SPC
Spare Parts Catalogue

TBA/19 020V

648160-2000

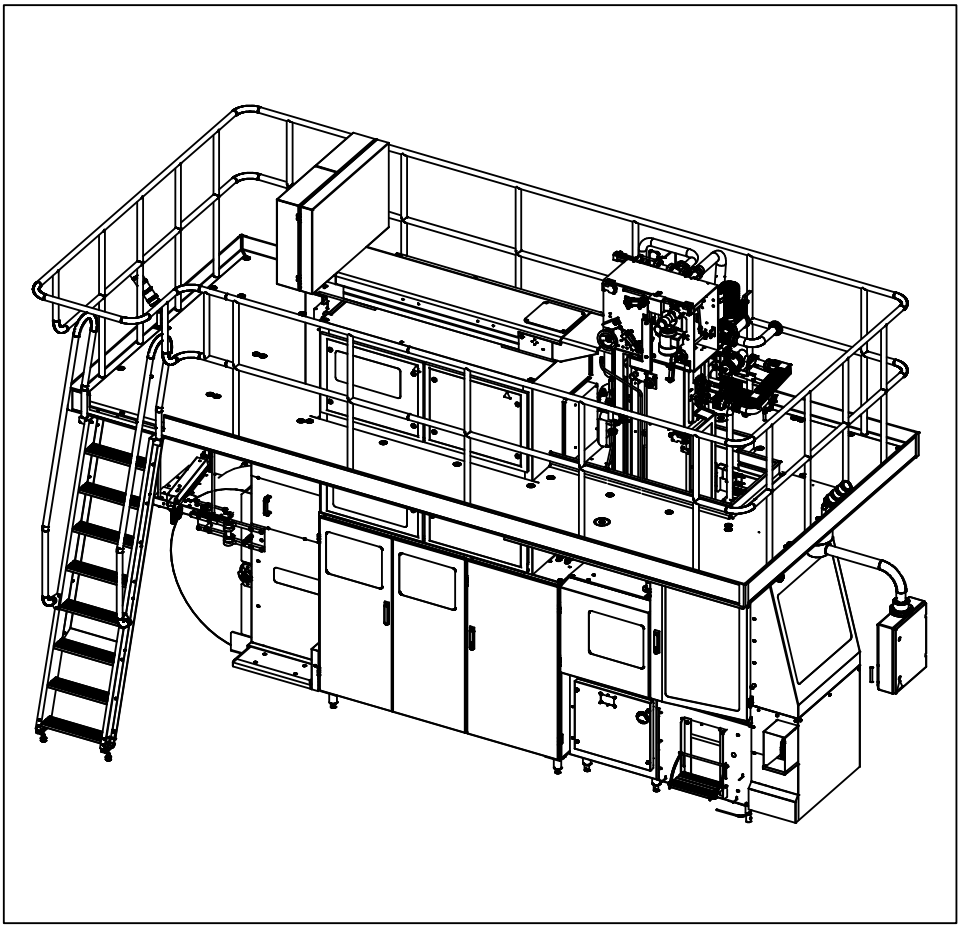

Tetra Pak

Doc. No: SPC-81656-0107

Main Groups of the Machine

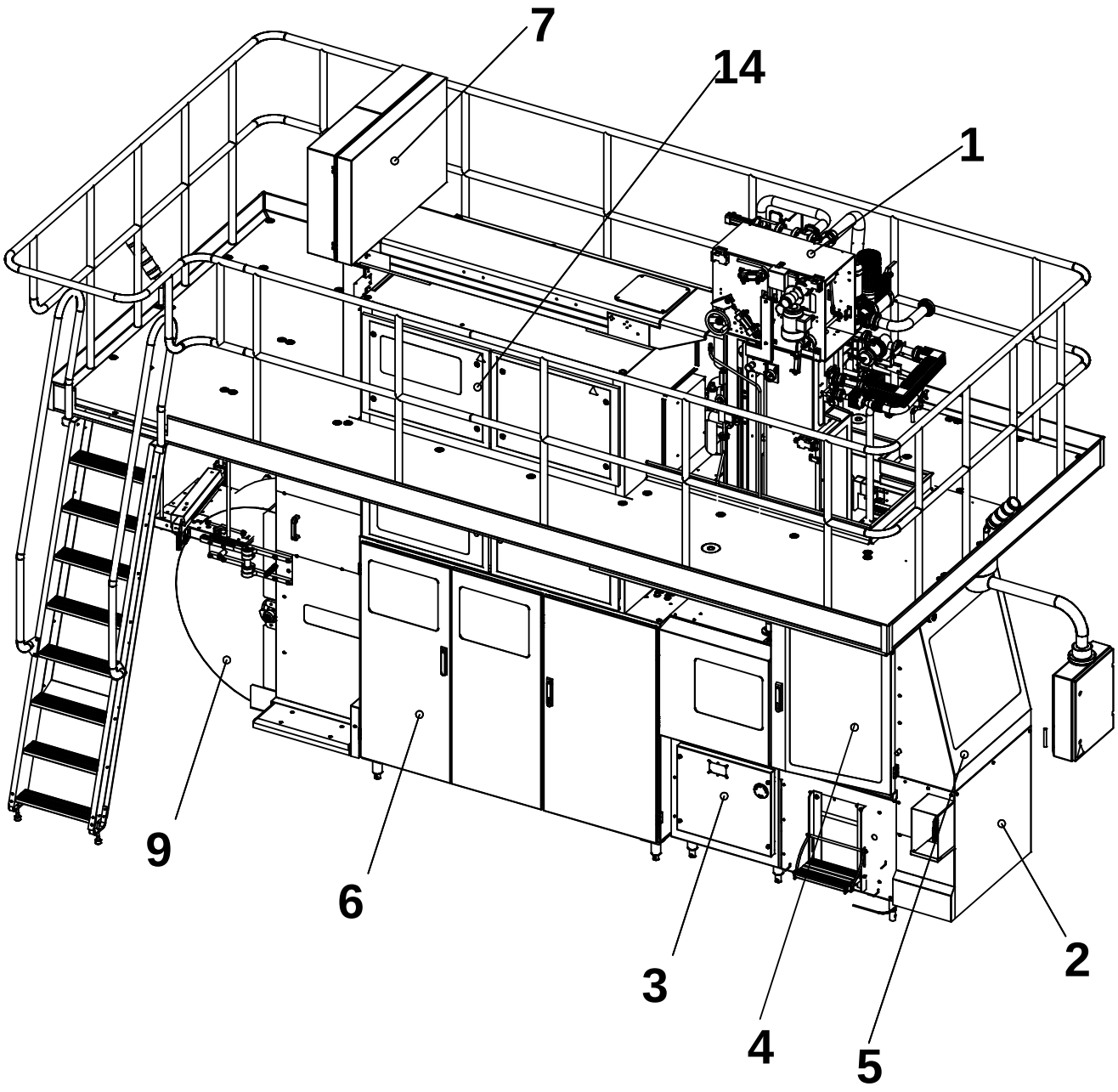

1 - Superstructure TBA/19 020v
2 - Machine Body
3 - Drive
4 - Jaw System
5 - Final Folder
6 - Service Unit
7 - Strip Applicator
9 - Packaging Material Infeed
14 - El. Cabinet

For the correct machine data, check your machine specification, supplied with the machine!

This document is valid for:

Series No/Machine No Sign.

SPC
Spare Parts Catalogue

Tetra Brik Aseptic
TBA/19 020V
648160-2000

Valid from machine series No.:
21204/00064

Table of Content:

Introduction ..... , **5**

Superstructure TBA/19 020V
B-648111-1200 ..... , **9**

Machine Body
B-648102-1200 ..... , **183**

Drive
B-648103-1100 ..... , **251**

Jaw System
B-648104-1200 ..... , **285**

Final Folder
B-648105-1200 ..... , **365**

Service Unit
B-648106-1200 ..... , **433**

Strip Applicator
B-648107-1200 ..... , **523**

Packaging Material Infeed
B-648156-0100 ..... , **589**

Regular Accessories
B-648109-1200 ..... , **661**

El. Cabinet
B-648114-0100 ..... , **699**

Optional Accessories
B-648119-1200 ..... , **847**

Part Number Index ..... , **875**

Electrical Parts Index ..... , **941**

Doc. No: SPC-81656-0107

Issue 2003-09

Tetra Pak

Tetra Pak Carton Ambient S.p.A.

General information

Manufacturer

This machine is produced by:
Tetra Pak Carton Ambient S.p.A.
Via Delfini 1
41100 Modena /Italy

Document producer

This document has been produced by:
Tetra Pak Carton Ambient S.p.A.
Technical Publications
Via Delfini 1
41100 Modena /Italy

Number of pages

This document contains totally **954 pages**, including the first **8** introduction pages.

Copyright © 2003 Tetra Pak Carton Ambient S.p.A.

All rights reserved. No parts of this document may be reproduced or copied in any forms or by any means, without written permission from Tetra Pak Carton Ambient S.p.A..

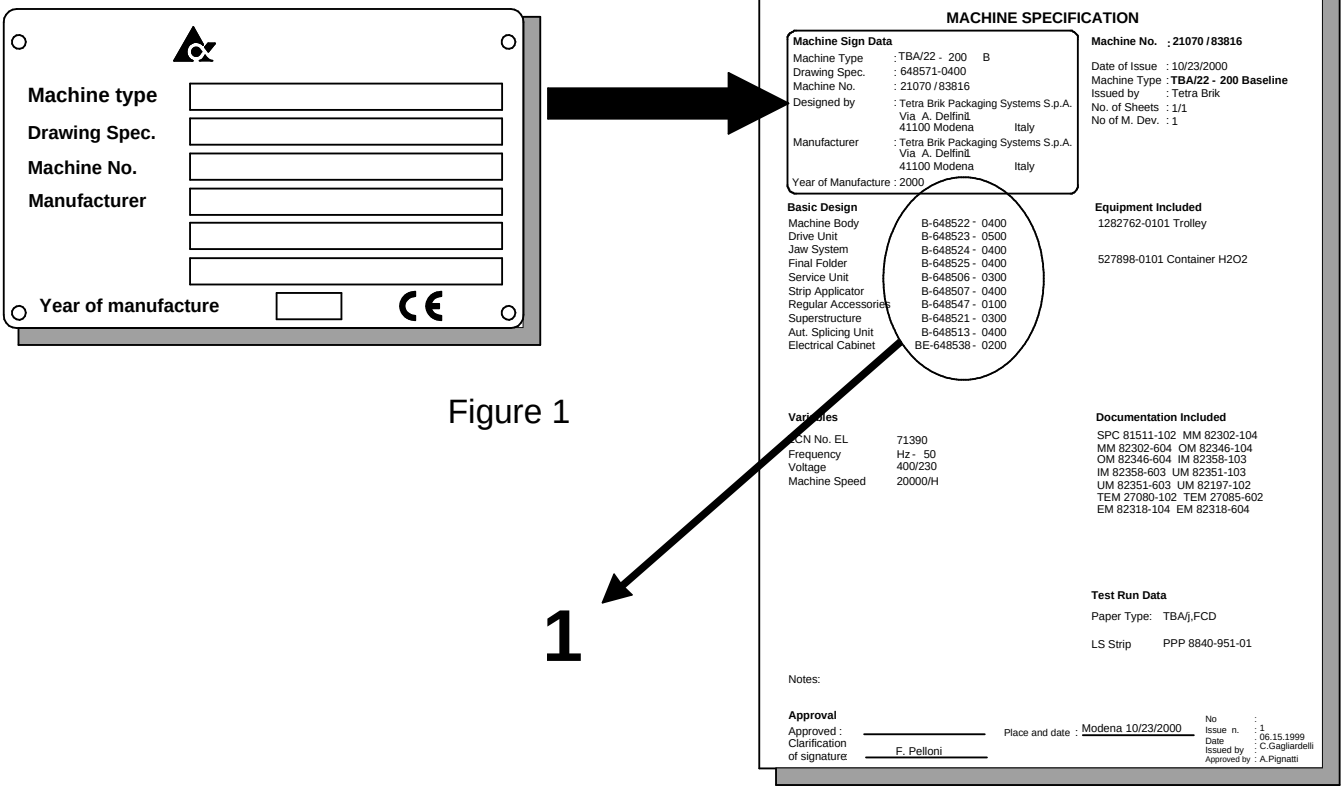

Figure 1

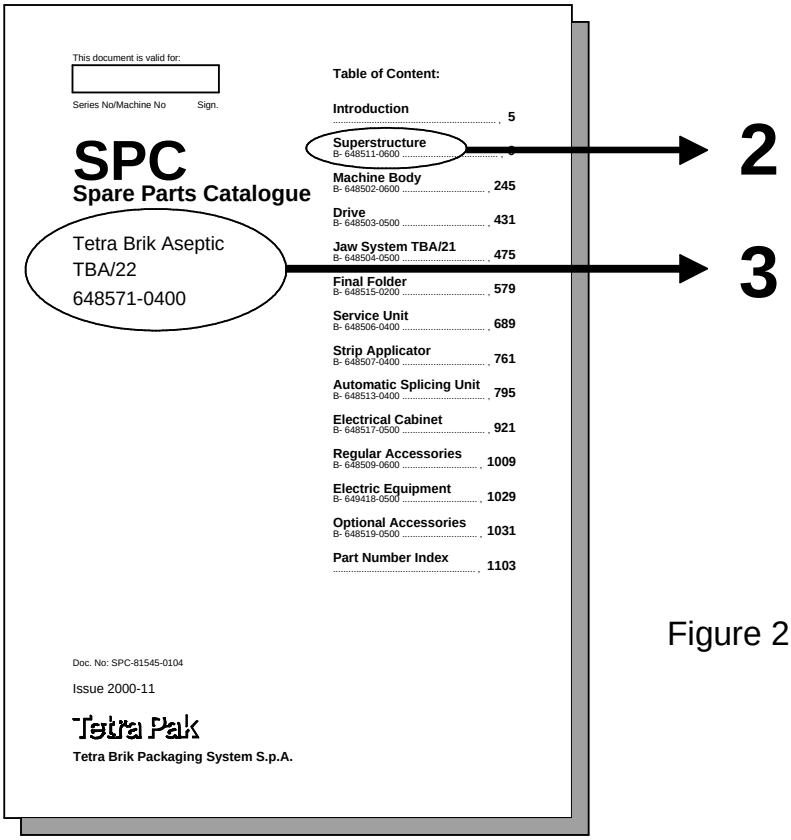

Figure 2

Figure 3 A-648571-0400

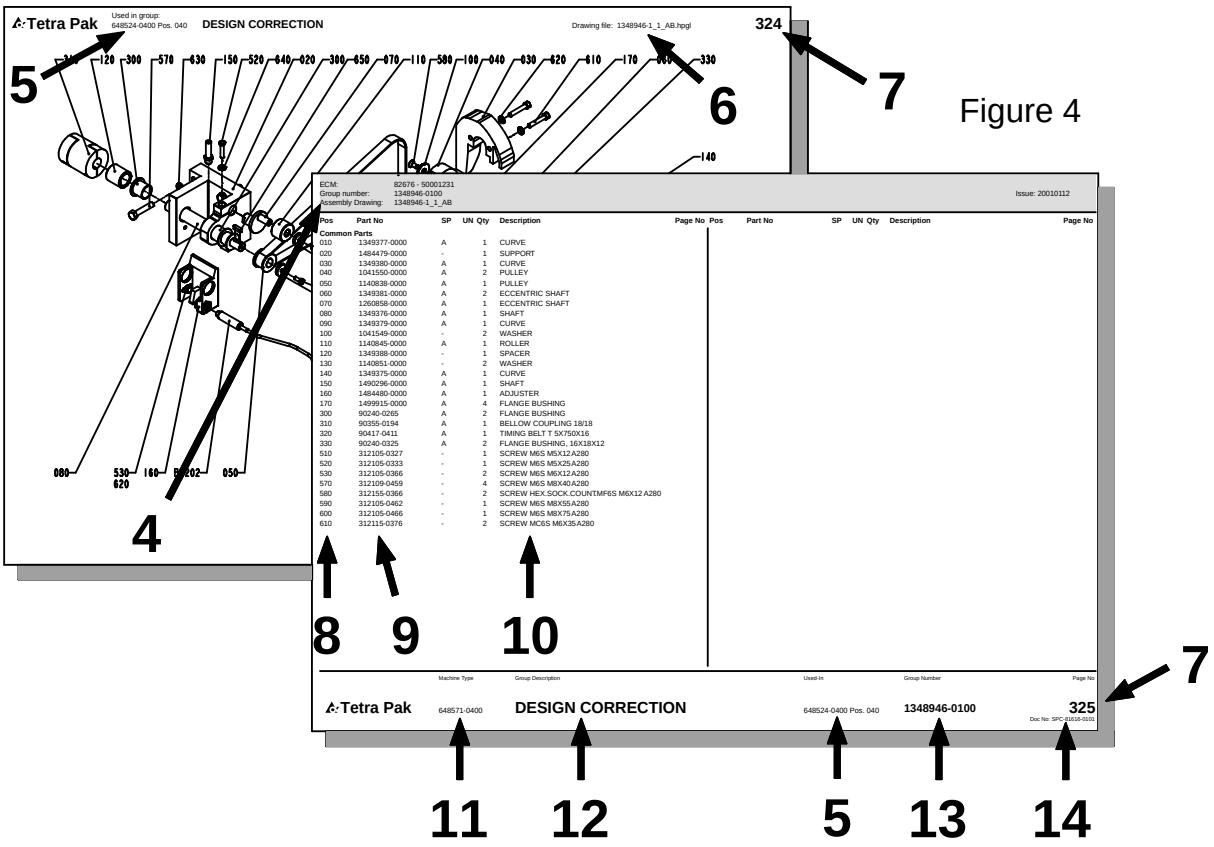

Figure 4

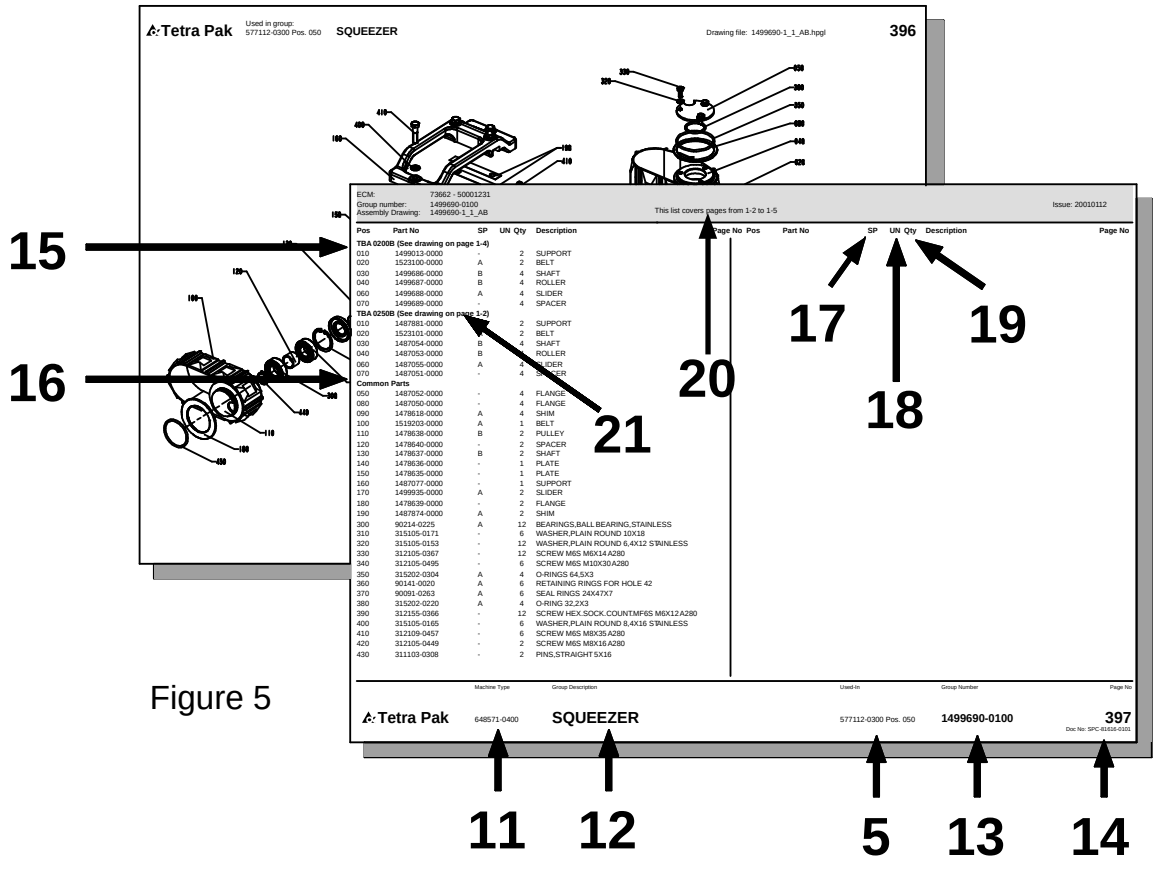

Figure 5

General information

Service

When ordering spare parts for your machine, contact the nearest Tetra Pak service station.

Machine identification

This machine plate is an example of the type of machine plate, attached to the machine frame. The plate carries data needed when contacting Tetra Pak concerning this particular machine **(see Figure 1)**.

Purpose of the Spare Parts Catalogue.

The purpose of the Spare Parts Catalogue (SPC) is to provide the technicians and contact personnel with information on how to find and order spare parts for maintenance and service of the machine.
For instructions of how to replace parts and adjust machine setup, see the Maintenance Manual (MM).

Delivered documentation

The technical documentation delivered with this machine is stated in the Machine Specification.
Note! If any of these documents is missing, it must be reported in the document **Start Up Machine Quality Report**. For more information, see chapter 8 Preparation for Commissioning in the Installation Manual.
It is important that you keep these documents for the life of the equipment, and pass the documents on to any subsequent holder or user of the equipment.

Design modification

The content of this document is in accordance with the design and construction of the machine at the time it was delivered from the Tetra Pak machine production facility.

Further copies

Additional copies can be ordered from the nearest Tetra Pak service station. When ordering technical publications, always quote the document number printed on the front cover of the document concerned.

Tetra Pak Part numbering system

The third and forth digits in the sub-number, specify one unique group which can be ordered. If the forth digit is replaced by a "0", the number combination only points to a bill-of-material document.
The first and second digits in the sub-number, specify the development step (model) of the machine or group. **(see fig. 3)**
Main number of machine /group /article, depending on level.
Prefix, giving information about level, eg.
A = Machine
B = Main section (*)
C = Groups and subgroups
*) Customized distribution machines are registered as B-level as well.

How to find the correct Spare Part Number

A. Check that the data on your machine sign, and /or machine specification, corresponds with the catalogue.**(see fig.1)**
1) Main groups of the machine

B. The second catalogue sheet contains a table of content for the main groups, included in the catalogue. The information regarding machine and main group status MUST correspond with your machine specification.
Locate and choose the main groups page number (1), in which you want to search for spare parts.
(see fig. 2)
2) Main group
3) Machine type

C. Search in the main group illustration, the item number, which may hold your wanted spare part. Go to the text page below and find the page number for the actual group. **(see fig. 4)**
4) Internal information, such as latest Engineering Change, Bill-of-Material included in the catalogue page and the Assembly Drawing required
5) Used-In reference to next higher level in the machine structure
6) Assembly drawing number including the archive file extension
7) Continuous page numbering through the document
8) Pos number corresponding to illustration
9) Group or article number. Groups having own pages are indicated by a Page reference. Some Part Numbers may contain sub parts, these are listed in *italic font* after their parent item.
10) Group or article description..
11) Machine type including development status
12) Group description
13) Group number (bill-of-material) including development status
14) Document number

D. Continue to the found page number, and search in the illustration for your spare part. Go to the text row for the found item number, and read the part number. Take eventual variant headings in consideration; if you are unsure, read your machine specification. **(see fig. 5)**
15) Variant heading, eg volume, left /right etc.
16) Heading for common parts

17a) SP = Code for articles, which are included into various spare part kits. (from R3 source)
A = Critical Spare Part
B = Non - Critical Spares Part
C = Don't stop function, can bypassed
D = Seldom break, long time production

17b) SP = Code for articles, which are included into various spare part kits. (from AS400 source)
U = Starting-up kit supplied on machine delivery
P = Production kit to be held at production site workshop
S = Service kit to be held at service stations store
C = Central depot kit to be available at the central store

18) UN = Short code for measure units, eg mm, kg etc.
19) Qty = Number of items needed in the complete assembly.

E. Some Groups in the Catalogue may span over multiple pages, due to long text pages and/ or need of multiple drawings. When this occurs, a note (*This list covers pages from x-2 to x-5*) is written in the text page header.
20) List length information

F. When the list has more then one variant and each variant has its own assembly drawing dedicated, a page reference to the right drawing is given by the note *(See drawing on page: x-2)* after the variant heading.
21) Drawing reference information

SPC
Spare Parts Catalogue

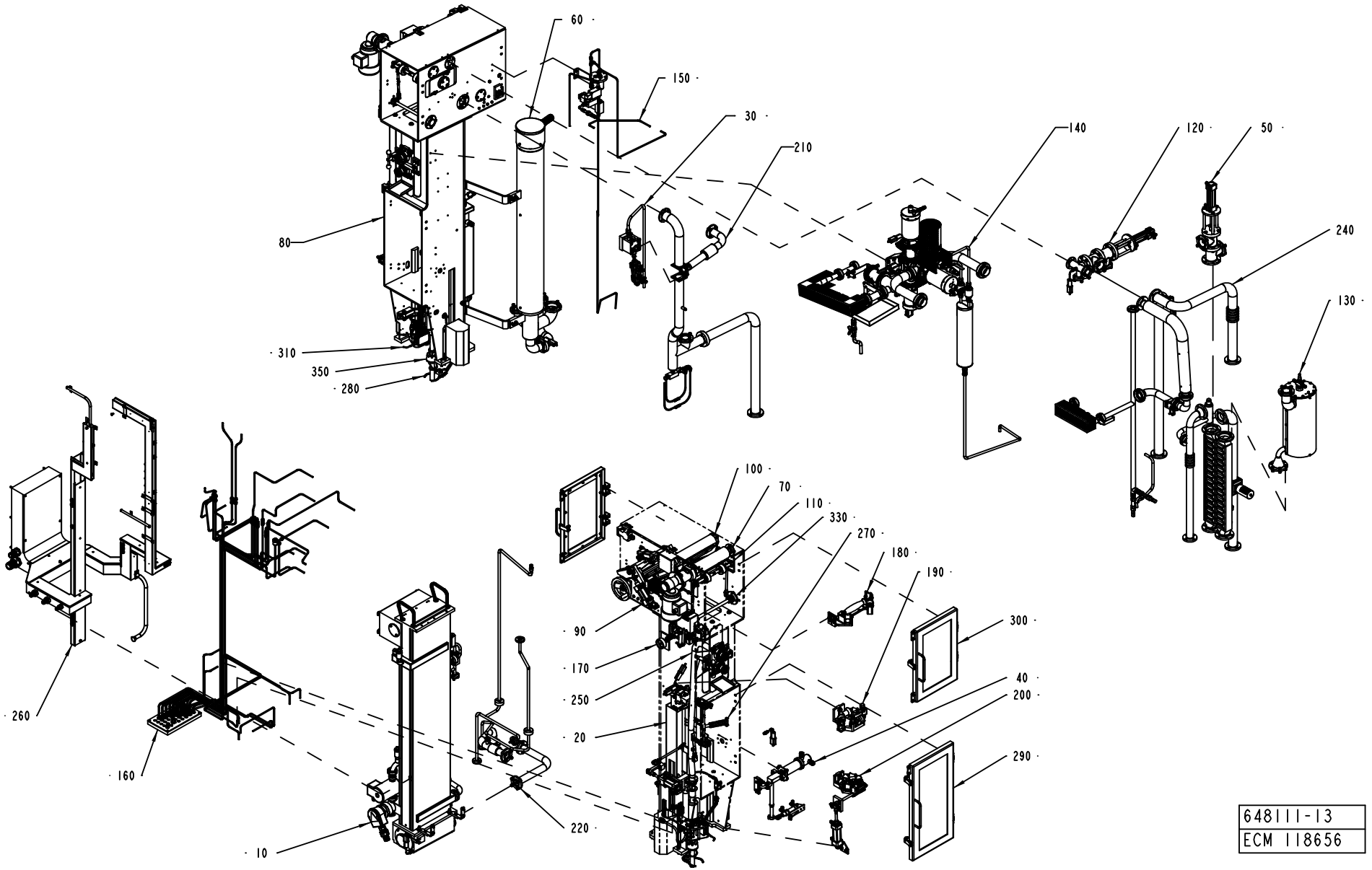
60
150
30
210
140
120
50
240
130
80
310
350
280
100
70
110
330
270
180
190
300
90
170
250
20
40
200
290
260
160
10
220
648111-13
ECM 118656

ECM: 134594 - 20030701
Group number: 648111-1200
Assembly Drawing: 648111-13_1_AA

This list covers pages from 10 to 13

Pos	Part No	SP	UN	Qty	Description	Page No
HI (See drawing on page: 12)						
360	2619758-0100	-		1	HEAD SPACE BY INJECTION	**15**
NOHI (See drawing on page: 10)						
-	-	-			-	
Common Parts						
010	256014-0800	-		1	BATH	**29, 31, 33, 35, 37, 39**
020	256055-0700	-		1	HOT AIR ELEMENT	**43**
030	256084-0700	-		1	CHANGE-OVER VALVE	**45**
040	256095-0700	-		1	HOT AIR ELEMENT	**47**
050	271169-0500	-		1	VALVE	**49**
060	271181-0600	-		1	AIR SUPER-HEATER	**51, 53**
070	272004-0500	-		1	BENDING ROLLER	**55**
080	272021-0800	-		1	ASEPTIC CHAMBER	**57, 59, 61**
090	272024-0500	A		1	CALENDER ROLLER	**63**
100	272025-0400	-		1	AIR KNIFE	**65**
110	272028-0800	-		1	BENDING ROLLER	**67**
120	272337-0600	-		1	VALVE	**69**
130	272407-0400	-		1	GENERATOR	**71**
140	272560-0800	-		1	PRODUCT VALVE	**73, 75, 77, 79**
150	272623-0700	-		1	SPRAY SYSTEM	**97, 99**
160	295045-0900	-		1	PIPE WORK-PNEUMATIC	**101, 103**
170	441304-0400	-		1	MOVABLE FORMING RING	**105, 107, 109, 111**
180	441307-0300	-		1	UPPER TUBE SUPPORT	**113, 115, 117**
190	441486-0400	-		1	DIVIDED FORMING RING	**121, 123, 125**
200	456309-0600	-		1	LOWER FORMING RING	**127, 129**
210	456555-0600	-		1	SUCTION PIPE	**131**
220	456556-0400	-		1	PEROXIDE PIPE	**133**
230	456836-0600	-		1	CLEANING SYSTEM	**135**
240	456976-0700	-		1	HEAT EXCHANGER	**139**
250	469091-0500	-		1	FILLER TUBE	**143**
260	469374-0600	-		1	CABLE TRENCH	**145, 147**
270	469501-0400	-		1	AIR NOZZLE	**153**
280	469781-0400	-		1	TUBE FLUSHING DEVICE	**155, 157**
290	491570-0200	-		1	DOOR	**161**
300	491579-0200	-		1	DOOR	**163**
310	491976-0300	-		1	PHOTOCELL UNIT	**165, 167**
320	579625-0100	-		1	PROTECTIVE GRATING	**169, 171**
330	1539920-0200	-		1	PENDULUM	**173**
350	925991-0200	-		1	LEVEL PROBE	**177**

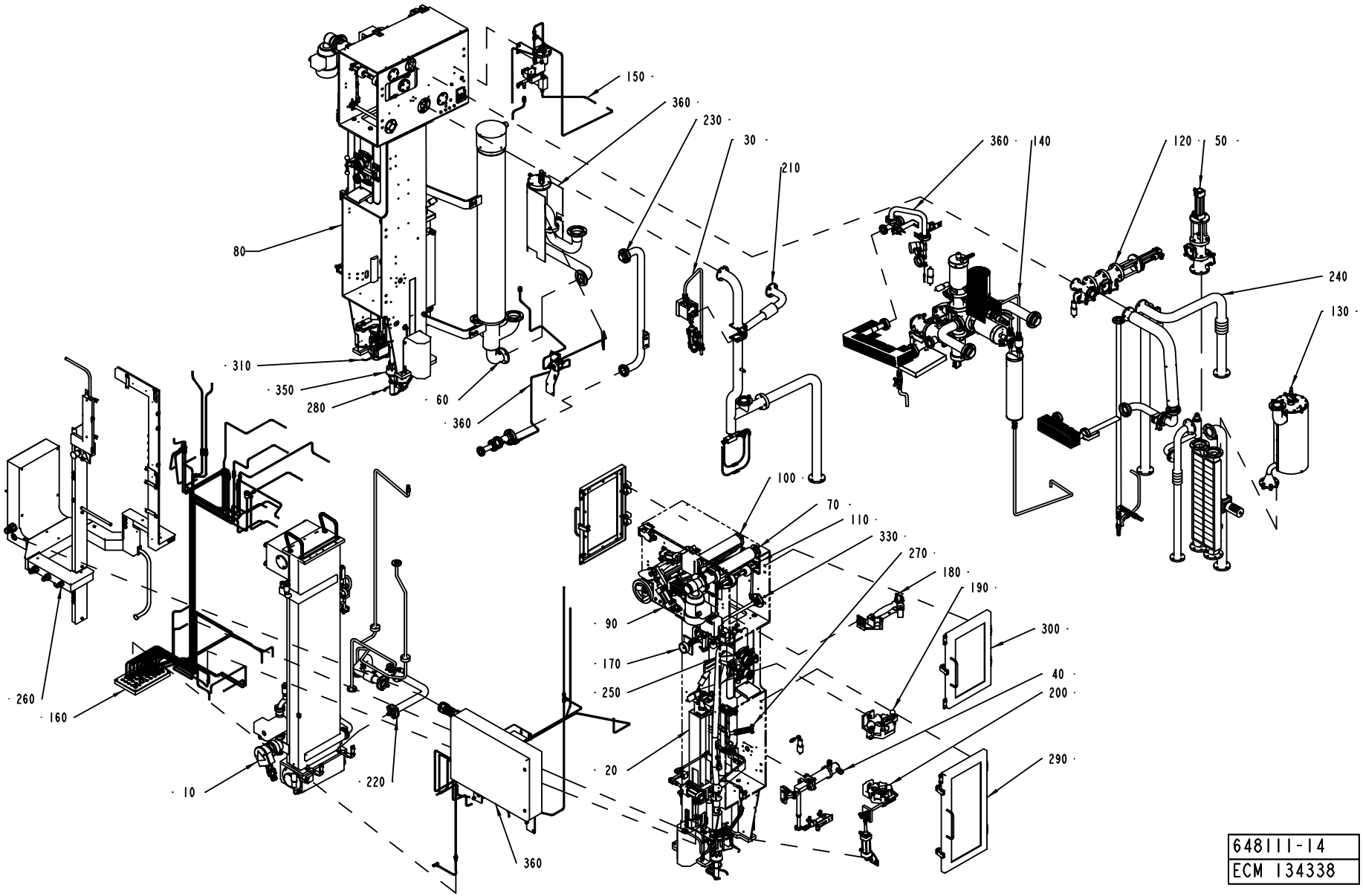
150
360
230
30
210
360
140
120
50
240
130
80
310
350
280
60
360
100
70
110
330
270
180
190
300
40
200
290
90
170
250
20
260
160
10
220
360
648111-14
ECM 134338

ECM: 134594 - 20030701
Group number: 648111-1200
Assembly Drawing: 648111-14_1_AA

This list covers pages from 10 to 13

Pos	Part No	SP	UN	Qty	Description	Page No
HI (See drawing on page: 12)						
360	2619758-0100	-		1	HEAD SPACE BY INJECTION	**15**
NOHI (See drawing on page: 10)						
-	-	-			-	
Common Parts						
010	256014-0800	-		1	BATH	**29, 31, 33, 35, 37, 39**
020	256055-0700	-		1	HOT AIR ELEMENT	**43**
030	256084-0700	-		1	CHANGE-OVER VALVE	**45**
040	256095-0700	-		1	HOT AIR ELEMENT	**47**
050	271169-0500	-		1	VALVE	**49**
060	271181-0600	-		1	AIR SUPER-HEATER	**51, 53**
070	272004-0500	-		1	BENDING ROLLER	**55**
080	272021-0800	-		1	ASEPTIC CHAMBER	**57, 59, 61**
090	272024-0500	A		1	CALENDER ROLLER	**63**
100	272025-0400	-		1	AIR KNIFE	**65**
110	272028-0800	-		1	BENDING ROLLER	**67**
120	272337-0600	-		1	VALVE	**69**
130	272407-0400	-		1	GENERATOR	**71**
140	272560-0800	-		1	PRODUCT VALVE	**73, 75, 77, 79**
150	272623-0700	-		1	SPRAY SYSTEM	**97, 99**
160	295045-0900	-		1	PIPE WORK-PNEUMATIC	**101, 103**
170	441304-0400	-		1	MOVABLE FORMING RING	**105, 107, 109, 111**
180	441307-0300	-		1	UPPER TUBE SUPPORT	**113, 115, 117**
190	441486-0400	-		1	DIVIDED FORMING RING	**121, 123, 125**
200	456309-0600	-		1	LOWER FORMING RING	**127, 129**
210	456555-0600	-		1	SUCTION PIPE	**131**
220	456556-0400	-		1	PEROXIDE PIPE	**133**
230	456836-0600	-		1	CLEANING SYSTEM	**135**
240	456976-0700	-		1	HEAT EXCHANGER	**139**
250	469091-0500	-		1	FILLER TUBE	**143**
260	469374-0600	-		1	CABLE TRENCH	**145, 147**
270	469501-0400	-		1	AIR NOZZLE	**153**
280	469781-0400	-		1	TUBE FLUSHING DEVICE	**155, 157**
290	491570-0200	-		1	DOOR	**161**
300	491579-0200	-		1	DOOR	**163**
310	491976-0300	-		1	PHOTOCELL UNIT	**165, 167**
320	579625-0100	-		1	PROTECTIVE GRATING	**169, 171**
330	1539920-0200	-		1	PENDULUM	**173**
350	925991-0200	-		1	LEVEL PROBE	**177**

HEAD SPACE BY INJECTION

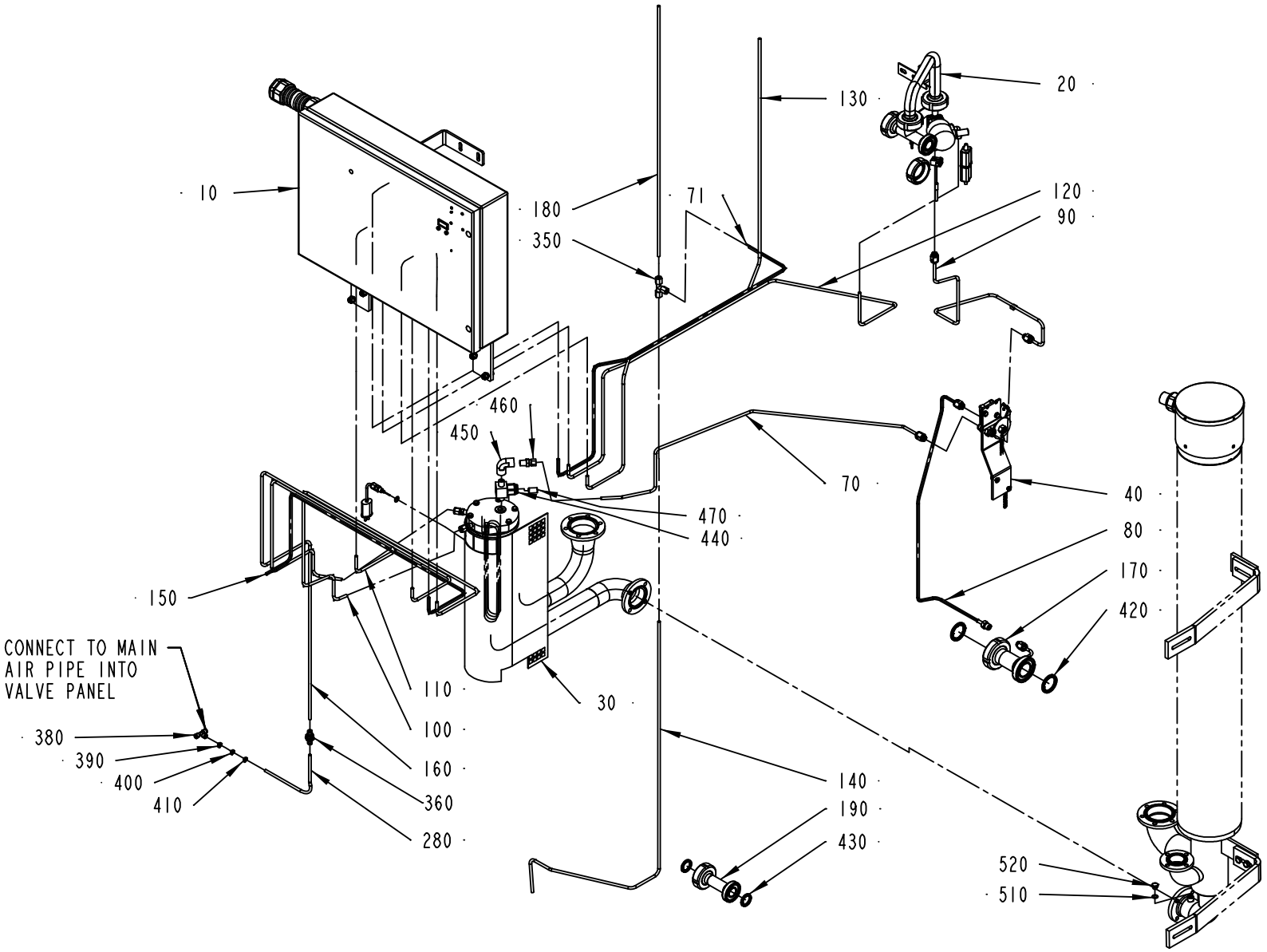

2619758-1
ECM 134338

ECM: 133969 - 20030701
Group number: 2619758-0100
Assembly Drawing: 2619758-1_1_AA

Pos	Part No	SP	UN	Qty	Description	Page No
-						
	2568779-0000	-		1	DIAGRAM	
070	1539604-0000	-		1	PIPE	
071	2546472-0000	-		1	PIPE	
080	2545432-0000	-		1	CLEANING PIPE	
090	1539605-0000	-		1	COOLING PIPE	
10	2545083-0100	-		1	CONTROL CABINET	**17, 19**
100	2546444-0000	-		1	PIPE	
110	2546447-0000	-		1	SPRAY PIPE	
120	2546471-0000	-		1	AIR PIPE	
130	2546473-0000	-		1	FILLING PIPE	
140	2547007-0000	-		1	RETURN PIPE	
150	2546446-0000	-		1	PIPE	
160	2546445-0000	-		1	AIR PIPE	
170	2545062-0000	-		1	CLEANING PIPE	
180	2547006-0000	-		1	RETURN PIPE	
190	1539601-0000	-		1	CLEANING PIPE	
20	2545080-0100	-		1	INJECTION SYSTEM	**23**
260	90144-0073	-		1	TREBOFLON-TAPE W=13MM	
280	90166-0132	-	MM	2500	TUBE 6 MM PA,TRANSP.	
30	1539599-0100	-		1	HEAT EXCHANGER	**25**
340	342706-0130	-		1	ACCESSORIES, INSERT SLEEVE 6 MM	
350	90030-0076	-		1	CONN. T-PIPE T-6	
360	90457-0086	-		2	BULKHEAD CONNECTOR 6MM	
380	342748-0102	-		1	T-CONNECTION 6MM	
390	359000-0400	-		1	MARKING CO2/4"0"	
40	1539602-0100	-		1	CONNECTION SYSTEM	**27**
400	359000-0401	-		1	MARKING COLLAR 2/4 "1" YELLOW	
410	359000-0405	-		1	MARKING CO2/4"5"	
420	90217-0348	B		2	GASKET 35,4X46,8X4 MM	
430	90217-0347	B		2	GASKET 32X22,6X3,6 MM	
440	90277-0062	-		1	FILTER HOUSING, SS-4TF2-60	
	90277-0347	*C*		*1*	*FILTER*	
450	90330-0169	-		1	ELBOW, 90 INT. THREAD, 4-4FE. SS	
460	90030-0062	-		1	CONN. STR. GE 6-1/4-18 NPTF	
470	90277-0407	-		1	FILTER ELEMENT 60µ, SS-4F-K4-60	
510	315234-0109	-		1	WASHER,PL.RND.CU.10,3/13,5 H=1,0	
520	90136-0001	-		1	PLUG, EXT. THREAD, NO. 100727	

Pos	Part No	SP	UN	Qty	Description	Page No

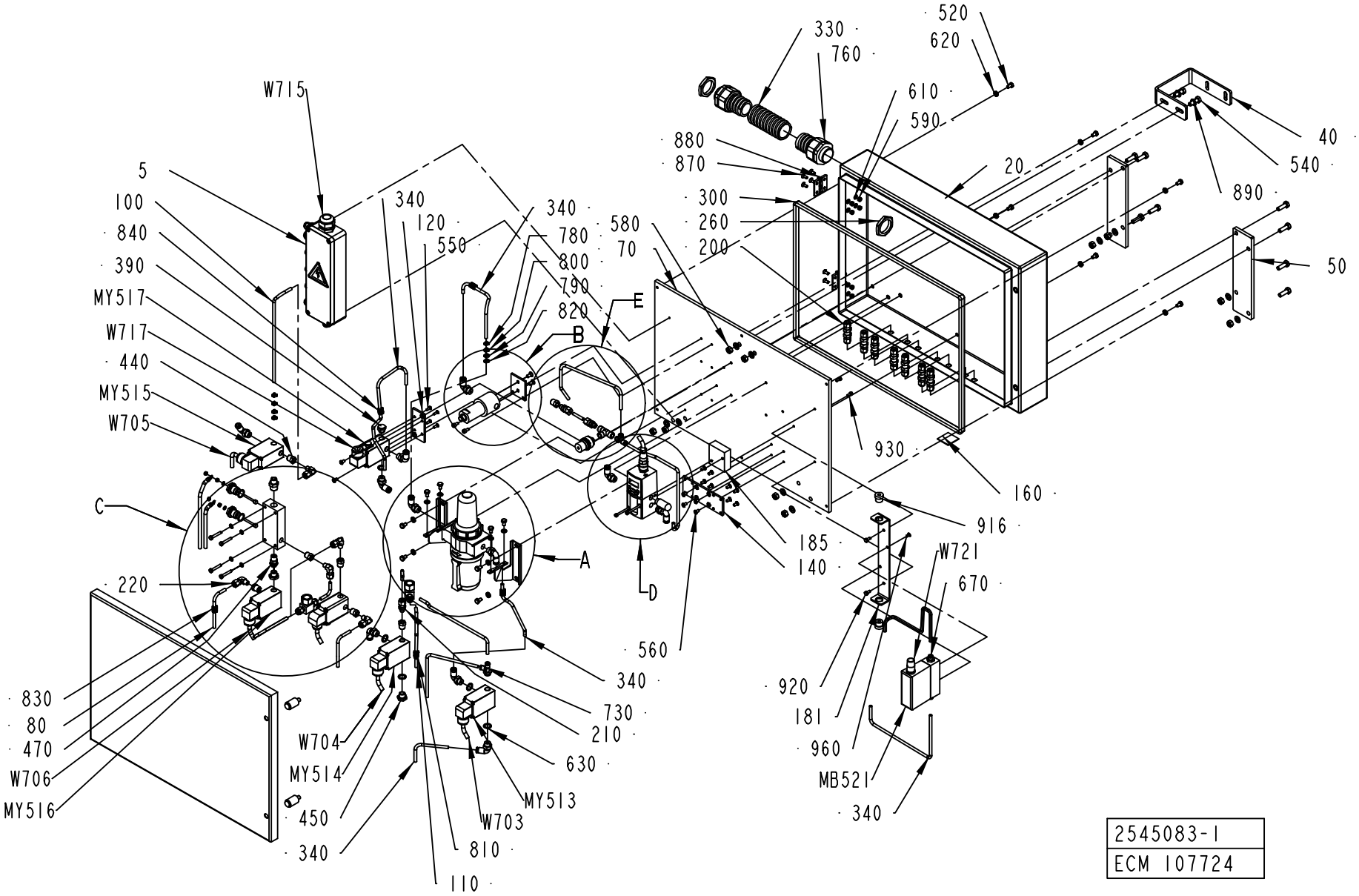

2545083-1
ECM 107724

ECM: 85292 - 20030701
Group number: 2545083-0100
Assembly Drawing: 2545083-1_1_AA

This list covers pages from 16 to 19

Pos	Part No	SP	UN	Qty	Description	Page No
-						
005	2623674-0100	-		1	CONNECTION BOX	**21**
010	2545423-0000	-		1	DOOR	
020	2545424-0000	-		1	CABINET	
030	2565736-0000	-		1	RESERVOIR	
040	2546448-0000	-		1	SUPPORT	
050	2547315-0000	-		2	SUPPORT	
070	2545426-0000	-		1	MOUNTING PLATE	
080	2545425-0000	-		1	SPRAY PIPE	
090	2545427-0000	-		1	FILLING PIPE	
100	2545428-0000	-		1	RETURN PIPE	
110	2545429-0000	-		1	PIPE	
120	978235-0000	-		1	VALVE PLATE	
140	2574348-0000	-		1	VALVE BRACKET	
150	979474-0000	-		1	BRACKET	
160	520072-0000	-		1	SIGN BOARD	
170	560931-0000	-		2	BRACKET	
181	2572676-0000	-		1	SUPPORT	
182	2570391-0000	-		1	PIPE	
185	2511330-0000	-		1	SPACER	
190	2558744-0000	-		1	PIPE	
195	2558745-0000	-		2	PIPE	
200	90030-0230	-		7	CONN. BULKHEAD SV 6-	
210	90030-0233	-		1	CONN. STR., 6-G1/8, EXT. THREAD	
220	90030-0234	-		1	CONN. ELBOW, 6-R1/8 , EXT.THREAD	
260	90099-0120	-		2	MUTTER PR 37 (PG29)	
290	90140-0015	-		1	T-PIPE, INT. THREAD, 2003-1/8	
300	90143-0059	-	M	2	SEAL STRIP 4610069	
310	90144-0073	-		1	TREBOFLON-TAPE W=13MM	
330	90152-0060	-	MM	1200	SPIRAL CONDUIT, 42X35, UL3529	
335	90153-0043	-		1	ADHESIVE, LOCTITE 495 20G	
340	90166-0132	-	M	10	TUBE 6 MM PA,TRANSP.	
350	90458-2957	-		11	ELBOW PIPE JOINT, EXT.THREAD, D=6MM-G1/4	
360	90226-0452	-		2	MOUNTING SCREW	
370	90236-0041	-		1	BRACKET	
390	90257-0001	-		1	FILTER PLUG PARTNO 8145-00-140 TYP F14	
410	90277-0104	A		1	FILTER F64B-2GN-ARO	
	90113-0458	*-*		*1*	*FILTER ELEMENTS*	
	90113-0457	*-*		*1*	*FILTER ELEMENTS*	
420	90277-0323	-		1	FILTER HOUSING / ART.NO 95S6-1/4 S 5430	
430	90277-0324	A		1	FILTER CARTRIDGE 050-11-A	
440	90330-0025	-		7	BUSHING, INT/EXT. THR. R1/4-RP1/8	
450	90330-0026	-		3	PLUG, EXT. G-THREAD, G1/4	
470	90330-0043	-		1	NIPPLES, EXT. THREAD. R-207R1/4	
480	90030-0234	-		5	CONN. ELBOW, 6-R1/8 , EXT.THREAD	
490	90330-0083	-		1	NIPPLES, EXT. THREAD. R3/8-R1/4	
510	312105-0335	-		4	SCREW M6S ISO 4014 M5X30 A480	
520	312105-0364	-		14	SCREW M6S ISO 4017 M6X10 A480	
530	312115-0325	-		2	SCREW ISO4762 M5X10 A4	
540	312105-0453	-		10	SCREW M6S ISO 4017 M8X25 A480	
550	312145-0291	-		12	SCREW COUNT.SLOT.HD. 4X12 A4	
560	312145-0325	-		14	SCREW COUNTERS.SLOT.HD. MFS 5X10 SS	
570	312145-0366	-		2	SCREW COUNTERS.SLOT.HD. MFS 6X12 SS	
580	312605-0318	-		10	HEXAGON NUT, M6M M8 A280	
585	312605-0312	-		4	HEXAGON NUT, M6M M4 A280	
590	312605-0314	-		8	HEXAGON NUT, M6M M5 A280	
595	315105-0136	-		4	WASHER BRB4,3XRFR	
600	315105-0153	-		12	WASHER BRB6,4X12RFR	
610	315105-0146	-		12	WASHER BRB5,3X10RFR	
630	315237-0110	-		6	WASHER,PL.RND.AL.13,5/18,H=1,5	
660	342713-0210	-		1	PLUG, EXT THREAD HEX SOCKET 8638-00-140	
670	342722-0203	-		2	STRAIGHT COUPLING	
730	342772-0114	-		1	ELBOW FITTING, 6 - G1/4	
735	342772-0113	-		1	ELBOW FITTING, 6 - G1/8	
760	353243-0008	-		2	EXTENDED WITHOUT INSERT, PG29	
780	359000-0400	-		6	MARKING CO2/4"0"	
790	359000-0401	-		8	MARKING COLLAR 2/4 "1" YELLOW	
800	359000-0403	-		3	MARKING COLLAR PA2/4 "3" YELLOW	
810	359000-0404	-		8	MARKING COLLAR PA2/4 "4" YELLOW	
820	359000-0405	-		8	MARKING CO2/4"5"	
830	359000-0406	-		1	MARKING COLLAR PA2/4 "6" YELLOW	
840	359000-0407	-		1	MARKING COLLAR PA2/4 "7" YELLOW	
850	315204-0213	-		2	O-RING 15,2X2,4 MM	
860	90230-0064	-		2	CHECK VALVE, 6 MM HIGH TEMP.	
870	312155-0327	-		8	SCREW EN 10642 MF6S M5X12 A480	
880	90459-0075	-		2	HINGE, 1056-U30	
890	315105-0165	-		12	WASHER BRB8,4X16RFR	
900	342706-0130	-		3	ACCESSORIES, INSERT SLEEVE 6 MM	
916	353249-0017	-		2	INSERT, SINGEL HOLE, HI.TEMP, EK152I7	
920	312105-0325	-		2	SCREW M6S ISO 4017 M5X10 A480	
930	312115-0289	-		2	SCREW ISO4762 M4X10 A4	
940	312115-0305	-		2	SCREW ISO4762 M4X50 A4	
960	312155-0287	-		2	SCREW EN 10642 MF6S M4X8 A480	
980	90030-0184	-		2	CONN. STR. GA-6-G1/8	

Machine Type | Group Description | Used-In | Group Number | Page No

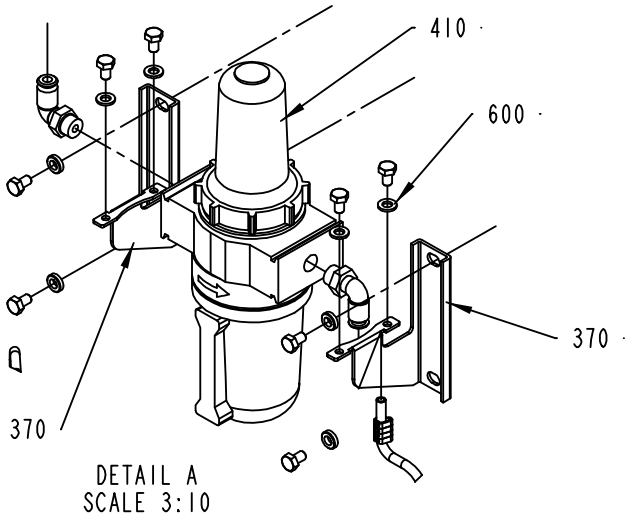

DETAIL A
SCALE 3:10

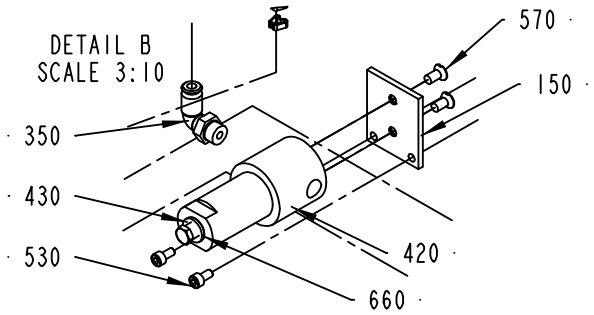

DETAIL B
SCALE 3:10

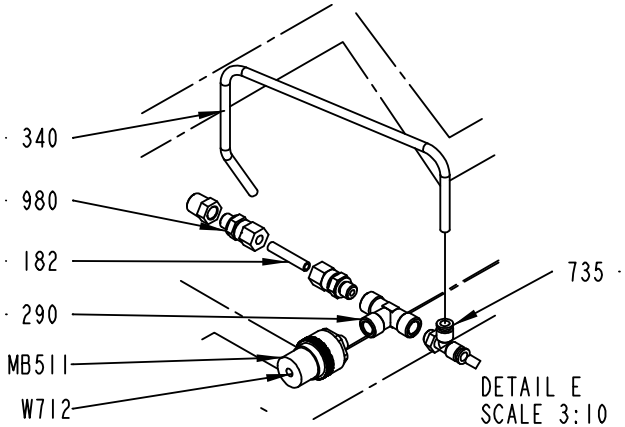

DETAIL E
SCALE 3:10

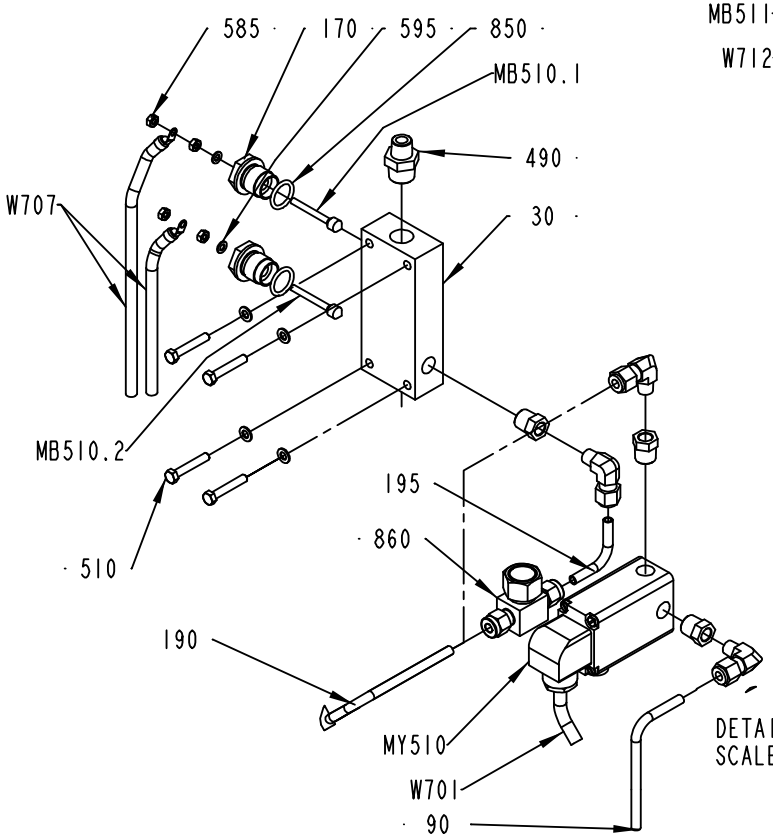

DETAIL C
SCALE 3:10

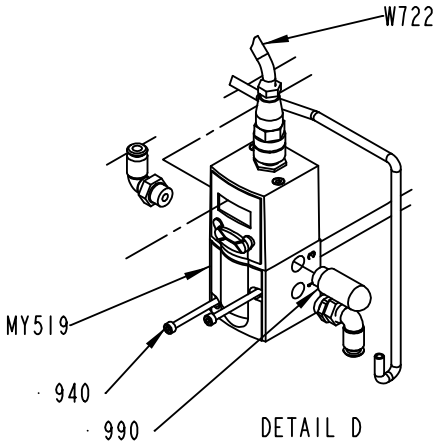

DETAIL D
SCALE 3:10

2545083-1
ECM 107724

Pos	Part No	SP	UN	Qty	Description	Page No
- (Cont'd)						
990	90328-0026	-		1	SILENCER G1/4	
MB510.1	567070-0014	-		2	ELECTRODE	
MB510.2	567070-0014	-		1	ELECTRODE	
MB511	90274-0066	A		1	PRESSURE SWITCH, 5,516 - 689,5 KPA	
MB521	90458-2619	A		1	FLOW METER, D-6230-HGB-BB-AV-99-0-N2	
MY510	979956-0000	A		1	SOLENOID VALVE	
MY513	90042-0171	A		1	SOLENOID VALVE BUERKERT	
	90042-0466	*C*		*1*	*DIAPHRAGM 330.95.2 VITON*	
MY514	90042-0171	A		1	SOLENOID VALVE BUERKERT	
	90042-0466	*C*		*1*	*DIAPHRAGM 330.95.2 VITON*	
MY515	90042-0171	A		1	SOLENOID VALVE BUERKERT	
	90042-0466	*C*		*1*	*DIAPHRAGM 330.95.2 VITON*	
MY516	90042-0171	A		1	SOLENOID VALVE BUERKERT	
	90042-0466	*C*		*1*	*DIAPHRAGM 330.95.2 VITON*	
MY517	90042-0171	A		1	SOLENOID VALVE BUERKERT	
	90042-0466	*C*		*1*	*DIAPHRAGM 330.95.2 VITON*	
MY519	90459-1420	A		1	PROPORTIONAL VALVE 0 - 10V/0-6 BAR	
	90458-1262	*-*		*1*	*CONNECTOR 131028001 FOR PROP. VALVE*	
W701	351150-0403	-	MM	720	CABLE OLFLEX 3X0,75 MM2 LIGHT/GREY	
W703	351150-0403	-	MM	980	CABLE OLFLEX 3X0,75 MM2 LIGHT/GREY	
W704	351150-0403	-	MM	780	CABLE OLFLEX 3X0,75 MM2 LIGHT/GREY	
W705	351150-0403	-	MM	780	CABLE OLFLEX 3X0,75 MM2 LIGHT/GREY	
W706	351150-0403	-	MM	580	CABLE OLFLEX 3X0,75 MM2 LIGHT/GREY	
W707	351150-0404	-	MM	630	CABLE OLFLEX 4X0,75 MM2 LIGHT/GREY	
W715	351150-0425	-	M	4	CABLE OLFLEX 25X0,75 MM2 LIGHT/GREY	
W717	351150-0403	-	MM	860	CABLE OLFLEX 3X0,75 MM2 LIGHT/GREY	
W721	90220-0072	-	M	7	SCR. CABLE 4X0,34MM2	
W721.1	353300-0006	-	MM	150	SHRINKABLE HOSE	
W722	90220-0072	-	M	7	SCR. CABLE 4X0,34MM2	
W722.1	353300-0006	-	MM	150	SHRINKABLE HOSE	

Pos	Part No	SP	UN	Qty	Description	Page No

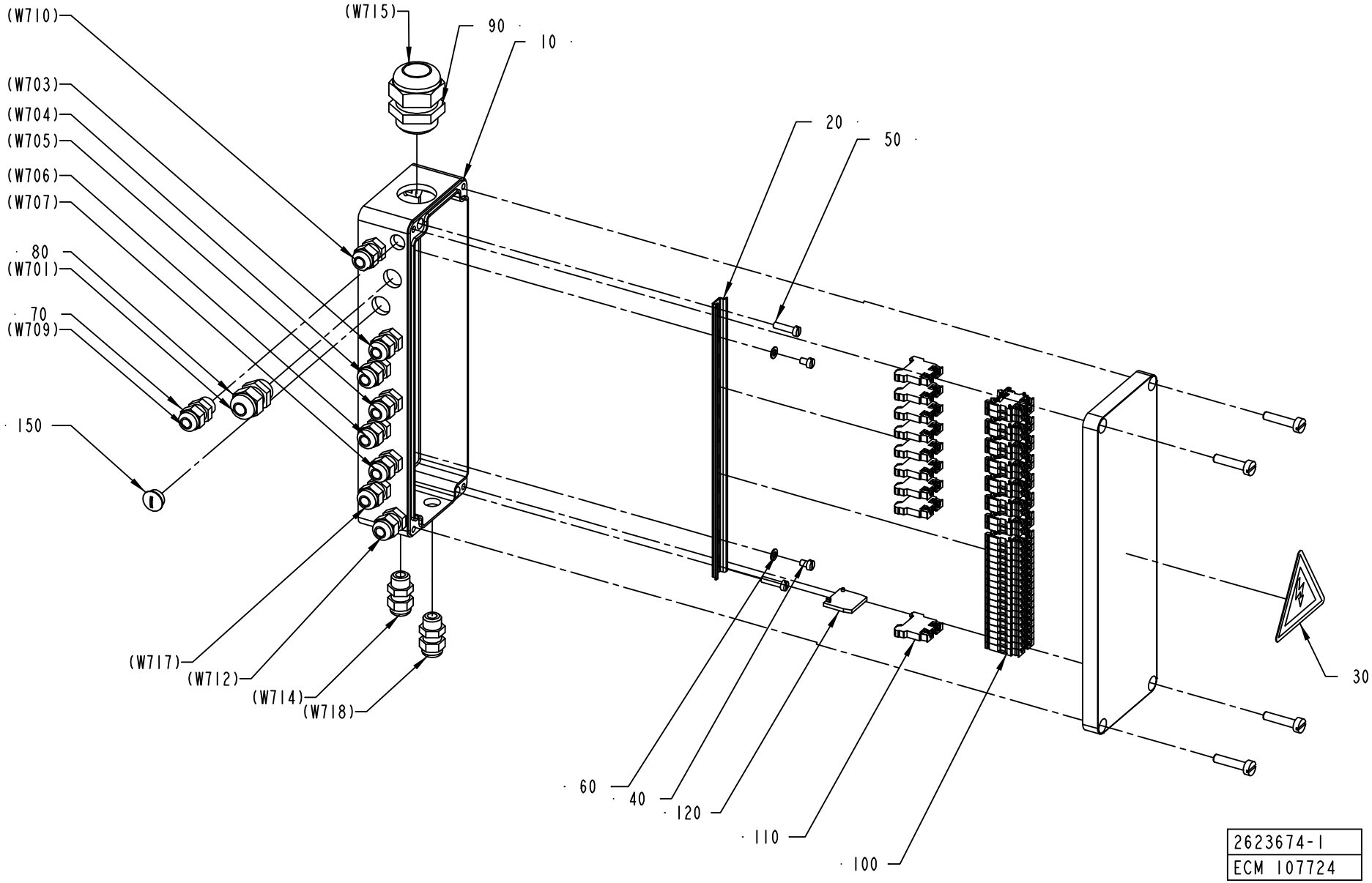
(W710)
(W715)
90
10
(W703)
(W704)
(W705)
(W706)
(W707)
20
50
80
(W701)
70
(W709)
150
(W717)
(W712)
(W714)
(W718)
60
40
120
110
100
30
2623674-1
ECM 107724

ECM: 133963 - 20030701
Group number: 2623674-0100
Assembly Drawing: 2623674-1_1_AA

Pos	Part No	SP	UN	Qty	Description	Page No
-						
010	979475-0000	-		1	CONNECTION BOX	
020	979476-0000	-		1	RAIL	
030	90194-0016	A		1	WARNING SIGN, RISK OF ELECTRIC SHOCK	
040	312125-0285	-		2	SCREW SLOT.PAN HD. MCS 4X6 A480	
050	312125-0293	-		2	SCREW PAN HEAD MCS M4X16 SS	
060	315105-0136	-		2	WASHER BRB4,3XRFR	
070	352103-0096	-		5	CABLE GLAND, ST 7, PR 12,5/PG7	
080	352103-0101	-		7	CABLE GLAND, ST 9, PR15,2/PG9	
090	352103-0116	-		1	CABLE GLAND, ST 21, PR28,3/PG21	
100	90077-0123	-		32	FEED THROUGH TERMINAL, 017596	
110	90135-0042	-		9	EARTH TERMINAL, 130336	
120	90077-0122	-		1	END PLATE AP/AKZ 2,5	
130	359011-0807	-		2	MARKING PLATES 5-FW 1-50	
140	359011-0819	-		1	MARKING PLATES 5-GW (EARTH)	
150	90002-0018	-		1	BLANK-OFF PLUG, PR 12,5 SKINDICHT-BLK7	
160	351160-0102	-	MM	1200	CABLE AWM 1X0,75 MM2 DARKBLUE	

Pos	Part No	SP	UN	Qty	Description	Page No

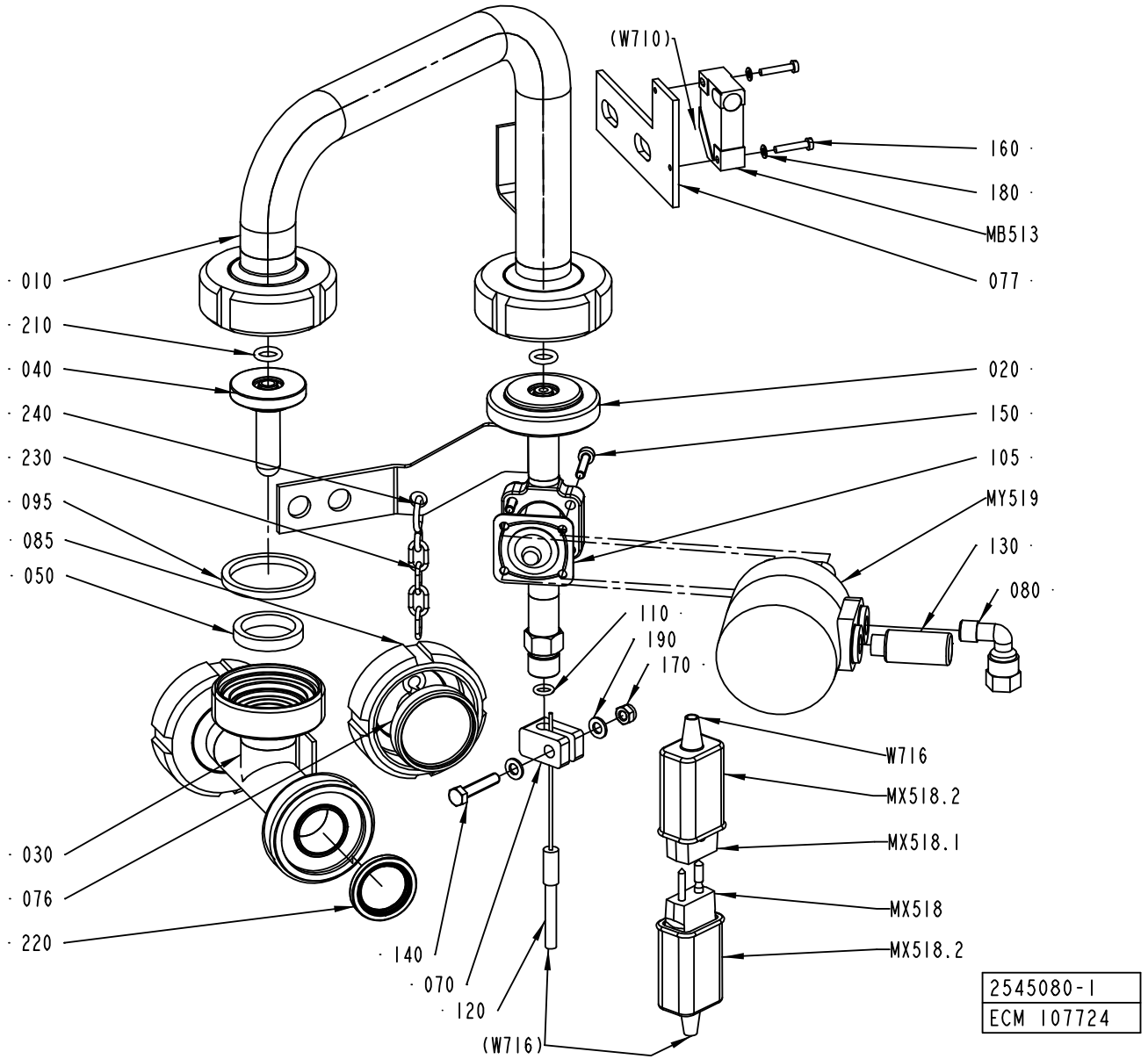
(W710)
160
180
MB513
077
010
210
040
240
230
095
085
050
020
150
105
MY519
130
080
110
190
170
W716
MX518.2
MX518.1
MX518
MX518.2
030
076
220
140
070
120
(W716)
2545080-1
ECM 107724

ECM: 86580 - 20030701
Group number: 2545080-0100
Assembly Drawing: 2545080-1_1_AA

Pos	Part No	SP	UN	Qty	Description	Page No
-						
010	2545132-0000	-		1	TRANSITION PIPE	
020	2545131-0000	-		1	VALVE BODY	
030	1539597-0000	-		1	T-PIECE	
040	1539606-0005	A		1	SPRAY NOZZLE	
040	1539606-0004	A		1	SPRAY NOZZLE	
040	2545134-0000	A		1	SPRAY NOZZLE	
040	1539606-0002	A		1	SPRAY NOZZLE	
040	1539606-0003	A		1	SPRAY NOZZLE	
050	12242-0001	C		1	GASKET 32X25X5,5	
070	978440-0000	-		1	CRAMP	
076	2545155-0000	-		1	PLUG	
077	979814-0000	-		1	BRACKET	
080	90030-0137	-		1	CONN. ELBOW WA 6-R1/8	
085	90217-0203	-		1	UNION NUT, 1 APV, 07-01-276/17	
095	315229-0104	A		1	GASKETS, 35,8X42,8X3,7 MM 1"1/2 FD	
105	90187-0325	A		1	DIAPHRAGM, 214/300 AO08 4-B -20-150§C	
110	315205-0505	A		1	O-RING 6,07X1,78 MM	
130	90328-0012	-		1	SILENCER	
140	312105-0333	-		1	SCREW M6S ISO 4017 M5X25 A480	
150	312115-0295	-		4	SCREW ISO4762 M4X20 A4	
160	312125-0228	-		2	SCREW PAN HEAD MCS M3X16 A480	
170	312812-0314	-		1	HEXAGON NUT, NY-LOCK M5 A480	
180	315105-0124	-		2	WASHER BRB3,2X6RFR	
190	315105-0146	-		2	WASHER BRB5,3X10RFR	
210	315204-0207	A		2	O-RING 8,3X2,4 MM	
220	90217-0347	A		2	GASKET 32X22,6X3,6 MM	
230	90155-0008	-	MM	200	HANGER CHAIN, 18	
240	209183-0000	-		2	RING	
MB153	90044-0104	A		1	PROX.SWITCH IFM IN 3002	
MB518	90326-0060	A		1	THERMOCOUPLE, CR-AL	
MX518	90326-0022	-		1	PLUG, MALE YELLOW CR-AL	
MX518.1	90326-0020	-		1	PLUG, FEMALE YELLOW CR-AL	
MX518.2	90326-0012	-		2	PROTECTIVE COVER, T31A4618	
MY519	90187-0176	A		1	ACTUATOR ECC 008 FOR DIAPHR. VALVE	
W716	90220-0059	-	MM	4500	THERMOCOUPLE CABLE K/ 2X0,81MM2	

Pos	Part No	SP	UN	Qty	Description	Page No

Machine Type | Group Description | Used-In | Group Number | Page No

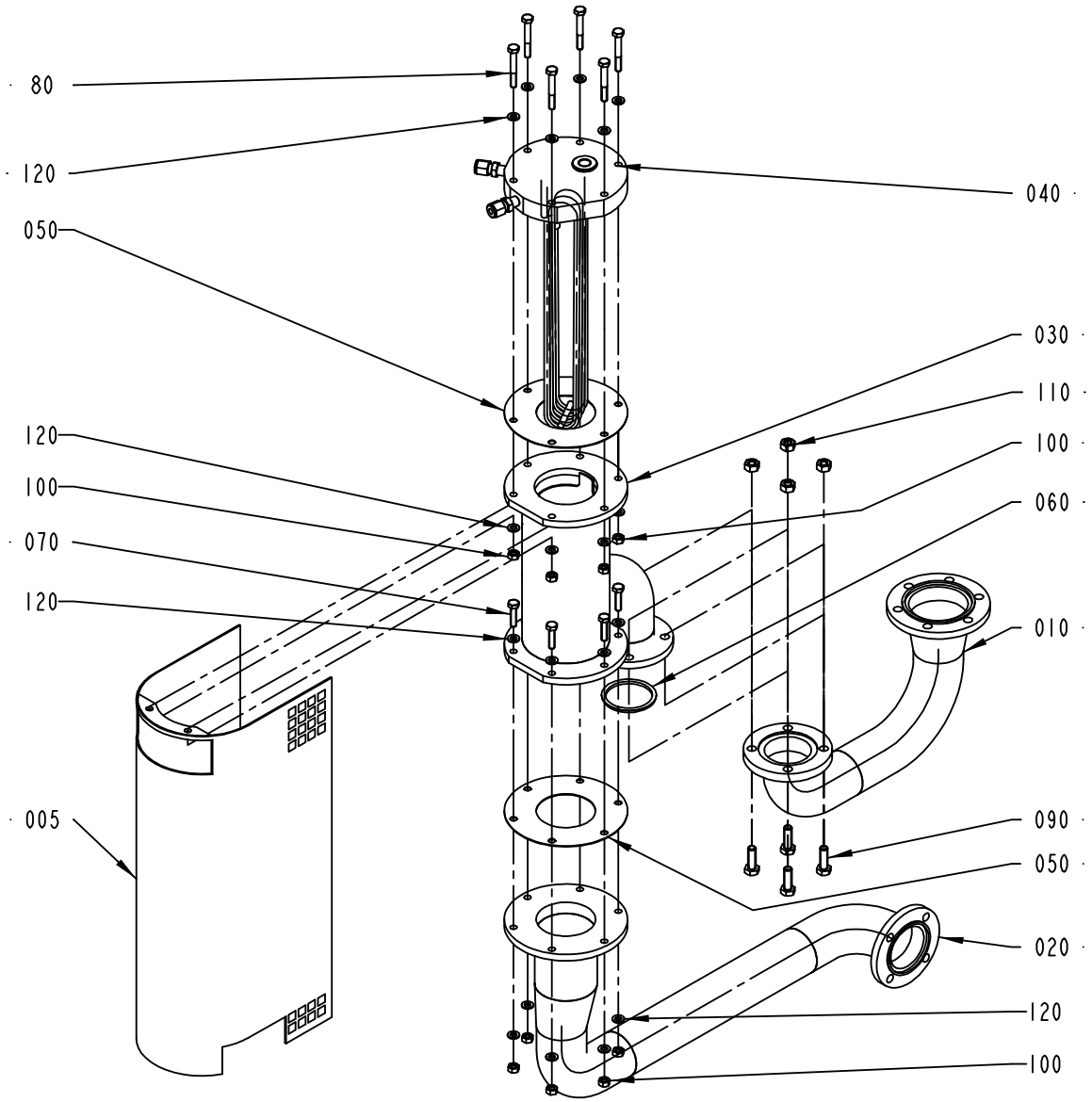
80
120
050
120
100
070
120
005
040
030
110
100
060
010
090
050
020
120
100
1539599-1
ECM 107724

ECM: 107732 - 20030701
Group number: 1539599-0100
Assembly Drawing: 1539599-1_1_AA

Pos	Part No	SP	UN	Qty	Description	Page No
-						
005	581341-0000	-		1	TOUCH GUARD	
010	1539603-0000	-		1	PIPE	
020	1539596-0000	-		1	PIPE	
030	979247-0000	-		1	HOUSE	
040	2555310-0000	-		1	COIL	
050	751016-0000	C		2	GASKET	
060	315229-0205	C		1	GASKET 47,5X55,5X3,7 MM 2"	
070	312105-0372	-		6	SCREW M6S ISO 4017 M6X25 A480	
080	312105-0378	-		6	SCREW M6S ISO 4014 M6X40 A480	
090	312105-0453	-		4	SCREW M6S ISO 4017 M8X25 A480	
100	312605-0316	-		12	HEXAGON NUT, M6M M6 A280	
110	312605-0318	-		4	HEXAGON NUT, M6M M8 A280	
120	315105-0153	-		24	WASHER BRB6,4X12RFR	

Pos	Part No	SP	UN	Qty	Description	Page No

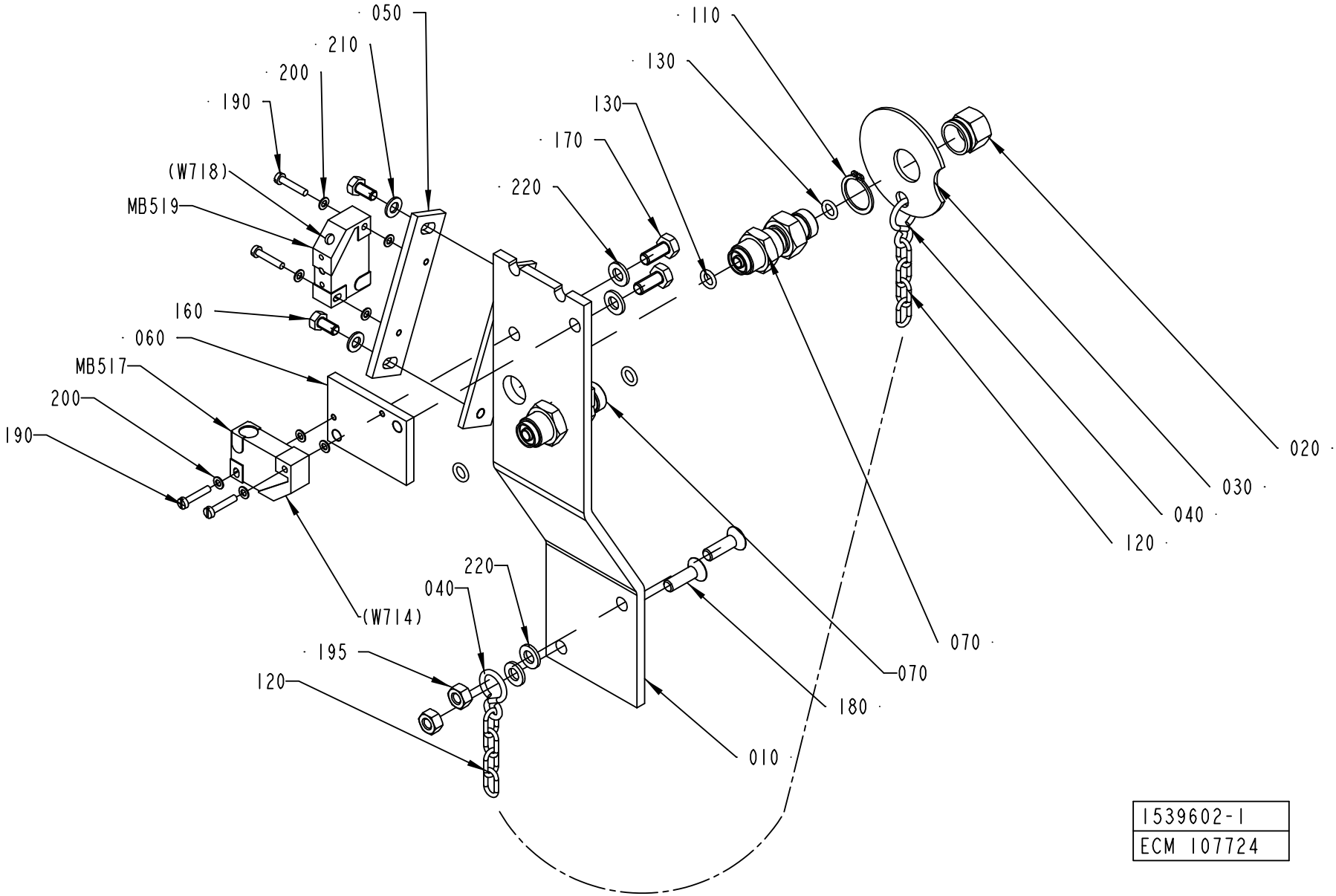

1539602-1
ECM 107724

ECM: 107733 - 20030701
Group number: 1539602-0100
Assembly Drawing: 1539602-1_1_AA

Pos	Part No	SP	UN	Qty	Description	Page No
-						
010	1539600-0000	-		1	SUPPORT	
020	978380-0000	-		1	BLIND PLUG	
030	978381-0000	-		1	WASHER 56X2MM	
040	209183-0000	-		2	RING	
050	927081-0000	-		1	SUPPORT	
060	979254-0000	-		1	SUPPORT	
070	90030-0549	-		2	CONN. STRAIGHT, BULKHEAD, SS-4-VCO-61	
110	90141-0017	-		1	RETAINING RING FOR SHAFT, 17X1MM	
120	90155-0008	-	MM	200	HANGER CHAIN, 18	
130	315205-0505	A		4	O-RING 6,07X1,78 MM	
160	312105-0325	-		2	SCREW M6S ISO 4017 M5X10 A480	
170	312105-0367	-		2	SCREW M6S M6X14 A280	
180	312155-0370	-		2	SCREW EN 10642 MF6S M6X20 A480	
190	312125-0228	-		4	SCREW PAN HEAD MCS M3X16 A480	
195	312605-0316	-		2	HEXAGON NUT, M6M M6 A280	
200	315105-0124	-		4	WASHER BRB3,2X6RFR	
210	315105-0146	-		2	WASHER BRB5,3X10RFR	
220	315105-0153	-		4	WASHER BRB6,4X12RFR	
MB517	90044-0104	A		1	PROX.SWITCH IFM IN 3002	
MB519	90044-0104	A		1	PROX.SWITCH IFM IN 3002	

Pos	Part No	SP	UN	Qty	Description	Page No

Machine Type | Group Description | Used-In | Group Number | Page No

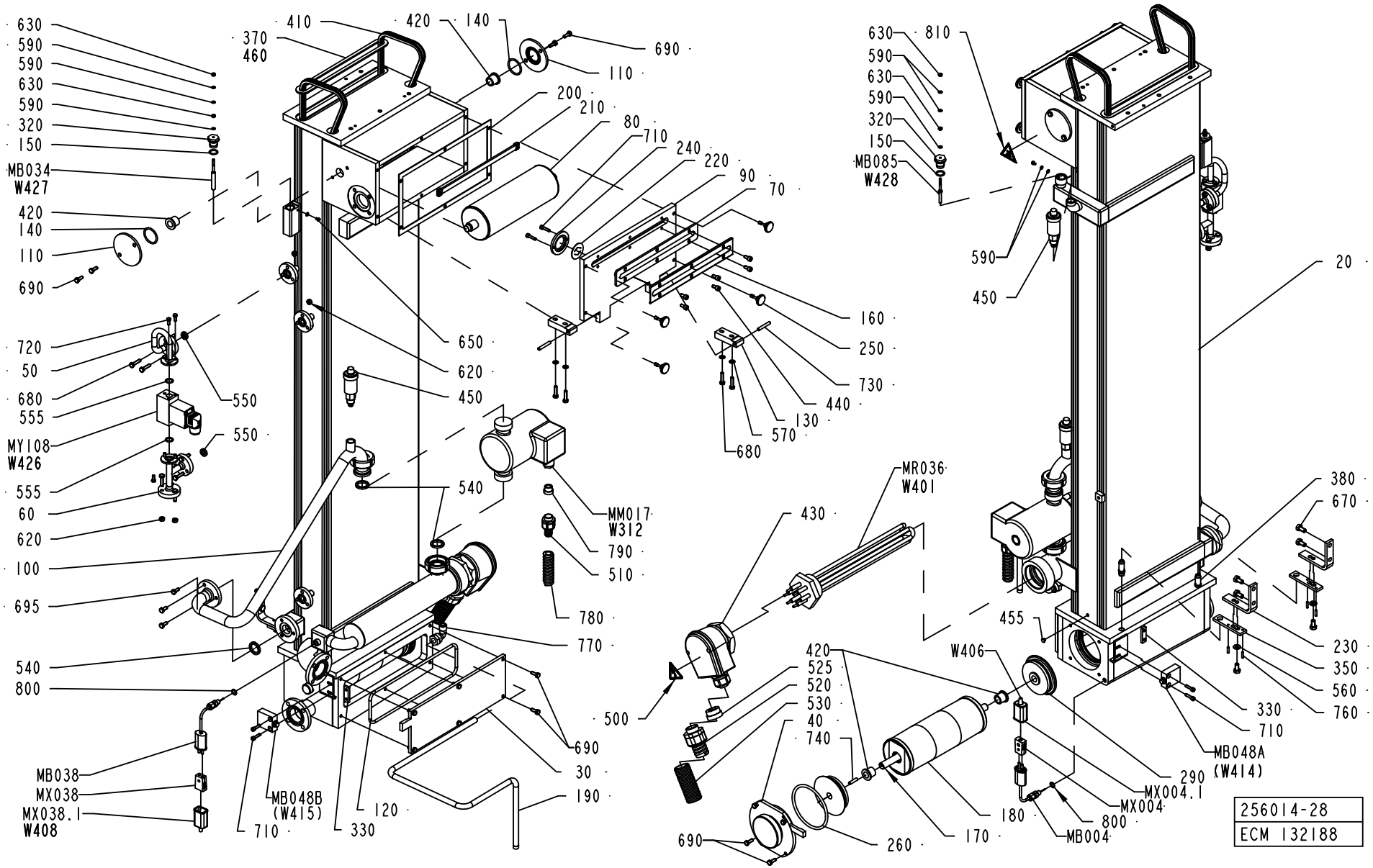
630
590
590
630
590
320
150
MB034
W427
420
140
110
690
720
50
680
555
MY108
W426
555
60
620
100
695
540
800
MB038
MX038
MX038.1
W408
410
370
460
420
140
690
110
200
210
80
710
240
220
90
70
650
620
450
550
550
540
MM017
W312
790
510
780
770
690
30
190
120
330
710
MB048B
(W415)
500
160
250
730
440
130
570
680
630
590
630
590
320
150
MB085
W428
810
590
450
20
MR036
W401
430
380
670
455
W406
230
350
560
760
330
710
MB048A
(W414)
420
525
520
530
40
740
690
260
170
180
290
MX004.1
MX004
800
MB004
256014-28
ECM 132188

ECM: 117592 - 20030701
Group number: 256014-0800
Assembly Drawing: 256014-28_1_AB

This list covers pages from 28 to 39

Pos	Part No	SP	UN	Qty	Description	Page No
NOPT TBA 0100B, NOPT TBA 0200M, NOPT TBA 0200S, NOPT TBA 0125S, NOPT TBA 0160S, NOPT TBA 0180B, NOPT TBA 0200B, NOPT TBA 0250B, NOPT TBA 0330S (See drawing on pages: 28, 30, 32)						
MB034	567070-0019	-		1	ELECTRODE	
NOPT TBA 0250S, NOPT TBA 0284B, NOPT TBA 0300S (See drawing on pages: 28, 30, 32)						
MB034	567070-0011	-		1	ELECTRODE	
PT19 TBA 0125S, PT19 TBA 0160S, PT19 TBA 0180B, PT19 TBA 0200B, PT19 TBA 0100B, PT19 TBA 0330S, PT19 TBA 0200M, PT19 TBA 0200S, PT19 TBA 0250B (See drawing on pages: 34, 36, 38)						
010	530600-0100	-		1	GUIDING PULLTAB TBA/8	**41**
MB034	567070-0019	-		1	ELECTRODE	
PT19 TBA 0250S, PT19 TBA 0284B, PT19 TBA 0300S (See drawing on pages: 34, 36, 38)						
010	530600-0100	-		1	GUIDING PULLTAB TBA/8	**41**
MB034	567070-0011	-		1	ELECTRODE	
Common Parts						
020	1296855-0000	-		1	BATH	
030	578492-0000	-		1	LID	
040	578491-0000	-		1	LID	
050	1490840-0000	-		1	PIPE	
060	1490839-0000	-		1	PIPE	
070	273954-0000	A		1	SEAL	
080	1282581-0000	A		1	BENDING ROLLER	
090	582433-0000	-		1	LID	
100	2528094-0000	-		1	PIPE	
110	578490-0000	-		2	LID	
120	578494-0000	-		1	O-RING	
130	979559-0000	-		2	HINGE	
140	927422-0014	B		2	O-RING 34.2X3 SILICON	
150	927421-0004	B		2	O-RING 15.3X2.4 SILICON	
160	456784-0000	-		1	LID	
170	578493-0000	A		1	SHAFT	
180	566191-0000	A		1	BENDING ROLLER	
190	2532923-0000	-		1	PIPE	
200	751331-0000	A		1	GASKET	
210	456995-0000	-		1	CARRIER	
220	273937-0000	A		1	DIAPHRAGM	
230	456472-0000	-		2	ANGLE	
240	469982-0000	-		1	WASHER	
250	751680-0000	-		4	SCREW	
260	578495-0000	A		1	O-RING	
290	578486-0000	-		2	WHEEL	
320	560931-0000	-		2	BRACKET	
330	490890-0000	-		2	NUT PLATE	
350	456474-0000	-		2	ADJUSTMENT PLATE	
370	256005-0000	A		1	GASKET	
380	247248-0000	-		2	PIN	
410	90288-0066	-		2	ROLLER CHAIN, SINGLE 3/8 -365	
420	90240-0146	A		4	FLANGE BUSHING,15X21X20 MM	
430	90206-0326	-		1	JUNCTION BOX FOR 90206-56	
440	312115-0366	-		6	SCREW ISO4762 M6X12 A4	
450	90187-0105	-		2	PURGING VALVE, G3/8 FOR WATER	
455	90261-0071	-		1	PLUG, BLIND, PLASTIC, NO. GPN500B58	
460	90153-0016	-		1	ADHESIVE,TUBE 100G RHODORSIL CAF 3	
470	90153-0023	-		1	ADHESIVE, SILICON 251470 TUB 90CC	
500	359705-0015	-		1	WARNING SIGN ISO, RISK OF ELECTRIC SHOCK	
510	353243-0003	-		1	EXTENDED WITHOUT INSERT, PG11	
520	353243-0007	-		1	EXTENDED WITHOUT INSERT, PG21	
525	353249-0016	-		1	INSERT, SINGEL HOLE, EK 155/18	
530	90152-0070	-	MM	800	METAL HOSE, 32,5X26, UL 2621	
540	315229-0103	A		3	GASKETS, 23,1X30,1X3,7 MM 1" FDA	
550	315229-0101	A		2	GASKETS, 10,4X17,4X3,7 MM 1/2" FDA	
555	927421-0003	-		2	O-RING 13.3X2.4 SILICON	
560	315105-0165	-		2	WASHER BRB8,4X16RFR	
570	315105-0153	-		4	WASHER BRB6,4X12RFR	
590	315105-0136	-		9	WASHER BRB4,3XRFR	
620	312605-0316	-		9	HEXAGON NUT, M6M M6 A280	
630	312605-0312	-		4	HEXAGON NUT, M6M M4 A280	
650	312125-0285	-		2	SCREW SLOT.PAN HD. MCS 4X6 A480	
670	312105-0449	-		6	SCREW M6S ISO 4017 M8X16 A480	
680	312105-0372	-		13	SCREW M6S ISO 4017 M6X25 A480	
690	312105-0368	-		14	SCREW M6S M6X16 A280	
695	312105-0367	-		3	SCREW M6S M6X14 A280	
710	312115-0331	-		6	SCREW ISO4762 M5X20 A4	
720	312105-0327	-		6	SCREW M6S ISO 4017 M5X12 A480	
730	311103-0361	-		2	PARALLELL PIN ISO2338 6X40 A1	
740	311103-0355	-		1	PARALLELL PIN, M6, 6X25 MM	
760	311103-0270	-		4	PARALLELL PIN ISO2338 4X16 A1	
770	90030-0115	-		1	CONN. ELBOW WA 12-R3/8	
780	90152-0050	-	M		SPIRAL CONDUIT, 20X13, UL 1313	
790	353249-0011	-		1	INSERT, SINGEL HOLE, EK 153/11	
800	315234-0109	-		2	WASHER,PL.RND.CU.10,3/13,5 H=1,0	
810	359710-0001	-		1	WARNING SIGN ISO, HOT SURFACE	

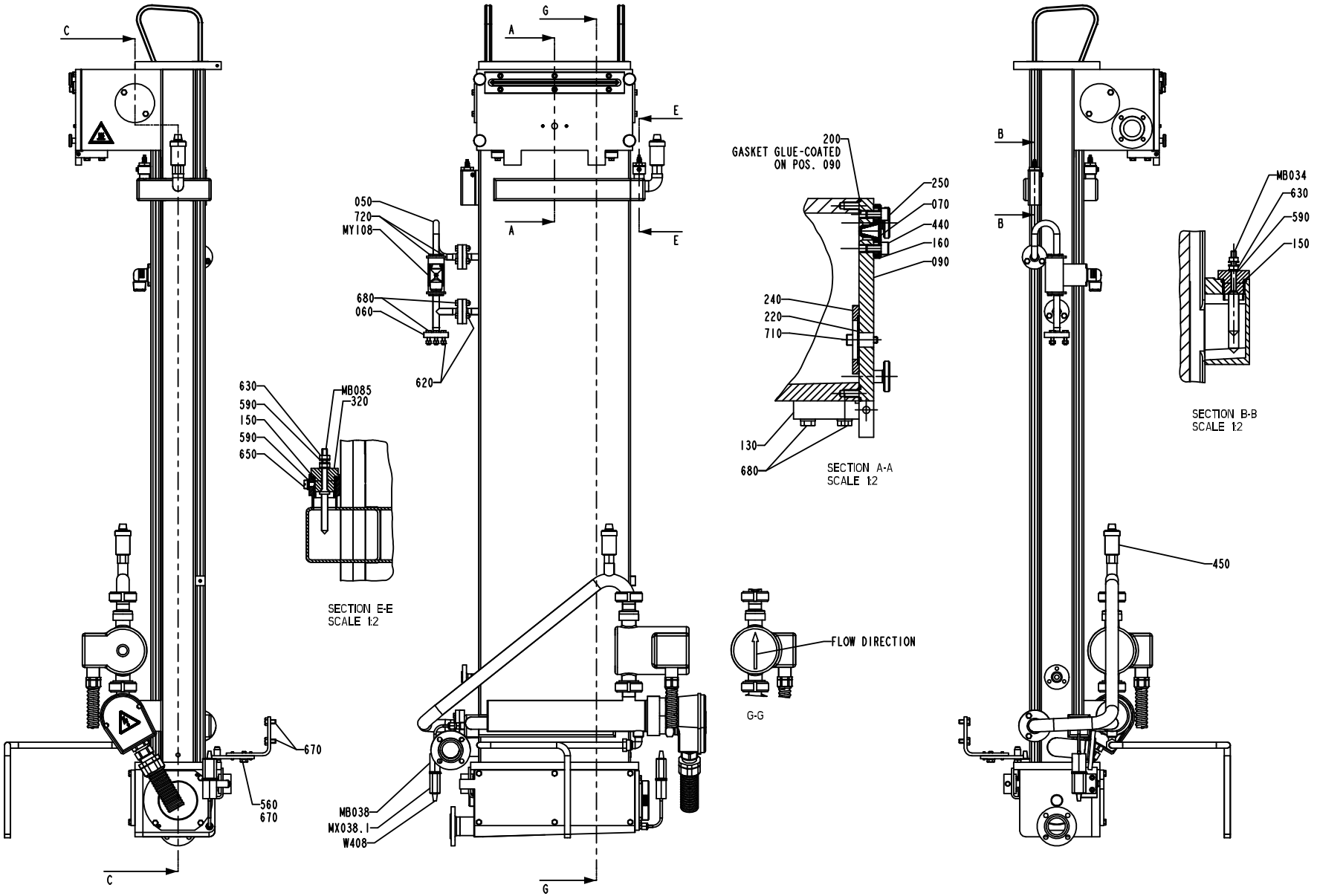
C
A
G
E
050
720
MY108
680
060
620
630
590
150
590
650
MB085
320
SECTION E-E
SCALE 1:2
200
GASKET GLUE-COATED
ON POS. 090
250
070
440
160
090
240
220
710
130
680
SECTION A-A
SCALE 1:2
B
MB034
630
590
150
SECTION B-B
SCALE 1:2
450
FLOW DIRECTION
G-G
670
560
670
MB038
MX038.1
W408

Pos	Part No	SP	UN	Qty	Description	Page No
Common Parts (Cont'd)						
MB004	90326-0052	A		1	THERMO ELEMENT	
MB038	90326-0052	A		1	THERMO ELEMENT	
MB048A	90044-0084	A		1	LIMIT SW. 14 CE1-4	
MB048B	90044-0084	A		1	LIMIT SW. 14 CE1-4	
MB085	979500-0001	-		1	ELECTRODE	
MM017	2526863-0000	A		1	PUMP	
MR036	90206-0070	A		1	HEATING ELEMENT 6000W 380/220V	
	90206-0326	*-*		*1*	*JUNCTION BOX FOR 90206-56*	
	90269-0308	*-*		*1*	*GASKET 59X68X3 MM*	
MX004	90326-0020	-		1	PLUG, FEMALE YELLOW CR-AL	
MX004.1	90326-0012	-		1	PROTECTIVE COVER, T31A4618	
MX038	90326-0020	-		1	PLUG, FEMALE YELLOW CR-AL	
MX038.1	90326-0012	-		1	PROTECTIVE COVER, T31A4618	
MY108	544906-0000	A		1	SOLENOID VALVE	
	90042-0465	*-*		*1*	*O-RING VITON 17,17X1,78*	
	90042-0464	*-*		*1*	*DIAPHRAGM VITON 1211321*	
W312	351150-0412	-	M	5	CABLE OLFLEX 3X1,5 MM2 LIGHT/GREY	
W401	351120-0167	-	M	3	CABLE SIHF 4X6MM2 GREEN/YELLOW	
W406	90220-0059	-	M	3	THERMOCOUPLE CABLE K/ 2X0,81MM2	
W408	90220-0059	-	M	3	THERMOCOUPLE CABLE K/ 2X0,81MM2	
W426	351150-0403	-	M	3	CABLE OLFLEX 3X0,75 MM2 LIGHT/GREY	
W427	351150-0431	-	M	3	CABLE OLFLEX 2X0,75 MM2 LIGHT/GREY	
W428	351150-0431	-	M	3	CABLE OLFLEX 2X0,75 MM2 LIGHT/GREY	

Pos	Part No	SP	UN	Qty	Description	Page No

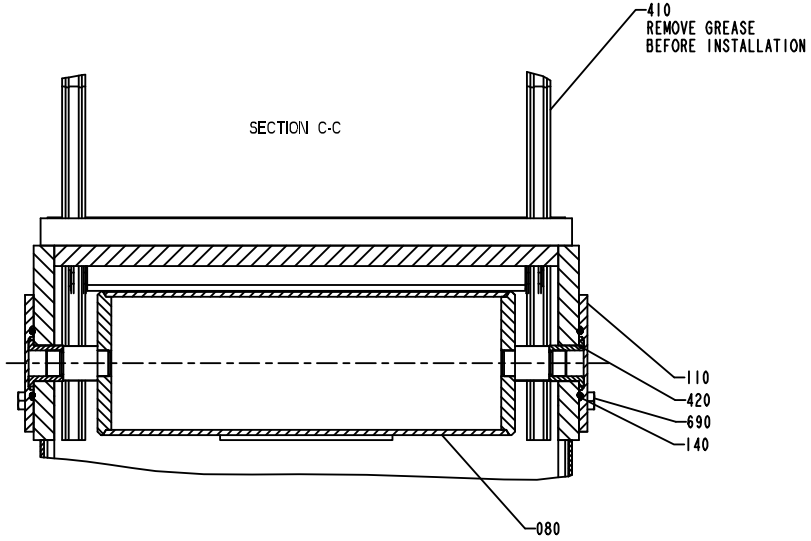
410
REMOVE GREASE
BEFORE INSTALLATION
SECTION C-C
110
420
690
140
080

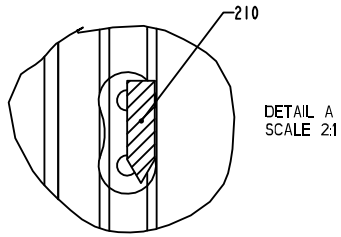
210
DETAIL A
SCALE 2:1

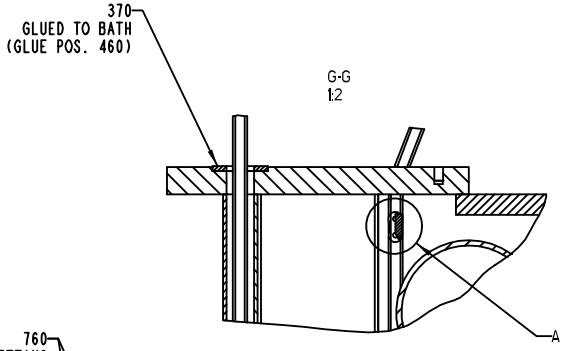
370
GLUED TO BATH
(GLUE POS. 460)
G-G
1:2
A

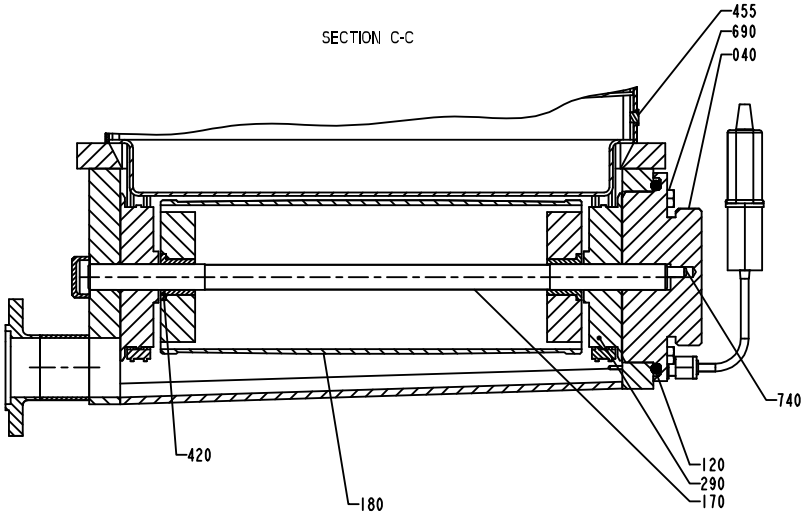
SECTION C-C
455
690
040
740
420
180
120
290
170

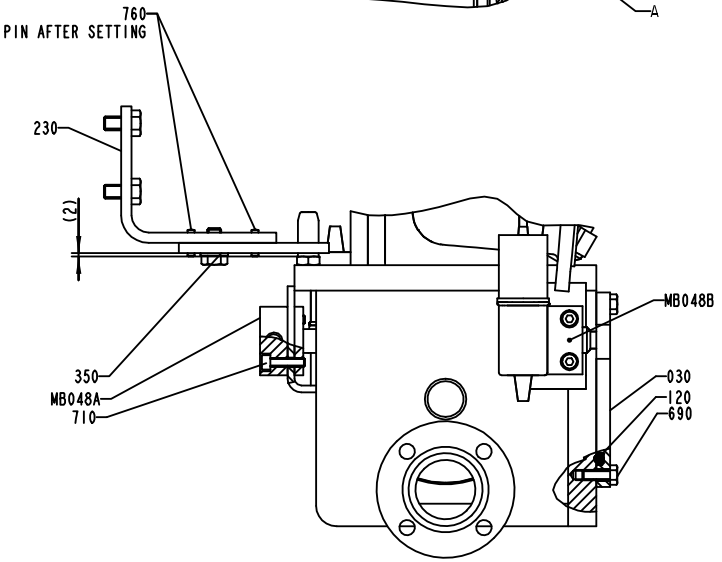
760
PIN AFTER SETTING
230
(2)
MB048B
350
MB048A
710
030
120
690

Pos	Part No	SP	UN	Qty	Description	Page No

SEE PREVIOUS LISTS PAGES: 29, 31.

Pos	Part No	SP	UN	Qty	Description	Page No

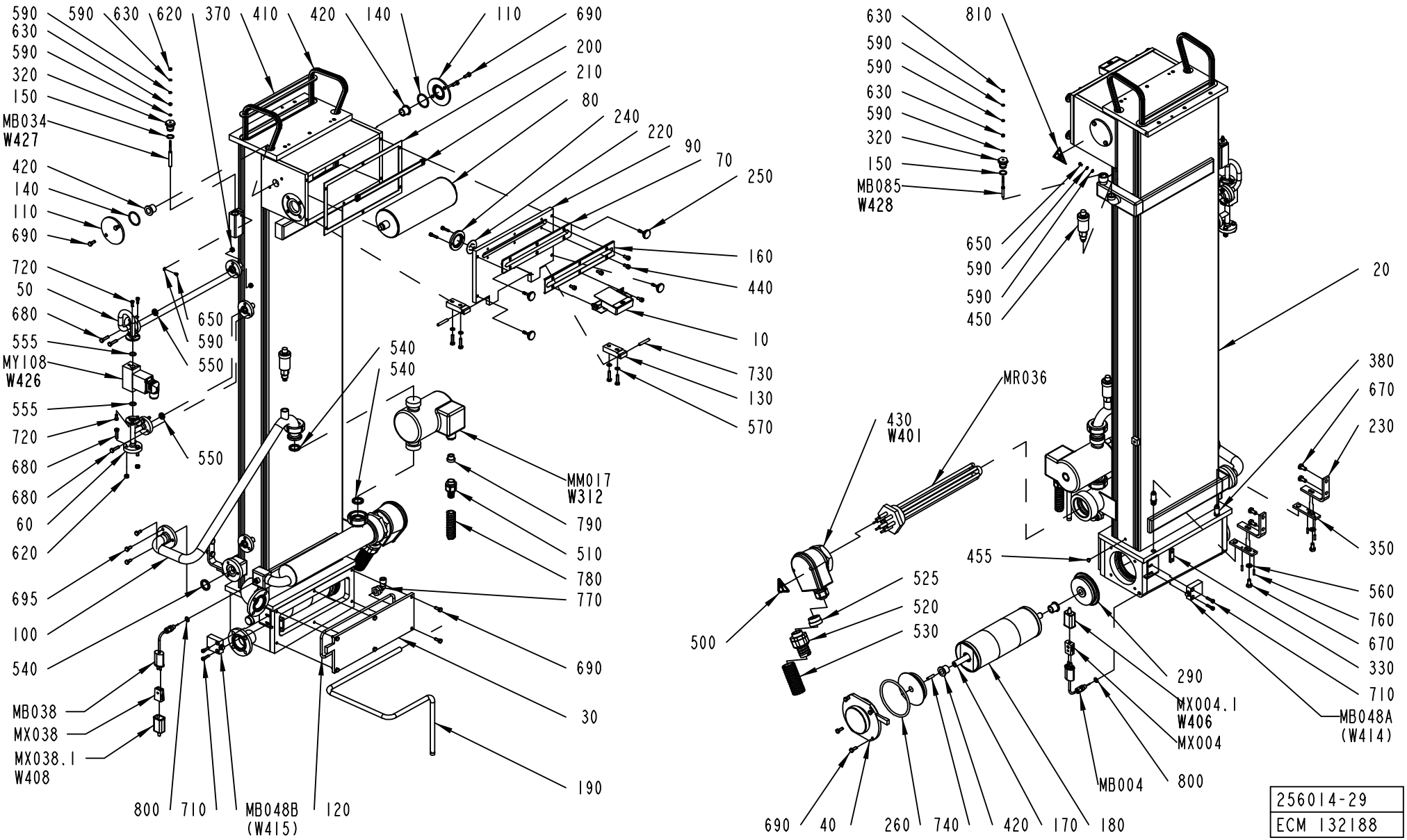
590
590
630
620
370
410
420
140
110
690
630
590
320
150
MB034
W427
420
140
110
690
720
50
680
555
MY108
W426
555
720
680
680
60
620
695
100
540
MB038
MX038
MX038.1
W408
800
710
MB048B
(W415)
120
190
30
690
770
780
510
790
MM017
W312
540
540
550
650
590
550
200
210
80
240
220
90
70
250
160
440
10
730
130
570
630
810
590
590
630
590
320
150
MB085
W428
650
590
590
450
20
380
670
230
MR036
430
W401
500
525
520
530
455
350
560
760
670
330
710
290
MX004.1
W406
MX004
MB048A
(W414)
MB004
800
690
40
260
740
420
170
180
256014-29
ECM 132188

Pos	Part No	SP	UN	Qty	Description	Page No

SEE PREVIOUS LISTS PAGES: 29, 31.

Pos	Part No	SP	UN	Qty	Description	Page No

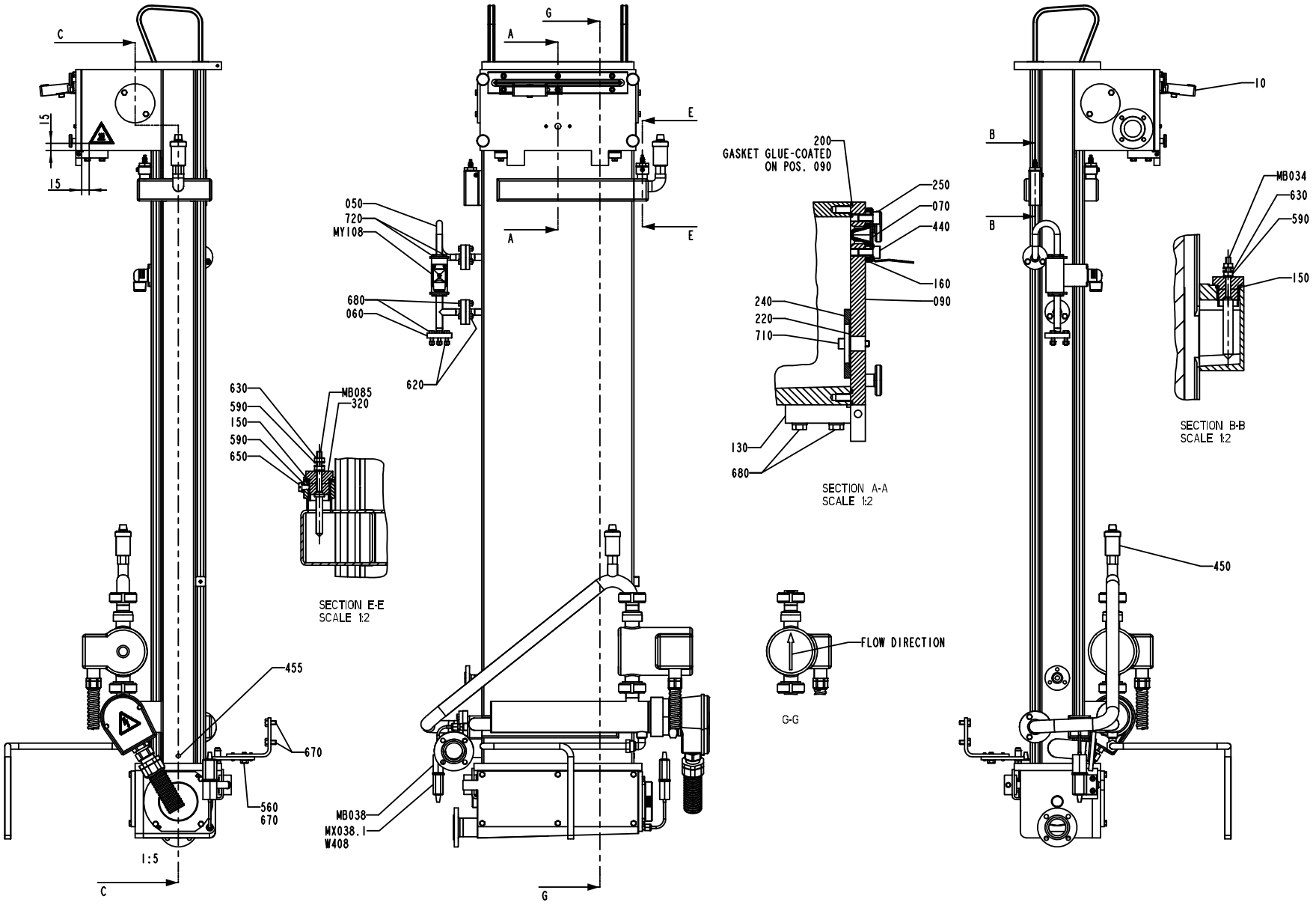
C
15
15
455
670
560
670
1:5
C
G
A
E
050
720
MY108
680
060
620
A
E
G
630
590
150
590
650
MB085
320
SECTION E-E
SCALE 1:2
MB038
MX038.1
W408
200
GASKET GLUE-COATED
ON POS. 090
250
070
440
160
090
240
220
710
130
680
SECTION A-A
SCALE 1:2
FLOW DIRECTION
G-G
10
B
B
MB034
630
590
150
SECTION B-B
SCALE 1:2
450

ECM: 117592 - 20030701
Group number: 256014-0800
Assembly Drawing: 256014-29_2_AA

This list covers pages from 28 to 39

Pos	Part No	SP	UN	Qty	Description	Page No
SEE PREVIOUS LISTS PAGES: 29, 31.						

Pos	Part No	SP	UN	Qty	Description	Page No

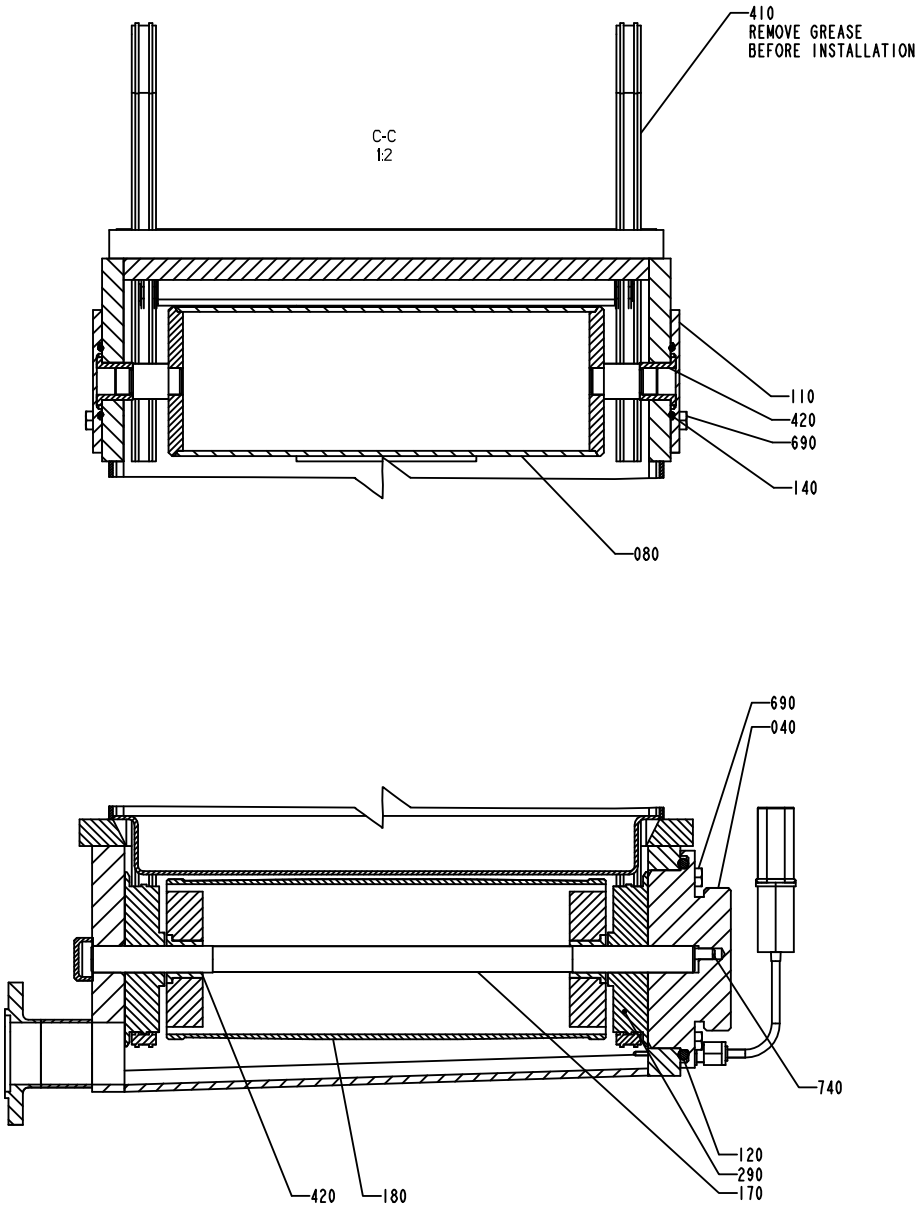
410
REMOVE GREASE
BEFORE INSTALLATION
C-C
1:2
110
420
690
140
080
690
040
740
120
290
170
420
180
DETAIL A
SCALE 2:1
210
370
GLUED TO BATH
(GLUE POS. 460)
G-G
1:2
A
760
PIN AFTER SETTING
230
MB048B
350
MB048A
710
030
120
690

Pos	Part No	SP	UN	Qty	Description	Page No

SEE PREVIOUS LISTS PAGES: 29, 31.

Pos	Part No	SP	UN	Qty	Description	Page No

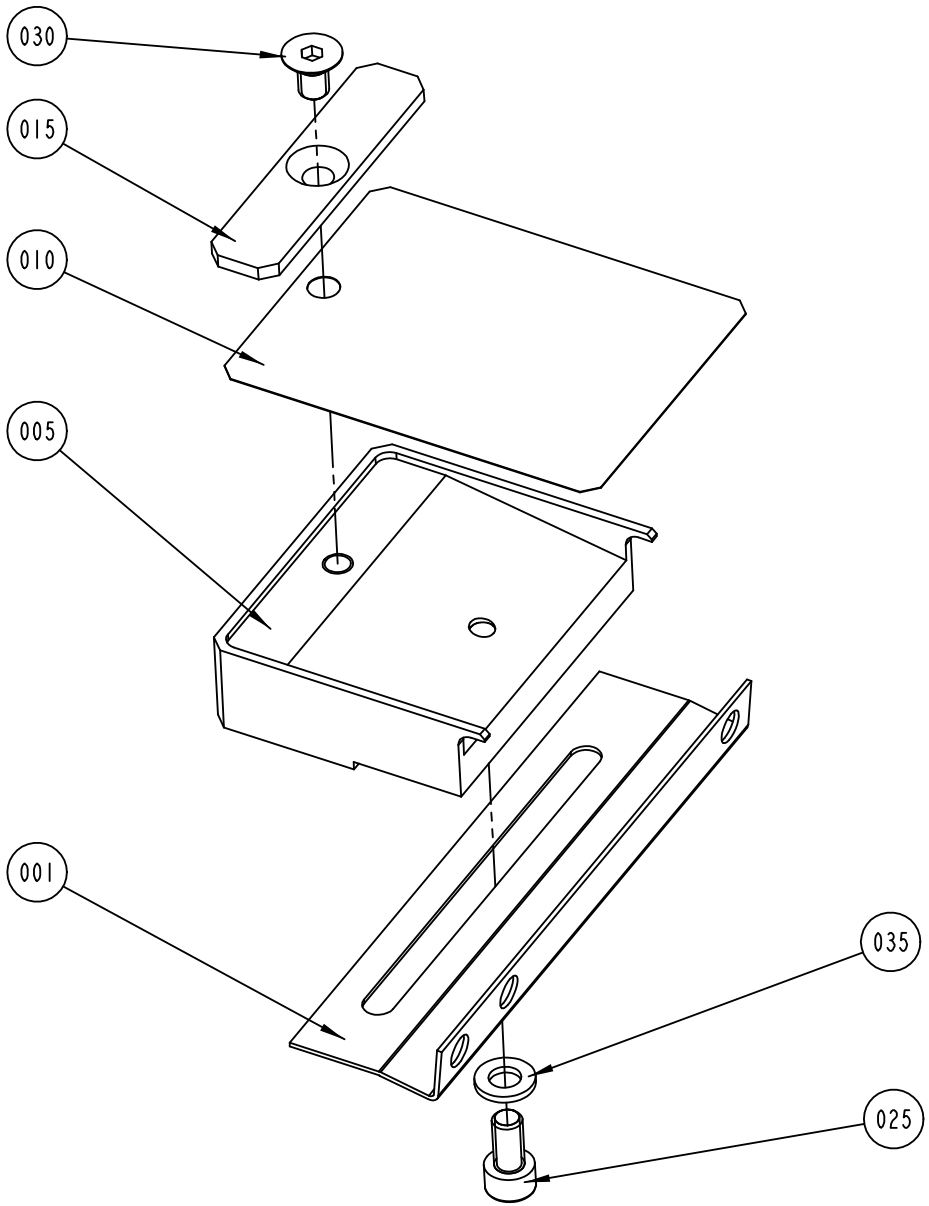

S-530600-I
ECN 72398

ECM: 72398 - 19990428
Group number: 530600-0100
Assembly Drawing: 530600-1_1_AB

Pos	Part No	SP	UN	Qty	Description	Page No
-						
001	529146-0000	-		1	ANGLE BRACKET	
005	529147-0000	-		1	SPRING BRACKET	
010	529148-0000	-		1	STEERING	
015	529149-0000	-		1	DOLLY WASHER	
025	312115-0366	-		1	SCREW ISO4762 M6X12 A4	
030	312155-0364	-		1	SCREW EN 10642 MF6S M6X10 A480	
035	315105-0153	-		1	WASHER BRB6,4X12RFR	

Pos	Part No	SP	UN	Qty	Description	Page No

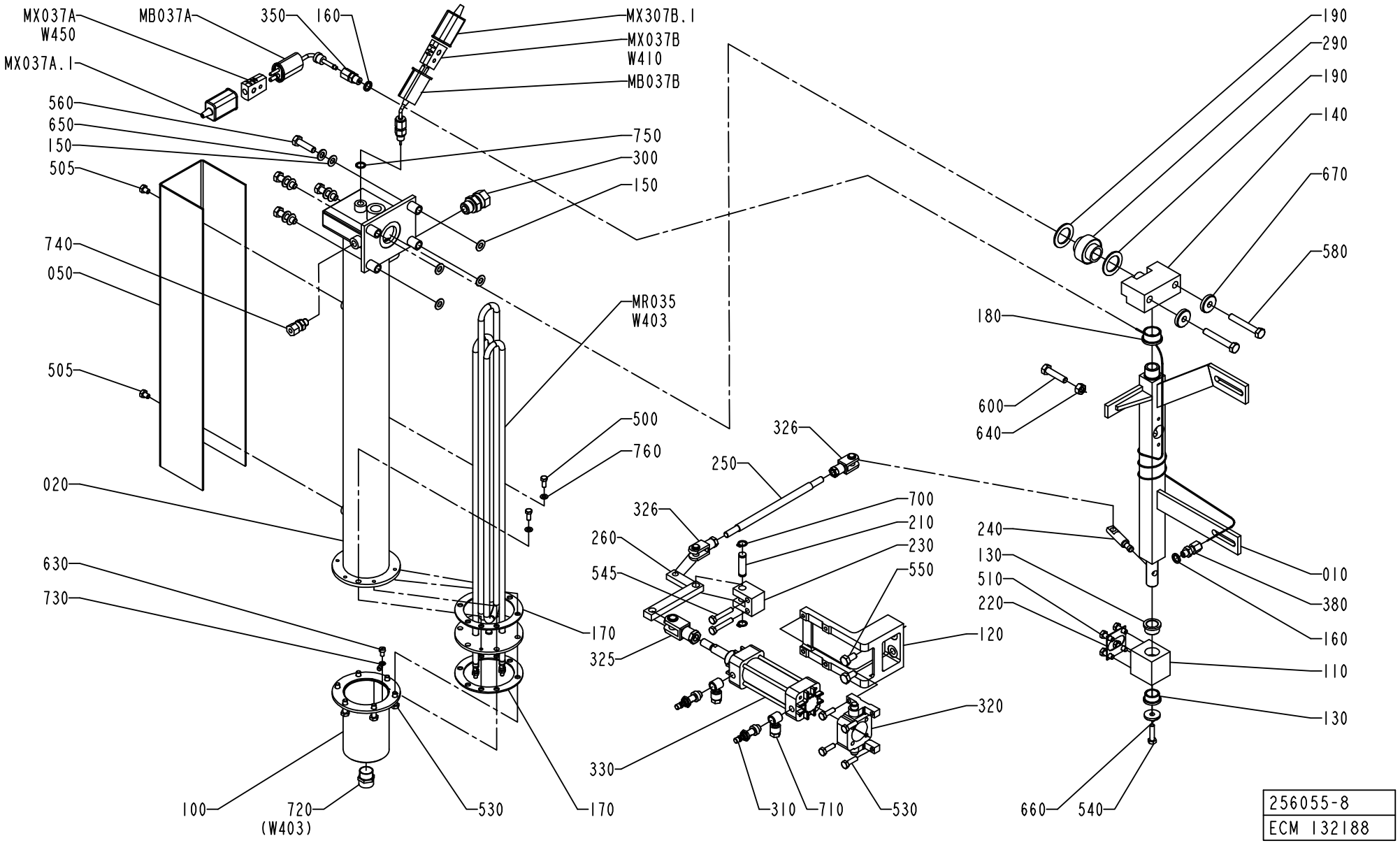
MX037A
W450
MB037A
350
160
MX307B.1
MX037B
W410
MB037B
MX037A.1
560
650
150
505
750
300
150
740
050
505
MR035
W403
020
630
730
500
760
326
250
326
260
545
325
700
210
230
550
120
320
330
170
170
100
720
(W403)
530
310
710
530
180
600
640
190
290
190
140
670
580
240
130
510
220
010
380
160
110
130
660
540
256055-8
ECM 132188

ECM: 117649 - 20030701
Group number: 256055-0700
Assembly Drawing: 256055-8_1_AB

Pos	Part No	SP	UN	Qty	Description	Page No
-						
010	491169-0000	-		1	PIVOT ARM	
020	752174-0000	-		1	HEATING PIPE	
050	1260743-0000	-		1	HEAT GUARD	
100	491170-0000	-		1	COVER	
110	491171-0000	-		1	BEARING BLOCK	
120	978736-0000	-		1	BRACKET	
130	271269-0000	B		2	BUSHING	
140	272286-0000	-		1	AXLE SUPPORT	
150	751019-0000	B		8	WASHER	
160	273429-0000	B		2	WASHER	
170	751020-0000	A		2	GASKET	
180	295909-0000	B		1	BUSHING	
190	751023-0000	B		2	GASKET	
210	491931-0000	A		1	SHAFT	
220	491172-0000	B		1	GASKET	
230	491173-0000	-		1	BRACKET	
240	491174-0000	A		1	ARM	
250	491175-0000	A		1	LINK	
260	491177-0000	-		1	ARM	
290	491487-0000	B		1	BUSHING	
300	90030-0187	-		1	CONN. STR. GA-12-G3/8	
310	90235-0280	-		2	THROTTLE CHECK VALVES,M5	
320	90239-0460	-		1	BRACKET	
325	90239-0516	-		1	ROD END, CLEVIS WITH AXLE M10X1,25	
326	90239-0532	-		2	ROD END, CLEVIS WITH AXLE M8X1,25	
330	90239-0779	-		1	CYLINDER	
	90239-0442	*C*		*1*	*SEAL KIT*	
350	90326-0306	-		1	GLAND FITTING 9041-45-KS-KR.1/8" D=4,5MM	
380	90326-0304	-		1	LEAD IN, 9041-15-KS-UB60	
500	312105-0327	-		2	SCREW M6S ISO 4017 M5X12 A480	
505	312105-0362	-		2	SCREW M6S ISO 4017 M6X8 A480	
510	312105-0368	-		4	SCREW M6S M6X16 A280	
530	312105-0370	-		10	SCREW M6S ISO 4017 M6X20 A480	
540	312105-0372	-		1	SCREW M6S ISO 4017 M6X25 A480	
545	312105-0376	-		2	SCREW M6S ISO 4014 M6X35 A480	
550	312105-0449	-		2	SCREW M6S ISO 4017 M8X16 A480	
560	312105-0455	-		4	SCREW M6S ISO 4017 M8X30 A480	
580	312105-0462	-		2	SCREW M6S ISO 4014 M8X55 A480	
600	312109-0457	-		1	SCREW M6S ISO 4017 M8X35 A480	
630	312125-0323	-		1	SCREW PAN HEAD MCS M5X8 SS	
640	312605-0318	-		1	HEXAGON NUT, M6M M8 A280	
650	315105-0165	-		4	WASHER BRB8,4X16RFR	
660	315125-0153	-		1	WASHER TBRSB 6,4X22X4 A4	
670	315125-0165	-		2	WASHER TBRSB 8,4X26X5 A4	
700	90141-0016	-		2	RETAIN. RING, 10	
710	342797-0121	-		2	CONN. BANJO, RINGPIECE 6-1/8	
720	352100-0106	-		1	CABLE GLANR.18,6-10,5	
730	353101-0132	-		1	CABLE SHOE, RING ø5,3MM	
740	90030-0184	-		1	CONN. STR. GA-6-G1/8	
750	315234-0109	-		1	WASHER,PL.RND.CU.10,3/13,5 H=1,0	
760	315105-0146	-		2	WASHER BRB5,3X10RFR	
MB037A	90326-0048	A		1	THERMOCOUPLE, 12826-31	
	90326-0304	*-*		*1*	*LEAD IN, 9041-15-KS-UB60*	
MB037B	90326-0057	A		1	THERMOCOUPLE, CR-AL	
MR035	90459-1094	A		1	HEATING ELEMENT, 3000W 240V	
MX037A	90326-0020	-		1	PLUG, FEMALE YELLOW CR-AL	
MX037A.1	90326-0012	-		1	PROTECTIVE COVER, T31A4618	
MX037B	90326-0020	-		1	PLUG, FEMALE YELLOW CR-AL	
MX037B.1	90326-0012	-		1	PROTECTIVE COVER, T31A4618	
W403	351120-0145	-	M	6	CABLE SIHF 3X2,5MM2 GREEN/YELLOW	
W410	90220-0059	A	MM	3500	THERMOCOUPLE CABLE K/ 2X0,81MM2	
W450	90220-0059	A	MM	3500	THERMOCOUPLE CABLE K/ 2X0,81MM2	

Machine Type | Group Description | Used-In | Group Number | Page No

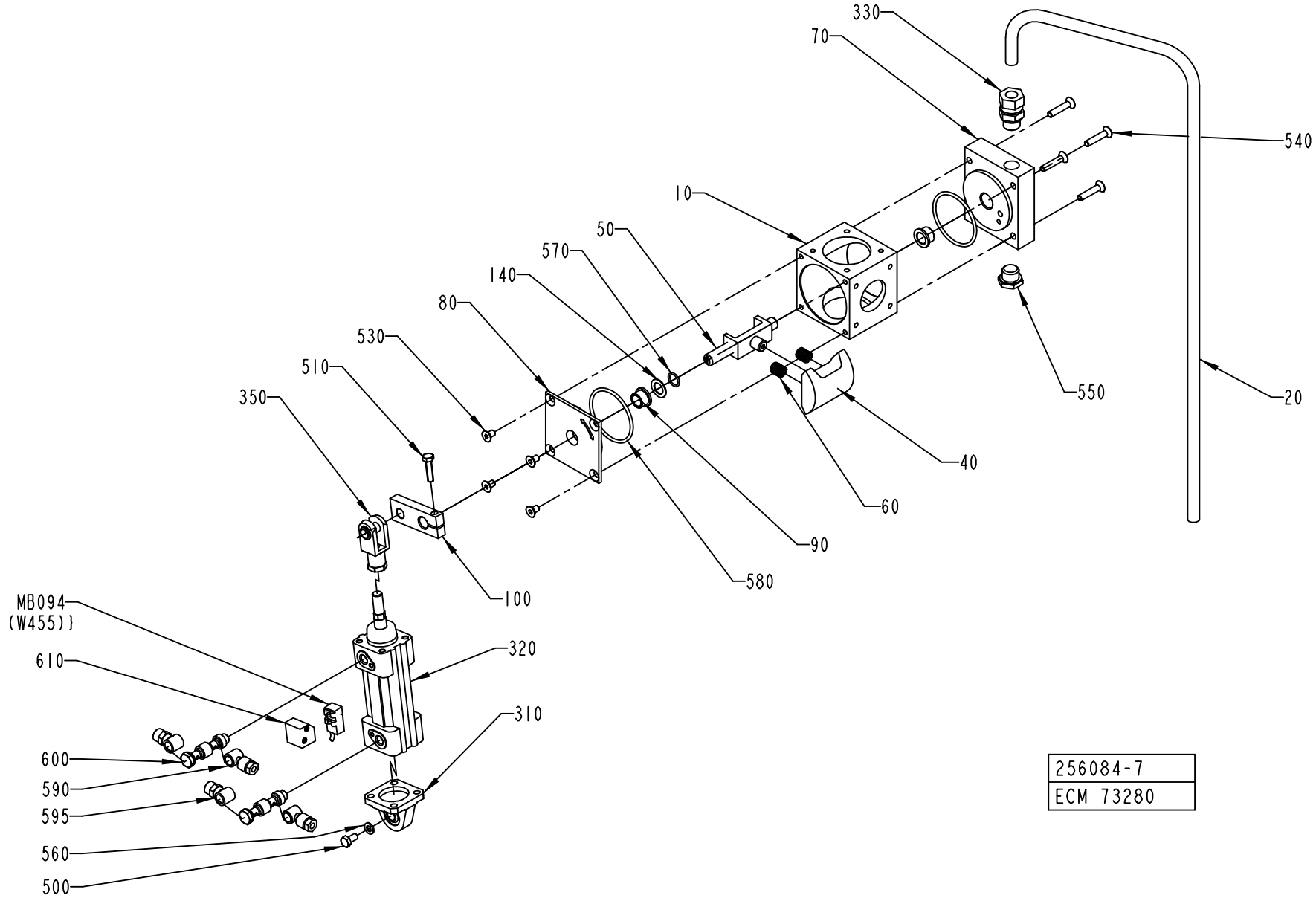
330
70
540
10
50
570
140
80
530
510
350
550
20
40
60
90
580
100
MB094
(W455))
610
320
310
600
590
595
560
500
256084-7
ECM 73280

ECM: 114416 - 20020930
Group number: 256084-0700
Assembly Drawing: 256084-7_1_AA

Pos	Part No	SP	UN	Qty	Description	Page No
-						
010	255870-0000	-		1	VALVE HOUSING	
0010	*1282023-0002*	*-*		*1*	*CAST WORKPIECE*	
020	1519934-0000	-		1	PIPE	
040	979722-0000	A		1	BLOCK	
050	751732-0000	-		1	BRACKET	
060	21521-0000	A		2	COMPRESSION SPRING	
070	751731-0000	-		1	BEARING COVER	
080	441957-0000	-		1	BEARING COVER	
090	255875-0000	B		2	BUSHING	
100	2527337-0000	-		1	CYLINDER BRACKET	
140	266737-0000	-		1	WASHER	
310	90450-0756	-		1	BRACKET, REAR EYE 32	
320	90450-0328	A		1	DOUBLE ACTING,PROFILE CYL32-25	
330	90030-0187	-		1	CONN. STR. GA-12-G3/8	
350	90239-0516	-		1	ROD END, CLEVIS WITH AXLE M10X1,25	
500	312105-0366	-		1	SCREW M6S M6X12 A280	
510	312105-0372	-		1	SCREW M6S ISO 4017 M6X25 A480	
530	312155-0364	-		4	SCREW EN 10642 MF6S M6X10 A480	
540	312155-0374	-		4	SCREW EN 10642 MF6S M6X30 A480	
550	90330-0029	-		1	PLUG, EXT. G-THREAD, R-236R3/8	
560	315105-0153	-		1	WASHER BRB6,4X12RFR	
570	315204-0110	A		1	O-RING 12,1X1,6 MM	
580	315204-0302	A		2	O-RING 54,5X3 MM	
590	342797-0121	-		2	CONN. BANJO, RINGPIECE 6-1/8	
595	342980-0113	-		2	BANJO-CONNECTION,RING 6/4-G1/8"	
600	342980-0313	-		2	BANJO-HOLLOW BOLT COUPL,EXT.THR.02-G1/8"	
610	90450-0669	-		1	SENSOR, BRACKET SERIES 168	
MB094	90044-0116	A		1	CYLINDER,SENSOR	

Pos	Part No	SP	UN	Qty	Description	Page No

Machine Type | Group Description | Used-In | Group Number | Page No

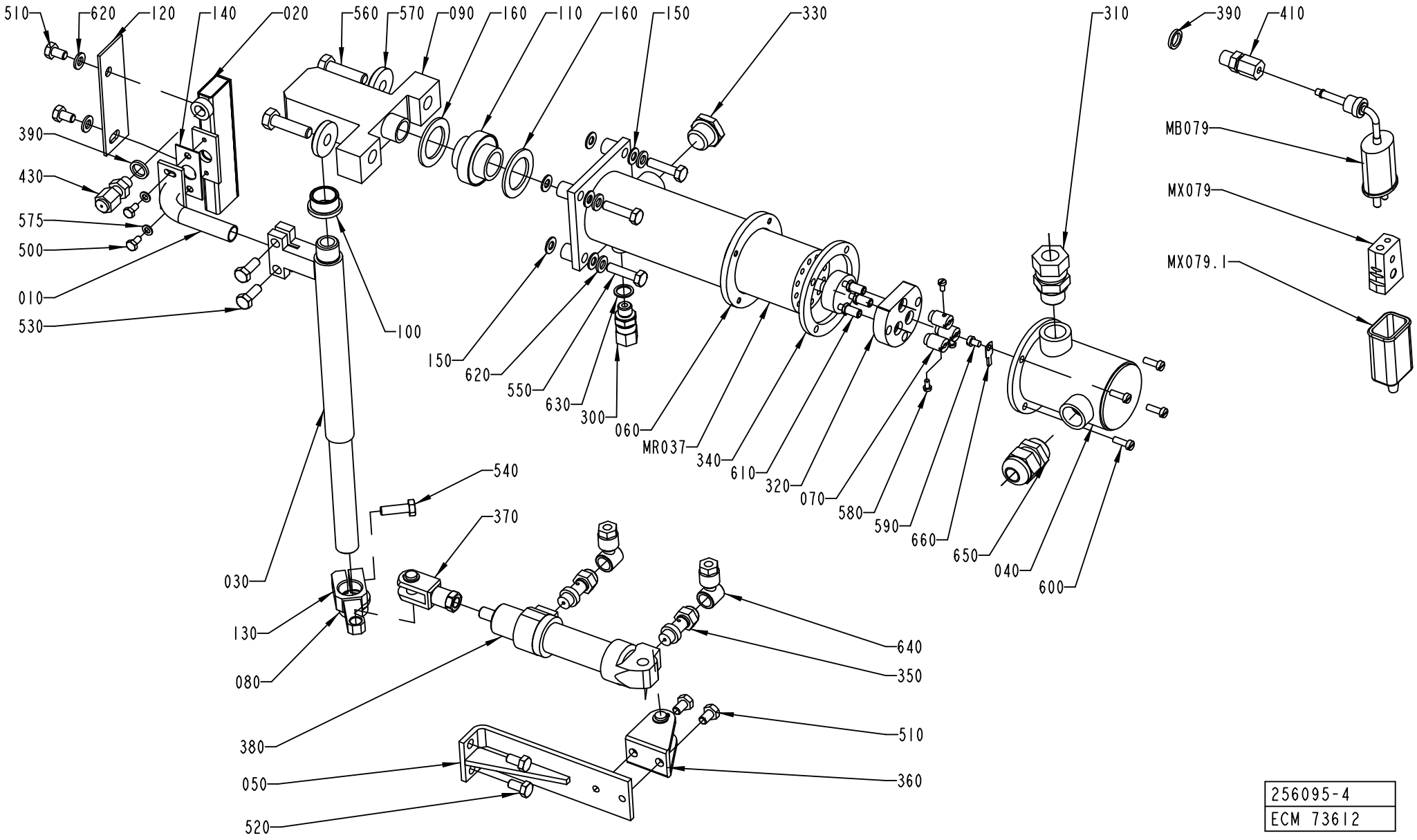

256095-4
ECM 73612

ECM: 114545 - 20020930
Group number: 256095-0700
Assembly Drawing: 256095-4_1_AA

Pos	Part No	SP	UN	Qty	Description	Page No
TBA 0125S, TBA 0100B						
010	571533-0000	-		1	BRACKET	
TBA 0160S, TBA 0250S, TBA 0200S, TBA 0200M						
010	571532-0000	-		1	BRACKET	
TBA 0330S, TBA 0300S, TBA 0180B, TBA 0200B, TBA 0284B, TBA 0250B						
010	256112-0000	-		1	BRACKET	
Common Parts						
020	1524662-0000	A		1	AIR NOZZLE	
030	272948-0003	-		1	SHAFT	
040	491223-0000	A		1	COVER	
050	491224-0000	-		1	BRACKET	
060	751733-0000	A		1	HEATING PIPE	
070	266739-0000	B		3	CABLE GLAND	
080	271269-0000	B		1	BUSHING	
090	272287-0000	-		1	AXLE SUPPORT	
100	295910-0000	B		1	BUSHING	
110	295936-0000	B		1	BUSHING	
120	491097-0000	A		1	HEAT GUARD	
130	491545-0000	-		1	BRACKET	
140	751015-0000	B		1	GASKET	
150	751018-0000	B		8	WASHER	
160	751023-0000	B		2	GASKET	
300	90030-0184	-		1	CONN. STR. GA-6-G1/8	
310	90030-0187	-		1	CONN. STR. GA-12-G3/8	
320	90125-0020	-		1	PLATE	
	294464-0000	*A*		*1*	*BASE PLATE*	
	270927-0000	*A*		*3*	*SCREW*	
	270926-0000	*A*		*6*	*NUT*	
330	90330-0029	-		1	PLUG, EXT. G-THREAD, R-236R3/8	
340	90206-0322	B		1	GASKET	
350	90235-0274	-		2	THROTTLE CHECK VALVES,G1/8"	
360	90239-0487	-		1	REAR,CLEVIS,MINI-ISO 20-25	
370	90239-0532	-		1	ROD END, CLEVIS WITH AXLE M8X1,25	
380	90239-0847	A		1	DOUBLE ACTING, MINI-ISO, CYL.20-50	
390	273429-0000	-		2	WASHER	
410	90326-0306	-		1	GLAND FITTING 9041-45-KS-KR.1/8" D=4,5MM	
430	90326-0304	-		1	LEAD IN, 9041-15-KS-UB60	
500	312105-0287	-		2	SCREW M6S ISO4017 M4X8 A480	
510	312105-0364	-		4	SCREW M6S ISO 4017 M6X10 A480	
520	312105-0366	-		2	SCREW M6S M6X12 A280	
530	312105-0368	-		2	SCREW M6S M6X16 A280	
540	312105-0370	-		1	SCREW M6S ISO 4017 M6X20 A480	
550	312105-0372	-		4	SCREW M6S ISO 4017 M6X25 A480	
560	312105-0455	-		2	SCREW M6S ISO 4017 M8X30 A480	
570	315125-0165	-		2	WASHER TBRSB 8,4X26X5 A4	
575	315105-0136	-		2	WASHER BRB4,3XRFR	
580	312125-0220	-		3	SCREW SLOT.PAN HD. MCS 3X6 A480	
590	312125-0285	-		1	SCREW SLOT.PAN HD. MCS 4X6 A480	
600	312125-0291	-		4	SCREW PAN HEAD MCS M4X12 SS	
610	312145-0228	-		3	SCREW COUNTERS.SLOT.HD. MFS 3X16 SS	
620	315105-0153	-		6	WASHER BRB6,4X12RFR	
630	315234-0109	-		1	WASHER,PL.RND.CU.10,3/13,5 H=1,0	
640	342797-0121	-		2	CONN. BANJO, RINGPIECE 6-1/8	
650	352103-0106	-		1	CABLE GLAND, ST 11, PR18,6/PG11	
660	353104-0130	-		1	CABLE SHOEYAV 025 M 4*	
MBO79	90326-0048	-		1	THERMOCOUPLE, 12826-31	
	90326-0304	*-*		*1*	*LEAD IN, 9041-15-KS-UB60*	
MR037	90206-0031	A		1	HEATING ELEMENT 700+1200W,220V	
MX079.1	90326-0012	-		1	PROTECTIVE COVER, T31A4618	
MXO79	90326-0020	-		1	PLUG, FEMALE YELLOW CR-AL	
W402	351120-0144	-	M	6	CABLE SIHF 3X1,5MM2 GREEN/YELLOW	
W433	90220-0059	-	M	6	THERMOCOUPLE CABLE K/ 2X0,81MM2	

Machine Type | Group Description | Used-In | Group Number | Page No

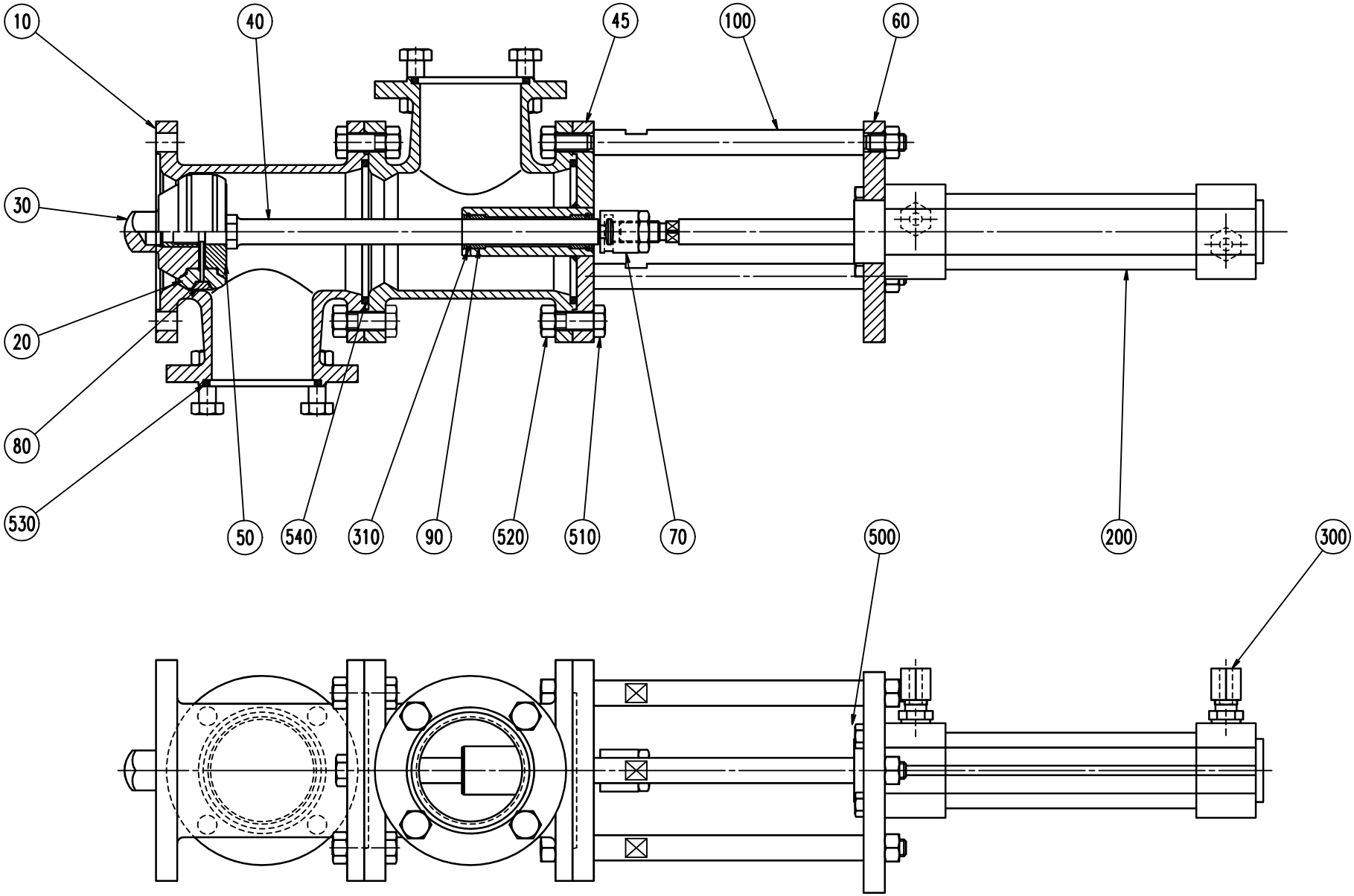
10
40
45
100
60
30
20
80
530
50
540
310
90
520
510
70
200
500
300

ECM: 114630 - 20020930
Group number: 271169-0500
Assembly Drawing: 271169-5_1_AA

Pos	Part No	SP	UN	Qty	Description	Page No
-						
010	1036194-0000	-		2	T-PIPE	
020	530589-0000	A		2	SEAL RING	
030	530590-0000	A		1	VALVE CONE	
040	1036188-0000	-		1	SHAFT	
045	1036189-0000	-		1	SPINDLE GUIDE	
050	1036191-0000	-		1	SEAL HOLDER	
060	1036193-0000	-		1	CYLINDER BRACKET	
070	441871-0000	A		1	PENDULUM SUSPENSION	
080	530599-0000	A		1	RING	
090	532349-0000	A		2	PLAIN BEARING	
100	1036192-0000	-		3	SPACER ROD	
200	90450-0281	A		1	DOUBLE ACTING,PROF.CYL 32-80	
300	90030-0184	B		2	CONN. STR. GA-6-G1/8	
310	90141-0022	A		2	SNAP RING B 16	
500	312105-0370	-		4	SCREW M6S ISO 4017 M6X20 A480	
510	312105-0453	-		17	SCREW M6S ISO 4017 M8X25 A480	
520	312605-0318	-		23	HEXAGON NUT, M6M M8 A280	
530	315229-0205	B		2	GASKET 47,5X55,5X3,7 MM 2"	
540	315229-0206	B		2	GASKET 60,2X68,2X3,7 MM 2"1/2	

Pos	Part No	SP	UN	Qty	Description	Page No

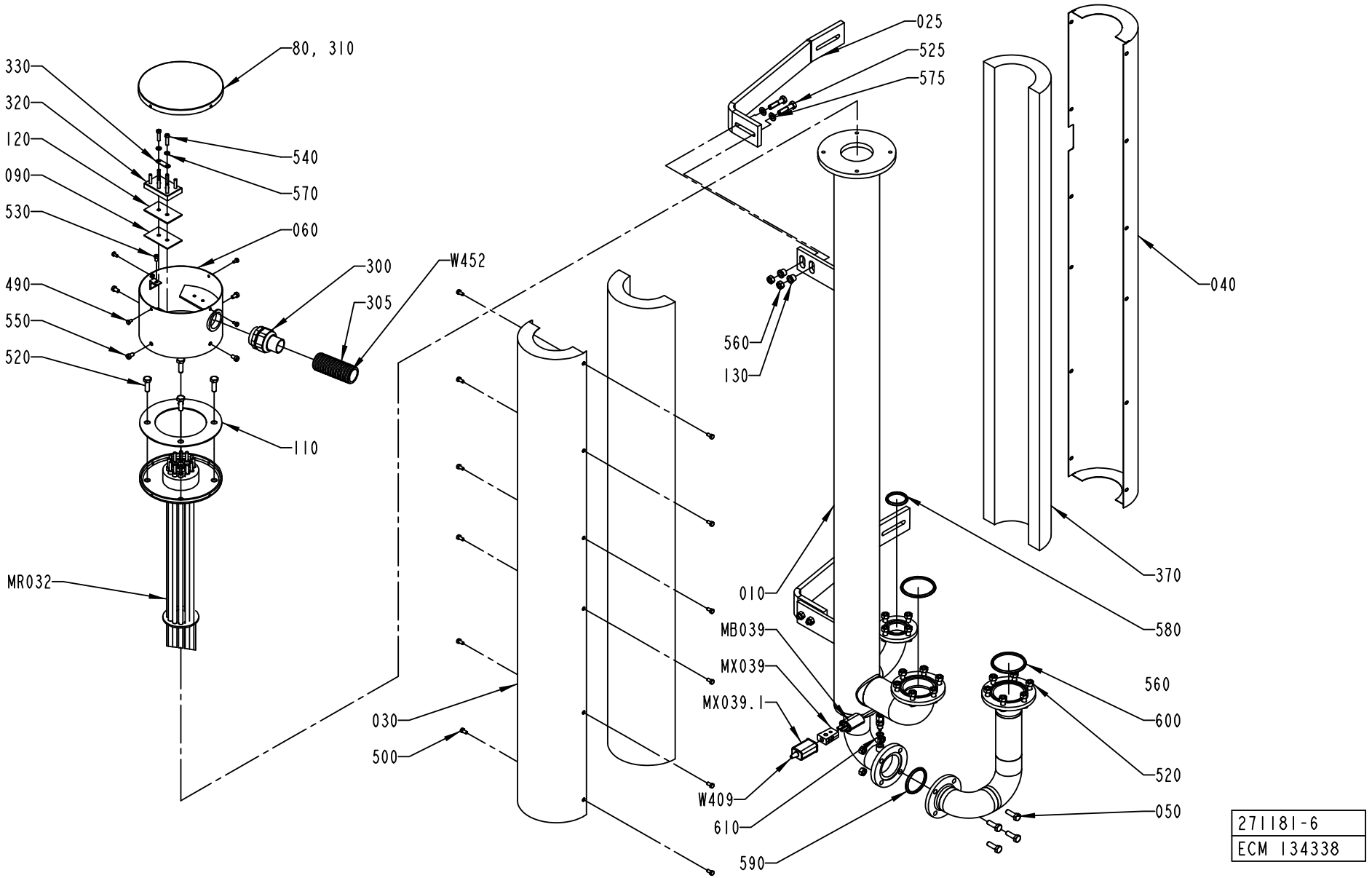
80, 310
330
320
120
090
530
540
570
060
490
550
520
300
305
W452
110
MR032
025
525
575
040
560
130
370
010
580
MB039
MX039
MX039.1
560
600
520
050
030
500
W409
610
590
271181-6
ECM 134338

ECM: 117652 - 20030701
Group number: 271181-0600
Assembly Drawing: 271181-6_1_AB

This list covers pages from 50 to 53

Pos	Part No	SP	UN	Qty	Description	Page No
HI (See drawing on page: 52)						
620	315234-0109	-		1	WASHER,PL.RND.CU.10,3/13,5 H=1,0	
630	90136-0001	-		1	PLUG, EXT. THREAD, NO. 100727	
NOHI (See drawing on page: 50)						
050	1519482-0000	-		1	PIPE	
Common Parts						
010	1519483-0000	-		1	HEATING PIPE	
025	1519484-0000	-		2	SUPPORT	
030	1296849-0000	-		1	DISCHARGE TRAY	
040	1296850-0000	-		1	DISCHARGE TRAY	
060	451430-0000	-		1	CONNECTION HOUS.(MINOR)	
	312605-0312	-		*4*	*HEXAGON NUT, M6M M4 A280*	
080	29876-0000	-		1	COVER	
090	30298-0000	A		1	INSULATION	
100	491305-0000	-		1	CONN.DIAGRAM AIR SUPERH.	
110	531731-0000	A		1	GASKET	
120	751009-0000	A		1	INSULATION	
130	1519601-0000	-		2	BUSHING	
300	90012-0126	-		1	NORMAL WITHOUT INSERT, PG29	
305	90152-0070	-	MM	1700	METAL HOSE, 32,5X26, UL 2621	
310	90153-0020	-	ML	1	ADHESIVE, BOSTIK 1782 125ML	
320	90195-0028	A		1	TERM.BLOCK 6-POLE STEATIT	
330	90195-0029	-		3	CONN. LINK NO324 FOR -28	
370	90411-0005	-	MM	1100	INSULATOR	
490	312105-0287	-		4	SCREW M6S ISO4017 M4X8 A480	
500	312105-0325	-		12	SCREW M6S ISO 4017 M5X10 A480	
510	312105-0451	-		2	SCREW M6S ISO 4017 M8X20 A480	
520	312105-0453	-		26	SCREW M6S ISO 4017 M8X25 A480	
525	312105-0457	-		4	SCREW M6S ISO 4014 M8X35 A480	
530	312125-0323	-		1	SCREW PAN HEAD MCS M5X8 SS	
540	312125-0331	-		2	SCREW PAN HEAD MCS M5X20 SS	
550	312125-0364	-		4	SCREW SLOT.PAN HD. MCS 6X10 A480	
560	312605-0318	-		30	HEXAGON NUT, M6M M8 A280	
570	315105-0146	-		2	WASHER BRB5,3X10RFR	
575	315105-0165	-		4	WASHER BRB8,4X16RFR	
580	315229-0204	B		1	GASKET 34,8X42,8X3,7 MM 1"1/2	
590	315229-0205	B		1	GASKET 47,5X55,5X3,7 MM 2"	
600	315229-0206	B		3	GASKET 60,2X68,2X3,7 MM 2"1/2	
610	315234-0109	-		1	WASHER,PL.RND.CU.10,3/13,5 H=1,0	
MB039	90326-0051	A		1	THERMOCOUPLE, 12826-33	
MR032	449939-0001	A		1	HEATING ELEMENT 15KW	
	449938-0003	*C*		*2*	*HEATING PIPE*	
	449938-0002	*C*		*2*	*HEATING PIPE*	
	449938-0001	*C*		*2*	*HEATING PIPE*	
MX039	90326-0020	-		1	PLUG, FEMALE YELLOW CR-AL	
MX039.1	90326-0012	-		1	PROTECTIVE COVER, T31A4618	
W409	90220-0059	A	M	4	THERMOCOUPLE CABLE K/ 2X0,81MM2	
W452	351120-0168	-	M	6	CABLE SIHF 4X10MM2 GREEN/YELLOW	

Machine Type | Group Description | Used-In | Group Number | Page No

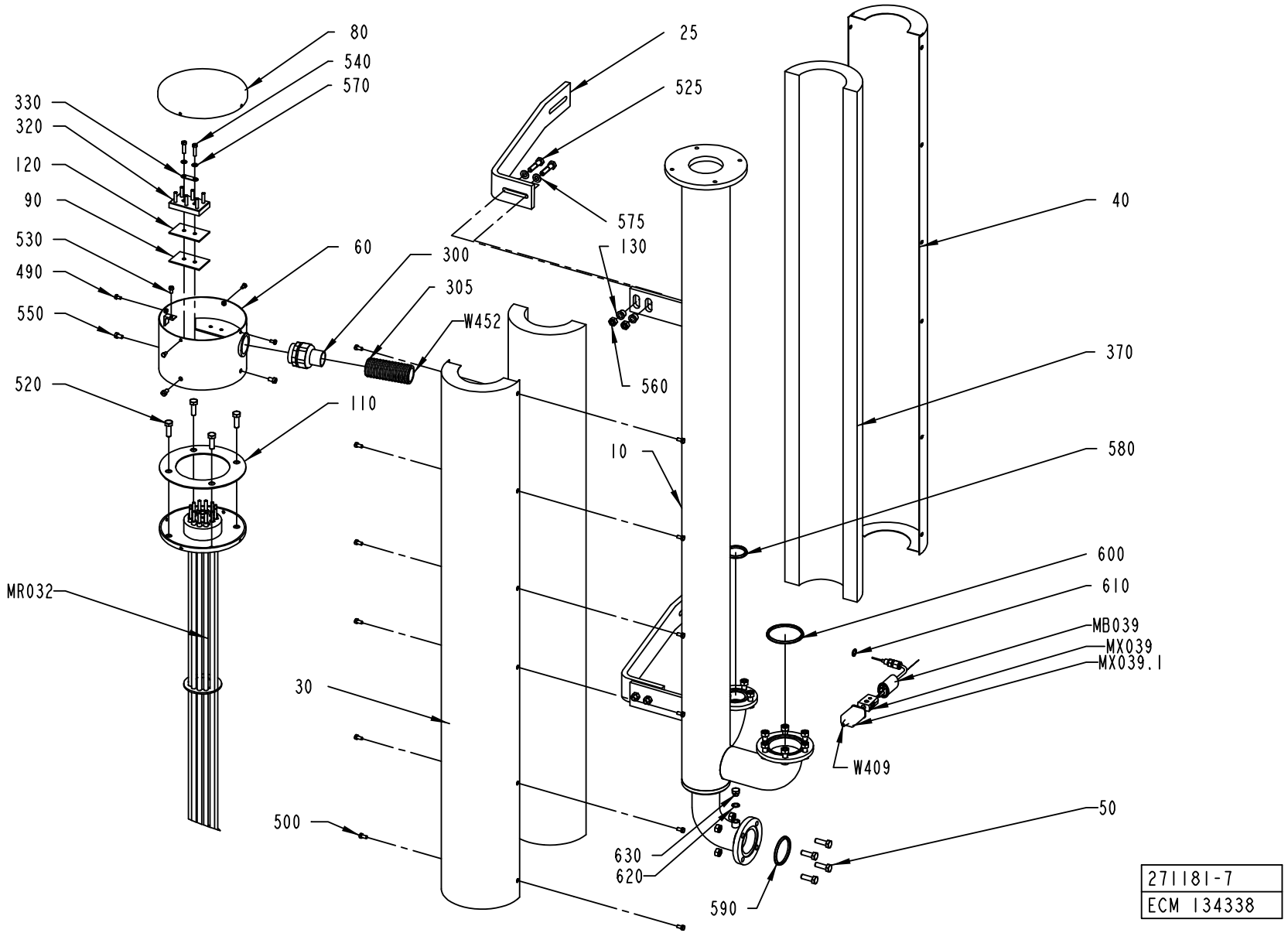
80
540
570
330
320
120
90
530
490
550
520
MR032
60
300
305
W452
110
25
525
575
130
560
10
40
370
580
600
610
MB039
MX039
MX039.1
W409
50
30
500
630
620
590
271181-7
ECM 134338

ECM: 117652 - 20030701
Group number: 271181-0600
Assembly Drawing: 271181-7_1_AA

This list covers pages from 50 to 53

Pos	Part No	SP	UN	Qty	Description	Page No
HI (See drawing on page: 52)						
620	315234-0109	-		1	WASHER,PL.RND.CU.10,3/13,5 H=1,0	
630	90136-0001	-		1	PLUG, EXT. THREAD, NO. 100727	
NOHI (See drawing on page: 50)						
050	1519482-0000	-		1	PIPE	
Common Parts						
010	1519483-0000	-		1	HEATING PIPE	
025	1519484-0000	-		2	SUPPORT	
030	1296849-0000	-		1	DISCHARGE TRAY	
040	1296850-0000	-		1	DISCHARGE TRAY	
060	451430-0000	-		1	CONNECTION HOUS.(MINOR)	
	312605-0312	-		*4*	*HEXAGON NUT, M6M M4 A280*	
080	29876-0000	-		1	COVER	
090	30298-0000	A		1	INSULATION	
100	491305-0000	-		1	CONN.DIAGRAM AIR SUPERH.	
110	531731-0000	A		1	GASKET	
120	751009-0000	A		1	INSULATION	
130	1519601-0000	-		2	BUSHING	
300	90012-0126	-		1	NORMAL WITHOUT INSERT, PG29	
305	90152-0070	-	MM	1700	METAL HOSE, 32,5X26, UL 2621	
310	90153-0020	-	ML	1	ADHESIVE, BOSTIK 1782 125ML	
320	90195-0028	A		1	TERM.BLOCK 6-POLE STEATIT	
330	90195-0029	-		3	CONN. LINK NO324 FOR -28	
370	90411-0005	-	MM	1100	INSULATOR	
490	312105-0287	-		4	SCREW M6S ISO4017 M4X8 A480	
500	312105-0325	-		12	SCREW M6S ISO 4017 M5X10 A480	
510	312105-0451	-		2	SCREW M6S ISO 4017 M8X20 A480	
520	312105-0453	-		26	SCREW M6S ISO 4017 M8X25 A480	
525	312105-0457	-		4	SCREW M6S ISO 4014 M8X35 A480	
530	312125-0323	-		1	SCREW PAN HEAD MCS M5X8 SS	
540	312125-0331	-		2	SCREW PAN HEAD MCS M5X20 SS	
550	312125-0364	-		4	SCREW SLOT.PAN HD. MCS 6X10 A480	
560	312605-0318	-		30	HEXAGON NUT, M6M M8 A280	
570	315105-0146	-		2	WASHER BRB5,3X10RFR	
575	315105-0165	-		4	WASHER BRB8,4X16RFR	
580	315229-0204	B		1	GASKET 34,8X42,8X3,7 MM 1"1/2	
590	315229-0205	B		1	GASKET 47,5X55,5X3,7 MM 2"	
600	315229-0206	B		3	GASKET 60,2X68,2X3,7 MM 2"1/2	
610	315234-0109	-		1	WASHER,PL.RND.CU.10,3/13,5 H=1,0	
MB039	90326-0051	A		1	THERMOCOUPLE, 12826-33	
MR032	449939-0001	A		1	HEATING ELEMENT 15KW	
	449938-0003	*C*		*2*	*HEATING PIPE*	
	449938-0002	*C*		*2*	*HEATING PIPE*	
	449938-0001	*C*		*2*	*HEATING PIPE*	
MX039	90326-0020	-		1	PLUG, FEMALE YELLOW CR-AL	
MX039.1	90326-0012	-		1	PROTECTIVE COVER, T31A4618	
W409	90220-0059	A	M	4	THERMOCOUPLE CABLE K/ 2X0,81MM2	
W452	351120-0168	-	M	6	CABLE SIHF 4X10MM2 GREEN/YELLOW	

Machine Type | Group Description | Used-In | Group Number | Page No

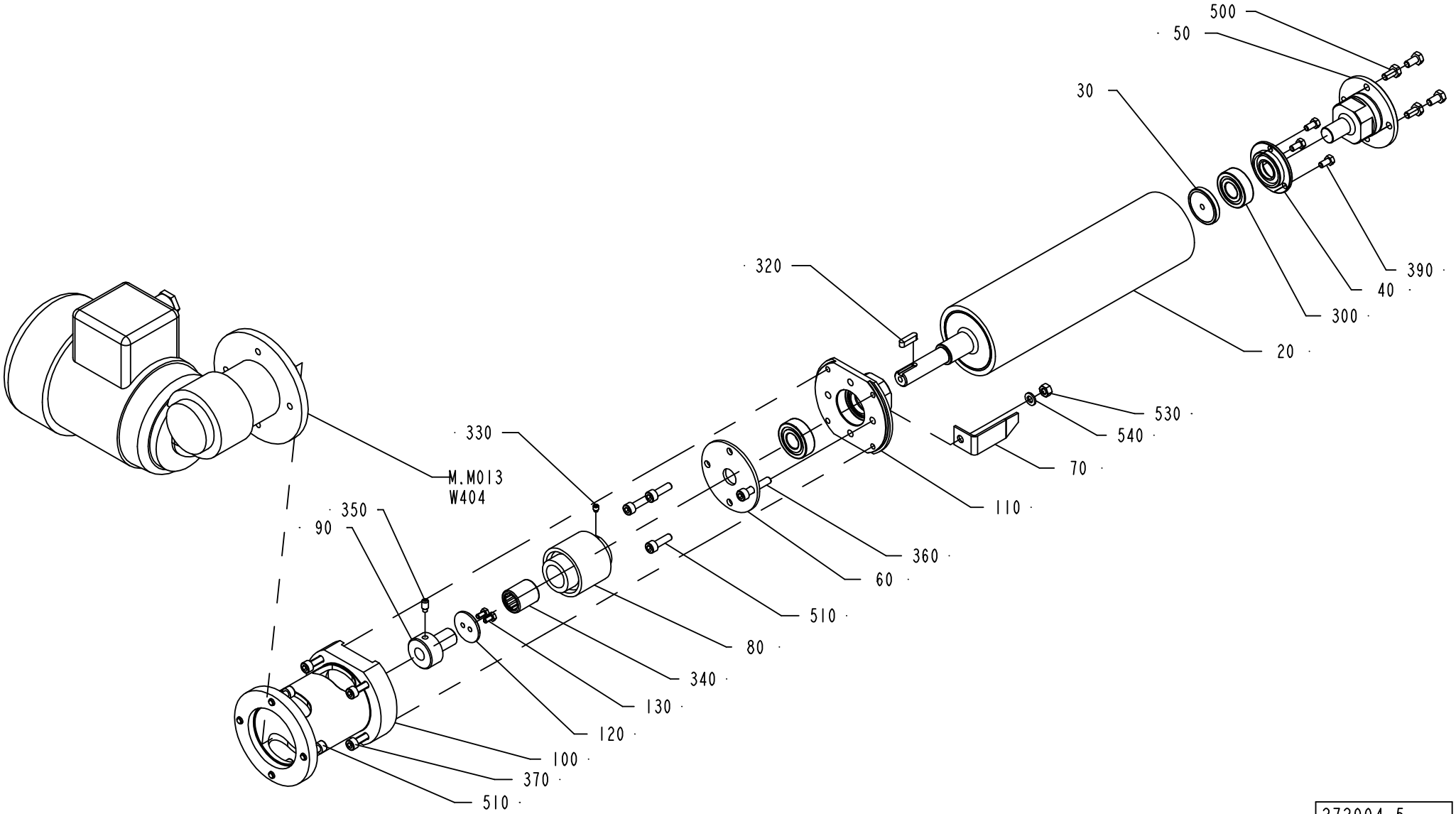

272004-5
ECM 73552

ECM: 107170 - 20021104
Group number: 272004-0500
Assembly Drawing: 272004-5_1_AA

Pos	Part No	SP	UN	Qty	Description	Page No
TBA 0125S, TBA 0100B						
070	752859-0000	A		1	POINTER	
TBA 0160S, TBA 0200S						
070	752858-0000	A		1	POINTER	
TBA 0250S, TBA 0200M						
070	574415-0000	A		1	INDICATOR 250S	
TBA 0330S, TBA 0300S, TBA 0180B, TBA 0200B, TBA 0284B, TBA 0250B						
070	752857-0000	A		1	POINTER	
Common Parts						
020	1548284-0000	A		1	ROLLER	
030	1490407-0000	-		1	WASHER	
040	1548275-0000	-		1	SEAL COVER	
050	1548056-0000	-		1	AXLE SUPPORT	
060	250590-0000	-		1	BEARING COVER	
080	90458-2841	-		1	SHAFT COUPLING 22,225H9/15	
090	1334234-0000	-		1	HUB	
100	1523228-0000	-		1	FLANGE	
110	2501542-0000	-		1	AXLE SUPPORT	
120	250592-0000	-		1	WASHER	
130	312105-0287	-		2	SCREW M6S ISO4017 M4X8 A480	
300	90458-1704	B		2	BALL BEARING, 15X35X11 MM	
320	315705-0201	-		1	PARALLEL KEY W. ROUND ENDS 5X5X20 MM	
330	312311-0321	-		1	SCREW ISO4028 M5X6 FZB	
340	90348-0007	-		1	FREE WHEEL COUPLING	
350	312311-0366	-		1	SCREW ISO4028 M6X12 FZB	
360	312115-0374	-		1	SCREW ISO4762 M6X30 A4	
370	312115-0372	-		4	SCREW ISO4762 M6X25 A4	
380	90069-0600	-		1	GEARS, WORM MOTOR ODM90-60KE5	
390	312105-0325	-		3	SCREW M6S ISO 4017 M5X10 A480	
500	312105-0366	-		4	SCREW M6S M6X12 A280	
510	312115-0370	-		7	SCREW ISO4762 M6X20 A4	
530	312605-0316	-		1	HEXAGON NUT, M6M M6 A280	
540	315105-0153	-		1	WASHER BRB6,4X12RFR	
M.M013	90069-0600	A		1	GEARS, WORM MOTOR ODM90-60KE5	
W404	90220-0104	-	M	4	SCR. CABLE 4X1,5MM2	

Pos	Part No	SP	UN	Qty	Description	Page No

Machine Type | Group Description | Used-In | Group Number | Page No

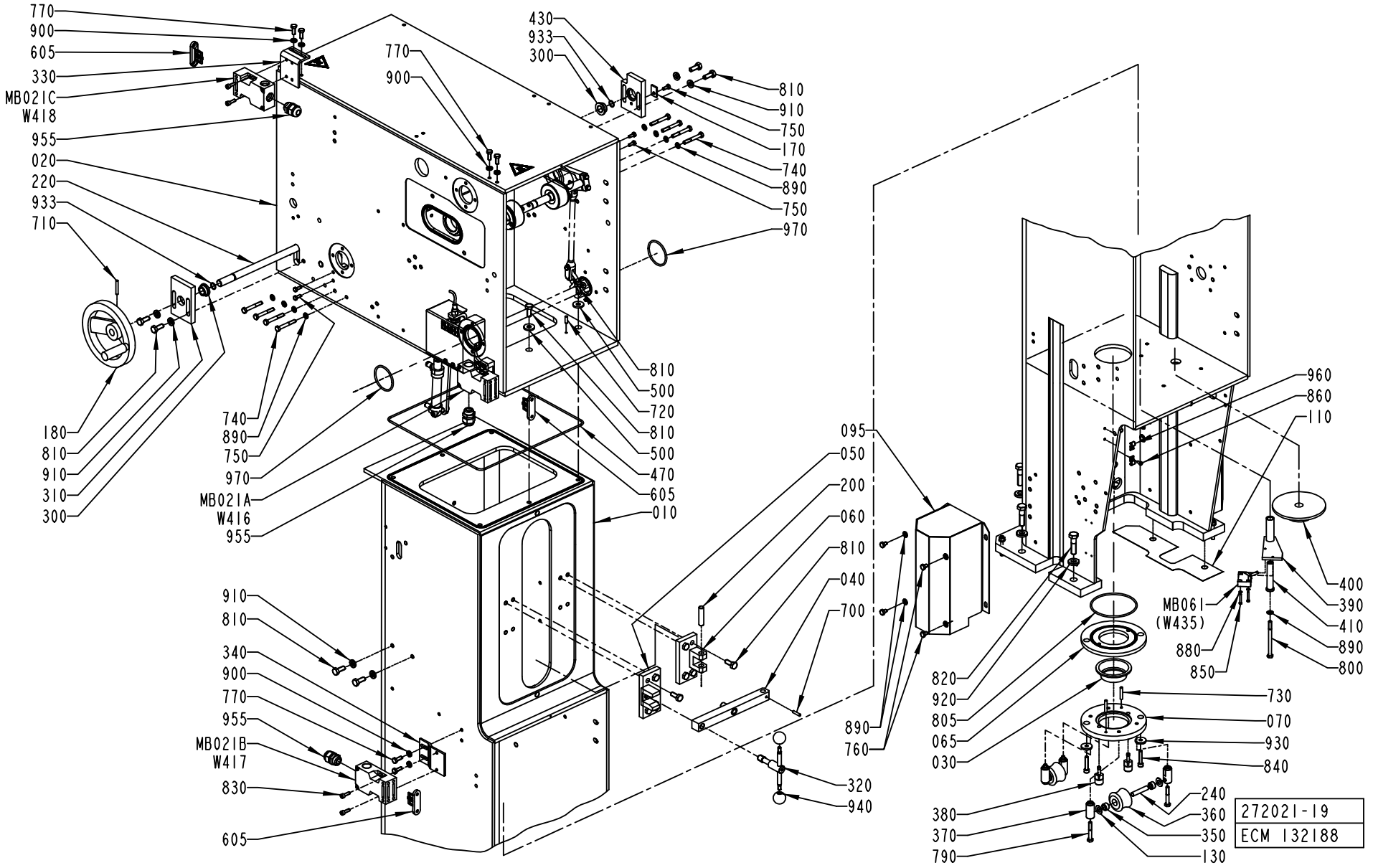
770
900
605
330
MB021C
W418
955
020
220
933
710
180
810
910
310
300
740
890
750
970
MB021A
W416
955
910
810
340
900
770
955
MB021B
W417
830
605
430
933
300
770
900
810
910
750
170
740
890
750
970
810
500
720
810
500
470
605
010
095
050
200
060
810
040
700
890
760
320
940
960
860
110
400
390
410
890
800
MB061
(W435)
880
850
820
920
805
065
030
730
070
930
840
240
360
350
130
380
370
790
272021-19
ECM 132188

Pos	Part No	SP	UN	Qty	Description	Page No
TBA 0125S, TBA 0100B						
030	490900-0000	B		1	SEALING RING	
065	571537-0000	-		1	RING	
070	571538-0000	-		1	RING	
240	490903-0000	-		2	SHAFT	
350	751230-0000	B		4	PLAIN BEARING	
360	441876-0000	A		2	ROLL	
370	490902-0000	-		4	AXLE SUPPORT	
380	571540-0000	-		2	PIN	
730	311103-0313	-		2	PARALLELL PIN ISO2338 5X28 A1	
805	315204-0309	B		1	O-RING 89,5X3 MM	
840	312115-0374	-		2	SCREW ISO4762 M6X30 A4	
TBA 0160S, TBA 0200S						
030	490901-0000	B		1	SEAL	
065	571537-0000	-		1	RING	
070	571539-0000	-		1	RING	
240	490903-0000	-		2	SHAFT	
350	751230-0000	B		4	PLAIN BEARING	
360	456996-0000	A		2	ROLLER	
370	490902-0000	-		4	AXLE SUPPORT	
380	571540-0000	-		2	PIN	
730	311103-0313	-		2	PARALLELL PIN ISO2338 5X28 A1	
805	315204-0309	B		1	O-RING 89,5X3 MM	
840	312115-0374	-		2	SCREW ISO4762 M6X30 A4	
TBA 0250S, TBA 0200M						
030	574336-0000	B		1	SEAL	
065	574334-0000	-		1	RING	
070	574335-0000	-		1	RING	
240	490903-0000	-		2	SHAFT	
350	751230-0000	B		4	PLAIN BEARING	
360	574333-0000	A		2	ROLL	
370	490902-0000	-		4	AXLE SUPPORT	
380	571540-0000	-		2	PIN	
730	311103-0313	-		2	PARALLELL PIN ISO2338 5X28 A1	
805	315204-0309	B		1	O-RING 89,5X3 MM	
840	312115-0374	-		2	SCREW ISO4762 M6X30 A4	
TBA 0330S, TBA 0300S, TBA 0180B, TBA 0200B, TBA 0284B, TBA 0250B						
030	273953-0000	B		1	SEAL	
070	456794-0000	-		1	RING	
240	263655-0006	-		2	SHAFT	
360	456796-0000	A		2	ROLLER	
370	456797-0000	-		4	AXLE SUPPORT	
380	752519-0002	-		2	PIN	
730	311103-0310	-		2	PARALLELL PIN ISO2338 5X20 A1	
840	312115-0370	-		2	SCREW ISO4762 M6X20 A4	
Common Parts						
010	1523494-0000	-		1	PILLAR	
015	12242-0005	-		1	GASKET 61X51X5,5	
020	978865-0000	-		1	HOUSE	
040	295426-0000	-		1	CAP	
050	295427-0000	-		1	LOCK	
060	295428-0000	-		1	HINGE	
095	490964-0000	-		2	COVER	
110	1523158-0001	-		1	SHIM	
110	1523158-0002	-		1	SHIM	
110	1523158-0003	-		1	SHIM	
130	2033-0007	-		8	WASHER	
140	247349-0000	-		2	STEERING	
150	491602-0000	-		2	GASKET HOLDER	
170	978872-0000	-		1	LOCK WASHER	
180	247358-0000	-		1	SHIFTER HANDLE	
190	255986-0000	-		2	WHEEL	
200	256163-0000	-		1	SHAFT	
210	247357-0000	-		2	SPROCKET	
220	751131-0000	-		1	SHAFT	
230	256170-0000	-		2	DRIP PLATE	
250	267033-0000	-		2	WASHER	
260	271863-0000	-		2	SHAFT	
270	271864-0000	-		2	WASHER	
280	272002-0000	-		1	PROTECTIVE COVER LEFT	
290	272003-0000	-		1	PROTECTIVE COVER RIGHT	
300	279008-0000	-		2	BUSHING	
310	978870-0000	-		1	BEARING PLATE	
320	295429-0000	-		1	HANDLE	
330	978532-0000	-		1	BRACKET	
340	978531-0000	-		1	BRACKET	
390	979962-0000	-		1	ARM	
400	751730-0000	-		1	LOCKING CIRCLIP	
410	979961-0000	-		1	PIVOT PIN	
420	469159-0000	-		2	PIN	

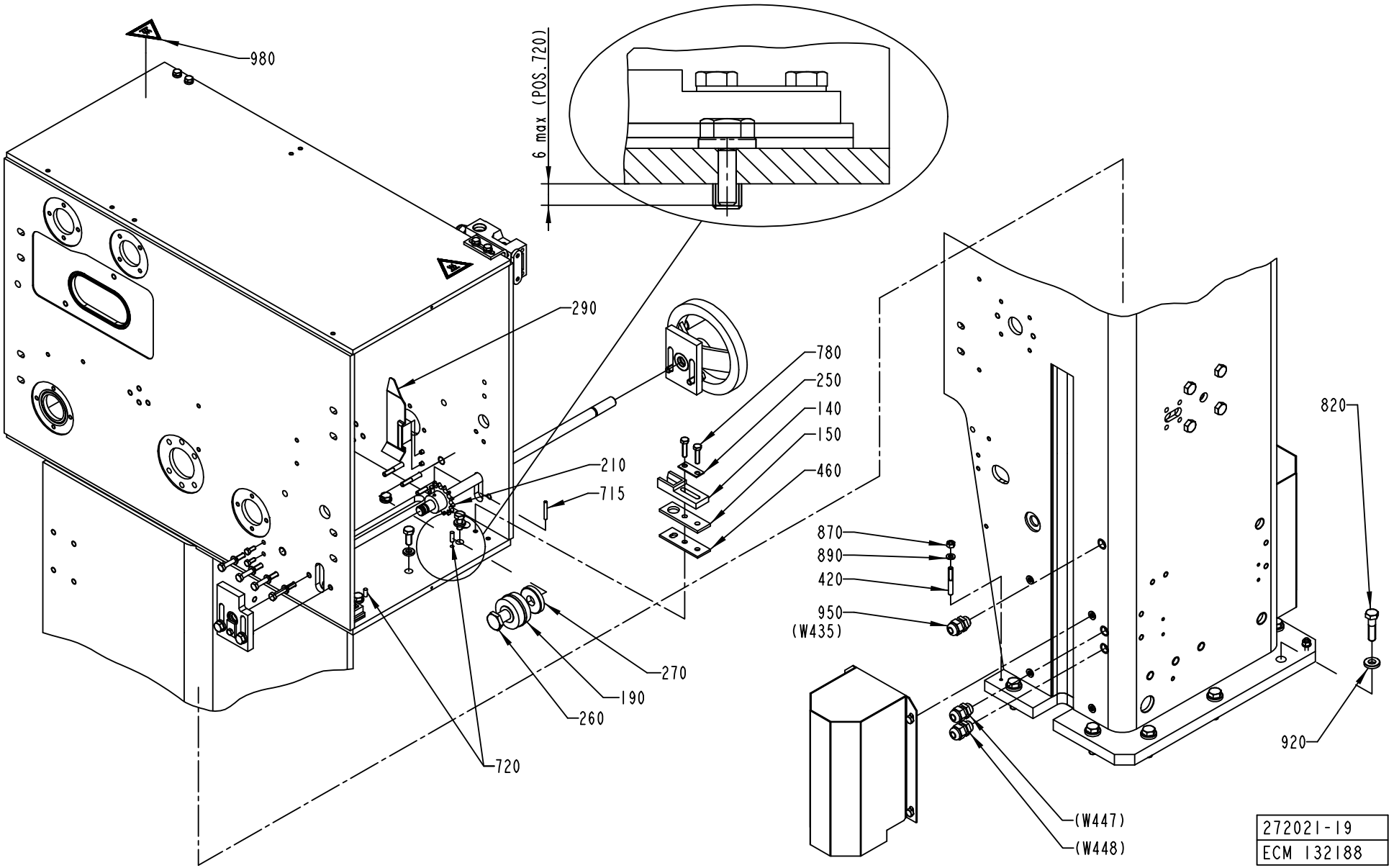
980
6 max (POS.720)
290
780
250
140
150
460
210
715
870
890
420
950
(W435)
820
270
190
260
720
920
(W447)
(W448)
272021-19
ECM 132188

Pos	Part No	SP	UN	Qty	Description	Page No
Common Parts (Cont'd)						
430	978871-0000	-		1	BEARING PLATE	
460	491128-0000	A		2	GASKET	
470	491418-0002	-		1	O-RING	
500	28036-0000	-		6	WASHER	
605	90044-0310	B		3	KEY FOR SAFETY SWITCH, AZ 15/16 B1	
700	311112-0256	-		1	SPRING PIN, ISO 8752 4X20-C	
710	311112-0262	-		1	SPRING PIN, ISO 8752 4X32-C	
715	311103-0276	-		2	PARALLELL PIN ISO2338 4X30 A1	
720	311103-0308	-		4	PARALLELL PIN ISO2338 5X16 A1	
740	312105-0379	-		8	SCREW M6S ISO 4014 M6X45 A480	
750	312105-0327	-		5	SCREW M6S ISO 4017 M5X12 A480	
760	312105-0362	-		8	SCREW M6S ISO 4017 M6X8 A480	
770	312105-0368	-		6	SCREW M6S M6X16 A280	
780	312105-0372	-		4	SCREW M6S ISO 4017 M6X25 A480	
790	312105-0378	-		4	SCREW M6S ISO 4014 M6X40 A480	
800	312105-0386	-		1	SCREW M6S ISO 4014 M6X80 A480	
810	312105-0451	-		26	SCREW M6S ISO 4017 M8X20 A480	
820	312105-0499	-		7	SCREW M6S ISO 4014 M10X40 A480	
830	312115-0329	-		6	SCREW ISO4762 M5X16 A4	
850	312125-0230	-		2	SLOTTED SCREW MCS M3X20 SS	
860	312125-0287	-		4	SCREW PAN HEAD MCS M4X8 SS	
870	312605-0316	-		10	HEXAGON NUT, M6M M6 A280	
880	315105-0124	-		2	WASHER BRB3,2X6RFR	
890	315105-0153	-		19	WASHER BRB6,4X12RFR	
900	315115-0153	-		6	WASHER PLAIN, TBRB 6,4/12 H=3	
910	315115-0165	-		12	WASHER PLAIN, TBRB 8,4/16 H=3	
920	315115-0173	-		7	WASHER PLAIN, TBRB 10,5/22 H=4	
930	315125-0153	-		2	WASHER TBRSB 6,4X22X4 A4	
933	315204-0109	A		2	O-RING 11,1X1,6 MM	
940	318800-0103	-		2	HANDLES,SPHERICAL KNOB,INT.THRE.,D.25-M6	
950	352103-0101	-		3	CABLE GLAND, ST 9, PR15,2/PG9	
955	352103-0106	-		3	CABLE GLAND, ST 11, PR18,6/PG11	
960	352110-0100	-		4	CABLE CLIPS, D=5-7 MM	
970	315204-0301	-		2	O-RING 49,5X3 MM	
980	359710-0001	-		2	WARNING SIGN ISO, HOT SURFACE	
MB021A	90044-0139	B		1	KEY SAF.SW. AZ16-02 ZVR K-2254	
MB021B	90044-0139	B		1	KEY SAF.SW. AZ16-02 ZVR K-2254	
MB021C	90044-0139	B		1	KEY SAF.SW. AZ16-02 ZVR K-2254	
MB061	90044-0194	A		1	PROX.SW. IN5329/IN3002-BPKG	
W416	351150-0405	-	M	6	CABLE OLFLEX 5X0,75 MM2 LIGHT/GREY	
W417	351150-0405	-	M	6	CABLE OLFLEX 5X0,75 MM2 LIGHT/GREY	
W418	351150-0405	-	M	6	CABLE OLFLEX 5X0,75 MM2 LIGHT/GREY	

Machine Type | Group Description | Used-In | Group Number | Page No

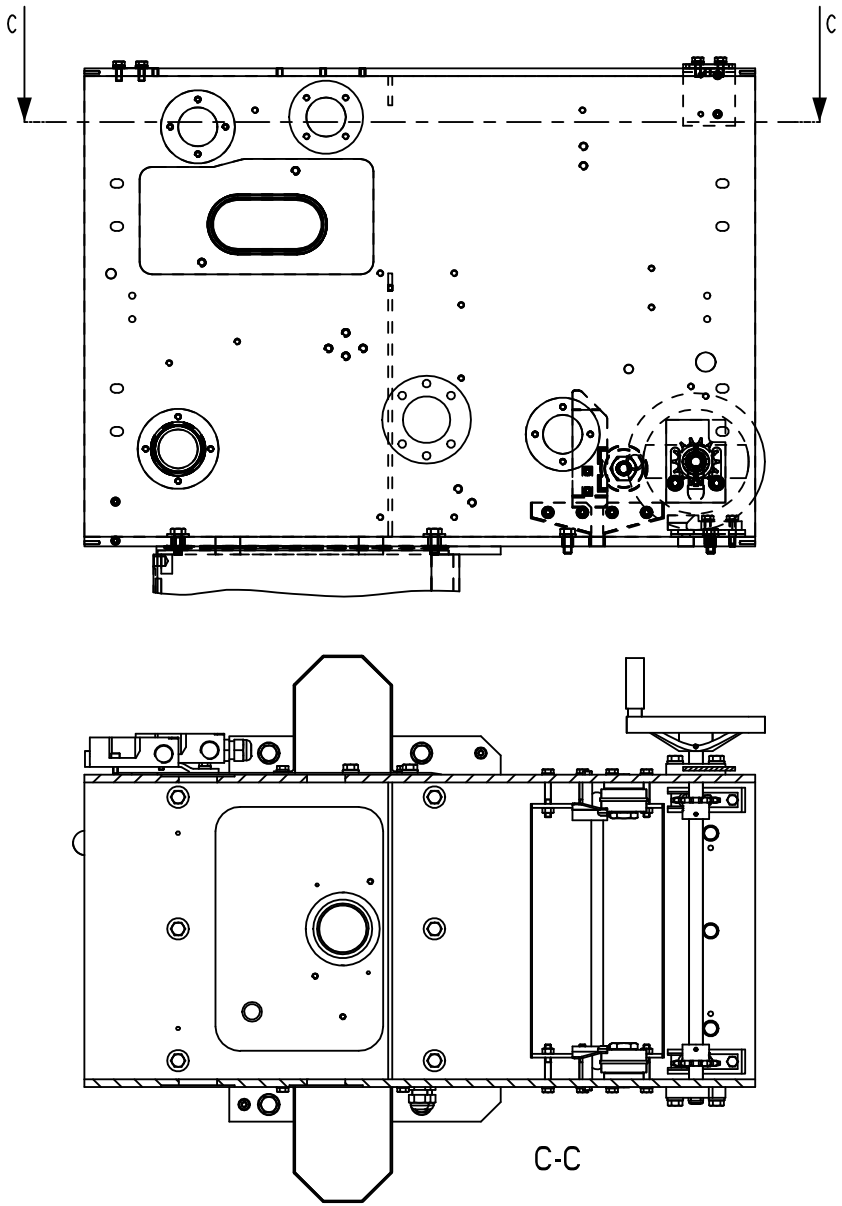

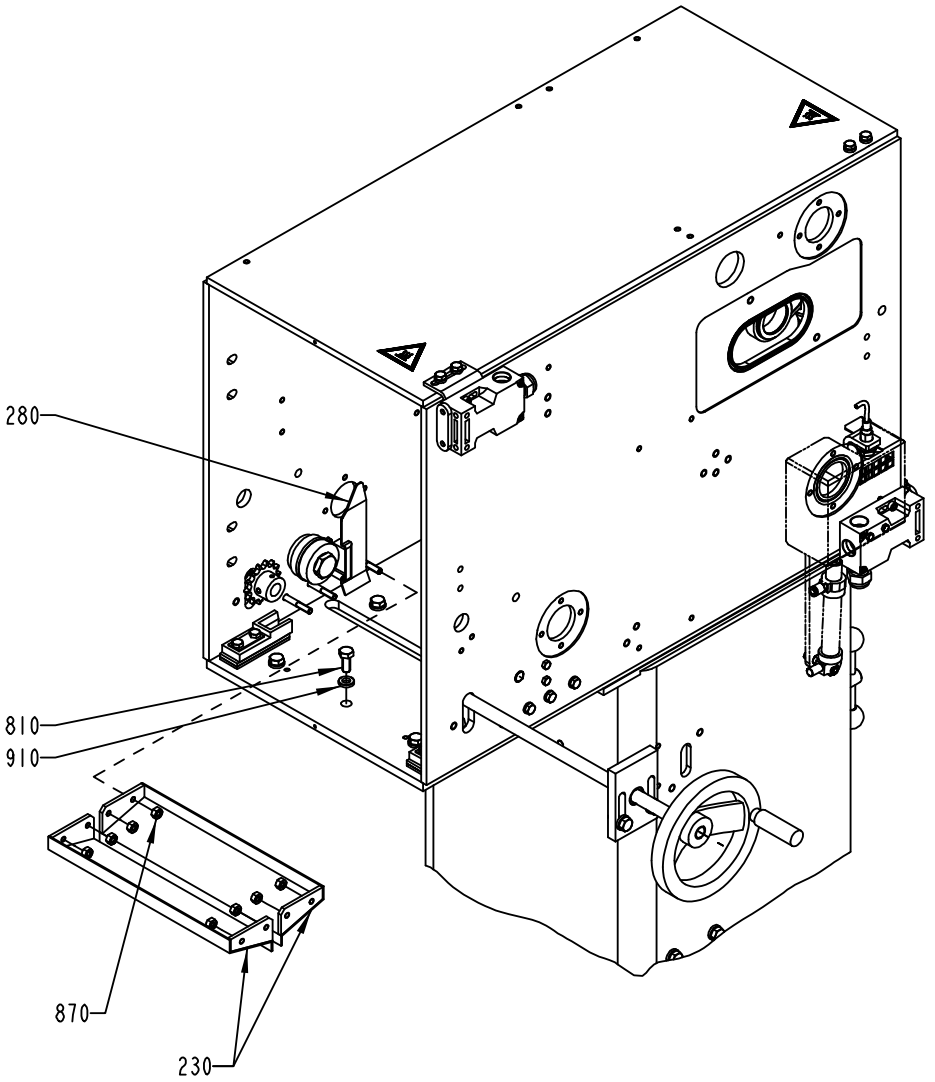

272021-19
ECM 132188

Pos	Part No	SP	UN	Qty	Description	Page No	Pos	Part No	SP	UN	Qty	Description	Page No

SEE PREVIOUS LISTS PAGES: 57, 59.

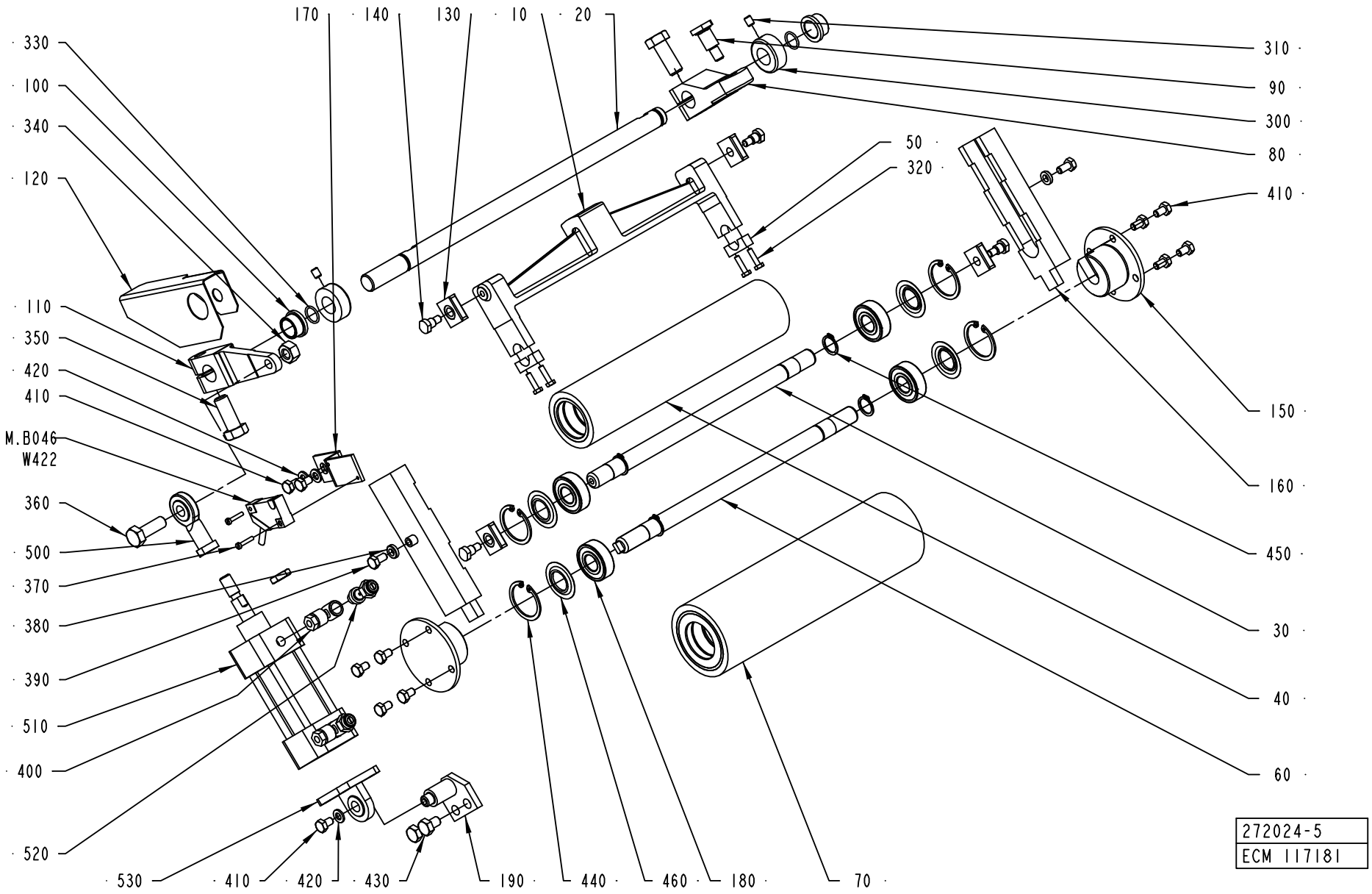
170
140
130
10
20
330
100
340
120
110
350
420
410
M.B046
W422
360
500
370
380
390
510
400
520
530
410
420
430
190
440
460
180
70
310
90
300
80
50
320
410
150
160
450
30
40
60
272024-5
ECM 117181

ECM: 117217 - 20030701
Group number: 272024-0500
Assembly Drawing: 272024-5_1_AB

Pos	Part No	SP	UN	Qty	Description	Page No
-						
010	1538103-0000	-		1	FORK	
020	751132-0000	A		1	SHAFT	
030	2555634-0000	A		1	SHAFT	
040	1538097-0000	A		1	CALENDER ROLLER	
050	1538098-0000	-		2	CLAMP	
060	2555633-0000	A		1	SHAFT	
070	1538096-0000	A		1	CALENDER ROLLER	
080	272927-0000	-		1	PRESSURE ARM	
090	271898-0000	B		1	SCREW	
100	271269-0000	A		2	BUSHING	
110	441904-0000	-		1	ARM	
120	978462-0000	-		1	PROTECTION PLATE	
130	1538104-0000	A		4	GUIDE	
140	271899-0000	B		4	SCREW	
150	566697-0000	-		2	AXLE SUPPORT	
160	566696-0000	A		2	GUIDE CONSOLE	
170	272033-0000	-		1	BRACKET	
180	90458-1704	A		4	BALL BEARING, 15X35X11 MM	
190	441578-0002	-		1	CYLINDER BRACKET	
300	315742-0112	-		2	COLLAR, 16/32, H=12	
310	312318-0362	-		2	SCREW ISO4029 M6X8 A4	
320	312105-0293	-		4	SCREW M6S ISO 4017 M4X16 A480	
330	315204-0111	A		2	O-RING 13,1X1,6 MM	
340	312605-0320	-		1	HEXAGON NUT, M6M M10 A280	
350	312105-0536	-		2	SCREW M6S ISO 4017 M12X30 A480	
360	312105-0495	-		1	SCREW M6S ISO 4017 M10X30 A480	
370	312125-0228	-		2	SCREW PAN HEAD MCS M3X16 A480	
380	315115-0153	-		2	WASHER PLAIN, TBRB 6,4/12 H=3	
390	312105-0366	-		2	SCREW M6S M6X12 A280	
400	342797-0121	-		2	CONN. BANJO, RINGPIECE 6-1/8	
410	312105-0364	-		11	SCREW M6S ISO 4017 M6X10 A480	
420	315105-0153	-		3	WASHER BRB6,4X12RFR	
430	312105-0447	-		2	SCREW M6S ISO 4017 M8X12 A480	
440	315753-0124	-		4	RETAIN. RING, 35	
450	315751-0112	-		4	RETAIN. RING, 15	
460	90214-0303	-		4	SEALING RING, 18,6X35X2 MM	
500	90239-0405	-		1	ROD END,BALL JOINT EYE M10X1,25	
510	90239-0773	A		1	CYLINDER	
	90239-0442	*C*		*1*	*SEAL KIT*	
520	90235-0274	-		2	THROTTLE CHECK VALVES,G1/8"	
530	90239-0453	-		1	BRACKET	

Pos	Part No	SP	UN	Qty	Description	Page No
MB046	90044-0194	A		1	PROX.SW. IN5329/IN3002-BPKG	

Machine Type	Group Description	Used-In	Group Number	Page No

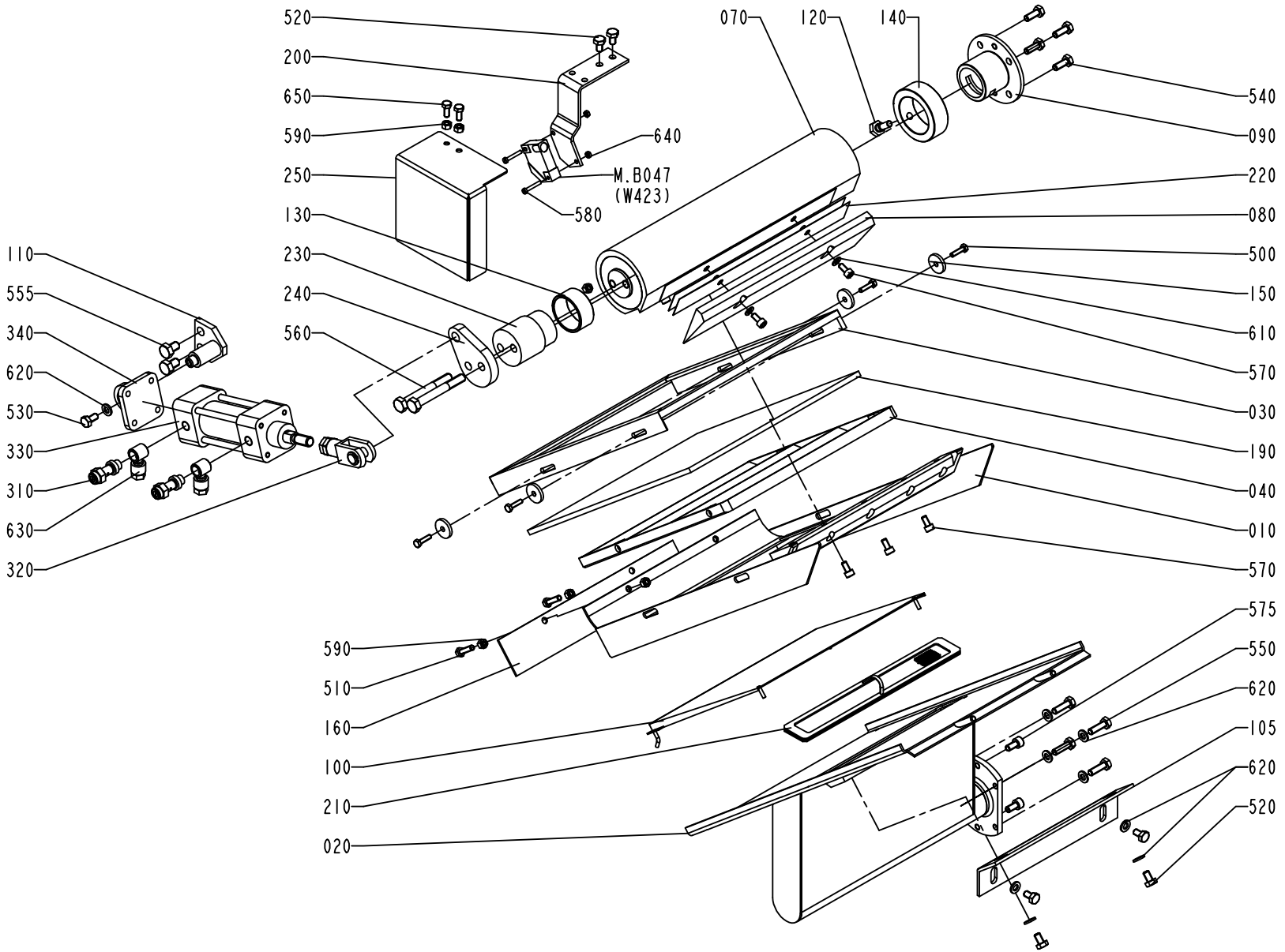

272025-5
ECM 73657

ECM: 114403 - 20020930
Group number: 272025-0400
Assembly Drawing: 272025-5_1_AA

Pos	Part No	SP	UN	Qty	Description	Page No
TBA 0125S, TBA 0100B						
010	271824-0000	-		1	AIR KNIFE, MOVABLE	
020	271825-0000	-		1	FIXED AIR KNIFE	
030	271941-0001	-		1	FRAME	
040	271942-0001	-		1	AIR GUIDE	
070	272026-0001	-		1	AIR DISTRIBUTOR	
080	271820-0001	-		1	STEERING RAIL	
100	272140-0001	-		1	HEAD PLATE	
160	271827-0001	-		1	HEAD PLATE	
190	272027-0001	-		1	GLASS PANE	
210	272141-0001	B		1	FILTER	
220	272329-0001	-		2	LACE	
570	312115-0325	-		5	SCREW ISO4762 M5X10 A4	
TBA 0330S, TBA 0300S, TBA 0180B, TBA 0160S, TBA 0200B, TBA 0250S, TBA 0284B, TBA 0200S, TBA 0200M, TBA 0250B						
010	272022-0000	-		1	AIR KNIFE, MOVABLE	
020	272023-0000	-		1	FIXED AIR KNIFE	
030	271941-0002	-		1	FRAME	
040	271942-0002	-		1	AIR GUIDE	
070	272026-0002	-		1	AIR DISTRIBUTOR	
080	271820-0002	-		1	STEERING RAIL	
100	272140-0002	-		1	HEAD PLATE	
160	271827-0002	-		1	HEAD PLATE	
190	272027-0002	-		1	GLASS PANE	
210	272141-0002	B		1	FILTER	
220	272329-0002	-		3	LACE	
570	312115-0325	-		7	SCREW ISO4762 M5X10 A4	
Common Parts						
090	271858-0000	-		1	FLANGE	
105	272464-0000	-		1	ANGLE BRACKET	
110	441578-0001	-		1	CYLINDER BRACKET	
120	255995-0000	-		1	SCREW	
130	751165-0000	-		1	BUSHING	
140	256022-0000	-		1	BUSHING	
150	263311-0000	-		4	WASHER	
200	1524653-0000	-		1	BRACKET	
230	441576-0000	-		1	SPACER	
240	1524654-0000	-		1	ARM	
250	1524655-0000	-		1	PROTECTION PLATE	
310	90235-0274	-		2	THROTTLE CHECK VALVES,G1/8"	
320	90239-0516	-		1	ROD END, CLEVIS WITH AXLE M10X1,25	
330	90239-0773	A		1	CYLINDER	
	90239-0442	*C*		*1*	*SEAL KIT*	
340	90239-0453	-		1	BRACKET	
500	312105-0293	-		4	SCREW M6S ISO 4017 M4X16 A480	
510	312105-0331	-		2	SCREW M6S ISO 4017 M5X20 A480	
520	312105-0364	-		6	SCREW M6S ISO 4017 M6X10 A480	
530	312105-0366	-		1	SCREW M6S M6X12 A280	
540	312105-0368	-		4	SCREW M6S M6X16 A280	
550	312105-0370	-		4	SCREW M6S ISO 4017 M6X20 A480	
555	312105-0447	-		2	SCREW M6S ISO 4017 M8X12 A480	
560	312105-0464	-		2	SCREW M6S ISO 4014 M8X65 A480	
575	312115-0366	-		2	SCREW ISO4762 M6X12 A4	
580	312125-0230	-		2	SLOTTED SCREW MCS M3X20 SS	
590	312605-0314	-		6	HEXAGON NUT, M6M M5 A280	
610	315105-0146	-		2	WASHER BRB5,3X10RFR	
620	315105-0153	-		9	WASHER BRB6,4X12RFR	
630	342797-0121	-		2	CONN. BANJO, RINGPIECE 6-1/8	
640	312605-0310	-		2	HEXAGON NUT, M6M M3 A280	
650	312105-0327	-		2	SCREW M6S ISO 4017 M5X12 A480	
MB047	90044-0104	A		1	PROX.SWITCH IFM IN 3002	

Machine Type | Group Description | Used-In | Group Number | Page No

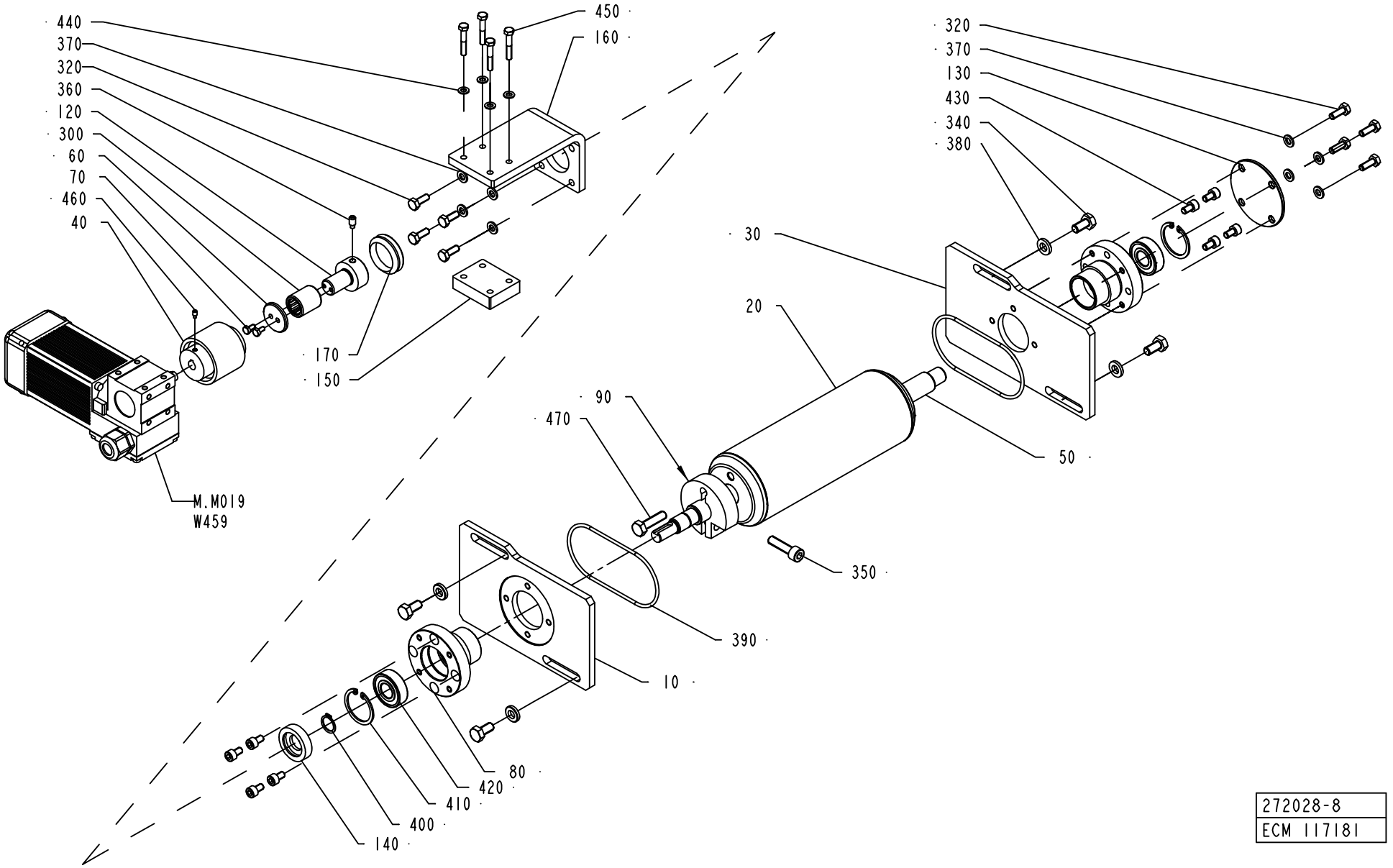
440
370
320
360
120
300
60
70
460
40
450
160
170
150
M.M019
W459
320
370
130
430
340
380
30
20
90
470
50
350
390
10
80
420
410
400
140
272028-8
ECM 117181

ECM: 117185 - 20030701
Group number: 272028-0800
Assembly Drawing: 272028-8_1_AB

Pos	Part No	SP	UN	Qty	Description	Page No
TBA 0125S 6000/H, TBA 0125S 7500/H, TBA 0100B 7500/H						
010	1524780-0000	-		1	PLATE	
020	2559069-0000	A		1	BENDING ROLLER	
030	572157-0000	-		1	BEARING PANEL	
TBA 0160S 6000/H, TBA 0160S 7500/H, TBA 0200S 6000/H, TBA 0200S 7500/H						
010	1524780-0000	-		1	PLATE	
020	2559071-0000	A		1	BENDING ROLLER	
030	572157-0000	-		1	BEARING PANEL	
TBA 0250S 6000/H, TBA 0250S 7500/H, TBA 0200M 7500/H						
010	1524780-0000	-		1	PLATE	
020	2559070-0000	A		1	BENDING ROLLER	
030	572157-0000	-		1	BEARING PANEL	
TBA 0330S 7500/H, TBA 0300S 6000/H, TBA 0300S 7500/H, TBA 0180B 6000/H, TBA 0180B 7500/H, TBA 0200B 6000/H, TBA 0200B 7500/H, TBA 0250B 6000/H, TBA 0250B 7500/H, TBA 0284B 7500/H, TBA 0284B 6000/H						
010	1524805-0000	-		1	PLATE	
020	2559068-0000	A		1	BENDING ROLLER	
030	572158-0000	-		1	BEARING PANEL	
Common Parts						
040	90458-2840	-		1	SHAFT COUPLING 22,225H9/9	
050	2522249-0000	-		1	SHAFT	
060	250592-0000	-		1	WASHER	
070	312105-0287	-		2	SCREW M6S ISO4017 M4X8 A480	
080	1539997-0000	-		2	AXLE SUPPORT	
090	2559087-0000	A		1	CLAMP	
120	1334234-0000	-		1	HUB	
130	1548143-0000	-		1	END PLATE	
140	1558403-0000	-		1	DISC	
150	2527718-0000	-		1	SPACER	
160	2522248-0000	-		1	BRACKET	
170	315220-0167	B		1	V-RINGS 27X35X10,5 MM V-30S	
300	90348-0007	B		1	FREE WHEEL COUPLING	
320	312105-0368	-		8	SCREW M6S M6X16 A280	
340	312105-0449	-		4	SCREW M6S ISO 4017 M8X16 A480	
350	312115-0455	-		2	SCREW ISO4762 M8X30 A4	
360	312311-0366	-		1	SCREW ISO4028 M6X12 FZB	
370	315105-0153	-		8	WASHER BRB6,4X12RFR	
380	315115-0165	-		4	WASHER PLAIN, TBRB 8,4/16 H=3	
390	315204-0309	B		2	O-RING 89,5X3 MM	
400	315751-0112	-		1	RETAIN. RING, 15	
410	315753-0124	-		2	RETAIN. RING, 35	
420	90458-1704	B		2	BALL BEARING, 15X35X11 MM	
430	312115-0364	-		8	SCREW ISO4762 M6X10 A4	
440	315105-0146	-		4	WASHER BRB5,3X10RFR	
450	312105-0335	-		4	SCREW M6S ISO 4014 M5X30 A480	
460	312311-0287	-		1	SCREW ISO4028 M4X8 FZB	
470	312105-0455	-		1	SCREW M6S ISO 4017 M8X30 A480	
MM019	90458-1879	A		1	GEARS, WORM MOTOR 528V--L06-B01	
W459	351150-0413	-	M	5	CABLE OLFLEX 4X1,5 MM2 LIGHT/GREY	

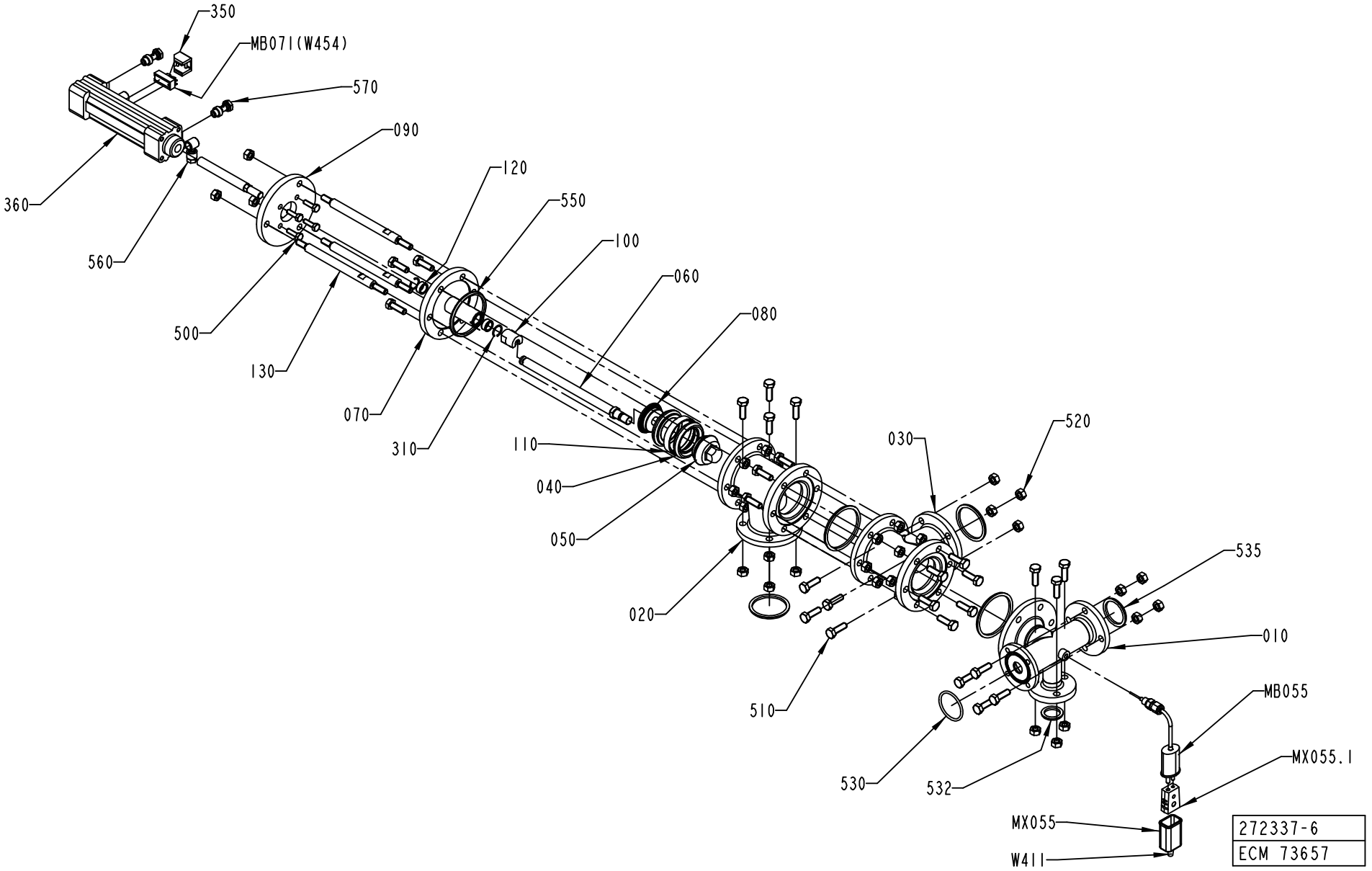
350
MB071(W454)
570
090
120
550
100
060
080
360
560
500
130
070
310
110
040
050
020
030
520
535
010
MB055
MX055.1
510
530
532
MX055
W411
272337-6
ECM 73657

ECM: 114631 - 20020930
Group number: 272337-0600
Assembly Drawing: 272337-6_1_AA

Pos	Part No	SP	UN	Qty	Description	Page No
-						
010	978996-0000	-		1	BRANCH PIPE	
020	1036187-0000	-		1	T-PIPE	
030	1036194-0000	-		1	T-PIPE	
040	530589-0000	A		2	SEAL RING	
050	530590-0000	A		1	VALVE CONE	
060	1036188-0000	-		1	SHAFT	
070	1036189-0000	B		1	SPINDLE GUIDE	
080	1036191-0000	A		1	SEAL HOLDER	
090	1036193-0000	-		1	CYLINDER BRACKET	
100	441871-0000	A		1	PENDULUM SUSPENSION	
110	530599-0000	A		1	RING	
120	532349-0000	A		2	PLAIN BEARING	
130	1036192-0000	-		3	SPACER ROD	
310	90141-0022	B		2	SNAP RING B 16	
350	90450-0669	A		1	SENSOR, BRACKET SERIES 168	
360	90450-0281	A		1	DOUBLE ACTING,PROF.CYL 32-80	
500	312105-0370	-		4	SCREW M6S ISO 4017 M6X20 A480	
510	312105-0453	-		30	SCREW M6S ISO 4017 M8X25 A480	
520	312605-0318	-		36	HEXAGON NUT, M6M M8 A280	
530	315204-0223	B		1	O-RING 39,2X3 MM	
532	315229-0203	B		1	GASKET 34,8X42,8X3,7 MM 1"1/2	
535	315229-0204	B		1	GASKET 34,8X42,8X3,7 MM 1"1/2	
540	315229-0205	B		2	GASKET 47,5X55,5X3,7 MM 2"	
550	315229-0206	B		3	GASKET 60,2X68,2X3,7 MM 2"1/2	
560	342797-0121	-		2	CONN. BANJO, RINGPIECE 6-1/8	
570	342980-0303	-		2	BANJO-HOLLOW BOLT COUPL,EXT.THR.01-G1/8"	
MB055	90326-0051	A		1	THERMOCOUPLE, 12826-33	
MB071	90457-0047	A		1	SENSOR 2750-1-5111-1 W.ADAPTER PNP	
MX055	90326-0020	-		1	PLUG, FEMALE YELLOW CR-AL	
MX055.1	90326-0012	-		1	PROTECTIVE COVER, T31A4618	
W411	90220-0059	-	M	5	THERMOCOUPLE CABLE K/ 2X0,81MM2	

Pos	Part No	SP	UN	Qty	Description	Page No

Machine Type | Group Description | Used-In | Group Number | Page No

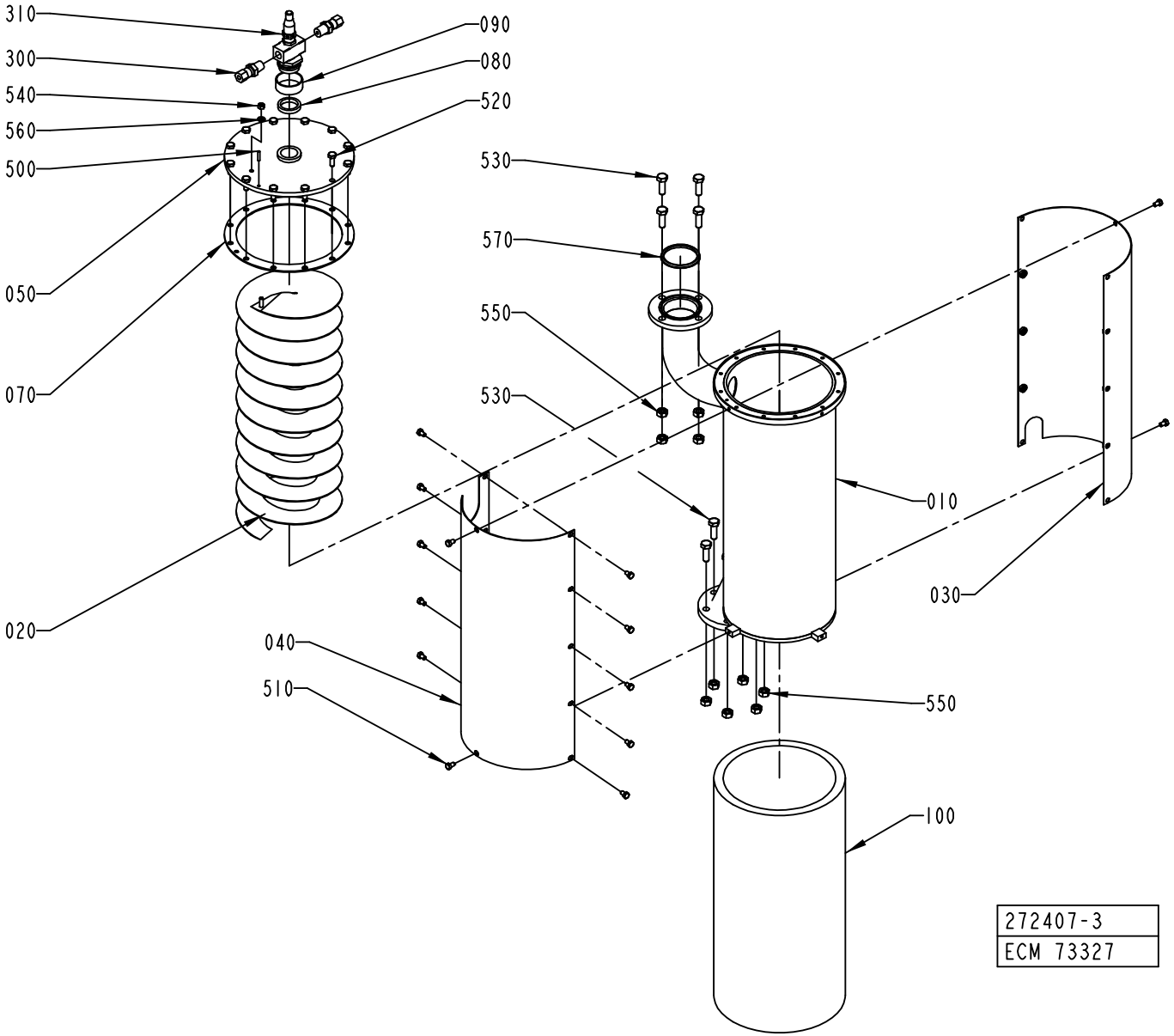
310
300
540
560
500
050
070
020
090
080
520
530
570
550
530
010
030
040
510
550
100
272407-3
ECM 73327

ECM: 114543 - 20020930
Group number: 272407-0400
Assembly Drawing: 272407-3_1_AC

Pos	Part No	SP	UN	Qty	Description	Page No
-						
010	978879-0000	-		1	CONTAINER	
020	272325-0000	-		1	SPIRAL	
030	978971-0000	-		1	DISCHARGE TRAY	
040	978972-0000	-		1	DISCHARGE TRAY	
050	272275-0000	-		1	LID	
070	272277-0000	A		2	GASKET	
080	12242-0001	A		1	GASKET 32X25X5,5	
090	295993-0000	A		1	GASKET HOLDER	
100	441501-0000	A		1	INSULATION	
300	90030-0062	A		2	CONN. STR. GE 6-1/4-18 NPTF	
310	90424-0017	A		1	SPRAY NOZZLE	
	90424-0304	*C*		*1*	*GASKET*	
	90424-0303	*C*		*1*	*GASKET*	
	90424-0302	*C*		*1*	*GASKET*	
	90424-0301	*C*		*1*	*SLEEVE*	
500	311103-0236	-		1	PARALLELL PIN ISO2338 3X16 A1	
510	312105-0323	-		14	SCREW M6S ISO 4017 M5X8 A480	
520	312105-0368	-		12	SCREW M6S M6X16 A280	
530	312105-0453	-		10	SCREW M6S ISO 4017 M8X25 A480	
540	312605-0314	-		1	HEXAGON NUT, M6M M5 A280	
550	312605-0318	-		10	HEXAGON NUT, M6M M8 A280	
560	315105-0146	-		1	WASHER BRB5,3X10RFR	
570	315229-0205	A		1	GASKET 47,5X55,5X3,7 MM 2"	

Pos	Part No	SP	UN	Qty	Description	Page No

Machine Type | Group Description | Used-In | Group Number | Page No

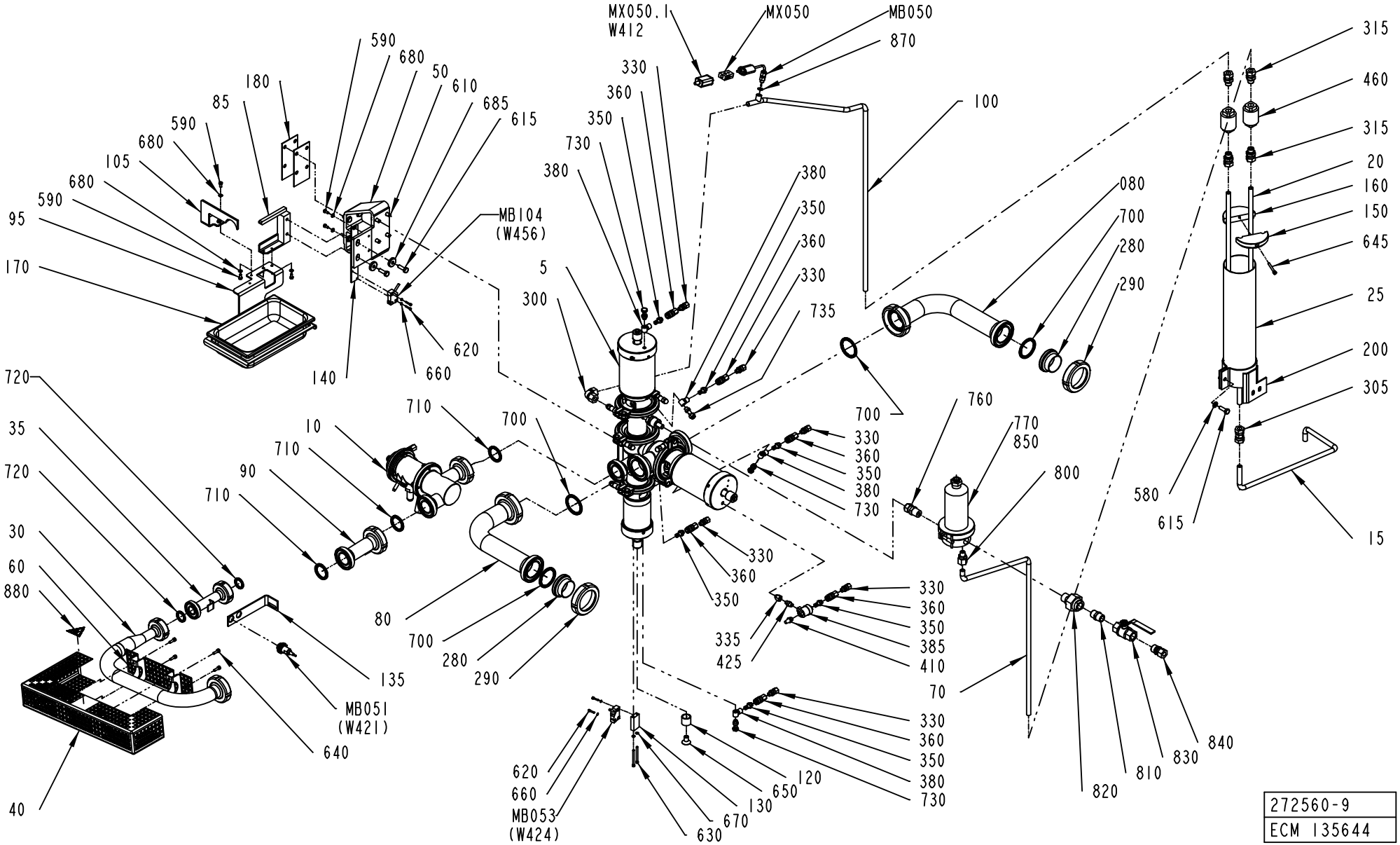

272560-9
ECM 135644

ECM: 135646 - 20030701
Group number: 272560-0800
Assembly Drawing: 272560-9_1_AC

This list covers pages from 72 to 79

Pos	Part No	SP	UN	Qty	Description	Page No
NOTCSB HI (See drawing on page: 76)						
070	2618265-0000	-		1	PIPE	
760	90030-0213	-		1	CONN. STR. M12 MSC1/2K-316 EXT. TAPPERED	
770	90277-0055	-		1	FILTER HOUSING / MDS 4463 G 08 H	
	90277-0339	-		*1*	*O-RING, ACS0272 EU FOR PALL FILTER*	
800	90030-0088	-		1	CONN. STR., 12-R1/4, EXT. THREAD	
810	90330-0021	-		1	NIPPLES, EXT. THREAD. R-207R1/2	
820	90330-0106	-		1	PIPE COUPLING	
830	90187-0082	-		1	BALL VALVE G1/2	
840	90030-0109	-		1	CONN. STR., 12-R1/2, EXT. THREAD	
850	90337-0315	-		1	FILTERINSERT / MCS 4463	
NOTCSB NOHI (See drawing on page: 72)						
070	2618265-0000	-		1	PIPE	
760	90030-0213	-		1	CONN. STR. M12 MSC1/2K-316 EXT. TAPPERED	
770	90277-0055	-		1	FILTER HOUSING / MDS 4463 G 08 H	
	90277-0339	-		*1*	*O-RING, ACS0272 EU FOR PALL FILTER*	
800	90030-0088	-		1	CONN. STR., 12-R1/4, EXT. THREAD	
810	90330-0021	-		1	NIPPLES, EXT. THREAD. R-207R1/2	
820	90330-0106	-		1	PIPE COUPLING	
830	90187-0082	-		1	BALL VALVE G1/2	
840	90030-0109	-		1	CONN. STR., 12-R1/2, EXT. THREAD	
850	90337-0315	-		1	FILTERINSERT / MCS 4463	
TCSB HI (See drawing on page: 78)						
070	2632811-0000	-		1	PIPE	
075	1539237-0000	-		1	PIPE	
190	1334841-0200	-		1	T.C.S.B. UNIT	**81**
860	342737-0204	-		1	CONN. ELBOW W-6 LRFR	
TCSB NOHI (See drawing on page: 74)						
070	2632811-0000	-		1	PIPE	
075	1539237-0000	-		1	PIPE	
190	1334841-0200	-		1	T.C.S.B. UNIT	**81**
860	342737-0204	-		1	CONN. ELBOW W-6 LRFR	
Common Parts						
005	576434-0200	-		1	AP-VALVE 51-38	**83**
010	927205-0200	-		1	REGULATING VALVE	**95**
015	2618264-0000	-		1	PIPE	
020	1512411-0000	-		2	PIPE	
025	2618263-0000	-		1	CONTAINER	
030	1519969-0000	-		1	PIPE	
035	1317756-0000	-		1	PIPE	
040	1348476-0000	-		1	TOUCH GUARD	
050	577360-0000	-		1	CANTILEVER	
060	1348636-0000	-		1	TOUCH GUARD	
080	1519936-0000	-		2	PIPE	
085	2611709-0000	-		1	BRACKET	
090	1317663-0000	-		1	PIPE	
095	2603631-0000	-		1	BRACKET	
100	2618266-0000	-		1	PIPE	
105	2632796-0000	-		1	BRACKET	
120	440647-0000	-		1	SLEEVE	
130	440731-0000	-		1	PLATE	
135	1317905-0000	-		1	BRACKET	
140	578480-0000	-		1	BRACKET	
150	1317262-0000	-		1	COVER	
160	1512377-0000	-		1	COVER	
170	90459-2435	-		1	CONTAINER 1,8L , GN 1406	
180	490985-0000	-		2	SPACER SHEET	
200	2635109-0000	-		1	CLAMP	
280	90217-0207	-		2	ASEPT. MALE FITTING ISO, 03-32-456/42	
290	90217-0209	-		2	UNION NUT, 2 APV, 07-01-426/17	
300	90030-0096	-		1	CONN. ELBOW W-12	
305	90030-0106	-		1	CONN. PIPE G-12	
315	90030-0187	-		4	CONN. STR. GA-12-G3/8	
330	90030-0184	-		6	CONN. STR. GA-6-G1/8	
335	90030-0212	-		1	NIPPLES, REDUSING, INT. THR. NO. 2521	
350	90163-0057	-		6	NIPPLE 1/8" BRASS	
355	90157-0037	-	L	1	SEALING COMPOUND	
360	90163-0062	-		6	QUICK COUPLING, (F) 5053-1/8	
380	90224-0308	-		4	CONN. BANJO, ART. NO. 2023-1/8-1/8	
385	90235-0259	-		1	VALVE	
410	90328-0003	A		1	SILENCER	
425	90330-0032	-		1	NIPPLES, EXT. THREAD. ISO 7/1 R1/8-R1/8	
460	90360-0020	-		2	STEAM TRAP / MK36/51 3/8"	
	90360-0310	-		*1*	*CAPSULE, FOR STEAM TRAP 90360-20*	
	90360-0309	-		*1*	*STRAINER, FOR STEAM TRAP 90360-20*	
580	315105-0165	-		1	WASHER BRB8,4X16RFR	
590	312105-0325	-		6	SCREW M6S ISO 4017 M5X10 A480	
610	312105-0451	-		8	SCREW M6S ISO 4017 M8X20 A480	
615	312105-0453	-		3	SCREW M6S ISO 4017 M8X25 A480	
620	312115-0228	-		4	SCREW ISO4762 M3X16 A4	

Machine Type | Group Description | Used-In | Group Number | Page No

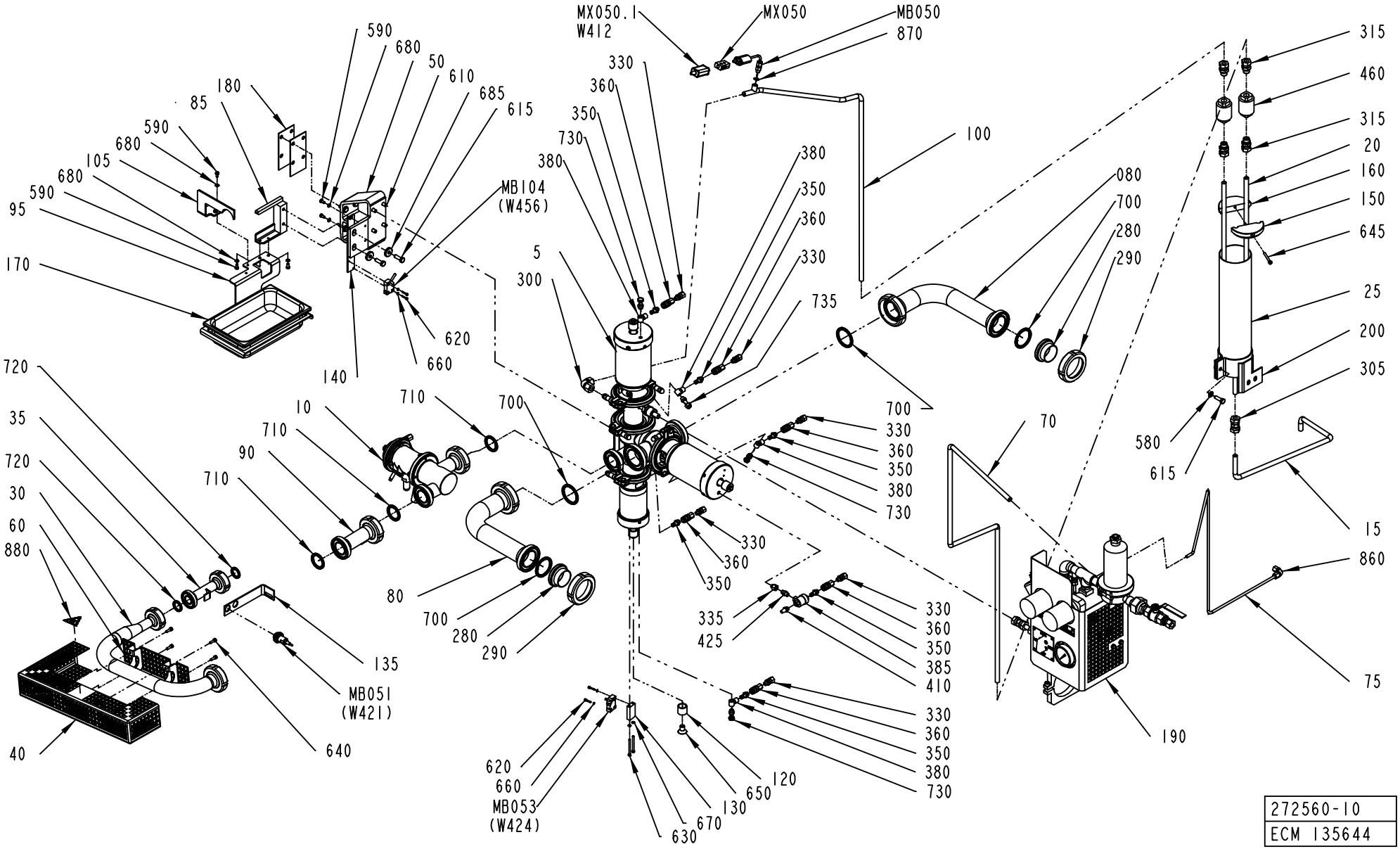

272560-10
ECM 135644

Pos	Part No	SP	UN	Qty	Description	Page No
Common Parts (Cont'd)						
630	312115-0305	-		2	SCREW ISO4762 M4X50 A4	
640	312115-0329	-		4	SCREW ISO4762 M5X16 A4	
645	312115-0340	-		1	SCREW ISO4762 M5X45 A4	
650	312155-0532	-		1	SCREW EN 10642 MF6S M12X20 A480	
660	315105-0124	-		4	WASHER BRB3,2X6RFR	
670	315105-0136	-		2	WASHER BRB4,3XRFR	
680	315105-0146	-		6	WASHER BRB5,3X10RFR	
685	315125-0165	-		2	WASHER TBRSB 8,4X26X5 A4	
700	90217-0349	A		4	GASKET 48,4X59,8X4 MM	
710	90217-0348	A		3	GASKET 35,4X46,8X4 MM	
720	90217-0347	A		2	GASKET 32X22,6X3,6 MM	
730	342980-0303	-		3	BANJO-HOLLOW BOLT COUPL,EXT.THR.01-G1/8"	
735	90235-0274	-		1	THROTTLE CHECK VALVES,G1/8"	
870	315234-0109	-		1	WASHER,PL.RND.CU.10,3/13,5 H=1,0	
880	359710-0001	-		1	WARNING SIGN ISO, HOT SURFACE	
MB050	90326-0089	A		1	THERMOCOUPLE, 5110-089-000	
MB051	90458-0676	A		1	PROXIMITY SWITCH,E2EG-X5B1-6M	
MB053	90044-0194	A		1	PROX.SW. IN5329/IN3002-BPKG	
MB104	90044-0194	A		1	PROX.SW. IN5329/IN3002-BPKG	
MB512	90458-0676	A		1	PROXIMITY SWITCH,E2EG-X5B1-6M	
MX050	90326-0020	-		1	PLUG, FEMALE YELLOW CR-AL	
MX050.1	90326-0012	-		1	PROTECTIVE COVER, T31A4618	
W412	90220-0059	A	M	5	THERMOCOUPLE CABLE K/ 2X0,81MM2	

Pos	Part No	SP	UN	Qty	Description	Page No

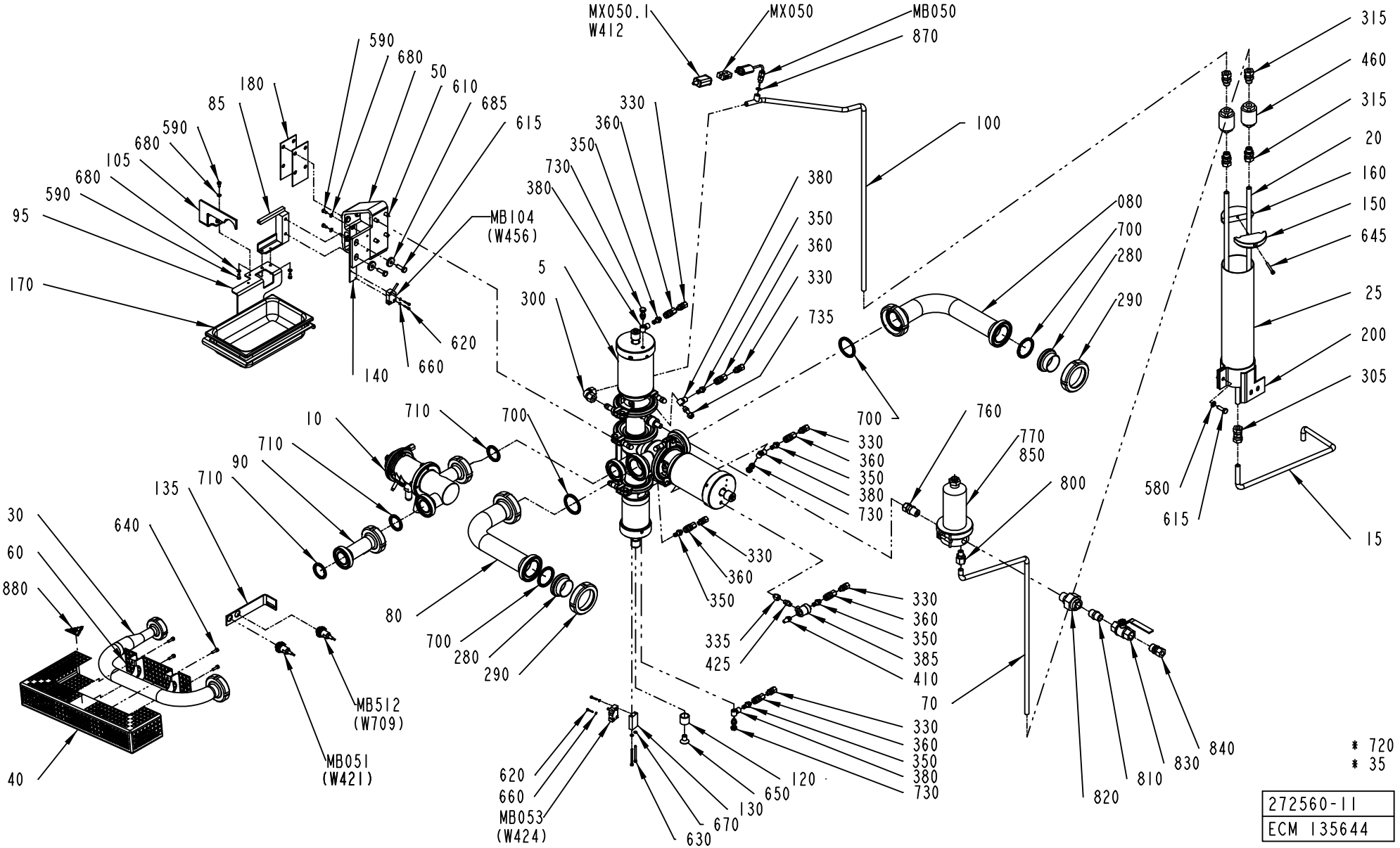
MX050.1
W412
MX050
MB050
870
100
590
680
50
610
685
615
180
85
590
680
105
680
590
95
170
MB104
(W456)
620
660
140
330
360
350
730
380
5
300
380
350
360
330
735
080
700
280
290
700
700
760
770
850
800
315
460
315
20
160
150
645
25
200
305
580
615
15
10
710
710
90
710
135
640
30
60
880
40
80
700
280
290
MB512
(W709)
MB051
(W421)
330
360
350
380
730
330
360
350
335
425
330
360
350
385
410
70
330
360
350
380
730
620
660
MB053
(W424)
630
670
130
650
120
820
810
830
840
* 720
* 35
272560-11
ECM 135644

ECM: 135646 - 20030701
Group number: 272560-0800
Assembly Drawing: 272560-11_1_AA

This list covers pages from 72 to 79

Pos	Part No	SP	UN	Qty	Description	Page No	Pos	Part No	SP	UN	Qty	Description	Page No

SEE PREVIOUS LISTS PAGES: 73, 75.

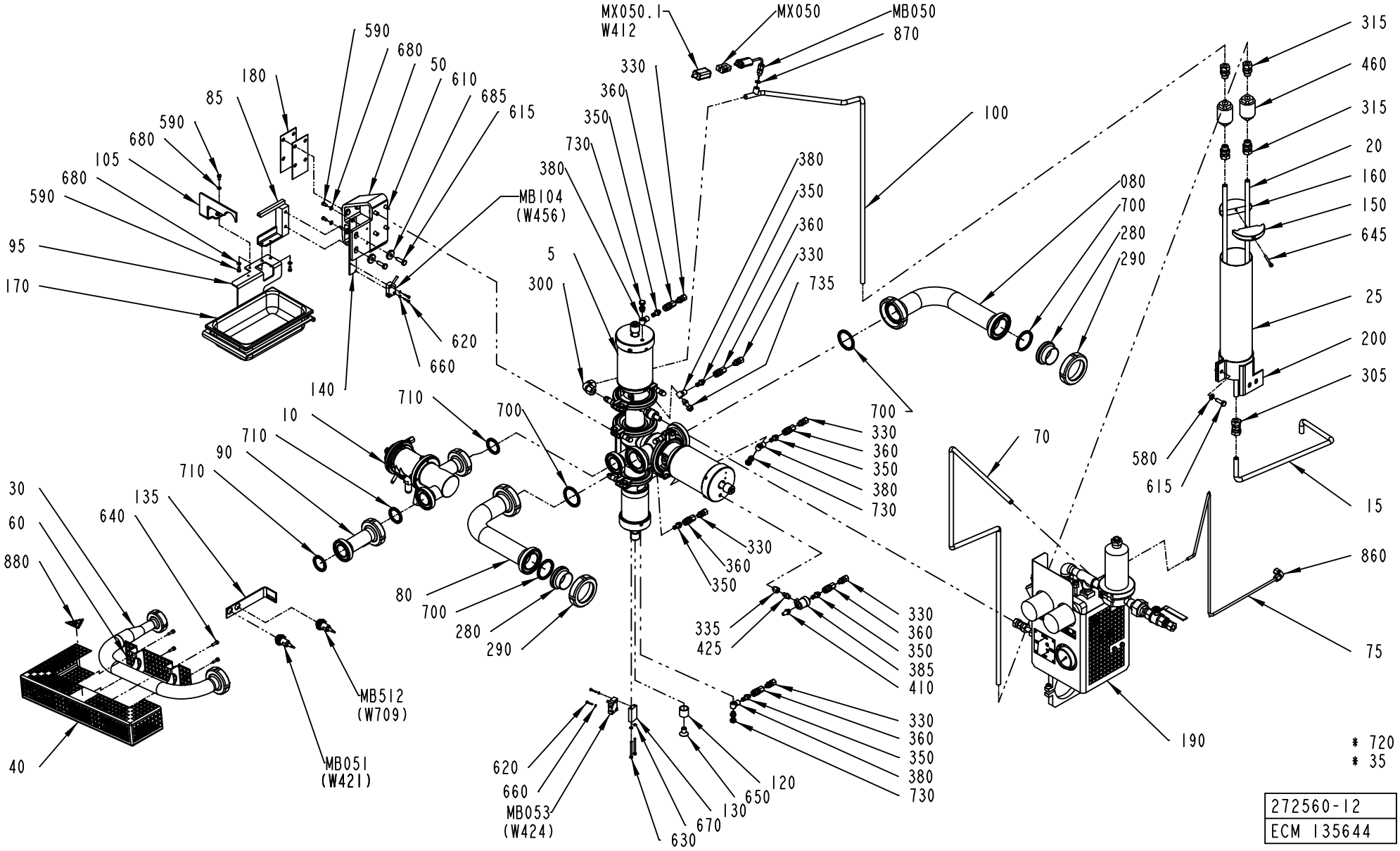
MX050.1
W412
MX050
MB050
870
590
680
50
610
685
615
180
85
590
680
105
680
590
95
170
620
660
140
MB104
(W456)
330
360
350
730
380
5
300
100
380
350
360
330
735
080
700
280
290
700
330
360
350
380
730
710
10
710
90
710
700
315
460
315
20
160
150
645
25
200
305
580
615
70
15
860
75
30
60
880
135
640
80
700
280
290
330
360
350
335
425
330
360
350
385
410
MB512
(W709)
MB051
(W421)
40
620
660
MB053
(W424)
630
670
130
650
120
330
360
350
380
730
190
* 720
* 35
272560-12
ECM 135644

Pos	Part No	SP	UN	Qty	Description	Page No	Pos	Part No	SP	UN	Qty	Description	Page No

SEE PREVIOUS LISTS PAGES: 73, 75.

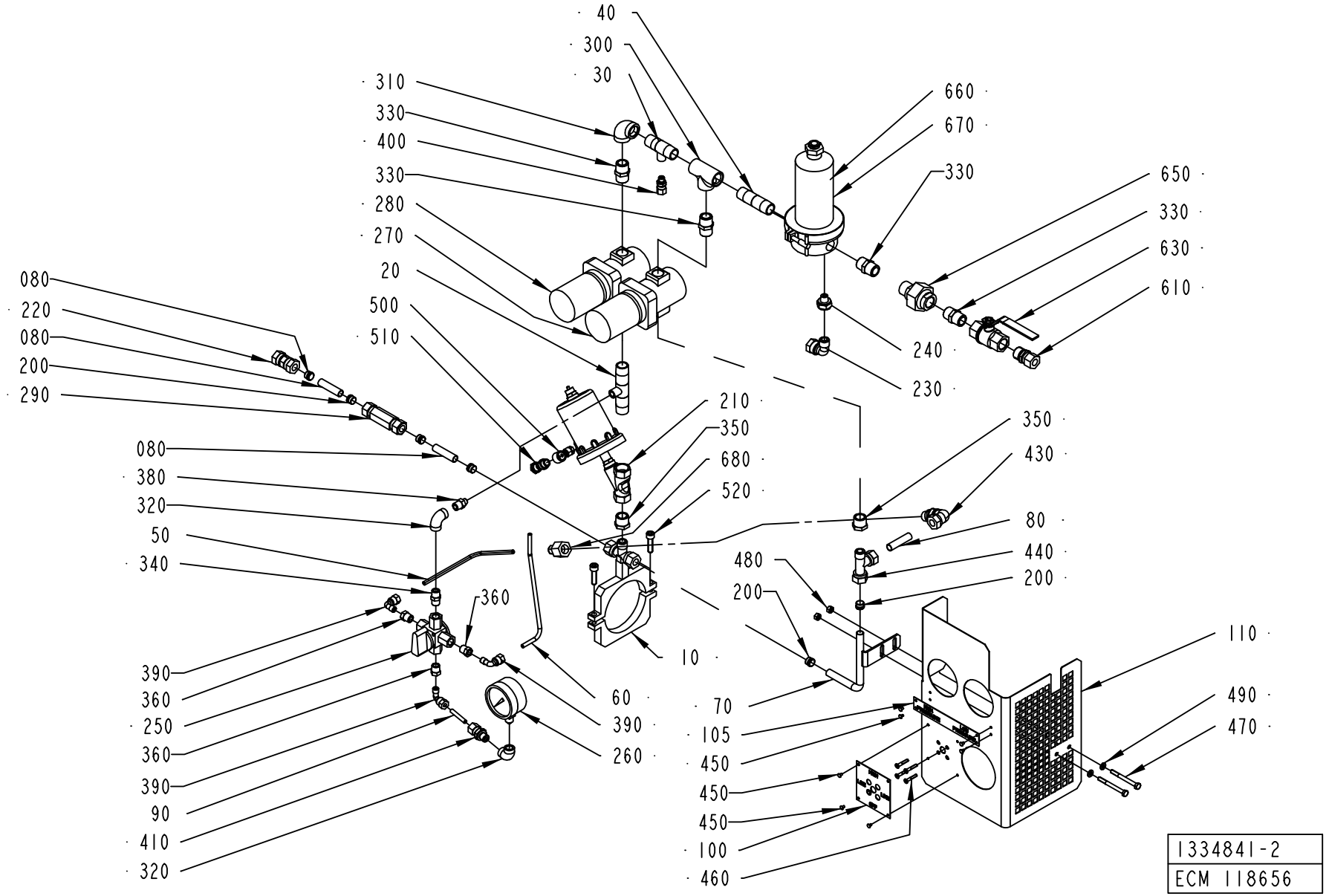
40
300
30
310
330
400
330
280
270
20
500
510
660
670
330
650
330
630
610
240
230
080
220
080
200
290
080
380
320
50
340
210
350
680
520
350
430
80
440
200
480
200
360
10
110
490
470
70
105
450
450
450
100
460
390
360
250
360
390
90
410
320
60
390
260
1334841-2
ECM 118656

ECM: 118772 - 20030113
Group number: 1334841-0200
Assembly Drawing: 1334841-2_1_AB

Pos	Part No	SP	UN	Qty	Description	Page No
-						
010	1260443-0000	-		1	CLAMP HOLDER	
020	1260261-0000	-		1	T-PIPE	
030	1260262-0000	-		1	T-PIPE	
040	1260263-0000	-		1	PIPE	
050	1532583-0000	-		1	PIPE	
060	1260265-0000	-		1	PIPE	
070	1260266-0000	-		1	PIPE	
080	1260267-0000	-		3	PIPE	
090	1260268-0000	-		1	PIPE	
100	1255924-0000	-		1	LABEL	
105	1279456-0000	-		1	LABEL	
110	1255925-0000	-		1	COVER	
200	90030-0110	-		3	ACCESSORIES, FERRULE 12	
210	90235-0261	-		1	ANGLE SEAT VALVE G1/2, N.C. DN13	
220	90030-0106	-		1	CONN. PIPE G-12	
230	90030-0115	-		1	CONN. ELBOW WA 12-R3/8	
240	90030-0170	-		1	REDUCER 2521-1/4"X3/8"	
250	90187-0112	C		1	COCK VALVE, G1/4, 4-WAY, VITON	
260	90043-0082	C		1	PRESSURE GAUGE, 2740, D=63 MM	
270	90113-0064	C		1	PRESSURE REGULATOR	
280	90113-0063	C		1	PRESSURE REGULATOR	
290	90230-0025	-		1	NON-RETURN VALVE, 12MM, L=85	
300	90330-0049	-		1	T-PIPE, INT. THREAD, R-221R1/2	
310	90330-0020	-		1	ELBOW, 90 INT. THREAD, R-2221/2	
320	90330-0081	-		2	ELBOW, 90 INT. THREAD, R-222R1/4	
330	90330-0021	-		4	NIPPLES, EXT. THREAD. R-207R1/2	
340	90330-0043	-		1	NIPPLES, EXT. THREAD. R-207R1/4	
350	90330-0048	-		2	BUSHING, INT/EXT. THR. R1/2-RP3/8	
360	90330-0025	-		3	BUSHING, INT/EXT. THR. R1/4-RP1/8	
380	90330-0013	-		1	NIPPLES, EXT. THREAD. ISO 7/1 R1/4-R1/8	
390	90030-0137	-		3	CONN. ELBOW WA 6-R1/8	
400	90030-0051	-		1	CONN. STR., 6-R1/8, EXT. THREAD	
410	90030-0092	-		1	STRAIGHT CONN., 6-R1/4,EXT. TAPPERED	
420	90144-0073	-		2	TREBOFLON-TAPE W=13MM	
430	90030-0136	-		1	ADJUSTABLE ELBOW CONNECTION,EXT 12-G3/8	
440	342751-0215	-		1	CONN. L-PIPE, EXT. LE-12-R3/8	
450	311521-0142	-		8	BLANK RIVET 3,2X6	
460	312155-0297	-		4	SCREW EN 10642 MF6S M4X25 A480	
470	312105-0382	-		2	SCREW M6S ISO 4014 M6X60 A480	
480	312605-0316	-		2	HEXAGON NUT, M6M M6 A280	
490	315105-0153	-		2	WASHER BRB6,4X12RFR	
500	342797-0122	-		1	CONN. BANJO, RINGPIECE 6-1/4	
510	342980-0304	-		1	BANJO-HOLLOW BOLT COUPL,EXT.THR.01-G1/4"	
520	312115-0455	-		2	SCREW ISO4762 M8X30 A4	
610	90030-0109	-		1	CONN. STR., 12-R1/2, EXT. THREAD	
630	90187-0082	-		1	BALL VALVE G1/2	
650	90330-0106	-		1	PIPE COUPLING	
660	90337-0315	-		1	FILTERINSERT / MCS 4463	
670	90277-0055	-		1	FILTER HOUSING / MDS 4463 G 08 H	
	90277-0339	*-*		*1*	*O-RING, ACS0272 EU FOR PALL FILTER*	
680	90030-0348	-		1	CONN. STR., 6-G3/8, INT. THREAD	

Machine Type	Group Description	Used-In	Group Number	Page No

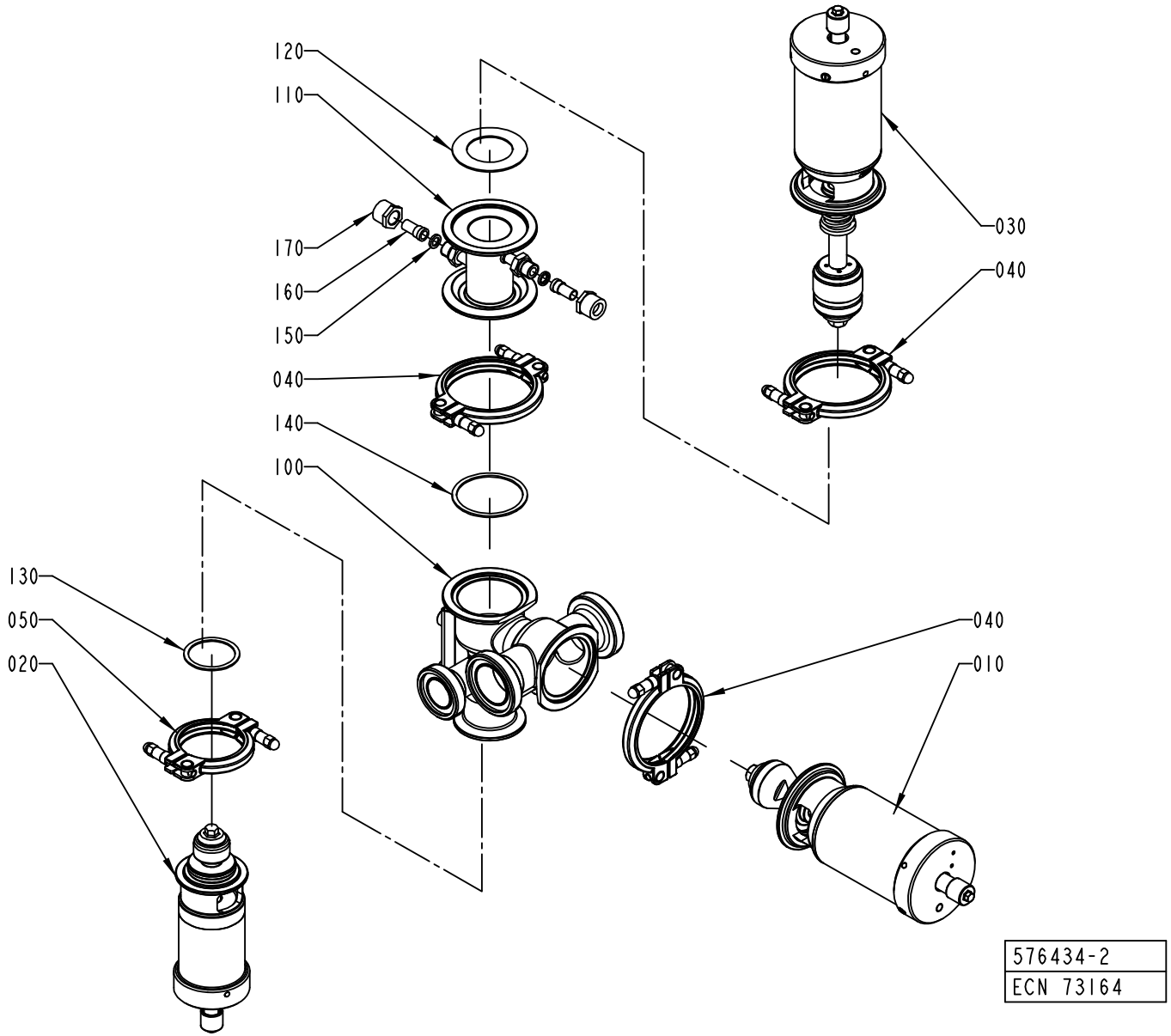
120
110
170
160
150
040
140
100
130
050
020
030
040
040
010
576434-2
ECN 73164

ECM: 114406 - 20020930
Group number: 576434-0200
Assembly Drawing: 576434-2_1_AA

Pos	Part No	SP	UN	Qty	Description	Page No
-						
010	576436-0100	-		1	A-CYLINDER	**85**
020	576438-0100	-		1	B-CYLINDER	**87**
030	576437-0100	-		1	C-CYLINDER	**89**
040	541163-0200	-		3	CLAMP RING	**91**
050	541164-0200	-		1	CLAMP RING	**93**
100	1523057-0000	A		1	AP-VALVE-BODY (51-38)	
110	567018-0000	A		1	STEAM HOUSE	
120	539212-0000	A		1	GASKET	
130	90207-0365	A		1	GASKET	
140	90207-0363	A		1	GASKET	
150	90091-0266	A		2	SEAL RING 10,4X16,3X2,5 MM	
160	90030-0336	-		2	CONN. STRAIGHT, 316L-12M-BVCO-3	
170	90030-0338	-		2	NUT, PIPE & CONNECTORS, SS-8-BVCO-4	

Pos	Part No	SP	UN	Qty	Description	Page No

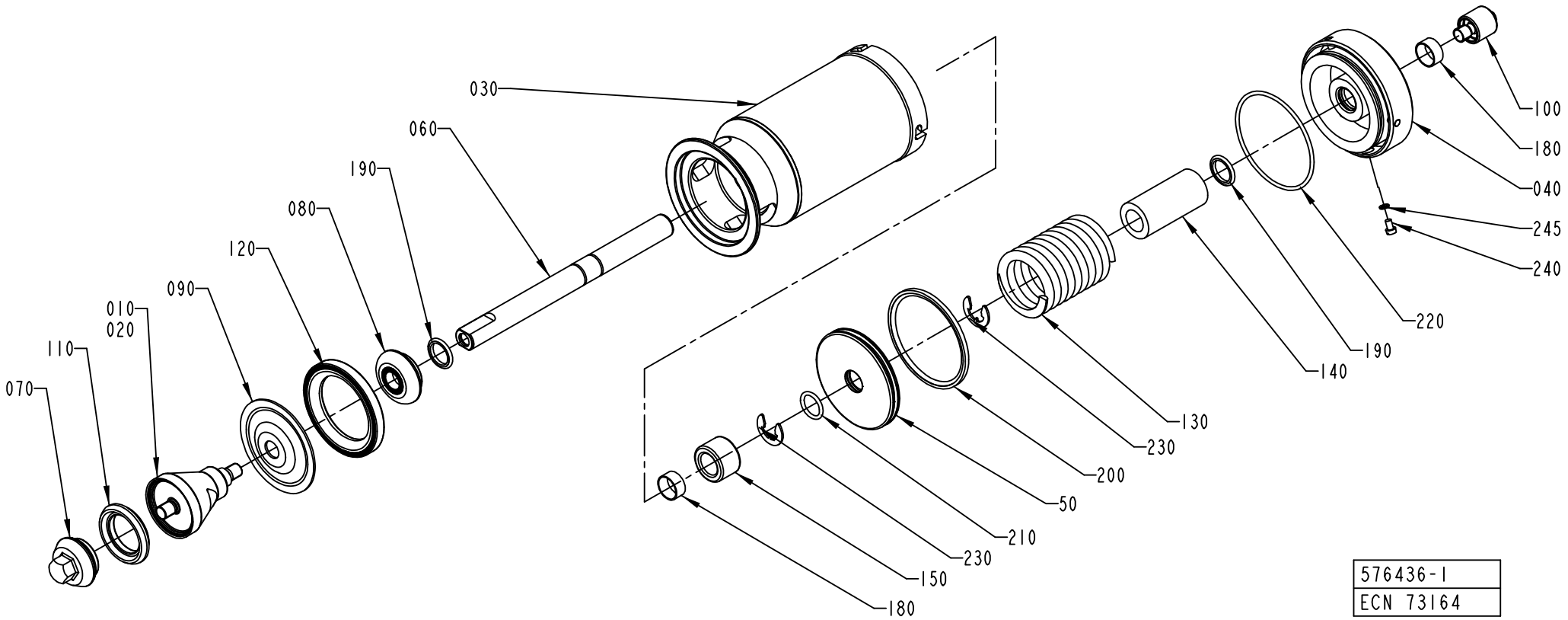
030
060
190
080
120
090
010
020
110
070
100
180
040
245
240
220
190
140
130
230
200
50
210
230
150
180
576436-1
ECN 73164

ECM: 114402 - 20020930
Group number: 576436-0100
Assembly Drawing: 576436-1_1_AB

Pos	Part No	SP	UN	Qty	Description	Page No
2"						
010	530592-0000	A		1	SEAL RING HOLDER	
3"						
010	530595-0000	A		1	SEAL RING HOLDER	
Common Parts						
030	576439-0000	-		1	CYLINDER HOUSING	
040	576440-0000	-		1	END SECTION	
050	576441-0000	A		1	PISTON	
060	576446-0000	A		1	PISTON ROD	
070	530590-0000	A		1	VALVE CONE	
080	541166-0000	A		1	WASHER	
090	533169-0000	A		1	DIAPHRAGM	
100	553607-0000	-		1	SLEEVE	
110	530589-0000	A		1	SEAL RING	
120	440655-0000	A		1	RING	
130	440663-0000	A		1	COMPRESSION SPRING	
140	576448-0000	-		1	SPACER	
150	576449-0000	-		1	SPACER	
180	90091-0238	A		2	WEAR RING 20X22X10 MM	
190	90091-0237	A		2	ROD SEAL, GLIDORING 20X27,5X3 MM	
200	90091-0336	A		1	PISTON SEAL, GLIDORING 79X90X4 MM	
210	315204-0215	A		1	O-RING 19,2X3 MM	
220	315202-0308	A		1	O-RING 84,5X3 MM	
230	315754-0113	-		2	LOCKING WAE 15	
240	312125-0323	-		1	SCREW PAN HEAD MCS M5X8 SS	
245	315233-0101	-		1	WASHER CAPTIVE SEALING M5	

Pos	Part No	SP	UN	Qty	Description	Page No

Machine Type | Group Description | Used-In | Group Number | Page No

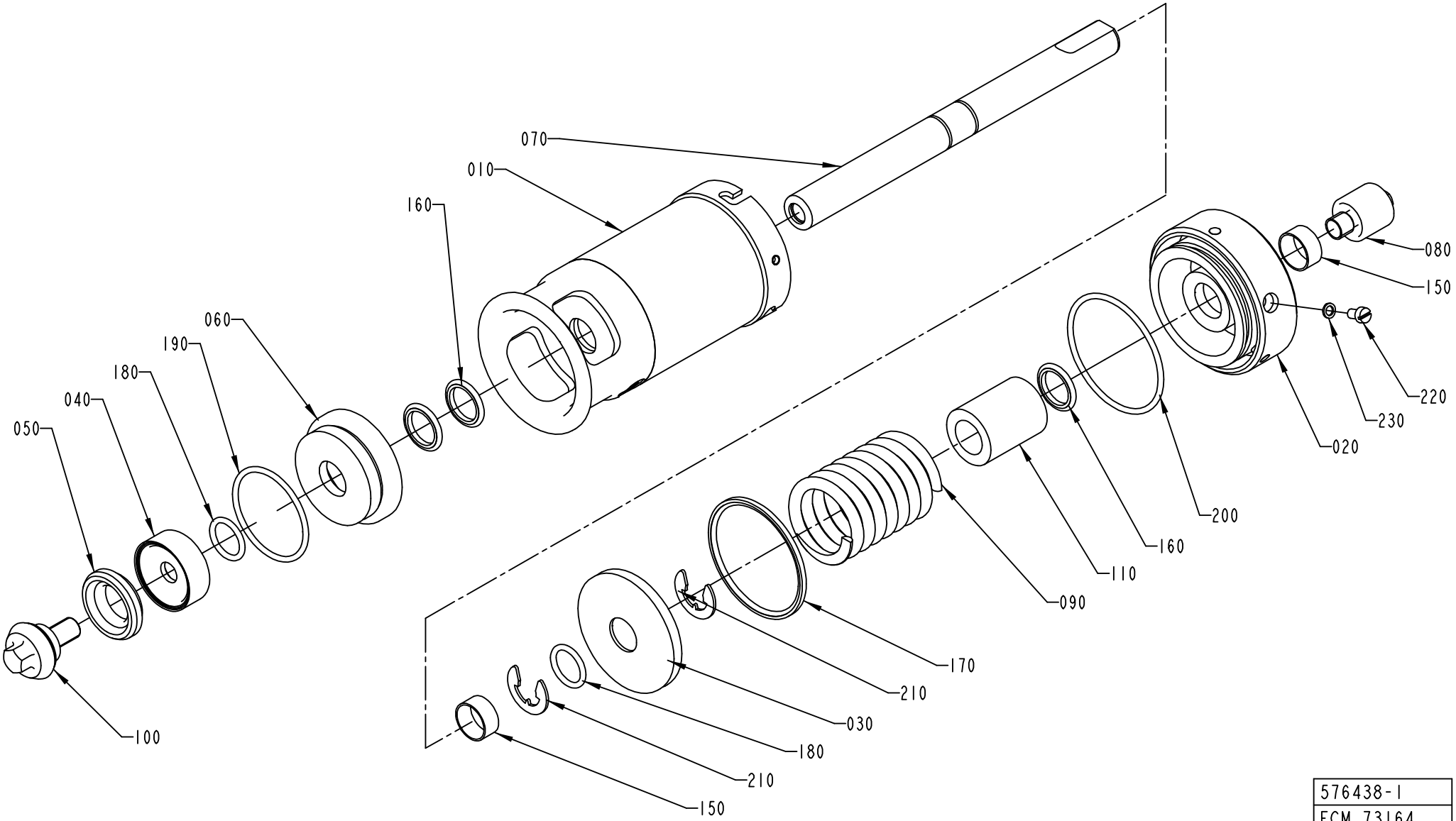

576438-1
ECM 73164

ECM: 114410 - 20020930
Group number: 576438-0100
Assembly Drawing: 576438-1_1_AB

Pos	Part No	SP	UN	Qty	Description	Page No
-						
010	576443-0000	-		1	CYLINDER HOUSING	
020	576444-0000	-		1	END SECTION	
030	576445-0000	A		1	PISTON	
040	530587-0000	A		1	WASHER	
050	530588-0000	A		1	SEAL RING	
060	556133-0000	-		1	SEALING WASHER	
070	576447-0000	A		1	PISTON ROD	
080	553607-0000	-		1	SLEEVE	
090	440662-0000	A		1	COMPRESSION SPRING	
100	476185-0000	A		1	VALVE CONE	
110	576451-0000	-		1	SPACER	
150	90091-0238	A		2	WEAR RING 20X22X10 MM	
160	90091-0237	A		3	ROD SEAL, GLIDORING 20X27,5X3 MM	
170	90091-0335	A		1	PISTON SEAL,GLIDORING 62,5X70X3 MM	
180	315204-0215	A		2	O-RING 19,2X3 MM	
190	315204-0301	A		1	O-RING 49,5X3 MM	
200	315202-0304	A		1	O-RING 64,5X3 MM	
210	315754-0113	-		2	LOCKING WAE 15	
220	312125-0323	-		1	SCREW PAN HEAD MCS M5X8 SS	
230	315233-0101	-		1	WASHER CAPTIVE SEALING M5	

Pos	Part No	SP	UN	Qty	Description	Page No

Machine Type | Group Description | Used-In | Group Number | Page No

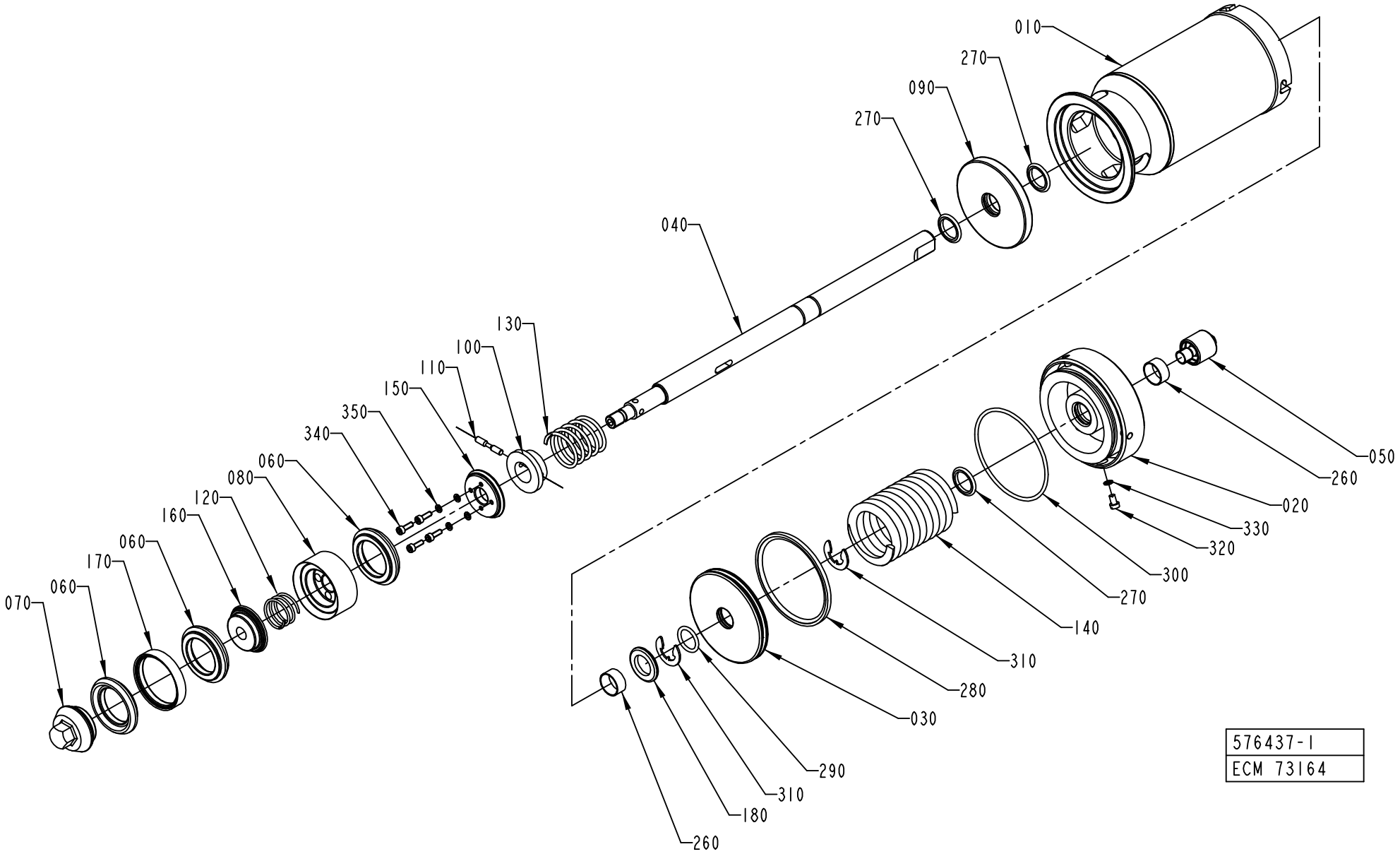
010
270
090
270
040
130
100
110
150
350
340
060
080
120
160
060
170
060
070
050
260
020
330
320
300
270
140
310
280
030
290
310
180
260
576437-1
ECM 73164

ECM: 114415 - 20020930
Group number: 576437-0100
Assembly Drawing: 576437-1_1_AB

Pos	Part No	SP	UN	Qty	Description	Page No
-						
010	576439-0000	-		1	CYLINDER HOUSING	
020	576440-0000	-		1	END SECTION	
030	576441-0000	A		1	PISTON	
040	576442-0000	A		1	PISTON ROD	
050	553607-0000	-		1	SLEEVE	
060	530589-0000	A		3	SEAL RING	
070	530590-0000	A		1	VALVE CONE	
080	530591-0000	-		1	HOLDER	
090	555458-0000	-		1	SEALING WASHER	
100	440650-0000	-		1	WASHER	
110	440659-0000	-		1	CYLINDRICAL PIN	
120	440660-0000	A		1	COMPRESSION SPRING	
130	440661-0000	A		1	COMPRESSION SPRING	
140	440663-0000	A		1	COMPRESSION SPRING	
150	530597-0000	-		1	WASHER	
160	530598-0000	-		1	WASHER	
170	530599-0000	-		2	RING	
180	576450-0000	-		1	SPACER	
260	90091-0238	A		2	WEAR RING 20X22X10 MM	
270	90091-0237	A		3	ROD SEAL, GLIDORING 20X27,5X3 MM	
280	90091-0336	A		1	PISTON SEAL, GLIDORING 79X90X4 MM	
290	315204-0215	A		1	O-RING 19,2X3 MM	
300	315202-0308	A		1	O-RING 84,5X3 MM	
310	315754-0113	-		2	LOCKING WAE 15	
320	312125-0323	-		1	SCREW PAN HEAD MCS M5X8 SS	
330	315233-0101	-		1	WASHER CAPTIVE SEALING M5	
340	312115-0291	-		4	SCREW ISO4762 M4X12 A4	
350	315402-0136	-		4	LOCK WASHER FBB 4,1	

Pos	Part No	SP	UN	Qty	Description	Page No

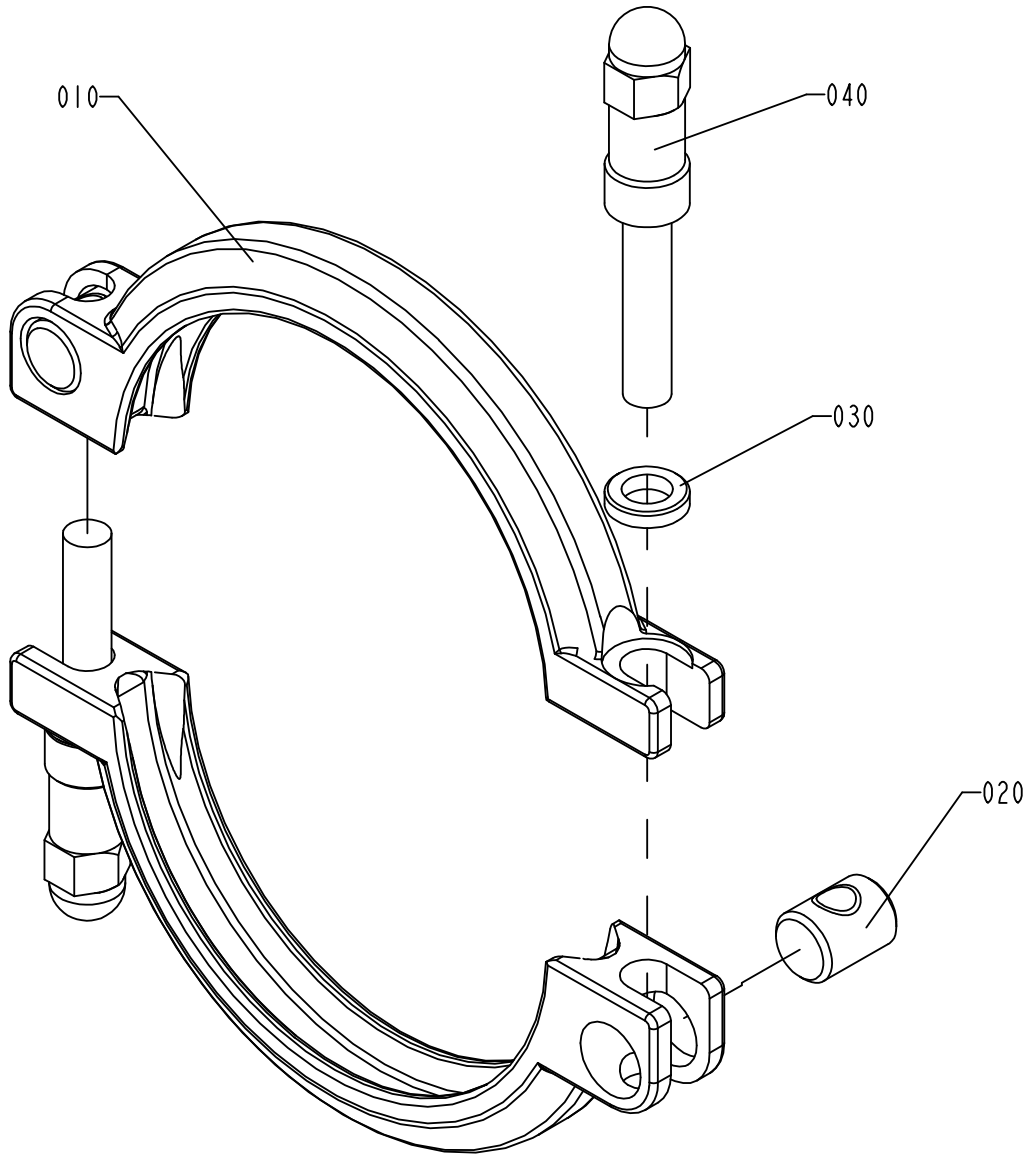

S-541163-2
ECN 71956

ECM: 114417 - 20020930
Group number: 541163-0200
Assembly Drawing: 541163-2_1_AB

Pos	Part No	SP	UN	Qty	Description	Page No
-						
010	532117-0000	A		2	CLAMP RING	
020	497748-0000	A		2	PIN	
030	541165-0000	A		2	WASHER	
040	554162-0000	A		2	SCREW	

Pos	Part No	SP	UN	Qty	Description	Page No

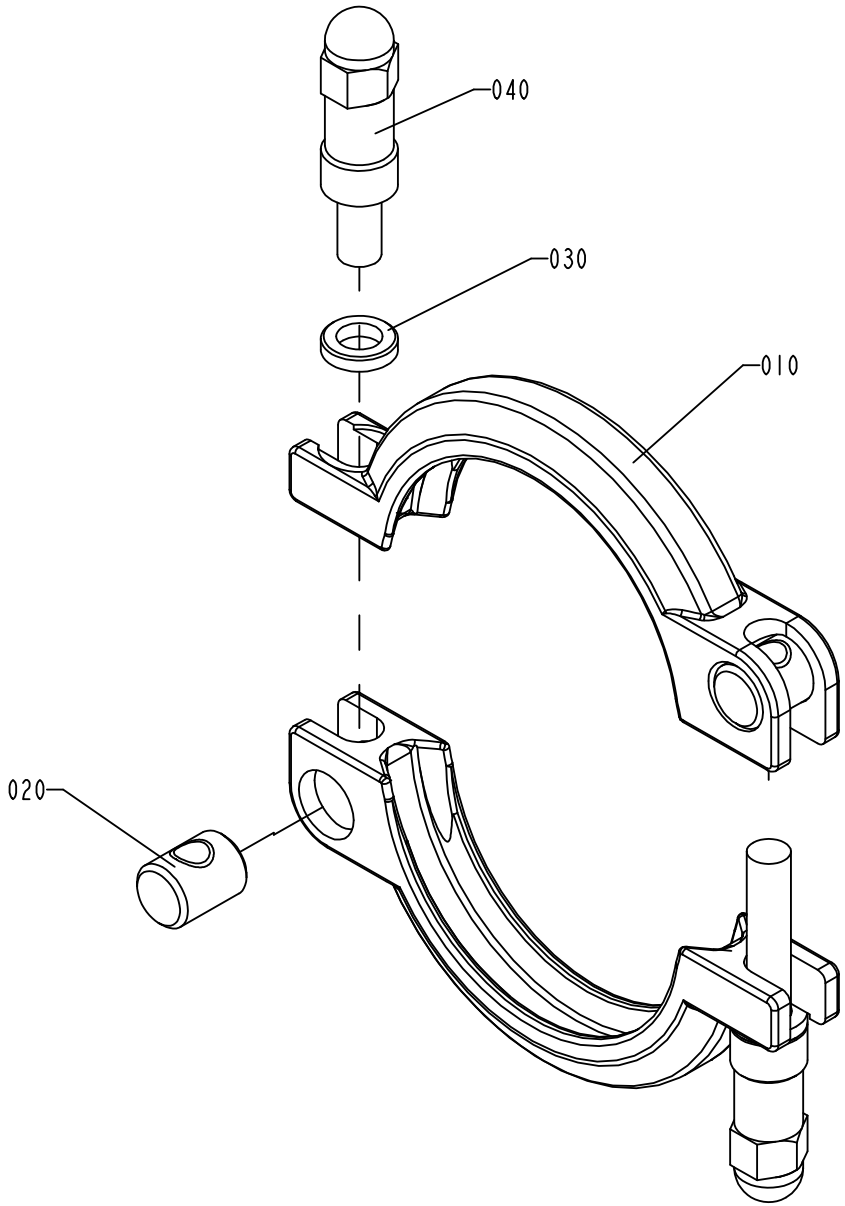

S-541164-2
ECN 71956

ECM: 81910 - 20000814
Group number: 541164-0200
Assembly Drawing: 541164-2_1_AB

Pos	Part No	SP	UN	Qty	Description	Page No
-						
010	532118-0000	A		2	CLAMP RING	
020	497748-0000	A		2	PIN	
030	541165-0000	A		2	WASHER	
040	554162-0000	A		2	SCREW	

Pos	Part No	SP	UN	Qty	Description	Page No

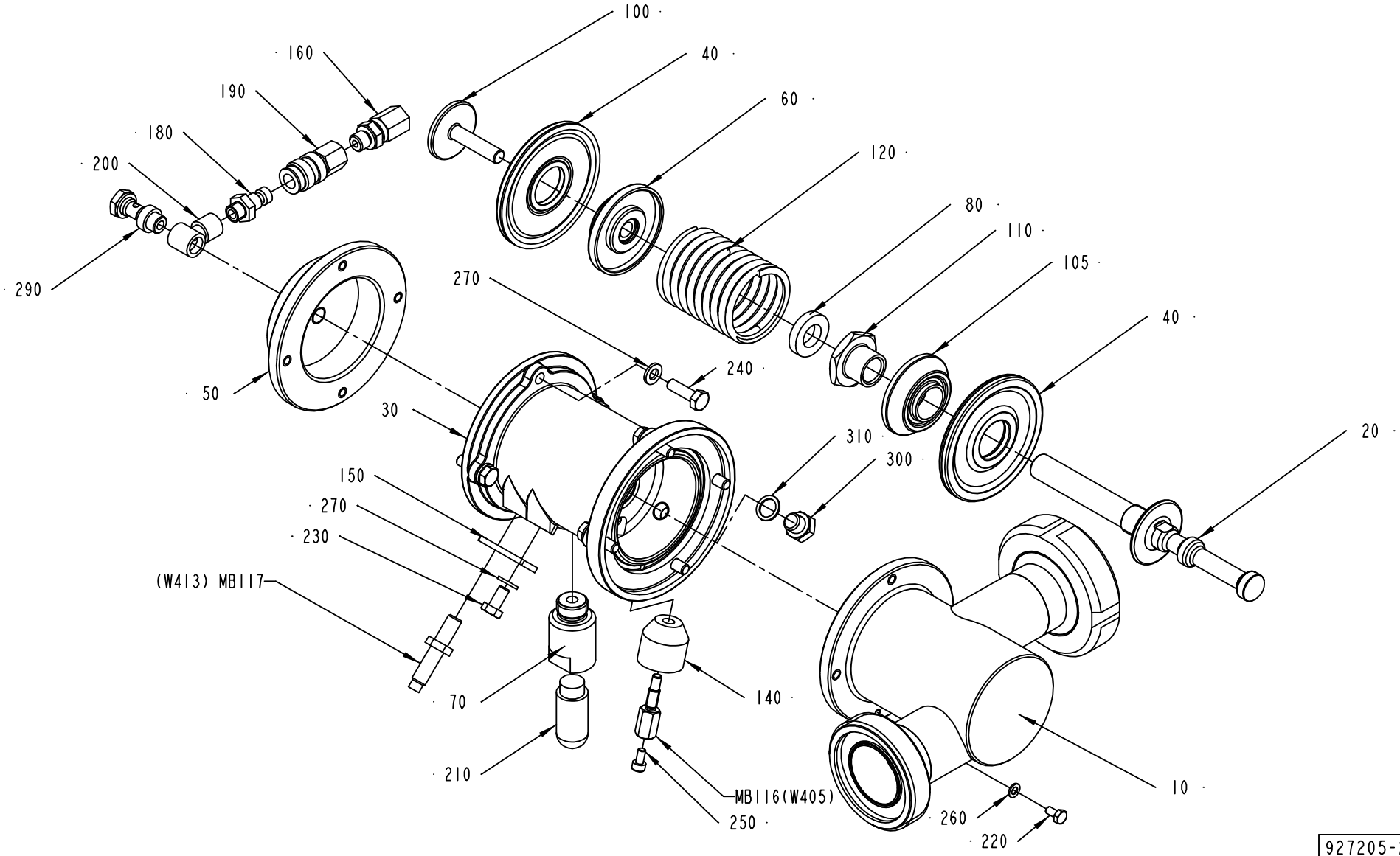

927205-2
ECM 73164

ECM: 114557 - 20020930
Group number: 927205-0200
Assembly Drawing: 927205-2_1_AA

Pos	Part No	SP	UN	Qty	Description	Page No
-						
010	1519937-0000	-		1	REGULATOR BODY	
020	927007-0000	A		1	SHUTTER	
030	927194-0000	-		1	BODY	
040	925998-0000	A		2	DIAPHRAGM	
050	927203-0000	-		1	COVER	
060	926906-0000	-		1	SPACER	
070	927044-0000	-		1	SPACER	
080	736514-0000	A		1	SHOCK ABSORBER	
100	926907-0000	-		1	SCREW	
105	1511600-0000	-		1	SPACER	
110	979434-0000	-		1	FERRULE	
120	926909-0000	A		1	COMPRESSION SPRING	
140	1478813-0000	-		1	SPACER	
150	926934-0000	-		1	SUPPORT	
160	90030-0089	-		1	STRAIGHT CONNECTION	
180	90163-0057	-		1	NIPPLE 1/8" BRASS	
190	90163-0062	-		1	QUICK COUPLING, (F) 5053-1/8	
200	90224-0308	-		1	CONN. BANJO, ART. NO. 2023-1/8-1/8	
210	90328-0026	A		1	SILENCER G1/4	
220	312105-0287	-		1	SCREW M6S ISO4017 M4X8 A480	
230	312105-0366	-		1	SCREW M6S M6X12 A280	
240	312105-0370	-		8	SCREW M6S ISO 4017 M6X20 A480	
250	312115-0287	-		1	SCREW ISO4762 M4X8 A4	
260	315105-0136	-		1	WASHER BRB4,3XRFR	
270	315105-0153	-		9	WASHER BRB6,4X12RFR	
290	342980-0303	-		1	BANJO-HOLLOW BOLT COUPL,EXT.THR.01-G1/8"	
300	90330-0066	-		1	PLUG, EXT. G-THREAD, G1/8	
310	315233-0109	-		1	WASHER CAPTIVE SEALING G1/8	
MB116	1478814-0000	A		1	SENSOR	
MB117	90044-0145	A		1	PROX.SW. 922 AAIY-A9P-050-LZ876	
W405	351150-0431	-	M	5	CABLE OLFLEX 2X0,75 MM2 LIGHT/GREY	

Pos	Part No	SP	UN	Qty	Description	Page No

Machine Type | Group Description | Used-In | Group Number | Page No

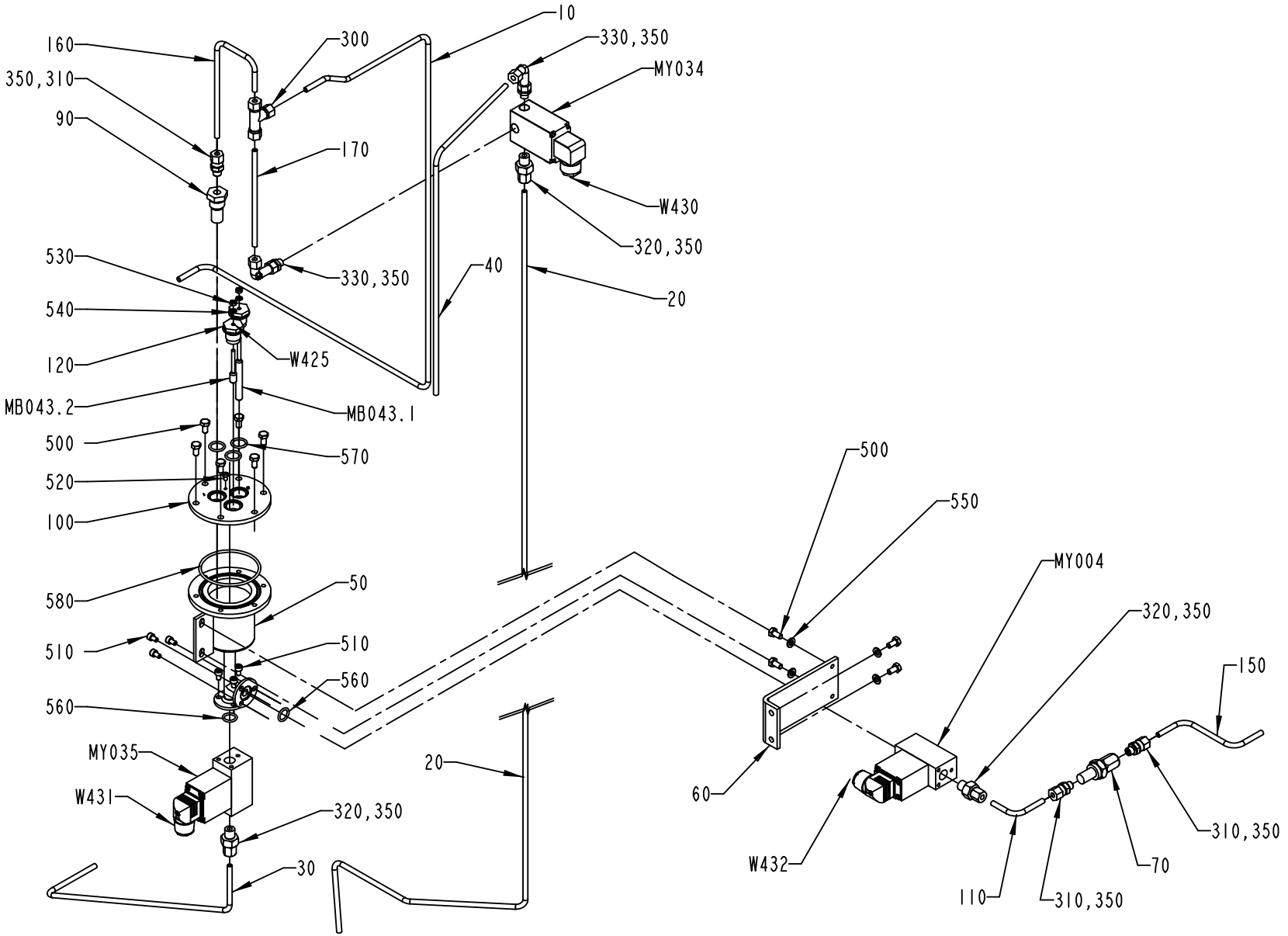

272623-7
ECM 73087

ECM: 134487 - 20030701
Group number: 272623-0700
Assembly Drawing: 272623-7_1_AA

This list covers pages from 96 to 99

Pos	Part No	SP	UN	Qty	Description	Page No
HI (See drawing on page: 98)						
590	90330-0013	-		1	NIPPLES, EXT. THREAD. ISO 7/1 R1/4-R1/8	
600	90330-0095	-		1	T-PIPE, INT. THREAD, R-221-R1/8	
610	90030-0234	-		1	CONN. ELBOW, 6-R1/8 , EXT.THREAD	
620	90330-0032	-		1	NIPPLES, EXT. THREAD. ISO 7/1 R1/8-R1/8	
NOHI (See drawing on page: 96)						
020	1517493-0000	-		1	PIPE	
110	456900-0000	-		1	PIPE	
310	90030-0184	-		3	CONN. STR. GA-6-G1/8	
320	90030-0202	-		3	CONN. STR., 6-G1/4, EXT. THREAD	
Common Parts						
010	1517494-0000	-		1	PIPE	
030	1517495-0000	-		1	PIPE	
040	578019-0000	-		1	TUBE40	
050	752576-0000	A		1	CONTAINER	
060	272844-0000	-		1	BRACKET	
070	484196-0000	B		1	FILTER	
	484197-0000	-		*1*	*FILTER*	
090	450833-0000	B		1	FILTER	
100	450837-0000	-		1	LID	
120	560931-0000	B		2	BRACKET	
150	578026-0000	-		1	PIPE	
160	752675-0000	-		1	PIPE	
170	752676-0000	-		1	PIPE	
300	90030-0076	-		1	CONN. T-PIPE T-6	
330	90030-0203	-		2	ADJUSTABLE ELBOW CONNECTION,EXT 6-G1/4	
350	90144-0073	-		1	TREBOFLON-TAPE W=13MM	
500	312105-0366	-		10	SCREW M6S M6X12 A280	
510	312115-0323	-		6	SCREW ISO4762 M5X8 A4	
520	312125-0285	-		1	SCREW SLOT.PAN HD. MCS 4X6 A480	
530	312605-0312	-		6	HEXAGON NUT, M6M M4 A280	
540	315105-0136	-		6	WASHER BRB4,3XRFR	
550	315105-0153	-		4	WASHER BRB6,4X12RFR	
560	927421-0003	B		2	O-RING 13.3X2.4 SILICON	
570	927421-0004	B		3	O-RING 15.3X2.4 SILICON	
580	927422-0011	B		1	O-RING 69.5X3 SILICON	
MB043.1	567070-0010	A		1	ELECTRODE	
MB043.2	567070-0013	A		1	ELECTRODE	
MY004	544906-0000	A		1	SOLENOID VALVE	
	90042-0465	-		*1*	*O-RING VITON 17,17X1,78*	
	90042-0464	-		*1*	*DIAPHRAGM VITON 1211321*	
MY034	90042-0171	A		1	SOLENOID VALVE BUERKERT	
	90042-0466	*C*		*1*	*DIAPHRAGM 330.95.2 VITON*	
MY035	544906-0000	A		1	SOLENOID VALVE	
	90042-0465	-		*1*	*O-RING VITON 17,17X1,78*	
	90042-0464	-		*1*	*DIAPHRAGM VITON 1211321*	
W425	351150-0404	-	M	5	CABLE OLFLEX 4X0,75 MM2 LIGHT/GREY	
W430	351150-0403	-	M	4	CABLE OLFLEX 3X0,75 MM2 LIGHT/GREY	
W431	351150-0403	-	M	4	CABLE OLFLEX 3X0,75 MM2 LIGHT/GREY	
W432	351150-0403	-	M	4	CABLE OLFLEX 3X0,75 MM2 LIGHT/GREY	

Machine Type | Group Description | Used-In | Group Number | Page No

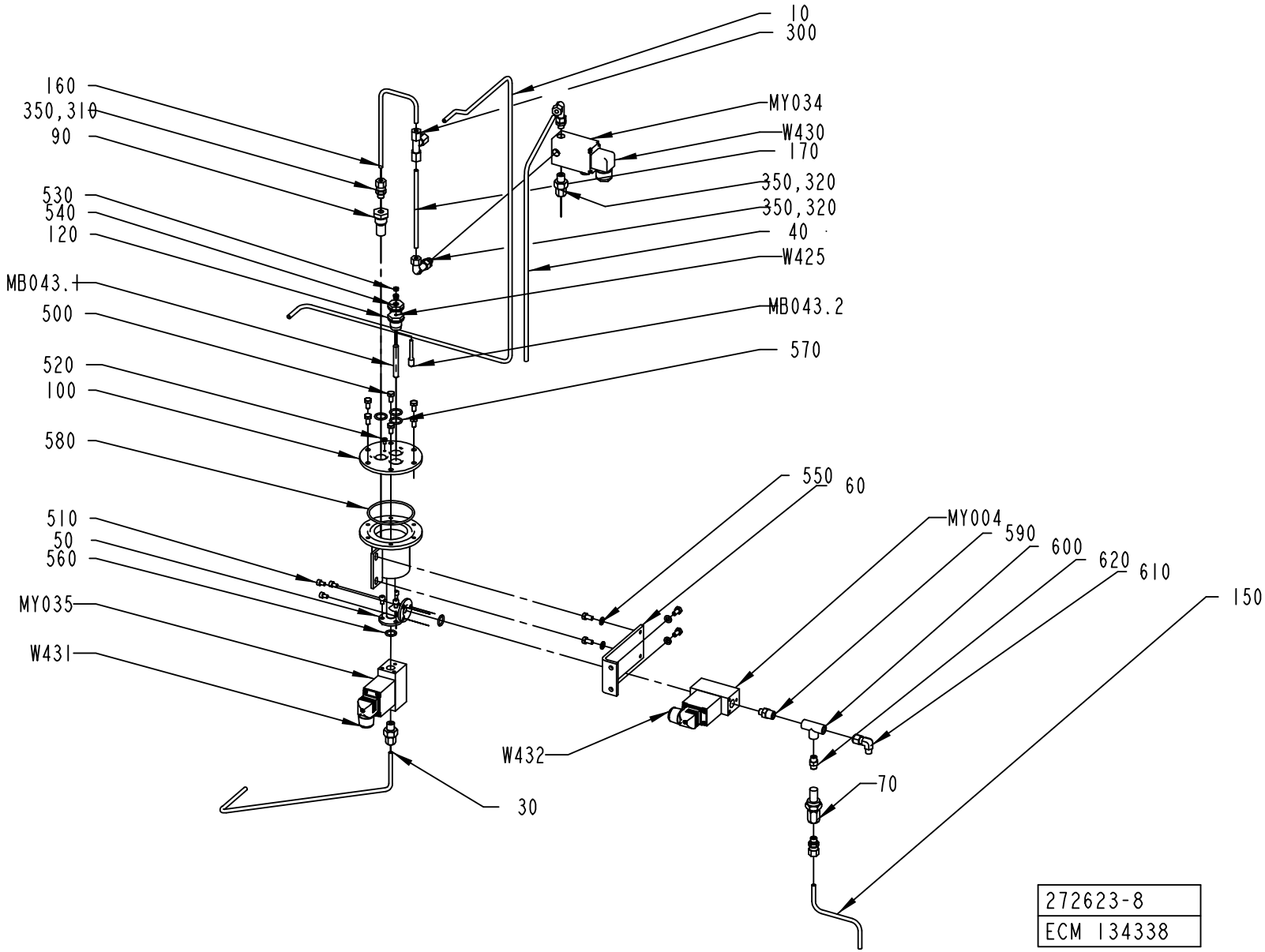
10
300
160
350,310
90
MY034
W430
170
350,320
350,320
40
W425
530
540
120
MB043.1
500
MB043.2
570
520
100
580
550
60
MY004
590
600
620
610
150
510
50
560
MY035
W431
W432
70
30
272623-8
ECM 134338

ECM: 134487 - 20030701
Group number: 272623-0700
Assembly Drawing: 272623-8_1_AA

This list covers pages from 96 to 99

Pos	Part No	SP	UN	Qty	Description	Page No
HI (See drawing on page: 98)						
590	90330-0013	-		1	NIPPLES, EXT. THREAD. ISO 7/1 R1/4-R1/8	
600	90330-0095	-		1	T-PIPE, INT. THREAD, R-221-R1/8	
610	90030-0234	-		1	CONN. ELBOW, 6-R1/8 , EXT.THREAD	
620	90330-0032	-		1	NIPPLES, EXT. THREAD. ISO 7/1 R1/8-R1/8	
NOHI (See drawing on page: 96)						
020	1517493-0000	-		1	PIPE	
110	456900-0000	-		1	PIPE	
310	90030-0184	-		3	CONN. STR. GA-6-G1/8	
320	90030-0202	-		3	CONN. STR., 6-G1/4, EXT. THREAD	
Common Parts						
010	1517494-0000	-		1	PIPE	
030	1517495-0000	-		1	PIPE	
040	578019-0000	-		1	TUBE40	
050	752576-0000	A		1	CONTAINER	
060	272844-0000	-		1	BRACKET	
070	484196-0000	B		1	FILTER	
	484197-0000	-		*1*	*FILTER*	
090	450833-0000	B		1	FILTER	
100	450837-0000	-		1	LID	
120	560931-0000	B		2	BRACKET	
150	578026-0000	-		1	PIPE	
160	752675-0000	-		1	PIPE	
170	752676-0000	-		1	PIPE	
300	90030-0076	-		1	CONN. T-PIPE T-6	
330	90030-0203	-		2	ADJUSTABLE ELBOW CONNECTION,EXT 6-G1/4	
350	90144-0073	-		1	TREBOFLON-TAPE W=13MM	
500	312105-0366	-		10	SCREW M6S M6X12 A280	
510	312115-0323	-		6	SCREW ISO4762 M5X8 A4	
520	312125-0285	-		1	SCREW SLOT.PAN HD. MCS 4X6 A480	
530	312605-0312	-		6	HEXAGON NUT, M6M M4 A280	
540	315105-0136	-		6	WASHER BRB4,3XRFR	
550	315105-0153	-		4	WASHER BRB6,4X12RFR	
560	927421-0003	B		2	O-RING 13.3X2.4 SILICON	
570	927421-0004	B		3	O-RING 15.3X2.4 SILICON	
580	927422-0011	B		1	O-RING 69.5X3 SILICON	
MB043.1	567070-0010	A		1	ELECTRODE	
MB043.2	567070-0013	A		1	ELECTRODE	
MY004	544906-0000	A		1	SOLENOID VALVE	
	90042-0465	-		*1*	*O-RING VITON 17,17X1,78*	
	90042-0464	-		*1*	*DIAPHRAGM VITON 1211321*	
MY034	90042-0171	A		1	SOLENOID VALVE BUERKERT	
	90042-0466	*C*		*1*	*DIAPHRAGM 330.95.2 VITON*	
MY035	544906-0000	A		1	SOLENOID VALVE	
	90042-0465	-		*1*	*O-RING VITON 17,17X1,78*	
	90042-0464	-		*1*	*DIAPHRAGM VITON 1211321*	
W425	351150-0404	-	M	5	CABLE OLFLEX 4X0,75 MM2 LIGHT/GREY	
W430	351150-0403	-	M	4	CABLE OLFLEX 3X0,75 MM2 LIGHT/GREY	
W431	351150-0403	-	M	4	CABLE OLFLEX 3X0,75 MM2 LIGHT/GREY	
W432	351150-0403	-	M	4	CABLE OLFLEX 3X0,75 MM2 LIGHT/GREY	

Machine Type | Group Description | Used-In | Group Number | Page No

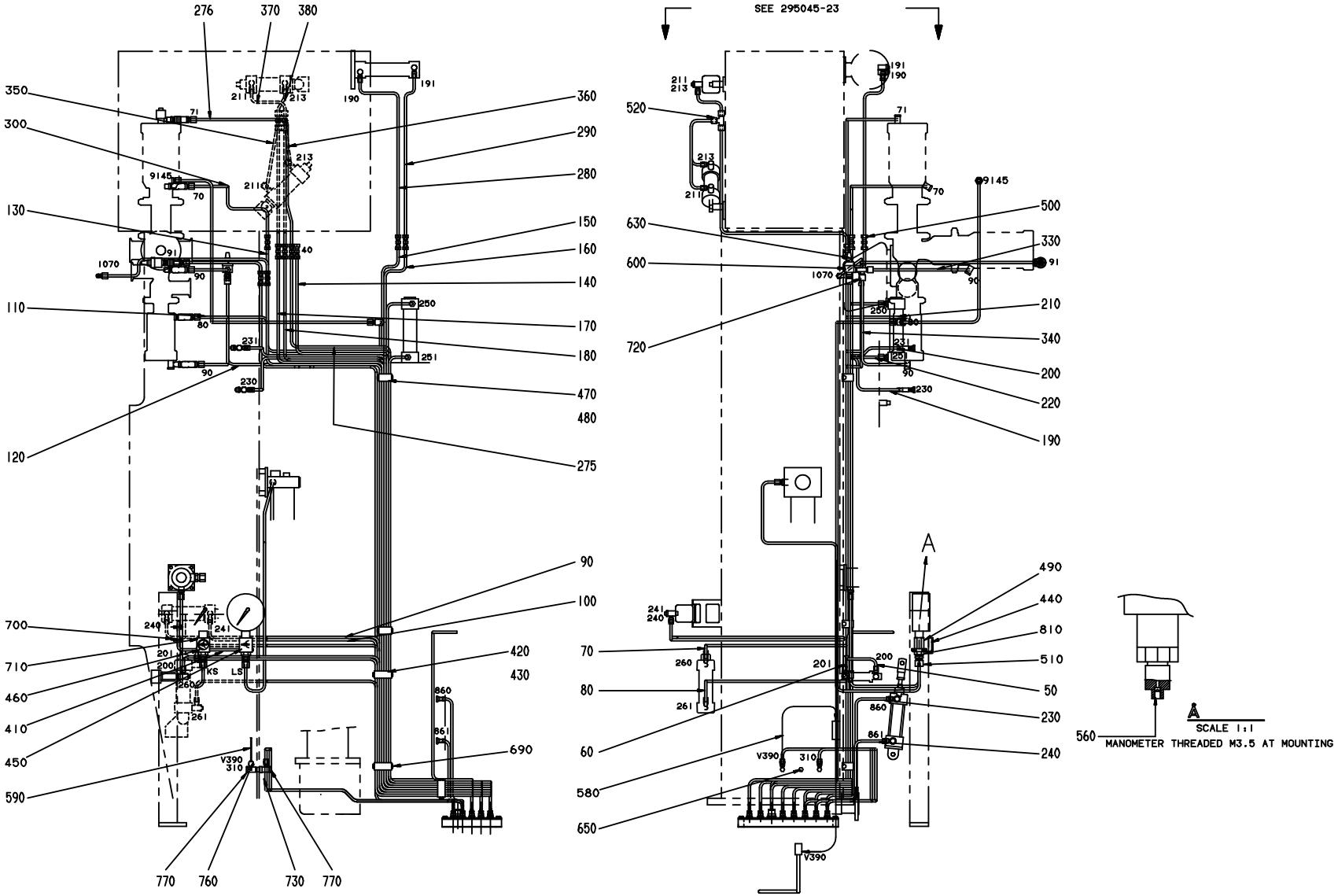

REMARK

ALL PIPES MARKED WITH CONNECTION NUMBER
IN BOTH ENDS.MARKING SLEEVE 359000-XXXX.

ECM: 114555 - 20020930
Group number: 295045-0900
Assembly Drawing: 295045-22_1_AA

This list covers pages from 100 to 103

Pos	Part No	SP	UN	Qty	Description	Page No
-						
020	2502197-0000	-		1	PIPE	
030	2502198-0000	-		1	PIPE	
050	577782-0000	-		1	TUBE 200	
060	577783-0000	-		1	TUBE 201	
070	577784-0000	-		1	TUBE260	
080	577785-0000	-		1	TUBE 261	
090	577786-0000	-		1	TUBE 240	
100	577787-0000	-		1	TUBE 241	
110	577788-0000	-		1	TUBE 80	
120	577789-0000	-		1	TUBE 90	
130	577790-0000	-		1	TUBE 70	
140	577791-0000	-		1	TUBE 40	
150	578002-0000	-		1	TUBE 190	
160	578003-0000	-		1	TUBE 191	
170	578004-0000	-		1	TUBE 211	
180	578005-0000	-		1	TUBE 213	
190	1524666-0000	-		1	TUBE 230	
200	1524667-0000	-		1	TUBE 231	
210	578008-0000	-		1	TUBE 250	
220	578009-0000	-		1	TUBE 251	
230	1524665-0000	-		1	TUBE 860	
240	1524664-0000	-		1	TUBE 861	
250	578013-0000	-		2	TUBE 213 AND 211	
260	578015-0000	-		1	TUBE 1071	
270	1524669-0000	-		1	PIPE	
275	580363-0000	-		1	PIPE 71	
276	580364-0000	-		1	PIPE 71	
277	581015-0000	-		1	PIPE 91	
278	581016-0000	-		1	PIPE 91	
279	1524663-0000	-		1	TUBE 55	
280	578017-0000	-		1	TUBE 190	
290	578018-0000	-		1	TUBE 191	
300	578020-0000	-		1	TUBE 70	
310	578021-0000	-		1	TUBE 1071	
320	1512356-0000	-		1	CONNECTION DEVICE	
330	577541-0000	-		1	TUBE 90	
340	577542-0000	-		1	TUBE 90	
350	578022-0000	-		1	TUBE 211	
360	578023-0000	-		1	TUBE 213	
370	1524672-0000	-		1	TUBE 211	
380	1524671-0000	-		1	TUBE 210	
390	578030-0000	-		2	GASKET	
400	1524670-0000	-		1	PIPE	
410	1524673-0000	-		1	BRACKET	
420	295604-0000	-		3	CRAMP	
430	295605-0000	-		3	BRACKET	
440	464173-0000	-		2	LABEL HOLDER	
450	464174-0000	-		1	SIGN	
460	464175-0000	-		1	SIGN	
470	578027-0000	-		3	CRAMP	
480	578028-0000	-		3	BRACKET	
490	1524674-0000	-		2	REDUCTION SLEEVE	
495	1539250-0000	-		1	SPACER	
496	1539237-0000	-		1	PIPE	
497	1539238-0000	-		1	PIPE	
500	90030-0075	-		9	PIPE CONNECTION G-6	
510	90030-0092	-		2	STRAIGHT CONN., 6-R1/4,EXT. TAPPERED	
520	90030-0164	-		2	CONN. T-PIPE T6-LL	
550	90043-0034	A		2	PRESSURE GAUGE	
560	90043-0302	-		2	SCREW	
580	90166-0119	-	MM	2100	HOSE PUR 4/6 BLACK	
590	90166-0132	-	MM	1500	TUBE 6 MM PA,TRANSP.	
600	90235-0259	A		1	VALVE	
630	90328-0003	A		1	SILENCER	
690	312105-0364	-		12	SCREW M6S ISO 4017 M6X10 A480	
700	312105-0368	-		2	SCREW M6S M6X16 A280	
710	312502-0120	-		4	DRIVE SCREW ROUND HEAD KDS 0X5	
720	342751-0204	-		1	CONN. L-PIPE, EXT. LE-6-R1/8	
730	342797-0121	-		2	CONN. BANJO, RINGPIECE 6-1/8	
740	90457-0087	-		1	BULKHEAD CONNECTOR 12 MM	
750	90457-0086	-		38	BULKHEAD CONNECTOR 6MM	
760	342980-0113	-		2	BANJO-CONNECTION,RING 6/4-G1/8"	
770	342980-0303	-		4	BANJO-HOLLOW BOLT COUPL,EXT.THR.01-G1/8"	
780	359000-0771	-		4	MARKING CO2/4"V"	
780	359000-0404	-		12	MARKING COLLAR PA2/4 "4" YELLOW	
780	359000-0405	-		8	MARKING CO2/4"5"	
780	359000-0406	-		14	MARKING COLLAR PA2/4 "6" YELLOW	
780	359000-0407	-		12	MARKING COLLAR PA2/4 "7" YELLOW	
780	359000-0408	-		12	MARKING COLLAR PA2/4 "8" YELLOW	
780	359000-0409	-		18	MARKING COLLAR PA2/4 "9" YELLOW	
780	359000-0400	-		61	MARKING CO2/4"0"	
780	359000-0401	-		63	MARKING COLLAR 2/4 "1" YELLOW	
780	359000-0402	-		44	MARKING COLLAR 2/4 "2" YELLOW	

Machine Type | Group Description | Used-In | Group Number | Page No

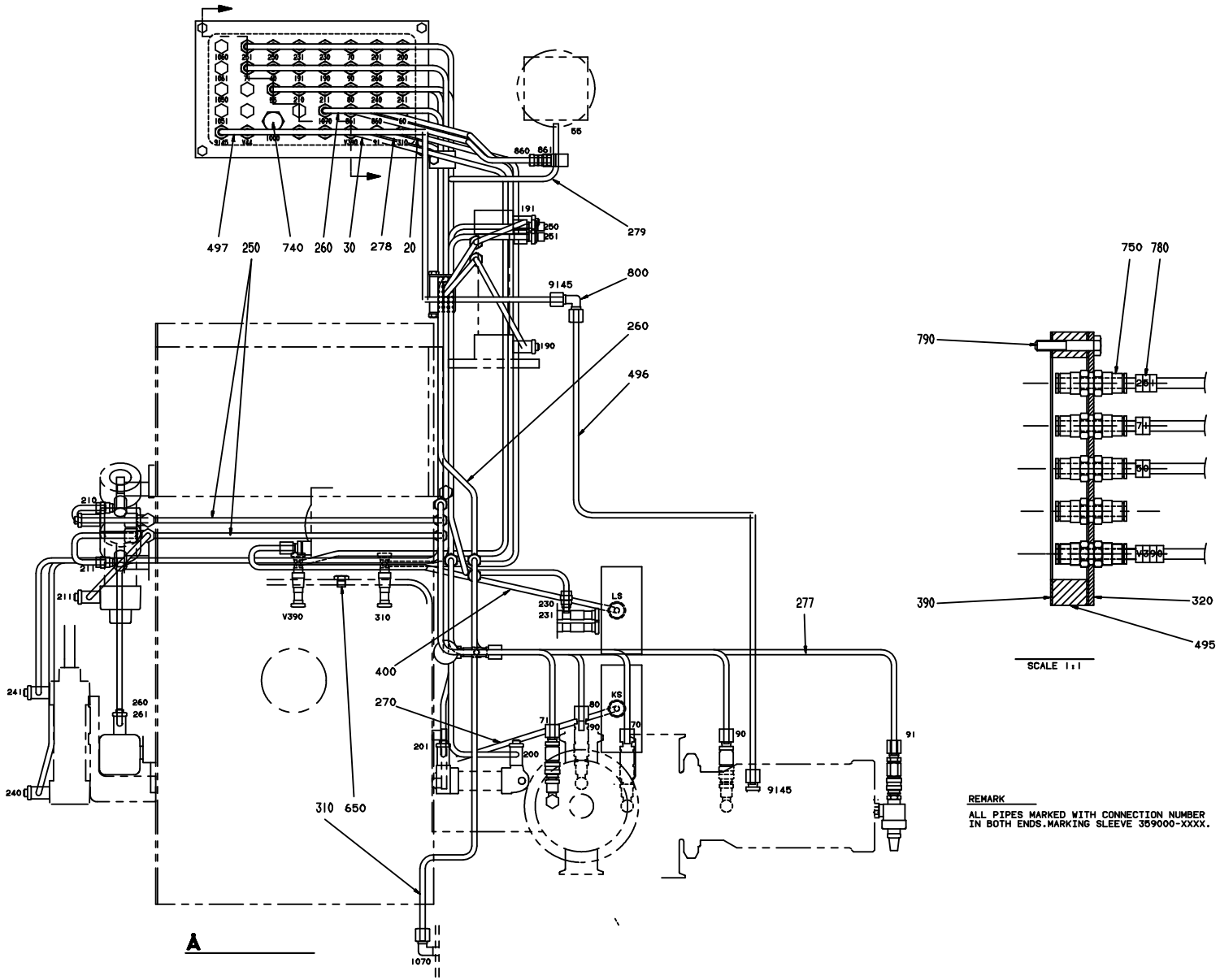
497
250
740
260
30
278
20
279
800
260
496
400
270
277
310
650
A
750
780
790
390
320
495
SCALE 1:1
REMARK
ALL PIPES MARKED WITH CONNECTION NUMBER IN BOTH ENDS.MARKING SLEEVE 359000-XXXX.

Pos	Part No	SP	UN	Qty	Description	Page No
- (Cont'd)						
780	359000-0403	-		12	MARKING COLLAR PA2/4 "3" YELLOW	
790	312109-0376	-		4	SCREW M6S ISO 4017 M6X35 A480	
800	342737-0204	-		1	CONN. ELBOW W-6 LRFR	
810	90099-0131	-		2	NUT HEX. M16X2 SS	

Pos	Part No	SP	UN	Qty	Description	Page No

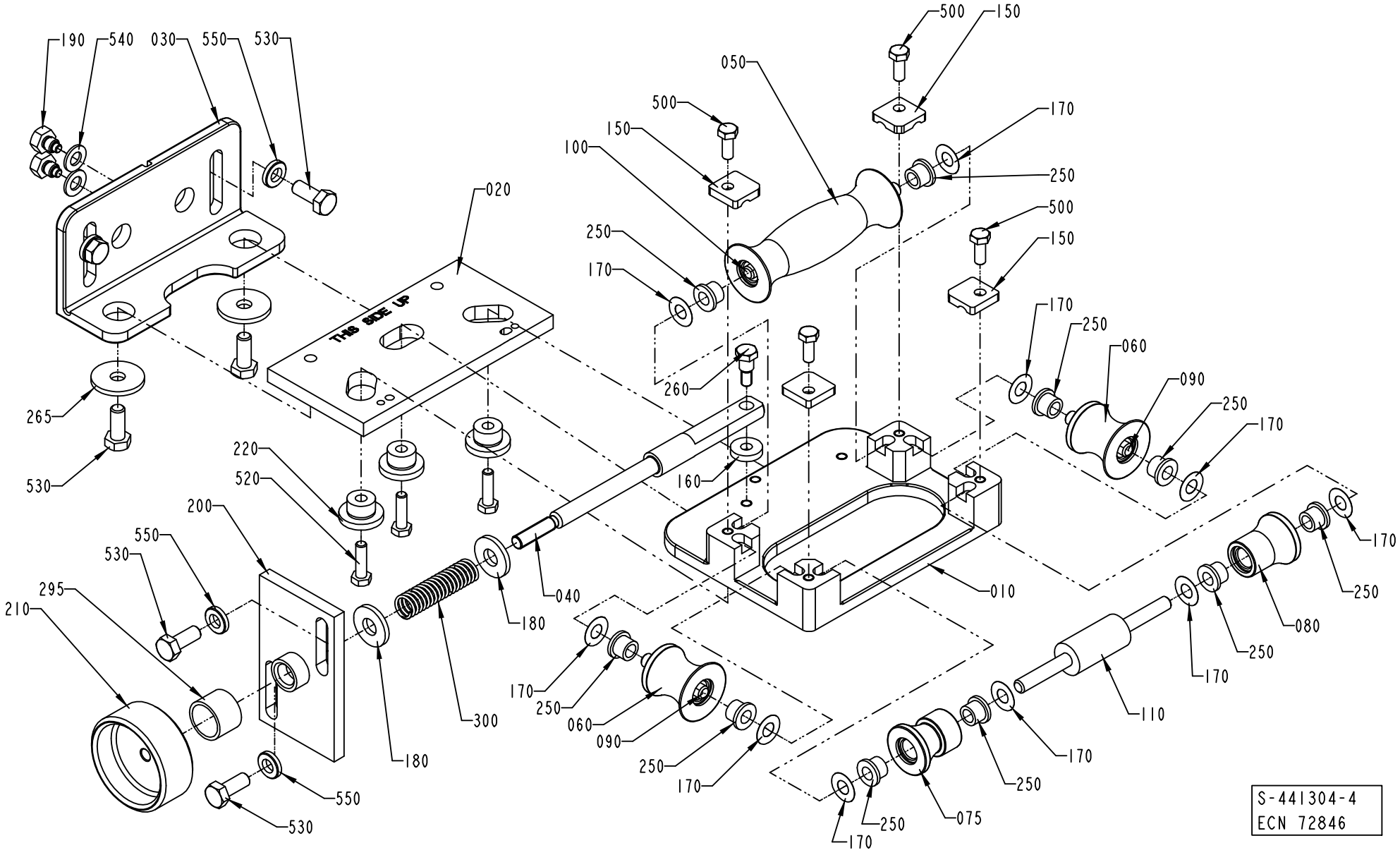
190
540
030
550
530
020
THIS SIDE UP
265
530
220
520
200
550
530
295
210
180
300
180
550
530
040
180
170
250
060
090
250
170
260
160
050
500
150
500
150
100
170
250
250
500
150
170
250
060
090
250
170
170
250
080
250
170
010
110
170
250
170
250
075
170
250
S-441304-4
ECN 72846

ECM: 124856 - 20030121
Group number: 441304-0400
Assembly Drawing: 441304-4_1_AD

This list covers pages from 104 to 111

Pos	Part No	SP	UN	Qty	Description	Page No
TBA 0125S, TBA 0100B (See drawing on page: 110)						
010	456905-0000	-		1	FASTENING PLATE	
0010	*1282582-0000*	*-*		*1*	*CAST WORKPIECE*	
030	571536-0000	-		1	CANTILEVER	
050	752141-0000	A		1	FORMING ROLLER	
060	752142-0000	A		2	FORMING ROLLER	
075	1296912-0000	A		1	ROLL	
080	752143-0000	A		1	FORMING ROLLER	
090	752186-0002	A		2	SHAFT	
100	752186-0008	A		1	SHAFT	
110	752186-0006	A		2	SHAFT	
140	456907-0000	A		2	LOCK PLATE	
250	90240-0172	A		6	FLANGE BUSHING, 8X12X10 MM	
255	752156-0000	A		4	FLANGE BUSHING	
500	312105-0332	-		6	SCREW M6S ISO 4017 M5X22 A480	
TBA 0160S, TBA 0200S (See drawing on page: 106)						
010	456905-0000	-		1	FASTENING PLATE	
0010	*1282582-0000*	*-*		*1*	*CAST WORKPIECE*	
030	571535-0000	-		1	CANTILEVER	
050	752126-0000	A		1	FORMING ROLLER	
060	752127-0000	A		2	FORMING ROLLER	
075	1296914-0000	A		1	ROLL	
080	752128-0000	A		1	FORMING ROLLER	
090	752186-0002	A		2	SHAFT	
100	752186-0008	A		1	SHAFT	
110	752186-0006	A		2	SHAFT	
140	456907-0000	A		2	LOCK PLATE	
250	90240-0172	A		6	FLANGE BUSHING, 8X12X10 MM	
255	752156-0000	A		4	FLANGE BUSHING	
500	312105-0332	-		6	SCREW M6S ISO 4017 M5X22 A480	
TBA 0250S, TBA 0200M (See drawing on page: 108)						
010	574404-0000	-		1	BRACKET	
0010	*1282582-0000*	*-*		*1*	*CAST WORKPIECE*	
030	571535-0000	-		1	CANTILEVER	
050	574479-0000	A		1	ROLL	
060	574480-0000	A		2	ROLL	
075	1296915-0000	A		1	ROLL	
080	574481-0000	A		1	ROLL	
090	752186-0002	A		2	SHAFT	
100	752186-0008	A		1	SHAFT	
110	752186-0006	A		2	SHAFT	
140	1279087-0000	A		2	LOCKING PLATE	
250	90240-0172	A		6	FLANGE BUSHING, 8X12X10 MM	
255	752156-0000	A		4	FLANGE BUSHING	
500	312105-0332	-		6	SCREW M6S ISO 4017 M5X22 A480	
TBA 0330S, TBA 0300S, TBA 0180B, TBA 0200B, TBA 0284B, TBA 0250B (See drawing on page: 104)						
010	978792-0000	-		1	PLATE	
030	571535-0000	-		1	CANTILEVER	
050	751491-0000	A		1	ROLL	
060	751492-0000	A		2	ROLL	
075	1296913-0000	A		1	ROLL	
080	751494-0000	A		1	ROLL	
090	752186-0005	A		2	SHAFT	
100	752186-0009	A		1	SHAFT	
110	752187-0000	A		1	SHAFT	
250	90240-0172	A		10	FLANGE BUSHING, 8X12X10 MM	
500	312105-0368	-		4	SCREW M6S M6X16 A280	
Common Parts						
020	751333-0000	-		1	SETTING PLATE	
040	256309-0000	A		1	SHAFT	
150	1279091-0000	A		4	LOCKING PLATE	
160	256312-0000	A		1	WASHER	
170	2033-0011	A		10	WASHER	
180	26490-0000	A		2	WASHER	
190	256280-0000	-		2	DOWEL	
200	571534-0000	-		1	PLATE	
210	257090-0000	A		1	SHIFTER HANDLE	
220	751334-0000	A		3	SPACER	
260	456042-0000	A		1	SCREW	
265	28037-0000	A		2	WASHER	
295	491153-0000	A		1	COMPRESSION GLAND	
300	90335-0008	A		1	COMP. SPRING 22490, 1,6X14,1X115	
520	312105-0371	-		3	SCREW M6S ISO 4017 M6X22 A480	
530	312105-0451	-		6	SCREW M6S ISO 4017 M8X20 A480	
540	315105-0165	-		2	WASHER BRB8,4X16RFR	
550	315115-0165	-		4	WASHER PLAIN, TBRB 8,4/16 H=3	

Machine Type | Group Description | Used-In | Group Number | Page No

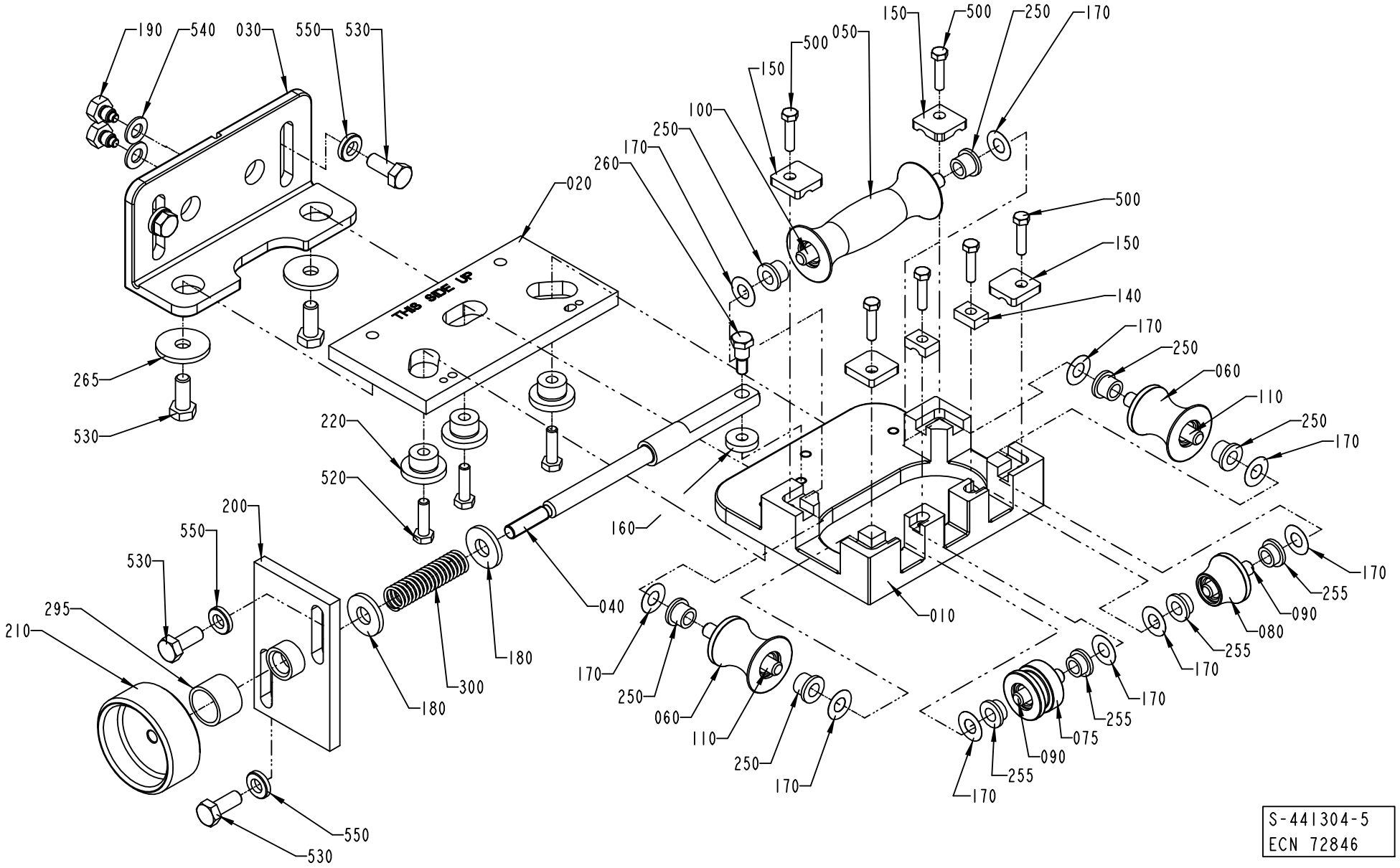
190
540
030
550
530
020
THIS SIDE UP
265
530
220
520
200
550
530
295
210
180
300
180
160
040
150
500
050
150
500
250
170
100
250
170
260
500
150
140
170
250
060
110
250
170
010
170
250
060
110
250
170
170
255
090
080
170
255
170
170
255
090
075
170
S-441304-5
ECN 72846

ECM: 124856 - 20030121
Group number: 441304-0400
Assembly Drawing: 441304-5_1_AD

This list covers pages from 104 to 111

Pos	Part No	SP	UN	Qty	Description	Page No
TBA 0125S, TBA 0100B (See drawing on page: 110)						
010	456905-0000	-		1	FASTENING PLATE	
0010	*1282582-0000*	*-*		*1*	*CAST WORKPIECE*	
030	571536-0000	-		1	CANTILEVER	
050	752141-0000	A		1	FORMING ROLLER	
060	752142-0000	A		2	FORMING ROLLER	
075	1296912-0000	A		1	ROLL	
080	752143-0000	A		1	FORMING ROLLER	
090	752186-0002	A		2	SHAFT	
100	752186-0008	A		1	SHAFT	
110	752186-0006	A		2	SHAFT	
140	456907-0000	A		2	LOCK PLATE	
250	90240-0172	A		6	FLANGE BUSHING, 8X12X10 MM	
255	752156-0000	A		4	FLANGE BUSHING	
500	312105-0332	-		6	SCREW M6S ISO 4017 M5X22 A480	
TBA 0160S, TBA 0200S (See drawing on page: 106)						
010	456905-0000	-		1	FASTENING PLATE	
0010	*1282582-0000*	*-*		*1*	*CAST WORKPIECE*	
030	571535-0000	-		1	CANTILEVER	
050	752126-0000	A		1	FORMING ROLLER	
060	752127-0000	A		2	FORMING ROLLER	
075	1296914-0000	A		1	ROLL	
080	752128-0000	A		1	FORMING ROLLER	
090	752186-0002	A		2	SHAFT	
100	752186-0008	A		1	SHAFT	
110	752186-0006	A		2	SHAFT	
140	456907-0000	A		2	LOCK PLATE	
250	90240-0172	A		6	FLANGE BUSHING, 8X12X10 MM	
255	752156-0000	A		4	FLANGE BUSHING	
500	312105-0332	-		6	SCREW M6S ISO 4017 M5X22 A480	
TBA 0250S, TBA 0200M (See drawing on page: 108)						
010	574404-0000	-		1	BRACKET	
0010	*1282582-0000*	*-*		*1*	*CAST WORKPIECE*	
030	571535-0000	-		1	CANTILEVER	
050	574479-0000	A		1	ROLL	
060	574480-0000	A		2	ROLL	
075	1296915-0000	A		1	ROLL	
080	574481-0000	A		1	ROLL	
090	752186-0002	A		2	SHAFT	
100	752186-0008	A		1	SHAFT	
110	752186-0006	A		2	SHAFT	
140	1279087-0000	A		2	LOCKING PLATE	
250	90240-0172	A		6	FLANGE BUSHING, 8X12X10 MM	
255	752156-0000	A		4	FLANGE BUSHING	
500	312105-0332	-		6	SCREW M6S ISO 4017 M5X22 A480	
TBA 0330S, TBA 0300S, TBA 0180B, TBA 0200B, TBA 0284B, TBA 0250B (See drawing on page: 104)						
010	978792-0000	-		1	PLATE	
030	571535-0000	-		1	CANTILEVER	
050	751491-0000	A		1	ROLL	
060	751492-0000	A		2	ROLL	
075	1296913-0000	A		1	ROLL	
080	751494-0000	A		1	ROLL	
090	752186-0005	A		2	SHAFT	
100	752186-0009	A		1	SHAFT	
110	752187-0000	A		1	SHAFT	
250	90240-0172	A		10	FLANGE BUSHING, 8X12X10 MM	
500	312105-0368	-		4	SCREW M6S M6X16 A280	
Common Parts						
020	751333-0000	-		1	SETTING PLATE	
040	256309-0000	A		1	SHAFT	
150	1279091-0000	A		4	LOCKING PLATE	
160	256312-0000	A		1	WASHER	
170	2033-0011	A		10	WASHER	
180	26490-0000	A		2	WASHER	
190	256280-0000	-		2	DOWEL	
200	571534-0000	-		1	PLATE	
210	257090-0000	A		1	SHIFTER HANDLE	
220	751334-0000	A		3	SPACER	
260	456042-0000	A		1	SCREW	
265	28037-0000	A		2	WASHER	
295	491153-0000	A		1	COMPRESSION GLAND	
300	90335-0008	A		1	COMP. SPRING 22490, 1,6X14,1X115	
520	312105-0371	-		3	SCREW M6S ISO 4017 M6X22 A480	
530	312105-0451	-		6	SCREW M6S ISO 4017 M8X20 A480	
540	315105-0165	-		2	WASHER BRB8,4X16RFR	
550	315115-0165	-		4	WASHER PLAIN, TBRB 8,4/16 H=3	

Machine Type | Group Description | Used-In | Group Number | Page No

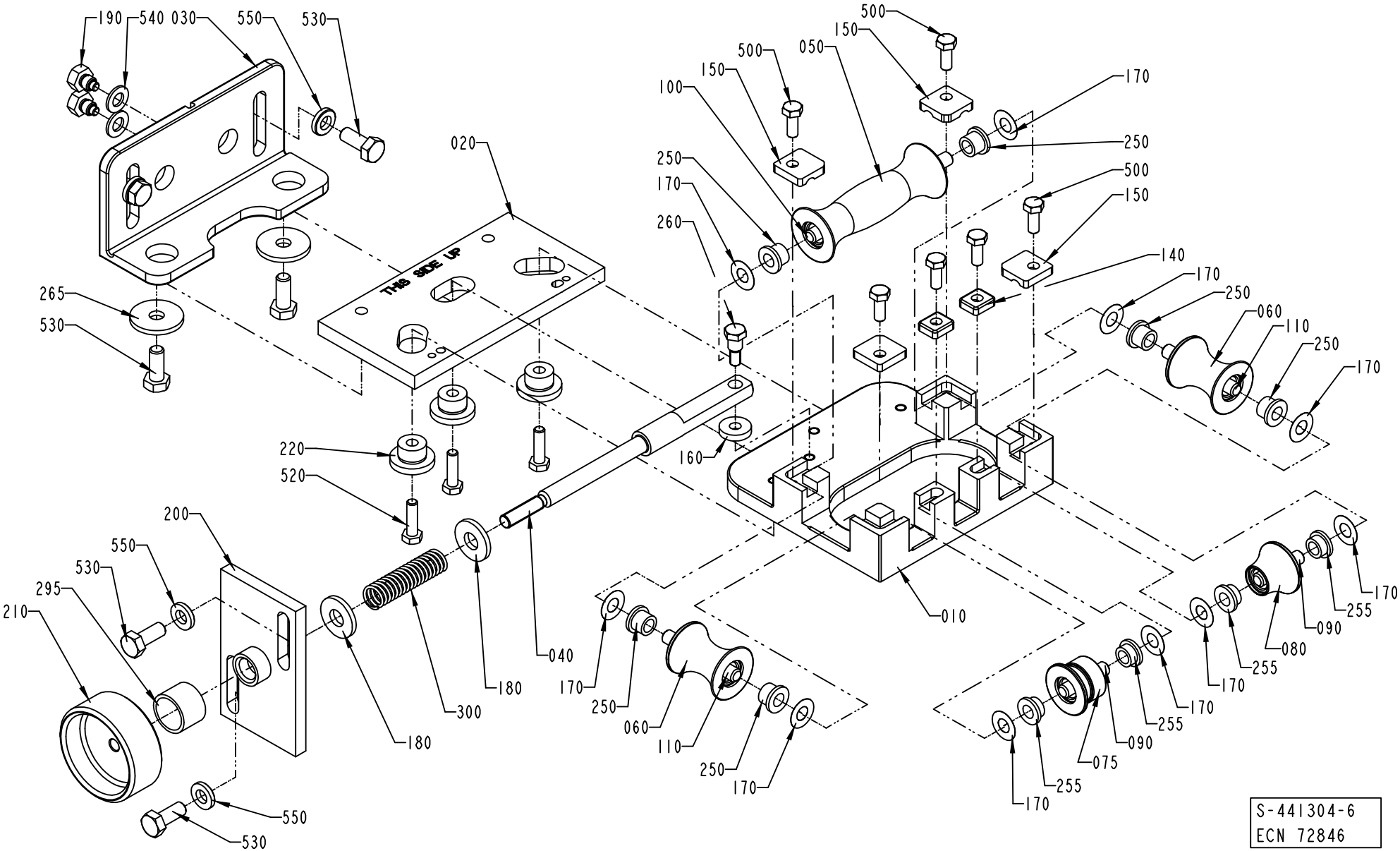
190
540 030
550
530
020
THIS SIDE UP
265
530
220
520
200
550
530
295
210
180
300
180
040
160
500
150
050
500
150
100
250
170
260
170
250
500
150
140
170
250
060
110
250
170
010
170
250
060
110
250
170
255
090
080
170
255
170
075
090
255
170
170
255
090
170
550
530
S-441304-6
ECN 72846

ECM: 124856 - 20030121
Group number: 441304-0400
Assembly Drawing: 441304-6_1_AD

This list covers pages from 104 to 111

Pos	Part No	SP	UN	Qty	Description	Page No
TBA 0125S, TBA 0100B (See drawing on page: 110)						
010	456905-0000	-		1	FASTENING PLATE	
0010	*1282582-0000*	*-*		*1*	*CAST WORKPIECE*	
030	571536-0000	-		1	CANTILEVER	
050	752141-0000	A		1	FORMING ROLLER	
060	752142-0000	A		2	FORMING ROLLER	
075	1296912-0000	A		1	ROLL	
080	752143-0000	A		1	FORMING ROLLER	
090	752186-0002	A		2	SHAFT	
100	752186-0008	A		1	SHAFT	
110	752186-0006	A		2	SHAFT	
140	456907-0000	A		2	LOCK PLATE	
250	90240-0172	A		6	FLANGE BUSHING, 8X12X10 MM	
255	752156-0000	A		4	FLANGE BUSHING	
500	312105-0332	-		6	SCREW M6S ISO 4017 M5X22 A480	
TBA 0160S, TBA 0200S (See drawing on page: 106)						
010	456905-0000	-		1	FASTENING PLATE	
0010	*1282582-0000*	*-*		*1*	*CAST WORKPIECE*	
030	571535-0000	-		1	CANTILEVER	
050	752126-0000	A		1	FORMING ROLLER	
060	752127-0000	A		2	FORMING ROLLER	
075	1296914-0000	A		1	ROLL	
080	752128-0000	A		1	FORMING ROLLER	
090	752186-0002	A		2	SHAFT	
100	752186-0008	A		1	SHAFT	
110	752186-0006	A		2	SHAFT	
140	456907-0000	A		2	LOCK PLATE	
250	90240-0172	A		6	FLANGE BUSHING, 8X12X10 MM	
255	752156-0000	A		4	FLANGE BUSHING	
500	312105-0332	-		6	SCREW M6S ISO 4017 M5X22 A480	
TBA 0250S, TBA 0200M (See drawing on page: 108)						
010	574404-0000	-		1	BRACKET	
0010	*1282582-0000*	*-*		*1*	*CAST WORKPIECE*	
030	571535-0000	-		1	CANTILEVER	
050	574479-0000	A		1	ROLL	
060	574480-0000	A		2	ROLL	
075	1296915-0000	A		1	ROLL	
080	574481-0000	A		1	ROLL	
090	752186-0002	A		2	SHAFT	
100	752186-0008	A		1	SHAFT	
110	752186-0006	A		2	SHAFT	
140	1279087-0000	A		2	LOCKING PLATE	
250	90240-0172	A		6	FLANGE BUSHING, 8X12X10 MM	
255	752156-0000	A		4	FLANGE BUSHING	
500	312105-0332	-		6	SCREW M6S ISO 4017 M5X22 A480	
TBA 0330S, TBA 0300S, TBA 0180B, TBA 0200B, TBA 0284B, TBA 0250B (See drawing on page: 104)						
010	978792-0000	-		1	PLATE	
030	571535-0000	-		1	CANTILEVER	
050	751491-0000	A		1	ROLL	
060	751492-0000	A		2	ROLL	
075	1296913-0000	A		1	ROLL	
080	751494-0000	A		1	ROLL	
090	752186-0005	A		2	SHAFT	
100	752186-0009	A		1	SHAFT	
110	752187-0000	A		1	SHAFT	
250	90240-0172	A		10	FLANGE BUSHING, 8X12X10 MM	
500	312105-0368	-		4	SCREW M6S M6X16 A280	
Common Parts						
020	751333-0000	-		1	SETTING PLATE	
040	256309-0000	A		1	SHAFT	
150	1279091-0000	A		4	LOCKING PLATE	
160	256312-0000	A		1	WASHER	
170	2033-0011	A		10	WASHER	
180	26490-0000	A		2	WASHER	
190	256280-0000	-		2	DOWEL	
200	571534-0000	-		1	PLATE	
210	257090-0000	A		1	SHIFTER HANDLE	
220	751334-0000	A		3	SPACER	
260	456042-0000	A		1	SCREW	
265	28037-0000	A		2	WASHER	
295	491153-0000	A		1	COMPRESSION GLAND	
300	90335-0008	A		1	COMP. SPRING 22490, 1,6X14,1X115	
520	312105-0371	-		3	SCREW M6S ISO 4017 M6X22 A480	
530	312105-0451	-		6	SCREW M6S ISO 4017 M8X20 A480	
540	315105-0165	-		2	WASHER BRB8,4X16RFR	
550	315115-0165	-		4	WASHER PLAIN, TBRB 8,4/16 H=3	

Machine Type | Group Description | Used-In | Group Number | Page No

MOVABLE FORMING RING

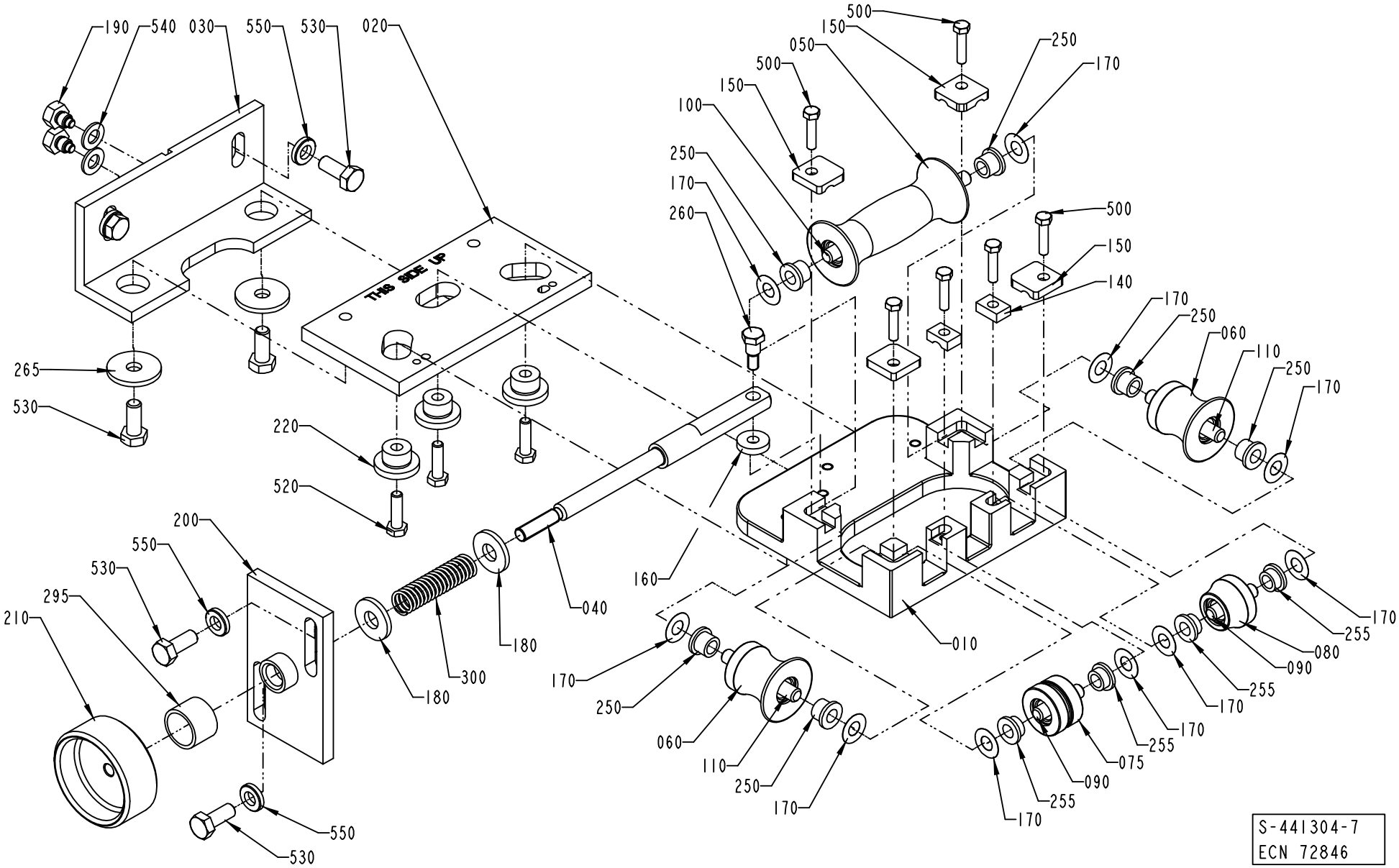

ECM: 124856 - 20030121
Group number: 441304-0400
Assembly Drawing: 441304-7_1_AB

This list covers pages from 104 to 111

Pos	Part No	SP	UN	Qty	Description	Page No
TBA 0125S, TBA 0100B (See drawing on page: 110)						
010	456905-0000	-		1	FASTENING PLATE	
0010	*1282582-0000*	*-*		*1*	*CAST WORKPIECE*	
030	571536-0000	-		1	CANTILEVER	
050	752141-0000	A		1	FORMING ROLLER	
060	752142-0000	A		2	FORMING ROLLER	
075	1296912-0000	A		1	ROLL	
080	752143-0000	A		1	FORMING ROLLER	
090	752186-0002	A		2	SHAFT	
100	752186-0008	A		1	SHAFT	
110	752186-0006	A		2	SHAFT	
140	456907-0000	A		2	LOCK PLATE	
250	90240-0172	A		6	FLANGE BUSHING, 8X12X10 MM	
255	752156-0000	A		4	FLANGE BUSHING	
500	312105-0332	-		6	SCREW M6S ISO 4017 M5X22 A480	
TBA 0160S, TBA 0200S (See drawing on page: 106)						
010	456905-0000	-		1	FASTENING PLATE	
0010	*1282582-0000*	*-*		*1*	*CAST WORKPIECE*	
030	571535-0000	-		1	CANTILEVER	
050	752126-0000	A		1	FORMING ROLLER	
060	752127-0000	A		2	FORMING ROLLER	
075	1296914-0000	A		1	ROLL	
080	752128-0000	A		1	FORMING ROLLER	
090	752186-0002	A		2	SHAFT	
100	752186-0008	A		1	SHAFT	
110	752186-0006	A		2	SHAFT	
140	456907-0000	A		2	LOCK PLATE	
250	90240-0172	A		6	FLANGE BUSHING, 8X12X10 MM	
255	752156-0000	A		4	FLANGE BUSHING	
500	312105-0332	-		6	SCREW M6S ISO 4017 M5X22 A480	
TBA 0250S, TBA 0200M (See drawing on page: 108)						
010	574404-0000	-		1	BRACKET	
0010	*1282582-0000*	*-*		*1*	*CAST WORKPIECE*	
030	571535-0000	-		1	CANTILEVER	
050	574479-0000	A		1	ROLL	
060	574480-0000	A		2	ROLL	
075	1296915-0000	A		1	ROLL	
080	574481-0000	A		1	ROLL	
090	752186-0002	A		2	SHAFT	
100	752186-0008	A		1	SHAFT	
110	752186-0006	A		2	SHAFT	
140	1279087-0000	A		2	LOCKING PLATE	
250	90240-0172	A		6	FLANGE BUSHING, 8X12X10 MM	
255	752156-0000	A		4	FLANGE BUSHING	
500	312105-0332	-		6	SCREW M6S ISO 4017 M5X22 A480	
TBA 0330S, TBA 0300S, TBA 0180B, TBA 0200B, TBA 0284B, TBA 0250B (See drawing on page: 104)						
010	978792-0000	-		1	PLATE	
030	571535-0000	-		1	CANTILEVER	
050	751491-0000	A		1	ROLL	
060	751492-0000	A		2	ROLL	
075	1296913-0000	A		1	ROLL	
080	751494-0000	A		1	ROLL	
090	752186-0005	A		2	SHAFT	
100	752186-0009	A		1	SHAFT	
110	752187-0000	A		1	SHAFT	
250	90240-0172	A		10	FLANGE BUSHING, 8X12X10 MM	
500	312105-0368	-		4	SCREW M6S M6X16 A280	
Common Parts						
020	751333-0000	-		1	SETTING PLATE	
040	256309-0000	A		1	SHAFT	
150	1279091-0000	A		4	LOCKING PLATE	
160	256312-0000	A		1	WASHER	
170	2033-0011	A		10	WASHER	
180	26490-0000	A		2	WASHER	
190	256280-0000	-		2	DOWEL	
200	571534-0000	-		1	PLATE	
210	257090-0000	A		1	SHIFTER HANDLE	
220	751334-0000	A		3	SPACER	
260	456042-0000	A		1	SCREW	
265	28037-0000	A		2	WASHER	
295	491153-0000	A		1	COMPRESSION GLAND	
300	90335-0008	A		1	COMP. SPRING 22490, 1,6X14,1X115	
520	312105-0371	-		3	SCREW M6S ISO 4017 M6X22 A480	
530	312105-0451	-		6	SCREW M6S ISO 4017 M8X20 A480	
540	315105-0165	-		2	WASHER BRB8,4X16RFR	
550	315115-0165	-		4	WASHER PLAIN, TBRB 8,4/16 H=3	

Machine Type | Group Description | Used-In | Group Number | Page No

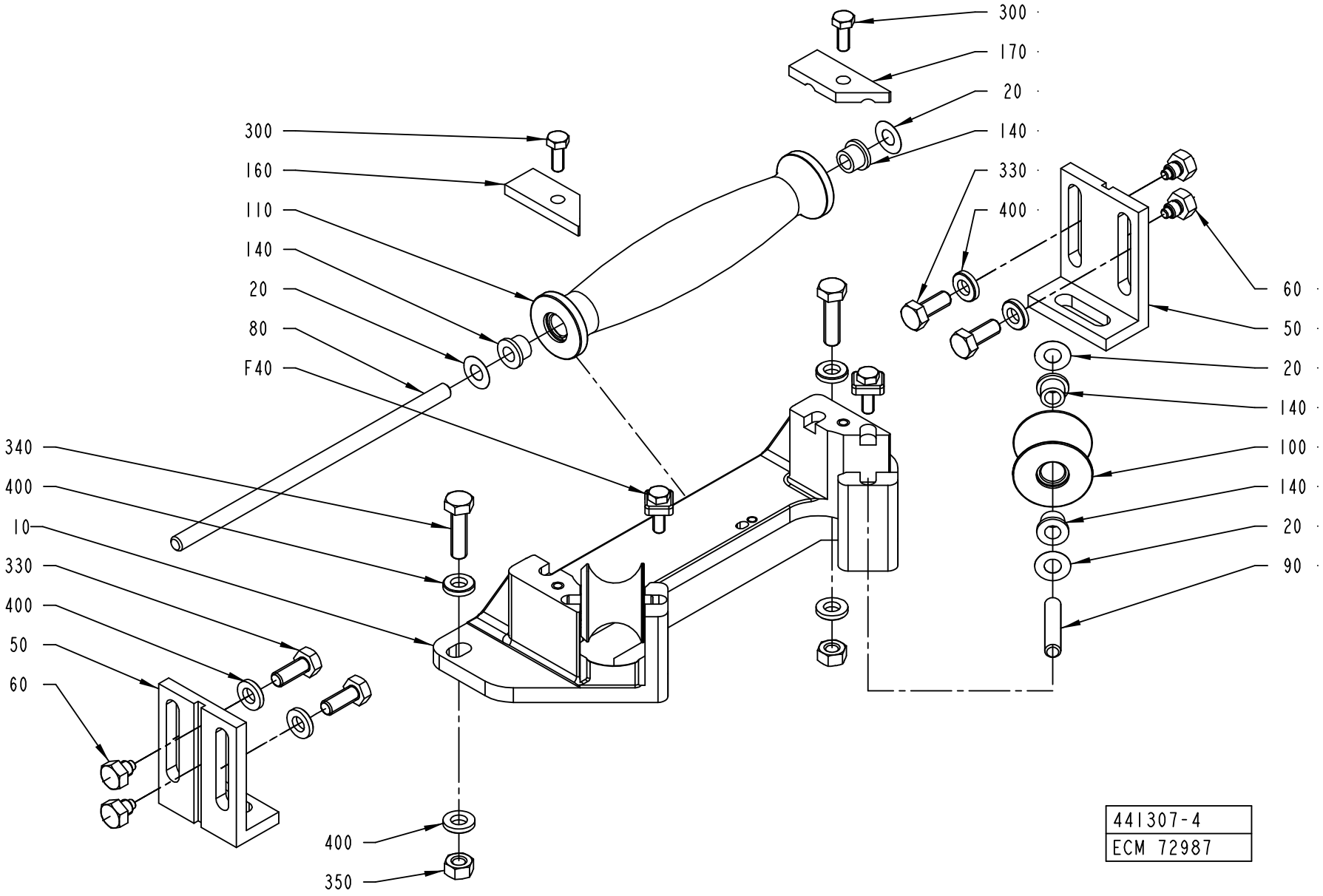
300
170
20
140
330
400
60
50
20
140
100
140
20
90
300
160
110
140
20
80
F40
340
400
10
330
400
50
60
400
350
441307-4
ECM 72987

Pos	Part No	SP	UN	Qty	Description	Page No
TBA 0125S, TBA 0100B (See drawing on page: 114)						
010	469078-0000	-		1	HOLDER	
050	256279-0000	-		2	ANGLE	
080	752186-0010	A		1	SHAFT	
090	752186-0001	A		2	SHAFT	
100	752145-0000	A		2	FORMING ROLLER	
110	752144-0000	A		1	FORMING ROLLER	
160	1279089-0000	A		1	LOCKING PLATE	
170	1279088-0000	A		1	LOCKING PLATE	
290	312105-0368	-		2	SCREW M6S M6X16 A280	
345	312105-0457	-		2	SCREW M6S ISO 4014 M8X35 A480	
TBA 0160S, TBA 0200S (See drawing on page: 116)						
010	469041-0000	-		1	HOLDER	
0010	*1282583-0000*	*-*		*1*	*CAST WORKPIECE*	
050	469047-0000	-		2	ANGLE	
080	752186-0010	A		1	SHAFT	
090	752186-0004	A		2	SHAFT	
100	752130-0000	A		2	FORMING ROLLER	
110	752129-0000	A		1	FORMING ROLLER	
160	1279089-0000	A		1	LOCKING PLATE	
170	1279088-0000	A		1	LOCKING PLATE	
300	312105-0368	-		2	SCREW M6S M6X16 A280	
340	312105-0455	-		2	SCREW M6S ISO 4017 M8X30 A480	
TBA 0180B (See drawing on page: 112)						
010	978791-0000	-		1	HOLDER	
050	751267-0000	-		2	CANTILEVER	
080	752186-0011	A		1	SHAFT	
090	752186-0004	A		2	SHAFT	
160	751287-0000	A		1	PLATE	
170	751288-0000	A		1	PLATE	
300	312105-0368	-		2	SCREW M6S M6X16 A280	
340	312105-0455	-		2	SCREW M6S ISO 4017 M8X30 A480	
TBA 0250S, TBA 0200M (See drawing on page: 116)						
010	574416-0000	-		1	BRACKET	
0010	*1282583-0000*	*-*		*1*	*CAST WORKPIECE*	
050	469047-0000	-		2	ANGLE	
080	752186-0010	A		1	SHAFT	
090	752186-0012	A		2	SHAFT	
100	574418-0000	A		2	ROLL	
110	574417-0000	A		1	ROLL	
160	1279089-0000	A		1	LOCKING PLATE	
170	1279088-0000	A		1	LOCKING PLATE	
300	312105-0368	-		2	SCREW M6S M6X16 A280	
340	312105-0455	-		2	SCREW M6S ISO 4017 M8X30 A480	
TBA 0330S, TBA 0300S, TBA 0200B, TBA 0284B, TBA 0250B (See drawing on page: 112)						
010	978791-0000	-		1	HOLDER	
050	751267-0000	-		2	CANTILEVER	
080	752186-0011	A		1	SHAFT	
090	752186-0004	A		2	SHAFT	
100	751284-0000	A		2	ROLL	
110	751283-0000	A		1	ROLL	
160	751287-0000	A		1	PLATE	
170	751288-0000	A		1	PLATE	
300	312105-0368	-		2	SCREW M6S M6X16 A280	
340	312105-0455	-		2	SCREW M6S ISO 4017 M8X30 A480	
Common Parts						
020	2033-0011	A		6	WASHER	
040	565462-0100	A		1	LOCK PLATE	**119**
060	256280-0000	-		4	DOWEL	
140	90240-0172	A		6	FLANGE BUSHING, 8X12X10 MM	
330	312105-0451	-		4	SCREW M6S ISO 4017 M8X20 A480	
350	312605-0318	-		2	HEXAGON NUT, M6M M8 A280	
400	315115-0165	-		8	WASHER PLAIN, TBRB 8,4/16 H=3	

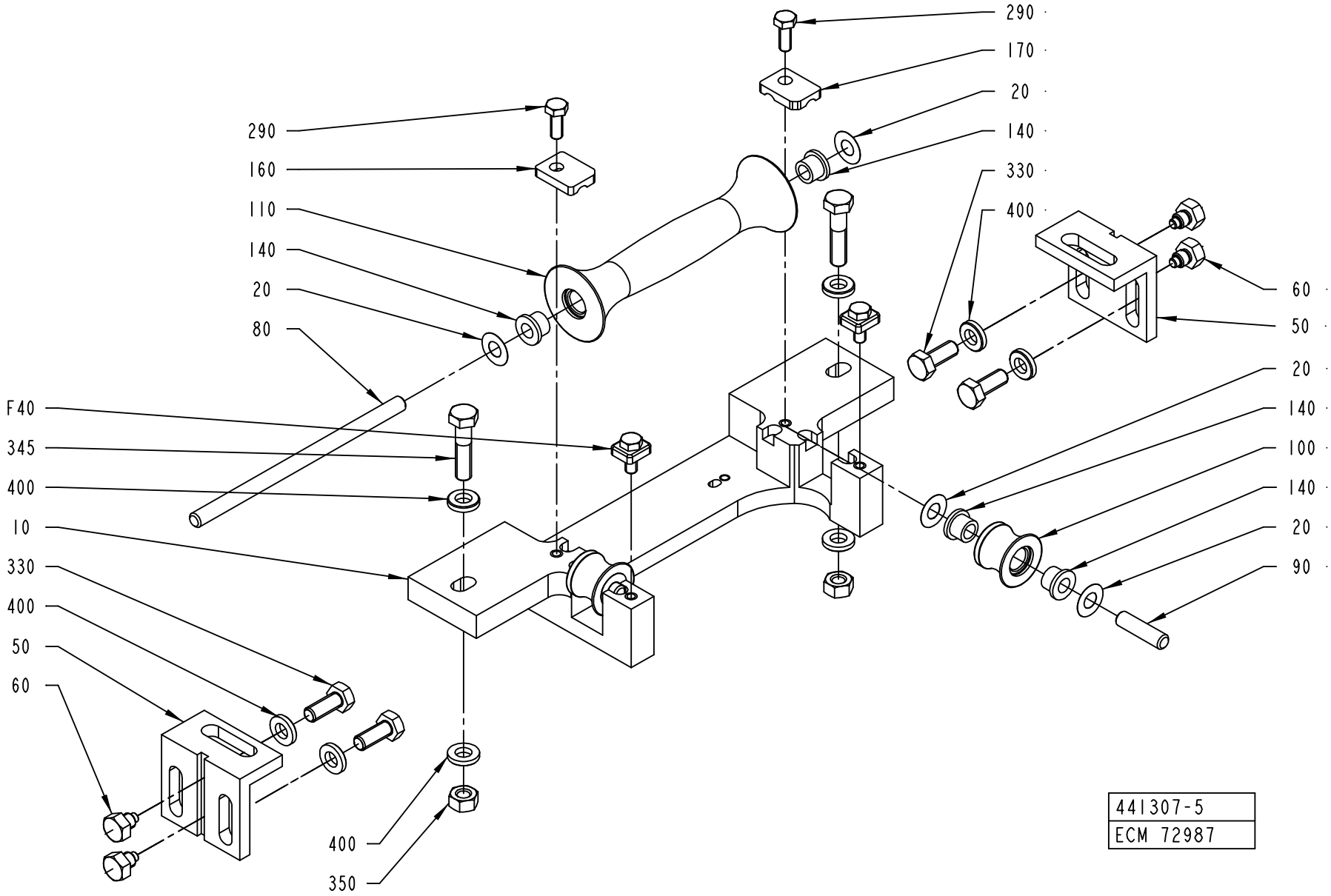
290
170
20
140
330
400
60
50
20
140
100
140
20
90
290
160
110
140
20
80
F40
345
400
10
330
400
50
60
400
350
441307-5
ECM 72987

Pos	Part No	SP	UN	Qty	Description	Page No
TBA 0125S, TBA 0100B (See drawing on page: 114)						
010	469078-0000	-		1	HOLDER	
050	256279-0000	-		2	ANGLE	
080	752186-0010	A		1	SHAFT	
090	752186-0001	A		2	SHAFT	
100	752145-0000	A		2	FORMING ROLLER	
110	752144-0000	A		1	FORMING ROLLER	
160	1279089-0000	A		1	LOCKING PLATE	
170	1279088-0000	A		1	LOCKING PLATE	
290	312105-0368	-		2	SCREW M6S M6X16 A280	
345	312105-0457	-		2	SCREW M6S ISO 4014 M8X35 A480	
TBA 0160S, TBA 0200S (See drawing on page: 116)						
010	469041-0000	-		1	HOLDER	
0010	*1282583-0000*	*-*		*1*	*CAST WORKPIECE*	
050	469047-0000	-		2	ANGLE	
080	752186-0010	A		1	SHAFT	
090	752186-0004	A		2	SHAFT	
100	752130-0000	A		2	FORMING ROLLER	
110	752129-0000	A		1	FORMING ROLLER	
160	1279089-0000	A		1	LOCKING PLATE	
170	1279088-0000	A		1	LOCKING PLATE	
300	312105-0368	-		2	SCREW M6S M6X16 A280	
340	312105-0455	-		2	SCREW M6S ISO 4017 M8X30 A480	
TBA 0180B (See drawing on page: 112)						
010	978791-0000	-		1	HOLDER	
050	751267-0000	-		2	CANTILEVER	
080	752186-0011	A		1	SHAFT	
090	752186-0004	A		2	SHAFT	
160	751287-0000	A		1	PLATE	
170	751288-0000	A		1	PLATE	
300	312105-0368	-		2	SCREW M6S M6X16 A280	
340	312105-0455	-		2	SCREW M6S ISO 4017 M8X30 A480	
TBA 0250S, TBA 0200M (See drawing on page: 116)						
010	574416-0000	-		1	BRACKET	
0010	*1282583-0000*	*-*		*1*	*CAST WORKPIECE*	
050	469047-0000	-		2	ANGLE	
080	752186-0010	A		1	SHAFT	
090	752186-0012	A		2	SHAFT	
100	574418-0000	A		2	ROLL	
110	574417-0000	A		1	ROLL	
160	1279089-0000	A		1	LOCKING PLATE	
170	1279088-0000	A		1	LOCKING PLATE	
300	312105-0368	-		2	SCREW M6S M6X16 A280	
340	312105-0455	-		2	SCREW M6S ISO 4017 M8X30 A480	
TBA 0330S, TBA 0300S, TBA 0200B, TBA 0284B, TBA 0250B (See drawing on page: 112)						
010	978791-0000	-		1	HOLDER	
050	751267-0000	-		2	CANTILEVER	
080	752186-0011	A		1	SHAFT	
090	752186-0004	A		2	SHAFT	
100	751284-0000	A		2	ROLL	
110	751283-0000	A		1	ROLL	
160	751287-0000	A		1	PLATE	
170	751288-0000	A		1	PLATE	
300	312105-0368	-		2	SCREW M6S M6X16 A280	
340	312105-0455	-		2	SCREW M6S ISO 4017 M8X30 A480	
Common Parts						
020	2033-0011	A		6	WASHER	
040	565462-0100	A		1	LOCK PLATE	**119**
060	256280-0000	-		4	DOWEL	
140	90240-0172	A		6	FLANGE BUSHING, 8X12X10 MM	
330	312105-0451	-		4	SCREW M6S ISO 4017 M8X20 A480	
350	312605-0318	-		2	HEXAGON NUT, M6M M8 A280	
400	315115-0165	-		8	WASHER PLAIN, TBRB 8,4/16 H=3	

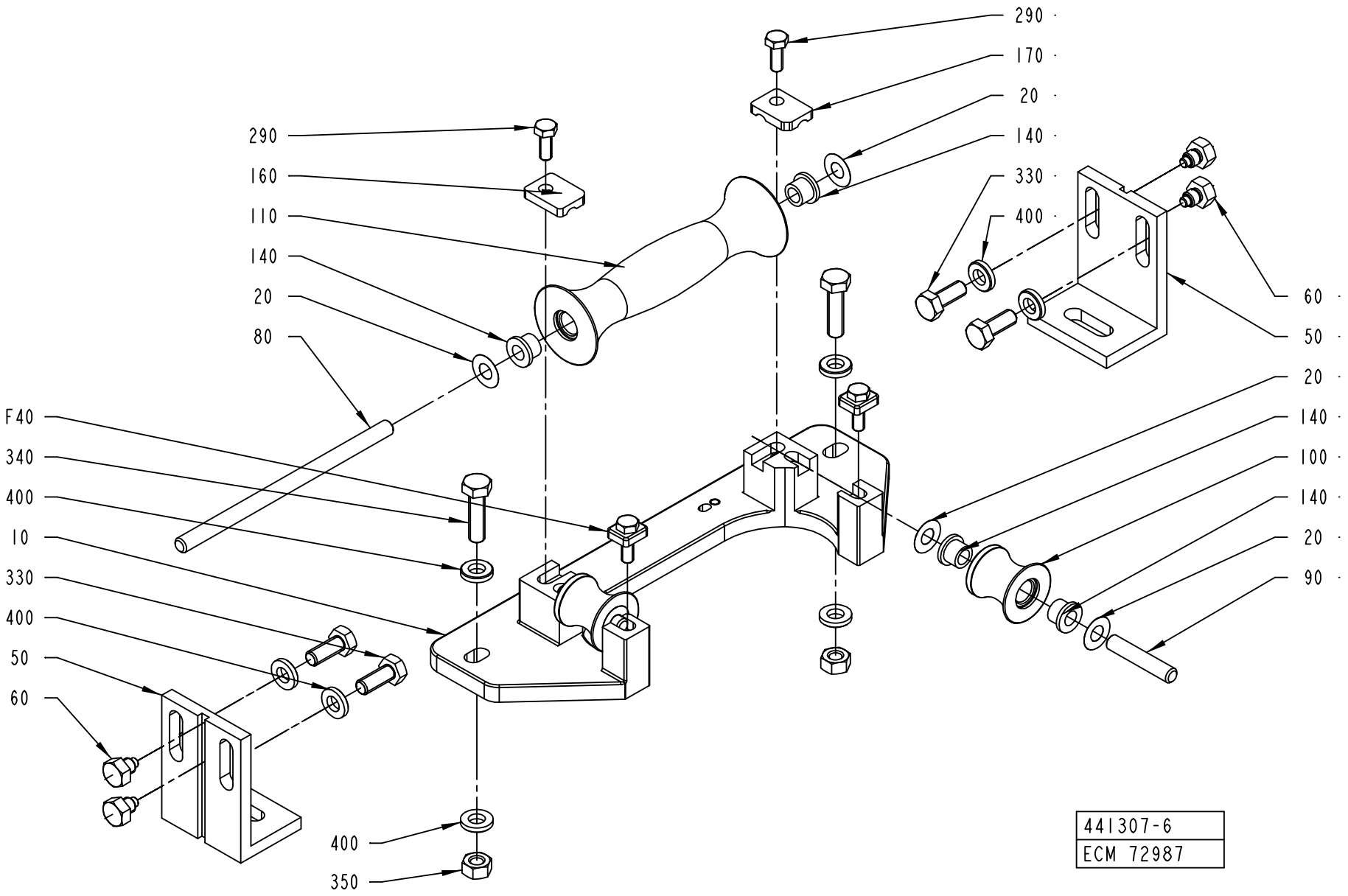
290
170
20
140
330
400
60
50
290
160
110
140
20
80
F40
340
400
10
330
400
50
60
20
140
100
140
20
90
400
350
441307-6
ECM 72987

Pos	Part No	SP	UN	Qty	Description	Page No
TBA 0125S, TBA 0100B (See drawing on page: 114)						
010	469078-0000	-		1	HOLDER	
050	256279-0000	-		2	ANGLE	
080	752186-0010	A		1	SHAFT	
090	752186-0001	A		2	SHAFT	
100	752145-0000	A		2	FORMING ROLLER	
110	752144-0000	A		1	FORMING ROLLER	
160	1279089-0000	A		1	LOCKING PLATE	
170	1279088-0000	A		1	LOCKING PLATE	
290	312105-0368	-		2	SCREW M6S M6X16 A280	
345	312105-0457	-		2	SCREW M6S ISO 4014 M8X35 A480	
TBA 0160S, TBA 0200S (See drawing on page: 116)						
010	469041-0000	-		1	HOLDER	
0010	*1282583-0000*	*-*		*1*	*CAST WORKPIECE*	
050	469047-0000	-		2	ANGLE	
080	752186-0010	A		1	SHAFT	
090	752186-0004	A		2	SHAFT	
100	752130-0000	A		2	FORMING ROLLER	
110	752129-0000	A		1	FORMING ROLLER	
160	1279089-0000	A		1	LOCKING PLATE	
170	1279088-0000	A		1	LOCKING PLATE	
300	312105-0368	-		2	SCREW M6S M6X16 A280	
340	312105-0455	-		2	SCREW M6S ISO 4017 M8X30 A480	
TBA 0180B (See drawing on page: 112)						
010	978791-0000	-		1	HOLDER	
050	751267-0000	-		2	CANTILEVER	
080	752186-0011	A		1	SHAFT	
090	752186-0004	A		2	SHAFT	
160	751287-0000	A		1	PLATE	
170	751288-0000	A		1	PLATE	
300	312105-0368	-		2	SCREW M6S M6X16 A280	
340	312105-0455	-		2	SCREW M6S ISO 4017 M8X30 A480	
TBA 0250S, TBA 0200M (See drawing on page: 116)						
010	574416-0000	-		1	BRACKET	
0010	*1282583-0000*	*-*		*1*	*CAST WORKPIECE*	
050	469047-0000	-		2	ANGLE	
080	752186-0010	A		1	SHAFT	
090	752186-0012	A		2	SHAFT	
100	574418-0000	A		2	ROLL	
110	574417-0000	A		1	ROLL	
160	1279089-0000	A		1	LOCKING PLATE	
170	1279088-0000	A		1	LOCKING PLATE	
300	312105-0368	-		2	SCREW M6S M6X16 A280	
340	312105-0455	-		2	SCREW M6S ISO 4017 M8X30 A480	
TBA 0330S, TBA 0300S, TBA 0200B, TBA 0284B, TBA 0250B (See drawing on page: 112)						
010	978791-0000	-		1	HOLDER	
050	751267-0000	-		2	CANTILEVER	
080	752186-0011	A		1	SHAFT	
090	752186-0004	A		2	SHAFT	
100	751284-0000	A		2	ROLL	
110	751283-0000	A		1	ROLL	
160	751287-0000	A		1	PLATE	
170	751288-0000	A		1	PLATE	
300	312105-0368	-		2	SCREW M6S M6X16 A280	
340	312105-0455	-		2	SCREW M6S ISO 4017 M8X30 A480	
Common Parts						
020	2033-0011	A		6	WASHER	
040	565462-0100	A		1	LOCK PLATE	**119**
060	256280-0000	-		4	DOWEL	
140	90240-0172	A		6	FLANGE BUSHING, 8X12X10 MM	
330	312105-0451	-		4	SCREW M6S ISO 4017 M8X20 A480	
350	312605-0318	-		2	HEXAGON NUT, M6M M8 A280	
400	315115-0165	-		8	WASHER PLAIN, TBRB 8,4/16 H=3	

This page is intentionally left blank.

ECM: 114548 - 20020930
Group number: 565462-0100
Assembly Drawing:

Pos	Part No	SP	UN	Qty	Description	Page No
TBA 0125S, TBA 0100B						
020	312105-0368	-		2	SCREW M6S M6X16 A280	
TBA 0330S, TBA 0300S, TBA 0180B, TBA 0160S, TBA 0200B, TBA 0250S, TBA 0284B, TBA 0200S, TBA 0200M, TBA 0250B						
020	312105-0370	-		2	SCREW M6S ISO 4017 M6X20 A480	
Common Parts						
010	1279087-0000	A		2	LOCKING PLATE	

Pos	Part No	SP	UN	Qty	Description	Page No

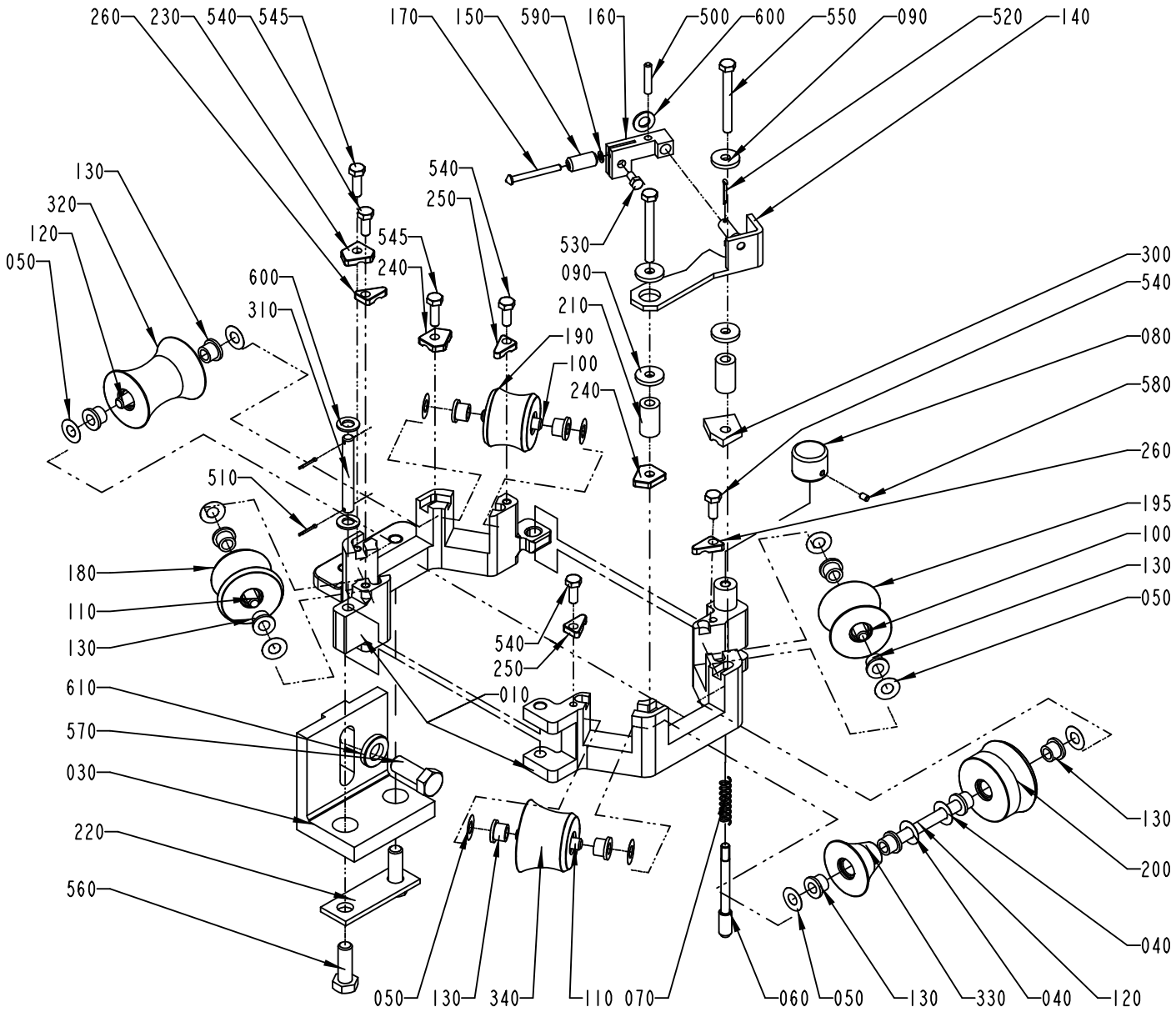

S-441486-7
ECN 72751

Pos	Part No	SP	UN	Qty	Description	Page No
TBA 0125S, TBA 0100B (See drawing on page: 122)						
010	469745-0000	-		1	BRACKET	
050	2033-0011	A		14	WASHER	
100	752186-0003	A		4	SHAFT	
120	752186-0006	A		1	SHAFT	
125	752185-0000	A		1	SHAFT	
130	90240-0172	A		12	FLANGE BUSHING, 8X12X10 MM	
180	752147-0000	A		1	FORMING ROLLER	
190	752148-0000	A		1	FORMING ROLLER	
195	752150-0000	A		1	FORMING ROLLER	
200	752151-0000	A		1	FORMING ROLLER	
300	456872-0000	A		1	LOCK PLATE	
320	752146-0000	A		1	FORMING ROLLER	
330	752152-0000	A		1	FORMING ROLLER	
340	752149-0000	A		1	FORMING ROLLER	
350	752156-0000	A		2	FLANGE BUSHING	
535	312105-0329	-		4	SCREW M6S ISO 4017 M5X16 A480	
536	312105-0332	-		4	SCREW M6S ISO 4017 M5X22 A480	
600	315105-0165	-		2	WASHER BRB8,4X16RFR	
TBA 0160S, TBA 0200S (See drawing on page: 122)						
010	469745-0000	-		1	BRACKET	
050	2033-0011	A		14	WASHER	
100	752186-0003	A		4	SHAFT	
120	752186-0006	A		1	SHAFT	
125	752185-0000	A		1	SHAFT	
130	90240-0172	A		12	FLANGE BUSHING, 8X12X10 MM	
180	752132-0000	A		1	FORMING ROLLER	
190	752133-0000	A		1	FORMING ROLLER	
195	752135-0000	A		1	FORMING ROLLER	
200	752136-0000	A		1	FORMING ROLLER	
300	456872-0000	A		1	LOCK PLATE	
320	752131-0000	A		1	FORMING ROLLER	
330	752137-0000	A		1	FORMING ROLLER	
340	752134-0000	A		1	FORMING ROLLER	
350	752156-0000	A		2	FLANGE BUSHING	
535	312105-0329	-		4	SCREW M6S ISO 4017 M5X16 A480	
536	312105-0332	-		4	SCREW M6S ISO 4017 M5X22 A480	
600	315105-0165	-		2	WASHER BRB8,4X16RFR	
TBA 0250S, TBA 0200M (See drawing on page: 124)						
010	574396-0000	-		1	BRACKET	
050	2033-0011	A		14	WASHER	
090	257175-0000	A		4	WASHER	
100	752186-0004	A		4	SHAFT	
120	752186-0006	A		1	SHAFT	
125	574395-0000	A		1	SHAFT	
130	90240-0172	A		12	FLANGE BUSHING, 8X12X10 MM	
140	574456-0000	-		1	BRACKET	
150	451117-0000	A		1	ROLL	
160	451148-0000	-		1	BRACKET	
170	451149-0000	A		1	SHAFT	
180	574397-0000	A		1	ROLL	
190	574399-0000	A		1	ROLL	
195	574400-0000	A		1	ROLL	
200	574401-0000	A		1	ROLL	
210	456181-0000	-		2	SPACER	
300	574393-0000	A		1	LOCK PLATE	
320	574398-0000	A		1	ROLL	
330	574402-0000	A		1	ROLL	
340	574403-0000	A		1	ROLL	
350	752156-0000	A		2	FLANGE BUSHING	
500	311103-0312	-		1	PARALLELL PIN, M6, 5X25 MM	
520	311411-0165	-		1	SPLIT PIN SP2,5X16RFR	
530	312105-0325	-		1	SCREW M6S ISO 4017 M5X10 A480	
535	312105-0329	-		4	SCREW M6S ISO 4017 M5X16 A480	
536	312105-0332	-		2	SCREW M6S ISO 4017 M5X22 A480	
550	312105-0381	-		2	SCREW M6S ISO 4014 M6X55 A480	
590	315105-0136	-		1	WASHER BRB4,3XRFR	
600	315105-0165	-		3	WASHER BRB8,4X16RFR	
TBA 0330S, TBA 0300S, TBA 0180B, TBA 0200B, TBA 0284B, TBA 0250B (See drawing on page: 120)						
010	978790-0000	-		1	BRACKET	
040	2033-0008	A		2	WASHER	
050	2033-0011	A		12	WASHER	
090	257175-0000	A		4	WASHER	
100	752186-0004	A		2	SHAFT	
110	752186-0005	A		2	SHAFT	
120	752186-0007	A		2	SHAFT	
130	90240-0172	A		14	FLANGE BUSHING, 8X12X10 MM	
140	441918-0000	-		1	BRACKET	
150	451117-0000	A		1	ROLL	
160	451148-0000	-		1	BRACKET	
170	451149-0000	A		1	SHAFT	

DIVIDED FORMING RING

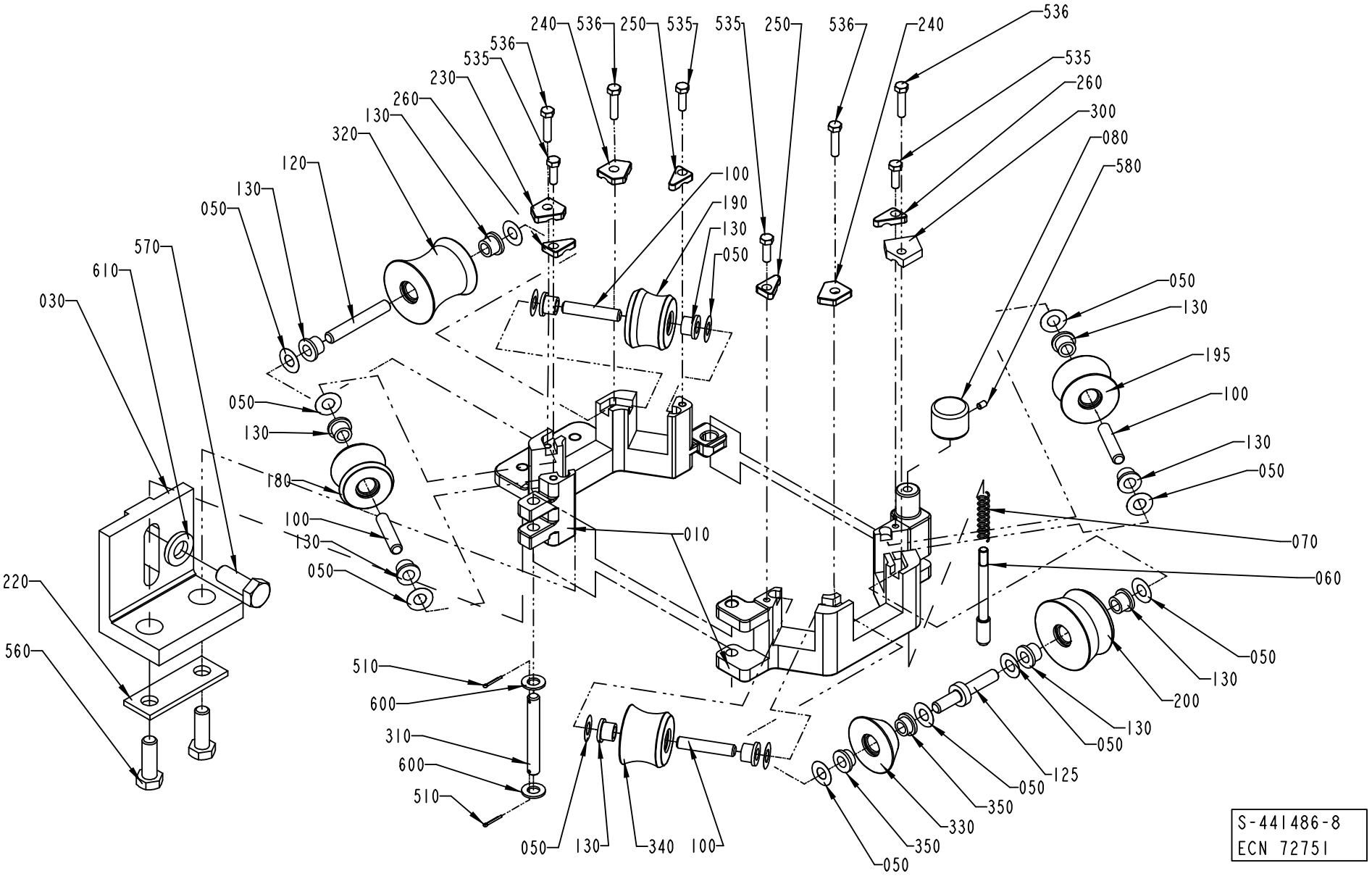

Pos	Part No	SP	UN	Qty	Description	Page No
TBA 0330S, TBA 0300S, TBA 0180B, TBA 0200B, TBA 0284B, TBA 0250B (Cont'd) (See drawing on page: 120)						
180	751499-0000	A		1	ROLL	
190	751497-0000	A		1	ROLL	
195	751496-0000	A		1	ROLL	
200	751495-0000	A		1	ROLL	
210	456181-0000	-		2	SPACER	
300	456199-0000	A		1	LOCK PLATE	
320	751498-0000	A		1	ROLL	
330	751501-0000	A		1	ROLL	
340	751500-0000	A		1	ROLL	
500	311103-0312	-		1	PARALLELL PIN, M6, 5X25 MM	
520	311411-0165	-		1	SPLIT PIN SP2,5X16RFR	
530	312105-0325	-		1	SCREW M6S ISO 4017 M5X10 A480	
540	312105-0368	-		4	SCREW M6S M6X16 A280	
545	312105-0370	-		2	SCREW M6S ISO 4017 M6X20 A480	
550	312105-0381	-		2	SCREW M6S ISO 4014 M6X55 A480	
590	315105-0136	-		1	WASHER BRB4,3XRFR	
600	315105-0165	-		3	WASHER BRB8,4X16RFR	
Common Parts						
030	456230-0000	-		1	ANGLE BRACKET	
060	35918-0000	A		1	SHAFT	
070	35919-0000	A		1	COMPRESSION SPRING	
080	36325-0000	-		1	KNOB	
220	456182-0000	-		1	PLATE	
230	1279086-0000	A		1	LOCKING PLATE	
240	1279090-0000	A		2	LOCKING PLATE	
250	1279093-0000	A		2	LOCKING PLATE	
260	1279094-0000	A		2	LOCKING PLATE	
310	751318-0000	A		1	SHAFT	
510	311411-0150	-		2	SPLIT PIN SP2X12RFR	
560	312105-0495	-		2	SCREW M6S ISO 4017 M10X30 A480	
570	312105-0536	-		1	SCREW M6S ISO 4017 M12X30 A480	
580	312318-0285	-		1	SCREW ISO4029 M4X6 A4	
610	315115-0178	-		1	WASHER PLAIN, TBRB 13/24 H=4	

Pos	Part No	SP	UN	Qty	Description	Page No

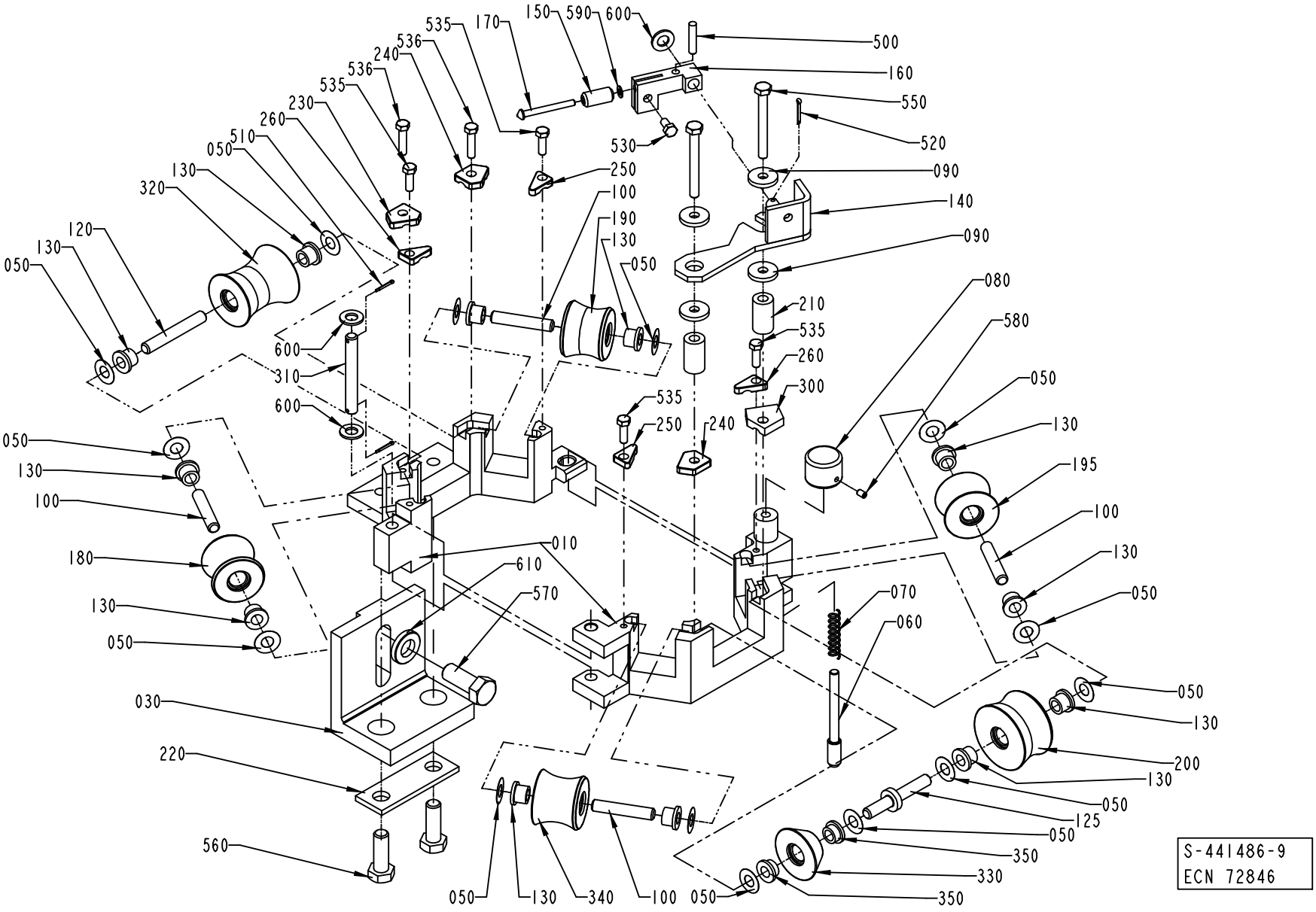
500
160
550
520
090
140
090
080
580
050
130
195
100
130
050
050
130
200
130
050
125
050
350
330
350
050
130
340
100
050
560
220
030
180
130
050
050
130
100
120
320
230
260
510
050
130
535
536
240
536
535
170
150
590
600
530
250
100
190
130
050
600
310
600
210
535
260
300
535
250
240
010
610
570
070
060
S-441486-9
ECN 72846

Pos	Part No	SP	UN	Qty	Description	Page No
SEE PREVIOUS LISTS PAGES: 121, 123.						

Pos	Part No	SP	UN	Qty	Description	Page No

Machine Type	Group Description	Used-In	Group Number	Page No

LOWER FORMING RING

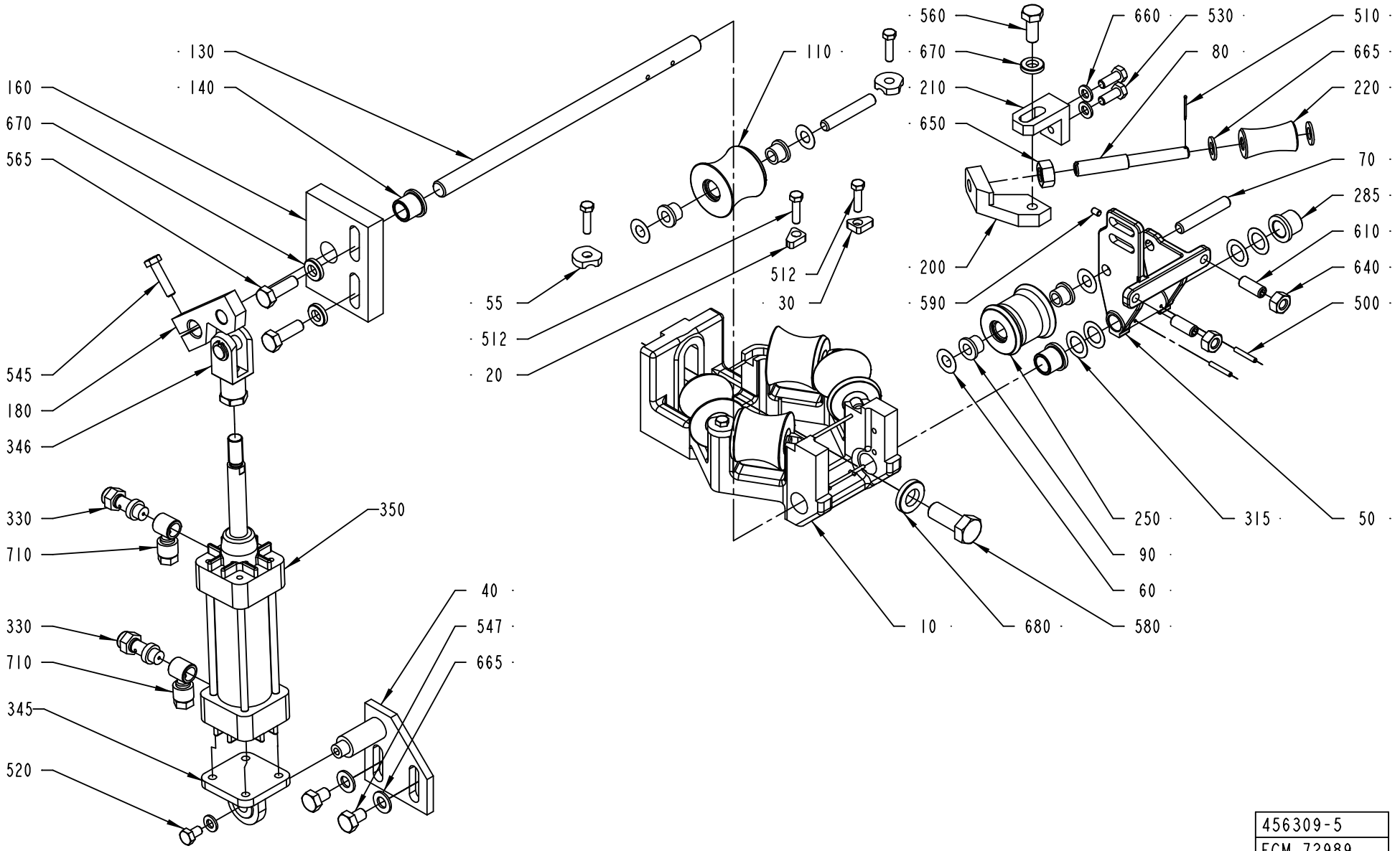

456309-5
ECM 72989

ECM: 114549 - 20020930
Group number: 456309-0600
Assembly Drawing: 456309-5_1_AC

This list covers pages from 126 to 129

Pos	Part No	SP	UN	Qty	Description	Page No
TBA 0125S, TBA 0100B (See drawing on page: 128)						
010	456837-0000	-		1	HOLDER	
050	257041-0000	-		1	FORK	
070	752186-0003	-		4	SHAFT	
075	752186-0012	-		2	SHAFT	
110	752153-0000	A		5	FORMING ROLLER	
140	255970-0000	A		3	BUSHING	
160	571544-0000	-		1	BEARING PLATE	
250	752155-0000	A		1	COUNTER ROLLER	
	90166-0179	*-*	*M*	*1*	*SHRINKABLE HOSE*	
512	312105-0331	-		2	SCREW M6S ISO 4017 M5X20 A480	
540	312105-0370	-		4	SCREW M6S ISO 4017 M6X20 A480	
600	312318-0368	-		2	SCREW ISO4029 M6X16 A4	
630	312605-0316	-		2	HEXAGON NUT, M6M M6 A280	
TBA 0160S, TBA 0200S (See drawing on page: 128)						
010	456837-0000	-		1	HOLDER	
050	257041-0000	-		1	FORK	
070	752186-0003	-		4	SHAFT	
075	752186-0012	-		2	SHAFT	
110	752138-0000	A		5	FORMING ROLLER	
140	255970-0000	A		3	BUSHING	
160	571544-0000	-		1	BEARING PLATE	
250	752140-0000	A		1	COUNTER ROLLER	
	90166-0179	*-*	*M*	*1*	*SHRINKABLE HOSE*	
512	312105-0331	-		2	SCREW M6S ISO 4017 M5X20 A480	
540	312105-0370	-		4	SCREW M6S ISO 4017 M6X20 A480	
600	312318-0368	-		2	SCREW ISO4029 M6X16 A4	
630	312605-0316	-		2	HEXAGON NUT, M6M M6 A280	
TBA 0250S, TBA 0200M (See drawing on page: 128)						
010	574337-0000	-		1	BRACKET	
050	574341-0000	-		1	FORK	
070	752186-0003	-		1	SHAFT	
075	752186-0004	-		5	SHAFT	
110	574346-0000	A		5	ROLL	
140	255970-0000	A		3	BUSHING	
160	571544-0000	-		1	BEARING PLATE	
250	574347-0000	A		1	COUNTER ROLLER	
512	312105-0331	-		2	SCREW M6S ISO 4017 M5X20 A480	
540	312105-0370	-		4	SCREW M6S ISO 4017 M6X20 A480	
600	312318-0368	-		2	SCREW ISO4029 M6X16 A4	
630	312605-0316	-		2	HEXAGON NUT, M6M M6 A280	
TBA 0330S, TBA 0300S, TBA 0180B, TBA 0200B, TBA 0284B, TBA 0250B (See drawing on page: 126)						
010	490518-0000	-		1	HOLDER	
050	257040-0000	-		1	FORK	
070	752186-0005	-		6	SHAFT	
110	751502-0000	A		5	ROLLER	
140	255970-0000	A		1	BUSHING	
160	571543-0000	-		1	BEARING PLATE	
250	751503-0000	A		1	COUNTER ROLLER	
	90166-0179	*-*	*M*	*1*	*SHRINKABLE HOSE*	
285	752047-0000	A		2	BUSHING	
512	312105-0331	-		6	SCREW M6S ISO 4017 M5X20 A480	
610	312318-0451	-		2	SCREW ISO4029 M8X20 A4	
640	312605-0318	-		2	HEXAGON NUT, M6M M8 A280	
Common Parts						
020	1279095-0000	A		1	LOCKING PLATE	
030	1279096-0000	A		1	LOCKING PLATE	
040	491022-0000	-		1	CYLINDER BRACKET	
055	1279092-0000	A		4	LOCKING PLATE	
060	2033-0011	A		12	WASHER	
080	239440-0000	-		1	SHAFT	
090	90240-0172	A		12	FLANGE BUSHING, 8X12X10 MM	
130	255969-0000	-		1	SHAFT	
180	441483-0000	-		1	CYLINDER BRACKET	
200	257042-0000	-		1	BRACKET	
210	257043-0000	-		1	ANGLE BRACKET	
220	257044-0000	A		1	ROLL	
315	752038-0000	-		4	SHIM	
330	90235-0274	-		2	THROTTLE CHECK VALVES,G1/8"	
345	90239-0453	-		1	BRACKET	
346	90239-0516	-		1	ROD END, CLEVIS WITH AXLE M10X1,25	
350	90239-0779	A		1	CYLINDER	
	90239-0442	*C*		*1*	*SEAL KIT*	
500	311103-0238	-		2	PARALLELL PIN ISO2338 3X20 A1	
510	311411-0140	-		1	SPLIT PIN SP1,6X16RFR	
520	312105-0364	-		1	SCREW M6S ISO 4017 M6X10 A480	
530	312105-0368	-		2	SCREW M6S M6X16 A280	
545	312105-0372	-		1	SCREW M6S ISO 4017 M6X25 A480	
547	312105-0447	-		2	SCREW M6S ISO 4017 M8X12 A480	
560	312105-0451	-		1	SCREW M6S ISO 4017 M8X20 A480	

Machine Type | Group Description | Used-In | Group Number | Page No

LOWER FORMING RING

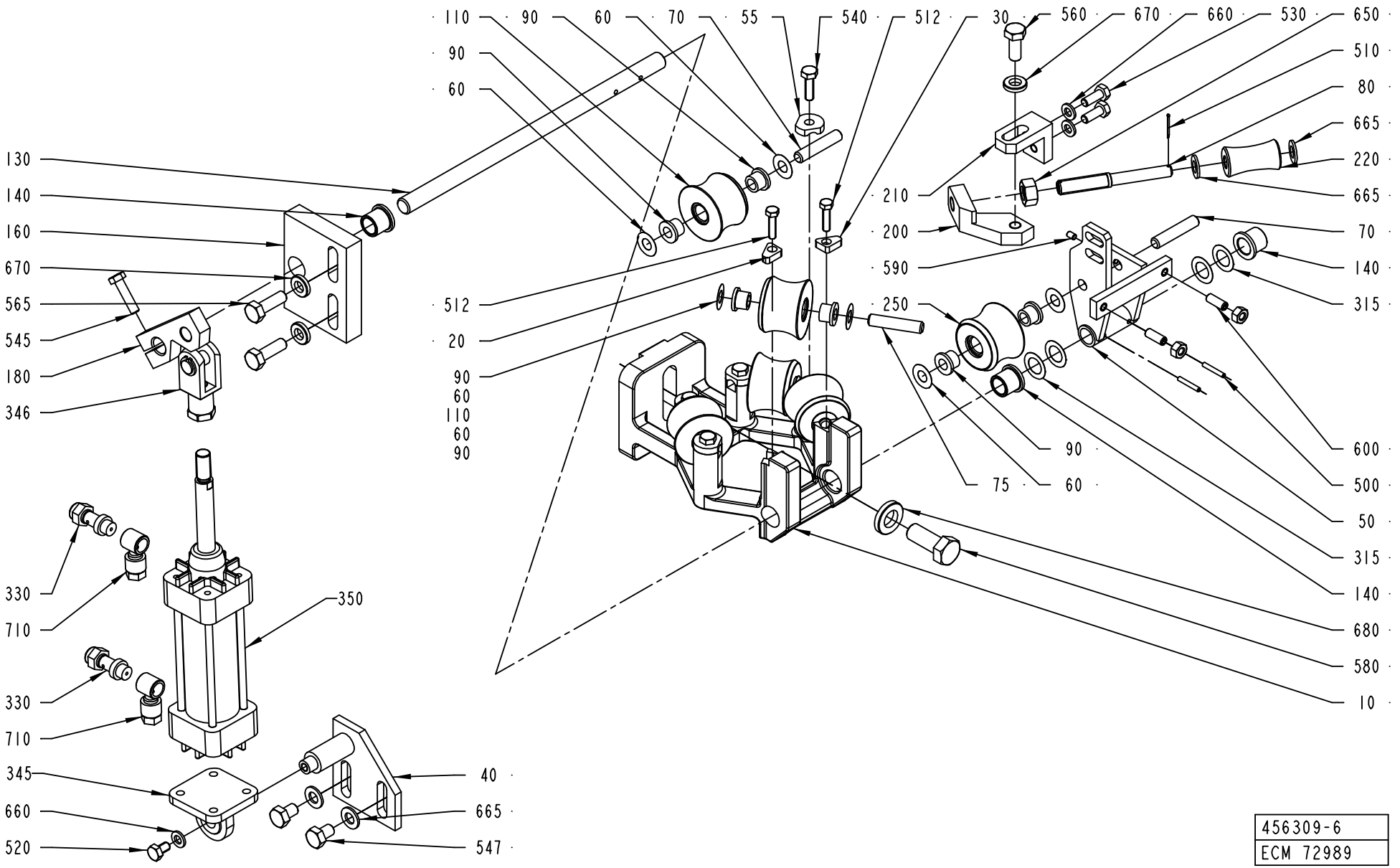

456309-6
ECM 72989

Pos	Part No	SP	UN	Qty	Description	Page No
Common Parts (Cont'd)						
565	312105-0453	-		2	SCREW M6S ISO 4017 M8X25 A480	
580	312105-0536	-		1	SCREW M6S ISO 4017 M12X30 A480	
590	312318-0285	-		1	SCREW ISO4029 M4X6 A4	
650	312605-0320	-		1	HEXAGON NUT, M6M M10 A280	
660	315105-0153	-		3	WASHER BRB6,4X12RFR	
665	315105-0165	-		4	WASHER BRB8,4X16RFR	
670	315115-0165	-		3	WASHER PLAIN, TBRB 8,4/16 H=3	
680	315115-0178	-		1	WASHER PLAIN, TBRB 13/24 H=4	
710	342797-0121	-		2	CONN. BANJO, RINGPIECE 6-1/8	

Pos	Part No	SP	UN	Qty	Description	Page No

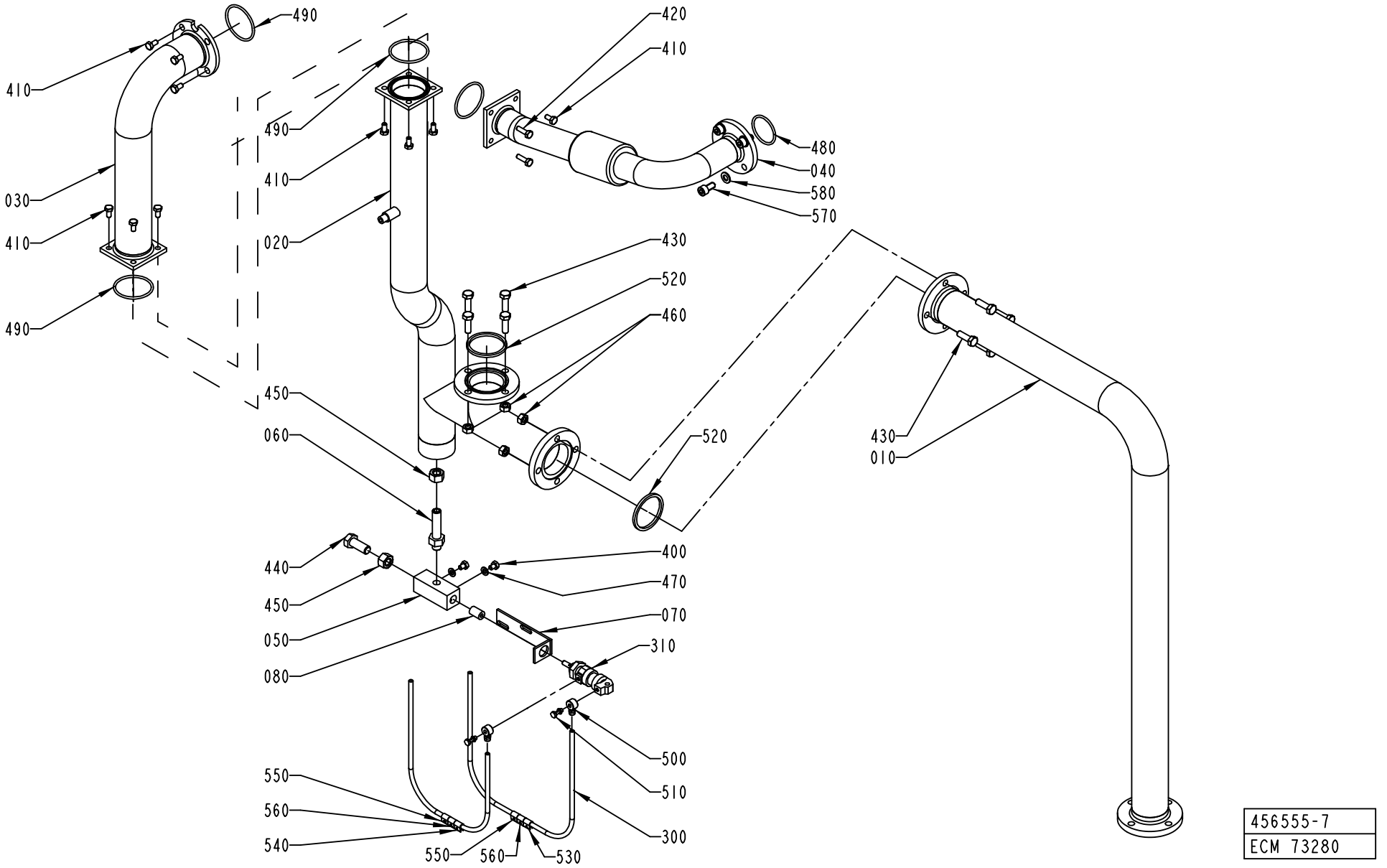
490
410
490
420
410
480
040
580
570
410
030
410
490
020
430
520
460
450
060
520
430
010
440
450
050
080
400
470
070
310
500
510
300
550
560
540
550
560
530
456555-7
ECM 73280

ECM: 114559 - 20020930
Group number: 456555-0600
Assembly Drawing: 456555-7_1_AA

Pos	Part No	SP	UN	Qty	Description	Page No
-						
010	1519401-0000	-		1	SUCTION PIPE	
020	1519402-0000	-		1	SUCTION PIPE	
030	1519403-0000	-		1	SUCTION PIPE	
040	2528095-0000	-		1	PIPE	
050	572487-0000	-		1	THROTTLING	
060	566669-0000	-		1	NIPPLE	
070	572485-0000	-		1	BRACKET	
080	572486-0000	-		1	PISTON	
300	90166-0124	-	MM	2000	TUBE 6 MM PA,TRANSP.	
310	90239-0840	A		1	DOUBLE ACTING, MINI-ISO, CYL.16-12	
400	312105-0362	-		2	SCREW M6S ISO 4017 M6X8 A480	
410	312105-0366	-		14	SCREW M6S M6X12 A280	
420	312105-0370	-		2	SCREW M6S ISO 4017 M6X20 A480	
430	312105-0453	-		8	SCREW M6S ISO 4017 M8X25 A480	
440	312105-0536	-		1	SCREW M6S ISO 4017 M12X30 A480	
450	312605-0322	-		2	HEXAGON NUT, M6M M12 A280	
460	312605-0318	-		8	HEXAGON NUT, M6M M8 A280	
470	315105-0153	-		2	WASHER BRB6,4X12RFR	
480	927422-0015	A		1	O-RING 39.2X3 SILICON	
490	927422-0008	A		4	O-RING 49.5X3 SILICON	
500	342980-0111	-		2	BANJO-CONNECTION,RING 6/4-M5	
510	342980-0301	-		2	BANJO-HOLLOW BOLT COUPL.,EXT.THREA.01-M5	
	315233-0101	*C*		*1*	*WASHER CAPTIVE SEALING M5*	
520	315229-0105	A		2	GASKETS, 48,5X55,5X3,7 MM 2" FDA	
530	359000-0400	-		1	MARKING CO2/4"0"	
540	359000-0401	-		1	MARKING COLLAR 2/4 "1" YELLOW	
550	359000-0402	-		2	MARKING COLLAR 2/4 "2" YELLOW	
560	359000-0403	-		2	MARKING COLLAR PA2/4 "3" YELLOW	
570	312115-0449	-		4	SCREW ISO4762 M8X16 A4	
580	315105-0165	-		4	WASHER BRB8,4X16RFR	

Pos	Part No	SP	UN	Qty	Description	Page No

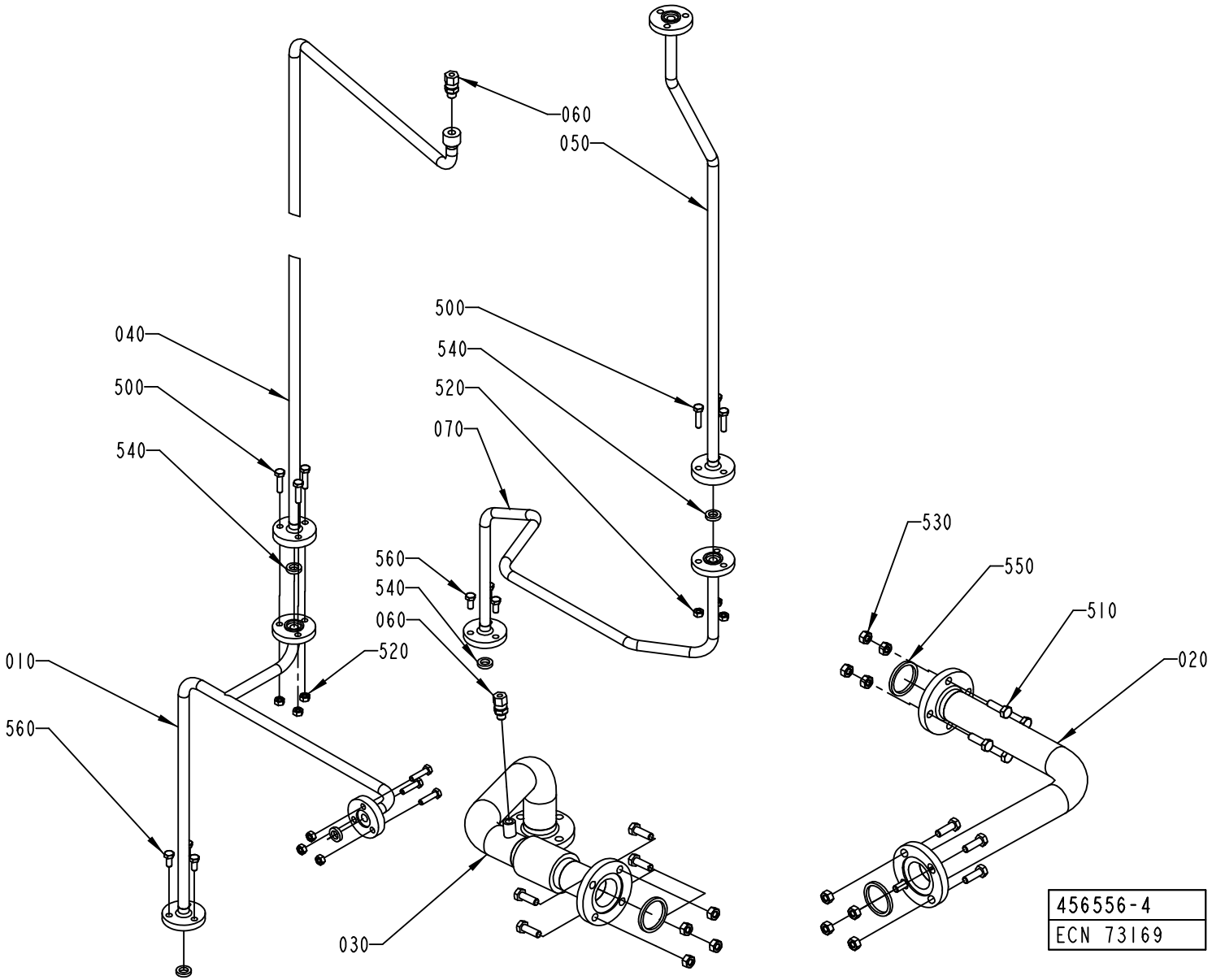
060
050
040
500
540
500
540
520
070
560
540
060
520
010
560
030
530
550
510
020
456556-4
ECN 73169

ECM: 114553 - 20020930
Group number: 456556-0400
Assembly Drawing: 456556-4_1_AA

Pos	Part No	SP	UN	Qty	Description	Page No
-						
010	1523049-0000	-		1	PIPE	
020	1523050-0000	-		1	PIPE	
030	1523051-0000	-		1	PIPE	
040	1523052-0000	-		1	PIPE	
050	1523053-0000	-		1	PIPE	
060	90030-0184	-		2	CONN. STR. GA-6-G1/8	
070	1548315-0000	-		1	PIPE	
500	312105-0372	-		9	SCREW M6S ISO 4017 M6X25 A480	
510	312105-0453	-		8	SCREW M6S ISO 4017 M8X25 A480	
520	312605-0316	-		9	HEXAGON NUT, M6M M6 A280	
530	312605-0318	-		12	HEXAGON NUT, M6M M8 A280	
540	315229-0101	A		5	GASKETS, 10,4X17,4X3,7 MM 1/2" FDA	
550	315229-0104	A		3	GASKETS, 35,8X42,8X3,7 MM 1"1/2 FD	
560	312105-0367	-		6	SCREW M6S M6X14 A280	

Pos	Part No	SP	UN	Qty	Description	Page No

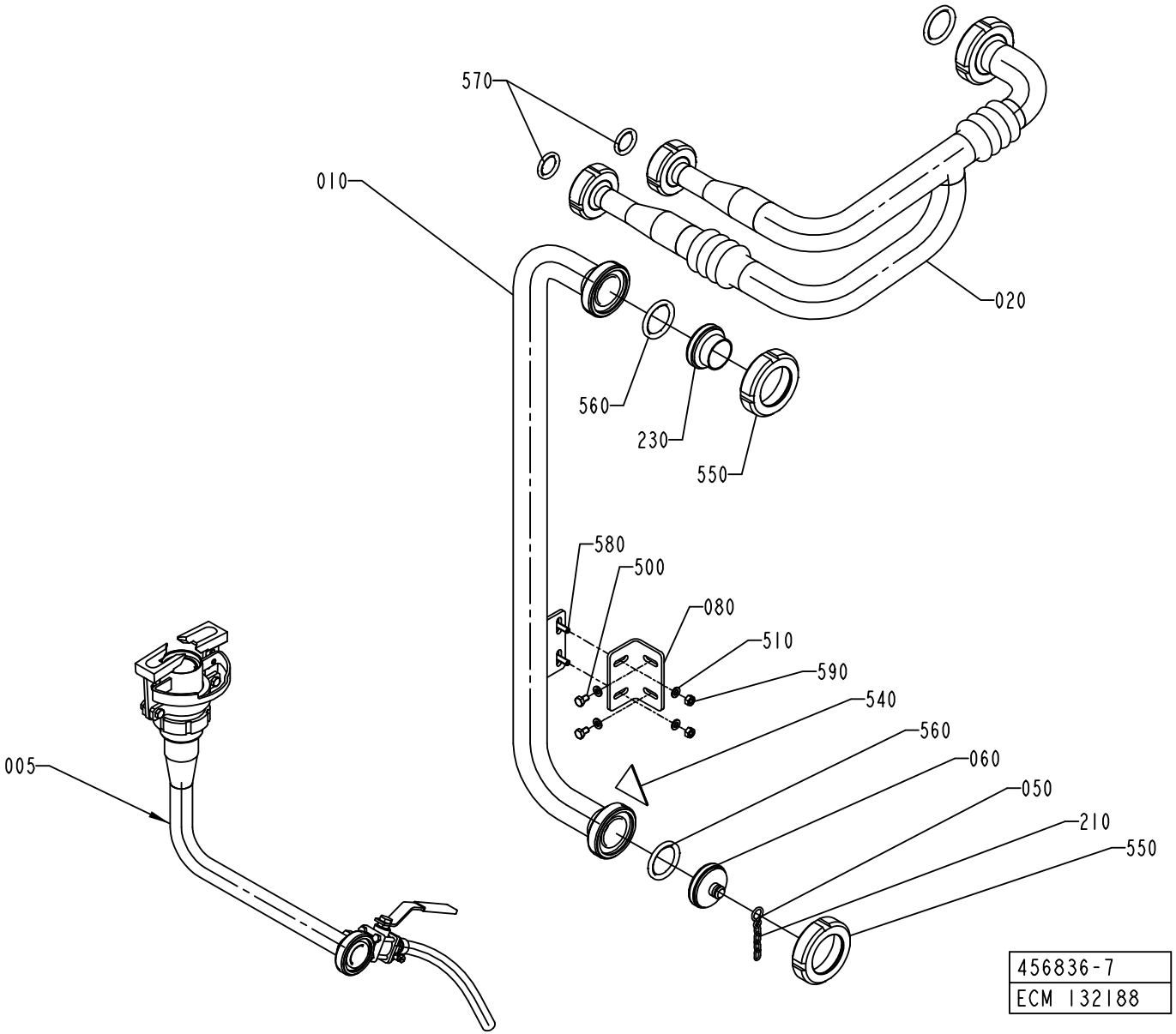
570
010
020
560
230
550
580
500
080
510
590
540
560
060
050
210
550
005
456836-7
ECM 132188

ECM: 117687 - 20030701
Group number: 456836-0600
Assembly Drawing: 456836-7_1_AB

Pos	Part No	SP	UN	Qty	Description	Page No
-						
005	752495-0300	-		1	ATTACHMENT	**137**
010	1523365-0000	-		1	PIPE	
020	1523366-0000	-		1	PIPE	
050	209183-0000	-		1	RING	
060	1523364-0000	-		1	LID	
080	1548833-0000	-		1	BRACKET	
210	90155-0016	-	MM	300	HANGER CHAIN, HL3-2	
230	90217-0204	-		1	ASEPT. MALE FITTING ISO, 03-32-406/42	
500	312105-0364	-		2	SCREW M6S ISO 4017 M6X10 A480	
510	315105-0153	-		4	WASHER BRB6,4X12RFR	
540	359705-0003	A		1	WARNING SIGN ISO, DANGEROUS CHEMICALS	
550	90217-0206	-		2	UNION NUT, 1 1/2 APV, 07-01-376/17	
560	90217-0348	A		3	GASKET 35,4X46,8X4 MM	
570	90217-0347	A		2	GASKET 32X22,6X3,6 MM	
580	312105-0370	-		2	SCREW M6S ISO 4017 M6X20 A480	
590	312605-0316	-		2	HEXAGON NUT, M6M M6 A280	

Pos	Part No	SP	UN	Qty	Description	Page No

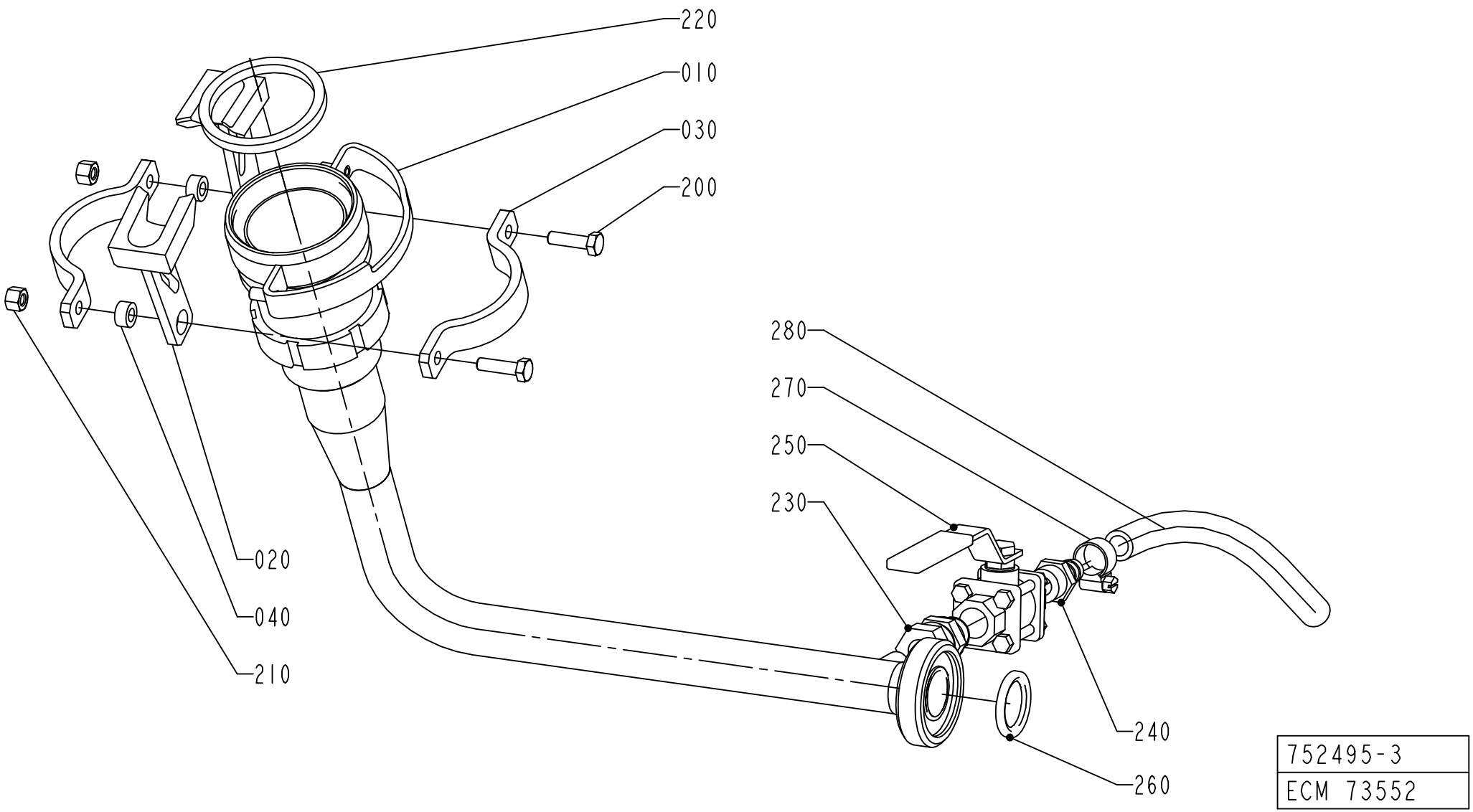
220
010
030
200
280
270
250
230
020
040
210
240
260
752495-3
ECM 73552

ECM: 114408 - 20020930
Group number: 752495-0300
Assembly Drawing: 752495-3_1_AA

Pos	Part No	SP	UN	Qty	Description	Page No
TBA 0160S, TBA 0125S, TBA 0100B, TBA 0200S						
010	1499408-0000	-		1	CLEANING PIPE	
020	979728-0000	-		2	CATCH	
220	315229-0104	A		1	GASKETS, 35,8X42,8X3,7 MM 1"1/2 FD	
TBA 0250S, TBA 0200M						
010	1519938-0000	-		1	CLEANING PIPE	
020	579771-0000	-		2	CATCH	
220	12242-0003	A		1	GASKET 48X38X5,5	
TBA 0330S, TBA 0300S, TBA 0180B, TBA 0200B, TBA 0284B, TBA 0250B						
010	1512123-0000	-		1	CLEANING PIPE	
020	579637-0000	-		2	CATCH	
220	12242-0005	A		1	GASKET 61X51X5,5	
Common Parts						
030	752499-0000	-		2	RING	
040	553586-0000	-		2	SPACER	
200	312105-0371	-		2	SCREW M6S ISO 4017 M6X22 A480	
210	312811-0316	-		2	NUT HEX.LOCK HELI COIL MID GRIP M6 SS	
230	90030-0187	-		1	CONN. STR. GA-12-G3/8	
240	90163-0041	-		1	HOSE NIPPLE, EXT.THR. 3/8-12 MM	
250	90187-0051	-		1	BALL VALVE G3/8 PTFE	
260	90217-0347	A		1	GASKET 32X22,6X3,6 MM	
270	342991-0101	-		1	HOSE CLIP,WORM DRIVE TYPE (13)-16	
280	90166-0138	-	MM	1500	HOSE	

Pos	Part No	SP	UN	Qty	Description	Page No

Machine Type | Group Description | Used-In | Group Number | Page No

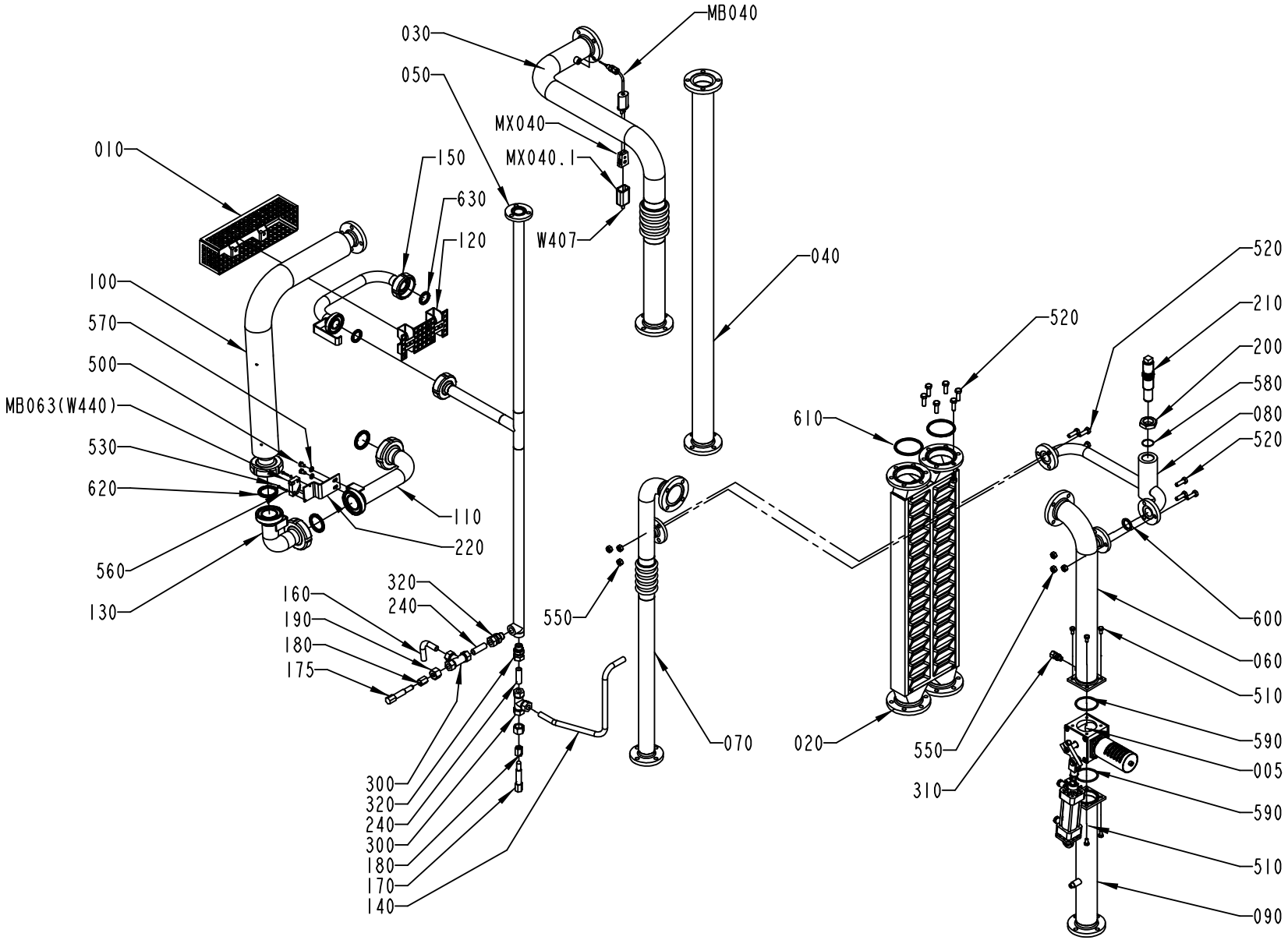

456976-13
ECM 73280

ECM: 114554 - 20020930
Group number: 456976-0700
Assembly Drawing: 456976-13_1_AA

Pos	Part No	SP	UN	Qty	Description	Page No
-						
005	476859-0300	-		1	WEAC-VALVE	**141**
010	1348477-0000	-		1	TOUCH GUARD	
020	978838-0000	-		1	HEAT EXCHANGER	
030	1519380-0000	-		1	PIPE	
040	1519381-0000	-		1	PIPE	
050	1519382-0000	-		1	PIPE	
060	1519383-0000	-		1	PIPE	
070	979028-0000	-		1	PIPE	
080	979031-0000	-		1	PIPE	
090	1519384-0000	-		1	PIPE	
100	1519385-0000	-		1	PIPE	
110	1519386-0000	-		1	PIPE	
120	1348637-0000	-		1	TOUCH GUARD	
130	1519387-0000	-		1	PIPE	
140	1260481-0000	-		1	PIPE	
150	1519388-0000	-		1	PIPE	
160	1260480-0000	-		1	PIPE	
170	209145-0000	-		1	THROTTLE SCREW	
175	1478767-0000	-		1	THROTTLE SCREW	
180	209146-0000	-		2	BARRIER NUT	
190	279589-0000	-		2	NUT	
200	442237-0000	-		1	NUT	
210	490998-0000	-		1	THROTTLE SCREW	
220	979109-0000	-		1	HOLDER	
240	1260489-0000	-		2	PIPE	
300	90030-0058	-		2	CONN. T-PIPE T-12	
310	90030-0184	-		1	CONN. STR. GA-6-G1/8	
320	90030-0187	-		2	CONN. STR. GA-12-G3/8	
500	312105-0364	-		2	SCREW M6S ISO 4017 M6X10 A480	
510	312105-0366	-		8	SCREW M6S M6X12 A280	
520	312105-0453	-		12	SCREW M6S ISO 4017 M8X25 A480	
530	312115-0228	-		2	SCREW ISO4762 M3X16 A4	
540	312115-0329	-		4	SCREW ISO4762 M5X16 A4	
550	312605-0318	-		12	HEXAGON NUT, M6M M8 A280	
560	315105-0124	-		2	WASHER BRB3,2X6RFR	
570	315105-0153	-		2	WASHER BRB6,4X12RFR	
580	315204-0119	A		1	O-RING 25,1X1,6 MM	
590	315204-0301	A		2	O-RING 49,5X3 MM	
600	315229-0203	A		2	GASKET 34,8X42,8X3,7 MM 1"1/2	
610	315229-0206	A		2	GASKET 60,2X68,2X3,7 MM 2"1/2	
620	90217-0348	A		3	GASKET 35,4X46,8X4 MM	
630	90217-0347	A		2	GASKET 32X22,6X3,6 MM	
MB040	90326-0051	A		1	THERMOCOUPLE, 12826-33	
MB063	90044-0194	A		1	PROX.SW. IN5329/IN3002-BPKG	
MX040	90326-0020	-		1	PLUG, FEMALE YELLOW CR-AL	
MX040.1	90326-0012	-		1	PROTECTIVE COVER, T31A4618	
W407	90220-0059	-	M	5	THERMOCOUPLE CABLE K/ 2X0,81MM2	

Machine Type | Group Description | Used-In | Group Number | Page No

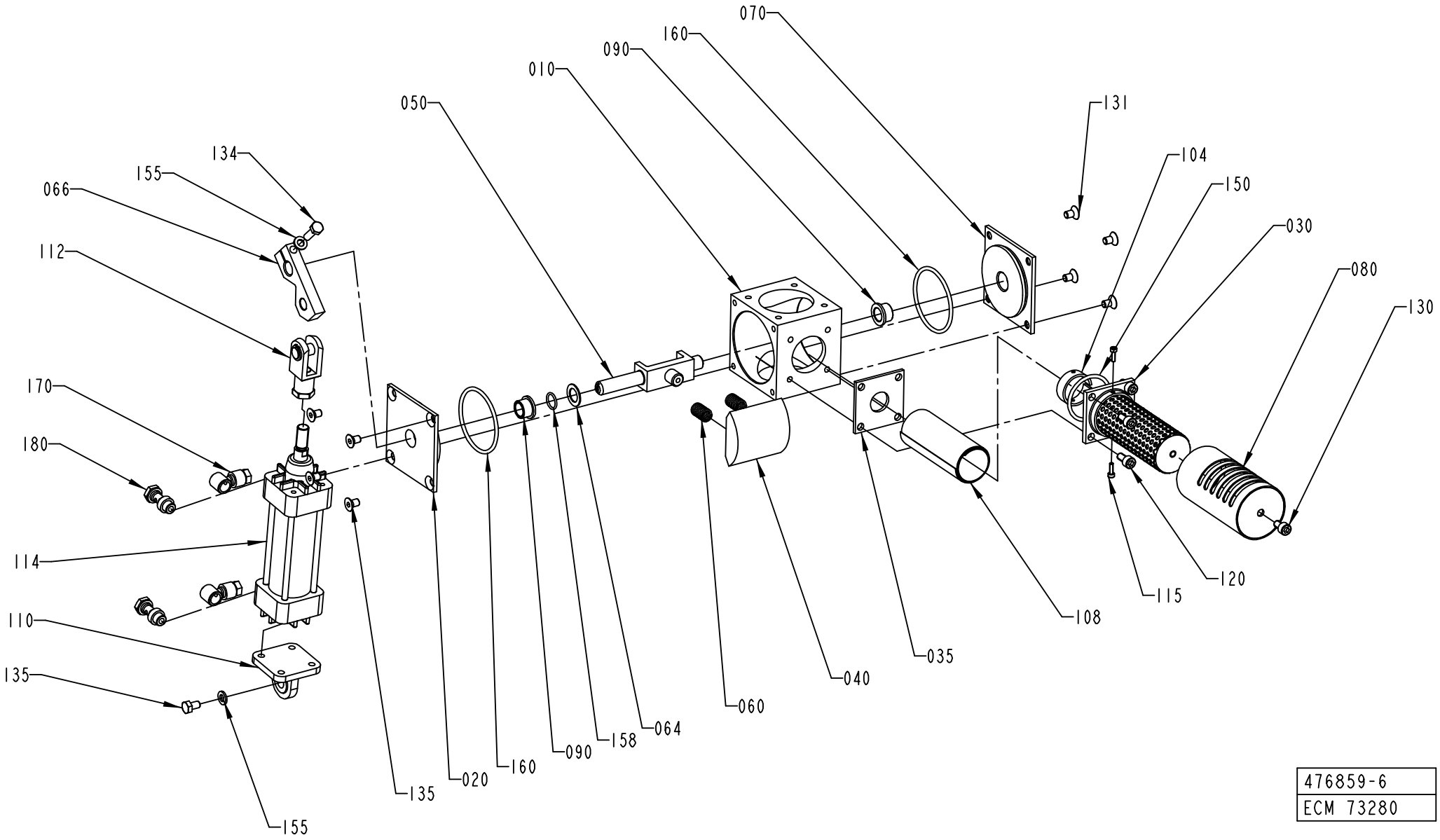

476859-6
ECM 73280

ECM: 114638 - 20020930
Group number: 476859-0300
Assembly Drawing: 476859-6_1_AC

Pos	Part No	SP	UN	Qty	Description	Page No
-						
010	578031-0000	-		1	VALVE HOUSING	
0010	*1282023-0002*	*-*		*1*	*CAST WORKPIECE*	
020	255874-0000	-		1	BEARING COVER	
030	466477-0000	-		1	INNER PIPE	
035	979953-0000	-		1	WASHER	
040	466479-0000	B		1	PIECE	
050	555541-0000	A		1	BRACKET	
060	21521-0000	A		2	COMPRESSION SPRING	
064	266737-0000	-		1	WASHER	
066	441483-0000	A		1	CYLINDER BRACKET	
070	255874-0000	A		1	BEARING COVER	
080	466478-0000	-		1	OUTER PIPE	
090	255875-0000	B		2	BUSHING	
104	466483-0000	-		1	CLAMPING PIECE	
108	466484-0000	-		1	NET	
110	90239-0453	-		1	BRACKET	
112	90239-0516	-		1	ROD END, CLEVIS WITH AXLE M10X1,25	
114	90239-0779	A		1	CYLINDER	
	90239-0442	*C*		*1*	*SEAL KIT*	
115	312115-0224	-		2	SCREW ISO4762 M3X10 A4	
120	312115-0366	-		4	SCREW ISO4762 M6X12 A4	
130	312115-0364	-		1	SCREW ISO4762 M6X10 A4	
131	312155-0364	-		8	SCREW EN 10642 MF6S M6X10 A480	
134	312105-0370	-		1	SCREW M6S ISO 4017 M6X20 A480	
135	312105-0364	-		1	SCREW M6S ISO 4017 M6X10 A480	
150	315204-0222	-		1	O-RING 36,2X3 MM	
155	315105-0153	-		2	WASHER BRB6,4X12RFR	
158	315204-0110	-		1	O-RING 12,1X1,6 MM	
160	315204-0302	B		2	O-RING 54,5X3 MM	
170	342797-0121	-		2	CONN. BANJO, RINGPIECE 6-1/8	
180	342980-0303	-		2	BANJO-HOLLOW BOLT COUPL,EXT.THR.01-G1/8"	

Pos	Part No	SP	UN	Qty	Description	Page No

Machine Type | Group Description | Used-In | Group Number | Page No

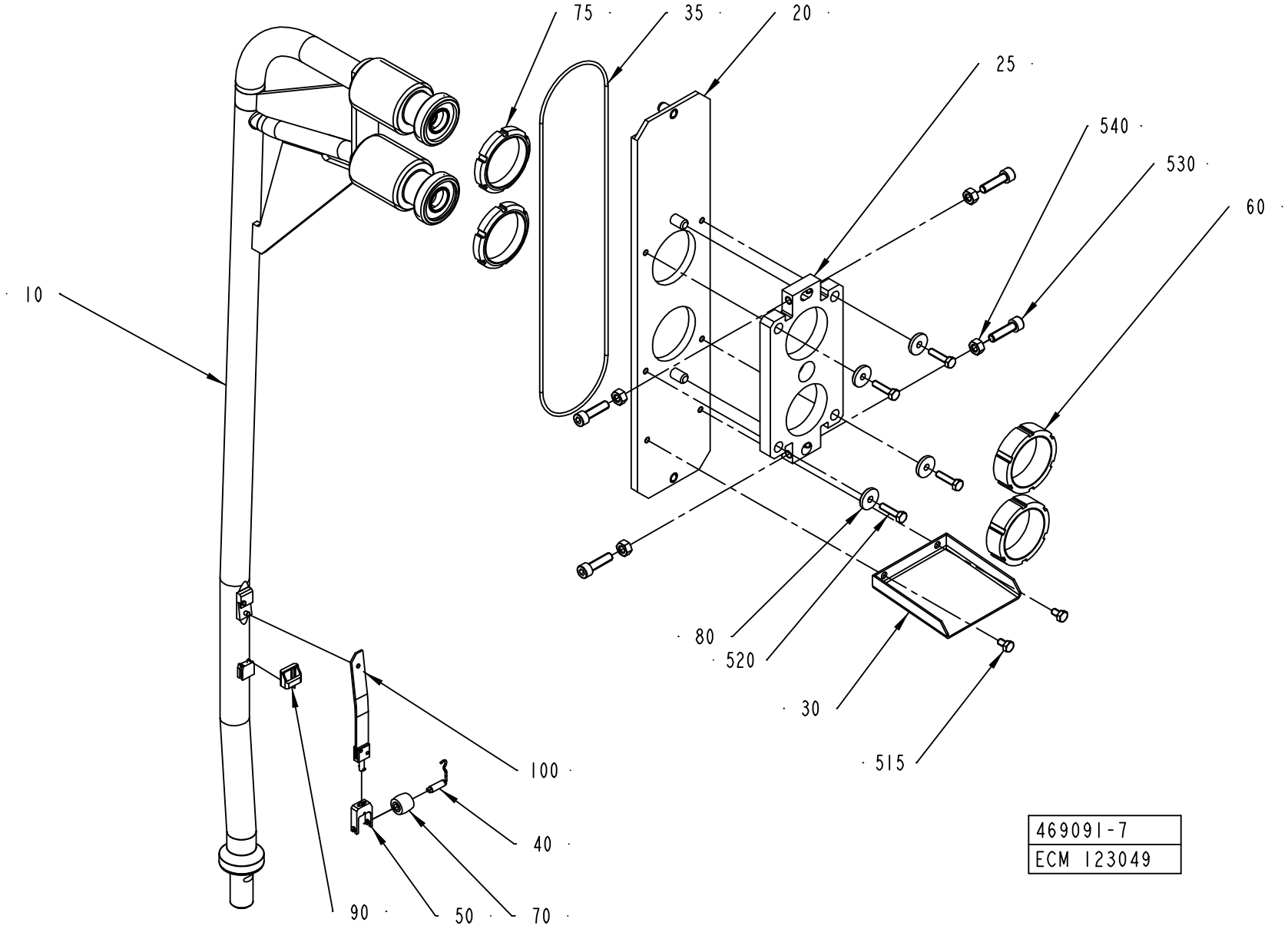
75
35
20
25
540
530
60
10
80
520
30
515
100
40
90
50
70
469091-7
ECM 123049

ECM: 122727 - 20030227
Group number: 469091-0500
Assembly Drawing: 469091-7_1_AB

Pos	Part No	SP	UN	Qty	Description	Page No
TBA 0125S, TBA 0100B						
010	1317914-0000	A		1	UPPER FILLING TUBE	
040	255977-0000	A		1	SHAFT	
050	255978-0000	A		1	FORK	
070	272479-0000	A		1	PRESSURE ROLLER	
090	491441-0000	A		1	HOOD	
100	1285580-0000	A		1	SPRING	
TBA 0160S, TBA 0200S						
010	1317914-0000	A		1	UPPER FILLING TUBE	
040	255977-0000	A		1	SHAFT	
050	255978-0000	A		1	FORK	
070	272479-0000	A		1	PRESSURE ROLLER	
090	295377-0001	A		1	HOOD	
100	1285580-0000	A		1	SPRING	
TBA 0250S, TBA 0200M						
010	1558442-0000	A		1	UPPER FILLING TUBE	
040	255977-0000	A		1	SHAFT	
050	255978-0000	A		1	FORK	
070	272479-0000	A		1	PRESSURE ROLLER	
090	295377-0001	A		1	HOOD	
100	1285580-0000	A		1	SPRING	
TBA 0330S, TBA 0300S, TBA 0180B, TBA 0200B, TBA 0284B, TBA 0250B						
010	1317989-0000	A		1	UPPER FILLING TUBE	
040	295376-0000	A		1	SHAFT	
050	568583-0000	A		1	FORK	
070	257330-0000	A		1	PRESSURE ROLLER	
090	295377-0002	A		1	HOOD	
100	1317991-0000	A		1	SPRING	
Common Parts						
020	1523222-0000	-		1	PLATE	
025	1523225-0000	-		1	FASTENING PLATE	
030	295984-0000	-		1	DRIP GUARD	
035	491418-0001	A		1	O-RING	
060	1523223-0000	-		2	NUT	
075	1523224-0000	-		2	NUT	
080	315125-0153	-		4	WASHER TBRSB 6,4X22X4 A4	
515	312105-0364	-		2	SCREW M6S ISO 4017 M6X10 A480	
520	312105-0372	-		4	SCREW M6S ISO 4017 M6X25 A480	
530	312115-0455	-		4	SCREW ISO4762 M8X30 A4	
540	312605-0318	-		4	HEXAGON NUT, M6M M8 A280	

Machine Type Group Description Used-In Group Number Page No

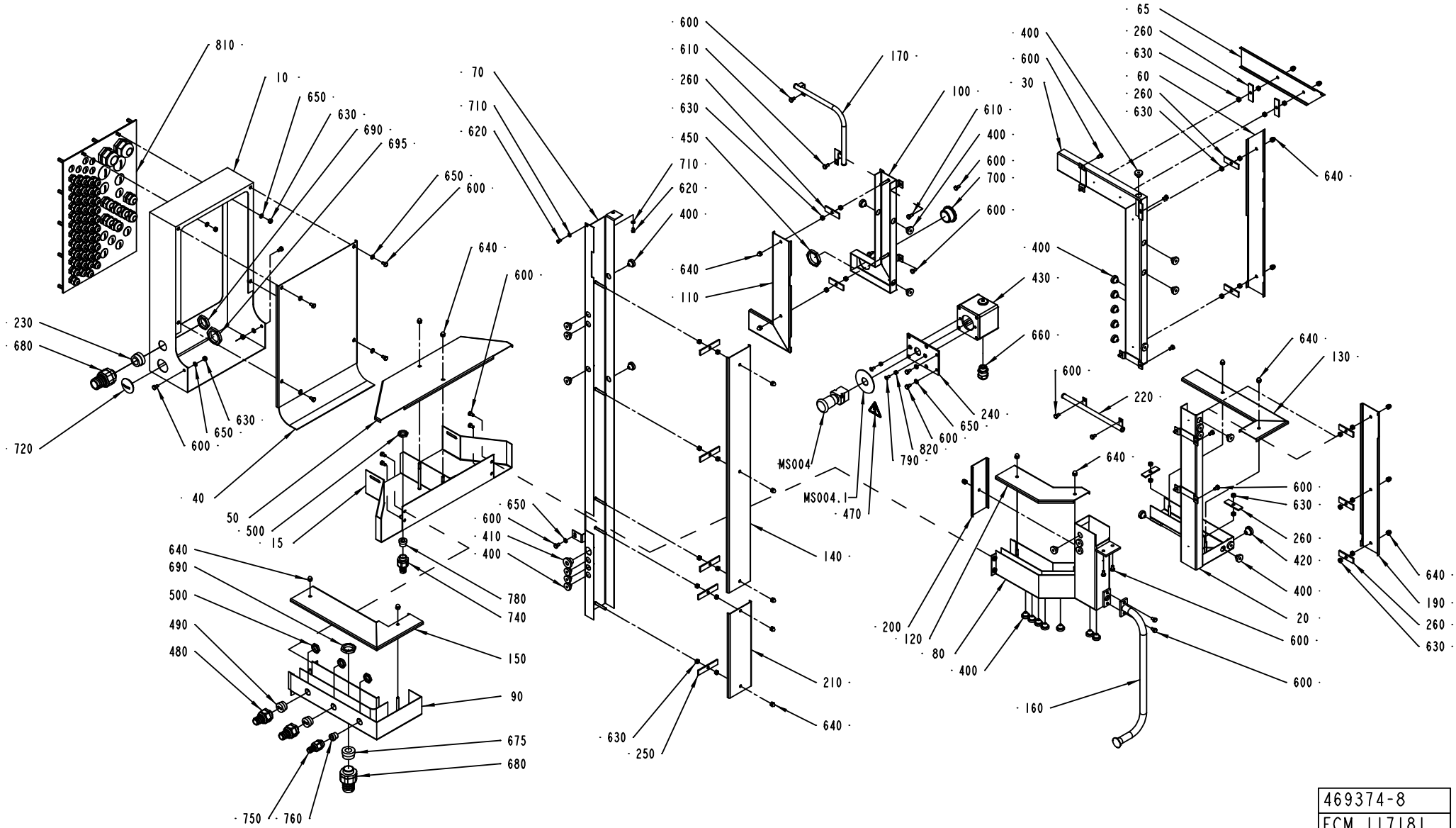

469374-8
ECM 117181

ECM: 117688 - 20030701
Group number: 469374-0600
Assembly Drawing: 469374-8_1_AB

This list covers pages from 144 to 147

Pos	Part No	SP	UN	Qty	Description	Page No
HI (See drawing on page: 146)						
-	-	-			-	
NOHI (See drawing on page: 144)						
720	90002-0010	-		1	BLANK-OFF PLUG, PR 37 SKINDICHT-BLK29	
Common Parts						
010	1517268-0000	-		1	CABLE TRENCH	
015	1517269-0000	-		1	CABLE TRENCH	
020	577462-0000	-		1	CABLE TRENCH	
030	577463-0000	-		1	CABLE TRENCH	
040	1517270-0000	-		1	LID	
050	1517271-0000	-		1	LID	
060	1334768-0000	-		1	LID	
065	1334769-0000	-		1	LID	
070	2526845-0000	-		1	CABLE TRENCH	
080	2526847-0000	-		1	CABLE TRENCH	
090	2526848-0000	-		1	CABLE TRENCH	
100	2526843-0000	-		1	CABLE TRENCH	
110	2526844-0000	-		1	LID	
120	577467-0000	-		1	LID	
130	577468-0000	-		1	LID	
140	578035-0000	-		1	LID	
150	2526846-0000	-		1	LID	
160	578500-0000	-		1	PIPE	
170	978540-0000	-		1	CABLE CONDUIT	
190	577469-0000	-		1	LID	
200	577470-0000	-		1	LID	
210	578496-0000	-		1	LID	
220	978539-0000	-		1	CABLE CONDUIT	
230	353249-0061	-		1	INSERT, SINGEL HOLE, EK 155/20	
240	2559093-0000	-		1	PLATE	
250	272945-0000	-		5	LOCK	
260	295466-0000	-		11	LOCK	
400	90015-0020	-		36	LEAD-IN, TET5-7, E-1458016	
410	90015-0021	-		1	LEAD-IN, TET10-14, E-1458023	
420	90015-0023	-		1	LEAD-IN, TET7-10, E-1458019	
430	2562665-0000	A		1	PUSH BUTTON BOX	
450	90099-0011	-		1	NUT PR 37 BRASS	
470	359705-0015	A		1	WARNING SIGN ISO, RISK OF ELECTRIC SHOCK	
480	90457-0146	-		2	EXTENDED WITHOUT INSERT,	
490	90457-0147	-		2	GLAND, INSERT, MULTI HOLE, 2X7	
500	90099-0117	-		4	NUT, PR 18,6 (PG11)	
600	312105-0364	-		32	SCREW M6S ISO 4017 M6X10 A480	
610	312105-0366	-		2	SCREW M6S M6X12 A280	
620	312125-0323	-		2	SCREW PAN HEAD MCS M5X8 SS	
630	312605-0316	-		36	HEXAGON NUT, M6M M6 A280	
640	312705-0316	-		23	NUT HEX. DOMED CAP MHM-6 M6 A280	
650	315105-0153	-		11	WASHER BRB6,4X12RFR	
660	90458-0315	-		1	CABLE GLAND, M20X1,5, NO.5311 1120	
675	353249-0016	-		1	INSERT, SINGEL HOLE, EK 155/18	
680	353243-0007	-		2	EXTENDED WITHOUT INSERT, PG21	
690	90099-0119	-		2	NUT, PR 28,3 (PG21)	
695	90099-0120	-		1	MUTTER PR 37 (PG29)	
700	352101-0107	-		1	LEAD-IN, PR37/PG29, E-1457537	
710	315105-0146	-		2	WASHER BRB5,3X10RFR	
740	353243-0003	-		1	EXTENDED WITHOUT INSERT, PG11	
750	353243-0002	-		1	EXTENDED WITHOUT INSERT, PG11	
760	353249-0010	-		1	INSERT, SINGEL HOLE, EK 152/11	
780	353249-0011	-		1	INSERT, SINGEL HOLE, EK 153/11	
790	312155-0327	-		2	SCREW EN 10642 MF6S M5X12 A480	
810	1511786-0100	-		1	TOWER CABLE INLETS	**149, 151**
820	312605-0314	-		2	HEXAGON NUT, M6M M5 A280	
MS004	90064-0124	A		1	SWITCH, EM. STOP, ZB2-BS844+ZB2-BZ1045	
MS004.1	486826-0001	A		1	SIGN "EMERGENCY STOP"	
W434	351150-0405	-	M	4	CABLE OLFLEX 5X0,75 MM2 LIGHT/GREY	

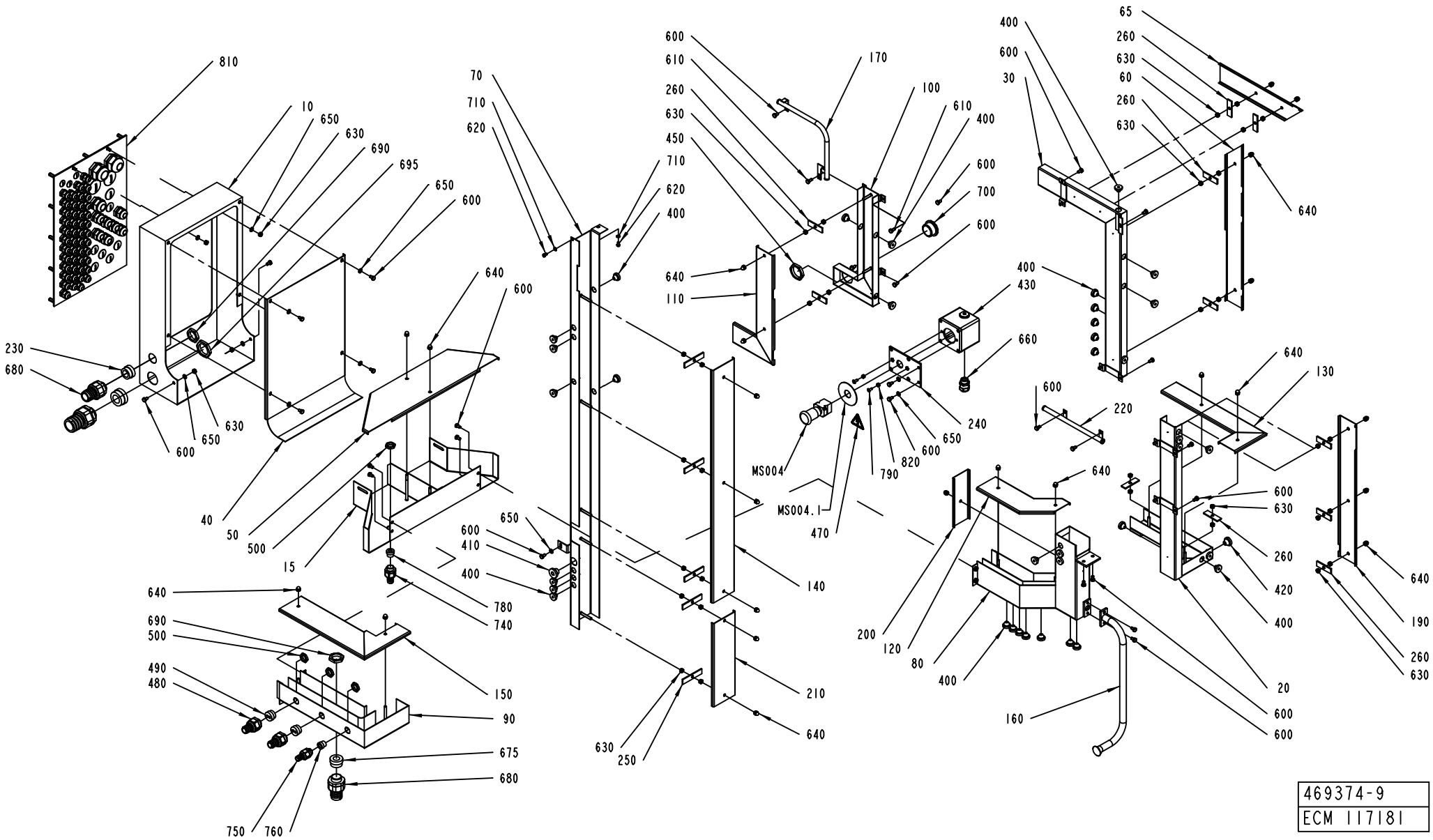

469374-9
ECM 117181

ECM: 117688 - 20030701
Group number: 469374-0600
Assembly Drawing: 469374-9_1_AB

This list covers pages from 144 to 147

Pos	Part No	SP	UN	Qty	Description	Page No
HI (See drawing on page: 146)						
-	-	-			-	
NOHI (See drawing on page: 144)						
720	90002-0010	-		1	BLANK-OFF PLUG, PR 37 SKINDICHT-BLK29	
Common Parts						
010	1517268-0000	-		1	CABLE TRENCH	
015	1517269-0000	-		1	CABLE TRENCH	
020	577462-0000	-		1	CABLE TRENCH	
030	577463-0000	-		1	CABLE TRENCH	
040	1517270-0000	-		1	LID	
050	1517271-0000	-		1	LID	
060	1334768-0000	-		1	LID	
065	1334769-0000	-		1	LID	
070	2526845-0000	-		1	CABLE TRENCH	
080	2526847-0000	-		1	CABLE TRENCH	
090	2526848-0000	-		1	CABLE TRENCH	
100	2526843-0000	-		1	CABLE TRENCH	
110	2526844-0000	-		1	LID	
120	577467-0000	-		1	LID	
130	577468-0000	-		1	LID	
140	578035-0000	-		1	LID	
150	2526846-0000	-		1	LID	
160	578500-0000	-		1	PIPE	
170	978540-0000	-		1	CABLE CONDUIT	
190	577469-0000	-		1	LID	
200	577470-0000	-		1	LID	
210	578496-0000	-		1	LID	
220	978539-0000	-		1	CABLE CONDUIT	
230	353249-0061	-		1	INSERT, SINGEL HOLE, EK 155/20	
240	2559093-0000	-		1	PLATE	
250	272945-0000	-		5	LOCK	
260	295466-0000	-		11	LOCK	
400	90015-0020	-		36	LEAD-IN, TET5-7, E-1458016	
410	90015-0021	-		1	LEAD-IN, TET10-14, E-1458023	
420	90015-0023	-		1	LEAD-IN, TET7-10, E-1458019	
430	2562665-0000	A		1	PUSH BUTTON BOX	
450	90099-0011	-		1	NUT PR 37 BRASS	
470	359705-0015	A		1	WARNING SIGN ISO, RISK OF ELECTRIC SHOCK	
480	90457-0146	-		2	EXTENDED WITHOUT INSERT,	
490	90457-0147	-		2	GLAND, INSERT, MULTI HOLE, 2X7	
500	90099-0117	-		4	NUT, PR 18,6 (PG11)	
600	312105-0364	-		32	SCREW M6S ISO 4017 M6X10 A480	
610	312105-0366	-		2	SCREW M6S M6X12 A280	
620	312125-0323	-		2	SCREW PAN HEAD MCS M5X8 SS	
630	312605-0316	-		36	HEXAGON NUT, M6M M6 A280	
640	312705-0316	-		23	NUT HEX. DOMED CAP MHM-6 M6 A280	
650	315105-0153	-		11	WASHER BRB6,4X12RFR	
660	90458-0315	-		1	CABLE GLAND, M20X1,5, NO.5311 1120	
675	353249-0016	-		1	INSERT, SINGEL HOLE, EK 155/18	
680	353243-0007	-		2	EXTENDED WITHOUT INSERT, PG21	
690	90099-0119	-		2	NUT, PR 28,3 (PG21)	
695	90099-0120	-		1	MUTTER PR 37 (PG29)	
700	352101-0107	-		1	LEAD-IN, PR37/PG29, E-1457537	
710	315105-0146	-		2	WASHER BRB5,3X10RFR	
740	353243-0003	-		1	EXTENDED WITHOUT INSERT, PG11	
750	353243-0002	-		1	EXTENDED WITHOUT INSERT, PG11	
760	353249-0010	-		1	INSERT, SINGEL HOLE, EK 152/11	
780	353249-0011	-		1	INSERT, SINGEL HOLE, EK 153/11	
790	312155-0327	-		2	SCREW EN 10642 MF6S M5X12 A480	
810	1511786-0100	-		1	TOWER CABLE INLETS	**149, 151**
820	312605-0314	-		2	HEXAGON NUT, M6M M5 A280	
MS004	90064-0124	A		1	SWITCH, EM. STOP, ZB2-BS844+ZB2-BZ1045	
MS004.1	486826-0001	A		1	SIGN "EMERGENCY STOP"	
W434	351150-0405	-	M	4	CABLE OLFLEX 5X0,75 MM2 LIGHT/GREY	

TOWER CABLE INLETS

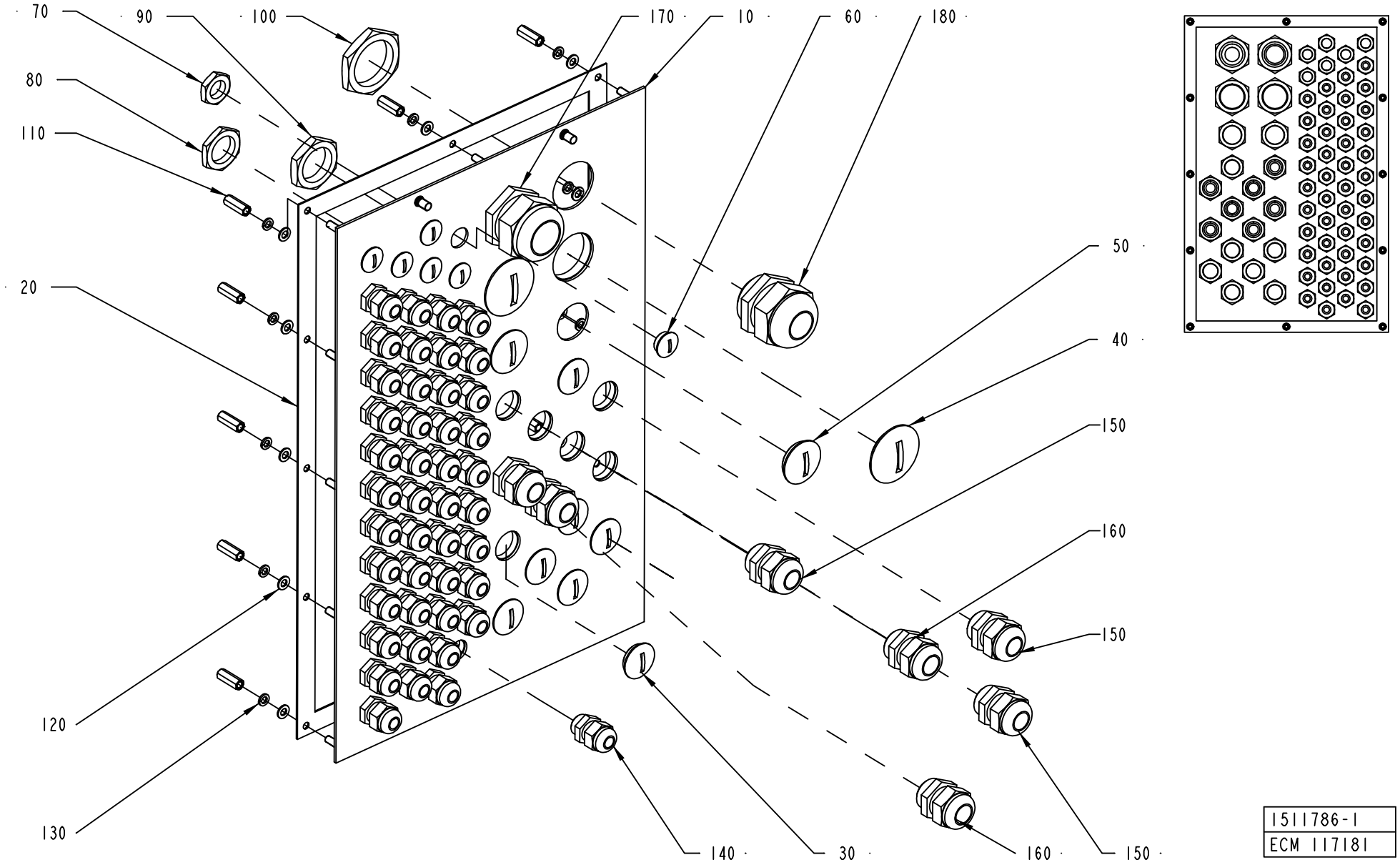

ECM: 134042 - 20030701
Group number: 1511786-0100
Assembly Drawing: 1511786-1_1_AC

This list covers pages from 148 to 151

Pos	Part No	SP	UN	Qty	Description	Page No
HI (See drawing on page: 150)						
050	90002-0012	-		1	BLANK-OFF PLUG, PR 28,3 SKINDICHT-BLK21	
060	90002-0013	-		3	BLANK-OFF PLUG, PR 15,2 SKINDICHT-BLK9	
140	352103-0101	-		47	CABLE GLAND, ST 9, PR15,2/PG9	
190	352103-0116	-		1	CABLE GLAND, ST 21, PR28,3/PG21	
NOHI (See drawing on page: 148)						
050	90002-0012	-		2	BLANK-OFF PLUG, PR 28,3 SKINDICHT-BLK21	
060	90002-0013	-		6	BLANK-OFF PLUG, PR 15,2 SKINDICHT-BLK9	
140	352103-0101	-		44	CABLE GLAND, ST 9, PR15,2/PG9	
Common Parts						
010	1511835-0000	-		1	PLATE	
020	1511836-0000	-		1	GASKET	
030	90002-0004	-		7	BLANK-OFF PLUG, PR 22,5 SKINDICHT-BLK16	
040	90002-0010	-		2	BLANK-OFF PLUG, PR 37 SKINDICHT-BLK29	
070	90099-0104	-		50	NUT, PR 15,2 (PG9)	
080	90099-0110	-		14	NUT, PR 22,5 (PG16)	
090	90099-0119	-		2	NUT, PR 28,3 (PG21)	
100	90099-0120	-		4	MUTTER PR 37 (PG29)	
110	1517676-0000	-		12	SPACER	
120	315105-0146	-		12	WASHER BRB5,3X10RFR	
130	315402-0146	-		12	LOCK WASHER FBB 5,1	
150	352103-0110	-		5	CABLE GLAND, STR 16, PR22,5/PG16	
160	352103-0111	-		2	CABLE GLAND, ST 16, PR22,5/PG16	
170	352103-0121	-		1	CABLE GLAND, ST 29, PR37,0/PG29	
180	352103-0120	-		1	CABLE GLAND, STR 29, PR37,0/PG29	

Pos	Part No	SP	UN	Qty	Description	Page No

TOWER CABLE INLETS

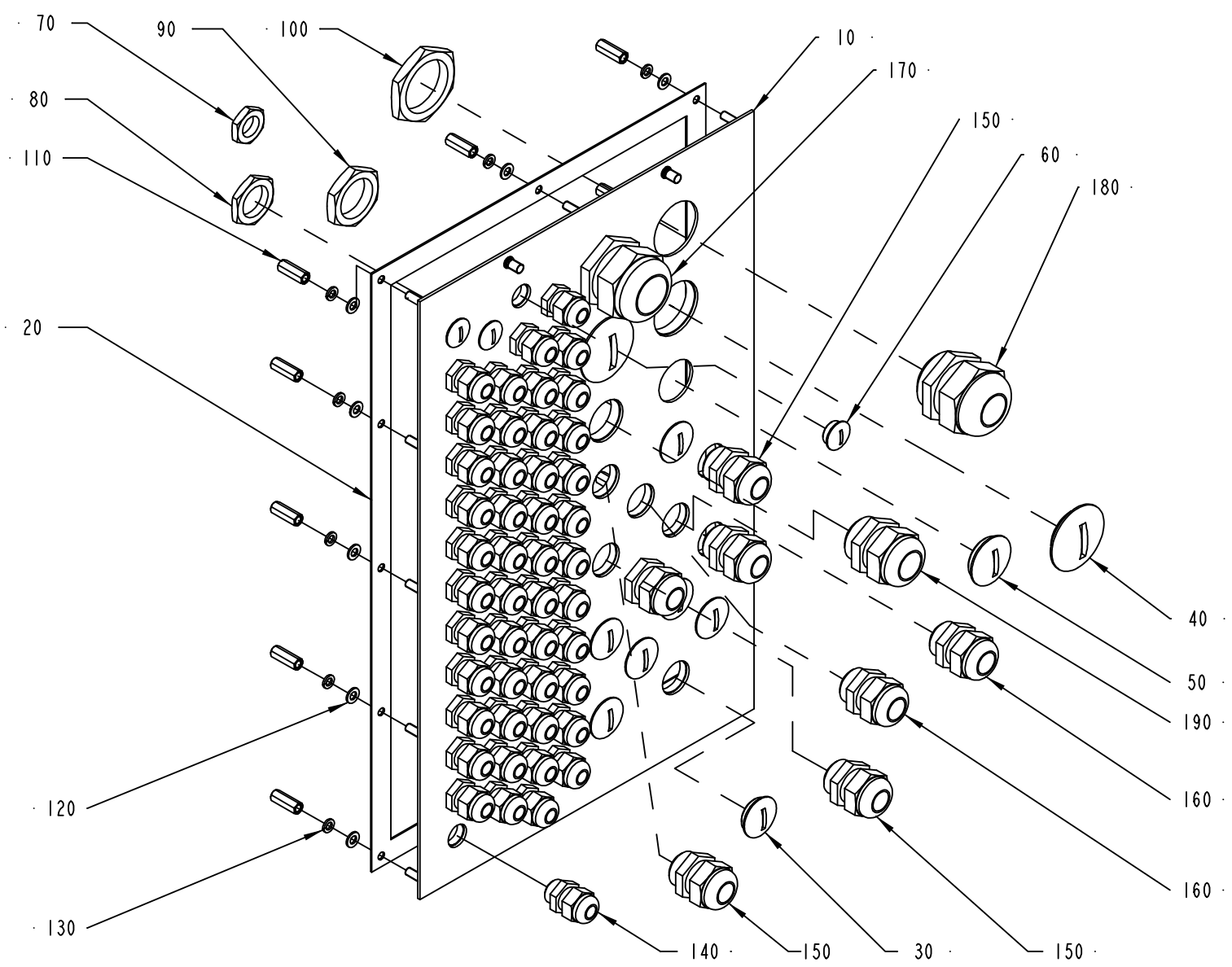

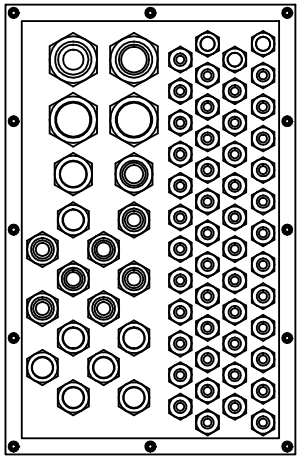

1511786-2
ECM 117181

ECM: 134042 - 20030701
Group number: 1511786-0100
Assembly Drawing: 1511786-2_1_AA

This list covers pages from 148 to 151

Pos	Part No	SP	UN	Qty	Description	Page No
HI (See drawing on page: 150)						
050	90002-0012	-		1	BLANK-OFF PLUG, PR 28,3 SKINDICHT-BLK21	
060	90002-0013	-		3	BLANK-OFF PLUG, PR 15,2 SKINDICHT-BLK9	
140	352103-0101	-		47	CABLE GLAND, ST 9, PR15,2/PG9	
190	352103-0116	-		1	CABLE GLAND, ST 21, PR28,3/PG21	
NOHI (See drawing on page: 148)						
050	90002-0012	-		2	BLANK-OFF PLUG, PR 28,3 SKINDICHT-BLK21	
060	90002-0013	-		6	BLANK-OFF PLUG, PR 15,2 SKINDICHT-BLK9	
140	352103-0101	-		44	CABLE GLAND, ST 9, PR15,2/PG9	
Common Parts						
010	1511835-0000	-		1	PLATE	
020	1511836-0000	-		1	GASKET	
030	90002-0004	-		7	BLANK-OFF PLUG, PR 22,5 SKINDICHT-BLK16	
040	90002-0010	-		2	BLANK-OFF PLUG, PR 37 SKINDICHT-BLK29	
070	90099-0104	-		50	NUT, PR 15,2 (PG9)	
080	90099-0110	-		14	NUT, PR 22,5 (PG16)	
090	90099-0119	-		2	NUT, PR 28,3 (PG21)	
100	90099-0120	-		4	MUTTER PR 37 (PG29)	
110	1517676-0000	-		12	SPACER	
120	315105-0146	-		12	WASHER BRB5,3X10RFR	
130	315402-0146	-		12	LOCK WASHER FBB 5,1	
150	352103-0110	-		5	CABLE GLAND, STR 16, PR22,5/PG16	
160	352103-0111	-		2	CABLE GLAND, ST 16, PR22,5/PG16	
170	352103-0121	-		1	CABLE GLAND, ST 29, PR37,0/PG29	
180	352103-0120	-		1	CABLE GLAND, STR 29, PR37,0/PG29	

Pos	Part No	SP	UN	Qty	Description	Page No

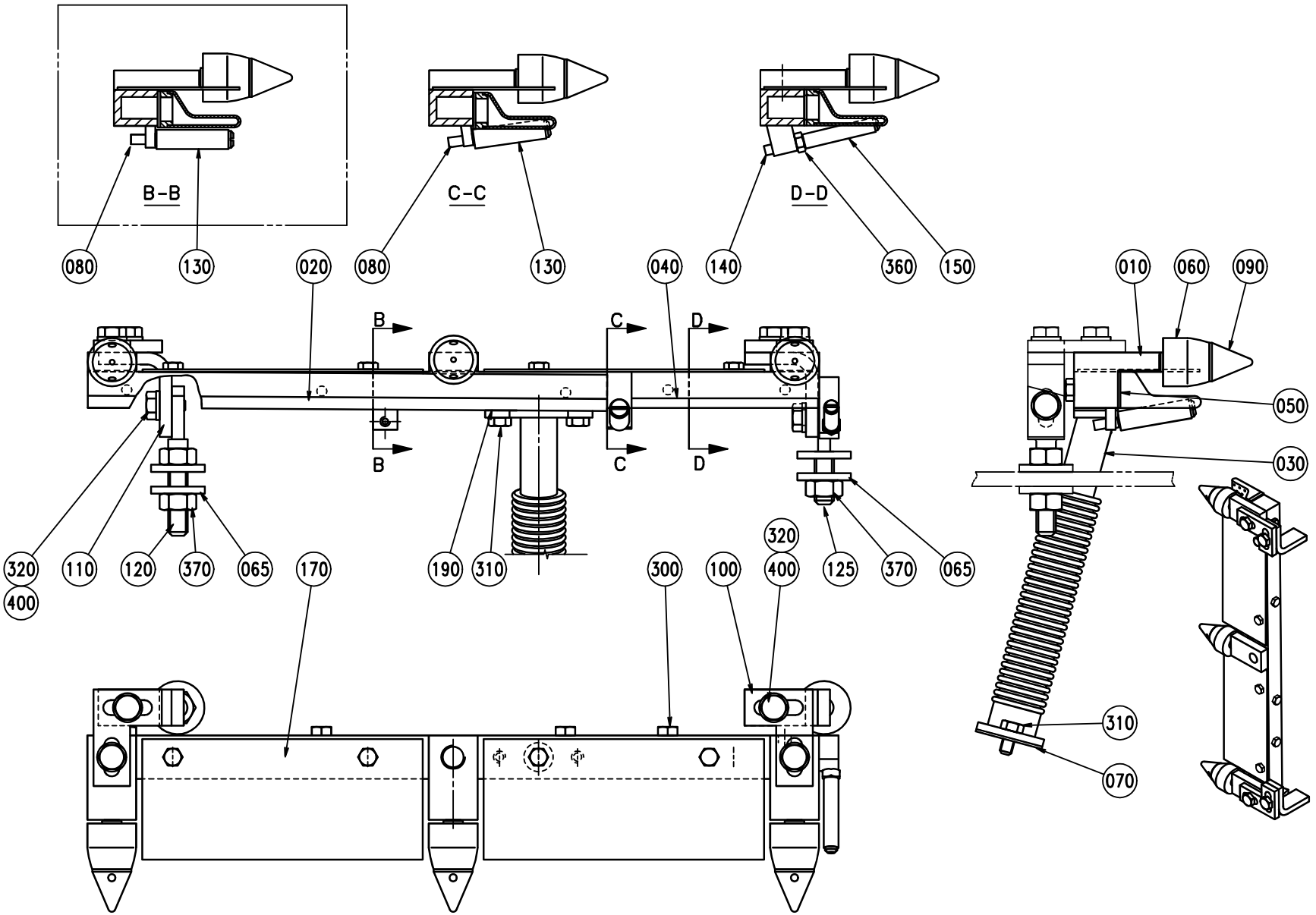
B-B
C-C
D-D
080
130
020
080
130
040
140
360
150
010
060
090
050
030
B
B
C
C
D
D
320
400
110
120
370
065
170
190
310
300
100
320
400
125
370
065
310
070

ECM: 124922 - 20030121
Group number: 469501-0400
Assembly Drawing: 469501-4_1_AA

Pos	Part No	SP	UN	Qty	Description	Page No
TBA 0160S, TBA 0125S, TBA 0100B, TBA 0250S, TBA 0200S, TBA 0200M						
080	256899-0000	-		2	SHAFT	
130	469461-0000	B		2	ROLL	
TBA 0330S, TBA 0300S, TBA 0180B, TBA 0200B, TBA 0284B, TBA 0250B						
080	256899-0000	-		1	SHAFT	
130	469461-0000	B		1	ROLL	
Common Parts						
010	752218-0000	-		1	ATTACHMENT	
020	568577-0000	A		1	AIR NOZZLE	
030	751722-0000	-		1	PIPE-LINE	
040	568578-0000	A		1	AIR NOZZLE	
050	568581-0000	-		1	DISTRIBUTOR WING	
060	6161-0000	B		3	ROLL	
065	28036-0000	-		4	WASHER	
070	751010-0000	B		1	GASKET	
090	272095-0000	-		3	SHAFT	
100	469458-0000	-		2	BRACKET	
110	469459-0000	-		2	BRACKET	
120	469460-0000	-		1	BRACKET	
125	491143-0000	-		1	BRACKET	
140	469463-0000	-		1	SHAFT	
150	469464-0000	B		1	ROLL	
170	469466-0000	-		2	PLATE	
190	751024-0000	B		1	GASKET	
300	312105-0287	-		4	SCREW M6S ISO4017 M4X8 A480	
310	312105-0325	-		4	SCREW M6S ISO 4017 M5X10 A480	
315	312105-0333	-		5	SCREW M6S ISO 4017 M5X25 A480	
320	312105-0366	-		6	SCREW M6S M6X12 A280	
360	312605-0312	-		1	HEXAGON NUT, M6M M4 A280	
370	312605-0318	-		3	HEXAGON NUT, M6M M8 A280	
400	315105-0153	-		6	WASHER BRB6,4X12RFR	

Pos	Part No	SP	UN	Qty	Description	Page No

Machine Type | Group Description | Used-In | Group Number | Page No

TUBE FLUSHING DEVICE

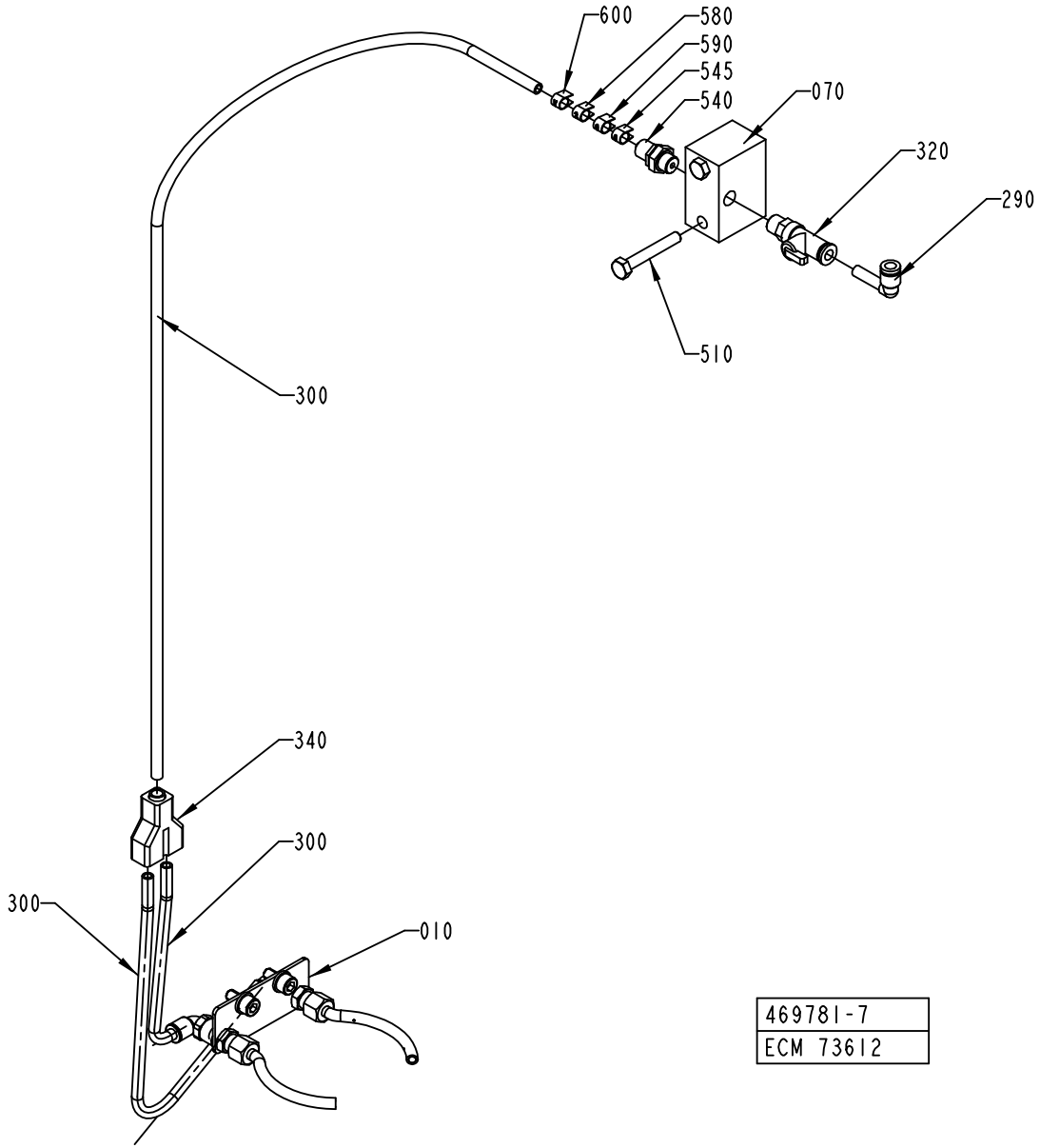

469781-7
ECM 73612

Pos	Part No	SP	UN	Qty	Description	Page No
NOPT TBA 0100B, NOPT TBA 0200M, NOPT TBA 0200S, NOPT TBA 0125S, NOPT TBA 0160S, NOPT TBA 0180B, NOPT TBA 0200B, NOPT TBA 0250B, NOPT TBA 0330S, NOPT TBA 0250S, NOPT TBA 0284B, NOPT TBA 0300S (See drawing on page: 154)						
	-	-			-	
PT19 TBA 0125S, PT19 TBA 0160S, PT19 TBA 0180B, PT19 TBA 0200B, PT19 TBA 0100B, PT19 TBA 0250S, PT19 TBA 0284B, PT19 TBA 0300S, PT19 TBA 0330S, PT19 TBA 0200M, PT19 TBA 0200S, PT19 TBA 0250B (See drawing on page: 156)						
030	589449-0000	-		1	NOZZLE	
040	342946-0112	-		1	T-COUPLING,UNION 6/4	
310	90166-0132	-	MM	250	TUBE 6 MM PA,TRANSP.	
330	90235-0280	-		1	THROTTLE CHECK VALVES,M5	
550	342980-0113	A		2	BANJO-CONNECTION,RING 6/4-G1/8"	
555	342980-0303	-		1	BANJO-HOLLOW BOLT COUPL,EXT.THR.01-G1/8"	
560	359000-0401	-		1	MARKING COLLAR 2/4 "1" YELLOW	
570	359000-0402	-		2	MARKING COLLAR 2/4 "2" YELLOW	
Common Parts						
010	1558128-0100	-		1	NOZZLE	**159**
070	271509-0000	-		1	JUNCTION BLOCK	
290	342722-0197	-		1	STRAIGHT COUPLING	
300	90166-0119	A	MM	500	HOSE PUR 4/6 BLACK	
320	90235-0723	-		1	THROTTLE VALVE	
340	90055-0100	-		1	Y-CONNECTION, 6-6	
510	312105-0378	-		2	SCREW M6S ISO 4014 M6X40 A480	
540	342921-0113	-		1	STRAIGHT COUPLING,EXT.THREADED 6/4-G1/8"	
545	359000-0400	-		1	MARKING CO2/4"0"	
580	359000-0403	-		1	MARKING COLLAR PA2/4 "3" YELLOW	
590	359000-0409	-		1	MARKING COLLAR PA2/4 "9" YELLOW	
600	359000-0771	-		1	MARKING CO2/4"V"	

Pos	Part No	SP	UN	Qty	Description	Page No

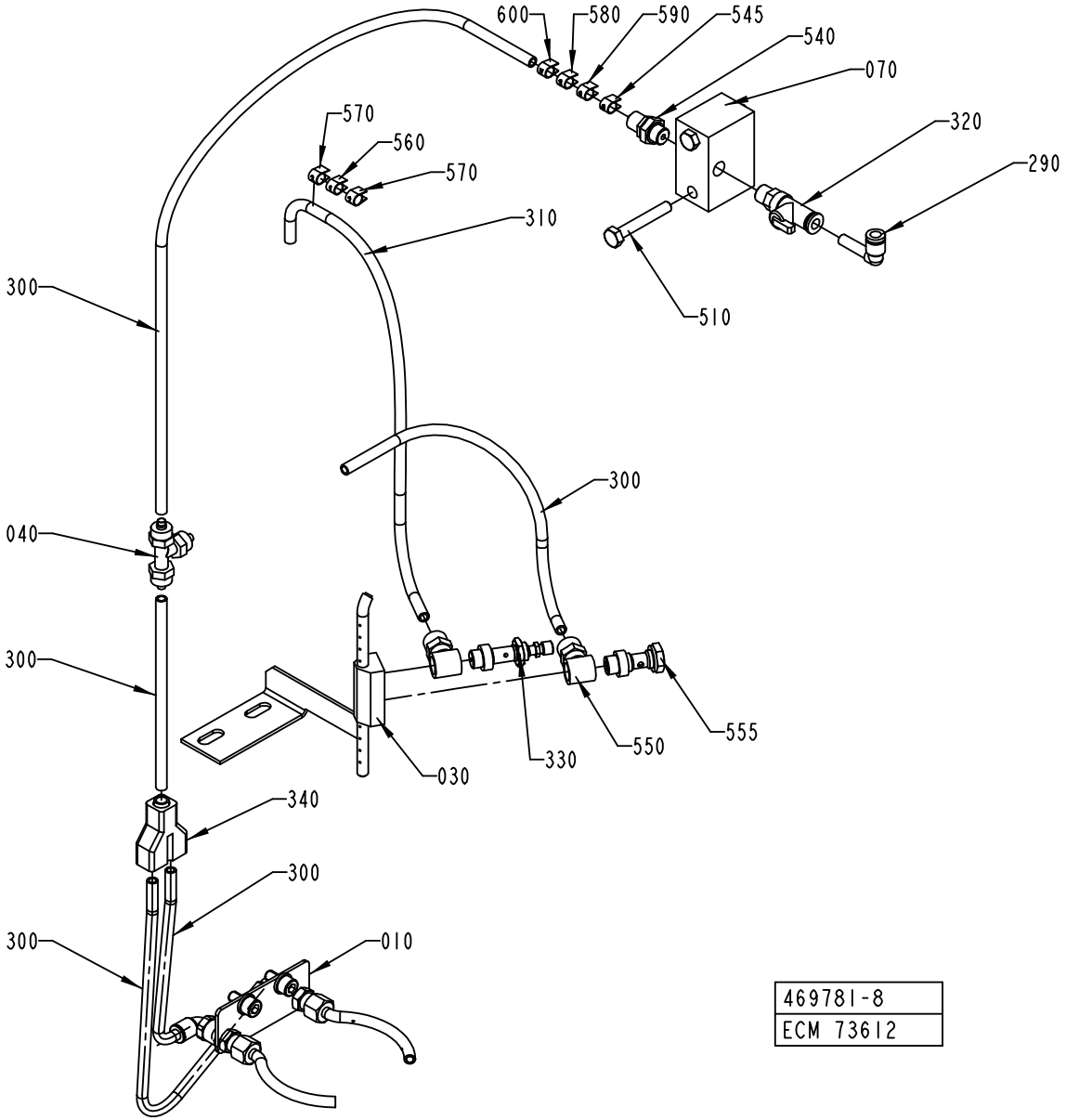
600
580
590
545
540
070
320
290
570
560
570
310
510
300
040
300
300
555
550
330
030
340
300
300
010
469781-8
ECM 73612

Pos	Part No	SP	UN	Qty	Description	Page No
NOPT TBA 0100B, NOPT TBA 0200M, NOPT TBA 0200S, NOPT TBA 0125S, NOPT TBA 0160S, NOPT TBA 0180B, NOPT TBA 0200B, NOPT TBA 0250B, NOPT TBA 0330S, NOPT TBA 0250S, NOPT TBA 0284B, NOPT TBA 0300S (See drawing on page: 154)						
	-	-			-	
PT19 TBA 0125S, PT19 TBA 0160S, PT19 TBA 0180B, PT19 TBA 0200B, PT19 TBA 0100B, PT19 TBA 0250S, PT19 TBA 0284B, PT19 TBA 0300S, PT19 TBA 0330S, PT19 TBA 0200M, PT19 TBA 0200S, PT19 TBA 0250B (See drawing on page: 156)						
030	589449-0000	-		1	NOZZLE	
040	342946-0112	-		1	T-COUPLING,UNION 6/4	
310	90166-0132	-	MM	250	TUBE 6 MM PA,TRANSP.	
330	90235-0280	-		1	THROTTLE CHECK VALVES,M5	
550	342980-0113	A		2	BANJO-CONNECTION,RING 6/4-G1/8"	
555	342980-0303	-		1	BANJO-HOLLOW BOLT COUPL,EXT.THR.01-G1/8"	
560	359000-0401	-		1	MARKING COLLAR 2/4 "1" YELLOW	
570	359000-0402	-		2	MARKING COLLAR 2/4 "2" YELLOW	
Common Parts						
010	1558128-0100	-		1	NOZZLE	**159**
070	271509-0000	-		1	JUNCTION BLOCK	
290	342722-0197	-		1	STRAIGHT COUPLING	
300	90166-0119	A	MM	500	HOSE PUR 4/6 BLACK	
320	90235-0723	-		1	THROTTLE VALVE	
340	90055-0100	-		1	Y-CONNECTION, 6-6	
510	312105-0378	-		2	SCREW M6S ISO 4014 M6X40 A480	
540	342921-0113	-		1	STRAIGHT COUPLING,EXT.THREADED 6/4-G1/8"	
545	359000-0400	-		1	MARKING CO2/4"0"	
580	359000-0403	-		1	MARKING COLLAR PA2/4 "3" YELLOW	
590	359000-0409	-		1	MARKING COLLAR PA2/4 "9" YELLOW	
600	359000-0771	-		1	MARKING CO2/4"V"	

Pos	Part No	SP	UN	Qty	Description	Page No

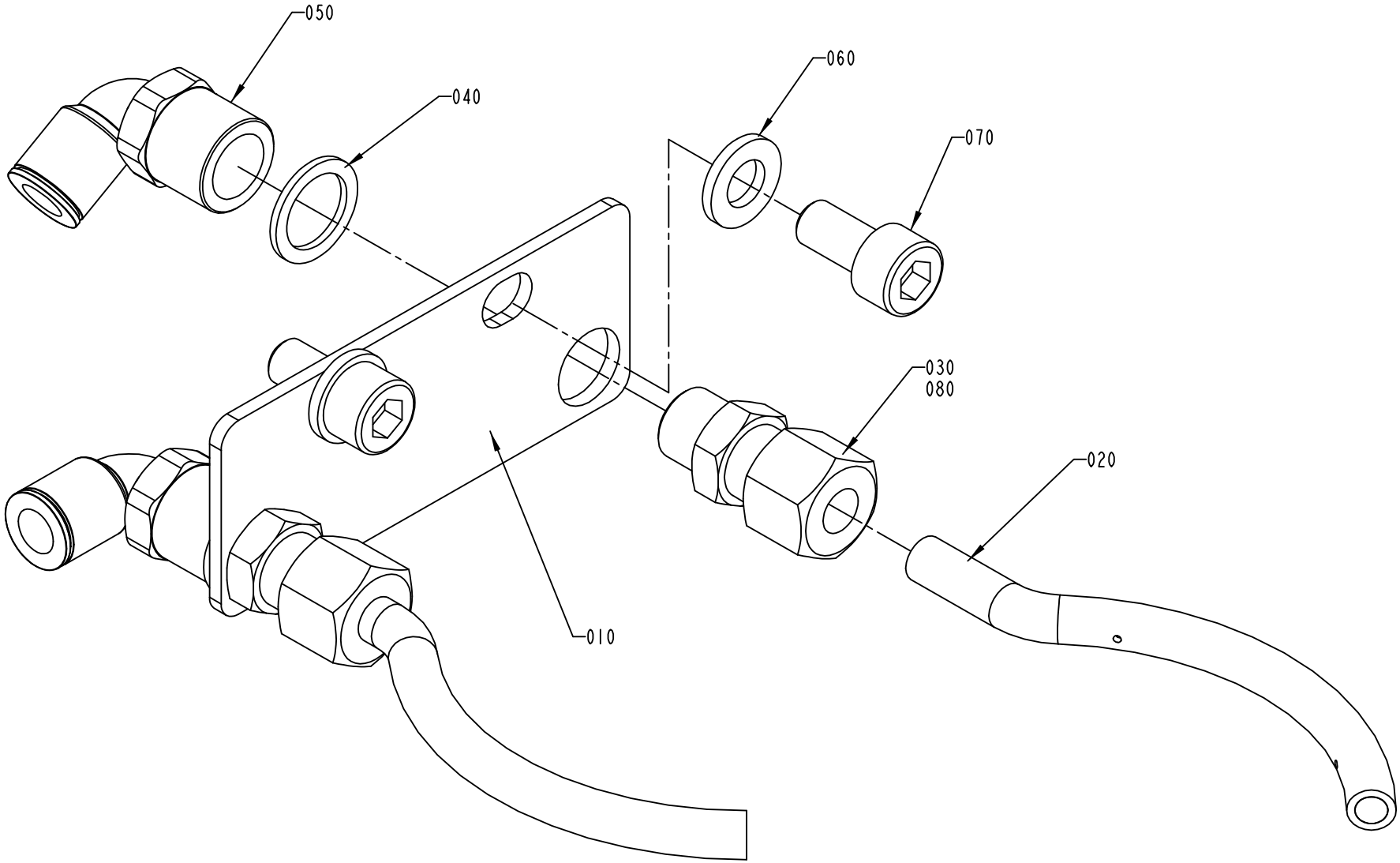

1558128-1
ECN 73612

ECM: 93720 - 20020211
Group number: 1558128-0100
Assembly Drawing: 1558128-1_1_AA

Pos	Part No	SP	UN	Qty	Description	Page No
-						
010	2500293-0000	-		1	PLATE	
020	2500294-0000	-		2	PIPE	
030	90458-2039	-		2	CONN. STR., 6-R1/8, EXT. THREAD	
040	315233-0109	-		2	WASHER CAPTIVE SEALING G1/8	
050	90458-2040	-		2	ELBOW PIPE JOINT, INT.THREAD, G1/8"D=6MM	
060	315105-0153	-		2	WASHER BRB6,4X12RFR	
070	312115-0366	-		2	SCREW ISO4762 M6X12 A4	
080	90157-0016	-	ML	1	LOCKING FLUID	

Pos	Part No	SP	UN	Qty	Description	Page No

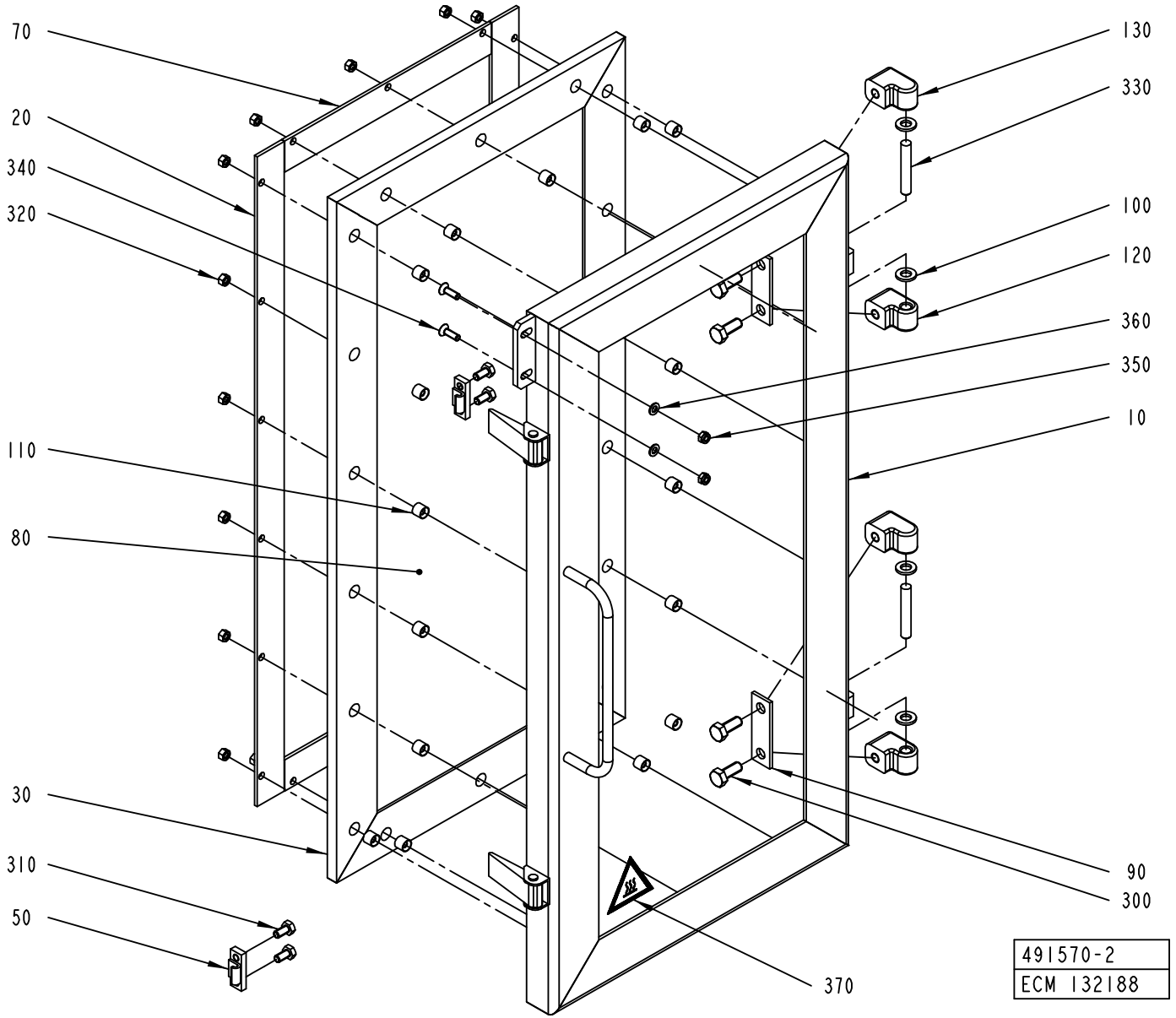
70
20
340
320
110
80
30
310
50
130
330
100
120
360
350
10
90
300
370
491570-2
ECM 132188

ECM: 136002 - 20030701
Group number: 491570-0200
Assembly Drawing: 491570-2_1_AC

Pos	Part No	SP	UN	Qty	Description	Page No
-						
010	978542-0000	-		1	FRAME	
020	272780-0000	-		2	COVER SLIP	
030	272785-0000	C		1	RUBBER STRIP	
050	271860-0000	D		2	CLAMP BLOCK	
070	272782-0000	-		2	COVER SLIP	
080	272783-0003	D		1	GLASS PANE	
090	441737-0000	D		2	WASHER	
100	441739-0000	D		4	WASHER	
110	441718-0000	-		18	SPACER	
120	441740-0000	D		2	HINGE FLANGE	
130	441741-0000	D		2	HINGE FLANGE	
300	312105-0451	-		4	SCREW M6S ISO 4017 M8X20 A480	
310	312105-0366	-		4	SCREW M6S M6X12 A280	
320	312605-0314	-		18	HEXAGON NUT, M6M M5 A280	
330	311103-0413	-		2	PARALLELL PIN ISO2338 8X50 A1	
340	312155-0329	-		2	SCREW EN 10642 MF6S M5X16 A480	
350	312812-0314	-		2	HEXAGON NUT, NY-LOCK M5 A480	
360	315105-0146	-		2	WASHER BRB5,3X10RFR	
370	359710-0001	-		1	WARNING SIGN ISO, HOT SURFACE	

Pos	Part No	SP	UN	Qty	Description	Page No

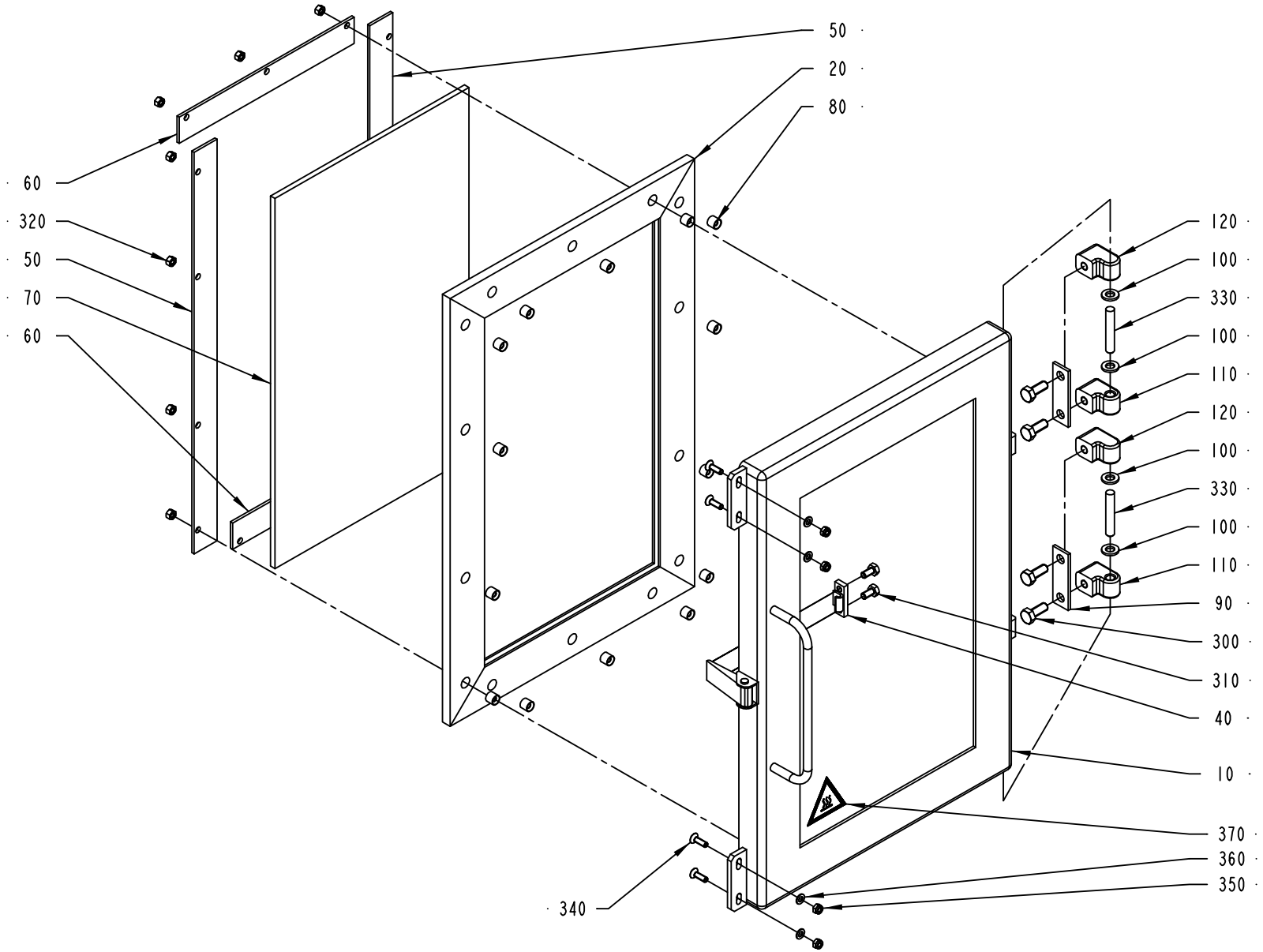

491579-2
ECM 132188

ECM: 117682 - 20030701
Group number: 491579-0200
Assembly Drawing: 491579-2_1_AC

Pos	Part No	SP	UN	Qty	Description	Page No
-						
010	978543-0000	-		1	FRAME	
020	272784-0002	A		1	RUBBER STRIP	
040	271860-0000	A		1	CLAMP BLOCK	
050	272781-0002	-		2	COVER SLIP	
060	272782-0000	-		2	COVER SLIP	
070	272783-0002	A		1	GLASS PANE	
080	441718-0000	A		14	SPACER	
090	441737-0000	A		2	WASHER	
100	441739-0000	A		4	WASHER	
110	441740-0000	A		2	HINGE FLANGE	
120	441741-0000	A		2	HINGE FLANGE	
300	312105-0451	-		4	SCREW M6S ISO 4017 M8X20 A480	
310	312105-0366	-		2	SCREW M6S M6X12 A280	
320	312605-0314	-		14	HEXAGON NUT, M6M M5 A280	
330	311103-0413	-		2	PARALLELL PIN ISO2338 8X50 A1	
340	312155-0329	-		4	SCREW EN 10642 MF6S M5X16 A480	
350	312812-0314	-		4	HEXAGON NUT, NY-LOCK M5 A480	
360	315105-0146	-		4	WASHER BRB5,3X10RFR	
370	359710-0001	-		1	WARNING SIGN ISO, HOT SURFACE	

Pos	Part No	SP	UN	Qty	Description	Page No

Machine Type | Group Description | Used-In | Group Number | Page No

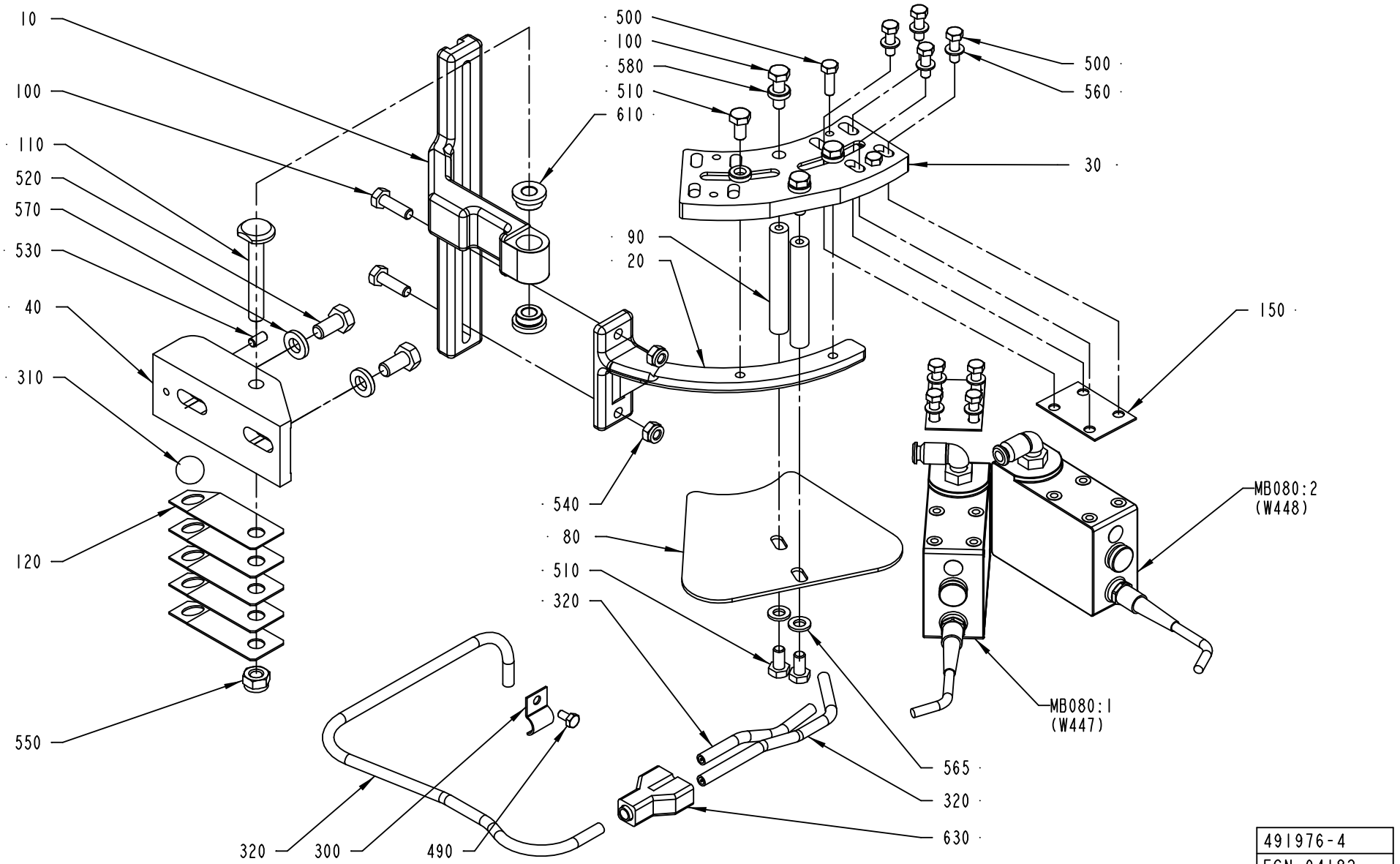

491976-4
ECN 94182

ECM: 114561 - 20020930
Group number: 491976-0300
Assembly Drawing: 491976-4_1_AC

This list covers pages from 164 to 167

Pos	Part No	SP	UN	Qty	Description	Page No
TBA 0160S, TBA 0125S, TBA 0100B, TBA 0250S, TBA 0200S, TBA 0200M (See drawing on page: 166)						
010	751456-0000	-		1	HOLDER	
020	751476-0000	-		1	CANTILEVER	
030	491880-0000	-		1	FASTENING PLATE	
060	752554-0000	-		4	SPACER	
080	1260487-0000	-		1	PLATE	
090	1260491-0000	-		2	NUT	
100	312105-0370	-		4	SCREW M6S ISO 4017 M6X20 A480	
170	312109-0335	-		8	SCREW M6S ISO 4017 M5X30 A480	
500	312105-0329	-		2	SCREW M6S ISO 4017 M5X16 A480	
510	312105-0366	-		4	SCREW M6S M6X12 A280	
580	315115-0153	-		4	WASHER PLAIN, TBRB 6,4/12 H=3	
TBA 0330S, TBA 0300S, TBA 0180B, TBA 0200B, TBA 0284B, TBA 0250B (See drawing on page: 164)						
010	751456-0000	-		1	HOLDER	
020	751457-0000	-		1	CANTILEVER	
030	978735-0000	-		1	FASTENING PLATE	
080	1260486-0000	-		1	PLATE	
090	1260490-0000	-		2	NUT	
100	312105-0370	-		4	SCREW M6S ISO 4017 M6X20 A480	
150	536374-0000	-		2	WASHER	
500	312105-0329	-		10	SCREW M6S ISO 4017 M5X16 A480	
510	312105-0366	-		4	SCREW M6S M6X12 A280	
580	315115-0153	-		4	WASHER PLAIN, TBRB 6,4/12 H=3	
Common Parts						
040	490876-0000	-		1	BRACKET	
110	457367-0000	A		1	SHAFT	
120	457368-0000	A		5	SPRING	
300	90074-0001	-		1	CABLE CLIPS, D=10 MM	
310	90090-0016	-		1	BALL, D=15 MM	
320	90166-0132	-	MM	750	TUBE 6 MM PA,TRANSP.	
490	312105-0287	-		1	SCREW M6S ISO4017 M4X8 A480	
520	312105-0449	-		2	SCREW M6S ISO 4017 M8X16 A480	
530	312318-0325	-		1	SCREW ISO4029 M5X10 A4	
540	312812-0316	-		2	HEXAGON NUT, NY-LOCK M6 A480	
550	312812-0318	-		1	HEXAGON NUT, NY-LOCK M8 A480	
560	315105-0146	-		8	WASHER BRB5,3X10RFR	
565	315105-0153	-		2	WASHER BRB6,4X12RFR	
570	315115-0165	-		2	WASHER PLAIN, TBRB 8,4/16 H=3	
610	321101-0143	-		2	FLANGE BUSHING, 8X14X8 MM	
630	90055-0100	-		1	Y-CONNECTION, 6-6	

Pos	Part No	SP	UN	Qty	Description	Page No
MB080:1	90458-0601	A		1	PHOTOCELL, SICK PHOTOCELL 1	
	342732-0102	-		*1*	*ELBOW PIPE JOINT, EXT.THREAD, D=6MM-G1/8*	
MB080:2	90458-0601	A		1	PHOTOCELL, SICK PHOTOCELL 1	
	342732-0102	-		*1*	*ELBOW PIPE JOINT, EXT.THREAD, D=6MM-G1/8*	

Machine Type | Group Description | Used-In | Group Number | Page No

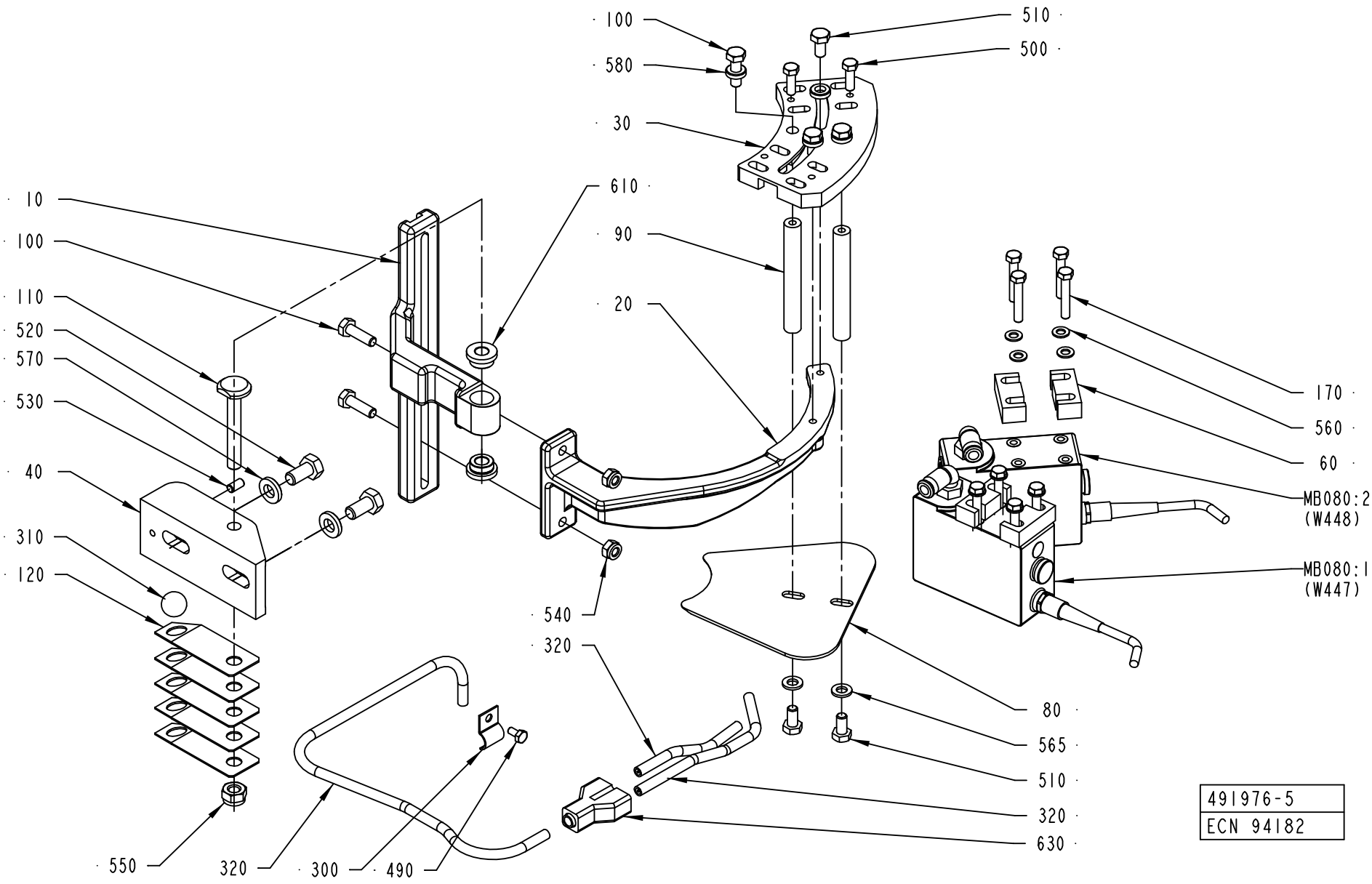
100
580
30
610
90
20
10
100
110
520
570
530
40
310
120
540
320
550
320
300
490
510
500
170
560
60
MB080:2
(W448)
MB080:1
(W447)
80
565
510
320
630
491976-5
ECN 94182

ECM: 114561 - 20020930
Group number: 491976-0300
Assembly Drawing: 491976-5_1_AC

This list covers pages from 164 to 167

Pos	Part No	SP	UN	Qty	Description	Page No
TBA 0160S, TBA 0125S, TBA 0100B, TBA 0250S, TBA 0200S, TBA 0200M (See drawing on page: 166)						
010	751456-0000	-		1	HOLDER	
020	751476-0000	-		1	CANTILEVER	
030	491880-0000	-		1	FASTENING PLATE	
060	752554-0000	-		4	SPACER	
080	1260487-0000	-		1	PLATE	
090	1260491-0000	-		2	NUT	
100	312105-0370	-		4	SCREW M6S ISO 4017 M6X20 A480	
170	312109-0335	-		8	SCREW M6S ISO 4017 M5X30 A480	
500	312105-0329	-		2	SCREW M6S ISO 4017 M5X16 A480	
510	312105-0366	-		4	SCREW M6S M6X12 A280	
580	315115-0153	-		4	WASHER PLAIN, TBRB 6,4/12 H=3	
TBA 0330S, TBA 0300S, TBA 0180B, TBA 0200B, TBA 0284B, TBA 0250B (See drawing on page: 164)						
010	751456-0000	-		1	HOLDER	
020	751457-0000	-		1	CANTILEVER	
030	978735-0000	-		1	FASTENING PLATE	
080	1260486-0000	-		1	PLATE	
090	1260490-0000	-		2	NUT	
100	312105-0370	-		4	SCREW M6S ISO 4017 M6X20 A480	
150	536374-0000	-		2	WASHER	
500	312105-0329	-		10	SCREW M6S ISO 4017 M5X16 A480	
510	312105-0366	-		4	SCREW M6S M6X12 A280	
580	315115-0153	-		4	WASHER PLAIN, TBRB 6,4/12 H=3	
Common Parts						
040	490876-0000	-		1	BRACKET	
110	457367-0000	A		1	SHAFT	
120	457368-0000	A		5	SPRING	
300	90074-0001	-		1	CABLE CLIPS, D=10 MM	
310	90090-0016	-		1	BALL, D=15 MM	
320	90166-0132	-	MM	750	TUBE 6 MM PA,TRANSP.	
490	312105-0287	-		1	SCREW M6S ISO4017 M4X8 A480	
520	312105-0449	-		2	SCREW M6S ISO 4017 M8X16 A480	
530	312318-0325	-		1	SCREW ISO4029 M5X10 A4	
540	312812-0316	-		2	HEXAGON NUT, NY-LOCK M6 A480	
550	312812-0318	-		1	HEXAGON NUT, NY-LOCK M8 A480	
560	315105-0146	-		8	WASHER BRB5,3X10RFR	
565	315105-0153	-		2	WASHER BRB6,4X12RFR	
570	315115-0165	-		2	WASHER PLAIN, TBRB 8,4/16 H=3	
610	321101-0143	-		2	FLANGE BUSHING, 8X14X8 MM	
630	90055-0100	-		1	Y-CONNECTION, 6-6	

Pos	Part No	SP	UN	Qty	Description	Page No
MB080:1	90458-0601	A		1	PHOTOCELL, SICK PHOTOCELL 1	
	342732-0102	-		*1*	*ELBOW PIPE JOINT, EXT.THREAD, D=6MM-G1/8*	
MB080:2	90458-0601	A		1	PHOTOCELL, SICK PHOTOCELL 1	
	342732-0102	-		*1*	*ELBOW PIPE JOINT, EXT.THREAD, D=6MM-G1/8*	

Machine Type | Group Description | Used-In | Group Number | Page No

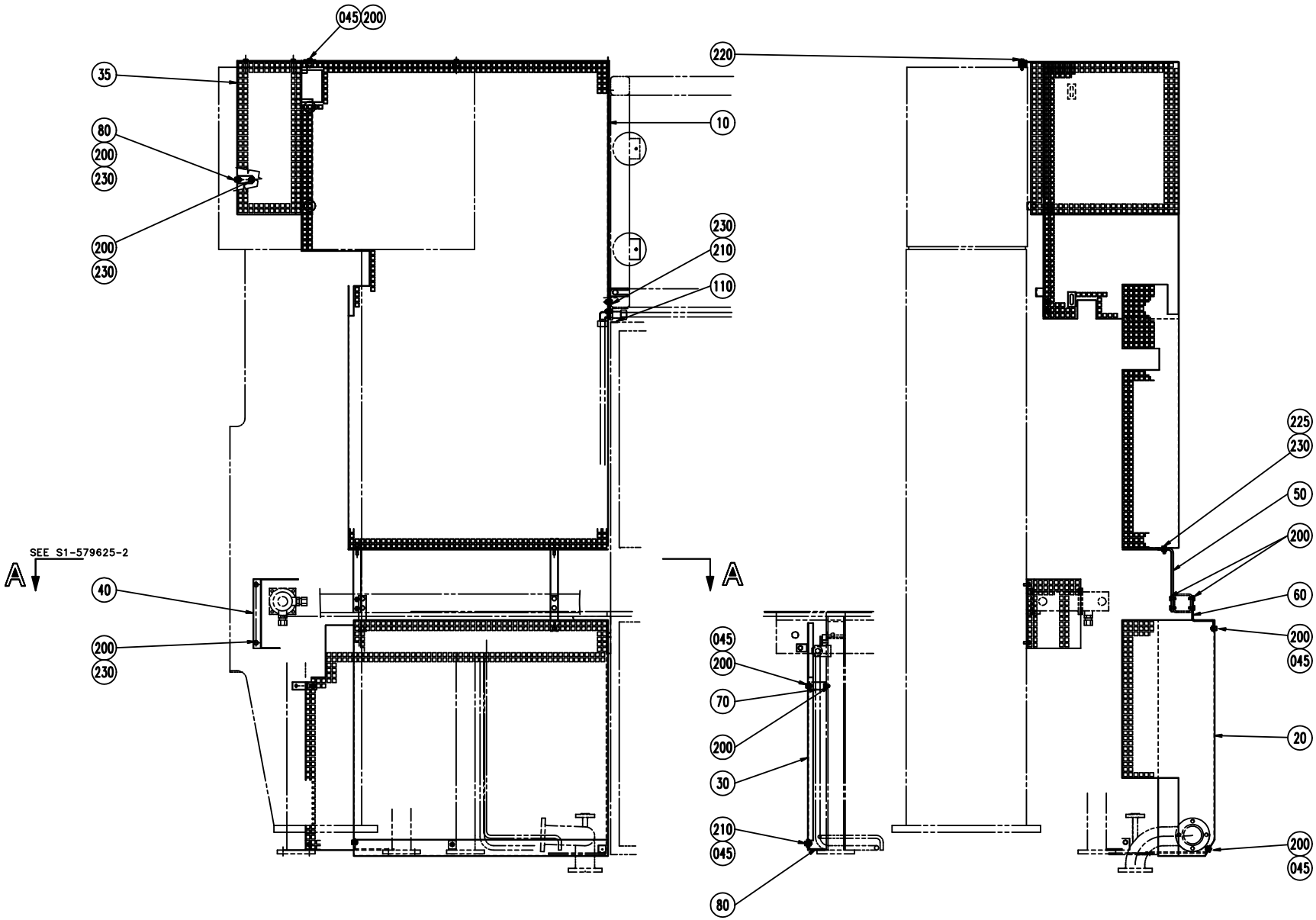
045
200
35
80
200
230
200
230
10
230
210
110
220
SEE S1-579625-2
A
A
40
200
230
045
200
70
200
30
210
045
80
225
230
50
200
60
200
045
20
200
045

ECM: 70918 - 19970718
Group number: 579625-0100
Assembly Drawing: 579625-1_1_AD

This list covers pages from 168 to 171

Pos	Part No	SP	UN	Qty	Description	Page No
-						
010	579626-0000	-		1	TOUCH GUARD	
020	579627-0000	-		1	TOUCH GUARD	
030	579628-0000	-		1	TOUCH GUARD	
035	979506-0000	-		1	TOUCH GUARD	
040	579629-0000	-		1	TOUCH GUARD	
045	315125-0153	-		9	WASHER TBRSB 6,4X22X4 A4	
050	579630-0000	-		2	BRACKET	
060	579631-0000	-		2	BRACKET	
070	579632-0000	-		1	BRACKET	
080	579633-0000	-		2	BRACKET	
090	579634-0000	-		1	BRACKET	
100	579635-0000	-		1	BRACKET	
110	579636-0000	-		1	BRACKET	
200	312105-0366	-		22	SCREW M6S M6X12 A280	
210	312105-0368	-		4	SCREW M6S M6X16 A280	
220	312105-0372	-		4	SCREW M6S ISO 4017 M6X25 A480	
225	312902-0316	-		2	NUT HEX. LEFT THREAD, M6 A280	
230	315105-0153	-		12	WASHER BRB6,4X12RFR	

Pos	Part No	SP	UN	Qty	Description	Page No

Machine Type | Group Description | Used-In | Group Number | Page No

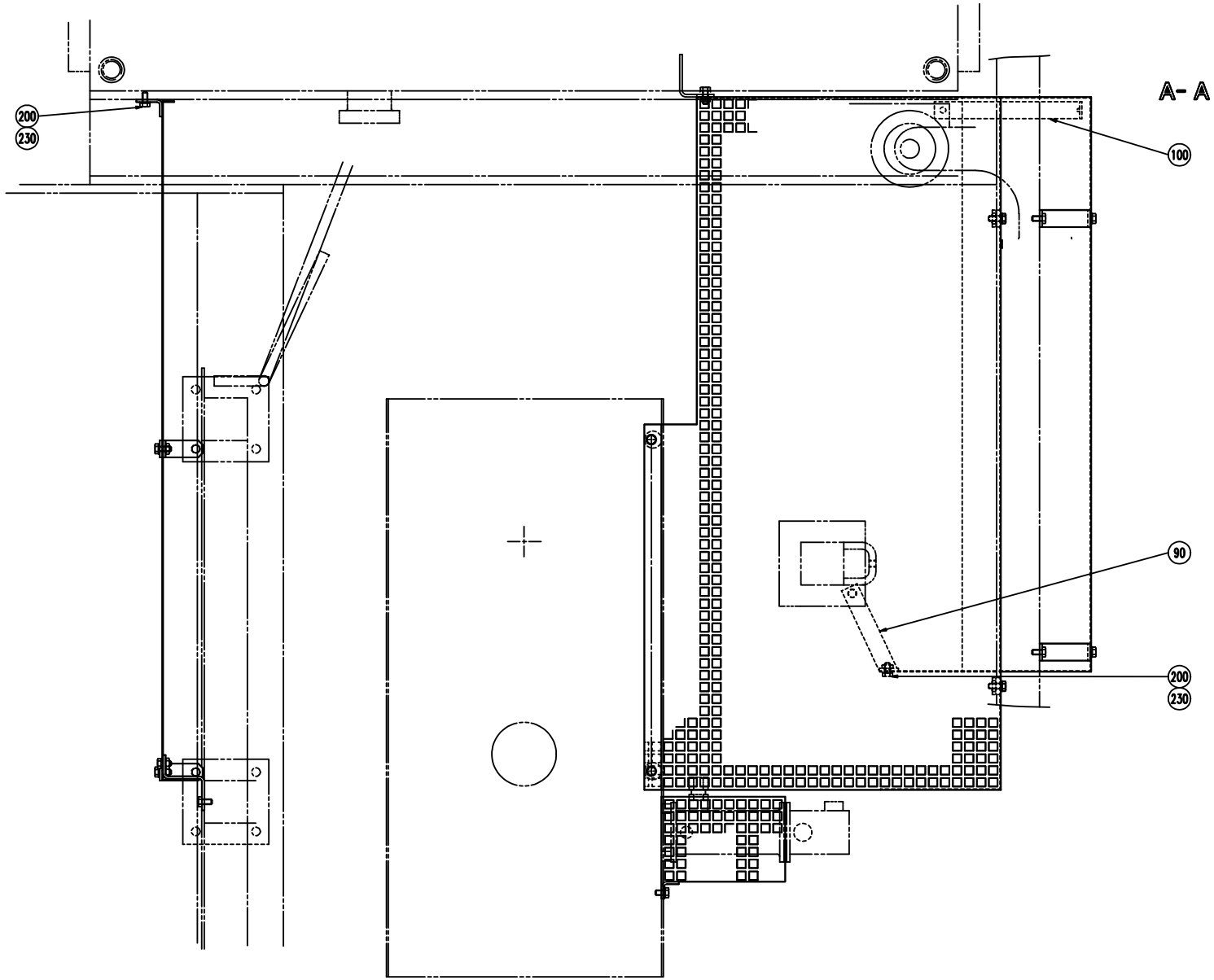
A- A
200
230
100
90
200
230

ECM: 70918 - 19970718
Group number: 579625-0100
Assembly Drawing: 579625-2_1_AA

This list covers pages from 168 to 171

Pos	Part No	SP	UN	Qty	Description	Page No
-						
010	579626-0000	-		1	TOUCH GUARD	
020	579627-0000	-		1	TOUCH GUARD	
030	579628-0000	-		1	TOUCH GUARD	
035	979506-0000	-		1	TOUCH GUARD	
040	579629-0000	-		1	TOUCH GUARD	
045	315125-0153	-		9	WASHER TBRSB 6,4X22X4 A4	
050	579630-0000	-		2	BRACKET	
060	579631-0000	-		2	BRACKET	
070	579632-0000	-		1	BRACKET	
080	579633-0000	-		2	BRACKET	
090	579634-0000	-		1	BRACKET	
100	579635-0000	-		1	BRACKET	
110	579636-0000	-		1	BRACKET	
200	312105-0366	-		22	SCREW M6S M6X12 A280	
210	312105-0368	-		4	SCREW M6S M6X16 A280	
220	312105-0372	-		4	SCREW M6S ISO 4017 M6X25 A480	
225	312902-0316	-		2	NUT HEX. LEFT THREAD, M6 A280	
230	315105-0153	-		12	WASHER BRB6,4X12RFR	

Pos	Part No	SP	UN	Qty	Description	Page No

Machine Type | Group Description | Used-In | Group Number | Page No

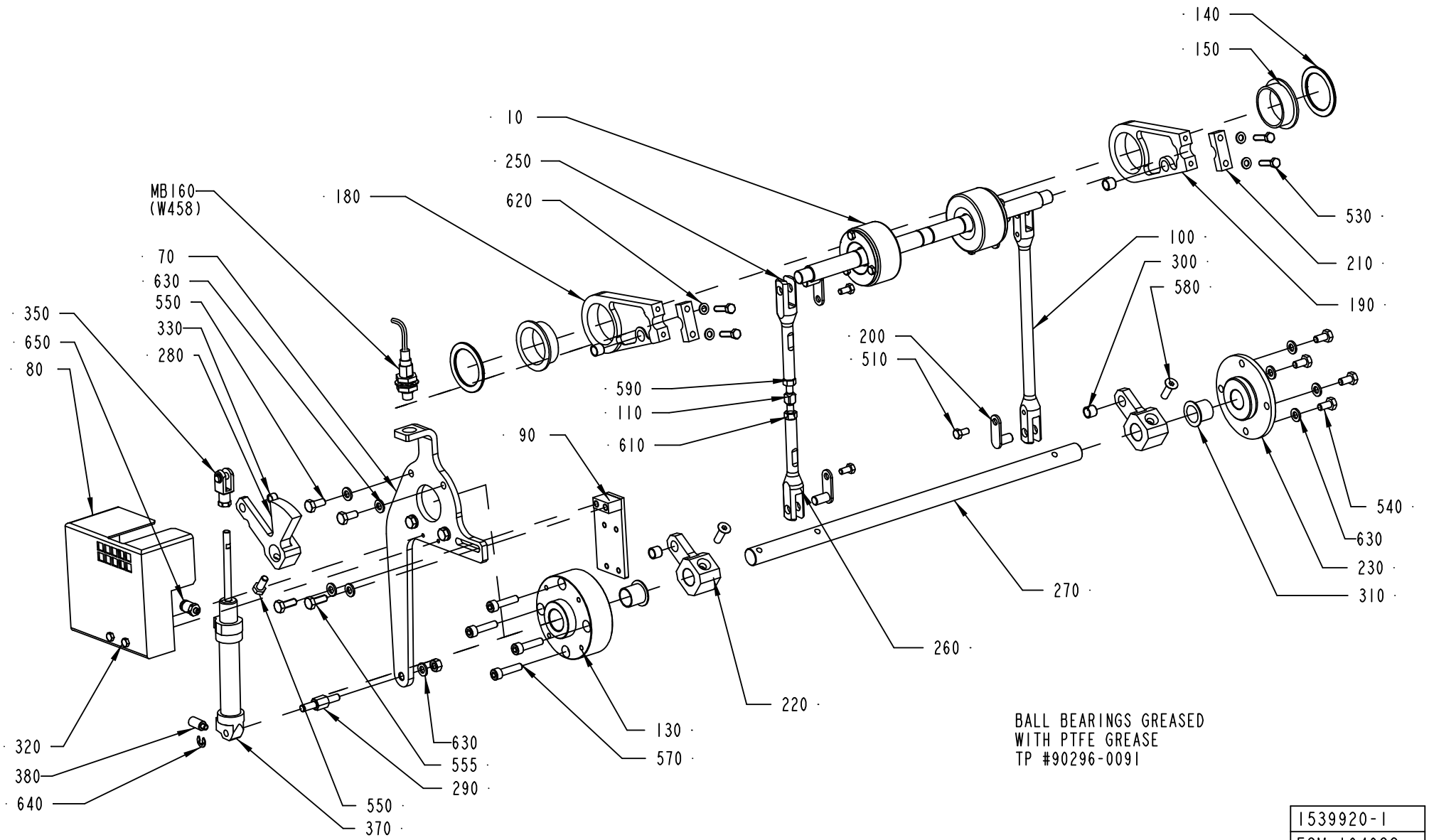

1539920-1
ECM 104628

ECM: 112177 - 20020930
Group number: 1539920-0200
Assembly Drawing: 1539920-1_1_AB

Pos	Part No	SP	UN	Qty	Description	Page No
-						
010	1548010-0200	-		1	PENDULUM ROLLER	**175**
070	1524829-0000	-		1	PLATE	
080	2510532-0000	-		1	PROTECTION	
090	1524814-0000	-		1	BRACKET	
100	1548003-0000	-		1	LINK	
110	1548006-0000	-		1	ADJUSTING SCREW	
130	1548059-0000	-		1	AXLE SUPPORT	
140	1548141-0000	-		2	WASHER	
150	1548142-0000	B		2	BUSHING	
180	1548147-0000	-		1	PLATE	
190	1548148-0000	-		1	PLATE	
200	1548152-0000	-		4	PIN	
210	1548225-0000	-		2	CLAMP	
220	1548276-0000	-		2	LEVER	
230	1548277-0000	-		1	FLANGE	
250	1548004-0001	-		1	LINK	
260	1548004-0002	-		1	LINK	
270	1548005-0000	-		1	SHAFT	
280	1548532-0000	-		1	LEVER	
290	1524830-0000	-		1	SHAFT	
300	90458-0824	-		4	BUSHING, 8X10X8 MM	
310	90458-0825	-		2	FLANGE BUSHING,16X18X17 MM	
320	312105-0301	-		2	SCREW M6S ISO 4017 M4X35 A480	
330	90458-1790	-		1	BUSHING, 6X8X6 MM	
350	90239-0489	-		1	ROD END, CLEVIS WITH AXLE M6X1,25	
360	90296-0091	-		1	LUBRICATION GREASE	
370	90239-0817	-		1	DOUBLE ACTING, MINI-ISO, CYL.16-50	
380	90328-0020	-		1	SILENCER	
510	312105-0325	-		4	SCREW M6S ISO 4017 M5X10 A480	
530	312105-0331	-		4	SCREW M6S ISO 4017 M5X20 A480	
540	312105-0366	-		4	SCREW M6S M6X12 A280	
550	312105-0367	-		5	SCREW M6S M6X14 A280	
555	312105-0368	-		4	SCREW M6S M6X16 A280	
570	312115-0372	-		4	SCREW ISO4762 M6X25 A4	
580	312155-0370	-		2	SCREW EN 10642 MF6S M6X20 A480	
590	312605-0316	-		2	HEXAGON NUT, M6M M6 A280	
610	312902-0316	-		1	NUT HEX. LEFT THREAD, M6 A280	
620	315105-0146	-		4	WASHER BRB5,3X10RFR	
630	315105-0153	-		11	WASHER BRB6,4X12RFR	
640	315755-0107	-		1	LOCKING WASHER 5	
650	342722-0197	-		2	STRAIGHT COUPLING	
MB160	90458-0675	B		1	PROXIMITY SENSOR, E2EG-X5MB1-5M	

Machine Type	Group Description	Used-In	Group Number	Page No

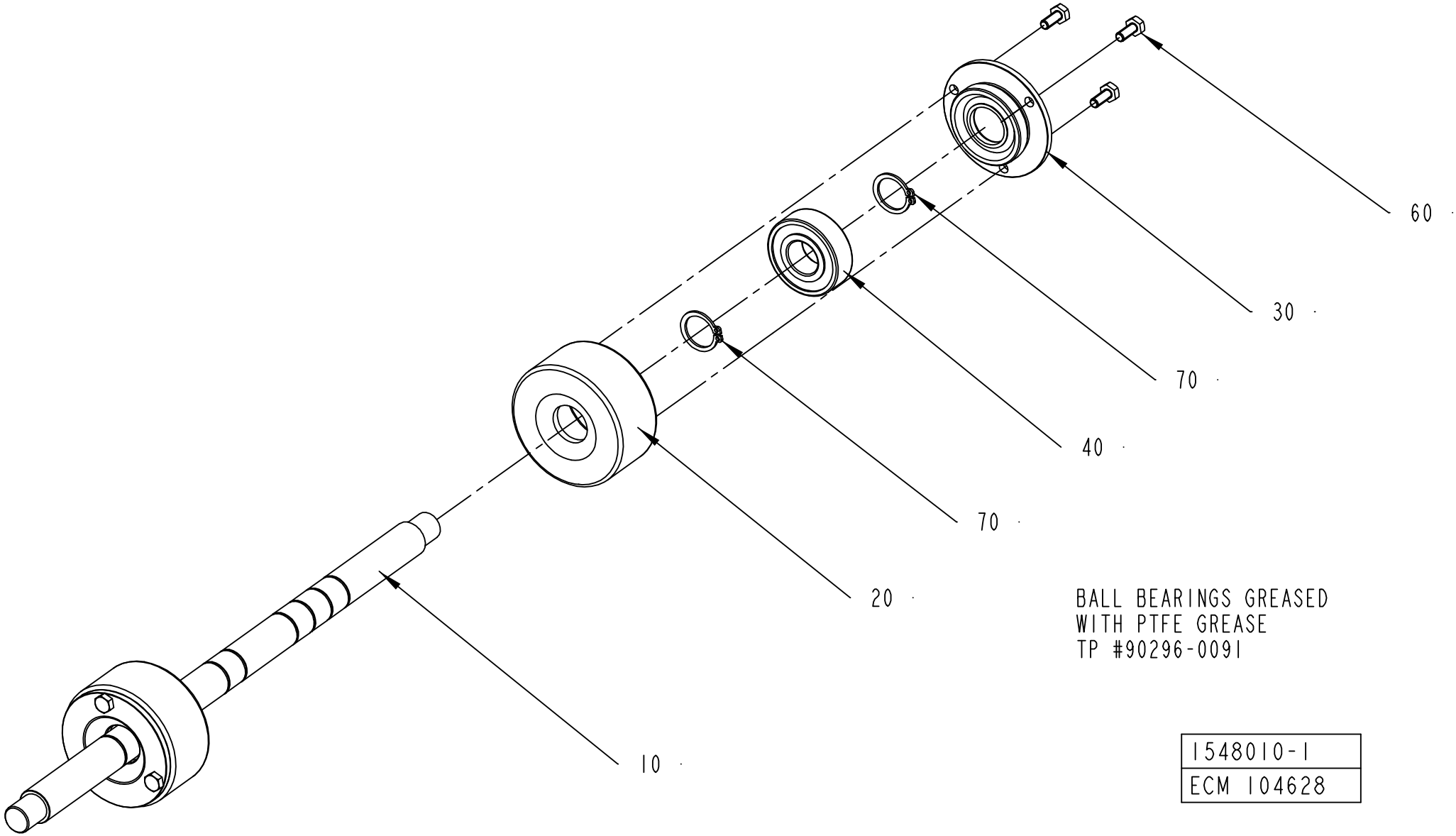

1548010-1
ECM 104628

ECM: 112174 - 20020930
Group number: 1548010-0200
Assembly Drawing: 1548010-1_1_AB

Pos	Part No	SP	UN	Qty	Description	Page No
-						
010	1539996-0000	-		1	SHAFT	
020	1548052-0000	-		2	ROLLER	
030	1548053-0000	-		2	COVER	
040	90458-1704	-		2	BALL BEARING, 15X35X11 MM	
050	90296-0091	-		1	LUBRICATION GREASE	
060	312105-0289	-		6	SCREW M6S ISO 4017 M4X10 A480	
070	315751-0112	-		4	RETAIN. RING, 15	

Pos	Part No	SP	UN	Qty	Description	Page No

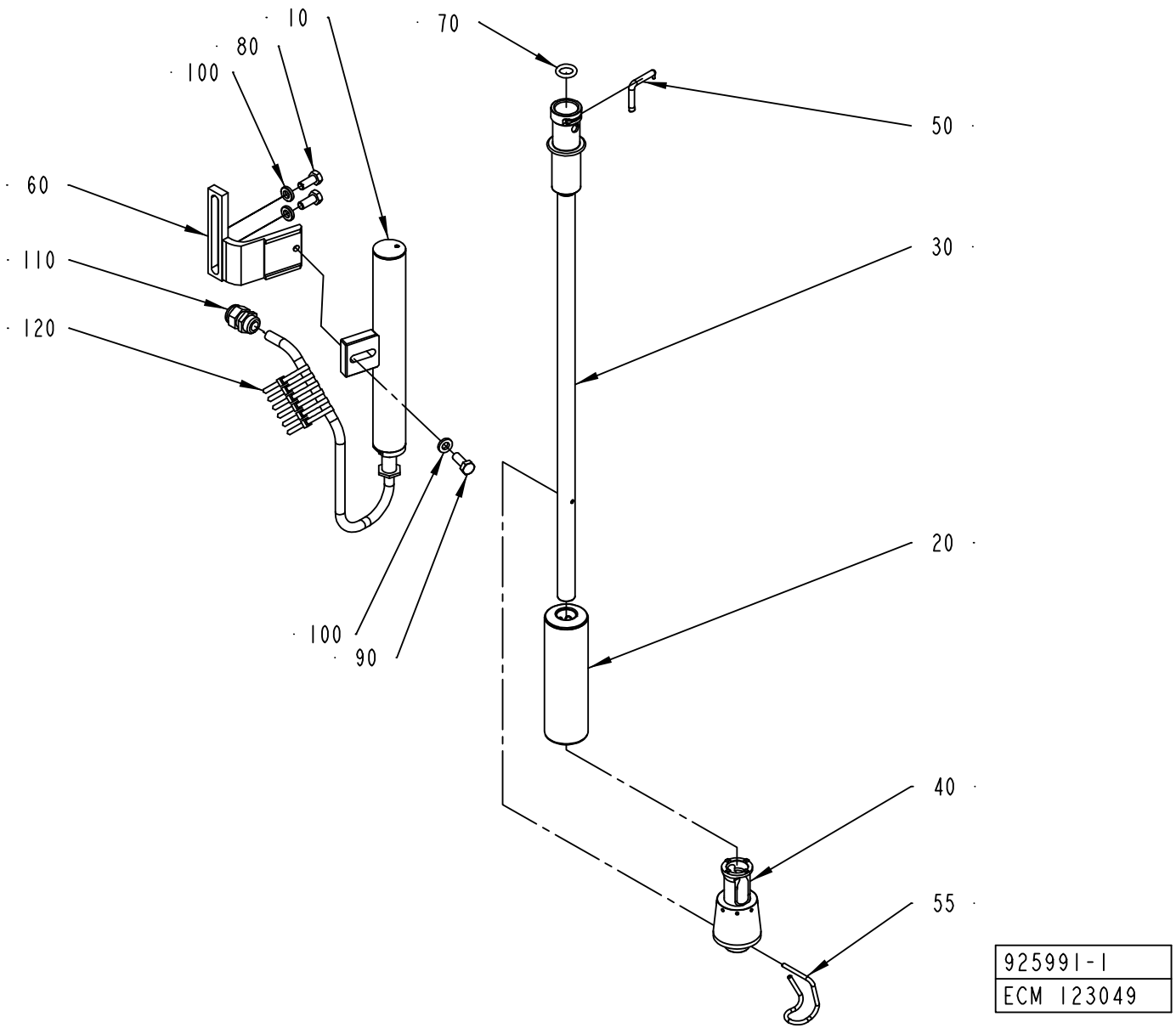
10
70
80
100
50
60
30
110
120
20
100
90
40
55
925991-1
ECM 123049

ECM: 122728 - 20030227
Group number: 925991-0200
Assembly Drawing: 925991-1_1_AF

Pos	Part No	SP	UN	Qty	Description	Page No
TBA 0125S, TBA 0100B						
020	979330-0000	A		1	FLOATER	
030	2527717-0000	A		1	FILLING PIPE	
040	2510541-0000	A		1	PRESSURE FLANGE	
055	2506432-0000	A		1	LOCKING FINGER	
TBA 0160S, TBA 0200S						
020	979330-0000	A		1	FLOATER	
030	2527707-0000	A		1	FILLING PIPE	
040	2527708-0000	A		1	PRESSURE FLANGE	
055	2506432-0000	A		1	LOCKING FINGER	
TBA 0180B, TBA 0200B						
020	979326-0000	A		1	FLOAT	
030	2524342-0000	A		1	FILLING PIPE	
040	1548332-0000	A		1	PRESSURE FLANGE	
055	2506433-0000	A		1	LOCKING FINGER	
TBA 0200M						
020	979330-0000	A		1	FLOATER	
030	2524341-0000	A		1	FILLING PIPE	
040	1558444-0000	A		1	PRESSURE FLANGE	
055	2506432-0000	A		1	LOCKING FINGER	
TBA 0250B						
020	979326-0000	A		1	FLOAT	
030	2524343-0000	A		1	FILLING PIPE	
040	1558446-0000	A		1	PRESSURE FLANGE	
055	2506433-0000	A		1	LOCKING FINGER	
TBA 0250S						
020	979330-0000	A		1	FLOATER	
030	1558443-0000	A		1	FILLING PIPE	
040	1558444-0000	A		1	PRESSURE FLANGE	
055	2506432-0000	A		1	LOCKING FINGER	
TBA 0300S, TBA 0284B						
020	979326-0000	A		1	FLOAT	
030	2527706-0000	A		1	FILLING PIPE	
040	2514301-0000	A		1	PRESSURE FLANGE	
055	2506433-0000	A		1	LOCKING FINGER	
TBA 0330S						
020	979326-0000	A		1	FLOAT	
030	2527710-0000	A		1	FILLING PIPE	
040	2514301-0000	A		1	PRESSURE FLANGE	
055	2506433-0000	A		1	LOCKING FINGER	
Common Parts						
010	42062-0200	A		1	LEVEL PROBE	**179**
050	2506530-0000	A		1	LOCKING FINGER	
060	979368-0000	-		1	HOLDER	
070	90459-2045	A		1	O-RING 14X4 MM	
080	312105-0451	-		2	SCREW M6S ISO 4017 M8X20 A480	
090	312105-0452	-		1	SCREW M6S ISO 4017 M8X22 A480	
100	315115-0165	-		3	WASHER PLAIN, TBRB 8,4/16 H=3	
110	352103-0106	-		1	CABLE GLAND, ST 11, PR18,6/PG11	
120	352113-0102	-		6	CLIP-STRIP, BLACK 188X4,8 MM	

Machine Type | Group Description | Used-In | Group Number | Page No

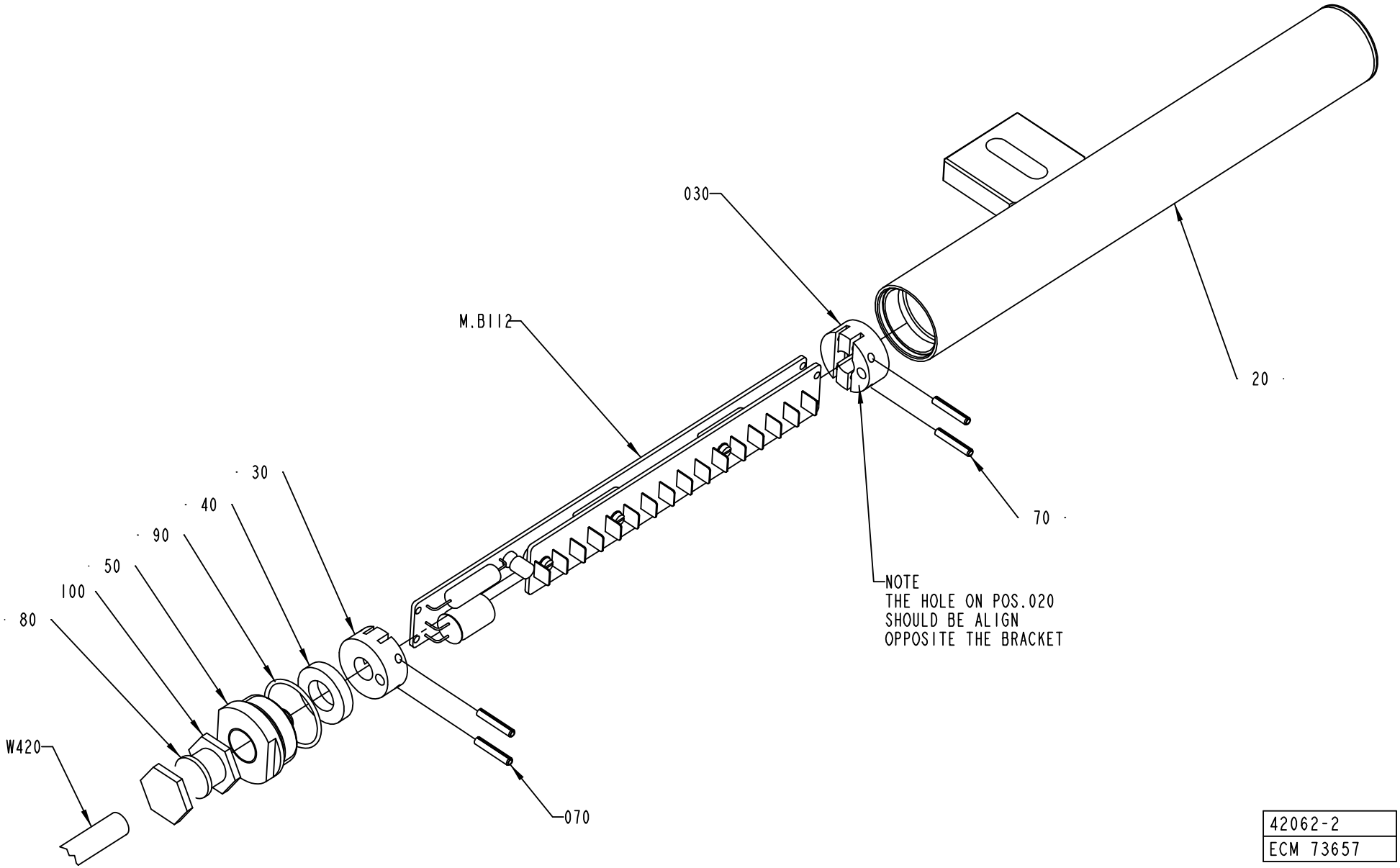

42062-2
ECM 73657

ECM: 73657 - 20020226
Group number: 42062-0200
Assembly Drawing: 42062-2_1_AA

Pos	Part No	SP	UN	Qty	Description	Page No
TBA/19						
020	925999-0000	-		1	PROTECTION PIPE	
Common Parts						
030	925877-0000	-		2	SUPPORT	
040	736514-0000	-		1	SHOCK ABSORBER	
050	926820-0000	-		1	PLUG	
070	311111-0209	-		4	SPRING PIN ISO 8752 3X18-ST	
080	315105-0171	-		1	WASHER BRB10X18	
090	315202-0120	-		1	O-RING 27,1X1,6 MM	
100	90012-0119	-		1	GLAND, EXTENDED WITH INSERT, PG9	
MB112	42063-0100	-		1	LEVEL DETECTOR	**181**
W420	90220-0085	-	M	6	CABLES, MULTI-CONDUCTOR SCREENED	

Pos	Part No	SP	UN	Qty	Description	Page No

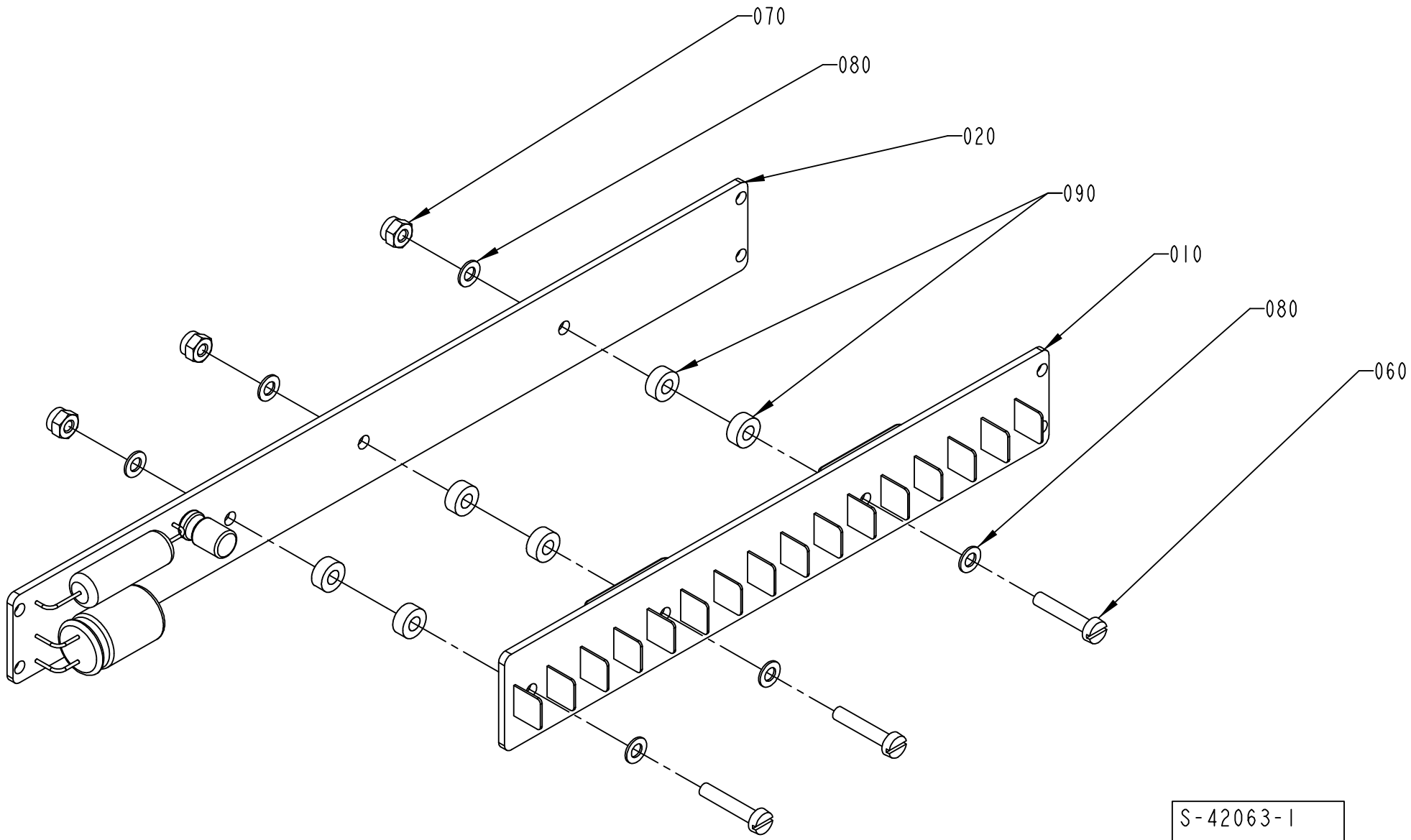
070
080
020
090
010
080
060
S-42063-I
ECN 72792

ECM: 114546 - 20020930
Group number: 42063-0100
Assembly Drawing: 42063-1_1_AA

Pos	Part No	SP	UN	Qty	Description	Page No
-						
010	42067-0100	-		1	SENSOR BOARD	
020	42068-0100	-		1	CONVERTER BOARD	
060	312125-0228	-		3	SCREW PAN HEAD MCS M3X16 A480	
070	312812-0310	-		3	HEXAGON NUT, NY-LOCK M3 A480	
080	315105-0124	-		6	WASHER BRB3,2X6RFR	
090	90005-0143	-		6	SPACER 3,3/7, H=3	

Pos	Part No	SP	UN	Qty	Description	Page No

Tetra Pak

SPC
Spare Parts Catalogue

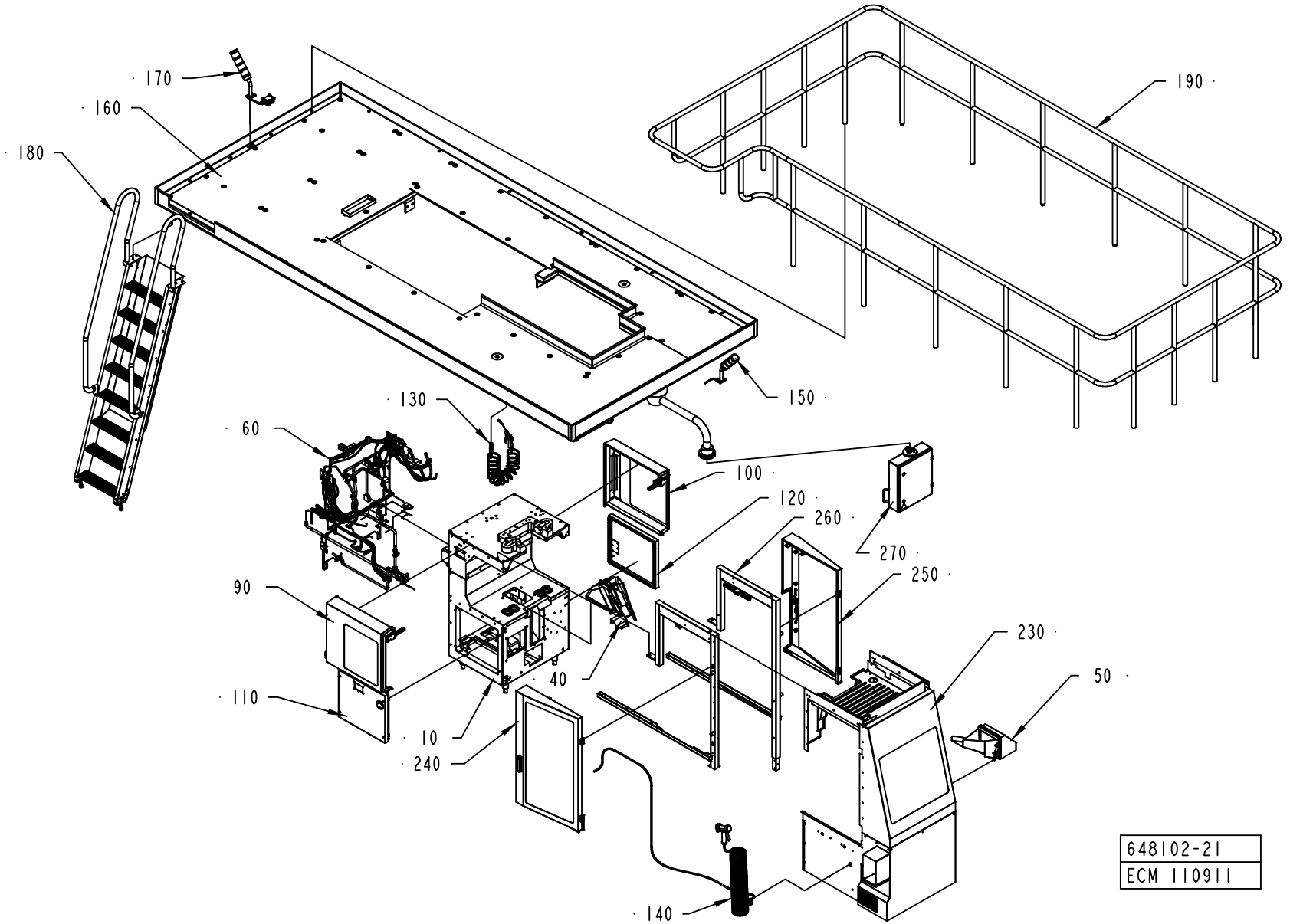
170
160
180
190
150
130
60
100
120
260
270
250
90
230
50
40
110
10
240
140
648102-21
ECM 110911

ECM: 111737 - 20030113
Group number: 648102-1200
Assembly Drawing: 648102-21_1_AB

Pos	Part No	SP	UN	Qty	Description	Page No
-						
010	1532584-0100	-		1	MACHINE BODY	**187**
040	2526338-0100	-		1	DROP CHUTE	**193, 195**
050	2552699-0100	-		1	DISCHARGE CHUTE	**197**
060	1548576-0100	-		1	PIPE WORK	**199, 201, 203**
090	2552694-0100	-		1	DOOR	**209**
100	2552695-0100	-		1	DOOR	**211**
110	256665-0200	-		1	HATCH	**213**
120	1296815-0100	-		1	HATCH	**215**
130	271414-0300	-		1	AIR JET GUN	**217**
140	271387-0400	-		1	SPRAY GUN	**219**
150	1519086-0100	-		1	LAMP	**221**
160	1512660-0100	-		1	PLATFORM	**223, 225**
170	1549603-0100	-		1	LAMP	**233**
180	598762-0200	-		1	LADDER	**235**
190	1519602-0100	-		1	RAILING	**237**
230	2552700-0100	-		1	COVER PLATES	**239**
240	2552680-0100	-		1	DOOR	**243**
250	2552681-0100	-		1	DOOR	**245**
260	2553830-0100	-		1	FRAME	**247**
270	1364345-0300	-		1	TPOP PANEL 12"	**249**

Pos	Part No	SP	UN	Qty	Description	Page No

MACHINE BODY

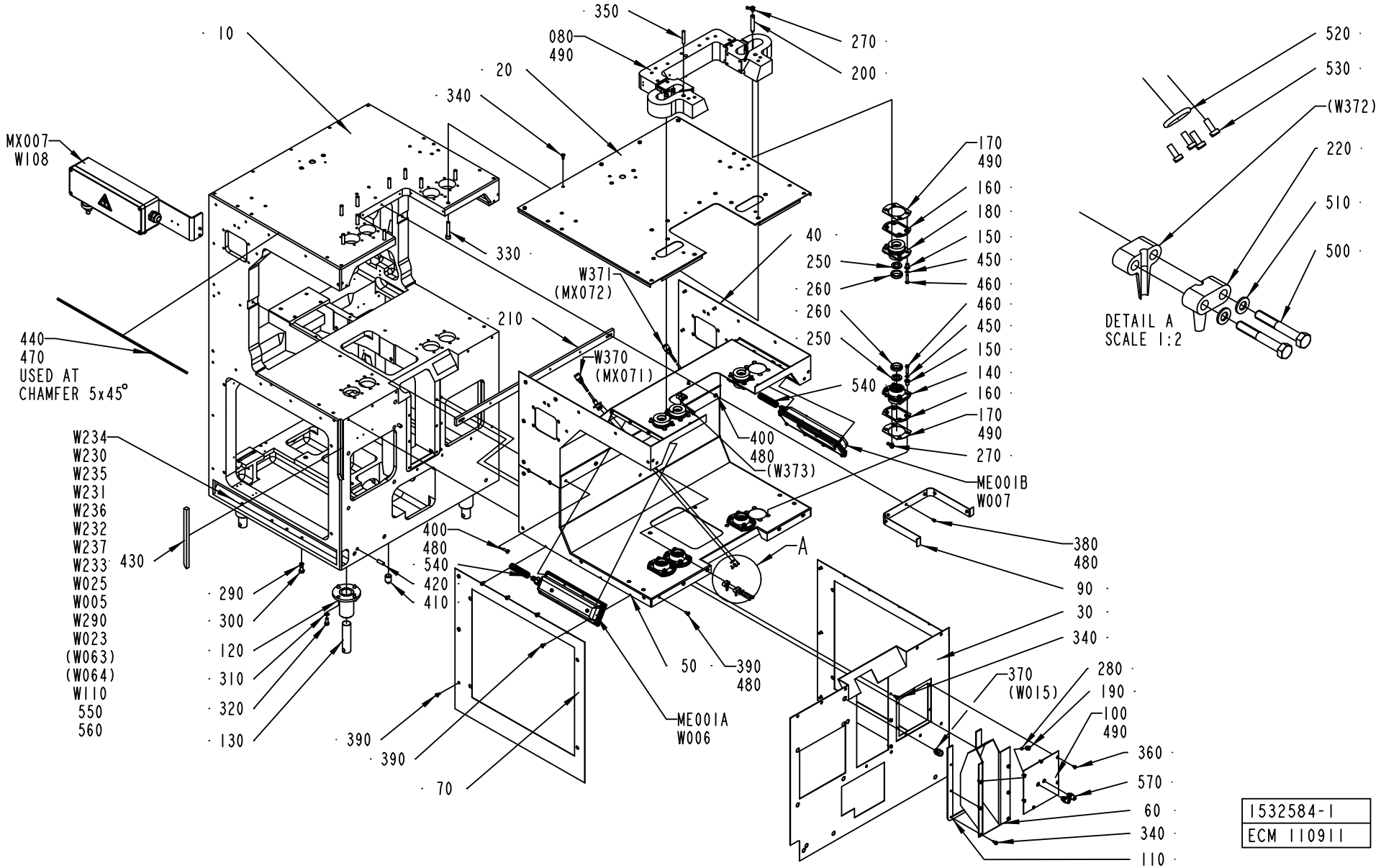

ECM: 111716 - 20030113
Group number: 1532584-0100
Assembly Drawing: 1532584-1_1_AB

Pos	Part No	SP	UN	Qty	Description	Page No
-						
0010	1523754-0000	-		1	MACHINE BODY	
0020	1523755-0000	-		1	COVERING PLATE	
0030	1523756-0000	-		1	COVER	
0040	1523757-0000	-		1	PLATE	
0050	1523758-0000	-		1	PLATE	
0060	1523759-0000	-		1	COVER	
0070	1523760-0000	-		1	FRONT PLATE	
0080	572294-0000	-		1	COLLAR	
0090	441677-0000	-		1	FRONT PLATE	
0100	2556246-0000	-		1	HATCH	
0110	1195428-0000	B		1	GASKET	
0120	469095-0000	-		4	HOLDER	
0130	469096-0000	-		4	LEG	
0140	441217-0000	B		4	BUSHING LOWER	
0150	751085-0000	B		32	BUSHING	
0160	441593-0000	B		8	GASKET	
0170	441221-0000	B		8	WASHER	
0180	441218-0000	B		4	BUSHING UPPER	
0190	441077-0000	B		1	NOZZLE BRACKET	
0200	469937-0000	-		4	PIPE	
0210	441212-0000	-		1	HOLDER	
0220	1282426-0000	B		4	CLIP	
0250	315259-0102	B		8	FELT SEAL 22-47 MM	
0260	90091-0106	B		8	SCRAPER 30X40X10 MM	
0270	90137-0010	-		8	BANJO CONN. M6, D=2,5 MM	
0280	90424-0027	-		1	SPRAY NOZZLE TIP, 8613-8V-TC	
0290	315233-0109	-		8	WASHER CAPTIVE SEALING G1/8	
0300	312105-0489	-		8	SCREW M6S ISO 4017 M10X16 A480	
0310	315105-0165	-		16	WASHER BRB8,4X16RFR	
0320	312105-0451	-		16	SCREW M6S ISO 4017 M8X20 A480	
0330	312115-0503	-		10	SCREW ISO4762 M10X60 A4	
0340	312105-0366	-		14	SCREW M6S M6X12 A280	
0350	311103-0415	-		3	PARALLELL PIN ISO2338 8X55 A1	
0360	312155-0325	-		6	SCREW EN 10642 MF6S M5X10 A480	
0370	352103-0100	-		1	CABLE GLAND, STR 9, PR15,2/PG9	
0380	312125-0323	-		7	SCREW PAN HEAD MCS M5X8 SS	
0390	90287-0075	-		38	SCREW SLOT. PAN HEAD LKCS M6X12	
0400	90287-0076	-		2	SCREW SLOT. PAN HEAD LKCS M6X20	
0410	90087-0002	-		3	PIPE PLUG	
0420	311103-0458	-		2	PARALLELL PIN ISO2338 10X30 A1	
0430	90143-0010	B	MM	260	STRIP	
0440	90143-0012	B	MM	1900	STRIP	
0450	315105-0153	-		32	WASHER BRB6,4X12RFR	
0460	312105-0374	-		32	SCREW M6S ISO 4014 M6X30 A480	
0470	90153-0017	-	KG	1	ADHESIVE, 2963 TUBE 160G	
0480	90157-0016	-	L	1	LOCKING FLUID	
0490	90157-0022	-	ML	1	SEALING COMPOUND	
0500	312105-0337	-		4	SCREW M6S ISO 4014 M5X35 A480	
0510	315105-0146	-		4	WASHER BRB5,3X10RFR	
0520	315202-0211	B		2	O-RING 13,3X2,4 MM	
0530	312125-0222	-		8	SLOTTED SCREW MCS M3X8 SS	
540	90152-0059	-	M	6	SPIRAL CONDUIT, 18X12, UL 1211	
550	90152-0051	-	M	8	SPIRAL CONDUIT, 25X18, UL 1816	
560	90152-0070	-	M	2	METAL HOSE, 32,5X26, UL 2621	
570	342768-0102	-		2	BULKHEAD CONNECTOR, 6 MM	
ME001A	441534-0200	-		1	LIGHT FIXTURE	**189**
ME001B	441534-0200	-		1	LIGHT FIXTURE	**189**
MX007	456827-0400	-		1	CONNECTION BOX	**191**
W005	351150-0418	-	M	7	CABLE OLFLEX 4X2,5 MM2 LIGHT/GREY	
W006	351150-0412	-	M	4	CABLE OLFLEX 3X1,5 MM2 LIGHT/GREY	
W007	351150-0412	-	M	3	CABLE OLFLEX 3X1,5 MM2 LIGHT/GREY	
W023	90220-0104	-	M	8	SCR. CABLE 4X1,5MM2	
W025	351150-0428	-	M	6	CABLE OLFLEX 41X0,75 MM2 LIGHT/GREY	
W108	351150-0425	-	M	4	CABLE OLFLEX 25X0,75 MM2 LIGHT/GREY	
W110	351150-0413	-	M	6	CABLE OLFLEX 4X1,5 MM2 LIGHT/GREY	
W230	351150-0412	-	M	6	CABLE OLFLEX 3X1,5 MM2 LIGHT/GREY	
W231	351150-0412	-	M	6	CABLE OLFLEX 3X1,5 MM2 LIGHT/GREY	
W232	351150-0412	-	M	6	CABLE OLFLEX 3X1,5 MM2 LIGHT/GREY	
W233	351150-0412	-	M	6	CABLE OLFLEX 3X1,5 MM2 LIGHT/GREY	
W234	90220-0034	A	M	6	THERMOCOUPLE CABLE K/ 2X0,5MM2	
W235	90220-0034	A	M	6	THERMOCOUPLE CABLE K/ 2X0,5MM2	
W236	90220-0034	A	M	6	THERMOCOUPLE CABLE K/ 2X0,5MM2	
W237	90220-0034	A	M	6	THERMOCOUPLE CABLE K/ 2X0,5MM2	
W290	351162-0106	-	M	8	CABLE AWM 1X4 MM2 YELLOW-GREEN	
W370	551969-0006	A		1	COAXIAL CABLES	
W371	551969-0006	A		1	COAXIAL CABLES	

Machine Type | Group Description | Used-In | Group Number | Page No

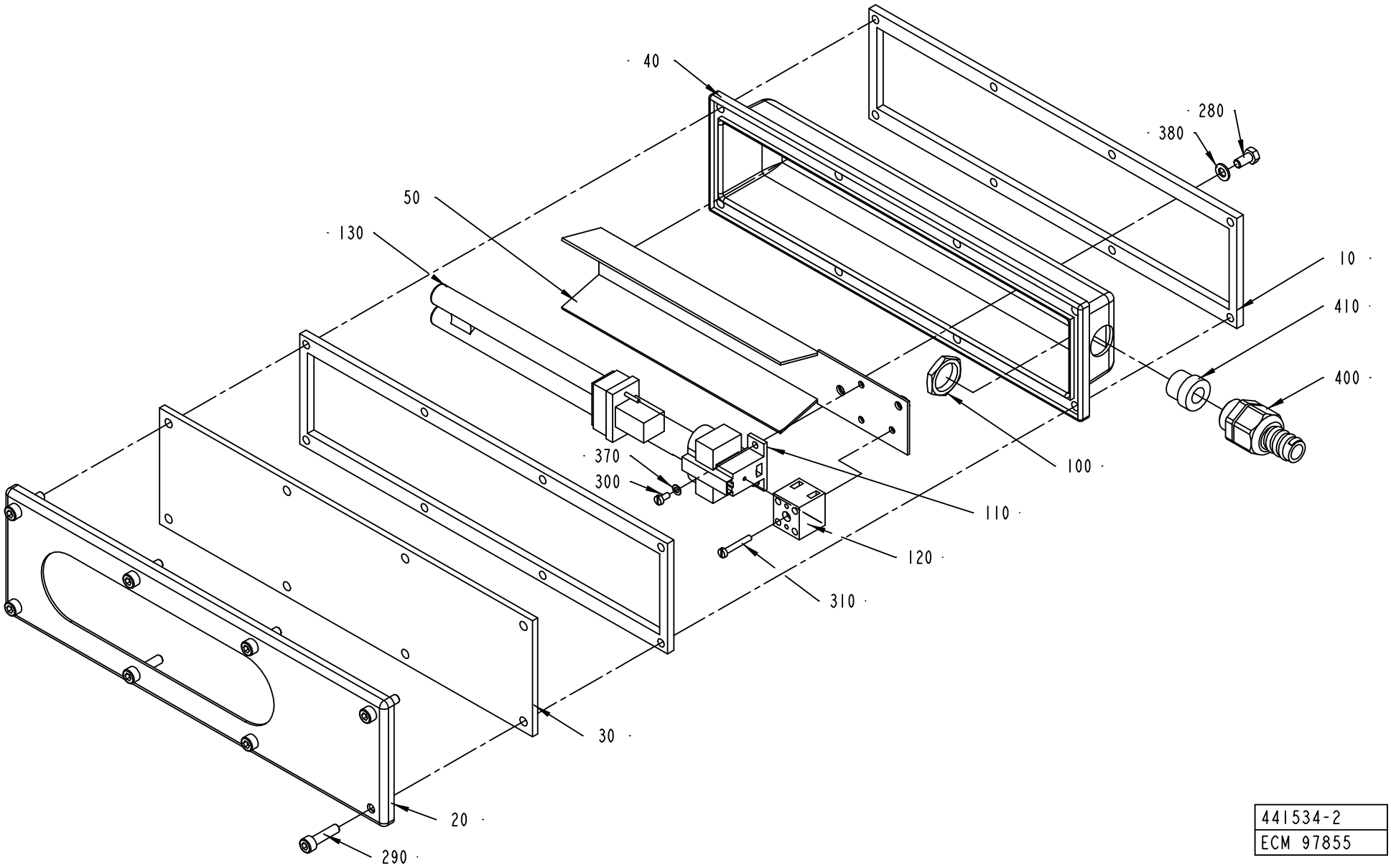

441534-2
ECM 97855

ECM: 106638 - 20020313
Group number: 441534-0200
Assembly Drawing: 441534-2_1_AA

Pos	Part No	SP	UN	Qty	Description	Page No
-						
010	441536-0000	B		2	GASKET	
020	456263-0000	-		1	SHEET	
030	456264-0000	-		1	GLASS	
040	469336-0000	-		1	COVER	
	456260-0000	*-*		*1*	*COVER*	
050	469337-0000	-		1	REFLECTOR	
	312605-0314	*-*		*2*	*HEXAGON NUT, M6M M5 A280*	
100	90099-0002	-		1	NUT PR 18,6 BRASS	
110	90164-0301	-		1	HOLDING FIXTURE	
120	90195-0020	-		1	TERMINAL BLOCK, 1977.2	
130	90297-0006	B		1	FLUORESCENT TUBE, PL9	
280	312105-0325	-		2	SCREW M6S ISO 4017 M5X10 A480	
290	312115-0331	-		8	SCREW ISO4762 M5X20 A4	
300	312125-0220	-		2	SCREW SLOT.PAN HD. MCS 3X6 A480	
310	312125-0230	-		1	SLOTTED SCREW MCS M3X20 SS	
370	315105-0124	-		2	WASHER BRB3,2X6RFR	
380	315105-0146	-		2	WASHER BRB5,3X10RFR	
400	353243-0002	-		1	EXTENDED WITHOUT INSERT, PG11	
410	353249-0009	-		1	INSERT, SINGEL HOLE, EK 152/9	

Pos	Part No	SP	UN	Qty	Description	Page No

Machine Type | Group Description | Used-In | Group Number | Page No

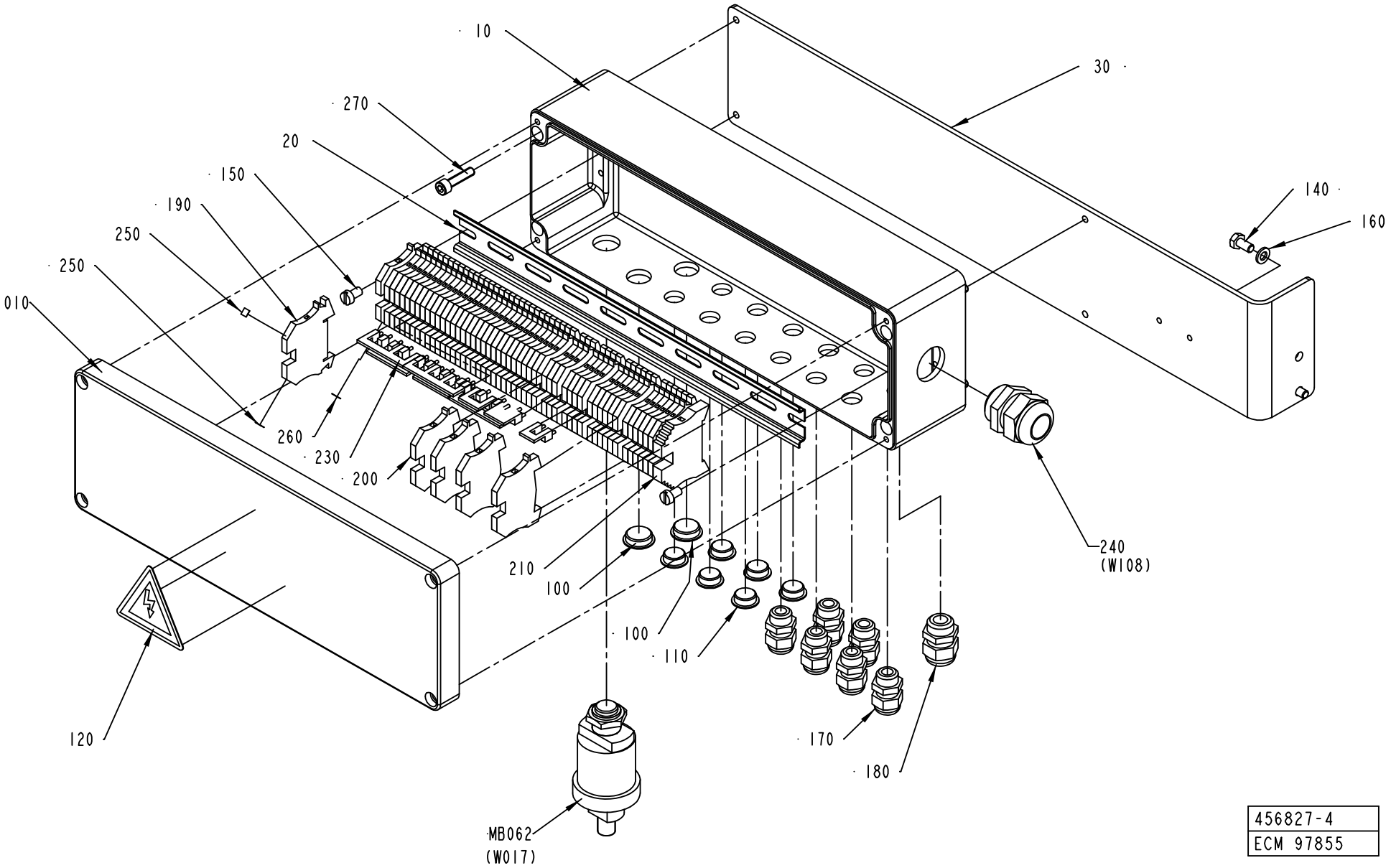
10
30
270
20
150
190
250
250
010
140
160
260
230
200
210
100
100
110
240
(W108)
120
170
180
MB062
(W017)
456827-4
ECM 97855

ECM: 115733 - 20020930
Group number: 456827-0400
Assembly Drawing: 456827-4_1_AA

Pos	Part No	SP	UN	Qty	Description	Page No
-						
010	1512667-0000	-		1	CONNECTION BOX	
020	578676-0000	-		1	RAIL	
030	1512840-0000	-		1	BRACKET	
100	90002-0009	-		2	BLANK-OFF PLUG, PR 18.6 SKINDICHT-BLK11	
110	90002-0013	-		6	BLANK-OFF PLUG, PR 15,2 SKINDICHT-BLK9	
120	90194-0016	A		1	WARNING SIGN, RISK OF ELECTRIC SHOCK	
140	312105-0366	-		2	SCREW M6S M6X12 A280	
150	312125-0364	-		2	SCREW SLOT.PAN HD. MCS 6X10 A480	
160	315105-0153	-		2	WASHER BRB6,4X12RFR	
170	352103-0101	-		6	CABLE GLAND, ST 9, PR15,2/PG9	
180	352103-0106	-		1	CABLE GLAND, ST 11, PR18,6/PG11	
190	353021-0212	-		50	FEED THROUGH TERMINAL, 10200.0	
200	353024-0204	-		5	EARTH TERMINAL WPE 2,5	
210	353031-0203	-		1	END SUPPORT, WEW 35/2	
230	353034-0030	-		6	BRIDGE CONNECTOR WQV 2,5/10, 10544.6	
240	352103-0116	-		1	CABLE GLAND, ST 21, PR28,3/PG21	
250	359011-0807	-		2	MARKING PLATES 5-FW 1-50	
260	359011-0819	-		1	MARKING PLATES 5-GW (EARTH)	
270	312115-0372	-		4	SCREW ISO4762 M6X25 A4	
MB062	90274-0045	A		1	PRESSURE GUARD, 14 KPA	

Pos	Part No	SP	UN	Qty	Description	Page No

Machine Type | Group Description | Used-In | Group Number | Page No

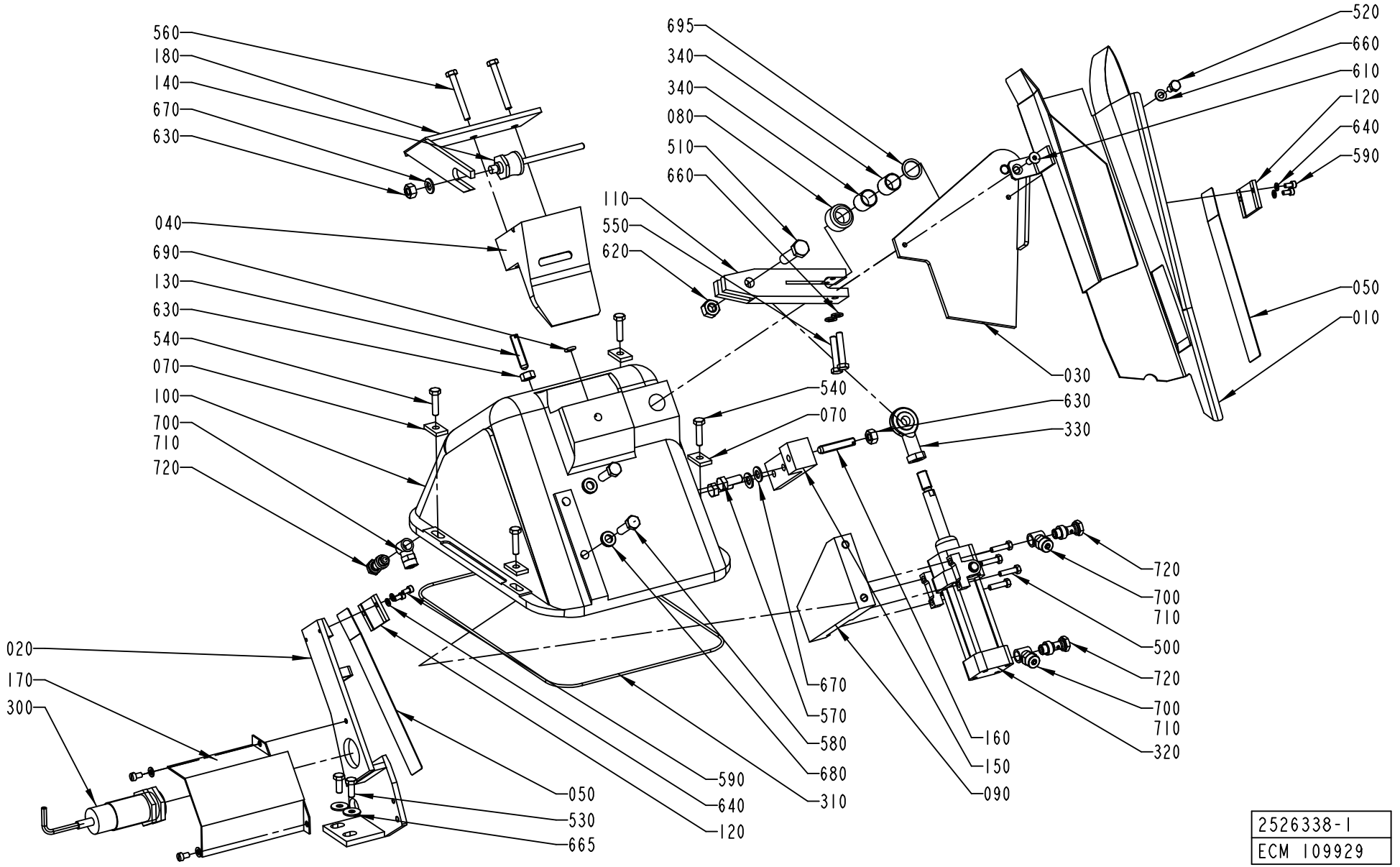

2526338-1
ECM 109929

ECM: 118410 - 20030113
Group number: 2526338-0100
Assembly Drawing: 2526338-1_1_AB

This list covers pages from 192 to 195

Pos	Part No	SP	UN	Qty	Description	Page No
TBA 0100B						
010	2526310-0000	B		1	DROP CHUTE	
020	2522107-0000	B		1	HEAD PLATE	
040	255942-0000	B		1	SLIDER	
050	2526327-0000	A		2	LEAF SPRING	
170	295075-0000	-		1	PROTECTION	
560	312105-0380	-		2	SCREW M6S ISO 4014 M6X50 A480	
TBA 0125S						
010	2526300-0000	B		1	DROP CHUTE	
020	2506323-0000	B		1	HEAD PLATE	
040	255942-0000	B		1	SLIDER	
050	2526323-0000	A		2	LEAF SPRING	
170	295075-0000	-		1	PROTECTION	
560	312105-0380	-		2	SCREW M6S ISO 4014 M6X50 A480	
TBA 0160S						
010	2526303-0000	B		1	DROP CHUTE	
020	2522109-0000	B		1	HEAD PLATE	
040	469502-0000	B		1	SLIDER	
050	2526325-0000	A		2	LEAF SPRING	
170	295075-0000	-		1	PROTECTION	
560	312105-0380	-		2	SCREW M6S ISO 4014 M6X50 A480	
TBA 0180B						
010	2526305-0000	B		1	DROP CHUTE	
020	2506322-0000	B		1	HEAD PLATE	
040	295097-0000	B		1	SLIDER	
050	2526324-0000	A		2	LEAF SPRING	
170	295075-0000	-		1	PROTECTION	
560	312105-0380	-		2	SCREW M6S ISO 4014 M6X50 A480	
TBA 0200B						
010	2526306-0000	B		1	DROP CHUTE	
020	2506321-0000	B		1	HEAD PLATE	
040	295097-0000	B		1	SLIDER	
050	2526324-0000	A		2	LEAF SPRING	
170	295075-0000	-		1	PROTECTION	
560	312105-0380	-		2	SCREW M6S ISO 4014 M6X50 A480	
TBA 0200M						
010	2526311-0000	B		1	DROP CHUTE	
020	2522105-0000	B		1	HEAD PLATE	
040	574449-0000	B		1	SLIDER	
050	2526328-0000	A		2	LEAF SPRING	
170	574452-0000	-		1	PROTECTION	
560	312105-0380	-		2	SCREW M6S ISO 4014 M6X50 A480	
TBA 0200S						
010	2526301-0000	B		1	DROP CHUTE	
020	2504445-0000	B		1	PLATE	
040	469502-0000	B		1	SLIDER	
050	2526323-0000	A		2	LEAF SPRING	
170	295075-0000	-		1	PROTECTION	
560	312105-0380	-		2	SCREW M6S ISO 4014 M6X50 A480	
TBA 0250B						
010	2526308-0000	B		1	DROP CHUTE	
020	2506319-0000	B		1	HEAD PLATE	
040	295097-0000	B		1	SLIDER	
050	2526324-0000	A		2	LEAF SPRING	
170	295075-0000	-		1	PROTECTION	
560	312105-0380	-		2	SCREW M6S ISO 4014 M6X50 A480	
TBA 0250S						
010	2526302-0000	B		1	DROP CHUTE	
020	2522106-0000	B		1	HEAD PLATE	
040	574449-0000	B		1	SLIDER	
050	2526325-0000	A		2	LEAF SPRING	
170	574452-0000	-		1	PROTECTION	
560	312105-0380	-		2	SCREW M6S ISO 4014 M6X50 A480	
TBA 0300S, TBA 0284B						
010	2526309-0000	B		1	DROP CHUTE	
020	2506324-0000	B		1	HEAD PLATE	
040	295097-0000	B		1	SLIDER	
050	2526326-0000	A		2	LEAF SPRING	
170	295075-0000	-		1	PROTECTION	
560	312105-0380	-		2	SCREW M6S ISO 4014 M6X50 A480	
TBA 0330S						
010	2526304-0000	B		1	DROP CHUTE	
020	2522108-0000	B		1	HEAD PLATE	
040	979938-0000	B		1	SLIDER	

Machine Type | Group Description | Used-In | Group Number | Page No

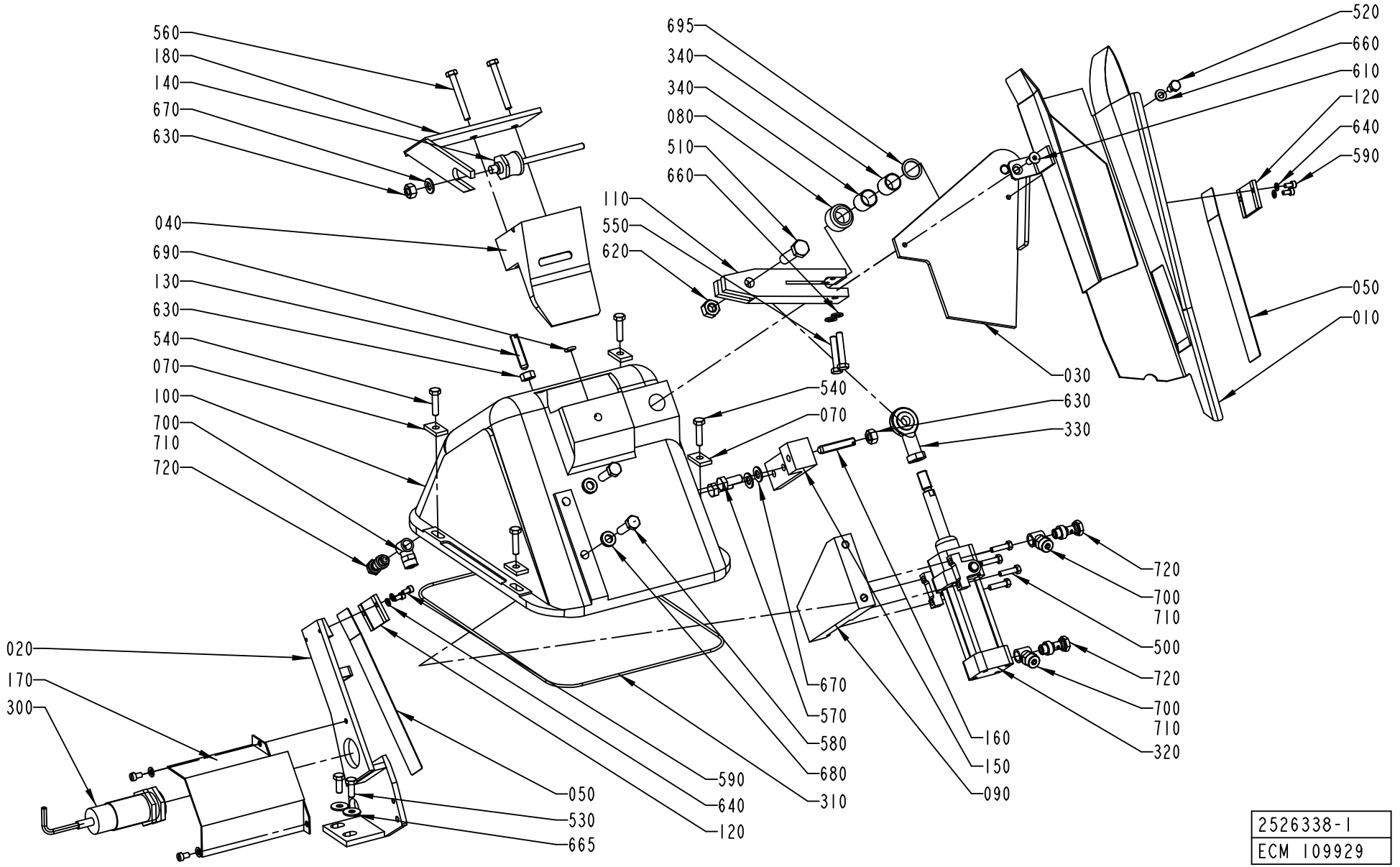

2526338-1
ECM 109929

Pos	Part No	SP	UN	Qty	Description	Page No
TBA 0330S (Cont'd)						
050	2526329-0000	A		2	LEAF SPRING	
170	574452-0000	-		1	PROTECTION	
560	312109-0378	-		2	SCREW M6S ISO4017 M6X40 A480	
Common Parts						
030	2547232-0000	-		1	PIVOT ARM	
070	255939-0000	-		4	WASHER	
080	255940-0000	-		1	SPACER	
090	255943-0000	-		1	HOLDER	
100	271163-0000	-		1	CANTILEVER	
110	272600-0000	-		1	ARM	
120	2522110-0000	-		2	PLATE	
130	272602-0000	-		1	SCREW	
140	272742-0000	B		1	FINGER	
150	272852-0000	-		1	HOLDER	
160	272853-0000	-		1	SCREW	
180	295399-0000	-		1	HOLDER	
300	90458-0256	A		1	PROXIMITY SWITCH IIA 3010-BPKG/6M	
310	90161-0001	B	MM	1500	O-RING MATERIAL 3 MM	
320	90450-0033	A		1	CYLINDER	
330	90239-0405	B		1	ROD END,BALL JOINT EYE M10X1,25	
340	90240-0073	B		2	BEARING BUSHING W/O FL, 16X18X20 MM	
500	312101-0331	-		4	SCREW M6S M5X20 FZB	
510	312101-0499	-		1	SCREW M6S M10X40 FZB	
520	312105-0366	-		1	SCREW M6S M6X12 A280	
530	312105-0368	-		2	SCREW M6S M6X16 A280	
540	312105-0372	-		4	SCREW M6S ISO 4017 M6X25 A480	
550	312105-0376	-		2	SCREW M6S ISO 4014 M6X35 A480	
570	312105-0451	-		2	SCREW M6S ISO 4017 M8X20 A480	
580	312105-0455	-		2	SCREW M6S ISO 4017 M8X30 A480	
590	312115-0287	-		4	SCREW ISO4762 M4X8 A4	
600	312125-0323	-		2	SCREW PAN HEAD MCS M5X8 SS	
610	312155-0368	-		1	SCREW EN 10642 MF6S M6X16 A480	
620	312601-0320	-		1	NUT M6M 10-8 FZB	
630	312605-0318	-		4	HEXAGON NUT, M6M M8 A280	
640	315105-0136	-		4	WASHER BRB4,3XRFR	
650	315105-0146	-		2	WASHER BRB5,3X10RFR	
660	315105-0153	-		3	WASHER BRB6,4X12RFR	
665	90005-0060	-		2	WASHER PLAIN, RBS 6,4/M6)/18,H=1,5	
670	315105-0165	-		3	WASHER BRB8,4X16RFR	
680	315115-0165	-		2	WASHER PLAIN, TBRB 8,4/16 H=3	
690	315202-0206	B		1	O-RING 7,3X2,4 MM	
695	315233-0111	-		1	WASHER CAPTIVE SEALING G3/8	
700	342903-0121	-		3	NUT WITH SPRING 8/6-M12X1	
710	342980-0121	-		3	BANJO-CONNECTION,RING 8/6-G1/8"	
720	342980-0303	-		3	BANJO-HOLLOW BOLT COUPL,EXT.THR.01-G1/8"	

Machine Type | Group Description | Used-In | Group Number | Page No

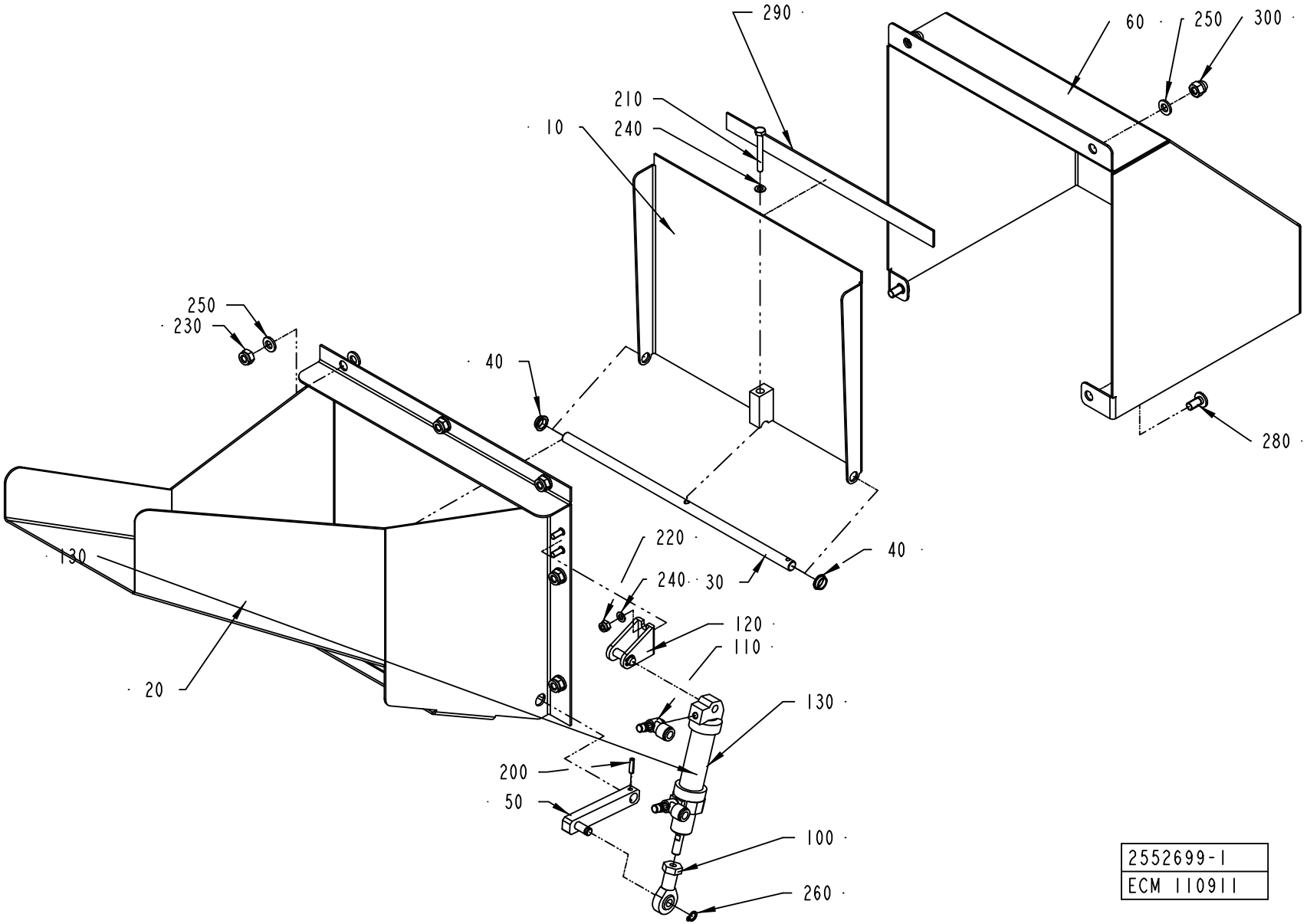
290
60
250
300
210
10
240
250
230
40
280
40
220
130
240
30
120
110
20
130
200
50
100
260
2552699-1
ECM 110911

ECM: 110917 - 20030113
Group number: 2552699-0100
Assembly Drawing: 2552699-1_1_AA

Pos	Part No	SP	UN	Qty	Description	Page No
-						
010	2552697-0000	-		1	LID	
020	2552698-0000	-		1	DISCHARGE CHUTE	
030	2552712-0000	-		1	SHAFT	
040	2552713-0000	-		2	BUSHING	
050	2552714-0000	-		1	BRACKET	
060	2554975-0000	-		1	COVER	
100	90115-0173	B		1	ROD END, ID=6 MM, M6X1	
110	90235-0844	-		2	THROTTLE CHECK VALVE, M5, MANUAL, 6MM	
120	90239-0486	-		1	REAR,CLEVIS,MINI-ISO 16	
130	90239-0842	B		1	DOUBLE ACTING, MINI-ISO, CYL.16-50	
200	311112-0206	-		1	SPRING PIN, ISO 8752 3X12-C	
210	312105-0301	-		1	SCREW M6S ISO 4017 M4X35 A480	
220	312812-0312	-		2	HEXAGON NUT, NY-LOCK M4 A480	
230	312812-0316	-		7	HEXAGON NUT, NY-LOCK M6 A480	
240	315105-0136	-		3	WASHER BRB4,3XRFR	
250	315105-0153	-		9	WASHER BRB6,4X12RFR	
260	315751-0103	-		1	RETAIN. RING, 6	
280	90287-0075	-		2	SCREW SLOT. PAN HEAD LKCS M6X12	
290	90458-0145	-		1	SEALING, 3X15 MM CLOSED CELL SPONGE	
300	312705-0316	-		2	NUT HEX. DOMED CAP MHM-6 M6 A280	

Pos	Part No	SP	UN	Qty	Description	Page No

Machine Type | Group Description | Used-In | Group Number | Page No

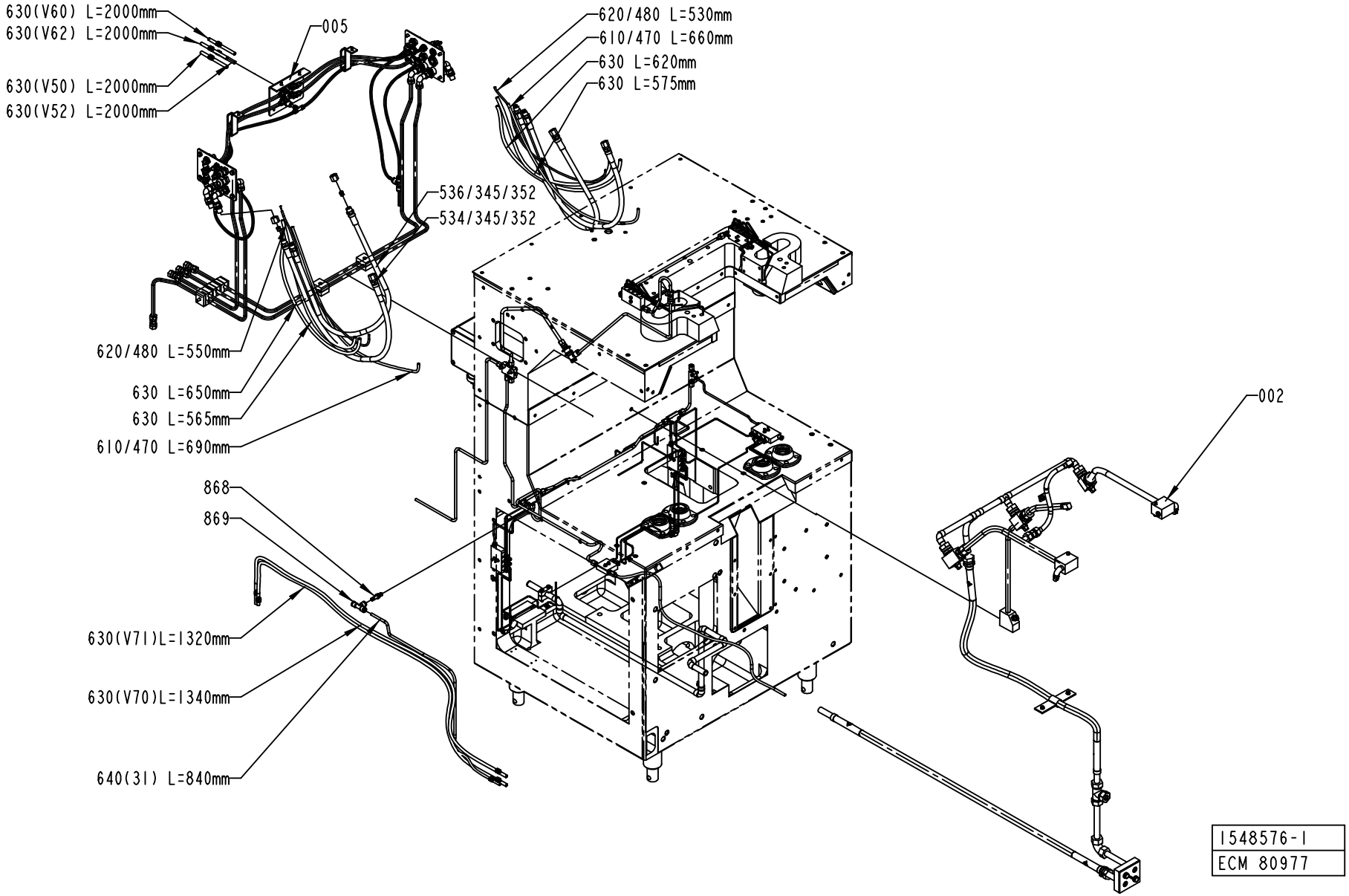
630(V60) L=2000mm
630(V62) L=2000mm
630(V50) L=2000mm
630(V52) L=2000mm
005
620/480 L=530mm
610/470 L=660mm
630 L=620mm
630 L=575mm
536/345/352
534/345/352
620/480 L=550mm
630 L=650mm
630 L=565mm
610/470 L=690mm
002
868
869
630(V71)L=1320mm
630(V70)L=1340mm
640(31) L=840mm
1548576-1
ECM 80977

ECM: 115744 - 20020930
Group number: 1548576-0100
Assembly Drawing: 1548576-1_1_AA

This list covers pages from 198 to 203

Pos	Part No	SP	UN	Qty	Description	Page No
-						
002	271261-0700	-		1	CLEANING SYSTEM	**205**
005	1523829-0100	-		1	DISTRIBUTOR BLOCK	**207**
010	491854-0000	-		1	PIPE WATER	
020	979486-0000	-		1	LUBRICATING PIPE	
060	469133-0000	-		1	PIPE	
070	469132-0000	-		1	PIPE	
075	469131-0000	-		2	LACE	
090	271622-0000	-		1	LACE	
100	271623-0000	-		1	LACE	
120	295986-0000	-		1	HOLDER	
130	456407-0000	-		1	LACE	
140	491390-0000	-		1	PIPE CENTRAL LUBRICATION	
150	491859-0000	-		1	HOLDER	
160	491860-0000	-		1	HOLDER	
310	90028-0001	-		5	CONE 5/32"	
320	90028-0020	-		22	CONE TUBE 2,5MM	
330	90028-0021	-		5	CONE TUBE 4 MM	
340	90030-0051	-		1	CONN. STR., 6-R1/8, EXT. THREAD	
345	90030-0098	-		8	ACCESSORIES, FERRULE 8	
347	90136-0002	-		2	PLUG 5/16"24	
350	90030-0162	-		3	CONN. STR. 6-M10X1, EXT. THREAD	
352	342703-0208	-		8	NUT, PIPES & CONNECTORS,NUT M-8 SS	
355	90030-0200	-		2	CONN. ELBOW, 6-M10X1, EXT.THREAD	
360	90032-0014	-		1	DISTR. BLOCK & DIST.5/16-24UNF X6	
370	90032-0026	-		1	DISTR. BLOCK, 5/16-24UNF X2	
390	90032-0030	-		1	DISTR. BLOCK, 5/16-24UNF X3	
391	90032-0031	-		1	DISTR. BLOCK, 5/16-24UNF X5	
400	90032-0038	-		1	BLOCK 2 WAYS	
410	90032-0039	-		5	BLOCK 4 WAYS	
420	90090-0008	-		2	BALL, D=7,1 MM	
430	90092-0052	-		10	METERING VALVE 10 MM3	
440	90092-0053	-		12	METERING VALVE 30 MM3	
450	90134-0003	B		5	BUSHING	
470	90134-0030	-		2	SLEEVE FOR PLASTIC TUBE	
480	90134-0031	-		6	SLEEVE FOR PLASTIC TUBE	
490	90134-0034	-		11	NIPPLE	
	90030-0101	-		*1*	*TAPER*	
500	90134-0038	-		7	BUSHING/NUT INLET/OUTLET 4 MM	
510	90134-0039	-		22	BUSHING VALVE CONNECTION 2,5 MM	
534	90148-0037	-		2	HOSE	
536	90148-0038	-		2	HOSE	
540	90151-0001	-	MM	2200	BRASS PIPE DI=2,6 MM	
550	90266-0019	-	MM	7000	PIPE	
560	90165-0002	-		2	CLIP	
590	90165-0022	-		2	PIPE CLIP, FOR TUBE D=2,5 MM, B-3570	
600	90165-0023	-		2	CLIP	
605	90165-0039	-		1	PIPE CLAMP, RSGU 1.15/12, D=15 MM	
610	90166-0108	-	MM	2100	TUBE 6 MM PA,TRANSP.	
620	90166-0109	-	MM	1080	TUBE 4 MM PA,TRANSP.	
630	90166-0118	-	M	13	TUBE 8 MM PA BLACK	
640	90166-0081	-	MM	840	TUBE 6 MM PA BLUE	
650	90266-0006	-	MM	3400	TUBE	
660	312101-0337	-		2	SCREW M6S M5X35 FZB	
790	312115-0289	-		2	SCREW ISO4762 M4X10 A4	
800	312105-0295	-		8	SCREW M6S ISO4017 M4X20 A480	
805	312121-0289	-		1	SCREW SLOT.PAN HD. MCS 4X10 FZB	
810	312105-0297	-		10	SCREW M6S ISO 4017 M4X25 A480	
820	312105-0372	-		2	SCREW M6S ISO 4017 M6X25 A480	
840	312125-0287	-		6	SCREW PAN HEAD MCS M4X8 SS	
845	312125-0323	-		1	SCREW PAN HEAD MCS M5X8 SS	
854	315101-0146	-		2	WASHER PLAIN, BRB, 5,3/10 H=1	
860	315234-0109	-		1	WASHER,PL.RND.CU.10,3/13,5 H=1,0	
865	342727-0102	-		1	CONN. PIPE G-6-LFZB	
867	90165-0065	-		1	PIPE CLAMP, RSGU 1.8/9, D=8 MM	
868	342716-0203	-		1	REDUCER 6-8	
869	342748-0103	-		1	T-CONNECTION 8MM	
870	342767-0100	-		1	CONN. BULKHEAD G1/8	
880	342797-0121	-		1	CONN. BANJO, RINGPIECE 6-1/8	
890	342980-0303	-		1	BANJO-HOLLOW BOLT COUPL,EXT.THR.01-G1/8"	
900	352113-0101	-		10	CLIP STRIP, 92X2,5 MM	
910	359000-0400	-		5	MARKING CO2/4"0"	
920	359000-0401	-		3	MARKING COLLAR 2/4 "1" YELLOW	
930	359000-0402	-		2	MARKING COLLAR 2/4 "2" YELLOW	
940	359000-0403	-		1	MARKING COLLAR PA2/4 "3" YELLOW	
951	359000-0405	-		2	MARKING CO2/4"5"	
952	359000-0406	-		2	MARKING COLLAR PA2/4 "6" YELLOW	
965	359000-0407	-		4	MARKING COLLAR PA2/4 "7" YELLOW	
990	359000-0771	-		8	MARKING CO2/4"V"	

Machine Type | Group Description | Used-In | Group Number | Page No

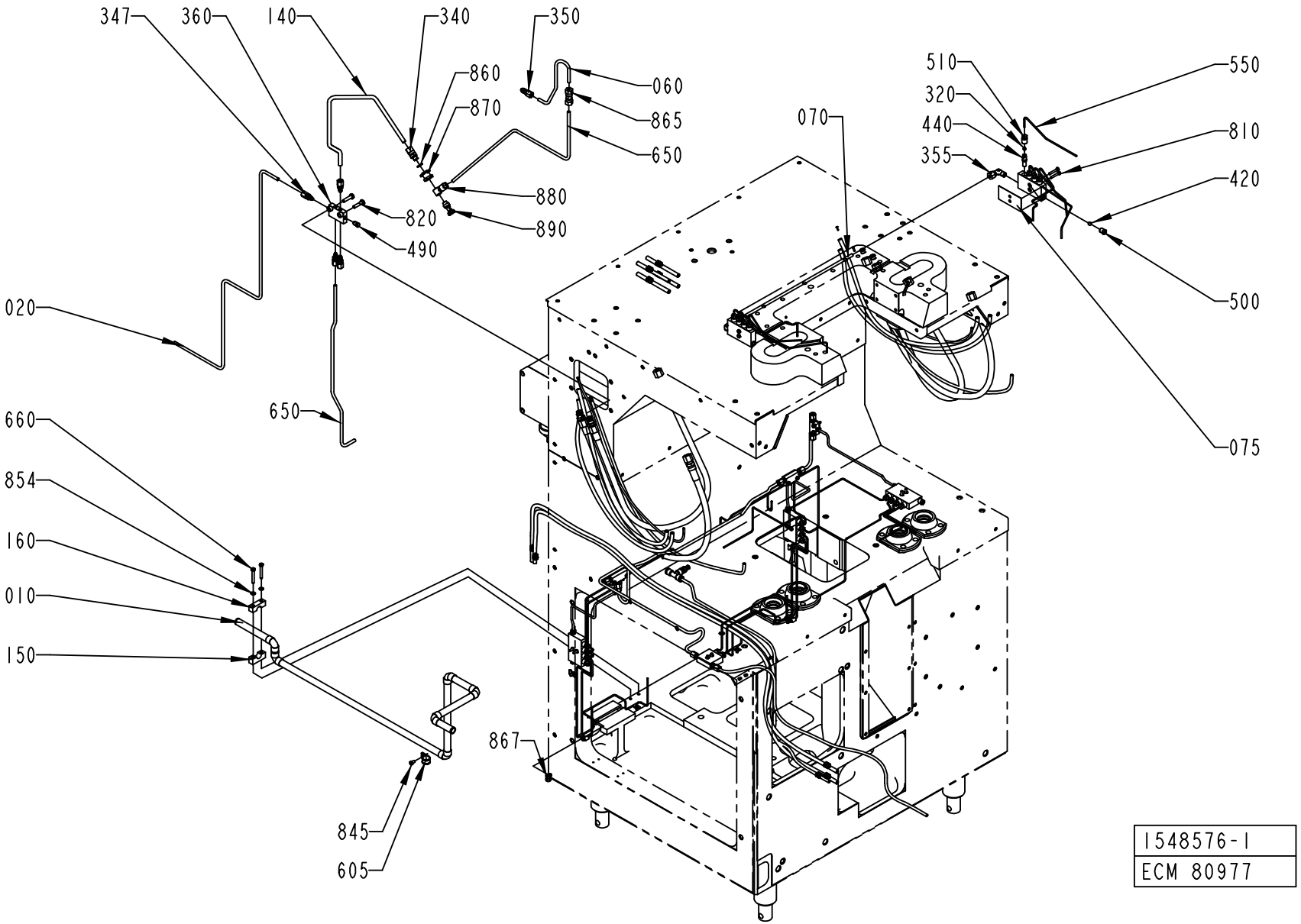
347
360
140
340
350
860
870
060
865
650
880
890
820
490
020
650
660
854
160
010
150
867
845
605
510
320
440
355
070
550
810
420
500
075
1548576-1
ECM 80977

ECM: 115744 - 20020930
Group number: 1548576-0100
Assembly Drawing: 1548576-1_2_AA

This list covers pages from 198 to 203

Pos	Part No	SP	UN	Qty	Description	Page No
-						
002	271261-0700	-		1	CLEANING SYSTEM	**205**
005	1523829-0100	-		1	DISTRIBUTOR BLOCK	**207**
010	491854-0000	-		1	PIPE WATER	
020	979486-0000	-		1	LUBRICATING PIPE	
060	469133-0000	-		1	PIPE	
070	469132-0000	-		1	PIPE	
075	469131-0000	-		2	LACE	
090	271622-0000	-		1	LACE	
100	271623-0000	-		1	LACE	
120	295986-0000	-		1	HOLDER	
130	456407-0000	-		1	LACE	
140	491390-0000	-		1	PIPE CENTRAL LUBRICATION	
150	491859-0000	-		1	HOLDER	
160	491860-0000	-		1	HOLDER	
310	90028-0001	-		5	CONE 5/32"	
320	90028-0020	-		22	CONE TUBE 2,5MM	
330	90028-0021	-		5	CONE TUBE 4 MM	
340	90030-0051	-		1	CONN. STR., 6-R1/8, EXT. THREAD	
345	90030-0098	-		8	ACCESSORIES, FERRULE 8	
347	90136-0002	-		2	PLUG 5/16"24	
350	90030-0162	-		3	CONN. STR. 6-M10X1, EXT. THREAD	
352	342703-0208	-		8	NUT, PIPES & CONNECTORS,NUT M-8 SS	
355	90030-0200	-		2	CONN. ELBOW, 6-M10X1, EXT.THREAD	
360	90032-0014	-		1	DISTR. BLOCK & DIST.5/16-24UNF X6	
370	90032-0026	-		1	DISTR. BLOCK, 5/16-24UNF X2	
390	90032-0030	-		1	DISTR. BLOCK, 5/16-24UNF X3	
391	90032-0031	-		1	DISTR. BLOCK, 5/16-24UNF X5	
400	90032-0038	-		1	BLOCK 2 WAYS	
410	90032-0039	-		5	BLOCK 4 WAYS	
420	90090-0008	-		2	BALL, D=7,1 MM	
430	90092-0052	-		10	METERING VALVE 10 MM3	
440	90092-0053	-		12	METERING VALVE 30 MM3	
450	90134-0003	B		5	BUSHING	
470	90134-0030	-		2	SLEEVE FOR PLASTIC TUBE	
480	90134-0031	-		6	SLEEVE FOR PLASTIC TUBE	
490	90134-0034	-		11	NIPPLE	
	90030-0101	-		*1*	*TAPER*	
500	90134-0038	-		7	BUSHING/NUT INLET/OUTLET 4 MM	
510	90134-0039	-		22	BUSHING VALVE CONNECTION 2,5 MM	
534	90148-0037	-		2	HOSE	
536	90148-0038	-		2	HOSE	
540	90151-0001	-	MM	2200	BRASS PIPE DI=2,6 MM	
550	90266-0019	-	MM	7000	PIPE	
560	90165-0002	-		2	CLIP	
590	90165-0022	-		2	PIPE CLIP, FOR TUBE D=2,5 MM, B-3570	
600	90165-0023	-		2	CLIP	
605	90165-0039	-		1	PIPE CLAMP, RSGU 1.15/12, D=15 MM	
610	90166-0108	-	MM	2100	TUBE 6 MM PA,TRANSP.	
620	90166-0109	-	MM	1080	TUBE 4 MM PA,TRANSP.	
630	90166-0118	-	M	13	TUBE 8 MM PA BLACK	
640	90166-0081	-	MM	840	TUBE 6 MM PA BLUE	
650	90266-0006	-	MM	3400	TUBE	
660	312101-0337	-		2	SCREW M6S M5X35 FZB	
790	312115-0289	-		2	SCREW ISO4762 M4X10 A4	
800	312105-0295	-		8	SCREW M6S ISO4017 M4X20 A480	
805	312121-0289	-		1	SCREW SLOT.PAN HD. MCS 4X10 FZB	
810	312105-0297	-		10	SCREW M6S ISO 4017 M4X25 A480	
820	312105-0372	-		2	SCREW M6S ISO 4017 M6X25 A480	
840	312125-0287	-		6	SCREW PAN HEAD MCS M4X8 SS	
845	312125-0323	-		1	SCREW PAN HEAD MCS M5X8 SS	
854	315101-0146	-		2	WASHER PLAIN, BRB, 5,3/10 H=1	
860	315234-0109	-		1	WASHER,PL.RND.CU.10,3/13,5 H=1,0	
865	342727-0102	-		1	CONN. PIPE G-6-LFZB	
867	90165-0065	-		1	PIPE CLAMP, RSGU 1.8/9, D=8 MM	
868	342716-0203	-		1	REDUCER 6-8	
869	342748-0103	-		1	T-CONNECTION 8MM	
870	342767-0100	-		1	CONN. BULKHEAD G1/8	
880	342797-0121	-		1	CONN. BANJO, RINGPIECE 6-1/8	
890	342980-0303	-		1	BANJO-HOLLOW BOLT COUPL,EXT.THR.01-G1/8"	
900	352113-0101	-		10	CLIP STRIP, 92X2,5 MM	
910	359000-0400	-		5	MARKING CO2/4"0"	
920	359000-0401	-		3	MARKING COLLAR 2/4 "1" YELLOW	
930	359000-0402	-		2	MARKING COLLAR 2/4 "2" YELLOW	
940	359000-0403	-		1	MARKING COLLAR PA2/4 "3" YELLOW	
951	359000-0405	-		2	MARKING CO2/4"5"	
952	359000-0406	-		2	MARKING COLLAR PA2/4 "6" YELLOW	
965	359000-0407	-		4	MARKING COLLAR PA2/4 "7" YELLOW	
990	359000-0771	-		8	MARKING CO2/4"V"	

Machine Type | Group Description | Used-In | Group Number | Page No

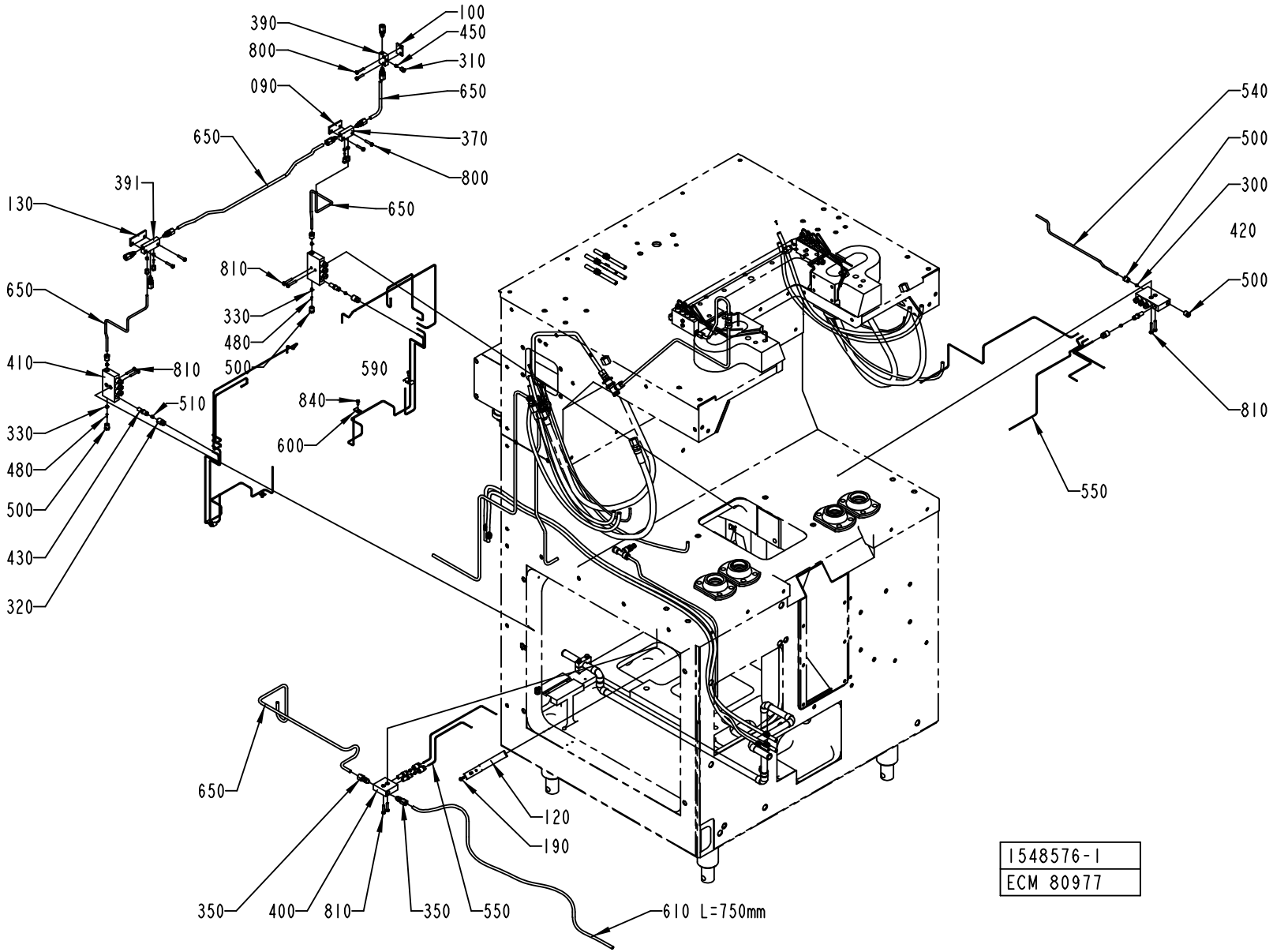
390
800
100
450
310
090
650
650
370
800
391
130
650
810
330
480
500
590
840
600
650
410
810
510
330
480
500
430
320
540
500
300
420
500
810
550
650
120
190
350
400
810
350
550
610 L=750mm
1548576-1
ECM 80977

ECM: 115744 - 20020930
Group number: 1548576-0100
Assembly Drawing: 1548576-1_3_AA

This list covers pages from 198 to 203

Pos	Part No	SP	UN	Qty	Description	Page No
-						
002	271261-0700	-		1	CLEANING SYSTEM	**205**
005	1523829-0100	-		1	DISTRIBUTOR BLOCK	**207**
010	491854-0000	-		1	PIPE WATER	
020	979486-0000	-		1	LUBRICATING PIPE	
060	469133-0000	-		1	PIPE	
070	469132-0000	-		1	PIPE	
075	469131-0000	-		2	LACE	
090	271622-0000	-		1	LACE	
100	271623-0000	-		1	LACE	
120	295986-0000	-		1	HOLDER	
130	456407-0000	-		1	LACE	
140	491390-0000	-		1	PIPE CENTRAL LUBRICATION	
150	491859-0000	-		1	HOLDER	
160	491860-0000	-		1	HOLDER	
310	90028-0001	-		5	CONE 5/32"	
320	90028-0020	-		22	CONE TUBE 2,5MM	
330	90028-0021	-		5	CONE TUBE 4 MM	
340	90030-0051	-		1	CONN. STR., 6-R1/8, EXT. THREAD	
345	90030-0098	-		8	ACCESSORIES, FERRULE 8	
347	90136-0002	-		2	PLUG 5/16"24	
350	90030-0162	-		3	CONN. STR. 6-M10X1, EXT. THREAD	
352	342703-0208	-		8	NUT, PIPES & CONNECTORS,NUT M-8 SS	
355	90030-0200	-		2	CONN. ELBOW, 6-M10X1, EXT.THREAD	
360	90032-0014	-		1	DISTR. BLOCK & DIST.5/16-24UNF X6	
370	90032-0026	-		1	DISTR. BLOCK, 5/16-24UNF X2	
390	90032-0030	-		1	DISTR. BLOCK, 5/16-24UNF X3	
391	90032-0031	-		1	DISTR. BLOCK, 5/16-24UNF X5	
400	90032-0038	-		1	BLOCK 2 WAYS	
410	90032-0039	-		5	BLOCK 4 WAYS	
420	90090-0008	-		2	BALL, D=7,1 MM	
430	90092-0052	-		10	METERING VALVE 10 MM3	
440	90092-0053	-		12	METERING VALVE 30 MM3	
450	90134-0003	B		5	BUSHING	
470	90134-0030	-		2	SLEEVE FOR PLASTIC TUBE	
480	90134-0031	-		6	SLEEVE FOR PLASTIC TUBE	
490	90134-0034	-		11	NIPPLE	
	90030-0101	-		*1*	*TAPER*	
500	90134-0038	-		7	BUSHING/NUT INLET/OUTLET 4 MM	
510	90134-0039	-		22	BUSHING VALVE CONNECTION 2,5 MM	
534	90148-0037	-		2	HOSE	
536	90148-0038	-		2	HOSE	
540	90151-0001	-	MM	2200	BRASS PIPE DI=2,6 MM	
550	90266-0019	-	MM	7000	PIPE	
560	90165-0002	-		2	CLIP	
590	90165-0022	-		2	PIPE CLIP, FOR TUBE D=2,5 MM, B-3570	
600	90165-0023	-		2	CLIP	
605	90165-0039	-		1	PIPE CLAMP, RSGU 1.15/12, D=15 MM	
610	90166-0108	-	MM	2100	TUBE 6 MM PA,TRANSP.	
620	90166-0109	-	MM	1080	TUBE 4 MM PA,TRANSP.	
630	90166-0118	-	M	13	TUBE 8 MM PA BLACK	
640	90166-0081	-	MM	840	TUBE 6 MM PA BLUE	
650	90266-0006	-	MM	3400	TUBE	
660	312101-0337	-		2	SCREW M6S M5X35 FZB	
790	312115-0289	-		2	SCREW ISO4762 M4X10 A4	
800	312105-0295	-		8	SCREW M6S ISO4017 M4X20 A480	
805	312121-0289	-		1	SCREW SLOT.PAN HD. MCS 4X10 FZB	
810	312105-0297	-		10	SCREW M6S ISO 4017 M4X25 A480	
820	312105-0372	-		2	SCREW M6S ISO 4017 M6X25 A480	
840	312125-0287	-		6	SCREW PAN HEAD MCS M4X8 SS	
845	312125-0323	-		1	SCREW PAN HEAD MCS M5X8 SS	
854	315101-0146	-		2	WASHER PLAIN, BRB, 5,3/10 H=1	
860	315234-0109	-		1	WASHER,PL.RND.CU.10,3/13,5 H=1,0	
865	342727-0102	-		1	CONN. PIPE G-6-LFZB	
867	90165-0065	-		1	PIPE CLAMP, RSGU 1.8/9, D=8 MM	
868	342716-0203	-		1	REDUCER 6-8	
869	342748-0103	-		1	T-CONNECTION 8MM	
870	342767-0100	-		1	CONN. BULKHEAD G1/8	
880	342797-0121	-		1	CONN. BANJO, RINGPIECE 6-1/8	
890	342980-0303	-		1	BANJO-HOLLOW BOLT COUPL,EXT.THR.01-G1/8"	
900	352113-0101	-		10	CLIP STRIP, 92X2,5 MM	
910	359000-0400	-		5	MARKING CO2/4"0"	
920	359000-0401	-		3	MARKING COLLAR 2/4 "1" YELLOW	
930	359000-0402	-		2	MARKING COLLAR 2/4 "2" YELLOW	
940	359000-0403	-		1	MARKING COLLAR PA2/4 "3" YELLOW	
951	359000-0405	-		2	MARKING CO2/4"5"	
952	359000-0406	-		2	MARKING COLLAR PA2/4 "6" YELLOW	
965	359000-0407	-		4	MARKING COLLAR PA2/4 "7" YELLOW	
990	359000-0771	-		8	MARKING CO2/4"V"	

Machine Type | Group Description | Used-In | Group Number | Page No

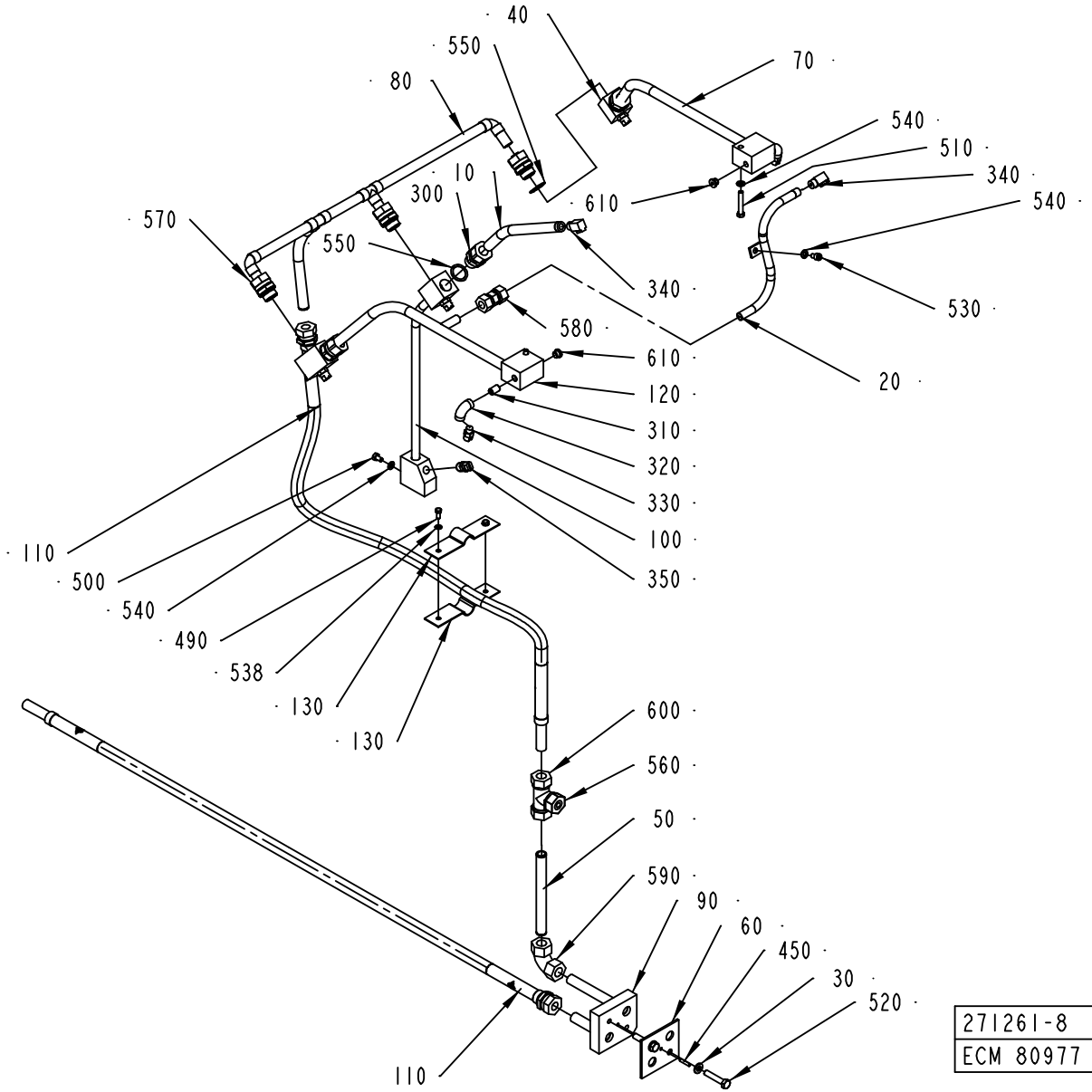
40
550
80
70
540
510
340
540
10
300
610
570
550
340
530
580
610
20
120
310
320
330
100
350
110
500
540
490
538
130
130
600
560
50
590
90
60
450
30
520
110
271261-8
ECM 80977

ECM: 115732 - 20020930
Group number: 271261-0700
Assembly Drawing: 271261-8_1_AA

Pos	Part No	SP	UN	Qty	Description	Page No
TBA 0125S, TBA 0100B						
010	271121-0000	-		1	FORCE SPRING	
020	456129-0001	-		1	FORCE SPRING	
TBA 0330S, TBA 0300S, TBA 0180B, TBA 0160S, TBA 0200B, TBA 0250S, TBA 0284B, TBA 0200S, TBA 0200M, TBA 0250B						
010	295985-0000	-		1	FORCE SPRING	
020	456129-0002	-		1	FORCE SPRING	
Common Parts						
030	18542-0000	-		2	WASHER	
040	257190-0000	-		2	SEPARATION BLOCK	
050	272679-0000	-		1	PIPE	
060	295417-0000	-		1	GASKET	
070	295785-0000	-		1	FORCE SPRING	
080	295978-0000	-		1	PIPE	
090	578091-0000	-		1	BRANCH PIPE	
100	441665-0000	-		1	FORCE SPRING	
110	469146-0000	-		2	HOSE	
120	456128-0000	-		1	FORCE SPRING	
130	2516972-0000	-		2	HOSE HOLDER	
300	90030-0151	-		3	CONN. STR.,15-R1/2, EXT. THREAD	
310	90330-0097	-		2	NIPPLES, EXT. THREAD, G1/8	
320	90330-0099	-		2	ELBOW, 90 INT. THREAD, R-222R1/8	
330	90424-0032	B		2	SPRAY NOZZLE 95 DEG	
340	90424-0033	B		2	SPRAY NOZZLE 76 DEG	
350	90424-0035	B		4	SPRAY NOZZLE 95 DEG	
450	311103-0272	-		1	PARALLELL PIN ISO2338 4X20 A1	
490	312105-0327	-		2	SCREW M6S ISO 4017 M5X12 A480	
500	312105-0364	-		1	SCREW M6S ISO 4017 M6X10 A480	
510	312105-0378	-		2	SCREW M6S ISO 4014 M6X40 A480	
520	312105-0459	-		2	SCREW M6S ISO 4014 M8X40 A480	
530	312115-0364	-		1	SCREW ISO4762 M6X10 A4	
538	315105-0146	-		2	WASHER BRB5,3X10RFR	
540	315105-0153	-		4	WASHER BRB6,4X12RFR	
550	315233-0113	-		6	WASHER CAPTIVE SEALING G1/2	
560	342710-0115	-		1	REDUCTION RBM 16/8	
570	342720-0114	-		3	CONN. STR. GA-15-G1/2	
580	342726-0109	-		1	CONN. PIPE G-12	
590	342736-0114	-		1	CONN. ELBOW W-15	
600	342746-0114	-		1	CONN. T-PIPE T-15	
610	342713-0209	-		2	PLUG, EXT THREAD HEX SOCKET 8638-00-180	

Pos	Part No	SP	UN	Qty	Description	Page No

Machine Type | Group Description | Used-In | Group Number | Page No

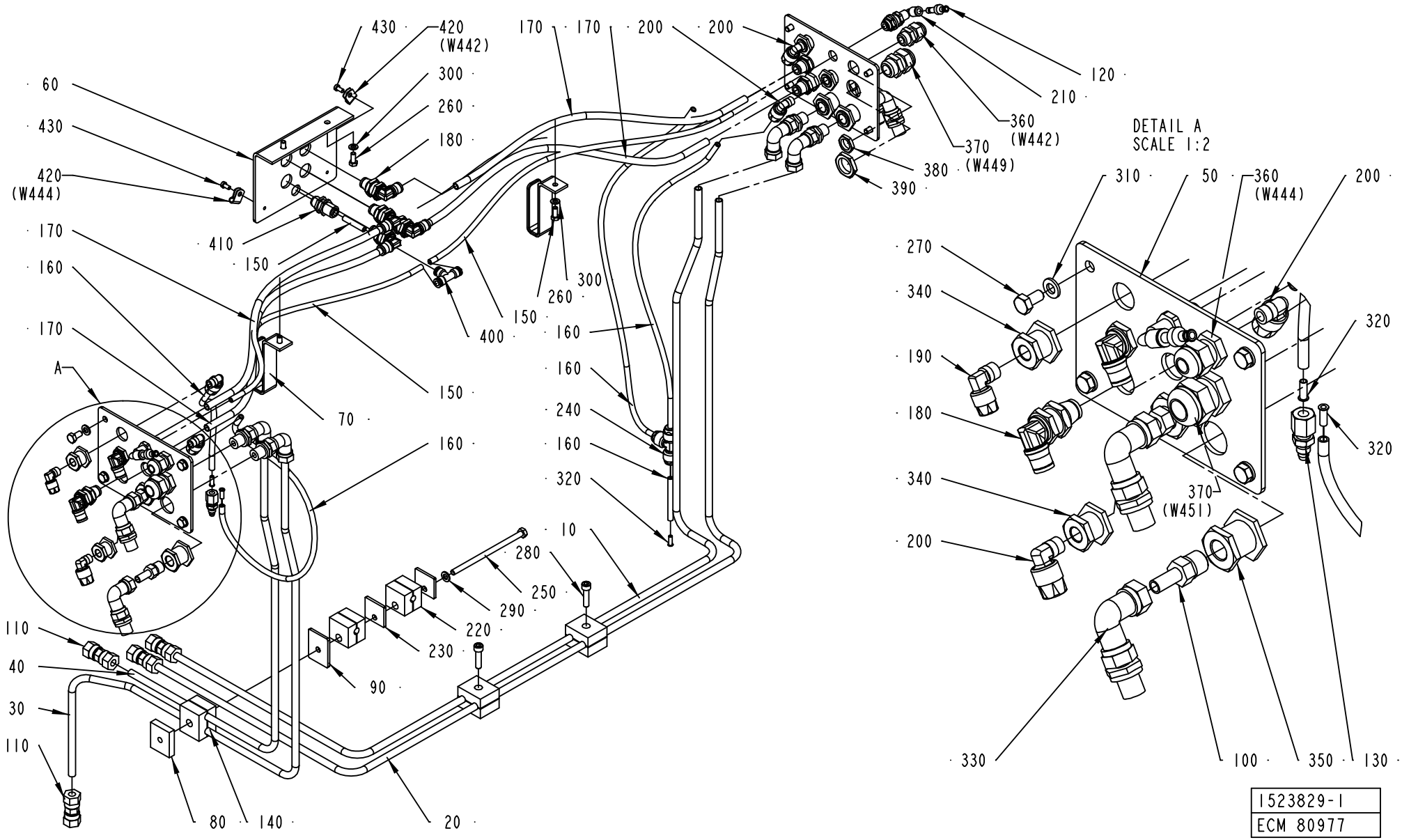
430
420 (W442)
170
170
200
200
120
210
360 (W442)
370 (W449)
380
390
60
430
420 (W444)
170
160
170
A
410
150
300
260
180
400
150
160
160
240
160
320
10
280
250
290
220
230
90
150
70
160
110
40
30
110
80
140
20
DETAIL A
SCALE 1:2
310
50
360 (W444)
200
270
340
190
180
340
200
320
320
370 (W451)
330
100
350
130
1523829-1
ECM 80977

ECM: 115735 - 20020930
Group number: 1523829-0100
Assembly Drawing: 1523829-1_1_AA

Pos	Part No	SP	UN	Qty	Description	Page No
-						
010	1523433-0000	-		1	PIPE	
020	1523434-0000	-		1	PIPE	
030	1523431-0000	-		1	PIPE	
040	1523432-0000	-		1	PIPE	
050	1523383-0000	-		2	CONNECTION PLATE	
060	1523384-0000	-		1	CONNECTION PLATE	
070	1523832-0000	-		2	HOSE HOLDER	
080	1523886-0000	-		1	SPACER PLATE	
090	1523887-0000	-		1	SPACER PLATE	
100	90030-0065	-		4	PIPE CONNECTION	
110	90030-0091	-		4	CONN. PIPE G-8	
120	342716-0202	-		2	REDUCER 4-6	
130	90134-0034	B		1	NIPPLE	
	90030-0101	*-*		*1*	*TAPER*	
140	90165-0099	-		3	PIPE CLAMP, DOUBLE, RBP-108, D=8 MM	
150	90166-0081	-	M	3	TUBE 6 MM PA BLUE	
160	90166-0108	-	M	2	TUBE 6 MM PA,TRANSP.	
170	90166-0118	-	M	2	TUBE 8 MM PA BLACK	
180	90457-0178	B		8	EQUAL BULKHEAD ELBOW CONNECTOR 36390800	
190	90457-0179	-		2	ELBOW COUPLING 6179 04 10	
200	90457-0180	-		6	ELBOW COUPLING 6179 06 10	
210	90457-0181	-		2	EQUAL BULKHEAD ELBOW CONNECTOR 31390600	
220	90457-0182	-		2	PIPE CLAMP, D=8 MM, RAPOD8X	
	90457-0183	*-*		*1*	*COVER PLATE DPA0X, FOR 90457-0182*	
230	90457-0183	-		2	COVER PLATE DPA0X, FOR 90457-0182	
240	90457-0184	-		1	T-CONNECTION 6 MM 6104 06 00	
250	312101-0392	-		1	SCREW M6S M6X110 FZB	
260	312105-0327	-		4	SCREW M6S ISO 4017 M5X12 A480	
270	312105-0366	-		8	SCREW M6S M6X12 A280	
280	312115-0372	-		2	SCREW ISO4762 M6X25 A4	
290	315101-0153	-		1	WASHER PLAIN, BRB, 6,4/12 H=1,5	
300	315105-0146	-		4	WASHER BRB5,3X10RFR	
310	315105-0153	-		8	WASHER BRB6,4X12RFR	
320	342706-0130	A		3	ACCESSORIES, INSERT SLEEVE 6 MM	
330	342738-0208	-		8	ADJUSTABLE ELBOW CONNECTION,EXT 8-G1/4	
340	342767-0100	-		4	CONN. BULKHEAD G1/8	
350	342767-0104	-		4	CONN. BULKHEAD G1/4	
360	352103-0101	-		2	CABLE GLAND, ST 9, PR15,2/PG9	
370	352103-0108	-		2	CABLE GLAND, ST 13,5 , PR20,4/PG13,5	
380	90099-0001	-		2	NUT PR 15,2 MäSSING	
390	90099-0087	-		2	NUT PR=20,4	
400	342748-0102	-		1	T-CONNECTION 6MM	
410	342768-0102	-		1	BULKHEAD CONNECTOR, 6 MM	
420	90458-1489	-		2	CABLE CLIPS, D=4,75 MM	
430	312125-0287	-		2	SCREW PAN HEAD MCS M4X8 SS	

Machine Type | Group Description | Used-In | Group Number | Page No

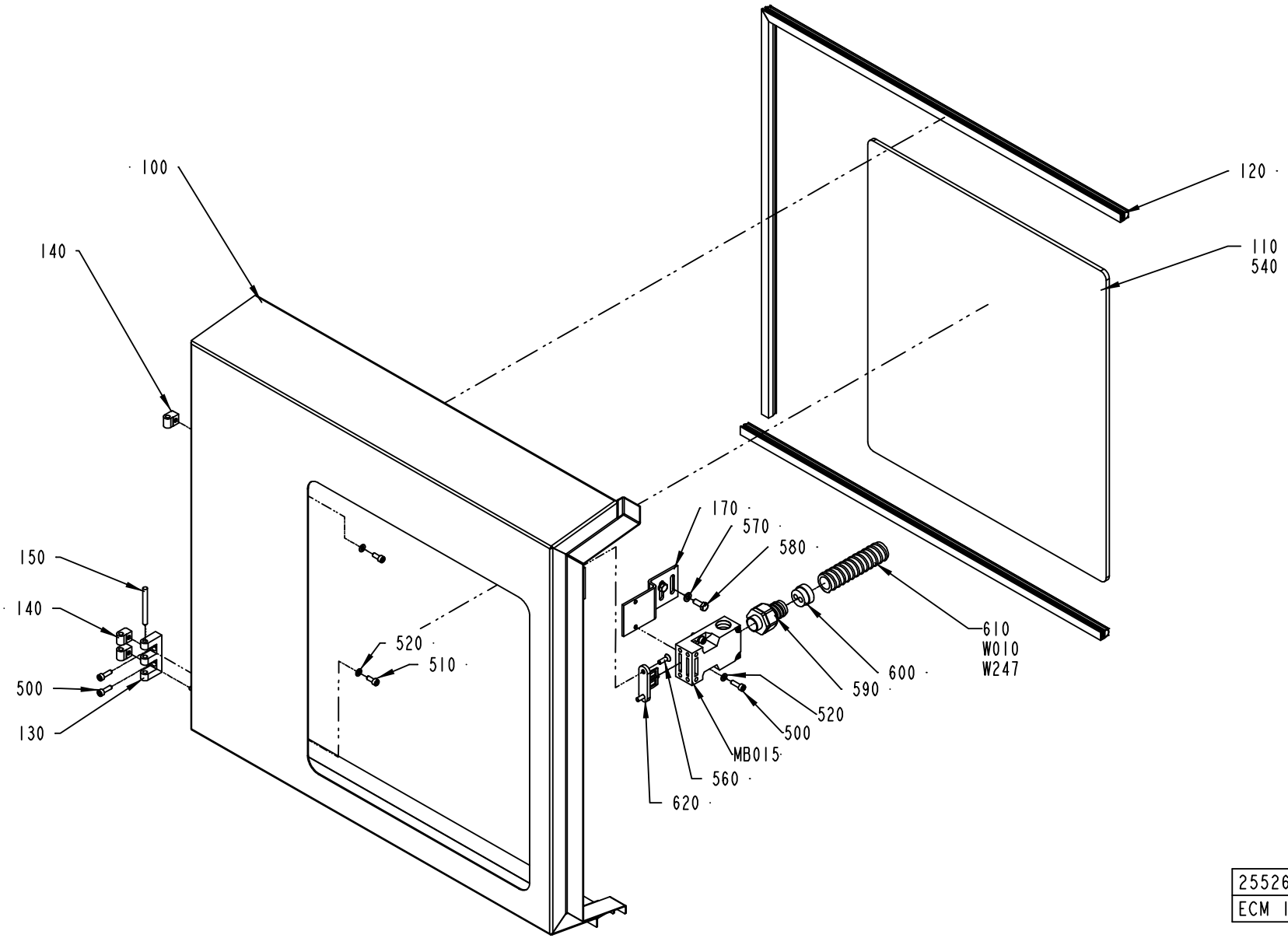

2552694-1
ECM 110911

ECM: 110918 - 20030113
Group number: 2552694-0100
Assembly Drawing: 2552694-1_1_AA

Pos	Part No	SP	UN	Qty	Description	Page No
-						
100	2552693-0000	-		1	DOOR	
110	2553350-0000	-		1	GLASS	
120	90143-0068	B	M	2	RUBBERSTRIP EMKA 1011-06	
130	1035792-0000	-		1	E-HINGE	
140	1035794-0000	-		3	BLOCKING PIECE	
150	988685-0000	-		1	PIN	
170	1511437-0000	-		1	BRACKET	
500	312115-0329	-		4	SCREW ISO4762 M5X16 A4	
510	312115-0327	-		3	SCREW ISO4762 M5X12 A4	
520	315105-0146	-		5	WASHER BRB5,3X10RFR	
540	90157-0041	-		1	SEALING COMPOUND	
560	312155-0329	-		2	SCREW EN 10642 MF6S M5X16 A480	
570	315105-0153	-		2	WASHER BRB6,4X12RFR	
580	312105-0368	-		2	SCREW M6S M6X16 A280	
590	90458-0430	-		1	EXTENDED WITHOUT INSERT, M20X1,5	
600	90457-0147	-		1	GLAND, INSERT, MULTI HOLE, 2X7	
610	90152-0051	-	M	1	SPIRAL CONDUIT, 25X18, UL 1816	
620	90044-0310	-		1	KEY FOR SAFETY SWITCH, AZ 15/16 B1	
MB015	90459-0472	A		1	KEY SAF.SW. AZ 16 02ZVRK-M20-2152-2254	
W010	351150-0431	-	M	1	CABLE OLFLEX 2X0,75 MM2 LIGHT/GREY	
W247	351150-0431	-	M	6	CABLE OLFLEX 2X0,75 MM2 LIGHT/GREY	

Pos	Part No	SP	UN	Qty	Description	Page No

Machine Type | Group Description | Used-In | Group Number | Page No

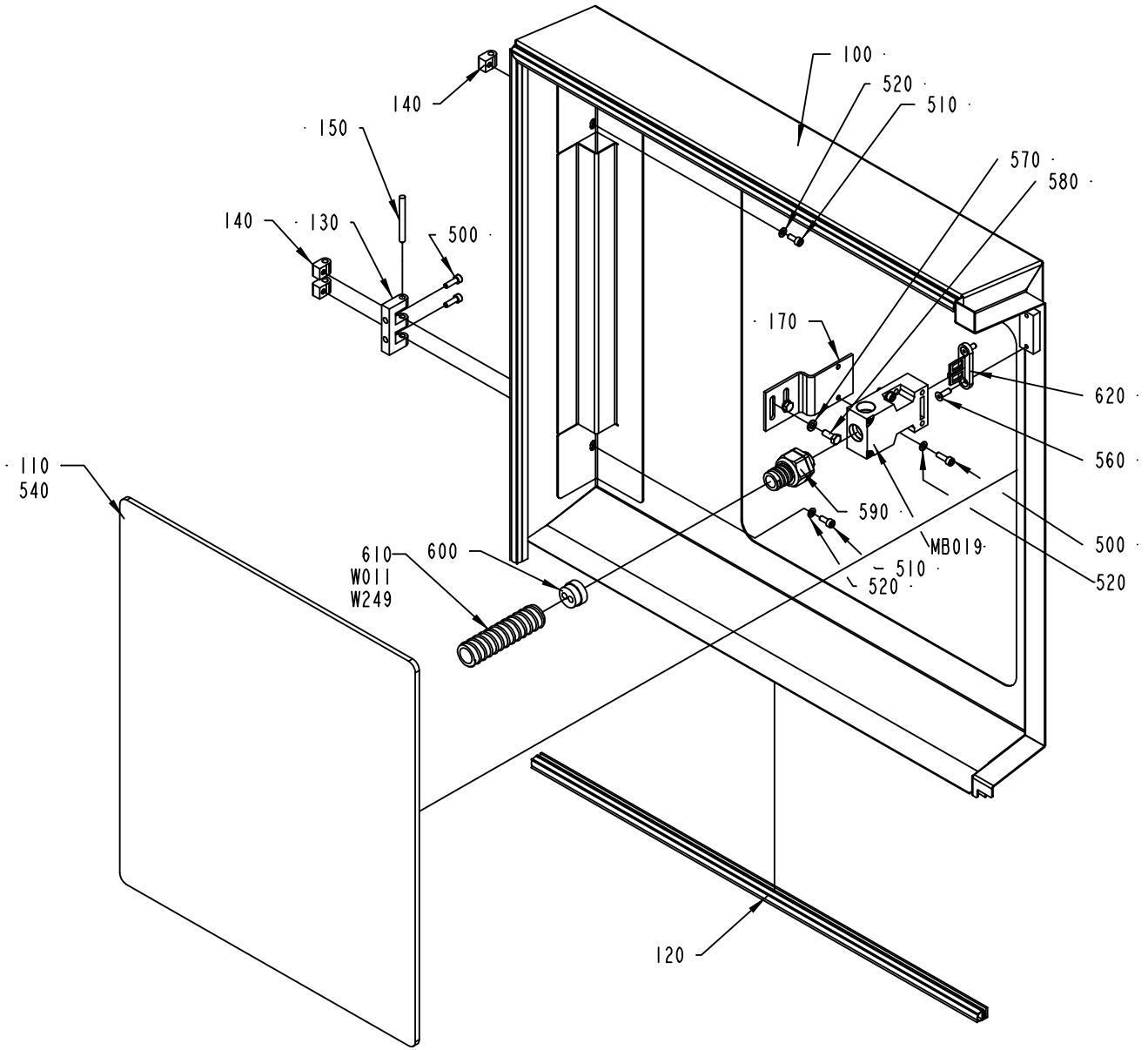

2552695-1
ECM 110911

ECM: 110919 - 20030113
Group number: 2552695-0100
Assembly Drawing: 2552695-1_1_AA

Pos	Part No	SP	UN	Qty	Description	Page No
-						
100	2552696-0000	-		1	DOOR	
110	2553350-0000	-		1	GLASS	
120	90143-0068	B	M	2	RUBBERSTRIP EMKA 1011-06	
130	1035792-0000	-		1	E-HINGE	
140	1035794-0000	-		3	BLOCKING PIECE	
150	988685-0000	-		1	PIN	
170	1511437-0000	-		1	BRACKET	
500	312115-0329	-		4	SCREW ISO4762 M5X16 A4	
510	312115-0327	-		3	SCREW ISO4762 M5X12 A4	
520	315105-0146	-		5	WASHER BRB5,3X10RFR	
540	90157-0041	-		1	SEALING COMPOUND	
560	312155-0329	-		2	SCREW EN 10642 MF6S M5X16 A480	
570	315105-0153	-		2	WASHER BRB6,4X12RFR	
580	312105-0368	-		2	SCREW M6S M6X16 A280	
590	90458-0430	-		1	EXTENDED WITHOUT INSERT, M20X1,5	
600	90457-0147	-		1	GLAND, INSERT, MULTI HOLE, 2X7	
610	90152-0051	-	M	1	SPIRAL CONDUIT, 25X18, UL 1816	
620	90044-0310	-		1	KEY FOR SAFETY SWITCH, AZ 15/16 B1	
MB019	90459-0472	A		1	KEY SAF.SW. AZ 16 02ZVRK-M20-2152-2254	
W011	351150-0431	-	M	1	CABLE OLFLEX 2X0,75 MM2 LIGHT/GREY	
W249	351150-0431	-	M	7	CABLE OLFLEX 2X0,75 MM2 LIGHT/GREY	

Pos	Part No	SP	UN	Qty	Description	Page No

Machine Type | Group Description | Used-In | Group Number | Page No

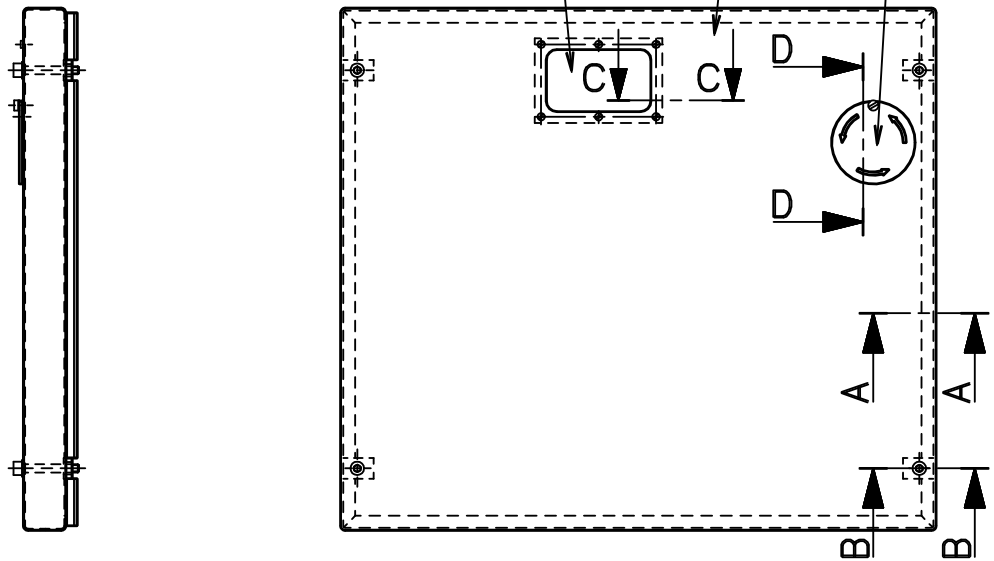

A-A
scale 1:2

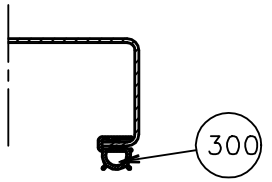

B-B
scale 1:2

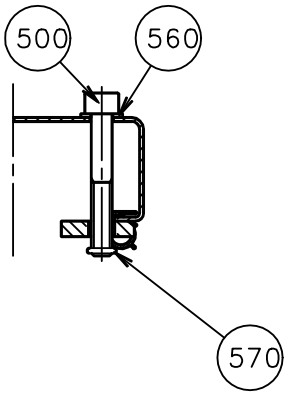

C-C
scale 1:1

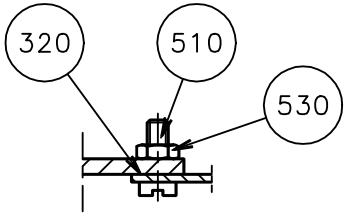

D-D
scale 1:1

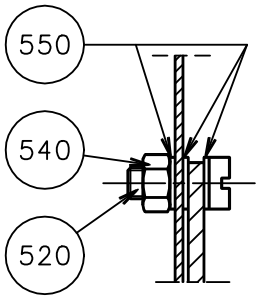

ECN 71482

ECM: 123414 - 20030120
Group number: 256665-0200
Assembly Drawing: 256665-4_1_AC

Pos	Part No	SP	UN	Qty	Description	Page No
-						
010	1279044-0000	-		1	HATCH	
030	469964-0000	-		1	LID	
040	257231-0000	-		1	WINDOW	
300	90143-0068	B	MM	2200	RUBBERSTRIP EMKA 1011-06	
320	90157-0022	-	L		SEALING COMPOUND	
500	312115-0463	-		4	SCREW ISO4762 M8X60 A4	
510	312125-0291	-		6	SCREW PAN HEAD MCS M4X12 SS	
520	312125-0329	-		1	SCREW PAN HEAD MCS M5X16 SS	
530	312605-0312	-		6	HEXAGON NUT, M6M M4 A280	
540	312810-0314	-		1	HEXAGON NUT, NY-LOCK M5 FZB	
550	315105-0146	-		3	WASHER BRB5,3X10RFR	
560	315105-0165	-		4	WASHER BRB8,4X16RFR	
570	315202-0105	B		4	O-RING 7,1X1,6 MM	

Pos	Part No	SP	UN	Qty	Description	Page No

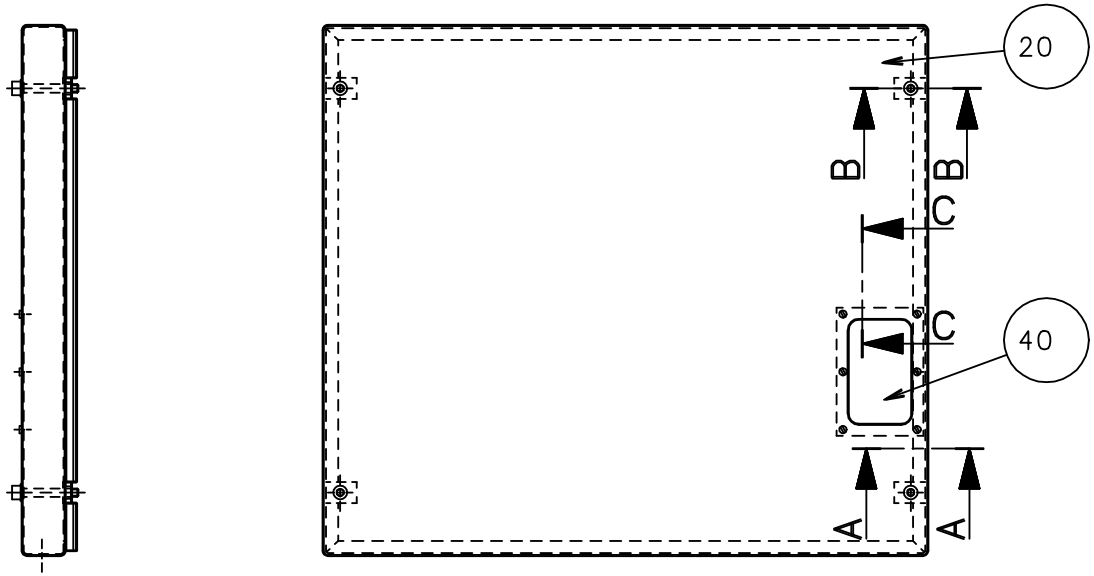

B–B
scale 1:2

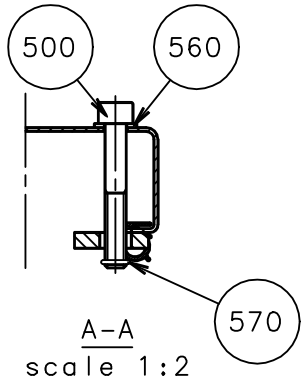

A–A
scale 1:2

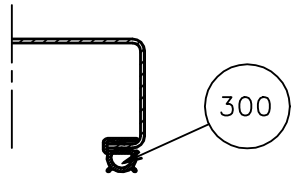

C–C
scale 2:1

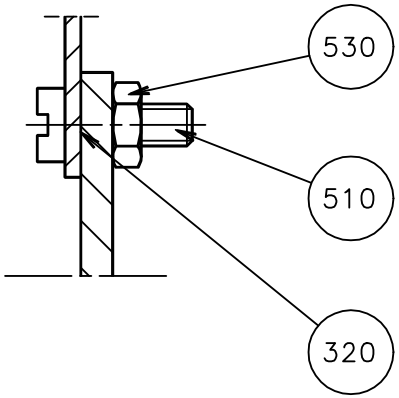

ECN 71730

ECM: 123444 - 20030120
Group number: 1296815-0100
Assembly Drawing: 1296815-1_1_AB

Pos	Part No	SP	UN	Qty	Description	Page No
-						
020	1279045-0000	-		1	HATCH	
040	257231-0000	-		1	WINDOW	
300	90143-0068	B	MM	2200	RUBBERSTRIP EMKA 1011-06	
320	90157-0022	-	L		SEALING COMPOUND	
500	312115-0463	-		4	SCREW ISO4762 M8X60 A4	
510	312125-0291	-		6	SCREW PAN HEAD MCS M4X12 SS	
530	312605-0312	-		6	HEXAGON NUT, M6M M4 A280	
560	315105-0165	-		4	WASHER BRB8,4X16RFR	
570	315202-0105	B		4	O-RING 7,1X1,6 MM	

Pos	Part No	SP	UN	Qty	Description	Page No

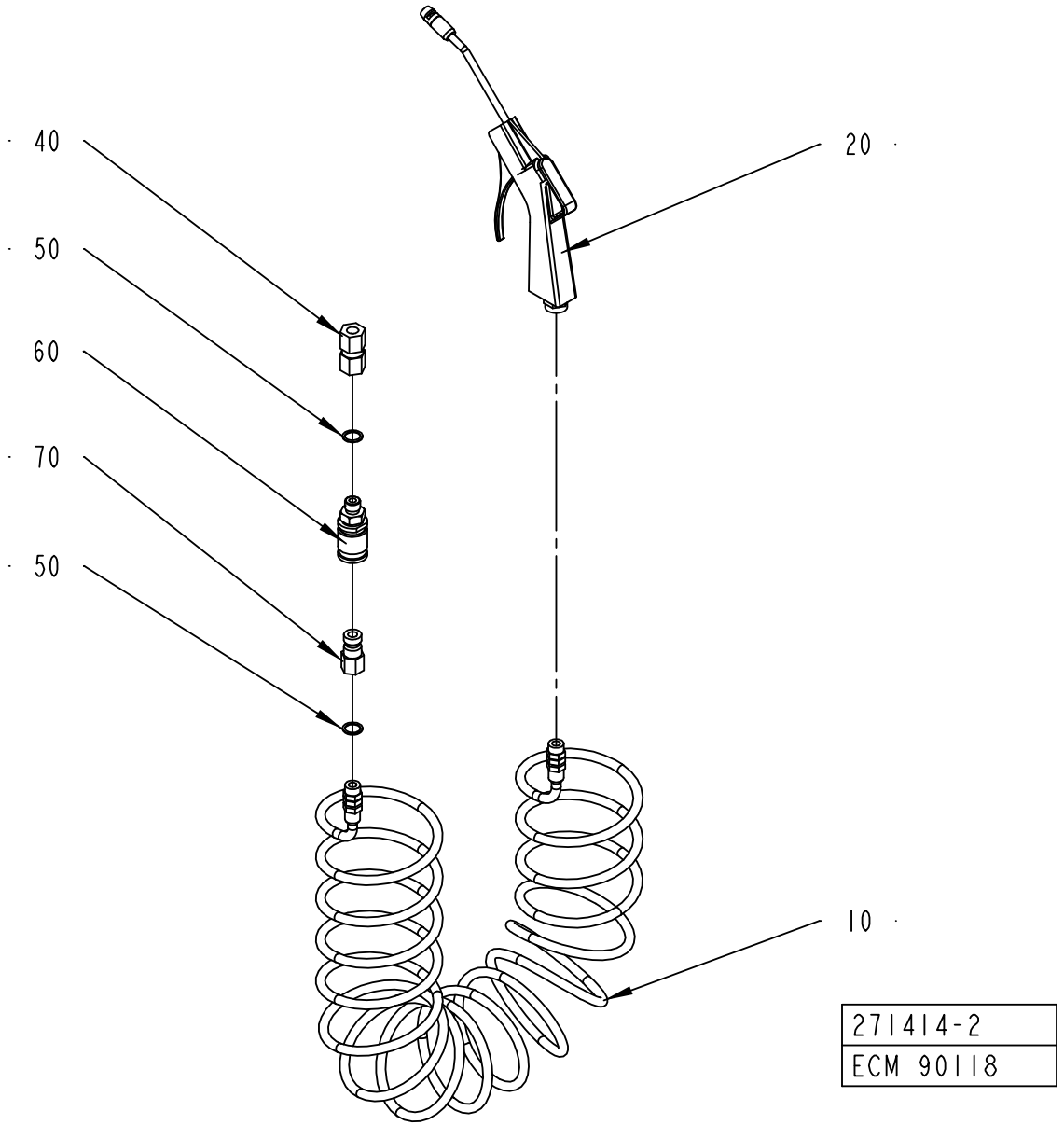
40
50
60
70
50
20
10
271414-2
ECM 90118

ECM: 115731 - 20020930
Group number: 271414-0300
Assembly Drawing: 271414-2_1_AA

Pos	Part No	SP	UN	Qty	Description	Page No
-						
010	90152-0016	B		1	HOSE (SPIRAL)	
020	90243-0061	B		1	AIR GUN, CEJN SERIE 204 ED: 90459-0173	
040	342725-0108	-		1	CONN. STR. PIPE GI-10-G1/4	
050	315233-0110	-		2	WASHER CAPTIVE SEALING G1/4	
060	90163-0013	-		1	QUICK COUPLING, (F) LP 006-0-WR013-01-2	
	90163-0301	*-*		*1*	*GASKET VITON REPL.BY 90163-312*	
070	90163-0015	-		1	QUICK COUPLING, (M) LP-006-1-WR513	

Pos	Part No	SP	UN	Qty	Description	Page No

Machine Type | Group Description | Used-In | Group Number | Page No

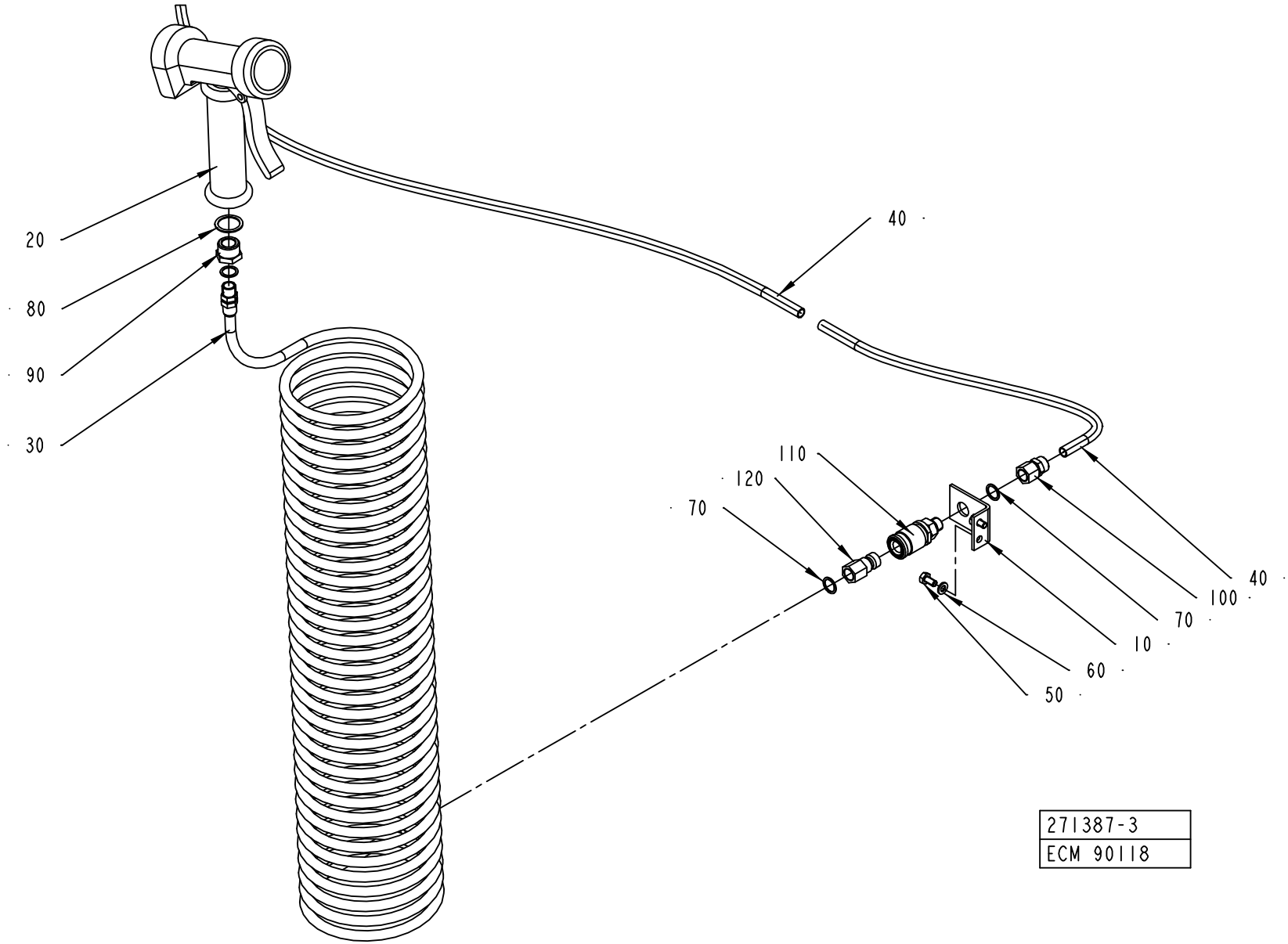
20
80
90
30
40
110
120
70
40
100
70
10
60
50
271387-3
ECM 90118

ECM: 115745 - 20020930
Group number: 271387-0400
Assembly Drawing: 271387-3_1_AA

Pos	Part No	SP	UN	Qty	Description	Page No
-						
010	2524394-0000	-		1	BRACKET	
020	90426-0003	B		1	HAND SHOWER	
030	90152-0017	B		1	HOSE (SPIRAL)	
040	90166-0135	-	M	2	TUBE 10 MM PA BLACK	
050	312105-0366	-		2	SCREW M6S M6X12 A280	
060	315105-0153	-		2	WASHER BRB6,4X12RFR	
070	315233-0110	-		3	WASHER CAPTIVE SEALING G1/4	
080	315233-0113	-		1	WASHER CAPTIVE SEALING G1/2	
090	342701-0205	-		1	BUSHING,INT./EXT.G-THREAD G1/2"-G1/4"	
100	342923-0132	-		1	STRAIGHT COUPL.,INT.THREADED 10/8-G1/4"	
110	90163-0013	-		1	QUICK COUPLING, (F) LP 006-0-WR013-01-2	
	90163-0301	*-*		*1*	*GASKET VITON REPL.BY 90163-312*	
120	90163-0015	-		1	QUICK COUPLING, (M) LP-006-1-WR513	

Pos	Part No	SP	UN	Qty	Description	Page No

Machine Type | Group Description | Used-In | Group Number | Page No

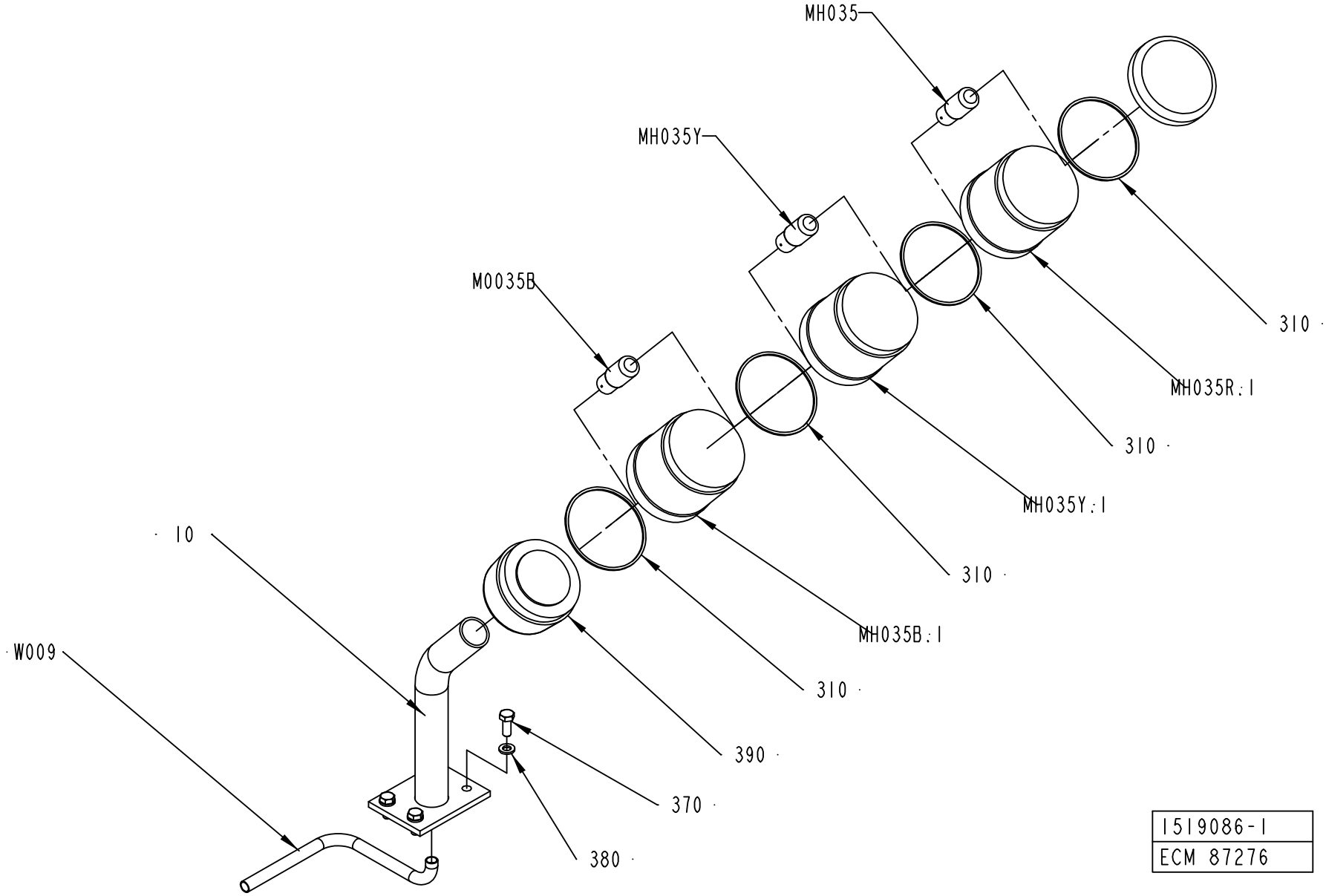

1519086-1
ECM 87276

ECM: 115741 - 20020930
Group number: 1519086-0100
Assembly Drawing: 1519086-1_1_AA

Pos	Part No	SP	UN	Qty	Description	Page No
-						
010	1517248-0000	-		1	BRACKET	
310	90419-0307	B		4	GASKET	
370	312105-0368	-		4	SCREW M6S M6X16 A280	
380	315105-0153	-		4	WASHER BRB6,4X12RFR	
390	90458-0292	-		1	BASE, KT70-1001	
MH035B	90036-0068	B		1	BULB 6.5W 24V	
MH035B.1	90458-0295	-		1	LIGHT ELEMENT, BLUE, KL70-401L	
MH035R	90036-0068	B		1	BULB 6.5W 24V	
MH035R.1	90458-0293	-		1	LIGHT ELEMENT, RED, KL70-401R	
MH035Y	90036-0068	B		1	BULB 6.5W 24V	
MH035Y.1	90458-0294	-		1	LIGHT ELEMENT, YELLOW, KL70-401Y	
W009	351150-0406	-	M	5	CABLE OLFLEX 7X0,75 MM2 LIGHT/GREY	

Pos	Part No	SP	UN	Qty	Description	Page No

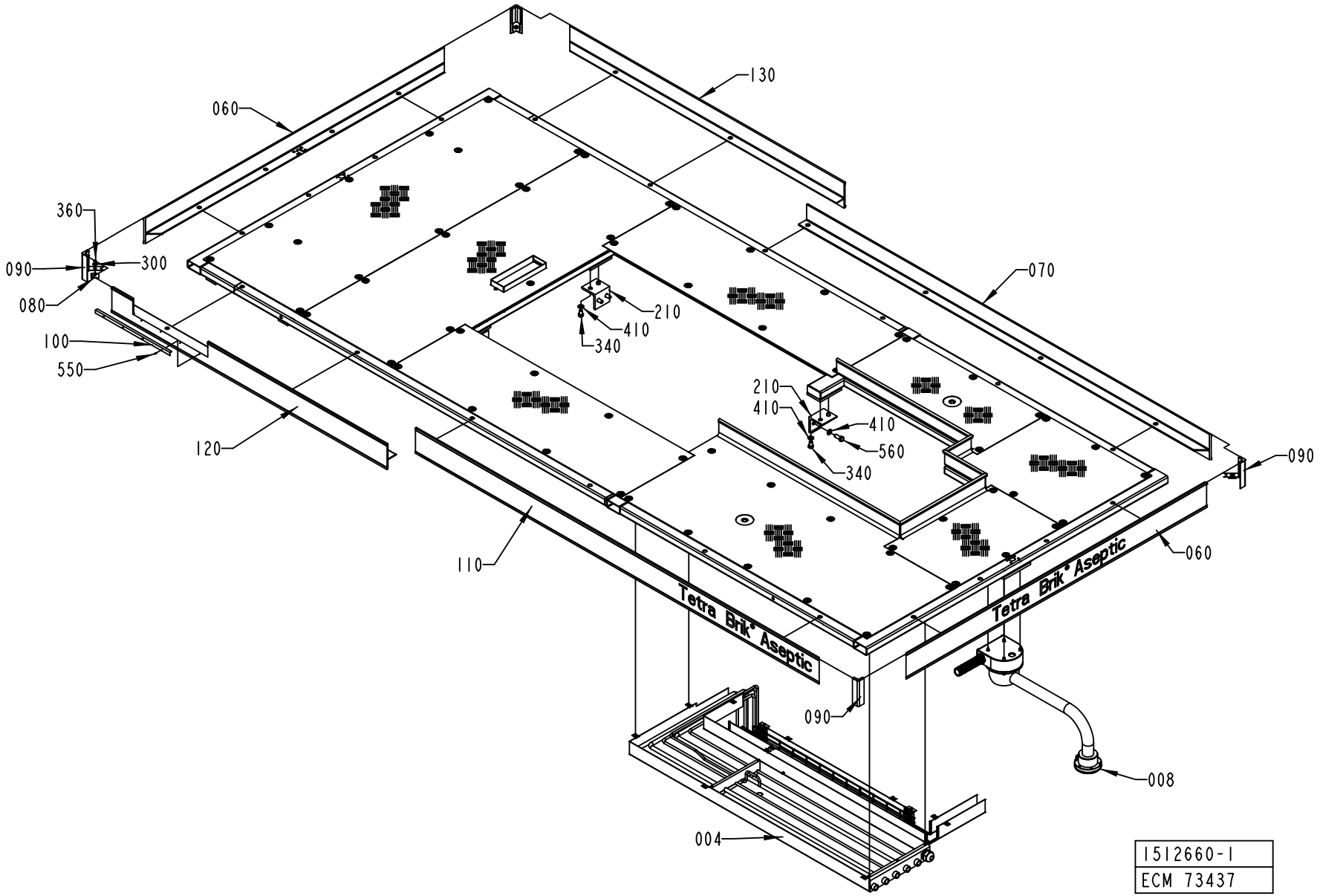
130
060
360
090
300
080
100
550
120
070
210
410
340
210
410
410
560
340
090
060
110
Tetra Brik Aseptic
Tetra Brik Aseptic
090
008
004
1512660-1
ECM 73437

ECM: 135552 - 20030701
Group number: 1512660-0100
Assembly Drawing: 1512660-1_1_AA

This list covers pages from 222 to 225

Pos	Part No	SP	UN	Qty	Description	Page No
LEFT						
120	1512643-0000	-		1	TOE PLATE	
130	1512666-0000	-		1	TOE PLATE	
NOPT						
050	1512633-0000	-		1	CHECKER PLATE	
PT19						
055	2632603-0000	-		1	CHECKER PLATE	
RIGHT						
120	2514018-0000	-		1	TOP TIE PLATE	
130	2512805-0000	-		1	TOE PLATE	
Common Parts						
004	2500214-0100	-		1	PIPE WORK	**227, 229**
008	2500332-0100	-		1	PIVOT ARM	**231**
010	1512350-0000	-		1	PLATFORM	
020	1512351-0000	-		1	PLATFORM	
030	1512631-0000	-		2	CHECKER PLATE	
040	1512632-0000	-		1	CHECKER PLATE	
060	1512640-0000	-		2	TOE PLATE	
070	1512641-0000	-		1	TOE PLATE	
080	1254028-0000	-		4	FASTENING PLATE	
090	1254027-0000	-		4	CORNER STRIP	
100	2506646-0000	-		1	STRIP	
110	1512642-0000	-		1	TOE PLATE	
140	1512845-0000	-		1	CHECKER PLATE	
150	1512846-0000	-		1	CHECKER PLATE	
160	1512847-0000	-		1	BRACKET	
180	2506608-0000	-		4	PLATE	
190	2506609-0000	-		4	PLATE	
200	1512851-0000	-		1	COVER	
210	1517249-0000	-		4	BRACKET	
220	2505282-0000	-		1	CHECKER PLATE	
230	2505236-0000	-		1	PLATFORM	
300	38087-0000	-		4	WASHER	
310	312105-0371	-		2	SCREW M6S ISO 4017 M6X22 A480	
320	312105-0648	-		4	SCREW M6S M16X150 A280	
340	312105-0622	-		8	SCREW M6S ISO 4017 M16X25 A480	
360	312605-0316	-		6	HEXAGON NUT, M6M M6 A280	
370	312812-0324	-		4	HEXAGON NUT, NY-LOCK M16 A480	
380	312105-0534	-		16	SCREW M6S ISO 4017 M12X25 A480	
390	315105-0153	-		4	WASHER BRB6,4X12RFR	
410	315105-0186	-		24	WASHER BRB17X30RFR	
420	315105-0178	-		16	WASHER BRB13X24RFR	
510	90458-0072	-		66	SCREW, HEX.SOCK.BUTTON HEAD M6X12	
520	90458-0073	-		66	WASHER 6,4/30, H=1,5	
540	352103-0106	-		1	CABLE GLAND, ST 11, PR18,6/PG11	
550	312502-0221	-		4	DRIVE SCREW ROUND HEAD KDS 4X6	
560	312105-0628	-		8	SCREW M6S ISO 4017 M16X40 A480	
570	90143-0076	-	MM	7300	PROFILE	

Machine Type	Group Description	Used-In	Group Number	Page No

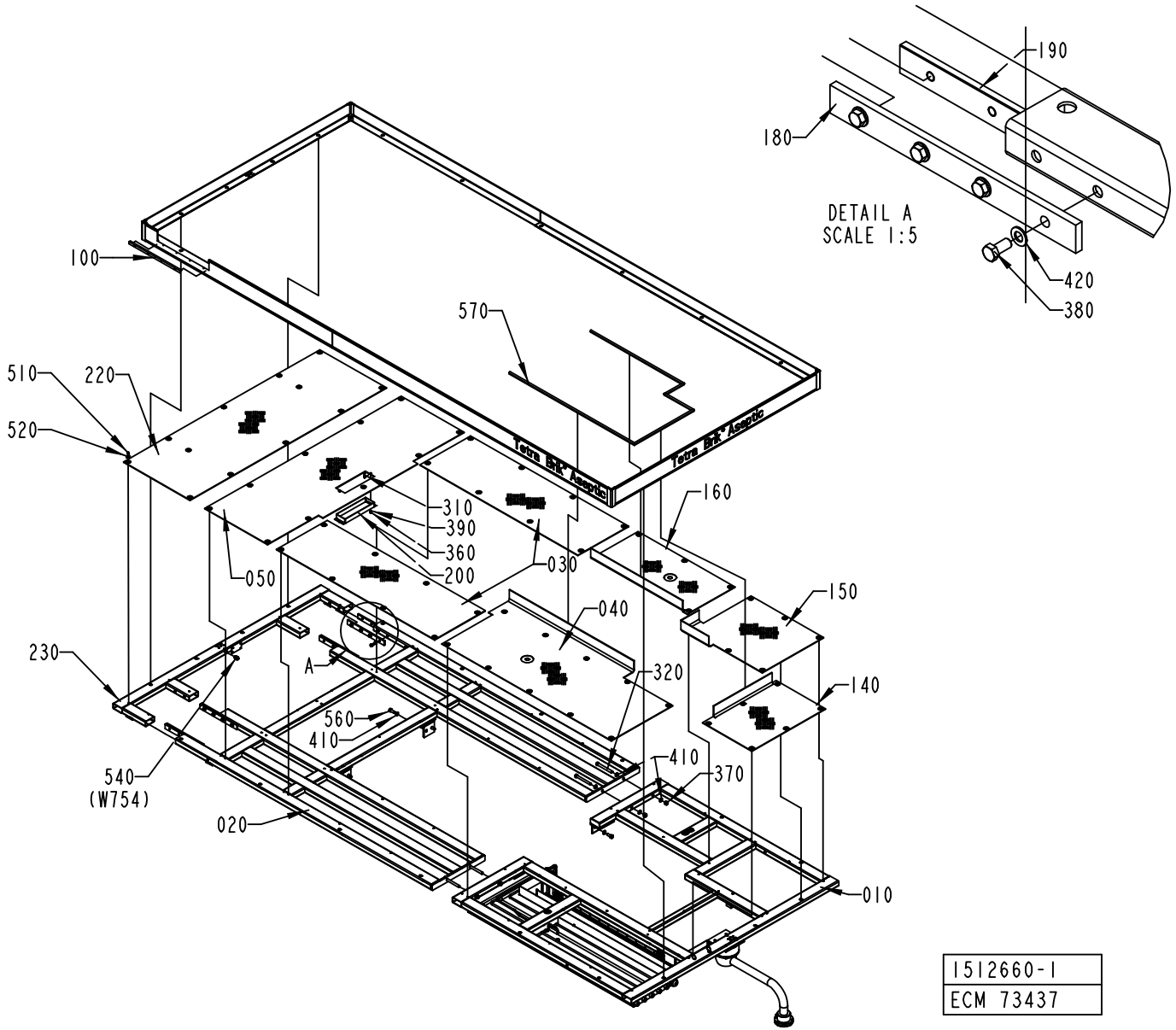

1512660-1
ECM 73437

ECM: 135552 - 20030701
Group number: 1512660-0100
Assembly Drawing: 1512660-1_2_AA

This list covers pages from 222 to 225

Pos	Part No	SP	UN	Qty	Description	Page No
LEFT						
120	1512643-0000	-		1	TOE PLATE	
130	1512666-0000	-		1	TOE PLATE	
NOPT						
050	1512633-0000	-		1	CHECKER PLATE	
PT19						
055	2632603-0000	-		1	CHECKER PLATE	
RIGHT						
120	2514018-0000	-		1	TOP TIE PLATE	
130	2512805-0000	-		1	TOE PLATE	
Common Parts						
004	2500214-0100	-		1	PIPE WORK	**227, 229**
008	2500332-0100	-		1	PIVOT ARM	**231**
010	1512350-0000	-		1	PLATFORM	
020	1512351-0000	-		1	PLATFORM	
030	1512631-0000	-		2	CHECKER PLATE	
040	1512632-0000	-		1	CHECKER PLATE	
060	1512640-0000	-		2	TOE PLATE	
070	1512641-0000	-		1	TOE PLATE	
080	1254028-0000	-		4	FASTENING PLATE	
090	1254027-0000	-		4	CORNER STRIP	
100	2506646-0000	-		1	STRIP	
110	1512642-0000	-		1	TOE PLATE	
140	1512845-0000	-		1	CHECKER PLATE	
150	1512846-0000	-		1	CHECKER PLATE	
160	1512847-0000	-		1	BRACKET	
180	2506608-0000	-		4	PLATE	
190	2506609-0000	-		4	PLATE	
200	1512851-0000	-		1	COVER	
210	1517249-0000	-		4	BRACKET	
220	2505282-0000	-		1	CHECKER PLATE	
230	2505236-0000	-		1	PLATFORM	
300	38087-0000	-		4	WASHER	
310	312105-0371	-		2	SCREW M6S ISO 4017 M6X22 A480	
320	312105-0648	-		4	SCREW M6S M16X150 A280	
340	312105-0622	-		8	SCREW M6S ISO 4017 M16X25 A480	
360	312605-0316	-		6	HEXAGON NUT, M6M M6 A280	
370	312812-0324	-		4	HEXAGON NUT, NY-LOCK M16 A480	
380	312105-0534	-		16	SCREW M6S ISO 4017 M12X25 A480	
390	315105-0153	-		4	WASHER BRB6,4X12RFR	
410	315105-0186	-		24	WASHER BRB17X30RFR	
420	315105-0178	-		16	WASHER BRB13X24RFR	
510	90458-0072	-		66	SCREW, HEX.SOCK.BUTTON HEAD M6X12	
520	90458-0073	-		66	WASHER 6,4/30, H=1,5	
540	352103-0106	-		1	CABLE GLAND, ST 11, PR18,6/PG11	
550	312502-0221	-		4	DRIVE SCREW ROUND HEAD KDS 4X6	
560	312105-0628	-		8	SCREW M6S ISO 4017 M16X40 A480	
570	90143-0076	-	MM	7300	PROFILE	

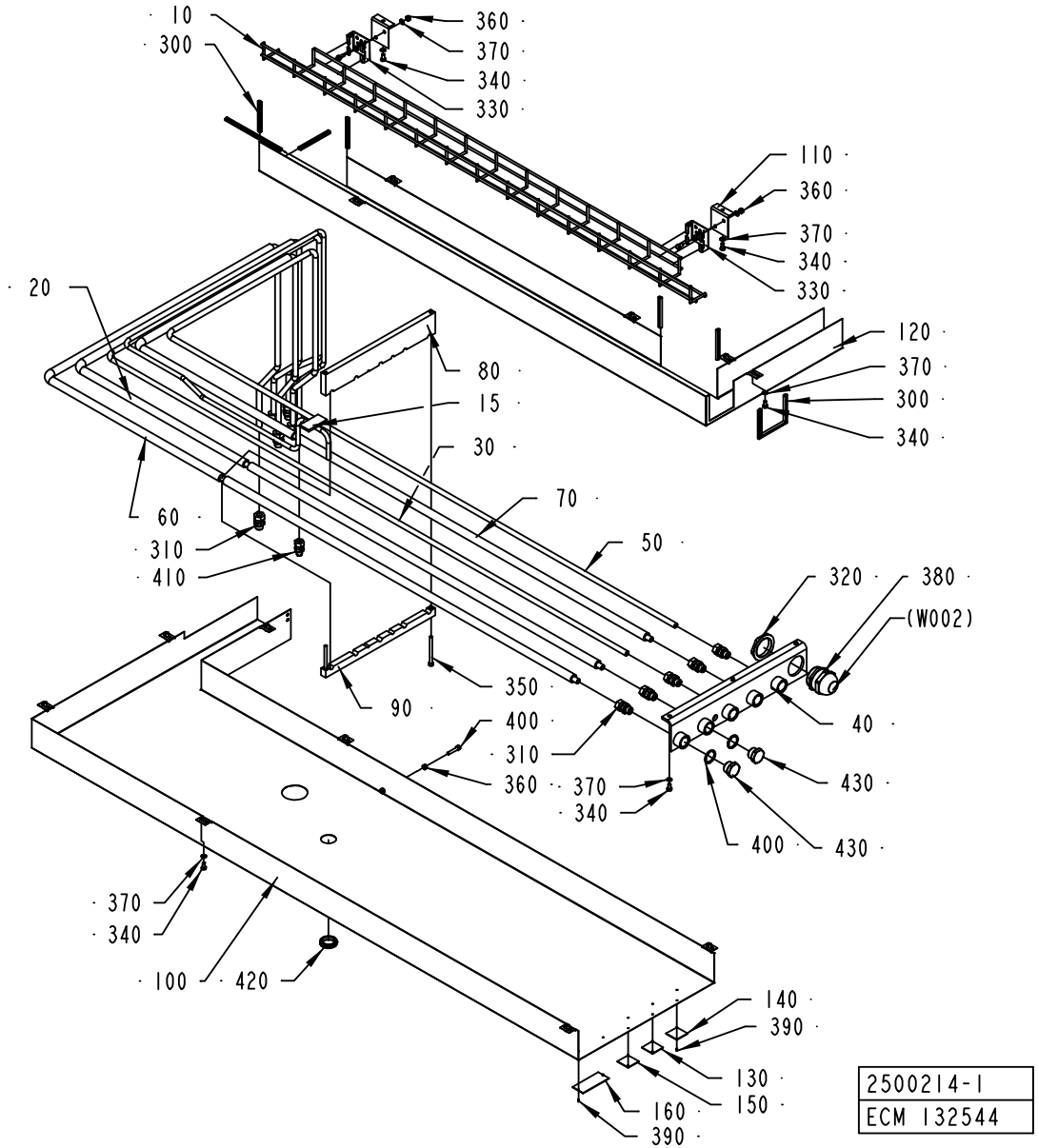
10
300
360
370
340
330
110
360
370
340
330
120
370
300
340
20
80
15
30
70
60
310
410
50
320
380
(W002)
90
350
400
310
360
370
340
40
430
400
430
370
340
100
420
140
390
130
150
160
390
2500214-1
ECM 132544

ECM: 132546 - 20030701
Group number: 2500214-0100
Assembly Drawing: 2500214-1_1_AD

This list covers pages from 226 to 229

Pos	Part No	SP	UN	Qty	Description	Page No
HI (See drawing on page: 228)						
170	2613035-0000	-		1	SUPPORT	
180	978010-0000	-		1	SIGN BOARD	
450	90030-0230	-		1	CONN. BULKHEAD SV 6-	
460	90166-0132	-	CM	250	TUBE 6 MM PA,TRANSP.	
470	90457-0086	-		1	BULKHEAD CONNECTOR 6MM	
480	312115-0325	-		2	SCREW ISO4762 M5X10 A4	
490	312605-0314	-		2	HEXAGON NUT, M6M M5 A280	
500	315105-0146	-		2	WASHER BRB5,3X10RFR	
NO HI (See drawing on page: 226)						
-	-	-			-	
Common Parts						
010	2500218-0000	-		1	CABLE TRENCH	
015	2523703-0000	-		1	PIPE	
020	1286000-0000	-		1	PIPE	
030	1296854-0000	-		1	PIPE	
040	1334694-0000	-		1	CONNECTION PLATE	
050	1350307-0000	-		1	PIPE	
060	1350308-0000	-		1	PIPE	
070	1350309-0000	-		1	PIPE	
080	1350472-0000	-		1	HOLDER	
090	1350473-0000	-		1	HOLDER	
100	2500215-0000	-		1	CABLE DUCT	
110	2500217-0000	-		2	BRACKET	
120	2500216-0000	-		1	CABLE DUCT	
130	273455-0000	-		1	LABEL (COLD WATER)	
140	273456-0000	-		1	SIGN	
150	273458-0000	-		1	LABEL (AIR)	
160	2555070-0000	-		1	SIGN	
300	90143-0060	-	M	1	EDGE STRIP 9,5X6,3MM BLACK PVC	
310	90030-0187	-		10	CONN. STR. GA-12-G3/8	
320	90458-0327	-		1	NUT, M50X1,5	
330	90181-0190	-		2	CABLE DUCT, WALL BRACKET, B4 MINI	
340	312105-0366	-		21	SCREW M6S M6X12 A280	
350	312115-0385	-		2	SCREW ISO4762 M6X75 A4	
360	312605-0316	-		5	HEXAGON NUT, M6M M6 A280	
370	315105-0153	-		21	WASHER BRB6,4X12RFR	
380	90458-0311	-		1	CABLE GLAND, M50X1,5, NO.5311 1060	
390	312502-0120	-		8	DRIVE SCREW ROUND HEAD KDS 0X5	
400	312115-0374	-		1	SCREW ISO4762 M6X30 A4	
410	90030-0186	-		1	CONN. STR. GA-10-G1/4	
420	90459-1066	-		1	LEAD-IN, BUSHING, DA 300/350/10	
440	315239-0115	-		2	NYLON WASHER G3/4	

Machine Type | Group Description | Used-In | Group Number | Page No

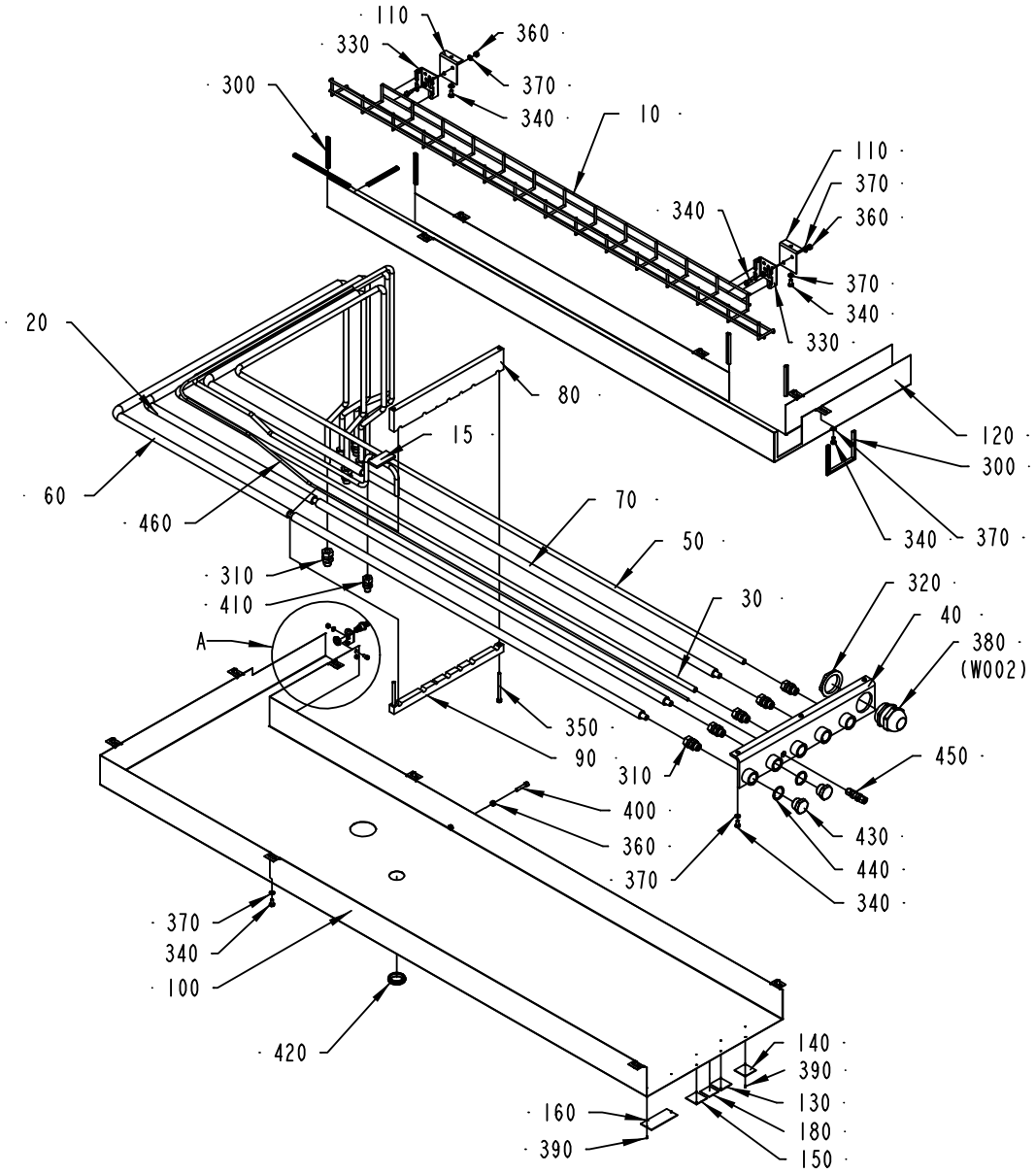

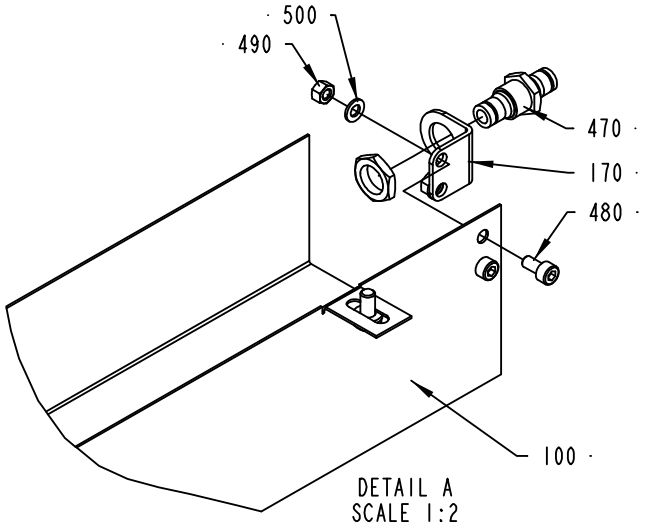

2500214-2
ECM 132544

ECM: 132546 - 20030701
Group number: 2500214-0100
Assembly Drawing: 2500214-2_1_AA

This list covers pages from 226 to 229

Pos	Part No	SP	UN	Qty	Description	Page No
HI (See drawing on page: 228)						
170	2613035-0000	-		1	SUPPORT	
180	978010-0000	-		1	SIGN BOARD	
450	90030-0230	-		1	CONN. BULKHEAD SV 6-	
460	90166-0132	-	CM	250	TUBE 6 MM PA,TRANSP.	
470	90457-0086	-		1	BULKHEAD CONNECTOR 6MM	
480	312115-0325	-		2	SCREW ISO4762 M5X10 A4	
490	312605-0314	-		2	HEXAGON NUT, M6M M5 A280	
500	315105-0146	-		2	WASHER BRB5,3X10RFR	
NO HI (See drawing on page: 226)						
-	-	-			-	
Common Parts						
010	2500218-0000	-		1	CABLE TRENCH	
015	2523703-0000	-		1	PIPE	
020	1286000-0000	-		1	PIPE	
030	1296854-0000	-		1	PIPE	
040	1334694-0000	-		1	CONNECTION PLATE	
050	1350307-0000	-		1	PIPE	
060	1350308-0000	-		1	PIPE	
070	1350309-0000	-		1	PIPE	
080	1350472-0000	-		1	HOLDER	
090	1350473-0000	-		1	HOLDER	
100	2500215-0000	-		1	CABLE DUCT	
110	2500217-0000	-		2	BRACKET	
120	2500216-0000	-		1	CABLE DUCT	
130	273455-0000	-		1	LABEL (COLD WATER)	
140	273456-0000	-		1	SIGN	
150	273458-0000	-		1	LABEL (AIR)	
160	2555070-0000	-		1	SIGN	
300	90143-0060	-	M	1	EDGE STRIP 9,5X6,3MM BLACK PVC	
310	90030-0187	-		10	CONN. STR. GA-12-G3/8	
320	90458-0327	-		1	NUT, M50X1,5	
330	90181-0190	-		2	CABLE DUCT, WALL BRACKET, B4 MINI	
340	312105-0366	-		21	SCREW M6S M6X12 A280	
350	312115-0385	-		2	SCREW ISO4762 M6X75 A4	
360	312605-0316	-		5	HEXAGON NUT, M6M M6 A280	
370	315105-0153	-		21	WASHER BRB6,4X12RFR	
380	90458-0311	-		1	CABLE GLAND, M50X1,5, NO.5311 1060	
390	312502-0120	-		8	DRIVE SCREW ROUND HEAD KDS 0X5	
400	312115-0374	-		1	SCREW ISO4762 M6X30 A4	
410	90030-0186	-		1	CONN. STR. GA-10-G1/4	
420	90459-1066	-		1	LEAD-IN, BUSHING, DA 300/350/10	
440	315239-0115	-		2	NYLON WASHER G3/4	

Machine Type | Group Description | Used-In | Group Number | Page No

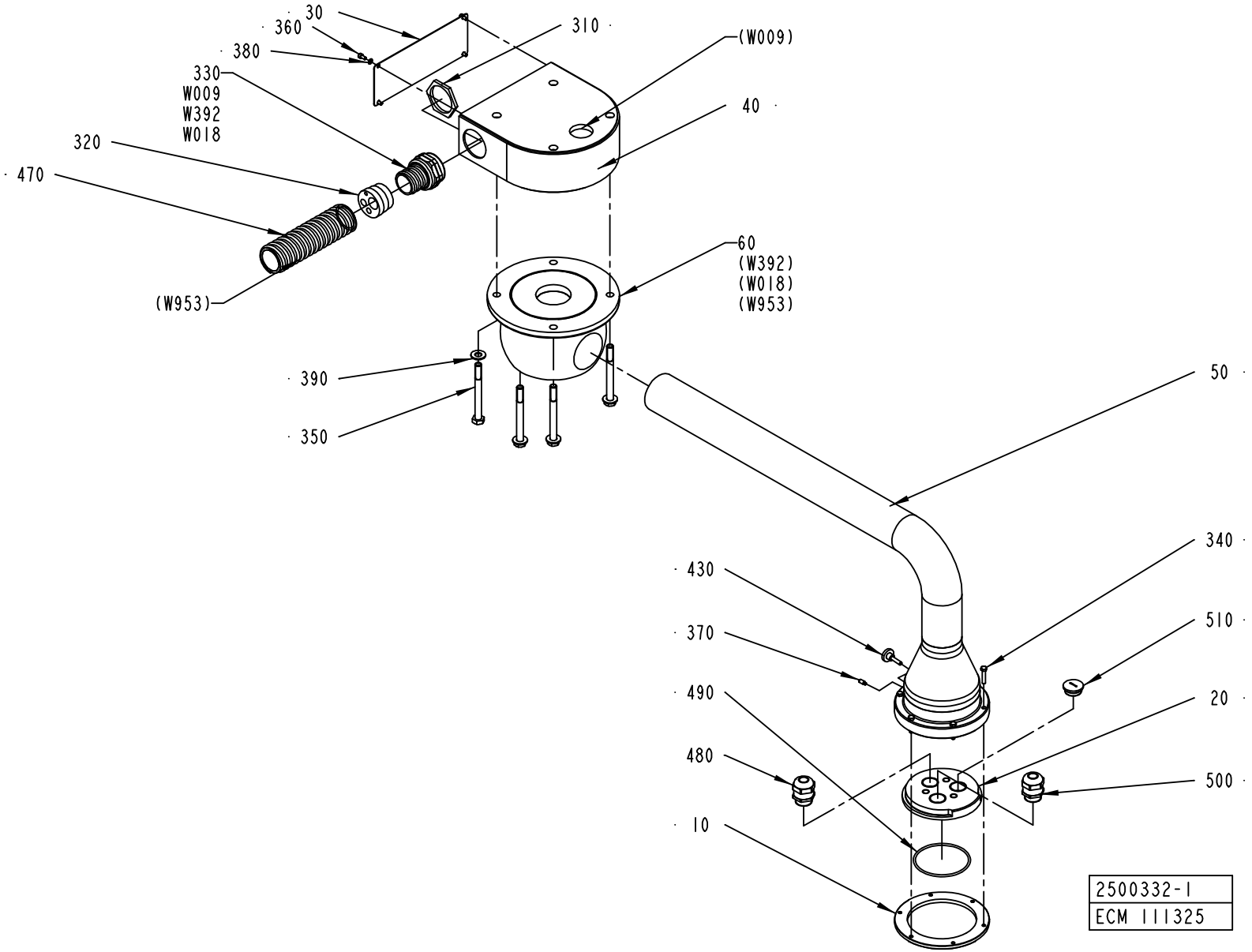
30
360
380
330
W009
W392
W018
320
470
(W953)
310
(W009)
40
60
(W392)
(W018)
(W953)
390
350
50
340
430
370
490
480
10
510
20
500
2500332-1
ECM 111325

ECM: 111327 - 20021111
Group number: 2500332-0100
Assembly Drawing: 2500332-1_1_AB

Pos	Part No	SP	UN	Qty	Description	Page No
-						
010	1558949-0000	-		1	PLATE	
020	2500261-0000	-		1	FIXING RING	
030	1539113-0000	-		1	COVER	
040	2500259-0000	-		1	BRACKET	
050	2500260-0000	-		1	ARM	
060	90458-1958	-		1	ARTICULATION, 300DEG WITH STOP	
310	90099-0085	-		1	NUT	
320	90457-0029	-		1	INSERT, MULTI HOLE, E156M5,9,11,19	
330	90457-0031	-		1	NORMAL WITHOUT INSERT, PG 36	
340	312105-0333	-		6	SCREW M6S ISO 4017 M5X25 A480	
350	312105-0511	-		4	SCREW M6S ISO 4014 M10X100 A480	
360	312115-0287	-		4	SCREW ISO4762 M4X8 A4	
370	312311-0327	-		1	SCREW ISO4028 M5X12 FZB	
380	315105-0136	-		4	WASHER BRB4,3XRFR	
390	315105-0173	-		4	WASHER BRB10,5X22RFR	
430	318860-0106	-		1	KNOB, ADJUST.HI.EXT.THREAD, NO 8324-3674	
470	90152-0060	-	M	4	SPIRAL CONDUIT, 42X35, UL3529	
480	90458-0308	-		1	CABLE GLAND, M25X1,5, NO.5311 1030	
490	315202-0307	B		1	O-RING 79,5X3 MM	
500	90458-0307	-		1	CABLE GLAND, M20X1,5, NO.5311 1020	
510	90458-1308	-		1	BLIND PLUG CIRCULAR, M20X1,5 514GFK/220	
W009	351150-0406	-	M	6	CABLE OLFLEX 7X0,75 MM2 LIGHT/GREY	
W018	90458-2557	-	M	7	CABLE OLFLEX 25X1 MM2	
W392	351162-0106	-	M	7	CABLE AWM 1X4 MM2 YELLOW-GREEN	

Pos	Part No	SP	UN	Qty	Description	Page No

Machine Type	Group Description	Used-In	Group Number	Page No

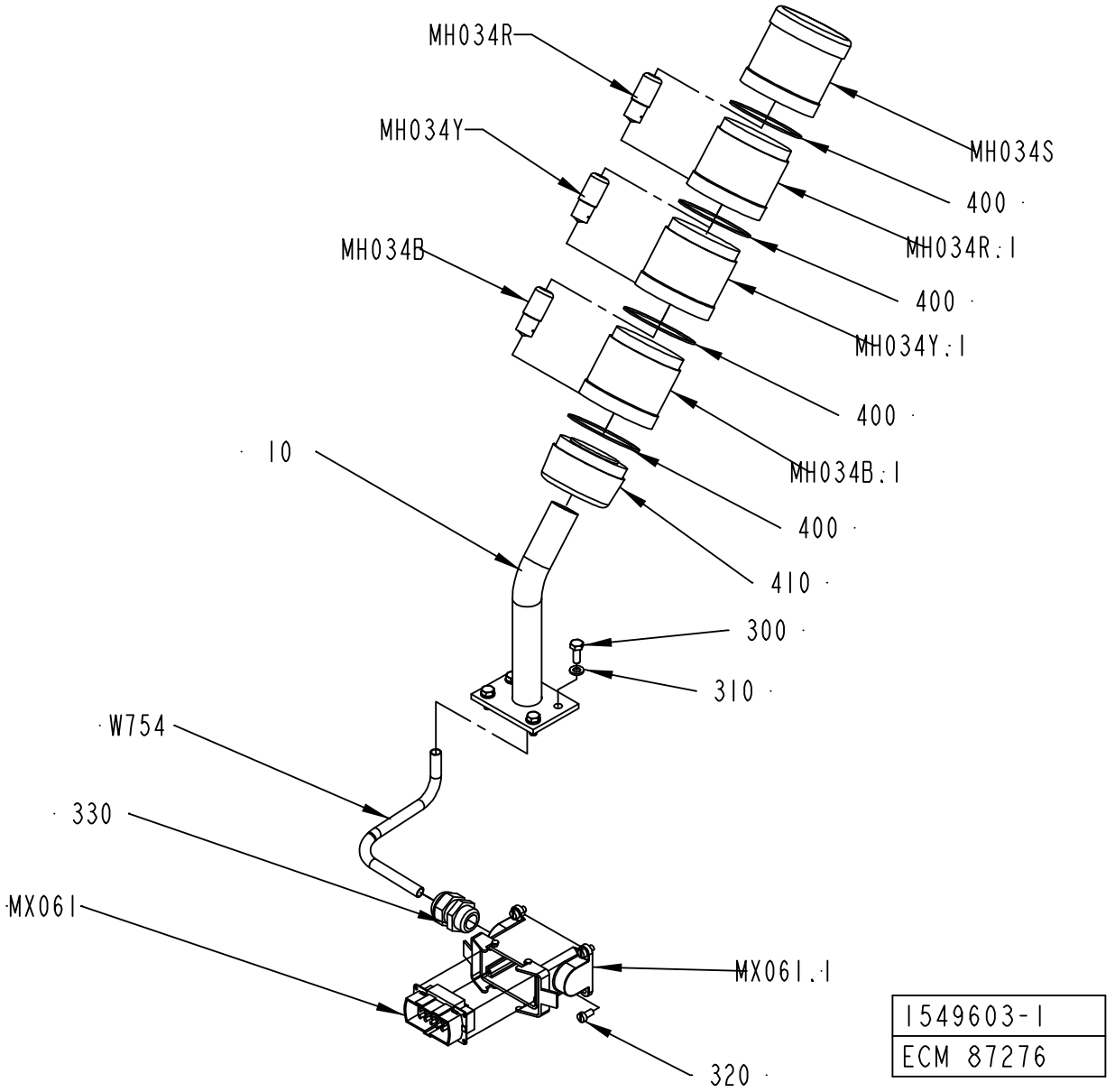
MH034R
MH034Y
MH034B
10
W754
330
MX061
MH034S
400
MH034R:1
400
MH034Y:1
400
MH034B:1
400
410
300
310
MX061:1
320
1549603-1
ECM 87276

ECM: 115742 - 20020930
Group number: 1549603-0100
Assembly Drawing: 1549603-1_1_AA

Pos	Part No	SP	UN	Qty	Description	Page No
-						
10	1517248-0000	-		1	BRACKET	
300	312105-0368	-		4	SCREW M6S M6X16 A280	
310	315105-0153	-		4	WASHER BRB6,4X12RFR	
320	312125-0325	-		4	SCREW SLOT.PAN HD. MCS 5X10 A480	
330	352103-0110	-		1	CABLE GLAND, STR 16, PR22,5/PG16	
400	90419-0307	B		4	GASKET	
410	90458-0292	-		1	BASE, KT70-1001	
MH034B	90036-0068	B		1	BULB 6.5W 24V	
MH034B.1	90458-0295	-		1	LIGHT ELEMENT, BLUE, KL70-401L	
MH034R	90036-0068	B		1	BULB 6.5W 24V	
MH034R.1	90458-0293	-		1	LIGHT ELEMENT, RED, KL70-401R	
MH034S	90458-0302	-		1	SIREN WITH ADJUSTABLE VOLUME KS 70-3004	
MH034Y	90036-0068	B		1	BULB 6.5W 24V	
MH034Y.1	90458-0294	-		1	LIGHT ELEMENT, YELLOW, KL70-401Y	
MX061	90110-0216	-		1	MALE INSERT 70 310 1040 0	
MX061.1	90458-2418	-		1	CHASSI HOUSING 10-POLE, 70.331.1028.0	
W754	351150-0406	-	M	2	CABLE OLFLEX 7X0,75 MM2 LIGHT/GREY	

Pos	Part No	SP	UN	Qty	Description	Page No

Machine Type Group Description Used-In Group Number Page No

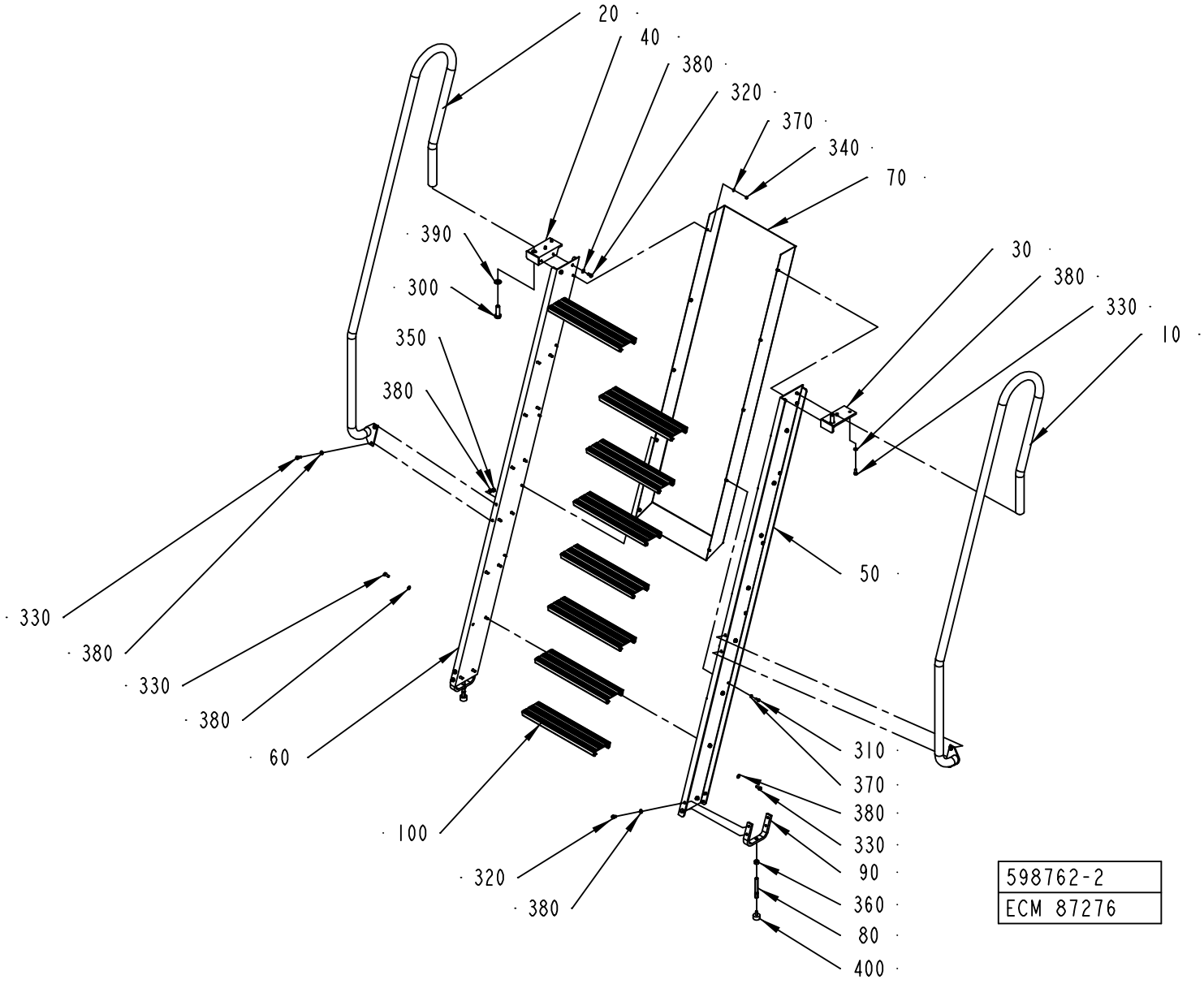
20
40
380
320
370
340
70
390
300
350
380
30
380
330
10
50
330
380
330
380
60
100
320
380
310
370
380
330
90
360
80
400
598762-2
ECM 87276

ECM: 87278 - 20011220
Group number: 598762-0200
Assembly Drawing: 598762-2_1_AA

Pos	Part No	SP	UN	Qty	Description	Page No
-						
010	597874-0000	-		1	RAIL RIGHT	
020	597875-0000	-		1	RAIL LEFT	
030	597888-0000	-		1	BRACKET	
040	597889-0000	-		1	BRACKET	
050	2527513-0000	-		1	SIDE PIECE	
060	2527514-0000	-		1	SIDE PIECE	
070	2514112-0000	-		1	COVER	
080	441905-0000	-		2	RETARD PIN	
	312911-0126	-		*1*	*HELI-COIL M8X1,5D*	
090	979966-0000	-		2	BRACKET	
100	441679-0000	-		8	STAIR	
300	312101-0630	-		2	SCREW M6S M16X50 FZB	
310	312105-0368	-		10	SCREW M6S M6X16 A280	
320	312105-0449	-		12	SCREW M6S ISO 4017 M8X16 A480	
330	312105-0451	-		40	SCREW M6S ISO 4017 M8X20 A480	
340	312605-0316	-		10	HEXAGON NUT, M6M M6 A280	
350	312605-0318	-		4	HEXAGON NUT, M6M M8 A280	
360	312605-0322	-		2	HEXAGON NUT, M6M M12 A280	
370	315105-0153	-		20	WASHER BRB6,4X12RFR	
380	315105-0165	-		56	WASHER BRB8,4X16RFR	
390	315105-0186	-		2	WASHER BRB17X30RFR	
400	90347-0004	-		2	VIBRATION DAMPER D=30 TH=M8 H=17 H2=21MM	

Pos	Part No	SP	UN	Qty	Description	Page No

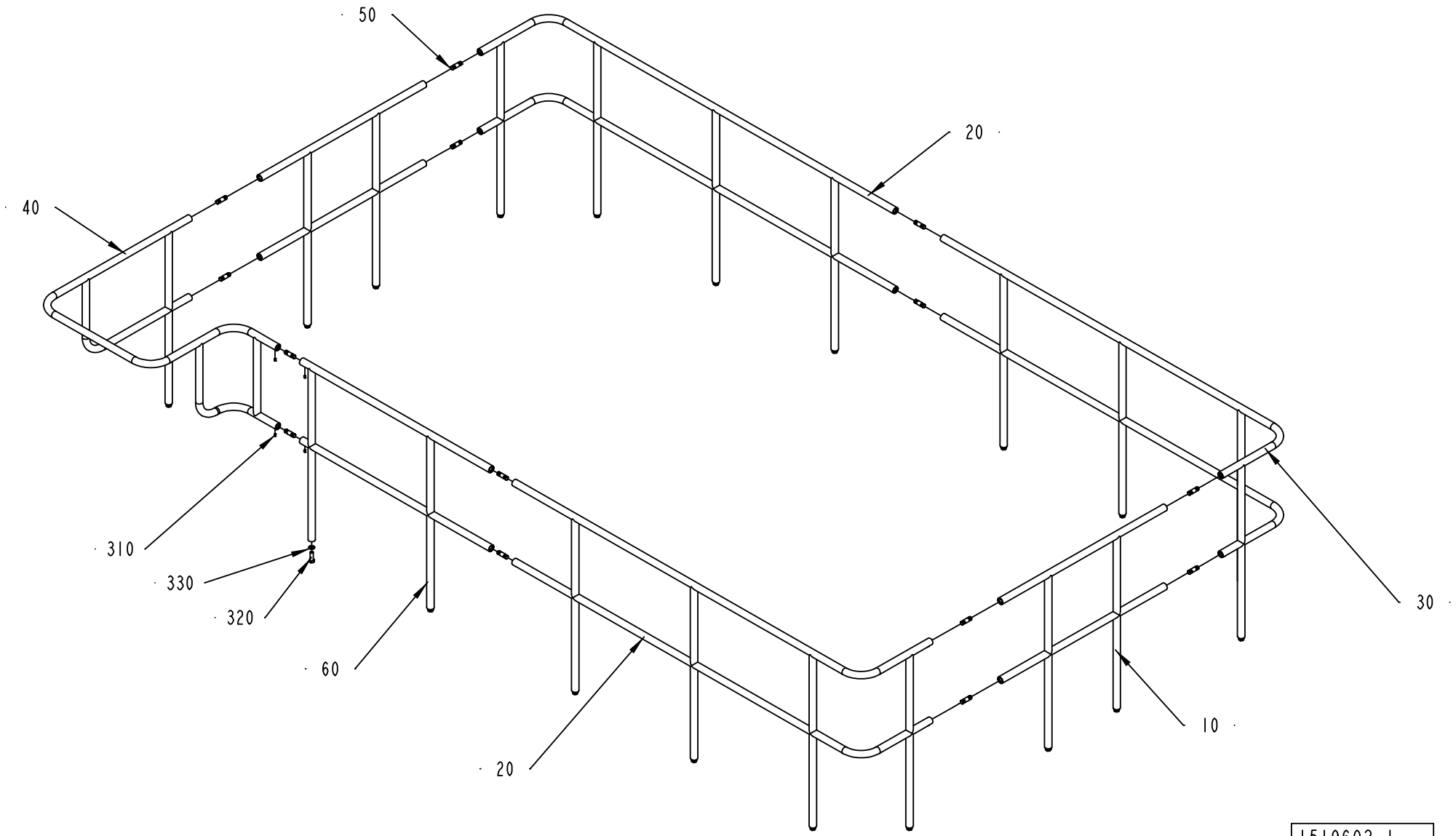

1519602-1
ECM 73437

ECM: 111429 - 20020930
Group number: 1519602-0100
Assembly Drawing: 1519602-1_1_AA

Pos	Part No	SP	UN	Qty	Description	Page No
LEFT						
020	1512636-0000	-		2	RAILING	
030	1512637-0000	-		1	RAILING	
040	1512638-0000	-		1	RAILING	
RIGHT						
020	1512636-0000	-		1	RAILING	
030	1512637-0000	-		2	RAILING	
040	2510767-0000	-		1	RAILING	
Common Parts						
010	1512635-0000	-		2	RAILING	
050	2555063-0000	-		14	PIN	
060	1538924-0000	-		1	RAILING	
310	312318-0447	-		28	SCREW ISO4029 M8X12 A4	
320	312105-0630	-		19	SCREW M6S ISO 4017 M16X50 A480	
330	315105-0186	-		19	WASHER BRB17X30RFR	

Pos	Part No	SP	UN	Qty	Description	Page No

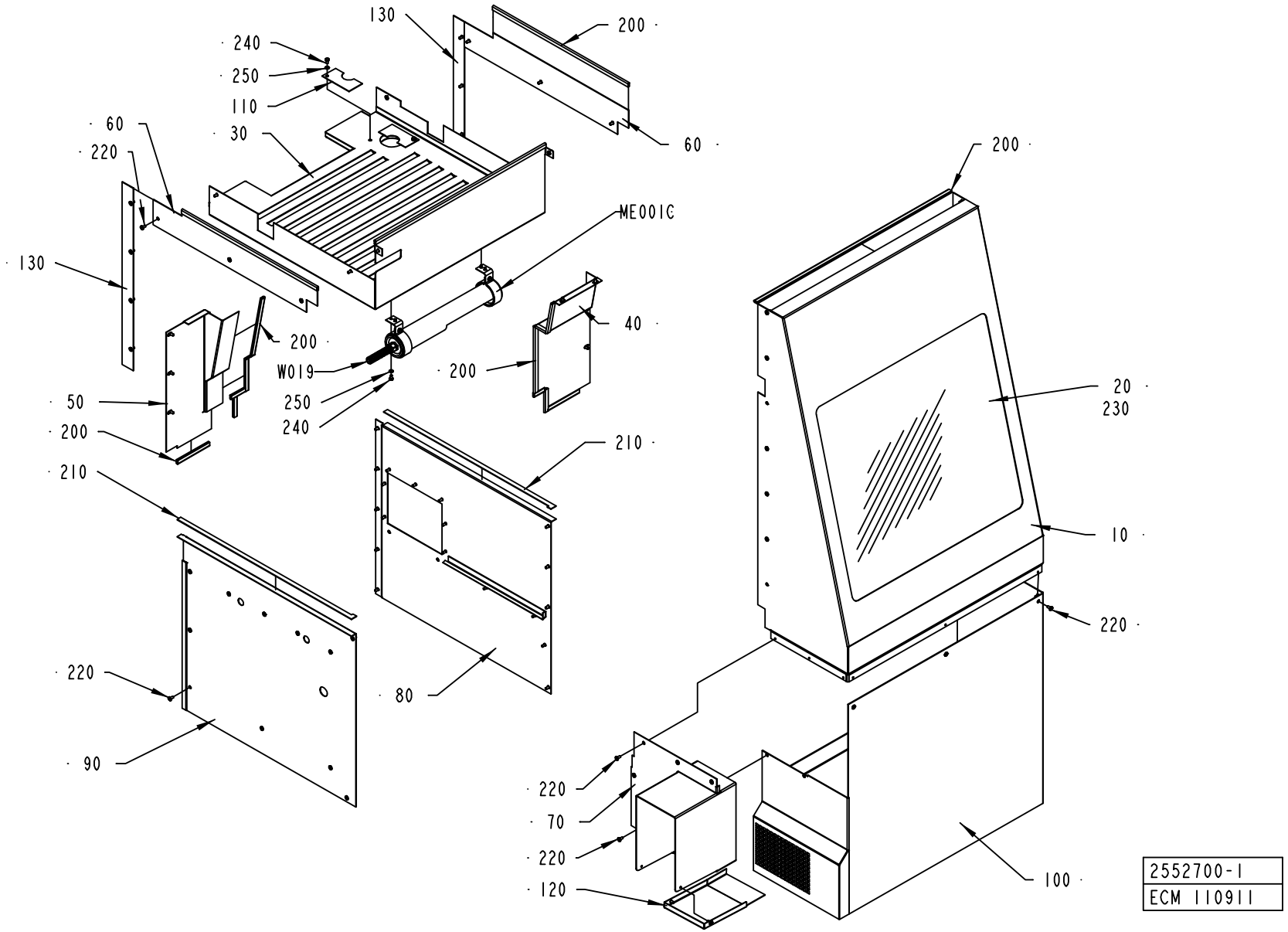
130
200
240
250
110
60
30
60
220
ME001C
130
200
40
W019
200
250
240
50
200
210
210
220
80
90
200
20
230
10
220
220
70
220
120
100
2552700-1
ECM 110911

ECM: 110920 - 20030113
Group number: 2552700-0100
Assembly Drawing: 2552700-1_1_AA

Pos	Part No	SP	UN	Qty	Description	Page No
-						
010	2552705-0000	-		1	FRONT COVER	
020	1549608-0000	-		1	GLASS PANE	
030	2552701-0000	-		1	TOP SECTION	
040	2552702-0000	-		1	COVER	
050	2552703-0000	-		1	COVER	
060	2552704-0000	-		2	COVER PLATE	
070	2552710-0000	-		1	COVER	
080	2552708-0000	-		1	COVERING PLATE	
090	2552709-0000	-		1	COVERING PLATE	
100	2552706-0000	-		1	COVER	
110	2552707-0000	-		2	COVER PLATE	
120	2552711-0000	-		1	COVER	
130	2553895-0000	-		2	COVER	
200	90143-0059	-	MM	4500	SEAL STRIP 4610069	
210	90458-0145	-		1	SEALING, 3X15 MM CLOSED CELL SPONGE	
220	90287-0075	-		74	SCREW SLOT. PAN HEAD LKCS M6X12	
230	90157-0041	-		1	SEALING COMPOUND	
240	312105-0364	-		6	SCREW M6S ISO 4017 M6X10 A480	
250	315105-0153	-		6	WASHER BRB6,4X12RFR	
ME001C	595430-0200	-		1	LIGHT FIXTURE	**241**
W019	351150-0412	-	M	6	CABLE OLFLEX 3X1,5 MM2 LIGHT/GREY	

Pos	Part No	SP	UN	Qty	Description	Page No

Machine Type | Group Description | Used-In | Group Number | Page No

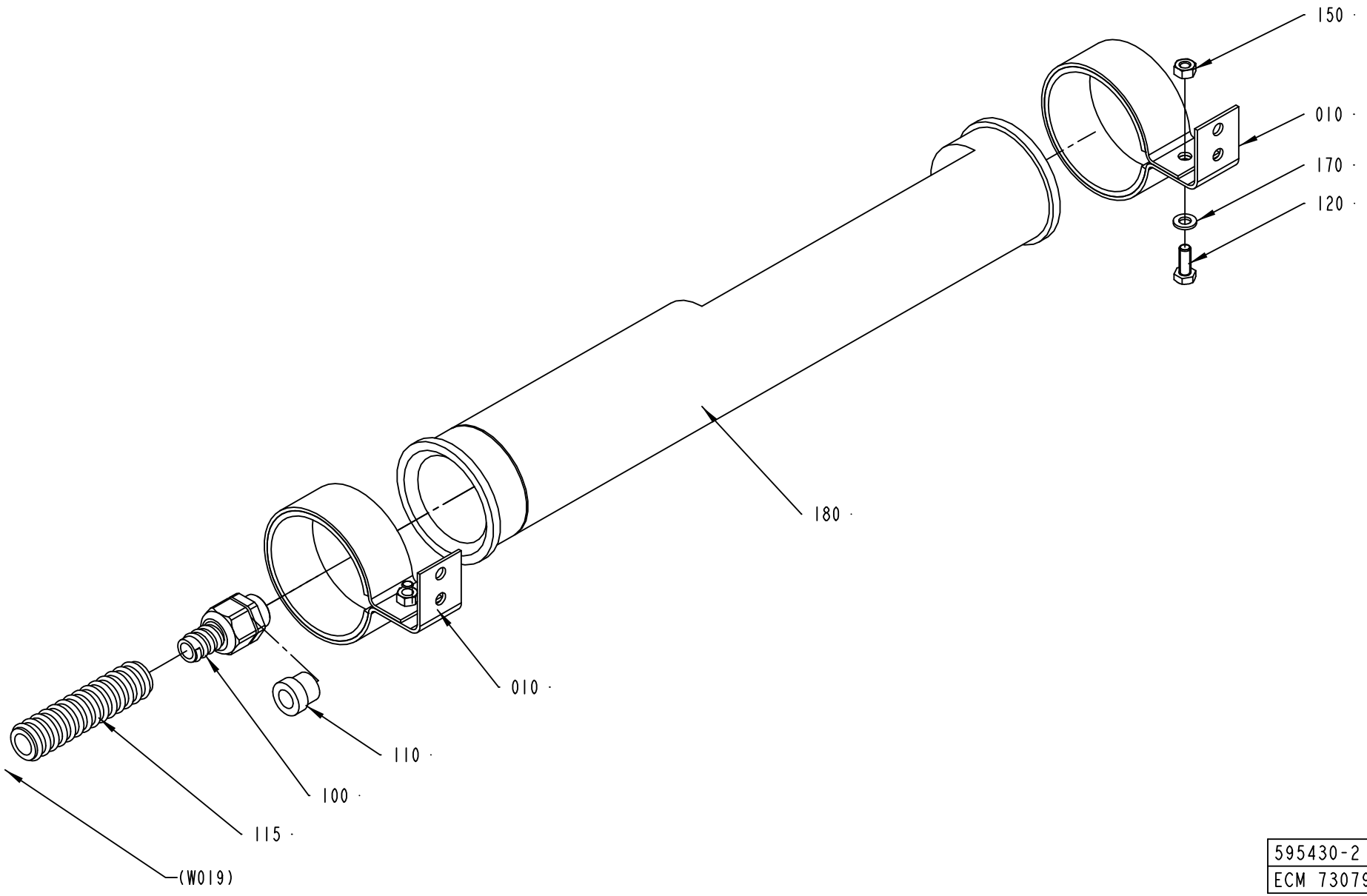

595430-2
ECM 73079

ECM: 115743 - 20020930
Group number: 595430-0200
Assembly Drawing: 595430-2_1_AA

Pos	Part No	SP	UN	Qty	Description	Page No
-						
10	1140129-0000	-		2	HOLDER	
100	353243-0002	-		1	EXTENDED WITHOUT INSERT, PG11	
110	353249-0010	-		1	INSERT, SINGEL HOLE, EK 152/11	
115	90152-0059	-	MM	2150	SPIRAL CONDUIT, 18X12, UL 1211	
120	312105-0368	-		2	SCREW M6S M6X16 A280	
150	312605-0316	-		2	HEXAGON NUT, M6M M6 A280	
170	315105-0153	-		2	WASHER BRB6,4X12RFR	
180	90164-0015	B		1	LIGHT FIXTURE, DWDCV111B/230V 50HZ	
	90297-0007	*B*		*1*	*FLUORESCENT TUBE, PLS 11*	

Pos	Part No	SP	UN	Qty	Description	Page No

Machine Type | Group Description | Used-In | Group Number | Page No

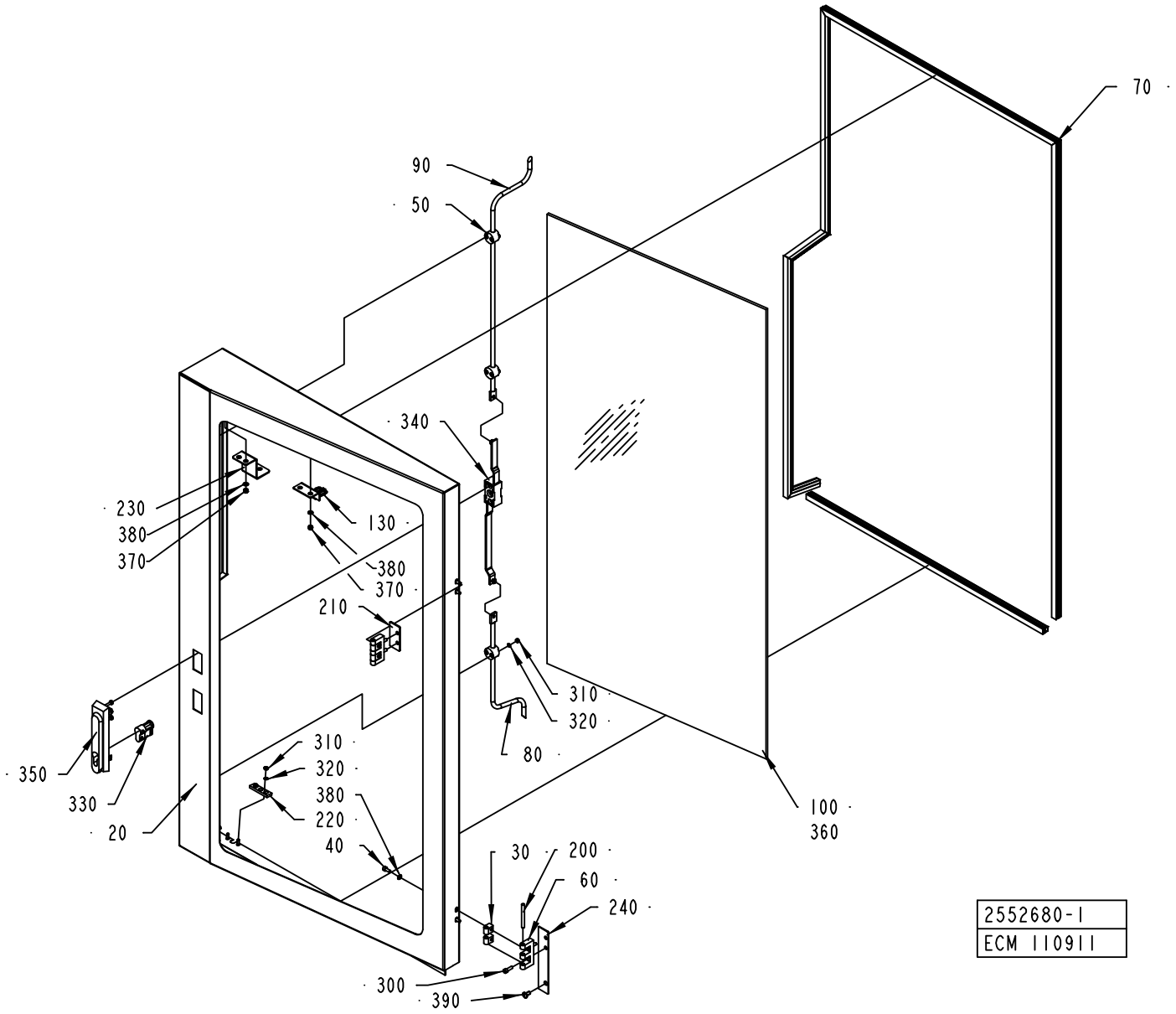
70
90
50
340
230
380
370
130
380
370
210
310
320
80
350
330
20
310
320
380
220
40
100
360
30
200
60
240
300
390
2552680-1
ECM 110911

ECM: 110921 - 20030113
Group number: 2552680-0100
Assembly Drawing: 2552680-1_1_AA

Pos	Part No	SP	UN	Qty	Description	Page No
-						
020	2552691-0000	-		1	DOOR	
030	1035794-0000	-		4	BLOCKING PIECE	
040	312115-0327	-		4	SCREW ISO4762 M5X12 A4	
050	1129274-0000	-		3	GUIDE LUG	
060	1035792-0000	-		2	E-HINGE	
070	90143-0068	B	M	3	RUBBERSTRIP EMKA 1011-06	
080	2552683-0000	-		1	LOCKING ARM	
090	2552682-0000	-		1	LOCKING ARM	
100	2552679-0000	-		1	GLASS PANE	
130	2552686-0000	-		1	KEY	
200	988685-0000	-		2	PIN	
210	2552687-0000	-		1	SPACER	
220	2552688-0000	-		1	GUIDE BRACKET	
230	2554959-0000	-		1	GUIDE	
240	2556243-0000	-		1	SPACER	
300	312115-0329	-		4	SCREW ISO4762 M5X16 A4	
310	312605-0312	-		8	HEXAGON NUT, M6M M4 A280	
320	315105-0136	-		8	WASHER BRB4,3XRFR	
330	90237-0128	-		1	LOCK CYLINDER, 1109-U3	
340	90237-0153	-		1	LOCK HOUSING, 1121-U26-0B	
350	90237-0176	-		1	TURNING HANDLE	
360	90157-0041	-		1	SEALING COMPOUND	
370	312812-0314	-		4	HEXAGON NUT, NY-LOCK M5 A480	
380	315105-0146	-		8	WASHER BRB5,3X10RFR	
390	90287-0075	-		1	SCREW SLOT. PAN HEAD LKCS M6X12	

Pos	Part No	SP	UN	Qty	Description	Page No

Machine Type | Group Description | Used-In | Group Number | Page No

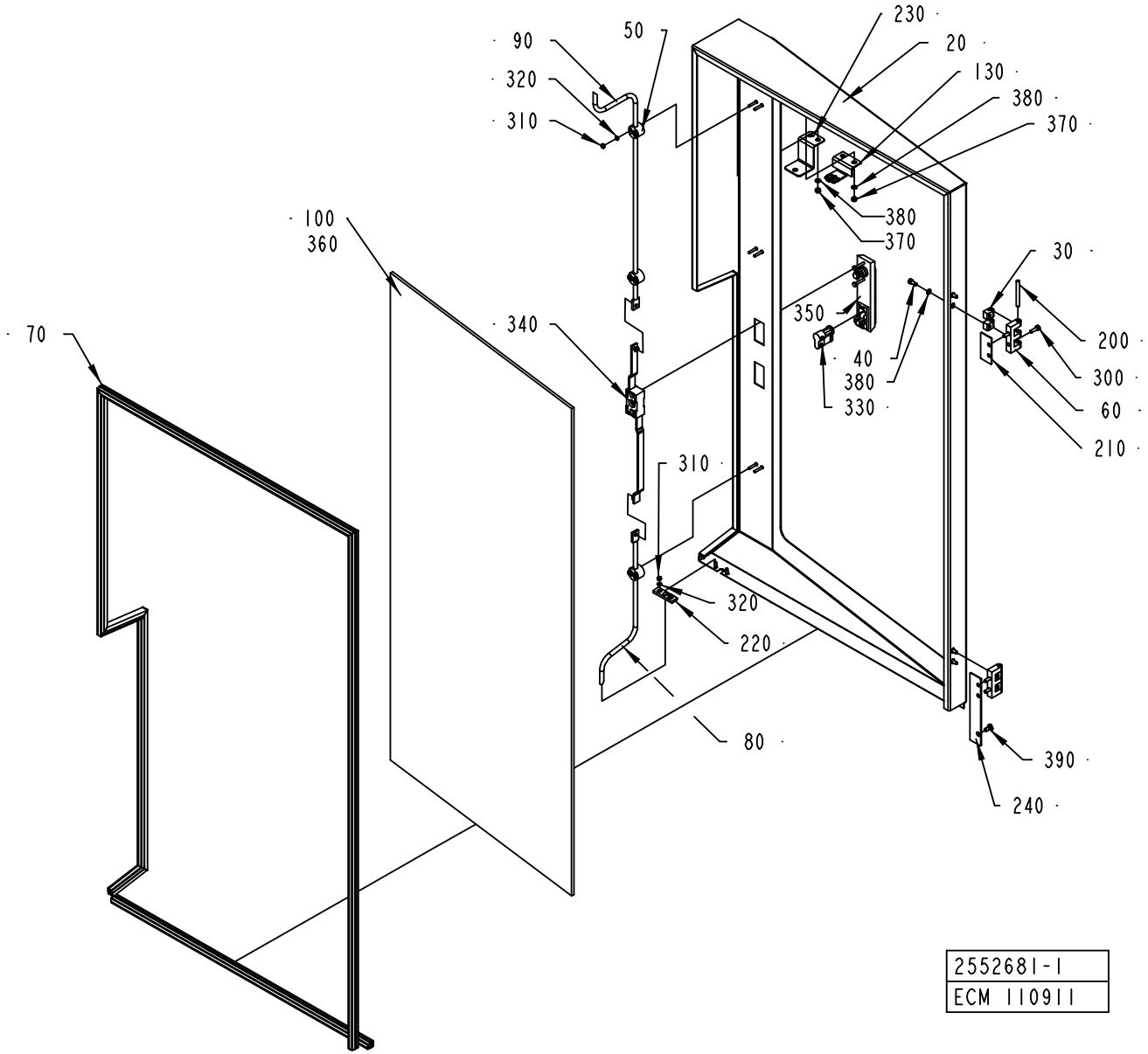
90
320
310
50
230
20
130
380
370
380
370
100
360
30
350
40
380
330
200
300
60
210
70
340
310
320
220
80
390
240
2552681-1
ECM 110911

ECM: 110922 - 20030113
Group number: 2552681-0100
Assembly Drawing: 2552681-1_1_AA

Pos	Part No	SP	UN	Qty	Description	Page No
-						
020	2552692-0000	-		1	DOOR	
030	1035794-0000	-		4	BLOCKING PIECE	
040	312115-0327	-		4	SCREW ISO4762 M5X12 A4	
050	1129274-0000	-		3	GUIDE LUG	
060	1035792-0000	-		2	E-HINGE	
070	90143-0068	B	M	3	RUBBERSTRIP EMKA 1011-06	
080	2552683-0000	-		1	LOCKING ARM	
090	2552682-0000	-		1	LOCKING ARM	
100	2552679-0000	-		1	GLASS PANE	
130	2552686-0000	-		1	KEY	
200	988685-0000	-		2	PIN	
210	2552687-0000	-		1	SPACER	
220	2552688-0000	-		1	GUIDE BRACKET	
230	2554959-0000	-		1	GUIDE	
240	2556243-0000	-		1	SPACER	
300	312115-0329	-		4	SCREW ISO4762 M5X16 A4	
310	312605-0312	-		8	HEXAGON NUT, M6M M4 A280	
320	315105-0136	-		8	WASHER BRB4,3XRFR	
330	90237-0128	-		1	LOCK CYLINDER, 1109-U3	
340	90237-0153	-		1	LOCK HOUSING, 1121-U26-0B	
350	90237-0176	-		1	TURNING HANDLE	
360	90157-0041	-		1	SEALING COMPOUND	
370	312812-0314	-		4	HEXAGON NUT, NY-LOCK M5 A480	
380	315105-0146	-		8	WASHER BRB5,3X10RFR	
390	90287-0075	-		1	SCREW SLOT. PAN HEAD LKCS M6X12	

Pos	Part No	SP	UN	Qty	Description	Page No

Machine Type | Group Description | Used-In | Group Number | Page No

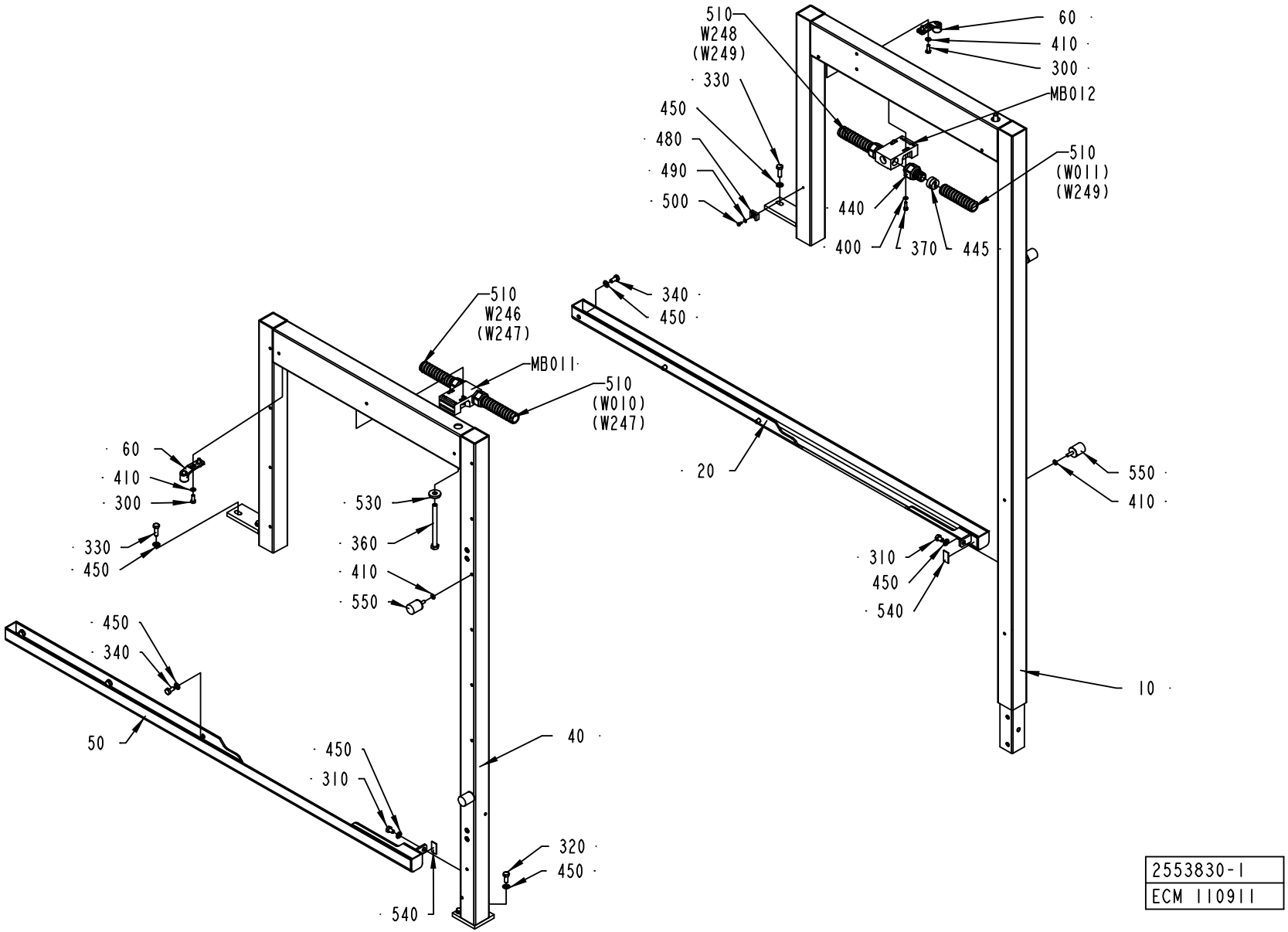

2553830-1
ECM 110911

ECM: 110923 - 20030113
Group number: 2553830-0100
Assembly Drawing: 2553830-1_1_AA

Pos	Part No	SP	UN	Qty	Description	Page No
-						
010	2553831-0000	-		1	FRAME	
020	2552685-0000	-		1	CHUTE	
040	2553832-0000	-		1	FRAME	
050	2552684-0000	-		1	CHUTE	
060	1538868-0000	-		2	BRACKET	
300	312105-0368	-		4	SCREW M6S M6X16 A280	
310	312105-0447	-		2	SCREW M6S ISO 4017 M8X12 A480	
320	312105-0451	-		2	SCREW M6S ISO 4017 M8X20 A480	
330	312105-0453	-		4	SCREW M6S ISO 4017 M8X25 A480	
340	312105-0449	-		6	SCREW M6S ISO 4017 M8X16 A480	
360	312105-0515	-		2	SCREW M6S ISO 4014 M10X120 A480	
370	312115-0329	-		4	SCREW ISO4762 M5X16 A4	
400	315105-0146	-		4	WASHER BRB5,3X10RFR	
410	315105-0153	-		8	WASHER BRB6,4X12RFR	
440	90458-0430	-		4	EXTENDED WITHOUT INSERT, M20X1,5	
445	90457-0147	-		4	GLAND, INSERT, MULTI HOLE, 2X7	
450	315105-0165	-		14	WASHER BRB8,4X16RFR	
480	352113-0204	-		2	ANCHOR PLATES FOR STRIPS, TYPE TM3S25-M	
490	315105-0136	-		2	WASHER BRB4,3XRFR	
500	312125-0287	-		2	SCREW PAN HEAD MCS M4X8 SS	
510	90152-0051	-	M	6	SPIRAL CONDUIT, 25X18, UL 1816	
530	315125-0173	-		2	WASHER TBRSB 10,5X28X6 A4	
540	90458-0145	-		1	SEALING, 3X15 MM CLOSED CELL SPONGE	
550	90459-1060	-		4	VIBRATION DAMPER, T15688	
MB011	90459-0472	A		1	KEY SAF.SW. AZ 16 02ZVRK-M20-2152-2254	
MB012	90459-0472	A		1	KEY SAF.SW. AZ 16 02ZVRK-M20-2152-2254	
W246	351150-0431	-	M	5	CABLE OLFLEX 2X0,75 MM2 LIGHT/GREY	
W248	351150-0431	-	M	6	CABLE OLFLEX 2X0,75 MM2 LIGHT/GREY	

Pos	Part No	SP	UN	Qty	Description	Page No

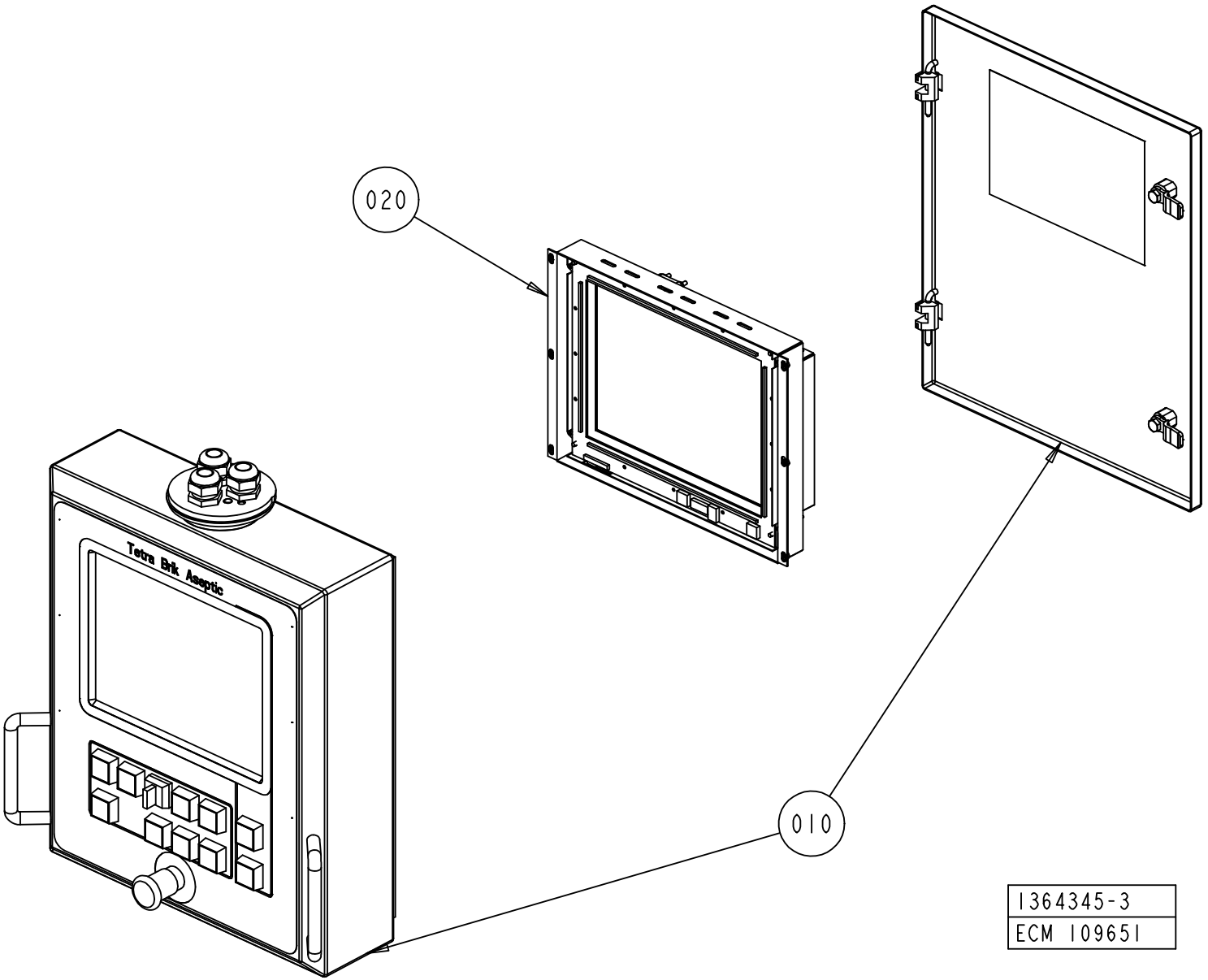

1364345-3
ECM 109651

ECM: 120877 - 20021126
Group number: 1364345-0300
Assembly Drawing: 1364345-3_1_AA

Pos	Part No	SP	UN	Qty	Description	Page No
TBA/19-0200						
010	1364346-0302	-		1	PANEL UNIT 12"	
Common Parts						
020	1348707-0101	-		1	DISPLAY UNIT 12"	
010	*90041-0099*	*A*		*1*	*IR TOUCH PCB, 12.1" , IRT 12I1-V2.1*	
020	*90041-0104*	*-*		*1*	*CHASSIS FOR TOUCH, 12,1" , M0089A39*	
030	*90041-0093*	*A*		*1*	*DISPLAY, TOSHIBA 12,1"*	
040	*1348708-0000*	*-*		*1*	*COVER PLATE*	
050	*1348709-0000*	*-*		*1*	*COVER PLATE*	
060	*90041-0079*	*A*		*1*	*ADAPTER BACKLIGHT, 50000007*	
070	*90041-0078*	*A*		*1*	*REMOTE COMMUNIKATION LINK BOARD,E000014B*	
080	*90041-0103*	*A*		*1*	*DATA CABLE DISPLAY, E000018B*	
090	*90316-0022*	*-*		*3*	*SPACER NUT DSNF M3060X20*	
100	*90041-0082*	*A*		*1*	*CABLE, DISPLAY POWER, 2223-0022-018*	
120	*90316-0023*	*-*		*4*	*SPACER NUT DSM M3055X8*	
130	*312605-0310*	*-*		*15*	*HEXAGON NUT, M6M M3 A280*	
140	*312125-0220*	*-*		*11*	*SCREW SLOT.PAN HD. MCS 3X6 A480*	
150	*90220-0302*	*-*		*1*	*CLAMP FOR SCR.CABLE, 16MM, 55-016-89*	
160	*90220-0304*	*-*		*5*	*CLAMP FOR SCR.CABLE, 24MM,*	
170	*315105-0136*	*-*		*24*	*WASHER BRB4,3XRFR*	
180	*312125-0299*	*-*		*6*	*SCREW PAN HEAD MCS M4X30 SS*	
190	*312605-0312*	*-*		*20*	*HEXAGON NUT, M6M M4 A280*	
200	*1129570-0000*	*-*		*1*	*LDS, LVDS TERMINAL 1*	
	90110-0282	*-*		*1*	*PLINTH, BLA18, 128336*	
	90194-0154	*-*		*1*	*TERM. MARKING LABEL KIT, BLA-BSTB, 1-24*	
210	*315105-0124*	*-*		*18*	*WASHER BRB3,2X6RFR*	
220	*90316-0029*	*-*		*4*	*SPACER NUT, M3X16*	
230	*90316-0030*	*-*		*4*	*ELASTIC SCREW, 15060002*	
240	*90144-0074*	*-*		*1*	*SHIELDING SEAL STRIP EMC, 3,17X3,17 MM*	
250	*312115-0222*	*-*		*9*	*SCREW ISO4762 M3X8 A4*	

Pos	Part No	SP	UN	Qty	Description	Page No

Tetra Pak

SPC
Spare Parts Catalogue

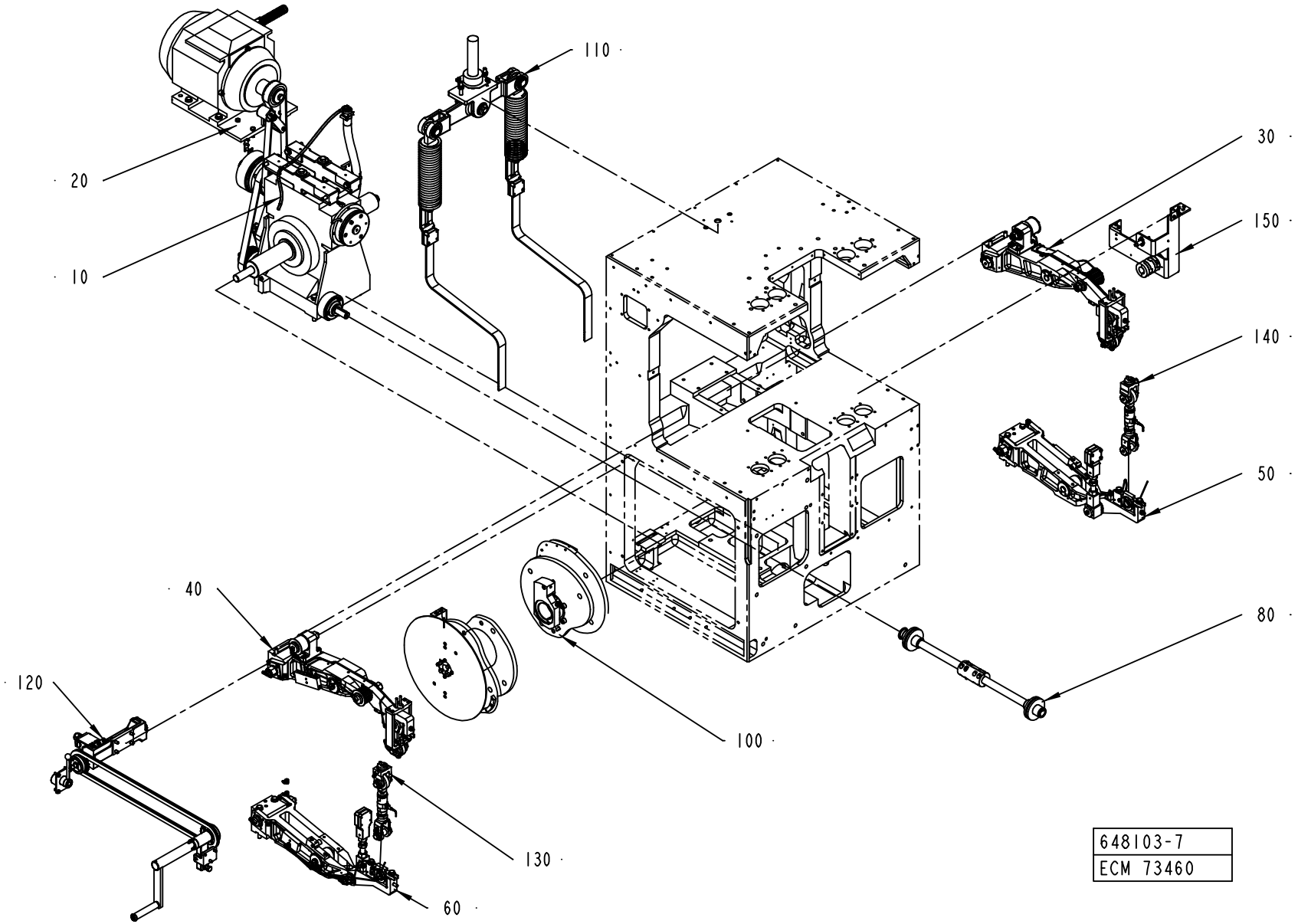
110
20
10
30
150
140
50
80
40
120
100
130
60
648103-7
ECM 73460

ECM: 73460 - 20011220
Group number: 648103-1100
Assembly Drawing: 648103-7_1_AA

Pos	Part No	SP	UN	Qty	Description	Page No
-						
010	256173-0600	-		1	WORM GEAR	**255**
020	1523210-0100	-		1	MOTOR	**257**
030	256197-0500	-		1	ARM	**259**
040	929438-0100	-		1	ARM	**261**
050	491814-0300	-		1	SLEWING BRACKET RIGHT	**263**
060	491815-0300	-		1	SLEWING BRACKET LEFT	**265**
080	256200-0300	-		1	INTERMEDIARY SHAFT	**267**
100	256202-0700	-		1	CURVE PACK	**269, 271**
110	2506790-0100	-		1	HOLD-DOWN DEVICE	**273**
120	1512286-0100	-		1	CRANK	**277**
130	1490120-0100	-		1	DISCONNECTION LINK LEFT	**279**
140	1539766-0100	-		1	DISCONNECTION LINK RIGHT	**281**
150	1512284-0100	-		1	ANGLE ENCODER	**283**

Pos	Part No	SP	UN	Qty	Description	Page No

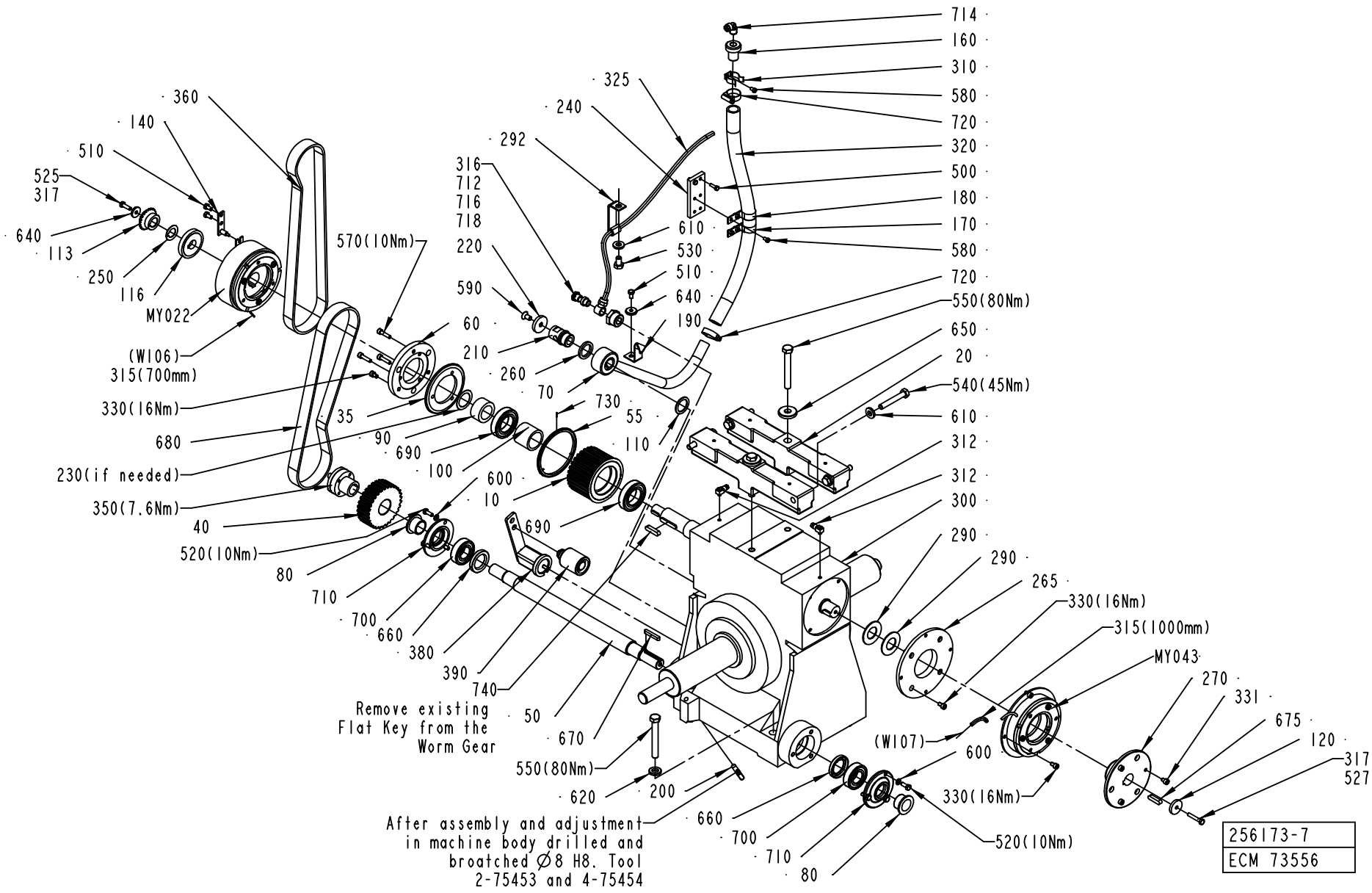
714
160
310
580
720
320
500
180
170
580
720
550(80Nm)
650
20
540(45Nm)
610
312
312
300
290
290
265
330(16Nm)
315(1000mm)
MY043
270
331
675
120
317
527
325
240
292
316
712
716
718
220
590
60
210
260
70
730
55
110
610
530
510
640
190
360
140
510
525
317
640
113
250
116
MY022
(W106)
315(700mm)
570(10Nm)
330(16Nm)
680
230(if needed)
350(7.6Nm)
40
520(10Nm)
80
710
700
660
380
390
740
35
90
690
100
600
10
690
Remove existing
Flat Key from the
Worm Gear
50
670
550(80Nm)
620
200
After assembly and adjustment
in machine body drilled and
broatched Ø8 H8. Tool
2-75453 and 4-75454
660
700
710
80
(W107)
600
330(16Nm)
520(10Nm)
256173-7
ECM 73556

ECM: 115563 - 20020930
Group number: 256173-0600
Assembly Drawing: 256173-7_1_AA

Pos	Part No	SP	UN	Qty	Description	Page No
-						
010	1524018-0000	A		1	TIMING BELT PULLEY	
020	441356-0000	-		2	BRACKET	
035	751245-0000	-		1	FLANGE	
040	256176-0000	-		1	GEAR WHEEL	
050	256177-0000	-		1	SHAFT	
055	2518410-0000	-		1	FLANGE	
060	256178-0000	-		1	FIXING RING	
070	272372-0000	-		1	HOUSE	
080	256179-0000	-		2	SPACER SLEEVE	
090	2527651-0000	-		1	SPACER	
100	256181-0000	-		1	SPACER PIPE	
110	257174-0000	-		1	SEALING WASHER	
113	257179-0000	B		1	GEAR WHEEL	
116	491409-0000	-		1	WASHER	
120	271689-0000	-		1	WASHER	
140	2527652-0000	-		1	ARM	
160	272376-0000	-		1	SHUTTER	
170	272377-0001	-		1	CRAMP	
180	272377-0002	-		1	CRAMP	
190	272388-0000	-		1	CRAMP	
200	295140-0000	-		2	PIN	
210	295766-0000	-		1	SCREW	
220	295767-0000	-		1	SEALING WASHER	
230	441024-0000	-		1	LACE	
240	441360-0000	-		1	PLATE	
250	491410-0000	-		1	LACE	
260	456934-0000	-		1	SEALING WASHER	
265	469999-0000	-		1	FLANGE	
270	491274-0000	-		1	HUB	
290	90016-0010	-		2	DISC SPRINGS,50X25,4X2	
292	469867-0000	-		1	HOSE HOLDER	
300	90457-0151	A		1	WORM GEAR UCZ 151 SIZE 125 39:1	
310	90074-0026	-		1	PIPE CLIP FOR TUBE D=24-35 MM	
312	90134-0058	-		2	CONNECTION	
315	90142-0005	-	MM	1500	HOSE	
316	90144-0073	-	MM	1	TREBOFLON-TAPE W=13MM	
317	90157-0016	-	ML	1	LOCKING FLUID	
320	90166-0060	-	MM	530	HOSE 19/26-27 REINF.PVC	
325	90166-0133	-	MM	500	TUBE 8 MM PA,TRANSP.	
330	90287-0081	-		11	SCREW MC6S M6X10 129	
331	312115-0362	-		6	SCREW ISO4762 M6X8 A4	
334	90296-0068	-	G	1	GREASE UNIWAY LI62 CARTRID.400GR	
336	90296-0075	-	L	4	OIL 54322-320 ACC TO M 1254.322	
350	90208-0120	-		1	CONE CLAMP. ELEMENT 22/32, L=25	
360	90417-0076	A		1	TIMING BELT T10X920X25 POLYURETH	
380	90457-0127	A		1	TENSIONER, TYPE SE-F-15	
390	90457-0128	A		1	CLAMPING ROLL	
500	312101-0329	-		2	SCREW M6S M5X16 FZB	
510	312101-0366	-		3	SCREW M6S M6X12 FZB	
520	312101-0368	-		6	SCREW M6S M6X16 FZB	
525	312101-0370	-		1	SCREW M6S M6X20 FZB	
527	312101-0376	-		1	SCREW M6S M6X35 FZB	
530	312101-0489	-		1	SCREW M6S M10X16 FZB	
540	312101-0504	-		4	SCREW M6S M10X65 FZB	
550	312101-0550	-		6	SCREW M6S M12X90 FZB	
570	312115-0372	-		3	SCREW ISO4762 M6X25 A4	
580	312121-0323	-		5	SCREW SLOT.PAN HD. MCS 5X8 FZB	
590	312155-0449	-		1	SCREW EN 10642 MF6S M8X16 A480	
600	315101-0153	-		6	WASHER PLAIN, BRB, 6,4/12 H=1,5	
610	315111-0173	-		5	WASHER PLAIN, TBRB 10,5/22 H=4	
620	315111-0178	-		4	WASHER PLAIN, TBRB 13/24 H=4	
640	315121-0153	-		2	WASHER PLAIN, TBRSB 6,4/22 H=4	
650	315121-0178	-		2	WASHER PLAIN, TBRSB 13/36 H=6	
660	315221-0169	-		2	RADIAL SEAL 30X47X7 MM	
670	315701-0239	-		1	PARALLEL KEY W. ROUND ENDS 6X6X40 MM	
675	315701-0268	-		1	PARALLEL KEY W. ROUND ENDS 8X7X32 MM	
680	90458-1591	A		1	TIMING BELT T10X1000X25 POLYURETHANE	
690	321308-0207	A		2	BALL BEARING, 2 SEALS, 35X62X14 MM	
700	321313-0105	A		2	BALL BEAR. 2 SEALS 25X52X15MM	
710	321600-0114	-		2	SEAL COVER LL3052	
712	342701-0208	-		1	BUSHING, INT/EXT. G-THREAD NO. 3/4-1/4	
714	342930-0122	-		1	ELBOW 90 COUPL.,EXT.THREAD 8/6-R1/4"	
716	342980-0122	-		1	BANJO-CONNECTION,RING 8/6-G1/4"	
718	342980-0304	-		1	BANJO-HOLLOW BOLT COUPL,EXT.THR.01-G1/4"	
720	342991-0104	-		2	HOSE CLIP,WORM DRIVE TYPE (23)-27	
730	311102-0153	-		3	PARALLELL PIN, CP, M6, 1,5X10 MM	
740	315705-0269	-		1	PARALLEL KEY W. ROUND ENDS 8X7X35 MM	
MY022	90458-2200	A		1	ELECTROMAGNETIC CLUTCH, 30 MM/24 VDC	
MY043	90432-0023	A		1	BRAKE ORTLINGHAUS	

Machine Type	Group Description	Used-In	Group Number	Page No

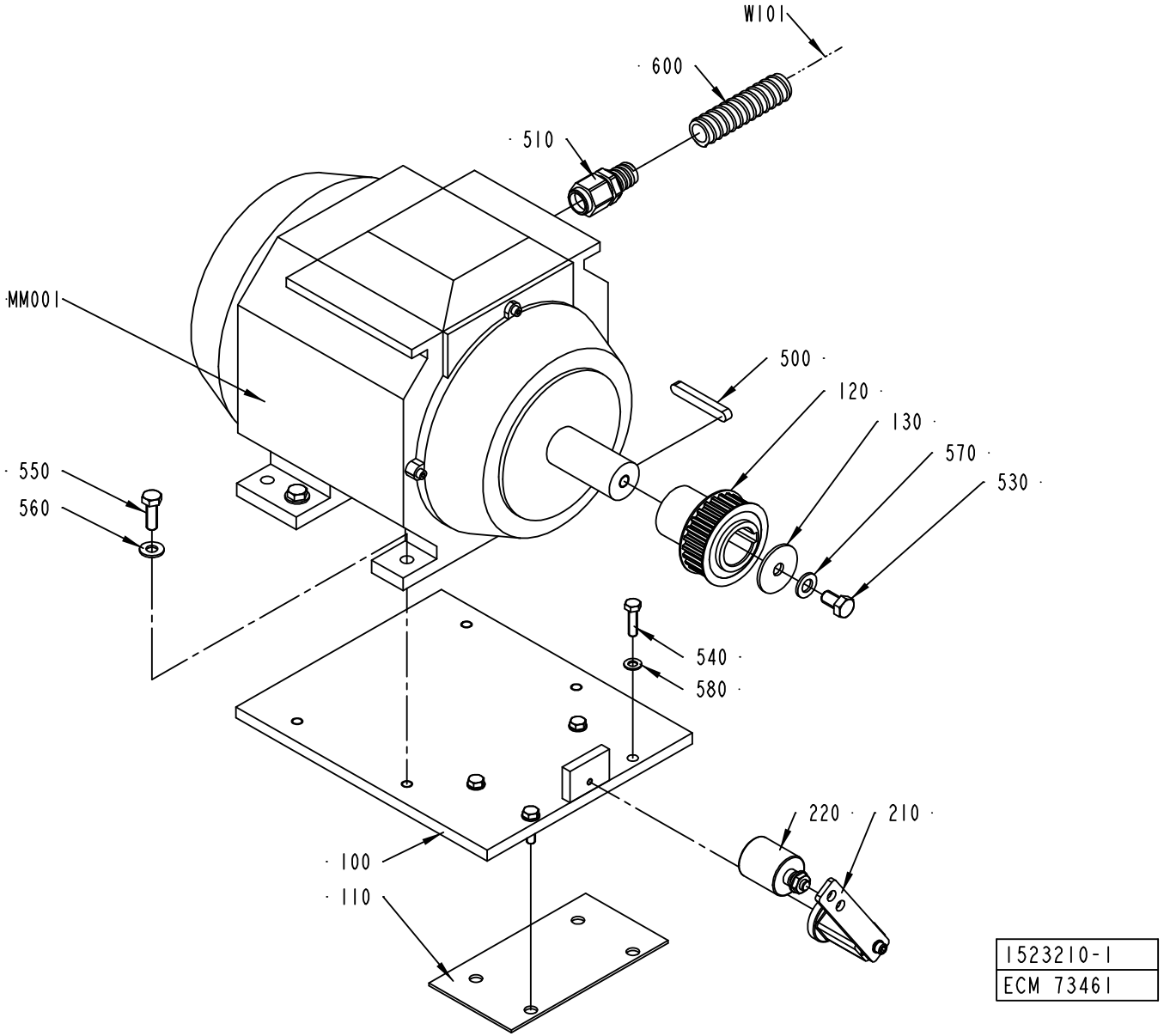
W101
600
510
MM001
500
120
130
570
530
550
560
540
580
220
210
100
110
1523210-1
ECM 73461

ECM: 115435 - 20020930
Group number: 1523210-0100
Assembly Drawing: 1523210-1_1_AA

Pos	Part No	SP	UN	Qty	Description	Page No
-						
100	1517230-0000	-		1	BRACKET	
110	1517231-0000	-		1	RUBBER SHIM	
120	1523215-0000	-		1	TIMING PULLEY	
130	1523211-0000	-		1	WASHER	
210	90457-0127	A		1	TENSIONER, TYPE SE-F-15	
220	90457-0128	A		1	CLAMPING ROLL	
500	315705-0307	-		1	PARALLEL KEY W. ROUND ENDS 10X8X70 MM	
510	90458-0450	-		1	GLAND, M25X1,5, NO. 2255416S08UL16	
530	312105-0532	-		1	SCREW M6S ISO 4017 M12X20 A480	
540	312105-0455	-		4	SCREW M6S ISO 4017 M8X30 A480	
550	312105-0495	-		4	SCREW M6S ISO 4017 M10X30 A480	
560	315105-0173	-		4	WASHER ISO 7089-10-200 HV-A4	
570	315105-0178	-		1	WASHER ISO 7089-12-200 HV-A4	
580	315105-0165	-		4	WASHER ISO 7089-8-200 HV-A4	
600	90152-0051	-	MM	2200	SPIRAL CONDUIT, 25X18, UL 1816	
MM001	90457-0172	A		1	MOTOR 3GAA 131001-ASA	
W101	90220-0105	-	M	6	SCR. CABLE 4X2,5MM2	

Pos	Part No	SP	UN	Qty	Description	Page No

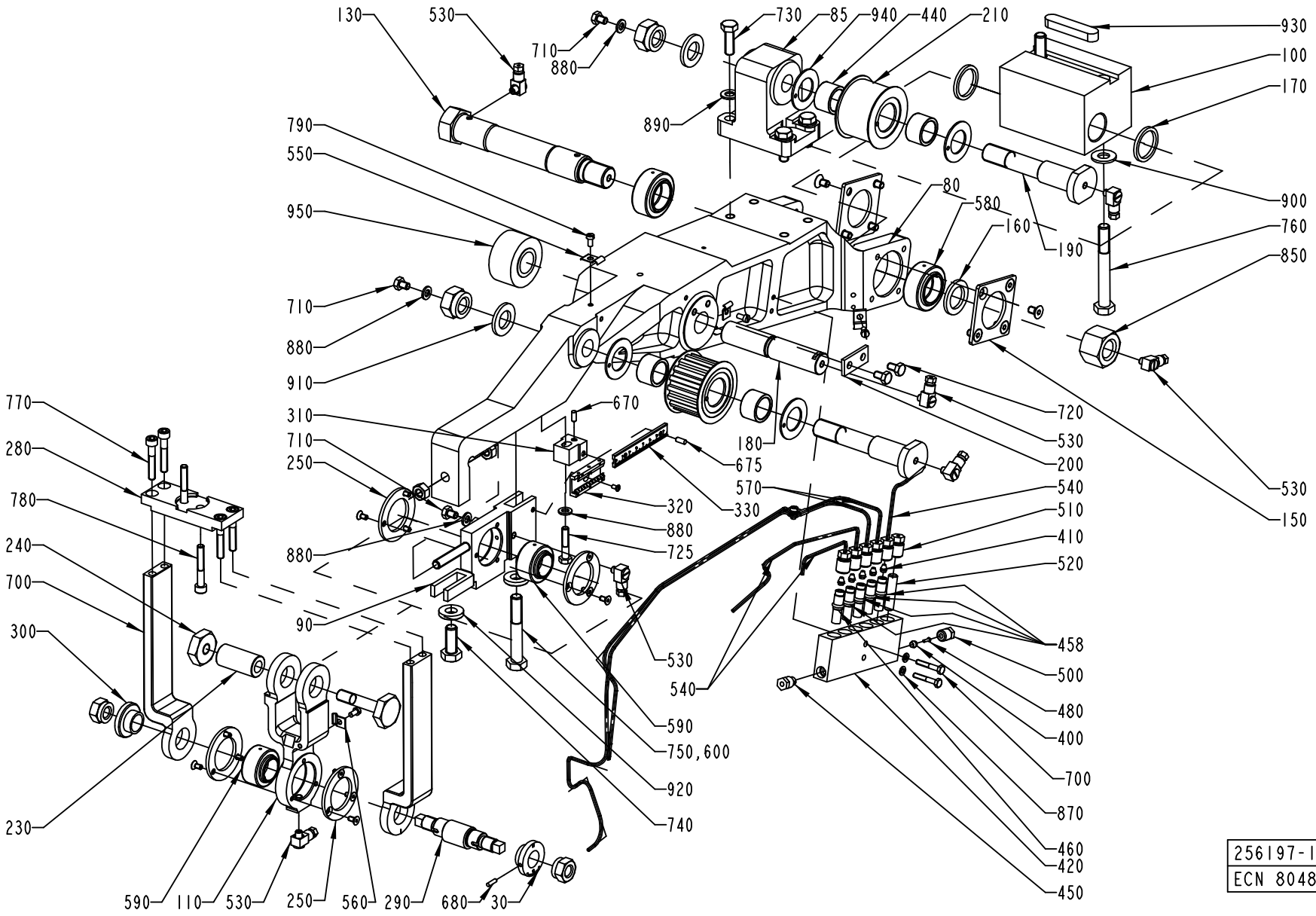
130
530
710
880
730
85
940
440
210
930
100
170
890
790
550
950
80
580
160
190
900
760
850
710
880
910
770
280
780
240
700
300
230
310
710
250
670
675
180
720
530
200
570
330
320
880
725
540
510
410
520
880
90
530
540
590
750,600
920
740
458
500
480
400
700
870
460
420
450
590
110
530
250
560
290
680
30
150
256197-19
ECN 80488

ECM: 115427 - 20020930
Group number: 256197-0500
Assembly Drawing: 256197-19_1_AA

Pos	Part No	SP	UN	Qty	Description	Page No
-						
030	272459-0000	-		1	WASHER	
080	751212-0000	-		1	ARM	
085	272442-0000	-		1	CANTILEVER	
090	978275-0000	-		1	BEARING HOLDER	
100	272455-0000	-		1	BEARING BRACKET	
110	272456-0000	-		1	LINK	
120	272457-0000	-		2	BOW CLAMP	
130	295770-0000	-		1	AXLE BOLT	
140	256421-0000	-		1	PULLEY	
150	256422-0000	-		2	WASHER	
160	256426-0001	-		1	WASHER	
170	256426-0002	-		2	WASHER	
180	256427-0000	-		1	SHAFT	
190	490916-0000	-		2	AXLE PIN	
200	256472-0000	-		1	WASHER	
210	257306-0000	-		1	ROLL	
220	257308-0000	-		1	SCREW	
230	257309-0000	-		1	SHAFT	
240	257310-0000	-		1	NUT	
250	257311-0000	-		4	CAP	
280	272116-0000	-		1	CAP	
290	272458-0000	-		1	ECCENTRIC SHAFT	
300	272461-0000	-		1	WASHER	
310	978272-0000	-		1	BRACKET	
320	1484792-0000	-		1	SCALE	
330	1484791-0000	-		1	SCALE	
400	90028-0021	A		1	CONE TUBE 4 MM	
410	90028-0020	A		5	CONE TUBE 2,5MM	
420	90032-0040	-		1	BLOCK 6 WAYS	
440	321531-0248	B		4	NEEDLE SLEEVE W/O CONE 20X26X16	
450	90087-0019	-		1	PLUG M10X1 STAINLESS	
458	90092-0052	A		4	METERING VALVE 10 MM3	
460	90092-0053	A		1	METERING VALVE 30 MM3	
480	90134-0031	A		1	SLEEVE FOR PLASTIC TUBE	
500	90134-0038	-		1	BUSHING/NUT INLET/OUTLET 4 MM	
510	90134-0039	-		6	BUSHING VALVE CONNECTION 2,5 MM	
520	90134-0052	-		1	PLUG DOSING BLOCK	
530	90134-0058	-		7	CONNECTION	
540	90266-0019	-	MM	550	PIPE	
550	90165-0002	-		3	CLIP	
560	90165-0022	-		2	PIPE CLIP, FOR TUBE D=2,5 MM, B-3570	
570	90166-0143	-	MM	1100	TUBE 2,5 MM PA,TRANSP.	
580	90240-0048	A		2	PLAIN BEAR,SELF ADJ.SPHER. 25X42X20 MM	
590	90240-0050	A		2	PLAIN BEAR,SELF ADJ. 20X35X24	
600	90157-0016	-		1	LOCKING FLUID	
670	311101-0267	-		1	PARALLELL PIN, CP, H6, 4X10 MM	
675	311103-0267	-		1	PARALLELL PIN, M6, 4X10 MM	
680	311303-0234	-		1	SLOTTED PIRPB3X12FZB	
700	312101-0297	-		2	SCREW M6S M4X25 FZB	
710	312101-0362	-		3	SCREW M6S M6X8 FZB	
720	312101-0364	-		2	SCREW M6S M6X10 FZB	
725	312105-0374	-		1	SCREW M6S ISO 4014 M6X30 A480	
730	312101-0453	-		4	SCREW M6S M8X25 FZB	
740	312101-0493	-		1	SCREW M6S M10X25 FZB	
750	312101-0504	-		1	SCREW M6S M10X65 FZB	
760	312101-0507	-		2	SCREW M6S M10X80 FZB	
770	312111-0376	-		4	SCREW HEX.SOCK.HD.MC6S-TT 6X35 88 FZB	
780	312111-0378	-		2	SCREW HEX.SOCK.HD.MC6S-TT 6X40 88 FZB	
790	312121-0287	-		5	SCREW SLOT.PAN HD. MCS 4X8 FZB	
795	312145-0220	-		1	SCREW COUNTERS.SLOT.HD. MFS 3X6 SS	
800	312151-0287	-		12	SCREW HEX.SOCK.COUNT.MF6S 4X8 FZB	
810	312151-0364	-		8	SCREW HEX.SOCK.COUNT.MF6S 6X10 FZB	
820	312601-0318	-		2	NUT M6M8FZB	
830	312811-0322	-		2	NUT HEX.LOCK HELI COIL MID GRIP M12 SS	
840	312811-0324	-		2	NUT HEX.LOCK HELI COIL MID GRIP M16 SS	
850	312811-0326	-		1	NUT HEX.LOCK HELI COIL MID GRIP M20 SS	
870	315101-0136	-		2	BRICKA, BRB, 4,3/8 H=0,8	
880	315101-0153	-		4	WASHER PLAIN, BRB, 6,4/12 H=1,5	
890	315101-0165	-		4	WASHER PLAIN, BRB, 8,4/16 H=1,5	
900	315101-0173	-		2	WASHER PLAIN, BRB, 10,5/22 H=2	
910	315101-0186	-		2	WASHER PLAIN, BRB, 17/30 H=3	
920	315111-0173	-		2	WASHER PLAIN, TBRB 10,5/22 H=4	
930	315701-0335	-		1	PARALLEL KEY W. ROUND ENDS 12X8X56 MM	
940	321129-0137	-		4	THRUST WASHER, 22/38X1,5	
950	321576-0260	A		1	BEAR.ROLLER, 2 SEALS 20X47X25	

Machine Type | Group Description | Used-In | Group Number | Page No

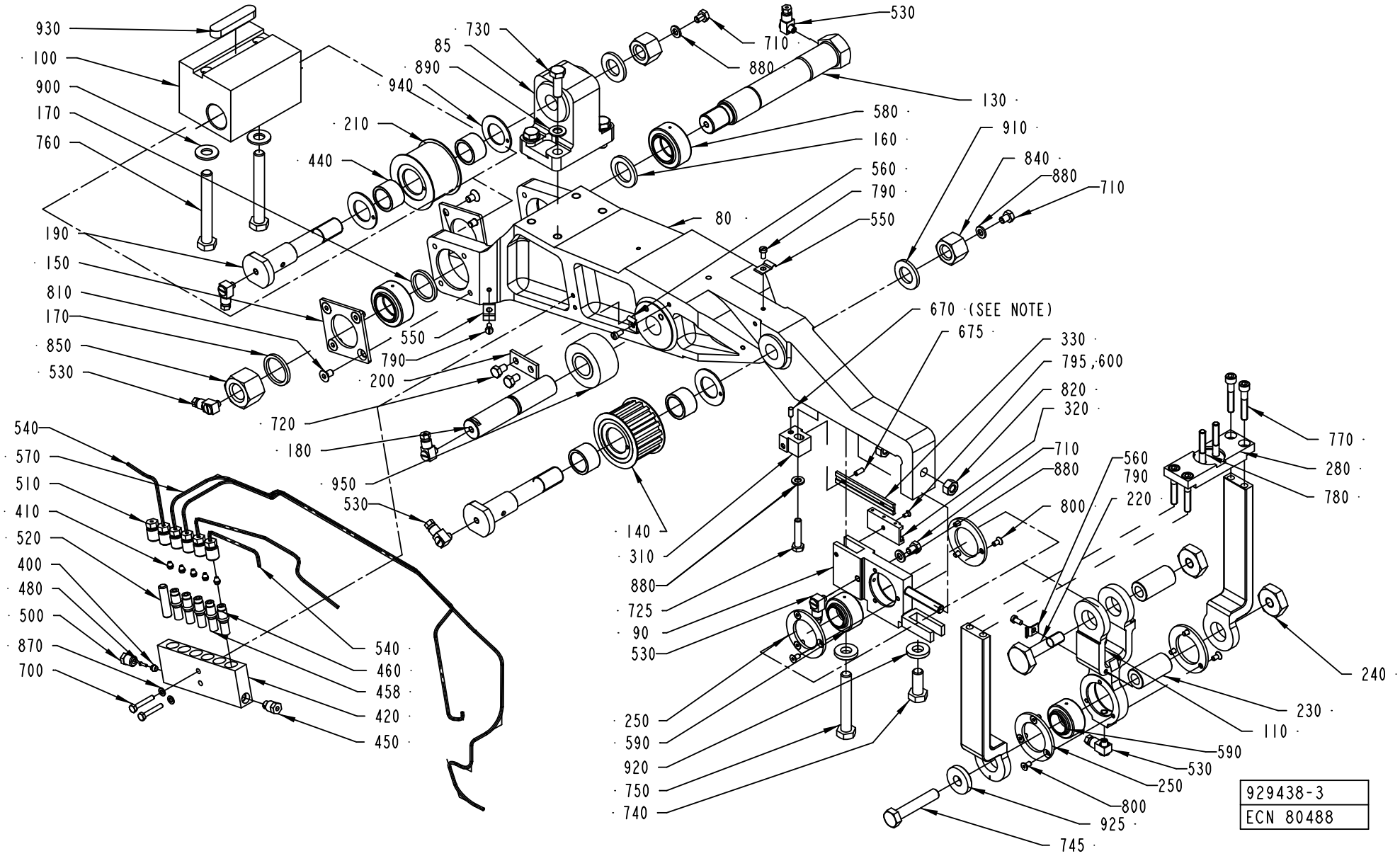
930
100
900
170
760
730
85
890
940
210
440
190
150
810
170
850
530
550
790
200
720
180
950
530
540
570
510
410
520
400
480
500
870
700
540
460
458
420
450
530
710
880
130
580
160
560
790
550
80
910
840
880
710
670 (SEE NOTE)
675
330
795,600
820
320
710
880
800
140
310
880
725
90
530
250
590
920
750
740
560
790
220
770
280
780
240
230
110
590
530
250
800
925
745
929438-3
ECN 80488

ECM: 115428 - 20020930
Group number: 929438-0100
Assembly Drawing: 929438-3_1_AA

Pos	Part No	SP	UN	Qty	Description	Page No
-						
080	751212-0000	-		1	ARM	
085	272442-0000	-		1	CANTILEVER	
090	978275-0000	-		1	BEARING HOLDER	
100	272455-0000	-		1	BEARING BRACKET	
110	272456-0000	-		1	LINK	
120	272457-0000	-		2	BOW CLAMP	
130	295770-0000	-		1	AXLE BOLT	
140	256421-0000	-		1	PULLEY	
150	256422-0000	-		2	WASHER	
160	256426-0001	-		1	WASHER	
170	256426-0002	-		2	WASHER	
180	256427-0000	-		1	SHAFT	
190	490916-0000	-		2	AXLE PIN	
200	256472-0000	-		1	WASHER	
210	257306-0000	-		1	ROLL	
220	257308-0000	-		1	SCREW	
230	257309-0000	-		2	SHAFT	
240	257310-0000	-		2	NUT	
250	257311-0000	-		4	CAP	
280	272116-0000	-		1	CAP	
310	978272-0000	-		1	BRACKET	
320	1484792-0000	-		1	SCALE	
330	1484791-0000	-		1	SCALE	
400	90028-0021	A		1	CONE TUBE 4 MM	
410	90028-0020	A		5	CONE TUBE 2,5MM	
420	90032-0040	-		1	BLOCK 6 WAYS	
440	321531-0248	B		4	NEEDLE SLEEVE W/O CONE 20X26X16	
450	90087-0019	-		1	PLUG M10X1 STAINLESS	
458	90092-0052	A		4	METERING VALVE 10 MM3	
460	90092-0053	A		1	METERING VALVE 30 MM3	
480	90134-0031	A		1	SLEEVE FOR PLASTIC TUBE	
500	90134-0038	-		1	BUSHING/NUT INLET/OUTLET 4 MM	
510	90134-0039	-		6	BUSHING VALVE CONNECTION 2,5 MM	
520	90134-0052	-		1	PLUG DOSING BLOCK	
530	90134-0058	-		7	CONNECTION	
540	90266-0019	-	MM	550	PIPE	
550	90165-0002	-		3	CLIP	
560	90165-0022	-		2	PIPE CLIP, FOR TUBE D=2,5 MM, B-3570	
570	90166-0143	-	MM	1100	TUBE 2,5 MM PA,TRANSP.	
580	90240-0048	A		2	PLAIN BEAR,SELF ADJ.SPHER. 25X42X20 MM	
590	90240-0050	A		2	PLAIN BEAR,SELF ADJ. 20X35X24	
600	90157-0016	-		1	LOCKING FLUID	
670	311101-0267	-		1	PARALLELL PIN, CP, H6, 4X10 MM	
675	311103-0267	-		1	PARALLELL PIN, M6, 4X10 MM	
700	312101-0297	-		2	SCREW M6S M4X25 FZB	
710	312101-0362	-		3	SCREW M6S M6X8 FZB	
720	312101-0364	-		2	SCREW M6S M6X10 FZB	
725	312105-0374	-		1	SCREW M6S ISO 4014 M6X30 A480	
730	312101-0453	-		4	SCREW M6S M8X25 FZB	
740	312101-0493	-		1	SCREW M6S M10X25 FZB	
745	312101-0502	-		1	SCREW M6S M10X55 FZB	
750	312101-0504	-		1	SCREW M6S M10X65 FZB	
760	312101-0507	-		2	SCREW M6S M10X80 FZB	
770	312111-0376	-		4	SCREW HEX.SOCK.HD.MC6S-TT 6X35 88 FZB	
780	312111-0378	-		2	SCREW HEX.SOCK.HD.MC6S-TT 6X40 88 FZB	
790	312121-0287	-		5	SCREW SLOT.PAN HD. MCS 4X8 FZB	
795	312145-0220	-		1	SCREW COUNTERS.SLOT.HD. MFS 3X6 SS	
800	312151-0287	-		12	SCREW HEX.SOCK.COUNT.MF6S 4X8 FZB	
810	312151-0364	-		8	SCREW HEX.SOCK.COUNT.MF6S 6X10 FZB	
820	312601-0318	-		2	NUT M6M8FZB	
840	312811-0324	-		2	NUT HEX.LOCK HELI COIL MID GRIP M16 SS	
850	312811-0326	-		1	NUT HEX.LOCK HELI COIL MID GRIP M20 SS	
870	315101-0136	-		2	BRICKA, BRB, 4,3/8 H=0,8	
880	315101-0153	-		4	WASHER PLAIN, BRB, 6,4/12 H=1,5	
890	315101-0165	-		4	WASHER PLAIN, BRB, 8,4/16 H=1,5	
900	315101-0173	-		2	WASHER PLAIN, BRB, 10,5/22 H=2	
910	315101-0186	-		2	WASHER PLAIN, BRB, 17/30 H=3	
920	315111-0173	-		2	WASHER PLAIN, TBRB 10,5/22 H=4	
925	315121-0173	-		1	WASHER PLAIN, TBRSB 10,5/28 H=6	
930	315701-0335	-		1	PARALLEL KEY W. ROUND ENDS 12X8X56 MM	
940	321129-0137	-		4	THRUST WASHER, 22/38X1,5	
950	321576-0260	A		1	BEAR.ROLLER, 2 SEALS 20X47X25	

Machine Type | Group Description | Used-In | Group Number | Page No

SLEWING BRACKET RIGHT

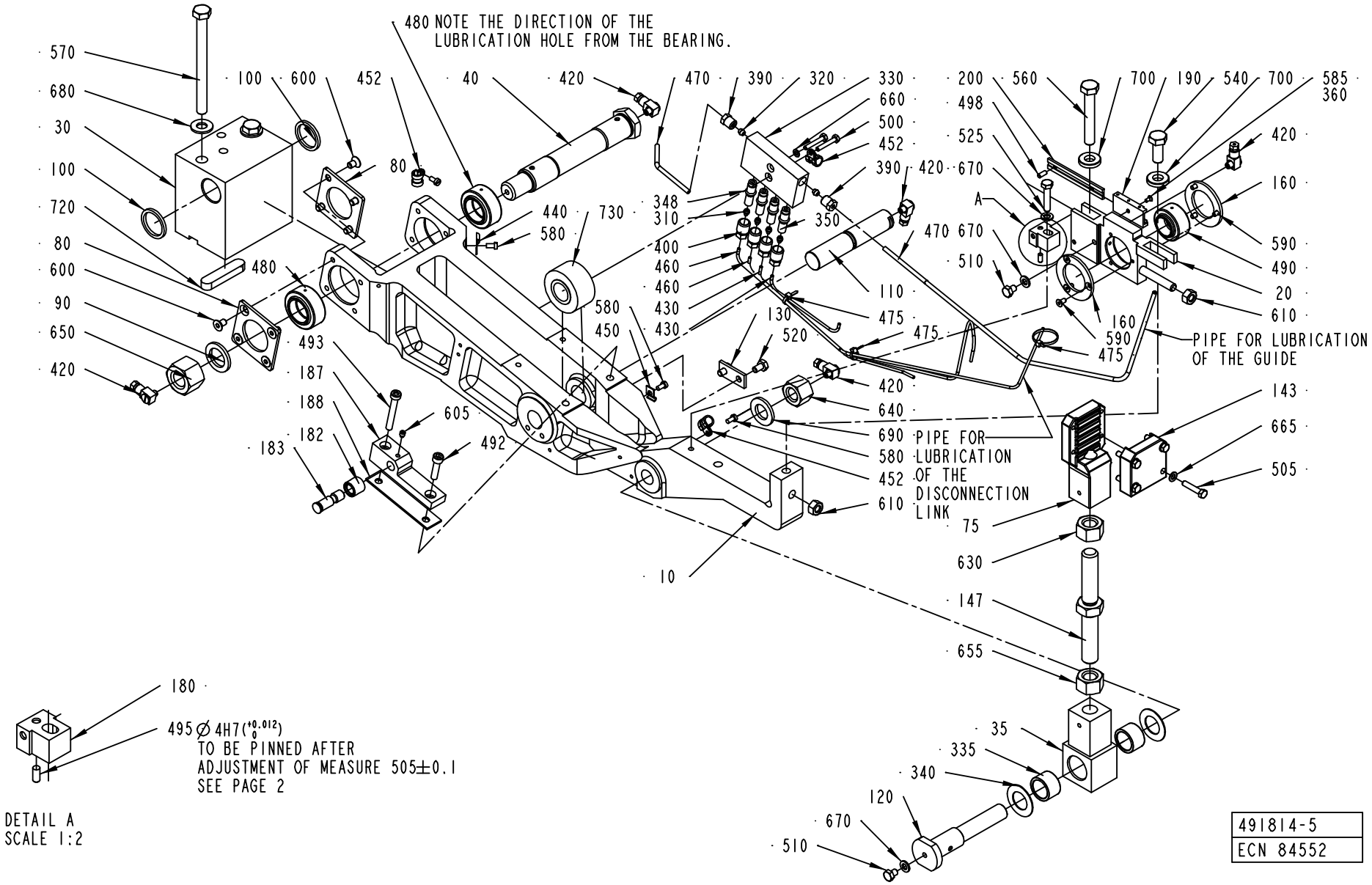

491814-5
ECN 84552

ECM: 115561 - 20020930
Group number: 491814-0300
Assembly Drawing: 491814-5_1_AA

Pos	Part No	SP	UN	Qty	Description	Page No
-						
0010	751212-0000	-		1	ARM	
0020	978275-0000	-		1	BEARING HOLDER	
0030	256418-0000	-		1	BEARING BRACKET	
0035	256515-0000	-		1	END PIECE	
0040	272462-0000	-		1	AXLE BOLT	
0075	272607-0000	-		1	BELT HOLDER	
0080	256422-0000	-		2	WASHER	
0090	256426-0001	-		1	WASHER	
0100	256426-0002	-		2	WASHER	
0110	256427-0000	-		1	SHAFT	
0120	490916-0000	-		1	AXLE PIN	
0130	256472-0000	-		1	WASHER	
0143	256516-0000	-		1	CAP	
0147	256517-0000	-		1	SCREW	
0160	257311-0000	-		2	CAP	
0180	978272-0000	-		1	BRACKET	
0182	491165-0000	A		1	ROLL	
0183	491166-0000	-		1	SHAFT	
0187	751078-0000	-		1	BRACKET RIGHT	
0188	491319-0000	-		2	LACE	
0190	1484792-0000	-		1	SCALE	
0200	1484791-0000	-		1	SCALE	
0310	90028-0020	A		4	CONE TUBE 2,5MM	
0320	90028-0021	A		2	CONE TUBE 4 MM	
0330	90032-0039	-		1	BLOCK 4 WAYS	
0335	321531-0248	B		2	NEEDLE SLEEVE W/O CONE 20X26X16	
0340	90083-0016	-		2	PLATE FOR AXK 2035	
0348	90092-0052	A		3	METERING VALVE 10 MM3	
0350	90092-0053	A		1	METERING VALVE 30 MM3	
0360	90157-0016	-	L	1	LOCKING FLUID	
0390	90134-0038	-		2	BUSHING/NUT INLET/OUTLET 4 MM	
0400	90134-0039	-		4	BUSHING VALVE CONNECTION 2,5 MM	
0420	90134-0058	A		5	CONNECTION	
0430	90266-0019	-	MM	350	PIPE	
0440	90165-0002	-		1	CLIP	
0450	90165-0022	-		1	PIPE CLIP, FOR TUBE D=2,5 MM, B-3570	
0452	90165-0065	-		3	PIPE CLAMP, RSGU 1.8/9, D=8 MM	
0460	90166-0143	-	MM	1100	TUBE 2,5 MM PA,TRANSP.	
0470	90166-0109	-	MM	700	TUBE 4 MM PA,TRANSP.	
0475	352113-0101	-		3	CLIP STRIP, 92X2,5 MM	
0480	90240-0048	A		2	PLAIN BEAR,SELF ADJ.SPHER. 25X42X20 MM	
0490	90240-0050	A		1	PLAIN BEAR,SELF ADJ. 20X35X24	
0492	90287-0143	-		1	SCREW MC6S M6X25 129	
0493	90287-0144	-		1	SCREW MC6S M6X35 129	
0495	311101-0267	-		1	PARALLELL PIN, CP, H6, 4X10 MM	
0498	311103-0267	-		1	PARALLELL PIN, M6, 4X10 MM	
0500	312101-0297	-		2	SCREW M6S M4X25 FZB	
0505	312101-0333	-		4	SCREW M6S M5X25 FZB	
0510	312101-0362	-		2	SCREW M6S M6X8 FZB	
0520	312101-0364	-		2	SCREW M6S M6X10 FZB	
0525	312105-0374	-		1	SCREW M6S ISO 4014 M6X30 A480	
0540	312101-0493	-		1	SCREW M6S M10X25 FZB	
0560	312101-0504	-		1	SCREW M6S M10X65 FZB	
0570	312101-0515	-		2	SCREW M6S M10X120 FZB	
0580	312121-0287	-		4	SCREW SLOT.PAN HD. MCS 4X8 FZB	
0585	312145-0220	-		1	SCREW COUNTERS.SLOT.HD. MFS 3X6 SS	
0590	312151-0287	-		6	SCREW HEX.SOCK.COUNT.MF6S 4X8 FZB	
0600	312151-0364	-		8	SCREW HEX.SOCK.COUNT.MF6S 6X10 FZB	
0605	312311-0321	-		1	SCREW ISO4028 M5X6 FZB	
0610	312601-0318	-		2	NUT M6M8FZB	
0630	312601-0324	-		1	NUT M6M 16-8 FZB	
0640	312811-0324	-		1	NUT HEX.LOCK HELI COIL MID GRIP M16 SS	
0650	312811-0326	-		1	NUT HEX.LOCK HELI COIL MID GRIP M20 SS	
0655	312901-0324	-		1	NUT M6M16VFZB	
0660	315101-0136	-		1	BRICKA, BRB, 4,3/8 H=0,8	
0665	315101-0146	-		4	WASHER PLAIN, BRB, 5,3/10 H=1	
0670	315101-0153	-		3	WASHER PLAIN, BRB, 6,4/12 H=1,5	
0680	315101-0173	-		2	WASHER PLAIN, BRB, 10,5/22 H=2	
0690	315101-0186	-		1	WASHER PLAIN, BRB, 17/30 H=3	
0700	315111-0173	-		2	WASHER PLAIN, TBRB 10,5/22 H=4	
0720	315701-0335	-		1	PARALLEL KEY W. ROUND ENDS 12X8X56 MM	
0730	321576-0260	A		1	BEAR.ROLLER, 2 SEALS 20X47X25	

Machine Type | Group Description | Used-In | Group Number | Page No

SLEWING BRACKET LEFT

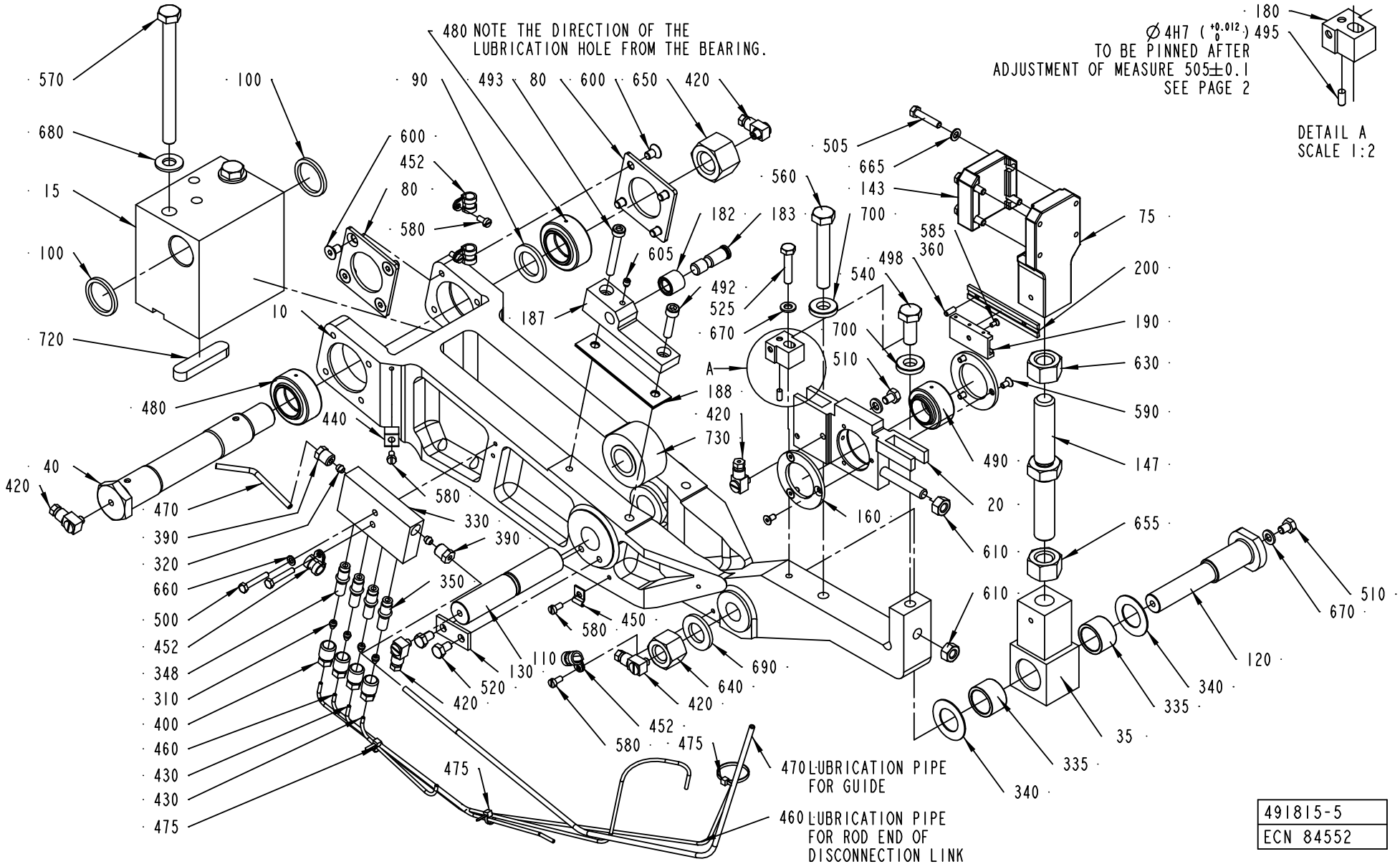

491815-5
ECN 84552

ECM: 115562 - 20020930
Group number: 491815-0300
Assembly Drawing: 491815-5_1_AA

Pos	Part No	SP	UN	Qty	Description	Page No
-						
0010	751212-0000	-		1	ARM	
0015	256418-0000	-		1	BEARING BRACKET	
0020	978275-0000	-		1	BEARING HOLDER	
0035	256515-0000	-		1	END PIECE	
0040	272462-0000	-		1	AXLE BOLT	
0075	272607-0000	-		1	BELT HOLDER	
0080	256422-0000	-		2	WASHER	
0090	256426-0001	-		1	WASHER	
0100	256426-0002	-		2	WASHER	
0110	256427-0000	-		1	SHAFT	
0120	490916-0000	-		1	AXLE PIN	
0130	256472-0000	-		1	WASHER	
0143	256516-0000	-		1	CAP	
0147	256517-0000	-		1	SCREW	
0160	257311-0000	-		2	CAP	
0180	978272-0000	-		1	BRACKET	
0182	491165-0000	A		1	ROLL	
0183	491166-0000	A		1	SHAFT	
0187	751079-0000	-		1	BRACKET LEFT	
0188	491319-0000	-		2	LACE	
0190	1484792-0000	-		1	SCALE	
0200	1484791-0000	-		1	SCALE	
0310	90028-0020	A		4	CONE TUBE 2,5MM	
0320	90028-0021	A		2	CONE TUBE 4 MM	
0330	90032-0039	-		1	BLOCK 4 WAYS	
0335	321531-0248	B		2	NEEDLE SLEEVE W/O CONE 20X26X16	
0340	90083-0016	-		2	PLATE FOR AXK 2035	
0348	90092-0052	A		3	METERING VALVE 10 MM3	
0350	90092-0053	A		1	METERING VALVE 30 MM3	
0360	90157-0016	-		1	LOCKING FLUID	
0390	90134-0038	-		2	BUSHING/NUT INLET/OUTLET 4 MM	
0400	90134-0039	-		4	BUSHING VALVE CONNECTION 2,5 MM	
0420	90134-0058	A		5	CONNECTION	
0430	90266-0019	-	MM	350	PIPE	
0440	90165-0002	-		1	CLIP	
0450	90165-0022	-		1	PIPE CLIP, FOR TUBE D=2,5 MM, B-3570	
0452	90165-0065	-		4	PIPE CLAMP, RSGU 1.8/9, D=8 MM	
0460	90166-0143	-	MM	1100	TUBE 2,5 MM PA,TRANSP.	
0470	90166-0109	-	MM	700	TUBE 4 MM PA,TRANSP.	
0475	352113-0101	-		3	CLIP STRIP, 92X2,5 MM	
0480	90240-0048	A		2	PLAIN BEAR,SELF ADJ.SPHER. 25X42X20 MM	
0490	90240-0050	A		1	PLAIN BEAR,SELF ADJ. 20X35X24	
0492	90287-0143	-		1	SCREW MC6S M6X25 129	
0493	90287-0144	-		1	SCREW MC6S M6X35 129	
0495	311101-0267	-		1	PARALLELL PIN, CP, H6, 4X10 MM	
0498	311103-0267	-		1	PARALLELL PIN, M6, 4X10 MM	
0500	312101-0297	-		2	SCREW M6S M4X25 FZB	
0505	312101-0333	-		4	SCREW M6S M5X25 FZB	
0510	312101-0362	-		2	SCREW M6S M6X8 FZB	
0520	312101-0364	-		2	SCREW M6S M6X10 FZB	
0525	312105-0374	-		1	SCREW M6S ISO 4014 M6X30 A480	
0540	312101-0493	-		1	SCREW M6S M10X25 FZB	
0560	312101-0504	-		1	SCREW M6S M10X65 FZB	
0570	312101-0515	-		2	SCREW M6S M10X120 FZB	
0580	312121-0287	-		5	SCREW SLOT.PAN HD. MCS 4X8 FZB	
0585	312145-0220	-		1	SCREW COUNTERS.SLOT.HD. MFS 3X6 SS	
0590	312151-0287	-		6	SCREW HEX.SOCK.COUNT.MF6S 4X8 FZB	
0600	312151-0364	-		8	SCREW HEX.SOCK.COUNT.MF6S 6X10 FZB	
0605	312311-0321	-		1	SCREW ISO4028 M5X6 FZB	
0610	312601-0318	-		2	NUT M6M8FZB	
0630	312601-0324	-		1	NUT M6M 16-8 FZB	
0640	312811-0324	-		1	NUT HEX.LOCK HELI COIL MID GRIP M16 SS	
0650	312811-0326	-		1	NUT HEX.LOCK HELI COIL MID GRIP M20 SS	
0655	312901-0324	-		1	NUT M6M16VFZB	
0660	315101-0136	-		1	BRICKA, BRB, 4,3/8 H=0,8	
0665	315101-0146	-		4	WASHER PLAIN, BRB, 5,3/10 H=1	
0670	315101-0153	-		3	WASHER PLAIN, BRB, 6,4/12 H=1,5	
0680	315101-0173	-		2	WASHER PLAIN, BRB, 10,5/22 H=2	
0690	315101-0186	-		1	WASHER PLAIN, BRB, 17/30 H=3	
0700	315111-0173	-		2	WASHER PLAIN, TBRB 10,5/22 H=4	
0720	315701-0335	-		1	PARALLEL KEY W. ROUND ENDS 12X8X56 MM	
0730	321576-0260	A		1	BEAR.ROLLER, 2 SEALS 20X47X25	

Machine Type | Group Description | Used-In | Group Number | Page No

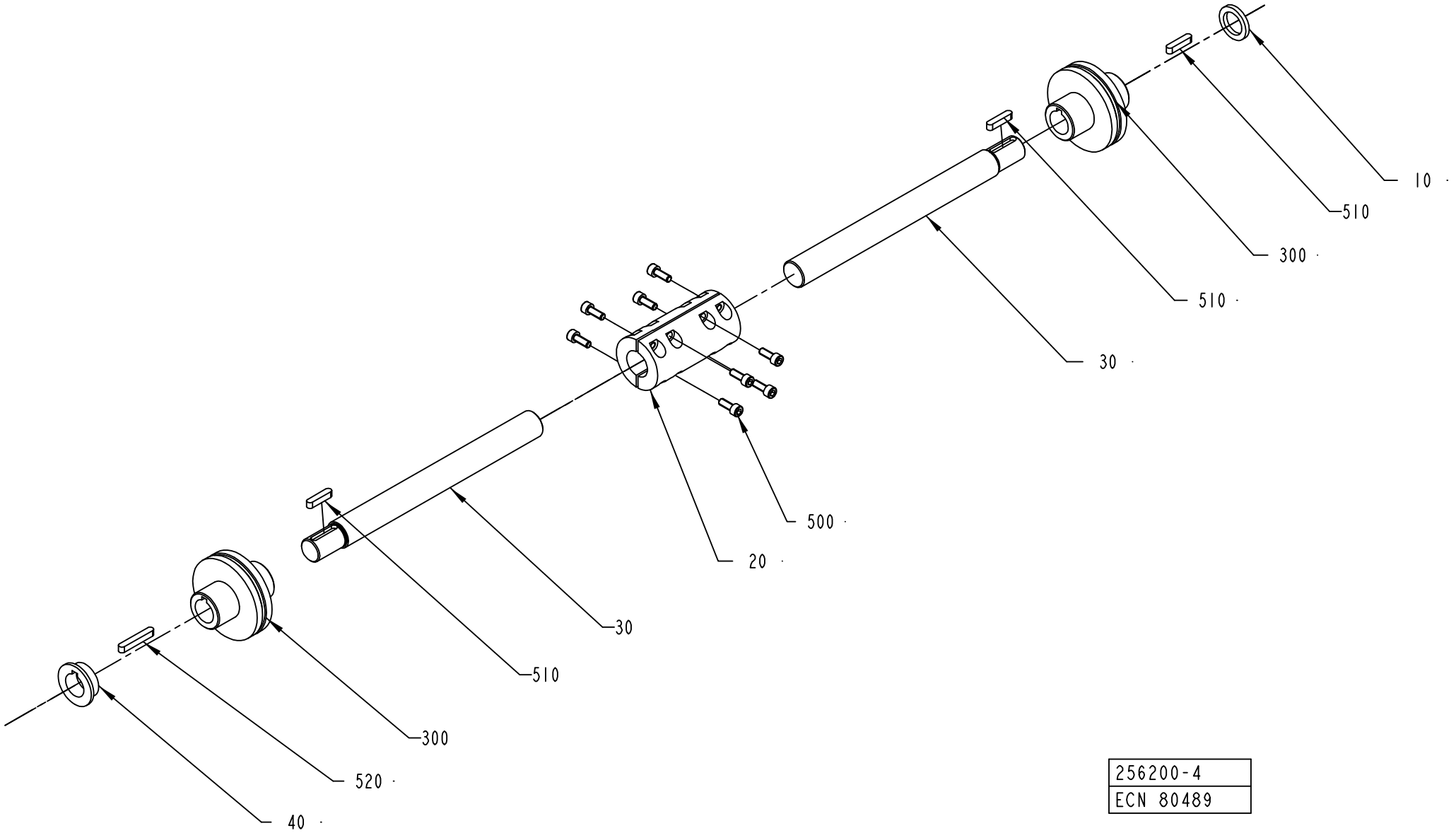

256200-4
ECN 80489

ECM: 119095 - 20021213
Group number: 256200-0300
Assembly Drawing: 256200-4_1_AB

Pos	Part No	SP	UN	Qty	Description	Page No
TBA						
030	441339-0000	-		2	SHAFT	
Common Parts						
010	272857-0000	-		1	RING	
020	295983-0000	-		1	CONNECTION	
040	441720-0000	-		1	SPACER	
300	90355-0048	A		2	TORQUE RIGID COUPLING, 22X22 MM	
500	312111-0368	-		8	SCREW HEX.SOCK.HD.MC6S-TT 6X16 88 FZB	
510	315701-0235	-		3	PARALLEL KEY W. ROUND ENDS 6X6X28 MM	
520	315701-0239	-		1	PARALLEL KEY W. ROUND ENDS 6X6X40 MM	

Pos	Part No	SP	UN	Qty	Description	Page No

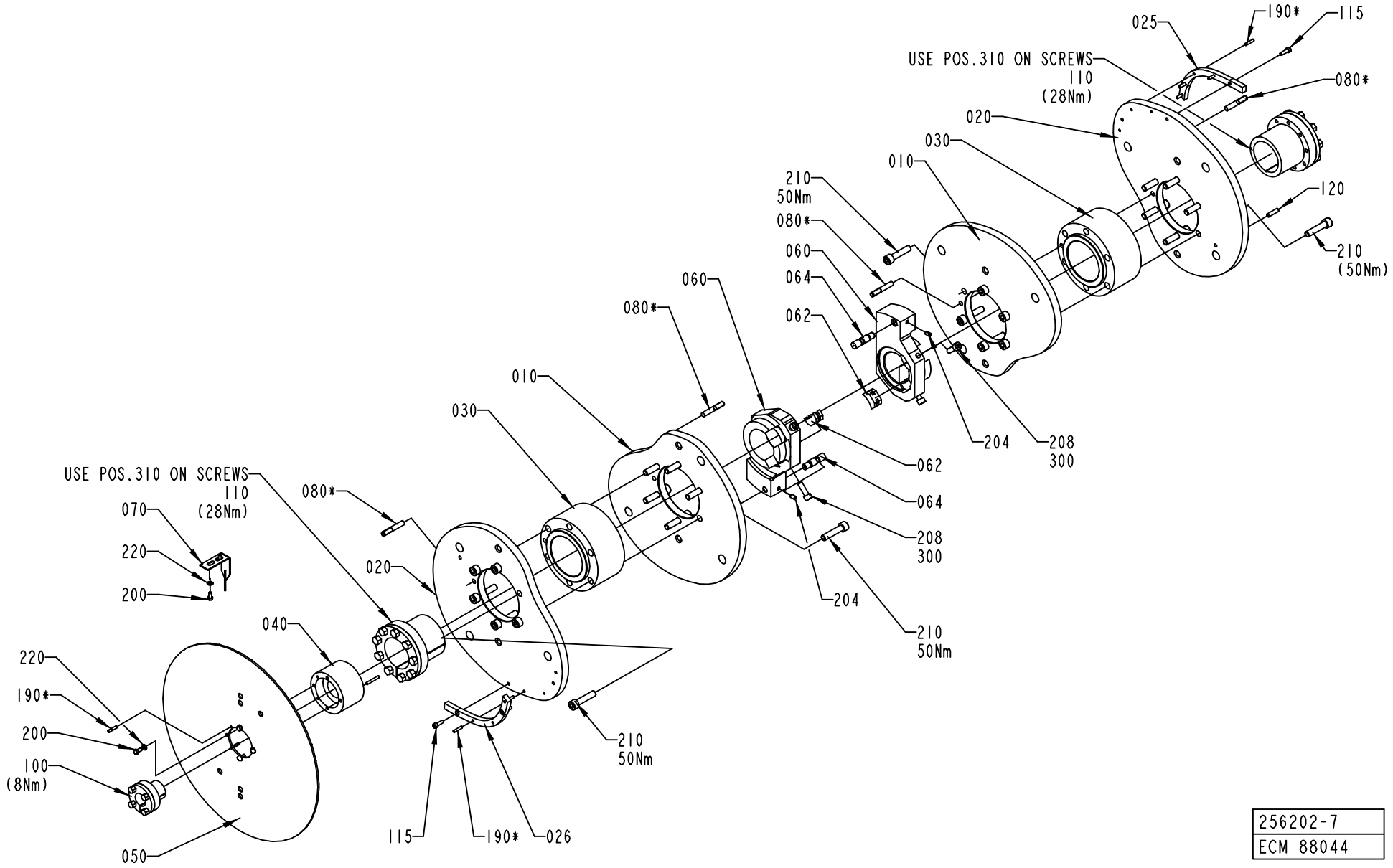
025
190*
115
USE POS.310 ON SCREWS
110
(28Nm)
080*
020
030
010
210
50Nm
080*
060
064
062
120
210
(50Nm)
060
080*
010
030
062
064
208
300
204
208
300
204
210
50Nm
USE POS.310 ON SCREWS
110
(28Nm)
070
220
200
080*
020
040
220
190*
200
100
(8Nm)
050
115
190*
026
210
50Nm
256202-7
ECM 88044

ECM: 115430 - 20020930
Group number: 256202-0700
Assembly Drawing: 256202-7_1_AA

This list covers pages from 268 to 271

Pos	Part No	SP	UN	Qty	Description	Page No
TBA 0100B						
010	979778-0000	A		2	YOKE CAM 100	
020	979779-0000	A		2	ARM CAM 100	
025	979780-0000	A		1	CAM SEGMENT R 100	
026	979781-0000	A		1	CAM SEGMENT L 100	
210	312115-0500	-		24	SCREW ISO4762 M10X45 A4	
230	315101-0173	-		24	WASHER PLAIN, BRB, 10,5/22 H=2	
TBA 0125S						
010	978793-0000	A		2	YOKECURVE 125ML	
020	978794-0000	A		2	ARMCURVE 125ML	
025	978795-0000	A		1	CAMSEGMENT R	
026	978796-0000	A		1	CAMSEGMENT L	
192	311103-0276	-		1	PARALLELL PIN, M6, 4X30 MM	
210	312115-0500	-		24	SCREW ISO4762 M10X45 A4	
230	315101-0173	-		24	WASHER PLAIN, BRB, 10,5/22 H=2	
300	90157-0016	-		1	LOCKING FLUID	
TBA 0160S						
010	577217-0000	A		2	YOKECAM 160ML	
020	577218-0000	A		2	ARMCAM 160ML	
025	577219-0000	A		1	CAMSEGMENT R	
026	577220-0000	A		1	CAMSEGMENT L	
210	312115-0500	-		24	SCREW ISO4762 M10X45 A4	
230	315101-0173	-		24	WASHER PLAIN, BRB, 10,5/22 H=2	
TBA 0180B						
010	469369-0000	A		2	YOKECAM 180ML	
020	469370-0000	A		2	ARMCAM 180ML	
025	491918-0000	A		1	CAMSEGMENT R	
026	491919-0000	A		1	CAMSEGMENT L	
210	312115-0500	-		24	SCREW ISO4762 M10X45 A4	
230	315101-0173	-		24	WASHER PLAIN, BRB, 10,5/22 H=2	
TBA 0200B						
010	978768-0000	A		2	YOKECURVE200ML	
020	978769-0000	A		2	ARMCURVE 200ML	
025	978770-0000	A		1	CAMSEGMENTL	
026	978771-0000	A		1	CAMSEGMENTL	
192	311103-0276	-		1	PARALLELL PIN, M6, 4X30 MM	
210	312115-0500	-		24	SCREW ISO4762 M10X45 A4	
230	315101-0173	-		24	WASHER PLAIN, BRB, 10,5/22 H=2	
300	90157-0016	-		1	LOCKING FLUID	
TBA 0200M						
010	1282310-0000	A		2	YOKE CAM 200ML MID	
020	1282309-0000	A		2	ARM CAM 200 ML MID	
025	1282312-0000	A		1	CAM SEGMENT R	
026	1282311-0000	A		1	CAM SEGMENT L	
210	312115-0500	-		22	SCREW ISO4762 M10X45 A4	
230	315101-0173	-		22	WASHER PLAIN, BRB, 10,5/22 H=2	
TBA 0200S						
010	978772-0000	A		2	YOKECURVE 200SL	
020	978773-0000	A		2	ARMCURVE 200SL	
025	978774-0000	A		1	CAMSEGMENT R	
026	978775-0000	A		1	CAMSEGMENT L	
192	311103-0276	-		1	PARALLELL PIN, M6, 4X30 MM	
210	312115-0500	-		22	SCREW ISO4762 M10X45 A4	
230	315101-0173	-		22	WASHER PLAIN, BRB, 10,5/22 H=2	
300	90157-0016	-		1	LOCKING FLUID	
TBA 0250B						
010	978776-0000	A		2	YOKECURVE 250ML	
020	978777-0000	A		2	ARMCURVE 250ML	
025	978778-0000	A		1	CAMSEGMENT R	
026	978779-0000	A		1	CAMSEGMENT L	
192	311103-0276	-		1	PARALLELL PIN, M6, 4X30 MM	
210	312115-0500	-		24	SCREW ISO4762 M10X45 A4	
230	315101-0173	-		24	WASHER PLAIN, BRB, 10,5/22 H=2	
300	90157-0016	-		1	LOCKING FLUID	
TBA 0250S						
010	580356-0000	A		2	YOKECAM 250ML SLIM	
020	580357-0000	A		2	ARMCAM 250ML SLIM	
025	580359-0000	A		1	CAM SEGMENT R	
026	580358-0000	A		1	CAM SEGMENT L	
210	312115-0500	-		22	SCREW ISO4762 M10X45 A4	
230	315101-0173	-		22	WASHER PLAIN, BRB, 10,5/22 H=2	
TBA 0300S, TBA 0284B						
010	581533-0000	A		2	YOKE CAM 284ML	
020	581534-0000	A		2	ARM CAM 284ML	
025	581535-0000	A		1	CAMSEGMENT R 284ML	

Machine Type Group Description Used-In Group Number Page No

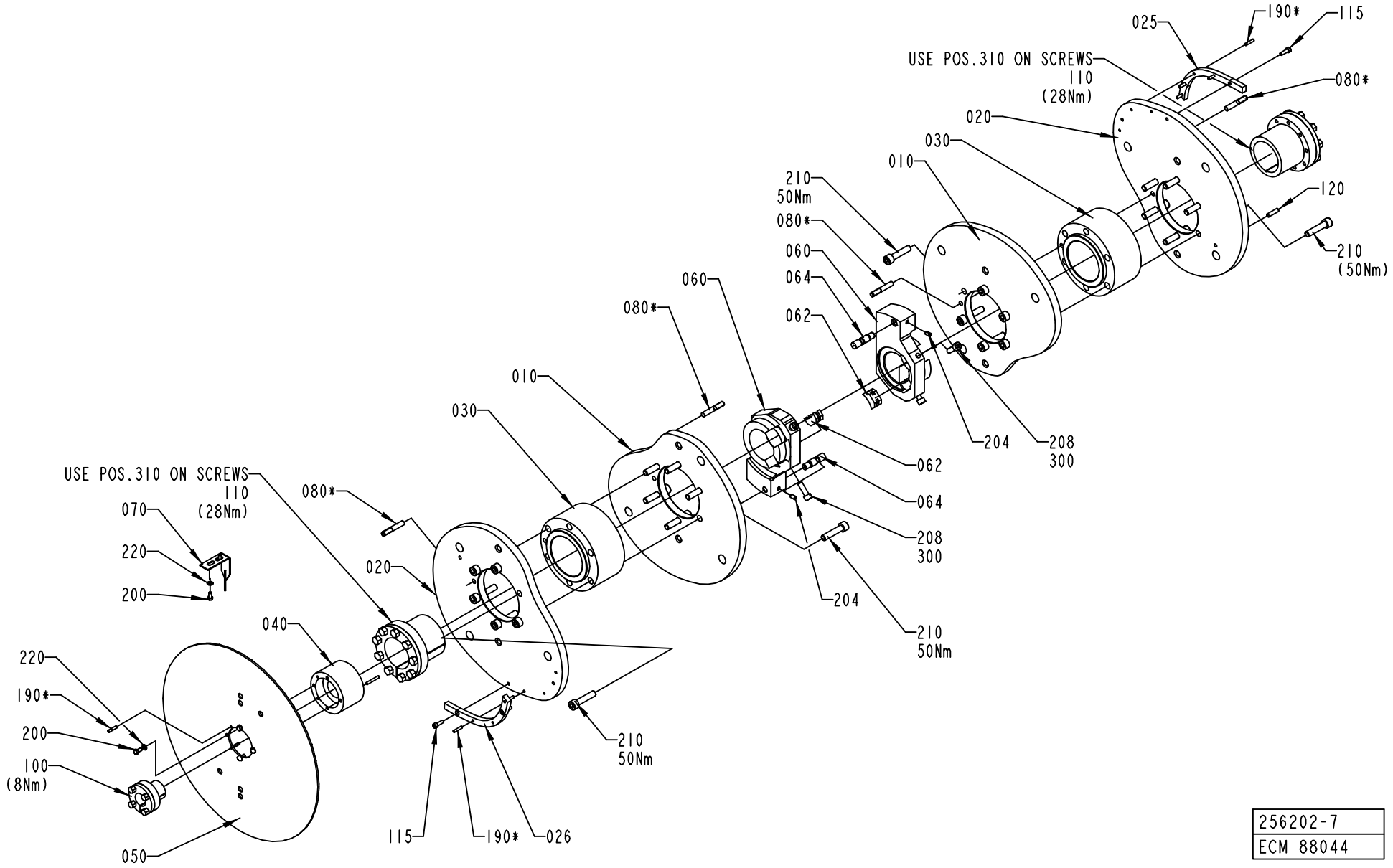
025
190*
115
USE POS.310 ON SCREWS
110
(28Nm)
080*
020
030
010
210
50Nm
080*
060
064
062
120
210
(50Nm)
060
080*
010
030
204
208
300
062
064
208
300
204
210
50Nm
USE POS.310 ON SCREWS
110
(28Nm)
070
220
200
080*
020
040
220
190*
200
100
(8Nm)
050
210
50Nm
115
190*
026
256202-7
ECM 88044

Pos	Part No	SP	UN	Qty	Description	Page No
TBA 0300S, TBA 0284B (Cont'd)						
026	581536-0000	A		1	CAMSEGMENT L 284ML	
192	311103-0276	-		1	PARALLELL PIN, M6, 4X30 MM	
210	312115-0500	-		22	SCREW ISO4762 M10X45 A4	
230	315101-0173	-		22	WASHER PLAIN, BRB, 10,5/22 H=2	
300	90157-0016	-		1	LOCKING FLUID	
TBA 0330S						
010	582197-0000	A		2	YOKE CAM 330S	
020	582195-0000	A		2	ARM CAM 330S	
025	582199-0000	A		1	CAM SEGMENT RIGHT	
026	582200-0000	A		1	CAM SEGMENT LEFT	
210	312115-0500	-		24	SCREW ISO4762 M10X45 A4	
230	315101-0173	-		24	WASHER PLAIN, BRB, 10,5/22 H=2	
Common Parts						
030	456744-0000	-		2	HUB	
040	1523828-0000	-		1	SPACER	
050	2504952-0000	-		1	PROTRACTOR	
060	978609-0000	-		2	ALIGNMENT TEMPLATE	
062	752774-0000	-		4	PLUNGER	
064	978262-0000	-		2	GUIDE PIN	
070	271007-0000	-		1	POINTER	
080	295140-0000	-		4	PIN	
090	978340-0000	-		1	SPACER	
100	90208-0080	A		1	CLAMPING ELEMENT WITH SLEEVE, 25X34 MM	
110	90208-0091	A		2	CLAMPING ELEMENT WITH SLEEVE, 60X77 MM	
115	90287-0145	-		4	SCREW MC6S M5X16 129	
120	929444-0000	-		1	PIN	
190	311103-0272	-		6	PARALLELL PIN, M6, 4X20 MM	
200	312101-0325	-		6	SCREW M6S M5X10 FZB	
204	312318-0364	-		2	SCREW ISO4029 M6X10 A4	
208	312115-0453	-		4	SCREW ISO4762 M8X25 A4	
220	315101-0146	-		6	WASHER PLAIN, BRB, 5,3/10 H=1	

Pos	Part No	SP	UN	Qty	Description	Page No

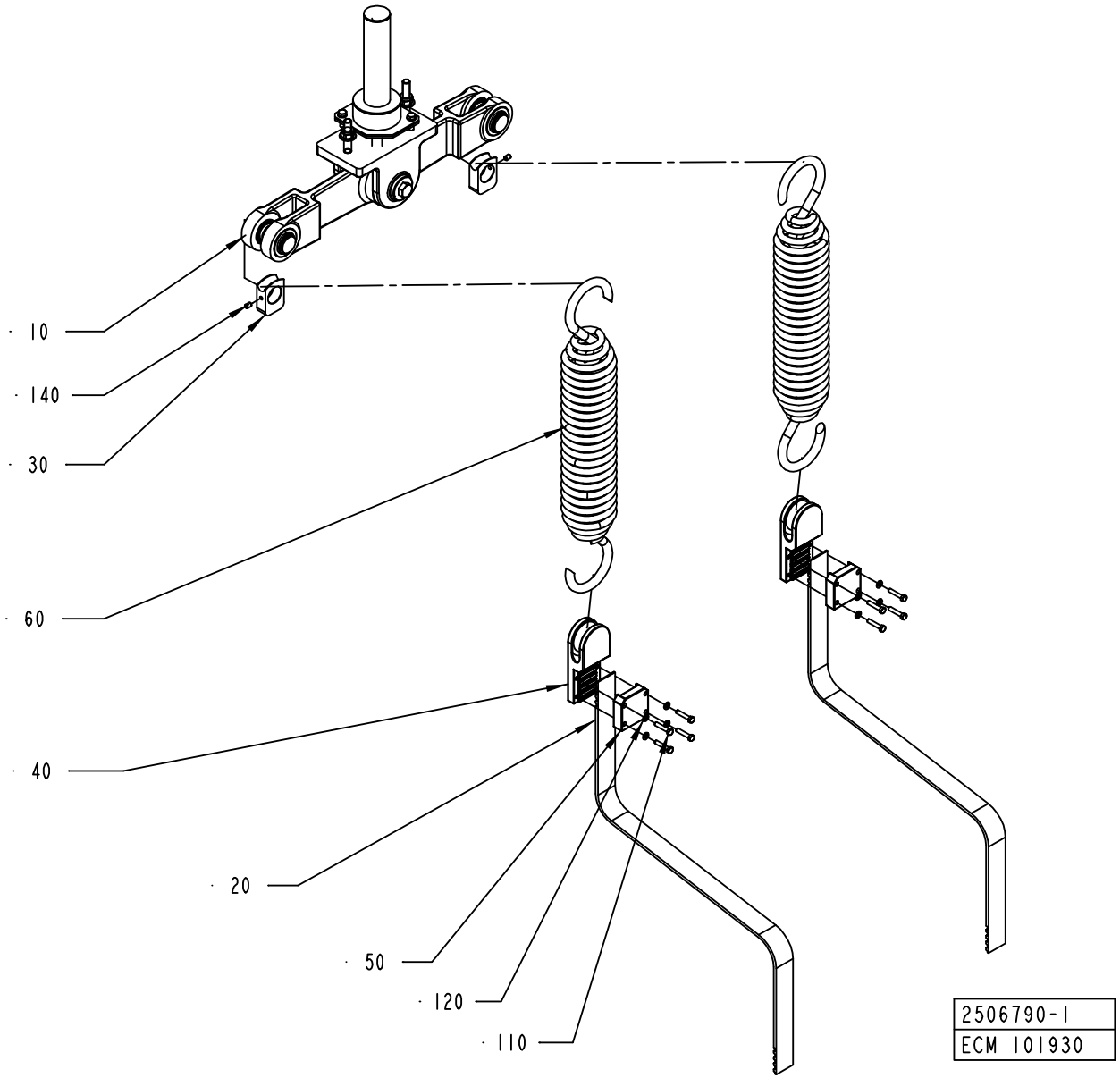
· 10
· 140
· 30
· 60
· 40
· 20
· 50
· 120
· 110
2506790-1
ECM 101930

ECM: 115433 - 20020930
Group number: 2506790-0100
Assembly Drawing: 2506790-1_1_AC

Pos	Part No	SP	UN	Qty	Description	Page No
TBA 0180B, TBA 0160S, TBA 0200B, TBA 0125S, TBA 0100B						
020	1539248-0001	A		2	TIMING BELT	
TBA 0250S, TBA 0200M						
020	1539248-0003	A		2	TIMING BELT	
TBA 0300S, TBA 0284B, TBA 0200S, TBA 0250B						
020	1539248-0002	A		2	TIMING BELT	
TBA 0330S						
020	1539248-0005	A		2	TIMING BELT	
Common Parts						
010	2507014-0100	-		1	ROCKER ARM	**275**
030	2519460-0000	-		2	SPRING BRACKET	
040	272608-0000	-		2	BELT HOLDER	
050	256516-0000	-		2	CAP	
060	441353-0000	A		2	TENSION SPRING	
110	312101-0333	-		8	SCREW M6S M5X25 FZB	
120	315101-0146	-		8	WASHER PLAIN, BRB, 5,3/10 H=1	
140	312318-0362	-		2	SCREW ISO4029 M6X8 A4	

Pos	Part No	SP	UN	Qty	Description	Page No

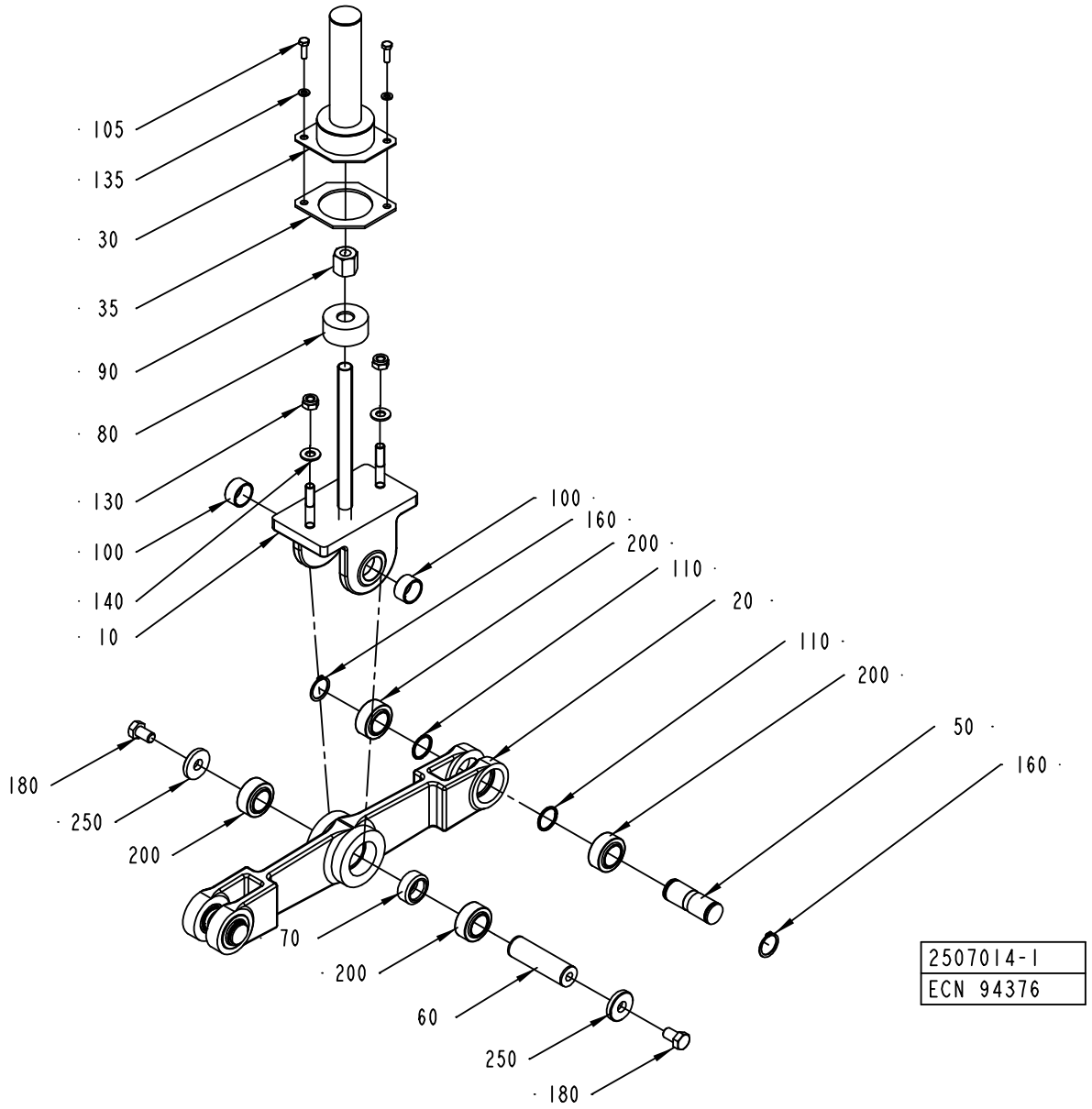
105
135
30
35
90
80
130
100
140
10
100
160
200
110
20
110
200
50
160
180
250
200
70
200
60
250
180
2507014-1
ECN 94376

ECM: 115560 - 20020930
Group number: 2507014-0100
Assembly Drawing: 2507014-1_1_AA

Pos	Part No	SP	UN	Qty	Description	Page No
-						
010	1484457-0000	-		1	BRACKET	
020	1484454-0000	-		1	ROCKER ARM	
030	579623-0000	-		1	PROTECTIVE CASING	
035	579624-0000	-		1	GASKET	
050	1484456-0000	-		2	SHAFT	
060	1484452-0000	-		1	SHAFT	
070	1484453-0000	-		1	SPACER	
080	978207-0000	-		1	SPACER PIPE	
090	978209-0000	-		1	NUT	
100	1484455-0000	-		2	SPACER	
105	312105-0370	-		2	SCREW M6S ISO 4017 M6X20 A480	
110	1484461-0000	-		4	SPACER	
130	312812-0320	-		2	HEXAGON NUT, NY-LOCK M10 A480	
135	315105-0153	-		2	WASHER ISO 7089-6-200 HV-A4	
140	315105-0173	-		2	WASHER ISO 7089-10-200 HV-A4	
160	315751-0119	-		4	RETAIN. RING, 25	
180	312105-0532	-		2	SCREW M6S ISO 4017 M12X20 A480	
200	90457-0188	B		6	BEARING 25X42X20 MM	
250	315121-0178	-		2	WASHER PLAIN, TBRSB 13/36 H=6	

Pos	Part No	SP	UN	Qty	Description	Page No

Machine Type | Group Description | Used-In | Group Number | Page No

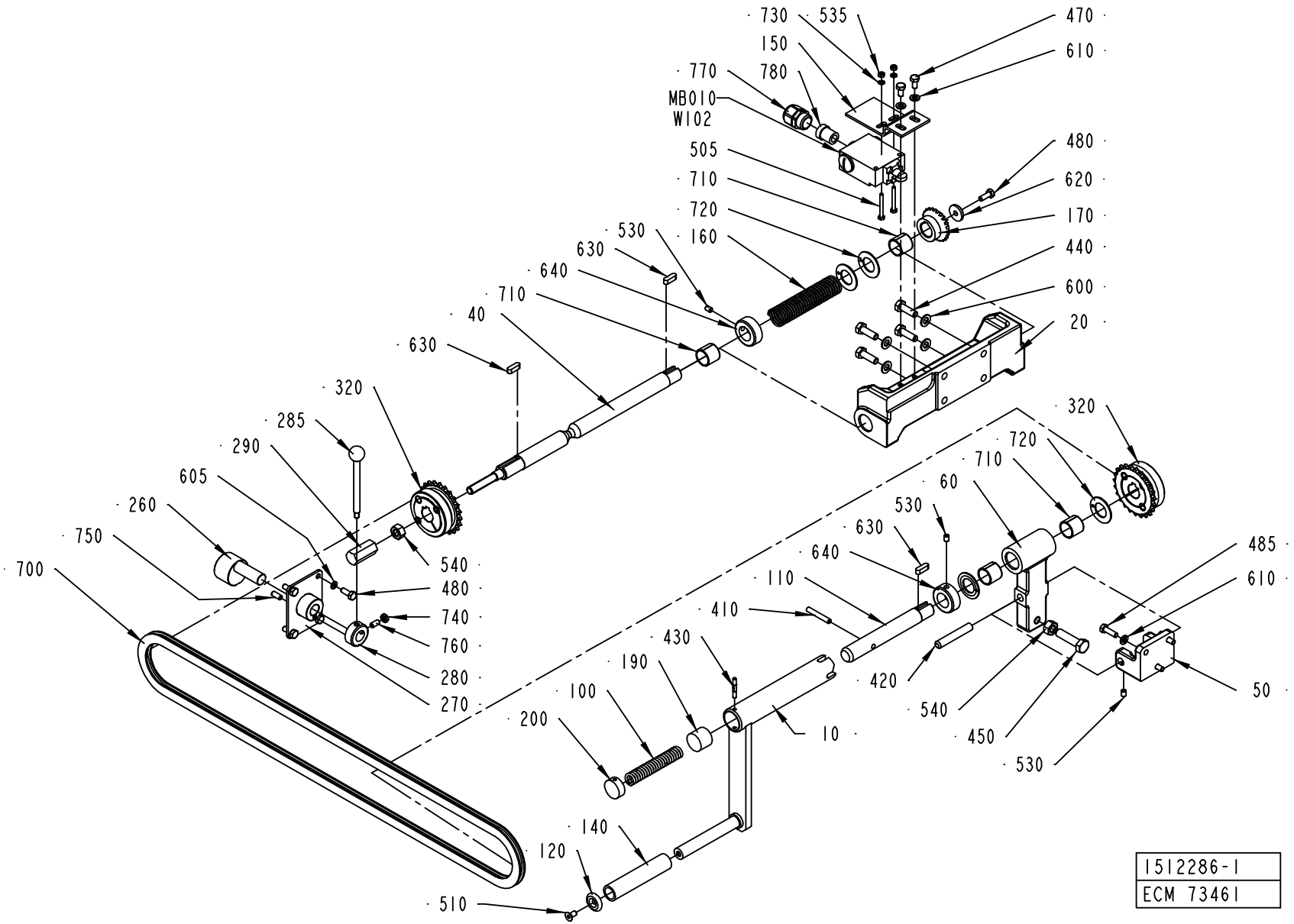
730
535
470
150
610
770
780
MB010
W102
505
480
710
620
720
170
530
160
630
440
640
600
710
40
20
630
320
320
285
720
290
710
605
60
530
260
630
750
640
485
700
110
610
540
480
410
740
760
430
420
190
280
540
270
100
50
200
10
450
530
140
120
510
1512286-1
ECM 73461

ECM: 115429 - 20020930
Group number: 1512286-0100
Assembly Drawing: 1512286-1_1_AA

Pos	Part No	SP	UN	Qty	Description	Page No
-						
010	257326-0000	-		1	CRANK	
020	272664-0000	-		1	CANTILEVER	
040	1517984-0000	-		1	SHAFT	
050	272736-0000	-		1	CANTILEVER	
060	272737-0000	-		1	BRACKET	
100	12228-0000	-		1	COMPRESSION SPRING	
110	256812-0000	-		1	SHAFT	
120	256814-0000	-		1	WASHER	
140	256816-0000	-		1	PIPE	
150	1517983-0000	-		1	BRACKET	
160	256828-0000	-		1	SPRING	
170	257179-0000	B		1	GEAR WHEEL	
190	257327-0000	-		1	SLIDER	
200	257328-0000	-		1	END PIECE	
260	1512355-0000	-		1	ECCENTRIC SHAFT	
270	1512354-0000	-		1	BRACKET	
280	1517985-0000	-		1	SETTING RING	
285	90458-1590	-		1	KNOB WITH SHAFT, M6	
290	1517986-0000	-		1	SCREW BUSHING	
320	90344-0022	-		2	SPROCKET	
410	311103-0361	-		1	PARALLELL PIN, M6, 6X40 MM	
420	311103-0470	-		1	PARALLELL PIN, M6, 10X60 MM	
430	311307-0275	-		1	SLOTTED PIRPD4X28FZB	
440	312105-0453	-		4	SCREW M6S ISO 4017 M8X25 A480	
450	312104-0499	-		1	SCREW M6S M10X40H FZB	
470	312105-0366	-		2	SCREW M6S M6X12 A280	
480	312105-0368	-		5	SCREW M6S M6X16 A280	
485	312105-0370	-		3	SCREW M6S ISO 4017 M6X20 A480	
505	312105-0301	-		2	SCREW M6S ISO 4017 M4X35 A480	
510	312155-0366	-		1	SCREW EN 10642 MF6S M6X12 A480	
530	312318-0362	-		3	SCREW ISO4029 M6X8 A4	
535	312605-0312	-		2	HEXAGON NUT, M6M M4 A280	
540	312605-0320	-		2	HEXAGON NUT, M6M M10 A280	
600	315101-0165	-		4	WASHER PLAIN, BRB, 8,4/16 H=1,5	
605	315105-0146	-		4	WASHER ISO 7089-5-200 HV-A4	
610	315105-0153	-		5	WASHER ISO 7089-6-200 HV-A4	
620	315125-0153	-		1	WASHER TBRSB 6,4X22X4 A4	
630	315705-0232	-		3	PARALLEL KEY W. ROUND ENDS 6X6X20 MM	
640	315742-0116	-		2	COLLAR, 20/36, H=13	
700	318201-0150	-		1	ROLLER CHAIN, SINGLE 3/8 -150	
710	321141-0260	-		4	BEARING BUSHING W/O FL, 20X23X20 MM	
720	321130-0260	-		4	THRUST WASHER, 20X36X1,5 MM	
730	315105-0136	-		2	WASHER ISO 7089-4-200 HV-A4	
740	312625-0316	-		1	HEXAGON THIN NUT, EN 24035 ML6M M6 A4	
750	90287-0163	-		1	SCREW SPRINGLOAD. SLOTTED HEAD M6X14	
760	312318-0366	-		1	SCREW ISO4029 M6X12 A4	
770	353240-0003	-		1	NORMAL WITHOUT INSERT, PG 13,5	
780	353249-0065	-		1	INSERT, SINGEL HOLE, E152/09	
MB010	90044-0151	A		1	LIMIT SW. GLEB24C	
W102	351150-0405	-	MM	1500	CABLE OLFLEX 5X0,75 MM2 LIGHT/GREY	

Machine Type	Group Description	Used-In	Group Number	Page No

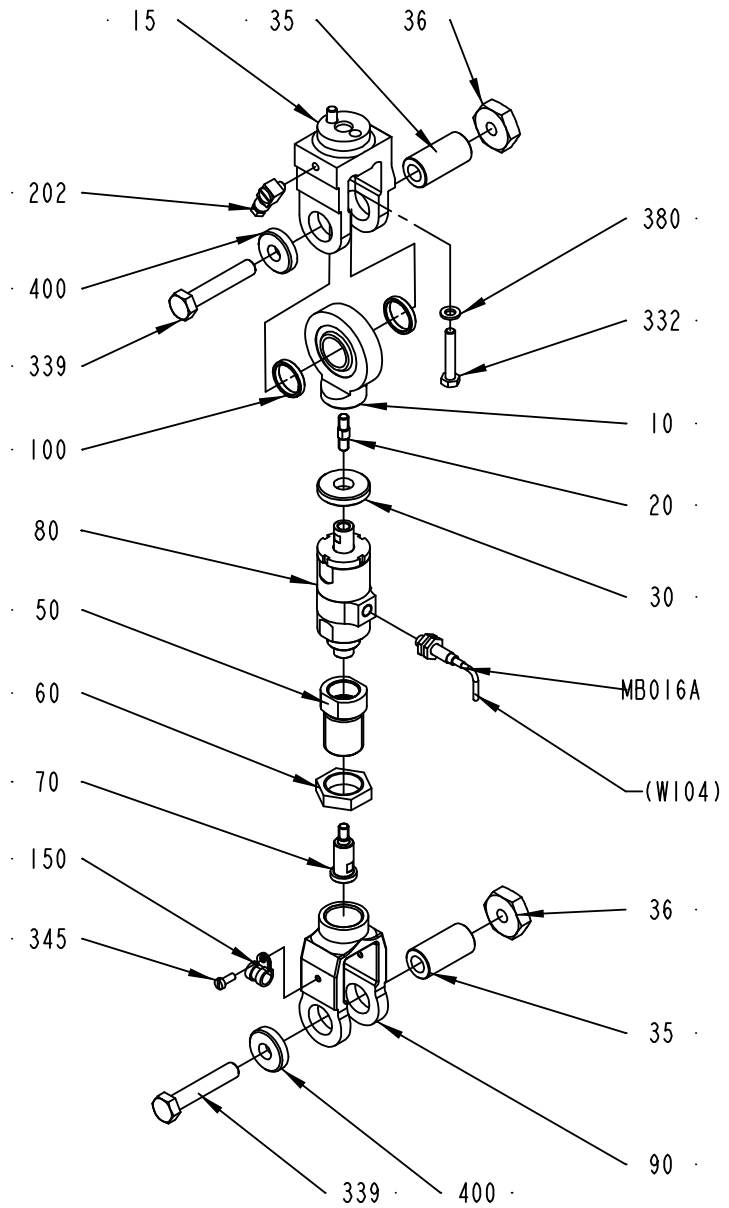

1490120-1
ECN 98301

ECM: 125569 - 20030127
Group number: 1490120-0100
Assembly Drawing: 1490120-1_1_AA

Pos	Part No	SP	UN	Qty	Description	Page No
-						
010	1490113-0000	B		1	LINK HEAD	
015	272472-0000	-		1	END PIECE	
020	1490114-0000	-		1	PIN	
030	1498194-0000	-		1	SPACER	
035	257309-0000	-		2	SHAFT	
036	257310-0000	-		2	NUT	
050	1490116-0000	-		1	SPACER	
060	1490117-0000	-		1	NUT	
070	1490119-0000	-		1	SHAFT	
080	1548313-0000	A		1	FORCE LIMITING DEVICE	
090	1490118-0000	-		1	LINK	
100	1490133-0000	-		2	SPACER	
150	90165-0065	-		1	PIPE CLAMP, RSGU 1.8/9, D=8 MM	
202	90134-0068	-		1	CONNECTION	
332	312101-0376	-		2	SCREW M6S M6X35 FZB	
339	312101-0502	-		2	SCREW M6S M10X55 FZB	
345	312101-0289	-		1	SCREW M6S M4X10 FZB	
380	315101-0153	-		2	WASHER PLAIN, BRB, 6,4/12 H=1,5	
400	315121-0173	-		2	WASHER PLAIN, TBRSB 10,5/28 H=6	
MB016A	90458-0138	A		1	PROX.SW. E2EG-X1R5B1-5M	

Pos	Part No	SP	UN	Qty	Description	Page No

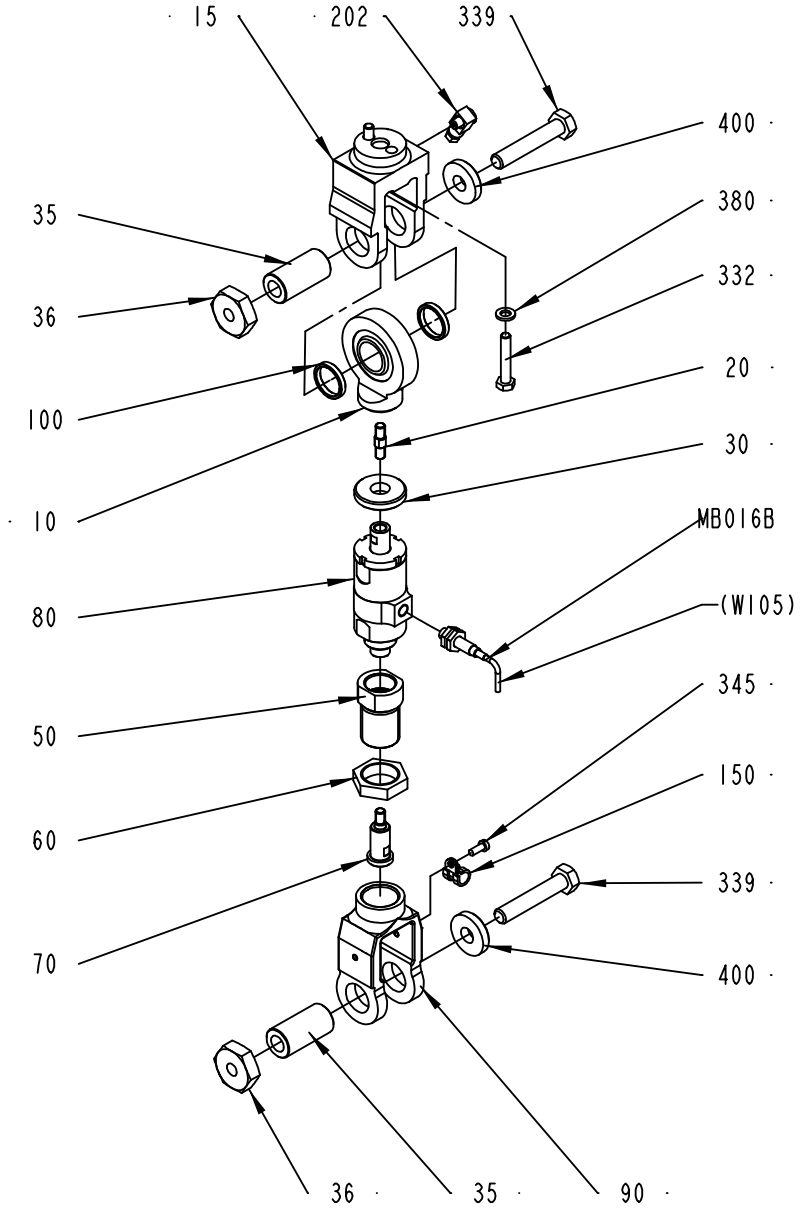

1539766-1
ECN 98301

ECM: 125570 - 20030127
Group number: 1539766-0100
Assembly Drawing: 1539766-1_1_AA

Pos	Part No	SP	UN	Qty	Description	Page No
-						
010	1490113-0000	B		1	LINK HEAD	
015	272472-0000	-		1	END PIECE	
020	1490114-0000	-		1	PIN	
030	1498194-0000	-		1	SPACER	
035	257309-0000	-		2	SHAFT	
036	257310-0000	-		2	NUT	
050	1490116-0000	-		1	SPACER	
060	1490117-0000	-		1	NUT	
070	1490119-0000	-		1	SHAFT	
080	1548313-0000	A		1	FORCE LIMITING DEVICE	
090	1490118-0000	-		1	LINK	
100	1490133-0000	-		2	SPACER	
150	90165-0065	-		1	PIPE CLAMP, RSGU 1.8/9, D=8 MM	
202	90134-0068	-		1	CONNECTION	
332	312101-0376	-		2	SCREW M6S M6X35 FZB	
339	312101-0502	-		2	SCREW M6S M10X55 FZB	
345	312101-0289	-		1	SCREW M6S M4X10 FZB	
380	315101-0153	-		2	WASHER PLAIN, BRB, 6,4/12 H=1,5	
400	315121-0173	-		2	WASHER PLAIN, TBRSB 10,5/28 H=6	
MB016B	90458-0138	A		1	PROX.SW. E2EG-X1R5B1-5M	

Pos	Part No	SP	UN	Qty	Description	Page No

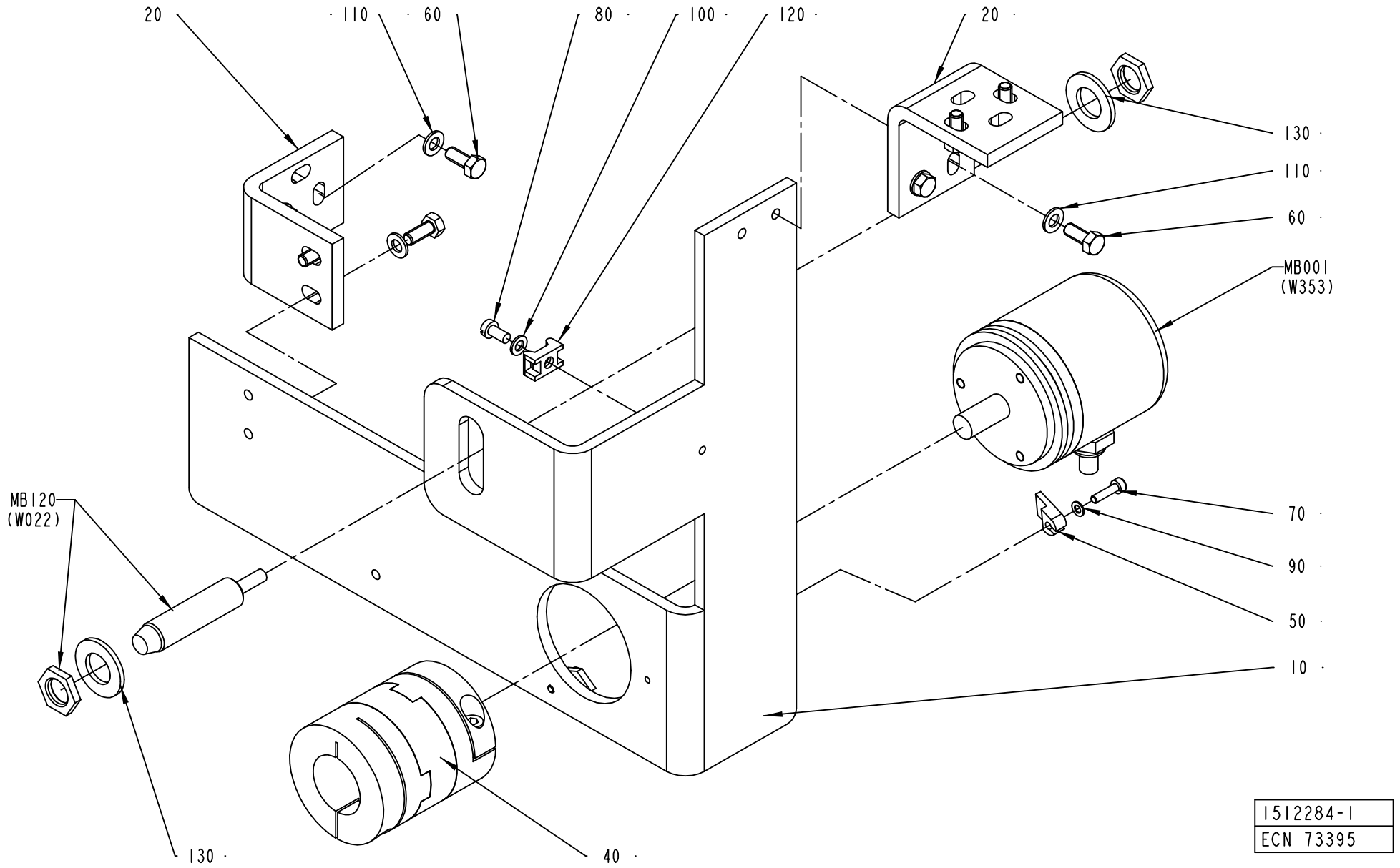
20
110
60
80
100
120
20
130
110
60
MB001
(W353)
MB120
(W022)
70
90
50
10
130
40
1512284-1
ECN 73395

ECM: 115426 - 20020930
Group number: 1512284-0100
Assembly Drawing: 1512284-1_1_AA

Pos	Part No	SP	UN	Qty	Description	Page No
-						
010	1523151-0000	-		1	BRACKET	
020	1523152-0000	-		2	ANGLE ENCODER	
040	90457-0150	A		1	FLEXIBLE COUPLING, 10X25 MM	
050	90457-0162	-		1	CLAMPING ELEMENT, 00203005	
060	312105-0327	-		8	SCREW M6S ISO 4017 M5X12 A480	
070	312115-0226	-		3	SCREW ISO4762 M3X12 A4	
080	312125-0287	-		2	SCREW PAN HEAD MCS M4X8 SS	
090	315105-0124	-		3	WASHER ISO 7089-3-200 HV-A4	
100	315105-0136	-		2	WASHER ISO 7089-4-200 HV-A4	
110	315105-0146	-		8	WASHER ISO 7089-5-200 HV-A4	
120	352113-0205	-		2	ANCHOR PLATES FOR STRIPS, TYPE TM2S8-C10	
130	315105-0178	-		2	WASHER ISO 7089-12-200 HV-A4	
MB001	90061-0027	A		1	ANGLE ENCODER 670900035	
MB120	90044-0124	A		1	PROX.SW. 922AB2XM-A9P-050-LZ-876	

Pos	Part No	SP	UN	Qty	Description	Page No

Tetra Pak

SPC
Spare Parts Catalogue

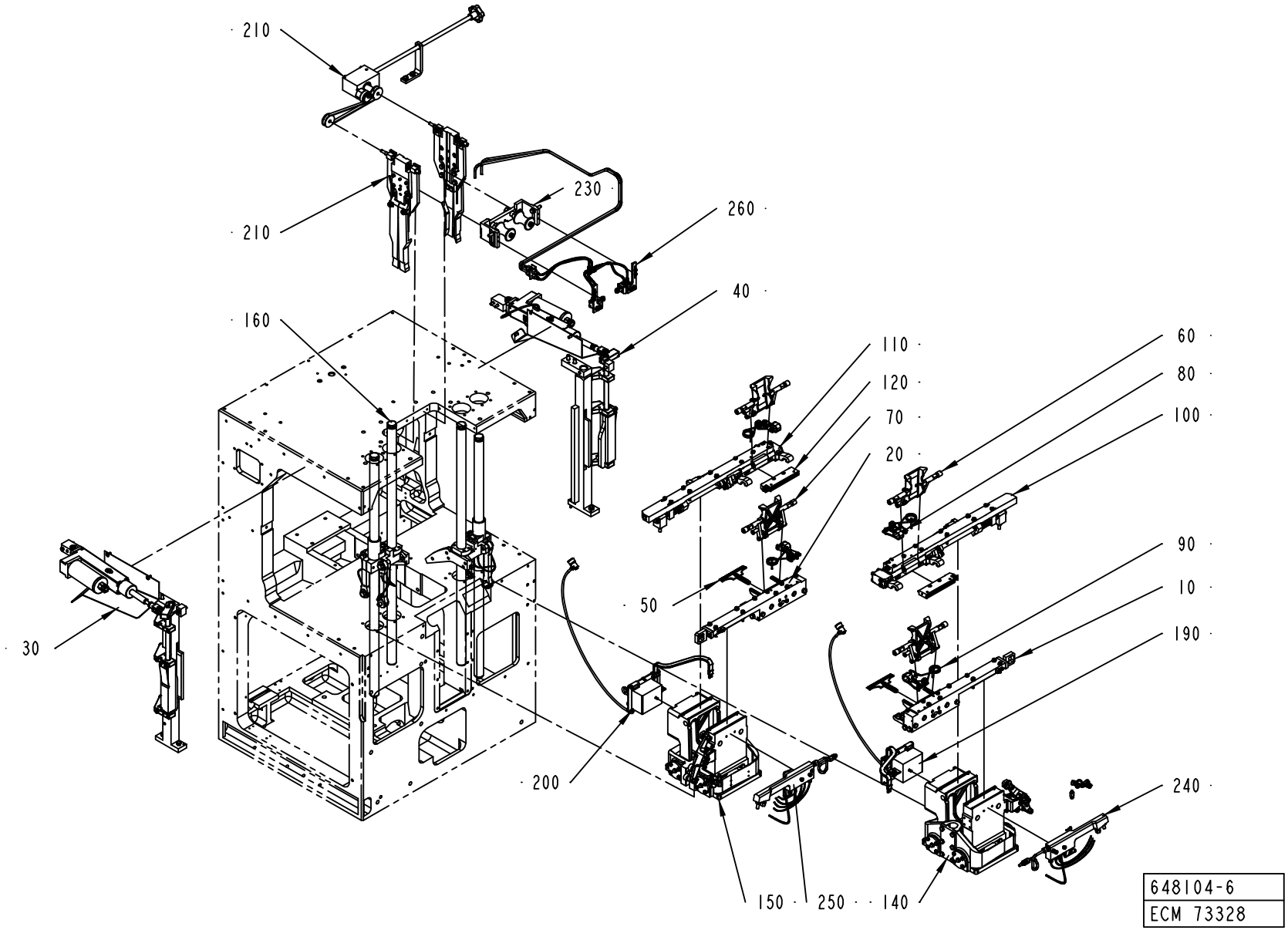
210
210
230
260
40
160
110
120
70
20
60
80
100
90
10
190
50
30
200
240
150
250
140
648104-6
ECM 73328

ECM: 113335 - 20020930
Group number: 648104-1200
Assembly Drawing: 648104-6_1_AA

Pos	Part No	SP	UN	Qty	Description	Page No
-						
010	256204-0600	-		1	CUTTING JAW	**289, 291**
020	256205-0600	-		1	CUTTING JAW	**293, 295**
030	1512305-0100	-		1	MOTORIZED DESIGN CONTROL SYSTEM, LEFT	**297, 299**
040	1512306-0100	-		1	MOTORIZED DESIGN CONTROL SYSTEM, RIGHT	**301**
						303
050	256208-0400	-		1	KNIFE HOLDER	**305, 307, 309**
060	1519427-0100	-		2	VOLUME FLAP	**311, 313**
070	1549581-0100	-		2	VOLUME FLAP	**315, 317**
080	752671-0100	-		2	SHOCK ABSORBER	**319, 321**
090	752672-0100	-		2	SHOCK ABSORBER	**323, 325**
100	256212-0600	-		1	PRESSURE JAW	**327, 329**
110	256213-0600	-		1	PRESSURE JAW	**331, 333**
120	256214-0400	-		2	PRESSURE RAIL	**335**
140	256951-0500	-		1	YOKE RIGHT	**337, 339**
150	256952-0500	-		1	YOKE LEFT	**341, 343**
160	256217-0500	-		1	GUIDE	**345**
190	572642-0200	-		1	TRANSFER	**347**
200	572643-0200	-		1	TRANSFER	**349**
210	1519117-0100	-		1	VOLUME ADJUSTER	**351**
230	1511403-0100	-		1	SUPPORT ROLLER	**355**
240	257381-0300	-		1	MANIFOLD RIGHT	**357**
250	257382-0300	-		1	MANIFOLD LEFT	**359**
260	1511069-0100	-		1	TUBE FOLDING DEVICE	**361**
300	295523-0400	-		1	START-UP KIT	**363**

Pos	Part No	SP	UN	Qty	Description	Page No

Machine Type | Group Description | Used-In | Group Number | Page No

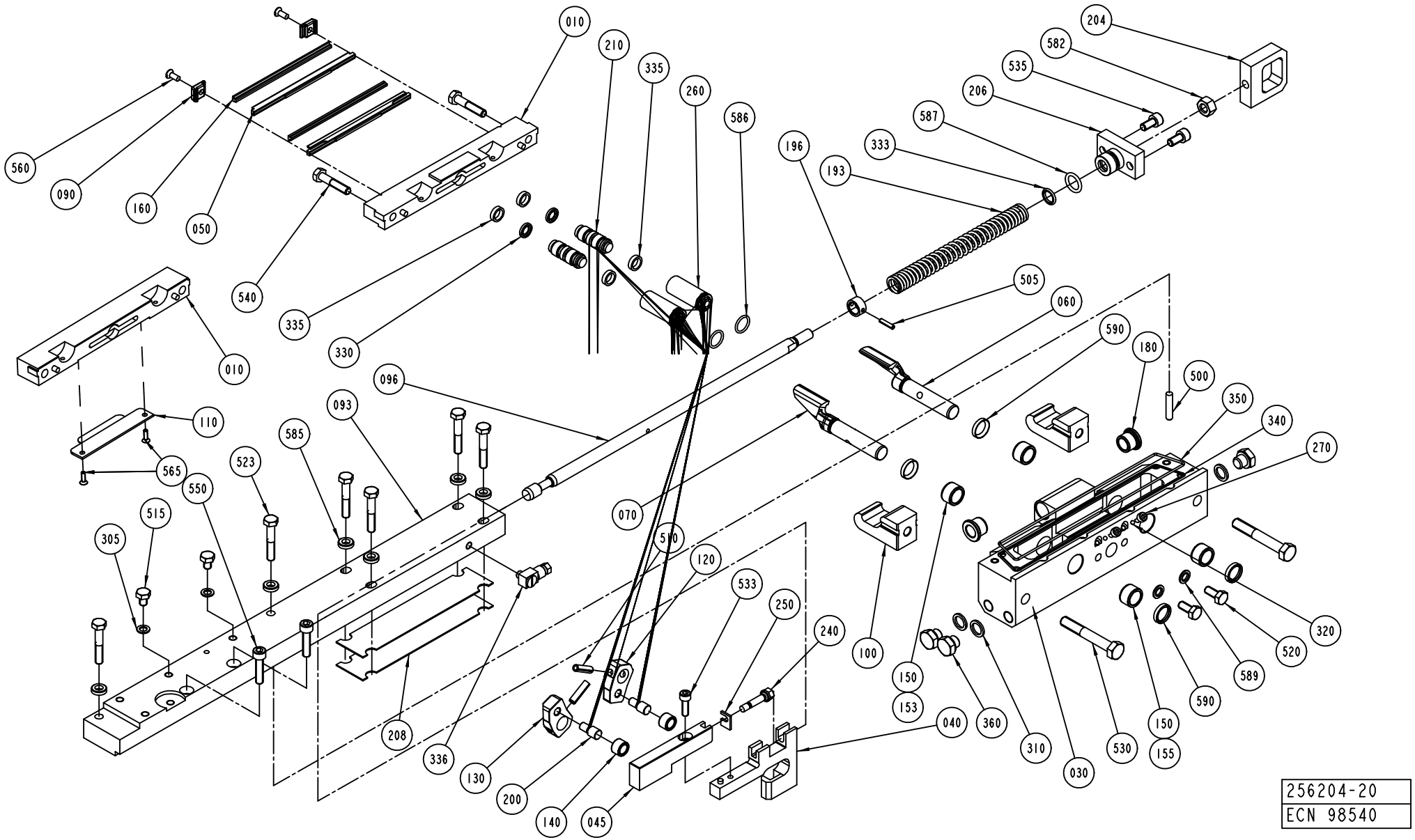

256204-20
ECN 98540

TBA 0125S, TBA 0100B

Pos	Part No	SP	UN	Qty	Description	Page No
010	256487-0000	A		1	CUTTING JAW	
030	1478222-0000	A		1	BEARING HOUSING	
040	752014-0000	A		1	RULERPART R	
045	752015-0000	A		1	RULERPART R	
050	1110829-0000	A		2	CUTTING RAIL	
060	272420-0000	A		1	FOLDING FLAP	
070	272421-0000	A		1	FOLDING FLAP	
090	272427-0000	A		2	BRACKET	
100	978745-0000	A		2	CATCH	
120	2527724-0000	A		1	CARRIER	
130	272416-0000	A		1	CARRIER	
150	33408-0000	A		4	BEARING	
160	1520577-0001	A		2	DOLLY	
180	1517641-0000	A		2	FLANGE BUSHING	
540	312105-0374	-		2	SCREW M6S ISO 4014 M6X30 A480	
550	312115-0372	-		2	SCREW ISO4762 M6X25 A4	
560	312145-0289	-		2	SCREW COUNTERS.SLOT.HD. MFS 4X10 SS	
585	315115-0153	-		6	WASHER PLAIN, TBRB 6,4/12 H=3	

TBA 0160S, TBA 0200S

Pos	Part No	SP	UN	Qty	Description	Page No
010	441727-0000	A		1	CUTTING JAW	
030	1478224-0000	A		1	BEARING HOUSING	
040	752009-0000	A		1	RULERPART R	
045	752010-0000	A		1	RULERPART R	
050	1110820-0000	A		2	CUTTING RAIL	
060	272424-0000	A		1	FOLDING FLAP	
070	272425-0000	A		1	FOLDING FLAP	
090	1348053-0000	A		2	BRACKET	
093	978715-0000	A		1	CARRIER RIGHT	
100	978745-0000	A		2	CATCH	
120	272419-0000	A		1	CARRIER	
130	272419-0000	A		1	CARRIER	
150	33408-0000	A		4	BEARING	
160	1110391-0000	A		2	DOLLY	
180	1517641-0000	A		2	FLANGE BUSHING	
540	312115-0370	-		2	SCREW ISO4762 M6X20 A4	
550	312105-0376	-		2	SCREW M6S ISO 4014 M6X35 A480	
560	312145-0291	-		2	SCREW COUNT.SLOT.HD. 4X12 A4	
585	315115-0153	-		8	WASHER PLAIN, TBRB 6,4/12 H=3	

TBA 0250S, TBA 0200M

Pos	Part No	SP	UN	Qty	Description	Page No
010	574386-0000	A		1	CUTTING JAW	
030	1478225-0000	A		1	BEARING HOUSING	
040	574369-0000	A		1	CARRIER RULER RIGHT	
045	574370-0000	A		1	CARRIER RULER RIGHT	
050	1110820-0000	A		2	CUTTING RAIL	
060	272424-0000	A		1	FOLDING FLAP	
070	272425-0000	A		1	FOLDING FLAP	
090	1348053-0000	A		2	BRACKET	
093	978715-0000	A		1	CARRIER RIGHT	
100	978745-0000	A		2	CATCH	
120	272419-0000	A		1	CARRIER	
130	272419-0000	A		1	CARRIER	
150	33408-0000	A		4	BEARING	
160	1110391-0000	A		2	DOLLY	
180	1517641-0000	A		2	FLANGE BUSHING	
540	312115-0370	-		2	SCREW ISO4762 M6X20 A4	
550	312105-0376	-		2	SCREW M6S ISO 4014 M6X35 A480	
560	312145-0291	-		2	SCREW COUNT.SLOT.HD. 4X12 A4	
585	315115-0153	-		8	WASHER PLAIN, TBRB 6,4/12 H=3	

TBA 0330S, TBA 0300S, TBA 0180B, TBA 0200B, TBA 0284B, TBA 0250B

Pos	Part No	SP	UN	Qty	Description	Page No
010	256769-0000	A		1	CUTTING JAW	
030	1478223-0000	A		1	BEARING HOUSING	
040	751575-0000	A		1	RULERPART R	
045	751577-0000	A		1	RULERPART R	
050	1110820-0000	A		2	CUTTING RAIL	
060	272422-0000	A		1	FOLDING FLAP	
070	272423-0000	A		1	FOLDING FLAP	
090	1348053-0000	A		2	BRACKET	
093	978715-0000	A		1	CARRIER RIGHT	
100	978745-0000	A		2	CATCH	
120	272419-0000	A		1	CARRIER	
130	272419-0000	A		1	CARRIER	
150	33408-0000	A		4	BEARING	
160	1110391-0000	A		2	DOLLY	
180	1517641-0000	A		2	FLANGE BUSHING	
540	312115-0370	-		2	SCREW ISO4762 M6X20 A4	
550	312105-0376	-		2	SCREW M6S ISO 4014 M6X35 A480	
560	312145-0291	-		2	SCREW COUNT.SLOT.HD. 4X12 A4	
585	315115-0153	-		8	WASHER PLAIN, TBRB 6,4/12 H=3	

Common Parts

Machine Type	Group Description	Used-In	Group Number	Page No

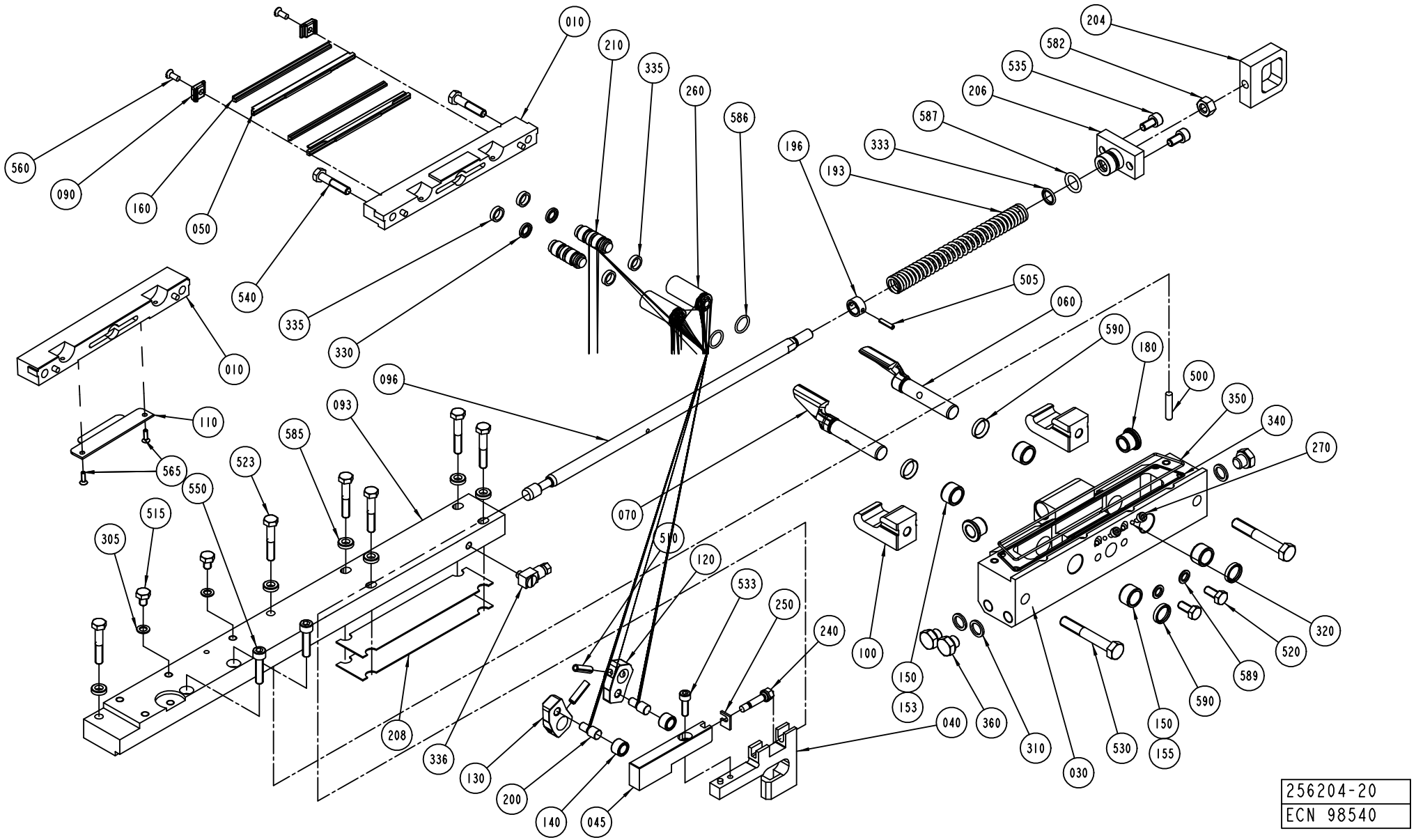
010
210
335
260
586
204
582
535
206
587
333
193
196
560
090
160
050
540
335
330
505
060
590
180
500
350
340
270
096
093
585
523
565
550
515
305
110
070
510
120
533
250
240
100
150
153
040
360
310
030
530
150
155
590
589
520
320
208
336
130
200
140
045
256204-20
ECN 98540

Pos	Part No	SP	UN	Qty	Description	Page No
Common Parts (Cont'd)						
096	256659-0000	A		1	OPERATING ROD	
140	22463-0000	A		2	ROLL	
193	255742-0000	A		1	COMPRESSION SPRING	
196	255801-0000	B		1	RETAINING RING	
200	256607-0000	A		2	AXLE PIN	
204	256626-0000	A		1	EAR	
206	256706-0000	A		1	BEARING PLATE	
208	257362-0000	B		2	LACE	
210	752115-0000	A		2	PLUNGER	
240	751579-0000	A		1	ADJUSTING SCREW	
250	751580-0000	B		1	SHIM	
260	752288-0000	B		2	SLEEVE	
270	752476-0000	B		2	SCREW	
305	315237-0106	-		2	WASHER,PL.RND.AL.6/10,H=1	
310	315237-0109	-		3	WASHER,PL.RND.AL.10/14,H=1,5	
320	315211-0101	-		2	GASKET BOLT HEAD 4,5X7X1 MM M4	
330	90091-0216	B		2	PISTON SEAL, GLIDORING 7,1X12X2,2 MM	
333	90091-0091	A		1	ROD SEAL, GLIDORING 10X14X1,7 MM	
335	90091-0169	A		4	WEAR RING 12X15X3,2 MM	
336	90134-0058	-		1	CONNECTION	
340	90153-0015	-	KG	1	ADHESIVE,LOCTITE IS 496/CYANOLOT 303	
350	90242-0093	A	MM	450	O-RING MATERIAL 1,5 MM	
360	90330-0066	-		3	PLUG, EXT. G-THREAD, G1/8	
500	311103-0312	-		1	PARALLELL PIN, M6, 5X25 MM	
505	311111-0207	-		1	PIN, STRAIGHT SLOTTED SPRING FRP 3X14	
510	311111-0308	-		2	PIN, STRAIGHT SLOTTED SPRING FRP 5X20	
515	312105-0362	-		2	SCREW M6S ISO 4017 M6X8 A480	
520	312105-0367	-		2	SCREW M6S M6X14 A280	
523	312105-0376	-		6	SCREW M6S ISO 4014 M6X35 A480	
530	312105-0462	-		2	SCREW M6S ISO 4014 M8X55 A480	
533	312115-0329	-		1	SCREW ISO4762 M5X16 A4	
535	312115-0366	-		2	SCREW ISO4762 M6X12 A4	
582	312605-0318	-		1	HEXAGON NUT, M6M M8 A280	
586	315202-0110	B		2	O-RING 12,1X1,6 MM	
587	315202-0265	B		1	O-RING 12,3X2,4 MM	
589	315211-0103	A		2	GASKET BOLT HEAD 6,7X11X1 MM M6	
590	315230-0157	B		4	BEARING SEAL 12X16X3 MM	

Pos	Part No	SP	UN	Qty	Description	Page No

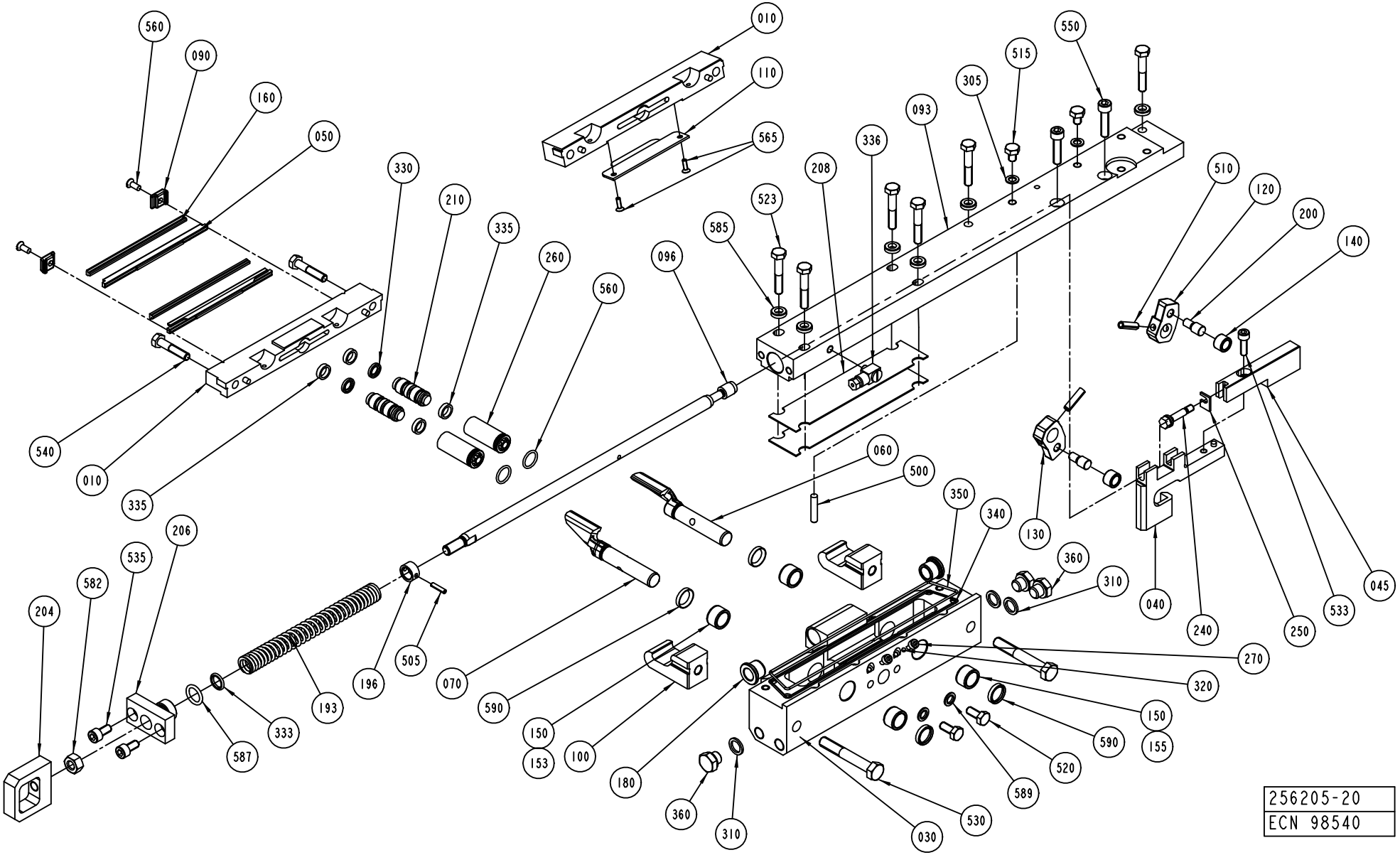
560
090
160
050
330
210
335
260
560
010
335
540
010
110
565
096
585
523
208
336
093
305
515
550
510
120
200
140
060
500
350
340
130
360
310
040
240
250
533
045
270
320
150
590
155
520
589
530
030
360
310
180
150
153
100
590
070
505
196
193
333
587
204
582
535
206
256205-20
ECN 98540

ECM: 115644 - 20020930
Group number: 256205-0600
Assembly Drawing: 256205-20_1_AD

This list covers pages from 292 to 295

TBA 0125S, TBA 0100B

Pos	Part No	SP	UN	Qty	Description	Page No
010	256487-0000	A		1	CUTTING JAW	
030	1478222-0000	A		1	BEARING HOUSING	
040	752016-0000	A		1	RULERPART L	
045	752017-0000	A		1	RULERPART L	
050	1110829-0000	A		2	CUTTING RAIL	
060	272420-0000	A		1	FOLDING FLAP	
070	272421-0000	A		1	FOLDING FLAP	
090	272427-0000	A		2	BRACKET	
093	979763-0000	A		1	CARRIER LEFT 100	
100	978745-0000	A		2	CATCH	
120	2527724-0000	A		1	CARRIER	
130	272416-0000	A		1	CARRIER	
150	33408-0000	A		4	BEARING	
160	1520577-0001	A		2	DOLLY	
180	1517641-0000	A		2	FLANGE BUSHING	
540	312105-0374	-		2	SCREW M6S ISO 4014 M6X30 A480	
550	312115-0372	-		2	SCREW ISO4762 M6X25 A4	
560	312145-0289	-		2	SCREW COUNTERS.SLOT.HD. MFS 4X10 SS	
585	315115-0153	-		6	WASHER PLAIN, TBRB 6,4/12 H=3	

TBA 0160S, TBA 0200S

Pos	Part No	SP	UN	Qty	Description	Page No
010	441727-0000	A		1	CUTTING JAW	
030	1478224-0000	A		1	BEARING HOUSING	
040	752011-0000	A		1	RULERPART L	
045	752012-0000	A		1	RULERPART L	
050	1110820-0000	A		2	CUTTING RAIL	
060	272424-0000	A		1	FOLDING FLAP	
070	272425-0000	A		1	FOLDING FLAP	
090	1348053-0000	A		2	BRACKET	
093	978714-0000	A		1	CARRIER LEFT	
100	978745-0000	A		2	CATCH	
120	272419-0000	A		1	CARRIER	
130	272419-0000	A		1	CARRIER	
150	33408-0000	A		4	BEARING	
160	1110391-0000	A		2	DOLLY	
180	1517641-0000	A		2	FLANGE BUSHING	
540	312115-0370	-		2	SCREW ISO4762 M6X20 A4	
550	312105-0376	-		2	SCREW M6S ISO 4014 M6X35 A480	
560	312145-0291	-		2	SCREW COUNT.SLOT.HD. 4X12 A4	
585	315115-0153	-		8	WASHER PLAIN, TBRB 6,4/12 H=3	

TBA 0250S, TBA 0200M

Pos	Part No	SP	UN	Qty	Description	Page No
010	574386-0000	A		1	CUTTING JAW	
030	1478225-0000	A		1	BEARING HOUSING	
040	574371-0000	A		1	CARRIER RULER LEFT	
045	574372-0000	A		1	CARRIER RULER LEFT	
050	1110820-0000	A		2	CUTTING RAIL	
060	272424-0000	A		1	FOLDING FLAP	
070	272425-0000	A		1	FOLDING FLAP	
090	1348053-0000	A		2	BRACKET	
093	978714-0000	A		1	CARRIER LEFT	
100	978745-0000	A		2	CATCH	
120	272419-0000	A		1	CARRIER	
130	272419-0000	A		1	CARRIER	
150	33408-0000	A		4	BEARING	
160	1110391-0000	A		2	DOLLY	
180	1517641-0000	A		2	FLANGE BUSHING	
540	312115-0370	-		2	SCREW ISO4762 M6X20 A4	
550	312105-0376	-		2	SCREW M6S ISO 4014 M6X35 A480	
560	312145-0291	-		2	SCREW COUNT.SLOT.HD. 4X12 A4	
585	315115-0153	-		8	WASHER PLAIN, TBRB 6,4/12 H=3	

TBA 0330S, TBA 0300S, TBA 0180B, TBA 0200B, TBA 0284B, TBA 0250B

Pos	Part No	SP	UN	Qty	Description	Page No
010	256769-0000	A		1	CUTTING JAW	
030	1478223-0000	A		1	BEARING HOUSING	
040	751576-0000	A		1	RULERPART L	
045	751578-0000	A		1	RULERPART L	
050	1110820-0000	A		2	CUTTING RAIL	
060	272422-0000	A		1	FOLDING FLAP	
070	272423-0000	A		1	FOLDING FLAP	
090	1348053-0000	A		2	BRACKET	
093	978714-0000	A		1	CARRIER LEFT	
100	978745-0000	A		2	CATCH	
120	272419-0000	A		1	CARRIER	
130	272419-0000	A		1	CARRIER	
150	33408-0000	A		4	BEARING	
160	1110391-0000	A		2	DOLLY	
180	1517641-0000	A		2	FLANGE BUSHING	
540	312115-0370	-		2	SCREW ISO4762 M6X20 A4	
550	312105-0376	-		2	SCREW M6S ISO 4014 M6X35 A480	
560	312145-0291	-		2	SCREW COUNT.SLOT.HD. 4X12 A4	
585	315115-0153	-		8	WASHER PLAIN, TBRB 6,4/12 H=3	

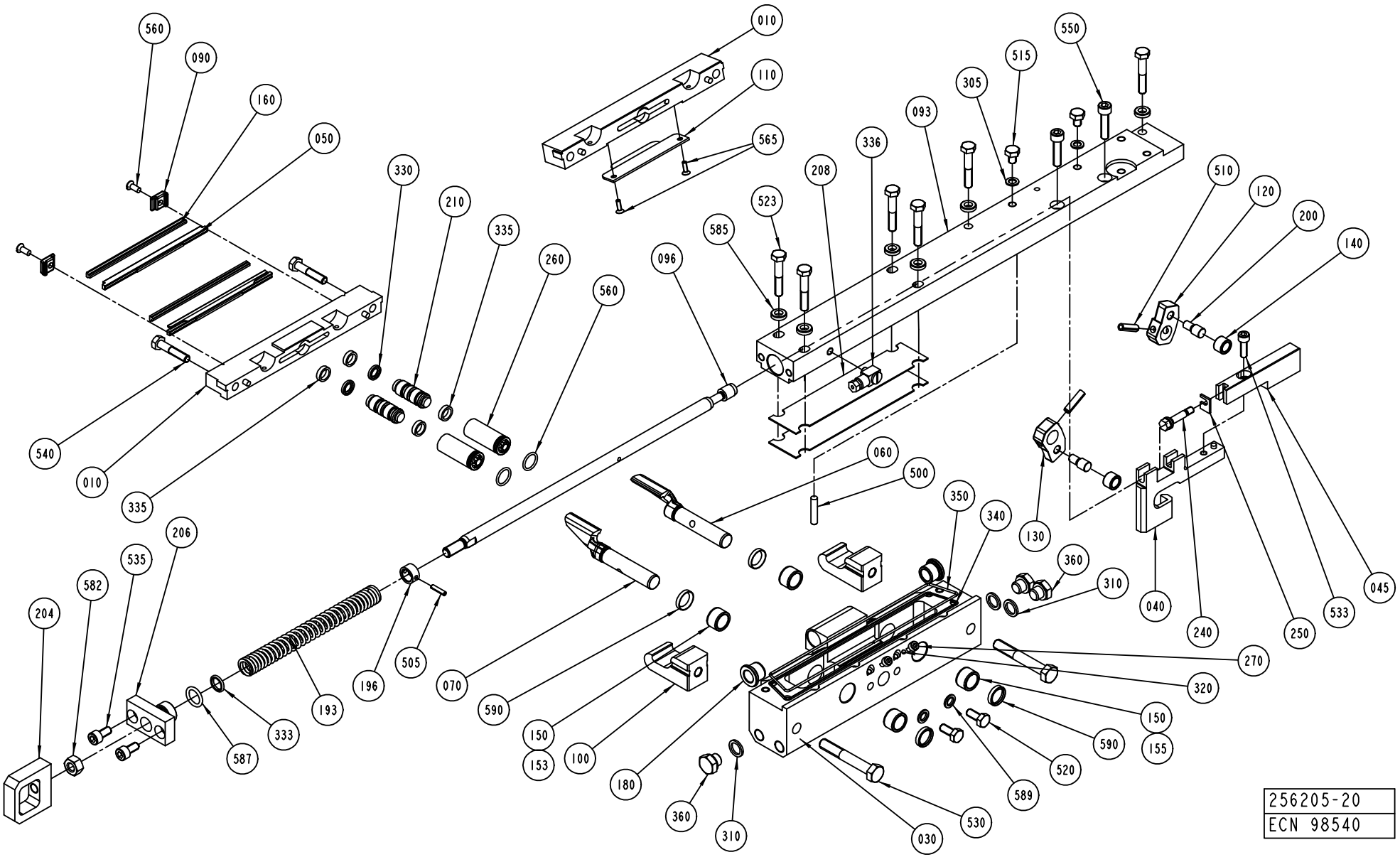
560
090
160
050
330
210
335
260
560
010
540
010
335
096
585
523
208
336
093
305
515
550
565
110
010
510
120
200
140
060
500
350
340
130
360
310
040
240
250
533
045
206
535
582
204
333
587
193
196
505
070
590
150
153
100
180
360
310
030
530
589
520
590
150
155
270
320
256205-20
ECN 98540

Pos	Part No	SP	UN	Qty	Description	Page No
Common Parts (Cont'd)						
096	256659-0000	A		1	OPERATING ROD	
140	22463-0000	A		2	ROLL	
193	255742-0000	A		1	COMPRESSION SPRING	
196	255801-0000	B		1	RETAINING RING	
200	256607-0000	A		2	AXLE PIN	
204	256626-0000	A		1	EAR	
206	256706-0000	A		1	BEARING PLATE	
208	257362-0000	B		2	LACE	
210	752115-0000	A		2	PLUNGER	
240	751579-0000	A		1	ADJUSTING SCREW	
250	751580-0000	B		1	SHIM	
260	752288-0000	B		2	SLEEVE	
270	752476-0000	B		2	SCREW	
305	315237-0106	-		2	WASHER,PL.RND.AL.6/10,H=1	
310	315237-0109	-		3	WASHER,PL.RND.AL.10/14,H=1,5	
320	315211-0101	-		2	GASKET BOLT HEAD 4,5X7X1 MM M4	
330	90091-0216	A		2	PISTON SEAL, GLIDORING 7,1X12X2,2 MM	
333	90091-0091	A		1	ROD SEAL, GLIDORING 10X14X1,7 MM	
335	90091-0169	A		4	WEAR RING 12X15X3,2 MM	
336	90134-0058	-		1	CONNECTION	
340	90153-0015	-	KG	1	ADHESIVE,LOCTITE IS 496/CYANOLOT 303	
350	90242-0093	B	MM	450	O-RING MATERIAL 1,5 MM	
360	90330-0066	-		3	PLUG, EXT. G-THREAD, G1/8	
500	311103-0312	B		1	PARALLELL PIN, M6, 5X25 MM	
505	311111-0207	-		1	PIN, STRAIGHT SLOTTED SPRING FRP 3X14	
510	311111-0308	-		2	PIN, STRAIGHT SLOTTED SPRING FRP 5X20	
515	312105-0362	-		2	SCREW M6S ISO 4017 M6X8 A480	
520	312105-0367	-		2	SCREW M6S M6X14 A280	
523	312105-0376	-		6	SCREW M6S ISO 4014 M6X35 A480	
530	312105-0462	-		2	SCREW M6S ISO 4014 M8X55 A480	
533	312115-0329	-		1	SCREW ISO4762 M5X16 A4	
535	312115-0366	-		2	SCREW ISO4762 M6X12 A4	
582	312605-0318	-		1	HEXAGON NUT, M6M M8 A280	
586	315202-0110	B		2	O-RING 12,1X1,6 MM	
587	315202-0265	B		1	O-RING 12,3X2,4 MM	
589	315211-0103	B		2	GASKET BOLT HEAD 6,7X11X1 MM M6	
590	315230-0157	B		4	BEARING SEAL 12X16X3 MM	

Pos	Part No	SP	UN	Qty	Description	Page No

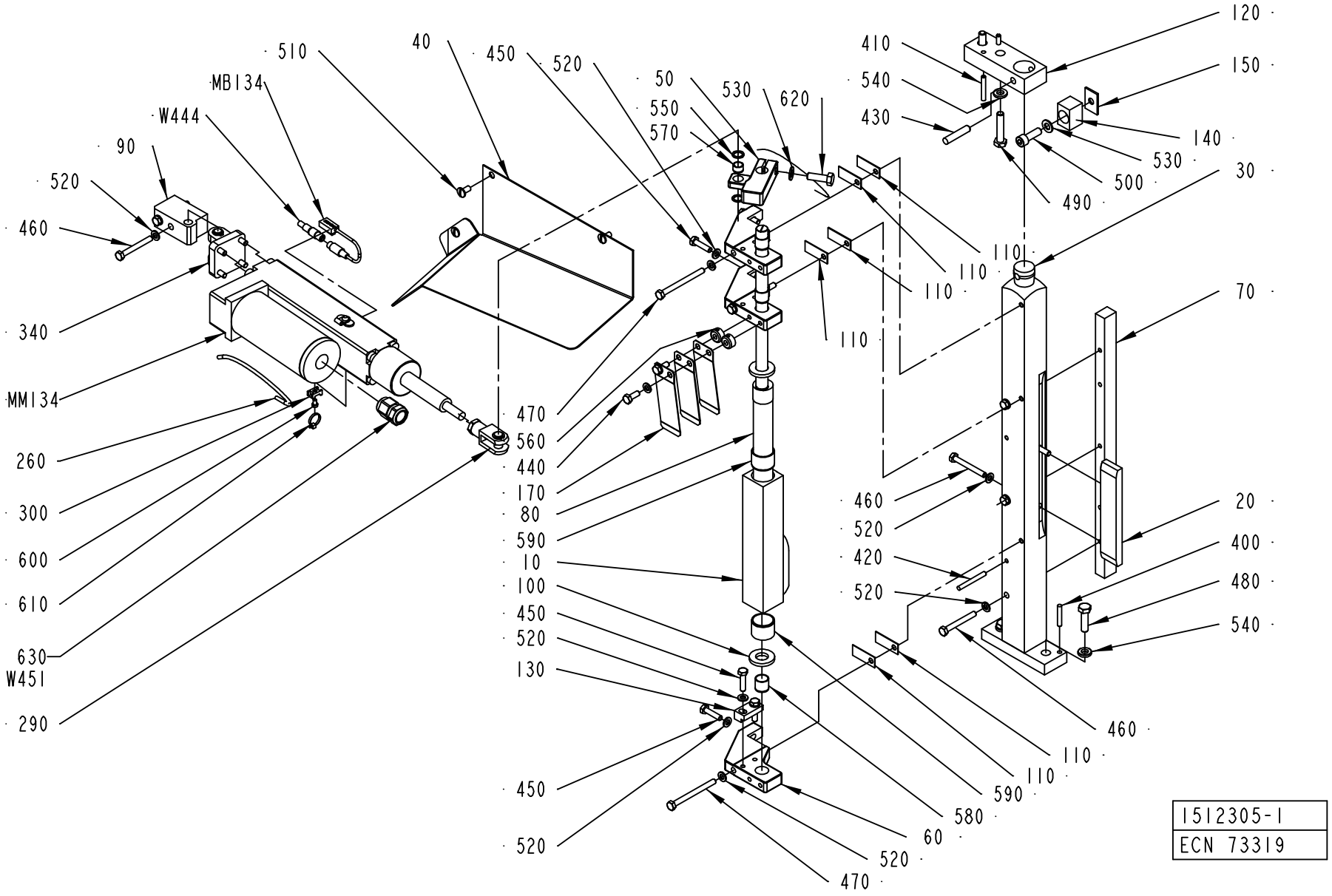
510
40
450
520
50
530
620
MB134
W444
90
520
460
340
MM134
260
300
600
610
630
W451
290
550
570
410
540
430
120
150
140
530
500
490
30
110
110
110
70
470
560
440
170
80
590
10
100
450
520
130
460
520
420
520
20
400
480
540
460
110
110
590
580
60
520
470
450
520
1512305-1
ECN 73319

ECM: 113339 - 20020930
Group number: 1512305-0100
Assembly Drawing: 1512305-1_1_AA

This list covers pages from 296 to 299

Pos	Part No	SP	UN	Qty	Description	Page No
TBA 0100B						
010	979770-0000	B		1	FOLDING FLAP CAM 100	
020	979771-0000	B		1	COUNTER CAM 100	
TBA 0160S						
010	577225-0000	B		1	FOLDING FLAP CAM	
020	272640-0006	B		1	COUNTER CAM	
TBA 0180B						
010	456760-0010	B		1	FOLDING FLAP CAM 200B & 125S	
020	272640-0007	B		1	COUNTER CAM	
TBA 0200B, TBA 0125S						
010	456760-0010	B		1	FOLDING FLAP CAM 200B & 125S	
020	272640-0005	B		1	COUNTER CAM	
TBA 0200M						
010	456760-0011	B		1	FOLDING FLAP CAM 250B	
020	272640-0009	B		1	COUNTER CAM	
TBA 0200S						
010	456760-0003	B		1	FOLDING FLAP CAM 200S	
020	272640-0009	B		1	COUNTER CAM	
TBA 0250B						
010	456760-0011	B		1	FOLDING FLAP CAM 250B	
020	272640-0002	B		1	COUNTER CAM	
TBA 0250S						
010	574494-0000	B		1	FOLDING FLAP CAM	
020	272640-0009	B		1	COUNTER CAM	
TBA 0300S, TBA 0284B						
010	456760-0012	B		1	FOLDING FLAP CAM	
020	272640-0002	B		1	COUNTER CAM	
TBA 0330S						
010	582162-0000	B		1	FOLDING FLAP CAM	
020	272640-0001	B		1	COUNTER CAM	
Common Parts						
030	272642-0000	-		1	PILLAR	
040	2514041-0000	-		1	PROTECTION	
050	929402-0000	-		1	ARM	
060	272491-0000	-		3	BRACKET	
070	272645-0000	-		1	RAIL	
080	272654-0000	B		1	ECCENTRIC SHAFT	
090	2512787-0000	-		1	HOLDER	
100	256621-0000	-		2	WASHER	
110	256705-0000	B		6	LACE	
120	256707-0000	-		1	BRACKET	
130	271284-0000	-		1	BLOCKING PIECE	
140	978184-0000	B		1	STOPPER	
150	978185-0000	B		1	SHIM	
170	257334-0000	B		3	LEAF SPRING	
260	90166-0095	-	MM	250	TUBE 4 MM PA BLUE	
290	90239-0357	B		1	ROD END, CLEVIS WITH AXLE M10X1,25	
300	352113-0205	-		1	ANCHOR PLATES FOR STRIPS, TYPE TM2S8-C10	
340	90450-0654	B		1	BRACKET,REAR,EYE WITH AXLE 32	
400	311103-0314	-		2	PARALLELL PIN, M6, 5X30 MM	
410	311103-0316	-		2	PARALLELL PIN, M6, 5X35 MM	
420	311103-0320	-		2	PARALLELL PIN, CP, M6, 5X45 MM	
430	311103-0409	-		1	PARALLELL PIN, M6, 8X40 MM	
440	312105-0368	-		2	SCREW M6S M6X16 A280	
450	312105-0372	-		5	SCREW M6S ISO 4017 M6X25 A480	
460	312105-0380	-		7	SCREW M6S ISO 4014 M6X50 A480	
470	312105-0384	-		3	SCREW M6S ISO 4014 M6X70 A480	
480	312105-0455	-		2	SCREW M6S ISO 4017 M8X30 A480	
490	312105-0459	-		2	SCREW M6S ISO 4014 M8X40 A480	
500	312115-0453	-		1	SCREW ISO4762 M8X25 A4	
510	90287-0075	-		3	SCREW SLOT. PAN HEAD LKCS M6X12	
520	315105-0153	-		17	WASHER ISO 7089-6-200 HV-A4	
530	315105-0165	-		2	WASHER ISO 7089-8-200 HV-A4	
540	315115-0165	-		4	WASHER PLAIN, TBRB 8,4/16 H=3	
550	315233-0109	-		2	WASHER PL.RND.NYL.10,3/14,H=1	
560	315742-0102	B		2	COLLAR, 6/16, H=8	
570	321120-0098	B		1	BEARING BUSHING W/O FL, 10/12X8	
580	321120-0118	B		3	BEARBUSHING W/O FL 14X16X15	
590	321120-0153	B		2	BEARBUSHING W/O FL 24X27X20	
600	312125-0285	-		1	SCREW SLOT.PAN HD. MCS 4X6 A480	
610	352113-0101	-		1	CLIP STRIP, 92X2,5 MM	
620	312105-0453	-		1	SCREW M6S ISO 4017 M8X25 A480	
630	90458-0438	-		1	GLAND, EXTENDED WITH INSERT, M20X1,5	
MB134	90450-0747	-		1	INTERMEDIATE PLATE	

Machine Type | Group Description | Used-In | Group Number | Page No

MOTORIZED DESIGN CONTROL SYSTEM, LEFT

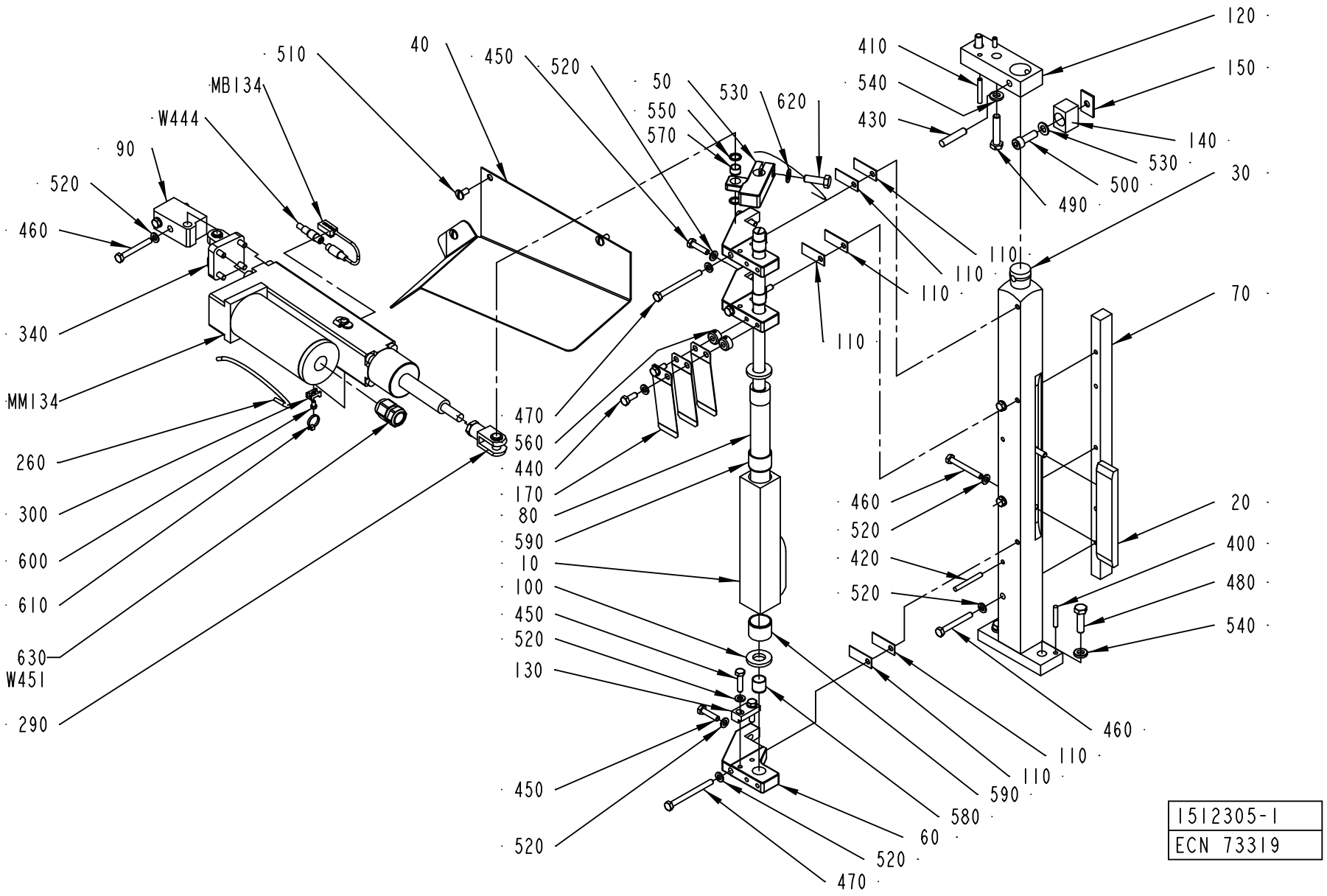

1512305-1
ECN 73319

Pos	Part No	SP	UN	Qty	Description	Page No
Common Parts (Cont'd)						
MM134	90458-1301	A		1	CYLINDER ETS32-M10NA2X-FM50-AEUM1D	
W444	90458-1298	A		1	CONNECTOR AND CABLE 403000E 18M 080	
W451	90220-0107	-	M	3	SCR. CABLE 5X0,75MM2	

Pos	Part No	SP	UN	Qty	Description	Page No

MOTORIZED DESIGN CONTROL SYSTEM, RIGHT

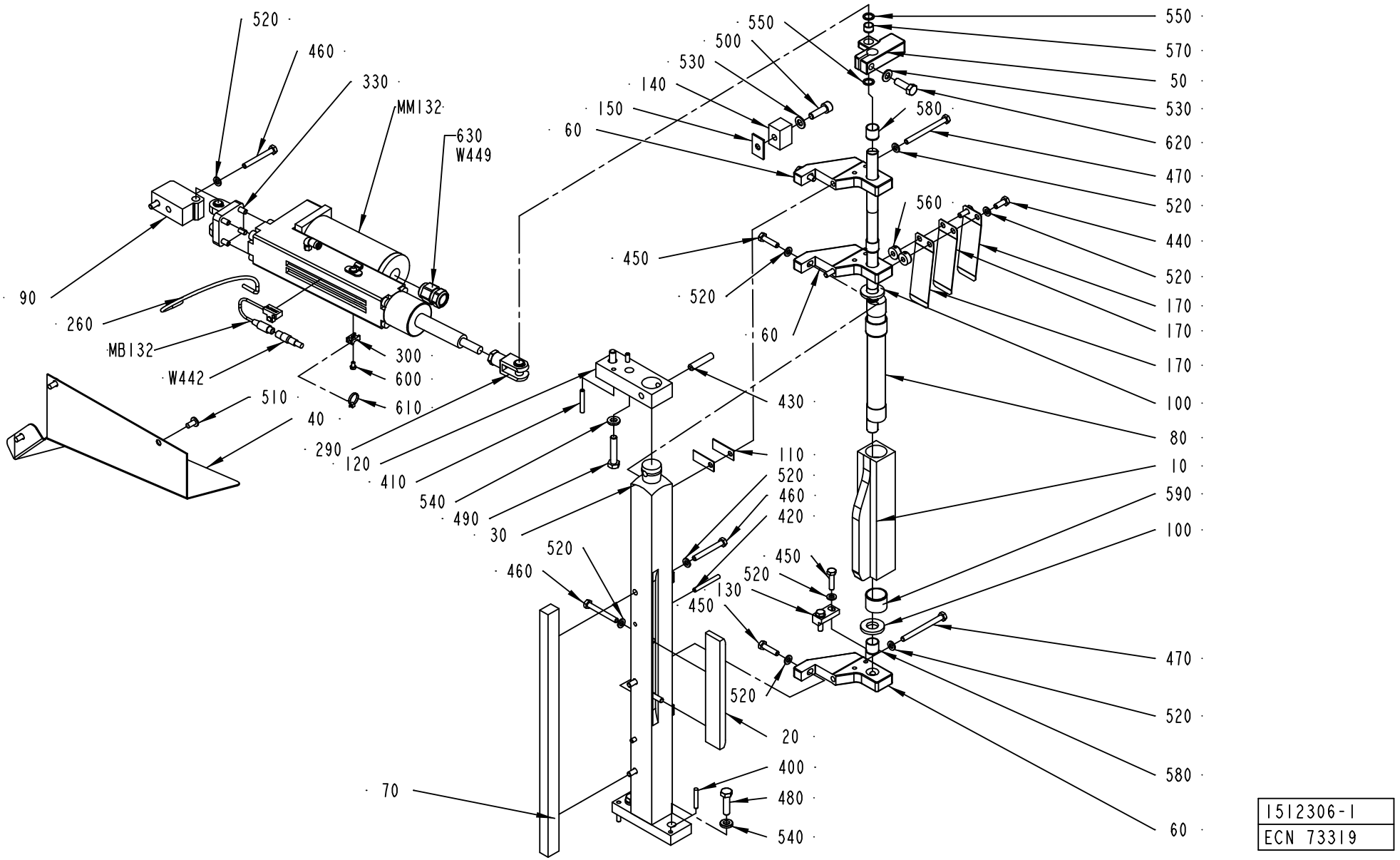

ECM: 113340 - 20020930
Group number: 1512306-0100
Assembly Drawing: 1512306-1_1_AA

This list covers pages from 300 to 303

Pos	Part No	SP	UN	Qty	Description	Page No
TBA 0100B						
010	979770-0000	B		1	FOLDING FLAP CAM 100	
020	979771-0000	B		1	COUNTER CAM 100	
TBA 0160S						
010	577225-0000	B		1	FOLDING FLAP CAM	
020	272640-0006	B		1	COUNTER CAM	
TBA 0180B						
010	456760-0010	B		1	FOLDING FLAP CAM 200B & 125S	
020	272640-0007	B		1	COUNTER CAM	
TBA 0200B, TBA 0125S						
010	456760-0010	B		1	FOLDING FLAP CAM 200B & 125S	
020	272640-0005	B		1	COUNTER CAM	
TBA 0200M						
010	456760-0011	B		1	FOLDING FLAP CAM 250B	
020	272640-0009	B		1	COUNTER CAM	
TBA 0200S						
010	456760-0003	B		1	FOLDING FLAP CAM 200S	
020	272640-0009	B		1	COUNTER CAM	
TBA 0250B						
010	456760-0011	B		1	FOLDING FLAP CAM 250B	
020	272640-0002	B		1	COUNTER CAM	
TBA 0250S						
010	574494-0000	B		1	FOLDING FLAP CAM	
020	272640-0009	B		1	COUNTER CAM	
TBA 0300S, TBA 0284B						
010	456760-0012	B		1	FOLDING FLAP CAM	
020	272640-0002	B		1	COUNTER CAM	
TBA 0330S						
010	582162-0000	B		1	FOLDING FLAP CAM	
020	272640-0001	B		1	COUNTER CAM	
Common Parts						
030	272641-0000	-		1	PILLAR	
040	2514042-0000	-		1	PROTECTION	
050	929402-0000	-		1	ARM	
060	272491-0000	-		3	BRACKET	
070	272645-0000	-		1	RAIL	
080	272654-0000	B		1	ECCENTRIC SHAFT	
090	2512787-0000	-		1	HOLDER	
100	256621-0000	-		2	WASHER	
110	256705-0000	B		6	LACE	
120	256707-0000	-		1	BRACKET	
130	271284-0000	-		1	BLOCKING PIECE	
140	978184-0000	B		1	STOPPER	
150	978185-0000	B		1	SHIM	
170	257334-0000	B		3	LEAF SPRING	
260	90166-0095	-	MM	250	TUBE 4 MM PA BLUE	
290	90239-0357	B		1	ROD END, CLEVIS WITH AXLE M10X1,25	
300	352113-0205	-		1	ANCHOR PLATES FOR STRIPS, TYPE TM2S8-C10	
340	90450-0654	B		1	BRACKET,REAR,EYE WITH AXLE 32	
400	311103-0314	-		2	PARALLELL PIN, M6, 5X30 MM	
410	311103-0316	-		2	PARALLELL PIN, M6, 5X35 MM	
420	311103-0320	-		2	PARALLELL PIN, CP, M6, 5X45 MM	
430	311103-0409	-		1	PARALLELL PIN, M6, 8X40 MM	
440	312105-0368	-		2	SCREW M6S M6X16 A280	
450	312105-0372	-		5	SCREW M6S ISO 4017 M6X25 A480	
460	312105-0380	-		7	SCREW M6S ISO 4014 M6X50 A480	
470	312105-0384	-		3	SCREW M6S ISO 4014 M6X70 A480	
480	312105-0455	-		2	SCREW M6S ISO 4017 M8X30 A480	
490	312105-0459	-		2	SCREW M6S ISO 4014 M8X40 A480	
500	312115-0453	-		1	SCREW ISO4762 M8X25 A4	
510	90287-0075	-		3	SCREW SLOT. PAN HEAD LKCS M6X12	
520	315105-0153	-		17	WASHER ISO 7089-6-200 HV-A4	
530	315105-0165	-		2	WASHER ISO 7089-8-200 HV-A4	
540	315115-0165	-		4	WASHER PLAIN, TBRB 8,4/16 H=3	
550	315233-0109	-		2	WASHER PL.RND.NYL.10,3/14,H=1	
560	315742-0102	B		2	COLLAR, 6/16, H=8	
570	321120-0098	B		1	BEARING BUSHING W/O FL, 10/12X8	
580	321120-0118	B		3	BEARBUSHING W/O FL 14X16X15	
590	321120-0153	B		2	BEARBUSHING W/O FL 24X27X20	
600	312125-0285	-		1	SCREW SLOT.PAN HD. MCS 4X6 A480	
610	352113-0101	-		1	CLIP STRIP, 92X2,5 MM	
620	312105-0453	-		1	SCREW M6S ISO 4017 M8X25 A480	
630	90458-0438	-		1	GLAND, EXTENDED WITH INSERT, M20X1,5	
MB132	90458-0747	A		1	SENSOR FOR CYLINDER, SMH-1PC	

Machine Type | Group Description | Used-In | Group Number | Page No

MOTORIZED DESIGN CONTROL SYSTEM, RIGHT

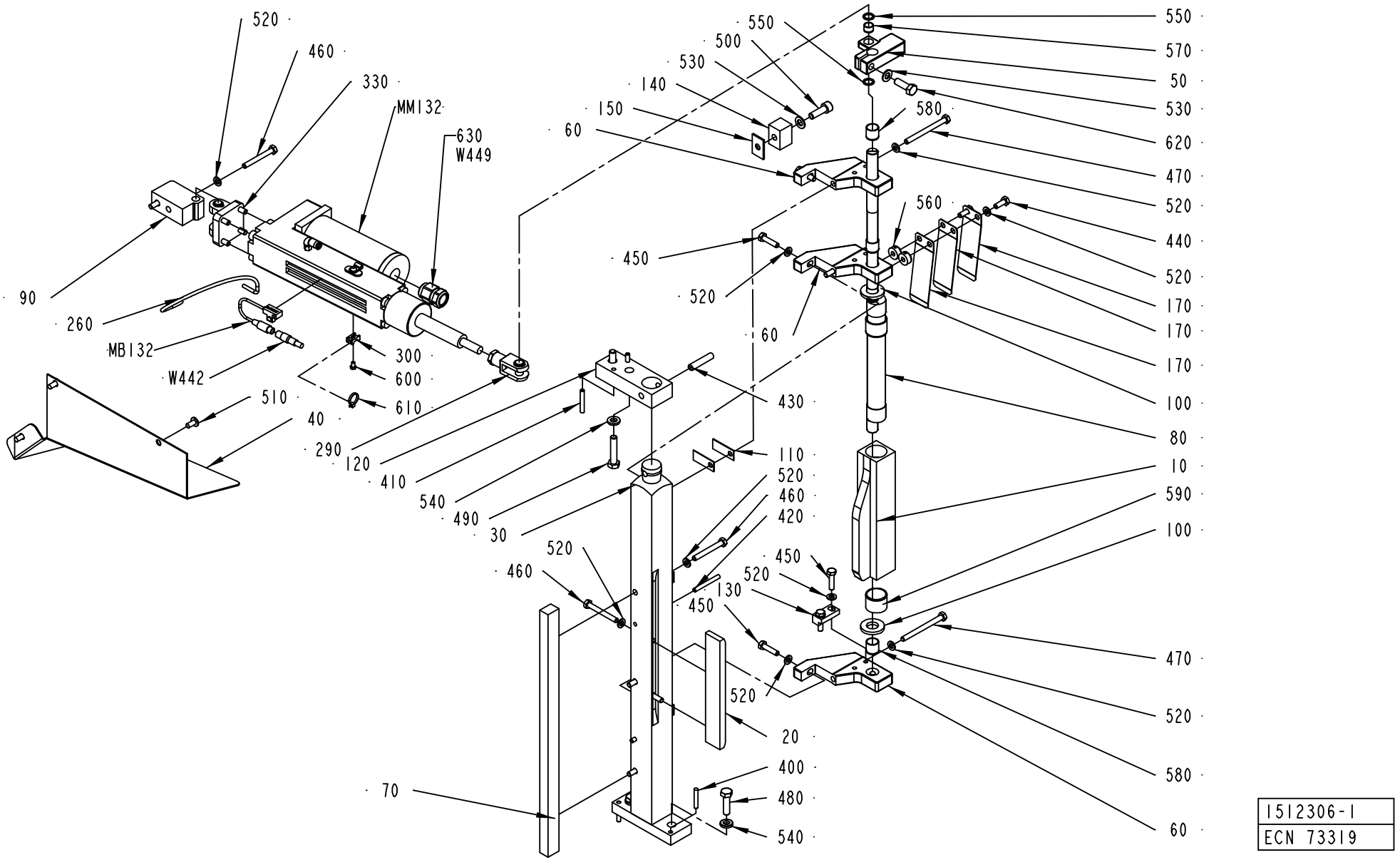

1512306-1
ECN 73319

Pos	Part No	SP	UN	Qty	Description	Page No
Common Parts (Cont'd)						
MM132	90458-1301	A		1	CYLINDER ETS32-M10NA2X-FM50-AEUM1D	
W442	90458-1298	A		1	CONNECTOR AND CABLE 403000E 18M 080	
W449	90220-0107	-	M	4	SCR. CABLE 5X0,75MM2	

Pos	Part No	SP	UN	Qty	Description	Page No

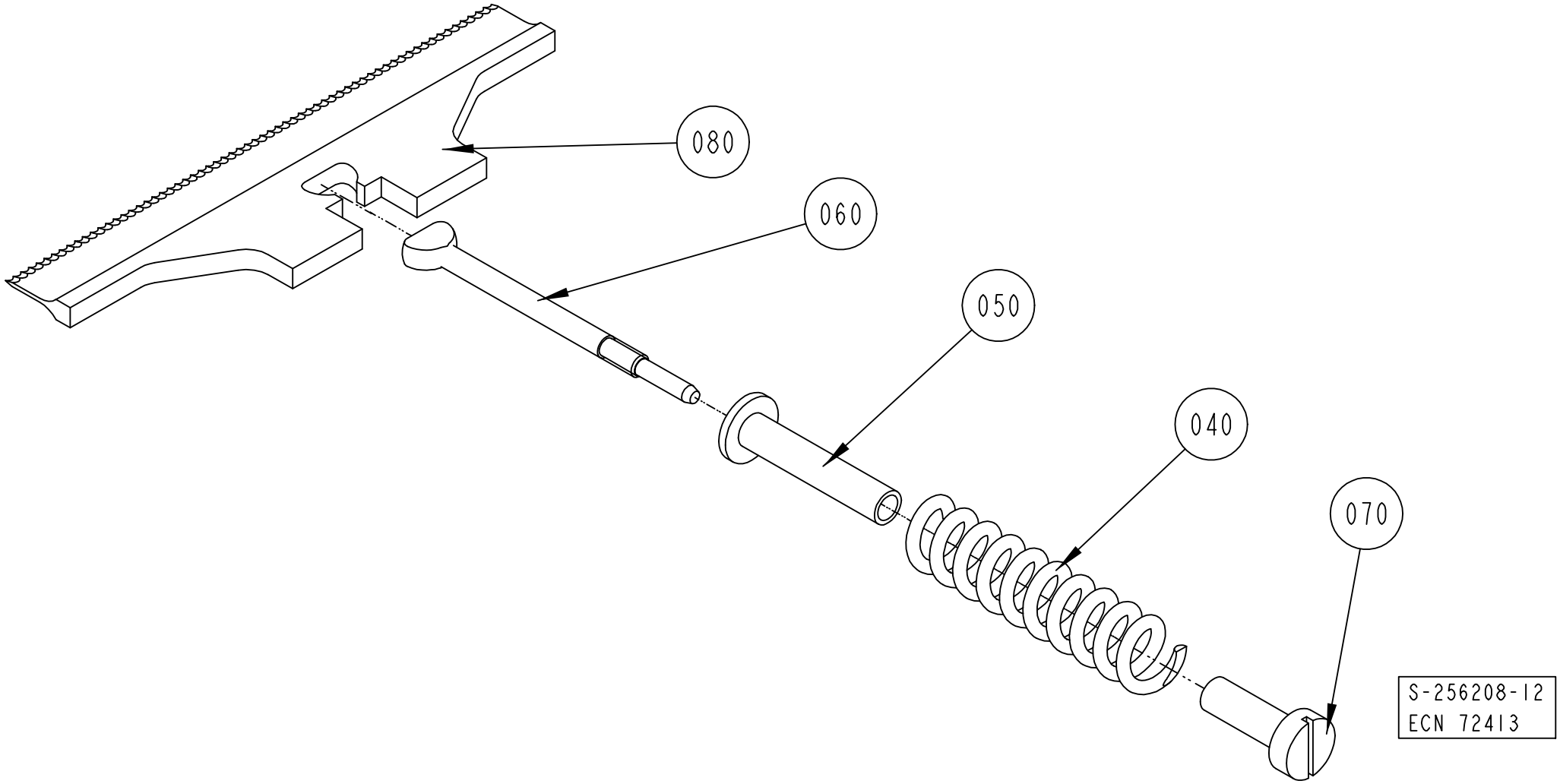
080
060
050
040
070
S-256208-12
ECN 72413

Pos	Part No	SP	UN	Qty	Description	Page No
TBA 0125S IH, TBA 0100B IH (See drawing on page: 306)						
080	1282645-0000	A		1	KNIFE	
TBA 0160S IH, TBA 0250S IH, TBA 0200M IH, TBA 0200S IH (See drawing on page: 308)						
080	1282647-0000	A		1	KNIFE	
TBA 0330S IH, TBA 0300S IH, TBA 0180B IH, TBA 0250B IH, TBA 0284B IH, TBA 0200B IH (See drawing on page: 304)						
080	1282646-0000	A		1	KNIFE	
Common Parts						
040	441726-0000	A		1	COMPRESSION SPRING	
050	272753-0000	A		1	STEERING	
060	456009-0000	A		1	LINK	
070	272755-0000	A		1	NUT	

Pos	Part No	SP	UN	Qty	Description	Page No

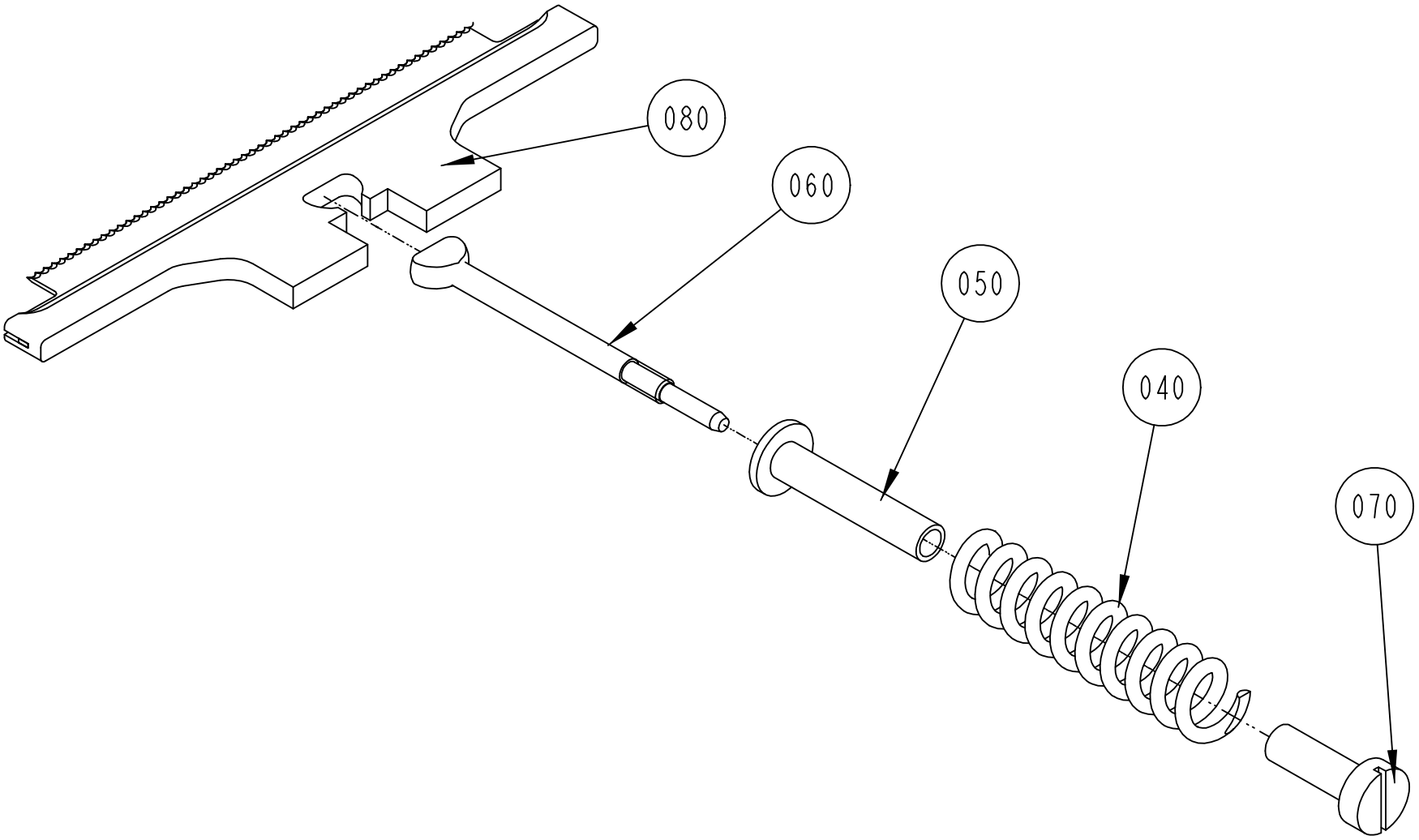

S-256208-13
ECN 72413

Pos	Part No	SP	UN	Qty	Description	Page No
TBA 0125S IH, TBA 0100B IH (See drawing on page: 306)						
080	1282645-0000	A		1	KNIFE	
TBA 0160S IH, TBA 0250S IH, TBA 0200M IH, TBA 0200S IH (See drawing on page: 308)						
080	1282647-0000	A		1	KNIFE	
TBA 0330S IH, TBA 0300S IH, TBA 0180B IH, TBA 0250B IH, TBA 0284B IH, TBA 0200B IH (See drawing on page: 304)						
080	1282646-0000	A		1	KNIFE	
Common Parts						
040	441726-0000	A		1	COMPRESSION SPRING	
050	272753-0000	A		1	STEERING	
060	456009-0000	A		1	LINK	
070	272755-0000	A		1	NUT	

Pos	Part No	SP	UN	Qty	Description	Page No

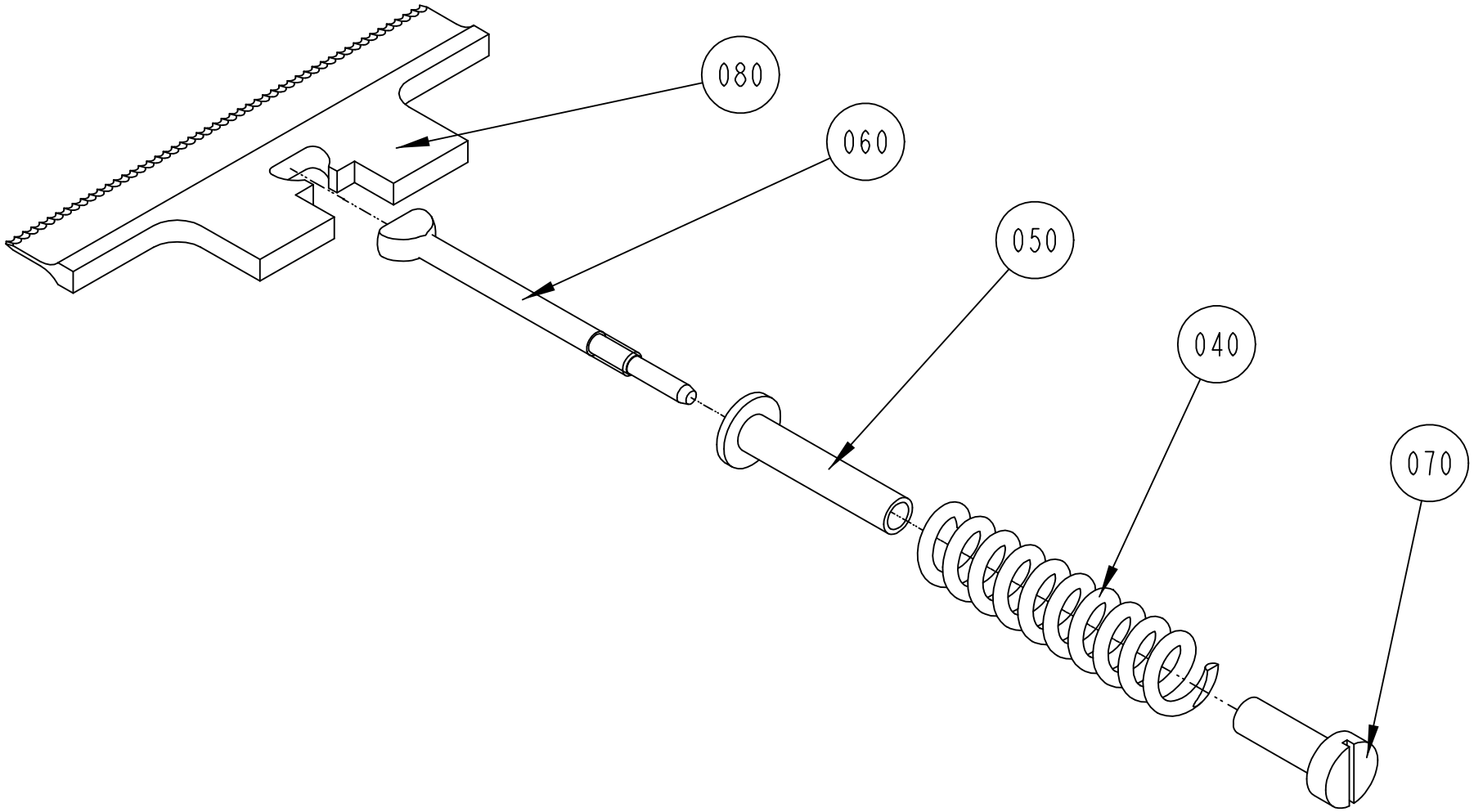

S-256208-14
ECN 72413

Pos	Part No	SP	UN	Qty	Description	Page No
TBA 0125S IH, TBA 0100B IH (See drawing on page: 306)						
080	1282645-0000	A		1	KNIFE	
TBA 0160S IH, TBA 0250S IH, TBA 0200M IH, TBA 0200S IH (See drawing on page: 308)						
080	1282647-0000	A		1	KNIFE	
TBA 0330S IH, TBA 0300S IH, TBA 0180B IH, TBA 0250B IH, TBA 0284B IH, TBA 0200B IH (See drawing on page: 304)						
080	1282646-0000	A		1	KNIFE	
Common Parts						
040	441726-0000	A		1	COMPRESSION SPRING	
050	272753-0000	A		1	STEERING	
060	456009-0000	A		1	LINK	
070	272755-0000	A		1	NUT	

Pos	Part No	SP	UN	Qty	Description	Page No

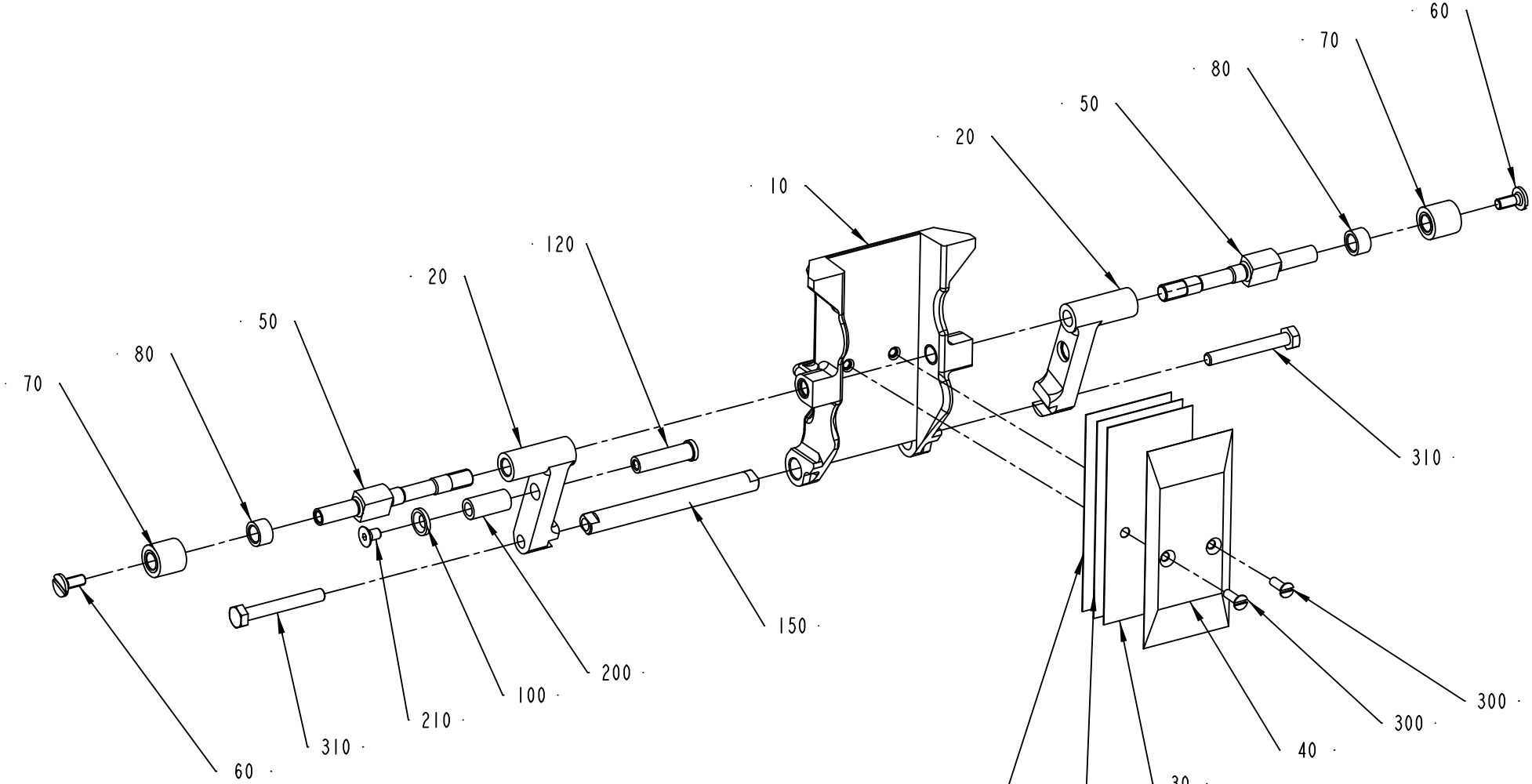

1519427-1
ECN 83326

Pos	Part No	SP	UN	Qty	Description	Page No
TBA 0100B (See drawing on page: 312)						
010	979751-0000	A		1	VOLUME FLAP 100	
020	1538942-0000	A		2	CARRIER	
030	979754-0000	A		3	VOLUME SHIM 100	
040	979755-0000	A		1	VOLUME BULGE 100	
050	979756-0000	A		2	SHAFT	
080	979757-0000	-		2	SPACER	
TBA 0125S (See drawing on page: 310)						
010	256849-0000	A		1	VOLUMEFLAP 125 ML	
020	1519374-0001	A		2	CARRIER	
030	272987-0000	A		3	VOLUME SHIM	
040	491868-0000	A		1	VOLUME BULGE	
050	752598-0000	A		2	SHAFT	
080	752615-0000	-		2	SPACER	
100	1519377-0000	-		1	WASHER	
120	1519376-0000	A		1	AXLE PIN	
210	312155-0323	-		1	SCREW EN 10642 MF6S M5X8 A480	
TBA 0160S (See drawing on page: 310)						
010	577211-0000	A		1	VOLUMEFLAP 160 ML	
020	1519374-0001	A		2	CARRIER	
030	577212-0000	A		3	VOLUME SHIM	
040	577213-0000	A		1	VOLUME BULGE 160 ML	
050	752598-0000	A		2	SHAFT	
080	752615-0000	-		2	SPACER	
100	1519377-0000	-		1	WASHER	
120	1519376-0000	A		1	AXLE PIN	
210	312155-0323	-		1	SCREW EN 10642 MF6S M5X8 A480	
TBA 0180B (See drawing on page: 310)						
010	752292-0000	A		1	VOLUMEFLAP 180 ML	
020	1519374-0002	A		2	CARRIER	
030	272986-0004	A		3	VOLUME SHIM	
040	272988-0004	A		1	VOLUME BULGE	
050	752598-0000	A		2	SHAFT	
080	752615-0000	-		2	SPACER	
100	1519377-0000	-		1	WASHER	
120	1519376-0000	A		1	AXLE PIN	
210	312155-0323	-		1	SCREW EN 10642 MF6S M5X8 A480	
TBA 0200B (See drawing on page: 310)						
010	752212-0000	A		1	VOLUME FLAP 200 ML	
020	1519374-0001	A		2	CARRIER	
030	272986-0003	A		3	VOLUME SHIM	
040	456005-0003	A		1	VOLUME BULGE	
050	752598-0000	A		2	SHAFT	
080	752615-0000	-		2	SPACER	
100	1519377-0000	-		1	WASHER	
120	1519376-0000	A		1	AXLE PIN	
210	312155-0323	-		1	SCREW EN 10642 MF6S M5X8 A480	
TBA 0200M (See drawing on page: 310)						
020	1519374-0001	A		2	CARRIER	
030	979861-0000	A		3	VOLUME SHIM	
040	979860-0000	A		1	VOLUME BULGE	
050	752598-0000	A		2	SHAFT	
080	752615-0000	-		2	SPACER	
100	1519377-0000	-		1	WASHER	
120	1519376-0000	A		1	AXLE PIN	
210	312155-0323	-		1	SCREW EN 10642 MF6S M5X8 A480	
TBA 0200S (See drawing on page: 310)						
010	752999-0000	A		1	VOLUME FLAP 200S	
020	1519374-0001	A		2	CARRIER	
030	272991-0000	A		3	VOLUME SHIM	
040	272990-0000	A		1	VOLUME BULGE	
050	752598-0000	A		2	SHAFT	
080	752615-0000	-		2	SPACER	
100	1519377-0000	-		1	WASHER	
120	1519376-0000	A		1	AXLE PIN	
210	312155-0323	-		1	SCREW EN 10642 MF6S M5X8 A480	
TBA 0250B (See drawing on page: 310)						
010	978366-0000	A		1	VOLUME FLAP 250 ML	
020	1519374-0001	A		2	CARRIER	
030	272986-0001	A		3	VOLUME SHIM	
040	456005-0001	A		1	VOLUME BULGE	
050	752598-0000	A		2	SHAFT	
080	752615-0000	-		2	SPACER	
100	1519377-0000	-		1	WASHER	
120	1519376-0000	A		1	AXLE PIN	
210	312155-0323	-		1	SCREW EN 10642 MF6S M5X8 A480	

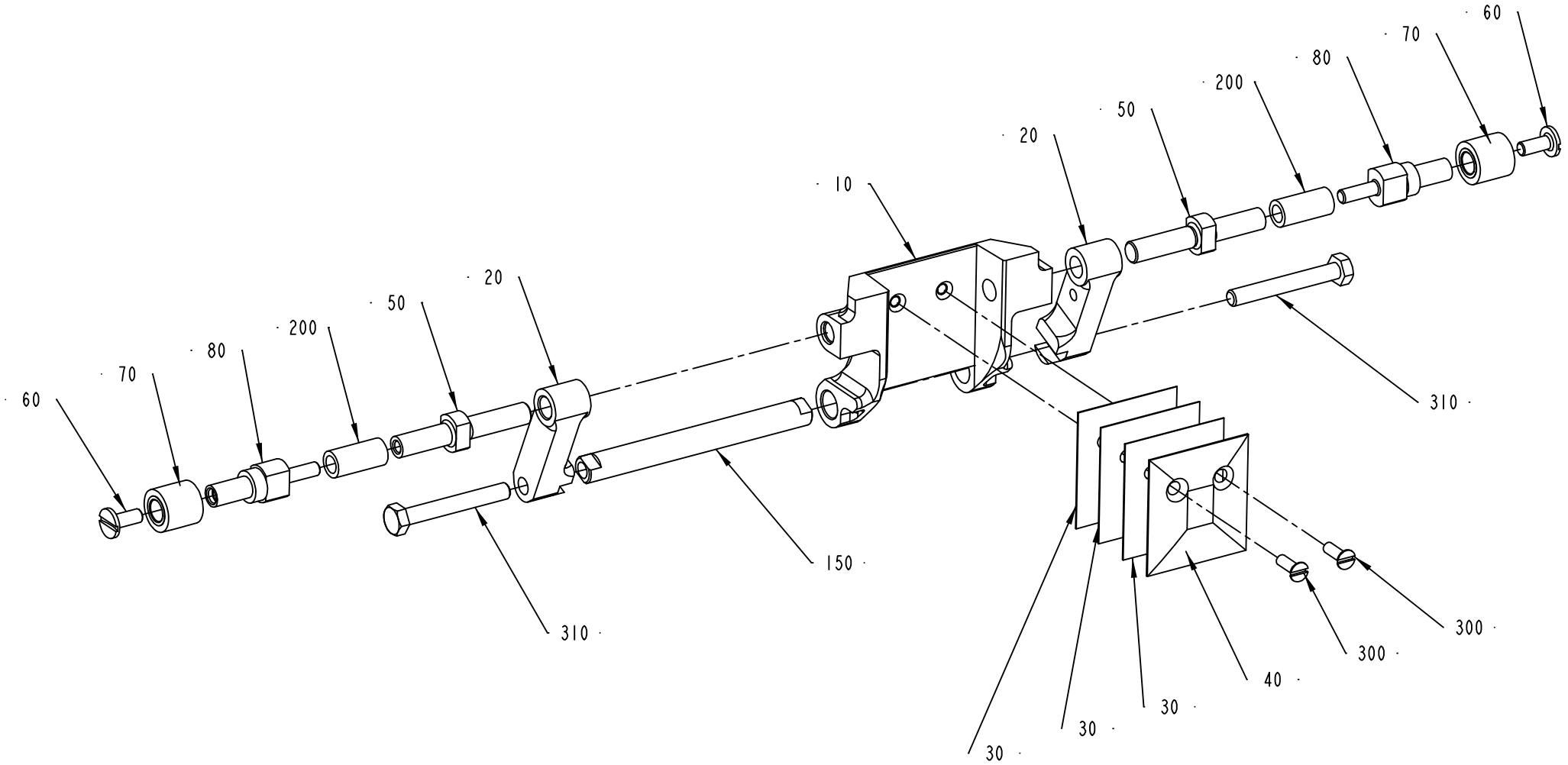

1519427-3
ECN 83326

Pos	Part No	SP	UN	Qty	Description	Page No
TBA 0250S (Cont'd) (See drawing on page: 310)						
010	574365-0000	A		1	VOLUMEFLAP 250S	
020	1519374-0001	A		2	CARRIER	
030	574366-0000	A		3	VOLUME SHIM	
040	574367-0000	A		1	VOLUME BULGE	
050	752598-0000	A		2	SHAFT	
080	752615-0000	-		2	SPACER	
100	1519377-0000	-		1	WASHER	
120	1519376-0000	A		1	AXLE PIN	
210	312155-0323	-		1	SCREW EN 10642 MF6S M5X8 A480	
TBA 0284B (See drawing on page: 310)						
010	978031-0000	A		1	VOLUMEFLAP 284 ML	
020	1519374-0001	A		2	CARRIER	
030	272986-0005	A		3	VOLUME SHIM	
040	752739-0000	A		1	VOLUME BULGE	
050	752598-0000	A		2	SHAFT	
080	752615-0000	-		2	SPACER	
100	1519377-0000	-		1	WASHER	
120	1519376-0000	A		1	AXLE PIN	
210	312155-0323	-		1	SCREW EN 10642 MF6S M5X8 A480	
TBA 0300S (See drawing on page: 310)						
010	978031-0000	A		1	VOLUMEFLAP 284 ML	
020	1519374-0001	A		2	CARRIER	
030	272986-0003	A		3	VOLUME SHIM	
040	979792-0000	A		1	VOLUME BULGE	
050	752598-0000	A		2	SHAFT	
080	752615-0000	-		2	SPACER	
100	1519377-0000	-		1	WASHER	
120	1519376-0000	A		1	AXLE PIN	
210	312155-0323	-		1	SCREW EN 10642 MF6S M5X8 A480	
TBA 0330S (See drawing on page: 310)						
010	582163-0000	A		1	VOLUME FLAP 330S	
020	1519374-0001	A		2	CARRIER	
030	272986-0006	A		3	VOLUME SHIM 330S	
040	979931-0000	A		1	VOLUME BULGE	
050	752598-0000	A		2	SHAFT	
080	752615-0000	-		2	SPACER	
100	1519377-0000	-		1	WASHER	
120	1519376-0000	A		1	AXLE PIN	
210	312155-0323	-		1	SCREW EN 10642 MF6S M5X8 A480	
Common Parts						
060	256859-0000	-		2	SCREW	
070	256860-0000	A		2	ROLL	
150	1519375-0001	A		1	SHAFT	
200	90166-0159	B	MM	25	RUBBER HOSE	
300	312145-0291	-		2	SCREW COUNT.SLOT.HD. 4X12 A4	
310	312105-0379	-		2	SCREW M6S ISO 4014 M6X45 A480	

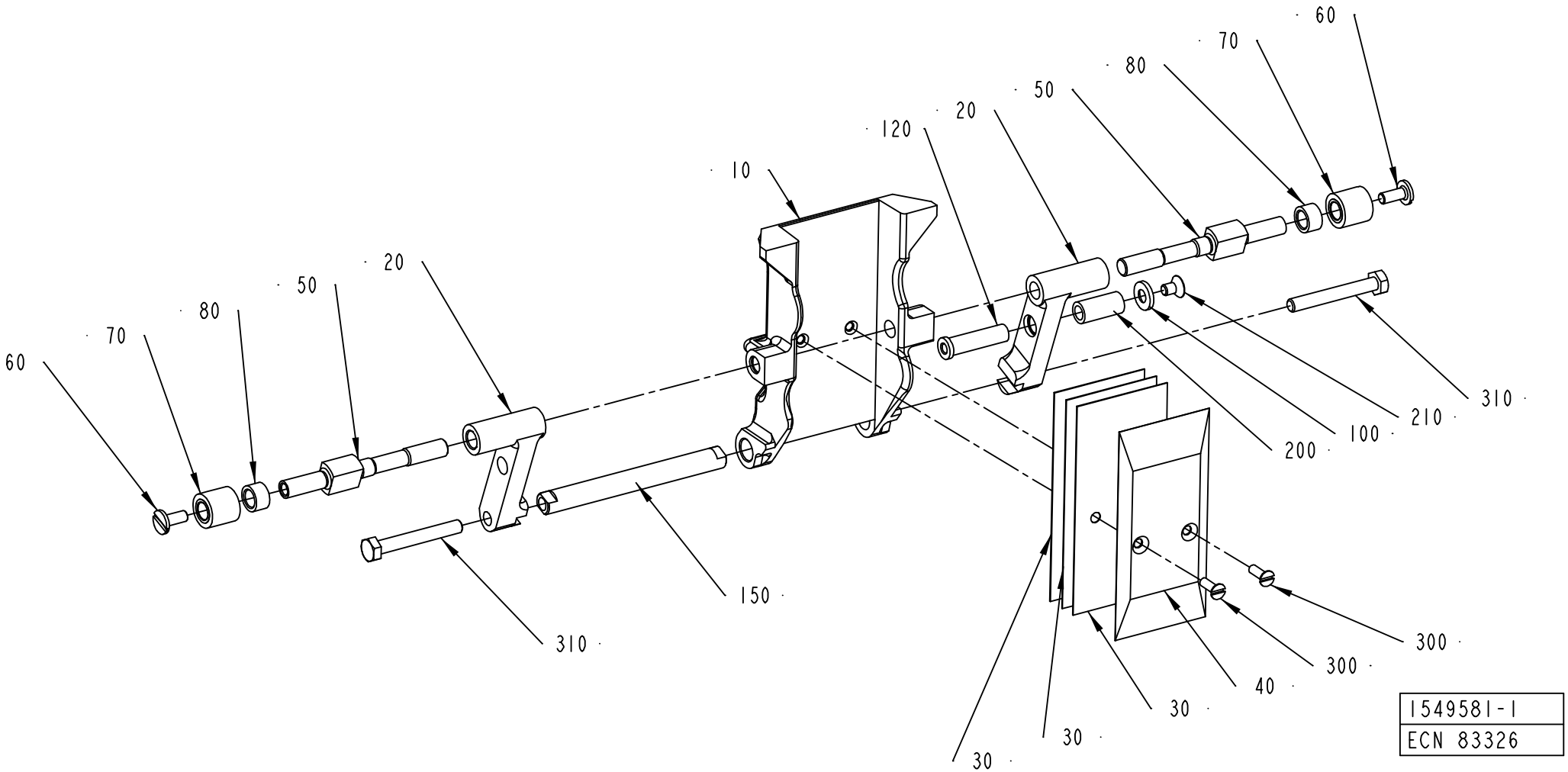
60
70
80
50
20
10
120
20
50
80
70
60
310
150
310
200
100
210
310
300
300
40
30
30
30
1549581-1
ECN 83326

ECM: 119338 - 20030113
Group number: 1549581-0100
Assembly Drawing: 1549581-1_1_AA

This list covers pages from 314 to 317

Pos	Part No	SP	UN	Qty	Description	Page No
TBA 0100B (See drawing on page: 316)						
010	979751-0000	A		1	VOLUME FLAP 100	
020	1538942-0000	A		2	CARRIER	
030	979754-0000	A		3	VOLUME SHIM 100	
040	979755-0000	A		1	VOLUME BULGE 100	
050	979756-0000	A		2	SHAFT	
080	979757-0000	-		2	SPACER	
TBA 0125S (See drawing on page: 314)						
010	256849-0000	A		1	VOLUMEFLAP 125 ML	
020	1519374-0001	A		2	CARRIER	
030	272987-0000	A		3	VOLUME SHIM	
040	491868-0000	A		1	VOLUME BULGE	
050	752598-0000	A		2	SHAFT	
080	752615-0000	-		2	SPACER	
100	1519377-0000	-		1	WASHER	
120	1519376-0000	A		1	AXLE PIN	
210	312155-0323	-		1	SCREW EN 10642 MF6S M5X8 A480	
TBA 0160S (See drawing on page: 314)						
010	577211-0000	A		1	VOLUMEFLAP 160 ML	
020	1519374-0001	A		2	CARRIER	
030	577212-0000	A		3	VOLUME SHIM	
040	577213-0000	A		1	VOLUME BULGE 160 ML	
050	752598-0000	A		2	SHAFT	
080	752615-0000	-		2	SPACER	
100	1519377-0000	-		1	WASHER	
120	1519376-0000	A		1	AXLE PIN	
210	312155-0323	-		1	SCREW EN 10642 MF6S M5X8 A480	
TBA 0180B (See drawing on page: 314)						
010	752292-0000	A		1	VOLUMEFLAP 180 ML	
020	1519374-0002	A		2	CARRIER	
030	272986-0004	A		3	VOLUME SHIM	
040	272988-0004	A		1	VOLUME BULGE	
050	752598-0000	A		2	SHAFT	
080	752615-0000	-		2	SPACER	
100	1519377-0000	-		1	WASHER	
120	1519376-0000	A		1	AXLE PIN	
210	312155-0323	-		1	SCREW EN 10642 MF6S M5X8 A480	
TBA 0200B (See drawing on page: 314)						
010	752212-0000	A		1	VOLUME FLAP 200 ML	
020	1519374-0001	A		2	CARRIER	
030	272986-0003	A		3	VOLUME SHIM	
040	456005-0003	A		1	VOLUME BULGE	
050	752598-0000	A		2	SHAFT	
080	752615-0000	-		2	SPACER	
100	1519377-0000	-		1	WASHER	
120	1519376-0000	A		1	AXLE PIN	
210	312155-0323	-		1	SCREW EN 10642 MF6S M5X8 A480	
TBA 0200M (See drawing on page: 314)						
020	1519374-0001	A		2	CARRIER	
030	979861-0000	A		3	VOLUME SHIM	
040	979860-0000	A		1	VOLUME BULGE	
050	752598-0000	A		2	SHAFT	
080	752615-0000	-		2	SPACER	
100	1519377-0000	-		1	WASHER	
120	1519376-0000	A		1	AXLE PIN	
210	312155-0323	-		1	SCREW EN 10642 MF6S M5X8 A480	
TBA 0200S (See drawing on page: 314)						
010	752999-0000	A		1	VOLUME FLAP 200S	
020	1519374-0001	A		2	CARRIER	
030	272991-0000	A		3	VOLUME SHIM	
040	272990-0000	A		1	VOLUME BULGE	
050	752598-0000	A		2	SHAFT	
080	752615-0000	-		2	SPACER	
100	1519377-0000	-		1	WASHER	
120	1519376-0000	A		1	AXLE PIN	
210	312155-0323	-		1	SCREW EN 10642 MF6S M5X8 A480	
TBA 0250B (See drawing on page: 314)						
010	978366-0000	A		1	VOLUME FLAP 250 ML	
020	1519374-0001	A		2	CARRIER	
030	272986-0001	A		3	VOLUME SHIM	
040	456005-0001	A		1	VOLUME BULGE	
050	752598-0000	A		2	SHAFT	
080	752615-0000	-		2	SPACER	
100	1519377-0000	-		1	WASHER	
120	1519376-0000	A		1	AXLE PIN	
210	312155-0323	-		1	SCREW EN 10642 MF6S M5X8 A480	

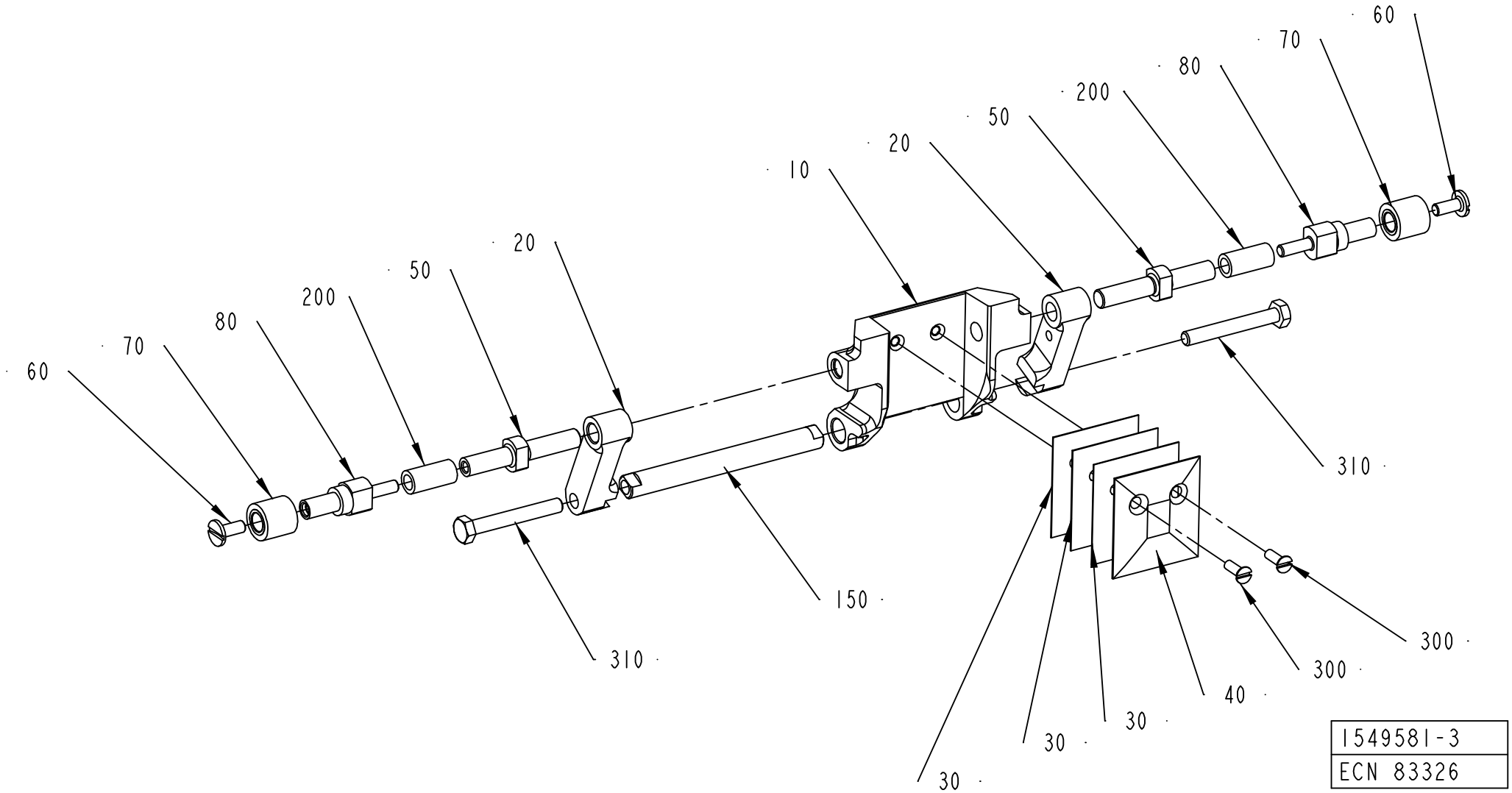
60
70
80
200
50
20
10
20
50
200
80
70
60
310
150
310
30
30
30
40
300
300
300
1549581-3
ECN 83326

Pos	Part No	SP	UN	Qty	Description	Page No
TBA 0250S (Cont'd) (See drawing on page: 314)						
010	574365-0000	A		1	VOLUMEFLAP 250S	
020	1519374-0001	A		2	CARRIER	
030	574366-0000	A		3	VOLUME SHIM	
040	574367-0000	A		1	VOLUME BULGE	
050	752598-0000	A		2	SHAFT	
080	752615-0000	-		2	SPACER	
100	1519377-0000	-		1	WASHER	
120	1519376-0000	A		1	AXLE PIN	
210	312155-0323	-		1	SCREW EN 10642 MF6S M5X8 A480	
TBA 0284B (See drawing on page: 314)						
010	978031-0000	A		1	VOLUMEFLAP 284 ML	
020	1519374-0001	A		2	CARRIER	
030	272986-0005	A		3	VOLUME SHIM	
040	752739-0000	A		1	VOLUME BULGE	
050	752598-0000	A		2	SHAFT	
080	752615-0000	-		2	SPACER	
100	1519377-0000	-		1	WASHER	
120	1519376-0000	A		1	AXLE PIN	
210	312155-0323	-		1	SCREW EN 10642 MF6S M5X8 A480	
TBA 0300S (See drawing on page: 314)						
010	978031-0000	A		1	VOLUMEFLAP 284 ML	
020	1519374-0001	A		2	CARRIER	
030	272986-0003	A		3	VOLUME SHIM	
040	979792-0000	A		1	VOLUME BULGE	
050	752598-0000	A		2	SHAFT	
080	752615-0000	-		2	SPACER	
100	1519377-0000	-		1	WASHER	
120	1519376-0000	A		1	AXLE PIN	
210	312155-0323	-		1	SCREW EN 10642 MF6S M5X8 A480	
TBA 0330S (See drawing on page: 314)						
010	582163-0000	A		1	VOLUME FLAP 330S	
020	1519374-0001	A		2	CARRIER	
030	272986-0006	A		3	VOLUME SHIM 330S	
040	979931-0000	A		1	VOLUME BULGE	
050	752598-0000	A		2	SHAFT	
080	752615-0000	-		2	SPACER	
100	1519377-0000	-		1	WASHER	
120	1519376-0000	A		1	AXLE PIN	
210	312155-0323	-		1	SCREW EN 10642 MF6S M5X8 A480	
Common Parts						
060	256859-0000	-		2	SCREW	
070	256860-0000	A		2	ROLL	
150	1519375-0001	A		1	SHAFT	
200	90166-0159	B	MM	25	RUBBER HOSE	
300	312145-0291	-		2	SCREW COUNT.SLOT.HD. 4X12 A4	
310	312105-0379	-		2	SCREW M6S ISO 4014 M6X45 A480	

Machine Type | Group Description | Used-In | Group Number | Page No

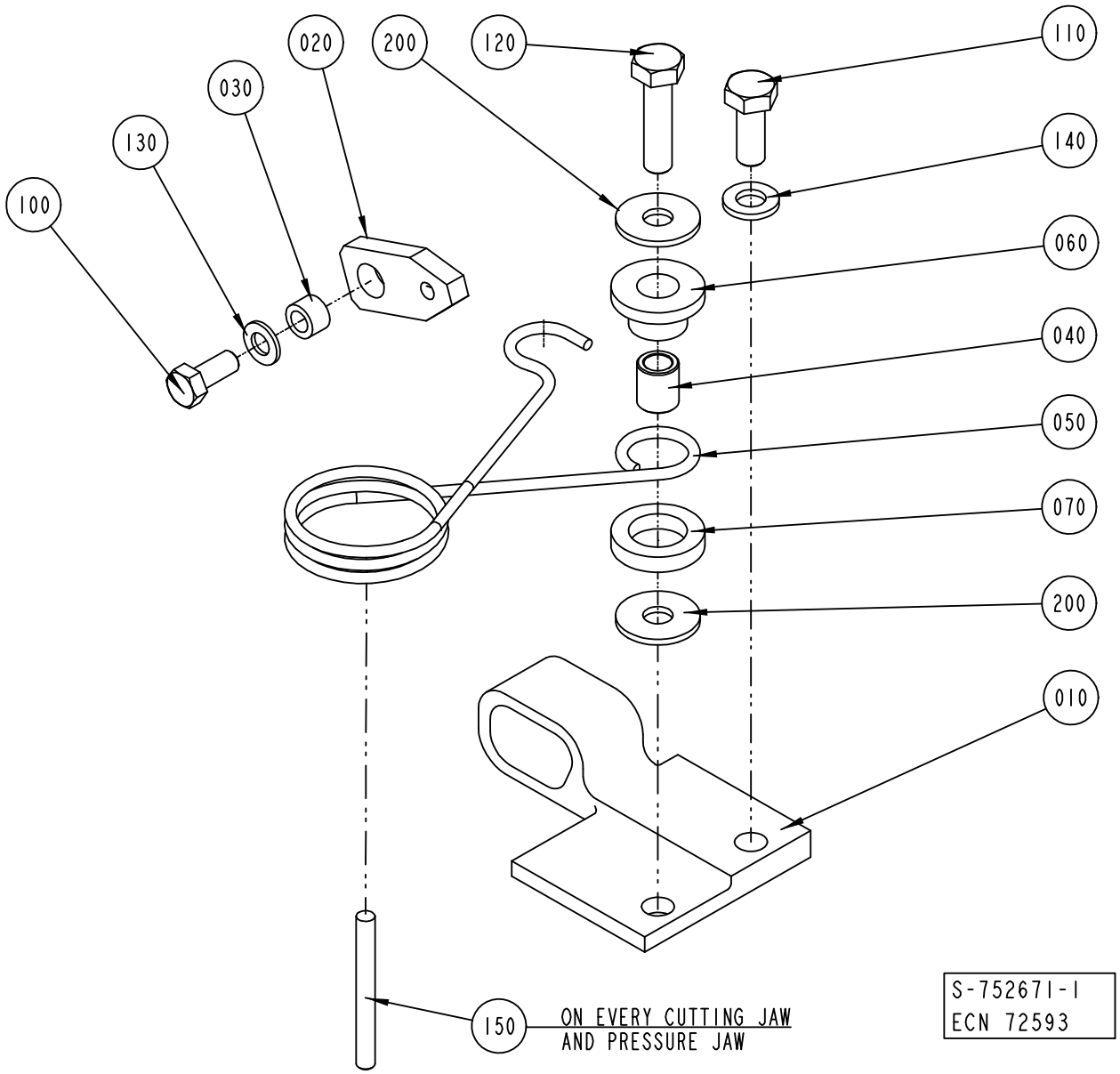
020
200
120
110
030
130
140
100
060
040
050
070
200
010
150
ON EVERY CUTTING JAW
AND PRESSURE JAW
S-752671-1
ECN 72593

ECM: 115645 - 20020930
Group number: 752671-0100
Assembly Drawing: 752671-1_1_AC

This list covers pages from 318 to 321

Pos	Part No	SP	UN	Qty	Description	Page No
TBA 0100B (See drawing on page: 320)						
010	979758-0000	A		1	STOP PERF 1	
040	979760-0000	B		1	SPACER	
050	752678-0000	A		1	SPRING PERF 1	
060	979761-0000	B		1	SLEEVE	
070	752681-0000	B		1	WASHER	
110	312155-0368	-		2	SCREW EN 10642 MF6S M6X16 A480	
150	311103-0278	-		1	PARALLELL PIN, M6, 4X35 MM	
TBA 0125S (See drawing on page: 318)						
010	752563-0000	A		1	STOP PERF 1	
040	752673-0000	B		1	SPACER	
050	752678-0000	A		1	SPRING PERF 1	
060	752680-0000	B		1	SLEEVE	
070	752681-0000	B		1	WASHER	
110	312105-0368	-		1	SCREW M6S M6X16 A280	
120	312105-0372	-		1	SCREW M6S ISO 4017 M6X25 A480	
140	315105-0153	-		1	WASHER ISO 7089-6-200 HV-A4	
150	311103-0280	-		1	PARALLELL PIN, M6, 4X40 MM	
200	90005-0060	-		2	WASHER PLAIN, RBS 6,4/M6)/18,H=1,5	
TBA 0180B (See drawing on page: 318)						
010	752561-0000	A		1	STOP PERF 1	
040	752673-0000	B		1	SPACER	
050	752678-0000	A		1	SPRING PERF 1	
060	752680-0000	B		1	SLEEVE	
070	752681-0000	B		1	WASHER	
110	312105-0368	-		1	SCREW M6S M6X16 A280	
120	312105-0372	-		1	SCREW M6S ISO 4017 M6X25 A480	
140	315105-0153	-		1	WASHER ISO 7089-6-200 HV-A4	
150	311103-0280	-		1	PARALLELL PIN, M6, 4X40 MM	
200	90005-0060	-		2	WASHER PLAIN, RBS 6,4/M6)/18,H=1,5	
TBA 0330S, TBA 0300S, TBA 0160S, TBA 0200B, TBA 0250S, TBA 0284B, TBA 0200S, TBA 0200M, TBA 0250B (See drawing on page: 318)						
010	752559-0000	A		1	STOP PERF 1	
040	752673-0000	B		1	SPACER	
050	752678-0000	A		1	SPRING PERF 1	
060	752680-0000	B		1	SLEEVE	
070	752681-0000	B		1	WASHER	
110	312105-0368	-		1	SCREW M6S M6X16 A280	
120	312105-0372	-		1	SCREW M6S ISO 4017 M6X25 A480	
140	315115-0153	-		1	WASHER PLAIN, TBRB 6,4/12 H=3	
150	311103-0280	-		1	PARALLELL PIN, M6, 4X40 MM	
200	90005-0060	-		2	WASHER PLAIN, RBS 6,4/M6)/18,H=1,5	
Common Parts						
020	752425-0000	A		1	LINK	
030	752556-0000	B		1	SPACER	
100	312105-0327	-		1	SCREW M6S ISO 4017 M5X12 A480	
130	315105-0146	-		1	WASHER ISO 7089-5-200 HV-A4	

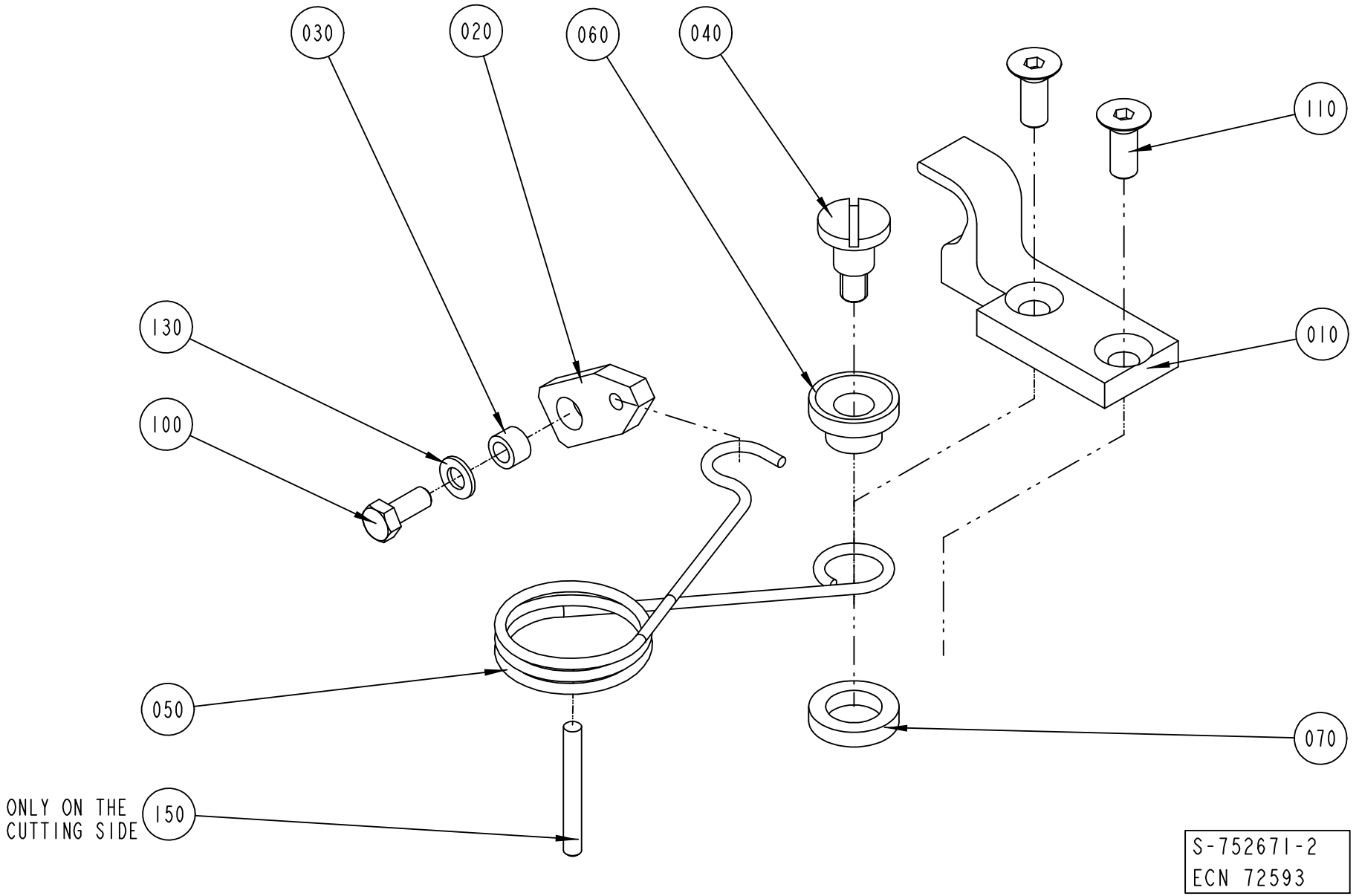
030
020
060
040
110
130
010
100
050
070
ONLY ON THE CUTTING SIDE
150
S-752671-2
ECN 72593

ECM: 115645 - 20020930
Group number: 752671-0100
Assembly Drawing: 752671-2_1_AB

This list covers pages from 318 to 321

Pos	Part No	SP	UN	Qty	Description	Page No
TBA 0100B (See drawing on page: 320)						
010	979758-0000	A		1	STOP PERF 1	
040	979760-0000	B		1	SPACER	
050	752678-0000	A		1	SPRING PERF 1	
060	979761-0000	B		1	SLEEVE	
070	752681-0000	B		1	WASHER	
110	312155-0368	-		2	SCREW EN 10642 MF6S M6X16 A480	
150	311103-0278	-		1	PARALLELL PIN, M6, 4X35 MM	
TBA 0125S (See drawing on page: 318)						
010	752563-0000	A		1	STOP PERF 1	
040	752673-0000	B		1	SPACER	
050	752678-0000	A		1	SPRING PERF 1	
060	752680-0000	B		1	SLEEVE	
070	752681-0000	B		1	WASHER	
110	312105-0368	-		1	SCREW M6S M6X16 A280	
120	312105-0372	-		1	SCREW M6S ISO 4017 M6X25 A480	
140	315105-0153	-		1	WASHER ISO 7089-6-200 HV-A4	
150	311103-0280	-		1	PARALLELL PIN, M6, 4X40 MM	
200	90005-0060	-		2	WASHER PLAIN, RBS 6,4/M6)/18,H=1,5	
TBA 0180B (See drawing on page: 318)						
010	752561-0000	A		1	STOP PERF 1	
040	752673-0000	B		1	SPACER	
050	752678-0000	A		1	SPRING PERF 1	
060	752680-0000	B		1	SLEEVE	
070	752681-0000	B		1	WASHER	
110	312105-0368	-		1	SCREW M6S M6X16 A280	
120	312105-0372	-		1	SCREW M6S ISO 4017 M6X25 A480	
140	315105-0153	-		1	WASHER ISO 7089-6-200 HV-A4	
150	311103-0280	-		1	PARALLELL PIN, M6, 4X40 MM	
200	90005-0060	-		2	WASHER PLAIN, RBS 6,4/M6)/18,H=1,5	
TBA 0330S, TBA 0300S, TBA 0160S, TBA 0200B, TBA 0250S, TBA 0284B, TBA 0200S, TBA 0200M, TBA 0250B (See drawing on page: 318)						
010	752559-0000	A		1	STOP PERF 1	
040	752673-0000	B		1	SPACER	
050	752678-0000	A		1	SPRING PERF 1	
060	752680-0000	B		1	SLEEVE	
070	752681-0000	B		1	WASHER	
110	312105-0368	-		1	SCREW M6S M6X16 A280	
120	312105-0372	-		1	SCREW M6S ISO 4017 M6X25 A480	
140	315115-0153	-		1	WASHER PLAIN, TBRB 6,4/12 H=3	
150	311103-0280	-		1	PARALLELL PIN, M6, 4X40 MM	
200	90005-0060	-		2	WASHER PLAIN, RBS 6,4/M6)/18,H=1,5	
Common Parts						
020	752425-0000	A		1	LINK	
030	752556-0000	B		1	SPACER	
100	312105-0327	-		1	SCREW M6S ISO 4017 M5X12 A480	
130	315105-0146	-		1	WASHER ISO 7089-5-200 HV-A4	

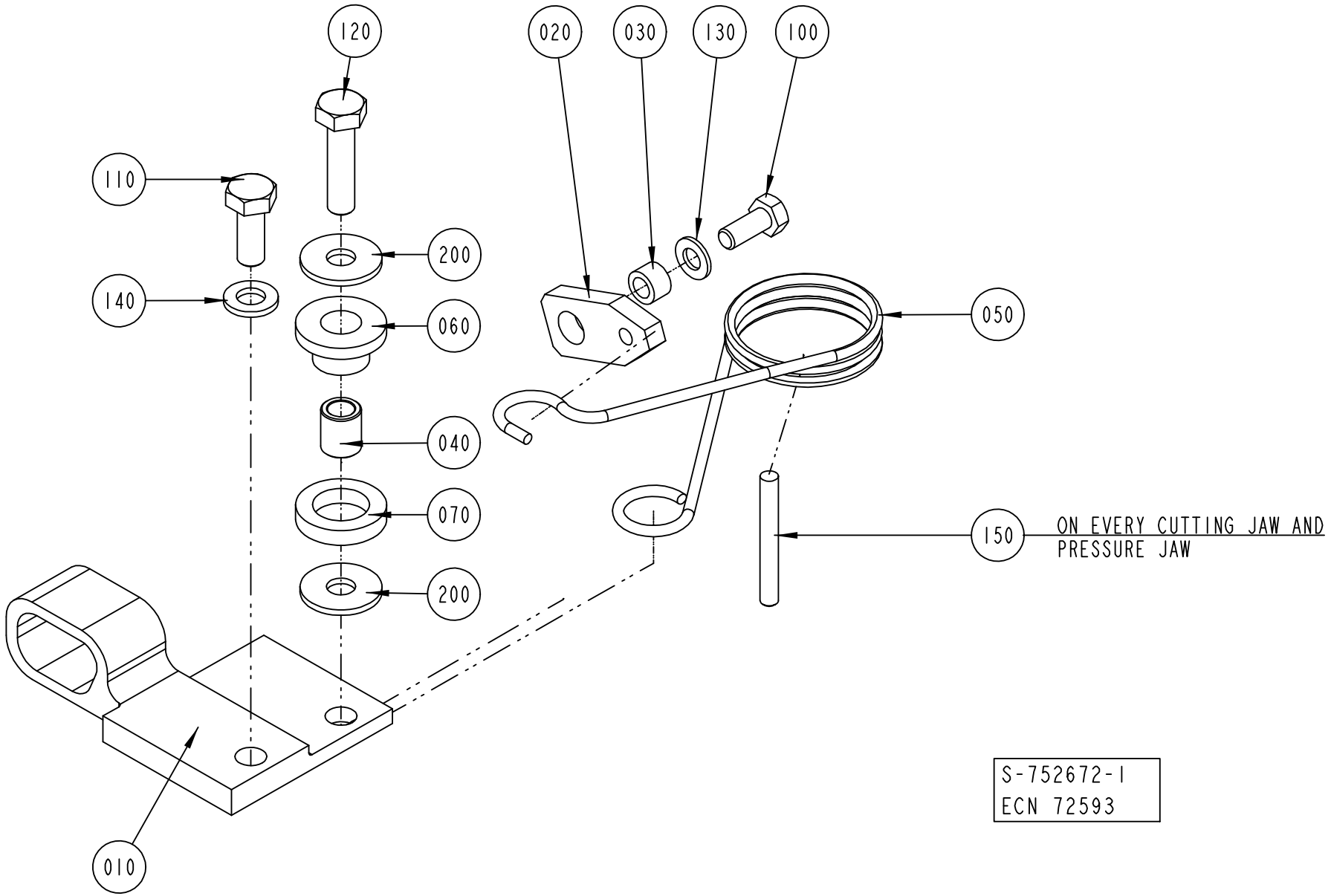
120
020
030
130
100
110
200
140
060
050
040
070
150
ON EVERY CUTTING JAW AND PRESSURE JAW
200
010
S-752672-1
ECN 72593

ECM: 115646 - 20020930
Group number: 752672-0100
Assembly Drawing: 752672-1_1_AC

This list covers pages from 322 to 325

Pos	Part No	SP	UN	Qty	Description	Page No
TBA 0100B (See drawing on page: 324)						
010	979759-0000	A		1	STOP PERF 2	
040	979760-0000	B		1	SPACER	
050	752679-0000	A		1	SPRING PERF 2	
060	979761-0000	B		1	SLEEVE	
070	752681-0000	B		1	WASHER	
110	312155-0368	-		2	SCREW EN 10642 MF6S M6X16 A480	
150	311103-0278	-		1	PARALLELL PIN, M6, 4X35 MM	
TBA 0125S (See drawing on page: 322)						
010	752564-0000	A		1	STOP PERF 2	
040	752673-0000	B		1	SPACER	
050	752679-0000	A		1	SPRING PERF 2	
060	752680-0000	B		1	SLEEVE	
070	752681-0000	B		1	WASHER	
110	312105-0368	-		1	SCREW M6S M6X16 A280	
120	312105-0372	-		1	SCREW M6S ISO 4017 M6X25 A480	
140	315105-0153	-		1	WASHER ISO 7089-6-200 HV-A4	
150	311103-0280	-		1	PARALLELL PIN, M6, 4X40 MM	
200	90005-0060	-		2	WASHER PLAIN, RBS 6,4/M6)/18,H=1,5	
TBA 0180B (See drawing on page: 322)						
010	752562-0000	A		1	STOP PERF 2	
040	752673-0000	B		1	SPACER	
050	752679-0000	A		1	SPRING PERF 2	
060	752680-0000	B		1	SLEEVE	
070	752681-0000	B		1	WASHER	
110	312105-0368	-		1	SCREW M6S M6X16 A280	
120	312105-0372	-		1	SCREW M6S ISO 4017 M6X25 A480	
140	315105-0153	-		1	WASHER ISO 7089-6-200 HV-A4	
150	311103-0280	-		1	PARALLELL PIN, M6, 4X40 MM	
200	90005-0060	-		2	WASHER PLAIN, RBS 6,4/M6)/18,H=1,5	
TBA 0330S, TBA 0300S, TBA 0160S, TBA 0200B, TBA 0250S, TBA 0284B, TBA 0200S, TBA 0200M, TBA 0250B (See drawing on page: 322)						
010	752560-0000	A		1	STOP PERF 2	
040	752673-0000	B		1	SPACER	
050	752679-0000	A		1	SPRING PERF 2	
060	752680-0000	B		1	SLEEVE	
070	752681-0000	B		1	WASHER	
110	312105-0368	-		1	SCREW M6S M6X16 A280	
120	312105-0372	-		1	SCREW M6S ISO 4017 M6X25 A480	
140	315115-0153	-		1	WASHER PLAIN, TBRB 6,4/12 H=3	
150	311103-0280	-		1	PARALLELL PIN, M6, 4X40 MM	
200	90005-0060	-		2	WASHER PLAIN, RBS 6,4/M6)/18,H=1,5	
Common Parts						
020	752425-0000	A		1	LINK	
030	752556-0000	B		1	SPACER	
100	312105-0327	-		1	SCREW M6S ISO 4017 M5X12 A480	
130	315105-0146	-		1	WASHER ISO 7089-5-200 HV-A4	

SHOCK ABSORBER

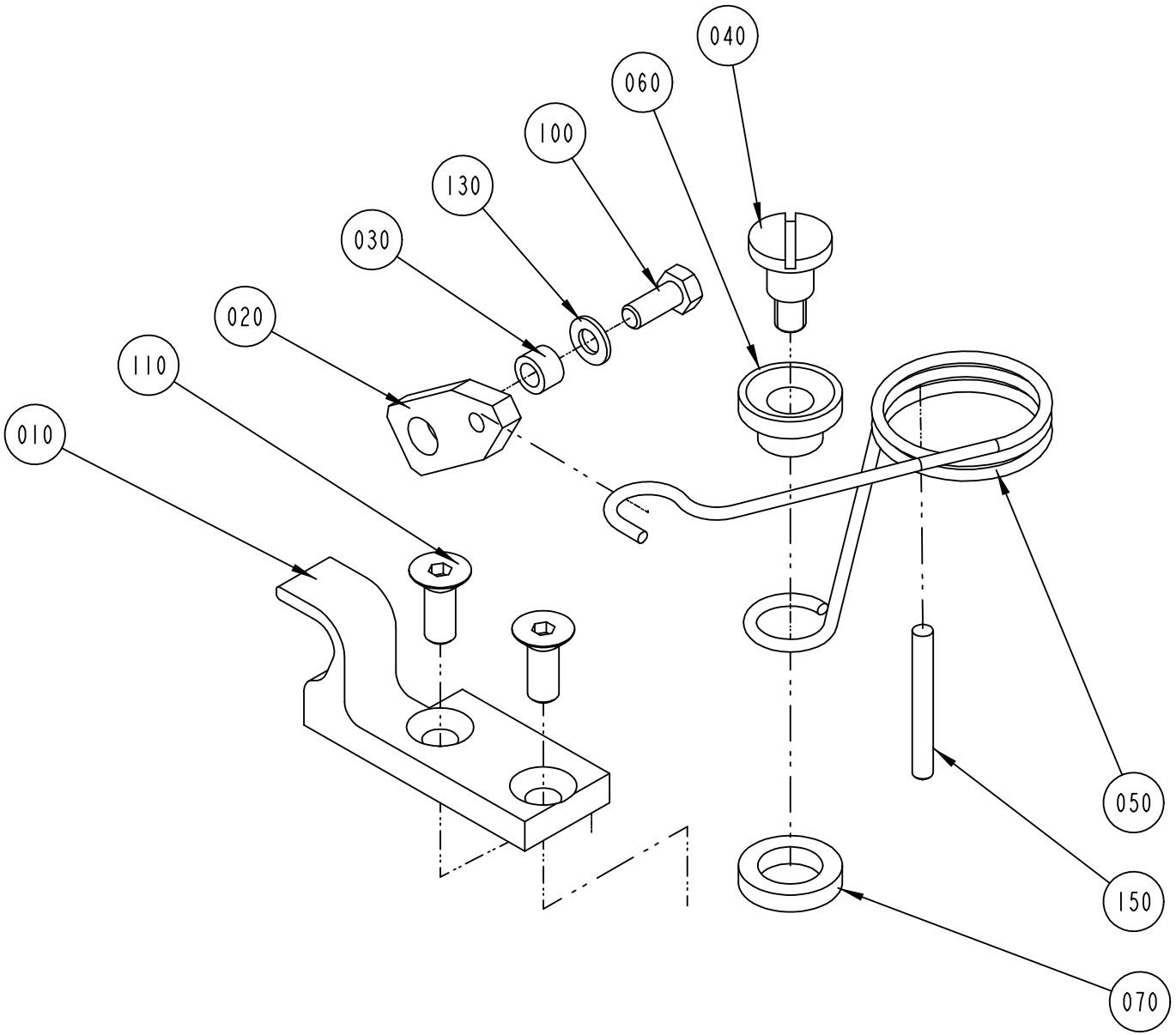

S-752672-2
ECN 72593

ECM: 115646 - 20020930
Group number: 752672-0100
Assembly Drawing: 752672-2_1_AB

This list covers pages from 322 to 325

Pos	Part No	SP	UN	Qty	Description	Page No
TBA 0100B (See drawing on page: 324)						
010	979759-0000	A		1	STOP PERF 2	
040	979760-0000	B		1	SPACER	
050	752679-0000	A		1	SPRING PERF 2	
060	979761-0000	B		1	SLEEVE	
070	752681-0000	B		1	WASHER	
110	312155-0368	-		2	SCREW EN 10642 MF6S M6X16 A480	
150	311103-0278	-		1	PARALLELL PIN, M6, 4X35 MM	
TBA 0125S (See drawing on page: 322)						
010	752564-0000	A		1	STOP PERF 2	
040	752673-0000	B		1	SPACER	
050	752679-0000	A		1	SPRING PERF 2	
060	752680-0000	B		1	SLEEVE	
070	752681-0000	B		1	WASHER	
110	312105-0368	-		1	SCREW M6S M6X16 A280	
120	312105-0372	-		1	SCREW M6S ISO 4017 M6X25 A480	
140	315105-0153	-		1	WASHER ISO 7089-6-200 HV-A4	
150	311103-0280	-		1	PARALLELL PIN, M6, 4X40 MM	
200	90005-0060	-		2	WASHER PLAIN, RBS 6,4/M6)/18,H=1,5	
TBA 0180B (See drawing on page: 322)						
010	752562-0000	A		1	STOP PERF 2	
040	752673-0000	B		1	SPACER	
050	752679-0000	A		1	SPRING PERF 2	
060	752680-0000	B		1	SLEEVE	
070	752681-0000	B		1	WASHER	
110	312105-0368	-		1	SCREW M6S M6X16 A280	
120	312105-0372	-		1	SCREW M6S ISO 4017 M6X25 A480	
140	315105-0153	-		1	WASHER ISO 7089-6-200 HV-A4	
150	311103-0280	-		1	PARALLELL PIN, M6, 4X40 MM	
200	90005-0060	-		2	WASHER PLAIN, RBS 6,4/M6)/18,H=1,5	
TBA 0330S, TBA 0300S, TBA 0160S, TBA 0200B, TBA 0250S, TBA 0284B, TBA 0200S, TBA 0200M, TBA 0250B (See drawing on page: 322)						
010	752560-0000	A		1	STOP PERF 2	
040	752673-0000	B		1	SPACER	
050	752679-0000	A		1	SPRING PERF 2	
060	752680-0000	B		1	SLEEVE	
070	752681-0000	B		1	WASHER	
110	312105-0368	-		1	SCREW M6S M6X16 A280	
120	312105-0372	-		1	SCREW M6S ISO 4017 M6X25 A480	
140	315115-0153	-		1	WASHER PLAIN, TBRB 6,4/12 H=3	
150	311103-0280	-		1	PARALLELL PIN, M6, 4X40 MM	
200	90005-0060	-		2	WASHER PLAIN, RBS 6,4/M6)/18,H=1,5	
Common Parts						
020	752425-0000	A		1	LINK	
030	752556-0000	B		1	SPACER	
100	312105-0327	-		1	SCREW M6S ISO 4017 M5X12 A480	
130	315105-0146	-		1	WASHER ISO 7089-5-200 HV-A4	

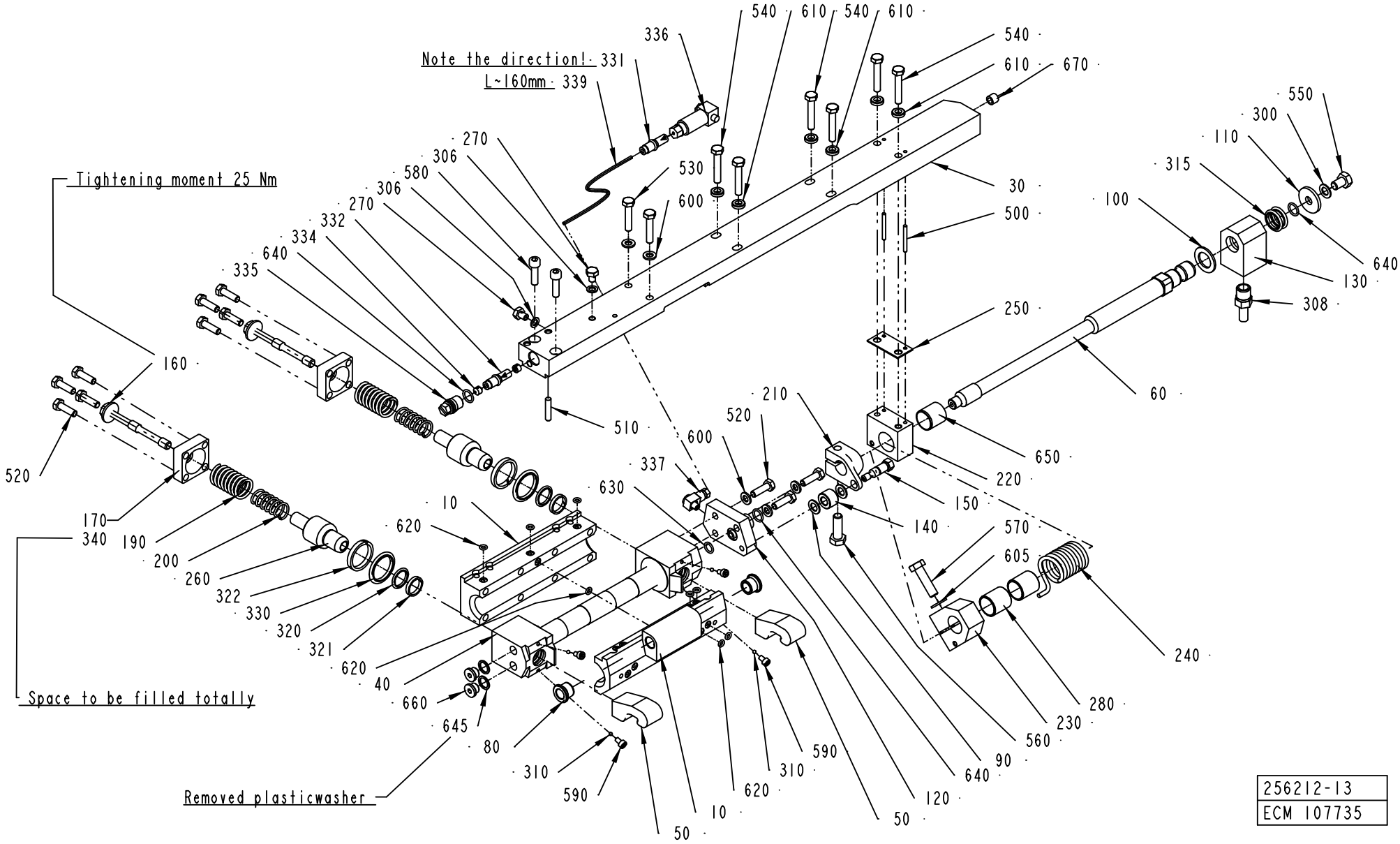
Note the direction! L~160mm
331
339
336
540
610
540
610
540
610
670
550
300
110
315
100
640
130
308
30
500
250
60
530
600
270
306
580
306
270
332
334
640
335
Tightening moment 25 Nm
160
520
170
340
190
200
260
322
330
320
321
620
40
660
645
Space to be filled totally
Removed plasticwasher
80
310
590
50
10
620
310
590
120
640
90
560
230
280
240
570
605
140
150
220
650
210
520
600
337
630
10
620
510
256212-13
ECM 107735

ECM: 109871 - 20030113
Group number: 256212-0600
Assembly Drawing: 256212-13_1_AD

This list covers pages from 326 to 329

Pos	Part No	SP	UN	Qty	Description	Page No
TBA 0100B						
010	2552528-0000	A		1	BEARING HOUSING	
030	979764-0000	A		1	CARRIER RIGHT 100	
080	1517641-0000	A		2	FLANGE BUSHING	
TBA 0125S						
010	2552528-0000	A		1	BEARING HOUSING	
030	979793-0000	A		1	CARRIER	
080	1517641-0000	A		2	FLANGE BUSHING	
TBA 0160S, TBA 0200S						
010	2552530-0000	A		1	BEARING HOUSING	
030	979793-0000	A		1	CARRIER	
080	1517641-0000	A		2	FLANGE BUSHING	
TBA 0250S, TBA 0200M						
010	2552527-0000	A		1	BEARING HOUSING	
030	979793-0000	A		1	CARRIER	
080	1517641-0000	A		2	FLANGE BUSHING	
TBA 0330S, TBA 0300S, TBA 0180B, TBA 0200B, TBA 0284B, TBA 0250B						
010	2552529-0000	A		1	BEARING HOUSING	
030	979793-0000	A		1	CARRIER	
080	1517641-0000	A		2	FLANGE BUSHING	
Common Parts						
040	490940-0000	B		1	CYLINDER	
050	978746-0000	A		2	CATCH	
060	752284-0000	B		1	SHAFT	
090	256557-0001	B		2	WASHER	
100	256557-0002	B		1	WASHER	
110	256557-0003	B		1	WASHER	
120	752282-0000	B		1	CONNECTION RIGHT	
130	441385-0000	B		1	HUB	
140	256576-0000	A		1	ROLL	
150	441764-0000	A		1	SHAFT	
160	257249-0000	A		2	SCREW	
170	257250-0000	-		2	LID	
190	490942-0000	A		2	COMPRESSION SPRING	
200	490943-0000	A		2	COMPRESSION SPRING	
210	752289-0000	A		1	CLAMP RIGHT	
220	272501-0000	A		1	BRACKET RIGHT	
230	272503-0000	A		1	CLAMPING PIECE	
240	456311-0000	A		1	TORSION SPRING RIGHT	
250	272506-0000	B		1	LACE	
260	751743-0000	B		2	PISTON	
270	441355-0000	-		2	BLEEDING SCREW	
280	751769-0000	B		2	SLEEVE	
300	315237-0107	-		1	WASHER,PL.RND.AL.8/14,H=1	
306	315237-0106	-		2	WASHER,PL.RND.AL.6/10,H=1	
308	90030-0065	-		1	PIPE CONNECTION	
310	90090-0005	-		4	BALL, D=3 MM	
315	90091-0089	B		2	ROD SEAL, GLIDORING 16X22X2,5 MM	
320	90091-0214	B		2	ROD SEAL, GLIDORING 16X20,9X2,2 MM	
321	90091-0162	B		2	WEAR RING 16X19X3,2 MM	
322	90091-0170	B		2	WEAR RING 25X30X4,2 MM	
330	90091-0215	B		2	ROD SEAL, GLIDORING 25X32,5X3,2 MM	
331	90092-0052	A		1	METERING VALVE 10 MM3	
332	90092-0053	-		1	METERING VALVE 30 MM3	
334	90134-0042	-		2	SPACER DOSING VALVE	
335	90134-0045	-		1	PLUG M12X1	
336	90134-0047	-		1	CONNECTION FOR DOSING VALVE	
337	90134-0058	-		1	CONNECTION	
339	90166-0143	-	MM	160	TUBE 2,5 MM PA,TRANSP.	
340	90296-0068	-	G	25	GREASE UNIWAY LI62 CARTRID.400GR	
500	311103-0242	B		2	PARALLELL PIN, M6, 3X30 MM	
510	311103-0312	B		1	PARALLELL PIN, M6, 5X25 MM	
520	312105-0370	-		11	SCREW M6S ISO 4017 M6X20 A480	
530	312105-0374	-		2	SCREW M6S ISO 4014 M6X30 A480	
540	312105-0376	-		6	SCREW M6S ISO 4014 M6X35 A480	
550	312105-0447	-		1	SCREW M6S ISO 4017 M8X12 A480	
560	312105-0453	-		1	SCREW M6S ISO 4017 M8X25 A480	
570	312105-0455	-		1	SCREW M6S ISO 4017 M8X30 A480	
580	312115-0371	-		2	SCREW ISO4762 M6X22 A4	
590	752476-0000	B		4	SCREW	
600	315105-0153	-		5	WASHER ISO 7089-6-200 HV-A4	
605	315105-0165	-		1	WASHER ISO 7089-8-200 HV-A4	
610	315115-0153	-		6	WASHER PLAIN, TBRB 6,4/12 H=3	
620	315202-0102	B		8	O-RING 4,1X1,6 MM	
630	315202-0106	B		1	O-RING 8,1X1,6 MM	
640	315202-0108	B		3	O-RING 10,1X1,6 MM	
645	315234-0109	B		2	WASHER,PL.RND.CU.10,3/13,5 H=1,0	
650	321120-0132	B		1	BEARBUSHING W/O FL 18X20X20	
660	342713-0209	-		2	PLUG, EXT THREAD HEX SOCKET 8638-00-180	

Machine Type | Group Description | Used-In | Group Number | Page No

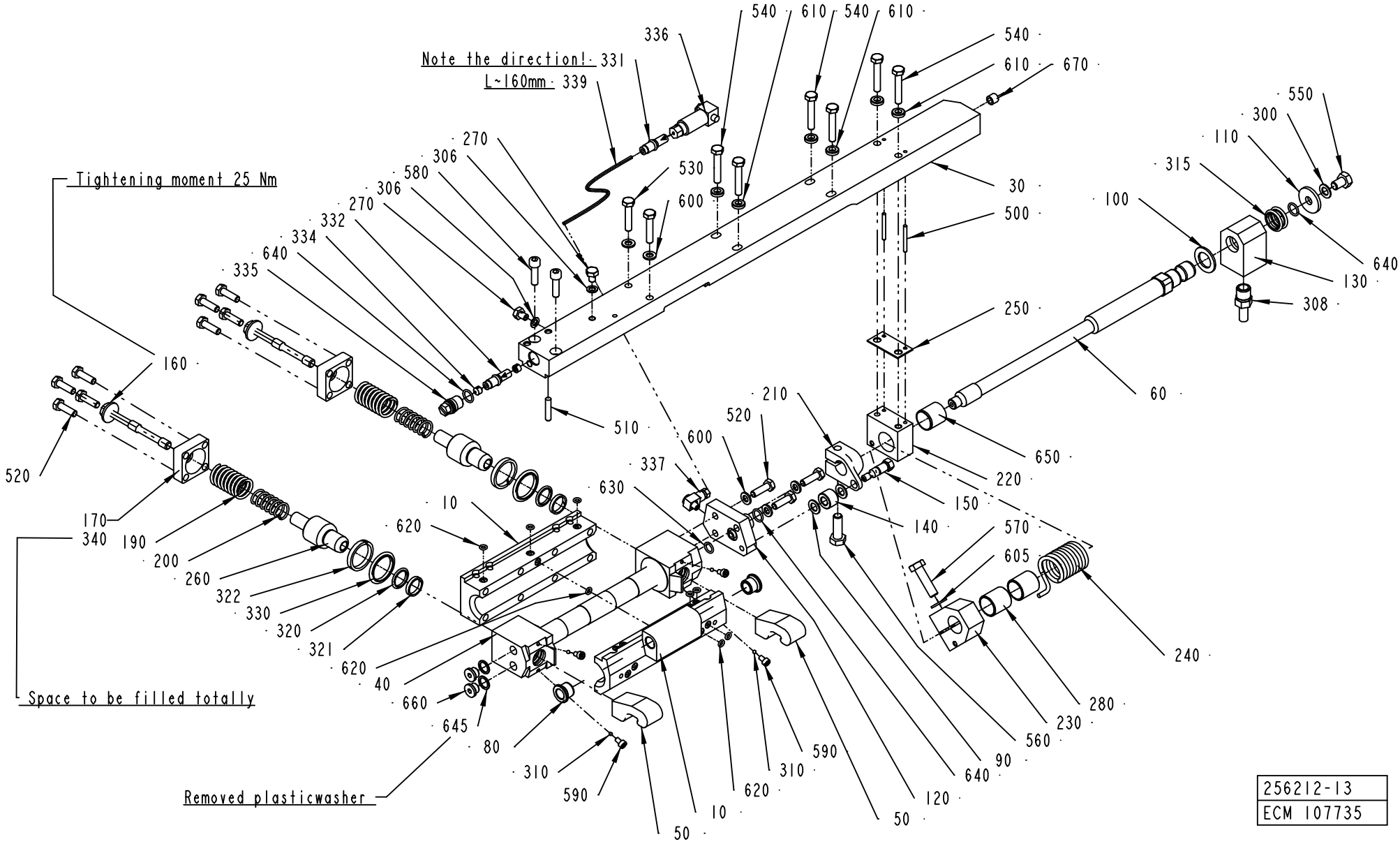
Note the direction! L~160mm
Tightening moment 25 Nm
Space to be filled totally
Removed plasticwasher
256212-13
ECM 107735

Pos	Part No	SP	UN	Qty	Description	Page No
Common Parts (Cont'd)						
670	2545249-0000	-		1	TEFLON HOSE	

Pos	Part No	SP	UN	Qty	Description	Page No

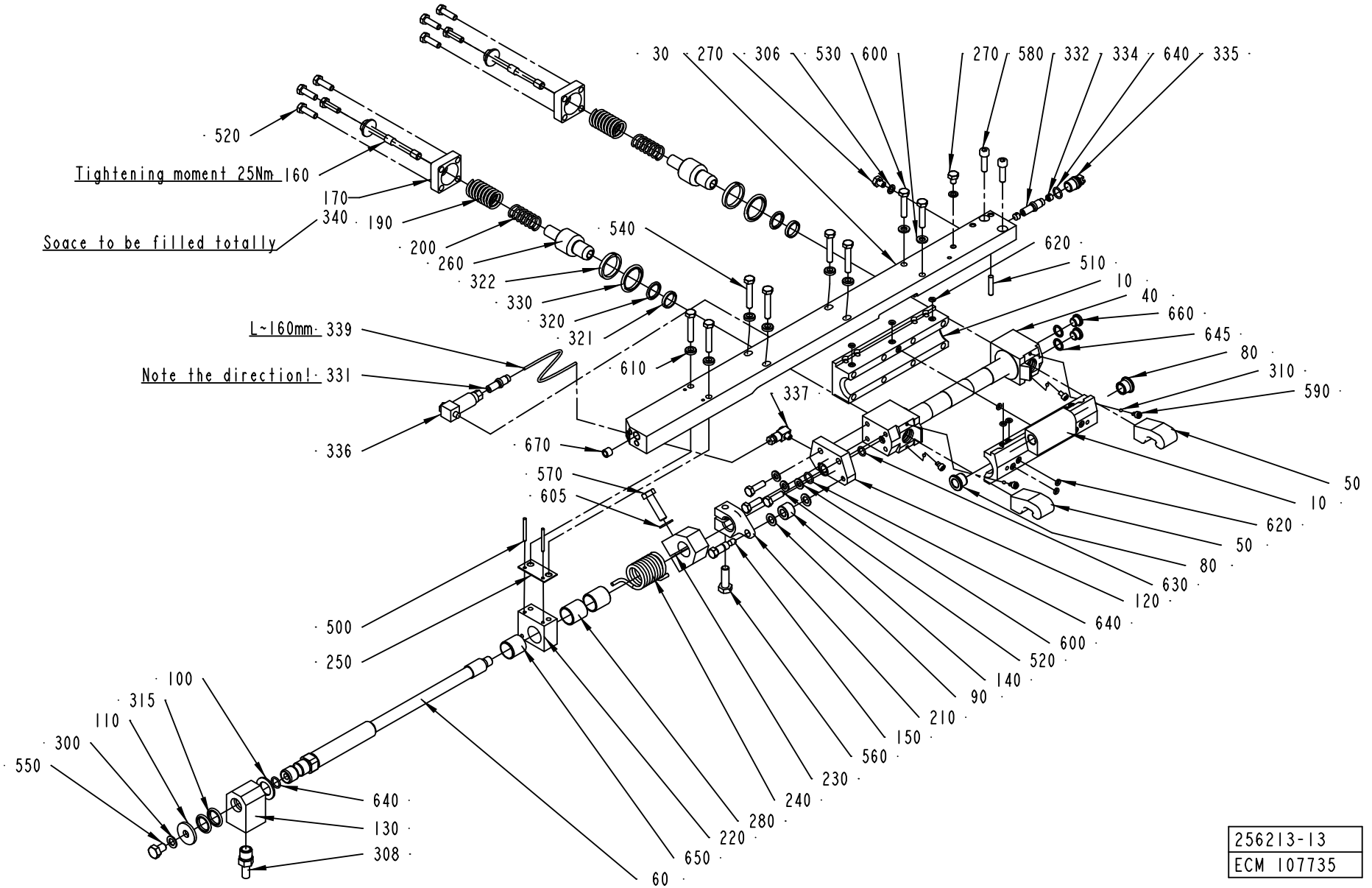
30
270
306
530
600
270
580
332
334
640
335
520
Tightening moment 25Nm
160
170
340
190
Soace to be filled totally
200
260
322
330
320
321
540
620
510
10
40
660
645
80
310
590
L~160mm
339
Note the direction!
331
336
610
337
670
570
605
50
10
620
50
80
630
120
640
600
520
140
90
210
150
560
230
240
280
220
650
60
500
250
100
315
110
300
550
640
130
308
256213-13
ECM 107735

ECM: 109872 - 20030113
Group number: 256213-0600
Assembly Drawing: 256213-13_1_AD

This list covers pages from 330 to 333

Pos	Part No	SP	UN	Qty	Description	Page No
TBA 0100B						
010	2552528-0000	A		1	BEARING HOUSING	
030	979765-0000	A		1	CARRIER LEFT 100	
080	1517641-0000	A		2	FLANGE BUSHING	
TBA 0125S						
010	2552528-0000	A		1	BEARING HOUSING	
030	979794-0000	A		1	CARRIER	
080	1517641-0000	A		2	FLANGE BUSHING	
TBA 0160S, TBA 0200S						
010	2552530-0000	A		1	BEARING HOUSING	
030	979794-0000	A		1	CARRIER	
080	1517641-0000	A		2	FLANGE BUSHING	
TBA 0250S, TBA 0200M						
010	2552527-0000	A		1	BEARING HOUSING	
030	979794-0000	A		1	CARRIER	
080	1517641-0000	A		2	FLANGE BUSHING	
TBA 0330S, TBA 0300S, TBA 0180B, TBA 0200B, TBA 0284B, TBA 0250B						
010	2552529-0000	A		1	BEARING HOUSING	
030	979794-0000	A		1	CARRIER	
080	1517641-0000	A		2	FLANGE BUSHING	
Common Parts						
040	490940-0000	B		1	CYLINDER	
050	978746-0000	A		2	CATCH	
060	752284-0000	B		1	SHAFT	
090	256557-0001	B		2	WASHER	
100	256557-0002	B		1	WASHER	
110	256557-0003	B		1	WASHER	
120	752283-0000	B		1	CONNECTION LEFT	
130	441385-0000	B		1	HUB	
140	256576-0000	A		1	ROLL	
150	441764-0000	A		1	SHAFT	
160	257249-0000	A		2	SCREW	
170	257250-0000	-		2	LID	
190	490942-0000	A		2	COMPRESSION SPRING	
200	490943-0000	A		2	COMPRESSION SPRING	
210	752290-0000	A		1	CLAMP LEFT	
220	272502-0000	A		1	BRACKET LEFT	
230	272503-0000	A		1	CLAMPING PIECE	
240	456312-0000	A		1	TORSION SPRING LEFT	
250	272506-0000	B		1	LACE	
260	751743-0000	B		2	PISTON	
270	441355-0000	-		2	BLEEDING SCREW	
280	751769-0000	B		2	SLEEVE	
300	315237-0107	-		1	WASHER,PL.RND.AL.8/14,H=1	
306	315237-0106	-		2	WASHER,PL.RND.AL.6/10,H=1	
308	90030-0065	-		1	PIPE CONNECTION	
310	90090-0005	-		4	BALL, D=3 MM	
315	90091-0089	B		2	ROD SEAL, GLIDORING 16X22X2,5 MM	
320	90091-0214	B		2	ROD SEAL, GLIDORING 16X20,9X2,2 MM	
321	90091-0162	B		2	WEAR RING 16X19X3,2 MM	
322	90091-0170	B		2	WEAR RING 25X30X4,2 MM	
330	90091-0215	B		2	ROD SEAL, GLIDORING 25X32,5X3,2 MM	
331	90092-0052	A		1	METERING VALVE 10 MM3	
332	90092-0053	-		1	METERING VALVE 30 MM3	
334	90134-0042	-		2	SPACER DOSING VALVE	
335	90134-0045	-		1	PLUG M12X1	
336	90134-0047	-		1	CONNECTION FOR DOSING VALVE	
337	90134-0058	-		1	CONNECTION	
339	90166-0143	-	MM	160	TUBE 2,5 MM PA,TRANSP.	
340	90296-0068	-	G	25	GREASE UNIWAY LI62 CARTRID.400GR	
500	311103-0242	B		2	PARALLELL PIN, M6, 3X30 MM	
510	311103-0312	B		1	PARALLELL PIN, M6, 5X25 MM	
520	312105-0370	-		11	SCREW M6S ISO 4017 M6X20 A480	
530	312105-0374	-		2	SCREW M6S ISO 4014 M6X30 A480	
540	312105-0376	-		6	SCREW M6S ISO 4014 M6X35 A480	
550	312105-0447	-		1	SCREW M6S ISO 4017 M8X12 A480	
560	312105-0453	-		1	SCREW M6S ISO 4017 M8X25 A480	
570	312105-0455	-		1	SCREW M6S ISO 4017 M8X30 A480	
580	312115-0371	-		2	SCREW ISO4762 M6X22 A4	
590	752476-0000	B		4	SCREW	
600	315105-0153	-		5	WASHER ISO 7089-6-200 HV-A4	
605	315105-0165	-		1	WASHER ISO 7089-8-200 HV-A4	
610	315115-0153	-		6	WASHER PLAIN, TBRB 6,4/12 H=3	
620	315202-0102	B		8	O-RING 4,1X1,6 MM	
630	315202-0106	B		1	O-RING 8,1X1,6 MM	
640	315202-0108	B		3	O-RING 10,1X1,6 MM	
645	315234-0109	B		2	WASHER,PL.RND.CU.10,3/13,5 H=1,0	
650	321120-0132	B		1	BEARBUSHING W/O FL 18X20X20	
660	342713-0209	-		2	PLUG, EXT THREAD HEX SOCKET 8638-00-180	

Machine Type | Group Description | Used-In | Group Number | Page No

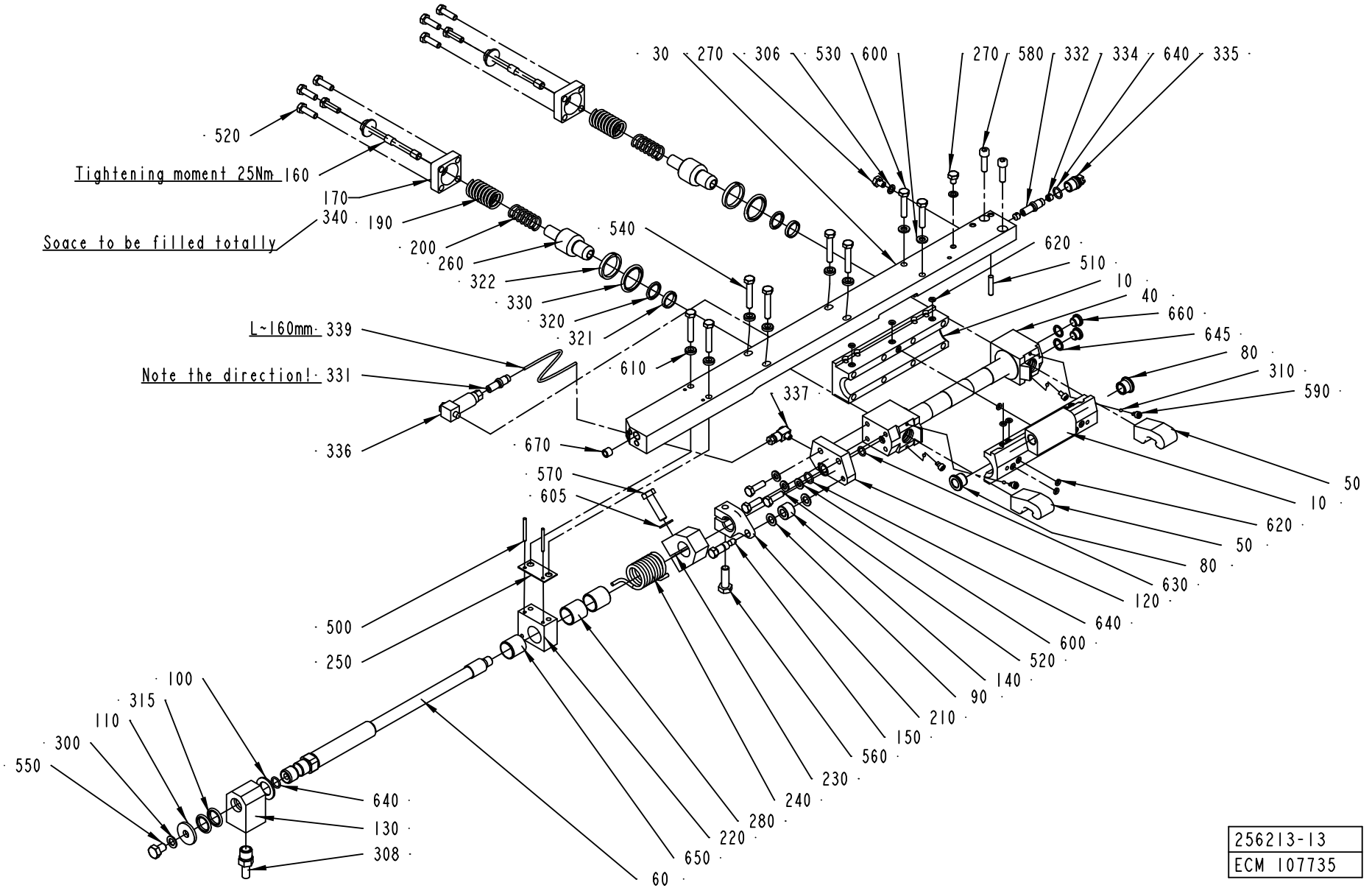
30
270
306
530
600
270
580
332
334
640
335
520
Tightening moment 25Nm
160
170
340
190
Space to be filled totally
200
260
322
330
320
321
540
620
510
10
40
660
645
80
310
590
L~160mm
339
Note the direction!
331
336
610
337
670
570
605
50
10
620
50
80
630
120
640
600
520
140
90
210
150
560
230
240
280
220
650
60
500
250
100
315
110
300
550
640
130
308
256213-13
ECM 107735

Pos	Part No	SP	UN	Qty	Description	Page No
Common Parts (Cont'd)						
670	2545249-0000	-		1	TEFLON HOSE	

Pos	Part No	SP	UN	Qty	Description	Page No

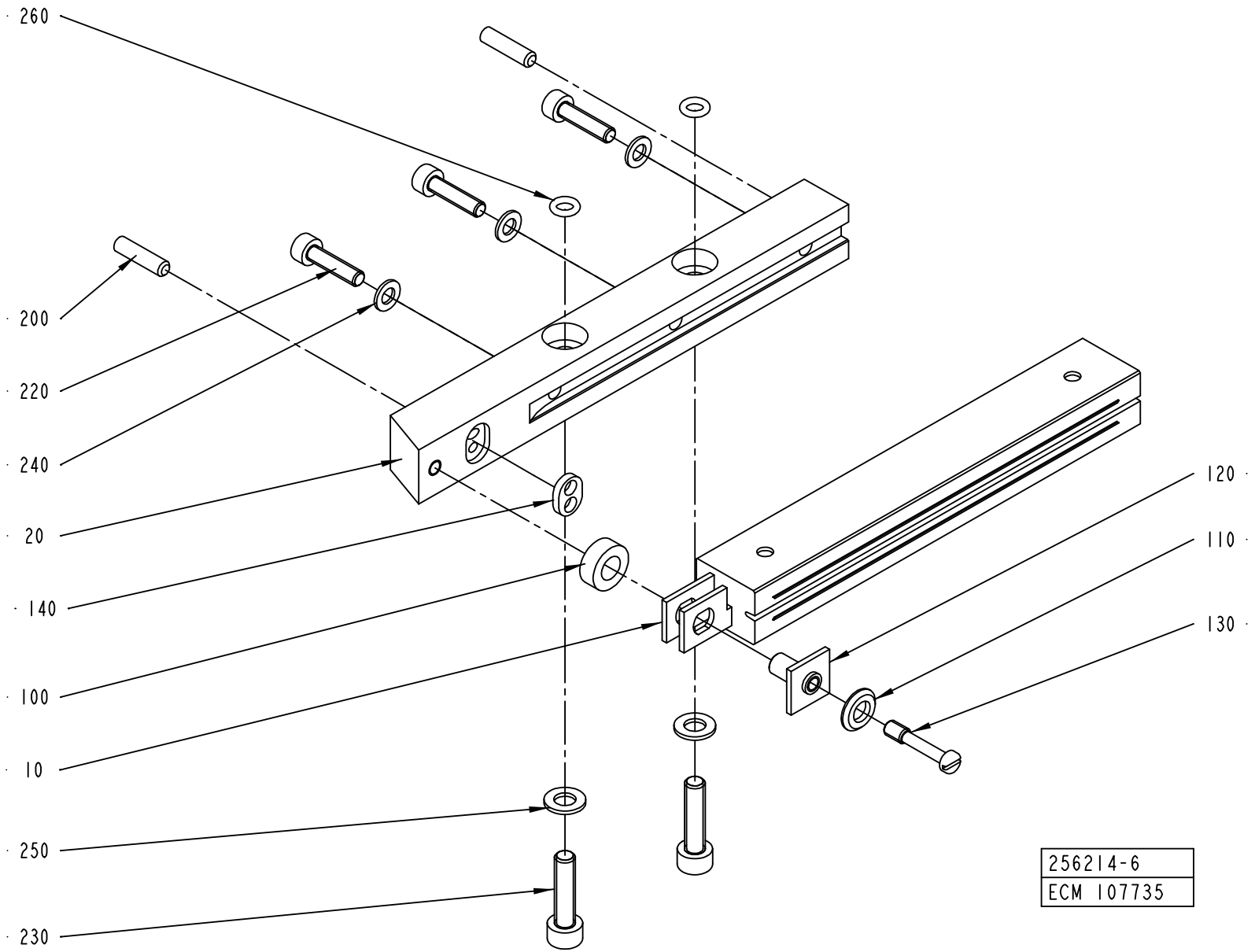
260
200
220
240
20
140
100
10
250
230
120
110
130
256214-6
ECM 107735

ECM: 125611 - 20030127
Group number: 256214-0400
Assembly Drawing: 256214-6_1_AD

Pos	Part No	SP	UN	Qty	Description	Page No
TBA 0125S, TBA 0100B (See drawing on page: 334)						
010	1110530-0000	A		1	INDUCTOR	
020	2527135-0000	A		1	RAIL (TITANIUM)	
220	312115-0293	-		3	SCREW ISO4762 M4X16 A4	
230	312105-0329	-		2	SCREW M6S ISO 4017 M5X16 A480	
240	315105-0136	-		3	WASHER ISO 7089-4-200 HV-A4	
250	315105-0146	-		2	WASHER ISO 7089-5-200 HV-A4	
TBA 0160S, TBA 0200S (See drawing on page: 334)						
010	1110532-0000	A		1	INDUCTOR	
020	2527137-0000	A		1	RAIL (TITANIUM)	
220	312115-0293	-		2	SCREW ISO4762 M4X16 A4	
230	312115-0331	-		2	SCREW ISO4762 M5X20 A4	
240	315105-0136	-		2	WASHER ISO 7089-4-200 HV-A4	
250	315105-0146	-		2	WASHER ISO 7089-5-200 HV-A4	
260	315202-0102	B		2	O-RING 4,1X1,6 MM	
TBA 0250S, TBA 0200M (See drawing on page: 334)						
010	1110535-0000	A		1	INDUCTOR	
020	2527137-0000	A		1	RAIL (TITANIUM)	
220	312115-0293	-		2	SCREW ISO4762 M4X16 A4	
230	312115-0331	-		2	SCREW ISO4762 M5X20 A4	
240	315105-0136	-		2	WASHER ISO 7089-4-200 HV-A4	
250	315105-0146	-		2	WASHER ISO 7089-5-200 HV-A4	
260	315202-0102	B		2	O-RING 4,1X1,6 MM	
TBA 0330S, TBA 0300S, TBA 0180B, TBA 0200B, TBA 0284B, TBA 0250B (See drawing on page: 334)						
010	1110534-0000	A		1	INDUCTOR	
020	2527136-0000	A		1	RAIL	
220	312115-0293	-		3	SCREW ISO4762 M4X16 A4	
230	312115-0331	-		2	SCREW ISO4762 M5X20 A4	
240	315105-0136	-		3	WASHER ISO 7089-4-200 HV-A4	
250	315105-0146	-		2	WASHER ISO 7089-5-200 HV-A4	
260	315202-0102	B		2	O-RING 4,1X1,6 MM	
Common Parts						
100	32644-0000	B		1	WASHER	
110	256882-0000	B		1	WASHER	
120	271846-0000	B		1	INSULATION NUT	
130	271848-0000	B		1	SCREW	
140	491681-0000	B		1	GASKET	
200	311103-0270	-		2	PARALLELL PIN, M6, 4X16 MM	

Pos	Part No	SP	UN	Qty	Description	Page No

Machine Type | Group Description | Used-In | Group Number | Page No

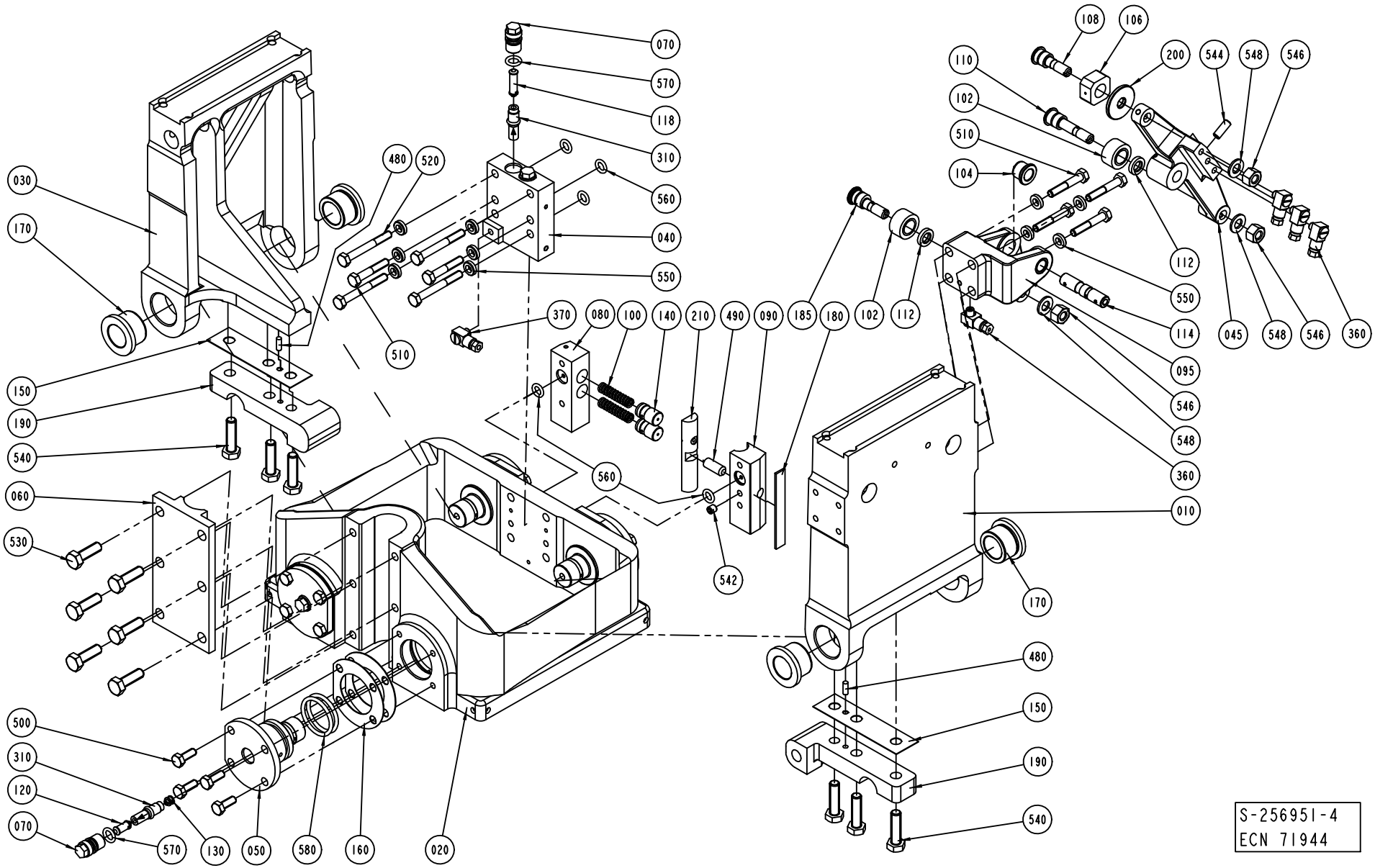
030
170
150
190
540
060
530
500
310
120
070
570
130
050
580
160
020
480
520
070
570
118
310
560
040
550
510
370
080
100
140
210
490
090
185
180
102
112
560
542
108
106
110
102
510
104
200
544
548
546
112
550
114
045
548
546
360
095
546
548
360
010
170
480
150
190
540
S-256951-4
ECN 71944

ECM: 113354 - 20020930
Group number: 256951-0500
Assembly Drawing: 256951-4_1_AB

This list covers pages from 336 to 339

Pos	Part No	SP	UN	Qty	Description	Page No
TBA IH						
030	562120-0000	A		1	ARM PRESSURE JAW	
Common Parts						
010	255609-0000	A		1	ARM CUTTING JAW	
020	256834-0000	A		1	YOKE	
	312911-0126	-		*6*	*HELI-COIL M8X1,5D*	
	312911-0118	-		*18*	*HELI-COIL M6X1,5D*	
040	256953-0000	-		1	BLOCK RIGHT	
045	272492-0000	A		1	ARM RIGHT	
050	272454-0000	B		4	PIVOT PIN	
060	256082-0000	-		1	CAP	
070	256829-0000	B		6	SCREW	
080	256870-0000	-		1	BRACKET	
090	491349-0000	-		1	BEARING SEAT	
095	272496-0000	-		1	BRACKET RIGHT	
100	20239-0000	A		2	COMPRESSION SPRING	
102	22475-0000	A		2	CURVE ROLLER	
104	255653-0000	A		2	FLANGE BUSHING	
106	256628-0000	A		1	PIECE	
108	256629-0001	A		1	AXLE PIN	
110	256629-0003	A		1	AXLE PIN	
112	256704-0000	A		2	WASHER	
114	256710-0000	A		1	SHAFT	
118	256831-0001	A		2	SPACER	
120	256831-0002	A		4	SPACER	
130	256831-0003	A		4	SPACER	
140	256889-0000	A		2	PLUNGER	
150	256890-0000	B		2	LACE	
160	256891-0000	B		6	LACE	
170	257213-0000	A		4	BUSHING	
180	257317-0000	B		1	LACE	
185	271100-0000	A		1	DOWEL	
190	272415-0000	-		2	ARM	
200	441706-0000	-		1	WASHER	
210	491350-0000	A		1	SLIDER	
310	90092-0052	A		6	METERING VALVE 10 MM3	
360	90134-0058	-		4	CONNECTION	
370	90134-0068	-		1	CONNECTION	
480	311103-0268	-		2	PARALLELL PIN, M6, 4X12 MM	
490	311103-0401	-		1	PARALLELL PIN, M6, 8X20 MM	
500	312105-0368	-		16	SCREW M6S M6X16 A280	
510	312105-0376	-		6	SCREW M6S ISO 4014 M6X35 A480	
520	312105-0380	-		4	SCREW M6S ISO 4014 M6X50 A480	
530	312105-0453	-		6	SCREW M6S ISO 4017 M8X25 A480	
540	312105-0455	-		6	SCREW M6S ISO 4017 M8X30 A480	
542	312318-0360	-		1	SCREW ISO4029 M6X6 A4	
544	312318-0368	-		1	SCREW ISO4029 M6X16 A4	
546	312811-0318	-		3	NUT HEX.LOCK HELI COIL M8 SS	
548	315105-0165	-		3	WASHER ISO 7089-8-200 HV-A4	
550	315115-0153	-		10	WASHER PLAIN, TBRB 6,4/12 H=3	
560	315202-0206	A		5	O-RING 7,3X2,4 MM	
570	315202-0207	A		6	O-RING 8,3X2,4 MM	
580	315202-0219	A		8	O-RING 29,2X3 MM	

Machine Type | Group Description | Used-In | Group Number | Page No

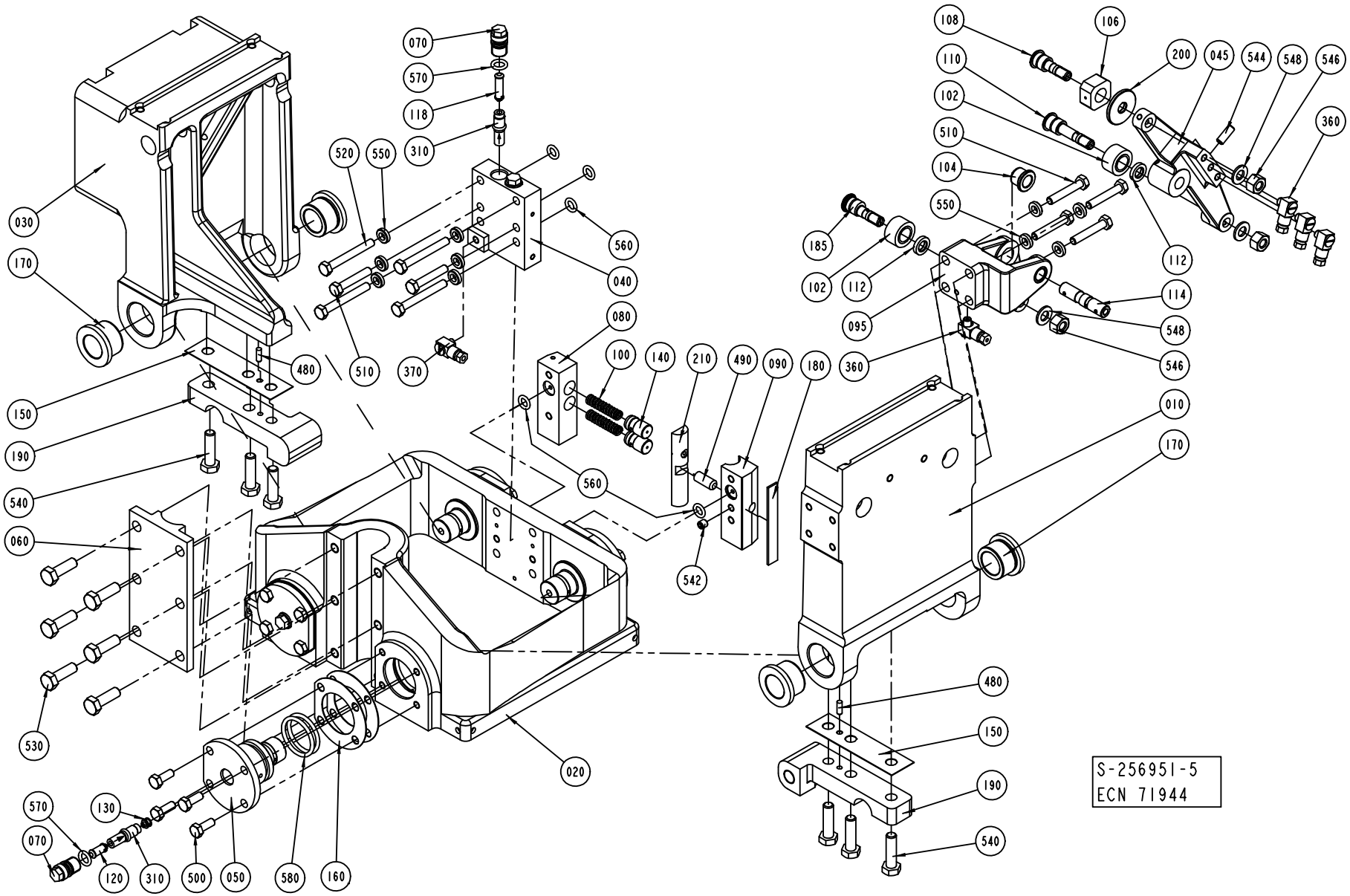
030
170
150
190
540
060
530
570
070
120
130
310
500
050
580
160
480
510
520
550
070
570
118
310
370
560
040
080
100
140
210
490
090
180
560
542
020
108
106
110
102
510
104
550
185
102
112
095
360
200
045
544
548
546
360
112
114
548
546
010
170
480
150
190
540
S-256951-5
ECN 71944

ECM: 113354 - 20020930
Group number: 256951-0500
Assembly Drawing: 256951-5_1_AC

This list covers pages from 336 to 339

Pos	Part No	SP	UN	Qty	Description	Page No
TBA IH						
030	562120-0000	A		1	ARM PRESSURE JAW	
Common Parts						
010	255609-0000	A		1	ARM CUTTING JAW	
020	256834-0000	A		1	YOKE	
	312911-0126	-		*6*	*HELI-COIL M8X1,5D*	
	312911-0118	-		*18*	*HELI-COIL M6X1,5D*	
040	256953-0000	-		1	BLOCK RIGHT	
045	272492-0000	A		1	ARM RIGHT	
050	272454-0000	B		4	PIVOT PIN	
060	256082-0000	-		1	CAP	
070	256829-0000	B		6	SCREW	
080	256870-0000	-		1	BRACKET	
090	491349-0000	-		1	BEARING SEAT	
095	272496-0000	-		1	BRACKET RIGHT	
100	20239-0000	A		2	COMPRESSION SPRING	
102	22475-0000	A		2	CURVE ROLLER	
104	255653-0000	A		2	FLANGE BUSHING	
106	256628-0000	A		1	PIECE	
108	256629-0001	A		1	AXLE PIN	
110	256629-0003	A		1	AXLE PIN	
112	256704-0000	A		2	WASHER	
114	256710-0000	A		1	SHAFT	
118	256831-0001	A		2	SPACER	
120	256831-0002	A		4	SPACER	
130	256831-0003	A		4	SPACER	
140	256889-0000	A		2	PLUNGER	
150	256890-0000	B		2	LACE	
160	256891-0000	B		6	LACE	
170	257213-0000	A		4	BUSHING	
180	257317-0000	B		1	LACE	
185	271100-0000	A		1	DOWEL	
190	272415-0000	-		2	ARM	
200	441706-0000	-		1	WASHER	
210	491350-0000	A		1	SLIDER	
310	90092-0052	A		6	METERING VALVE 10 MM3	
360	90134-0058	-		4	CONNECTION	
370	90134-0068	-		1	CONNECTION	
480	311103-0268	-		2	PARALLELL PIN, M6, 4X12 MM	
490	311103-0401	-		1	PARALLELL PIN, M6, 8X20 MM	
500	312105-0368	-		16	SCREW M6S M6X16 A280	
510	312105-0376	-		6	SCREW M6S ISO 4014 M6X35 A480	
520	312105-0380	-		4	SCREW M6S ISO 4014 M6X50 A480	
530	312105-0453	-		6	SCREW M6S ISO 4017 M8X25 A480	
540	312105-0455	-		6	SCREW M6S ISO 4017 M8X30 A480	
542	312318-0360	-		1	SCREW ISO4029 M6X6 A4	
544	312318-0368	-		1	SCREW ISO4029 M6X16 A4	
546	312811-0318	-		3	NUT HEX.LOCK HELI COIL M8 SS	
548	315105-0165	-		3	WASHER ISO 7089-8-200 HV-A4	
550	315115-0153	-		10	WASHER PLAIN, TBRB 6,4/12 H=3	
560	315202-0206	A		5	O-RING 7,3X2,4 MM	
570	315202-0207	A		6	O-RING 8,3X2,4 MM	
580	315202-0219	A		8	O-RING 29,2X3 MM	

Machine Type | Group Description | Used-In | Group Number | Page No

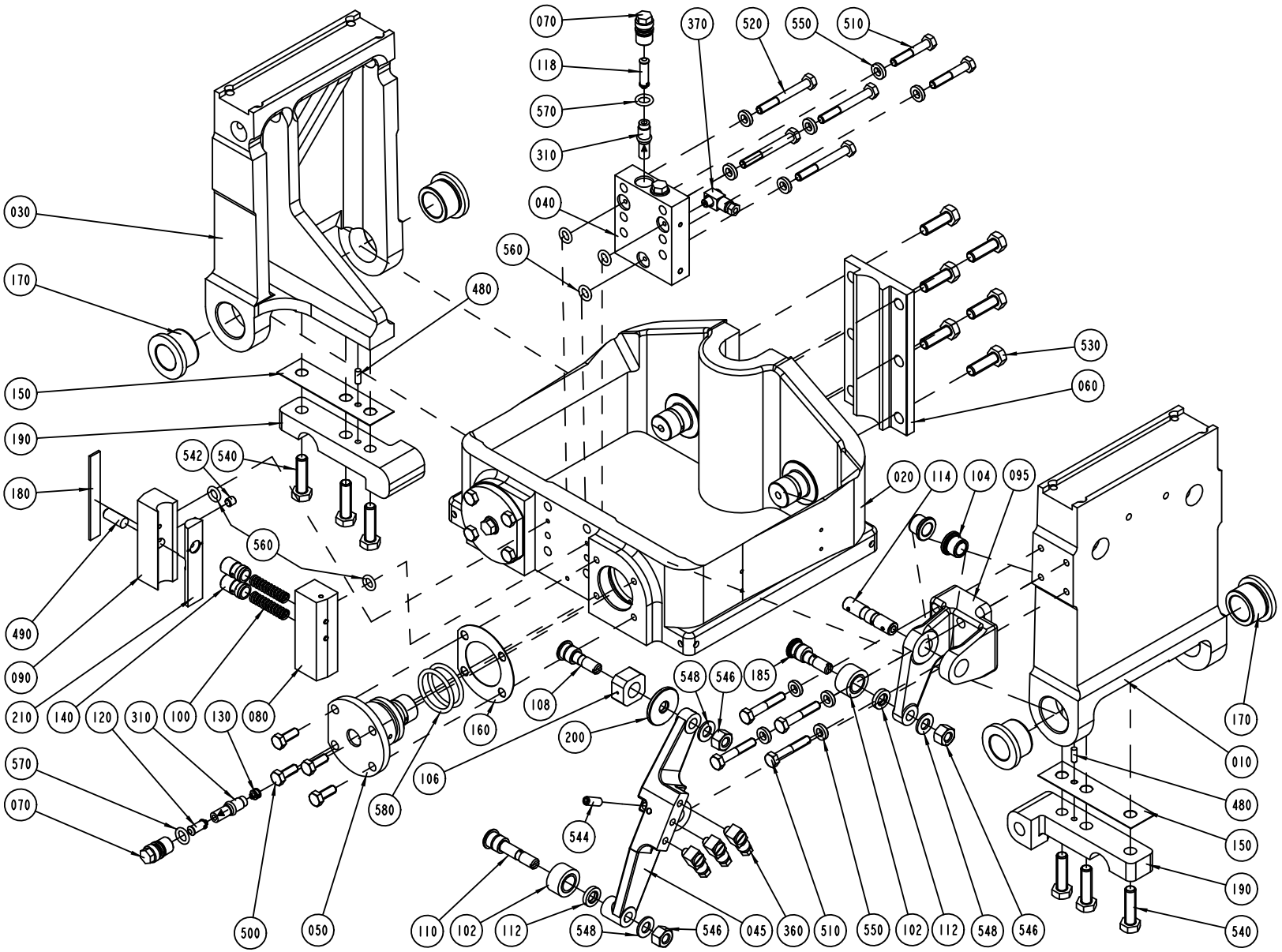

S-256952-4
ECN 71944

ECM: 113353 - 20020930
Group number: 256952-0500
Assembly Drawing: 256952-4_1_AB

This list covers pages from 340 to 343

Pos	Part No	SP	UN	Qty	Description	Page No
TBA IH						
030	562120-0000	A		1	ARM PRESSURE JAW	
Common Parts						
010	255609-0000	A		1	ARM CUTTING JAW	
020	256834-0000	A		1	YOKE	
	312911-0126	-		*6*	*HELI-COIL M8X1,5D*	
	312911-0118	-		*18*	*HELI-COIL M6X1,5D*	
040	256954-0000	-		1	BLOCK LEFT	
045	272493-0000	A		1	ARM LEFT	
050	272454-0000	B		4	PIVOT PIN	
060	256082-0000	-		1	CAP	
070	256829-0000	B		6	SCREW	
080	256870-0000	-		1	BRACKET	
090	491349-0000	-		1	BEARING SEAT	
095	272497-0000	-		1	BRACKET LEFT	
100	20239-0000	A		2	COMPRESSION SPRING	
102	22475-0000	A		2	CURVE ROLLER	
104	255653-0000	A		2	FLANGE BUSHING	
106	256628-0000	A		1	PIECE	
108	256629-0001	A		1	AXLE PIN	
110	256629-0003	A		1	AXLE PIN	
112	256704-0000	A		2	WASHER	
114	256710-0000	A		1	SHAFT	
118	256831-0001	A		2	SPACER	
120	256831-0002	A		4	SPACER	
130	256831-0003	A		4	SPACER	
140	256889-0000	A		2	PLUNGER	
150	256890-0000	B		2	LACE	
160	256891-0000	B		6	LACE	
170	257213-0000	A		4	BUSHING	
180	257317-0000	B		1	LACE	
185	271100-0000	A		1	DOWEL	
190	272415-0000	-		2	ARM	
200	441706-0000	-		1	WASHER	
210	491350-0000	A		1	SLIDER	
310	90092-0052	A		6	METERING VALVE 10 MM3	
360	90134-0058	-		4	CONNECTION	
370	90134-0068	-		1	CONNECTION	
480	311103-0268	-		2	PARALLELL PIN, M6, 4X12 MM	
490	311103-0401	-		1	PARALLELL PIN, M6, 8X20 MM	
500	312105-0368	-		16	SCREW M6S M6X16 A280	
510	312105-0376	-		6	SCREW M6S ISO 4014 M6X35 A480	
520	312105-0380	-		4	SCREW M6S ISO 4014 M6X50 A480	
530	312105-0453	-		6	SCREW M6S ISO 4017 M8X25 A480	
540	312105-0455	-		6	SCREW M6S ISO 4017 M8X30 A480	
542	312318-0360	-		1	SCREW ISO4029 M6X6 A4	
544	312318-0368	-		1	SCREW ISO4029 M6X16 A4	
546	312811-0318	-		3	NUT HEX.LOCK HELI COIL M8 SS	
548	315105-0165	-		3	WASHER ISO 7089-8-200 HV-A4	
550	315115-0153	-		10	WASHER PLAIN, TBRB 6,4/12 H=3	
560	315202-0206	A		5	O-RING 7,3X2,4 MM	
570	315202-0207	A		6	O-RING 8,3X2,4 MM	
580	315202-0219	A		8	O-RING 29,2X3 MM	

Machine Type | Group Description | Used-In | Group Number | Page No

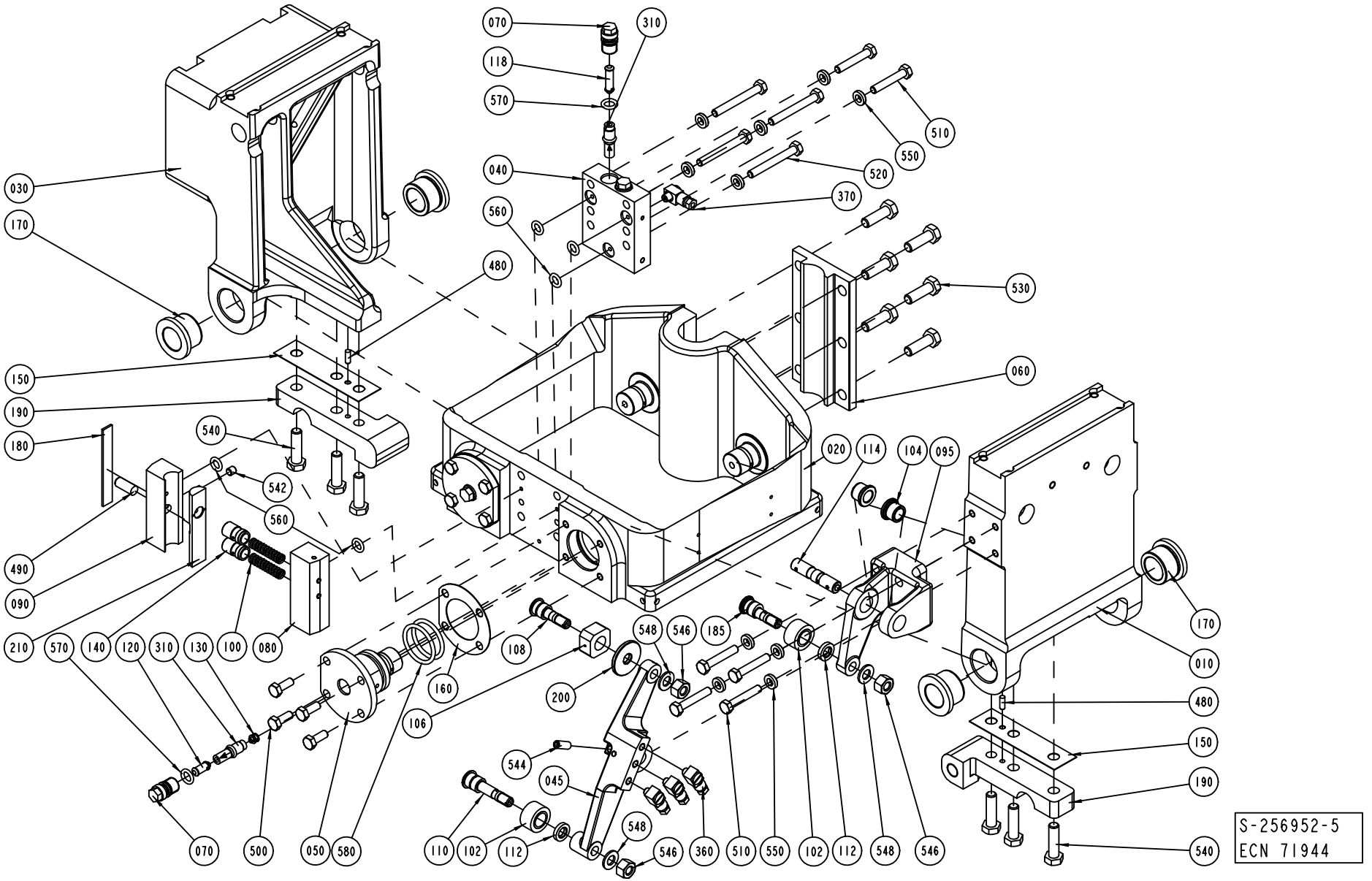
070
310
118
570
510
550
520
040
370
560
480
530
030
170
060
150
190
180
540
542
020
114
104
095
560
490
090
210
570
140
120
310
130
100
080
548
546
185
108
160
200
106
170
010
480
150
190
540
544
045
548
546
360
510
550
102
112
548
546
110
102
112
070
500
050
580
S-256952-5
ECN 71944

ECM: 113353 - 20020930
Group number: 256952-0500
Assembly Drawing: 256952-5_1_AC

This list covers pages from 340 to 343

Pos	Part No	SP	UN	Qty	Description	Page No
TBA IH						
030	562120-0000	A		1	ARM PRESSURE JAW	
Common Parts						
010	255609-0000	A		1	ARM CUTTING JAW	
020	256834-0000	A		1	YOKE	
	312911-0126	-		*6*	*HELI-COIL M8X1,5D*	
	312911-0118	-		*18*	*HELI-COIL M6X1,5D*	
040	256954-0000	-		1	BLOCK LEFT	
045	272493-0000	A		1	ARM LEFT	
050	272454-0000	B		4	PIVOT PIN	
060	256082-0000	-		1	CAP	
070	256829-0000	B		6	SCREW	
080	256870-0000	-		1	BRACKET	
090	491349-0000	-		1	BEARING SEAT	
095	272497-0000	-		1	BRACKET LEFT	
100	20239-0000	A		2	COMPRESSION SPRING	
102	22475-0000	A		2	CURVE ROLLER	
104	255653-0000	A		2	FLANGE BUSHING	
106	256628-0000	A		1	PIECE	
108	256629-0001	A		1	AXLE PIN	
110	256629-0003	A		1	AXLE PIN	
112	256704-0000	A		2	WASHER	
114	256710-0000	A		1	SHAFT	
118	256831-0001	A		2	SPACER	
120	256831-0002	A		4	SPACER	
130	256831-0003	A		4	SPACER	
140	256889-0000	A		2	PLUNGER	
150	256890-0000	B		2	LACE	
160	256891-0000	B		6	LACE	
170	257213-0000	A		4	BUSHING	
180	257317-0000	B		1	LACE	
185	271100-0000	A		1	DOWEL	
190	272415-0000	-		2	ARM	
200	441706-0000	-		1	WASHER	
210	491350-0000	A		1	SLIDER	
310	90092-0052	A		6	METERING VALVE 10 MM3	
360	90134-0058	-		4	CONNECTION	
370	90134-0068	-		1	CONNECTION	
480	311103-0268	-		2	PARALLELL PIN, M6, 4X12 MM	
490	311103-0401	-		1	PARALLELL PIN, M6, 8X20 MM	
500	312105-0368	-		16	SCREW M6S M6X16 A280	
510	312105-0376	-		6	SCREW M6S ISO 4014 M6X35 A480	
520	312105-0380	-		4	SCREW M6S ISO 4014 M6X50 A480	
530	312105-0453	-		6	SCREW M6S ISO 4017 M8X25 A480	
540	312105-0455	-		6	SCREW M6S ISO 4017 M8X30 A480	
542	312318-0360	-		1	SCREW ISO4029 M6X6 A4	
544	312318-0368	-		1	SCREW ISO4029 M6X16 A4	
546	312811-0318	-		3	NUT HEX.LOCK HELI COIL M8 SS	
548	315105-0165	-		3	WASHER ISO 7089-8-200 HV-A4	
550	315115-0153	-		10	WASHER PLAIN, TBRB 6,4/12 H=3	
560	315202-0206	A		5	O-RING 7,3X2,4 MM	
570	315202-0207	A		6	O-RING 8,3X2,4 MM	
580	315202-0219	A		8	O-RING 29,2X3 MM	

Machine Type | Group Description | Used-In | Group Number | Page No

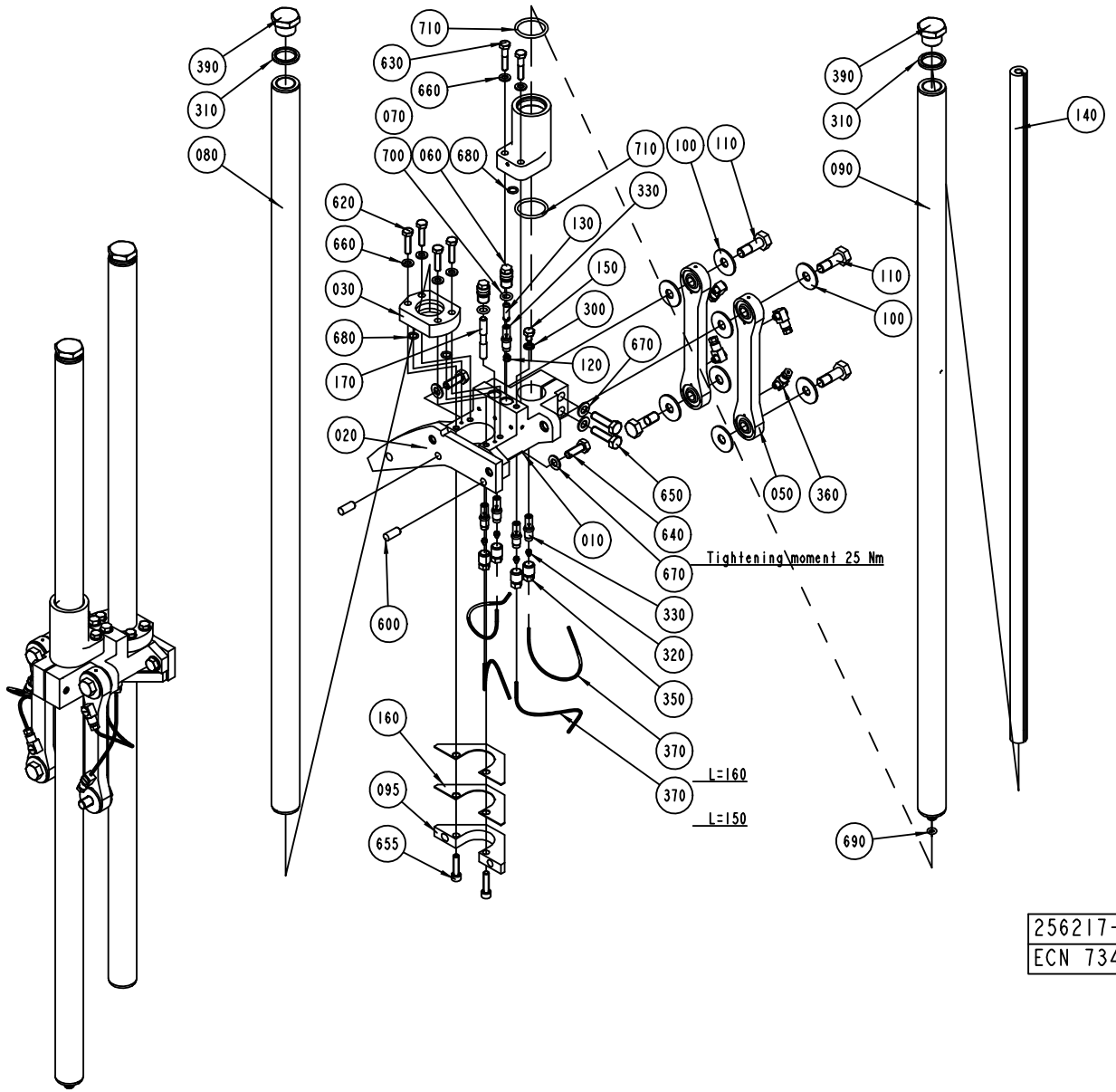
390
310
080
710
630
660
070
700
060
680
620
660
030
680
170
020
600
160
095
655
710
100
110
330
130
150
300
670
120
650
640
010
670
330
320
350
370
370
L=160
L=150
Tightening\moment 25 Nm
390
310
090
140
110
100
050
360
690
256217-4
ECN 73446

ECM: 118409 - 20030113
Group number: 256217-0500
Assembly Drawing: 256217-4_1_AD

Pos	Part No	SP	UN	Qty	Description	Page No
TBA 0300S, TBA 0180B, TBA 0160S, TBA 0200B, TBA 0125S, TBA 0100B, TBA 0250S, TBA 0200S, TBA 0200M, TBA 0250B						
095	441750-0000	B		2	YOKE	
160	441751-0000	B		4	LACE	
600	311103-0401	-		4	PARALLELL PIN, M6, 8X20 MM	
640	312105-0452	-		4	SCREW M6S ISO 4017 M8X22 A480	
655	312115-0372	-		4	SCREW ISO4762 M6X25 A4	
670	315105-0165	-		8	WASHER ISO 7089-8-200 HV-A4	
TBA 0330S, TBA 0284B						
095	441750-0000	B		2	YOKE	
160	441751-0000	B		4	LACE	
600	311103-0401	-		4	PARALLELL PIN, M6, 8X20 MM	
640	312105-0452	-		4	SCREW M6S ISO 4017 M8X22 A480	
655	312115-0372	-		4	SCREW ISO4762 M6X25 A4	
670	315105-0165	-		8	WASHER ISO 7089-8-200 HV-A4	
Common Parts						
010	2514091-0000	A		2	BRACKET	
015	2514090-0000	-		2	FORCE PLATE	
020	1538039-0000	A		2	CURVE	
030	456002-0000	B		2	BEARING	
050	441031-0000	A		4	LINK BEARING	
060	256829-0000	B		4	SCREW	
070	272490-0000	B		2	SLEEVE	
080	441269-0000	A		2	GUIDE	
090	441268-0000	A		2	GUIDE	
100	256738-0000	B		16	WASHER	
110	256739-0000	A		8	SCREW	
120	256831-0003	B		2	SPACER	
130	256831-0004	B		2	SPACER	
140	272840-0000	B		2	ROD	
150	441355-0000	B		2	BLEEDING SCREW	
170	456004-0000	B		2	SPACER	
300	90005-0003	B		2	GASKET BOLT HEAD 6,7X11X1 MM M6	
310	90005-0014	B		4	GASKET BOLT HEAD 21,5X28,6X2,5 MM G1/2"	
320	90028-0020	B		8	CONE TUBE 2,5MM	
330	90092-0052	A		10	METERING VALVE 10 MM3	
350	90134-0039	-		8	BUSHING VALVE CONNECTION 2,5 MM	
360	90134-0058	-		8	CONNECTION	
370	90166-0143	-	MM	1160	TUBE 2,5 MM PA,TRANSP.	
390	90330-0037	-		4	PLUG, EXT. G-THREAD, G1/2	
620	312105-0372	-		8	SCREW M6S ISO 4017 M6X25 A480	
630	312105-0374	-		4	SCREW M6S ISO 4014 M6X30 A480	
650	312105-0460	-		4	SCREW M6S ISO 4014 M8X45 A480	
660	315105-0153	-		12	WASHER ISO 7089-6-200 HV-A4	
680	315202-0106	B		6	O-RING 8,1X1,6 MM	
690	315202-0204	B		2	O-RING 5,3X2,4 MM	
700	315202-0207	B		4	O-RING 8,3X2,4 MM	
710	315202-0219	B		4	O-RING 29,2X3 MM	

Machine Type | Group Description | Used-In | Group Number | Page No

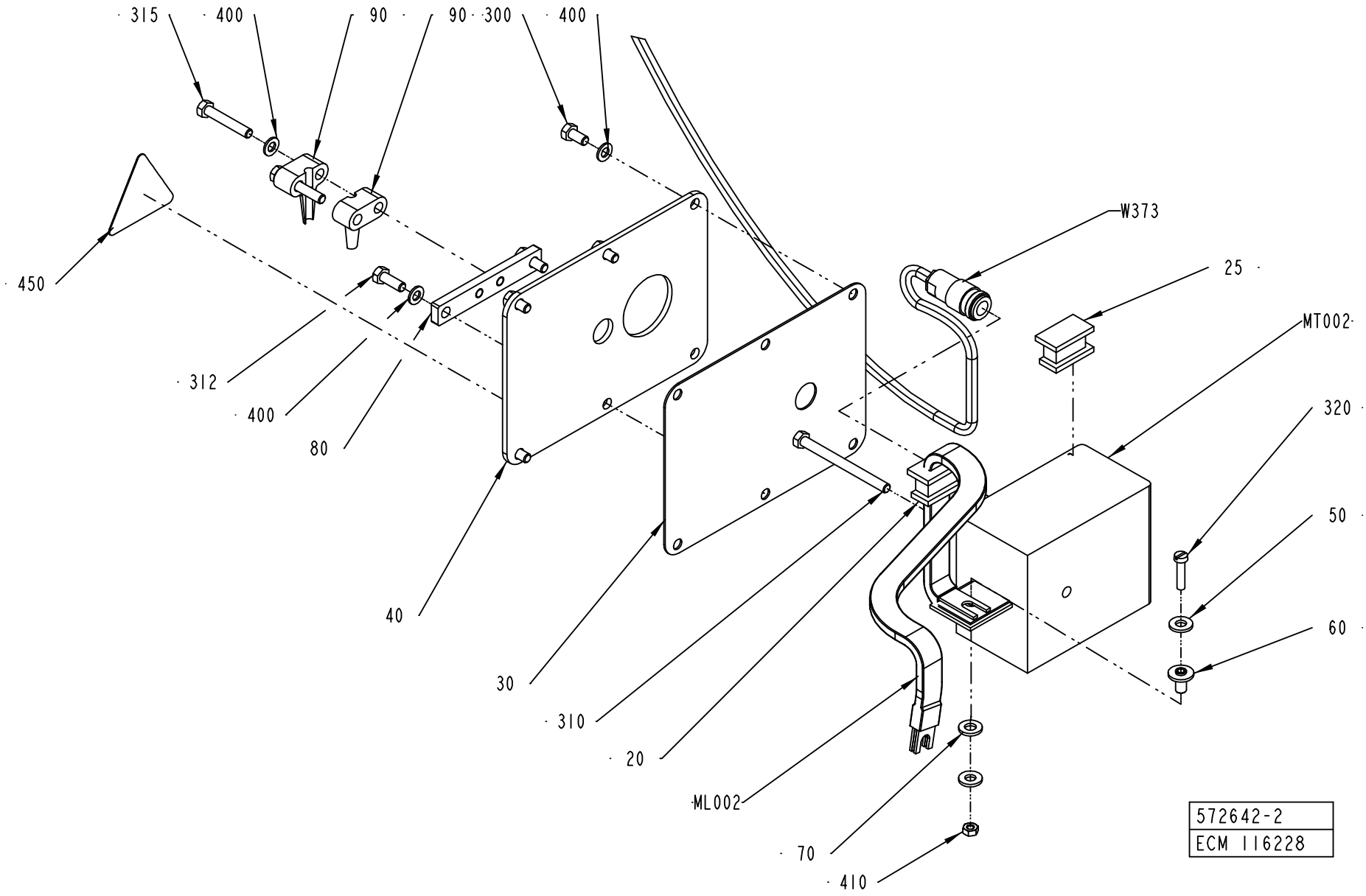
315
400
90
90
300
400
450
312
400
80
40
30
310
20
ML002
70
410
W373
25
MT002
320
50
60
572642-2
ECM 116228

ECM: 116302 - 20030113
Group number: 572642-0200
Assembly Drawing: 572642-2_1_AB

Pos	Part No	SP	UN	Qty	Description	Page No
TBA 0125S, TBA 0100B						
ML002	2554961-0000	A		1	BUSBAR RIGHT	
MT002	67379-0262	A		1	TRANSFORMER	
TBA 0160S, TBA 0200S						
ML002	571871-0000	A		1	BUSBAR,RIGHT	
MT002	67379-0254	A		1	TRANSFORMER	
TBA 0330S, TBA 0300S, TBA 0180B, TBA 0200B, TBA 0284B, TBA 0250B						
ML002	571871-0000	A		1	BUSBAR,RIGHT	
MT002	67379-0264	A		1	TRANSFORMER	
TBA 0200M, TBA 0250S						
ML002	571871-0000	A		1	BUSBAR,RIGHT	
MT002	67379-0265	A		1	TRANSFORMER	
Common Parts						
020	571873-0000	A		1	SEAL	
025	571874-0000	A		1	SEALING PLUG	
030	562119-0000	B		1	GASKET	
040	562118-0000	-		1	LID	
050	28509-0000	-		2	BRICKA	
060	32544-0000	B		1	INSULATION NUT	
070	32079-0000	B		1	WASHER	
080	578104-0000	-		1	SHEET	
090	1282426-0000	B		2	CLIP	
300	312105-0325	-		4	SCREW M6S ISO 4017 M5X10 A480	
310	312101-0343	-		1	SCREW M6S M5X60 FZB	
312	312105-0328	-		2	SCREW M6S ISO 4017 M5X14 A480	
315	312105-0335	-		2	SCREW M6S ISO 4014 M5X30 A480	
320	312122-0294	-		1	SCREW SLOT.PAN HD. MCS 4X18 BR NP	
400	315105-0146	-		8	WASHER ISO 7089-5-200 HV-A4	
410	312602-0312	-		1	HEXAGON NUT, EN 24032 M6M M4 NIPLBR	
450	359705-0015	-		1	WARNING SIGN ISO, RISK OF ELECTRIC SHOCK	
W373	1548155-0000	A		1	COAXIAL CABLE	

Pos	Part No	SP	UN	Qty	Description	Page No

Machine Type | Group Description | Used-In | Group Number | Page No

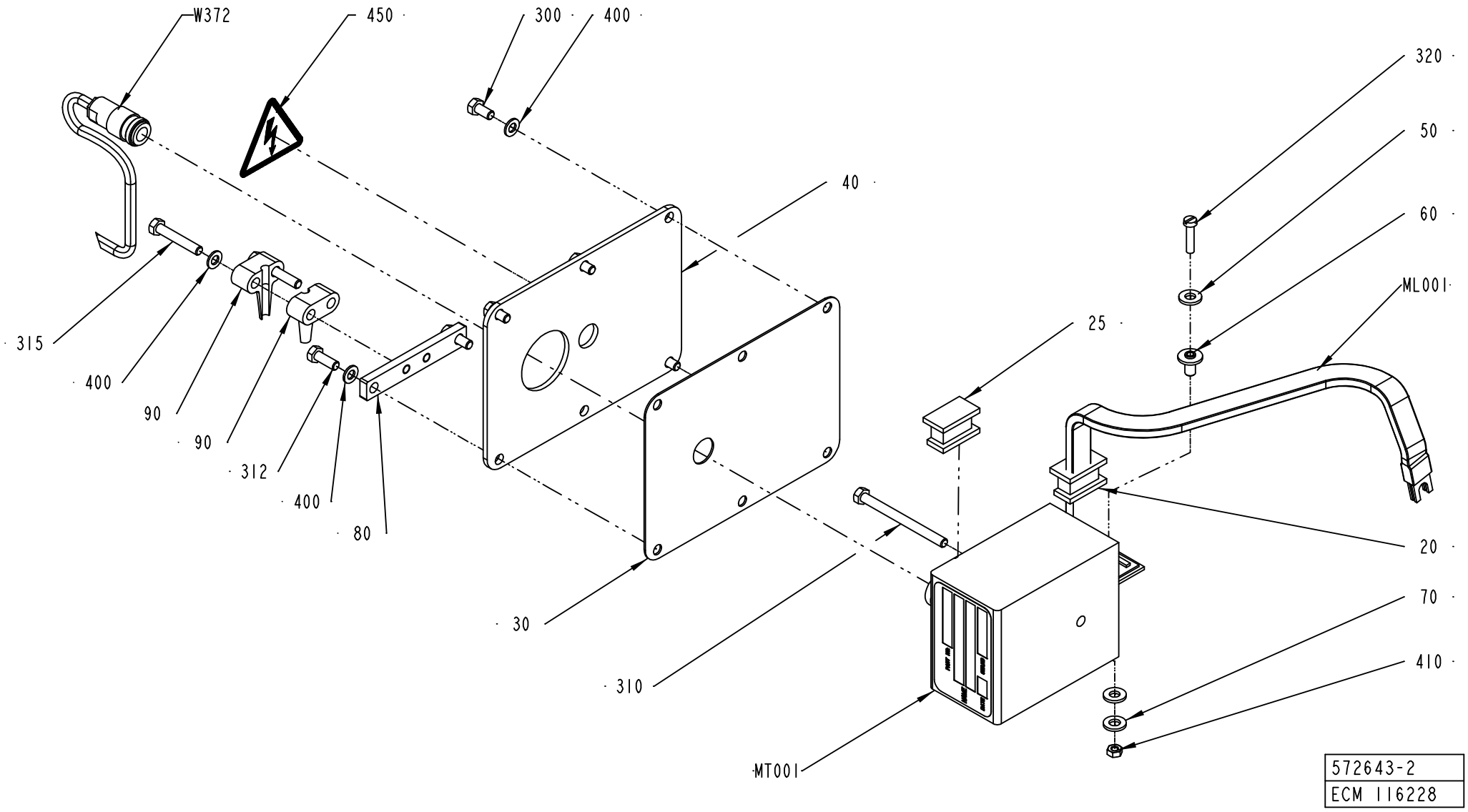
W372
450
300
400
320
50
60
ML001
40
315
400
90
90
312
400
80
25
30
310
MT001
20
70
410
572643-2
ECM 116228

ECM: 116303 - 20030113
Group number: 572643-0200
Assembly Drawing: 572643-2_1_AB

Pos	Part No	SP	UN	Qty	Description	Page No
TBA 0125S, TBA 0100B						
ML001	2554960-0000	A		1	BUSBAR LEFT	
MT001	67379-0262	A		1	TRANSFORMER	
TBA 0160S , TBA 0200S						
ML001	571872-0000	A		1	BUSBAR,LEFT	
MT001	67379-0254	A		1	TRANSFORMER	
TBA 0330S, TBA 0300S, TBA 0180B, TBA 0200B, TBA 0284B, TBA 0250B						
ML001	571872-0000	A		1	BUSBAR,LEFT	
MT001	67379-0264	A		1	TRANSFORMER	
TBA 0200M, TBA 0250S						
ML001	571872-0000	A		1	BUSBAR,LEFT	
MT001	67379-0265	A		1	TRANSFORMER	
Common Parts						
020	571873-0000	A		1	SEAL	
025	571874-0000	A		1	SEALING PLUG	
030	562119-0000	B		1	GASKET	
040	562118-0000	-		1	LID	
050	28509-0000	-		2	BRICKA	
060	32544-0000	B		1	INSULATION NUT	
070	32079-0000	B		1	WASHER	
080	578104-0000	-		1	SHEET	
090	1282426-0000	B		2	CLIP	
300	312105-0325	-		4	SCREW M6S ISO 4017 M5X10 A480	
310	312101-0343	-		1	SCREW M6S M5X60 FZB	
312	312105-0328	-		2	SCREW M6S ISO 4017 M5X14 A480	
315	312105-0335	-		2	SCREW M6S ISO 4014 M5X30 A480	
320	312122-0294	-		1	SCREW SLOT.PAN HD. MCS 4X18 BR NP	
400	315105-0146	-		8	WASHER ISO 7089-5-200 HV-A4	
410	312602-0312	-		1	HEXAGON NUT, EN 24032 M6M M4 NIPLBR	
450	359705-0015	-		1	WARNING SIGN ISO, RISK OF ELECTRIC SHOCK	
W372	1548155-0000	A		1	COAXIAL CABLE	

Pos	Part No	SP	UN	Qty	Description	Page No

Machine Type | Group Description | Used-In | Group Number | Page No

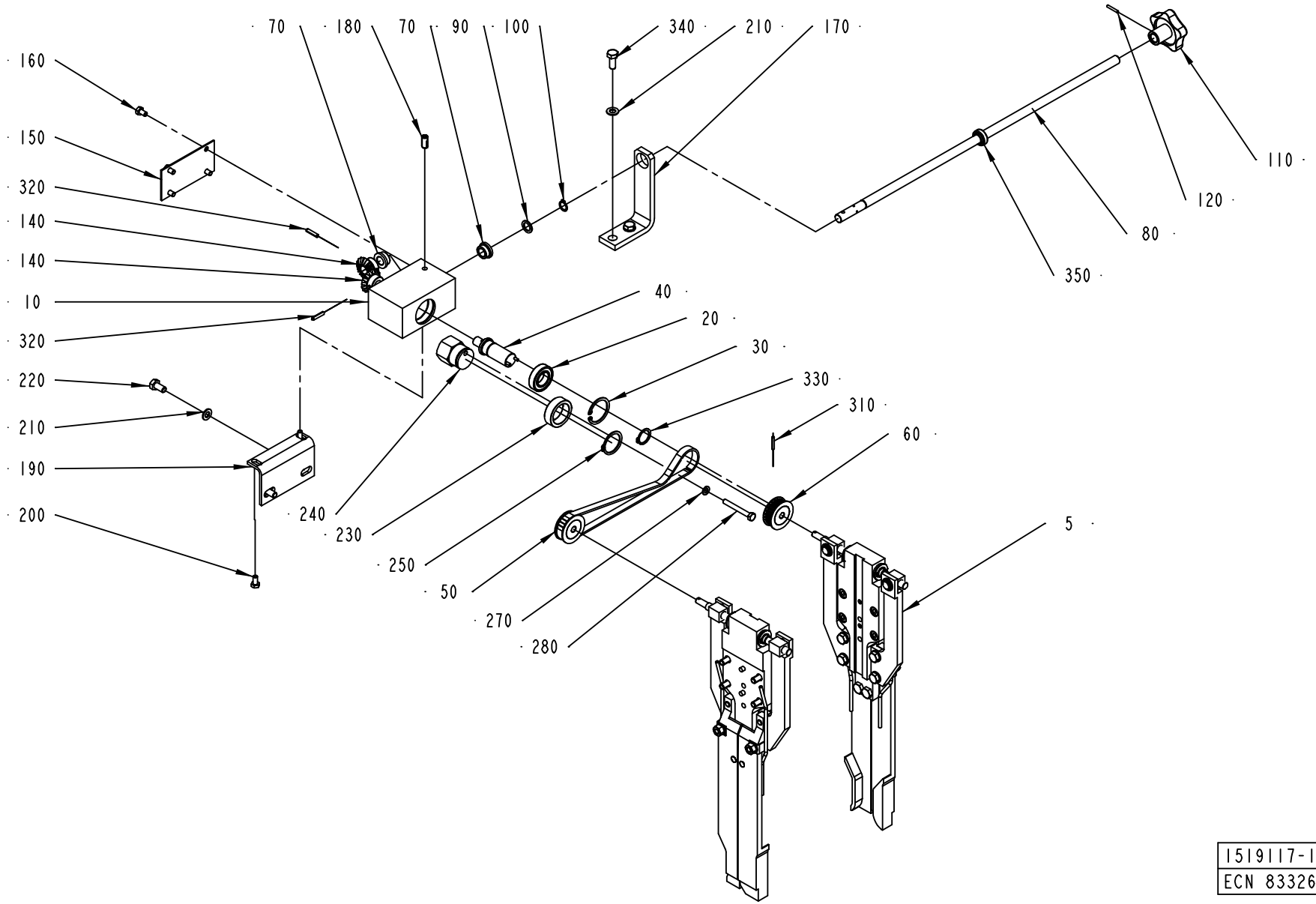

1519117-1
ECN 83326

ECM: 113350 - 20020930
Group number: 1519117-0100
Assembly Drawing: 1519117-1_1_AA

Pos	Part No	SP	UN	Qty	Description	Page No
-						
005	1519118-0100	-		1	VOLUM CURVE PIECE	**353**
010	1539105-0000	-		1	BOX	
020	90214-0166	B		1	BALL BEARING, 2 SEALS, 20X37X12 MM	
030	315752-0125	-		1	RETAINING RING FOR HOLE, 37X1,5 MM	
040	1539106-0000	-		1	SHAFT	
050	1539107-0000	B		1	TIMING BELT	
060	1539108-0000	B		2	TIMING BELT PULLEY	
070	321101-0172	B		2	FLANGE BUS 12F7X10	
080	1539109-0000	-		1	SHAFT	
090	90005-0047	-		1	WASHER,PL.RND.CU.12,2/ H=1,5	
100	315751-0109	-		1	RETAIN. RING, 12	
110	240797-0000	-		1	HANDLE	
120	311103-0238	-		1	CYLINDERPINNE M6, 3X20 MM	
140	293610-0000	B		2	GEAR WHEEL	
150	1539110-0000	-		1	LID	
160	312105-0364	-		4	SCREW M6S ISO 4017 M6X10 A480	
170	1539111-0000	-		1	SUPPORT	
180	90458-1517	-		1	SCREW SPRINGLOAD. SOCK. HEX HEAD M8X18	
190	1539112-0000	-		1	SUPPORT	
200	312105-0366	-		2	SCREW M6S M6X12 A280	
210	315105-0165	-		4	WASHER ISO 7089-8-200 HV-A4	
220	312105-0449	-		2	SCREW M6S ISO 4017 M8X16 A480	
230	1538948-0000	-		1	ECCENTRIC	
240	1538949-0000	-		1	ECCENTRIC	
250	315751-0122	-		1	RETAIN. RING, 30	
270	315105-0153	-		1	WASHER ISO 7089-6-200 HV-A4	
280	312105-0380	-		1	SCREW M6S ISO 4014 M6X50 A480	
310	90258-0031	-		1	PIN, STRAIGHT SLOTTED SPRING FRP 3X20	
320	311112-0256	-		2	SPRING PIN, ISO 8752 4X20-C	
330	315751-0116	-		1	RETAIN. RING, 20	
340	312105-0451	-		2	SCREW M6S ISO 4017 M8X20 A480	
350	90240-0152	B		1	PLAIN BEAR,SELF ADJ.SPHER.12X22X10 MM	

Pos	Part No	SP	UN	Qty	Description	Page No

Machine Type | Group Description | Used-In | Group Number | Page No

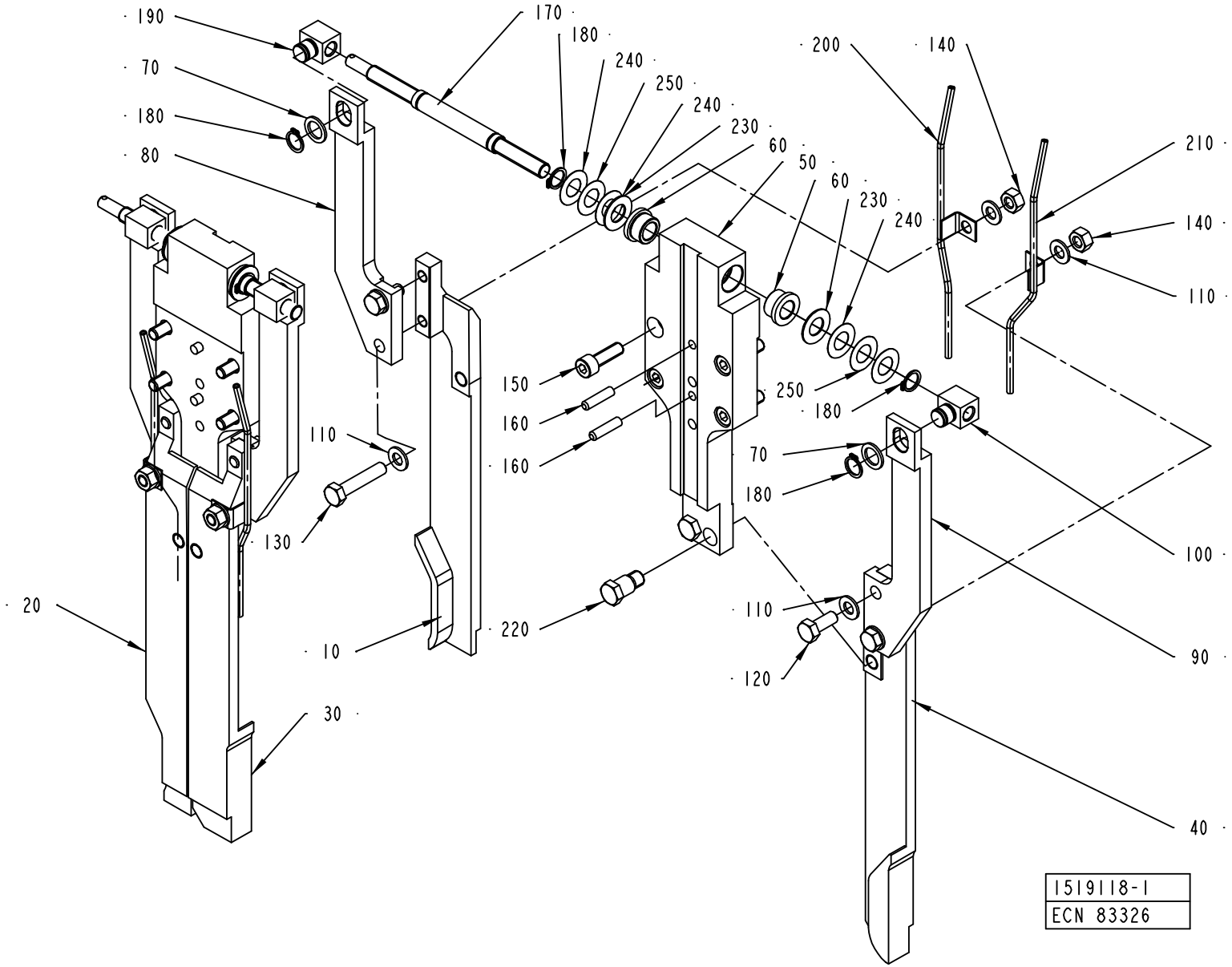
190
70
180
80
170
180
240
250
240
230
60
50
60
230
240
200
140
210
140
110
150
160
160
110
130
250
180
70
180
100
20
10
220
110
120
90
30
40
1519118-1
ECN 83326

ECM: 110619 - 20030113
Group number: 1519118-0100
Assembly Drawing: 1519118-1_1_AA

Pos	Part No	SP	UN	Qty	Description	Page No
TBA 0100B						
010	979772-0000	A		1	VOLUME CAM L 100	
020	979774-0000	A		1	VOLUME CAM R 100	
030	979773-0000	A		1	VOLUME CAM L WIDE 100	
040	979775-0000	A		1	VOLUME CAM R WIDE 100	
TBA 0125S						
010	1490235-0000	A		1	VOLUME CAM	
020	1490236-0000	A		1	VOLUME CAM	
030	1490237-0000	A		1	VOLUME CAM, WIDE	
040	1490238-0000	A		1	VOLUME CAM, WIDE	
TBA 0160S						
010	2506638-0000	A		1	VOLUME CAM	
020	2506639-0000	A		1	VOLUME CAM	
030	2506640-0000	A		1	VOLUME CAM	
040	2506641-0000	A		1	VOLUME CAM	
TBA 0180B						
010	272956-0000	A		1	VOLUME CAM LEFT	
020	272964-0000	A		1	VOLUME CAM RIGHT	
030	272965-0000	A		1	VOLUME CAM LEFT, WIDE	
040	272967-0000	A		1	VOLUME CAM RIGHT, WIDE	
TBA 0200B						
010	1490239-0000	A		1	VOLUME CAM	
020	1490240-0000	A		1	VOLUME CAM	
030	1490239-0000	A		1	VOLUME CAM	
040	1490240-0000	A		1	VOLUME CAM	
TBA 0200M, TBA 0250B						
010	1282315-0000	A		1	VOLUME CAM LEFT	
020	1282316-0000	A		1	VOLUME CAM RIGHT	
030	1282315-0000	A		1	VOLUME CAM LEFT	
040	1282316-0000	A		1	VOLUME CAM RIGHT	
TBA 0200S						
010	2506645-0000	A		1	VOLUME CAM	
020	2506643-0000	A		1	VOLUME CAM	
030	2506642-0000	A		1	VOLUME CAM	
040	2506644-0000	A		1	VOLUME CAM	

Pos	Part No	SP	UN	Qty	Description	Page No
TBA 0250S						
010	2553111-0000	A		1	CAM	
020	2553110-0000	A		1	CAM	
30	2553111-0000	A		1	CAM	
40	2553110-0000	A		1	CAM	
TBA 0300S, TBA 0284B						
010	272949-0000	A		1	VOLUME CAM LEFT	
020	272957-0000	A		1	VOLUME CAM RIGHT	
030	272949-0000	A		1	VOLUME CAM LEFT	
040	272957-0000	A		1	VOLUME CAM RIGHT	
TBA 0330S						
010	582166-0000	A		1	VOLUME CAM L 330S	
020	582164-0000	A		1	VOLUME CAM R 330S	
030	582167-0000	A		1	VOLUME CAM L WIDE 330S	
040	582165-0000	A		1	VOLUME CAM R WIDE 330S	
Common Parts						
050	1539101-0000	-		2	BRACKET	
060	321101-0173	B		4	FLANGE BUS 12F7X12	
070	90005-0047	B		4	WASHER,PL.RND.CU.12,2/ H=1,5	
080	1539102-0000	-		2	ARM	
090	1539103-0000	-		2	ARM	
100	1519134-0000	B		2	JOINT	
110	315105-0165	-		12	WASHER ISO 7089-8-200 HV-A4	
120	312155-0451	-		4	SCREW EN 10642 MF6S M8X20 A480	
130	312155-0459	-		4	SCREW EN 10642 MF6S M8X40 A480	
140	312605-0318	-		4	HEXAGON NUT, M6M M8 A280	
150	312115-0453	-		8	SCREW ISO4762 M8X25 A4	
160	311103-0355	-		4	PARALLELL PIN, M6, 6X25 MM	
170	1539104-0000	B		2	SPINDLE	
180	315751-0109	-		8	RETAIN. RING, 12	
190	1519133-0000	B		2	JOINT	
200	441759-0000	B		2	PIPE LEFT	
210	441758-0000	B		2	PIPE RIGHT	
220	272973-0000	B		4	DOWEL	
230	1755-0001	B		4	WASHER	
240	1755-0002	B		8	WASHER	
250	1755-0003	B		4	WASHER	
300	90157-0021	-	KG		LOCKING FLUID	

Machine Type | Group Description | Used-In | Group Number | Page No

SUPPORT ROLLER

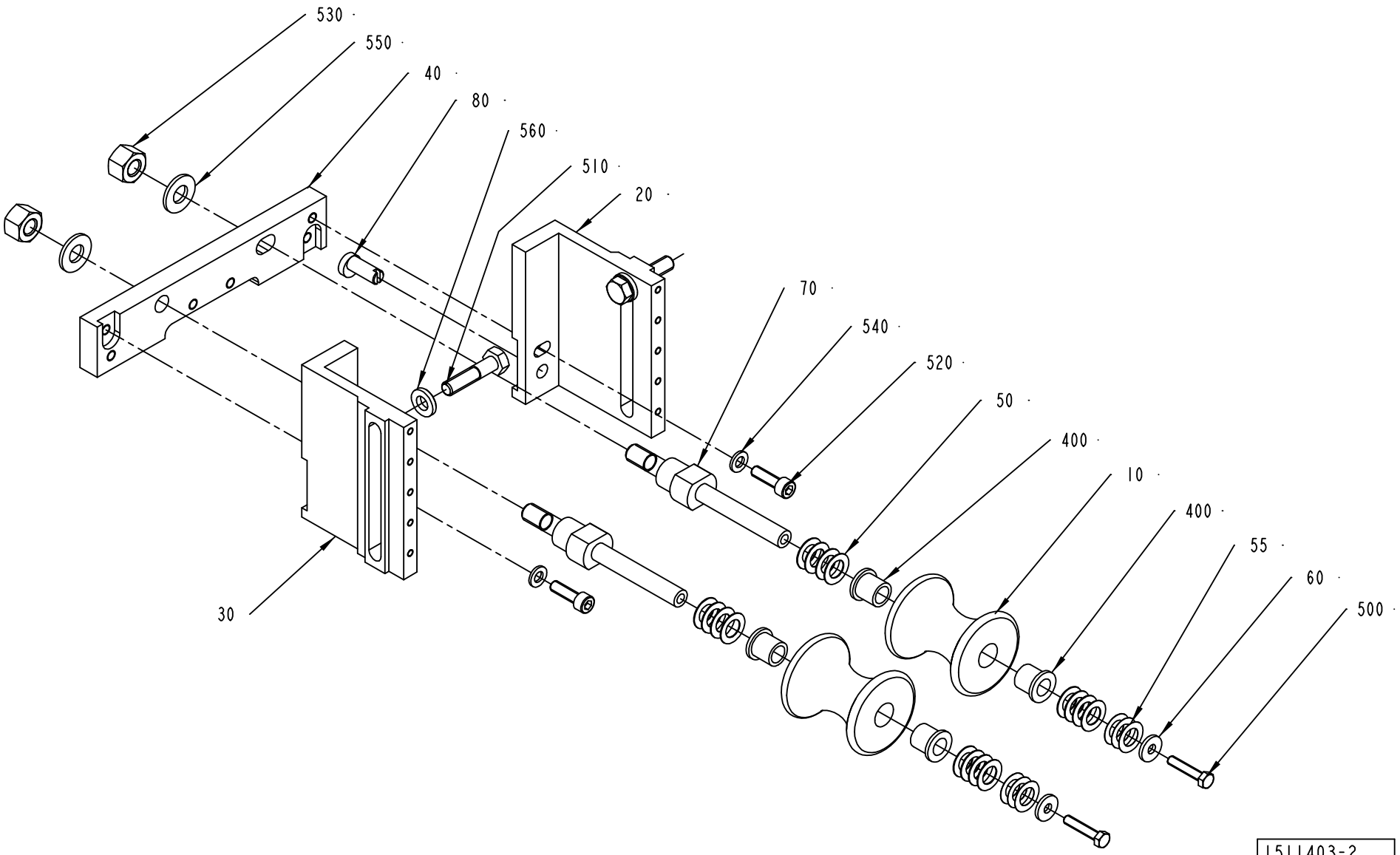

ECM: 116315 - 20020930
Group number: 1511403-0100
Assembly Drawing: 1511403-2_1_AA

Pos	Part No	SP	UN	Qty	Description	Page No
NOPT TBA 0100B IH, NOPT TBA 0125S IH						
010	978758-0000	B		2	ROLLER 125ML	
040	1511405-0003	-		1	BRACKET	
NOPT TBA 0200M IH, NOPT TBA 0250S IH						
010	574385-0000	B		2	ROLLER TBA250SL	
040	1511405-0001	-		1	BRACKET	
NOPT TBA 0200S IH, NOPT TBA 0160S IH						
010	978760-0000	B		2	ROLLER TBA200SL	
040	1511405-0004	-		1	BRACKET	
NOPT TBA 0200B IH, NOPT TBA 0180B IH, NOPT TBA 0330S IH, NOPT TBA 0250B IH, NOPT TBA 0284B IH, NOPT TBA 0300S IH						
010	978757-0000	B		2	ROLLER 180-284ML	
040	1511405-0002	-		1	BRACKET	
Common Parts						
020	1511406-0000	-		1	BRACKET	
030	1511407-0000	-		1	BRACKET	
050	2033-0009	-		16	WASHER	
055	2033-0014	-		6	WASHER	
060	27815-0000	-		2	WASHER	
070	978756-0000	A		2	PIN	
080	1511404-0000	B		1	ECCENTRIC SHAFT	
400	90240-0180	B		4	FLANGE BUSHING 10X14X15MM	
500	312105-0333	-		2	SCREW M6S ISO 4017 M5X25 A480	
510	312105-0457	-		2	SCREW M6S ISO 4014 M8X35 A480	
520	312115-0370	-		2	SCREW ISO4762 M6X20 A4	
530	312811-0320	-		2	NUT HEX.LOCK HELI COIL MID GRIP M10 SS	
540	315105-0153	-		2	WASHER ISO 7089-6-200 HV-A4	
550	315105-0173	-		2	WASHER ISO 7089-10-200 HV-A4	
560	315115-0165	-		2	WASHER PLAIN, TBRB 8,4/16 H=3	

Pos	Part No	SP	UN	Qty	Description	Page No

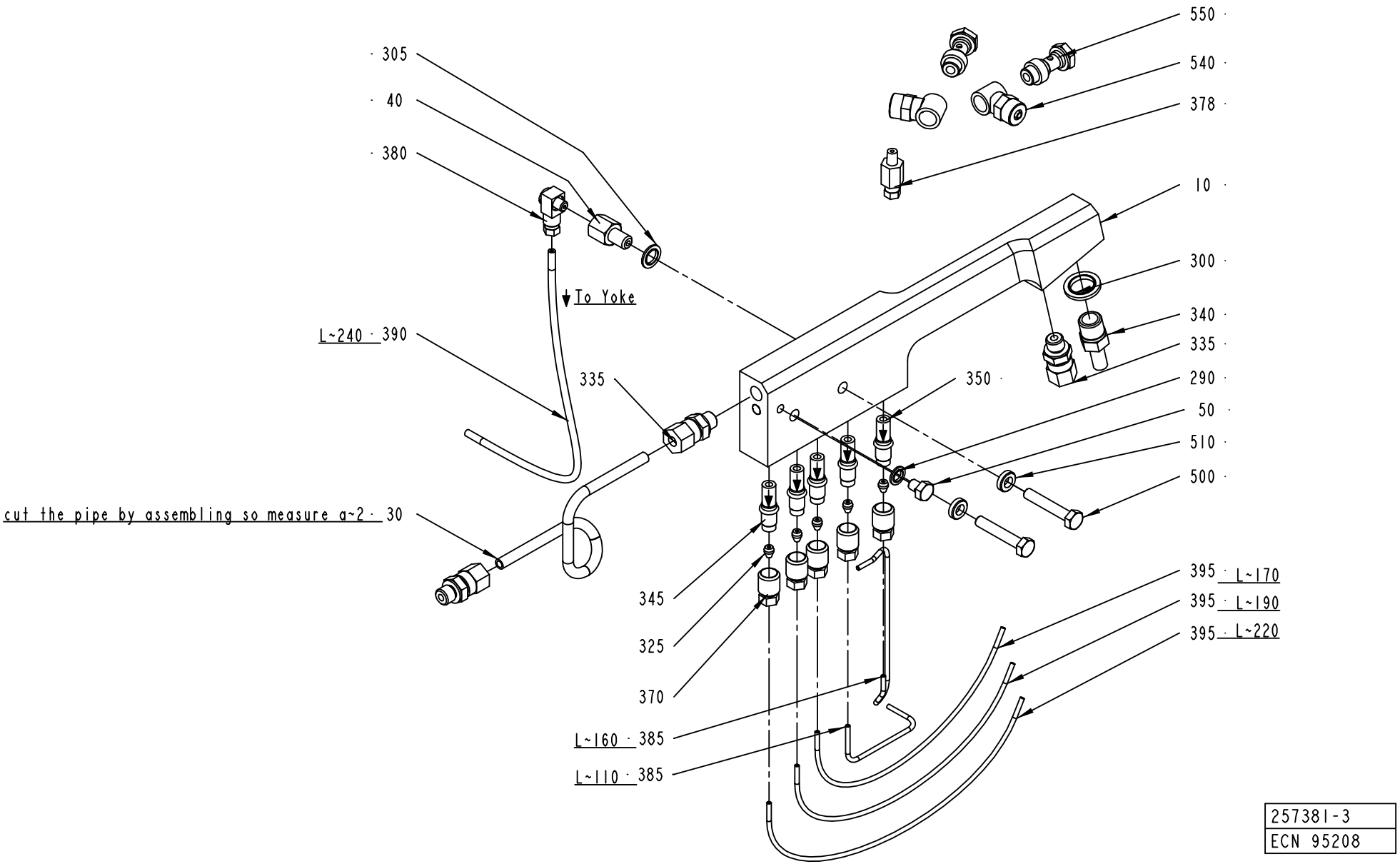
305
40
380
To Yoke
L~240 390
335
cut the pipe by assembling so measure a~2 30
345
325
370
L~160 385
L~110 385
550
540
378
10
300
340
335
290
50
510
500
350
395 L~170
395 L~190
395 L~220
257381-3
ECN 95208

ECM: 123353 - 20030102
Group number: 257381-0300
Assembly Drawing: 257381-3_1_AC

Pos	Part No	SP	UN	Qty	Description	Page No
-						
010	456017-0000	A		1	HOSE HOLDER RIGHT	
030	257379-0000	B		1	HYDRAULIC PIPE RIGHT	
040	257000-0000	-		1	NIPPLE	
050	441355-0000	-		1	BLEEDING SCREW	
290	90005-0003	B		1	GASKET BOLT HEAD 6,7X11X1 MM M6	
300	90005-0005	B		1	GASKET BOLT HEAD 13,7X20,6X2,1 MM G1/4"	
305	90005-0007	B		1	GASKET BOLT HEAD 8,7X14X1 MM M8	
325	90028-0020	-		5	CONE TUBE 2,5MM	
335	90030-0184	-		3	CONN. STR. GA-6-G1/8	
340	90030-0065	-		1	PIPE CONNECTION	
345	90092-0052	A		4	METERING VALVE 10 MM3	
350	90092-0053	A		1	METERING VALVE 30 MM3	
370	90134-0039	-		5	BUSHING VALVE CONNECTION 2,5 MM	
378	90134-0066	-		1	CONNECTION M6 TUBE 4 MM	
380	90134-0068	-		1	CONNECTION	
385	90266-0019	-	MM	270	PIPE	
390	90166-0109	-	MM	240	TUBE 4 MM PA,TRANSP.	
395	90166-0143	-	MM	580	TUBE 2,5 MM PA,TRANSP.	
500	312105-0376	-		2	SCREW M6S ISO 4014 M6X35 A480	
510	315115-0153	-		2	WASHER PLAIN, TBRB 6,4/12 H=3	
540	342980-0121	-		2	BANJO-CONNECTION,RING 8/6-G1/8"	
550	342980-0303	-		2	BANJO-HOLLOW BOLT COUPL,EXT.THR.01-G1/8"	

Pos	Part No	SP	UN	Qty	Description	Page No

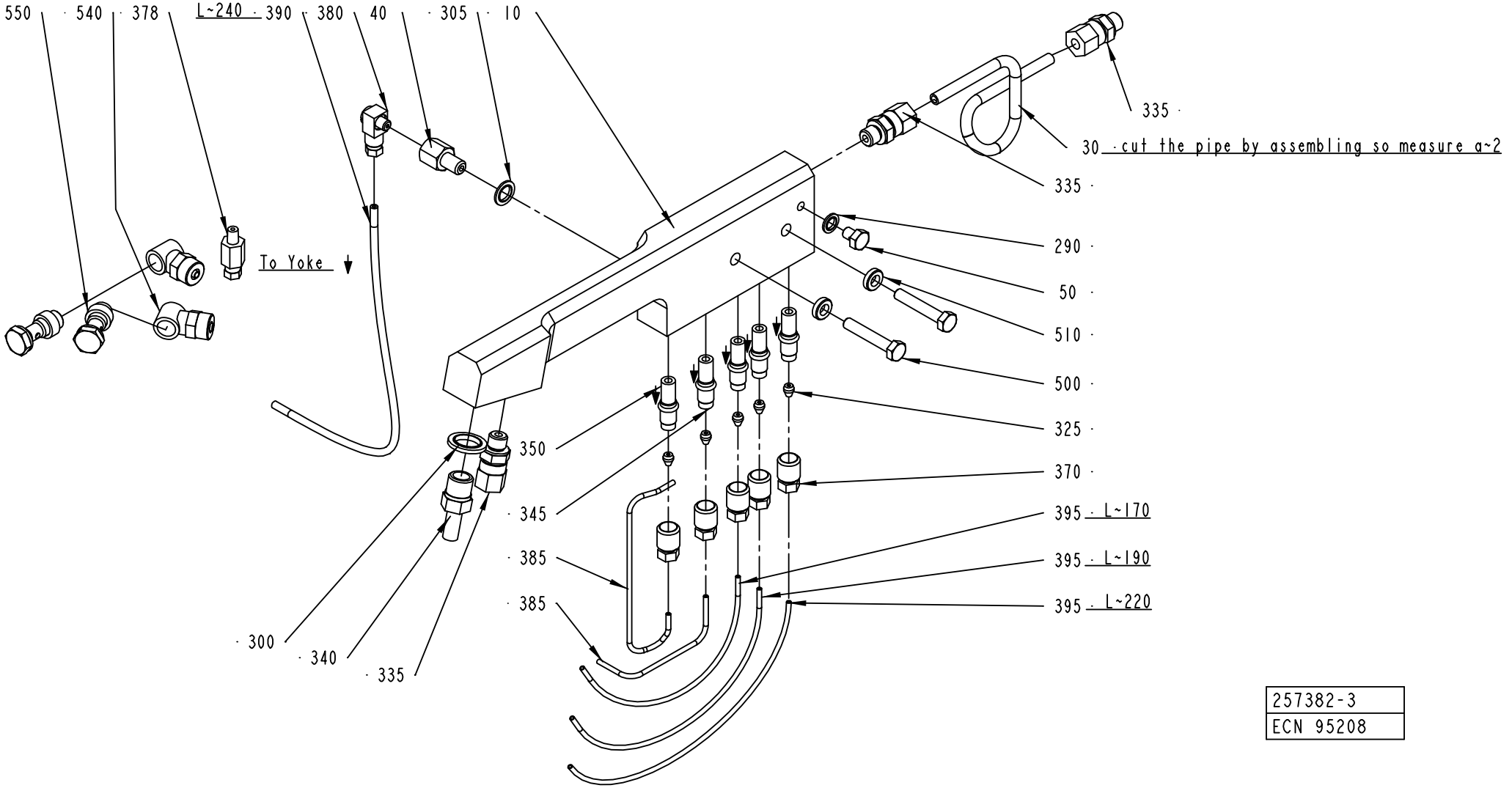

257382-3
ECN 95208

ECM: 123354 - 20030102
Group number: 257382-0300
Assembly Drawing: 257382-3_1_AC

Pos	Part No	SP	UN	Qty	Description	Page No
-						
010	456018-0000	A		1	HOSE HOLDER LEFT	
030	257380-0000	B		1	HYDRAULIC PIPE LEFT	
040	257000-0000	-		1	NIPPLE	
050	441355-0000	-		1	BLEEDING SCREW	
290	90005-0003	B		1	GASKET BOLT HEAD 6,7X11X1 MM M6	
300	90005-0005	B		1	GASKET BOLT HEAD 13,7X20,6X2,1 MM G1/4"	
305	90005-0007	B		1	GASKET BOLT HEAD 8,7X14X1 MM M8	
325	90028-0020	-		5	CONE TUBE 2,5MM	
335	90030-0184	-		3	CONN. STR. GA-6-G1/8	
340	90030-0065	-		1	PIPE CONNECTION	
345	90092-0052	A		4	METERING VALVE 10 MM3	
350	90092-0053	A		1	METERING VALVE 30 MM3	
370	90134-0039	-		5	BUSHING VALVE CONNECTION 2,5 MM	
378	90134-0066	-		1	CONNECTION M6 TUBE 4 MM	
380	90134-0068	-		1	CONNECTION	
385	90266-0019	-	MM	270	PIPE	
390	90166-0109	-	MM	240	TUBE 4 MM PA,TRANSP.	
395	90166-0143	-	MM	580	TUBE 2,5 MM PA,TRANSP.	
500	312105-0376	-		2	SCREW M6S ISO 4014 M6X35 A480	
510	315115-0153	-		2	WASHER PLAIN, TBRB 6,4/12 H=3	
540	342980-0121	-		2	BANJO-CONNECTION,RING 8/6-G1/8"	
550	342980-0303	-		2	BANJO-HOLLOW BOLT COUPL,EXT.THR.01-G1/8"	

Pos	Part No	SP	UN	Qty	Description	Page No

Machine Type | Group Description | Used-In | Group Number | Page No

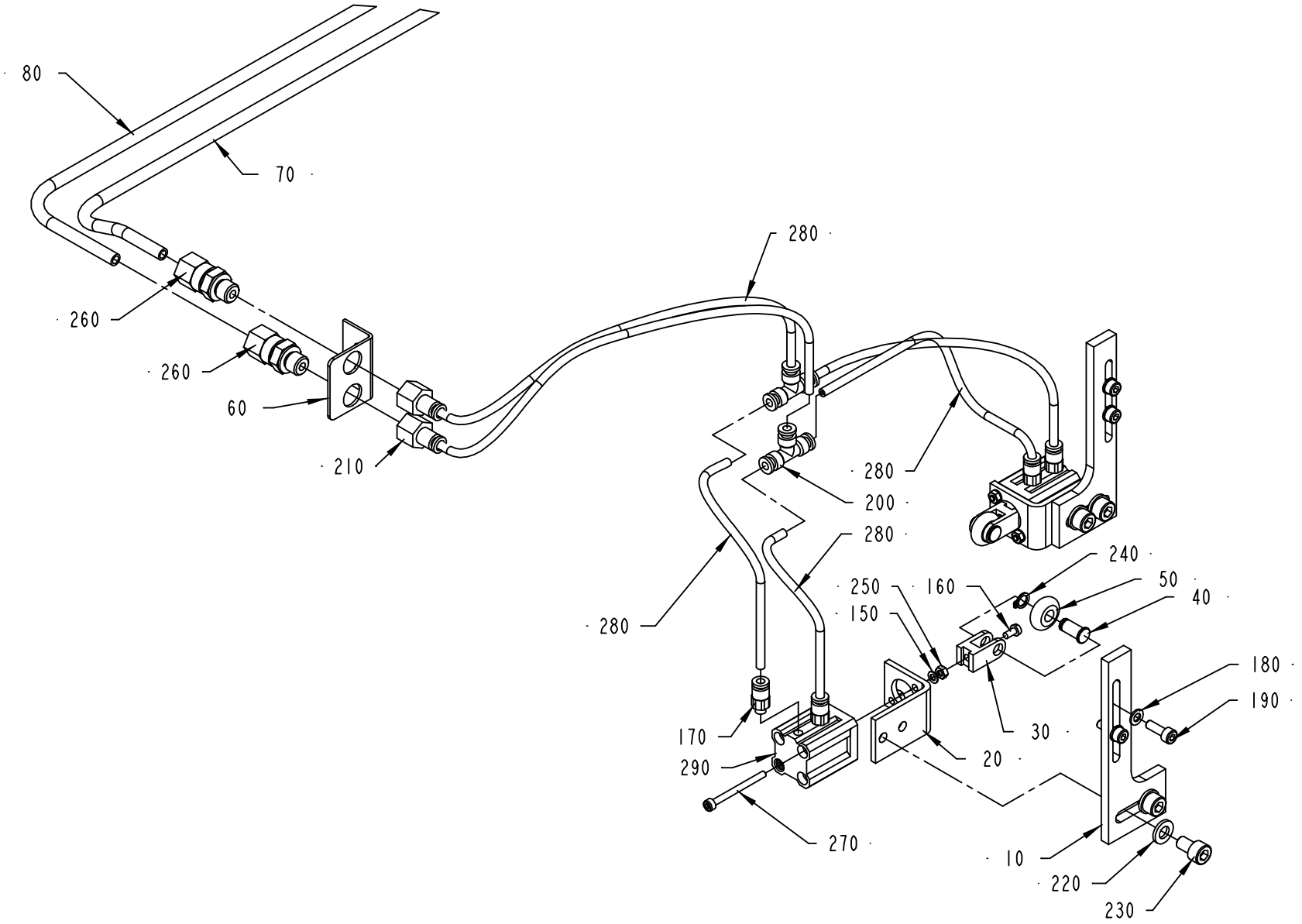

1511069-1
ECM 73438

ECM: 113349 - 20020930
Group number: 1511069-0100
Assembly Drawing: 1511069-1_1_AA

Pos	Part No	SP	UN	Qty	Description	Page No
-						
010	1549540-0000	-		2	BRACKET	
020	1558130-0000	-		2	BRACKET	
030	1558124-0000	B		2	FORK HEAD	
040	1490932-0000	B		2	SHAFT	
050	1490931-0000	B		2	WHEEL	
060	1558129-0000	-		1	BRACKET	
070	1558127-0000	-		1	PIPE	
080	1558126-0000	-		1	PIPE	
150	315105-0124	-		4	WASHER ISO 7089-3-200 HV-A4	
160	312125-0220	-		2	SKRUV SLOT.PAN HD. MCS 3X6 A480	
170	90458-2954	-		4	ELBOW PIPE JOINT, EXT.THREAD, D=4MM M5	
180	315105-0136	-		4	WASHER ISO 7089-4-200 HV-A4	
190	312115-0291	-		4	SCREW ISO4762 M4X12 A4	
200	342748-0100	-		2	T-CONNECTION 4MM	
210	342770-0101	-		2	STRAIGHT COUPLING INT, D=4 MM - G1/8	
220	315105-0153	-		4	WASHER ISO 7089-6-200 HV-A4	
230	312115-0364	-		4	SCREW ISO4762 M6X10 A4	
240	315751-0103	-		2	RETAIN. RING, 6	
250	312605-0310	-		4	HEXAGON NUT, M6M M3 A280	
260	90030-0184	-		2	CONN. STR. GA-6-G1/8	
270	90457-0937	-		4	SCREW MC6S M3X40 A480	
280	90166-0095	-	M	1	TUBE 4 MM PA BLUE	
290	90459-0251	B		2	DOUBLE ACTING, COMPACT, CYL 12-15	

Pos	Part No	SP	UN	Qty	Description	Page No

This page is intentionally left blank.

ECM: 92423 - 20011113
Group number: 295523-0400
Assembly Drawing:

Pos	Part No	SP	UN	Qty	Description	Page No
TBA 0125S, TBA 0100B						
020	1110530-0000	-		2	INDUCTOR	
040	1520577-0001	-		4	DOLLY	
TBA 0160S, TBA 0200S						
025	1110532-0000	-		2	INDUCTOR	
055	1110391-0000	-		4	DOLLY	
TBA 0250S, TBA 0200M						
028	1110535-0000	-		2	INDUCTOR	
055	1110391-0000	-		4	DOLLY	
TBA 0330S, TBA 0300S, TBA 0180B, TBA 0200B, TBA 0284B, TBA 0250B						
010	1110534-0000	-		2	INDUCTOR	
055	1110391-0000	-		4	DOLLY	

Pos	Part No	SP	UN	Qty	Description	Page No

Tetra Pak

SPC
Spare Parts Catalogue

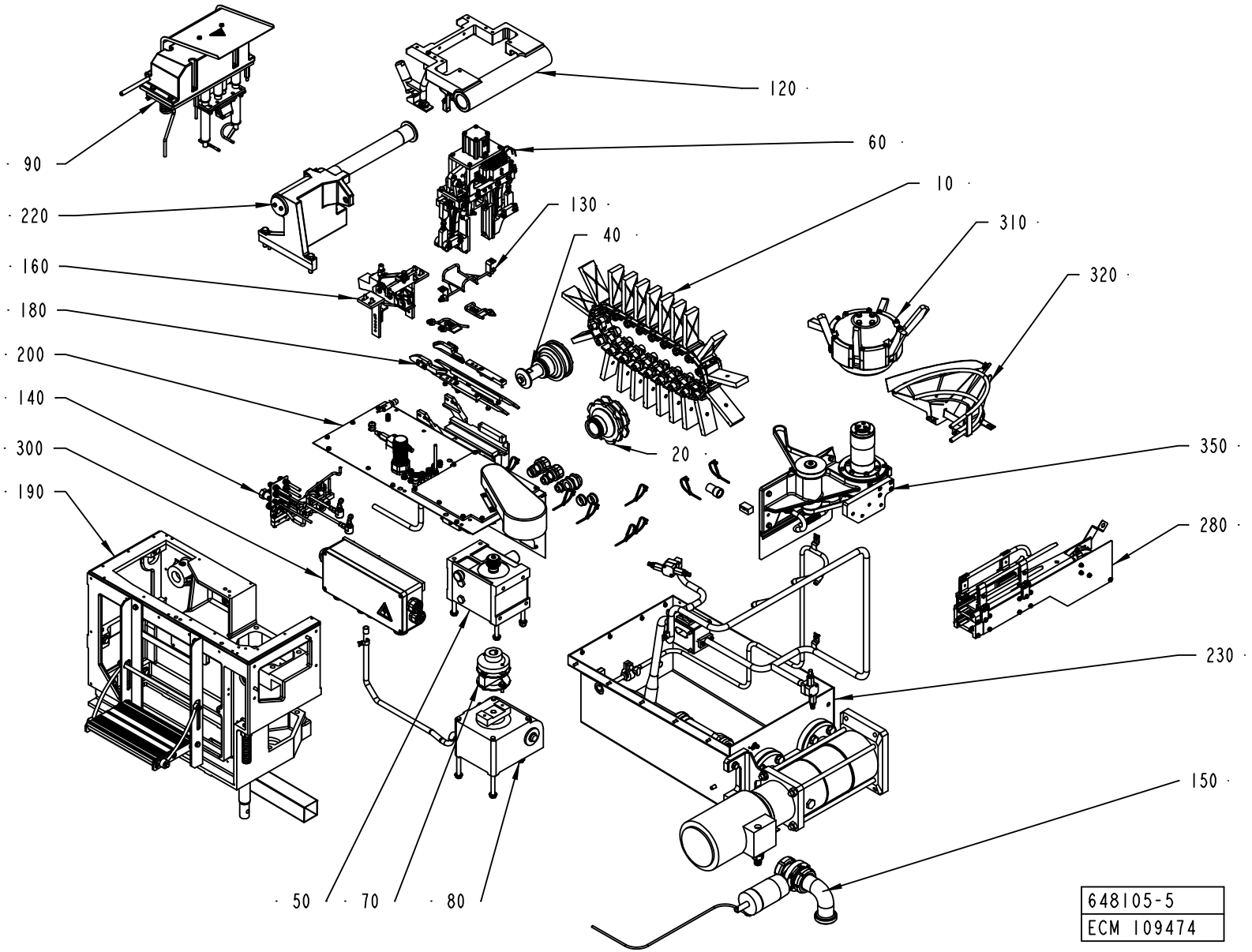
· 90
· 220
· 160
· 180
· 200
· 140
· 300
· 190
120 ·
60 ·
10 ·
130 ·
40 ·
310 ·
320 ·
20 ·
350 ·
280 ·
230 ·
150 ·
· 50
· 70
· 80
648105-5
ECM 109474

ECM: 129615 - 50001231
Group number: 648105-1200
Assembly Drawing: 648105-5_1_AB

Pos	Part No	SP	UN	Qty	Description	Page No
-						
010	1317526-0100	A		1	STATION CHAIN	**369**
020	491850-0100	-		1	DRIVE WHEEL	**371**
040	491846-0300	-		1	TENSION SPROCKET	**373**
050	256410-0900	-		1	INDEXING UNIT	**375**
060	2523725-0200	-		1	PRESSURE DEVICE	**377, 379**
070	256437-0200	-		1	DISC COUPLING	**383**
080	256438-0300	-		1	WORM GEAR	**385**
090	1539968-0100	-		1	FLAP HEATER	**387, 389**
120	1548000-0100	-		1	FRAME	**391**
130	1539970-0100	-		1	FOLDING BAR	**393**
140	456455-0600	-		1	PIPE WORK	**395**
150	256674-0500	-		1	BOTTOM VALVE	**397**
160	1539975-0100	-		1	FORMING UNIT	**399**
180	1539969-0100	-		1	GUIDE	**401**
190	441695-0500	-		1	MACHINE BODY	**403**
200	1539995-0100	-		1	CANTILEVER	**407**
220	1539949-0100	-		1	FIXING UNIT	**413**
230	2544980-0100	-		1	CLEANING SYSTEM	**415**
280	2500233-0100	-		1	CONVEYOR	**419**
300	441850-0700	-		1	CABLE	**421**
310	1539265-0100	-		1	OUTFEED UNIT	**427**
320	2544961-0100	-		1	RAIL	**429**
350	2530400-0100	-		1	TRASMISSION UNIT	**431**

Pos	Part No	SP	UN	Qty	Description	Page No

Machine Type	Group Description	Used-In	Group Number	Page No

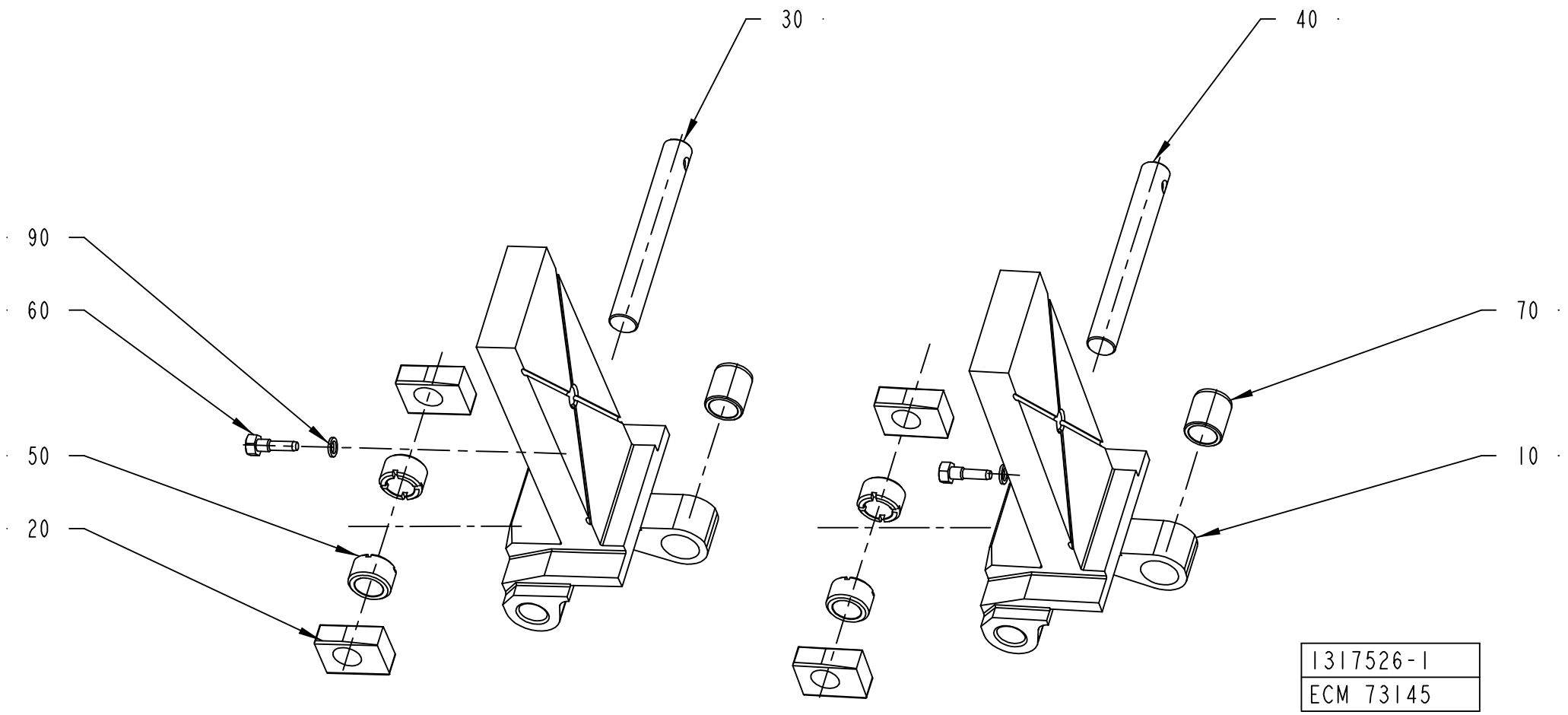
30
40
90
60
70
50
10
20
1317526-1
ECM 73145

ECM: 115050 - 20030113
Group number: 1317526-0100
Assembly Drawing: 1317526-1_1_AC

Pos	Part No	SP	UN	Qty	Description	Page No
TBA 0100B						
010	1296313-0000	A		21	CARTON STATION	
TBA 0125S						
010	1296312-0000	A		21	CARTON STATION WITH BEVEL	
TBA 0160S						
010	1296311-0000	A		21	CARTON STATION WITH BEVEL	
TBA 0180B						
010	1296310-0006	A		21	CARTON STATION WITH BEVEL	
TBA 0200B						
010	1296310-0004	A		21	CARTON STATION WITH BEVEL	
TBA 0200M						
010	1282435-0002	A		21	CARTON STATION	
TBA 0200S						
010	1282444-0000	A		21	CARTON STATION WITH BEVEL	
TBA 0250B						
010	1296310-0002	A		21	CARTON STATION WITH BEVEL	
TBA 0250S						
010	1282435-0001	A		21	CARTON STATION	
TBA 0300S, TBA 0284B						
010	1296310-0001	A		21	CARTON STATION WITH BEVEL	
TBA 0330S						
010	1296310-0007	A		21	CARTON STATION WITH BEVEL	
Common Parts						
020	491227-0000	A		42	SLIDER	
030	491228-0001	A		18	SHAFT	
040	491228-0002	A		3	SHAFT	
050	491229-0000	A		42	BUSHING	
060	491230-0000	A		21	GRUB SCREW	
070	491231-0000	A		21	BUSHING	
090	315233-0101	A		21	WASHER CAPTIVE SEALING M5	

Pos	Part No	SP	UN	Qty	Description	Page No

Machine Type | Group Description | Used-In | Group Number | Page No

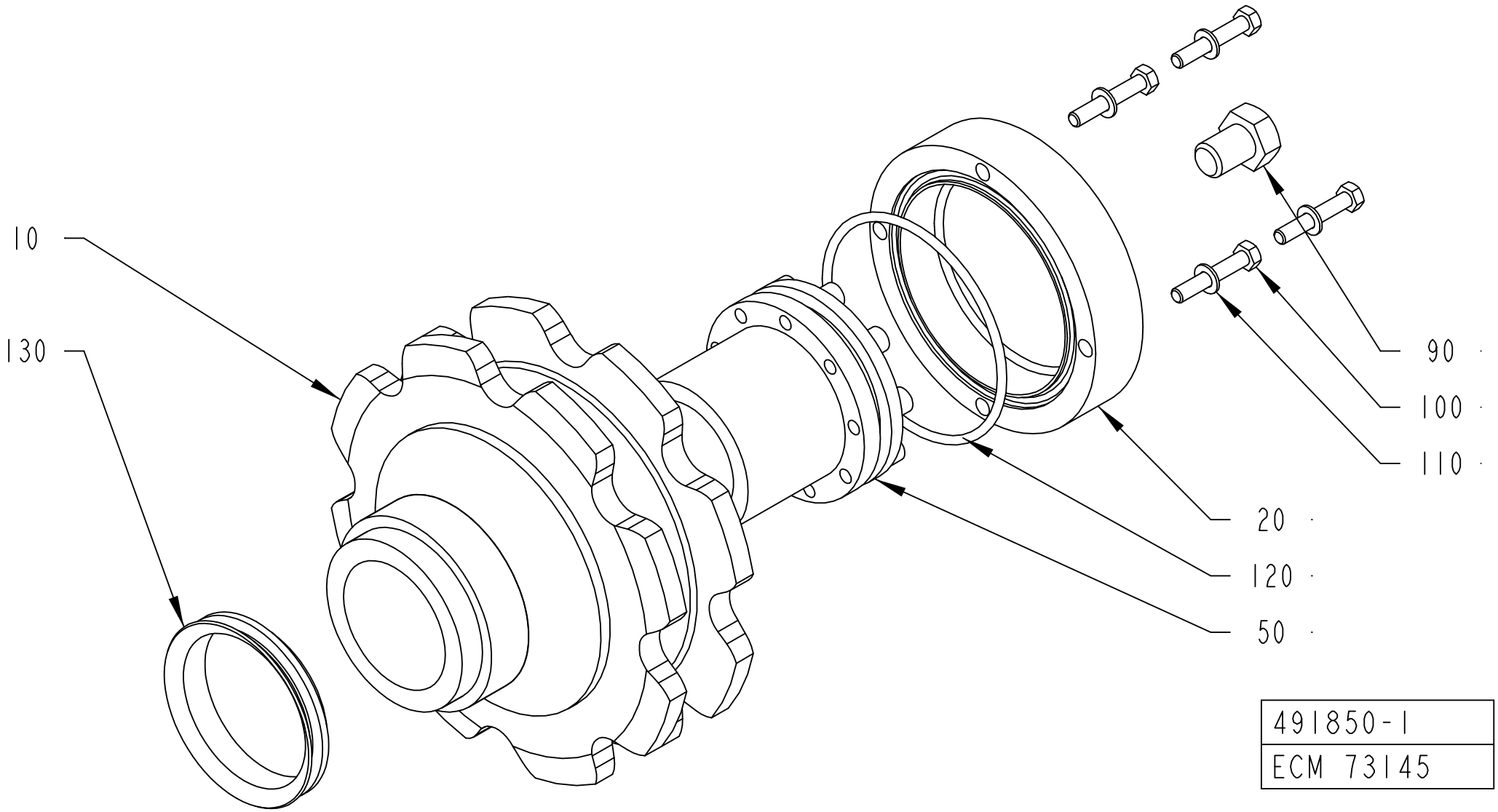
10
130
90
100
110
20
120
50
491850-1
ECM 73145

ECM: 115409 - 20030528
Group number: 491850-0100
Assembly Drawing: 491850-1_1_AC

Pos	Part No	SP	UN	Qty	Description	Page No
TBA 0330S, TBA 0300S, TBA 0180B, TBA 0160S, TBA 0200B, TBA 0125S, TBA 0100B, TBA 0250S, TBA 0284B, TBA 0200S, TBA 0200M, TBA 0250B						
010	491258-0000	A		1	DRIVE WHEEL	
Common Parts						
020	491851-0000	A		1	LID	
050	90208-0031	A		1	BUSHING	
090	312101-0530	-		1	SCREW M6S M12X16 FZB	
100	312105-0335	-		4	SCREW M6S ISO 4014 M5X30 A480	
110	315105-0146	-		4	BRICKA BRB5,3X10RFR	
120	315202-0306	A		1	O-RING 74,5X3 MM	
130	315220-0210	A		1	V-RINGS 54X64X13 MM V-60S	

Pos	Part No	SP	UN	Qty	Description	Page No

TENSION SPROCKET

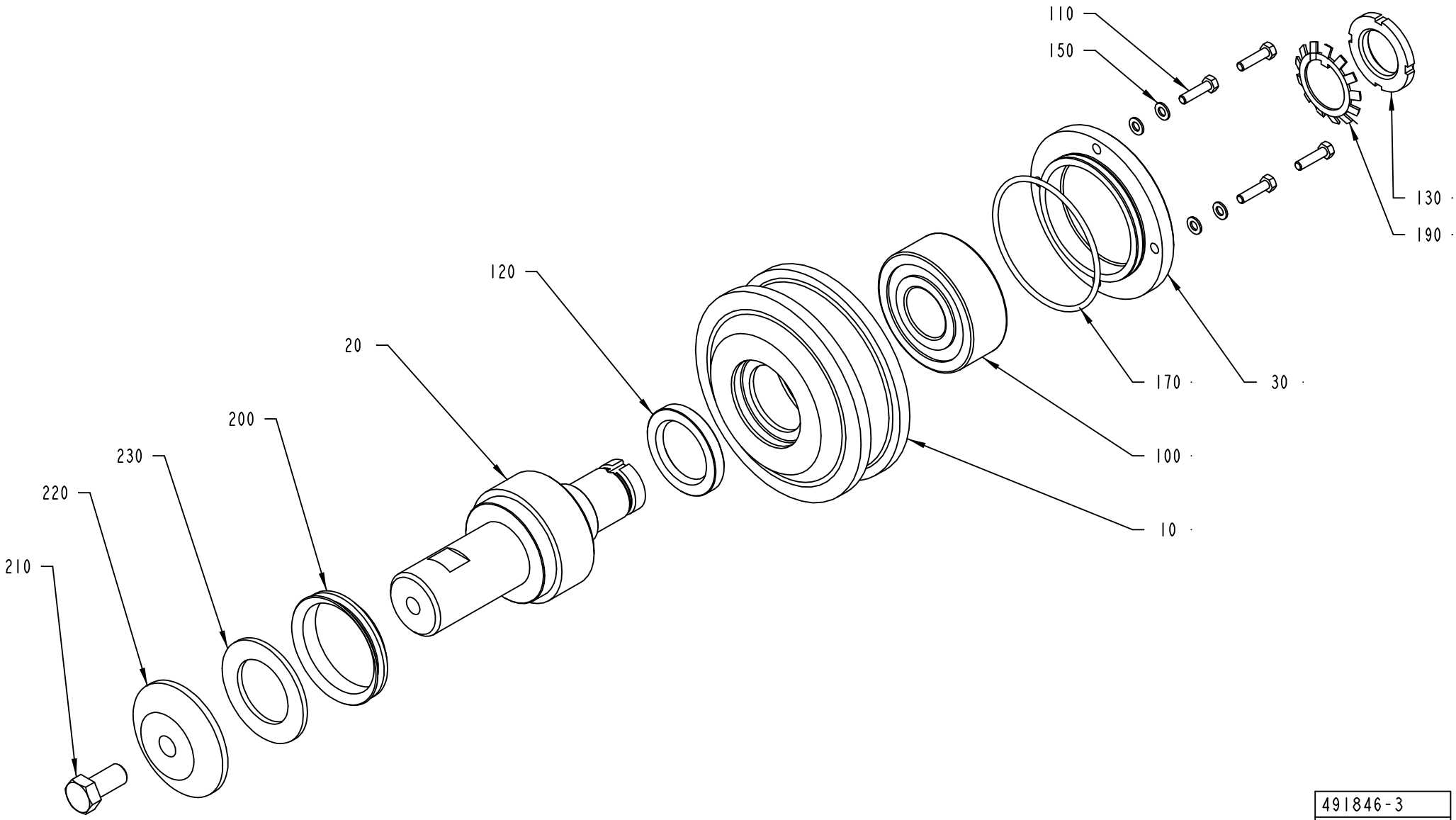

491846-3
ECM 73145

ECM: 126805 - 20030912
Group number: 491846-0300
Assembly Drawing: 491846-3_1_AA

Pos	Part No	SP	UN	Qty	Description	Page No
-						
010	2569884-0000	-		1	TENSION SPROCKET	
020	1490928-0000	A		1	SHAFT	
030	491291-0000	-		1	LID	
100	90214-0122	A		1	BALL BEARING, 30X72X27 MM	
105	90296-0070	-		1	GREASE	
110	312105-0331	-		4	SCREW M6S ISO 4017 M5X20 A480	
120	315221-0177	B		1	RADIAL SEAL 35X52X7 MM	
130	312805-0106	-		1	NUT ROUND WITH SLOTS M30X1,5 FE	
150	315105-0146	-		4	BRICKA BRB5,3X10RFR	
170	315202-0306	B		1	O-RING 74,5X3 MM	
190	315410-0106	-		1	LOCK WASHER MB 6 D=30 H=1,25	
200	315220-0210	B		1	V-RINGS 54X64X13 MM V-60S	
210	312105-0534	-		1	SCREW M6S ISO 4017 M12X25 A480	
220	1279701-0000	-		1	WASHER	
230	1517506-0000	-		1	SHIM	

Pos	Part No	SP	UN	Qty	Description	Page No

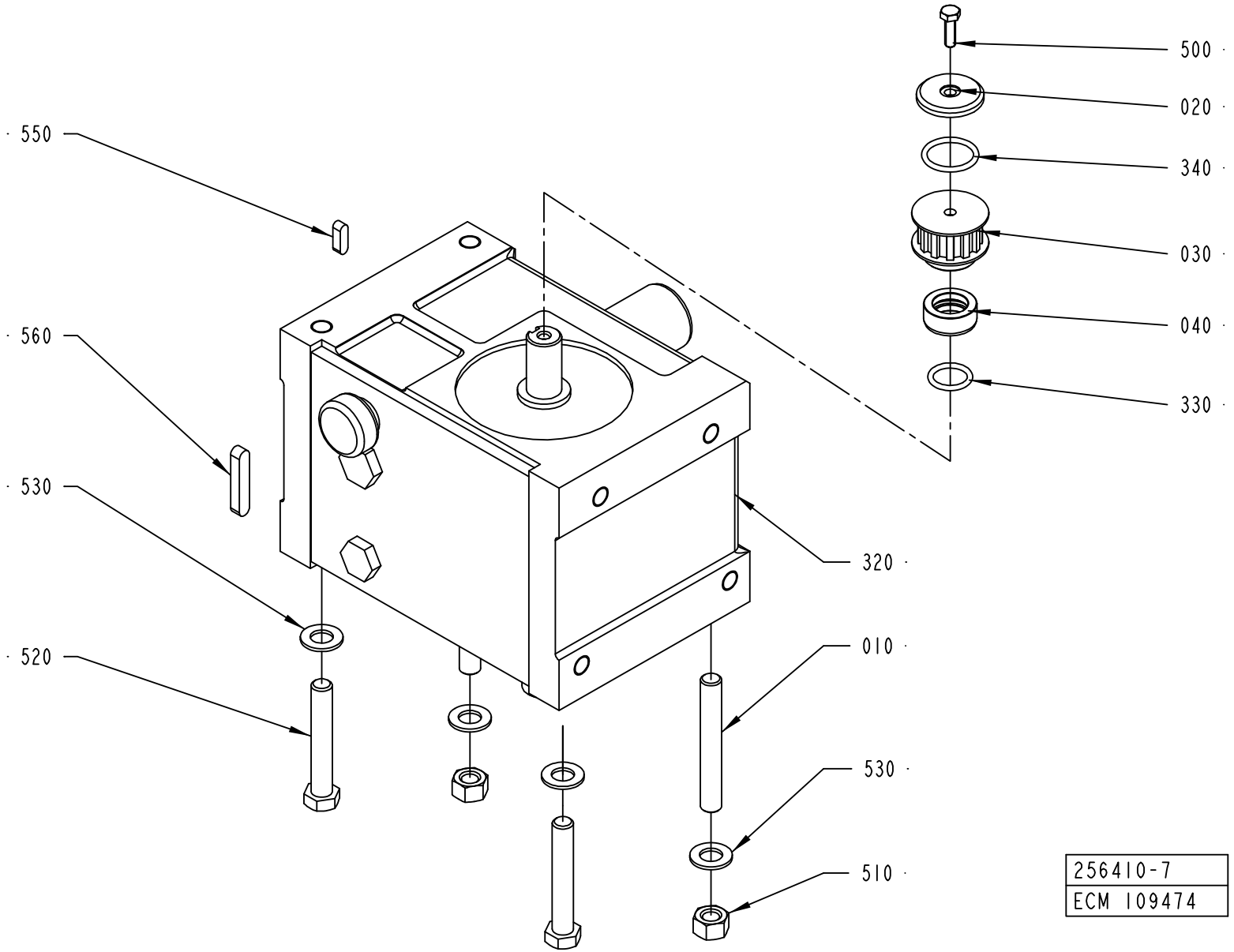
500
020
340
030
040
330
550
560
530
520
320
010
530
510
256410-7
ECM 109474

ECM: 112858 - 20030113
Group number: 256410-0900
Assembly Drawing: 256410-7_1_AB

Pos	Part No	SP	UN	Qty	Description	Page No
-						
010	1511487-0000	-		2	STUD SCREW	
020	1539261-0000	-		1	WASHER	
030	1539301-0000	A		1	TOOTHED PULLEY	
040	1539302-0000	-		1	SPACER	
310	90296-0073	-	L	2	OIL	
320	90458-1721	A		1	INDEXING GEAR, 10.707.207	
	90459-3205	*B*		*1*	*SHIM*	
	90459-2632	*B*		*1*	*GASKET*	
330	315202-0215	B		1	O-RING 19,2X3 MM	
340	315202-0218	B		1	O-RING 26,2X3 MM	
500	312105-0370	-		1	SCREW M6S ISO 4017 M6X20 A480	
510	312605-0322	-		2	HEXAGON NUT, M6M M12 A280	
520	312105-0547	-		2	SCREW M6S ISO 4014 M12X75 A480	
530	315105-0178	-		4	WASHER BRB13X24RFR	
550	315705-0232	-		1	PARALLEL KEY W. ROUND ENDS 6X6X20 MM	
560	315705-0271	-		1	PARALLEL KEY W. ROUND ENDS 8X7X45 MM	

Pos	Part No	SP	UN	Qty	Description	Page No

Machine Type | Group Description | Used-In | Group Number | Page No

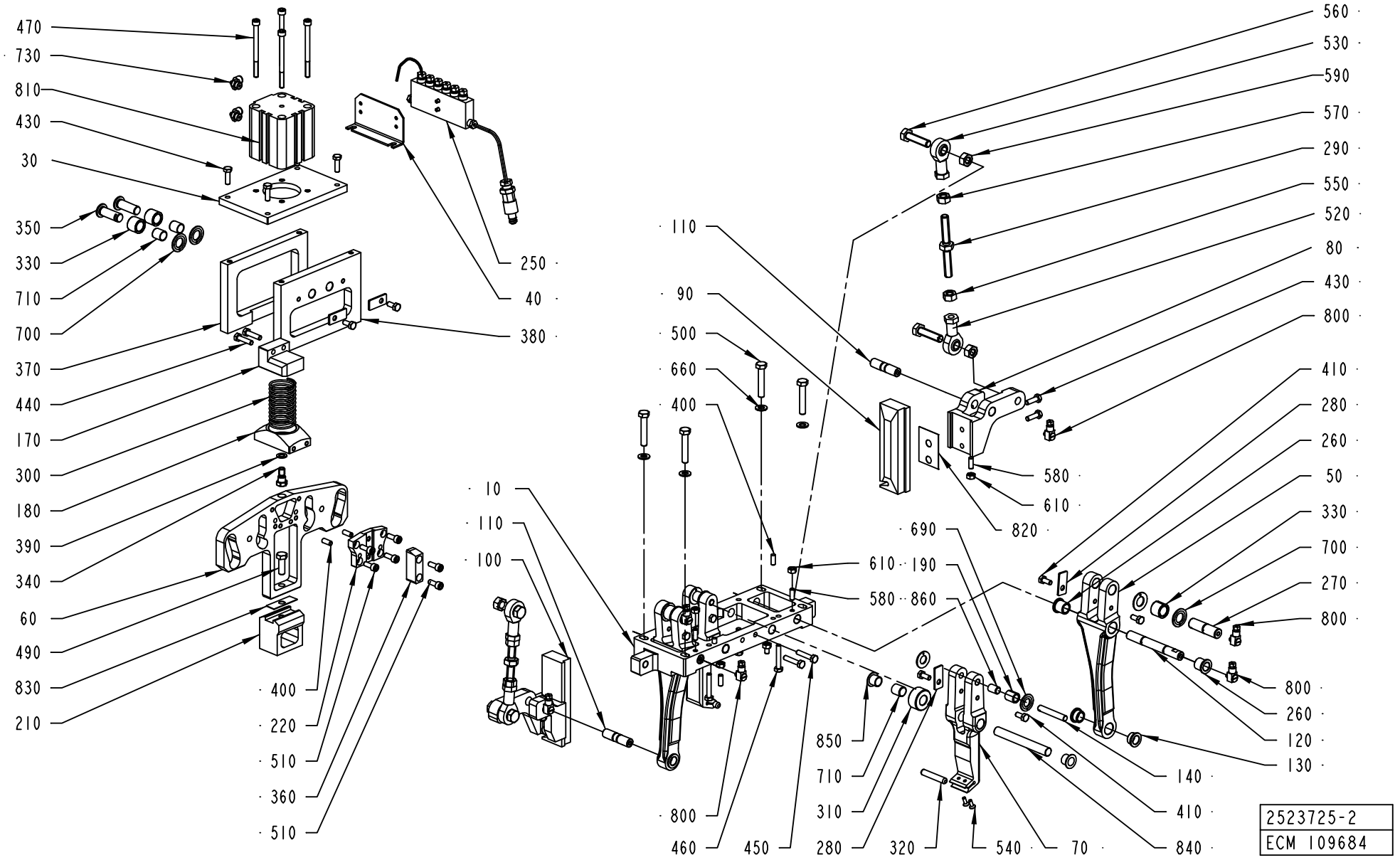
470
730
810
430
30
350
330
710
700
370
440
170
300
180
390
340
60
490
830
210
250
40
380
400
220
510
360
510
110
90
500
660
400
10
110
100
800
460
450
280
850
710
310
320
540
70
840
410
140
130
120
260
800
690
610
190
580
860
560
530
590
570
290
550
520
80
430
800
580
610
820
410
280
260
50
330
700
270
800
2523725-2
ECM 109684

ECM: 129614 - 50001231
Group number: 2523725-0200
Assembly Drawing: 2523725-2_1_AA

This list covers pages from 376 to 379

Pos	Part No	SP	UN	Qty	Description	Page No
TBA 0100B						
070	2576344-0001	A		2	LEVER	
090	2575624-0001	B		1	BLOCK	
100	2575625-0001	B		1	BLOCK	
210	2552734-0001	B		1	BLOCK	
TBA 0125S						
070	2576344-0002	A		2	LEVER	
090	2575624-0002	B		1	BLOCK	
100	2575625-0002	B		1	BLOCK	
210	2552734-0002	B		1	BLOCK	
TBA 0160S						
070	2576344-0003	A		2	LEVER	
090	2575624-0003	B		1	BLOCK	
100	2575625-0003	B		1	BLOCK	
210	2554977-0001	B		1	BLOCK	
TBA 0180B						
070	2576344-0004	A		2	LEVER	
090	2575624-0004	B		1	BLOCK	
100	2575625-0004	B		1	BLOCK	
210	2524579-0004	B		1	BLOCK	
TBA 0200B						
070	2576344-0005	A		2	LEVER	
090	2575624-0005	B		1	BLOCK	
100	2575625-0005	B		1	BLOCK	
210	2524579-0005	B		1	BLOCK	
TBA 0200M						
070	2576344-0006	A		2	LEVER	
090	2575624-0006	B		1	BLOCK	
100	2575625-0006	B		1	BLOCK	
210	2554977-0002	B		1	BLOCK	
TBA 0200S						
070	2576344-0007	A		2	LEVER	
090	2575624-0007	B		1	BLOCK	
100	2575625-0007	B		1	BLOCK	
210	2554977-0003	B		1	BLOCK	
TBA 0250B						
070	2576344-0008	A		2	LEVER	
090	2575624-0008	B		1	BLOCK	
100	2575625-0008	B		1	BLOCK	
210	2524579-0008	B		1	BLOCK	
TBA 0250S						
070	2576344-0009	A		2	LEVER	
090	2575624-0009	B		1	BLOCK	
100	2575625-0009	B		1	BLOCK	
210	2554977-0004	B		1	BLOCK	
TBA 0300S, TBA 0284B						
070	2576344-0010	A		2	LEVER	
090	2575624-0010	B		1	BLOCK	
100	2575625-0010	B		1	BLOCK	
210	2524579-0010	B		1	BLOCK	
TBA 0330S						
070	2576344-0011	A		2	LEVER	
090	2575624-0011	B		1	BLOCK	
100	2575625-0011	B		1	BLOCK	
210	2524579-0011	B		1	BLOCK	
Common Parts						
010	2606879-0000	-		1	PLATE	
030	2552720-0000	-		1	PLATE	
040	2576353-0000	-		1	SUPPORT	
050	2523730-0000	-		2	LEVER	
060	2552721-0000	A		1	CAM	
080	2606880-0000	-		2	HOLDER	
110	2523736-0000	A		2	SHAFT	
120	2523737-0000	A		2	SHAFT	
130	2523738-0000	B		4	BUSHING	
140	2576348-0000	A		2	SHAFT	
170	2552723-0000	-		1	SPRING BRACKET	
180	2552732-0000	-		1	SPRING BRACKET	
190	2576349-0000	A		2	ROLLER	
220	2552724-0000	-		1	SUPPORT	
250	2502424-0200	-		1	LUBRICATION	381
260	1144507-0000	B		4	BUSHING	
270	2576345-0000	A		2	AXLE PIN	

Machine Type | Group Description | Used-In | Group Number | Page No

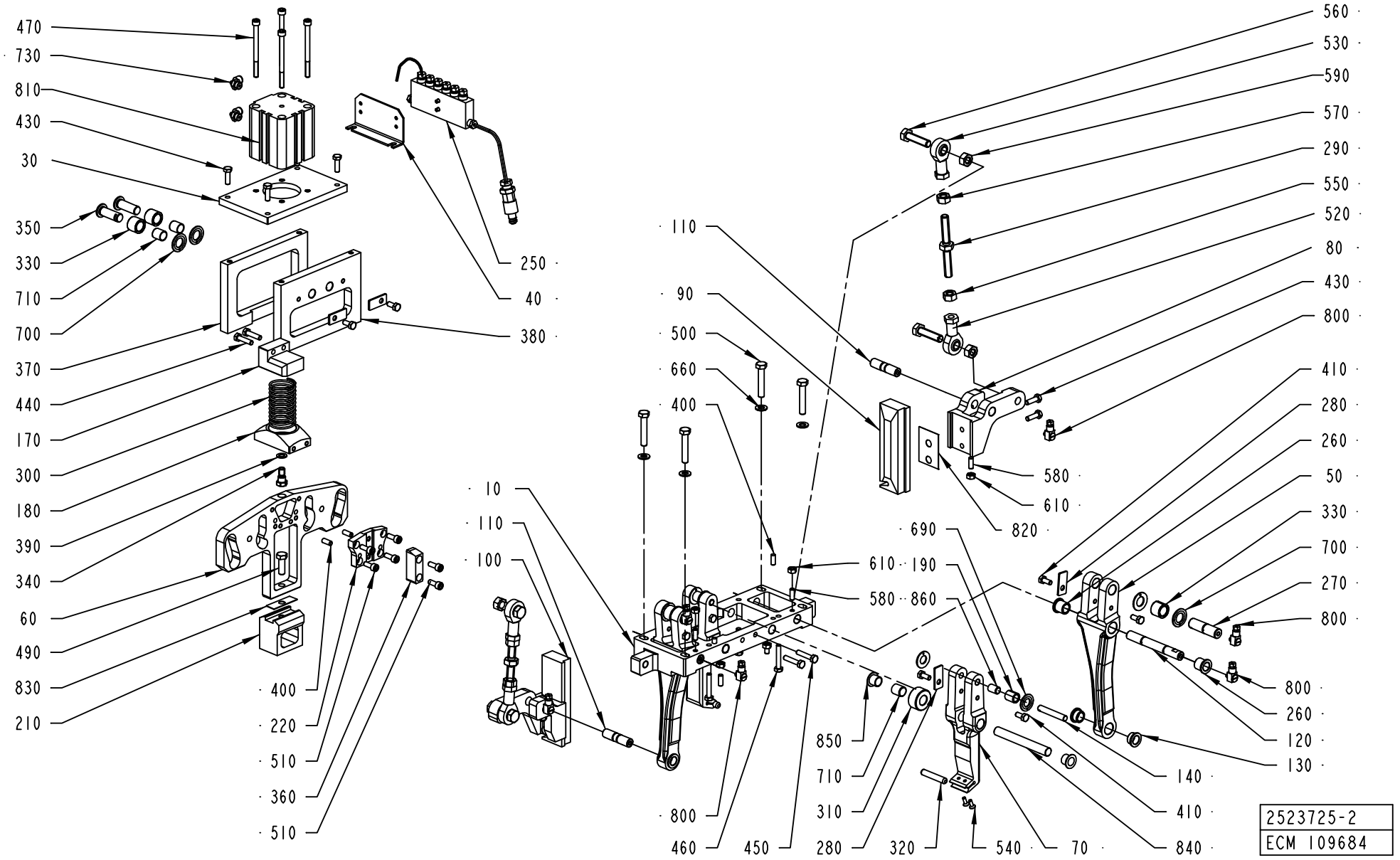
470
730
810
430
30
350
330
710
700
370
440
170
300
180
390
340
60
490
830
210
250
40
380
400
220
510
360
510
110
90
500
660
400
10
110
100
800
460
450
280
850
710
310
320
540
70
840
410
140
130
120
260
800
690
610
190
580
860
560
530
590
570
290
550
520
80
430
800
410
280
260
50
330
700
270
800
580
610
820
2523725-2
ECM 109684

Pos	Part No	SP	UN	Qty	Description	Page No
Common Parts (Cont'd)						
280	1144521-0000	-		6	CLAMP	
290	2606881-0000	-		2	ADJUSTING SCREW	
300	1195044-0000	B		1	SPRING	
310	2576346-0000	A		2	ROLLER	
320	1511021-0000	-		2	SHAFT	
330	2576350-0000	A		4	ROLLER	
340	2552722-0000	-		1	AXLE PIN	
350	2576351-0000	-		2	AXLE PIN	
360	2552726-0000	-		1	GUIDE	
370	2552727-0000	-		1	PLATE	
380	2576352-0000	-		1	PLATE	
390	2552731-0000	-		1	WASHER	
400	311103-0351	-		4	PARALLELL PIN ISO2338 6X16 A1	
410	312105-0367	-		10	SCREW M6S M6X14 A280	
430	312105-0370	-		8	SCREW M6S ISO 4017 M6X20 A480	
440	312105-0372	-		2	SCREW M6S ISO 4017 M6X25 A480	
450	312105-0374	-		2	SCREW M6S ISO 4014 M6X30 A480	
460	312105-0376	-		4	SCREW M6S ISO 4014 M6X35 A480	
470	312115-0386	-		4	SCREW ISO4762 M6X80 A4	
490	312105-0453	-		1	SCREW M6S ISO 4017 M8X25 A480	
500	312105-0460	-		4	SCREW M6S ISO 4014 M8X45 A480	
510	312115-0368	-		6	SCREW ISO4762 M6X16 A4	
520	90115-0181	-		2	ROD END, ID=10 MM M10X1,5	
530	90115-0182	-		2	ROD END, ID=10 MM M10X1,5LH	
540	312155-0291	-		4	SCREW EN 10642 MF6S M4X12 A480	
550	312605-0320	-		2	HEXAGON NUT, M6M M10 A280	
560	312109-0499	-		4	SCREW M6S ISO 4017 M10X40 A480	
570	312902-0320	-		2	NUT HEX. LEFT THREAD, M10 A280	
580	312318-0368	-		6	SCREW ISO4029 M6X16 A4	
590	312605-0320	-		4	HEXAGON NUT, M6M M10 A280	
610	312605-0316	-		6	HEXAGON NUT, M6M M6 A280	
660	315105-0165	-		4	WASHER BRB8,4X16RFR	
690	321130-0180	B		4	THRUST WASHER, 12X24X1,5 MM	
700	321130-0200	B		6	THRUST WASHER, 14X26X1,5 MM	
710	321135-0183	-		4	BUSHING, 12X14X15 MM	
730	90458-2956	-		2	ELBOW PIPE JOINT, EXT.THREAD, D=6MM-G1/8	
800	90134-0058	-		6	CONNECTION	
810	90459-1845	A		1	DOUBLE ACTING, COMPACT, 50-30	
820	2527454-0000	-		6	SHIM	
830	2530401-0000	-		3	SHIM	
840	2576347-0000	-		2	SHAFT	
850	90240-0262	-		4	FLANGE BUSHING, 12X14X12 MM	
860	90240-0301	-		2	BUSHING, 8X10X15 MM	

Machine Type | Group Description | Used-In | Group Number | Page No

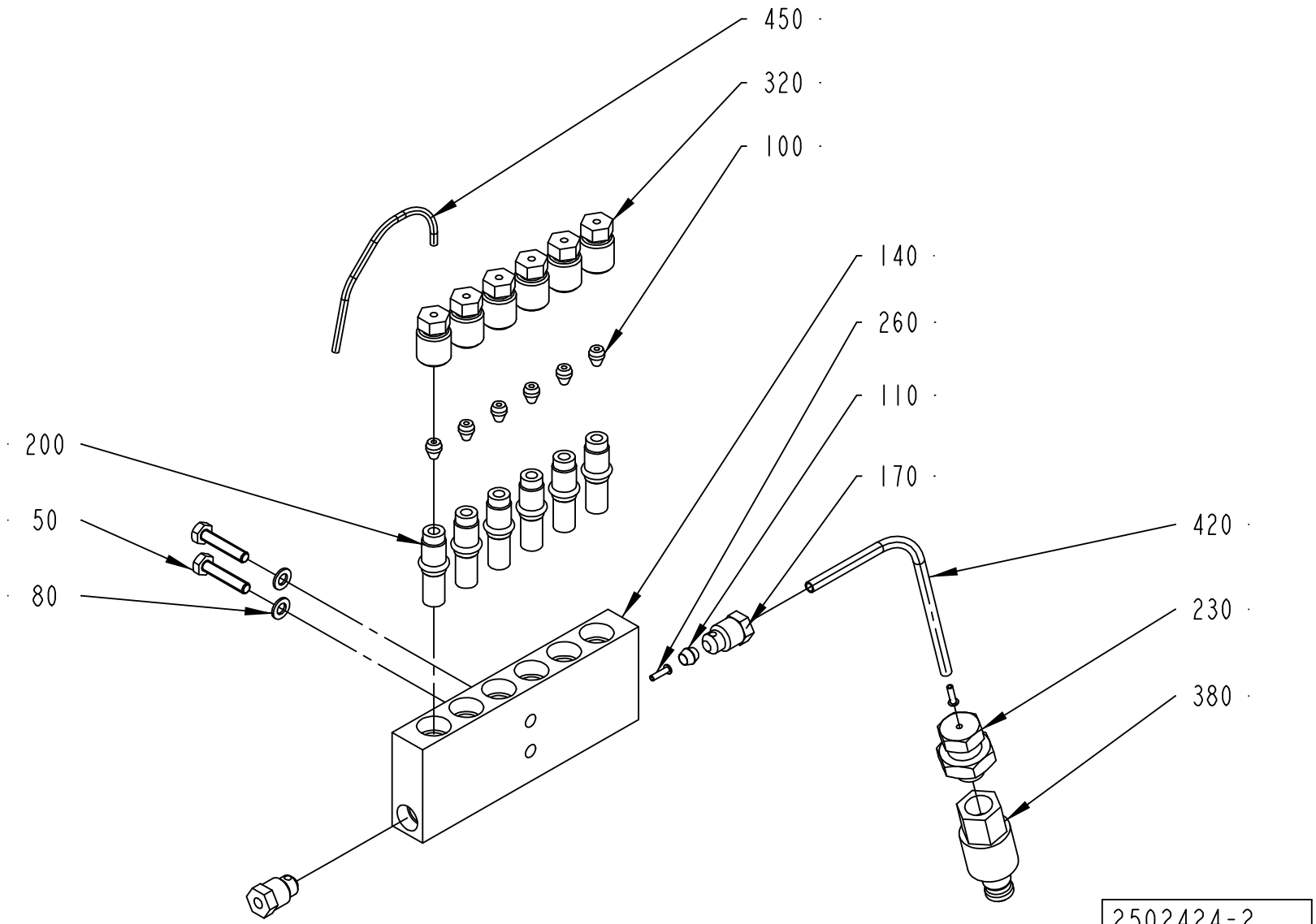
450
320
100
140
260
110
170
200
50
80
420
230
380
2502424-2
ECM 109684

ECM: 130013 - 50001231
Group number: 2502424-0200
Assembly Drawing: 2502424-2_1_AA

Pos	Part No	SP	UN	Qty	Description	Page No
-						
050	312101-0295	-		2	SCREW M6S M4X20 FZB	
080	315105-0136	-		2	WASHER BRB4,3XRFR	
100	90028-0020	-		6	CONE TUBE 2,5MM	
110	90028-0021	-		1	CONE TUBE 4 MM	
140	90032-0040	-		1	BLOCK 6 WAYS	
170	90087-0019	-		2	PLUG M10X1 STAINLESS	
200	90092-0052	B		6	METERING VALVE 10 MM3	
230	90134-0004	-		1	PIPE CONNECTION R1/8	
260	90134-0031	-		2	SLEEVE FOR PLASTIC TUBE	
320	90134-0039	-		6	BUSHING VALVE CONNECTION 2,5 MM	
380	90163-0048	-		1	NIPPLE LP-004-2-WR 510-23-1	
420	90166-0109	-	M	1	TUBE 4 MM PA,TRANSP.	
450	90166-0143	-	M	2	TUBE 2,5 MM PA,TRANSP.	

Pos	Part No	SP	UN	Qty	Description	Page No

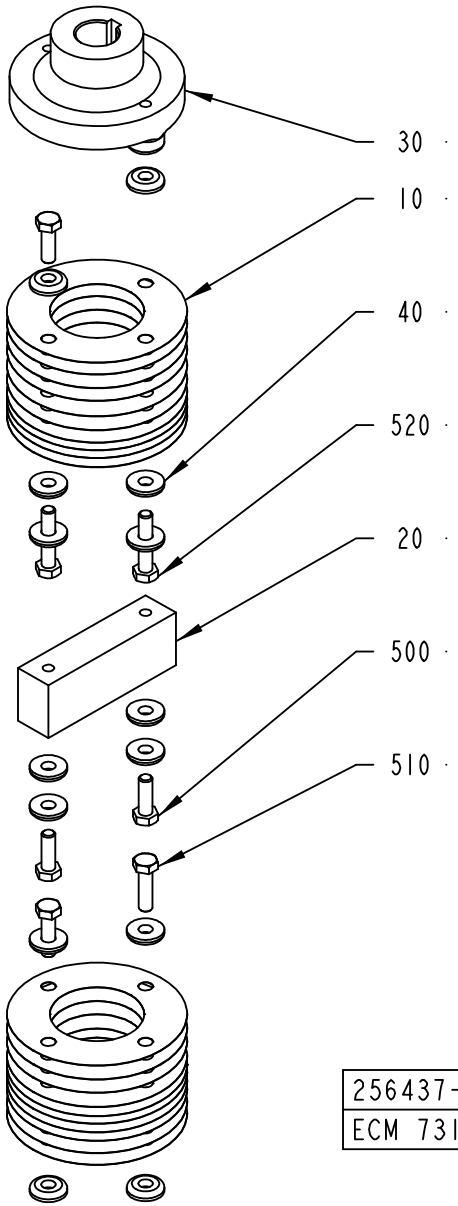

256437-2
ECM 73145

ECM: 102661 - 20020109
Group number: 256437-0200
Assembly Drawing: 256437-2_1_AC

Pos	Part No	SP	UN	Qty	Description	Page No
-						
010	31559-0000	A		20	SPRING PLATE	
020	272746-0000	B		1	ROD	
030	272747-0000	B		1	CONNECTION	
040	31553-0001	-		14	WASHER	
500	312101-0453	-		4	SCREW M6S M8X25 FZB	
510	312101-0455	-		2	SCREW M6S M8X30 FZB	
520	312101-0459	-		2	SCREW M6S M8X40 FZB	

Pos	Part No	SP	UN	Qty	Description	Page No

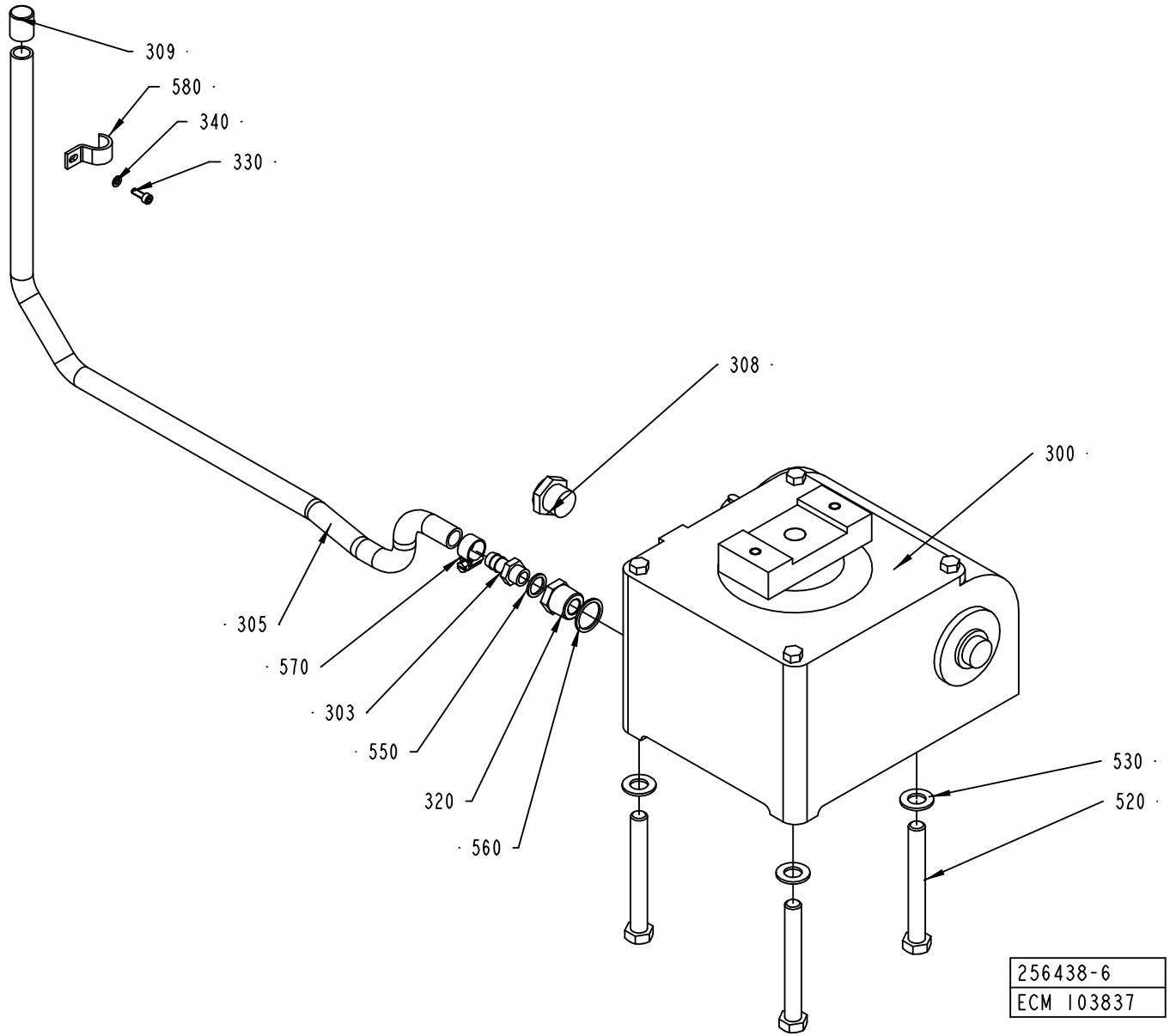
309
580
340
330
308
300
305
570
303
550
320
560
530
520
256438-6
ECM 103837

ECM: 103619 - 20020527
Group number: 256438-0300
Assembly Drawing: 256438-6_1_AD

Pos	Part No	SP	UN	Qty	Description	Page No
-						
300	90056-0071	A		1	WORM GEAR	
303	90163-0052	-		1	HOSE NIPPLE, EXT.THR. 1/4-12 MM	
305	90166-0113	-	MM	800	HOSE	
308	90257-0002	-		1	FILTER PLUG, NO. 8145-00-120 TYP F12	
309	90261-0073	-		1	PLUG, BLIND, PLASTIC, NO. GPN250/15	
310	90296-0073	-	L	2	OIL	
320	90330-0085	-		1	BUSHING, INT/EXT. THR. R1/2-RP1/4	
330	312115-0291	-		1	SCREW ISO4762 M4X12 A4	
340	315105-0136	-		1	WASHER BRB4,3XRFR	
520	312101-0552	-		3	SCREW M6S M12X100 FZB	
530	315101-0178	-		3	WASHER PLAIN, BRB, 13/24 H=2	
550	315234-0110	-		1	WASHER,PL.RND.CU.13,5/18 H=1,5	
560	315234-0113	-		1	WASHER PL.RND.CU.21,3//26 H=1,5	
570	342991-0101	-		1	HOSE CLIP,WORM DRIVE TYPE (13)-16	
580	352110-0103	-		1	CABLE CLIPS, D=14-20 MM	

Pos	Part No	SP	UN	Qty	Description	Page No

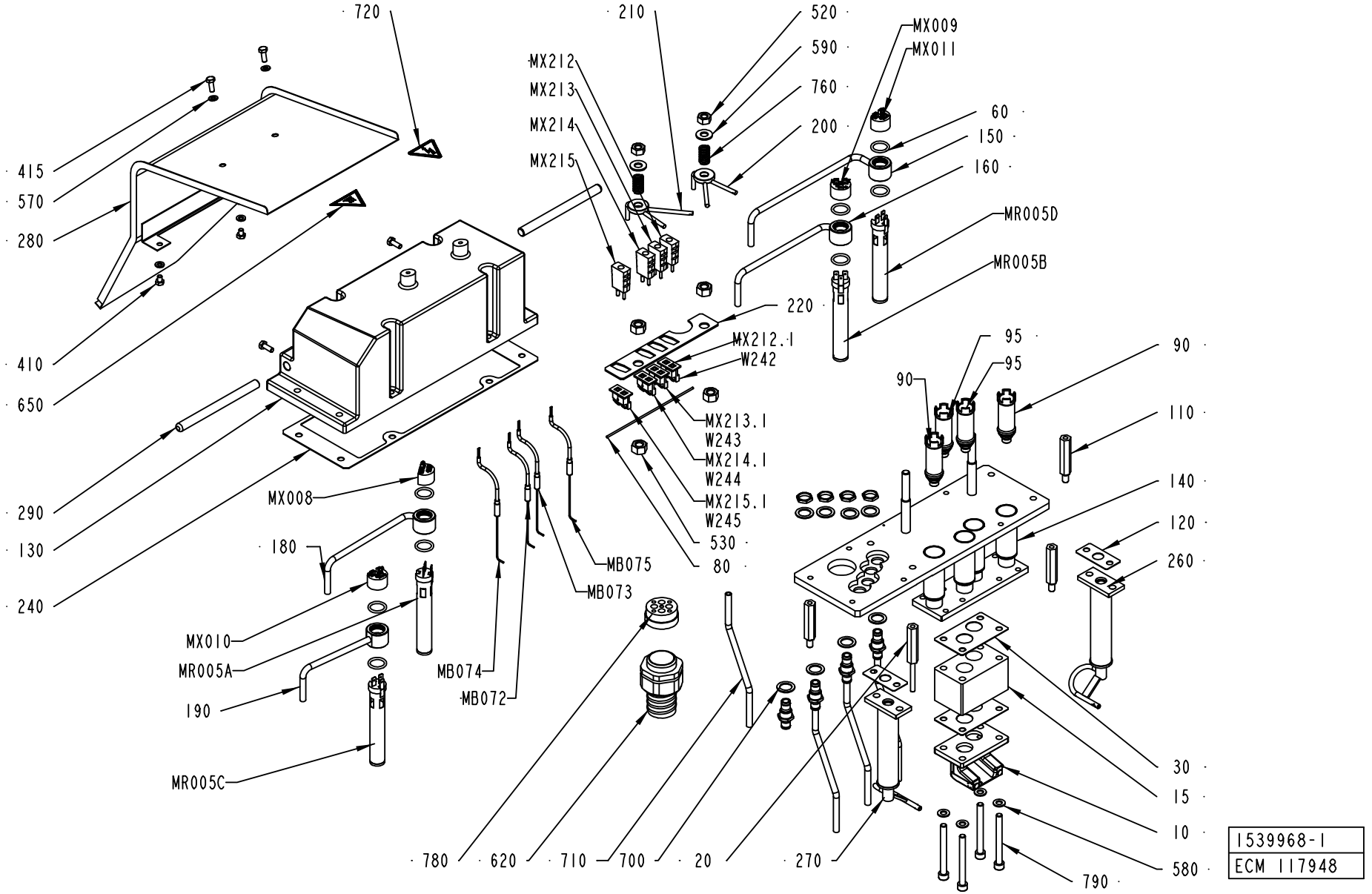
720
210
520
590
760
200
MX009
MX011
MX212
MX213
MX214
MX215
60
150
160
MR005D
MR005B
220
MX212.1
W242
MX213.1
W243
MX214.1
W244
MX215.1
W245
530
80
415
570
280
410
650
290
130
240
MX008
180
MX010
MR005A
190
MR005C
MB075
MB073
MB074
MB072
95
95
90
90
110
140
120
260
30
15
10
580
790
780
620
710
700
20
270
1539968-1
ECM 117948

ECM: 117949 - 50001231
Group number: 1539968-0100
Assembly Drawing: 1539968-1_1_AC

This list covers pages from 386 to 389

Pos	Part No	SP	UN	Qty	Description	Page No
TBA 0100B						
010	2611151-0002	-		1	AIR NOZZLE	
015	2611190-0008	-		1	SPACER	
030	1539967-0000	B		4	GASKET	
260	1519307-0000	-		1	AIR NOZZLE	
270	1519308-0000	-		1	AIR NOZZLE	
480	312115-0451	-		4	SCREW ISO4762 M8X20 A4	
790	90287-0335	-		4	SCREW MC6S M8X90 A280	
TBA 0125S						
010	2611151-0002	-		1	AIR NOZZLE	
015	2611190-0009	-		1	SPACER	
030	1539967-0000	B		4	GASKET	
260	1519307-0000	-		1	AIR NOZZLE	
270	1519308-0000	-		1	AIR NOZZLE	
480	312115-0451	-		8	SCREW ISO4762 M8X20 A4	
790	312115-0465	-		4	SCREW ISO4762 M8X70 A4	
TBA 0160S						
010	2611151-0001	-		1	AIR NOZZLE	
015	2611190-0003	-		1	SPACER	
030	1539967-0000	B		4	GASKET	
260	1519318-0000	-		1	AIR NOZZLE	
270	1519319-0000	-		1	AIR NOZZLE	
480	312115-0451	-		4	SCREW ISO4762 M8X20 A4	
790	312115-0463	-		4	SCREW ISO4762 M8X60 A4	
TBA 0180B						
010	2611153-0000	-		1	AIR NOZZLE	
015	2611190-0006	-		1	SPACER	
030	1539967-0000	B		4	GASKET	
260	1519313-0000	-		1	AIR NOZZLE	
270	1519314-0000	-		1	AIR NOZZLE	
480	312115-0451	-		4	SCREW ISO4762 M8X20 A4	
790	312115-0467	-		4	SCREW ISO4762 M8X80 A4	
TBA 0200B						
010	2611153-0000	-		1	AIR NOZZLE	
015	2611190-0005	-		1	SPACER	
030	1539967-0000	B		4	GASKET	
260	1519313-0000	-		1	AIR NOZZLE	
270	1519314-0000	-		1	AIR NOZZLE	
480	312115-0451	-		4	SCREW ISO4762 M8X20 A4	
790	312115-0467	-		4	SCREW ISO4762 M8X80 A4	
TBA 0200M						
010	2611152-0000	-		1	AIR NOZZLE	
015	2611190-0002	-		1	SPACER	
030	1539967-0000	B		4	GASKET	
260	1517504-0000	-		1	AIR NOZZLE	
270	1517505-0000	-		1	AIR NOZZLE	
480	312115-0451	-		4	SCREW ISO4762 M8X20 A4	
790	312115-0460	-		4	SCREW ISO4762 M8X45 A4	
TBA 0200S						
010	2611151-0001	-		1	AIR NOZZLE	
015	2611190-0007	-		1	SPACER	
030	1539967-0000	B		4	GASKET	
260	1519318-0000	-		1	AIR NOZZLE	
270	1519319-0000	-		1	AIR NOZZLE	
480	312115-0451	-		8	SCREW ISO4762 M8X20 A4	
790	312115-0457	-		4	SCREW ISO4762 M8X35 A4	
TBA 0250B						
010	2611153-0000	-		1	AIR NOZZLE	
015	2611190-0004	-		1	SPACER	
030	1539967-0000	B		4	GASKET	
260	1519313-0000	-		1	AIR NOZZLE	
270	1519314-0000	-		1	AIR NOZZLE	
480	312115-0451	-		4	SCREW ISO4762 M8X20 A4	
790	312115-0461	-		4	SCREW ISO4762 M8X50 A4	
TBA 0250S						
010	2611152-0000	-		1	AIR NOZZLE	
030	1539967-0000	B		3	GASKET	
260	1517504-0000	-		1	AIR NOZZLE	
270	1517505-0000	-		1	AIR NOZZLE	
480	312115-0451	-		8	SCREW ISO4762 M8X20 A4	
790	312115-0451	-		4	SCREW ISO4762 M8X20 A4	
TBA 0300S, TBA 0284B						
010	2611153-0000	-		1	AIR NOZZLE	
015	2611190-0001	-		1	SPACER	
030	1539967-0000	B		4	GASKET	

Machine Type | Group Description | Used-In | Group Number | Page No

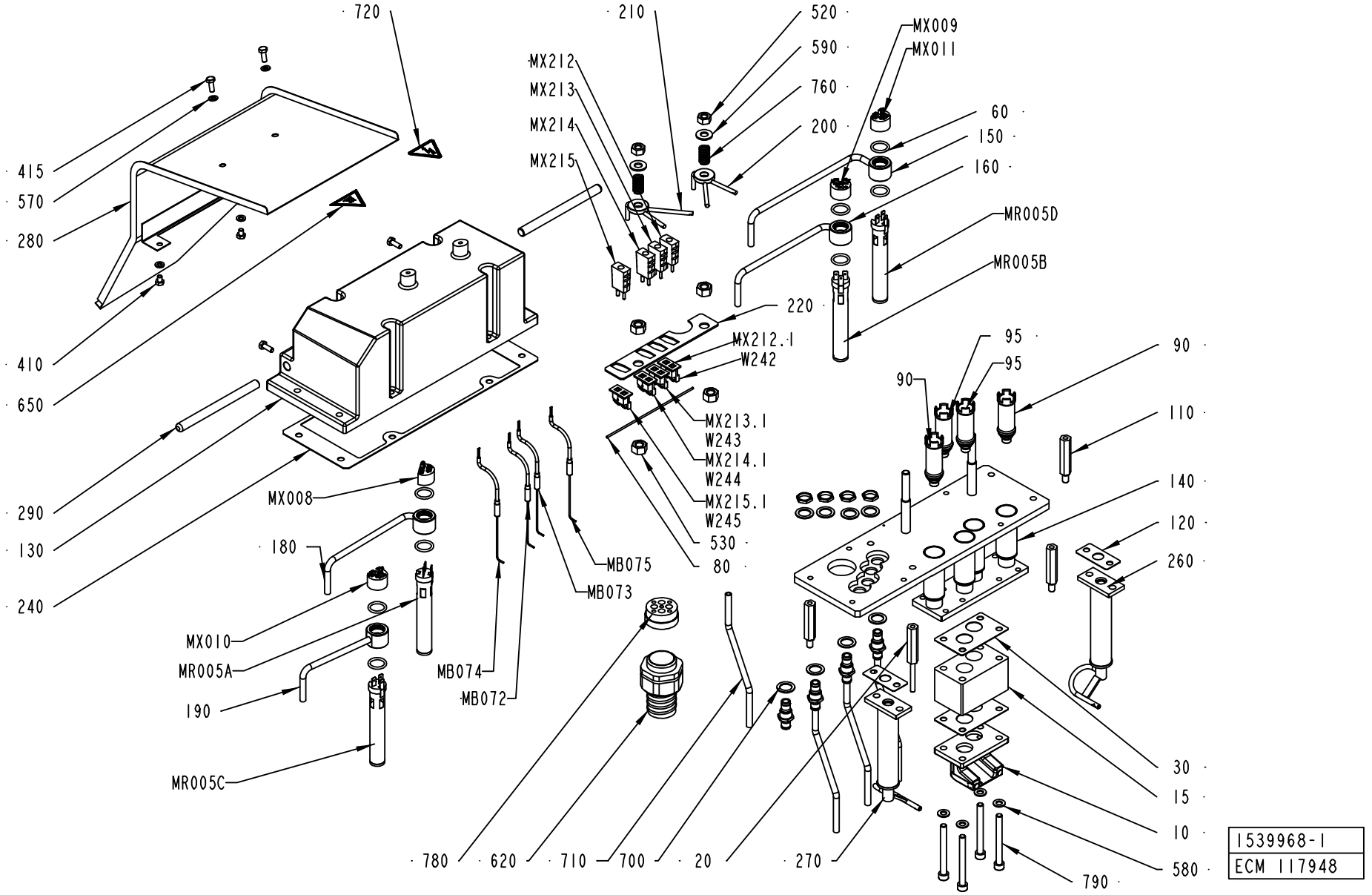
720
210
520
590
760
200
MX009
MX011
MX212
MX213
MX214
MX215
60
150
160
MR005D
MR005B
220
MX212.1
W242
MX213.1
W243
MX214.1
W244
MX215.1
W245
530
80
415
570
280
410
650
290
130
240
MX008
180
MX010
MR005A
190
MR005C
MB075
MB073
MB074
MB072
95
95
90
90
110
140
120
260
30
15
10
580
790
780
620
710
700
20
270
1539968-1
ECM 117948

ECM: 117949 - 50001231
Group number: 1539968-0100
Assembly Drawing: 1539968-1_1_AC

This list covers pages from 386 to 389

Pos	Part No	SP	UN	Qty	Description	Page No
TBA 0300S, TBA 0284B (Cont'd)						
260	1519313-0000	-		1	AIR NOZZLE	
270	1519314-0000	-		1	AIR NOZZLE	
480	312115-0451	-		4	SCREW ISO4762 M8X20 A4	
790	312115-0459	-		4	SCREW ISO4762 M8X40 A4	
TBA 0330S						
010	2611153-0000	-		1	AIR NOZZLE	
030	1539967-0000	B		3	GASKET	
260	1519313-0000	-		1	AIR NOZZLE	
270	1519314-0000	-		1	AIR NOZZLE	
480	312115-0451	-		8	SCREW ISO4762 M8X20 A4	
790	312115-0451	-		4	SCREW ISO4762 M8X20 A4	
Common Parts						
020	1539966-0000	-		1	BRACKET	
060	927422-0001	B		8	O-RING 19.2X3 SILICON	
080	1144059-0000	-		1	WIRE	
090	1144122-0000	-		2	REDUCTION	
095	2552081-0000	-		2	REDUCTION	
110	1279702-0000	-		3	BRACKET	
120	1296415-0000	B		2	GASKET	
130	1498216-0000	-		1	LID	
140	1498217-0000	-		1	HEATING CHAMBER	
150	1498218-0000	-		1	PIPE	
160	1498219-0000	-		1	PIPE	
180	1498220-0000	-		1	PIPE	
190	1498221-0000	-		1	PIPE	
200	1498222-0000	-		1	PLATE	
210	1498223-0000	-		1	PLATE	
220	1498224-0000	-		1	PLATE	
230	2528198-0000	-		1	PLATE	
240	1498233-0000	B		1	GASKET	
290	2528199-0000	-		2	HANDLE	
400	312105-0368	-		2	SCREW M6S M6X16 A280	
410	312105-0362	-		2	SCREW M6S ISO 4017 M6X8 A480	
420	312105-0453	-		2	SCREW M6S ISO 4017 M8X25 A480	
430	312105-0455	-		6	SCREW M6S ISO 4017 M8X30 A480	
440	312109-0457	-		2	SCREW M6S ISO 4017 M8X35 A480	
520	312605-0320	-		2	HEXAGON NUT, M6M M10 A280	
530	312605-0322	-		4	HEXAGON NUT, M6M M12 A280	
570	315105-0153	-		4	WASHER BRB6,4X12RFR	
580	315105-0165	-		17	WASHER BRB8,4X16RFR	
590	315105-0173	-		2	WASHER BRB10,5X22RFR	
620	90458-0459	-		1	EXTENDED WITHOUT INSERT, HIGH TEMP, 40X1	
650	359705-0007	A		1	WARNING SIGN ISO, HOT SURFACE	
700	2552073-0000	-		8	SEAL	
710	315400-0004	-	M	2	TUBE PUN-H-8X1,25-BL	
720	359705-0015	A		1	WARNING SIGN ISO, RISK OF ELECTRIC SHOCK	
760	90335-0036	-		2	COMP. SPRING 22450, 1,6X14,1X24	
770	90457-0141	-		4	BULKHEAD CONNECTOR, 8MM	
780	90457-0199	B		1	INSERT EK 156M 5X5/4X9	
MB072	90326-0080	A		1	THERMOCOUPLE, 5110080-000	
MB073	90326-0080	A		1	THERMOCOUPLE, 5110080-000	
MB074	90326-0080	A		1	THERMOCOUPLE, 5110080-000	
MB075	90326-0080	A		1	THERMOCOUPLE, 5110080-000	
MR005A	90459-1382	A		1	HEATING ELEMENT, 1100W 220V	
MR005B	90459-1382	A		1	HEATING ELEMENT, 1100W 220V	
MR005C	90459-1382	A		1	HEATING ELEMENT, 1100W 220V	
MR005D	90459-1382	A		1	HEATING ELEMENT, 1100W 220V	
MX008	1036443-0000	-		1	CONTACT UNIT	
MX009	1036443-0000	-		1	CONTACT UNIT	
MX010	1036443-0000	-		1	CONTACT UNIT	
MX011	1036443-0000	-		1	CONTACT UNIT	
MX212	90326-0022	-		1	PLUG, MALE YELLOW CR-AL	
MX212,1	90326-0077	-		1	CONTACT	
MX213	90326-0022	-		1	PLUG, MALE YELLOW CR-AL	
MX213,1	90326-0077	-		1	CONTACT	
MX214	90326-0022	-		1	PLUG, MALE YELLOW CR-AL	
MX214,1	90326-0077	-		1	CONTACT	
MX215	90326-0022	-		1	PLUG, MALE YELLOW CR-AL	
MX215,1	90326-0077	-		1	CONTACT	
W238	90220-0034	-	MM	2500	THERMOCOUPLE CABLE K/ 2X0,5MM2	
W239	90220-0034	-	MM	2500	THERMOCOUPLE CABLE K/ 2X0,5MM2	
W240	90220-0034	-	MM	2500	THERMOCOUPLE CABLE K/ 2X0,5MM2	
W241	90220-0034	-	MM	2500	THERMOCOUPLE CABLE K/ 2X0,5MM2	
W242	351120-0144	-	MM	2500	CABLE SIHF 3X1,5MM2 GREEN/YELLOW	
W243	351120-0144	-	MM	2500	CABLE SIHF 3X1,5MM2 GREEN/YELLOW	
W244	351120-0144	-	MM	2500	CABLE SIHF 3X1,5MM2 GREEN/YELLOW	
W245	351120-0144	-	MM	2500	CABLE SIHF 3X1,5MM2 GREEN/YELLOW	

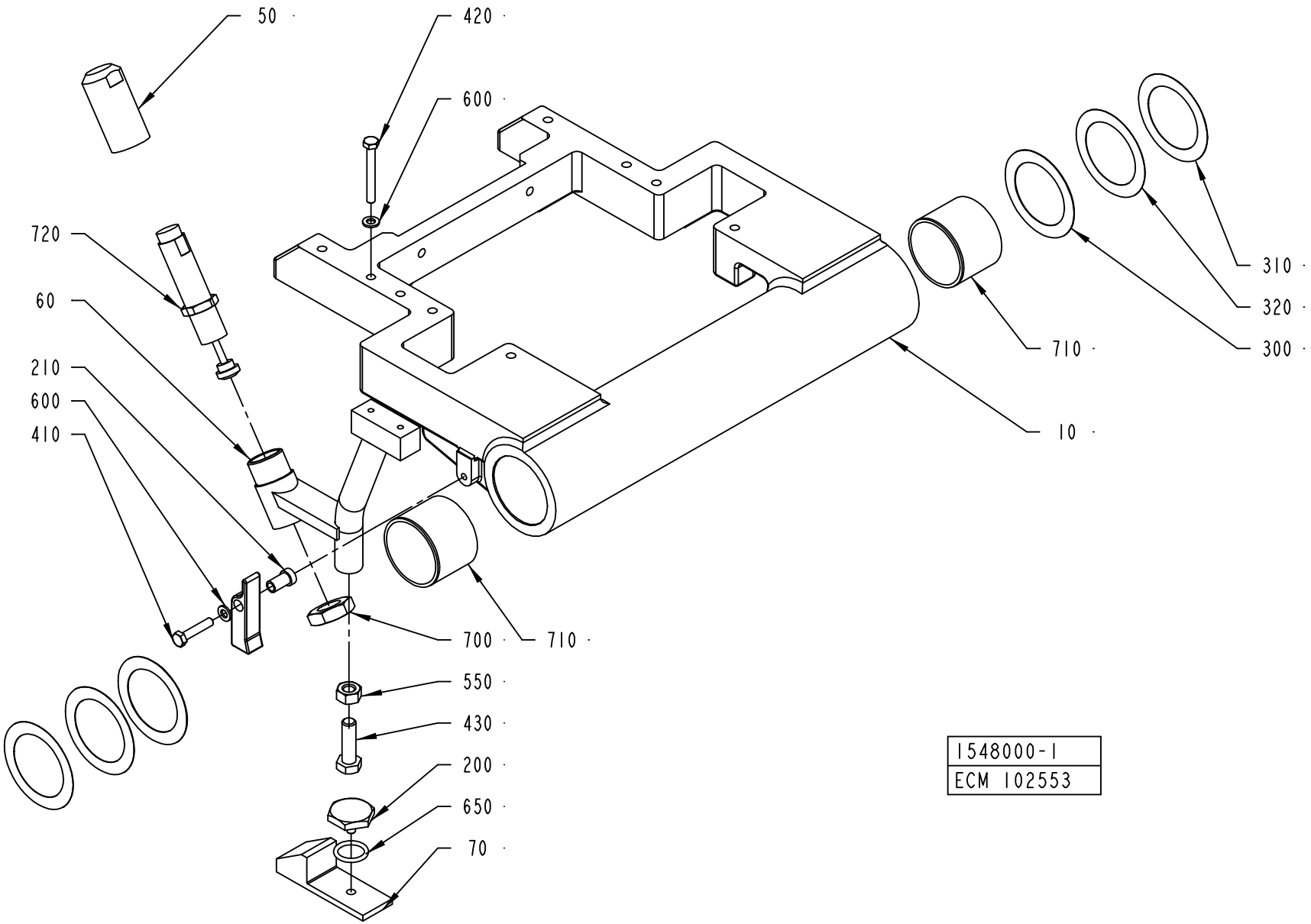
50
420
600
720
60
210
600
410
310
320
300
710
10
700
710
550
430
200
650
70
1548000-1
ECM 102553

ECM: 113160 - 20020731
Group number: 1548000-0100
Assembly Drawing: 1548000-1_1_AA

Pos	Part No	SP	UN	Qty	Description	Page No
-						
010	1539296-0000	-		1	PIVOT ARM	
050	1512128-0000	-		1	PLUG	
060	1512129-0000	-		1	BRACKET	
070	1512133-0000	-		1	STOP	
200	272997-0000	-		1	STOPPER	
210	295205-0000	-		1	SPACER SLEEVE	
220	295206-0000	B		1	FLAP	
300	295204-0001	B		2	SHIM	
310	295204-0002	B		2	SHIM	
320	295204-0003	B		2	SHIM	
410	312105-0374	-		1	SCREW M6S ISO 4014 M6X30 A480	
420	312105-0380	-		1	SCREW M6S ISO 4014 M6X50 A480	
430	312105-0497	-		1	SCREW M6S ISO 4017 M10X35 A480	
550	312605-0320	-		1	HEXAGON NUT, M6M M10 A280	
600	315105-0153	-		2	WASHER BRB6,4X12RFR	
650	315202-0215	B		1	O-RING 19,2X3 MM	
700	90099-0057	-		1	NUT HEX. M20X1,5	
710	90240-0094	A		2	BEARING BUSHING W/O FL, 50X55X40 MM	
720	90347-0189	A		1	SHOCK ABSORBER, 370-050-400	

Pos	Part No	SP	UN	Qty	Description	Page No

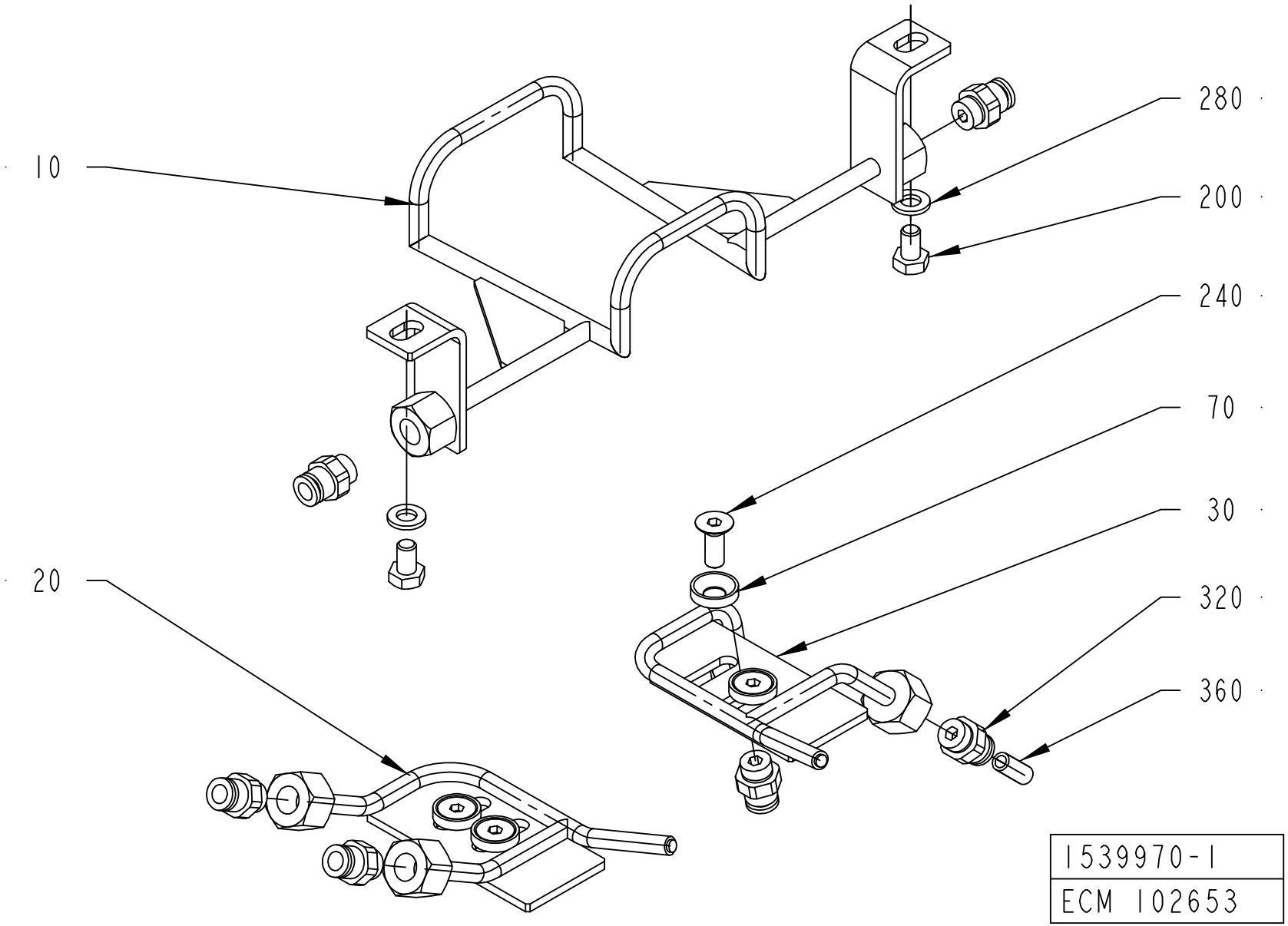
10
20
280
200
240
70
30
320
360
1539970-1
ECM 102653

ECM: 129872 - 50001231
Group number: 1539970-0100
Assembly Drawing: 1539970-1_1_AA

Pos	Part No	SP	UN	Qty	Description	Page No
TBA 0100B						
010	2500243-0000	A		1	PIPE	
TBA 0125S						
010	1558200-0000	A		1	PIPE	
TBA 0160S						
010	2500244-0000	A		1	PIPE	
TBA 0180B						
010	2500245-0000	A		1	PIPE	
TBA 0200B						
010	1558196-0000	A		1	PIPE	
TBA 0200M						
010	1558201-0000	A		1	PIPE	
TBA 0200S						
010	1558203-0000	A		1	PIPE	
TBA 0250B						
010	2500246-0000	A		1	PIPE	
TBA 0250S						
010	1539972-0000	A		1	PIPE	
TBA 0300S, TBA 0284B						
010	2500247-0000	A		1	PIPE	
TBA 0330S						
010	2500248-0000	A		1	PIPE	
Common Parts						
020	2566107-0000	A		1	PIPE	
030	2566108-0000	A		1	PIPE	
070	1317228-0000	A		4	WASHER	
200	312105-0364	-		2	SCREW M6S ISO 4017 M6X10 A480	
240	312155-0368	-		4	SCREW EN 10642 MF6S M6X16 A480	
280	315105-0153	-		2	WASHER BRB6,4X12RFR	
320	342722-0202	-		6	PIPE COUPLING 1/8" D=6MM	
360	90166-0108	-	MM	3500	TUBE 6 MM PA,TRANSP.	

Pos	Part No	SP	UN	Qty	Description	Page No

Machine Type Group Description Used-In Group Number Page No

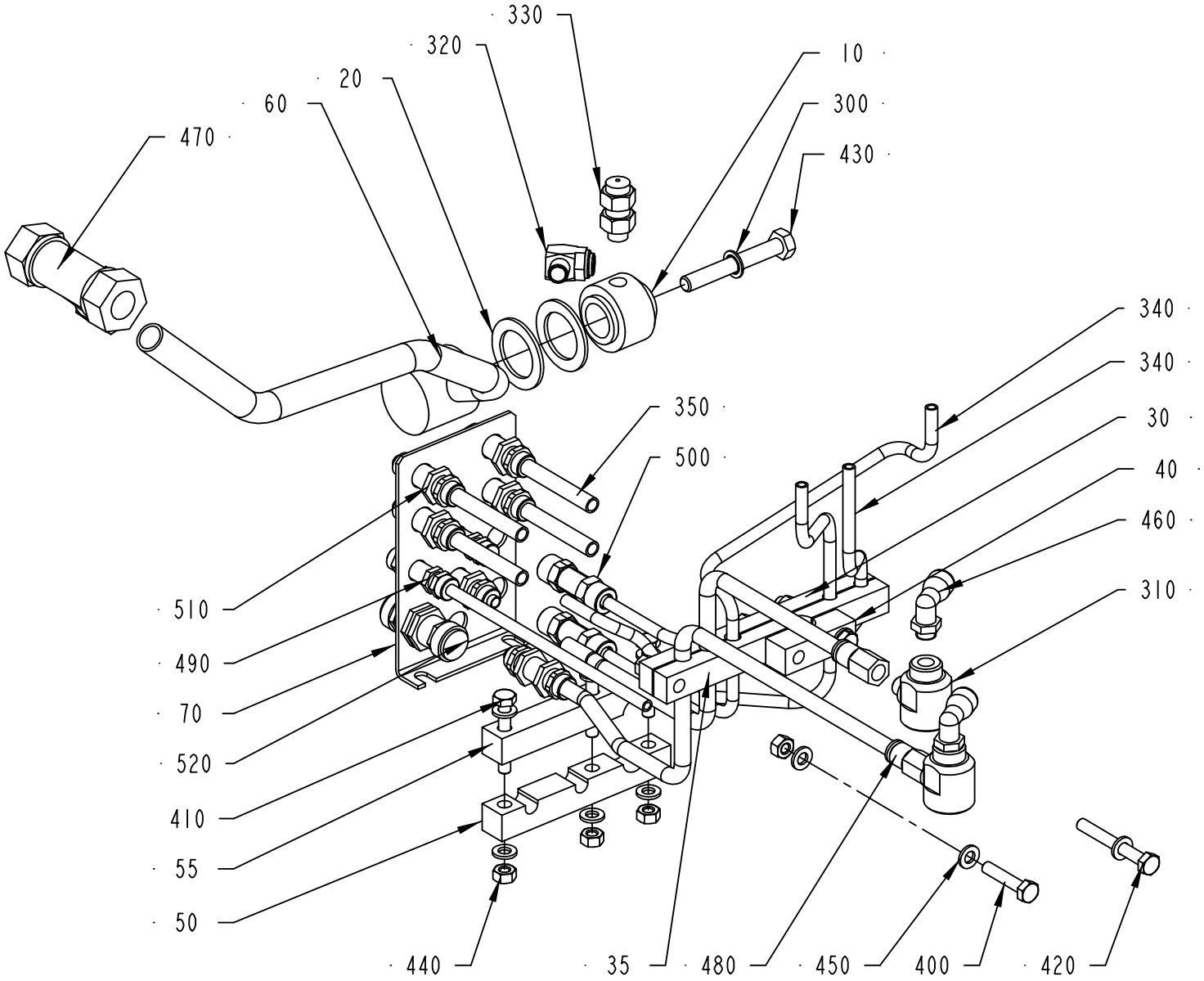

456455-5
ECM 103837

ECM: 113161 - 20020731
Group number: 456455-0600
Assembly Drawing: 456455-5_1_AB

Pos	Part No	SP	UN	Qty	Description	Page No
-						
010	272191-0000	-		1	DISTRIBUTOR	
020	256907-0000	B		2	WASHER	
030	456853-0001	-		1	PIPE CLAMP	
035	456853-0002	-		1	PIPE CLAMP	
040	456853-0003	-		1	PIPE CLAMP	
050	456854-0001	-		1	CRAMP	
055	456854-0002	-		1	CRAMP	
060	1511887-0000	-		1	DISTRIBUTOR	
070	1517519-0000	-		1	PLATE	
300	90005-0007	B		1	SEAL WASHER, 8,7X14X1 MM M8	
310	90235-0206	-		2	QUICK EXHAUST VALVE, SEU-1/8	
320	90424-0009	A		1	SPRAY NOZZLE 103 DEG	
330	90424-0016	A		1	SPRAY NOZZLE 103 DEG R 1/8 GG8W	
340	90166-0089	-	M	2	HOSE 4/6.2 PE BLUE	
350	90166-0090	-	M	2	HOSE 6/8.4 PE BLUE	
400	312105-0374	-		1	SCREW M6S ISO 4014 M6X30 A480	
410	312105-0378	-		3	SCREW M6S ISO 4014 M6X40 A480	
420	312105-0380	-		2	SCREW M6S ISO 4014 M6X50 A480	
430	312105-0463	-		1	SCREW M6S ISO 4014 M8X60 A480	
440	312605-0316	-		7	HEXAGON NUT, M6M M6 A280	
450	315105-0153	-		13	WASHER BRB6,4X12RFR	
460	90458-2964	-		2	ELBOW PIPE JOINT, EXT.THREAD, D=8MM-G1/8	
470	342746-0114	-		1	CONN. T-PIPE T-15	
480	342770-0107	-		2	STRAIGHT COUPLING INT, D=8 MM - G1/8	
490	342960-0112	-		2	BULKHEAD COUPLING 6/4	
500	342960-0121	-		2	BULKHEAD COUPLING 8/6-6/4	
510	342960-0122	-		6	BULKHEAD COUPLING 8/6	
520	342960-0133	-		1	BULKHEAD COUPLING 10/8	

Pos	Part No	SP	UN	Qty	Description	Page No

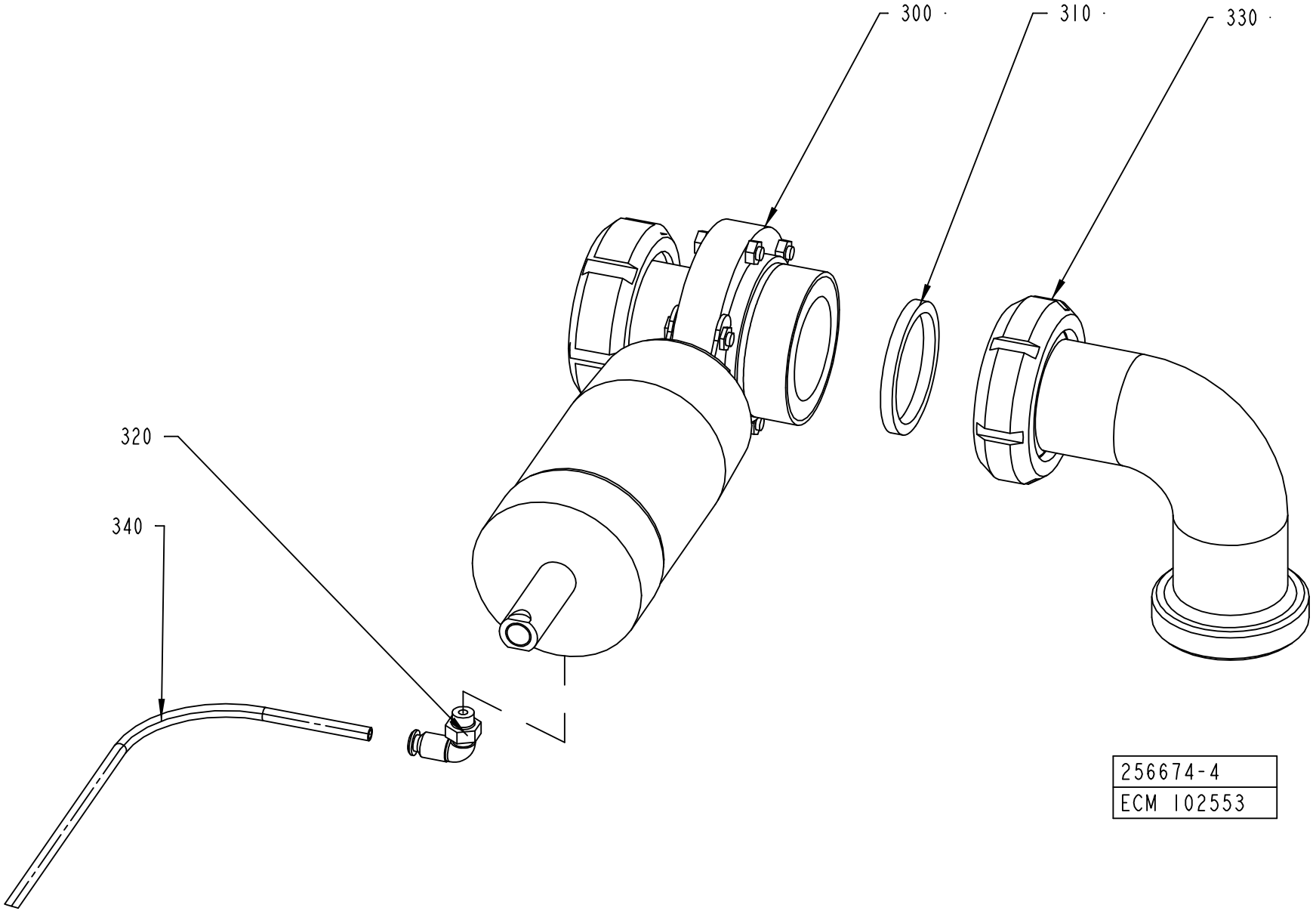
300
310
330
320
340
256674-4
ECM 102553

ECM: 113947 - 20030113
Group number: 256674-0500
Assembly Drawing: 256674-4_1_AA

Pos	Part No	SP	UN	Qty	Description	Page No
-						
300	90457-0132	-		1	VALVE, BUTTERFLY, N.O. ZVF1200BSAAO	
310	315250-0104	B		1	GASKET 61X51X5,5 MM	
320	90458-2956	-		1	ELBOW PIPE JOINT, EXT.THREAD, D=6MM-G1/8	
330	342807-0104	-		1	PIPE ELBOW 90 DEGR. SMS1220, D=51 MM	
340	90166-0089	-	M	1	HOSE 4/6.2 PE BLUE	

Pos	Part No	SP	UN	Qty	Description	Page No

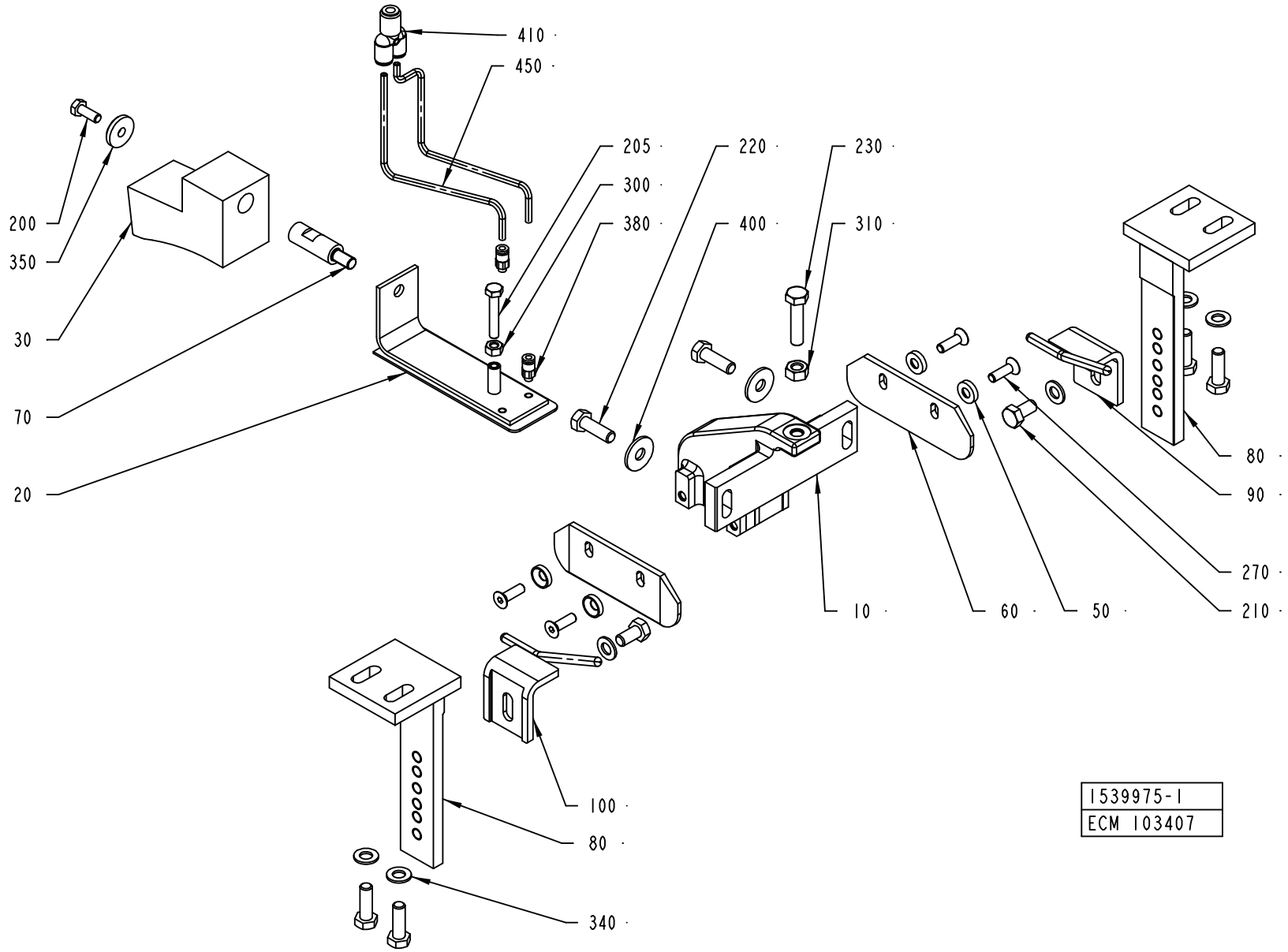
410
450
205
300
380
220
400
230
310
200
350
30
70
20
10
60
50
270
210
80
90
100
80
340
1539975-1
ECM 103407

ECM: 113159 - 20020731
Group number: 1539975-0100
Assembly Drawing: 1539975-1_1_AB

Pos	Part No	SP	UN	Qty	Description	Page No
TBA 0100B						
010	1558190-0001	-		1	HOLDER	
020	1558202-0001	A		1	PRESSURE PLATE	
030	1558205-0000	B		1	BLOCK	
TBA 0125S						
010	1558190-0002	-		1	HOLDER	
020	1558202-0001	A		1	PRESSURE PLATE	
030	1558198-0000	A		1	BLOCK	
TBA 0160S						
010	1558190-0003	-		1	HOLDER	
020	1558202-0001	A		1	PRESSURE PLATE	
030	1558206-0000	A		1	BLOCK	
TBA 0180B						
010	1558190-0004	-		1	HOLDER	
020	1558202-0004	A		1	PRESSURE PLATE	
030	1558207-0000	A		1	BLOCK	
TBA 0200B						
010	1558190-0005	-		1	HOLDER	
020	1558202-0003	A		1	PRESSURE PLATE	
030	1558197-0000	A		1	BLOCK	
TBA 0200M						
010	1558190-0006	-		1	HOLDER	
020	1558202-0002	A		1	PRESSURE PLATE	
030	1558199-0000	A		1	BLOCK	
TBA 0200S						
010	1558190-0007	-		1	HOLDER	
020	1558202-0001	A		1	PRESSURE PLATE	
030	1558204-0000	A		1	BLOCK	
205	312105-0379	-		1	SCREW M6S ISO 4014 M6X45 A480	
TBA 0250B						
010	1558190-0008	-		1	HOLDER	
020	1558202-0003	A		1	PRESSURE PLATE	
030	1558208-0000	A		1	BLOCK	
TBA 0250S						
010	1558190-0009	-		1	HOLDER	
020	1558202-0002	A		1	PRESSURE PLATE	
030	1539789-0000	A		1	BLOCK	
205	312105-0376	-		1	SCREW M6S ISO 4014 M6X35 A480	
TBA 0300S, TBA 0284B						
010	1558190-0010	-		1	HOLDER	
020	1558202-0004	A		1	PRESSURE PLATE	
030	2500241-0000	A		1	BLOCK	
TBA 0330S						
010	1558190-0011	-		1	HOLDER	
020	1558202-0003	A		1	PRESSURE PLATE	
030	2500242-0000	A		1	BLOCK	
Common Parts						
050	1317228-0000	-		4	WASHER	
060	1558191-0000	B		2	PLATE	
070	1539792-0000	A		1	PIN	
080	1523505-0000	-		2	SUPPORT	
090	1539976-0000	A		1	GUIDE	
100	1539977-0000	A		1	GUIDE	
200	312105-0368	-		1	SCREW M6S M6X16 A280	
210	312105-0449	-		2	SCREW M6S ISO 4017 M8X16 A480	
220	312105-0453	-		6	SCREW M6S ISO 4017 M8X25 A480	
230	312105-0457	-		1	SCREW M6S ISO 4014 M8X35 A480	
270	312155-0370	-		4	SCREW EN 10642 MF6S M6X20 A480	
300	312605-0316	-		1	HEXAGON NUT, M6M M6 A280	
310	312605-0318	-		1	HEXAGON NUT, M6M M8 A280	
340	315105-0165	-		6	WASHER BRB8,4X16RFR	
350	315125-0153	-		1	WASHER TBRSB 6,4X22X4 A4	
380	342722-0198	-		2	STRAIGHT COUPLING	
400	90005-0116	-		2	WASHER PLAIN ROUND 8,4(M8)/24, H=2	
410	90055-0154	-		1	HOSE COUPLING	
450	90166-0095	-	MM	2000	TUBE 4 MM PA BLUE	

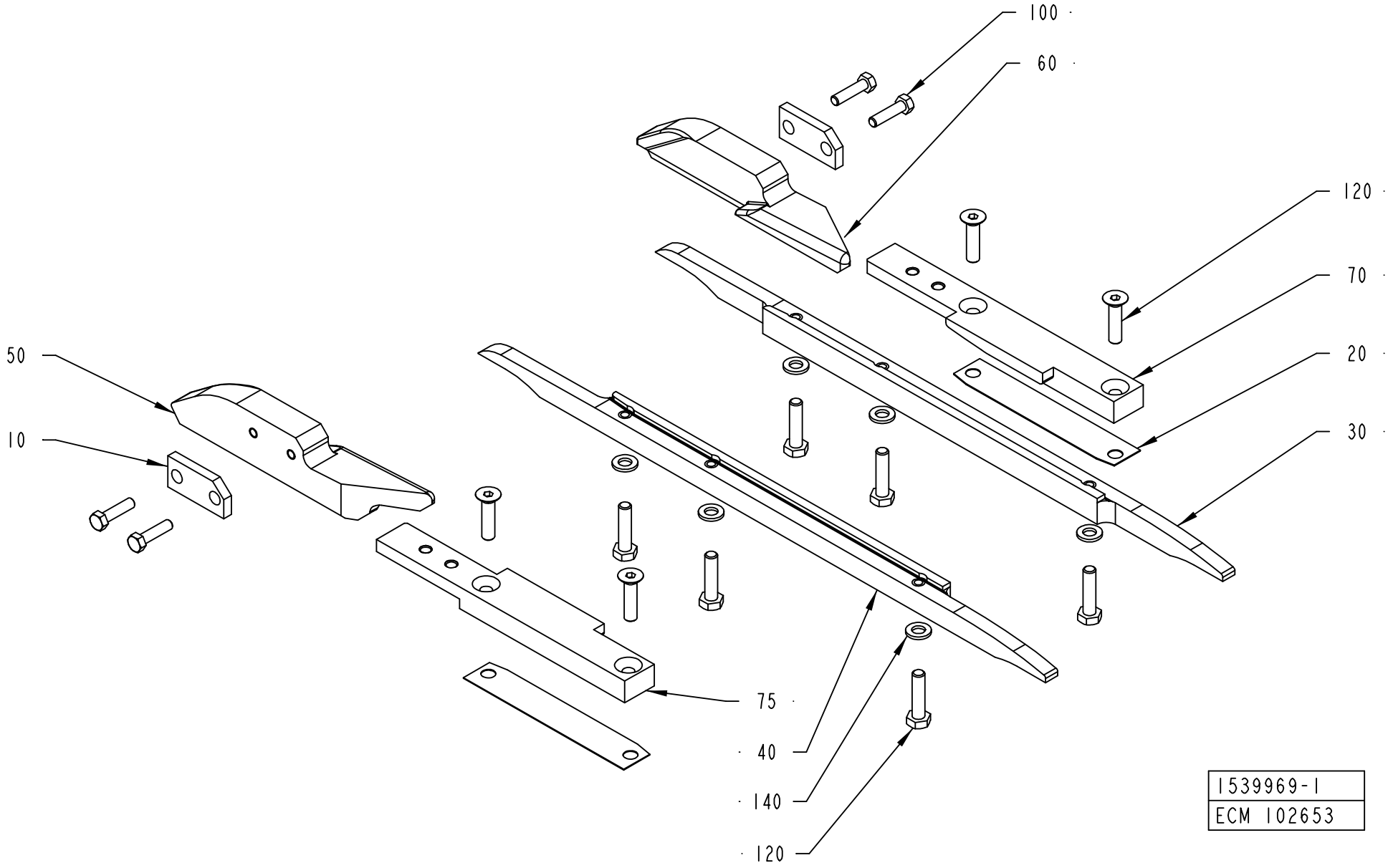
100
60
120
70
20
30
50
10
75
40
140
120
1539969-1
ECM 102653

ECM: 117951 - 50001231
Group number: 1539969-0100
Assembly Drawing: 1539969-1_1_AA

Pos	Part No	SP	UN	Qty	Description	Page No
TBA 0125S, TBA 0100B						
050	2598198-0000	-		1	FOLDING BAR	
060	2598199-0000	-		1	FOLDING BAR	
TBA 0160S, TBA 0200S						
050	1558194-0001	-		1	FOLDING BAR	
060	1558195-0001	-		1	FOLDING BAR	
TBA 0250S, TBA 0200M						
050	1558194-0003	-		1	FOLDING BAR	
060	1558195-0003	-		1	FOLDING BAR	
TBA 0330S, TBA 0300S, TBA 0180B, TBA 0200B, TBA 0284B, TBA 0250B						
050	1558194-0002	-		1	FOLDING BAR	
060	1558195-0002	-		1	FOLDING BAR	
Common Parts						
010	295729-0000	-		2	WASHER	
020	491266-0000	-		4	SHIM	
030	751109-0000	B		1	RAIL RIGHT	
040	751110-0000	B		1	RAIL LEFT	
070	2526343-0000	B		1	PLATE	
075	2526344-0000	B		1	PLATE	
100	312105-0331	-		4	SCREW M6S ISO 4017 M5X20 A480	
110	312105-0362	-		2	SCREW M6S ISO 4017 M6X8 A480	
120	312105-0372	-		6	SCREW M6S ISO 4017 M6X25 A480	
130	312155-0372	-		4	SCREW EN 10642 MF6S M6X25 A480	
140	315105-0153	-		6	WASHER BRB6,4X12RFR	

Pos	Part No	SP	UN	Qty	Description	Page No

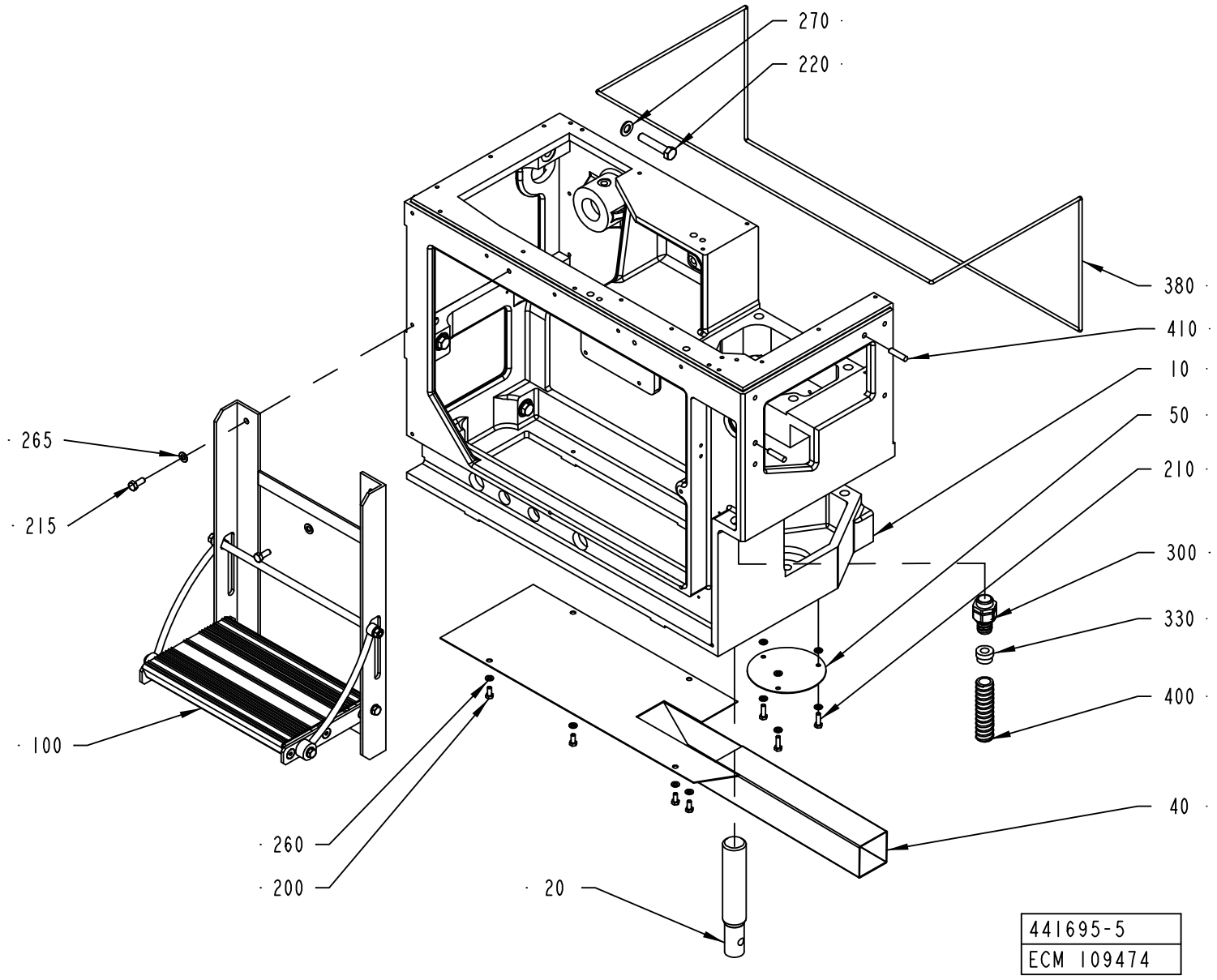
270
220
380
410
10
50
210
300
330
400
40
265
215
100
260
200
20
441695-5
ECM 109474

ECM: 110046 - 20030113
Group number: 441695-0500
Assembly Drawing: 441695-5_1_AC

Pos	Part No	SP	UN	Qty	Description	Page No
-						
010	1539960-0000	-		1	MACHINE BODY	
020	272673-0000	-		1	LEG	
040	1519416-0000	-		1	BOTTOM PLATE	
050	272743-0000	-		1	LID	
100	1519426-0100	-		1	STAIR	**405**
200	312105-0367	-		4	SCREW M6S M6X14 A280	
210	312105-0370	-		3	SCREW M6S ISO 4017 M6X20 A480	
215	312105-0451	-		2	SCREW M6S ISO 4017 M8X20 A480	
220	312105-0544	-		6	SCREW M6S ISO 4014 M12X60 A480	
260	315105-0153	-		7	WASHER BRB6,4X12RFR	
265	315105-0165	-		2	WASHER BRB8,4X16RFR	
270	315105-0178	-		6	WASHER BRB13X24RFR	
300	90458-0431	-		1	EXTENDED WITHOUT INSERT, M25X1,5	
330	353249-0013	-		1	INSERT, SINGEL HOLE, EK 154/13	
380	90143-0028	-	M	2	STRIP	
400	90152-0051	-	M	1	SPIRAL CONDUIT, 25X18, UL 1816	
410	311103-0407	-		2	PARALLELL PIN ISO2338 8X35 A1	

Pos	Part No	SP	UN	Qty	Description	Page No

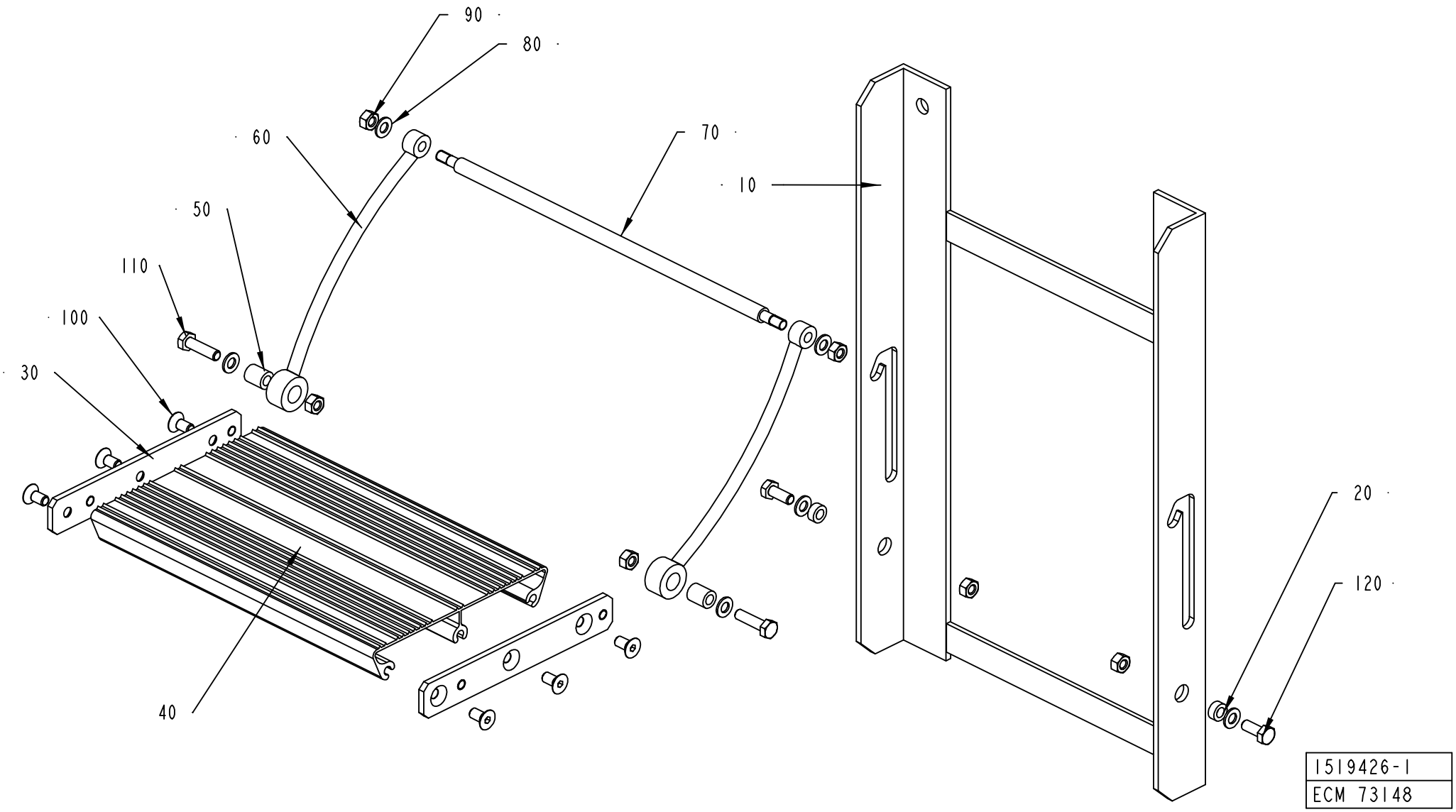
90
80
60
70
10
50
110
100
30
20
120
40
1519426-1
ECM 73148

ECM: 73148 - 20011221
Group number: 1519426-0100
Assembly Drawing: 1519426-1_1_AA

Pos	Part No	SP	UN	Qty	Description	Page No
-						
010	1519423-0000	-		1	SUPPORT	
020	1519421-0000	-		2	BUSHING	
030	1519418-0000	-		2	PLATE	
040	1519417-0000	-		1	STAIR	
050	1519422-0000	-		2	BUSHING	
060	1519424-0000	-		2	SUPPORT	
070	1519425-0000	-		1	SPACER	
080	315105-0165	-		6	WASHER BRB8,4X16RFR	
090	312605-0318	-		6	HEXAGON NUT, M6M M8 A280	
100	312155-0449	-		6	SCREW EN 10642 MF6S M8X16 A480	
110	312105-0455	-		2	SCREW M6S ISO 4017 M8X30 A480	
120	312105-0451	-		2	SCREW M6S ISO 4017 M8X20 A480	

Pos	Part No	SP	UN	Qty	Description	Page No

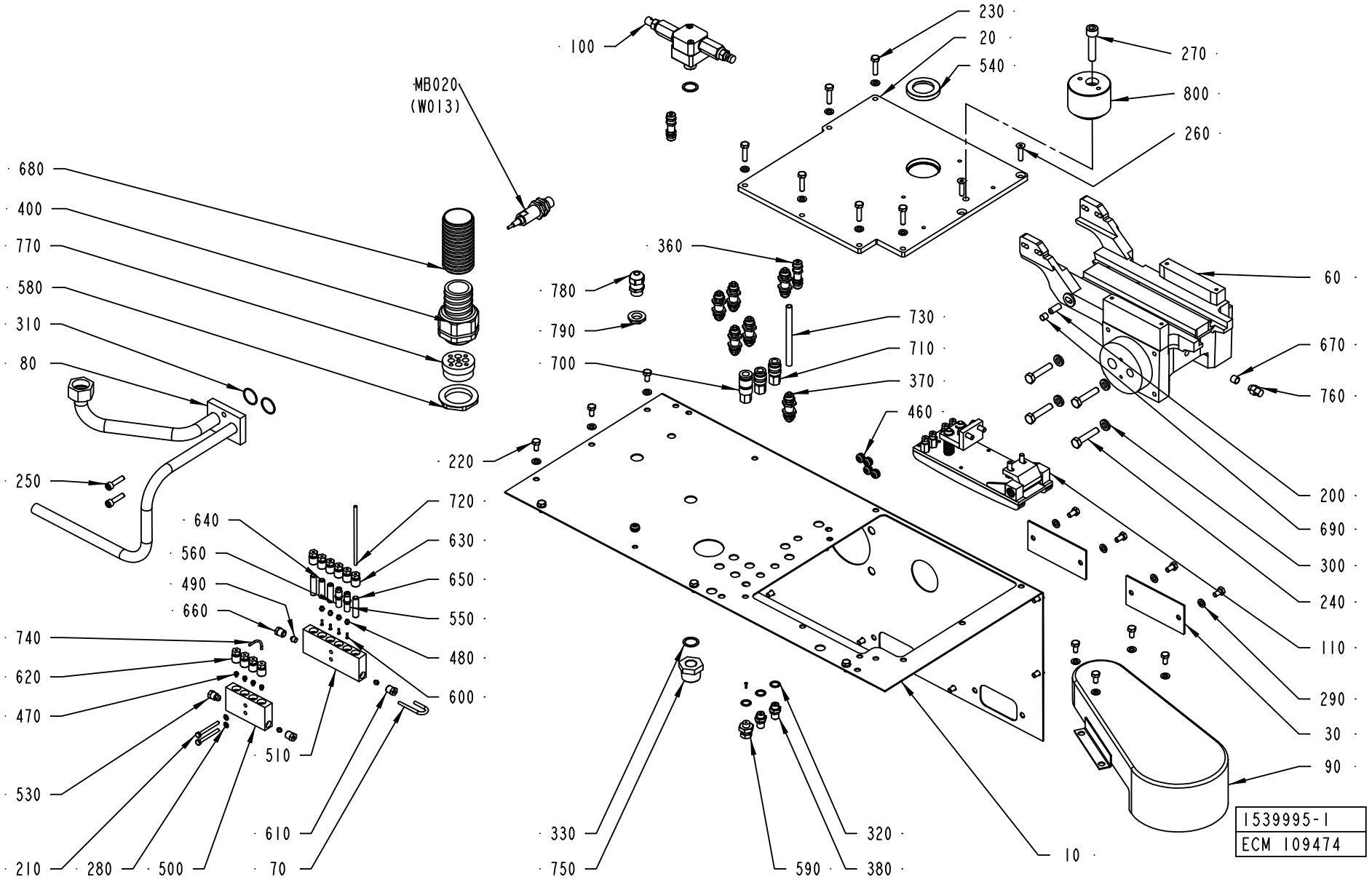
100
MB020
(W013)
230
20
540
270
800
260
680
400
770
580
310
80
360
780
790
700
730
710
370
460
60
670
760
200
690
300
240
110
290
30
90
250
220
720
630
650
550
480
600
640
560
490
660
740
620
470
530
210
280
500
510
610
70
330
750
590
320
380
10
1539995-1
ECM 109474

ECM: 110047 - 20030113
Group number: 1539995-0100
Assembly Drawing: 1539995-1_1_AC

Pos	Part No	SP	UN	Qty	Description	Page No
-						
010	1539943-0000	-		1	SHIELD PLATE	
020	2544966-0000	-		1	PLATE	
030	1539957-0000	-		2	PLATE	
060	1498245-0000	-		1	SUPPORTING ARM	
070	1512442-0000	-		1	CONNECTING PIPE	
080	1512448-0000	-		1	PIPE CONNECTION	
090	1539953-0000	-		1	PROTECTIVE COVER	
100	441811-0100	-		1	ROTOR	**409**
110	1255876-0200	-		1	CHAIN TENSIONER	**411**
200	311103-0401	-		1	PARALLELL PIN ISO2338 8X20 A1	
210	312105-0303	-		2	SCREW M6S ISO 4017 M4X40 A480	
220	312105-0366	-		24	SCREW M6S M6X12 A280	
230	312105-0372	-		6	SCREW M6S ISO 4017 M6X25 A480	
240	312105-0459	-		4	SCREW M6S ISO 4014 M8X40 A480	
250	312115-0372	-		2	SCREW ISO4762 M6X25 A4	
260	312155-0372	-		2	SCREW EN 10642 MF6S M6X25 A480	
270	312115-0500	-		1	SCREW ISO4762 M10X45 A4	
280	315105-0136	-		2	WASHER BRB4,3XRFR	
290	315105-0153	-		30	WASHER BRB6,4X12RFR	
300	315111-0165	-		4	WASHER PLAIN, TBRB 8,4/16 H=3	
310	315202-0118	B		2	O-RING 22,1X1,6 MM	
320	315233-0109	-		3	WASHER CAPTIVE SEALING G1/8	
330	315233-0111	-		2	WASHER CAPTIVE SEALING G3/8	
360	342960-0112	-		2	BULKHEAD COUPLING 6/4	
370	342960-0122	-		6	BULKHEAD COUPLING 8/6	
380	342921-0113	-		2	STRAIGHT COUPLING,EXT.THREADED 6/4-G1/8"	
400	90458-0459	-		1	EXTENDED WITHOUT INSERT, HIGH TEMP, 40X1	
460	90015-0028	-		5	LEAD-IN BUSHING	
470	90028-0020	-		4	CONE TUBE 2,5MM	
480	90028-0021	-		6	CONE TUBE 4 MM	
490	90028-0025	-		1	CONE TUBE 6 MM	
500	90032-0039	-		1	BLOCK 4 WAYS	
510	90032-0040	-		1	BLOCK 6 WAYS	
530	90087-0019	-		1	PLUG M10X1 STAINLESS	
540	90091-0306	B		1	RADIAL SEAL 30X47X7 MM DUST LIP	
550	90092-0053	B		1	METERING VALVE 30 MM3	
560	90092-0054	B		1	METERING VALVE 50 MM3	
580	90458-0326	-		1	NUT, M40X1,5	
590	90134-0004	-		1	PIPE CONNECTION R1/8	
600	90134-0031	-		5	SLEEVE FOR PLASTIC TUBE	
610	90134-0038	-		2	BUSHING/NUT INLET/OUTLET 4 MM	
620	90134-0039	-		4	BUSHING VALVE CONNECTION 2,5 MM	
630	90134-0040	-		6	BUSHING VALVE CONNECTION 4 MM	
640	90134-0051	-		2	SPACING COLLAR DOSING BLOCK	
650	90134-0052	-		2	PLUG DOSING BLOCK	
660	90134-0055	-		1	BUSHING/NUT INLET/OUTLET 6 MM	
670	90144-0073	-	MM	1	TREBOFLON-TAPE W=13MM	
680	90152-0070	B	M	1	METAL HOSE, 32,5X26, UL 2621	
690	90157-0022	-		1	SEALING COMPOUND	
700	90163-0046	-		1	SLEEVE LP-004-0-WR 0510-21-1 BRASS	
710	90163-0062	-		2	QUICK COUPLING, (F) 5053-1/8	
720	90166-0109	-	M	2	TUBE 4 MM PA,TRANSP.	
730	90166-0013	-	M	2	TUBE 8 MM PA BLUE	
740	90166-0143	-	M	2	TUBE 2,5 MM PA,TRANSP.	
750	90330-0078	-		1	BUSHING, INT/EXT. THR. R3/4-RP3/8	
760	90424-0010	B		1	SPRAY NOZZLE 142 DEG BSPT 1/4 K5	
770	90457-0199	-		1	INSERT EK 156M 5X5/4X9	
780	90458-0314	B		1	CABLE GLAND, M16X1,5, NO.5311 1110	
790	90458-0322	-		1	NUT, M16X1,5	
800	90458-0220	-		1	TENSION ROLLER, M40/60-0-M EXCENTRIC	
MB020	90458-0894	A		1	PROXIMITY SENSOR E2E2-X10MB1-5M	

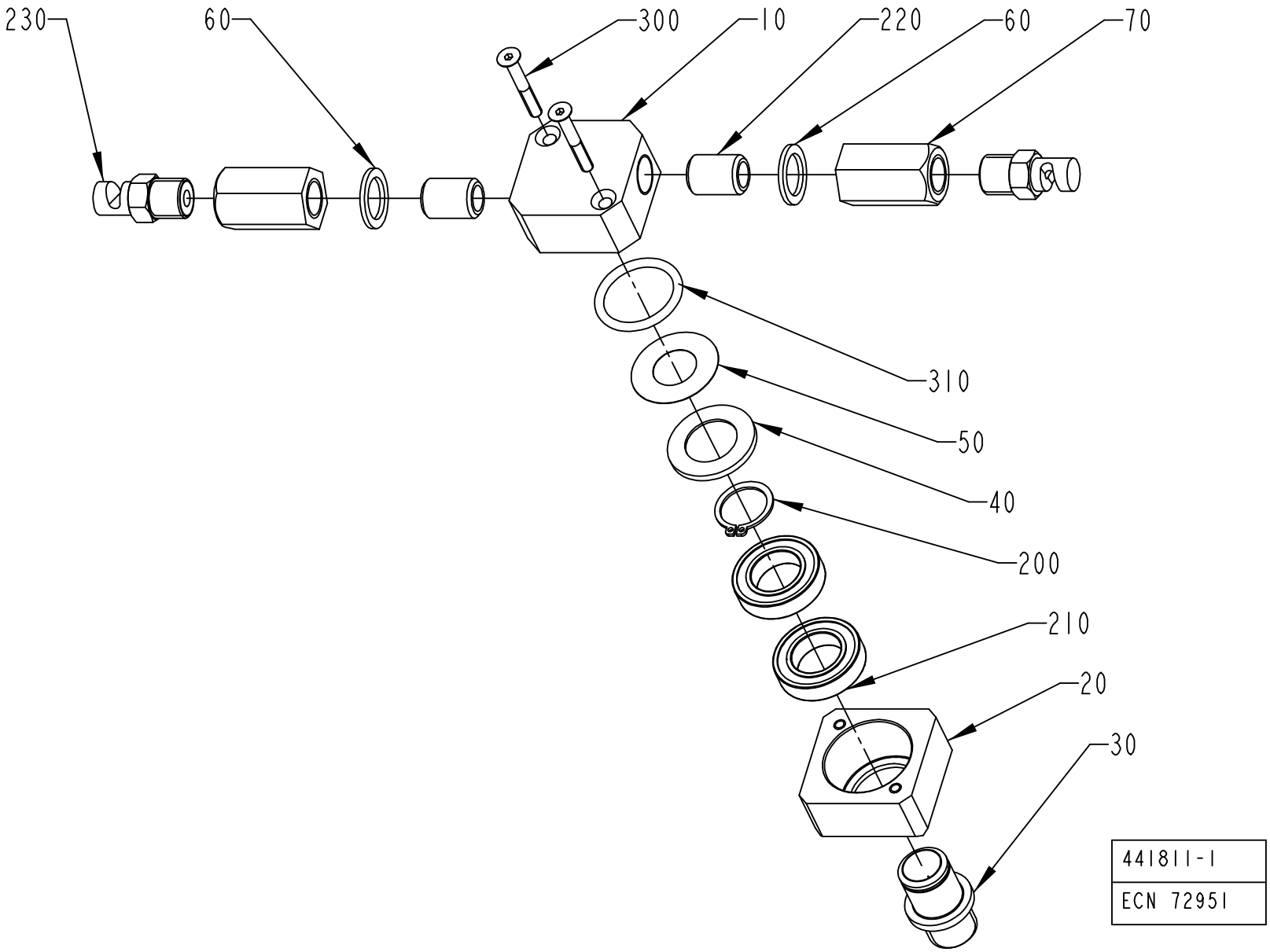
230
60
300
10
220
60
70
310
50
40
200
210
20
30
441811-1
ECN 72951

ECM: 140035 - 50001231
Group number: 441811-0100
Assembly Drawing: 441811-1_1_AB

Pos	Part No	SP	UN	Qty	Description	Page No
-						
010	441792-0000	-		1	HEAD	
020	441793-0000	-		1	BEARING HOUSING	
030	441794-0000	B		1	PIVOT PIN	
040	441795-0000	B		1	WASHER	
050	441796-0000	A		1	SEAL	
060	441797-0000	A		2	SHIM	
070	441800-0000	-		2	STRAIGHT FITTING	
200	90141-0017	-		1	RETAINING RING FOR SHAFT, 17X1MM	
210	90214-0092	A		2	BALL BEARING, 17X30X7 MM	
220	90330-0101	-		2	NIPPLES, EXT. THREAD, G1/4	
230	90424-0025	A		2	SPRAY NOZZLE 145 DEG	
300	312155-0299	-		2	SCREW EN 10642 MF6S M4X30 A480	
310	315202-0217	A		1	O-RING 24,2X3 MM	

Pos	Part No	SP	UN	Qty	Description	Page No

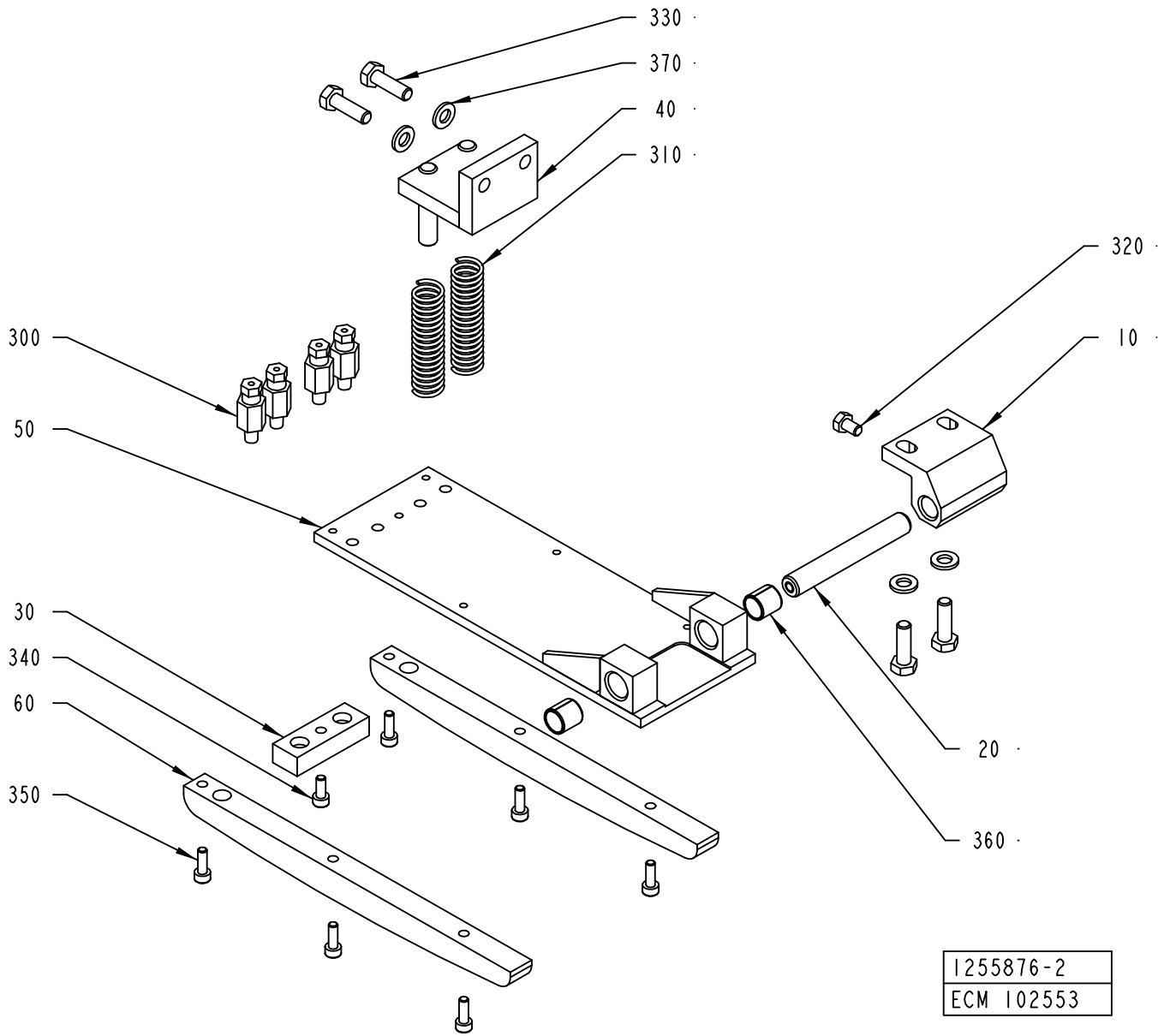
330
370
40
310
320
10
300
50
30
340
60
350
20
360
1255876-2
ECM 102553

ECM: 117950 - 50001231
Group number: 1255876-0200
Assembly Drawing: 1255876-2_1_AA

Pos	Part No	SP	UN	Qty	Description	Page No
-						
010	1195454-0000	-		1	BRACKET	
020	1195456-0000	B		1	SHAFT	
030	1334721-0000	-		1	BLOCK	
040	1346933-0000	-		1	BRACKET	
050	1512443-0000	-		1	PLATE CHOKE	
060	1512444-0000	B		2	GUIDE RAIL	
300	90134-0065	-		4	CONNECTION M6 TUBE 2,5 MM	
310	90335-0152	B		2	COMP. SPRING 22300, 1,25X17,25X40,5	
320	312105-0323	-		1	SKRUV M6S ISO 4017 M5X8 A480	
330	312105-0370	-		4	SCREW M6S ISO 4017 M6X20 A480	
340	312115-0289	-		1	SCREW ISO4762 M4X10 A4	
350	312115-0291	-		6	SCREW ISO4762 M4X12 A4	
360	321141-0142	B		2	BEARING BUSHING W/O FL, 10X12X12 MM	
370	315105-0153	-		4	WASHER BRB6,4X12RFR	

Pos	Part No	SP	UN	Qty	Description	Page No

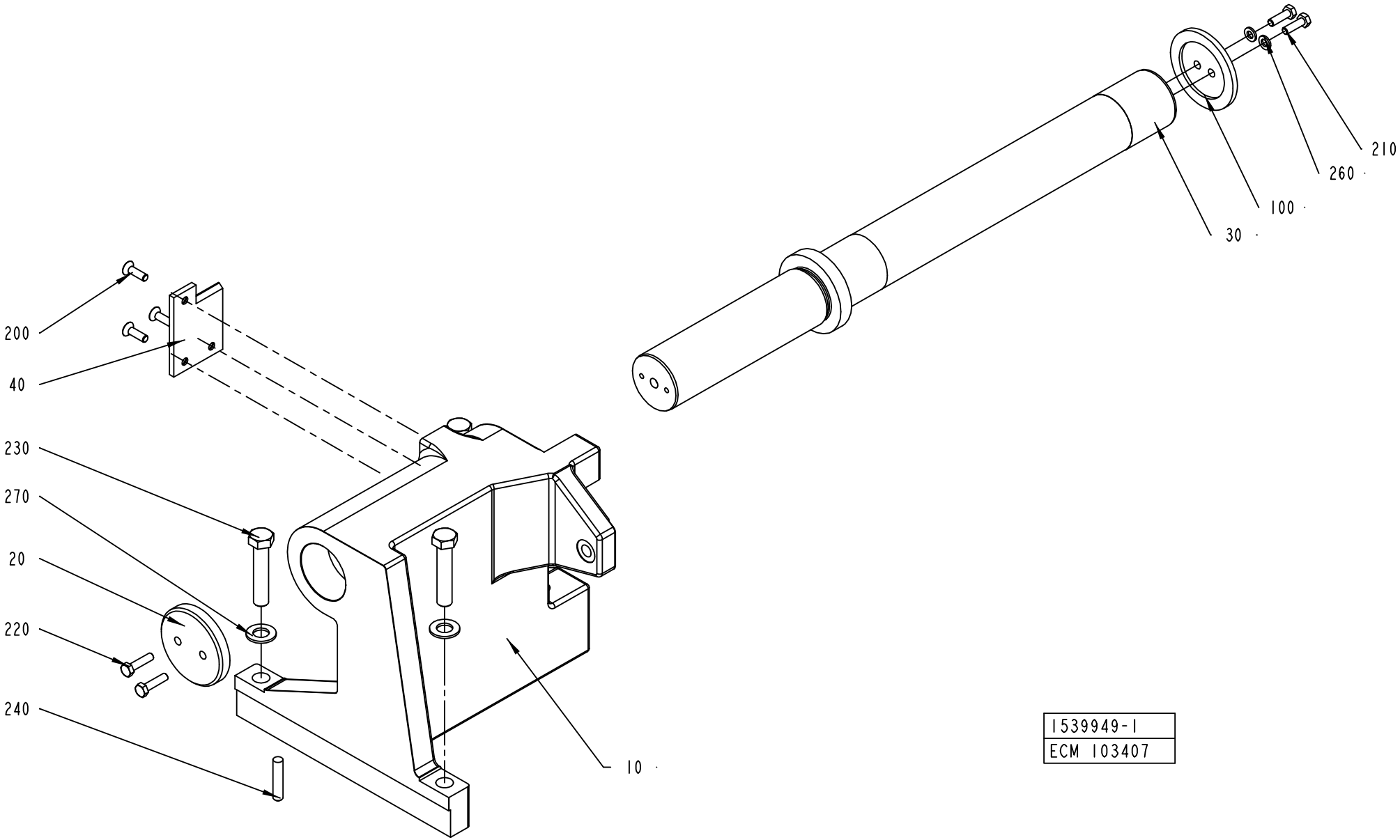

1539949-1
ECM 103407

ECM: 104089 - 20020226
Group number: 1539949-0100
Assembly Drawing: 1539949-1_1_AB

Pos	Part No	SP	UN	Qty	Description	Page No
-						
010	1539951-0000	-		1	HOUSE	
020	1539950-0000	-		1	WASHER	
030	1539948-0000	-		1	SHAFT	
040	1539965-0000	-		1	PLATE	
100	295203-0000	-		1	LID	
200	312155-0370	-		3	SCREW EN 10642 MF6S M6X20 A480	
210	312105-0370	-		2	SCREW M6S ISO 4017 M6X20 A480	
220	312105-0372	-		2	SCREW M6S ISO 4017 M6X25 A480	
230	312105-0544	-		3	SCREW M6S ISO 4014 M12X60 A480	
240	311103-0409	-		2	PARALLELL PIN ISO2338 8X40 A1	
260	315105-0153	-		2	WASHER BRB6,4X12RFR	
270	315105-0178	-		3	WASHER BRB13X24RFR	

Pos	Part No	SP	UN	Qty	Description	Page No

Machine Type | Group Description | Used-In | Group Number | Page No

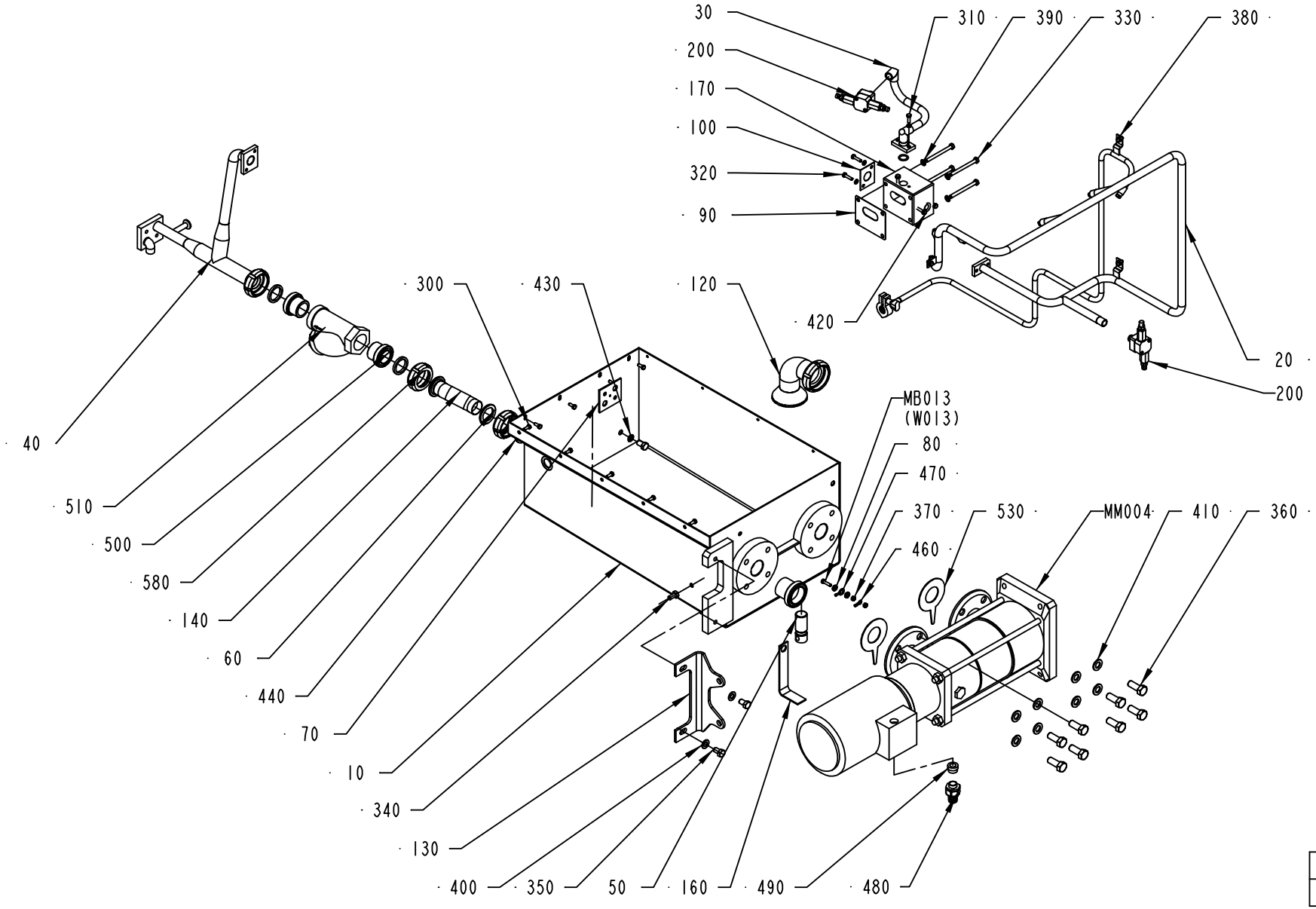

2544980-1
ECM 109474

ECM: 110048 - 20030113
Group number: 2544980-0100
Assembly Drawing: 2544980-1_1_AA

Pos	Part No	SP	UN	Qty	Description	Page No
50HZ						
MM004	90457-0131	B		1	PUMP SV805 R22T 50HZ	
60HZ						
MM004	90458-2762	B		1	PUMP SV805 R406T 60HZ	
Common Parts						
010	2544960-0000	-		1	CLEANING BASIN	
020	2544981-0100	-		1	CLEANING CIRCUIT	**417**
030	1539947-0000	-		1	PIPE	
040	2544959-0000	-		1	PIPE	
050	256641-0000	-		1	LEG	
060	271435-0000	-		1	WASHER	
070	295417-0000	-		1	GASKET	
080	295434-0000	-		2	BUSHING	
090	456395-0000	B		1	GASKET	
100	456396-0000	B		1	GASKET	
120	1511291-0000	-		1	CURVE	
130	1511293-0000	-		1	BRACKET	
140	1511294-0000	-		1	CLEANING PIPE	
160	1512440-0000	-		1	BRACKET	
170	1517523-0000	-		1	BLOCK	
200	441811-0100	-		2	ROTOR	**409**
300	312105-0368	-		9	SCREW M6S M6X16 A280	
310	312105-0370	-		2	SCREW M6S ISO 4017 M6X20 A480	
320	312105-0372	-		4	SCREW M6S ISO 4017 M6X25 A480	
330	312105-0469	-		4	SCREW M6S ISO 4014 M8X90 A480	
340	312105-0491	-		1	SCREW M6S ISO 4017 M10X20 A480	
350	312105-0532	-		3	SCREW M6S ISO 4017 M12X20 A480	
360	312105-0628	-		8	SCREW M6S ISO 4017 M16X40 A480	
370	312605-0316	-		2	HEXAGON NUT, M6M M6 A280	
380	315105-0153	-		6	WASHER BRB6,4X12RFR	
390	315105-0165	-		4	WASHER BRB8,4X16RFR	
400	315105-0178	-		2	WASHER BRB13X24RFR	
410	315105-0186	-		8	WASHER BRB17X30RFR	
420	315202-0215	-		2	O-RING 19,2X3 MM	
430	315211-0107	-		1	SEAL WASHER,NBR90/SS. 12,7X19X1,5 MM M12	
440	315250-0103	B		3	GASKET 48X38X5,5 MM	
460	353101-0123	-		1	CABLE SHOE 0,5-1,5MM2 RED	
470	353101-0126	-		1	CABLE SHOE	
480	90458-0430	-		1	EXTENDED WITHOUT INSERT, M20X1,5	
490	353249-0014	-		1	INSERT, SINGEL HOLE, EK 154/16	
500	90217-0041	-		2	NIPPLE LKBN, RD 60-6 - R1 1/2 M	
510	90415-0022	-		1	FILTER / R1 1/2" TYP. 1012	
	90415-0320	*C*		*1*	*FILTER INSERT*	
530	90458-2199	B		2	GASKET, LOWARA 168061340	
580	342803-0103	-		2	UNION NUT, RD 60-6 (SMS 38)	
MB013	312105-0372	-		1	SCREW M6S ISO 4017 M6X25 A480	
W013	351150-0431	-	M	1	CABLE OLFLEX 2X0,75 MM2 LIGHT/GREY	

Machine Type | Group Description | Used-In | Group Number | Page No

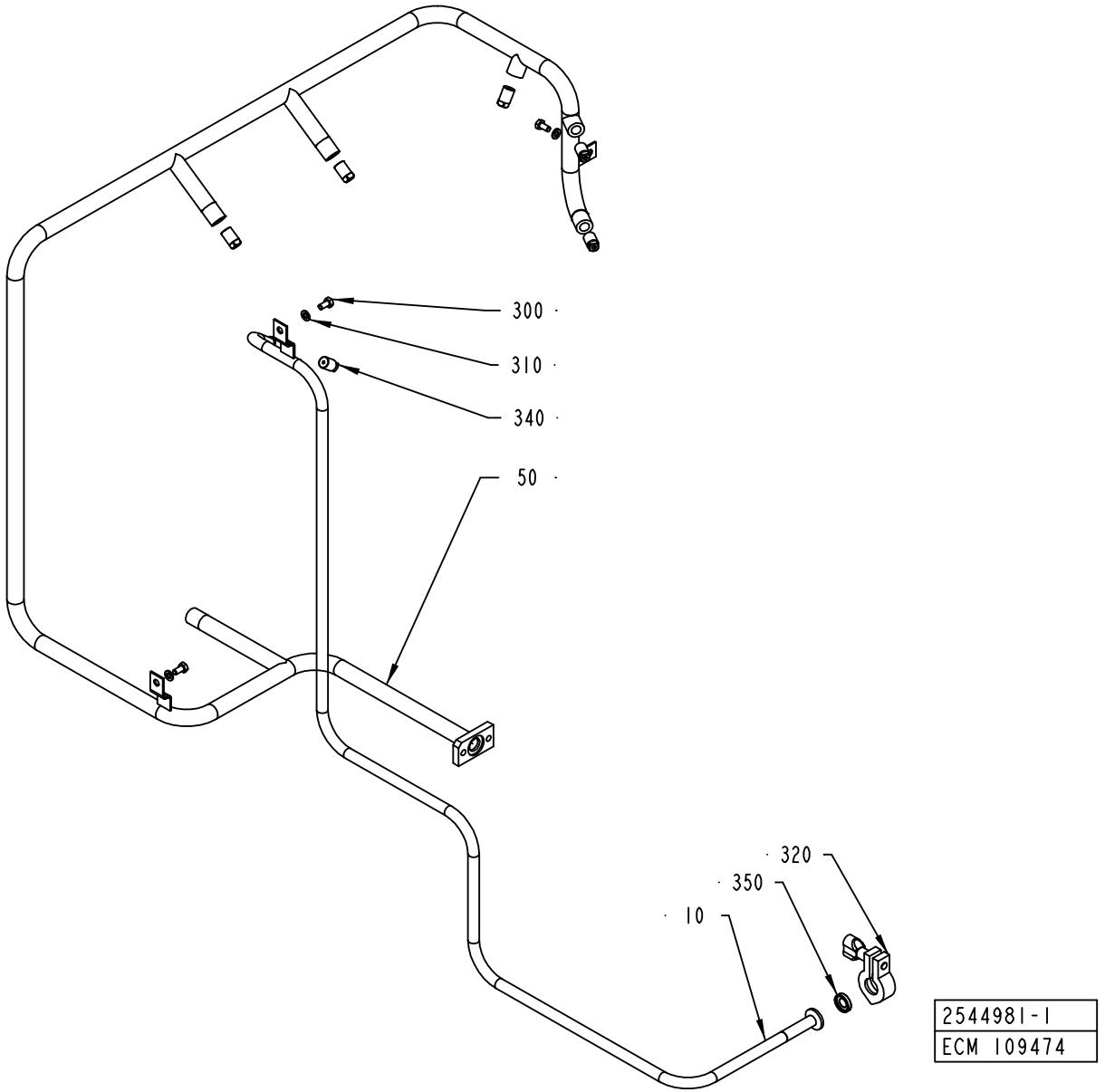
300
310
340
50
320
350
10
2544981-1
ECM 109474

ECM: 110049 - 20030113
Group number: 2544981-0100
Assembly Drawing: 2544981-1_1_AA

Pos	Part No	SP	UN	Qty	Description	Page No
-						
010	1517510-0000	-		1	PIPE	
050	2544979-0000	-		1	PIPE	
300	312105-0366	-		3	SCREW M6S M6X12 A280	
310	315105-0153	-		3	WASHER BRB6,4X12RFR	
320	342840-0101	-		1	CLAMP, 12,7 AND 19,1 MM 3-A PCS+PMCS	
340	90424-0070	B		6	SPRAY NOZZLE 61 DEG	
350	342850-0101	B		1	GASKET, FDA, 3-A, 1/2	

Pos	Part No	SP	UN	Qty	Description	Page No

Machine Type | Group Description | Used-In | Group Number | Page No

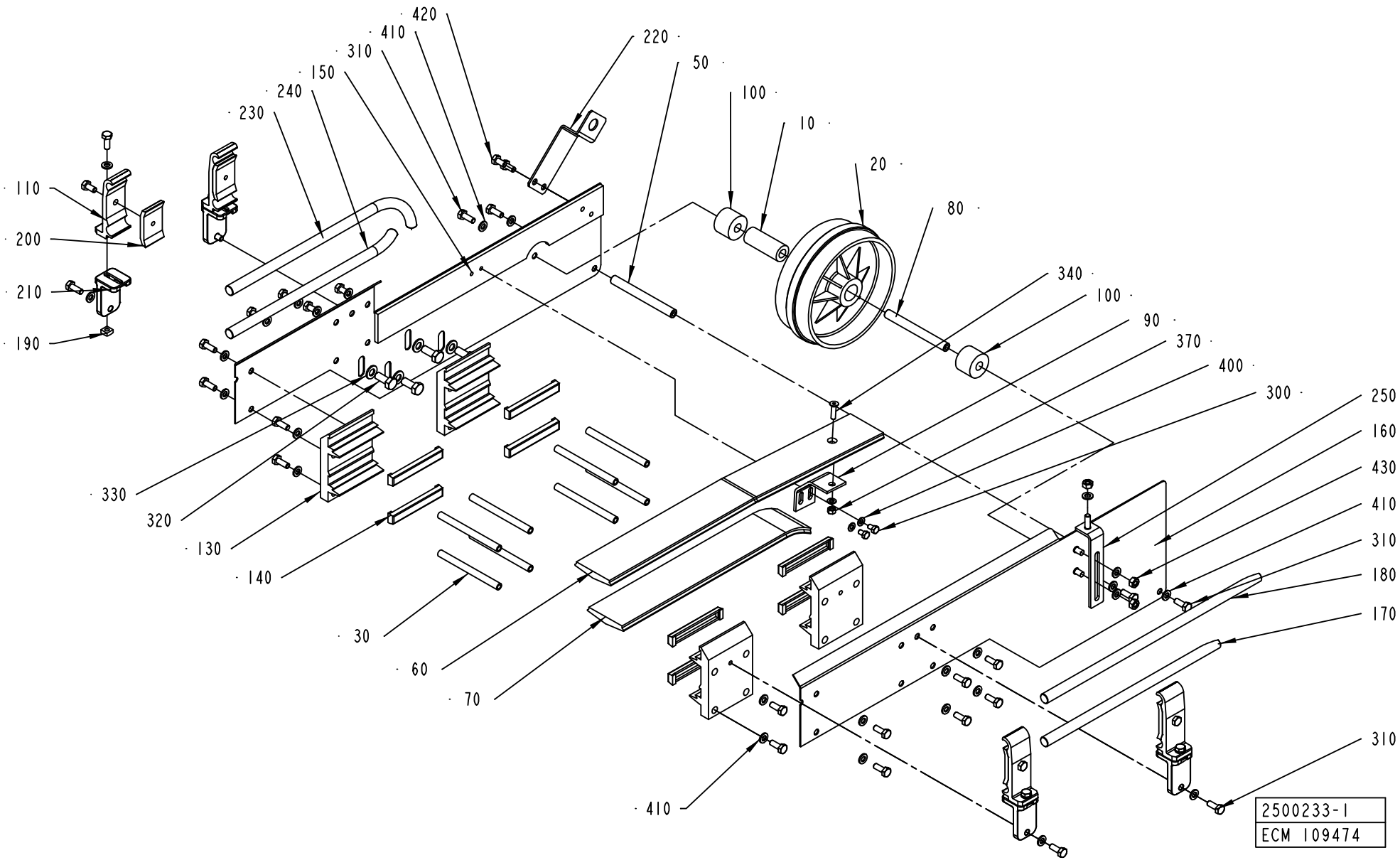
420
410
310
150
240
230
220
50
100
10
20
80
110
200
210
190
340
100
90
370
400
300
250
160
430
410
310
180
170
330
320
130
140
30
60
70
410
310
2500233-1
ECM 109474

ECM: 117953 - 50001231
Group number: 2500233-0100
Assembly Drawing: 2500233-1_1_AB

Pos	Part No	SP	UN	Qty	Description	Page No
-						
010	229207-0000	B		1	BEARING SLEEVE	
020	245039-0000	B		1	GUIDE WHEEL	
030	476220-0000	-		8	SPACER	
050	1091683-0000	-		1	SPACER	
060	1091684-0000	B		1	RAIL	
070	1091685-0000	B		1	RAIL	
080	1091686-0000	B		1	SPACER	
090	1091719-0000	-		1	BRACKET	
100	1144943-0000	-		2	SPACER	
110	1366726-0000	-		4	HOLDER	
130	457696-0001	-		4	JOINT PIECE	
140	466074-0002	B		8	SLIDER	
150	2500234-0000	-		1	PLATE	
160	2500235-0000	-		1	PLATE	
170	2500236-0000	B		1	RAIL	
180	2500237-0000	B		1	RAIL	
190	1359565-0000	-		4	NUT	
200	1366727-0000	-		4	CLAMP	
210	2559121-0000	-		4	BRACKET	
220	2511668-0000	-		1	SUPPORT	
230	2518102-0000	B		1	RAIL	
240	2518103-0000	B		1	RAIL	
250	2546226-0000	-		1	SUPPORT	
300	312105-0323	-		2	SKRUV M6S ISO 4017 M5X8 A480	
310	312105-0368	-		26	SCREW M6S M6X16 A280	
320	312105-0447	-		4	SCREW M6S ISO 4017 M8X12 A480	
330	315105-0165	-		4	WASHER BRB8,4X16RFR	
340	312155-0331	-		1	SCREW EN 10642 MF6S M5X20 A480	
370	312605-0314	-		1	HEXAGON NUT, M6M M5 A280	
400	315105-0146	-		3	BRICKA BRB5,3X10RFR	
410	315105-0153	-		33	WASHER BRB6,4X12RFR	
420	312105-0366	-		8	SCREW M6S M6X12 A280	
430	312605-0316	-		3	HEXAGON NUT, M6M M6 A280	

Pos	Part No	SP	UN	Qty	Description	Page No

Machine Type | Group Description | Used-In | Group Number | Page No

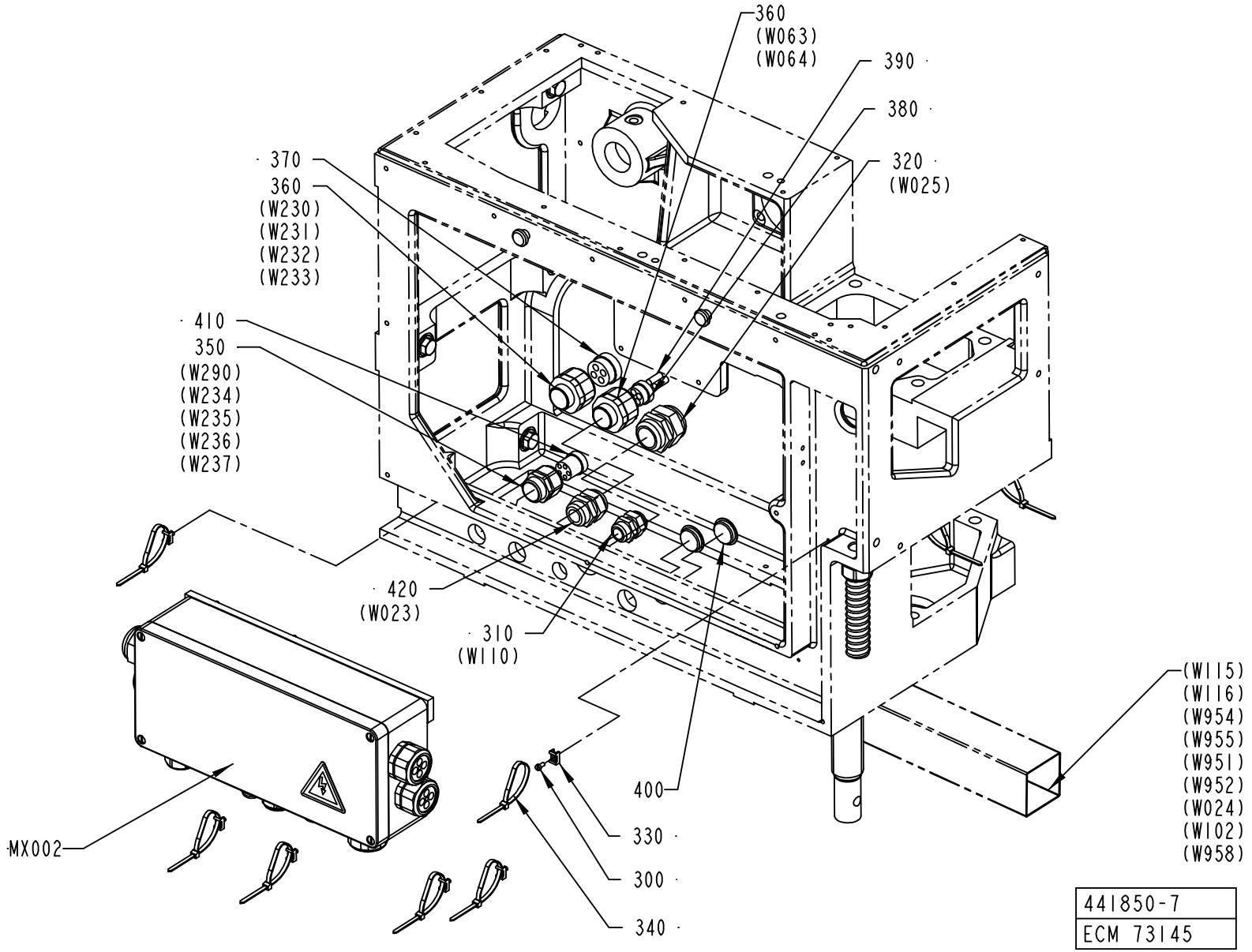
360
(W063)
(W064)
390
380
320
(W025)
370
360
(W230)
(W231)
(W232)
(W233)
410
350
(W290)
(W234)
(W235)
(W236)
(W237)
420
(W023)
310
(W110)
(W115)
(W116)
(W954)
(W955)
(W951)
(W952)
(W024)
(W102)
(W958)
400
330
300
340
MX002
441850-7
ECM 73145

ECM: 96554 - 20020109
Group number: 441850-0700
Assembly Drawing: 441850-7_1_AA

Pos	Part No	SP	UN	Qty	Description	Page No
-						
300	312125-0287	-		8	SCREW PAN HEAD MCS M4X8 SS	
310	352103-0111	-		1	CABLE GLAND, ST 16, PR22,5/PG16	
320	352103-0121	-		1	CABLE GLAND, ST 29, PR37,0/PG29	
330	352113-0205	-		8	ANCHOR PLATES FOR STRIPS, TYPE TM2S8-C10	
340	352113-0102	-		8	CLIP-STRIP, BLACK 188X4,8 MM	
350	353240-0005	-		1	NORMAL WITHOUT INSERT, PG 21	
360	353241-0003	-		2	EXTENDED WITHOUT INSERT, PG 21	
370	353249-0037	-		1	INSERT, MULTI HOLE, EK155M4X8	
380	353249-0084	-		1	INSERT, MULTI HOLE, EK 154M4X7,5	
390	353249-0307	-		2	SEALING PIN, 7,5X20	
400	90002-0012	-		2	BLANK-OFF PLUG, PR 28,3 SKINDICHT-BLK21	
410	90457-0028	-		1	INSERT, MULTI HOLE, E154M5X5	
420	352103-0115	-		1	CABLE GLAND, STR 21, PR28,3/PG21	
MX002	2506331-0200	-		1	CONNECTION BOX	**423, 425**

Pos	Part No	SP	UN	Qty	Description	Page No

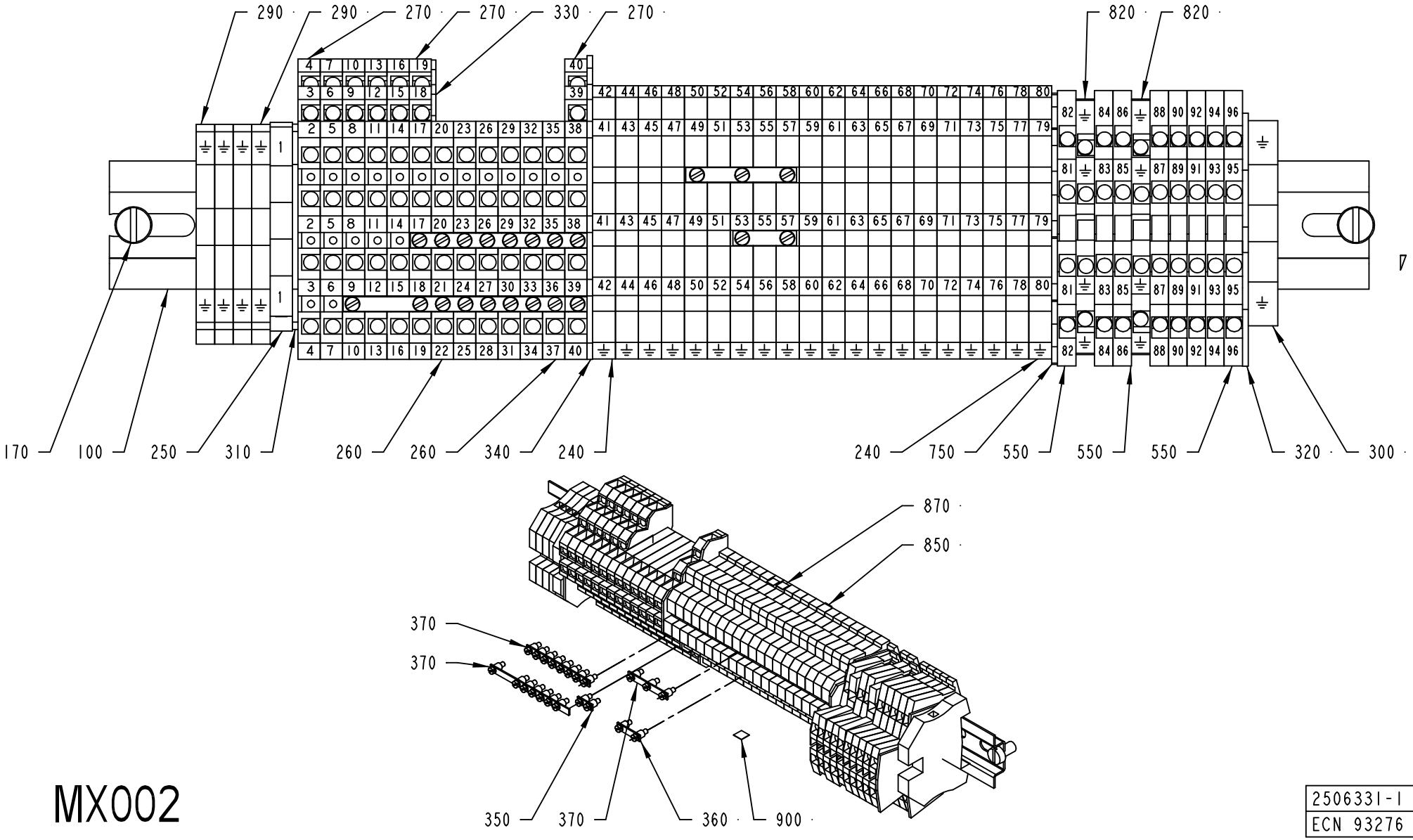

MX002

2506331-1
ECN 93276

ECM: 94021 - 20020109
Group number: 2506331-0200
Assembly Drawing: 2506331-1_1_AA

This list covers pages from 422 to 425

Pos	Part No	SP	UN	Qty	Description	Page No
-						
0010	1255874-0000	-		1	SPACER	
0030	2506332-0000	-		1	BOX	
0100	353042-0005	-	MM	340	RAIL TS 35/7.5	
0130	312115-0366	-		2	SCREW ISO4762 M6X12 A4	
0140	312115-0372	-		2	SCREW ISO4762 M6X25 A4	
0170	312125-0364	-		2	SCREW SLOT.PAN HD. MCS 6X10 A480	
0200	352103-0106	-		1	CABLE GLAND, ST 11, PR18,6/PG11	
0210	352103-0121	-		1	CABLE GLAND, ST 29, PR37,0/PG29	
0240	353021-0132	-		20	TERMINALS,TRIPLE-LEVEL, DLD 2,5/PE	
0250	353021-0213	-		1	FEED THROUGH TERMINAL, 10201.0	
0260	353021-0301	-		6	TERMINALS,TRIPLE-LEVEL, DLI 2,5/35 PA	
0270	353021-0302	-		7	TERMINALS,TRIPLE-LEVEL, DLD 2,5/35 PA	
0290	353024-0204	-		4	EARTH TERMINAL WPE 2,5	
0300	353024-0206	-		1	EARTH TERMINAL, 1010.2	
0310	353032-0004	-		1	END PLATE WAP 2,5-10 BEIGE	
0320	353032-0009	-		1	END PLATE, WAP 16/35	
0330	353032-0013	-		1	END PLATE, 13818.6	
0340	353032-0302	-		1	END PLATE WAP	
0350	353034-0401	-		1	BRIDGE CONNECTOR Q2, 13125.0	
0360	353034-0402	-		1	BRIDGE CONNECTOR Q3, 13126.0	
0370	353034-0404	-		3	BRIDGE CONNECTOR Q10, 13131.0	
0385	353240-0004	-		2	NORMAL WITHOUT INSERT, PG 16	
0390	353240-0005	-		3	NORMAL WITHOUT INSERT, PG 21	
0400	353240-0006	-		4	FöRSKRUVNING PG 29	
0420	353241-0005	-		1	EXTENDED WITHOUT INSERT, PG 13,5	
0430	353241-0007	-		1	EXTENDED WITHOUT INSERT, PG 16/21	
0460	90458-0147	-		1	GLAND, INSERT, MULTI HOLE, 2X6,5	
0470	353249-0051	-		1	INSERT, MULTI HOLE, E154M4X8	
0480	353249-0059	-		1	GLAND, INSERT, MULTI HOLE, 4X8	
0490	353249-0060	-		1	INSERT, MULTI HOLE, E155M2X13	
0500	353249-0084	-		1	INSERT, MULTI HOLE, EK 154M4X7,5	
0550	90077-0113	-		8	FEED THROUGH TERMINAL, 10-00102150-1	
0600	90194-0016	-		1	WARNING SIGN, RISK OF ELECTRIC SHOCK	
0650	90457-0027	-		2	INSERT, MULTI HOLE, E155M1X5/4X9	
0700	90457-0030	-		1	INSERT, MULTI HOLE, EK155M4X9	
0750	90457-0051	-		1	END PLATE	
0820	90458-1136	-		2	TERMINAL BLOCK, 103630	
0830	90458-1906	-		2	GLAND, INSERT, MULTI HOLE, 4X5	
0850	359011-0807	-		2	MARKING PLATES 5-FW 1-50	
0870	359011-0808	-		2	MARKING PLATES 5-FW 51-100	
0900	359011-0818	-		1	SYMBOL 5-GW (-) 50PC	
1000	353249-0304	-		3	SEALING PIN, 6X25	
1010	353249-0308	-		2	SEALING PIN, 8X20	
1020	353249-0309	-		1	SEALING PIN, 9,3X20	
1070	90002-0004	-		1	BLANK-OFF PLUG, PR 22,5 SKINDICHT-BLK16	
1080	90002-0009	-		1	BLANK-OFF PLUG, PR 18.6 SKINDICHT-BLK11	
1090	90002-0010	-		1	BLANK-OFF PLUG, PR 37 SKINDICHT-BLK29	

Machine Type | Group Description | Used-In | Group Number | Page No

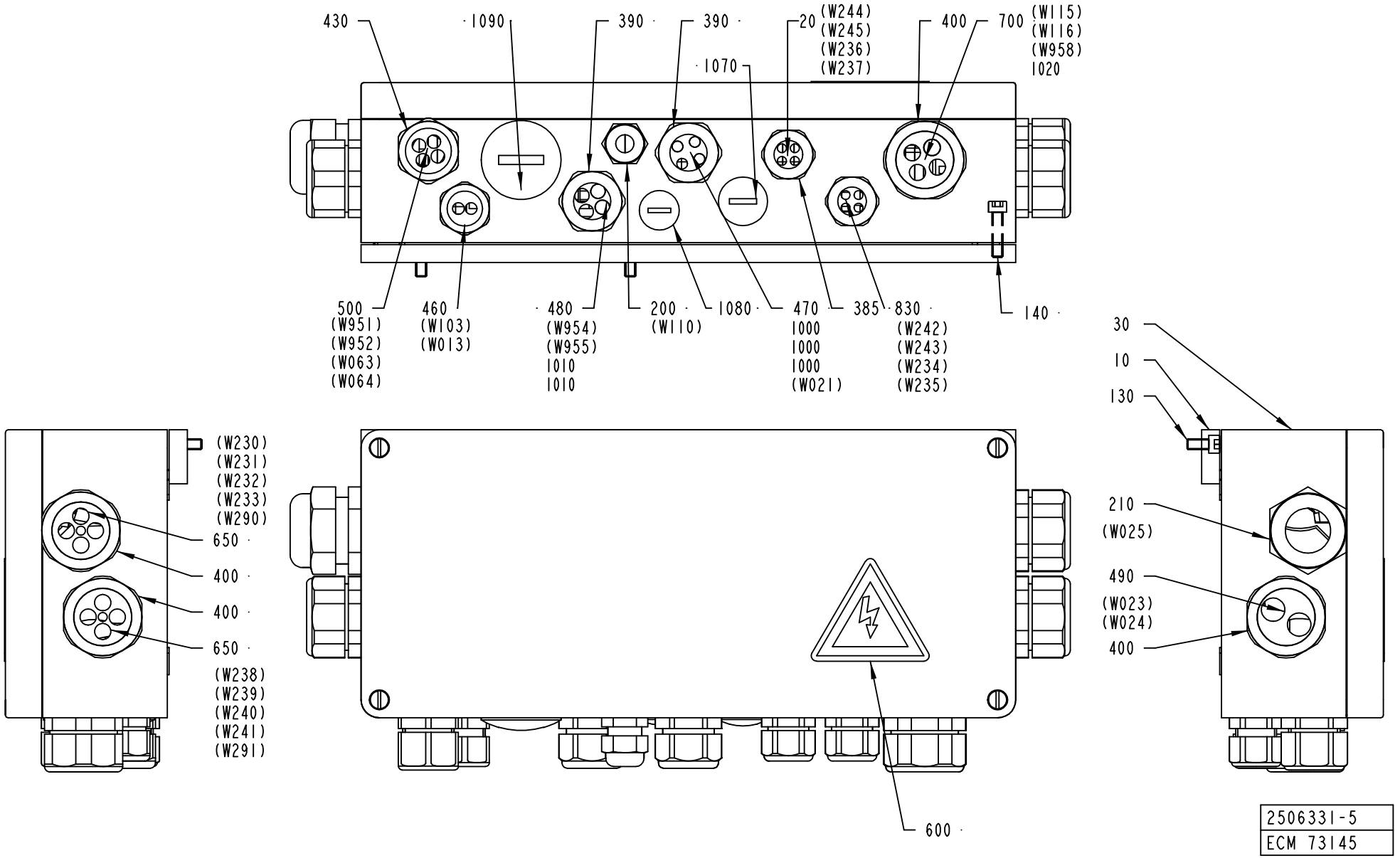

2506331-5
ECM 73145

ECM: 94021 - 20020109
Group number: 2506331-0200
Assembly Drawing: 2506331-5_1_AA

This list covers pages from 422 to 425

Pos	Part No	SP	UN	Qty	Description	Page No
-						
0010	1255874-0000	-		1	SPACER	
0030	2506332-0000	-		1	BOX	
0100	353042-0005	-	MM	340	RAIL TS 35/7.5	
0130	312115-0366	-		2	SCREW ISO4762 M6X12 A4	
0140	312115-0372	-		2	SCREW ISO4762 M6X25 A4	
0170	312125-0364	-		2	SCREW SLOT.PAN HD. MCS 6X10 A480	
0200	352103-0106	-		1	CABLE GLAND, ST 11, PR18,6/PG11	
0210	352103-0121	-		1	CABLE GLAND, ST 29, PR37,0/PG29	
0240	353021-0132	-		20	TERMINALS,TRIPLE-LEVEL, DLD 2,5/PE	
0250	353021-0213	-		1	FEED THROUGH TERMINAL, 10201.0	
0260	353021-0301	-		6	TERMINALS,TRIPLE-LEVEL, DLI 2,5/35 PA	
0270	353021-0302	-		7	TERMINALS,TRIPLE-LEVEL, DLD 2,5/35 PA	
0290	353024-0204	-		4	EARTH TERMINAL WPE 2,5	
0300	353024-0206	-		1	EARTH TERMINAL, 1010.2	
0310	353032-0004	-		1	END PLATE WAP 2,5-10 BEIGE	
0320	353032-0009	-		1	END PLATE, WAP 16/35	
0330	353032-0013	-		1	END PLATE, 13818.6	
0340	353032-0302	-		1	END PLATE WAP	
0350	353034-0401	-		1	BRIDGE CONNECTOR Q2, 13125.0	
0360	353034-0402	-		1	BRIDGE CONNECTOR Q3, 13126.0	
0370	353034-0404	-		3	BRIDGE CONNECTOR Q10, 13131.0	
0385	353240-0004	-		2	NORMAL WITHOUT INSERT, PG 16	
0390	353240-0005	-		3	NORMAL WITHOUT INSERT, PG 21	
0400	353240-0006	-		4	FöRSKRUVNING PG 29	
0420	353241-0005	-		1	EXTENDED WITHOUT INSERT, PG 13,5	
0430	353241-0007	-		1	EXTENDED WITHOUT INSERT, PG 16/21	
0460	90458-0147	-		1	GLAND, INSERT, MULTI HOLE, 2X6,5	
0470	353249-0051	-		1	INSERT, MULTI HOLE, E154M4X8	
0480	353249-0059	-		1	GLAND, INSERT, MULTI HOLE, 4X8	
0490	353249-0060	-		1	INSERT, MULTI HOLE, E155M2X13	
0500	353249-0084	-		1	INSERT, MULTI HOLE, EK 154M4X7,5	
0550	90077-0113	-		8	FEED THROUGH TERMINAL, 10-00102150-1	
0600	90194-0016	-		1	WARNING SIGN, RISK OF ELECTRIC SHOCK	
0650	90457-0027	-		2	INSERT, MULTI HOLE, E155M1X5/4X9	
0700	90457-0030	-		1	INSERT, MULTI HOLE, EK155M4X9	
0750	90457-0051	-		1	END PLATE	
0820	90458-1136	-		2	TERMINAL BLOCK, 103630	
0830	90458-1906	-		2	GLAND, INSERT, MULTI HOLE, 4X5	
0850	359011-0807	-		2	MARKING PLATES 5-FW 1-50	
0870	359011-0808	-		2	MARKING PLATES 5-FW 51-100	
0900	359011-0818	-		1	SYMBOL 5-GW (-) 50PC	
1000	353249-0304	-		3	SEALING PIN, 6X25	
1010	353249-0308	-		2	SEALING PIN, 8X20	
1020	353249-0309	-		1	SEALING PIN, 9,3X20	
1070	90002-0004	-		1	BLANK-OFF PLUG, PR 22,5 SKINDICHT-BLK16	
1080	90002-0009	-		1	BLANK-OFF PLUG, PR 18.6 SKINDICHT-BLK11	
1090	90002-0010	-		1	BLANK-OFF PLUG, PR 37 SKINDICHT-BLK29	

Machine Type | Group Description | Used-In | Group Number | Page No

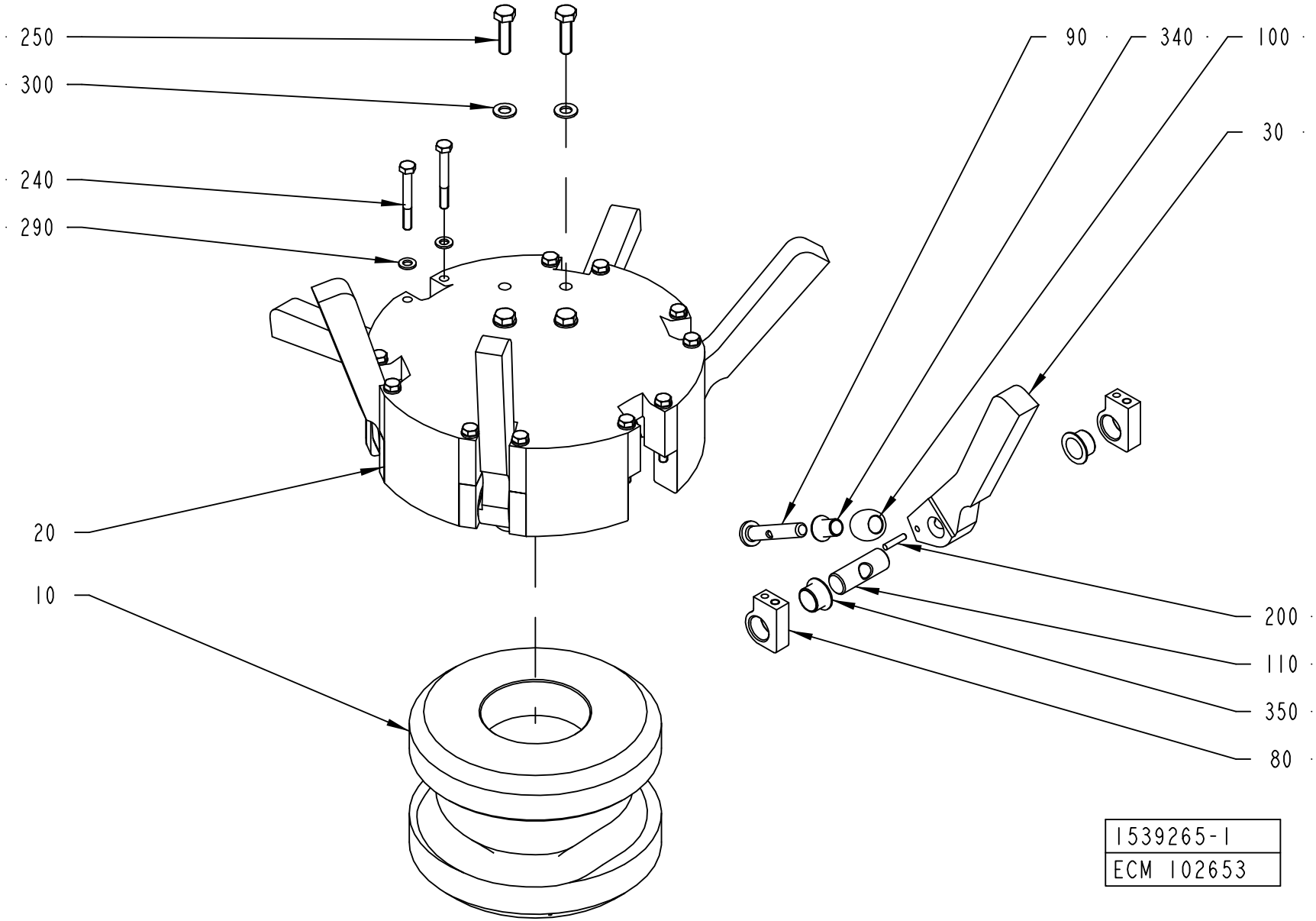
250
300
240
290
20
10
90
340
100
30
200
110
350
80
1539265-1
ECM 102653

ECM: 113965 - 20030113
Group number: 1539265-0100
Assembly Drawing: 1539265-1_1_AA

Pos	Part No	SP	UN	Qty	Description	Page No
TBA 0100B						
030	1549186-0000	A		6	CARRIER	
TBA 0125S						
030	1549184-0000	A		6	CARRIER	
TBA 0160S						
030	2502192-0000	A		6	CARRIER	
TBA 0180B						
030	1549193-0000	A		6	CARRIER	
TBA 0200B						
030	1549183-0000	A		6	CARRIER	
TBA 0200M						
030	1549190-0000	A		6	CARRIER	
TBA 0200S						
030	1549182-0000	A		6	CARRIER	
TBA 0250B						
030	1549187-0000	A		6	CARRIER	
TBA 0250S						
030	1539268-0000	A		6	CARRIER	
TBA 0300S, TBA 0284B						
030	2502194-0000	A		6	CARRIER	
TBA 0330S						
030	1549191-0000	A		6	CARRIER	
Common Parts						
010	1539266-0000	A		1	CAM	
020	1539267-0000	-		1	DRUM	
080	1260065-0000	A		12	BRACKET	
090	1260068-0000	A		6	SHAFT	
100	1260069-0000	A		6	ROLLER	
110	1260070-0000	A		6	SHAFT	
200	311103-0272	A		6	PARALLELL PIN ISO2338 4X20 A1	
240	312105-0380	-		12	SCREW M6S ISO 4014 M6X50 A480	
250	312105-0455	-		4	SCREW M6S ISO 4017 M8X30 A480	
290	315105-0153	-		12	WASHER BRB6,4X12RFR	
300	315105-0165	-		4	WASHER BRB8,4X16RFR	
340	90240-0331	A		6	FLANGE BUSHING, 10X12X17 MM	
350	90240-0332	A		12	FLANGE BUSHING, 16X18X12 MM	

Machine Type | Group Description | Used-In | Group Number | Page No

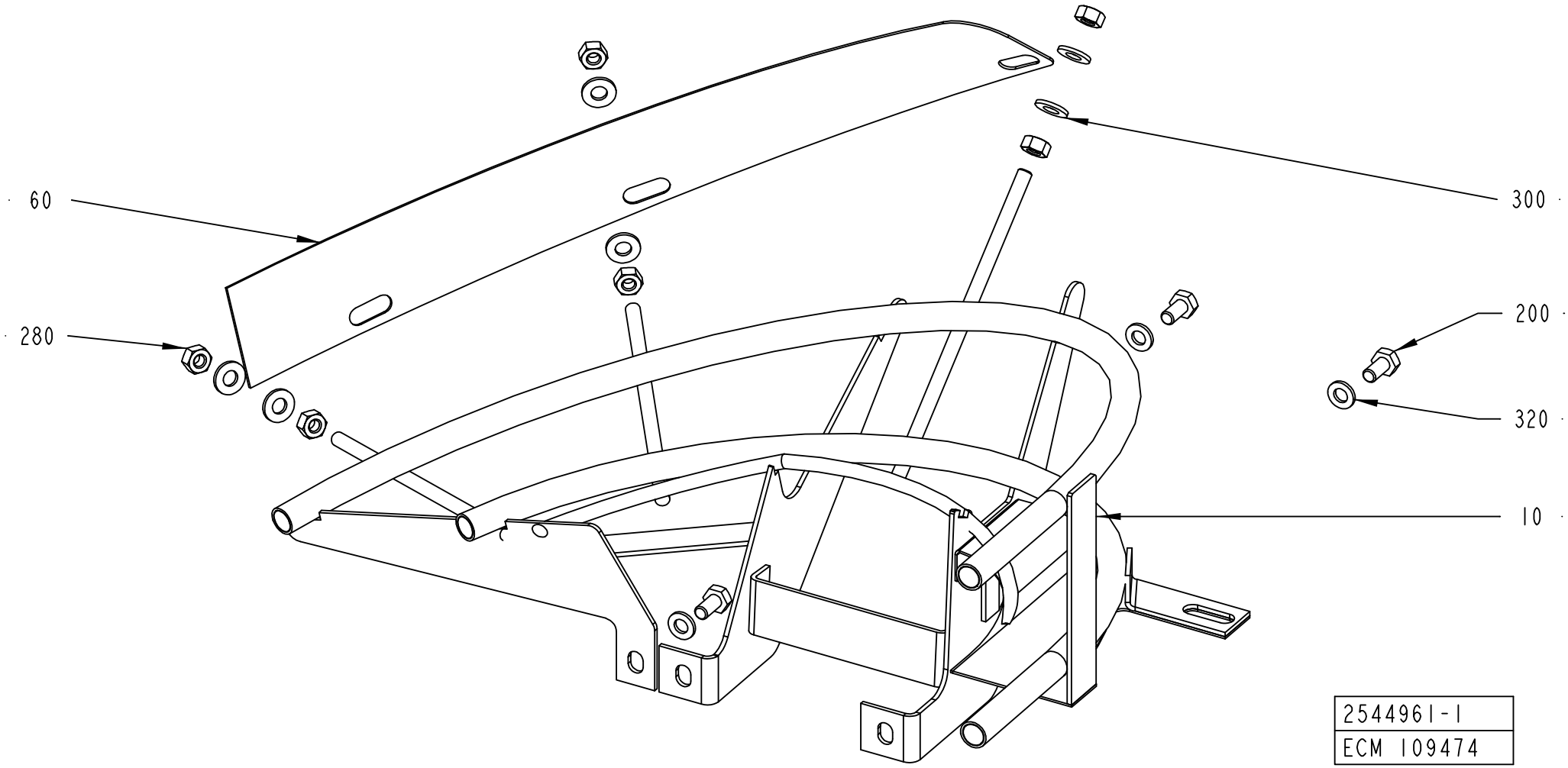
60
280
300
200
320
10
2544961-1
ECM 109474

ECM: 110050 - 20030113
Group number: 2544961-0100
Assembly Drawing: 2544961-1_1_AA

Pos	Part No	SP	UN	Qty	Description	Page No
TBA 0100B						
010	2555564-0000	A		1	GUIDE	
TBA 0125S						
010	2555563-0000	A		1	GUIDE	
TBA 0160S						
010	2555568-0000	A		1	GUIDE	
TBA 0180B						
010	2555567-0000	A		1	GUIDE	
TBA 0200B						
010	2555562-0000	A		1	GUIDE	
TBA 0200M						
010	2555571-0000	-		1	GUIDE	
TBA 0200S						
010	2545667-0000	A		1	GUIDE	
TBA 0250B						
010	2555565-0000	A		1	GUIDE	
TBA 0300S, TBA 0284B						
010	2555569-0000	-		1	GUIDE	
TBA 0330S, TBA 0250S						
010	2555566-0000	A		1	GUIDE	
Common Parts						
060	1539956-0000	B		1	PLATE	
200	312105-0366	-		3	SCREW M6S M6X12 A280	
280	312605-0316	-		6	HEXAGON NUT, M6M M6 A280	
300	315105-0156	-		6	WASHER BRB 6.7X14 RFR	
320	315105-0153	-		3	WASHER BRB6,4X12RFR	

Pos	Part No	SP	UN	Qty	Description	Page No

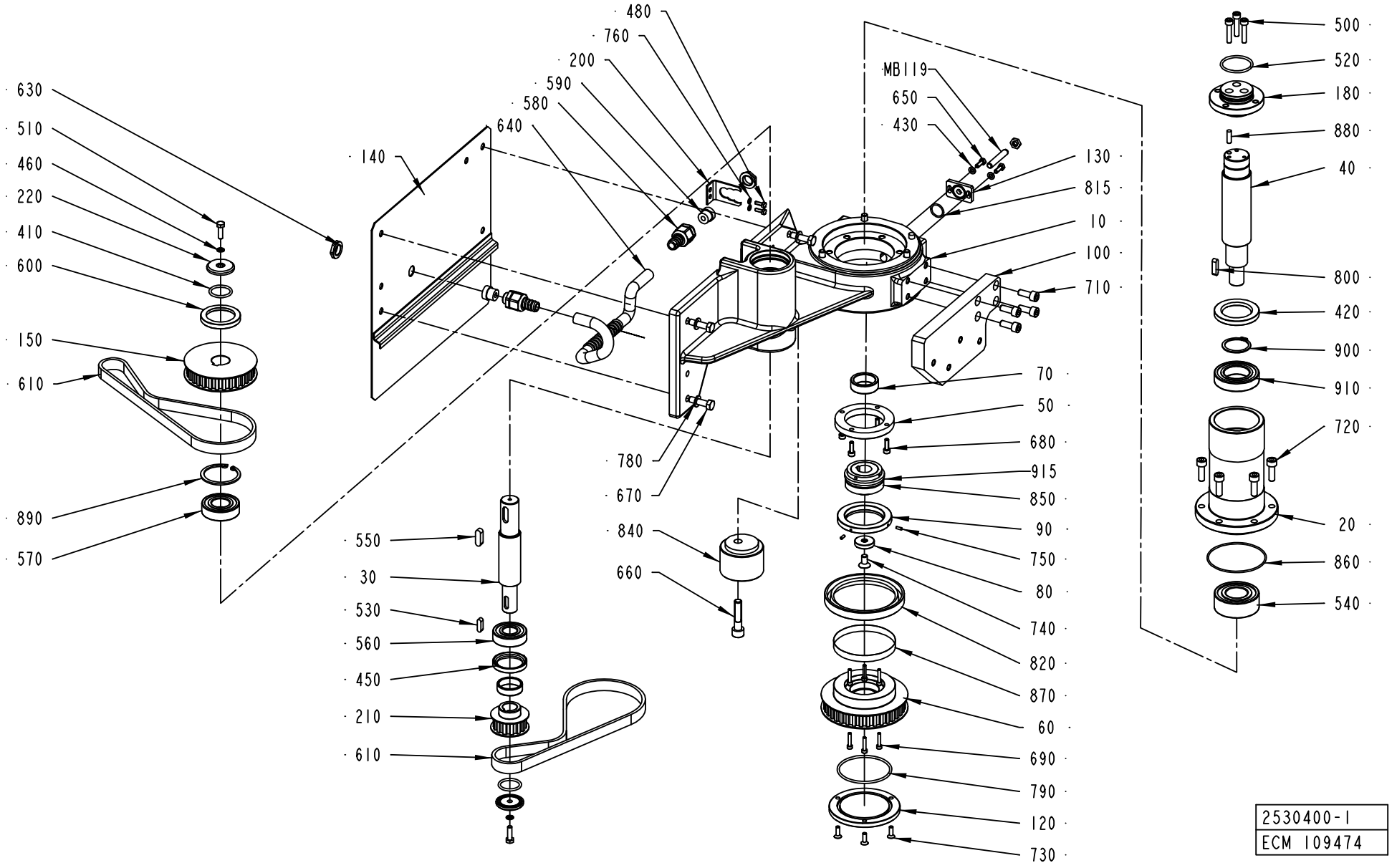
480
760
200
590
580
640
140
630
510
460
220
410
600
150
610
890
570
MB119
650
430
130
815
10
100
710
500
520
180
880
40
800
420
900
910
720
20
860
540
70
50
680
915
850
90
750
80
740
820
870
60
690
790
120
730
780
670
840
660
550
30
530
560
450
210
610
2530400-1
ECM 109474

ECM: 117952 - 50001231
Group number: 2530400-0100
Assembly Drawing: 2530400-1_1_AA

Pos	Part No	SP	UN	Qty	Description	Page No
-						
010	2544957-0000	-		1	AXLE SUPPORT	
020	2544958-0000	-		1	BEARING FLANGE	
030	2544962-0000	-		1	SHAFT	
040	2544963-0000	-		1	SHAFT	
050	2544964-0000	-		1	FLANGE	
060	2544965-0000	A		1	TOOTHED PULLEY	
070	2544968-0000	-		1	INNER RING	
080	2544969-0000	-		1	SPACER	
090	2544970-0000	-		1	FLANGE	
100	2544971-0000	-		1	BRACKET	
120	2544973-0000	-		1	CUP	
130	2544974-0000	-		1	BLANK PLUG	
140	2544975-0000	-		1	SHEET	
150	1539260-0000	A		1	TOOTHED PULLEY	
180	2559122-0000	-		1	FLANGE	
200	977527-0000	-		1	BRACKET	
210	1539256-0000	A		1	TOOTHED PULLEY	
220	1539261-0000	-		3	WASHER	
410	315202-0218	B		3	O-RING 26,2X3 MM	
420	315221-0185	B		1	RADIAL SEAL 40X62X7 MM	
430	315105-0146	-		2	BRICKA BRB5,3X10RFR	
450	315221-0175	B		1	RADIAL SEAL 35X47X7 MM	
460	315211-0103	-		2	SEAL WASHER,NBR90/SS. 6,7X10X1 MM M6	
480	312105-0291	-		2	SCREW M6S ISO 4017 M4X12 A480	
500	312115-0374	-		1	SCREW ISO4762 M6X30 A4	
510	312105-0370	-		2	SCREW M6S ISO 4017 M6X20 A480	
520	315202-0223	B		1	O-RING 39,2X3 MM	
530	315705-0232	-		1	PARALLEL KEY W. ROUND ENDS 6X6X20 MM	
540	321330-0106	A		1	ANG. BALL BEAR, 30X62X23,8 MM	
550	315705-0265	-		1	PARALLEL KEY W. ROUND ENDS 8X7X25 MM	
560	321309-0104	A		1	BALL BEARING, 20X47X14 MM	
570	321309-0105	A		1	BALL BEARING, 25X52X15 MM	
580	90458-0427	-		2	EXTENDED WITHOUT INSERT, M16X1,5	
590	353249-0008	-		2	INSERT, SINGEL HOLE, EK 152/7	
600	90091-0305	-		1	RADIAL SEAL 40X55X7 MM DUST LIP	
610	90417-0292	A		2	TIMING BELT T10X690X16 POLYURETHANE	
630	90458-0322	-		2	NUT, M16X1,5	
640	90152-0058	-	M	1	SPIRAL CONDUIT, 15X9, UL 0909	
650	312105-0328	-		2	SCREW M6S ISO 4017 M5X14 A480	
660	312115-0500	-		1	SCREW ISO4762 M10X45 A4	
670	312105-0455	-		4	SCREW M6S ISO 4017 M8X30 A480	
680	312115-0329	-		4	SCREW ISO4762 M5X16 A4	
690	312115-0295	-		6	SCREW ISO4762 M4X20 A4	
700	312115-0374	-		2	SCREW ISO4762 M6X30 A4	
710	312155-0451	-		4	SCREW EN 10642 MF6S M8X20 A480	
720	312115-0453	-		9	SCREW ISO4762 M8X25 A4	
730	312155-0329	-		3	SCREW EN 10642 MF6S M5X16 A480	
740	312155-0449	-		1	SCREW EN 10642 MF6S M8X16 A480	
750	312318-0222	-		2	SCREW ISO4029 M3X8 A4	
760	315101-0136	-		2	BRICKA BRB, 4,3/8 H=0,8	
780	315105-0165	-		4	WASHER BRB8,4X16RFR	
790	315202-0305	B		1	O-RING 69,5X3 MM	
800	315701-0234	-		1	PARALLEL KEY W. ROUND ENDS 6X6X25 MM	
815	315205-0705	B		1	O-RING 17,17X1,78 MM	
820	90091-0233	B		1	RADIAL SEAL 85X110X12 MM DUST LIP	
840	90458-0220	-		1	TENSION ROLLER, M40/60-0-M EXCENTRIC	
850	90459-0737	A		1	SAFETY CLUTCH, SK1 15/D/20/5-20	
860	90459-0765	B		1	O-RING 78X2 MM	
870	90459-0766	-		1	SLEEVE, CR 99334	
880	311103-0353	-		1	PARALLELL PIN ISO2338 6X20 A1	
890	315753-0132	-		1	RETAINING RING FOR HOLE, 52X2 MM	
900	315751-0124	-		1	RETAINING RING FOR SHAFT, 35X1,5 MM	
910	321306-0107	B		1	BALL BEARING, 35X62X14 MM	
915	90296-0070	-	KG		GREASE	
MB119	90044-0117	A		1	PROX.SW. IX 0208	

Machine Type | Group Description | Used-In | Group Number | Page No

Tetra Pak

SPC
Spare Parts Catalogue

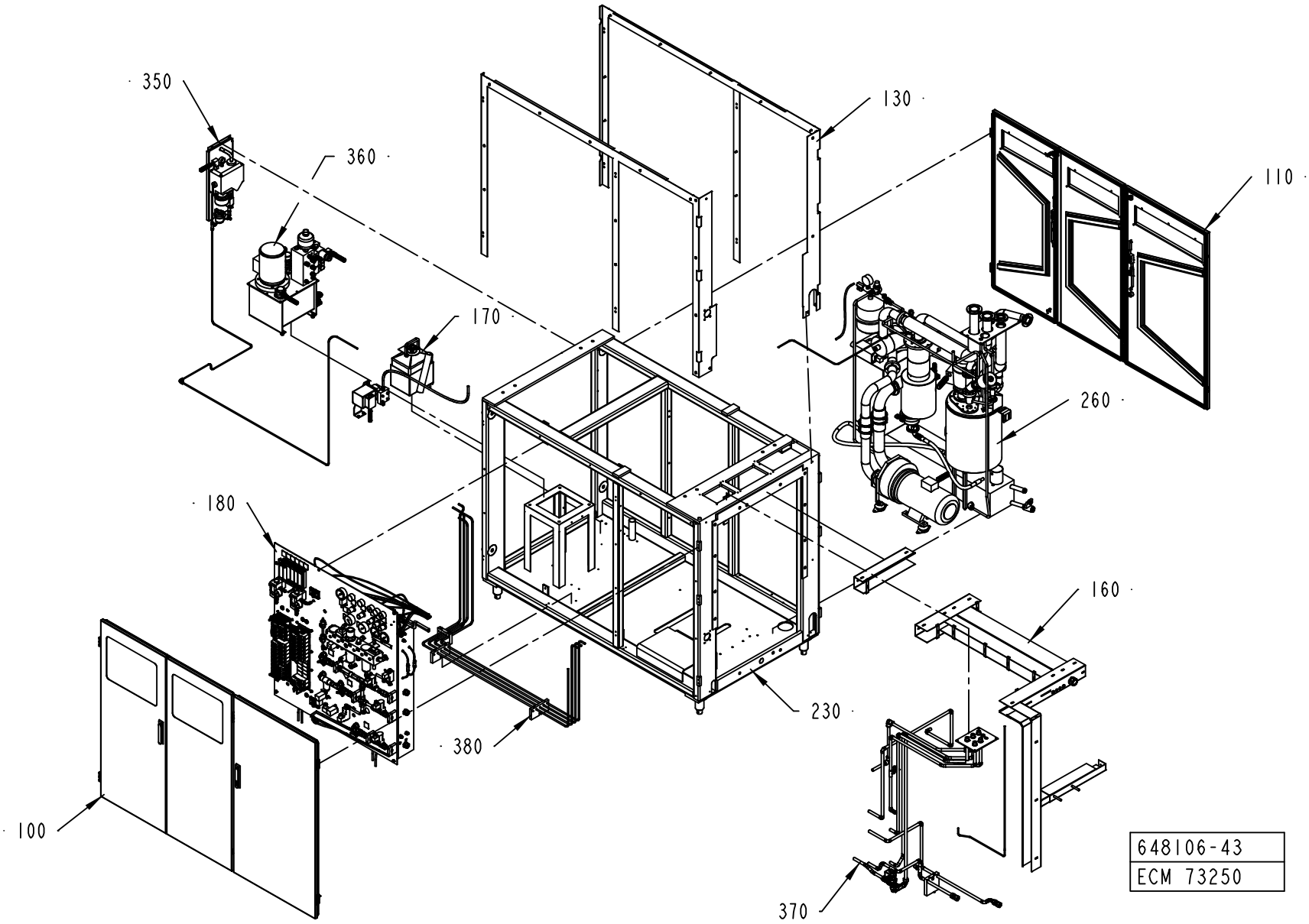
350
360
130
110
170
260
180
160
230
380
100
370
648106-43
ECM 73250

ECM: 73250 - 20011221
Group number: 648106-1200
Assembly Drawing: 648106-43_1_AA

Pos	Part No	SP	UN	Qty	Description	Page No
-						
100	1350529-0100	-		1	DOORS LEFT SIDE	**437**
110	1350531-0100	-		1	DOORS RIGHT SIDE	**439**
130	979215-0200	-		1	COVER PLATE	**441**
160	1524319-0100	-		1	CABLE DUCT	**443**
170	490761-0200	-		1	DETERGENT PUMP	**445**
180	1349029-0100	-		1	VALVE PANEL	**447, 449, 451**
230	979216-0200	-		1	MACHINE BODY	**483**
260	978834-0200	-		1	PEROXID AND STERILESYSTEM	**485**
350	978823-0200	-		1	CENTRAL LUBRICATION	**511**
360	1512304-0100	-		1	HYDRAULIC SYSTEM	**513, 515**
370	1350184-0100	-		1	PIPE WORK,AIR WATER	**517**
380	1519663-0100	-		1	PIPE WORK-HYDRAULIC	**519**
600	469384-0100	-		1	START-UP KIT	**521**

Pos	Part No	SP	UN	Qty	Description	Page No

Machine Type | Group Description | Used-In | Group Number | Page No

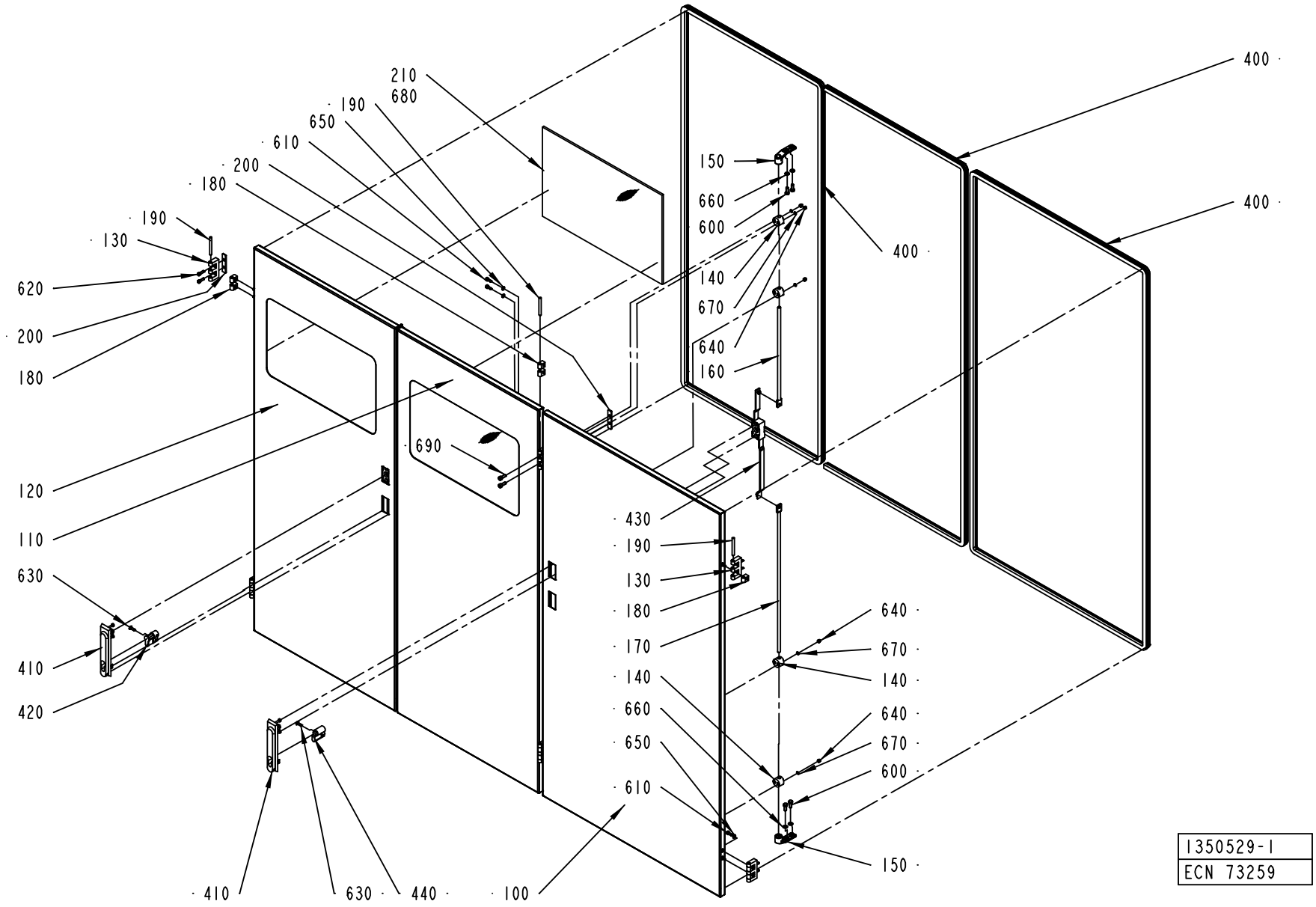
210
680
190
650
610
200
180
190
130
620
200
180
120
110
630
410
420
690
150
660
600
140
670
640
160
400
400
400
430
190
130
180
170
140
660
650
610
640
670
140
640
670
600
150
410
630
440
100
1350529-1
ECN 73259

ECM: 106562 - 20020313
Group number: 1350529-0100
Assembly Drawing: 1350529-1_1_AA

Pos	Part No	SP	UN	Qty	Description	Page No
-						
100	1512826-0000	-		1	DOOR	
110	1512827-0000	-		1	DOOR	
120	1512828-0000	-		1	DOOR	
130	1035792-0000	-		6	E-HINGE	
140	1129274-0000	-		8	GUIDE LUG	
150	1538868-0000	-		4	BRACKET	
160	1511613-0000	-		2	LOCKING ARM	
170	1511614-0000	-		2	LOCKING ARM	
180	1035794-0000	-		11	BLOCKING PIECE	
190	988685-0000	-		6	PIN	
200	1517182-0000	-		4	SPACER	
210	2517063-0000	-		2	GLASS PANE	
400	90143-0068	-	M	9	RUBBERSTRIP EMKA 1011-06	
410	90237-0175	-		2	TURNING HANDLE	
420	90237-0128	-		1	LOCK CYLINDER, 1109-U3	
430	90237-0153	-		2	LOCK HOUSING, 1121-U26-0B	
440	90237-0129	-		1	LOCK CYLINDER, 1109-U2	
600	312105-0368	-		8	SCREW M6S M6X16 A280	
610	312115-0327	-		11	SCREW ISO4762 M5X12 A4	
620	312115-0329	-		8	SCREW ISO4762 M5X16 A4	
630	312155-0329	-		2	SCREW EN 10642 MF6S M5X16 A480	
640	312705-0312	-		16	NUT HEX. DOMED CAP MHM-6 M4 A280	
650	315105-0146	-		11	WASHER ISO 7089-5-200 HV-A4	
660	315105-0153	-		8	WASHER ISO 7089-6-200 HV-A4	
670	315105-0136	-		16	WASHER ISO 7089-4-200 HV-A4	
680	90157-0041	-	ML	50	SEALING COMPOUND	
690	312115-0368	-		4	SCREW ISO4762 M6X16 A4	

Pos	Part No	SP	UN	Qty	Description	Page No

Machine Type	Group Description	Used-In	Group Number	Page No

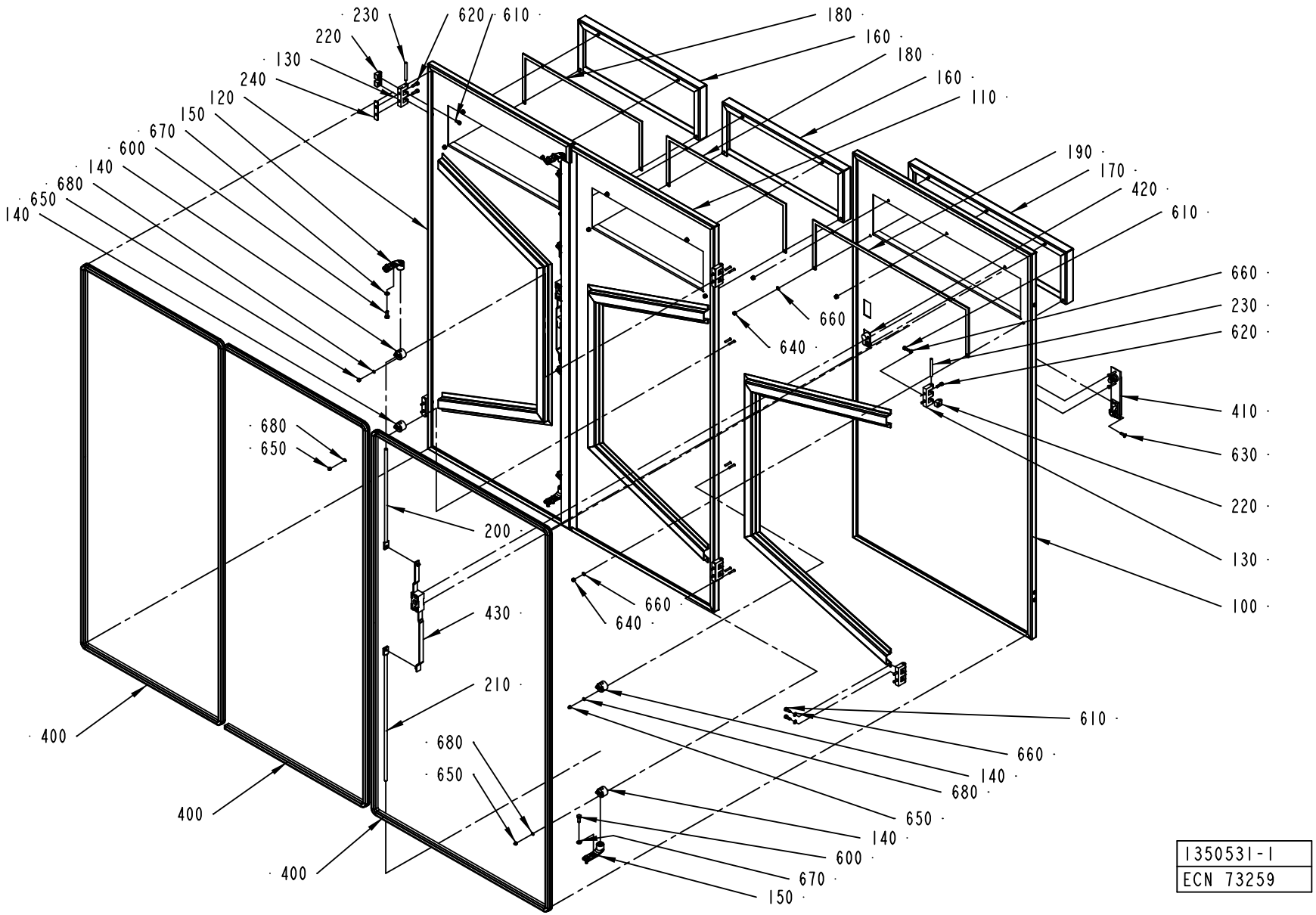
230
620
610
220
130
240
120
150
670
600
140
680
650
140
180
160
180
160
110
190
170
420
610
660
230
620
660
640
410
630
220
130
100
680
650
200
430
660
640
210
400
680
650
400
400
610
660
140
680
650
140
600
670
150
1350531-1
ECN 73259

ECM: 106563 - 20020313
Group number: 1350531-0100
Assembly Drawing: 1350531-1_1_AA

Pos	Part No	SP	UN	Qty	Description	Page No
-						
100	1512829-0000	-		1	DOOR	
110	1512830-0000	-		1	DOOR	
120	1512831-0000	-		1	DOOR	
130	1035792-0000	-		6	E-HINGE	
140	1129274-0000	-		8	GUIDE LUG	
150	1538868-0000	-		4	BRACKET	
160	1511609-0000	-		2	COVER	
170	1511610-0000	-		1	COVER	
180	1511611-0000	-		2	GASKET	
190	1511612-0000	-		1	GASKET	
200	1511613-0000	-		2	LOCKING ARM	
210	1511681-0000	-		2	LOCKING ARM	
220	1035794-0000	-		11	BLOCKING PIECE	
230	988685-0000	-		6	PIN	
240	1517182-0000	-		4	SPACER	
400	90143-0068	-	M	9	RUBBERSTRIP EMKA 1011-06	
410	90237-0175	-		2	TURNING HANDLE	
420	90237-0128	-		2	LOCK CYLINDER, 1109-U3	
430	90237-0153	-		2	LOCK HOUSING, 1121-U26-0B	
600	312105-0368	-		8	SCREW M6S M6X16 A280	
610	312115-0327	-		11	SCREW ISO4762 M5X12 A4	
620	312115-0329	-		12	SCREW ISO4762 M5X16 A4	
630	312155-0329	-		2	SCREW EN 10642 MF6S M5X16 A480	
640	312605-0314	-		13	HEXAGON NUT, M6M M5 A280	
650	312705-0312	-		16	NUT HEX. DOMED CAP MHM-6 M4 A280	
660	315105-0146	-		24	WASHER ISO 7089-5-200 HV-A4	
670	315105-0153	-		8	WASHER ISO 7089-6-200 HV-A4	
680	315105-0136	-		16	WASHER ISO 7089-4-200 HV-A4	

Pos	Part No	SP	UN	Qty	Description	Page No

Machine Type | Group Description | Used-In | Group Number | Page No

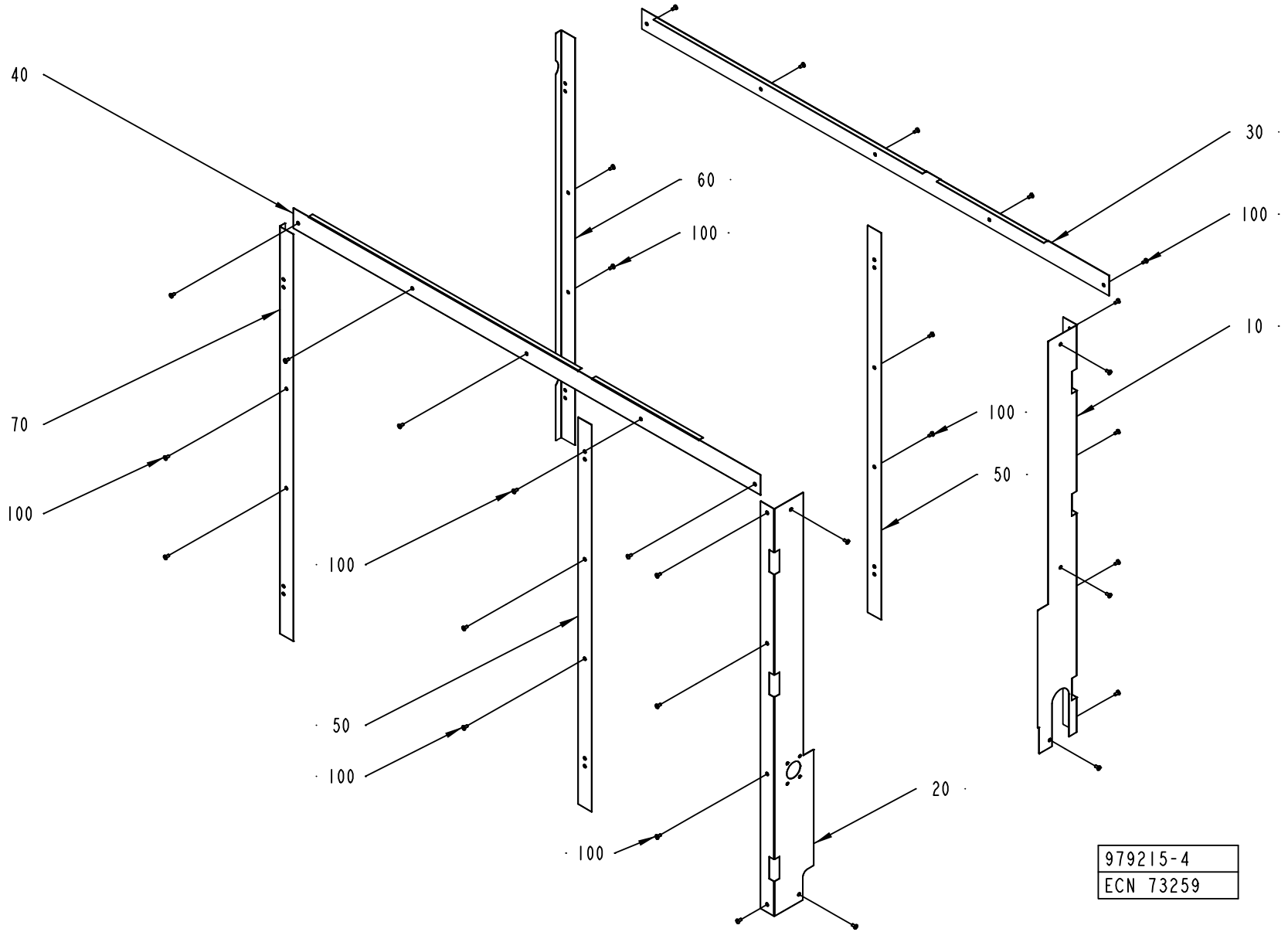
40
60
100
30
100
10
70
100
100
100
50
100
50
100
100
20
979215-4
ECN 73259

ECM: 73259 - 20011025
Group number: 979215-0200
Assembly Drawing: 979215-4_1_AA

Pos	Part No	SP	UN	Qty	Description	Page No
-						
10	1538089-0000	-		1	PLATE	
100	90287-0075	-		31	SCREW SLOT. PAN HEAD LKCS M6X12	
20	1517072-0000	-		1	PLATE	
30	1517073-0000	-		1	PLATE	
40	1517074-0000	-		1	PLATE	
50	1517075-0000	-		2	PLATE	
60	1517076-0000	-		1	PLATE	
70	1517077-0000	-		1	PLATE	

Pos	Part No	SP	UN	Qty	Description	Page No

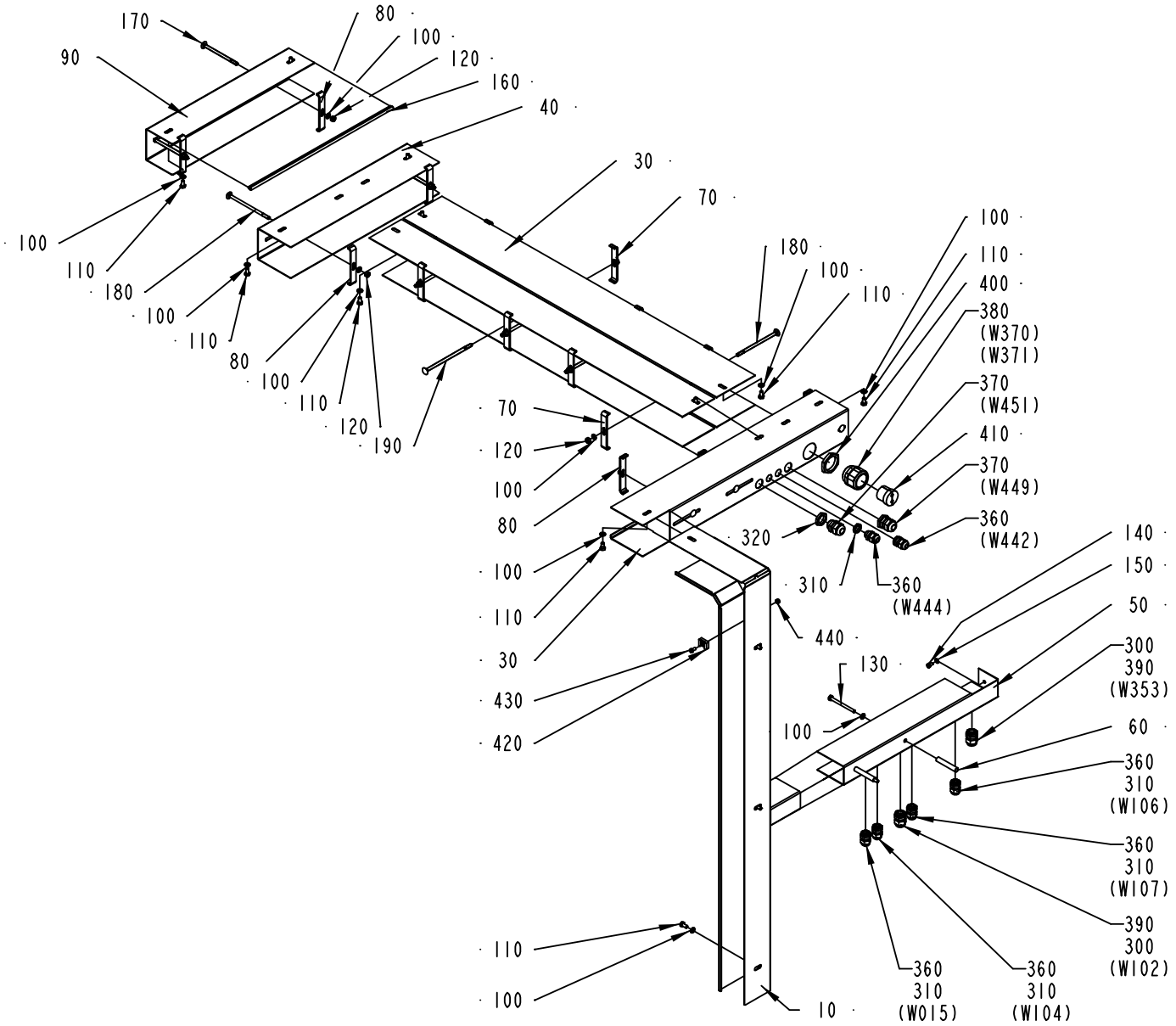

1524319-1
ECM 73260

ECM: 73260 - 20011220
Group number: 1524319-0100
Assembly Drawing: 1524319-1_1_AA

Pos	Part No	SP	UN	Qty	Description	Page No
-						
010	1519758-0000	-		1	CABLE DUCT	
020	1519760-0000	-		1	CABLE DUCT	
030	1519761-0000	-		1	CABLE DUCT	
040	1519762-0000	-		1	CABLE DUCT	
050	1519759-0000	-		1	CABLE DUCT	
060	1519764-0000	-		2	SPACER	
070	1519765-0001	-		8	SUPPORT	
080	1519765-0002	-		7	SUPPORT	
090	1519763-0000	-		1	CABLE DUCT	
100	315105-0153	-		30	WASHER ISO 7089-6-200 HV-A4	
110	312105-0366	-		13	SCREW M6S M6X12 A280	
120	312605-0316	-		15	HEXAGON NUT, M6M M6 A280	
130	312105-0384	-		2	SCREW M6S ISO 4014 M6X70 A480	
140	312105-0323	-		2	SKRUV M6S ISO 4017 M5X8 A480	
150	315105-0146	-		2	WASHER ISO 7089-5-200 HV-A4	
160	90143-0060	-	M	12	EDGE STRIP 9,5X6,3MM BLACK PVC	
170	90457-0148	-		2	SCREW CAP HEAD SQ. NECK M6X100 SS	
180	90458-1612	-		9	SCREW CAP HEAD SQ. NECK M6X120 SS	
190	90458-1613	-		4	SCREW CAP HEAD SQ. NECK M6X140 SS	
300	90099-0002	-		2	NUT PR 18,6 BRASS	
310	90099-0001	-		6	MUTTER PR 15,2 MäSSING	
320	90099-0087	-		2	NUT PR=20,4	
360	352103-0101	-		6	KABELFöRSKR. ST 9, PR15,2/PG9	
370	352103-0108	-		2	CABLE GLAND, ST 13,5 , PR20,4/PG13,5	
380	353240-0006	-		1	FöRSKRUVNING, PG 29	
390	352103-0106	-		2	CABLE GLAND, ST 11, PR18,6/PG11	
400	90099-0011	-		1	NUT PR 37 BRASS	
410	2504449-0000	-		1	INSERT	
420	352113-0204	-		5	ANCHOR PLATES FOR STRIPS, TYPE TM3S25-M	
430	312125-0325	-		5	SCREW SLOT.PAN HD. MCS 5X10 A480	
440	312605-0314	-		5	HEXAGON NUT, M6M M5 A280	

Pos	Part No	SP	UN	Qty	Description	Page No

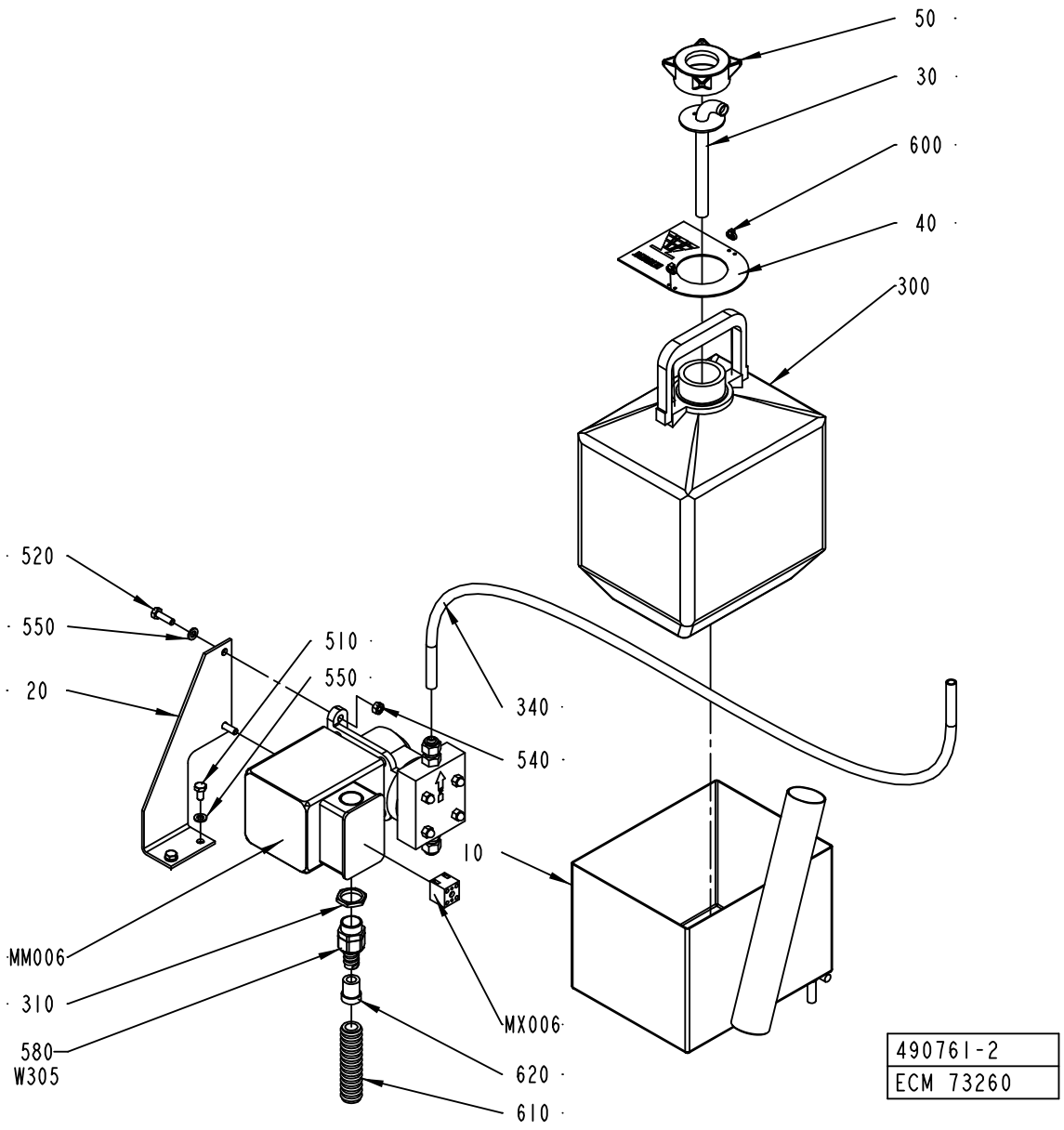
50
30
600
40
300
520
550
20
510
550
340
540
10
MM006
310
580
W305
MX006
620
610
490761-2
ECM 73260

ECM: 106564 - 20020313
Group number: 490761-0200
Assembly Drawing: 490761-2_1_AA

Pos	Part No	SP	UN	Qty	Description	Page No
-						
010	490768-0000	-		1	BOX	
020	490769-0000	-		1	BRACKET	
030	979217-0000	-		1	PIPE	
040	295387-0000	-		1	SIGN BOARD	
050	35962-0000	-		1	LID	
300	90050-0011	-		1	BOTTLE	
310	90099-0003	-		1	NUT	
340	90166-0008	-	CM	200	HOSE 7/10 PVC TRANSP.	
510	312105-0366	-		2	SCREW M6S M6X12 A280	
520	312105-0370	-		2	SCREW M6S ISO 4017 M6X20 A480	
540	312605-0316	-		2	HEXAGON NUT, M6M M6 A280	
550	315105-0153	-		4	WASHER ISO 7089-6-200 HV-A4	
580	353242-0001	-		1	NORMAL WITHOUT INSERT, PG13,5	
600	352113-0101	-		2	CLIP STRIP, 92X2,5 MM	
610	90152-0059	-	MM	2500	SPIRAL CONDUIT, 18X12, UL 1211	
620	353249-0065	-		1	INSERT, SINGEL HOLE, E152/09	
MM006	90321-0037	B		1	PUMP C-6125P EP 220V;50HZ	
	90321-0396	*C*		*1*	*FILTER*	
	90321-0380	*C*		*1*	*DIAPHRAGM*	
	90166-0157	*C*	*MM*	*1500*	*HOSE*	
MX006	90195-0020	B		1	TERMINAL BLOCK, 1977.2	
W305	351150-0412	-	M	4	CABLE OLFLEX 3X1,5 MM2 LIGHT/GREY	

Pos	Part No	SP	UN	Qty	Description	Page No

Machine Type	Group Description	Used-In	Group Number	Page No

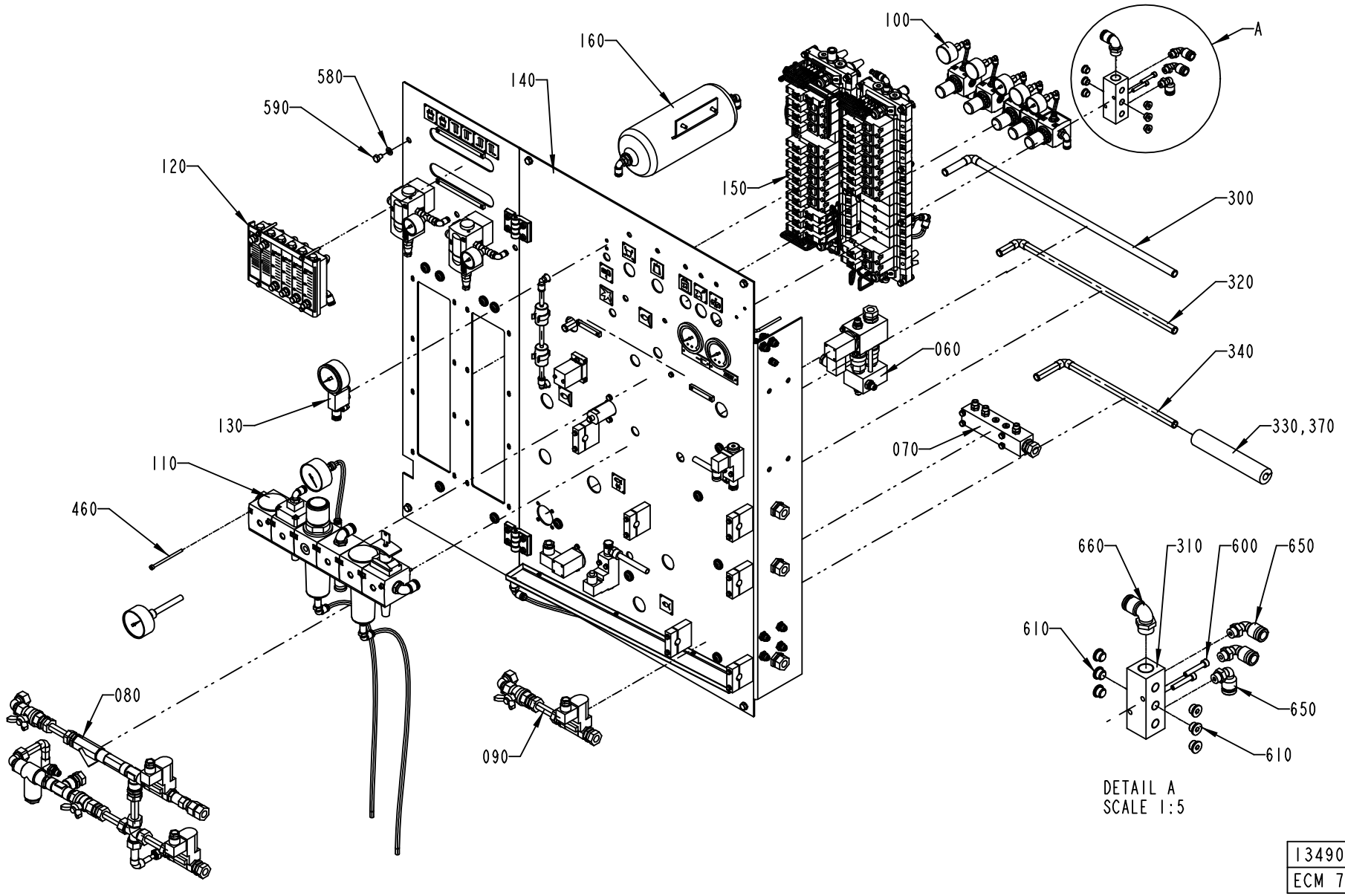

1349029-1
ECM 73251

ECM: 106552 - 20020313
Group number: 1349029-0100
Assembly Drawing: 1349029-1_1_AA

This list covers pages from 446 to 451

Pos	Part No	SP	UN	Qty	Description	Page No
-						
010	580993-0000	-		1	WATER DIAGRAM	
020	1348964-0000	-		1	AIR DIAGRAM	
060	456757-0300	-		1	AIR INJECTOR	**453**
070	469121-0400	-		1	JUNCTION BLOCK	**457**
080	577824-0200	-		1	COOL WATER VALVE	**459**
090	577825-0200	-		1	HOT WATER VALVE	**461**
100	577822-0200	-		1	PRESSURE REGULATOR GROUP	**463**
110	1348237-0100	-		1	AIR INLET GROUP	**465**
120	1349090-0100	-		1	FLOW METER	**467**
130	1349091-0100	-		1	GAUGE GROUP	**469**
140	1349094-0100	-		1	VALVE PLATE	**471, 473**
150	1478717-0100	-		1	VALVE GROUP	**475, 477, 479**
160	929415-0100	-		1	BALANCE TANK	**481**
290	342946-0122	-		1	T-COUPLING,UNION 8/6	
300	2517051-0000	-		1	PIPE	
310	90458-0281	-		1	DISTRIBUTOR 8933502114	
320	577832-0000	-		1	PIPE	
330	456137-0000	-		1	HOSE	
340	576293-0000	-		1	PIPE	
350	342735-0110	-		1	ELBOW PIPE	
360	90055-0118	-		2	ELBOW PIPE JOINT -8MM	
370	90153-0035	-		1	ADHESIVE, CLIMAFLEX 1632864	
380	90166-0013	-	M	38	TUBE 8 MM PA BLUE	
390	90166-0196	-	CM	500	TUBE 14 MM PA BLUE	
400	90166-0068	-	M	3	TUBE 12 MM PA BLUE	
410	90166-0081	-	M	154	TUBE 6 MM PA BLUE	
420	90166-0118	-	M	9	TUBE 8 MM PA BLACK	
430	90166-0119	-	M	3	HOSE PUR 4/6 BLACK	
440	90230-0062	B		2	NON RETURN VALVE, 6, OP. PRESS. 0,2 BAR	
450	90235-0151	B		1	NON-RETURN VALVE	
460	90287-0212	-		4	SCREW MC6S M5X85 129	
470	90055-0101	-		3	Y-CONNECTION, 8-8	
580	315105-0165	-		6	WASHER ISO 7089-8-200 HV-A4	
590	312105-0447	-		6	SCREW M6S ISO 4017 M8X12 A480	
600	312115-0376	-		2	SCREW ISO4762 M6X35 A4	
610	342713-0210	-		6	PLUG, EXT THREAD HEX SOCKET 8638-00-140	
620	342716-0203	-		4	REDUCER 6-8	
630	342716-0209	-		3	REDUCER 8-12	
640	342722-0205	-		1	STRAIGHT COUPLING D=8-G1/4"	
650	342732-0109	-		3	ELBOW PIPE JOINT, EXT.THREAD, D=1MM-G1/4	
660	342732-0161	-		1	ELBOW PIPE JOINT,EXT.THREAD,D=14 MM-G1/2	
670	342735-0102	-		2	ELBOW PIPE JOINT	
680	342735-0103	-		2	ELBOW PIPE JOINT	
690	342735-0109	-		9	ELBOW PIPE JOINT	
700	342742-0104	-		1	T-COUPLING,ADJUST,F.PLASTIC TUBE 8-G1/4"	
710	342748-0102	-		3	T-CONNECTION 6MM	
720	342748-0103	-		4	T-CONNECTION 8MM	
730	342748-0109	-		5	T-CONNECTION 12MM	
740	342946-0112	-		2	T-COUPLING,UNION 6/4	
750	352113-0104	-		15	CLIP STRIP, 300X4,8 MM	
760	359000-0400	-		78	MARKING CO2/4"0"	
770	359000-0401	-		59	MARKING COLLAR 2/4 "1" YELLOW	
780	359000-0402	-		44	MARKING COLLAR 2/4 "2" YELLOW	
790	359000-0403	-		13	MARKING COLLAR PA2/4 "3" YELLOW	
800	359000-0404	-		18	MARKING COLLAR PA2/4 "4" YELLOW	
810	359000-0405	-		22	MARKING CO2/4"5"	
820	359000-0406	-		20	MARKING COLLAR PA2/4 "6" YELLOW	
830	359000-0407	-		16	MARKING COLLAR PA2/4 "7" YELLOW	
840	359000-0408	-		6	MARKING COLLAR PA2/4 "8" YELLOW	
850	359000-0409	-		11	MARKING COLLAR PA2/4 "9" YELLOW	
860	359000-0771	-		27	MARKING CO2/4"V"	

Machine Type | Group Description | Used-In | Group Number | Page No

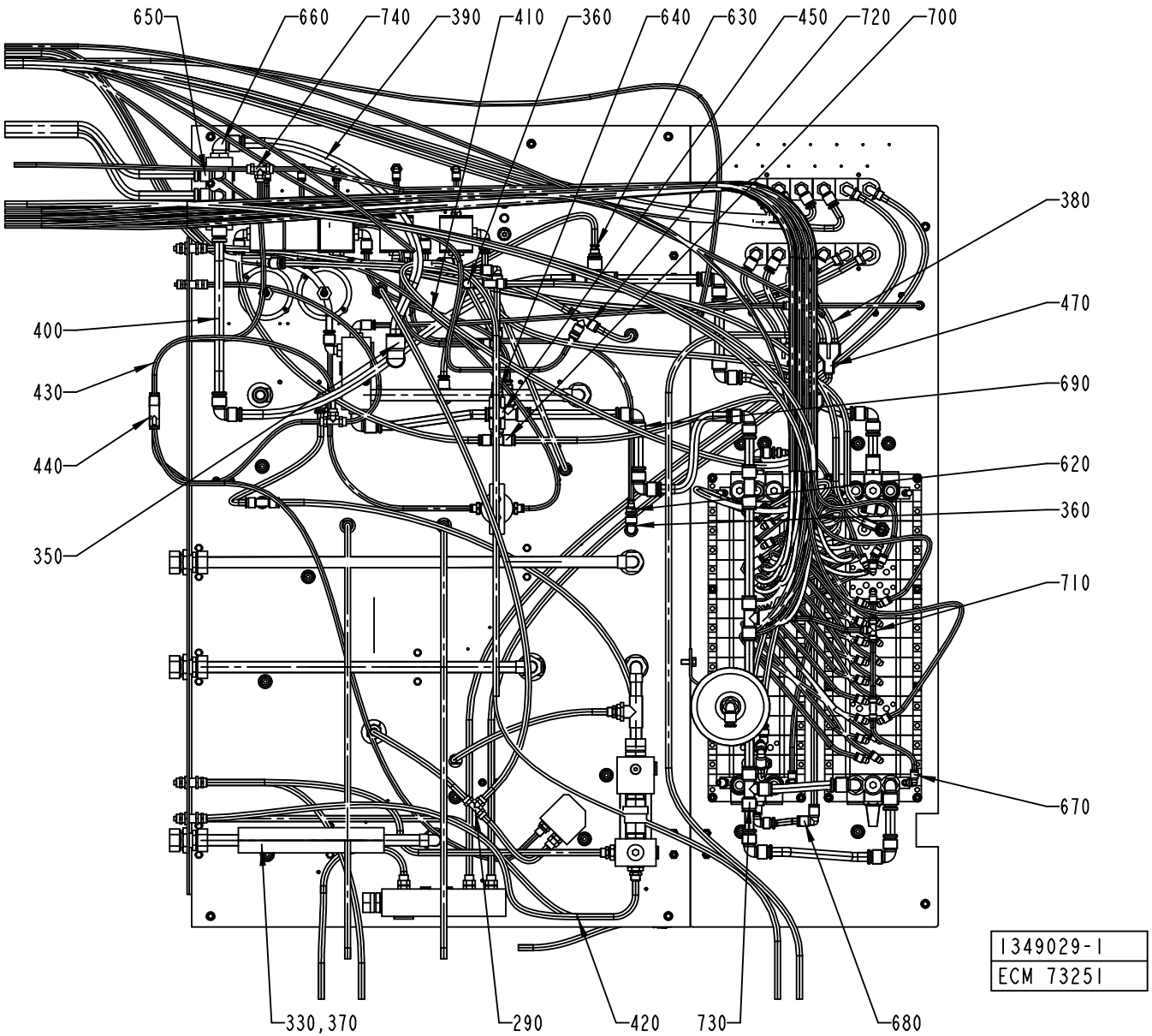
650
660
740
390
410
360
640
630
450
720
700
380
470
690
620
360
710
670
400
430
440
350
330,370
290
420
730
680
1349029-1
ECM 73251

ECM: 106552 - 20020313
Group number: 1349029-0100
Assembly Drawing: 1349029-1_2_AA

This list covers pages from 446 to 451

Pos	Part No	SP	UN	Qty	Description	Page No
-						
010	580993-0000	-		1	WATER DIAGRAM	
020	1348964-0000	-		1	AIR DIAGRAM	
060	456757-0300	-		1	AIR INJECTOR	**453**
070	469121-0400	-		1	JUNCTION BLOCK	**457**
080	577824-0200	-		1	COOL WATER VALVE	**459**
090	577825-0200	-		1	HOT WATER VALVE	**461**
100	577822-0200	-		1	PRESSURE REGULATOR GROUP	**463**
110	1348237-0100	-		1	AIR INLET GROUP	**465**
120	1349090-0100	-		1	FLOW METER	**467**
130	1349091-0100	-		1	GAUGE GROUP	**469**
140	1349094-0100	-		1	VALVE PLATE	**471, 473**
150	1478717-0100	-		1	VALVE GROUP	**475, 477, 479**
160	929415-0100	-		1	BALANCE TANK	**481**
290	342946-0122	-		1	T-COUPLING,UNION 8/6	
300	2517051-0000	-		1	PIPE	
310	90458-0281	-		1	DISTRIBUTOR 8933502114	
320	577832-0000	-		1	PIPE	
330	456137-0000	-		1	HOSE	
340	576293-0000	-		1	PIPE	
350	342735-0110	-		1	ELBOW PIPE	
360	90055-0118	-		2	ELBOW PIPE JOINT -8MM	
370	90153-0035	-		1	ADHESIVE, CLIMAFLEX 1632864	
380	90166-0013	-	M	38	TUBE 8 MM PA BLUE	
390	90166-0196	-	CM	500	TUBE 14 MM PA BLUE	
400	90166-0068	-	M	3	TUBE 12 MM PA BLUE	
410	90166-0081	-	M	154	TUBE 6 MM PA BLUE	
420	90166-0118	-	M	9	TUBE 8 MM PA BLACK	
430	90166-0119	-	M	3	HOSE PUR 4/6 BLACK	
440	90230-0062	B		2	NON RETURN VALVE, 6, OP. PRESS. 0,2 BAR	
450	90235-0151	B		1	NON-RETURN VALVE	
460	90287-0212	-		4	SCREW MC6S M5X85 129	
470	90055-0101	-		3	Y-CONNECTION, 8-8	
580	315105-0165	-		6	WASHER ISO 7089-8-200 HV-A4	
590	312105-0447	-		6	SCREW M6S ISO 4017 M8X12 A480	
600	312115-0376	-		2	SCREW ISO4762 M6X35 A4	
610	342713-0210	-		6	PLUG, EXT THREAD HEX SOCKET 8638-00-140	
620	342716-0203	-		4	REDUCER 6-8	
630	342716-0209	-		3	REDUCER 8-12	
640	342722-0205	-		1	STRAIGHT COUPLING D=8-G1/4"	
650	342732-0109	-		3	ELBOW PIPE JOINT, EXT.THREAD, D=1MM-G1/4	
660	342732-0161	-		1	ELBOW PIPE JOINT,EXT.THREAD,D=14 MM-G1/2	
670	342735-0102	-		2	ELBOW PIPE JOINT	
680	342735-0103	-		2	ELBOW PIPE JOINT	
690	342735-0109	-		9	ELBOW PIPE JOINT	
700	342742-0104	-		1	T-COUPLING,ADJUST,F.PLASTIC TUBE 8-G1/4"	
710	342748-0102	-		3	T-CONNECTION 6MM	
720	342748-0103	-		4	T-CONNECTION 8MM	
730	342748-0109	-		5	T-CONNECTION 12MM	
740	342946-0112	-		2	T-COUPLING,UNION 6/4	
750	352113-0104	-		15	CLIP STRIP, 300X4,8 MM	
760	359000-0400	-		78	MARKING CO2/4"0"	
770	359000-0401	-		59	MARKING COLLAR 2/4 "1" YELLOW	
780	359000-0402	-		44	MARKING COLLAR 2/4 "2" YELLOW	
790	359000-0403	-		13	MARKING COLLAR PA2/4 "3" YELLOW	
800	359000-0404	-		18	MARKING COLLAR PA2/4 "4" YELLOW	
810	359000-0405	-		22	MARKING CO2/4"5"	
820	359000-0406	-		20	MARKING COLLAR PA2/4 "6" YELLOW	
830	359000-0407	-		16	MARKING COLLAR PA2/4 "7" YELLOW	
840	359000-0408	-		6	MARKING COLLAR PA2/4 "8" YELLOW	
850	359000-0409	-		11	MARKING COLLAR PA2/4 "9" YELLOW	
860	359000-0771	-		27	MARKING CO2/4"V"	

Machine Type | Group Description | Used-In | Group Number | Page No

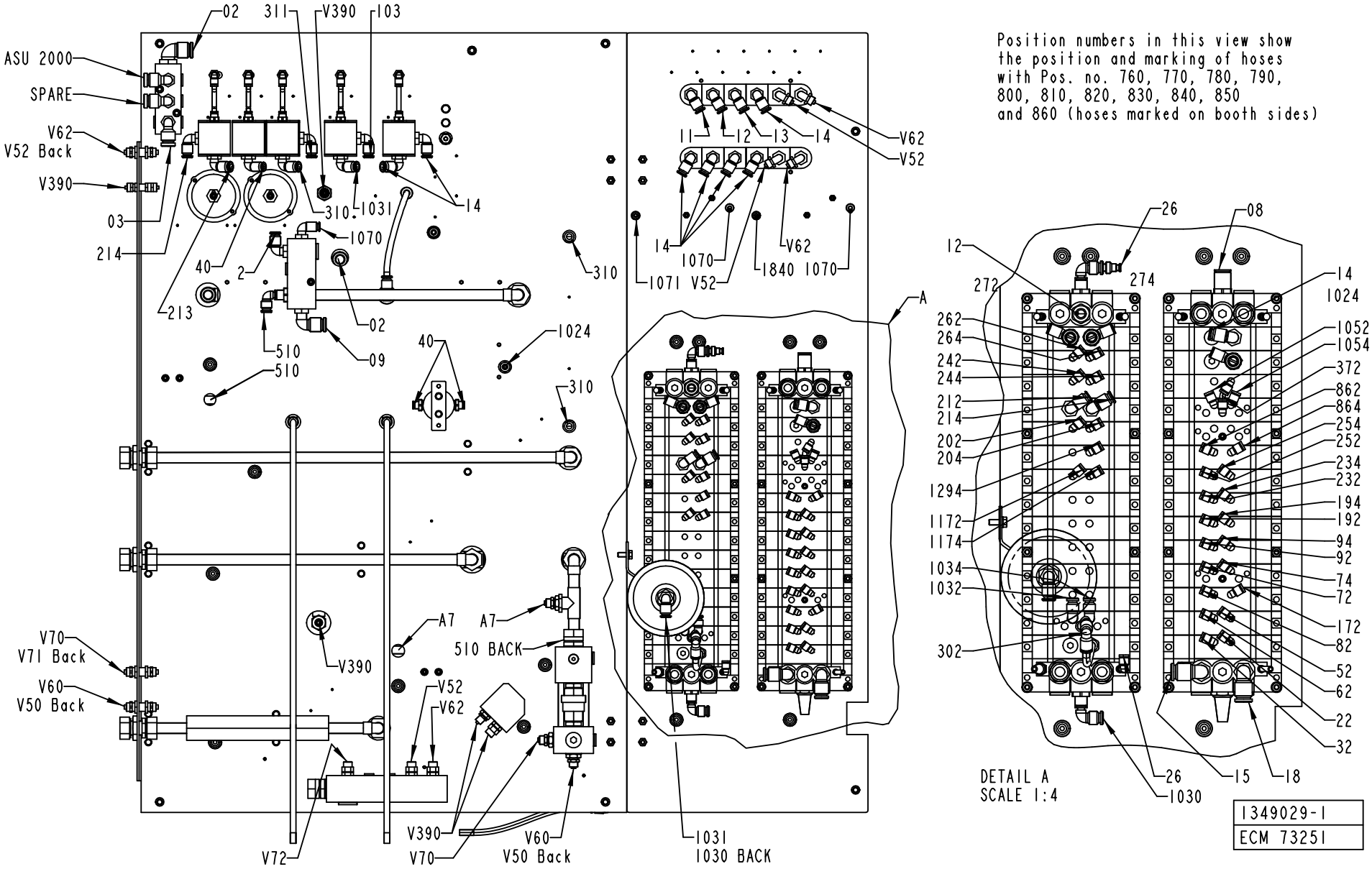
02
311
V390
103
ASU 2000
SPARE
V62
V52 Back
V390
03
214
213
40
2
310
1031
14
1070
02
09
510
510
310
1024
40
310
11
12
13
14
V62
V52
14
1070
1071 V52
V62
1840 1070
A
Position numbers in this view show the position and marking of hoses with Pos. no. 760, 770, 780, 790, 800, 810, 820, 830, 840, 850 and 860 (hoses marked on booth sides)
26
08
12
272
274
14
1024
262
264
242
244
212
214
202
204
1294
1172
1174
1034
1032
302
1052
1054
372
862
864
254
252
234
232
194
192
94
92
74
72
172
82
52
62
22
32
DETAIL A
SCALE 1:4
26
1030
15
18
V70
V71 Back
V60
V50 Back
A7
A7
510 BACK
V390
V52
V62
V72
V390
V70
V60
V50 Back
1031
1030 BACK
1349029-1
ECM 73251

ECM: 106552 - 20020313
Group number: 1349029-0100
Assembly Drawing: 1349029-1_3_AA

This list covers pages from 446 to 451

Pos	Part No	SP	UN	Qty	Description	Page No
-						
010	580993-0000	-		1	WATER DIAGRAM	
020	1348964-0000	-		1	AIR DIAGRAM	
060	456757-0300	-		1	AIR INJECTOR	**453**
070	469121-0400	-		1	JUNCTION BLOCK	**457**
080	577824-0200	-		1	COOL WATER VALVE	**459**
090	577825-0200	-		1	HOT WATER VALVE	**461**
100	577822-0200	-		1	PRESSURE REGULATOR GROUP	**463**
110	1348237-0100	-		1	AIR INLET GROUP	**465**
120	1349090-0100	-		1	FLOW METER	**467**
130	1349091-0100	-		1	GAUGE GROUP	**469**
140	1349094-0100	-		1	VALVE PLATE	**471, 473**
150	1478717-0100	-		1	VALVE GROUP	**475, 477, 479**
160	929415-0100	-		1	BALANCE TANK	**481**
290	342946-0122	-		1	T-COUPLING,UNION 8/6	
300	2517051-0000	-		1	PIPE	
310	90458-0281	-		1	DISTRIBUTOR 8933502114	
320	577832-0000	-		1	PIPE	
330	456137-0000	-		1	HOSE	
340	576293-0000	-		1	PIPE	
350	342735-0110	-		1	ELBOW PIPE	
360	90055-0118	-		2	ELBOW PIPE JOINT -8MM	
370	90153-0035	-		1	ADHESIVE, CLIMAFLEX 1632864	
380	90166-0013	-	M	38	TUBE 8 MM PA BLUE	
390	90166-0196	-	CM	500	TUBE 14 MM PA BLUE	
400	90166-0068	-	M	3	TUBE 12 MM PA BLUE	
410	90166-0081	-	M	154	TUBE 6 MM PA BLUE	
420	90166-0118	-	M	9	TUBE 8 MM PA BLACK	
430	90166-0119	-	M	3	HOSE PUR 4/6 BLACK	
440	90230-0062	B		2	NON RETURN VALVE, 6, OP. PRESS. 0,2 BAR	
450	90235-0151	B		1	NON-RETURN VALVE	
460	90287-0212	-		4	SCREW MC6S M5X85 129	
470	90055-0101	-		3	Y-CONNECTION, 8-8	
580	315105-0165	-		6	WASHER ISO 7089-8-200 HV-A4	
590	312105-0447	-		6	SCREW M6S ISO 4017 M8X12 A480	
600	312115-0376	-		2	SCREW ISO4762 M6X35 A4	
610	342713-0210	-		6	PLUG, EXT THREAD HEX SOCKET 8638-00-140	
620	342716-0203	-		4	REDUCER 6-8	
630	342716-0209	-		3	REDUCER 8-12	
640	342722-0205	-		1	STRAIGHT COUPLING D=8-G1/4"	
650	342732-0109	-		3	ELBOW PIPE JOINT, EXT.THREAD, D=1MM-G1/4	
660	342732-0161	-		1	ELBOW PIPE JOINT,EXT.THREAD,D=14 MM-G1/2	
670	342735-0102	-		2	ELBOW PIPE JOINT	
680	342735-0103	-		2	ELBOW PIPE JOINT	
690	342735-0109	-		9	ELBOW PIPE JOINT	
700	342742-0104	-		1	T-COUPLING,ADJUST,F.PLASTIC TUBE 8-G1/4"	
710	342748-0102	-		3	T-CONNECTION 6MM	
720	342748-0103	-		4	T-CONNECTION 8MM	
730	342748-0109	-		5	T-CONNECTION 12MM	
740	342946-0112	-		2	T-COUPLING,UNION 6/4	
750	352113-0104	-		15	CLIP STRIP, 300X4,8 MM	
760	359000-0400	-		78	MARKING CO2/4"0"	
770	359000-0401	-		59	MARKING COLLAR 2/4 "1" YELLOW	
780	359000-0402	-		44	MARKING COLLAR 2/4 "2" YELLOW	
790	359000-0403	-		13	MARKING COLLAR PA2/4 "3" YELLOW	
800	359000-0404	-		18	MARKING COLLAR PA2/4 "4" YELLOW	
810	359000-0405	-		22	MARKING CO2/4"5"	
820	359000-0406	-		20	MARKING COLLAR PA2/4 "6" YELLOW	
830	359000-0407	-		16	MARKING COLLAR PA2/4 "7" YELLOW	
840	359000-0408	-		6	MARKING COLLAR PA2/4 "8" YELLOW	
850	359000-0409	-		11	MARKING COLLAR PA2/4 "9" YELLOW	
860	359000-0771	-		27	MARKING CO2/4"V"	

Machine Type | Group Description | Used-In | Group Number | Page No

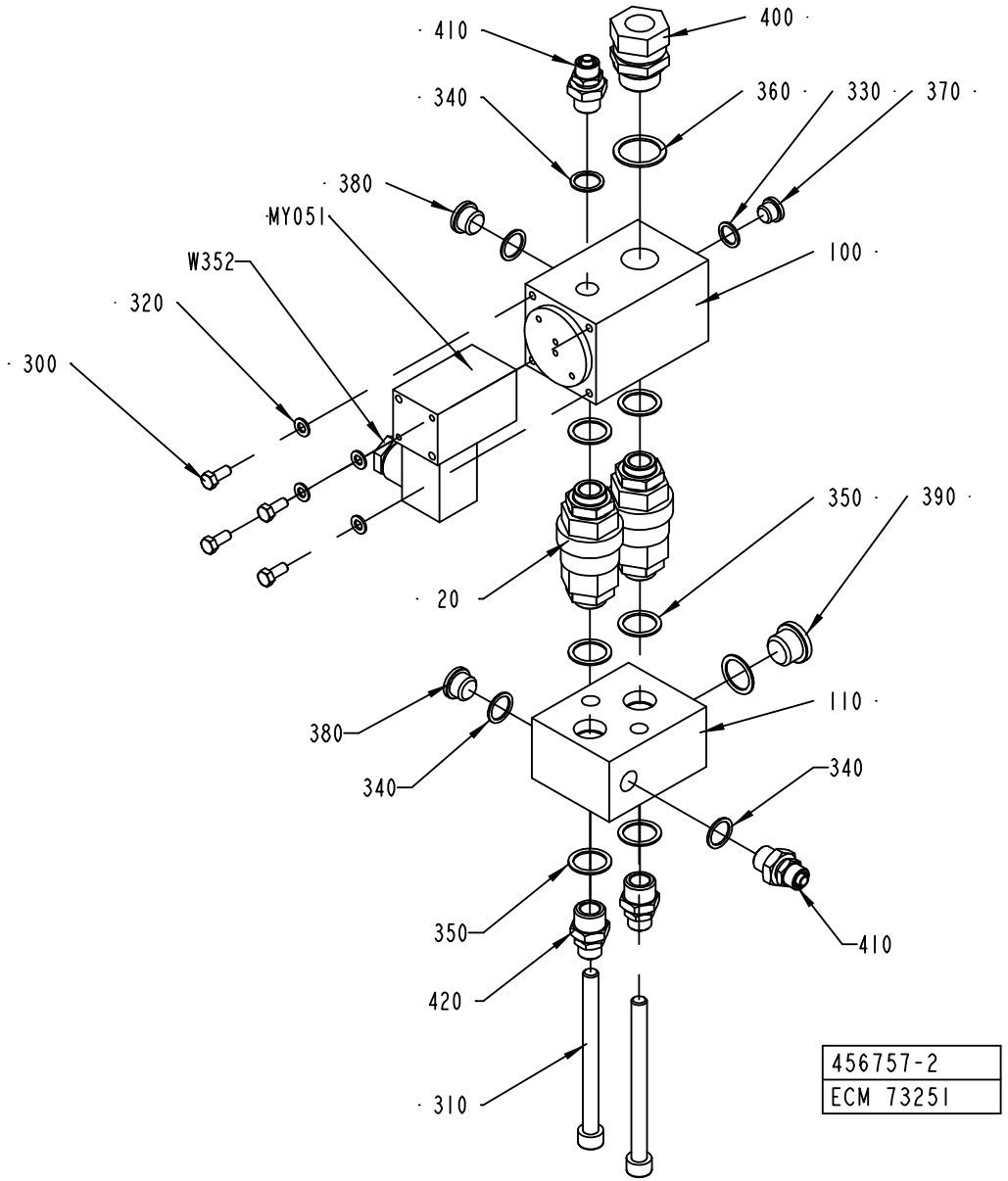
410
400
340
360
330
370
380
MY051
W352
100
320
300
350
390
20
380
110
340
340
350
410
420
310
456757-2
ECM 73251

ECM: 115746 - 20020930
Group number: 456757-0300
Assembly Drawing: 456757-2_1_AA

Pos	Part No	SP	UN	Qty	Description	Page No
-						
020	491536-0200	B		2	NON-RETURN VALVE	**455**
100	456756-0000	-		1	BLOCK	
110	456755-0000	-		1	BLOCK	
300	312105-0327	-		4	SCREW M6S ISO 4017 M5X12 A480	
310	312111-0471	-		2	SCREW HEX.SOCK.HD.MC6S-TT 8X100 88 FZ	
320	315105-0146	-		4	WASHER ISO 7089-5-200 HV-A4	
330	315233-0109	-		1	WASHER PL.RND.NYL.10,3/14,H=1	
340	315233-0110	-		4	WASHER PL.RND.NYL.13,3/17,H=1	
350	315233-0111	-		7	WASHER PL.RND.NYL.17/22,H=1	
360	315233-0113	-		1	WASHER PL.RND.NYL.21,4/27,H=1,2	
370	342713-0209	-		1	PLUG, EXT THREAD HEX SOCKET 8638-00-180	
380	342713-0210	-		2	PLUG, EXT THREAD HEX SOCKET 8638-00-140	
390	342713-0211	-		1	PLUG, EXT THREAD HEX SOCKET 8638-00-380	
400	342720-0114	-		1	CONN. STR. GA-15-G1/2	
410	342921-0122	-		2	STRAIGHT COUPLING,EXT.THREADED 8/6-G1/4"	
420	342921-0123	-		2	STRAIGHT COUPLING,EXT.THREADED 8/6-G3/8"	
MY051	90042-0173	B		1	SOLENOID VALVE BURKERT	
W352	351150-0431	-	M	3	CABLE OLFLEX 2X0,75 MM2 LIGHT/GREY	

Pos	Part No	SP	UN	Qty	Description	Page No

Machine Type | Group Description | Used-In | Group Number | Page No

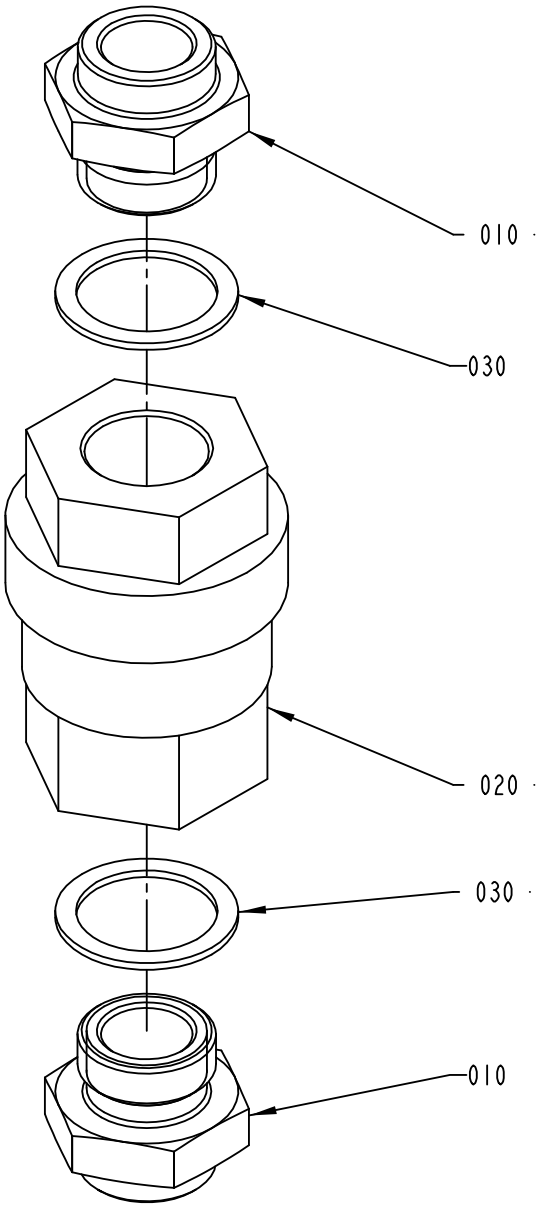

491536-2
ECM 73251

ECM: 115878 - 20020930
Group number: 491536-0200
Assembly Drawing: 491536-2_1_AA

Pos	Part No	SP	UN	Qty	Description	Page No
-						
010	751086-0000	-		2	NIPPLE	
020	90230-0028	B		1	NON-RETURN VALVE H 151 R 3/8"	
030	315233-0111	B		2	WASHER PL.RND.NYL.17/22,H=1	

Pos	Part No	SP	UN	Qty	Description	Page No

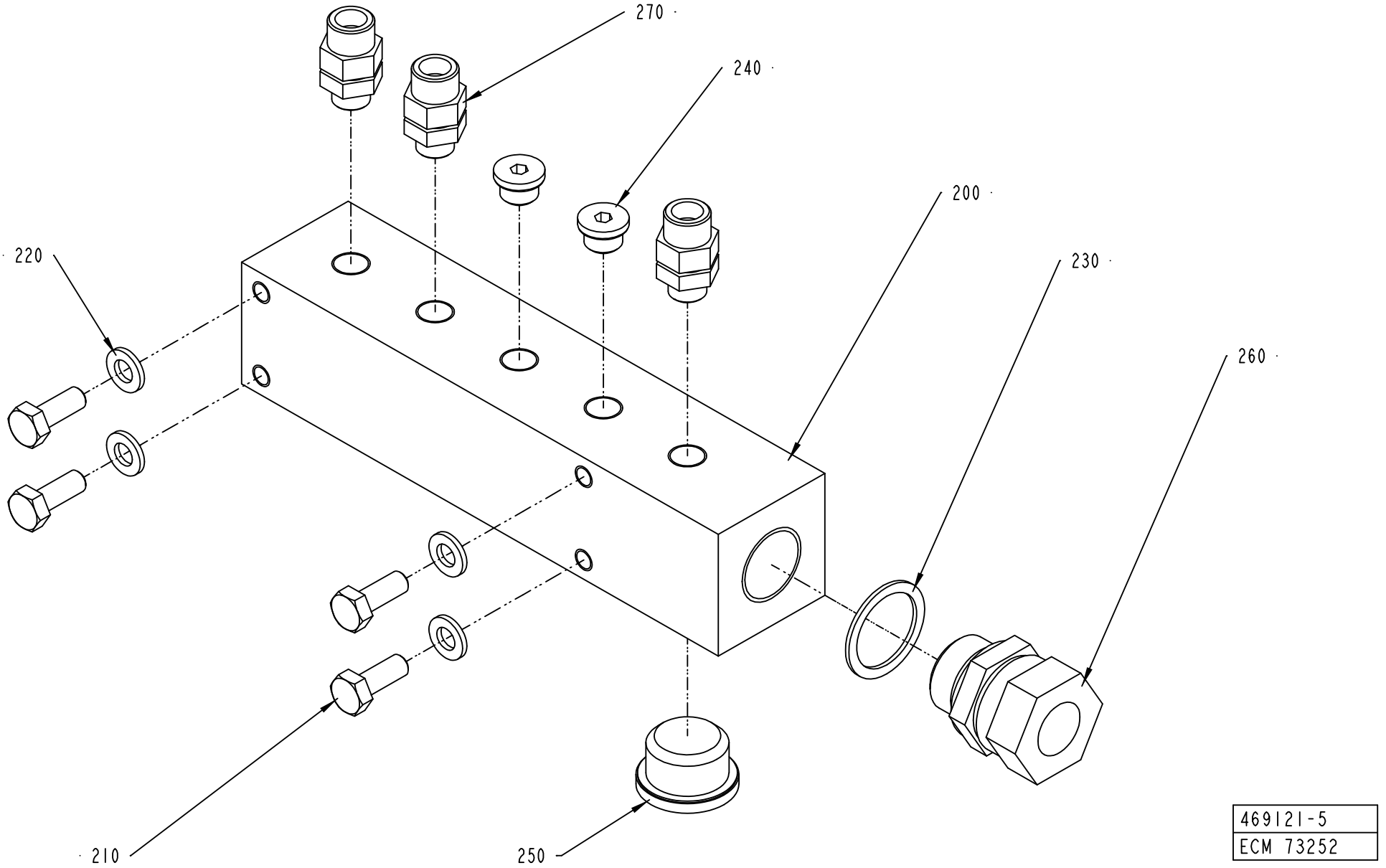
270
240
200
220
230
260
210
250
469121-5
ECM 73252

ECM: 73252 - 20011221
Group number: 469121-0400
Assembly Drawing: 469121-5_1_AA

Pos	Part No	SP	UN	Qty	Description	Page No
-						
200	469122-0000	-		1	BLOCK	
210	312105-0368	-		4	SCREW M6S M6X16 A280	
220	315105-0153	-		4	WASHER ISO 7089-6-200 HV-A4	
230	315233-0113	-		1	WASHER PL.RND.NYL.21,4/27,H=1,2	
240	342713-0209	-		2	PLUG, EXT THREAD HEX SOCKET 8638-00-180	
250	342713-0213	-		1	PLUG, EXT THREAD HEX SOCKET 8638-00-120	
260	342720-0114	-		1	CONN. STR. GA-15-G1/2	
270	342921-0121	-		3	STRAIGHT COUPLING,EXT.THREADED 8/6-G1/8"	

Pos	Part No	SP	UN	Qty	Description	Page No

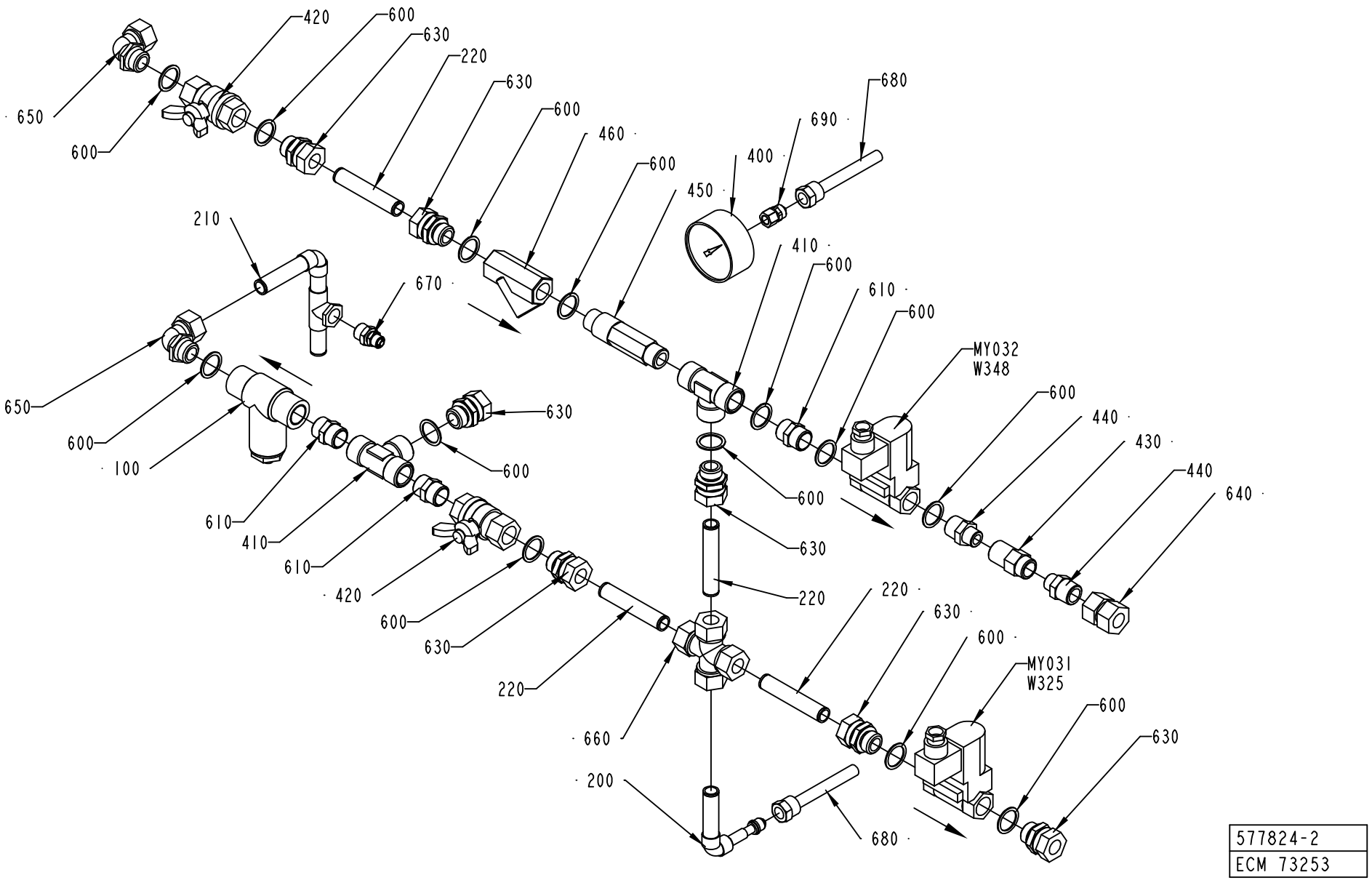
650
600
420
600
630
220
630
600
460
600
450
400
690
680
210
670
650
600
100
630
600
610
410
610
420
600
630
220
600
410
610
600
630
600
MY032
W348
600
440
430
440
640
220
630
600
MY031
W325
600
630
660
200
680
577824-2
ECM 73253

ECM: 115874 - 20020930
Group number: 577824-0200
Assembly Drawing: 577824-2_1_AA

Pos	Part No	SP	UN	Qty	Description	Page No
-						
100	271823-0000	B		1	FILTER	
	90415-0314	*B*		*1*	*FILTER INSERT / 5594-36*	
	90415-0325	*B*		*1*	*GASKET*	
200	1512806-0000	-		1	PIPE	
210	1350188-0000	-		1	PIPE	
220	576287-0000	-		4	PIPE	
400	90043-0006	B		1	PRESSURE GAUGE, 2041 D=63 MM	
410	90140-0010	-		2	T-PIPE, INT. THREAD, 20031/2	
420	90187-0029	-		2	BALL VALVE G1/2, NPBR	
430	90270-0347	B		1	VALVE	
440	90330-0019	-		2	NIPPLES, EXT. THREAD. R1/2-R3/8	
450	90415-0018	B		1	FILTER FOR LIME SEPARATING / D MOD.AD	
460	90415-0019	B		1	FILTER / ART.NO. HH-M15-RG	
600	315233-0113	-		13	WASHER PL.RND.NYL.21,4/27,H=1,2	
610	342700-0113	-		3	NIPPLES,HEXAGON,EXT.G-THREAD G1/2"-G1/2"	
630	342720-0114	-		7	CONN. STR. GA-15-G1/2	
640	342723-0114	-		1	CONN. STR. PIPE GI-15-G1/2	
650	342730-0114	-		2	CONN. ELBOW WA-15-1/2	
660	342753-0114	-		1	CONN. CROSS K-15	
670	342921-0123	-		1	STRAIGHT COUPLING,EXT.THREADED 8/6-G3/8"	
680	342903-0121	-		2	NUT WITH SPRING 8/6-M12X1	
690	342923-0121	-		1	STRAIGHT COUPL.,INT.THREADED 8/6-G1/8"	
MY031	90042-0172	B		1	SOLENOID VALVE 4023/1005/1032 24VDC	
	90042-0467	*A*		*1*	*COIL 24VDC GSR*	
MY032	90042-0172	B		1	SOLENOID VALVE 4023/1005/1032 24VDC	
	90042-0467	*A*		*1*	*COIL 24VDC GSR*	
W325	351150-0403	-	M	3	CABLE OLFLEX 3X0,75 MM2 LIGHT/GREY	
W348	351150-0403	-	M	3	CABLE OLFLEX 3X0,75 MM2 LIGHT/GREY	

Pos	Part No	SP	UN	Qty	Description	Page No

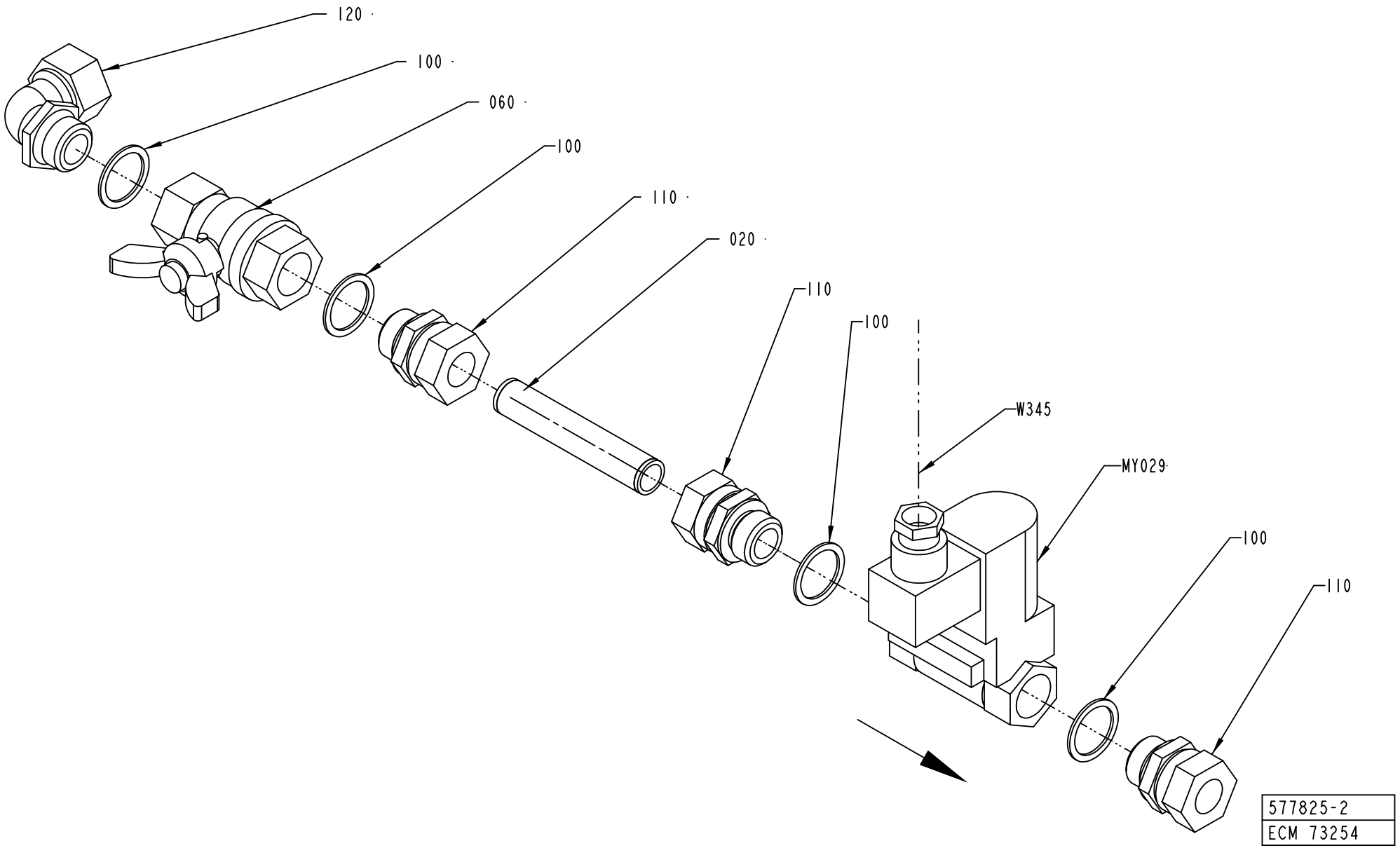
120
100
060
100
110
020
110
100
W345
MY029
100
110
577825-2
ECM 73254

ECM: 115876 - 20020930
Group number: 577825-0200
Assembly Drawing: 577825-2_1_AA

Pos	Part No	SP	UN	Qty	Description	Page No
-						
100	315233-0113	-		4	WASHER PL.RND.NYL.21,4/27,H=1,2	
110	342720-0114	-		3	CONN. STR. GA-15-G1/2	
120	342730-0114	-		1	CONN. ELBOW WA-15-1/2	
20	576287-0000	-		1	PIPE	
60	90187-0029	B		1	BALL VALVE G1/2, NPBR	
MY029	90042-0172	B		1	SOLENOID VALVE 4023/1005/1032 24VDC	
	90042-0467	*A*		*1*	*COIL 24VDC GSR*	
W345	351150-0431	-	M	1	CABLE OLFLEX 2X0,75 MM2 LIGHT/GREY	

Pos	Part No	SP	UN	Qty	Description	Page No

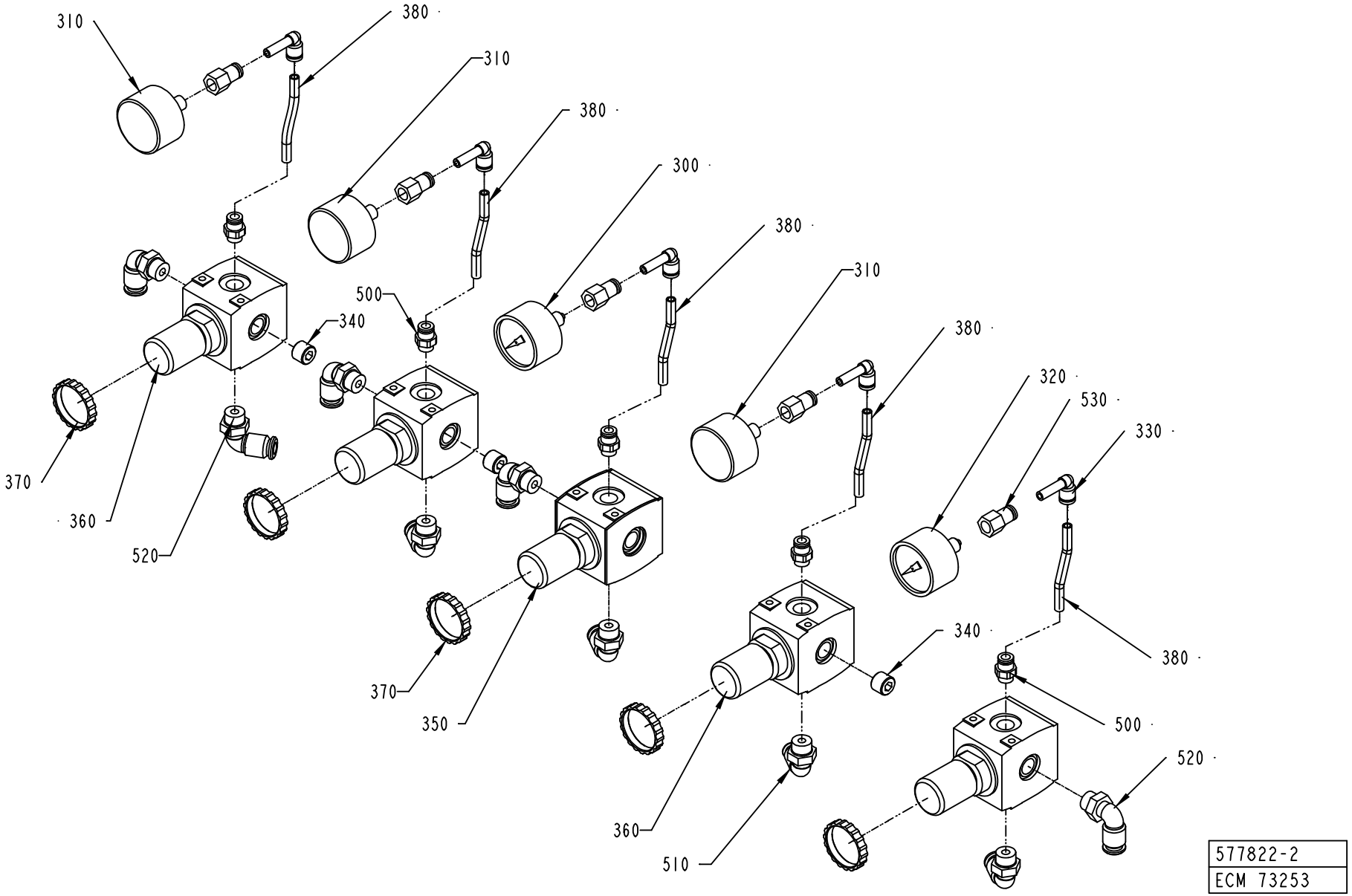
310
380
310
380
300
380
310
380
320
530
330
500
340
370
360
520
350
340
380
500
520
360
510
577822-2
ECM 73253

ECM: 106555 - 20020313
Group number: 577822-0200
Assembly Drawing: 577822-2_1_AA

Pos	Part No	SP	UN	Qty	Description	Page No
-						
300	90043-0021	B		1	PRESSURE GAUGE WIEGAND 0-1 BAR 1/8"	
310	90043-0068	B		3	PRESSURE GAUGE	
320	90043-0069	B		1	PRESSURE GAUGE 0-4BAR WIEGAND 2040	
330	90055-0217	-		5	ELBOW PIPE JOINT	
340	90087-0036	-		3	PLUG	
350	90113-0076	B		1	PRESSURE REGULATOR	
360	90113-0069	B		4	PRESSURE REGULATOR	
370	90113-0379	-		5	NUT	
380	90166-0081	-	MM	300	TUBE 6 MM PA BLUE	
500	342722-0202	-		5	PIPE COUPLING 1/8" D=6MM	
510	342732-0103	-		1	ELBOW PIPE JOINT, EXT.THREAD, D=6MM-G1/4	
520	342732-0104	-		8	ELBOW PIPE JOINT, EXT.THREAD, D=8MM-G1/4	
530	342770-0105	-		5	STRAIGHT COUPLING INT, D=6 MM - G1/8	

Pos	Part No	SP	UN	Qty	Description	Page No

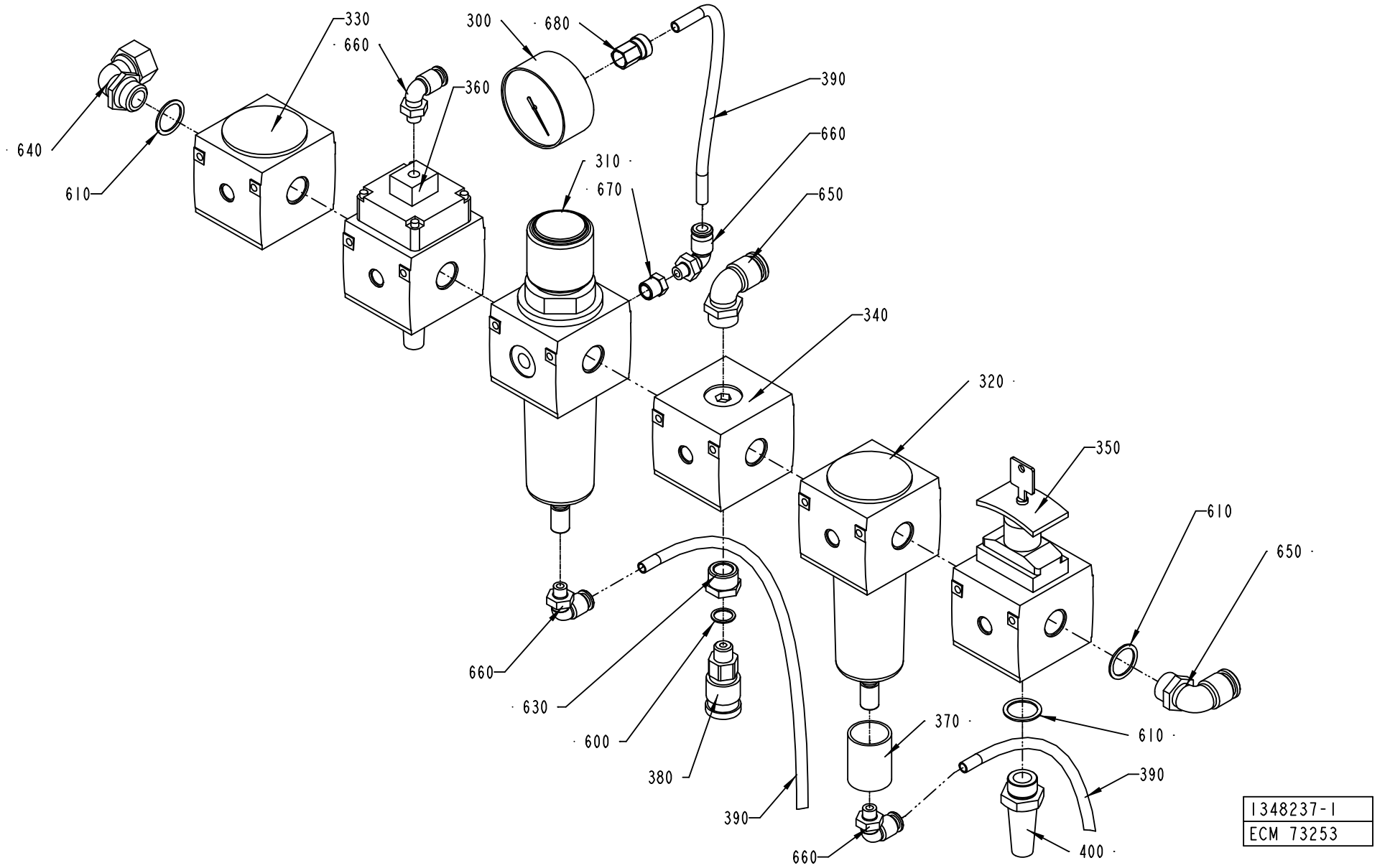
330
660
300
680
360
390
640
610
310
670
660
650
340
320
350
610
650
660
630
600
380
390
370
610
390
660
400
1348237-1
ECM 73253

ECM: 115869 - 20020930
Group number: 1348237-0100
Assembly Drawing: 1348237-1_1_AA

Pos	Part No	SP	UN	Qty	Description	Page No
-						
300	90043-0036	B		1	PRESSURE GAUGE, 2041 D=63 MM	
310	90113-0085	B		1	PRESSURE REGULATOR	
	90113-0389	*-*		*1*	*FILTER ELEMENT 8æM FOR 90113-0085*	
	90113-0459	*-*		*1*	*O-RING*	
320	90113-0128	B		1	FILTER	
	90113-0459	*-*		*1*	*O-RING*	
	90113-0389	*C*		*1*	*FILTER ELEMENT 8æM FOR 90113-0085*	
330	90113-0374	B		1	SLOW STARTING VALVE	
340	90113-0375	B		1	PRESSURE DISTRIBUTION	
350	90113-0377	B		1	SHUT-OFF VALVE	
360	90113-0378	B		1	SHUT-OFF VALVE	
370	90113-0387	B		1	FILTER ELEMENT 40æM FOR 90113-0094	
380	90163-0016	-		1	QUICK COUPLING, (F) LP 006-0-WR013	
390	90166-0118	-	M	3	TUBE 8 MM PA BLACK	
400	90328-0001	-		1	SILENCER	
600	315233-0110	-		1	WASHER PL.RND.NYL.13,3/17,H=1	
610	315233-0113	-		3	WASHER PL.RND.NYL.21,4/27,H=1,2	
630	342701-0205	-		1	BUSHING,INT./EXT.G-THREAD G1/2"-G1/4"	
640	342730-0114	-		1	CONN. ELBOW WA-15-1/2	
650	342732-0161	-		2	ELBOW PIPE JOINT,EXT.THREAD,D=14 MM-G1/2	
660	342732-0801	-		4	ELBOW PIPE JOINT, EXT.THREAD, D=8MM-G1/8	
670	342701-0201	-		1	BUSHING,INT./EXT.G-THREAD G1/4"-G1/8"	
680	342923-0122	-		1	STRAIGHT COUPL.,INT.THREADED 8/6-G1/4"	

Pos	Part No	SP	UN	Qty	Description	Page No

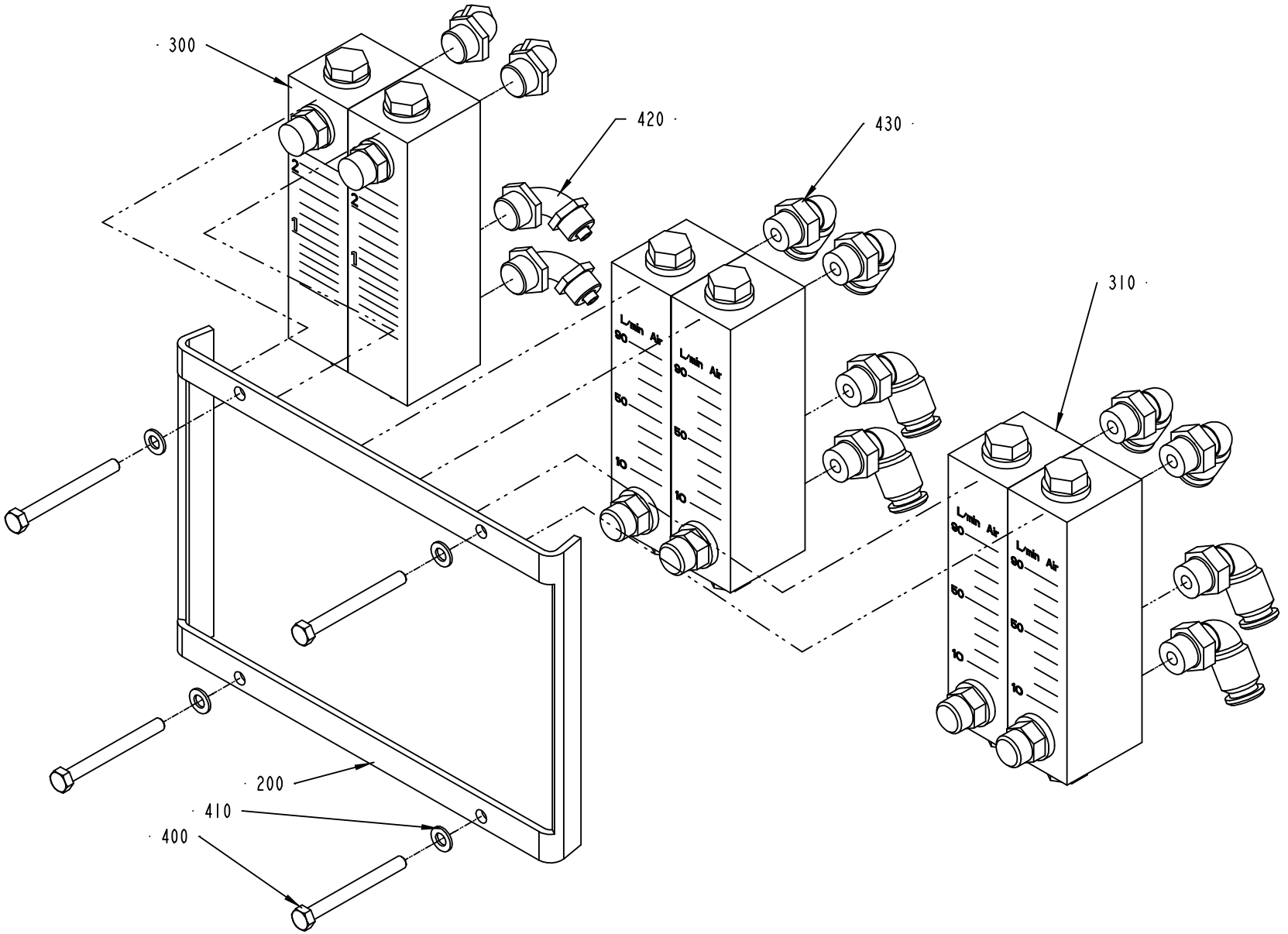

1349090-1
ECM 73254

ECM: 106561 - 20020313
Group number: 1349090-0100
Assembly Drawing: 1349090-1_1_AA

Pos	Part No	SP	UN	Qty	Description	Page No
-						
200	1512488-0000	-		1	HOLDER	
300	90243-0134	B		2	FLOW METER	
310	90457-0101	B		4	FLOW METER FOR AIR	
400	312105-0341	-		4	SCREW M6S ISO 4014 M5X50 A480	
410	315105-0146	-		4	WASHER ISO 7089-5-200 HV-A4	
420	342931-0122	-		4	ELBOW 90 COUPL.,EXT.THREAD 8/6-G1/4"	
430	342732-0104	-		8	ELBOW PIPE JOINT, EXT.THREAD, D=8MM-G1/4	

Pos	Part No	SP	UN	Qty	Description	Page No

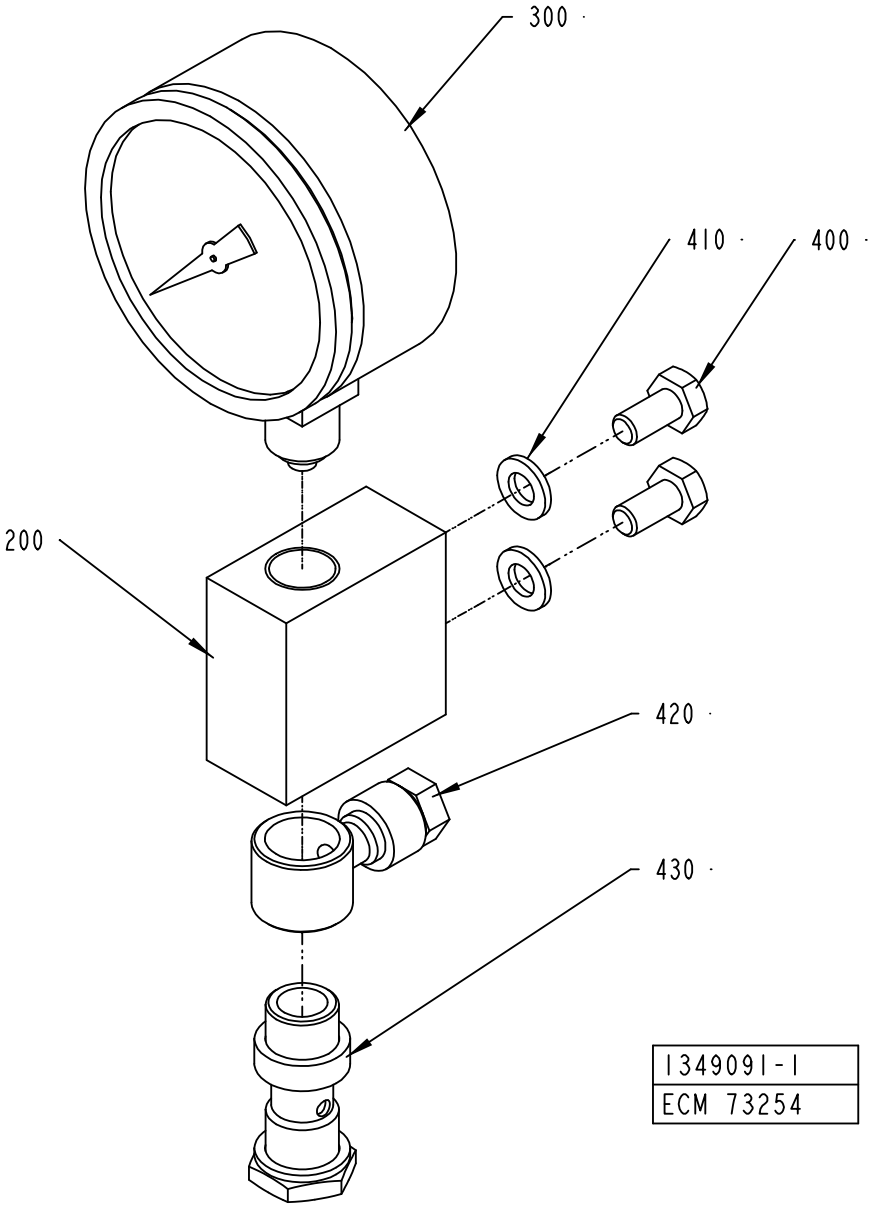
300
410
400
200
420
430
1349091-1
ECM 73254

ECM: 106560 - 20020313
Group number: 1349091-0100
Assembly Drawing: 1349091-1_1_AA

Pos	Part No	SP	UN	Qty	Description	Page No
-						
200	1349092-0000	-		1	SUPPORT	
300	90043-0095	B		1	PRESSURE GAUGE, 2740, D=63 MM, GLYC.	
400	312105-0366	-		2	SCREW M6S M6X12 A280	
410	315105-0153	-		2	WASHER ISO 7089-6-200 HV-A4	
420	342797-0122	-		1	CONN. BANJO, RINGPIECE 6-1/4	
430	342980-0304	-		1	BANJO-HOLLOW BOLT COUPL,EXT.THR.01-G1/4"	

Pos	Part No	SP	UN	Qty	Description	Page No

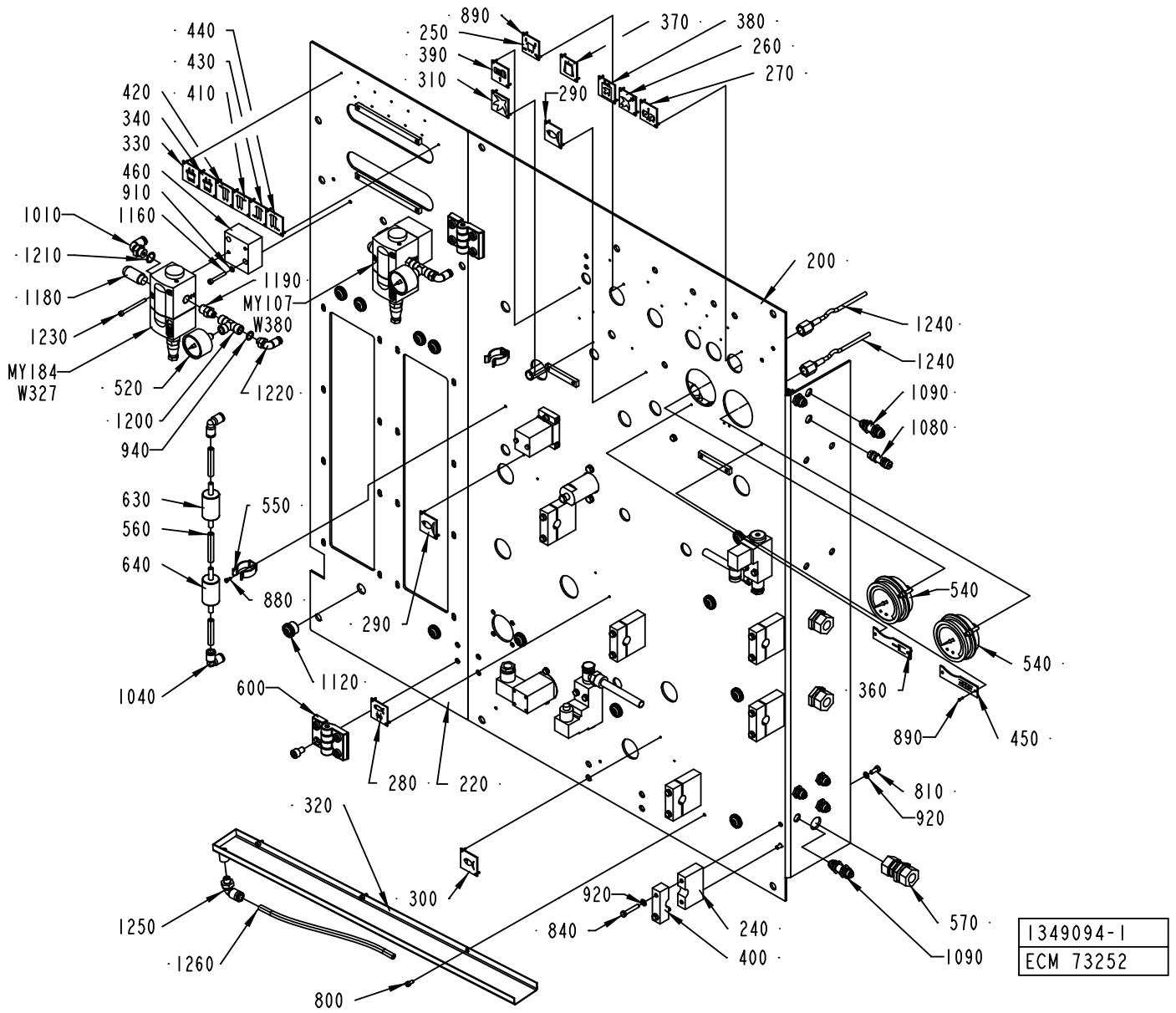
890
250
390
310
370
380
260
270
290
440
430
410
420
340
330
460
910
1160
1010
1210
1180
1230
MY184
W327
520
1200
940
1190
MY107
W380
1220
200
1240
1240
1090
1080
630
560
640
880
550
290
1040
600
1120
280
220
540
540
360
890
450
810
920
320
300
1250
1260
800
920
840
240
400
570
1090
1349094-1
ECM 73252

ECM: 115884 - 20020930
Group number: 1349094-0100
Assembly Drawing: 1349094-1_1_AA

This list covers pages from 470 to 473

Pos	Part No	SP	UN	Qty	Description	Page No
-						
0200	1512487-0000	-		1	PLATE	
0210	576294-0000	-		1	JUNCTION BLOCK	
0220	1512490-0000	-		1	PLATE	
0230	295496-0000	-		1	BLOCKING PIECE	
0240	576286-0000	-		6	HOLDER	
0250	273449-0000	-		1	SIGN	
0260	273450-0000	-		1	SIGN	
0270	273452-0000	-		1	SIGN	
0280	273454-0000	-		1	SIGN	
0290	273455-0000	-		2	LABEL (COLD WATER)	
0300	273456-0000	-		1	SIGN	
0310	273458-0000	-		1	LABEL (AIR)	
0320	1346061-0000	-		1	DRAIN CHUTE	
0330	445533-0000	-		1	SIGN	
0340	445534-0000	-		1	SIGN	
0350	491649-0000	-		1	BRACKET	
0360	247385-0000	-		1	SIGN	
0370	929413-0000	-		1	SIGN	
0380	978603-0000	-		1	SIGN	
0390	979421-0000	-		1	SIGN	
0400	979446-0000	-		6	HOLDER	
0410	1517498-0000	-		1	SIGN FLEW-METER AIR	
0420	1517499-0000	-		1	SIGN FLEW-METER AIR	
0430	1517500-0000	-		1	SIGN FLEW-METER AIR	
0440	1517501-0000	-		1	SIGN FLEW-METER AIR	
0450	247386-0000	-		1	SIGN	
0460	1538758-0000	-		2	SPACER	
0520	90043-0069	B		2	PRESSURE GAUGE 0-4BAR WIEGAND 2040	
0530	90055-0118	-		1	ELBOW PIPE JOINT -8MM	
0540	90458-2421	-		2	PRESSURE GAUGE, 1453 W. BRACKET	
0550	90165-0019	-		2	TOOL CLIP, 81/3, OPEN, 20 - 30 MM	
0560	90166-0194	-	M	1	TUBE 8 MM PUR BLUE	
0570	90224-0296	-		3	CONN. BULKHEAD, ART.NO. 116 1500	
0580	90235-0450	-		1	PLATE	
0590	90235-0708	A		1	VALVE	
0600	90248-0034	-		2	HINGE, 66073	
0630	90277-0045	B		1	FILTER / 9900-05-BK	
0640	90277-0046	A		1	FILTER / 9933-05-101	
0650	90277-0323	-		1	FILTER HOUSING / ART.NO 95S6-1/4 S 5430	
0660	90277-0324	B		1	FILTER CARTRIDGE / 050-11-A	
0800	312115-0287	-		3	SCREW ISO4762 M4X8 A4	
0810	312105-0327	-		16	SCREW M6S ISO 4017 M5X12 A480	
0820	312115-0329	-		2	SCREW ISO4762 M5X16 A4	
0830	312115-0447	-		8	SCREW ISO4762 M8X12 A4	
0840	312105-0335	-		12	SCREW M6S ISO 4014 M5X30 A480	
0850	312105-0339	-		4	SCREW M6S ISO 4014 M5X40 A480	
0860	312105-0341	-		1	SCREW M6S ISO 4014 M5X50 A480	
0870	312105-0380	-		2	SCREW M6S ISO 4014 M6X50 A480	
0880	312125-0222	-		2	SPåRSKRUV MCS M3X8 SS	
0890	90457-0104	-		38	BLANK RIVET 2X7,4	
0900	312605-0314	-		5	HEXAGON NUT, M6M M5 A280	
0910	315105-0136	-		6	WASHER ISO 7089-4-200 HV-A4	
0920	315105-0146	-		35	WASHER ISO 7089-5-200 HV-A4	
0930	315105-0153	-		3	WASHER ISO 7089-6-200 HV-A4	
0940	315233-0109	-		4	WASHER PL.RND.NYL.10,3/14,H=1	
0950	341001-0148	-	MM	17	COPPER TUBE	
0960	342713-0210	-		1	PLUG, EXT THREAD HEX SOCKET 8638-00-140	
0970	342713-0211	-		1	PLUG, EXT THREAD HEX SOCKET 8638-00-380	
0980	342722-0203	-		2	STRAIGHT COUPLING	
0990	342722-0204	-		1	PIPE COUPLING	
1000	342722-0206	-		1	STRAIGHT COUPLING D=8-G3/8"	
1010	342732-0103	-		3	ELBOW PIPE JOINT, EXT.THREAD, D=6MM-G1/4	
1020	342732-0104	-		1	ELBOW PIPE JOINT, EXT.THREAD, D=8MM-G1/4	
1030	342732-0110	-		1	ELBOW PIPE JOINT, EXT.THREAD,D=12MM-G3/8	
1040	342735-0103	-		2	ELBOW PIPE JOINT	
1050	342770-0105	-		2	STRAIGHT COUPLING INT, D=6 MM - G1/8	
1060	342921-0113	-		1	STRAIGHT COUPLING,EXT.THREADED 6/4-G1/8"	
1070	342921-0121	-		1	STRAIGHT COUPLING,EXT.THREADED 8/6-G1/8"	
1080	342960-0112	-		1	BULKHEAD COUPLING 6/4	
1090	342960-0122	-		6	BULKHEAD COUPLING 8/6	
1100	342980-0122	-		2	BANJO-CONNECTION,RING 8/6-G1/4"	
1110	342980-0304	-		2	BANJO-HOLLOW BOLT COUPL,EXT.THR.01-G1/4"	
1120	352101-0103	-		13	LEAD-IN, PR18,6/PG11, E-1457518	
1130	312605-0316	-		1	HEXAGON NUT, M6M M6 A280	
1140	312602-0316	-		8	MUTTER, EN 24032 M6M M6 NIPLBR	
1150	342903-0121	-		2	NUT WITH SPRING 8/6-M12X1	
1160	312115-0299	-		4	SCREW ISO4762 M4X30 A4	
1170	312812-0312	-		4	HEXAGON NUT, NY-LOCK M4 A480	
1180	90328-0026	A		2	SILENCER G1/4	
1190	90330-0013	-		2	NIPPLES, EXT. THREAD. ISO 7/1 R1/4-R1/8	
1200	90140-0015	-		2	T-PIPE, INT. THREAD, 2003-1/8	
1210	315233-0110	-		2	WASHER PL.RND.NYL.13,3/17,H=1	
1220	342732-0102	-		2	ELBOW PIPE JOINT, EXT.THREAD, D=6MM-G1/8	

Machine Type | Group Description | Used-In | Group Number | Page No

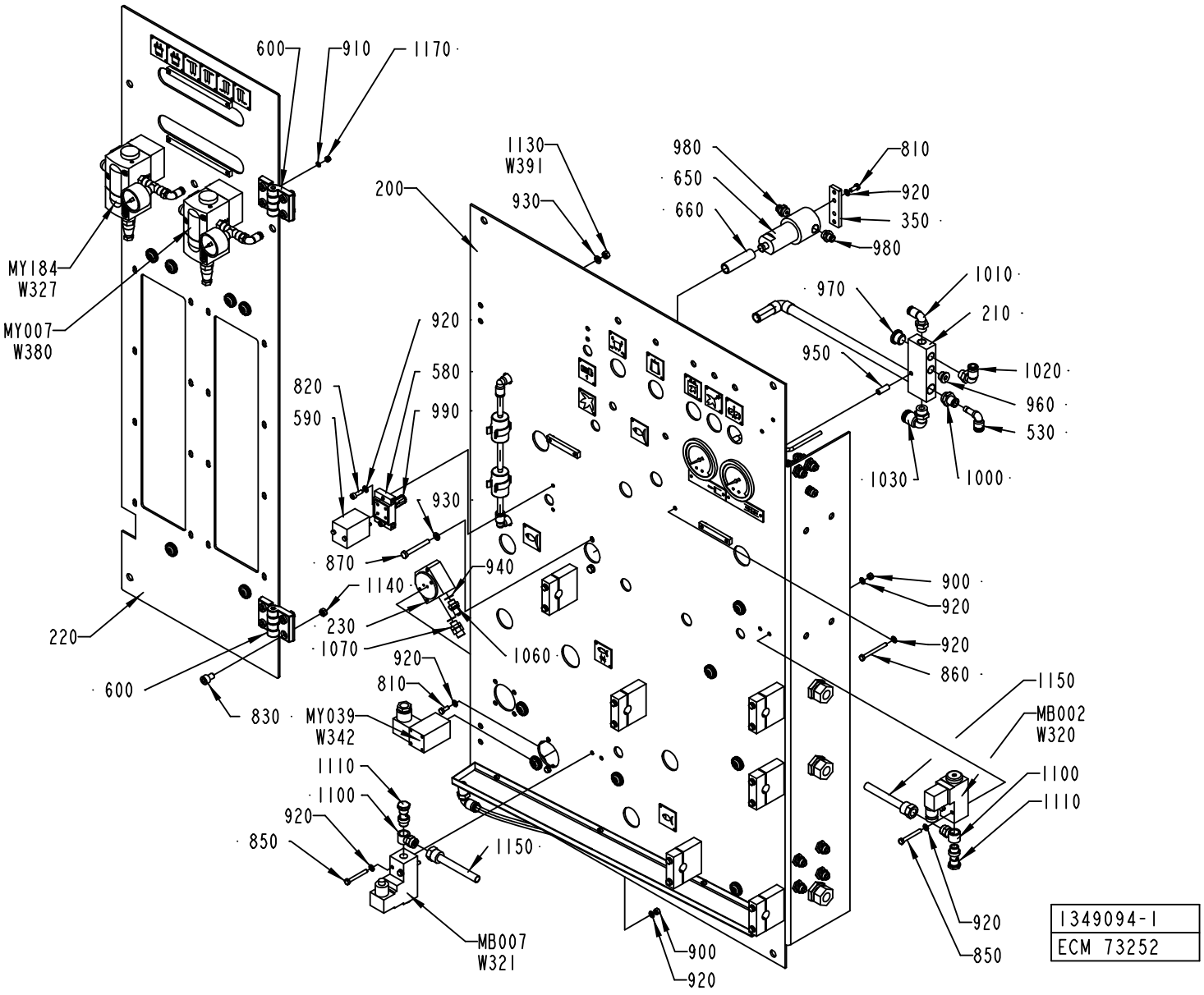
600
910
1170
1130
W391
930
200
980
650
660
810
920
350
980
MY184
W327
MY007
W380
970
1010
210
950
1020
960
530
1030
1000
920
580
990
820
590
930
870
940
1140
230
1070
1060
900
920
920
860
220
600
830
920
810
MY039
W342
1150
MB002
W320
1110
1100
920
850
1150
1100
1110
MB007
W321
900
920
920
850
1349094-1
ECM 73252

Pos	Part No	SP	UN	Qty	Description	Page No
- (Cont'd)						
1230	312115-0305	-		4	SCREW ISO4762 M4X50 A4	
1240	90458-2488	-		2	MEASURING HOSE DN2 L=1500MM, MAX 400BAR	
1250	342732-0801	-		1	ELBOW PIPE JOINT, EXT.THREAD, D=8MM-G1/8	
1260	90166-0061	-	M	1	HOSE 4/8 PVC TRANSP.	
MB002	90274-0074	A		1	PRESSURE GUARD, 530 KPA	
MB007	90274-0056	A		1	PRESSURE SWITCH, 100 - 1200 KPA	
MY039	90042-0173	A		1	SOLENOID VALVE BURKERT	
MY107	90458-1092	A		1	PROPORTIONAL VALVE 0 - 10V/0-6 BAR	
	90458-1262	*-*		*1*	*CONNECTOR 131028001 FOR PROP. VALVE*	
MY184	90458-1092	A		1	PROPORTIONAL VALVE 0 - 10V/0-6 BAR	
	90458-1262	*-*		*1*	*CONNECTOR 131028001 FOR PROP. VALVE*	
W320	351150-0403	-	M	3	CABLE OLFLEX 3X0,75 MM2 LIGHT/GREY	
W321	351150-0403	-	M	3	CABLE OLFLEX 3X0,75 MM2 LIGHT/GREY	
W327	90220-0091	-	M	7	PAIR TWISTED CABLE 2X2X0,25MM2	
W342	351150-0403	-	M	3	CABLE OLFLEX 3X0,75 MM2 LIGHT/GREY	
W380	90220-0091	-	M	7	PAIR TWISTED CABLE 2X2X0,25MM2	
W391	351162-0106	-	M	4	CABLE AWM 1X4 MM2 YELLOW-GREEN	

Pos	Part No	SP	UN	Qty	Description	Page No

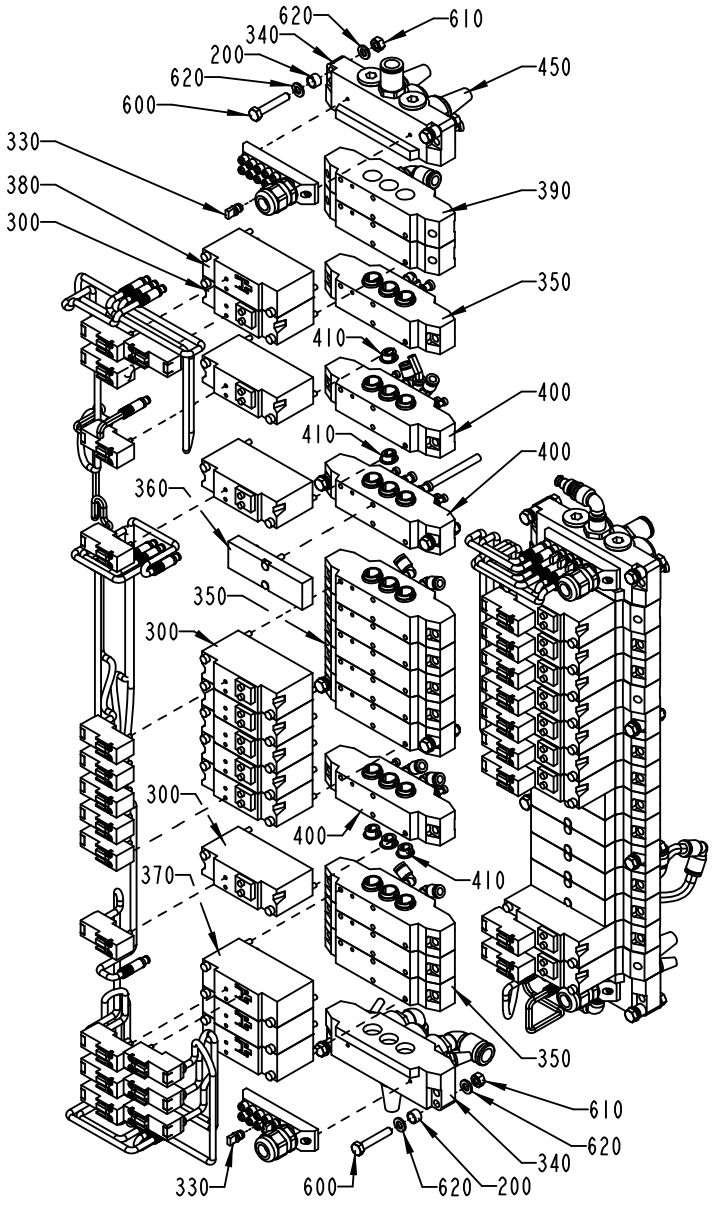

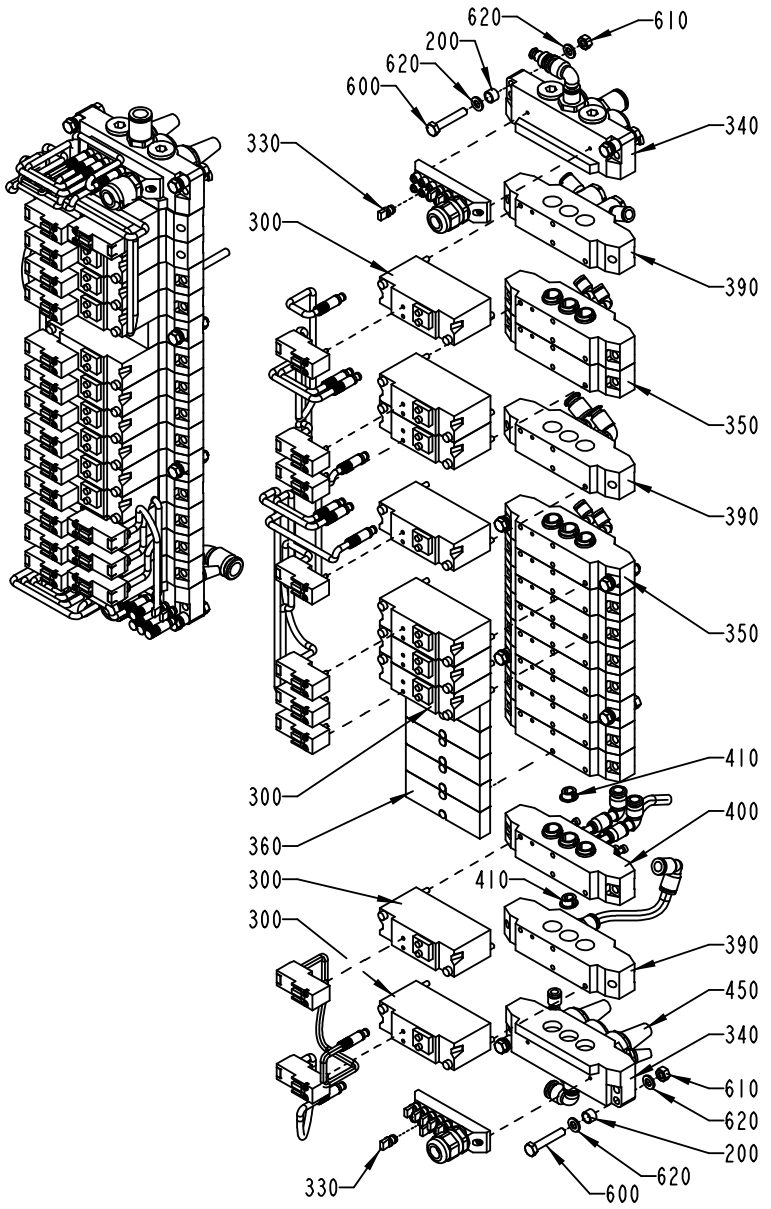

1478717-1
ECM 73254

ECM: 115883 - 20020930
Group number: 1478717-0100
Assembly Drawing: 1478717-1_1_AA

This list covers pages from 474 to 479

Pos	Part No	SP	UN	Qty	Description	Page No
-						
200	979219-0000	-		16	SPACER PIPE	
300	90042-0255	A		18	VALVE BODY 5/2 UNISTABLE	
330	90042-0550	-		14	PROTECTION PLUG FOR UNUSED CONNECTION	
340	90042-0565	-		4	PORTED END PIECE ISO VDMA 01	
350	90042-0566	-		19	BASE PLATE ISO VDMA 01	
360	90042-0567	-		6	BLANK PLATE VDMA SIZE 01	
370	90042-0579	A		3	VALVE BODY 2X3/2 NORM CLOSE	
380	90042-0580	A		1	VALVE BODY 5/2 BISTABLE	
390	90042-0581	-		5	BASE PLATE ISO VDMA 01	
400	90042-0586	-		4	BASE PLATE ISO VDMA 01	
410	90042-0587	-		7	BLANKING KIT SEALS VDMA SIZE 01	
420	90055-0217	-		32	ELBOW PIPE JOINT	
430	90055-0118	-		2	ELBOW PIPE JOINT -8MM	
440	90166-0081	-	M	4	TUBE 6 MM PA BLUE	
450	90328-0007	-		5	SILENCER	
460	90328-0017	-		2	SILENCER, D=6 MM	
600	312105-0376	-		16	SCREW M6S ISO 4014 M6X35 A480	
610	312605-0316	-		16	HEXAGON NUT, M6M M6 A280	
620	315105-0153	-		24	WASHER ISO 7089-6-200 HV-A4	
630	342713-0210	-		3	PLUG, EXT THREAD HEX SOCKET 8638-00-140	
640	342713-0211	-		13	PLUG, EXT THREAD HEX SOCKET 8638-00-380	
650	342715-0100	-		8	BLIND PLUG 4 MM	
660	342715-0102	-		26	BLIND PLUG 6 MM	
670	342722-0206	-		2	STRAIGHT COUPLING D=8-G3/8"	
680	342722-0210	-		2	RöRKOPPLING D=12-G3/8"	
690	342732-0103	-		1	ELBOW PIPE JOINT, EXT.THREAD, D=6MM-G1/4	
700	342732-0104	-		2	ELBOW PIPE JOINT, EXT.THREAD, D=8MM-G1/4	
710	342732-0110	-		2	ELBOW PIPE JOINT, EXT.THREAD,D=12MM-G3/8	
720	342722-0205	-		1	STRAIGHT COUPLING D=8-G1/4"	
730	90458-2169	-		3	INCREASER 6-8	
740	90055-0172	-		2	ELBOW WITH TAILPIECE 8/8 MM	
750	342735-0103	-		1	ELBOW PIPE JOINT	
760	90166-0013	-	M		TUBE 8 MM PA BLUE	
770	342716-0203	-		1	REDUCER 6-8	
780	90458-2661	A		3	THROTTLE CHECK VALVE G1/4" MANUAL, 8	
MX032	90042-0535	A		1	TERMINAL BOARD 19 CORDS	
MX033	90042-0535	A		1	TERMINAL BOARD 19 CORDS	
MX034	90042-0535	A		1	TERMINAL BOARD 19 CORDS	
MX035	90042-0535	A		1	TERMINAL BOARD 19 CORDS	
MY001	90042-0539	A		1	PILOT VALVE L=350MM	
MY002	90042-0539	A		1	PILOT VALVE L=350MM	
MY003	90042-0539	A		1	PILOT VALVE L=350MM	
MY005	90042-0539	A		1	PILOT VALVE L=350MM	
MY006	90042-0539	A		1	PILOT VALVE L=350MM	
MY007	90042-0539	A		1	PILOT VALVE L=350MM	
MY008	90042-0539	A		1	PILOT VALVE L=350MM	
MY009	90042-0539	A		1	PILOT VALVE L=350MM	
MY017	90042-0539	A		1	PILOT VALVE L=350MM	
MY019	90042-0539	A		1	PILOT VALVE L=350MM	
MY020	90042-0539	A		1	PILOT VALVE L=350MM	
MY021	90042-0539	A		1	PILOT VALVE L=350MM	
MY023	90042-0539	A		1	PILOT VALVE L=350MM	
MY024	90042-0539	A		1	PILOT VALVE L=350MM	
MY025	90042-0539	A		1	PILOT VALVE L=350MM	
MY026	90042-0539	A		1	PILOT VALVE L=350MM	
MY027	90042-0539	A		1	PILOT VALVE L=350MM	
MY030	90042-0539	A		1	PILOT VALVE L=350MM	
MY037	90042-0539	A		1	PILOT VALVE L=350MM	
MY086	90042-0539	A		1	PILOT VALVE L=350MM	
MY100	90042-0539	A		1	PILOT VALVE L=350MM	
MY102	90042-0539	A		1	PILOT VALVE L=350MM	
MY103	90042-0539	A		1	PILOT VALVE L=350MM	
MY105	90042-0539	A		1	PILOT VALVE L=350MM	
MY129	90042-0539	A		1	PILOT VALVE L=350MM	
MY915	90042-0539	A		1	PILOT VALVE L=350MM	

Machine Type	Group Description	Used-In	Group Number	Page No

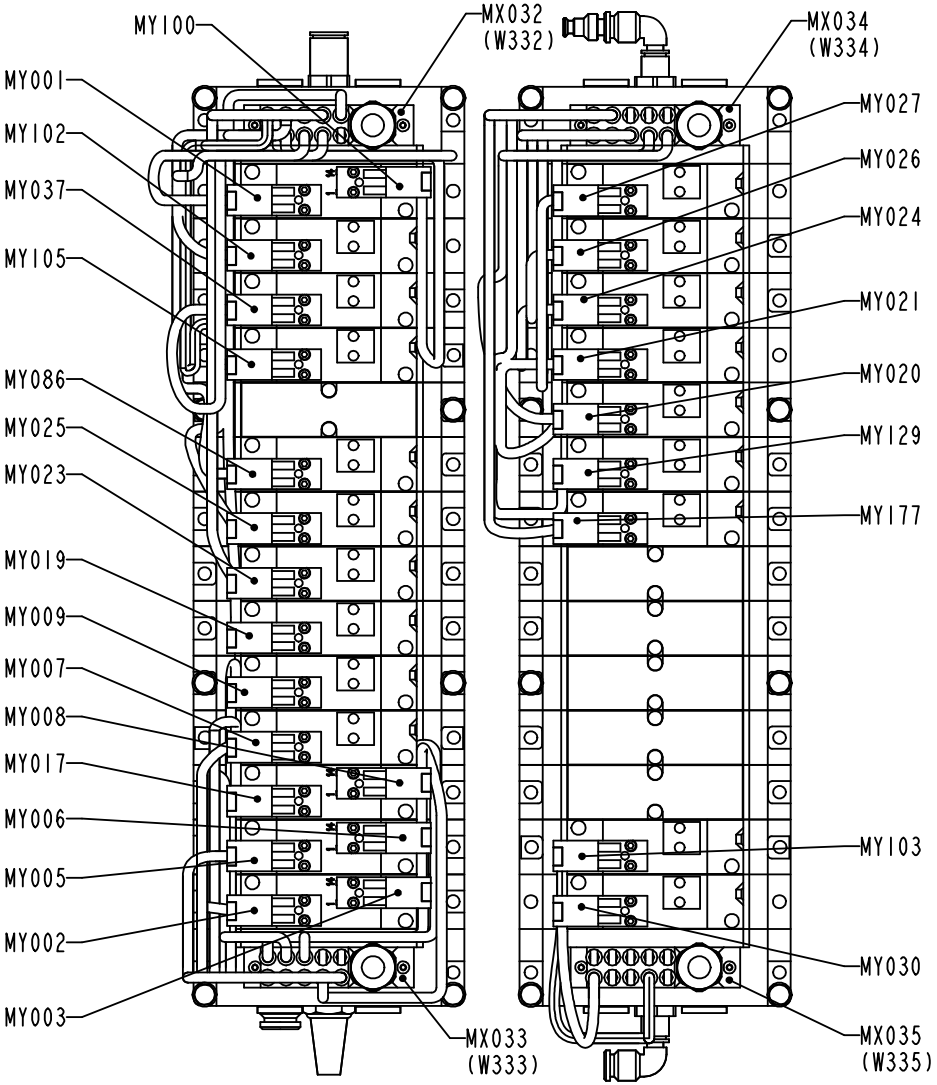
MY100
MX032 (W332)
MX034 (W334)
MY001
MY102
MY037
MY105
MY086
MY025
MY023
MY019
MY009
MY007
MY008
MY017
MY006
MY005
MY002
MY003
MY027
MY026
MY024
MY021
MY020
MY129
MY177
MY103
MY030
MX033 (W333)
MX035 (W335)

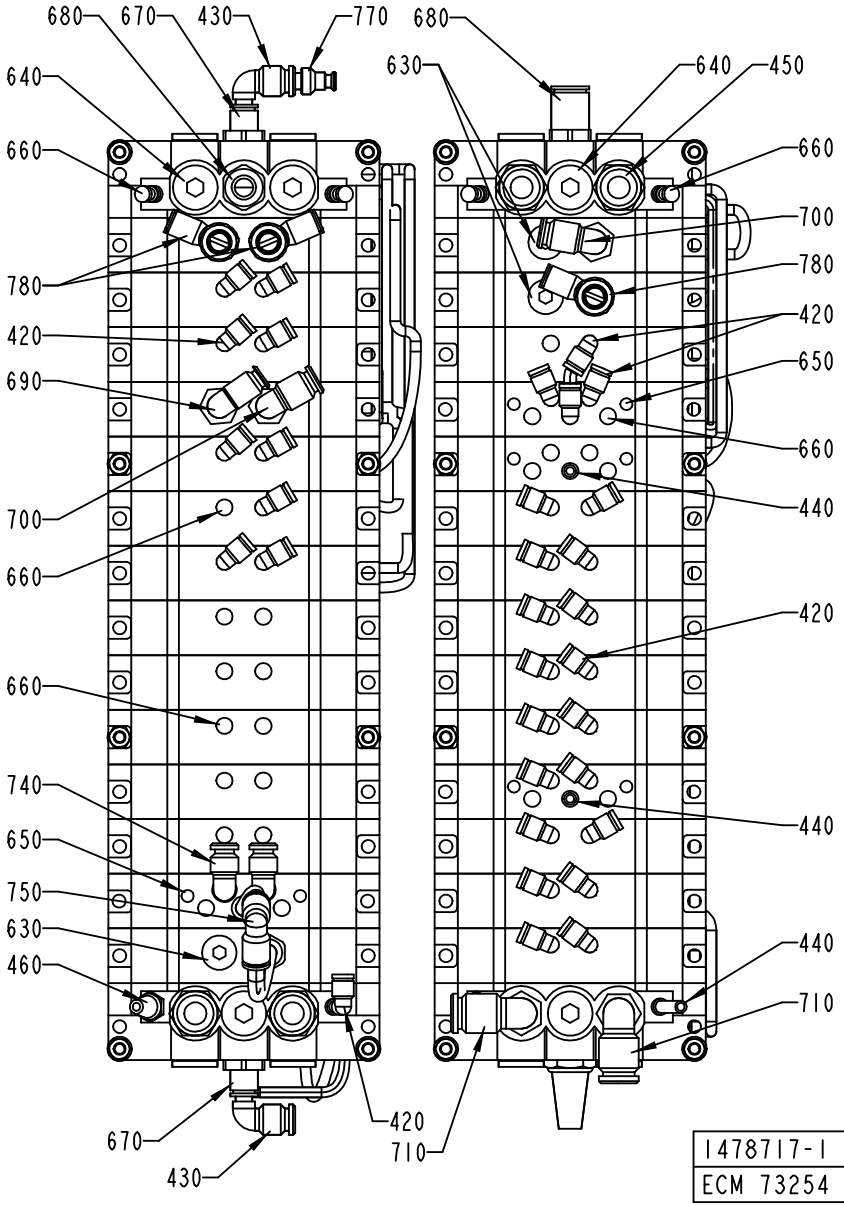
680
670
430
770
680
640
630
640
450
660
660
700
780
780
420
420
650
690
660
440
700
660
420
660
740
440
650
750
630
460
440
710
670
420
710
430
1478717-1
ECM 73254

ECM: 115883 - 20020930
Group number: 1478717-0100
Assembly Drawing: 1478717-1_2_AA

This list covers pages from 474 to 479

Pos	Part No	SP	UN	Qty	Description	Page No
-						
200	979219-0000	-		16	SPACER PIPE	
300	90042-0255	A		18	VALVE BODY 5/2 UNISTABLE	
330	90042-0550	-		14	PROTECTION PLUG FOR UNUSED CONNECTION	
340	90042-0565	-		4	PORTED END PIECE ISO VDMA 01	
350	90042-0566	-		19	BASE PLATE ISO VDMA 01	
360	90042-0567	-		6	BLANK PLATE VDMA SIZE 01	
370	90042-0579	A		3	VALVE BODY 2X3/2 NORM CLOSE	
380	90042-0580	A		1	VALVE BODY 5/2 BISTABLE	
390	90042-0581	-		5	BASE PLATE ISO VDMA 01	
400	90042-0586	-		4	BASE PLATE ISO VDMA 01	
410	90042-0587	-		7	BLANKING KIT SEALS VDMA SIZE 01	
420	90055-0217	-		32	ELBOW PIPE JOINT	
430	90055-0118	-		2	ELBOW PIPE JOINT -8MM	
440	90166-0081	-	M	4	TUBE 6 MM PA BLUE	
450	90328-0007	-		5	SILENCER	
460	90328-0017	-		2	SILENCER, D=6 MM	
600	312105-0376	-		16	SCREW M6S ISO 4014 M6X35 A480	
610	312605-0316	-		16	HEXAGON NUT, M6M M6 A280	
620	315105-0153	-		24	WASHER ISO 7089-6-200 HV-A4	
630	342713-0210	-		3	PLUG, EXT THREAD HEX SOCKET 8638-00-140	
640	342713-0211	-		13	PLUG, EXT THREAD HEX SOCKET 8638-00-380	
650	342715-0100	-		8	BLIND PLUG 4 MM	
660	342715-0102	-		26	BLIND PLUG 6 MM	
670	342722-0206	-		2	STRAIGHT COUPLING D=8-G3/8"	
680	342722-0210	-		2	RöRKOPPLING D=12-G3/8"	
690	342732-0103	-		1	ELBOW PIPE JOINT, EXT.THREAD, D=6MM-G1/4	
700	342732-0104	-		2	ELBOW PIPE JOINT, EXT.THREAD, D=8MM-G1/4	
710	342732-0110	-		2	ELBOW PIPE JOINT, EXT.THREAD,D=12MM-G3/8	
720	342722-0205	-		1	STRAIGHT COUPLING D=8-G1/4"	
730	90458-2169	-		3	INCREASER 6-8	
740	90055-0172	-		2	ELBOW WITH TAILPIECE 8/8 MM	
750	342735-0103	-		1	ELBOW PIPE JOINT	
760	90166-0013	-	M		TUBE 8 MM PA BLUE	
770	342716-0203	-		1	REDUCER 6-8	
780	90458-2661	A		3	THROTTLE CHECK VALVE G1/4" MANUAL, 8	
MX032	90042-0535	A		1	TERMINAL BOARD 19 CORDS	
MX033	90042-0535	A		1	TERMINAL BOARD 19 CORDS	
MX034	90042-0535	A		1	TERMINAL BOARD 19 CORDS	
MX035	90042-0535	A		1	TERMINAL BOARD 19 CORDS	
MY001	90042-0539	A		1	PILOT VALVE L=350MM	
MY002	90042-0539	A		1	PILOT VALVE L=350MM	
MY003	90042-0539	A		1	PILOT VALVE L=350MM	
MY005	90042-0539	A		1	PILOT VALVE L=350MM	
MY006	90042-0539	A		1	PILOT VALVE L=350MM	
MY007	90042-0539	A		1	PILOT VALVE L=350MM	
MY008	90042-0539	A		1	PILOT VALVE L=350MM	
MY009	90042-0539	A		1	PILOT VALVE L=350MM	
MY017	90042-0539	A		1	PILOT VALVE L=350MM	
MY019	90042-0539	A		1	PILOT VALVE L=350MM	
MY020	90042-0539	A		1	PILOT VALVE L=350MM	
MY021	90042-0539	A		1	PILOT VALVE L=350MM	
MY023	90042-0539	A		1	PILOT VALVE L=350MM	
MY024	90042-0539	A		1	PILOT VALVE L=350MM	
MY025	90042-0539	A		1	PILOT VALVE L=350MM	
MY026	90042-0539	A		1	PILOT VALVE L=350MM	
MY027	90042-0539	A		1	PILOT VALVE L=350MM	
MY030	90042-0539	A		1	PILOT VALVE L=350MM	
MY037	90042-0539	A		1	PILOT VALVE L=350MM	
MY086	90042-0539	A		1	PILOT VALVE L=350MM	
MY100	90042-0539	A		1	PILOT VALVE L=350MM	
MY102	90042-0539	A		1	PILOT VALVE L=350MM	
MY103	90042-0539	A		1	PILOT VALVE L=350MM	
MY105	90042-0539	A		1	PILOT VALVE L=350MM	
MY129	90042-0539	A		1	PILOT VALVE L=350MM	
MY915	90042-0539	A		1	PILOT VALVE L=350MM	

Machine Type	Group Description	Used-In	Group Number	Page No

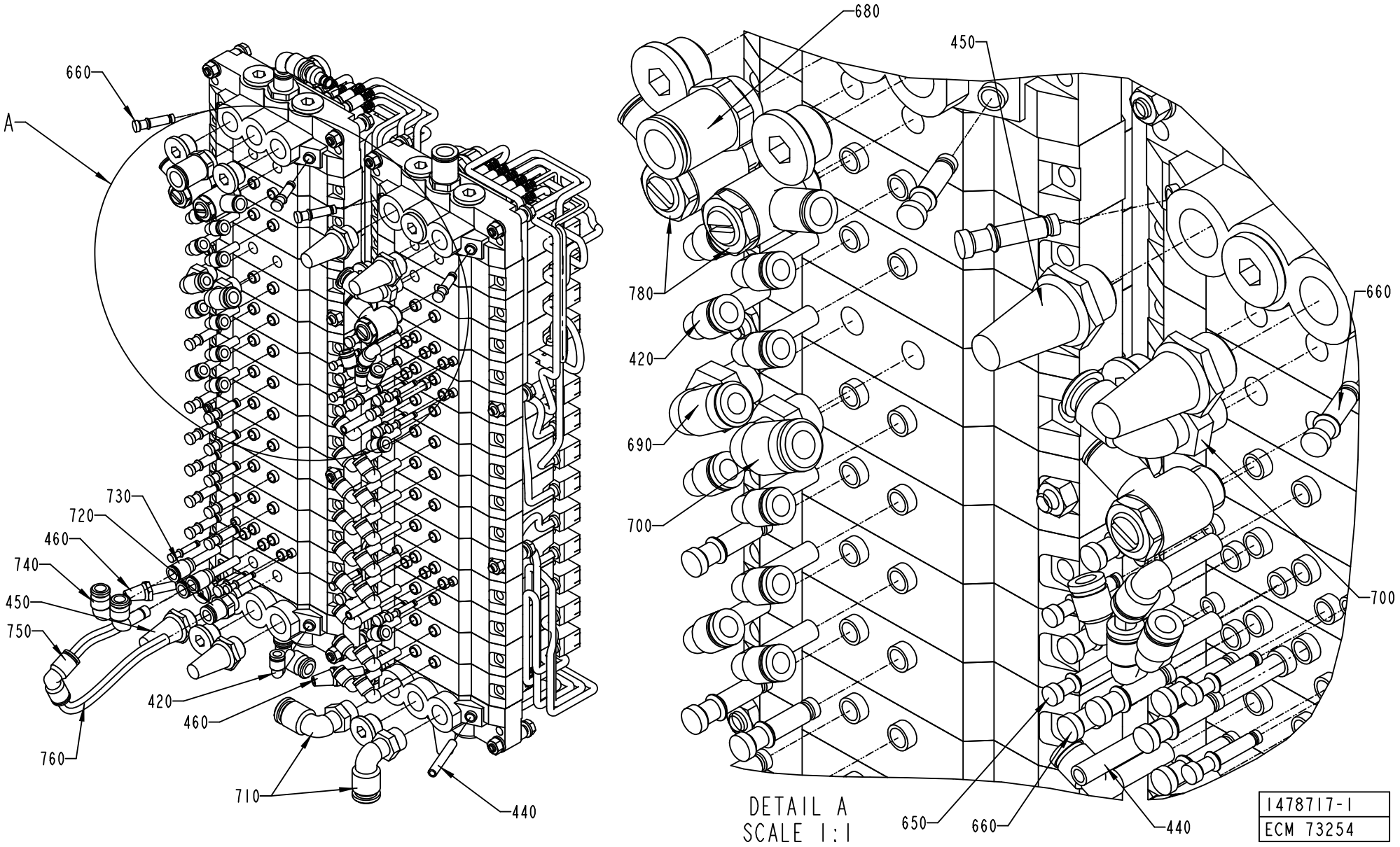
660
A
730
720
460
740
450
750
760
420
460
710
440
680
450
780
420
690
700
660
700
650
660
440
DETAIL A
SCALE 1:1
1478717-1
ECM 73254

ECM: 115883 - 20020930
Group number: 1478717-0100
Assembly Drawing: 1478717-1_3_AA

This list covers pages from 474 to 479

Pos	Part No	SP	UN	Qty	Description	Page No
-						
200	979219-0000	-		16	SPACER PIPE	
300	90042-0255	A		18	VALVE BODY 5/2 UNISTABLE	
330	90042-0550	-		14	PROTECTION PLUG FOR UNUSED CONNECTION	
340	90042-0565	-		4	PORTED END PIECE ISO VDMA 01	
350	90042-0566	-		19	BASE PLATE ISO VDMA 01	
360	90042-0567	-		6	BLANK PLATE VDMA SIZE 01	
370	90042-0579	A		3	VALVE BODY 2X3/2 NORM CLOSE	
380	90042-0580	A		1	VALVE BODY 5/2 BISTABLE	
390	90042-0581	-		5	BASE PLATE ISO VDMA 01	
400	90042-0586	-		4	BASE PLATE ISO VDMA 01	
410	90042-0587	-		7	BLANKING KIT SEALS VDMA SIZE 01	
420	90055-0217	-		32	ELBOW PIPE JOINT	
430	90055-0118	-		2	ELBOW PIPE JOINT -8MM	
440	90166-0081	-	M	4	TUBE 6 MM PA BLUE	
450	90328-0007	-		5	SILENCER	
460	90328-0017	-		2	SILENCER, D=6 MM	
600	312105-0376	-		16	SCREW M6S ISO 4014 M6X35 A480	
610	312605-0316	-		16	HEXAGON NUT, M6M M6 A280	
620	315105-0153	-		24	WASHER ISO 7089-6-200 HV-A4	
630	342713-0210	-		3	PLUG, EXT THREAD HEX SOCKET 8638-00-140	
640	342713-0211	-		13	PLUG, EXT THREAD HEX SOCKET 8638-00-380	
650	342715-0100	-		8	BLIND PLUG 4 MM	
660	342715-0102	-		26	BLIND PLUG 6 MM	
670	342722-0206	-		2	STRAIGHT COUPLING D=8-G3/8"	
680	342722-0210	-		2	RöRKOPPLING D=12-G3/8"	
690	342732-0103	-		1	ELBOW PIPE JOINT, EXT.THREAD, D=6MM-G1/4	
700	342732-0104	-		2	ELBOW PIPE JOINT, EXT.THREAD, D=8MM-G1/4	
710	342732-0110	-		2	ELBOW PIPE JOINT, EXT.THREAD,D=12MM-G3/8	
720	342722-0205	-		1	STRAIGHT COUPLING D=8-G1/4"	
730	90458-2169	-		3	INCREASER 6-8	
740	90055-0172	-		2	ELBOW WITH TAILPIECE 8/8 MM	
750	342735-0103	-		1	ELBOW PIPE JOINT	
760	90166-0013	-	M		TUBE 8 MM PA BLUE	
770	342716-0203	-		1	REDUCER 6-8	
780	90458-2661	A		3	THROTTLE CHECK VALVE G1/4" MANUAL, 8	
MX032	90042-0535	A		1	TERMINAL BOARD 19 CORDS	
MX033	90042-0535	A		1	TERMINAL BOARD 19 CORDS	
MX034	90042-0535	A		1	TERMINAL BOARD 19 CORDS	
MX035	90042-0535	A		1	TERMINAL BOARD 19 CORDS	
MY001	90042-0539	A		1	PILOT VALVE L=350MM	
MY002	90042-0539	A		1	PILOT VALVE L=350MM	
MY003	90042-0539	A		1	PILOT VALVE L=350MM	
MY005	90042-0539	A		1	PILOT VALVE L=350MM	
MY006	90042-0539	A		1	PILOT VALVE L=350MM	
MY007	90042-0539	A		1	PILOT VALVE L=350MM	
MY008	90042-0539	A		1	PILOT VALVE L=350MM	
MY009	90042-0539	A		1	PILOT VALVE L=350MM	
MY017	90042-0539	A		1	PILOT VALVE L=350MM	
MY019	90042-0539	A		1	PILOT VALVE L=350MM	
MY020	90042-0539	A		1	PILOT VALVE L=350MM	
MY021	90042-0539	A		1	PILOT VALVE L=350MM	
MY023	90042-0539	A		1	PILOT VALVE L=350MM	
MY024	90042-0539	A		1	PILOT VALVE L=350MM	
MY025	90042-0539	A		1	PILOT VALVE L=350MM	
MY026	90042-0539	A		1	PILOT VALVE L=350MM	
MY027	90042-0539	A		1	PILOT VALVE L=350MM	
MY030	90042-0539	A		1	PILOT VALVE L=350MM	
MY037	90042-0539	A		1	PILOT VALVE L=350MM	
MY086	90042-0539	A		1	PILOT VALVE L=350MM	
MY100	90042-0539	A		1	PILOT VALVE L=350MM	
MY102	90042-0539	A		1	PILOT VALVE L=350MM	
MY103	90042-0539	A		1	PILOT VALVE L=350MM	
MY105	90042-0539	A		1	PILOT VALVE L=350MM	
MY129	90042-0539	A		1	PILOT VALVE L=350MM	
MY915	90042-0539	A		1	PILOT VALVE L=350MM	

Machine Type	Group Description	Used-In	Group Number	Page No

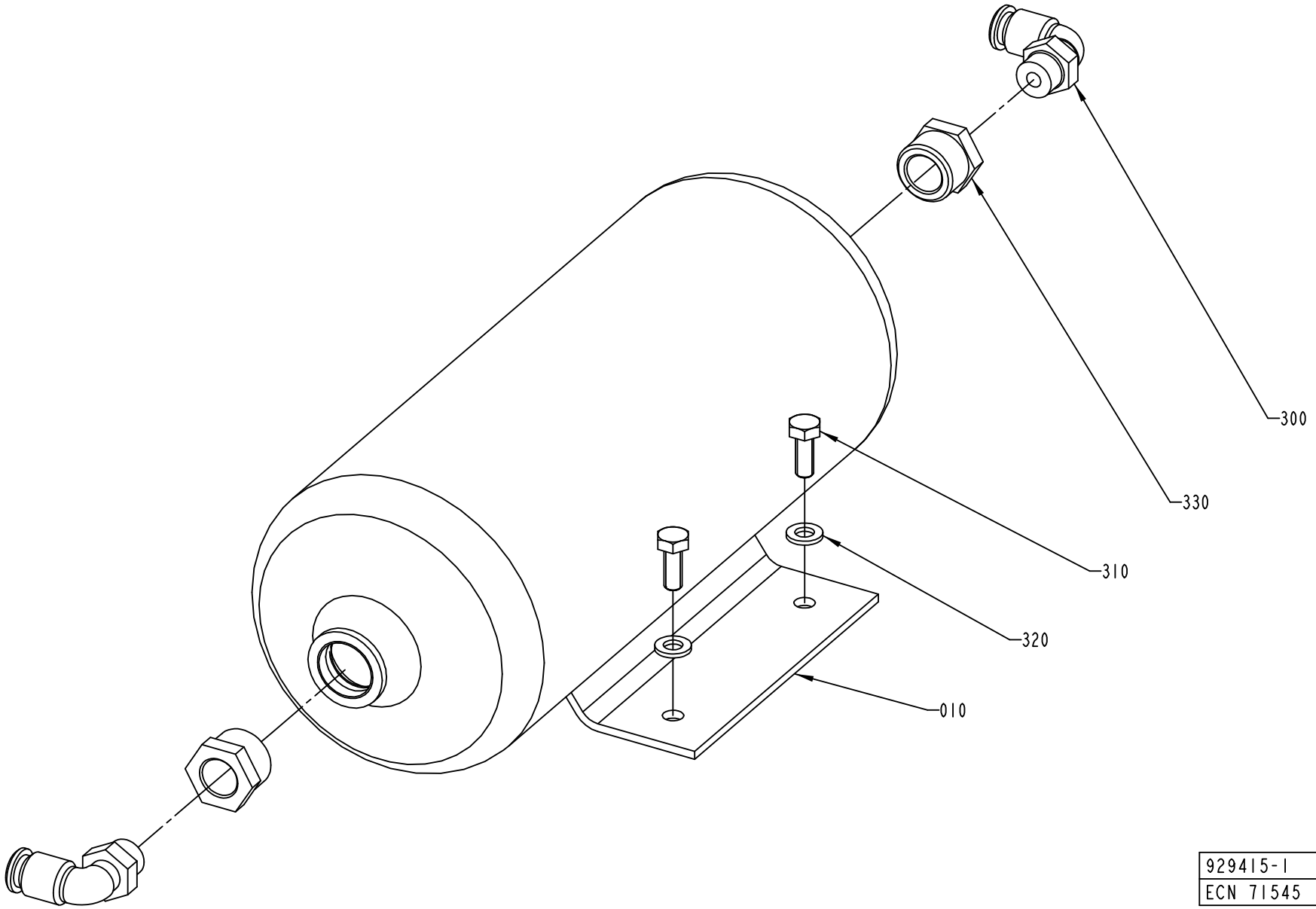

929415-1
ECN 71545

ECM: 71545 - 20010502
Group number: 929415-0100
Assembly Drawing: 929415-1_1_AC

Pos	Part No	SP	UN	Qty	Description	Page No
-						
010	90457-0100	-		1	ACCUMULATOR CRVZS-2	
300	342732-0104	-		2	ELBOW PIPE JOINT, EXT.THREAD, D=8MM-G1/4	
310	312105-0368	-		2	SCREW M6S M6X16 A280	
320	315105-0153	-		2	WASHER ISO 7089-6-200 HV-A4	
330	342701-0205	-		2	BUSHING,INT./EXT.G-THREAD G1/2"-G1/4"	

Pos	Part No	SP	UN	Qty	Description	Page No

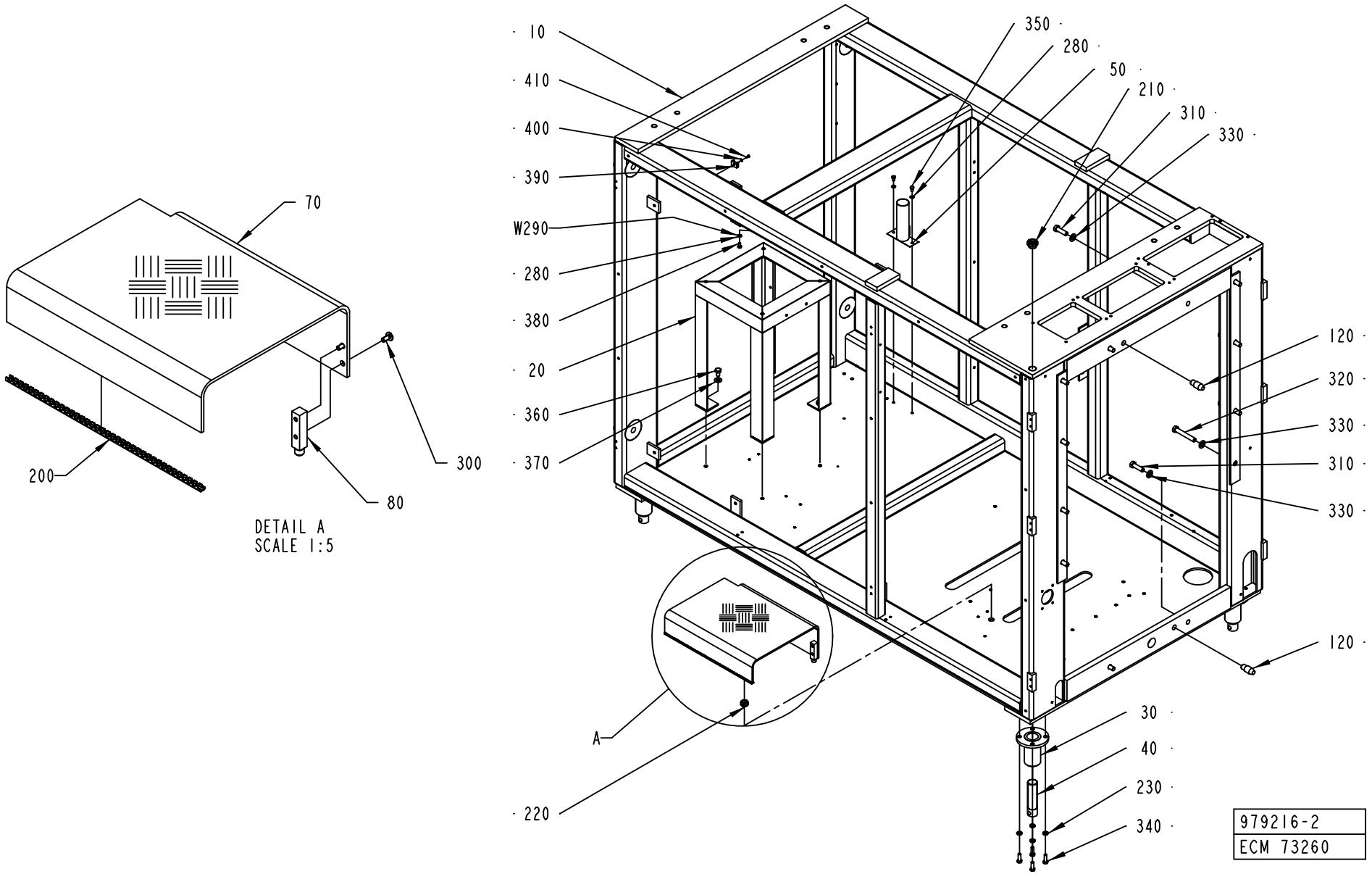
10
410
400
390
W290
280
380
20
360
370
350
280
50
210
310
330
120
320
330
310
330
120
30
40
230
340
A
220
70
200
300
80
DETAIL A
SCALE 1:5
979216-2
ECM 73260

ECM: 73260 - 20011220
Group number: 979216-0200
Assembly Drawing: 979216-2_1_AA

Pos	Part No	SP	UN	Qty	Description	Page No
-						
010	1512486-0000	-		1	MACHINE BODY	
020	1512489-0000	-		1	LITTLE FRAME	
030	469095-0000	-		4	HOLDER	
040	469096-0000	-		4	LEG	
050	295259-0000	-		1	HOLDER	
070	2518415-0000	-		1	COVER PLATE	
080	2518416-0000	-		2	JOINT BOLT	
120	1517252-0000	-		2	BOLT Ø20H7	
200	90143-0062	-	MM	380	STRIP	
210	90458-2487	-		1	SCREW PLUG HD-PE, M24	
220	90458-1227	-		2	LEAD-IN, BUSHING, DA 130/170/50	
230	315105-0165	-		16	WASHER ISO 7089-8-200 HV-A4	
280	315105-0153	-		3	WASHER ISO 7089-6-200 HV-A4	
300	90287-0075	-		4	SCREW SLOT. PAN HEAD LKCS M6X12	
310	312105-0540	-		4	SCREW M6S ISO 4017 M12X40 A480	
320	312105-0548	-		8	SCREW M6S ISO 4014 M12X80 A480	
330	315105-0178	-		12	WASHER ISO 7089-12-200 HV-A4	
340	312105-0453	-		16	SCREW M6S ISO 4017 M8X25 A480	
350	312105-0364	-		2	SCREW M6S ISO 4017 M6X10 A480	
360	312105-0489	-		4	SCREW M6S ISO 4017 M10X16 A480	
370	315105-0173	-		4	WASHER ISO 7089-10-200 HV-A4	
380	312105-0366	-		1	SCREW M6S M6X12 A280	
390	352113-0203	-		2	ANCHOR PLATES FOR STRIPS, TYPE TM3S8-M0	
400	315105-0136	-		2	WASHER ISO 7089-4-200 HV-A4	
410	312125-0287	-		2	SCREW PAN HEAD MCS M4X8 SS	
W390	351162-0109	-	M	4	CABLE AWM 1X16 MM2 YELLOW-GREEN	

Pos	Part No	SP	UN	Qty	Description	Page No

Machine Type | Group Description | Used-In | Group Number | Page No

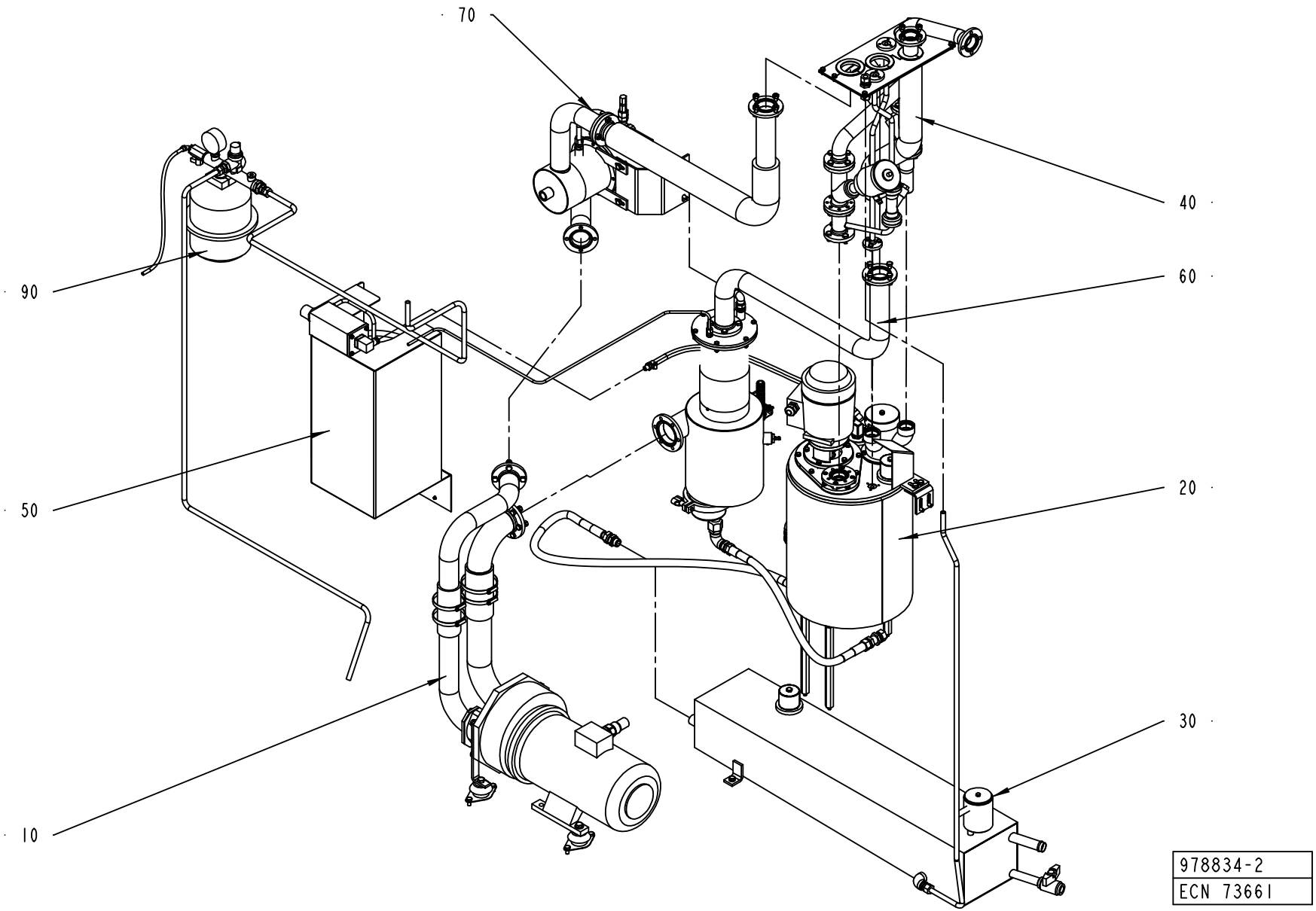
70
40
90
60
50
20
30
10
978834-2
ECN 7366I

ECM: 73661 - 20011025
Group number: 978834-0200
Assembly Drawing: 978834-2_1_AA

Pos	Part No	SP	UN	Qty	Description	Page No
-						
010	469452-0500	-		1	COMPRESSOR UNIT	**487**
020	751373-0300	-		1	PEROXIDE TANK	**489**
030	751398-0400	-		1	TANK	**495**
040	978835-0200	-		1	PIPE WORK	**497**
050	979328-0200	-		1	CABINET	**499**
060	978988-0200	-		1	SEPARATOR	**505**
070	978989-0200	-		1	SCRUBBER	**507**
090	979026-0200	-		1	WATER CIRCULATION	**509**

Pos	Part No	SP	UN	Qty	Description	Page No

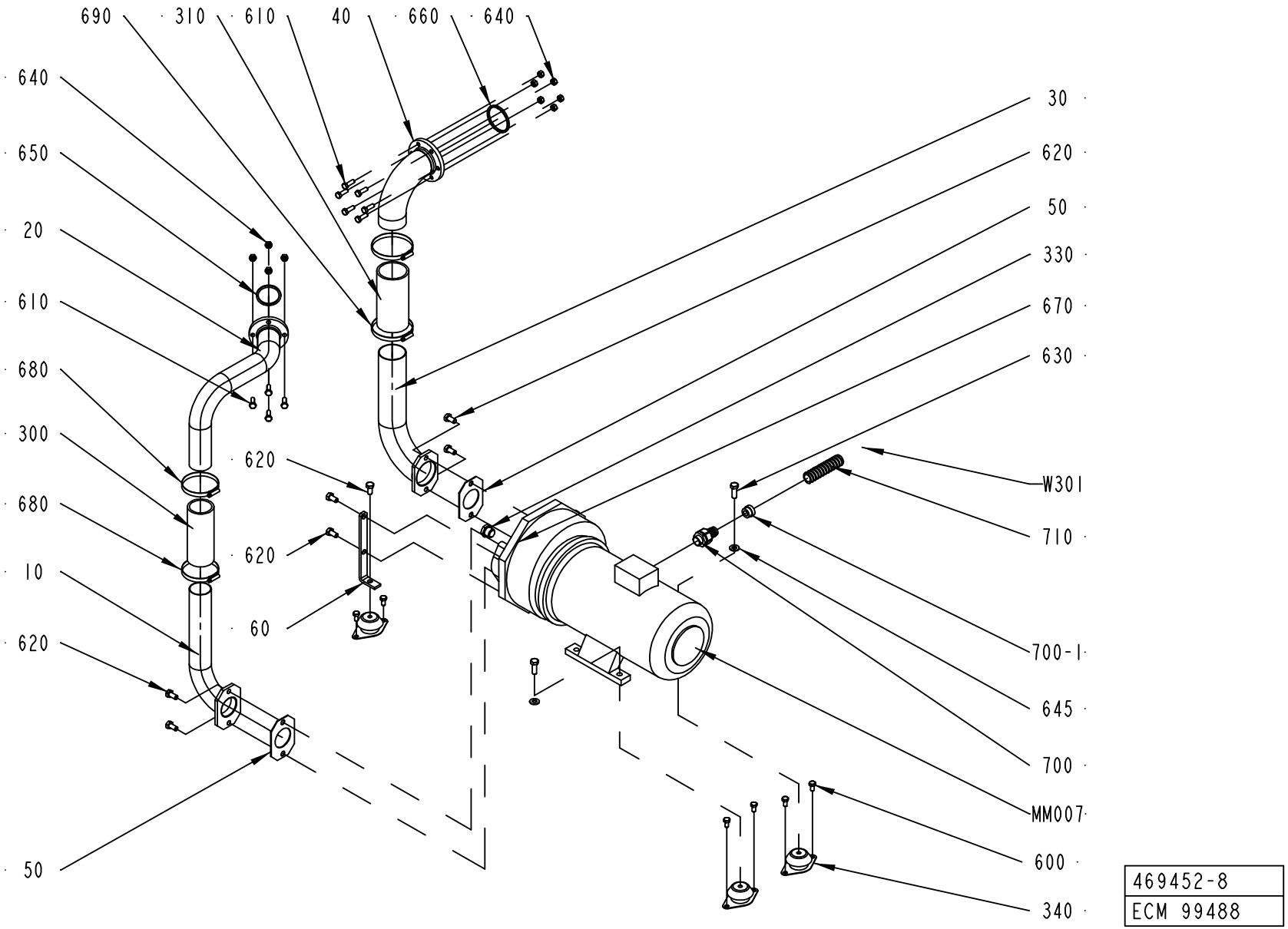
690
310
610
40
660
640
640
650
20
610
680
300
680
10
620
50
620
620
60
30
620
50
330
670
630
W301
710
700-1
645
700
MM007
600
340
469452-8
ECM 99488

ECM: 115872 - 20020930
Group number: 469452-0500
Assembly Drawing: 469452-8_1_AC

Pos	Part No	SP	UN	Qty	Description	Page No
-						
010	978963-0000	-		1	PIPE	
020	1511774-0000	-		1	PIPE	
030	979069-0000	-		1	PIPE	
040	2514391-0000	-		1	PIPE	
	343421-0106	*-*		*1*	*FLANGE FOR AIR & PER. PIPE F D=63,5 MM*	
050	230551-0000	B		2	GASKET	
060	269859-0000	-		2	BRACKET	
300	90166-0244	B	MM	200	RUBBER HOSE	
310	90166-0245	B	MM	200	RUBBER HOSE	
330	90330-0037	-		1	PLUG, EXT. G-THREAD, G1/2	
340	90347-0144	B		4	VIBRATION DAMPER, NO. RA 40EM-A	
600	312105-0449	-		8	SCREW M6S ISO 4017 M8X16 A480	
610	312105-0453	-		10	SCREW M6S ISO 4017 M8X25 A480	
620	312105-0491	-		10	SCREW M6S ISO 4017 M10X20 A480	
630	312105-0495	B		2	SCREW M6S ISO 4017 M10X30 A480	
640	312605-0318	-		10	HEXAGON NUT, M6M M8 A280	
645	315105-0173	-		2	WASHER ISO 7089-10-200 HV-A4	
650	315229-0105	B		1	GASKETS, 48,5X55,5X3,7 MM 2" FDA	
660	315229-0106	B		1	GASKETS, 61,2X68,2X3,7 MM 2"1/2 FD	
670	315234-0113	-		1	WASHER PL.RND.CU.21,3//26 H=1,5	
680	342991-0112	-		2	HOSE CLIP,WORM DRIVE TYPE (73)-83	
690	342991-0113	-		2	HOSE CLIP,WORM DRIVE TYPE (83)-93	
700	353243-0005	-		1	EXTENDED WITHOUT INSERT, PG16	
700-1	353249-0013	-		1	INSERT, SINGEL HOLE, EK 154/13	
710	90152-0051	-	M	2	SPIRAL CONDUIT, 25X18, UL 1816	
MM007	90270-0017	A		1	COMPRESSOR NASH/ELMO 112 MB/4-2083	
W301	351150-0418	-	M	4	CABLE OLFLEX 4X2,5 MM2 LIGHT/GREY	

Pos	Part No	SP	UN	Qty	Description	Page No

Machine Type | Group Description | Used-In | Group Number | Page No

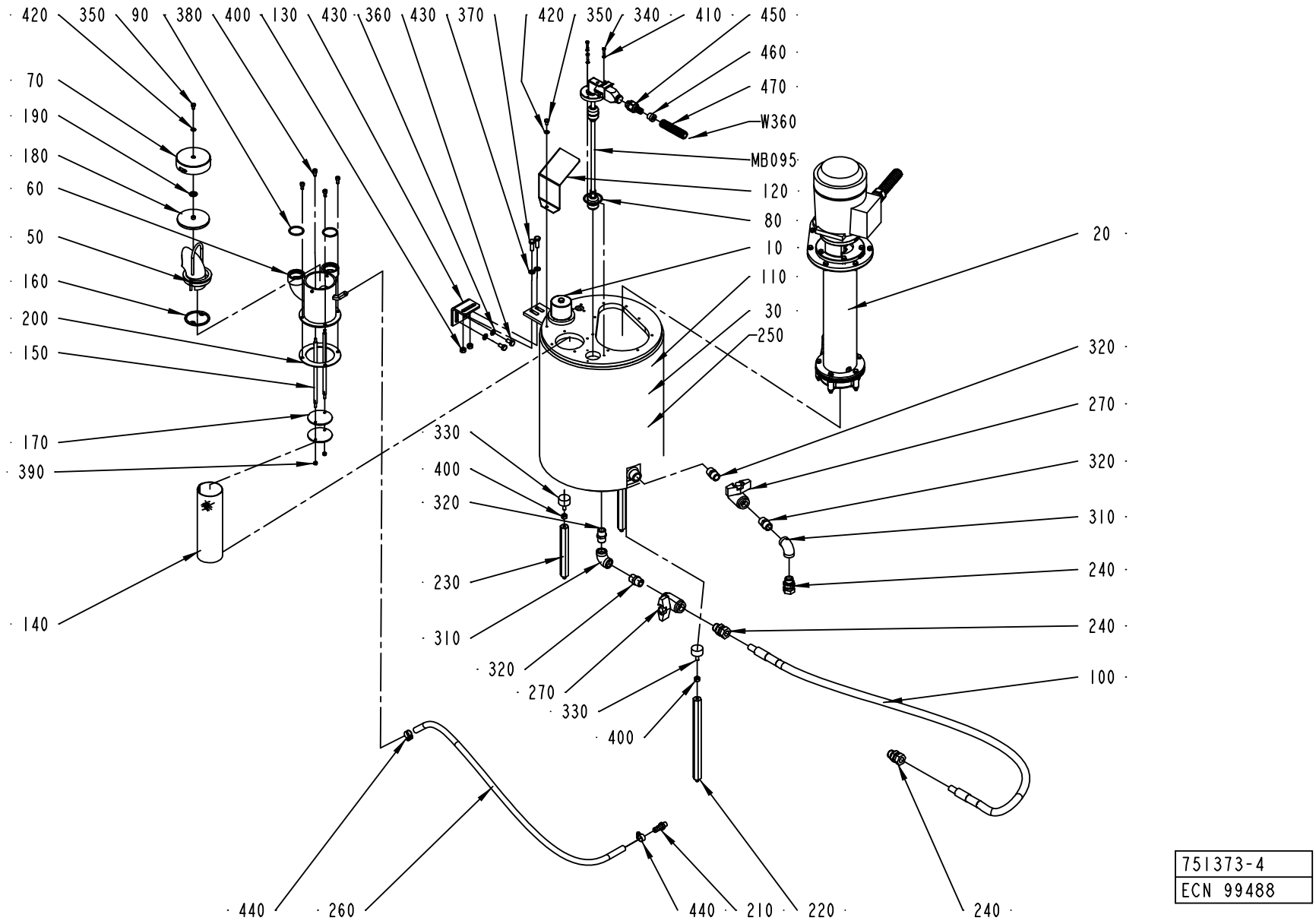

751373-4
ECN 99488

ECM: 115881 - 20020930
Group number: 751373-0300
Assembly Drawing: 751373-4_1_AC

Pos	Part No	SP	UN	Qty	Description	Page No
-						
010	493652-0100	-		1	LID	**491**
020	751393-0300	-		1	PEROXIDE PUMP	**493**
030	1523058-0000	-		1	TANK	
050	1523059-0000	B		1	HOLDER	
060	1523060-0000	B		1	FILLER TUBE	
070	751220-0000	-		1	FILLER CAP	
080	927422-0007	B		1	O-RING 44.2X3 SILICON	
090	927422-0014	B		2	O-RING 34.2X3 SILICON	
100	978973-0001	-		1	HOSE	
110	1499899-0000	-		1	INSULATION CLOTH	
120	1296118-0000	-		1	PROTECTION	
130	1499060-0000	-		1	HOLDER	
140	257202-0000	B		1	STRAINER	
150	491203-0000	-		2	STRUT	
160	491303-0000	-		1	WASHER	
170	491304-0000	-		2	WASHER	
180	563286-0000	B		1	GASKET	
190	563287-0000	-		1	WASHER	
200	577773-0000	B		1	GASKET	
210	979336-0000	-		1	HOSE NIPPLE	
220	1499061-0000	-		2	PILLAR	
230	1499062-0000	-		1	PILLAR	
240	90030-0188	-		3	CONN. STR. GA-15-G1/2	
250	90153-0048	-		1	ADHESIVE,DEVCON TYPE 5-MIN-EPOXI 28G	
260	90166-0138	-	MM	1300	HOSE	
270	90187-0059	-		2	BALL VALVE FOR HYDR.PER. G1/2 3MM HOLE	
310	90330-0020	-		2	ELBOW, 90 INT. THREAD, R-2221/2	
320	90330-0021	-		4	NIPPLES, EXT. THREAD. R-207R1/2	
330	90347-0004	B		3	VIBRATION DAMPER D=30 TH=M8 H=17 H2=21MM	
340	312105-0293	-		3	SCREW M6S ISO 4017 M4X16 A480	
350	312105-0364	-		2	SCREW M6S ISO 4017 M6X10 A480	
360	312105-0449	-		2	SCREW M6S ISO 4017 M8X16 A480	
370	312105-0453	-		2	SCREW M6S ISO 4017 M8X25 A480	
380	312115-0366	-		4	SCREW ISO4762 M6X12 A4	
390	312605-0314	-		2	HEXAGON NUT, M6M M5 A280	
400	312605-0318	-		5	HEXAGON NUT, M6M M8 A280	
410	315105-0136	-		3	WASHER ISO 7089-4-200 HV-A4	
420	315105-0153	-		2	WASHER ISO 7089-6-200 HV-A4	
430	315105-0165	-		4	WASHER ISO 7089-8-200 HV-A4	
440	342991-0101	-		2	HOSE CLIP,WORM DRIVE TYPE (13)-16	
450	353243-0002	-		1	EXTENDED WITHOUT INSERT, PG11	
460	353249-0009	-		1	INSERT, SINGEL HOLE, EK 152/9	
470	90152-0059	-	M	2	SPIRAL CONDUIT, 18X12, UL 1211	
MB095	1282411-0000	A		1	FLOAT	
W360	351150-0405	-	M	3	CABLE OLFLEX 5X0,75 MM2 LIGHT/GREY	

Machine Type | Group Description | Used-In | Group Number | Page No

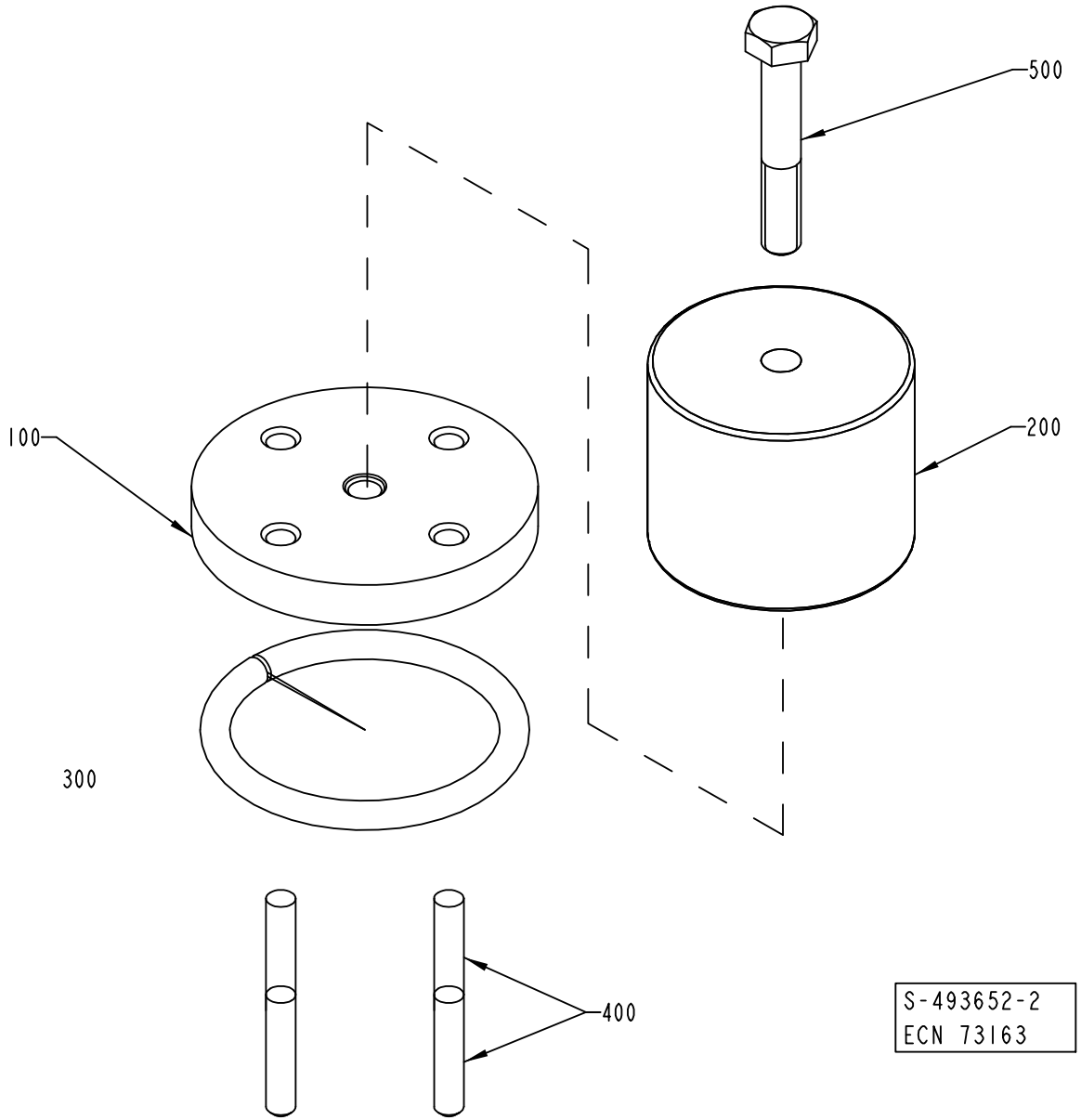
500
200
100
300
400
S-493652-2
ECN 73163

ECM: 73163 - 20000421
Group number: 493652-0100
Assembly Drawing: 493652-2_1_AB

Pos	Part No	SP	UN	Qty	Description	Page No
-						
100	273964-0000	-		1	LID	
200	273965-0001	-		1	WEIGHT	
300	90143-0020	-	MM	190	STRIP	
400	311103-0357	-		4	PARALLELL PIN, M6, 6X30 MM	
500	312105-0461	-		1	SCREW M6S ISO 4014 M8X50 A480	

Pos	Part No	SP	UN	Qty	Description	Page No

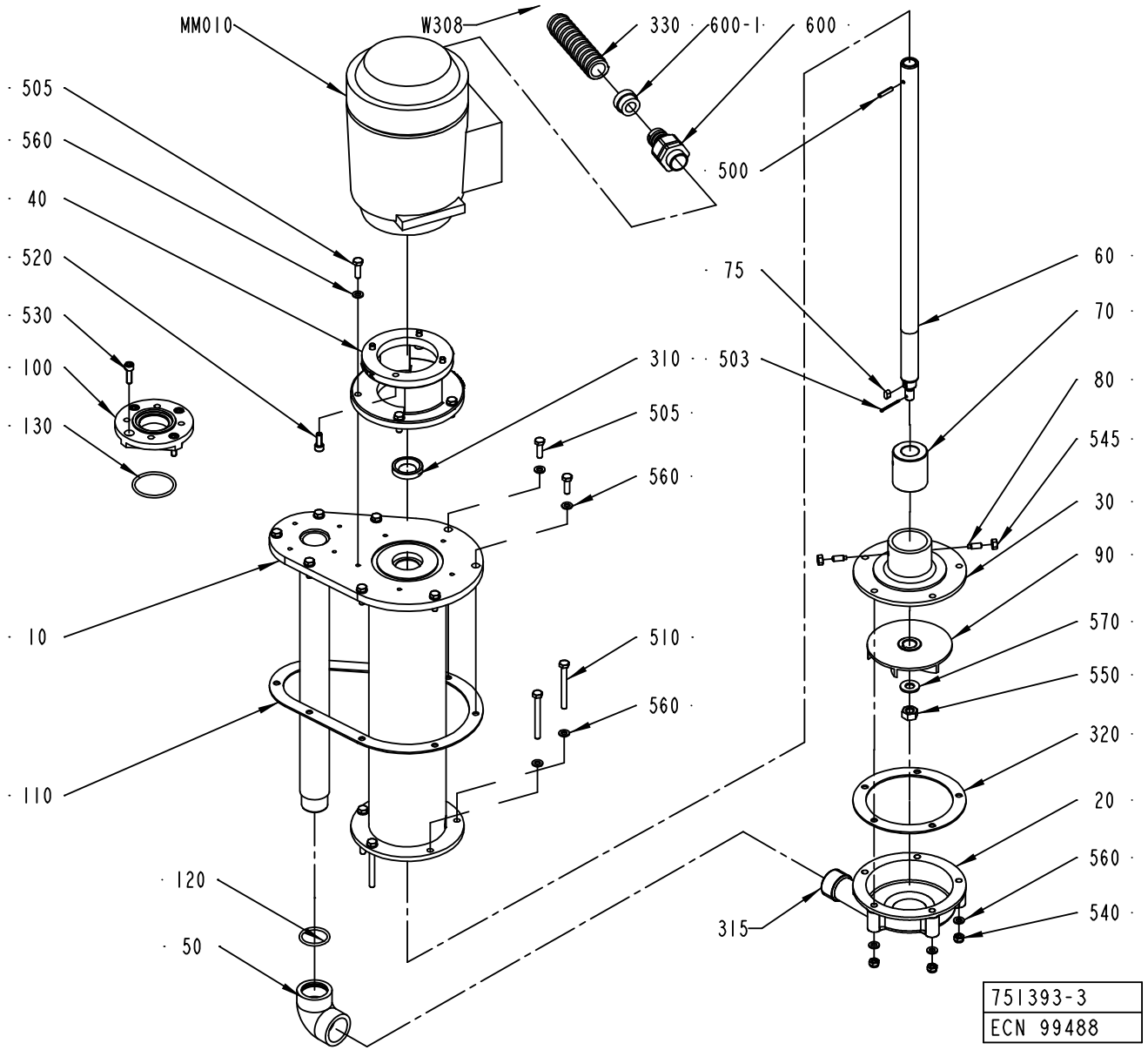
MM010
W308
330
600-1
600
505
560
40
520
530
100
130
500
75
60
70
310
503
505
560
80
545
30
90
10
570
550
510
560
320
110
20
560
120
50
315
540
751393-3
ECN 99488

ECM: 115880 - 20020930
Group number: 751393-0300
Assembly Drawing: 751393-3_1_AB

Pos	Part No	SP	UN	Qty	Description	Page No
-						
010	577769-0000	-		1	EXTENSION PIPE	
020	292449-0000	-		1	PUMP HOUSING	
030	292456-0000	-		1	BEARING COVER	
040	751395-0000	-		1	FLANGE	
050	751316-0000	-		1	ELBOW PIPE	
060	577771-0000	B		1	SHAFT	
070	491770-0000	B		1	BUSHING	
075	315705-0196	-		1	PARALLEL KEY W. ROUND ENDS 5X5X10 MM	
080	312311-0368	-		2	SCREW ISO4028 M6X16 FZB	
090	491929-0000	-		1	IMPELLER WHEEL	
100	1523061-0000	-		1	FLANGE	
110	577770-0000	B		1	GASKET	
120	927422-0004	B		1	O-RING 29.2X3 SILICON	
130	927422-0007	B		1	O-RING 44.2X3 SILICON	
310	90091-0137	B		1	RADIAL SEAL VARILIP 20X35X7MM	
315	90144-0073	-	MM	1	TREBOFLON-TAPE W=13MM	
330	90152-0051	-	M	2	SPIRAL CONDUIT, 25X18, UL 1816	
500	311112-0256	-		1	SPRING PIN, ISO 8752 4X20-C	
503	311411-0169	-		1	SPLIT PIN SP2,5X25RFR	
505	312105-0370	-		14	SCREW M6S ISO 4017 M6X20 A480	
510	312105-0382	-		5	SCREW M6S ISO 4014 M6X60 A480	
520	312115-0368	-		4	SCREW ISO4762 M6X16 A4	
530	312115-0370	-		4	SCREW ISO4762 M6X20 A4	
540	312811-0316	-		5	NUT HEX.LOCK HELI COIL MID GRIP M6 SS	
545	312605-0316	-		2	HEXAGON NUT, M6M M6 A280	
550	312605-0320	-		1	HEXAGON NUT, M6M M10 A280	
560	315105-0153	-		24	WASHER ISO 7089-6-200 HV-A4	
570	315105-0173	-		1	WASHER ISO 7089-10-200 HV-A4	
600	353243-0005	-		1	EXTENDED WITHOUT INSERT, PG16	
600-1	353249-0013	-		1	INSERT, SINGEL HOLE, EK 154/13	
MM010	90045-0087	A		1	MOTOR 3GAA 071002-CSA M2AA 71B	
W308	351150-0418	-	M	3	CABLE OLFLEX 4X2,5 MM2 LIGHT/GREY	

Pos	Part No	SP	UN	Qty	Description	Page No

Machine Type | Group Description | Used-In | Group Number | Page No

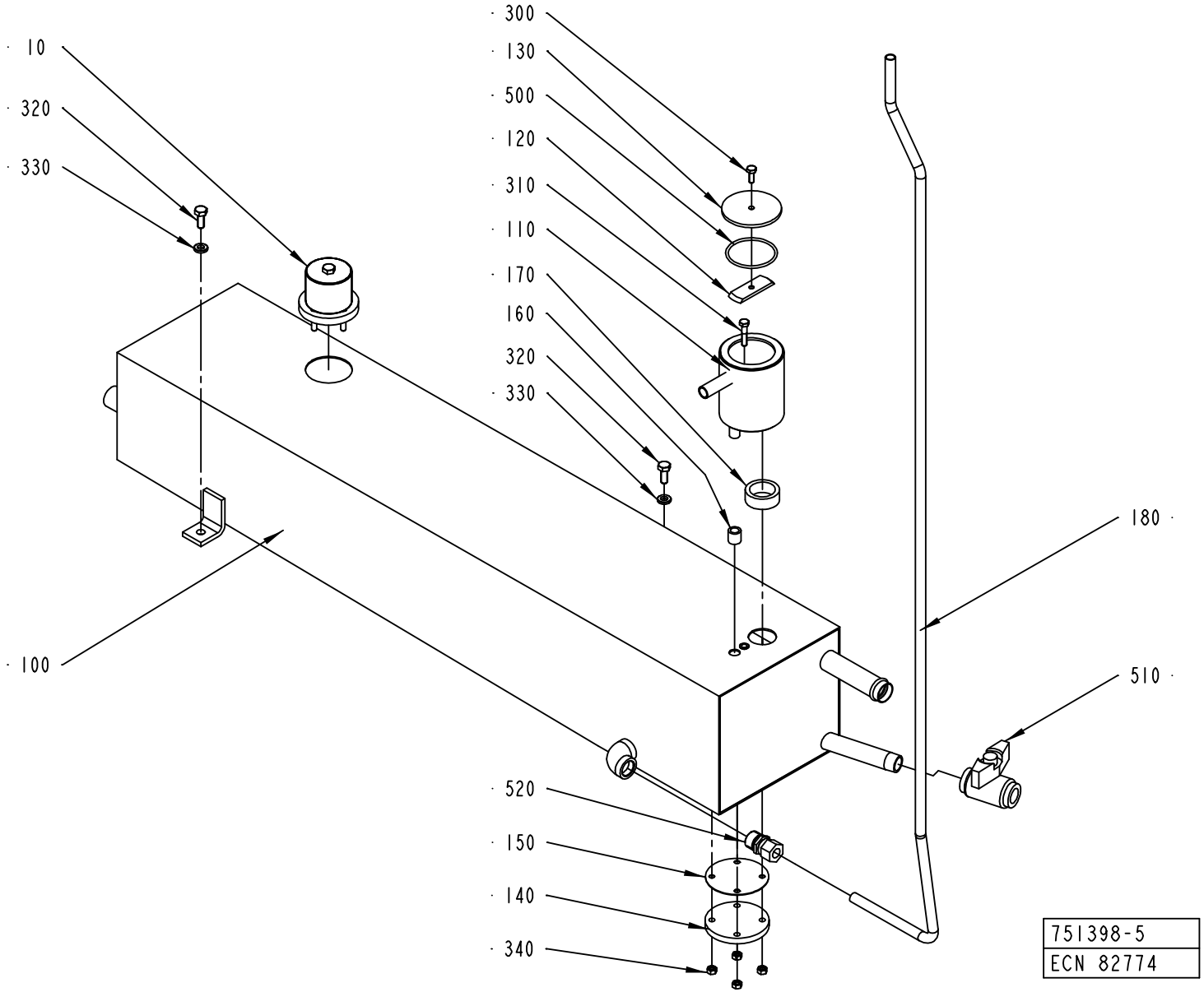
10
320
330
300
130
500
120
310
110
170
160
320
330
180
510
100
520
150
140
340
751398-5
ECN 82774

ECM: 106568 - 20020313
Group number: 751398-0400
Assembly Drawing: 751398-5_1_AB

Pos	Part No	SP	UN	Qty	Description	Page No
-						
010	493652-0100	-		1	LID	**491**
100	1519389-0000	-		1	TANK	
110	978970-0000	-		1	METERING DEVICE	
120	751403-0000	-		1	BRACKET	
130	751223-0000	-		1	LID	
140	532205-0000	-		1	LID	
150	532206-0000	B		1	GASKET	
160	527906-0000	B		1	GASKET	
170	2514491-0000	B		1	METERING DEVICE	
	90266-0025	-	*M*		*DAIRY PIPE 76,1X1,6*	
	90266-0172	-	*M*		*TUBE,GROUND 15X1,5 SS 2333-22*	
180	1511683-0000	-		1	PIPE	
300	312105-0368	-		1	SCREW M6S M6X16 A280	
310	312105-0374	-		1	SCREW M6S ISO 4014 M6X30 A480	
320	312105-0451	-		2	SCREW M6S ISO 4017 M8X20 A480	
330	315115-0165	-		2	WASHER PLAIN, TBRB 8,4/16 H=3	
340	312605-0316	-		4	HEXAGON NUT, M6M M6 A280	
500	927422-0009	B		1	O-RING 54.5X3 SILICON	
510	90187-0059	-		1	BALL VALVE FOR HYDR.PER. G1/2 3MM HOLE	
520	90030-0109	-		1	CONN. STR., 12-R1/2, EXT. THREAD	

Pos	Part No	SP	UN	Qty	Description	Page No

Machine Type | Group Description | Used-In | Group Number | Page No

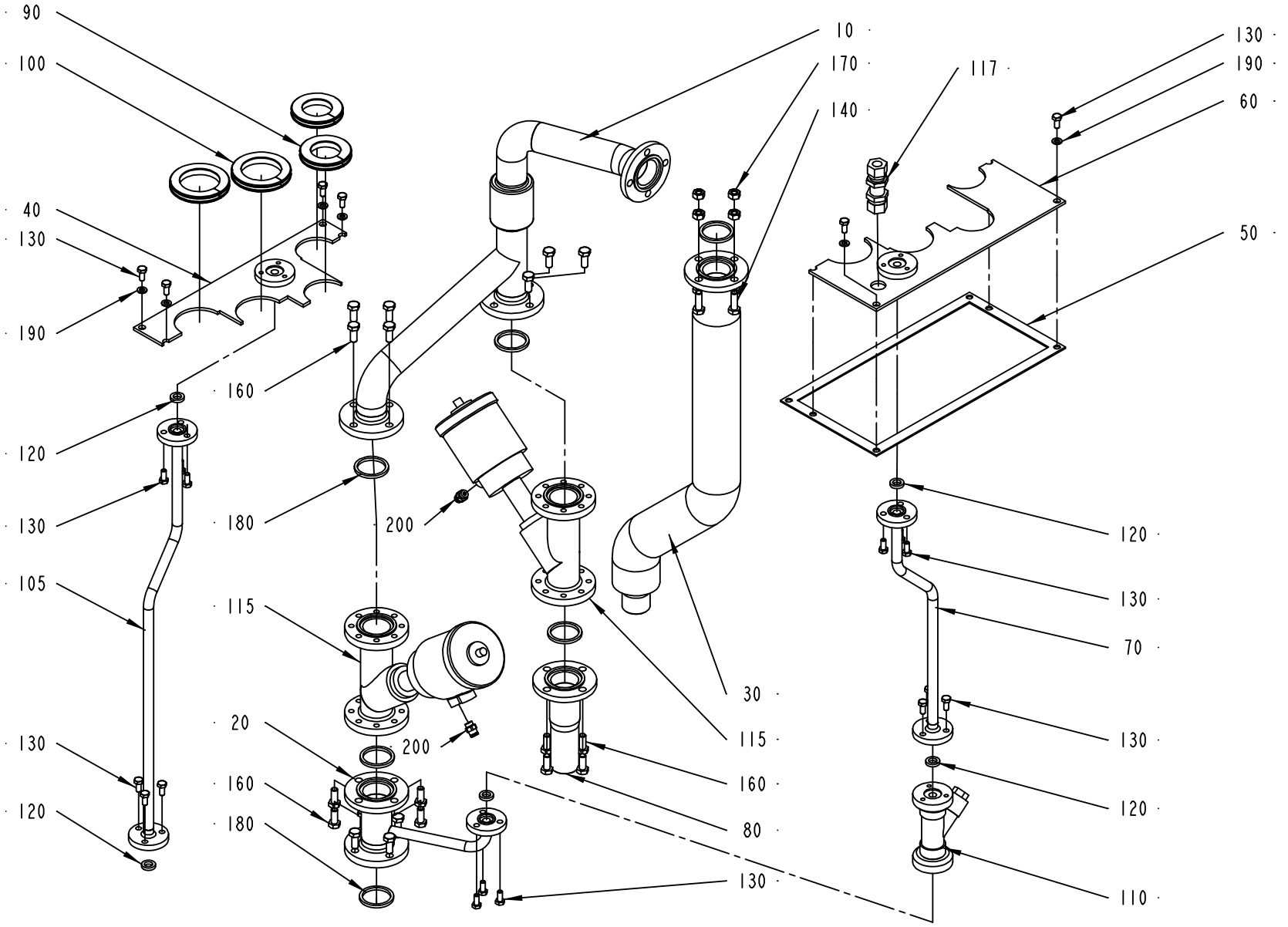

978835-2
ECN 82774

ECM: 115882 - 20020930
Group number: 978835-0200
Assembly Drawing: 978835-2_1_AB

Pos	Part No	SP	UN	Qty	Description	Page No
-						
010	1523062-0000	-		1	FILLING PIPE	
020	1523063-0000	-		1	TUBE	
030	1523064-0000	-		1	RETURN PIPE	
040	1523065-0000	-		1	PLATE	
050	1523066-0000	B		1	GASKET	
060	1523067-0000	-		1	PLATE	
070	1523068-0000	-		1	PIPE	
080	1523069-0000	-		1	PIPE CONNECTION	
090	1517492-0000	B		2	GASKET	
095	2550181-0000	B		1	GASKET	
100	1517058-0000	-		2	GASKET	
105	1548316-0000	-		1	PIPE	
110	1511701-0000	-		1	FILTER	
115	1512673-0000	A		2	VALVE	
117	90030-0030	-		1	CONN. BULKHEAD SV 12-L/SY	
120	315229-0101	B		5	GASKETS, 10,4X17,4X3,7 MM 1/2" FDA	
130	312105-0367	-		21	SCREW M6S M6X14 A280	
140	312105-0453	-		4	SCREW M6S ISO 4017 M8X25 A480	
160	312105-0451	-		20	SCREW M6S ISO 4017 M8X20 A480	
170	312605-0318	-		4	HEXAGON NUT, M6M M8 A280	
180	315229-0104	B		6	GASKETS, 35,8X42,8X3,7 MM 1"1/2 FD	
190	315105-0153	-		6	WASHER ISO 7089-6-200 HV-A4	
200	342722-0202	-		2	PIPE COUPLING 1/8" D=6MM	

Pos	Part No	SP	UN	Qty	Description	Page No

Machine Type | Group Description | Used-In | Group Number | Page No

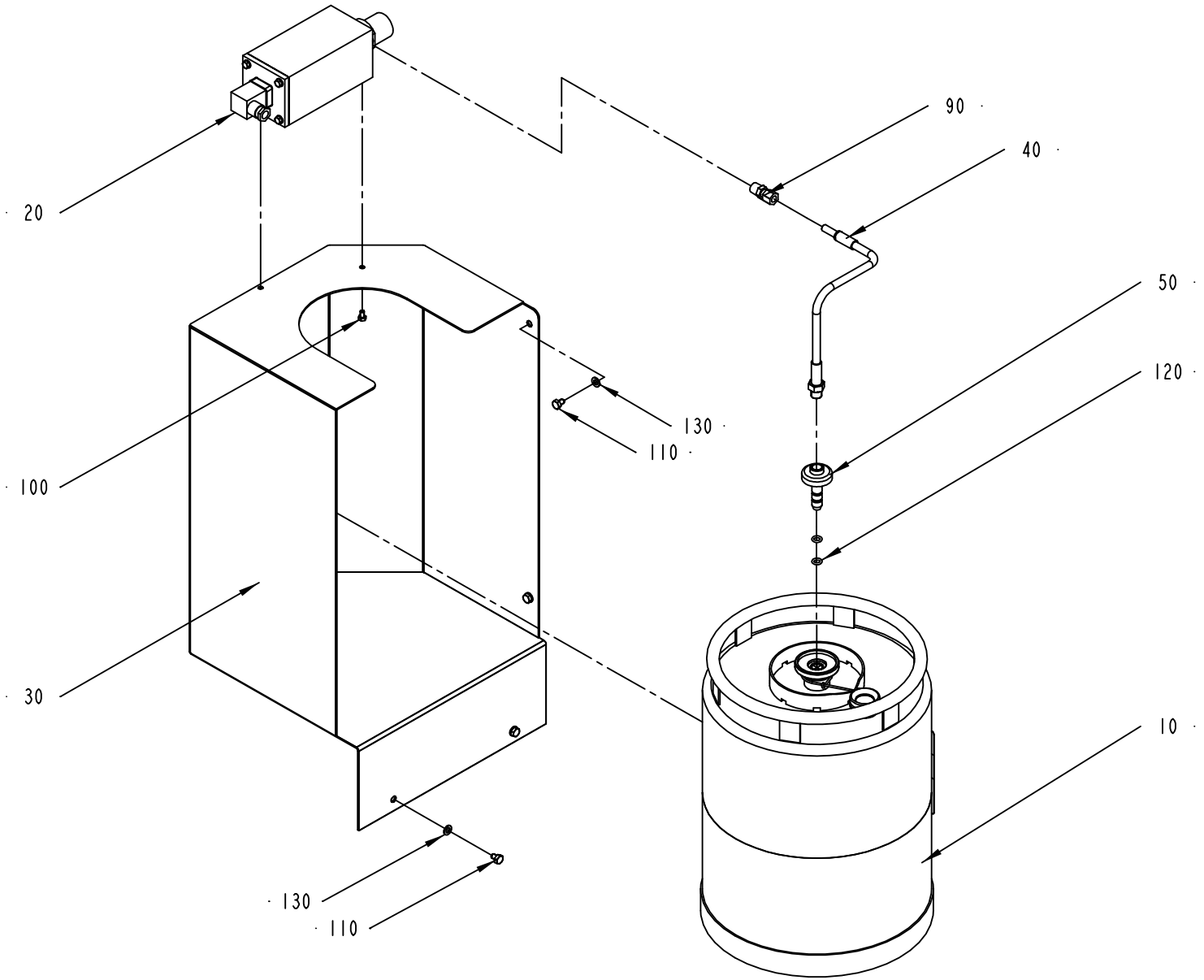

979328-2
ECN 82774

ECM: 115870 - 20020930
Group number: 979328-0200
Assembly Drawing: 979328-2_1_AB

Pos	Part No	SP	UN	Qty	Description	Page No
-						
010	527898-0100	A		1	CONTAINER H2O2	**501**
020	979329-0200	-		1	FILLING UNIT	**503**
030	1512805-0000	-		1	CABINET (SMALL)	
040	979300-0000	B		1	PIPE	
050	1511773-0000	-		1	CONNECTOR	
090	90030-0086	-		1	CONN. STR., 8-R1/4, EXT. THREAD	
100	312105-0323	-		2	SKRUV M6S ISO 4017 M5X8 A480	
110	312105-0362	-		4	SCREW M6S ISO 4017 M6X8 A480	
120	927421-0005	B		2	O-RING 7.3X2.4 SILICON	
130	315105-0153	-		4	WASHER ISO 7089-6-200 HV-A4	

Pos	Part No	SP	UN	Qty	Description	Page No

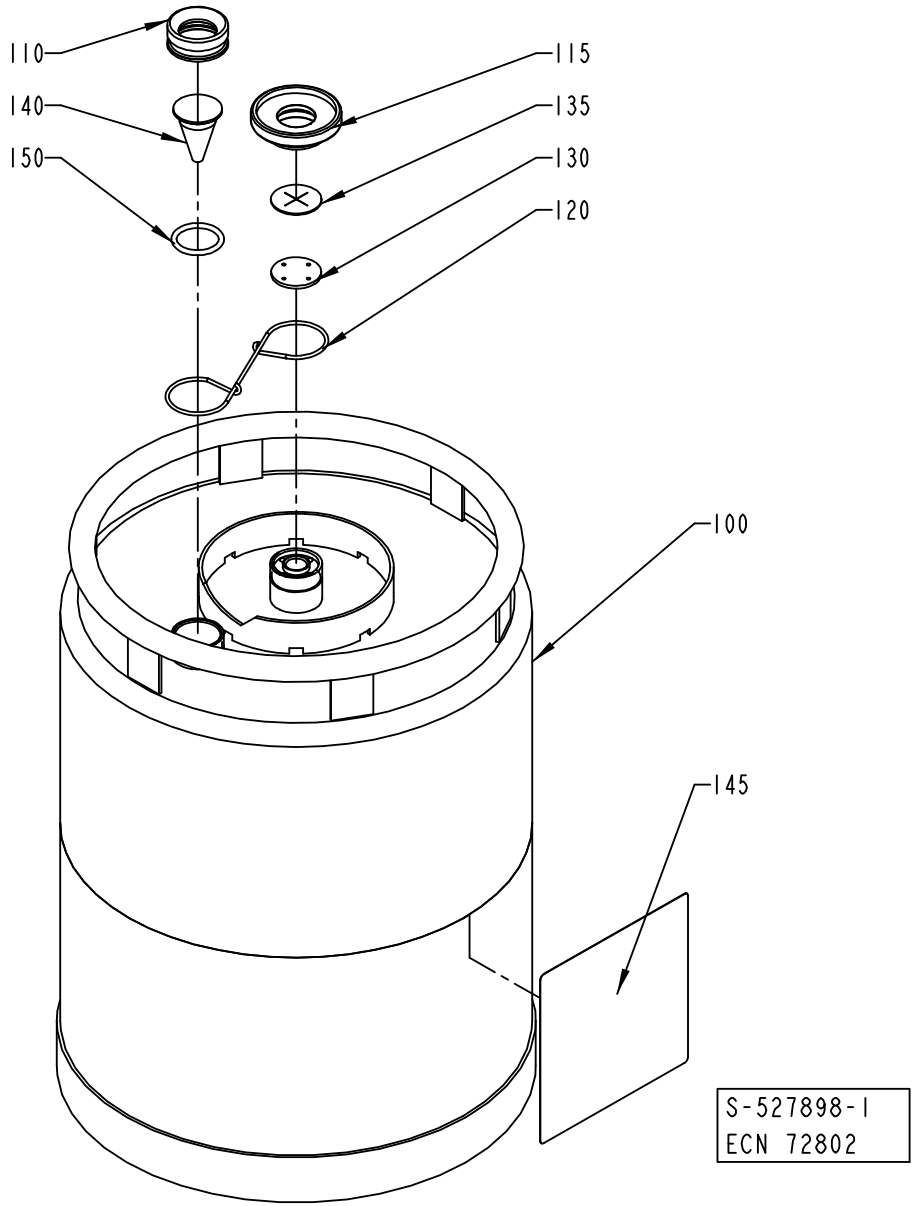
110
140
150
115
135
130
120
100
145
S-527898-1
ECN 72802

ECM: 115873 - 20020930
Group number: 527898-0100
Assembly Drawing: 527898-1_1_AB

Pos	Part No	SP	UN	Qty	Description	Page No
-						
100	561427-0000	-		1	CONTAINER	
110	273977-0000	-		1	NUT	
115	273996-0000	-		1	NUT	
120	273980-0000	-		1	SPRING	
130	565250-0000	B		1	WASHER	
135	565251-0000	B		1	VALVE	
140	273978-0000	-		1	LEVEL GLASS	
145	532655-0000	A		1	CAUTION SIGN	
150	927422-0003	B		1	O.RING 24.2X3 SILICON	

Pos	Part No	SP	UN	Qty	Description	Page No

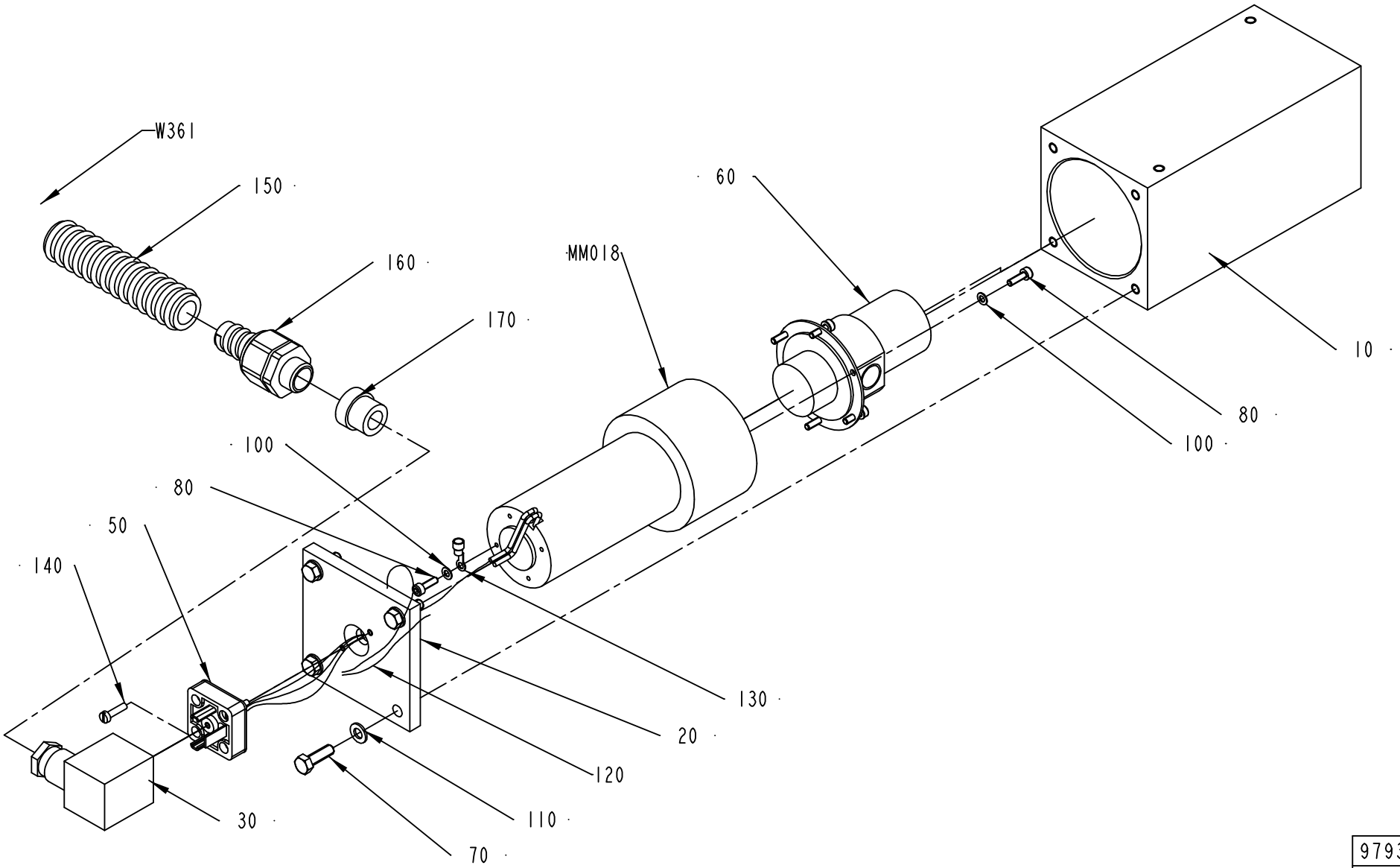

979329-2
ECN 99488

ECM: 115875 - 20020930
Group number: 979329-0200
Assembly Drawing: 979329-2_1_AB

Pos	Part No	SP	UN	Qty	Description	Page No
-						
010	979279-0000	-		1	COVER HOUSING	
020	979280-0000	-		1	COVER	
030	90042-0398	B		1	CONTACT 3 POLE+EARTH	
050	90110-0207	B		1	SOCKET	
060	90321-0101	B		1	GEAR PUMP	
070	312105-0329	-		4	SCREW M6S ISO 4017 M5X16 A480	
080	312115-0224	-		7	SCREW ISO4762 M3X10 A4	
100	315105-0124	-		7	WASHER ISO 7089-3-200 HV-A4	
110	315105-0146	-		4	WASHER ISO 7089-5-200 HV-A4	
120	351175-0102	-	CM	15	CABLE AWM 1X 075 MM2 YELLOW-GREEN	
130	353101-0118	-		1	KABELSKO 0,75-1,5MM2 RED	
140	312125-0226	-		2	SCREW PAN HEAD MCS M3X12 SS	
150	90152-0059	-	M	1	SPIRAL CONDUIT, 18X12, UL 1211	
160	353243-0001	-		1	EXTENDED WITHOUT INSERT, PG9	
170	353249-0009	-		1	INSERT, SINGEL HOLE, EK 152/9	
MM018	90045-0161	B		1	MOTOR MGC 11	
W361	351150-0403	-	M	3	CABLE OLFLEX 3X0,75 MM2 LIGHT/GREY	

Pos	Part No	SP	UN	Qty	Description	Page No

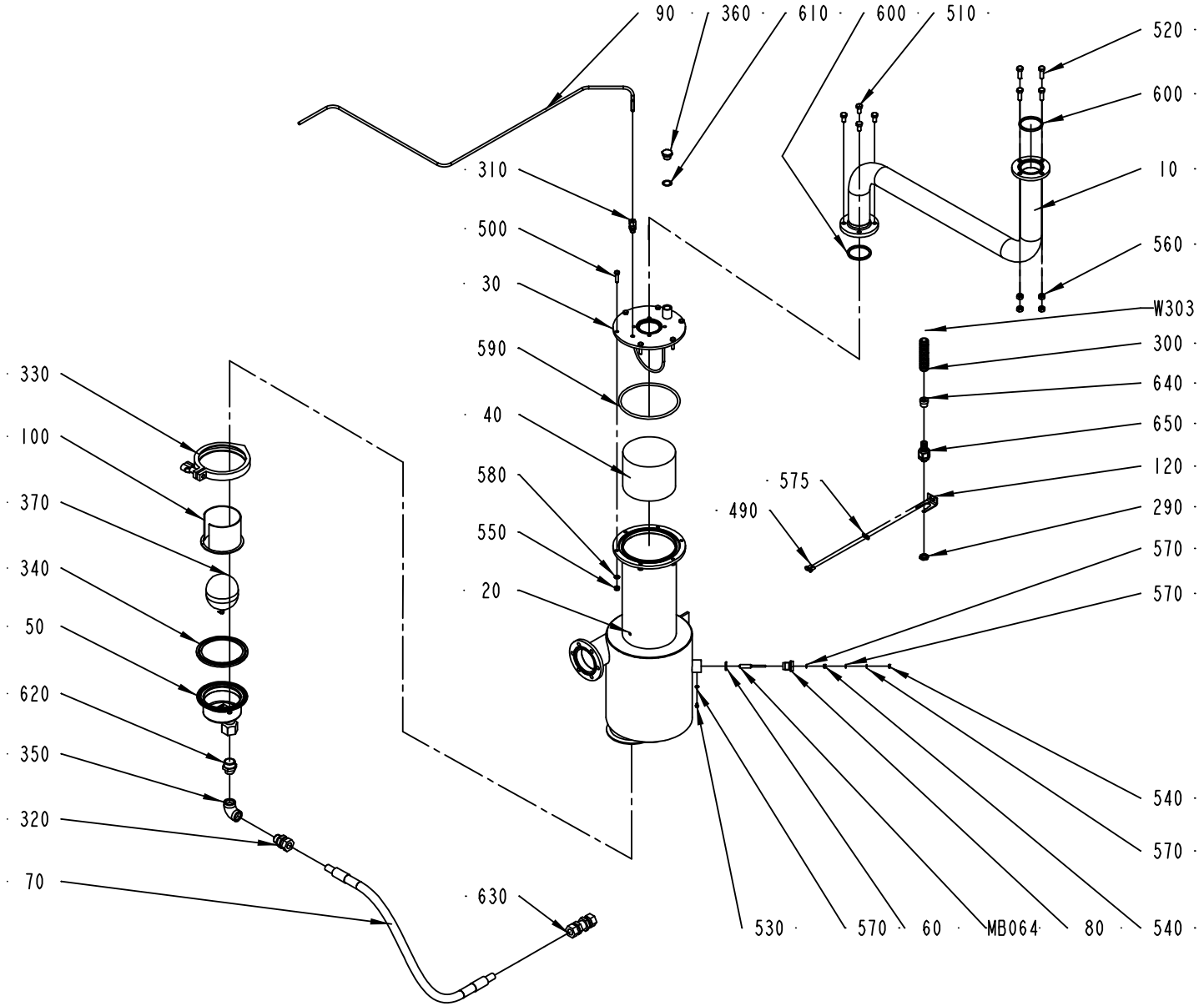

978988-2
ECM 99488

ECM: 106572 - 20020313
Group number: 978988-0200
Assembly Drawing: 978988-2_1_AC

Pos	Part No	SP	UN	Qty	Description	Page No
50HZ						
360	90330-0029	-		1	PLUG, EXT. G-THREAD, R-236R3/8	
60HZ						
110	90030-0136	-		1	ADJUSTABLE ELBOW CONNECTION,EXT 12-G3/8	
Common Parts						
010	1519395-0000	-		1	PIPE	
020	1511775-0000	-		1	SEPARATOR	
030	978956-0000	-		1	LID	
040	546929-0000	B		1	FILTER	
050	571088-0000	-		1	DRAINING	
	90360-0304	*D*		*1*	*SPARE PART KIT*	
060	927421-0004	-		1	O-RING 15.3X2.4 SILICON	
070	978973-0003	-		1	HOSE	
080	560931-0000	-		1	BRACKET	
090	2518125-0000	-		1	PIPE	
	90266-0166	-	*M*		*PIPE*	
100	568828-0000	-		1	FLOAT GUARD	
120	977527-0000	-		1	BRACKET	
290	90099-0001	-		1	MUTTER PR 15,2 MäSSING	
300	90152-0059	-	M	2	SPIRAL CONDUIT, 18X12, UL 1211	
310	90030-0184	-		1	CONN. STR. GA-6-G1/8	
320	90030-0188	-		1	CONN. STR. GA-15-G1/2	
330	90217-0312	-		1	CLAMP, ISO2852 FOR PIPE 101,6 MM	
340	90217-0313	B		1	GASKET 97,8X119X5,5 MM	
350	90330-0020	-		1	ELBOW, 90 INT. THREAD, R-2221/2	
370	90360-0305	-		1	FLOAT, ART NO 10739920	
490	312105-0327	-		2	SCREW M6S ISO 4017 M5X12 A480	
500	312105-0372	-		6	SCREW M6S ISO 4017 M6X25 A480	
510	312105-0449	-		4	SCREW M6S ISO 4017 M8X16 A480	
520	312105-0453	-		4	SCREW M6S ISO 4017 M8X25 A480	
530	312125-0285	-		1	SCREW SLOT.PAN HD. MCS 4X6 A480	
540	312605-0312	-		2	HEXAGON NUT, M6M M4 A280	
550	312605-0316	-		6	HEXAGON NUT, M6M M6 A280	
560	312605-0318	-		4	HEXAGON NUT, M6M M8 A280	
570	315105-0136	-		4	WASHER ISO 7089-4-200 HV-A4	
575	315105-0146	-		2	WASHER ISO 7089-5-200 HV-A4	
580	315105-0153	-		6	WASHER ISO 7089-6-200 HV-A4	
590	315202-0244	B		1	O-RING 134,3X5,7 MM	
600	315229-0105	B		2	GASKETS, 48,5X55,5X3,7 MM 2" FDA	
610	315233-0111	-		1	WASHER PL.RND.NYL.17/22,H=1	
620	342700-0210	-		1	NIPPLES,HEXAGON,EXT.G-THREAD G3/4"-G1/2"	
630	342762-0114	-		1	CONN. BULKHEAD SV 15-LFZB	
640	353249-0009	-		1	INSERT, SINGEL HOLE, EK 152/9	
650	353243-0001	-		1	EXTENDED WITHOUT INSERT, PG9	
MB064	567070-0012	-		1	ELECTRODE	
W303	351150-0431	-	M	3	CABLE OLFLEX 2X0,75 MM2 LIGHT/GREY	

Machine Type Group Description Used-In Group Number Page No

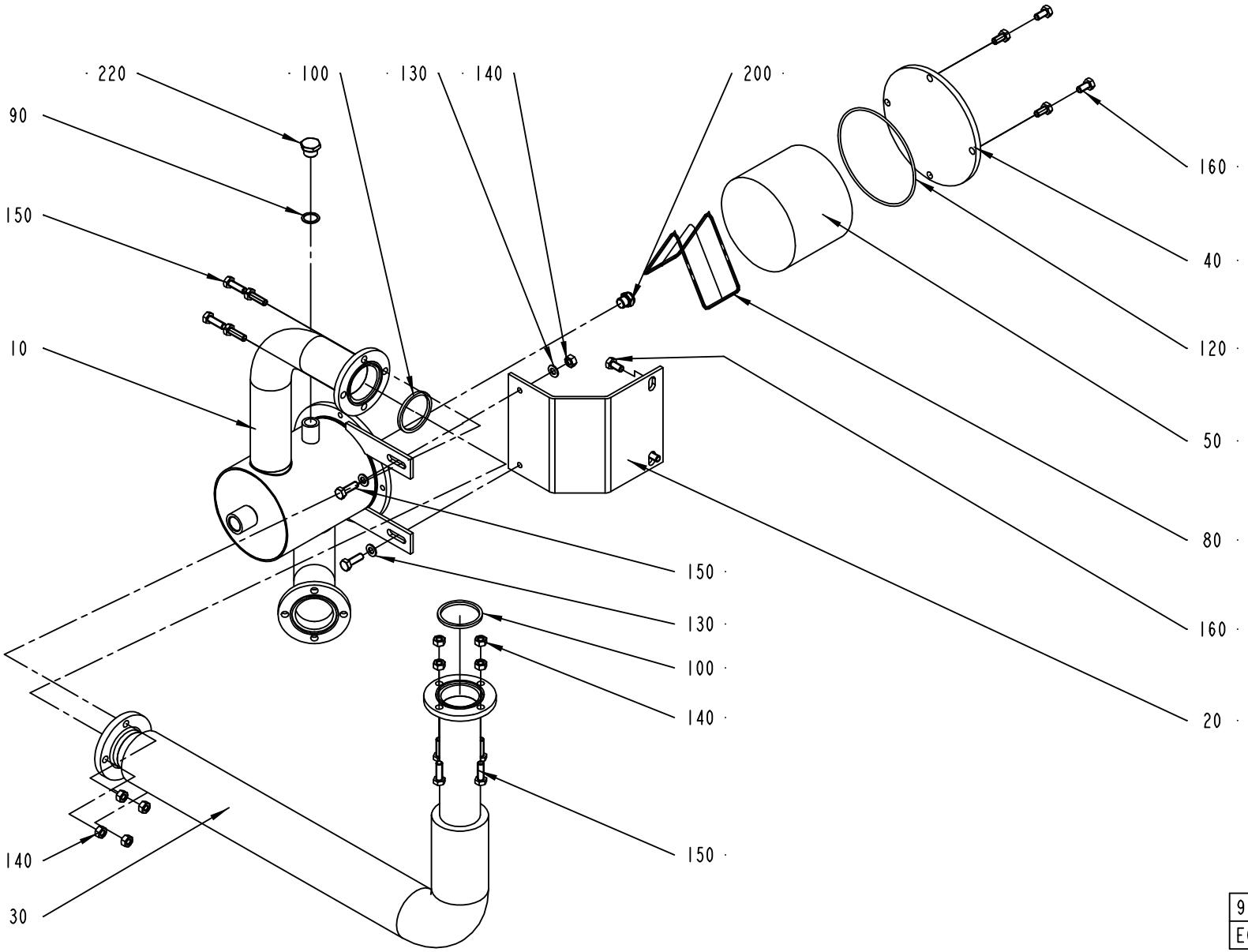

978989-2
ECN 82774

ECM: 106573 - 20020313
Group number: 978989-0200
Assembly Drawing: 978989-2_1_AB

Pos	Part No	SP	UN	Qty	Description	Page No
50HZ						
220	90330-0029	-		1	PLUG, EXT. G-THREAD, R-236R3/8	
60HZ						
060	1519390-0000	-		1	PIPE(FOR 60HZ)	
070	1519391-0000	-		1	PIPE BEND	
170	279589-0000	-		1	NUT	
180	209146-0000	-		1	BARRIER NUT	
190	209145-0000	-		1	THROTTLE SCREW	
210	90030-0058	-		1	CONN. T-PIPE T-12	
230	90030-0084	-		1	CONN. STR. GE 10-3/8-18 NPTF	
Common Parts						
010	1519392-0000	-		1	SCRUBBER	
020	1519393-0000	-		1	PLATE	
030	1519394-0000	-		1	PIPE	
040	568806-0000	-		1	LID	
050	546929-0000	B		1	FILTER	
080	571087-0000	-		1	RETAINING RING	
090	315233-0111	-		1	WASHER PL.RND.NYL.17/22,H=1	
100	315229-0105	B		2	GASKETS, 48,5X55,5X3,7 MM 2" FDA	
120	315202-0317	B		1	O-RING 129,5X3 MM	
130	315105-0165	-		4	WASHER ISO 7089-8-200 HV-A4	
140	312605-0318	-		10	HEXAGON NUT, M6M M8 A280	
150	312105-0453	-		10	SCREW M6S ISO 4017 M8X25 A480	
160	312105-0449	-		6	SCREW M6S ISO 4017 M8X16 A480	
200	90424-0054	-		1	SPRAY NOZZLE 120 DEG	

Pos	Part No	SP	UN	Qty	Description	Page No

Machine Type | Group Description | Used-In | Group Number | Page No

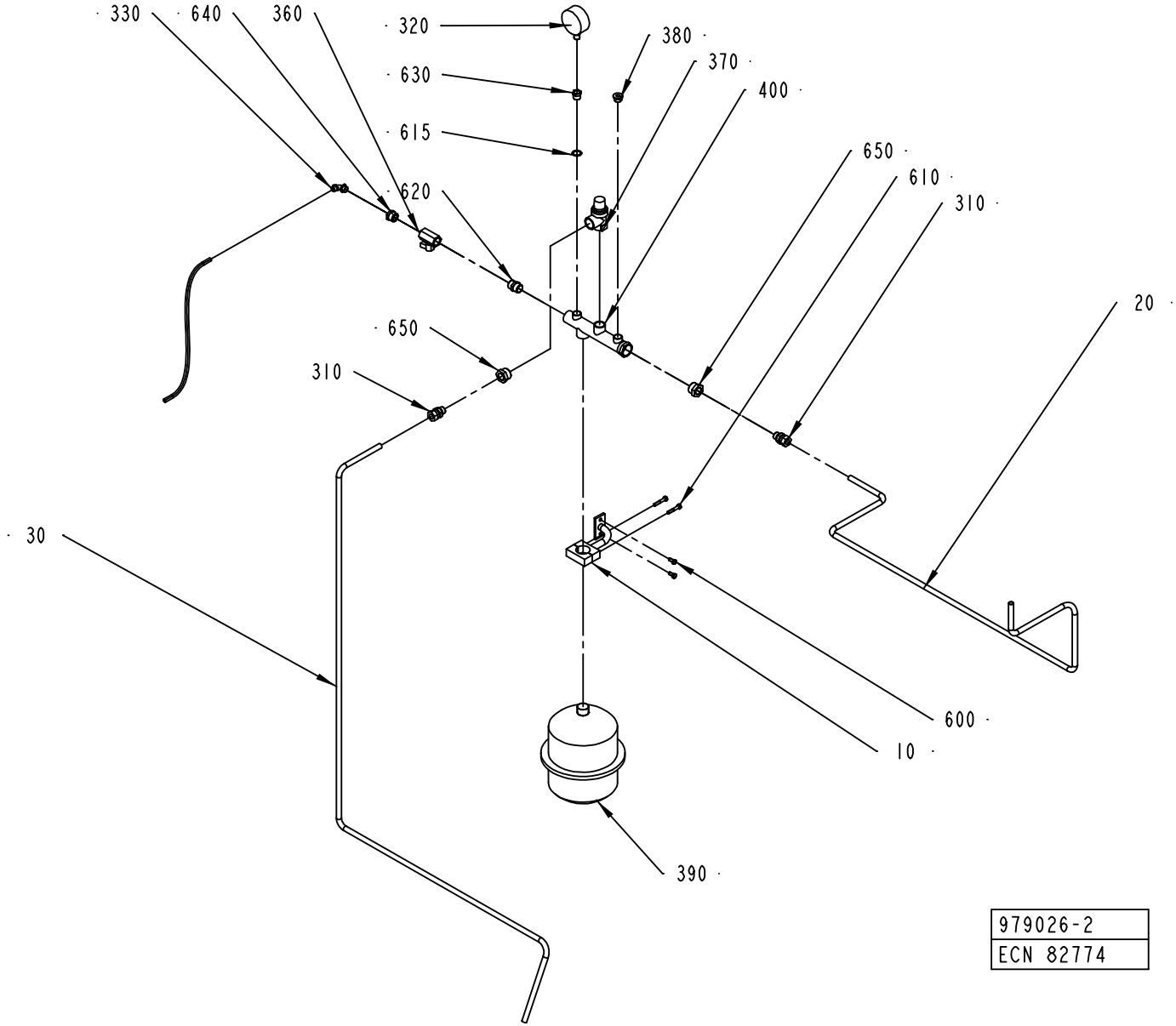
330
640
360
320
380
370
630
400
615
650
610
620
310
20
650
310
30
600
10
390
979026-2
ECN 82774

ECM: 115885 - 20020930
Group number: 979026-0200
Assembly Drawing: 979026-2_1_AB

Pos	Part No	SP	UN	Qty	Description	Page No
-						
010	978953-0000	-		1	BRACKET	
020	1350187-0000	-		1	PIPE	
030	1350186-0000	-		1	PIPE	
310	342752-0110	-		2	CONN. STR. GA-12-G3/8	
320	90043-0002	B		1	PRESSURE GAUGE, 2040 D=63 MM	
330	342931-0122	-		1	ELBOW 90 COUPL.,EXT.THREAD 8/6-G1/4"	
350	90166-0118	-	MM	1800	TUBE 8 MM PA BLACK	
360	90187-0062	-		1	BALL VALVE G1/2, NPBR	
370	90187-0104	B		1	SAFETY VALVE, R3/4,	
380	342713-0211	-		1	PLUG, EXT THREAD HEX SOCKET 8638-00-380	
390	90304-0020	B		1	LIQUID CONTAINER	
400	90304-0307	-		1	ATTACHMENT PIPE	
600	312105-0367	-		2	SCREW M6S M6X14 A280	
610	312105-0376	-		2	SCREW M6S ISO 4014 M6X35 A480	
615	315233-0111	-		1	WASHER PL.RND.NYL.17/22,H=1	
620	342700-0113	-		1	NIPPLES,HEXAGON,EXT.G-THREAD G1/2"-G1/2"	
630	342701-0203	-		1	BUSHING, INT/EXT. G-THREAD NO. 3/8-1/4	
640	342701-0205	-		1	BUSHING,INT./EXT.G-THREAD G1/2"-G1/4"	
650	342701-0209	-		2	BUSHING,INT./EXT.G-THREAD G3/4"-G3/8"	

Pos	Part No	SP	UN	Qty	Description	Page No

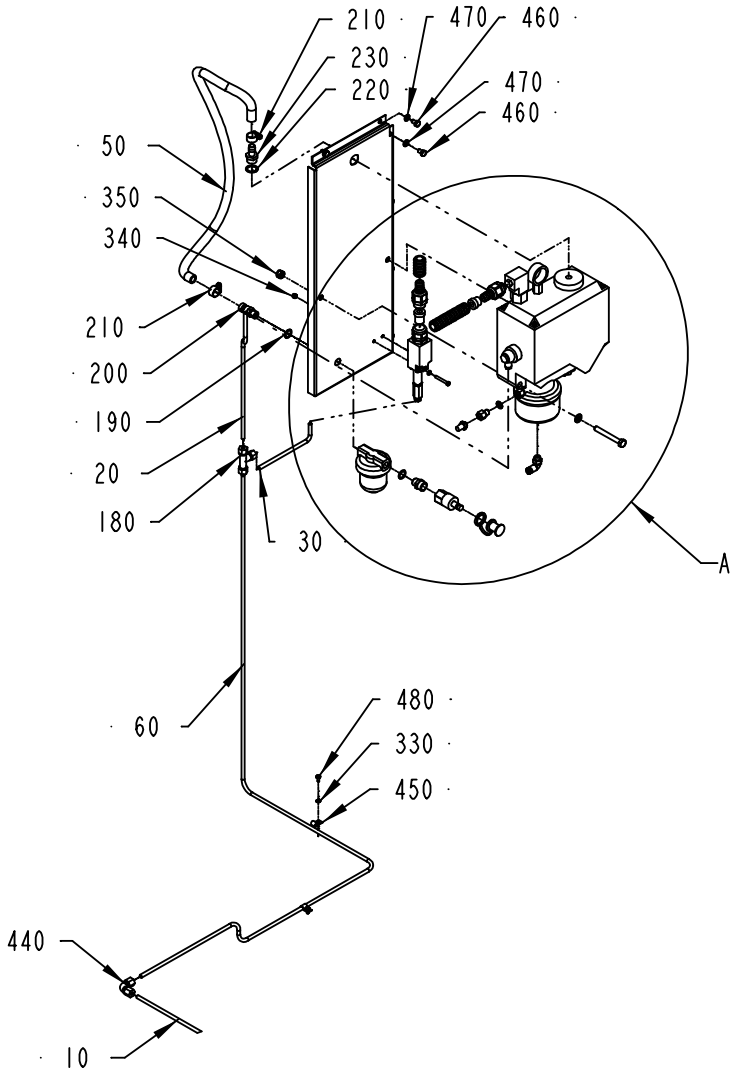

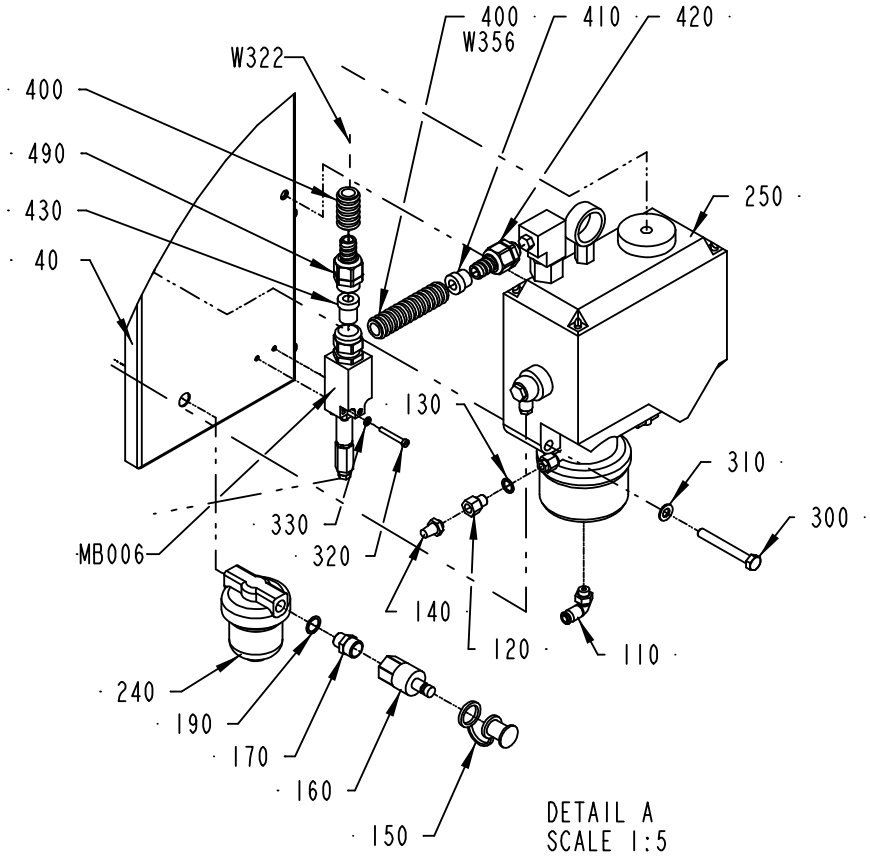

978823-2
ECM 73395

ECM: 115871 - 20020930
Group number: 978823-0200
Assembly Drawing: 978823-2_1_AA

Pos	Part No	SP	UN	Qty	Description	Page No
-						
010	1538908-0000	-		1	PIPE	
020	1538907-0000	-		1	PIPE	
030	1538906-0000	-		1	PIPE	
040	1558125-0000	-		1	MOUNTING SHEET	
050	90166-0113	-	M		HOSE	
060	1539332-0000	-		1	PIPE	
110	342732-0102	-		1	ELBOW PIPE JOINT, EXT.THREAD, D=6MM-G1/8	
120	90134-0081	-		1	REDUCTION SLEEVE M10X1/R 1/8"	
130	315233-0109	-		1	WASHER PL.RND.NYL.10,3/14,H=1	
140	346800-0109	-		1	SILENCER FILTER R1/8"	
150	90163-0304	-		1	QUICK COUPLING, LP-006-5-74-KU (DUST CAP	
160	90163-0064	-		1	QUICK COUPLING, (M) LP-006-2-WR517	
170	342700-0203	-		1	NIPPLES,HEXAGON,EXT.G-THREAD G3/8"-G1/4"	
180	90030-0076	-		1	CONN. T-PIPE T-6	
190	315233-0110	-		2	WASHER PL.RND.NYL.13,3/17,H=1	
200	90163-0014	-		1	QUICK COUPLING, (M) LP-006-1-WR013	
210	342991-0101	-		2	HOSE CLIP,WORM DRIVE TYPE (13)-16	
220	315233-0111	-		1	WASHER PL.RND.NYL.17/22,H=1	
230	90163-0041	-		1	HOSE NIPPLE, EXT.THR. 3/8-12 MM	
240	90415-0033	-		1	OIL FILTER REFILLING UC-HP-1229-25	
	90415-0330	*C*		*1*	*FILTER INSERT ARTNO HR-1229-25UCC*	
250	90048-0046	-		1	OIL PUMP	
	90274-0105	*-*		*1*	*LEVEL GUARD*	
	90048-0041	*-*		*1*	*OIL PUMP NO CONTAINER*	
	90048-0526	*-*		*1*	*O-RING*	
	90048-0527	*-*		*1*	*SEALING RING*	
	90048-0528	*-*		*1*	*PISTON SEAL*	
	90048-0525	*-*		*1*	*PUMP HOUSING*	
	90048-0523	*-*		*1*	*PISTON SPR. 4.581921.1 FOR PUMP 90048-18*	
	90048-0452	*-*		*1*	*SEALING KIT*	
	90048-0450	*-*		*1*	*SPARE PARTS KIT*	
300	312105-0464	-		2	SCREW M6S ISO 4014 M8X65 A480	
310	315105-0165	-		2	WASHER ISO 7089-8-200 HV-A4	
320	312125-0299	-		2	SCREW PAN HEAD MCS M4X30 SS	
330	315105-0136	-		4	WASHER ISO 7089-4-200 HV-A4	
340	312812-0312	-		2	HEXAGON NUT, NY-LOCK M4 A480	
350	312812-0318	-		2	HEXAGON NUT, NY-LOCK M8 A480	
400	90152-0059	-	M	5	SPIRAL CONDUIT, 18X12, UL 1211	
410	353249-0009	-		1	INSERT, SINGEL HOLE, EK 152/9	
420	353243-0001	-		1	EXTENDED WITHOUT INSERT, PG9	
430	353249-0065	-		1	INSERT, SINGEL HOLE, E152/09	
440	342737-0204	-		1	CONN. ELBOW W-6 LRFR	
450	90165-0057	-		2	PIPE CLIP FOR TUBE D=6 MM	
460	312105-0364	-		6	SCREW M6S ISO 4017 M6X10 A480	
470	315105-0153	-		6	WASHER ISO 7089-6-200 HV-A4	
480	312105-0287	-		2	SCREW M6S ISO4017 M4X8 A480	
490	353242-0001	-		1	NORMAL WITHOUT INSERT, PG13,5	
MB006	90274-0084	A		1	PRESSURE GUARD, 1800 KPA	
W322	351150-0403	-	M	4	CABLE OLFLEX 3X0,75 MM2 LIGHT/GREY	
W356	351150-0404	-	MM	3500	CABLE OLFLEX 4X0,75 MM2 LIGHT/GREY	

Machine Type | Group Description | Used-In | Group Number | Page No

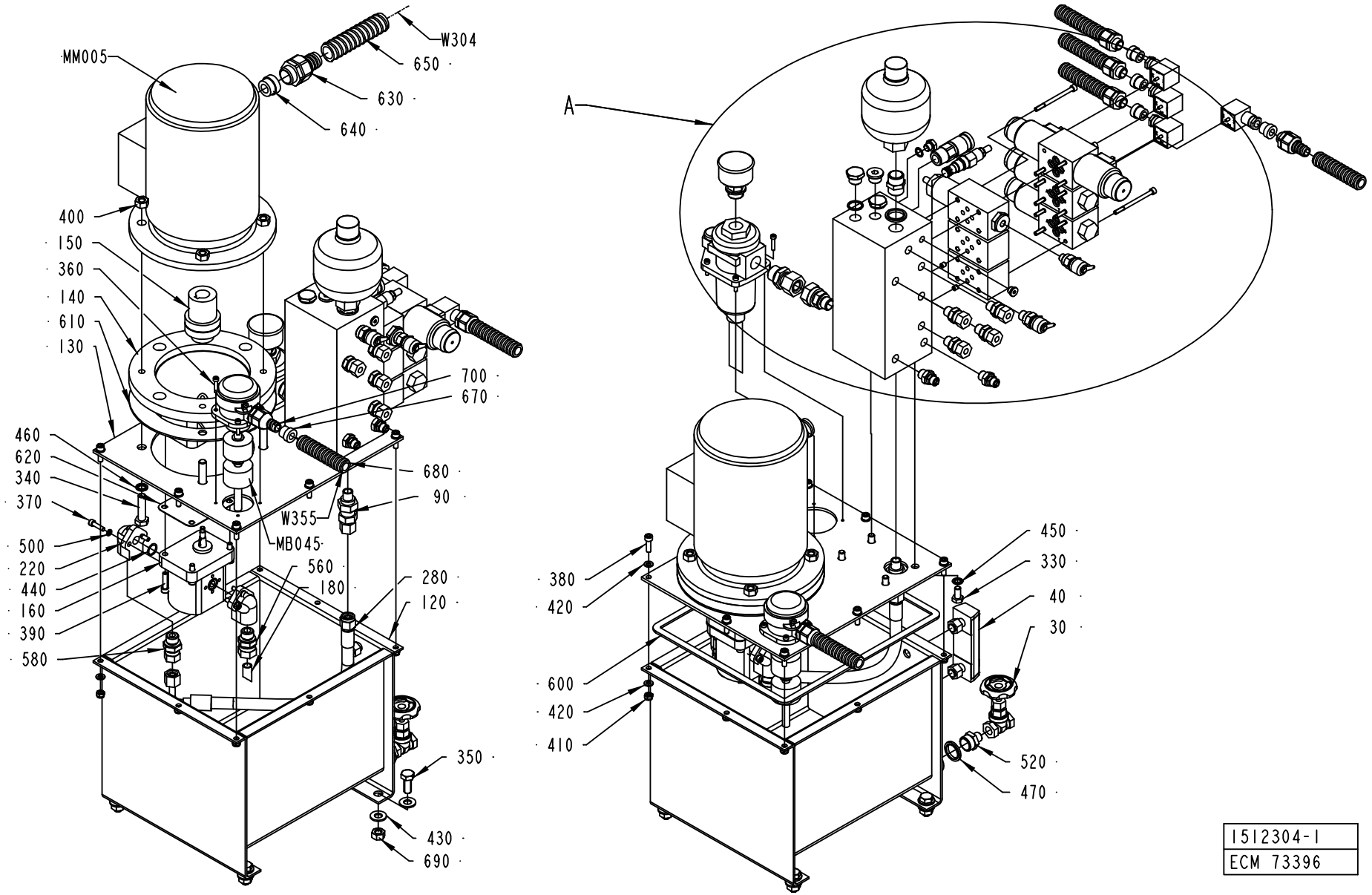
MM005
W304
650
630
640
400
150
360
140
610
130
700
670
460
620
340
370
680
90
W355
MB045
500
220
440
160
390
580
560
180
280
120
350
430
690
A
380
420
600
420
410
450
330
40
30
520
470
1512304-1
ECM 73396

ECM: 115877 - 20020930
Group number: 1512304-0100
Assembly Drawing: 1512304-1_1_AA

This list covers pages from 512 to 515

Pos	Part No	SP	UN	Qty	Description	Page No
-						
020	90163-0076	-		1	QUICK COUPLING, (F) LP-006-0-WR021	
030	90187-0120	-		1	FLAP VALVE, G1/4, L=38	
040	90199-0020	-		1	LEVEL GLASS/THERMOM. FSA 76.1.1./T/12	
050	90201-0010	-		2	DIRECT CHECK VALVE, NO. DGMDC-3-Y-PK-41	
	90201-0303	-		*1*	*SPARE PARTS KIT*	
	90201-0302	-		*1*	*WASHER*	
	90201-0301	-		*1*	*SPRING*	
	90201-0300	-		*1*	*MOUNTING PLATE, NO. A1-89 57B*	
060	90201-0014	A		1	VALVE	
080	90201-0407	-		3	BOLT KIT	
090	90230-0026	B		1	NON-RETURN VALVE RHZ 10-PLR-ED	
100	90330-0029	-		2	PLUG, EXT. G-THREAD, R-236R3/8	
110	90330-0066	-		1	PLUG, EXT. G-THREAD, G1/8	
120	90457-0011	-		1	HYDRAULIC TANK, 12 LI, NO A3-14010	
130	90457-0012	-		1	TANK LID, LID-12L, NO A3-14011	
140	90457-0013	-		1	PUMP-MOTOR BRACKET, LS-211, NO 1711121	
150	90457-0014	A		1	FLEXIBLE COUPLING, ND5-A, CON.10X19 MM	
160	90457-0015	A		1	HYDR.PUMP, TFP100/2,2-S-C001, NO 1111250	
170	90457-0016	-		1	HYDR. VALVE MANIFOLD BLOCK, NO AI-14004	
180	90457-0017	-		1	TANK RET. OUTLET PIPE, NO 8185-0187	
190	90457-0018	A		1	HYDR.ACCU, NO SBO210-0,32EI/112A-210AK60	
220	90457-0021	-		2	PUMP CONN. ELBOW FLANGE T-26/12-3/8	
240	90030-0630	-		2	REDUCER, 1,5MM, M6, NO. 815406	
250	90201-0133	A		1	VALVE	
260	90201-0132	A		1	VALVE	
270	90201-0131	A		1	VALVE	
280	90457-0022	-		1	HYDR. HOSE, 6,4 & M16X1,5 STR+90DEGR.CON	
290	90458-0726	-		1	PRESSURE GAUGE, D=50 MM WITH FILTER	
300	90457-0024	-		1	RETURNFILTER UNIT, RF-P/30-G-010AI.IT	
320	90457-0023	-		1	CONN.STRAIGHTG1/2-M22X1,5, VADKO15-RL/WD	
330	312101-0499	-		4	SCREW M6S M10X40 FZB	
340	312104-0499	-		4	SCREW M6S M10X40H FZB	
350	312105-0493	-		4	SCREW M6S ISO 4017 M10X25 A480	
360	312111-0295	-		8	SCREW HEX.SOCK.HD.MC6S-TT 4X20 88 FZB	
370	312111-0331	-		6	SCREW HEX.SOCK.HD.MC6S-TT 5X20 88 FZB	
380	312111-0370	-		8	SCREW HEX.SOCK.HD.MC6S-TT 6X20 88 FZB	
390	312111-0372	-		4	SCREW HEX.SOCK.HD.MC6S-TT 6X25 88 FZB	
400	312601-0320	-		4	NUT M6M 10-8 FZB	
410	312810-0316	-		8	HEXAGON NUT, NY-LOCK M6 FZB	
420	315101-0153	-		16	WASHER PLAIN, BRB, 6,4/12 H=1,5	
430	315105-0173	-		8	WASHER ISO 7089-10-200 HV-A4	
440	315202-0112	-		2	O-RING 14,1X1,6 MM	
450	315211-0104	B		4	GASKET BOLT HEAD 8,7X14X1 MM M8	
460	315211-0106	B		4	GASKET BOLT HEAD 10,7X16X1,5 MM M10	
470	315211-0111	B		2	GASKET BOLT HEAD 21,5X28,6X2,5 MM G1/2	
480	315234-0109	-		1	WASHER,PL.RND.CU.10,3/13,5 H=1,0	
490	315234-0111	-		2	WASHER,PL.RND.CU.17,5//21 H=1,5	
500	315402-0146	-		6	LOCK WASHER FBB 5,1	
510	342700-0113	-		1	NIPPLES,HEXAGON,EXT.G-THREAD G1/2"-G1/2"	
520	342700-0205	-		1	NIPPLES,HEXAGON,EXT.G-THREAD G1/2"-G1/4"	
530	342713-0209	-		1	PLUG, EXT THREAD HEX SOCKET 8638-00-180	
540	342713-0211	-		1	PLUG, EXT THREAD HEX SOCKET 8638-00-380	
550	342752-0103	-		4	CONN. STR. GA-8-G1/4	
560	342752-0110	-		1	CONN. STR. GA-12-G3/8	
570	342921-0122	-		2	STRAIGHT COUPLING,EXT.THREADED 8/6-G1/4"	
580	90457-0139	-		1	CONN.STRAIGHT G3/8-10 MM, A 10-L/R3/8/WD	
590	90457-0140	-		1	CONN.STRAIGHT G3/8-15 MM, A 15-L/R3/8/WD	
600	90457-0136	B		1	FLAT GASKET TAPE W. ADHESIVE, 10X3.0	
610	90457-0138	B		1	GASKET, DP-200	
620	90457-0137	B		1	GASKET, GP IP	
630	90458-0431	-		1	EXTENDED WITHOUT INSERT, M25X1,5	
640	353249-0013	-		1	INSERT, SINGEL HOLE, EK 154/13	
650	90152-0051	-	M	1	SPIRAL CONDUIT, 25X18, UL 1816	
660	353243-0001	-		4	EXTENDED WITHOUT INSERT, PG9	
670	353249-0009	-		5	INSERT, SINGEL HOLE, EK 152/9	
680	90152-0059	-	M	8	SPIRAL CONDUIT, 18X12, UL 1211	
690	312605-0320	-		4	HEXAGON NUT, M6M M10 A280	
700	353243-0002	-		1	EXTENDED WITHOUT INSERT, PG11	
MB045	90457-0019	A		1	LEVEL PROBE, HMFB-S=45-0=80-0=90-T70	
MM005	90045-0228	A		1	MOTOR MEZ-4AP80-4-B5-0	
MY052	90457-0170	A		1	DIRECTION VALVE, NO. 0 810 091 212	
	90457-0169	-		*1*	*SOL. COIL, 24VDC/1,4A, NO 1837001227*	
MY052A.1	90110-0095	-		1	CONNECTOR 3 POLE + EARTH	
MY052B.1	90110-0095	-		1	CONNECTOR 3 POLE + EARTH	
MY131	90458-2722	A		1	DIRECTION VALVE, NO. 0 810 091 222	
MY131.1	90110-0095	-		1	CONNECTOR 3 POLE + EARTH	
MY132	90458-2722	A		1	DIRECTION VALVE, NO. 0 810 091 222	
MY132.1	90110-0095	-		1	CONNECTOR 3 POLE + EARTH	
W304	351150-0418	-	M	3	CABLE OLFLEX 4X2,5 MM2 LIGHT/GREY	
W316	351150-0403	-	M	3	CABLE OLFLEX 3X0,75 MM2 LIGHT/GREY	
W317	351150-0403	-	M	3	CABLE OLFLEX 3X0,75 MM2 LIGHT/GREY	
W349	351150-0403	-	M	3	CABLE OLFLEX 3X0,75 MM2 LIGHT/GREY	
W350	351150-0403	-	M	3	CABLE OLFLEX 3X0,75 MM2 LIGHT/GREY	

Machine Type | Group Description | Used-In | Group Number | Page No

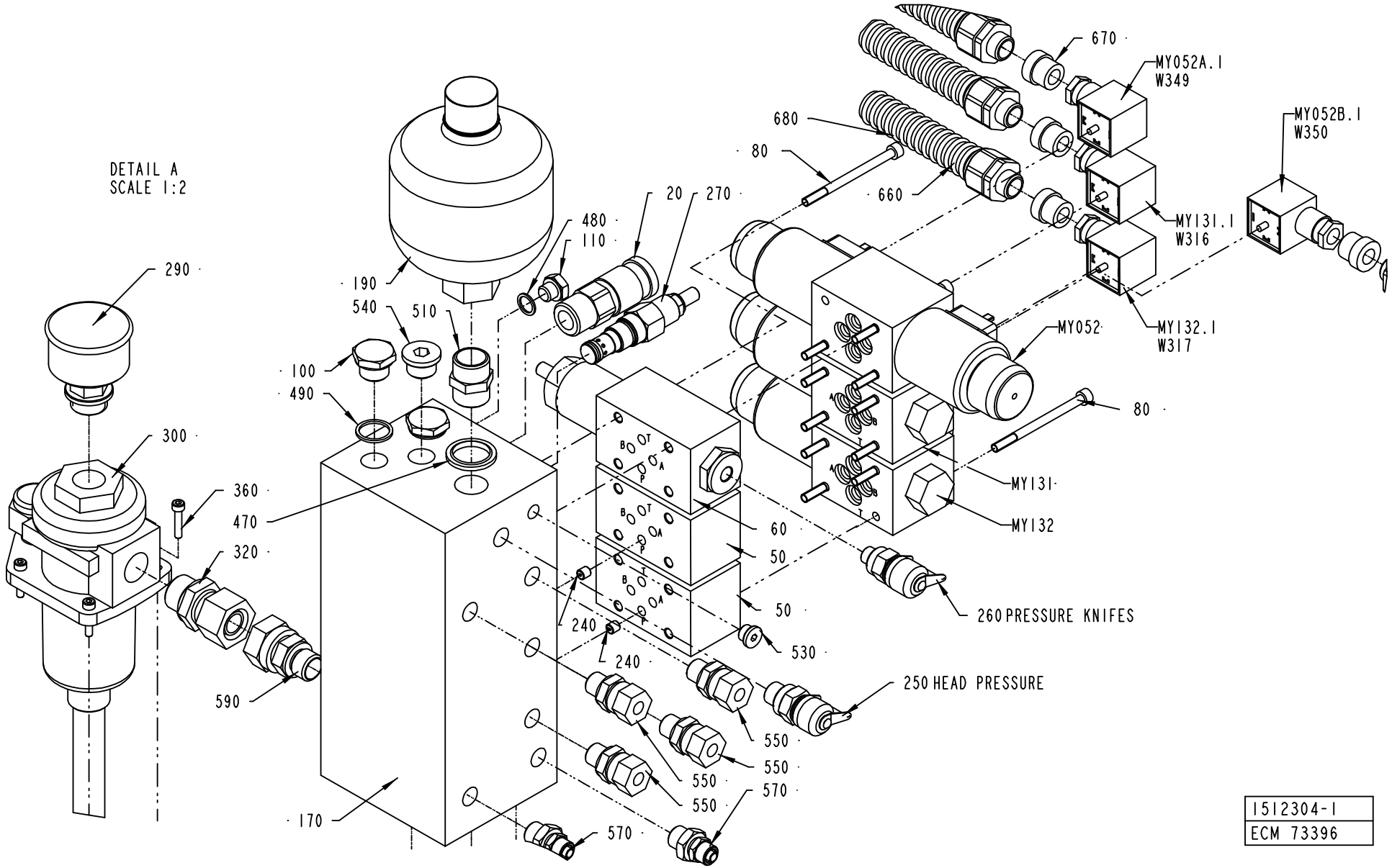

1512304-1
ECM 73396

Pos	Part No	SP	UN	Qty	Description	Page No
- (Cont'd)						
W355	351150-0404	-	M	3	CABLE OLFLEX 4X0,75 MM2 LIGHT/GREY	

Pos	Part No	SP	UN	Qty	Description	Page No

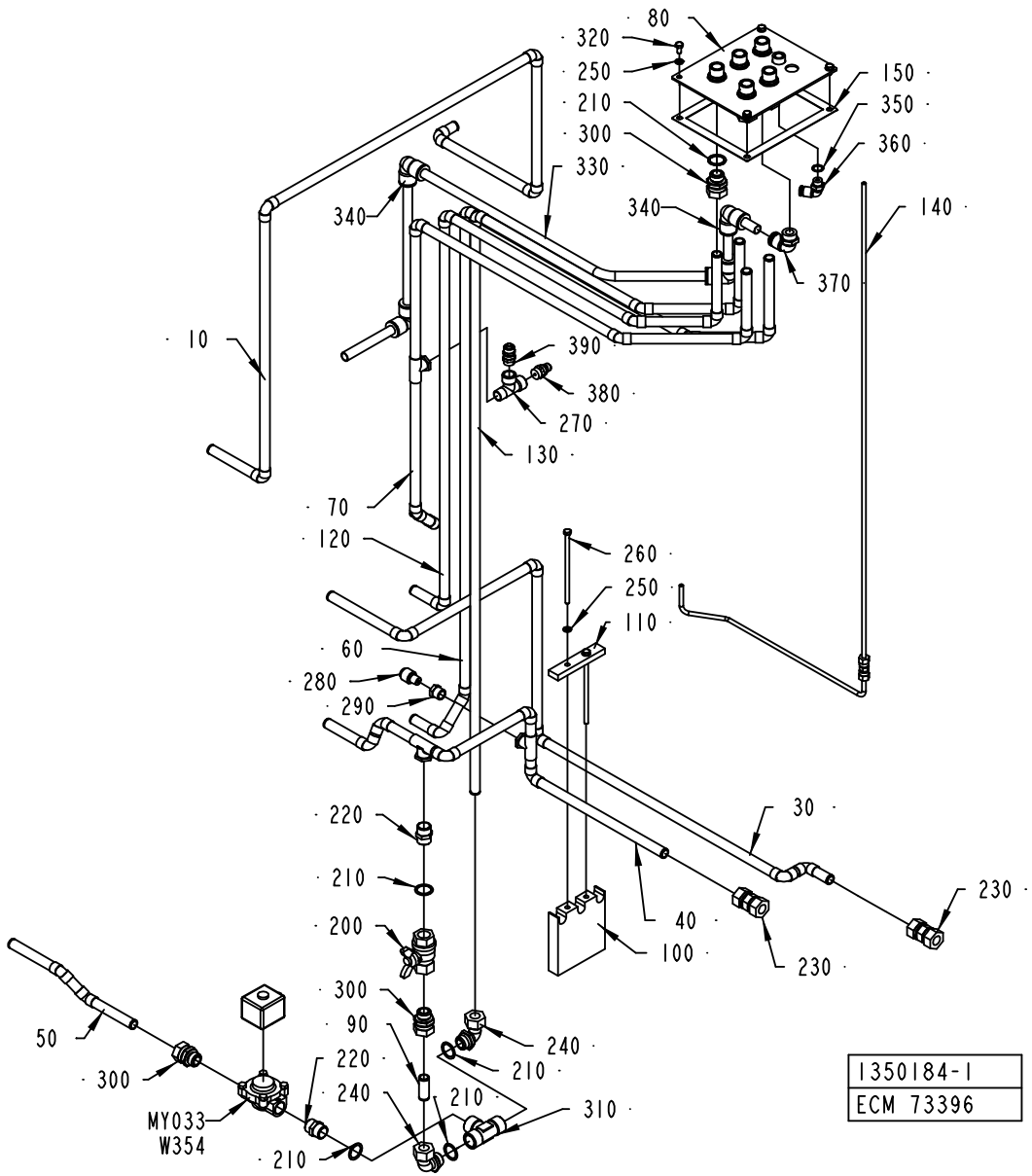
80
320
250
210
300
330
340
340
150
350
360
140
370
10
390
380
270
130
70
120
260
250
110
60
280
290
220
210
200
300
90
220
240
210
240
210
310
210
MY033
W354
300
50
30
230
40
100
230
1350184-1
ECM 73396

ECM: 106577 - 20020313
Group number: 1350184-0100
Assembly Drawing: 1350184-1_1_AA

Pos	Part No	SP	UN	Qty	Description	Page No
-						
010	1517484-0000	-		1	PIPE	
030	1517486-0000	-		1	PIPE	
040	1517487-0000	-		1	PIPE	
050	1517488-0000	-		1	PIPE	
060	1517489-0000	-		1	PIPE	
070	1350185-0000	-		1	PIPE	
080	1519997-0000	-		1	CONNECTION PLATE	
090	1548156-0000	-		1	PIPE	
100	1517490-0000	-		1	INFERIOR HOLDER	
110	1517491-0000	-		1	INFERIOR HOLDER	
120	1519577-0000	-		1	PIPE	
130	1519576-0000	-		1	PIPE	
140	1512353-0000	-		1	PIPE	
150	1517181-0000	-		1	GASKET	
200	90187-0029	-		1	BALL VALVE G1/2, NPBR	
210	315233-0113	B		8	WASHER PL.RND.NYL.21,4/27,H=1,2	
220	342700-0113	-		2	NIPPLES,HEXAGON,EXT.G-THREAD G1/2"-G1/2"	
230	342726-0114	-		2	CONN. PIPE G-15	
240	342730-0114	-		2	CONN. ELBOW WA-15-1/2	
250	315105-0153	-		6	WASHER ISO 7089-6-200 HV-A4	
260	90457-0143	-		2	SCREW M6S ISO 4014 M6X130 A480	
270	90140-0023	-		1	T-PIPE, INT. THREAD, NO. 2070-3/8-3/8	
280	90224-0094	-		1	NIPPLE	
290	342701-0203	-		1	BUSHING, INT/EXT. G-THREAD NO. 3/8-1/4	
300	342720-0114	-		6	CONN. STR. GA-15-G1/2	
310	90140-0010	-		1	T-PIPE, INT. THREAD, 20031/2	
320	312105-0366	-		4	SCREW M6S M6X12 A280	
330	90166-0196	-	MM	1800	TUBE 14 MM PA BLUE	
340	342735-0110	-		4	ELBOW PIPE	
350	315233-0110	-		1	WASHER PL.RND.NYL.13,3/17,H=1	
360	342732-0104	-		1	ELBOW PIPE JOINT, EXT.THREAD, D=8MM-G1/4	
370	342732-0161	-		1	ELBOW PIPE JOINT,EXT.THREAD,D=14 MM-G1/2	
380	342920-0115	-		1	STRAIGHT COUPLING,EXT.THREADED 6/4-R3/8"	
390	342920-0133	-		1	STRAIGHT COUPL.,EXT.THREADED 10/8-R3/8"	
MY033	90042-0134	B		1	SOLENOID VALVE ASCO SCG 210 802 24VDC	
	90042-0428	*C*		*1*	*COIL ASCO 24VDC*	
W354	351150-0403	-	MM	3500	CABLE OLFLEX 3X0,75 MM2 LIGHT/GREY	

Pos	Part No	SP	UN	Qty	Description	Page No

Machine Type	Group Description	Used-In	Group Number	Page No

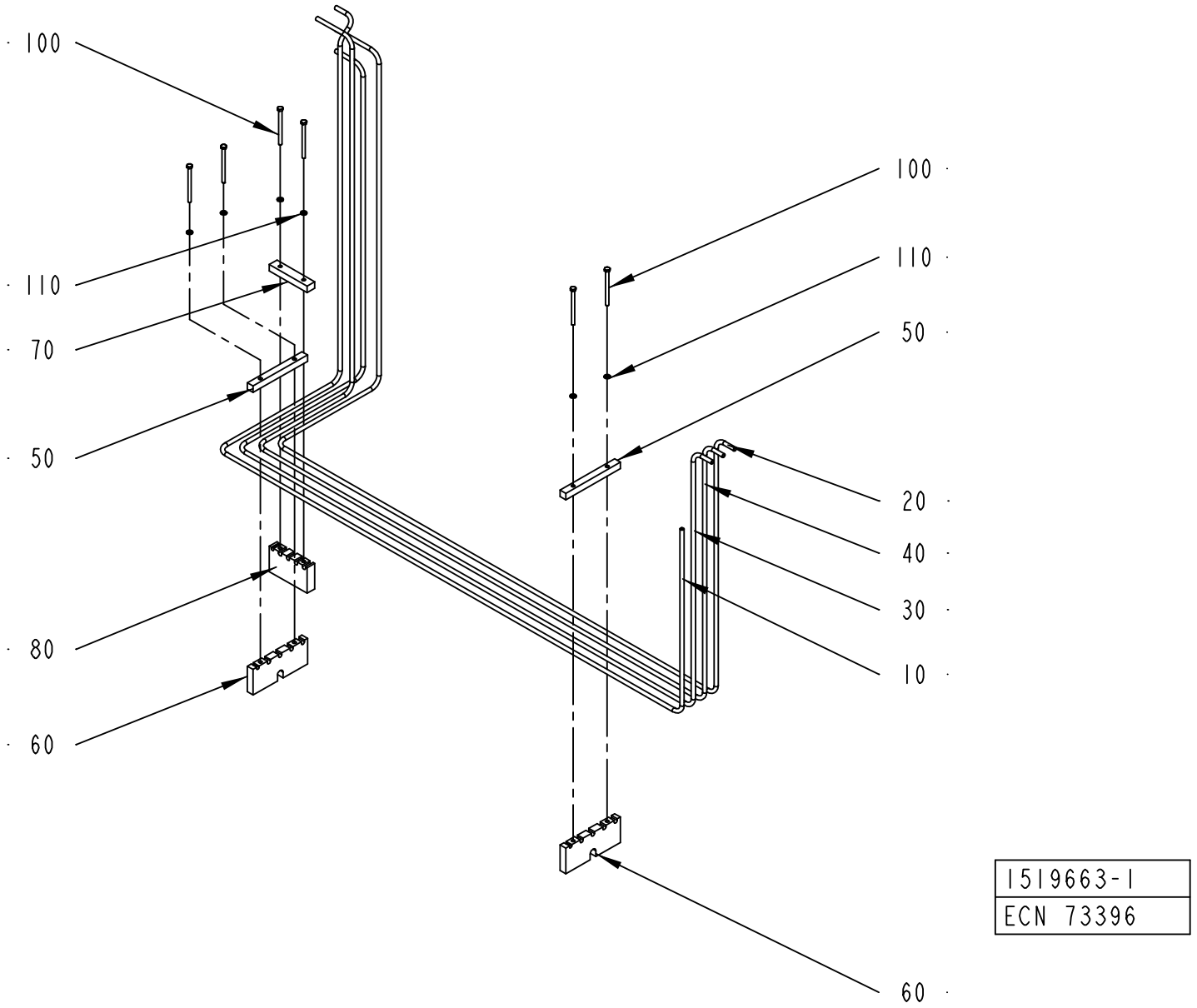
100
110
70
50
80
60
100
110
50
20
40
30
10
60
1519663-1
ECN 73396

ECM: 73396 - 20011221
Group number: 1519663-0100
Assembly Drawing: 1519663-1_1_AA

Pos	Part No	SP	UN	Qty	Description	Page No
-						
010	1519664-0000	-		1	PIPE	
020	1519665-0000	-		1	PIPE	
030	1519666-0000	-		1	PIPE	
040	1519667-0000	-		1	PIPE	
050	1519668-0000	-		2	PIPE HOLDER	
060	1519669-0000	-		2	PIPE HOLDER	
070	1519670-0000	-		1	PIPE HOLDER	
080	1519671-0000	-		1	PIPE HOLDER	
100	312105-0386	-		6	SCREW M6S ISO 4014 M6X80 A480	
110	315105-0153	-		6	WASHER ISO 7089-6-200 HV-A4	

Pos	Part No	SP	UN	Qty	Description	Page No

This page is intentionally left blank.

ECM: 70475 - 19961031
Group number: 469384-0100
Assembly Drawing:

Pos	Part No	SP	UN	Qty	Description	Page No
-						
010	90296-0053	-	L	10	OIL	
020	90296-0075	-	ML	2500	OIL 54322-320 ACC TO M 1254.322	
030	90298-0019	-		1	DETERGENT	
040	90144-0003	-		1	TAPE	

Pos	Part No	SP	UN	Qty	Description	Page No

Machine Type | Group Description | Used-In | Group Number | Page No

Tetra Pak

SPC
Spare Parts Catalogue

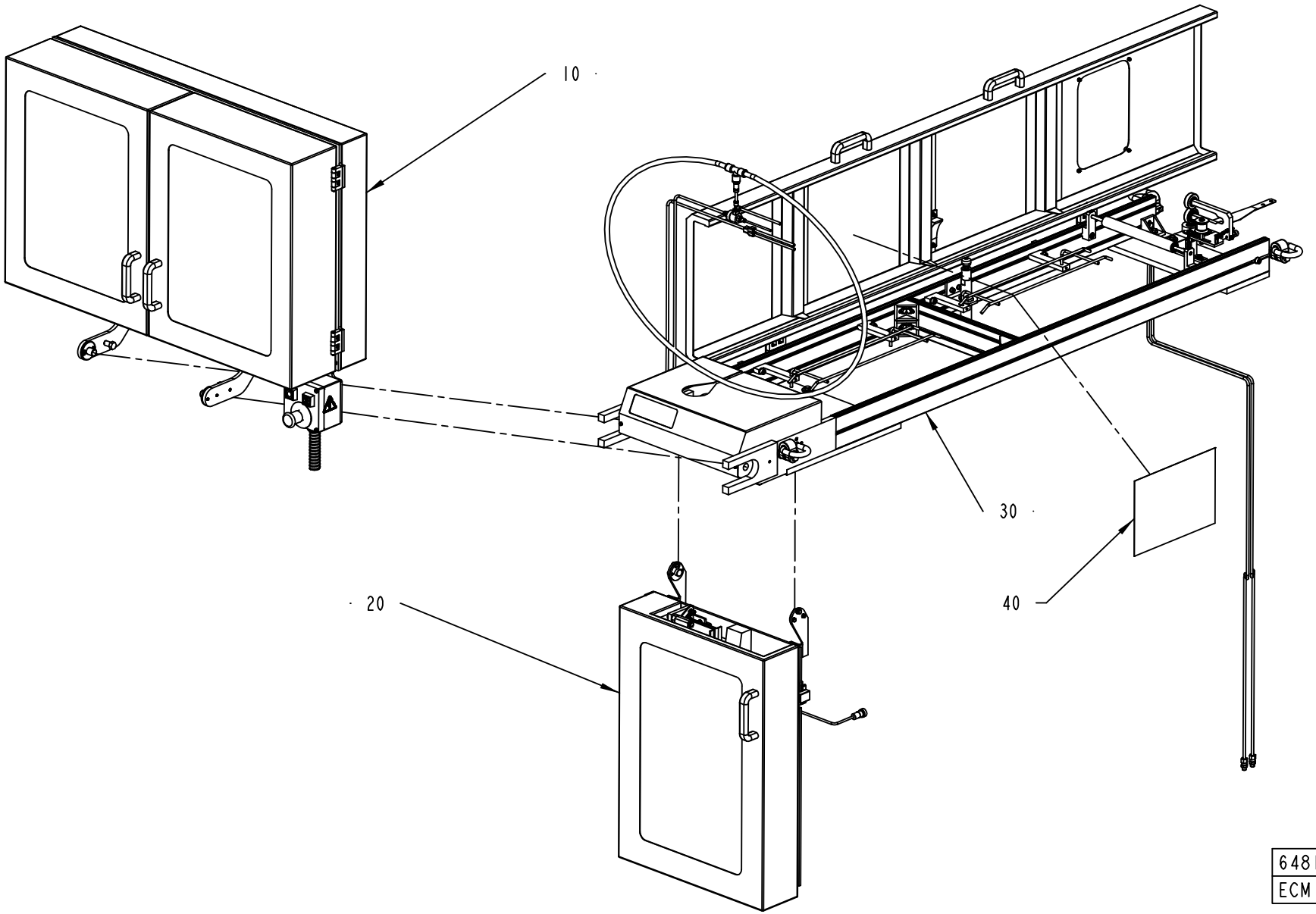
10
20
30
40
648107-16
ECM 99349

ECM: 109339 - 20020808
Group number: 648107-1200
Assembly Drawing: 648107-16_1_AB

Pos	Part No	SP	UN	Qty	Description	Page No
-						
010	580037-0200	-		1	STRIP MAGAZINE	**527, 529**
020	580036-0200	-		1	STRIP APPLICATOR	**555, 557**
030	1499477-0100	-		1	WEB TUNNEL	**575**
040	2540724-0000	-		1	HOSE INSTALLATION	

Pos	Part No	SP	UN	Qty	Description	Page No

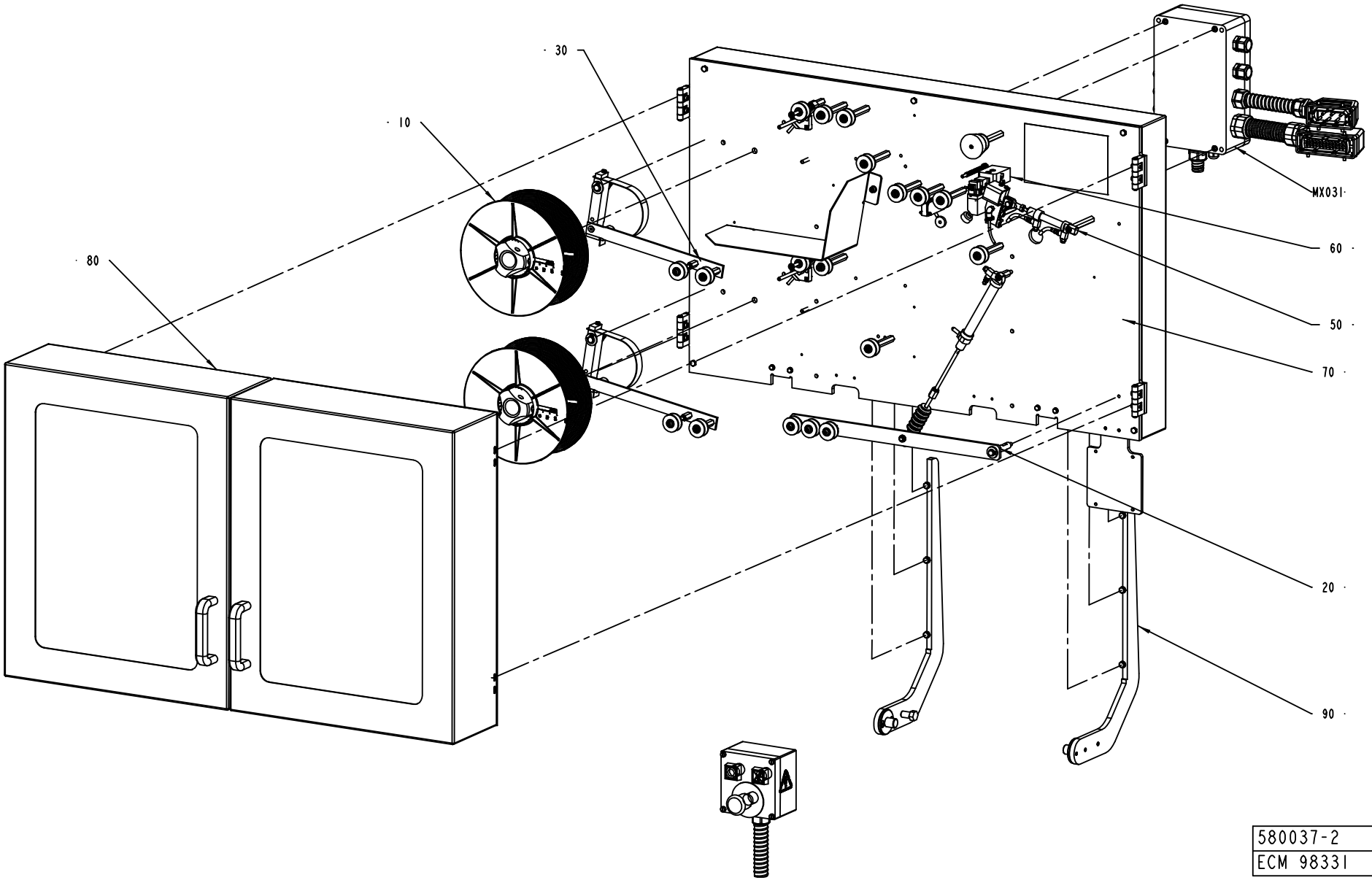
30
10
80
MX031
60
50
70
20
90
580037-2
ECM 98331

ECM: 131914 - 20030630
Group number: 580037-0200
Assembly Drawing: 580037-2_1_AC

This list covers pages from 526 to 529

Pos	Part No	SP	UN	Qty	Description	Page No
NOPT (See drawing on page: 526)						
090	1498753-0100	-		1	MAGAZINE HOLDER	**531**
PT19 (See drawing on page: 528)						
-	-	-			-	
Common Parts						
010	580042-0100	-		2	HUB JUMBO	
020	580044-0200	-		1	SPLICING MAGAZINE	**533**
030	580060-0200	-		2	BRAKE ARM	**535**
040	580329-0200	-		1	PUSH BUTTON BOX	**537**
050	1558897-0100	-		1	HEATING DEVICE	**539**
060	1524477-0100	-		1	CUTTING TABLE	**541**
070	1499480-0100	-		1	MOUNTING PLATE	**543, 545, 547, 549**
080	1498751-0100	-		1	DOORS	**551**
MX031	580064-0200	-		1	CONNECTION BOX	**553**

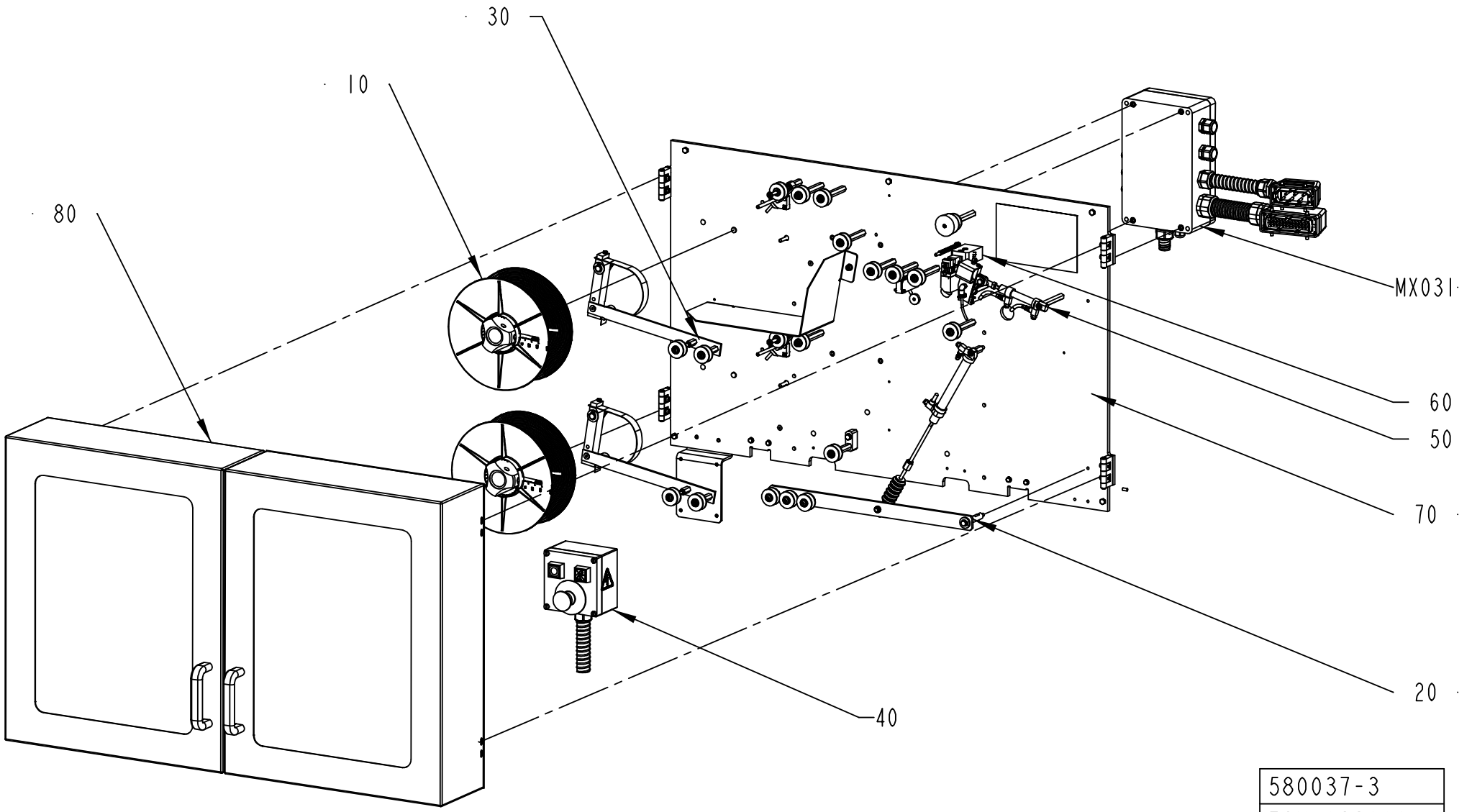

580037-3
ECM 122919

ECM: 131914 - 20030630
Group number: 580037-0200
Assembly Drawing: 580037-3_1_AA

This list covers pages from 526 to 529

Pos	Part No	SP	UN	Qty	Description	Page No
NOPT (See drawing on page: 526)						
090	1498753-0100	-		1	MAGAZINE HOLDER	**531**
PT19 (See drawing on page: 528)						
-	-	-			-	
Common Parts						
010	580042-0100	-		2	HUB JUMBO	
020	580044-0200	-		1	SPLICING MAGAZINE	**533**
030	580060-0200	-		2	BRAKE ARM	**535**
040	580329-0200	-		1	PUSH BUTTON BOX	**537**
050	1558897-0100	-		1	HEATING DEVICE	**539**
060	1524477-0100	-		1	CUTTING TABLE	**541**
070	1499480-0100	-		1	MOUNTING PLATE	**543, 545, 547, 549**
080	1498751-0100	-		1	DOORS	**551**
MX031	580064-0200	-		1	CONNECTION BOX	**553**

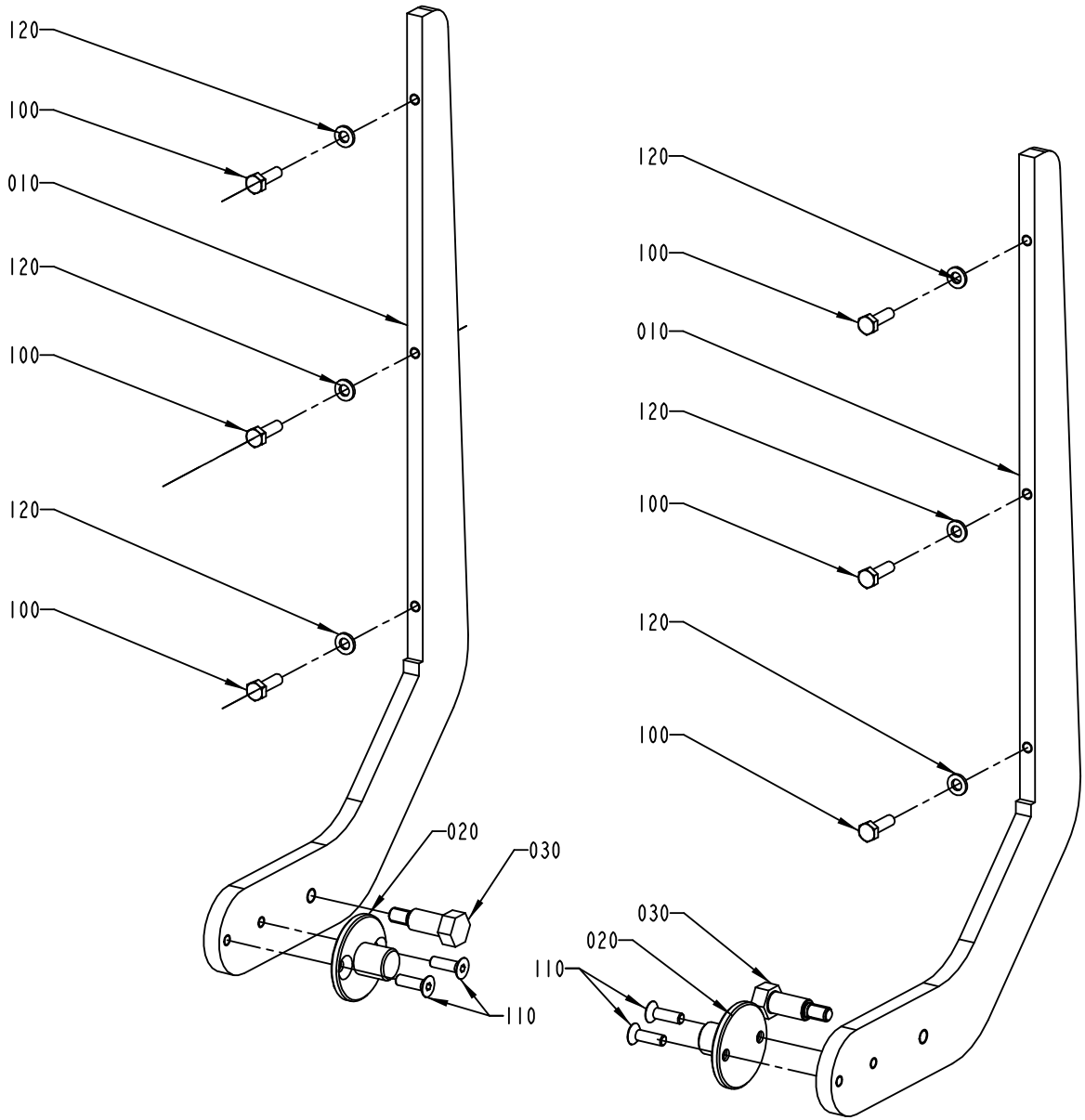

1498753-1
ECN 72945

ECM: 98335 - 20020808
Group number: 1498753-0100
Assembly Drawing: 1498753-1_1_AA

Pos	Part No	SP	UN	Qty	Description	Page No
-						
010	1498761-0000	-		2	MAGAZINE HOLDER	
020	1498757-0000	-		2	FLANGE	
030	1498758-0000	-		2	AXLE PIN	
100	312105-0370	-		6	SCREW M6S ISO 4017 M6X20 A480	
110	312155-0368	-		4	SCREW EN 10642 MF6S M6X16 A480	
120	315105-0153	-		6	WASHER BRB6,4X12RFR	

Pos	Part No	SP	UN	Qty	Description	Page No

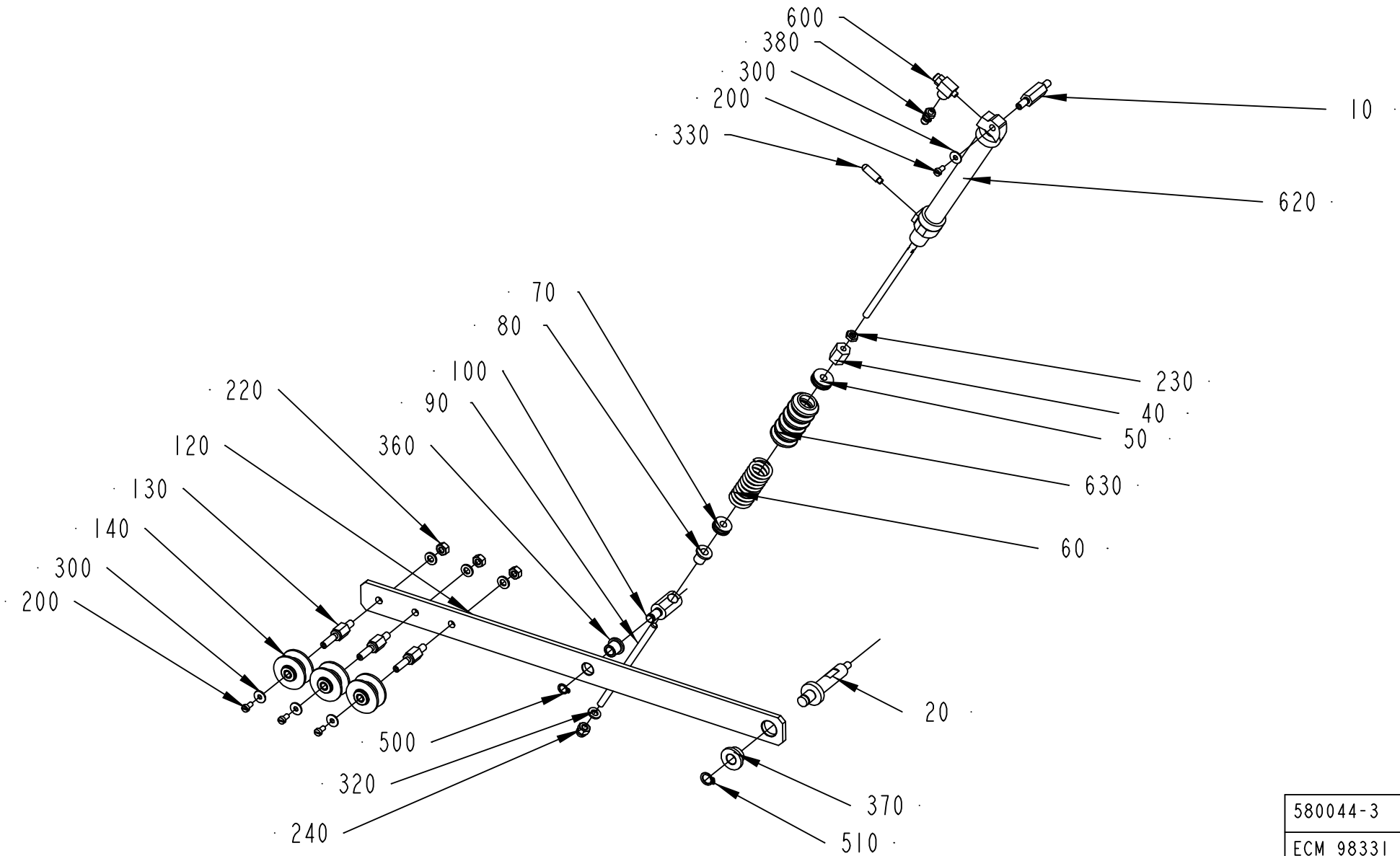

580044-3
ECM 98331

ECM: 113781 - 20030113
Group number: 580044-0200
Assembly Drawing: 580044-3_1_AC

Pos	Part No	SP	UN	Qty	Description	Page No
-						
010	979576-0000	-		1	AXLE PIN	
020	979578-0000	-		1	AXLE PIN	
040	401186-0000	-		1	HEX NUT	
050	401371-0000	B		1	BUSHING	
060	400800-0000	B		1	SPRING	
070	401372-0000	B		1	BUSHING	
080	401370-0000	B		1	BUSHING	
090	1499515-0000	-		1	SHAFT	
100	401183-0000	-		1	GUIDE AXLE	
120	580055-0000	-		1	ARM	
130	579553-0000	-		3	SHAFT	
140	1512583-0000	A		3	ROLLER	
	321120-0101	*B*		*2*	*BEARING BUSHING W/O FLANGE,6/8X6*	
200	312125-0287	-		4	SCREW PAN HEAD MCS M4X8 SS	
220	312605-0316	-		3	HEXAGON NUT, M6M M6 A280	
230	312625-0316	-		1	HEXAGON THIN NUT, EN 24035 ML6M M6 A4	
240	312705-0316	-		1	NUT HEX. DOMED CAP MHM-6 M6 A280	
300	90005-0082	-		4	WASHER PLAIN ROUND 4,3(M4)/12,H=1	
320	315105-0153	-		4	WASHER BRB6,4X12RFR	
330	90328-0029	B		1	SILENCER M5	
360	321111-0097	B		1	FLANGE BUSHING, 8X12X12 MM	
370	321111-0135	B		1	FLANGE BUSHING, 10X16X10 MM	
380	342921-0111	-		1	STRAIGHT COUPL,EXT.THREAD.6/4-M5	
500	90141-0015	-		1	RETAIN. RING, 8	
510	90141-0016	-		1	RETAIN. RING, 10	
600	90235-0289	A		2	VALVE	
620	90239-0819	B		1	DOUBLE ACTING, MINI-ISO, CYL.16-100	
630	90342-0013	B		1	BELLOWS	

Pos	Part No	SP	UN	Qty	Description	Page No

Machine Type | Group Description | Used-In | Group Number | Page No

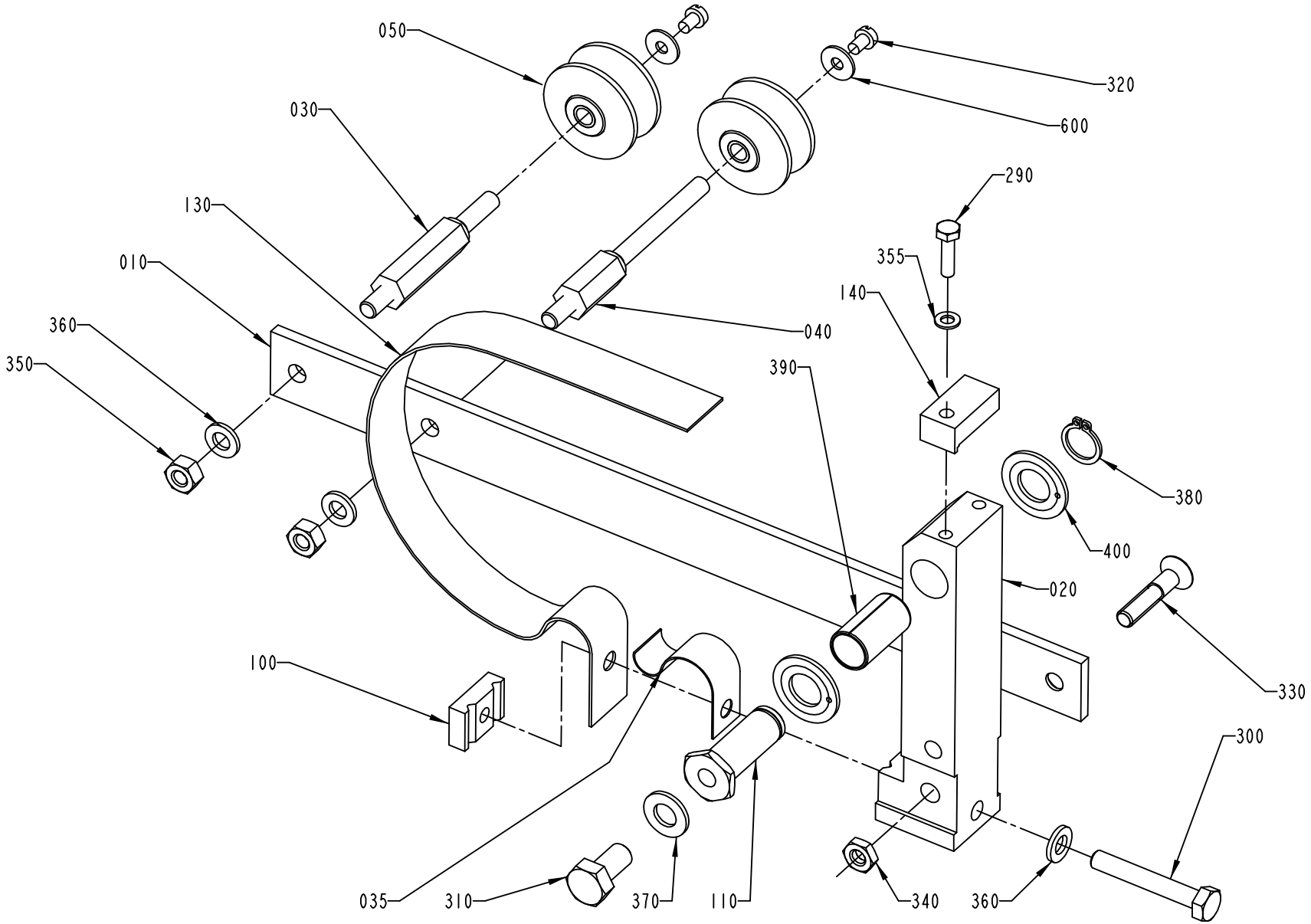

580060-3
ECM 98331

ECM: 114165 - 20020930
Group number: 580060-0200
Assembly Drawing: 580060-3_1_AB

Pos	Part No	SP	UN	Qty	Description	Page No
-						
010	979994-0000	D		1	ARM	
020	1260678-0000	-		1	ARM	
030	536917-0000	B		1	AXLE PIN	
035	1484486-0000	A		1	SPRING	
040	544726-0000	B		1	AXLE PIN	
050	1512583-0000	B		2	ROLLER	
	321120-0101	*B*		*2*	*BEARING BUSHING W/O FLANGE,6/8X6*	
100	583878-0000	-		1	SPRING BRACKET	
110	541070-0000	B		1	SHAFT	
130	979990-0000	A		1	BELT BRAKE	
140	979991-0000	-		1	BLOCK	
290	312105-0293	-		1	SCREW M6S ISO 4017 M4X16 A480	
300	312105-0378	-		1	SCREW M6S ISO 4014 M6X40 A480	
310	312105-0449	-		1	SCREW M6S ISO 4017 M8X16 A480	
320	312125-0285	-		2	SCREW SLOT.PAN HD. MCS 4X6 A480	
330	312155-0374	-		1	SCREW EN 10642 MF6S M6X30 A480	
340	312625-0316	-		1	HEXAGON THIN NUT, EN 24035 ML6M M6 A4	
350	312605-0316	-		2	HEXAGON NUT, M6M M6 A280	
355	315105-0136	-		1	WASHER BRB4,3XRFR	
360	315105-0153	-		3	WASHER BRB6,4X12RFR	
370	315105-0165	-		1	WASHER BRB8,4X16RFR	
380	315751-0109	-		1	RETAIN. RING, 12	
390	321141-0193	B		1	BEARING BUSHING W/O FL, 12X14X25 MM	
400	321130-0180	B		2	THRUST WASHER, 12X24X1,5 MM	
600	90005-0082	-		2	WASHER PLAIN ROUND 4,3(M4)/12,H=1	

Pos	Part No	SP	UN	Qty	Description	Page No

Machine Type | Group Description | Used-In | Group Number | Page No

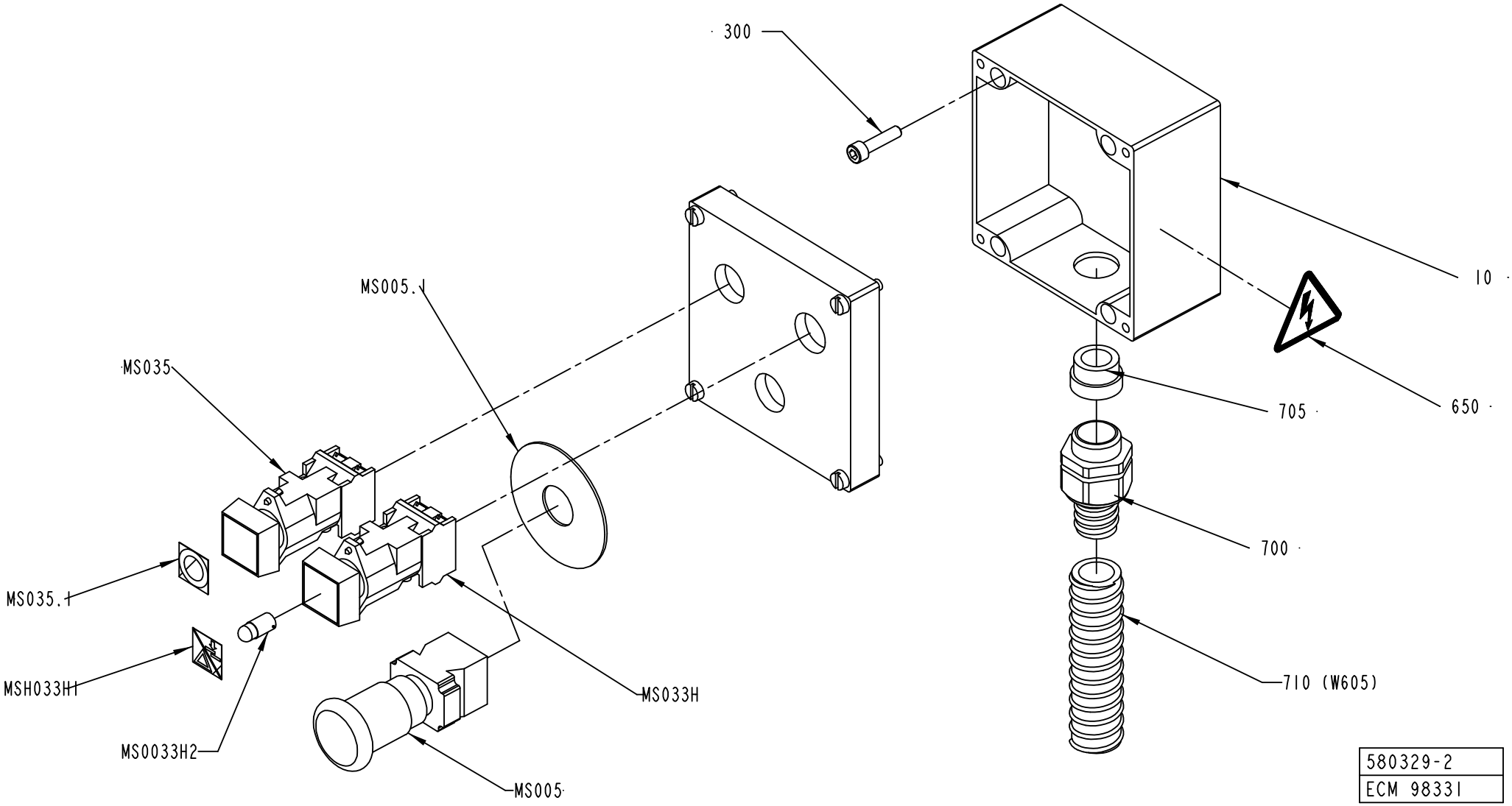
300
10
MS005.1
MS035
705
650
700
MS035.1
MSH033H1
MS033H
710 (W605)
MS0033H2
MS005
580329-2
ECM 98331

ECM: 116935 - 20030113
Group number: 580329-0200
Assembly Drawing: 580329-2_1_AB

Pos	Part No	SP	UN	Qty	Description	Page No
-						
010	1558892-0000	-		1	CONNECTION BOX	
300	312115-0372	-		4	SCREW ISO4762 M6X25 A4	
650	359705-0015	B		1	WARNING SIGN ISO, RISK OF ELECTRIC SHOCK	
700	90458-0431	-		1	EXTENDED WITHOUT INSERT, M25X1,5	
705	353249-0014	-		1	INSERT, SINGEL HOLE, EK 154/16	
710	90152-0051	-	MM	1600	SPIRAL CONDUIT, 25X18, UL 1816	
MS005	90458-1651	A		1	EMERGENCY STOP, ZB4-BS-844 ZB4-BZ-104	
MS005.1	486826-0001	-		1	SIGN "EMERGENCY STOP"	
MS033H	90064-0098	B		1	PUSH BUTTON, CLEAR	
MS033H1	90459-0691	-		1	SIGN, STRIP SPLICE/ RESET ALARM	
MS033H2	90036-0057	B		1	LIGHT BULB, BA9S 28V	
MS035	90064-0085	B		1	PUSH BUTTON, RED	
MS035.1	359301-0110	-		1	SIGN "SHORT STOP"	
W605	351150-0407	-	MM	1900	CABLE OLFLEX 12X0,75 MM2 LIGHT/GREY	

Pos	Part No	SP	UN	Qty	Description	Page No

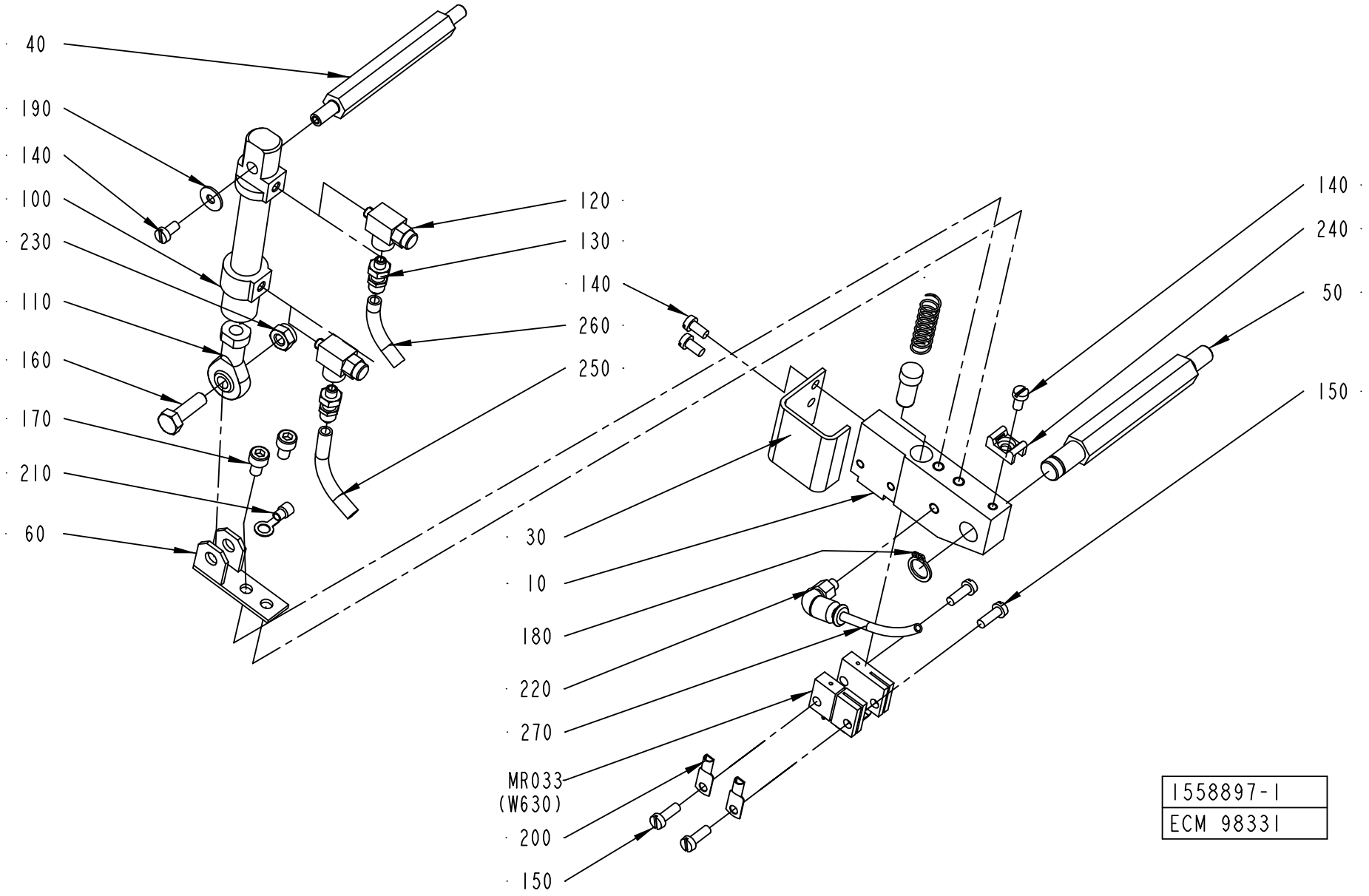
40
190
140
100
230
110
160
170
210
60
120
130
140
260
250
30
10
180
220
270
MR033
(W630)
200
150
140
240
50
150
1558897-1
ECM 98331

ECM: 98936 - 20020808
Group number: 1558897-0100
Assembly Drawing: 1558897-1_1_AA

Pos	Part No	SP	UN	Qty	Description	Page No
-						
010	1490804-0000	-		1	HOLDER	
020	400833-0000	-		1	PLUNGER	
030	2523596-0000	-		1	COVER	
040	1037121-0000	-		1	SHAFT	
050	1037120-0000	-		1	SHAFT	
060	1037124-0000	-		1	HOLDER	
070	400828-0000	B		1	SPRING	
100	90450-0306	A		1	DOUBLE ACTING, MINI-ISO, CYL. 12-25	
110	90239-0491	-		1	ROD END,BALL JOINT EYE,MINI-ISO M6	
120	90235-0289	-		2	VALVE	
130	342921-0111	-		2	STRAIGHT COUPL,EXT.THREAD.6/4-M5	
140	312125-0287	-		4	SCREW PAN HEAD MCS M4X8 SS	
150	312125-0291	-		4	SCREW PAN HEAD MCS M4X12 SS	
160	312105-0370	-		1	SCREW M6S ISO 4017 M6X20 A480	
170	312115-0323	-		2	SCREW ISO4762 M5X8 A4	
180	90141-0016	-		1	RETAIN. RING, 10	
190	90005-0082	-		1	WASHER PLAIN ROUND 4,3(M4)/12,H=1	
200	353104-0140	-		2	CABLE SHOEYAV 06 M 4*	
210	353101-0132	-		1	CABLE SHOE, RING ø5,3MM	
220	342732-0099	-		1	ELBOW PIPE JOINT, EXT.THREAD, D=4MM-M5	
230	312812-0316	-		1	HEXAGON NUT, NY-LOCK M6 A480	
240	352113-0205	-		1	ANCHOR PLATES FOR STRIPS, TYPE TM2S8-C10	
250	90166-0193	-	MM	1000	TUBE 6 MM PUR BLUE	
260	90166-0193	-	MM	1000	TUBE 6 MM PUR BLUE	
270	90166-0095	-	MM	500	TUBE 4 MM PA BLUE	
MR033	1538473-0000	A		1	SEALING BLOCK	
W630	351120-0146	-	MM	1000	CABLE SIHF 3X4MM2 GREEN/YELLOW	

Pos	Part No	SP	UN	Qty	Description	Page No

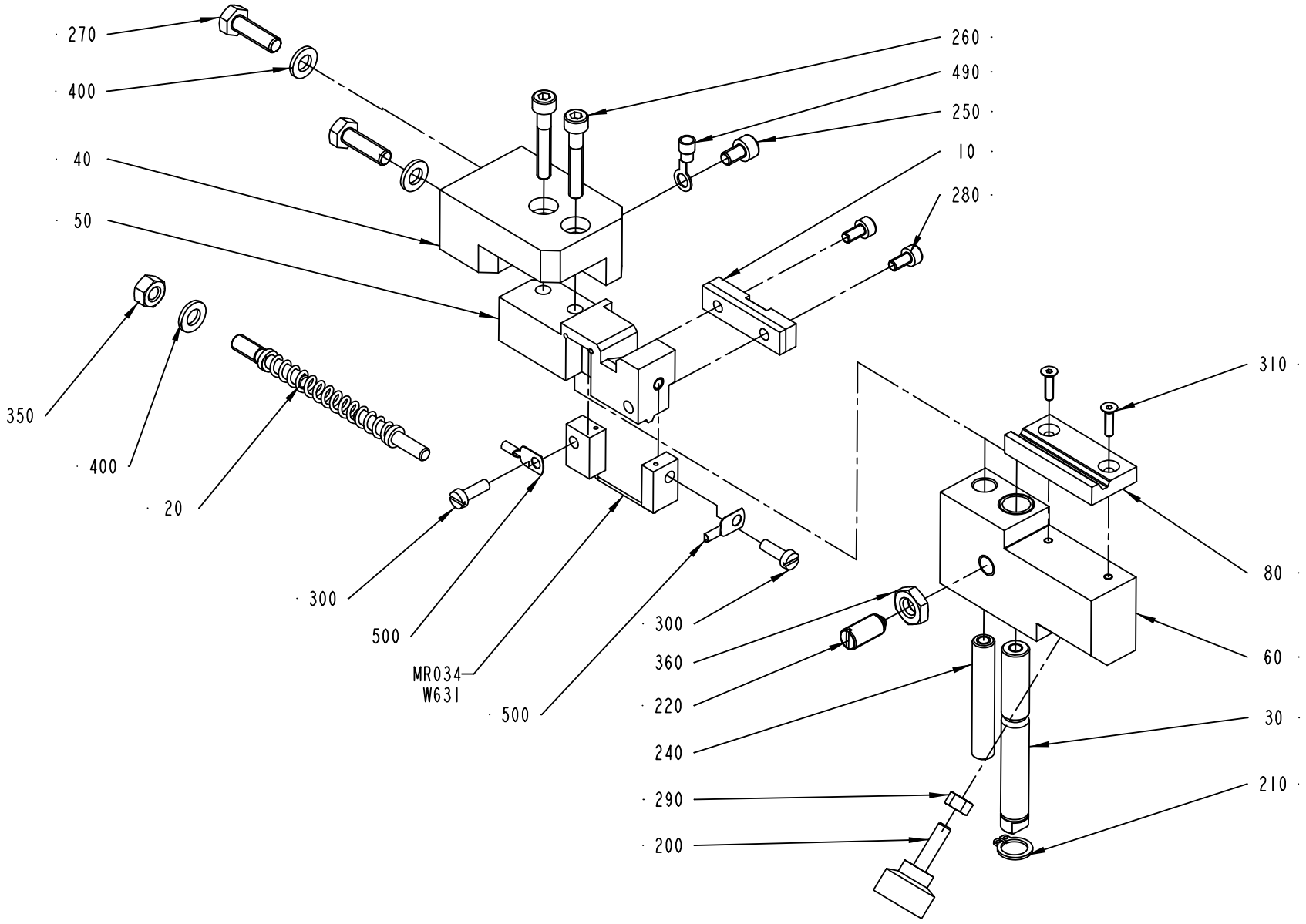

1524477-1
ECM 98331

ECM: 113779 - 20030113
Group number: 1524477-0100
Assembly Drawing: 1524477-1_1_AC

Pos	Part No	SP	UN	Qty	Description	Page No
-						
010	1349014-0000	-		1	PAD	
020	2540726-0000	-		1	FINGER	
030	1517751-0000	-		1	SHAFT	
040	2523599-0000	-		1	SUPPORT	
050	2523598-0000	A		1	SPLICING TABLE	
060	2523597-0000	-		1	SLIDER	
080	2523601-0000	A		1	PAD	
090	2523600-0000	-		1	PIN	
200	90051-0035	-		1	KNOB, EXTERNAL THREAD. NO. 8308-1135	
210	90141-0016	-		1	RETAIN. RING, 10	
220	90287-0112	A		1	SCREW SPRINGLOAD. SLOTTED HEAD M8X16	
250	312115-0323	-		1	SCREW ISO4762 M5X8 A4	
260	312115-0335	-		2	SCREW ISO4762 M5X30 A4	
270	312105-0370	-		2	SCREW M6S ISO 4017 M6X20 A480	
280	312115-0287	-		2	SCREW ISO4762 M4X8 A4	
290	312605-0314	-		1	HEXAGON NUT, M6M M5 A280	
300	312125-0291	-		1	SCREW PAN HEAD MCS M4X12 SS	
305	312125-0293	-		1	SCREW PAN HEAD MCS M4X16 SS	
310	312155-0226	-		2	SCREW EN 10642 MF6S M3X12 A480	
350	312605-0316	-		1	HEXAGON NUT, M6M M6 A280	
360	312625-0318	-		1	HEXAGON THIN NUT, EN 24035 ML6M M8 A4	
400	315101-0153	-		3	WASHER PLAIN, BRB, 6,4/12 H=1,5	
490	353101-0132	-		1	CABLE SHOE, RING ø5,3MM	
500	353101-0130	B		2	CABLE SHOE 1,5-2,5MM2 BLUE	
MR034	1524481-0000	A		1	SEALING BLOCK	
W631	351120-0145	-	MM	1000	CABLE SIHF 3X2,5MM2 GREEN/YELLOW	

Pos	Part No	SP	UN	Qty	Description	Page No

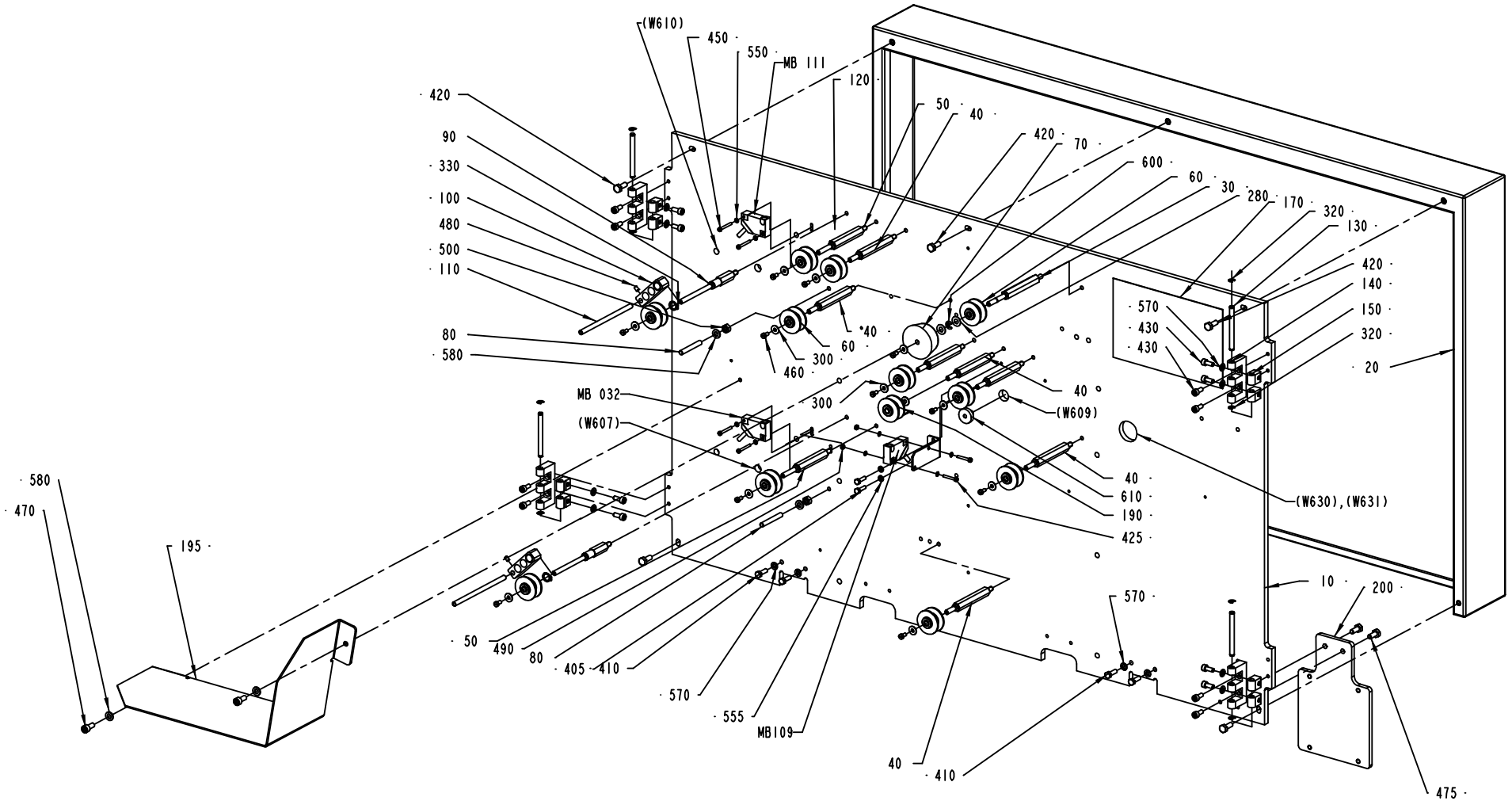

1499480-1
ECM 98331

ECM: 111683 - 20030630
Group number: 1499480-0100
Assembly Drawing: 1499480-1_1_AC

This list covers pages from 542 to 549

Pos	Part No	SP	UN	Qty	Description	Page No
NOPT (See drawing on pages: 542, 544)						
020	1498764-0000	-		1	COVER	
200	1498775-0000	-		1	BOX BRACKET	
PT19 (See drawing on pages: 546, 548)						
200	2552624-0000	-		1	BOX BRACKET	
Common Parts						
010	1498748-0000	-		1	MOUNTING PLATE	
030	1498762-0000	-		1	AXLE PIN	
040	2547218-0000	-		7	AXLE PIN	
050	2547219-0000	-		2	AXLE PIN	
060	1512583-0000	A		11	ROLLER	
	321120-0101	*B*		*2*	*BEARING BUSHING W/O FLANGE,6/8X6*	
070	1499481-0000	A		1	ROLLER	
080	469159-0000	-		2	PIN	
	311103-0369	*-*		*1*	*PARALLELL PIN ISO2338 6X60 A1*	
090	2547217-0000	-		2	AXLE PIN	
100	979667-0000	-		2	ARM	
	90240-0028	*-*		*1*	*BEARING BUSHING W/O FLANGE,10/12X15*	
110	979668-0000	-		2	FINGER	
120	979669-0000	-		2	FORCE PLATE	
130	1499512-0000	-		4	PIN	
140	1499514-0000	-		4	E-HINGE	
150	1035794-0000	-		8	BLOCKING PIECE	
160	2519644-0000	-		2	BRACKET	
170	1517464-0000	-		1	SIGN	
180	1538219-0000	-		1	SWITCH BRACKET	
190	1517293-0000	A		1	ROLLER	
	1512583-0000	*B*		*1*	*ROLLER*	
	321120-0101	*B*		*2*	*BEARING BUSHING W/O FLANGE,6/8X6*	
195	2506478-0000	-		1	COVER	
220	2588000-0000	-		1	BRACKET	
230	2588001-0000	-		1	AXLE PIN	
280	2033-0013	-		2	WASHER	
290	352113-0206	-		9	ANCHOR PLATES FOR STRIPS, TYPE ABM100-AT	
300	90005-0082	-		12	WASHER PLAIN ROUND 4,3(M4)/12,H=1	
320	315755-0106	-		8	LOCKING WASHER 4	
330	90141-0016	-		2	RETAIN. RING, 10	
400	312155-0287	-		9	SCREW EN 10642 MF6S M4X8 A480	
405	312105-0293	-		2	SCREW M6S ISO 4017 M4X16 A480	
410	312105-0329	-		4	SCREW M6S ISO 4017 M5X16 A480	
420	312105-0368	-		5	SCREW M6S M6X16 A280	
425	312115-0230	-		2	SCREW ISO4762 M3X20 A4	
430	312115-0327	-		16	SCREW ISO4762 M5X12 A4	
450	312125-0232	-		4	SCREW PAN HEAD MCS M3X25 SS	
460	312125-0287	-		12	SCREW PAN HEAD MCS M4X8 SS	
470	312115-0367	-		2	SCREW ISO4762 M6X14 A4	
475	312105-0367	-		2	SCREW M6S M6X14 A280	
480	312318-0285	-		2	SCREW ISO4029 M4X6 A4	
490	312605-0310	-		2	HEXAGON NUT, M6M M3 A280	
500	312605-0316	-		2	HEXAGON NUT, M6M M6 A280	
550	315105-0124	-		8	WASHER BRB3,2X6RFR	
555	315105-0136	-		2	WASHER BRB4,3XRFR	
570	315105-0146	-		12	WASHER BRB5,3X10RFR	
580	315105-0153	-		4	WASHER BRB6,4X12RFR	
600	315755-0107	-		1	LOCKING WASHER 5	
610	90015-0020	-		1	LEAD-IN, TET5-7, E-1458016	
620	312105-0374	-		1	SCREW M6S ISO 4014 M6X30 A480	
MB032	90044-0194	B		1	PROX.SW. IN5329/IN3002-BPKG	
MB109	90044-0194	B		1	PROX.SW. IN5329/IN3002-BPKG	
MB111	90044-0194	B		1	PROX.SW. IN5329/IN3002-BPKG	

Machine Type | Group Description | Used-In | Group Number | Page No

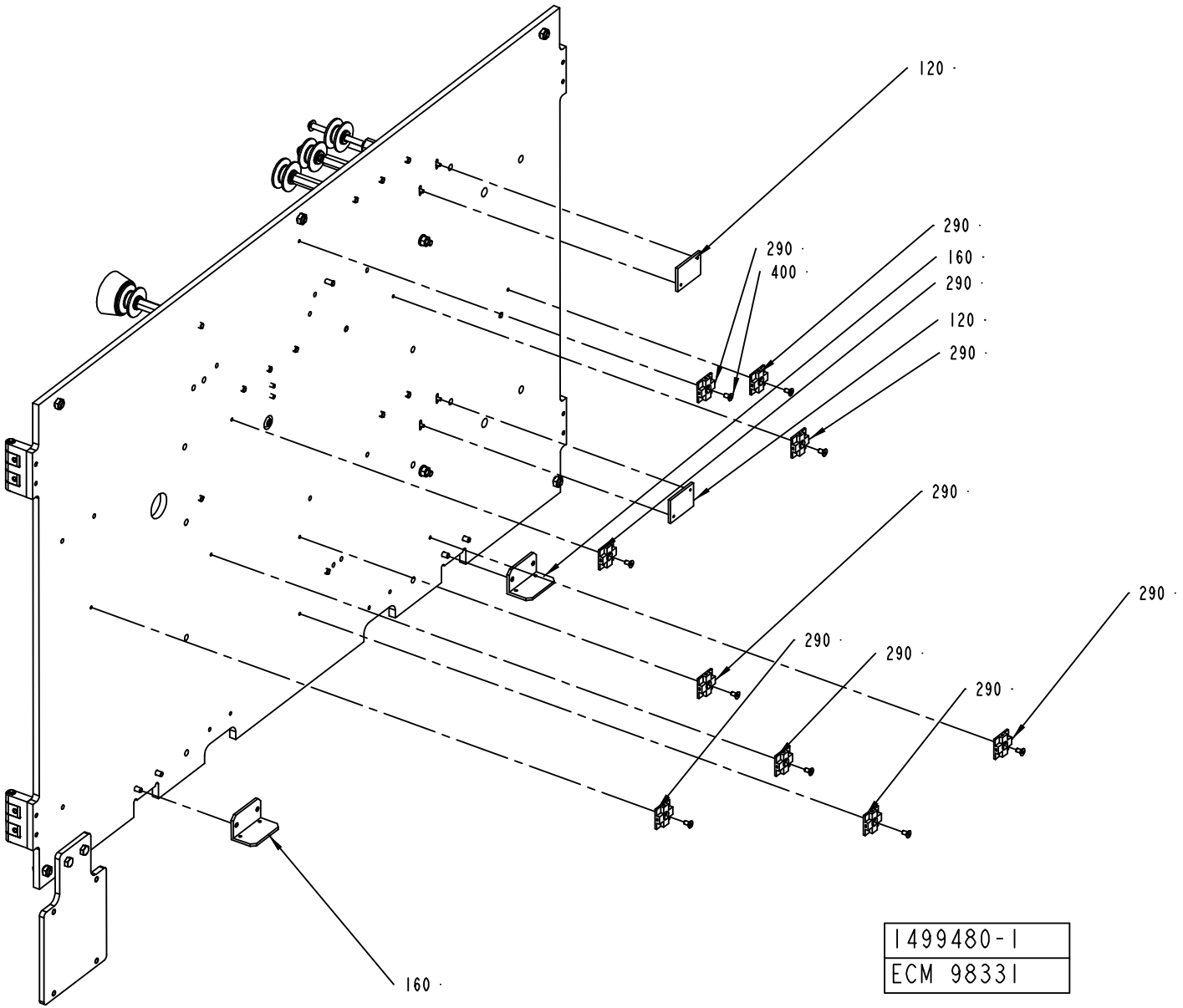
120 ·
290 ·
290 ·
160 ·
290 ·
400 ·
120 ·
290 ·
290 ·
290 ·
290 ·
290 ·
290 ·
160 ·
1499480-1
ECM 98331

ECM: 111683 - 20030630
Group number: 1499480-0100
Assembly Drawing: 1499480-1_2_AC

This list covers pages from 542 to 549

Pos	Part No	SP	UN	Qty	Description	Page No
NOPT (See drawing on pages: 542, 544)						
020	1498764-0000	-		1	COVER	
200	1498775-0000	-		1	BOX BRACKET	
PT19 (See drawing on pages: 546, 548)						
200	2552624-0000	-		1	BOX BRACKET	
Common Parts						
010	1498748-0000	-		1	MOUNTING PLATE	
030	1498762-0000	-		1	AXLE PIN	
040	2547218-0000	-		7	AXLE PIN	
050	2547219-0000	-		2	AXLE PIN	
060	1512583-0000	A		11	ROLLER	
	321120-0101	*B*		*2*	*BEARING BUSHING W/O FLANGE,6/8X6*	
070	1499481-0000	A		1	ROLLER	
080	469159-0000	-		2	PIN	
	311103-0369	*-*		*1*	*PARALLELL PIN ISO2338 6X60 A1*	
090	2547217-0000	-		2	AXLE PIN	
100	979667-0000	-		2	ARM	
	90240-0028	*-*		*1*	*BEARING BUSHING W/O FLANGE,10/12X15*	
110	979668-0000	-		2	FINGER	
120	979669-0000	-		2	FORCE PLATE	
130	1499512-0000	-		4	PIN	
140	1499514-0000	-		4	E-HINGE	
150	1035794-0000	-		8	BLOCKING PIECE	
160	2519644-0000	-		2	BRACKET	
170	1517464-0000	-		1	SIGN	
180	1538219-0000	-		1	SWITCH BRACKET	
190	1517293-0000	A		1	ROLLER	
	1512583-0000	*B*		*1*	*ROLLER*	
	321120-0101	*B*		*2*	*BEARING BUSHING W/O FLANGE,6/8X6*	
195	2506478-0000	-		1	COVER	
220	2588000-0000	-		1	BRACKET	
230	2588001-0000	-		1	AXLE PIN	
280	2033-0013	-		2	WASHER	
290	352113-0206	-		9	ANCHOR PLATES FOR STRIPS, TYPE ABM100-AT	
300	90005-0082	-		12	WASHER PLAIN ROUND 4,3(M4)/12,H=1	
320	315755-0106	-		8	LOCKING WASHER 4	
330	90141-0016	-		2	RETAIN. RING, 10	
400	312155-0287	-		9	SCREW EN 10642 MF6S M4X8 A480	
405	312105-0293	-		2	SCREW M6S ISO 4017 M4X16 A480	
410	312105-0329	-		4	SCREW M6S ISO 4017 M5X16 A480	
420	312105-0368	-		5	SCREW M6S M6X16 A280	
425	312115-0230	-		2	SCREW ISO4762 M3X20 A4	
430	312115-0327	-		16	SCREW ISO4762 M5X12 A4	
450	312125-0232	-		4	SCREW PAN HEAD MCS M3X25 SS	
460	312125-0287	-		12	SCREW PAN HEAD MCS M4X8 SS	
470	312115-0367	-		2	SCREW ISO4762 M6X14 A4	
475	312105-0367	-		2	SCREW M6S M6X14 A280	
480	312318-0285	-		2	SCREW ISO4029 M4X6 A4	
490	312605-0310	-		2	HEXAGON NUT, M6M M3 A280	
500	312605-0316	-		2	HEXAGON NUT, M6M M6 A280	
550	315105-0124	-		8	WASHER BRB3,2X6RFR	
555	315105-0136	-		2	WASHER BRB4,3XRFR	
570	315105-0146	-		12	WASHER BRB5,3X10RFR	
580	315105-0153	-		4	WASHER BRB6,4X12RFR	
600	315755-0107	-		1	LOCKING WASHER 5	
610	90015-0020	-		1	LEAD-IN, TET5-7, E-1458016	
620	312105-0374	-		1	SCREW M6S ISO 4014 M6X30 A480	
MB032	90044-0194	B		1	PROX.SW. IN5329/IN3002-BPKG	
MB109	90044-0194	B		1	PROX.SW. IN5329/IN3002-BPKG	
MB111	90044-0194	B		1	PROX.SW. IN5329/IN3002-BPKG	

Machine Type | Group Description | Used-In | Group Number | Page No

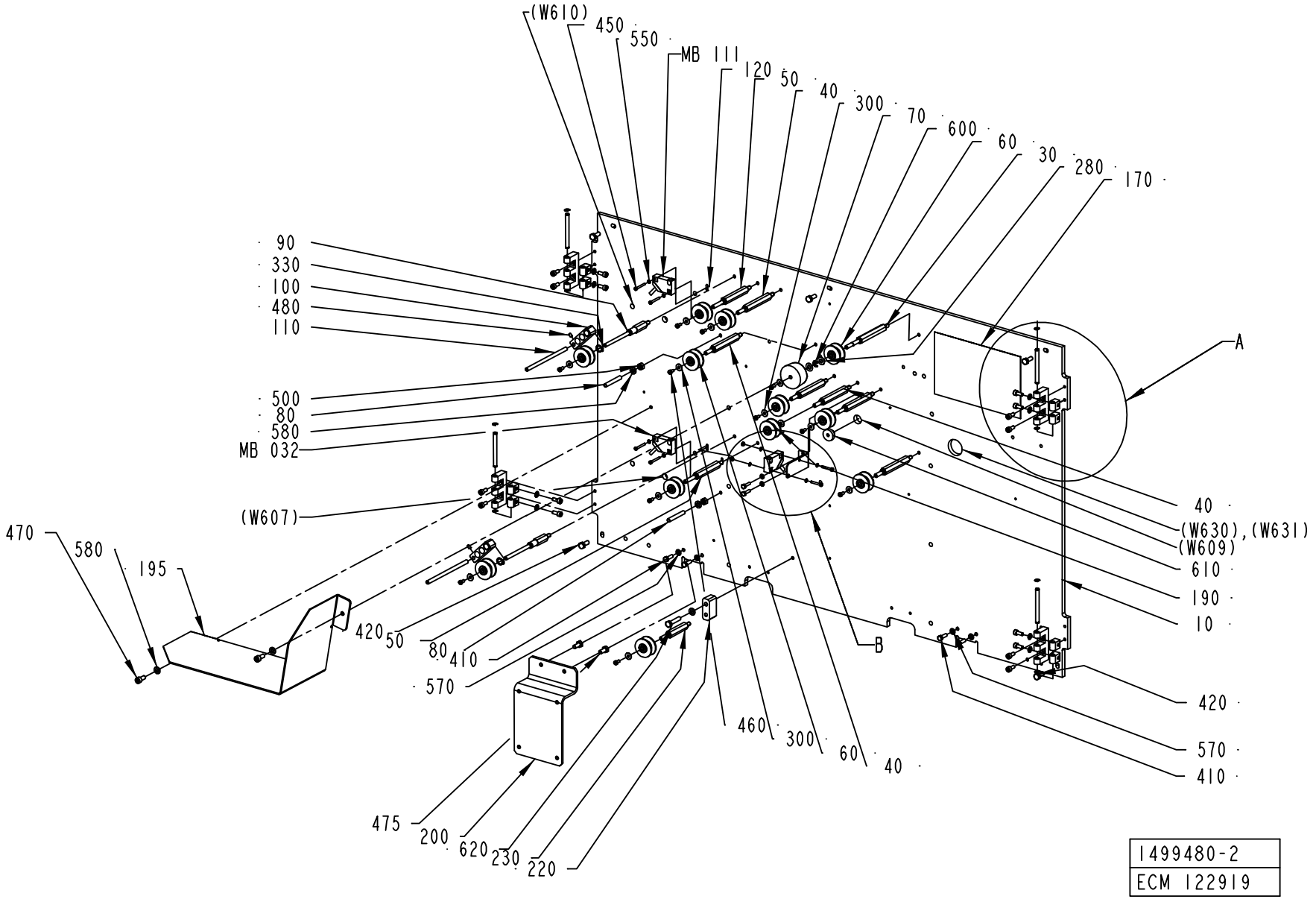
(W610)
450
550
MB 111
120
50
40
300
70
600
60
30
280
170
90
330
100
480
110
500
80
580
MB 032
(W607)
470
580
195
420
50
80
410
570
475
200
620
230
220
460
300
60
40
A
B
40
(W630),(W631)
(W609)
610
190
10
420
570
410
1499480-2
ECM 122919

ECM: 111683 - 20030630
Group number: 1499480-0100
Assembly Drawing: 1499480-2_1_AA

This list covers pages from 542 to 549

Pos	Part No	SP	UN	Qty	Description	Page No
NOPT (See drawing on pages: 542, 544)						
020	1498764-0000	-		1	COVER	
200	1498775-0000	-		1	BOX BRACKET	
PT19 (See drawing on pages: 546, 548)						
200	2552624-0000	-		1	BOX BRACKET	
Common Parts						
010	1498748-0000	-		1	MOUNTING PLATE	
030	1498762-0000	-		1	AXLE PIN	
040	2547218-0000	-		7	AXLE PIN	
050	2547219-0000	-		2	AXLE PIN	
060	1512583-0000	A		11	ROLLER	
	321120-0101	*B*		*2*	*BEARING BUSHING W/O FLANGE,6/8X6*	
070	1499481-0000	A		1	ROLLER	
080	469159-0000	-		2	PIN	
	311103-0369	*-*		*1*	*PARALLELL PIN ISO2338 6X60 A1*	
090	2547217-0000	-		2	AXLE PIN	
100	979667-0000	-		2	ARM	
	90240-0028	*-*		*1*	*BEARING BUSHING W/O FLANGE,10/12X15*	
110	979668-0000	-		2	FINGER	
120	979669-0000	-		2	FORCE PLATE	
130	1499512-0000	-		4	PIN	
140	1499514-0000	-		4	E-HINGE	
150	1035794-0000	-		8	BLOCKING PIECE	
160	2519644-0000	-		2	BRACKET	
170	1517464-0000	-		1	SIGN	
180	1538219-0000	-		1	SWITCH BRACKET	
190	1517293-0000	A		1	ROLLER	
	1512583-0000	*B*		*1*	*ROLLER*	
	321120-0101	*B*		*2*	*BEARING BUSHING W/O FLANGE,6/8X6*	
195	2506478-0000	-		1	COVER	
220	2588000-0000	-		1	BRACKET	
230	2588001-0000	-		1	AXLE PIN	
280	2033-0013	-		2	WASHER	
290	352113-0206	-		9	ANCHOR PLATES FOR STRIPS, TYPE ABM100-AT	
300	90005-0082	-		12	WASHER PLAIN ROUND 4,3(M4)/12,H=1	
320	315755-0106	-		8	LOCKING WASHER 4	
330	90141-0016	-		2	RETAIN. RING, 10	
400	312155-0287	-		9	SCREW EN 10642 MF6S M4X8 A480	
405	312105-0293	-		2	SCREW M6S ISO 4017 M4X16 A480	
410	312105-0329	-		4	SCREW M6S ISO 4017 M5X16 A480	
420	312105-0368	-		5	SCREW M6S M6X16 A280	
425	312115-0230	-		2	SCREW ISO4762 M3X20 A4	
430	312115-0327	-		16	SCREW ISO4762 M5X12 A4	
450	312125-0232	-		4	SCREW PAN HEAD MCS M3X25 SS	
460	312125-0287	-		12	SCREW PAN HEAD MCS M4X8 SS	
470	312115-0367	-		2	SCREW ISO4762 M6X14 A4	
475	312105-0367	-		2	SCREW M6S M6X14 A280	
480	312318-0285	-		2	SCREW ISO4029 M4X6 A4	
490	312605-0310	-		2	HEXAGON NUT, M6M M3 A280	
500	312605-0316	-		2	HEXAGON NUT, M6M M6 A280	
550	315105-0124	-		8	WASHER BRB3,2X6RFR	
555	315105-0136	-		2	WASHER BRB4,3XRFR	
570	315105-0146	-		12	WASHER BRB5,3X10RFR	
580	315105-0153	-		4	WASHER BRB6,4X12RFR	
600	315755-0107	-		1	LOCKING WASHER 5	
610	90015-0020	-		1	LEAD-IN, TET5-7, E-1458016	
620	312105-0374	-		1	SCREW M6S ISO 4014 M6X30 A480	
MB032	90044-0194	B		1	PROX.SW. IN5329/IN3002-BPKG	
MB109	90044-0194	B		1	PROX.SW. IN5329/IN3002-BPKG	
MB111	90044-0194	B		1	PROX.SW. IN5329/IN3002-BPKG	

Machine Type | Group Description | Used-In | Group Number | Page No

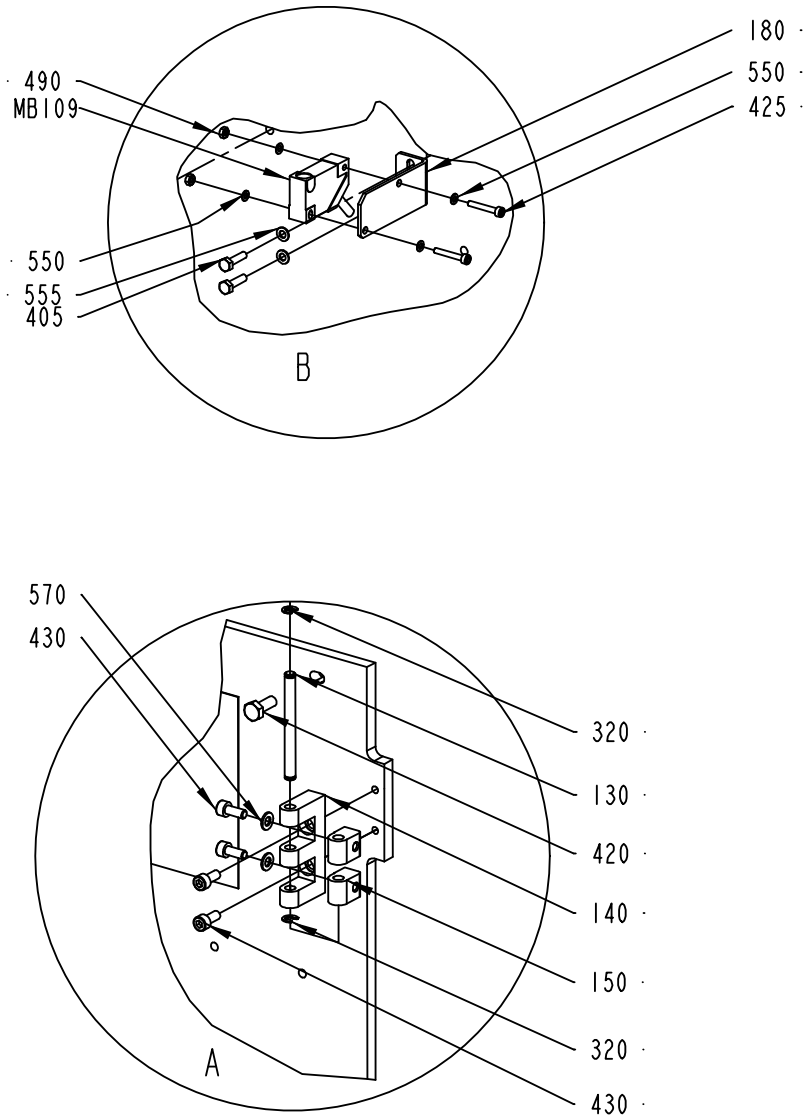
180
550
425
490
MB109
550
555
405
B
570
430
320
130
420
140
150
320
430
A
120
290
400
290
290
120
290
160
160
290
290
290
290
290
290
1499480-2
ECM 122919

ECM: 111683 - 20030630
Group number: 1499480-0100
Assembly Drawing: 1499480-2_2_AA

This list covers pages from 542 to 549

Pos	Part No	SP	UN	Qty	Description	Page No
NOPT (See drawing on pages: 542, 544)						
020	1498764-0000	-		1	COVER	
200	1498775-0000	-		1	BOX BRACKET	
PT19 (See drawing on pages: 546, 548)						
200	2552624-0000	-		1	BOX BRACKET	
Common Parts						
010	1498748-0000	-		1	MOUNTING PLATE	
030	1498762-0000	-		1	AXLE PIN	
040	2547218-0000	-		7	AXLE PIN	
050	2547219-0000	-		2	AXLE PIN	
060	1512583-0000	A		11	ROLLER	
	321120-0101	*B*		*2*	*BEARING BUSHING W/O FLANGE,6/8X6*	
070	1499481-0000	A		1	ROLLER	
080	469159-0000	-		2	PIN	
	311103-0369	*-*		*1*	*PARALLELL PIN ISO2338 6X60 A1*	
090	2547217-0000	-		2	AXLE PIN	
100	979667-0000	-		2	ARM	
	90240-0028	*-*		*1*	*BEARING BUSHING W/O FLANGE,10/12X15*	
110	979668-0000	-		2	FINGER	
120	979669-0000	-		2	FORCE PLATE	
130	1499512-0000	-		4	PIN	
140	1499514-0000	-		4	E-HINGE	
150	1035794-0000	-		8	BLOCKING PIECE	
160	2519644-0000	-		2	BRACKET	
170	1517464-0000	-		1	SIGN	
180	1538219-0000	-		1	SWITCH BRACKET	
190	1517293-0000	A		1	ROLLER	
	1512583-0000	*B*		*1*	*ROLLER*	
	321120-0101	*B*		*2*	*BEARING BUSHING W/O FLANGE,6/8X6*	
195	2506478-0000	-		1	COVER	
220	2588000-0000	-		1	BRACKET	
230	2588001-0000	-		1	AXLE PIN	
280	2033-0013	-		2	WASHER	
290	352113-0206	-		9	ANCHOR PLATES FOR STRIPS, TYPE ABM100-AT	
300	90005-0082	-		12	WASHER PLAIN ROUND 4,3(M4)/12,H=1	
320	315755-0106	-		8	LOCKING WASHER 4	
330	90141-0016	-		2	RETAIN. RING, 10	
400	312155-0287	-		9	SCREW EN 10642 MF6S M4X8 A480	
405	312105-0293	-		2	SCREW M6S ISO 4017 M4X16 A480	
410	312105-0329	-		4	SCREW M6S ISO 4017 M5X16 A480	
420	312105-0368	-		5	SCREW M6S M6X16 A280	
425	312115-0230	-		2	SCREW ISO4762 M3X20 A4	
430	312115-0327	-		16	SCREW ISO4762 M5X12 A4	
450	312125-0232	-		4	SCREW PAN HEAD MCS M3X25 SS	
460	312125-0287	-		12	SCREW PAN HEAD MCS M4X8 SS	
470	312115-0367	-		2	SCREW ISO4762 M6X14 A4	
475	312105-0367	-		2	SCREW M6S M6X14 A280	
480	312318-0285	-		2	SCREW ISO4029 M4X6 A4	
490	312605-0310	-		2	HEXAGON NUT, M6M M3 A280	
500	312605-0316	-		2	HEXAGON NUT, M6M M6 A280	
550	315105-0124	-		8	WASHER BRB3,2X6RFR	
555	315105-0136	-		2	WASHER BRB4,3XRFR	
570	315105-0146	-		12	WASHER BRB5,3X10RFR	
580	315105-0153	-		4	WASHER BRB6,4X12RFR	
600	315755-0107	-		1	LOCKING WASHER 5	
610	90015-0020	-		1	LEAD-IN, TET5-7, E-1458016	
620	312105-0374	-		1	SCREW M6S ISO 4014 M6X30 A480	
MB032	90044-0194	B		1	PROX.SW. IN5329/IN3002-BPKG	
MB109	90044-0194	B		1	PROX.SW. IN5329/IN3002-BPKG	
MB111	90044-0194	B		1	PROX.SW. IN5329/IN3002-BPKG	

Machine Type | Group Description | Used-In | Group Number | Page No

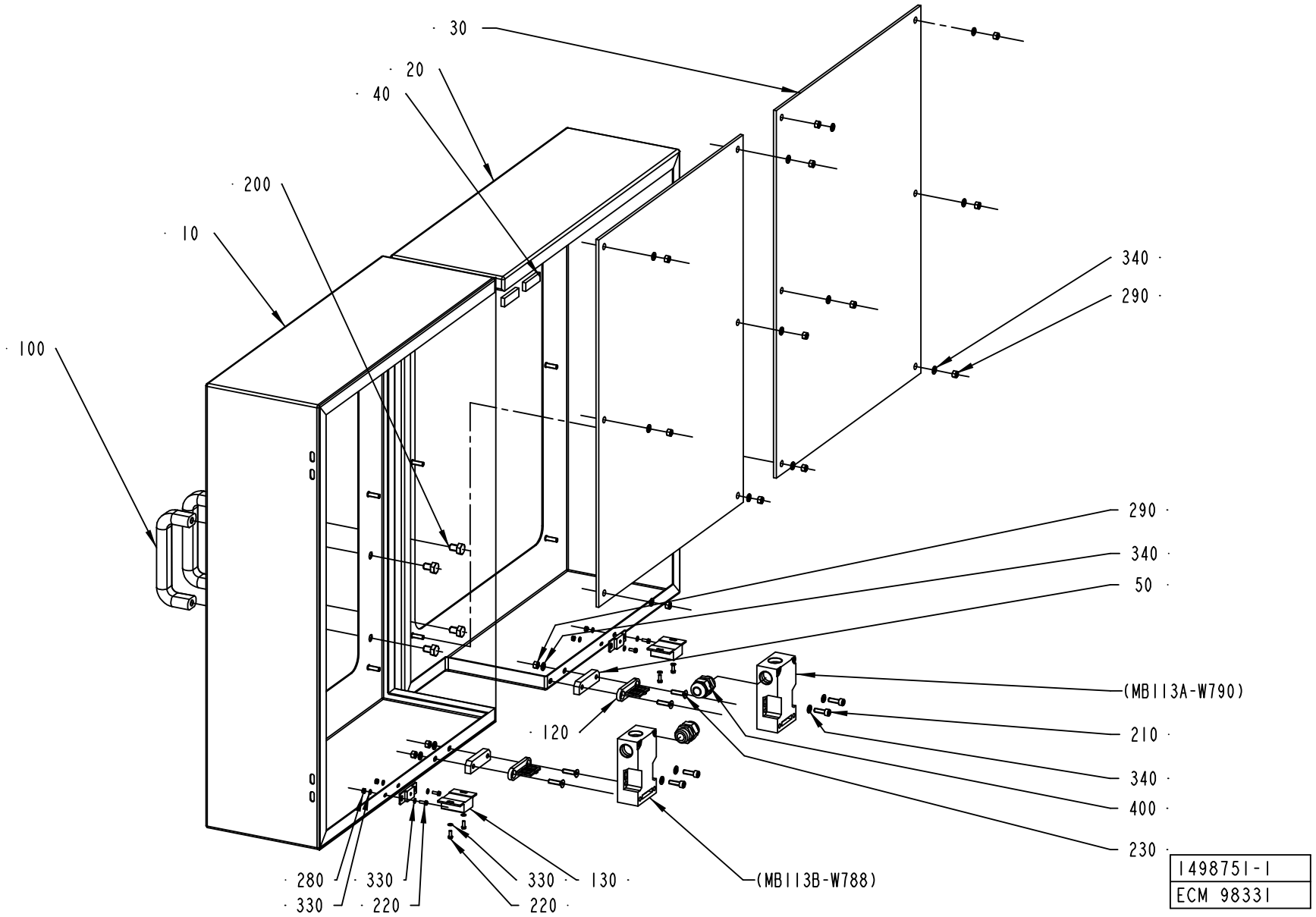
· 30
· 20
· 40
· 200
· 10
· 100
340 ·
290 ·
290 ·
340 ·
50 ·
(MB113A-W790)
· 120
210 ·
340 ·
400 ·
230 ·
· 280
· 330
· 330
· 220
330 ·
· 130
· 220
(MB113B-W788)
1498751-1
ECM 98331

ECM: 114166 - 20020930
Group number: 1498751-0100
Assembly Drawing: 1498751-1_1_AB

Pos	Part No	SP	UN	Qty	Description	Page No
-						
010	1498749-0000	-		1	DOOR	
020	1498750-0000	-		1	DOOR	
030	1499511-0000	-		2	PANEL	
040	1511323-0000	-		2	STRIP ADHESIVE	
050	2506479-0000	-		2	PLATE	
100	90017-0022	-		2	HANDLE, NO. EL-037311	
120	90044-0310	A		2	KEY FOR SAFETY SWITCH, AZ 15/16 B1	
130	90237-0046	B		2	MAGNETIC LOCK, 46X33X15 MM	
200	312105-0447	-		4	SCREW M6S ISO 4017 M8X12 A480	
210	312115-0329	-		4	SCREW ISO4762 M5X16 A4	
220	312125-0222	-		8	SLOTTED SCREW MCS M3X8 SS	
230	312155-0331	-		4	SCREW EN 10642 MF6S M5X20 A480	
280	312605-0310	-		4	HEXAGON NUT, M6M M3 A280	
290	312605-0314	-		16	HEXAGON NUT, M6M M5 A280	
330	315105-0124	-		12	WASHER BRB3,2X6RFR	
340	315105-0146	-		20	WASHER BRB5,3X10RFR	
400	352103-0106	-		2	CABLE GLAND, ST 11, PR18,6/PG11	
MB113A	90044-0139	A		1	KEY SAF.SW. AZ16-02 ZVR K-2254	
MB113B	90044-0139	A		1	KEY SAF.SW. AZ16-02 ZVR K-2254	
W802	351150-0405	-	MM	600	CABLE OLFLEX 5X0,75 MM2 LIGHT/GREY	
W803	351150-0405	-	MM	600	CABLE OLFLEX 5X0,75 MM2 LIGHT/GREY	

Pos	Part No	SP	UN	Qty	Description	Page No

Machine Type | Group Description | Used-In | Group Number | Page No

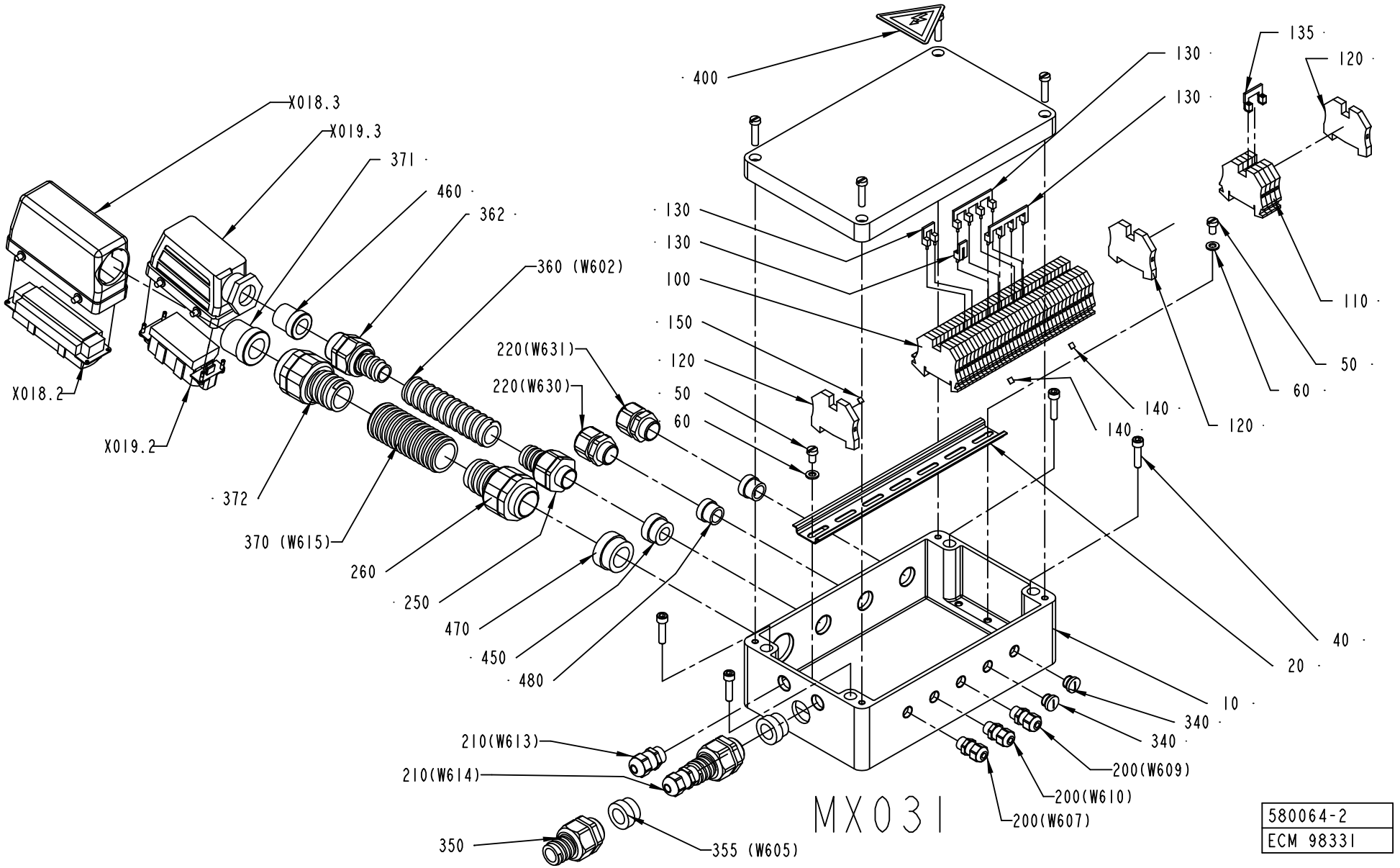
400
X018.3
X019.3
371
460
362
360 (W602)
220(W631)
220(W630)
X018.2
X019.2
372
370 (W615)
260
250
470
450
480
130
130
100
150
120
50
60
135
120
130
130
110
50
60
140
140
120
40
20
10
340
340
200(W609)
200(W610)
200(W607)
210(W613)
210(W614)
350
355 (W605)
MX031
580064-2
ECM 98331

ECM: 117147 - 20030113
Group number: 580064-0200
Assembly Drawing: 580064-2_1_AC

Pos	Part No	SP	UN	Qty	Description	Page No
-						
010	1512283-0000	-		1	CONNECTION BOX	
020	1512352-0000	-		1	RAIL	
040	312115-0372	-		4	SCREW ISO4762 M6X25 A4	
050	312125-0364	-		2	SCREW SLOT.PAN HD. MCS 6X10 A480	
060	315105-0153	-		2	WASHER BRB6,4X12RFR	
100	353021-0212	-		36	FEED THROUGH TERMINAL, 10200.0	
110	353021-0213	-		4	FEED THROUGH TERMINAL, 10201.0	
120	353024-0205	-		3	EARTH TERMINAL, 1010.1	
130	353034-0030	-		3	BRIDGE CONNECTOR WQV 2,5/10, 10544.6	
135	353034-0039	-		1	BRIDGE CONN. WQV 4/4	
140	359011-0807	-		2	MARKING PLATES 5-FW 1-50	
150	359011-0819	-		1	MARKING PLATES 5-GW (EARTH)	
200	90458-0305	-		3	CABLE GLAND, M12X1,5, NO.5311 1000	
210	90458-0306	-		2	CABLE GLAND, M16X1,5, NO.5311 1010	
220	90458-0422	-		2	EXTENDED WITHOUT INSERT, M20X1,5	
250	90458-0430	-		1	EXTENDED WITHOUT INSERT, M20X1,5	
260	90458-0433	-		1	EXTENDED WITHOUT INSERT, M32X1,5	
340	90458-1306	-		2	BLIND PLUG CIRCULAR, M12X1,5 514GFK/212	
350	90458-0431	-		1	EXTENDED WITHOUT INSERT, M25X1,5	
355	353249-0014	-		1	INSERT, SINGEL HOLE, EK 154/16	
360	90152-0051	-	MM	1800	SPIRAL CONDUIT, 25X18, UL 1816	
362	90458-0146	-		1	GLAND, HOSE, WITHOUT INSERT, PG21	
370	90152-0070	-	MM	2100	METAL HOSE, 32,5X26, UL 2621	
371	353249-0072	-		1	INSERT, SINGEL HOLE, E155/20	
372	353242-0003	-		1	NORMAL WITHOUT INSERT, PG29	
400	359705-0015	A		1	WARNING SIGN ISO, RISK OF ELECTRIC SHOCK	
450	353249-0013	-		1	INSERT, SINGEL HOLE, EK 154/13	
460	353249-0070	-		1	INSERT, SINGEL HOLE, E154/16	
470	353249-0061	-		1	INSERT, SINGEL HOLE, EK 155/20	
480	353249-0075	-		2	INSERT, SINGEL HOLE, EK 153/13	
W602	351150-0422	-	MM	2300	CABLE OLFLEX 3X4 MM2 LIGHT/GREY	
W605	351150-0407	-	MM	1900	CABLE OLFLEX 12X0,75 MM2 LIGHT/GREY	
W615	351150-0425	-	MM	2600	CABLE OLFLEX 25X0,75 MM2 LIGHT/GREY	
X018.2	90110-0150	-		1	MALE INSERT 121110 0000	
X018.3	90110-0346	-		1	CABLE HOOD 1211220 00 00	
X019.2	90110-0156	-		1	MALE INSERT 70.210.0653.0	
X019.3	90110-0244	-		1	CABLE HOOD 6-POL 70.350.1628.0	

Pos	Part No	SP	UN	Qty	Description	Page No

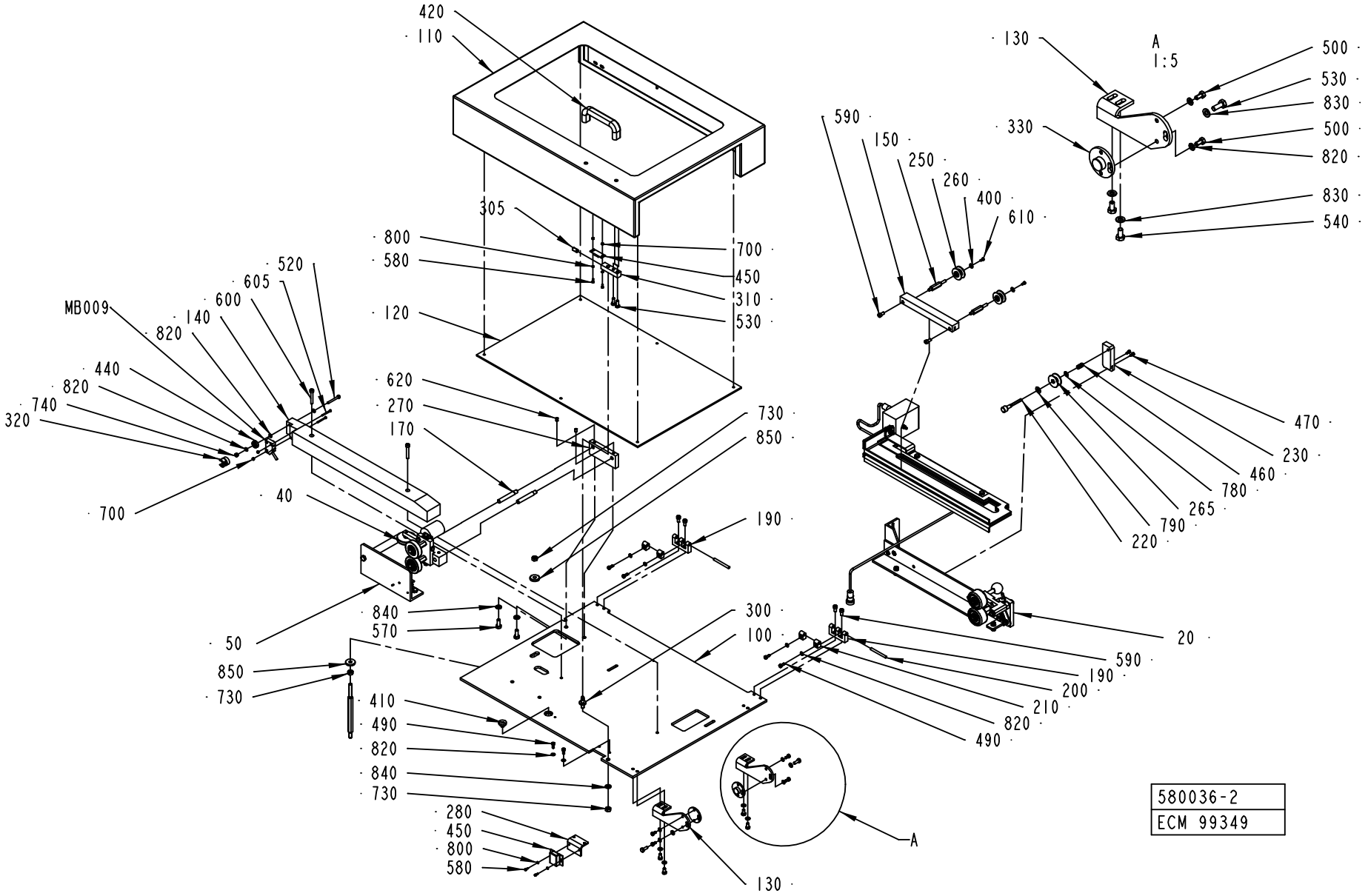
420
110
305
800
580
120
620
270
170
40
700
320
740
820
440
MB009
820
140
600
605
520
700
450
310
530
730
850
190
300
100
590
190
200
210
820
490
20
470
230
460
780
265
790
220
130
A
1:5
500
530
830
500
820
830
540
590
150
250
260
400
610
330
840
570
50
850
730
410
490
820
840
730
280
450
800
580
130
A
580036-2
ECM 99349

ECM: 134651 - 20030630
Group number: 580036-0200
Assembly Drawing: 580036-2_1_AC

This list covers pages from 554 to 557

Pos	Part No	SP	UN	Qty	Description	Page No
NOPT (See drawing on page: 554)						
050	1279624-0200	-		1	SPLICE DETECTOR	**559, 561**
110	2552620-0000	-		1	DOOR	
120	1499483-0000	-		1	PANE	
180	2552619-0000	-		1	COVER	
190	90459-0075	-		2	HINGE, 1056-U30	
200	2552622-0000	-		1	HOLDER	
210	2552621-0000	-		1	HOLDER	
420	90017-0022	-		1	HANDLE, NO. EL-037311	
450	90237-0046	-		1	MAGNETIC LOCK, 46X33X15 MM	
540	312105-0366	-		11	SCREW M6S M6X12 A280	
560	312105-0449	-		2	SCREW M6S ISO 4017 M8X16 A480	
630	312115-0220	-		4	SCREW ISO4762 M3X6 A4 80	
640	312155-0325	-		4	SCREW EN 10642 MF6S M5X10 A480	
650	312155-0327	-		4	SCREW EN 10642 MF6S M5X12 A480	
660	312605-0314	-		10	HEXAGON NUT, M6M M5 A280	
700	312605-0310	-		4	HEXAGON NUT, M6M M3 A280	
820	315105-0146	-		17	WASHER BRB5,3X10RFR	
830	315105-0153	-		13	WASHER BRB6,4X12RFR	
840	315105-0165	-		4	WASHER BRB8,4X16RFR	
PT19 (See drawing on page: 556)						
030	2576243-0100	-		1	STRIP GUIDE	**563**
540	312105-0366	-		6	SCREW M6S M6X12 A280	
560	312105-0449	-		3	SCREW M6S ISO 4017 M8X16 A480	
700	312605-0310	-		3	HEXAGON NUT, M6M M3 A280	
820	315105-0146	-		9	WASHER BRB5,3X10RFR	
830	315105-0153	-		8	WASHER BRB6,4X12RFR	
840	315105-0165	-		4	WASHER BRB8,4X16RFR	
860	266737-0000	-		2	WASHER	
870	979899-0000	-		1	BRACKET	
880	1035897-0000	-		1	SHAFT	
890	2524478-0000	-		1	BRACKET	
900	312115-0228	-		1	SCREW ISO4762 M3X16 A4	
910	315751-0109	-		1	RETAIN. RING, 12	
920	321141-0183	B		2	BEARING BUSHING W/O FL, 12X14X15 MM	
930	90335-0216	B		1	TENSION SPRING 40910, 0,5X5,5X27,7	
940	312105-0328	-		1	SCREW M6S ISO 4017 M5X14 A480	
Common Parts						
010	580038-0200	-		1	INDUCTOR	**565**
020	2506475-0100	-		1	PRESSURE ROLLER	**567**
040	2524476-0100	-		1	WEB GUIDE	**569**
055	2576240-0100	-		1	STRIP GUIDE	**571, 573**
100	2552630-0000	-		1	MOUNTING PLATE	
130	1498773-0000	-		2	CANTILEVER	
140	1517535-0000	-		1	STEERING	
150	1282988-0000	-		1	RAIL	
170	1498778-0000	-		2	SHAFT	
250	1282989-0000	-		2	AXLE PIN	
260	1512583-0000	A		2	ROLLER	
	321120-0101	*B*		*2*	*BEARING BUSHING W/O FLANGE,6/8X6*	
270	1498777-0000	-		1	GUIDE HOLDER	
290	1498765-0000	-		1	AXLE PIN	
320	1517534-0000	-		1	RUNNER RING	
330	1334331-0000	-		2	FLANGE	
400	90005-0082	-		2	WASHER PLAIN ROUND 4,3(M4)/12,H=1	
410	90015-0020	-		1	LEAD-IN, TET5-7, E-1458016	
440	90214-0138	A		1	BALL BEARING, 5X19X6 MM	
500	312105-0325	-		4	SCREW M6S ISO 4017 M5X10 A480	
520	312105-0339	-		1	SCREW M6S ISO 4014 M5X40 A480	
530	312105-0368	-		2	SCREW M6S M6X16 A280	
570	312105-0451	-		2	SCREW M6S ISO 4017 M8X20 A480	
590	312115-0366	-		2	SCREW ISO4762 M6X12 A4	
600	312115-0378	-		2	SCREW ISO4762 M6X40 A4	
605	312125-0234	-		2	SCREW PAN HEAD MCS M3X30 SS	
610	312125-0287	-		2	SCREW PAN HEAD MCS M4X8 SS	
620	312318-0362	-		2	SCREW ISO4029 M6X8 A4	
730	312605-0318	-		2	HEXAGON NUT, M6M M8 A280	
740	312812-0314	-		1	HEXAGON NUT, NY-LOCK M5 A480	
850	315125-0165	-		2	WASHER TBRSB 8,4X26X5 A4	
MB009	90044-0194	A		1	PROX.SW. IN5329/IN3002-BPKG	

Machine Type	Group Description	Used-In	Group Number	Page No

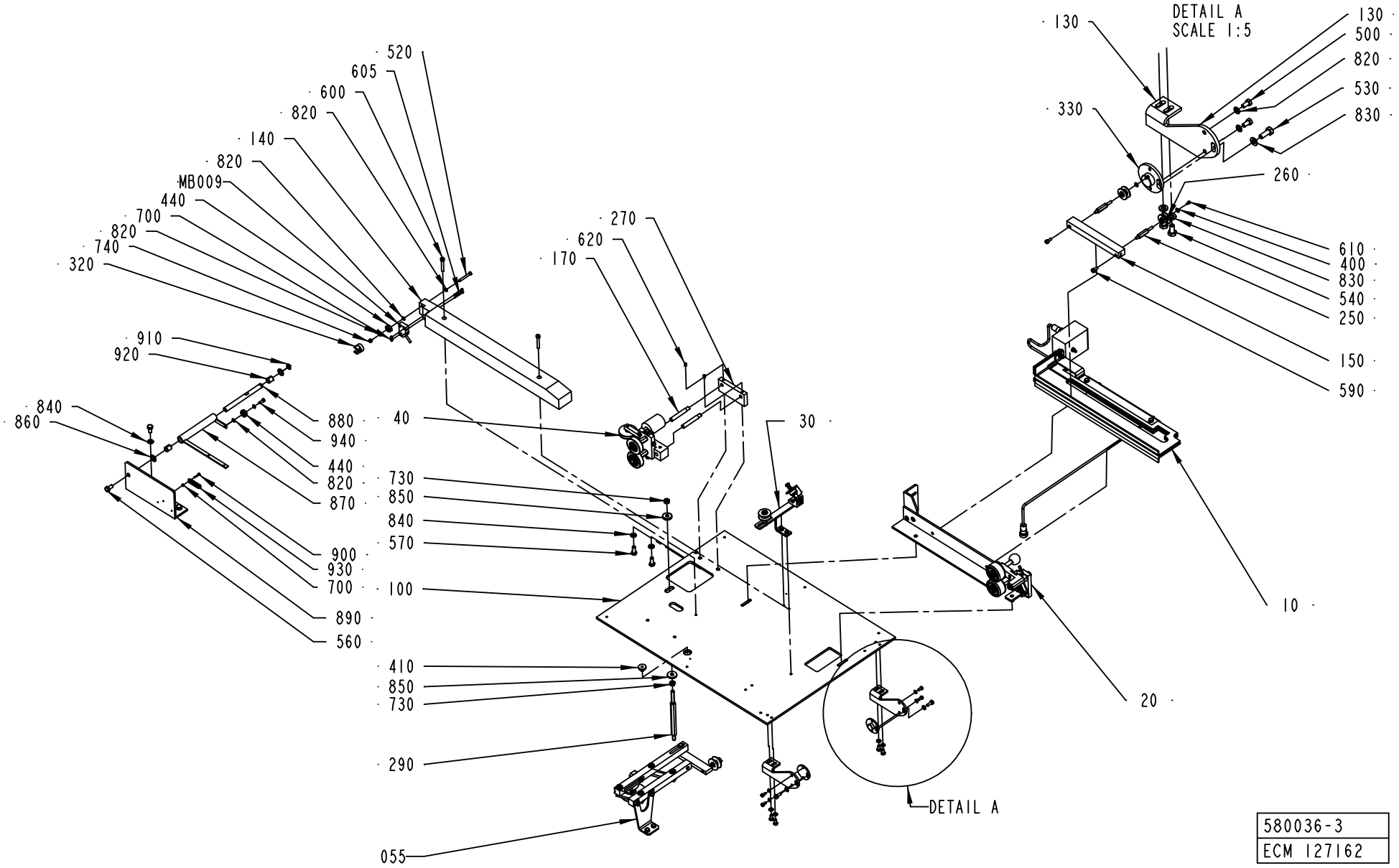
DETAIL A
SCALE 1:5
130
500
820
530
830
330
260
610
400
830
540
250
150
590
10
20
520
605
600
820
140
820
MB009
440
700
820
740
320
910
920
840
860
880
940
440
820
870
900
930
700
890
560
40
270
620
170
730
850
840
570
100
410
850
730
290
055
30
DETAIL A
580036-3
ECM 127162

ECM: 134651 - 20030630
Group number: 580036-0200
Assembly Drawing: 580036-3_1_AB

This list covers pages from 554 to 557

Pos	Part No	SP	UN	Qty	Description	Page No
NOPT (See drawing on page: 554)						
050	1279624-0200	-		1	SPLICE DETECTOR	**559, 561**
110	2552620-0000	-		1	DOOR	
120	1499483-0000	-		1	PANE	
180	2552619-0000	-		1	COVER	
190	90459-0075	-		2	HINGE, 1056-U30	
200	2552622-0000	-		1	HOLDER	
210	2552621-0000	-		1	HOLDER	
420	90017-0022	-		1	HANDLE, NO. EL-037311	
450	90237-0046	-		1	MAGNETIC LOCK, 46X33X15 MM	
540	312105-0366	-		11	SCREW M6S M6X12 A280	
560	312105-0449	-		2	SCREW M6S ISO 4017 M8X16 A480	
630	312115-0220	-		4	SCREW ISO4762 M3X6 A4 80	
640	312155-0325	-		4	SCREW EN 10642 MF6S M5X10 A480	
650	312155-0327	-		4	SCREW EN 10642 MF6S M5X12 A480	
660	312605-0314	-		10	HEXAGON NUT, M6M M5 A280	
700	312605-0310	-		4	HEXAGON NUT, M6M M3 A280	
820	315105-0146	-		17	WASHER BRB5,3X10RFR	
830	315105-0153	-		13	WASHER BRB6,4X12RFR	
840	315105-0165	-		4	WASHER BRB8,4X16RFR	
PT19 (See drawing on page: 556)						
030	2576243-0100	-		1	STRIP GUIDE	**563**
540	312105-0366	-		6	SCREW M6S M6X12 A280	
560	312105-0449	-		3	SCREW M6S ISO 4017 M8X16 A480	
700	312605-0310	-		3	HEXAGON NUT, M6M M3 A280	
820	315105-0146	-		9	WASHER BRB5,3X10RFR	
830	315105-0153	-		8	WASHER BRB6,4X12RFR	
840	315105-0165	-		4	WASHER BRB8,4X16RFR	
860	266737-0000	-		2	WASHER	
870	979899-0000	-		1	BRACKET	
880	1035897-0000	-		1	SHAFT	
890	2524478-0000	-		1	BRACKET	
900	312115-0228	-		1	SCREW ISO4762 M3X16 A4	
910	315751-0109	-		1	RETAIN. RING, 12	
920	321141-0183	B		2	BEARING BUSHING W/O FL, 12X14X15 MM	
930	90335-0216	B		1	TENSION SPRING 40910, 0,5X5,5X27,7	
940	312105-0328	-		1	SCREW M6S ISO 4017 M5X14 A480	
Common Parts						
010	580038-0200	-		1	INDUCTOR	**565**
020	2506475-0100	-		1	PRESSURE ROLLER	**567**
040	2524476-0100	-		1	WEB GUIDE	**569**
055	2576240-0100	-		1	STRIP GUIDE	**571, 573**
100	2552630-0000	-		1	MOUNTING PLATE	
130	1498773-0000	-		2	CANTILEVER	
140	1517535-0000	-		1	STEERING	
150	1282988-0000	-		1	RAIL	
170	1498778-0000	-		2	SHAFT	
250	1282989-0000	-		2	AXLE PIN	
260	1512583-0000	A		2	ROLLER	
	321120-0101	*B*		*2*	*BEARING BUSHING W/O FLANGE,6/8X6*	
270	1498777-0000	-		1	GUIDE HOLDER	
290	1498765-0000	-		1	AXLE PIN	
320	1517534-0000	-		1	RUNNER RING	
330	1334331-0000	-		2	FLANGE	
400	90005-0082	-		2	WASHER PLAIN ROUND 4,3(M4)/12,H=1	
410	90015-0020	-		1	LEAD-IN, TET5-7, E-1458016	
440	90214-0138	A		1	BALL BEARING, 5X19X6 MM	
500	312105-0325	-		4	SCREW M6S ISO 4017 M5X10 A480	
520	312105-0339	-		1	SCREW M6S ISO 4014 M5X40 A480	
530	312105-0368	-		2	SCREW M6S M6X16 A280	
570	312105-0451	-		2	SCREW M6S ISO 4017 M8X20 A480	
590	312115-0366	-		2	SCREW ISO4762 M6X12 A4	
600	312115-0378	-		2	SCREW ISO4762 M6X40 A4	
605	312125-0234	-		2	SCREW PAN HEAD MCS M3X30 SS	
610	312125-0287	-		2	SCREW PAN HEAD MCS M4X8 SS	
620	312318-0362	-		2	SCREW ISO4029 M6X8 A4	
730	312605-0318	-		2	HEXAGON NUT, M6M M8 A280	
740	312812-0314	-		1	HEXAGON NUT, NY-LOCK M5 A480	
850	315125-0165	-		2	WASHER TBRSB 8,4X26X5 A4	
MB009	90044-0194	A		1	PROX.SW. IN5329/IN3002-BPKG	

Machine Type	Group Description	Used-In	Group Number	Page No

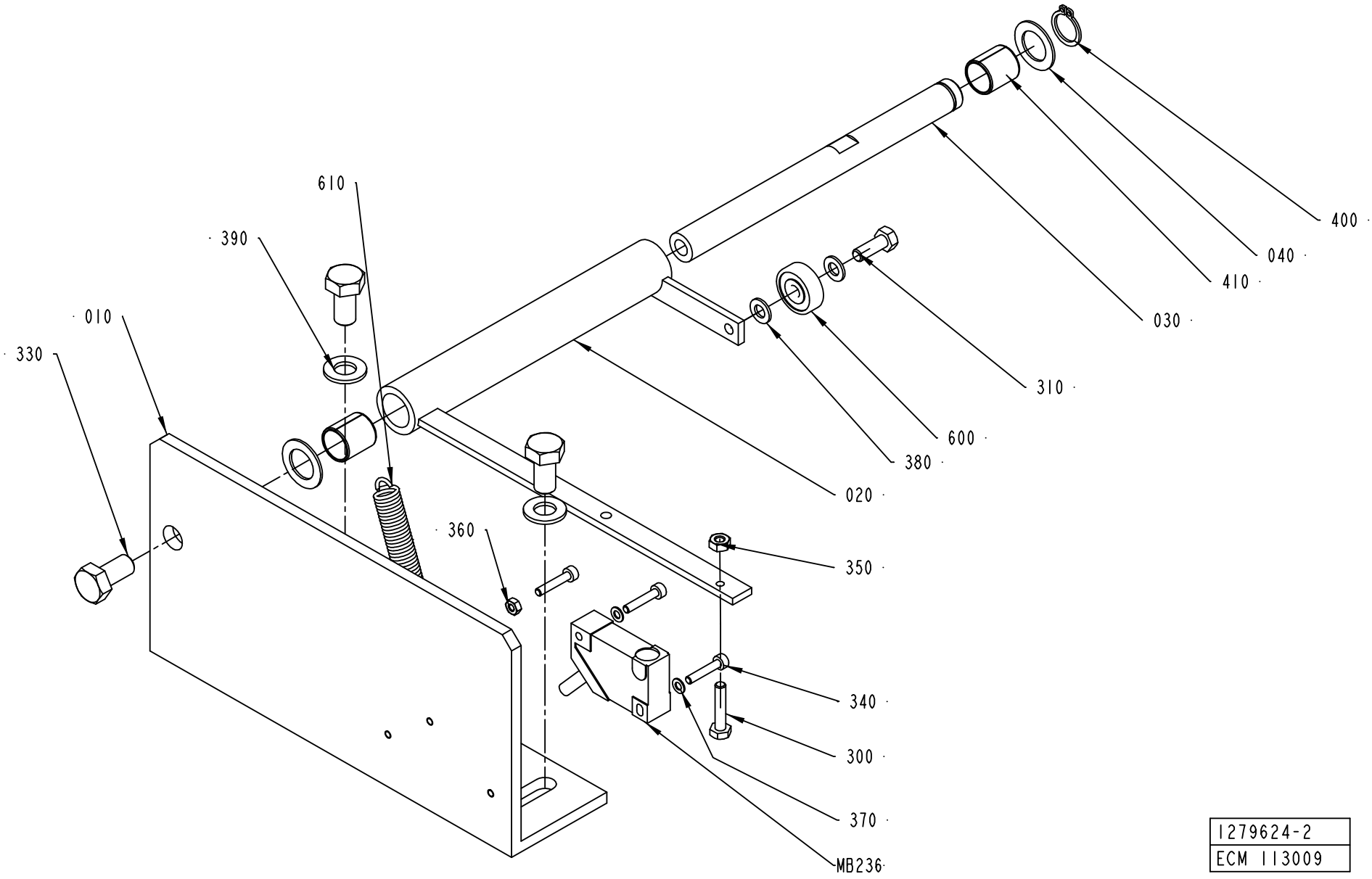

1279624-2
ECM 113009

ECM: 133424 - 20030630
Group number: 1279624-0200
Assembly Drawing: 1279624-2_1_AC

This list covers pages from 558 to 561

Pos	Part No	SP	UN	Qty	Description	Page No
-						
010	2524478-0000	-		1	BRACKET	
020	979899-0000	-		1	BRACKET	
030	1035897-0000	-		1	SHAFT	
040	266737-0000	-		2	WASHER	
300	312105-0295	-		1	SCREW M6S ISO4017 M4X20 A480	
310	312105-0328	-		1	SCREW M6S ISO 4017 M5X14 A480	
330	312105-0449	-		3	SCREW M6S ISO 4017 M8X16 A480	
340	312115-0228	-		3	SCREW ISO4762 M3X16 A4	
350	312605-0312	-		1	HEXAGON NUT, M6M M4 A280	
360	312605-0310	-		1	HEXAGON NUT, M6M M3 A280	
370	315105-0124	-		2	WASHER BRB3,2X6RFR	
380	315105-0146	-		2	WASHER BRB5,3X10RFR	
390	315105-0165	-		2	WASHER BRB8,4X16RFR	
400	315751-0109	-		1	RETAIN. RING, 12	
410	321141-0183	B		2	BEARING BUSHING W/O FL, 12X14X15 MM	
600	90214-0138	B		1	BALL BEARING, 5X19X6 MM	
610	90335-0216	B		1	TENSION SPRING 40910, 0,5X5,5X27,7	
MB236	90044-0194	B		1	PROX.SW. IN5329/IN3002-BPKG	

Pos	Part No	SP	UN	Qty	Description	Page No

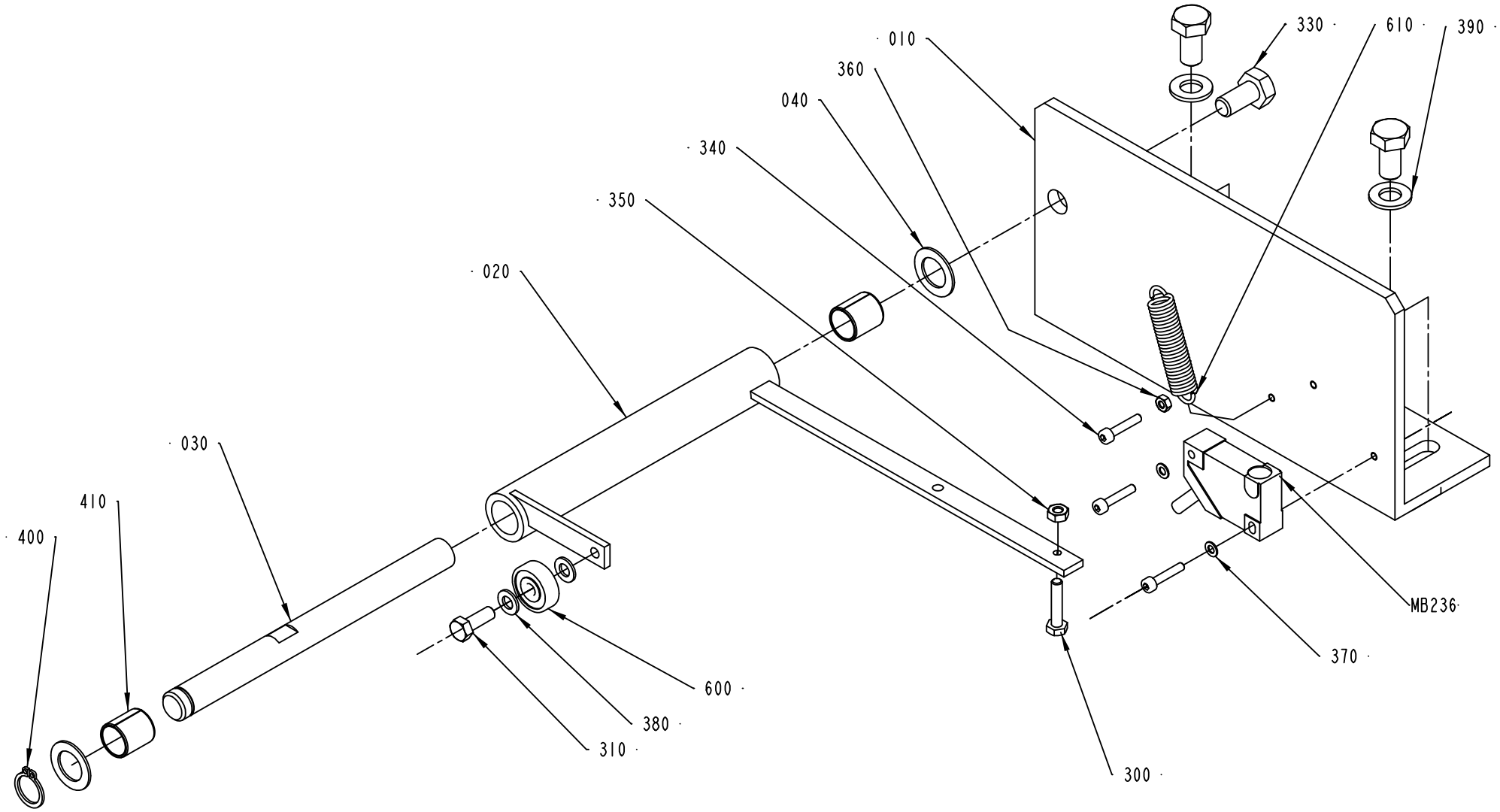

1279624-3
ECM 113009

ECM: 133424 - 20030630
Group number: 1279624-0200
Assembly Drawing: 1279624-3_1_AA

This list covers pages from 558 to 561

Pos	Part No	SP	UN	Qty	Description	Page No
-						
010	2524478-0000	-		1	BRACKET	
020	979899-0000	-		1	BRACKET	
030	1035897-0000	-		1	SHAFT	
040	266737-0000	-		2	WASHER	
300	312105-0295	-		1	SCREW M6S ISO4017 M4X20 A480	
310	312105-0328	-		1	SCREW M6S ISO 4017 M5X14 A480	
330	312105-0449	-		3	SCREW M6S ISO 4017 M8X16 A480	
340	312115-0228	-		3	SCREW ISO4762 M3X16 A4	
350	312605-0312	-		1	HEXAGON NUT, M6M M4 A280	
360	312605-0310	-		1	HEXAGON NUT, M6M M3 A280	
370	315105-0124	-		2	WASHER BRB3,2X6RFR	
380	315105-0146	-		2	WASHER BRB5,3X10RFR	
390	315105-0165	-		2	WASHER BRB8,4X16RFR	
400	315751-0109	-		1	RETAIN. RING, 12	
410	321141-0183	B		2	BEARING BUSHING W/O FL, 12X14X15 MM	
600	90214-0138	B		1	BALL BEARING, 5X19X6 MM	
610	90335-0216	B		1	TENSION SPRING 40910, 0,5X5,5X27,7	
MB236	90044-0194	B		1	PROX.SW. IN5329/IN3002-BPKG	

Pos	Part No	SP	UN	Qty	Description	Page No

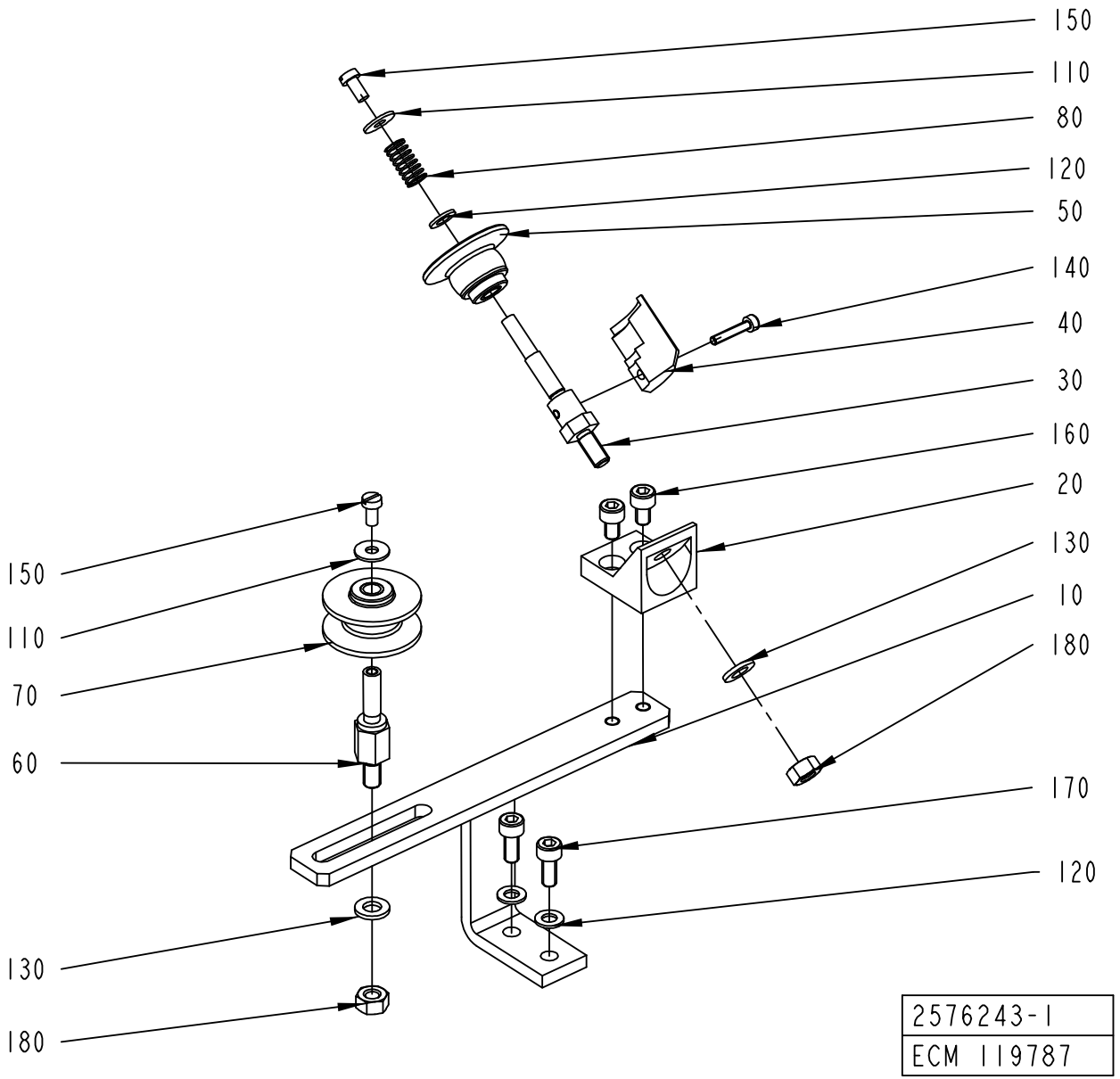
150
110
80
120
50
140
40
30
160
20
130
10
180
170
120
150
110
70
60
130
180
2576243-1
ECM 119787

ECM: 127165 - 20030303
Group number: 2576243-0100
Assembly Drawing: 2576243-1_1_AA

Pos	Part No	SP	UN	Qty	Description	Page No
-						
010	2603016-0000	-		1	BRACKET	
020	979575-0000	-		1	ROLLER PLATE	
030	2552631-0000	-		1	AXLE PIN	
040	2552633-0000	-		1	ROLLER	
050	2552632-0000	A		1	ROLLER	
060	579553-0000	-		1	SHAFT	
070	1512583-0000	A		1	ROLLER	
	321120-0101	*B*		*2*	*BEARING BUSHING W/O FLANGE,6/8X6*	
080	90335-0146	A		1	COMP. SPRING, 0,6X7,2X20	
110	90005-0082	-		2	WASHER PLAIN ROUND 4,3(M4)/12,H=1	
120	315105-0146	-		3	WASHER BRB5,3X10RFR	
130	315105-0153	-		2	WASHER BRB6,4X12RFR	
140	312115-0228	-		1	SCREW ISO4762 M3X16 A4	
150	312125-0287	-		2	SCREW PAN HEAD MCS M4X8 SS	
160	312115-0323	-		2	SCREW ISO4762 M5X8 A4	
170	312115-0327	-		2	SCREW ISO4762 M5X12 A4	
180	312605-0316	-		2	HEXAGON NUT, M6M M6 A280	

Pos	Part No	SP	UN	Qty	Description	Page No

Machine Type | Group Description | Used-In | Group Number | Page No

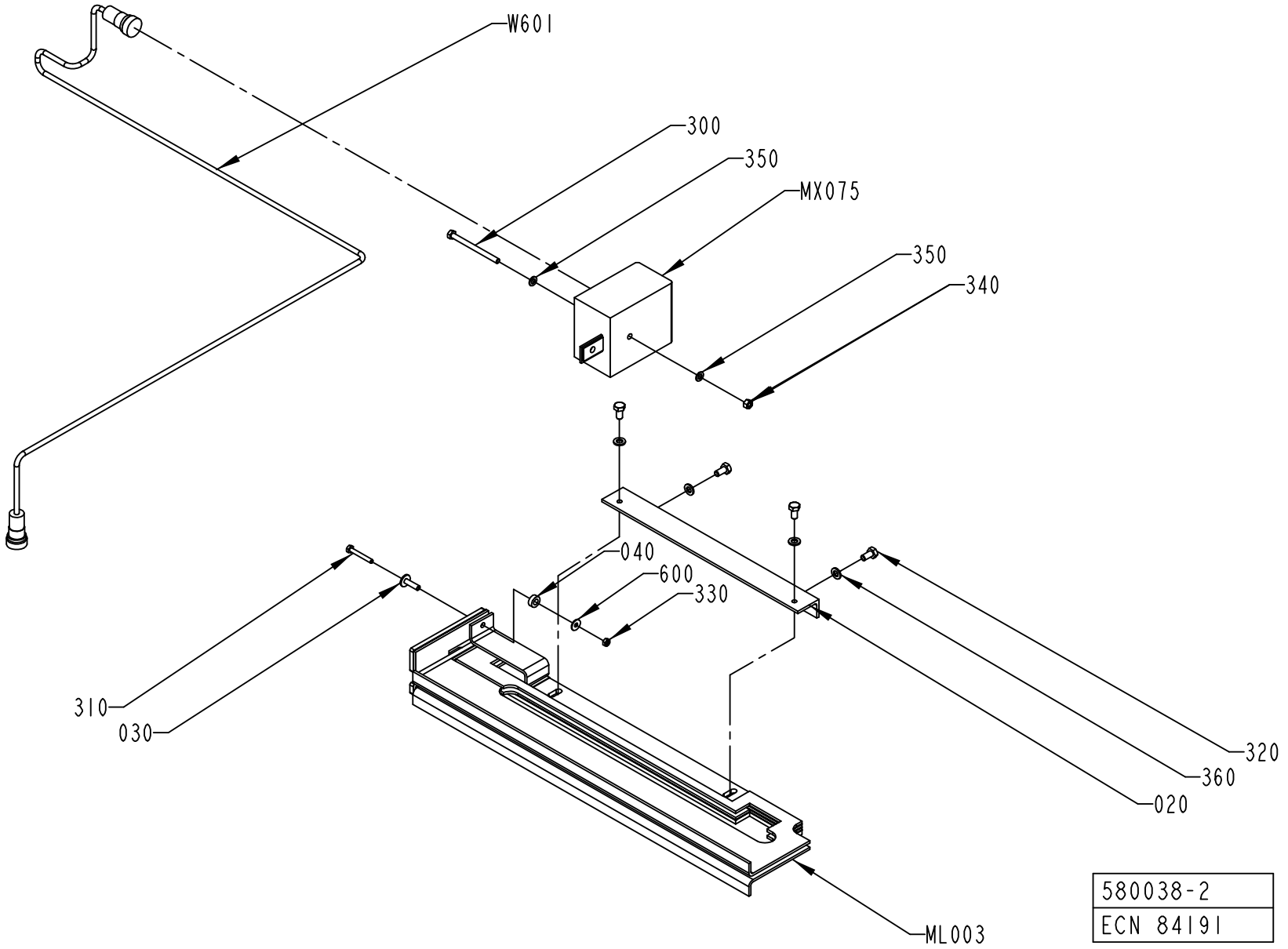
W601
300
350
MX075
350
340
040
600
330
310
030
320
360
020
ML003
580038-2
ECN 84191

ECM: 120692 - 20030113
Group number: 580038-0200
Assembly Drawing: 580038-2_1_AB

Pos	Part No	SP	UN	Qty	Description	Page No
-						
020	1036588-0000	-		1	BRACKET	
030	1038016-0000	-		1	SPACER	
040	32644-0000	-		1	WASHER	
300	312101-0344	-		1	SCREW M6S M5X65 FZB	
310	312105-0299	-		1	SCREW M6S ISO 4017 M4X30 A480	
320	312105-0366	-		4	SCREW M6S M6X12 A280	
330	312605-0312	-		1	HEXAGON NUT, M6M M4 A280	
340	312605-0314	-		1	HEXAGON NUT, M6M M5 A280	
350	315105-0146	-		2	WASHER BRB5,3X10RFR	
360	315105-0153	-		4	WASHER BRB6,4X12RFR	
600	90005-0082	-		1	WASHER PLAIN ROUND 4,3(M4)/12,H=1	
ML003	1035587-0000	A		1	INDUCTOR	
MX075	67380-0208	A		1	TRANSFORMER	
W601	548770-0006	A		1	COAXIAL CABLE L=1200 MM	

Pos	Part No	SP	UN	Qty	Description	Page No

Machine Type | Group Description | Used-In | Group Number | Page No

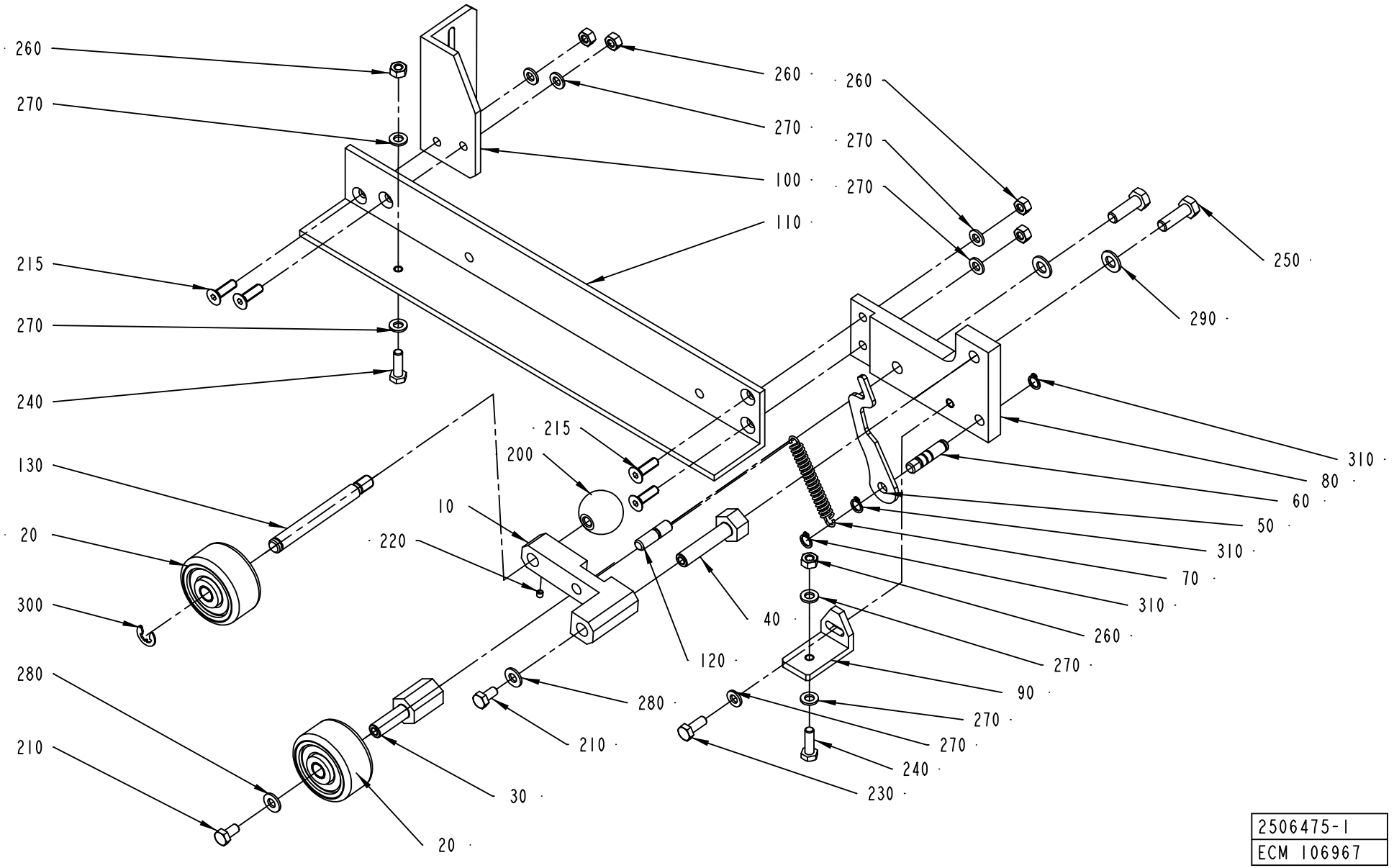

2506475-1
ECM 106967

ECM: 110380 - 20030113
Group number: 2506475-0100
Assembly Drawing: 2506475-1_1_AA

Pos	Part No	SP	UN	Qty	Description	Page No
-						
010	2524482-0000	-		1	BRACKET	
020	1346988-0000	A		2	ROLL	
010	*90166-0056*	*-*	*MM*	*40*	*SHRINKABLE HOSE*	
020	*321120-0104*	*-*		*2*	*BEARBUSHING W/O FL,ANGE 10/12X10*	
030	1035895-0000	-		1	SHAFT	
040	2529646-0000	-		1	SHAFT	
050	2524479-0000	-		1	PLATE	
060	2524480-0000	-		1	PIN	
070	1478303-0000	A		1	TENSION SPRING	
080	2506471-0000	-		1	BRACKET	
090	2506472-0000	-		1	HOLDER	
100	2506473-0000	-		1	BRACKET	
110	2506474-0000	-		1	FASTENING BRACKET	
120	2524484-0000	-		1	PIN	
130	2524485-0000	-		1	PIN	
200	318800-0104	-		1	HANDLE,SPHERICAL KNOB,INT.THRE.,D.30-M8	
210	312105-0366	-		2	SCREW M6S M6X12 A280	
215	312155-0370	-		4	SCREW EN 10642 MF6S M6X20 A480	
220	312318-0283	-		1	SCREW ISO4029 M4X4 A4	
230	312105-0368	-		1	SCREW M6S M6X16 A280	
240	312105-0367	-		2	SCREW M6S M6X14 A280	
250	312105-0453	-		2	SCREW M6S ISO 4017 M8X25 A480	
260	312605-0316	-		4	HEXAGON NUT, M6M M6 A280	
270	315105-0153	-		7	WASHER BRB6,4X12RFR	
280	315105-0156	-		2	WASHER BRB 6.7X14 RFR	
290	315105-0165	-		2	WASHER BRB8,4X16RFR	
300	315755-0801	-		1	LOCKING WASHER 8	
310	90141-0015	-		3	RETAIN. RING, 8	

Pos	Part No	SP	UN	Qty	Description	Page No

Machine Type | Group Description | Used-In | Group Number | Page No

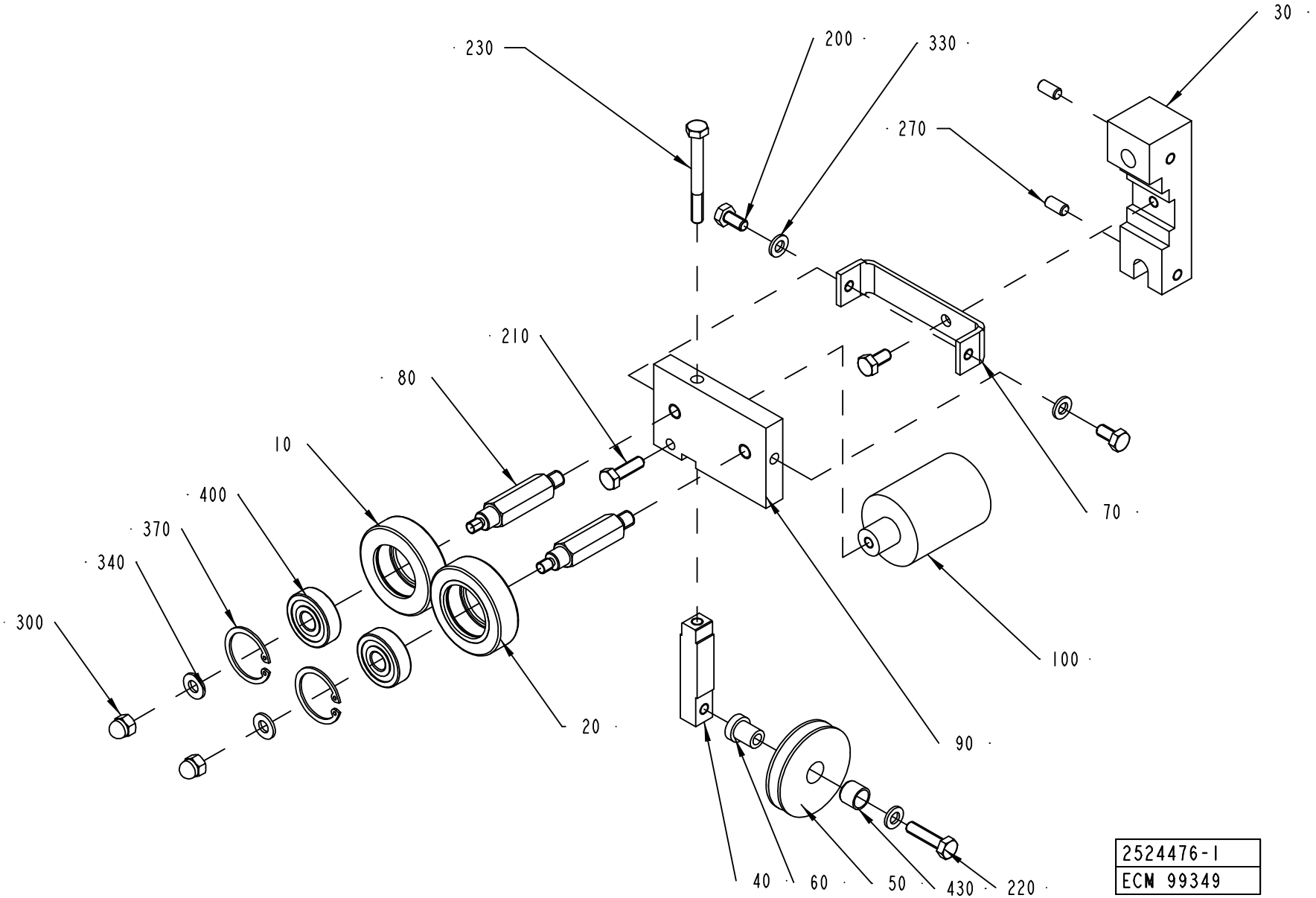
230
200
330
30
270
210
80
10
400
370
340
300
70
100
20
90
40
60
50
430
220
2524476-1
ECM 99349

ECM: 113780 - 20030113
Group number: 2524476-0100
Assembly Drawing: 2524476-1_1_AA

Pos	Part No	SP	UN	Qty	Description	Page No
-						
010	1036622-0000	-		1	GUIDE ROLLER	
020	1036623-0000	C		1	GUIDE ROLLER	
030	1511002-0000	-		1	HOLDER	
040	1499024-0000	-		1	BAR	
050	2524477-0000	-		1	ROLLER	
060	1499026-0000	-		1	SHAFT	
070	1499027-0000	-		1	BRACKET	
080	1511001-0000	-		1	SHAFT	
090	1511000-0000	-		1	PLATE	
100	1511003-0000	-		1	WEIGHT	
110	2552628-0000	-		1	PIN	
120	1346612-0000	-		1	SHAFT	
200	312105-0366	-		3	SCREW M6S M6X12 A280	
210	312105-0370	-		1	SCREW M6S ISO 4017 M6X20 A480	
220	312105-0372	-		1	SCREW M6S ISO 4017 M6X25 A480	
230	312105-0381	-		1	SCREW M6S ISO 4014 M6X55 A480	
240	312105-0333	-		1	SCREW M6S ISO 4017 M5X25 A480	
270	312318-0366	-		2	SCREW ISO4029 M6X12 A4	
300	312705-0316	-		2	NUT HEX. DOMED CAP MHM-6 M6 A280	
330	315105-0153	-		3	WASHER BRB6,4X12RFR	
340	315105-0156	-		2	WASHER BRB 6.7X14 RFR	
350	315105-0156	-		1	WASHER BRB 6.7X14 RFR	
370	315753-0122	-		2	RETAIN. RING, 30	
400	321313-0100	A		2	BALL BEARING, 10X30X9 MM	
430	90240-0287	A		1	BUSHING, 10X12X10 MM	

Pos	Part No	SP	UN	Qty	Description	Page No

Machine Type | Group Description | Used-In | Group Number | Page No

STRIP GUIDE

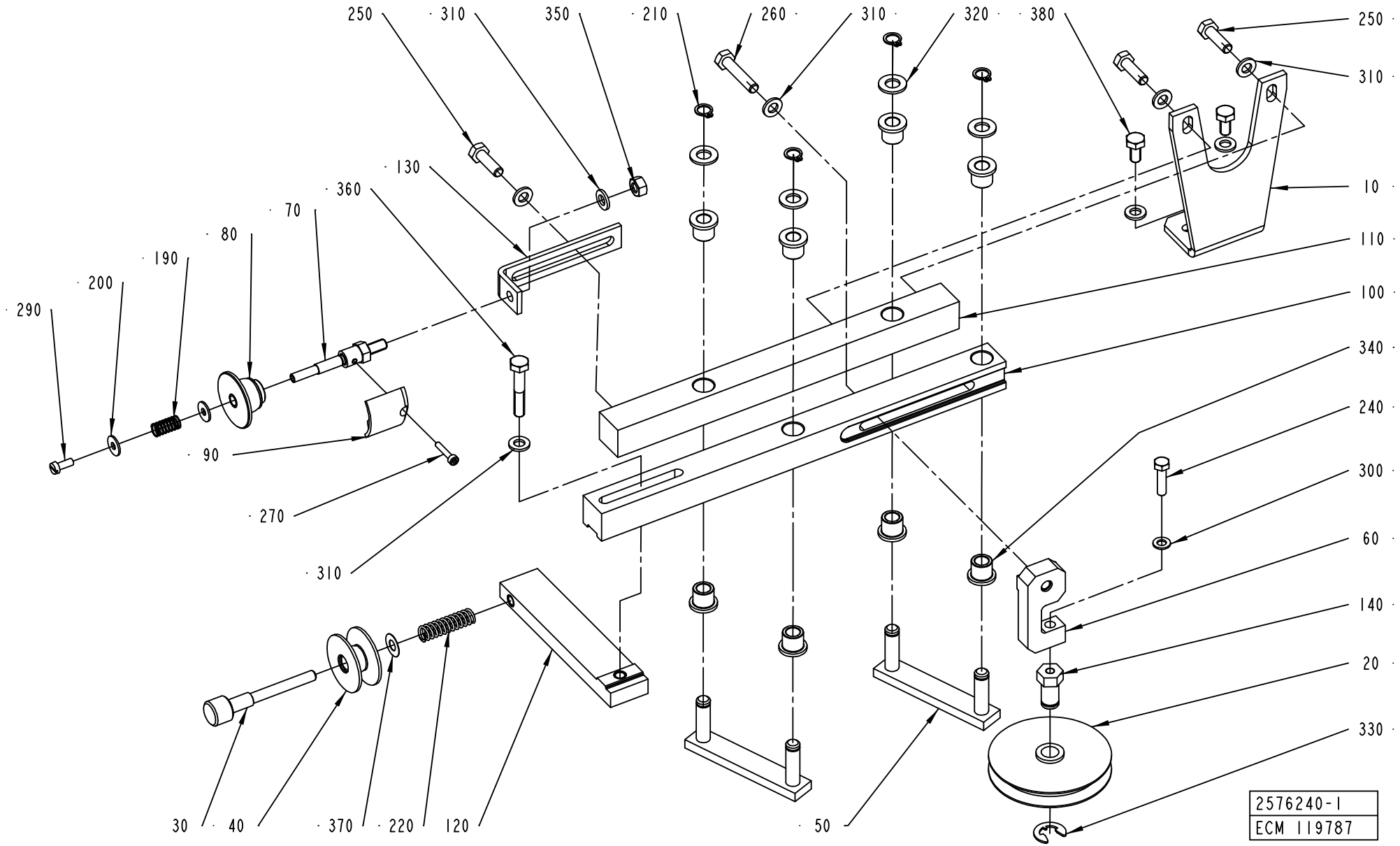
250
310
350
210
260
310
320
380
250
310
130
360
70
80
190
200
290
10
110
100
340
240
300
60
140
20
330
90
270
310
30
40
370
220
120
50
2576240-1
ECM 119787

ECM: 119789 - 20030303
Group number: 2576240-0100
Assembly Drawing: 2576240-1_1_AA

This list covers pages from 570 to 573

Pos	Part No	SP	UN	Qty	Description	Page No
TBA NOPT (See drawing on page: 570)						
070	2552631-0000	-		1	AXLE PIN	
080	2552632-0000	A		1	ROLLER	
090	2552633-0000	-		1	ROLLER	
130	2575481-0000	-		1	BRACKET	
190	90335-0146	-		1	COMP. SPRING, 0,6X7,2X20	
200	90005-0082	-		2	WASHER PLAIN ROUND 4,3(M4)/12,H=1	
270	312115-0228	-		1	SCREW ISO4762 M3X16 A4	
290	312125-0289	-		1	SLOTTED SCREW MCS 4X10 A480	
350	312605-0316	-		1	HEXAGON NUT, M6M M6 A280	
TBA PT19 (See drawing on page: 572)						
-	-	-			-	
Common Parts						
010	2576239-0000	-		1	HOLDER	
020	282635-0000	A		1	GUIDE WHEEL	
030	1035893-0000	-		1	ADJUSTING SCREW	
040	1285546-0000	A		1	ROLL	
010	*321120-0100*	*C*		*1*	*BEARING BUSHING W/O FLANGE 8/10X12*	
050	1346746-0000	-		2	LEVER	
060	2575480-0000	-		1	HOLDER	
100	2570400-0000	-		1	ROD	
110	2570401-0000	-		1	ROD	
120	2575484-0000	-		1	HOLDER	
140	2575482-0000	-		1	PIN	
210	90141-0015	-		4	RETAIN. RING, 8	
220	90335-0027	A		1	COMP. SPRING 22170, 1,25X9,25X33	
240	312105-0331	-		1	SCREW M6S ISO 4017 M5X20 A480	
250	312105-0370	-		3	SCREW M6S ISO 4017 M6X20 A480	
260	312105-0374	-		1	SCREW M6S ISO 4014 M6X30 A480	
300	315105-0146	-		1	WASHER BRB5,3X10RFR	
310	315105-0153	-		8	WASHER BRB6,4X12RFR	
320	315105-0165	-		4	WASHER BRB8,4X16RFR	
330	315755-0110	-		1	LOCKING WASHER 9	
340	321111-0097	A		8	FLANGE BUSHING, 8X12X12 MM	
360	312105-0376	-		1	SCREW M6S ISO 4014 M6X35 A480	
370	2033-0013	-		1	WASHER	
380	312105-0366	-		2	SCREW M6S M6X12 A280	

Pos	Part No	SP	UN	Qty	Description	Page No

Machine Type | Group Description | Used-In | Group Number | Page No

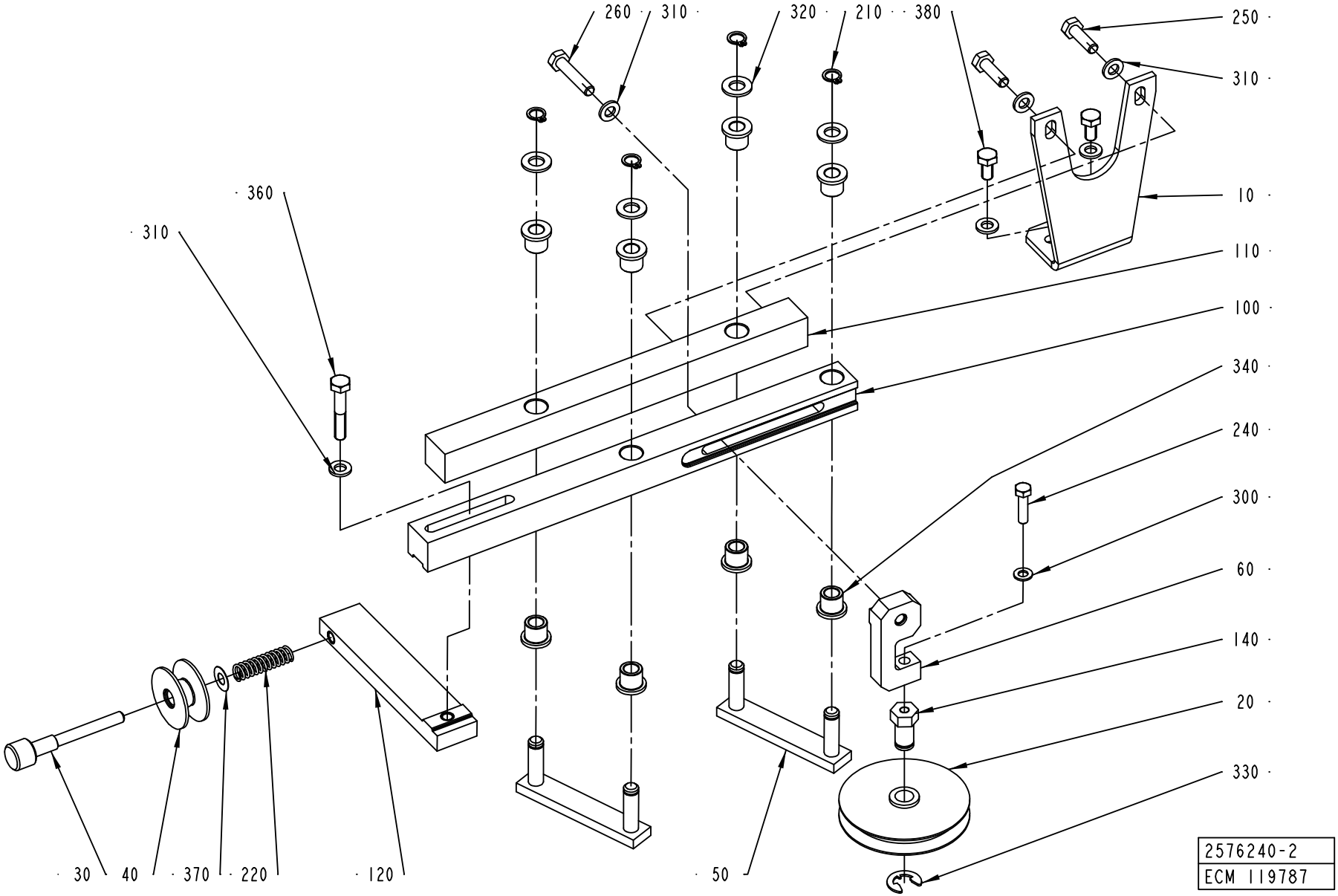
260
310
320
210
380
250
310
360
310
10
110
100
340
240
300
60
140
20
330
30
40
370
220
120
50
2576240-2
ECM 119787

Pos	Part No	SP	UN	Qty	Description	Page No
TBA NOPT (See drawing on page: 570)						
070	2552631-0000	-		1	AXLE PIN	
080	2552632-0000	A		1	ROLLER	
090	2552633-0000	-		1	ROLLER	
130	2575481-0000	-		1	BRACKET	
190	90335-0146	-		1	COMP. SPRING, 0,6X7,2X20	
200	90005-0082	-		2	WASHER PLAIN ROUND 4,3(M4)/12,H=1	
270	312115-0228	-		1	SCREW ISO4762 M3X16 A4	
290	312125-0289	-		1	SLOTTED SCREW MCS 4X10 A480	
350	312605-0316	-		1	HEXAGON NUT, M6M M6 A280	
TBA PT19 (See drawing on page: 572)						
-	-	-			-	
Common Parts						
010	2576239-0000	-		1	HOLDER	
020	282635-0000	A		1	GUIDE WHEEL	
030	1035893-0000	-		1	ADJUSTING SCREW	
040	1285546-0000	A		1	ROLL	
010	*321120-0100*	*C*		*1*	*BEARING BUSHING W/O FLANGE 8/10X12*	
050	1346746-0000	-		2	LEVER	
060	2575480-0000	-		1	HOLDER	
100	2570400-0000	-		1	ROD	
110	2570401-0000	-		1	ROD	
120	2575484-0000	-		1	HOLDER	
140	2575482-0000	-		1	PIN	
210	90141-0015	-		4	RETAIN. RING, 8	
220	90335-0027	A		1	COMP. SPRING 22170, 1,25X9,25X33	
240	312105-0331	-		1	SCREW M6S ISO 4017 M5X20 A480	
250	312105-0370	-		3	SCREW M6S ISO 4017 M6X20 A480	
260	312105-0374	-		1	SCREW M6S ISO 4014 M6X30 A480	
300	315105-0146	-		1	WASHER BRB5,3X10RFR	
310	315105-0153	-		8	WASHER BRB6,4X12RFR	
320	315105-0165	-		4	WASHER BRB8,4X16RFR	
330	315755-0110	-		1	LOCKING WASHER 9	
340	321111-0097	A		8	FLANGE BUSHING, 8X12X12 MM	
360	312105-0376	-		1	SCREW M6S ISO 4014 M6X35 A480	
370	2033-0013	-		1	WASHER	
380	312105-0366	-		2	SCREW M6S M6X12 A280	

Pos	Part No	SP	UN	Qty	Description	Page No

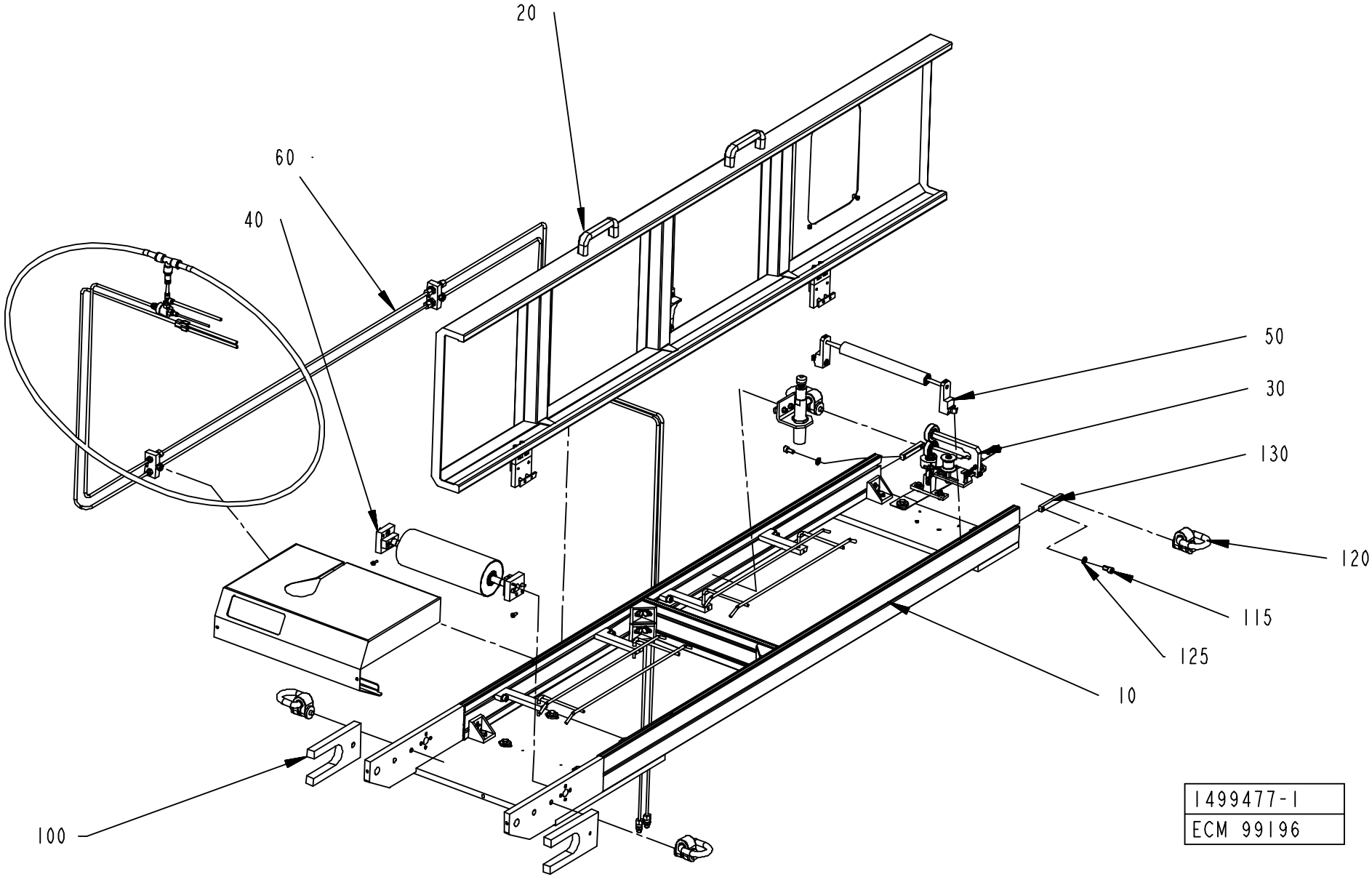
20
60
40
50
30
130
120
115
125
10
100
1499477-1
ECM 99196

ECM: 116565 - 20030113
Group number: 1499477-0100
Assembly Drawing: 1499477-1_1_AB

Pos	Part No	SP	UN	Qty	Description	Page No
-						
010	1499484-0100	-		1	TUNNEL FRAME	**577**
020	1511319-0100	-		1	TUNNEL COVER	**579**
030	1517065-0100	-		1	WEB GUIDE	**581**
040	2570394-0100	-		1	BENDING ROLLER	**583**
050	1498756-0100	-		1	BENDING ROLLER	**585**
060	580335-0200	-		1	PIPE WORK-PNEUMATIC	**587**
100	1499485-0000	-		2	TRANSPORT BRACKET	

Pos	Part No	SP	UN	Qty	Description	Page No

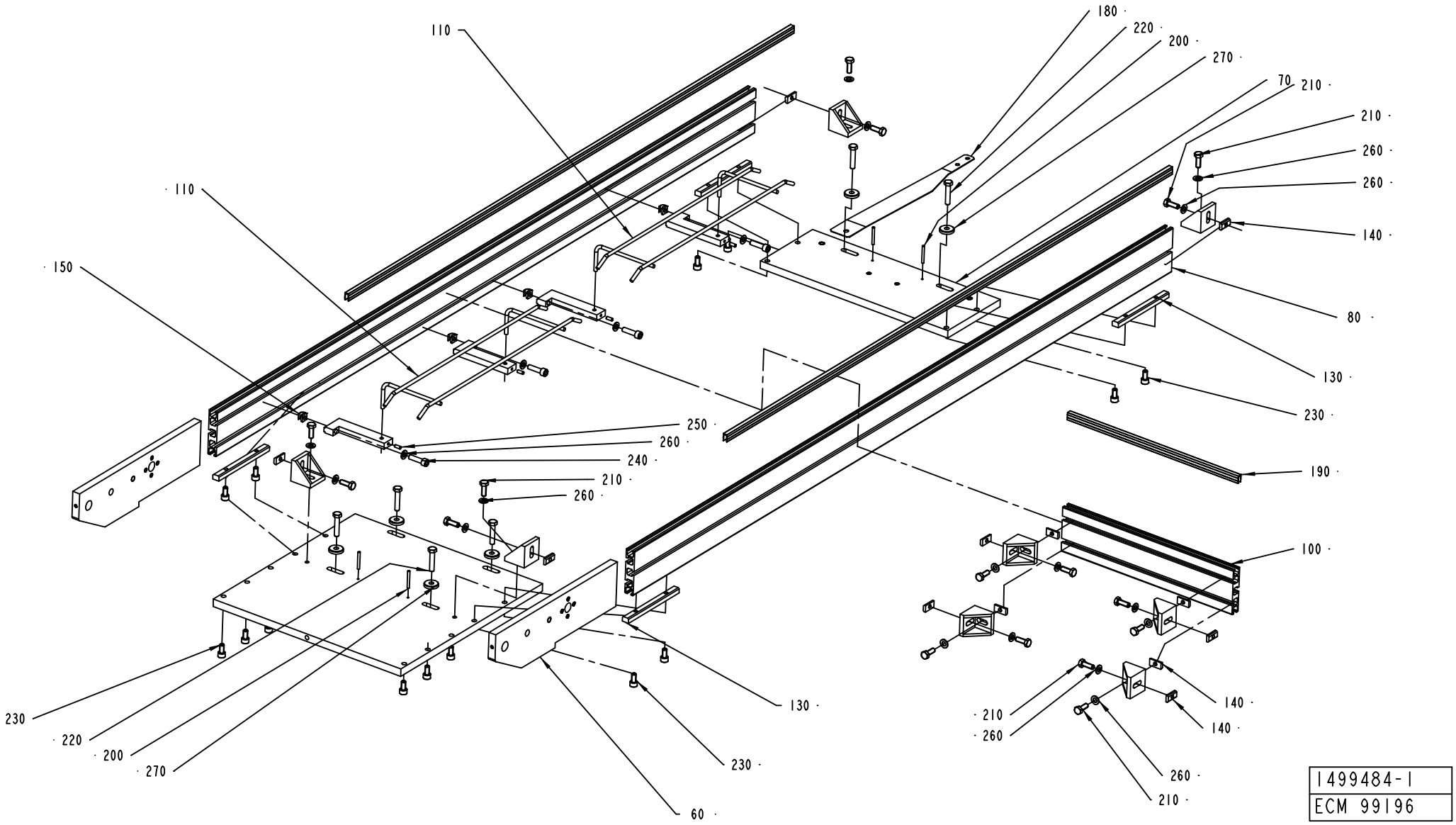
110
110
150
180
220
200
270
70
210
210
260
260
140
80
130
230
190
100
250
260
240
210
260
130
230
60
230
220
200
270
210
260
140
140
260
210
1499484-1
ECM 99196

ECM: 99200 - 20020808
Group number: 1499484-0100
Assembly Drawing: 1499484-1_1_AB

Pos	Part No	SP	UN	Qty	Description	Page No
-						
050	1498766-0000	-		1	LOWER PLATE	
060	1498767-0000	-		2	SIDE PIECE	
070	1498768-0000	-		1	LOWER PLATE	
080	1498769-0000	-		2	WALL	
090	1498771-0000	-		4	HOLDER	
100	2540729-0000	-		1	WALL	
110	36316-0000	-		2	PAPER SUPPORT	
120	1498759-0000	-		8	ANGLE HOLDER	
130	1498763-0000	-		4	JOINT PIECE	
140	1511308-0000	-		12	NUT PLATE	
150	1511310-0000	-		4	NUT	
160	1511320-0000	-		2	STRIP	
180	1499371-0000	-		1	JOINT PLATE	
190	2540730-0000	-		1	STRIP	
200	311103-0278	-		4	PARALLELL PIN ISO2338 4X35 A1	
210	312105-0452	-		16	SCREW M6S ISO 4017 M8X22 A480	
220	312109-0459	-		6	SCREW M6S ISO 4017 M8X40 A480	
230	312115-0449	-		14	SCREW ISO4762 M8X16 A4	
240	312115-0455	-		4	SCREW ISO4762 M8X30 A4	
250	312318-0327	-		4	SCREW ISO4029 M5X12 A4	
260	315105-0165	-		20	WASHER BRB8,4X16RFR	
270	315125-0165	-		6	WASHER TBRSB 8,4X26X5 A4	

Pos	Part No	SP	UN	Qty	Description	Page No

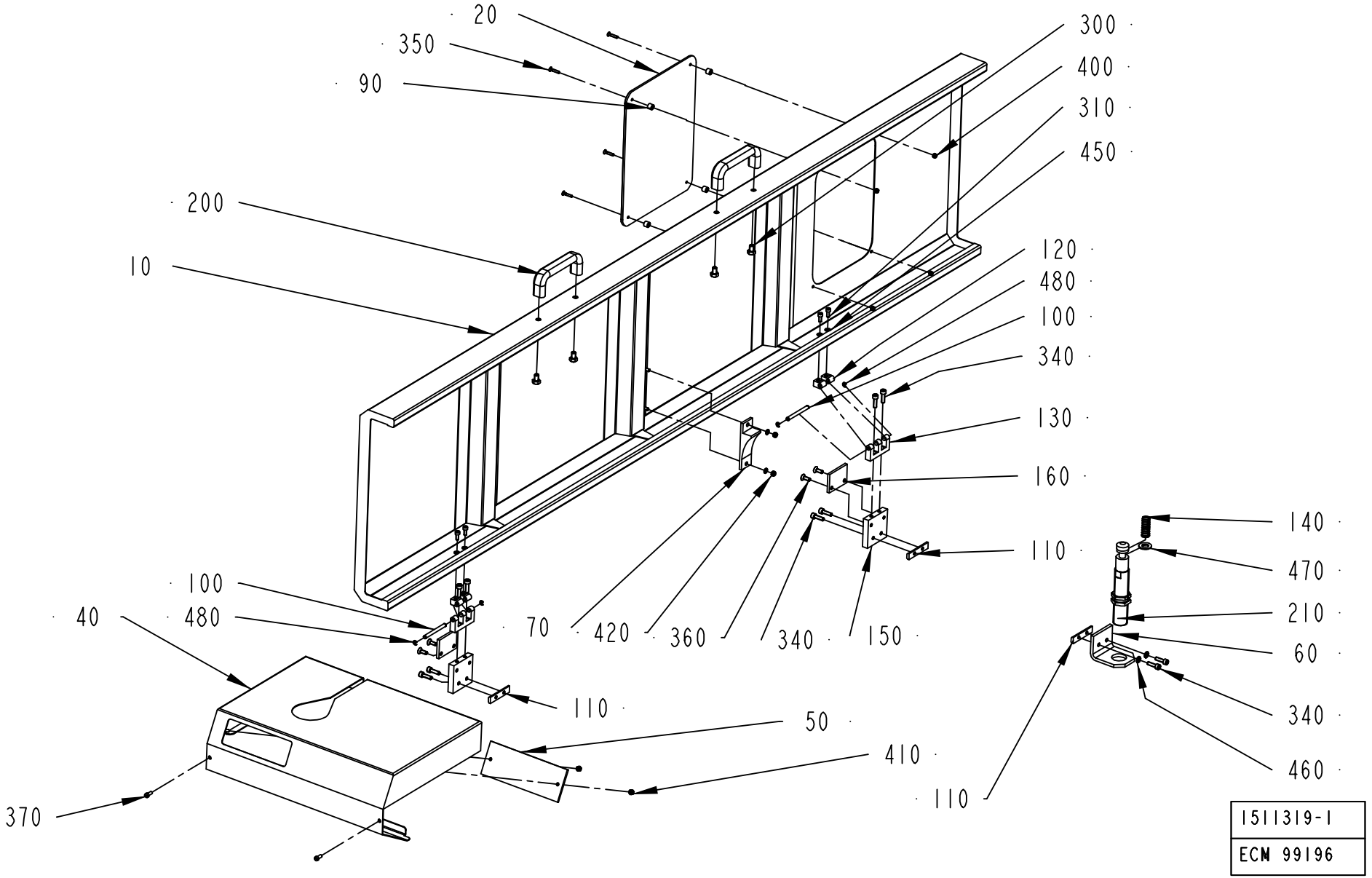
20
350
90
200
10
300
400
310
450
120
480
100
340
130
160
110
140
470
210
60
340
460
110
100
480
40
70
420
360
340
150
110
50
410
370
1511319-1
ECM 99196

ECM: 114179 - 20020930
Group number: 1511319-0100
Assembly Drawing: 1511319-1_1_AB

Pos	Part No	SP	UN	Qty	Description	Page No
-						
010	1499486-0000	-		1	TOP COVER	
020	1511317-0000	-		1	PANE	
040	1498780-0000	-		1	BACK COVER	
050	1511311-0000	-		1	GLASS PANE	
060	1511314-0000	-		1	DAMPER BRACKET	
070	1511315-0000	-		1	SLIDE BLOCK	
090	1511318-0000	-		4	SPACER	
100	1499512-0000	-		2	PIN	
110	1499513-0000	-		3	NUT PLATE	
120	1035794-0000	-		4	BLOCKING PIECE	
130	1499514-0000	-		2	E-HINGE	
140	1511324-0000	B		1	SPRING	
150	2519647-0000	-		2	BRACKET	
160	2519646-0000	-		2	PLATE	
200	90017-0022	-		2	HANDLE, NO. EL-037311	
210	90347-0024	B		1	SHOCK ABSORBER, 370-120-400	
300	312105-0447	-		4	SCREW M6S ISO 4017 M8X12 A480	
310	312115-0327	-		4	SCREW ISO4762 M5X12 A4	
340	312115-0370	-		10	SCREW ISO4762 M6X20 A4	
350	312155-0295	-		4	SCREW EN 10642 MF6S M4X20 A480	
360	312155-0368	-		4	SCREW EN 10642 MF6S M6X16 A480	
370	312125-0327	-		2	SCREW PAN HEAD MCS M5X12 SS	
400	312605-0312	-		4	HEXAGON NUT, M6M M4 A280	
410	312605-0314	-		2	HEXAGON NUT, M6M M5 A280	
420	312812-0314	-		2	HEXAGON NUT, NY-LOCK M5 A480	
450	315105-0146	-		6	WASHER BRB5,3X10RFR	
460	315105-0153	-		2	WASHER BRB6,4X12RFR	
470	315105-0178	-		1	WASHER BRB13X24RFR	
480	315755-0106	-		4	LOCKING WASHER 4	

Pos	Part No	SP	UN	Qty	Description	Page No

Machine Type | Group Description | Used-In | Group Number | Page No

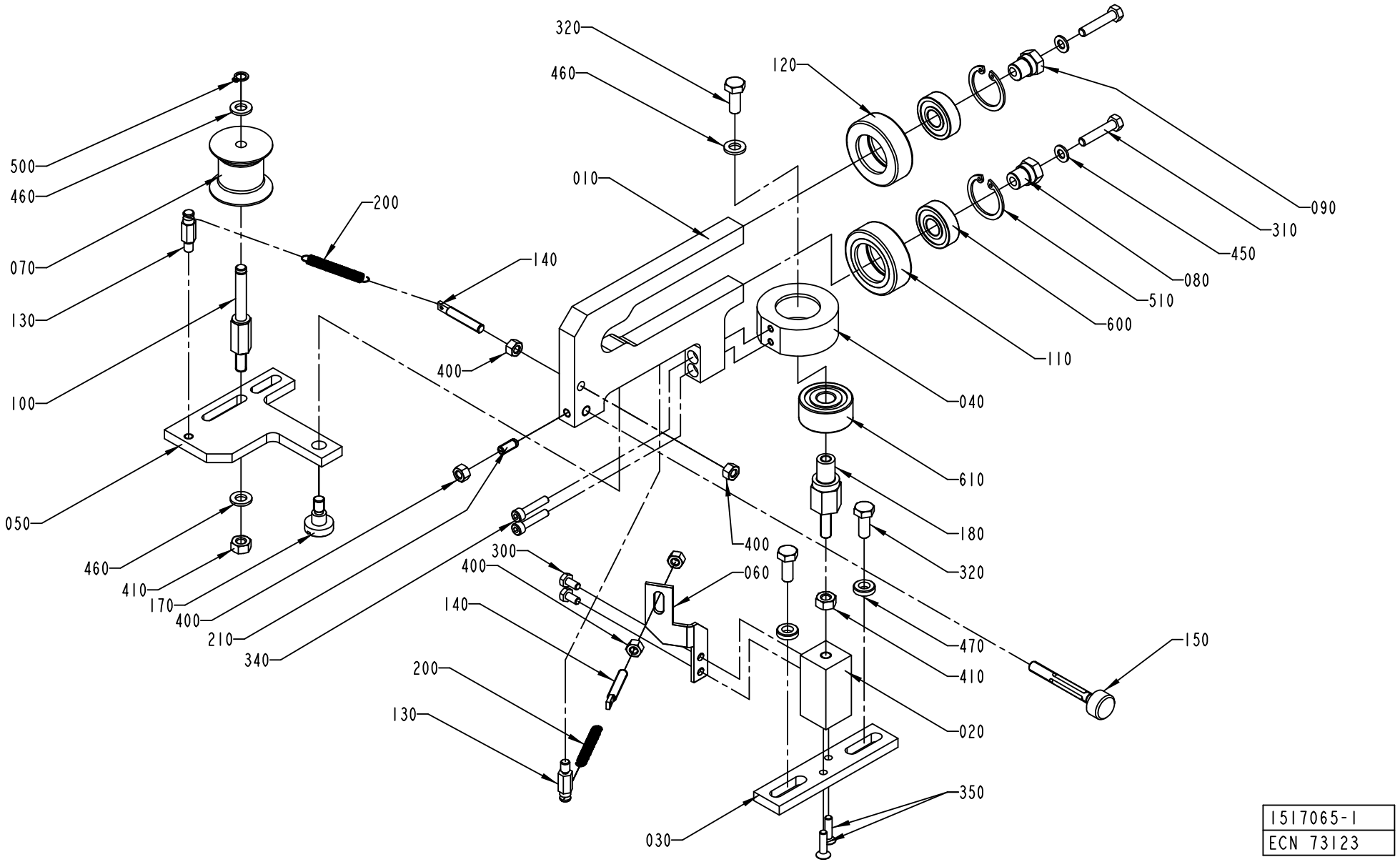

1517065-1
ECN 73123

ECM: 114180 - 20020930
Group number: 1517065-0100
Assembly Drawing: 1517065-1_1_AA

Pos	Part No	SP	UN	Qty	Description	Page No
-						
010	1517071-0000	-		1	BOW CLAMP	
020	1517068-0000	-		1	PILLAR	
030	1517069-0000	-		1	CLAMP PLATE	
040	1517070-0000	-		1	BEARING SEAT	
050	1517066-0000	B		1	PIVOT ARM	
060	1517067-0000	-		1	SPRING HOLDER	
070	979582-0000	A		1	ROLLER	
080	1334256-0000	B		1	SHAFT	
090	1346612-0000	B		1	SHAFT	
100	1538107-0000	B		1	SHAFT	
110	583737-0000	A		1	ROLLER	
120	583738-0000	A		1	ROLLER	
130	583735-0000	-		2	PIN	
140	583749-0000	-		2	PIN	
150	589432-0000	B		1	SCREW	
170	556541-0000	B		1	SCREW	
180	1517753-0000	B		1	ADJUSTING NUT	
200	90335-0216	A		2	TENSION SPRING 40910, 0,5X5,5X27,7	
210	90287-0148	-		1	SCREW SPRINGLOAD. SLOTTED HEAD M5X12	
300	312105-0287	-		2	SCREW M6S ISO4017 M4X8 A480	
310	312105-0333	-		2	SCREW M6S ISO 4017 M5X25 A480	
320	312105-0368	-		3	SCREW M6S M6X16 A280	
340	312115-0295	-		2	SCREW ISO4762 M4X20 A4	
350	312155-0293	-		2	SCREW EN 10642 MF6S M4X16 A480	
400	312605-0314	-		5	HEXAGON NUT, M6M M5 A280	
410	312605-0316	-		2	HEXAGON NUT, M6M M6 A280	
450	315105-0146	-		2	WASHER BRB5,3X10RFR	
460	315105-0153	-		3	WASHER BRB6,4X12RFR	
470	315115-0153	-		2	WASHER PLAIN, TBRB 6,4/12 H=3	
500	315751-0103	-		1	RETAIN. RING, 6	
510	315752-0120	-		2	RETAIN. RING, 26	
600	321308-0200	A		2	BALL BEARING, 10X26X8 MM	
610	321330-0100	A		1	ANG. BALL BEAR, 10X30X14 MM	

Pos	Part No	SP	UN	Qty	Description	Page No

Machine Type | Group Description | Used-In | Group Number | Page No

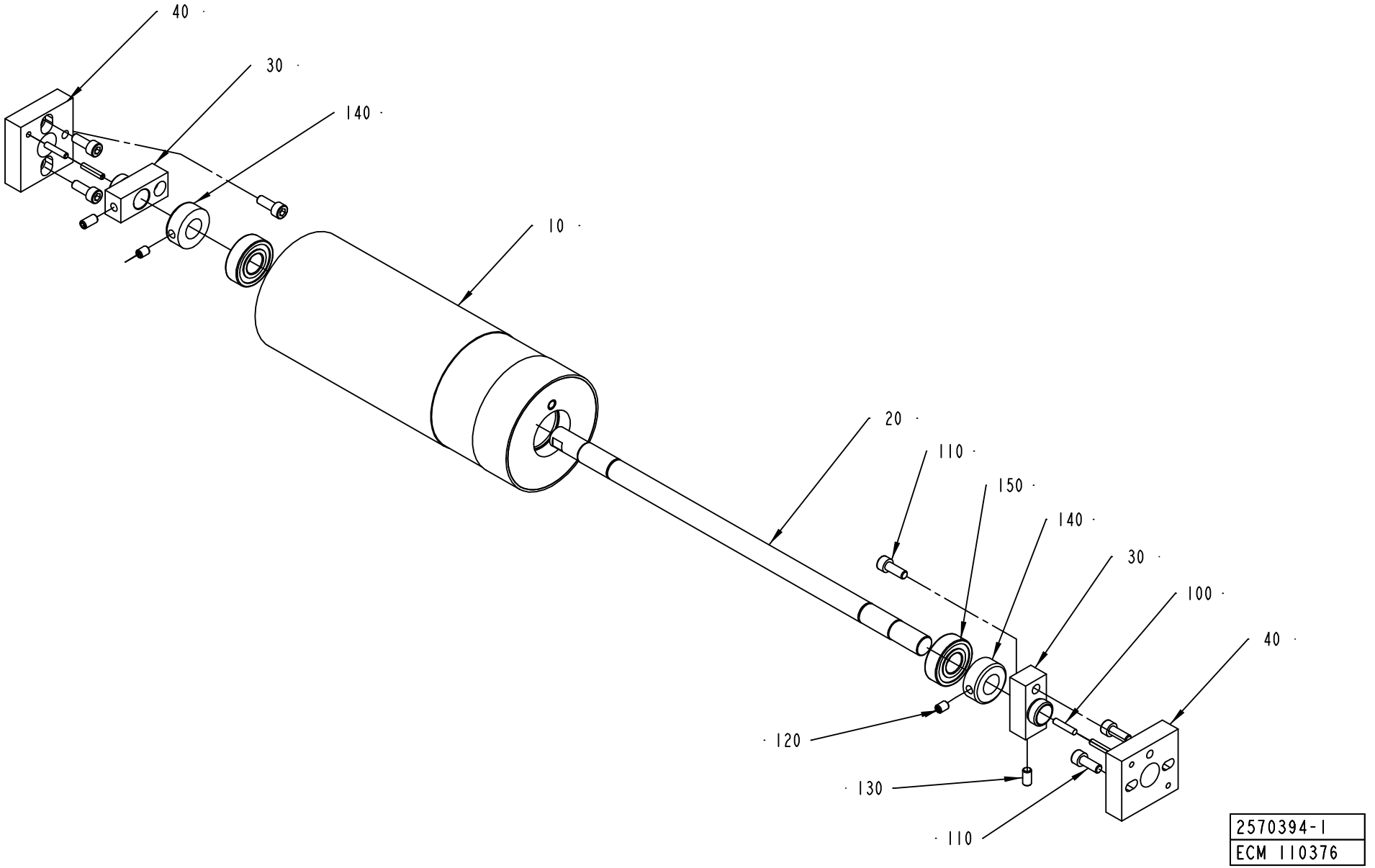
40
30
140
10
20
110
150
140
30
100
40
120
130
110
2570394-1
ECM 110376

ECM: 117146 - 20030113
Group number: 2570394-0100
Assembly Drawing: 2570394-1_1_AA

Pos	Part No	SP	UN	Qty	Description	Page No
-						
010	2570393-0000	-		1	BENDING ROLLER	
020	583683-0000	-		1	SHAFT	
030	583684-0000	-		2	AXLE SUPPORT	
040	583685-0000	-		2	BEARING SEAT	
100	311103-0272	-		4	PARALLELL PIN ISO2338 4X20 A1	
110	312115-0368	-		6	SCREW ISO4762 M6X16 A4	
120	312318-0362	-		2	SCREW ISO4029 M6X8 A4	
130	312318-0366	-		2	SCREW ISO4029 M6X12 A4	
140	315742-0111	-		2	COLLAR, 15/30, H=12	
150	321313-0102	A		2	BALL BEARING, 15X35X11 MM	

Pos	Part No	SP	UN	Qty	Description	Page No

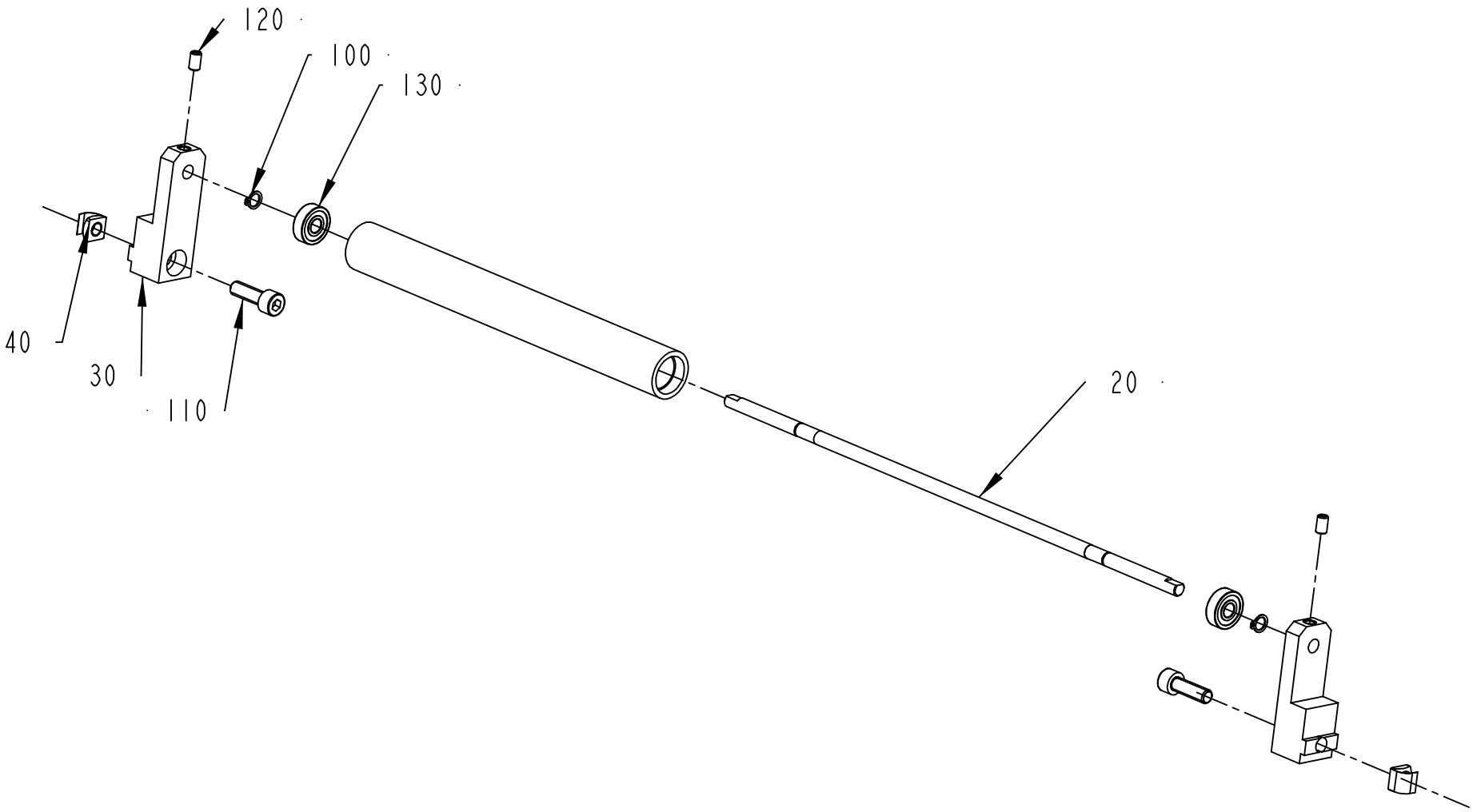

1498756-1
ECM 99196

ECM: 117145 - 20030113
Group number: 1498756-0100
Assembly Drawing: 1498756-1_1_AB

Pos	Part No	SP	UN	Qty	Description	Page No
-						
010	1511307-0000	-		1	ROLLER	
020	1499517-0000	-		1	SHAFT	
030	2506480-0000	-		2	HOLDER	
040	1511310-0000	-		2	NUT	
050	2570392-0000	-		2	RETAINING RING	
110	312115-0453	-		2	SCREW ISO4762 M8X25 A4	
120	312318-0364	-		2	SCREW ISO4029 M6X10 A4	
130	321302-0298	A		2	BALL BEARING, 8X22X7 MM	
140	312311-0285	-		2	SCREW ISO4028 M4X6 FZB	

Pos	Part No	SP	UN	Qty	Description	Page No

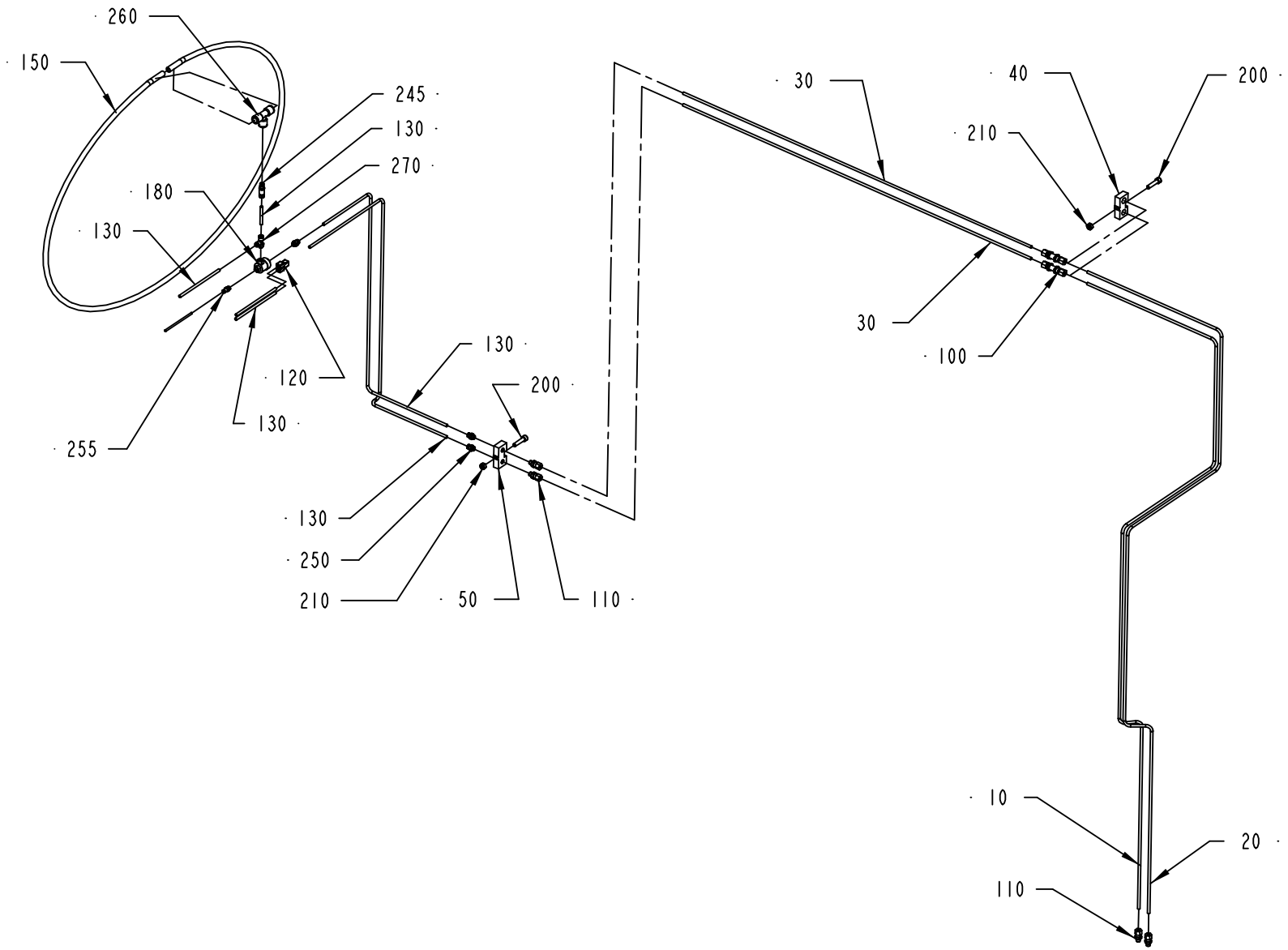

580335-2
ECM 99196

ECM: 116927 - 20030113
Group number: 580335-0200
Assembly Drawing: 580335-2_1_AB

Pos	Part No	SP	UN	Qty	Description	Page No
-						
010	1511460-0000	-		1	PIPE 1050	
020	1511461-0000	-		1	PIPE 1051	
030	1511462-0000	-		2	STRAIGHT PIPE	
040	1511463-0000	-		1	PIPE HOLDER	
050	1511464-0000	-		1	PIPE HOLDER	
100	90030-0066	-		2	CONN. BULKHEAD SV 6-L/SY	
110	90030-0184	-		2	CONN. STR. GA-6-G1/8	
120	90055-0100	-		1	Y-CONNECTION, 6-6	
130	90166-0081	-	M	4	TUBE 6 MM PA BLUE	
140	90166-0095	-	M	1	TUBE 4 MM PA BLUE	
150	90166-0068	-	MM	2500	TUBE 12 MM PA BLUE	
180	90235-0259	A		1	VALVE	
200	312115-0457	-		2	SCREW ISO4762 M8X35 A4	
210	312605-0318	-		2	HEXAGON NUT, M6M M8 A280	
245	342716-0210	-		1	REDUCER 6-12	
250	342722-0202	-		3	PIPE COUPLING 1/8" D=6MM	
255	342722-0199	-		1	STRAIGHT COUPLING	
260	342748-0109	-		1	T-CONNECTION 12MM	
270	342772-0113	-		1	ELBOW FITTING, 6 - G1/8	
300	359000-0400	-		14	MARKING CO2/4"0"	
310	359000-0401	-		14	MARKING COLLAR 2/4 "1" YELLOW	
320	359000-0405	-		14	MARKING CO2/4"5"	
330	359000-0404	-		7	MARKING COLLAR PA2/4 "4" YELLOW	
340	359000-0402	-		7	MARKING COLLAR 2/4 "2" YELLOW	

Pos	Part No	SP	UN	Qty	Description	Page No

Machine Type | Group Description | Used-In | Group Number | Page No

Tetra Pak

SPC
Spare Parts Catalogue

This page is intentionally left blank.

ECM: 104338 - 20030113
Group number: 648156-0100
Assembly Drawing:

Pos	Part No	SP	UN	Qty	Description	Page No
-						
010	1549295-0100	-		1	MACHINE BODY	**593**
020	1549296-0100	-		1	COVER PLATE	**597, 599**
030	1549305-0100	-		1	COVER	**601**
040	1549300-0100	-		1	PAPER MAGAZINE	**603, 605**
050	579241-0200	-		1	DATING UNIT	**609**
060	2501836-0100	-		1	SPLICING DEVICE	**641**
070	979381-0100	-		1	PAPER REEL HOLDER	**653**
080	1549480-0100	-		1	ELECTRIC EQUIPMENT	**655**

Pos	Part No	SP	UN	Qty	Description	Page No

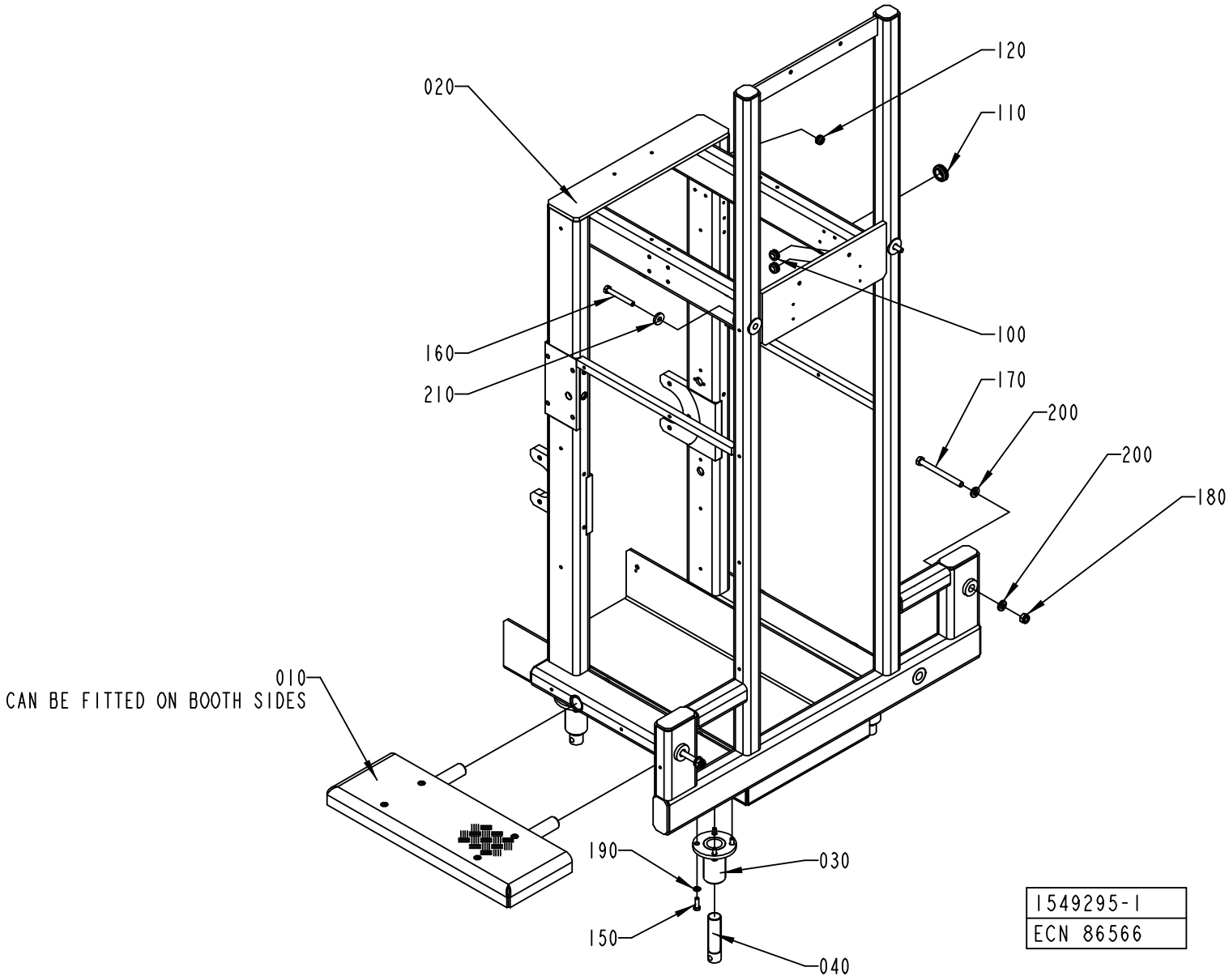
020
120
110
100
160
210
170
200
200
180
010
CAN BE FITTED ON BOOTH SIDES
190
030
150
040
1549295-1
ECN 86566

ECM: 91373 - 20020111
Group number: 1549295-0100
Assembly Drawing: 1549295-1_1_AA

Pos	Part No	SP	UN	Qty	Description	Page No
-						
010	1558320-0100	-		1	PLATFORM	**595**
020	1549294-0000	-		1	MACHINE BODY	
030	469095-0000	-		4	HOLDER	
040	469096-0000	-		4	LEG	
100	90458-1227	-		2	LEAD-IN, BUSHING, DA 130/170/50	
110	90458-1228	-		1	LEAD-IN, BUSHING, DA 230/300/60	
120	90458-1229	-		1	LEAD-IN, BUSHING, DA 75/110/50	
150	312105-0453	-		16	SCREW M6S ISO 4017 M8X25 A480	
160	312105-0507	-		2	SCREW M6S ISO 4014 M10X80 A480	
170	1367022-0000	-		2	ALIGNMENT SCREW	
180	312812-0322	-		2	HEXAGON NUT, NY-LOCK M12 A480	
190	315105-0165	-		16	WASHER ISO 7089-8-200 HV-A4	
200	315115-0178	-		4	WASHER PLAIN, TBRB 13/24 H=4	
210	315125-0173	-		2	WASHER TBRSB 10,5X28X6 A4	
220	315105-0191	-		2	WASHER PLAIN, BRB, 20/36 H=3	
230	312605-0318	-		2	HEXAGON NUT, M6M M8 A280	
240	90287-0112	-		2	SCREW SPRINGLOAD. SLOTTED HEAD M8X16	

Pos	Part No	SP	UN	Qty	Description	Page No

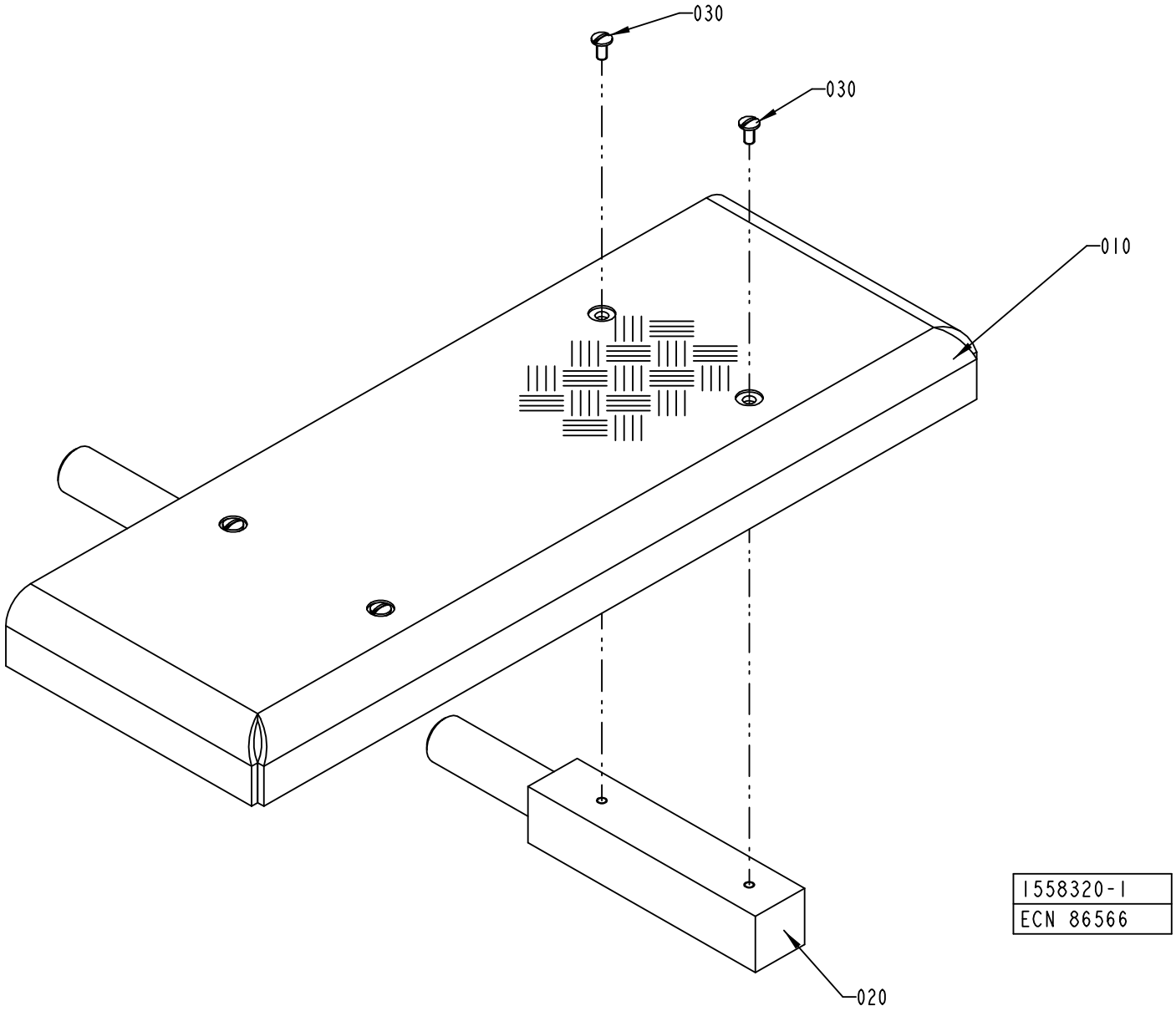
030
030
010
020
1558320-1
ECN 86566

ECM: 86574 - 20020111
Group number: 1558320-0100
Assembly Drawing: 1558320-1_1_AA

Pos	Part No	SP	UN	Qty	Description	Page No
-						
010	1558321-0000	-		1	COVER PLATE	
020	1558322-0000	-		2	JOINT BOLT	
030	90287-0075	-		4	SCREW SLOT. PAN HEAD LKCS M6X12	

Pos	Part No	SP	UN	Qty	Description	Page No

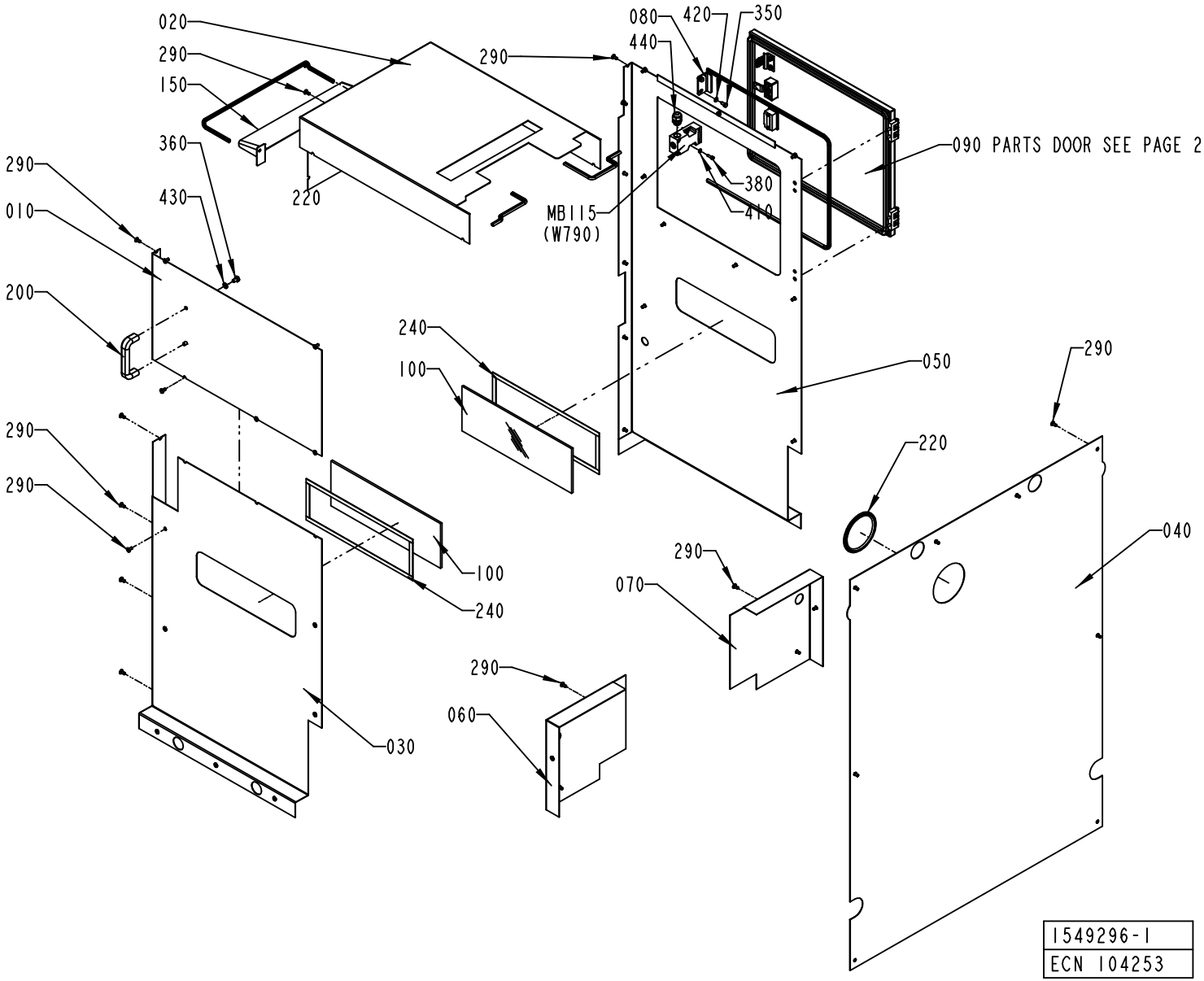
020
290
150
360
430
220
290
080
420
350
440
290
090 PARTS DOOR SEE PAGE 2
380
410
MB115
(W790)
290
010
200
240
100
050
290
220
040
290
290
100
240
290
070
290
060
030
1549296-1
ECN 104253

ECM: 104330 - 20030113
Group number: 1549296-0100
Assembly Drawing: 1549296-1_1_AB

This list covers pages from 596 to 599

Pos	Part No	SP	UN	Qty	Description	Page No
-						
010	1549299-0000	-		1	PLATE	
020	1549483-0000	-		1	PLATE	
030	1549484-0000	-		1	PLATE	
040	1549485-0000	-		1	PLATE	
050	1549486-0000	-		1	PLATE	
060	1549487-0000	-		1	PLATE	
070	1549488-0000	-		1	PLATE	
080	1549489-0000	-		1	BRACKET	
090	1549490-0000	-		1	DOOR	
100	2500050-0000	-		2	GLASS	
110	975917-0000	-		1	KEY FOR SAFETY SWITCH 90044-103	
120	988685-0000	-		2	PIN	
130	1035792-0000	-		2	E-HINGE	
140	1035794-0000	-		4	BLOCKING PIECE	
150	2551088-0000	-		1	COVER	
200	90017-0022	-		1	HANDLE, NO. EL-037311	
220	90143-0060	-	MM	7000	EDGE STRIP 9,5X6,3MM BLACK PVC	
230	90143-0068	-	M	1	RUBBERSTRIP EMKA 1011-06	
240	90144-0072	-	M	2	TAPE SCOTCH VHBS 4945 W=12,7MM	
250	90237-0128	-		1	LOCK CYLINDER, 1109-U3	
260	90237-0150	-		1	TURNING HANDLE, NO. 1125-U190-0A	
270	90237-0155	-		1	LOCK ADAPTER, 1121-U40	
280	90237-0156	-		1	LOCK BOLT, 1000-16	
290	90287-0075	-		45	SCREW SLOT. PAN HEAD LKCS M6X12	
300	90237-0154	-		1	LOCK HOUSING, 1121-U60-0C	
350	312105-0366	-		2	SCREW M6S M6X12 A280	
360	312105-0447	-		2	SCREW M6S ISO 4017 M8X12 A480	
370	312115-0327	-		4	SCREW ISO4762 M5X12 A4	
380	312115-0329	-		2	SCREW ISO4762 M5X16 A4	
390	312115-0368	-		4	SCREW ISO4762 M6X16 A4	
400	312605-0316	-		2	HEXAGON NUT, M6M M6 A280	
410	315105-0146	-		6	WASHER ISO 7089-5-200 HV-A4	
420	315105-0153	-		4	WASHER ISO 7089-6-200 HV-A4	
430	315105-0165	-		2	WASHER ISO 7089-8-200 HV-A4	
440	352103-0106	-		1	CABLE GLAND, ST 11, PR18,6/PG11	
450	312105-0293	-		3	SCREW M6S ISO 4017 M4X16 A480	
460	315105-0136	-		3	WASHER ISO 7089-4-200 HV-A4	
470	90243-0133	-		1	CONTAINER	
480	90287-0316	-		5	SCREW	
MB115	90044-0139	B		1	KEY SAF.SW. AZ16-02 ZVR K-2254	

Pos	Part No	SP	UN	Qty	Description	Page No

Machine Type | Group Description | Used-In | Group Number | Page No

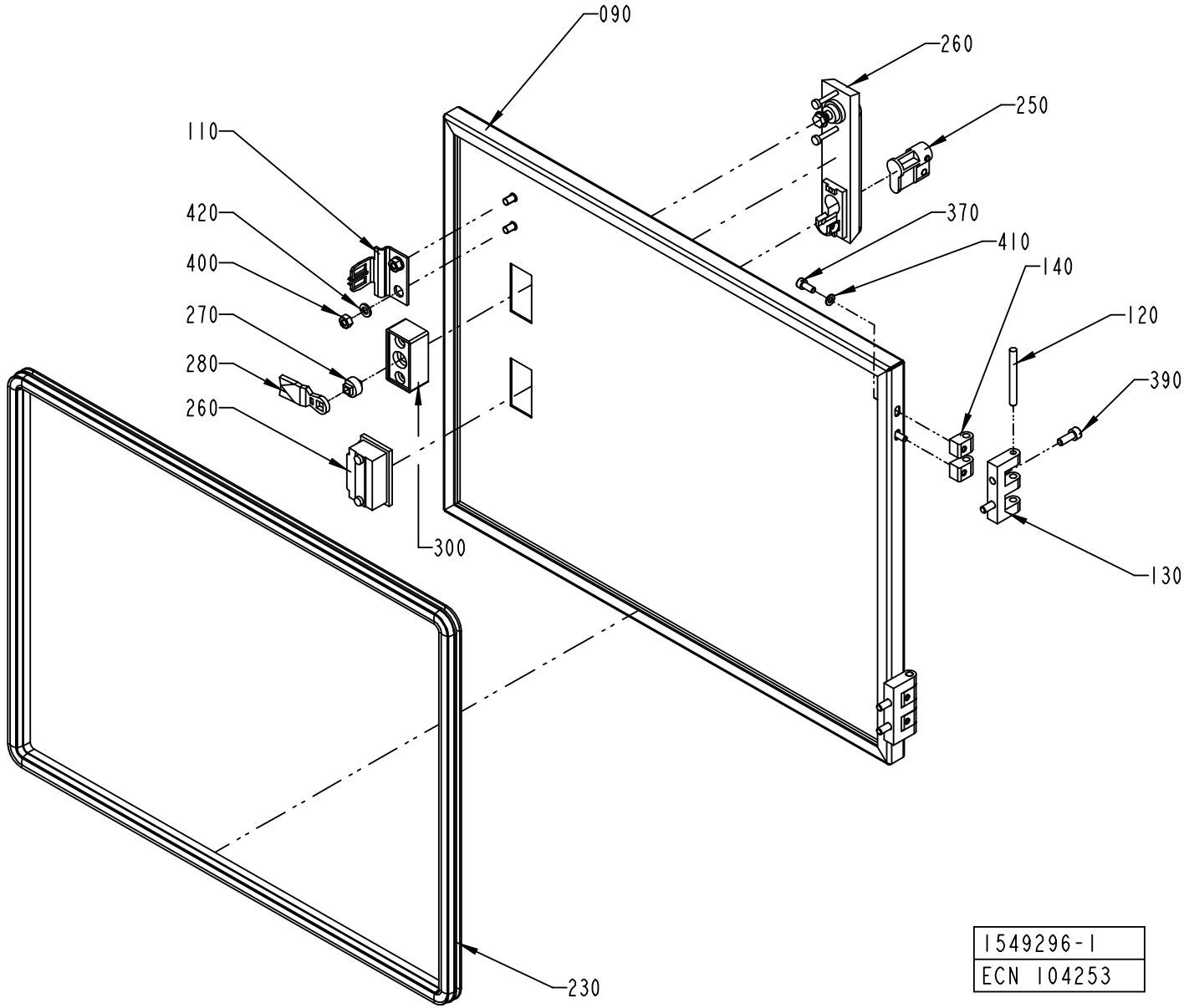
090
260
250
110
420
400
370
410
140
270
120
280
390
260
300
130
230
1549296-1
ECN 104253

ECM: 104330 - 20030113
Group number: 1549296-0100
Assembly Drawing: 1549296-1_2_AB

This list covers pages from 596 to 599

Pos	Part No	SP	UN	Qty	Description	Page No
-						
010	1549299-0000	-		1	PLATE	
020	1549483-0000	-		1	PLATE	
030	1549484-0000	-		1	PLATE	
040	1549485-0000	-		1	PLATE	
050	1549486-0000	-		1	PLATE	
060	1549487-0000	-		1	PLATE	
070	1549488-0000	-		1	PLATE	
080	1549489-0000	-		1	BRACKET	
090	1549490-0000	-		1	DOOR	
100	2500050-0000	-		2	GLASS	
110	975917-0000	-		1	KEY FOR SAFETY SWITCH 90044-103	
120	988685-0000	-		2	PIN	
130	1035792-0000	-		2	E-HINGE	
140	1035794-0000	-		4	BLOCKING PIECE	
150	2551088-0000	-		1	COVER	
200	90017-0022	-		1	HANDLE, NO. EL-037311	
220	90143-0060	-	MM	7000	EDGE STRIP 9,5X6,3MM BLACK PVC	
230	90143-0068	-	M	1	RUBBERSTRIP EMKA 1011-06	
240	90144-0072	-	M	2	TAPE SCOTCH VHBS 4945 W=12,7MM	
250	90237-0128	-		1	LOCK CYLINDER, 1109-U3	
260	90237-0150	-		1	TURNING HANDLE, NO. 1125-U190-0A	
270	90237-0155	-		1	LOCK ADAPTER, 1121-U40	
280	90237-0156	-		1	LOCK BOLT, 1000-16	
290	90287-0075	-		45	SCREW SLOT. PAN HEAD LKCS M6X12	
300	90237-0154	-		1	LOCK HOUSING, 1121-U60-0C	
350	312105-0366	-		2	SCREW M6S M6X12 A280	
360	312105-0447	-		2	SCREW M6S ISO 4017 M8X12 A480	
370	312115-0327	-		4	SCREW ISO4762 M5X12 A4	
380	312115-0329	-		2	SCREW ISO4762 M5X16 A4	
390	312115-0368	-		4	SCREW ISO4762 M6X16 A4	
400	312605-0316	-		2	HEXAGON NUT, M6M M6 A280	
410	315105-0146	-		6	WASHER ISO 7089-5-200 HV-A4	
420	315105-0153	-		4	WASHER ISO 7089-6-200 HV-A4	
430	315105-0165	-		2	WASHER ISO 7089-8-200 HV-A4	
440	352103-0106	-		1	CABLE GLAND, ST 11, PR18,6/PG11	
450	312105-0293	-		3	SCREW M6S ISO 4017 M4X16 A480	
460	315105-0136	-		3	WASHER ISO 7089-4-200 HV-A4	
470	90243-0133	-		1	CONTAINER	
480	90287-0316	-		5	SCREW	
MB115	90044-0139	B		1	KEY SAF.SW. AZ16-02 ZVR K-2254	

Pos	Part No	SP	UN	Qty	Description	Page No

Machine Type	Group Description	Used-In	Group Number	Page No

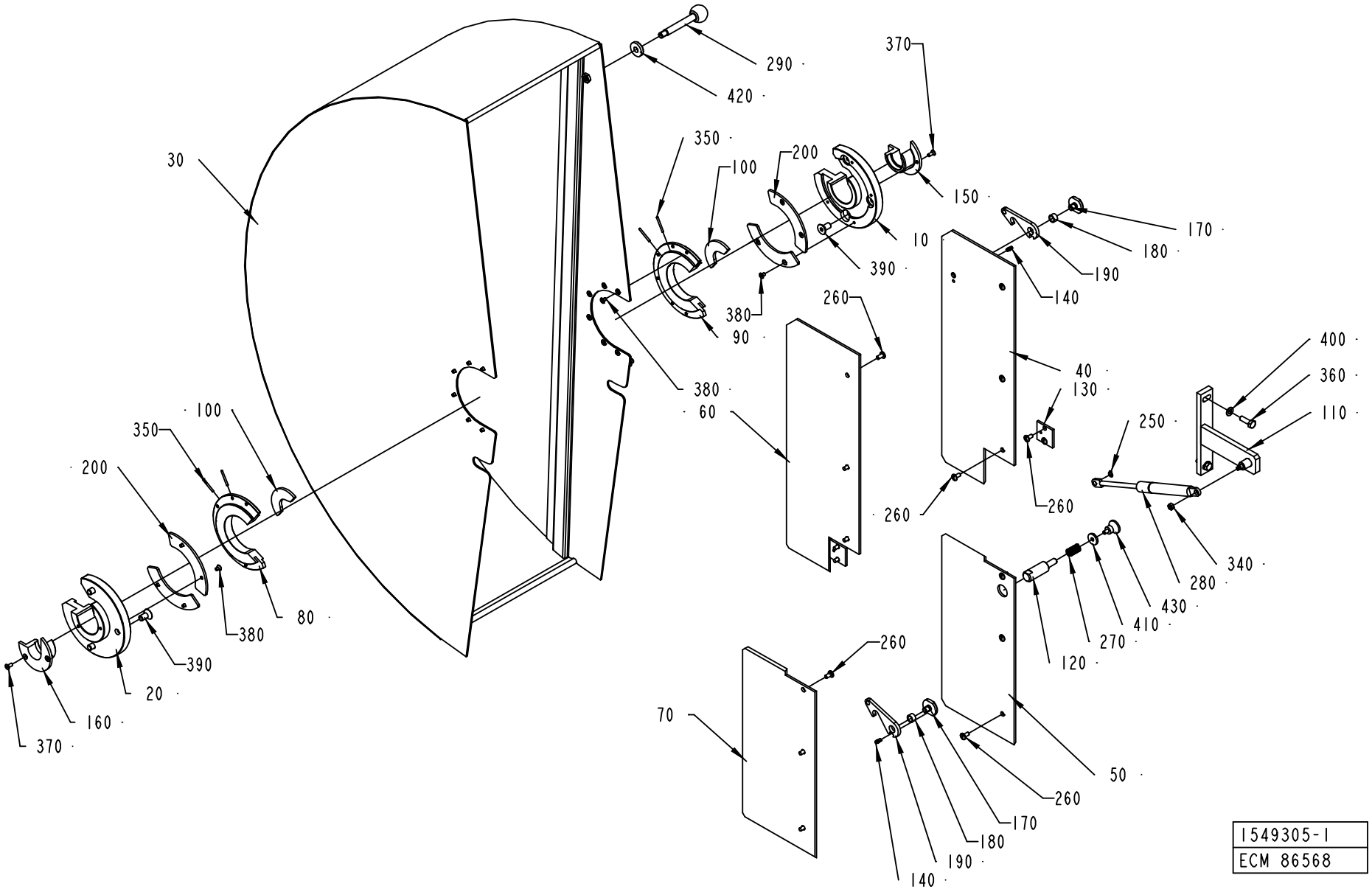
290
420
370
350
100
200
150
30
10
170
180
190
140
390
380
90
260
400
360
110
250
40
130
380
60
260
260
340
280
430
410
270
120
260
70
50
260
170
180
190
140
370
160
20
390
380
80
100
350
200
1549305-1
ECM 86568

ECM: 86576 - 20020111
Group number: 1549305-0100
Assembly Drawing: 1549305-1_1_AA

Pos	Part No	SP	UN	Qty	Description	Page No
-						
010	1549297-0000	-		1	REEL HOLDER	
020	1549298-0000	-		1	REEL HOLDER	
030	1549306-0000	-		1	COVER	
040	1549476-0000	-		1	PLATE	
050	1549477-0000	-		1	PLATE	
060	1549478-0000	-		1	PLATE	
070	1549479-0000	-		1	PLATE	
080	1549481-0000	-		1	REEL HOLDER	
090	1549482-0000	-		1	REEL HOLDER	
100	1549491-0000	-		2	REEL HOLDER	
110	1549492-0000	-		1	HOLDER	
120	1558313-0000	-		1	SHAFT	
130	1558314-0000	-		2	BRACKET	
140	1013-0000	-		2	SHAFT	
150	440252-0000	-		1	SLEEVE	
160	440253-0000	-		1	SLEEVE	
170	440271-0000	-		2	SCREW	
180	457358-0000	-		2	SLEEVE	
190	476117-0000	-		2	CATCH	
200	2508118-0000	-		4	FIXING RING	
250	90141-0015	-		1	RETAIN. RING, 8	
260	90287-0075	-		16	SCREW SLOT. PAN HEAD LKCS M6X12	
270	90335-0036	-		1	COMP. SPRING 22450, 1,6X14,1X24	
280	90347-0108	-		1	GAS SPRING NO. 03-08-100-084174	
290	90458-1226	-		1	HANDLE, NO. GN 310-12-100-A-NI	
340	312605-0316	-		8	HEXAGON NUT, M6M M6 A280	
350	311103-0242	-		4	PARALLELL PIN, M6, 3X30 MM	
360	312105-0453	-		4	SCREW M6S ISO 4017 M8X25 A480	
370	312155-0327	-		4	SCREW EN 10642 MF6S M5X12 A480	
380	312155-0323	-		20	SCREW EN 10642 MF6S M5X8 A480	
390	312155-0491	-		6	SCREW EN 10642 MF6S M10X20 A480	
400	315105-0165	-		2	WASHER ISO 7089-8-200 HV-A4	
410	315125-0153	-		1	WASHER TBRSB 6,4X22X4 A4	
420	315125-0173	-		1	WASHER TBRSB 10,5X28X6 A4	
430	318871-0104	-		1	KNOB CIRCULAR, EXT THREAD, NO. 8302-6118	

Pos	Part No	SP	UN	Qty	Description	Page No

Machine Type	Group Description	Used-In	Group Number	Page No

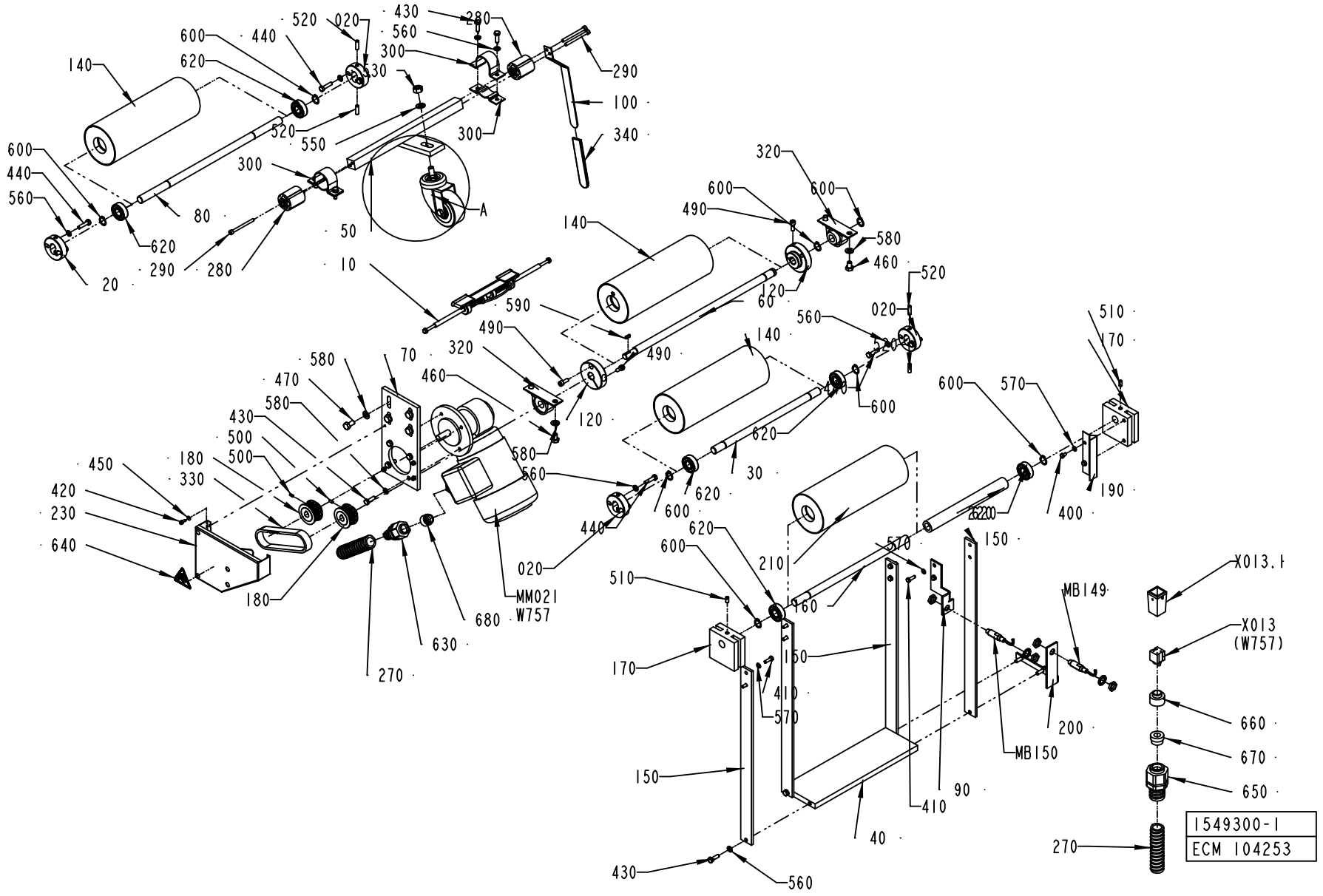
140
600
620
520
020
440
430
560
300
280
530
290
100
340
550
A
80
50
10
20
290
280
620
600
440
560
300
320
600
490
580
460
520
120
60
590
140
490
560
020
510
170
600
570
620
600
30
620
600
190
400
150
620
600
510
210
160
570
MB149
X013.1
X013
(W757)
660
670
650
1549300-1
ECM 104253
270
150
410
570
200
MB150
90
40
430
560
580
470
580
430
500
500
180
330
450
420
230
640
180
70
320
460
120
580
560
440
020
MM021
W757
680
630
270

ECM: 112108 - 20030113
Group number: 1549300-0100
Assembly Drawing: 1549300-1_1_AB

This list covers pages from 602 to 605

Pos	Part No	SP	UN	Qty	Description	Page No
-						
010	577800-0200	-		1	PAPER GUIDE	**607**
020	1549301-0000	-		4	BEARING	
030	1549302-0000	-		1	SHAFT	
040	1549303-0000	-		1	PLATE	
050	1549304-0000	-		1	ARM	
060	2501613-0000	-		1	SHAFT	
070	1549307-0000	-		1	BRACKET	
080	1549474-0000	-		1	SHAFT	
090	1549475-0000	-		1	BRACKET	
100	1549493-0000	-		1	HANDSPIKE	
110	1558319-0000	-		2	BUSHING	
120	2501362-0000	-		2	CLAMP RING	
130	266710-0000	A		1	USE NEW PART 2555116 WHEEL	
140	574932-0000	-		3	BENDING ROLLER	
150	2525340-0000	-		4	BRACKET	
160	574937-0000	-		1	SHAFT	
170	574940-0000	-		2	BLOCKING PIECE	
180	574945-0000	-		2	TOOTHED PULLY	
190	574946-0000	-		1	FLAG	
200	576274-0000	-		1	BRACKET	
210	979555-0000	-		1	WEB TENSION ROLLER	
220	979946-0000	-		1	STEEL TUBE	
230	2509543-0000	-		1	PROTECTION	
270	90152-0051	-	M	3	SPIRAL CONDUIT, 25X18, UL 1816	
280	90458-1240	B		2	RUBBERSPRING DK-A 15X40	
290	90458-0058	-		4	SCREW M5X60 A280	
300	90458-1230	B		2	CLAMPING ELEMENT, DI=36 MM	
310	90458-1231	-		1	FORK HOLDER 913588/04	
320	90458-1232	-		2	BEARING BRACKET AY15	
330	90458-1233	A		1	TIMING BELT AT10 340X16 MM	
340	90458-1234	-		1	PROTECTIVE CAP 2X20X1.2X100	
400	312101-0323	-		2	SCREW M6S M5X8 FZB	
410	312105-0329	-		8	SCREW M6S ISO 4017 M5X16 A480	
420	312115-0287	-		4	SCREW ISO4762 M4X8 A4	
430	312105-0370	-		12	SCREW M6S ISO 4017 M6X20 A480	
440	312105-0372	-		8	SCREW M6S ISO 4017 M6X25 A480	
450	315105-0136	-		4	WASHER ISO 7089-4-200 HV-A4	
460	312105-0447	-		4	SCREW M6S ISO 4017 M8X12 A480	
470	312105-0449	-		4	SCREW M6S ISO 4017 M8X16 A480	
480	312115-0495	-		1	SCREW ISO4762 M10X30 A4	
490	312115-0368	-		3	SCREW ISO4762 M6X16 A4	
500	312318-0287	-		2	SCREW ISO4029 M4X8 A4	
510	312318-0366	-		2	SCREW ISO4029 M6X12 A4	
520	312318-0370	-		8	SCREW ISO4029 M6X20 A4	
530	312605-0320	-		1	HEXAGON NUT, M6M M10 A280	
540	312625-0320	-		1	HEXAGON THIN NUT, EN 24035 ML6M M10 A4	
550	315105-0171	-		1	WASHER PLAIN, BRB, 10/18,H=2	
560	315105-0153	-		20	WASHER ISO 7089-6-200 HV-A4	
570	315105-0146	-		10	WASHER ISO 7089-5-200 HV-A4	
580	315105-0165	-		8	WASHER ISO 7089-8-200 HV-A4	
590	315705-0166	-		1	PARALLEL KEY W. ROUND ENDS 4X4X12 MM	
600	315751-0112	-		8	RETAIN. RING, 15	
610	321308-0202	A		2	BALL BEARING, 2 SEALS, 15X32X9 MM	
620	321313-0102	A		6	BALL BEARING, 2 SEALS, 15X35X11 MM	
630	353247-0008	-		2	GLAND, PG13,5, 15254P13S05UL16	
640	359705-0001	A		1	WARNING SIGN ISO, ENTAGLEMENT	
650	353243-0005	-		1	EXTENDED WITHOUT INSERT, PG16	
660	90089-0007	-		1	REDUCING SLEEVE, PR18,6/PR22,5	
670	353249-0013	-		1	INSERT, SINGEL HOLE, EK 154/13	
MB149	90458-0675	A		1	PROXIMITY SENSOR, E2EG-X5MB1-5M	
MB150	90458-0675	A		1	PROXIMITY SENSOR, E2EG-X5MB1-5M	
MM021	90069-0600	A		1	GEARS, WORM MOTOR ODM90-60KE5	
W757	90220-0104	-	M	3	SCR. CABLE 4X1,5MM2	
X013	90110-0295	-		1	CONNECTOR 4 POLE + EARTH	
X013.1	90110-0371	-		1	PLUG HOOD	

Machine Type | Group Description | Used-In | Group Number | Page No

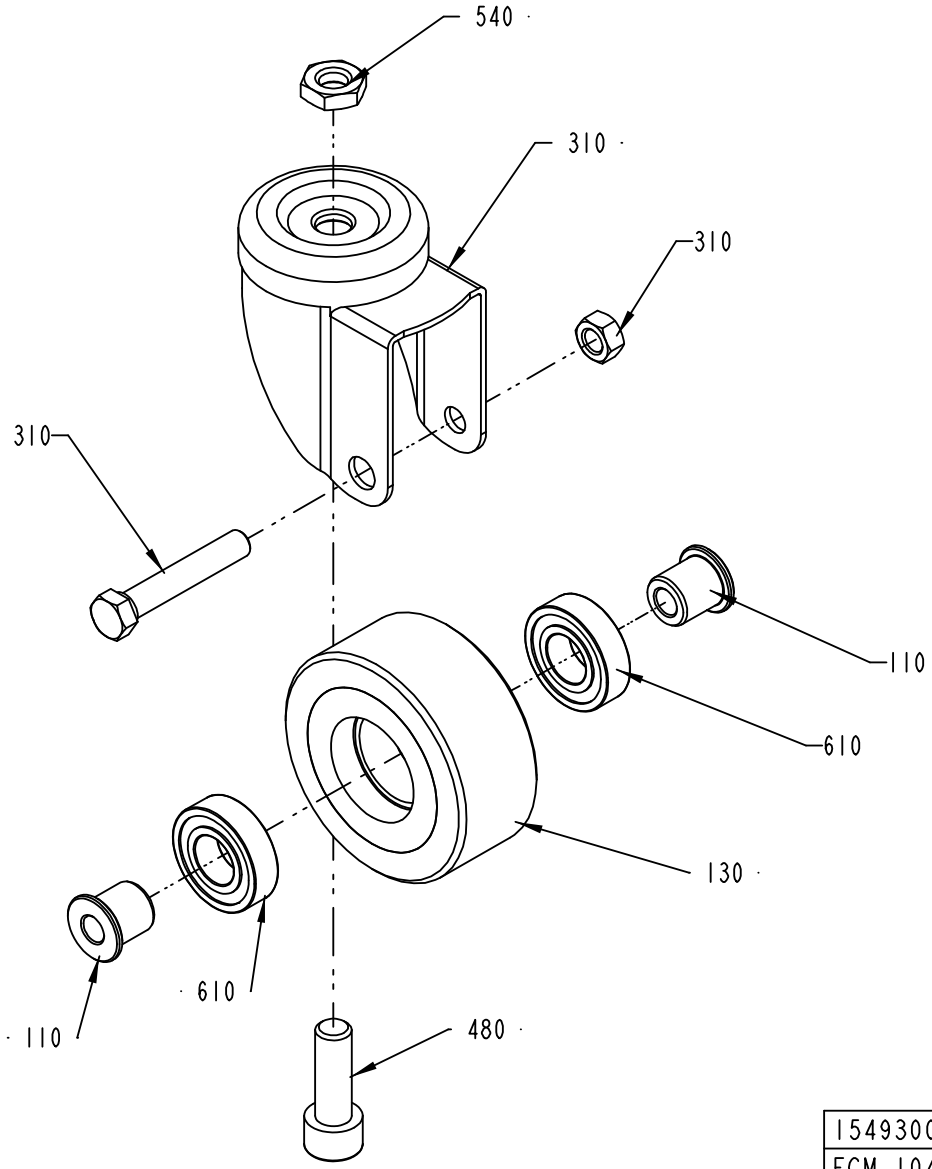

1549300-1
ECM 104253

DETAIL A

ECM: 112108 - 20030113
Group number: 1549300-0100
Assembly Drawing: 1549300-1_2_AB

This list covers pages from 602 to 605

Pos	Part No	SP	UN	Qty	Description	Page No
-						
010	577800-0200	-		1	PAPER GUIDE	**607**
020	1549301-0000	-		4	BEARING	
030	1549302-0000	-		1	SHAFT	
040	1549303-0000	-		1	PLATE	
050	1549304-0000	-		1	ARM	
060	2501613-0000	-		1	SHAFT	
070	1549307-0000	-		1	BRACKET	
080	1549474-0000	-		1	SHAFT	
090	1549475-0000	-		1	BRACKET	
100	1549493-0000	-		1	HANDSPIKE	
110	1558319-0000	-		2	BUSHING	
120	2501362-0000	-		2	CLAMP RING	
130	266710-0000	A		1	USE NEW PART 2555116 WHEEL	
140	574932-0000	-		3	BENDING ROLLER	
150	2525340-0000	-		4	BRACKET	
160	574937-0000	-		1	SHAFT	
170	574940-0000	-		2	BLOCKING PIECE	
180	574945-0000	-		2	TOOTHED PULLY	
190	574946-0000	-		1	FLAG	
200	576274-0000	-		1	BRACKET	
210	979555-0000	-		1	WEB TENSION ROLLER	
220	979946-0000	-		1	STEEL TUBE	
230	2509543-0000	-		1	PROTECTION	
270	90152-0051	-	M	3	SPIRAL CONDUIT, 25X18, UL 1816	
280	90458-1240	B		2	RUBBERSPRING DK-A 15X40	
290	90458-0058	-		4	SCREW M5X60 A280	
300	90458-1230	B		2	CLAMPING ELEMENT, DI=36 MM	
310	90458-1231	-		1	FORK HOLDER 913588/04	
320	90458-1232	-		2	BEARING BRACKET AY15	
330	90458-1233	A		1	TIMING BELT AT10 340X16 MM	
340	90458-1234	-		1	PROTECTIVE CAP 2X20X1.2X100	
400	312101-0323	-		2	SCREW M6S M5X8 FZB	
410	312105-0329	-		8	SCREW M6S ISO 4017 M5X16 A480	
420	312115-0287	-		4	SCREW ISO4762 M4X8 A4	
430	312105-0370	-		12	SCREW M6S ISO 4017 M6X20 A480	
440	312105-0372	-		8	SCREW M6S ISO 4017 M6X25 A480	
450	315105-0136	-		4	WASHER ISO 7089-4-200 HV-A4	
460	312105-0447	-		4	SCREW M6S ISO 4017 M8X12 A480	
470	312105-0449	-		4	SCREW M6S ISO 4017 M8X16 A480	
480	312115-0495	-		1	SCREW ISO4762 M10X30 A4	
490	312115-0368	-		3	SCREW ISO4762 M6X16 A4	
500	312318-0287	-		2	SCREW ISO4029 M4X8 A4	
510	312318-0366	-		2	SCREW ISO4029 M6X12 A4	
520	312318-0370	-		8	SCREW ISO4029 M6X20 A4	
530	312605-0320	-		1	HEXAGON NUT, M6M M10 A280	
540	312625-0320	-		1	HEXAGON THIN NUT, EN 24035 ML6M M10 A4	
550	315105-0171	-		1	WASHER PLAIN, BRB, 10/18,H=2	
560	315105-0153	-		20	WASHER ISO 7089-6-200 HV-A4	
570	315105-0146	-		10	WASHER ISO 7089-5-200 HV-A4	
580	315105-0165	-		8	WASHER ISO 7089-8-200 HV-A4	
590	315705-0166	-		1	PARALLEL KEY W. ROUND ENDS 4X4X12 MM	
600	315751-0112	-		8	RETAIN. RING, 15	
610	321308-0202	A		2	BALL BEARING, 2 SEALS, 15X32X9 MM	
620	321313-0102	A		6	BALL BEARING, 2 SEALS, 15X35X11 MM	
630	353247-0008	-		2	GLAND, PG13,5, 15254P13S05UL16	
640	359705-0001	A		1	WARNING SIGN ISO, ENTAGLEMENT	
650	353243-0005	-		1	EXTENDED WITHOUT INSERT, PG16	
660	90089-0007	-		1	REDUCING SLEEVE, PR18,6/PR22,5	
670	353249-0013	-		1	INSERT, SINGEL HOLE, EK 154/13	
MB149	90458-0675	A		1	PROXIMITY SENSOR, E2EG-X5MB1-5M	
MB150	90458-0675	A		1	PROXIMITY SENSOR, E2EG-X5MB1-5M	
MM021	90069-0600	A		1	GEARS, WORM MOTOR ODM90-60KE5	
W757	90220-0104	-	M	3	SCR. CABLE 4X1,5MM2	
X013	90110-0295	-		1	CONNECTOR 4 POLE + EARTH	
X013.1	90110-0371	-		1	PLUG HOOD	

Machine Type | Group Description | Used-In | Group Number | Page No

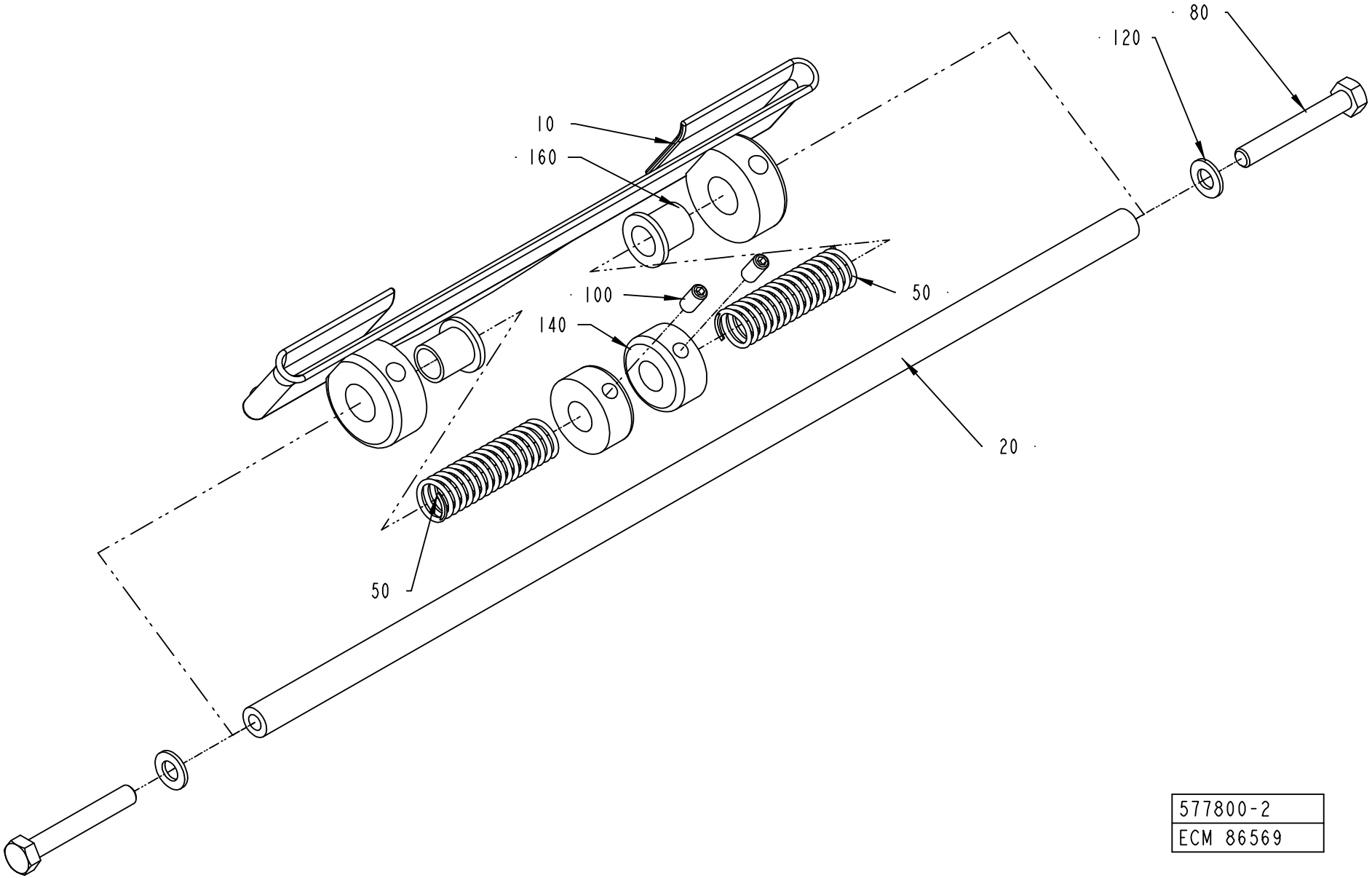

577800-2
ECM 86569

ECM: 112927 - 20020731
Group number: 577800-0200
Assembly Drawing: 577800-2_1_AA

Pos	Part No	SP	UN	Qty	Description	Page No
TBA 0125S, TBA 0100B						
010	578685-0000	A		1	GUIDING ARBOR	
	315742-0106	-		*2*	*COLLAR, 10/25, H=10*	
TBA 0160S, TBA 0200S						
010	577798-0000	A		1	GUIDING ARBOR	
	315742-0106	-		*2*	*COLLAR, 10/25, H=10*	
TBA 0250S, TBA 0200M						
010	578687-0000	A		1	GUIDING ARBOR	
	315742-0106	-		*2*	*COLLAR, 10/25, H=10*	
TBA 0330S, TBA 0300S, TBA 0180B, TBA 0200B, TBA 0284B, TBA 0250B						
010	578686-0000	A		1	GUIDING ARBOR	
	315742-0106	-		*2*	*COLLAR, 10/25, H=10*	
Common Parts						
020	577799-0000	-		1	SHAFT	
050	752085-0000	A		2	SPRING	
080	312105-0337	-		2	SCREW M6S ISO 4014 M5X35 A480	
100	312318-0287	-		2	SCREW ISO4029 M4X8 A4	
120	315105-0146	-		2	WASHER ISO 7089-5-200 HV-A4	
140	315742-0104	-		2	COLLAR, 8/20, H=9	
160	90240-0121	A		2	FLANGE BUSHING, 8X10X12 MM	

Pos	Part No	SP	UN	Qty	Description	Page No

This page is intentionally left blank.

ECM: 104335 - 20030113
Group number: 579241-0200
Assembly Drawing:

Pos	Part No	SP	UN	Qty	Description	Page No
NOPT TBA 0100B, NOPT TBA 0200M, NOPT TBA 0200S, NOPT TBA 0125S, NOPT TBA 0160S, NOPT TBA 0250S, PT19 TBA 0125S, PT19 TBA 0160S, PT19 TBA 0180B, PT19 TBA 0200B, PT19 TBA 0100B, PT19 TBA 0250S, PT19 TBA 0284B, PT19 TBA 0300S, PT19 TBA 0330S, PT19 TBA 0200M, PT19 TBA 0200S, PT19 TBA 0250B						
040	752646-0400	-		1	DATING UNIT	**611, 613, 615**
NOPT TBA 0180B, NOPT TBA 0200B, NOPT TBA 0250B, NOPT TBA 0330S, NOPT TBA 0284B, NOPT TBA 0300S						
030	752645-0400	-		1	DATING UNIT	**631, 633**

Pos	Part No	SP	UN	Qty	Description	Page No

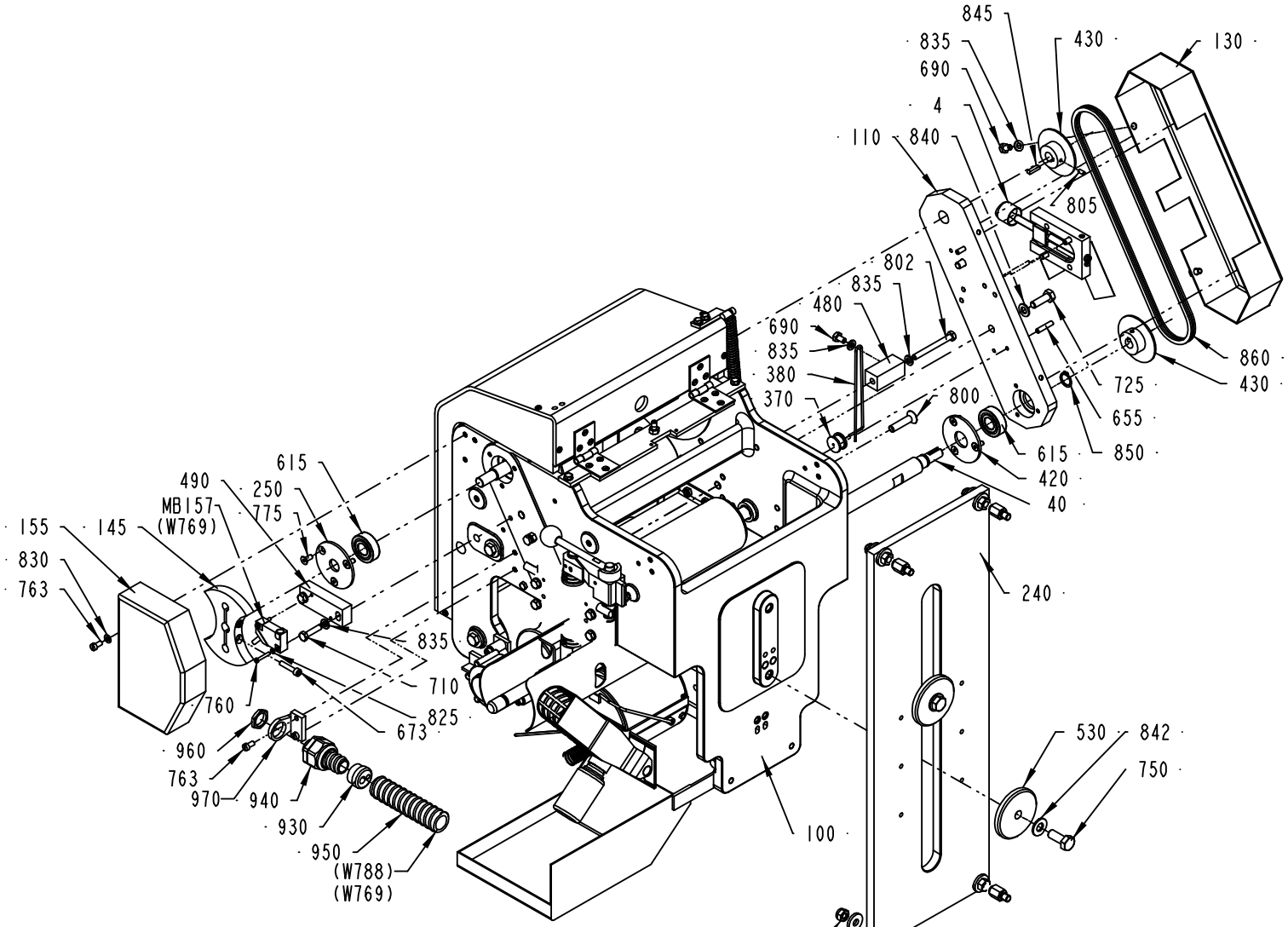

752646-6
ECM 104253

ECM: 104337 - 20030113
Group number: 752646-0400
Assembly Drawing: 752646-6_1_AB

This list covers pages from 610 to 615

Pos	Part No	SP	UN	Qty	Description	Page No
TBA 0100B						
010	752542-0002	D		1	BENDING ROLLER	
020	752543-0002	D		1	SHAFT	
030	456327-0000	D		2	CREASE BAR	
040	752536-0002	D		1	SHAFT	
050	979769-0000	D		2	SPACER	
060	456334-0000	D		1	SHAFT	
070	90166-0059	C	MM	37	HOSE PVC 12/16MM TRANSP.	
075	90166-0059	C	MM	37	HOSE PVC 12/16MM TRANSP.	
520	752541-0000	-		1	CANTILEVER	
670	311103-0357	-		1	PARALLELL PIN, M6, 6X30 MM	
735	312105-0457	-		1	SCREW M6S ISO 4014 M8X35 A480	
TBA 0125S						
010	752542-0002	D		1	BENDING ROLLER	
020	752543-0002	D		1	SHAFT	
030	456327-0000	D		2	CREASE BAR	
040	752536-0002	D		1	SHAFT	
050	441556-0007	D		2	SPACER	
060	456334-0000	D		1	SHAFT	
070	90166-0059	C	MM	37	HOSE PVC 12/16MM TRANSP.	
075	90166-0059	C	MM	37	HOSE PVC 12/16MM TRANSP.	
520	752541-0000	-		1	CANTILEVER	
670	311103-0357	-		1	PARALLELL PIN, M6, 6X30 MM	
735	312105-0457	-		1	SCREW M6S ISO 4014 M8X35 A480	
TBA 0160S						
010	752542-0002	D		1	BENDING ROLLER	
020	752543-0002	D		1	SHAFT	
030	441554-0000	D		2	CREASE BAR	
040	752536-0001	D		1	SHAFT	
040	752536-0002	D		1	SHAFT	
050	441556-0011	D		2	SPACER	
060	456334-0000	D		1	SHAFT	
070	90166-0059	C	MM	37	HOSE PVC 12/16MM TRANSP.	
075	90166-0059	C	MM	37	HOSE PVC 12/16MM TRANSP.	
520	752541-0000	-		1	CANTILEVER	
670	311103-0357	-		1	PARALLELL PIN, M6, 6X30 MM	
735	312105-0457	-		1	SCREW M6S ISO 4014 M8X35 A480	
TBA 0180B						
010	752542-0001	D		1	BENDING ROLLER	
020	752543-0001	D		1	SHAFT	
030	456767-0000	D		2	CREASE BAR	
040	752536-0001	-		1	SHAFT	
050	441556-0006	D		2	SPACER	
060	256400-0000	D		1	SHAFT	
070	90166-0059	C	MM	24	HOSE PVC 12/16MM TRANSP.	
075	90166-0059	C	MM	24	HOSE PVC 12/16MM TRANSP.	
520	752541-0000	-		1	CANTILEVER	
670	311103-0357	-		1	PARALLELL PIN, M6, 6X30 MM	
735	312105-0457	-		1	SCREW M6S ISO 4014 M8X35 A480	
TBA 0200B						
010	752542-0001	D		1	BENDING ROLLER	
020	752543-0001	D		1	SHAFT	
030	456767-0000	D		2	CREASE BAR	
040	752536-0001	D		1	SHAFT	
050	441556-0004	D		2	SPACER	
060	256400-0000	D		1	SHAFT	
070	90166-0059	C	MM	24	HOSE PVC 12/16MM TRANSP.	
075	90166-0059	C	MM	24	HOSE PVC 12/16MM TRANSP.	
520	752541-0000	-		1	CANTILEVER	
670	311103-0357	-		1	PARALLELL PIN, M6, 6X30 MM	
735	312105-0457	-		1	SCREW M6S ISO 4014 M8X35 A480	
TBA 0200M						
010	752542-0003	D		1	BENDING ROLLER	
020	752543-0003	D		1	SHAFT	
030	441554-0000	D		2	CREASE BAR	
040	752536-0003	D		1	SHAFT	
050	441556-0002	D		2	SPACER	
060	574443-0000	-		1	SHAFT	
070	90166-0059	C	MM	30	HOSE PVC 12/16MM TRANSP.	
075	90166-0059	C	MM	30	HOSE PVC 12/16MM TRANSP.	
080	574444-0000	-		1	SPACER	
520	574445-0000	-		1	CANTILEVER	
670	311103-0361	-		1	PARALLELL PIN, M6, 6X40 MM	
736	312105-0460	-		1	SCREW M6S ISO 4014 M8X45 A480	
TBA 0200S						
010	752542-0002	D		1	BENDING ROLLER	
020	752543-0002	D		1	SHAFT	
030	441554-0000	D		2	CREASE BAR	

Machine Type | Group Description | Used-In | Group Number | Page No

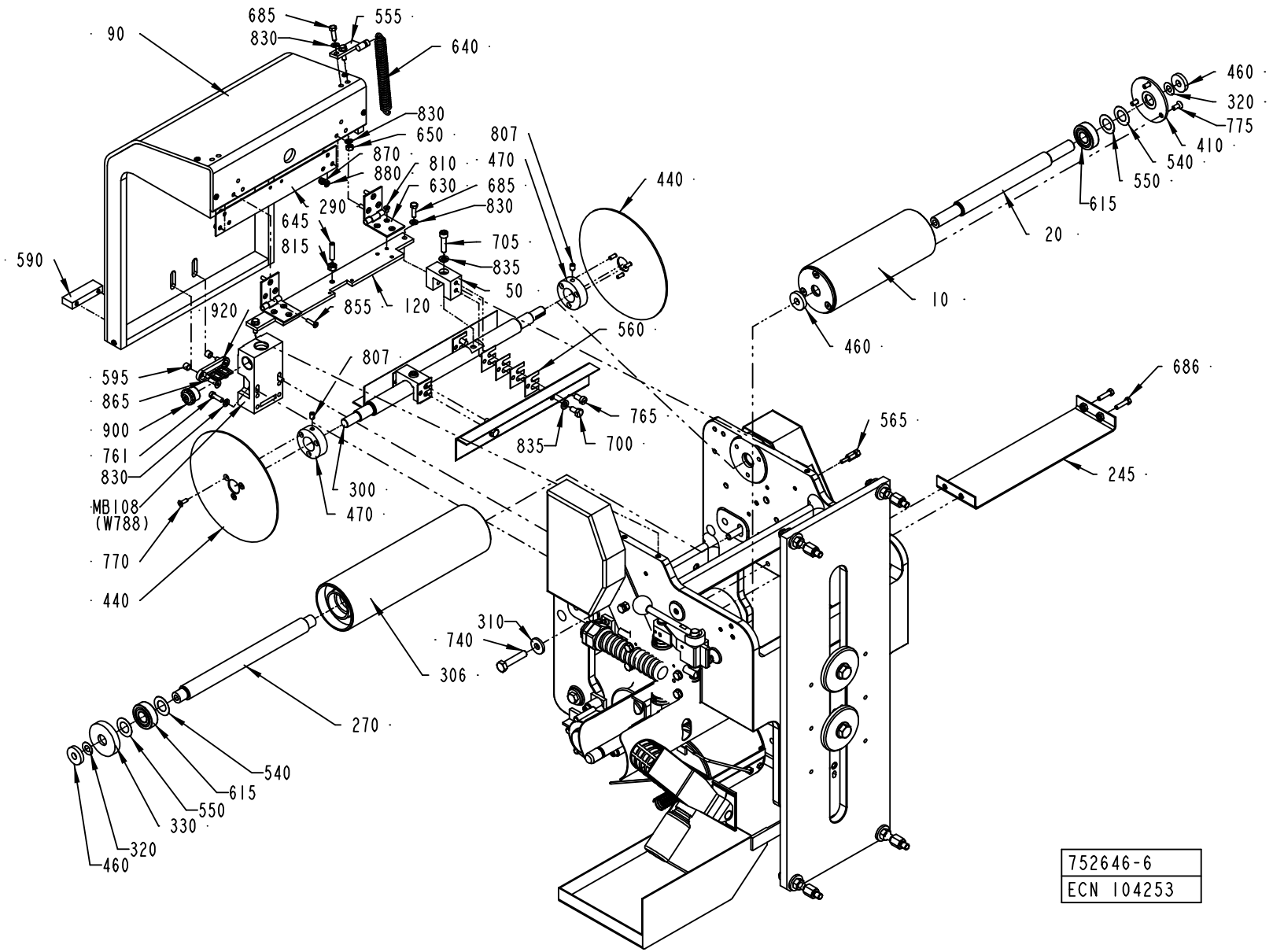

752646-6
ECN 104253

Pos	Part No	SP	UN	Qty	Description	Page No
TBA 0200S (Cont'd)						
040	752536-0002	D		1	SHAFT	
050	441556-0009	D		2	SPACER	
060	456334-0000	D		1	SHAFT	
070	90166-0059	C	MM	37	HOSE PVC 12/16MM TRANSP.	
075	90166-0059	C	MM	37	HOSE PVC 12/16MM TRANSP.	
520	752541-0000	-		1	CANTILEVER	
670	311103-0357	-		1	PARALLELL PIN, M6, 6X30 MM	
735	312105-0457	-		1	SCREW M6S ISO 4014 M8X35 A480	
TBA 0250B						
010	752542-0001	D		1	BENDING ROLLER	
020	752543-0001	D		1	SHAFT	
030	456767-0000	D		2	CREASE BAR	
040	752536-0001	D		1	SHAFT	
050	441556-0002	D		2	SPACER	
060	256400-0000	D		1	SHAFT	
065	299643-0000	-		2	WASHER	
070	90166-0059	C	MM	24	HOSE PVC 12/16MM TRANSP.	
075	90166-0059	C	MM	24	HOSE PVC 12/16MM TRANSP.	
520	752541-0000	-		1	CANTILEVER	
670	311103-0357	-		1	PARALLELL PIN, M6, 6X30 MM	
735	312105-0457	-		1	SCREW M6S ISO 4014 M8X35 A480	
TBA 0250S						
010	752542-0003	D		1	BENDING ROLLER	
020	752543-0003	D		1	SHAFT	
030	441554-0000	D		2	CREASE BAR	
040	752536-0003	D		1	SHAFT	
050	441556-0010	D		2	SPACER	
060	574443-0000	-		1	SHAFT	
070	90166-0059	C	MM	30	HOSE PVC 12/16MM TRANSP.	
075	90166-0059	C	MM	30	HOSE PVC 12/16MM TRANSP.	
080	574444-0000	-		1	SPACER	
520	574445-0000	-		1	CANTILEVER	
670	311103-0361	-		1	PARALLELL PIN, M6, 6X40 MM	
736	312105-0460	-		1	SCREW M6S ISO 4014 M8X45 A480	
TBA 0330S, TBA 0300S, TBA 0284B						
010	752542-0001	D		1	BENDING ROLLER	
020	752543-0001	D		1	SHAFT	
030	456767-0000	D		2	CREASE BAR	
040	752536-0001	-		1	SHAFT	
050	441556-0001	D		2	SPACER	
060	256400-0000	D		1	SHAFT	
070	90166-0059	C	MM	24	HOSE PVC 12/16MM TRANSP.	
075	90166-0059	C	MM	24	HOSE PVC 12/16MM TRANSP.	
520	752541-0000	-		1	CANTILEVER	
670	311103-0357	-		1	PARALLELL PIN, M6, 6X30 MM	
735	312105-0457	-		1	SCREW M6S ISO 4014 M8X35 A480	
Common Parts						
001	293684-0200	-		2	PRINTING WHEEL NSS	**617, 619**
002	440286-0300	-		1	INK UNIT NSS	**621**
003	751718-0100	-		1	HOLDER	**623**
004	543143-0100	-		1	ADJUSTMENT DEVICE	**625, 627**
005	1549584-0100	-		1	PAPER BRAKE	**629**
090	979790-0000	-		1	COVER	
100	752200-0000	-		1	CANTILEVER	
110	752526-0000	-		1	PLATE	
120	572252-0000	-		1	BRACKET	
130	752528-0000	-		1	COVER	
140	752527-0000	-		1	CANTILEVER	
145	491965-0000	-		1	CAM	
150	979544-0000	-		1	SPLASH PLATE	
155	556422-0000	-		1	PROTECTION	
160	752529-0000	D		1	BEARING COVER	
180	2531115-0000	C		4	SCREW	
240	752539-0000	-		1	PLATE	
245	572460-0000	-		1	SHEET	
250	752240-0000	-		1	LID	
270	752538-0000	D		2	SHAFT	
280	752642-0000	-		1	BRACKET	
290	572253-0000	-		1	SHEET	
300	752535-0000	D		1	SHAFT	
306	979709-0000	D		2	BENDING ROLLER	
310	28036-0000	-		12	WASHER	
320	2033-0011	D		6	WASHER	
330	265568-0000	C		4	DUST COVER	
340	32925-0000	D		1	CARRIER	
350	32926-0000	D		1	ROLL	
360	32927-0000	D		1	SHAFT	
370	33182-0000	C		1	ROLL	
380	752237-0000	C		1	SPRING	

Machine Type Group Description Used-In Group Number Page No

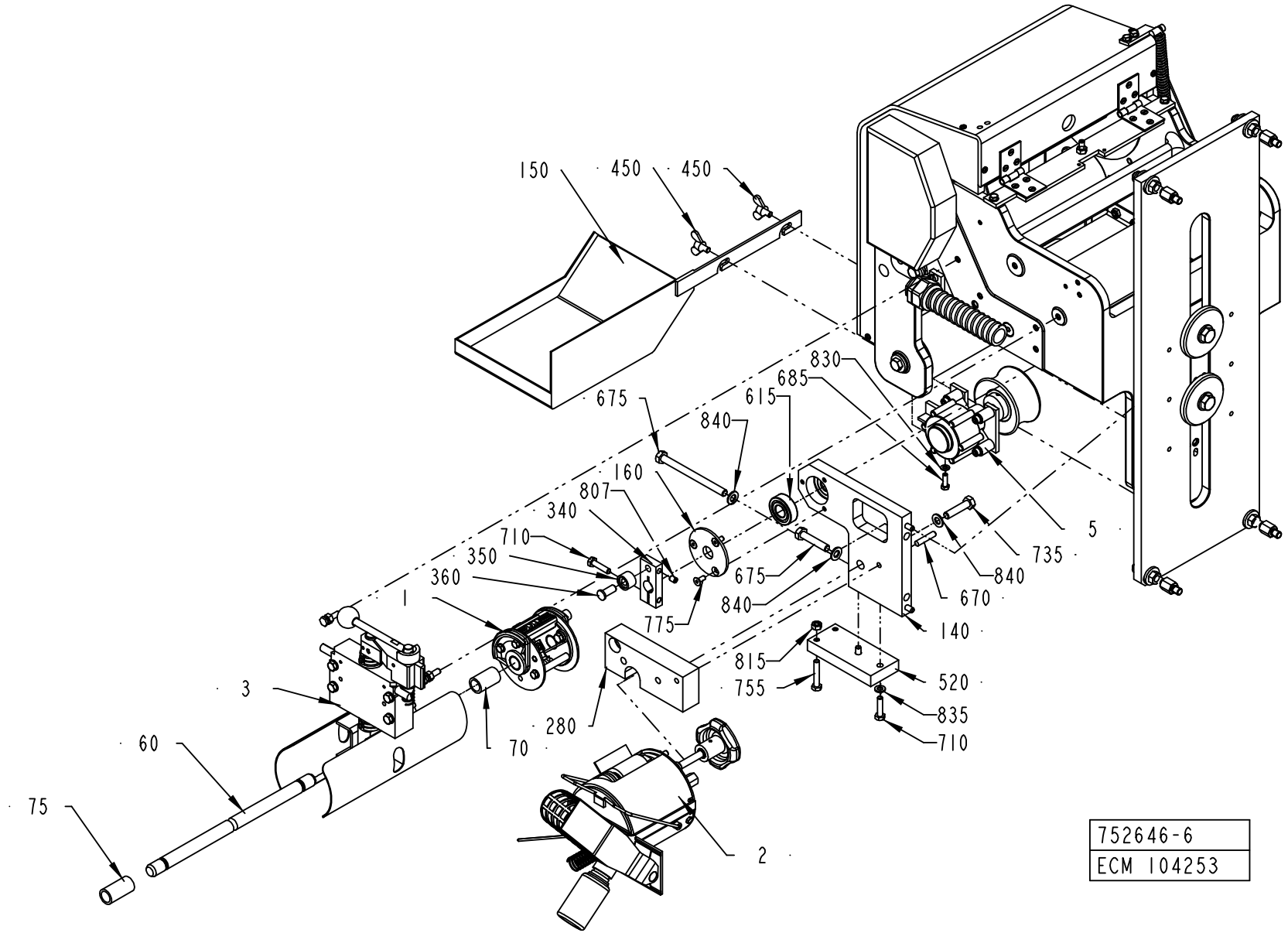
150
450
450
830
685
615
675
840
160
807
340
710
350
360
1
3
60
75
70
280
775
675
840
670
735
5
840
140
815
755
520
835
710
2
752646-6
ECM 104253

ECM: 104337 - 20030113
Group number: 752646-0400
Assembly Drawing: 752646-6_3_AB

This list covers pages from 610 to 615

Pos	Part No	SP	UN	Qty	Description	Page No
Common Parts (Cont'd)						
410	256248-0001	D		2	LID	
420	256398-0000	D		1	LID	
430	752530-0000	C		2	SPROCKET	
440	256406-0000	-		2	GABLE PLATE	
450	752644-0000	-		2	SCREW	
460	256409-0000	-		6	WASHER	
470	257141-0000	-		2	RETAINING RING	
480	752531-0000	-		1	BRACKET	
490	752534-0000	-		1	PLATE	
530	253107-0000	D		2	WASHER	
540	752544-0001	D		6	SHIM	
550	752544-0002	D		6	SHIM	
555	979789-0000	-		1	SPRING HOLDER	
560	456817-0001	C		16	SHIM	
565	979788-0000	-		1	SPRING HOLDER	
590	572254-0000	-		1	HANDLE	
595	572255-0000	-		2	SPACER	
615	90214-0098	C		10	BALL BEARING, 15X35X11 MM	
630	90248-0026	-		2	HINGE, 1703-80X32	
640	90335-0041	-		1	TENSION SPRING 42350, 2X14X68	
645	312318-0372	-		1	SCREW ISO4029 M6X25 A4	
650	312605-0314	-		2	HEXAGON NUT, M6M M5 A280	
655	311103-0312	-		2	PARALLELL PIN, M6, 5X25 MM	
673	312115-0333	-		2	SCREW ISO4762 M5X25 A4	
675	312111-0471	-		1	SCREW HEX.SOCK.HD.MC6S-TT 8X100 88 FZ	
685	312105-0329	-		5	SCREW M6S ISO 4017 M5X16 A480	
686	312105-0331	-		4	SCREW M6S ISO 4017 M5X20 A480	
690	312105-0364	-		3	SCREW M6S ISO 4017 M6X10 A480	
700	312105-0366	-		4	SCREW M6S M6X12 A280	
705	312115-0372	-		2	SCREW ISO4762 M6X25 A4	
710	312105-0372	-		5	SCREW M6S ISO 4017 M6X25 A480	
725	312105-0453	-		2	SCREW M6S ISO 4017 M8X25 A480	
740	312105-0459	-		5	SCREW M6S ISO 4014 M8X40 A480	
750	312105-0493	-		2	SCREW M6S ISO 4017 M10X25 A480	
755	312109-0376	-		1	SCREW M6S ISO 4017 M6X35 A480	
760	312125-0230	-		2	SPåRSKRUV MCS M3X20 SS	
761	312125-0329	-		2	SCREW PAN HEAD MCS M5X16 SS	
763	312125-0325	-		4	SCREW SLOT.PAN HD. MCS 5X10 A480	
765	312125-0366	-		4	SCREW PAN HEAD MCS M6X12 SS	
770	312155-0291	-		6	SCREW EN 10642 MF6S M4X12 A480	
775	312155-0327	-		15	SCREW EN 10642 MF6S M5X12 A480	
800	312155-0457	-		2	SCREW EN 10642 MF6S M8X35 A480	
802	312105-0382	-		1	SCREW M6S ISO 4014 M6X60 A480	
805	312318-0287	-		2	SCREW ISO4029 M4X8 A4	
807	312318-0362	-		3	SCREW ISO4029 M6X8 A4	
810	312145-0285	-		6	SCREW COUNTERS.SLOT.HD. MFS 4X6 SS	
815	312605-0316	-		2	HEXAGON NUT, M6M M6 A280	
820	312605-0318	-		4	HEXAGON NUT, M6M M8 A280	
825	315105-0124	-		2	WASHER ISO 7089-3-200 HV-A4	
830	315105-0146	-		11	WASHER ISO 7089-5-200 HV-A4	
835	315105-0153	-		14	WASHER ISO 7089-6-200 HV-A4	
840	315105-0165	-		5	WASHER ISO 7089-8-200 HV-A4	
842	315105-0173	-		2	WASHER ISO 7089-10-200 HV-A4	
845	315701-0169	C		2	PARALLEL KEY W. ROUND ENDS 4X4X18 MM	
850	315751-0112	C		1	RETAIN. RING, 15	
855	312145-0293	-		6	SCREW COUNTERS.SLOT.HD. MFS 4X16 SS	
860	318207-0168	C		1	ROLLER CHAIN, SINGLE 6MM-168	
865	312155-0329	-		2	SCREW EN 10642 MF6S M5X16 A480	
870	312812-0312	-		6	HEXAGON NUT, NY-LOCK M4 A480	
880	315101-0136	-		6	BRICKA, BRB, 4,3/8 H=0,8	
900	352101-0103	-		1	LEAD-IN, PR18,6/PG11, E-1457518	
910	312812-0318	-		4	HEXAGON NUT, NY-LOCK M8 A480	
920	90044-0310	-		1	KEY FOR SAFETY SWITCH, AZ 15/16 B1	
930	90458-1239	-		1	GLAND, INSERT, MULTI HOLE, 1X9/1X5,5	
940	90457-0146	-		1	EXTENDED WITHOUT INSERT,	
950	90152-0051	-	M	3	SPIRAL CONDUIT, 25X18, UL 1816	
960	90099-0002	-		1	NUT PR 18,6 BRASS	
970	352135-0202	-		1	CLIP, 16 MM, 913.016	
MB108	90044-0139	-		1	KEY SAF.SW. AZ16-02 ZVR K-2254	
MB154	90044-0194	C		1	PROX.SW. IN5329/IN3002-BPKG	

Machine Type | Group Description | Used-In | Group Number | Page No

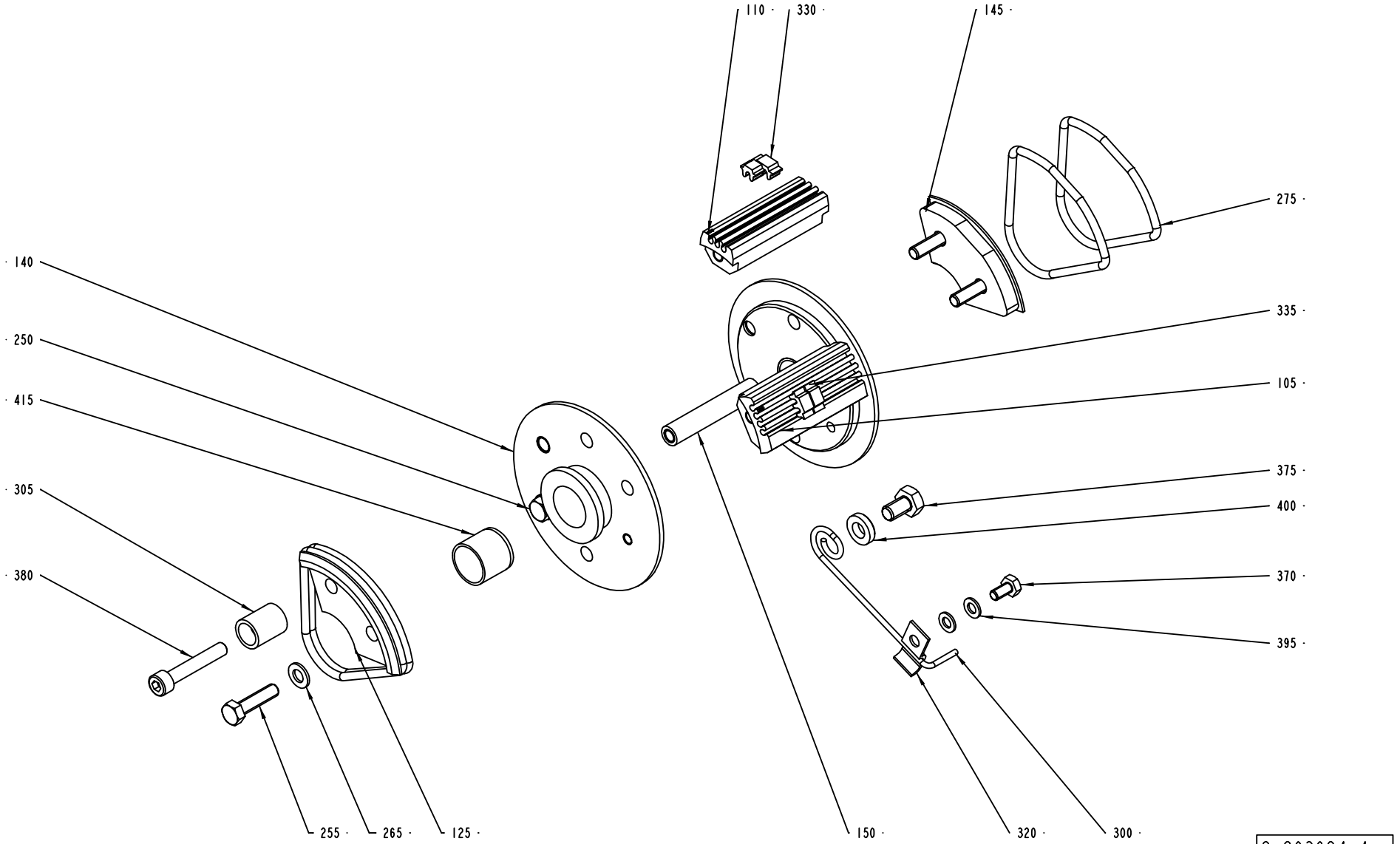
110
330
145
275
140
335
250
105
415
375
305
400
380
370
395
255
265
125
150
320
300
S-293684-4
ECN 73044

Pos	Part No	SP	UN	Qty	Description	Page No
TBA 0284B (See drawing on pages: 616, 618)						
105	293395-0002	A		2	TYPE HOLDER	
110	293395-0001	A		2	TYPE HOLDER	
130	292412-0000	B		1	END SECTION	
135	292413-0000	B		1	END SECTION	
145	293659-0000	B		1	CARRIER	
255	312101-0331	-		7	SCREW M6S M5X20 FZB	
265	315101-0146	-		7	WASHER PLAIN, BRB, 5,3/10 H=1	
285	315202-0304	A		2	O-RING 64,5X3 MM	
410	315202-0305	A		2	O-RING 69,5X3 MM	
TBA 0330S, TBA 0300S, TBA 0180B, TBA 0160S, TBA 0200B, TBA 0189B, TBA 0125S, TBA 0100B, TBA 0250S, TBA 0200S, TBA 0200M, TBA 0250B (See drawing on pages: 616, 618)						
105	293395-0002	A		2	TYPE HOLDER	
110	293395-0001	A		2	TYPE HOLDER	
130	292412-0000	B		1	END SECTION	
135	292413-0000	B		1	END SECTION	
145	293659-0000	B		1	CARRIER	
255	312101-0331	-		7	SCREW M6S M5X20 FZB	
265	315101-0146	-		7	WASHER PLAIN, BRB, 5,3/10 H=1	
285	315202-0304	A		2	O-RING 64,5X3 MM	
410	315202-0305	A		2	O-RING 69,5X3 MM	
Common Parts						
300	32691-0000	B		1	LOCKING SPRING	
305	33011-0000	A		1	SLEEVE	
320	1511572-0000	-		1	CLIP	
330	90413-0043	A		1	CODE INSERT SET	
330	90413-0033	A		1	CODE INSERT SET 0-9	
335	90413-0047	A		1	CODE INSERT SET	
335	90413-0044	A		1	CODE INSERT SET	
370	312101-0287	-		1	SCREW M6S M4X8 FZB	
375	312101-0364	-		1	SCREW M6S M6X10 FZB	
380	312111-0335	-		1	SCREW HEX.SOCK.HD.MC6S-TT 5X30 88 FZB	
395	315101-0136	-		2	BRICKA, BRB, 4,3/8 H=0,8	
400	315111-0153	-		1	WASHER PLAIN, TBRB 6,4/12 H=3	
415	321120-0122	A		2	BEARING BUSHING W/O FL, 15X17X15 MM	

Pos	Part No	SP	UN	Qty	Description	Page No

Volume: TB- 180B. 200B. 200M. 200S. 236B. 250S. 300B.ml
TBA- 100B. 125S. 160S. 180B. 200B. 200M.
TBA- 200S. 250B. 250S. 284B. 300S. 330S.ml
TPA- 250SQ. 330SQ.ml

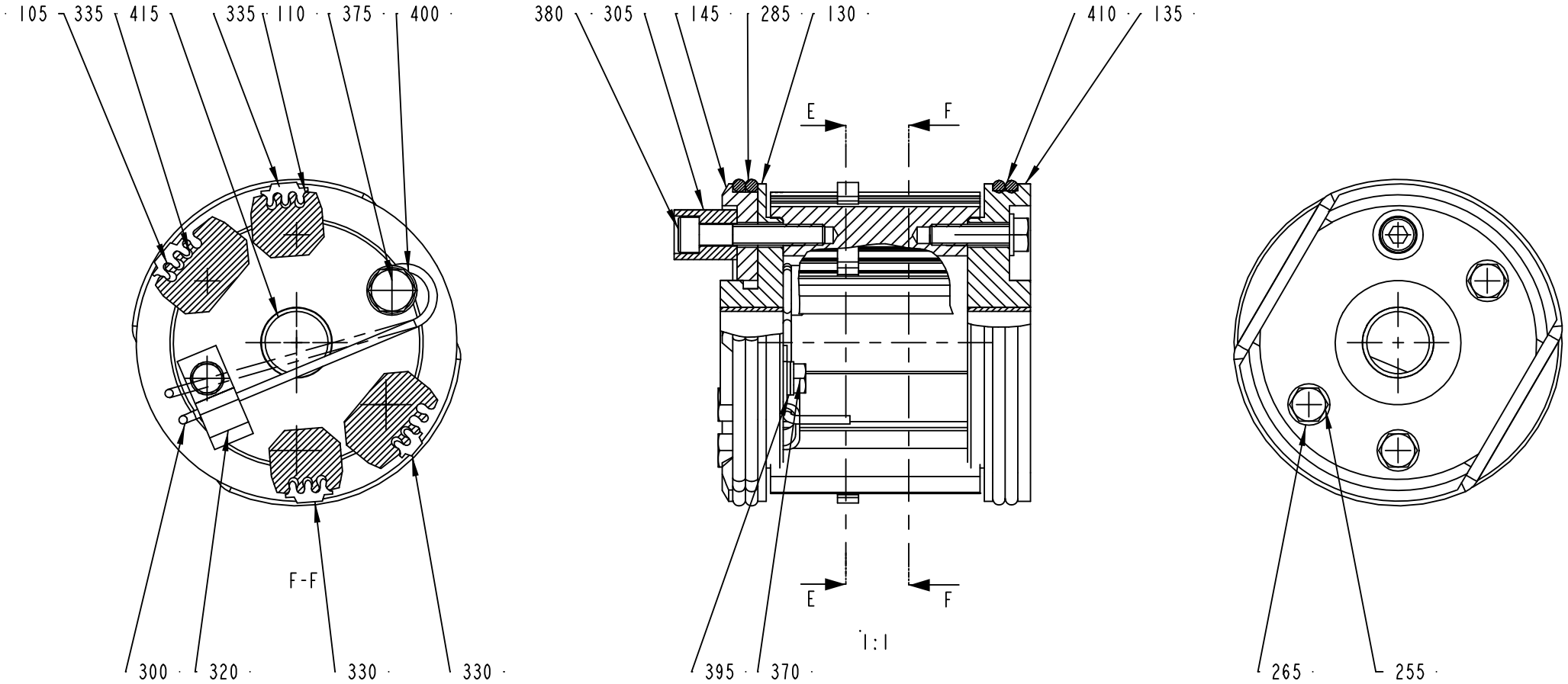

Pos	Part No	SP	UN	Qty	Description	Page No
TBA 0284B (See drawing on pages: 616, 618)						
105	293395-0002	A		2	TYPE HOLDER	
110	293395-0001	A		2	TYPE HOLDER	
130	292412-0000	B		1	END SECTION	
135	292413-0000	B		1	END SECTION	
145	293659-0000	B		1	CARRIER	
255	312101-0331	-		7	SCREW M6S M5X20 FZB	
265	315101-0146	-		7	WASHER PLAIN, BRB, 5,3/10 H=1	
285	315202-0304	A		2	O-RING 64,5X3 MM	
410	315202-0305	A		2	O-RING 69,5X3 MM	
TBA 0330S, TBA 0300S, TBA 0180B, TBA 0160S, TBA 0200B, TBA 0189B, TBA 0125S, TBA 0100B, TBA 0250S, TBA 0200S, TBA 0200M, TBA 0250B (See drawing on pages: 616, 618)						
105	293395-0002	A		2	TYPE HOLDER	
110	293395-0001	A		2	TYPE HOLDER	
130	292412-0000	B		1	END SECTION	
135	292413-0000	B		1	END SECTION	
145	293659-0000	B		1	CARRIER	
255	312101-0331	-		7	SCREW M6S M5X20 FZB	
265	315101-0146	-		7	WASHER PLAIN, BRB, 5,3/10 H=1	
285	315202-0304	A		2	O-RING 64,5X3 MM	
410	315202-0305	A		2	O-RING 69,5X3 MM	
Common Parts						
300	32691-0000	B		1	LOCKING SPRING	
305	33011-0000	A		1	SLEEVE	
320	1511572-0000	-		1	CLIP	
330	90413-0043	A		1	CODE INSERT SET	
330	90413-0033	A		1	CODE INSERT SET 0-9	
335	90413-0047	A		1	CODE INSERT SET	
335	90413-0044	A		1	CODE INSERT SET	
370	312101-0287	-		1	SCREW M6S M4X8 FZB	
375	312101-0364	-		1	SCREW M6S M6X10 FZB	
380	312111-0335	-		1	SCREW HEX.SOCK.HD.MC6S-TT 5X30 88 FZB	
395	315101-0136	-		2	BRICKA, BRB, 4,3/8 H=0,8	
400	315111-0153	-		1	WASHER PLAIN, TBRB 6,4/12 H=3	
415	321120-0122	A		2	BEARING BUSHING W/O FL, 15X17X15 MM	

Pos	Part No	SP	UN	Qty	Description	Page No

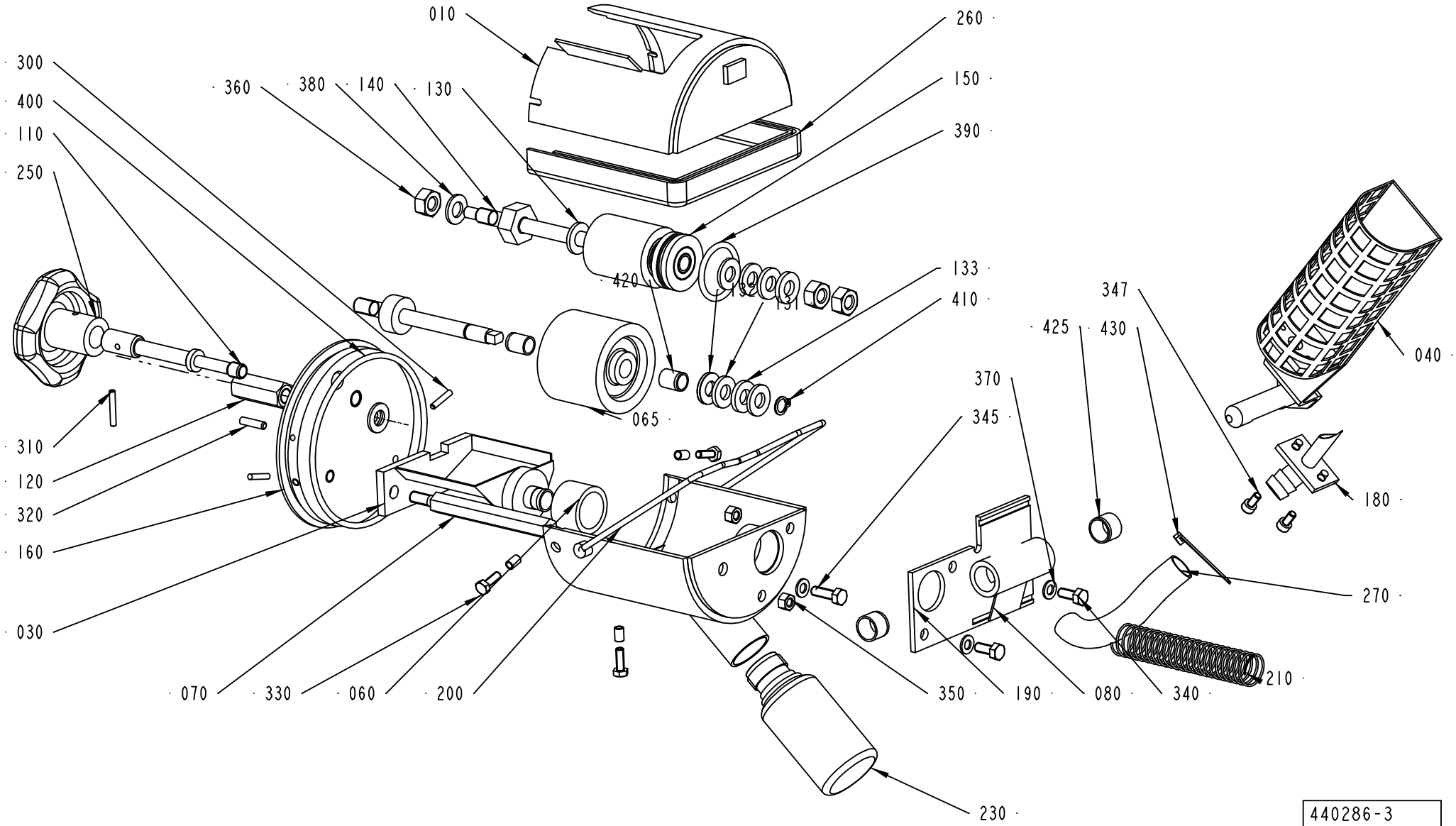
010
260
300
150
360
380
140
130
390
400
110
250
133
420
131
410
347
425
430
040
370
345
065
310
120
320
160
180
270
030
210
070
330
060
200
350
190
080
340
230
440286-3
ECN 95310

ECM: 104523 - 20021112
Group number: 440286-0300
Assembly Drawing: 440286-3_1_AC

Pos	Part No	SP	UN	Qty	Description	Page No
TBA/19						
230	90050-0012	B		1	BOTTLE, 50ML PLASTIC	
Common Parts						
010	440287-0000	-		1	COVER	
030	297211-0000	B		1	INK WELL	
040	476356-0000	B		1	HOLDER FOR INK BOTTLE	
060	445542-0000	B		1	MANTEL RUBBER	
065	450355-0000	A		1	INK ROLLER	
070	33010-0000	B		1	SCREW	
080	35547-0000	B		1	SPRING	
100	292044-0000	A		1	SHAFT	
110	293667-0000	A		1	DOWEL	
120	436927-0000	B		1	NUT	
130	293669-0001	A		4	WASHER	
131	293669-0002	A		2	WASHER	
132	293669-0003	A		2	WASHER	
133	293669-0004	A		2	WASHER	
140	293670-0000	A		1	SHAFT	
150	543135-0000	A		1	INK TRANSFER ROLLER	
	90153-0050	-		*1*	*ADHESIVE, 3M TYPE SCOTCH-WELD 2216 B/A*	
	321120-0100	-		*1*	*BEARING BUSHING W/O FLANGE 8/10X12*	
160	293697-0000	B		1	END SECTION	
180	476354-0000	B		1	CANNULAR TUBE	
190	456773-0000	B		1	PIVOT BRACKET	
200	434747-0000	B		1	BOW CLAMP	
210	537308-0000	B		1	SPRING	
250	90051-0077	-		1	HANDLE	
260	90143-0029	B	MM	295	STRIP	
270	90166-0138	B	MM	100	HOSE	
280	90299-0072	A		48	INK	
300	311103-0236	-		2	PARALLELL PIN, M6, 3X16 MM	
310	311103-0238	-		1	CYLINDERPINNE M6, 3X20 MM	
320	311103-0270	-		1	PARALLELL PIN, M6, 4X16 MM	
330	312105-0291	-		3	SCREW M6S ISO 4017 M4X12 A480	
340	312105-0327	-		2	SCREW M6S ISO 4017 M5X12 A480	
345	312105-0329	-		1	SCREW M6S ISO 4017 M5X16 A480	
347	312115-0287	-		2	SCREW ISO4762 M4X8 A4	
350	312605-0314	-		2	HEXAGON NUT, M6M M5 A280	
360	312605-0318	-		3	HEXAGON NUT, M6M M8 A280	
370	315105-0146	-		3	WASHER ISO 7089-5-200 HV-A4	
380	315105-0165	-		2	WASHER ISO 7089-8-200 HV-A4	
390	315202-0218	A		1	O-RING 26,2X3 MM	
400	315202-0309	A		1	O-RING 89,5X3 MM	
410	315750-0105	-		1	RETAIN. RING, 8	
420	321120-0100	A		2	BEARING BUSHING W/O FLANGE 8/10X12	
425	321120-0109	A		2	BEARING BUSHING W/O FLANGE,12/14X10	
430	352113-0101	-		1	CLIP STRIP, 92X2,5 MM	

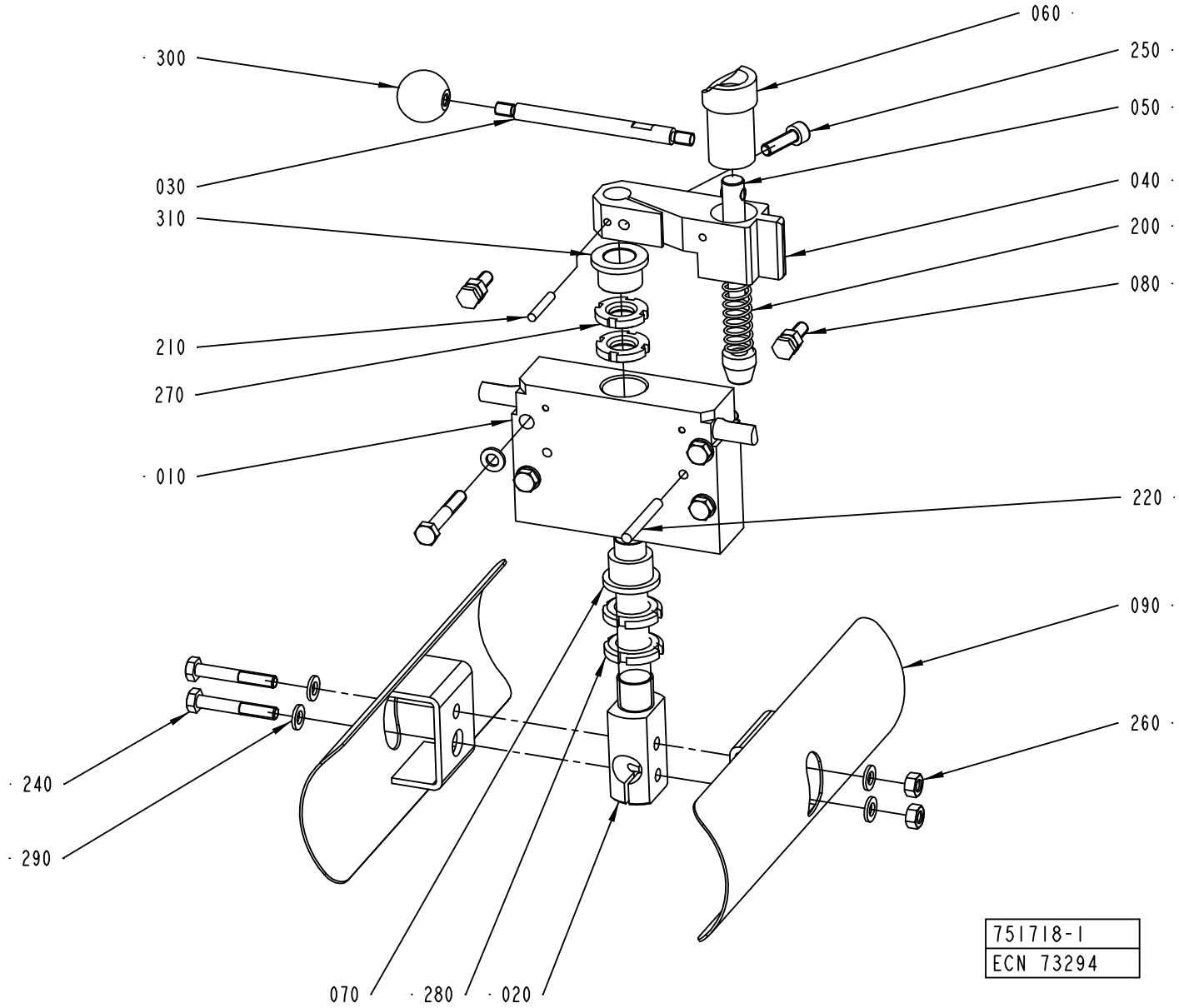
060
300
250
050
030
040
310
200
080
210
270
010
220
090
260
240
290
070
280
020
751718-1
ECN 73294

ECM: 114211 - 20020926
Group number: 751718-0100
Assembly Drawing: 751718-1_1_AD

Pos	Part No	SP	UN	Qty	Description	Page No
-						
010	464009-0003	-		1	BLOCKING PIECE	
020	979960-0000	B		1	SHAFT	
030	450500-0000	B		1	DOWEL	
040	464010-0000	-		1	ARM	
050	464011-0000	B		1	LOCK STUD	
060	464012-0000	-		1	CURVE	
070	466430-0000	B		1	BUSHING	
	321111-0212	*-*		*1*	*FLANGE BUSHING, 15X21X15*	
080	476377-0000	-		2	SCREW	
	312105-0371	*-*		*1*	*SCREW M6S ISO 4017 M6X22 A480*	
090	979942-0000	-		2	COVER	
200	90335-0064	B		1	COMP. SPRING 22270, 1,25X13,75X62,5	
210	311103-0274	-		2	PARALLELL PIN, M6, 4X25 MM	
220	311103-0318	-		2	PARALLELL PIN, M6, 5X40 MM	
240	312105-0378	-		6	SCREW M6S ISO 4014 M6X40 A480	
250	312115-0370	-		1	SCREW ISO4762 M6X20 A4	
260	312605-0316	-		4	HEXAGON NUT, M6M M6 A280	
270	312805-0102	-		2	NUT ROUND WITH SLOTS M15X1 FE	
280	312805-0103	-		2	NUT ROUND WITH SLOTS M17X1 FE	
290	315105-0153	-		8	WASHER ISO 7089-6-200 HV-A4	
300	318800-0103	-		1	HANDLES,SPHERICAL KNOB,INT.THRE.,D.25-M6	
310	321111-0212	B		1	FLANGE BUSHING, 15X21X15	

Pos	Part No	SP	UN	Qty	Description	Page No

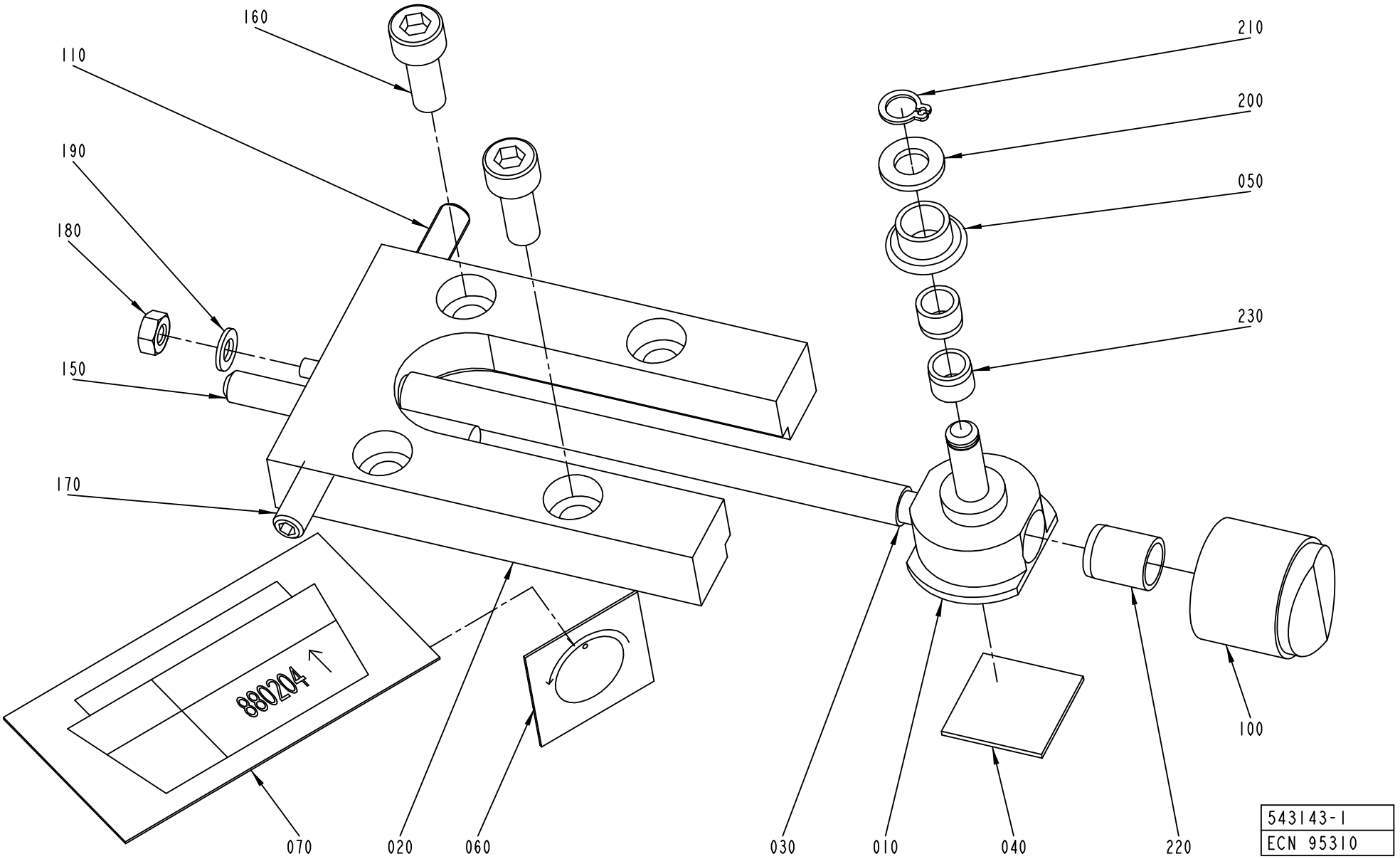
160
110
190
180
150
170
210
200
050
230
100
880204
070
020
060
030
010
040
220
543143-1
ECN 95310

ECM: 99112 - 20011129
Group number: 543143-0100
Assembly Drawing: 543143-1_1_AC

This list covers pages from 624 to 627

Pos	Part No	SP	UN	Qty	Description	Page No
-						
010	526984-0000	A		1	SADDLE	
020	526985-0000	B		1	PLATE	
030	526986-0001	B		1	SHAFT	
040	527649-0000	B		1	DISTANCE RUBBER	
050	529362-0000	A		1	SPROCKET	
060	543141-0000	-		1	SIGN	
070	543142-0000	-		1	SIGN	
100	90051-0089	-		1	SHIFTER HANDLE	
110	90287-0167	-		1	SCREW SPRINGLOAD. SOCK. HEX HEAD M6X20	
150	311103-0365	-		1	PARALLELL PIN, M6, 6X50 MM	
160	312115-0368	-		2	SCREW ISO4762 M6X16 A4	
170	312318-0368	-		1	SCREW ISO4029 M6X16 A4	
180	312605-0312	-		1	HEXAGON NUT, M6M M4 A280	
190	315105-0136	-		1	WASHER ISO 7089-4-200 HV-A4	
200	315105-0153	-		1	WASHER ISO 7089-6-200 HV-A4	
210	315751-0103	-		1	RETAIN. RING, 6	
220	321120-0100	A		1	BEARING BUSHING W/O FLANGE 8/10X12	
230	321120-0101	A		2	BEARING BUSHING W/O FLANGE,6/8X6	

Pos	Part No	SP	UN	Qty	Description	Page No

ADJUSTMENT DEVICE

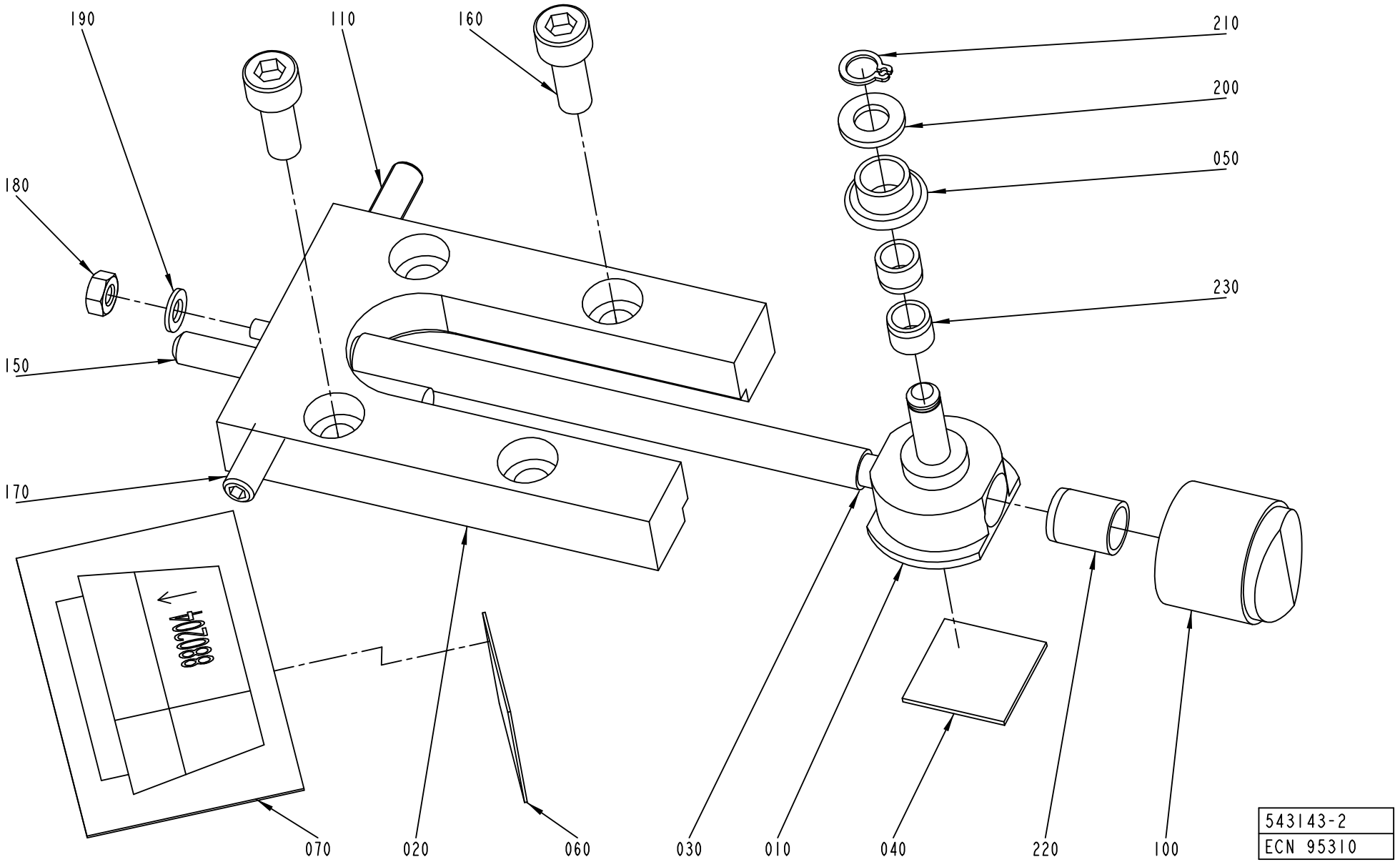

ECM: 99112 - 20011129
Group number: 543143-0100
Assembly Drawing: 543143-2_1_AB

This list covers pages from 624 to 627

Pos	Part No	SP	UN	Qty	Description	Page No
-						
010	526984-0000	A		1	SADDLE	
020	526985-0000	B		1	PLATE	
030	526986-0001	B		1	SHAFT	
040	527649-0000	B		1	DISTANCE RUBBER	
050	529362-0000	A		1	SPROCKET	
060	543141-0000	-		1	SIGN	
070	543142-0000	-		1	SIGN	
100	90051-0089	-		1	SHIFTER HANDLE	
110	90287-0167	-		1	SCREW SPRINGLOAD. SOCK. HEX HEAD M6X20	
150	311103-0365	-		1	PARALLELL PIN, M6, 6X50 MM	
160	312115-0368	-		2	SCREW ISO4762 M6X16 A4	
170	312318-0368	-		1	SCREW ISO4029 M6X16 A4	
180	312605-0312	-		1	HEXAGON NUT, M6M M4 A280	
190	315105-0136	-		1	WASHER ISO 7089-4-200 HV-A4	
200	315105-0153	-		1	WASHER ISO 7089-6-200 HV-A4	
210	315751-0103	-		1	RETAIN. RING, 6	
220	321120-0100	A		1	BEARING BUSHING W/O FLANGE 8/10X12	
230	321120-0101	A		2	BEARING BUSHING W/O FLANGE,6/8X6	

Pos	Part No	SP	UN	Qty	Description	Page No

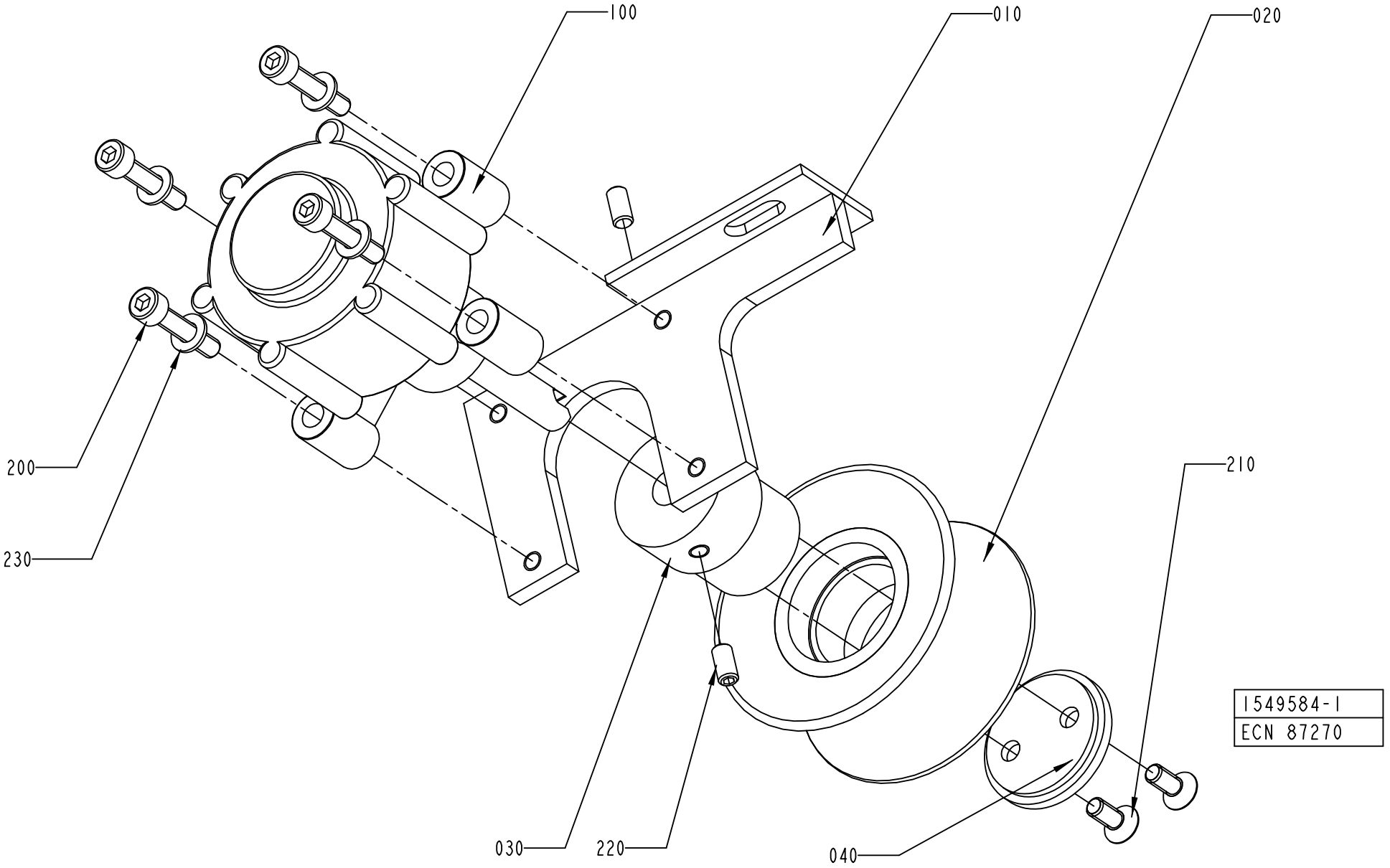
100
010
020
200
230
210
030
220
040
1549584-1
ECN 87270

ECM: 112931 - 20020731
Group number: 1549584-0100
Assembly Drawing: 1549584-1_1_AA

Pos	Part No	SP	UN	Qty	Description	Page No
-						
010	980002-0000	-		1	BRACKET	
020	540719-0000	A		1	WHEEL	
030	980003-0000	-		1	SHAFT	
040	980004-0000	-		1	PLUG	
100	90347-0054	A		1	DAMPER	
200	312115-0333	-		4	SCREW ISO4762 M5X25 A4	
210	312155-0327	-		2	SCREW EN 10642 MF6S M5X12 A480	
220	312318-0325	-		2	SCREW ISO4029 M5X10 A4	
230	315105-0146	-		4	WASHER ISO 7089-5-200 HV-A4	

Pos	Part No	SP	UN	Qty	Description	Page No

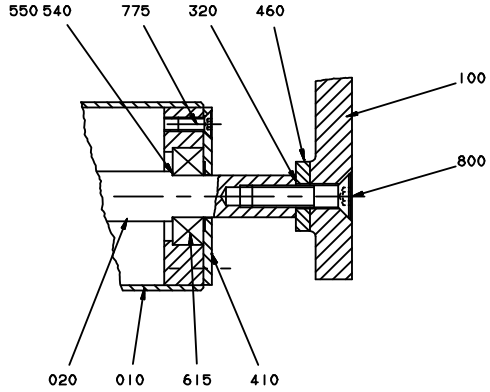

DET.A

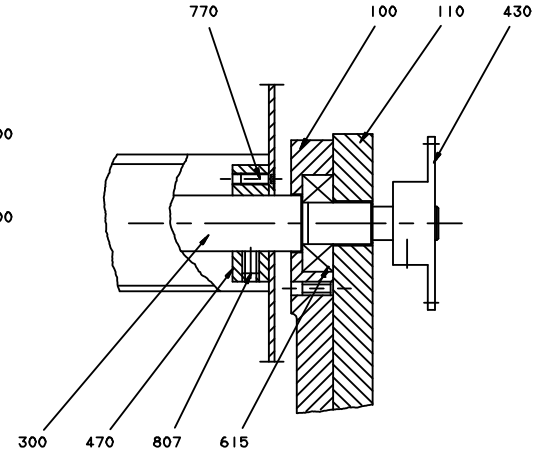

DET.B

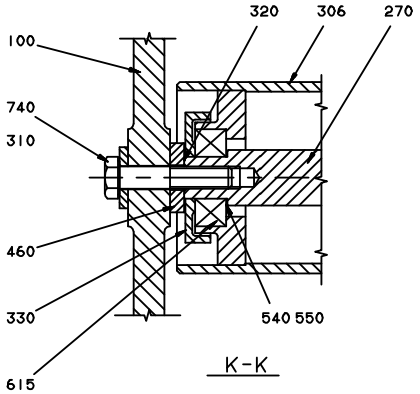

K-K

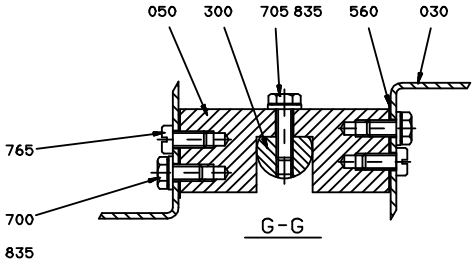

G-G

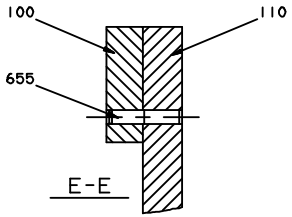

E-E

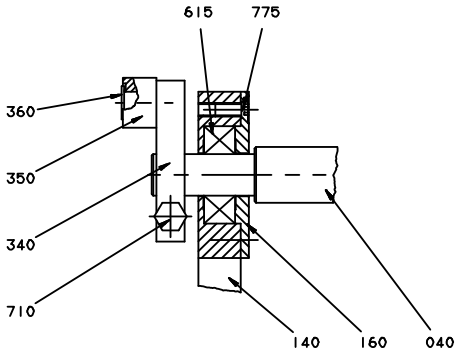

DET.C

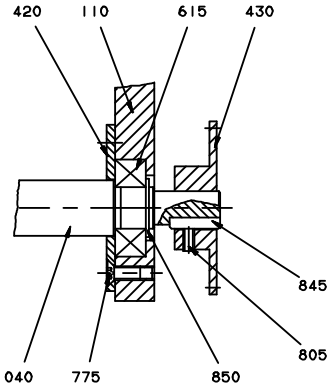

DET.D

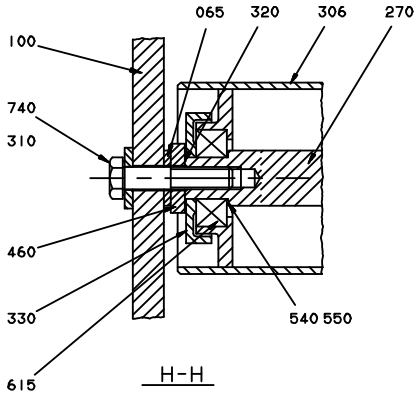

H-H

ONLY 250 ml

ECM: 104336 - 20030113
Group number: 752645-0400
Assembly Drawing: 752645-2_1_AH

This list covers pages from 630 to 633

Pos	Part No	SP	UN	Qty	Description	Page No
TBA 0180B						
030	456767-0000	D		2	CREASE BAR	
050	441556-0006	D		2	SPACER	
TBA 0200B						
030	456767-0000	D		2	CREASE BAR	
050	441556-0004	D		2	SPACER	
TBA 0250B						
030	456767-0000	D		2	CREASE BAR	
050	441556-0002	D		2	SPACER	
065	299643-0000	-		2	WASHER	
TBA 0330S, TBA 0300S, TBA 0284B						
030	456767-0000	D		2	CREASE BAR	
050	441556-0001	D		2	SPACER	
Common Parts						
	1549584-0100	-		1	PAPER BRAKE	**629**
010	752542-0001	D		1	BENDING ROLLER	
020	752543-0001	D		1	SHAFT	
040	752536-0001	D		1	SHAFT	
060	256400-0000	C		1	SHAFT	
070	90166-0059	-	MM	24	HOSE PVC 12/16MM TRANSP.	
075	90166-0059	-	MM	24	HOSE PVC 12/16MM TRANSP.	
090	979790-0000	-		1	COVER	
100	752200-0000	-		1	CANTILEVER	
110	752526-0000	-		1	PLATE	
120	572252-0000	-		1	BRACKET	
130	752528-0000	-		1	COVER	
140	752527-0000	-		1	CANTILEVER	
145	491965-0000	-		1	CAM	
150	979543-0000	-		1	SPLASH PLATE	
155	556422-0000	-		1	PROTECTION	
160	752529-0000	D		1	BEARING COVER	
170	578000-0000	-		1	BRACKET	
180	578001-0000	-		2	SCREW	
240	752539-0000	-		1	PLATE	
245	572460-0000	-		1	SHEET	
250	752240-0000	-		1	LID	
270	752538-0000	-		2	SHAFT	
280	752642-0000	D		1	BRACKET	
290	572253-0000	-		1	SHEET	
300	752535-0000	D		1	SHAFT	
305	979701-0000	-		1	CABLE CONDUIT	
306	979709-0000	D		2	BENDING ROLLER	
307	1260476-0000	-		4	SCREW	
310	28036-0000	D		12	WASHER	
320	2033-0011	D		20	WASHER	
330	265568-0000	C		4	DUST COVER	
340	32925-0000	D		1	CARRIER	
350	32926-0000	D		1	ROLL	
360	32927-0000	D		1	SHAFT	
370	33182-0000	C		1	ROLL	
380	752237-0000	C		1	SPRING	
410	256248-0001	D		2	LID	
420	256398-0000	D		1	LID	
430	752530-0000	D		2	SPROCKET	
440	256406-0000	-		2	GABLE PLATE	
450	752644-0000	-		2	SCREW	
460	256409-0000	D		6	WASHER	
470	257141-0000	-		2	RETAINING RING	
480	752531-0000	-		1	BRACKET	
490	752534-0000	-		1	PLATE	
520	752541-0000	D		1	CANTILEVER	
530	253107-0000	D		2	WASHER	
540	752544-0001	C		6	SHIM	
550	752544-0002	C		8	SHIM	
555	979788-0000	-		1	SPRING HOLDER	
560	456817-0001	C		16	SHIM	
565	979789-0000	-		1	SPRING HOLDER	
590	572254-0000	-		1	HANDLE	
595	572255-0000	-		2	SPACER	
600	90044-0104	C		1	PROX.SWITCH IFM IN 3002	
612	90165-0056	-		6	PIPE CLIP FOR TUBE D=4 MM	
613	90165-0008	-		2	PIPE CLIP FOR TUBE D=10 MM	
615	90214-0098	C		10	BALL BEARING, 15X35X11 MM	
620	90044-0103	C		1	KEY SAFETY SWITCH AZ 15 ZVR	
	90044-0310	*A*		*1*	*KEY FOR SAFETY SWITCH, AZ 15/16 B1*	
630	90248-0026	-		2	HINGE, 1703-80X32	
640	90335-0041	C		1	TENSION SPRING 42350, 2X14X68	
645	312318-0372	-		1	SCREW ISO4029 M6X25 A4	
650	312605-0314	-		2	HEXAGON NUT, M6M M5 A280	
655	311103-0312	-		2	PARALLELL PIN, M6, 5X25 MM	

Machine Type | Group Description | Used-In | Group Number | Page No

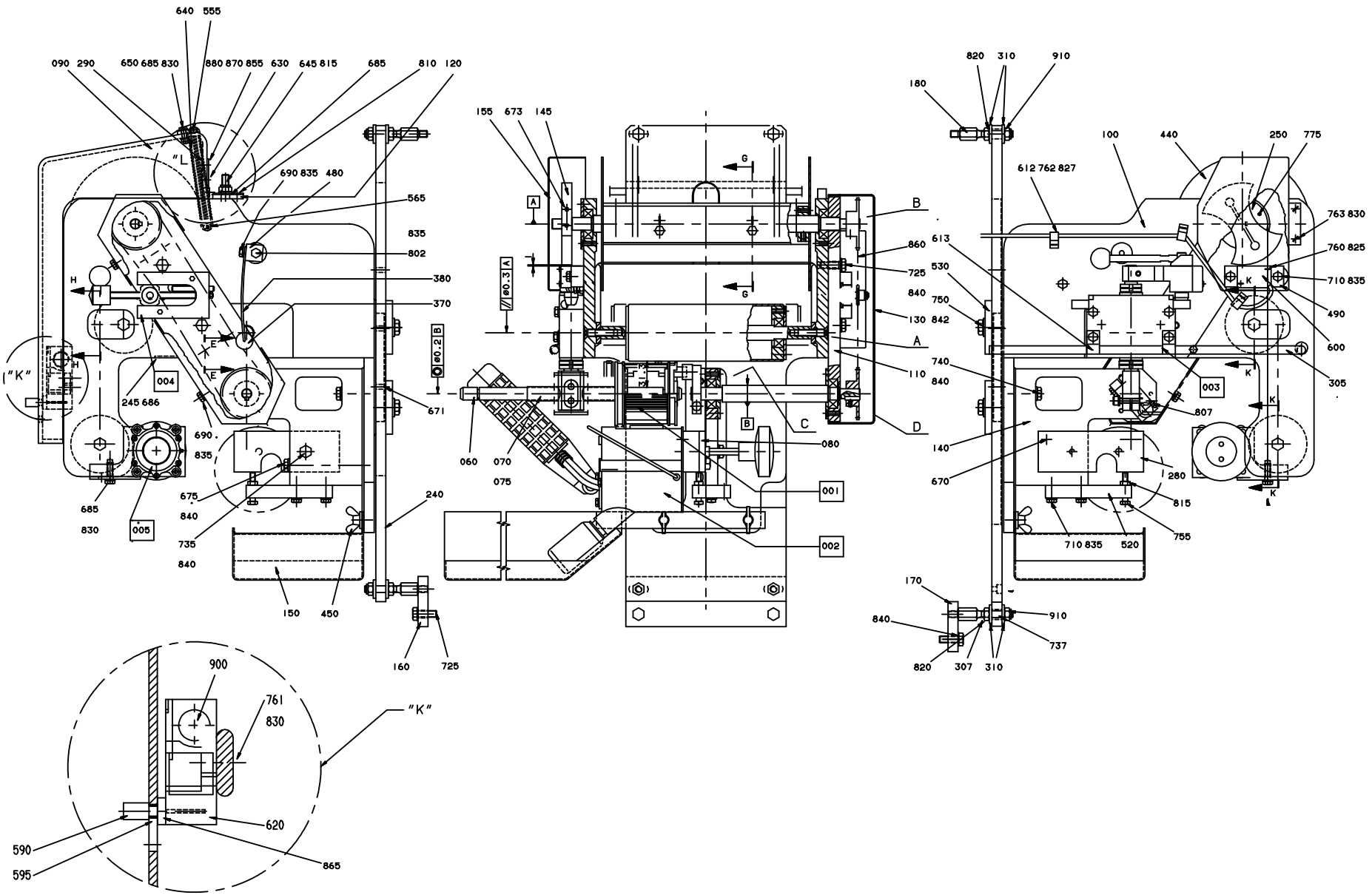
640 555
090 290
650 685 830
880 870 855
630
645 815
685
810 120
"L"
690 835 480
565
835
802
380
370
H
E
004
245 686
671
690
835
675
840
735
840
685
830
005
240
150
450
160
725
"K"
155 673 145
G
A
B
C
D
060.3 A
ø0.2 B
860
725
840
750
130 842
110
080
060
070
075
001
002
820 310 910
180
100
440
250 775
612 762 827
763 830
760 825
710 835
490
600
305
613
530
740
840
003
807
140
670
280
815
755
710 835
520
170
840
910
737
820
307
310
900
761
830
620
590
595
865

ECM: 104336 - 20030113
Group number: 752645-0400
Assembly Drawing: 752645-5_1_AH

This list covers pages from 630 to 633

Pos	Part No	SP	UN	Qty	Description	Page No
Common Parts (Cont'd)						
670	311103-0357	-		1	PARALLELL PIN, M6, 6X30 MM	
671	311103-0353	-		2	PARALLELL PIN, M6, 6X20 MM	
673	312115-0333	-		2	SCREW ISO4762 M5X25 A4	
675	312111-0471	-		1	SCREW HEX.SOCK.HD.MC6S-TT 8X100 88 FZ	
685	312105-0329	-		5	SCREW M6S ISO 4017 M5X16 A480	
686	312105-0331	-		4	SCREW M6S ISO 4017 M5X20 A480	
690	312105-0364	-		3	SCREW M6S ISO 4017 M6X10 A480	
700	312105-0366	-		4	SCREW M6S M6X12 A280	
705	312115-0370	-		2	SCREW ISO4762 M6X20 A4	
710	312105-0372	-		5	SCREW M6S ISO 4017 M6X25 A480	
725	312105-0453	-		2	SCREW M6S ISO 4017 M8X25 A480	
735	312105-0457	-		1	SCREW M6S ISO 4014 M8X35 A480	
737	312115-0329	-		2	SCREW ISO4762 M5X16 A4	
740	312105-0459	-		5	SCREW M6S ISO 4014 M8X40 A480	
750	312105-0493	-		2	SCREW M6S ISO 4017 M10X25 A480	
755	312109-0376	-		1	SCREW M6S ISO 4017 M6X35 A480	
760	312125-0230	-		2	SPåRSKRUV MCS M3X20 SS	
761	312125-0329	-		2	SCREW PAN HEAD MCS M5X16 SS	
762	312125-0289	-		6	SPåRSKRUV MCS 4X10 A480	
763	312125-0325	-		2	SCREW SLOT.PAN HD. MCS 5X10 A480	
765	312125-0366	-		4	SCREW PAN HEAD MCS M6X12 SS	
770	312155-0291	-		6	SCREW EN 10642 MF6S M4X12 A480	
775	312155-0327	-		15	SCREW EN 10642 MF6S M5X12 A480	
800	312155-0457	-		2	SCREW EN 10642 MF6S M8X35 A480	
802	312105-0382	-		1	SCREW M6S ISO 4014 M6X60 A480	
805	312318-0287	-		2	SCREW ISO4029 M4X8 A4	
807	312318-0362	-		3	SCREW ISO4029 M6X8 A4	
810	312145-0285	-		6	SCREW COUNTERS.SLOT.HD. MFS 4X6 SS	
815	312605-0316	-		2	HEXAGON NUT, M6M M6 A280	
820	312605-0318	-		4	HEXAGON NUT, M6M M8 A280	
825	315105-0124	-		2	WASHER ISO 7089-3-200 HV-A4	
827	315105-0136	-		7	WASHER ISO 7089-4-200 HV-A4	
830	315105-0146	-		9	WASHER ISO 7089-5-200 HV-A4	
835	315105-0153	-		13	WASHER ISO 7089-6-200 HV-A4	
840	315105-0165	-		5	WASHER ISO 7089-8-200 HV-A4	
842	315105-0173	-		2	WASHER ISO 7089-10-200 HV-A4	
845	315701-0169	-		2	PARALLEL KEY W. ROUND ENDS 4X4X18 MM	
850	315751-0112	-		1	RETAIN. RING, 15	
855	312145-0293	-		6	SCREW COUNTERS.SLOT.HD. MFS 4X16 SS	
860	318207-0168	C		1	ROLLER CHAIN, SINGLE 6MM-168	
865	312155-0329	-		4	SCREW EN 10642 MF6S M5X16 A480	
870	312812-0312	-		6	HEXAGON NUT, NY-LOCK M4 A480	
880	315101-0136	-		6	BRICKA, BRB, 4,3/8 H=0,8	
900	352101-0103	-		1	LEAD-IN, PR18,6/PG11, E-1457518	
910	312812-0318	-		6	HEXAGON NUT, NY-LOCK M8 A480	
F001	293685-0200	D		2	PRINTING WHEEL SS	**635, 637**
F002	458192-0300	-		1	INK UNIT SS	**639**
F003	751718-0100	-		1	HOLDER	**623**
F004	543143-0100	-		1	ADJUSTMENT DEVICE	**625, 627**

Machine Type | Group Description | Used-In | Group Number | Page No

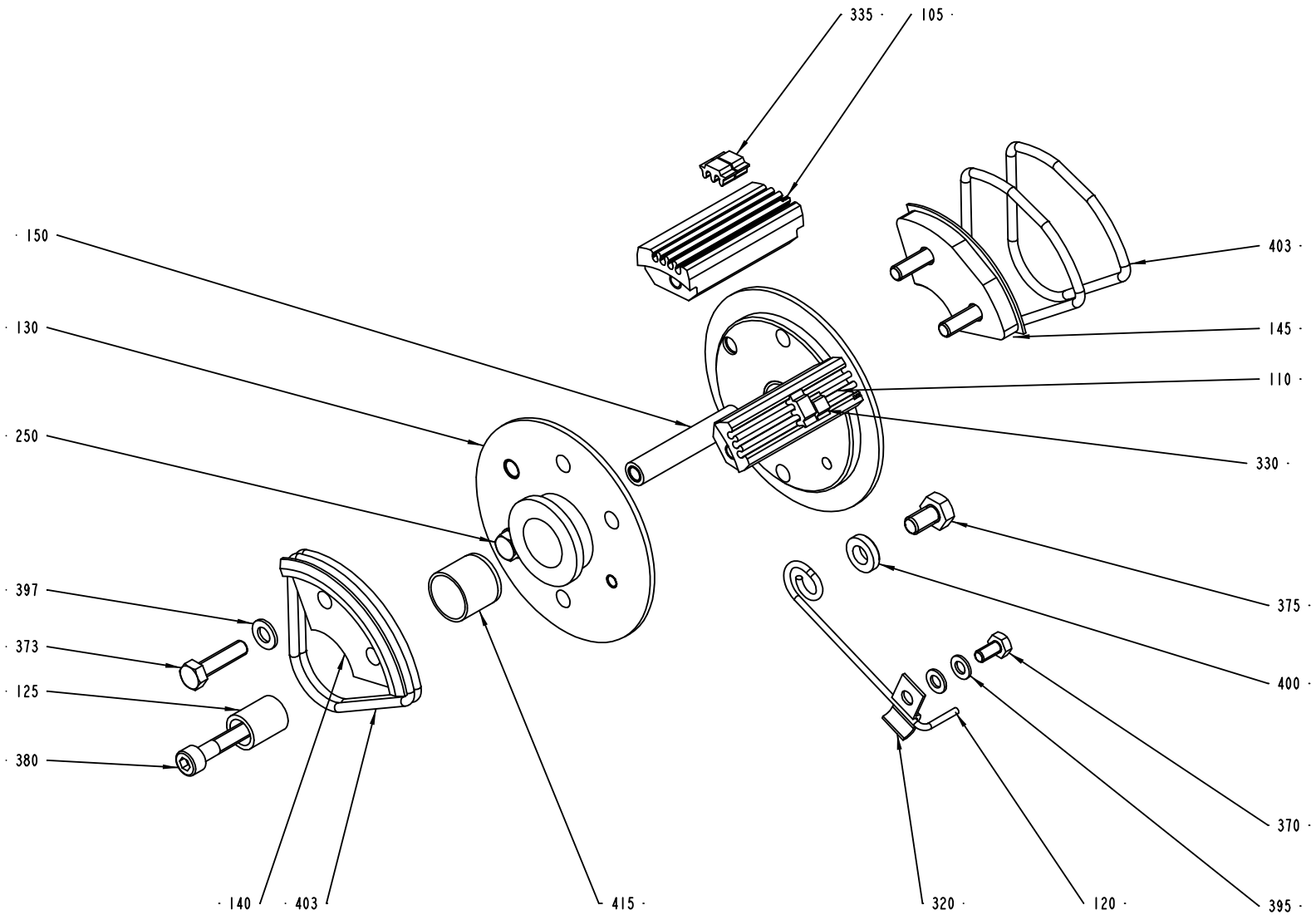

S-293685-2
ECN 73044

ECM: 102361 - 20011206
Group number: 293685-0200
Assembly Drawing: 293685-2_1_AB

This list covers pages from 634 to 637

Pos	Part No	SP	UN	Qty	Description	Page No
0125S, 0100B, 0180B, 0200B, 0300S, 0330S, 0250B, 0284B						
105-02	293395-0002	A		2	TYPE HOLDER	
110-02	293395-0001	A		2	TYPE HOLDER	
130	292412-0000	A		1	END SECTION	
135	292413-0000	A		1	END SECTION	
140	292414-0000	A		1	CARRIER	
373-02	312101-0331	-		7	SCREW M6S M5X20 FZB	
397-02	315101-0146	-		7	WASHER PLAIN, BRB, 5,3/10 H=1	
405	315202-0304	A		2	O-RING 64,5X3 MM	
410	315202-0305	A		2	O-RING 69,5X3 MM	
Common Parts						
120	32691-0000	A		1	LOCKING SPRING	
125	33011-0000	A		1	SLEEVE	
320	90165-0010	-		1	CLIP	
330	90413-0043	A		1	CODE INSERT SET	
330	90413-0033	A		1	CODE INSERT SET 0-9	
335	90413-0047	A		1	CODE INSERT SET	
335	90413-0044	A		1	CODE INSERT SET	
370	312101-0287	-		1	SCREW M6S M4X8 FZB	
375	312101-0364	-		1	SCREW M6S M6X10 FZB	
380	312111-0335	-		1	SCREW HEX.SOCK.HD.MC6S-TT 5X30 88 FZB	
395	315101-0136	-		1	BRICKA, BRB, 4,3/8 H=0,8	
400	315111-0153	-		1	WASHER PLAIN, TBRB 6,4/12 H=3	
415	321120-0122	A		2	BEARING BUSHING W/O FL, 15X17X15 MM	

Pos	Part No	SP	UN	Qty	Description	Page No

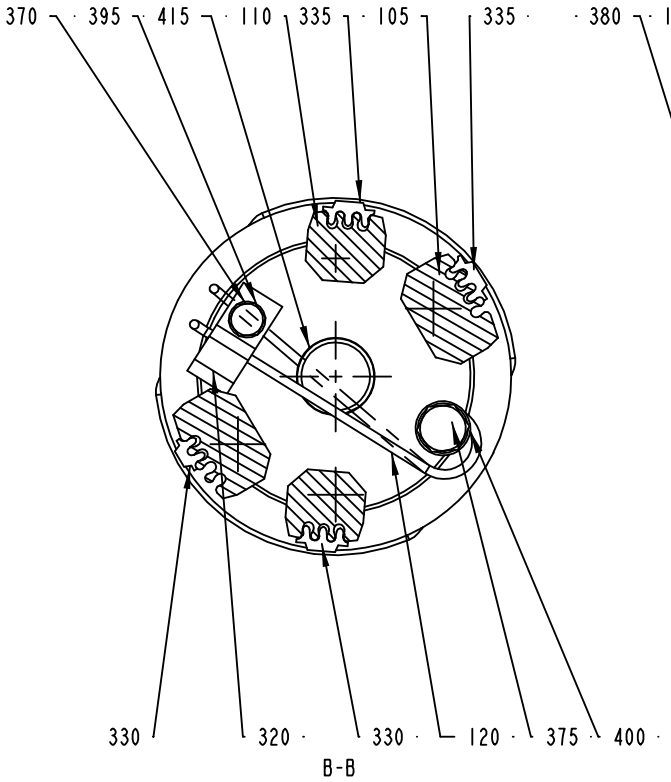

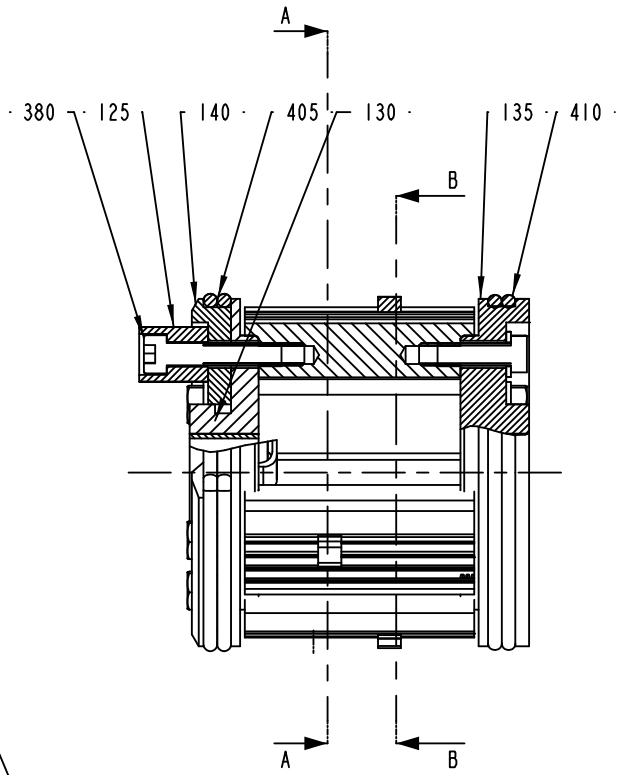

Volume: 100B. 125S. 180B. 189B. 200B. 236B. 250B.ml
284B. 300B. 300S. 330S.ml

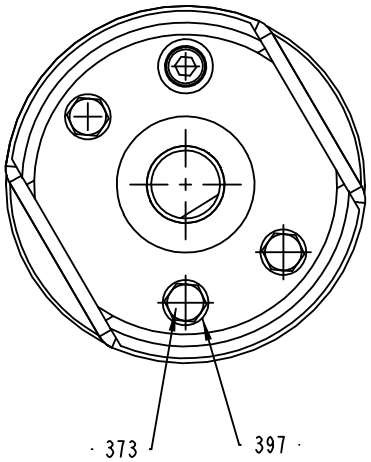

Pos	Part No	SP	UN	Qty	Description	Page No
0125S, 0100B, 0180B, 0200B, 0300S, 0330S, 0250B, 0284B						
105-02	293395-0002	A		2	TYPE HOLDER	
110-02	293395-0001	A		2	TYPE HOLDER	
130	292412-0000	A		1	END SECTION	
135	292413-0000	A		1	END SECTION	
140	292414-0000	A		1	CARRIER	
373-02	312101-0331	-		7	SCREW M6S M5X20 FZB	
397-02	315101-0146	-		7	WASHER PLAIN, BRB, 5,3/10 H=1	
405	315202-0304	A		2	O-RING 64,5X3 MM	
410	315202-0305	A		2	O-RING 69,5X3 MM	
Common Parts						
120	32691-0000	A		1	LOCKING SPRING	
125	33011-0000	A		1	SLEEVE	
320	90165-0010	-		1	CLIP	
330	90413-0043	A		1	CODE INSERT SET	
330	90413-0033	A		1	CODE INSERT SET 0-9	
335	90413-0047	A		1	CODE INSERT SET	
335	90413-0044	A		1	CODE INSERT SET	
370	312101-0287	-		1	SCREW M6S M4X8 FZB	
375	312101-0364	-		1	SCREW M6S M6X10 FZB	
380	312111-0335	-		1	SCREW HEX.SOCK.HD.MC6S-TT 5X30 88 FZB	
395	315101-0136	-		1	BRICKA, BRB, 4,3/8 H=0,8	
400	315111-0153	-		1	WASHER PLAIN, TBRB 6,4/12 H=3	
415	321120-0122	A		2	BEARING BUSHING W/O FL, 15X17X15 MM	

Pos	Part No	SP	UN	Qty	Description	Page No

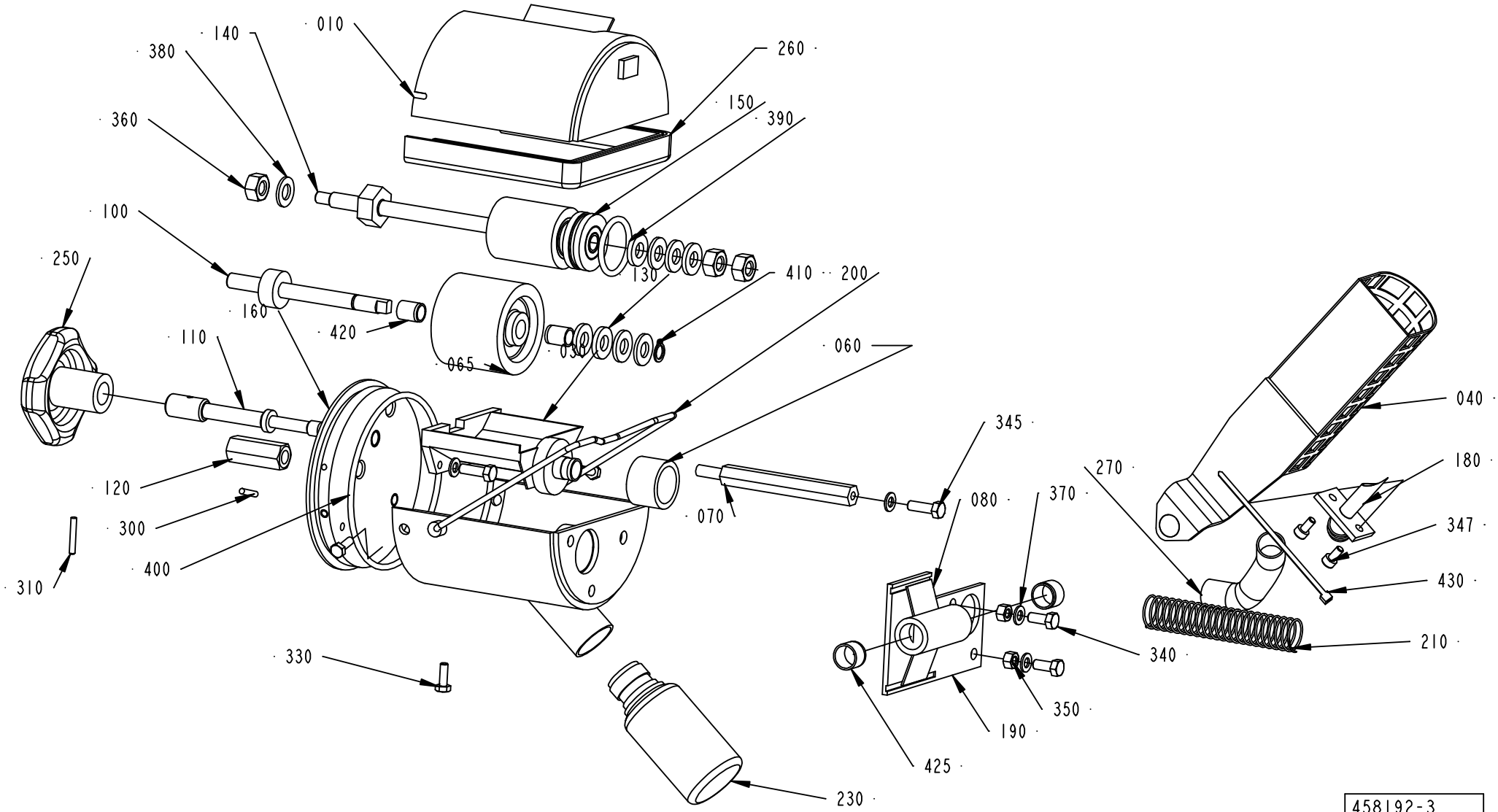

458192-3
ECN 73132

ECM: 106773 - 20021112
Group number: 458192-0300
Assembly Drawing: 458192-3_1_AB

Pos	Part No	SP	UN	Qty	Description	Page No
TBA/19						
230	90050-0012	B		1	BOTTLE, 50ML PLASTIC	
Common Parts						
010	458364-0000	A		1	COVER	
030	297210-0000	A		1	INK WELL	
040	476356-0000	A		1	HOLDER FOR INK BOTTLE	
060	445542-0000	B		1	MANTEL RUBBER	
065	450355-0000	A		1	INK ROLLER	
070	33010-0000	A		1	SCREW	
080	35547-0000	B		1	SPRING	
100	292044-0000	A		1	SHAFT	
110	293667-0000	A		1	DOWEL	
120	436927-0000	A		1	NUT	
130	293669-0001	A		4	WASHER	
130	293669-0004	A		2	WASHER	
130	293669-0003	A		2	WASHER	
130	293669-0002	A		2	WASHER	
140	293670-0000	A		1	SHAFT	
150	543135-0000	A		1	INK TRANSFER ROLLER	
	90153-0050	-		*1*	*ADHESIVE, 3M TYPE SCOTCH-WELD 2216 B/A*	
	321120-0100	-		*1*	*BEARING BUSHING W/O FLANGE 8/10X12*	
160	297213-0000	A		1	END SECTION	
180	476355-0000	A		1	CANNULAR TUBE	
190	456772-0000	A		1	PIVOT BRACKET	
200	434747-0000	B		1	BOW CLAMP	
210	537308-0000	B		1	SPRING	
250	90051-0077	-		1	HANDLE	
260	90143-0029	B	MM	295	STRIP	
270	90166-0138	B	MM	100	HOSE	
280	90299-0072	A		48	INK	
300	311103-0236	-		2	PARALLELL PIN, M6, 3X16 MM	
310	311103-0238	-		1	CYLINDERPINNE M6, 3X20 MM	
320	311103-0270	-		1	PARALLELL PIN, M6, 4X16 MM	
330	312105-0291	-		3	SCREW M6S ISO 4017 M4X12 A480	
340	312105-0327	-		2	SCREW M6S ISO 4017 M5X12 A480	
345	312105-0329	-		1	SCREW M6S ISO 4017 M5X16 A480	
347	312115-0287	-		2	SCREW ISO4762 M4X8 A4	
350	312605-0314	-		2	HEXAGON NUT, M6M M5 A280	
360	312605-0318	-		3	HEXAGON NUT, M6M M8 A280	
370	315105-0146	-		3	WASHER ISO 7089-5-200 HV-A4	
380	315105-0165	-		2	WASHER ISO 7089-8-200 HV-A4	
390	315202-0218	A		1	O-RING 26,2X3 MM	
400	315202-0309	A		1	O-RING 89,5X3 MM	
410	315750-0105	-		1	RETAIN. RING, 8	
420	321120-0100	A		2	BEARING BUSHING W/O FLANGE 8/10X12	
425	321120-0109	A		2	BEARING BUSHING W/O FLANGE,12/14X10	
430	352113-0101	-		1	CLIP STRIP, 92X2,5 MM	

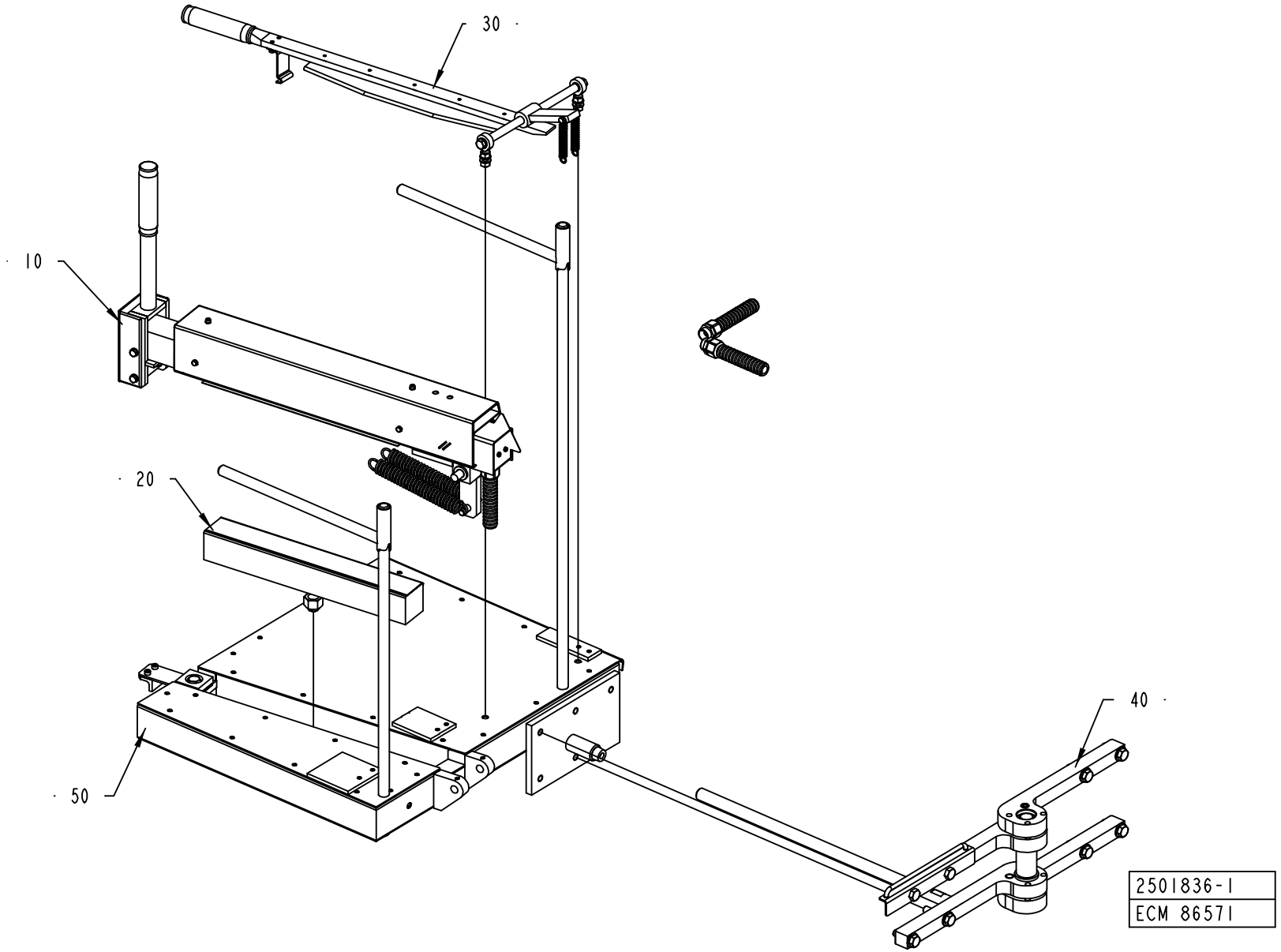
30
10
20
40
50
2501836-1
ECM 86571

ECM: 91613 - 20020111
Group number: 2501836-0100
Assembly Drawing: 2501836-1_1_AA

Pos	Part No	SP	UN	Qty	Description	Page No
-						
010	37877-0400	-		1	HEATING BLOCK	**643**
020	37894-0100	-		1	COUNTER RAIL	**645**
030	450101-0300	-		1	TEARING DEVICE	**647**
040	2500587-0100	-		1	SUSPENSION ARM	**649**
050	271641-0500	-		1	SPLICING TABLE	**651**

Pos	Part No	SP	UN	Qty	Description	Page No

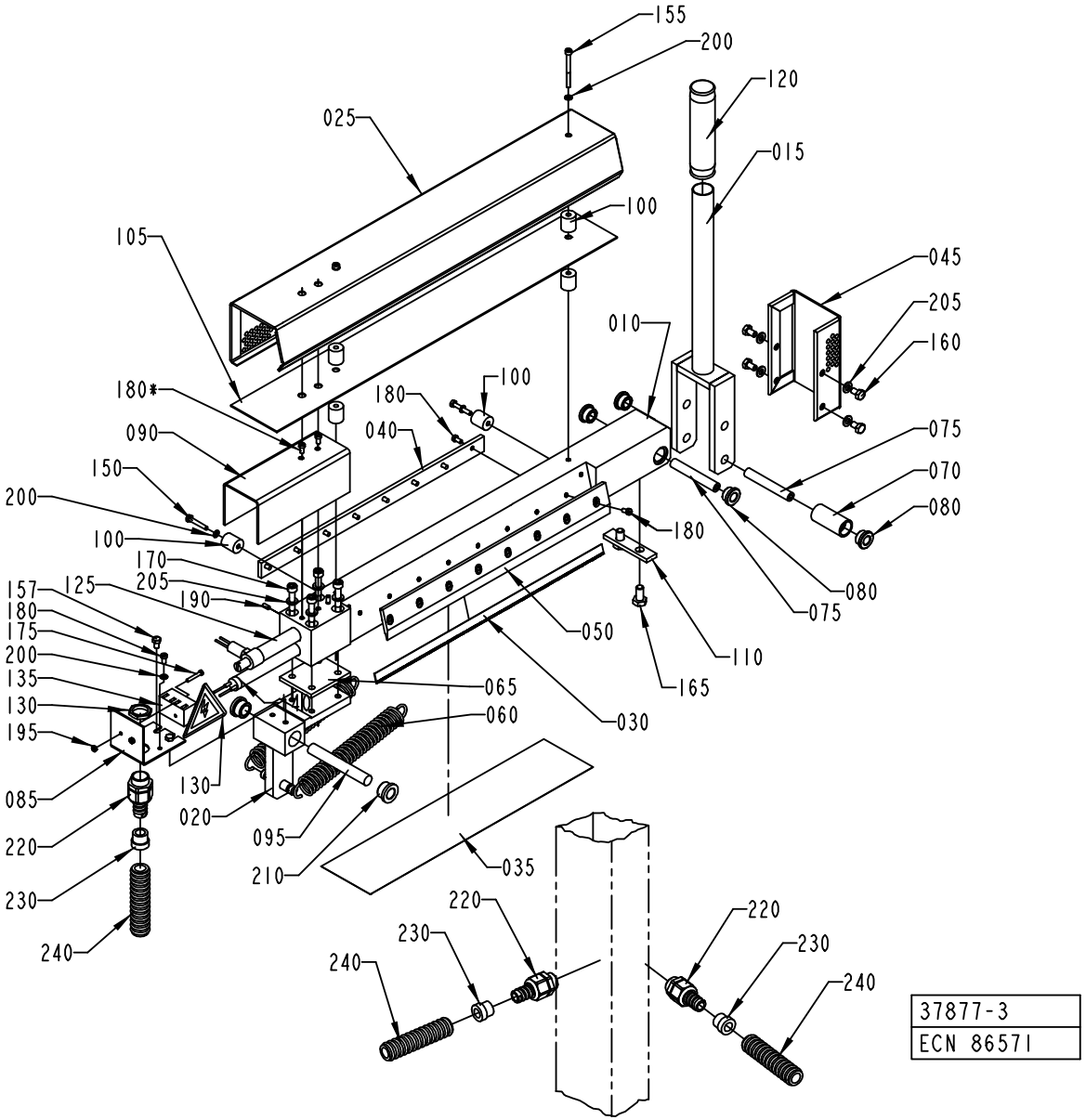
155
200
120
025
015
100
105
045
205
160
010
180*
180
100
090
040
075
150
070
200
080
100
180
170
205
080
157
125
190
075
180
175
050
200
110
135
065
165
130
060
030
195
085
130
020
095
210
035
220
230
240
220
230
240
220
230
240
37877-3
ECN 86571

ECM: 91449 - 20020111
Group number: 37877-0400
Assembly Drawing: 37877-3_1_AA

Pos	Part No	SP	UN	Qty	Description	Page No
-						
010	255301-0000	D		1	HEATING RAIL	
015	37879-0000	-		1	LOCKING ARM	
020	37880-0000	-		1	HINGE	
025	243132-0000	D		1	PROTECTION PLATE	
030	31017-0000	C		1	KNIFE	
035	31723-0000	C		1	TEFLON STRIP	
040	31724-0000	-		1	LOCK BAR	
045	37882-0000	D		1	PROTECTION PLATE	
050	37883-0000	-		1	LOCK BAR	
055	37884-0000	D		1	SHAFT	
060	37885-0000	C		2	TENSION SPRING	
065	37886-0000	D		1	INSULATING DISK	
070	37888-0000	D		1	ROLL	
075	37889-0000	D		2	SHAFT	
080	37890-0000	D		4	FLANGE ROLLER	
085	37892-0000	D		1	CONNECTION BOX	
090	37893-0000	-		1	LID	
095	208173-0000	D		1	SHAFT	
100	229775-0000	D		6	SPACER	
105	243133-0000	D		1	SHIELD PLATE	
110	245221-0000	-		1	STOP	
120	90017-0001	D		1	BIKE HANDLE	
125	90059-0001	C		1	THERMOSTAT	
130	90099-0002	-		1	NUT PR 18,6 BRASS	
135	90077-0102	-		1	TERMINAL BLOCK, 1952.2	
137	90194-0016	-		1	ETIKETT	
140	90206-0053	C		1	HEATING ELEMENT 230V 1200W	
150	312105-0297	-		2	SCREW M6S ISO 4017 M4X25 A480	
155	312115-0304	-		2	SCREW ISO4762 M4X45 A4	
157	312105-0323	-		2	SKRUV M6S ISO 4017 M5X8 A480	
160	312105-0364	-		4	SCREW M6S ISO 4017 M6X10 A480	
165	312105-0449	-		2	SCREW M6S ISO 4017 M8X16 A480	
170	312115-0380	-		4	SCREW ISO4762 M6X50 A4	
175	312125-0230	-		2	SPåRSKRUV MCS M3X20 SS	
180	312125-0287	-		19	SCREW PAN HEAD MCS M4X8 SS	
190	312318-0287	-		2	SCREW ISO4029 M4X8 A4	
195	312605-0310	-		2	HEXAGON NUT, M6M M3 A280	
200	315105-0136	-		5	WASHER ISO 7089-4-200 HV-A4	
205	315105-0153	-		8	WASHER ISO 7089-6-200 HV-A4	
210	321101-0173	-		2	FLANGE BUS 12F7X12	
220	353243-0002	-		3	EXTENDED WITHOUT INSERT, PG11	
230	353249-0010	-		3	INSERT, SINGEL HOLE, EK 152/11	
240	90152-0059	-	M	2	SPIRAL CONDUIT, 18X12, UL 1211	

Machine Type Group Description Used-In Group Number Page No

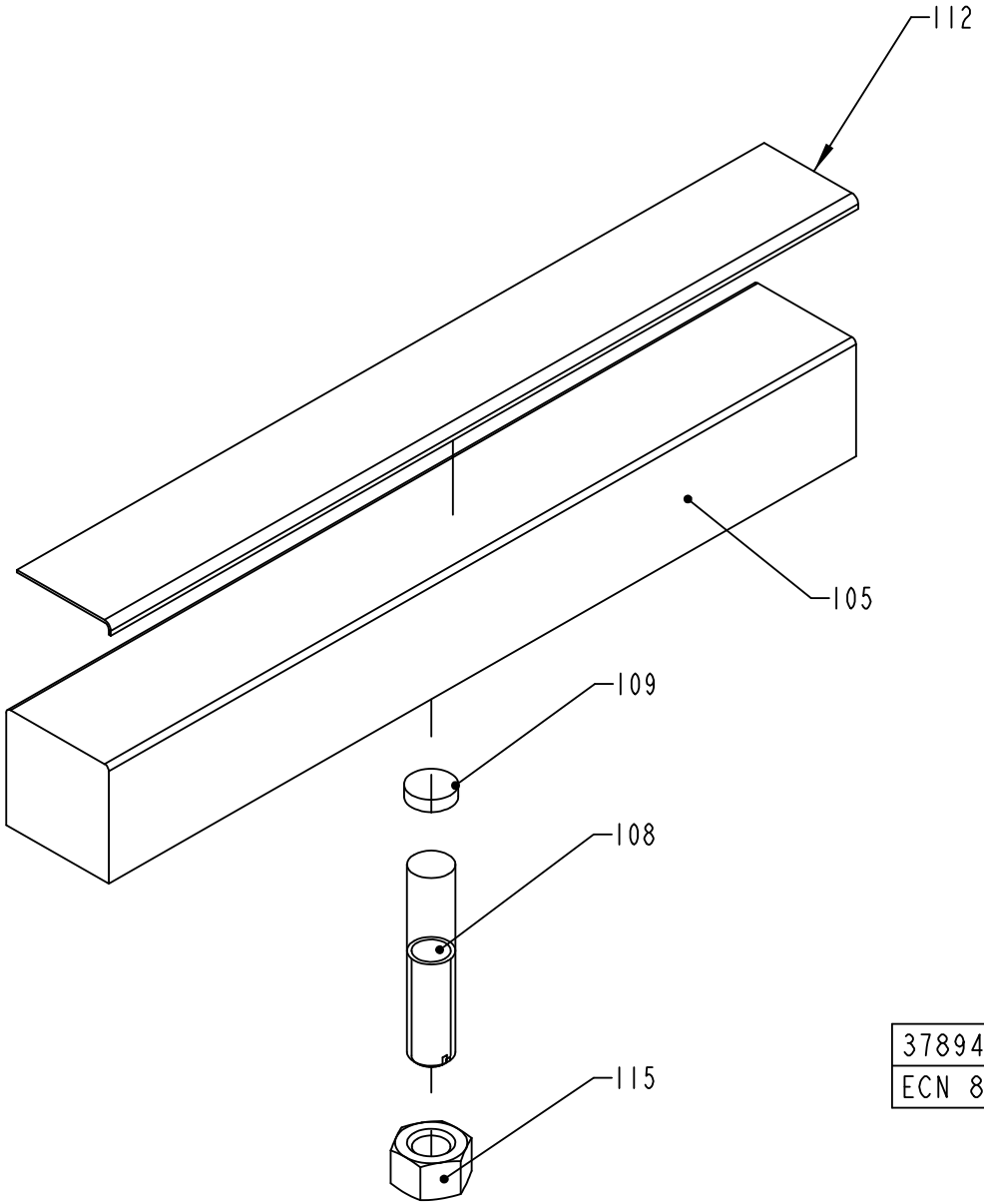

37894-1
ECN 89888

ECM: 102864 - 20020110
Group number: 37894-0100
Assembly Drawing: 37894-1_1_AB

Pos	Part No	SP	UN	Qty	Description	Page No
-						
105	37895-0000	-		1	RAIL	
108	37896-0000	-		1	DOWEL	
109	37897-0000	-		1	WASHER	
112	90144-0030	A	MM	360	TAPE	
115	312605-0324	-		1	HEXAGON NUT, M6M M16 A280	

Pos	Part No	SP	UN	Qty	Description	Page No

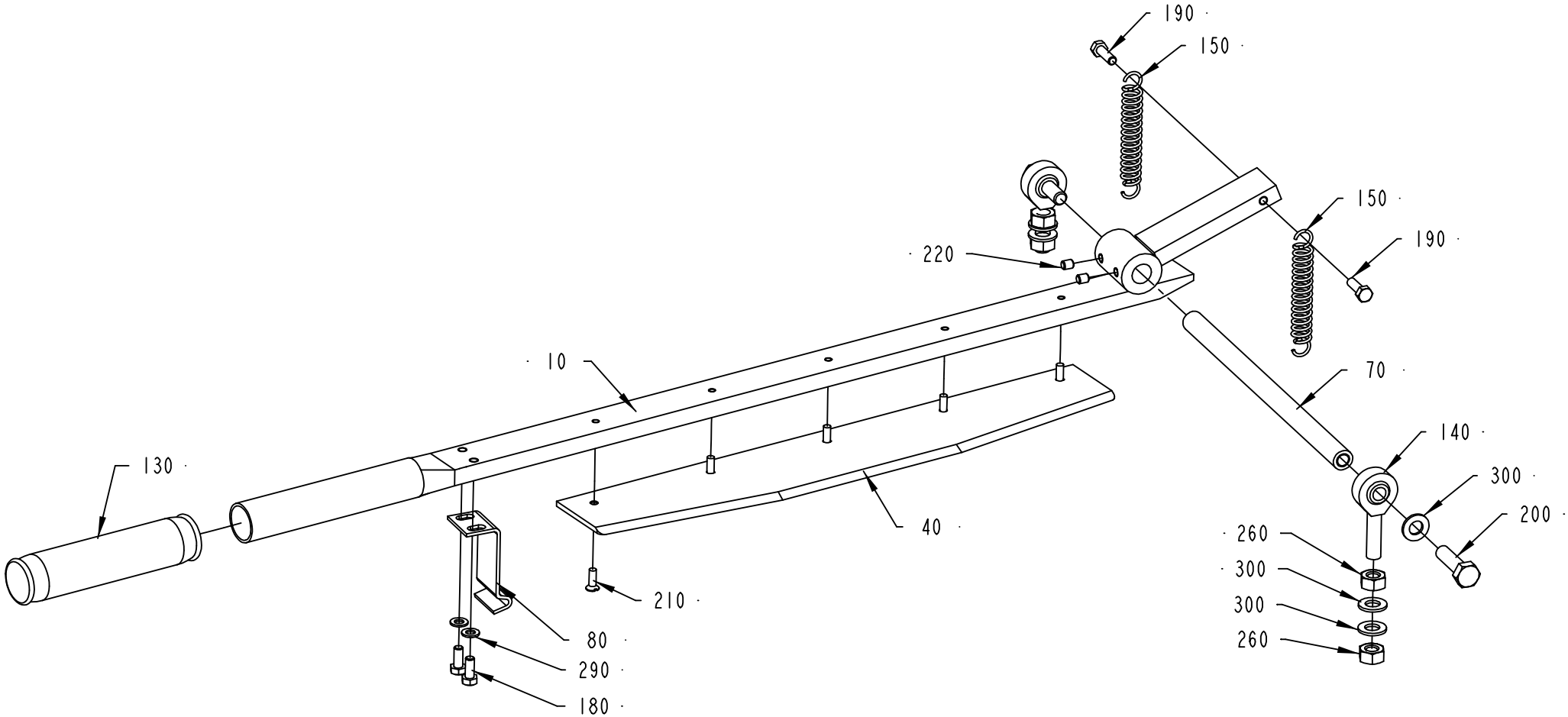

450101-3
ECM 86571

ECM: 91615 - 20020111
Group number: 450101-0300
Assembly Drawing: 450101-3_1_AA

Pos	Part No	SP	UN	Qty	Description	Page No
-						
010	571920-0000	-		1	PRESSURE ARM	
040	37900-0000	D		1	KNIFE	
070	979784-0000	-		1	SHAFT	
080	206913-0000	D		1	LOCKING LOOP	
130	90017-0001	-		1	BIKE HANDLE	
140	90115-0054	-		2	ROD END, ID=8 MM, M8X1,25	
150	90458-1241	-		2	TENSION SPRING RZ-1221	
180	312101-0327	-		2	SCREW M6S M5X12 FZB	
190	312101-0329	-		2	SCREW M6S M5X16 FZB	
200	312105-0455	-		2	SCREW M6S ISO 4017 M8X30 A480	
210	312145-0291	-		5	SCREW COUNT.SLOT.HD. 4X12 A4	
220	312316-0321	-		2	SCREW HEX.SOCK.SET CUP P.MSK6SS5X6 FZB	
260	312605-0318	-		4	HEXAGON NUT, M6M M8 A280	
290	315101-0146	-		2	WASHER PLAIN, BRB, 5,3/10 H=1	
300	315105-0165	-		6	WASHER ISO 7089-8-200 HV-A4	

Pos	Part No	SP	UN	Qty	Description	Page No

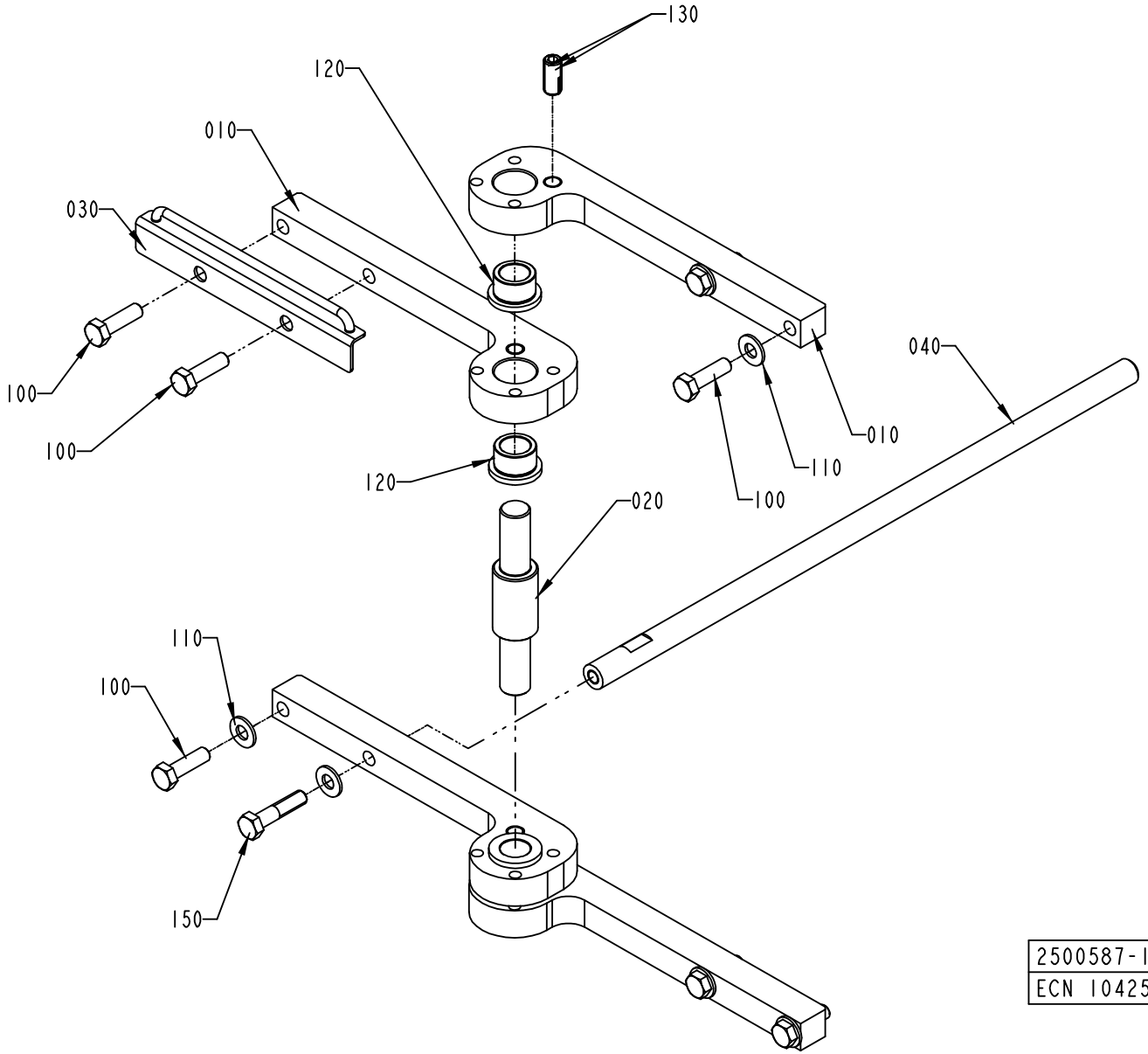

2500587-1
ECN 104253

ECM: 104333 - 20030113
Group number: 2500587-0100
Assembly Drawing: 2500587-1_1_AB

Pos	Part No	SP	UN	Qty	Description	Page No
-						
010	1558317-0000	-		4	BRACKET	
020	2501385-0000	-		1	SHAFT	
030	2500593-0000	-		1	BOW CLAMP	
040	272862-0000	-		1	HOLDER	
100	312105-0497	-		7	SCREW M6S ISO 4017 M10X35 A480	
110	315105-0173	-		6	WASHER ISO 7089-10-200 HV-A4	
120	321101-0233	-		4	FLANGE BUSHING, 20X28X20 MM	
130	90458-2078	-		2	SCREW SPRINGLOAD. SOCK. HEX HEAD M12X26	
150	312105-0500	-		1	SCREW M6S ISO 4014 M10X45 A480	

Pos	Part No	SP	UN	Qty	Description	Page No

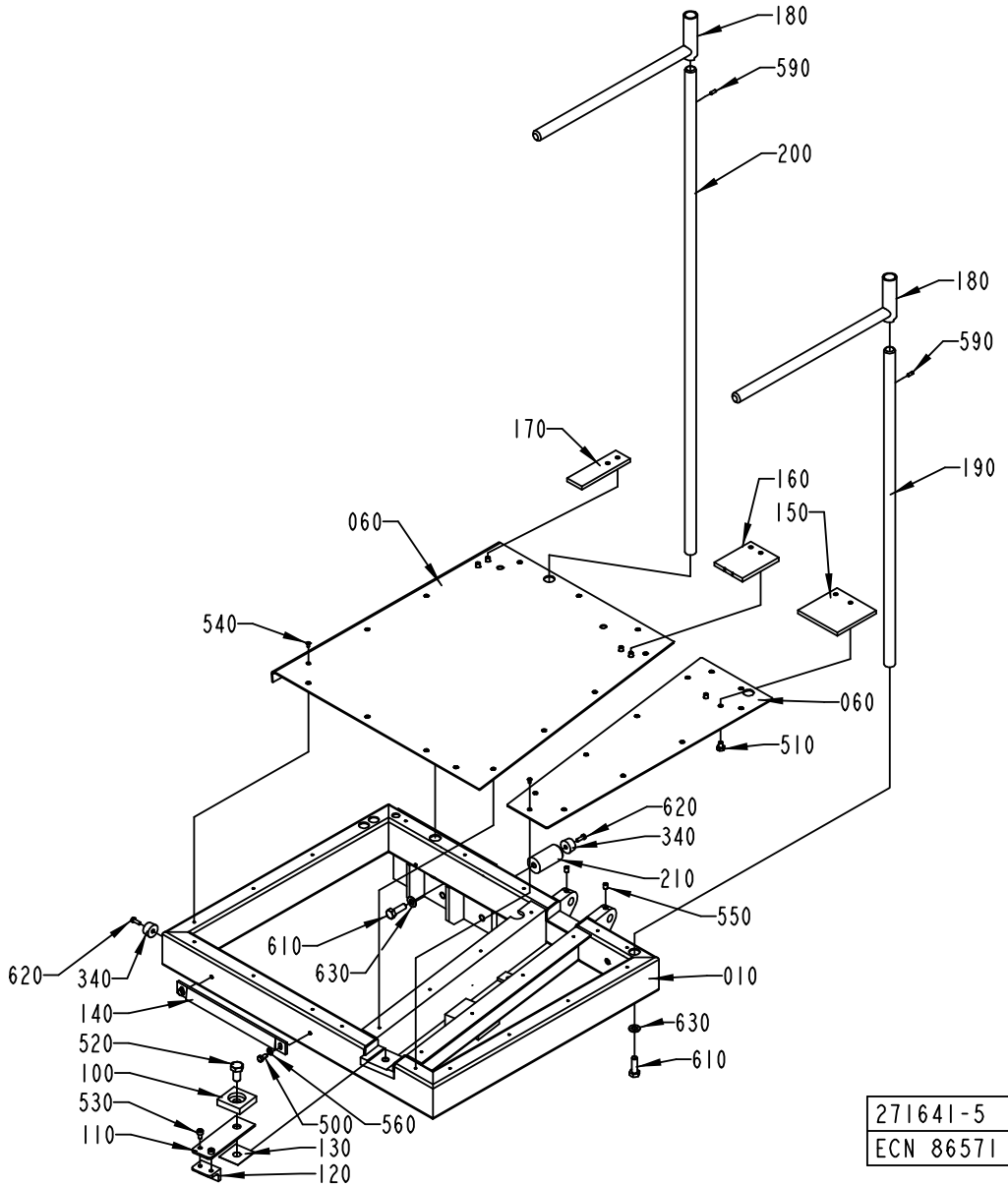

271641-5
ECN 86571

ECM: 91578 - 20020111
Group number: 271641-0500
Assembly Drawing: 271641-5_1_AA

Pos	Part No	SP	UN	Qty	Description	Page No
TBA 0125S, TBA 0100B						
150	271642-0000	-		1	RULER	
160	271643-0000	-		1	RULER	
170	271644-0000	-		1	RULER	
TBA 0160S, TBA 0200S						
150	272886-0000	-		1	RULER	
160	272887-0000	-		1	RULER	
170	272888-0000	-		1	RULER	
TBA 0250S, TBA 0200M						
150	574426-0000	D		1	RULER	
160	574427-0000	D		1	RULER	
170	574428-0000	D		1	RULER	
TBA 0330S, TBA 0300S, TBA 0180B, TBA 0200B, TBA 0284B, TBA 0250B						
150	37913-0000	D		1	RULER	
160	37916-0000	D		1	RULER	
170	37917-0000	D		1	RULER	
Common Parts						
010	37905-0000	-		1	FRAME	
050	979783-0000	-		1	PLATE	
060	979204-0000	-		1	PLATE	
100	37908-0000	-		1	PLATE	
110	37909-0000	D		1	SPRING	
120	37910-0000	D		1	LOCK	
130	37911-0000	-		1	LACE	
140	37912-0000	D		1	LOCK PLATE	
180	469141-0000	-		2	HOLDER	
190	978876-0000	-		1	SHAFT	
200	978877-0000	-		1	SHAFT	
210	2501835-0000	-		1	SHAFT	
340	90347-0005	-		2	DAMPER, NO. F 1006 B	
500	312105-0325	-		2	SCREW M6S ISO 4017 M5X10 A480	
510	312105-0362	-		6	SCREW M6S ISO 4017 M6X8 A480	
520	312105-0491	-		1	SCREW M6S ISO 4017 M10X20 A480	
530	312115-0323	-		2	SCREW ISO4762 M5X8 A4	
540	312145-0220	-		25	SCREW COUNTERS.SLOT.HD. MFS 3X6 SS	
550	312318-0362	-		2	SCREW ISO4029 M6X8 A4	
560	315105-0146	-		2	WASHER ISO 7089-5-200 HV-A4	
590	311103-0267	-		2	PARALLELL PIN, M6, 4X10 MM	
600	312105-0461	-		1	SCREW M6S ISO 4014 M8X50 A480	
610	312105-0453	-		2	SCREW M6S ISO 4017 M8X25 A480	
620	312125-0291	-		2	SCREW PAN HEAD MCS M4X12 SS	
630	315105-0165	-		3	WASHER ISO 7089-8-200 HV-A4	

Machine Type | Group Description | Used-In | Group Number | Page No

PAPER REEL HOLDER

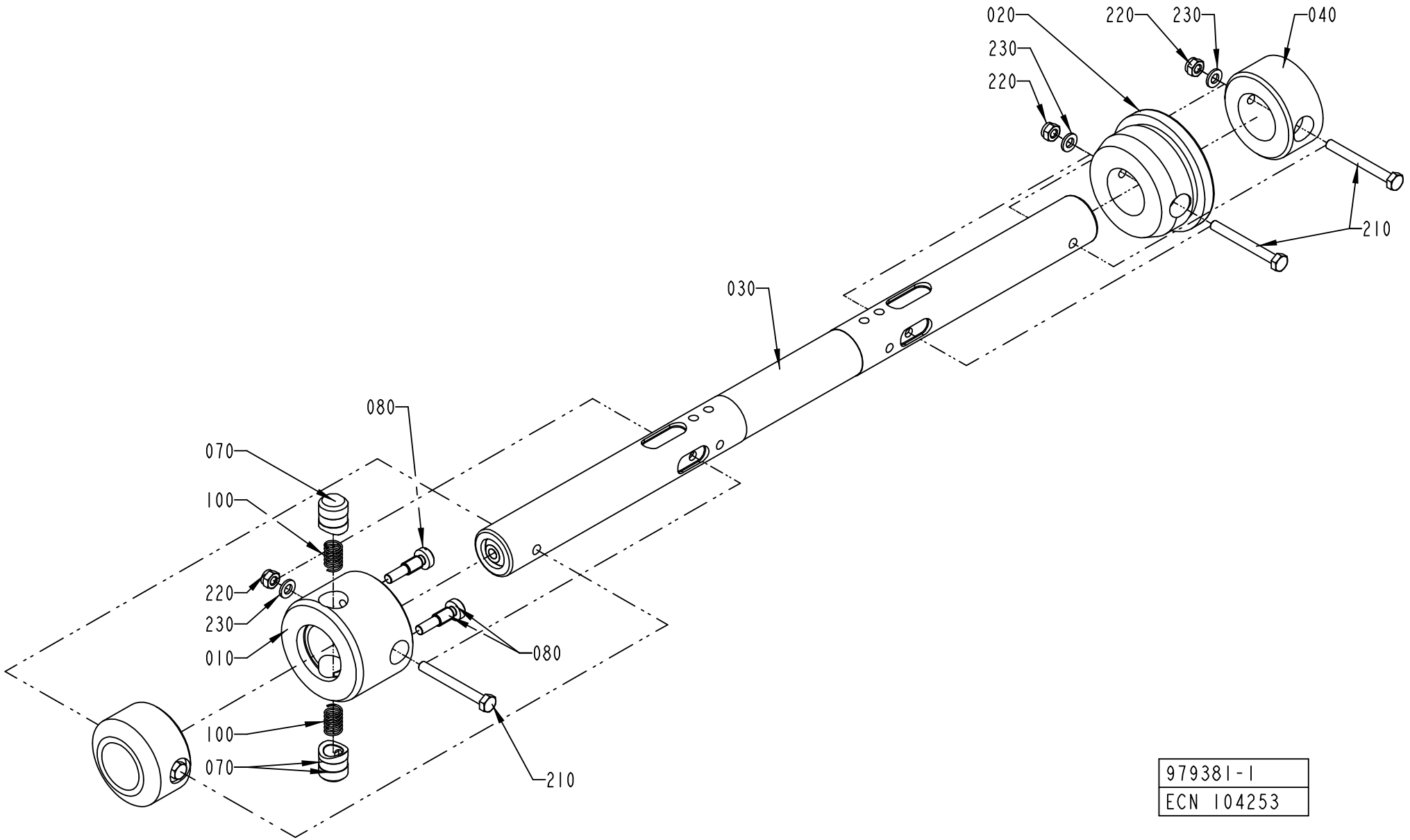

979381-1
ECN 104253

ECM: 104332 - 20030113
Group number: 979381-0100
Assembly Drawing: 979381-1_1_AC

Pos	Part No	SP	UN	Qty	Description	Page No
-						
010	271239-0000	-		1	SLEEVE	
020	272810-0001	-		1	SLEEVE	
030	979382-0000	-		1	SHAFT	
040	440259-0000	-		2	RETAINING RING	
070	272813-0000	-		2	PLUNGER	
080	271241-0000	-		2	SCREW	
100	90335-0025	-		2	COMP. SPRING 22010, 1X11X26	
210	312101-0381	-		4	SCREW M6S M6X55 FZB	
220	312812-0316	-		4	HEXAGON NUT, NY-LOCK M6 A480	
230	315101-0153	-		4	WASHER PLAIN, BRB, 6,4/12 H=1,5	

Pos	Part No	SP	UN	Qty	Description	Page No

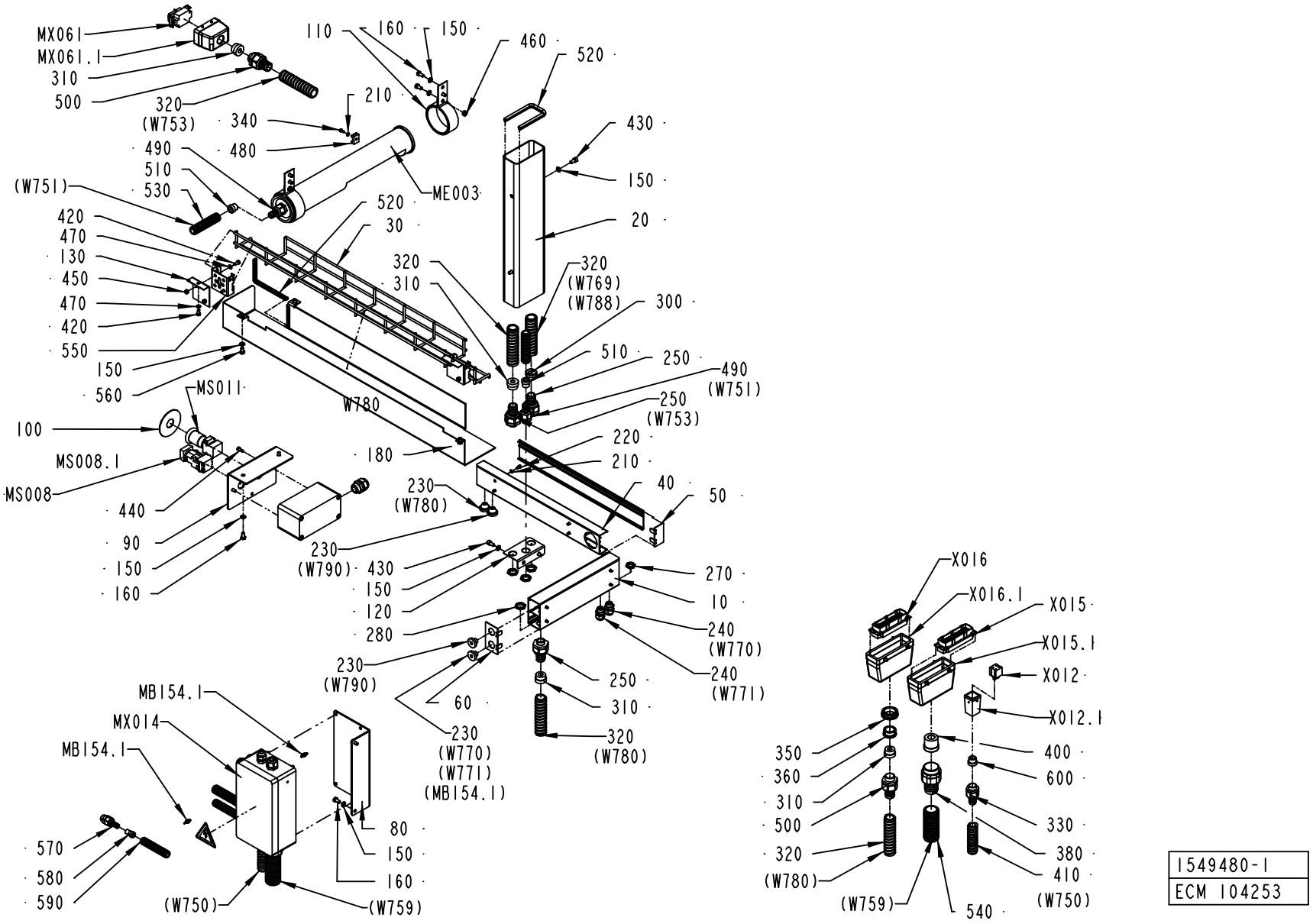

1549480-1
ECM 104253

ECM: 107791 - 20030113
Group number: 1549480-0100
Assembly Drawing: 1549480-1_1_AB

Pos	Part No	SP	UN	Qty	Description	Page No
-						
010	2501327-0000	-		1	CABLE DUCT	
020	2501328-0000	-		1	CABLE DUCT	
030	2501329-0000	-		1	CABLE DUCT	
040	2501330-0000	-		1	CABLE DUCT	
050	2501331-0000	-		1	LID	
060	2501332-0000	-		1	LID	
080	1558315-0000	-		1	BRACKET	
090	1558316-0000	-		1	BRACKET	
110	2526341-0000	-		2	LAMP HOLDER	
120	2526342-0000	-		1	BRACKET	
130	2500217-0000	-		2	BRACKET	
150	315105-0153	-		17	WASHER ISO 7089-6-200 HV-A4	
160	312105-0366	-		10	SCREW M6S M6X12 A280	
170	359705-0015	A		1	WARNING SIGN ISO, RISK OF ELECTRIC SHOCK	
180	2529564-0000	-		1	COVER	
210	315105-0136	-		9	WASHER ISO 7089-4-200 HV-A4	
220	312115-0287	-		8	SCREW ISO4762 M4X8 A4	
230	90015-0023	-		4	LEAD-IN, TET7-10, E-1458019	
240	352103-0100	-		2	CABLE GLAND, STR 9, PR15,2/PG9	
250	90457-0146	-		3	EXTENDED WITHOUT INSERT,	
260	2564115-0000	-		1	PUSH BUTTON BOX	
270	90099-0001	-		2	MUTTER PR 15,2 MäSSING	
280	90099-0002	-		4	NUT PR 18,6 BRASS	
290	90458-0307	-		1	CABLE GLAND, M20X1,5, NO.5311 1020	
300	90458-1239	-		1	GLAND, INSERT, MULTI HOLE, 1X9/1X5,5	
310	353249-0012	-		4	INSERT, SINGEL HOLE, EK 154/11	
320	90152-0051	-	M	4	SPIRAL CONDUIT, 25X18, UL 1816	
330	353243-0003	-		1	EXTENDED WITHOUT INSERT, PG11	
340	312125-0287	-		1	SCREW PAN HEAD MCS M4X8 SS	
350	90089-0005	-		1	REDUCING SLEEVE, PR37/PR28,3	
360	90089-0004	-		1	REDUCING SLEEVE, PR28,3/PR22,5	
380	353242-0003	-		1	NORMAL WITHOUT INSERT, PG29	
400	353249-0072	-		1	INSERT, SINGEL HOLE, E155/20	
410	90152-0050	-	M	4	SPIRAL CONDUIT, 20X13, UL 1313	
420	312105-0325	-		6	SCREW M6S ISO 4017 M5X10 A480	
430	312115-0366	-		4	SCREW ISO4762 M6X12 A4	
440	312125-0329	-		2	SCREW PAN HEAD MCS M5X16 SS	
450	312605-0314	-		4	HEXAGON NUT, M6M M5 A280	
460	312605-0316	-		2	HEXAGON NUT, M6M M6 A280	
470	315105-0146	-		6	WASHER ISO 7089-5-200 HV-A4	
480	352113-0203	-		1	ANCHOR PLATES FOR STRIPS, TYPE TM3S8-M0	
490	353243-0002	-		2	EXTENDED WITHOUT INSERT, PG11	
500	353243-0005	-		2	EXTENDED WITHOUT INSERT, PG16	
510	353249-0010	-		2	INSERT, SINGEL HOLE, EK 152/11	
520	90143-0060	-	MM	850	EDGE STRIP 9,5X6,3MM BLACK PVC	
530	90152-0059	-	M	4	SPIRAL CONDUIT, 18X12, UL 1211	
540	90152-0070	-	M	4	METAL HOSE, 32,5X26, UL 2621	
550	90181-0190	-		2	CABLE DUCT, WALL BRACKET, B4 MINI	
560	312105-0364	-		3	SCREW M6S ISO 4017 M6X10 A480	
570	353242-0005	-		1	NORMAL WITHOUT INSERT, PG9	
580	90458-1238	-		1	GLAND, INSERT, SINGLE HOLE,	
590	90152-0058	-	M	1	SPIRAL CONDUIT, 15X9, UL 0909	
600	353249-0011	-		1	INSERT, SINGEL HOLE, EK 153/11	
MB154.1	90232-0347	-		1	FIBRE LL3-TB01 5 308050	
ME003	90164-0015	-		1	LIGHT FIXTURE, DWDCV111B/230V 50HZ	
	90297-0007	*B*		*1*	*FLUORESCENT TUBE, PLS 11*	
MS008	90064-0085	A		1	PUSH BUTTON, RED	
MS008.1	359301-0110	-		1	SIGN "SHORT STOP"	
MS011	90064-0124	A		1	SWITCH, EM. STOP, ZB2-BS844+ZB2-BZ1045	
MS011.1	486826-0001	A		1	SIGN "EMERGENCY STOP"	
MX060	1558318-0100	-		1	CONNECTION BOX	**657, 659**
MX061	90110-0170	-		1	FEMALE INSERT 10-POLE	
MX061.1	90110-0171	-		1	COVER 10-POLE	
W780	351150-0406	-	M	4	CABLE OLFLEX 7X0,75 MM2 LIGHT/GREY	
X012	90110-0295	-		1	CONNECTOR 4 POLE + EARTH	
X012.1	90110-0371	-		1	PLUG HOOD	
X015	90110-0150	A		1	MALE INSERT 121110 0000	
X015.1	90110-0152	-		1	CABLE HOOD 24-POL 70.352.2428.1	
X016	90110-0150	-		1	MALE INSERT 121110 0000	
X016.1	90110-0152	-		1	CABLE HOOD 24-POL 70.352.2428.1	

Machine Type | Group Description | Used-In | Group Number | Page No

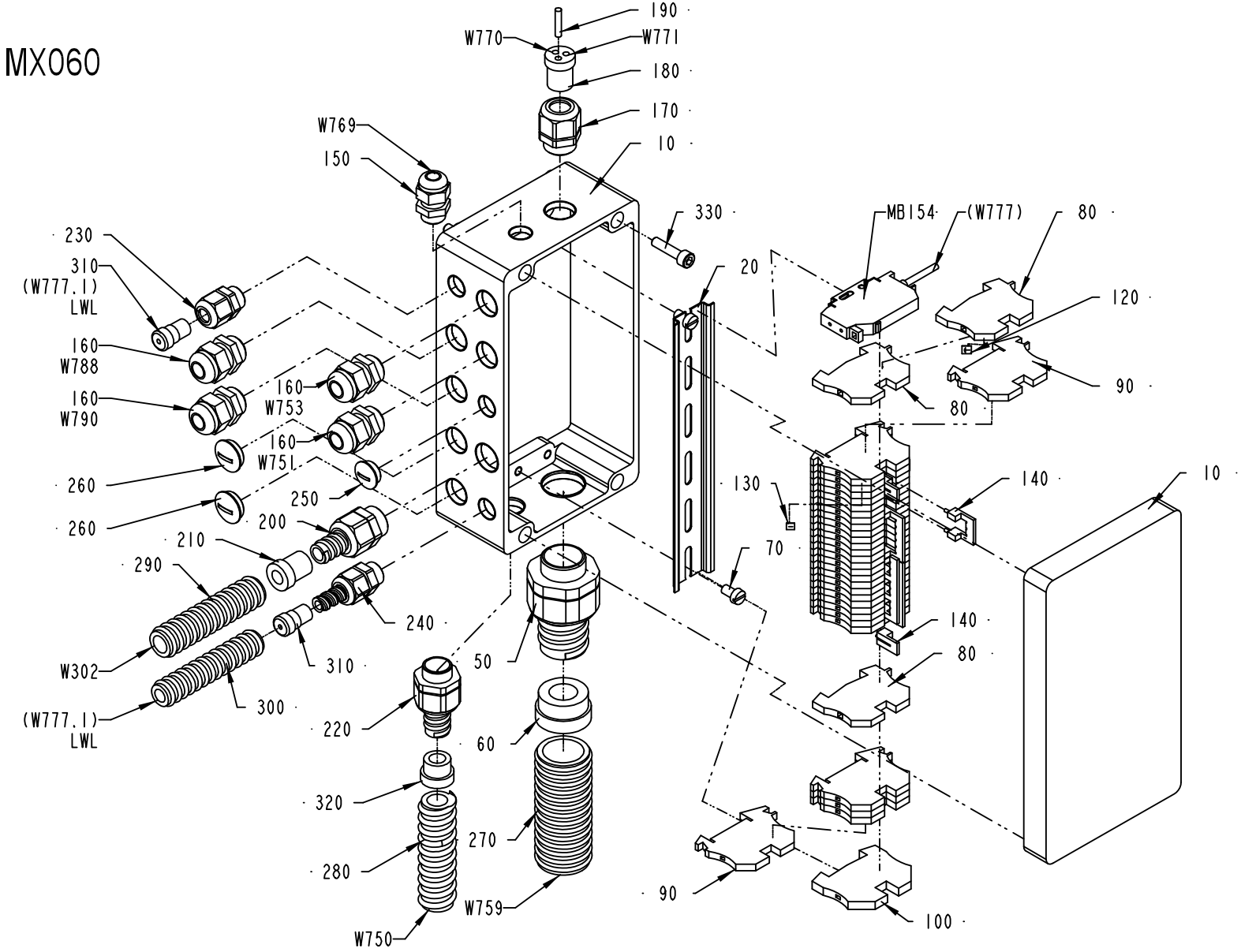
MX060
190
W770
W771
180
170
W769
10
150
330
MB154
(W777)
80
230
310
(W777.1)
LWL
20
120
160
W788
160
W790
160
W753
90
80
160
W751
260
130
140
10
250
260
200
70
210
290
140
240
80
W302
310
50
300
(W777.1)
LWL
220
60
320
270
280
W759
90
100
W750
1558318-1
ECM 104253

ECM: 107792 - 20030113
Group number: 1558318-0100
Assembly Drawing: 1558318-1_1_AB

This list covers pages from 656 to 659

Pos	Part No	SP	UN	Qty	Description	Page No
-						
010	2501265-0000	-		1	CONNECTION BOX	
020	2501266-0000	-		1	RAIL	
050	353243-0007	-		1	EXTENDED WITHOUT INSERT, PG21	
060	353249-0016	-		1	INSERT, SINGEL HOLE, EK 155/18	
070	312125-0364	-		2	SCREW SLOT.PAN HD. MCS 6X10 A480	
080	353024-0204	-		3	EARTH TERMINAL WPE 2,5	
090	353021-0212	-		30	FEED THROUGH TERMINAL, 10200.0	
100	353024-0205	-		1	EARTH TERMINAL, 1010.1	
120	359011-0818	-		1	SYMBOL 5-GW (-) 50PC	
130	359011-0807	-		2	MARKING PLATES 5-FW 1-50	
135	359011-0809	-		2	MARKING PLATES 5-FW 101-150	
140	353034-0030	-		4	BRIDGE CONNECTOR WQV 2,5/10, 10544.6	
150	352103-0101	-		1	KABELFöRSKR. ST 9, PR15,2/PG9	
160	352103-0106	-		4	CABLE GLAND, ST 11, PR18,6/PG11	
170	353240-0003	-		1	NORMAL WITHOUT INSERT, PG 13,5	
180	353249-0025	-		1	INSERT, MULTI HOLE, E152M3X4	
190	353249-0301	-		1	SEALING PIN, 4X20	
200	353242-0001	-		1	NORMAL WITHOUT INSERT, PG13,5	
210	353249-0065	-		1	INSERT, SINGEL HOLE, E152/09	
220	353249-0011	-		1	INSERT, SINGEL HOLE, EK 153/11	
230	353240-0001	-		1	NORMAL WITHOUT INSERT, PG 9	
240	353242-0005	-		1	NORMAL WITHOUT INSERT, PG9	
250	90002-0013	-		1	BLANK-OFF PLUG, PR 15,2 SKINDICHT-BLK9	
260	90002-0009	-		2	BLANK-OFF PLUG, PR 18.6 SKINDICHT-BLK11	
270	90152-0070	-	M	4	METAL HOSE, 32,5X26, UL 2621	
280	90152-0050	-	M	4	SPIRAL CONDUIT, 20X13, UL 1313	
290	90152-0059	-	M	4	SPIRAL CONDUIT, 18X12, UL 1211	
300	90152-0058	-	M	4	SPIRAL CONDUIT, 15X9, UL 0909	
310	90458-1238	-		2	GLAND, INSERT, SINGLE HOLE,	
320	353249-0003	-		1	INSERT, SINGEL HOLE, E151/11	
330	312115-0372	-		4	SCREW ISO4762 M6X25 A4	
MB154	90232-0123	A		1	PH.CELL WLL170-P135-6011723	
W302	351120-0144	-	M	4	CABLE SIHF 3X1,5MM2 GREEN/YELLOW	
W750	351150-0414	-	M	2	CABLE OLFLEX 5X1,5 MM2 LIGHT/GREY	
W751	351150-0412	-	M	2	CABLE OLFLEX 3X1,5 MM2 LIGHT/GREY	
W753	351150-0406	-	M	4	CABLE OLFLEX 7X0,75 MM2 LIGHT/GREY	
W759	351150-0425	-	M	2	CABLE OLFLEX 25X0,75 MM2 LIGHT/GREY	
W788	351150-0405	-	M	4	CABLE OLFLEX 5X0,75 MM2 LIGHT/GREY	
W790	351150-0405	-	M	4	CABLE OLFLEX 5X0,75 MM2 LIGHT/GREY	

Pos	Part No	SP	UN	Qty	Description	Page No

Machine Type	Group Description	Used-In	Group Number	Page No

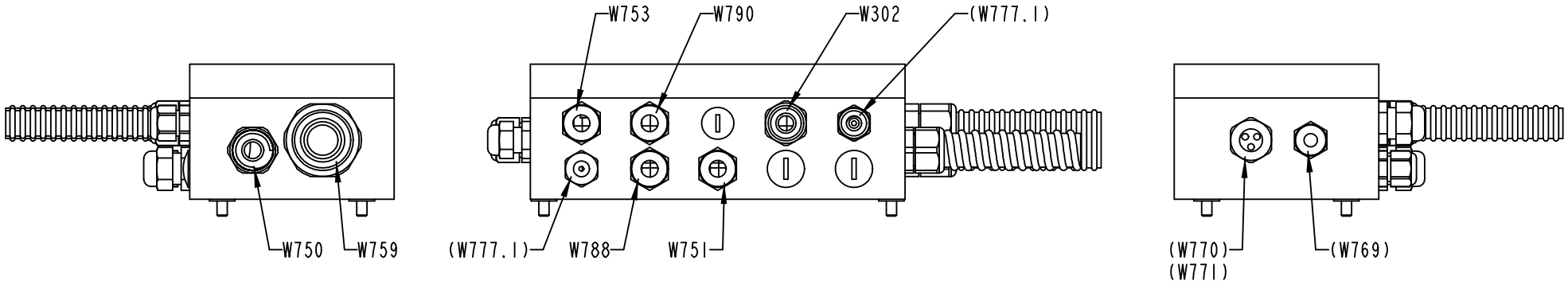

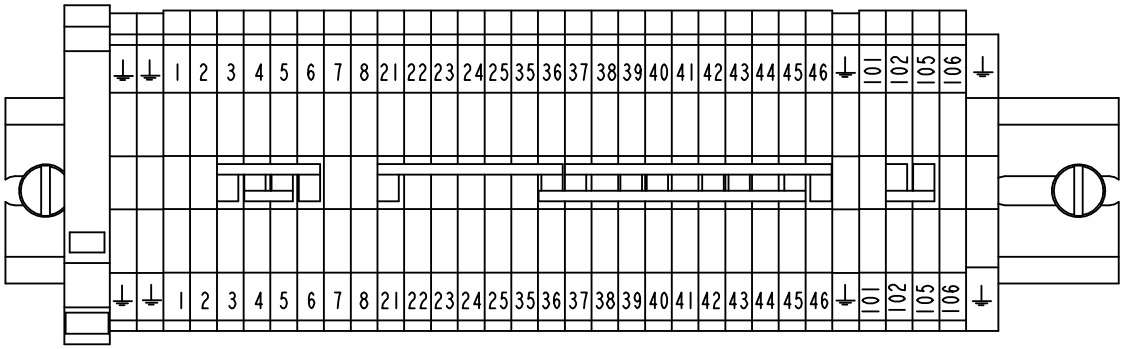

1558318-1
ECM 104253

ECM: 107792 - 20030113
Group number: 1558318-0100
Assembly Drawing: 1558318-1_2_AB

This list covers pages from 656 to 659

Pos	Part No	SP	UN	Qty	Description	Page No
-						
010	2501265-0000	-		1	CONNECTION BOX	
020	2501266-0000	-		1	RAIL	
050	353243-0007	-		1	EXTENDED WITHOUT INSERT, PG21	
060	353249-0016	-		1	INSERT, SINGEL HOLE, EK 155/18	
070	312125-0364	-		2	SCREW SLOT.PAN HD. MCS 6X10 A480	
080	353024-0204	-		3	EARTH TERMINAL WPE 2,5	
090	353021-0212	-		30	FEED THROUGH TERMINAL, 10200.0	
100	353024-0205	-		1	EARTH TERMINAL, 1010.1	
120	359011-0818	-		1	SYMBOL 5-GW (-) 50PC	
130	359011-0807	-		2	MARKING PLATES 5-FW 1-50	
135	359011-0809	-		2	MARKING PLATES 5-FW 101-150	
140	353034-0030	-		4	BRIDGE CONNECTOR WQV 2,5/10, 10544.6	
150	352103-0101	-		1	KABELFöRSKR. ST 9, PR15,2/PG9	
160	352103-0106	-		4	CABLE GLAND, ST 11, PR18,6/PG11	
170	353240-0003	-		1	NORMAL WITHOUT INSERT, PG 13,5	
180	353249-0025	-		1	INSERT, MULTI HOLE, E152M3X4	
190	353249-0301	-		1	SEALING PIN, 4X20	
200	353242-0001	-		1	NORMAL WITHOUT INSERT, PG13,5	
210	353249-0065	-		1	INSERT, SINGEL HOLE, E152/09	
220	353249-0011	-		1	INSERT, SINGEL HOLE, EK 153/11	
230	353240-0001	-		1	NORMAL WITHOUT INSERT, PG 9	
240	353242-0005	-		1	NORMAL WITHOUT INSERT, PG9	
250	90002-0013	-		1	BLANK-OFF PLUG, PR 15,2 SKINDICHT-BLK9	
260	90002-0009	-		2	BLANK-OFF PLUG, PR 18.6 SKINDICHT-BLK11	
270	90152-0070	-	M	4	METAL HOSE, 32,5X26, UL 2621	
280	90152-0050	-	M	4	SPIRAL CONDUIT, 20X13, UL 1313	
290	90152-0059	-	M	4	SPIRAL CONDUIT, 18X12, UL 1211	
300	90152-0058	-	M	4	SPIRAL CONDUIT, 15X9, UL 0909	
310	90458-1238	-		2	GLAND, INSERT, SINGLE HOLE,	
320	353249-0003	-		1	INSERT, SINGEL HOLE, E151/11	
330	312115-0372	-		4	SCREW ISO4762 M6X25 A4	
MB154	90232-0123	A		1	PH.CELL WLL170-P135-6011723	
W302	351120-0144	-	M	4	CABLE SIHF 3X1,5MM2 GREEN/YELLOW	
W750	351150-0414	-	M	2	CABLE OLFLEX 5X1,5 MM2 LIGHT/GREY	
W751	351150-0412	-	M	2	CABLE OLFLEX 3X1,5 MM2 LIGHT/GREY	
W753	351150-0406	-	M	4	CABLE OLFLEX 7X0,75 MM2 LIGHT/GREY	
W759	351150-0425	-	M	2	CABLE OLFLEX 25X0,75 MM2 LIGHT/GREY	
W788	351150-0405	-	M	4	CABLE OLFLEX 5X0,75 MM2 LIGHT/GREY	
W790	351150-0405	-	M	4	CABLE OLFLEX 5X0,75 MM2 LIGHT/GREY	

Pos	Part No	SP	UN	Qty	Description	Page No

Machine Type | Group Description | Used-In | Group Number | Page No

Tetra Pak

SPC
Spare Parts Catalogue

This page is intentionally left blank.

ECM: 137792 - 50001231
Group number: 648109-1200
Assembly Drawing:

Pos	Part No	SP	UN	Qty	Description	Page No
-						
010	1350086-0200	-		1	INSTALLATION DRAWING	
020	1350087-0200	-		1	DIAGRAM	**665**
050	2543594-0100	-		1	ELECTRICAL COMPONENTS	**667**
060	90459-0308	-		1	PAPER TROLLEY, STOCKA 32.04.250.9	
090	531345-0200	-		1	PERSONAL PROTECT. EQ H2O2	**669**
100	77099-0300	-		1	TOOL KIT	**671**
110	2541126-0100	-		1	INSTALLATION ACCESSORIES	**673**
110	1520972-0000	-		5	TPO-BAR	
120	2501528-0100	-		1	PLMS KIT	**675**
120	1519952-0000	-		5	DOLLY	
130	2541886-0100	-		1	START-UP KIT	**689**
310	579899-0000	-		1	LIFTING UNIT	
320	441725-0000	-		1	COVERING PLATE	
330	90220-0104	-	M	20	SCR. CABLE 4X1,5MM2	
340	351150-0405	-	M	100	CABLE OLFLEX 5X0,75 MM2 LIGHT/GREY	
50	2531465-0000	-		1	SUPPORT	
600	579765-0000	-		1	MACHINE SIGN CE	
610	979548-0000	-		8	MACHINE PLATE	
900	90003-0422	-		1	CORRUGATED CARDBOARD BOX	
910	90347-0079	-		10	DAMPER TFE 601	

Pos	Part No	SP	UN	Qty	Description	Page No

Machine Type | Group Description | Used-In | Group Number | Page No

This page is intentionally left blank.

ECM: 118282 - 20030228
Group number: 1350087-0200
Assembly Drawing:

Pos	Part No	SP	UN	Qty	Description	Page No
ASU						
020	1511567-0000	-		1	AIR DIAGRAM ASU	
NOTCSB						
010	1348964-0000	-		1	AIR DIAGRAM	
TCSB						
080	2605572-0000	-		1	AIR DIAGRAM	
Common Parts						
030	2569978-0000	-		1	WATER DIAGRAM	
040	2569977-0000	-		1	ASEPTIC DIAGRAM	
050	2569976-0000	-		1	VALVE PANEL	
060	2569980-0000	-		1	LUBRIFICATION DIAGRAM	
070	2569979-0000	-		1	HYDRAULIC SYSTEM	

Pos	Part No	SP	UN	Qty	Description	Page No

This page is intentionally left blank.

ECM: 106690 - 20020514
Group number: 2543594-0100
Assembly Drawing:

Pos	Part No	SP	UN	Qty	Description	Page No
-						
010	90082-0301	-		3	OVERVOLTOLTAGE PROTECTOR	
020	90064-0315	-		1	LAMP REMOVER, NO:700	
030	90332-0325	-		1	PAPER FOR RECORDER 90332-20	
040	90332-0324	-		1	INK WHEEL	
050	779910-0101	-		1	PADLOCK	
060	90233-0027	-		5	TUBE FUSE, 16A	
	90233-0305	*C*		*1*	*INDICATOR*	
070	90233-0027	-		5	TUBE FUSE, 16A	
	90233-0305	*C*		*1*	*INDICATOR*	
080	90233-0029	-		5	TUBE FUSE, 25A	

Pos	Part No	SP	UN	Qty	Description	Page No

This page is intentionally left blank.

ECM: 72190 - 19990628
Group number: 531345-0200
Assembly Drawing:

Pos	Part No	SP	UN	Qty	Description	Page No	Pos	Part No	SP	UN	Qty	Description	Page No
-													
	90303-0013	-		1	APRON								
	90303-0012	-		1	PROTECTIVE GLOVES								
	90303-0011	-		1	PROTECTIVE GOGGLES								

This page is intentionally left blank.

ECM: 103434 - 20020514
Group number: 77099-0300
Assembly Drawing:

Pos	Part No	SP	UN	Qty	Description	Page No
TBA						
020	72947-0000	-		1	HOOK SPANNER	
040	76131-0000	-		1	ASSEMBLY CONE	
050	76132-0000	-		1	ASSEMBLY TOOL	
060	78801-0000	-		1	CALIBRATION TOOL	
130	777150-0801	-		2	KEY SET ,SEXKANT	

Pos	Part No	SP	UN	Qty	Description	Page No

This page is intentionally left blank.

ECM: 103435 - 20020514
Group number: 2541126-0100
Assembly Drawing:

Pos	Part No	SP	UN	Qty	Description	Page No
-						
010	1512848-0000	-		1	BRACKET	
300	90458-1960	-		2	STRETCHING SCREW, 468-697MM MAX2950KG	
310	90458-1959	-		8	LIFTING EYE BOLT, LGB (3) 3T M24	
320	312105-0463	-		4	SCREW M6S ISO 4014 M8X60 A480	

Pos	Part No	SP	UN	Qty	Description	Page No

This page is intentionally left blank.

ECM: 91113 - 20020514
Group number: 2501528-0100
Assembly Drawing:

Pos	Part No	SP	UN	Qty	Description	Page No
TBA						
	2501547-0100	-		1	QUEUE GUARD	**677**
	359000-0104	-		10	MARKING CO01/3"4"	
	359000-0103	-		10	MARKING CO01/3"3"	
	359000-0102	-		10	MARKING CO01/3"2"	
	359000-0101	-		10	MARKING CO01/3"1"	
	359000-0100	-		10	MARKING CO01/3"0"	
	359000-0105	-		10	MARKING CO01/3"5"	
	359000-0109	-		10	MARKING CO01/3"9"	
	359000-0108	-		10	MARKING CO01/3"8"	
	359000-0107	-		10	MARKING CO01/3"7"	
	359000-0106	-		10	MARKING CO01/3"6"	
	353001-0102	-		50	END SLEEVE 0,75 MM2	
	90110-0518	-		5	PLINTH 15 PIN	
	353001-0101	-		50	END SLEEVE 0,5 MM2	
	90110-0383	-		5	CONTACT COVER 15 PIN	
MA451	90453-0001	-		1	MODEM MA-12	
MX022	2510844-0100	-		1	CONNECTION BOX	**679**
Common Parts						
	2501472-0100	-		1	COUNTER	**681**
	2501471-0100	-		1	COUNTER	**683**
MX020	2501466-0100	-		1	CONNECTION BOX	**685**
MX021	2501465-0100	-		1	CONNECTION BOX	**687**
W951	90220-0091	-	M	200	PAIR TWISTED CABLE 2X2X0,25MM2	
W952	90220-0091	-	M	200	PAIR TWISTED CABLE 2X2X0,25MM2	
W956	90041-0068	-		1	DATACABLE MODEM PC	

Pos	Part No	SP	UN	Qty	Description	Page No

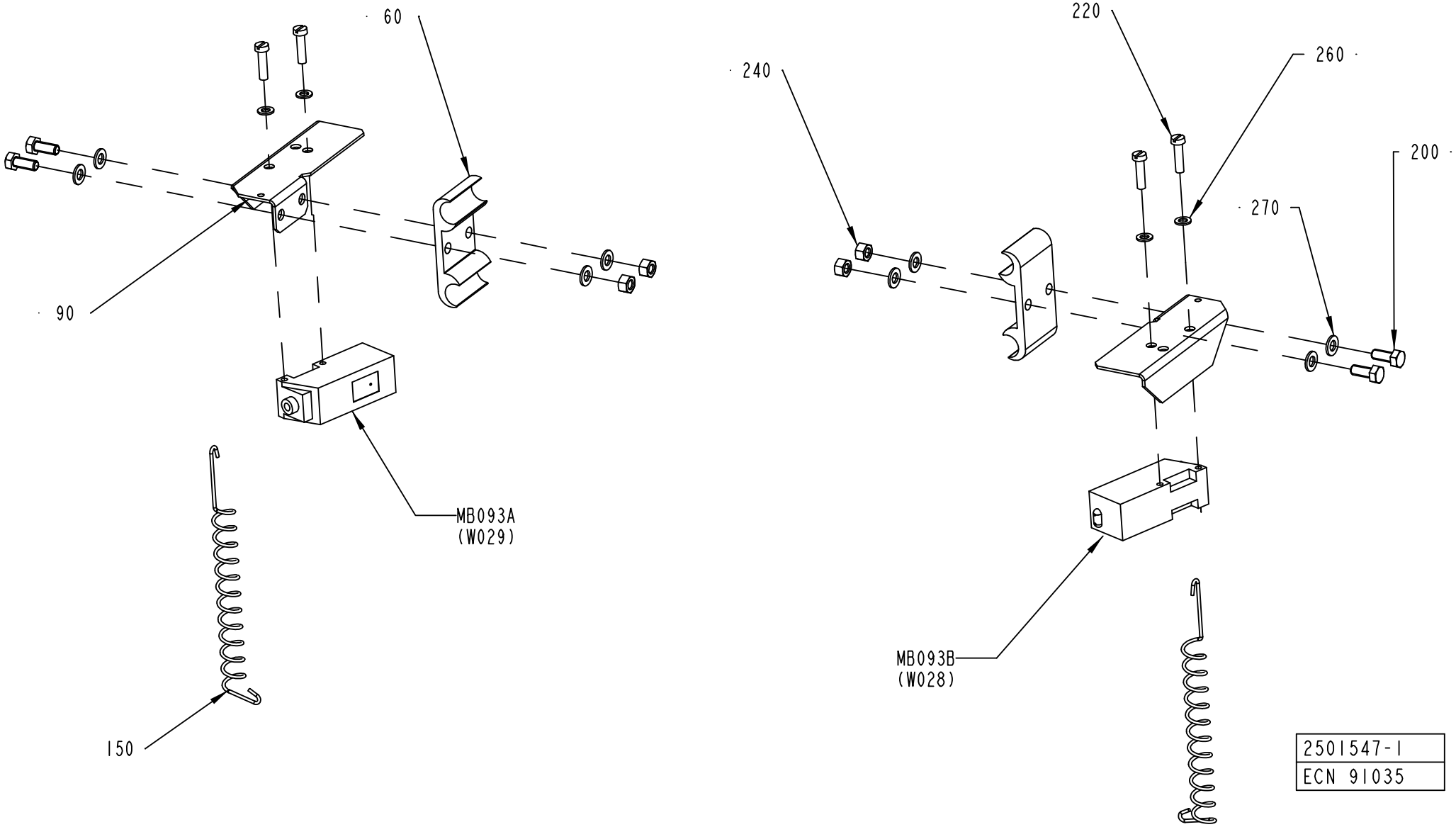
60
90
MB093A
(W029)
150
220
260
240
200
270
MB093B
(W028)
2501547-1
ECN 91035

ECM: 91168 - 20020514
Group number: 2501547-0100
Assembly Drawing: 2501547-1_1_AA

Pos	Part No	SP	UN	Qty	Description	Page No
TBA 0125S, TBA 0100B						
060	1020638-0000	-		2	HOLDER	
TBA 0330S, TBA 0300S, TBA 0180B, TBA 0160S, TBA 0200B, TBA 0250S, TBA 0284B, TBA 0200S, TBA 0200M, TBA 0250B						
060	1020637-0000	-		2	HOLDER	
Common Parts						
090	1086888-0000	-		2	COVER	
150	532412-0000	-		2	SPRING	
200	312105-0327	-		4	SCREW M6S ISO 4017 M5X12 A480	
220	312125-0293	-		4	SCREW PAN HEAD MCS M4X16 SS	
240	312605-0314	-		4	HEXAGON NUT, M6M M5 A280	
260	315105-0136	-		4	WASHER BRB4,3XRFR	
270	315105-0146	-		8	WASHER BRB5,3X10RFR	
MB093A	90232-0103	C		1	PH.CELL E3S-CT61-L-5M	
MB093B	90232-0104	C		1	PH.CELL E3S-CT61-D-5M	

Pos	Part No	SP	UN	Qty	Description	Page No

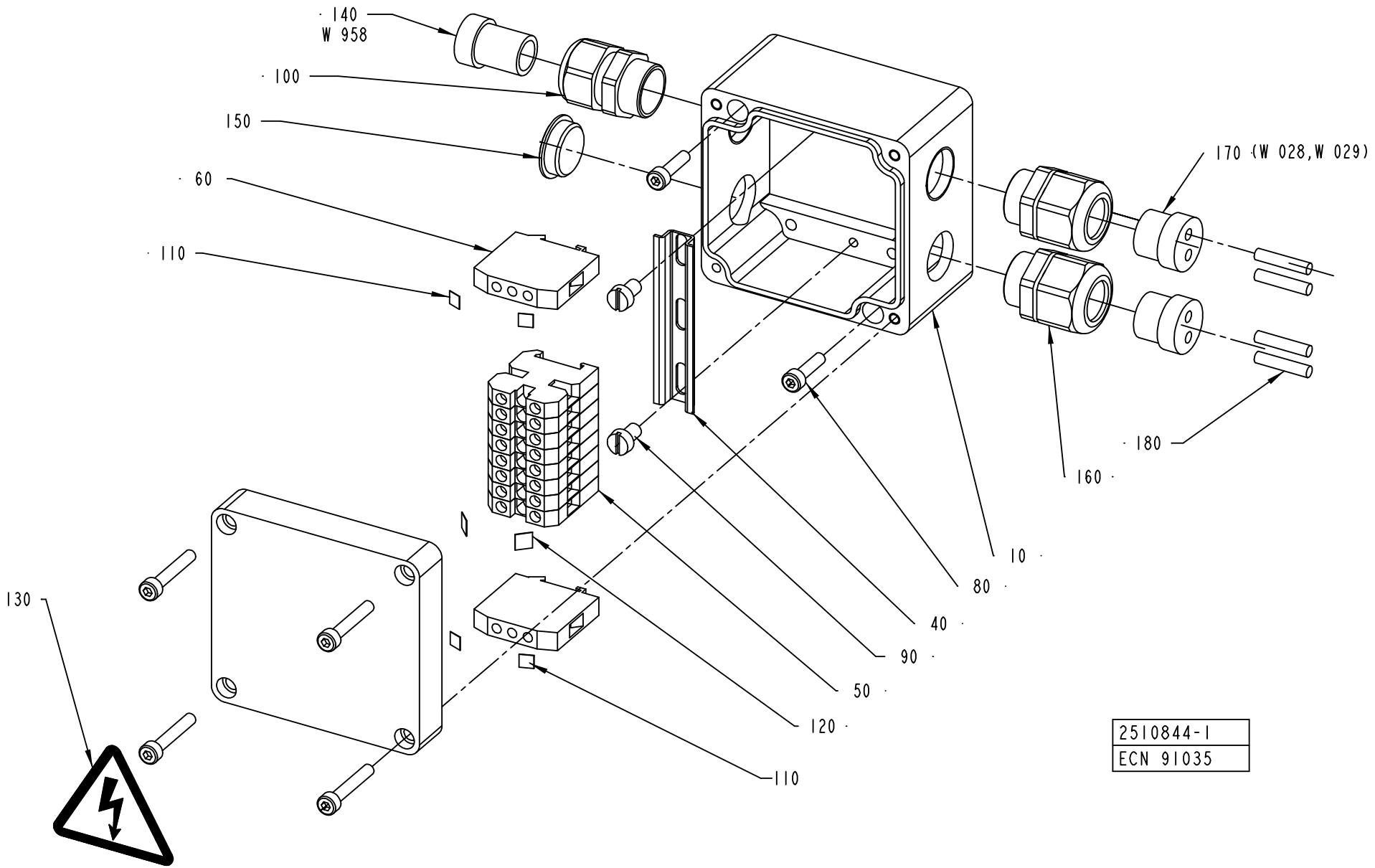
· 140
W 958
· 100
150
· 60
· 110
170 (W 028,W 029)
· 180
160 ·
10 ·
80 ·
40 ·
90 ·
50 ·
120 ·
110
130
2510844-1
ECN 91035

ECM: 95640 - 20020514
Group number: 2510844-0100
Assembly Drawing: 2510844-1_1_AA

Pos	Part No	SP	UN	Qty	Description	Page No
-						
010	1349568-0000	-		1	CONNECTION BOX	
040	90077-0328	-	M	65	RAIL TS15/5	
050	90077-0079	-		8	FEED THROUGH TERMINAL, 02943.6	
060	90135-0026	-		2	EARTH TERMINAL, 3802.6	
080	312115-0293	-		2	SCREW ISO4762 M4X16 A4	
090	312125-0323	-		2	SCREW PAN HEAD MCS M5X8 SS	
100	353240-0002	-		1	NORMAL WITHOUT INSERT, PG 11	
110	359011-0819	-		4	MARKING PLATES 5-GW (EARTH)	
120	359011-0821	-		2	SET OF SIGNS 6-FW 1-50	
130	359705-0015	-		1	WARNING SIGN ISO, RISK OF ELECTRIC SHOCK	
140	353249-0003	-		1	INSERT, SINGEL HOLE, E151/11	
150	90002-0009	-		1	BLANK-OFF PLUG, PR 18.6 SKINDICHT-BLK11	
160	353241-0002	-		2	EXTENDED WITHOUT INSERT, PG 11	
160	353249-0036	-		2	INSERT, MULTI HOLE, EK152 M 2X4	
180	353249-0301	-		4	SEALING PIN, 4X20	
200	353001-0113	-		2	END SLEEVE 0,75MM2	
210	359000-0201	-		1	MARKING CO02/3"1"	
220	359000-0204	-		1	MARKING CO02/3"4"	
W958	351150-0405	-	M	40	CABLE OLFLEX 5X0,75 MM2 LIGHT/GREY	

Pos	Part No	SP	UN	Qty	Description	Page No

Machine Type | Group Description | Used-In | Group Number | Page No

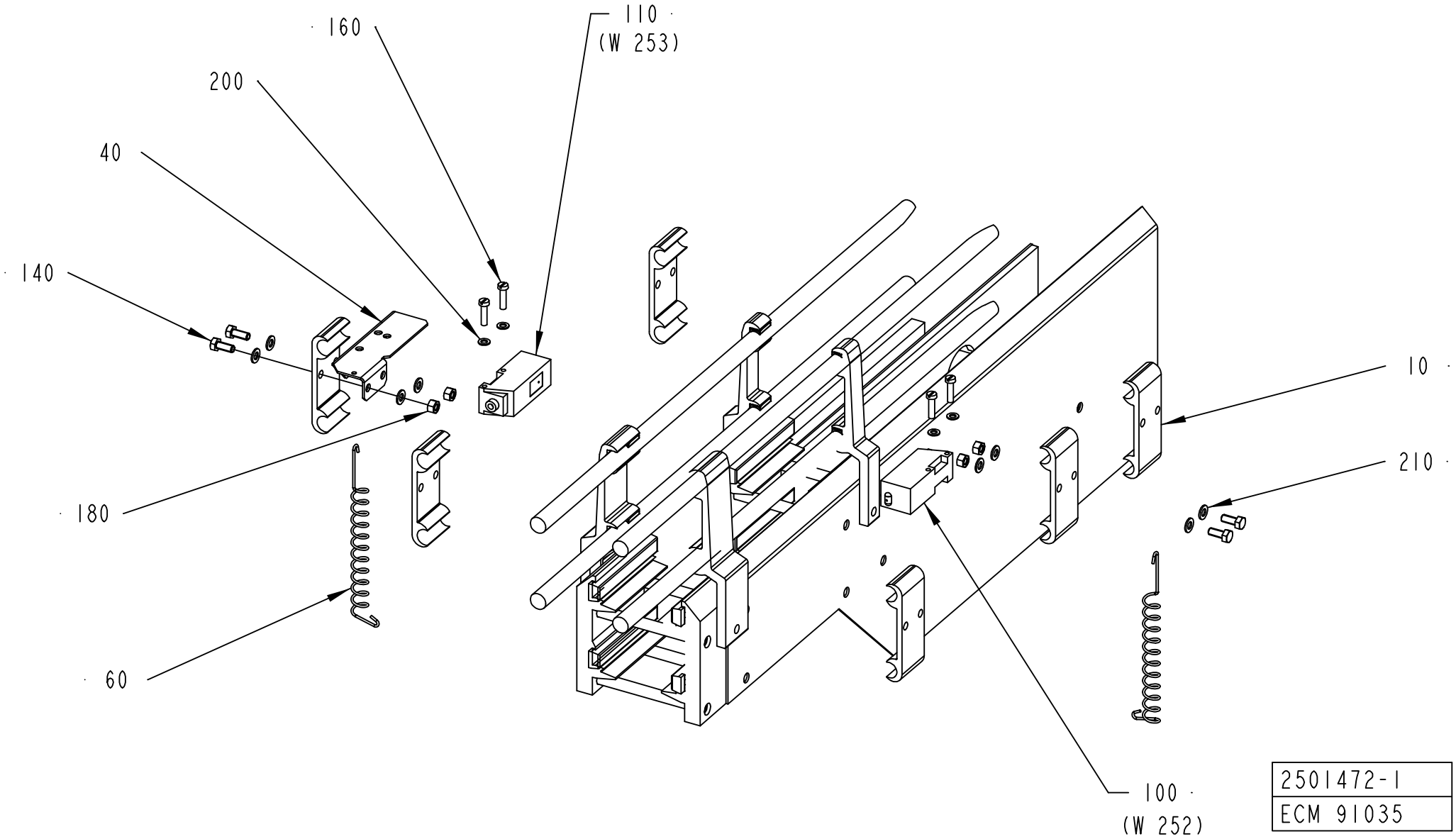
160
110
(W 253)
200
40
140
180
60
10
210
100
(W 252)
2501472-1
ECM 91035

ECM: 91093 - 20020514
Group number: 2501472-0100
Assembly Drawing: 2501472-1_1_AA

Pos	Part No	SP	UN	Qty	Description	Page No
-						
010	1020637-0000	-		6	HOLDER	
030	1020638-0000	-		6	HOLDER	
040	1086888-0000	-		2	COVER	
060	532412-0000	-		2	SPRING	
070	1478659-0000	-		4	BRACKET	
140	312105-0327	-		16	SCREW M6S ISO 4017 M5X12 A480	
150	312105-0323	-		2	SCREW M6S ISO 4017 M5X8 A480	
160	312125-0293	-		4	SCREW PAN HEAD MCS M4X16 SS	
180	312605-0314	-		16	HEXAGON NUT, M6M M5 A280	
190	312705-0314	-		2	NUT HEX. DOMED CAP MHM-6 M5 A280	
200	315105-0136	-		8	WASHER BRB4,3XRFR	
210	315105-0146	-		12	WASHER BRB5,3X10RFR	
MB092A	90232-0103	-		1	PH.CELL E3S-CT61-L-5M	
MB092B	90232-0104	-		1	PH.CELL E3S-CT61-D-5M	

Pos	Part No	SP	UN	Qty	Description	Page No

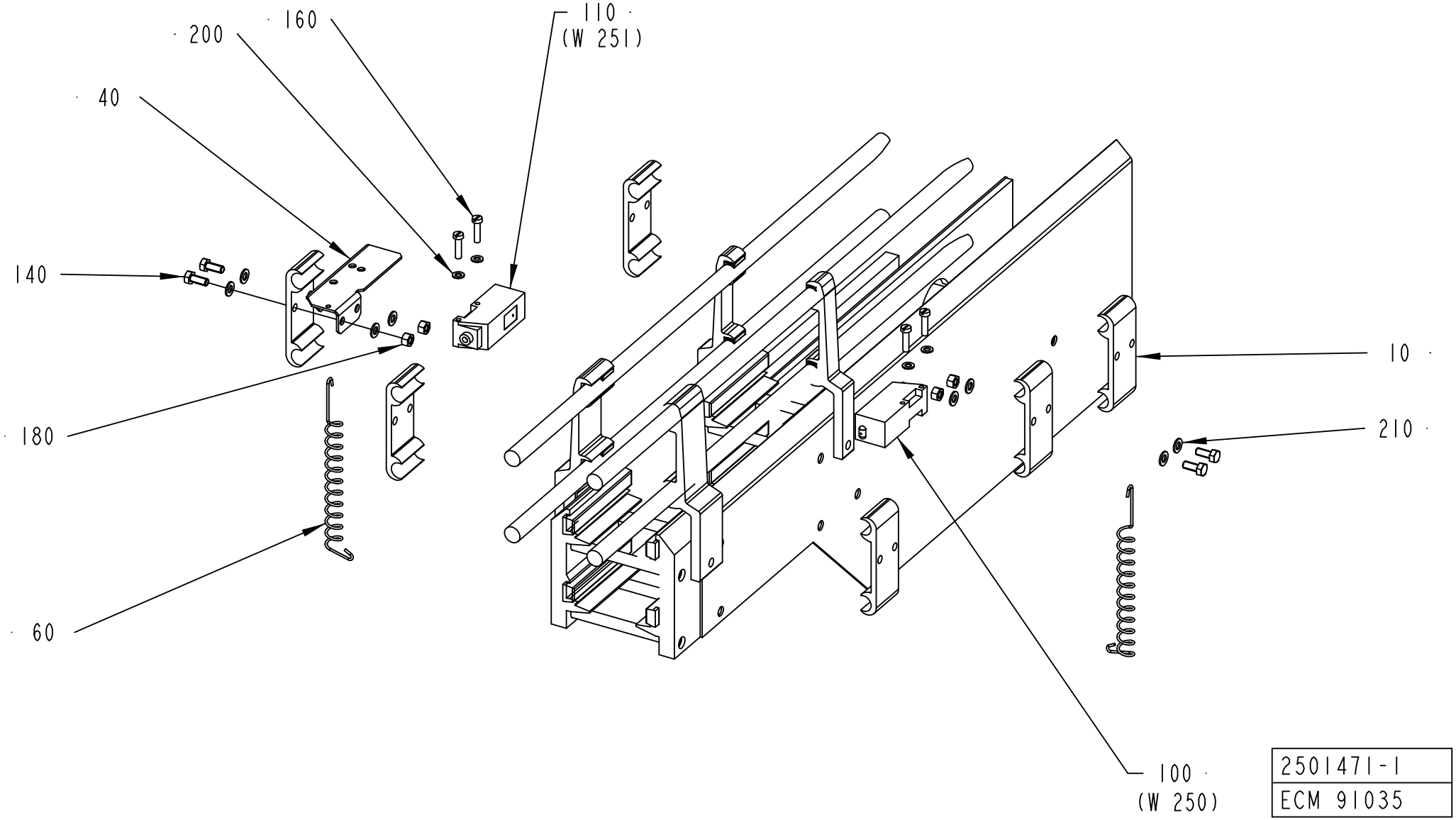

2501471-1
ECM 91035

ECM: 91092 - 20020514
Group number: 2501471-0100
Assembly Drawing: 2501471-1_1_AA

Pos	Part No	SP	UN	Qty	Description	Page No
-						
010	1020637-0000	-		6	HOLDER	
030	1020638-0000	-		6	HOLDER	
040	1086888-0000	-		2	COVER	
060	532412-0000	-		2	SPRING	
070	1478659-0000	-		4	BRACKET	
140	312105-0327	-		16	SCREW M6S ISO 4017 M5X12 A480	
150	312105-0323	-		2	SCREW M6S ISO 4017 M5X8 A480	
160	312125-0293	-		4	SCREW PAN HEAD MCS M4X16 SS	
180	312605-0314	-		16	HEXAGON NUT, M6M M5 A280	
190	312705-0314	-		2	NUT HEX. DOMED CAP MHM-6 M5 A280	
200	315105-0136	-		8	WASHER BRB4,3XRFR	
210	315105-0146	-		12	WASHER BRB5,3X10RFR	
MB091A	90232-0103	-		1	PH.CELL E3S-CT61-L-5M	
MB091B	90232-0104	-		1	PH.CELL E3S-CT61-D-5M	

Pos	Part No	SP	UN	Qty	Description	Page No

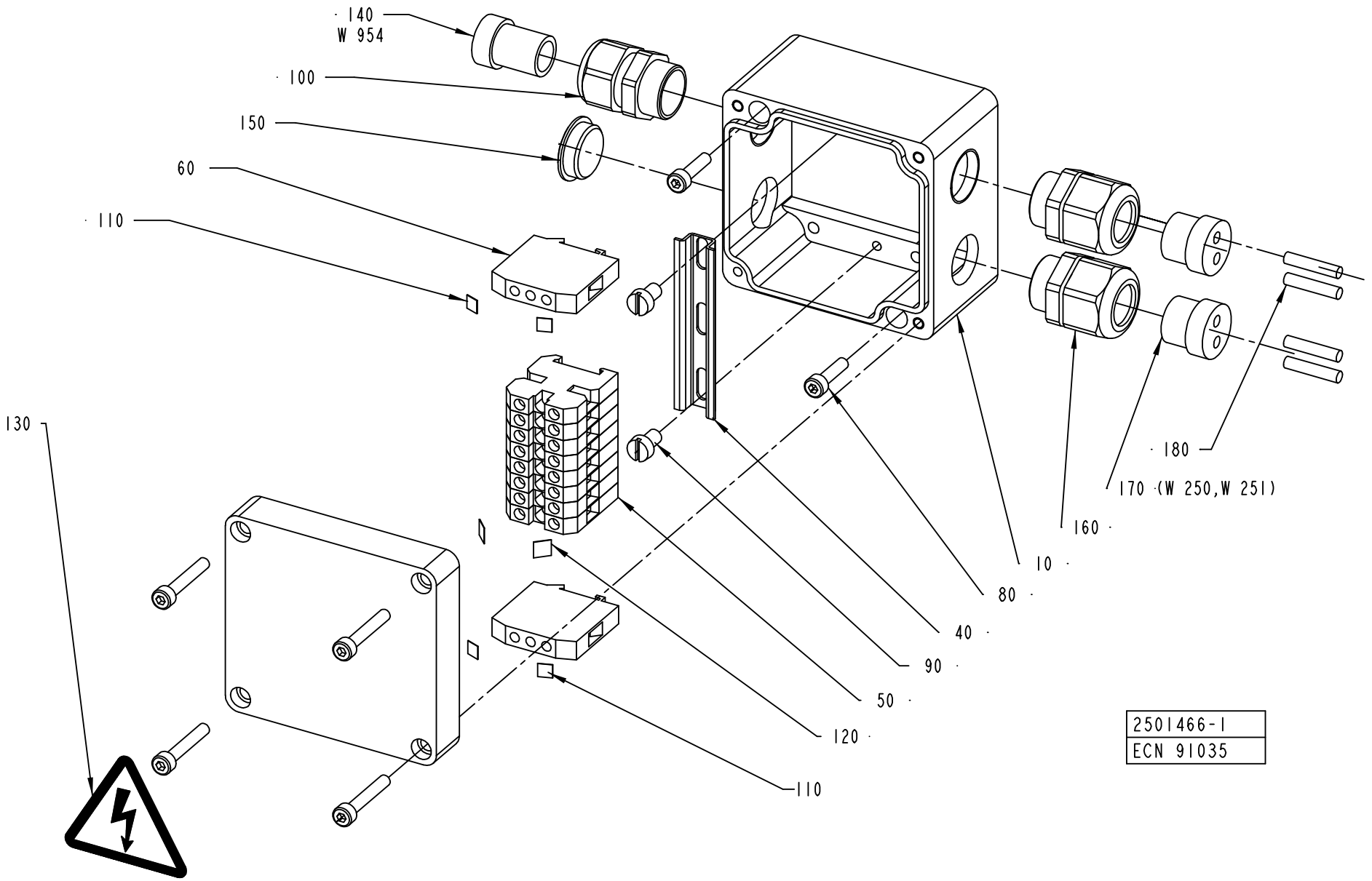
140
W 954
100
150
60
110
130
180
170 (W 250,W 251)
160
10
80
40
90
50
120
110
2501466-1
ECN 91035

ECM: 91048 - 20020514
Group number: 2501466-0100
Assembly Drawing: 2501466-1_1_AA

Pos	Part No	SP	UN	Qty	Description	Page No
-						
010	1349568-0000	-		1	CONNECTION BOX	
040	90077-0328	-	M	65	RAIL TS15/5	
050	90077-0079	-		8	FEED THROUGH TERMINAL, 02943.6	
060	90135-0026	-		2	EARTH TERMINAL, 3802.6	
080	312115-0293	-		2	SCREW ISO4762 M4X16 A4	
090	312125-0323	-		2	SCREW PAN HEAD MCS M5X8 SS	
100	353240-0002	-		1	NORMAL WITHOUT INSERT, PG 11	
110	359011-0819	-		4	MARKING PLATES 5-GW (EARTH)	
120	359011-0821	-		2	SET OF SIGNS 6-FW 1-50	
130	359705-0015	-		1	WARNING SIGN ISO, RISK OF ELECTRIC SHOCK	
140	353249-0003	-		1	INSERT, SINGEL HOLE, E151/11	
150	90002-0009	-		1	BLANK-OFF PLUG, PR 18.6 SKINDICHT-BLK11	
160	353241-0002	-		2	EXTENDED WITHOUT INSERT, PG 11	
160	353249-0036	-		2	INSERT, MULTI HOLE, EK152 M 2X4	
180	353249-0301	-		4	SEALING PIN, 4X20	
200	353001-0113	-		2	END SLEEVE 0,75MM2	
210	359000-0201	-		1	MARKING CO02/3"1"	
220	359000-0204	-		1	MARKING CO02/3"4"	
W954	351150-0405	-	M	20	CABLE OLFLEX 5X0,75 MM2 LIGHT/GREY	

Pos	Part No	SP	UN	Qty	Description	Page No

Machine Type | Group Description | Used-In | Group Number | Page No

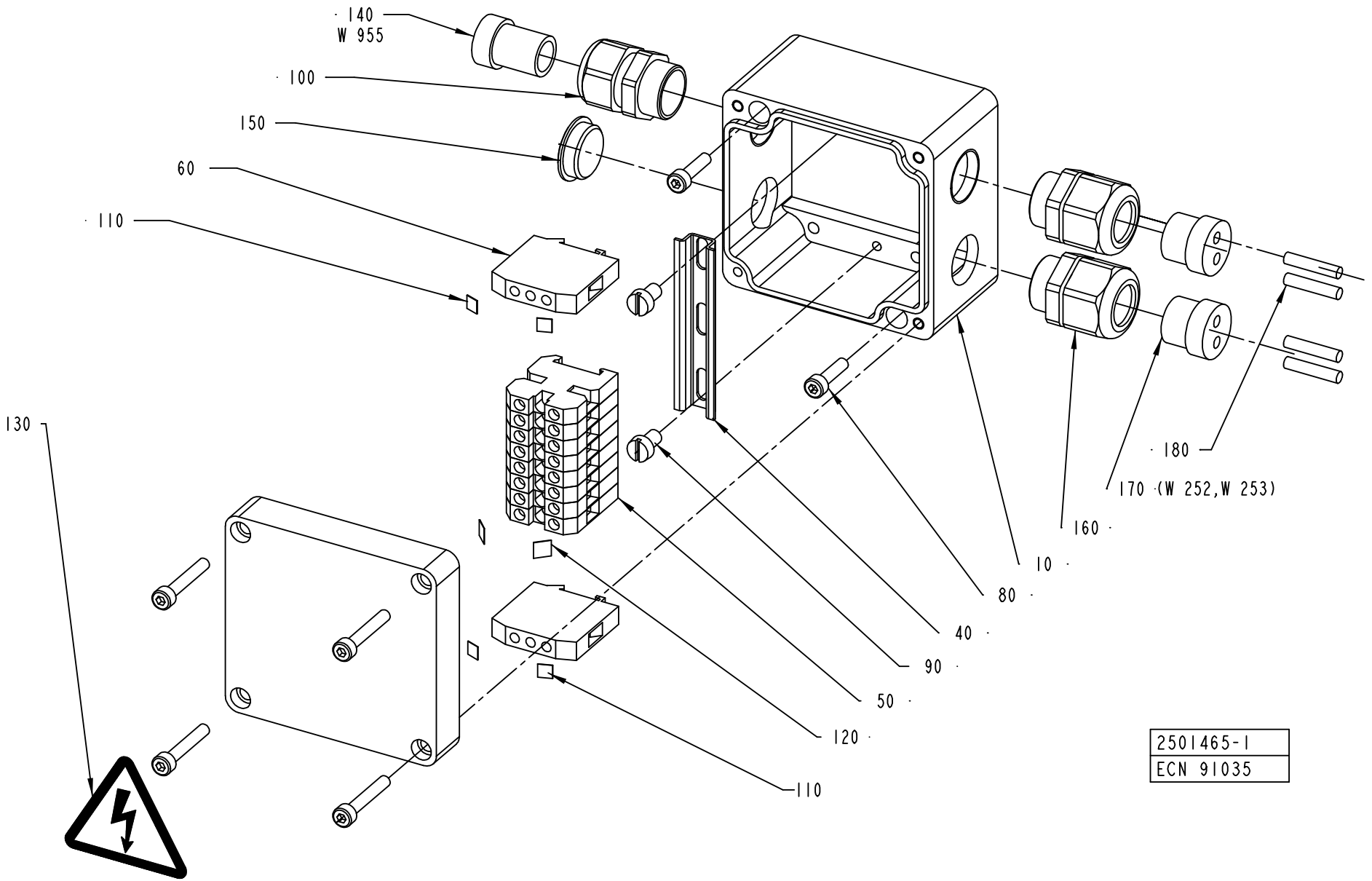
140
W 955
100
150
60
110
130
180
170 (W 252,W 253)
160
10
80
40
90
50
120
110
2501465-1
ECN 91035

ECM: 91047 - 20020514
Group number: 2501465-0100
Assembly Drawing: 2501465-1_1_AA

Pos	Part No	SP	UN	Qty	Description	Page No
-						
010	1349568-0000	-		1	CONNECTION BOX	
040	90077-0328	-	MM	65	RAIL TS15/5	
050	90077-0079	-		8	FEED THROUGH TERMINAL, 02943.6	
060	90135-0026	-		2	EARTH TERMINAL, 3802.6	
080	312115-0293	-		2	SCREW ISO4762 M4X16 A4	
090	312125-0323	-		2	SCREW PAN HEAD MCS M5X8 SS	
100	353240-0002	-		1	NORMAL WITHOUT INSERT, PG 11	
110	359011-0819	-		4	MARKING PLATES 5-GW (EARTH)	
120	359011-0821	-		2	SET OF SIGNS 6-FW 1-50	
130	359705-0015	-		1	WARNING SIGN ISO, RISK OF ELECTRIC SHOCK	
140	353249-0003	-		1	INSERT, SINGEL HOLE, E151/11	
150	90002-0009	-		1	BLANK-OFF PLUG, PR 18.6 SKINDICHT-BLK11	
160	353241-0002	-		2	EXTENDED WITHOUT INSERT, PG 11	
170	353249-0036	-		2	INSERT, MULTI HOLE, EK152 M 2X4	
180	353249-0301	-		4	SEALING PIN, 4X20	
200	353001-0113	-		2	END SLEEVE 0,75MM2	
210	359000-0201	-		1	MARKING CO02/3"1"	
220	359000-0204	-		1	MARKING CO02/3"4"	
W955	351150-0405	-	M	130	CABLE OLFLEX 5X0,75 MM2 LIGHT/GREY	

Pos	Part No	SP	UN	Qty	Description	Page No

Machine Type | Group Description | Used-In | Group Number | Page No

This page is intentionally left blank.

ECM: 106019 - 20020514
Group number: 2541886-0100
Assembly Drawing:

Pos	Part No	SP	UN	Qty	Description	Page No
-						
010	295778-0600	-		1	START-UP KIT	**691**
020	469384-0200	-		1	START-UP KIT	**695**
030	295523-0500	-		1	START-UP KIT	**697**

Pos	Part No	SP	UN	Qty	Description	Page No

This page is intentionally left blank.

ECM: 106020 - 20020514
Group number: 295778-0600
Assembly Drawing:

Pos	Part No	SP	UN	Qty	Description	Page No
TBA 0160S, TBA 0125S, TBA 0100B, TBA 0250S, TBA 0200S, TBA 0200M						
030	272479-0000	-		1	PRESSURE ROLLER	
TBA 0330S, TBA 0300S, TBA 0180B, TBA 0200B, TBA 0284B, TBA 0250B						
020	257330-0000	-		1	PRESSURE ROLLER	
Common Parts						
010	1296877-0100	-		1	SEAL KIT	**693**
040	441804-0000	-		1	COIL HEATER	
050	484197-0000	-		1	FILTER	
060	491418-0001	-		1	O-RING	
070	578494-0000	-		1	O-RING	
080	578495-0000	-		1	O-RING	
100	90206-0031	-		1	HEATING ELEMENT 700+1200W,220V	
110	90206-0070	-		1	HEATING ELEMENT 6000W 380/220V	
	90206-0326	*-*		*1*	*JUNCTION BOX FOR 90206-56*	
	90269-0308	*-*		*1*	*GASKET 59X68X3 MM*	
120	90424-0304	-		1	GASKET	
130	927421-0006	-		1	O-RING 17.3X2.4 SILICON	
140	927422-0003	-		1	O.RING 24.2X3 SILICON	
150	927422-0008	-		1	O-RING 49.5X3 SILICON	
160	925998-0000	-		6	DIAPHRAGM	
170	736514-0000	-		1	SHOCK ABSORBER	
180	90328-0026	-		3	SILENCER G1/4	
190	342850-0303	-		6	GASKET 22,7X49,1X5,2 MM 1" FDA	
200	342850-0304	-		6	GASKET 35,4X49,1X5,2 1"1/2 FDA	
210	342850-0305	-		2	GASKET 47,8X62,6X5,2 MM 2" FDA	
220	926822-0000	-		6	GASKET	
230	90458-0138	-		1	PROX.SW. E2EG-X1R5B1-5M	

Pos	Part No	SP	UN	Qty	Description	Page No

Machine Type | Group Description | Used-In | Group Number | Page No

This page is intentionally left blank.

ECM: 70850 - 19970729
Group number: 1296877-0100
Assembly Drawing:

Pos	Part No	SP	UN	Qty	Description	Page No
-						
010	530589-0000	-		4	SEAL RING	
020	530588-0000	-		1	SEAL RING	
030	533169-0000	-		1	DIAPHRAGM	
040	539212-0000	-		1	GASKET	
050	90091-0266	-		2	SEAL RING 10,4X16,3X2,5 MM	
060	90207-0363	-		1	GASKET	
070	90207-0365	-		1	GASKET	
100	315204-0215	-		1	O-RING 19,2X3 MM	
110	315204-0301	-		1	O-RING 49,5X3 MM	

Pos	Part No	SP	UN	Qty	Description	Page No

This page is intentionally left blank.

ECM: 106107 - 20020514
Group number: 469384-0200
Assembly Drawing:

Pos	Part No	SP	UN	Qty	Description	Page No
-						
010	90298-0019	-		1	DETERGENT	
020	90144-0003	-	MM	1	TAPE	

Pos	Part No	SP	UN	Qty	Description	Page No

Machine Type Group Description Used-In Group Number Page No

This page is intentionally left blank.

ECM: 106108 - 20020514
Group number: 295523-0500
Assembly Drawing:

Pos	Part No	SP	UN	Qty	Description	Page No
TBA 0125S, TBA 0100B						
020	1110530-0000	-		2	INDUCTOR	
040	1520577-0001	-		20	DOLLY	
TBA 0160S, TBA 0200S						
020	1110532-0000	-		2	INDUCTOR	
055	1110391-0000	-		20	DOLLY	
TBA 0250S, TBA 0200M						
028	1110535-0000	-		2	INDUCTOR	
055	1110391-0000	-		20	DOLLY	
TBA 0330S, TBA 0300S, TBA 0180B, TBA 0200B, TBA 0284B, TBA 0250B						
010	1110534-0000	-		2	INDUCTOR	
055	1110391-0000	-		20	DOLLY	

Pos	Part No	SP	UN	Qty	Description	Page No

Tetra Pak

SPC
Spare Parts Catalogue

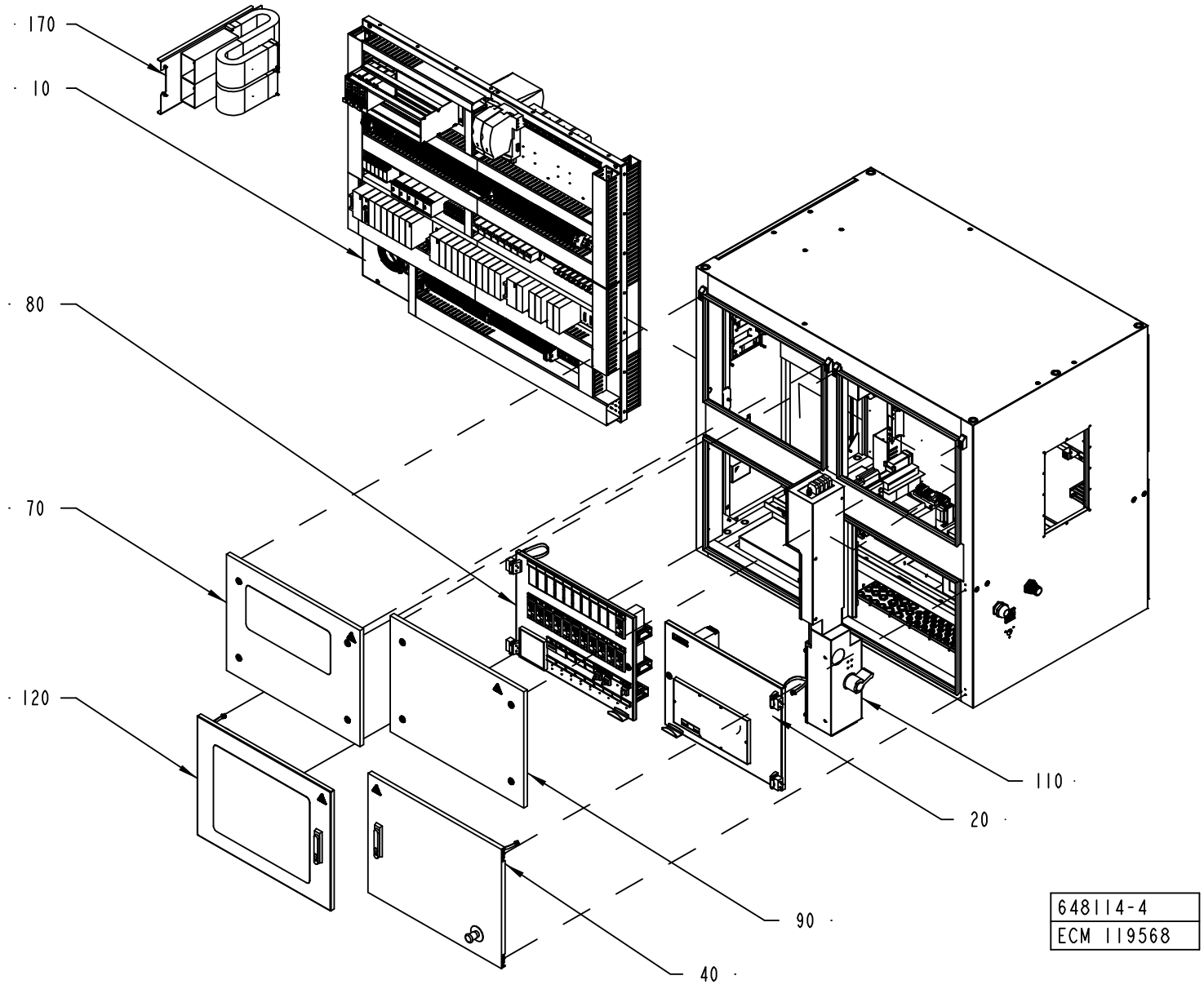
170
10
80
70
120
110
20
90
40
648114-4
ECM 119568

ECM: 118637 - 20030227
Group number: 648114-0100
Assembly Drawing: 648114-4_1_AC

This list covers pages from 700 to 703

Pos	Part No	SP	UN	Qty	Description	Page No
-						
	1523972-0100	-		1	ELECTRICAL MATERIALS	**705, 707, 709**
010	1511779-0100	-		1	COMPONENT PLATE	**711, 713, 715, 717, 719**
020	1511790-0100	-		1	INTERNAL DOOR PLMS	**767**
030	1511795-0100	-		1	CABINET	**771, 773**
040	1511796-0100	-		1	EXTERNAL DOOR PLMS	**805**
050	1511799-0100	-		1	EXTERNAL DOOR SPARE FUSES	**807**
060	1511810-0100	-		1	INTERNAL DOOR FUSES	**809, 811**
070	1511811-0100	-		1	REAR UPPER CONTROL DOOR	**819**
080	1511814-0100	-		1	INTERNAL DOOR TERMOREGULATORS	**821, 823, 825**
090	1511819-0100	-		1	FRONT UPPER CONTROL DOOR	**827**
100	1511820-0100	-		1	UPPER DOOR POWER	**829**
110	1511821-0100	-		1	POWER BOX	**831**
120	1511830-0100	-		1	EXTERNAL DOOR TERMOREGULATORS	**835**
130	1517653-0100	-		1	EXTERNAL DOOR FUSES	**837**
140	1517677-0100	-		1	COOLER	**839**
150	1517678-0100	-		1	TPIH	**841**
160	1523961-0100	-		1	PLATE	**843**
170	2598113-0100	-		1	CABLE LEAD-IN PLATE	**845**

Pos	Part No	SP	UN	Qty	Description	Page No

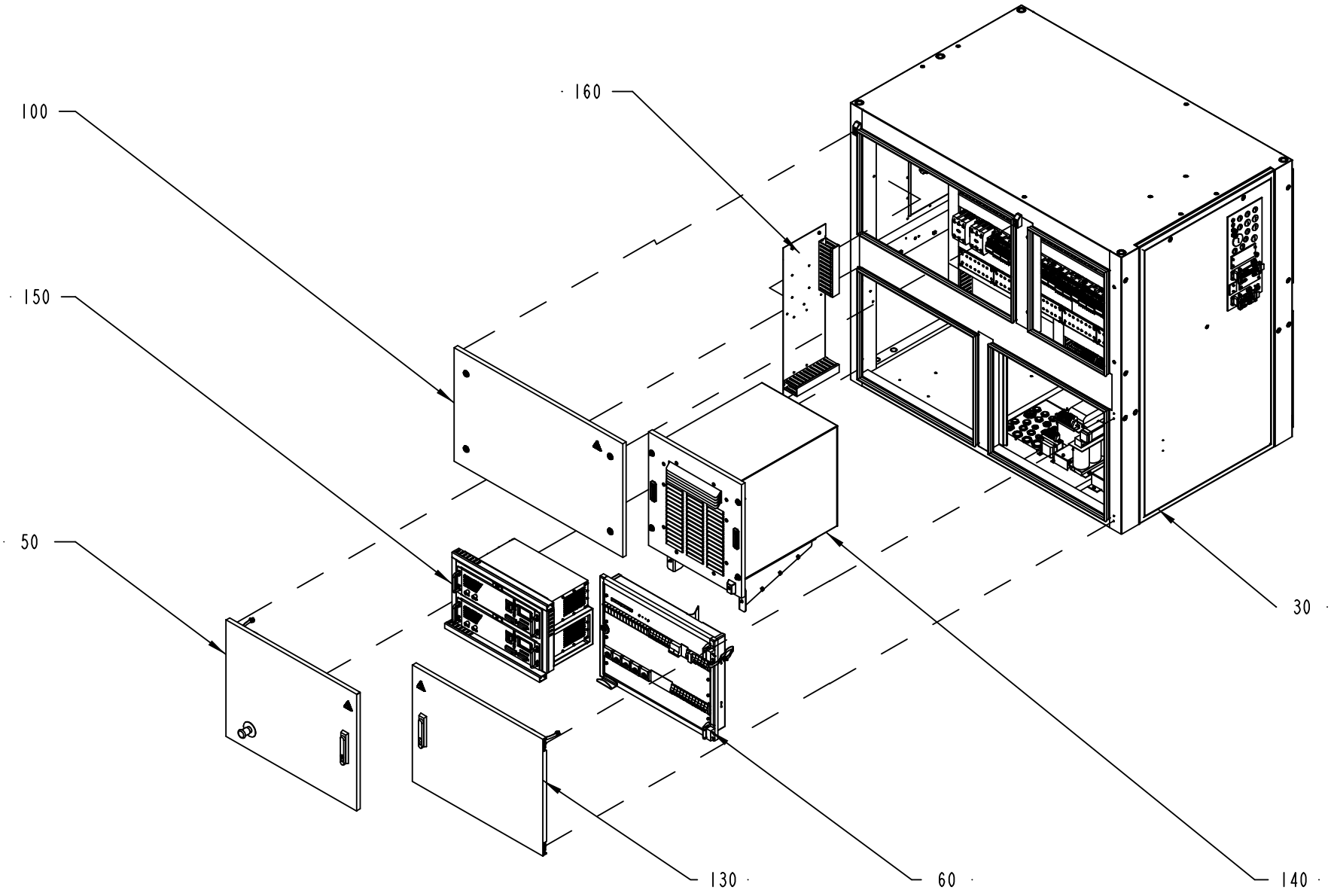

648114-4
ECM 119568

ECM: 118637 - 20030227
Group number: 648114-0100
Assembly Drawing: 648114-4_2_AC

This list covers pages from 700 to 703

Pos	Part No	SP	UN	Qty	Description	Page No
-						
	1523972-0100	-		1	ELECTRICAL MATERIALS	**705, 707, 709**
010	1511779-0100	-		1	COMPONENT PLATE	**711, 713, 715, 717, 719**
020	1511790-0100	-		1	INTERNAL DOOR PLMS	**767**
030	1511795-0100	-		1	CABINET	**771, 773**
040	1511796-0100	-		1	EXTERNAL DOOR PLMS	**805**
050	1511799-0100	-		1	EXTERNAL DOOR SPARE FUSES	**807**
060	1511810-0100	-		1	INTERNAL DOOR FUSES	**809, 811**
070	1511811-0100	-		1	REAR UPPER CONTROL DOOR	**819**
080	1511814-0100	-		1	INTERNAL DOOR TERMOREGULATORS	**821, 823, 825**
090	1511819-0100	-		1	FRONT UPPER CONTROL DOOR	**827**
100	1511820-0100	-		1	UPPER DOOR POWER	**829**
110	1511821-0100	-		1	POWER BOX	**831**
120	1511830-0100	-		1	EXTERNAL DOOR TERMOREGULATORS	**835**
130	1517653-0100	-		1	EXTERNAL DOOR FUSES	**837**
140	1517677-0100	-		1	COOLER	**839**
150	1517678-0100	-		1	TPIH	**841**
160	1523961-0100	-		1	PLATE	**843**
170	2598113-0100	-		1	CABLE LEAD-IN PLATE	**845**

Pos	Part No	SP	UN	Qty	Description	Page No

This page is intentionally left blank.

ECM: 132180 - 50001231
Group number: 1523972-0100
Assembly Drawing:

This list covers pages from 704 to 709

Pos	Part No	SP	UN	Qty	Description	Page No
TBA NOPT ASU HI						
010	351160-0102	-	M	155	CABLE AWM 1X0,75 MM2 DARKBLUE	
030	351161-0104	-	M	4	CABLE AWM 1X1,5 MM2 LIGHTBLUE	
050	351164-0104	-	M	4	CABLE AWM 1X1,5 MM2 BLACK	
070	351161-0105	-	M	1	CABLE AWM 1X2,5 MM2 LIGHTBLUE	
080	351162-0105	-	M	2	CABLE AWM 1X2,5 MM2 YELLOW-GREEN	
090	351164-0105	-	M	6	CABLE AWM 1X2,5 MM2 BLACK	
100	351162-0106	-	M	2	CABLE AWM 1X4 MM2 YELLOW-GREEN	
110	351164-0106	-	M	6	CABLE AWM 1X4 MM2 BLACK	
120	351161-0106	-	M	2	CABLE AWM 1X4 MM2 LIGHTBLUE	
210	351164-0111	-	M	11	CABLE AWM 1X35 MM2 BLACK	
220	353001-0102	-		29	END SLEEVE 0,75 MM2	
250	353001-0115	-		7	END SLEEVE 2,5/14	
260	353001-0117	-		8	END SLEEVE H4.0/20 GREY	
280	353001-0119	-		72	END SLEEVE H 1.0/14 YELLOW	
290	353001-0120	-		6	END SLEEVE H 10/28	
320	353101-0130	-		1	CABLE SHOE 1,5-2,5MM2 BLUE	
370	353103-0120	-		3	CABLE SHOE 1,25 MM2 RED	
390	353103-0138	-		2	CABLE SHOE	
TBA NOPT ASU NOHI						
010	351160-0102	-	M	105	CABLE AWM 1X0,75 MM2 DARKBLUE	
070	351161-0105	-	M	1	CABLE AWM 1X2,5 MM2 LIGHTBLUE	
080	351162-0105	-	M	2	CABLE AWM 1X2,5 MM2 YELLOW-GREEN	
090	351164-0105	-	M	6	CABLE AWM 1X2,5 MM2 BLACK	
100	351162-0106	-	M	2	CABLE AWM 1X4 MM2 YELLOW-GREEN	
110	351164-0106	-	M	6	CABLE AWM 1X4 MM2 BLACK	
120	351161-0106	-	M	2	CABLE AWM 1X4 MM2 LIGHTBLUE	
210	351164-0111	-	M	11	CABLE AWM 1X35 MM2 BLACK	
220	353001-0102	-		29	END SLEEVE 0,75 MM2	
250	353001-0115	-		7	END SLEEVE 2,5/14	
260	353001-0117	-		8	END SLEEVE H4.0/20 GREY	
280	353001-0119	-		72	END SLEEVE H 1.0/14 YELLOW	
290	353001-0120	-		6	END SLEEVE H 10/28	
320	353101-0130	-		1	CABLE SHOE 1,5-2,5MM2 BLUE	
370	353103-0120	-		3	CABLE SHOE 1,25 MM2 RED	
390	353103-0138	-		2	CABLE SHOE	
TBA NOPT NOASU HI						
010	351160-0102	-	M	50	CABLE AWM 1X0,75 MM2 DARKBLUE	
030	351161-0104	-	M	4	CABLE AWM 1X1,5 MM2 LIGHTBLUE	
050	351164-0104	-	M	4	CABLE AWM 1X1,5 MM2 BLACK	
TBA PT19 ASU HI						
010	351160-0102	-	M	383	CABLE AWM 1X0,75 MM2 DARKBLUE	
030	351161-0104	-	M	9	CABLE AWM 1X1,5 MM2 LIGHTBLUE	
040	351162-0104	-	M	6	CABLE AWM 1X1,5 MM2 YELLOW-GREEN	
050	351164-0104	-	M	25	CABLE AWM 1X1,5 MM2 BLACK	
070	351161-0105	-	M	4	CABLE AWM 1X2,5 MM2 LIGHTBLUE	
080	351162-0105	-	M	2	CABLE AWM 1X2,5 MM2 YELLOW-GREEN	
090	351164-0105	-	M	23	CABLE AWM 1X2,5 MM2 BLACK	
100	351162-0106	-	M	2	CABLE AWM 1X4 MM2 YELLOW-GREEN	
110	351164-0106	-	M	6	CABLE AWM 1X4 MM2 BLACK	
120	351161-0106	-	M	2	CABLE AWM 1X4 MM2 LIGHTBLUE	
130	351160-0107	-	M	4	CABLE AWM 1X6 MM2 DARKBLUE	
140	351162-0107	-	M	5	CABLE AWM 1X6 MM2 YELLOW-GREEN	
150	351164-0107	-	M	6	CABLE AWM 1X6 MM2 BLACK	
210	351164-0111	-	M	11	CABLE AWM 1X35 MM2 BLACK	
220	353001-0102	-		76	END SLEEVE 0,75 MM2	
230	353001-0113	-		6	END SLEEVE 0,75MM2	
240	353001-0114	-		18	END SLEEVE 1,5MM2	
250	353001-0115	-		25	END SLEEVE 2,5/14	
260	353001-0117	-		8	END SLEEVE H4.0/20 GREY	
270	353001-0118	-		5	END SLEEVE 6MM2 BLACK	
280	353001-0119	-		243	END SLEEVE H 1.0/14 YELLOW	
290	353001-0120	-		6	END SLEEVE H 10/28	
300	353101-0120	-		1	CABLE SHOE 1,25-4MM2	
330	353101-0132	-		2	CABLE SHOE, RING ø5,3MM	
340	353101-0150	-		2	CABLE SHOE	
350	353101-0152	-		1	CABLE SHOE 4-6MM2,M5,YE	
370	353103-0120	-		19	CABLE SHOE 1,25 MM2 RED	
390	353103-0138	-		9	CABLE SHOE	
470	90097-0017	-		5	FLAT PIN PLUG 6,3MM	
480	90097-0019	-		20	FLAT PIN PLUG 2,8MM	
TBA PT19 ASU NOHI						
010	351160-0102	-	M	333	CABLE AWM 1X0,75 MM2 DARKBLUE	
030	351161-0104	-	M	5	CABLE AWM 1X1,5 MM2 LIGHTBLUE	
040	351162-0104	-	M	6	CABLE AWM 1X1,5 MM2 YELLOW-GREEN	
050	351164-0104	-	M	21	CABLE AWM 1X1,5 MM2 BLACK	
070	351161-0105	-	M	4	CABLE AWM 1X2,5 MM2 LIGHTBLUE	
080	351162-0105	-	M	2	CABLE AWM 1X2,5 MM2 YELLOW-GREEN	
090	351164-0105	-	M	23	CABLE AWM 1X2,5 MM2 BLACK	
100	351162-0106	-	M	2	CABLE AWM 1X4 MM2 YELLOW-GREEN	

Machine Type | Group Description | Used-In | Group Number | Page No

This page is intentionally left blank.

ECM: 132180 - 50001231
Group number: 1523972-0100
Assembly Drawing:

This list covers pages from 704 to 709

Pos	Part No	SP	UN	Qty	Description	Page No
TBA PT19 ASU NOHI (Cont'd)						
110	351164-0106	-	M	6	CABLE AWM 1X4 MM2 BLACK	
120	351161-0106	-	M	2	CABLE AWM 1X4 MM2 LIGHTBLUE	
130	351160-0107	-	M	4	CABLE AWM 1X6 MM2 DARKBLUE	
140	351162-0107	-	M	5	CABLE AWM 1X6 MM2 YELLOW-GREEN	
150	351164-0107	-	M	6	CABLE AWM 1X6 MM2 BLACK	
210	351164-0111	-	M	11	CABLE AWM 1X35 MM2 BLACK	
220	353001-0102	-		76	END SLEEVE 0,75 MM2	
230	353001-0113	-		6	END SLEEVE 0,75MM2	
240	353001-0114	-		18	END SLEEVE 1,5MM2	
250	353001-0115	-		25	END SLEEVE 2,5/14	
260	353001-0117	-		8	END SLEEVE H4.0/20 GREY	
270	353001-0118	-		5	END SLEEVE 6MM2 BLACK	
280	353001-0119	-		243	END SLEEVE H 1.0/14 YELLOW	
290	353001-0120	-		6	END SLEEVE H 10/28	
300	353101-0120	-		1	CABLE SHOE 1,25-4MM2	
330	353101-0132	-		2	CABLE SHOE, RING ø5,3MM	
340	353101-0150	-		2	CABLE SHOE	
350	353101-0152	-		1	CABLE SHOE 4-6MM2,M5,YE	
370	353103-0120	-		19	CABLE SHOE 1,25 MM2 RED	
390	353103-0138	-		9	CABLE SHOE	
470	90097-0017	-		5	FLAT PIN PLUG 6,3MM	
480	90097-0019	-		20	FLAT PIN PLUG 2,8MM	
TBA PT19 NOASU HI						
010	351160-0102	-	M	278	CABLE AWM 1X0,75 MM2 DARKBLUE	
030	351161-0104	-	M	9	CABLE AWM 1X1,5 MM2 LIGHTBLUE	
040	351162-0104	-	M	6	CABLE AWM 1X1,5 MM2 YELLOW-GREEN	
050	351164-0104	-	M	25	CABLE AWM 1X1,5 MM2 BLACK	
070	351161-0105	-	M	2	CABLE AWM 1X2,5 MM2 LIGHTBLUE	
090	351164-0105	-	M	17	CABLE AWM 1X2,5 MM2 BLACK	
130	351160-0107	-	M	4	CABLE AWM 1X6 MM2 DARKBLUE	
140	351162-0107	-	M	5	CABLE AWM 1X6 MM2 YELLOW-GREEN	
150	351164-0107	-	M	6	CABLE AWM 1X6 MM2 BLACK	
220	353001-0102	-		47	END SLEEVE 0,75 MM2	
230	353001-0113	-		6	END SLEEVE 0,75MM2	
240	353001-0114	-		18	END SLEEVE 1,5MM2	
250	353001-0115	-		18	END SLEEVE 2,5/14	
270	353001-0118	-		5	END SLEEVE 6MM2 BLACK	
280	353001-0119	-		171	END SLEEVE H 1.0/14 YELLOW	
300	353101-0120	-		1	CABLE SHOE 1,25-4MM2	
320	353101-0130	-		1	CABLE SHOE 1,5-2,5MM2 BLUE	
330	353101-0132	-		2	CABLE SHOE, RING ø5,3MM	
340	353101-0150	-		2	CABLE SHOE	
350	353101-0152	-		1	CABLE SHOE 4-6MM2,M5,YE	
370	353103-0120	-		16	CABLE SHOE 1,25 MM2 RED	
390	353103-0138	-		7	CABLE SHOE	
470	90097-0017	-		5	FLAT PIN PLUG 6,3MM	
480	90097-0019	-		20	FLAT PIN PLUG 2,8MM	
TBA PT19 NOASU NOHI						
010	351160-0102	-	M	228	CABLE AWM 1X0,75 MM2 DARKBLUE	
030	351161-0104	-	M	5	CABLE AWM 1X1,5 MM2 LIGHTBLUE	
040	351162-0104	-	M	6	CABLE AWM 1X1,5 MM2 YELLOW-GREEN	
050	351164-0104	-	M	21	CABLE AWM 1X1,5 MM2 BLACK	
070	351161-0105	-	M	2	CABLE AWM 1X2,5 MM2 LIGHTBLUE	
090	351164-0105	-	M	17	CABLE AWM 1X2,5 MM2 BLACK	
130	351160-0107	-	M	4	CABLE AWM 1X6 MM2 DARKBLUE	
140	351162-0107	-	M	5	CABLE AWM 1X6 MM2 YELLOW-GREEN	
150	351164-0107	-	M	6	CABLE AWM 1X6 MM2 BLACK	
220	353001-0102	-		47	END SLEEVE 0,75 MM2	
230	353001-0113	-		6	END SLEEVE 0,75MM2	
240	353001-0114	-		18	END SLEEVE 1,5MM2	
250	353001-0115	-		18	END SLEEVE 2,5/14	
270	353001-0118	-		5	END SLEEVE 6MM2 BLACK	
280	353001-0119	-		171	END SLEEVE H 1.0/14 YELLOW	
300	353101-0120	-		1	CABLE SHOE 1,25-4MM2	
320	353101-0130	-		1	CABLE SHOE 1,5-2,5MM2 BLUE	
330	353101-0132	-		2	CABLE SHOE, RING ø5,3MM	
340	353101-0150	-		2	CABLE SHOE	
350	353101-0152	-		1	CABLE SHOE 4-6MM2,M5,YE	
370	353103-0120	-		16	CABLE SHOE 1,25 MM2 RED	
390	353103-0138	-		7	CABLE SHOE	
470	90097-0017	-		5	FLAT PIN PLUG 6,3MM	
480	90097-0019	-		20	FLAT PIN PLUG 2,8MM	
Common Parts						
010	351160-0102	-	M	1164	CABLE AWM 1X0,75 MM2 DARKBLUE	
020	351166-0102	-	M	28	CABLE AWM 1X0,75 MM2 ORANGE	
030	351161-0104	-	M	80	CABLE AWM 1X1,5 MM2 LIGHTBLUE	
040	351162-0104	-	M	41	CABLE AWM 1X1,5 MM2 YELLOW-GREEN	
050	351164-0104	-	M	153	CABLE AWM 1X1,5 MM2 BLACK	
060	351160-0105	-	M	7	CABLE AWM 1X2,5 MM2 DARKBLUE	
070	351161-0105	-	M	7	CABLE AWM 1X2,5 MM2 LIGHTBLUE	

Machine Type | Group Description | Used-In | Group Number | Page No

This page is intentionally left blank.

Pos	Part No	SP	UN	Qty	Description	Page No
Common Parts (Cont'd)						
080	351162-0105	-	M	15	CABLE AWM 1X2,5 MM2 YELLOW-GREEN	
090	351164-0105	-	M	158	CABLE AWM 1X2,5 MM2 BLACK	
110	351164-0106	-	M	5	CABLE AWM 1X4 MM2 BLACK	
120	351161-0106	-	M	2	CABLE AWM 1X4 MM2 LIGHTBLUE	
130	351160-0107	-	M	6	CABLE AWM 1X6 MM2 DARKBLUE	
140	351162-0107	-	M	31	CABLE AWM 1X6 MM2 YELLOW-GREEN	
150	351164-0107	-	M	55	CABLE AWM 1X6 MM2 BLACK	
160	351163-0107	-	M	1	CABLE AWM 1X6 MM2 RED	
170	351162-0109	-	M	8	CABLE AWM 1X16 MM2 YELLOW-GREEN	
180	351161-0109	-	M	1	CABLE AWM 1X16 MM2 LIGHTBLUE	
190	351164-0110	-	M	55	CABLE AWM 1X25 MM2 BLACK	
200	351161-0110	-	M	2	CABLE AWM 1X25 MM2 LIGHTBLUE	
210	351164-0111	-	M	11	CABLE AWM 1X35 MM2 BLACK	
220	353001-0102	-		337	END SLEEVE 0,75 MM2	
230	353001-0113	-		44	END SLEEVE 0,75MM2	
240	353001-0114	-		191	END SLEEVE 1,5MM2	
250	353001-0115	-		155	END SLEEVE 2,5/14	
260	353001-0117	-		16	END SLEEVE H4.0/20 GREY	
270	353001-0118	-		47	END SLEEVE 6MM2 BLACK	
280	353001-0119	-		893	END SLEEVE H 1.0/14 YELLOW	
290	353001-0120	-		3	END SLEEVE H 10/28	
300	353101-0120	-		1	CABLE SHOE 1,25-4MM2	
310	353101-0129	-		1	CABLE SHOE	
320	353101-0130	-		70	CABLE SHOE 1,5-2,5MM2 BLUE	
340	353101-0150	-		2	CABLE SHOE	
350	353101-0152	-		11	CABLE SHOE 4-6MM2,M5,YE	
360	353101-0153	-		7	CABLE SHOE 4-6MM2 YELLOW	
370	353103-0120	-		36	CABLE SHOE 1,25 MM2 RED	
380	353103-0130	-		2	CABLE SHOE	
390	353103-0138	-		16	CABLE SHOE	
400	353104-0164	-		2	CABLE SHOEYAV 10 M10*	
410	353104-0168	-		3	CABLE SHO YAV 16 M6*	
420	353104-0175	-		15	CABLE SHOEYAV 25 M6	
430	352113-0101	-		100	CLIP STRIP, 92X2,5 MM	
440	352113-0102	-		30	CLIP-STRIP, BLACK 188X4,8 MM	
450	90024-0062	-	MM	600	CABLE PROTECTION, 40MM	
460	90024-0063	-	M	6	CABLE PROTECTION, 25MM	
470	90097-0017	-		35	FLAT PIN PLUG 6,3MM	
480	90097-0019	-		68	FLAT PIN PLUG 2,8MM	
490	90459-2912	-		46	BAR, TR1	
500	90459-3092	-	M	17	CABLE PROTECTION, CP10	

Pos	Part No	SP	UN	Qty	Description	Page No

Machine Type | Group Description | Used-In | Group Number | Page No

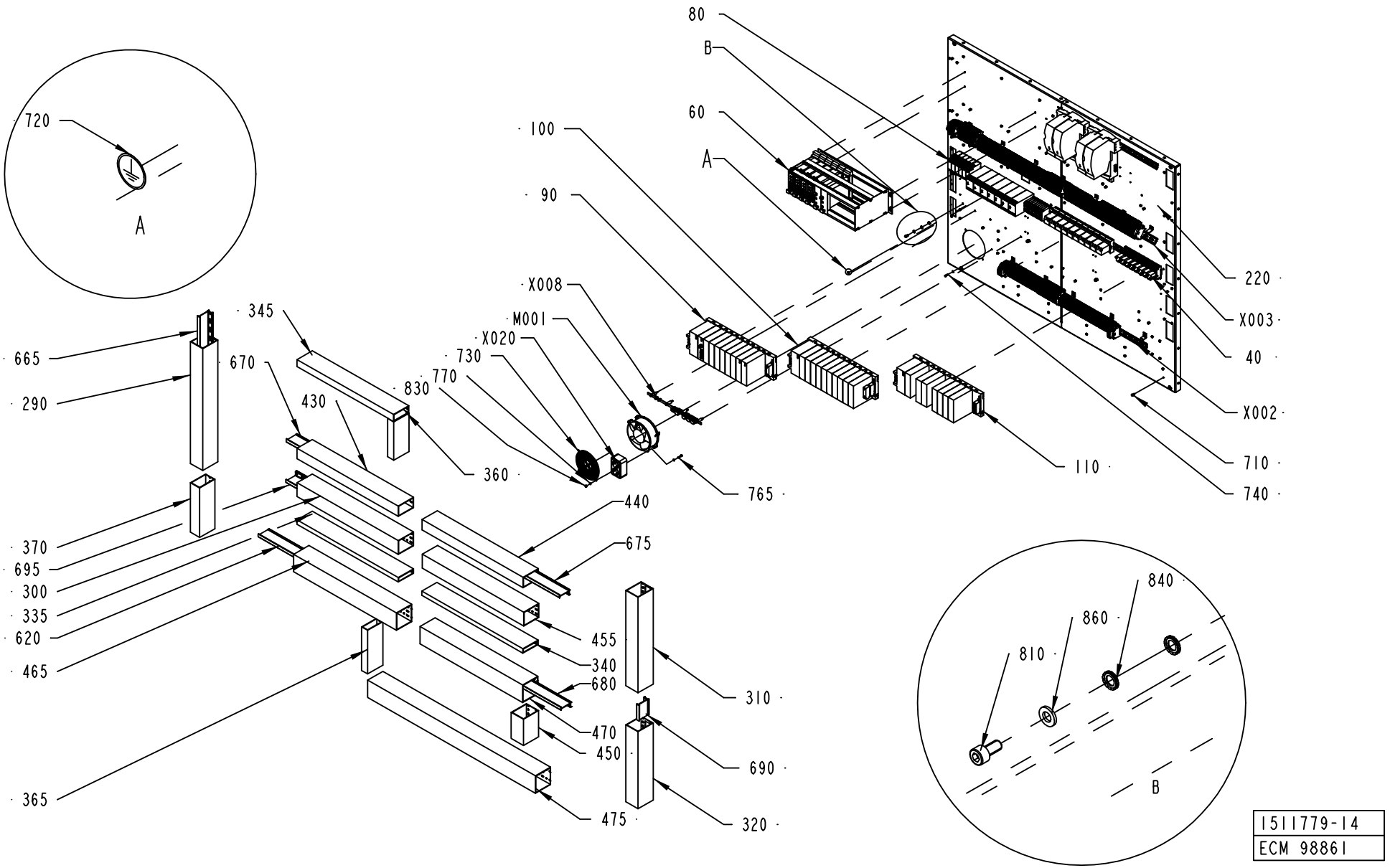

1511779-14
ECM 98861

ECM: 118636 - 50001231
Group number: 1511779-0100
Assembly Drawing: 1511779-14_1_AA

This list covers pages from 710 to 719

Pos	Part No	SP	UN	Qty	Description	Page No
TBA NOPT ASU						
740	312115-0291	-		24	SCREW ISO4762 M4X12 A4	
750	312115-0325	-		22	SCREW ISO4762 M5X10 A4	
770	315105-0136	-		36	WASHER BRB4,3XRFR	
780	315402-0136	-		14	LOCK WASHER FBB 4,1	
790	315402-0146	-		22	LOCK WASHER FBB 5,1	
G002	90430-0070	A		1	FREQ.CONV. 6SE3213-6CA40	
W069	90220-0183	-	M	3	SCR. CABLE 2X0,34MM2	
Z006	90024-0047	B		1	EMI SUPPRESSION FERRITE	
Z007	90024-0047	B		1	EMI SUPPRESSION FERRITE	
Z009	90430-0326	A		1	FILTER 6SE3290-0BA87-0FB2	
TBA NOPT NOASU						
030	90458-1490	-		2	CABLE CLIPS, D=7,9 MM	
740	312115-0291	-		36	SCREW ISO4762 M4X12 A4	
750	312115-0325	-		18	SCREW ISO4762 M5X10 A4	
755	312115-0289	-		4	SCREW ISO4762 M4X10 A4	
770	315105-0136	-		34	WASHER BRB4,3XRFR	
775	312115-0333	-		8	SCREW ISO4762 M5X25 A4	
780	315402-0136	-		10	LOCK WASHER FBB 4,1	
790	315402-0146	-		18	LOCK WASHER FBB 5,1	
850	315105-0146	-		3	WASHER BRB5,3X10RFR	
TBA PT19 ASU						
030	90458-1490	-		4	CABLE CLIPS, D=7,9 MM	
120	2553176-0100	-		1	EARTH BAR	**721**
740	312115-0291	-		26	SCREW ISO4762 M4X12 A4	
750	315402-0146	-		32	LOCK WASHER FBB 5,1	
755	312115-0291	-		8	SCREW ISO4762 M4X12 A4	
770	315105-0136	-		42	WASHER BRB4,3XRFR	
775	312122-0366	-		9	SCREW PAN HEAD MCS M6X12 NL. PL.	
780	315402-0136	-		16	LOCK WASHER FBB 4,1	
790	315402-0146	-		32	LOCK WASHER FBB 5,1	
850	315105-0146	-		9	WASHER BRB5,3X10RFR	
A002	90458-0397	-		1	SERVO DRIVE DMC2 50720 P	
A002.1	90045-0376	-		1	CONNECTOR KIT 9-032-011-970	
A015	90458-1300	-		1	2 AXIS DOCKING STATION D2/PLC	
	90458-1856	-		*1*	*ADHESIVE LABEL, CONNECTION DIAGRAM*	
A016	90458-0746	-		1	STEP MOTOR DRIVE L50	
A017	90458-0746	-		1	STEP MOTOR DRIVE L50	
G006	90430-0070	A		1	FREQ.CONV. 6SE3213-6CA40	
W069	90220-0183	-	M	3	SCR. CABLE 2X0,34MM2	
X023	90458-1279	A		1	PLUG CONNECTOR DP1	
Z023	90458-1162	A		1	FILTER, 6 A, 250 VAC	
Z024	90024-0047	B		1	EMI SUPPRESSION FERRITE	
Z025	90024-0047	B		1	EMI SUPPRESSION FERRITE	
Z033	90430-0326	A		1	FILTER 6SE3290-0BA87-0FB2	
Z034	90024-0047	B		1	EMI SUPPRESSION FERRITE	
Z035	90024-0047	B		1	EMI SUPPRESSION FERRITE	
Z036	90024-0037	A		1	INPUT FILTER, 8 A	
TBA PT19 NOASU						
030	90458-1490	-		4	CABLE CLIPS, D=7,9 MM	
120	2553176-0100	-		1	EARTH BAR	**721**
740	312115-0291	-		39	SCREW ISO4762 M4X12 A4	
750	315402-0146	-		28	LOCK WASHER FBB 5,1	
755	312115-0291	-		8	SCREW ISO4762 M4X12 A4	
770	315105-0136	-		40	WASHER BRB4,3XRFR	
775	312122-0366	-		9	SCREW PAN HEAD MCS M6X12 NL. PL.	
780	315402-0136	-		12	LOCK WASHER FBB 4,1	
790	315402-0146	-		28	LOCK WASHER FBB 5,1	
850	315105-0146	-		9	WASHER BRB5,3X10RFR	
A002	90458-0397	-		1	SERVO DRIVE DMC2 50720 P	
A002.1	90045-0376	-		1	CONNECTOR KIT 9-032-011-970	
A015	90458-1300	-		1	2 AXIS DOCKING STATION D2/PLC	
	90458-1856	-		*1*	*ADHESIVE LABEL, CONNECTION DIAGRAM*	
A016	90458-0746	-		1	STEP MOTOR DRIVE L50	
A017	90458-0746	-		1	STEP MOTOR DRIVE L50	
G006	90430-0070	A		1	FREQ.CONV. 6SE3213-6CA40	
X023	90458-1279	A		1	PLUG CONNECTOR DP1	
Z023	90458-1162	A		1	FILTER, 6 A, 250 VAC	
Z024	90024-0047	B		1	EMI SUPPRESSION FERRITE	
Z025	90024-0047	B		1	EMI SUPPRESSION FERRITE	
Z033	90430-0326	A		1	FILTER 6SE3290-0BA87-0FB2	
Z034	90024-0047	B		1	EMI SUPPRESSION FERRITE	
Z035	90024-0047	B		1	EMI SUPPRESSION FERRITE	
Z036	90024-0037	A		1	INPUT FILTER, 8 A	
Common Parts						
020	1511801-0100	-		1	SOLID STATE RELAY RAIL 1	**723**
040	1511803-0100	-		1	RELAYS RAIL	**725**
060	1511805-0100	-		1	RACK	**727, 729**
070	1511808-0100	A		1	FREQUENCY CONVERTER EARTH BAR	**731**
080	1511824-0100	-		1	LEVEL RELAYS RAIL	**733**

Machine Type | Group Description | Used-In | Group Number | Page No

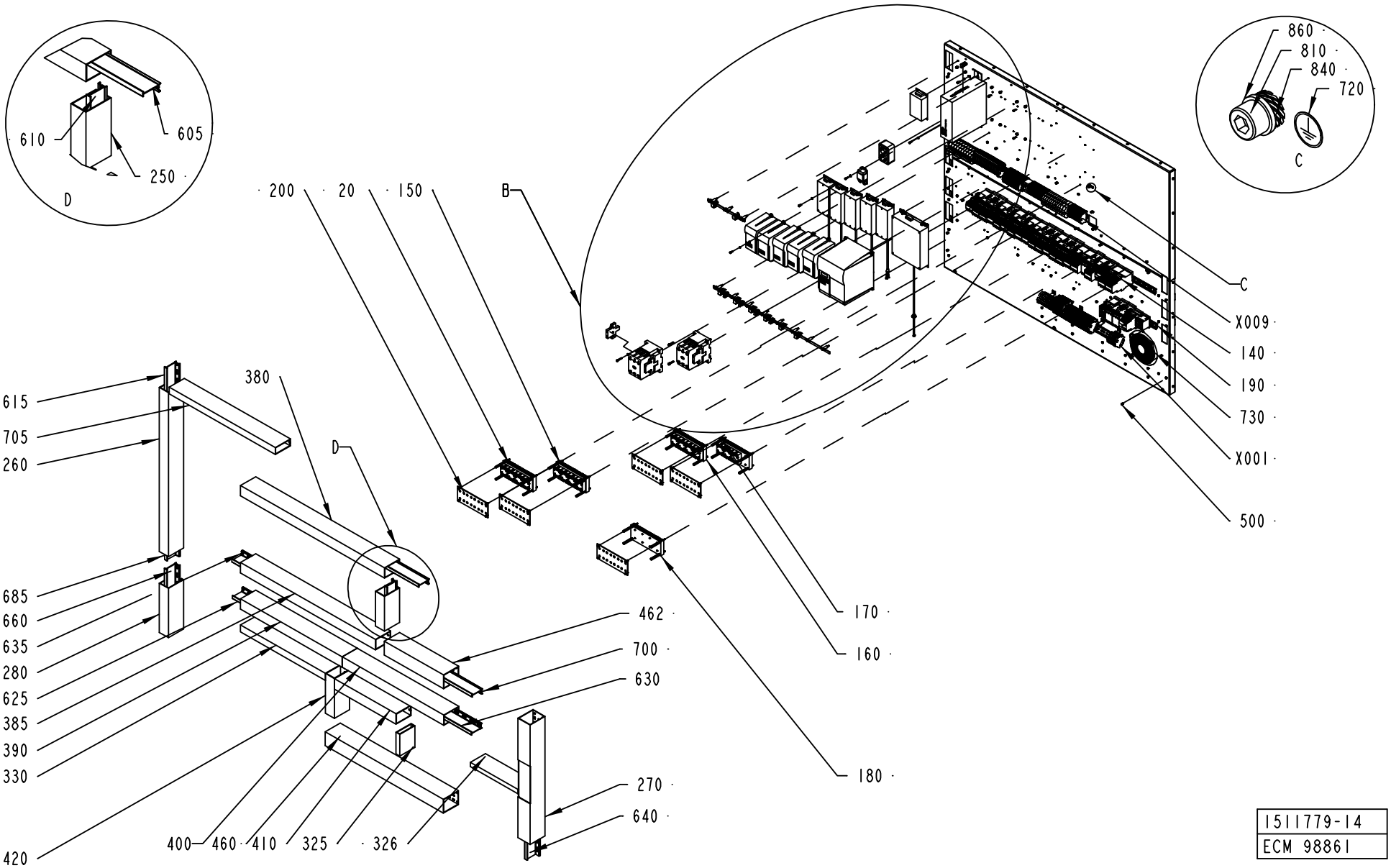

1511779-14
ECM 98861

ECM: 118636 - 50001231
Group number: 1511779-0100
Assembly Drawing: 1511779-14_2_AA

This list covers pages from 710 to 719

Pos	Part No	SP	UN	Qty	Description	Page No
Common Parts (Cont'd)						
090	1511825-0100	-		1	PLC RACK 1	**735**
100	1511826-0100	-		1	PLC RACK 2	**737**
110	1511827-0100	-		1	PLC RACK 3	**739**
140	1511834-0100	-		1	CONTACTORS RAIL	**741**
150	1517651-0100	A		1	SOLID STATE RELAY RAIL 2	**743, 745**
160	1517652-0100	A		1	SOLID STATE RELAY RAIL 3	**747**
170	1523445-0100	A		1	SOLID STATE RELAY RAIL 4	**749**
180	1523446-0100	A		1	SOLID STATE RELAY RAIL 5	**751**
190	2531998-0100	-		1	RAIL	**753**
200	2531996-0000	-		5	COVER	
220	1523463-0000	-		1	PLATE	
250	2604462-0000	-		1	CABLE DUCT	
260	2604461-0000	-		1	CABLE DUCT	
270	2604468-0000	-		1	CABLE DUCT	
280	2604463-0000	-		1	CABLE DUCT	
290	2604464-0000	-		1	CABLE DUCT	
300	2604466-0000	-		1	CABLE DUCT	
310	2604465-0000	-		1	CABLE DUCT	
320	2604467-0000	-		1	CABLE DUCT	
325	90459-2452	-	MM	125	CABLE DUCT, 25X100MM	
326	90459-2452	-	MM	314	CABLE DUCT, 25X100MM	
330	90181-0060	-	MM	560	CABLE DUCT, 40X100MM	
335	90459-2452	-	MM	663	CABLE DUCT, 25X100MM	
340	90459-2452	-	MM	663	CABLE DUCT, 25X100MM	
345	90181-0060	-	MM	632	CABLE DUCT, 40X100MM	
360	90181-0060	-	MM	220	CABLE DUCT, 40X100MM	
365	90181-0060	-	MM	250	CABLE DUCT, 40X100MM	
370	2604460-0000	-		1	CABLE DUCT	
380	90181-0061	-	MM	950	CABLE DUCT, 60X100MM	
385	90181-0061	-	MM	890	CABLE DUCT, 60X100MM	
390	90181-0061	-	MM	670	CABLE DUCT, 60X100MM	
400	90181-0061	-	MM	670	CABLE DUCT, 60X100MM	
410	90181-0061	-	MM	406	CABLE DUCT, 60X100MM	
420	90181-0061	-	MM	230	CABLE DUCT, 60X100MM	
430	90181-0061	-	MM	663	CABLE DUCT, 60X100MM	
440	90181-0061	-	MM	663	CABLE DUCT, 60X100MM	
450	90181-0174	-	MM	150	CABLE DUCT	
455	90181-0174	-	MM	665	CABLE DUCT	
460	90181-0174	-	MM	780	CABLE DUCT	
462	90181-0174	-	MM	390	CABLE DUCT	
465	90181-0062	-	MM	674	CABLE DUCT, 100X100MM	
470	90181-0062	-	MM	674	CABLE DUCT, 100X100MM	
475	90181-0062	-	MM	1100	CABLE DUCT, 100X100MM	
500	90181-0064	-		42	LOCK ZP1 FOR CHANNEL T1	
605	90181-0067	-	MM	946	DIVIDING PLATE SEP80	
610	90181-0067	-	MM	61	DIVIDING PLATE SEP80	
615	90181-0067	-	MM	279	DIVIDING PLATE SEP80	
620	90181-0067	-	MM	660	DIVIDING PLATE SEP80	
625	90181-0067	-	MM	660	DIVIDING PLATE SEP80	
630	90181-0067	-	MM	660	DIVIDING PLATE SEP80	
635	90181-0067	-	MM	880	DIVIDING PLATE SEP80	
640	90181-0067	-	MM	233	DIVIDING PLATE SEP80	
660	90181-0067	-	MM	260	DIVIDING PLATE SEP80	
665	90181-0067	-	MM	586	DIVIDING PLATE SEP80	
670	90181-0067	-	MM	650	DIVIDING PLATE SEP80	
675	90181-0067	-	MM	650	DIVIDING PLATE SEP80	
680	90181-0067	-	MM	660	DIVIDING PLATE SEP80	
685	90181-0067	-	MM	89	DIVIDING PLATE SEP80	
690	90181-0067	-	MM	89	DIVIDING PLATE SEP80	
695	90181-0067	-	MM	386	DIVIDING PLATE SEP80	
700	90181-0067	-	MM	386	DIVIDING PLATE SEP80	
705	90181-0060	-	MM	700	CABLE DUCT, 40X100MM	
710	90181-0313	-		137	RIVET DUCTAFIX R4	
720	90194-0163	-		2	SIGN, EARTH WITHIN CIRCLE	
730	90457-0057	-		2	GRID FOR FAN LZ36	
735	312115-0323	-		3	SCREW ISO4762 M5X8 A4	
765	312115-0295	-		4	SCREW ISO4762 M4X20 A4	
810	312115-0366	-		4	SCREW ISO4762 M6X12 A4	
820	353042-0004	-	MM	650	RAIL TS 35/7,5	
830	312812-0312	-		4	HEXAGON NUT, NY-LOCK M4 A480	
840	90062-0061	-		8	LOCK WASHER NORD-LOCK,6,5/10,8, H=2,6	
860	315105-0153	-		4	WASHER BRB6,4X12RFR	
A012	90458-1300	A		1	2 AXIS DOCKING STATION D2/PLC	
	90458-1856	-		*1*	*ADHESIVE LABEL, CONNECTION DIAGRAM*	
A013	90458-0746	A		1	STEP MOTOR DRIVE L50	
A014	90458-0746	A		1	STEP MOTOR DRIVE L50	
G001	90430-0070	A		1	FREQ.CONV. 6SE3213-6CA40	
G003	90430-0070	A		1	FREQ.CONV. 6SE3213-6CA40	
G004	90430-0076	A		1	FREQ.CONV. 6SE3221-3DC40	
G005	90430-0070	A		1	FREQ.CONV. 6SE3213-6CA40	
K003	90458-2924	A		1	CONTACTOR 30KW COIL 24VDC	
K003.1	90458-2925	A		2	AUXILIARY CONTACT, DIL M820-XHI11-SI	
K030	90458-2924	A		1	CONTACTOR 30KW COIL 24VDC	

Machine Type | Group Description | Used-In | Group Number | Page No

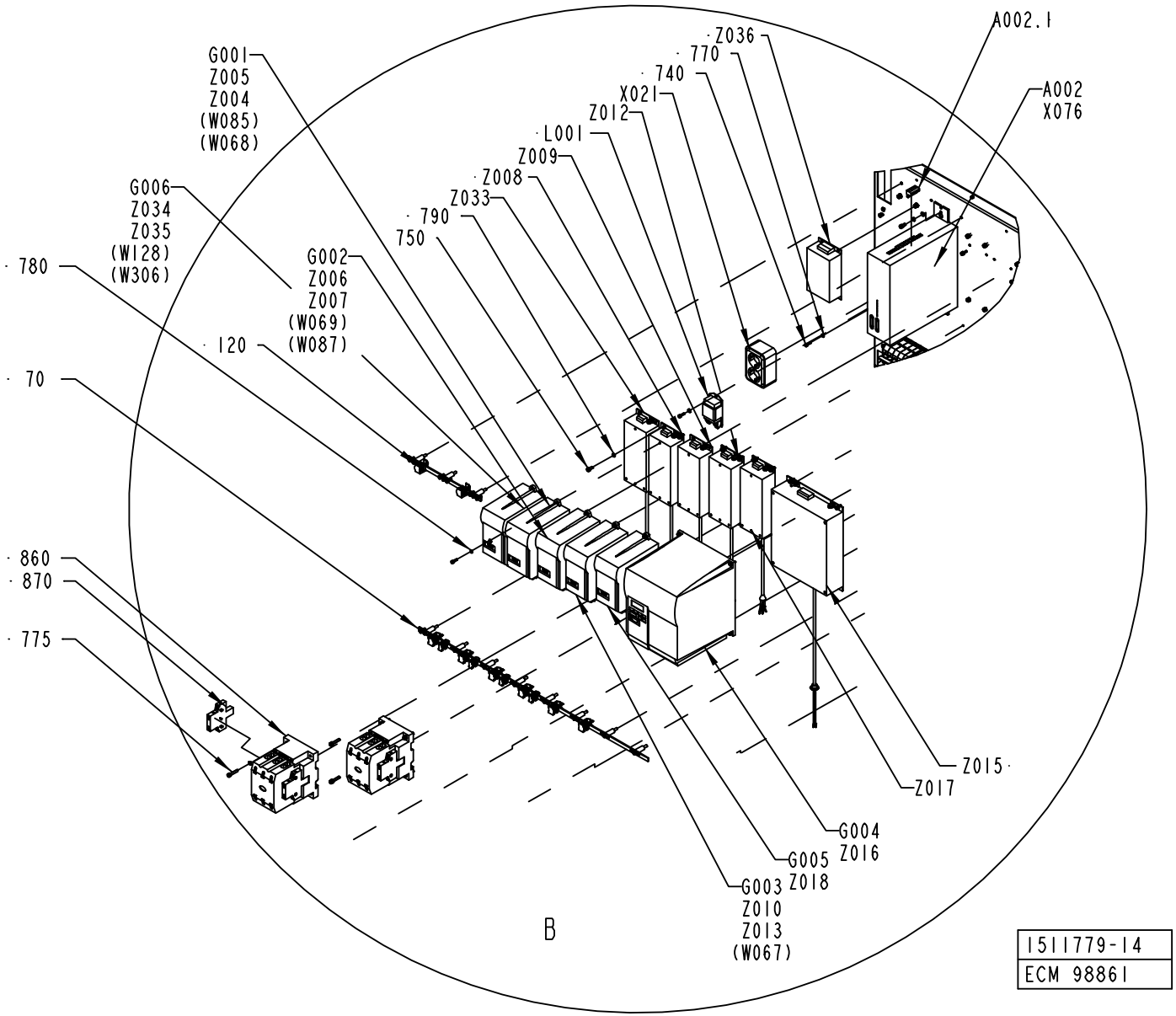
A002.1
A002
X076
Z036
770
740
X021
Z012
L001
Z009
Z008
Z033
790
750
G001
Z005
Z004
(W085)
(W068)
G006
Z034
Z035
(W128)
(W306)
780
G002
Z006
Z007
(W069)
(W087)
120
70
860
870
775
Z015
Z017
G004
Z016
G005
Z018
G003
Z010
Z013
(W067)
B
1511779-14
ECM 98861

Pos	Part No	SP	UN	Qty	Description	Page No
Common Parts (Cont'd)						
K030.1	90458-2925	A		2	AUXILIARY CONTACT, DIL M820-XHI11-SI	
L001	90297-0306	B		1	BALLAST COIL 50/60 HZ	
M001	90457-0056	B		1	FAN 7450 ES	
W0127	90220-0183	-	M	3	SCR. CABLE 2X0,34MM2	
W067	90220-0183	-	M	3	SCR. CABLE 2X0,34MM2	
W068	90220-0183	-	M	3	SCR. CABLE 2X0,34MM2	
W099	90220-0183	-	M	1	SCR. CABLE 2X0,34MM2	
X001	1511800-0100	-		1	POWER SIDE,BOTTOM TERMINAL BLOCK	**755**
X002	1511802-0100	-		1	LOGIC BOTTOM TERMINAL BLOCK	**757**
X003	1511804-0100	-		1	LOGIC SIDE,TOP TERMINAL BLOCK	**759, 761**
X008	1511828-0100	-		1	X008	**763**
X009	1511829-0100	-		1	POWER SIDE,TOP TERMINAL BLOCK	**765**
X020	90001-0033	B		1	WALL SOCKET OUTLET	
X021	90001-0033	B		1	WALL SOCKET OUTLET	
X027	90458-1279	A		1	PLUG CONNECTOR DP1	
Z004	90024-0047	B		1	EMI SUPPRESSION FERRITE	
Z005	90024-0047	B		1	EMI SUPPRESSION FERRITE	
Z008	90430-0326	A		1	FILTER 6SE3290-0BA87-0FB2	
Z010	90024-0047	B		1	EMI SUPPRESSION FERRITE	
Z012	90430-0326	A		1	FILTER 6SE3290-0BA87-0FB2	
Z013	90024-0047	B		1	EMI SUPPRESSION FERRITE	
Z015	90430-0330	A		1	FILTER 6SE3290-0DC87-0FB4	
Z016	90024-0047	B		1	EMI SUPPRESSION FERRITE	
Z017	90430-0326	A		1	FILTER 6SE3290-0BA87-0FB2	
Z018	90024-0047	B		1	EMI SUPPRESSION FERRITE	
Z019	90458-1162	A		1	FILTER, 6 A, 250 VAC	
Z020	90024-0047	B		1	EMI SUPPRESSION FERRITE	
Z021	90024-0047	B		1	EMI SUPPRESSION FERRITE	
Z022	90024-0047	B		1	EMI SUPPRESSION FERRITE	

Pos	Part No	SP	UN	Qty	Description	Page No

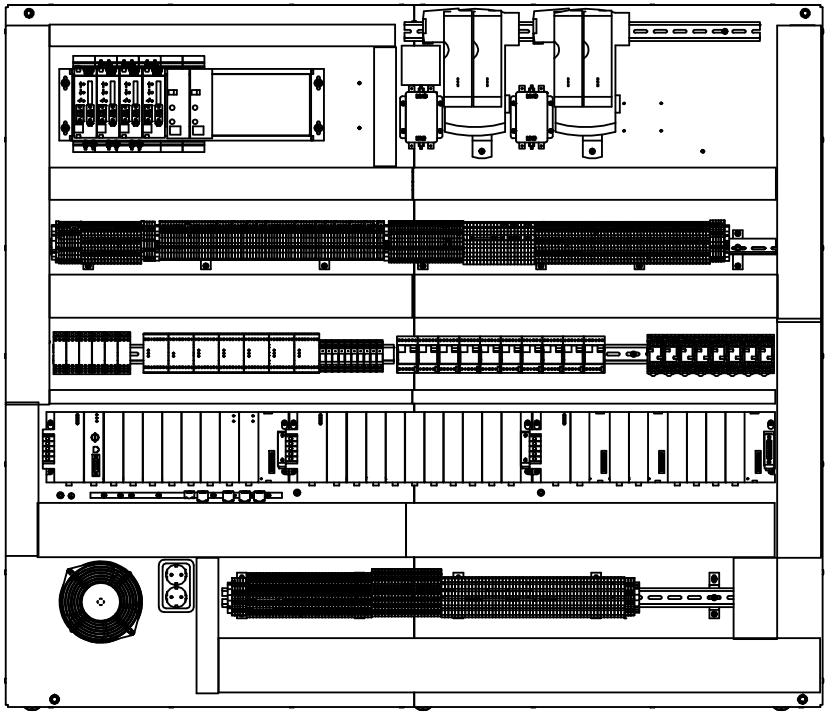

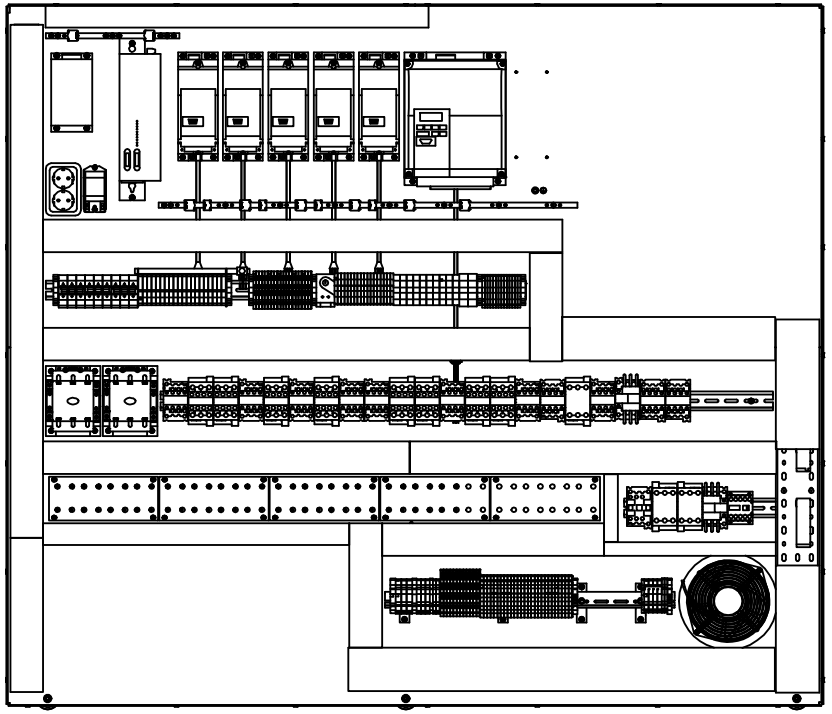

1511779-14
ECM 98861

ECM: 118636 - 50001231
Group number: 1511779-0100
Assembly Drawing: 1511779-14_4_AA

This list covers pages from 710 to 719

Pos	Part No	SP	UN	Qty	Description	Page No
SEE PREVIOUS LISTS PAGES: 711, 713, 715.						

Pos	Part No	SP	UN	Qty	Description	Page No

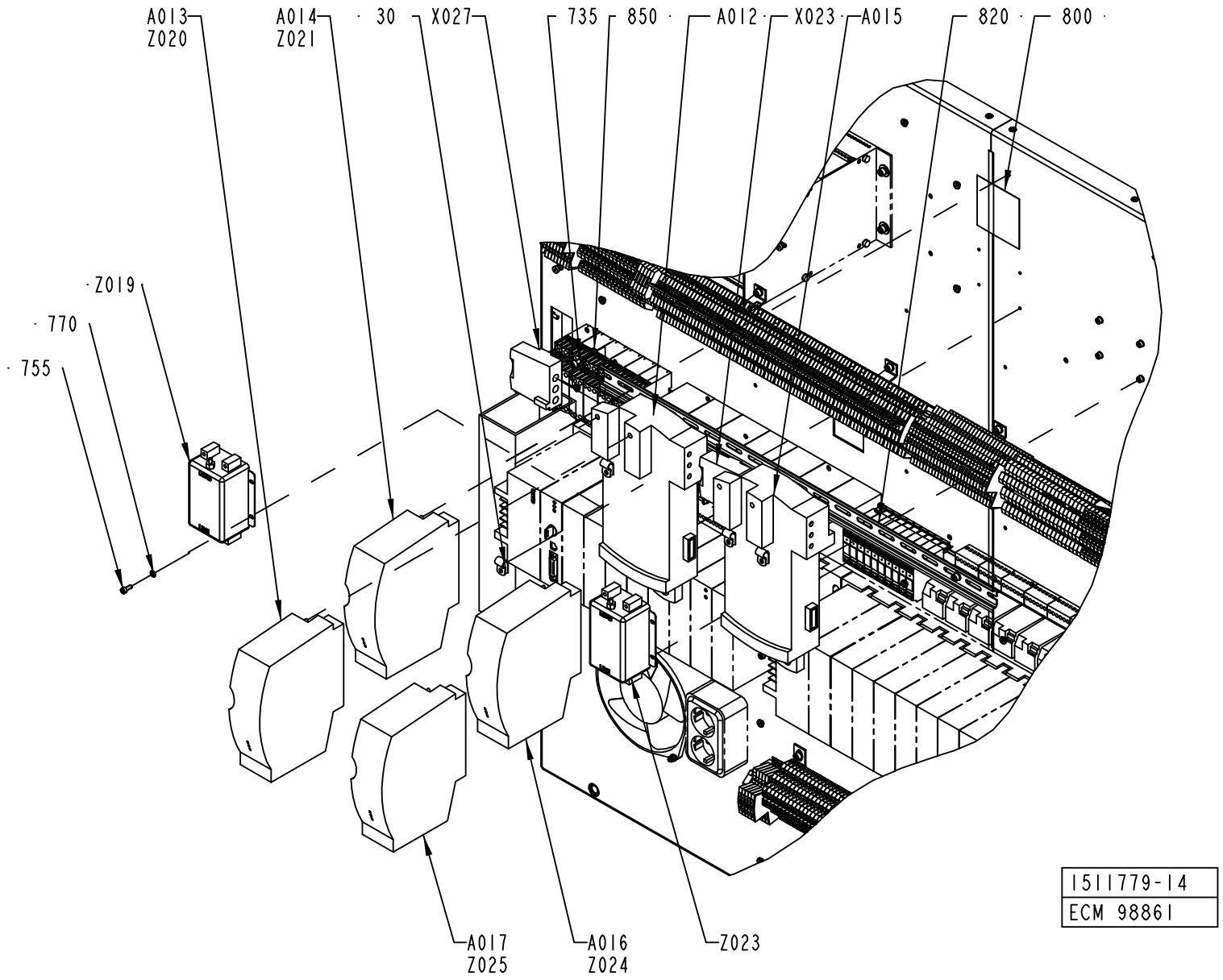
A013
Z020
A014
Z021
30
X027
735
850
A012
X023
A015
820
800
Z019
770
755
A017
Z025
A016
Z024
Z023
1511779-14
ECM 98861

Pos	Part No	SP	UN	Qty	Description	Page No
SEE PREVIOUS LISTS PAGES: 711, 713, 715.						

Pos	Part No	SP	UN	Qty	Description	Page No

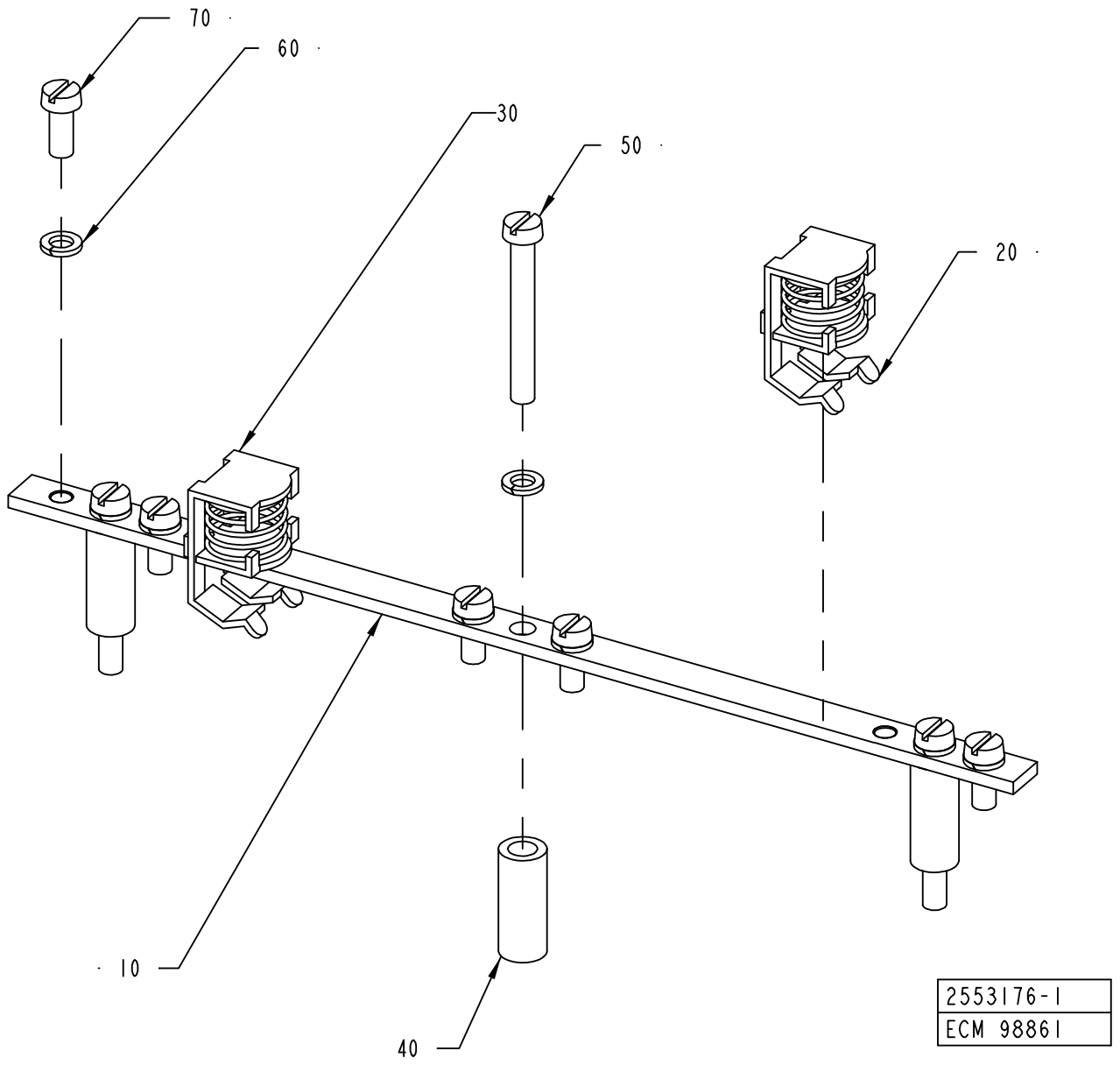
70
60
30
50
20
10
40
2553176-1
ECM 98861

ECM: 118446 - 50001231
Group number: 2553176-0100
Assembly Drawing: 2553176-1_1_AA

Pos	Part No	SP	UN	Qty	Description	Page No
-						
010	2553175-0000	-		1	EARTH BAR	
020	90135-0039	-		1	SHIELD CLIP KLBU 4-13.5	
030	90135-0039	-		1	SHIELD CLIP KLBU 4-13.5	
040	988436-0000	-		3	SPACER SLEEVE	
050	312125-0339	-		3	SCREW PAN HEAD MCS M5X40 SS	
060	315402-0146	-		8	LOCK WASHER FBB 5,1	
070	312125-0327	-		5	SCREW PAN HEAD MCS M5X12 SS	

Pos	Part No	SP	UN	Qty	Description	Page No

Machine Type | Group Description | Used-In | Group Number | Page No

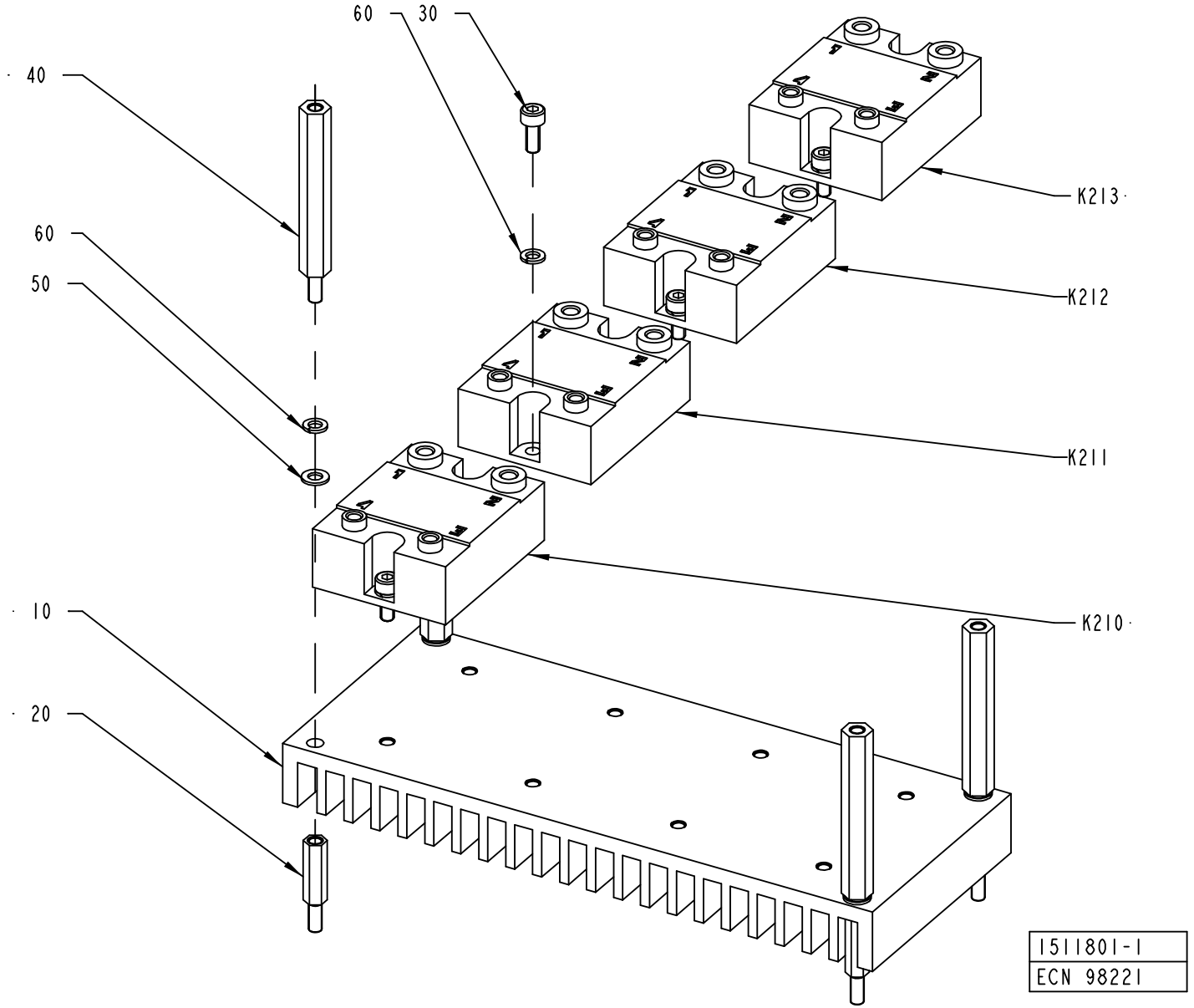
60
30
40
60
50
K213
K212
K211
K210
10
20
1511801-1
ECN 98221

ECM: 115723 - 20020930
Group number: 1511801-0100
Assembly Drawing: 1511801-1_1_AB

Pos	Part No	SP	UN	Qty	Description	Page No
-						
010	1498819-0000	-		1	COOLING PLATE	
020	1517675-0000	-		4	SPACER	
030	312115-0289	-		8	SCREW ISO4762 M4X10 A4	
040	2531997-0000	-		4	SPACER	
050	315105-0136	-		4	WASHER BRB4,3XRFR	
060	315402-0136	-		12	LOCK WASHER FBB 4,1	
K210	90119-0067	A		1	SOLID-STATE RELAY, H12WD4850	
K211	90119-0067	A		1	SOLID-STATE RELAY, H12WD4850	
K212	90119-0067	A		1	SOLID-STATE RELAY, H12WD4850	
K213	90119-0067	A		1	SOLID-STATE RELAY, H12WD4850	

Pos	Part No	SP	UN	Qty	Description	Page No

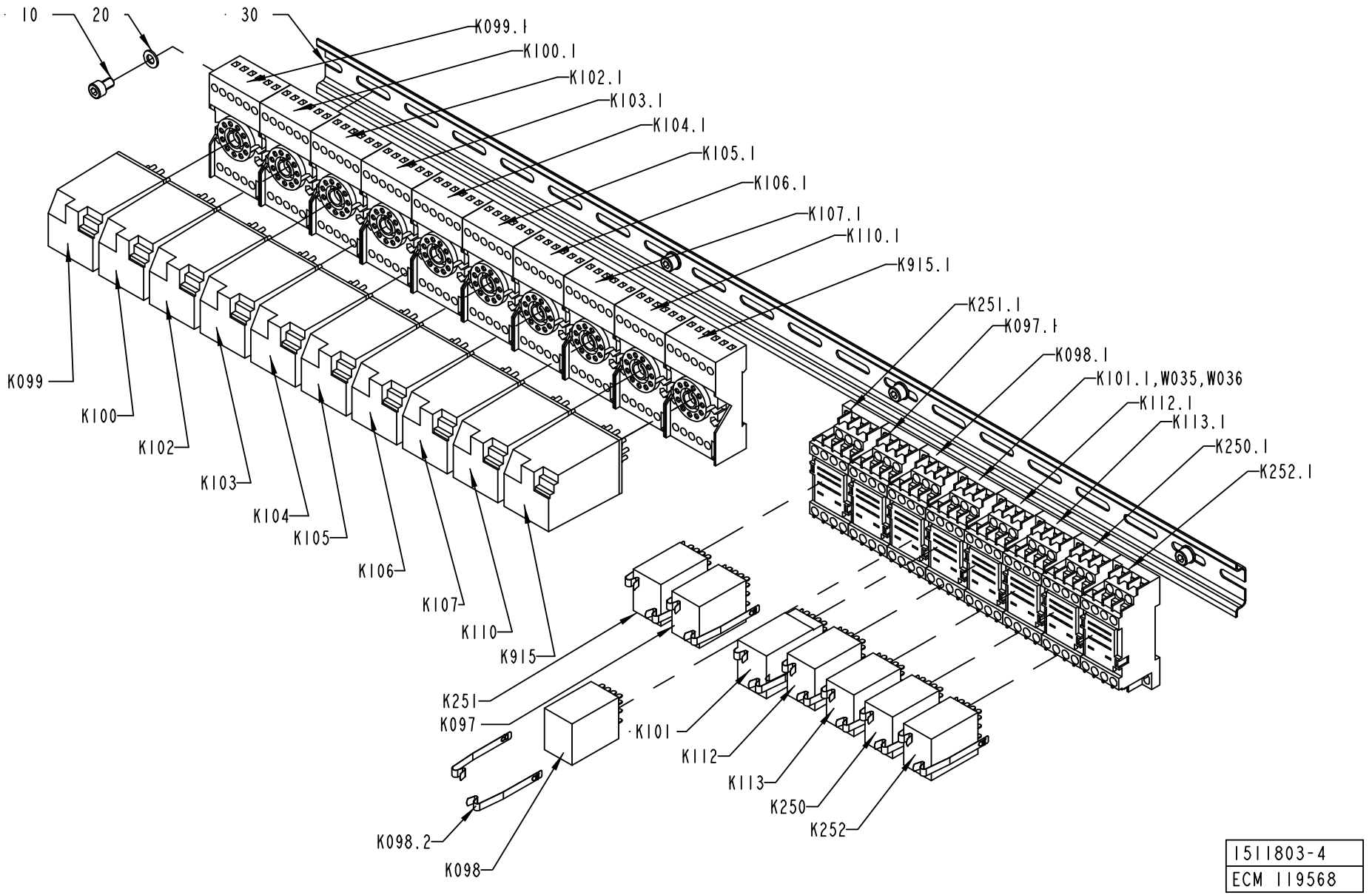

1511803-4
ECM 119568

ECM: 118680 - 50001231
Group number: 1511803-0100
Assembly Drawing: 1511803-4_1_AB

Pos	Part No	SP	UN	Qty	Description	Page No
TBA ASU NOTCSB						
K112	90119-0086	A		1	RELAY, AUXILIARY MY4IN4 24VDC	
K112.1	90119-0309	A		1	BASE UNIT, TYPE PYF 14AE	
K112.2	90119-0310	B		1	CLAMP, TYPE PYC-A1	
TBA ASU TCSB						
K112	90119-0086	A		1	RELAY, AUXILIARY MY4IN4 24VDC	
K112.1	90119-0309	A		1	BASE UNIT, TYPE PYF 14AE	
K112.2	90119-0310	B		1	CLAMP, TYPE PYC-A1	
K915	90119-0056	A		1	RELAY, AUXILIARY MK3P5-S 24VDC	
K915.1	90129-0006	A		1	BASE, S3-B	
TBA NOASU TCSB						
K915	90119-0056	A		1	RELAY, AUXILIARY MK3P5-S 24VDC	
K915.1	90129-0006	A		1	BASE, S3-B	
Common Parts						
010	312115-0323	-		4	SCREW ISO4762 M5X8 A4	
020	315105-0146	-		4	WASHER BRB5,3X10RFR	
030	353042-0004	-	MM	690	RAIL TS 35/7,5	
K097	90119-0086	A		1	RELAY, AUXILIARY MY4IN4 24VDC	
K097.1	90119-0309	A		1	BASE UNIT, TYPE PYF 14AE	
K097.2	90119-0310	B		1	CLAMP, TYPE PYC-A1	
K098	90119-0086	A		1	RELAY, AUXILIARY MY4IN4 24VDC	
K098.1	90119-0309	A		1	BASE UNIT, TYPE PYF 14AE	
K098.2	90119-0310	B		1	CLAMP, TYPE PYC-A1	
K099	90119-0056	A		1	RELAY, AUXILIARY MK3P5-S 24VDC	
K099.1	90129-0006	A		1	BASE, S3-B	
K100	90119-0056	A		1	RELAY, AUXILIARY MK3P5-S 24VDC	
K100.1	90129-0006	A		1	BASE, S3-B	
K101	90119-0109	A		1	RELAY OMRON 24VDC MY4H	
K101.1	90119-0309	A		1	BASE UNIT, TYPE PYF 14AE	
K101.2	90119-0310	B		1	CLAMP, TYPE PYC-A1	
K102	90119-0056	A		1	RELAY, AUXILIARY MK3P5-S 24VDC	
K102.1	90129-0006	A		1	BASE, S3-B	
K103	90119-0056	A		1	RELAY, AUXILIARY MK3P5-S 24VDC	
K103.1	90129-0006	A		1	BASE, S3-B	
K104	90119-0056	A		1	RELAY, AUXILIARY MK3P5-S 24VDC	
K104.1	90129-0006	A		1	BASE, S3-B	
K105	90119-0056	A		1	RELAY, AUXILIARY MK3P5-S 24VDC	
K105.1	90129-0006	A		1	BASE, S3-B	
K106	90119-0056	A		1	RELAY, AUXILIARY MK3P5-S 24VDC	
K106.1	90129-0006	A		1	BASE, S3-B	
K107	90119-0056	A		1	RELAY, AUXILIARY MK3P5-S 24VDC	
K107.1	90129-0006	A		1	BASE, S3-B	
K110	90119-0056	A		1	RELAY, AUXILIARY MK3P5-S 24VDC	
K110.1	90129-0006	A		1	BASE, S3-B	
K113	90119-0086	A		1	RELAY, AUXILIARY MY4IN4 24VDC	
K113.1	90119-0309	A		1	BASE UNIT, TYPE PYF 14AE	
K113.2	90119-0310	B		1	CLAMP, TYPE PYC-A1	
K250	90119-0086	A		1	RELAY, AUXILIARY MY4IN4 24VDC	
K250.1	90119-0309	A		1	BASE UNIT, TYPE PYF 14AE	
K250.2	90119-0310	B		1	CLAMP, TYPE PYC-A1	
K251	90119-0086	A		1	RELAY, AUXILIARY MY4IN4 24VDC	
K251.1	90119-0309	A		1	BASE UNIT, TYPE PYF 14AE	
K251.2	90119-0310	B		1	CLAMP, TYPE PYC-A1	
K252	90119-0086	A		1	RELAY, AUXILIARY MY4IN4 24VDC	
K252.1	90119-0309	A		1	BASE UNIT, TYPE PYF 14AE	
K252.2	90119-0310	B		1	CLAMP, TYPE PYC-A1	
W035	90220-0059	-	MM	2000	THERMOCOUPLE CABLE K/ 2X0,81MM2	
W036	90220-0059	-	MM	2000	THERMOCOUPLE CABLE K/ 2X0,81MM2	

Machine Type | Group Description | Used-In | Group Number | Page No

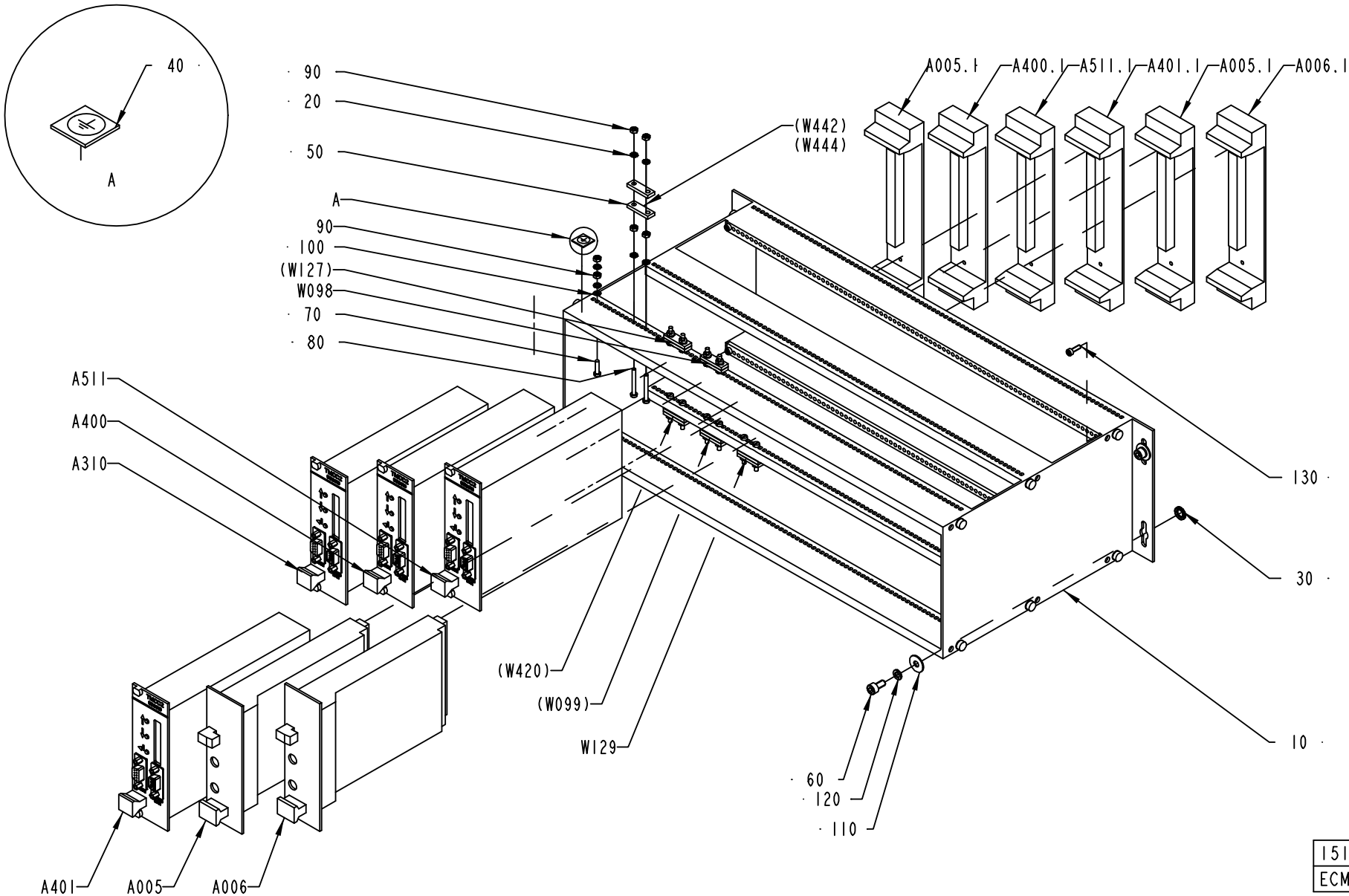

1511805-4
ECM 98861

ECM: 118442 - 50001231
Group number: 1511805-0100
Assembly Drawing: 1511805-4_1_AA

This list covers pages from 726 to 729

Pos	Part No	SP	UN	Qty	Description	Page No
TBA NOPT ASU						
020	90062-0058	-		18	LOCK WASHER SERRAT.EXT.GEAR,3,2/6 H=0,4	
050	90220-0305	-		8	CLAMP FOR SCR.CABLE, 16MM,	
080	312125-0232	-		8	SCREW PAN HEAD MCS M3X25 SS	
090	312605-0310	-		18	HEXAGON NUT, M6M M3 A280	
A511	559810-0101	A		1	TMCC2 CONTROLLER	
010	*559809-0101*	*-*		*1*	*CIRCUIT BOARD*	
150	*559807-0000*	*-*		*1*	*PRINTED CIRCUIT BOARD*	
180	*559811-0101*	*-*		*1*	*CIRCUIT BOARD*	
130	*559808-0000*	*-*		*1*	*PRINTED CIRCUIT BOARD*	
020	*2524654-0000*	*-*		*1*	*PLATE*	
030	*2524660-0000*	*-*		*1*	*CASING*	
070	*2524662-0000*	*-*		*1*	*COOLING BLOCK*	
100	*2524658-0000*	*-*		*1*	*COVER*	
170	*2524659-0000*	*-*		*1*	*CABLE*	
A511.1	67372-0101	A		1	BACKPLANE 8TE(32 POLE)	
0010	*543336-0001*	*-*		*1*	*COMPONENTS WITHOUT TP-NO*	
0020	*543319-0000*	*-*		*1*	*PRINTED CIRCUIT BOARD*	
0030	*543337-0000*	*-*		*1*	*TERMINAL LABELS 1-4*	
TBA NOPT NOASU						
020	90062-0058	-		18	LOCK WASHER SERRAT.EXT.GEAR,3,2/6 H=0,4	
050	90220-0305	-		8	CLAMP FOR SCR.CABLE, 16MM,	
080	312125-0232	-		8	SCREW PAN HEAD MCS M3X25 SS	
090	312605-0310	-		18	HEXAGON NUT, M6M M3 A280	
TBA PT19 ASU						
020	90062-0058	-		22	LOCK WASHER SERRAT.EXT.GEAR,3,2/6 H=0,4	
050	90220-0305	-		10	CLAMP FOR SCR.CABLE, 16MM,	
080	312125-0232	-		10	SCREW PAN HEAD MCS M3X25 SS	
090	312605-0310	-		22	HEXAGON NUT, M6M M3 A280	
A005	67347-0101	-		1	CARD BRAKEREG.MAGN.POWDER BRAKE	
A005:1	67372-0101	A		1	BACKPLANE 8TE(32 POLE)	
0010	*543336-0001*	*-*		*1*	*COMPONENTS WITHOUT TP-NO*	
0020	*543319-0000*	*-*		*1*	*PRINTED CIRCUIT BOARD*	
0030	*543337-0000*	*-*		*1*	*TERMINAL LABELS 1-4*	
A006	67347-0101	-		1	CARD BRAKEREG.MAGN.POWDER BRAKE	
A006.1	67372-0101	A		1	BACKPLANE 8TE(32 POLE)	
0010	*543336-0001*	*-*		*1*	*COMPONENTS WITHOUT TP-NO*	
0020	*543319-0000*	*-*		*1*	*PRINTED CIRCUIT BOARD*	
0030	*543337-0000*	*-*		*1*	*TERMINAL LABELS 1-4*	
A401	559810-0101	A		1	TMCC2 CONTROLLER	
010	*559809-0101*	*-*		*1*	*CIRCUIT BOARD*	
150	*559807-0000*	*-*		*1*	*PRINTED CIRCUIT BOARD*	
180	*559811-0101*	*-*		*1*	*CIRCUIT BOARD*	
130	*559808-0000*	*-*		*1*	*PRINTED CIRCUIT BOARD*	
020	*2524654-0000*	*-*		*1*	*PLATE*	
030	*2524660-0000*	*-*		*1*	*CASING*	
070	*2524662-0000*	*-*		*1*	*COOLING BLOCK*	
100	*2524658-0000*	*-*		*1*	*COVER*	
170	*2524659-0000*	*-*		*1*	*CABLE*	
A401.1	67372-0101	A		1	BACKPLANE 8TE(32 POLE)	
0010	*543336-0001*	*-*		*1*	*COMPONENTS WITHOUT TP-NO*	
0020	*543319-0000*	*-*		*1*	*PRINTED CIRCUIT BOARD*	
0030	*543337-0000*	*-*		*1*	*TERMINAL LABELS 1-4*	
A511	559810-0101	A		1	TMCC2 CONTROLLER	
010	*559809-0101*	*-*		*1*	*CIRCUIT BOARD*	
150	*559807-0000*	*-*		*1*	*PRINTED CIRCUIT BOARD*	
180	*559811-0101*	*-*		*1*	*CIRCUIT BOARD*	
130	*559808-0000*	*-*		*1*	*PRINTED CIRCUIT BOARD*	
020	*2524654-0000*	*-*		*1*	*PLATE*	
030	*2524660-0000*	*-*		*1*	*CASING*	
070	*2524662-0000*	*-*		*1*	*COOLING BLOCK*	
100	*2524658-0000*	*-*		*1*	*COVER*	
170	*2524659-0000*	*-*		*1*	*CABLE*	
A511.1	67372-0101	A		1	BACKPLANE 8TE(32 POLE)	
0010	*543336-0001*	*-*		*1*	*COMPONENTS WITHOUT TP-NO*	
0020	*543319-0000*	*-*		*1*	*PRINTED CIRCUIT BOARD*	
0030	*543337-0000*	*-*		*1*	*TERMINAL LABELS 1-4*	
W129	90220-0183	-	M	1	SCR. CABLE 2X0,34MM2	
TBA PT19 NOASU						
020	90062-0058	-		22	LOCK WASHER SERRAT.EXT.GEAR,3,2/6 H=0,4	
050	90220-0305	-		10	CLAMP FOR SCR.CABLE, 16MM,	
080	312125-0232	-		10	SCREW PAN HEAD MCS M3X25 SS	
090	312605-0310	-		22	HEXAGON NUT, M6M M3 A280	
A005	67347-0101	-		1	CARD BRAKEREG.MAGN.POWDER BRAKE	
A005:1	67372-0101	A		1	BACKPLANE 8TE(32 POLE)	
0010	*543336-0001*	*-*		*1*	*COMPONENTS WITHOUT TP-NO*	
0020	*543319-0000*	*-*		*1*	*PRINTED CIRCUIT BOARD*	
0030	*543337-0000*	*-*		*1*	*TERMINAL LABELS 1-4*	
A006	67347-0101	-		1	CARD BRAKEREG.MAGN.POWDER BRAKE	
A006.1	67372-0101	A		1	BACKPLANE 8TE(32 POLE)	
0010	*543336-0001*	*-*		*1*	*COMPONENTS WITHOUT TP-NO*	

Machine Type | Group Description | Used-In | Group Number | Page No

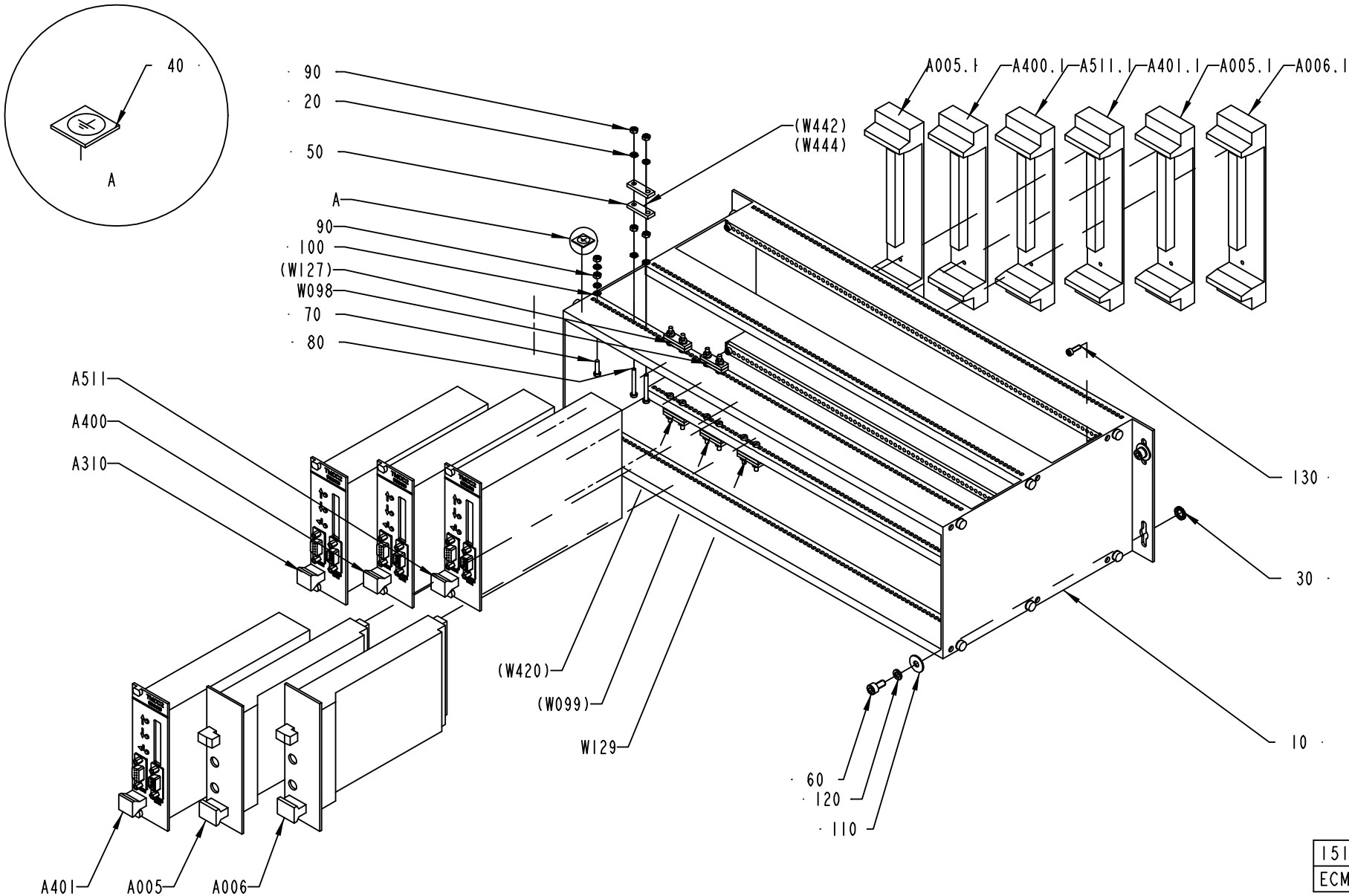

1511805-4
ECM 98861

ECM: 118442 - 50001231
Group number: 1511805-0100
Assembly Drawing: 1511805-4_1_AA

This list covers pages from 726 to 729

Pos	Part No	SP	UN	Qty	Description	Page No
TBA PT19 NOASU (Cont'd)						
A401	559810-0101	A		1	TMCC2 CONTROLLER	
010	*559809-0101*	-		*1*	*CIRCUIT BOARD*	
150	*559807-0000*	-		*1*	*PRINTED CIRCUIT BOARD*	
180	*559811-0101*	-		*1*	*CIRCUIT BOARD*	
130	*559808-0000*	-		*1*	*PRINTED CIRCUIT BOARD*	
020	*2524654-0000*	-		*1*	*PLATE*	
030	*2524660-0000*	-		*1*	*CASING*	
070	*2524662-0000*	-		*1*	*COOLING BLOCK*	
100	*2524658-0000*	-		*1*	*COVER*	
170	*2524659-0000*	-		*1*	*CABLE*	
A401.1	67372-0101	A		1	BACKPLANE 8TE(32 POLE)	
0010	*543336-0001*	-		*1*	*COMPONENTS WITHOUT TP-NO*	
0020	*543319-0000*	-		*1*	*PRINTED CIRCUIT BOARD*	
0030	*543337-0000*	-		*1*	*TERMINAL LABELS 1-4*	
W129	90220-0183	-	M	1	SCR. CABLE 2X0,34MM2	
Common Parts						
010	67369-0102	-		1	RACK WALLMOUNTED 84TE	
030 2	*540282-0002*	-		*1*	*COMPONENTS WITHOUT TP-NO*	
030	90062-0061	-		4	LOCK WASHER NORD-LOCK,6,5/10,8, H=2,6	
040	90194-0152	-		1	SIGN, EARTH	
060	312115-0325	-		4	SCREW ISO4762 M5X10 A4	
070	312125-0226	-		1	SCREW PAN HEAD MCS M3X12 SS	
110	315105-0124	-		1	WASHER BRB3,2X6RFR	
110	315125-0146	-		4	WASHER TBRSB 5.3X15X1 A4	
120	315402-0146	-		4	LOCK WASHER FBB 5,1	
130	312115-0224	-		4	SCREW ISO4762 M3X10 A4	
A310	559810-0101	A		1	TMCC2 CONTROLLER	
010	*559809-0101*	-		*1*	*CIRCUIT BOARD*	
150	*559807-0000*	-		*1*	*PRINTED CIRCUIT BOARD*	
180	*559811-0101*	-		*1*	*CIRCUIT BOARD*	
130	*559808-0000*	-		*1*	*PRINTED CIRCUIT BOARD*	
020	*2524654-0000*	-		*1*	*PLATE*	
030	*2524660-0000*	-		*1*	*CASING*	
070	*2524662-0000*	-		*1*	*COOLING BLOCK*	
100	*2524658-0000*	-		*1*	*COVER*	
170	*2524659-0000*	-		*1*	*CABLE*	
A310.1	67372-0101	A		1	BACKPLANE 8TE(32 POLE)	
0010	*543336-0001*	-		*1*	*COMPONENTS WITHOUT TP-NO*	
0020	*543319-0000*	-		*1*	*PRINTED CIRCUIT BOARD*	
0030	*543337-0000*	-		*1*	*TERMINAL LABELS 1-4*	
A400	559810-0101	A		1	TMCC2 CONTROLLER	
010	*559809-0101*	-		*1*	*CIRCUIT BOARD*	
150	*559807-0000*	-		*1*	*PRINTED CIRCUIT BOARD*	
180	*559811-0101*	-		*1*	*CIRCUIT BOARD*	
130	*559808-0000*	-		*1*	*PRINTED CIRCUIT BOARD*	
020	*2524654-0000*	-		*1*	*PLATE*	
030	*2524660-0000*	-		*1*	*CASING*	
070	*2524662-0000*	-		*1*	*COOLING BLOCK*	
100	*2524658-0000*	-		*1*	*COVER*	
170	*2524659-0000*	-		*1*	*CABLE*	
A400.1	67372-0101	A		1	BACKPLANE 8TE(32 POLE)	
0010	*543336-0001*	-		*1*	*COMPONENTS WITHOUT TP-NO*	
0020	*543319-0000*	-		*1*	*PRINTED CIRCUIT BOARD*	
0030	*543337-0000*	-		*1*	*TERMINAL LABELS 1-4*	
W098	90220-0183	-	M	3	SCR. CABLE 2X0,34MM2	

Machine Type | Group Description | Used-In | Group Number | Page No

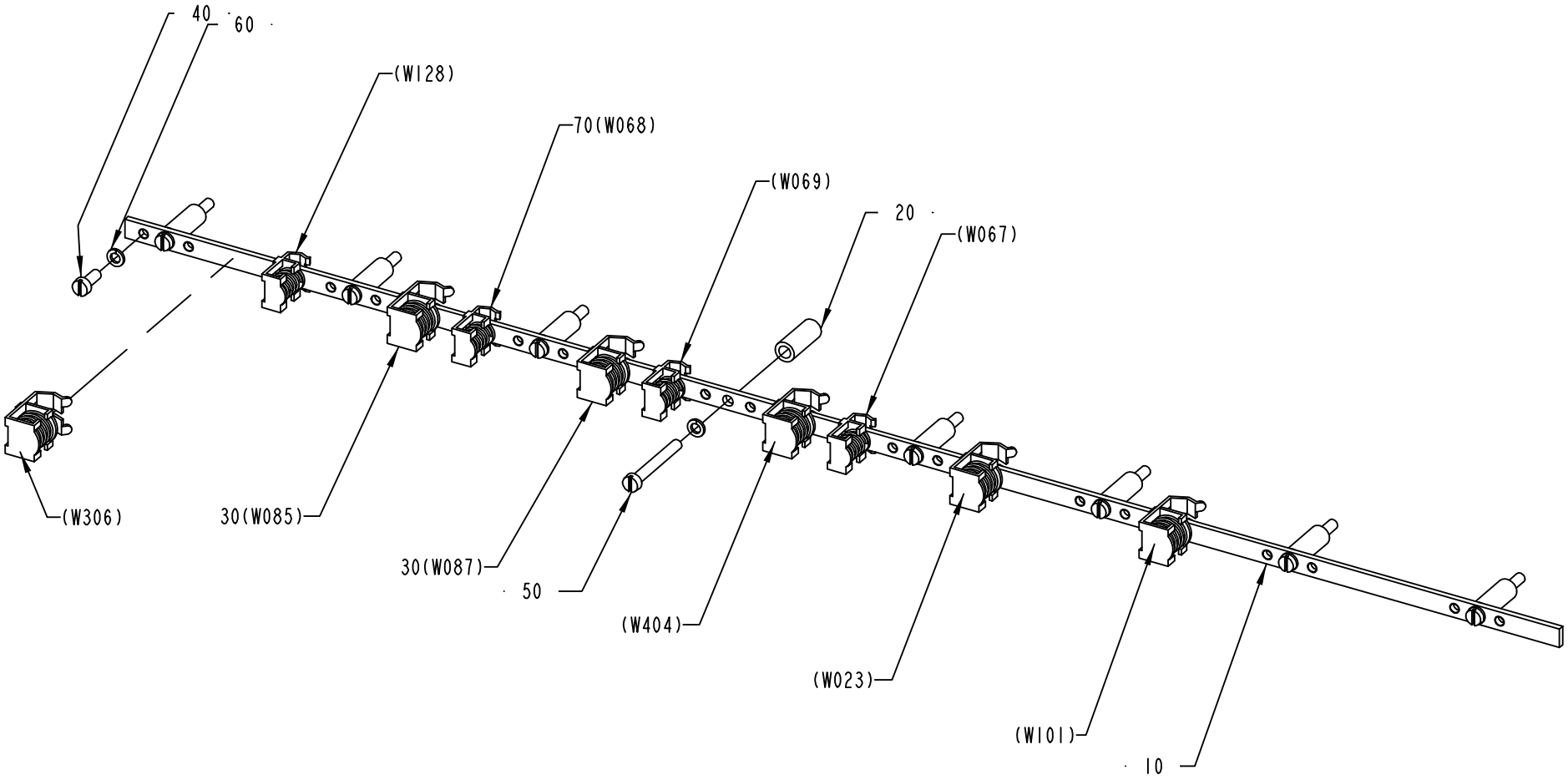

1511808-4
ECM 98861

ECM: 118391 - 50001231
Group number: 1511808-0100
Assembly Drawing: 1511808-4_1_AA

Pos	Part No	SP	UN	Qty	Description	Page No
TBA NOPT NOASU						
030	90135-0039	-		4	SHIELD CLIP KLBU 4-13.5	
070	90135-0034	B		2	SHIELD CLAMP KLBU 3-8	
TBA PT19 ASU						
030	90135-0039	B		6	SHIELD CLIP KLBU 4-13.5	
070	90135-0034	B		4	SHIELD CLAMP KLBU 3-8	
TBA PT19 NOASU, TBA NOPT ASU						
030	90135-0039	B		5	SHIELD CLIP KLBU 4-13.5	
070	90135-0034	B		3	SHIELD CLAMP KLBU 3-8	
Common Parts						
010	1523947-0000	-		1	EARTH BAR	
020	988436-0000	-		8	SPACER SLEEVE	
040	312125-0327	-		1	SCREW PAN HEAD MCS M5X12 SS	
050	312125-0339	-		8	SCREW PAN HEAD MCS M5X40 SS	
060	315402-0146	-		8	LOCK WASHER FBB 5,1	

Pos	Part No	SP	UN	Qty	Description	Page No

Machine Type Group Description Used-In Group Number Page No

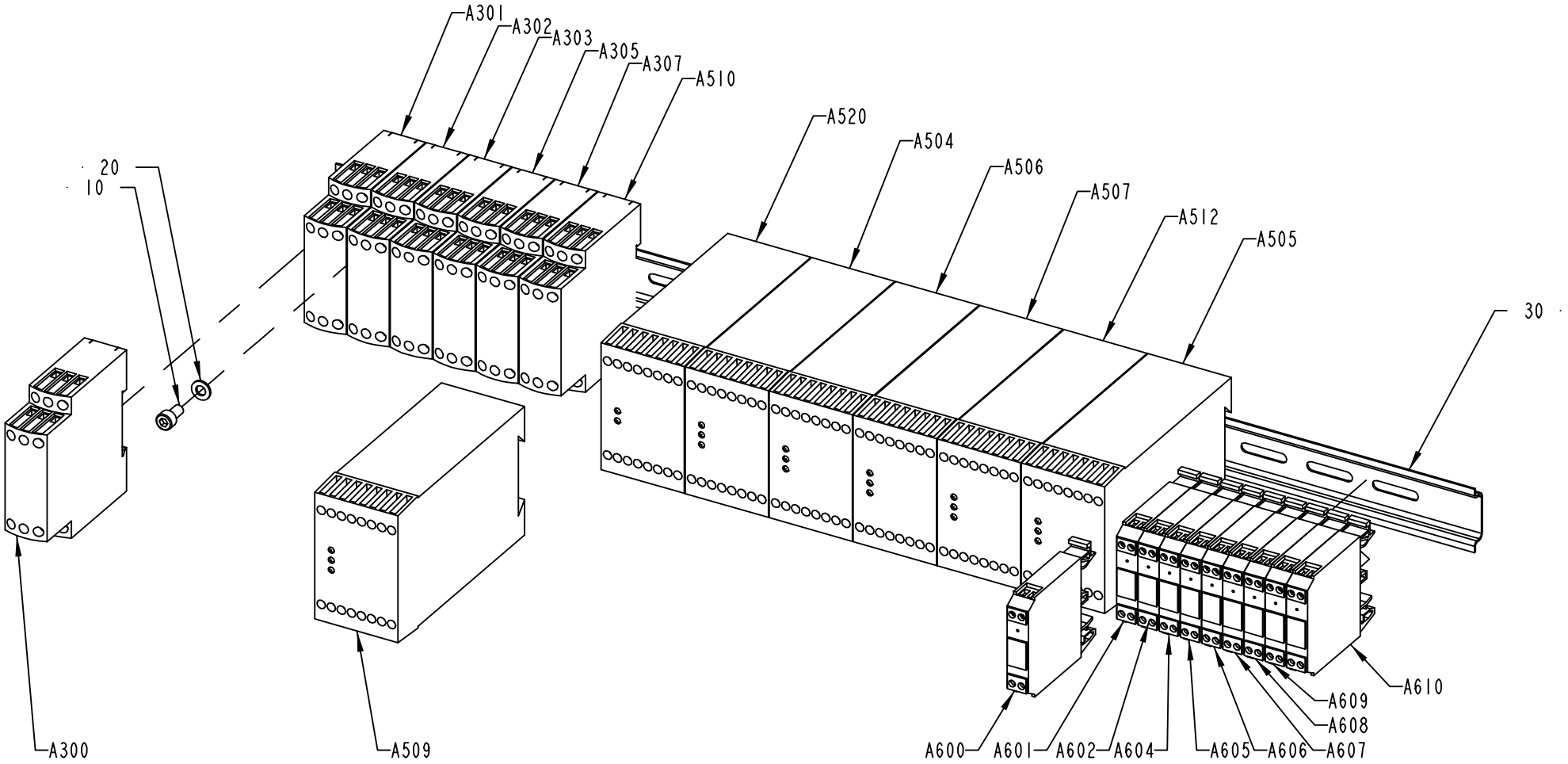

1511824-8
ECM 98861

ECM: 118682 - 50001231
Group number: 1511824-0100
Assembly Drawing: 1511824-8_1_AA

Pos	Part No	SP	UN	Qty	Description	Page No
TBA NOPT ASU HI						
A505	90119-0072	A		1	SAFETY RELAY, JSBR4	
A510	90458-2580	A		1	LEVEL CONTROL RELAY RM4-LA32M	
TBA NOPT ASU NOHI						
A505	90119-0072	A		1	SAFETY RELAY, JSBR4	
TBA NOPT NOASU HI						
A510	90458-2580	A		1	LEVEL CONTROL RELAY RM4-LA32M	
TBA PT19 ASU HI						
A505	90119-0072	A		1	SAFETY RELAY, JSBR4	
A509	90119-0072	A		1	SAFETY RELAY, JSBR4	
A510	90458-2580	A		1	LEVEL CONTROL RELAY RM4-LA32M	
A520	90119-0084	A		1	EXPANSION RELAY, JSR1T-500MS	
TBA PT19 ASU NOHI						
A505	90119-0072	A		1	SAFETY RELAY, JSBR4	
A509	90119-0072	A		1	SAFETY RELAY, JSBR4	
A520	90119-0084	A		1	EXPANSION RELAY, JSR1T-500MS	
TBA PT19 NOASU HI						
A509	90119-0072	A		1	SAFETY RELAY, JSBR4	
A510	90458-2580	A		1	LEVEL CONTROL RELAY RM4-LA32M	
A520	90119-0084	A		1	EXPANSION RELAY, JSR1T-500MS	
TBA PT19 NOASU NOHI						
A509	90119-0072	A		1	SAFETY RELAY, JSBR4	
A520	90119-0084	A		1	EXPANSION RELAY, JSR1T-500MS	
Common Parts						
010	312115-0325	-		3	SCREW ISO4762 M5X10 A4	
020	315105-0146	-		3	WASHER BRB5,3X10RFR	
030	353042-0004	-	MM	623	RAIL TS 35/7,5	
A300	90458-2580	A		1	LEVEL CONTROL RELAY RM4-LA32M	
A301	90458-2580	A		1	LEVEL CONTROL RELAY RM4-LA32M	
A302	90458-2580	A		1	LEVEL CONTROL RELAY RM4-LA32M	
A303	90458-2580	A		1	LEVEL CONTROL RELAY RM4-LA32M	
A305	90458-2580	A		1	LEVEL CONTROL RELAY RM4-LA32M	
A307	90458-2580	A		1	LEVEL CONTROL RELAY RM4-LA32M	
A504	90119-0089	A		1	SAFETY RELAY, JSBT4 24VDC	
A506	90119-0072	A		1	SAFETY RELAY, JSBR4	
A507	90119-0072	A		1	SAFETY RELAY, JSBR4	
A512	90119-0072	A		1	SAFETY RELAY, JSBR4	
A600	90119-0104	A		1	OPTO COUPLER AMMS 50070	
A601	90119-0063	A		1	OPTO-RELAY, DC/DC AMMS-10-1/30VDC	
A602	90119-0063	A		1	OPTO-RELAY, DC/DC AMMS-10-1/30VDC	
A604	90119-0063	A		1	OPTO-RELAY, DC/DC AMMS-10-1/30VDC	
A605	90119-0063	A		1	OPTO-RELAY, DC/DC AMMS-10-1/30VDC	
A606	90119-0063	A		1	OPTO-RELAY, DC/DC AMMS-10-1/30VDC	
A607	90119-0104	A		1	OPTO COUPLER AMMS 50070	
A608	90119-0104	A		1	OPTO COUPLER AMMS 50070	
A609	90119-0104	A		1	OPTO COUPLER AMMS 50070	
A610	90119-0104	A		1	OPTO COUPLER AMMS 50070	

Machine Type | Group Description | Used-In | Group Number | Page No

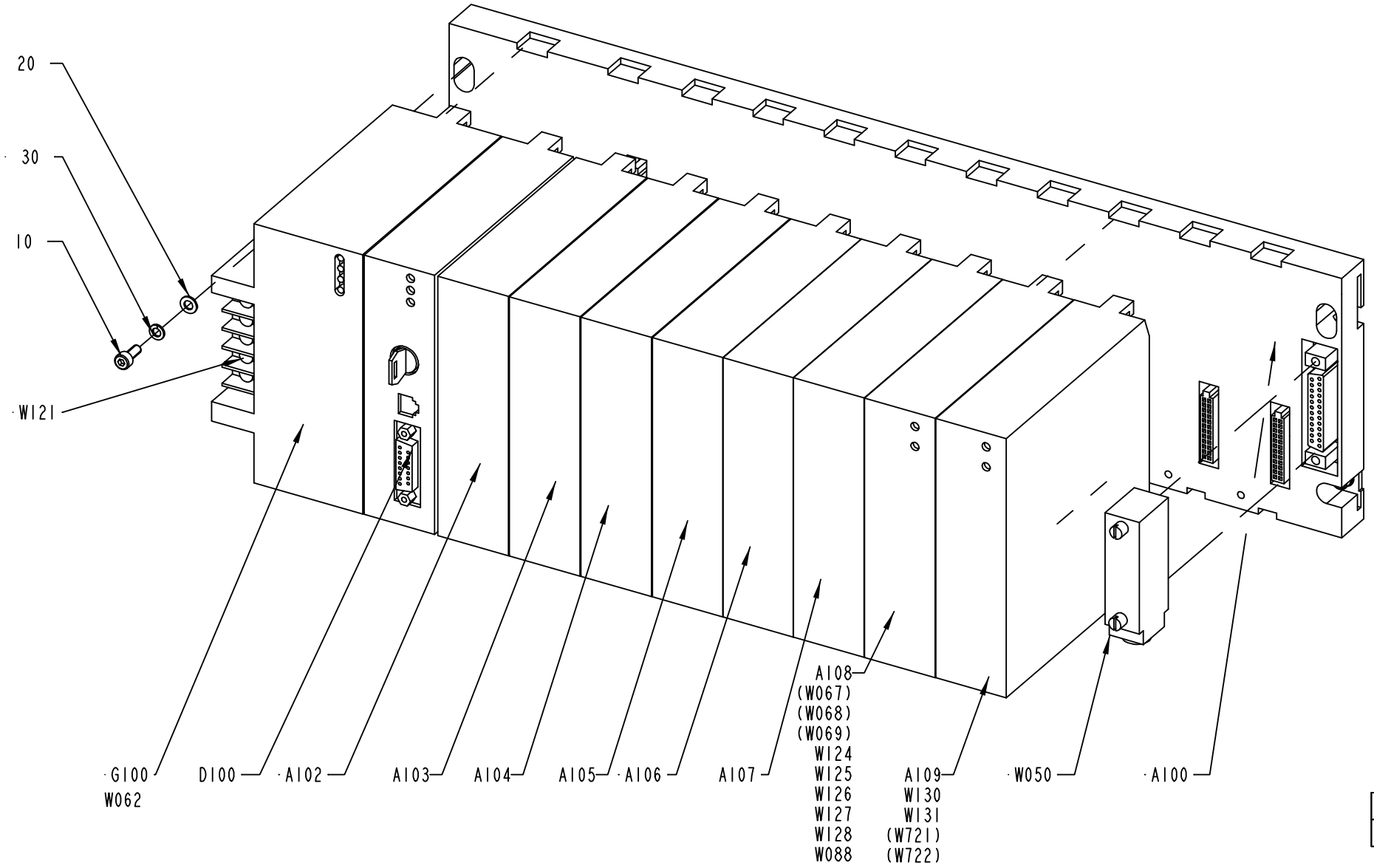
20
30
10
W121
G100
W062
D100
A102
A103
A104
A105
A106
A107
A108
(W067)
(W068)
(W069)
W124
W125
W126
W127
W128
W088
A109
W130
W131
(W721)
(W722)
W050
A100
1511825-2
ECN 98861

ECM: 118395 - 50001231
Group number: 1511825-0100
Assembly Drawing: 1511825-2_1_AA

Pos	Part No	SP	UN	Qty	Description	Page No
TBA NOPT ASU HI, TBA NOPT NOASU HI						
A109	90031-0063	A		1	PLC,ANALOG COMBO MODULE,IN-4PT/OUT-2PT	
W131	1512322-0000	-		1	COPPER BRAID	
TBA PT19 ASU HI, TBA PT19 ASU NOHI, TBA PT19 NOASU HI, TBA PT19 NOASU NOHI						
A109	90031-0063	A		1	PLC,ANALOG COMBO MODULE,IN-4PT/OUT-2PT	
W128	90220-0183	-	M	3	SCR. CABLE 2X0,34MM2	
W130	90220-0183	-	M	3	SCR. CABLE 2X0,34MM2	
W131	1512322-0000	-		1	COPPER BRAID	
Common Parts						
010	312115-0289	-		4	SCREW ISO4762 M4X10 A4	
020	315105-0136	-		4	WASHER BRB4,3XRFR	
030	315402-0136	-		4	LOCK WASHER FBB 4,1	
A100	90031-0051	A		1	BASEPLATE, 10-SLOT	
A102	90031-0057	A		1	PLC, DIGITAL INPUT MODULE	
A103	90031-0057	A		1	PLC, DIGITAL INPUT MODULE	
A104	90031-0057	A		1	PLC, DIGITAL INPUT MODULE	
A105	90031-0057	A		1	PLC, DIGITAL INPUT MODULE	
A106	90031-0058	A		1	PLC, DIGITAL INPUT MODULE	
A107	90031-0059	A		1	PLC, DIGITAL OUTPUT MODULE	
A108	90031-0062	A		1	PLC, ANALOG OUTPUT MODULE 8PT/CURR/VOLT	
D100	90031-0075	A		1	CPU363, SERIAL COMMUNICATION	
G100	90031-0068	A		1	PLC, POWER SUPPLY	
	90031-0301	*A*		*1*	*SPARE BATTERY CPU,PCM,2PCS*	
	352551-0134	*A*		*1*	*FINE-WIRE FUSE 2 A SLOW;5X20MM*	
W050	90031-0305	A		1	I/O EXPANSION CABLE	
W088	1512322-0000	-		1	COPPER BRAID	
W121	1512322-0000	-		1	COPPER BRAID	
W124	90220-0183	-	M	3	SCR. CABLE 2X0,34MM2	
W125	90220-0183	-	M	3	SCR. CABLE 2X0,34MM2	
W126	90220-0183	-	M	3	SCR. CABLE 2X0,34MM2	
W127	90220-0183	-	M	2	SCR. CABLE 2X0,34MM2	

Pos	Part No	SP	UN	Qty	Description	Page No

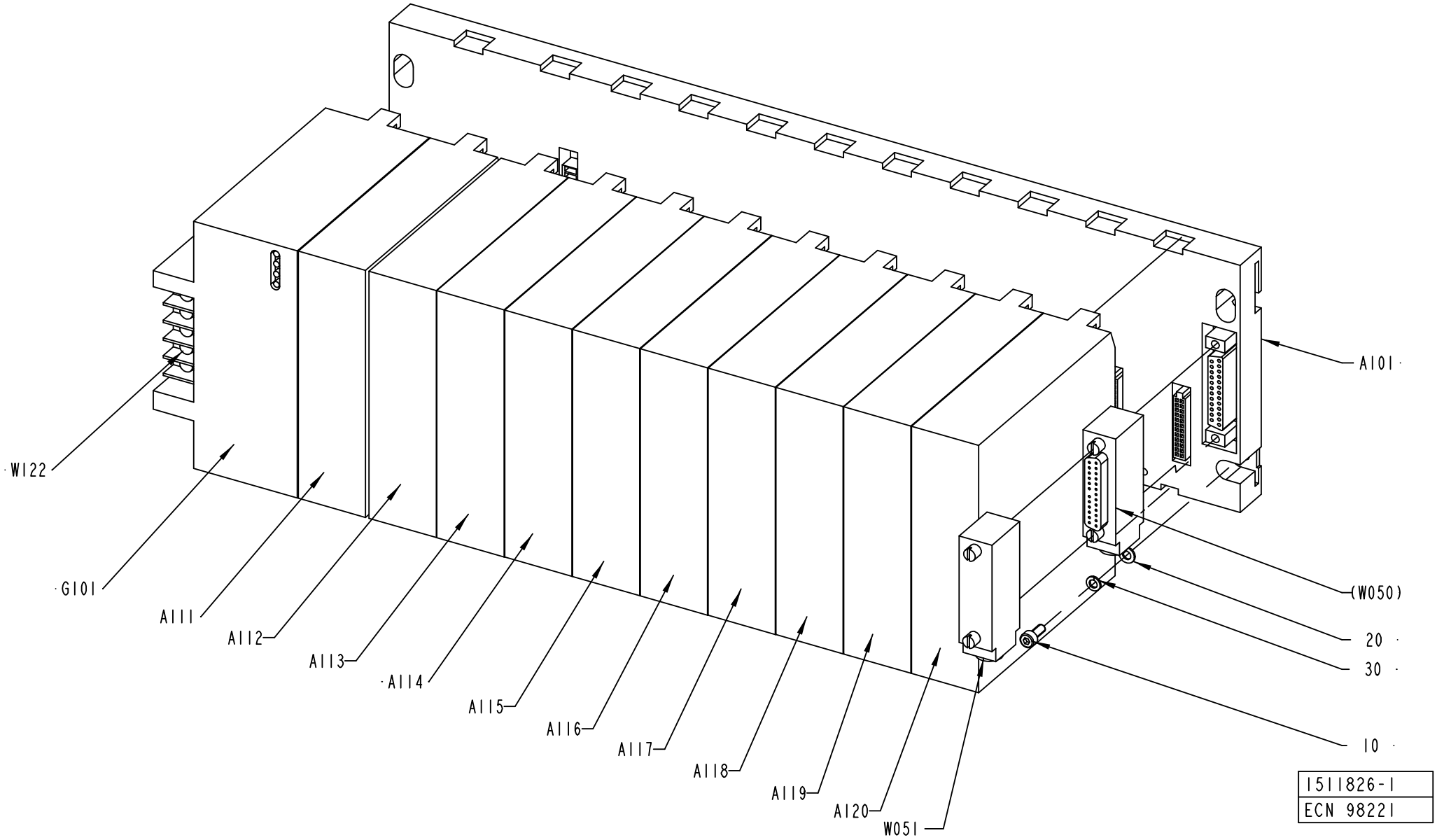
A101
W122
G101
A111
A112
A113
A114
A115
A116
A117
A118
A119
A120
W051
(W050)
20
30
10
1511826-1
ECN 98221

ECM: 115717 - 20020930
Group number: 1511826-0100
Assembly Drawing: 1511826-1_1_AB

Pos	Part No	SP	UN	Qty	Description	Page No
-						
010	312115-0289	-		4	SCREW ISO4762 M4X10 A4	
020	315105-0136	-		4	WASHER BRB4,3XRFR	
030	315402-0136	-		4	LOCK WASHER FBB 4,1	
A101	90031-0053	A		1	BASEPLATE,10-SLOT	
	90031-0302	*-*		*1*	*I/O BUS TERMINATION PLUG*	
A111	90031-0057	A		1	PLC, DIGITAL INPUT MODULE	
A112	90031-0057	A		1	PLC, DIGITAL INPUT MODULE	
A113	90031-0057	A		1	PLC, DIGITAL INPUT MODULE	
A114	90031-0059	A		1	PLC, DIGITAL OUTPUT MODULE	
A115	90031-0059	A		1	PLC, DIGITAL OUTPUT MODULE	
A116	90031-0059	A		1	PLC, DIGITAL OUTPUT MODULE	
A117	90031-0059	A		1	PLC, DIGITAL OUTPUT MODULE	
A118	90031-0059	A		1	PLC, DIGITAL OUTPUT MODULE	
A119	90031-0059	A		1	PLC, DIGITAL OUTPUT MODULE	
A120	90031-0059	A		1	PLC, DIGITAL OUTPUT MODULE	
G101	90031-0068	A		1	PLC, POWER SUPPLY	
	90031-0301	*A*		*1*	*SPARE BATTERY CPU,PCM,2PCS*	
	352551-0134	*A*		*1*	*FINE-WIRE FUSE 2 A SLOW;5X20MM*	
W050	90031-0305	A		1	I/O EXPANSION CABLE	
W122	1512322-0000	B		1	COPPER BRAID	

Pos	Part No	SP	UN	Qty	Description	Page No

Machine Type | Group Description | Used-In | Group Number | Page No

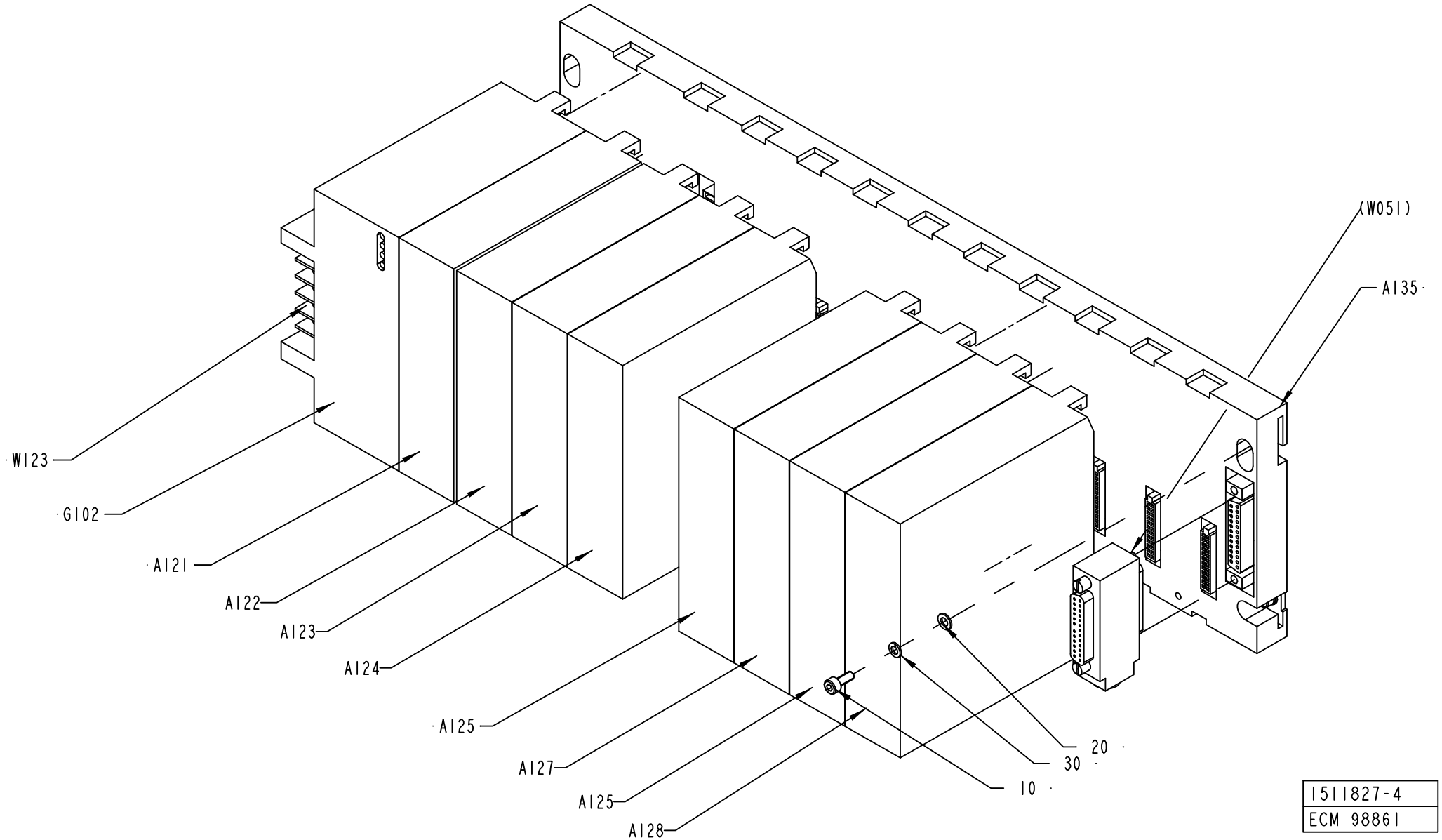
(W051)
A135
W123
G102
A121
A122
A123
A124
A125
A127
A125
A128
20
30
10
1511827-4
ECM 98861

ECM: 118396 - 50001231
Group number: 1511827-0100
Assembly Drawing: 1511827-4_1_AA

Pos	Part No	SP	UN	Qty	Description	Page No
TBA NOPT HI						
A122	90031-0059	A		1	PLC, DIGITAL OUTPUT MODULE	
TBA PT19 HI						
A122	90031-0059	A		1	PLC, DIGITAL OUTPUT MODULE	
A125	90031-0057	A		1	PLC, DIGITAL INPUT MODULE	
A128	90031-0057	A		1	PLC, DIGITAL INPUT MODULE	
TBA PT19 NOHI						
A125	90031-0057	A		1	PLC, DIGITAL INPUT MODULE	
A128	90031-0057	A		1	PLC, DIGITAL INPUT MODULE	
Common Parts						
0010	312115-0289	-		4	SCREW ISO4762 M4X10 A4	
0020	315105-0136	-		4	WASHER BRB4,3XRFR	
030	315402-0136	-		4	LOCK WASHER FBB 4,1	
A121	90031-0059	A		1	PLC, DIGITAL OUTPUT MODULE	
A123	90031-0059	A		1	PLC, DIGITAL OUTPUT MODULE	
A124	90031-0059	A		1	PLC, DIGITAL OUTPUT MODULE	
A126	90031-0057	A		1	PLC, DIGITAL INPUT MODULE	
A127	90031-0057	A		1	PLC, DIGITAL INPUT MODULE	
A135	90031-0053	A		1	BASEPLATE,10-SLOT	
	90031-0302	*-*		*1*	*I/O BUS TERMINATION PLUG*	
G102	90031-0068	A		1	PLC, POWER SUPPLY	
	90031-0301	*A*		*1*	*SPARE BATTERY CPU,PCM,2PCS*	
	352551-0134	*A*		*1*	*FINE-WIRE FUSE 2 A SLOW;5X20MM*	
W123	1512322-0000	B		1	COPPER BRAID	

Pos	Part No	SP	UN	Qty	Description	Page No

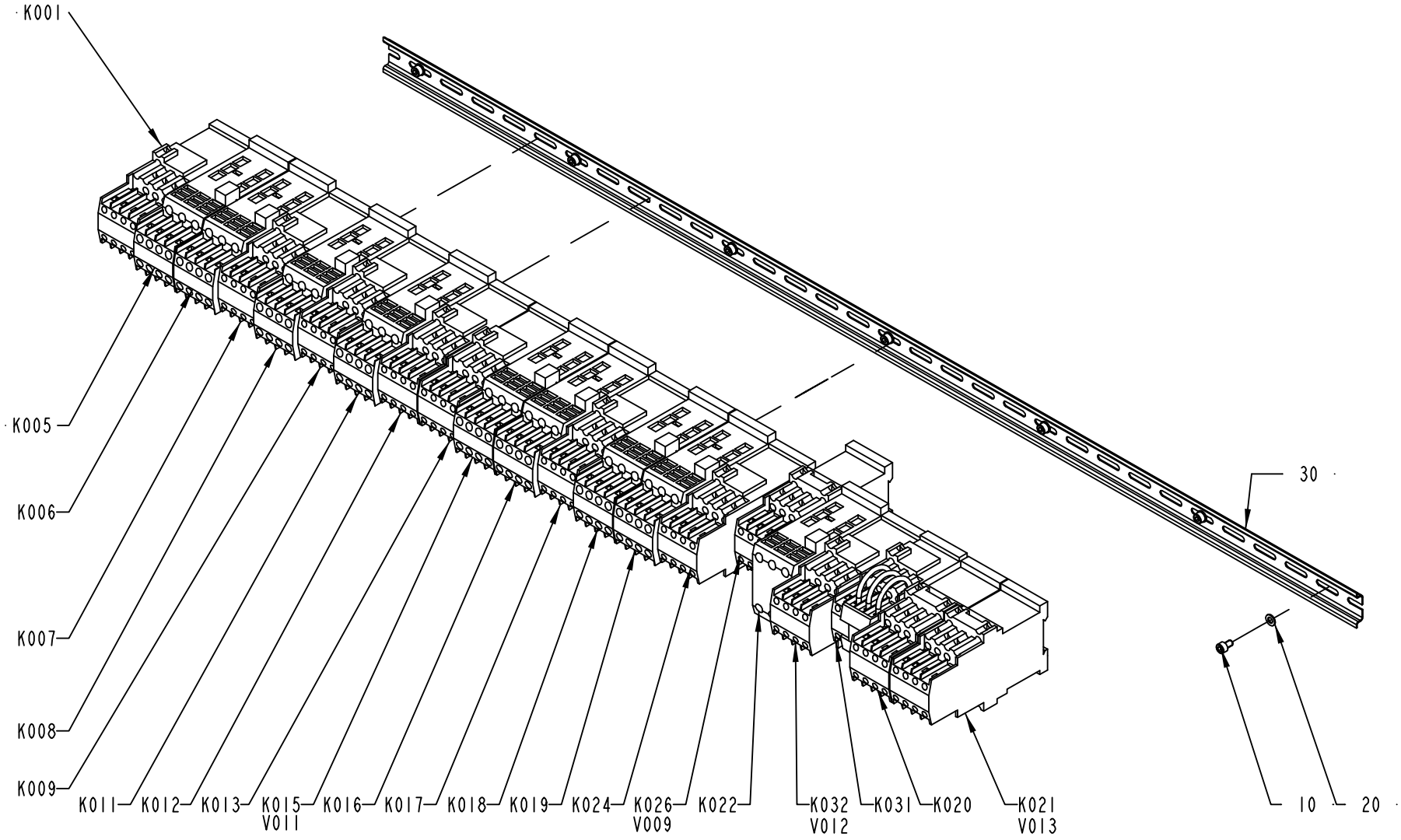

1511834-4
ECM 98861

ECM: 118443 - 50001231
Group number: 1511834-0100
Assembly Drawing: 1511834-4_1_AA

Pos	Part No	SP	UN	Qty	Description	Page No
TBA NOPT ASU						
K022	90075-0128	A		1	CONTACTOR, 7,5KW 24VDC	
TBA PT19 ASU						
K020	90075-0127	A		1	CONTACTOR, 4KW 24VDC	
K021	90075-0127	A		1	CONTACTOR, 4KW 24VDC	
K022	90075-0128	A		1	CONTACTOR, 7,5KW 24VDC	
K031	90458-1302	A		1	CONTACTOR, 4KW 48VAC	
K032	90075-0125	A		1	CONTACTOR, 7,5KW 24VDC	
	90075-0313	*A*		*1*	*AUXILIARY CONTACT K&M 22 DILM.2NO;2NC*	
V013	90024-0034	B		1	DIODE SURGE SUPPRESSOR, FD B DIL	
TBA PT19 NOASU						
K020	90075-0127	A		1	CONTACTOR, 4KW 24VDC	
K021	90075-0127	A		1	CONTACTOR, 4KW 24VDC	
K031	90458-1302	A		1	CONTACTOR, 4KW 48VAC	
K032	90075-0125	A		1	CONTACTOR, 7,5KW 24VDC	
	90075-0313	*A*		*1*	*AUXILIARY CONTACT K&M 22 DILM.2NO;2NC*	
V013	90024-0034	B		1	DIODE SURGE SUPPRESSOR, FD B DIL	
Common Parts						
010	312115-0323	-		7	SCREW ISO4762 M5X8 A4	
020	315105-0146	-		7	WASHER BRB5,3X10RFR	
030	353042-0004	-	MM	1120	RAIL TS 35/7,5	
K001	90075-0124	A		1	CONTACTOR, 4KW 24VDC	
	90075-0313	*A*		*1*	*AUXILIARY CONTACT K&M 22 DILM.2NO;2NC*	
K005	90075-0125	A		1	CONTACTOR, 7,5KW 24VDC	
	90075-0313	*A*		*1*	*AUXILIARY CONTACT K&M 22 DILM.2NO;2NC*	
K006	90075-0125	A		1	CONTACTOR, 7,5KW 24VDC	
	90075-0313	*A*		*1*	*AUXILIARY CONTACT K&M 22 DILM.2NO;2NC*	
K007	90075-0124	A		1	CONTACTOR, 4KW 24VDC	
	90075-0313	*A*		*1*	*AUXILIARY CONTACT K&M 22 DILM.2NO;2NC*	
K008	90075-0125	A		1	CONTACTOR, 7,5KW 24VDC	
	90075-0313	*A*		*1*	*AUXILIARY CONTACT K&M 22 DILM.2NO;2NC*	
K009	90075-0124	A		1	CONTACTOR, 4KW 24VDC	
	90075-0313	*A*		*1*	*AUXILIARY CONTACT K&M 22 DILM.2NO;2NC*	
K011	90075-0125	A		1	CONTACTOR, 7,5KW 24VDC	
	90075-0313	*A*		*1*	*AUXILIARY CONTACT K&M 22 DILM.2NO;2NC*	
K012	90075-0124	A		1	CONTACTOR, 4KW 24VDC	
	90075-0313	*A*		*1*	*AUXILIARY CONTACT K&M 22 DILM.2NO;2NC*	
K013	90075-0124	A		1	CONTACTOR, 4KW 24VDC	
	90075-0313	*A*		*1*	*AUXILIARY CONTACT K&M 22 DILM.2NO;2NC*	
K015	90075-0125	A		1	CONTACTOR, 7,5KW 24VDC	
	90075-0313	*A*		*1*	*AUXILIARY CONTACT K&M 22 DILM.2NO;2NC*	
K016	90075-0125	A		1	CONTACTOR, 7,5KW 24VDC	
	90075-0313	*A*		*1*	*AUXILIARY CONTACT K&M 22 DILM.2NO;2NC*	
K017	90075-0124	A		1	CONTACTOR, 4KW 24VDC	
	90075-0313	*A*		*1*	*AUXILIARY CONTACT K&M 22 DILM.2NO;2NC*	
K018	90075-0125	A		1	CONTACTOR, 7,5KW 24VDC	
	90075-0313	*A*		*1*	*AUXILIARY CONTACT K&M 22 DILM.2NO;2NC*	
K019	90075-0125	A		1	CONTACTOR, 7,5KW 24VDC	
	90075-0313	*A*		*1*	*AUXILIARY CONTACT K&M 22 DILM.2NO;2NC*	
K024	90075-0124	A		1	CONTACTOR, 4KW 24VDC	
	90075-0313	*A*		*1*	*AUXILIARY CONTACT K&M 22 DILM.2NO;2NC*	
K026	90075-0124	A		1	CONTACTOR, 4KW 24VDC	
	90075-0313	*A*		*1*	*AUXILIARY CONTACT K&M 22 DILM.2NO;2NC*	
V009	90024-0034	B		1	DIODE SURGE SUPPRESSOR, FD B DIL	
V011	90024-0034	B		1	DIODE SURGE SUPPRESSOR, FD B DIL	
V012	90024-0034	B		1	DIODE SURGE SUPPRESSOR, FD B DIL	

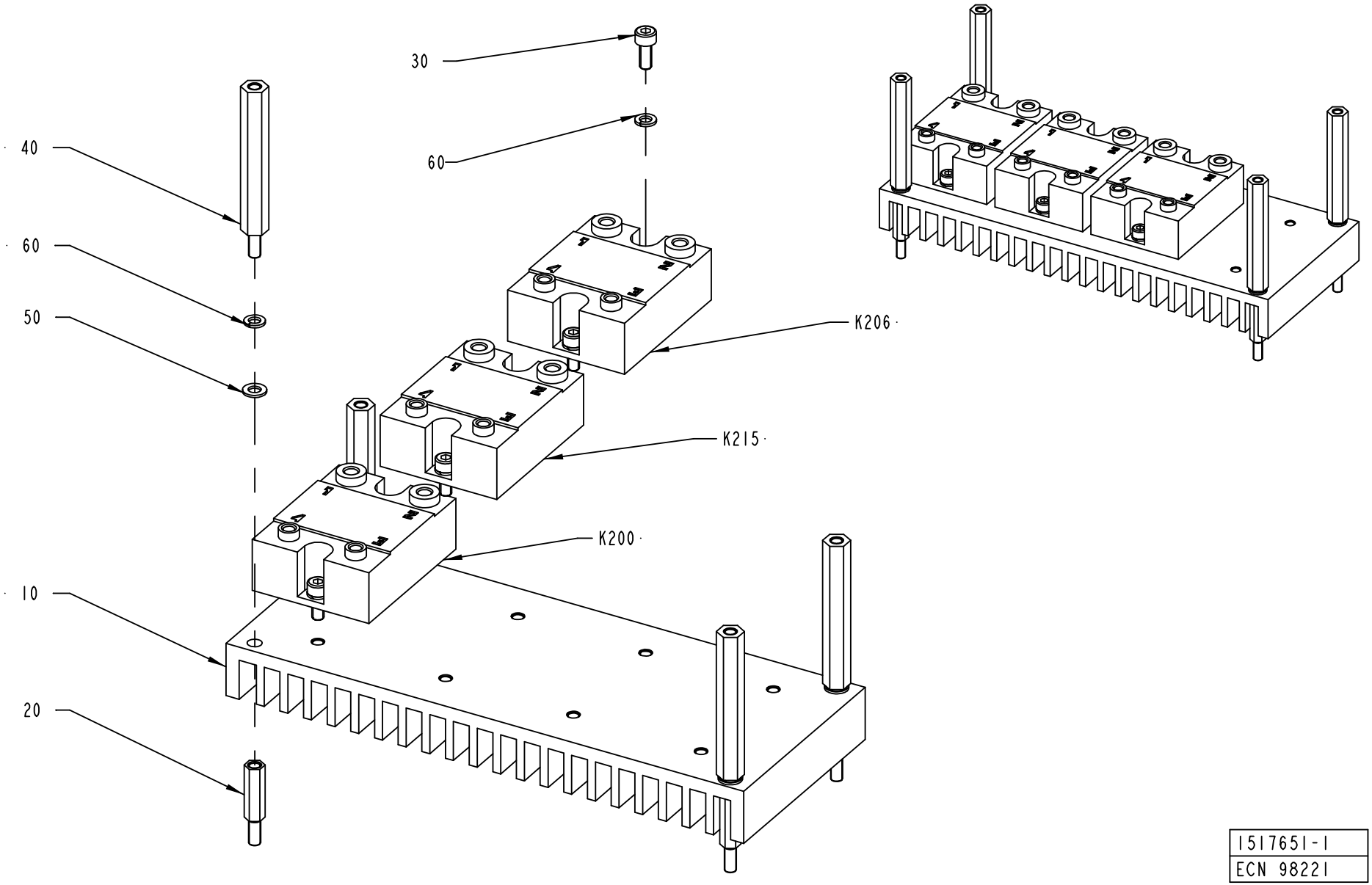

1517651-1
ECN 98221

Pos	Part No	SP	UN	Qty	Description	Page No
TBA NOPT ASU (See drawing on page: 744)						
030	312115-0289	-		8	SCREW ISO4762 M4X10 A4	
060	315402-0136	-		12	LOCK WASHER FBB 4,1	
K205	90119-0067	A		1	SOLID-STATE RELAY, H12WD4850	
TBA NOPT NOASU (See drawing on page: 742)						
030	312115-0289	-		6	SCREW ISO4762 M4X10 A4	
060	315402-0136	-		10	LOCK WASHER FBB 4,1	
Common Parts						
010	1498819-0000	-		1	COOLING PLATE	
020	1517675-0000	-		4	SPACER	
040	2531997-0000	-		4	SPACER	
050	315105-0136	-		4	WASHER BRB4,3XRFR	
K200	90119-0067	A		1	SOLID-STATE RELAY, H12WD4850	
K206	90119-0067	A		1	SOLID-STATE RELAY, H12WD4850	
K215	90119-0067	A		1	SOLID-STATE RELAY, H12WD4850	

Pos	Part No	SP	UN	Qty	Description	Page No

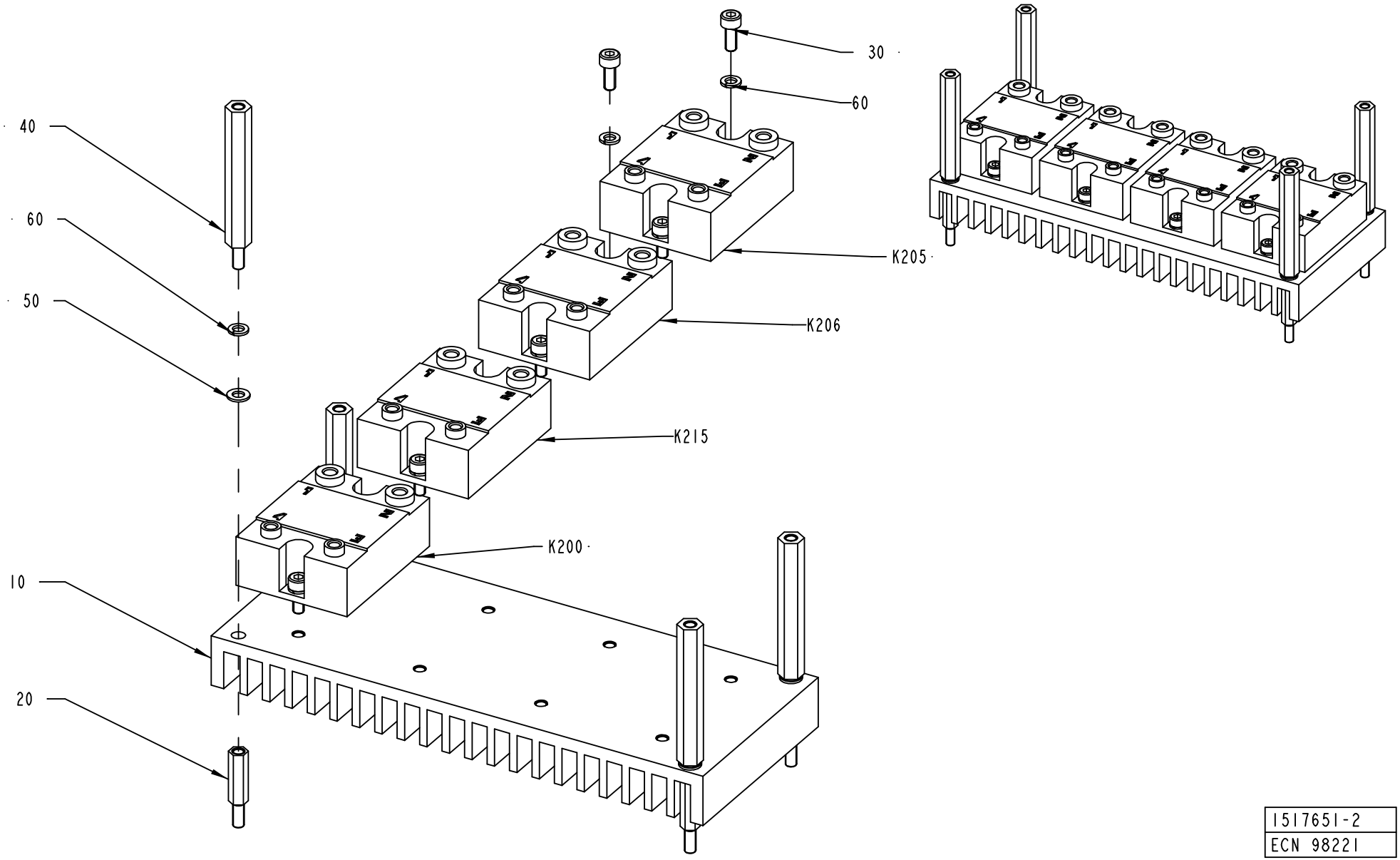

1517651-2
ECN 98221

ECM: 115724 - 20020930
Group number: 1517651-0100
Assembly Drawing: 1517651-2_1_AA

This list covers pages from 742 to 745

Pos	Part No	SP	UN	Qty	Description	Page No
TBA NOPT ASU (See drawing on page: 744)						
030	312115-0289	-		8	SCREW ISO4762 M4X10 A4	
060	315402-0136	-		12	LOCK WASHER FBB 4,1	
K205	90119-0067	A		1	SOLID-STATE RELAY, H12WD4850	
TBA NOPT NOASU (See drawing on page: 742)						
030	312115-0289	-		6	SCREW ISO4762 M4X10 A4	
060	315402-0136	-		10	LOCK WASHER FBB 4,1	
Common Parts						
010	1498819-0000	-		1	COOLING PLATE	
020	1517675-0000	-		4	SPACER	
040	2531997-0000	-		4	SPACER	
050	315105-0136	-		4	WASHER BRB4,3XRFR	
K200	90119-0067	A		1	SOLID-STATE RELAY, H12WD4850	
K206	90119-0067	A		1	SOLID-STATE RELAY, H12WD4850	
K215	90119-0067	A		1	SOLID-STATE RELAY, H12WD4850	

Pos	Part No	SP	UN	Qty	Description	Page No

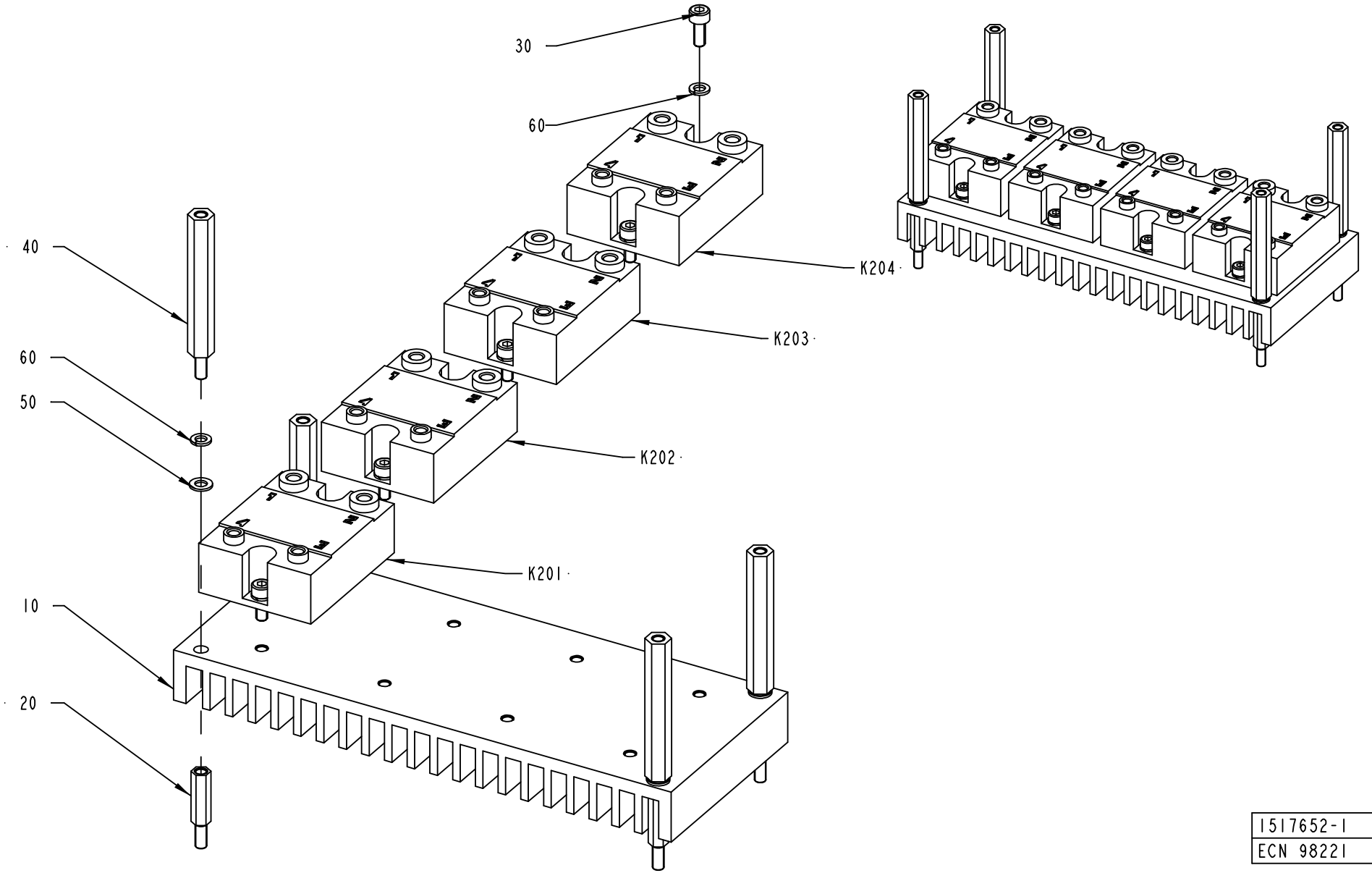

1517652-1
ECN 98221

ECM: 115727 - 20020930
Group number: 1517652-0100
Assembly Drawing: 1517652-1_1_AB

Pos	Part No	SP	UN	Qty	Description	Page No
-						
010	1498819-0000	-		2	COOLING PLATE	
020	1517675-0000	-		4	SPACER	
030	312115-0289	-		8	SCREW ISO4762 M4X10 A4	
040	2531997-0000	-		4	SPACER	
050	315105-0136	-		12	WASHER BRB4,3XRFR	
060	315402-0136	-		12	LOCK WASHER FBB 4,1	
K201	90119-0067	A		1	SOLID-STATE RELAY, H12WD4850	
K202	90119-0067	A		1	SOLID-STATE RELAY, H12WD4850	
K203	90119-0067	A		1	SOLID-STATE RELAY, H12WD4850	
K204	90119-0067	A		1	SOLID-STATE RELAY, H12WD4850	

Pos	Part No	SP	UN	Qty	Description	Page No

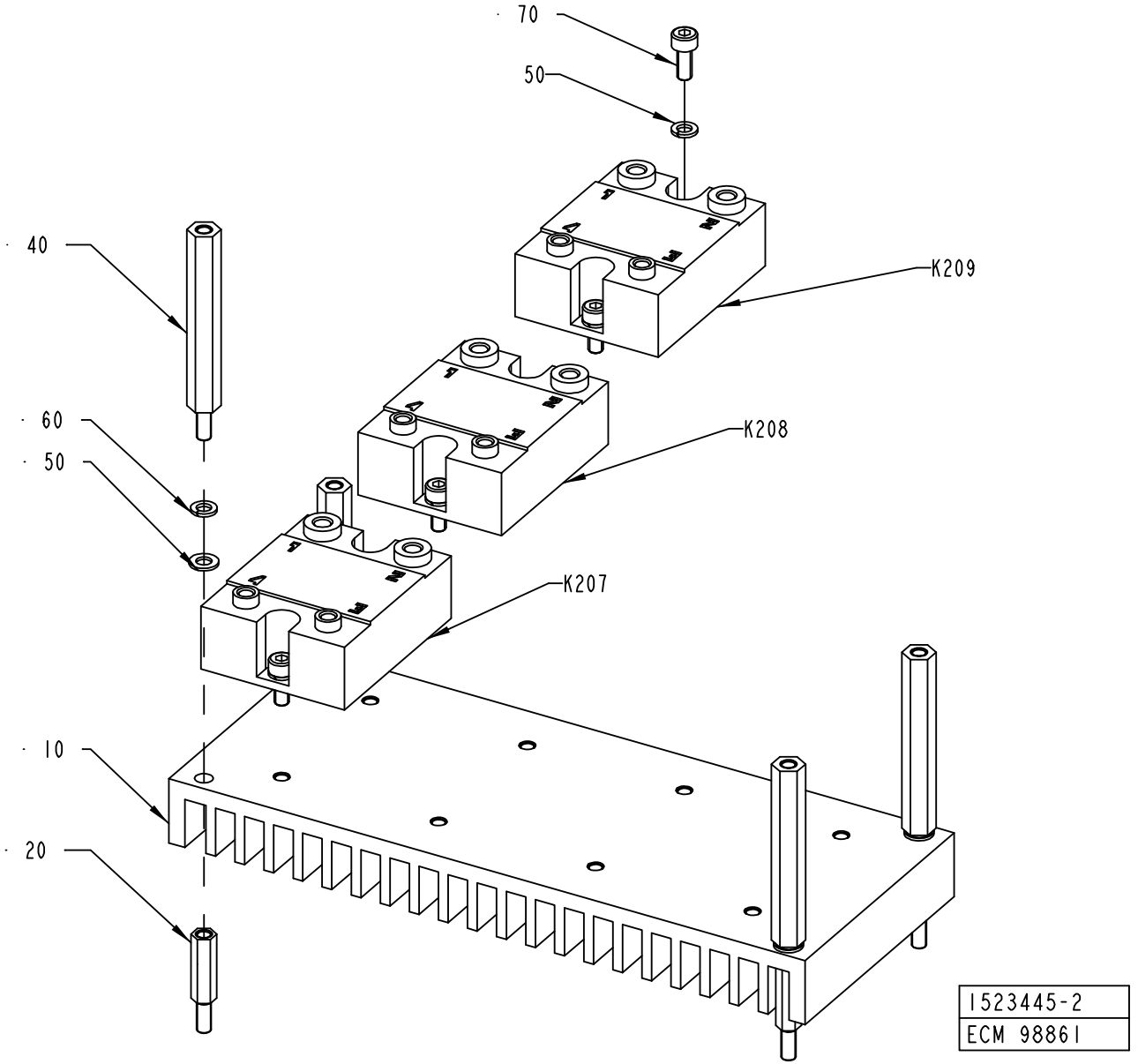
70
50
40
K209
60
50
K208
K207
10
20
1523445-2
ECM 98861

ECM: 118444 - 50001231
Group number: 1523445-0100
Assembly Drawing: 1523445-2_1_AA

Pos	Part No	SP	UN	Qty	Description	Page No
TBA NOPT						
060	315402-0136	-		4	LOCK WASHER FBB 4,1	
TBA PT19						
060	315402-0136	-		10	LOCK WASHER FBB 4,1	
070	312115-0289	-		6	SCREW ISO4762 M4X10 A4	
K207	90119-0067	A		1	SOLID-STATE RELAY, H12WD4850	
K208	90119-0067	A		1	SOLID-STATE RELAY, H12WD4850	
K209	90119-0067	A		1	SOLID-STATE RELAY, H12WD4850	
Common Parts						
010	1498819-0000	-		1	COOLING PLATE	
020	1517675-0000	-		4	SPACER	
040	2531997-0000	-		4	SPACER	
050	315105-0136	-		4	WASHER BRB4,3XRFR	

Pos	Part No	SP	UN	Qty	Description	Page No

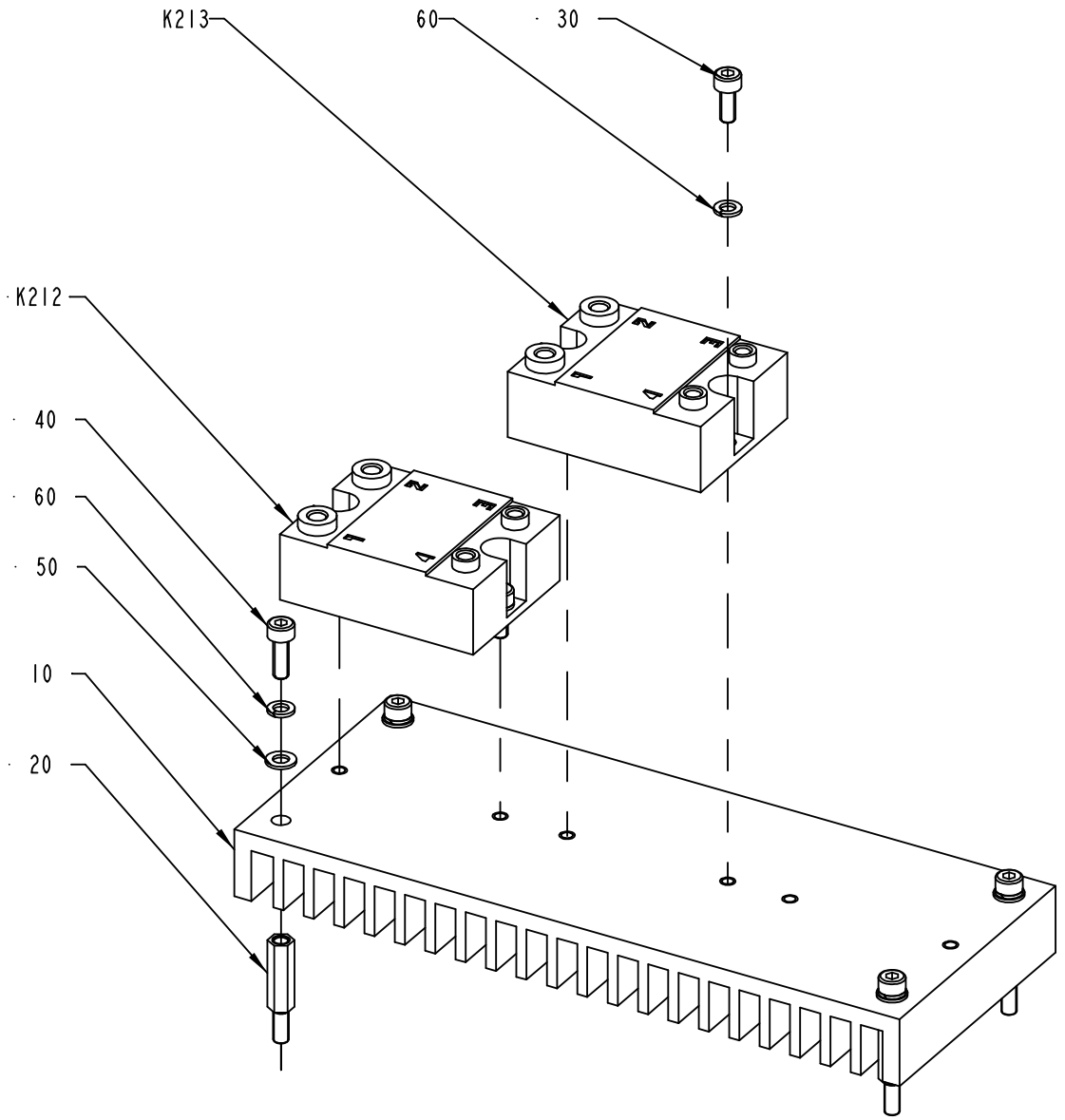

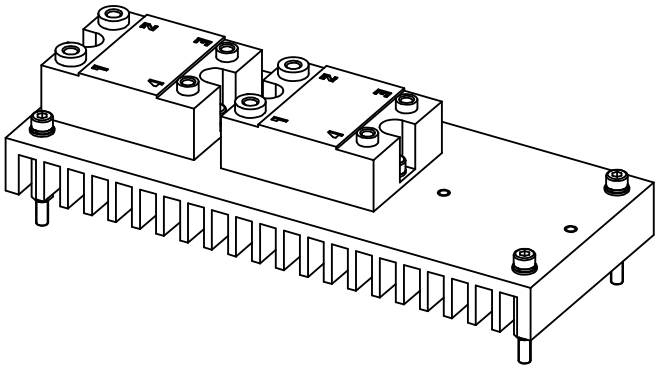

1523446-1
ECN 73191

ECM: 103857 - 20020521
Group number: 1523446-0100
Assembly Drawing: 1523446-1_1_AA

Pos	Part No	SP	UN	Qty	Description	Page No
-						
010	1498819-0000	-		1	COOLING PLATE	
020	1517675-0000	-		4	SPACER	
040	2531997-0000	-		4	SPACER	
050	315105-0136	-		4	WASHER BRB4,3XRFR	
060	315402-0136	-		4	LOCK WASHER FBB 4,1	

Pos	Part No	SP	UN	Qty	Description	Page No

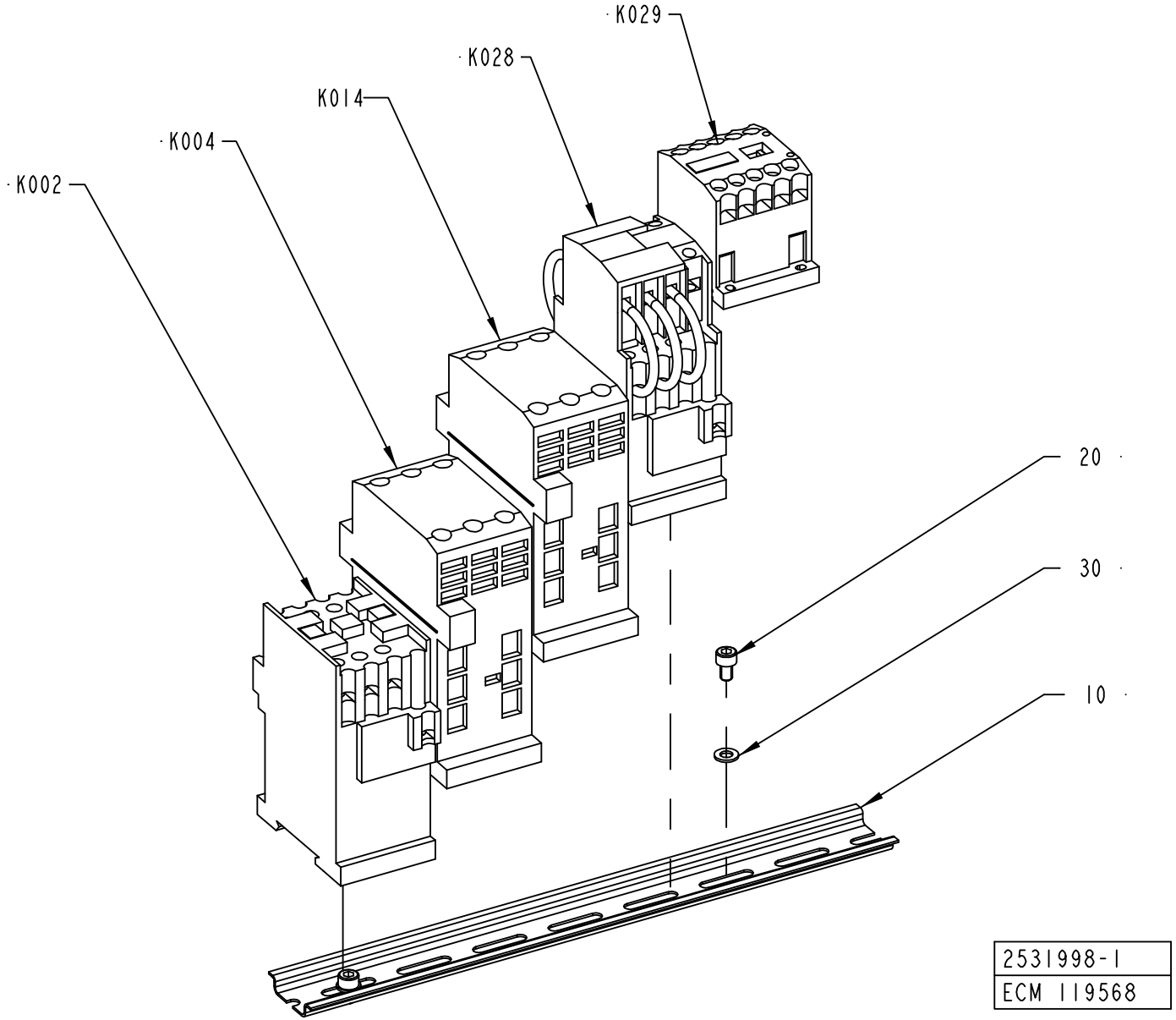
K029
K028
K014
K004
K002
20
30
10
2531998-1
ECM 119568

ECM: 118392 - 50001231
Group number: 2531998-0100
Assembly Drawing: 2531998-1_1_AB

Pos	Part No	SP	UN	Qty	Description	Page No
-						
010	353042-0004	-	MM	280	RAIL TS 35/7,5	
020	312115-0323	-		2	SCREW ISO4762 M5X8 A4	
030	315105-0146	-		2	WASHER BRB5,3X10RFR	
K002	90075-0127	A		1	CONTACTOR, 4KW 24VDC	
K004	90075-0128	A		1	CONTACTOR, 7,5KW 24VDC	
K014	90075-0128	A		1	CONTACTOR, 7,5KW 24VDC	
K028	90458-1302	A		1	CONTACTOR, 4KW 48VAC	
K029	90075-0141	A		1	CONTACTOR, 4KW 24VDC	

Pos	Part No	SP	UN	Qty	Description	Page No

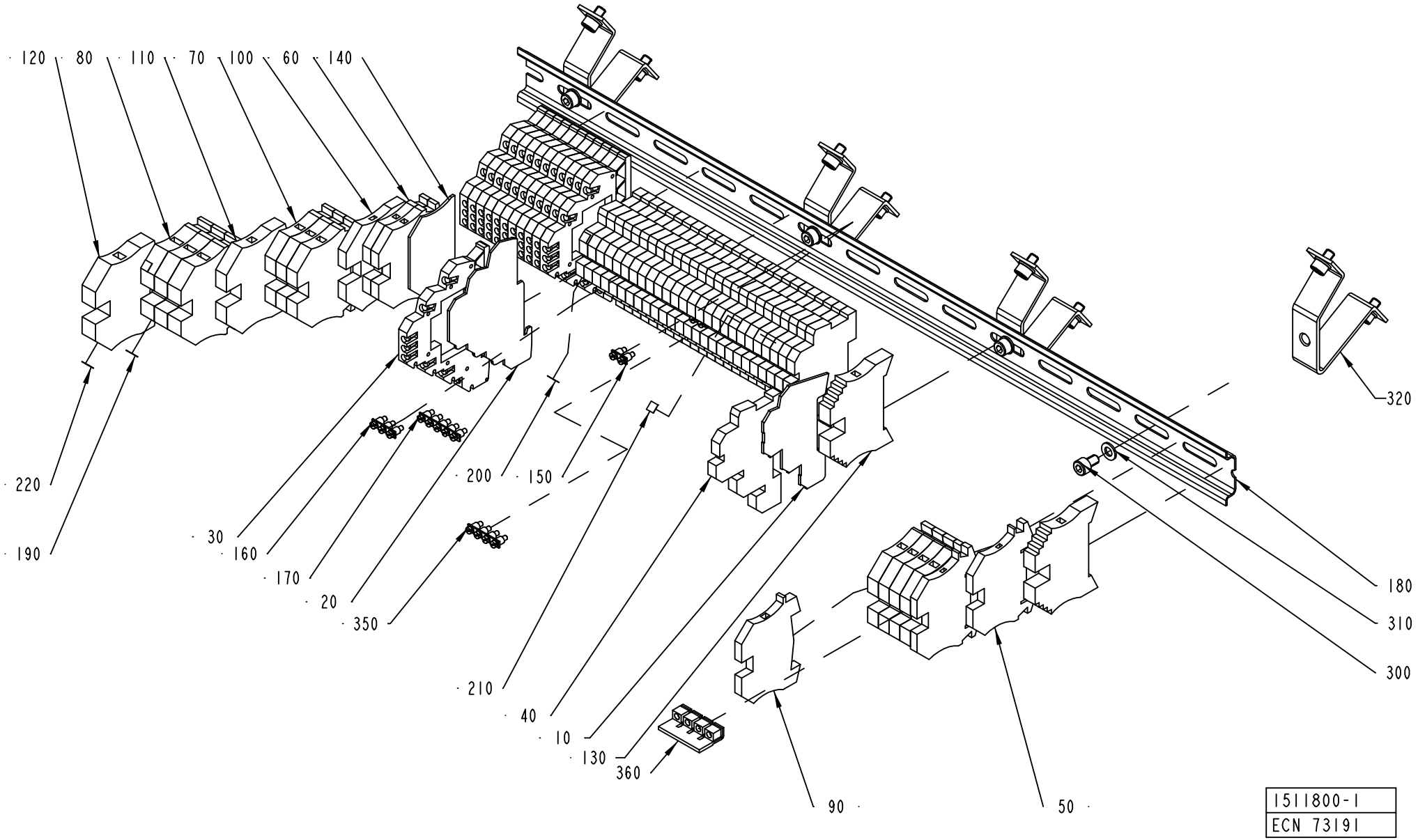
120
80
110
70
100
60
140
220
190
30
160
170
20
350
200
150
210
40
10
130
360
90
50
320
180
310
300
1511800-1
ECN 73191

ECM: 73191 - 20011221
Group number: 1511800-0100
Assembly Drawing: 1511800-1_1_AA

Pos	Part No	SP	UN	Qty	Description	Page No
-						
010	90457-0051	-		1	END PLATE	
020	90457-0052	-		1	END PLATE	
030	90457-0054	-		12	FEED THROUGH TERMINAL, 161527	
040	353021-0132	-		27	TERMINALS,TRIPLE-LEVEL, DLD 2,5/PE	
050	353021-0212	-		2	FEED THROUGH TERMINAL, 10200.0	
060	353021-0213	-		2	FEED THROUGH TERMINAL, 10201.0	
070	353021-0214	-		3	FEED THROUGH TERMINAL, 10202.0	
080	353021-0215	-		3	FEED THROUGH TERMINAL, 10203.0	
090	353024-0204	-		1	EARTH TERMINAL WPE 2,5	
100	353024-0205	-		1	EARTH TERMINAL, 1010.1	
110	353024-0206	-		1	EARTH TERMINAL, 1010.2	
120	353024-0207	-		1	EARTH TERMINAL, 1010.3	
130	353031-0203	-		2	END SUPPORT, WEW 35/2	
140	353032-0004	-		1	END PLATE WAP 2,5-10 BEIGE	
150	353034-0401	-		3	BRIDGE CONNECTOR Q2, 13125.0	
160	353034-0402	-		1	BRIDGE CONNECTOR Q3, 13126.0	
170	353034-0404	-		1	BRIDGE CONNECTOR Q10, 13131.0	
180	353042-0004	-	MM	530	RAIL TS 35/7,5	
190	359011-0807	-		4	MARKING PLATES 5-FW 1-50	
200	359011-0808	-		2	MARKING PLATES 5-FW 51-100	
210	359011-0809	-		2	MARKING PLATES 5-FW 101-150	
220	359011-0819	-		1	MARKING PLATES 5-GW (EARTH)	
300	312115-0323	-		4	SCREW ISO4762 M5X8 A4	
310	315105-0146	-		4	WASHER BRB5,3X10RFR	
320	90094-0005	-		4	RAIL BRACKET	
330	312125-0327	-		4	SCREW PAN HEAD MCS M5X12 SS	
340	90458-1447	-		4	MOUNTING RAIL SUPPORT TST 128660	
350	353034-0403	-		1	BRIDGE CONNECTOR Q4, 13127,0	
360	353034-0032	-		1	BRIDGE CONNECTOR, WQV 6/10, 10522.6	

Pos	Part No	SP	UN	Qty	Description	Page No

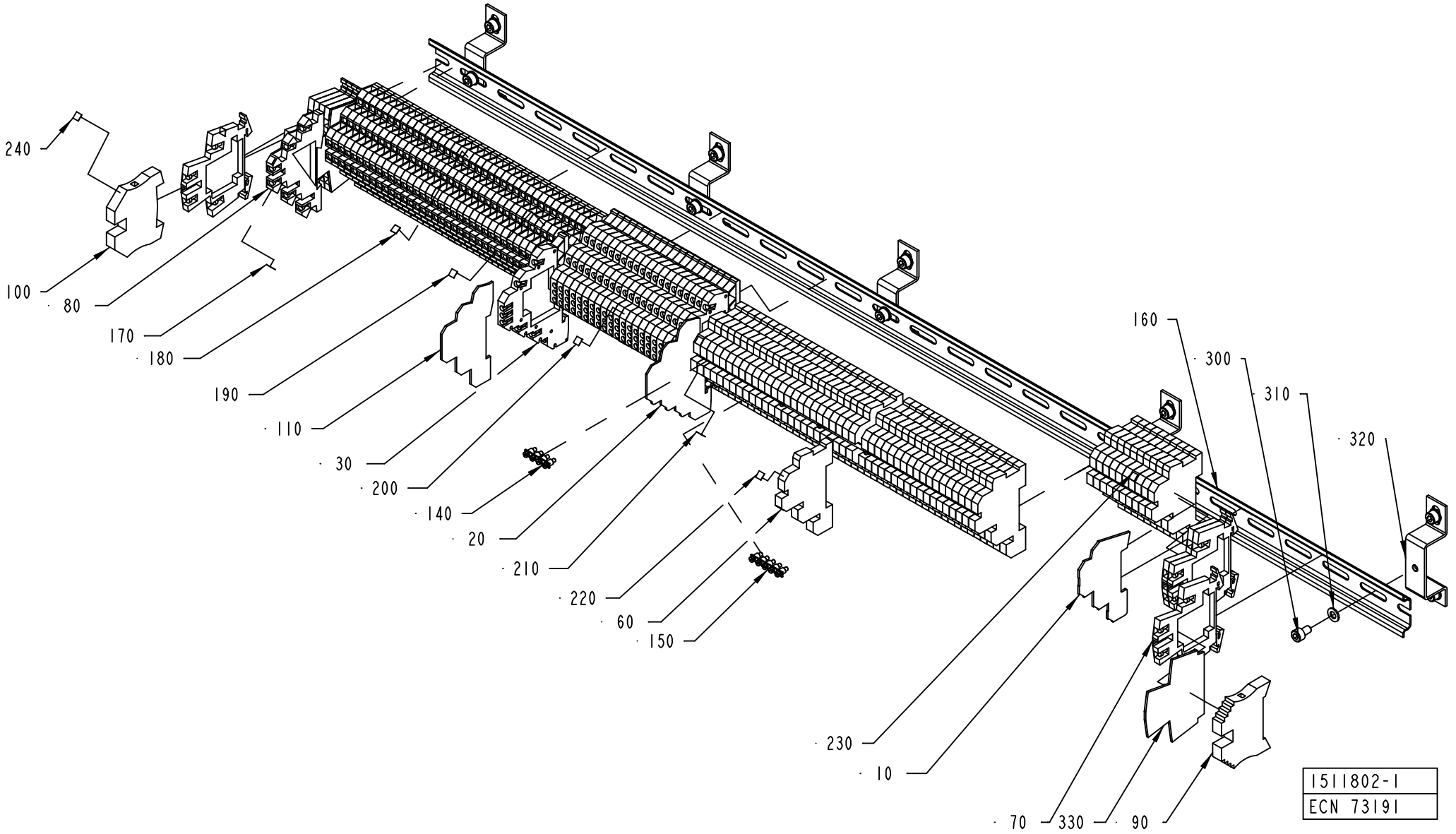
240
100
80
170
180
190
110
30
200
140
20
210
220
60
150
160
300
310
320
230
10
70
330
90
1511802-1
ECN 73191

ECM: 104297 - 20020521
Group number: 1511802-0100
Assembly Drawing: 1511802-1_1_AA

Pos	Part No	SP	UN	Qty	Description	Page No
-						
010	90457-0051	-		1	END PLATE	
020	90457-0052	-		1	END PLATE	
030	90457-0054	-		21	FEED THROUGH TERMINAL, 161527	
060	353021-0132	-		54	TERMINALS,TRIPLE-LEVEL, DLD 2,5/PE	
070	90458-1136	-		8	TERMINAL BLOCK, 103630	
080	353021-0302	-		38	TERMINALS,TRIPLE-LEVEL, DLD 2,5/35 PA	
090	353031-0203	-		1	END SUPPORT, WEW 35/2	
100	353024-0206	-		1	EARTH TERMINAL, 1010.2	
110	353032-0302	-		1	END PLATE WAP	
140	353034-0403	-		2	BRIDGE CONNECTOR Q4, 13127,0	
150	353034-0404	-		7	BRIDGE CONNECTOR Q10, 13131.0	
160	353042-0004	-	MM	935	RAIL TS 35/7,5	
170	359011-0807	-		2	MARKING PLATES 5-FW 1-50	
180	359011-0808	-		2	MARKING PLATES 5-FW 51-100	
190	359011-0809	-		2	MARKING PLATES 5-FW 101-150	
200	359011-0810	-		2	MARKING PLATES 5-FW 151-200	
210	359011-0811	-		2	MARKING PLATES 5-FW 201-250	
220	359011-0812	-		2	SET OF SIGNS 5-FW 251-300	
230	359011-0813	-		2	SET OF SIGNS 5-FW 301-350	
240	359011-0819	-		2	MARKING PLATES 5-GW (EARTH)	
300	312115-0323	-		15	SCREW ISO4762 M5X8 A4	
310	315105-0146	-		15	WASHER BRB5,3X10RFR	
320	90458-1447	-		5	MOUNTING RAIL SUPPORT TST 128660	
330	353032-0009	-		2	END PLATE, WAP 16/35	

Pos	Part No	SP	UN	Qty	Description	Page No

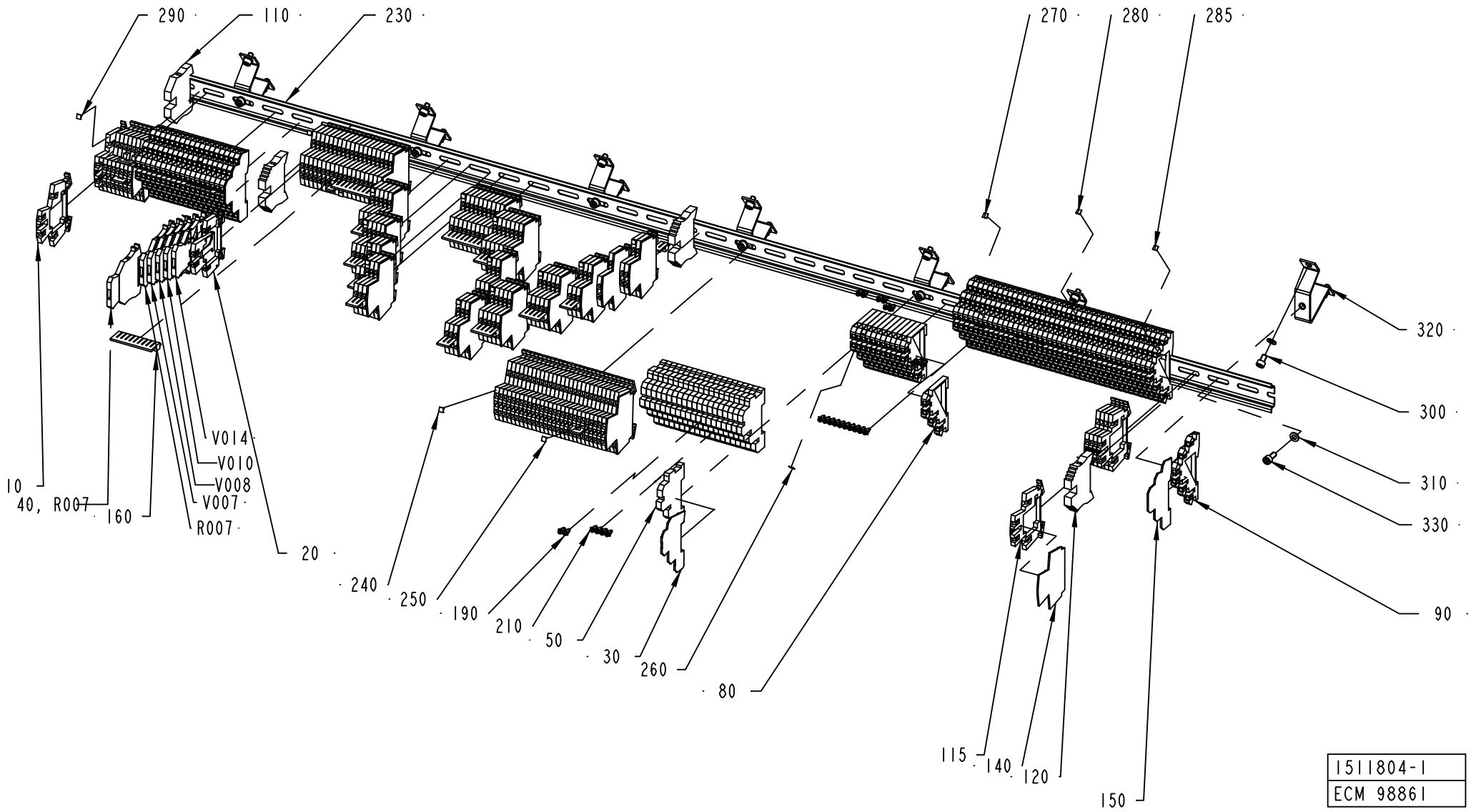
290
110
230
270
280
285
320
300
310
330
90
10
40, R007
160
V014
V010
V008
V007
R007
20
240
250
190
210
50
30
260
80
115
140
120
150
1511804-1
ECM 98861

ECM: 126398 - 50001231
Group number: 1511804-0100
Assembly Drawing: 1511804-1_1_AC

This list covers pages from 758 to 761

Pos	Part No	SP	UN	Qty	Description	Page No
-						
010	90077-0113	-		35	FEED THROUGH TERMINAL, 10-00102150-1	
020	90457-0049	-		110	TERMINAL BLOCK, 102230	
030	90457-0051	-		1	END PLATE	
040	353021-0127	-		1	TERMINAL DISCONNECTBLE, WTR 2,5+WSD 2,5	
050	353021-0132	-		21	TERMINALS,TRIPLE-LEVEL, DLD 2,5/PE	
080	353021-0301	-		12	TERMINALS,TRIPLE-LEVEL, DLI 2,5/35 PA	
090	353021-0302	-		59	TERMINALS,TRIPLE-LEVEL, DLD 2,5/35 PA	
110	353024-0206	-		1	EARTH TERMINAL, 1010.2	
115	90458-1136	-		6	TERMINAL BLOCK, 103630	
120	353031-0203	-		3	END SUPPORT, WEW 35/2	
140	90077-0114	-		16	END PLATE, WAP/WDK 2,5	
150	353032-0302	-		2	END PLATE WAP	
160	353034-0030	-		19	BRIDGE CONNECTOR WQV 2,5/10, 10544.6	
190	353034-0401	-		11	BRIDGE CONNECTOR Q2, 13125.0	
210	353034-0403	-		2	BRIDGE CONNECTOR Q4, 13127,0	
220	353034-0404	-		9	BRIDGE CONNECTOR Q10, 13131.0	
230	353042-0004	-	MM	1328	RAIL TS 35/7,5	
240	359011-0807	-		18	MARKING PLATES 5-FW 1-50	
250	359011-0808	-		6	MARKING PLATES 5-FW 51-100	
260	359011-0809	-		3	MARKING PLATES 5-FW 101-150	
270	359011-0810	-		2	MARKING PLATES 5-FW 151-200	
280	359011-0811	-		2	MARKING PLATES 5-FW 201-250	
285	359011-0812	-		2	SET OF SIGNS 5-FW 251-300	
290	359011-0819	-		2	MARKING PLATES 5-GW (EARTH)	
300	312115-0323	-		14	SCREW ISO4762 M5X8 A4	
310	315105-0146	-		21	WASHER BRB5,3X10RFR	
320	90094-0005	-		7	RAIL BRACKET	
330	312115-0327	-		7	SCREW ISO4762 M5X12 A4	
R007	90121-0132	A		1	RESISTANCE FIXED, 0,51 KOHM, 0,25 W	
V007	353021-0122	-		1	TERMINAL DISCONNECTBLE, WTR 2,5 D	
V008	353021-0122	-		1	TERMINAL DISCONNECTBLE, WTR 2,5 D	
V009	90024-0034	B		1	DIODE SURGE SUPPRESSOR, FD B DIL	
V010	353021-0122	-		1	TERMINAL DISCONNECTBLE, WTR 2,5 D	
V011	90024-0034	-		1	DIODE SURGE SUPPRESSOR, FD B DIL	
V014	353021-0122	-		1	TERMINAL DISCONNECTBLE, WTR 2,5 D	

Pos	Part No	SP	UN	Qty	Description	Page No

Machine Type | Group Description | Used-In | Group Number | Page No

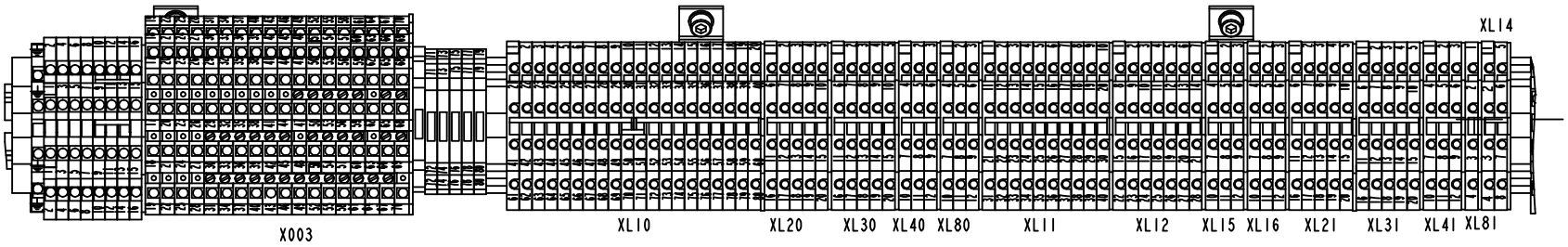

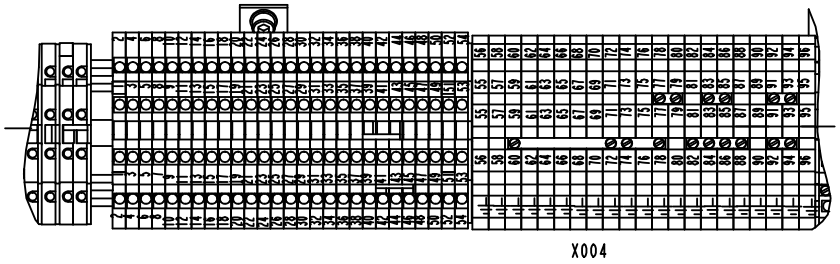

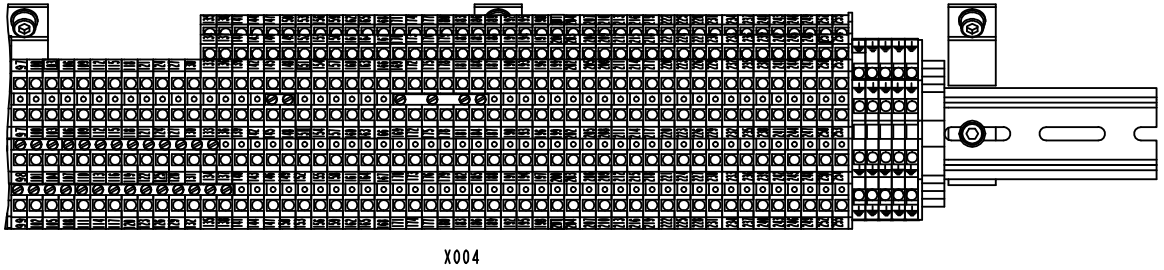

1511804-1
ECM 98861

ECM: 126398 - 50001231
Group number: 1511804-0100
Assembly Drawing: 1511804-1_2_AC

This list covers pages from 758 to 761

Pos	Part No	SP	UN	Qty	Description	Page No
-						
010	90077-0113	-		35	FEED THROUGH TERMINAL, 10-00102150-1	
020	90457-0049	-		110	TERMINAL BLOCK, 102230	
030	90457-0051	-		1	END PLATE	
040	353021-0127	-		1	TERMINAL DISCONNECTBLE, WTR 2,5+WSD 2,5	
050	353021-0132	-		21	TERMINALS,TRIPLE-LEVEL, DLD 2,5/PE	
080	353021-0301	-		12	TERMINALS,TRIPLE-LEVEL, DLI 2,5/35 PA	
090	353021-0302	-		59	TERMINALS,TRIPLE-LEVEL, DLD 2,5/35 PA	
110	353024-0206	-		1	EARTH TERMINAL, 1010.2	
115	90458-1136	-		6	TERMINAL BLOCK, 103630	
120	353031-0203	-		3	END SUPPORT, WEW 35/2	
140	90077-0114	-		16	END PLATE, WAP/WDK 2,5	
150	353032-0302	-		2	END PLATE WAP	
160	353034-0030	-		19	BRIDGE CONNECTOR WQV 2,5/10, 10544.6	
190	353034-0401	-		11	BRIDGE CONNECTOR Q2, 13125.0	
210	353034-0403	-		2	BRIDGE CONNECTOR Q4, 13127,0	
220	353034-0404	-		9	BRIDGE CONNECTOR Q10, 13131.0	
230	353042-0004	-	MM	1328	RAIL TS 35/7,5	
240	359011-0807	-		18	MARKING PLATES 5-FW 1-50	
250	359011-0808	-		6	MARKING PLATES 5-FW 51-100	
260	359011-0809	-		3	MARKING PLATES 5-FW 101-150	
270	359011-0810	-		2	MARKING PLATES 5-FW 151-200	
280	359011-0811	-		2	MARKING PLATES 5-FW 201-250	
285	359011-0812	-		2	SET OF SIGNS 5-FW 251-300	
290	359011-0819	-		2	MARKING PLATES 5-GW (EARTH)	
300	312115-0323	-		14	SCREW ISO4762 M5X8 A4	
310	315105-0146	-		21	WASHER BRB5,3X10RFR	
320	90094-0005	-		7	RAIL BRACKET	
330	312115-0327	-		7	SCREW ISO4762 M5X12 A4	
R007	90121-0132	A		1	RESISTANCE FIXED, 0,51 KOHM, 0,25 W	
V007	353021-0122	-		1	TERMINAL DISCONNECTBLE, WTR 2,5 D	
V008	353021-0122	-		1	TERMINAL DISCONNECTBLE, WTR 2,5 D	
V009	90024-0034	B		1	DIODE SURGE SUPPRESSOR, FD B DIL	
V010	353021-0122	-		1	TERMINAL DISCONNECTBLE, WTR 2,5 D	
V011	90024-0034	-		1	DIODE SURGE SUPPRESSOR, FD B DIL	
V014	353021-0122	-		1	TERMINAL DISCONNECTBLE, WTR 2,5 D	

Pos	Part No	SP	UN	Qty	Description	Page No

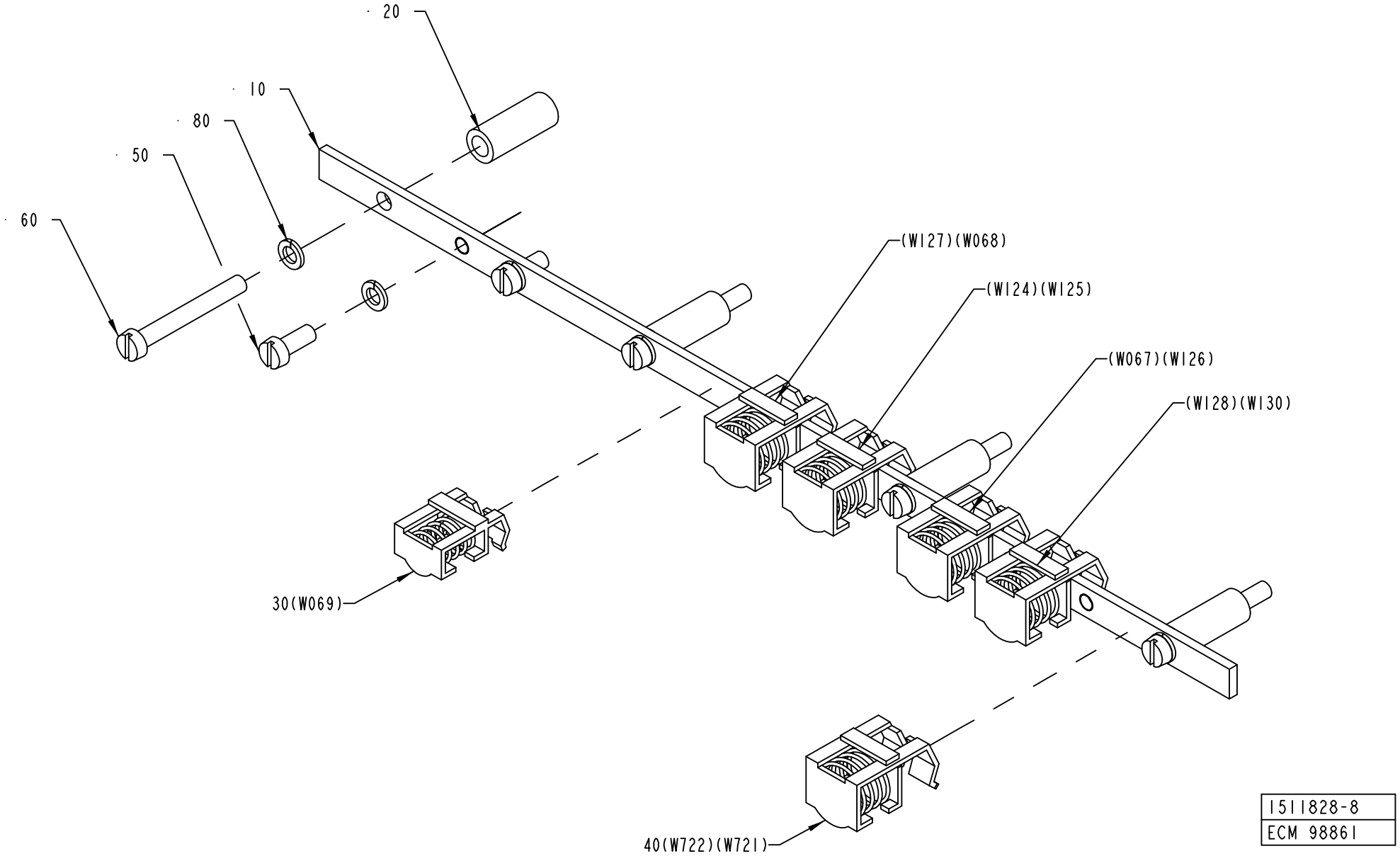
20
10
80
50
60
(W127)(W068)
(W124)(W125)
(W067)(W126)
(W128)(W130)
30(W069)
40(W722)(W721)
1511828-8
ECM 98861

ECM: 118397 - 50001231
Group number: 1511828-0100
Assembly Drawing: 1511828-8_1_AA

Pos	Part No	SP	UN	Qty	Description	Page No
TBA NOPT ASU HI, TBA PT19 ASU NOHI						
030	90135-0034	B		1	SHIELD CLAMP KLBU 3-8	
040	90135-0039	B		4	SHIELD CLIP KLBU 4-13.5	
TBA NOPT ASU NOHI						
030	90135-0034	B		1	SHIELD CLAMP KLBU 3-8	
040	90135-0039	B		3	SHIELD CLIP KLBU 4-13.5	
TBA NOPT NOASU HI, TBA PT19 NOASU NOHI						
040	90135-0039	B		4	SHIELD CLIP KLBU 4-13.5	
TBA NOPT NOASU NOHI						
040	90135-0039	B		3	SHIELD CLIP KLBU 4-13.5	
TBA PT19 ASU HI						
030	90135-0034	B		1	SHIELD CLAMP KLBU 3-8	
040	90135-0039	-		5	SHIELD CLIP KLBU 4-13.5	
TBA PT19 NOASU HI						
040	90135-0039	-		5	SHIELD CLIP KLBU 4-13.5	
Common Parts						
010	1523948-0000	-		1	EARTH BAR	
020	988436-0000	-		4	SPACER SLEEVE	
050	312125-0327	-		2	SCREW PAN HEAD MCS M5X12 SS	
060	312125-0339	-		4	SCREW PAN HEAD MCS M5X40 SS	
080	315402-0146	-		6	LOCK WASHER FBB 5,1	

Pos	Part No	SP	UN	Qty	Description	Page No

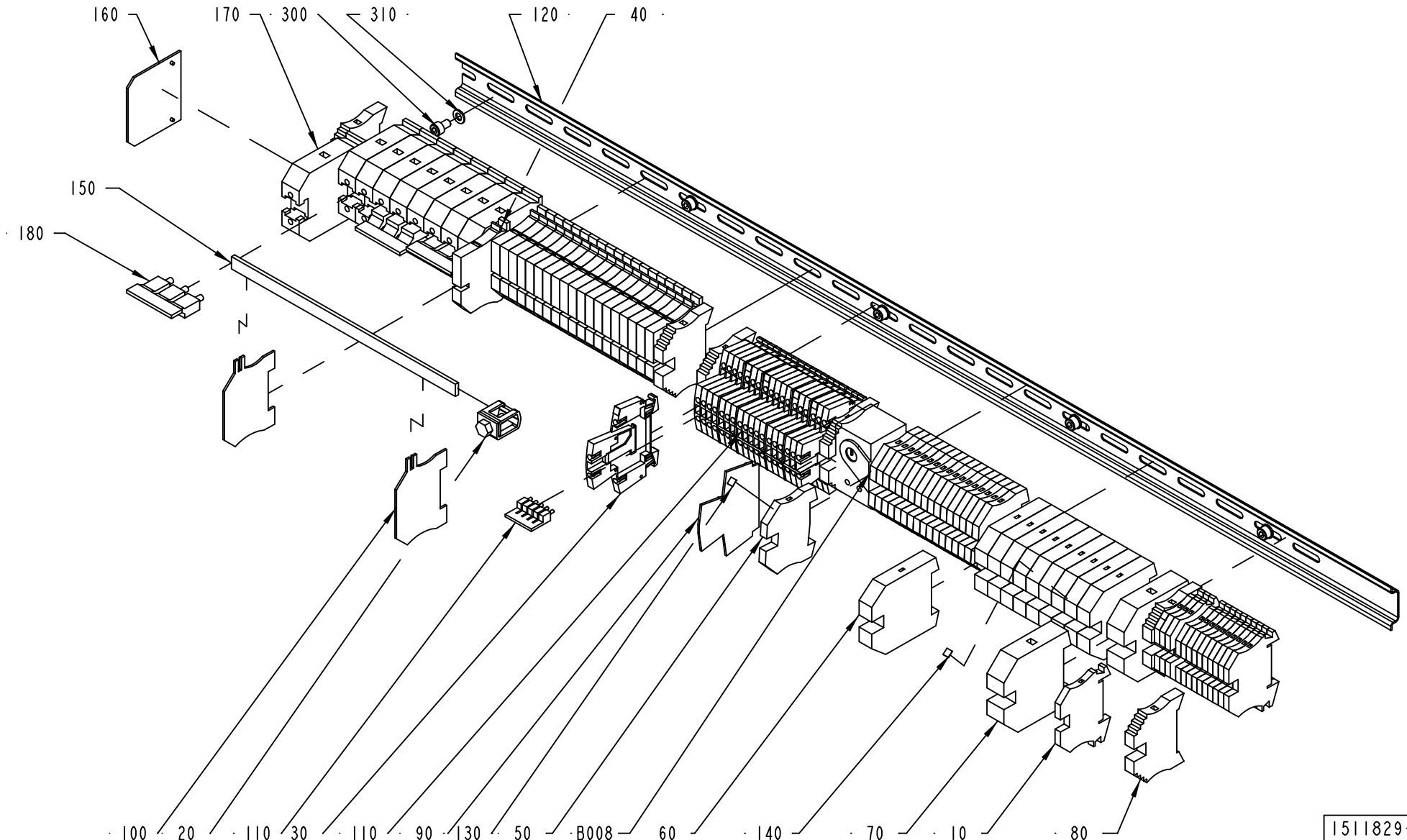
160
170
300
310
120
40
150
180
N
N
100
20
110
30
110
90
130
50
B008
60
140
70
10
80
1511829-1
ECN 98221

ECM: 115721 - 20020930
Group number: 1511829-0100
Assembly Drawing: 1511829-1_1_AB

Pos	Part No	SP	UN	Qty	Description	Page No
-						
010	353021-0212	-		14	FEED THROUGH TERMINAL, 10200.0	
020	90135-0019	-		1	CLAMP ZB 35	
030	90457-0049	-		19	TERMINAL BLOCK, 102230	
040	353022-0003	-		20	NEUTRAL TERMINAL, 10108.8	
050	353024-0205	-		18	EARTH TERMINAL, 1010.1	
060	353024-0208	-		10	EARTH TERMINAL, 1010.4	
070	353024-0209	-		2	EARTH TERMINAL, 1010.5	
080	353031-0203	-		7	END SUPPORT, WEW 35/2	
090	353032-0009	-		5	END PLATE, WAP 16/35	
100	353033-0104	-		2	END PLATE, 10502.8	
110	353034-0030	-		2	BRIDGE CONNECTOR WQV 2,5/10, 10544.6	
120	353042-0004	-	MM	880	RAIL TS 35/7,5	
130	359011-0807	-		11	MARKING PLATES 5-FW 1-50	
140	359011-0808	-		1	MARKING PLATES 5-FW 51-100	
150	495498-0021	-		1	CU-RAIL L=210MM	
160	353033-0105	-		1	PARTITITION, 10501.0	
170	353021-0219	-		9	FEED THROUGH TERMINAL, 10205.0	
180	353034-0035	-		1	BRIDGE CONNECTOR, WQV 35/10, 10531.6	
300	312115-0323	-		5	SCREW ISO4762 M5X8 A4	
310	315105-0146	-		5	WASHER BRB5,3X10RFR	
B008	90458-1114	B		1	BIMET. ELECTROMECH. THERMOSTAT K7H.020	

Pos	Part No	SP	UN	Qty	Description	Page No

Machine Type | Group Description | Used-In | Group Number | Page No

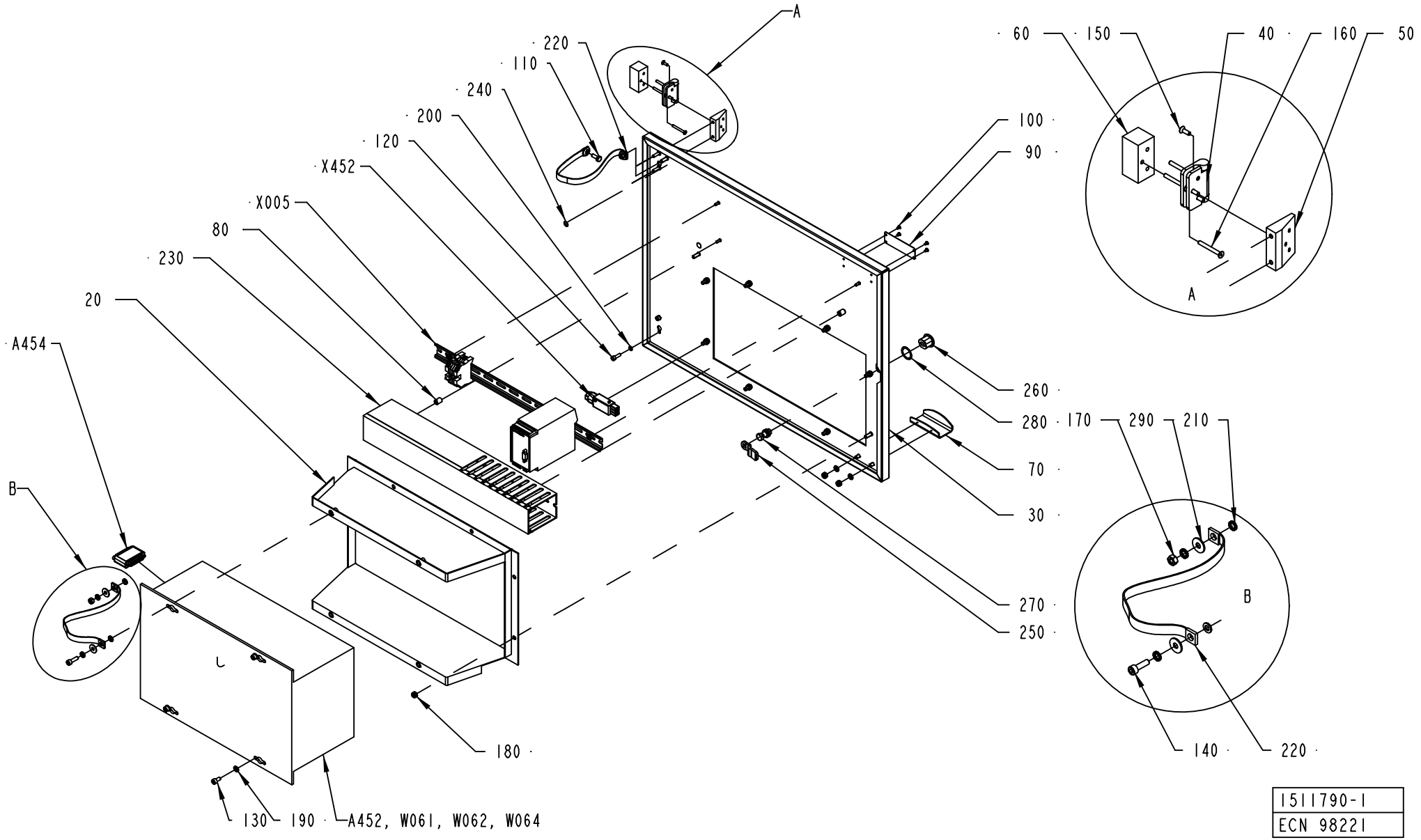

1511790-1
ECN 98221

ECM: 113245 - 20030113
Group number: 1511790-0100
Assembly Drawing: 1511790-1_1_AB

Pos	Part No	SP	UN	Qty	Description	Page No
-						
020	1523435-0000	-		1	FRAME	
030	1523436-0000	-		1	DOOR	
040	1523437-0000	B		2	HINGE	
050	1523439-0000	-		2	SPACER	
060	1523440-0000	-		2	SPACER	
070	1523968-0000	-		1	HANDLE	
080	1285109-0000	-		2	NUT	
090	979548-0000	-		1	MACHINE PLATE	
100	311521-0142	-		4	BLANK RIVET 3,2X6	
110	312105-0368	-		1	SCREW M6S M6X16 A280	
120	312115-0329	-		4	SCREW ISO4762 M5X16 A4	
130	312115-0366	-		3	SCREW ISO4762 M6X12 A4	
140	312115-0370	-		1	SCREW ISO4762 M6X20 A4	
150	312155-0291	-		6	SCREW EN 10642 MF6S M4X12 A480	
160	312155-0301	-		6	SCREW EN 10642 MF6S M4X35 A480	
170	312605-0316	-		2	HEXAGON NUT, M6M M6 A280	
180	312812-0316	-		10	HEXAGON NUT, NY-LOCK M6 A480	
190	315105-0153	-		6	WASHER BRB6,4X12RFR	
200	315402-0146	-		4	LOCK WASHER FBB 5,1	
210	90062-0015	-		7	LOCK WASHER SERRAT.EXT.GEAR,6,4/11 H=0,7	
220	90135-0044	A		2	EARTH WIRE, L=320 MM 16 MM2	
230	90181-0054	-	MM	465	CABLE DUCT, 60X80MM	
240	90194-0163	-		2	SIGN, EARTH WITHIN CIRCLE	
250	90237-0157	-		1	LOCK BOLT, 1000-230	
260	90237-0319	-		1	LOCK HOUSING, 1000-U134	
270	90237-0320	-		1	LOCK HOUSING, 1000-U136	
280	90237-0322	-		1	LOCK GASKET, 1000-U137	
290	90457-0192	-		4	WASHER PLAIN ROUND, 6,5/18, H=1,5	
A452	1363288-0301	A		1	FLEXBOX TETRA BRIK	
100	*90041-0092*	*A*		*1*	*FLEX BOX INNOSCAN E100006A*	
	90458-0266	*A*		*1*	*POWER SUPPLY UNIT, U036407A*	
	90264-0064	*A*		*1*	*FAN / FL 12G308*	
	90041-0091	*A*		*1*	*PC 2,5" HD BAY, 3016-0028-013*	
	90041-0029	*A*		*1*	*FLOPPY DISC UNIT FD-235HF 1,4MB*	
	90041-0027	*A*		*1*	*BACK PLANE CARD 7-SLOT, 2120-0037-015*	
110	*90041-0083*	*A*		*1*	*HOST COMM. LINK BOARD LVDS, E000013A-02*	
120	*90458-0259*	*A*		*1*	*PROCESSOR BOARD PMMX E000032B*	
130	*90041-0087*	*A*		*1*	*SERIAL CARD 2 CHANNEL RS486/422 BOARD*	
140	*90041-0090*	*A*		*1*	*HARD DISC 2,5" , U036403A*	
150	*90041-0080*	*A*		*1*	*CABLE, CPU-LVDSCARD+DISPLAY-LVDSCARD*	
160	*90041-0086*	*A*		*1*	*CABLE, COM 2, 2223-0012-015*	
A454	90456-0001	A		1	INTOUCH OEM 2000 V.5.6B/6.0B HW KEY	
W061	1254442-0000	-		1	CABLE SERIAL	
W062	1511793-0000	-		1	CABLE	
W064	1478661-0000	-		1	CABLE SERIAL	
W953	1366189-0000	-		1	CABLE LVDS 6M	
X005	1517659-0100	B		1	MODEM	**769**
X452	90110-0028	A		1	CONTACT UNIT 4-POLE	

Machine Type	Group Description	Used-In	Group Number	Page No

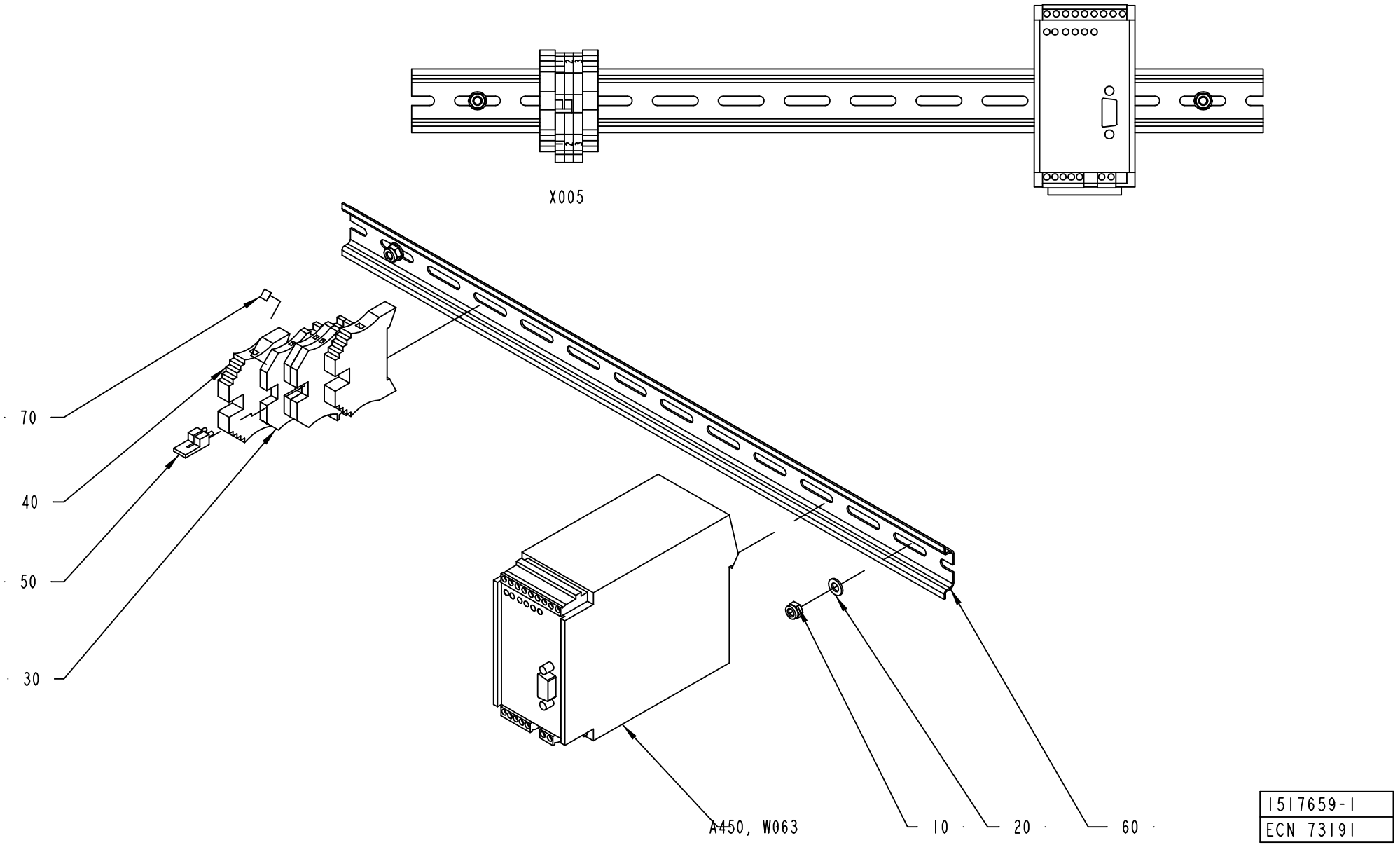
X005
70
40
50
30
A450, W063
10
20
60
1517659-1
ECN 73191

ECM: 115715 - 20020930
Group number: 1517659-0100
Assembly Drawing: 1517659-1_1_AA

Pos	Part No	SP	UN	Qty	Description	Page No
-						
010	312812-0314	-		2	HEXAGON NUT, NY-LOCK M5 A480	
020	315105-0146	-		2	WASHER BRB5,3X10RFR	
030	353021-0212	-		3	FEED THROUGH TERMINAL, 10200.0	
040	353031-0203	-		2	END SUPPORT, WEW 35/2	
050	353034-0030	-		1	BRIDGE CONNECTOR WQV 2,5/10, 10544.6	
060	353042-0004	-	MM	465	RAIL TS 35/7,5	
070	359011-0807	-		2	MARKING PLATES 5-FW 1-50	
A450	90453-0002	B		1	MODEM MD-12 DC	
W063	90220-0091	-	M	10	PAIR TWISTED CABLE 2X2X0,25MM2	

Pos	Part No	SP	UN	Qty	Description	Page No

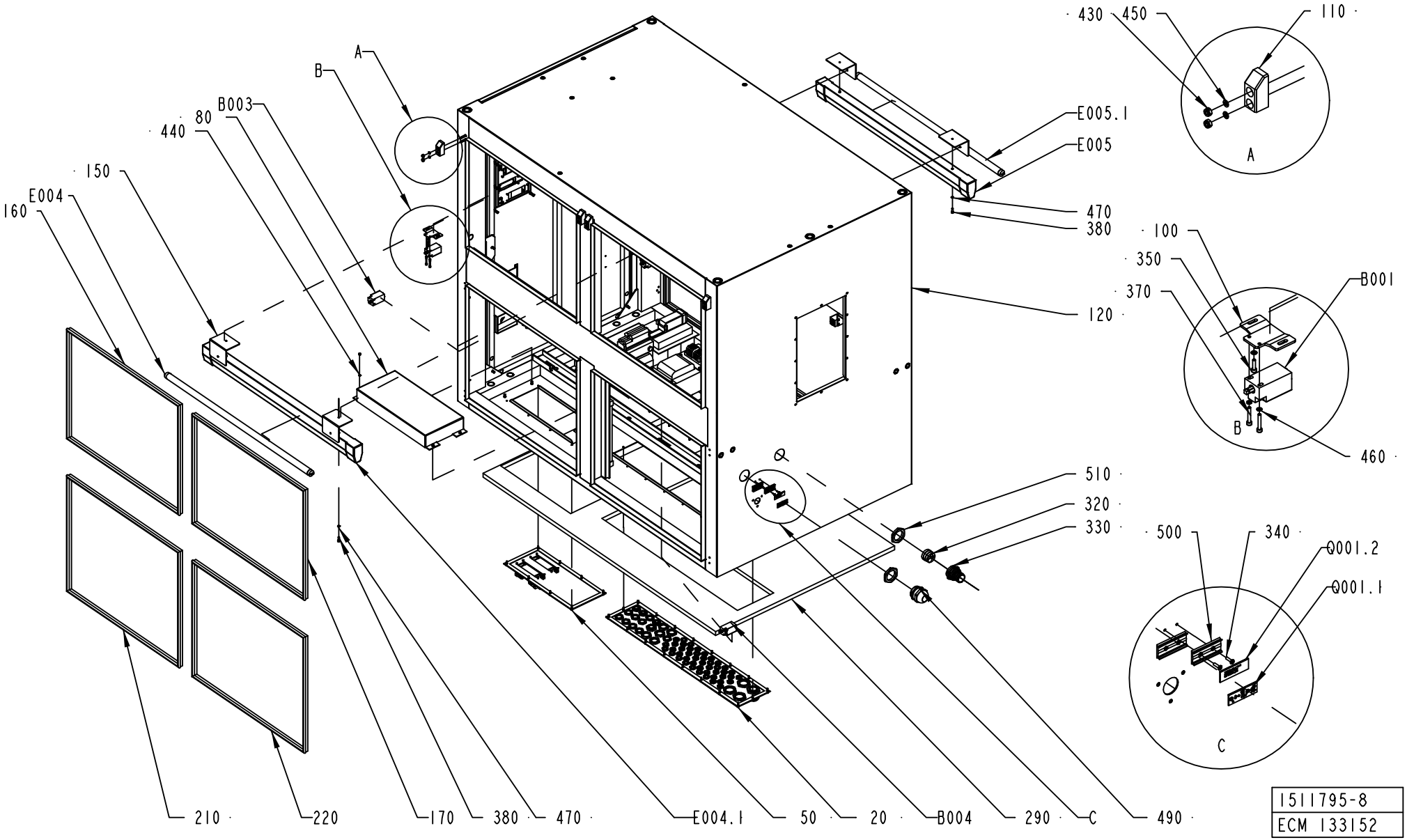

1511795-8
ECM 133152

ECM: 118679 - 50001231
Group number: 1511795-0100
Assembly Drawing: 1511795-8_1_AA

This list covers pages from 770 to 773

Pos	Part No	SP	UN	Qty	Description	Page No
TBA NOPT ASU 50Hz, TBA NOPT ASU 60Hz						
400	312115-0368	-		6	SCREW ISO4762 M6X16 A4	
480	315402-0156	-		20	LOCK WASHER FBB 6,5	
520	90457-0192	-		4	WASHER PLAIN ROUND, 6,5/18, H=1,5	
T005	90245-0029	A		1	TRANSFORMER, 1280-3660/TP 182	
TBA NOPT NOASU 50Hz, TBA NOPT NOASU 60Hz						
400	312115-0368	-		2	SCREW ISO4762 M6X16 A4	
480	315402-0156	-		16	LOCK WASHER FBB 6,5	
Common Parts						
010	1511784-0100	-		1	POWER CABLE INLETS	**775**
020	1511785-0100	-		1	CONTROL CABLE INLETS	**777**
030	2532862-0000	-		2	SPACER	
031	2531999-0000	-		1	COVER	
040	1511788-0100	-		1	POWER CONNECTOR PLATE	**779, 781**
050	1511789-0100	-		1	CONTROL CONNECTOR PLATE	**783**
060	1511791-0100	-		1	BLIND DOOR	**785**
070	1517694-0000	-		2	END BLOCK	
080	1517697-0000	-		1	PROTECTION	
090	1517698-0000	-		1	PROTECTION	
100	1517699-0000	-		3	SUPPORT	
110	1517700-0000	-		6	EDGE GUIDE	
120	1517695-0000	-		1	WELDED CABINET	
130	1523459-0000	-		4	SUPPORT	
140	1523960-0000	-		1	SPACER	
150	1523974-0000	-		4	SUPPORT	
160	90143-0057	-	MM	2430	STRIP EMKA 1011-05 21X11MM	
170	90143-0057	-	MM	2430	STRIP EMKA 1011-05 21X11MM	
180	90143-0057	-	MM	2872	STRIP EMKA 1011-05 21X11MM	
190	90143-0057	-	MM	1960	STRIP EMKA 1011-05 21X11MM	
200	90143-0057	-	MM	4116	STRIP EMKA 1011-05 21X11MM	
210	90143-0057	-	MM	2850	STRIP EMKA 1011-05 21X11MM	
220	90143-0057	-	MM	2850	STRIP EMKA 1011-05 21X11MM	
230	90143-0057	-	MM	2850	STRIP EMKA 1011-05 21X11MM	
240	90143-0057	-	MM	2850	STRIP EMKA 1011-05 21X11MM	
250	90143-0073	-	MM	585	RUBBER STRIP	
260	90143-0073	-	MM	585	RUBBER STRIP	
270	90143-0073	-	MM	585	RUBBER STRIP	
280	90143-0073	-	MM	585	RUBBER STRIP	
290	1523464-0000	-		1	GASKET	
310	90194-0163	-		1	SIGN, EARTH WITHIN CIRCLE	
320	90457-0029	-		1	INSERT, MULTI HOLE, E156M5,9,11,19	
330	90458-1747	-		1	NORMAL WITHOUT INSERT, M50X1,5	
340	311521-0146	-		4	BLANK RIVET 3,2X12	
350	312115-0293	-		8	SCREW ISO4762 M4X16 A4	
360	312115-0299	-		8	SCREW ISO4762 M4X30 A4	
370	312115-0297	-		6	SCREW ISO4762 M4X25 A4	
380	312115-0329	-		8	SCREW ISO4762 M5X16 A4	
390	312115-0366	-		10	SCREW ISO4762 M6X12 A4	
410	312155-0291	-		8	SCREW EN 10642 MF6S M4X12 A480	
420	312812-0312	-		16	HEXAGON NUT, NY-LOCK M4 A480	
430	312812-0316	-		12	HEXAGON NUT, NY-LOCK M6 A480	
440	315105-0136	-		20	WASHER BRB4,3XRFR	
450	315105-0146	-		12	WASHER BRB5,3X10RFR	
460	315402-0136	-		18	LOCK WASHER FBB 4,1	
470	315402-0146	-		8	LOCK WASHER FBB 5,1	
490	90458-0311	-		1	CABLE GLAND, M50X1,5, NO.5311 1060	
500	359240-0100	-		2	SIGN HOLDER FOR 359240-0001	
510	90458-0327	-		2	NUT, M50X1,5	
530	315105-0153	-		8	WASHER BRB6,4X12RFR	
540	312115-0289	-		4	SCREW ISO4762 M4X10 A4	
550	352113-0205	-		25	ANCHOR PLATES FOR STRIPS, TYPE TM2S8-C10	
B001	90044-0192	A		1	LIMIT SW. SZ2586.000	
B002	90044-0192	A		1	LIMIT SW. SZ2586.000	
B003	90044-0192	A		1	LIMIT SW. SZ2586.000	
B004	90044-0192	A		1	LIMIT SW. SZ2586.000	
B005	90044-0192	A		1	LIMIT SW. SZ2586.000	
B006	90044-0192	A		1	LIMIT SW. SZ2586.000	
B007	90044-0192	A		1	LIMIT SW. SZ2586.000	
E004	90459-2560	B		1	LIGHT FIXTURE, TMS121 1XTL-D30W/830 IP	
E005	90459-2560	B		1	LIGHT FIXTURE, TMS121 1XTL-D30W/830 IP	
E006	90459-3090	B		1	LIGHT FIXTURE, TMS121 1XTL8W/830 IP	
Q001.1	90457-0123	A		1	SIGN, MAIN SWITCH	
Q001.2	359241-0297	-		1	SIGN, 400 V, 50 HZ, 63 A	
T001	90458-0917	A		1	TRANSF. 3-PH 750VA SEC. 23A	
T004	90458-1273	A		1	TRANSFORMER, OFL-1350	
T006	90458-0258	A		1	TRANSFORMER, 220VAC/6-9-12VAC	
V001	90038-0024	A		1	RECTIFIER, 10/22A SKD 50/04A3	

Machine Type | Group Description | Used-In | Group Number | Page No

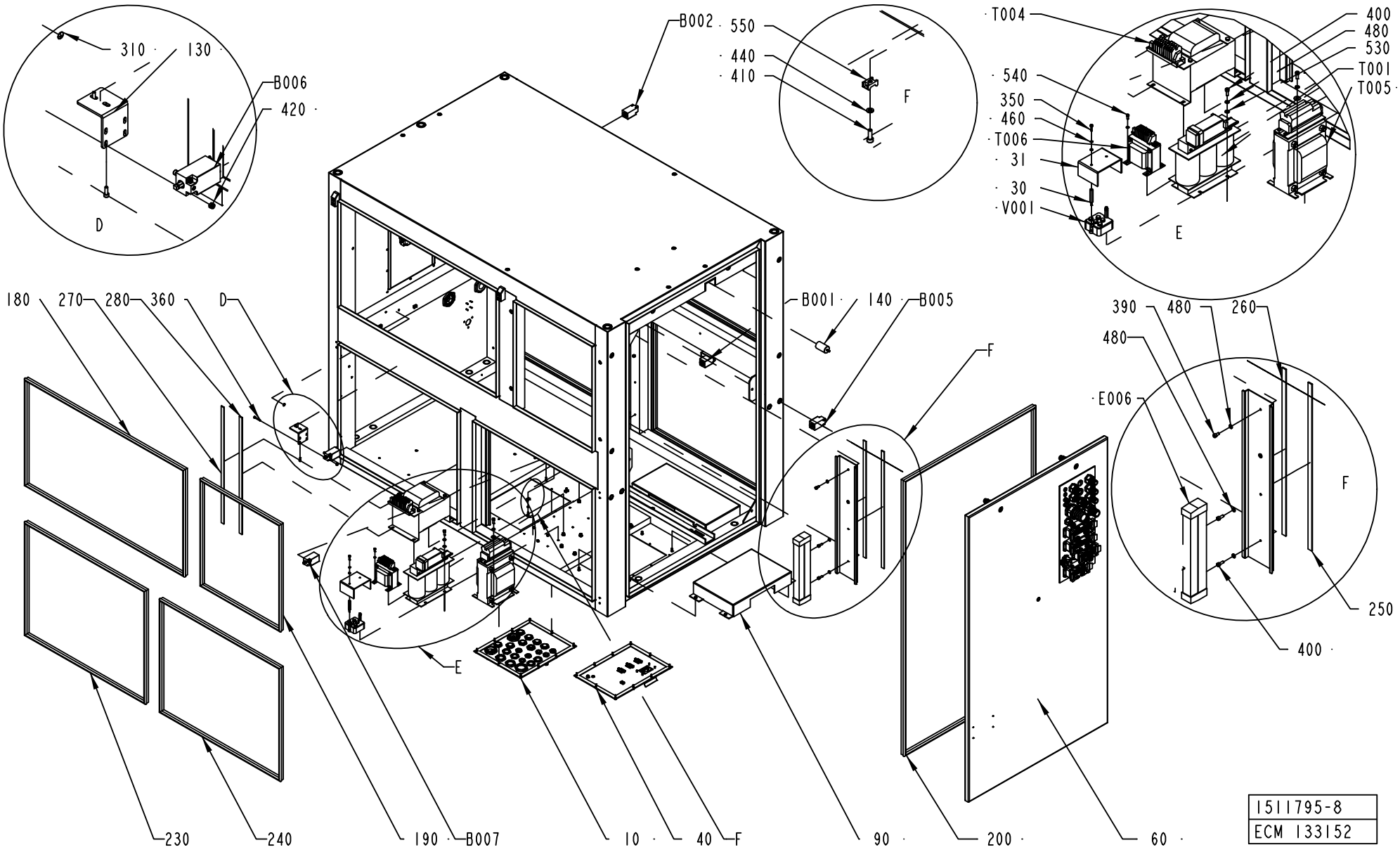
310
130
B006
420
D
B002
550
440
410
F
T004
400
480
530
T001
T005
540
350
460
T006
31
30
V001
E
180
270
280
360
D
B001
140
B005
F
390
480
260
480
E006
F
250
400
E
230
240
190
B007
10
40
F
90
200
60
1511795-8
ECM 133152

ECM: 118679 - 50001231
Group number: 1511795-0100
Assembly Drawing: 1511795-8_2_AA

This list covers pages from 770 to 773

Pos	Part No	SP	UN	Qty	Description	Page No
TBA NOPT ASU 50Hz, TBA NOPT ASU 60Hz						
400	312115-0368	-		6	SCREW ISO4762 M6X16 A4	
480	315402-0156	-		20	LOCK WASHER FBB 6,5	
520	90457-0192	-		4	WASHER PLAIN ROUND, 6,5/18, H=1,5	
T005	90245-0029	A		1	TRANSFORMER, 1280-3660/TP 182	
TBA NOPT NOASU 50Hz, TBA NOPT NOASU 60Hz						
400	312115-0368	-		2	SCREW ISO4762 M6X16 A4	
480	315402-0156	-		16	LOCK WASHER FBB 6,5	
Common Parts						
010	1511784-0100	-		1	POWER CABLE INLETS	**775**
020	1511785-0100	-		1	CONTROL CABLE INLETS	**777**
030	2532862-0000	-		2	SPACER	
031	2531999-0000	-		1	COVER	
040	1511788-0100	-		1	POWER CONNECTOR PLATE	**779, 781**
050	1511789-0100	-		1	CONTROL CONNECTOR PLATE	**783**
060	1511791-0100	-		1	BLIND DOOR	**785**
070	1517694-0000	-		2	END BLOCK	
080	1517697-0000	-		1	PROTECTION	
090	1517698-0000	-		1	PROTECTION	
100	1517699-0000	-		3	SUPPORT	
110	1517700-0000	-		6	EDGE GUIDE	
120	1517695-0000	-		1	WELDED CABINET	
130	1523459-0000	-		4	SUPPORT	
140	1523960-0000	-		1	SPACER	
150	1523974-0000	-		4	SUPPORT	
160	90143-0057	-	MM	2430	STRIP EMKA 1011-05 21X11MM	
170	90143-0057	-	MM	2430	STRIP EMKA 1011-05 21X11MM	
180	90143-0057	-	MM	2872	STRIP EMKA 1011-05 21X11MM	
190	90143-0057	-	MM	1960	STRIP EMKA 1011-05 21X11MM	
200	90143-0057	-	MM	4116	STRIP EMKA 1011-05 21X11MM	
210	90143-0057	-	MM	2850	STRIP EMKA 1011-05 21X11MM	
220	90143-0057	-	MM	2850	STRIP EMKA 1011-05 21X11MM	
230	90143-0057	-	MM	2850	STRIP EMKA 1011-05 21X11MM	
240	90143-0057	-	MM	2850	STRIP EMKA 1011-05 21X11MM	
250	90143-0073	-	MM	585	RUBBER STRIP	
260	90143-0073	-	MM	585	RUBBER STRIP	
270	90143-0073	-	MM	585	RUBBER STRIP	
280	90143-0073	-	MM	585	RUBBER STRIP	
290	1523464-0000	-		1	GASKET	
310	90194-0163	-		1	SIGN, EARTH WITHIN CIRCLE	
320	90457-0029	-		1	INSERT, MULTI HOLE, E156M5,9,11,19	
330	90458-1747	-		1	NORMAL WITHOUT INSERT, M50X1,5	
340	311521-0146	-		4	BLANK RIVET 3,2X12	
350	312115-0293	-		8	SCREW ISO4762 M4X16 A4	
360	312115-0299	-		8	SCREW ISO4762 M4X30 A4	
370	312115-0297	-		6	SCREW ISO4762 M4X25 A4	
380	312115-0329	-		8	SCREW ISO4762 M5X16 A4	
390	312115-0366	-		10	SCREW ISO4762 M6X12 A4	
410	312155-0291	-		8	SCREW EN 10642 MF6S M4X12 A480	
420	312812-0312	-		16	HEXAGON NUT, NY-LOCK M4 A480	
430	312812-0316	-		12	HEXAGON NUT, NY-LOCK M6 A480	
440	315105-0136	-		20	WASHER BRB4,3XRFR	
450	315105-0146	-		12	WASHER BRB5,3X10RFR	
460	315402-0136	-		18	LOCK WASHER FBB 4,1	
470	315402-0146	-		8	LOCK WASHER FBB 5,1	
490	90458-0311	-		1	CABLE GLAND, M50X1,5, NO.5311 1060	
500	359240-0100	-		2	SIGN HOLDER FOR 359240-0001	
510	90458-0327	-		2	NUT, M50X1,5	
530	315105-0153	-		8	WASHER BRB6,4X12RFR	
540	312115-0289	-		4	SCREW ISO4762 M4X10 A4	
550	352113-0205	-		25	ANCHOR PLATES FOR STRIPS, TYPE TM2S8-C10	
B001	90044-0192	A		1	LIMIT SW. SZ2586.000	
B002	90044-0192	A		1	LIMIT SW. SZ2586.000	
B003	90044-0192	A		1	LIMIT SW. SZ2586.000	
B004	90044-0192	A		1	LIMIT SW. SZ2586.000	
B005	90044-0192	A		1	LIMIT SW. SZ2586.000	
B006	90044-0192	A		1	LIMIT SW. SZ2586.000	
B007	90044-0192	A		1	LIMIT SW. SZ2586.000	
E004	90459-2560	B		1	LIGHT FIXTURE, TMS121 1XTL-D30W/830 IP	
E005	90459-2560	B		1	LIGHT FIXTURE, TMS121 1XTL-D30W/830 IP	
E006	90459-3090	B		1	LIGHT FIXTURE, TMS121 1XTL8W/830 IP	
Q001.1	90457-0123	A		1	SIGN, MAIN SWITCH	
Q001.2	359241-0297	-		1	SIGN, 400 V, 50 HZ, 63 A	
T001	90458-0917	A		1	TRANSF. 3-PH 750VA SEC. 23A	
T004	90458-1273	A		1	TRANSFORMER, OFL-1350	
T006	90458-0258	A		1	TRANSFORMER, 220VAC/6-9-12VAC	
V001	90038-0024	A		1	RECTIFIER, 10/22A SKD 50/04A3	

Machine Type | Group Description | Used-In | Group Number | Page No

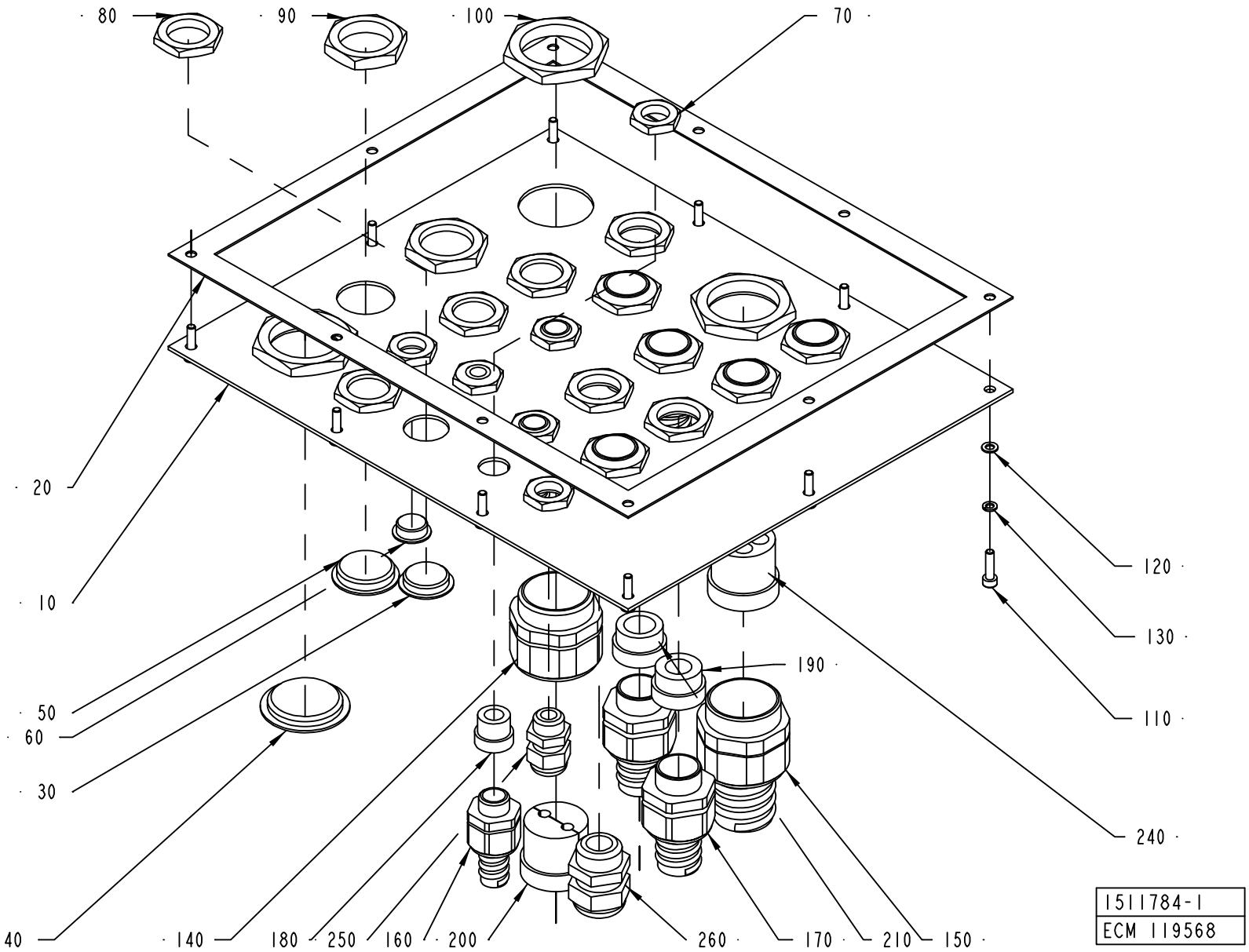
80
90
100
70
20
10
50
60
30
40
140
180
250
160
200
260
170
210
150
240
190
120
130
110
1511784-1
ECM 119568

ECM: 125690 - 20030227
Group number: 1511784-0100
Assembly Drawing: 1511784-1_1_AB

Pos	Part No	SP	UN	Qty	Description	Page No
-						
010	1511831-0000	-		1	PLATE	
020	1511841-0000	-		1	GASKET	
030	90002-0004	-		4	BLANK-OFF PLUG, PR 22,5 SKINDICHT-BLK16	
040	90002-0010	-		1	BLANK-OFF PLUG, PR 37 SKINDICHT-BLK29	
050	90002-0012	-		2	BLANK-OFF PLUG, PR 28,3 SKINDICHT-BLK21	
060	90002-0013	-		1	BLANK-OFF PLUG, PR 15,2 SKINDICHT-BLK9	
070	90099-0104	-		6	NUT, PR 15,2 (PG9)	
080	90099-0110	-		12	NUT, PR 22,5 (PG16)	
090	90099-0119	-		2	NUT, PR 28,3 (PG21)	
100	90099-0120	-		3	MUTTER PR 37 (PG29)	
110	312115-0293	-		10	SCREW ISO4762 M4X16 A4	
120	315105-0136	-		10	WASHER BRB4,3XRFR	
130	315402-0136	-		10	LOCK WASHER FBB 4,1	
140	353240-0006	-		1	COMPRESSION GLAND PG 29	
150	353242-0003	-		1	NORMAL WITHOUT INSERT, PG29	
160	353243-0001	-		3	EXTENDED WITHOUT INSERT, PG9	
170	353243-0005	-		7	EXTENDED WITHOUT INSERT, PG16	
180	353249-0009	-		3	INSERT, SINGEL HOLE, EK 152/9	
190	353249-0013	-		5	INSERT, SINGEL HOLE, EK 154/13	
200	2504449-0000	-		1	INSERT	
210	353249-0014	-		2	INSERT, SINGEL HOLE, EK 154/16	
240	90457-0027	-		1	INSERT, MULTI HOLE, E155M1X5/4X9	
250	352103-0101	-		2	CABLE GLAND, ST 9, PR15,2/PG9	
260	352103-0110	-		1	CABLE GLAND, STR 16, PR22,5/PG16	

Pos	Part No	SP	UN	Qty	Description	Page No

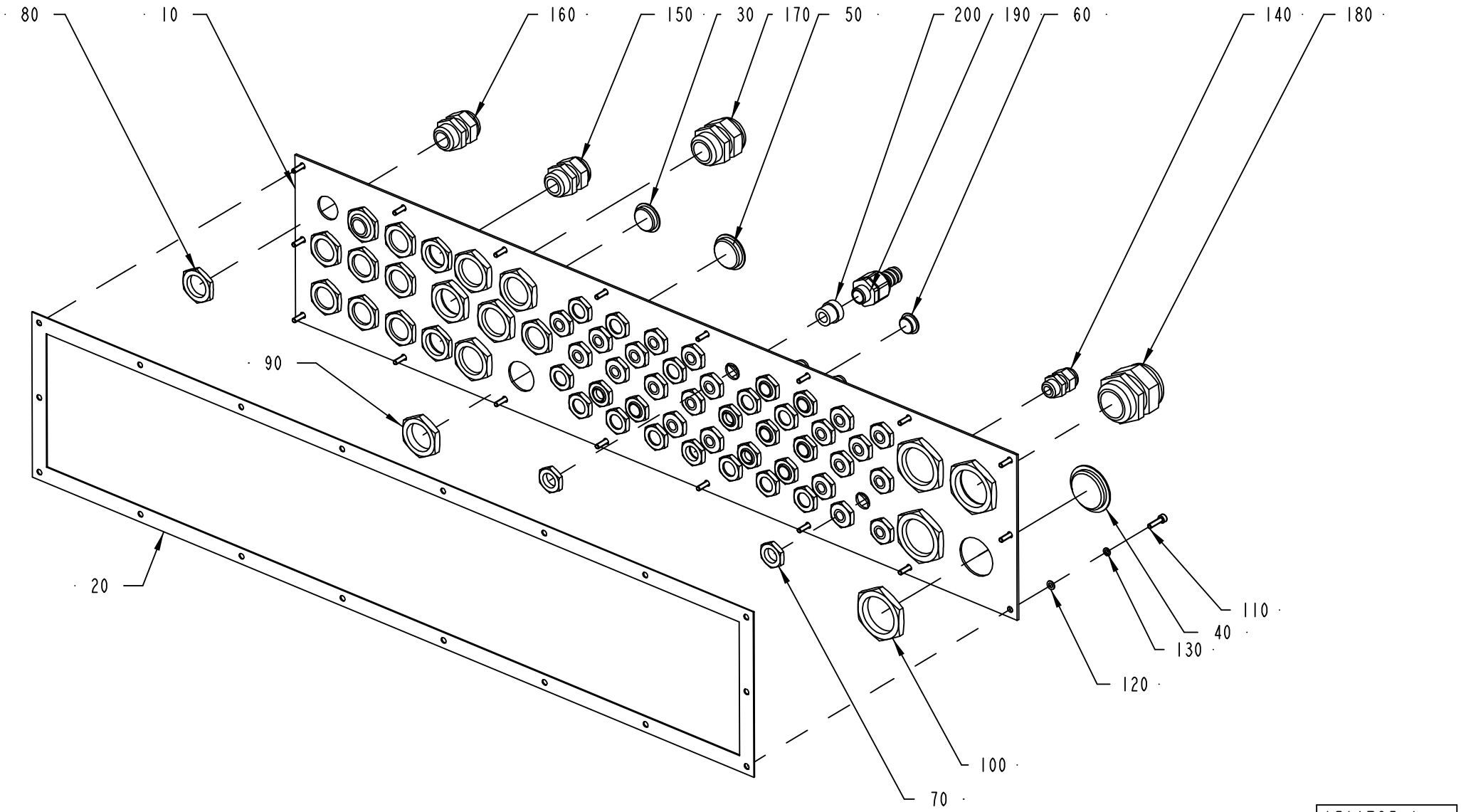

1511785-1
ECN 98221

ECM: 94619 - 20020521
Group number: 1511785-0100
Assembly Drawing: 1511785-1_1_AB

Pos	Part No	SP	UN	Qty	Description	Page No
-						
010	1511842-0000	-		1	PLATE	
020	1511843-0000	-		1	GASKET	
030	90002-0004	-		9	BLANK-OFF PLUG, PR 22,5 SKINDICHT-BLK16	
040	90002-0010	-		3	BLANK-OFF PLUG, PR 37 SKINDICHT-BLK29	
050	90002-0012	-		5	BLANK-OFF PLUG, PR 28,3 SKINDICHT-BLK21	
060	90002-0013	-		12	BLANK-OFF PLUG, PR 15,2 SKINDICHT-BLK9	
070	90099-0104	-		45	NUT, PR 15,2 (PG9)	
080	90099-0110	-		12	NUT, PR 22,5 (PG16)	
090	90099-0119	-		6	NUT, PR 28,3 (PG21)	
100	90099-0120	-		4	MUTTER PR 37 (PG29)	
110	312115-0293	-		18	SCREW ISO4762 M4X16 A4	
120	315105-0136	-		18	WASHER BRB4,3XRFR	
130	315402-0136	-		18	LOCK WASHER FBB 4,1	
140	352103-0101	-		22	CABLE GLAND, ST 9, PR15,2/PG9	
150	352103-0110	-		1	CABLE GLAND, STR 16, PR22,5/PG16	
160	352103-0111	-		2	CABLE GLAND, ST 16, PR22,5/PG16	
170	352103-0116	-		1	CABLE GLAND, ST 21, PR28,3/PG21	
180	352103-0121	-		1	CABLE GLAND, ST 29, PR37,0/PG29	
190	353243-0001	-		10	EXTENDED WITHOUT INSERT, PG9	
200	353249-0009	-		10	INSERT, SINGEL HOLE, EK 152/9	

Pos	Part No	SP	UN	Qty	Description	Page No

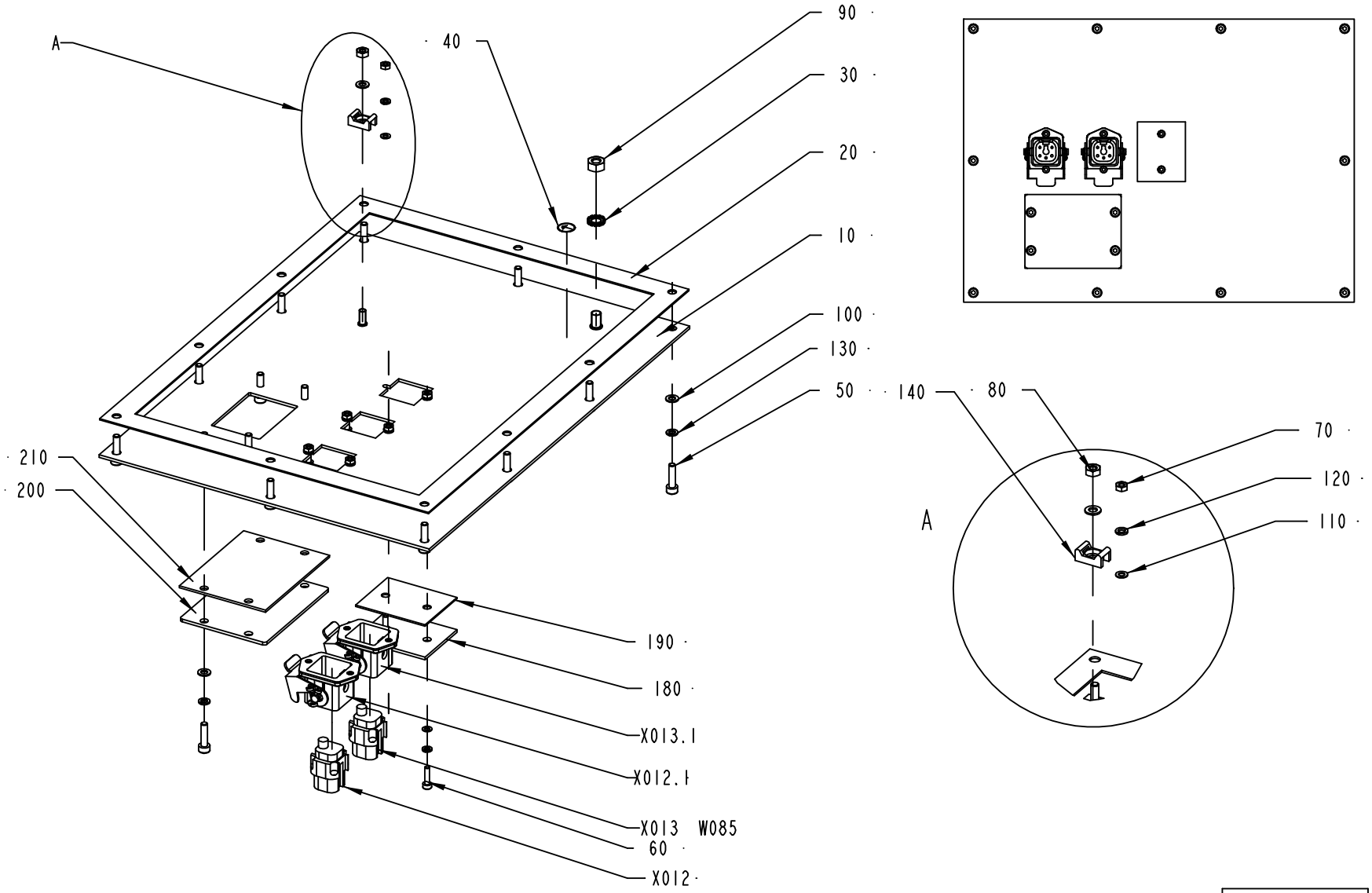

1511788-1
ECM 119568

ECM: 118681 - 50001231
Group number: 1511788-0100
Assembly Drawing: 1511788-1_1_AB

This list covers pages from 778 to 781

Pos	Part No	SP	UN	Qty	Description	Page No
TBA NOPT ASU (See drawing on page: 780)						
X011	90458-0876	A		1	FEMALE INSERT HAN 6B 09 14002 2751	
X011.1	90458-0871	-		1	HOUSING BULKHEAD MOUNTING HAN 6B-AGG-RB	
X011.2	90458-0875	-		1	HINGED FRAME HAN 6B FOR HOUSING	
X014	90110-0296	A		1	CONTACT SCREW	
X014.1	90457-0050	-		1	BULKHEAD HOUSING 149760	
TBA NOPT NOASU (See drawing on page: 778)						
180	1487430-0000	-		1	COVER	
190	1487431-0000	-		1	GASKET	
200	1037572-0000	-		1	COVER PLATE	
210	1037573-0000	-		1	GASKET	
Common Parts						
010	1511837-0000	-		1	PLATE	
020	1511838-0000	-		1	GASKET	
030	90062-0015	-		1	LOCK WASHER SERRAT.EXT.GEAR,6,4/11 H=0,7	
040	90194-0163	-		1	SIGN, EARTH WITHIN CIRCLE	
050	312115-0293	-		14	SCREW ISO4762 M4X16 A4	
060	312115-0226	-		6	SCREW ISO4762 M3X12 A4	
070	312605-0310	-		6	HEXAGON NUT, M6M M3 A280	
080	312605-0312	-		1	HEXAGON NUT, M6M M4 A280	
090	312605-0316	-		1	HEXAGON NUT, M6M M6 A280	
100	315105-0136	-		15	WASHER BRB4,3XRFR	
110	315105-0124	-		12	WASHER BRB3,2X6RFR	
120	315402-0128	-		12	LOCK WASHER FBB 3,6	
130	315402-0136	-		14	LOCK WASHER FBB 4,1	
140	352113-0205	-		1	ANCHOR PLATES FOR STRIPS, TYPE TM2S8-C10	
W085	90220-0104	-	M	4	SCR. CABLE 4X1,5MM2	
X012	90110-0296	A		1	CONTACT SCREW	
X012.1	90457-0050	-		1	BULKHEAD HOUSING 149760	
X013	90110-0296	A		1	CONTACT SCREW	
X013.1	90457-0050	-		1	BULKHEAD HOUSING 149760	

Pos	Part No	SP	UN	Qty	Description	Page No

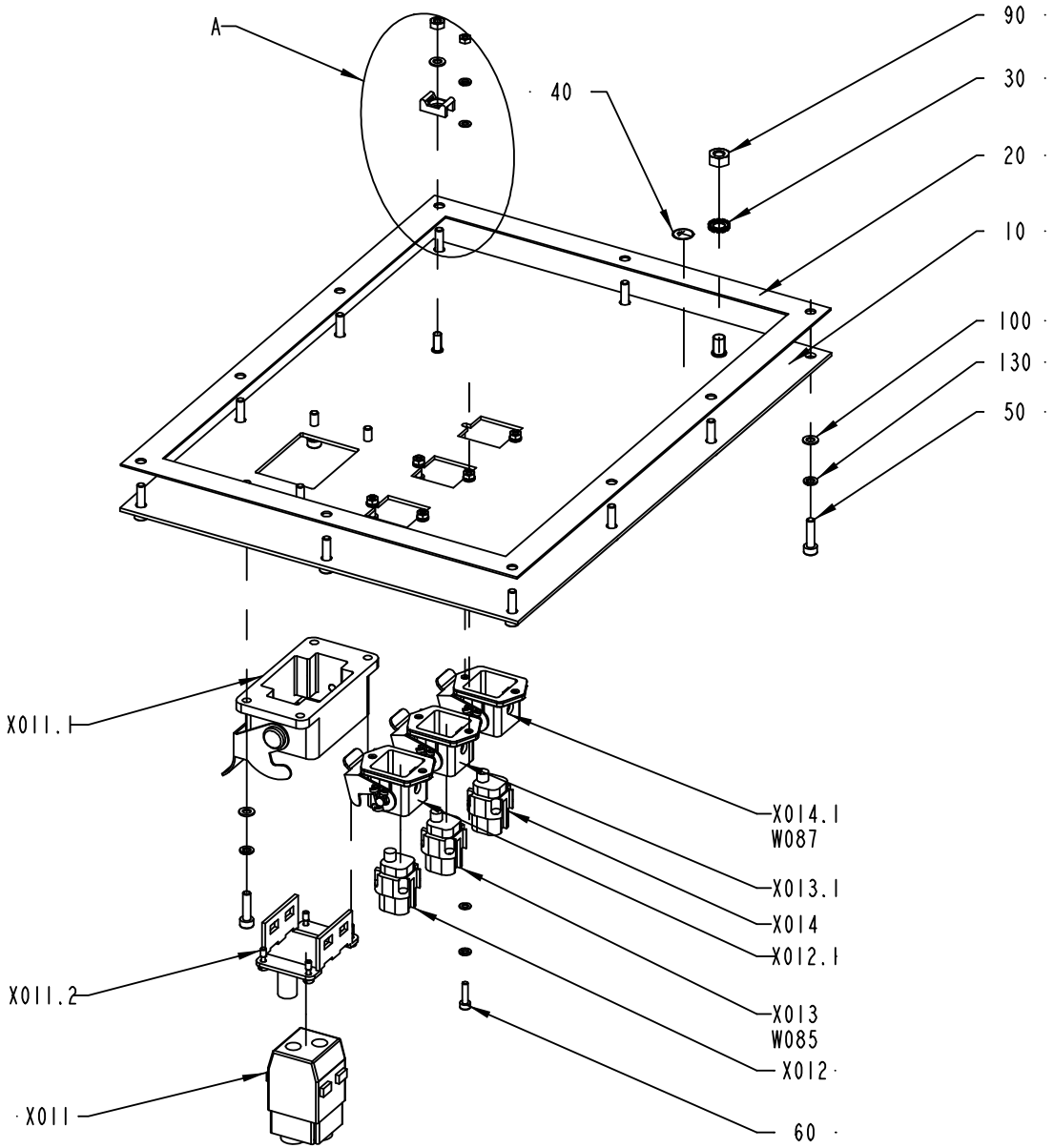

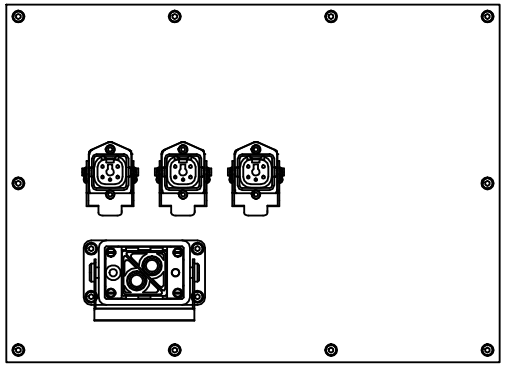

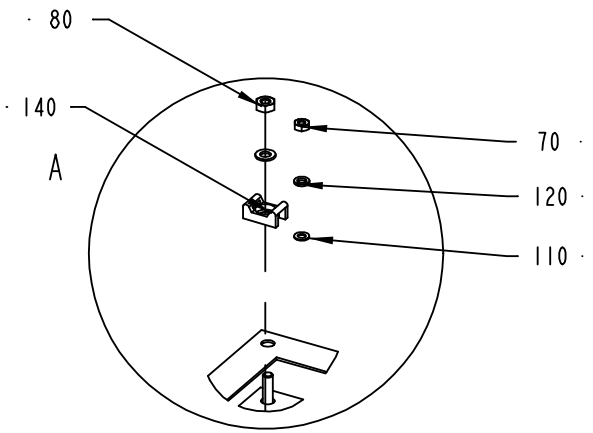

1511788-2
ECM 119568

ECM: 118681 - 50001231
Group number: 1511788-0100
Assembly Drawing: 1511788-2_1_AB

This list covers pages from 778 to 781

Pos	Part No	SP	UN	Qty	Description	Page No
TBA NOPT ASU (See drawing on page: 780)						
X011	90458-0876	A		1	FEMALE INSERT HAN 6B 09 14002 2751	
X011.1	90458-0871	-		1	HOUSING BULKHEAD MOUNTING HAN 6B-AGG-RB	
X011.2	90458-0875	-		1	HINGED FRAME HAN 6B FOR HOUSING	
X014	90110-0296	A		1	CONTACT SCREW	
X014.1	90457-0050	-		1	BULKHEAD HOUSING 149760	
TBA NOPT NOASU (See drawing on page: 778)						
180	1487430-0000	-		1	COVER	
190	1487431-0000	-		1	GASKET	
200	1037572-0000	-		1	COVER PLATE	
210	1037573-0000	-		1	GASKET	
Common Parts						
010	1511837-0000	-		1	PLATE	
020	1511838-0000	-		1	GASKET	
030	90062-0015	-		1	LOCK WASHER SERRAT.EXT.GEAR,6,4/11 H=0,7	
040	90194-0163	-		1	SIGN, EARTH WITHIN CIRCLE	
050	312115-0293	-		14	SCREW ISO4762 M4X16 A4	
060	312115-0226	-		6	SCREW ISO4762 M3X12 A4	
070	312605-0310	-		6	HEXAGON NUT, M6M M3 A280	
080	312605-0312	-		1	HEXAGON NUT, M6M M4 A280	
090	312605-0316	-		1	HEXAGON NUT, M6M M6 A280	
100	315105-0136	-		15	WASHER BRB4,3XRFR	
110	315105-0124	-		12	WASHER BRB3,2X6RFR	
120	315402-0128	-		12	LOCK WASHER FBB 3,6	
130	315402-0136	-		14	LOCK WASHER FBB 4,1	
140	352113-0205	-		1	ANCHOR PLATES FOR STRIPS, TYPE TM2S8-C10	
W085	90220-0104	-	M	4	SCR. CABLE 4X1,5MM2	
X012	90110-0296	A		1	CONTACT SCREW	
X012.1	90457-0050	-		1	BULKHEAD HOUSING 149760	
X013	90110-0296	A		1	CONTACT SCREW	
X013.1	90457-0050	-		1	BULKHEAD HOUSING 149760	

Pos	Part No	SP	UN	Qty	Description	Page No

CONTROL CONNECTOR PLATE

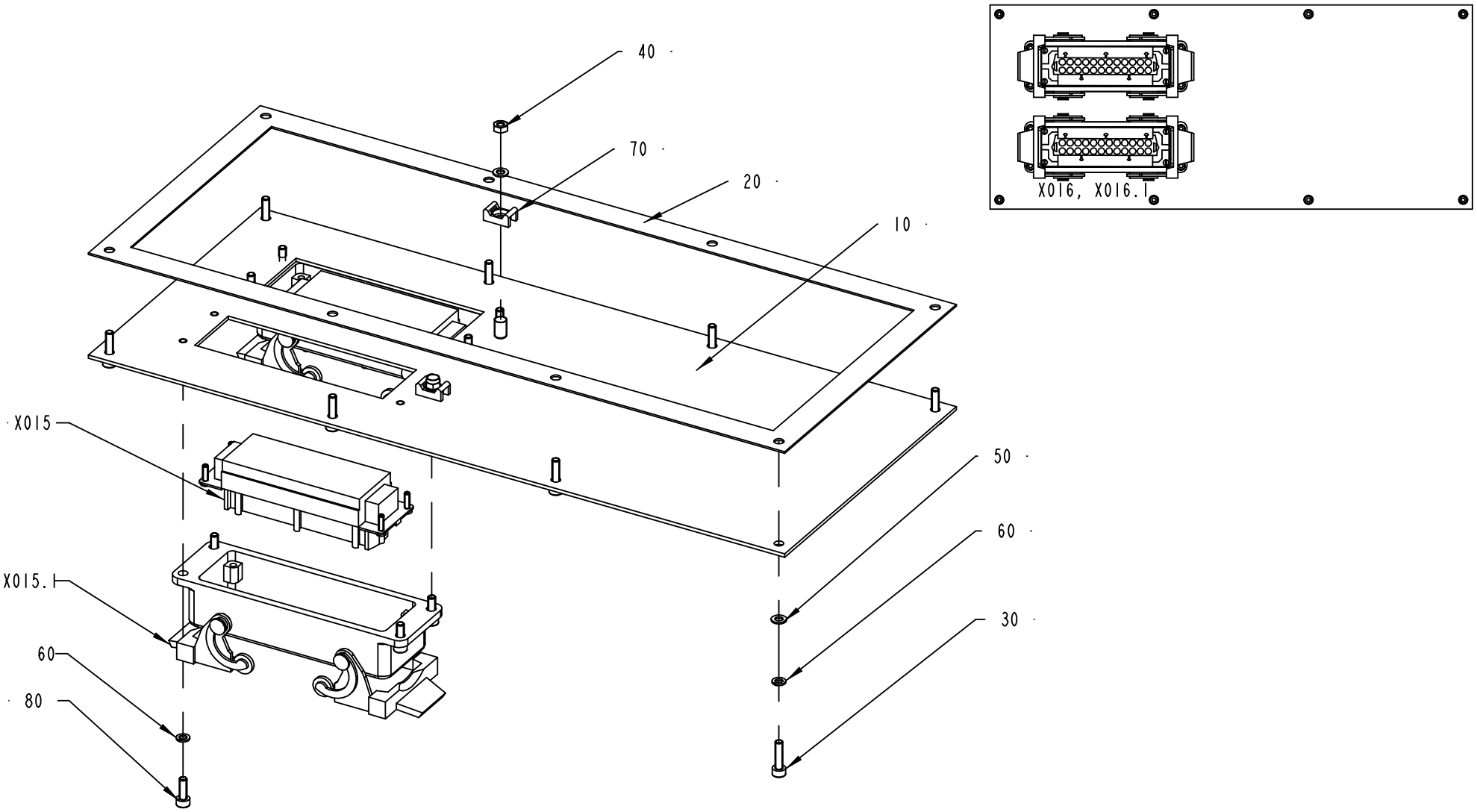

1511789-1
ECN 73363

ECM: 115706 - 20020930
Group number: 1511789-0100
Assembly Drawing: 1511789-1_1_AA

Pos	Part No	SP	UN	Qty	Description	Page No
-						
010	1511839-0000	-		1	PLATE	
020	1511840-0000	-		1	GASKET	
030	312115-0293	-		8	SCREW ISO4762 M4X16 A4	
040	312605-0312	-		2	HEXAGON NUT, M6M M4 A280	
050	315105-0136	-		10	WASHER BRB4,3XRFR	
060	315402-0136	-		8	LOCK WASHER FBB 4,1	
070	352113-0205	-		2	ANCHOR PLATES FOR STRIPS, TYPE TM2S8-C10	
080	312115-0291	-		8	SCREW ISO4762 M4X12 A4	
X015	90110-0151	A		1	FEMALE INSERT 24-POL 121130 0000	
X015.1	90110-0153	-		1	CHASSIS HOUSING 24-P CHI 24, 121240 0000	
X016	90110-0151	A		1	FEMALE INSERT 24-POL 121130 0000	
X016.1	90110-0153	-		1	CHASSIS HOUSING 24-P CHI 24, 121240 0000	

Pos	Part No	SP	UN	Qty	Description	Page No

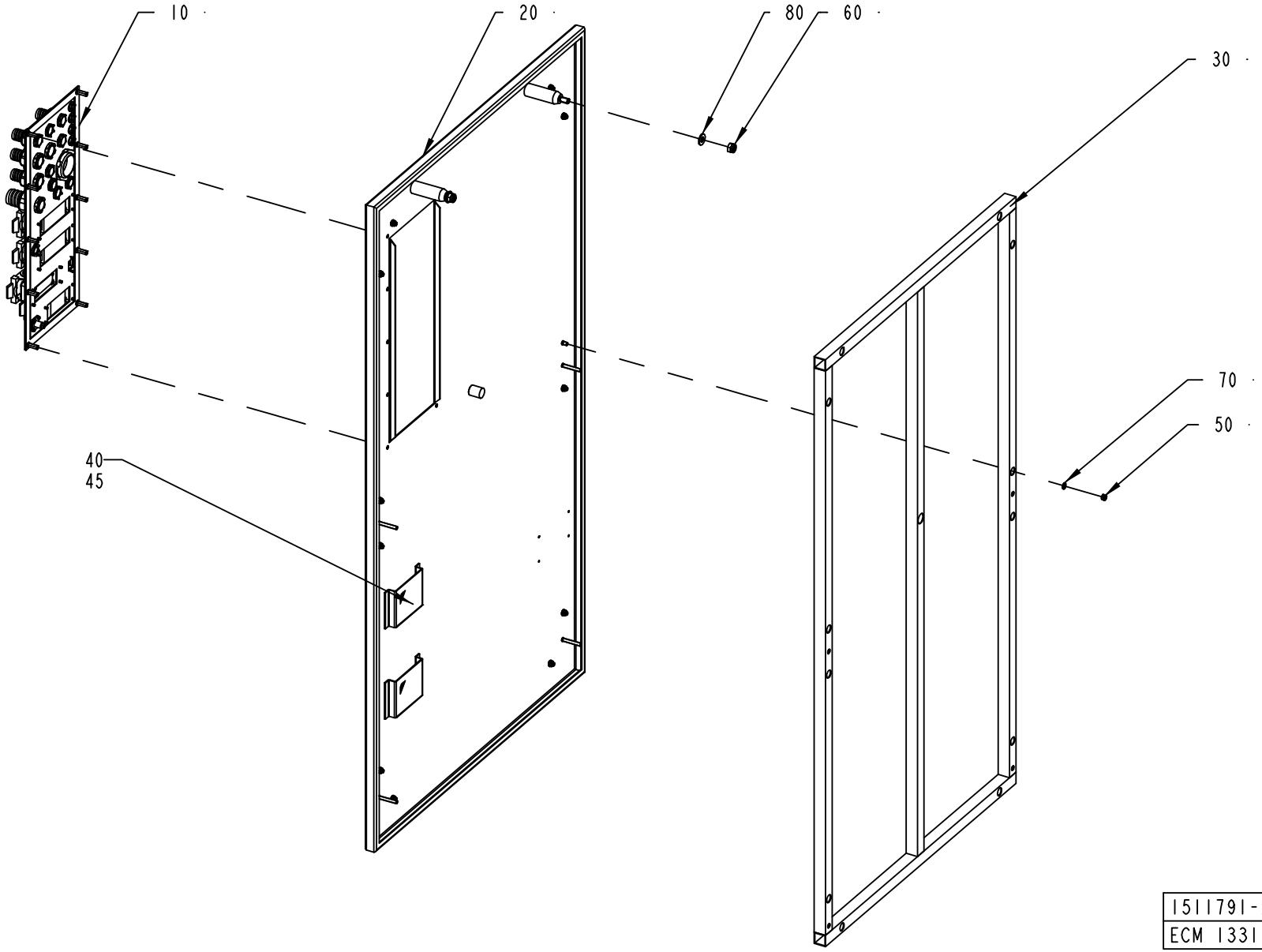
10
20
80
60
30
70
50
40
45
1511791-2
ECM 133152

ECM: 118389 - 50001231
Group number: 1511791-0100
Assembly Drawing: 1511791-2_1_AA

Pos	Part No	SP	UN	Qty	Description	Page No
-						
010	1511787-0100	-		1	STRIP APPLICATOR CABLE INLETS	**787, 789, 791, 793** **795, 797, 799, 801, 803**
020	1511797-0000	-		1	DOOR	
030	1511798-0000	-		1	FRAME	
040	970802-0000	-		2	DISCETTE BOX 3,5"	
045	90144-0072	-	MM	400	TAPE SCOTCH VHBS 4945 W=12,7MM	
050	312812-0316	-		12	HEXAGON NUT, NY-LOCK M6 A480	
060	312812-0320	-		2	HEXAGON NUT, NY-LOCK M10 A480	
070	315105-0153	-		12	WASHER BRB6,4X12RFR	
080	315105-0173	-		2	WASHER BRB10,5X22RFR	

Pos	Part No	SP	UN	Qty	Description	Page No

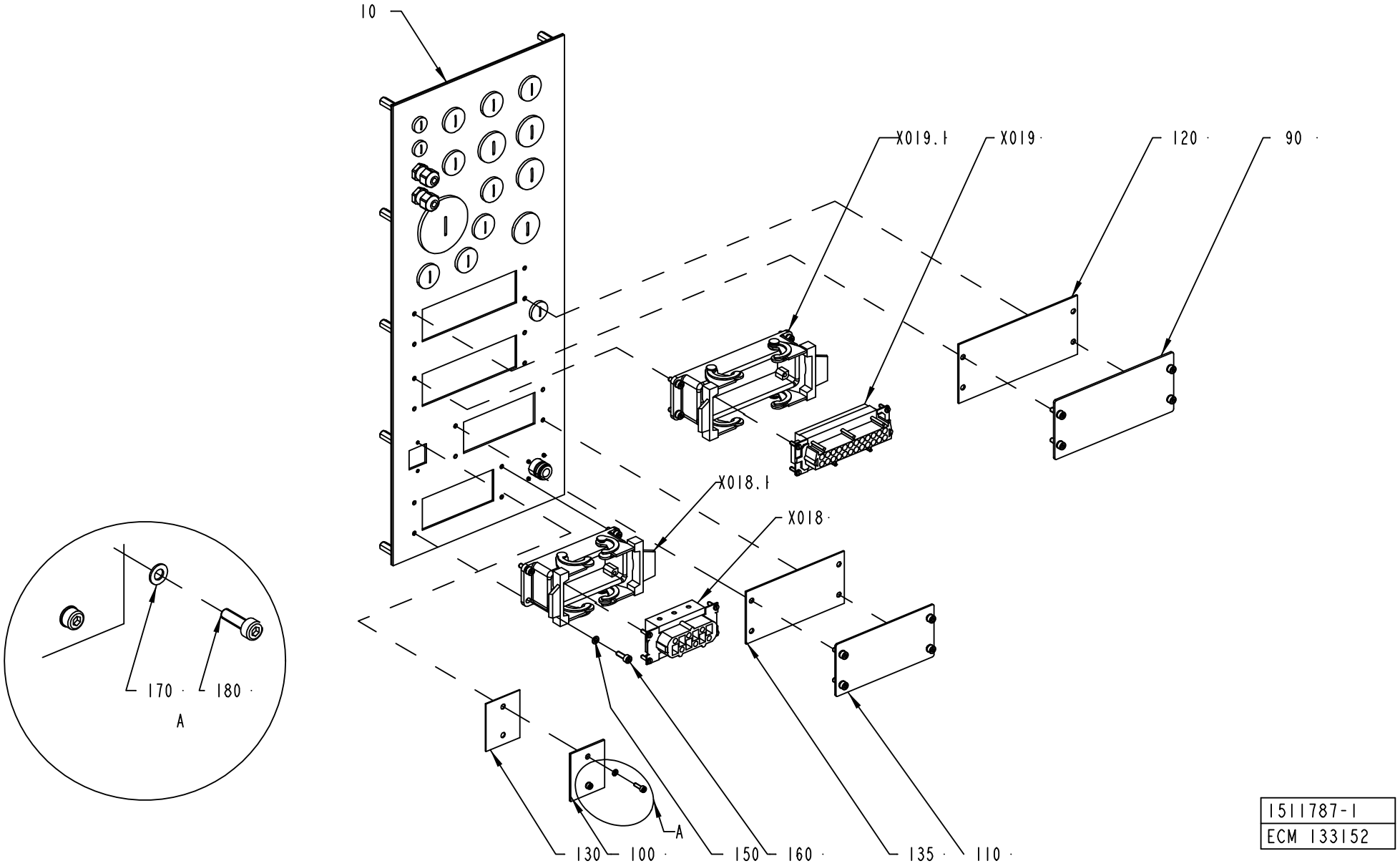

1511787-1
ECM 133152

ECM: 118390 - 50001231
Group number: 1511787-0100
Assembly Drawing: 1511787-1_1_AB

This list covers pages from 786 to 803

Pos	Part No	SP	UN	Qty	Description	Page No
TBA NOPT (See drawing on pages: 786, 788, 790, 792)						
090	1037574-0000	-		1	COVER PLATE	
100	1487430-0000	-		1	COVER	
110	1129481-0000	-		1	COVERING PLATE	
120	1037575-0000	-		1	GASKET	
130	1487431-0000	-		1	GASKET	
135	1129478-0000	-		1	GASKET	
210	90458-0305	-		2	CABLE GLAND, M12X1,5, NO.5311 1000	
220	90458-1306	-		2	BLIND PLUG CIRCULAR, M12X1,5 514GFK/212	
240	90458-1308	-		8	BLIND PLUG CIRCULAR, M20X1,5 514GFK/220	
260	90458-1309	-		4	BLIND PLUG CIRCULAR, M25X1,5 514GFK/225	
280	90458-1312	-		1	BLIND PLUG CIRCULAR, M50X1,5 514GFK/250	
TBA PT19 (See drawing on pages: 794, 796, 798, 800, 802)						
210	90458-0305	-		1	CABLE GLAND, M12X1,5, NO.5311 1000	
220	90458-1306	-		3	BLIND PLUG CIRCULAR, M12X1,5 514GFK/212	
240	90458-1308	-		2	BLIND PLUG CIRCULAR, M20X1,5 514GFK/220	
260	90458-1309	-		1	BLIND PLUG CIRCULAR, M25X1,5 514GFK/225	
320	90458-0422	-		1	EXTENDED WITHOUT INSERT, M20X1,5	
330	90458-0428	-		1	EXTENDED WITHOUT INSERT, M20X1,5	
340	90458-0430	-		4	EXTENDED WITHOUT INSERT, M20X1,5	
350	90458-0188	-		3	GLAND, INSERT, MULTI HOLE, 1X7/1X10,5	
360	90457-0147	-		1	GLAND, INSERT, MULTI HOLE, 2X7	
370	90458-0416	-		1	NORMAL WITHOUT INSERT, M50X1,5	
380	2618387-0000	-		1	INSERT	
390	90458-0432	-		1	EXTENDED WITHOUT INSERT, M25X1,5	
400	353249-0016	-		1	INSERT, SINGEL HOLE, EK 155/18	
410	353249-0075	-		1	INSERT, SINGEL HOLE, EK 153/13	
420	90458-0431	-		2	EXTENDED WITHOUT INSERT, M25X1,5	
430	353249-0013	-		2	INSERT, SINGEL HOLE, EK 154/13	
X022	90110-0296	-		1	CONTACT SCREW	
X022.1	90458-1181	-		1	BULKHEAD HOUSING HDC-HA-3-AWVL1/11	
X025	90110-0151	A		1	FEMALE INSERT 24-POL 121130 0000	
X025.1	90110-0153	-		1	CHASSIS HOUSING 24-P CHI 24, 121240 0000	
X026	90458-1406	A		1	FEMALE INSERT 120770	
X026.1	90110-0243	-		1	CONTACT HOUSING 16-POL 70.320.1628.0	
Common Parts						
010	1511832-0000	-		1	PLATE	
020	1511833-0000	-		1	GASKET	
030	1517676-0000	-		10	SPACER	
140	315105-0146	-		10	WASHER BRB5,3X10RFR	
150	315402-0136	-		16	LOCK WASHER FBB 4,1	
160	312115-0291	-		16	SCREW ISO4762 M4X12 A4	
170	315105-0124	-		2	WASHER BRB3,2X6RFR	
180	312115-0224	-		2	SCREW ISO4762 M3X10 A4	
190	90110-0127	-		1	COAXIAL CONNECTOR, GE 15057C10HBN	
200	312115-0220	-		4	SCREW ISO4762 M3X6 A4 80	
230	90458-0321	-		4	NUT, M12X1,5	
250	90458-0461	-		8	GLAND, LOCKNUT, M20X1,5	
270	90458-0462	-		4	GLAND, LOCKNUT, M25X1,5	
290	90458-0465	-		1	GLAND, LOCKNUT, M50X1,5	
300	90458-0460	-		1	GLAND, LOCKNUT, M16X1,5	
310	90458-1307	-		1	BLIND PLUG CIRCULAR, M16X1,5 514GFK/216	
440	353249-0036	-		1	INSERT, MULTI HOLE, EK152 M 2X4	
X018	90110-0247	A		1	FEMALE INSERT 70.200.0653.0	
X018.1	90110-0243	-		1	CONTACT HOUSING 16-POL 70.320.1628.0	
X019	90110-0151	A		1	FEMALE INSERT 24-POL 121130 0000	
X019.1	90110-0153	-		1	CHASSIS HOUSING 24-P CHI 24, 121240 0000	

Machine Type | Group Description | Used-In | Group Number | Page No

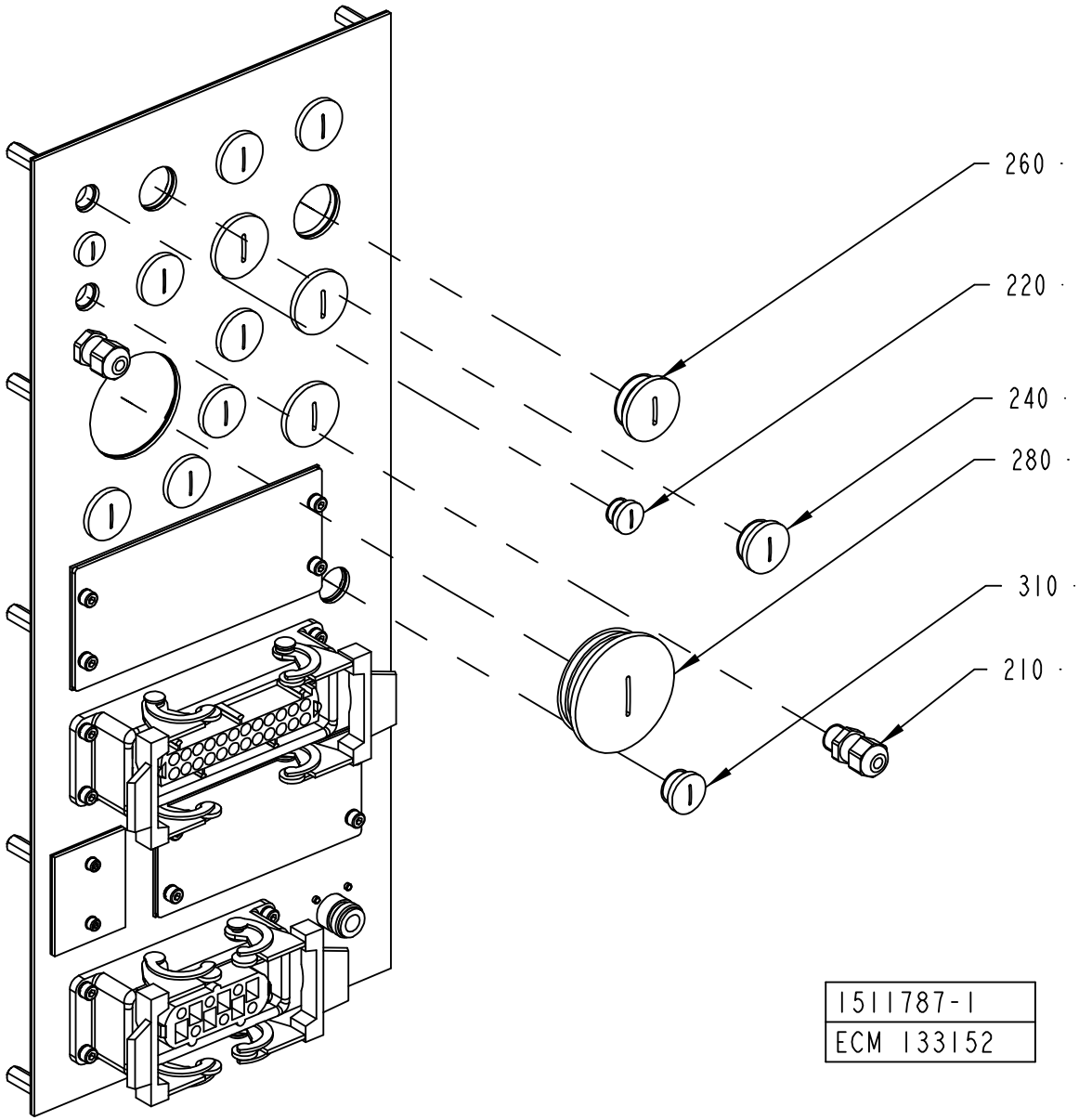
260
220
240
280
310
210
1511787-1
ECM 133152

ECM: 118390 - 50001231
Group number: 1511787-0100
Assembly Drawing: 1511787-1_2_AB

This list covers pages from 786 to 803

Pos	Part No	SP	UN	Qty	Description	Page No
TBA NOPT (See drawing on pages: 786, 788, 790, 792)						
090	1037574-0000	-		1	COVER PLATE	
100	1487430-0000	-		1	COVER	
110	1129481-0000	-		1	COVERING PLATE	
120	1037575-0000	-		1	GASKET	
130	1487431-0000	-		1	GASKET	
135	1129478-0000	-		1	GASKET	
210	90458-0305	-		2	CABLE GLAND, M12X1,5, NO.5311 1000	
220	90458-1306	-		2	BLIND PLUG CIRCULAR, M12X1,5 514GFK/212	
240	90458-1308	-		8	BLIND PLUG CIRCULAR, M20X1,5 514GFK/220	
260	90458-1309	-		4	BLIND PLUG CIRCULAR, M25X1,5 514GFK/225	
280	90458-1312	-		1	BLIND PLUG CIRCULAR, M50X1,5 514GFK/250	
TBA PT19 (See drawing on pages: 794, 796, 798, 800, 802)						
210	90458-0305	-		1	CABLE GLAND, M12X1,5, NO.5311 1000	
220	90458-1306	-		3	BLIND PLUG CIRCULAR, M12X1,5 514GFK/212	
240	90458-1308	-		2	BLIND PLUG CIRCULAR, M20X1,5 514GFK/220	
260	90458-1309	-		1	BLIND PLUG CIRCULAR, M25X1,5 514GFK/225	
320	90458-0422	-		1	EXTENDED WITHOUT INSERT, M20X1,5	
330	90458-0428	-		1	EXTENDED WITHOUT INSERT, M20X1,5	
340	90458-0430	-		4	EXTENDED WITHOUT INSERT, M20X1,5	
350	90458-0188	-		3	GLAND, INSERT, MULTI HOLE, 1X7/1X10,5	
360	90457-0147	-		1	GLAND, INSERT, MULTI HOLE, 2X7	
370	90458-0416	-		1	NORMAL WITHOUT INSERT, M50X1,5	
380	2618387-0000	-		1	INSERT	
390	90458-0432	-		1	EXTENDED WITHOUT INSERT, M25X1,5	
400	353249-0016	-		1	INSERT, SINGEL HOLE, EK 155/18	
410	353249-0075	-		1	INSERT, SINGEL HOLE, EK 153/13	
420	90458-0431	-		2	EXTENDED WITHOUT INSERT, M25X1,5	
430	353249-0013	-		2	INSERT, SINGEL HOLE, EK 154/13	
X022	90110-0296	-		1	CONTACT SCREW	
X022.1	90458-1181	-		1	BULKHEAD HOUSING HDC-HA-3-AWVL1/11	
X025	90110-0151	A		1	FEMALE INSERT 24-POL 121130 0000	
X025.1	90110-0153	-		1	CHASSIS HOUSING 24-P CHI 24, 121240 0000	
X026	90458-1406	A		1	FEMALE INSERT 120770	
X026.1	90110-0243	-		1	CONTACT HOUSING 16-POL 70.320.1628.0	
Common Parts						
010	1511832-0000	-		1	PLATE	
020	1511833-0000	-		1	GASKET	
030	1517676-0000	-		10	SPACER	
140	315105-0146	-		10	WASHER BRB5,3X10RFR	
150	315402-0136	-		16	LOCK WASHER FBB 4,1	
160	312115-0291	-		16	SCREW ISO4762 M4X12 A4	
170	315105-0124	-		2	WASHER BRB3,2X6RFR	
180	312115-0224	-		2	SCREW ISO4762 M3X10 A4	
190	90110-0127	-		1	COAXIAL CONNECTOR, GE 15057C10HBN	
200	312115-0220	-		4	SCREW ISO4762 M3X6 A4 80	
230	90458-0321	-		4	NUT, M12X1,5	
250	90458-0461	-		8	GLAND, LOCKNUT, M20X1,5	
270	90458-0462	-		4	GLAND, LOCKNUT, M25X1,5	
290	90458-0465	-		1	GLAND, LOCKNUT, M50X1,5	
300	90458-0460	-		1	GLAND, LOCKNUT, M16X1,5	
310	90458-1307	-		1	BLIND PLUG CIRCULAR, M16X1,5 514GFK/216	
440	353249-0036	-		1	INSERT, MULTI HOLE, EK152 M 2X4	
X018	90110-0247	A		1	FEMALE INSERT 70.200.0653.0	
X018.1	90110-0243	-		1	CONTACT HOUSING 16-POL 70.320.1628.0	
X019	90110-0151	A		1	FEMALE INSERT 24-POL 121130 0000	
X019.1	90110-0153	-		1	CHASSIS HOUSING 24-P CHI 24, 121240 0000	

Machine Type | Group Description | Used-In | Group Number | Page No

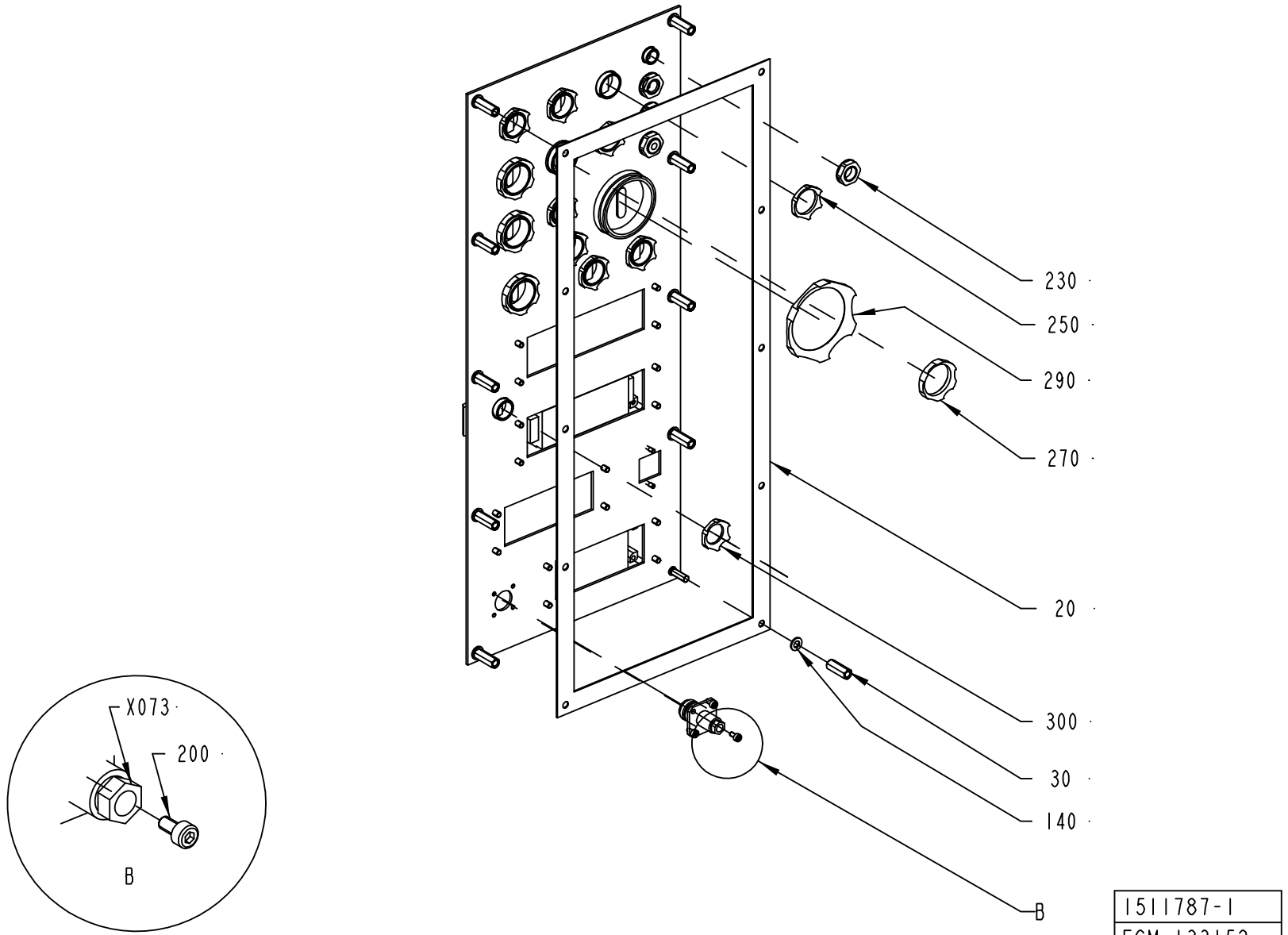

1511787-1
ECM 133152

ECM: 118390 - 50001231
Group number: 1511787-0100
Assembly Drawing: 1511787-1_3_AB

This list covers pages from 786 to 803

Pos	Part No	SP	UN	Qty	Description	Page No
TBA NOPT (See drawing on pages: 786, 788, 790, 792)						
090	1037574-0000	-		1	COVER PLATE	
100	1487430-0000	-		1	COVER	
110	1129481-0000	-		1	COVERING PLATE	
120	1037575-0000	-		1	GASKET	
130	1487431-0000	-		1	GASKET	
135	1129478-0000	-		1	GASKET	
210	90458-0305	-		2	CABLE GLAND, M12X1,5, NO.5311 1000	
220	90458-1306	-		2	BLIND PLUG CIRCULAR, M12X1,5 514GFK/212	
240	90458-1308	-		8	BLIND PLUG CIRCULAR, M20X1,5 514GFK/220	
260	90458-1309	-		4	BLIND PLUG CIRCULAR, M25X1,5 514GFK/225	
280	90458-1312	-		1	BLIND PLUG CIRCULAR, M50X1,5 514GFK/250	
TBA PT19 (See drawing on pages: 794, 796, 798, 800, 802)						
210	90458-0305	-		1	CABLE GLAND, M12X1,5, NO.5311 1000	
220	90458-1306	-		3	BLIND PLUG CIRCULAR, M12X1,5 514GFK/212	
240	90458-1308	-		2	BLIND PLUG CIRCULAR, M20X1,5 514GFK/220	
260	90458-1309	-		1	BLIND PLUG CIRCULAR, M25X1,5 514GFK/225	
320	90458-0422	-		1	EXTENDED WITHOUT INSERT, M20X1,5	
330	90458-0428	-		1	EXTENDED WITHOUT INSERT, M20X1,5	
340	90458-0430	-		4	EXTENDED WITHOUT INSERT, M20X1,5	
350	90458-0188	-		3	GLAND, INSERT, MULTI HOLE, 1X7/1X10,5	
360	90457-0147	-		1	GLAND, INSERT, MULTI HOLE, 2X7	
370	90458-0416	-		1	NORMAL WITHOUT INSERT, M50X1,5	
380	2618387-0000	-		1	INSERT	
390	90458-0432	-		1	EXTENDED WITHOUT INSERT, M25X1,5	
400	353249-0016	-		1	INSERT, SINGEL HOLE, EK 155/18	
410	353249-0075	-		1	INSERT, SINGEL HOLE, EK 153/13	
420	90458-0431	-		2	EXTENDED WITHOUT INSERT, M25X1,5	
430	353249-0013	-		2	INSERT, SINGEL HOLE, EK 154/13	
X022	90110-0296	-		1	CONTACT SCREW	
X022.1	90458-1181	-		1	BULKHEAD HOUSING HDC-HA-3-AWVL1/11	
X025	90110-0151	A		1	FEMALE INSERT 24-POL 121130 0000	
X025.1	90110-0153	-		1	CHASSIS HOUSING 24-P CHI 24, 121240 0000	
X026	90458-1406	A		1	FEMALE INSERT 120770	
X026.1	90110-0243	-		1	CONTACT HOUSING 16-POL 70.320.1628.0	
Common Parts						
010	1511832-0000	-		1	PLATE	
020	1511833-0000	-		1	GASKET	
030	1517676-0000	-		10	SPACER	
140	315105-0146	-		10	WASHER BRB5,3X10RFR	
150	315402-0136	-		16	LOCK WASHER FBB 4,1	
160	312115-0291	-		16	SCREW ISO4762 M4X12 A4	
170	315105-0124	-		2	WASHER BRB3,2X6RFR	
180	312115-0224	-		2	SCREW ISO4762 M3X10 A4	
190	90110-0127	-		1	COAXIAL CONNECTOR, GE 15057C10HBN	
200	312115-0220	-		4	SCREW ISO4762 M3X6 A4 80	
230	90458-0321	-		4	NUT, M12X1,5	
250	90458-0461	-		8	GLAND, LOCKNUT, M20X1,5	
270	90458-0462	-		4	GLAND, LOCKNUT, M25X1,5	
290	90458-0465	-		1	GLAND, LOCKNUT, M50X1,5	
300	90458-0460	-		1	GLAND, LOCKNUT, M16X1,5	
310	90458-1307	-		1	BLIND PLUG CIRCULAR, M16X1,5 514GFK/216	
440	353249-0036	-		1	INSERT, MULTI HOLE, EK152 M 2X4	
X018	90110-0247	A		1	FEMALE INSERT 70.200.0653.0	
X018.1	90110-0243	-		1	CONTACT HOUSING 16-POL 70.320.1628.0	
X019	90110-0151	A		1	FEMALE INSERT 24-POL 121130 0000	
X019.1	90110-0153	-		1	CHASSIS HOUSING 24-P CHI 24, 121240 0000	

Machine Type | Group Description | Used-In | Group Number | Page No

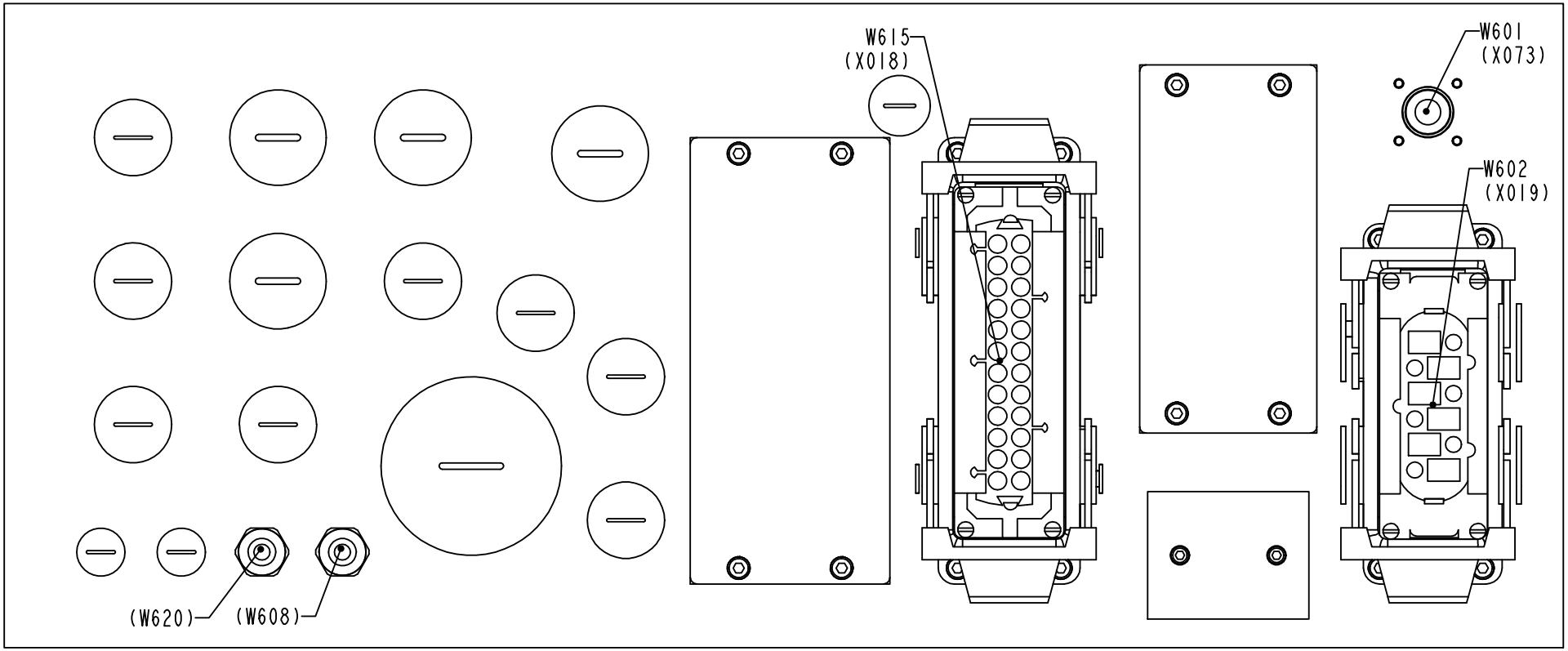

1511787-1
ECM 133152

ECM: 118390 - 50001231
Group number: 1511787-0100
Assembly Drawing: 1511787-1_4_AB

This list covers pages from 786 to 803

Pos	Part No	SP	UN	Qty	Description	Page No
TBA NOPT (See drawing on pages: 786, 788, 790, 792)						
090	1037574-0000	-		1	COVER PLATE	
100	1487430-0000	-		1	COVER	
110	1129481-0000	-		1	COVERING PLATE	
120	1037575-0000	-		1	GASKET	
130	1487431-0000	-		1	GASKET	
135	1129478-0000	-		1	GASKET	
210	90458-0305	-		2	CABLE GLAND, M12X1,5, NO.5311 1000	
220	90458-1306	-		2	BLIND PLUG CIRCULAR, M12X1,5 514GFK/212	
240	90458-1308	-		8	BLIND PLUG CIRCULAR, M20X1,5 514GFK/220	
260	90458-1309	-		4	BLIND PLUG CIRCULAR, M25X1,5 514GFK/225	
280	90458-1312	-		1	BLIND PLUG CIRCULAR, M50X1,5 514GFK/250	
TBA PT19 (See drawing on pages: 794, 796, 798, 800, 802)						
210	90458-0305	-		1	CABLE GLAND, M12X1,5, NO.5311 1000	
220	90458-1306	-		3	BLIND PLUG CIRCULAR, M12X1,5 514GFK/212	
240	90458-1308	-		2	BLIND PLUG CIRCULAR, M20X1,5 514GFK/220	
260	90458-1309	-		1	BLIND PLUG CIRCULAR, M25X1,5 514GFK/225	
320	90458-0422	-		1	EXTENDED WITHOUT INSERT, M20X1,5	
330	90458-0428	-		1	EXTENDED WITHOUT INSERT, M20X1,5	
340	90458-0430	-		4	EXTENDED WITHOUT INSERT, M20X1,5	
350	90458-0188	-		3	GLAND, INSERT, MULTI HOLE, 1X7/1X10,5	
360	90457-0147	-		1	GLAND, INSERT, MULTI HOLE, 2X7	
370	90458-0416	-		1	NORMAL WITHOUT INSERT, M50X1,5	
380	2618387-0000	-		1	INSERT	
390	90458-0432	-		1	EXTENDED WITHOUT INSERT, M25X1,5	
400	353249-0016	-		1	INSERT, SINGEL HOLE, EK 155/18	
410	353249-0075	-		1	INSERT, SINGEL HOLE, EK 153/13	
420	90458-0431	-		2	EXTENDED WITHOUT INSERT, M25X1,5	
430	353249-0013	-		2	INSERT, SINGEL HOLE, EK 154/13	
X022	90110-0296	-		1	CONTACT SCREW	
X022.1	90458-1181	-		1	BULKHEAD HOUSING HDC-HA-3-AWVL1/11	
X025	90110-0151	A		1	FEMALE INSERT 24-POL 121130 0000	
X025.1	90110-0153	-		1	CHASSIS HOUSING 24-P CHI 24, 121240 0000	
X026	90458-1406	A		1	FEMALE INSERT 120770	
X026.1	90110-0243	-		1	CONTACT HOUSING 16-POL 70.320.1628.0	
Common Parts						
010	1511832-0000	-		1	PLATE	
020	1511833-0000	-		1	GASKET	
030	1517676-0000	-		10	SPACER	
140	315105-0146	-		10	WASHER BRB5,3X10RFR	
150	315402-0136	-		16	LOCK WASHER FBB 4,1	
160	312115-0291	-		16	SCREW ISO4762 M4X12 A4	
170	315105-0124	-		2	WASHER BRB3,2X6RFR	
180	312115-0224	-		2	SCREW ISO4762 M3X10 A4	
190	90110-0127	-		1	COAXIAL CONNECTOR, GE 15057C10HBN	
200	312115-0220	-		4	SCREW ISO4762 M3X6 A4 80	
230	90458-0321	-		4	NUT, M12X1,5	
250	90458-0461	-		8	GLAND, LOCKNUT, M20X1,5	
270	90458-0462	-		4	GLAND, LOCKNUT, M25X1,5	
290	90458-0465	-		1	GLAND, LOCKNUT, M50X1,5	
300	90458-0460	-		1	GLAND, LOCKNUT, M16X1,5	
310	90458-1307	-		1	BLIND PLUG CIRCULAR, M16X1,5 514GFK/216	
440	353249-0036	-		1	INSERT, MULTI HOLE, EK152 M 2X4	
X018	90110-0247	A		1	FEMALE INSERT 70.200.0653.0	
X018.1	90110-0243	-		1	CONTACT HOUSING 16-POL 70.320.1628.0	
X019	90110-0151	A		1	FEMALE INSERT 24-POL 121130 0000	
X019.1	90110-0153	-		1	CHASSIS HOUSING 24-P CHI 24, 121240 0000	

Machine Type | Group Description | Used-In | Group Number | Page No

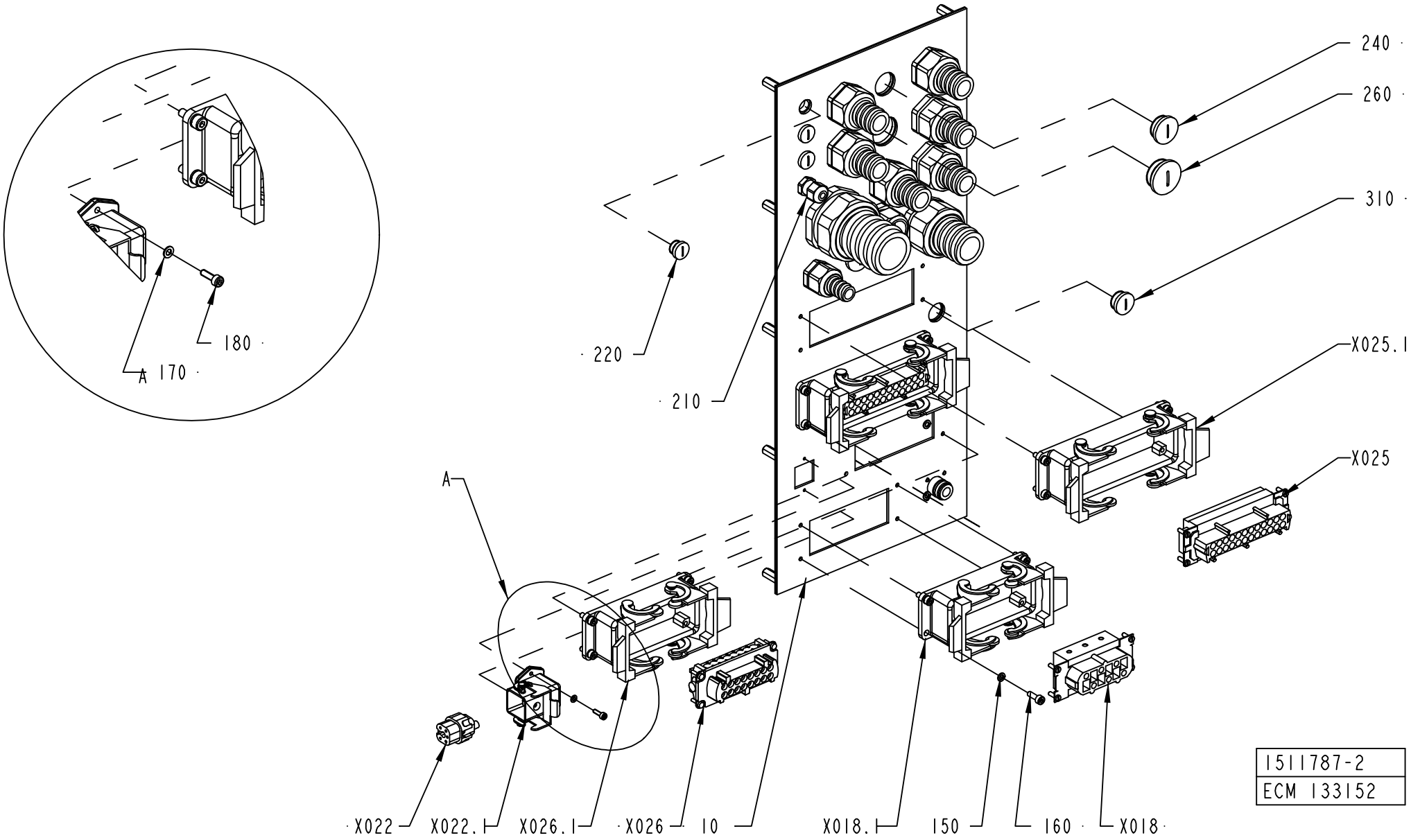
240
260
310
X025.1
X025
220
210
A
180
A 170
X022
X022.1
X026.1
X026
10
X018.1
150
160
X018
1511787-2
ECM 133152

ECM: 118390 - 50001231
Group number: 1511787-0100
Assembly Drawing: 1511787-2_1_AA

This list covers pages from 786 to 803

Pos	Part No	SP	UN	Qty	Description	Page No
TBA NOPT (See drawing on pages: 786, 788, 790, 792)						
090	1037574-0000	-		1	COVER PLATE	
100	1487430-0000	-		1	COVER	
110	1129481-0000	-		1	COVERING PLATE	
120	1037575-0000	-		1	GASKET	
130	1487431-0000	-		1	GASKET	
135	1129478-0000	-		1	GASKET	
210	90458-0305	-		2	CABLE GLAND, M12X1,5, NO.5311 1000	
220	90458-1306	-		2	BLIND PLUG CIRCULAR, M12X1,5 514GFK/212	
240	90458-1308	-		8	BLIND PLUG CIRCULAR, M20X1,5 514GFK/220	
260	90458-1309	-		4	BLIND PLUG CIRCULAR, M25X1,5 514GFK/225	
280	90458-1312	-		1	BLIND PLUG CIRCULAR, M50X1,5 514GFK/250	
TBA PT19 (See drawing on pages: 794, 796, 798, 800, 802)						
210	90458-0305	-		1	CABLE GLAND, M12X1,5, NO.5311 1000	
220	90458-1306	-		3	BLIND PLUG CIRCULAR, M12X1,5 514GFK/212	
240	90458-1308	-		2	BLIND PLUG CIRCULAR, M20X1,5 514GFK/220	
260	90458-1309	-		1	BLIND PLUG CIRCULAR, M25X1,5 514GFK/225	
320	90458-0422	-		1	EXTENDED WITHOUT INSERT, M20X1,5	
330	90458-0428	-		1	EXTENDED WITHOUT INSERT, M20X1,5	
340	90458-0430	-		4	EXTENDED WITHOUT INSERT, M20X1,5	
350	90458-0188	-		3	GLAND, INSERT, MULTI HOLE, 1X7/1X10,5	
360	90457-0147	-		1	GLAND, INSERT, MULTI HOLE, 2X7	
370	90458-0416	-		1	NORMAL WITHOUT INSERT, M50X1,5	
380	2618387-0000	-		1	INSERT	
390	90458-0432	-		1	EXTENDED WITHOUT INSERT, M25X1,5	
400	353249-0016	-		1	INSERT, SINGEL HOLE, EK 155/18	
410	353249-0075	-		1	INSERT, SINGEL HOLE, EK 153/13	
420	90458-0431	-		2	EXTENDED WITHOUT INSERT, M25X1,5	
430	353249-0013	-		2	INSERT, SINGEL HOLE, EK 154/13	
X022	90110-0296	-		1	CONTACT SCREW	
X022.1	90458-1181	-		1	BULKHEAD HOUSING HDC-HA-3-AWVL1/11	
X025	90110-0151	A		1	FEMALE INSERT 24-POL 121130 0000	
X025.1	90110-0153	-		1	CHASSIS HOUSING 24-P CHI 24, 121240 0000	
X026	90458-1406	A		1	FEMALE INSERT 120770	
X026.1	90110-0243	-		1	CONTACT HOUSING 16-POL 70.320.1628.0	
Common Parts						
010	1511832-0000	-		1	PLATE	
020	1511833-0000	-		1	GASKET	
030	1517676-0000	-		10	SPACER	
140	315105-0146	-		10	WASHER BRB5,3X10RFR	
150	315402-0136	-		16	LOCK WASHER FBB 4,1	
160	312115-0291	-		16	SCREW ISO4762 M4X12 A4	
170	315105-0124	-		2	WASHER BRB3,2X6RFR	
180	312115-0224	-		2	SCREW ISO4762 M3X10 A4	
190	90110-0127	-		1	COAXIAL CONNECTOR, GE 15057C10HBN	
200	312115-0220	-		4	SCREW ISO4762 M3X6 A4 80	
230	90458-0321	-		4	NUT, M12X1,5	
250	90458-0461	-		8	GLAND, LOCKNUT, M20X1,5	
270	90458-0462	-		4	GLAND, LOCKNUT, M25X1,5	
290	90458-0465	-		1	GLAND, LOCKNUT, M50X1,5	
300	90458-0460	-		1	GLAND, LOCKNUT, M16X1,5	
310	90458-1307	-		1	BLIND PLUG CIRCULAR, M16X1,5 514GFK/216	
440	353249-0036	-		1	INSERT, MULTI HOLE, EK152 M 2X4	
X018	90110-0247	A		1	FEMALE INSERT 70.200.0653.0	
X018.1	90110-0243	-		1	CONTACT HOUSING 16-POL 70.320.1628.0	
X019	90110-0151	A		1	FEMALE INSERT 24-POL 121130 0000	
X019.1	90110-0153	-		1	CHASSIS HOUSING 24-P CHI 24, 121240 0000	

Machine Type | Group Description | Used-In | Group Number | Page No

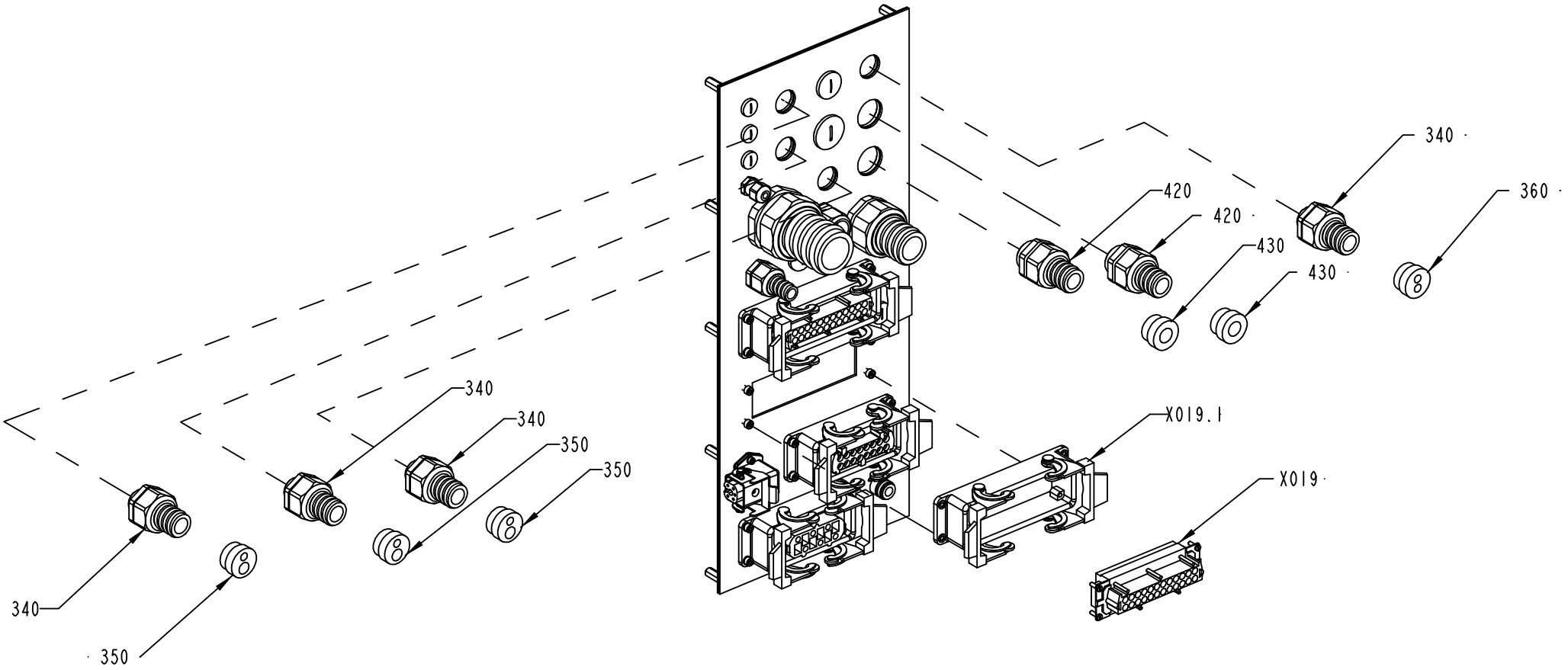

1511787-2
ECM 133152

ECM: 118390 - 50001231
Group number: 1511787-0100
Assembly Drawing: 1511787-2_2_AA

This list covers pages from 786 to 803

Pos	Part No	SP	UN	Qty	Description	Page No
TBA NOPT (See drawing on pages: 786, 788, 790, 792)						
090	1037574-0000	-		1	COVER PLATE	
100	1487430-0000	-		1	COVER	
110	1129481-0000	-		1	COVERING PLATE	
120	1037575-0000	-		1	GASKET	
130	1487431-0000	-		1	GASKET	
135	1129478-0000	-		1	GASKET	
210	90458-0305	-		2	CABLE GLAND, M12X1,5, NO.5311 1000	
220	90458-1306	-		2	BLIND PLUG CIRCULAR, M12X1,5 514GFK/212	
240	90458-1308	-		8	BLIND PLUG CIRCULAR, M20X1,5 514GFK/220	
260	90458-1309	-		4	BLIND PLUG CIRCULAR, M25X1,5 514GFK/225	
280	90458-1312	-		1	BLIND PLUG CIRCULAR, M50X1,5 514GFK/250	
TBA PT19 (See drawing on pages: 794, 796, 798, 800, 802)						
210	90458-0305	-		1	CABLE GLAND, M12X1,5, NO.5311 1000	
220	90458-1306	-		3	BLIND PLUG CIRCULAR, M12X1,5 514GFK/212	
240	90458-1308	-		2	BLIND PLUG CIRCULAR, M20X1,5 514GFK/220	
260	90458-1309	-		1	BLIND PLUG CIRCULAR, M25X1,5 514GFK/225	
320	90458-0422	-		1	EXTENDED WITHOUT INSERT, M20X1,5	
330	90458-0428	-		1	EXTENDED WITHOUT INSERT, M20X1,5	
340	90458-0430	-		4	EXTENDED WITHOUT INSERT, M20X1,5	
350	90458-0188	-		3	GLAND, INSERT, MULTI HOLE, 1X7/1X10,5	
360	90457-0147	-		1	GLAND, INSERT, MULTI HOLE, 2X7	
370	90458-0416	-		1	NORMAL WITHOUT INSERT, M50X1,5	
380	2618387-0000	-		1	INSERT	
390	90458-0432	-		1	EXTENDED WITHOUT INSERT, M25X1,5	
400	353249-0016	-		1	INSERT, SINGEL HOLE, EK 155/18	
410	353249-0075	-		1	INSERT, SINGEL HOLE, EK 153/13	
420	90458-0431	-		2	EXTENDED WITHOUT INSERT, M25X1,5	
430	353249-0013	-		2	INSERT, SINGEL HOLE, EK 154/13	
X022	90110-0296	-		1	CONTACT SCREW	
X022.1	90458-1181	-		1	BULKHEAD HOUSING HDC-HA-3-AWVL1/11	
X025	90110-0151	A		1	FEMALE INSERT 24-POL 121130 0000	
X025.1	90110-0153	-		1	CHASSIS HOUSING 24-P CHI 24, 121240 0000	
X026	90458-1406	A		1	FEMALE INSERT 120770	
X026.1	90110-0243	-		1	CONTACT HOUSING 16-POL 70.320.1628.0	
Common Parts						
010	1511832-0000	-		1	PLATE	
020	1511833-0000	-		1	GASKET	
030	1517676-0000	-		10	SPACER	
140	315105-0146	-		10	WASHER BRB5,3X10RFR	
150	315402-0136	-		16	LOCK WASHER FBB 4,1	
160	312115-0291	-		16	SCREW ISO4762 M4X12 A4	
170	315105-0124	-		2	WASHER BRB3,2X6RFR	
180	312115-0224	-		2	SCREW ISO4762 M3X10 A4	
190	90110-0127	-		1	COAXIAL CONNECTOR, GE 15057C10HBN	
200	312115-0220	-		4	SCREW ISO4762 M3X6 A4 80	
230	90458-0321	-		4	NUT, M12X1,5	
250	90458-0461	-		8	GLAND, LOCKNUT, M20X1,5	
270	90458-0462	-		4	GLAND, LOCKNUT, M25X1,5	
290	90458-0465	-		1	GLAND, LOCKNUT, M50X1,5	
300	90458-0460	-		1	GLAND, LOCKNUT, M16X1,5	
310	90458-1307	-		1	BLIND PLUG CIRCULAR, M16X1,5 514GFK/216	
440	353249-0036	-		1	INSERT, MULTI HOLE, EK152 M 2X4	
X018	90110-0247	A		1	FEMALE INSERT 70.200.0653.0	
X018.1	90110-0243	-		1	CONTACT HOUSING 16-POL 70.320.1628.0	
X019	90110-0151	A		1	FEMALE INSERT 24-POL 121130 0000	
X019.1	90110-0153	-		1	CHASSIS HOUSING 24-P CHI 24, 121240 0000	

Machine Type | Group Description | Used-In | Group Number | Page No

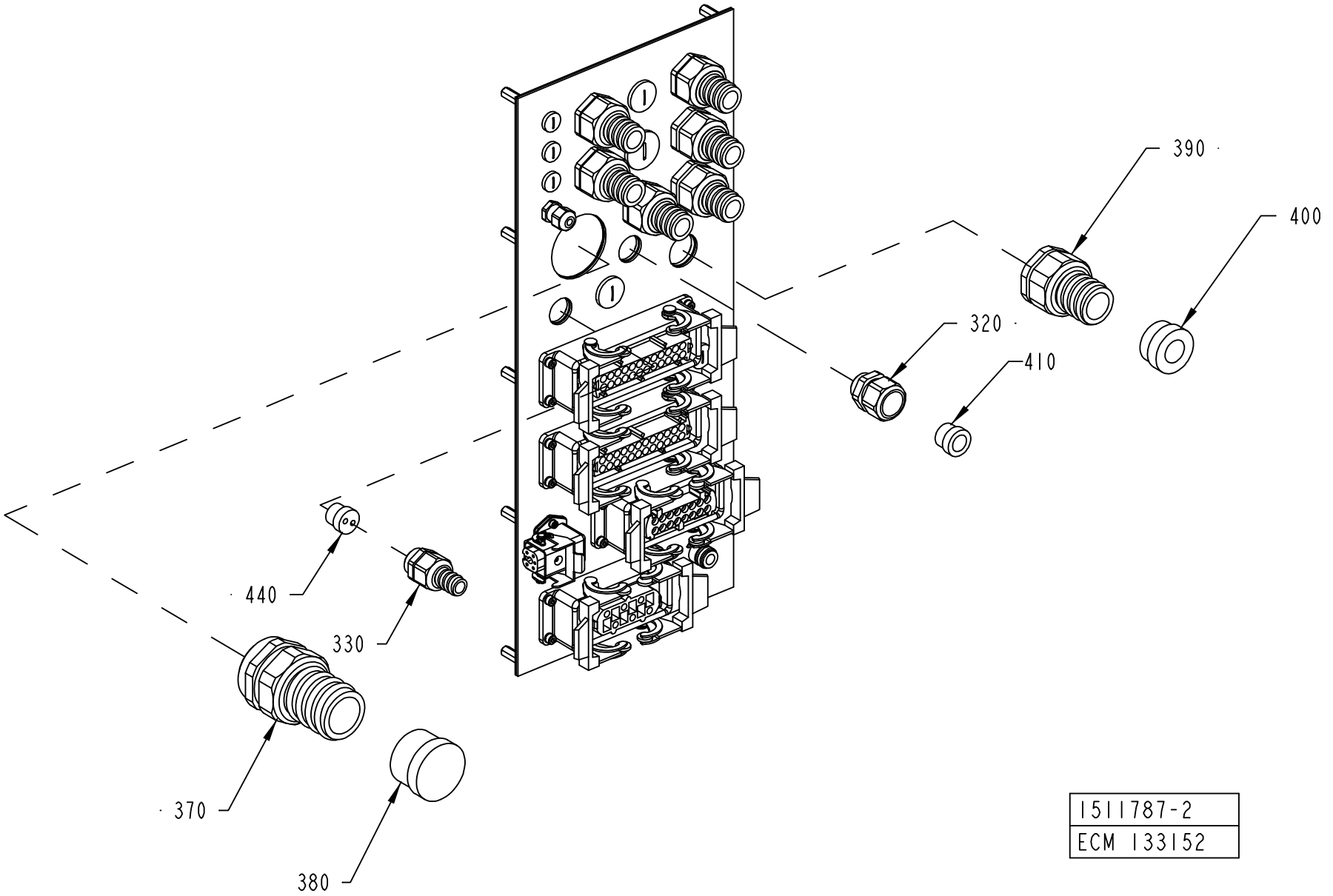

1511787-2
ECM 133152

ECM: 118390 - 50001231
Group number: 1511787-0100
Assembly Drawing: 1511787-2_3_AA

This list covers pages from 786 to 803

Pos	Part No	SP	UN	Qty	Description	Page No
TBA NOPT (See drawing on pages: 786, 788, 790, 792)						
090	1037574-0000	-		1	COVER PLATE	
100	1487430-0000	-		1	COVER	
110	1129481-0000	-		1	COVERING PLATE	
120	1037575-0000	-		1	GASKET	
130	1487431-0000	-		1	GASKET	
135	1129478-0000	-		1	GASKET	
210	90458-0305	-		2	CABLE GLAND, M12X1,5, NO.5311 1000	
220	90458-1306	-		2	BLIND PLUG CIRCULAR, M12X1,5 514GFK/212	
240	90458-1308	-		8	BLIND PLUG CIRCULAR, M20X1,5 514GFK/220	
260	90458-1309	-		4	BLIND PLUG CIRCULAR, M25X1,5 514GFK/225	
280	90458-1312	-		1	BLIND PLUG CIRCULAR, M50X1,5 514GFK/250	
TBA PT19 (See drawing on pages: 794, 796, 798, 800, 802)						
210	90458-0305	-		1	CABLE GLAND, M12X1,5, NO.5311 1000	
220	90458-1306	-		3	BLIND PLUG CIRCULAR, M12X1,5 514GFK/212	
240	90458-1308	-		2	BLIND PLUG CIRCULAR, M20X1,5 514GFK/220	
260	90458-1309	-		1	BLIND PLUG CIRCULAR, M25X1,5 514GFK/225	
320	90458-0422	-		1	EXTENDED WITHOUT INSERT, M20X1,5	
330	90458-0428	-		1	EXTENDED WITHOUT INSERT, M20X1,5	
340	90458-0430	-		4	EXTENDED WITHOUT INSERT, M20X1,5	
350	90458-0188	-		3	GLAND, INSERT, MULTI HOLE, 1X7/1X10,5	
360	90457-0147	-		1	GLAND, INSERT, MULTI HOLE, 2X7	
370	90458-0416	-		1	NORMAL WITHOUT INSERT, M50X1,5	
380	2618387-0000	-		1	INSERT	
390	90458-0432	-		1	EXTENDED WITHOUT INSERT, M25X1,5	
400	353249-0016	-		1	INSERT, SINGEL HOLE, EK 155/18	
410	353249-0075	-		1	INSERT, SINGEL HOLE, EK 153/13	
420	90458-0431	-		2	EXTENDED WITHOUT INSERT, M25X1,5	
430	353249-0013	-		2	INSERT, SINGEL HOLE, EK 154/13	
X022	90110-0296	-		1	CONTACT SCREW	
X022.1	90458-1181	-		1	BULKHEAD HOUSING HDC-HA-3-AWVL1/11	
X025	90110-0151	A		1	FEMALE INSERT 24-POL 121130 0000	
X025.1	90110-0153	-		1	CHASSIS HOUSING 24-P CHI 24, 121240 0000	
X026	90458-1406	A		1	FEMALE INSERT 120770	
X026.1	90110-0243	-		1	CONTACT HOUSING 16-POL 70.320.1628.0	
Common Parts						
010	1511832-0000	-		1	PLATE	
020	1511833-0000	-		1	GASKET	
030	1517676-0000	-		10	SPACER	
140	315105-0146	-		10	WASHER BRB5,3X10RFR	
150	315402-0136	-		16	LOCK WASHER FBB 4,1	
160	312115-0291	-		16	SCREW ISO4762 M4X12 A4	
170	315105-0124	-		2	WASHER BRB3,2X6RFR	
180	312115-0224	-		2	SCREW ISO4762 M3X10 A4	
190	90110-0127	-		1	COAXIAL CONNECTOR, GE 15057C10HBN	
200	312115-0220	-		4	SCREW ISO4762 M3X6 A4 80	
230	90458-0321	-		4	NUT, M12X1,5	
250	90458-0461	-		8	GLAND, LOCKNUT, M20X1,5	
270	90458-0462	-		4	GLAND, LOCKNUT, M25X1,5	
290	90458-0465	-		1	GLAND, LOCKNUT, M50X1,5	
300	90458-0460	-		1	GLAND, LOCKNUT, M16X1,5	
310	90458-1307	-		1	BLIND PLUG CIRCULAR, M16X1,5 514GFK/216	
440	353249-0036	-		1	INSERT, MULTI HOLE, EK152 M 2X4	
X018	90110-0247	A		1	FEMALE INSERT 70.200.0653.0	
X018.1	90110-0243	-		1	CONTACT HOUSING 16-POL 70.320.1628.0	
X019	90110-0151	A		1	FEMALE INSERT 24-POL 121130 0000	
X019.1	90110-0153	-		1	CHASSIS HOUSING 24-P CHI 24, 121240 0000	

Machine Type | Group Description | Used-In | Group Number | Page No

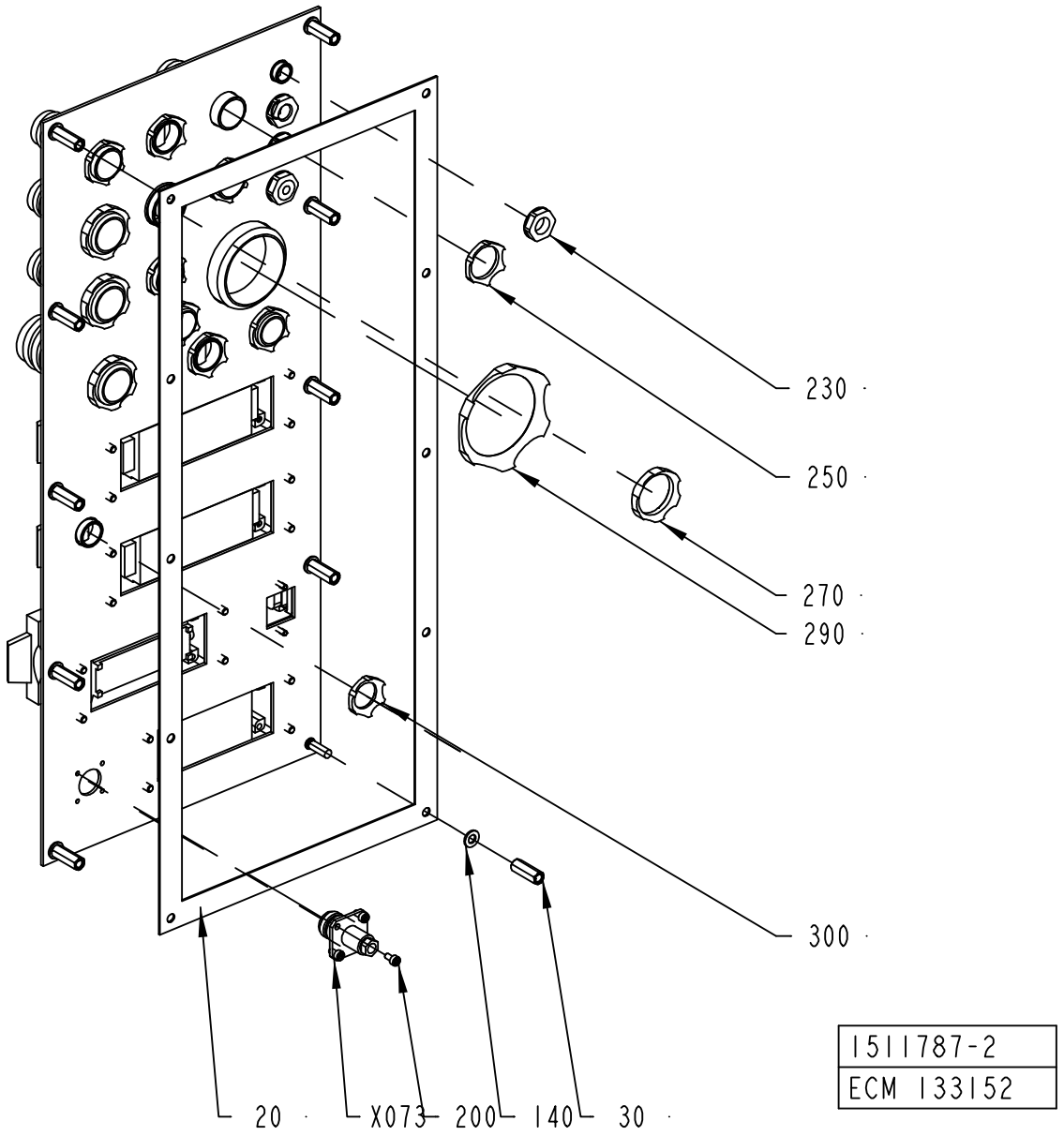
230
250
270
290
300
20
X073
200
140
30
1511787-2
ECM 133152

ECM: 118390 - 50001231
Group number: 1511787-0100
Assembly Drawing: 1511787-2_4_AA

This list covers pages from 786 to 803

Pos	Part No	SP	UN	Qty	Description	Page No
TBA NOPT (See drawing on pages: 786, 788, 790, 792)						
090	1037574-0000	-		1	COVER PLATE	
100	1487430-0000	-		1	COVER	
110	1129481-0000	-		1	COVERING PLATE	
120	1037575-0000	-		1	GASKET	
130	1487431-0000	-		1	GASKET	
135	1129478-0000	-		1	GASKET	
210	90458-0305	-		2	CABLE GLAND, M12X1,5, NO.5311 1000	
220	90458-1306	-		2	BLIND PLUG CIRCULAR, M12X1,5 514GFK/212	
240	90458-1308	-		8	BLIND PLUG CIRCULAR, M20X1,5 514GFK/220	
260	90458-1309	-		4	BLIND PLUG CIRCULAR, M25X1,5 514GFK/225	
280	90458-1312	-		1	BLIND PLUG CIRCULAR, M50X1,5 514GFK/250	
TBA PT19 (See drawing on pages: 794, 796, 798, 800, 802)						
210	90458-0305	-		1	CABLE GLAND, M12X1,5, NO.5311 1000	
220	90458-1306	-		3	BLIND PLUG CIRCULAR, M12X1,5 514GFK/212	
240	90458-1308	-		2	BLIND PLUG CIRCULAR, M20X1,5 514GFK/220	
260	90458-1309	-		1	BLIND PLUG CIRCULAR, M25X1,5 514GFK/225	
320	90458-0422	-		1	EXTENDED WITHOUT INSERT, M20X1,5	
330	90458-0428	-		1	EXTENDED WITHOUT INSERT, M20X1,5	
340	90458-0430	-		4	EXTENDED WITHOUT INSERT, M20X1,5	
350	90458-0188	-		3	GLAND, INSERT, MULTI HOLE, 1X7/1X10,5	
360	90457-0147	-		1	GLAND, INSERT, MULTI HOLE, 2X7	
370	90458-0416	-		1	NORMAL WITHOUT INSERT, M50X1,5	
380	2618387-0000	-		1	INSERT	
390	90458-0432	-		1	EXTENDED WITHOUT INSERT, M25X1,5	
400	353249-0016	-		1	INSERT, SINGEL HOLE, EK 155/18	
410	353249-0075	-		1	INSERT, SINGEL HOLE, EK 153/13	
420	90458-0431	-		2	EXTENDED WITHOUT INSERT, M25X1,5	
430	353249-0013	-		2	INSERT, SINGEL HOLE, EK 154/13	
X022	90110-0296	-		1	CONTACT SCREW	
X022.1	90458-1181	-		1	BULKHEAD HOUSING HDC-HA-3-AWVL1/11	
X025	90110-0151	A		1	FEMALE INSERT 24-POL 121130 0000	
X025.1	90110-0153	-		1	CHASSIS HOUSING 24-P CHI 24, 121240 0000	
X026	90458-1406	A		1	FEMALE INSERT 120770	
X026.1	90110-0243	-		1	CONTACT HOUSING 16-POL 70.320.1628.0	
Common Parts						
010	1511832-0000	-		1	PLATE	
020	1511833-0000	-		1	GASKET	
030	1517676-0000	-		10	SPACER	
140	315105-0146	-		10	WASHER BRB5,3X10RFR	
150	315402-0136	-		16	LOCK WASHER FBB 4,1	
160	312115-0291	-		16	SCREW ISO4762 M4X12 A4	
170	315105-0124	-		2	WASHER BRB3,2X6RFR	
180	312115-0224	-		2	SCREW ISO4762 M3X10 A4	
190	90110-0127	-		1	COAXIAL CONNECTOR, GE 15057C10HBN	
200	312115-0220	-		4	SCREW ISO4762 M3X6 A4 80	
230	90458-0321	-		4	NUT, M12X1,5	
250	90458-0461	-		8	GLAND, LOCKNUT, M20X1,5	
270	90458-0462	-		4	GLAND, LOCKNUT, M25X1,5	
290	90458-0465	-		1	GLAND, LOCKNUT, M50X1,5	
300	90458-0460	-		1	GLAND, LOCKNUT, M16X1,5	
310	90458-1307	-		1	BLIND PLUG CIRCULAR, M16X1,5 514GFK/216	
440	353249-0036	-		1	INSERT, MULTI HOLE, EK152 M 2X4	
X018	90110-0247	A		1	FEMALE INSERT 70.200.0653.0	
X018.1	90110-0243	-		1	CONTACT HOUSING 16-POL 70.320.1628.0	
X019	90110-0151	A		1	FEMALE INSERT 24-POL 121130 0000	
X019.1	90110-0153	-		1	CHASSIS HOUSING 24-P CHI 24, 121240 0000	

Machine Type | Group Description | Used-In | Group Number | Page No

STRIP APPLICATOR CABLE INLETS

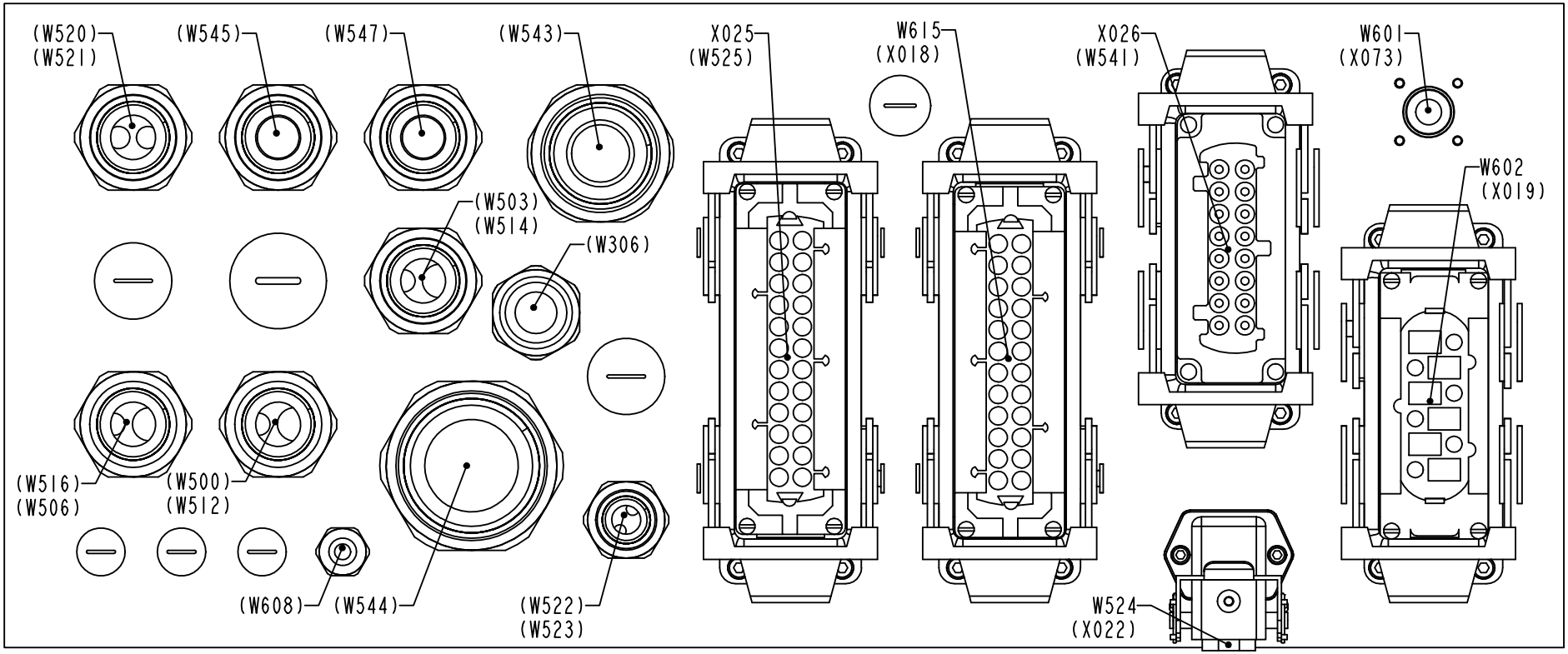

1511787-2
ECM 133152

ECM: 118390 - 50001231
Group number: 1511787-0100
Assembly Drawing: 1511787-2_5_AA

This list covers pages from 786 to 803

Pos	Part No	SP	UN	Qty	Description	Page No
TBA NOPT (See drawing on pages: 786, 788, 790, 792)						
090	1037574-0000	-		1	COVER PLATE	
100	1487430-0000	-		1	COVER	
110	1129481-0000	-		1	COVERING PLATE	
120	1037575-0000	-		1	GASKET	
130	1487431-0000	-		1	GASKET	
135	1129478-0000	-		1	GASKET	
210	90458-0305	-		2	CABLE GLAND, M12X1,5, NO.5311 1000	
220	90458-1306	-		2	BLIND PLUG CIRCULAR, M12X1,5 514GFK/212	
240	90458-1308	-		8	BLIND PLUG CIRCULAR, M20X1,5 514GFK/220	
260	90458-1309	-		4	BLIND PLUG CIRCULAR, M25X1,5 514GFK/225	
280	90458-1312	-		1	BLIND PLUG CIRCULAR, M50X1,5 514GFK/250	
TBA PT19 (See drawing on pages: 794, 796, 798, 800, 802)						
210	90458-0305	-		1	CABLE GLAND, M12X1,5, NO.5311 1000	
220	90458-1306	-		3	BLIND PLUG CIRCULAR, M12X1,5 514GFK/212	
240	90458-1308	-		2	BLIND PLUG CIRCULAR, M20X1,5 514GFK/220	
260	90458-1309	-		1	BLIND PLUG CIRCULAR, M25X1,5 514GFK/225	
320	90458-0422	-		1	EXTENDED WITHOUT INSERT, M20X1,5	
330	90458-0428	-		1	EXTENDED WITHOUT INSERT, M20X1,5	
340	90458-0430	-		4	EXTENDED WITHOUT INSERT, M20X1,5	
350	90458-0188	-		3	GLAND, INSERT, MULTI HOLE, 1X7/1X10,5	
360	90457-0147	-		1	GLAND, INSERT, MULTI HOLE, 2X7	
370	90458-0416	-		1	NORMAL WITHOUT INSERT, M50X1,5	
380	2618387-0000	-		1	INSERT	
390	90458-0432	-		1	EXTENDED WITHOUT INSERT, M25X1,5	
400	353249-0016	-		1	INSERT, SINGEL HOLE, EK 155/18	
410	353249-0075	-		1	INSERT, SINGEL HOLE, EK 153/13	
420	90458-0431	-		2	EXTENDED WITHOUT INSERT, M25X1,5	
430	353249-0013	-		2	INSERT, SINGEL HOLE, EK 154/13	
X022	90110-0296	-		1	CONTACT SCREW	
X022.1	90458-1181	-		1	BULKHEAD HOUSING HDC-HA-3-AWVL1/11	
X025	90110-0151	A		1	FEMALE INSERT 24-POL 121130 0000	
X025.1	90110-0153	-		1	CHASSIS HOUSING 24-P CHI 24, 121240 0000	
X026	90458-1406	A		1	FEMALE INSERT 120770	
X026.1	90110-0243	-		1	CONTACT HOUSING 16-POL 70.320.1628.0	
Common Parts						
010	1511832-0000	-		1	PLATE	
020	1511833-0000	-		1	GASKET	
030	1517676-0000	-		10	SPACER	
140	315105-0146	-		10	WASHER BRB5,3X10RFR	
150	315402-0136	-		16	LOCK WASHER FBB 4,1	
160	312115-0291	-		16	SCREW ISO4762 M4X12 A4	
170	315105-0124	-		2	WASHER BRB3,2X6RFR	
180	312115-0224	-		2	SCREW ISO4762 M3X10 A4	
190	90110-0127	-		1	COAXIAL CONNECTOR, GE 15057C10HBN	
200	312115-0220	-		4	SCREW ISO4762 M3X6 A4 80	
230	90458-0321	-		4	NUT, M12X1,5	
250	90458-0461	-		8	GLAND, LOCKNUT, M20X1,5	
270	90458-0462	-		4	GLAND, LOCKNUT, M25X1,5	
290	90458-0465	-		1	GLAND, LOCKNUT, M50X1,5	
300	90458-0460	-		1	GLAND, LOCKNUT, M16X1,5	
310	90458-1307	-		1	BLIND PLUG CIRCULAR, M16X1,5 514GFK/216	
440	353249-0036	-		1	INSERT, MULTI HOLE, EK152 M 2X4	
X018	90110-0247	A		1	FEMALE INSERT 70.200.0653.0	
X018.1	90110-0243	-		1	CONTACT HOUSING 16-POL 70.320.1628.0	
X019	90110-0151	A		1	FEMALE INSERT 24-POL 121130 0000	
X019.1	90110-0153	-		1	CHASSIS HOUSING 24-P CHI 24, 121240 0000	

Machine Type | Group Description | Used-In | Group Number | Page No

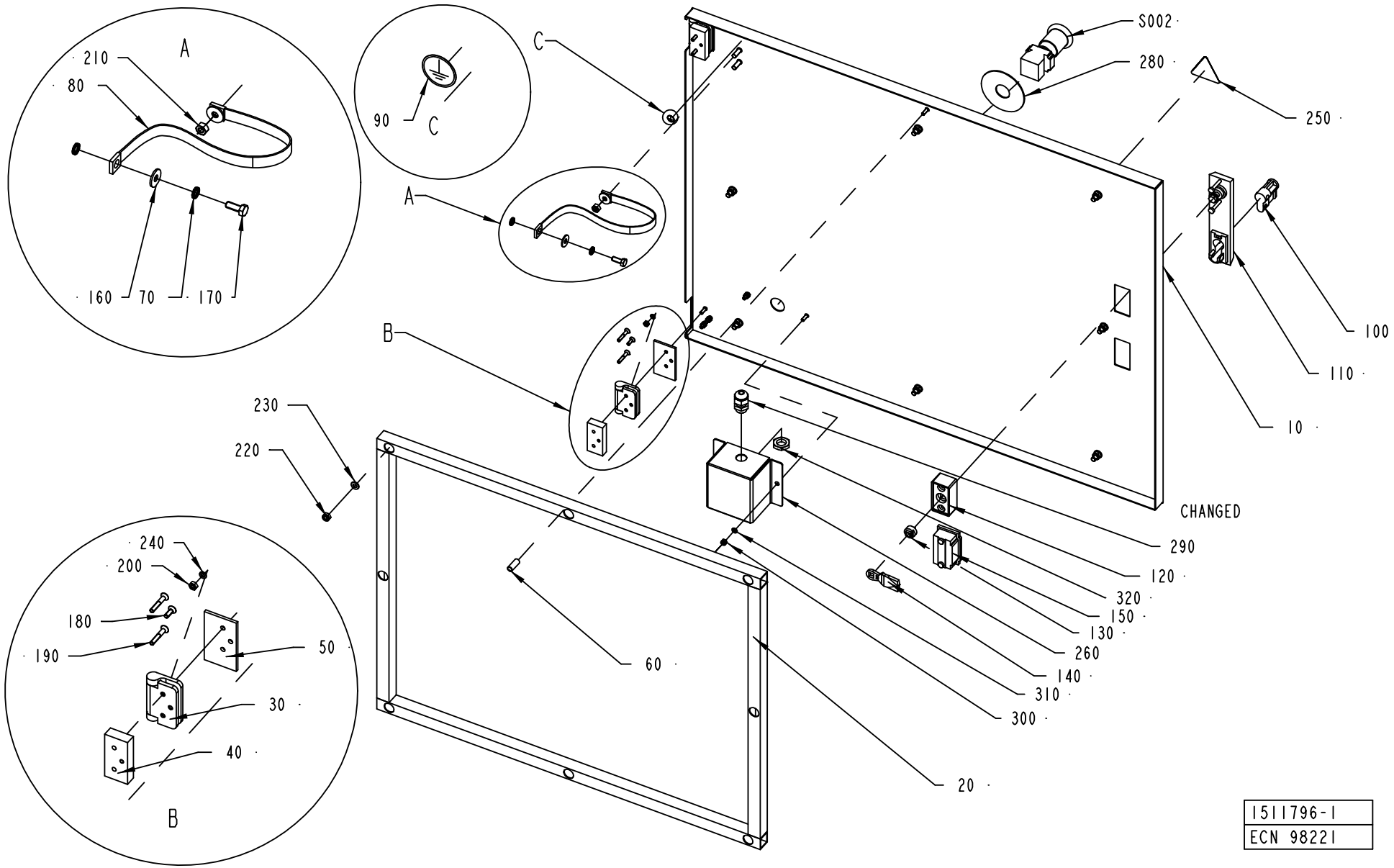

1511796-1
ECN 98221

ECM: 115708 - 20020930
Group number: 1511796-0100
Assembly Drawing: 1511796-1_1_AB

Pos	Part No	SP	UN	Qty	Description	Page No
-						
010	1523969-0000	-		1	DOOR	
020	1517664-0000	-		1	FRAME	
030	1523438-0000	B		2	HINGE	
040	1523441-0000	-		2	SPACER SHEET	
050	1523442-0000	-		2	SPACER SHEET	
060	1523957-0000	-		2	SPACER	
070	90062-0015	-		4	LOCK WASHER SERRAT.EXT.GEAR,6,4/11 H=0,7	
080	90135-0044	A		1	EARTH WIRE, L=320 MM 16 MM2	
090	90194-0163	-		1	SIGN, EARTH WITHIN CIRCLE	
100	90237-0128	-		1	LOCK CYLINDER, 1109-U3	
110	90237-0150	-		1	TURNING HANDLE, NO. 1125-U190-0A	
120	90237-0154	-		1	LOCK HOUSING, 1121-U60-0C	
130	90237-0155	-		1	LOCK ADAPTER, 1121-U40	
140	90237-0156	-		1	LOCK BOLT, 1000-16	
150	90237-0176	-		1	TURNING HANDLE	
160	90457-0192	-		2	WASHER PLAIN ROUND, 6,5/18, H=1,5	
170	312105-0368	-		1	SCREW M6S M6X16 A280	
180	312155-0291	-		2	SCREW EN 10642 MF6S M4X12 A480	
190	312155-0297	-		4	SCREW EN 10642 MF6S M4X25 A480	
200	312605-0312	-		6	HEXAGON NUT, M6M M4 A280	
210	312605-0316	-		1	HEXAGON NUT, M6M M6 A280	
220	312812-0316	-		8	HEXAGON NUT, NY-LOCK M6 A480	
230	315105-0153	-		8	WASHER BRB6,4X12RFR	
240	315402-0136	-		6	LOCK WASHER FBB 4,1	
250	359705-0015	A		1	WARNING SIGN ISO, RISK OF ELECTRIC SHOCK	
260	1523971-0000	-		1	CONNECTION BOX	
280	486826-0000	-		1	SIGN	
290	352103-0101	-		1	CABLE GLAND, ST 9, PR15,2/PG9	
300	312812-0312	-		2	HEXAGON NUT, NY-LOCK M4 A480	
310	315105-0136	-		2	WASHER BRB4,3XRFR	
320	90099-0104	-		1	NUT, PR 15,2 (PG9)	
S002	90064-0124	A		1	SWITCH, EM. STOP, ZB2-BS844+ZB2-BZ1045	

Pos	Part No	SP	UN	Qty	Description	Page No

EXTERNAL DOOR SPARE FUSES

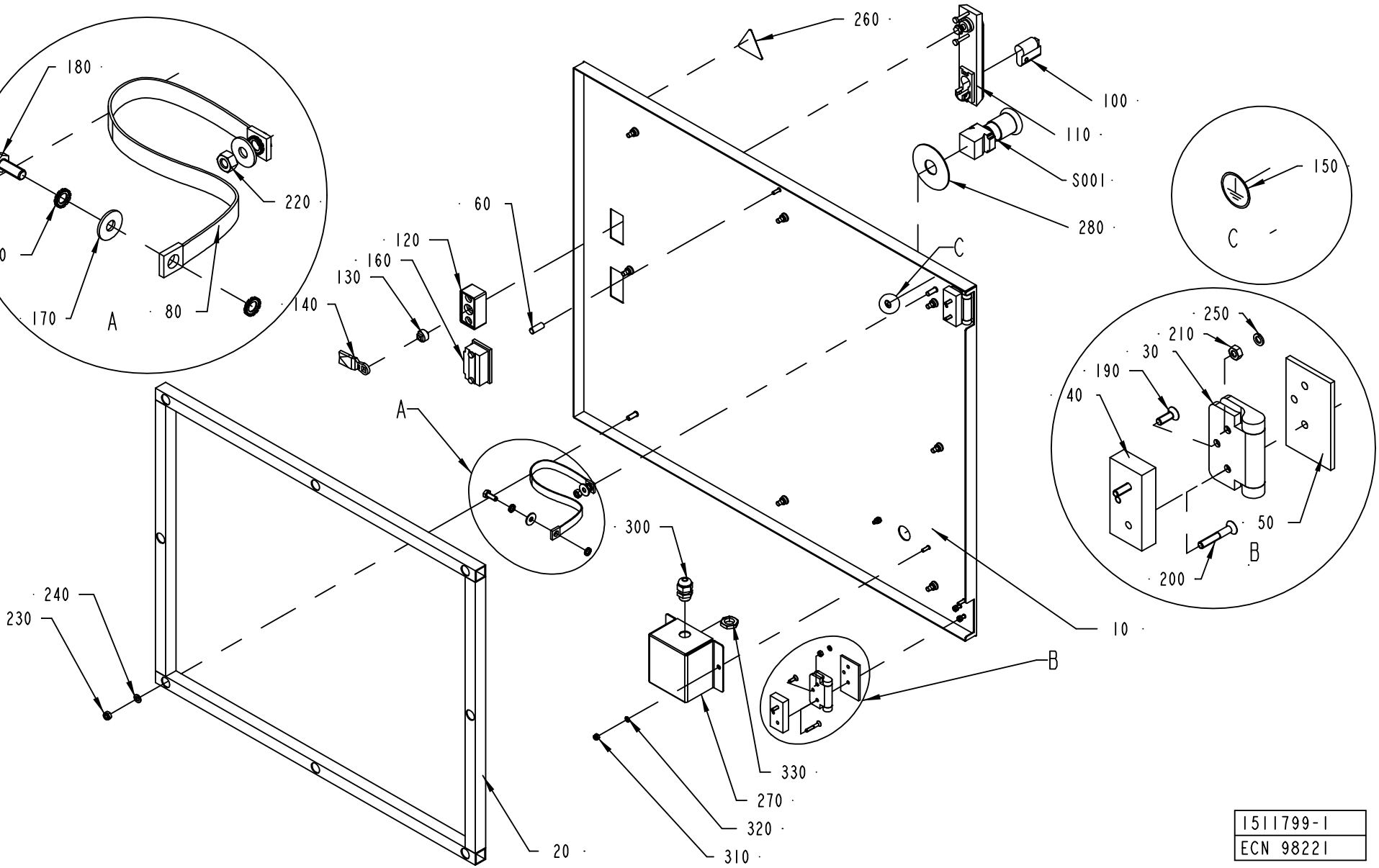

1511799-1
ECN 98221

ECM: 115709 - 20020930
Group number: 1511799-0100
Assembly Drawing: 1511799-1_1_AB

Pos	Part No	SP	UN	Qty	Description	Page No
-						
020	1517664-0000	-		1	FRAME	
030	1523438-0000	B		2	HINGE	
040	1523441-0000	-		2	SPACER SHEET	
050	1523442-0000	-		2	SPACER SHEET	
060	1523957-0000	-		1	SPACER	
070	90062-0015	-		4	LOCK WASHER SERRAT.EXT.GEAR,6,4/11 H=0,7	
080	90135-0044	A		1	EARTH WIRE, L=320 MM 16 MM2	
090	1517667-0000	-		1	DOOR	
100	90237-0129	-		1	LOCK CYLINDER, 1109-U6-N	
110	90237-0150	-		1	TURNING HANDLE, NO. 1125-U190-0A	
120	90237-0154	-		1	LOCK HOUSING, 1121-U60-0C	
130	90237-0155	-		1	LOCK ADAPTER, 1121-U40	
140	90237-0156	-		1	LOCK BOLT, 1000-16	
150	90194-0163	-		1	SIGN, EARTH WITHIN CIRCLE	
160	90237-0176	-		1	TURNING HANDLE	
170	90457-0192	-		2	WASHER PLAIN ROUND, 6,5/18, H=1,5	
180	312105-0368	-		1	SCREW M6S M6X16 A280	
190	312155-0291	-		2	SCREW EN 10642 MF6S M4X12 A480	
200	312155-0297	-		4	SCREW EN 10642 MF6S M4X25 A480	
210	312605-0312	-		6	HEXAGON NUT, M6M M4 A280	
220	312605-0316	-		1	HEXAGON NUT, M6M M6 A280	
230	312812-0316	-		8	HEXAGON NUT, NY-LOCK M6 A480	
240	315105-0153	-		8	WASHER BRB6,4X12RFR	
250	315402-0136	-		6	LOCK WASHER FBB 4,1	
260	359705-0015	A		1	WARNING SIGN ISO, RISK OF ELECTRIC SHOCK	
270	1523971-0000	-		1	CONNECTION BOX	
290	486826-0000	-		1	SIGN	
300	352103-0101	-		1	CABLE GLAND, ST 9, PR15,2/PG9	
310	312812-0312	-		2	HEXAGON NUT, NY-LOCK M4 A480	
320	315105-0136	-		2	WASHER BRB4,3XRFR	
330	90099-0104	-		1	NUT, PR 15,2 (PG9)	
S001	90064-0124	A		1	SWITCH, EM. STOP, ZB2-BS844+ZB2-BZ1045	

Pos	Part No	SP	UN	Qty	Description	Page No

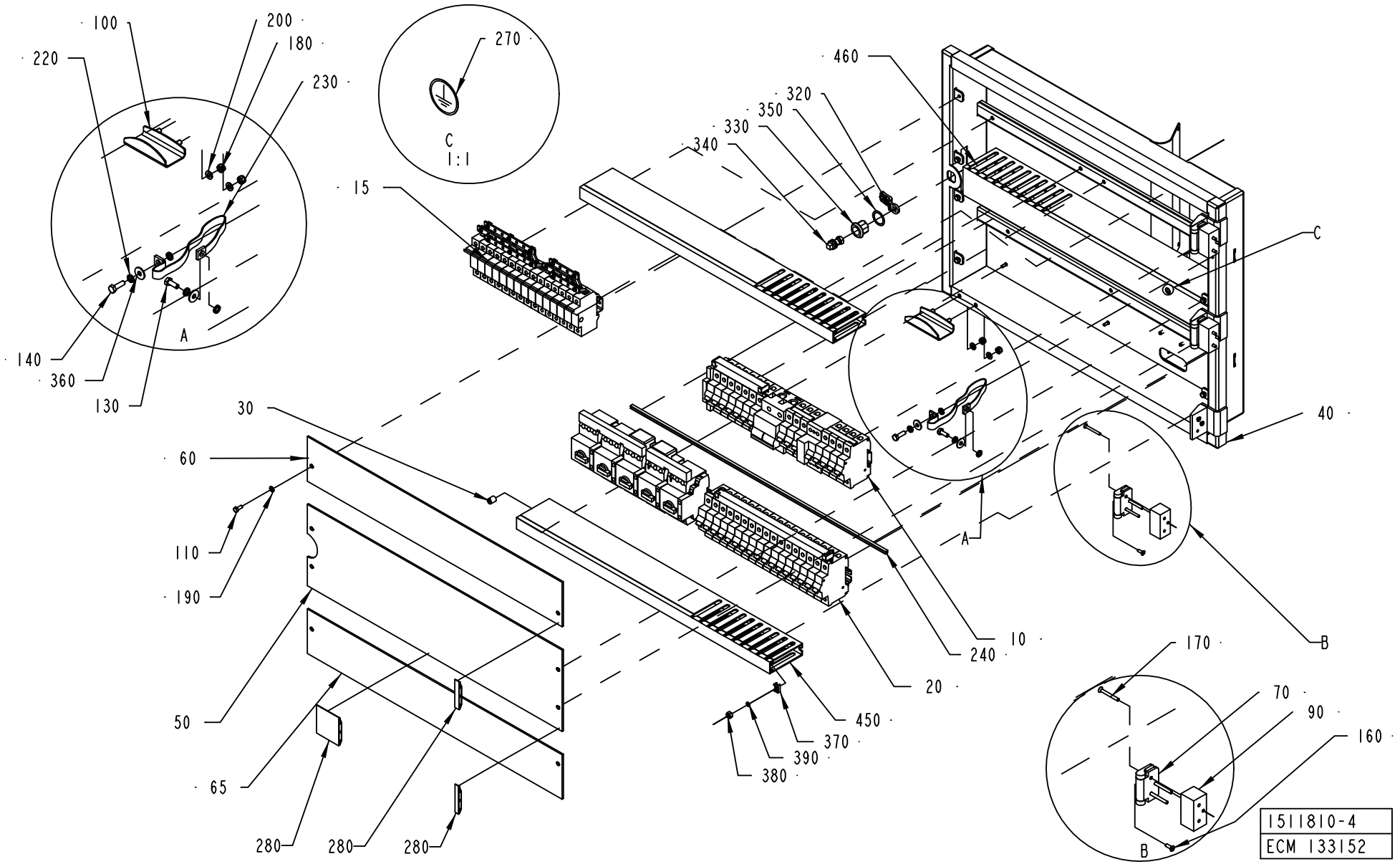
100
200
180
220
230
270
C
1:1
15
460
320
350
330
340
C
A
140
360
130
30
40
60
110
190
A
10
240
B
20
50
450
370
390
380
65
280
280
280
170
70
90
160
B
1511810-4
ECM 133152

ECM: 118447 - 50001231
Group number: 1511810-0100
Assembly Drawing: 1511810-4_1_AA

This list covers pages from 808 to 811

Pos	Part No	SP	UN	Qty	Description	Page No
-						
010	1511822-0100	-		1	FUSES RAIL	**813**
015	1487447-0100	-		1	FUSE	**815**
020	1511823-0100	-		1	OVERLOAD RAIL	**817**
030	1285109-0000	-		6	NUT	
040	2598114-0000	-		1	DOOR	
050	2542329-0000	-		1	COVER	
060	2542328-0000	-		1	COVER	
065	2542328-0000	-		1	COVER	
070	1523437-0000	B		2	HINGE	
090	1523440-0000	-		2	SPACER	
100	1523968-0000	-		1	HANDLE	
120	312105-0327	-		8	SCREW M6S ISO 4017 M5X12 A480	
130	312105-0368	-		1	SCREW M6S M6X16 A280	
140	312105-0370	-		1	SCREW M6S ISO 4017 M6X20 A480	
160	312155-0291	-		6	SCREW EN 10642 MF6S M4X12 A480	
170	312155-0301	-		6	SCREW EN 10642 MF6S M4X35 A480	
180	312812-0316	-		2	HEXAGON NUT, NY-LOCK M6 A480	
190	315101-0146	-		10	WASHER PLAIN, BRB, 5,3/10 H=1	
200	315105-0153	-		2	WASHER BRB6,4X12RFR	
220	90062-0015	-		4	LOCK WASHER SERRAT.EXT.GEAR,6,4/11 H=0,7	
230	90135-0044	A		1	EARTH WIRE, L=320 MM 16 MM2	
240	90143-0094	-	MM	2330	SEAL	
270	90194-0163	-		1	SIGN, EARTH WITHIN CIRCLE	
280	90226-0455	-		1	BLIND PLATE ABB 1666060	
320	90237-0157	-		1	LOCK BOLT, 1000-230	
330	90237-0319	-		1	LOCK HOUSING, 1000-U134	
340	90237-0320	-		1	LOCK HOUSING, 1000-U136	
350	90237-0322	-		1	LOCK GASKET, 1000-U137	
360	90457-0192	-		2	WASHER PLAIN ROUND, 6,5/18, H=1,5	
370	352113-0205	-		3	ANCHOR PLATES FOR STRIPS, TYPE TM2S8-C10	
380	312605-0316	-		3	HEXAGON NUT, M6M M6 A280	
390	315105-0136	-		3	WASHER BRB4,3XRFR	
450	2598375-0000	-		2	CABLE DUCT	
460	2598376-0000	-		1	CABLE DUCT	
470	2598377-0000	-		1	CABLE DUCT	
480	90181-0313	-		4	RIVET DUCTAFIX R4	

Pos	Part No	SP	UN	Qty	Description	Page No

Machine Type | Group Description | Used-In | Group Number | Page No

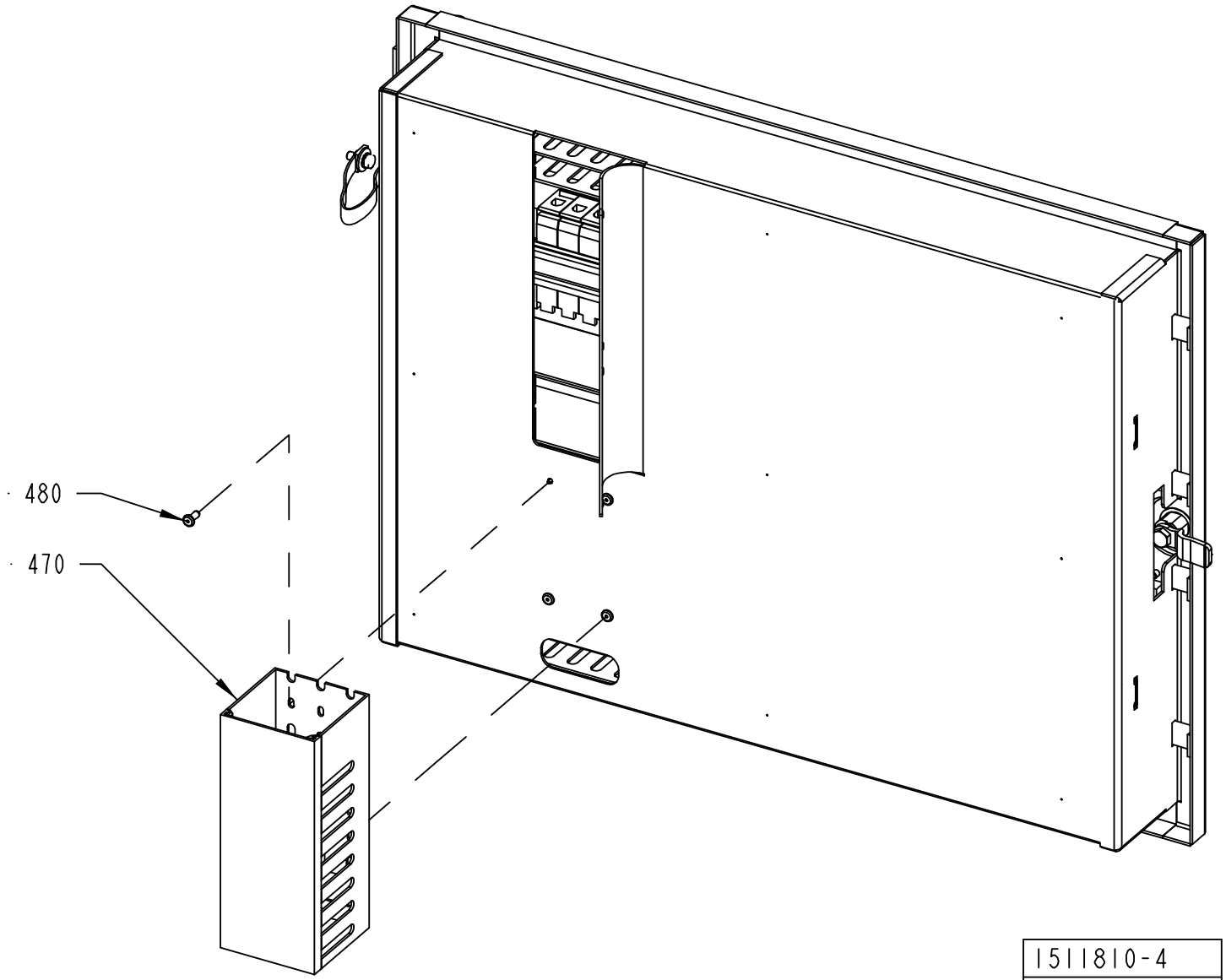
480
470
1511810-4
ECM 133152

ECM: 118447 - 50001231
Group number: 1511810-0100
Assembly Drawing: 1511810-4_2_AA

This list covers pages from 808 to 811

Pos	Part No	SP	UN	Qty	Description	Page No
-						
010	1511822-0100	-		1	FUSES RAIL	**813**
015	1487447-0100	-		1	FUSE	**815**
020	1511823-0100	-		1	OVERLOAD RAIL	**817**
030	1285109-0000	-		6	NUT	
040	2598114-0000	-		1	DOOR	
050	2542329-0000	-		1	COVER	
060	2542328-0000	-		1	COVER	
065	2542328-0000	-		1	COVER	
070	1523437-0000	B		2	HINGE	
090	1523440-0000	-		2	SPACER	
100	1523968-0000	-		1	HANDLE	
120	312105-0327	-		8	SCREW M6S ISO 4017 M5X12 A480	
130	312105-0368	-		1	SCREW M6S M6X16 A280	
140	312105-0370	-		1	SCREW M6S ISO 4017 M6X20 A480	
160	312155-0291	-		6	SCREW EN 10642 MF6S M4X12 A480	
170	312155-0301	-		6	SCREW EN 10642 MF6S M4X35 A480	
180	312812-0316	-		2	HEXAGON NUT, NY-LOCK M6 A480	
190	315101-0146	-		10	WASHER PLAIN, BRB, 5,3/10 H=1	
200	315105-0153	-		2	WASHER BRB6,4X12RFR	
220	90062-0015	-		4	LOCK WASHER SERRAT.EXT.GEAR,6,4/11 H=0,7	
230	90135-0044	A		1	EARTH WIRE, L=320 MM 16 MM2	
240	90143-0094	-	MM	2330	SEAL	
270	90194-0163	-		1	SIGN, EARTH WITHIN CIRCLE	
280	90226-0455	-		1	BLIND PLATE ABB 1666060	
320	90237-0157	-		1	LOCK BOLT, 1000-230	
330	90237-0319	-		1	LOCK HOUSING, 1000-U134	
340	90237-0320	-		1	LOCK HOUSING, 1000-U136	
350	90237-0322	-		1	LOCK GASKET, 1000-U137	
360	90457-0192	-		2	WASHER PLAIN ROUND, 6,5/18, H=1,5	
370	352113-0205	-		3	ANCHOR PLATES FOR STRIPS, TYPE TM2S8-C10	
380	312605-0316	-		3	HEXAGON NUT, M6M M6 A280	
390	315105-0136	-		3	WASHER BRB4,3XRFR	
450	2598375-0000	-		2	CABLE DUCT	
460	2598376-0000	-		1	CABLE DUCT	
470	2598377-0000	-		1	CABLE DUCT	
480	90181-0313	-		4	RIVET DUCTAFIX R4	

Machine Type	Group Description	Used-In	Group Number	Page No

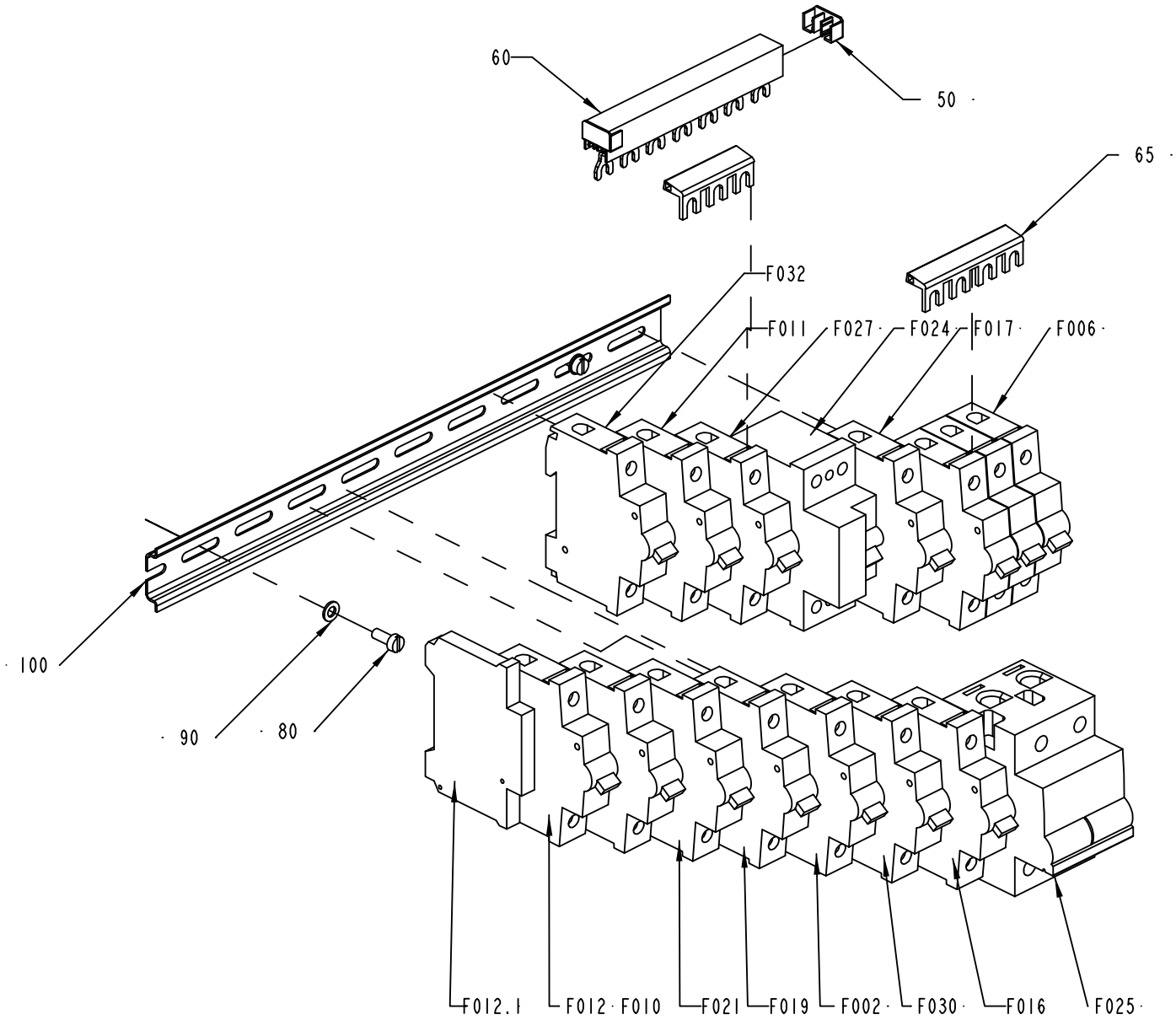

1511822-4
ECM 133152

ECM: 118394 - 50001231
Group number: 1511822-0100
Assembly Drawing: 1511822-4_1_AA

Pos	Part No	SP	UN	Qty	Description	Page No
TBA NOPT ASU						
060	90457-0125	-	MM	119	POWER RAIL SZ-PSB 12 N	
	90457-0124	-		*1*	*END CAP PSB-END6*	
F016	90007-0131	A		1	CIRCUIT BREAKER, 1P 16 A K	
F025	90458-1448	A		1	MAGNETIC FUSE, S292 C100	
TBA NOPT NOASU						
060	90457-0125	-	MM	102	POWER RAIL SZ-PSB 12 N	
	90457-0124	-		*1*	*END CAP PSB-END6*	
TBA PT19 ASU						
060	90457-0125	-	MM	119	POWER RAIL SZ-PSB 12 N	
	90457-0124	-		*1*	*END CAP PSB-END6*	
F011	90007-0128	A		1	CIRCUIT BREAKER, 1P 6 A K	
F016	90007-0131	A		1	CIRCUIT BREAKER, 1P 16 A K	
F025	90458-1448	A		1	MAGNETIC FUSE, S292 C100	
F032	90007-0128	A		1	CIRCUIT BREAKER, 1P 6 A K	
TBA PT19 NOASU						
060	90457-0125	-	MM	102	POWER RAIL SZ-PSB 12 N	
	90457-0124	-		*1*	*END CAP PSB-END6*	
F011	90007-0128	A		1	CIRCUIT BREAKER, 1P 6 A K	
F032	90007-0128	A		1	CIRCUIT BREAKER, 1P 6 A K	
Common Parts						
050	90457-0124	-		2	END CAP PSB-END6	
065	90459-1901	-	MM	66	POWER RAIL SZ-KS 18/56N	
080	312125-0327	-		3	SCREW PAN HEAD MCS M5X12 SS	
090	315105-0146	-		3	WASHER BRB5,3X10RFR	
100	353042-0004	-	MM	347	RAIL TS 35/7,5	
F002	90007-0129	A		1	CIRCUIT BREAKER, 1P 10 A K	
F006	90007-0146	A		1	CIRCUIT BREAKER, 3P 6 A K	
F010	90007-0129	A		1	CIRCUIT BREAKER, 1P 10 A K	
F012	90459-2063	A		1	CIRCUIT BREAKER, 1P 0,75 A K	
F012.1	90007-0312	-		1	AUXILIARY CONTACT	
F017	90007-0128	A		1	CIRCUIT BREAKER, 1P 6 A K	
F019	90007-0129	A		1	CIRCUIT BREAKER, 1P 10 A K	
F021	90007-0155	A		1	CIRCUIT BREAKER, 1P 0,5 A K	
F024	90111-0172	A		1	EARTH FAULT BREAKER, F 362-25/0.03	
F027	90007-0129	A		1	CIRCUIT BREAKER, 1P 10 A K	
F030	90007-0155	A		1	CIRCUIT BREAKER, 1P 0,5 A K	

Pos	Part No	SP	UN	Qty	Description	Page No

Machine Type | Group Description | Used-In | Group Number | Page No

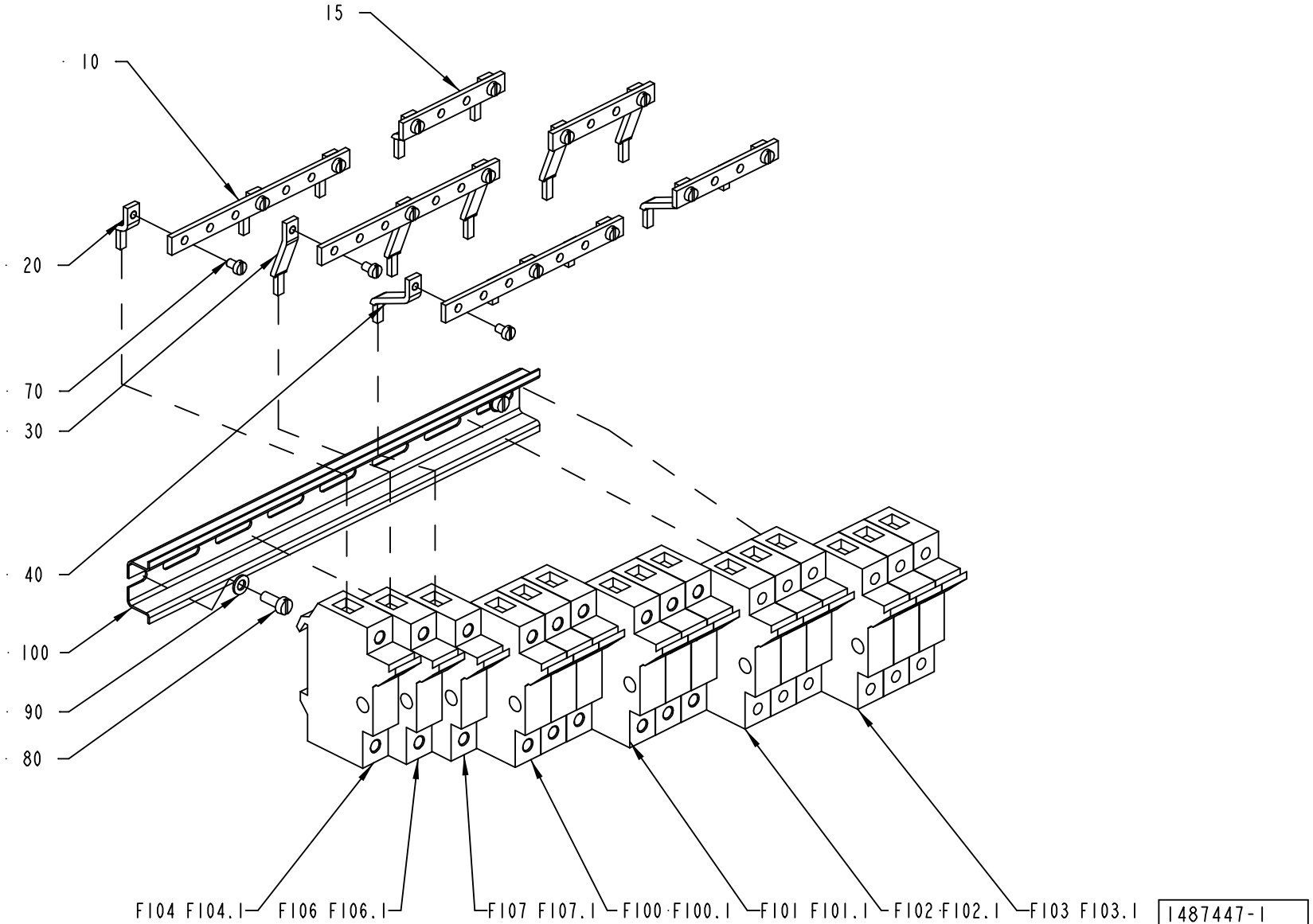

1487447-1
ECN 98221

ECM: 133058 - 50001231
Group number: 1487447-0100
Assembly Drawing: 1487447-1_1_AB

Pos	Part No	SP	UN	Qty	Description	Page No
-						
010	732419-0007	-		3	RAIL	
015	732419-0004	-		3	RAIL	
020	971140-0000	-		5	PHASE BAR ANGLED	
030	971141-0000	-		5	PHASE BAR ANGLED	
040	971142-0000	-		5	PHASE BAR ANGLED	
070	312125-0285	-		15	SCREW SLOT.PAN HD. MCS 4X6 A480	
080	312125-0327	-		2	SCREW PAN HEAD MCS M5X12 SS	
090	315105-0146	-		2	WASHER BRB5,3X10RFR	
100	353042-0003	-	MM	269	RAIL TS35/15/1,5	
F100	90233-0027	A		3	TUBE FUSE, 16A	
	90233-0305	*C*		*1*	*INDICATOR*	
F100.1	90233-0303	B		3	FUSE HOLDER, ST10	
F101	90233-0029	A		3	TUBE FUSE, 25A	
F101.1	90233-0303	B		3	FUSE HOLDER, ST10	
F102	90459-1254	A		3	TUBE FUSE, 4A 500V	
F102.1	90233-0304	B		1	FUSE HOLDER, ST10	
F103	90459-1254	A		3	TUBE FUSE, 4A 500V	
F103.1	90233-0304	B		1	FUSE HOLDER, ST10	
F104	90233-0027	A		1	TUBE FUSE, 16A	
	90233-0305	*C*		*1*	*INDICATOR*	
F104.1	90233-0303	B		1	FUSE HOLDER, ST10	
F106	90233-0028	A		1	TUBE FUSE, 10A	
F106.1	90233-0303	B		1	FUSE HOLDER, ST10	
F107	90233-0028	A		1	TUBE FUSE, 10A	
F107.1	90233-0303	B		1	FUSE HOLDER, ST10	

Pos	Part No	SP	UN	Qty	Description	Page No

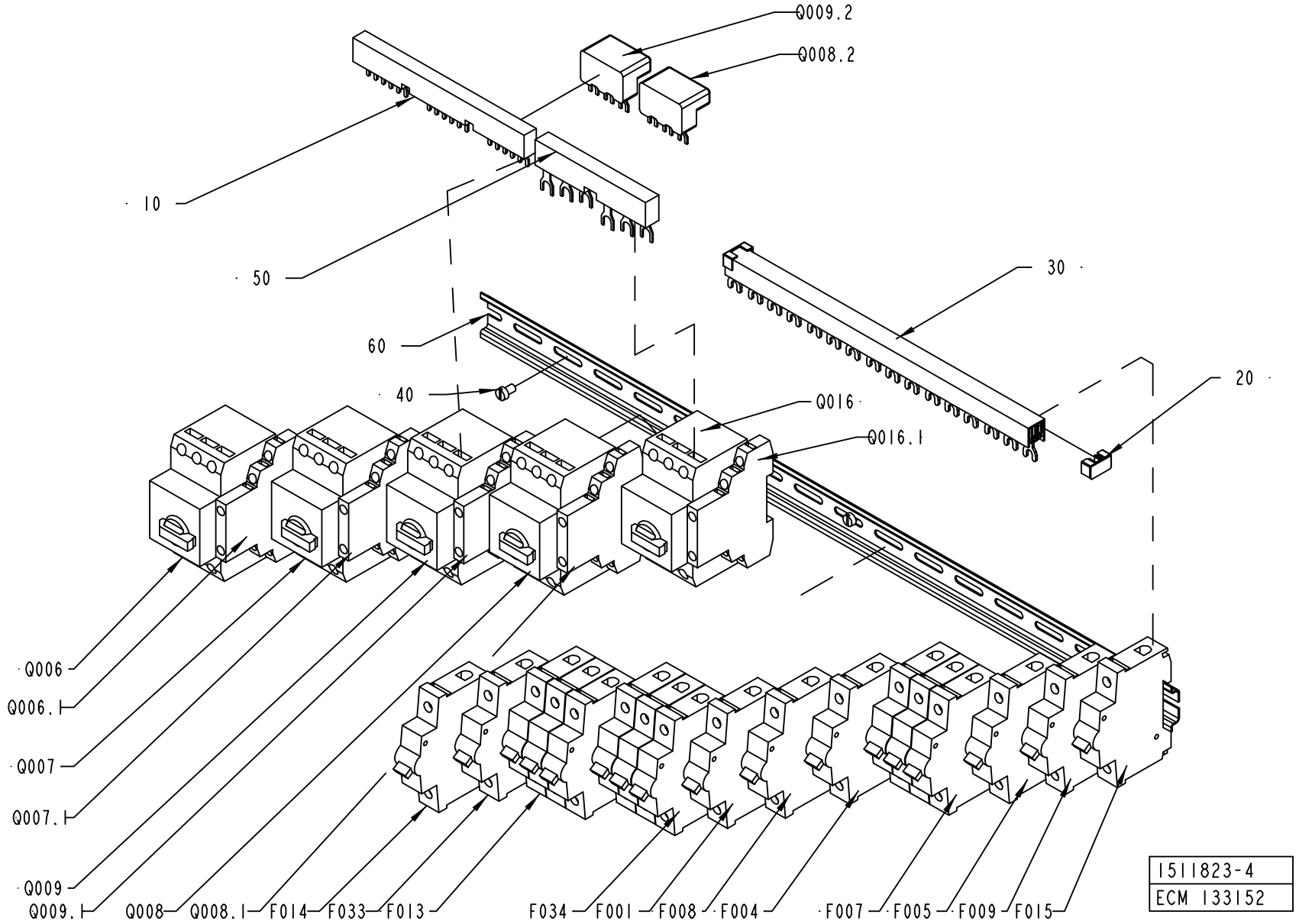
Q009.2
Q008.2
10
50
30
60
40
20
Q016
Q016.1
Q006
Q006.1
Q007
Q007.1
Q009
Q009.1
Q008
Q008.1
F014
F033
F013
F034
F001
F008
F004
F007
F005
F009
F015
1511823-4
ECM 133152

ECM: 118393 - 50001231
Group number: 1511823-0100
Assembly Drawing: 1511823-4_1_AA

Pos	Part No	SP	UN	Qty	Description	Page No
TBA NOPT ASU						
030	90457-0125	-	MM	204	POWER RAIL SZ-PSB 12 N	
	90457-0124	-		*1*	*END CAP PSB-END6*	
F015	90007-0129	A		1	CIRCUIT BREAKER, 1P 10 A K	
TBA NOPT NOASU						
030	90457-0125	-	MM	204	POWER RAIL SZ-PSB 12 N	
	90457-0124	-		*1*	*END CAP PSB-END6*	
TBA PT19 ASU						
030	90457-0125	-	MM	272	POWER RAIL SZ-PSB 12 N	
	90457-0124	-		*1*	*END CAP PSB-END6*	
F013	90007-0146	A		1	CIRCUIT BREAKER, 3P 6 A K	
F014	90007-0128	A		1	CIRCUIT BREAKER, 1P 6 A K	
F015	90007-0129	A		1	CIRCUIT BREAKER, 1P 10 A K	
F033	90007-0129	A		1	CIRCUIT BREAKER, 1P 10 A K	
TBA PT19 NOASU						
030	90457-0125	-	MM	272	POWER RAIL SZ-PSB 12 N	
	90457-0124	-		*1*	*END CAP PSB-END6*	
F013	90007-0146	A		1	CIRCUIT BREAKER, 3P 6 A K	
F014	90007-0128	A		1	CIRCUIT BREAKER, 1P 6 A K	
F033	90007-0129	A		1	CIRCUIT BREAKER, 1P 10 A K	
Common Parts						
010	90259-0311	-		1	3 POLE BUSBAR K&M B3.1/5	
020	90457-0124	-		2	END CAP PSB-END6	
040	312125-0323	-		3	SCREW PAN HEAD MCS M5X8 SS	
050	90259-0315	-		1	BUS BAR 3-POLE, K&M B 3.1/2-PKZM1	
060	353042-0004	-	MM	620	RAIL TS 35/7,5	
F001	90007-0129	A		1	CIRCUIT BREAKER, 1P 10 A K	
F004	90007-0129	A		1	CIRCUIT BREAKER, 1P 10 A K	
F005	90007-0128	A		1	CIRCUIT BREAKER, 1P 6 A K	
F007	90007-0149	A		1	CIRCUIT BREAKER, 3P 20 A K	
F008	90007-0129	A		1	CIRCUIT BREAKER, 1P 10 A K	
F009	90007-0129	A		1	CIRCUIT BREAKER, 1P 10 A K	
F034	90459-2195	A		1	CIRCUIT BREAKER, 3P 2 A K	
Q006	90095-0077	A		1	OVERLOAD PROTECTION, PKZM 6-10 A	
Q006.1	90259-0313	A		1	AUX. CONTACT K&M NHI21-PKZM0	
Q007	90095-0075	A		1	OVERLOAD PROTECTION, PKZM 4 A	
Q007.1	90259-0313	A		1	AUX. CONTACT K&M NHI21-PKZM0	
Q008	90095-0077	A		1	OVERLOAD PROTECTION, PKZM 6-10 A	
Q008.1	90259-0313	A		1	AUX. CONTACT K&M NHI21-PKZM0	
Q008.2	90259-0308	-		1	CONN.TERM.K&M BK 25/3-PKZ0	
Q009	90095-0073	A		1	OVERLOAD PROTECTION, PKZM 1,6 A	
Q009.1	90259-0313	A		1	AUX. CONTACT K&M NHI21-PKZM0	
Q009.2	90259-0308	-		1	CONN.TERM.K&M BK 25/3-PKZ0	
Q016	90095-0069	A		1	OVERLOAD PROTECTION, PKZM 0,25 A	
Q016.1	90259-0313	A		1	AUX. CONTACT K&M NHI21-PKZM0	

Machine Type | Group Description | Used-In | Group Number | Page No

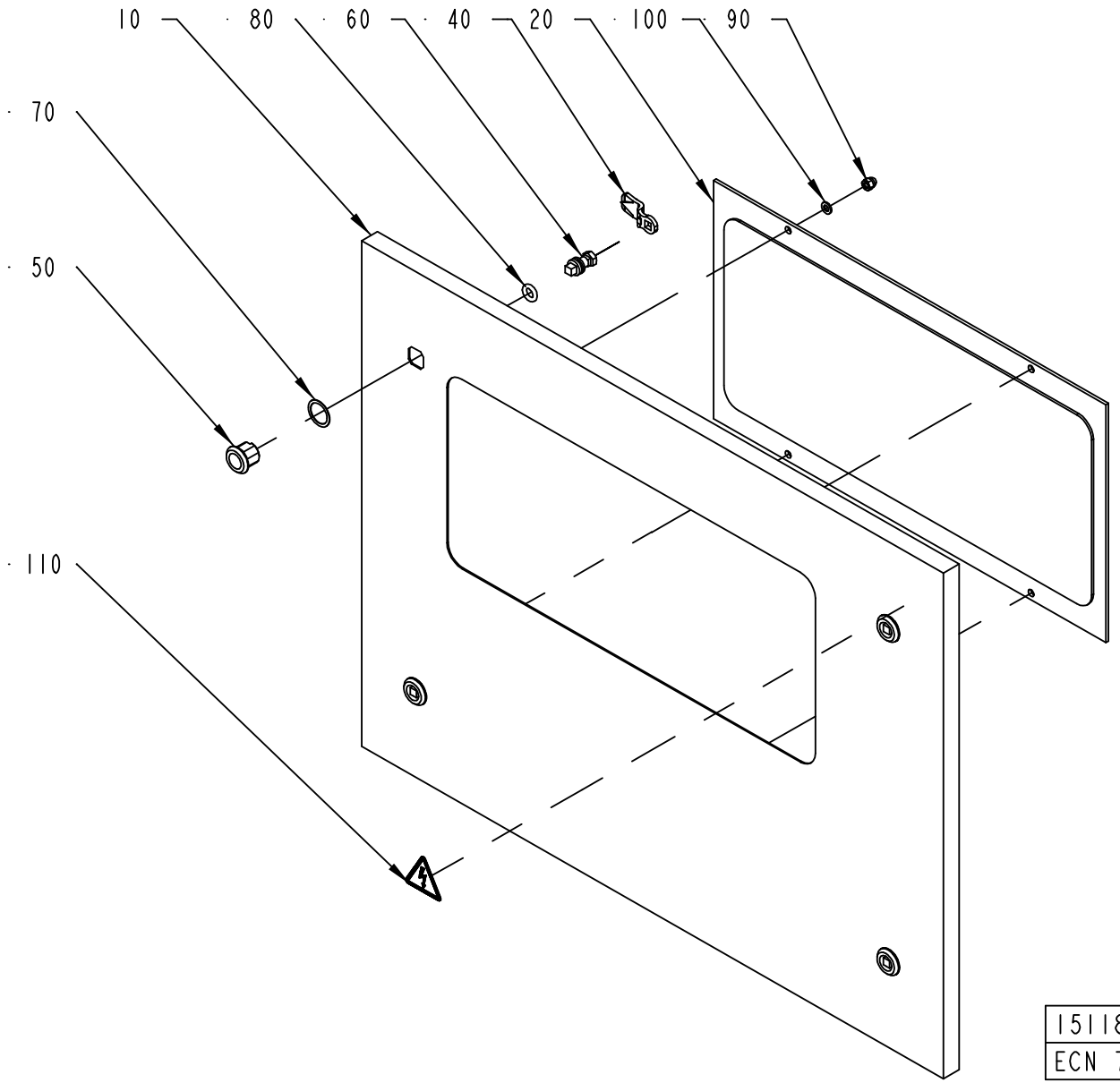
10
80
60
40
20
100
90
70
50
110
1511811-1
ECN 73363

ECM: 115722 - 20020930
Group number: 1511811-0100
Assembly Drawing: 1511811-1_1_AA

Pos	Part No	SP	UN	Qty	Description	Page No
-						
010	1511812-0000	-		1	DOOR	
020	1511813-0000	-		1	WINDOW	
030	90144-0072	-	MM	1500	TAPE SCOTCH VHBS 4945 W=12,7MM	
040	90237-0157	-		4	LOCK BOLT, 1000-230	
050	90237-0319	-		4	LOCK HOUSING, 1000-U134	
060	90237-0320	-		4	LOCK HOUSING, 1000-U136	
070	90237-0322	-		4	LOCK GASKET, 1000-U137	
080	90237-0323	-		4	LOCK O-RINGT, 1000-24	
090	312705-0316	-		4	NUT HEX. DOMED CAP MHM-6 M6 A280	
100	315105-0153	-		4	WASHER BRB6,4X12RFR	
110	359705-0015	A		1	WARNING SIGN ISO, RISK OF ELECTRIC SHOCK	

Pos	Part No	SP	UN	Qty	Description	Page No

INTERNAL DOOR TERMOREGULATORS

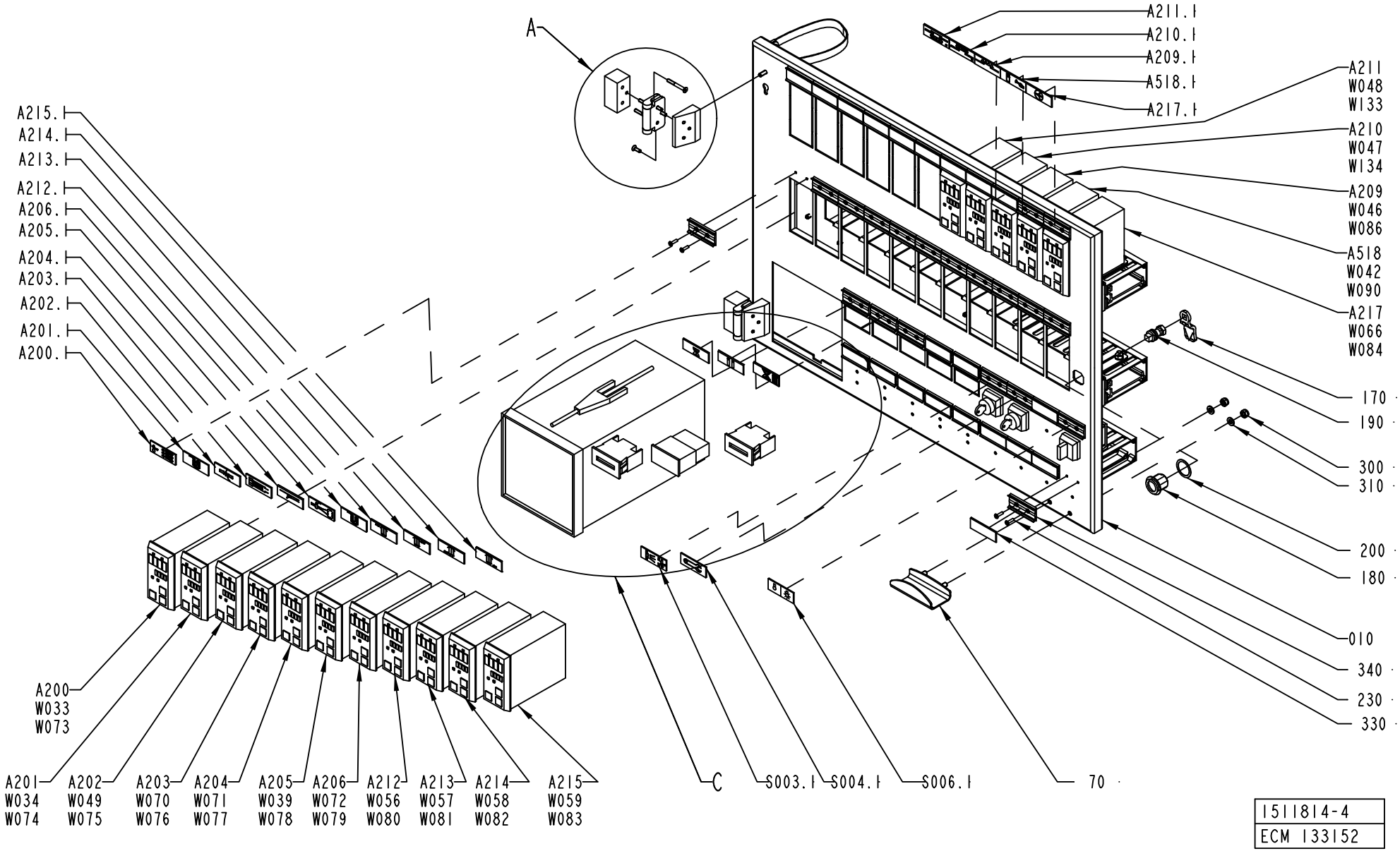

1511814-4
ECM 133152

ECM: 118445 - 50001231
Group number: 1511814-0100
Assembly Drawing: 1511814-4_1_AA

This list covers pages from 820 to 825

Pos	Part No	SP	UN	Qty	Description	Page No
TBA NOPT HI						
090	90062-0022	-		13	LOCKING WASHER D=6,4/11	
290	312605-0316	-		13	HEXAGON NUT, M6M M6 A280	
330	359240-0001	-		22	SIGN, NOT ENGRAVED	
A518	90410-0051	A		1	TEMPERATURE CONTROLLER, KS 40	
A518.1	359241-0268	-		1	SIGN	
W042	90220-0059	-	M	3	THERMOCOUPLE CABLE K/ 2X0,81MM2	
W090	1143884-0000	B		1	COPPER BRAID	
TBA NOPT NOHI						
090	90062-0022	-		12	LOCKING WASHER D=6,4/11	
290	312605-0316	-		12	HEXAGON NUT, M6M M6 A280	
330	359240-0001	-		23	SIGN, NOT ENGRAVED	
TBA PT19 HI						
090	90062-0022	-		16	LOCKING WASHER D=6,4/11	
290	312605-0316	-		16	HEXAGON NUT, M6M M6 A280	
330	359240-0001	-		19	SIGN, NOT ENGRAVED	
A209	90410-0051	A		1	TEMPERATURE CONTROLLER, KS 40	
A209.1	359241-0439	-		1	SIGN"PATCH SEALER"	
A210	90410-0051	A		1	TEMPERATURE CONTROLLER, KS 40	
A210.1	359241-0460	-		1	SIGN "PATCH SEALER 2"	
A211	90410-0051	A		1	TEMPERATURE CONTROLLER, KS 40	
A211.1	359241-0444	-		1	SIGN"TAB RESEAL"	
A518	90410-0051	A		1	TEMPERATURE CONTROLLER, KS 40	
A518.1	359241-0268	-		1	SIGN	
P004	90053-0031	B		1	HOUR COUNTER, B 609.10 10-50VDC	
P004.1	359241-0459	-		1	SIGN "PT HOUR METER"	
W042	90220-0059	-	M	3	THERMOCOUPLE CABLE K/ 2X0,81MM2	
W046	90220-0059	-	M	5	THERMOCOUPLE CABLE K/ 2X0,81MM2	
W047	90220-0059	-	M	5	THERMOCOUPLE CABLE K/ 2X0,81MM2	
W048	90220-0059	-	M	5	THERMOCOUPLE CABLE K/ 2X0,81MM2	
W086	1143884-0000	B		1	COPPER BRAID	
W090	1143884-0000	B		1	COPPER BRAID	
W132	1143884-0000	B		1	COPPER BRAID	
W133	1143884-0000	-		1	COPPER BRAID	
TBA PT19 NOHI						
090	90062-0022	-		15	LOCKING WASHER D=6,4/11	
290	312605-0316	-		15	HEXAGON NUT, M6M M6 A280	
330	359240-0001	-		20	SIGN, NOT ENGRAVED	
A209	90410-0051	A		1	TEMPERATURE CONTROLLER, KS 40	
A209.1	359241-0439	-		1	SIGN"PATCH SEALER"	
A210	90410-0051	A		1	TEMPERATURE CONTROLLER, KS 40	
A210.1	359241-0460	-		1	SIGN "PATCH SEALER 2"	
A211	90410-0051	A		1	TEMPERATURE CONTROLLER, KS 40	
A211.1	359241-0444	-		1	SIGN"TAB RESEAL"	
P004	90053-0031	B		1	HOUR COUNTER, B 609.10 10-50VDC	
P004.1	359241-0459	-		1	SIGN "PT HOUR METER"	
W046	90220-0059	-	M	5	THERMOCOUPLE CABLE K/ 2X0,81MM2	
W047	90220-0059	-	M	5	THERMOCOUPLE CABLE K/ 2X0,81MM2	
W048	90220-0059	-	M	5	THERMOCOUPLE CABLE K/ 2X0,81MM2	
W086	1143884-0000	B		1	COPPER BRAID	
W132	1143884-0000	B		1	COPPER BRAID	
W133	1143884-0000	-		1	COPPER BRAID	
Common Parts						
010	1511815-0000	-		1	DOOR	
020	1511817-0000	-		1	CABLE DUCT	
030	1523437-0000	B		2	HINGE	
040	1523439-0000	-		2	SPACER	
050	1523440-0000	-		2	SPACER	
060	1523444-0000	-		3	SPACER	
065	1523443-0000	-		1	COVER	
070	1523968-0000	-		1	HANDLE	
080	1285109-0000	-		3	NUT	
100	90062-0015	-		4	LOCK WASHER SERRAT.EXT.GEAR,6,4/11 H=0,7	
110	90135-0044	-		1	EARTH WIRE, L=320 MM 16 MM2	
120	90181-0064	-		8	LOCK ZP1 FOR CHANNEL T1	
125	90181-0054	-	MM	555	CABLE DUCT, 60X80MM	
130	90181-0054	-	MM	555	CABLE DUCT, 60X80MM	
135	90181-0054	-	MM	210	CABLE DUCT, 60X80MM	
140	90181-0067	-	MM	555	DIVIDING PLATE SEP80	
145	90181-0067	-	MM	555	DIVIDING PLATE SEP80	
150	90181-0088	-		8	PLASTIC RIVET, PR 52314	
160	90194-0163	-		1	SIGN, EARTH WITHIN CIRCLE	
170	90237-0157	-		1	LOCK BOLT, 1000-230	
180	90237-0319	-		1	LOCK HOUSING, 1000-U134	
190	90237-0320	-		1	LOCK HOUSING, 1000-U136	
200	90237-0322	-		1	LOCK GASKET, 1000-U137	
210	90457-0055	-		3	PROTECTION, 704-9645	
220	90457-0192	-		2	WASHER PLAIN ROUND, 6,5/18, H=1,5	
230	311521-0146	-		80	BLANK RIVET 3,2X12	
240	312105-0368	-		1	SCREW M6S M6X16 A280	

Machine Type | Group Description | Used-In | Group Number | Page No

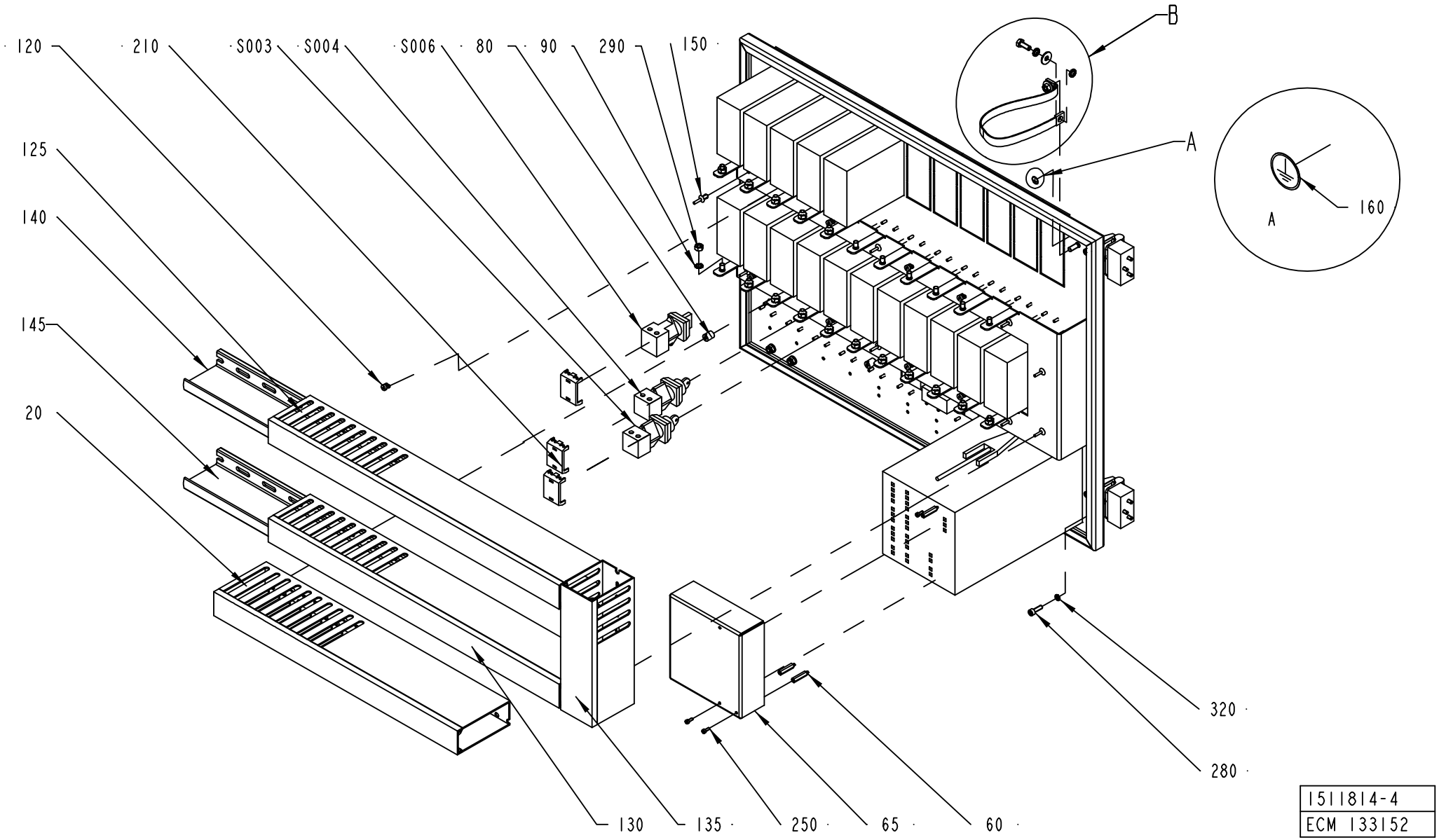
120
210
S003
S004
S006
80
90
290
150
125
140
145
20
B
A
A
160
320
280
130
135
250
65
60
1511814-4
ECM 133152

ECM: 118445 - 50001231
Group number: 1511814-0100
Assembly Drawing: 1511814-4_2_AA

This list covers pages from 820 to 825

Pos	Part No	SP	UN	Qty	Description	Page No
Common Parts (Cont'd)						
250	312115-0222	-		3	SCREW ISO4762 M3X8 A4	
260	312155-0291	-		6	SCREW EN 10642 MF6S M4X12 A480	
270	312155-0301	-		6	SCREW EN 10642 MF6S M4X35 A480	
280	312115-0329	-		4	SCREW ISO4762 M5X16 A4	
300	312812-0316	-		2	HEXAGON NUT, NY-LOCK M6 A480	
310	315105-0153	-		2	WASHER BRB6,4X12RFR	
320	315402-0146	-		4	LOCK WASHER FBB 5,1	
340	359240-0100	-		40	SIGN HOLDER FOR 359240-0001	
A200	90410-0051	A		1	TEMPERATURE CONTROLLER, KS 40	
A200.1	359241-0123	-		1	SIGN, TEMP. PRE-STERILIZATION VALVE	
A201	90410-0051	A		1	TEMPERATURE CONTROLLER, KS 40	
A201.1	359241-0141	A		1	SIGN, PEROXIDE / WATER BATH	
A202	90410-0051	A		1	TEMPERATURE CONTROLLER, KS 40	
A202.1	359241-0131	-		1	SIGN, TEMP. LS HEATER	
A203	90410-0051	A		1	TEMPERATURE CONTROLLER, KS 40	
A203.1	359241-0130	-		1	SIGN, TEMP. AIR SUPER HEATER	
A204	90410-0051	A		1	TEMPERATURE CONTROLLER, KS 40	
A204.1	359241-0126	-		1	SIGN, TEMP. AIR KNIFE	
A205	90410-0051	A		1	TEMPERATURE CONTROLLER, KS 40	
A205.1	359241-0121	-		1	SIGN "STEAM"	
A206	90410-0051	A		1	TEMPERATURE CONTROLLER, KS 40	
A206.1	359241-0125	-		1	SIGN, PEROXIDE BATH	
A212	90410-0051	A		1	TEMPERATURE CONTROLLER, KS 40	
A212.1	359241-0338	-		1	SIGN "FLAP HEAT TOP L"	
A213	90410-0051	A		1	TEMPERATURE CONTROLLER, KS 40	
A213.1	359241-0337	-		1	SIGN "FLAP HEAT TOP R"	
A214	90410-0051	A		1	TEMPERATURE CONTROLLER, KS 40	
A214.1	359241-0340	-		1	SIGN "FLAPPHEAT BOTTOM L"	
A215	90410-0051	A		1	TEMPERATURE CONTROLLER, KS 40	
A215.1	359241-0339	-		1	SIGN "FLAPPHEAT BOTTOM R"	
A216	90410-0051	A		1	TEMPERATURE CONTROLLER, KS 40	
A216.1	90457-0058	-		1	SIGN, LS SHORT STOP	
P002	90053-0031	B		1	HOUR COUNTER, B 609.10 10-50VDC	
P002.1	359241-0201	-		1	SIGN "HOUR GLASS"	
P003	90053-0029	B		1	COUNTER, F524.800FA3C 24VDC	
P003.1	359241-0180	-		1	SIGN "PRODUCTION"	
P005	90332-0020	A		1	RECORDER HONEYWELL	
	90332-0328	-		*1*	*RECORDER CASSETTE PAPER ROLL FOR 90332-2*	
	90332-0326	-		*1*	*DOWNLOADE INTRFACE FOR RECORDER 90332-20*	
	90332-0325	-		*1*	*PAPER FOR RECORDER 90332-20*	
	90332-0324	-		*1*	*INK WHEEL*	
S003	90111-0124	A		1	KEY SWITCH, 1NO,1NC CONTACT	
S003.1	359241-0122	-		1	SIGN, CIP OF STEAM BARRIER SPACE	
S004	90111-0122	A		1	KEY SWITCH, 2 NO CONTACTS	
S004.1	359241-0133	-		1	SIGN, SERVICE SWITCH	
S006	90111-0120	A		1	SWITCH, 2 POS.704.510 .0A+704.901.5/A	
S006.1	359241-0140	-		1	SIGN "LIGHTING MACHINE"	
W033	90220-0059	-	M	4	THERMOCOUPLE CABLE K/ 2X0,81MM2	
W034	90220-0059	-	M	4	THERMOCOUPLE CABLE K/ 2X0,81MM2	
W037	90220-0059	-	M	5	THERMOCOUPLE CABLE K/ 2X0,81MM2	
W038	90220-0059	-	M	5	THERMOCOUPLE CABLE K/ 2X0,81MM2	
W039	90220-0059	-	M	4	THERMOCOUPLE CABLE K/ 2X0,81MM2	
W040	90220-0059	-	M	5	THERMOCOUPLE CABLE K/ 2X0,81MM2	
W049	90220-0059	-	M	3	THERMOCOUPLE CABLE K/ 2X0,81MM2	
W056	90220-0059	-	M	3	THERMOCOUPLE CABLE K/ 2X0,81MM2	
W057	90220-0059	-	M	3	THERMOCOUPLE CABLE K/ 2X0,81MM2	
W058	90220-0059	-	M	3	THERMOCOUPLE CABLE K/ 2X0,81MM2	
W059	90220-0059	-	M	3	THERMOCOUPLE CABLE K/ 2X0,81MM2	
W066	90220-0059	-	M	4	THERMOCOUPLE CABLE K/ 2X0,81MM2	
W070	90220-0059	-	MM	500	THERMOCOUPLE CABLE K/ 2X0,81MM2	
W071	90220-0059	-	MM	500	THERMOCOUPLE CABLE K/ 2X0,81MM2	
W072	90220-0059	-	MM	500	THERMOCOUPLE CABLE K/ 2X0,81MM2	
W073	1143884-0000	B		1	COPPER BRAID	
W074	1143884-0000	B		1	COPPER BRAID	
W075	1143884-0000	B		1	COPPER BRAID	
W076	1143884-0000	B		1	COPPER BRAID	
W077	1143884-0000	B		1	COPPER BRAID	
W078	1143884-0000	B		1	COPPER BRAID	
W079	1143884-0000	B		1	COPPER BRAID	
W080	1143884-0000	B		1	COPPER BRAID	
W081	1143884-0000	B		1	COPPER BRAID	
W082	1143884-0000	B		1	COPPER BRAID	
W083	1143884-0000	B		1	COPPER BRAID	
W084	1143884-0000	B		1	COPPER BRAID	

Machine Type | Group Description | Used-In | Group Number | Page No

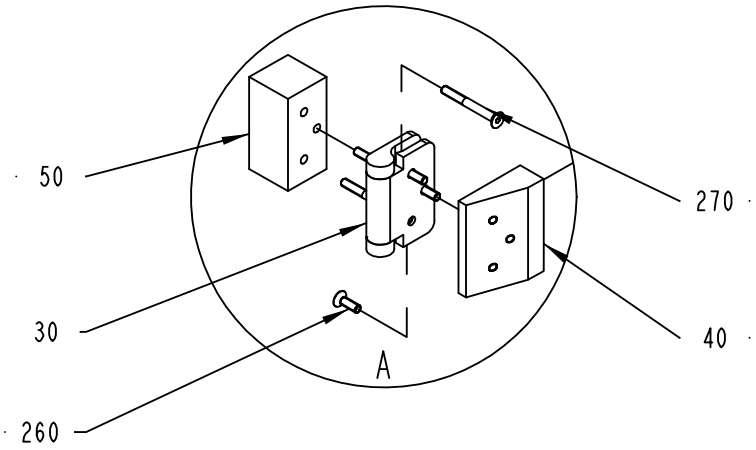

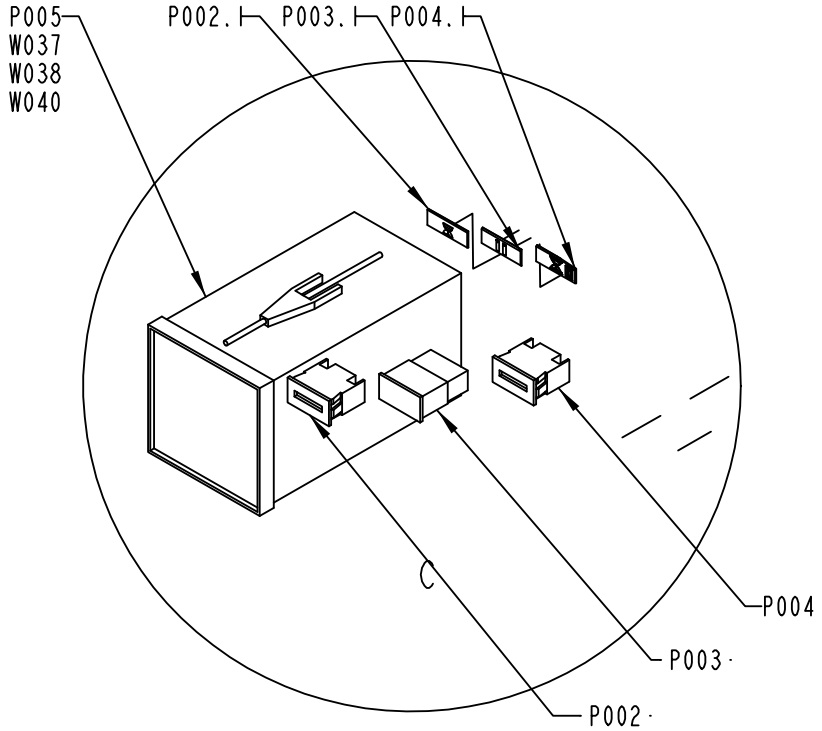

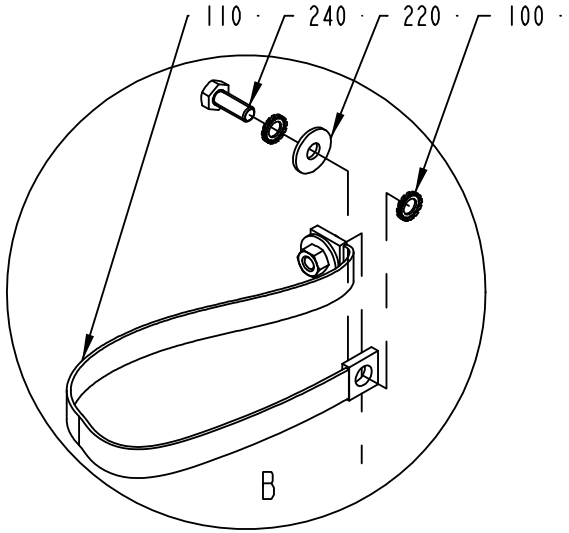

1511814-4
ECM 133152

Pos	Part No	SP	UN	Qty	Description	Page No	Pos	Part No	SP	UN	Qty	Description	Page No

SEE PREVIOUS LISTS PAGES: 821, 823.

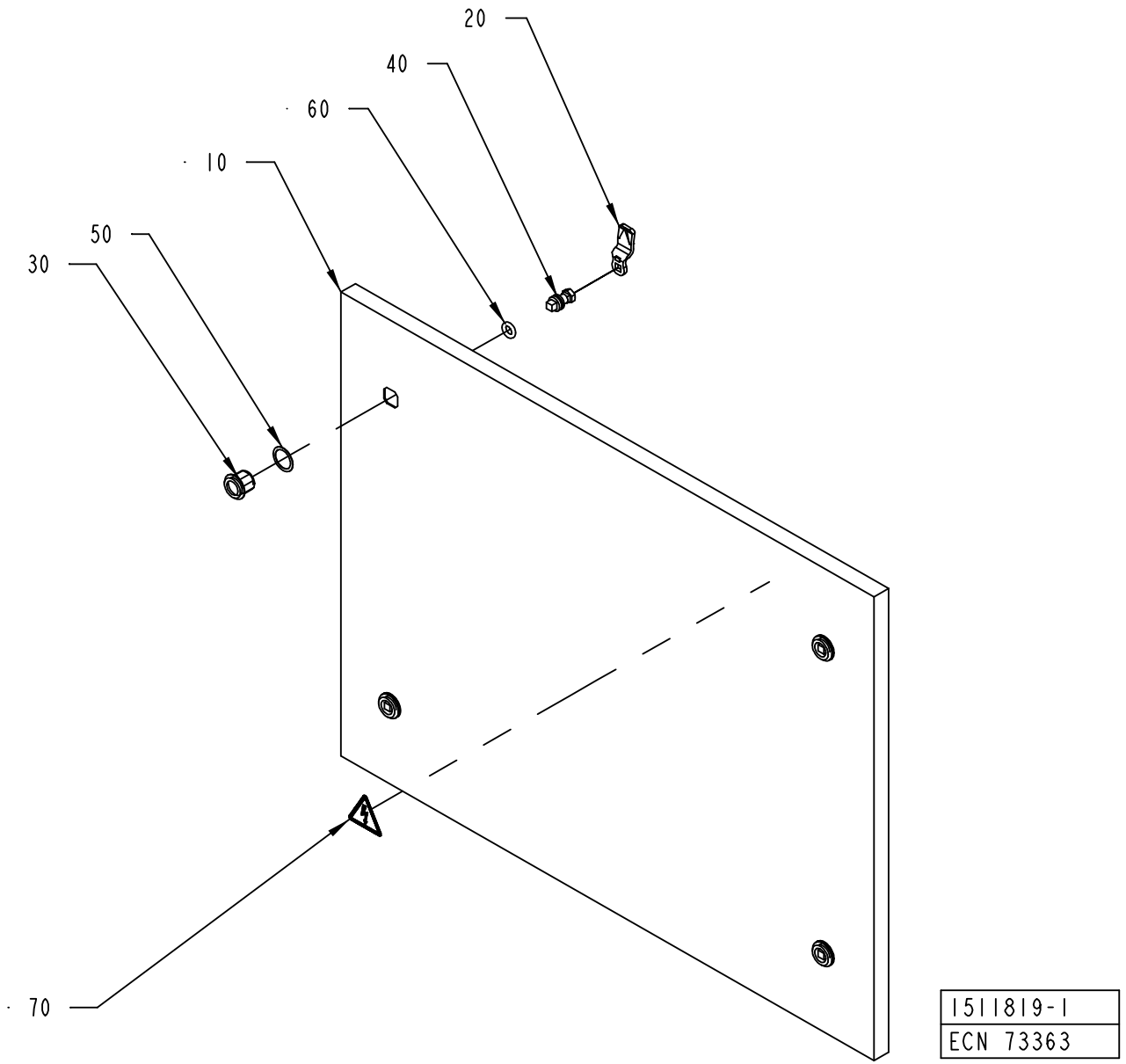
20
40
60
10
50
30
70
1511819-1
ECN 73363

ECM: 115712 - 20020930
Group number: 1511819-0100
Assembly Drawing: 1511819-1_1_AA

Pos	Part No	SP	UN	Qty	Description	Page No
-						
010	1517671-0000	-		1	DOOR	
020	90237-0157	-		4	LOCK BOLT, 1000-230	
030	90237-0319	-		4	LOCK HOUSING, 1000-U134	
040	90237-0320	-		4	LOCK HOUSING, 1000-U136	
050	90237-0322	-		4	LOCK GASKET, 1000-U137	
060	90237-0323	-		4	LOCK O-RINGT, 1000-24	
070	359705-0015	A		1	WARNING SIGN ISO, RISK OF ELECTRIC SHOCK	

Pos	Part No	SP	UN	Qty	Description	Page No

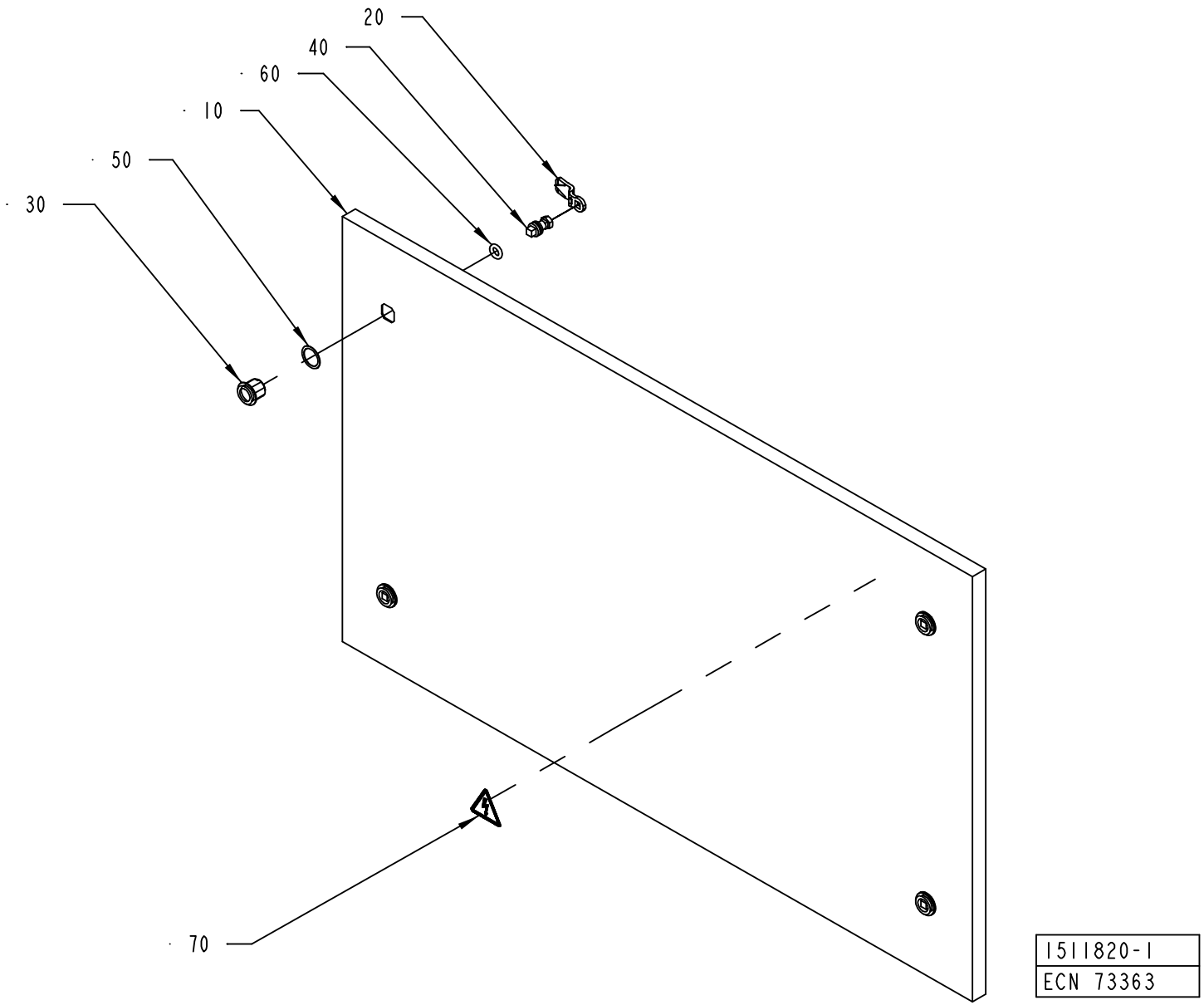
20
40
60
10
50
30
70
1511820-1
ECN 73363

ECM: 115729 - 20020930
Group number: 1511820-0100
Assembly Drawing: 1511820-1_1_AA

Pos	Part No	SP	UN	Qty	Description	Page No
-						
010	1517672-0000	-		1	DOOR	
020	90237-0157	-		4	LOCK BOLT, 1000-230	
030	90237-0319	-		4	LOCK HOUSING, 1000-U134	
040	90237-0320	-		4	LOCK HOUSING, 1000-U136	
050	90237-0322	-		4	LOCK GASKET, 1000-U137	
060	90237-0323	-		4	LOCK O-RINGT, 1000-24	
070	359705-0015	A		1	WARNING SIGN ISO, RISK OF ELECTRIC SHOCK	

Pos	Part No	SP	UN	Qty	Description	Page No

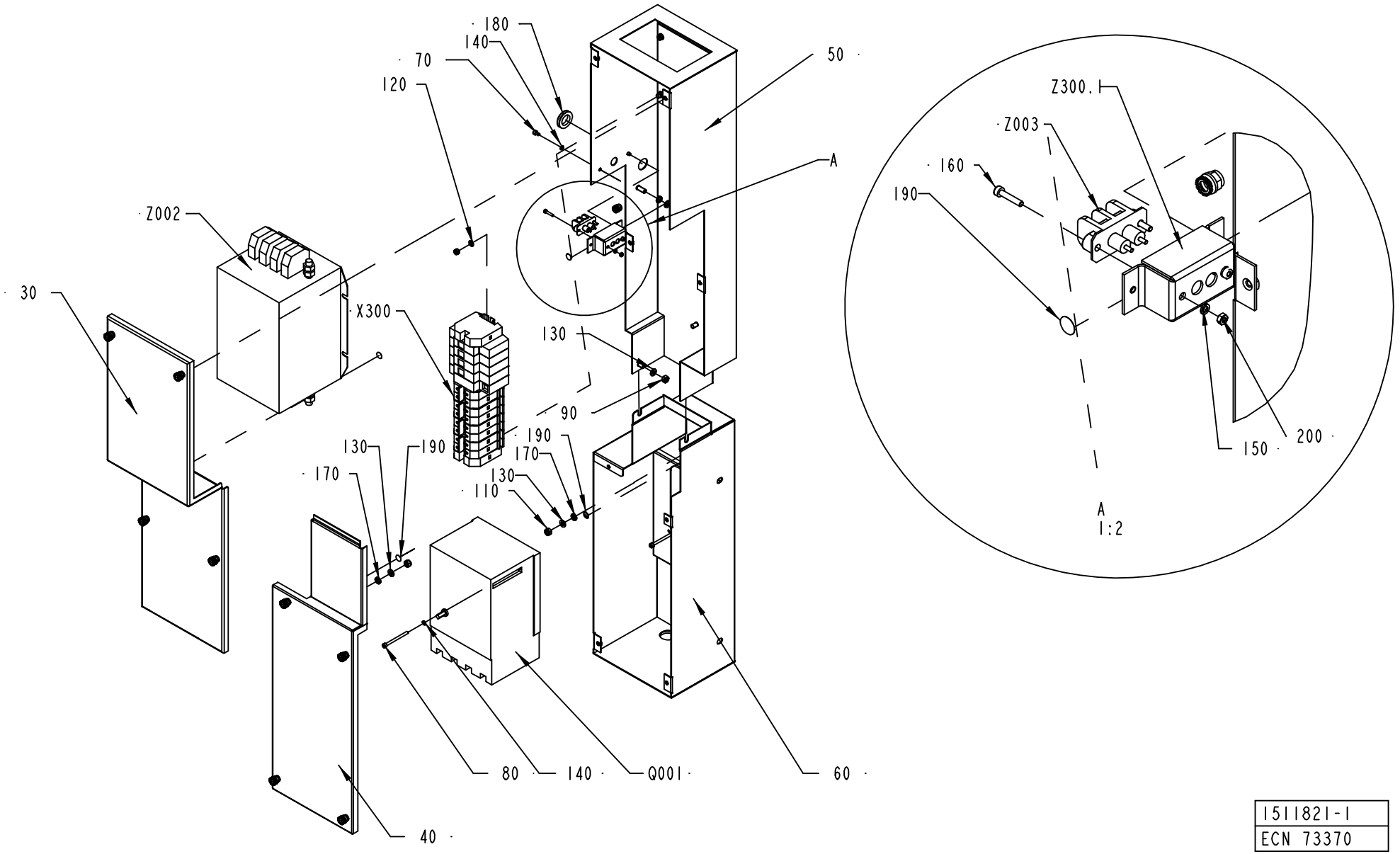

1511821-1
ECN 73370

ECM: 115719 - 20020930
Group number: 1511821-0100
Assembly Drawing: 1511821-1_1_AA

Pos	Part No	SP	UN	Qty	Description	Page No
-						
030	1511780-0000	-		1	COVER	
040	1511781-0000	-		1	COVER	
050	1511782-0000	-		1	BOX	
060	1511783-0000	-		1	BOX	
070	312115-0285	-		2	SCREW ISO4762 M4X6 A4	
080	312115-0305	-		2	SCREW ISO4762 M4X50 A4	
090	312605-0316	-		2	HEXAGON NUT, M6M M6 A280	
100	312812-0314	-		4	HEXAGON NUT, NY-LOCK M5 A480	
110	312812-0316	-		4	HEXAGON NUT, NY-LOCK M6 A480	
120	315105-0146	-		4	WASHER BRB5,3X10RFR	
130	315105-0153	-		6	WASHER BRB6,4X12RFR	
140	315402-0136	-		4	LOCK WASHER FBB 4,1	
150	315402-0128	-		2	LOCK WASHER FBB 3,6	
160	312115-0228	-		2	SCREW ISO4762 M3X16 A4	
170	90062-0015	-		4	LOCK WASHER SERRAT.EXT.GEAR,6,4/11 H=0,7	
180	90143-0094	-	MM	100	SEAL	
190	90194-0163	-		4	SIGN, EARTH WITHIN CIRCLE	
200	312605-0310	-		2	HEXAGON NUT, M6M M3 A280	
Q001	90457-0198	A		1	MAIN SWITCH	
X300	1511806-0100	-		1	X300	**833**
Z002	90024-0060	A		1	POWER LINE FILTER, 80 A 250/440 VAC	
Z003	90024-0036	B		1	FILTERED TERMINAL BLOCK	
Z003.1	1285108-0000	-		1	COVER	

Pos	Part No	SP	UN	Qty	Description	Page No

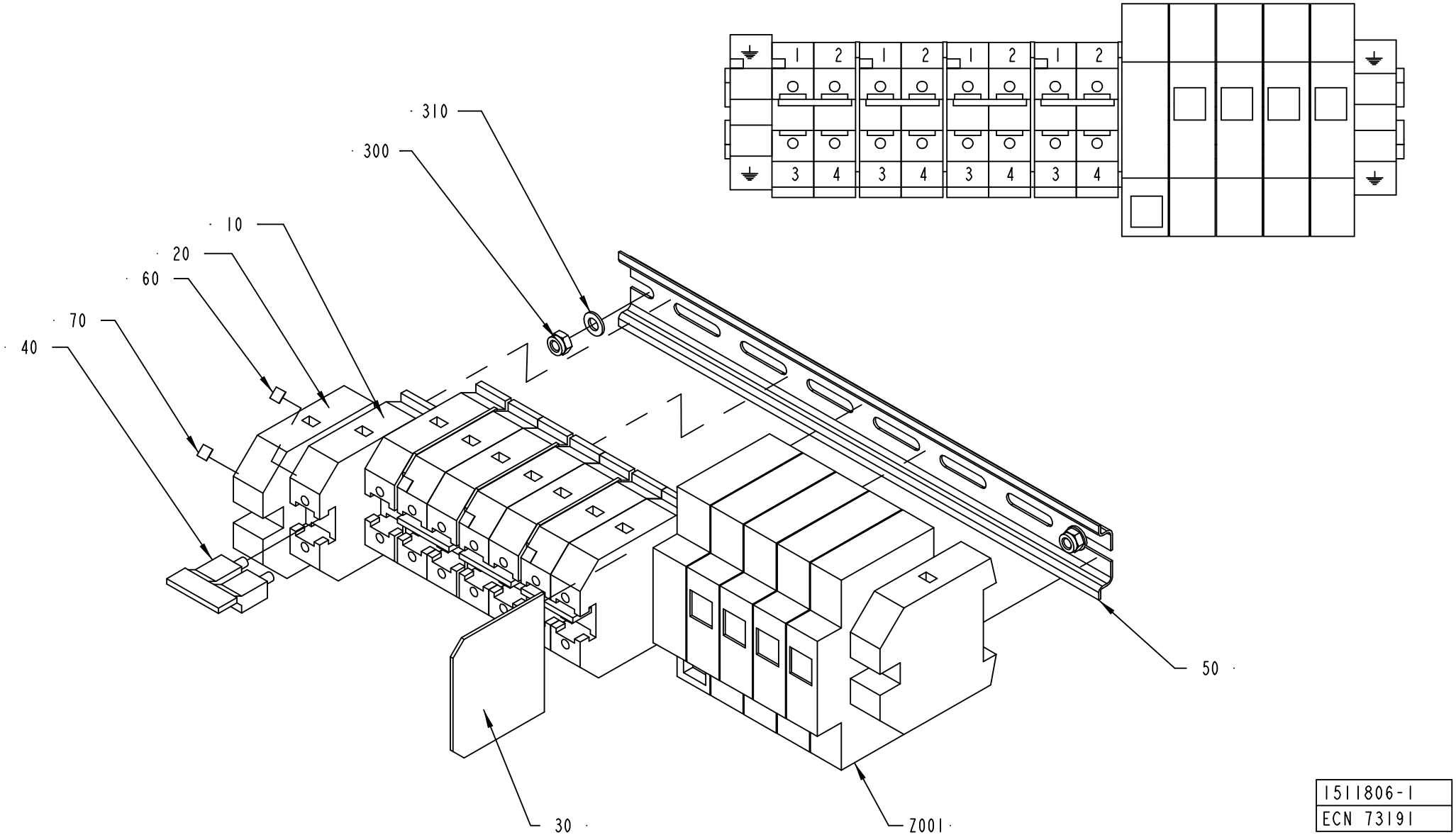

1511806-1
ECN 73191

ECM: 115730 - 20020930
Group number: 1511806-0100
Assembly Drawing: 1511806-1_1_AA

Pos	Part No	SP	UN	Qty	Description	Page No
-						
010	353021-0219	-		8	FEED THROUGH TERMINAL, 10205.0	
020	353024-0209	-		2	EARTH TERMINAL, 1010.5	
030	353033-0105	-		1	PARTITITION, 10501.0	
040	353034-0026	-		4	BRIDGE CONNECTOR, WQV 35/2, 10530.6	
050	353042-0004	-	MM	260	RAIL TS 35/7,5	
060	359011-0807	-		4	MARKING PLATES 5-FW 1-50	
070	359011-0819	-		1	MARKING PLATES 5-GW (EARTH)	
300	312812-0314	-		2	HEXAGON NUT, NY-LOCK M5 A480	
310	315105-0146	-		2	WASHER BRB5,3X10RFR	
Z001	90082-0013	A		1	OVERVOLTAGE PROTECTOR	
	90082-0301	*A*		*3*	*OVERVOLTOLTAGE PROTECTOR*	

Pos	Part No	SP	UN	Qty	Description	Page No

EXTERNAL DOOR TERMOREGULATORS

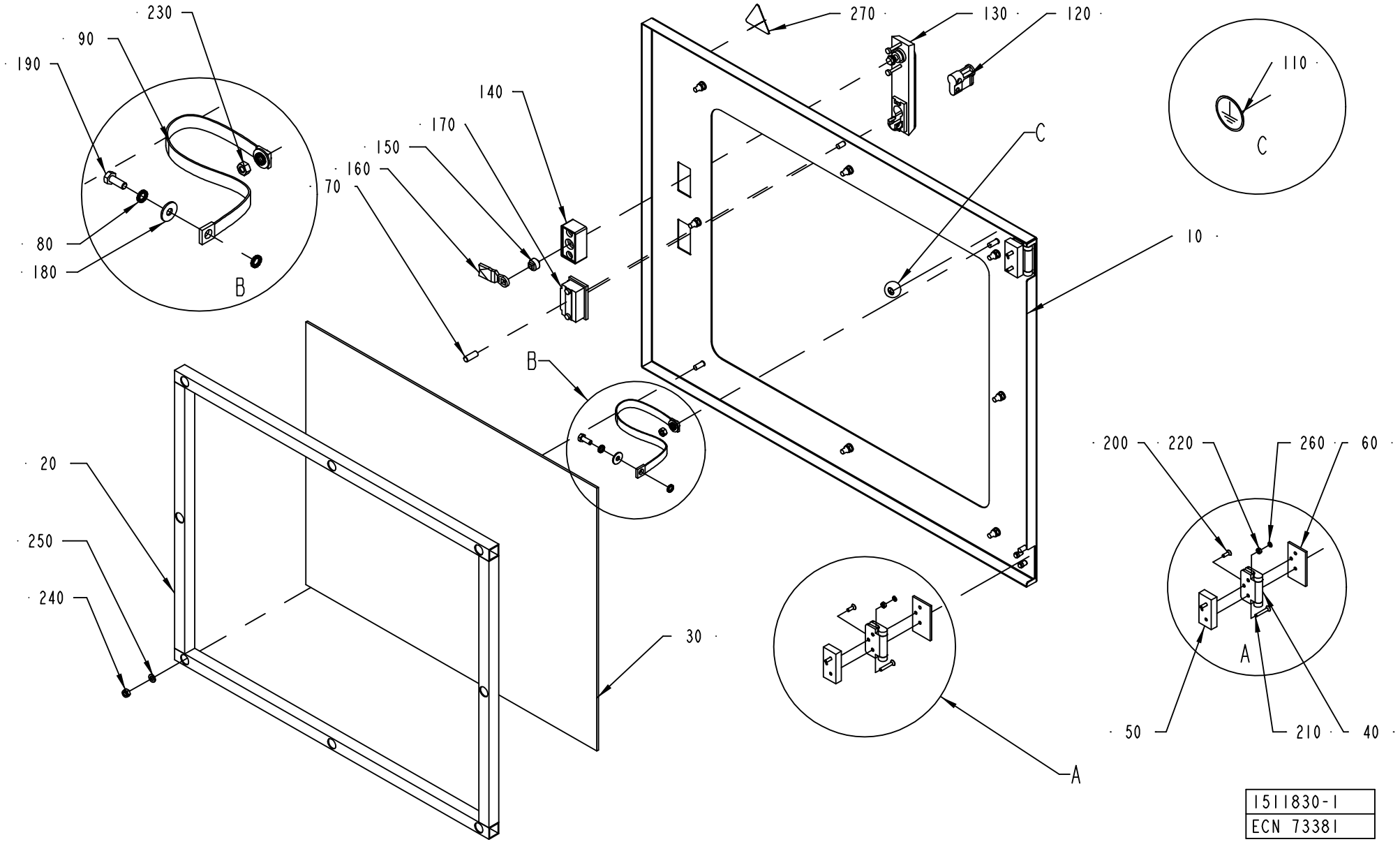

1511830-1
ECN 73381

ECM: 115710 - 20020930
Group number: 1511830-0100
Assembly Drawing: 1511830-1_1_AA

Pos	Part No	SP	UN	Qty	Description	Page No
-						
010	1517663-0000	-		1	DOOR	
020	1517664-0000	-		1	FRAME	
030	1517665-0000	-		1	WINDOW	
040	1523438-0000	B		2	HINGE	
050	1523441-0000	-		2	SPACER SHEET	
060	1523442-0000	-		2	SPACER SHEET	
070	1523957-0000	-		1	SPACER	
080	90062-0015	-		4	LOCK WASHER SERRAT.EXT.GEAR,6,4/11 H=0,7	
090	90135-0044	A		1	EARTH WIRE, L=320 MM 16 MM2	
100	90144-0072	-	MM	2060	TAPE SCOTCH VHBS 4945 W=12,7MM	
110	90194-0163	-		1	SIGN, EARTH WITHIN CIRCLE	
120	90237-0128	-		1	LOCK CYLINDER, 1109-U3	
130	90237-0150	-		1	TURNING HANDLE, NO. 1125-U190-0A	
140	90237-0154	-		1	LOCK HOUSING, 1121-U60-0C	
150	90237-0155	-		1	LOCK ADAPTER, 1121-U40	
160	90237-0156	-		1	LOCK BOLT, 1000-16	
170	90237-0176	-		1	TURNING HANDLE	
180	90457-0192	-		2	WASHER PLAIN ROUND, 6,5/18, H=1,5	
190	312105-0368	-		1	SCREW M6S M6X16 A280	
200	312155-0291	-		2	SCREW EN 10642 MF6S M4X12 A480	
210	312155-0297	-		4	SCREW EN 10642 MF6S M4X25 A480	
220	312605-0312	-		6	HEXAGON NUT, M6M M4 A280	
230	312605-0316	-		1	HEXAGON NUT, M6M M6 A280	
240	312812-0316	-		8	HEXAGON NUT, NY-LOCK M6 A480	
250	315105-0153	-		8	WASHER BRB6,4X12RFR	
260	315402-0136	-		6	LOCK WASHER FBB 4,1	
270	359705-0015	A		1	WARNING SIGN ISO, RISK OF ELECTRIC SHOCK	

Pos	Part No	SP	UN	Qty	Description	Page No

Machine Type | Group Description | Used-In | Group Number | Page No

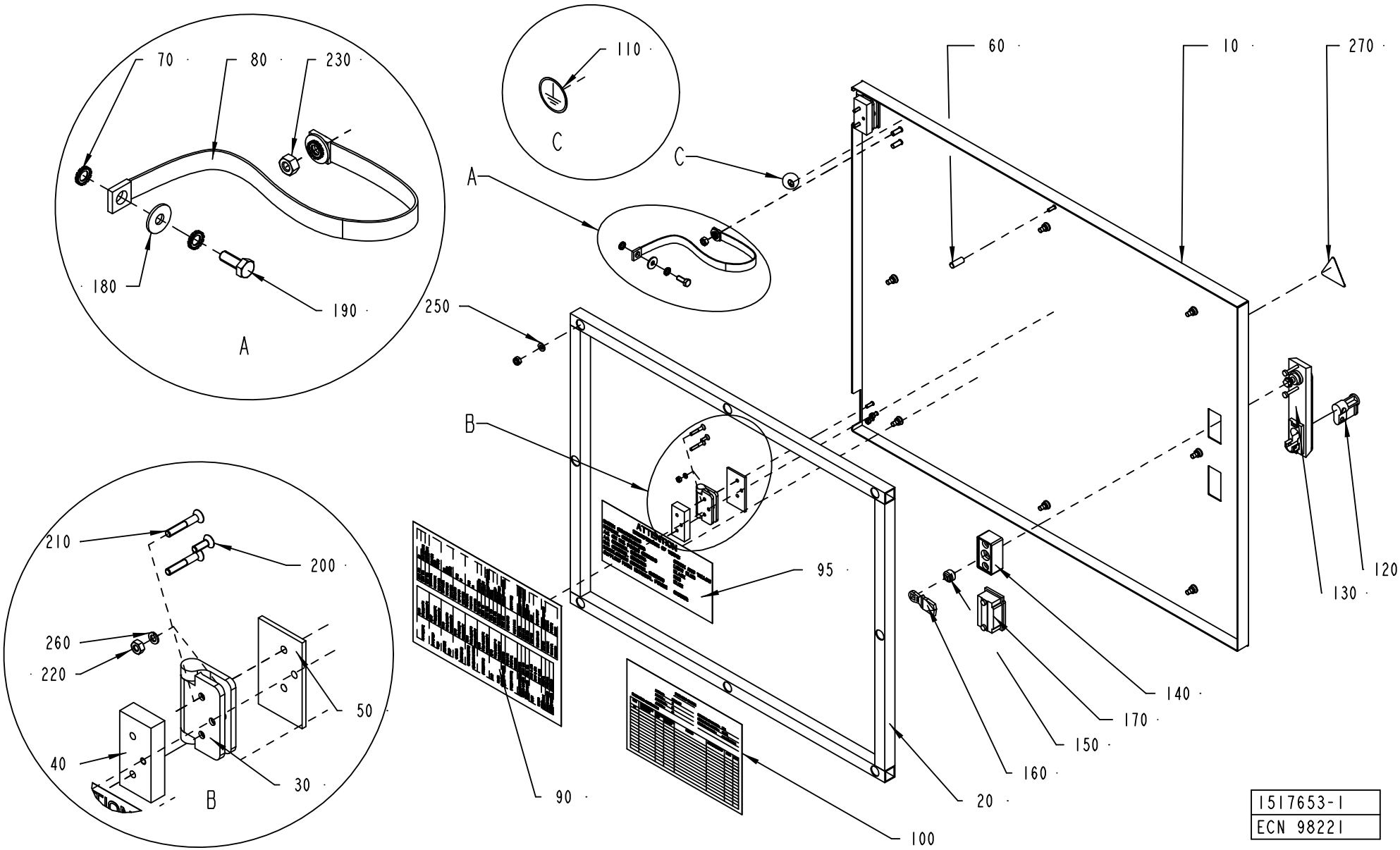
70
80
230
180
190
A
110
C
A
C
60
10
270
250
B
95
120
130
140
170
150
160
20
100
90
210
200
260
220
50
40
30
B
1517653-1
ECN 98221

ECM: 115707 - 20020930
Group number: 1517653-0100
Assembly Drawing: 1517653-1_1_AB

Pos	Part No	SP	UN	Qty	Description	Page No
-						
010	1517667-0000	-		1	DOOR	
020	1517664-0000	-		1	FRAME	
030	1523438-0000	B		2	HINGE	
040	1523441-0000	-		2	SPACER SHEET	
050	1523442-0000	-		2	SPACER SHEET	
060	1523957-0000	A		1	SPACER	
070	90062-0015	-		4	LOCK WASHER SERRAT.EXT.GEAR,6,4/11 H=0,7	
080	90135-0044	-		1	EARTH WIRE, L=320 MM 16 MM2	
090	1538212-0000	-		1	FUSE BOARD	
095	90194-0080	-		1	SIGN, IDENTIFICATION OF WIRING	
100	1517654-0000	-		1	DELIVERED DESIGN	
110	90194-0163	-		1	SIGN, EARTH WITHIN CIRCLE	
120	90237-0128	-		1	LOCK CYLINDER, 1109-U3	
130	90237-0150	-		1	TURNING HANDLE, NO. 1125-U190-0A	
140	90237-0154	-		1	LOCK HOUSING, 1121-U60-0C	
150	90237-0155	-		1	LOCK ADAPTER, 1121-U40	
160	90237-0156	-		1	LOCK BOLT, 1000-16	
170	90237-0176	-		1	TURNING HANDLE	
180	90457-0192	-		2	WASHER PLAIN ROUND, 6,5/18, H=1,5	
190	312105-0368	-		1	SCREW M6S M6X16 A280	
200	312155-0291	-		2	SCREW EN 10642 MF6S M4X12 A480	
210	312155-0297	-		4	SCREW EN 10642 MF6S M4X25 A480	
220	312605-0312	-		6	HEXAGON NUT, M6M M4 A280	
230	312605-0316	-		1	HEXAGON NUT, M6M M6 A280	
240	312812-0316	-		8	HEXAGON NUT, NY-LOCK M6 A480	
250	315105-0153	-		8	WASHER BRB6,4X12RFR	
260	315402-0136	-		6	LOCK WASHER FBB 4,1	
270	359705-0015	A		1	WARNING SIGN ISO, RISK OF ELECTRIC SHOCK	

Pos	Part No	SP	UN	Qty	Description	Page No

Machine Type | Group Description | Used-In | Group Number | Page No

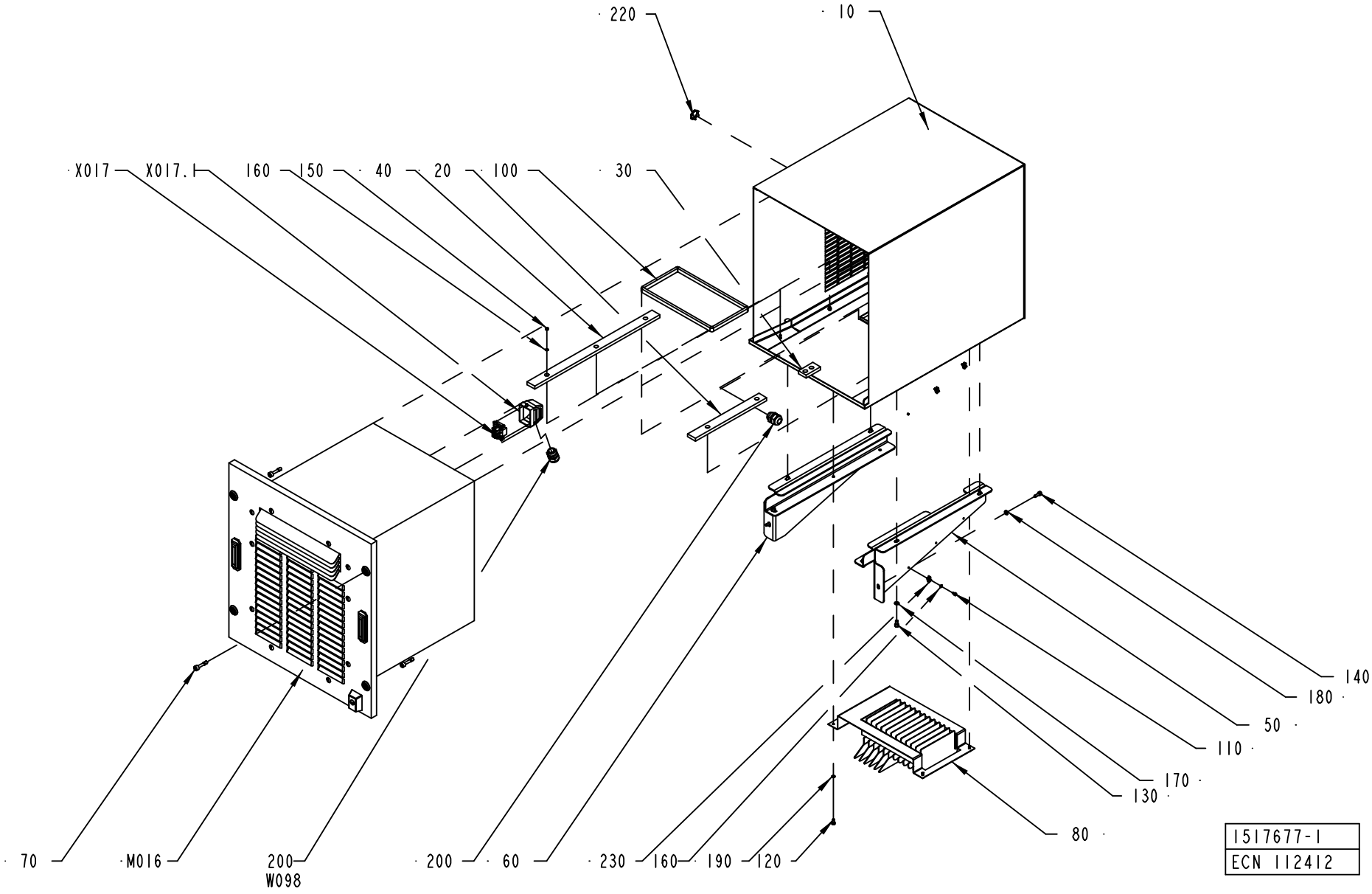
220
10
X017
X017.
160
150
40
20
100
30
140
180
50
110
170
130
80
70
M016
200
W098
200
60
230
160
190
120
1517677-1
ECN 112412

ECM: 113220 - 20030113
Group number: 1517677-0100
Assembly Drawing: 1517677-1_1_AB

Pos	Part No	SP	UN	Qty	Description	Page No
-						
010	1523448-0000	-		1	FRAME	
020	1523449-0000	-		1	SLIDE	
030	1523450-0000	-		1	SLIDE	
040	1523451-0000	-		1	SLIDE	
050	1523452-0000	-		1	SUPPORT	
060	1523453-0000	-		1	SUPPORT	
070	1523454-0000	-		4	SCREW	
080	1523973-0000	-		1	FRAME	
100	90143-0059	-	MM	830	SEAL STRIP 4610069	
120	312115-0325	-		4	SCREW ISO4762 M5X10 A4	
130	312115-0366	-		4	SCREW ISO4762 M6X12 A4	
140	312115-0368	-		4	SCREW ISO4762 M6X16 A4	
150	312605-0312	-		7	HEXAGON NUT, M6M M4 A280	
160	315105-0136	-		7	WASHER BRB4,3XRFR	
170	315105-0153	-		4	WASHER BRB6,4X12RFR	
180	315401-0153	-		4	WASHER FBH6,1FZB	
190	315402-0146	-		4	LOCK WASHER FBB 5,1	
200	352103-0111	-		2	CABLE GLAND, ST 16, PR22,5/PG16	
220	90099-0110	-		1	NUT, PR 22,5 (PG16)	
M016	90457-0063	B		1	COOLING UNIT, KB17TB.CBB	
W098	351150-0415	-	MM	3000	CABLE OLFLEX 7X1,5 MM2 LIGHT/GREY	
X017	90110-0163	B		1	FEMALE INSERT 70 300 0640 0	
X017.1	90110-0226	-		1	CABLE HOOD 6-POL 70.350.0628.0	

Pos	Part No	SP	UN	Qty	Description	Page No

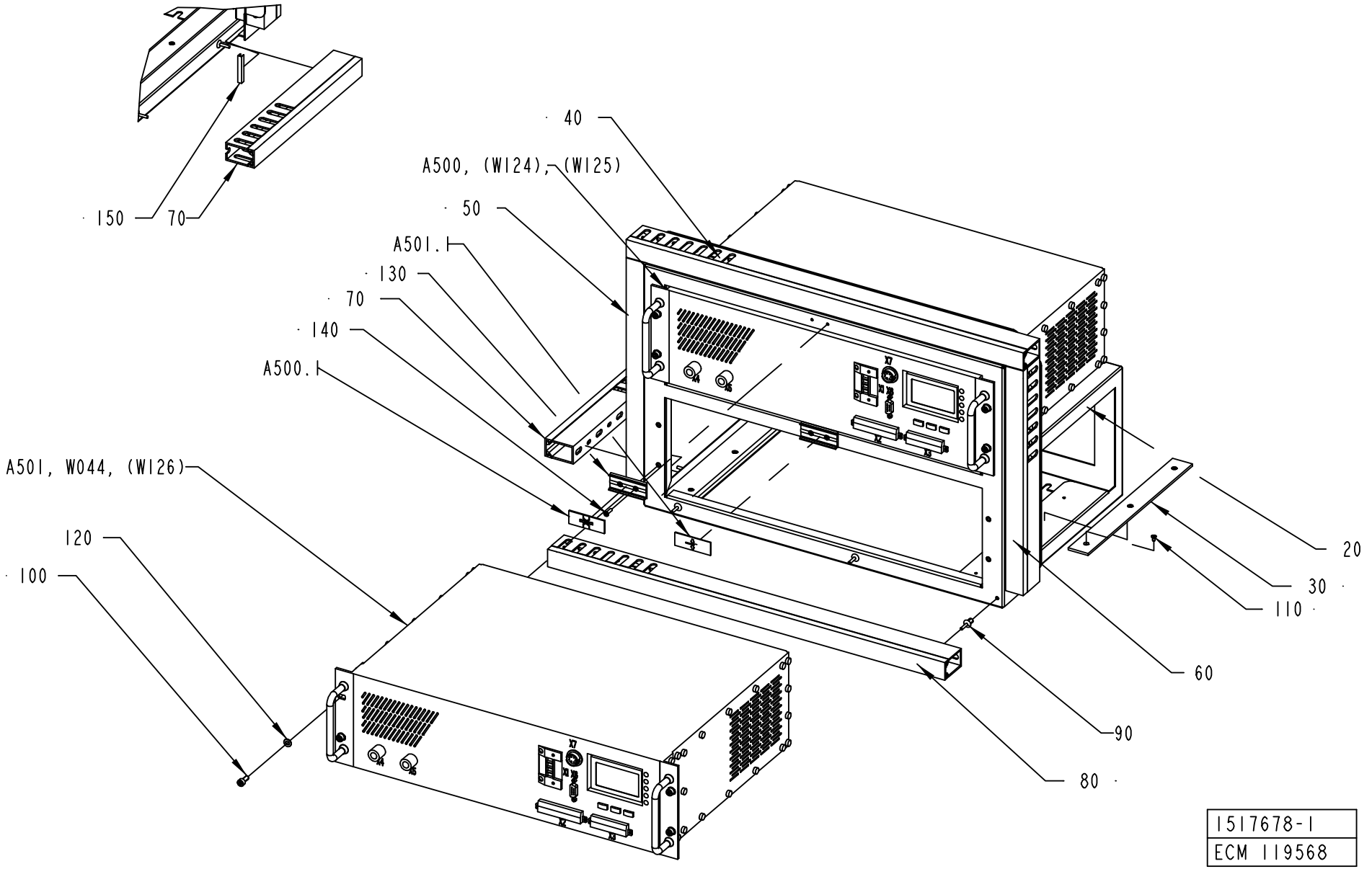
150
70
40
A500, (W124), (W125)
50
A501.1
130
70
140
A500.1
A501, W044, (W126)
120
100
20
30
110
60
90
80
1517678-1
ECM 119568

ECM: 120812 - 20030227
Group number: 1517678-0100
Assembly Drawing: 1517678-1_1_AC

Pos	Part No	SP	UN	Qty	Description	Page No
-						
020	1523455-0000	-		1	FRAME	
030	1523456-0000	-		4	SLIDE	
040	90181-0037	-	MM	560	CABLE DUCT, 25X40MM	
050	90181-0037	-	MM	320	CABLE DUCT, 25X40MM	
060	90181-0037	-	MM	320	CABLE DUCT, 25X40MM	
070	90181-0037	-	MM	263	CABLE DUCT, 25X40MM	
080	90181-0037	-	MM	560	CABLE DUCT, 25X40MM	
090	90181-0088	-		14	PLASTIC RIVET, PR 52314	
100	312115-0327	-		8	SCREW ISO4762 M5X12 A4	
110	312155-0220	-		12	SCREW EN 10642 MF6S M3X6 A480	
120	315105-0146	-		8	WASHER BRB5,3X10RFR	
130	359240-0100	-		2	SIGN HOLDER FOR 359240-0001	
140	311521-0146	-		4	BLANK RIVET 3,2X12	
150	90143-0094	-	MM	38	SEAL	
A500	1499642-0101	A		1	TPIH 2500 HORIZONTAL MOUNTING	
A500.1	90458-1423	A		1	CONNECTOR, PC 4/4-STF-7.62	
A500.2	90458-1424	A		1	CONNECTOR, MSTB 2.5/10-STF-5.08	
A500.3	359241-0135	-		1	SIGN, TRANSVERSAL SEALING	
A501	1499642-0101	A		1	TPIH 2500 HORIZONTAL MOUNTING	
A501.1	90458-1423	A		1	CONNECTOR, PC 4/4-STF-7.62	
A501.2	90458-1424	A		1	CONNECTOR, MSTB 2.5/10-STF-5.08	
A501.3	359241-0132	-		1	SIGN, TEMP. STRIP APPLICATOR	
W044	551969-0012	A		1	COAXIAL CABLE	
W102	90220-0183	-	M	4	SCR. CABLE 2X0,34MM2	
W103	90220-0183	-	M	4	SCR. CABLE 2X0,34MM2	
W104	90220-0183	-	M	4	SCR. CABLE 2X0,34MM2	

Pos	Part No	SP	UN	Qty	Description	Page No

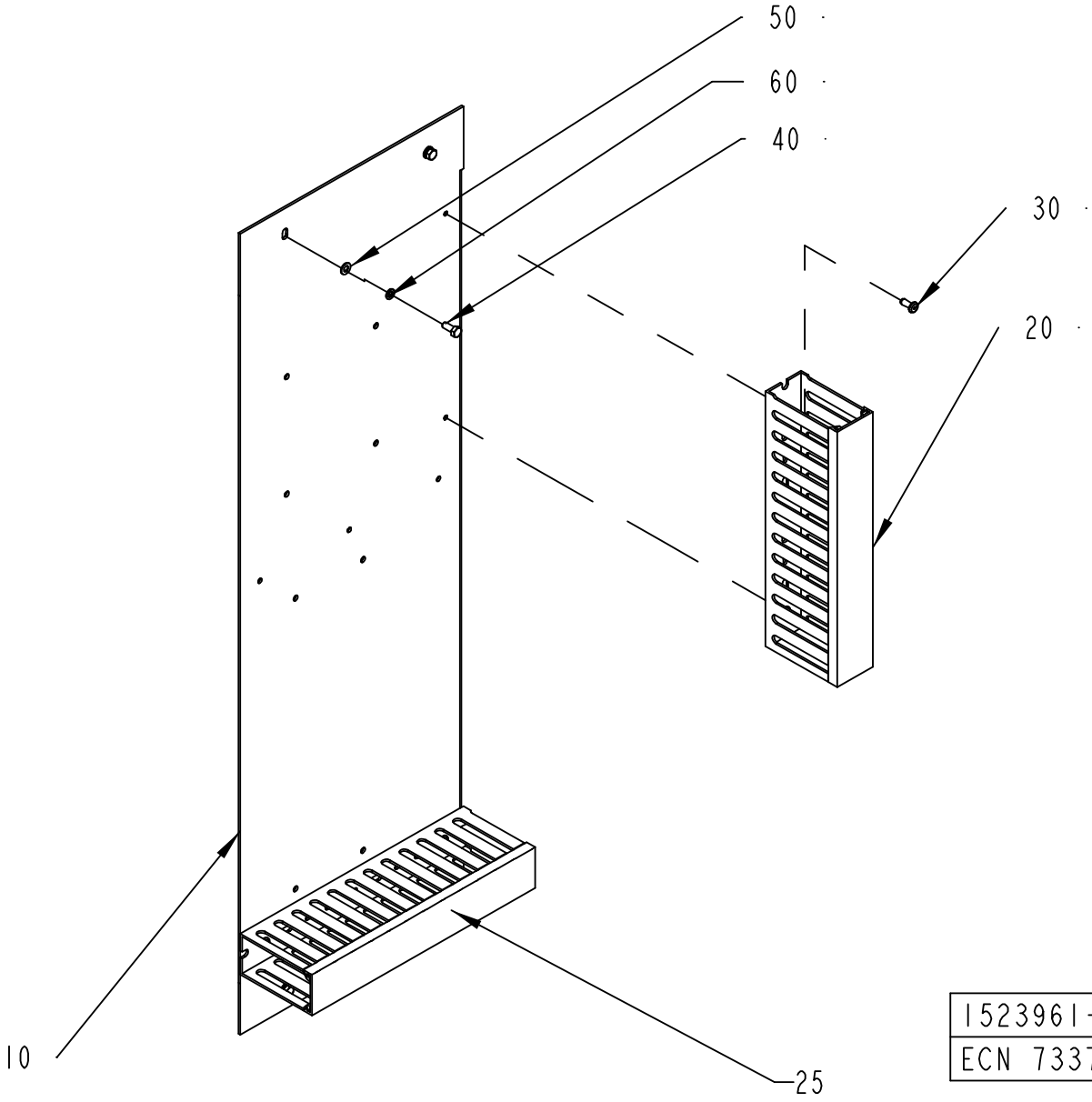

1523961-1
ECN 73370

ECM: 81707 - 20011221
Group number: 1523961-0100
Assembly Drawing: 1523961-1_1_AA

Pos	Part No	SP	UN	Qty	Description	Page No
-						
010	1523963-0000	-		1	SUPPORT PLATE	
020	90181-0053	-	MM	250	CABLE DUCT, 40X80MM	
025	90181-0053	-	MM	250	CABLE DUCT, 40X80MM	
030	90181-0313	-		4	RIVET DUCTAFIX R4	
040	312105-0327	-		4	SCREW M6S ISO 4017 M5X12 A480	
050	315105-0146	-		4	WASHER BRB5,3X10RFR	
060	315402-0146	-		4	LOCK WASHER FBB 5,1	

Pos	Part No	SP	UN	Qty	Description	Page No

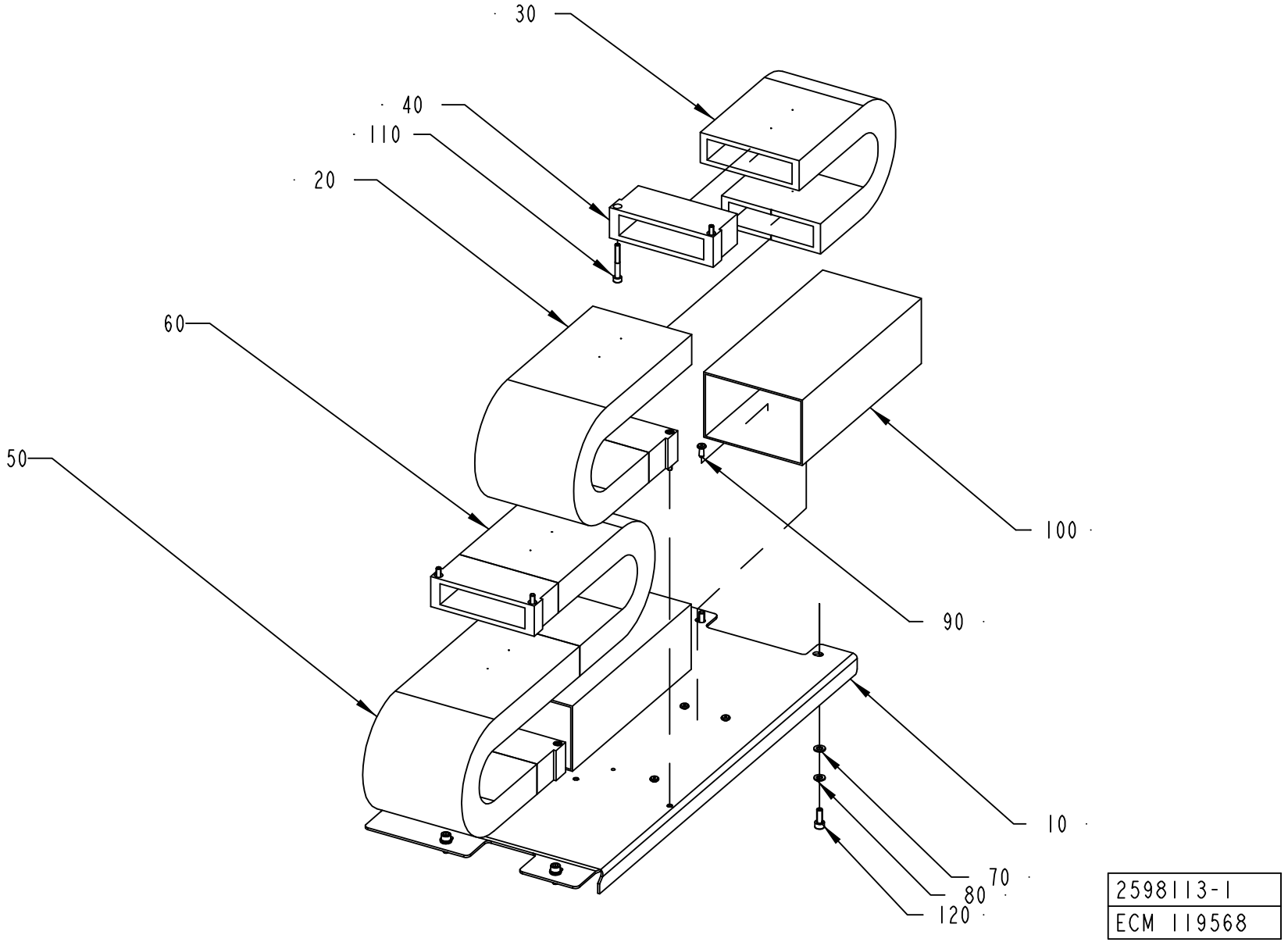

2598113-1
ECM 119568

ECM: 126326 - 20030227
Group number: 2598113-0100
Assembly Drawing: 2598113-1_1_AA

Pos	Part No	SP	UN	Qty	Description	Page No
-						
010	2598430-0000	-		1	SUPPORT	
020	90459-2309	-	MM	405	FLEXIBLE CHAIN, A325A103KM	
030	90459-2309	-	MM	360	FLEXIBLE CHAIN, A325A103KM	
040	90459-2350	-		4	END BRACKET, A325A103KM	
050	90459-2309	-	MM	405	FLEXIBLE CHAIN, A325A103KM	
060	90459-2309	-	MM	360	FLEXIBLE CHAIN, A325A103KM	
070	315101-0153	-		4	WASHER PLAIN, BRB, 6,4/12 H=1,5	
080	315401-0153	-		4	WASHER FBH6,1FZB	
090	90181-0313	-		8	RIVET DUCTAFIX R4	
100	90181-0057	-	MM	500	CABLE DUCT, 120X80MM	
110	312115-0339	-		8	SCREW ISO4762 M5X40 A4	
120	312115-0368	-		4	SCREW ISO4762 M6X16 A4	

Pos	Part No	SP	UN	Qty	Description	Page No

Tetra Pak

SPC
Spare Parts Catalogue

This page is intentionally left blank.

ECM: 140598 - 50001231
Group number: 648119-1200
Assembly Drawing:

Pos	Part No	SP	UN	Qty	Description	Page No
-						
	77092-0500	-		1	SERVICE PARTS	**851**
	77094-0300	-		1	PRODUCTION PARTS	**869**

Pos	Part No	SP	UN	Qty	Description	Page No

Machine Type | Group Description | Used-In | Group Number | Page No

This page is intentionally left blank.

ECM: 132179 - 20030820
Group number: 77092-0500
Assembly Drawing:

Pos	Part No	SP	UN	Qty	Description	Page No
-						
010	2614370-0100	-		1	SERVICE PARTS	**853**

Pos	Part No	SP	UN	Qty	Description	Page No

This page is intentionally left blank.

ECM: 140958 - 20030821
Group number: 2614370-0100
Assembly Drawing:

Pos	Part No	SP	UN	Qty	Description	Page No
-						
010	2552943-0100	-		1	TOOL	**855**
010	2552941-0100	-		1	TOOL	**857**
020	2552944-0100	-		1	TOOL	**859**
030	2552946-0100	-		1	TOOL	**861**
040	2552947-0100	-		1	TOOL	**863**
050	2552949-0100	-		1	TOOL	**865**
060	2641477-0100	-		1	TOOL	**867**

Pos	Part No	SP	UN	Qty	Description	Page No

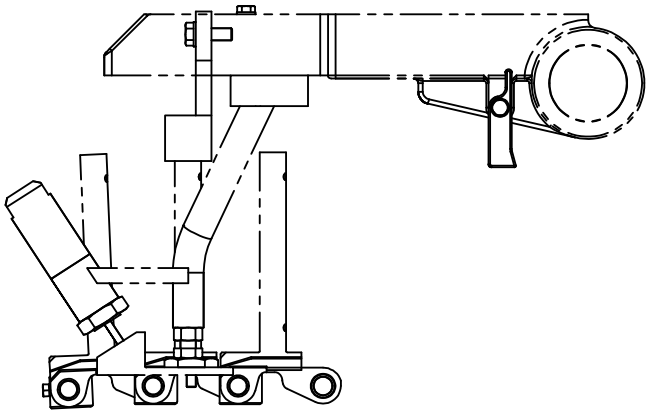

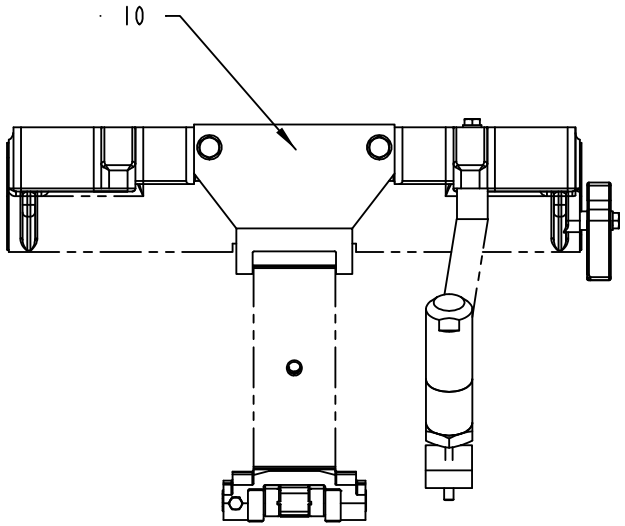

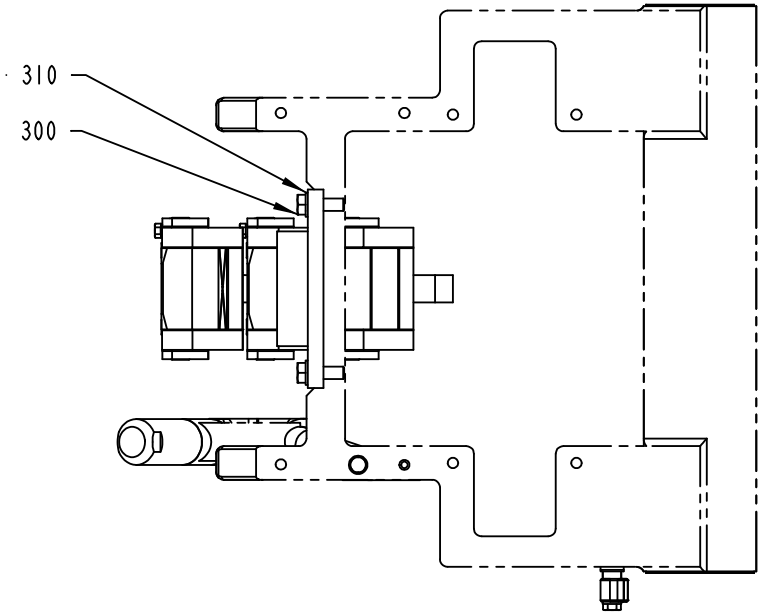

TOOL FOR ARM POSITION
UTENSILE PER POSIZIONE BRACCIO

2552943-1
ECM 111480

ECM: 140959 - 20030821
Group number: 2552943-0100
Assembly Drawing: 2552943-1_1_AA

Pos	Part No	SP	UN	Qty	Description	Page No
TBA 0100B						
010	1512453-0002	-		1	TEMPLATE	
TBA 0125S						
010	1512453-0003	-		1	TEMPLATE	
TBA 0160S						
010	1512453-0004	-		1	TEMPLATE	
TBA 0180B						
010	1512453-0005	-		1	TEMPLATE	
TBA 0200B						
010	1512453-0006	-		1	TEMPLATE	
TBA 0200M						
010	1512453-0007	-		1	TEMPLATE	
TBA 0200S						
010	1512453-0008	-		1	TEMPLATE	
TBA 0250B						
010	1512453-0009	-		1	TEMPLATE	
TBA 0250S						
010	1512453-0001	-		1	TEMPLATE	
TBA 0300S						
010	1512453-0011	-		1	TEMPLATE	
TBA 0330S						
010	1512453-0010	-		1	TEMPLATE	
Common Parts						
300	312105-0453	-		2	SCREW M6S ISO 4017 M8X25 A480	
310	315105-0165	-		2	WASHER BRB8,4X16RFR	

Pos	Part No	SP	UN	Qty	Description	Page No

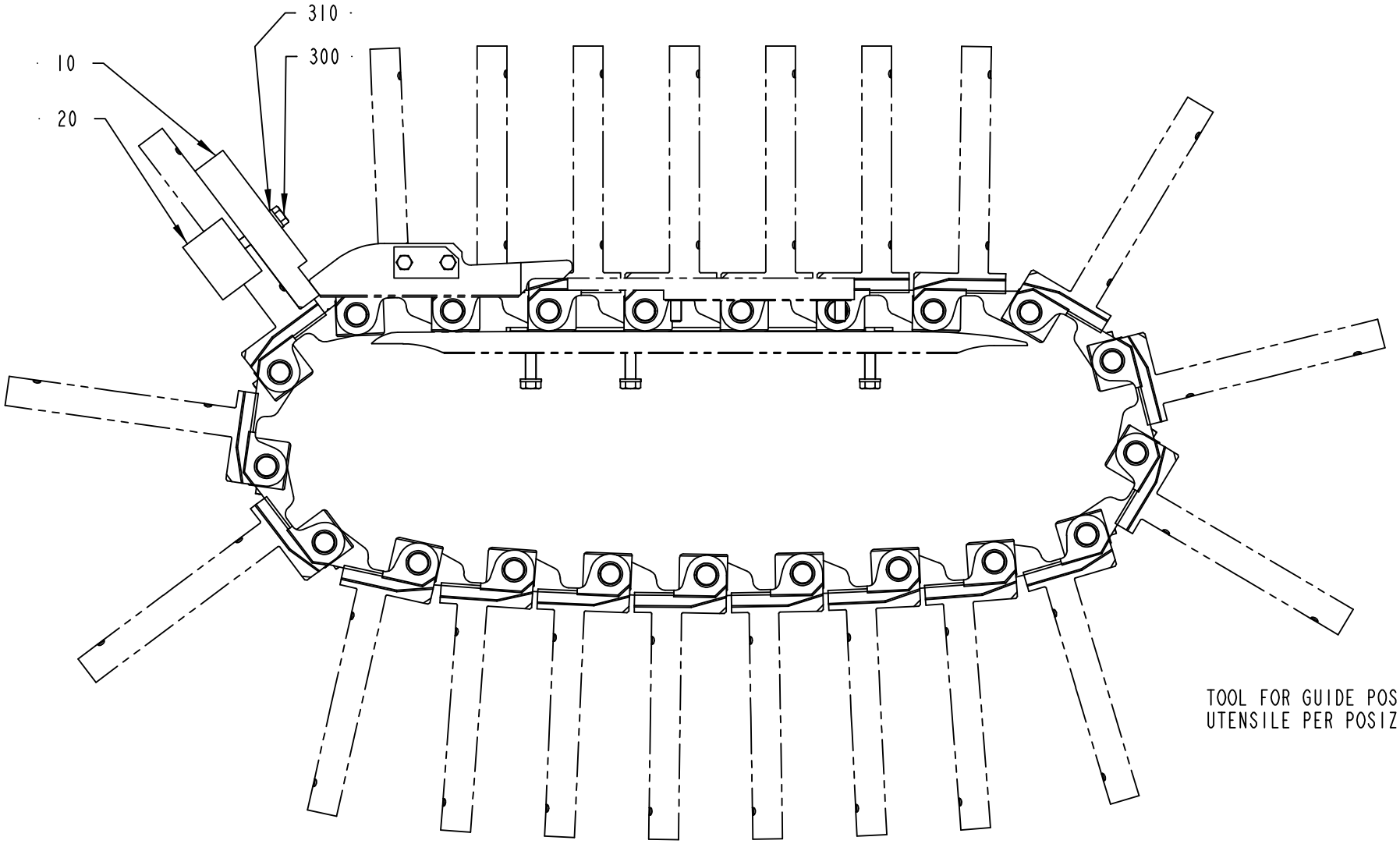

TOOL FOR GUIDE POSITION
UTENSILE PER POSIZIONE GUIDE

2552941-1
ECM 111480

ECM: 111571 - 20030820
Group number: 2552941-0100
Assembly Drawing: 2552941-1_1_AA

Pos	Part No	SP	UN	Qty	Description	Page No
TBA 0160S, TBA 0125S, TBA 0100B, TBA 0200S						
020	1517518-0001	-		1	CLAMP	
TBA 0250S, TBA 0200M						
020	1517518-0003	-		1	CLAMP	
TBA 0330S, TBA 0300S, TBA 0180B, TBA 0200B, TBA 0284B, TBA 0250B						
020	1517518-0002	-		1	CLAMP	
Common Parts						
010	1517517-0000	-		1	TEMPLATE	
300	312105-0379	-		2	SCREW M6S ISO 4014 M6X45 A480	
310	315105-0153	-		2	WASHER BRB6,4X12RFR	

Pos	Part No	SP	UN	Qty	Description	Page No

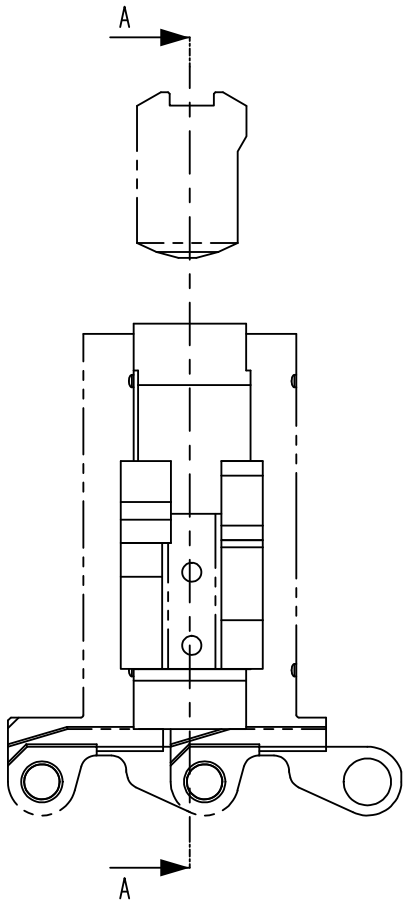

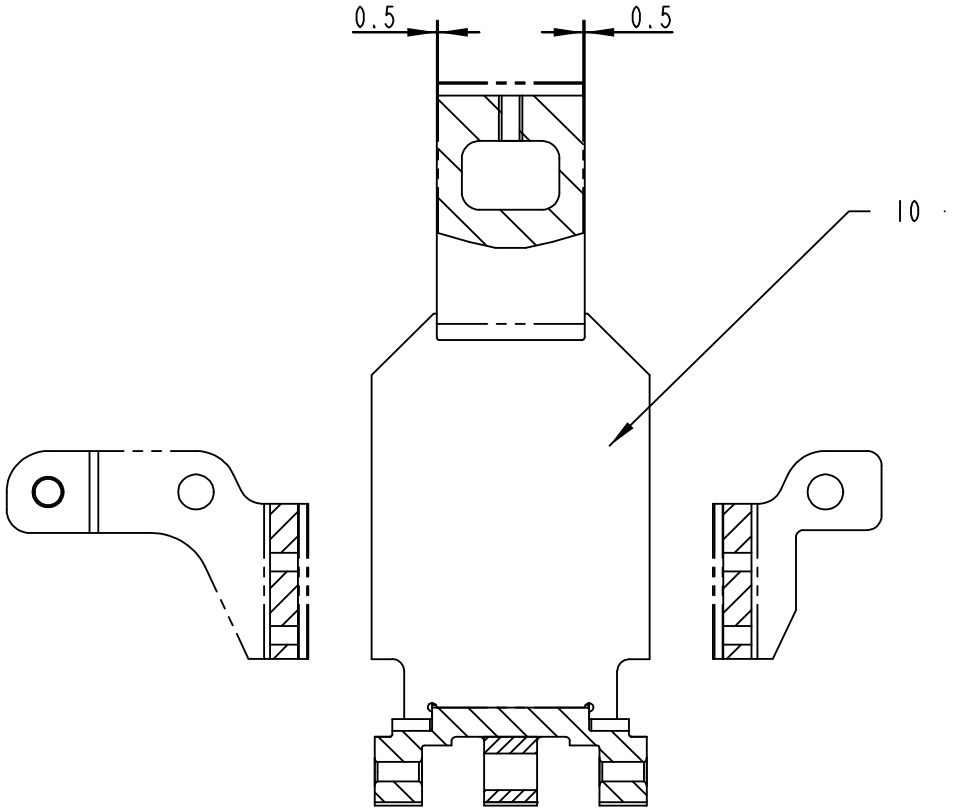

A-A

TOOL FOR PRESSURE DEVICE
UTENSILE PER SISTEMA DI PRESSIONE

2552944-1
ECM 111480

ECM: 140960 - 20030821
Group number: 2552944-0100
Assembly Drawing: 2552944-1_1_AA

Pos	Part No	SP	UN	Qty	Description	Page No
TBA 0100B						
010	2552945-0002	-		1	TEMPLATE	
TBA 0125S						
010	2552945-0003	-		1	TEMPLATE	
TBA 0160S						
010	2552945-0004	-		1	TEMPLATE	
TBA 0180B						
010	2552945-0005	-		1	TEMPLATE	
TBA 0200B						
010	2552945-0006	-		1	TEMPLATE	
TBA 0200M						
010	2552945-0007	-		1	TEMPLATE	
TBA 0200S						
010	2552945-0008	-		1	TEMPLATE	
TBA 0250B						
010	2552945-0009	-		1	TEMPLATE	
TBA 0250S						
010	2552945-0001	-		1	TEMPLATE	
TBA 0300S						
010	2552945-0011	-		1	TEMPLATE	
TBA 0330S						
010	2552945-0010	-		1	TEMPLATE	
Common Parts						
	2610198-0000	-		1	TOOL	
	2610197-0000	-		1	TOOL	

Pos	Part No	SP	UN	Qty	Description	Page No

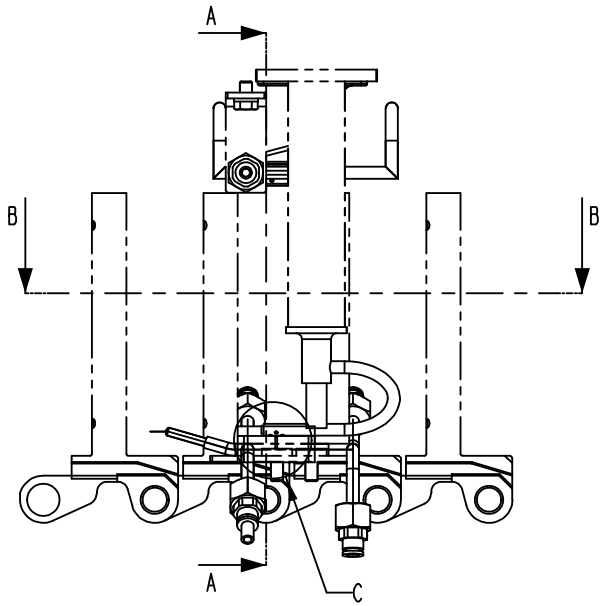

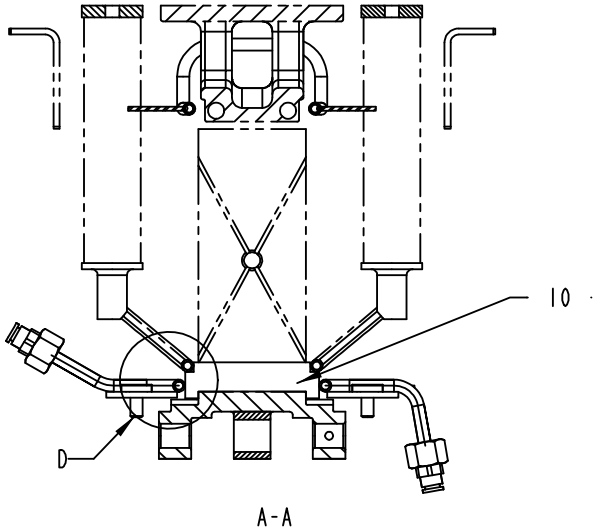

A-A

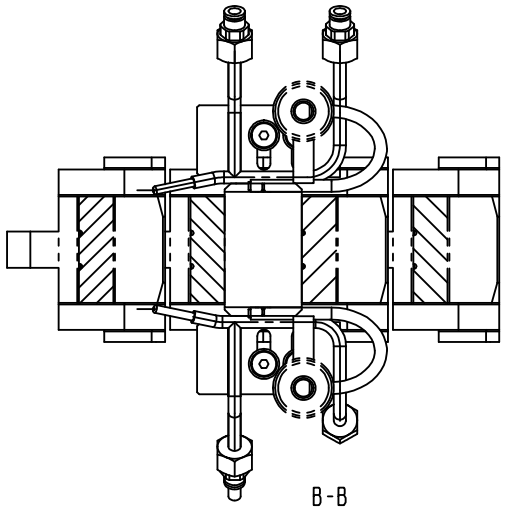

B-B

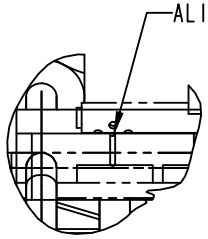

C
1:1

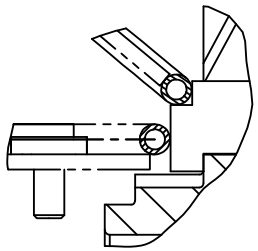

D
1:1

TOOL FOR:
LOWER AIR NOZZLE (left - right)
LOWER FOLDING BAR (left - right)

UTENSILI PER:
UGELLI SOFFIATORI INFERIORI (Sx-Dx)
GUIDE PIEGAORECCHIE INFERIORI (Sx-Dx)

2552946-1
ECM 111480

ECM: 140961 - 20030821
Group number: 2552946-0100
Assembly Drawing: 2552946-1_1_AA

Pos	Part No	SP	UN	Qty	Description	Page No
TBA 0125S, TBA 0100B						
010	1512450-0002	-		1	TEMPLATE	
TBA 0160S, TBA 0200S						
010	1512450-0004	-		1	TEMPLATE	
TBA 0250S, TBA 0200M						
010	1512450-0001	-		1	TEMPLATE	
TBA 0330S, TBA 0300S, TBA 0180B, TBA 0200B, TBA 0284B, TBA 0250B						
010	1512450-0003	-		1	TEMPLATE	

Pos	Part No	SP	UN	Qty	Description	Page No

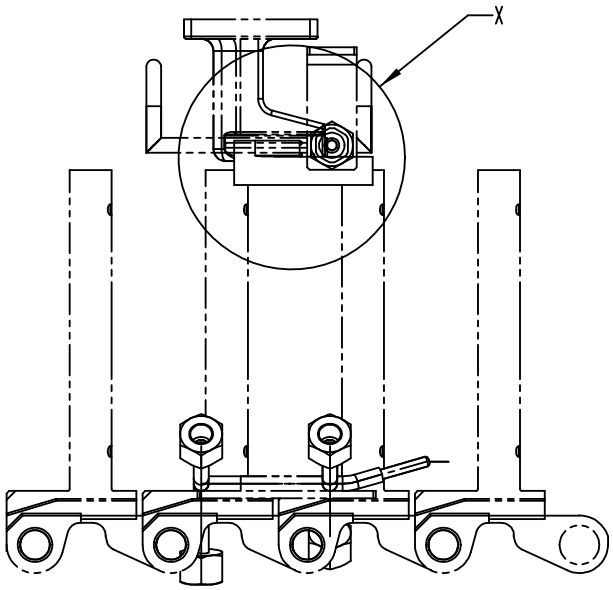

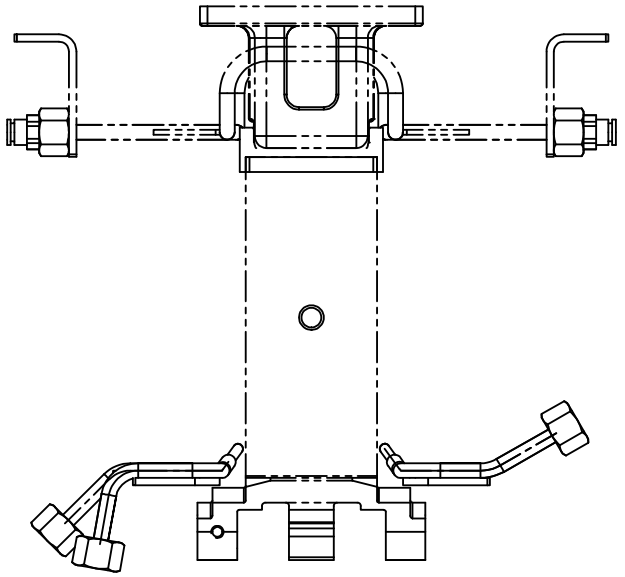

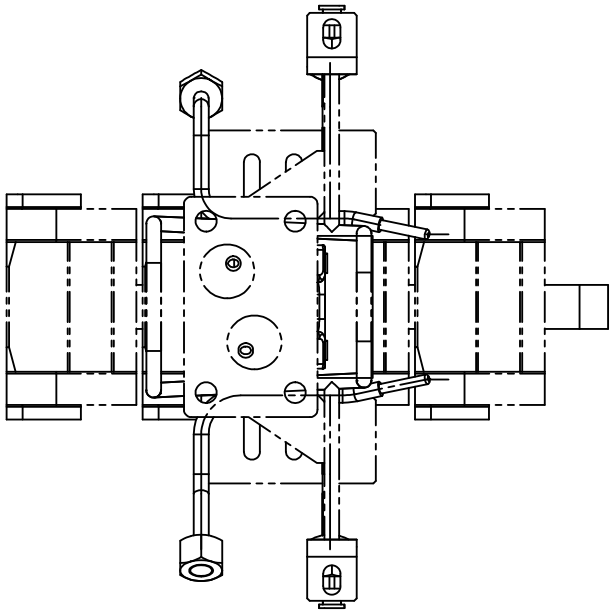

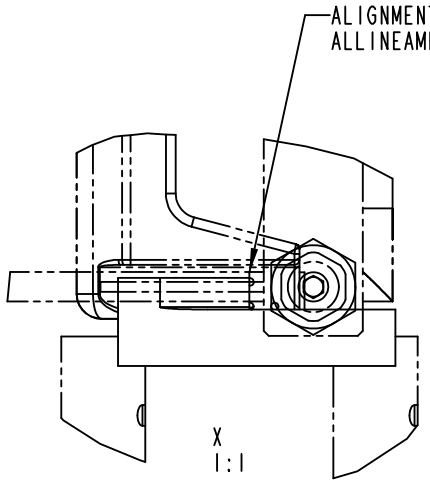

TOOL FOR:
UPPER AIR NOZZLE
UPPER FOLDING BAR

UTENSILE PER:
UGELLO SOFFIATORE SUPERIORE
GUIDA PIEGA ORECCHIE SUPERIORE

2552947-1
ECM 111480

ECM: 140962 - 20030821
Group number: 2552947-0100
Assembly Drawing: 2552947-1_1_AA

Pos	Part No	SP	UN	Qty	Description	Page No
TBA 0125S, TBA 0100B						
010	2552948-0002	-		1	TEMPLATE	
TBA 0160S, TBA 0200S						
010	2552948-0004	-		1	TEMPLATE	
TBA 0250S, TBA 0200M						
010	2552948-0001	-		1	TEMPLATE	
TBA 0330S, TBA 0300S, TBA 0180B, TBA 0200B, TBA 0284B, TBA 0250B						
010	2552948-0003	-		1	TEMPLATE	

Pos	Part No	SP	UN	Qty	Description	Page No

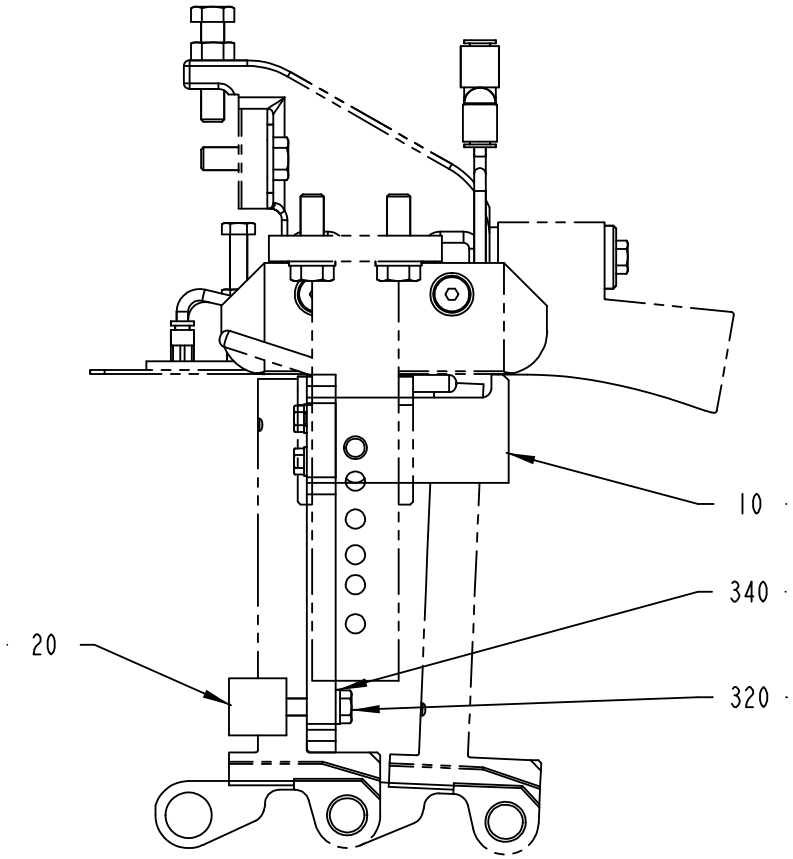

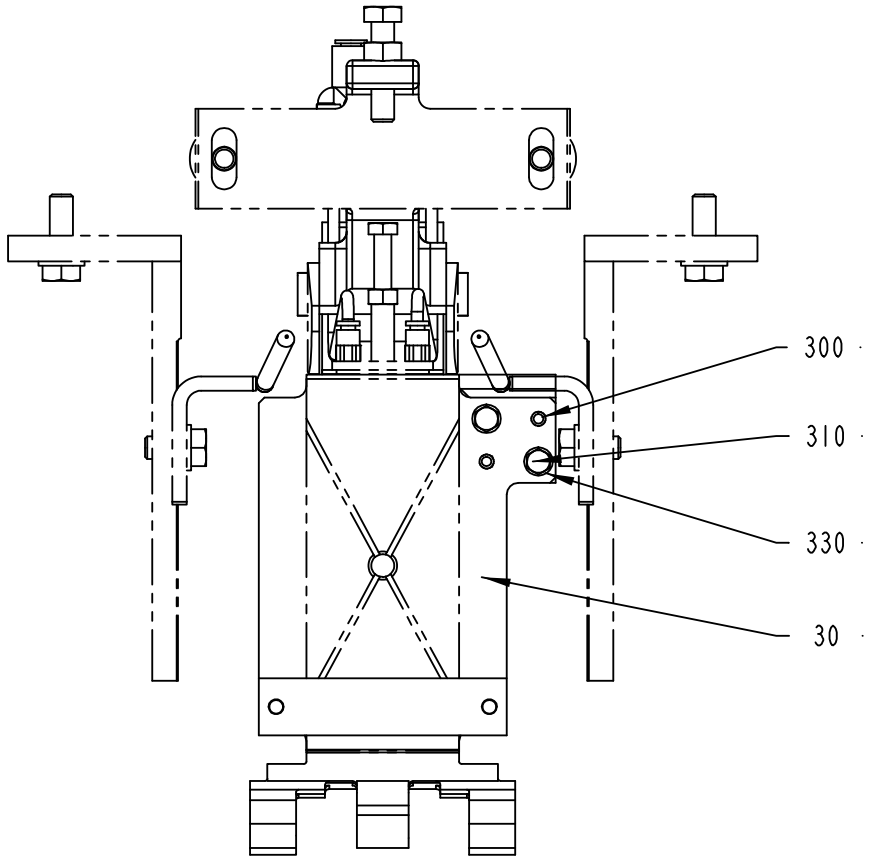

TOOL FOR ROOF POSITION

UTENSILE PER POSIZIONE TETTO

2552949-1
ECM 111480

ECM: 140963 - 20030821
Group number: 2552949-0100
Assembly Drawing: 2552949-1_1_AA

Pos	Part No	SP	UN	Qty	Description	Page No
TBA 0100B						
010	2552950-0002	-		1	TEMPLATE	
020	2552951-0003	-		1	CLAMP	
030	2552952-0002	-		1	PLATE	
TBA 0125S						
010	2552950-0002	-		1	TEMPLATE	
020	2552951-0003	-		1	CLAMP	
030	2552952-0003	-		1	PLATE	
TBA 0160S						
010	2552950-0001	-		1	TEMPLATE	
020	2552951-0003	-		1	CLAMP	
030	2552952-0004	-		1	PLATE	
TBA 0180B						
010	2552950-0003	-		1	TEMPLATE	
020	2552951-0002	-		1	CLAMP	
030	2552952-0005	-		1	PLATE	
TBA 0200B						
010	2552950-0001	-		1	TEMPLATE	
020	2552951-0002	-		1	CLAMP	
030	2552952-0006	-		1	PLATE	
TBA 0200M						
010	2552950-0001	-		1	TEMPLATE	
020	2552951-0001	-		1	CLAMP	
030	2552952-0007	-		1	PLATE	
TBA 0200S						
010	2552950-0001	-		1	TEMPLATE	
020	2552951-0003	-		1	CLAMP	
030	2552952-0008	-		1	PLATE	
TBA 0250B						
010	2552950-0003	-		1	TEMPLATE	
020	2552951-0002	-		1	CLAMP	
030	2552952-0009	-		1	PLATE	
TBA 0250S						
010	2552950-0001	-		1	TEMPLATE	
020	2552951-0001	-		1	CLAMP	
030	2552952-0001	-		1	PLATE	
TBA 0300S, TBA 0284B						
010	2552950-0003	-		1	TEMPLATE	
020	2552951-0002	-		1	CLAMP	
030	2552952-0011	-		1	PLATE	
TBA 0330S						
010	2552950-0003	-		1	TEMPLATE	
020	2552951-0002	-		1	CLAMP	
030	2552952-0010	-		1	PLATE	
Common Parts						
300	311103-0308	-		2	PARALLELL PIN ISO2338 5X16 A1	
310	312105-0331	-		2	SCREW M6S ISO 4017 M5X20 A480	
320	312105-0374	-		2	SCREW M6S ISO 4014 M6X30 A480	
330	315105-0146	-		2	BRICKA BRB5,3X10RFR	
340	315105-0153	-		2	WASHER BRB6,4X12RFR	

Machine Type | Group Description | Used-In | Group Number | Page No

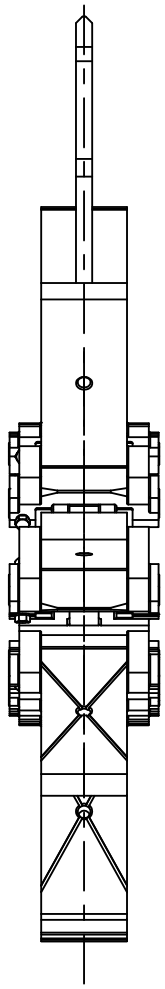

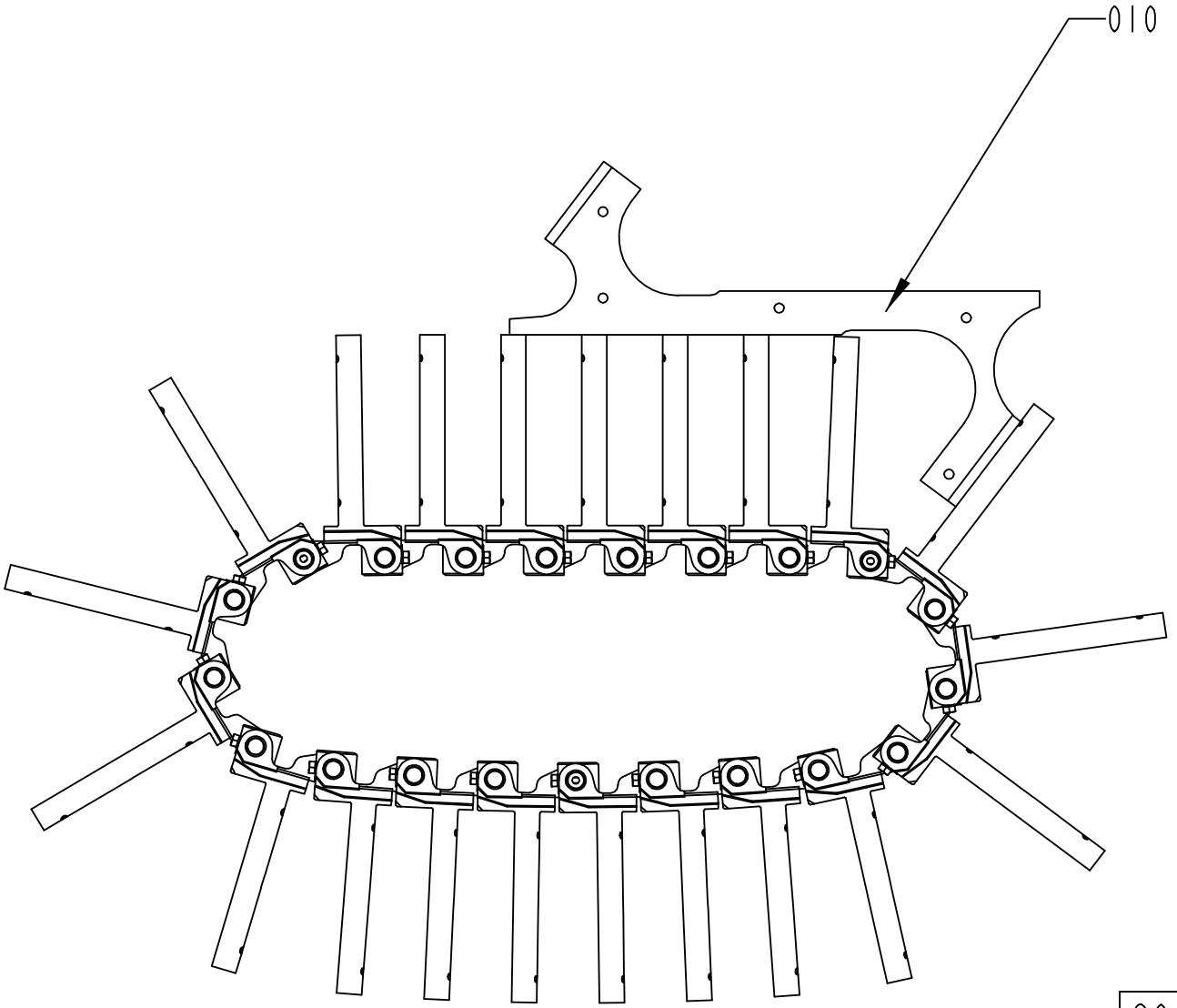

2641477-1
ECM 140998

ECM: 140967 - 20030821
Group number: 2641477-0100
Assembly Drawing: 2641477-1_1_AA

Pos	Part No	SP	UN	Qty	Description	Page No
-						
010	76128-0000	-		1	TEMPLATE	

Pos	Part No	SP	UN	Qty	Description	Page No

This page is intentionally left blank.

ECM: 140599 - 50001231
Group number: 77094-0300
Assembly Drawing:

Pos	Part No	SP	UN	Qty	Description	Page No
-						
	2566433-0100	-		1	TEMPLATE PT19-020V	**871**

Pos	Part No	SP	UN	Qty	Description	Page No

Machine Type | Group Description | Used-In | Group Number | Page No

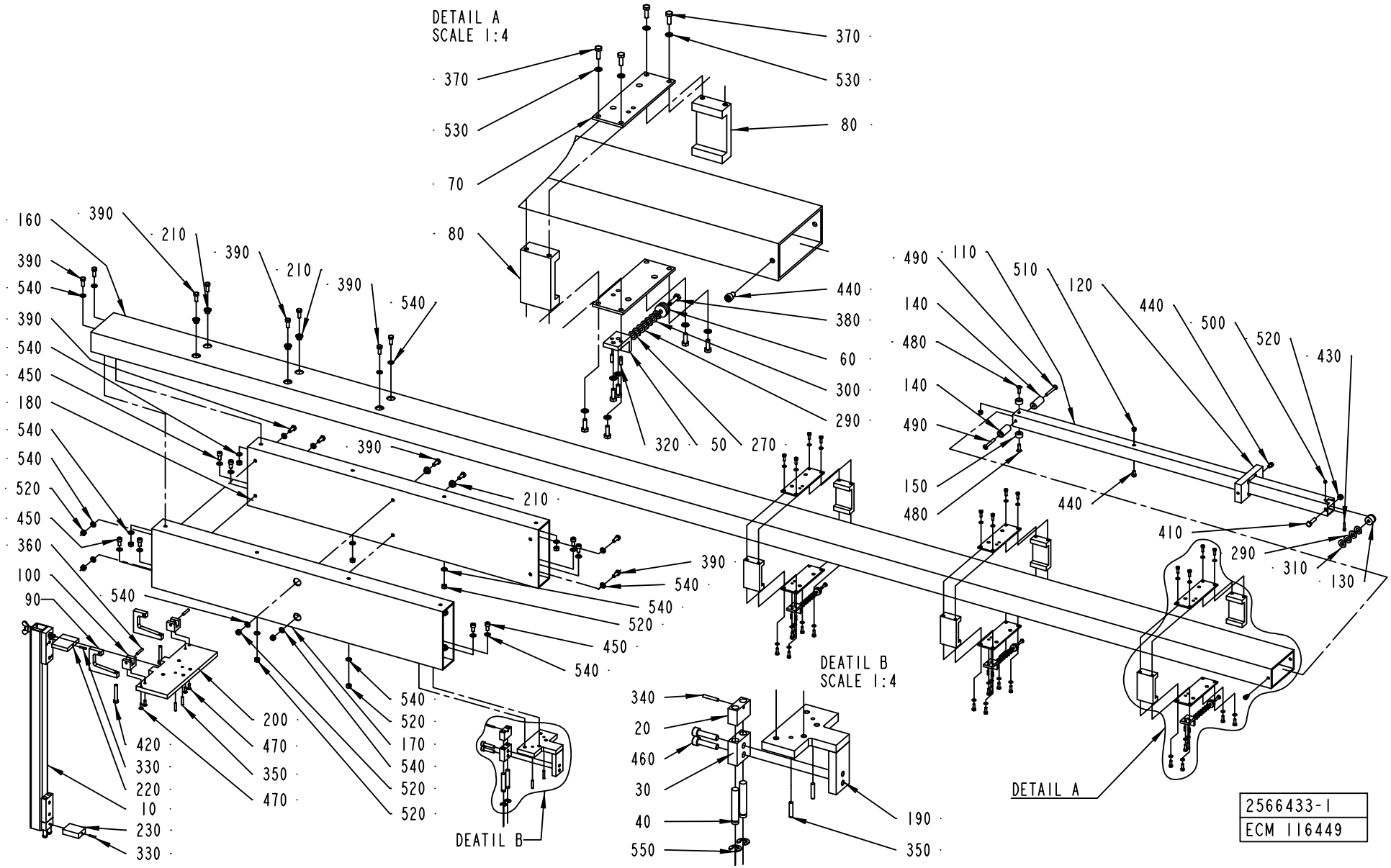
DETAIL A
SCALE 1:4
370
530
80
70
440
380
60
300
290
320
50
270
160
390
210
540
180
520
450
360
100
90
420
330
220
10
230
200
470
350
170
DEATIL B
340
20
460
30
40
550
190
DEATIL B
SCALE 1:4
490
110
510
120
140
480
500
520
430
150
410
290
310
130
DETAIL A
2566433-1
ECM 116449

ECM: 116451 - 50001231
Group number: 2566433-0100
Assembly Drawing: 2566433-1_1_AA

Pos	Part No	SP	UN	Qty	Description	Page No
-						
010	589885-0100	-		1	TEMPLATE HOUSE/BENDING ROLLER	**873**
020	589908-0000	-		1	BLOCKING PIECE	
030	589909-0000	-		1	BLOCKING PIECE	
040	590205-0000	-		2	PIN	
050	590215-0000	-		3	SUPPORT	
060	590216-0000	-		3	ROLLER	
070	590217-0000	-		6	SHEET	
080	590218-0000	-		6	GUIDE	
090	2615467-0000	-		2	BRACKET	
100	590221-0000	-		2	BLOCK	
110	1350674-0000	-		1	EXTENSION	
120	1350675-0000	-		1	GUIDE	
130	1350676-0000	-		1	ROLLER	
140	1350677-0000	-		2	GUIDE	
150	1350678-0000	-		2	GUIDE	
160	2566434-0000	-		1	BEAM	
170	2566435-0000	-		1	BEAM	
180	2566436-0000	-		1	BEAM	
190	2566437-0000	-		1	ANGLE BRACKET	
200	2566438-0000	-		1	SUPPORT	
210	2566439-0000	-		6	BUSHING	
220	2594679-0000	-		1	BLOCK	
230	2594680-0000	-		1	BLOCK	
270	2033-0002	-		6	WASHER	
280	2033-0003	-		9	WASHER	
290	2033-0008	-		3	WASHER	
300	2033-0010	-		6	WASHER	
310	2033-0011	-		1	WASHER	
320	311103-0233	-		6	PARALLELL PIN ISO2338 3X10 A1	
330	311103-0236	-		2	PARALLELL PIN ISO2338 3X16 A1	
340	311103-0238	-		1	PARALLELL PIN ISO2338 3X20 A1	
350	311103-0272	-		4	PARALLELL PIN ISO2338 4X20 A1	
360	311103-1274	-		2	PARALLELL PIN ISO2338 4X24 A1	
370	312105-0291	-		30	SCREW M6S ISO 4017 M4X12 A480	
380	312105-0293	-		3	SCREW M6S ISO 4017 M4X16 A480	
390	312105-0368	-		14	SCREW M6S M6X16 A280	
400	312105-0370	-		3	SCREW M6S ISO 4017 M6X20 A480	
410	312105-0372	-		1	SCREW M6S ISO 4017 M6X25 A480	
420	312109-0378	-		2	SCREW M6S ISO4017 M6X40 A480	
430	312115-0228	-		1	SCREW ISO4762 M3X16 A4	
440	312115-0323	-		3	SCREW ISO4762 M5X8 A4	
450	312115-0366	-		8	SCREW ISO4762 M6X12 A4	
460	312115-0372	-		2	SCREW ISO4762 M6X25 A4	
470	312155-0291	-		4	SCREW EN 10642 MF6S M4X12 A480	
480	312155-0329	-		2	SCREW EN 10642 MF6S M5X16 A480	
490	312155-0339	-		2	SCREW EN 10642 MF6S M5X40 A480	
500	312605-0310	-		1	HEXAGON NUT, M6M M3 A280	
510	312605-0314	-		5	HEXAGON NUT, M6M M5 A280	
520	312605-0316	-		15	HEXAGON NUT, M6M M6 A280	
530	315105-0136	-		30	WASHER BRB4,3XRFR	
540	315105-0153	-		30	WASHER BRB6,4X12RFR	
550	315755-0109	-		2	LOCKING WASHER 7	

Machine Type	Group Description	Used-In	Group Number	Page No

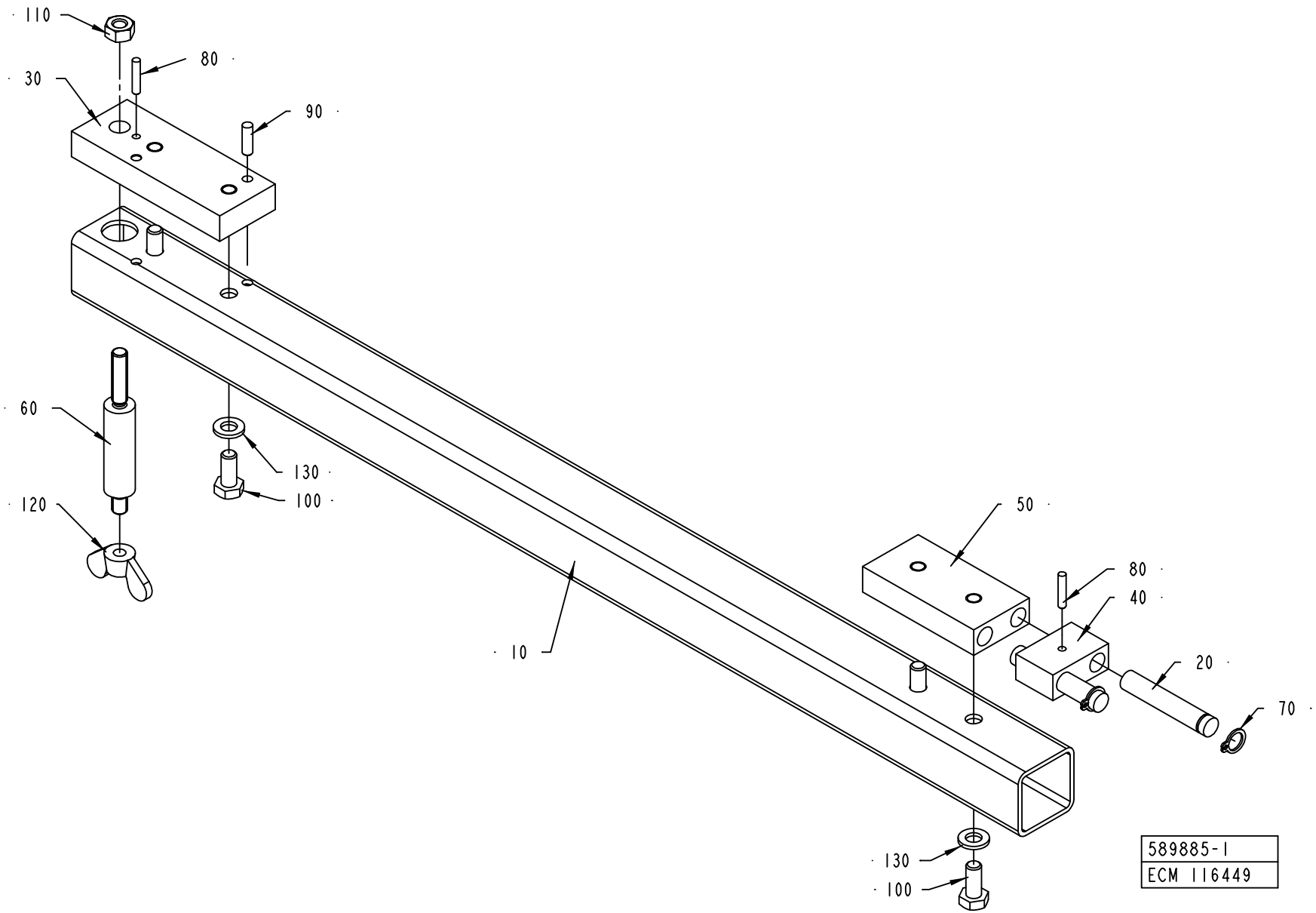
110
80
30
90
60
130
120
100
50
80
40
10
20
70
130
100
589885-1
ECM 116449

ECM: 117667 - 50001231
Group number: 589885-0100
Assembly Drawing: 589885-1_1_AB

Pos	Part No	SP	UN	Qty	Description	Page No
-						
010	589910-0000	-		1	BEAM	
020	590205-0000	-		2	PIN	
030	590206-0000	-		1	BLOCK	
040	590207-0000	-		1	BLOCKING PIECE	
050	590208-0000	-		1	BLOCKING PIECE	
060	590219-0000	-		1	PIN	
070	90141-0015	-		2	RETAIN. RING, 8	
080	311103-0236	-		2	PARALLELL PIN ISO2338 3X16 A1	
090	311103-0269	-		2	PARALLELL PIN ISO2338 4X14 A1	
100	312115-0367	-		4	SCREW ISO4762 M6X14 A4	
110	312605-0316	-		1	HEXAGON NUT, M6M M6 A280	
120	312715-0116	-		1	NUT WING COLD WORK.MVM-K M6 A280	
130	315105-0153	-		4	WASHER BRB6,4X12RFR	

Pos	Part No	SP	UN	Qty	Description	Page No

Tetra Pak

SPC
Spare Parts Catalogue

Part No	Description	Page No
-	-	11, 13, 145, 147, 155, 157, 227, 229, 527, 529, 571, 573
1013-0000	SHAFT	601
1755-0001	WASHER	353
1755-0002	WASHER	353
1755-0003	WASHER	353
2033-0002	WASHER	871
2033-0003	WASHER	871
2033-0007	WASHER	57, 59
2033-0008	WASHER	121, 123, 871
2033-0009	WASHER	355
2033-0010	WASHER	871
2033-0011	WASHER	105, 107, 109, 111, 113, 115, 117, 121, 123, 127, 129, 611, 613, 615, 631, 633, 871
2033-0013	WASHER	543, 545, 547, 549, 571, 573
2033-0014	WASHER	355
6161-0000	ROLL	153
12228-0000	COMPRESSION SPRING	277
12242-0001	GASKET 32X25X5,5	23, 71
12242-0003	GASKET 48X38X5,5	137
12242-0005	GASKET 61X51X5,5	57, 59, 137
18542-0000	WASHER	205
20239-0000	COMPRESSION SPRING	337, 339, 341, 343
21521-0000	COMPRESSION SPRING	45, 141
22463-0000	ROLL	289, 291, 293, 295
22475-0000	CURVE ROLLER	337, 339, 341, 343
26490-0000	WASHER	105, 107, 109, 111
27815-0000	WASHER	355
28036-0000	WASHER	57, 59, 153, 611, 613, 615, 631, 633
28037-0000	WASHER	105, 107, 109, 111
28509-0000	BRICKA	347, 349
29876-0000	COVER	51, 53
30298-0000	INSULATION	51, 53
31017-0000	KNIFE	643
31553-0001	WASHER	383
31559-0000	SPRING PLATE	383
31723-0000	TEFLON STRIP	643
31724-0000	LOCK BAR	643
32079-0000	WASHER	347, 349
32544-0000	INSULATION NUT	347, 349
32644-0000	WASHER	335, 565
32691-0000	LOCKING SPRING	617, 619, 635, 637
32925-0000	CARRIER	611, 613, 615, 631, 633
32926-0000	ROLL	611, 613, 615, 631, 633
32927-0000	SHAFT	611, 613, 615, 631, 633
33010-0000	SCREW	621, 639
33011-0000	SLEEVE	617, 619, 635, 637
33182-0000	ROLL	611, 613, 615, 631, 633
33408-0000	BEARING	289, 291, 293, 295
35547-0000	SPRING	621, 639
35918-0000	SHAFT	121, 123
35919-0000	COMPRESSION SPRING	121, 123
35962-0000	LID	445
36316-0000	PAPER SUPPORT	577
36325-0000	KNOB	121, 123
37877-0400	HEATING BLOCK	641
37879-0000	LOCKING ARM	643
37880-0000	HINGE	643
37882-0000	PROTECTION PLATE	643
37883-0000	LOCK BAR	643
37884-0000	SHAFT	643
37885-0000	TENSION SPRING	643
37886-0000	INSULATING DISK	643
37888-0000	ROLL	643
37889-0000	SHAFT	643
37890-0000	FLANGE ROLLER	643
37892-0000	CONNECTION BOX	643
37893-0000	LID	643
37894-0100	COUNTER RAIL	641
37895-0000	RAIL	645
37896-0000	DOWEL	645
37897-0000	WASHER	645
37900-0000	KNIFE	647
37905-0000	FRAME	651
37908-0000	PLATE	651
37909-0000	SPRING	651
37910-0000	LOCK	651
37911-0000	LACE	651
37912-0000	LOCK PLATE	651
37913-0000	RULER	651
37916-0000	RULER	651
37917-0000	RULER	651
38087-0000	WASHER	223, 225
42062-0200	LEVEL PROBE	177
42063-0100	LEVEL DETECTOR	179
42067-0100	SENSOR BOARD	181

Part No	Description	Page No
42068-0100	CONVERTER BOARD	181
67347-0101	CARD BRAKEREG.MAGN.POWDER BRAKE	727, 729
67369-0102	RACK WALLMOUNTED 84TE	727, 729
67372-0101	BACKPLANE 8TE(32 POLE)	727, 729
67379-0254	TRANSFORMER	347, 349
67379-0262	TRANSFORMER	347, 349
67379-0264	TRANSFORMER	347, 349
67379-0265	TRANSFORMER	347, 349
67380-0208	TRANSFORMER	565
72947-0000	HOOK SPANNER	671
76128-0000	TEMPLATE	867
76131-0000	ASSEMBLY CONE	671
76132-0000	ASSEMBLY TOOL	671
77092-0500	SERVICE PARTS	849
77094-0300	PRODUCTION PARTS	849
77099-0300	TOOL KIT	663
78801-0000	CALIBRATION TOOL	671
90001-0033	WALL SOCKET OUTLET	711, 713, 715
90002-0004	BLANK-OFF PLUG, PR 22,5 SKINDICHT-BLK16	149, 151, 423, 425, 775, 777
90002-0009	BLANK-OFF PLUG, PR 18.6 SKINDICHT-BLK11	191, 423, 425, 657, 659, 679, 685, 687
90002-0010	BLANK-OFF PLUG, PR 37 SKINDICHT-BLK29	145, 147, 149, 151, 423, 425, 775, 777
90002-0012	BLANK-OFF PLUG, PR 28,3 SKINDICHT-BLK21	149, 151, 421, 775, 777
90002-0013	BLANK-OFF PLUG, PR 15,2 SKINDICHT-BLK9	149, 151, 191, 657, 659, 775, 777
90002-0018	BLANK-OFF PLUG, PR 12,5 SKINDICHT-BLK7	21
90003-0422	CORRUGATED CARDBOARD BOX	663
90005-0003	GASKET BOLT HEAD 6,7X11X1 MM M6	345, 357, 359
90005-0005	GASKET BOLT HEAD 13,7X20,6X2,1 MM G1/4"	357, 359
90005-0007	GASKET BOLT HEAD 8,7X14X1 MM M8	357, 359, 395
90005-0014	GASKET BOLT HEAD 21,5X28,6X2,5 MM G1/2"	345
90005-0047	WASHER,PL.RND.CU.12,2/ H=1,5	351, 353
90005-0060	WASHER PLAIN, RBS 6,4/M6)/18,H=1,5	193, 195, 319, 321, 323, 325
90005-0082	WASHER PLAIN ROUND 4,3(M4)/12,H=1	533, 535, 539, 543, 545, 547, 549, 555, 557, 563, 565, 571, 573
90005-0116	WASHER PLAIN ROUND 8,4(M8)/24, H=2	399
90005-0143	SPACER 3,3/7, H=3	181
90007-0128	CIRCUIT BREAKER, 1P 6 A K	813, 817
90007-0129	CIRCUIT BREAKER, 1P 10 A K	813, 817
90007-0131	CIRCUIT BREAKER, 1P 16 A K	813
90007-0146	CIRCUIT BREAKER, 3P 6 A K	813, 817
90007-0149	CIRCUIT BREAKER, 3P 20 A K	817
90007-0155	CIRCUIT BREAKER, 1P 0,5 A K	813
90007-0312	AUXILIARY CONTACT	813
90012-0119	GLAND, EXTENDED WITH INSERT, PG9	179
90012-0126	NORMAL WITHOUT INSERT, PG29	51, 53
90015-0020	LEAD-IN, TET5-7, E-1458016	145, 147, 543, 545, 547, 549, 555, 557
90015-0021	LEAD-IN, TET10-14, E-1458023	145, 147
90015-0023	LEAD-IN, TET7-10, E-1458019	145, 147, 655
90015-0028	LEAD-IN BUSHING	407
90016-0010	DISC SPRINGS,50X25,4X2	255
90017-0001	BIKE HANDLE	643, 647
90017-0022	HANDLE, NO. EL-037311	551, 555, 557, 579, 597, 599
90024-0034	DIODE SURGE SUPPRESSOR, FD B DIL	741, 759, 761
90024-0036	FILTERED TERMINAL BLOCK	831
90024-0037	INPUT FILTER, 8 A	711, 713, 715
90024-0047	EMI SUPPRESSION FERRITE	711, 713, 715
90024-0060	POWER LINE FILTER, 80 A 250/440 VAC	831
90024-0062	CABLE PROTECTION, 40MM	705, 707, 709
90024-0063	CABLE PROTECTION, 25MM	705, 707, 709
90028-0001	CONE 5/32"	199, 201, 203
90028-0020	CONE TUBE 2,5MM	199, 201, 203, 259, 261, 263, 265, 345, 357, 359, 381, 407
90028-0021	CONE TUBE 4 MM	199, 201, 203, 259, 261, 263, 265, 381, 407
90028-0025	CONE TUBE 6 MM	407
90030-0030	CONN. BULKHEAD SV 12-L/SY	497
90030-0051	CONN. STR., 6-R1/8, EXT. THREAD	81, 199, 201, 203
90030-0058	CONN. T-PIPE T-12	139, 507
90030-0062	CONN. STR. GE 6-1/4-18 NPTF	15, 71
90030-0065	PIPE CONNECTION	207, 327, 329, 331, 333, 357, 359
90030-0066	CONN. BULKHEAD SV 6-L/SY	587
90030-0075	PIPE CONNECTION G-6	101, 103
90030-0076	CONN. T-PIPE T-6	15, 97, 99, 511
90030-0084	CONN. STR. GE 10-3/8-18 NPTF	507
90030-0086	CONN. STR., 8-R1/4, EXT. THREAD	499
90030-0088	CONN. STR., 12-R1/4, EXT. THREAD	73, 75
90030-0089	STRAIGHT CONNECTION	95
90030-0091	CONN. PIPE G-8	207
90030-0092	STRAIGHT CONN., 6-R1/4,EXT. TAPPERED	81, 101, 103
90030-0096	CONN. ELBOW W-12	73, 75
90030-0098	ACCESSORIES, FERRULE 8	199, 201, 203
90030-0106	CONN. PIPE G-12	73, 75, 81
90030-0109	CONN. STR., 12-R1/2, EXT. THREAD	73, 75, 81, 495
90030-0110	ACCESSORIES, FERRULE 12	81
90030-0115	CONN. ELBOW WA 12-R3/8	29, 31, 81
90030-0136	ADJUSTABLE ELBOW CONNECTION,EXT 12-G3/8	81, 505
90030-0137	CONN. ELBOW WA 6-R1/8	23, 81

Part No	Description	Page No
90030-0151	CONN. STR.,15-R1/2, EXT. THREAD	205
90030-0162	CONN. STR. 6-M10X1, EXT. THREAD	199, 201, 203
90030-0164	CONN. T-PIPE T6-LL	101, 103
90030-0170	REDUCER 2521-1/4"X3/8"	81
90030-0184	CONN. STR. GA-6-G1/8	17, 19, 43, 47, 49, 73, 75, 97, 99, 133, 139, 357, 359, 361, 505, 587
90030-0186	CONN. STR. GA-10-G1/4	227, 229
90030-0187	CONN. STR. GA-12-G3/8	43, 45, 47, 73, 75, 137, 139, 227, 229
90030-0188	CONN. STR. GA-15-G1/2	489, 505
90030-0200	CONN. ELBOW, 6-M10X1, EXT.THREAD	199, 201, 203
90030-0202	CONN. STR., 6-G1/4, EXT. THREAD	97, 99
90030-0203	ADJUSTABLE ELBOW CONNECTION,EXT 6-G1/4	97, 99
90030-0212	NIPPLES, REDUSING, INT. THR. NO. 2521	73, 75
90030-0213	CONN. STR. M12 MSC1/2K-316 EXT. TAPPERED	73, 75
90030-0230	CONN. BULKHEAD SV 6-	17, 19, 227, 229
90030-0233	CONN. STR., 6-G1/8, EXT. THREAD	17, 19
90030-0234	CONN. ELBOW, 6-R1/8 , EXT.THREAD	17, 19, 97, 99
90030-0336	CONN. STRAIGHT, 316L-12M-BVCO-3	83
90030-0338	NUT, PIPE & CONNECTORS, SS-8-BVCO-4	83
90030-0348	CONN. STR., 6-G3/8, INT. THREAD	81
90030-0549	CONN. STRAIGHT, BULKHEAD, SS-4-VCO-61	27
90030-0630	REDUCER, 1,5MM, M6, NO. 815406	513, 515
90031-0051	BASEPLATE, 10-SLOT	735
90031-0053	BASEPLATE,10-SLOT	737, 739
90031-0057	PLC, DIGITAL INPUT MODULE	735, 737, 739
90031-0058	PLC, DIGITAL INPUT MODULE	735
90031-0059	PLC, DIGITAL OUTPUT MODULE	735, 737, 739
90031-0062	PLC, ANALOG OUTPUT MODULE 8PT/CURR/VOLT	735
90031-0063	PLC,ANALOG COMBO MODULE,IN-4PT/OUT-2PT	735
90031-0068	PLC, POWER SUPPLY	735, 737, 739
90031-0075	CPU363, SERIAL COMMUNICATION	735
90031-0305	I/O EXPANSION CABLE	735, 737
90032-0014	DISTR. BLOCK & DIST.5/16-24UNF X6	199, 201, 203
90032-0026	DISTR. BLOCK, 5/16-24UNF X2	199, 201, 203
90032-0030	DISTR. BLOCK, 5/16-24UNF X3	199, 201, 203
90032-0031	DISTR. BLOCK, 5/16-24UNF X5	199, 201, 203
90032-0038	BLOCK 2 WAYS	199, 201, 203
90032-0039	BLOCK 4 WAYS	199, 201, 203, 263, 265, 407
90032-0040	BLOCK 6 WAYS	259, 261, 381, 407
90036-0057	LIGHT BULB, BA9S 28V	537
90036-0068	BULB 6.5W 24V	221, 233
90038-0024	RECTIFIER, 10/22A SKD 50/04A3	771, 773
90041-0068	DATACABLE MODEM PC	675
90042-0134	SOLENOID VALVE ASCO SCG 210 802 24VDC	517
90042-0171	SOLENOID VALVE BUERKERT	17, 19, 97, 99
90042-0172	SOLENOID VALVE 4023/1005/1032 24VDC	459, 461
90042-0173	SOLENOID VALVE BURKERT	453, 471, 473
90042-0255	VALVE BODY 5/2 UNISTABLE	475, 477, 479
90042-0398	CONTACT 3 POLE+EARTH	503
90042-0535	TERMINAL BOARD 19 CORDS	475, 477, 479
90042-0539	PILOT VALVE L=350MM	475, 477, 479
90042-0550	PROTECTION PLUG FOR UNUSED CONNECTION	475, 477, 479
90042-0565	PORTED END PIECE ISO VDMA 01	475, 477, 479
90042-0566	BASE PLATE ISO VDMA 01	475, 477, 479
90042-0567	BLANK PLATE VDMA SIZE 01	475, 477, 479
90042-0579	VALVE BODY 2X3/2 NORM CLOSE	475, 477, 479
90042-0580	VALVE BODY 5/2 BISTABLE	475, 477, 479
90042-0581	BASE PLATE ISO VDMA 01	475, 477, 479
90042-0586	BASE PLATE ISO VDMA 01	475, 477, 479
90042-0587	BLANKING KIT SEALS VDMA SIZE 01	475, 477, 479
90043-0002	PRESSURE GAUGE, 2040 D=63 MM	509
90043-0006	PRESSURE GAUGE, 2041 D=63 MM	459
90043-0021	PRESSURE GAUGE WIEGAND 0-1 BAR 1/8"	463
90043-0034	PRESSURE GAUGE	101, 103
90043-0036	PRESSURE GAUGE, 2041 D=63 MM	465
90043-0068	PRESSURE GAUGE	463
90043-0069	PRESSURE GAUGE 0-4BAR WIEGAND 2040	463, 471, 473
90043-0082	PRESSURE GAUGE, 2740, D=63 MM	81
90043-0095	PRESSURE GAUGE, 2740, D=63 MM, GLYC.	469
90043-0302	SCREW	101, 103
90044-0084	LIMIT SW. 14 CE1-4	29, 31
90044-0103	KEY SAFETY SWITCH AZ 15 ZVR	631, 633
90044-0104	PROX.SWITCH IFM IN 3002	23, 27, 65, 631, 633
90044-0116	CYLINDER,SENSOR	45
90044-0117	PROX.SW. IX 0208	431
90044-0124	PROX.SW. 922AB2XM-A9P-050-LZ-876	283
90044-0139	KEY SAF.SW. AZ16-02 ZVR K-2254	57, 59, 551, 597, 599, 611, 613, 615
90044-0145	PROX.SW. 922 AAIY-A9P-050-LZ876	95
90044-0151	LIMIT SW. GLEB24C	277
90044-0192	LIMIT SW. SZ2586.000	771, 773
90044-0194	PROX.SW. IN5329/IN3002-BPKG	57, 59, 63, 73, 75, 139, 543, 545, 547, 549, 555, 557, 559, 561, 611, 613, 615
90044-0310	KEY FOR SAFETY SWITCH, AZ 15/16 B1	57, 59, 209, 211, 551, 611, 613, 615
90045-0087	MOTOR 3GAA 071002-CSA M2AA 71B	493
90045-0161	MOTOR MGC 11	503

Part No	Description	Page No
90045-0228	MOTOR MEZ-4AP80-4-B5-0	513, 515
90045-0376	CONNECTOR KIT 9-032-011-970	711, 713, 715
90048-0046	OIL PUMP	511
90050-0011	BOTTLE	445
90050-0012	BOTTLE, 50ML PLASTIC	621, 639
90051-0035	KNOB, EXTERNAL THREAD. NO. 8308-1135	541
90051-0077	HANDLE	621, 639
90051-0089	SHIFTER HANDLE	625, 627
90053-0029	COUNTER, F524.800FA3C 24VDC	821, 823
90053-0031	HOUR COUNTER, B 609.10 10-50VDC	821, 823
90055-0100	Y-CONNECTION, 6-6	155, 157, 165, 167, 587
90055-0101	Y-CONNECTION, 8-8	447, 449, 451
90055-0118	ELBOW PIPE JOINT -8MM	447, 449, 451, 471, 473, 475, 477, 479
90055-0154	HOSE COUPLING	399
90055-0172	ELBOW WITH TAILPIECE 8/8 MM	475, 477, 479
90055-0217	ELBOW PIPE JOINT	463, 475, 477, 479
90056-0071	WORM GEAR	385
90059-0001	THERMOSTAT	643
90061-0027	ANGLE ENCODER 670900035	283
90062-0015	LOCK WASHER SERRAT.EXT.GEAR,6,4/11 H=0,7	767, 779, 781, 805, 807, 809, 811, 821, 823, 831, 835, 837
90062-0022	LOCKING WASHER D=6,4/11	821, 823
90062-0058	LOCK WASHER SERRAT.EXT.GEAR,3,2/6 H=0,4	727, 729
90062-0061	LOCK WASHER NORD-LOCK,6,5/10,8, H=2,6	711, 713, 715, 727, 729
90064-0085	PUSH BUTTON, RED	537, 655
90064-0098	PUSH BUTTON, CLEAR	537
90064-0124	SWITCH, EM. STOP, ZB2-BS844+ZB2-BZ1045	145, 147, 655, 805, 807
90064-0315	LAMP REMOVER, NO:700	667
90069-0600	GEARS, WORM MOTOR ODM90-60KE5	55, 603, 605
90074-0001	CABLE CLIPS, D=10 MM	165, 167
90074-0026	PIPE CLIP FOR TUBE D=24-35 MM	255
90075-0124	CONTACTOR, 4KW 24VDC	741
90075-0125	CONTACTOR, 7,5KW 24VDC	741
90075-0127	CONTACTOR, 4KW 24VDC	741, 753
90075-0128	CONTACTOR, 7,5KW 24VDC	741, 753
90075-0141	CONTACTOR, 4KW 24VDC	753
90077-0079	FEED THROUGH TERMINAL, 02943.6	679, 685, 687
90077-0102	TERMINAL BLOCK, 1952.2	643
90077-0113	FEED THROUGH TERMINAL, 10-00102150-1	423, 425, 759, 761
90077-0114	END PLATE, WAP/WDK 2,5	759, 761
90077-0122	END PLATE AP/AKZ 2,5	21
90077-0123	FEED THROUGH TERMINAL, 017596	21
90077-0328	RAIL TS15/5	679, 685, 687
90082-0013	OVERVOLTAGE PROTECTOR	833
90082-0301	OVERVOLTOLTAGE PROTECTOR	667
90083-0016	PLATE FOR AXK 2035	263, 265
90087-0002	PIPE PLUG	187
90087-0019	PLUG M10X1 STAINLESS	259, 261, 381, 407
90087-0036	PLUG	463
90089-0004	REDUCING SLEEVE, PR28,3/PR22,5	655
90089-0005	REDUCING SLEEVE, PR37/PR28,3	655
90089-0007	REDUCING SLEEVE, PR18,6/PR22,5	603, 605
90090-0005	BALL, D=3 MM	327, 329, 331, 333
90090-0008	BALL, D=7,1 MM	199, 201, 203
90090-0016	BALL, D=15 MM	165, 167
90091-0089	ROD SEAL, GLIDORING 16X22X2,5 MM	327, 329, 331, 333
90091-0091	ROD SEAL, GLIDORING 10X14X1,7 MM	289, 291, 293, 295
90091-0106	SCRAPER 30X40X10 MM	187
90091-0137	RADIAL SEAL VARILIP 20X35X7MM	493
90091-0162	WEAR RING 16X19X3,2 MM	327, 329, 331, 333
90091-0169	WEAR RING 12X15X3,2 MM	289, 291, 293, 295
90091-0170	WEAR RING 25X30X4,2 MM	327, 329, 331, 333
90091-0214	ROD SEAL, GLIDORING 16X20,9X2,2 MM	327, 329, 331, 333
90091-0215	ROD SEAL, GLIDORING 25X32,5X3,2 MM	327, 329, 331, 333
90091-0216	PISTON SEAL, GLIDORING 7,1X12X2,2 MM	289, 291, 293, 295
90091-0233	RADIAL SEAL 85X110X12 MM DUST LIP	431
90091-0237	ROD SEAL, GLIDORING 20X27,5X3 MM	85, 87, 89
90091-0238	WEAR RING 20X22X10 MM	85, 87, 89
90091-0266	SEAL RING 10,4X16,3X2,5 MM	83, 693
90091-0305	RADIAL SEAL 40X55X7 MM DUST LIP	431
90091-0306	RADIAL SEAL 30X47X7 MM DUST LIP	407
90091-0335	PISTON SEAL,GLIDORING 62,5X70X3 MM	87
90091-0336	PISTON SEAL, GLIDORING 79X90X4 MM	85, 89
90092-0052	METERING VALVE 10 MM3	199, 201, 203, 259, 261, 263, 265, 327, 329, 331, 333, 337, 339, 341, 343, 345, 357, 359, 381
90092-0053	METERING VALVE 30 MM3	199, 201, 203, 259, 261, 263, 265, 327, 329, 331, 333, 357, 359, 407
90092-0054	METERING VALVE 50 MM3	407
90094-0005	RAIL BRACKET	755, 759, 761
90095-0069	OVERLOAD PROTECTION, PKZM 0,25 A	817
90095-0073	OVERLOAD PROTECTION, PKZM 1,6 A	817
90095-0075	OVERLOAD PROTECTION, PKZM 4 A	817
90095-0077	OVERLOAD PROTECTION, PKZM 6-10 A	817
90097-0017	FLAT PIN PLUG 6,3MM	705, 707, 709
90097-0019	FLAT PIN PLUG 2,8MM	705, 707, 709

Part No	Description	Page No
90099-0001	NUT PR 15,2 MäSSING	207, 443, 505, 655
90099-0002	NUT PR 18,6 BRASS	189, 443, 611, 613, 615, 643, 655
90099-0003	NUT	445
90099-0011	NUT PR 37 BRASS	145, 147, 443
90099-0057	NUT HEX. M20X1,5	391
90099-0085	NUT	231
90099-0087	NUT PR=20,4	207, 443
90099-0104	NUT, PR 15,2 (PG9)	149, 151, 775, 777, 805, 807
90099-0110	NUT, PR 22,5 (PG16)	149, 151, 775, 777, 839
90099-0117	NUT, PR 18,6 (PG11)	145, 147
90099-0119	NUT, PR 28,3 (PG21)	145, 147, 149, 151, 775, 777
90099-0120	MUTTER PR 37 (PG29)	17, 19, 145, 147, 149, 151, 775, 777
90099-0131	NUT HEX. M16X2 SS	101, 103
90110-0028	CONTACT UNIT 4-POLE	767
90110-0095	CONNECTOR 3 POLE + EARTH	513, 515
90110-0127	COAXIAL CONNECTOR, GE 15057C10HBN	787, 789, 791, 793, 795, 797, 799, 801, 803
90110-0150	MALE INSERT 121110 0000	553, 655
90110-0151	FEMALE INSERT 24-POL 121130 0000	783, 787, 789, 791, 793, 795, 797, 799, 801, 803
90110-0152	CABLE HOOD 24-POL 70.352.2428.1	655
90110-0153	CHASSIS HOUSING 24-P CHI 24, 121240 0000	783, 787, 789, 791, 793, 795, 797, 799, 801, 803
90110-0156	MALE INSERT 70.210.0653.0	553
90110-0163	FEMALE INSERT 70 300 0640 0	839
90110-0170	FEMALE INSERT 10-POLE	655
90110-0171	COVER 10-POLE	655
90110-0207	SOCKET	503
90110-0216	MALE INSERT 70 310 1040 0	233
90110-0226	CABLE HOOD 6-POL 70.350.0628.0	839
90110-0243	CONTACT HOUSING 16-POL 70.320.1628.0	787, 789, 791, 793, 795, 797, 799, 801, 803
90110-0244	CABLE HOOD 6-POL 70.350.1628.0	553
90110-0247	FEMALE INSERT 70.200.0653.0	787, 789, 791, 793, 795, 797, 799, 801, 803
90110-0295	CONNECTOR 4 POLE + EARTH	603, 605, 655
90110-0296	CONTACT SCREW	779, 781, 787, 789, 791, 793, 795, 797, 799, 801, 803
90110-0346	CABLE HOOD 1211220 00 00	553
90110-0371	PLUG HOOD	603, 605, 655
90110-0383	CONTACT COVER 15 PIN	675
90110-0518	PLINTH 15 PIN	675
90111-0120	SWITCH, 2 POS.704.510 .0A+704.901.5/A	821, 823
90111-0122	KEY SWITCH, 2 NO CONTACTS	821, 823
90111-0124	KEY SWITCH, 1NO,1NC CONTACT	821, 823
90111-0172	EARTH FAULT BREAKER, F 362-25/0.03	813
90113-0063	PRESSURE REGULATOR	81
90113-0064	PRESSURE REGULATOR	81
90113-0069	PRESSURE REGULATOR	463
90113-0076	PRESSURE REGULATOR	463
90113-0085	PRESSURE REGULATOR	465
90113-0128	FILTER	465
90113-0374	SLOW STARTING VALVE	465
90113-0375	PRESSURE DISTRIBUTION	465
90113-0377	SHUT-OFF VALVE	465
90113-0378	SHUT-OFF VALVE	465
90113-0379	NUT	463
90113-0387	FILTER ELEMENT 40æM FOR 90113-0094	465
90115-0054	ROD END, ID=8 MM, M8X1,25	647
90115-0173	ROD END, ID=6 MM, M6X1	197
90115-0181	ROD END, ID=10 MM M10X1,5	377, 379
90115-0182	ROD END, ID=10 MM M10X1,5LH	377, 379
90119-0056	RELAY, AUXILIARY MK3P5-S 24VDC	725
90119-0063	OPTO-RELAY, DC/DC AMMS-10-1/30VDC	733
90119-0067	SOLID-STATE RELAY, H12WD4850	723, 743, 745, 747, 749
90119-0072	SAFETY RELAY, JSBR4	733
90119-0084	EXPANSION RELAY, JSR1T-500MS	733
90119-0086	RELAY, AUXILIARY MY4IN4 24VDC	725
90119-0089	SAFETY RELAY, JSBT4 24VDC	733
90119-0104	OPTO COUPLER AMMS 50070	733
90119-0109	RELAY OMRON 24VDC MY4H	725
90119-0309	BASE UNIT, TYPE PYF 14AE	725
90119-0310	CLAMP, TYPE PYC-A1	725
90121-0132	RESISTANCE FIXED, 0,51 KOHM, 0,25 W	759, 761
90125-0020	PLATE	47
90129-0006	BASE, S3-B	725
90134-0003	BUSHING	199, 201, 203
90134-0004	PIPE CONNECTION R1/8	381, 407
90134-0030	SLEEVE FOR PLASTIC TUBE	199, 201, 203
90134-0031	SLEEVE FOR PLASTIC TUBE	199, 201, 203, 259, 261, 381, 407
90134-0034	NIPPLE	199, 201, 203, 207
90134-0038	BUSHING/NUT INLET/OUTLET 4 MM	199, 201, 203, 259, 261, 263, 265, 407
90134-0039	BUSHING VALVE CONNECTION 2,5 MM	199, 201, 203, 259, 261, 263, 265, 345, 357, 359, 381, 407
90134-0040	BUSHING VALVE CONNECTION 4 MM	407
90134-0042	SPACER DOSING VALVE	327, 329, 331, 333
90134-0045	PLUG M12X1	327, 329, 331, 333
90134-0047	CONNECTION FOR DOSING VALVE	327, 329, 331, 333
90134-0051	SPACING COLLAR DOSING BLOCK	407
90134-0052	PLUG DOSING BLOCK	259, 261, 407
90134-0055	BUSHING/NUT INLET/OUTLET 6 MM	407

Part No	Description	Page No
90134-0058	CONNECTION	255, 259, 261, 263, 265, 289, 291, 293, 295, 327, 329, 331, 333, 337, 339, 341, 343, 345, 377, 379
90134-0065	CONNECTION M6 TUBE 2,5 MM	411
90134-0066	CONNECTION M6 TUBE 4 MM	357, 359
90134-0068	CONNECTION	279, 281, 337, 339, 341, 343, 357, 359
90134-0081	REDUCTION SLEEVE M10X1/R 1/8"	511
90135-0019	CLAMP ZB 35	765
90135-0026	EARTH TERMINAL, 3802.6	679, 685, 687
90135-0034	SHIELD CLAMP KLBU 3-8	731, 763
90135-0039	SHIELD CLIP KLBU 4-13.5	721, 731, 763
90135-0042	EARTH TERMINAL, 130336	21
90135-0044	EARTH WIRE, L=320 MM 16 MM2	767, 805, 807, 809, 811, 821, 823, 835, 837
90136-0001	PLUG, EXT. THREAD, NO. 100727	15, 51, 53
90136-0002	PLUG 5/16"24	199, 201, 203
90137-0010	BANJO CONN. M6, D=2,5 MM	187
90140-0010	T-PIPE, INT. THREAD, 20031/2	459, 517
90140-0015	T-PIPE, INT. THREAD, 2003-1/8	17, 19, 471, 473
90140-0023	T-PIPE, INT. THREAD, NO. 2070-3/8-3/8	517
90141-0015	RETAIN. RING, 8	533, 567, 571, 573, 601, 873
90141-0016	RETAIN. RING, 10	43, 533, 539, 541, 543, 545, 547, 549
90141-0017	RETAINING RING FOR SHAFT, 17X1MM	27, 409
90141-0022	SNAP RING B 16	49, 69
90142-0005	HOSE	255
90143-0010	STRIP	187
90143-0012	STRIP	187
90143-0020	STRIP	491
90143-0028	STRIP	403
90143-0029	STRIP	621, 639
90143-0057	STRIP EMKA 1011-05 21X11MM	771, 773
90143-0059	SEAL STRIP 4610069	17, 19, 239, 839
90143-0060	EDGE STRIP 9,5X6,3MM BLACK PVC	227, 229, 443, 597, 599, 655
90143-0062	STRIP	483
90143-0068	RUBBERSTRIP EMKA 1011-06	209, 211, 213, 215, 243, 245, 437, 439, 597, 599
90143-0073	RUBBER STRIP	771, 773
90143-0076	PROFILE	223, 225
90143-0094	SEAL	809, 811, 831, 841
90144-0003	TAPE	521, 695
90144-0030	TAPE	645
90144-0072	TAPE SCOTCH VHBS 4945 W=12,7MM	597, 599, 785, 819, 835
90144-0073	TREBOFLON-TAPE W=13MM	15, 17, 19, 81, 97, 99, 255, 407, 493
90148-0037	HOSE	199, 201, 203
90148-0038	HOSE	199, 201, 203
90151-0001	BRASS PIPE DI=2,6 MM	199, 201, 203
90152-0016	HOSE (SPIRAL)	217
90152-0017	HOSE (SPIRAL)	219
90152-0050	SPIRAL CONDUIT, 20X13, UL 1313	29, 31, 655, 657, 659
90152-0051	SPIRAL CONDUIT, 25X18, UL 1816	187, 209, 211, 247, 257, 403, 487, 493, 513, 515, 537, 553, 603, 605, 611, 613, 615, 655
90152-0058	SPIRAL CONDUIT, 15X9, UL 0909	431, 655, 657, 659
90152-0059	SPIRAL CONDUIT, 18X12, UL 1211	187, 241, 445, 489, 503, 505, 511, 513, 515, 643, 655, 657, 659
90152-0060	SPIRAL CONDUIT, 42X35, UL3529	17, 19, 231
90152-0070	METAL HOSE, 32,5X26, UL 2621	29, 31, 51, 53, 187, 407, 553, 655, 657, 659
90153-0015	ADHESIVE,LOCTITE IS 496/CYANOLOT 303	289, 291, 293, 295
90153-0016	ADHESIVE,TUBE 100G RHODORSIL CAF 3	29, 31
90153-0017	ADHESIVE, 2963 TUBE 160G	187
90153-0020	ADHESIVE, BOSTIK 1782 125ML	51, 53
90153-0023	ADHESIVE, SILICON 251470 TUB 90CC	29, 31
90153-0035	ADHESIVE, CLIMAFLEX 1632864	447, 449, 451
90153-0043	ADHESIVE, LOCTITE 495 20G	17, 19
90153-0048	ADHESIVE,DEVCON TYPE 5-MIN-EPOXI 28G	489
90155-0008	HANGER CHAIN, 18	23, 27
90155-0016	HANGER CHAIN, HL3-2	135
90157-0016	LOCKING FLUID	159, 187, 255, 259, 261, 263, 265, 269, 271
90157-0021	LOCKING FLUID	353
90157-0022	SEALING COMPOUND	187, 213, 215, 407
90157-0037	SEALING COMPOUND	73, 75
90157-0041	SEALING COMPOUND	209, 211, 239, 243, 245, 437
90161-0001	O-RING MATERIAL 3 MM	193, 195
90163-0013	QUICK COUPLING, (F) LP 006-0-WR013-01-2	217, 219
90163-0014	QUICK COUPLING, (M) LP-006-1-WR013	511
90163-0015	QUICK COUPLING, (M) LP-006-1-WR513	217, 219
90163-0016	QUICK COUPLING, (F) LP 006-0-WR013	465
90163-0041	HOSE NIPPLE, EXT.THR. 3/8-12 MM	137, 511
90163-0046	SLEEVE LP-004-0-WR 0510-21-1 BRASS	407
90163-0048	NIPPLE LP-004-2-WR 510-23-1	381
90163-0052	HOSE NIPPLE, EXT.THR. 1/4-12 MM	385
90163-0057	NIPPLE 1/8" BRASS	73, 75, 95
90163-0062	QUICK COUPLING, (F) 5053-1/8	73, 75, 95, 407
90163-0064	QUICK COUPLING, (M) LP-006-2-WR517	511
90163-0076	QUICK COUPLING, (F) LP-006-0-WR021	513, 515
90163-0304	QUICK COUPLING, LP-006-5-74-KU (DUST CAP	511
90164-0015	LIGHT FIXTURE, DWDCV111B/230V 50HZ	241, 655
90164-0301	HOLDING FIXTURE	189
90165-0002	CLIP	199, 201, 203, 259, 261, 263, 265

Part No	Description	Page No
90165-0008	PIPE CLIP FOR TUBE D=10 MM	631, 633
90165-0010	CLIP	635, 637
90165-0019	TOOL CLIP, 81/3, OPEN, 20 - 30 MM	471, 473
90165-0022	PIPE CLIP, FOR TUBE D=2,5 MM, B-3570	199, 201, 203, 259, 261, 263, 265
90165-0023	CLIP	199, 201, 203
90165-0039	PIPE CLAMP, RSGU 1.15/12, D=15 MM	199, 201, 203
90165-0056	PIPE CLIP FOR TUBE D=4 MM	631, 633
90165-0057	PIPE CLIP FOR TUBE D=6 MM	511
90165-0065	PIPE CLAMP, RSGU 1.8/9, D=8 MM	199, 201, 203, 263, 265, 279, 281
90165-0099	PIPE CLAMP, DOUBLE, RBP-108, D=8 MM	207
90166-0008	HOSE 7/10 PVC TRANSP.	445
90166-0013	TUBE 8 MM PA BLUE	407, 447, 449, 451, 475, 477, 479
90166-0059	HOSE PVC 12/16MM TRANSP.	611, 613, 615, 631, 633
90166-0060	HOSE 19/26-27 REINF.PVC	255
90166-0061	HOSE 4/8 PVC TRANSP.	471, 473
90166-0068	TUBE 12 MM PA BLUE	447, 449, 451, 587
90166-0081	TUBE 6 MM PA BLUE	199, 201, 203, 207, 447, 449, 451, 463, 475, 477, 479, 587
90166-0089	HOSE 4/6.2 PE BLUE	395, 397
90166-0090	HOSE 6/8.4 PE BLUE	395
90166-0095	TUBE 4 MM PA BLUE	297, 299, 301, 303, 361, 399, 539, 587
90166-0108	TUBE 6 MM PA,TRANSP.	199, 201, 203, 207, 393
90166-0109	TUBE 4 MM PA,TRANSP.	199, 201, 203, 263, 265, 357, 359, 381, 407
90166-0113	HOSE	385, 511
90166-0118	TUBE 8 MM PA BLACK	199, 201, 203, 207, 447, 449, 451, 465, 509
90166-0119	HOSE PUR 4/6 BLACK	101, 103, 155, 157, 447, 449, 451
90166-0124	TUBE 6 MM PA,TRANSP.	131
90166-0132	TUBE 6 MM PA,TRANSP.	15, 17, 19, 101, 103, 155, 157, 165, 167, 227, 229
90166-0133	TUBE 8 MM PA,TRANSP.	255
90166-0135	TUBE 10 MM PA BLACK	219
90166-0138	HOSE	137, 489, 621, 639
90166-0143	TUBE 2,5 MM PA,TRANSP.	259, 261, 263, 265, 327, 329, 331, 333, 345, 357, 359, 381, 407
90166-0159	RUBBER HOSE	311, 313, 315, 317
90166-0193	TUBE 6 MM PUR BLUE	539
90166-0194	TUBE 8 MM PUR BLUE	471, 473
90166-0196	TUBE 14 MM PA BLUE	447, 449, 451, 517
90166-0244	RUBBER HOSE	487
90166-0245	RUBBER HOSE	487
90181-0037	CABLE DUCT, 25X40MM	841
90181-0053	CABLE DUCT, 40X80MM	843
90181-0054	CABLE DUCT, 60X80MM	767, 821, 823
90181-0057	CABLE DUCT, 120X80MM	845
90181-0060	CABLE DUCT, 40X100MM	711, 713, 715
90181-0061	CABLE DUCT, 60X100MM	711, 713, 715
90181-0062	CABLE DUCT, 100X100MM	711, 713, 715
90181-0064	LOCK ZP1 FOR CHANNEL T1	711, 713, 715, 821, 823
90181-0067	DIVIDING PLATE SEP80	711, 713, 715, 821, 823
90181-0088	PLASTIC RIVET, PR 52314	821, 823, 841
90181-0174	CABLE DUCT	711, 713, 715
90181-0190	CABLE DUCT, WALL BRACKET, B4 MINI	227, 229, 655
90181-0313	RIVET DUCTAFIX R4	711, 713, 715, 809, 811, 843, 845
90187-0029	BALL VALVE G1/2, NPBR	459, 461, 517
90187-0051	BALL VALVE G3/8 PTFE	137
90187-0059	BALL VALVE FOR HYDR.PER. G1/2 3MM HOLE	489, 495
90187-0062	BALL VALVE G1/2, NPBR	509
90187-0082	BALL VALVE G1/2	73, 75, 81
90187-0104	SAFETY VALVE, R3/4,	509
90187-0105	PURGING VALVE, G3/8 FOR WATER	29, 31
90187-0112	COCK VALVE, G1/4, 4-WAY, VITON	81
90187-0120	FLAP VALVE, G1/4, L=38	513, 515
90187-0176	ACTUATOR ECC 008 FOR DIAPHR. VALVE	23
90187-0325	DIAPHRAGM, 214/300 AO08 4-B -20-150§C	23
90194-0016	WARNING SIGN, RISK OF ELECTRIC SHOCK	21, 191, 423, 425, 643
90194-0080	SIGN, IDENTIFICATION OF WIRING	837
90194-0152	SIGN, EARTH	727, 729
90194-0163	SIGN, EARTH WITHIN CIRCLE	711, 713, 715, 767, 771, 773, 779, 781, 805, 807, 809, 811, 821, 823, 831, 835, 837
90195-0020	TERMINAL BLOCK, 1977.2	189, 445
90195-0028	TERM.BLOCK 6-POLE STEATIT	51, 53
90195-0029	CONN. LINK NO324 FOR -28	51, 53
90199-0020	LEVEL GLASS/THERMOM. FSA 76.1.1./T/12	513, 515
90201-0010	DIRECT CHECK VALVE, NO. DGMDC-3-Y-PK-41	513, 515
90201-0014	VALVE	513, 515
90201-0131	VALVE	513, 515
90201-0132	VALVE	513, 515
90201-0133	VALVE	513, 515
90201-0407	BOLT KIT	513, 515
90206-0031	HEATING ELEMENT 700+1200W,220V	47, 691
90206-0053	HEATING ELEMENT 230V 1200W	643
90206-0070	HEATING ELEMENT 6000W 380/220V	29, 31, 691
90206-0322	GASKET	47
90206-0326	JUNCTION BOX FOR 90206-56	29, 31
90207-0363	GASKET	83, 693
90207-0365	GASKET	83, 693
90208-0031	BUSHING	371

Part No	Description	Page No
90208-0080	CLAMPING ELEMENT WITH SLEEVE, 25X34 MM	269, 271
90208-0091	CLAMPING ELEMENT WITH SLEEVE, 60X77 MM	269, 271
90208-0120	CONE CLAMP. ELEMENT 22/32, L=25	255
90214-0092	BALL BEARING, 17X30X7 MM	409
90214-0098	BALL BEARING, 15X35X11 MM	611, 613, 615, 631, 633
90214-0122	BALL BEARING, 30X72X27 MM	373
90214-0138	BALL BEARING, 5X19X6 MM	555, 557, 559, 561
90214-0166	BALL BEARING, 2 SEALS, 20X37X12 MM	351
90214-0303	SEALING RING, 18,6X35X2 MM	63
90217-0041	NIPPLE LKBN, RD 60-6 - R1 1/2 M	415
90217-0203	UNION NUT, 1 APV, 07-01-276/17	23
90217-0204	ASEPT. MALE FITTING ISO, 03-32-406/42	135
90217-0206	UNION NUT, 1 1/2 APV, 07-01-376/17	135
90217-0207	ASEPT. MALE FITTING ISO, 03-32-456/42	73, 75
90217-0209	UNION NUT, 2 APV, 07-01-426/17	73, 75
90217-0312	CLAMP, ISO2852 FOR PIPE 101,6 MM	505
90217-0313	GASKET 97,8X119X5,5 MM	505
90217-0347	GASKET 32X22,6X3,6 MM	15, 23, 73, 75, 135, 137, 139
90217-0348	GASKET 35,4X46,8X4 MM	15, 73, 75, 135, 139
90217-0349	GASKET 48,4X59,8X4 MM	73, 75
90220-0034	THERMOCOUPLE CABLE K/ 2X0,5MM2	187, 387, 389
90220-0059	THERMOCOUPLE CABLE K/ 2X0,81MM2	23, 29, 31, 43, 47, 51, 53, 69, 73, 75, 139, 725, 821, 823
90220-0072	SCR. CABLE 4X0,34MM2	17, 19
90220-0085	CABLES, MULTI-CONDUCTOR SCREENED	179
90220-0091	PAIR TWISTED CABLE 2X2X0,25MM2	471, 473, 675, 769
90220-0104	SCR. CABLE 4X1,5MM2	55, 187, 603, 605, 663, 779, 781
90220-0105	SCR. CABLE 4X2,5MM2	257
90220-0107	SCR. CABLE 5X0,75MM2	297, 299, 301, 303
90220-0183	SCR. CABLE 2X0,34MM2	711, 713, 715, 727, 729, 735, 841
90220-0305	CLAMP FOR SCR.CABLE, 16MM,	727, 729
90224-0094	NIPPLE	517
90224-0296	CONN. BULKHEAD, ART.NO. 116 1500	471, 473
90224-0308	CONN. BANJO, ART. NO. 2023-1/8-1/8	73, 75, 95
90226-0452	MOUNTING SCREW	17, 19
90226-0455	BLIND PLATE ABB 1666060	809, 811
90230-0025	NON-RETURN VALVE, 12MM, L=85	81
90230-0026	NON-RETURN VALVE RHZ 10-PLR-ED	513, 515
90230-0028	NON-RETURN VALVE H 151 R 3/8"	455
90230-0062	NON RETURN VALVE, 6, OP. PRESS. 0,2 BAR	447, 449, 451
90230-0064	CHECK VALVE, 6 MM HIGH TEMP.	17, 19
90232-0103	PH.CELL E3S-CT61-L-5M	677, 681, 683
90232-0104	PH.CELL E3S-CT61-D-5M	677, 681, 683
90232-0123	PH.CELL WLL170-P135-6011723	657, 659
90232-0347	FIBRE LL3-TB01 5 308050	655
90233-0027	TUBE FUSE, 16A	667, 815
90233-0028	TUBE FUSE, 10A	815
90233-0029	TUBE FUSE, 25A	667, 815
90233-0303	FUSE HOLDER, ST10	815
90233-0304	FUSE HOLDER, ST10	815
90235-0151	NON-RETURN VALVE	447, 449, 451
90235-0206	QUICK EXHAUST VALVE, SEU-1/8	395
90235-0259	VALVE	73, 75, 101, 103, 587
90235-0261	ANGLE SEAT VALVE G1/2, N.C. DN13	81
90235-0274	THROTTLE CHECK VALVES,G1/8"	47, 63, 65, 73, 75, 127, 129
90235-0280	THROTTLE CHECK VALVES,M5	43, 155, 157
90235-0289	VALVE	533, 539
90235-0450	PLATE	471, 473
90235-0708	VALVE	471, 473
90235-0723	THROTTLE VALVE	155, 157
90235-0844	THROTTLE CHECK VALVE, M5, MANUAL, 6MM	197
90236-0041	BRACKET	17, 19
90237-0046	MAGNETIC LOCK, 46X33X15 MM	551, 555, 557
90237-0128	LOCK CYLINDER, 1109-U3	243, 245, 437, 439, 597, 599, 805, 835, 837
90237-0129	LOCK CYLINDER, 1109-U2	437, 807
90237-0150	TURNING HANDLE, NO. 1125-U190-0A	597, 599, 805, 807, 835, 837
90237-0153	LOCK HOUSING, 1121-U26-0B	243, 245, 437, 439
90237-0154	LOCK HOUSING, 1121-U60-0C	597, 599, 805, 807, 835, 837
90237-0155	LOCK ADAPTER, 1121-U40	597, 599, 805, 807, 835, 837
90237-0156	LOCK BOLT, 1000-16	597, 599, 805, 807, 835, 837
90237-0157	LOCK BOLT, 1000-230	767, 809, 811, 819, 821, 823, 827, 829
90237-0175	TURNING HANDLE	437, 439
90237-0176	TURNING HANDLE	243, 245, 805, 807, 835, 837
90237-0319	LOCK HOUSING, 1000-U134	767, 809, 811, 819, 821, 823, 827, 829
90237-0320	LOCK HOUSING, 1000-U136	767, 809, 811, 819, 821, 823, 827, 829
90237-0322	LOCK GASKET, 1000-U137	767, 809, 811, 819, 821, 823, 827, 829
90237-0323	LOCK O-RINGT, 1000-24	819, 827, 829
90239-0357	ROD END, CLEVIS WITH AXLE M10X1,25	297, 299, 301, 303
90239-0405	ROD END,BALL JOINT EYE M10X1,25	63, 193, 195
90239-0453	BRACKET	63, 65, 127, 129, 141
90239-0460	BRACKET	43
90239-0486	REAR,CLEVIS,MINI-ISO 16	197
90239-0487	REAR,CLEVIS,MINI-ISO 20-25	47
90239-0489	ROD END, CLEVIS WITH AXLE M6X1,25	173

Part No	Description	Page No
90239-0491	ROD END,BALL JOINT EYE,MINI-ISO M6	539
90239-0516	ROD END, CLEVIS WITH AXLE M10X1,25	43, 45, 65, 127, 129, 141
90239-0532	ROD END, CLEVIS WITH AXLE M8X1,25	43, 47
90239-0773	CYLINDER	63, 65
90239-0779	CYLINDER	43, 127, 129, 141
90239-0817	DOUBLE ACTING, MINI-ISO, CYL.16-50	173
90239-0819	DOUBLE ACTING, MINI-ISO, CYL.16-100	533
90239-0840	DOUBLE ACTING, MINI-ISO, CYL.16-12	131
90239-0842	DOUBLE ACTING, MINI-ISO, CYL.16-50	197
90239-0847	DOUBLE ACTING, MINI-ISO, CYL.20-50	47
90240-0048	PLAIN BEAR,SELF ADJ.SPHER. 25X42X20 MM	259, 261, 263, 265
90240-0050	PLAIN BEAR,SELF ADJ. 20X35X24	259, 261, 263, 265
90240-0073	BEARING BUSHING W/O FL, 16X18X20 MM	193, 195
90240-0094	BEARING BUSHING W/O FL, 50X55X40 MM	391
90240-0121	FLANGE BUSHING, 8X10X12 MM	607
90240-0146	FLANGE BUSHING,15X21X20 MM	29, 31
90240-0152	PLAIN BEAR,SELF ADJ.SPHER.12X22X10 MM	351
90240-0172	FLANGE BUSHING, 8X12X10 MM	105, 107, 109, 111, 113, 115, 117, 121, 123, 127, 129
90240-0180	FLANGE BUSHING 10X14X15MM	355
90240-0262	FLANGE BUSHING, 12X14X12 MM	377, 379
90240-0287	BUSHING, 10X12X10 MM	569
90240-0301	BUSHING, 8X10X15 MM	377, 379
90240-0331	FLANGE BUSHING, 10X12X17 MM	427
90240-0332	FLANGE BUSHING, 16X18X12 MM	427
90242-0093	O-RING MATERIAL 1,5 MM	289, 291, 293, 295
90243-0061	AIR GUN, CEJN SERIE 204 ED: 90459-0173	217
90243-0133	CONTAINER	597, 599
90243-0134	FLOW METER	467
90245-0029	TRANSFORMER, 1280-3660/TP 182	771, 773
90248-0026	HINGE, 1703-80X32	611, 613, 615, 631, 633
90248-0034	HINGE, 66073	471, 473
90257-0001	FILTER PLUG PARTNO 8145-00-140 TYP F14	17, 19
90257-0002	FILTER PLUG, NO. 8145-00-120 TYP F12	385
90258-0031	PIN, STRAIGHT SLOTTED SPRING FRP 3X20	351
90259-0308	CONN.TERM.K&M BK 25/3-PKZ0	817
90259-0311	3 POLE BUSBAR K&M B3.1/5	817
90259-0313	AUX. CONTACT K&M NHI21-PKZM0	817
90259-0315	BUS BAR 3-POLE, K&M B 3.1/2-PKZM1	817
90261-0071	PLUG, BLIND, PLASTIC, NO. GPN500B58	29, 31
90261-0073	PLUG, BLIND, PLASTIC, NO. GPN250/15	385
90266-0006	TUBE	199, 201, 203
90266-0019	PIPE	199, 201, 203, 259, 261, 263, 265, 357, 359
90270-0017	COMPRESSOR NASH/ELMO 112 MB/4-2083	487
90270-0347	VALVE	459
90274-0045	PRESSURE GUARD, 14 KPA	191
90274-0056	PRESSURE SWITCH, 100 - 1200 KPA	471, 473
90274-0066	PRESSURE SWITCH, 5,516 - 689,5 KPA	17, 19
90274-0074	PRESSURE GUARD, 530 KPA	471, 473
90274-0084	PRESSURE GUARD, 1800 KPA	511
90277-0045	FILTER / 9900-05-BK	471, 473
90277-0046	FILTER / 9933-05-101	471, 473
90277-0055	FILTER HOUSING / MDS 4463 G 08 H	73, 75, 81
90277-0062	FILTER HOUSING, SS-4TF2-60	15
90277-0104	FILTER F64B-2GN-ARO	17, 19
90277-0323	FILTER HOUSING / ART.NO 95S6-1/4 S 5430	17, 19, 471, 473
90277-0324	FILTER CARTRIDGE 050-11-A	17, 19, 471, 473
90277-0407	FILTER ELEMENT 60µ, SS-4F-K4-60	15
90287-0075	SCREW SLOT. PAN HEAD LKCS M6X12	187, 197, 239, 243, 245, 297, 299, 301, 303, 441, 483, 595, 597, 599, 601
90287-0076	SCREW SLOT. PAN HEAD LKCS M6X20	187
90287-0081	SCREW MC6S M6X10 129	255
90287-0112	SCREW SPRINGLOAD. SLOTTED HEAD M8X16	541, 593
90287-0143	SCREW MC6S M6X25 129	263, 265
90287-0144	SCREW MC6S M6X35 129	263, 265
90287-0145	SCREW MC6S M5X16 129	269, 271
90287-0148	SCREW SPRINGLOAD. SLOTTED HEAD M5X12	581
90287-0163	SCREW SPRINGLOAD. SLOTTED HEAD M6X14	277
90287-0167	SCREW SPRINGLOAD. SOCK. HEX HEAD M6X20	625, 627
90287-0212	SCREW MC6S M5X85 129	447, 449, 451
90287-0316	SCREW	597, 599
90287-0335	SCREW MC6S M8X90 A280	387, 389
90288-0066	ROLLER CHAIN, SINGLE 3/8 -365	29, 31
90296-0053	OIL	521
90296-0068	GREASE UNIWAY LI62 CARTRID.400GR	255, 327, 329, 331, 333
90296-0070	GREASE	373, 431
90296-0073	OIL	375, 385
90296-0075	OIL 54322-320 ACC TO M 1254.322	255, 521
90296-0091	LUBRICATION GREASE	173, 175
90297-0006	FLUORESCENT TUBE, PL9	189
90297-0306	BALLAST COIL 50/60 HZ	711, 713, 715
90298-0019	DETERGENT	521, 695
90299-0072	INK	621, 639
90303-0011	PROTECTIVE GOGGLES	669
90303-0012	PROTECTIVE GLOVES	669

Part No	Description	Page No
90303-0013	APRON	669
90304-0020	LIQUID CONTAINER	509
90304-0307	ATTACHMENT PIPE	509
90321-0037	PUMP C-6125P EP 220V;50HZ	445
90321-0101	GEAR PUMP	503
90326-0012	PROTECTIVE COVER, T31A4618	23, 29, 31, 43, 47, 51, 53, 69, 73, 75, 139
90326-0020	PLUG, FEMALE YELLOW CR-AL	23, 29, 31, 43, 47, 51, 53, 69, 73, 75, 139
90326-0022	PLUG, MALE YELLOW CR-AL	23, 387, 389
90326-0048	THERMOCOUPLE, 12826-31	43, 47
90326-0051	THERMOCOUPLE, 12826-33	51, 53, 69, 139
90326-0052	THERMO ELEMENT	29, 31
90326-0057	THERMOCOUPLE, CR-AL	43
90326-0060	THERMOCOUPLE, CR-AL	23
90326-0077	CONTACT	387, 389
90326-0080	THERMOCOUPLE, 5110080-000	387, 389
90326-0089	THERMOCOUPLE, 5110-089-000	73, 75
90326-0304	LEAD IN, 9041-15-KS-UB60	43, 47
90326-0306	GLAND FITTING 9041-45-KS-KR.1/8" D=4,5MM	43, 47
90328-0001	SILENCER	465
90328-0003	SILENCER	73, 75, 101, 103
90328-0007	SILENCER	475, 477, 479
90328-0012	SILENCER	23
90328-0017	SILENCER, D=6 MM	475, 477, 479
90328-0020	SILENCER	173
90328-0026	SILENCER G1/4	17, 19, 95, 471, 473, 691
90328-0029	SILENCER M5	533
90330-0013	NIPPLES, EXT. THREAD. ISO 7/1 R1/4-R1/8	81, 97, 99, 471, 473
90330-0019	NIPPLES, EXT. THREAD. R1/2-R3/8	459
90330-0020	ELBOW, 90 INT. THREAD, R-2221/2	81, 489, 505
90330-0021	NIPPLES, EXT. THREAD. R-207R1/2	73, 75, 81, 489
90330-0025	BUSHING, INT/EXT. THR. R1/4-RP1/8	17, 19, 81
90330-0026	PLUG, EXT. G-THREAD, G1/4	17, 19
90330-0029	PLUG, EXT. G-THREAD, R-236R3/8	45, 47, 505, 507, 513, 515
90330-0032	NIPPLES, EXT. THREAD. ISO 7/1 R1/8-R1/8	73, 75, 97, 99
90330-0037	PLUG, EXT. G-THREAD, G1/2	345, 487
90330-0043	NIPPLES, EXT. THREAD. R-207R1/4	17, 19, 81
90330-0048	BUSHING, INT/EXT. THR. R1/2-RP3/8	81
90330-0049	T-PIPE, INT. THREAD, R-221R1/2	81
90330-0066	PLUG, EXT. G-THREAD, G1/8	95, 289, 291, 293, 295, 513, 515
90330-0078	BUSHING, INT/EXT. THR. R3/4-RP3/8	407
90330-0081	ELBOW, 90 INT. THREAD, R-222R1/4	81
90330-0083	NIPPLES, EXT. THREAD. R3/8-R1/4	17, 19
90330-0085	BUSHING, INT/EXT. THR. R1/2-RP1/4	385
90330-0095	T-PIPE, INT. THREAD, R-221-R1/8	97, 99
90330-0097	NIPPLES, EXT. THREAD, G1/8	205
90330-0099	ELBOW, 90 INT. THREAD, R-222R1/8	205
90330-0101	NIPPLES, EXT. THREAD, G1/4	409
90330-0106	PIPE COUPLING	73, 75, 81
90330-0169	ELBOW, 90 INT. THREAD, 4-4FE. SS	15
90332-0020	RECORDER HONEYWELL	821, 823
90332-0324	INK WHEEL	667
90332-0325	PAPER FOR RECORDER 90332-20	667
90335-0008	COMP. SPRING 22490, 1,6X14,1X115	105, 107, 109, 111
90335-0025	COMP. SPRING 22010, 1X11X26	653
90335-0027	COMP. SPRING 22170, 1,25X9,25X33	571, 573
90335-0036	COMP. SPRING 22450, 1,6X14,1X24	387, 389, 601
90335-0041	TENSION SPRING 42350, 2X14X68	611, 613, 615, 631, 633
90335-0064	COMP. SPRING 22270, 1,25X13,75X62,5	623
90335-0146	COMP. SPRING, 0,6X7,2X20	563, 571, 573
90335-0152	COMP. SPRING 22300, 1,25X17,25X40,5	411
90335-0216	TENSION SPRING 40910, 0,5X5,5X27,7	555, 557, 559, 561, 581
90337-0315	FILTERINSERT / MCS 4463	73, 75, 81
90342-0013	BELLOWS	533
90344-0022	SPROCKET	277
90347-0004	VIBRATION DAMPER D=30 TH=M8 H=17 H2=21MM	235, 489
90347-0005	DAMPER, NO. F 1006 B	651
90347-0024	SHOCK ABSORBER, 370-120-400	579
90347-0054	DAMPER	629
90347-0079	DAMPER TFE 601	663
90347-0108	GAS SPRING NO. 03-08-100-084174	601
90347-0144	VIBRATION DAMPER, NO. RA 40EM-A	487
90347-0189	SHOCK ABSORBER, 370-050-400	391
90348-0007	FREE WHEEL COUPLING	55, 67
90355-0048	TORQUE RIGID COUPLING, 22X22 MM	267
90360-0020	STEAM TRAP / MK36/51 3/8"	73, 75
90360-0305	FLOAT, ART NO 10739920	505
90410-0051	TEMPERATURE CONTROLLER, KS 40	821, 823
90411-0005	INSULATOR	51, 53
90413-0033	CODE INSERT SET 0-9	617, 619, 635, 637
90413-0043	CODE INSERT SET	617, 619, 635, 637
90413-0044	CODE INSERT SET	617, 619, 635, 637
90413-0047	CODE INSERT SET	617, 619, 635, 637
90415-0018	FILTER FOR LIME SEPARATING / D MOD.AD	459
90415-0019	FILTER / ART.NO. HH-M15-RG	459

Part No	Description	Page No
90415-0022	FILTER / R1 1/2" TYP. 1012	415
90415-0033	OIL FILTER REFILLING UC-HP-1229-25	511
90417-0076	TIMING BELT T10X920X25 POLYURETH	255
90417-0292	TIMING BELT T10X690X16 POLYURETHANE	431
90419-0307	GASKET	221, 233
90424-0009	SPRAY NOZZLE 103 DEG	395
90424-0010	SPRAY NOZZLE 142 DEG BSPT 1/4 K5	407
90424-0016	SPRAY NOZZLE 103 DEG R 1/8 GG8W	395
90424-0017	SPRAY NOZZLE	71
90424-0025	SPRAY NOZZLE 145 DEG	409
90424-0027	SPRAY NOZZLE TIP, 8613-8V-TC	187
90424-0032	SPRAY NOZZLE 95 DEG	205
90424-0033	SPRAY NOZZLE 76 DEG	205
90424-0035	SPRAY NOZZLE 95 DEG	205
90424-0054	SPRAY NOZZLE 120 DEG	507
90424-0070	SPRAY NOZZLE 61 DEG	417
90424-0304	GASKET	691
90426-0003	HAND SHOWER	219
90430-0070	FREQ.CONV. 6SE3213-6CA40	711, 713, 715
90430-0076	FREQ.CONV. 6SE3221-3DC40	711, 713, 715
90430-0326	FILTER 6SE3290-0BA87-0FB2	711, 713, 715
90430-0330	FILTER 6SE3290-0DC87-0FB4	711, 713, 715
90432-0023	BRAKE ORTLINGHAUS	255
90450-0033	CYLINDER	193, 195
90450-0281	DOUBLE ACTING,PROF.CYL 32-80	49, 69
90450-0306	DOUBLE ACTING, MINI-ISO, CYL. 12-25	539
90450-0328	DOUBLE ACTING,PROFILE CYL32-25	45
90450-0654	BRACKET,REAR,EYE WITH AXLE 32	297, 299, 301, 303
90450-0669	SENSOR, BRACKET SERIES 168	45, 69
90450-0747	INTERMEDIATE PLATE	297, 299
90450-0756	BRACKET, REAR EYE 32	45
90453-0001	MODEM MA-12	675
90453-0002	MODEM MD-12 DC	769
90456-0001	INTOUCH OEM 2000 V.5.6B/6.0B HW KEY	767
90457-0011	HYDRAULIC TANK, 12 LI, NO A3-14010	513, 515
90457-0012	TANK LID, LID-12L, NO A3-14011	513, 515
90457-0013	PUMP-MOTOR BRACKET, LS-211, NO 1711121	513, 515
90457-0014	FLEXIBLE COUPLING, ND5-A, CON.10X19 MM	513, 515
90457-0015	HYDR.PUMP, TFP100/2,2-S-C001, NO 1111250	513, 515
90457-0016	HYDR. VALVE MANIFOLD BLOCK, NO AI-14004	513, 515
90457-0017	TANK RET. OUTLET PIPE, NO 8185-0187	513, 515
90457-0018	HYDR.ACCU, NO SBO210-0,32EI/112A-210AK60	513, 515
90457-0019	LEVEL PROBE, HMFB-S=45-0=80-0=90-T70	513, 515
90457-0021	PUMP CONN. ELBOW FLANGE T-26/12-3/8	513, 515
90457-0022	HYDR. HOSE, 6,4 & M16X1,5 STR+90DEGR.CON	513, 515
90457-0023	CONN.STRAIGHTG1/2-M22X1,5, VADKO15-RL/WD	513, 515
90457-0024	RETURNFILTER UNIT, RF-P/30-G-010AI.IT	513, 515
90457-0027	INSERT, MULTI HOLE, E155M1X5/4X9	423, 425, 775
90457-0028	INSERT, MULTI HOLE, E154M5X5	421
90457-0029	INSERT, MULTI HOLE, E156M5,9,11,19	231, 771, 773
90457-0030	INSERT, MULTI HOLE, EK155M4X9	423, 425
90457-0031	NORMAL WITHOUT INSERT, PG 36	231
90457-0047	SENSOR 2750-1-5111-1 W.ADAPTER PNP	69
90457-0049	TERMINAL BLOCK, 102230	759, 761, 765
90457-0050	BULKHEAD HOUSING 149760	779, 781
90457-0051	END PLATE	423, 425, 755, 757, 759, 761
90457-0052	END PLATE	755, 757
90457-0054	FEED THROUGH TERMINAL, 161527	755, 757
90457-0055	PROTECTION, 704-9645	821, 823
90457-0056	FAN 7450 ES	711, 713, 715
90457-0057	GRID FOR FAN LZ36	711, 713, 715
90457-0058	SIGN, LS SHORT STOP	821, 823
90457-0063	COOLING UNIT, KB17TB.CBB	839
90457-0086	BULKHEAD CONNECTOR 6MM	15, 101, 103, 227, 229
90457-0087	BULKHEAD CONNECTOR 12 MM	101, 103
90457-0100	ACCUMULATOR CRVZS-2	481
90457-0101	FLOW METER FOR AIR	467
90457-0104	BLANK RIVET 2X7,4	471, 473
90457-0123	SIGN, MAIN SWITCH	771, 773
90457-0124	END CAP PSB-END6	813, 817
90457-0125	POWER RAIL SZ-PSB 12 N	813, 817
90457-0127	TENSIONER, TYPE SE-F-15	255, 257
90457-0128	CLAMPING ROLL	255, 257
90457-0131	PUMP SV805 R22T 50HZ	415
90457-0132	VALVE, BUTTERFLY, N.O. ZVF1200BSAAO	397
90457-0136	FLAT GASKET TAPE W. ADHESIVE, 10X3.0	513, 515
90457-0137	GASKET, GP IP	513, 515
90457-0138	GASKET, DP-200	513, 515
90457-0139	CONN.STRAIGHT G3/8-10 MM, A 10-L/R3/8/WD	513, 515
90457-0140	CONN.STRAIGHT G3/8-15 MM, A 15-L/R3/8/WD	513, 515
90457-0141	BULKHEAD CONNECTOR, 8MM	387, 389
90457-0143	SCREW M6S ISO 4014 M6X130 A480	517
90457-0146	EXTENDED WITHOUT INSERT,	145, 147, 611, 613, 615, 655
90457-0147	GLAND, INSERT, MULTI HOLE, 2X7	145, 147, 209, 211, 247, 787, 789, 791, 793, 795, 797, 799

Part No	Description	Page No
		801, 803
90457-0148	SCREW CAP HEAD SQ. NECK M6X100 SS	443
90457-0150	FLEXIBLE COUPLING, 10X25 MM	283
90457-0151	WORM GEAR UCZ 151 SIZE 125 39:1	255
90457-0162	CLAMPING ELEMENT, 00203005	283
90457-0170	DIRECTION VALVE, NO. 0 810 091 212	513, 515
90457-0172	MOTOR 3GAA 131001-ASA	257
90457-0178	EQUAL BULKHEAD ELBOW CONNECTOR 36390800	207
90457-0179	ELBOW COUPLING 6179 04 10	207
90457-0180	ELBOW COUPLING 6179 06 10	207
90457-0181	EQUAL BULKHEAD ELBOW CONNECTOR 31390600	207
90457-0182	PIPE CLAMP, D=8 MM, RAPOD8X	207
90457-0183	COVER PLATE DPA0X, FOR 90457-0182	207
90457-0184	T-CONNECTION 6 MM 6104 06 00	207
90457-0188	BEARING 25X42X20 MM	275
90457-0192	WASHER PLAIN ROUND, 6,5/18, H=1,5	767, 771, 773, 805, 807, 809, 811, 821, 823, 835, 837
90457-0198	MAIN SWITCH	831
90457-0199	INSERT EK 156M 5X5/4X9	387, 389, 407
90457-0937	SCREW MC6S M3X40 A480	361
90458-0058	SCREW M5X60 A280	603, 605
90458-0072	SCREW, HEX.SOCK.BUTTON HEAD M6X12	223, 225
90458-0073	WASHER 6,4/30, H=1,5	223, 225
90458-0138	PROX.SW. E2EG-X1R5B1-5M	279, 281, 691
90458-0145	SEALING, 3X15 MM CLOSED CELL SPONGE	197, 239, 247
90458-0146	GLAND, HOSE, WITHOUT INSERT, PG21	553
90458-0147	GLAND, INSERT, MULTI HOLE, 2X6,5	423, 425
90458-0188	GLAND, INSERT, MULTI HOLE, 1X7/1X10,5	787, 789, 791, 793, 795, 797, 799, 801, 803
90458-0220	TENSION ROLLER, M40/60-0-M EXCENTRIC	407, 431
90458-0256	PROXIMITY SWITCH IIA 3010-BPKG/6M	193, 195
90458-0258	TRANSFORMER, 220VAC/6-9-12VAC	771, 773
90458-0281	DISTRIBUTOR 8933502114	447, 449, 451
90458-0292	BASE, KT70-1001	221, 233
90458-0293	LIGHT ELEMENT, RED, KL70-401R	221, 233
90458-0294	LIGHT ELEMENT, YELLOW, KL70-401Y	221, 233
90458-0295	LIGHT ELEMENT, BLUE, KL70-401L	221, 233
90458-0302	SIREN WITH ADJUSTABLE VOLUME KS 70-3004	233
90458-0305	CABLE GLAND, M12X1,5, NO.5311 1000	553, 787, 789, 791, 793, 795, 797, 799, 801, 803
90458-0306	CABLE GLAND, M16X1,5, NO.5311 1010	553
90458-0307	CABLE GLAND, M20X1,5, NO.5311 1020	231, 655
90458-0308	CABLE GLAND, M25X1,5, NO.5311 1030	231
90458-0311	CABLE GLAND, M50X1,5, NO.5311 1060	227, 229, 771, 773
90458-0314	CABLE GLAND, M16X1,5, NO.5311 1110	407
90458-0315	CABLE GLAND, M20X1,5, NO.5311 1120	145, 147
90458-0321	NUT, M12X1,5	787, 789, 791, 793, 795, 797, 799, 801, 803
90458-0322	NUT, M16X1,5	407, 431
90458-0326	NUT, M40X1,5	407
90458-0327	NUT, M50X1,5	227, 229, 771, 773
90458-0397	SERVO DRIVE DMC2 50720 P	711, 713, 715
90458-0416	NORMAL WITHOUT INSERT, M50X1,5	787, 789, 791, 793, 795, 797, 799, 801, 803
90458-0422	EXTENDED WITHOUT INSERT, M20X1,5	553, 787, 789, 791, 793, 795, 797, 799, 801, 803
90458-0427	EXTENDED WITHOUT INSERT, M16X1,5	431
90458-0428	EXTENDED WITHOUT INSERT, M20X1,5	787, 789, 791, 793, 795, 797, 799, 801, 803
90458-0430	EXTENDED WITHOUT INSERT, M20X1,5	209, 211, 247, 415, 553, 787, 789, 791, 793, 795, 797
		799, 801, 803
90458-0431	EXTENDED WITHOUT INSERT, M25X1,5	403, 513, 515, 537, 553, 787, 789, 791, 793, 795, 797
		799, 801, 803
90458-0432	EXTENDED WITHOUT INSERT, M25X1,5	787, 789, 791, 793, 795, 797, 799, 801, 803
90458-0433	EXTENDED WITHOUT INSERT, M32X1,5	553
90458-0438	GLAND, EXTENDED WITH INSERT, M20X1,5	297, 299, 301, 303
90458-0450	GLAND, M25X1,5, NO. 2255416S08UL16	257
90458-0459	EXTENDED WITHOUT INSERT, HIGH TEMP, 40X1	387, 389, 407
90458-0460	GLAND, LOCKNUT, M16X1,5	787, 789, 791, 793, 795, 797, 799, 801, 803
90458-0461	GLAND, LOCKNUT, M20X1,5	787, 789, 791, 793, 795, 797, 799, 801, 803
90458-0462	GLAND, LOCKNUT, M25X1,5	787, 789, 791, 793, 795, 797, 799, 801, 803
90458-0465	GLAND, LOCKNUT, M50X1,5	787, 789, 791, 793, 795, 797, 799, 801, 803
90458-0601	PHOTOCELL, SICK PHOTOCELL 1	165, 167
90458-0675	PROXIMITY SENSOR, E2EG-X5MB1-5M	173, 603, 605
90458-0676	PROXIMITY SWITCH,E2EG-X5B1-6M	73, 75
90458-0726	PRESSURE GAUGE, D=50 MM WITH FILTER	513, 515
90458-0746	STEP MOTOR DRIVE L50	711, 713, 715
90458-0747	SENSOR FOR CYLINDER, SMH-1PC	301, 303
90458-0824	BUSHING, 8X10X8 MM	173
90458-0825	FLANGE BUSHING,16X18X17 MM	173
90458-0871	HOUSING BULKHEAD MOUNTING HAN 6B-AGG-RB	779, 781
90458-0875	HINGED FRAME HAN 6B FOR HOUSING	779, 781
90458-0876	FEMALE INSERT HAN 6B 09 14002 2751	779, 781
90458-0894	PROXIMITY SENSOR E2E2-X10MB1-5M	407
90458-0917	TRANSF. 3-PH 750VA SEC. 23A	771, 773
90458-1092	PROPORTIONAL VALVE 0 - 10V/0-6 BAR	471, 473
90458-1114	BIMET. ELECTROMECH. THERMOSTAT K7H.020	765
90458-1136	TERMINAL BLOCK, 103630	423, 425, 757, 759, 761
90458-1162	FILTER, 6 A, 250 VAC	711, 713, 715
90458-1181	BULKHEAD HOUSING HDC-HA-3-AWVL1/11	787, 789, 791, 793, 795, 797, 799, 801, 803
90458-1226	HANDLE, NO. GN 310-12-100-A-NI	601

Part No	Description	Page No
90458-1227	LEAD-IN, BUSHING, DA 130/170/50	483, 593
90458-1228	LEAD-IN, BUSHING, DA 230/300/60	593
90458-1229	LEAD-IN, BUSHING, DA 75/110/50	593
90458-1230	CLAMPING ELEMENT, DI=36 MM	603, 605
90458-1231	FORK HOLDER 913588/04	603, 605
90458-1232	BEARING BRACKET AY15	603, 605
90458-1233	TIMING BELT AT10 340X16 MM	603, 605
90458-1234	PROTECTIVE CAP 2X20X1.2X100	603, 605
90458-1238	GLAND, INSERT, SINGLE HOLE,	655, 657, 659
90458-1239	GLAND, INSERT, MULTI HOLE, 1X9/1X5,5	611, 613, 615, 655
90458-1240	RUBBERSPRING DK-A 15X40	603, 605
90458-1241	TENSION SPRING RZ-1221	647
90458-1273	TRANSFORMER, OFL-1350	771, 773
90458-1279	PLUG CONNECTOR DP1	711, 713, 715
90458-1298	CONNECTOR AND CABLE 403000E 18M 080	297, 299, 301, 303
90458-1300	2 AXIS DOCKING STATION D2/PLC	711, 713, 715
90458-1301	CYLINDER ETS32-M10NA2X-FM50-AEUM1D	297, 299, 301, 303
90458-1302	CONTACTOR, 4KW 48VAC	741, 753
90458-1306	BLIND PLUG CIRCULAR, M12X1,5 514GFK/212	553, 787, 789, 791, 793, 795, 797, 799, 801, 803
90458-1307	BLIND PLUG CIRCULAR, M16X1,5 514GFK/216	787, 789, 791, 793, 795, 797, 799, 801, 803
90458-1308	BLIND PLUG CIRCULAR, M20X1,5 514GFK/220	231, 787, 789, 791, 793, 795, 797, 799, 801, 803
90458-1309	BLIND PLUG CIRCULAR, M25X1,5 514GFK/225	787, 789, 791, 793, 795, 797, 799, 801, 803
90458-1312	BLIND PLUG CIRCULAR, M50X1,5 514GFK/250	787, 789, 791, 793, 795, 797, 799, 801, 803
90458-1406	FEMALE INSERT 120770	787, 789, 791, 793, 795, 797, 799, 801, 803
90458-1423	CONNECTOR, PC 4/4-STF-7.62	841
90458-1424	CONNECTOR, MSTB 2.5/10-STF-5.08	841
90458-1447	MOUNTING RAIL SUPPORT TST 128660	755, 757
90458-1448	MAGNETIC FUSE, S292 C100	813
90458-1489	CABLE CLIPS, D=4,75 MM	207
90458-1490	CABLE CLIPS, D=7,9 MM	711, 713, 715
90458-1517	SCREW SPRINGLOAD. SOCK. HEX HEAD M8X18	351
90458-1590	KNOB WITH SHAFT, M6	277
90458-1591	TIMING BELT T10X1000X25 POLYURETHANE	255
90458-1612	SCREW CAP HEAD SQ. NECK M6X120 SS	443
90458-1613	SCREW CAP HEAD SQ. NECK M6X140 SS	443
90458-1651	EMERGENCY STOP, ZB4-BS-844 ZB4-BZ-104	537
90458-1704	BALL BEARING, 15X35X11 MM	55, 63, 67, 175
90458-1721	INDEXING GEAR, 10.707.207	375
90458-1747	NORMAL WITHOUT INSERT, M50X1,5	771, 773
90458-1790	BUSHING, 6X8X6 MM	173
90458-1879	GEARS, WORM MOTOR 528V--L06-B01	67
90458-1906	GLAND, INSERT, MULTI HOLE, 4X5	423, 425
90458-1958	ARTICULATION, 300DEG WITH STOP	231
90458-1959	LIFTING EYE BOLT, LGB (3) 3T M24	673
90458-1960	STRETCHING SCREW, 468-697MM MAX2950KG	673
90458-2039	CONN. STR., 6-R1/8, EXT. THREAD	159
90458-2040	ELBOW PIPE JOINT, INT.THREAD, G1/8"D=6MM	159
90458-2078	SCREW SPRINGLOAD. SOCK. HEX HEAD M12X26	649
90458-2169	INCREASER 6-8	475, 477, 479
90458-2199	GASKET, LOWARA 168061340	415
90458-2200	ELECTROMAGNETIC CLUTCH, 30 MM/24 VDC	255
90458-2418	CHASSI HOUSING 10-POLE, 70.331.1028.0	233
90458-2421	PRESSURE GAUGE, 1453 W. BRACKET	471, 473
90458-2487	SCREW PLUG HD-PE, M24	483
90458-2488	MEASURING HOSE DN2 L=1500MM, MAX 400BAR	471, 473
90458-2557	CABLE OLFLEX 25X1 MM2	231
90458-2580	LEVEL CONTROL RELAY RM4-LA32M	733
90458-2619	FLOW METER, D-6230-HGB-BB-AV-99-0-N2	17, 19
90458-2661	THROTTLE CHECK VALVE G1/4" MANUAL, 8	475, 477, 479
90458-2722	DIRECTION VALVE, NO. 0 810 091 222	513, 515
90458-2762	PUMP SV805 R406T 60HZ	415
90458-2840	SHAFT COUPLING 22,225H9/9	67
90458-2841	SHAFT COUPLING 22,225H9/15	55
90458-2924	CONTACTOR 30KW COIL 24VDC	711, 713, 715
90458-2925	AUXILIARY CONTACT, DIL M820-XHI11-SI	711, 713, 715
90458-2954	ELBOW PIPE JOINT, EXT.THREAD, D=4MM M5	361
90458-2956	ELBOW PIPE JOINT, EXT.THREAD, D=6MM-G1/8	377, 379, 397
90458-2957	ELBOW PIPE JOINT, EXT.THREAD, D=6MM-G1/4	17, 19
90458-2964	ELBOW PIPE JOINT, EXT.THREAD, D=8MM-G1/8	395
90459-0075	HINGE, 1056-U30	17, 19, 555, 557
90459-0251	DOUBLE ACTING, COMPACT, CYL 12-15	361
90459-0308	PAPER TROLLEY, STOCKA 32.04.250.9	663
90459-0472	KEY SAF.SW. AZ 16 02ZVRK-M20-2152-2254	209, 211, 247
90459-0691	SIGN, STRIP SPLICE/ RESET ALARM	537
90459-0737	SAFETY CLUTCH, SK1 15/D/20/5-20	431
90459-0765	O-RING 78X2 MM	431
90459-0766	SLEEVE, CR 99334	431
90459-1060	VIBRATION DAMPER, T15688	247
90459-1066	LEAD-IN, BUSHING, DA 300/350/10	227, 229
90459-1094	HEATING ELEMENT, 3000W 240V	43
90459-1254	TUBE FUSE, 4A 500V	815
90459-1382	HEATING ELEMENT, 1100W 220V	387, 389

Part No	Description	Page No
90459-1420	PROPORTIONAL VALVE 0 - 10V/0-6 BAR	17, 19
90459-1845	DOUBLE ACTING, COMPACT, 50-30	377, 379
90459-1901	POWER RAIL SZ-KS 18/56N	813
90459-2045	O-RING 14X4 MM	177
90459-2063	CIRCUIT BREAKER, 1P 0,75 A K	813
90459-2195	CIRCUIT BREAKER, 3P 2 A K	817
90459-2309	FLEXIBLE CHAIN, A325A103KM	845
90459-2350	END BRACKET, A325A103KM	845
90459-2435	CONTAINER 1,8L , GN 1406	73, 75
90459-2452	CABLE DUCT, 25X100MM	711, 713, 715
90459-2560	LIGHT FIXTURE, TMS121 1XTL-D30W/830 IP	771, 773
90459-2912	BAR, TR1	705, 707, 709
90459-3090	LIGHT FIXTURE, TMS121 1XTL8W/830 IP	771, 773
90459-3092	CABLE PROTECTION, CP10	705, 707, 709
206913-0000	LOCKING LOOP	647
208173-0000	SHAFT	643
209145-0000	THROTTLE SCREW	139, 507
209146-0000	BARRIER NUT	139, 507
209183-0000	RING	23, 27, 135
229207-0000	BEARING SLEEVE	419
229775-0000	SPACER	643
230551-0000	GASKET	487
239440-0000	SHAFT	127, 129
240797-0000	HANDLE	351
243132-0000	PROTECTION PLATE	643
243133-0000	SHIELD PLATE	643
245039-0000	GUIDE WHEEL	419
245221-0000	STOP	643
247248-0000	PIN	29, 31
247349-0000	STEERING	57, 59
247357-0000	SPROCKET	57, 59
247358-0000	SHIFTER HANDLE	57, 59
247385-0000	SIGN	471, 473
247386-0000	SIGN	471, 473
250590-0000	BEARING COVER	55
250592-0000	WASHER	55, 67
253107-0000	WASHER	611, 613, 615, 631, 633
255301-0000	HEATING RAIL	643
255609-0000	ARM CUTTING JAW	337, 339, 341, 343
255653-0000	FLANGE BUSHING	337, 339, 341, 343
255742-0000	COMPRESSION SPRING	289, 291, 293, 295
255801-0000	RETAINING RING	289, 291, 293, 295
255870-0000	VALVE HOUSING	45
255874-0000	BEARING COVER	141
255875-0000	BUSHING	45, 141
255939-0000	WASHER	193, 195
255940-0000	SPACER	193, 195
255942-0000	SLIDER	193, 195
255943-0000	HOLDER	193, 195
255969-0000	SHAFT	127, 129
255970-0000	BUSHING	127, 129
255977-0000	SHAFT	143
255978-0000	FORK	143
255986-0000	WHEEL	57, 59
255995-0000	SCREW	65
256005-0000	GASKET	29, 31
256014-0800	BATH	11, 13
256022-0000	BUSHING	65
256055-0700	HOT AIR ELEMENT	11, 13
256082-0000	CAP	337, 339, 341, 343
256084-0700	CHANGE-OVER VALVE	11, 13
256095-0700	HOT AIR ELEMENT	11, 13
256112-0000	BRACKET	47
256163-0000	SHAFT	57, 59
256170-0000	DRIP PLATE	57, 59
256173-0600	WORM GEAR	253
256176-0000	GEAR WHEEL	255
256177-0000	SHAFT	255
256178-0000	FIXING RING	255
256179-0000	SPACER SLEEVE	255
256181-0000	SPACER PIPE	255
256197-0500	ARM	253
256200-0300	INTERMEDIARY SHAFT	253
256202-0700	CURVE PACK	253
256204-0600	CUTTING JAW	287
256205-0600	CUTTING JAW	287
256208-0400	KNIFE HOLDER	287
256212-0600	PRESSURE JAW	287
256213-0600	PRESSURE JAW	287
256214-0400	PRESSURE RAIL	287
256217-0500	GUIDE	287
256248-0001	LID	611, 613, 615, 631, 633
256279-0000	ANGLE	113, 115, 117
256280-0000	DOWEL	105, 107, 109, 111, 113, 115, 117

Part No	Description	Page No
256309-0000 ..	SHAFT	105, 107, 109, 111
256312-0000 ..	WASHER	105, 107, 109, 111
256398-0000 ..	LID	611, 613, 615, 631, 633
256400-0000 ..	SHAFT	611, 613, 615, 631, 633
256406-0000 ..	GABLE PLATE	611, 613, 615, 631, 633
256409-0000 ..	WASHER	611, 613, 615, 631, 633
256410-0900 ..	INDEXING UNIT	367
256418-0000 ..	BEARING BRACKET	263, 265
256421-0000 ..	PULLEY	259, 261
256422-0000 ..	WASHER	259, 261, 263, 265
256426-0001 ..	WASHER	259, 261, 263, 265
256426-0002 ..	WASHER	259, 261, 263, 265
256427-0000 ..	SHAFT	259, 261, 263, 265
256437-0200 ..	DISC COUPLING	367
256438-0300 ..	WORM GEAR	367
256472-0000 ..	WASHER	259, 261, 263, 265
256487-0000 ..	CUTTING JAW	289, 291, 293, 295
256515-0000 ..	END PIECE	263, 265
256516-0000 ..	CAP	263, 265, 273
256517-0000 ..	SCREW	263, 265
256557-0001 ..	WASHER	327, 329, 331, 333
256557-0002 ..	WASHER	327, 329, 331, 333
256557-0003 ..	WASHER	327, 329, 331, 333
256576-0000 ..	ROLL	327, 329, 331, 333
256607-0000 ..	AXLE PIN	289, 291, 293, 295
256621-0000 ..	WASHER	297, 299, 301, 303
256626-0000 ..	EAR	289, 291, 293, 295
256628-0000 ..	PIECE	337, 339, 341, 343
256629-0001 ..	AXLE PIN	337, 339, 341, 343
256629-0003 ..	AXLE PIN	337, 339, 341, 343
256641-0000 ..	LEG	415
256659-0000 ..	OPERATING ROD	289, 291, 293, 295
256665-0200 ..	HATCH	185
256674-0500 ..	BOTTOM VALVE	367
256704-0000 ..	WASHER	337, 339, 341, 343
256705-0000 ..	LACE	297, 299, 301, 303
256706-0000 ..	BEARING PLATE	289, 291, 293, 295
256707-0000 ..	BRACKET	297, 299, 301, 303
256710-0000 ..	SHAFT	337, 339, 341, 343
256738-0000 ..	WASHER	345
256739-0000 ..	SCREW	345
256769-0000 ..	CUTTING JAW	289, 291, 293, 295
256812-0000 ..	SHAFT	277
256814-0000 ..	WASHER	277
256816-0000 ..	PIPE	277
256828-0000 ..	SPRING	277
256829-0000 ..	SCREW	337, 339, 341, 343, 345
256831-0001 ..	SPACER	337, 339, 341, 343
256831-0002 ..	SPACER	337, 339, 341, 343
256831-0003 ..	SPACER	337, 339, 341, 343, 345
256831-0004 ..	SPACER	345
256834-0000 ..	YOKE	337, 339, 341, 343
256849-0000 ..	VOLUMEFLAP 125 ML	311, 313, 315, 317
256859-0000 ..	SCREW	311, 313, 315, 317
256860-0000 ..	ROLL	311, 313, 315, 317
256870-0000 ..	BRACKET	337, 339, 341, 343
256882-0000 ..	WASHER	335
256889-0000 ..	PLUNGER	337, 339, 341, 343
256890-0000 ..	LACE	337, 339, 341, 343
256891-0000 ..	LACE	337, 339, 341, 343
256899-0000 ..	SHAFT	153
256907-0000 ..	WASHER	395
256951-0500 ..	YOKE RIGHT	287
256952-0500 ..	YOKE LEFT	287
256953-0000 ..	BLOCK RIGHT	337, 339
256954-0000 ..	BLOCK LEFT	341, 343
257000-0000 ..	NIPPLE	357, 359
257040-0000 ..	FORK	127, 129
257041-0000 ..	FORK	127, 129
257042-0000 ..	BRACKET	127, 129
257043-0000 ..	ANGLE BRACKET	127, 129
257044-0000 ..	ROLL	127, 129
257090-0000 ..	SHIFTER HANDLE	105, 107, 109, 111
257141-0000 ..	RETAINING RING	611, 613, 615, 631, 633
257174-0000 ..	SEALING WASHER	255
257175-0000 ..	WASHER	121, 123
257179-0000 ..	GEAR WHEEL	255, 277
257190-0000 ..	SEPARATION BLOCK	205
257202-0000 ..	STRAINER	489
257213-0000 ..	BUSHING	337, 339, 341, 343
257231-0000 ..	WINDOW	213, 215
257249-0000 ..	SCREW	327, 329, 331, 333
257250-0000 ..	LID	327, 329, 331, 333
257306-0000 ..	ROLL	259, 261

Part No	Description	Page No
257308-0000 ..	SCREW	259, 261
257309-0000 ..	SHAFT	259, 261, 279, 281
257310-0000 ..	NUT	259, 261, 279, 281
257311-0000 ..	CAP	259, 261, 263, 265
257317-0000 ..	LACE	337, 339, 341, 343
257326-0000 ..	CRANK	277
257327-0000 ..	SLIDER	277
257328-0000 ..	END PIECE	277
257330-0000 ..	PRESSURE ROLLER	143, 691
257334-0000 ..	LEAF SPRING	297, 299, 301, 303
257362-0000 ..	LACE	289, 291, 293, 295
257379-0000 ..	HYDRAULIC PIPE RIGHT	357
257380-0000 ..	HYDRAULIC PIPE LEFT	359
257381-0300 ..	MANIFOLD RIGHT	287
257382-0300 ..	MANIFOLD LEFT	287
263311-0000 ..	WASHER	65
263655-0006 ..	SHAFT	57, 59
265568-0000 ..	DUST COVER	611, 613, 615, 631, 633
266710-0000 ..	USE NEW PART 2555116 WHEEL	603, 605
266737-0000 ..	WASHER	45, 141, 555, 557, 559, 561
266739-0000 ..	CABLE GLAND	47
267033-0000 ..	WASHER	57, 59
269859-0000 ..	BRACKET	487
271007-0000 ..	POINTER	269, 271
271100-0000 ..	DOWEL	337, 339, 341, 343
271121-0000 ..	FORCE SPRING	205
271163-0000 ..	CANTILEVER	193, 195
271169-0500 ..	VALVE	11, 13
271181-0600 ..	AIR SUPER-HEATER	11, 13
271239-0000 ..	SLEEVE	653
271241-0000 ..	SCREW	653
271261-0700 ..	CLEANING SYSTEM	199, 201, 203
271269-0000 ..	BUSHING	43, 47, 63
271284-0000 ..	BLOCKING PIECE	297, 299, 301, 303
271387-0400 ..	SPRAY GUN	185
271414-0300 ..	AIR JET GUN	185
271435-0000 ..	WASHER	415
271509-0000 ..	JUNCTION BLOCK	155, 157
271622-0000 ..	LACE	199, 201, 203
271623-0000 ..	LACE	199, 201, 203
271641-0500 ..	SPLICING TABLE	641
271642-0000 ..	RULER	651
271643-0000 ..	RULER	651
271644-0000 ..	RULER	651
271689-0000 ..	WASHER	255
271820-0001 ..	STEERING RAIL	65
271820-0002 ..	STEERING RAIL	65
271823-0000 ..	FILTER	459
271824-0000 ..	AIR KNIFE, MOVABLE	65
271825-0000 ..	FIXED AIR KNIFE	65
271827-0001 ..	HEAD PLATE	65
271827-0002 ..	HEAD PLATE	65
271846-0000 ..	INSULATION NUT	335
271848-0000 ..	SCREW	335
271858-0000 ..	FLANGE	65
271860-0000 ..	CLAMP BLOCK	161, 163
271863-0000 ..	SHAFT	57, 59
271864-0000 ..	WASHER	57, 59
271898-0000 ..	SCREW	63
271899-0000 ..	SCREW	63
271941-0001 ..	FRAME	65
271941-0002 ..	FRAME	65
271942-0001 ..	AIR GUIDE	65
271942-0002 ..	AIR GUIDE	65
272002-0000 ..	PROTECTIVE COVER LEFT	57, 59
272003-0000 ..	PROTECTIVE COVER RIGHT	57, 59
272004-0500 ..	BENDING ROLLER	11, 13
272021-0800 ..	ASEPTIC CHAMBER	11, 13
272022-0000 ..	AIR KNIFE, MOVABLE	65
272023-0000 ..	FIXED AIR KNIFE	65
272024-0500 ..	CALENDER ROLLER	11, 13
272025-0400 ..	AIR KNIFE	11, 13
272026-0001 ..	AIR DISTRIBUTOR	65
272026-0002 ..	AIR DISTRIBUTOR	65
272027-0001 ..	GLASS PANE	65
272027-0002 ..	GLASS PANE	65
272028-0800 ..	BENDING ROLLER	11, 13
272033-0000 ..	BRACKET	63
272095-0000 ..	SHAFT	153
272116-0000 ..	CAP	259, 261
272140-0001 ..	HEAD PLATE	65
272140-0002 ..	HEAD PLATE	65
272141-0001 ..	FILTER	65
272141-0002 ..	FILTER	65

Part No	Description	Page No
272191-0000 ..	DISTRIBUTOR	395
272275-0000 ..	LID	71
272277-0000 ..	GASKET	71
272286-0000 ..	AXLE SUPPORT	43
272287-0000 ..	AXLE SUPPORT	47
272325-0000 ..	SPIRAL	71
272329-0001 ..	LACE	65
272329-0002 ..	LACE	65
272337-0600 ..	VALVE	11, 13
272372-0000 ..	HOUSE	255
272376-0000 ..	SHUTTER	255
272377-0001 ..	CRAMP	255
272377-0002 ..	CRAMP	255
272388-0000 ..	CRAMP	255
272407-0400 ..	GENERATOR	11, 13
272415-0000 ..	ARM	337, 339, 341, 343
272416-0000 ..	CARRIER	289, 291, 293, 295
272419-0000 ..	CARRIER	289, 291, 293, 295
272420-0000 ..	FOLDING FLAP	289, 291, 293, 295
272421-0000 ..	FOLDING FLAP	289, 291, 293, 295
272422-0000 ..	FOLDING FLAP	289, 291, 293, 295
272423-0000 ..	FOLDING FLAP	289, 291, 293, 295
272424-0000 ..	FOLDING FLAP	289, 291, 293, 295
272425-0000 ..	FOLDING FLAP	289, 291, 293, 295
272427-0000 ..	BRACKET	289, 291, 293, 295
272442-0000 ..	CANTILEVER	259, 261
272454-0000 ..	PIVOT PIN	337, 339, 341, 343
272455-0000 ..	BEARING BRACKET	259, 261
272456-0000 ..	LINK	259, 261
272457-0000 ..	BOW CLAMP	259, 261
272458-0000 ..	ECCENTRIC SHAFT	259
272459-0000 ..	WASHER	259
272461-0000 ..	WASHER	259
272462-0000 ..	AXLE BOLT	263, 265
272464-0000 ..	ANGLE BRACKET	65
272472-0000 ..	END PIECE	279, 281
272479-0000 ..	PRESSURE ROLLER	143, 691
272490-0000 ..	SLEEVE	345
272491-0000 ..	BRACKET	297, 299, 301, 303
272492-0000 ..	ARM RIGHT	337, 339
272493-0000 ..	ARM LEFT	341, 343
272496-0000 ..	BRACKET RIGHT	337, 339
272497-0000 ..	BRACKET LEFT	341, 343
272501-0000 ..	BRACKET RIGHT	327, 329
272502-0000 ..	BRACKET LEFT	331, 333
272503-0000 ..	CLAMPING PIECE	327, 329, 331, 333
272506-0000 ..	LACE	327, 329, 331, 333
272560-0800 ..	PRODUCT VALVE	11, 13
272600-0000 ..	ARM	193, 195
272602-0000 ..	SCREW	193, 195
272607-0000 ..	BELT HOLDER	263, 265
272608-0000 ..	BELT HOLDER	273
272623-0700 ..	SPRAY SYSTEM	11, 13
272640-0001 ..	COUNTER CAM	297, 299, 301, 303
272640-0002 ..	COUNTER CAM	297, 299, 301, 303
272640-0005 ..	COUNTER CAM	297, 299, 301, 303
272640-0006 ..	COUNTER CAM	297, 299, 301, 303
272640-0007 ..	COUNTER CAM	297, 299, 301, 303
272640-0009 ..	COUNTER CAM	297, 299, 301, 303
272641-0000 ..	PILLAR	301, 303
272642-0000 ..	PILLAR	297, 299
272645-0000 ..	RAIL	297, 299, 301, 303
272654-0000 ..	ECCENTRIC SHAFT	297, 299, 301, 303
272664-0000 ..	CANTILEVER	277
272673-0000 ..	LEG	403
272679-0000 ..	PIPE	205
272736-0000 ..	CANTILEVER	277
272737-0000 ..	BRACKET	277
272742-0000 ..	FINGER	193, 195
272743-0000 ..	LID	403
272746-0000 ..	ROD	383
272747-0000 ..	CONNECTION	383
272753-0000 ..	STEERING	305, 307, 309
272755-0000 ..	NUT	305, 307, 309
272780-0000 ..	COVER SLIP	161
272781-0002 ..	COVER SLIP	163
272782-0000 ..	COVER SLIP	161, 163
272783-0002 ..	GLASS PANE	163
272783-0003 ..	GLASS PANE	161
272784-0002 ..	RUBBER STRIP	163
272785-0000 ..	RUBBER STRIP	161
272810-0001 ..	SLEEVE	653
272813-0000 ..	PLUNGER	653
272840-0000 ..	ROD	345

Part No	Description	Page No
272844-0000 ..	BRACKET	97, 99
272852-0000 ..	HOLDER	193, 195
272853-0000 ..	SCREW	193, 195
272857-0000 ..	RING	267
272862-0000 ..	HOLDER	649
272886-0000 ..	RULER	651
272887-0000 ..	RULER	651
272888-0000 ..	RULER	651
272927-0000 ..	PRESSURE ARM	63
272945-0000 ..	LOCK	145, 147
272948-0003 ..	SHAFT	47
272949-0000 ..	VOLUME CAM LEFT	353
272956-0000 ..	VOLUME CAM LEFT	353
272957-0000 ..	VOLUME CAM RIGHT	353
272964-0000 ..	VOLUME CAM RIGHT	353
272965-0000 ..	VOLUME CAM LEFT, WIDE	353
272967-0000 ..	VOLUME CAM RIGHT, WIDE	353
272973-0000 ..	DOWEL	353
272986-0001 ..	VOLUME SHIM	311, 313, 315, 317
272986-0003 ..	VOLUME SHIM	311, 313, 315, 317
272986-0004 ..	VOLUME SHIM	311, 313, 315, 317
272986-0005 ..	VOLUME SHIM	311, 313, 315, 317
272986-0006 ..	VOLUME SHIM 330S	311, 313, 315, 317
272987-0000 ..	VOLUME SHIM	311, 313, 315, 317
272988-0004 ..	VOLUME BULGE	311, 313, 315, 317
272990-0000 ..	VOLUME BULGE	311, 313, 315, 317
272991-0000 ..	VOLUME SHIM	311, 313, 315, 317
272997-0000 ..	STOPPER	391
273429-0000 ..	WASHER	43, 47
273449-0000 ..	SIGN	471, 473
273450-0000 ..	SIGN	471, 473
273452-0000 ..	SIGN	471, 473
273454-0000 ..	SIGN	471, 473
273455-0000 ..	LABEL (COLD WATER)	227, 229, 471, 473
273456-0000 ..	SIGN	227, 229, 471, 473
273458-0000 ..	LABEL (AIR)	227, 229, 471, 473
273937-0000 ..	DIAPHRAGM	29, 31
273953-0000 ..	SEAL	57, 59
273954-0000 ..	SEAL	29, 31
273964-0000 ..	LID	491
273965-0001 ..	WEIGHT	491
273977-0000 ..	NUT	501
273978-0000 ..	LEVEL GLASS	501
273980-0000 ..	SPRING	501
273996-0000 ..	NUT	501
279008-0000 ..	BUSHING	57, 59
279589-0000 ..	NUT	139, 507
282635-0000 ..	GUIDE WHEEL	571, 573
292044-0000 ..	SHAFT	621, 639
292412-0000 ..	END SECTION	617, 619, 635, 637
292413-0000 ..	END SECTION	617, 619, 635, 637
292414-0000 ..	CARRIER	635, 637
292449-0000 ..	PUMP HOUSING	493
292456-0000 ..	BEARING COVER	493
293395-0001 ..	TYPE HOLDER	617, 619, 635, 637
293395-0002 ..	TYPE HOLDER	617, 619, 635, 637
293610-0000 ..	GEAR WHEEL	351
293659-0000 ..	CARRIER	617, 619
293667-0000 ..	DOWEL	621, 639
293669-0001 ..	WASHER	621, 639
293669-0002 ..	WASHER	621, 639
293669-0003 ..	WASHER	621, 639
293669-0004 ..	WASHER	621, 639
293670-0000 ..	SHAFT	621, 639
293684-0200 ..	PRINTING WHEEL NSS	611, 613, 615
293685-0200 ..	PRINTING WHEEL SS	631, 633
293697-0000 ..	END SECTION	621
295045-0900 ..	PIPE WORK-PNEUMATIC	11, 13
295075-0000 ..	PROTECTION	193, 195
295097-0000 ..	SLIDER	193, 195
295140-0000 ..	PIN	255, 269, 271
295203-0000 ..	LID	413
295204-0001 ..	SHIM	391
295204-0002 ..	SHIM	391
295204-0003 ..	SHIM	391
295205-0000 ..	SPACER SLEEVE	391
295206-0000 ..	FLAP	391
295259-0000 ..	HOLDER	483
295376-0000 ..	SHAFT	143
295377-0001 ..	HOOD	143
295377-0002 ..	HOOD	143
295387-0000 ..	SIGN BOARD	445
295399-0000 ..	HOLDER	193, 195
295417-0000 ..	GASKET	205, 415

Part No	Description	Page No
295426-0000 ..	CAP	57, 59
295427-0000 ..	LOCK	57, 59
295428-0000 ..	HINGE	57, 59
295429-0000 ..	HANDLE	57, 59
295434-0000 ..	BUSHING	415
295466-0000 ..	LOCK	145, 147
295496-0000 ..	BLOCKING PIECE	471, 473
295523-0400 ..	START-UP KIT	287
295523-0500 ..	START-UP KIT	689
295604-0000 ..	CRAMP	101, 103
295605-0000 ..	BRACKET	101, 103
295729-0000 ..	WASHER	401
295766-0000 ..	SCREW	255
295767-0000 ..	SEALING WASHER	255
295770-0000 ..	AXLE BOLT	259, 261
295778-0600 ..	START-UP KIT	689
295785-0000 ..	FORCE SPRING	205
295909-0000 ..	BUSHING	43
295910-0000 ..	BUSHING	47
295936-0000 ..	BUSHING	47
295978-0000 ..	PIPE	205
295983-0000 ..	CONNECTION	267
295984-0000 ..	DRIP GUARD	143
295985-0000 ..	FORCE SPRING	205
295986-0000 ..	HOLDER	199, 201, 203
295993-0000 ..	GASKET HOLDER	71
297210-0000 ..	INK WELL	639
297211-0000 ..	INK WELL	621
297213-0000 ..	END SECTION	639
299643-0000 ..	WASHER	611, 613, 615, 631, 633
311101-0267 ..	PARALLELL PIN, CP, H6, 4X10 MM	259, 261, 263, 265
311102-0153 ..	PARALLELL PIN, CP, M6, 1,5X10 MM	255
311103-0233 ..	PARALLELL PIN ISO2338 3X10 A1	871
311103-0236 ..	PARALLELL PIN ISO2338 3X16 A1	71, 621, 639, 871, 873
311103-0238 ..	PARALLELL PIN ISO2338 3X20 A1	127, 129, 351, 621, 639, 871
311103-0242 ..	PARALLELL PIN, M6, 3X30 MM	327, 329, 331, 333, 601
311103-0267 ..	PARALLELL PIN, M6, 4X10 MM	259, 261, 263, 265, 651
311103-0268 ..	PARALLELL PIN, M6, 4X12 MM	337, 339, 341, 343
311103-0269 ..	PARALLELL PIN ISO2338 4X14 A1	873
311103-0270 ..	PARALLELL PIN ISO2338 4X16 A1	29, 31, 335, 621, 639
311103-0272 ..	PARALLELL PIN ISO2338 4X20 A1	205, 269, 271, 427, 583, 871
311103-0274 ..	PARALLELL PIN, M6, 4X25 MM	623
311103-0276 ..	PARALLELL PIN ISO2338 4X30 A1	57, 59, 269, 271
311103-0278 ..	PARALLELL PIN, M6, 4X35 MM	319, 321, 323, 325, 577
311103-0280 ..	PARALLELL PIN, M6, 4X40 MM	319, 321, 323, 325
311103-0308 ..	PARALLELL PIN ISO2338 5X16 A1	57, 59, 865
311103-0310 ..	PARALLELL PIN ISO2338 5X20 A1	57, 59
311103-0312 ..	PARALLELL PIN, M6, 5X25 MM	121, 123, 289, 291, 293, 295, 327, 329, 331, 333, 611, 613, 615, 631, 633
311103-0313 ..	PARALLELL PIN ISO2338 5X28 A1	57, 59
311103-0314 ..	PARALLELL PIN, M6, 5X30 MM	297, 299, 301, 303
311103-0316 ..	PARALLELL PIN, M6, 5X35 MM	297, 299, 301, 303
311103-0318 ..	PARALLELL PIN, M6, 5X40 MM	623
311103-0320 ..	PARALLELL PIN, CP, M6, 5X45 MM	297, 299, 301, 303
311103-0351 ..	PARALLELL PIN ISO2338 6X16 A1	377, 379
311103-0353 ..	PARALLELL PIN ISO2338 6X20 A1	431, 631, 633
311103-0355 ..	PARALLELL PIN, M6, 6X25 MM	29, 31, 353
311103-0357 ..	PARALLELL PIN, M6, 6X30 MM	491, 611, 613, 615, 631, 633
311103-0361 ..	PARALLELL PIN ISO2338 6X40 A1	29, 31, 277, 611, 613, 615
311103-0365 ..	PARALLELL PIN, M6, 6X50 MM	625, 627
311103-0401 ..	PARALLELL PIN, M6, 8X20 MM	337, 339, 341, 343, 345, 407
311103-0407 ..	PARALLELL PIN ISO2338 8X35 A1	403
311103-0409 ..	PARALLELL PIN, M6, 8X40 MM	297, 299, 301, 303, 413
311103-0413 ..	PARALLELL PIN ISO2338 8X50 A1	161, 163
311103-0415 ..	PARALLELL PIN ISO2338 8X55 A1	187
311103-0458 ..	PARALLELL PIN ISO2338 10X30 A1	187
311103-0470 ..	PARALLELL PIN, M6, 10X60 MM	277
311103-1274 ..	PARALLELL PIN ISO2338 4X24 A1	871
311111-0207 ..	PIN, STRAIGHT SLOTTED SPRING FRP 3X14	289, 291, 293, 295
311111-0209 ..	SPRING PIN ISO 8752 3X18-ST	179
311111-0308 ..	PIN, STRAIGHT SLOTTED SPRING FRP 5X20	289, 291, 293, 295
311112-0206 ..	SPRING PIN, ISO 8752 3X12-C	197
311112-0256 ..	SPRING PIN, ISO 8752 4X20-C	57, 59, 351, 493
311112-0262 ..	SPRING PIN, ISO 8752 4X32-C	57, 59
311303-0234 ..	SLOTTED PIRPB3X12FZB	259
311307-0275 ..	SLOTTED PIRPD4X28FZB	277
311411-0140 ..	SPLIT PIN SP1,6X16RFR	127, 129
311411-0150 ..	SPLIT PIN SP2X12RFR	121, 123
311411-0165 ..	SPLIT PIN SP2,5X16RFR	121, 123
311411-0169 ..	SPLIT PIN SP2,5X25RFR	493
311521-0142 ..	BLANK RIVET 3,2X6	81, 767
311521-0146 ..	BLANK RIVET 3,2X12	771, 773, 821, 823, 841
312101-0287 ..	SCREW M6S M4X8 FZB	617, 619, 635, 637
312101-0289 ..	SCREW M6S M4X10 FZB	279, 281

Part No	Description	Page No
312101-0295 ..	SCREW M6S M4X20 FZB	381
312101-0297 ..	SCREW M6S M4X25 FZB	259, 261, 263, 265
312101-0323 ..	SCREW M6S M5X8 FZB	603, 605
312101-0325 ..	SCREW M6S M5X10 FZB	269, 271
312101-0327 ..	SCREW M6S M5X12 FZB	647
312101-0329 ..	SCREW M6S M5X16 FZB	255, 647
312101-0331 ..	SCREW M6S M5X20 FZB	193, 195, 617, 619, 635, 637
312101-0333 ..	SCREW M6S M5X25 FZB	263, 265, 273
312101-0337 ..	SCREW M6S M5X35 FZB	199, 201, 203
312101-0343 ..	SCREW M6S M5X60 FZB	347, 349
312101-0344 ..	SCREW M6S M5X65 FZB	565
312101-0362 ..	SCREW M6S M6X8 FZB	259, 261, 263, 265
312101-0364 ..	SCREW M6S M6X10 FZB	259, 261, 263, 265, 617, 619, 635, 637
312101-0366 ..	SCREW M6S M6X12 FZB	255
312101-0368 ..	SCREW M6S M6X16 FZB	255
312101-0370 ..	SCREW M6S M6X20 FZB	255
312101-0376 ..	SCREW M6S M6X35 FZB	255, 279, 281
312101-0381 ..	SCREW M6S M6X55 FZB	653
312101-0392 ..	SCREW M6S M6X110 FZB	207
312101-0453 ..	SCREW M6S M8X25 FZB	259, 261, 383
312101-0455 ..	SCREW M6S M8X30 FZB	383
312101-0459 ..	SCREW M6S M8X40 FZB	383
312101-0489 ..	SCREW M6S M10X16 FZB	255
312101-0493 ..	SCREW M6S M10X25 FZB	259, 261, 263, 265
312101-0499 ..	SCREW M6S M10X40 FZB	193, 195, 513, 515
312101-0502 ..	SCREW M6S M10X55 FZB	261, 279, 281
312101-0504 ..	SCREW M6S M10X65 FZB	255, 259, 261, 263, 265
312101-0507 ..	SCREW M6S M10X80 FZB	259, 261
312101-0515 ..	SCREW M6S M10X120 FZB	263, 265
312101-0530 ..	SCREW M6S M12X16 FZB	371
312101-0550 ..	SCREW M6S M12X90 FZB	255
312101-0552 ..	SCREW M6S M12X100 FZB	385
312101-0630 ..	SCREW M6S M16X50 FZB	235
312104-0499 ..	SCREW M6S M10X40H FZB	277, 513, 515
312105-0287 ..	SCREW M6S ISO4017 M4X8 A480	47, 51, 53, 55, 67, 95, 153, 165, 167, 511, 581
312105-0289 ..	SCREW M6S ISO 4017 M4X10 A480	175
312105-0291 ..	SCREW M6S ISO 4017 M4X12 A480	431, 621, 639, 871
312105-0293 ..	SCREW M6S ISO 4017 M4X16 A480	63, 65, 489, 535, 543, 545, 547, 549, 597, 599, 871
312105-0295 ..	SCREW M6S ISO4017 M4X20 A480	199, 201, 203, 559, 561
312105-0297 ..	SCREW M6S ISO 4017 M4X25 A480	199, 201, 203, 643
312105-0299 ..	SCREW M6S ISO 4017 M4X30 A480	565
312105-0301 ..	SCREW M6S ISO 4017 M4X35 A480	173, 197, 277
312105-0303 ..	SCREW M6S ISO 4017 M4X40 A480	407
312105-0323 ..	SCREW M6S ISO 4017 M5X8 A480	71, 411, 419, 443, 499, 643, 681, 683
312105-0325 ..	SCREW M6S ISO 4017 M5X10 A480	17, 19, 27, 51, 53, 55, 73, 75, 121, 123, 153, 173, 189, 347, 349, 555, 557, 651, 655
312105-0327 ..	SCREW M6S ISO 4017 M5X12 A480	29, 31, 43, 57, 59, 65, 205, 207, 283, 319, 321, 323, 325, 453, 471, 473, 505, 621, 639, 677, 681, 683, 809, 811, 843
312105-0328 ..	SCREW M6S ISO 4017 M5X14 A480	347, 349, 431, 555, 557, 559, 561
312105-0329 ..	SCREW M6S ISO 4017 M5X16 A480	121, 123, 165, 167, 335, 503, 543, 545, 547, 549, 603, 605, 611, 613, 615, 621, 631, 633, 639
312105-0331 ..	SCREW M6S ISO 4017 M5X20 A480	65, 127, 129, 173, 373, 401, 571, 573, 611, 613, 615, 631, 633, 865
312105-0332 ..	SCREW M6S ISO 4017 M5X22 A480	105, 107, 109, 111, 121, 123
312105-0333 ..	SCREW M6S ISO 4017 M5X25 A480	23, 153, 231, 355, 569, 581
312105-0335 ..	SCREW M6S ISO 4014 M5X30 A480	17, 19, 67, 347, 349, 371, 471, 473
312105-0337 ..	SCREW M6S ISO 4014 M5X35 A480	187, 607
312105-0339 ..	SCREW M6S ISO 4014 M5X40 A480	471, 473, 555, 557
312105-0341 ..	SCREW M6S ISO 4014 M5X50 A480	467, 471, 473
312105-0362 ..	SCREW M6S ISO 4017 M6X8 A480	43, 57, 59, 131, 289, 291, 293, 295, 387, 389, 401, 499, 651
312105-0364 ..	SCREW M6S ISO 4017 M6X10 A480	17, 19, 47, 63, 65, 101, 103, 127, 129, 135, 139, 141, 143, 145, 147, 205, 239, 351, 393, 483, 489, 511, 611, 613, 615, 631, 633, 643, 655
312105-0366 ..	SCREW M6S M6X12 A280	45, 47, 55, 63, 65, 95, 97, 99, 131, 139, 145, 147, 153, 161, 163, 165, 167, 169, 171, 173, 187, 191, 193, 195, 207, 219, 227, 229, 277, 351, 407, 417, 419, 429, 443, 445, 469, 483, 517, 555, 557, 565, 567, 569, 571, 573, 597, 599, 611, 613, 615, 631, 633, 655
312105-0367 ..	SCREW M6S M6X14 A280	27, 29, 31, 133, 173, 289, 291, 293, 295, 377, 379, 403, 497, 509, 543, 545, 547, 549, 567
312105-0368 ..	SCREW M6S M6X16 A280	29, 31, 43, 47, 57, 59, 65, 67, 71, 101, 103, 105, 107, 109, 111, 113, 115, 117, 119, 121, 123, 127, 129, 169, 171, 173, 193, 195, 209, 211, 221, 233, 235, 241, 247, 277, 297, 299, 301, 303, 319, 321, 323, 325, 337, 339, 341, 343, 387, 389, 399, 415, 419, 437, 439, 457, 481, 495, 543, 545, 547, 549, 555, 557, 567, 581, 767, 805, 807, 809, 811, 821, 823, 835, 837, 871
312105-0370 ..	SCREW M6S ISO 4017 M6X20 A480	43, 47, 49, 65, 69, 95, 119, 121, 123, 127, 129, 131, 135, 141, 165, 167, 275, 277, 327, 329, 331, 333, 375, 377, 379, 403, 411, 413, 415, 431, 445, 493, 531, 539, 541, 569, 571, 573, 603, 605, 809, 811, 871
312105-0371 ..	SCREW M6S ISO 4017 M6X22 A480	105, 107, 109, 111, 137, 223, 225
312105-0372 ..	SCREW M6S ISO 4017 M6X25 A480	25, 29, 31, 43, 45, 47, 57, 59, 127, 129, 133, 143, 169, 171, 193, 195, 199, 201, 203, 297, 299, 301, 303, 319, 321, 323, 325, 345, 377, 379, 401, 407, 413, 415, 505, 569, 603, 605, 611, 613, 615, 631, 633, 871
312105-0374 ..	SCREW M6S ISO 4014 M6X30 A480	187, 259, 261, 263, 265, 289, 291, 293, 295, 327, 329, 331, 333, 345, 377, 379, 391, 395, 495, 543, 545, 547, 549, 571, 573, 865
312105-0376 ..	SCREW M6S ISO 4014 M6X35 A480	43, 193, 195, 289, 291, 293, 295, 327, 329, 331, 333, 337, 339, 341, 343, 357, 359, 377, 379, 399, 475, 477, 479, 509, 571, 573
312105-0378 ..	SCREW M6S ISO 4014 M6X40 A480	25, 57, 59, 155, 157, 205, 395, 535, 623
312105-0379 ..	SCREW M6S ISO 4014 M6X45 A480	57, 59, 311, 313, 315, 317, 399, 857

Part No	Description	Page No
312105-0380 ..	SCREW M6S ISO 4014 M6X50 A480	193, 195, 297, 299, 301, 303, 337, 339, 341, 343, 351, 391, 395, 427, 471, 473
312105-0381 ..	SCREW M6S ISO 4014 M6X55 A480	121, 123, 569
312105-0382 ..	SCREW M6S ISO 4014 M6X60 A480	81, 493, 611, 613, 615, 631, 633
312105-0384 ..	SCREW M6S ISO 4014 M6X70 A480	297, 299, 301, 303, 443
312105-0386 ..	SCREW M6S ISO 4014 M6X80 A480	57, 59, 519
312105-0447 ..	SCREW M6S ISO 4017 M8X12 A480	63, 65, 127, 129, 247, 327, 329, 331, 333, 419, 447, 449, 451, 551, 579, 597, 599, 603, 605
312105-0449 ..	SCREW M6S ISO 4017 M8X16 A480	29, 31, 43, 67, 165, 167, 235, 247, 351, 399, 487, 489, 505, 507, 535, 555, 557, 559, 561, 603, 605, 643
312105-0451 ..	SCREW M6S ISO 4017 M8X20 A480	51, 53, 57, 59, 73, 75, 105, 107, 109, 111, 113, 115, 117, 127, 129, 161, 163, 177, 187, 193, 195, 235, 247, 351, 403, 405, 495, 497, 555, 557
312105-0452 ..	SCREW M6S ISO 4017 M8X22 A480	177, 345, 577
312105-0453 ..	SCREW M6S ISO 4017 M8X25 A480	17, 19, 25, 49, 51, 53, 69, 71, 73, 75, 127, 129, 131, 133 139, 247, 277, 297, 299, 301, 303, 327, 329, 331, 333, 337, 339, 341, 343, 377, 379, 387, 389, 399 483, 487, 489, 497, 505, 507, 567, 593, 601, 611, 613, 615, 631, 633, 651, 855
312105-0455 ..	SCREW M6S ISO 4017 M8X30 A480	43, 47, 67, 113, 115, 117, 193, 195, 257, 297, 299, 301 303, 327, 329, 331, 333, 337, 339, 341, 343, 387, 389, 405, 427, 431, 647
312105-0457 ..	SCREW M6S ISO 4014 M8X35 A480	51, 53, 113, 115, 117, 355, 399, 611, 613, 615, 631, 633
312105-0459 ..	SCREW M6S ISO 4014 M8X40 A480	205, 297, 299, 301, 303, 407, 611, 613, 615, 631, 633
312105-0460 ..	SCREW M6S ISO 4014 M8X45 A480	345, 377, 379, 611, 613, 615
312105-0461 ..	SCREW M6S ISO 4014 M8X50 A480	491, 651
312105-0462 ..	SCREW M6S ISO 4014 M8X55 A480	43, 289, 291, 293, 295
312105-0463 ..	SCREW M6S ISO 4014 M8X60 A480	395, 673
312105-0464 ..	SCREW M6S ISO 4014 M8X65 A480	65, 511
312105-0469 ..	SCREW M6S ISO 4014 M8X90 A480	415
312105-0489 ..	SCREW M6S ISO 4017 M10X16 A480	187, 483
312105-0491 ..	SCREW M6S ISO 4017 M10X20 A480	415, 487, 651
312105-0493 ..	SCREW M6S ISO 4017 M10X25 A480	513, 515, 611, 613, 615, 631, 633
312105-0495 ..	SCREW M6S ISO 4017 M10X30 A480	63, 121, 123, 257, 487
312105-0497 ..	SCREW M6S ISO 4017 M10X35 A480	391, 649
312105-0499 ..	SCREW M6S ISO 4014 M10X40 A480	57, 59
312105-0500 ..	SCREW M6S ISO 4014 M10X45 A480	649
312105-0507 ..	SCREW M6S ISO 4014 M10X80 A480	593
312105-0511 ..	SCREW M6S ISO 4014 M10X100 A480	231
312105-0515 ..	SCREW M6S ISO 4014 M10X120 A480	247
312105-0532 ..	SCREW M6S ISO 4017 M12X20 A480	257, 275, 415
312105-0534 ..	SCREW M6S ISO 4017 M12X25 A480	223, 225, 373
312105-0536 ..	SCREW M6S ISO 4017 M12X30 A480	63, 121, 123, 127, 129, 131
312105-0540 ..	SCREW M6S ISO 4017 M12X40 A480	483
312105-0544 ..	SCREW M6S ISO 4014 M12X60 A480	403, 413
312105-0547 ..	SCREW M6S ISO 4014 M12X75 A480	375
312105-0548 ..	SCREW M6S ISO 4014 M12X80 A480	483
312105-0622 ..	SCREW M6S ISO 4017 M16X25 A480	223, 225
312105-0628 ..	SCREW M6S ISO 4017 M16X40 A480	223, 225, 415
312105-0630 ..	SCREW M6S ISO 4017 M16X50 A480	237
312105-0648 ..	SCREW M6S M16X150 A280	223, 225
312109-0335 ..	SCREW M6S ISO 4017 M5X30 A480	165, 167
312109-0376 ..	SCREW M6S ISO 4017 M6X35 A480	101, 103, 611, 613, 615, 631, 633
312109-0378 ..	SCREW M6S ISO4017 M6X40 A480	193, 195, 871
312109-0457 ..	SCREW M6S ISO 4017 M8X35 A480	43, 387, 389
312109-0459 ..	SCREW M6S ISO 4017 M8X40 A480	577
312109-0499 ..	SCREW M6S ISO 4017 M10X40 A480	377, 379
312111-0295 ..	SCREW HEX.SOCK.HD.MC6S-TT 4X20 88 FZB	513, 515
312111-0331 ..	SCREW HEX.SOCK.HD.MC6S-TT 5X20 88 FZB	513, 515
312111-0335 ..	SCREW HEX.SOCK.HD.MC6S-TT 5X30 88 FZB	617, 619, 635, 637
312111-0368 ..	SCREW HEX.SOCK.HD.MC6S-TT 6X16 88 FZB	267
312111-0370 ..	SCREW HEX.SOCK.HD.MC6S-TT 6X20 88 FZB	513, 515
312111-0372 ..	SCREW HEX.SOCK.HD.MC6S-TT 6X25 88 FZB	513, 515
312111-0376 ..	SCREW HEX.SOCK.HD.MC6S-TT 6X35 88 FZB	259, 261
312111-0378 ..	SCREW HEX.SOCK.HD.MC6S-TT 6X40 88 FZB	259, 261
312111-0471 ..	SCREW HEX.SOCK.HD.MC6S-TT 8X100 88 FZ	453, 611, 613, 615, 631, 633
312115-0220 ..	SCREW ISO4762 M3X6 A4 80	555, 557, 787, 789, 791, 793, 795, 797, 799, 801, 803
312115-0222 ..	SCREW ISO4762 M3X8 A4	821, 823
312115-0224 ..	SCREW ISO4762 M3X10 A4	141, 503, 727, 729, 787, 789, 791, 793, 795, 797, 799, 801, 803
312115-0226 ..	SCREW ISO4762 M3X12 A4	283, 779, 781
312115-0228 ..	SCREW ISO4762 M3X16 A4	73, 75, 139, 555, 557, 559, 561, 563, 571, 573, 831, 871
312115-0230 ..	SCREW ISO4762 M3X20 A4	543, 545, 547, 549
312115-0285 ..	SCREW ISO4762 M4X6 A4	831
312115-0287 ..	SCREW ISO4762 M4X8 A4	95, 193, 195, 231, 471, 473, 541, 603, 605, 621, 639, 655
312115-0289 ..	SCREW ISO4762 M4X10 A4	17, 19, 199, 201, 203, 411, 711, 713, 715, 723, 735, 737, 739, 743 745, 747, 749, 771, 773
312115-0291 ..	SCREW ISO4762 M4X12 A4	89, 361, 385, 411, 711, 713, 715, 783, 787, 789, 791, 793, 795 797, 799, 801, 803
312115-0293 ..	SCREW ISO4762 M4X16 A4	335, 679, 685, 687, 771, 773, 775, 777, 779, 781, 783
312115-0295 ..	SCREW ISO4762 M4X20 A4	23, 431, 581, 711, 713, 715
312115-0297 ..	SCREW ISO4762 M4X25 A4	771, 773
312115-0299 ..	SCREW ISO4762 M4X30 A4	471, 473, 771, 773
312115-0304 ..	SCREW ISO4762 M4X45 A4	643
312115-0305 ..	SCREW ISO4762 M4X50 A4	17, 19, 73, 75, 471, 473, 831
312115-0323 ..	SCREW ISO4762 M5X8 A4	97, 99, 539, 541, 563, 651, 711, 713, 715, 725, 741, 753, 755, 757 759, 761, 765, 871
312115-0325 ..	SCREW ISO4762 M5X10 A4	17, 19, 65, 227, 229, 711, 713, 715, 727, 729, 733, 839
312115-0327 ..	SCREW ISO4762 M5X12 A4	209, 211, 243, 245, 437, 439, 543, 545, 547, 549, 563, 579, 597

Part No	Description	Page No
		599, 759, 761, 841
312115-0329 ..	SCREW ISO4762 M5X16 A4	57, 59, 73, 75, 139, 209, 211, 243, 245, 247, 289, 291, 293, 295, 431, 437, 439, 471, 473, 551, 597, 599, 631, 633, 767, 771, 773, 821, 823
312115-0331 ..	SCREW ISO4762 M5X20 A4	29, 31, 189, 335
312115-0333 ..	SCREW ISO4762 M5X25 A4	611, 613, 615, 629, 631, 633, 711, 713, 715
312115-0335 ..	SCREW ISO4762 M5X30 A4	541
312115-0339 ..	SCREW ISO4762 M5X40 A4	845
312115-0340 ..	SCREW ISO4762 M5X45 A4	73, 75
312115-0362 ..	SCREW ISO4762 M6X8 A4	255
312115-0364 ..	SCREW ISO4762 M6X10 A4	67, 141, 205, 361
312115-0366 ..	SCREW ISO4762 M6X12 A4	29, 31, 41, 65, 141, 159, 289, 291, 293, 295, 423, 425, 489, 555, 557, 655, 711, 713, 715, 767, 771, 773, 839, 871
312115-0367 ..	SCREW ISO4762 M6X14 A4	543, 545, 547, 549, 873
312115-0368 ..	SCREW ISO4762 M6X16 A4	377, 379, 437, 493, 583, 597, 599, 603, 605, 625, 627, 771, 773, 839, 845
312115-0370 ..	SCREW ISO4762 M6X20 A4	.. 55, 57, 59, 289, 291, 293, 295, 355, 493, 579, 623, 631, 633, 767
312115-0371 ..	SCREW ISO4762 M6X22 A4	327, 329, 331, 333
312115-0372 ..	SCREW ISO4762 M6X25 A4	55, 173, 191, 207, 255, 289, 291, 293, 295, 345, 407, 423, 425, 537, 553, 611, 613, 615, 657, 659, 871
312115-0374 ..	SCREW ISO4762 M6X30 A4	55, 57, 59, 227, 229, 431
312115-0376 ..	SCREW ISO4762 M6X35 A4	447, 449, 451
312115-0378 ..	SCREW ISO4762 M6X40 A4	555, 557
312115-0380 ..	SCREW ISO4762 M6X50 A4	643
312115-0385 ..	SCREW ISO4762 M6X75 A4	227, 229
312115-0386 ..	SCREW ISO4762 M6X80 A4	377, 379
312115-0447 ..	SCREW ISO4762 M8X12 A4	471, 473
312115-0449 ..	SCREW ISO4762 M8X16 A4	131, 577
312115-0451 ..	SCREW ISO4762 M8X20 A4	387, 389
312115-0453 ..	SCREW ISO4762 M8X25 A4	269, 271, 297, 299, 301, 303, 353, 431, 585
312115-0455 ..	SCREW ISO4762 M8X30 A4	67, 81, 143, 577
312115-0457 ..	SCREW ISO4762 M8X35 A4	387, 389, 587
312115-0459 ..	SCREW ISO4762 M8X40 A4	387, 389
312115-0460 ..	SCREW ISO4762 M8X45 A4	387, 389
312115-0461 ..	SCREW ISO4762 M8X50 A4	387, 389
312115-0463 ..	SCREW ISO4762 M8X60 A4	213, 215, 387, 389
312115-0465 ..	SCREW ISO4762 M8X70 A4	387, 389
312115-0467 ..	SCREW ISO4762 M8X80 A4	387, 389
312115-0495 ..	SCREW ISO4762 M10X30 A4	603, 605
312115-0500 ..	SCREW ISO4762 M10X45 A4	269, 271, 407, 431
312115-0503 ..	SCREW ISO4762 M10X60 A4	187
312121-0287 ..	SCREW SLOT.PAN HD. MCS 4X8 FZB	259, 261, 263, 265
312121-0289 ..	SCREW SLOT.PAN HD. MCS 4X10 FZB	199, 201, 203
312121-0323 ..	SCREW SLOT.PAN HD. MCS 5X8 FZB	255
312122-0294 ..	SCREW SLOT.PAN HD. MCS 4X18 BR NP	347, 349
312122-0366 ..	SCREW PAN HEAD MCS M6X12 NL. PL.	711, 713, 715
312125-0220 ..	SCREW SLOT.PAN HD. MCS 3X6 A480	47, 189, 361
312125-0222 ..	SLOTTED SCREW MCS M3X8 SS	187, 471, 473, 551
312125-0226 ..	SCREW PAN HEAD MCS M3X12 SS	503, 727, 729
312125-0228 ..	SCREW PAN HEAD MCS M3X16 A480	23, 27, 63, 181
312125-0230 ..	SLOTTED SCREW MCS M3X20 SS	57, 59, 65, 189, 611, 613, 615, 631, 633, 643
312125-0232 ..	SCREW PAN HEAD MCS M3X25 SS	543, 545, 547, 549, 727, 729
312125-0234 ..	SCREW PAN HEAD MCS M3X30 SS	555, 557
312125-0285 ..	SCREW SLOT.PAN HD. MCS 4X6 A480	21, 29, 31, 47, 97, 99, 297, 299, 301, 303, 505, 535, 815
312125-0287 ..	SCREW PAN HEAD MCS M4X8 SS	57, 59, 199, 201, 203, 207, 247, 283, 421, 483, 533, 539, 543, 545, 547, 549, 555, 557, 563, 643, 655
312125-0289 ..	SLOTTED SCREW MCS 4X10 A480	571, 573, 631, 633
312125-0291 ..	SCREW PAN HEAD MCS M4X12 SS	47, 213, 215, 539, 541, 651
312125-0293 ..	SCREW PAN HEAD MCS M4X16 SS	21, 541, 677, 681, 683
312125-0299 ..	SCREW PAN HEAD MCS M4X30 SS	511
312125-0323 ..	SCREW PAN HEAD MCS M5X8 SS	43, 51, 53, 85, 87, 89, 145, 147, 187, 193, 195, 199, 201, 203, 679, 685, 687, 817
312125-0325 ..	SCREW SLOT.PAN HD. MCS 5X10 A480	233, 443, 611, 613, 615, 631, 633
312125-0327 ..	SCREW PAN HEAD MCS M5X12 SS	579, 721, 731, 755, 763, 813, 815
312125-0329 ..	SCREW PAN HEAD MCS M5X16 SS	213, 611, 613, 615, 631, 633, 655
312125-0331 ..	SCREW PAN HEAD MCS M5X20 SS	51, 53
312125-0339 ..	SCREW PAN HEAD MCS M5X40 SS	721, 731, 763
312125-0364 ..	SCREW SLOT.PAN HD. MCS 6X10 A480	51, 53, 191, 423, 425, 553, 657, 659
312125-0366 ..	SCREW PAN HEAD MCS M6X12 SS	611, 613, 615, 631, 633
312145-0220 ..	SCREW COUNTERS.SLOT.HD. MFS 3X6 SS	259, 261, 263, 265, 651
312145-0228 ..	SCREW COUNTERS.SLOT.HD. MFS 3X16 SS	47
312145-0285 ..	SCREW COUNTERS.SLOT.HD. MFS 4X6 SS	611, 613, 615, 631, 633
312145-0289 ..	SCREW COUNTERS.SLOT.HD. MFS 4X10 SS	289, 291, 293, 295
312145-0291 ..	SCREW COUNT.SLOT.HD. 4X12 A4	17, 19, 289, 291, 293, 295, 311, 313, 315, 317, 647
312145-0293 ..	SCREW COUNTERS.SLOT.HD. MFS 4X16 SS	611, 613, 615, 631, 633
312145-0325 ..	SCREW COUNTERS.SLOT.HD. MFS 5X10 SS	17, 19
312145-0366 ..	SCREW COUNTERS.SLOT.HD. MFS 6X12 SS	17, 19
312151-0287 ..	SCREW HEX.SOCK.COUNT.MF6S 4X8 FZB	259, 261, 263, 265
312151-0364 ..	SCREW HEX.SOCK.COUNT.MF6S 6X10 FZB	259, 261, 263, 265
312155-0220 ..	SCREW EN 10642 MF6S M3X6 A480	841
312155-0226 ..	SCREW EN 10642 MF6S M3X12 A480	541
312155-0287 ..	SCREW EN 10642 MF6S M4X8 A480	17, 19, 543, 545, 547, 549
312155-0291 ..	SCREW EN 10642 MF6S M4X12 A480	377, 379, 611, 613, 615, 631, 633, 767, 771, 773, 805, 807, 809, 811, 821, 823, 835, 837, 871
312155-0293 ..	SCREW EN 10642 MF6S M4X16 A480	581

Part No	Description	Page No
312155-0295 ..	SCREW EN 10642 MF6S M4X20 A480	579
312155-0297 ..	SCREW EN 10642 MF6S M4X25 A480	81, 805, 807, 835, 837
312155-0299 ..	SCREW EN 10642 MF6S M4X30 A480	409
312155-0301 ..	SCREW EN 10642 MF6S M4X35 A480	767, 809, 811, 821, 823
312155-0323 ..	SCREW EN 10642 MF6S M5X8 A480	311, 313, 315, 317, 601
312155-0325 ..	SCREW EN 10642 MF6S M5X10 A480	187, 555, 557
312155-0327 ..	SCREW EN 10642 MF6S M5X12 A480	17, 19, 145, 147, 555, 557, 601, 611, 613, 615, 629, 631, 633
312155-0329 ..	SCREW EN 10642 MF6S M5X16 A480	161, 163, 209, 211, 431, 437, 439, 611, 613, 615, 631, 633, 871
312155-0331 ..	SCREW EN 10642 MF6S M5X20 A480	419, 551
312155-0339 ..	SCREW EN 10642 MF6S M5X40 A480	871
312155-0364 ..	SCREW EN 10642 MF6S M6X10 A480	41, 45, 141
312155-0366 ..	SCREW EN 10642 MF6S M6X12 A480	277
312155-0368 ..	SCREW EN 10642 MF6S M6X16 A480	193, 195, 319, 321, 323, 325, 393, 531, 579
312155-0370 ..	SCREW EN 10642 MF6S M6X20 A480	27, 173, 399, 413, 567
312155-0372 ..	SCREW EN 10642 MF6S M6X25 A480	401, 407
312155-0374 ..	SCREW EN 10642 MF6S M6X30 A480	45, 535
312155-0449 ..	SCREW EN 10642 MF6S M8X16 A480	255, 405, 431
312155-0451 ..	SCREW EN 10642 MF6S M8X20 A480	353, 431
312155-0457 ..	SCREW EN 10642 MF6S M8X35 A480	611, 613, 615, 631, 633
312155-0459 ..	SCREW EN 10642 MF6S M8X40 A480	353
312155-0491 ..	SCREW EN 10642 MF6S M10X20 A480	601
312155-0532 ..	SCREW EN 10642 MF6S M12X20 A480	73, 75
312311-0285 ..	SCREW ISO4028 M4X6 FZB	585
312311-0287 ..	SCREW ISO4028 M4X8 FZB	67
312311-0321 ..	SCREW ISO4028 M5X6 FZB	55, 263, 265
312311-0327 ..	SCREW ISO4028 M5X12 FZB	231
312311-0366 ..	SCREW ISO4028 M6X12 FZB	55, 67
312311-0368 ..	SCREW ISO4028 M6X16 FZB	493
312316-0321 ..	SCREW HEX.SOCK.SET CUP P.MSK6SS5X6 FZB	647
312318-0222 ..	SCREW ISO4029 M3X8 A4	431
312318-0283 ..	SCREW ISO4029 M4X4 A4	567
312318-0285 ..	SCREW ISO4029 M4X6 A4	121, 123, 127, 129, 543, 545, 547, 549
312318-0287 ..	SCREW ISO4029 M4X8 A4	603, 605, 607, 611, 613, 615, 631, 633, 643
312318-0325 ..	SCREW ISO4029 M5X10 A4	165, 167, 629
312318-0327 ..	SCREW ISO4029 M5X12 A4	577
312318-0360 ..	SCREW ISO4029 M6X6 A4	337, 339, 341, 343
312318-0362 ..	SCREW ISO4029 M6X8 A4	63, 273, 277, 555, 557, 583, 611, 613, 615, 631, 633, 651
312318-0364 ..	SCREW ISO4029 M6X10 A4	269, 271, 585
312318-0366 ..	SCREW ISO4029 M6X12 A4	277, 569, 583, 603, 605
312318-0368 ..	SCREW ISO4029 M6X16 A4	127, 129, 337, 339, 341, 343, 377, 379, 625, 627
312318-0370 ..	SCREW ISO4029 M6X20 A4	603, 605
312318-0372 ..	SCREW ISO4029 M6X25 A4	611, 613, 615, 631, 633
312318-0447 ..	SCREW ISO4029 M8X12 A4	237
312318-0451 ..	SCREW ISO4029 M8X20 A4	127, 129
312502-0120 ..	DRIVE SCREW ROUND HEAD KDS 0X5	101, 103, 227, 229
312502-0221 ..	DRIVE SCREW ROUND HEAD KDS 4X6	223, 225
312601-0318 ..	NUT M6M8FZB	259, 261, 263, 265
312601-0320 ..	NUT M6M 10-8 FZB	193, 195, 513, 515
312601-0324 ..	NUT M6M 16-8 FZB	263, 265
312602-0312 ..	HEXAGON NUT, EN 24032 M6M M4 NIPLBR	347, 349
312602-0316 ..	MUTTER, EN 24032 M6M M6 NIPLBR	471, 473
312605-0310 ..	HEXAGON NUT, M6M M3 A280	65, 361, 543, 545, 547, 549, 551, 555, 557, 559, 561, 643, 727, 729, 779, 781, 831, 871
312605-0312 ..	HEXAGON NUT, M6M M4 A280	17, 19, 29, 31, 97, 99, 153, 213, 215, 243, 245, 277, 505, 559, 561, 565, 579, 625, 627, 779, 781, 783, 805, 807, 835, 837, 839
312605-0314 ..	HEXAGON NUT, M6M M5 A280	17, 19, 65, 71, 145, 147, 161, 163, 227, 229, 419, 439, 443, 471, 473, 489, 541, 551, 555, 557, 565, 579, 581, 611, 613, 615, 621, 631, 633, 639, 655, 677, 681, 683, 871
312605-0316 ..	HEXAGON NUT, M6M M6 A280	25, 27, 29, 31, 55, 57, 59, 81, 127, 129, 133, 135, 145, 147, 173, 223, 225, 227, 229, 235, 241, 377, 379, 395, 399, 415, 419, 429, 443, 445, 471, 473, 475, 477, 479, 493, 495, 505, 533, 535, 541, 543, 545, 547, 549, 563, 567, 571, 573, 581, 597, 599, 601, 611, 613, 615, 623, 631, 633, 655, 767, 779, 781, 805, 807, 809, 811, 821, 823, 831, 835, 837, 871, 873
312605-0318 ..	HEXAGON NUT, M6M M8 A280	17, 19, 25, 43, 49, 51, 53, 69, 71, 113, 115, 117, 127, 129, 131, 133, 139, 143, 153, 193, 195, 235, 289, 291, 293, 295, 353, 399, 405, 487, 489, 497, 505, 507, 555, 557, 587, 593, 611, 613, 615, 621, 631, 633, 639, 647
312605-0320 ..	HEXAGON NUT, M6M M10 A280	83, 127, 129, 277, 377, 379, 387, 389, 391, 493, 513, 515, 603, 605
312605-0322 ..	HEXAGON NUT, M6M M12 A280	131, 235, 375, 387, 389
312605-0324 ..	HEXAGON NUT, M6M M16 A280	645
312625-0316 ..	HEXAGON THIN NUT, EN 24035 ML6M M6 A4	277, 533, 535
312625-0318 ..	HEXAGON THIN NUT, EN 24035 ML6M M8 A4	541
312625-0320 ..	HEXAGON THIN NUT, EN 24035 ML6M M10 A4	603, 605
312705-0312 ..	NUT HEX. DOMED CAP MHM-6 M4 A280	437, 439
312705-0314 ..	NUT HEX. DOMED CAP MHM-6 M5 A280	681, 683
312705-0316 ..	NUT HEX. DOMED CAP MHM-6 M6 A280	145, 147, 197, 533, 569, 819
312715-0116 ..	NUT WING COLD WORK.MVM-K M6 A280	873
312805-0102 ..	NUT ROUND WITH SLOTS M15X1 FE	623
312805-0103 ..	NUT ROUND WITH SLOTS M17X1 FE	623
312805-0106 ..	NUT ROUND WITH SLOTS M30X1,5 FE	373
312810-0314 ..	HEXAGON NUT, NY-LOCK M5 FZB	213
312810-0316 ..	HEXAGON NUT, NY-LOCK M6 FZB	513, 515
312811-0316 ..	NUT HEX.LOCK HELI COIL MID GRIP M6 SS	137, 493
312811-0318 ..	NUT HEX.LOCK HELI COIL M8 SS	337, 339, 341, 343
312811-0320 ..	NUT HEX.LOCK HELI COIL MID GRIP M10 SS	355
312811-0322 ..	NUT HEX.LOCK HELI COIL MID GRIP M12 SS	259

Part No	Description	Page No
312811-0324 ..	NUT HEX.LOCK HELI COIL MID GRIP M16 SS	259, 261, 263, 265
312811-0326 ..	NUT HEX.LOCK HELI COIL MID GRIP M20 SS	259, 261, 263, 265
312812-0310 ..	HEXAGON NUT, NY-LOCK M3 A480	181
312812-0312 ..	HEXAGON NUT, NY-LOCK M4 A480	197, 471, 473, 511, 611, 613, 615, 631, 633, 711, 713, 715 771, 773, 805, 807
312812-0314 ..	HEXAGON NUT, NY-LOCK M5 A480	23, 161, 163, 243, 245, 555, 557, 579, 769, 831, 833
312812-0316 ..	HEXAGON NUT, NY-LOCK M6 A480	165, 167, 197, 539, 653, 767, 771, 773, 785, 805, 807, 809 811, 821, 823, 831, 835, 837
312812-0318 ..	HEXAGON NUT, NY-LOCK M8 A480	165, 167, 511, 611, 613, 615, 631, 633
312812-0320 ..	HEXAGON NUT, NY-LOCK M10 A480	275, 785
312812-0322 ..	HEXAGON NUT, NY-LOCK M12 A480	593
312812-0324 ..	HEXAGON NUT, NY-LOCK M16 A480	223, 225
312901-0324 ..	NUT M6M16VFZB	263, 265
312902-0316 ..	NUT HEX. LEFT THREAD, M6 A280	169, 171, 173
312902-0320 ..	NUT HEX. LEFT THREAD, M10 A280	377, 379
315101-0136 ..	BRICKA, BRB, 4,3/8 H=0,8	259, 261, 263, 265, 431, 611, 613, 615, 617, 619, 631, 633, 635, 637
315101-0146 ..	WASHER PLAIN, BRB, 5,3/10 H=1	199, 201, 203, 263, 265, 269, 271, 273, 617, 619, 635, 637 647, 809, 811
315101-0153 ..	WASHER PLAIN, BRB, 6,4/12 H=1,2	207, 255, 259, 261, 263, 265, 279, 281, 513, 515, 541, 653, 845
315101-0165 ..	WASHER PLAIN, BRB, 8,4/16 H=1,5	259, 261, 277
315101-0173 ..	WASHER PLAIN, BRB, 10,5/22 H=2	259, 261, 263, 265, 269, 271
315101-0178 ..	WASHER PLAIN, BRB, 13/24 H=2	385
315101-0186 ..	WASHER PLAIN, BRB, 17/30 H=3	259, 261, 263, 265
315105-0124 ..	WASHER BRB3,2X6RFR	23, 27, 57, 59, 73, 75, 139, 181, 189, 283, 361, 503, 543, 545, 547, 549 551, 559, 561, 611, 613, 615, 631, 633, 727, 729, 779, 781, 787, 789, 791, 793, 795, 797, 799, 801, 803
315105-0136 ..	WASHER BRB4,3XRFR	17, 19, 21, 29, 31, 47, 73, 75, 95, 97, 99, 121, 123, 193, 195, 197, 231 243, 245, 247, 277, 283, 335, 361, 381, 385, 407, 437, 439, 471, 473, 483, 489, 505, 511, 535, 543 545, 547, 549, 597, 599, 603, 605, 625, 627, 631, 633, 643, 655, 677, 681, 683, 711, 713, 715, 723 735, 737, 739, 743, 745, 747, 749, 751, 771, 773, 775, 777, 779, 781, 783, 805, 807, 809, 811, 839, 871
315105-0146 ..	WASHER BRB5,3X10RFR	17, 19, 23, 27, 43, 51, 53, 65, 67, 71, 73, 75, 145, 147, 149, 151, 161 163, 165, 167, 173, 187, 189, 193, 195, 205, 207, 209, 211, 213, 227, 229, 243, 245, 247, 277, 283 319, 321, 323, 325, 335, 347, 349, 371, 373, 419, 431, 437, 439, 443, 453, 467, 471, 473, 503, 505 543, 545, 547, 549, 551, 555, 557, 559, 561, 563, 565, 571, 573, 579, 581, 597, 599, 603, 605, 607 611, 613, 615, 621, 629, 631, 633, 639, 651, 655, 677, 681, 683, 711, 713, 715, 725, 733, 741, 753 755, 757, 759, 761, 765, 769, 771, 773, 787, 789, 791, 793, 795, 797, 799, 801, 803, 813, 815, 831 833, 841, 843, 865
315105-0153 ..	WASHER BRB6,4X12RFR	17, 19, 25, 27, 29, 31, 41, 45, 47, 55, 57, 59, 63, 65, 67, 81, 95, 97, 99 127, 129, 131, 135, 139, 141, 145, 147, 153, 159, 165, 167, 169, 171, 173, 187, 191, 193, 195, 197 205, 207, 209, 211, 219, 221, 223, 225, 227, 229, 233, 235, 239, 241, 247, 275, 277, 297, 299, 301 303, 319, 321, 323, 325, 327, 329, 331, 333, 345, 351, 355, 361, 387, 389, 391, 393, 395, 401, 403 407, 411, 413, 415, 417, 419, 427, 429, 437, 439, 443, 445, 457, 469, 471, 473, 475, 477, 479, 481 483, 489, 493, 497, 499, 505, 511, 517, 519, 531, 533, 535, 543, 545, 547, 549, 553, 555, 557, 563 565, 567, 569, 571, 573, 579, 581, 597, 599, 603, 605, 611, 613, 615, 623, 625, 627, 631, 633, 643 655, 711, 713, 715, 767, 771, 773, 785, 805, 807, 809, 811, 819, 821, 823, 831, 835, 837, 839, 857 865, 871, 873
315105-0156 ..	WASHER BRB 6.7X14 RFR	429, 567, 569
315105-0165 ..	WASHER BRB8,4X16RFR	17, 19, 29, 31, 43, 51, 53, 73, 75, 105, 107, 109, 111, 121, 123, 127 129, 131, 187, 193, 195, 213, 215, 235, 247, 257, 297, 299, 301, 303, 327, 329, 331, 333, 337, 339 341, 343, 345, 351, 353, 377, 379, 387, 389, 399, 403, 405, 415, 419, 427, 431, 447, 449, 451, 483 489, 507, 511, 535, 555, 557, 559, 561, 567, 571, 573, 577, 593, 597, 599, 601, 603, 605, 611, 613 615, 621, 631, 633, 639, 647, 651, 855
315105-0171 ..	WASHER BRB10X18	179, 603, 605
315105-0173 ..	WASHER BRB10,5X22RFR	231, 257, 275, 355, 387, 389, 483, 487, 493, 513, 515, 611, 613 615, 631, 633, 649, 785
315105-0178 ..	WASHER BRB13X24RFR	223, 225, 257, 283, 375, 403, 413, 415, 483, 579
315105-0186 ..	WASHER BRB17X30RFR	223, 225, 235, 237, 415
315105-0191 ..	WASHER PLAIN, BRB, 20/36 H=3	593
315111-0153 ..	WASHER PLAIN, TBRB 6,4/12 H=3	617, 619, 635, 637
315111-0165 ..	WASHER PLAIN, TBRB 8,4/16 H=3	407
315111-0173 ..	WASHER PLAIN, TBRB 10,5/22 H=4	255, 259, 261, 263, 265
315111-0178 ..	WASHER PLAIN, TBRB 13/24 H=4	255
315115-0153 ..	WASHER PLAIN, TBRB 6,4/12 H=3	57, 59, 63, 165, 167, 289, 291, 293, 295, 319, 321, 323, 325 327, 329, 331, 333, 337, 339, 341, 343, 357, 359, 581
315115-0165 ..	WASHER PLAIN, TBRB 8,4/16 H=3	57, 59, 67, 105, 107, 109, 111, 113, 115, 117, 127, 129, 165 167, 177, 193, 195, 297, 299, 301, 303, 355, 495
315115-0173 ..	WASHER PLAIN, TBRB 10,5/22 H=4	57, 59
315115-0178 ..	WASHER PLAIN, TBRB 13/24 H=4	121, 123, 127, 129, 593
315121-0153 ..	WASHER PLAIN, TBRSB 6,4/22 H=4	255
315121-0173 ..	WASHER PLAIN, TBRSB 10,5/28 H=6	261, 279, 281
315121-0178 ..	WASHER PLAIN, TBRSB 13/36 H=6	255, 275
315125-0146 ..	WASHER TBRSB 5.3X15X1 A4	727, 729
315125-0153 ..	WASHER TBRSB 6,4X22X4 A4	43, 57, 59, 143, 169, 171, 277, 399, 601
315125-0165 ..	WASHER TBRSB 8,4X26X5 A4	43, 47, 73, 75, 555, 557, 577
315125-0173 ..	WASHER TBRSB 10,5X28X6 A4	247, 593, 601
315202-0102 ..	O-RING 4,1X1,6 MM	327, 329, 331, 333, 335
315202-0105 ..	O-RING 7,1X1,6 MM	213, 215
315202-0106 ..	O-RING 8,1X1,6 MM	327, 329, 331, 333, 345
315202-0108 ..	O-RING 10,1X1,6 MM	327, 329, 331, 333
315202-0110 ..	O-RING 12,1X1,6 MM	289, 291, 293, 295
315202-0112 ..	O-RING 14,1X1,6 MM	513, 515
315202-0118 ..	O-RING 22,1X1,6 MM	407
315202-0120 ..	O-RING 27,1X1,6 MM	179
315202-0204 ..	O-RING 5,3X2,4 MM	345
315202-0206 ..	O-RING 7,3X2,4 MM	193, 195, 337, 339, 341, 343

Part No	Description	Page No
315202-0207 ..	O-RING 8,3X2,4 MM	337, 339, 341, 343, 345
315202-0211 ..	O-RING 13,3X2,4 MM	187
315202-0215 ..	O-RING 19,2X3 MM	375, 391, 415
315202-0217 ..	O-RING 24,2X3 MM	409
315202-0218 ..	O-RING 26,2X3 MM	375, 431, 621, 639
315202-0219 ..	O-RING 29,2X3 MM	337, 339, 341, 343, 345
315202-0223 ..	O-RING 39,2X3 MM	431
315202-0244 ..	O-RING 134,3X5,7 MM	505
315202-0265 ..	O-RING 12,3X2,4 MM	289, 291, 293, 295
315202-0304 ..	O-RING 64,5X3 MM	87, 617, 619, 635, 637
315202-0305 ..	O-RING 69,5X3 MM	431, 617, 619, 635, 637
315202-0306 ..	O-RING 74,5X3 MM	371, 373
315202-0307 ..	O-RING 79,5X3 MM	231
315202-0308 ..	O-RING 84,5X3 MM	85, 89
315202-0309 ..	O-RING 89,5X3 MM	621, 639
315202-0317 ..	O-RING 129,5X3 MM	507
315204-0109 ..	O-RING 11,1X1,6 MM	57, 59
315204-0110 ..	O-RING 12,1X1,6 MM	45, 141
315204-0111 ..	O-RING 13,1X1,6 MM	63
315204-0119 ..	O-RING 25,1X1,6 MM	139
315204-0207 ..	O-RING 8,3X2,4 MM	23
315204-0213 ..	O-RING 15,2X2,4 MM	17, 19
315204-0215 ..	O-RING 19,2X3 MM	85, 87, 89, 693
315204-0222 ..	O-RING 36,2X3 MM	141
315204-0223 ..	O-RING 39,2X3 MM	69
315204-0301 ..	O-RING 49,5X3 MM	57, 59, 87, 139, 693
315204-0302 ..	O-RING 54,5X3 MM	45, 141
315204-0309 ..	O-RING 89,5X3 MM	57, 59, 67
315205-0505 ..	O-RING 6,07X1,78 MM	23, 27
315205-0705 ..	O-RING 17,17X1,78 MM	431
315211-0101 ..	GASKET BOLT HEAD 4,5X7X1 MM M4	289, 291, 293, 295
315211-0103 ..	GASKET BOLT HEAD 6,7X11X1 MM M6	289, 291, 293, 295, 431
315211-0104 ..	GASKET BOLT HEAD 8,7X14X1 MM M8	513, 515
315211-0106 ..	GASKET BOLT HEAD 10,7X16X1,5 MM M10	513, 515
315211-0107 ..	SEAL WASHER,NBR90/SS. 12,7X19X1,5 MM M12	415
315211-0111 ..	GASKET BOLT HEAD 21,5X28,6X2,5 MM G1/2	513, 515
315220-0167 ..	V-RINGS 27X35X10,5 MM V-30S	67
315220-0210 ..	V-RINGS 54X64X13 MM V-60S	371, 373
315221-0169 ..	RADIAL SEAL 30X47X7 MM	255
315221-0175 ..	RADIAL SEAL 35X47X7 MM	431
315221-0177 ..	RADIAL SEAL 35X52X7 MM	373
315221-0185 ..	RADIAL SEAL 40X62X7 MM	431
315229-0101 ..	GASKETS, 10,4X17,4X3,7 MM 1/2" FDA	29, 31, 133, 497
315229-0103 ..	GASKETS, 23,1X30,1X3,7 MM 1" FDA	29, 31
315229-0104 ..	GASKETS, 35,8X42,8X3,7 MM 1"1/2 FD	23, 133, 137, 497
315229-0105 ..	GASKETS, 48,5X55,5X3,7 MM 2" FDA	131, 487, 505, 507
315229-0106 ..	GASKETS, 61,2X68,2X3,7 MM 2"1/2 FD	487
315229-0203 ..	GASKET 34,8X42,8X3,7 MM 1"1/2	69, 139
315229-0204 ..	GASKET 34,8X42,8X3,7 MM 1"1/2	51, 53, 69
315229-0205 ..	GASKET 47,5X55,5X3,7 MM 2"	25, 49, 51, 53, 69, 71
315229-0206 ..	GASKET 60,2X68,2X3,7 MM 2"1/2	49, 51, 53, 69, 139
315230-0157 ..	BEARING SEAL 12X16X3 MM	289, 291, 293, 295
315233-0101 ..	WASHER CAPTIVE SEALING M5	85, 87, 89, 369
315233-0109 ..	WASHER CAPTIVE SEALING G1/8	95, 159, 187, 297, 299, 301, 303, 407, 453, 471, 473, 511
315233-0110 ..	WASHER CAPTIVE SEALING G1/4	217, 219, 453, 465, 471, 473, 511, 517
315233-0111 ..	WASHER CAPTIVE SEALING G3/8	193, 195, 407, 453, 455, 505, 507, 509, 511
315233-0113 ..	WASHER CAPTIVE SEALING G1/2	205, 219, 453, 457, 459, 461, 465, 517
315234-0109 ..	WASHER,PL.RND.CU.10,3/13,5 H=1,0	15, 29, 31, 43, 47, 51, 53, 73, 75, 199, 201, 203, 327, 329, 331, 333, 513, 515
315234-0110 ..	WASHER,PL.RND.CU.13,5/18 H=1,5	385
315234-0111 ..	WASHER,PL.RND.CU.17,5//21 H=1,5	513, 515
315234-0113 ..	WASHER PL.RND.CU.21,3//26 H=1,5	385, 487
315237-0106 ..	WASHER,PL.RND.AL.6/10,H=1	289, 291, 293, 295, 327, 329, 331, 333
315237-0107 ..	WASHER,PL.RND.AL.8/14,H=1	327, 329, 331, 333
315237-0109 ..	WASHER,PL.RND.AL.10/14,H=1,5	289, 291, 293, 295
315237-0110 ..	WASHER,PL.RND.AL.13,5/18,H=1,5	17, 19
315239-0115 ..	NYLON WASHER G3/4	227, 229
315250-0103 ..	GASKET 48X38X5,5 MM	415
315250-0104 ..	GASKET 61X51X5,5 MM	397
315259-0102 ..	FELT SEAL 22-47 MM	187
315400-0004 ..	TUBE PUN-H-8X1,25-BL	387, 389
315401-0153 ..	WASHER FBH6,1FZB	839, 845
315402-0128 ..	LOCK WASHER FBB 3,6	779, 781, 831
315402-0136 ..	LOCK WASHER FBB 4,1	89, 711, 713, 715, 723, 735, 737, 739, 743, 745, 747, 749, 751, 771, 773, 775, 777, 779, 781, 783, 787, 789, 791, 793, 795, 797, 799, 801, 803, 805, 807, 831, 835, 837
315402-0146 ..	LOCK WASHER FBB 5,1	149, 151, 513, 515, 711, 713, 715, 721, 727, 729, 731, 763, 767, 771, 773, 821, 823, 839, 843
315402-0156 ..	LOCK WASHER FBB 6,5	771, 773
315410-0106 ..	LOCK WASHER MB 6 D=30 H=1,25	373
315701-0169 ..	PARALLEL KEY W. ROUND ENDS 4X4X18 MM	611, 613, 615, 631, 633
315701-0234 ..	PARALLEL KEY W. ROUND ENDS 6X6X25 MM	431
315701-0235 ..	PARALLEL KEY W. ROUND ENDS 6X6X28 MM	267
315701-0239 ..	PARALLEL KEY W. ROUND ENDS 6X6X40 MM	255, 267
315701-0268 ..	PARALLEL KEY W. ROUND ENDS 8X7X32 MM	255

Part No	Description	Page No
315701-0335 ..	PARALLEL KEY W. ROUND ENDS 12X8X56 MM	259, 261, 263, 265
315705-0166 ..	PARALLEL KEY W. ROUND ENDS 4X4X12 MM	603, 605
315705-0196 ..	PARALLEL KEY W. ROUND ENDS 5X5X10 MM	493
315705-0201 ..	PARALLEL KEY W. ROUND ENDS 5X5X20 MM	55
315705-0232 ..	PARALLEL KEY W. ROUND ENDS 6X6X20 MM	277, 375, 431
315705-0265 ..	PARALLEL KEY W. ROUND ENDS 8X7X25 MM	431
315705-0269 ..	PARALLEL KEY W. ROUND ENDS 8X7X35 MM	255
315705-0271 ..	PARALLEL KEY W. ROUND ENDS 8X7X45 MM	375
315705-0307 ..	PARALLEL KEY W. ROUND ENDS 10X8X70 MM	257
315742-0102 ..	COLLAR, 6/16, H=8	297, 299, 301, 303
315742-0104 ..	COLLAR, 8/20, H=9	607
315742-0111 ..	COLLAR, 15/30, H=12	583
315742-0112 ..	COLLAR, 16/32, H=12	63
315742-0116 ..	COLLAR, 20/36, H=13	277
315750-0105 ..	RETAIN. RING, 8	621, 639
315751-0103 ..	RETAIN. RING, 6	197, 361, 581, 625, 627
315751-0109 ..	RETAIN. RING, 12	351, 353, 535, 555, 557, 559, 561
315751-0112 ..	RETAIN. RING, 15	63, 67, 175, 603, 605, 611, 613, 615, 631, 633
315751-0116 ..	RETAIN. RING, 20	351
315751-0119 ..	RETAIN. RING, 25	275
315751-0122 ..	RETAIN. RING, 30	351
315751-0124 ..	RETAINING RING FOR SHAFT, 35X1,5 MM	431
315752-0120 ..	RETAIN. RING, 26	581
315752-0125 ..	RETAINING RING FOR HOLE, 37X1,5 MM	351
315753-0122 ..	RETAIN. RING, 30	569
315753-0124 ..	RETAIN. RING, 35	63, 67
315753-0132 ..	RETAINING RING FOR HOLE, 52X2 MM	431
315754-0113 ..	LOCKING WAE 15	85, 87, 89
315755-0106 ..	LOCKING WASHER 4	543, 545, 547, 549, 579
315755-0107 ..	LOCKING WASHER 5	173, 543, 545, 547, 549
315755-0109 ..	LOCKING WASHER 7	871
315755-0110 ..	LOCKING WASHER 9	571, 573
315755-0801 ..	LOCKING WASHER 8	567
318201-0150 ..	ROLLER CHAIN, SINGLE 3/8 -150	277
318207-0168 ..	ROLLER CHAIN, SINGLE 6MM-168	611, 613, 615, 631, 633
318800-0103 ..	HANDLES,SPHERICAL KNOB,INT.THRE.,D.25-M6	57, 59, 623
318800-0104 ..	HANDLE,SPHERICAL KNOB,INT.THRE.,D.30-M8	567
318860-0106 ..	KNOB, ADJUST.HI.EXT.THREAD, NO 8324-3674	231
318871-0104 ..	KNOB CIRCULAR, EXT THREAD, NO. 8302-6118	601
321101-0143 ..	FLANGE BUSHING, 8X14X8 MM	165, 167
321101-0172 ..	FLANGE BUS 12F7X10	351
321101-0173 ..	FLANGE BUS 12F7X12	353, 643
321101-0233 ..	FLANGE BUSHING, 20X28X20 MM	649
321111-0097 ..	FLANGE BUSHING, 8X12X12 MM	533, 571, 573
321111-0135 ..	FLANGE BUSHING, 10X16X10 MM	533
321111-0212 ..	FLANGE BUSHING, 15X21X15	623
321120-0098 ..	BEARING BUSHING W/O FL, 10/12X8	297, 299, 301, 303
321120-0100 ..	BEARING BUSHING W/O FLANGE 8/10X12	621, 625, 627, 639
321120-0101 ..	BEARING BUSHING W/O FLANGE,6/8X6	625, 627
321120-0109 ..	BEARING BUSHING W/O FLANGE,12/14X10	621, 639
321120-0118 ..	BEARBUSHING W/O FL 14X16X15	297, 299, 301, 303
321120-0122 ..	BEARING BUSHING W/O FL, 15X17X15 MM	617, 619, 635, 637
321120-0132 ..	BEARBUSHING W/O FL 18X20X20	327, 329, 331, 333
321120-0153 ..	BEARBUSHING W/O FL 24X27X20	297, 299, 301, 303
321129-0137 ..	THRUST WASHER, 22/38X1,5	259, 261
321130-0180 ..	THRUST WASHER, 12X24X1,5 MM	377, 379, 535
321130-0200 ..	THRUST WASHER, 14X26X1,5 MM	377, 379
321130-0260 ..	THRUST WASHER, 20X36X1,5 MM	277
321135-0183 ..	BUSHING, 12X14X15 MM	377, 379
321141-0142 ..	BEARING BUSHING W/O FL, 10X12X12 MM	411
321141-0183 ..	BEARING BUSHING W/O FL, 12X14X15 MM	555, 557, 559, 561
321141-0193 ..	BEARING BUSHING W/O FL, 12X14X25 MM	535
321141-0260 ..	BEARING BUSHING W/O FL, 20X23X20 MM	277
321302-0298 ..	BALL BEARING, 8X22X7 MM	585
321306-0107 ..	BALL BEARING, 35X62X14 MM	431
321308-0200 ..	BALL BEARING, 10X26X8 MM	581
321308-0202 ..	BALL BEARING, 2 SEALS, 15X32X9 MM	603, 605
321308-0207 ..	BALL BEARING, 2 SEALS, 35X62X14 MM	255
321309-0104 ..	BALL BEARING, 20X47X14 MM	431
321309-0105 ..	BALL BEARING, 25X52X15 MM	431
321313-0100 ..	BALL BEARING, 10X30X9 MM	569
321313-0102 ..	BALL BEARING, 15X35X11 MM	583, 603, 605
321313-0105 ..	BALL BEAR. 2 SEALS 25X52X15MM	255
321330-0100 ..	ANG. BALL BEAR, 10X30X14 MM	581
321330-0106 ..	ANG. BALL BEAR, 30X62X23,8 MM	431
321531-0248 ..	NEEDLE SLEEVE W/O CONE 20X26X16	259, 261, 263, 265
321576-0260 ..	BEAR.ROLLER, 2 SEALS 20X47X25	259, 261, 263, 265
321600-0114 ..	SEAL COVER LL3052	255
341001-0148 ..	COPPER TUBE	471, 473
342700-0113 ..	NIPPLES,HEXAGON,EXT.G-THREAD G1/2"-G1/2"	459, 509, 513, 515, 517
342700-0203 ..	NIPPLES,HEXAGON,EXT.G-THREAD G3/8"-G1/4"	511
342700-0205 ..	NIPPLES,HEXAGON,EXT.G-THREAD G1/2"-G1/4"	513, 515
342700-0210 ..	NIPPLES,HEXAGON,EXT.G-THREAD G3/4"-G1/2"	505
342701-0201 ..	BUSHING,INT./EXT.G-THREAD G1/4"-G1/8"	465

Part No	Description	Page No
342701-0203 ..	BUSHING, INT/EXT. G-THREAD NO. 3/8-1/4	509, 517
342701-0205 ..	BUSHING,INT./EXT.G-THREAD G1/2"-G1/4"	219, 465, 481, 509
342701-0208 ..	BUSHING, INT/EXT. G-THREAD NO. 3/4-1/4	255
342701-0209 ..	BUSHING,INT./EXT.G-THREAD G3/4"-G3/8"	509
342703-0208 ..	NUT, PIPES & CONNECTORS,NUT M-8 SS	199, 201, 203
342706-0130 ..	ACCESSORIES, INSERT SLEEVE 6 MM	15, 17, 19, 207
342710-0115 ..	REDUCTION RBM 16/8	205
342713-0209 ..	PLUG, EXT THREAD HEX SOCKET 8638-00-180	205, 327, 329, 331, 333, 453, 457, 513, 515
342713-0210 ..	PLUG, EXT THREAD HEX SOCKET 8638-00-140	17, 19, 447, 449, 451, 453, 471, 473, 475, 477, 479
342713-0211 ..	PLUG, EXT THREAD HEX SOCKET 8638-00-380	453, 471, 473, 475, 477, 479, 509, 513, 515
342713-0213 ..	PLUG, EXT THREAD HEX SOCKET 8638-00-120	457
342715-0100 ..	BLIND PLUG 4 MM	475, 477, 479
342715-0102 ..	BLIND PLUG 6 MM	475, 477, 479
342716-0202 ..	REDUCER 4-6	207
342716-0203 ..	REDUCER 6-8	199, 201, 203, 447, 449, 451, 475, 477, 479
342716-0209 ..	REDUCER 8-12	447, 449, 451
342716-0210 ..	REDUCER 6-12	587
342720-0114 ..	CONN. STR. GA-15-G1/2	205, 453, 457, 459, 461, 517
342722-0197 ..	STRAIGHT COUPLING	155, 157, 173
342722-0198 ..	STRAIGHT COUPLING	399
342722-0199 ..	STRAIGHT COUPLING	587
342722-0202 ..	PIPE COUPLING 1/8" D=6MM	393, 463, 497, 587
342722-0203 ..	STRAIGHT COUPLING	17, 19, 471, 473
342722-0204 ..	PIPE COUPLING	471, 473
342722-0205 ..	STRAIGHT COUPLING D=8-G1/4"	447, 449, 451, 475, 477, 479
342722-0206 ..	STRAIGHT COUPLING D=8-G3/8"	471, 473, 475, 477, 479
342722-0210 ..	RöRKOPPLING D=12-G3/8"	475, 477, 479
342723-0114 ..	CONN. STR. PIPE GI-15-G1/2	459
342725-0108 ..	CONN. STR. PIPE GI-10-G1/4	217
342726-0109 ..	CONN. PIPE G-12	205
342726-0114 ..	CONN. PIPE G-15	517
342727-0102 ..	CONN. PIPE G-6-LFZB	199, 201, 203
342730-0114 ..	CONN. ELBOW WA-15-1/2	459, 461, 465, 517
342732-0099 ..	ELBOW PIPE JOINT, EXT.THREAD, D=4MM-M5	539
342732-0102 ..	ELBOW PIPE JOINT, EXT.THREAD, D=6MM-G1/8	471, 473, 511
342732-0103 ..	ELBOW PIPE JOINT, EXT.THREAD, D=6MM-G1/4	463, 471, 473, 475, 477, 479
342732-0104 ..	ELBOW PIPE JOINT, EXT.THREAD, D=8MM-G1/4	463, 467, 471, 473, 475, 477, 479, 481, 517
342732-0109 ..	ELBOW PIPE JOINT, EXT.THREAD, D=1MM-G1/4	447, 449, 451
342732-0110 ..	ELBOW PIPE JOINT, EXT.THREAD,D=12MM-G3/8	471, 473, 475, 477, 479
342732-0161 ..	ELBOW PIPE JOINT,EXT.THREAD,D=14 MM-G1/2	447, 449, 451, 465, 517
342732-0801 ..	ELBOW PIPE JOINT, EXT.THREAD, D=8MM-G1/8	465, 471, 473
342735-0102 ..	ELBOW PIPE JOINT	447, 449, 451
342735-0103 ..	ELBOW PIPE JOINT	447, 449, 451, 471, 473, 475, 477, 479
342735-0109 ..	ELBOW PIPE JOINT	447, 449, 451
342735-0110 ..	ELBOW PIPE	447, 449, 451, 517
342736-0114 ..	CONN. ELBOW W-15	205
342737-0204 ..	CONN. ELBOW W-6 LRFR	73, 75, 101, 103, 511
342738-0208 ..	ADJUSTABLE ELBOW CONNECTION,EXT 8-G1/4	207
342742-0104 ..	T-COUPLING,ADJUST,F.PLASTIC TUBE 8-G1/4"	447, 449, 451
342746-0114 ..	CONN. T-PIPE T-15	205, 395
342748-0100 ..	T-CONNECTION 4MM	361
342748-0102 ..	T-CONNECTION 6MM	15, 207, 447, 449, 451
342748-0103 ..	T-CONNECTION 8MM	199, 201, 203, 447, 449, 451
342748-0109 ..	T-CONNECTION 12MM	447, 449, 451, 587
342751-0204 ..	CONN. L-PIPE, EXT. LE-6-R1/8	101, 103
342751-0215 ..	CONN. L-PIPE, EXT. LE-12-R3/8	81
342752-0103 ..	CONN. STR. GA-8-G1/4	513, 515
342752-0110 ..	CONN. STR. GA-12-G3/8	509, 513, 515
342753-0114 ..	CONN. CROSS K-15	459
342762-0114 ..	CONN. BULKHEAD SV 15-LFZB	505
342767-0100 ..	CONN. BULKHEAD G1/8	199, 201, 203, 207
342767-0104 ..	CONN. BULKHEAD G1/4	207
342768-0102 ..	BULKHEAD CONNECTOR, 6 MM	187, 207
342770-0101 ..	STRAIGHT COUPLING INT, D=4 MM - G1/8	361
342770-0105 ..	STRAIGHT COUPLING INT, D=6 MM - G1/8	463, 471, 473
342770-0107 ..	STRAIGHT COUPLING INT, D=8 MM - G1/8	395
342772-0113 ..	ELBOW FITTING, 6 - G1/8	17, 19, 587
342772-0114 ..	ELBOW FITTING, 6 - G1/4	17, 19
342797-0121 ..	CONN. BANJO, RINGPIECE 6-1/8	43, 45, 47, 63, 65, 69, 101, 103, 127, 129, 141, 199, 201, 203
342797-0122 ..	CONN. BANJO, RINGPIECE 6-1/4	81, 469
342803-0103 ..	UNION NUT, RD 60-6 (SMS 38)	415
342807-0104 ..	PIPE ELBOW 90 DEGR. SMS1220, D=51 MM	397
342840-0101 ..	CLAMP, 12,7 AND 19,1 MM 3-A PCS+PMCS	417
342850-0101 ..	GASKET, FDA, 3-A, 1/2	417
342850-0303 ..	GASKET 22,7X49,1X5,2 MM 1" FDA	691
342850-0304 ..	GASKET 35,4X49,1X5,2 1"1/2 FDA	691
342850-0305 ..	GASKET 47,8X62,6X5,2 MM 2" FDA	691
342903-0121 ..	NUT WITH SPRING 8/6-M12X1	193, 195, 459, 471, 473
342920-0115 ..	STRAIGHT COUPLING,EXT.THREADED 6/4-R3/8"	517
342920-0133 ..	STRAIGHT COUPL.,EXT.THREADED 10/8-R3/8"	517
342921-0111 ..	STRAIGHT COUPL,EXT.THREAD.6/4-M5	533, 539
342921-0113 ..	STRAIGHT COUPLING,EXT.THREADED 6/4-G1/8"	155, 157, 407, 471, 473
342921-0121 ..	STRAIGHT COUPLING,EXT.THREADED 8/6-G1/8"	457, 471, 473
342921-0122 ..	STRAIGHT COUPLING,EXT.THREADED 8/6-G1/4"	453, 513, 515

Part No	Description	Page No
342921-0123 ..	STRAIGHT COUPLING,EXT.THREADED 8/6-G3/8"	453, 459
342923-0121 ..	STRAIGHT COUPL.,INT.THREADED 8/6-G1/8"	459
342923-0122 ..	STRAIGHT COUPL.,INT.THREADED 8/6-G1/4"	465
342923-0132 ..	STRAIGHT COUPL.,INT.THREADED 10/8-G1/4"	219
342930-0122 ..	ELBOW 90 COUPL.,EXT.THREAD 8/6-R1/4"	255
342931-0122 ..	ELBOW 90 COUPL.,EXT.THREAD 8/6-G1/4"	467, 509
342946-0112 ..	T-COUPLING,UNION 6/4	155, 157, 447, 449, 451
342946-0122 ..	T-COUPLING,UNION 8/6	447, 449, 451
342960-0112 ..	BULKHEAD COUPLING 6/4	395, 407, 471, 473
342960-0121 ..	BULKHEAD COUPLING 8/6-6/4	395
342960-0122 ..	BULKHEAD COUPLING 8/6	395, 407, 471, 473
342960-0133 ..	BULKHEAD COUPLING 10/8	395
342980-0111 ..	BANJO-CONNECTION,RING 6/4-M5	131
342980-0113 ..	BANJO-CONNECTION,RING 6/4-G1/8"	45, 101, 103, 155, 157
342980-0121 ..	BANJO-CONNECTION,RING 8/6-G1/8"	193, 195, 357, 359
342980-0122 ..	BANJO-CONNECTION,RING 8/6-G1/4"	255, 471, 473
342980-0301 ..	BANJO-HOLLOW BOLT COUPL.,EXT.THREA.01-M5	131
342980-0303 ..	BANJO-HOLLOW BOLT COUPL,EXT.THR.01-G1/8"	69, 73, 75, 95, 101, 103, 141, 155, 157, 193, 195, 199, 201, 203, 357, 359
342980-0304 ..	BANJO-HOLLOW BOLT COUPL,EXT.THR.01-G1/4"	81, 255, 469, 471, 473
342980-0313 ..	BANJO-HOLLOW BOLT COUPL,EXT.THR.02-G1/8"	45
342991-0101 ..	HOSE CLIP,WORM DRIVE TYPE (13)-16	137, 385, 489, 511
342991-0104 ..	HOSE CLIP,WORM DRIVE TYPE (23)-27	255
342991-0112 ..	HOSE CLIP,WORM DRIVE TYPE (73)-83	487
342991-0113 ..	HOSE CLIP,WORM DRIVE TYPE (83)-93	487
346800-0109 ..	SILENCER FILTER R1/8"	511
351120-0144 ..	CABLE SIHF 3X1,5MM2 GREEN/YELLOW	47, 387, 389, 657, 659
351120-0145 ..	CABLE SIHF 3X2,5MM2 GREEN/YELLOW	43, 541
351120-0146 ..	CABLE SIHF 3X4MM2 GREEN/YELLOW	539
351120-0167 ..	CABLE SIHF 4X6MM2 GREEN/YELLOW	29, 31
351120-0168 ..	CABLE SIHF 4X10MM2 GREEN/YELLOW	51, 53
351150-0403 ..	CABLE OLFLEX 3X0,75 MM2 LIGHT/GREY	17, 19, 29, 31, 97, 99, 459, 471, 473, 503, 511, 513, 515, 517
351150-0404 ..	CABLE OLFLEX 4X0,75 MM2 LIGHT/GREY	17, 19, 97, 99, 511, 513, 515
351150-0405 ..	CABLE OLFLEX 5X0,75 MM2 LIGHT/GREY	57, 59, 145, 147, 277, 489, 551, 657, 659, 663, 679, 685, 687
351150-0406 ..	CABLE OLFLEX 7X0,75 MM2 LIGHT/GREY	221, 231, 233, 655, 657, 659
351150-0407 ..	CABLE OLFLEX 12X0,75 MM2 LIGHT/GREY	537, 553
351150-0412 ..	CABLE OLFLEX 3X1,5 MM2 LIGHT/GREY	29, 31, 187, 239, 445, 657, 659
351150-0413 ..	CABLE OLFLEX 4X1,5 MM2 LIGHT/GREY	67, 187
351150-0414 ..	CABLE OLFLEX 5X1,5 MM2 LIGHT/GREY	657, 659
351150-0415 ..	CABLE OLFLEX 7X1,5 MM2 LIGHT/GREY	839
351150-0418 ..	CABLE OLFLEX 4X2,5 MM2 LIGHT/GREY	187, 487, 493, 513, 515
351150-0422 ..	CABLE OLFLEX 3X4 MM2 LIGHT/GREY	553
351150-0425 ..	CABLE OLFLEX 25X0,75 MM2 LIGHT/GREY	17, 19, 187, 553, 657, 659
351150-0428 ..	CABLE OLFLEX 41X0,75 MM2 LIGHT/GREY	187
351150-0431 ..	CABLE OLFLEX 2X0,75 MM2 LIGHT/GREY	29, 31, 95, 209, 211, 247, 415, 453, 461, 505
351160-0102 ..	CABLE AWM 1X0,75 MM2 DARKBLUE	21, 705, 707, 709
351160-0105 ..	CABLE AWM 1X2,5 MM2 DARKBLUE	705, 707, 709
351160-0107 ..	CABLE AWM 1X6 MM2 DARKBLUE	705, 707, 709
351161-0104 ..	CABLE AWM 1X1,5 MM2 LIGHTBLUE	705, 707, 709
351161-0105 ..	CABLE AWM 1X2,5 MM2 LIGHTBLUE	705, 707, 709
351161-0106 ..	CABLE AWM 1X4 MM2 LIGHTBLUE	705, 707, 709
351161-0109 ..	CABLE AWM 1X16 MM2 LIGHTBLUE	705, 707, 709
351161-0110 ..	CABLE AWM 1X25 MM2 LIGHTBLUE	705, 707, 709
351162-0104 ..	CABLE AWM 1X1,5 MM2 YELLOW-GREEN	705, 707, 709
351162-0105 ..	CABLE AWM 1X2,5 MM2 YELLOW-GREEN	705, 707, 709
351162-0106 ..	CABLE AWM 1X4 MM2 YELLOW-GREEN	187, 231, 471, 473, 705, 707, 709
351162-0107 ..	CABLE AWM 1X6 MM2 YELLOW-GREEN	705, 707, 709
351162-0109 ..	CABLE AWM 1X16 MM2 YELLOW-GREEN	483, 705, 707, 709
351163-0107 ..	CABLE AWM 1X6 MM2 RED	705, 707, 709
351164-0104 ..	CABLE AWM 1X1,5 MM2 BLACK	705, 707, 709
351164-0105 ..	CABLE AWM 1X2,5 MM2 BLACK	705, 707, 709
351164-0106 ..	CABLE AWM 1X4 MM2 BLACK	705, 707, 709
351164-0107 ..	CABLE AWM 1X6 MM2 BLACK	705, 707, 709
351164-0110 ..	CABLE AWM 1X25 MM2 BLACK	705, 707, 709
351164-0111 ..	CABLE AWM 1X35 MM2 BLACK	705, 707, 709
351166-0102 ..	CABLE AWM 1X0,75 MM2 ORANGE	705, 707, 709
351175-0102 ..	CABLE AWM 1X 075 MM2 YELLOW-GREEN	503
352100-0106 ..	CABLE GLANR.18,6-10,5	43
352101-0103 ..	LEAD-IN, PR18,6/PG11, E-1457518	471, 473, 611, 613, 615, 631, 633
352101-0107 ..	LEAD-IN, PR37/PG29, E-1457537	145, 147
352103-0096 ..	CABLE GLAND, ST 7, PR 12,5/PG7	21
352103-0100 ..	CABLE GLAND, STR 9, PR15,2/PG9	187, 655
352103-0101 ..	CABLE GLAND, ST 9, PR15,2/PG21	21, 57, 59, 149, 151, 191, 207, 443, 657, 659, 775, 777, 805, 807
352103-0106 ..	CABLE GLAND, ST 11, PR18,6/PG11	47, 57, 59, 177, 191, 223, 225, 423, 425, 443, 551, 597, 599, 657, 659
352103-0108 ..	CABLE GLAND, ST 13,5 , PR20,4/PG13,5	207, 443
352103-0110 ..	CABLE GLAND, STR 16, PR22,5/PG16	149, 151, 233, 775, 777
352103-0111 ..	CABLE GLAND, ST 16, PR22,5/PG16	149, 151, 421, 777, 839
352103-0115 ..	CABLE GLAND, STR 21, PR28,3/PG21	421
352103-0116 ..	CABLE GLAND, ST 21, PR28,3/PG21	21, 149, 151, 191, 777
352103-0120 ..	CABLE GLAND, STR 29, PR37,0/PG29	149, 151
352103-0121 ..	CABLE GLAND, ST 29, PR37,0/PG29	149, 151, 421, 423, 425, 777

Part No	Description	Page No
352110-0100 ..	CABLE CLIPS, D=5-7 MM	57, 59
352110-0103 ..	CABLE CLIPS, D=14-20 MM	385
352113-0101 ..	CLIP STRIP, 92X2,5 MM	199, 201, 203, 263, 265, 297, 299, 301, 303, 445, 621, 639, 705, 707, 709
352113-0102 ..	CLIP-STRIP, BLACK 188X4,8 MM	177, 421, 705, 707, 709
352113-0104 ..	CLIP STRIP, 300X4,8 MM	447, 449, 451
352113-0203 ..	ANCHOR PLATES FOR STRIPS, TYPE TM3S8-M0	483, 655
352113-0204 ..	ANCHOR PLATES FOR STRIPS, TYPE TM3S25-M	247, 443
352113-0205 ..	ANCHOR PLATES FOR STRIPS, TYPE TM2S8-C10	283, 297, 299, 301, 303, 421, 539, 771, 773, 779, 781, 783, 809, 811
352113-0206 ..	ANCHOR PLATES FOR STRIPS, TYPE ABM100-AT	543, 545, 547, 549
352135-0202 ..	CLIP, 16 MM, 913.016	611, 613, 615
353001-0101 ..	END SLEEVE 0,5 MM2	675
353001-0102 ..	END SLEEVE 0,75 MM2	675, 705, 707, 709
353001-0113 ..	END SLEEVE 0,75MM2	679, 685, 687, 705, 707, 709
353001-0114 ..	END SLEEVE 1,5MM2	705, 707, 709
353001-0115 ..	END SLEEVE 2,5/14	705, 707, 709
353001-0117 ..	END SLEEVE H4.0/20 GREY	705, 707, 709
353001-0118 ..	END SLEEVE 6MM2 BLACK	705, 707, 709
353001-0119 ..	END SLEEVE H 1.0/14 YELLOW	705, 707, 709
353001-0120 ..	END SLEEVE H 10/28	705, 707, 709
353021-0122 ..	TERMINAL DISCONNECTBLE, WTR 2,5 D	759, 761
353021-0127 ..	TERMINAL DISCONNECTBLE, WTR 2,5+WSD 2,5	759, 761
353021-0132 ..	TERMINALS,TRIPLE-LEVEL, DLD 2,5/PE	423, 425, 755, 757, 759, 761
353021-0212 ..	FEED THROUGH TERMINAL, 10200.0	191, 553, 657, 659, 755, 765, 769
353021-0213 ..	FEED THROUGH TERMINAL, 10201.0	423, 425, 553, 755
353021-0214 ..	FEED THROUGH TERMINAL, 10202.0	755
353021-0215 ..	FEED THROUGH TERMINAL, 10203.0	755
353021-0219 ..	FEED THROUGH TERMINAL, 10205.0	765, 833
353021-0301 ..	TERMINALS,TRIPLE-LEVEL, DLI 2,5/35 PA	423, 425, 759, 761
353021-0302 ..	TERMINALS,TRIPLE-LEVEL, DLD 2,5/35 PA	423, 425, 757, 759, 761
353022-0003 ..	NEUTRAL TERMINAL, 10108.8	765
353024-0204 ..	EARTH TERMINAL WPE 2,5	191, 423, 425, 657, 659, 755
353024-0205 ..	EARTH TERMINAL, 1010.1	553, 657, 659, 755, 765
353024-0206 ..	EARTH TERMINAL, 1010.2	423, 425, 755, 757, 759, 761
353024-0207 ..	EARTH TERMINAL, 1010.3	755
353024-0208 ..	EARTH TERMINAL, 1010.4	765
353024-0209 ..	EARTH TERMINAL, 1010.5	765, 833
353031-0203 ..	END SUPPORT, WEW 35/2	191, 755, 757, 759, 761, 765, 769
353032-0004 ..	END PLATE WAP 2,5-10 BEIGE	423, 425, 755
353032-0009 ..	END PLATE, WAP 16/35	423, 425, 757, 765
353032-0013 ..	END PLATE, 13818.6	423, 425
353032-0302 ..	END PLATE WAP	423, 425, 757, 759, 761
353033-0104 ..	END PLATE, 10502.8	765
353033-0105 ..	PARTITITION, 10501.0	765, 833
353034-0026 ..	BRIDGE CONNECTOR, WQV 35/2, 10530.6	833
353034-0030 ..	BRIDGE CONNECTOR WQV 2,5/10, 10544.6	191, 553, 657, 659, 759, 761, 765, 769
353034-0032 ..	BRIDGE CONNECTOR, WQV 6/10, 10522.6	755
353034-0035 ..	BRIDGE CONNECTOR, WQV 35/10, 10531.6	765
353034-0039 ..	BRIDGE CONN. WQV 4/4	553
353034-0401 ..	BRIDGE CONNECTOR Q2, 13125.0	423, 425, 755, 759, 761
353034-0402 ..	BRIDGE CONNECTOR Q3, 13126.0	423, 425, 755
353034-0403 ..	BRIDGE CONNECTOR Q4, 13127,0	755, 757, 759, 761
353034-0404 ..	BRIDGE CONNECTOR Q10, 13131.0	423, 425, 755, 757, 759, 761
353042-0003 ..	RAIL TS35/15/1,5	815
353042-0004 ..	RAIL TS 35/7,5	711, 713, 715, 725, 733, 741, 753, 755, 757, 759, 761, 765, 769, 813, 817, 833
353042-0005 ..	RAIL TS 35/7.5	423, 425
353101-0118 ..	KABELSKO 0,75-1,5MM2 RED	503
353101-0120 ..	CABLE SHOE 1,25-4MM2	705, 707, 709
353101-0123 ..	CABLE SHOE 0,5-1,5MM2 RED	415
353101-0126 ..	CABLE SHOE	415
353101-0129 ..	CABLE SHOE	705, 707, 709
353101-0130 ..	CABLE SHOE 1,5-2,5MM2 BLUE	541, 705, 707, 709
353101-0132 ..	CABLE SHOE, RING ø5,3MM	43, 539, 541, 705, 707, 709
353101-0150 ..	CABLE SHOE	705, 707, 709
353101-0152 ..	CABLE SHOE 4-6MM2,M5,YE	705, 707, 709
353101-0153 ..	CABLE SHOE 4-6MM2 YELLOW	705, 707, 709
353103-0120 ..	CABLE SHOE 1,25 MM2 RED	705, 707, 709
353103-0130 ..	CABLE SHOE	705, 707, 709
353103-0138 ..	CABLE SHOE	705, 707, 709
353104-0130 ..	CABLE SHOEYAV 025 M 4*	47
353104-0140 ..	CABLE SHOEYAV 06 M 4*	539
353104-0164 ..	CABLE SHOEYAV 10 M10*	705, 707, 709
353104-0168 ..	CABLE SHO YAV 16 M6*	705, 707, 709
353104-0175 ..	CABLE SHOEYAV 25 M6	705, 707, 709
353240-0001 ..	NORMAL WITHOUT INSERT, PG 9	657, 659
353240-0002 ..	NORMAL WITHOUT INSERT, PG 11	679, 685, 687
353240-0003 ..	NORMAL WITHOUT INSERT, PG 13,5	277, 657, 659
353240-0004 ..	NORMAL WITHOUT INSERT, PG 16	423, 425
353240-0005 ..	NORMAL WITHOUT INSERT, PG 21	421, 423, 425
353240-0006 ..	FöRSKRUVNING PG 29	423, 425, 443, 775
353241-0002 ..	EXTENDED WITHOUT INSERT, PG 11	679, 685, 687
353241-0003 ..	EXTENDED WITHOUT INSERT, PG 21	421
353241-0005 ..	EXTENDED WITHOUT INSERT, PG 13,5	423, 425
353241-0007 ..	EXTENDED WITHOUT INSERT, PG 16/21	423, 425

Part No	Description	Page No
353242-0001 ..	NORMAL WITHOUT INSERT, PG13,5	445, 511, 657, 659
353242-0003 ..	NORMAL WITHOUT INSERT, PG29	553, 655, 775
353242-0005 ..	NORMAL WITHOUT INSERT, PG9	655, 657, 659
353243-0001 ..	EXTENDED WITHOUT INSERT, PG9	503, 505, 511, 513, 515, 775, 777
353243-0002 ..	EXTENDED WITHOUT INSERT, PG11	145, 147, 189, 241, 489, 513, 515, 643, 655
353243-0003 ..	EXTENDED WITHOUT INSERT, PG11	29, 31, 145, 147, 655
353243-0005 ..	EXTENDED WITHOUT INSERT, PG16	487, 493, 603, 605, 655, 775
353243-0007 ..	EXTENDED WITHOUT INSERT, PG21	29, 31, 145, 147, 657, 659
353243-0008 ..	EXTENDED WITHOUT INSERT, PG29	17, 19
353247-0008 ..	GLAND, PG13,5, 15254P13S05UL16	603, 605
353249-0003 ..	INSERT, SINGEL HOLE, E151/11	657, 659, 679, 685, 687
353249-0008 ..	INSERT, SINGEL HOLE, EK 152/7	431
353249-0009 ..	INSERT, SINGEL HOLE, EK 152/9	189, 489, 503, 505, 511, 513, 515, 775, 777
353249-0010 ..	INSERT, SINGEL HOLE, EK 152/11	145, 147, 241, 643, 655
353249-0011 ..	INSERT, SINGEL HOLE, EK 153/11	29, 31, 145, 147, 655, 657, 659
353249-0012 ..	INSERT, SINGEL HOLE, EK 154/11	655
353249-0013 ..	INSERT, SINGEL HOLE, EK 154/13	403, 487, 493, 513, 515, 553, 603, 605, 775, 787, 789, 791, 793, 795, 797, 799, 801, 803
353249-0014 ..	INSERT, SINGEL HOLE, EK 154/16	415, 537, 553, 775
353249-0016 ..	INSERT, SINGEL HOLE, EK 155/18	29, 31, 145, 147, 657, 659, 787, 789, 791, 793, 795, 797, 799, 801, 803
353249-0017 ..	INSERT, SINGEL HOLE, HI.TEMP, EK152I7	17, 19
353249-0025 ..	INSERT, MULTI HOLE, E152M3X4	657, 659
353249-0036 ..	INSERT, MULTI HOLE, EK152 M 2X4	679, 685, 687, 787, 789, 791, 793, 795, 797, 799, 801, 803
353249-0037 ..	INSERT, MULTI HOLE, EK155M4X8	421
353249-0051 ..	INSERT, MULTI HOLE, E154M4X8	423, 425
353249-0059 ..	GLAND, INSERT, MULTI HOLE, 4X8	423, 425
353249-0060 ..	INSERT, MULTI HOLE, E155M2X13	423, 425
353249-0061 ..	INSERT, SINGEL HOLE, EK 155/20	145, 147, 553
353249-0065 ..	INSERT, SINGEL HOLE, E152/09	277, 445, 511, 657, 659
353249-0070 ..	INSERT, SINGEL HOLE, E154/16	553
353249-0072 ..	INSERT, SINGEL HOLE, E155/20	553, 655
353249-0075 ..	INSERT, SINGEL HOLE, EK 153/13	553, 787, 789, 791, 793, 795, 797, 799, 801, 803
353249-0084 ..	INSERT, MULTI HOLE, EK 154M4X7,5	421, 423, 425
353249-0301 ..	SEALING PIN, 4X20	657, 659, 679, 685, 687
353249-0304 ..	SEALING PIN, 6X25	423, 425
353249-0307 ..	SEALING PIN, 7,5X20	421
353249-0308 ..	SEALING PIN, 8X20	423, 425
353249-0309 ..	SEALING PIN, 9,3X20	423, 425
353300-0006 ..	SHRINKABLE HOSE	17, 19
359000-0100 ..	MARKING CO01/3"0"	675
359000-0101 ..	MARKING CO01/3"1"	675
359000-0102 ..	MARKING CO01/3"2"	675
359000-0103 ..	MARKING CO01/3"3"	675
359000-0104 ..	MARKING CO01/3"4"	675
359000-0105 ..	MARKING CO01/3"5"	675
359000-0106 ..	MARKING CO01/3"6"	675
359000-0107 ..	MARKING CO01/3"7"	675
359000-0108 ..	MARKING CO01/3"8"	675
359000-0109 ..	MARKING CO01/3"9"	675
359000-0201 ..	MARKING CO02/3"1"	679, 685, 687
359000-0204 ..	MARKING CO02/3"4"	679, 685, 687
359000-0400 ..	MARKING CO2/4"0"	15, 17, 19, 101, 103, 131, 155, 157, 199, 201, 203, 447, 449, 451, 587
359000-0401 ..	MARKING COLLAR 2/4 "1" YELLOW	15, 17, 19, 101, 103, 131, 155, 157, 199, 201, 203, 447, 449, 451, 587
359000-0402 ..	MARKING COLLAR 2/4 "2" YELLOW	101, 103, 131, 155, 157, 199, 201, 203, 447, 449, 451, 587
359000-0403 ..	MARKING COLLAR PA2/4 "3" YELLOW	17, 19, 101, 103, 131, 155, 157, 199, 201, 203, 447, 449, 451
359000-0404 ..	MARKING COLLAR PA2/4 "4" YELLOW	17, 19, 101, 103, 447, 449, 451, 587
359000-0405 ..	MARKING CO2/4"5"	15, 17, 19, 101, 103, 199, 201, 203, 447, 449, 451, 587
359000-0406 ..	MARKING COLLAR PA2/4 "6" YELLOW	17, 19, 101, 103, 199, 201, 203, 447, 449, 451
359000-0407 ..	MARKING COLLAR PA2/4 "7" YELLOW	17, 19, 101, 103, 199, 201, 203, 447, 449, 451
359000-0408 ..	MARKING COLLAR PA2/4 "8" YELLOW	101, 103, 447, 449, 451
359000-0409 ..	MARKING COLLAR PA2/4 "9" YELLOW	101, 103, 155, 157, 447, 449, 451
359000-0771 ..	MARKING CO2/4"V"	101, 103, 155, 157, 199, 201, 203, 447, 449, 451
359011-0807 ..	MARKING PLATES 5-FW 1-50	21, 191, 423, 425, 553, 657, 659, 755, 757, 759, 761, 765, 769, 833
359011-0808 ..	MARKING PLATES 5-FW 51-100	423, 425, 755, 757, 759, 761, 765
359011-0809 ..	MARKING PLATES 5-FW 101-150	657, 659, 755, 757, 759, 761
359011-0810 ..	MARKING PLATES 5-FW 151-200	757, 759, 761
359011-0811 ..	MARKING PLATES 5-FW 201-250	757, 759, 761
359011-0812 ..	SET OF SIGNS 5-FW 251-300	757, 759, 761
359011-0813 ..	SET OF SIGNS 5-FW 301-350	757
359011-0818 ..	SYMBOL 5-GW (-) 50PC	423, 425, 657, 659
359011-0819 ..	MARKING PLATES 5-GW (EARTH)	21, 191, 553, 679, 685, 687, 755, 757, 759, 761, 833
359011-0821 ..	SET OF SIGNS 6-FW 1-50	679, 685, 687
359240-0001 ..	SIGN, NOT ENGRAVED	821, 823
359240-0100 ..	SIGN HOLDER FOR 359240-0001	771, 773, 821, 823, 841
359241-0121 ..	SIGN "STEAM"	821, 823
359241-0122 ..	SIGN, CIP OF STEAM BARRIER SPACE	821, 823
359241-0123 ..	SIGN, TEMP. PRE-STERILIZATION VALVE	821, 823
359241-0125 ..	SIGN, PEROXIDE BATH	821, 823
359241-0126 ..	SIGN, TEMP. AIR KNIFE	821, 823
359241-0130 ..	SIGN, TEMP. AIR SUPER HEATER	821, 823
359241-0131 ..	SIGN, TEMP. LS HEATER	821, 823

Part No	Description	Page No
359241-0132 ..	SIGN, TEMP. STRIP APPLICATOR	841
359241-0133 ..	SIGN, SERVICE SWITCH	821, 823
359241-0135 ..	SIGN, TRANSVERSAL SEALING	841
359241-0140 ..	SIGN "LIGHTING MACHINE"	821, 823
359241-0141 ..	SIGN, PEROXIDE / WATER BATH	821, 823
359241-0180 ..	SIGN "PRODUCTION"	821, 823
359241-0201 ..	SIGN "HOUR GLASS"	821, 823
359241-0268 ..	SIGN	821, 823
359241-0297 ..	SIGN, 400 V, 50 HZ, 63 A	771, 773
359241-0337 ..	SIGN "FLAP HEAT TOP R"	821, 823
359241-0338 ..	SIGN "FLAP HEAT TOP L"	821, 823
359241-0339 ..	SIGN "FLAPPHEAT BOTTOM R"	821, 823
359241-0340 ..	SIGN "FLAPPHEAT BOTTOM L"	821, 823
359241-0439 ..	SIGN"PATCH SEALER"	821, 823
359241-0444 ..	SIGN"TAB RESEAL"	821, 823
359241-0459 ..	SIGN "PT HOUR METER"	821, 823
359241-0460 ..	SIGN "PATCH SEALER 2"	821, 823
359301-0110 ..	SIGN "SHORT STOP"	537, 655
359705-0001 ..	WARNING SIGN ISO, ENTAGLEMENT	603, 605
359705-0003 ..	WARNING SIGN ISO, DANGEROUS CHEMICALS	135
359705-0007 ..	WARNING SIGN ISO, HOT SURFACE	387, 389
359705-0015 ..	WARNING SIGN ISO, RISK OF ELECTRIC SHOCK	29, 31, 145, 147, 347, 349, 387, 389, 537, 553, 655, 679, 685, 687, 805, 807, 819, 827, 829, 835, 837
359710-0001 ..	WARNING SIGN ISO, HOT SURFACE	29, 31, 57, 59, 73, 75, 161, 163
400800-0000 ..	SPRING	533
400828-0000 ..	SPRING	539
400833-0000 ..	PLUNGER	539
401183-0000 ..	GUIDE AXLE	533
401186-0000 ..	HEX NUT	533
401370-0000 ..	BUSHING	533
401371-0000 ..	BUSHING	533
401372-0000 ..	BUSHING	533
434747-0000 ..	BOW CLAMP	621, 639
436927-0000 ..	NUT	621, 639
440252-0000 ..	SLEEVE	601
440253-0000 ..	SLEEVE	601
440259-0000 ..	RETAINING RING	653
440271-0000 ..	SCREW	601
440286-0300 ..	INK UNIT NSS	611, 613, 615
440287-0000 ..	COVER	621
440647-0000 ..	SLEEVE	73, 75
440650-0000 ..	WASHER	89
440655-0000 ..	RING	85
440659-0000 ..	CYLINDRICAL PIN	89
440660-0000 ..	COMPRESSION SPRING	89
440661-0000 ..	COMPRESSION SPRING	89
440662-0000 ..	COMPRESSION SPRING	87
440663-0000 ..	COMPRESSION SPRING	85, 89
440731-0000 ..	PLATE	73, 75
441024-0000 ..	LACE	255
441031-0000 ..	LINK BEARING	345
441077-0000 ..	NOZZLE BRACKET	187
441212-0000 ..	HOLDER	187
441217-0000 ..	BUSHING LOWER	187
441218-0000 ..	BUSHING UPPER	187
441221-0000 ..	WASHER	187
441268-0000 ..	GUIDE	345
441269-0000 ..	GUIDE	345
441304-0400 ..	MOVABLE FORMING RING	11, 13
441307-0300 ..	UPPER TUBE SUPPORT	11, 13
441339-0000 ..	SHAFT	267
441353-0000 ..	TENSION SPRING	273
441355-0000 ..	BLEEDING SCREW	327, 329, 331, 333, 345, 357, 359
441356-0000 ..	BRACKET	255
441360-0000 ..	PLATE	255
441385-0000 ..	HUB	327, 329, 331, 333
441483-0000 ..	CYLINDER BRACKET	127, 129, 141
441486-0400 ..	DIVIDED FORMING RING	11, 13
441501-0000 ..	INSULATION	71
441534-0200 ..	LIGHT FIXTURE	187
441536-0000 ..	GASKET	189
441554-0000 ..	CREASE BAR	611, 613, 615
441556-0001 ..	SPACER	611, 613, 615, 631, 633
441556-0002 ..	SPACER	611, 613, 615, 631, 633
441556-0004 ..	SPACER	611, 613, 615, 631, 633
441556-0006 ..	SPACER	611, 613, 615, 631, 633
441556-0007 ..	SPACER	611, 613, 615
441556-0009 ..	SPACER	611, 613, 615
441556-0010 ..	SPACER	611, 613, 615
441556-0011 ..	SPACER	611, 613, 615
441576-0000 ..	SPACER	65
441578-0001 ..	CYLINDER BRACKET	65
441578-0002 ..	CYLINDER BRACKET	63
441593-0000 ..	GASKET	187

Part No	Description	Page No
441665-0000 ..	FORCE SPRING	205
441677-0000 ..	FRONT PLATE	187
441679-0000 ..	STAIR	235
441695-0500 ..	MACHINE BODY	367
441706-0000 ..	WASHER	337, 339, 341, 343
441718-0000 ..	SPACER	161, 163
441720-0000 ..	SPACER	267
441725-0000 ..	COVERING PLATE	663
441726-0000 ..	COMPRESSION SPRING	305, 307, 309
441727-0000 ..	CUTTING JAW	289, 291, 293, 295
441737-0000 ..	WASHER	161, 163
441739-0000 ..	WASHER	161, 163
441740-0000 ..	HINGE FLANGE	161, 163
441741-0000 ..	HINGE FLANGE	161, 163
441750-0000 ..	YOKE	345
441751-0000 ..	LACE	345
441758-0000 ..	PIPE RIGHT	353
441759-0000 ..	PIPE LEFT	353
441764-0000 ..	SHAFT	327, 329, 331, 333
441792-0000 ..	HEAD	409
441793-0000 ..	BEARING HOUSING	409
441794-0000 ..	PIVOT PIN	409
441795-0000 ..	WASHER	409
441796-0000 ..	SEAL	409
441797-0000 ..	SHIM	409
441800-0000 ..	STRAIGHT FITTING	409
441804-0000 ..	COIL HEATER	691
441811-0100 ..	ROTOR	407, 415
441850-0700 ..	CABLE	367
441871-0000 ..	PENDULUM SUSPENSION	49, 69
441876-0000 ..	ROLL	57, 59
441904-0000 ..	ARM	63
441905-0000 ..	RETARD PIN	235
441918-0000 ..	BRACKET	121, 123
441957-0000 ..	BEARING COVER	45
442237-0000 ..	NUT	139
445533-0000 ..	SIGN	471, 473
445534-0000 ..	SIGN	471, 473
445542-0000 ..	MANTEL RUBBER	621, 639
449939-0001 ..	HEATING ELEMENT 15KW	51, 53
450101-0300 ..	TEARING DEVICE	641
450355-0000 ..	INK ROLLER	621, 639
450500-0000 ..	DOWEL	623
450833-0000 ..	FILTER	97, 99
450837-0000 ..	LID	97, 99
451117-0000 ..	ROLL	121, 123
451148-0000 ..	BRACKET	121, 123
451149-0000 ..	SHAFT	121, 123
451430-0000 ..	CONNECTION HOUS.(MINOR)	51, 53
456002-0000 ..	BEARING	345
456004-0000 ..	SPACER	345
456005-0001 ..	VOLUME BULGE	311, 313, 315, 317
456005-0003 ..	VOLUME BULGE	311, 313, 315, 317
456009-0000 ..	LINK	305, 307, 309
456017-0000 ..	HOSE HOLDER RIGHT	357
456018-0000 ..	HOSE HOLDER LEFT	359
456042-0000 ..	SCREW	105, 107, 109, 111
456128-0000 ..	FORCE SPRING	205
456129-0001 ..	FORCE SPRING	205
456129-0002 ..	FORCE SPRING	205
456137-0000 ..	HOSE	447, 449, 451
456181-0000 ..	SPACER	121, 123
456182-0000 ..	PLATE	121, 123
456199-0000 ..	LOCK PLATE	121, 123
456230-0000 ..	ANGLE BRACKET	121, 123
456263-0000 ..	SHEET	189
456264-0000 ..	GLASS	189
456309-0600 ..	LOWER FORMING RING	11, 13
456311-0000 ..	TORSION SPRING RIGHT	327, 329
456312-0000 ..	TORSION SPRING LEFT	331, 333
456327-0000 ..	CREASE BAR	611, 613, 615
456334-0000 ..	SHAFT	611, 613, 615
456395-0000 ..	GASKET	415
456396-0000 ..	GASKET	415
456407-0000 ..	LACE	199, 201, 203
456455-0600 ..	PIPE WORK	367
456472-0000 ..	ANGLE	29, 31
456474-0000 ..	ADJUSTMENT PLATE	29, 31
456555-0600 ..	SUCTION PIPE	11, 13
456556-0400 ..	PEROXIDE PIPE	11, 13
456744-0000 ..	HUB	269, 271
456755-0000 ..	BLOCK	453
456756-0000 ..	BLOCK	453
456757-0300 ..	AIR INJECTOR	447, 449, 451

Part No	Description	Page No
456760-0003 ..	FOLDING FLAP CAM 200S	297, 299, 301, 303
456760-0010 ..	FOLDING FLAP CAM 200B & 125S	297, 299, 301, 303
456760-0011 ..	FOLDING FLAP CAM 250B	297, 299, 301, 303
456760-0012 ..	FOLDING FLAP CAM	297, 299, 301, 303
456767-0000 ..	CREASE BAR	611, 613, 615, 631, 633
456772-0000 ..	PIVOT BRACKET	639
456773-0000 ..	PIVOT BRACKET	621
456784-0000 ..	LID	29, 31
456794-0000 ..	RING	57, 59
456796-0000 ..	ROLLER	57, 59
456797-0000 ..	AXLE SUPPORT	57, 59
456817-0001 ..	SHIM	611, 613, 615, 631, 633
456827-0400 ..	CONNECTION BOX	187
456836-0600 ..	CLEANING SYSTEM	11, 13
456837-0000 ..	HOLDER	127, 129
456853-0001 ..	PIPE CLAMP	395
456853-0002 ..	PIPE CLAMP	395
456853-0003 ..	PIPE CLAMP	395
456854-0001 ..	CRAMP	395
456854-0002 ..	CRAMP	395
456872-0000 ..	LOCK PLATE	121, 123
456900-0000 ..	PIPE	97, 99
456905-0000 ..	FASTENING PLATE	105, 107, 109, 111
456907-0000 ..	LOCK PLATE	105, 107, 109, 111
456934-0000 ..	SEALING WASHER	255
456976-0700 ..	HEAT EXCHANGER	11, 13
456995-0000 ..	CARRIER	29, 31
456996-0000 ..	ROLLER	57, 59
457358-0000 ..	SLEEVE	601
457367-0000 ..	SHAFT	165, 167
457368-0000 ..	SPRING	165, 167
457696-0001 ..	JOINT PIECE	419
458192-0300 ..	INK UNIT SS	631, 633
458364-0000 ..	COVER	639
464009-0003 ..	BLOCKING PIECE	623
464010-0000 ..	ARM	623
464011-0000 ..	LOCK STUD	623
464012-0000 ..	CURVE	623
464173-0000 ..	LABEL HOLDER	101, 103
464174-0000 ..	SIGN	101, 103
464175-0000 ..	SIGN	101, 103
466074-0002 ..	SLIDER	419
466430-0000 ..	BUSHING	623
466477-0000 ..	INNER PIPE	141
466478-0000 ..	OUTER PIPE	141
466479-0000 ..	PIECE	141
466483-0000 ..	CLAMPING PIECE	141
466484-0000 ..	NET	141
469041-0000 ..	HOLDER	113, 115, 117
469047-0000 ..	ANGLE	113, 115, 117
469078-0000 ..	HOLDER	113, 115, 117
469091-0500 ..	FILLER TUBE	11, 13
469095-0000 ..	HOLDER	187, 483, 593
469096-0000 ..	LEG	187, 483, 593
469121-0400 ..	JUNCTION BLOCK	447, 449, 451
469122-0000 ..	BLOCK	457
469131-0000 ..	LACE	199, 201, 203
469132-0000 ..	PIPE	199, 201, 203
469133-0000 ..	PIPE	199, 201, 203
469141-0000 ..	HOLDER	651
469146-0000 ..	HOSE	205
469159-0000 ..	PIN	57, 59, 543, 545, 547, 549
469336-0000 ..	COVER	189
469337-0000 ..	REFLECTOR	189
469369-0000 ..	YOKECAM 180ML	269, 271
469370-0000 ..	ARMCAM 180ML	269, 271
469374-0600 ..	CABLE TRENCH	11, 13
469384-0100 ..	START-UP KIT	435
469384-0200 ..	START-UP KIT	689
469452-0500 ..	COMPRESSOR UNIT	485
469458-0000 ..	BRACKET	153
469459-0000 ..	BRACKET	153
469460-0000 ..	BRACKET	153
469461-0000 ..	ROLL	153
469463-0000 ..	SHAFT	153
469464-0000 ..	ROLL	153
469466-0000 ..	PLATE	153
469501-0400 ..	AIR NOZZLE	11, 13
469502-0000 ..	SLIDER	193, 195
469745-0000 ..	BRACKET	121, 123
469781-0400 ..	TUBE FLUSHING DEVICE	11, 13
469867-0000 ..	HOSE HOLDER	255
469937-0000 ..	PIPE	187
469964-0000 ..	LID	213

Part No	Description	Page No
469982-0000 ..	WASHER	29, 31
469999-0000 ..	FLANGE	255
476117-0000 ..	CATCH	601
476185-0000 ..	VALVE CONE	87
476220-0000 ..	SPACER	419
476354-0000 ..	CANNULAR TUBE	621
476355-0000 ..	CANNULAR TUBE	639
476356-0000 ..	HOLDER FOR INK BOTTLE	621, 639
476377-0000 ..	SCREW	623
476859-0300 ..	WEAC-VALVE	139
484196-0000 ..	FILTER	97, 99
484197-0000 ..	FILTER	691
486826-0000 ..	SIGN	805, 807
486826-0001 ..	SIGN "EMERGENCY STOP"	145, 147, 537, 655
490518-0000 ..	HOLDER	127, 129
490761-0200 ..	DETERGENT PUMP	435
490768-0000 ..	BOX	445
490769-0000 ..	BRACKET	445
490876-0000 ..	BRACKET	165, 167
490890-0000 ..	NUT PLATE	29, 31
490900-0000 ..	SEALING RING	57, 59
490901-0000 ..	SEAL	57, 59
490902-0000 ..	AXLE SUPPORT	57, 59
490903-0000 ..	SHAFT	57, 59
490916-0000 ..	AXLE PIN	259, 261, 263, 265
490940-0000 ..	CYLINDER	327, 329, 331, 333
490942-0000 ..	COMPRESSION SPRING	327, 329, 331, 333
490943-0000 ..	COMPRESSION SPRING	327, 329, 331, 333
490964-0000 ..	COVER	57, 59
490985-0000 ..	SPACER SHEET	73, 75
490998-0000 ..	THROTTLE SCREW	139
491022-0000 ..	CYLINDER BRACKET	127, 129
491097-0000 ..	HEAT GUARD	47
491128-0000 ..	GASKET	57, 59
491143-0000 ..	BRACKET	153
491153-0000 ..	COMPRESSION GLAND	105, 107, 109, 111
491165-0000 ..	ROLL	263, 265
491166-0000 ..	SHAFT	263, 265
491169-0000 ..	PIVOT ARM	43
491170-0000 ..	COVER	43
491171-0000 ..	BEARING BLOCK	43
491172-0000 ..	GASKET	43
491173-0000 ..	BRACKET	43
491174-0000 ..	ARM	43
491175-0000 ..	LINK	43
491177-0000 ..	ARM	43
491203-0000 ..	STRUT	489
491223-0000 ..	COVER	47
491224-0000 ..	BRACKET	47
491227-0000 ..	SLIDER	369
491228-0001 ..	SHAFT	369
491228-0002 ..	SHAFT	369
491229-0000 ..	BUSHING	369
491230-0000 ..	GRUB SCREW	369
491231-0000 ..	BUSHING	369
491258-0000 ..	DRIVE WHEEL	371
491266-0000 ..	SHIM	401
491274-0000 ..	HUB	255
491291-0000 ..	LID	373
491303-0000 ..	WASHER	489
491304-0000 ..	WASHER	489
491305-0000 ..	CONN.DIAGRAM AIR SUPERH.	51, 53
491319-0000 ..	LACE	263, 265
491349-0000 ..	BEARING SEAT	337, 339, 341, 343
491350-0000 ..	SLIDER	337, 339, 341, 343
491390-0000 ..	PIPE CENTRAL LUBRICATION	199, 201, 203
491409-0000 ..	WASHER	255
491410-0000 ..	LACE	255
491418-0001 ..	O-RING	143, 691
491418-0002 ..	O-RING	57, 59
491441-0000 ..	HOOD	143
491487-0000 ..	BUSHING	43
491536-0200 ..	NON-RETURN VALVE	453
491545-0000 ..	BRACKET	47
491570-0200 ..	DOOR	11, 13
491579-0200 ..	DOOR	11, 13
491602-0000 ..	GASKET HOLDER	57, 59
491649-0000 ..	BRACKET	471, 473
491681-0000 ..	GASKET	335
491770-0000 ..	BUSHING	493
491814-0300 ..	SLEWING BRACKET RIGHT	253
491815-0300 ..	SLEWING BRACKET LEFT	253
491846-0300 ..	TENSION SPROCKET	367
491850-0100 ..	DRIVE WHEEL	367

Part No	Description	Page No
491851-0000 ..	LID	371
491854-0000 ..	PIPE WATER	199, 201, 203
491859-0000 ..	HOLDER	199, 201, 203
491860-0000 ..	HOLDER	199, 201, 203
491868-0000 ..	VOLUME BULGE	311, 313, 315, 317
491880-0000 ..	FASTENING PLATE	165, 167
491918-0000 ..	CAMSEGMENT R	269, 271
491919-0000 ..	CAMSEGMENT L	269, 271
491929-0000 ..	IMPELLER WHEEL	493
491931-0000 ..	SHAFT	43
491965-0000 ..	CAM	611, 613, 615, 631, 633
491976-0300 ..	PHOTOCELL UNIT	11, 13
493652-0100 ..	LID	489, 495
495498-0021 ..	CU-RAIL L=210MM	765
497748-0000 ..	PIN	91, 93
520072-0000 ..	SIGN BOARD	17, 19
526984-0000 ..	SADDLE	625, 627
526985-0000 ..	PLATE	625, 627
526986-0001 ..	SHAFT	625, 627
527649-0000 ..	DISTANCE RUBBER	625, 627
527898-0100 ..	CONTAINER H2O2	499
527906-0000 ..	GASKET	495
529146-0000 ..	ANGLE BRACKET	41
529147-0000 ..	SPRING BRACKET	41
529148-0000 ..	STEERING	41
529149-0000 ..	DOLLY WASHER	41
529362-0000 ..	SPROCKET	625, 627
530587-0000 ..	WASHER	87
530588-0000 ..	SEAL RING	87, 693
530589-0000 ..	SEAL RING	49, 69, 85, 89, 693
530590-0000 ..	VALVE CONE	49, 69, 85, 89
530591-0000 ..	HOLDER	89
530592-0000 ..	SEAL RING HOLDER	85
530595-0000 ..	SEAL RING HOLDER	85
530597-0000 ..	WASHER	89
530598-0000 ..	WASHER	89
530599-0000 ..	RING	49, 69, 89
530600-0100 ..	GUIDING PULLTAB TBA/8	29, 31
531345-0200 ..	PERSONAL PROTECT. EQ H2O2	663
531731-0000 ..	GASKET	51, 53
532117-0000 ..	CLAMP RING	91
532118-0000 ..	CLAMP RING	93
532205-0000 ..	LID	495
532206-0000 ..	GASKET	495
532349-0000 ..	PLAIN BEARING	49, 69
532412-0000 ..	SPRING	677, 681, 683
532655-0000 ..	CAUTION SIGN	501
533169-0000 ..	DIAPHRAGM	85, 693
536374-0000 ..	WASHER	165, 167
536917-0000 ..	AXLE PIN	535
537308-0000 ..	SPRING	621, 639
539212-0000 ..	GASKET	83, 693
540719-0000 ..	WHEEL	629
541070-0000 ..	SHAFT	535
541163-0200 ..	CLAMP RING	83
541164-0200 ..	CLAMP RING	83
541165-0000 ..	WASHER	91, 93
541166-0000 ..	WASHER	85
543135-0000 ..	INK TRANSFER ROLLER	621, 639
543141-0000 ..	SIGN	625, 627
543142-0000 ..	SIGN	625, 627
543143-0100 ..	ADJUSTMENT DEVICE	611, 613, 615, 631, 633
544726-0000 ..	AXLE PIN	535
544906-0000 ..	SOLENOID VALVE	29, 31, 97, 99
546929-0000 ..	FILTER	505, 507
548770-0006 ..	COAXIAL CABLE L=1200 MM	565
551969-0006 ..	COAXIAL CABLES	187
551969-0012 ..	COAXIAL CABLE	841
553586-0000 ..	SPACER	137
553607-0000 ..	SLEEVE	85, 87, 89
554162-0000 ..	SCREW	91, 93
555458-0000 ..	SEALING WASHER	89
555541-0000 ..	BRACKET	141
556133-0000 ..	SEALING WASHER	87
556422-0000 ..	PROTECTION	611, 613, 615, 631, 633
556541-0000 ..	SCREW	581
559810-0101 ..	TMCC2 CONTROLLER	727, 729
560931-0000 ..	BRACKET	17, 19, 29, 31, 97, 99, 505
561427-0000 ..	CONTAINER	501
562118-0000 ..	LID	347, 349
562119-0000 ..	GASKET	347, 349
562120-0000 ..	ARM PRESSURE JAW	337, 339, 341, 343
563286-0000 ..	GASKET	489
563287-0000 ..	WASHER	489

Part No	Description	Page No
565250-0000 ..	WASHER	501
565251-0000 ..	VALVE	501
565462-0100 ..	LOCK PLATE	113, 115, 117
566191-0000 ..	BENDING ROLLER	29, 31
566669-0000 ..	NIPPLE	131
566696-0000 ..	GUIDE CONSOLE	63
566697-0000 ..	AXLE SUPPORT	63
567018-0000 ..	STEAM HOUSE	83
567070-0010 ..	ELECTRODE	97, 99
567070-0011 ..	ELECTRODE	29, 31
567070-0012 ..	ELECTRODE	505
567070-0013 ..	ELECTRODE	97, 99
567070-0014 ..	ELECTRODE	17, 19
567070-0019 ..	ELECTRODE	29, 31
568577-0000 ..	AIR NOZZLE	153
568578-0000 ..	AIR NOZZLE	153
568581-0000 ..	DISTRIBUTOR WING	153
568583-0000 ..	FORK	143
568806-0000 ..	LID	507
568828-0000 ..	FLOAT GUARD	505
571087-0000 ..	RETAINING RING	507
571088-0000 ..	DRAINING	505
571532-0000 ..	BRACKET	47
571533-0000 ..	BRACKET	47
571534-0000 ..	PLATE	105, 107, 109, 111
571535-0000 ..	CANTILEVER	105, 107, 109, 111
571536-0000 ..	CANTILEVER	105, 107, 109, 111
571537-0000 ..	RING	57, 59
571538-0000 ..	RING	57, 59
571539-0000 ..	RING	57, 59
571540-0000 ..	PIN	57, 59
571543-0000 ..	BEARING PLATE	127, 129
571544-0000 ..	BEARING PLATE	127, 129
571871-0000 ..	BUSBAR,RIGHT	347
571872-0000 ..	BUSBAR,LEFT	349
571873-0000 ..	SEAL	347, 349
571874-0000 ..	SEALING PLUG	347, 349
571920-0000 ..	PRESSURE ARM	647
572157-0000 ..	BEARING PANEL	67
572158-0000 ..	BEARING PANEL	67
572252-0000 ..	BRACKET	611, 613, 615, 631, 633
572253-0000 ..	SHEET	611, 613, 615, 631, 633
572254-0000 ..	HANDLE	611, 613, 615, 631, 633
572255-0000 ..	SPACER	611, 613, 615, 631, 633
572294-0000 ..	COLLAR	187
572460-0000 ..	SHEET	611, 613, 615, 631, 633
572485-0000 ..	BRACKET	131
572486-0000 ..	PISTON	131
572487-0000 ..	THROTTLING	131
572642-0200 ..	TRANSFER	287
572643-0200 ..	TRANSFER	287
574333-0000 ..	ROLL	57, 59
574334-0000 ..	RING	57, 59
574335-0000 ..	RING	57, 59
574336-0000 ..	SEAL	57, 59
574337-0000 ..	BRACKET	127, 129
574341-0000 ..	FORK	127, 129
574346-0000 ..	ROLL	127, 129
574347-0000 ..	COUNTER ROLLER	127, 129
574365-0000 ..	VOLUMEFLAP 250S	311, 313, 315, 317
574366-0000 ..	VOLUME SHIM	311, 313, 315, 317
574367-0000 ..	VOLUME BULGE	311, 313, 315, 317
574369-0000 ..	CARRIER RULER RIGHT	289, 291
574370-0000 ..	CARRIER RULER RIGHT	289, 291
574371-0000 ..	CARRIER RULER LEFT	293, 295
574372-0000 ..	CARRIER RULER LEFT	293, 295
574385-0000 ..	ROLLER TBA250SL	355
574386-0000 ..	CUTTING JAW	289, 291, 293, 295
574393-0000 ..	LOCK PLATE	121, 123
574395-0000 ..	SHAFT	121, 123
574396-0000 ..	BRACKET	121, 123
574397-0000 ..	ROLL	121, 123
574398-0000 ..	ROLL	121, 123
574399-0000 ..	ROLL	121, 123
574400-0000 ..	ROLL	121, 123
574401-0000 ..	ROLL	121, 123
574402-0000 ..	ROLL	121, 123
574403-0000 ..	ROLL	121, 123
574404-0000 ..	BRACKET	105, 107, 109, 111
574415-0000 ..	INDICATOR 250S	55
574416-0000 ..	BRACKET	113, 115, 117
574417-0000 ..	ROLL	113, 115, 117
574418-0000 ..	ROLL	113, 115, 117
574426-0000 ..	RULER	651

Part No	Description	Page No
574427-0000 ..	RULER	651
574428-0000 ..	RULER	651
574443-0000 ..	SHAFT	611, 613, 615
574444-0000 ..	SPACER	611, 613, 615
574445-0000 ..	CANTILEVER	611, 613, 615
574449-0000 ..	SLIDER	193, 195
574452-0000 ..	PROTECTION	193, 195
574456-0000 ..	BRACKET	121, 123
574479-0000 ..	ROLL	105, 107, 109, 111
574480-0000 ..	ROLL	105, 107, 109, 111
574481-0000 ..	ROLL	105, 107, 109, 111
574494-0000 ..	FOLDING FLAP CAM	297, 299, 301, 303
574932-0000 ..	BENDING ROLLER	603, 605
574937-0000 ..	SHAFT	603, 605
574940-0000 ..	BLOCKING PIECE	603, 605
574945-0000 ..	TOOTHED PULLY	603, 605
574946-0000 ..	FLAG	603, 605
576274-0000 ..	BRACKET	603, 605
576286-0000 ..	HOLDER	471, 473
576287-0000 ..	PIPE	459, 461
576293-0000 ..	PIPE	447, 449, 451
576294-0000 ..	JUNCTION BLOCK	471, 473
576434-0200 ..	AP-VALVE 51-38	73, 75
576436-0100 ..	A-CYLINDER	83
576437-0100 ..	C-CYLINDER	83
576438-0100 ..	B-CYLINDER	83
576439-0000 ..	CYLINDER HOUSING	85, 89
576440-0000 ..	END SECTION	85, 89
576441-0000 ..	PISTON	85, 89
576442-0000 ..	PISTON ROD	89
576443-0000 ..	CYLINDER HOUSING	87
576444-0000 ..	END SECTION	87
576445-0000 ..	PISTON	87
576446-0000 ..	PISTON ROD	85
576447-0000 ..	PISTON ROD	87
576448-0000 ..	SPACER	85
576449-0000 ..	SPACER	85
576450-0000 ..	SPACER	89
576451-0000 ..	SPACER	87
577211-0000 ..	VOLUMEFLAP 160 ML	311, 313, 315, 317
577212-0000 ..	VOLUME SHIM	311, 313, 315, 317
577213-0000 ..	VOLUME BULGE 160 ML	311, 313, 315, 317
577217-0000 ..	YOKECAM 160ML	269, 271
577218-0000 ..	ARMCAM 160ML	269, 271
577219-0000 ..	CAMSEGMENT R	269, 271
577220-0000 ..	CAMSEGMENT L	269, 271
577225-0000 ..	FOLDING FLAP CAM	297, 299, 301, 303
577360-0000 ..	CANTILEVER	73, 75
577462-0000 ..	CABLE TRENCH	145, 147
577463-0000 ..	CABLE TRENCH	145, 147
577467-0000 ..	LID	145, 147
577468-0000 ..	LID	145, 147
577469-0000 ..	LID	145, 147
577470-0000 ..	LID	145, 147
577541-0000 ..	TUBE 90	101, 103
577542-0000 ..	TUBE 90	101, 103
577769-0000 ..	EXTENSION PIPE	493
577770-0000 ..	GASKET	493
577771-0000 ..	SHAFT	493
577773-0000 ..	GASKET	489
577782-0000 ..	TUBE 200	101, 103
577783-0000 ..	TUBE 201	101, 103
577784-0000 ..	TUBE260	101, 103
577785-0000 ..	TUBE 261	101, 103
577786-0000 ..	TUBE 240	101, 103
577787-0000 ..	TUBE 241	101, 103
577788-0000 ..	TUBE 80	101, 103
577789-0000 ..	TUBE 90	101, 103
577790-0000 ..	TUBE 70	101, 103
577791-0000 ..	TUBE 40	101, 103
577798-0000 ..	GUIDING ARBOR	607
577799-0000 ..	SHAFT	607
577800-0200 ..	PAPER GUIDE	603, 605
577822-0200 ..	PRESSURE REGULATOR GROUP	447, 449, 451
577824-0200 ..	COOL WATER VALVE	447, 449, 451
577825-0200 ..	HOT WATER VALVE	447, 449, 451
577832-0000 ..	PIPE	447, 449, 451
578000-0000 ..	BRACKET	631, 633
578001-0000 ..	SCREW	631, 633
578002-0000 ..	TUBE 190	101, 103
578003-0000 ..	TUBE 191	101, 103
578004-0000 ..	TUBE 211	101, 103
578005-0000 ..	TUBE 213	101, 103
578008-0000 ..	TUBE 250	101, 103

Part No	Description	Page No
578009-0000 ..	TUBE 251	101, 103
578013-0000 ..	TUBE 213 AND 211	101, 103
578015-0000 ..	TUBE 1071	101, 103
578017-0000 ..	TUBE 190	101, 103
578018-0000 ..	TUBE 191	101, 103
578019-0000 ..	TUBE40	97, 99
578020-0000 ..	TUBE 70	101, 103
578021-0000 ..	TUBE 1071	101, 103
578022-0000 ..	TUBE 211	101, 103
578023-0000 ..	TUBE 213	101, 103
578026-0000 ..	PIPE	97, 99
578027-0000 ..	CRAMP	101, 103
578028-0000 ..	BRACKET	101, 103
578030-0000 ..	GASKET	101, 103
578031-0000 ..	VALVE HOUSING	141
578035-0000 ..	LID	145, 147
578091-0000 ..	BRANCH PIPE	205
578104-0000 ..	SHEET	347, 349
578480-0000 ..	BRACKET	73, 75
578486-0000 ..	WHEEL	29, 31
578490-0000 ..	LID	29, 31
578491-0000 ..	LID	29, 31
578492-0000 ..	LID	29, 31
578493-0000 ..	SHAFT	29, 31
578494-0000 ..	O-RING	29, 31, 691
578495-0000 ..	O-RING	29, 31, 691
578496-0000 ..	LID	145, 147
578500-0000 ..	PIPE	145, 147
578676-0000 ..	RAIL	191
578685-0000 ..	GUIDING ARBOR	607
578686-0000 ..	GUIDING ARBOR	607
578687-0000 ..	GUIDING ARBOR	607
579241-0200 ..	DATING UNIT	591
579553-0000 ..	SHAFT	533, 563
579623-0000 ..	PROTECTIVE CASING	275
579624-0000 ..	GASKET	275
579625-0100 ..	PROTECTIVE GRATING	11, 13
579626-0000 ..	TOUCH GUARD	169, 171
579627-0000 ..	TOUCH GUARD	169, 171
579628-0000 ..	TOUCH GUARD	169, 171
579629-0000 ..	TOUCH GUARD	169, 171
579630-0000 ..	BRACKET	169, 171
579631-0000 ..	BRACKET	169, 171
579632-0000 ..	BRACKET	169, 171
579633-0000 ..	BRACKET	169, 171
579634-0000 ..	BRACKET	169, 171
579635-0000 ..	BRACKET	169, 171
579636-0000 ..	BRACKET	169, 171
579637-0000 ..	CATCH	137
579765-0000 ..	MACHINE SIGN CE	663
579771-0000 ..	CATCH	137
579899-0000 ..	LIFTING UNIT	663
580036-0200 ..	STRIP APPLICATOR	525
580037-0200 ..	STRIP MAGAZINE	525
580038-0200 ..	INDUCTOR	555, 557
580042-0100 ..	HUB JUMBO	527, 529
580044-0200 ..	SPLICING MAGAZINE	527, 529
580055-0000 ..	ARM	533
580060-0200 ..	BRAKE ARM	527, 529
580064-0200 ..	CONNECTION BOX	527, 529
580329-0200 ..	PUSH BUTTON BOX	527, 529
580335-0200 ..	PIPE WORK-PNEUMATIC	575
580356-0000 ..	YOKECAM 250ML SLIM	269, 271
580357-0000 ..	ARMCAM 250ML SLIM	269, 271
580358-0000 ..	CAM SEGMENT L	269, 271
580359-0000 ..	CAM SEGMENT R	269, 271
580363-0000 ..	PIPE 71	101, 103
580364-0000 ..	PIPE 71	101, 103
580993-0000 ..	WATER DIAGRAM	447, 449, 451
581015-0000 ..	PIPE 91	101, 103
581016-0000 ..	PIPE 91	101, 103
581341-0000 ..	TOUCH GUARD	25
581533-0000 ..	YOKE CAM 284ML	269, 271
581534-0000 ..	ARM CAM 284ML	269, 271
581535-0000 ..	CAMSEGMENT R 284ML	269, 271
581536-0000 ..	CAMSEGMENT L 284ML	269, 271
582162-0000 ..	FOLDING FLAP CAM	297, 299, 301, 303
582163-0000 ..	VOLUME FLAP 330S	311, 313, 315, 317
582164-0000 ..	VOLUME CAM R 330S	353
582165-0000 ..	VOLUME CAM R WIDE 330S	353
582166-0000 ..	VOLUME CAM L 330S	353
582167-0000 ..	VOLUME CAM L WIDE 330S	353
582195-0000 ..	ARM CAM 330S	269, 271
582197-0000 ..	YOKE CAM 330S	269, 271

Part No	Description	Page No
582199-0000 ..	CAM SEGMENT RIGHT	269, 271
582200-0000 ..	CAM SEGMENT LEFT	269, 271
582433-0000 ..	LID	29, 31
583683-0000 ..	SHAFT	583
583684-0000 ..	AXLE SUPPORT	583
583685-0000 ..	BEARING SEAT	583
583735-0000 ..	PIN	581
583737-0000 ..	ROLLER	581
583738-0000 ..	ROLLER	581
583749-0000 ..	PIN	581
583878-0000 ..	SPRING BRACKET	535
589432-0000 ..	SCREW	581
589449-0000 ..	NOZZLE	155, 157
589885-0100 ..	TEMPLATE HOUSE/BENDING ROLLER	871
589908-0000 ..	BLOCKING PIECE	871
589909-0000 ..	BLOCKING PIECE	871
589910-0000 ..	BEAM	873
590205-0000 ..	PIN	871, 873
590206-0000 ..	BLOCK	873
590207-0000 ..	BLOCKING PIECE	873
590208-0000 ..	BLOCKING PIECE	873
590215-0000 ..	SUPPORT	871
590216-0000 ..	ROLLER	871
590217-0000 ..	SHEET	871
590218-0000 ..	GUIDE	871
590219-0000 ..	PIN	873
590221-0000 ..	BLOCK	871
595430-0200 ..	LIGHT FIXTURE	239
597874-0000 ..	RAIL RIGHT	235
597875-0000 ..	RAIL LEFT	235
597888-0000 ..	BRACKET	235
597889-0000 ..	BRACKET	235
598762-0200 ..	LADDER	185
732419-0004 ..	RAIL	815
732419-0007 ..	RAIL	815
736514-0000 ..	SHOCK ABSORBER	95, 179, 691
751009-0000 ..	INSULATION	51, 53
751010-0000 ..	GASKET	153
751015-0000 ..	GASKET	47
751016-0000 ..	GASKET	25
751018-0000 ..	WASHER	47
751019-0000 ..	WASHER	43
751020-0000 ..	GASKET	43
751023-0000 ..	GASKET	43, 47
751024-0000 ..	GASKET	153
751078-0000 ..	BRACKET RIGHT	263
751079-0000 ..	BRACKET LEFT	265
751085-0000 ..	BUSHING	187
751086-0000 ..	NIPPLE	455
751109-0000 ..	RAIL RIGHT	401
751110-0000 ..	RAIL LEFT	401
751131-0000 ..	SHAFT	57, 59
751132-0000 ..	SHAFT	63
751165-0000 ..	BUSHING	65
751212-0000 ..	ARM	259, 261, 263, 265
751220-0000 ..	FILLER CAP	489
751223-0000 ..	LID	495
751230-0000 ..	PLAIN BEARING	57, 59
751245-0000 ..	FLANGE	255
751267-0000 ..	CANTILEVER	113, 115, 117
751283-0000 ..	ROLL	113, 115, 117
751284-0000 ..	ROLL	113, 115, 117
751287-0000 ..	PLATE	113, 115, 117
751288-0000 ..	PLATE	113, 115, 117
751316-0000 ..	ELBOW PIPE	493
751318-0000 ..	SHAFT	121, 123
751331-0000 ..	GASKET	29, 31
751333-0000 ..	SETTING PLATE	105, 107, 109, 111
751334-0000 ..	SPACER	105, 107, 109, 111
751373-0300 ..	PEROXIDE TANK	485
751393-0300 ..	PEROXIDE PUMP	489
751395-0000 ..	FLANGE	493
751398-0400 ..	TANK	485
751403-0000 ..	BRACKET	495
751456-0000 ..	HOLDER	165, 167
751457-0000 ..	CANTILEVER	165, 167
751476-0000 ..	CANTILEVER	165, 167
751491-0000 ..	ROLL	105, 107, 109, 111
751492-0000 ..	ROLL	105, 107, 109, 111
751494-0000 ..	ROLL	105, 107, 109, 111
751495-0000 ..	ROLL	121, 123
751496-0000 ..	ROLL	121, 123
751497-0000 ..	ROLL	121, 123
751498-0000 ..	ROLL	121, 123

Part No	Description	Page No
751499-0000 ..	ROLL	121, 123
751500-0000 ..	ROLL	121, 123
751501-0000 ..	ROLL	121, 123
751502-0000 ..	ROLLER	127, 129
751503-0000 ..	COUNTER ROLLER	127, 129
751575-0000 ..	RULERPART R	289, 291
751576-0000 ..	RULERPART L	293, 295
751577-0000 ..	RULERPART R	289, 291
751578-0000 ..	RULERPART L	293, 295
751579-0000 ..	ADJUSTING SCREW	289, 291, 293, 295
751580-0000 ..	SHIM	289, 291, 293, 295
751680-0000 ..	SCREW	29, 31
751718-0100 ..	HOLDER	611, 613, 615, 631, 633
751722-0000 ..	PIPE-LINE	153
751730-0000 ..	LOCKING CIRCLIP	57, 59
751731-0000 ..	BEARING COVER	45
751732-0000 ..	BRACKET	45
751733-0000 ..	HEATING PIPE	47
751743-0000 ..	PISTON	327, 329, 331, 333
751769-0000 ..	SLEEVE	327, 329, 331, 333
752009-0000 ..	RULERPART R	289, 291
752010-0000 ..	RULERPART R	289, 291
752011-0000 ..	RULERPART L	293, 295
752012-0000 ..	RULERPART L	293, 295
752014-0000 ..	RULERPART R	289, 291
752015-0000 ..	RULERPART R	289, 291
752016-0000 ..	RULERPART L	293, 295
752017-0000 ..	RULERPART L	293, 295
752038-0000 ..	SHIM	127, 129
752047-0000 ..	BUSHING	127, 129
752085-0000 ..	SPRING	607
752115-0000 ..	PLUNGER	289, 291, 293, 295
752126-0000 ..	FORMING ROLLER	105, 107, 109, 111
752127-0000 ..	FORMING ROLLER	105, 107, 109, 111
752128-0000 ..	FORMING ROLLER	105, 107, 109, 111
752129-0000 ..	FORMING ROLLER	113, 115, 117
752130-0000 ..	FORMING ROLLER	113, 115, 117
752131-0000 ..	FORMING ROLLER	121, 123
752132-0000 ..	FORMING ROLLER	121, 123
752133-0000 ..	FORMING ROLLER	121, 123
752134-0000 ..	FORMING ROLLER	121, 123
752135-0000 ..	FORMING ROLLER	121, 123
752136-0000 ..	FORMING ROLLER	121, 123
752137-0000 ..	FORMING ROLLER	121, 123
752138-0000 ..	FORMING ROLLER	127, 129
752140-0000 ..	COUNTER ROLLER	127, 129
752141-0000 ..	FORMING ROLLER	105, 107, 109, 111
752142-0000 ..	FORMING ROLLER	105, 107, 109, 111
752143-0000 ..	FORMING ROLLER	105, 107, 109, 111
752144-0000 ..	FORMING ROLLER	113, 115, 117
752145-0000 ..	FORMING ROLLER	113, 115, 117
752146-0000 ..	FORMING ROLLER	121, 123
752147-0000 ..	FORMING ROLLER	121, 123
752148-0000 ..	FORMING ROLLER	121, 123
752149-0000 ..	FORMING ROLLER	121, 123
752150-0000 ..	FORMING ROLLER	121, 123
752151-0000 ..	FORMING ROLLER	121, 123
752152-0000 ..	FORMING ROLLER	121, 123
752153-0000 ..	FORMING ROLLER	127, 129
752155-0000 ..	COUNTER ROLLER	127, 129
752156-0000 ..	FLANGE BUSHING	105, 107, 109, 111, 121, 123
752174-0000 ..	HEATING PIPE	43
752185-0000 ..	SHAFT	121, 123
752186-0001 ..	SHAFT	113, 115, 117
752186-0002 ..	SHAFT	105, 107, 109, 111
752186-0003 ..	SHAFT	121, 123, 127, 129
752186-0004 ..	SHAFT	113, 115, 117, 121, 123, 127, 129
752186-0005 ..	SHAFT	105, 107, 109, 111, 121, 123, 127, 129
752186-0006 ..	SHAFT	105, 107, 109, 111, 121, 123
752186-0007 ..	SHAFT	121, 123
752186-0008 ..	SHAFT	105, 107, 109, 111
752186-0009 ..	SHAFT	105, 107, 109, 111
752186-0010 ..	SHAFT	113, 115, 117
752186-0011 ..	SHAFT	113, 115, 117
752186-0012 ..	SHAFT	113, 115, 117, 127, 129
752187-0000 ..	SHAFT	105, 107, 109, 111
752200-0000 ..	CANTILEVER	611, 613, 615, 631, 633
752212-0000 ..	VOLUME FLAP 200 ML	311, 313, 315, 317
752218-0000 ..	ATTACHMENT	153
752237-0000 ..	SPRING	611, 613, 615, 631, 633
752240-0000 ..	LID	611, 613, 615, 631, 633
752282-0000 ..	CONNECTION RIGHT	327, 329
752283-0000 ..	CONNECTION LEFT	331, 333
752284-0000 ..	SHAFT	327, 329, 331, 333

Part No	Description	Page No
752288-0000 ..	SLEEVE	289, 291, 293, 295
752289-0000 ..	CLAMP RIGHT	327, 329
752290-0000 ..	CLAMP LEFT	331, 333
752292-0000 ..	VOLUMEFLAP 180 ML	311, 313, 315, 317
752425-0000 ..	LINK	319, 321, 323, 325
752476-0000 ..	SCREW	289, 291, 293, 295, 327, 329, 331, 333
752495-0300 ..	ATTACHMENT	135
752499-0000 ..	RING	137
752519-0002 ..	PIN	57, 59
752526-0000 ..	PLATE	611, 613, 615, 631, 633
752527-0000 ..	CANTILEVER	611, 613, 615, 631, 633
752528-0000 ..	COVER	611, 613, 615, 631, 633
752529-0000 ..	BEARING COVER	611, 613, 615, 631, 633
752530-0000 ..	SPROCKET	611, 613, 615, 631, 633
752531-0000 ..	BRACKET	611, 613, 615, 631, 633
752534-0000 ..	PLATE	611, 613, 615, 631, 633
752535-0000 ..	SHAFT	611, 613, 615, 631, 633
752536-0001 ..	SHAFT	611, 613, 615, 631, 633
752536-0002 ..	SHAFT	611, 613, 615
752536-0003 ..	SHAFT	611, 613, 615
752538-0000 ..	SHAFT	611, 613, 615, 631, 633
752539-0000 ..	PLATE	611, 613, 615, 631, 633
752541-0000 ..	CANTILEVER	611, 613, 615, 631, 633
752542-0001 ..	BENDING ROLLER	611, 613, 615, 631, 633
752542-0002 ..	BENDING ROLLER	611, 613, 615
752542-0003 ..	BENDING ROLLER	611, 613, 615
752543-0001 ..	SHAFT	611, 613, 615, 631, 633
752543-0002 ..	SHAFT	611, 613, 615
752543-0003 ..	SHAFT	611, 613, 615
752544-0001 ..	SHIM	611, 613, 615, 631, 633
752544-0002 ..	SHIM	611, 613, 615, 631, 633
752554-0000 ..	SPACER	165, 167
752556-0000 ..	SPACER	319, 321, 323, 325
752559-0000 ..	STOP PERF 1	319, 321
752560-0000 ..	STOP PERF 2	323, 325
752561-0000 ..	STOP PERF 1	319, 321
752562-0000 ..	STOP PERF 2	323, 325
752563-0000 ..	STOP PERF 1	319, 321
752564-0000 ..	STOP PERF 2	323, 325
752576-0000 ..	CONTAINER	97, 99
752598-0000 ..	SHAFT	311, 313, 315, 317
752615-0000 ..	SPACER	311, 313, 315, 317
752642-0000 ..	BRACKET	611, 613, 615, 631, 633
752644-0000 ..	SCREW	611, 613, 615, 631, 633
752645-0400 ..	DATING UNIT	609
752646-0400 ..	DATING UNIT	609
752671-0100 ..	SHOCK ABSORBER	287
752672-0100 ..	SHOCK ABSORBER	287
752673-0000 ..	SPACER	319, 321, 323, 325
752675-0000 ..	PIPE	97, 99
752676-0000 ..	PIPE	97, 99
752678-0000 ..	SPRING PERF 1	319, 321
752679-0000 ..	SPRING PERF 2	323, 325
752680-0000 ..	SLEEVE	319, 321, 323, 325
752681-0000 ..	WASHER	319, 321, 323, 325
752739-0000 ..	VOLUME BULGE	311, 313, 315, 317
752774-0000 ..	PLUNGER	269, 271
752857-0000 ..	POINTER	55
752858-0000 ..	POINTER	55
752859-0000 ..	POINTER	55
752999-0000 ..	VOLUME FLAP 200S	311, 313, 315, 317
777150-0801 ..	KEY SET ,SEXKANT	671
779910-0101 ..	PADLOCK	667
925877-0000 ..	SUPPORT	179
925991-0200 ..	LEVEL PROBE	11, 13
925998-0000 ..	DIAPHRAGM	95, 691
925999-0000 ..	PROTECTION PIPE	179
926820-0000 ..	PLUG	179
926822-0000 ..	GASKET	691
926906-0000 ..	SPACER	95
926907-0000 ..	SCREW	95
926909-0000 ..	COMPRESSION SPRING	95
926934-0000 ..	SUPPORT	95
927007-0000 ..	SHUTTER	95
927044-0000 ..	SPACER	95
927081-0000 ..	SUPPORT	27
927194-0000 ..	BODY	95
927203-0000 ..	COVER	95
927205-0200 ..	REGULATING VALVE	73, 75
927421-0003 ..	O-RING 13.3X2.4 SILICON	29, 31, 97, 99
927421-0004 ..	O-RING 15.3X2.4 SILICON	29, 31, 97, 99, 505
927421-0005 ..	O-RING 7.3X2.4 SILICON	499
927421-0006 ..	O-RING 17.3X2.4 SILICON	691
927422-0001 ..	O-RING 19.2X3 SILICON	387, 389

Part No	Description	Page No
927422-0003 ..	O.RING 24.2X3 SILICON	501, 691
927422-0004 ..	O-RING 29.2X3 SILICON	493
927422-0007 ..	O-RING 44.2X3 SILICON	489, 493
927422-0008 ..	O-RING 49.5X3 SILICON	131, 691
927422-0009 ..	O-RING 54.5X3 SILICON	495
927422-0011 ..	O-RING 69.5X3 SILICON	97, 99
927422-0014 ..	O-RING 34.2X3 SILICON	29, 31, 489
927422-0015 ..	O-RING 39.2X3 SILICON	131
929402-0000 ..	ARM	297, 299, 301, 303
929413-0000 ..	SIGN	471, 473
929415-0100 ..	BALANCE TANK	447, 449, 451
929438-0100 ..	ARM	253
929444-0000 ..	PIN	269, 271
970802-0000 ..	DISCETTE BOX 3,5"	785
971140-0000 ..	PHASE BAR ANGLED	815
971141-0000 ..	PHASE BAR ANGLED	815
971142-0000 ..	PHASE BAR ANGLED	815
975917-0000 ..	KEY FOR SAFETY SWITCH 90044-103	597, 599
977527-0000 ..	BRACKET	431, 505
978010-0000 ..	SIGN BOARD	227, 229
978031-0000 ..	VOLUMEFLAP 284 ML	311, 313, 315, 317
978184-0000 ..	STOPPER	297, 299, 301, 303
978185-0000 ..	SHIM	297, 299, 301, 303
978207-0000 ..	SPACER PIPE	275
978209-0000 ..	NUT	275
978235-0000 ..	VALVE PLATE	17, 19
978262-0000 ..	GUIDE PIN	269, 271
978272-0000 ..	BRACKET	259, 261, 263, 265
978275-0000 ..	BEARING HOLDER	259, 261, 263, 265
978340-0000 ..	SPACER	269, 271
978366-0000 ..	VOLUME FLAP 250 ML	311, 313, 315, 317
978380-0000 ..	BLIND PLUG	27
978381-0000 ..	WASHER 56X2MM	27
978440-0000 ..	CRAMP	23
978462-0000 ..	PROTECTION PLATE	63
978531-0000 ..	BRACKET	57, 59
978532-0000 ..	BRACKET	57, 59
978539-0000 ..	CABLE CONDUIT	145, 147
978540-0000 ..	CABLE CONDUIT	145, 147
978542-0000 ..	FRAME	161
978543-0000 ..	FRAME	163
978603-0000 ..	SIGN	471, 473
978609-0000 ..	ALIGNMENT TEMPLATE	269, 271
978714-0000 ..	CARRIER LEFT	293, 295
978715-0000 ..	CARRIER RIGHT	289, 291
978735-0000 ..	FASTENING PLATE	165, 167
978736-0000 ..	BRACKET	43
978745-0000 ..	CATCH	289, 291, 293, 295
978746-0000 ..	CATCH	327, 329, 331, 333
978756-0000 ..	PIN	355
978757-0000 ..	ROLLER 180-284ML	355
978758-0000 ..	ROLLER 125ML	355
978760-0000 ..	ROLLER TBA200SL	355
978768-0000 ..	YOKECURVE200ML	269, 271
978769-0000 ..	ARMCURVE 200ML	269, 271
978770-0000 ..	CAMSEGMENTL	269, 271
978771-0000 ..	CAMSEGMENTL	269, 271
978772-0000 ..	YOKECURVE 200SL	269, 271
978773-0000 ..	ARMCURVE 200SL	269, 271
978774-0000 ..	CAMSEGMENT R	269, 271
978775-0000 ..	CAMSEGMENT L	269, 271
978776-0000 ..	YOKECURVE 250ML	269, 271
978777-0000 ..	ARMCURVE 250ML	269, 271
978778-0000 ..	CAMSEGMENT R	269, 271
978779-0000 ..	CAMSEGMENT L	269, 271
978790-0000 ..	BRACKET	121, 123
978791-0000 ..	HOLDER	113, 115, 117
978792-0000 ..	PLATE	105, 107, 109, 111
978793-0000 ..	YOKECURVE 125ML	269, 271
978794-0000 ..	ARMCURVE 125ML	269, 271
978795-0000 ..	CAMSEGMENT R	269, 271
978796-0000 ..	CAMSEGMENT L	269, 271
978823-0200 ..	CENTRAL LUBRICATION	435
978834-0200 ..	PEROXID AND STERILESYSTEM	435
978835-0200 ..	PIPE WORK	485
978838-0000 ..	HEAT EXCHANGER	139
978865-0000 ..	HOUSE	57, 59
978870-0000 ..	BEARING PLATE	57, 59
978871-0000 ..	BEARING PLATE	57, 59
978872-0000 ..	LOCK WASHER	57, 59
978876-0000 ..	SHAFT	651
978877-0000 ..	SHAFT	651
978879-0000 ..	CONTAINER	71
978953-0000 ..	BRACKET	509

Part No	Description	Page No
978956-0000 ..	LID	505
978963-0000 ..	PIPE	487
978970-0000 ..	METERING DEVICE	495
978971-0000 ..	DISCHARGE TRAY	71
978972-0000 ..	DISCHARGE TRAY	71
978973-0001 ..	HOSE	489
978973-0003 ..	HOSE	505
978988-0200 ..	SEPARATOR	485
978989-0200 ..	SCRUBBER	485
978996-0000 ..	BRANCH PIPE	69
979026-0200 ..	WATER CIRCULATION	485
979028-0000 ..	PIPE	139
979031-0000 ..	PIPE	139
979069-0000 ..	PIPE	487
979109-0000 ..	HOLDER	139
979204-0000 ..	PLATE	651
979215-0200 ..	COVER PLATE	435
979216-0200 ..	MACHINE BODY	435
979217-0000 ..	PIPE	445
979219-0000 ..	SPACER PIPE	475, 477, 479
979247-0000 ..	HOUSE	25
979254-0000 ..	SUPPORT	27
979279-0000 ..	COVER HOUSING	503
979280-0000 ..	COVER	503
979300-0000 ..	PIPE	499
979326-0000 ..	FLOAT	177
979328-0200 ..	CABINET	485
979329-0200 ..	FILLING UNIT	499
979330-0000 ..	FLOATER	177
979336-0000 ..	HOSE NIPPLE	489
979368-0000 ..	HOLDER	177
979381-0100 ..	PAPER REEL HOLDER	591
979382-0000 ..	SHAFT	653
979421-0000 ..	SIGN	471, 473
979434-0000 ..	FERRULE	95
979446-0000 ..	HOLDER	471, 473
979474-0000 ..	BRACKET	17, 19
979475-0000 ..	CONNECTION BOX	21
979476-0000 ..	RAIL	21
979486-0000 ..	LUBRICATING PIPE	199, 201, 203
979500-0001 ..	ELECTRODE	29, 31
979506-0000 ..	TOUCH GUARD	169, 171
979543-0000 ..	SPLASH PLATE	631, 633
979544-0000 ..	SPLASH PLATE	611, 613, 615
979548-0000 ..	MACHINE PLATE	663, 767
979555-0000 ..	WEB TENSION ROLLER	603, 605
979559-0000 ..	HINGE	29, 31
979575-0000 ..	ROLLER PLATE	563
979576-0000 ..	AXLE PIN	533
979578-0000 ..	AXLE PIN	533
979582-0000 ..	ROLLER	581
979667-0000 ..	ARM	543, 545, 547, 549
979668-0000 ..	FINGER	543, 545, 547, 549
979669-0000 ..	FORCE PLATE	543, 545, 547, 549
979701-0000 ..	CABLE CONDUIT	631, 633
979709-0000 ..	BENDING ROLLER	611, 613, 615, 631, 633
979722-0000 ..	BLOCK	45
979728-0000 ..	CATCH	137
979751-0000 ..	VOLUME FLAP 100	311, 313, 315, 317
979754-0000 ..	VOLUME SHIM 100	311, 313, 315, 317
979755-0000 ..	VOLUME BULGE 100	311, 313, 315, 317
979756-0000 ..	SHAFT	311, 313, 315, 317
979757-0000 ..	SPACER	311, 313, 315, 317
979758-0000 ..	STOP PERF 1	319, 321
979759-0000 ..	STOP PERF 2	323, 325
979760-0000 ..	SPACER	319, 321, 323, 325
979761-0000 ..	SLEEVE	319, 321, 323, 325
979763-0000 ..	CARRIER LEFT 100	293, 295
979764-0000 ..	CARRIER RIGHT 100	327, 329
979765-0000 ..	CARRIER LEFT 100	331, 333
979769-0000 ..	SPACER	611, 613, 615
979770-0000 ..	FOLDING FLAP CAM 100	297, 299, 301, 303
979771-0000 ..	COUNTER CAM 100	297, 299, 301, 303
979772-0000 ..	VOLUME CAM L 100	353
979773-0000 ..	VOLUME CAM L WIDE 100	353
979774-0000 ..	VOLUME CAM R 100	353
979775-0000 ..	VOLUME CAM R WIDE 100	353
979778-0000 ..	YOKE CAM 100	269, 271
979779-0000 ..	ARM CAM 100	269, 271
979780-0000 ..	CAM SEGMENT R 100	269, 271
979781-0000 ..	CAM SEGMENT L 100	269, 271
979783-0000 ..	PLATE	651
979784-0000 ..	SHAFT	647
979788-0000 ..	SPRING HOLDER	611, 613, 615, 631, 633

Part No	Description	Page No
979789-0000 ..	SPRING HOLDER	611, 613, 615, 631, 633
979790-0000 ..	COVER	611, 613, 615, 631, 633
979792-0000 ..	VOLUME BULGE	311, 313, 315, 317
979793-0000 ..	CARRIER	327, 329
979794-0000 ..	CARRIER	331, 333
979814-0000 ..	BRACKET	23
979860-0000 ..	VOLUME BULGE	311, 313, 315, 317
979861-0000 ..	VOLUME SHIM	311, 313, 315, 317
979899-0000 ..	BRACKET	555, 557, 559, 561
979931-0000 ..	VOLUME BULGE	311, 313, 315, 317
979938-0000 ..	SLIDER	193, 195
979942-0000 ..	COVER	623
979946-0000 ..	STEEL TUBE	603, 605
979953-0000 ..	WASHER	141
979956-0000 ..	SOLENOID VALVE	17, 19
979960-0000 ..	SHAFT	623
979961-0000 ..	PIVOT PIN	57, 59
979962-0000 ..	ARM	57, 59
979966-0000 ..	BRACKET	235
979990-0000 ..	BELT BRAKE	535
979991-0000 ..	BLOCK	535
979994-0000 ..	ARM	535
980002-0000 ..	BRACKET	629
980003-0000 ..	SHAFT	629
980004-0000 ..	PLUG	629
988436-0000 ..	SPACER SLEEVE	721, 731, 763
988685-0000 ..	PIN	209, 211, 243, 245, 437, 439, 597, 599
1020637-0000 .	HOLDER	677, 681, 683
1020638-0000 .	HOLDER	677, 681, 683
1035587-0000 .	INDUCTOR	565
1035792-0000 .	E-HINGE	209, 211, 243, 245, 437, 439, 597, 599
1035794-0000 .	BLOCKING PIECE	209, 211, 243, 245, 437, 439, 543, 545, 547, 549, 579, 597, 599
1035893-0000 .	ADJUSTING SCREW	571, 573
1035895-0000 .	SHAFT	567
1035897-0000 .	SHAFT	555, 557, 559, 561
1036187-0000 .	T-PIPE	69
1036188-0000 .	SHAFT	49, 69
1036189-0000 .	SPINDLE GUIDE	49, 69
1036191-0000 .	SEAL HOLDER	49, 69
1036192-0000 .	SPACER ROD	49, 69
1036193-0000 .	CYLINDER BRACKET	49, 69
1036194-0000 .	T-PIPE	49, 69
1036443-0000 .	CONTACT UNIT	387, 389
1036588-0000 .	BRACKET	565
1036622-0000 .	GUIDE ROLLER	569
1036623-0000 .	GUIDE ROLLER	569
1037120-0000 .	SHAFT	539
1037121-0000 .	SHAFT	539
1037124-0000 .	HOLDER	539
1037572-0000 .	COVER PLATE	779, 781
1037573-0000 .	GASKET	779, 781
1037574-0000 .	COVER PLATE	787, 789, 791, 793, 795, 797, 799, 801, 803
1037575-0000 .	GASKET	787, 789, 791, 793, 795, 797, 799, 801, 803
1038016-0000 .	SPACER	565
1086888-0000 .	COVER	677, 681, 683
1091683-0000 .	SPACER	419
1091684-0000 .	RAIL	419
1091685-0000 .	RAIL	419
1091686-0000 .	SPACER	419
1091719-0000 .	BRACKET	419
1110391-0000 .	DOLLY	289, 291, 293, 295, 363, 697
1110530-0000 .	INDUCTOR	335, 363, 697
1110532-0000 .	INDUCTOR	335, 363, 697
1110534-0000 .	INDUCTOR	335, 363, 697
1110535-0000 .	INDUCTOR	335, 363, 697
1110820-0000 .	CUTTING RAIL	289, 291, 293, 295
1110829-0000 .	CUTTING RAIL	289, 291, 293, 295
1129274-0000 .	GUIDE LUG	243, 245, 437, 439
1129478-0000 .	GASKET	787, 789, 791, 793, 795, 797, 799, 801, 803
1129481-0000 .	COVERING PLATE	787, 789, 791, 793, 795, 797, 799, 801, 803
1140129-0000 .	HOLDER	241
1143884-0000 .	COPPER BRAID	821, 823
1144059-0000 .	WIRE	387, 389
1144122-0000 .	REDUCTION	387, 389
1144507-0000 .	BUSHING	377, 379
1144521-0000 .	CLAMP	377, 379
1144943-0000 .	SPACER	419
1195044-0000 .	SPRING	377, 379
1195428-0000 .	GASKET	187
1195454-0000 .	BRACKET	411
1195456-0000 .	SHAFT	411
1254027-0000 .	CORNER STRIP	223, 225
1254028-0000 .	FASTENING PLATE	223, 225
1254442-0000 .	CABLE SERIAL	767

Part No	Description	Page No
1255874-0000	.SPACER	423, 425
1255876-0200	.CHAIN TENSIONER	407
1255924-0000	.LABEL	81
1255925-0000	.COVER	81
1260065-0000	.BRACKET	427
1260068-0000	.SHAFT	427
1260069-0000	.ROLLER	427
1260070-0000	.SHAFT	427
1260261-0000	.T-PIPE	81
1260262-0000	.T-PIPE	81
1260263-0000	.PIPE	81
1260265-0000	.PIPE	81
1260266-0000	.PIPE	81
1260267-0000	.PIPE	81
1260268-0000	.PIPE	81
1260443-0000	.CLAMP HOLDER	81
1260476-0000	.SCREW	631, 633
1260480-0000	.PIPE	139
1260481-0000	.PIPE	139
1260486-0000	.PLATE	165, 167
1260487-0000	.PLATE	165, 167
1260489-0000	.PIPE	139
1260490-0000	.NUT	165, 167
1260491-0000	.NUT	165, 167
1260678-0000	.ARM	535
1260743-0000	.HEAT GUARD	43
1279044-0000	.HATCH	213
1279045-0000	.HATCH	215
1279086-0000	.LOCKING PLATE	121, 123
1279087-0000	.LOCKING PLATE	105, 107, 109, 111, 119
1279088-0000	.LOCKING PLATE	113, 115, 117
1279089-0000	.LOCKING PLATE	113, 115, 117
1279090-0000	.LOCKING PLATE	121, 123
1279091-0000	.LOCKING PLATE	105, 107, 109, 111
1279092-0000	.LOCKING PLATE	127, 129
1279093-0000	.LOCKING PLATE	121, 123
1279094-0000	.LOCKING PLATE	121, 123
1279095-0000	.LOCKING PLATE	127, 129
1279096-0000	.LOCKING PLATE	127, 129
1279456-0000	.LABEL	81
1279624-0200	.SPLICE DETECTOR	555, 557
1279701-0000	.WASHER	373
1279702-0000	.BRACKET	387, 389
1282309-0000	.ARM CAM 200 ML MID	269, 271
1282310-0000	.YOKE CAM 200ML MID	269, 271
1282311-0000	.CAM SEGMENT L	269, 271
1282312-0000	.CAM SEGMENT R	269, 271
1282315-0000	.VOLUME CAM LEFT	353
1282316-0000	.VOLUME CAM RIGHT	353
1282411-0000	.FLOAT	489
1282426-0000	.CLIP	187, 347, 349
1282435-0001	.CARTON STATION	369
1282435-0002	.CARTON STATION	369
1282444-0000	.CARTON STATION WITH BEVEL	369
1282581-0000	.BENDING ROLLER	29, 31
1282645-0000	.KNIFE	305, 307, 309
1282646-0000	.KNIFE	305, 307, 309
1282647-0000	.KNIFE	305, 307, 309
1282988-0000	.RAIL	555, 557
1282989-0000	.AXLE PIN	555, 557
1285108-0000	.COVER	831
1285109-0000	.NUT	767, 809, 811, 821, 823
1285546-0000	.ROLL	571, 573
1285580-0000	.SPRING	143
1286000-0000	.PIPE	227, 229
1296118-0000	.PROTECTION	489
1296310-0001	.CARTON STATION WITH BEVEL	369
1296310-0002	.CARTON STATION WITH BEVEL	369
1296310-0004	.CARTON STATION WITH BEVEL	369
1296310-0006	.CARTON STATION WITH BEVEL	369
1296310-0007	.CARTON STATION WITH BEVEL	369
1296311-0000	.CARTON STATION WITH BEVEL	369
1296312-0000	.CARTON STATION WITH BEVEL	369
1296313-0000	.CARTON STATION	369
1296415-0000	.GASKET	387, 389
1296815-0100	.HATCH	185
1296849-0000	.DISCHARGE TRAY	51, 53
1296850-0000	.DISCHARGE TRAY	51, 53
1296854-0000	.PIPE	227, 229
1296855-0000	.BATH	29, 31
1296877-0100	.SEAL KIT	691
1296912-0000	.ROLL	105, 107, 109, 111
1296913-0000	.ROLL	105, 107, 109, 111
1296914-0000	.ROLL	105, 107, 109, 111

Part No	Description	Page No
1296915-0000	.ROLL	105, 107, 109, 111
1317228-0000	.WASHER	393, 399
1317262-0000	.COVER	73, 75
1317526-0100	.STATION CHAIN	367
1317663-0000	.PIPE	73, 75
1317756-0000	.PIPE	73, 75
1317905-0000	.BRACKET	73, 75
1317914-0000	.UPPER FILLING TUBE	143
1317989-0000	.UPPER FILLING TUBE	143
1317991-0000	.SPRING	143
1334234-0000	.HUB	55, 67
1334256-0000	.SHAFT	581
1334331-0000	.FLANGE	555, 557
1334694-0000	.CONNECTION PLATE	227, 229
1334721-0000	.BLOCK	411
1334768-0000	.LID	145, 147
1334769-0000	.LID	145, 147
1334841-0200	.T.C.S.B. UNIT	73, 75
1346061-0000	.DRAIN CHUTE	471, 473
1346612-0000	.SHAFT	569, 581
1346746-0000	.LEVER	571, 573
1346933-0000	.BRACKET	411
1346988-0000	.ROLL	567
1348053-0000	.BRACKET	289, 291, 293, 295
1348237-0100	.AIR INLET GROUP	447, 449, 451
1348476-0000	.TOUCH GUARD	73, 75
1348477-0000	.TOUCH GUARD	139
1348636-0000	.TOUCH GUARD	73, 75
1348637-0000	.TOUCH GUARD	139
1348707-0101	.DISPLAY UNIT 12"	249
1348964-0000	.AIR DIAGRAM	447, 449, 451, 665
1349014-0000	.PAD	541
1349029-0100	.VALVE PANEL	435
1349090-0100	.FLOW METER	447, 449, 451
1349091-0100	.GAUGE GROUP	447, 449, 451
1349092-0000	.SUPPORT	469
1349094-0100	.VALVE PLATE	447, 449, 451
1349568-0000	.CONNECTION BOX	679, 685, 687
1350086-0200	.INSTALLATION DRAWING	663
1350087-0200	.DIAGRAM	663
1350184-0100	.PIPE WORK,AIR WATER	435
1350185-0000	.PIPE	517
1350186-0000	.PIPE	509
1350187-0000	.PIPE	509
1350188-0000	.PIPE	459
1350307-0000	.PIPE	227, 229
1350308-0000	.PIPE	227, 229
1350309-0000	.PIPE	227, 229
1350472-0000	.HOLDER	227, 229
1350473-0000	.HOLDER	227, 229
1350529-0100	.DOORS LEFT SIDE	435
1350531-0100	.DOORS RIGHT SIDE	435
1350674-0000	.EXTENSION	871
1350675-0000	.GUIDE	871
1350676-0000	.ROLLER	871
1350677-0000	.GUIDE	871
1350678-0000	.GUIDE	871
1359565-0000	.NUT	419
1363288-0301	.FLEXBOX TETRA BRIK	767
1364345-0300	.TPOP PANEL 12"	185
1364346-0302	.PANEL UNIT 12"	249
1366189-0000	.CABLE LVDS 6M	767
1366726-0000	.HOLDER	419
1366727-0000	.CLAMP	419
1367022-0000	.ALIGNMENT SCREW	593
1478222-0000	.BEARING HOUSING	289, 291, 293, 295
1478223-0000	.BEARING HOUSING	289, 291, 293, 295
1478224-0000	.BEARING HOUSING	289, 291, 293, 295
1478225-0000	.BEARING HOUSING	289, 291, 293, 295
1478303-0000	.TENSION SPRING	567
1478659-0000	.BRACKET	681, 683
1478661-0000	.CABLE SERIAL	767
1478717-0100	.VALVE GROUP	447, 449, 451
1478767-0000	.THROTTLE SCREW	139
1478813-0000	.SPACER	95
1478814-0000	.SENSOR	95
1484452-0000	.SHAFT	275
1484453-0000	.SPACER	275
1484454-0000	.ROCKER ARM	275
1484455-0000	.SPACER	275
1484456-0000	.SHAFT	275
1484457-0000	.BRACKET	275
1484461-0000	.SPACER	275
1484486-0000	.SPRING	535

Part No	Description	Page No
1484791-0000	.SCALE	259, 261, 263, 265
1484792-0000	.SCALE	259, 261, 263, 265
1487430-0000	.COVER	779, 781, 787, 789, 791, 793, 795, 797, 799, 801, 803
1487431-0000	.GASKET	779, 781, 787, 789, 791, 793, 795, 797, 799, 801, 803
1487447-0100	.FUSE	809, 811
1490113-0000	.LINK HEAD	279, 281
1490114-0000	.PIN	279, 281
1490116-0000	.SPACER	279, 281
1490117-0000	.NUT	279, 281
1490118-0000	.LINK	279, 281
1490119-0000	.SHAFT	279, 281
1490120-0100	.DISCONNECTION LINK LEFT	253
1490133-0000	.SPACER	279, 281
1490235-0000	.VOLUME CAM	353
1490236-0000	.VOLUME CAM	353
1490237-0000	.VOLUME CAM, WIDE	353
1490238-0000	.VOLUME CAM, WIDE	353
1490239-0000	.VOLUME CAM	353
1490240-0000	.VOLUME CAM	353
1490407-0000	.WASHER	55
1490804-0000	.HOLDER	539
1490839-0000	.PIPE	29, 31
1490840-0000	.PIPE	29, 31
1490928-0000	.SHAFT	373
1490931-0000	.WHEEL	361
1490932-0000	.SHAFT	361
1498194-0000	.SPACER	279, 281
1498216-0000	.LID	387, 389
1498217-0000	.HEATING CHAMBER	387, 389
1498218-0000	.PIPE	387, 389
1498219-0000	.PIPE	387, 389
1498220-0000	.PIPE	387, 389
1498221-0000	.PIPE	387, 389
1498222-0000	.PLATE	387, 389
1498223-0000	.PLATE	387, 389
1498224-0000	.PLATE	387, 389
1498233-0000	.GASKET	387, 389
1498245-0000	.SUPPORTING ARM	407
1498748-0000	.MOUNTING PLATE	543, 545, 547, 549
1498749-0000	.DOOR	551
1498750-0000	.DOOR	551
1498751-0100	.DOORS	527, 529
1498753-0100	.MAGAZINE HOLDER	527, 529
1498756-0100	.BENDING ROLLER	575
1498757-0000	.FLANGE	531
1498758-0000	.AXLE PIN	531
1498759-0000	.ANGLE HOLDER	577
1498761-0000	.MAGAZINE HOLDER	531
1498762-0000	.AXLE PIN	543, 545, 547, 549
1498763-0000	.JOINT PIECE	577
1498764-0000	.COVER	543, 545, 547, 549
1498765-0000	.AXLE PIN	555, 557
1498766-0000	.LOWER PLATE	577
1498767-0000	.SIDE PIECE	577
1498768-0000	.LOWER PLATE	577
1498769-0000	.WALL	577
1498771-0000	.HOLDER	577
1498773-0000	.CANTILEVER	555, 557
1498775-0000	.BOX BRACKET	543, 545, 547, 549
1498777-0000	.GUIDE HOLDER	555, 557
1498778-0000	.SHAFT	555, 557
1498780-0000	.BACK COVER	579
1498819-0000	.COOLING PLATE	723, 743, 745, 747, 749, 751
1499024-0000	.BAR	569
1499026-0000	.SHAFT	569
1499027-0000	.BRACKET	569
1499060-0000	.HOLDER	489
1499061-0000	.PILLAR	489
1499062-0000	.PILLAR	489
1499371-0000	.JOINT PLATE	577
1499408-0000	.CLEANING PIPE	137
1499477-0100	.WEB TUNNEL	525
1499480-0100	.MOUNTING PLATE	527, 529
1499481-0000	.ROLLER	543, 545, 547, 549
1499483-0000	.PANE	555, 557
1499484-0100	.TUNNEL FRAME	575
1499485-0000	.TRANSPORT BRACKET	575
1499486-0000	.TOP COVER	579
1499511-0000	.PANEL	551
1499512-0000	.PIN	543, 545, 547, 549, 579
1499513-0000	.NUT PLATE	579
1499514-0000	.E-HINGE	543, 545, 547, 549, 579
1499515-0000	.SHAFT	533
1499517-0000	.SHAFT	585

Part No	Description	Page No
1499642-0101	.TPIH 2500 HORIZONTAL MOUNTING	841
1499899-0000	.INSULATION CLOTH	489
1511000-0000	.PLATE	569
1511001-0000	.SHAFT	569
1511002-0000	.HOLDER	569
1511003-0000	.WEIGHT	569
1511021-0000	.SHAFT	377, 379
1511069-0100	.TUBE FOLDING DEVICE	287
1511291-0000	.CURVE	415
1511293-0000	.BRACKET	415
1511294-0000	.CLEANING PIPE	415
1511307-0000	.ROLLER	585
1511308-0000	.NUT PLATE	577
1511310-0000	.NUT	577, 585
1511311-0000	.GLASS PANE	579
1511314-0000	.DAMPER BRACKET	579
1511315-0000	.SLIDE BLOCK	579
1511317-0000	.PANE	579
1511318-0000	.SPACER	579
1511319-0100	.TUNNEL COVER	575
1511320-0000	.STRIP	577
1511323-0000	.STRIP ADHESIVE	551
1511324-0000	.SPRING	579
1511403-0100	.SUPPORT ROLLER	287
1511404-0000	.ECCENTRIC SHAFT	355
1511405-0001	.BRACKET	355
1511405-0002	.BRACKET	355
1511405-0003	.BRACKET	355
1511405-0004	.BRACKET	355
1511406-0000	.BRACKET	355
1511407-0000	.BRACKET	355
1511437-0000	.BRACKET	209, 211
1511460-0000	.PIPE 1050	587
1511461-0000	.PIPE 1051	587
1511462-0000	.STRAIGHT PIPE	587
1511463-0000	.PIPE HOLDER	587
1511464-0000	.PIPE HOLDER	587
1511487-0000	.STUD SCREW	375
1511567-0000	.AIR DIAGRAM ASU	665
1511572-0000	.CLIP	617, 619
1511600-0000	.SPACER	95
1511609-0000	.COVER	439
1511610-0000	.COVER	439
1511611-0000	.GASKET	439
1511612-0000	.GASKET	439
1511613-0000	.LOCKING ARM	437, 439
1511614-0000	.LOCKING ARM	437
1511681-0000	.LOCKING ARM	439
1511683-0000	.PIPE	495
1511701-0000	.FILTER	497
1511773-0000	.CONNECTOR	499
1511774-0000	.PIPE	487
1511775-0000	.SEPARATOR	505
1511779-0100	.COMPONENT PLATE	701, 703
1511780-0000	.COVER	831
1511781-0000	.COVER	831
1511782-0000	.BOX	831
1511783-0000	.BOX	831
1511784-0100	.POWER CABLE INLETS	771, 773
1511785-0100	.CONTROL CABLE INLETS	771, 773
1511786-0100	.TOWER CABLE INLETS	145, 147
1511787-0100	.STRIP APPLICATOR CABLE INLETS	785
1511788-0100	.POWER CONNECTOR PLATE	771, 773
1511789-0100	.CONTROL CONNECTOR PLATE	771, 773
1511790-0100	.INTERNAL DOOR PLMS	701, 703
1511791-0100	.BLIND DOOR	771, 773
1511793-0000	.CABLE	767
1511795-0100	.CABINET	701, 703
1511796-0100	.EXTERNAL DOOR PLMS	701, 703
1511797-0000	.DOOR	785
1511798-0000	.FRAME	785
1511799-0100	.EXTERNAL DOOR SPARE FUSES	701, 703
1511800-0100	.POWER SIDE,BOTTOM TERMINAL BLOCK	711, 713, 715
1511801-0100	.SOLID STATE RELAY RAIL 1	711, 713, 715
1511802-0100	.LOGIC BOTTOM TERMINAL BLOCK	711, 713, 715
1511803-0100	.RELAYS RAIL	711, 713, 715
1511804-0100	.LOGIC SIDE,TOP TERMINAL BLOCK	711, 713, 715
1511805-0100	.RACK	711, 713, 715
1511806-0100	.X300	831
1511808-0100	.FREQUENCY CONVERTER EARTH BAR	711, 713, 715
1511810-0100	.INTERNAL DOOR FUSES	701, 703
1511811-0100	.REAR UPPER CONTROL DOOR	701, 703
1511812-0000	.DOOR	819
1511813-0000	.WINDOW	819

Part No	Description	Page No
1511814-0100	.INTERNAL DOOR TERMOREGULATORS	701, 703
1511815-0000	.DOOR	821, 823
1511817-0000	.CABLE DUCT	821, 823
1511819-0100	.FRONT UPPER CONTROL DOOR	701, 703
1511820-0100	.UPPER DOOR POWER	701, 703
1511821-0100	.POWER BOX	701, 703
1511822-0100	.FUSES RAIL	809, 811
1511823-0100	.OVERLOAD RAIL	809, 811
1511824-0100	.LEVEL RELAYS RAIL	711, 713, 715
1511825-0100	.PLC RACK 1	711, 713, 715
1511826-0100	.PLC RACK 2	711, 713, 715
1511827-0100	.PLC RACK 3	711, 713, 715
1511828-0100	.X008	711, 713, 715
1511829-0100	.POWER SIDE,TOP TERMINAL BLOCK	711, 713, 715
1511830-0100	.EXTERNAL DOOR TERMOREGULATORS	701, 703
1511831-0000	.PLATE	775
1511832-0000	.PLATE	787, 789, 791, 793, 795, 797, 799, 801, 803
1511833-0000	.GASKET	787, 789, 791, 793, 795, 797, 799, 801, 803
1511834-0100	.CONTACTORS RAIL	711, 713, 715
1511835-0000	.PLATE	149, 151
1511836-0000	.GASKET	149, 151
1511837-0000	.PLATE	779, 781
1511838-0000	.GASKET	779, 781
1511839-0000	.PLATE	783
1511840-0000	.GASKET	783
1511841-0000	.GASKET	775
1511842-0000	.PLATE	777
1511843-0000	.GASKET	777
1511887-0000	.DISTRIBUTOR	395
1512123-0000	.CLEANING PIPE	137
1512128-0000	.PLUG	391
1512129-0000	.BRACKET	391
1512133-0000	.STOP	391
1512283-0000	.CONNECTION BOX	553
1512284-0100	.ANGLE ENCODER	253
1512286-0100	.CRANK	253
1512304-0100	.HYDRAULIC SYSTEM	435
1512305-0100	.MOTORIZED DESIGN CONTROL SYSTEM, LEFT	287
1512306-0100	.MOTORIZED DESIGN CONTROL SYSTEM, RIGHT	287
1512322-0000	.COPPER BRAID	735, 737, 739
1512350-0000	.PLATFORM	223, 225
1512351-0000	.PLATFORM	223, 225
1512352-0000	.RAIL	553
1512353-0000	.PIPE	517
1512354-0000	.BRACKET	277
1512355-0000	.ECCENTRIC SHAFT	277
1512356-0000	.CONNECTION DEVICE	101, 103
1512377-0000	.COVER	73, 75
1512411-0000	.PIPE	73, 75
1512440-0000	.BRACKET	415
1512442-0000	.CONNECTING PIPE	407
1512443-0000	.PLATE CHOKE	411
1512444-0000	.GUIDE RAIL	411
1512448-0000	.PIPE CONNECTION	407
1512450-0001	.TEMPLATE	861
1512450-0002	.TEMPLATE	861
1512450-0003	.TEMPLATE	861
1512450-0004	.TEMPLATE	861
1512453-0001	.TEMPLATE	855
1512453-0002	.TEMPLATE	855
1512453-0003	.TEMPLATE	855
1512453-0004	.TEMPLATE	855
1512453-0005	.TEMPLATE	855
1512453-0006	.TEMPLATE	855
1512453-0007	.TEMPLATE	855
1512453-0008	.TEMPLATE	855
1512453-0009	.TEMPLATE	855
1512453-0010	.TEMPLATE	855
1512453-0011	.TEMPLATE	855
1512486-0000	.MACHINE BODY	483
1512487-0000	.PLATE	471, 473
1512488-0000	.HOLDER	467
1512489-0000	.LITTLE FRAME	483
1512490-0000	.PLATE	471, 473
1512583-0000	.ROLLER	533, 535, 543, 545, 547, 549, 555, 557, 563
1512631-0000	.CHECKER PLATE	223, 225
1512632-0000	.CHECKER PLATE	223, 225
1512633-0000	.CHECKER PLATE	223, 225
1512635-0000	.RAILING	237
1512636-0000	.RAILING	237
1512637-0000	.RAILING	237
1512638-0000	.RAILING	237
1512640-0000	.TOE PLATE	223, 225
1512641-0000	.TOE PLATE	223, 225

Part No	Description	Page No
1512642-0000	.TOE PLATE	223, 225
1512643-0000	.TOE PLATE	223, 225
1512660-0100	.PLATFORM	185
1512666-0000	.TOE PLATE	223, 225
1512667-0000	.CONNECTION BOX	191
1512673-0000	.VALVE	497
1512805-0000	.CABINET (SMALL)	499
1512806-0000	.PIPE	459
1512826-0000	.DOOR	437
1512827-0000	.DOOR	437
1512828-0000	.DOOR	437
1512829-0000	.DOOR	439
1512830-0000	.DOOR	439
1512831-0000	.DOOR	439
1512840-0000	.BRACKET	191
1512845-0000	.CHECKER PLATE	223, 225
1512846-0000	.CHECKER PLATE	223, 225
1512847-0000	.BRACKET	223, 225
1512848-0000	.BRACKET	673
1512851-0000	.COVER	223, 225
1517058-0000	.GASKET	497
1517065-0100	.WEB GUIDE	575
1517066-0000	.PIVOT ARM	581
1517067-0000	.SPRING HOLDER	581
1517068-0000	.PILLAR	581
1517069-0000	.CLAMP PLATE	581
1517070-0000	.BEARING SEAT	581
1517071-0000	.BOW CLAMP	581
1517072-0000	.PLATE	441
1517073-0000	.PLATE	441
1517074-0000	.PLATE	441
1517075-0000	.PLATE	441
1517076-0000	.PLATE	441
1517077-0000	.PLATE	441
1517181-0000	.GASKET	517
1517182-0000	.SPACER	437, 439
1517230-0000	.BRACKET	257
1517231-0000	.RUBBER SHIM	257
1517248-0000	.BRACKET	221, 233
1517249-0000	.BRACKET	223, 225
1517252-0000	.BOLT Ø20H7	483
1517268-0000	.CABLE TRENCH	145, 147
1517269-0000	.CABLE TRENCH	145, 147
1517270-0000	.LID	145, 147
1517271-0000	.LID	145, 147
1517293-0000	.ROLLER	543, 545, 547, 549
1517464-0000	.SIGN	543, 545, 547, 549
1517484-0000	.PIPE	517
1517486-0000	.PIPE	517
1517487-0000	.PIPE	517
1517488-0000	.PIPE	517
1517489-0000	.PIPE	517
1517490-0000	.INFERIOR HOLDER	517
1517491-0000	.INFERIOR HOLDER	517
1517492-0000	.GASKET	497
1517493-0000	.PIPE	97, 99
1517494-0000	.PIPE	97, 99
1517495-0000	.PIPE	97, 99
1517498-0000	.SIGN FLEW-METER AIR	471, 473
1517499-0000	.SIGN FLEW-METER AIR	471, 473
1517500-0000	.SIGN FLEW-METER AIR	471, 473
1517501-0000	.SIGN FLEW-METER AIR	471, 473
1517504-0000	.AIR NOZZLE	387, 389
1517505-0000	.AIR NOZZLE	387, 389
1517506-0000	.SHIM	373
1517510-0000	.PIPE	417
1517517-0000	.TEMPLATE	857
1517518-0001	.CLAMP	857
1517518-0002	.CLAMP	857
1517518-0003	.CLAMP	857
1517519-0000	.PLATE	395
1517523-0000	.BLOCK	415
1517534-0000	.RUNNER RING	555, 557
1517535-0000	.STEERING	555, 557
1517641-0000	.FLANGE BUSHING	289, 291, 293, 295, 327, 329, 331, 333
1517651-0100	.SOLID STATE RELAY RAIL 2	711, 713, 715
1517652-0100	.SOLID STATE RELAY RAIL 3	711, 713, 715
1517653-0100	.EXTERNAL DOOR FUSES	701, 703
1517654-0000	.DELIVERED DESIGN	837
1517659-0100	.MODEM	767
1517663-0000	.DOOR	835
1517664-0000	.FRAME	805, 807, 835, 837
1517665-0000	.WINDOW	835
1517667-0000	.DOOR	807, 837

Part No	Description	Page No
1517671-0000	.DOOR	827
1517672-0000	.DOOR	829
1517675-0000	.SPACER	723, 743, 745, 747, 749, 751
1517676-0000	.SPACER	149, 151, 787, 789, 791, 793, 795, 797, 799, 801, 803
1517677-0100	.COOLER	701, 703
1517678-0100	.TPIH	701, 703
1517694-0000	.END BLOCK	771, 773
1517695-0000	.WELDED CABINET	771, 773
1517697-0000	.PROTECTION	771, 773
1517698-0000	.PROTECTION	771, 773
1517699-0000	.SUPPORT	771, 773
1517700-0000	.EDGE GUIDE	771, 773
1517751-0000	.SHAFT	541
1517753-0000	.ADJUSTING NUT	581
1517983-0000	.BRACKET	277
1517984-0000	.SHAFT	277
1517985-0000	.SETTING RING	277
1517986-0000	.SCREW BUSHING	277
1519086-0100	.LAMP	185
1519117-0100	.VOLUME ADJUSTER	287
1519118-0100	.VOLUM CURVE PIECE	351
1519133-0000	.JOINT	353
1519134-0000	.JOINT	353
1519307-0000	.AIR NOZZLE	387, 389
1519308-0000	.AIR NOZZLE	387, 389
1519313-0000	.AIR NOZZLE	387, 389
1519314-0000	.AIR NOZZLE	387, 389
1519318-0000	.AIR NOZZLE	387, 389
1519319-0000	.AIR NOZZLE	387, 389
1519374-0001	.CARRIER	311, 313, 315, 317
1519374-0002	.CARRIER	311, 313, 315, 317
1519375-0001	.SHAFT	311, 313, 315, 317
1519376-0000	.AXLE PIN	311, 313, 315, 317
1519377-0000	.WASHER	311, 313, 315, 317
1519380-0000	.PIPE	139
1519381-0000	.PIPE	139
1519382-0000	.PIPE	139
1519383-0000	.PIPE	139
1519384-0000	.PIPE	139
1519385-0000	.PIPE	139
1519386-0000	.PIPE	139
1519387-0000	.PIPE	139
1519388-0000	.PIPE	139
1519389-0000	.TANK	495
1519390-0000	.PIPE(FOR 60HZ)	507
1519391-0000	.PIPE BEND	507
1519392-0000	.SCRUBBER	507
1519393-0000	.PLATE	507
1519394-0000	.PIPE	507
1519395-0000	.PIPE	505
1519401-0000	.SUCTION PIPE	131
1519402-0000	.SUCTION PIPE	131
1519403-0000	.SUCTION PIPE	131
1519416-0000	.BOTTOM PLATE	403
1519417-0000	.STAIR	405
1519418-0000	.PLATE	405
1519421-0000	.BUSHING	405
1519422-0000	.BUSHING	405
1519423-0000	.SUPPORT	405
1519424-0000	.SUPPORT	405
1519425-0000	.SPACER	405
1519426-0100	.STAIR	403
1519427-0100	.VOLUME FLAP	287
1519482-0000	.PIPE	51, 53
1519483-0000	.HEATING PIPE	51, 53
1519484-0000	.SUPPORT	51, 53
1519576-0000	.PIPE	517
1519577-0000	.PIPE	517
1519601-0000	.BUSHING	51, 53
1519602-0100	.RAILING	185
1519663-0100	.PIPE WORK-HYDRAULIC	435
1519664-0000	.PIPE	519
1519665-0000	.PIPE	519
1519666-0000	.PIPE	519
1519667-0000	.PIPE	519
1519668-0000	.PIPE HOLDER	519
1519669-0000	.PIPE HOLDER	519
1519670-0000	.PIPE HOLDER	519
1519671-0000	.PIPE HOLDER	519
1519758-0000	.CABLE DUCT	443
1519759-0000	.CABLE DUCT	443
1519760-0000	.CABLE DUCT	443
1519761-0000	.CABLE DUCT	443
1519762-0000	.CABLE DUCT	443

Part No	Description	Page No
1519763-0000	.CABLE DUCT	443
1519764-0000	.SPACER	443
1519765-0001	.SUPPORT	443
1519765-0002	.SUPPORT	443
1519934-0000	.PIPE	45
1519936-0000	.PIPE	73, 75
1519937-0000	.REGULATOR BODY	95
1519938-0000	.CLEANING PIPE	137
1519952-0000	.DOLLY	663
1519969-0000	.PIPE	73, 75
1519997-0000	.CONNECTION PLATE	517
1520577-0001	.DOLLY	289, 291, 293, 295, 363, 697
1520972-0000	.TPO-BAR	663
1523049-0000	.PIPE	133
1523050-0000	.PIPE	133
1523051-0000	.PIPE	133
1523052-0000	.PIPE	133
1523053-0000	.PIPE	133
1523057-0000	.AP-VALVE-BODY (51-38)	83
1523058-0000	.TANK	489
1523059-0000	.HOLDER	489
1523060-0000	.FILLER TUBE	489
1523061-0000	.FLANGE	493
1523062-0000	.FILLING PIPE	497
1523063-0000	.TUBE	497
1523064-0000	.RETURN PIPE	497
1523065-0000	.PLATE	497
1523066-0000	.GASKET	497
1523067-0000	.PLATE	497
1523068-0000	.PIPE	497
1523069-0000	.PIPE CONNECTION	497
1523151-0000	.BRACKET	283
1523152-0000	.ANGLE ENCODER	283
1523158-0001	.SHIM	57, 59
1523158-0002	.SHIM	57, 59
1523158-0003	.SHIM	57, 59
1523210-0100	.MOTOR	253
1523211-0000	.WASHER	257
1523215-0000	.TIMING PULLEY	257
1523222-0000	.PLATE	143
1523223-0000	.NUT	143
1523224-0000	.NUT	143
1523225-0000	.FASTENING PLATE	143
1523228-0000	.FLANGE	55
1523364-0000	.LID	135
1523365-0000	.PIPE	135
1523366-0000	.PIPE	135
1523383-0000	.CONNECTION PLATE	207
1523384-0000	.CONNECTION PLATE	207
1523431-0000	.PIPE	207
1523432-0000	.PIPE	207
1523433-0000	.PIPE	207
1523434-0000	.PIPE	207
1523435-0000	.FRAME	767
1523436-0000	.DOOR	767
1523437-0000	.HINGE	767, 809, 811, 821, 823
1523438-0000	.HINGE	805, 807, 835, 837
1523439-0000	.SPACER	767, 821, 823
1523440-0000	.SPACER	767, 809, 811, 821, 823
1523441-0000	.SPACER SHEET	805, 807, 835, 837
1523442-0000	.SPACER SHEET	805, 807, 835, 837
1523443-0000	.COVER	821, 823
1523444-0000	.SPACER	821, 823
1523445-0100	.SOLID STATE RELAY RAIL 4	711, 713, 715
1523446-0100	.SOLID STATE RELAY RAIL 5	711, 713, 715
1523448-0000	.FRAME	839
1523449-0000	.SLIDE	839
1523450-0000	.SLIDE	839
1523451-0000	.SLIDE	839
1523452-0000	.SUPPORT	839
1523453-0000	.SUPPORT	839
1523454-0000	.SCREW	839
1523455-0000	.FRAME	841
1523456-0000	.SLIDE	841
1523459-0000	.SUPPORT	771, 773
1523463-0000	.PLATE	711, 713, 715
1523464-0000	.GASKET	771, 773
1523494-0000	.PILLAR	57, 59
1523505-0000	.SUPPORT	399
1523754-0000	.MACHINE BODY	187
1523755-0000	.COVERING PLATE	187
1523756-0000	.COVER	187
1523757-0000	.PLATE	187
1523758-0000	.PLATE	187

Part No	Description	Page No
1523759-0000	.COVER	187
1523760-0000	.FRONT PLATE	187
1523828-0000	.SPACER	269, 271
1523829-0100	.DISTRIBUTOR BLOCK	199, 201, 203
1523832-0000	.HOSE HOLDER	207
1523886-0000	.SPACER PLATE	207
1523887-0000	.SPACER PLATE	207
1523947-0000	.EARTH BAR	731
1523948-0000	.EARTH BAR	763
1523957-0000	.SPACER	805, 807, 835, 837
1523960-0000	.SPACER	771, 773
1523961-0100	.PLATE	701, 703
1523963-0000	.SUPPORT PLATE	843
1523968-0000	.HANDLE	767, 809, 811, 821, 823
1523969-0000	.DOOR	805
1523971-0000	.CONNECTION BOX	805, 807
1523972-0100	.ELECTRICAL MATERIALS	701, 703
1523973-0000	.FRAME	839
1523974-0000	.SUPPORT	771, 773
1524018-0000	.TIMING BELT PULLEY	255
1524319-0100	.CABLE DUCT	435
1524477-0100	.CUTTING TABLE	527, 529
1524481-0000	.SEALING BLOCK	541
1524653-0000	.BRACKET	65
1524654-0000	.ARM	65
1524655-0000	.PROTECTION PLATE	65
1524662-0000	.AIR NOZZLE	47
1524663-0000	.TUBE 55	101, 103
1524664-0000	.TUBE 861	101, 103
1524665-0000	.TUBE 860	101, 103
1524666-0000	.TUBE 230	101, 103
1524667-0000	.TUBE 231	101, 103
1524669-0000	.PIPE	101, 103
1524670-0000	.PIPE	101, 103
1524671-0000	.TUBE 210	101, 103
1524672-0000	.TUBE 211	101, 103
1524673-0000	.BRACKET	101, 103
1524674-0000	.REDUCTION SLEEVE	101, 103
1524780-0000	.PLATE	67
1524805-0000	.PLATE	67
1524814-0000	.BRACKET	173
1524829-0000	.PLATE	173
1524830-0000	.SHAFT	173
1532583-0000	.PIPE	81
1532584-0100	.MACHINE BODY	185
1538039-0000	.CURVE	345
1538089-0000	.PLATE	441
1538096-0000	.CALENDER ROLLER	63
1538097-0000	.CALENDER ROLLER	63
1538098-0000	.CLAMP	63
1538103-0000	.FORK	63
1538104-0000	.GUIDE	63
1538107-0000	.SHAFT	581
1538212-0000	.FUSE BOARD	837
1538219-0000	.SWITCH BRACKET	543, 545, 547, 549
1538473-0000	.SEALING BLOCK	539
1538758-0000	.SPACER	471, 473
1538868-0000	.BRACKET	247, 437, 439
1538906-0000	.PIPE	511
1538907-0000	.PIPE	511
1538908-0000	.PIPE	511
1538924-0000	.RAILING	237
1538942-0000	.CARRIER	311, 313, 315, 317
1538948-0000	.ECCENTRIC	351
1538949-0000	.ECCENTRIC	351
1539101-0000	.BRACKET	353
1539102-0000	.ARM	353
1539103-0000	.ARM	353
1539104-0000	.SPINDLE	353
1539105-0000	.BOX	351
1539106-0000	.SHAFT	351
1539107-0000	.TIMING BELT	351
1539108-0000	.TIMING BELT PULLEY	351
1539109-0000	.SHAFT	351
1539110-0000	.LID	351
1539111-0000	.SUPPORT	351
1539112-0000	.SUPPORT	351
1539113-0000	.COVER	231
1539237-0000	.PIPE	73, 75, 101, 103
1539238-0000	.PIPE	101, 103
1539248-0001	.TIMING BELT	273
1539248-0002	.TIMING BELT	273
1539248-0003	.TIMING BELT	273
1539248-0005	.TIMING BELT	273

Part No	Description	Page No
1539250-0000	.SPACER	101, 103
1539256-0000	.TOOTHED PULLEY	431
1539260-0000	.TOOTHED PULLEY	431
1539261-0000	.WASHER	375, 431
1539265-0100	.OUTFEED UNIT	367
1539266-0000	.CAM	427
1539267-0000	.DRUM	427
1539268-0000	.CARRIER	427
1539296-0000	.PIVOT ARM	391
1539301-0000	.TOOTHED PULLEY	375
1539302-0000	.SPACER	375
1539332-0000	.PIPE	511
1539596-0000	.PIPE	25
1539597-0000	.T-PIECE	23
1539599-0100	.HEAT EXCHANGER	15
1539600-0000	.SUPPORT	27
1539601-0000	.CLEANING PIPE	15
1539602-0100	.CONNECTION SYSTEM	15
1539603-0000	.PIPE	25
1539604-0000	.PIPE	15
1539605-0000	.COOLING PIPE	15
1539606-0002	.SPRAY NOZZLE	23
1539606-0003	.SPRAY NOZZLE	23
1539606-0004	.SPRAY NOZZLE	23
1539606-0005	.SPRAY NOZZLE	23
1539766-0100	.DISCONNECTION LINK RIGHT	253
1539789-0000	.BLOCK	399
1539792-0000	.PIN	399
1539920-0200	.PENDULUM	11, 13
1539943-0000	.SHIELD PLATE	407
1539947-0000	.PIPE	415
1539948-0000	.SHAFT	413
1539949-0100	.FIXING UNIT	367
1539950-0000	.WASHER	413
1539951-0000	.HOUSE	413
1539953-0000	.PROTECTIVE COVER	407
1539956-0000	.PLATE	429
1539957-0000	.PLATE	407
1539960-0000	.MACHINE BODY	403
1539965-0000	.PLATE	413
1539966-0000	.BRACKET	387, 389
1539967-0000	.GASKET	387, 389
1539968-0100	.FLAP HEATER	367
1539969-0100	.GUIDE	367
1539970-0100	.FOLDING BAR	367
1539972-0000	.PIPE	393
1539975-0100	.FORMING UNIT	367
1539976-0000	.GUIDE	399
1539977-0000	.GUIDE	399
1539995-0100	.CANTILEVER	367
1539996-0000	.SHAFT	175
1539997-0000	.AXLE SUPPORT	67
1548000-0100	.FRAME	367
1548003-0000	.LINK	173
1548004-0001	.LINK	173
1548004-0002	.LINK	173
1548005-0000	.SHAFT	173
1548006-0000	.ADJUSTING SCREW	173
1548010-0200	.PENDULUM ROLLER	173
1548052-0000	.ROLLER	175
1548053-0000	.COVER	175
1548056-0000	.AXLE SUPPORT	55
1548059-0000	.AXLE SUPPORT	173
1548141-0000	.WASHER	173
1548142-0000	.BUSHING	173
1548143-0000	.END PLATE	67
1548147-0000	.PLATE	173
1548148-0000	.PLATE	173
1548152-0000	.PIN	173
1548155-0000	.COAXIAL CABLE	347, 349
1548156-0000	.PIPE	517
1548225-0000	.CLAMP	173
1548275-0000	.SEAL COVER	55
1548276-0000	.LEVER	173
1548277-0000	.FLANGE	173
1548284-0000	.ROLLER	55
1548313-0000	.FORCE LIMITING DEVICE	279, 281
1548315-0000	.PIPE	133
1548316-0000	.PIPE	497
1548332-0000	.PRESSURE FLANGE	177
1548532-0000	.LEVER	173
1548576-0100	.PIPE WORK	185
1548833-0000	.BRACKET	135
1549182-0000	.CARRIER	427

Part No	Description	Page No
1549183-0000	.CARRIER	427
1549184-0000	.CARRIER	427
1549186-0000	.CARRIER	427
1549187-0000	.CARRIER	427
1549190-0000	.CARRIER	427
1549191-0000	.CARRIER	427
1549193-0000	.CARRIER	427
1549294-0000	.MACHINE BODY	593
1549295-0100	.MACHINE BODY	591
1549296-0100	.COVER PLATE	591
1549297-0000	.REEL HOLDER	601
1549298-0000	.REEL HOLDER	601
1549299-0000	.PLATE	597, 599
1549300-0100	.PAPER MAGAZINE	591
1549301-0000	.BEARING	603, 605
1549302-0000	.SHAFT	603, 605
1549303-0000	.PLATE	603, 605
1549304-0000	.ARM	603, 605
1549305-0100	.COVER	591
1549306-0000	.COVER	601
1549307-0000	.BRACKET	603, 605
1549474-0000	.SHAFT	603, 605
1549475-0000	.BRACKET	603, 605
1549476-0000	.PLATE	601
1549477-0000	.PLATE	601
1549478-0000	.PLATE	601
1549479-0000	.PLATE	601
1549480-0100	.ELECTRIC EQUIPMENT	591
1549481-0000	.REEL HOLDER	601
1549482-0000	.REEL HOLDER	601
1549483-0000	.PLATE	597, 599
1549484-0000	.PLATE	597, 599
1549485-0000	.PLATE	597, 599
1549486-0000	.PLATE	597, 599
1549487-0000	.PLATE	597, 599
1549488-0000	.PLATE	597, 599
1549489-0000	.BRACKET	597, 599
1549490-0000	.DOOR	597, 599
1549491-0000	.REEL HOLDER	601
1549492-0000	.HOLDER	601
1549493-0000	.HANDSPIKE	603, 605
1549540-0000	.BRACKET	361
1549581-0100	.VOLUME FLAP	287
1549584-0100	.PAPER BRAKE	611, 613, 615, 631, 633
1549603-0100	.LAMP	185
1549608-0000	.GLASS PANE	239
1558124-0000	.FORK HEAD	361
1558125-0000	.MOUNTING SHEET	511
1558126-0000	.PIPE	361
1558127-0000	.PIPE	361
1558128-0100	.NOZZLE	155, 157
1558129-0000	.BRACKET	361
1558130-0000	.BRACKET	361
1558190-0001	.HOLDER	399
1558190-0002	.HOLDER	399
1558190-0003	.HOLDER	399
1558190-0004	.HOLDER	399
1558190-0005	.HOLDER	399
1558190-0006	.HOLDER	399
1558190-0007	.HOLDER	399
1558190-0008	.HOLDER	399
1558190-0009	.HOLDER	399
1558190-0010	.HOLDER	399
1558190-0011	.HOLDER	399
1558191-0000	.PLATE	399
1558194-0001	.FOLDING BAR	401
1558194-0002	.FOLDING BAR	401
1558194-0003	.FOLDING BAR	401
1558195-0001	.FOLDING BAR	401
1558195-0002	.FOLDING BAR	401
1558195-0003	.FOLDING BAR	401
1558196-0000	.PIPE	393
1558197-0000	.BLOCK	399
1558198-0000	.BLOCK	399
1558199-0000	.BLOCK	399
1558200-0000	.PIPE	393
1558201-0000	.PIPE	393
1558202-0001	.PRESSURE PLATE	399
1558202-0002	.PRESSURE PLATE	399
1558202-0003	.PRESSURE PLATE	399
1558202-0004	.PRESSURE PLATE	399
1558203-0000	.PIPE	393
1558204-0000	.BLOCK	399
1558205-0000	.BLOCK	399

Part No	Description	Page No
1558206-0000	.BLOCK	399
1558207-0000	.BLOCK	399
1558208-0000	.BLOCK	399
1558313-0000	.SHAFT	601
1558314-0000	.BRACKET	601
1558315-0000	.BRACKET	655
1558316-0000	.BRACKET	655
1558317-0000	.BRACKET	649
1558318-0100	.CONNECTION BOX	655
1558319-0000	.BUSHING	603, 605
1558320-0100	.PLATFORM	593
1558321-0000	.COVER PLATE	595
1558322-0000	.JOINT BOLT	595
1558403-0000	.DISC	67
1558442-0000	.UPPER FILLING TUBE	143
1558443-0000	.FILLING PIPE	177
1558444-0000	.PRESSURE FLANGE	177
1558446-0000	.PRESSURE FLANGE	177
1558892-0000	.CONNECTION BOX	537
1558897-0100	.HEATING DEVICE	527, 529
1558949-0000	.PLATE	231
2500050-0000	.GLASS	597, 599
2500214-0100	.PIPE WORK	223, 225
2500215-0000	.CABLE DUCT	227, 229
2500216-0000	.CABLE DUCT	227, 229
2500217-0000	.BRACKET	227, 229, 655
2500218-0000	.CABLE TRENCH	227, 229
2500233-0100	.CONVEYOR	367
2500234-0000	.PLATE	419
2500235-0000	.PLATE	419
2500236-0000	.RAIL	419
2500237-0000	.RAIL	419
2500241-0000	.BLOCK	399
2500242-0000	.BLOCK	399
2500243-0000	.PIPE	393
2500244-0000	.PIPE	393
2500245-0000	.PIPE	393
2500246-0000	.PIPE	393
2500247-0000	.PIPE	393
2500248-0000	.PIPE	393
2500259-0000	.BRACKET	231
2500260-0000	.ARM	231
2500261-0000	.FIXING RING	231
2500293-0000	.PLATE	159
2500294-0000	.PIPE	159
2500332-0100	.PIVOT ARM	223, 225
2500587-0100	.SUSPENSION ARM	641
2500593-0000	.BOW CLAMP	649
2501265-0000	.CONNECTION BOX	657, 659
2501266-0000	.RAIL	657, 659
2501327-0000	.CABLE DUCT	655
2501328-0000	.CABLE DUCT	655
2501329-0000	.CABLE DUCT	655
2501330-0000	.CABLE DUCT	655
2501331-0000	.LID	655
2501332-0000	.LID	655
2501362-0000	.CLAMP RING	603, 605
2501385-0000	.SHAFT	649
2501465-0100	.CONNECTION BOX	675
2501466-0100	.CONNECTION BOX	675
2501471-0100	.COUNTER	675
2501472-0100	.COUNTER	675
2501528-0100	.PLMS KIT	663
2501542-0000	.AXLE SUPPORT	55
2501547-0100	.QUEUE GUARD	675
2501613-0000	.SHAFT	603, 605
2501835-0000	.SHAFT	651
2501836-0100	.SPLICING DEVICE	591
2502192-0000	.CARRIER	427
2502194-0000	.CARRIER	427
2502197-0000	.PIPE	101, 103
2502198-0000	.PIPE	101, 103
2502424-0200	.LUBRICATION	377, 379
2504445-0000	.PLATE	193, 195
2504449-0000	.INSERT	443, 775
2504952-0000	.PROTRACTOR	269, 271
2505236-0000	.PLATFORM	223, 225
2505282-0000	.CHECKER PLATE	223, 225
2506319-0000	.HEAD PLATE	193, 195
2506321-0000	.HEAD PLATE	193, 195
2506322-0000	.HEAD PLATE	193, 195
2506323-0000	.HEAD PLATE	193, 195
2506324-0000	.HEAD PLATE	193, 195
2506331-0200	.CONNECTION BOX	421

Part No	Description	Page No
2506332-0000	.BOX	423, 425
2506432-0000	.LOCKING FINGER	177
2506433-0000	.LOCKING FINGER	177
2506471-0000	.BRACKET	567
2506472-0000	.HOLDER	567
2506473-0000	.BRACKET	567
2506474-0000	.FASTENING BRACKET	567
2506475-0100	.PRESSURE ROLLER	555, 557
2506478-0000	.COVER	543, 545, 547, 549
2506479-0000	.PLATE	551
2506480-0000	.HOLDER	585
2506530-0000	.LOCKING FINGER	177
2506608-0000	.PLATE	223, 225
2506609-0000	.PLATE	223, 225
2506638-0000	.VOLUME CAM	353
2506639-0000	.VOLUME CAM	353
2506640-0000	.VOLUME CAM	353
2506641-0000	.VOLUME CAM	353
2506642-0000	.VOLUME CAM	353
2506643-0000	.VOLUME CAM	353
2506644-0000	.VOLUME CAM	353
2506645-0000	.VOLUME CAM	353
2506646-0000	.STRIP	223, 225
2506790-0100	.HOLD-DOWN DEVICE	253
2507014-0100	.ROCKER ARM	273
2508118-0000	.FIXING RING	601
2509543-0000	.PROTECTION	603, 605
2510532-0000	.PROTECTION	173
2510541-0000	.PRESSURE FLANGE	177
2510767-0000	.RAILING	237
2510844-0100	.CONNECTION BOX	675
2511330-0000	.SPACER	17, 19
2511668-0000	.SUPPORT	419
2512787-0000	.HOLDER	297, 299, 301, 303
2512805-0000	.TOE PLATE	223, 225
2514018-0000	.TOP TIE PLATE	223, 225
2514041-0000	.PROTECTION	297, 299
2514042-0000	.PROTECTION	301, 303
2514090-0000	.FORCE PLATE	345
2514091-0000	.BRACKET	345
2514112-0000	.COVER	235
2514301-0000	.PRESSURE FLANGE	177
2514391-0000	.PIPE	487
2514491-0000	.METERING DEVICE	495
2516972-0000	.HOSE HOLDER	205
2517051-0000	.PIPE	447, 449, 451
2517063-0000	.GLASS PANE	437
2518102-0000	.RAIL	419
2518103-0000	.RAIL	419
2518125-0000	.PIPE	505
2518410-0000	.FLANGE	255
2518415-0000	.COVER PLATE	483
2518416-0000	.JOINT BOLT	483
2519460-0000	.SPRING BRACKET	273
2519644-0000	.BRACKET	543, 545, 547, 549
2519646-0000	.PLATE	579
2519647-0000	.BRACKET	579
2522105-0000	.HEAD PLATE	193, 195
2522106-0000	.HEAD PLATE	193, 195
2522107-0000	.HEAD PLATE	193, 195
2522108-0000	.HEAD PLATE	193, 195
2522109-0000	.HEAD PLATE	193, 195
2522110-0000	.PLATE	193, 195
2522248-0000	.BRACKET	67
2522249-0000	.SHAFT	67
2523596-0000	.COVER	539
2523597-0000	.SLIDER	541
2523598-0000	.SPLICING TABLE	541
2523599-0000	.SUPPORT	541
2523600-0000	.PIN	541
2523601-0000	.PAD	541
2523703-0000	.PIPE	227, 229
2523725-0200	.PRESSURE DEVICE	367
2523730-0000	.LEVER	377, 379
2523736-0000	.SHAFT	377, 379
2523737-0000	.SHAFT	377, 379
2523738-0000	.BUSHING	377, 379
2524341-0000	.FILLING PIPE	177
2524342-0000	.FILLING PIPE	177
2524343-0000	.FILLING PIPE	177
2524394-0000	.BRACKET	219
2524476-0100	.WEB GUIDE	555, 557
2524477-0000	.ROLLER	569
2524478-0000	.BRACKET	555, 557, 559, 561

Part No	Description	Page No
2524479-0000	.PLATE	567
2524480-0000	.PIN	567
2524482-0000	.BRACKET	567
2524484-0000	.PIN	567
2524485-0000	.PIN	567
2524579-0004	.BLOCK	377, 379
2524579-0005	.BLOCK	377, 379
2524579-0008	.BLOCK	377, 379
2524579-0010	.BLOCK	377, 379
2524579-0011	.BLOCK	377, 379
2525340-0000	.BRACKET	603, 605
2526300-0000	.DROP CHUTE	193, 195
2526301-0000	.DROP CHUTE	193, 195
2526302-0000	.DROP CHUTE	193, 195
2526303-0000	.DROP CHUTE	193, 195
2526304-0000	.DROP CHUTE	193, 195
2526305-0000	.DROP CHUTE	193, 195
2526306-0000	.DROP CHUTE	193, 195
2526308-0000	.DROP CHUTE	193, 195
2526309-0000	.DROP CHUTE	193, 195
2526310-0000	.DROP CHUTE	193, 195
2526311-0000	.DROP CHUTE	193, 195
2526323-0000	.LEAF SPRING	193, 195
2526324-0000	.LEAF SPRING	193, 195
2526325-0000	.LEAF SPRING	193, 195
2526326-0000	.LEAF SPRING	193, 195
2526327-0000	.LEAF SPRING	193, 195
2526328-0000	.LEAF SPRING	193, 195
2526329-0000	.LEAF SPRING	193, 195
2526338-0100	.DROP CHUTE	185
2526341-0000	.LAMP HOLDER	655
2526342-0000	.BRACKET	655
2526343-0000	.PLATE	401
2526344-0000	.PLATE	401
2526843-0000	.CABLE TRENCH	145, 147
2526844-0000	.LID	145, 147
2526845-0000	.CABLE TRENCH	145, 147
2526846-0000	.LID	145, 147
2526847-0000	.CABLE TRENCH	145, 147
2526848-0000	.CABLE TRENCH	145, 147
2526863-0000	.PUMP	29, 31
2527135-0000	.RAIL (TITANIUM)	335
2527136-0000	.RAIL	335
2527137-0000	.RAIL (TITANIUM)	335
2527337-0000	.CYLINDER BRACKET	45
2527454-0000	.SHIM	377, 379
2527513-0000	.SIDE PIECE	235
2527514-0000	.SIDE PIECE	235
2527651-0000	.SPACER	255
2527652-0000	.ARM	255
2527706-0000	.FILLING PIPE	177
2527707-0000	.FILLING PIPE	177
2527708-0000	.PRESSURE FLANGE	177
2527710-0000	.FILLING PIPE	177
2527717-0000	.FILLING PIPE	177
2527718-0000	.SPACER	67
2527724-0000	.CARRIER	289, 291, 293, 295
2528094-0000	.PIPE	29, 31
2528095-0000	.PIPE	131
2528198-0000	.PLATE	387, 389
2528199-0000	.HANDLE	387, 389
2529564-0000	.COVER	655
2529646-0000	.SHAFT	567
2530400-0100	.TRASMISSION UNIT	367
2530401-0000	.SHIM	377, 379
2531115-0000	.SCREW	611, 613, 615
2531465-0000	.SUPPORT	663
2531996-0000	.COVER	711, 713, 715
2531997-0000	.SPACER	723, 743, 745, 747, 749, 751
2531998-0100	.RAIL	711, 713, 715
2531999-0000	.COVER	771, 773
2532862-0000	.SPACER	771, 773
2532923-0000	.PIPE	29, 31
2540724-0000	.HOSE INSTALLATION	525
2540726-0000	.FINGER	541
2540729-0000	.WALL	577
2540730-0000	.STRIP	577
2541126-0100	.INSTALLATION ACCESSORIES	663
2541886-0100	.START-UP KIT	663
2542328-0000	.COVER	809, 811
2542329-0000	.COVER	809, 811
2543594-0100	.ELECTRICAL COMPONENTS	663
2544957-0000	.AXLE SUPPORT	431
2544958-0000	.BEARING FLANGE	431

Part No	Description	Page No
2544959-0000	.PIPE	415
2544960-0000	.CLEANING BASIN	415
2544961-0100	.RAIL	367
2544962-0000	.SHAFT	431
2544963-0000	.SHAFT	431
2544964-0000	.FLANGE	431
2544965-0000	.TOOTHED PULLEY	431
2544966-0000	.PLATE	407
2544968-0000	.INNER RING	431
2544969-0000	.SPACER	431
2544970-0000	.FLANGE	431
2544971-0000	.BRACKET	431
2544973-0000	.CUP	431
2544974-0000	.BLANK PLUG	431
2544975-0000	.SHEET	431
2544979-0000	.PIPE	417
2544980-0100	.CLEANING SYSTEM	367
2544981-0100	.CLEANING CIRCUIT	415
2545062-0000	.CLEANING PIPE	15
2545080-0100	.INJECTION SYSTEM	15
2545083-0100	.CONTROL CABINET	15
2545131-0000	.VALVE BODY	23
2545132-0000	.TRANSITION PIPE	23
2545134-0000	.SPRAY NOZZLE	23
2545155-0000	.PLUG	23
2545249-0000	.TEFLON HOSE	327, 329, 331, 333
2545423-0000	.DOOR	17, 19
2545424-0000	.CABINET	17, 19
2545425-0000	.SPRAY PIPE	17, 19
2545426-0000	.MOUNTING PLATE	17, 19
2545427-0000	.FILLING PIPE	17, 19
2545428-0000	.RETURN PIPE	17, 19
2545429-0000	.PIPE	17, 19
2545432-0000	.CLEANING PIPE	15
2545667-0000	.GUIDE	429
2546226-0000	.SUPPORT	419
2546444-0000	.PIPE	15
2546445-0000	.AIR PIPE	15
2546446-0000	.PIPE	15
2546447-0000	.SPRAY PIPE	15
2546448-0000	.SUPPORT	17, 19
2546471-0000	.AIR PIPE	15
2546472-0000	.PIPE	15
2546473-0000	.FILLING PIPE	15
2547006-0000	.RETURN PIPE	15
2547007-0000	.RETURN PIPE	15
2547217-0000	.AXLE PIN	543, 545, 547, 549
2547218-0000	.AXLE PIN	543, 545, 547, 549
2547219-0000	.AXLE PIN	543, 545, 547, 549
2547232-0000	.PIVOT ARM	193, 195
2547315-0000	.SUPPORT	17, 19
2550181-0000	.GASKET	497
2551088-0000	.COVER	597, 599
2552073-0000	.SEAL	387, 389
2552081-0000	.REDUCTION	387, 389
2552527-0000	.BEARING HOUSING	327, 329, 331, 333
2552528-0000	.BEARING HOUSING	327, 329, 331, 333
2552529-0000	.BEARING HOUSING	327, 329, 331, 333
2552530-0000	.BEARING HOUSING	327, 329, 331, 333
2552619-0000	.COVER	555, 557
2552620-0000	.DOOR	555, 557
2552621-0000	.HOLDER	555, 557
2552622-0000	.HOLDER	555, 557
2552624-0000	.BOX BRACKET	543, 545, 547, 549
2552628-0000	.PIN	569
2552630-0000	.MOUNTING PLATE	555, 557
2552631-0000	.AXLE PIN	563, 571, 573
2552632-0000	.ROLLER	563, 571, 573
2552633-0000	.ROLLER	563, 571, 573
2552679-0000	.GLASS PANE	243, 245
2552680-0100	.DOOR	185
2552681-0100	.DOOR	185
2552682-0000	.LOCKING ARM	243, 245
2552683-0000	.LOCKING ARM	243, 245
2552684-0000	.CHUTE	247
2552685-0000	.CHUTE	247
2552686-0000	.KEY	243, 245
2552687-0000	.SPACER	243, 245
2552688-0000	.GUIDE BRACKET	243, 245
2552691-0000	.DOOR	243
2552692-0000	.DOOR	245
2552693-0000	.DOOR	209
2552694-0100	.DOOR	185
2552695-0100	.DOOR	185

Part No	Description	Page No
2552696-0000	.DOOR	211
2552697-0000	.LID	197
2552698-0000	.DISCHARGE CHUTE	197
2552699-0100	.DISCHARGE CHUTE	185
2552700-0100	.COVER PLATES	185
2552701-0000	.TOP SECTION	239
2552702-0000	.COVER	239
2552703-0000	.COVER	239
2552704-0000	.COVER PLATE	239
2552705-0000	.FRONT COVER	239
2552706-0000	.COVER	239
2552707-0000	.COVER PLATE	239
2552708-0000	.COVERING PLATE	239
2552709-0000	.COVERING PLATE	239
2552710-0000	.COVER	239
2552711-0000	.COVER	239
2552712-0000	.SHAFT	197
2552713-0000	.BUSHING	197
2552714-0000	.BRACKET	197
2552720-0000	.PLATE	377, 379
2552721-0000	.CAM	377, 379
2552722-0000	.AXLE PIN	377, 379
2552723-0000	.SPRING BRACKET	377, 379
2552724-0000	.SUPPORT	377, 379
2552726-0000	.GUIDE	377, 379
2552727-0000	.PLATE	377, 379
2552731-0000	.WASHER	377, 379
2552732-0000	.SPRING BRACKET	377, 379
2552734-0001	.BLOCK	377, 379
2552734-0002	.BLOCK	377, 379
2552941-0100	.TOOL	853
2552943-0100	.TOOL	853
2552944-0100	.TOOL	853
2552945-0001	.TEMPLATE	859
2552945-0002	.TEMPLATE	859
2552945-0003	.TEMPLATE	859
2552945-0004	.TEMPLATE	859
2552945-0005	.TEMPLATE	859
2552945-0006	.TEMPLATE	859
2552945-0007	.TEMPLATE	859
2552945-0008	.TEMPLATE	859
2552945-0009	.TEMPLATE	859
2552945-0010	.TEMPLATE	859
2552945-0011	.TEMPLATE	859
2552946-0100	.TOOL	853
2552947-0100	.TOOL	853
2552948-0001	.TEMPLATE	863
2552948-0002	.TEMPLATE	863
2552948-0003	.TEMPLATE	863
2552948-0004	.TEMPLATE	863
2552949-0100	.TOOL	853
2552950-0001	.TEMPLATE	865
2552950-0002	.TEMPLATE	865
2552950-0003	.TEMPLATE	865
2552951-0001	.CLAMP	865
2552951-0002	.CLAMP	865
2552951-0003	.CLAMP	865
2552952-0001	.PLATE	865
2552952-0002	.PLATE	865
2552952-0003	.PLATE	865
2552952-0004	.PLATE	865
2552952-0005	.PLATE	865
2552952-0006	.PLATE	865
2552952-0007	.PLATE	865
2552952-0008	.PLATE	865
2552952-0009	.PLATE	865
2552952-0010	.PLATE	865
2552952-0011	.PLATE	865
2553110-0000	.CAM	353
2553111-0000	.CAM	353
2553175-0000	.EARTH BAR	721
2553176-0100	.EARTH BAR	711, 713, 715
2553350-0000	.GLASS	209, 211
2553830-0100	.FRAME	185
2553831-0000	.FRAME	247
2553832-0000	.FRAME	247
2553895-0000	.COVER	239
2554959-0000	.GUIDE	243, 245
2554960-0000	.BUSBAR LEFT	349
2554961-0000	.BUSBAR RIGHT	347
2554975-0000	.COVER	197
2554977-0001	.BLOCK	377, 379
2554977-0002	.BLOCK	377, 379
2554977-0003	.BLOCK	377, 379

Part No	Description	Page No
2554977-0004	.BLOCK	377, 379
2555063-0000	.PIN	237
2555070-0000	.SIGN	227, 229
2555310-0000	.COIL	25
2555562-0000	.GUIDE	429
2555563-0000	.GUIDE	429
2555564-0000	.GUIDE	429
2555565-0000	.GUIDE	429
2555566-0000	.GUIDE	429
2555567-0000	.GUIDE	429
2555568-0000	.GUIDE	429
2555569-0000	.GUIDE	429
2555571-0000	.GUIDE	429
2555633-0000	.SHAFT	63
2555634-0000	.SHAFT	63
2556243-0000	.SPACER	243, 245
2556246-0000	.HATCH	187
2558744-0000	.PIPE	17, 19
2558745-0000	.PIPE	17, 19
2559068-0000	.BENDING ROLLER	67
2559069-0000	.BENDING ROLLER	67
2559070-0000	.BENDING ROLLER	67
2559071-0000	.BENDING ROLLER	67
2559087-0000	.CLAMP	67
2559093-0000	.PLATE	145, 147
2559121-0000	.BRACKET	419
2559122-0000	.FLANGE	431
2562665-0000	.PUSH BUTTON BOX	145, 147
2564115-0000	.PUSH BUTTON BOX	655
2565736-0000	.RESERVOIR	17, 19
2566107-0000	.PIPE	393
2566108-0000	.PIPE	393
2566433-0100	.TEMPLATE PT19-020V	869
2566434-0000	.BEAM	871
2566435-0000	.BEAM	871
2566436-0000	.BEAM	871
2566437-0000	.ANGLE BRACKET	871
2566438-0000	.SUPPORT	871
2566439-0000	.BUSHING	871
2568779-0000	.DIAGRAM	15
2569884-0000	.TENSION SPROCKET	373
2569976-0000	.VALVE PANEL	665
2569977-0000	.ASEPTIC DIAGRAM	665
2569978-0000	.WATER DIAGRAM	665
2569979-0000	.HYDRAULIC SYSTEM	665
2569980-0000	.LUBRIFICATION DIAGRAM	665
2570391-0000	.PIPE	17, 19
2570392-0000	.RETAINING RING	585
2570393-0000	.BENDING ROLLER	583
2570394-0100	.BENDING ROLLER	575
2570400-0000	.ROD	571, 573
2570401-0000	.ROD	571, 573
2572676-0000	.SUPPORT	17, 19
2574348-0000	.VALVE BRACKET	17, 19
2575480-0000	.HOLDER	571, 573
2575481-0000	.BRACKET	571, 573
2575482-0000	.PIN	571, 573
2575484-0000	.HOLDER	571, 573
2575624-0001	.BLOCK	377, 379
2575624-0002	.BLOCK	377, 379
2575624-0003	.BLOCK	377, 379
2575624-0004	.BLOCK	377, 379
2575624-0005	.BLOCK	377, 379
2575624-0006	.BLOCK	377, 379
2575624-0007	.BLOCK	377, 379
2575624-0008	.BLOCK	377, 379
2575624-0009	.BLOCK	377, 379
2575624-0010	.BLOCK	377, 379
2575624-0011	.BLOCK	377, 379
2575625-0001	.BLOCK	377, 379
2575625-0002	.BLOCK	377, 379
2575625-0003	.BLOCK	377, 379
2575625-0004	.BLOCK	377, 379
2575625-0005	.BLOCK	377, 379
2575625-0006	.BLOCK	377, 379
2575625-0007	.BLOCK	377, 379
2575625-0008	.BLOCK	377, 379
2575625-0009	.BLOCK	377, 379
2575625-0010	.BLOCK	377, 379
2575625-0011	.BLOCK	377, 379
2576239-0000	.HOLDER	571, 573
2576240-0100	.STRIP GUIDE	555, 557
2576243-0100	.STRIP GUIDE	555, 557
2576344-0001	.LEVER	377, 379

Part No	Description	Page No
2576344-0002	.LEVER	377, 379
2576344-0003	.LEVER	377, 379
2576344-0004	.LEVER	377, 379
2576344-0005	.LEVER	377, 379
2576344-0006	.LEVER	377, 379
2576344-0007	.LEVER	377, 379
2576344-0008	.LEVER	377, 379
2576344-0009	.LEVER	377, 379
2576344-0010	.LEVER	377, 379
2576344-0011	.LEVER	377, 379
2576345-0000	.AXLE PIN	377, 379
2576346-0000	.ROLLER	377, 379
2576347-0000	.SHAFT	377, 379
2576348-0000	.SHAFT	377, 379
2576349-0000	.ROLLER	377, 379
2576350-0000	.ROLLER	377, 379
2576351-0000	.AXLE PIN	377, 379
2576352-0000	.PLATE	377, 379
2576353-0000	.SUPPORT	377, 379
2588000-0000	.BRACKET	543, 545, 547, 549
2588001-0000	.AXLE PIN	543, 545, 547, 549
2594679-0000	.BLOCK	871
2594680-0000	.BLOCK	871
2598113-0100	.CABLE LEAD-IN PLATE	701, 703
2598114-0000	.DOOR	809, 811
2598198-0000	.FOLDING BAR	401
2598199-0000	.FOLDING BAR	401
2598375-0000	.CABLE DUCT	809, 811
2598376-0000	.CABLE DUCT	809, 811
2598377-0000	.CABLE DUCT	809, 811
2598430-0000	.SUPPORT	845
2603016-0000	.BRACKET	563
2603631-0000	.BRACKET	73, 75
2604460-0000	.CABLE DUCT	711, 713, 715
2604461-0000	.CABLE DUCT	711, 713, 715
2604462-0000	.CABLE DUCT	711, 713, 715
2604463-0000	.CABLE DUCT	711, 713, 715
2604464-0000	.CABLE DUCT	711, 713, 715
2604465-0000	.CABLE DUCT	711, 713, 715
2604466-0000	.CABLE DUCT	711, 713, 715
2604467-0000	.CABLE DUCT	711, 713, 715
2604468-0000	.CABLE DUCT	711, 713, 715
2605572-0000	.AIR DIAGRAM	665
2606879-0000	.PLATE	377, 379
2606880-0000	.HOLDER	377, 379
2606881-0000	.ADJUSTING SCREW	377, 379
2610197-0000	.TOOL	859
2610198-0000	.TOOL	859
2611151-0001	.AIR NOZZLE	387, 389
2611151-0002	.AIR NOZZLE	387, 389
2611152-0000	.AIR NOZZLE	387, 389
2611153-0000	.AIR NOZZLE	387, 389
2611190-0001	.SPACER	387, 389
2611190-0002	.SPACER	387, 389
2611190-0003	.SPACER	387, 389
2611190-0004	.SPACER	387, 389
2611190-0005	.SPACER	387, 389
2611190-0006	.SPACER	387, 389
2611190-0007	.SPACER	387, 389
2611190-0008	.SPACER	387, 389
2611190-0009	.SPACER	387, 389
2611709-0000	.BRACKET	73, 75
2613035-0000	.SUPPORT	227, 229
2614370-0100	.SERVICE PARTS	851
2615467-0000	.BRACKET	871
2618263-0000	.CONTAINER	73, 75
2618264-0000	.PIPE	73, 75
2618265-0000	.PIPE	73, 75
2618266-0000	.PIPE	73, 75
2618387-0000	.INSERT	787, 789, 791, 793, 795, 797, 799, 801, 803
2619758-0100	.HEAD SPACE BY INJECTION	11, 13
2623674-0100	.CONNECTION BOX	17, 19
2632603-0000	.CHECKER PLATE	223, 225
2632796-0000	.BRACKET	73, 75
2632811-0000	.PIPE	73, 75
2635109-0000	.CLAMP	73, 75
2641477-0100	.TOOL	853

Part No	Description	Page No

Part No	Description	Page No

Part No	Description	Page No

Part No	Description	Page No

Machine Type	Group Description	Page No

Tetra Pak

SPC
Spare Parts Catalogue

Pos	Part No	Description	Page No
A			
A002.1	90045-0376	CONNECTOR KIT 9-032-011-970	711, 713, 715
A002	90458-0397	SERVO DRIVE DMC2 50720 P	711, 713, 715
A005	67347-0101	CARD BRAKEREG.MAGN.POWDER BRAKE	727, 729
A005:1	67372-0101	BACKPLANE 8TE(32 POLE)	727, 729
A006	67347-0101	CARD BRAKEREG.MAGN.POWDER BRAKE	727, 729
A006.1	67372-0101	BACKPLANE 8TE(32 POLE)	727, 729
A012	90458-1300	2 AXIS DOCKING STATION D2/PLC	711, 713, 715
A013	90458-0746	STEP MOTOR DRIVE L50	711, 713, 715
A014	90458-0746	STEP MOTOR DRIVE L50	711, 713, 715
A015	90458-1300	2 AXIS DOCKING STATION D2/PLC	711, 713, 715
A016	90458-0746	STEP MOTOR DRIVE L50	711, 713, 715
A017	90458-0746	STEP MOTOR DRIVE L50	711, 713, 715
A100	90031-0051	BASEPLATE, 10-SLOT	735
A101	90031-0053	BASEPLATE,10-SLOT	737
A102	90031-0057	PLC, DIGITAL INPUT MODULE	735
A103	90031-0057	PLC, DIGITAL INPUT MODULE	735
A104	90031-0057	PLC, DIGITAL INPUT MODULE	735
A105	90031-0057	PLC, DIGITAL INPUT MODULE	735
A106	90031-0058	PLC, DIGITAL INPUT MODULE	735
A107	90031-0059	PLC, DIGITAL OUTPUT MODULE	735
A108	90031-0062	PLC, ANALOG OUTPUT MODULE 8PT/CURR/VOLT	735
A109	90031-0063	PLC,ANALOG COMBO MODULE,IN-4PT/OUT-2PT	735
A111	90031-0057	PLC, DIGITAL INPUT MODULE	737
A112	90031-0057	PLC, DIGITAL INPUT MODULE	737
A113	90031-0057	PLC, DIGITAL INPUT MODULE	737
A114	90031-0059	PLC, DIGITAL OUTPUT MODULE	737
A115	90031-0059	PLC, DIGITAL OUTPUT MODULE	737
A116	90031-0059	PLC, DIGITAL OUTPUT MODULE	737
A117	90031-0059	PLC, DIGITAL OUTPUT MODULE	737
A118	90031-0059	PLC, DIGITAL OUTPUT MODULE	737
A119	90031-0059	PLC, DIGITAL OUTPUT MODULE	737
A120	90031-0059	PLC, DIGITAL OUTPUT MODULE	737
A121	90031-0059	PLC, DIGITAL OUTPUT MODULE	739
A122	90031-0059	PLC, DIGITAL OUTPUT MODULE	739
A123	90031-0059	PLC, DIGITAL OUTPUT MODULE	739
A124	90031-0059	PLC, DIGITAL OUTPUT MODULE	739
A125	90031-0057	PLC, DIGITAL INPUT MODULE	739
A126	90031-0057	PLC, DIGITAL INPUT MODULE	739
A127	90031-0057	PLC, DIGITAL INPUT MODULE	739
A128	90031-0057	PLC, DIGITAL INPUT MODULE	739
A135	90031-0053	BASEPLATE,10-SLOT	739
A200	90410-0051	TEMPERATURE CONTROLLER, KS 40	821, 823
A200.1	359241-0123	SIGN, TEMP. PRE-STERILIZATION VALVE	821, 823
A201	90410-0051	TEMPERATURE CONTROLLER, KS 40	821, 823
A201.1	359241-0141	SIGN, PEROXIDE / WATER BATH	821, 823
A202	90410-0051	TEMPERATURE CONTROLLER, KS 40	821, 823
A202.1	359241-0131	SIGN, TEMP. LS HEATER	821, 823
A203	90410-0051	TEMPERATURE CONTROLLER, KS 40	821, 823
A203.1	359241-0130	SIGN, TEMP. AIR SUPER HEATER	821, 823
A204	90410-0051	TEMPERATURE CONTROLLER, KS 40	821, 823
A204.1	359241-0126	SIGN, TEMP. AIR KNIFE	821, 823
A205	90410-0051	TEMPERATURE CONTROLLER, KS 40	821, 823
A205.1	359241-0121	SIGN "STEAM"	821, 823
A206	90410-0051	TEMPERATURE CONTROLLER, KS 40	821, 823
A206.1	359241-0125	SIGN, PEROXIDE BATH	821, 823
A209	90410-0051	TEMPERATURE CONTROLLER, KS 40	821, 823
A209.1	359241-0439	SIGN"PATCH SEALER"	821, 823
A210	90410-0051	TEMPERATURE CONTROLLER, KS 40	821, 823
A210.1	359241-0460	SIGN "PATCH SEALER 2"	821, 823
A211	90410-0051	TEMPERATURE CONTROLLER, KS 40	821, 823
A211.1	359241-0444	SIGN"TAB RESEAL"	821, 823
A212	90410-0051	TEMPERATURE CONTROLLER, KS 40	821, 823
A212.1	359241-0338	SIGN "FLAP HEAT TOP L"	821, 823
A213	90410-0051	TEMPERATURE CONTROLLER, KS 40	821, 823
A213.1	359241-0337	SIGN "FLAP HEAT TOP R"	821, 823
A214	90410-0051	TEMPERATURE CONTROLLER, KS 40	821, 823
A214.1	359241-0340	SIGN "FLAPPHEAT BOTTOM L"	821, 823
A215	90410-0051	TEMPERATURE CONTROLLER, KS 40	821, 823
A215.1	359241-0339	SIGN "FLAPPHEAT BOTTOM R"	821, 823
A216	90410-0051	TEMPERATURE CONTROLLER, KS 40	821, 823
A216.1	90457-0058	SIGN, LS SHORT STOP	821, 823
A300	90458-2580	LEVEL CONTROL RELAY RM4-LA32M	733
A301	90458-2580	LEVEL CONTROL RELAY RM4-LA32M	733
A302	90458-2580	LEVEL CONTROL RELAY RM4-LA32M	733
A303	90458-2580	LEVEL CONTROL RELAY RM4-LA32M	733
A305	90458-2580	LEVEL CONTROL RELAY RM4-LA32M	733
A307	90458-2580	LEVEL CONTROL RELAY RM4-LA32M	733
A310.1	67372-0101	BACKPLANE 8TE(32 POLE)	727, 729
A310	559810-0101	TMCC2 CONTROLLER	727, 729
A400.1	67372-0101	BACKPLANE 8TE(32 POLE)	727, 729
A400	559810-0101	TMCC2 CONTROLLER	727, 729
A401.1	67372-0101	BACKPLANE 8TE(32 POLE)	727, 729

Pos	Part No	Description	Page No
A			
A401	559810-0101	TMCC2 CONTROLLER	727, 729
A450	90453-0002	MODEM MD-12 DC	769
A452	1363288-0301	FLEXBOX TETRA BRIK	767
A454	90456-0001	INTOUCH OEM 2000 V.5.6B/6.0B HW KEY	767
A500.1	90458-1423	CONNECTOR, PC 4/4-STF-7.62	841
A500.2	90458-1424	CONNECTOR, MSTB 2.5/10-STF-5.08	841
A500.3	359241-0135	SIGN, TRANSVERSAL SEALING	841
A500	1499642-0101	TPIH 2500 HORIZONTAL MOUNTING	841
A501.1	90458-1423	CONNECTOR, PC 4/4-STF-7.62	841
A501.2	90458-1424	CONNECTOR, MSTB 2.5/10-STF-5.08	841
A501.3	359241-0132	SIGN, TEMP. STRIP APPLICATOR	841
A501	1499642-0101	TPIH 2500 HORIZONTAL MOUNTING	841
A504	90119-0089	SAFETY RELAY, JSBT4 24VDC	733
A505	90119-0072	SAFETY RELAY, JSBR4	733
A506	90119-0072	SAFETY RELAY, JSBR4	733
A507	90119-0072	SAFETY RELAY, JSBR4	733
A509	90119-0072	SAFETY RELAY, JSBR4	733
A510	90458-2580	LEVEL CONTROL RELAY RM4-LA32M	733
A511.1	67372-0101	BACKPLANE 8TE(32 POLE)	727, 729
A511	559810-0101	TMCC2 CONTROLLER	727, 729
A512	90119-0072	SAFETY RELAY, JSBR4	733
A518	90410-0051	TEMPERATURE CONTROLLER, KS 40	821, 823
A518.1	359241-0268	SIGN	821, 823
A520	90119-0084	EXPANSION RELAY, JSR1T-500MS	733
A600	90119-0104	OPTO COUPLER AMMS 50070	733
A601	90119-0063	OPTO-RELAY, DC/DC AMMS-10-1/30VDC	733
A602	90119-0063	OPTO-RELAY, DC/DC AMMS-10-1/30VDC	733
A604	90119-0063	OPTO-RELAY, DC/DC AMMS-10-1/30VDC	733
A605	90119-0063	OPTO-RELAY, DC/DC AMMS-10-1/30VDC	733
A606	90119-0063	OPTO-RELAY, DC/DC AMMS-10-1/30VDC	733
A607	90119-0104	OPTO COUPLER AMMS 50070	733
A608	90119-0104	OPTO COUPLER AMMS 50070	733
A609	90119-0104	OPTO COUPLER AMMS 50070	733
A610	90119-0104	OPTO COUPLER AMMS 50070	733
B			
B001	90044-0192	LIMIT SW. SZ2586.000	771, 773
B002	90044-0192	LIMIT SW. SZ2586.000	771, 773
B003	90044-0192	LIMIT SW. SZ2586.000	771, 773
B004	90044-0192	LIMIT SW. SZ2586.000	771, 773
B005	90044-0192	LIMIT SW. SZ2586.000	771, 773
B006	90044-0192	LIMIT SW. SZ2586.000	771, 773
B007	90044-0192	LIMIT SW. SZ2586.000	771, 773
B008	90458-1114	BIMET. ELECTROMECH. THERMOSTAT K7H.020	765
D			
D100	90031-0075	CPU363, SERIAL COMMUNICATION	735
E			
E004	90459-2560	LIGHT FIXTURE, TMS121 1XTL-D30W/830 IP	771, 773
E005	90459-2560	LIGHT FIXTURE, TMS121 1XTL-D30W/830 IP	771, 773
E006	90459-3090	LIGHT FIXTURE, TMS121 1XTL8W/830 IP	771, 773
F			
F001	90007-0129	CIRCUIT BREAKER, 1P 10 A K	817
F001	293685-0200	PRINTING WHEEL SS	631, 633
F002	90007-0129	CIRCUIT BREAKER, 1P 10 A K	813
F002	458192-0300	INK UNIT SS	631, 633
F003	751718-0100	HOLDER	631, 633
F004	90007-0129	CIRCUIT BREAKER, 1P 10 A K	817
F004	543143-0100	ADJUSTMENT DEVICE	631, 633
F005	90007-0128	CIRCUIT BREAKER, 1P 6 A K	817
F006	90007-0146	CIRCUIT BREAKER, 3P 6 A K	813
F007	90007-0149	CIRCUIT BREAKER, 3P 20 A K	817
F008	90007-0129	CIRCUIT BREAKER, 1P 10 A K	817
F009	90007-0129	CIRCUIT BREAKER, 1P 10 A K	817
F010	90007-0129	CIRCUIT BREAKER, 1P 10 A K	813
F011	90007-0128	CIRCUIT BREAKER, 1P 6 A K	813
F012.1	90007-0312	AUXILIARY CONTACT	813
F012	90459-2063	CIRCUIT BREAKER, 1P 0,75 A K	813
F013	90007-0146	CIRCUIT BREAKER, 3P 6 A K	817
F014	90007-0128	CIRCUIT BREAKER, 1P 6 A K	817
F015	90007-0129	CIRCUIT BREAKER, 1P 10 A K	817
F016	90007-0131	CIRCUIT BREAKER, 1P 16 A K	813
F017	90007-0128	CIRCUIT BREAKER, 1P 6 A K	813
F019	90007-0129	CIRCUIT BREAKER, 1P 10 A K	813
F021	90007-0155	CIRCUIT BREAKER, 1P 0,5 A K	813
F024	90111-0172	EARTH FAULT BREAKER, F 362-25/0.03	813
F025	90458-1448	MAGNETIC FUSE, S292 C100	813
F027	90007-0129	CIRCUIT BREAKER, 1P 10 A K	813
F030	90007-0155	CIRCUIT BREAKER, 1P 0,5 A K	813
F032	90007-0128	CIRCUIT BREAKER, 1P 6 A K	813
F033	90007-0129	CIRCUIT BREAKER, 1P 10 A K	817
F034	90459-2195	CIRCUIT BREAKER, 3P 2 A K	817
F100	90233-0027	TUBE FUSE, 16A	815
F100.1	90233-0303	FUSE HOLDER, ST10	815

Pos	Part No	Description	Page No
F			
F101	90233-0029	TUBE FUSE, 25A	815
F101.1	90233-0303	FUSE HOLDER, ST10	815
F102.1	90233-0304	FUSE HOLDER, ST10	815
F102	90459-1254	TUBE FUSE, 4A 500V	815
F103.1	90233-0304	FUSE HOLDER, ST10	815
F103	90459-1254	TUBE FUSE, 4A 500V	815
F104	90233-0027	TUBE FUSE, 16A	815
F104.1	90233-0303	FUSE HOLDER, ST10	815
F106	90233-0028	TUBE FUSE, 10A	815
F106.1	90233-0303	FUSE HOLDER, ST10	815
F107	90233-0028	TUBE FUSE, 10A	815
F107.1	90233-0303	FUSE HOLDER, ST10	815
G			
G001	90430-0070	FREQ.CONV. 6SE3213-6CA40	711, 713, 715
G002	90430-0070	FREQ.CONV. 6SE3213-6CA40	711, 713, 715
G003	90430-0070	FREQ.CONV. 6SE3213-6CA40	711, 713, 715
G004	90430-0076	FREQ.CONV. 6SE3221-3DC40	711, 713, 715
G005	90430-0070	FREQ.CONV. 6SE3213-6CA40	711, 713, 715
G006	90430-0070	FREQ.CONV. 6SE3213-6CA40	711, 713, 715
G100	90031-0068	PLC, POWER SUPPLY	735
G101	90031-0068	PLC, POWER SUPPLY	737
G102	90031-0068	PLC, POWER SUPPLY	739
K			
K001	90075-0124	CONTACTOR, 4KW 24VDC	741
K002	90075-0127	CONTACTOR, 4KW 24VDC	753
K003	90458-2924	CONTACTOR 30KW COIL 24VDC	711, 713, 715
K003.1	90458-2925	AUXILIARY CONTACT, DIL M820-XHI11-SI	711, 713, 715
K004	90075-0128	CONTACTOR, 7,5KW 24VDC	753
K005	90075-0125	CONTACTOR, 7,5KW 24VDC	741
K006	90075-0125	CONTACTOR, 7,5KW 24VDC	741
K007	90075-0124	CONTACTOR, 4KW 24VDC	741
K008	90075-0125	CONTACTOR, 7,5KW 24VDC	741
K009	90075-0124	CONTACTOR, 4KW 24VDC	741
K011	90075-0125	CONTACTOR, 7,5KW 24VDC	741
K012	90075-0124	CONTACTOR, 4KW 24VDC	741
K013	90075-0124	CONTACTOR, 4KW 24VDC	741
K014	90075-0128	CONTACTOR, 7,5KW 24VDC	753
K015	90075-0125	CONTACTOR, 7,5KW 24VDC	741
K016	90075-0125	CONTACTOR, 7,5KW 24VDC	741
K017	90075-0124	CONTACTOR, 4KW 24VDC	741
K018	90075-0125	CONTACTOR, 7,5KW 24VDC	741
K019	90075-0125	CONTACTOR, 7,5KW 24VDC	741
K020	90075-0127	CONTACTOR, 4KW 24VDC	741
K021	90075-0127	CONTACTOR, 4KW 24VDC	741
K022	90075-0128	CONTACTOR, 7,5KW 24VDC	741
K024	90075-0124	CONTACTOR, 4KW 24VDC	741
K026	90075-0124	CONTACTOR, 4KW 24VDC	741
K028	90458-1302	CONTACTOR, 4KW 48VAC	753
K029	90075-0141	CONTACTOR, 4KW 24VDC	753
K030	90458-2924	CONTACTOR 30KW COIL 24VDC	711, 713, 715
K030.1	90458-2925	AUXILIARY CONTACT, DIL M820-XHI11-SI	711, 713, 715
K031	90458-1302	CONTACTOR, 4KW 48VAC	741
K032	90075-0125	CONTACTOR, 7,5KW 24VDC	741
K097	90119-0086	RELAY, AUXILIARY MY4IN4 24VDC	725
K097.1	90119-0309	BASE UNIT, TYPE PYF 14AE	725
K097.2	90119-0310	CLAMP, TYPE PYC-A1	725
K098	90119-0086	RELAY, AUXILIARY MY4IN4 24VDC	725
K098.1	90119-0309	BASE UNIT, TYPE PYF 14AE	725
K098.2	90119-0310	CLAMP, TYPE PYC-A1	725
K099	90119-0056	RELAY, AUXILIARY MK3P5-S 24VDC	725
K099.1	90129-0006	BASE, S3-B	725
K100	90119-0056	RELAY, AUXILIARY MK3P5-S 24VDC	725
K100.1	90129-0006	BASE, S3-B	725
K101	90119-0109	RELAY OMRON 24VDC MY4H	725
K101.1	90119-0309	BASE UNIT, TYPE PYF 14AE	725
K101.2	90119-0310	CLAMP, TYPE PYC-A1	725
K102	90119-0056	RELAY, AUXILIARY MK3P5-S 24VDC	725
K102.1	90129-0006	BASE, S3-B	725
K103	90119-0056	RELAY, AUXILIARY MK3P5-S 24VDC	725
K103.1	90129-0006	BASE, S3-B	725
K104	90119-0056	RELAY, AUXILIARY MK3P5-S 24VDC	725
K104.1	90129-0006	BASE, S3-B	725
K105	90119-0056	RELAY, AUXILIARY MK3P5-S 24VDC	725
K105.1	90129-0006	BASE, S3-B	725
K106	90119-0056	RELAY, AUXILIARY MK3P5-S 24VDC	725
K106.1	90129-0006	BASE, S3-B	725
K107	90119-0056	RELAY, AUXILIARY MK3P5-S 24VDC	725
K107.1	90129-0006	BASE, S3-B	725
K110	90119-0056	RELAY, AUXILIARY MK3P5-S 24VDC	725
K110.1	90129-0006	BASE, S3-B	725
K112	90119-0086	RELAY, AUXILIARY MY4IN4 24VDC	725
K112.1	90119-0309	BASE UNIT, TYPE PYF 14AE	725

Pos	Part No	Description	Page No
K			
K112.2	90119-0310	CLAMP, TYPE PYC-A1	725
K113	90119-0086	RELAY, AUXILIARY MY4IN4 24VDC	725
K113.1	90119-0309	BASE UNIT, TYPE PYF 14AE	725
K113.2	90119-0310	CLAMP, TYPE PYC-A1	725
K200	90119-0067	SOLID-STATE RELAY, H12WD4850	743, 745
K201	90119-0067	SOLID-STATE RELAY, H12WD4850	747
K202	90119-0067	SOLID-STATE RELAY, H12WD4850	747
K203	90119-0067	SOLID-STATE RELAY, H12WD4850	747
K204	90119-0067	SOLID-STATE RELAY, H12WD4850	747
K205	90119-0067	SOLID-STATE RELAY, H12WD4850	743, 745
K206	90119-0067	SOLID-STATE RELAY, H12WD4850	743, 745
K207	90119-0067	SOLID-STATE RELAY, H12WD4850	749
K208	90119-0067	SOLID-STATE RELAY, H12WD4850	749
K209	90119-0067	SOLID-STATE RELAY, H12WD4850	749
K210	90119-0067	SOLID-STATE RELAY, H12WD4850	723
K211	90119-0067	SOLID-STATE RELAY, H12WD4850	723
K212	90119-0067	SOLID-STATE RELAY, H12WD4850	723
K213	90119-0067	SOLID-STATE RELAY, H12WD4850	723
K215	90119-0067	SOLID-STATE RELAY, H12WD4850	743, 745
K250	90119-0086	RELAY, AUXILIARY MY4IN4 24VDC	725
K250.1	90119-0309	BASE UNIT, TYPE PYF 14AE	725
K250.2	90119-0310	CLAMP, TYPE PYC-A1	725
K251	90119-0086	RELAY, AUXILIARY MY4IN4 24VDC	725
K251.1	90119-0309	BASE UNIT, TYPE PYF 14AE	725
K251.2	90119-0310	CLAMP, TYPE PYC-A1	725
K252	90119-0086	RELAY, AUXILIARY MY4IN4 24VDC	725
K252.1	90119-0309	BASE UNIT, TYPE PYF 14AE	725
K252.2	90119-0310	CLAMP, TYPE PYC-A1	725
K915	90119-0056	RELAY, AUXILIARY MK3P5-S 24VDC	725
K915.1	90129-0006	BASE, S3-B	725
L			
L001	90297-0306	BALLAST COIL 50/60 HZ	711, 713, 715
M			
MB080:1	90458-0601	PHOTOCELL, SICK PHOTOCELL 1	165, 167
MB080:2	90458-0601	PHOTOCELL, SICK PHOTOCELL 1	165, 167
M001	90457-0056	FAN 7450 ES	711, 713, 715
M016	90457-0063	COOLING UNIT, KB17TB.CBB	839
MA451	90453-0001	MODEM MA-12	675
MB001	90061-0027	ANGLE ENCODER 670900035	283
MB002	90274-0074	PRESSURE GUARD, 530 KPA	471, 473
MB004	90326-0052	THERMO ELEMENT	29, 31
MB006	90274-0084	PRESSURE GUARD, 1800 KPA	511
MB007	90274-0056	PRESSURE SWITCH, 100 - 1200 KPA	471, 473
MB009	90044-0194	PROX.SW. IN5329/IN3002-BPKG	555, 557
MB010	90044-0151	LIMIT SW. GLEB24C	277
MB011	90459-0472	KEY SAF.SW. AZ 16 02ZVRK-M20-2152-2254	247
MB012	90459-0472	KEY SAF.SW. AZ 16 02ZVRK-M20-2152-2254	247
MB013	312105-0372	SCREW M6S ISO 4017 M6X25 A480	415
MB015	90459-0472	KEY SAF.SW. AZ 16 02ZVRK-M20-2152-2254	209
MB019	90459-0472	KEY SAF.SW. AZ 16 02ZVRK-M20-2152-2254	211
MB020	90458-0894	PROXIMITY SENSOR E2E2-X10MB1-5M	407
MB032	90044-0194	PROX.SW. IN5329/IN3002-BPKG	543, 545, 547, 549
MB034	567070-0011	ELECTRODE	29, 31
MB034	567070-0019	ELECTRODE	29, 31
MB038	90326-0052	THERMO ELEMENT	29, 31
MB039	90326-0051	THERMOCOUPLE, 12826-33	51, 53
MB040	90326-0051	THERMOCOUPLE, 12826-33	139
MB043.1	567070-0010	ELECTRODE	97, 99
MB043.2	567070-0013	ELECTRODE	97, 99
MB045	90457-0019	LEVEL PROBE, HMFB-S=45-0=80-0=90-T70	513, 515
MB046	90044-0194	PROX.SW. IN5329/IN3002-BPKG	63
MB047	90044-0104	PROX.SWITCH IFM IN 3002	65
MB050	90326-0089	THERMOCOUPLE, 5110-089-000	73, 75
MB051	90458-0676	PROXIMITY SWITCH,E2EG-X5B1-6M	73, 75
MB053	90044-0194	PROX.SW. IN5329/IN3002-BPKG	73, 75
MB055	90326-0051	THERMOCOUPLE, 12826-33	69
MB061	90044-0194	PROX.SW. IN5329/IN3002-BPKG	57, 59
MB062	90274-0045	PRESSURE GUARD, 14 KPA	191
MB063	90044-0194	PROX.SW. IN5329/IN3002-BPKG	139
MB064	567070-0012	ELECTRODE	505
MB071	90457-0047	SENSOR 2750-1-5111-1 W.ADAPTER PNP	69
MB072	90326-0080	THERMOCOUPLE, 5110080-000	387, 389
MB073	90326-0080	THERMOCOUPLE, 5110080-000	387, 389
MB074	90326-0080	THERMOCOUPLE, 5110080-000	387, 389
MB075	90326-0080	THERMOCOUPLE, 5110080-000	387, 389
MB085	979500-0001	ELECTRODE	29, 31
MB094	90044-0116	CYLINDER,SENSOR	45
MB095	1282411-0000	FLOAT	489
MB104	90044-0194	PROX.SW. IN5329/IN3002-BPKG	73, 75
MB108	90044-0139	KEY SAF.SW. AZ16-02 ZVR K-2254	611, 613, 615
MB109	90044-0194	PROX.SW. IN5329/IN3002-BPKG	543, 545, 547, 549
MB111	90044-0194	PROX.SW. IN5329/IN3002-BPKG	543, 545, 547, 549

Pos	Part No	Description	Page No
M			
MB112	...42063-0100	LEVEL DETECTOR	179
MB115	...90044-0139	KEY SAF.SW. AZ16-02 ZVR K-2254	597, 599
MB116	...1478814-0000	SENSOR	95
MB117	...90044-0145	PROX.SW. 922 AAIY-A9P-050-LZ876	95
MB119	...90044-0117	PROX.SW. IX 0208	431
MB120	...90044-0124	PROX.SW. 922AB2XM-A9P-050-LZ-876	283
MB132	...90458-0747	SENSOR FOR CYLINDER, SMH-1PC	301, 303
MB134	...90450-0747	INTERMEDIATE PLATE	297, 299
MB149	...90458-0675	PROXIMITY SENSOR, E2EG-X5MB1-5M	603, 605
MB150	...90458-0675	PROXIMITY SENSOR, E2EG-X5MB1-5M	603, 605
MB153	...90044-0104	PROX.SWITCH IFM IN 3002	23
MB154	...90044-0194	PROX.SW. IN5329/IN3002-BPKG	611, 613, 615
MB154	...90232-0123	PH.CELL WLL170-P135-6011723	657, 659
MB154.1	90232-0347	FIBRE LL3-TB01 5 308050	655
MB160	...90458-0675	PROXIMITY SENSOR, E2EG-X5MB1-5M	173
MB236	...90044-0194	PROX.SW. IN5329/IN3002-BPKG	559, 561
MB510.1	567070-0014	ELECTRODE	17, 19
MB510.2	567070-0014	ELECTRODE	19
MB511	...90274-0066	PRESSURE SWITCH, 5,516 - 689,5 KPA	17, 19
MB512	...90458-0676	PROXIMITY SWITCH,E2EG-X5B1-6M	73, 75
MB517	...90044-0104	PROX.SWITCH IFM IN 3002	27
MB518	...90326-0060	THERMOCOUPLE, CR-AL	23
MB519	...90044-0104	PROX.SWITCH IFM IN 3002	27
MB521	...90458-2619	FLOW METER, D-6230-HGB-BB-AV-99-0-N2	17, 19
ME003	...90164-0015	LIGHT FIXTURE, DWDCV111B/230V 50HZ	655
ML001	...571872-0000	BUSBAR,LEFT	349
ML001	...2554960-0000	BUSBAR LEFT	349
ML002	...571871-0000	BUSBAR,RIGHT	347
ML002	...2554961-0000	BUSBAR RIGHT	347
ML003	...1035587-0000	INDUCTOR	565
MM001	..90457-0172	MOTOR 3GAA 131001-ASA	257
MM004	..90457-0131	PUMP SV805 R22T 50HZ	415
MM004	..90458-2762	PUMP SV805 R406T 60HZ	415
MM005	..90045-0228	MOTOR MEZ-4AP80-4-B5-0	513, 515
MM006	..90321-0037	PUMP C-6125P EP 220V;50HZ	445
MM007	..90270-0017	COMPRESSOR NASH/ELMO 112 MB/4-2083	487
MM010	..90045-0087	MOTOR 3GAA 071002-CSA M2AA 71B	493
MM017	..2526863-0000	PUMP	29, 31
MM018	..90045-0161	MOTOR MGC 11	503
MM019	..90458-1879	GEARS, WORM MOTOR 528V--L06-B01	67
MM021	..90069-0600	GEARS, WORM MOTOR ODM90-60KE5	603, 605
MM132	..90458-1301	CYLINDER ETS32-M10NA2X-FM50-AEUM1D	301, 303
MM134	..90458-1301	CYLINDER ETS32-M10NA2X-FM50-AEUM1D	297, 299
MR032	..449939-0001	HEATING ELEMENT 15KW	51, 53
MR033	...1538473-0000	SEALING BLOCK	539
MR034	...1524481-0000	SEALING BLOCK	541
MR035	..90459-1094	HEATING ELEMENT, 3000W 240V	43
MR036	..90206-0070	HEATING ELEMENT 6000W 380/220V	29, 31
MR037	..90206-0031	HEATING ELEMENT 700+1200W,220V	47
MS004	...90064-0124	SWITCH, EM. STOP, ZB2-BS844+ZB2-BZ1045	145, 147
MS004.1	486826-0001	SIGN "EMERGENCY STOP"	145, 147
MS005	...90458-1651	EMERGENCY STOP, ZB4-BS-844 ZB4-BZ-104	537
MS005.1	486826-0001	SIGN "EMERGENCY STOP"	537
MS008	...90064-0085	PUSH BUTTON, RED	655
MS008.1	359301-0110	SIGN "SHORT STOP"	655
MS011	...90064-0124	SWITCH, EM. STOP, ZB2-BS844+ZB2-BZ1045	655
MS011.1	486826-0001	SIGN "EMERGENCY STOP"	655
MS035	...90064-0085	PUSH BUTTON, RED	537
MS035.1	359301-0110	SIGN "SHORT STOP"	537
MT001	...67379-0254	TRANSFORMER	349
MT001	...67379-0262	TRANSFORMER	349
MT001	...67379-0264	TRANSFORMER	349
MT001	...67379-0265	TRANSFORMER	349
MT002	...67379-0254	TRANSFORMER	347
MT002	...67379-0262	TRANSFORMER	347
MT002	...67379-0264	TRANSFORMER	347
MT002	...67379-0265	TRANSFORMER	347
MX002	...2506331-0200	CONNECTION BOX	421
MX004.1	90326-0012	PROTECTIVE COVER, T31A4618	29, 31
MX004	...90326-0020	PLUG, FEMALE YELLOW CR-AL	29, 31
MX006	...90195-0020	TERMINAL BLOCK, 1977.2	445
MX007	...456827-0400	CONNECTION BOX	187
MX008	...1036443-0000	CONTACT UNIT	387, 389
MX009	...1036443-0000	CONTACT UNIT	387, 389
MX010	...1036443-0000	CONTACT UNIT	387, 389
MX011	...1036443-0000	CONTACT UNIT	387, 389
MX020	...2501466-0100	CONNECTION BOX	675
MX021	...2501465-0100	CONNECTION BOX	675
MX022	...2510844-0100	CONNECTION BOX	675
MX031	...580064-0200	CONNECTION BOX	527, 529
MX032	...90042-0535	TERMINAL BOARD 19 CORDS	475, 477, 479
MX033	...90042-0535	TERMINAL BOARD 19 CORDS	475, 477, 479

Pos	Part No	Description	Page No
M			
MX034	...90042-0535	TERMINAL BOARD 19 CORDS	475, 477, 479
MX035	...90042-0535	TERMINAL BOARD 19 CORDS	475, 477, 479
MX038.1	90326-0012	PROTECTIVE COVER, T31A4618	29, 31
MX038	...90326-0020	PLUG, FEMALE YELLOW CR-AL	29, 31
MX039.1	90326-0012	PROTECTIVE COVER, T31A4618	51, 53
MX039	...90326-0020	PLUG, FEMALE YELLOW CR-AL	51, 53
MX040.1	90326-0012	PROTECTIVE COVER, T31A4618	139
MX040	...90326-0020	PLUG, FEMALE YELLOW CR-AL	139
MX050.1	90326-0012	PROTECTIVE COVER, T31A4618	73, 75
MX050	...90326-0020	PLUG, FEMALE YELLOW CR-AL	73, 75
MX055.1	90326-0012	PROTECTIVE COVER, T31A4618	69
MX055	...90326-0020	PLUG, FEMALE YELLOW CR-AL	69
MX060	...1558318-0100	CONNECTION BOX	655
MX061	...90110-0170	FEMALE INSERT 10-POLE	655
MX061.1	90110-0171	COVER 10-POLE	655
MX061	...90110-0216	MALE INSERT 70 310 1040 0	233
MX061.1	90458-2418	CHASSI HOUSING 10-POLE, 70.331.1028.0	233
MX075	...67380-0208	TRANSFORMER	565
MX079.1	90326-0012	PROTECTIVE COVER, T31A4618	47
MX212	...90326-0022	PLUG, MALE YELLOW CR-AL	387, 389
MX213	...90326-0022	PLUG, MALE YELLOW CR-AL	387, 389
MX214	...90326-0022	PLUG, MALE YELLOW CR-AL	387, 389
MX215	...90326-0022	PLUG, MALE YELLOW CR-AL	387, 389
MX518.2	90326-0012	PROTECTIVE COVER, T31A4618	23
MX518.1	90326-0020	PLUG, FEMALE YELLOW CR-AL	23
MX518	...90326-0022	PLUG, MALE YELLOW CR-AL	23
MY001	...90042-0539	PILOT VALVE L=350MM	475, 477, 479
MY002	...90042-0539	PILOT VALVE L=350MM	475, 477, 479
MY003	...90042-0539	PILOT VALVE L=350MM	475, 477, 479
MY004	...544906-0000	SOLENOID VALVE	97, 99
MY005	...90042-0539	PILOT VALVE L=350MM	475, 477, 479
MY006	...90042-0539	PILOT VALVE L=350MM	475, 477, 479
MY007	...90042-0539	PILOT VALVE L=350MM	475, 477, 479
MY008	...90042-0539	PILOT VALVE L=350MM	475, 477, 479
MY009	...90042-0539	PILOT VALVE L=350MM	475, 477, 479
MY017	...90042-0539	PILOT VALVE L=350MM	475, 477, 479
MY019	...90042-0539	PILOT VALVE L=350MM	475, 477, 479
MY020	...90042-0539	PILOT VALVE L=350MM	475, 477, 479
MY021	...90042-0539	PILOT VALVE L=350MM	475, 477, 479
MY022	...90458-2200	ELECTROMAGNETIC CLUTCH, 30 MM/24 VDC	255
MY023	...90042-0539	PILOT VALVE L=350MM	475, 477, 479
MY024	...90042-0539	PILOT VALVE L=350MM	475, 477, 479
MY025	...90042-0539	PILOT VALVE L=350MM	475, 477, 479
MY026	...90042-0539	PILOT VALVE L=350MM	475, 477, 479
MY027	...90042-0539	PILOT VALVE L=350MM	475, 477, 479
MY029	...90042-0172	SOLENOID VALVE 4023/1005/1032 24VDC	461
MY030	...90042-0539	PILOT VALVE L=350MM	475, 477, 479
MY031	...90042-0172	SOLENOID VALVE 4023/1005/1032 24VDC	459
MY032	...90042-0172	SOLENOID VALVE 4023/1005/1032 24VDC	459
MY033	...90042-0134	SOLENOID VALVE ASCO SCG 210 802 24VDC	517
MY034	...90042-0171	SOLENOID VALVE BUERKERT	97, 99
MY035	...544906-0000	SOLENOID VALVE	97, 99
MY037	...90042-0539	PILOT VALVE L=350MM	475, 477, 479
MY039	...90042-0173	SOLENOID VALVE BURKERT	471, 473
MY043	...90432-0023	BRAKE ORTLINGHAUS	255
MY051	...90042-0173	SOLENOID VALVE BURKERT	453
MY052	...90457-0170	DIRECTION VALVE, NO. 0 810 091 212	513, 515
MY086	...90042-0539	PILOT VALVE L=350MM	475, 477, 479
MY100	...90042-0539	PILOT VALVE L=350MM	475, 477, 479
MY102	...90042-0539	PILOT VALVE L=350MM	475, 477, 479
MY103	...90042-0539	PILOT VALVE L=350MM	475, 477, 479
MY105	...90042-0539	PILOT VALVE L=350MM	475, 477, 479
MY107	...90458-1092	PROPORTIONAL VALVE 0 - 10V/0-6 BAR	471, 473
MY108	...544906-0000	SOLENOID VALVE	29, 31
MY129	...90042-0539	PILOT VALVE L=350MM	475, 477, 479
MY131.1	90110-0095	CONNECTOR 3 POLE + EARTH	513, 515
MY131	...90458-2722	DIRECTION VALVE, NO. 0 810 091 222	513, 515
MY132.1	90110-0095	CONNECTOR 3 POLE + EARTH	513, 515
MY132	...90458-2722	DIRECTION VALVE, NO. 0 810 091 222	513, 515
MY184	...90458-1092	PROPORTIONAL VALVE 0 - 10V/0-6 BAR	471, 473
MY510	...979956-0000	SOLENOID VALVE	17, 19
MY513	...90042-0171	SOLENOID VALVE BUERKERT	17, 19
MY514	...90042-0171	SOLENOID VALVE BUERKERT	19
MY515	...90042-0171	SOLENOID VALVE BUERKERT	19
MY516	...90042-0171	SOLENOID VALVE BUERKERT	19
MY517	...90042-0171	SOLENOID VALVE BUERKERT	19
MY519	...90187-0176	ACTUATOR ECC 008 FOR DIAPHR. VALVE	23
MY519	...90459-1420	PROPORTIONAL VALVE 0 - 10V/0-6 BAR	17, 19
MY915	...90042-0539	PILOT VALVE L=350MM	475, 477, 479
P			
P002	90053-0031	HOUR COUNTER, B 609.10 10-50VDC	821, 823
P002.1	...359241-0201	SIGN "HOUR GLASS"	821, 823

Pos	Part No	Description	Page No
P			
P003	90053-0029	COUNTER, F524.800FA3C 24VDC	821, 823
P003.1	359241-0180	SIGN "PRODUCTION"	821, 823
P004	90053-0031	HOUR COUNTER, B 609.10 10-50VDC	821, 823
P004.1	359241-0459	SIGN "PT HOUR METER"	821, 823
P005	90332-0020	RECORDER HONEYWELL	821, 823
Q			
Q001.1	90457-0123	SIGN, MAIN SWITCH	771, 773
Q001	90457-0198	MAIN SWITCH	831
Q001.2	359241-0297	SIGN, 400 V, 50 HZ, 63 A	771, 773
Q006	90095-0077	OVERLOAD PROTECTION, PKZM 6-10 A	817
Q006.1	90259-0313	AUX. CONTACT K&M NHI21-PKZM0	817
Q007	90095-0075	OVERLOAD PROTECTION, PKZM 4 A	817
Q007.1	90259-0313	AUX. CONTACT K&M NHI21-PKZM0	817
Q008	90095-0077	OVERLOAD PROTECTION, PKZM 6-10 A	817
Q008.2	90259-0308	CONN.TERM.K&M BK 25/3-PKZ0	817
Q008.1	90259-0313	AUX. CONTACT K&M NHI21-PKZM0	817
Q009	90095-0073	OVERLOAD PROTECTION, PKZM 1,6 A	817
Q009.2	90259-0308	CONN.TERM.K&M BK 25/3-PKZ0	817
Q009.1	90259-0313	AUX. CONTACT K&M NHI21-PKZM0	817
Q016	90095-0069	OVERLOAD PROTECTION, PKZM 0,25 A	817
Q016.1	90259-0313	AUX. CONTACT K&M NHI21-PKZM0	817
R			
R007	90121-0132	RESISTANCE FIXED, 0,51 KOHM, 0,25 W	759, 761
S			
S001	90064-0124	SWITCH, EM. STOP, ZB2-BS844+ZB2-BZ1045	807
S002	90064-0124	SWITCH, EM. STOP, ZB2-BS844+ZB2-BZ1045	805
S003	90111-0124	KEY SWITCH, 1NO,1NC CONTACT	821, 823
S003.1	359241-0122	SIGN, CIP OF STEAM BARRIER SPACE	821, 823
S004	90111-0122	KEY SWITCH, 2 NO CONTACTS	821, 823
S004.1	359241-0133	SIGN, SERVICE SWITCH	821, 823
S006	90111-0120	SWITCH, 2 POS.704.510 .0A+704.901.5/A	821, 823
S006.1	359241-0140	SIGN "LIGHTING MACHINE"	821, 823
T			
T001	90458-0917	TRANSF. 3-PH 750VA SEC. 23A	771, 773
T004	90458-1273	TRANSFORMER, OFL-1350	771, 773
T005	90245-0029	TRANSFORMER, 1280-3660/TP 182	771, 773
T006	90458-0258	TRANSFORMER, 220VAC/6-9-12VAC	771, 773
V			
V001	90038-0024	RECTIFIER, 10/22A SKD 50/04A3	771, 773
V007	353021-0122	TERMINAL DISCONNECTBLE, WTR 2,5 D	759, 761
V008	353021-0122	TERMINAL DISCONNECTBLE, WTR 2,5 D	759, 761
V009	90024-0034	DIODE SURGE SUPPRESSOR, FD B DIL	741, 759, 761
V010	353021-0122	TERMINAL DISCONNECTBLE, WTR 2,5 D	759, 761
V011	90024-0034	DIODE SURGE SUPPRESSOR, FD B DIL	741, 759, 761
V012	90024-0034	DIODE SURGE SUPPRESSOR, FD B DIL	741
V013	90024-0034	DIODE SURGE SUPPRESSOR, FD B DIL	741
V014	353021-0122	TERMINAL DISCONNECTBLE, WTR 2,5 D	759, 761
W			
W005	351150-0418	CABLE OLFLEX 4X2,5 MM2 LIGHT/GREY	187
W006	351150-0412	CABLE OLFLEX 3X1,5 MM2 LIGHT/GREY	187
W007	351150-0412	CABLE OLFLEX 3X1,5 MM2 LIGHT/GREY	187
W009	351150-0406	CABLE OLFLEX 7X0,75 MM2 LIGHT/GREY	221, 231
W010	351150-0431	CABLE OLFLEX 2X0,75 MM2 LIGHT/GREY	209
W011	351150-0431	CABLE OLFLEX 2X0,75 MM2 LIGHT/GREY	211
W013	351150-0431	CABLE OLFLEX 2X0,75 MM2 LIGHT/GREY	415
W018	90458-2557	CABLE OLFLEX 25X1 MM2	231
W019	351150-0412	CABLE OLFLEX 3X1,5 MM2 LIGHT/GREY	239
W023	90220-0104	SCR. CABLE 4X1,5MM2	187
W025	351150-0428	CABLE OLFLEX 41X0,75 MM2 LIGHT/GREY	187
W033	90220-0059	THERMOCOUPLE CABLE K/ 2X0,81MM2	821, 823
W034	90220-0059	THERMOCOUPLE CABLE K/ 2X0,81MM2	821, 823
W035	90220-0059	THERMOCOUPLE CABLE K/ 2X0,81MM2	725
W036	90220-0059	THERMOCOUPLE CABLE K/ 2X0,81MM2	725
W037	90220-0059	THERMOCOUPLE CABLE K/ 2X0,81MM2	821, 823
W038	90220-0059	THERMOCOUPLE CABLE K/ 2X0,81MM2	821, 823
W039	90220-0059	THERMOCOUPLE CABLE K/ 2X0,81MM2	821, 823
W040	90220-0059	THERMOCOUPLE CABLE K/ 2X0,81MM2	821, 823
W042	90220-0059	THERMOCOUPLE CABLE K/ 2X0,81MM2	821, 823
W044	551969-0012	COAXIAL CABLE	841
W046	90220-0059	THERMOCOUPLE CABLE K/ 2X0,81MM2	821, 823
W047	90220-0059	THERMOCOUPLE CABLE K/ 2X0,81MM2	821, 823
W048	90220-0059	THERMOCOUPLE CABLE K/ 2X0,81MM2	821, 823
W049	90220-0059	THERMOCOUPLE CABLE K/ 2X0,81MM2	821, 823
W050	90031-0305	I/O EXPANSION CABLE	735, 737
W056	90220-0059	THERMOCOUPLE CABLE K/ 2X0,81MM2	821, 823
W057	90220-0059	THERMOCOUPLE CABLE K/ 2X0,81MM2	821, 823
W058	90220-0059	THERMOCOUPLE CABLE K/ 2X0,81MM2	821, 823
W059	90220-0059	THERMOCOUPLE CABLE K/ 2X0,81MM2	821, 823
W061	1254442-0000	CABLE SERIAL	767
W062	1511793-0000	CABLE	767
W063	90220-0091	PAIR TWISTED CABLE 2X2X0,25MM2	769
W064	1478661-0000	CABLE SERIAL	767

Pos	Part No	Description	Page No
W			
W066	90220-0059	THERMOCOUPLE CABLE K/ 2X0,81MM2	821, 823
W067	90220-0183	SCR. CABLE 2X0,34MM2	711, 713, 715
W068	90220-0183	SCR. CABLE 2X0,34MM2	711, 713, 715
W069	90220-0183	SCR. CABLE 2X0,34MM2	711, 713, 715
W070	90220-0059	THERMOCOUPLE CABLE K/ 2X0,81MM2	821, 823
W071	90220-0059	THERMOCOUPLE CABLE K/ 2X0,81MM2	821, 823
W072	90220-0059	THERMOCOUPLE CABLE K/ 2X0,81MM2	821, 823
W073	1143884-0000	COPPER BRAID	821, 823
W074	1143884-0000	COPPER BRAID	821, 823
W075	1143884-0000	COPPER BRAID	821, 823
W076	1143884-0000	COPPER BRAID	821, 823
W077	1143884-0000	COPPER BRAID	821, 823
W078	1143884-0000	COPPER BRAID	821, 823
W079	1143884-0000	COPPER BRAID	821, 823
W080	1143884-0000	COPPER BRAID	821, 823
W081	1143884-0000	COPPER BRAID	821, 823
W082	1143884-0000	COPPER BRAID	821, 823
W083	1143884-0000	COPPER BRAID	821, 823
W084	1143884-0000	COPPER BRAID	821, 823
W085	90220-0104	SCR. CABLE 4X1,5MM2	779, 781
W086	1143884-0000	COPPER BRAID	821, 823
W088	1512322-0000	COPPER BRAID	735
W090	1143884-0000	COPPER BRAID	821, 823
W098	90220-0183	SCR. CABLE 2X0,34MM2	727, 729
W098	351150-0415	CABLE OLFLEX 7X1,5 MM2 LIGHT/GREY	839
W099	90220-0183	SCR. CABLE 2X0,34MM2	711, 713, 715
W101	90220-0105	SCR. CABLE 4X2,5MM2	257
W102	90220-0183	SCR. CABLE 2X0,34MM2	841
W102	351150-0405	CABLE OLFLEX 5X0,75 MM2 LIGHT/GREY	277
W103	90220-0183	SCR. CABLE 2X0,34MM2	841
W104	90220-0183	SCR. CABLE 2X0,34MM2	841
W108	351150-0425	CABLE OLFLEX 25X0,75 MM2 LIGHT/GREY	187
W110	351150-0413	CABLE OLFLEX 4X1,5 MM2 LIGHT/GREY	187
W121	1512322-0000	COPPER BRAID	735
W122	1512322-0000	COPPER BRAID	737
W123	1512322-0000	COPPER BRAID	739
W124	90220-0183	SCR. CABLE 2X0,34MM2	735
W125	90220-0183	SCR. CABLE 2X0,34MM2	735
W126	90220-0183	SCR. CABLE 2X0,34MM2	735
W0127	90220-0183	SCR. CABLE 2X0,34MM2	711, 713, 715
W127	90220-0183	SCR. CABLE 2X0,34MM2	735
W128	90220-0183	SCR. CABLE 2X0,34MM2	735
W129	90220-0183	SCR. CABLE 2X0,34MM2	727, 729
W130	90220-0183	SCR. CABLE 2X0,34MM2	735
W131	1512322-0000	COPPER BRAID	735
W132	1143884-0000	COPPER BRAID	821, 823
W133	1143884-0000	COPPER BRAID	821, 823
W230	351150-0412	CABLE OLFLEX 3X1,5 MM2 LIGHT/GREY	187
W231	351150-0412	CABLE OLFLEX 3X1,5 MM2 LIGHT/GREY	187
W232	351150-0412	CABLE OLFLEX 3X1,5 MM2 LIGHT/GREY	187
W233	351150-0412	CABLE OLFLEX 3X1,5 MM2 LIGHT/GREY	187
W234	90220-0034	THERMOCOUPLE CABLE K/ 2X0,5MM2	187
W235	90220-0034	THERMOCOUPLE CABLE K/ 2X0,5MM2	187
W236	90220-0034	THERMOCOUPLE CABLE K/ 2X0,5MM2	187
W237	90220-0034	THERMOCOUPLE CABLE K/ 2X0,5MM2	187
W238	90220-0034	THERMOCOUPLE CABLE K/ 2X0,5MM2	387, 389
W239	90220-0034	THERMOCOUPLE CABLE K/ 2X0,5MM2	387, 389
W240	90220-0034	THERMOCOUPLE CABLE K/ 2X0,5MM2	387, 389
W241	90220-0034	THERMOCOUPLE CABLE K/ 2X0,5MM2	387, 389
W242	351120-0144	CABLE SIHF 3X1,5MM2 GREEN/YELLOW	387, 389
W243	351120-0144	CABLE SIHF 3X1,5MM2 GREEN/YELLOW	387, 389
W244	351120-0144	CABLE SIHF 3X1,5MM2 GREEN/YELLOW	387, 389
W245	351120-0144	CABLE SIHF 3X1,5MM2 GREEN/YELLOW	387, 389
W246	351150-0431	CABLE OLFLEX 2X0,75 MM2 LIGHT/GREY	247
W247	351150-0431	CABLE OLFLEX 2X0,75 MM2 LIGHT/GREY	209
W248	351150-0431	CABLE OLFLEX 2X0,75 MM2 LIGHT/GREY	247
W249	351150-0431	CABLE OLFLEX 2X0,75 MM2 LIGHT/GREY	211
W290	351162-0106	CABLE AWM 1X4 MM2 YELLOW-GREEN	187
W301	351150-0418	CABLE OLFLEX 4X2,5 MM2 LIGHT/GREY	487
W302	351120-0144	CABLE SIHF 3X1,5MM2 GREEN/YELLOW	657, 659
W303	351150-0431	CABLE OLFLEX 2X0,75 MM2 LIGHT/GREY	505
W304	351150-0418	CABLE OLFLEX 4X2,5 MM2 LIGHT/GREY	513, 515
W305	351150-0412	CABLE OLFLEX 3X1,5 MM2 LIGHT/GREY	445
W308	351150-0418	CABLE OLFLEX 4X2,5 MM2 LIGHT/GREY	493
W312	351150-0412	CABLE OLFLEX 3X1,5 MM2 LIGHT/GREY	29, 31
W316	351150-0403	CABLE OLFLEX 3X0,75 MM2 LIGHT/GREY	513, 515
W317	351150-0403	CABLE OLFLEX 3X0,75 MM2 LIGHT/GREY	513, 515
W320	351150-0403	CABLE OLFLEX 3X0,75 MM2 LIGHT/GREY	471, 473
W321	351150-0403	CABLE OLFLEX 3X0,75 MM2 LIGHT/GREY	471, 473
W322	351150-0403	CABLE OLFLEX 3X0,75 MM2 LIGHT/GREY	511
W325	351150-0403	CABLE OLFLEX 3X0,75 MM2 LIGHT/GREY	459
W327	90220-0091	PAIR TWISTED CABLE 2X2X0,25MM2	471, 473

W

Pos	Part No	Description	Page No
W342	351150-0403	CABLE OLFLEX 3X0,75 MM2 LIGHT/GREY	471, 473
W345	351150-0431	CABLE OLFLEX 2X0,75 MM2 LIGHT/GREY	461
W348	351150-0403	CABLE OLFLEX 3X0,75 MM2 LIGHT/GREY	459
W349	351150-0403	CABLE OLFLEX 3X0,75 MM2 LIGHT/GREY	513, 515
W350	351150-0403	CABLE OLFLEX 3X0,75 MM2 LIGHT/GREY	513, 515
W352	351150-0431	CABLE OLFLEX 2X0,75 MM2 LIGHT/GREY	453
W354	351150-0403	CABLE OLFLEX 3X0,75 MM2 LIGHT/GREY	517
W355	351150-0404	CABLE OLFLEX 4X0,75 MM2 LIGHT/GREY	513, 515
W356	351150-0404	CABLE OLFLEX 4X0,75 MM2 LIGHT/GREY	511
W360	351150-0405	CABLE OLFLEX 5X0,75 MM2 LIGHT/GREY	489
W361	351150-0403	CABLE OLFLEX 3X0,75 MM2 LIGHT/GREY	503
W370	551969-0006	COAXIAL CABLES	187
W371	551969-0006	COAXIAL CABLES	187
W372	1548155-0000	COAXIAL CABLE	349
W373	1548155-0000	COAXIAL CABLE	347
W380	90220-0091	PAIR TWISTED CABLE 2X2X0,25MM2	471, 473
W390	351162-0109	CABLE AWM 1X16 MM2 YELLOW-GREEN	483
W391	351162-0106	CABLE AWM 1X4 MM2 YELLOW-GREEN	471, 473
W392	351162-0106	CABLE AWM 1X4 MM2 YELLOW-GREEN	231
W401	351120-0167	CABLE SIHF 4X6MM2 GREEN/YELLOW	29, 31
W402	351120-0144	CABLE SIHF 3X1,5MM2 GREEN/YELLOW	47
W403	351120-0145	CABLE SIHF 3X2,5MM2 GREEN/YELLOW	43
W404	90220-0104	SCR. CABLE 4X1,5MM2	55
W405	351150-0431	CABLE OLFLEX 2X0,75 MM2 LIGHT/GREY	95
W406	90220-0059	THERMOCOUPLE CABLE K/ 2X0,81MM2	29, 31
W407	90220-0059	THERMOCOUPLE CABLE K/ 2X0,81MM2	139
W408	90220-0059	THERMOCOUPLE CABLE K/ 2X0,81MM2	29, 31
W409	90220-0059	THERMOCOUPLE CABLE K/ 2X0,81MM2	51, 53
W410	90220-0059	THERMOCOUPLE CABLE K/ 2X0,81MM2	43
W411	90220-0059	THERMOCOUPLE CABLE K/ 2X0,81MM2	69
W412	90220-0059	THERMOCOUPLE CABLE K/ 2X0,81MM2	73, 75
W416	351150-0405	CABLE OLFLEX 5X0,75 MM2 LIGHT/GREY	57, 59
W417	351150-0405	CABLE OLFLEX 5X0,75 MM2 LIGHT/GREY	57, 59
W418	351150-0405	CABLE OLFLEX 5X0,75 MM2 LIGHT/GREY	57, 59
W420	90220-0085	CABLES, MULTI-CONDUCTOR SCREENED	179
W425	351150-0404	CABLE OLFLEX 4X0,75 MM2 LIGHT/GREY	97, 99
W426	351150-0403	CABLE OLFLEX 3X0,75 MM2 LIGHT/GREY	29, 31
W427	351150-0431	CABLE OLFLEX 2X0,75 MM2 LIGHT/GREY	29, 31
W428	351150-0431	CABLE OLFLEX 2X0,75 MM2 LIGHT/GREY	29, 31
W430	351150-0403	CABLE OLFLEX 3X0,75 MM2 LIGHT/GREY	97, 99
W431	351150-0403	CABLE OLFLEX 3X0,75 MM2 LIGHT/GREY	97, 99
W432	351150-0403	CABLE OLFLEX 3X0,75 MM2 LIGHT/GREY	97, 99
W433	90220-0059	THERMOCOUPLE CABLE K/ 2X0,81MM2	47
W434	351150-0405	CABLE OLFLEX 5X0,75 MM2 LIGHT/GREY	145, 147
W442	90458-1298	CONNECTOR AND CABLE 403000E 18M 080	301, 303
W444	90458-1298	CONNECTOR AND CABLE 403000E 18M 080	297, 299
W449	90220-0107	SCR. CABLE 5X0,75MM2	301, 303
W450	90220-0059	THERMOCOUPLE CABLE K/ 2X0,81MM2	43
W451	90220-0107	SCR. CABLE 5X0,75MM2	297, 299
W452	351120-0168	CABLE SIHF 4X10MM2 GREEN/YELLOW	51, 53
W459	351150-0413	CABLE OLFLEX 4X1,5 MM2 LIGHT/GREY	67
W601	548770-0006	COAXIAL CABLE L=1200 MM	565
W602	351150-0422	CABLE OLFLEX 3X4 MM2 LIGHT/GREY	553
W605	351150-0407	CABLE OLFLEX 12X0,75 MM2 LIGHT/GREY	537, 553
W615	351150-0425	CABLE OLFLEX 25X0,75 MM2 LIGHT/GREY	553
W630	351120-0146	CABLE SIHF 3X4MM2 GREEN/YELLOW	539
W631	351120-0145	CABLE SIHF 3X2,5MM2 GREEN/YELLOW	541
W701	351150-0403	CABLE OLFLEX 3X0,75 MM2 LIGHT/GREY	17, 19
W703	351150-0403	CABLE OLFLEX 3X0,75 MM2 LIGHT/GREY	19
W704	351150-0403	CABLE OLFLEX 3X0,75 MM2 LIGHT/GREY	19
W705	351150-0403	CABLE OLFLEX 3X0,75 MM2 LIGHT/GREY	19
W706	351150-0403	CABLE OLFLEX 3X0,75 MM2 LIGHT/GREY	19
W707	351150-0404	CABLE OLFLEX 4X0,75 MM2 LIGHT/GREY	17, 19
W715	351150-0425	CABLE OLFLEX 25X0,75 MM2 LIGHT/GREY	17, 19
W716	90220-0059	THERMOCOUPLE CABLE K/ 2X0,81MM2	23
W717	351150-0403	CABLE OLFLEX 3X0,75 MM2 LIGHT/GREY	17, 19
W721	90220-0072	SCR. CABLE 4X0,34MM2	17, 19
W721.1	353300-0006	SHRINKABLE HOSE	17, 19
W722	90220-0072	SCR. CABLE 4X0,34MM2	17, 19
W722.1	353300-0006	SHRINKABLE HOSE	17, 19
W750	351150-0414	CABLE OLFLEX 5X1,5 MM2 LIGHT/GREY	657, 659
W751	351150-0412	CABLE OLFLEX 3X1,5 MM2 LIGHT/GREY	657, 659
W753	351150-0406	CABLE OLFLEX 7X0,75 MM2 LIGHT/GREY	657, 659
W754	351150-0406	CABLE OLFLEX 7X0,75 MM2 LIGHT/GREY	233
W757	90220-0104	SCR. CABLE 4X1,5MM2	603, 605
W759	351150-0425	CABLE OLFLEX 25X0,75 MM2 LIGHT/GREY	657, 659
W780	351150-0406	CABLE OLFLEX 7X0,75 MM2 LIGHT/GREY	655
W788	351150-0405	CABLE OLFLEX 5X0,75 MM2 LIGHT/GREY	657, 659
W790	351150-0405	CABLE OLFLEX 5X0,75 MM2 LIGHT/GREY	657, 659
W802	351150-0405	CABLE OLFLEX 5X0,75 MM2 LIGHT/GREY	551
W951	90220-0091	PAIR TWISTED CABLE 2X2X0,25MM2	675
W952	90220-0091	PAIR TWISTED CABLE 2X2X0,25MM2	675

Pos	Part No	Description	Page No
W			
W953	1366189-0000	CABLE LVDS 6M	767
W954	351150-0405	CABLE OLFLEX 5X0,75 MM2 LIGHT/GREY	685
W955	351150-0405	CABLE OLFLEX 5X0,75 MM2 LIGHT/GREY	687
W956	90041-0068	DATACABLE MODEM PC	675
W958	351150-0405	CABLE OLFLEX 5X0,75 MM2 LIGHT/GREY	679
X			
X001	1511800-0100	POWER SIDE,BOTTOM TERMINAL BLOCK	711, 713, 715
X002	1511802-0100	LOGIC BOTTOM TERMINAL BLOCK	711, 713, 715
X003	1511804-0100	LOGIC SIDE,TOP TERMINAL BLOCK	711, 713, 715
X005	1517659-0100	MODEM	767
X008	1511828-0100	X008	711, 713, 715
X009	1511829-0100	POWER SIDE,TOP TERMINAL BLOCK	711, 713, 715
X011.1	90458-0871	HOUSING BULKHEAD MOUNTING HAN 6B-AGG-RB	779, 781
X011.2	90458-0875	HINGED FRAME HAN 6B FOR HOUSING	779, 781
X011	90458-0876	FEMALE INSERT HAN 6B 09 14002 2751	779, 781
X012	90110-0295	CONNECTOR 4 POLE + EARTH	655
X012	90110-0296	CONTACT SCREW	779, 781
X012.1	90110-0371	PLUG HOOD	655
X012.1	90457-0050	BULKHEAD HOUSING 149760	779, 781
X013	90110-0295	CONNECTOR 4 POLE + EARTH	603, 605
X013	90110-0296	CONTACT SCREW	779, 781
X013.1	90110-0371	PLUG HOOD	603, 605
X013.1	90457-0050	BULKHEAD HOUSING 149760	779, 781
X014	90110-0296	CONTACT SCREW	779, 781
X014.1	90457-0050	BULKHEAD HOUSING 149760	779, 781
X015	90110-0150	MALE INSERT 121110 0000	655
X015	90110-0151	FEMALE INSERT 24-POL 121130 0000	783
X015.1	90110-0152	CABLE HOOD 24-POL 70.352.2428.1	655
X015.1	90110-0153	CHASSIS HOUSING 24-P CHI 24, 121240 0000	783
X016	90110-0150	MALE INSERT 121110 0000	655
X016	90110-0151	FEMALE INSERT 24-POL 121130 0000	783
X016.1	90110-0152	CABLE HOOD 24-POL 70.352.2428.1	655
X016.1	90110-0153	CHASSIS HOUSING 24-P CHI 24, 121240 0000	783
X017	90110-0163	FEMALE INSERT 70 300 0640 0	839
X017.1	90110-0226	CABLE HOOD 6-POL 70.350.0628.0	839
X018.2	90110-0150	MALE INSERT 121110 0000	553
X018.1	90110-0243	CONTACT HOUSING 16-POL 70.320.1628.0	787, 789, 791, 793, 795, 797, 799, 801, 803
X018	90110-0247	FEMALE INSERT 70.200.0653.0	787, 789, 791, 793, 795, 797, 799, 801, 803
X018.3	90110-0346	CABLE HOOD 1211220 00 00	553
X019	90110-0151	FEMALE INSERT 24-POL 121130 0000	787, 789, 791, 793, 795, 797, 799, 801, 803
X019.1	90110-0153	CHASSIS HOUSING 24-P CHI 24, 121240 0000	787, 789, 791, 793, 795, 797, 799, 801, 803
X019.2	90110-0156	MALE INSERT 70.210.0653.0	553
X019.3	90110-0244	CABLE HOOD 6-POL 70.350.1628.0	553
X020	90001-0033	WALL SOCKET OUTLET	711, 713, 715
X021	90001-0033	WALL SOCKET OUTLET	711, 713, 715
X022	90110-0296	CONTACT SCREW	787, 789, 791, 793, 795, 797, 799, 801, 803
X022.1	90458-1181	BULKHEAD HOUSING HDC-HA-3-AWVL1/1	787, 789, 791, 793, 795, 797, 799, 801, 803
X023	90458-1279	PLUG CONNECTOR DP1	711, 713, 715
X025	90110-0151	FEMALE INSERT 24-POL 121130 0000	787, 789, 791, 793, 795, 797, 799, 801, 803
X025.1	90110-0153	CHASSIS HOUSING 24-P CHI 24, 121240 0000	787, 789, 791, 793, 795, 797, 799, 801, 803
X026.1	90110-0243	CONTACT HOUSING 16-POL 70.320.1628.0	787, 789, 791, 793, 795, 797, 799, 801, 803
X026	90458-1406	FEMALE INSERT 120770	787, 789, 791, 793, 795, 797, 799, 801, 803
X027	90458-1279	PLUG CONNECTOR DP1	711, 713, 715
X300	1511806-0100	X300	831
X452	90110-0028	CONTACT UNIT 4-POLE	767
Z			
Z001	90082-0013	OVERVOLTAGE PROTECTOR	833
Z002	90024-0060	POWER LINE FILTER, 80 A 250/440 VAC	831
Z003	90024-0036	FILTERED TERMINAL BLOCK	831
Z003.1	1285108-0000	COVER	831
Z004	90024-0047	EMI SUPPRESSION FERRITE	711, 713, 715
Z005	90024-0047	EMI SUPPRESSION FERRITE	711, 713, 715
Z006	90024-0047	EMI SUPPRESSION FERRITE	711, 713, 715
Z007	90024-0047	EMI SUPPRESSION FERRITE	713, 715
Z008	90430-0326	FILTER 6SE3290-0BA87-0FB2	711, 713, 715
Z009	90430-0326	FILTER 6SE3290-0BA87-0FB2	711, 713, 715
Z010	90024-0047	EMI SUPPRESSION FERRITE	711, 713, 715
Z012	90430-0326	FILTER 6SE3290-0BA87-0FB2	711, 713, 715
Z013	90024-0047	EMI SUPPRESSION FERRITE	711, 713, 715
Z015	90430-0330	FILTER 6SE3290-0DC87-0FB4	711, 713, 715
Z016	90024-0047	EMI SUPPRESSION FERRITE	711, 713, 715
Z017	90430-0326	FILTER 6SE3290-0BA87-0FB2	711, 713, 715
Z018	90024-0047	EMI SUPPRESSION FERRITE	711, 713, 715
Z019	90458-1162	FILTER, 6 A, 250 VAC	711, 713, 715
Z020	90024-0047	EMI SUPPRESSION FERRITE	711, 713, 715
Z021	90024-0047	EMI SUPPRESSION FERRITE	711, 713, 715
Z022	90024-0047	EMI SUPPRESSION FERRITE	711, 713, 715
Z023	90458-1162	FILTER, 6 A, 250 VAC	711, 713, 715
Z024	90024-0047	EMI SUPPRESSION FERRITE	711, 713, 715
Z025	90024-0047	EMI SUPPRESSION FERRITE	711, 713, 715

Pos	Part No	Description	Page No
Z			
Z033	90430-0326	FILTER 6SE3290-0BA87-0FB2	711, 713, 715
Z034	90024-0047	EMI SUPPRESSION FERRITE	711, 713, 715
Z035	90024-0047	EMI SUPPRESSION FERRITE	711, 713, 715
Z036	90024-0037	INPUT FILTER, 8 A	711, 713, 715

Pos	Part No	Description	Page No

Pos	Part No	Description	Page No	Pos	Part No	Description	Page No

Machine Type	Group Description	Page No

Tetra Pak

SPC binder labels. 30 mm Full width *Note! This page is generated* **automatically.**
using the **variable definitions** *made in the* **front page** *file!!*

TBA/19 020V
648160-2000
Issue: 2003-09 Doc No: SPC-81656-0107

TBA/19 020V
648160-2000
Issue: 2003-09 Doc No: SPC-81656-0107

TBA/19 020V
648160-2000
Issue: 2003-09 Doc No: SPC-81656-0107

TBA/19 020V
648160-2000
Issue: 2003-09 Doc No: SPC-81656-0107

TBA/19 020V
648160-2000
Issue: 2003-09 Doc No: SPC-81656-0107

TBA/19 020V
648160-2000
Issue: 2003-09 Doc No: SPC-81656-0107

TBA/19 020V
648160-2000
Issue: 2003-09 Doc No: SPC-81656-0107

TBA/19 020V
648160-2000
Issue: 2003-09 Doc No: SPC-81656-0107

TBA/19 020V
648160-2000
Issue: 2003-09 Doc No: SPC-81656-0107

TBA/19 020V
648160-2000
Issue: 2003-09 Doc No: SPC-81656-0107

TBA/19 020V
648160-2000
Issue: 2003-09 Doc No: SPC-81656-0107

TBA/19 020V
648160-2000
Issue: 2003-09 Doc No: SPC-81656-0107