SPC
Spare Parts Catalogue

TBA/19 020V

648160-2000

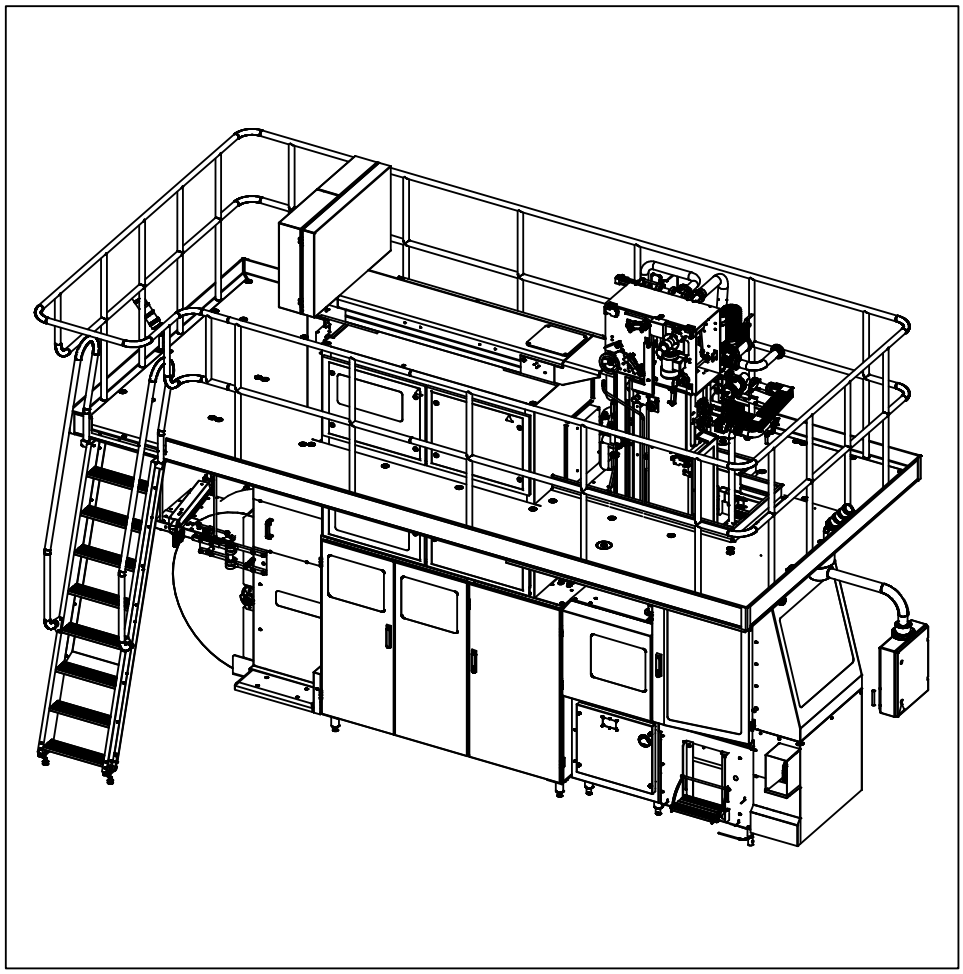

Tetra Pak

Doc. No: SPC-81656-0110

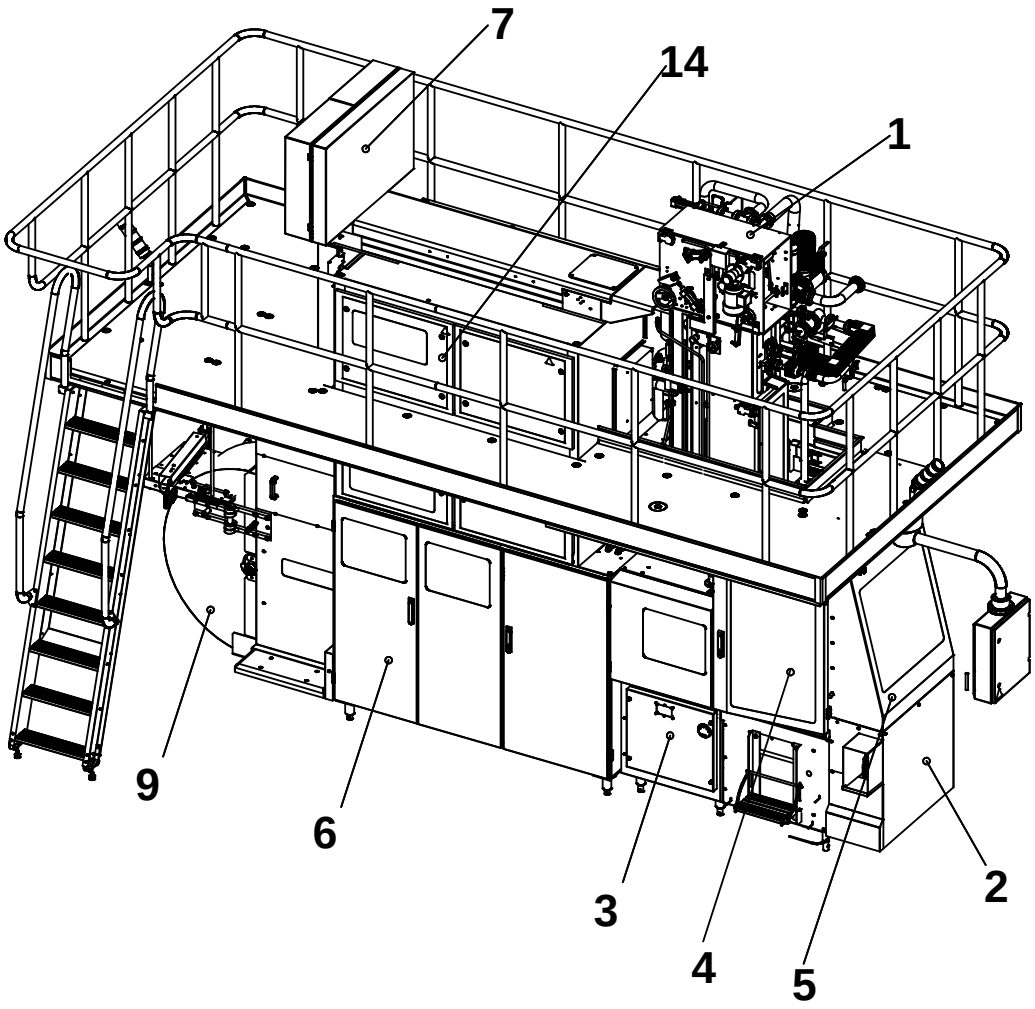

The position numbers in the illustration correspond with the chapter numbers listed on the next page.

Copyright © 2004 Tetra Pak Group

All rights reserved. No part of this document may be reproduced or copied in any form or by any means without written permission from Tetra Pak Carton Ambient AB.

Tetra Pak and all Tetra Pak products are trademarks belonging to the Tetra Pak Group.

The content of this manual is in accordance with the design and construction of the machine or equipment at the time of publishing. Tetra Pak reserves the right to introduce design modifications without prior notice.

This document was produced by:

Tetra Pak Carton Ambient AB
Technical Publications
Ruben Rausings gata
S-221 86 Lund / Sweden

This Tetra Pak equipment was manufactured by:

Tetra Pak Carton Ambient AB
Ruben Rausings gata
S-221 86 Lund / Sweden

Additional copies can be ordered from Tetra Pak Parts or the nearest Tetra Pak office. When ordering additional copies, always provide the document number. This can be found in the machine specification document. It is also printed on the front cover and in the footer on each page of the manual.

Doc. No. SPC-81656-0110

Issue 2004-09

This document is valid from:

21204/00152

Series No/Machine No Sign.

SPC

Spare Parts Catalogue

Tetra Brik Aseptic
TBA/19 020V
648160-2000

BINDER 1

i Introduction

1 Superstructure TBA/19 .
B-648111-1200

2 Machine Body
B-648102-1200

3 Drive
B-648103-1100

4 Jaw System
B-648104-1200

5 Final Folder
B-648105-1200

6 Service Unit
B-648106-1200

7 Strip Applicator
B-648107-1200

8 Packaging Material Infe.
B-648156-0100

BINDER 2

9 Regular Accessories
B-648109-1200

10 El. Cabinet
B-648114-0100

11 Optional Accessories
B-648119-1200

ii Part Number Index

iii Electrical Parts Index

A list of all optional equipment, optional kits, and rebuilding kits that this catalogue is valid for is found on the next page.

Doc. No: SPC-81656-0110

Issue 2004-09

Tetra Pak

Tetra Pak Carton Ambient S.p.A.

Valid for:

Headspace by Injection
2619758-0100

Temperature Controlled Steam Barrier
1334841-0200

Update Log for Doc. No. SPC-81656-0110

This table shows all changes made to this catalogue, such as kits installed and pages added or removed.

Date	Installed Kit	Added Pages (Doc. No.)	Removed Pages	Signature

Date	Installed Kit	Added Pages (Doc. No.)	Removed Pages	Signature

i Introduction

TechPub-2660371-0101

en About the Introduction Chapter
This chapter contains basic information about this catalogue and related Tetra Pak equipment.

cs Seznámení s úvodní kapitolou
Tato kapitola obsahuje základní informace o tomto katalogu a o příslušném zařízení Tetra Pak.

da Om indledningen
Kapitlet indeholder grundlæggende oplysninger om dette katalog og tilhørende Tetra Pak-udstyr.

de Zur Einleitung
Dieses Kapitel enthält grundlegende Informationen zu diesem Handbuch und der entsprechenden Tetra Pak Ausrüstung.

el Σχετικά με το Κεφάλαιο 'Εισαγωγή'
Αυτό το κεφάλαιο περιέχει βασικές πληροφορίες για τον παρόντα κατάλογο και τον σχετικό εξοπλισμό της Tetra Pak.

es Sobre el Capítulo de Introducción
Este capítulo contiene información básica sobre este manual y el equipo Tetra Pak relacionado.

et Sissejuhatava peatüki kohta
Sellest peatükist leiate põhiinfo kataloogi ja Tetra Pak seadmete kohta.

fi Tietoja Johdanto-luvusta
Tässä luvussa on perustietoja tästä luettelosta ja Tetra Pak -laitteesta.

fr Concernant le chapitre d'Introduction
Le présent chapitre contient les renseignements de base concernant ce manuel et l'équipement Tetra Pak concerné.

hu A Bevezetés fejezetről
Ezen fejezet alapvető információt tartalmaz jelen kézikönyvről és a kapcsolódó Tetra Pak berendezésről.

it Informazioni sulla sezione Introduzione
Questa sezione contiene informazioni generali sul presente catalogo e la relativa macchina Tetra Pak.

lt Apie pristatymo skyrių
Šiame skyriuje yra pagrindinė informacija apie šį katalogą ir su juo susijusią Tetra Pak įrangą.

lv Par Ievada nodaļu
Šī nodaļa satur galveno informāciju par katalogu un par Tetra Pak iekārtām, uz kurām tas attiecas.

mt Dwar il-Kapitlu ta' l-Introduzzjoni
Dan il-kapitlu fih informazzjoni bażika dwar dan il-katalgu u tagħmir relatat ta' Tetra Pak.

nl Omtrent het hoofdstuk Inleiding
Dit hoofdstuk bevat basisinformatie betreffende dit handboek en daarmee verband houdende apparatuur van Tetra Pak.

no Om kapitlet Introduksjon
Dette kapitlet inneholder grunnleggende informasjon om denne katalogen og relatert Tetra Pak-ustyr.

pl Informacje na temat Rozdziału Wprowadzającego
Rozdział ten zawiera podstawowe informacje na temat niniejszego katalogu i związanego z nim wyposażenia Tetra Pak.

pt Sobre o capítulo Introdução
Este capítulo contém informações básicas sobre este catálogo e ao equipamento Tetra Pak relacionado.

sk O úvodnej kapitole
Táto kapitola obsahuje základné informácie o tomto katalógu a príslušnom zariadení Tetra Pak.

sl Informacija o uvodnem poglavju
Poglavje vsebuje osnovne informacije o tem katalogu in opremi Tetra Pak.

sv Om inledningskapitlet
Det här kapitlet innehåller grundläggande information om katalogen och Tetra Pak-utrustningen.

TechPub-2660371-0101

Introduction

Illustrations . . . . . i - 5
English Text . . . . . i - 7

Úvod

Obrázky . . . . . i - 5
Český text . . . . . i - 11

Indledning

Illustrationer . . . . . i - 5
Dansk tekst . . . . . i - 15

Einleitung

Abbildungen . . . . . i - 5
Deutscher Text . . . . . i - 19

Εισαγωγή

Εικόνες . . . . . i - 5
Ελληνικό Κείμενο . . . . . i - 23

Introducción

Ilustraciones . . . . . i - 5
Texto español . . . . . i - 27

Sissejuhatus

Illustratsioonid . . . . . i - 5
Eestikeelne tekst . . . . . i - 31

Johdanto

Kuvat . . . . . i - 5
Suomenkielinen teksti . . . . . i - 35

Introduction

Figures . . . . . i - 5
Texte français . . . . . i - 39

Bevezetés

Ábrák . . . . . i - 5
Magyar szöveg . . . . . i - 43

Introduzione

Figure . . . . . i - 5
Testo in italiano . . . . . i - 47

TechPub-26603371-0101

Įvadas

Iliustracijos . . . . . i - 5
Lietuviškas tekstas . . . . . i - 51

Ievads

Ilustrācijas . . . . . i - 5
Latviešu teksts . . . . . i - 55

Introduzzjoni

Stampi . . . . . i - 5
Test bil-Malti . . . . . i - 59

Inleiding

Illustraties . . . . . i - 5
Nederlands tekst . . . . . i - 63

Introduksjon

Illustrasjoner . . . . . i - 5
Norsk tekst . . . . . i - 67

Wprowadzenie

Ilustracje . . . . . i - 5
Tekst po polsku . . . . . i - 71

Introdução

Ilustrações . . . . . i - 5
Texto em portugese . . . . . i - 75

Úvod

Zobrazenie . . . . . i - 5
Slovenský text . . . . . i - 79

Uvod

Risbe . . . . . i - 5
Slovensko besedilo . . . . . i - 83

Inledning

Bilder . . . . . i - 5
Svensk text . . . . . i - 87

TechPub-2660371-0101

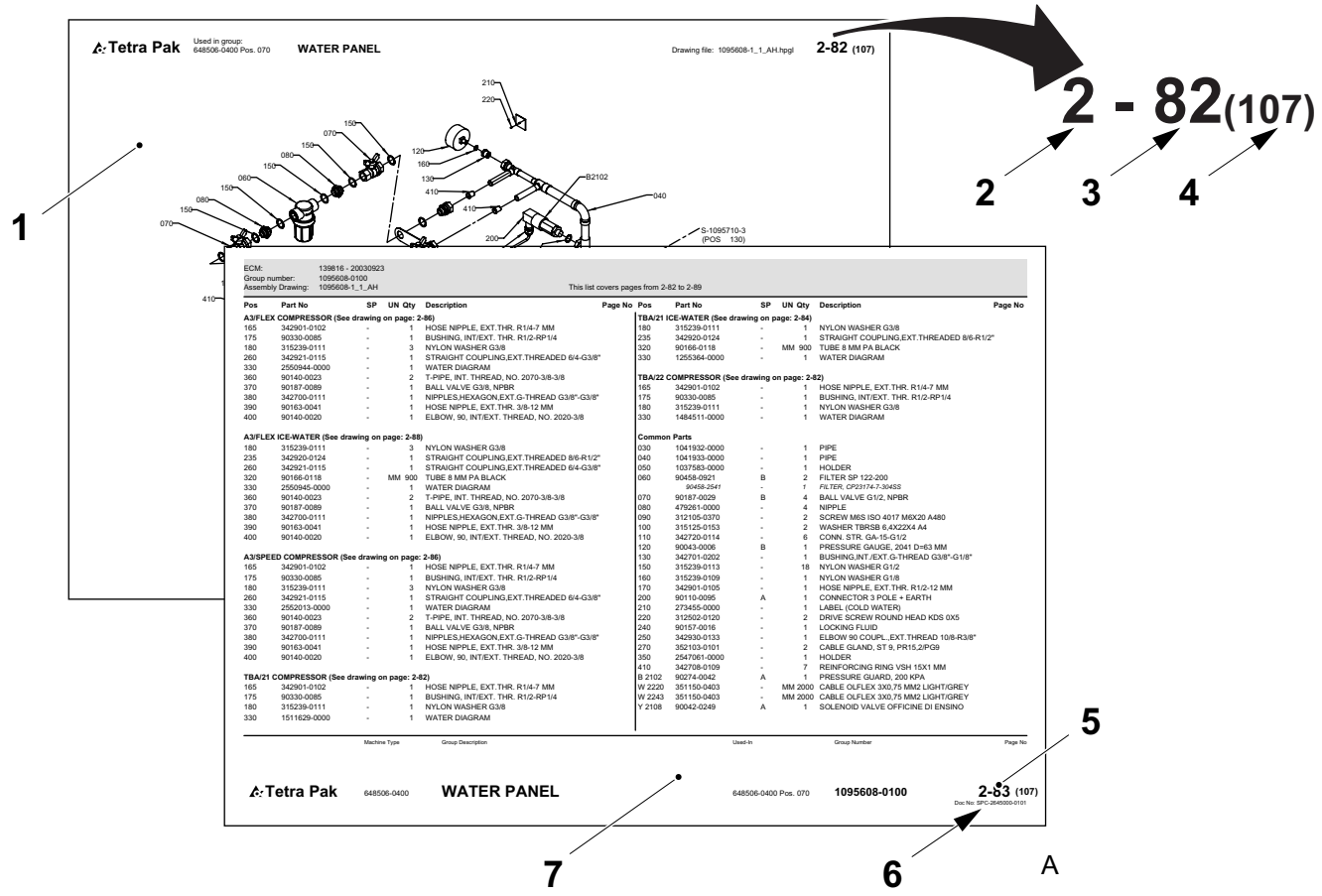

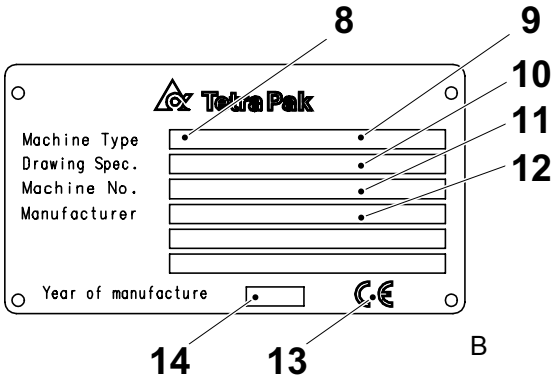

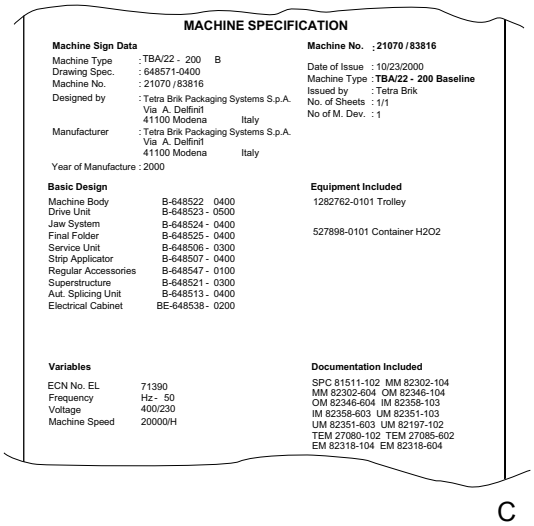

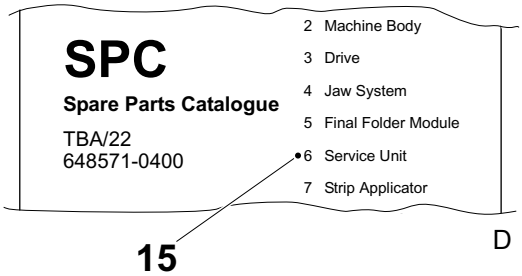

TechPub-2660371-0101

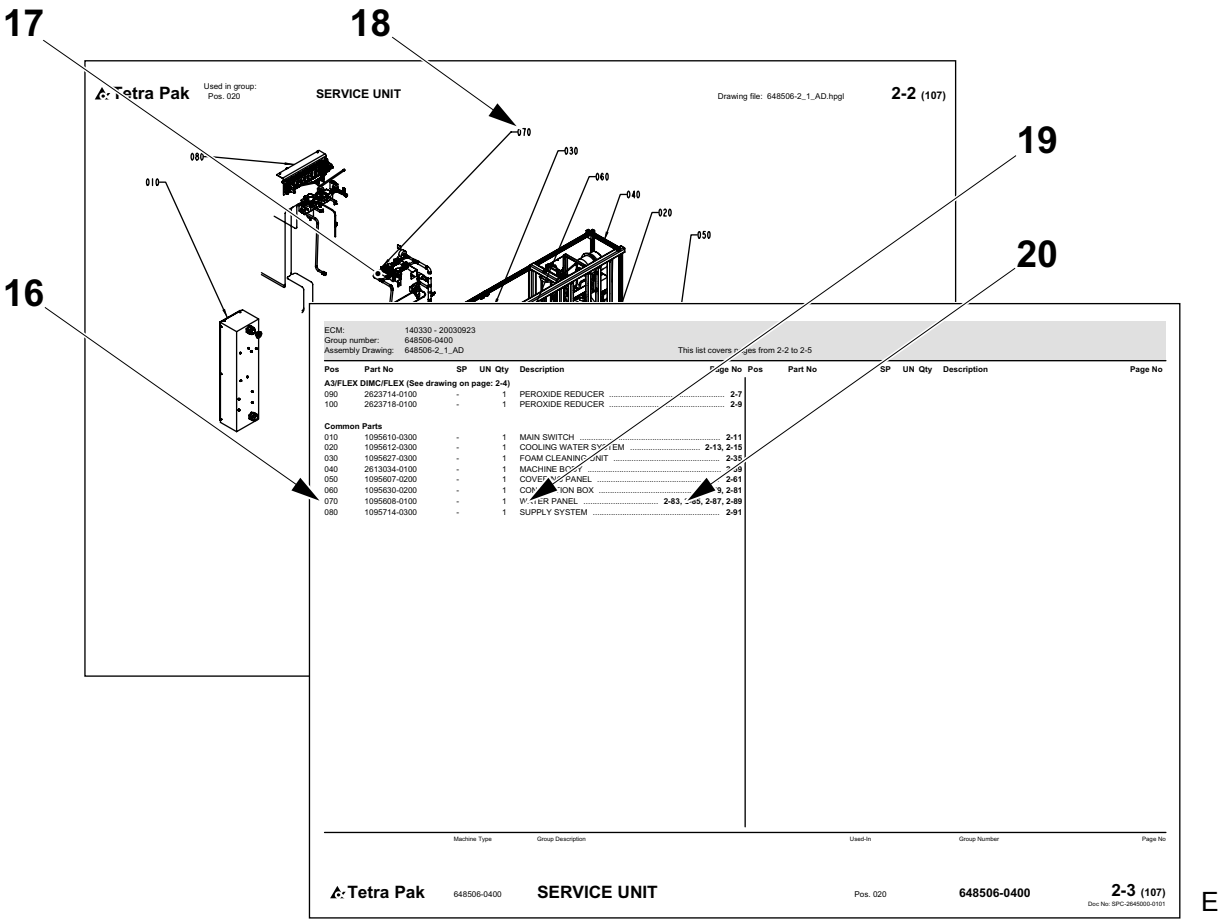

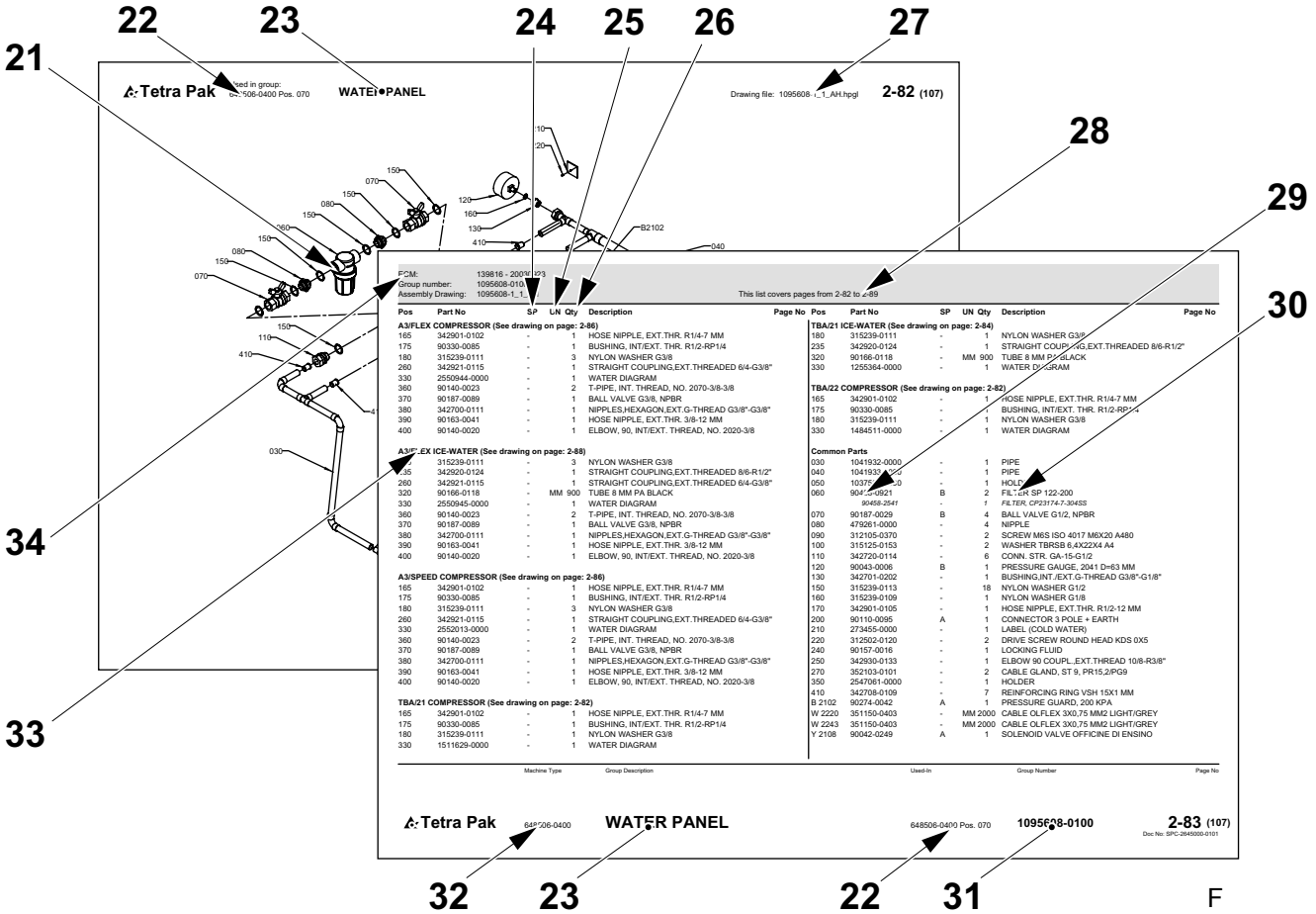

TechPub-2660371-0101

Introduction

Manual Information

Tetra Pak recommends reading all delivered manuals carefully. Make sure that the delivered manuals are available to personnel who operate or maintain the equipment.

It is important to keep this catalogue for the lifetime of the equipment and to pass the catalogue on to any subsequent holder or user.

Tetra Pak will not be held responsible for any damage to the equipment caused by not following the instructions given in the manuals that accompany this equipment.

Delivered Manuals

The manuals delivered with this equipment may include

- Conversion Manual (CM)
  This manual provides technicians with information on converting the equipment between different production modes.
- Electrical Manual (EM)
  This manual provides technicians with information about the equipment's electrical system.
- Installation Manual (IM)
  This manual provides technicians with information required to safely install the equipment.
- Maintenance Manual (MM)
  This manual provides technicians with information on maintaining the equipment.
- Operation Manual (OM)
  This manual provides the operator with information on handling and operating the equipment before, during, and after production.
- Spare Parts Catalogue (SPC)
  This manual provides the information necessary to order spare parts from Tetra Pak.
- Technical Manual (TeM)
  - provides technicians with information required to safely install the equipment
  - provides technicians with information on maintaining the equipment
  - provides technicians with information about the equipment's electrical system
  - provides the information necessary to order spare parts from Tetra Pak

TechPub-2660371-0101

Page Layout

Refer to the illustration (A) on page i-5: The main pages in a Spare Parts Catalogue consist of an illustration page (1) and a corresponding list page (7). The page number (5) is shown in the header of an illustration page and in the footer of a list page. The document number (6) is shown in the footer of a list page.

Page Numbering

Refer to the illustration (A) on page i-5: A page number (5) has three parts:

- chapter number (2)
- consecutive page number within the chapter (3)
- total number of pages in the chapter (4)

Machine Introduction

Manufacturer

For the manufacturer's name and address, see the second page of this catalogue.

Service

To order spare parts for this machine, or to report problems associated with operating this machine, contact the nearest Tetra Pak office.

Contact the Liaison with other inquiries, comments, or suggestions for improvement regarding the equipment and its documentation.

Identification

CE Classification

This equipment complies with the basic health and safety regulations of the European Economic Area (EEA).

TechPub-2660371-0101

Machine Plate

The illustration (B) on page i-5 shows an example of a machine plate. An illustration of the valid machine plate and its location on the equipment is shown in the Introduction chapter of the manuals delivered with this equipment. The machine plate contains the data listed below, needed when contacting Tetra Pak concerning this specific equipment.

- Machine type (8)
- Volume (9)
- Drawing specifications (10)
- Machine serial number (11)
- Manufacturer (12)
- CE mark (13)
- Year of manufacture (14)

The illustration (C) on page i-5 shows an example of a machine specification. Make sure that the equipment data listed in the front pages of this manual corresponds to the machine plate data and the machine specification.

TechPub-2660371-0101

How to Use This Spare Parts Catalogue

Locate a Spare Part Number

a) Refer to the illustration (D) on page i-5: Go to the chapter number (15) indicated beside the main group that contains the part you want to locate.

Items b) and c) refer to the illustration (E) on page i-6.

b) On the main group illustration, look for the machine subgroup (17) that contains the part or subgroup you are looking for. Note the position number (18) and go to the list page that follows the illustration.

c) Look for the position number (16) or the subgroup name (19). Go to the corresponding page number (20) listed in the right-hand column.

Items d) and e) refer to the illustration (F) on page i-6.

d) Locate the part (21) that you are looking for on the subgroup illustration and note the part's position number.

e) The part number (29) and part description (30) are listed beside the position number on the list page.

Information Listed in a Spare Parts Catalogue

The list below refers to the illustration (F) on page i-6. A Spare Parts Catalogue contains the following information about groups, subgroups, and spare parts for the equipment:

- Group structure reference (22). Indicates the next higher group in the equipment list structure.
- Group name (23)
- Spare part code (24). See the Spare Part Codes section.
- Unit of measure (25)
- Quantity (26)
- Assembly drawing number (27)
- List page range (28). Included if there are multiple pages in the group illustration or list.
- Part or subgroup number (29)
- Subgroup name or part description (30)
- Group number (31)
- Equipment number (32)
- Group information heading (33). Indicates if the section below the heading is for a specific machine variant or if it is a list of common parts. If a list has more than one variant and each variant has its own assembly drawing, a page reference to the variant's assembly drawing is shown.
- Internal information (34)

Spare Part Codes

The tables below show the two possible types of Spare Part (SP) Code that may be listed in the SP column of a Spare Parts Catalogue list page.

SP Code	Meaning
A	Critical part
B	Non-critical part

SP Code	Meaning
U	Start-up kit supplied with machine delivery
P	Production kit to be held at production site
S	Service kit to be held at service stations store
C	Central depot kit to be available at the central store

TechPub-2660371-0101

Úvod

Informace o příručce

Společnost Tetra Pak doporučuje, abyste se důkladně seznámili se všemi dodanými příručkami. Dodané příručky musí být k dispozici pracovníkům, kteří provádějí obsluhu nebo údržbu zařízení.

Tento katalog je třeba uchovávat po celou dobu životnosti zařízení a předat jej každému dalšímu vlastníkovi nebo uživateli.

Společnost Tetra Pak nezodpovídá za škody na zařízení způsobené nedodržováním pokynů uvedených v příručkách dodaných se zařízením.

Dodané příručky

Mezi příručky dodané se zařízením patří:

- Příručka pro konverzi (CM)
  Tato příručka obsahuje informace pro techniky o konverzi zařízení mezi jednotlivými výrobními režimy.
- Příručka pro elektroinstalaci (EM)
  Tato příručka obsahuje informace pro techniky o elektroinstalaci zařízení.
- Příručka pro instalaci (IM)
  Tato příručka obsahuje informace pro techniky týkající se bezpečné instalace zařízení.
- Příručka pro obsluhu (MM)
  Tato příručka obsahuje informace pro techniky o údržbě zařízení.
- Provozní příručka (OM)
  Tato příručka obsahuje informace pro obsluhu o manipulaci a provozu zařízení před, během a po výrobě.
- Katalog náhradních dílů (SPC)
  Tato příručka obsahuje informace nezbytné pro objednávání náhradních dílů od společnosti Tetra Pak.
- Technická příručka (TeM)
  - obsahuje informace pro techniky týkající se bezpečné instalace zařízení
  - obsahuje informace pro techniky o údržbě zařízení
  - obsahuje informace pro techniky o elektroinstalaci zařízení
  - obsahuje informace nezbytné pro objednávání náhradních dílů od společnosti Tetra Pak

TechPub-2660371-0101

Vzhled stránky

Viz obrázek (A) na stránce i-5: hlavní stránky v katalogu náhradních dílů se skládají ze stránky s obrázkem (1) a z odpovídající katalogové stránky (7). Číslo stránky (5) je uvedeno v záhlaví stránky s obrázkem a v zapatí katalogové stránky. Číslo dokumentu (6) je uvedeno v záhlaví katalogové stránky.

Číslování stránek

Viz obrázek (A) na stránce i-5: číslo stránky (5) se skládá ze tří částí:

- číslo kapitoly (2)
- číslo další stránky (3) v rámci kapitoly
- celkový počet stránek (4) v kapitole

Seznámení se zařízením

Výrobce

Název a adresa výrobce jsou uvedeny na druhé stránce tohoto katalogu.

Servis

Chcete-li objednat náhradní díly pro toto zařízení nebo chcete-li ohlásit potíže spojené s provozem zařízení, obrat’te se na nejbližší pobočku společnosti Tetra Pak.

S ostatními stížnostmi, připomínkami nebo zlepšovacími návrhy v souvislosti se zařízením a dokumentací se obrat’te na zastoupení společnosti.

Označení

Klasifikace CE

Toto zařízení vyhovuje základním zdravotním a bezpečnostním směrnicím EEA (European Economic Area).

TechPub-2660371-0101

Typový štítek

Na obrázku (B) na stránce i-5 je uveden příklad typového štítku zařízení. Příslušné typové štítky a jejich umístění na zařízení jsou uvedeny v kapitole Úvod v příručkách dodaných se zařízením. Typový štítek obsahuje níže uvedené údaje, které je třeba uvést při kontaktování společnosti Tetra Pak ohledně tohoto zařízení.

- typ zařízení (8)
- množství (9)
- označení schémat (10)
- sériové číslo zařízení (11)
- výrobce (12)
- symbol CE (13)
- rok výroby (14)

Na obrázku (C) na stránce i-5 je uveden příklad specifikace zařízení. Údaje o zařízení uvedené na předních stránkách této příručky musí souhlasit s údaji na typovém štítku a se specifikacemi zařízení.

TechPub-2660371-0101

Jak používat tento katalog náhradních dílů

Vyhledání čísla náhradního dílů

a) Viz obrázek (D) na stránce i-5: přejdete na číslo kapitoly (15) uvedené vedle hlavní skupiny, která obsahuje hledaný díl.

Položky b) a c) odkazují na obrázek (E) na stránce i-6.

b) Na obrázku hlavní skupiny vyhledejte podskupinu zařízení (17) která obsahuje hledaný díl nebo podskupinu. Zapamatujte si číslo umístění (18) a přejděte na katalogovou stránku, která následuje obrázek.

c) Vyhledejte číslo umístění (16) nebo název podskupiny (19). Přejděte na příslušné číslo stránky (20) uvedené v pravém sloupci.

Položky d) a e) odkazují na obrázek (F) na stránce i-6.

d) Na obrázku podskupiny vyhledejte požadovaný díl (21) a poznamenejte si číslo jeho umístění.

e) Na katalogové stránce je vedle čísla umístění uvedeno číslo dílu (29) a popis (30).

Informace uvedené v katalogu náhradních dílů

Následující seznam odkazuje na obrázek (F) na stránce i-6. Katalog náhradních dílů obsahuje následující informace o skupinách, podskupinách a náhradních dílech pro toto zařízení:

- Označení struktury skupiny (22). Označuje další vyšší skupinu ve struktuře katalogu zařízení.
- Název skupiny (23)
- Kód náhradního dílu (24). Další informace najdete v části Náhradní díl.
- Měrné jednotky (25)
- Množství (26)
- Číslo schématu součásti (27)
- Rozsah katalogových stránek (28). Je uvedeno, pokud obrázek skupiny nebo katalog obsahují více stránek.
- Číslo dílu nebo podskupiny (29)
- Název podskupiny nebo popis dílu (30)
- Číslo skupiny (31)
- Číslo zařízení (32)
- Nadpis informací o skupině (33). Označuje, zda se oddíl pod nadpisem vztahuje na konkrétní variantu zařízení nebo představuje katalog běžných dílů. Pokud některý katalog obsahuje více, než jednu variantu, a pokud má každá varianta vlastní schéma součásti, zobrazí se odkaz na stránku se schématem součásti dané varianty.
- Vnitřní informace (34)

Náhradní díl

V následujících tabulkách jsou uvedeny možné typy kódů náhradních dílů (SP), které mohou být uvedeny ve sloupci SP na katalogové stránce katalogu náhradních dílů.

Kód SP	Význam
A	Kritický náhradní díl.
B	Nekritický náhradní díl.

Kód SP	Význam
U	Sada pro uvedení zařízení do provozu dodaná se zařízením.
P	Provozní sada, která musí bát k dispozici na místě výroby.
S	Servisní sada, která musí být uložena v servisní dílně.
C	Sada pro hlavní uskladnění, která musí být k dispozici v centrálním skladu.

TechPub-2660371-0101

Indledning

Information om manualen

Tetra Pak anbefaler, at alle leverede manualer læses omhyggeligt. Sørg for, at de leverede manualer er tilgængelige for medarbejdere, der betjener eller vedligeholder udstyret.

Det er vigtigt at opbevare dette katalog hele udstyrets levetid og give kataloget videre til eventuelt kommende ejere eller brugere.

Tetra Pak kan ikke holdes ansvarlig for eventuel beskadigelse af udstyr, der opstår, fordi instruktionerne i manualerne til dette udstyr ikke følges.

Leverede manualer

De manualer, der leveres sammen med dette udstyr, kan omfatte:

- Konverteringsmanual (CM)
  Denne manual forsyner teknikere med informationer om konvertering af udstyret mellem forskellige produktionstilstande.
- Elektrisk manual (EM)
  Denne manual forsyner teknikere med informationer om udstyrets elektriske system.
- Installationsmanual (IM)
  Denne manual forsyner teknikere med informationer, der er nødvendige for en sikker installation af udstyret.
- Vedligeholdelsesmanual (MM)
  Denne manual forsyner teknikere med informationer om vedligeholdelse af udstyret.
- Betjeningsmanual (OM)
  Denne manual forsyner operatøren med informationer om håndtering og betjening af udstyret før, under og efter produktion.
- Reservedelskatalog (SPC)
  Denne manual indeholder de informationer, der er nødvendige for at kunne bestille reservedele fra Tetra Pak.
- Teknisk manual (TeM)
  - forsyner teknikere med informationer, der er nødvendige for en sikker installation af udstyret.
  - forsyner teknikere med informationer om vedligeholdelse af udstyret.
  - forsyner teknikere med informationer om udstyrets elektriske system.
  - indeholder de informationer, der er nødvendige for at kunne bestille reservedele fra Tetra Pak.

TechPub-2660371-0101

Sidelayout

Se illustrationen (A) på side i-5: Hovedsiderne i et reservedelskatalog består af en illustrationsside (1) og en tilsvarende listeside (7). Sidenummeret (5) vises i sidehovedet på en illlustrationsside og i sidefoden på en listeside. Dokumentnummeret (6) vises i sidefoden på en listeside.

Sidenummerering

Se illustrationen (A) på side i-5: Et sidenummer (5) har tre dele:

- kapitelnummer (2)
- fortløbende sidenummer i kapitlet (3)
- samlet sideantal i kapitlet (4)

Præsentation af maskinen

Producent

Producentens navn og adresse findes på side to i dette katalog.

Service

Kontakt nærmeste Tetra Pak-kontor for at bestille reservedele eller rapportere problemer i forbindelse med betjening af denne maskine.

Kontakt kontaktpersonen med andre forespørgsler, kommentarer eller forslag til forbedringer af udstyret og dets dokumentation.

Identifikation

CE-klassificering

Dette udstyr overholder de grundlæggende sundheds- og sikkerheds-bestemmelser for Det Europæiske Økonomiske Samarbejdsområde (EØS).

TechPub-2660371-0101

Maskinskilt

Illustrationen (B) på side i-5 viser et eksempel på et maskinskilt. En illustration af et gyldigt maskinskilt og dets placering på udstyret er vist i indledningskapitlet i de manualer, der leveres med dette udstyr. Maskinskiltet indeholder nedennævnte data. Disse er nødvendige ved kontakt med Tetra Pak vedrørende dette specifikke udstyr.

- Maskintype (8)
- Volumen (9)
- Tegningsspecifikationer (10)
- Maskinens serienummer (11)
- Producent (12)
- CE-mærke (13)
- Produktionsår (14)

Illustrationen (C) på side i-5 viser et eksempel på en maskinspecifikation. Kontroller, at de udstyrsdata, der er anført på de første sider i denne manual, svarer til maskinskiltsdataene og maskinspecifikationen.

TechPub-2660371-0101

Sådan bruges dette reservedelskatalog

Find et reservedelsnummer

a) Se illustrationen (D) på side i-5: Gå til kapitelnummeret (15), der er angivet ved siden af hovedgruppen, der indeholder den del, der ønskes fundet.

Punkterne b) og c) refererer til illustrationen (E) på side i-6.

b) I hovedgruppeillustrationen skal man se efter maskinundergruppen (17), som indeholder den del eller undergruppe, der søges. Bemærk placeringsnummeret (18), og gå til listesiden, som følger illustrationen.

c) Se efter placeringsnummeret (16) eller undergruppens navn (19). Gå til det tilsvarende sidenummer (20) angivet i den højre kolonne.

Punkterne d) og e) refererer til illustrationen (F) på side i-6.

d) Find den del (21), du søger i undergruppeillustrationen, og notér delens placeringsnummer.

e) Reservedelsnummeret (29) og -beskrivelsen (30) er angivet ved siden af placeringsnummeret på listesiden.

Informationer der er angivet i et reservedelskatalog

Listen nedenfor refererer til illustrationen (F) på side i-6. Et reservedelskatalog indeholder følgende informationer om grupper, undergrupper og reservedele til udstyret:

- Gruppestrukturreference (22). Angiver næste overordnede gruppe i udstyrslistestrukturen.
- Gruppenavn (23)
- Reservedelskode (24). Se afsnit Reservedelskoder.
- Måleenhed (25)
- Antal (26)
- Samletegningsnummer (27)
- Listens sideområde (28). Er angivet, hvis gruppeillustrationen eller -listen inkluderer mange sider.
- Del- eller undergruppenummer (29)
- Undergruppens navn eller delsbeskrivelse (30)
- Gruppenummer (31)
- Udstyrsnummer (32)
- Overskrift for gruppeinformation (33). Angiver om afsnittet under overskriften er for en specifik maskinvariant, eller om det er en liste over fælles dele. Hvis en liste har mere end én variant, og hver variant har sin egen samletegning, vises en sidereference til variantens samletegning.
- Intern information (34)

Reservedelskoder

Tabellerne nedenfor viser de to mulige typer reservedelskoder (SP), som kan være anført i SP-kolonnen på listesiden i et reservedelskatalog.

SP-kode	Betydning
A	Kritisk del
B	Ikke-kritisk del

SP-kode	Betydning
U	Startsæt der leveres med maskinen
P	Produktionssæt til opbevaring på produktionsstedet
S	Servicesæt til opbevaring på servicestationslager
C	Centraldepotsæt der skal være til rådighed på centrallageret

TechPub-2660371-0101

Einleitung

Handbuch-Informationen

Tetra Pak empfiehlt, alle gelieferten Handbücher sorgfältig zu lesen. Es muss sichergestellt werden, dass die gelieferten Handbücher dem Bediener- oder Wartungspersonal der Ausrüstung verfügbar sind.

Es ist wichtig, dieses Handbuch während der Lebensdauer der Ausrüstung vorzuhalten und es an nachfolgende Halter oder Benutzer weiterzugeben.

Tetra Pak ist nicht verantwortlich für Schäden an der Ausrüstung, die durch die Nichtbefolgung der Anweisungen dieses Handbuchs verursacht werden.

Gelieferte Handbücher

Die mit dieser Ausrüstung gelieferten Handbücher umfassen

- Umbauhandbuch (CM)
  Dieses Handbuch liefert den Technikern Informationen über den Umbau der Ausrüstung zwischen den verschiedenen Produktionsweisen.
- Elektrohandbuch (EM)
  Dieses Handbuch liefert den Technikern Informationen zum Elektrosystem der Ausrüstung.
- Installationshandbuch (IM)
  Dieses Handbuch liefert den Technikern Informationen für die sichere Installation der Ausrüstung.
- Wartungshandbuch (MM)
  Dieses Handbuch liefert den Technikern Informationen über die Wartung der Ausrüstung.
- Betriebshandbuch (OM)
  Dieses Handbuch liefert dem Bediener Informationen über die Handhabung und den Betrieb der Ausrüstung vor, während und nach der Produktion.
- Ersatzteilkatalog (SPC)
  Dieses Handbuch liefert Informationen, wie sie für die Bestellung von Ersatzteilen bei Tetra Pak erforderlich sind.
- Technisches Handbuch (TeM)
  - liefert den Technikern Informationen für die sichere Installation der Ausrüstung
  - liefert den Technikern Informationen über die Wartung der Ausrüstung
  - liefert den Technikern Informationen über das Elektrosystem der Ausrüstung
  - liefert die erforderlichen Informationen für die Bestellung von Ersatzteilen bei Tetra Pak.

TechPub-2660371-0101

Seitenlayout

Bezugnahme Abbildung (A) auf Seite i-5: Die Hauptseiten in einem Ersatzteilkatalog bestehen aus einer Abbildungsseite (1) und einer entsprechenden Listenseite (7). Die Seitennummer (5) ist im Kopf einer Abbilldungsseite und im Fuß einer Listenseite aufgeführt. Die Dokumentennummer (6) ist ist im Fuß einer Listenseite angegeben.

Seitennummerierung

Bezugnahme Abbildung (A) auf Seite i-5: Eine Seitennummer (5) besteht aus drei Teilen:

- Kapitelnummer (2)
- Fortlaufende Seitennummer innerhalb des Kapitels (3)
- Gesamtanzahl der Seiten im Kapitel (4)

Einführung in die Maschine

Hersteller

Für Name und Anschrift des Herstellers, siehe die zweite Seite dieses Kataloges.

Service

Um Ersatzteile für diese Maschine zu bestellen oder um über Probleme beim Betrieb dieser Maschine zu berichten, ist das nächstgelegene Büro von Tetra Pak anzusprechen.

Mit anderen Anfragen. Kommentaren oder Vorschlägen zur Ausrüstung und der Dokumentation ist die Verbindungsstelle anzusprechen.

Identifizierung

CE-Klassifizierung

Diese Ausrüstung entspricht den grundlegenden Gesundheits- und Sicherheitsvorschriften des Europäischen Wirtschaftsraumes (EEA).

TechPub-2660371-0101

Maschinenschild

Die Abbildung (B) auf Seite i-5 zeigt das Beispiel eines Maschinenschildes. Die Abbildung eines gültigen Maschinenschildes und die Lage desselben auf der Ausrüstung befindet sich im Einleitungskapitel der mit der Ausrüstung gelieferten Handbücher. Das Maschinenschild enthält die nachstehend aufgeführten Daten, wie sie erforderlich sind, wenn Tetra Pak wegen dieser spezifischen Ausrüstung anzusprechen ist.

- Maschinentyp (8)
- Volumen (9)
- Zeichnungs-Spezifikationen (10)
- Serien-Nummer der Maschine (11)
- Hersteller (12)
- CE-Markierung (13)
- Baujahr (14)

Die Abbildung (C) auf Seite i-5 zeigt das Beispiel einer Maschinenspezifikation. Es muss sichergestellt sein, dass die in den Frontseiten dieses Handbuchs aufgeführten Ausrüstungsdaten mit den Daten des Maschinenschildes und der Maschinenspezifikation übereinstimmen.

TechPub-2660371-0101

Verwendung dieses Ersatzteilkatalogs

Anordnung einer Ersatzteilnummer

a) Bezugnahme auf Abbildung (D) auf Seite i-5: Weiter zur Kapitelnummer (15), die neben der Hauptgruppe angegeben ist, die das entsprechende Teil enthält.

Die Pos. b) und c) beziehen sich auf die Abbildung (E) auf Seite i-6.

b) Auf der Hauptgruppenabbildung die Maschinen-Untergruppe (17) suchen, die das gesuchte Teil oder die gesuchte Untergruppe enthält. Die Positionsnummer (18) notieren und weiter zur Listenseite gehen, die der Abbildung folgt.

c) Die Positionsnummer (16) oder den Namen der Untergruppe (19) suchen. Dann zur entsprechenden Seitennummer (20) in der rechten Spalte gehen.

Pos. d) und e) beziehen sich auf die Abbildung (F) auf Seite i-6.

d) Suchen Sie Teil (21) auf der Untergruppen-Abbildung und notieren Sie die Positionsnummer des Teils.

e) Die Teilnummer (29) und die Teilebeschreibung (30) finden Sie neben der Positionsnummer auf der Listenseite.

In einem Ersatzteilkatalog enthaltene Information

Die nachstehende Liste bezieht sich auf die Abbildung (F) auf Seite i-6.
Ein Ersatzteilkatalog enthält folgende Informationen über Gruppen, Untergruppen und Ersatzteile für die Ausrüstung:

- Gruppenstrukturreferenz (22). Sie gibt die nächst höhere Gruppe in der Ausrüstungslistenstruktur an
- Gruppenname (23)
- Ersatzteilcode (24). Siehe Kapitel Ersatzteilcode
- Maßeinheit (25)
- Menge (26)
- Nummer der Zusammenbauzeichnung (27)
- Listenseite, Bereich (28). Eingeschlossen, wenn Mehrfachseiten in der Gruppenabbildung oder Liste enthalten sind
- Teile- oder Untergruppennummer (29)
- Untergruppenname oder Teilebeschreibung (30)
- Gruppennummer (31)
- Ausrüstungsnummer (32)
- Gruppeninformationsüberschrift (33). Gibt an, ob der Abschnitt unter der Überschrift sich auf eine spezifische Maschinenvariante bezieht oder eine Liste der allgemeinen Teile ist. Wenn eine Liste sich auf mehr als eine Variante bezieht und jede Variante eine eigene Zusammenbauzeichnung hat, wird eine Seitenreferenz zur Zusammenbauzeichnung der Variante vorgestellt.
- Interne Information (34)

Ersatzteilcode

Die nachstehenden Tabellen zeigen die beiden möglichen Typen von Ersatzteilcode (SP), die in der SP-Spalte einer Listenseite des Ersatzteilkatalogs enthalten sein können.

SP Code	Bedeutung
A	Kritisches Teil
B	Unkritisches Teil

SP Code	Bedeutung
U	Mit der Maschine gelieferterAnfahr-Kit
P	Vor Ort vorzuhaltender Produktions-Kit
S	Im Lager der Servicestation vorzuhaltender Service-Kit
C	Im Zentrallager vorzuhaltender Zentraldepot-Kit

TechPub-2660371-0101

Εισαγωγή

Πληροφορίες για το Εγχειρίδιο

Η Tetra Pak σας συνιστά να διαβάζετε προσεκτικά όλα τα χορηγούμενα εγχειρίδια. Βεβαιωθείτε ότι είναι διαθέσιμα όλα τα χορηγούμενα εγχειρίδια για το προσωπικό που χειρίζεται ή συντηρεί τον εξοπλισμό.

Είναι σημαντικό να διατηρείτε αυτό τον κατάλογο καθ' όλη τη διάρκεια ζωής του εξοπλισμού καθώς και να παραδίδετε τον κατάλογο στον τυχόν επόμενο ιδιοκτήτη ή χρήστη του εξοπλισμού.

Η Tetra Pak δεν πρόκειται να αναλάβει καμία ευθύνη για οποιαδήποτε ζημιά που προκαλείται στον εξοπλισμό λόγω της παράβλεψης των οδηγιών που δίνονται στα εγχειρίδια που συνοδεύουν αυτό τον εξοπλισμό.

Χορηγούμενα Εγχειρίδια

Τα εγχειρίδια που χορηγούνται μ' αυτόν τον εξοπλισμό, μπορεί να περιλαμβάνουν

- Εγχειρίδιο Μετατροπής (CM)
  Αυτό το εγχειρίδιο χορηγεί στους τεχνικούς πληροφορίες για τη μετατροπή του εξοπλισμού στους διαφορετικούς τρόπους παραγωγής.
- Εγχειρίδιο Ηλεκτρικού (EM)
  Αυτό το εγχειρίδιο χορηγεί στους τεχνικούς πληροφορίες για το ηλεκτρικό σύστημα του εξοπλισμού.
- Εγχειρίδιο Εγκατάστασης (IM)
  Αυτό το εγχειρίδιο χορηγεί στους τεχνικούς τις απαιτούμενες πληροφορίες για την ασφαλή εγκατάσταση του εξοπλισμού.
- Εγχειρίδιο Συντήρησης (MM)
  Αυτό το εγχειρίδιο χορηγεί στους τεχνικούς πληροφορίες για τη συντήρηση του εξοπλισμού.
- Εγχειρίδιο Χρήσης (OM)
  Αυτό το εγχειρίδιο χορηγεί στο χειριστή πληροφορίες για τη διακίνηση και το χειρισμό του εξοπλισμού πριν, κατά τη διάρκεια και μετά την παραγωγή.
- Κατάλογος Ανταλλακτικών (SPC)
  Αυτό το εγχειρίδιο χορηγεί τις απαραίτητες πληροφορίες για την παραγγελία ανταλλακτικών από την Tetra Pak.
- Τεχνικό Εγχειρίδιο (TeM)
  - χορηγεί στους τεχνικούς τις απαιτούμενες πληροφορίες για την ασφαλή εγκατάσταση του εξοπλισμού
  - χορηγεί στους τεχνικούς πληροφορίες για τη συντήρηση του εξοπλισμού
  - χορηγεί στους τεχνικούς πληροφορίες για το ηλεκτρικό σύστημα του εξοπλισμού
  - χορηγεί τις απαραίτητες πληροφορίες για την παραγγελία ανταλλακτικών από την Tetra Pak

TechPub-2660371-0101

Σχεδίαση Σελίδας

Ανατρέξτε στην εικόνα (A) της σελίδας i-5: Οι κύριες σελίδες ενός Καταλόγου Ανταλλακτικών αποτελούνται από μία εικονογραφημένη σελίδα (1) και από μία αντίστοιχη σελίδα καταλόγου (7). Ο αριθμός σελίδας (5) φαίνεται στην κεφαλίδα μιας εικονογραφημένης σελίδας και στο υποσέλιδο μιας σελίδας καταλόγου. Ο αριθμός εγγράφου (6) φαίνεται στο υποσέλιδο μιας σελίδας λίστας.

Αρίθμηση Σελίδων

Ανατρέξτε στην εικόνα (A) της σελίδας i-5: Ένας αριθμός σελίδας (5) αποτελείται από τρία μέρη:

- αριθμός κεφαλαίου (2)
- αύξων αριθμός σελίδας του κεφαλαίου (3)
- συνολικός αριθμός σελίδων του κεφαλαίου (4)

Εισαγωγή στη Μηχανή

Κατασκευαστής

Για την επωνυμία και τη διεύθυνση του κατασκευαστή, βλέπετε στη δεύτερη σελίδα αυτού του καταλόγου.

Σέρβις

Για να παραγγείλετε ανταλλακτικά για τη συγκεκριμένη μηχανή, ή για να αναφέρετε προβλήματα που σχετίζονται με το χειρισμό αυτής της μηχανής, επικοινωνήστε με το πλησιέστερο γραφείο της Tetra Pak.

Εάν έχετε άλλου είδους ερωτήσεις, σχόλια ή προτάσεις βελτίωσης όσον αφορά τον εξοπλισμό και την έγγραφη τεκμηρίωσή του, επικοινωνήστε με το Τμήμα Σχέσεων.

Αναγνώριση

Κατάταξη ΕΚ

Αυτός ο εξοπλισμός συμμορφώνεται με τους βασικούς κανονισμούς υγείας και ασφάλειας του Ευρωπαϊκού Οικονομικού Χώρου (ΕΟΧ).

TechPub-2660371-0101

Πινακίδα Μηχανής

Η εικόνα (B) της σελίδας i-5 δείχνει ένα παράδειγμα μιας πινακίδας μηχανής. Μια εικόνα της ενδεδειγμένης μορφής και θέσης της πινακίδας μηχανής στον εξοπλισμό, υποδεικνύεται στο κεφάλαιο 'Εισαγωγή' των εγχειριδίων που χορηγούνται μ' αυτόν τον εξοπλισμό. Η πινακίδα μηχανής περιέχει τα στοιχεία που παρατίθενται παρακάτω, τα οποία χρειάζονται όταν επικοινωνείτε με την Tetra Pak για όσον αφορά αυτό το συγκεκριμένο εξοπλισμό.

- Τύπος μηχανής (8)
- Όγκος (9)
- Προδιαγραφές σχεδίου (10)
- Αριθμός σειράς μηχανής (11)
- Κατασκευαστής (12)
- Σήμα ΕΚ (13)
- Έτος κατασκευής (14)

Η εικόνα (C) της σελίδας i-5 δείχνει ένα παράδειγμα τεχνικών χαρακτηριστικών μηχανής. Βεβαιωθείτε ότι τα στοιχεία εξοπλισμού που παρατίθενται στις πρώτες σελίδες αυτού του εγχειριδίου αντιστοιχούν με τα στοιχεία της πινακίδας μηχανής και τα τεχνικά χαρακτηριστικά μηχανής.

TechPub-2660371-0101

Πώς Χρησιμοποιείται Αυτός ο Κατάλογος Ανταλλακτικών

Εντοπισμός ενός Αριθμού Ανταλλακτικού

a) Ανατρέξτε στην εικόνα (D) της σελίδας i-5: Πηγαίνετε στον αριθμό κεφαλαίου (15) που υποδεικνύεται δίπλα από το κύριο συγκρότημα το οποίο περιλαμβάνει το εξάρτημα που θέλετε να εντοπίσετε.

Τα βήματα b) και c) αναφέρονται στην εικόνα (E) της σελίδας i-6.

b) Στην εικόνα της κύριου συγκροτήματος, αναζητήστε το υποσυγκρότημα μηχανής (17) που περιλαμβάνει το εξάρτημα ή το υποσυγκρότημα που αναζητάτε. Σημειώστε τον αριθμό θέσης (18) και πηγαίνετε στη σελίδα καταλόγου που ακολουθεί την εικόνα.

c) Αναζητήστε τον αριθμό θέσης (16) ή το όνομα υποσυγκροτήματος (19). Πηγαίνετε στον αντίστοιχο αριθμό σελίδας (20) που αναγράφεται στη δεξιά στήλη.

Τα βήματα d) και e) αναφέρονται στην εικόνα (F) της σελίδας i-6.

d) Εντοπίστε το εξάρτημα (21) που αναζητάτε στην εικόνα υποσυγκροτήματος και σημειώστε τον αριθμό θέσης του εξαρτήματος.

e) Ο αριθμός του εξαρτήματος (29) και η περιγραφή του εξαρτήματος (30) παρατίθενται δίπλα στον αριθμό θέσης στη σελίδα καταλόγου.

Πληροφορίες που Περιέχονται σε έναν Κατάλογο Ανταλλακτικών

Ο παρακάτω κατάλογος αναφέρεται στην εικόνα (F) της σελίδας i-6. Ένας Κατάλογος Ανταλλακτικών περιέχει τις ακόλουθες πληροφορίες σχετικά με συγκροτήματα, υποσυγκροτήματα και ανταλλακτικά του εξοπλισμού:

- Αναφορά συγκροτήματος κατασκευής (22). Υποδεικνύει το επόμενο μεγαλύτερο συγκρότημα στον πίνακα εξοπλισμού κατασκευής.
- Όνομα συγκροτήματος (23)
- Κωδικός ανταλλακτικού (24). Δείτε την ενότητα Κωδικοί Ανταλλακτικών.
- Μονάδα μέτρησης (25)
- Ποσότητα (26)
- Αριθμός σχεδίου συναρμολόγησης (27)
- Σειρά σελίδων καταλόγου (28). Περιλαμβάνεται εάν υπάρχουν πολλαπλές σελίδες στην εικόνα ή στον κατάλογο συγκροτήματος.
- Αριθμός εξαρτήματος ή υποσυγκροτήματος (29)
- Όνομα υποσυγκροτήματος ή περιγραφή εξαρτήματος (30)
- Αριθμός συγκροτήματος (31)
- Αριθμός εξοπλισμού (32)
- Επικεφαλίδα πληροφοριών συγκροτήματος (33). Υποδεικνύει εάν η ενότητα κάτω από την επικεφαλίδα αφορά μια ειδική παραλλαγή μηχανής ή είναι ένας κατάλογος κοινών εξαρτημάτων. Εάν ένας κατάλογος περιέχει περισσότερες από μία παραλλαγές και κάθε παραλλαγή έχει το δικό της σχέδιο συναρμολόγησης, υποδεικνύεται μια παραπομπή στη σελίδα σχεδίου συναρμολόγησης της παραλλαγής.
- Εσωτερικές πληροφορίες (34)

Κωδικοί Ανταλλακτικών

Οι παρακάτω πίνακες δείχνουν τους δύο δυνατούς τύπους Κωδικών Ανταλλακτικών (SP) που μπορεί να αναγράφονται στη στήλη SP μίας σελίδας καταλόγου ενός Καταλόγου Ανταλλακτικών.

Κωδικός SP	**Σημασία**
A	Κρίσιμο εξάρτημα
B	Μη κρίσιμο εξάρτημα

Κωδικός SP	**Σημασία**
U	Κιτ εκκίνησης που παραδίδεται μαζί με τη μηχανή
P	Κιτ παραγωγής που διατηρείται στο χώρο παραγωγής
S	Κιτ σέρβις που διατηρείται στις αποθήκες των πρατηρίων σέρβις
C	Κιτ κεντρικής αποθήκης που διατίθεται στην κεντρική αποθήκη

TechPub-2660371-0101

Introducción

Información del manual

Tetra Pak recomienda que se lean cuidadosamente todos los manuales entregados. Comprobar que todos los manuales entregados estén disponibles para el personal que efectúe la operación o el mantenimiento del equipo.

Es importante conservar este manual durante la vida útil del equipo, así como facilitárselo a cualquier propietario o usuario posterior.

Tetra Pak no se responsabilizará de daños en la máquina o equipo debidos a la inobservancia de las instrucciones dadas en los manuales que acompañan este equipo.

Manuales entregados

Los manuales entregados con este equipo pueden incluir

- Manual de conversión (CM)
  Este manual proporciona a los técnicos información sobre cómo convertir el equipo entre diferentes modos de producción.
- Manual eléctrico (EM)
  Este manual proporciona a los técnicos información acerca del sistema eléctrico del sistema.
- Manual de instalación (IM)
  Este manual proporciona a los técnicos la información necesaria para la instalación segura del equipo.
- Manual de mantenimiento (MM)
  Este manual proporciona a los técnicos la información acerca del mantenimiento del equipo.
- Manual de servicio (OM)
  Este manual proporciona al operador información acerca de la manipulación y operación de la máquina antes, durante y después de la producción.
- Catálogo de piezas de recambio (SPC)
  Este manual proporciona la información necesaria para pedir piezas de recambio a Tetra Pak.
- Manual técnico (TeM)
  - proporciona a los técnicos la información necesaria para la instalación segura del equipo
  - proporciona a los técnicos la información acerca del mantenimiento del equipo
  - proporciona a los técnicos información acerca del sistema eléctrico del sistema
  - proporciona la información necesaria para pedir piezas de recambio a Tetra Pak

TechPub-2660371-0101

Organización de las páginas

Remitirse a la ilustración (A) en la página i-5: Las páginas principales en un Catálogo de piezas de recambio se componen de una página de ilustración (1) y una página de lista correspondiente (7). El número de la página (5) se muestra en el encabezado de una página de ilustración y en el pie de página de una página de lista. El número del documento (6) se muestra en el pie de página de una página de lista.

Numeración de las páginas

Remitirse a la ilustración (A) en la página i-5: Un número de página (5) se compone de tres partes:

- Número de capítulo (2)
- número de página consecutivo (2) dentro del capítulo (3)
- número total de páginas del capítulo (4)

Introducción a la máquina

Fabricante

Para el nombre y la dirección del fabricante, ver la segunda página de este catálogo.

Servicio

Para pedir piezas de recambio para esta máquina o informar problemas asociados con la operación de esta máquina, contactar con la oficina de Tetra Pak más cercana.

Ponerse en contacto con el responsable correspondiente para otras preguntas, comentarios o sugerencias sobre mejoras de la máquina o equipo y su documentación.

Identificación

Clasificación de la CE

Este equipo cumple los requisitos esenciales relativos a la salud y la seguridad del Área Económica Europea (EEA).

TechPub-2660371-0101

Placa de la máquina

La ilustración (B) en la página i-5 muestra un ejemplo de placa de máquina. En la Introducción del capítulo de los manuales entregados con este equipo se muestra una ilustración de la placa de máquina válida y su ubicación en el equipo La placa de máquina contiene los datos listados a continuación requeridos al contactar con Tetra Pak en relaciôn a este equipo específico.

- Tipo de máquina (8)
- Volumen (9)
- Especificaciones de plano (10)
- Número de serie de la máquina (11)
- Fabricante (12)
- Marca de la CE (13)
- Año de fabricación (14)

La ilustración (C) en la página i-5 muestra un ejemplo de especificación máquina. Asegúrese que los datos de equipo listados en las páginas de cubierta de este manual corresponden a los datos de la placa de máquina y la especificación máquinav.

TechPub-2660371-0101

Cómo utilizar este Catálogo de piezas de recambio

Localizar un número de pieza de recambio

a) Remitirse a la ilustración (D) en la página i-5: Ir al número de capítulo (15) indicado detrás el grupo principal que contiene la parte que usted desea localizar.

Los items b) y c) se refieren a la ilustracióni (E) en la página i-6.

b) En la ilustración del grupo principal, buscar el subgrupo máquina (17) que contiene la pieza o subgrupo que usted busca. Anote el número de posición (18) y vaya a la página de lista que sigue la ilustración.

c) Busque el número de posición (16) o el nombre del subgrupo (19). Vaya al número de página correspondiente (20) listado en la columna de la derecha.

Los items d) y e) se refieren a la ilustración (F) en la página i-6.

d) Localizar la pieza (21) que busca en la ilustración del subgrupo y anotar el número de posición de la pieza.

e) El número de pieza (29) y la descripción de pieza (30) están listadas detrás del número de posición en la página de lista.

Información listada en un Catálogo de piezas de recambio

La lista a continuación remite a la ilustración (F) en la página i-6.
Un Catálogo de piezas de recambio contiene la siguiente información sobre grupos, subgrupos y piezas de recambio para el equipo:

- Referencia de estructura de grupo (22). Indica el siguiente grupo más alto en la estructura de lista del equipo.
- Nombre del grupo (23)
- Código de pieza de recambio (24). Consultar la sección Códigos de piezas de recambio.
- Unidad de medida (25)
- Cantidad (26)
- Número de plano de conjunto (27)
- Gama de página lista (28). Incluida si hay páginas múltiples en la ilustración o lista de grupo.
- Número de pieza o subgrupo (29)
- Nombre, subgrupo o descripción de pieza (30)
- Número de grupo (31)
- Número de equipo (32)
- Encabezado de información grupo (33). Indica si la sección debajo del encabezado es para una variante máquina específica o si es una lista de piezas comunes. Si la lista tiene más de una variante y cada variante tiene su propio plano de conjunto, se muestra una referencia página para el plano de conjunto de la variante.
- Información interna (34)

Códigos de piezas de recambio

Las tablas a continuación muestran los dos tipos posibles de códigos de Piezas de recambio (PR) que se pueden listar en la columna PR o en una página de lista de Catálogo de piezas de recambio.

Código PR	Significado
A	Pieza crítica
B	Pieza no crítica

Código PR	Significado
U	Kit de inicio suministrado con la entrega de la máquina.
P	Kit de producción debe guardarse en el sitio de producción.
S	Kit de servicio; debe guardarse en el almacén de las estaciones de servicio.
C	Kit de almacén central; debe guardarse en el almacén central.

TechPub-2660371-0101

Sissejuhatus

Kasutusjuhendi teave

Tetra Pak soovitab lugeda hoolega kõiki kaasasolevaid juhendeid. Veenduge, et juhendid on seadmega töötavatele ja neid hooldavatele töötajatele kättesaadavad.

Oluline on hoida kataloog alles kogu seadme eluea jooksul ja anda kataloog kaasa ka järgmisele omanikule või kasutajale.

Tetra Pak ei vastuta seadme kahjustuste eest, mille põhjuseks on seadmega kaasasolevas juhendis toodud juhiste mittejärgimine.

Kaasasolevad juhendid

Seadmega kaasasolevad juhendid võivad sisaldada järgmist:

- Konverteerimisjuhend (ÜJ)
  Juhend annab tehnikutele teavet seadme konverteerimise kohta eri tootmisrežiimide korral.
- Elektrijuhend (EJ)
  Juhend annab tehnikutele teavet seadme elektrisüsteemi kohta.
- Paigaldusjuhend (PJ)
  Juhend annab tehnikutele teavet seadme ohutu paigaldamise kohta.
- Hooldusjuhend (HJ)
  Juhend annab tehnikutele teavet seadme hoolduse kohta.
- Kasutusjuhend (KJ)
  Juhend annab operaatorile teavet seadme käitlemise ja töö kohta enne tootmist, selle ajal ja pärast seda.
- Varuosade kataloog (VOK)
  Juhend annab Tetra Pakilt varuosade tellimiseks vajalikku teavet.
- Tehniline juhend (TJ)
  - annab tehnikutele seadme ohutuks paigaldamiseks vajalikku teavet
  - annab tehnikutele teavet seadme hoolduse kohta
  - annab tehnikutele teavet seadme elektrisüsteemi kohta
  - annab Tetra Pakilt varuosade tellimiseks vajalikku teavet

TechPub-2660371-0101

Küljend

Vt illustratsiooni (A) lk i-5: Varuosade kataloogi põhilehtedeks on illustratsioonilehed (1) ja vastavad loetelulehed (7). Lehekülje number (5) on toodud illustratsioonilehe päises ja loetelulehe jaluses. Dokumendi number (6) on toodud loetelulehe jaluses.

Leheküljenummerdus

Vt illustratsiooni (A) lk i-5: Lehekülje number (5) koosneb kolmest osast:

- peatüki number (2)
- lehekülgede järjestikused numbrid peatüki sees (3)
- lehekülgede koguarv peatükis (4)

Sissejuhatus masina kohta

Tootja

Tootja nimi ja aadress on toodud kataloogi teisel lehel.

Teenindus

Varuosade tellimiseks masinale või selle tööga seotud probleemidest teatamiseks võtke ühendust lähima Tetra Pak kontoriga.

Kui teil on muid küsimusi, märkusi või soovitusi seadmete ja dokumentatsiooni täiustamise kohta, võtke ühendust Tetra Paki kontaktisikuga.

Identifitseerimine

CE-klassifikatsioon

Seade vastab Euroopa Majanduspiirkonna (EMP) põhilistele tervisekaitse ja ohutuse alastele määrustele.

TechPub-2660371-0101

Masina andmeplaat

Illustratsioon (B) leheküljel i-5 kujutab masina andmeplaati.
Masina andmeplaadi pilt ja selle asukoht seadmel on toodud seadmega kaasasolevate juhendite sissejuhatavas peatükis. Masina andmeplaadil on allpool nimetatud andmed, mida vajate antud konkreetse seadmega seoses Tetra Paki poole pöördudes.

- Masina tüüp (8)
- Maht (9)
- Joonisspetsifikatsioonid (10)
- Masina seerianumber (11)
- Tootja (12)
- CE-tähis (13)
- Tootmisaasta (14)

Illustratsioon (C) leheküljel i-5 kujutab masina spetsifikatsiooni. Veenduge, et käesoleva juhendi esimestel lehekülgedel toodud andmed seadme kohta vastavad masina andmesildil olevatele andmetele ja masina spetsifikatsioonile.

TechPub-2660371-0101

Kuidas varuosade kataloogi kasutada

Leidke varuosa number

a) Vt illustratsiooni (D) lk i-5: Leidke peatükk, mille number (15) on toodud selle põhirühma juures, mis sisaldab teie poolt otsitavat varuosa.

Punktid b) ja c) käivad illustratsiooni (E) kohta lk i-6.

b) Põhirühma illustratsioonil leidke masina alarühm (17), mis sisaldab osa või alarühma, mida otsite. Leidke positsiooni number (18) ja avage siis illustratsioonile järgnev loeteluleht.

c) Leidke positsiooni number (16) või alarühma nimetus (19). Leidke vastav leheküljenumber (20) parempoolsest veerust.

Punktid d) ja e) käivad illustratsiooni (F) kohta lk i-6.

d) Leidke otsitav osa (21) alarühma illustratsioonilt ja siis osa positsiooninumber.

e) Osa number (29) ja osa kirjeldus (30) on toodud positsiooninumbri kõrval loetelulehel.

Varuosade kataloogis toodud teave

Allpool toodud loetelu käib illustratsiooni (F) kohta lk i-6. Varuosade kataloogis on järgmine teave seadme rühmade, alarühmade ja varuosade kohta:

- Rühmastruktuuri viide (22). Esitab järgmise kõrgema rühma seadmete loetelu struktuuris.
- Rühma nimetus (23)
- Varuosa kood (24). Vt jaotis Varuosade koodid.
- Mõõtühik (25)
- Kogus (26)
- Koostejoonise number (27)
- Loetelu lehekülgede vahemik (28). Märgitud, kui rühma illustratsioonid või loetelu on mitmel lehel.
- Osa või alarühma number (29)
- Alarühma nimetus või osa kirjeldus (30)
- Rühma number (31)
- Seadme number (32)
- Rühma teabe rubriik (33). Näitab, kas rubriigi all toodud jaotis on konkreetse masinavariandi kohta või on tegemist tavaliste varuosade loeteluga. Kui loetelus on üle ühe variandi ja iga variandi jaoks on oma koostejoonis, esitatakse viide selle variandi koostejoonise leheküljele.
- Siseteave (34)

Varuosade koodid

Allpool toodud tabelitest leiate kaks võimalikku varuosade (SP) koodi, mida võite näha varuosade kataloogi loetelulehe varuosade veerus.

SP-kood	Tähendus
A	Kriitilise tähtsusega osa
B	Vähemtähtis osa

SP-kood	Tähendus
U	Stardikomplekt, tarnitakse koos seadmega
P	Tootmiskomplekt, mida tuleb hoida tootmiskohas
S	Teeninduskomplekt, mida tuleb hoida teenindusjaama laos
C	Kesklao komplekt, mille saab kesklaost

TechPub-2660371-0101

Johdanto

Tietoja käsikirjasta

Tetra Pak suosittelee kaikkien toimitettavien oppaiden lukemista huolellisesti. Varmista, että toimitetut oppaat ovat laitetta käyttävän tai huoltavan henkilökunnan saatavilla.

Tämä luettelo on säilytettävä laitteen käyttöiän ajan ja toimitettava edelleen mahdolliselle seuraavalle omistajalle tai käyttäjälle.

Tetra Pak ei vastaa laitevaurioista, jotka aiheutuvat laitteen mukana tulevissa oppaissa annettujen ohjeiden noudattamatta jättämisestä.

Toimitettavat ohjeet

Tämän laitteen mukana toimitettaviin ohjeisiin kuuluvat:

- Muutoskirja (CM)
  Tässä oppaassa on teknikoille tarkoitettuja ohjeita laitteiston muuttamisesta eti tuotantotiloihin.
- Sähkökirja (EM)
  Tässä oppaassa on teknikoille tarkoitettuja tietoja laitteen sähköjärjestelmästä.
- Asennuskäsikirja (IM)
  Tässä oppaassa on teknikoille tarkoitettuja tietoja, jotka tarvitaan laitteen turvallista asentamista varten.
- Huoltokäsikirja (MM)
  Tässä oppaassa on teknikoille tarkoitettuja tietoja tämän laitteen huoltamisesta.
- Käyttäjän käsikirja (OM)
  Tässä oppaassa on käyttäjälle tarkoitettuja tietoja laitteiston käsittelystä ja käyttämisestä ennen tuotantoa, tuotannon aikana ja sen jälkeen.
- Varaosakuvasto (SPC)
  Tässä oppaassa on tietoja, joita tarvitaan varaosien tilaamiseen Tetra Pakilta.
- Tekninen käsikirja (TeM)
  - sisältää teknikoille tarkoitettuja tietoja, joita tarvitaan laitteen turvallista asentamista varten
  - sisältää teknikoille tarkoitettuja tietoja laitteen huoltamisesta
  - sisältää teknikoille tarkoitettuja tietoja laitteen sähköjärjestelmästä
  - sisältää tietoja, joita tarvitaan varaosien tilaamiseen Tetra Pakilta.

TechPub-2660371-0101

Sivujen asettelu

Katso kuva (A) sivulla i-5: Varaosaluettelon pääsivut koostuvat kuvasivusta (1) ja sitä vastaavasta luettelosivusta (7). Sivunumero (5) näytetään kuvasivun ylätunnisteessa ja luettelosivun alatunnisteessa. Asiakirjan numero (6) näytetään luettelosivun alatunnisteessa.

Sivunumerointi

Katso kuva (A) sivulla i-5: Sivunumerossa (5) on kolme osaa:

- luvun numero (2)
- perättäinen sivunumero (3) luvun sisällä
- luvun kokonaissivumäärä (4).

Koneen esittely

Valmistaja

Valmistajan nimi ja osoite on ilmoitettu tämän luettelon toisella sivulla.

Huolto

Jos haluat tilata tähän koneeseen varaosia tai jos tämän koneen käytössä ilmenee ongelmia, jotka haluat raportoida, ota yhteyttä lähimpään Tetra Pakin toimistoon.

Jos sinulla on muuta kysyttävää, huomautettavaa tai ehdotuksia laitteistoa ja sen asiakirjoja koskevista parannuksista, ota yhteys yhteyshenkilöön.

Tunnistetiedot

CE-luokitus

Tämä laite vastaa Euroopan talousalueen (EEA) perustason terveys- ja turvallisuusvaatimuksia.

TechPub-2660371-0101

Koneen tyyppikilpi

Kuvassa (B) sivulla i-5 on esimerkki koneen tyyppikilvestä. Voimassa olevan tyyppikilven kuva ja sen sijainti koneessa käy ilmi laitteiston mukana tulleiden ohjeiden Johdanto-luvusta. Tyyppikilvessä on tarvitsemasi Tetra Pakin voimassa olevat yhteystiedot, kun on kyseessä tämä nimenomainen laite.

- Konetyyppi (8)
- Tilavuus (9)
- Piirustuserittelyt (10)
- Koneen sarjanumero (11)
- Valmistaja (12)
- CE-merkki (13)
- Valmistusvuosi (14)

Kuvassa (C) sivulla i-5 on esimerkki koneen erittelystä. Varmista, että tämän ohjeen etusivuilla ilmoitetut laitetiedot vastaavat tyyppikilven ja kone-erittelyn tietoja.

Tämän varaosaluettelon käyttäminen

Etsi varaosan numero

a) Katso kuva (D) sivulla i-5: Siirry lukuun (15), joka on ilmoitettu etsittävän osan pääryhmän vieressä.

Kohdat b) ja c) viittaavat kuvaan (E) sivulla i-6.

b) Etsi pääryhmän kuvasta koneen alaryhmä (17), joka sisältää etsimäsi osan tai alaryhmän. Merkitse muistiin paikkanumero (18) ja siirry luettelosivulle, joka seuraa kuvaa.

c) Etsi paikkanumero (16) tai alaryhmän nimi (19). Siirry vastaavalle sivunumerolle (20), joka on ilmoitettu oikeassa sarakkeessa.

Kohdat d) ja e) viittaavat kuvaan (F) sivulla i-6.

d) Hae etsittävä osa (21) alaryhmän kuvasta ja merkitse osan paikkanumero muistiin.

e) Osanumero (29) ja osan kuvaus (30) on annettu paikkanumeron vieressä luettelosivulla.

TechPub-2660371-0101

Varaosaluettelossa olevat tiedot

Alla oleva luettelo viittaa kuvaan (F) sivulla i-6. Varaosaluettelo sisältää seuraavat tiedot ryhmistä, alaryhmistä ja laitteen varaosista:

- Ryhmärakenneviite (22). Osoittaa seuraavaksi ylemmän ryhmän laiteluettelorakenteessa.
- Ryhmän nimi (23)
- Varaosan koodi (24). Katso osio Varaosakoodit.
- Mittayksikkö (25)
- Määrä (26)
- Kokoonpanopiirustuksen numero (27)
- Luettelosivun väli (28). Tämä on mukana, jos ryhmäkuvassa tai luettelossa on useita sivuja.
- Osan tai alaryhmän numero (29)
- Alaryhmän nimi tai osan kuvaus (30)
- Ryhmän numero (31)
- Laitteen numero (32)
- Ryhmätietojen otsikko (33). Osoittaa, koskeeko alla oleva osio tiettyä koneversiota vai onko kyseessä yleisten osien luettelo. Jos luettelolla on useampi kuin yksi versio ja kullakin versiolla on oma kokoonpanopiirustuksensa, näytetään version kokoonpanopiirustuksen sivuviittaus.
- Sisäiset tiedot (34)

Varaosakoodit

Alla oleva taulukko osoittaa kaksi mahdollista varaosan (SP) koodin tyyppiä, jotka voidaan luetella varaosaluettelon luettelosivun SP-sarakkeessa.

SP-koodi	Merkitys
A	Kriittinen osa
B	Ei-kriittinen osa

SP-koodi	Merkitys
U	Aloituspaketti, joka toimitetaan koneen mukana
P	Tuotantopaketti, joka pidetään tuotantopaikassa
S	Huoltosarja, joka pidetään huoltokorjaamon varastossa
C	Keskusvarastosarja, jonka saa keskusvarastolta

TechPub-2660371-0101

Introduction

Information sur le manuel

Tetra Pak recommande de lire attentivement tous les manuels fournis. S'assurer que les manuels fournis soient accessibles au personnel qui s'occupe du fonctionnement ou de la maintenance de l'équipement.

Il est important de conserver ce manuel pendant toute la durée d'utilisation de la machine et de le transmettre à tout détenteur ou utilisateur ultérieur.

Tetra Pak ne sera pas tenu responsable d'un dommage causé à la machine ou à l'équipement par le fait de ne pas avoir respecté les instructions figurant dans le présent manuel.

Manuels fournis

Les manuels fournis avec cette machine comprennent

- Le Manuel de Conversion (CM)
  Ce manuel fournit aux techniciens les informations nécessaires pour convertir la machine en vue des différents modes de production.
- Manuel Electrique (EM)
  Ce manuel fournit aux techniciens les informations sur le système électrique de la machine.
- Manuel de Mise en Place (IM)
  Ce manuel fournit aux techniciens les informations nécessaires pour l'installation de la machine en toute sécurité.
- Manuel de Maintenance (MM)
  Ce manuel fournit aux techniciens les informations pour la maintenance.
- Manuel d'Opérateur (OM)
  Ce manuel fournit aux opérateurs les informations nécessaires pour la manutention et le fonctionnement de la machine avant, pendant et après la production.
- Catalogue de Pièces de Rechange (SPC)
  Ce manuel fournit l'information nécessaire à la commande de pièces de rechange auprès de Tetra Pak
- Manuel Technique (TeM)
  - fournit aux techniciens les informations nécessaires pour l'installation de la machine en toute sécurité
  - fournit aux techniciens les informations pour la maintenance
  - fournit aux techniciens les informations sur le système électrique de la machine
  - fournit l' information nécessaire à la commande de pièces de rechange auprès de Tetra Pak

TechPub-2660371-0101

Présentation d’une page

Se référer à la figure (A) à la page i-5: Les pages principales du Catalogue des Pièces de Rechange sont composées d'une page de figure (1) et d'une page de liste correspondante (7). Le numéro de page (5) est indiqué dans le titre de la page de figure et dans le bas de page d'une page de liste.
Le numéro de document (6) est indiqué dans le bas de page de la page de liste.

Numérotation de page

Se référer (A) à la page i-5: Un numéro de page (5) possède trois parties:

- Numéro de chapitre (2)
- numéro de page consécutif (2) à l'intérieur du chapitre (3)
- nombre total de pages dans le chapitre (4)

Présentation de la machine

Fabricant

Pour le nom et l'adresse du fabricant, voir la deuxième page de ce catalogue.

Assistance technique

Pour commander les pièces de rechange de cette machine ou pour rapporter les problèmes associés au fonctionnement de celle-ci, prendre contact avec le bureau Tetra Pak le plus proche.

Prendre contact avec le responsable de liaison pour les renseignements, commentaires ou suggestions concernant la machine ou l’équipement et sa documentation.

Identification

Certification CE

Cet équipement est conforme aux réglementations essentielles d'hygiène et de sécurité de la Communauté Economique Européenne (CEE).

TechPub-2660371-0101

Plaque signalétique de machine

La figure (B) à la page i-5 montre un exemple d'une plaque signalétique de machine.
Une représentation de la plaque de machine valable et son emplacement sur l'équipement est indiquée au Chapitre Introduction des manuels fournis avec l'équipement. La plaque de machine contient les caractéristiques figurant dans la liste ci-dessous, nécessaires pour prendre contact avec Tetra Pak au sujet de cet équipement spécifique.

- Type de machine (8)
- Volume (9)
- Spécifications du plan (10)
- Numéro de série de la machine (11)
- Fabricant (12)
- Marquage CE (13)
- Année de fabrication (14)

La figure (C) à la page i-5 montre un exemple d'une spécification de machine. S'assurer que les caractéristiques de l'équipement figurant dans la liste des pages de garde de ce manuel correspondent aux caractéristiques de la plaque signalétique de la machine et à ses spécifications.

TechPub-2660371-0101

Comment utiliser ce Catalogue de Pièces de Rechange

Localiser un numéro de pièce de rechange

a) Se référer à la figure (D) à la page i-5: Aller au numéro de chapitre (15) indiqué à côté du groupe principal qui contient la pièce que vous souhaitez localiser.

Les articles b) et c) se réfèrent à la figure (E) à la page i-6.

b) Sur la figure du groupe principal, chercher la sous-groupe de machine (17) qui contient la pièce ou le sous-groupe que vous recherchez. Noter le numéro de repère (18) et aller à la page de liste qui suit la figure.

c) Rechercher le numéro de repère (16) ou le nom de sous-groupe (19). Aller au numéro de page correspondant (20) figurant dans la liste de la colonne de droite.

Les articles d) et e) se réfèrent à la figure (F) à la page i-6.

d) Localiser la pièce (21) que vous recherchez sur la figure de sous-groupe et noter le numéro de repère de la pièce.

e) Le numéro de pièce (29) et la description de la pièce (30) figurent dans la liste à côté du numéro de repère sur la page de liste.

Informations figurant dans la liste dans un Catalogue de Pièces de Rechange

La liste ci-dessous se réfère à la figure (F) à la page i-6. Un Catalogue de Pièces de Rechange contient les renseignements suivants relatifs aux groupes, sous-groupes et pièces de rechange de l'équipement:

- Référence de structure de groupe (22). Indique le groupe supérieur suivant dans la structure de liste d'équipement.
- Nom du groupe (23).
- Code de pièce de rechange (24). Voir la section Codes des pièces de rechange.
- Unité de mesure (25).
- Quantité (26).
- Numéro de plan de montage (27).
- Gamme de la page de liste (28). Incluse s'il y a des pages multiples dans la figure de groupe ou dans la liste.
- Numéro de pièce ou de sous-groupe (29).
- Nom de sous-groupe ou description de la pièce (30).
- Numéro de groupe (31).
- Numéro de l'équipement (32).
- Titre des informations de groupe (33). Indique si la section sous le titre est pour une variante de machine spécifique ou s'il y a une liste de pièces communes. Si une liste comporte plus d'une variante et que chaque variante possède son propre plan de montage, une référence de page au plan de montage de la variante est alors indiqué.
- Renseignements internes (34).

Codes des pièces de rechange

Les tableaux ci-dessous montrent les deux types possibles de Code de Pièces de rechange (SP) qui peuvent figurer dans la liste dans la colonne de pièces de rechange d'une page de liste de Catalogue de Pièces de Rechange.

Code SP	Signification
A	Pièce critique
B	Pièce non critique

Code SP	Signification
U	Kit de mise en route avec livraison de la machine
P	Kit de production à conserver sur le site de production
S	Kit d'assistance à conserver au magasin des postes d'assistance
C	Kit de dépôt central disponible au magasin central

TechPub-2660371-0101

Bevezetés

Kézikönyv információ

A Tetra Pak az összes rendelkezésre bocsátott kézikönyv figyelmes elolvasását ajánlja. Győződjön meg arról, hogy a rendelkezésre bocsátott kézikönyveket hozzáférhetővé tették a berendezést kezelő és karbantartó személyzet számára.

Föltétlenül őrizzék meg ezen kézikönyvet a berendezés teljes élethossza alatt, és adják át a következő tulajdonosnak vagy felhasználónak.

A Tetra Pak nem vonható felelősségre a berendezést ért olyan károkért, amelyek a kézikönyvben meghatározott utasítások be nem tartásából erednek.

Rendelkezésre bocsátott kézikönyvek

A géppel vagy berendezéssel együtt a következő dokumentumokat szállítjuk

- Karbantartási kézikönyv (CM)
  Ezen kézikönyv a technikusok számára szolgáltat adatokat a berendezés átkapcsolásáról egyik üzemmódból a másikba.
- Elektromos kézikönyv (EM)
  Ezen kézikönyv a villamosmérnökök és szervizelő technikusok számára szolgáltat adatokat a berendezés elektromos hálózatáról.
- Beszerelési kézikönyv (IM)
  Ezen kézikönyv a berendezés biztonságos beszerelésével kapcsolatos adatokat szolgáltat a technikusoknak.
- Karbantartási kézikönyv (MM)
  Ezen kézikönyv a technikusok számára szolgáltat adatokat a berendezés karbantartásáról.
- Kezelési kézikönyv (OM)
  Ezen kézikönyv a berendezés kezelésével és vezérlésével kapcsolatos adatokat szolgáltat a kezelőknek termelés előtt, közben és után.
- Cserealkatrész katalógus (SPC)
  Ezen kézikönyv a cserealkatrészek Tetra Pak cégtől való megrendeléséhez szükséges adatokat tartalmaz.
- Műszaki kézikönyv (TeM)
  - a berendezés biztonságos beszerelésével kapcsolatos adatokat szolgáltat a technikusoknak
  - a technikusok számára szolgáltat adatokat a berendezés karbantartásáról
  - a villamosmérnökök és szervizelő technikusok számára szolgáltat adatokat a berendezés elektromos hálózatáról
  - a cserealkatrészek Tetra Pak cégtől való megrendeléséhez szükséges adatokat tartalmaz

TechPub-2660371-0101

Lap elrendezése

Tekintse meg a i-5 oldalon levő ábrát (A): A Cserealkatrészek katalógusának főoldalai egy rajzoldalból (1) és egy hozzá tartozó listaoldalból (7) állnak. Az oldalszám (5) a rajzoldal fejlécében és a listaoldal láblécében jelenik meg. A dokumentumszám (6) a listaoldal láblécében jelenik meg.

Oldalszámozás

Tekintse meg a i-5 oldalon levő ábrát (A): Az oldalszám (5) három részből áll:

- fejezetszám (2)
- folytonos oldalszám (3) a fejezeten belül
- fejezet oldalszáma (4)

A gép bemutatása

Gyártó

A gyártó neve és címe ezen katalógus, második oldalán található.

Szervizelés

Ezen gép valamely cserealkatrészének megrendelése vagy a gép működésével kapcsolatos üzemzavarok bejelentése végett, forduljon a legközelebbi Tetra Pak képviselethez.

Bármilyen más, a berendezés, illetve dokumentációjának feljavítására irányuló kérdéseivel, megjegyzéseivel vagy javaslataival forduljon kapcsolattartóhoz.

Azonosítás

CE besorolás

Ezen berendezés megfelel az Európai Gazdasági Régió (EEA) alapvető egészségügyi és biztonsági előírásainak.

TechPub-2660371-0101

A gép adattáblája

A i-5 oldalon található ábra (B) a gép adattáblájának egyik példája.
A megfelelő gép-adattábla ábrája és helye a berendezésen a berendezéssel szállított kézikönyvek Bevezetés fejezetében található. A gép adattáblája az alább felsorolt adatokat tartalmazza, amelyek ezen berendezésre vonatkoznak, és a Tetra Pak céggel való kapcsolat felvételekor szükségesek.

- Géptípus (8)
- Térfogat (9)
- Tervrajz (10)
- A gép sorozatszáma (11)
- Gyártó (12)
- CE jelzés (13)
- Gyártás éve (14)

A i-5 oldalon található ábra (C) példa a gép műszaki leírására. Győződjön meg arról, hogy ezen kézikönyv előlapjain közölt berendezésadatok megegyeznek a gép adattábláján és a gép műszaki leírásában megjelenő információval.

TechPub-2660371-0101

A Cserealkatrészek katalógus használata

Keresse meg a cserealkatrész számát

a) Tekintse meg a i-5 oldalon levő ábrát (D): Lapozzon a keresett alkatrészt tartalmazó főcsoport mellett feltüntetett számú (15) fejezetre.

A b) és c) elemek a i-6 oldalon levő ábrára vonatkoznak.

b) A főcsoport-ábrán keresse meg azt az alcsoportot (17), amelyik a keresett alkatrészt vagy alcsoportot tartalmazza. Jegyezze le a helyszámot (18), majd lapozzon az ábrát követő listaoldalra.

c) Keresse meg a lejegyzett helyszámot (16) vagy a keresett alcsoport nevét (19). Lapozzon a jobb oldali oszlopban feltüntetett számú (20) oldalra.

A d) és e) elemek a i-6 oldalon levő ábrára (F) vonatkoznak.

d) Az alcsoport ábrán keresse meg a keresett alkatrészt (21), és jegyezze le az alkatrész helyszámát.

e) Az alkatrészek száma (29) és leírása (30) a listaoldalon, a helyszám mellett láthatóak.

A Cserelkatrész katalógusban közölt adatok

Az alábbi lista a i-6 oldalon található ábrára (F) vonatkozik. A Cserealkatrészek katalógus a következő, csoportokra, alcsoportokra és cserealkatrészkere vonatkozó, adatokat tartalmazza:

- Csoportstruktúra hivatkozás (22). A berendezés listás struktúrájában közvetlenül az aktuális csoport fölött álló csoportot jelöli.
- Csoportnév (23)
- Cserealkatrész kód (24). Lásd a Cserealkatrész-kódok alfejezetet.
- Mértékegység (25)
- Menniség (26)
- Szerelvény tervrajza (27)
- Lista oldaltartománya (28). Abban az esetben jelenik meg, ha a csoport ábrája vagy listája többboldalas.
- Alkatrész vagy alcsoport száma (29)
- Alcsoport neve vagy alkatrész leírása (30)
- Csoportszám (31)
- Berendezésszám (32)
- Csoportinformáció fejléc (33). Azt mutatja, hogy a fejléc után következő rész egy bizonyos gépváltozatra vonatkozik vagy az általános cserealkatrészek listája. Ha a listának több változata van, és mindegyikhez más szerelvény-tervrajz tartozik, az illető szerelvény-tervrajz oldalhivatkozása is megjelenik.
- Belső információ (34)

Cserealkatrész-kódok

Az alábbi táblázatok a cserealkatrész (SP) típusok két lehetséges kódját tartalmazzák, amelyek a Cserealkatrész katalógus SP oszlopában jelenhetnek meg.

SP kód	Jelentés
A	Kritikus rész
B	Nem-kritikus rész

SP kód	Jelentés
U	Indító készlet a géppel együtt szállítva
P	A gyártási telephelyen megőrzendő gyártási készlet
S	A szervizelési telephelyen megőrzendő szervizelési készlet
C	A központi raktárban megőrzendő központi raktár készlet

TechPub-2660371-0101

Introduzione

Informazioni sul manuale

Tetra Pak consiglia di leggere con attenzione tutti i manuali forniti in dotazione. Assicurarsi che tutti i manuali in dotazione siano disponibili per il personale addetto al funzionamento e alla manutenzione della macchina.

È importante conservare il presente catalogo per tutta la durata della macchina e consegnarlo al successivo proprietario o utilizzatore.

Tetra Pak non sarà da ritenersi responsabile per eventuali danni alla macchina causati dal mancato rispetto delle istruzioni fornite nei manuali che accompagnano le macchine.

Manuali in dotazione

I manuali consegnati con la presente macchina possono comprendere:

- Manuale di Conversione (CM)
  Questo manuale fornisce ai tecnici le informazioni necessarie per la conversione della macchina da una modalità di produzione a un'altra.
- Manuale Elettrico (EM)
  Questo manuale fornisce ai tecnici informazioni sull'impianto elettrico della macchina.
- Manuale di Installazione (IM)
  Questo manuale fornisce ai tecnici le informazioni necessarie per installare in sicurezza la macchina.
- Manuale di Manutenzione (MM)
  Questo manuale fornisce ai tecnici le informazioni necessarie per la manutenzione della macchina.
- Manuale Operativo (OM)
  Questo manuale fornisce all'operatore le informazioni sull'utilizzo e il funzionamento della macchina prima, durante e dopo la produzione.
- Catalogo Pezzi di Ricambio (SPC)
  Questo manuale fornisce le informazioni necessarie per ordinare a Tetra Pak i pezzi di ricambio.
- Manuale Tecnico (TeM)
  - fornisce ai tecnici le informazioni necessarie per installare in sicurezza la macchina
  - fornisce ai tecnici le informazioni necessarie per la manutenzione della macchina
  - fornisce ai tecnici informazioni sull'impianto elettrico della macchina
  - fornisce le informazioni necessarie per ordinare a Tetra Pak i pezzi di ricambio.

TechPub-2660371-0101

Schema della pagina

Consultare la figura (A) a pagina i-5. Le pagine principali del Catalogo Pezzi di Ricambio consistono in una pagina con la figura (1) e una pagina elenco corrispondente (7). Il numero di pagina (5) è indicato nell'intestazione delle pagine con le figure e nel piè di pagina delle pagine elenco. Il codice del documento (6) è indicato nel piè di pagina delle pagine elenco.

Numerazione delle pagine

Consultare la figura (A) a pagina i-5. Il numero di pagina (5) è suddiviso in tre parti:

- numero della sezione (2)
- numero progressivo di pagina all'interno della sezione (3)
- numero totale di pagine della sezione (4)

Introduzione alla macchina

Fabbricante

Il nome e l'indirizzo del fabbricante sono riportati sulla seconda pagina del presente catalogo.

Assistenza

Per ordinare i pezzi di ricambio per questa macchina oppure per riferire problemi associati con il funzionamento della macchina, contattare il più vicino ufficio Tetra Pak.

Per tutte le altre richieste, commenti o suggerimenti per eventuali miglioramenti da apportare alla macchina e alla relativa documentazione, contattare il responsabile di collegamento.

Identificazione

Marchio CE

La macchina è conforme alle principali norme sanitarie e di sicurezza dell'Area Economica Europea (EEA).

TechPub-2660371-0101

Targhetta della macchina

La figura (B) a pagina i-5 illustra un esempio di targhetta della macchina. La sezione Introduzione di tutti i manuali consegnati con la presente macchina contiene invece la figura della targhetta della macchina valida e l'illustrazione della sua posizione sulla macchina. La targhetta riporta i dati elencati sotto che sono necessari per contattare Tetra Pak in relazione a questa macchina specifica.

- Tipo di macchina (8)
- Volume (9)
- Specifiche disegno (10)
- Numero di matricola della macchina (11)
- Fabbricante (12)
- Marchio CE (13)
- Anno di fabbricazione (14)

La figura (C) a pagina i-5 mostra un esempio delle specifiche di una macchina. Verificare che i dati relativi alla macchina elencati nelle pagine iniziali del manuale corrispondano ai dati riportati sulla targhetta della macchina e nelle specifiche della macchina.

TechPub-2660371-0101

Come usare questo Catalogo Pezzi di Ricambio

Individuare il numero del pezzo di ricambio

f) Vedere la figura (D) a pagina i-5. Andare al numero della sezione (15) indicato accanto al gruppo principale che contiene il pezzo che si desidera individuare.

I punti b) e c) fanno riferimento alla figura (E) a pagina i-6.

g) Nella figura del gruppo principale, identificare il sottogruppo della macchina (17) che contiene il pezzo o il sottogruppo cercato. Annotare il numero di posizione (18) e andare alla pagina elenco che segue la figura.

h) Identificare il numero di posizione (16) o il nome del sottogruppo (19). Andare al numero di pagina corrispondente (20) indicato nella colonna di destra.

I punti d) e e) fanno riferimento alla figura (F) a pagina i-6.

i) Individuare il pezzo (21) cercato sulla figura del sottogruppo e annotare il numero di posizione del pezzo.

j) Il numero del pezzo (29) e la descrizione del pezzo (30) sono indicati accanto al numero di posizione sulla pagina elenco.

Informazioni contenute nel Catalogo Pezzi di Ricambio

L'elenco seguente fa riferimento alla figura (F) a pagina i-6. Il Catalogo Pezzi di Ricambio contiene le seguenti informazioni sui gruppi, i sottogruppi e i pezzi di ricambio della macchina:

- Riferimento struttura gruppo (22). Indica il gruppo superiore più prossimo nella struttura elenco della macchina.
- Nome gruppo (23)
- Codice pezzo di ricambio (24). Vedere la sezione Codici pezzi di ricambio.
- Unità di misura (25)
- Quantità (26)
- Numero disegno di assemblaggio (27)
- Pagine dell'elenco (28). Questa informazione è presente se la figura o l'elenco relativi al gruppo occupano più di una pagina del manuale.
- Numero pezzo o sottogruppo (29)
- Nome sottogruppo o descrizione pezzo (30)
- Numero gruppo (31)
- Numero macchina (32)
- Titolo informazioni gruppo (33). Indica se la sezione che segue il titolo si riferisce a una variante di macchina specifica oppure se si tratta di un elenco di parti comuni. Se un elenco contiene più di una variante ed esiste un disegno di assemblaggio specifico per ogni variante, viene fornito il riferimento alla pagina in cui è riportato il disegno di assemblaggio relativo alla variante.
- Informazioni interne (34)

Codici pezzi di ricambio

Le tabelle seguenti mostrano le due tipologie di codici dei pezzi di ricambio (SP) che è possibile trovare nella colonna SP di una pagina elenco del Catalogo Pezzi di Ricambio.

Codice SP	Spiegazione
A	Pezzo critico
B	Pezzo non critico

Codice SP	Spiegazione
U	Kit d'avviamento fornito insieme alla macchina
P	Kit di produzione da conservare nei locali di produzione
S	Kit d'assistenza da conservare presso il magazzino del centro di assistenza
C	Kit magazzino centrale che deve essere disponibile presso il magazzino centrale

TechPub-2660371-0101

Įvadas

Žinyno informacija

Tetra Pak rekomenduoja atidžiai perskaityti visus pateikiamus žinynus. Užtikrinkite, kad pateikti žinynai būtų prieinami darbuotojams, kurie naudoja ar aptarnauja įrangą.

Svarbu išsaugoti šį katalogą visą įrangos naudojimo laiką ir perduoti jį vėlesniems savininkams ar naudotojams.

Tetra Pak neprisiima atsakomybės už bet kokius pažeidimus įrangai, kuriuos sukels nurodymų, pateikiamų žinynuose kartu su įranga, nesilaikymas.

Pateikiami žinynai

Žinynuose, pateikiamuose su šia įranga, gali būti:

- Konversijos žinynas (KŽ)
  Šiame žinyne technikams pateikiama informacija apie įrangos perjungimą skirtingais gamybiniais režimais.
- Elektros žinynas (EŽ)
  Šiame žinyne technikams pateikiama informacija apie įrangos elektros sistemą.
- Montavimo žinynas (MŽ)
  Šiame žinyne technikams pateikiama informacija, reikalinga saugiam įrangos sumontavimui.
- Aptarnavimo žinynas (AŽ)
  Šiame žinyne technikams pateikiama informacija apie įrangos aptarnavimą.
- Naudotojo žinynas (NŽ)
  Šiame žinyne operatoriui pateikiama informacija apie įrangos priežiūrą ir naudojimą prieš gamybos procesą, jo metu ir po jo.
- Atsarginių detalių katalogas (ADK)
  Šiame žinyne pateikiama informacija, reikalinga norint užsakyti atsargines detales iš Tetra Pak.
- Techninis žinynas (TeŽ)
  - pateikia technikams informaciją, reikalingą saugiam įrangos sumontavimui
  - pateikia technikams informaciją, reikalingą įrangos aptarnavimui
  - pateikiama technikams informacija apie įrangos elektros sistemą
  - pateikiama informacija, kaip užsakyti atsargines detales iš Tetra Pak

TechPub-2660371-0101

Puslapio išdėstymas

Remkitės iliustracija (A) puslapyje i-5: Pagrindiniai atsarginių detalių katalogo puslapiai yra sudaryti iš iliustracijos puslapio (1) ir jį atitinkančio sąrašo puslapio (7). Puslapio numeris (5) parodytas iliustracijos puslapio viršutinėje paraštėje ir sąrašo puslapio apatinėje paraštėje. Dokumento numeris (6) yra parodytas apatinėje sąrašo puslapio paraštėje.

Puslapių numeravimas

Vadovaukitės iliustracija (A) puslapyje i-5: A puslapio numeris (5) turi tris dalis:

- skyriaus numerį (2)
- puslapio eilės numerį skyriuje (3)
- bendrą puslapių skaičių skyriuje (4)

Mašinos pristatymas

Gamintojas

Gamintojo pavadinimą ir adresą galite rasti šio katalogo antrajame puslapyje.

Aptarnavimas

Norėdami užsakyti atsargines detales šiai mašinai arba pranešti apie nesklandumus, susijusius su šios mašinos naudojimu, susisiekite su artimiausiu Tetra Pak biuru.

Susisiekite su Liaison dėl kitų komentarų, klausimų ar pasiūlymų, kaip patobulinti įrangą ar jos dokumentaciją.

Identifikacija

CE Klasifikacija

Ši įranga atitinka Europos ekonominės erdvės (EEE) pirminius sveikatos ir saugumo normatyvus.

TechPub-2660371-0101

Mašinos plokštelė

Iliustracijoje (B) puslapyje i-5 parodytas mašinos plokštelės pavyzdys. Mašinos specifikacijos plokštelės iliustracija ir jos vieta prie įrangos parodyta įžanginiame žinynų, pateikiamų su šia įranga, skyriuje. Mašinos plokštelėje yra žemiau išvardinti duomenys, reikalingi kreipiantis į Tetra Pak su šia konkrečia įranga susijusiais klausimais:

- mašinos tipas (8)
- tomas (9)
- brėžinių specifikacijos (10)
- mašinos serijos numeris (11)
- gamintojas (12)
- CE ženklas (13)
- pagaminimo metai (14)

Iliustracija (C) puslapyje i-5 vaizduoja mašinos specifikacijos pavyzdį. Įsitikinkite, kad įrangos duomenys, išdėstyti šio žinyno pirmuosiuose puslapiuose, atitinka duomenis mašinos plokštelėje ir mašinos specifikaciją.

Kaip naudotis šiuo atsarginių detalių katalogu?

Atsarginės detalės numerio nustatymas

a) Remkitės iliustracija (D) puslapyje i-5: eikite į skyrių Nr. (15), nurodytą šalia pagrindinės grupės, kurioje yra jūsų ieškoma detalė.

Elementai b) ir c) nurodo iliustraciją (E) puslapyje i-6.

b) Pagrindinės grupės iliustracijoje suraskite mašinos pogrupį (17), kuriame yra jūsų ieškoma detalė. Įsidėmėkite pozicijos numerį ir pereikite į sąrašo puslapį, kuris atitinka iliustraciją.

c) Ieškokite pozicijos numerio (16) arba pogrupio pavadinimo (19). Pereikite į atitinkamo numerio puslapį (20), kuris nurodytas dešiniajame stulpelyje.

Elementai d) ir e) nurodo iliustraciją (F) puslapyje i-6.

d) Raskite ieškomą detalę (21) pogrupio iliustracijoje ir įsidėmėkite detalės pozicijos numerį.

e) Detalės numeris (29) ir detalės aprašymas (30) pateikiami šalia pozicijos numerio sąrašo puslapyje.

TechPub-2660371-0101

Informacija, pateikiama atsarginių detalių kataloge

Žemiau pateikiamas sąrašas nurodo iliustraciją (F) puslapyje i-6. Atsarginių detalių kataloge yra tokia informacija apie grupes, pogrupius ir atsargines detales įrangai:

- Grupės struktūros nuorodos (22). Nurodo tolimesnę aukštesnę grupę įrangos sąrašo struktūroje.
- Grupės pavadinimas (23)
- Atsarginės detalės kodas (24). Žiūrėkite skyrių Atsarginių detalių kodai.
- Mato vienetas (25)
- Kiekis (26)
- Surinkimo brėžinio numeris (27)
- Sąrašo puslapio diapazonas (28). Įtrauktas, jei egzistuoja daug puslapių grupės iliustracijoje arba sąraše.
- Detalės arba pogrupio numeris (29)
- Pogrupio pavadinimas ar detalės aprašymas (30)
- Grupės numeris (31)
- Įrangos numeris (32)
- Grupės informacinė antraštė (33). Nurodo, ar žemiau antraštės esantis skyrius yra skirtas specifiniam mašinos variantui, ar tai yra įprastinių detalių sąrašas. Jei sąrašas turi daugiau nei vieną variantą ir kiekvienas variantas iliustruojamas surinkimo brėžiniu, pateikiama nuoroda į surinkimo brėžinio puslapį.
- Vidinė informacija (34)

Atsarginių detalių kodai

Žemiau esančiose lentelėse parodyti du galimi atsarginės detalės (AD) kodo tipai, kurie gali būti nurodyti ir AD stulpelyje atsarginių detalių katalogo sąrašo puslapyje.

AD kodas	Reikšmė
A	Svarbi detalė
B	Nesvarbi detalė

AD kodas	Reikšmė
U	Pradžiai skirtas rinkinys, pateikiamas pristatant mašiną
P	Gamybos rinkinys, kuris turi būti laikomas gamybos vietoje
S	Aptarnavimo rinkinys, kuris turi būti laikomas aptarnavimo stoties parduotuvėje
C	Centrinio sandėlio rinkinys, kuris turi būti centriniame sandėlyje

TechPub-2660371-0101

Ievads

Informācija par rokasgrāmatu

Tetra Pak iesaka rūpīgi izlasīt visas piegādātās rokasgrāmatas. Piegādātajām rokasgrāmatām ir jābūt pieejamām personālam, kas apkalpo iekārtas vai veic to apkopi.

Nepieciešams saglabāt šo katalogu visu laiku, kamēr iekārtas tiek izmantotas, un nodot katalogu nākamajam īpašniekam vai lietotājam.

Tetra Pak neatbild par iekārtas bojājumiem, kuri rodas līdz ar iekārtu piegādāto instrukciju neievērošanas rezultātā.

Piegādātās rokasgrāmatas

Līdz ar iekārtu var tikt piegādātas šādas rokasgrāmatas

- Pārslēgšanas rokasgrāmata (CM)
  Šī rokasgrāmata sniedz tehniķiem informāciju par iekārtas pārslēgšanu dažādos atšķirīgos ražošanas režīmos.
- Elektriskās instalācijas rokasgrāmata (EM)
  Šī rokasgrāmata sniedz tehniķiem informāciju par iekārtas elektriskās instalācijas sistēmu.
- Uzstādīšanas rokasgrāmata (IM)
  Šī rokasgrāmata sniedz tehniķiem informāciju, kas nepieciešama drošai iekārtas uzstādīšanai.
- Apkopes rokasgrāmata (MM)
  Šī rokasgrāmata sniedz tehniķiem informāciju par iekārtas apkopi.
- Ekspluatācijas rokasgrāmata (OM)
  Šī rokasgrāmata sniedz apkalpojošajam personālam informāciju par iekārtas apkalpošanu un ekspluatēšanu pirms darba sākuma, darba laikā un pēc darba beigām.
- Rezerves daļu katalogs (SPC)
  Šī rokasgrāmata sniedz informāciju, kas nepieciešama, lai pasūtītu rezerves daļas no Tetra Pak.
- Tehniskā rokasgrāmata (TeM)
  - sniedz tehniķiem informāciju, kas nepieciešama drošai iekārtas uzstādīšanai
  - sniedz tehniķiem informāciju par iekārtas apkopi
  - sniedz tehniķiem informāciju par iekārtas elektrisko instalāciju
  - sniedz informāciju, kas nepieciešama, lai pasūtītu rezerves daļas no Tetra Pak

TechPub-2660371-0101

Lappuses izkārtojums

Skatīt ilustrāciju (A) i-5 lappusē: Galvenās lappuses Rezerves daļu katalogā sastāv no ilustrāciju lapas (1) un atbilstīgās saraksta lapas (7). Lappuses numurs (5) ir norādīts ilustrācijas lapas galvenē un saraksta lapas kājenē. Dokumenta numurs (6) ir norādīts saraksta lapas kājenē.

Lappušu numerācija

Skatīt ilustrāciju (A) lappusē i-5: Lappuses numurs (5) sastāv no trim daļām:

- nodaļas numura (2)
- secīga lappuses numura nodaļas ietvaros (3)
- kopējā lappušu skaita nodaļā (4)

Iepazīstināšana ar iekārtu

Ražotājs

Ražotāja nosaukumu un adresi skatīt šī kataloga otrajā lappusē.

Serviss

Ja nepieciešams pasūtīt rezerves daļas šai mašīnai vai ziņot par problēmām, kas saistītas ar mašīnas ekspluatāciju, tad, lūdzu, sazinieties ar tuvāko Tetra Pak pārstāvniecību.

Ja Jums ir citi jautājumi, piezīmes vai ieteikumi par iekārtas un tās dokumentācijas uzlabošanu, tad lūdzam sazināties ar Sakaru biroju.

Identifikācija

CE klasifikācija

Šī iekārta atbilst galvenajām Eiropas Ekonomiskās Zonas (EEA) regulām, kuras attiecas uz veselību un drošību.

TechPub-2660371-0101

Mašīnas tipa plāksnīte

Ilustrācijā (B) i-5lappusē redzams mašīnas tipa plāksnītes paraugs. Aktuālās mašīnas tipa plāksnīte un tās atrašanās vieta uz iekārtas ir parādīta līdz ar šo iekārtu piegādāto rokasgrāmatu Ievada nodaļā. Mašīnas tipa plāksnīte satur tālāk uzskaitīto informāciju, kura ir nepieciešama, sazinoties ar Tetra Pak par šo iekārtu.

- Mašīnas tips (8)
- Daudzums (9)
- Rasējuma specifikācijas (10)
- Mašīnas sērijas numurs (11)
- Ražotājs (12)
- CE apzīmējums (13)
- Izgatavošanas gads (14)

Ilustrācijā (C) i-5lappusē ir parādīts mašīnas specifikācijas paraugs. Pārliecinieties, ka šīs rokasgrāmatas titullapās minētā informācija par iekārtu atbilst tai, kas norādīta uz mašīnas tipa plāksnītes un mašīnas specifikācijā.

TechPub-2660371-0101

Rezerves daļu kataloga lietošana

Vajadzīgās rezerves daļas numura atrašana

a) Skatiet ilustrāciju (D) i-5lappusē: atrodiet nodaļas numuru (15), kas norādīts līdzās galvenajai grupai, kurā ietilpst Jūsu meklētā rezerves daļa.

Pozīcijas b) un c) skatiet ilustrāciju (E) i-6lappusē.

b) Galvenās grupas ilustrācijā atrodiet mašīnas apakšgrupu (17), kurā ietilpst Jūsu meklētā detaļa vai apakšgrupa. Atzīmējiet pozīcijas numuru (18) un pievērsieties saraksta lappusei, kura seko šai ilustrācijai.

c) Sameklējiet atbilstīgo pozīcijas numuru (16) vai apakšgrupas nosaukumu (19). Pievērsieties atbilstīgajam lappuses numuram (20), kas norādīts ailē pa labi.

Pozīcijas d) un e) skatiet ilustrāciju (E) i-6lappusē.

d) Atrodiet vajadzīgo rezerves daļu (21) apakšgrupas ilustrācijā un atzīmējiet šīs detaļas pozīcijas numuru.

e) Šīs daļas numurs (29) un apraksts (30) atrodas saraksta lapā līdzās pozīcijas numuram.

Rezerves daļu katalogā sniegtā informācija

Šis saraksts attiecas uz ilustrāciju (F) i-6lappusē. Rezerves daļu katalogs satur šādu informāciju par grupām, apakšgrupām un iekārtas rezerves daļām:

- Norādes par grupu struktūru (22). Norāde uz tuvāko augstāko grupu iekārtas saraksta struktūrā.
- Grupas nosaukums (23)
- Rezerves daļas kods (24). Skatīt Rezerves daļu kodi sadaļu.
- Mērvienība (25)
- Skaits (26)
- Montāžas rasējuma numurs (27)
- Saraksta lappuses zona (28). Tiek izmantota tad, ja grupas ilustrācija vai saraksts ir uz vairākām lappusēm.
- Daļas vai apakšgrupas numurs (29)
- Apakšgrupas nosaukums vai daļas apraksts (30)
- Grupas numurs (31)
- Iekārtas numurs (32)
- Grupas informācijas iedaļas apzīmējums (33). Norāda, vai iedaļa zem šī apzīmējuma attiecas uz noteiktu mašīnas variantu, vai arī tas ir kopējo rezerves daļu saraksts. Ja sarakstam ir vairāk par vienu variantu un katram variantam ir savs montāžas rasējums, tad tiek dota atsauce uz lappusi, kur atrodams katra varianta montāžas rasējums.
- Iekšējā informācija (34)

Rezerves daļu kodi

Apakšā ievietotās tabulas parāda divus iespējamos rezerves daļu (SP) koda tipus, kuri var būt norādīti Rezerves daļu kataloga saraksta lappuses SP ailē.

SP kods	Nozīme
A	Nozīmīga detaļa
B	Nenozīmīga detaļa

SP kods	Nozīme
U	Palaides komplekts, ko piegādā līdz ar mašīnu
P	Ekspluatācijas komplekts, kam jāatrodas mašīnas izmantošanas vietā
S	Servisa komplekts, kam jāatrodas apkopes stacijas noliktavā
C	Centrālās noliktavas komplekts, kam jāatrodas centrālajā noliktavā

TechPub-2660371-0101

Introduzzjoni

Informazzjoni tal-Manwal

Tetra Pak tirrakkomanda li jinqraw bl-attenzjoni l-manwali kkunsinnati kollha. Aċċerta ruħek li l-manwali kkunsinnati kollha huma disponibbli għall-personàl li jħaddem jew li jagħmel manutezjoni fuq it-tagħmir.

Huwa importanti li żżomm dan il-katalgu sakemm idum jaħdem it-tagħmir, u li tgħaddi l-katalgu lil xi sid jew lil xi persuna oħra li tuża dan it-tagħmir fil-futur.

Tetra Pak ma tistax tinżamm responsabbli ta' xi ħsara lit-tagħmir ikkawżata minn nuqqas ta' osservanza ta' l-istruzzjonijiet li jingħataw f'dan il-manwal.

Manwali Kkunsinnati

Il-manwali kkunsinnati ma' dan it-tagħmir jinkludu

- Manwal tal-Konverżjoni (CM)
  Dan il-manwal jipprovdi informazzjoni lit-tekniċi dwar il-konverżjoni tat-tagħmir bejn modi differenti tal-produzzjoni.
- Manwal Elettriku (EM)
  Dan il-manwal jipprovdi informazzjoni lit-tekniċi dwar is-sistema ta' l-elettriku tat-tagħmir.
- Manwal ta' l-Installazzjoni (IM)
  Dan il-manwal jipprovdi lit-tekniċi b'informazzjoni meħtieġa biex jinstallaw it-tagħmir mingħajr periklu.
- Manwal tal-Manutenzjoni (MM)
  Dan il-manwal jipprovdi lit-tekniċi b'informazzjoni fuq kif jagħmlu manutenzjoni fuq it-tagħmir.
- Manwal ta' l-Operazzjoni (OM)
  Dan il-manwal jipprovdi informazzjoni lill-operatur fuq kif jimmaniġġja u jħaddem it-tagħmir, qabel, waqt, u wara l-produzzjoni.
- Katalgu tal-Partijiet Għat-Tibdil (SPC)
  Dan il-manwal jipprovdi l-informazzjoni neċessarja biex jiġu ordnati partijiet għat-tibdil mingħand Tetra Pak.
- Manwal Tekniku (TeM)
  - jipprovdi lit-tekniċi b'informazzjoni meħtieġa biex jinstallaw it-tagħmir mingħajr periklu
  - jipprovdi lit-tekniċi b'informazzjoni fuq kif jagħmlu manutenzjoni fuq it-tagħmir
  - jipprovdi informazzjoni lit-tekniċi dwar is-sistema ta' l-elettriku tat-tagħmir.
  - jipprovdi l-informazzjoni neċessarja biex jiġu ordnati partijiet għat-tibdil mingħand Tetra Pak

TechPub-2660371-0101

Taqsim tal-Paġna

Irreferi għal stampa (A) f'paġna i-5: Il-paġni ewlenin fil-Katalgu tal-Partijiet Għat-Tibdil jikkonsistu f'paġna bl-istampi (1) u paġna b'lista li tikkorrispondi (7). In-numru tal-paġna (5) jintwera fil-header ta' paġna bl-istampi u fil-footer ta' paġna b'lista. In-numru tad-dokument (6) jintwera fil-footer ta' paġna b'lista.

Numru tal-paġna

Irreferi għal stampa (A) f'paġna i-5: In-numru tal-paġna (5) fih tliet partijiet:

- numru tal-kapitlu (2)
- in-numru konsekuttiv tal-paġna fil-kapitlu (3)
- in-numru totali ta' paġni fil-kapitlu (4)

Introduzzjoni tal-Magna

Manifattur

Għall-isem u l-indirizz tal-manifattur, ara t-tieni paġna ta' dan il-katalgu.

Servizz

Biex tordna partijiet għat-tibdil għal din il-magna, jew biex tirrapporta problemi assoċjati mat-tħaddim ta' din il-magna, ikkuntattja l-eqreb uffiċċju ta' Tetra Pak.

Ikkuntattja lill-persuna responsabbli mill-komunikazzjoni jekk ikollok xi mistoqsijiet, kummenti, jew suġġerimenti oħrajn biex ittejjeb it-tagħmir u d-dokumentazzjoni tiegħu.

Identifikazzjoni

Klassifikazzjoni CE

Dan it-tagħmir huwa konformi mar-regolamenti bażiċi tas-saħħa u s-sigurtà tal- European Economic Area (EEA).

TechPub-2660371-0101

Pjanċa tal-Magna

L-istampa (B) fuq paġna i-5 turi eżempju ta' pjanċa tal-magna.
Stampa tal-pjanċa valida tal-magna u l-lok tagħha fuq it-tagħmir hi murija fil-kapitlu ta' l-Introduzzjoni tal-manwali kkunsinnati ma' dan it-tagħmir.
Il-pjanċa tat-tagħmir fiha l-informazzjoni elenkata hawn taħt, meħtieġa meta tikkuntattja lil Tetra Pak dwar dan it-tagħmir partikulari.

- Tip ta' magna (8)
- Volum (9)
- Speċifikazzjonijiet tad-Disinn (10)
- Numru tas-serje tal-magna (11)
- Manifattur (12)
- Marka CE (13)
- Sena tal-manifattura (14)

L-istampa (Ċ) fuq paġna i-5 turi eżempju ta' speċifikazzjoni tal-magna.
Aċċerta ruħek li l-informazzjoni tat-tagħmir elenkata fuq il-paġni ta' quddiem ta' dan il-manwal tikkorrispondi għall-informazzjoni tal-pjanċa tal-magna u l-ispeċifikazzjoni tal-magna.

Kif Tuża Dan il-Katalgu tal-Partijiet Għat-Tibdil

Sib Numru ta' Parti Għat-Tibdil

a) Irreferi għal stampa (D) f'paġna i-5: Mur fin-numru tal-kapitlu (15) indikat ħdejn il-grupp prinċipali li fih il-parti li trid issib.

Oġġetti b) u c) irreferi għal stampa (E) f'paġna i-6.

b) Fl-istampa tal-grupp prinċipali, fittex għas-sottogrupp tal-magna (17) li fih il-parti jew sottogrupp li tkun qed tfittex. Innota n-numru tal-pożizzjoni (18) u mur fil-paġna bil-lista li ssegwi l-istampa.

c) Fittex in-numru tal-pożizzjoni (16) jew l-isem tas-sottogrupp (19). Mur fin-numru tal-paġna li jikkorrispondi (20) elenkat fil-kolonna tan-naħa tal-lemin.

Oġġetti d) u e) irreferi għal stampa (F) f'paġna i-6.

d) Sib il-parti (21) li qed tfittex fl-istampa tas-sottogrupp u nnota n-numru tal-pożizzjoni tal-parti.

e) In-numru tal-parti (29) u d-deskrizzjoni tal-parti (30) huma elenkati ħdejn n-numru tal-pożizzjoni fuq il-paġna bil-lista.

TechPub-2660371-0101

Informazzjoni Elenkata fil-Katalgu tal-Partijiet Għat-Tibdil

Il-lista t'hawn taħt tirreferi għal stampa (F) fuq paġna i-6. Il-Katalgu tal-Partijiet Għat-Tibdil fih din l-informazzjoni li ġejja dwar gruppi, sottogruppi, u partijiet għat-tibdil għat-tagħmir:

- Referenza ta' l-istruttura tal-grupp (22). Tindika l-ogħla grupp li jmiss fl-istruttura tal-lista tat-tagħmir.
- Isem tal-grupp (23)
- Kodiċi tal-parti għat-tibdil (24). Ara s-sezzjoni Kodiċi tal-Partijiet għat-Tibdil.
- Unit tal-kejl (25)
- Kwantità (26)
- Numru tad-disinn ta' l-immuntar (27)
- Medda tal-paġni tal-lista (28). Inklużi jekk hemm paġni multipli fil-lista jew fl-istampa tal-grupp.
- Numru tal-parti jew sottogrupp (29)
- Deskrizzjoni ta' l-isem tas-sottogrupp jew parti (30)
- Numru tal-grupp (31)
- Numru tat-tagħmir (32)
- Heading ta' l-informazzjoni tal-grupp (33). Tindika jekk is-sezzjoni ta' taħt il-heading hix għal xi varjant speċifiku tal-magna jew jekk hix lista ta' partijiet komuni. Jekk lista jkun fiha aktar minn varjant wieħed u jekk kull varjant ikollu d-disinn ta' l-immuntar tiegħu, tintwera referenza ta' paġna għad-disinn ta' l-immuntar tal-varjant.
- Informazzjoni interna (34)

Kodiċi tal-Partijiet għat-Tibdil

Il-listi t'hawn taħt juru ż-żewġ tipi possibbli ta' Kodiċi ta' Parti għat-Tibdil (SP) li jistgħu jkunu elenkati fil-kolonna SP ta' paġna b'lista f'Katalgu tal-Partijiet Għat-Tibdil.

Kodiċi SP	Tifsir
A	Parti kritika
B	Parti mhux kritika

Kodiċi SP	Tifsir
U	Kitt Start-up ipprovdut mal-kunsinna tal-magna
P	Kitt tal-produzzjoni li għandu jinżamm fil-lok tal-produzzjoni
S	Kitt tal-servizz li għandu jinżamm fil-maħżen ta' l-istazzjonijiet tas-servizz
C	Kitt tal-maħżen ċentrali li għandu jkun disponibbli fil-maħżen ċentrali

TechPub-2660371-0101

Inleiding

Informatie betreffende dit handboek

Tetra Pak raadt aan alle geleverde documentatie zorgvuldig te lezen. Ga na of de geleverde documentatie ter beschikking is van het personeel dat de machine moet bedienen of servicewerkzaamheden moet uitvoeren.

Het is belangrijk deze catalogus voor de duur van de machine te bewaren en de catalogus door te geven aan elke volgende eigenaar of gebruiker.

Tetra Pak aanvaardt geen verantwoordelijkheid voor om het even welke soort beschadiging aan de machine als gevolg van het niet opvolgen van de in dit handboek gegeven instructies.

Bijgeleverde handboeken

De met deze apparatuur geleverde handboeken omvatten

- Conversiehandboek (CM)
  Dit handboek geeft technici informatie over het ombouwen van de apparatuur tussen verschillende productiemodi.
- Handboek Elektriciteit (EM)
  Dit handboek geeft elektriciens en servicetechnici informatie betreffende het elektrisch systeem van de apparatuur.
- Installatiehandboek (IM)
  Dit handboek geeft installatiepersoneel informatie om op veilige wijze de apparatuur te installeren.
- Onderhoudshandboek (MM)
  Dit handboek geeft technici informatie over het onderhoud van de apparatuur.
- Bedieningshandboek (OM)
  Dit handboek geeft de operator informatie betreffende het omgaan met en bedienen van de apparatuur, voor, tijdens en na productie.
- Catalogus reservedelen (SPC).
  Dit handboek geeft de nodige informatie om reserveonderdelen bij Tetra Pak te bestellen.
- Technisch Handboek (TeM)
  - Dit handboek geeft technici informatie, nodig om op veilige wijze de apparatuur te installeren
  - Dit handboek geeft technici informatie over het onderhoud van de apparatuur
  - Dit handboek geeft technici informatie betreffende het elektrisch systeem van de apparatuur
  - geeft de nodige informatie, nodig om reserveonderdelen bij Tetra Pak te bestellen

TechPub-2660371-0101

Pagina lay-out

Refereer naar de illustratie (A) op bladzijde i-5: De belangrijkste bladzijden van een Catalogus Reserveonderdelen bestaan uit een bladzijde met een illustratie (1) en een corresponderende bladzijde met een lijst (7).
Het bladzijdenummer (5) is te vinden in de kop van een illustratiebladzijde en in de voetnoot van de lijstbladzijde. Het documentnummer (6) is te vinden in de voetnoot van een lijstbladzijde.

Bladzijdenummering

Refereer naar de illustratie (A) op bladzijde i-5: een bladzijdenummer (5) bestaat uit drie delen:

- hoofdstuknummer (2)
- opeenvolgende bladzijdenummer in het hoofdstuk (3)
- totaal aantal bladzijden in het hoofdstuk (4)

Introductie van de machine

Fabrikant

Voor naam en adres van de fabrikant, zie de tweede bladzijde van deze catalogus.

Service

Voor het bestellen van reserveonderdelen of om bedieningsproblemen van deze machine te melden, contacteer de dichtst bijzijnde vestiging van Tetra Pak.

Neem contact op met de contactpersoon voor andere informatie, opmerkingen of suggesties ter verbetering van de machine en de bijbehorende documentatie.

Identificatie

CE-classificatie

Deze apparatuur voldoet aan de basiseisen voor gezondheid en veiligheid voor het Europese Economische Gebied (EEA).

TechPub-2660371-0101

Machineplaatje

De illustratie (B) op bladzijde i-5 toont een voorbeeld van een machineplaatje.
Een illustratie van het wettige machineplaatje en de plaatsing ervan wordt getoond in het hoofdstuk Introductie van de handboeken, meegeleverd met deze apparatuur. Het machineplaatje bevat onderstaande gegevens die nodig zijn wanneer Tetra Pak moet worden gecontacteerd betreffende deze apparatuur.

- Machinetype (8)
- Volume (9)
- Tekeningspecificaties (10)
- Serienummer machine (11)
- Fabrikant (12)
- CE-markering (13)
- Fabricagejaar (14)

De illustratie (C) op bladzijde i-5 toont een voorbeeld van een machineplaatje. Controleer of de gegevens betreffende de apparatuur in de voorste bladzijden van dit handboek overeenkomen met de gegevens op het machineplaatje en de machinespecificaties.

TechPub-2660371-0101

Hoe dient deze catalogus reserveonderdelen te worden gebruikt

Lokaliseren van een nummer van een reserveonderdeel

a) Refereer naar de illustratie (D) op bladzijde i-5: ga naar het hoofdstuknummer (15), naast de hoofdgroep die het gewenste deel bevat.

Items b) en c) refereer naar de illustratie (E) op bladzijde i-6.

b) Op de illustratie van de hoofdgroep, zoek de machinesub-groep (17) op die het deel van de gewenste sub-groep bevat. Noteer het positienummer (18) en ga naar de lijstbladzijde die op de illustratie volgt.

c) Op de illustratie van de hoofdgroep, zoek de machinesub-groep (17) op die het deel van de gewenste sub-groep bevat. Noteer het positienummer (18) en ga naar de lijstbladzijde die op de illustratie volgt.

Items d) en e) refereren naar de illustratie (F) op bladzijde i-6.

d) Lokaliseer het gewenste onderdeel (21) in de illustratie van de sub-groep en noteer het positienummer van het onderdeel.

e) Het onderdeelnummer (29) en de beschrijving ervan (30) worden naast het positienummer op de lijstbladzijde weergegeven.

Informatie die in een Catalogus reserveonderdelen wordt gegeven

Onderstaande lijst verwijst naar de illustratie (F) op bladzijde i-6.
Een Catalogus reserveonderdelen bevat de volgende informatie betreffende groepen, sub-groepen en reserveonderdelen voor de apparatuur:

- Referentie groepsstructuur (22). Geeft de volgende hoogste groep in de structuur van de apparatuur aan.
- Groepsnaam(23)
- Code reserveonderdeel (24). Zie deel Codes reserveonderdelen.
- Meeteenheid (25)
- Hoeveelheid (26)
- Tekeningnummer montage (27)
- Lijst met bladzijdenreeks (28). Inclusief indien er meerdere bladzijden in de groepsillustratie of lijst voorkomen.
- Onderdeel of sub-groepsnummer (29)
- Naam sub-groep of beschrijving onderdeel (30)
- Groepsnummer (31)
- Apparatuurnummer (32)
- Titel groepsinformatie (33). Geeft aan of het deel onder de titel voor een specifieke machine is, voor een variant of een lijst is met algemene onderdelen. Indien een lijst meer dan één variant bevat en elke variant heeft zijn eigen montagetekening, wordt een bladzijdenreferentie naar de montagetekening van de variant gegeven.
- Interne informatie (34)

Codes reserveonderdelen

Onderstaande tabellen tonen de twee mogelijke codetypes van reserveonderdelen (SP) die vermeld kunnen worden in de SP-kolom van een bladzijde van de Catalogus reserveonderdelen.

SP-code	Omschrijving
A	Essentieel onderdeel
B	Niet essentieel onderdeel

SP-code	Omschrijving
U	Start-up kit, met de machine meegeleverd
P	Productiekit, op te slaan op productielocatie
S	Servicekit, op te slaan op servicelocatie
C	Kit centrale depot, beschikbaar te zijn in centraal magazijn

TechPub-2660371-0101

Introduksjon

Informasjon om håndboken

Tetra Pak anbefaler at du leser nøye gjennom alle leverte håndbøker. Sørg for at håndbøkene er tilgjengelige for alle som betjener eller vedlikeholder utstyret.

Det er viktig at du tar vare på denne katalogen under hele levetiden til utstyret og at du gir den videre til eventuelle nye eiere eller brukere.

Tetra Pak vil ikke være ansvarlig for skader på utstyret som oppstår fordi brukeren ikke følger instruksjonene i håndbøkene som følger med utstyret.

Leverte håndbøker

Håndbøkene som leveres med dette utstyret, kan inkludere

- Konverteringsmanual (CM)
  Denne håndboken gir teknikere informasjon om hvordan de konverterer utstyret mellom ulike produksjonsmodi.
- Electrisk manual (EM)
  Denne håndboken gir teknikere informasjon om utstyrets elektriske system.
- Installasjonsmanual (IM)
  Denne håndboken gir teknikere informasjon som kreves for å kunne installere utstyret på en sikker måte.
- Vedlikeholdsmanual (MM)
  Denne håndboken gir teknikere informasjon om vedlikehold av utstyret.
- Driftsmanual (OM)
  Denne håndboken gir operatøren informasjon om hvordan han håndterer og bruker utstyret før, under og etter produksjon.
- Reservedelskatalog (SPC)
  Denne håndboken inneholder informasjon som du trenger for å bestille reservedeler fra Tetra Pak.
- Teknisk manual (TeM)
  - gir teknikere informasjon om sikker installasjon av utstyret
  - gir teknikere informasjon om vedlikehold av utstyret
  - gir teknikere informasjon om utstyrets elektriske system
  - inneholder informasjon som du trenger for å bestille reservedeler fra Tetra Pak

TechPub-2660371-0101

Sideoppsett

Se illustrasjonen (A) på side i-5: Hovedsidene i reservedelskatalogen består av en illustrasjonsside (1) og en korresponderende listeside (7). Sidenummeret (5) vises i topptekster på illustrasjonssiden og i bunnteksten listesiden. Dokumentnummeret (6) vises i bunnteksten på listesiden.

Sidenummerering

Se illustrasjonen (A) på side i-5: Et sidenummer (5) består av tre deler:

- kapittelnummer (2)
- etterfølgende sidenummer i kapitlet (3)
- det totale antall sider i kapitlet (4)

Introduksjon av maskinen

Produsent

Hvis du ønsker produsentens navn og adresse, kan du se side to i denne katalogen.

Service

Når du skal bestille reservedeler til denne maskinen eller rapportere problemer forbundet med driften av denne maskinen, må du kontakte ditt nærmeste Tetra Pak-kontor.

Når det gjelder andre forespørsler, kommentarer eller forslag til forbedringer av utstyret og dets dokumentasjon, kan du ta kontakt med din kontaktperson.

Identifisering

CE-klassifisering

Dette utstyret er i overensstemmelse med de grunnleggende helse- og sikkerhetsforskriftene i Det europeiske økonomiske samarbeidsområdet (EØS).

TechPub-2660371-0101

Maskinplate

Illustrasjonen (B) på side i-5 viser et eksempel på en maskinplate. En illustrasjon av en gyldig maskinplate og hvor denne er plassert på utstyret, er vist i introduksjonskapitlet i håndbøkene som følger med dette utstyret. Maskinplaten inneholder nedenstående data, som du trenger når du skal kontakte Tetra Pak angående dette bestemte utstyret.

- Maskintype (8)
- Volum (9)
- Tegningsspesifikasjoner (10)
- Maskin-serienummer (11)
- Produsent (12)
- CE-merke (13)
- Produksjonsår (14)

Illustrasjonen (C) på side i-5 viser et eksempel på en maskinspesifikasjon. Sørg for at utstyrsdataene som står oppført foran i denne håndboken samsvarer med dataene på maskinplaten og maskinspesifikasjonen.

TechPub-2660371-0101

Hvordan bruke denne reservedelskatalogen

Finn et reservedelsnummer

a) Se illustrasjonen (D) på side i-5: Gå til kapittelnummeret (15) som er angitt ved siden av hovedgruppen som inneholder delen du vil finne.

Punkt b) og c) viser til illustrasjonen (E) på side i-6.

b) På hovedgruppeillustrasjonen ser du etter maskinundergruppen (17) som inneholder delen eller undergruppen du ser etter. Merk deg posisjonsnummeret (18), og gå til listesiden som kommer etter illustrasjonen.

c) Se etter posisjonsnummeret (16) eller undergruppenavnet (19). Gå til det korresponderende sidenummeret (20) som står oppført i høyre kolonne.

Punkt d) og e) viser til illustrasjonen (F) på side i-6.

d) Finn delen (21) du ser etter på undergruppeillustrasjonen, og merk deg delens posisjonsnummer.

e) Delenummeret (29) og delebeskrivelsen (30) finner du ved siden av posisjonsnummeret på listesiden.

Informasjon i en reservedelskatalog

Listen nedenfor viser til illustrasjonen (F) på side i-6. En reservedelskatalog inneholder følgende informasjon om grupper, undergrupper og reservedeler for utstyret:

- Gruppeinndelingsreferanse (22). Angir den neste gruppen opp i inndelingen av utstyrslisten.
- Gruppenavn (23)
- Reservedelskode (24). Se avsnittet Reservedelskoder.
- Målenhet (25)
- Antall (26)
- Tegningsnummer (27)
- Listesideområde (28). Inkludert hvis det er flere sider i gruppeillustrasjonen eller listen.
- Dele- eller undergruppenummer (29)
- Undergruppenavn eller delebeskrivelse (30)
- Gruppenummer (31)
- Utstyrsnummer (32)
- Gruppeinformasjonsoverskrift (33). Angir om avsnittet under overskriften er for en bestemt maskinvariant eller om det er en liste over vanlige deler. Hvis en liste har flere varianter og hver variant har sin egen sammenstillingstegning, vises det en sidereferanse til variantens sammenstillingstegning.
- Intern informasjon (34)

Reservedelskoder

Tabellene nedenfor viser de to mulige typene av reservedelskode (SP) som kan stå oppført i SP-kolonnen på en listeside i en reservedelskatalog.

SP-kode	Betydning
A	Kritisk del
B	Ikke-kritisk del

SP-kode	Betydning
U	Oppstartsett som følger med maskinleveransen
P	Produksjonssett som skal være på produksjonsstedet
S	Servicesett som skal være på servicestasjonen
C	Sentrallagersett som skal være tilgjengelig på sentrallageret

TechPub-2660371-0101

Wprowadzenie

Informacje o Instrukcji

Tetra Pak zaleca dokładne zapoznanie się ze wszystkimi dostarczonymi instrukcjami obsługi. Upewnij się, że dostarczone instrukcje obsługi są dostępne dla personelu obsługującego lub konserwującego wyposażenie.

Ważne jest, aby niniejszy katalog zachować na cały okres eksploatacji urządzenia i przekazać go każdemu kolejnemu użytkownikowi/ właścicielowi.

Tetra Pak nie ponosi odpowiedzialności za żadne uszkodzenia urządzenia spowodowane nieprzestrzeganiem zaleceń zawartych instrukcjach dołączonych do tego urządzenia.

Dostarczone Instrukcje

Instrukcje dostarczone z tym urządzeniem zawierają

- Instrukcję Konwersji (CM)
  Instrukcja ta dostarcza technikom informacje o sposobie konwersji urządzenia pomiędzy różnymi trybami produkcji.
- Instrukcję Elektryki (EM)
  Instrukcja ta dostarcza technikom informacje o układzie elektrycznym urządzenia.
- Instrukcję Instalacyjną (IM)
  Instrukcja ta dostarcza technikom informacje niezbędne do bezpiecznego zainstalowania urządzenia.
- Instrukcję Konserwacji (MM)
  Instrukcja ta dostarcza technikom informacje o sposobie konserwacji urządzenia.
- Instrukcję Operacyjną (OM)
  Instrukcja ta dostarcza operatorowi informacje o sposobie manipulacji i obsługi urządzenia przed, podczas i po produkcji.
- Katalog Części Zamiennych (SPC)
  Instrukcja ta dostarcza informacje niezbędne do zamawiania części zamiennych z firmy Tetra Pak.
- Instrukcję Techniczną (TeM)
  - dostarcza technikom informacje niezbędne do bezpiecznego zainstalowania urządzenia
  - dostarcza technikom informacje o konserwacji urządzenia
  - dostarcza technikom informacje o układzie elektrycznym urządzenia
  - dostarcza informacje niezbędne do zamawiania części zamiennych z firmy Tetra Pak

TechPub-2660371-0101

Układ Strony

Patrz ilustracja (A) na stronie i-5: Kartki główne Katalogu Części Zamiennych składają się z ze strony z ilustracją (1) oraz odpowiadającej jej strony z listą (7). W nagłówku strony z ilustracją oraz w stopce strony z listą pokazany jest numer strony (5). Numer dokumentu (6)umieszczony jest w stopce strony z listą.

Numeracja stron

Patrz ilustracja (A) na stronie i-5:Numer strony (5) zawiera trzy części:

- numer rozdziału (2)
- kolejny numer strony (3) w ramach rozdziału
- łączna ilość stron (4) w rozdziale

Wprowadzenie do Maszyny

Producent

Nazwę i adres producenta można znaleźć na drugiej stronie niniejszego katalogu.

Serwis

Aby zamówić części zapasowe do tej maszyny lub zgłosić problemy związane z jej pracą należy skontaktować się z najbliższym biurem Tetra Pak.

Prosimy o nawiązanie kontaktu w przypadku jakichkolwiek zapytań, komentarzy, lub sugestii zmierzających do usprawnienia wyposażenia oraz dokumentacji z nimi związanych.

Identyfikacja

Klasyfikacja CE

Urządzenie spełnia wymagania podstawowych przepisów BHP Europejskiego Obszaru Ekonomicznego (EEA).

TechPub-2660371-0101

Płyta znamionowa maszyny

Ilustracja (B) przedstawiona na stronie i-5 pokazuje przykład płyty znamionowej maszyny.
Ilustracja prawidłowej płyty znamionowej oraz jej położenie na urządzeniu pokazana jest w rozdziale Wprowadzenie zawartym w instrukcjach dostarczonych z tym urządzeniem. Płyta znamionowa maszyny zawiera niżej przedstawione dane, potrzebne podczas kontaktowania się z firmą Tetra Pak w sprawach dotyczących tego konkretnego urządzenia.

- Typ maszyny (8)
- Objętość (9)
- Specyfikacje rysunkowe (10)
- Numer seryjny urządzenia (11)
- Producent (12)
- Oznaczenie symbolemCE (13)
- Rok produkcji (14)

TechPub-2660371-0101

Ilustracja (C) zawarta na stronie i-5 pokazuje przykład specyfikacji maszyny. Należy sprawdzić, czy dane wyposażenia przedstawione na pierwszej stronie tej instrukcji odpowiadają danym zawartym na płycie znamionowej maszyny oraz specyfikacji maszyny.

Jak Korzystać z niniejszego Katalogu Części Zamiennych

Należy znaleźć Numer części zamiennej

a) Patrz ilustracja (D) zawarta na stronie i-5: Przejdź do numeru rozdziału (15) pokazanego obok głównej grupy zawierającej część, którą chcesz odszukać.

Pozycje b) i c) odnoszą się do ilustracji (E) zawartej na stronie i-6.

b) Na ilustracji grupy głównej odszukaj podgrupę maszyny (17), która zawiera odpowiednią część lub podgrupę, której szukasz. Zanotuj numer pozycji (18) i przejdź na stronę z listą, umieszczoną za ilustracją.

c) Odszukaj numer pozycji (16) lub nazwę podgrupy (19). Przejdź do odpowiedniego numeru strony (20) pokazanego w kolumnie umieszczonej po prawej stronie.

Pozycje d) i e) odnoszą się do ilustracji (F) zawartej na stronie i-6.

d) Znajdź na ilustracji podgrupy część (21), której szukasz i zanotuj numer pozycji części.

e) Numer części (29) oraz opis części (30) są umieszczone na stronie z listą obok numeru pozycji.

Informacje zawarte w Katalogu Części Zamiennych

Poniższa lista odnosi się do ilustracji (F) zawartej na stronie i-6. Katalog Części Zamiennych zawiera następujące informacje o grupach, podgrupach oraz częściach zamiennych dla urządzenia:

- Struktura referencji grup (22). Wskazuje następną wyższą grupę zawartą w strukturze listy wyposażenia.
- Nazwa grupy (23)
- Kod części zamiennej (24). Zobacz również część Kody Części Zamiennych.
- Jednostka miary(25)
- Ilość (26)
- Numer rysunku montażowego (27)
- Zakres strony z listą (28). Zawarty w przypadku występowania wielu stron dla ilustracji lub listy grupy.
- Numer części lub podgrupy (29)
- Nazwa podgrupy lub opis części (30)
- Numer grupy (31)
- Numer urządzenia (32)
- Nagłówek informacyjny grupy (33). Wskazuje, czy sekcja umieszczona pod nagłówkiem dotyczy określonego wariantu maszyny, czy też jest to lista wspólna dla wszystkich wariantów. Jeśli lista występuje w wielu wariantach i dla każdego z nich dostępny jest własny rysunek montażowy, pokazany jest numer strony odniesienia rysunku montażowego dla danego wariantu.
- Informacje wewnętrzne (34)

Kody Części Zamiennych

W poniższych tabelach przedstawiono dwa dopuszczalne rodzaje Kodów Części Zmiennych (SP), które mogą być pokazane w kolumnie SP na stronie z listą Katalogu Części Zamiennych.

Kod SP	Znaczenie
A	Część krytyczna
B	Część niekrytyczna

Kod SP	Znaczenie
U	Zestaw instalacyjny dostarczany z maszyną
P	Zestaw eksploatacyjny do przechowywania w miejscu pracy
S	Zestaw konserwacyjny do przechowywania na warsztacie
C	Zestaw zapasowy do przechowywania w magazynie głównym

TechPub-2660371-0101

Introdução

Informação do Manual

A Tetra Pak recomenda ler cuidadosamente todos os manuais fornecidos. Verificar se os manuais fornecidos estão ao dispor do pessoal que trabalha com o equipamento ou que faz a manutenção do mesmo.

É importante guardar este catálogo durante o tempo útil de vida da máquina ou do equipamento e de entregar o catálogo a qualquer proprietário ou utilizador subsequente.

A Tetra Pak não toma a responsabilidade por quaisquer danos no equipamento causados devido ao facto de que as instruções dadas nos manuais que acompanham este equipamento não foram seguidas.

Manuais fornecidos

Os manuais fornecidos com este equipamento incluem

- Manual de Conversão (CM)
  Este manual fornece aos técnicos as informações sobre a conversão do equipamento entre os diferentes modos de produção.
- Manual Eléctrico (EM)
  Este manual fornece aos técnicos as informações sobre o sistema eléctrico do equipamento.
- Manual de Instalação (IM)
  Este manual fornece aos técnicos as informações necessárias para instalar seguramente o equipamento.
- Manual de Manutenção (MM)
  Este manual fornece aos técnicos as informações para a manutenção do equipamento.
- Manual de Operação (OM)
  Este manual fornece ao operador as informações que ele necessita para manejar e accionar o equipamento antes, durante e depois da produção.
- Catálogo de Peças Sobressalentes (SPC)
  Este manual fornece as informações necessárias para encomendar peças sobressalentes à Tetra Pak.
- Manual Técnico (TeM)
  - fornece aos técnicos as informações necessárias para instalar seguramente o equipamento
  - fornece aos técnicos as informações para a manutenção do equipamento
  - fornece aos técnicos as informações sobre o sistema eléctrico do equipamento
  - fornece as informações necessárias para encomendar peças sobressalentes à Tetra Pak

TechPub-2660371-0101

Disposição da página

Referência à ilustração (A) na página i-5: As páginas principais num Catálogo de Peças Sobressalentes consistem numa página ilustrada (1) e numa página com a lista correspondente (7). O número da página (5) é mostrado no cabeçalho de uma página ilustrada e no rodapé de uma página com lista. O número do documento (6) é mostrado no rodapé de uma página com lista.

Numeração da página

Referência à ilustração (A) na página i-5: Um número de página (5) tem três partes:

- Número do capítulo (2)
- número consecutivo da página dentro do capítulo (3)
- número total de páginas no capítulo (4)

Introdução da máquina

Fabricante

Para o nome e morada do fabricante, ver a segunda página deste catálogo.

Assistência técnica

Para encomendar peças sobressalentes para esta máquina, ou para relatar problemas associados com a operação desta máquina, contactar a companhia Tetra Pak mais próxima.

Contactar a Liaison se tiver quaisquer questões, comentários ou sugestões para o desenvolvimento relacionado com o equipamento e a sua documentação.

Identificação

Classificação CE

Este equipamento está de acordo com os regulamentos de segurança e saúde da Área Económica Europeia (EEA).

TechPub-2660371-0101

Placa da máquina

A ilustração (B) na página i-5 mostra um exemplo de uma placa da máquina. Uma ilustração da placa da máquina válida e a sua localização no equipamento é mostrada no capítulo Introdução dos manuais fornecidos com este equipamento. A placa da máquina contem os dados alistados em baixo, necessários quando se contactar a Tetra Pak relacionando-se a este equipamento em específico.

- Tipo da máquina (8)
- Volume (9)
- Especificações dos desenhos (10)
- Número de série da máquina (11)
- Fabricante (12)
- Marca CE (13)
- Ano de construção (14)

A ilustração (C) na página i-5 mostra um exemplo de uma especificação da máquina. Verificar se os dados do equipamento alistados nas páginas da frente deste manual correspondem aos dados na placa da máquina e à especificação da máquina.

TechPub-2660371-0101

Como usar este Catálogo de Peças Sobressalentes

Localizar um Número da peça sobressalente

f) Referência à ilustração (D) na página i-5: Para o número do capítulo (15) indicado ao lado do grupo principal que contem a peça que quer localizar.

Pos. b) e c) referem-se à ilustração (E) na página i-6.

g) Na ilustração do grupo principal, procurar o subgrupo da máquina (17) que contem a peça ou subgrupo que está à procura. Anotar o número da posição (18) e passar para a página da lista que segue a ilustração.

h) Procurar o número da posição (16) ou o nome do subgrupo (19). Passar para o número da página correspondente (20) alistado na coluna do lado direito.

Pos. d) e e) referem-se à ilustração (F) na página i-6.

i) Localizar a peça (21) que está à procura na ilustração do subgrupo e anotar o número da posição da peça.

j) O número da peça (29) e a descrição da peça (30) estão alistados ao lado do número da posição na página da lista.

Informações indicadas num Catálogo de Peças Sobressalentes

A lista em baixo refere-se à ilustração (F) na página i-6. Um Catálogo de Peças Sobressalentes contem as seguintes informações sobre grupos, subgrupos e peças sobressalentes para o equipamento:

- Referência da estrutura do grupo (22). Indica o grupo a seguir mais elevado na estrutura da lista do equipamento.
- Nome do grupo (23)
- Código da peça sobressalente (24). Ver o capítulo Códigos de peças sobressalentes.
- Unidade de medição (25)
- Quantidade (26)
- Número do desenho de montagem (27)
- Gama da página de lista (28). Incluída se houver páginas múltiplas na ilustração do grupo ou lista.
- Número da peça ou do subgrupo (29)
- Nome do subgrupo ou descrição da peça (30)
- Número do grupo (31)
- Número do equipamento (32)
- Título da informação do grupo (33). Indica se a secção abaixo do título é para uma variante de máquina específica ou se é uma lista de peças comuns. Se uma lista tiver mais do que uma variante e cada variante tiver o seu próprio desenho de montagem, é mostrada uma referência para a página do desenho de montagem da variante.
- Informação interna (34)

Códigos de peças sobressalentes

As tabelas em baixo mostram os dois tipos possíveis do código de Peça Sobressalente (SP) que podem estar alistadas na coluna SP de uma página de lista do Catálogo de Peças Sobressalentes.

Código SP	Significado
A	Peça crítica
B	Peça não crítica

Código SP	Significado
U	Kit de colocação ao serviço fornecido com a máquina
P	Kit de produção que deve estar presente no local de produção
S	Conjunto de serviço de assistência para ser mantido no armazém das estações de serviço.
C	Conjunto do depósito geral para estar disponível no armazém central.

TechPub-2660371-0101

Úvod

Informácie o príručke

Tetra Pak doporučuje čítať pozorne všetky dodané príručky. Presvedčte sa, že dodané príručky sú k dispozícii personálu, ktorý vykonáva obsluhu alebo údržbu zariadenia.

Je dôležité ponechať si tento katalóg počas životnosti zariadenia a odovzdať katalóg inému majiteľovi alebo užívateľovi.

Tetra Pak nebude zodpovedať za nijaké zničenie zariadenia spôsobené nedodržaním pokynov uvedených v príručke vzhľadom na toto zariadenie.

Dodané príručky

Príručky dodané s týmto zariadením majú obsahovať

- Konverznú príručku (CM)
  Táto príručka poskytuje technikom informácie o konvertovaní zariadenia medzi rozličnými režimami výroby.
- Príručku elektriky (EM)
  Táto príručka poskytujetechnikom informácie o zariadeniach elektrickej inštalácie.
- Inštalačnú príručku (IM)
  Táto príručka poskytuje technikom informácie, požadované pre bezpečnú inštaláciu zariadenia.
- Údržbársku príručku (MM)
  Táto príručka poskytujetechnikom informáciu o údržbe zariadenia.
- Návod k použitiu (OM)
  Táto príručka poskytuje obsluhe informáciu o zaobchádzaní a obsluhe zariadenia pred, počas a po výrobe.
- Katalóg náhradných dielov (SPC)
  Táto príručka poskytuje informácie potrebné pre objednávku náhradných dielov Tetra Pak.
- Technická príručka (TeM)
  - poskytuje technikom informácie potrebné pre bezpečnú inštaláciu zariadenia
  - poskytuje technikom informácie o údržbe zariadenia
  - poskytujetechnikom informácie o zariadení elektrickej inštalácie
  - poskytuje informácie potrebné pre objednávku náhradných dielov z Tetra Pak

TechPub-2660371-0101

Formát stránky

Odvoláva sa na zobrazenie (A) na stranei-5: Hlavné stránky v katalógu náhradných dielov pozostávajú zo stránky zobrazenia (1) a stránky príslušného zoznamu (7). Stránka číslo (5) ukazuje v hlavičke stránky zobrazenie a v zápätí stránky zoznam. Číslo dokumentu (6) je zobrazené v zápätí stránky zoznamu.

Číslo stránky

Odvoláva sa na zobrazenie (A) na stranei-5: Číslo stránky (5) má tri časti:

- číslo kapitoly (2)
- nasledujúce číslo stránky v rámci kapitoly (3)
- celkový počet strán v kapitole (4)

Úvod o stroji

Výrobca

Pre názov a adresu výrobcu, viď druhá strana tohoto katalógu.

Servis

Pre objednávku náhradných dielov pre tento stroj, alebo pre hlásenie problémov spojených s obsluhou tohoto stroja, kontaktujte najbližšiu pobočku spoločnosti Tetra Pak.

Kontaktujte styčnú osobu s inými žiadosť ami, poznámkami, alebo zlepšovacími návrhmi týkajúcimi sa zariadenia a jeho dokumentácie.

Označenie

CE klasifikácia

Zariadenie spĺňa základné zdravotné a bezpečnostné predpisy Európskeho hospodárskeho priestoru (EEA).

TechPub-2660371-0101

Prístrojová doska

Zobrazenie (B) na strane i-5 ukazuje príklad prístrojovej dosky. Zobrazenie správnej prístrojovej dosky a jej umiestnenie na zariadení je uvedené v kapitole Úvod príručky dodanej s týmto zariadením. Prístrojová doska obsahuje dole zoznam údajov, potrebných ak kontaktujete spoločnosť Tetra Pak ohľadom tohoto špeciálneho zariadenia.

- Typ stroja (8)
- Kapacita (9)
- Výkres špecifikácie (10)
- Sériové číslo stroja (11)
- Výrobca (12)
- značka CE (13)
- Rok výroby (14)

Zobrazenie (C) na strane i-5 ukazuje príklad špecifikácie stroja. Presvedčte sa, či údaje zariadenia uvedené na prednej strane tejto príručky zodpovedajú údajom prístrojovej dosky a špecifikácii stroja.

Ako používať tento katalóg náhradných dielov

Vyhľadajte číslo náhradného dielu

a) Odvoláva sa na zobrazenie (D) na strane i-5: Chodťe na kapitolu číslo (15) označenú při halvnej skupine, ktorá obsahuje diel, ktorý chcete vyhľadať.

Položky b) a c) sa odvolávajú na zobrazenie (E) na strane i-6

b) Na zobrazení hlavnej skupiny, hľadajte pre stroj podskupinu (17) ktorá obsahuje diel alebo podskupinu, ktoré hľadáte. Zaznamenajte pozíciu číslo (18) a choďte na stránku zoznamu, ktorá sleduje zobrazenie.

c) Hľadajte číslo položky (16) alebo názov podskupiny (19). Choďte na zodpovedajúcu stránku číslo (20)uvedenú v stĺpci po pravej ruke.

Položky d) a e) sa odvolávajú na zobrazenie (F) na stranei-6

d) Vyhľadajte diel (21), ktorý hľadáte podľa zobrazenia podskupiny a poznámky čísla položky dielu.

e) Číslo dielu (29) a popis dielu (30) sú uvedené pri čísle položky na zozname stránok.

TechPub-2660371-0101

Informácie uvedené v katalógu náhradných dielov

Zoznam dole sa odvoláva na zobrazenie (F) na strane i-6 Katalóg náhradných dielov obsahuje informácie o skupinách, podskupinách a náhradných dieloch pre zariadenie:

- Odkaz na usporiadanie skupiny (22) Označuje nasledujúcu vyššiu skupinu v štruktúre zoznamu zariadenia.
- Názov skupiny (23)
- Kód náhradného dielu (24). Viď Kódy náhradných dielov sekcia.
- Jednotka merania(25)
- Množstvo (26)
- Číslo výkresu montáže (27)
- Zoznam rozsahu stránok (28). Zahrnutý, ak sú to mnohonásobné stránky v zobrazení skupiny alebo zoznam.
- Diel alebo číslo podskupiny (29)
- Názov podskupiny alebo popis dielu (30)
- Číslo skupiny (31)
- Číslo zariadenia (32)
- Základné informácie o skupine (33). Označuje, ak sekcia pod hlavičkou je pre špeciálnu variantu stroja alebo ak je to zoznam všeobecných dielov. Ak zoznam má viac ako jednu variantu a každá varianta má svoj vlastný montážny výkres, tak je zobrazená strana, ktorá odkazuje na varianty montážneho výkresu.
- Interné informácie (34)

Kódy náhradných dielov

Tabuľka dole ukazuje dva možné typy kódu náhradného dielu (SP), ktorý môže byt' uvedený v stĺpci SP na stránke zoznamu katalógu náhradných dielov.

SP kód	Význam
A	kritický diel
B	Nekritický diel

SP kód	Význam
U	Štartovacia súprava dodaná s dodávkou stroja
P	Výrobná súprava na podporu výrobnej strany
S	Servisná súprava na podporu uskladnenia servisnej stanice
C	Centrálna skladová súprava má byť k dispozícii na centrálnom sklade

TechPub-2660371-0101

Uvod

Informacija o priročnikih

Podjetje Tetra Pak priporoča, da natančno preberete vse priložene priročnike. Osebje, ki upravlja in vzdržuje opremo, mora imeti dostop do priloženih priročnikov.

Katalog hranite v celotnem času uporabe opreme. V primeru, ko opremo pridobi drug uporabnik, mu obenem izročite tudi katalog.

Podjetje Tetra Pak ne prevzema odgovornosti za poškodbe na opremi, ki nastanejo zaradi neupoštevanja navodil iz priročnikov, ki so priloženi opremi.

Priloženi priročniki

Priročniki, ki so priloženi opremi, vključujejo

- Priročnik za zamenjavo (CM)
  V tem priročniku so podatki, ki tehnikom omogočajo izvesti zamenjavo opreme med različnimi načini proizvodnje.
- Električni priročnik (EM)
  Priročnik vsebuje informacije za tehnike o električnem sistemu opreme.
- Priročnik za namestitev (IM)
  Priročnik vsebuje ustrezne tehnične informacije za varno namestitev opreme.
- Priročnik za vzdrževanje (MM)
  Priročnik vsebuje informacije za tehnike o vzdrževanju opreme.
- Priročnik za obratovanje (OM)
  Priročnik je namenjen informiranju za pravilno rokovanje in upravljanje s strojem pred, med in po proizvodnem postopku.
- Katalog rezervnih delov (SPC)
  Priročnik vsebuje potrebne informacije za naročanje rezervnih delov v podjetju Tetra Pak.
- Tehnični priročnik (TeM) vsebuje:
  - ustrezne tehnične informacije za tehnike za varno namestitev opreme
  - informacije za tehnike o vzdrževanju opreme
  - informacije za tehnike o električnem sistemu opreme
  - potrebne informacije za naročanje rezervnih delov v podjetju Tetra Pak

TechPub-2660371-0101

Zgradba strani

Oglejte si risbo (A) na strani i-5: Glavne strani v Katalogu rezervnih delov sestavljata stran z risbo (1) ter ustrezna stran s seznamom (7). Številka strani (5) je v glavi na strani z risbo ter v nogi na strani s seznamom. Številka dokumenta (6) je v nogi na strani s seznamom.

Številčenje strani

Oglejte si risbo (A) na strani i-5: Številko strani (5) sestavljajo trije deli:

- številka poglavja (2)
- zaporedna številka strani v poglavju (3)
- skupno število strani poglavja (4)

Predstavitev stroja

Proizvajalec

Ime in naslov proizvajalca poiščite na drugi strani tega kataloga.

Servis

Za naročanje rezervnih delov za stroj ter za sporočanje motenj pri delovanju stroja se obrnite na najbližjo servisno službo podjetja Tetra Pak.

V primeru drugih zahtev, komentarjev, predlogov za izboljšavo opreme ali dokumentacije se obrnite na odgovorno osebo.

Identifikacijska oznaka

CE klasifikacija

Oprema je izdelana v skladu z osnovnimi zdravstvenimi in varnostnimi predpisi Evropskega gospodarskega prostora (EGP).

TechPub-2660371-0101

Ploščica s podatki

Risba (B) na strani i-5 prikazuje primer ploščice s podatki.
Risba veljavne ploščice s podatki ter mesto njene namestitve na opremi je v uvodnem poglavju posameznih priročnikov, ki so priloženi opremi.
Na ploščici s podatki so zapisani spodaj našteti podatki, ki jih potrebujete pri posvetovanju s podjetjem Tetra Pak.

- Tip stroja (8)
- Prostornina (9)
- Specifikacija risbe (10)
- Serijska številka stroja (11)
- Proizvajalec (12)
- CE oznaka (13)
- Leto izdelave (14)

Risba (C) na strani i-5 prikazuje primer specifikacije strojne opreme.
Prepričajte se, da podatki o opremi, ki so zapisani na prvih straneh priročnika, ustrezajo podatkom na ploščici s podatki in specifikaciji strojne opreme.

TechPub-2660371-0101

Uporaba Kataloga rezervnih delov

Določitev številke rezervnega dela

a) Oglejte si risbo (D) na strani i-5: Zatem si oglejte poglavje številka (15), ki je označeno poleg glavne skupine, ki vsebuje želeni del.

Točki b) in c) se nanašata na risbo (E) na strani i-6.

b) Na risbi glavne skupine poiščite podskupino stroja (17), ki vključuje del ali podskupino, ki ga (jo) iščete. Zapomnite si pozicijsko številko (18) in pojdite na stran s seznamom, ki sledi risbi.

c) Poiščite pozicijsko številko (16) ali ime podskupine (19). Pojdite na ustrezno številko strani (20), ki je označena v desnem stolpcu.

Točki d) in e) se nanašata na risbo (F) na strani i-6.

d) Na risbi podskupine poiščite sestavni del (21) in si zapišite njegovo pozicijsko številko.

e) Številka sestavnega dela (29) in opis sestavnega dela (30) se nahajata poleg pozicijske številke na strani s seznamom.

Informacije v Katalogu rezervnih delov

Spodnji seznam se nanaša na risbo (F) na strani i-6. V Katalogu rezervnih delov so naslednje informacije o skupinah, podskupinah in rezervnih delih za opremo:

- Referenca strukture skupine (22). Označuje naslednjo višjo skupino v strukturi seznama opreme.
- Ime skupine (23)
- Koda rezervnega dela (24). Glejte odsek Kode rezervnih delov.
- Merska enota (25)
- Količina (26)
- Številka sestavne risbe (27)
- Število strani seznama (28). Vključeno, kadar risba ali seznam skupine vsebuje več strani.
- Številka dela ali podskupine (29)
- Ime podskupine ali opis dela (30)
- Številka skupine (31)
- Številka opreme (32)
- Naslov skupine informacij (33). Označuje, če se odsek pod naslovom nanaša na specifično izvedbo stroja, ali je seznam skupnih delov. Če ima seznam več izvedb ter ima vsaka izvedba svojo sestavno risbo, je prikazana referenčna stran sestavne risbe za to izvedbo.
- Interna informacija (34)

Kode rezervnih delov

V spodnji razpredelnici sta prikazana dva možna tipa kode rezervnih delov (SP), ki sta lahko navedena v SP stolpcu v Katalogu rezervnih delov na strani s seznamom.

SP koda	Pomen
A	Kritičen del
B	Nekritičen del

SP koda	Pomen
U	Komplet za zagon, dobavljen hkrati s strojem
P	Komplet za proizvodnjo - obdrži se v proizvodnem oddelku
S	Komplet za servisiranje - shrani se v skladišču servisnega oddelka
C	Glavni skladiščni komplet, ki se shranjuje v glavnem skladišču

TechPub-2660371-0101

Inledning

Information om manualerna

Tetra Pak rekommenderar att alla manualer läses noggrant. Se till att manualerna är tillgängliga för personalen som använder eller underhåller utrustningen.

Det är viktigt att denna katalog behålls under utrustningens livslängd, och att den överlämnas till varje efterföljande innehavare eller användare av utrustningen.

Tetra Pak tar inte ansvar för någon skada på utrustningen som orsakats av att instruktionerna i medföljande manualer inte har följts.

Medföljande manualer

Följande manualer levereras tillsammans med utrustningen:

- Konverteringsmanual (CM)
  Manualen innehåller information för tekniker om hur utrustningen ska konverteras mellan olika produktionslägen.
- Elektrisk manual (EM)
  Manualen innehåller information för tekniker om utrustningens elektriska system.
- Installationsmanual (IM)
  Manualen innehåller information för tekniker om hur utrustningen installeras på ett säkert sätt.
- Underhållsmanual (MM)
  Manualen innehåller information för tekniker om hur utrustningen ska underhållas.
- Driftsmanual (OM)
  Manualen innehåller information för operatören om hur utrustningen ska hanteras före, under och efter produktion.
- Reservdelskatalog (SPC)
  Manualen innehåller information som behövs för beställning av reservdelar från Tetra Pak.
- Teknisk manual (TeM)
  - innehåller information för tekniker om hur utrustningen installeras på ett säkert sätt.
  - innehåller information för tekniker om hur utrustningen ska underhållas.
  - innehåller information för tekniker om utrustningens elektriska system.
  - innehåller information som behövs för beställning av reservdelar från Tetra Pak.

TechPub-2660371-0101

Sidlayout

Se bilden (A) på sidan i-5: Huvudsidorna i reservdelskatalogen består av en bildsida (1) och en motsvarande listsida (7). Sidnumret (5) visas i sidhuvudet på bildsidan och i sidfoten på listsidan. Dokumentnumret (6) visas i sidfoten på listsidan.

Sidnumrering

Se bilden (A) på sidan i-5: Ett sidnummer (5) består av tre delar:

- kapitelnummer (2)
- löpande sidnummer inom kapitlet (3)
- totalt sidantal i kapitlet (4)

Introduktion till maskinen

Tillverkare

Tillverkarens namn och adress finns på sidan 2 i katalogen.

Service

För att beställa reservdelar till denna maskin eller för att rapportera problem som uppstått i samband med driften kontaktar du närmaste Tetra Pak-kontor.

Har du andra frågor, kommentarer eller förslag som gäller förbättring av maskinen eller utrustningen och dokumentationen vänder du dig till din kontaktperson på Tetra Pak.

Identifiering

CE-klassificering

Denna utrustning överensstämmer med de grundläggande hälso- och säkerhetsbestämmelserna inom den europeiska ekonomiska unionen (EEA).

TechPub-2660371-0101

Maskinskylt

Bilden (B) på sidan i-5 visar ett exempel på en maskinskylt. En bild på giltig maskinskylt och dess placering på utrustningen visas i inledningskapitlet som medföljer utrustningen. Skylten innehåller de uppgifter som listas nedan och som behövs vid kontakt med Tetra Pak angående utrustningen.

- Maskintyp (8)
- Volym (9)
- Ritningsspecifikationer (10)
- Maskinnummer (11)
- Tillverkare (12)
- CE-märkning (13)
- Tillverkningsår (14)

Bilden (C) på sidan i-5 visar ett exempel på en maskinspecifikation. Kontrollera att informationen om utrustningen som listas på manualens framsida motsvarar informationen på maskinskylten och i maskinspecifikationen.

Använda reservdelskatalogen

Hitta ett reservdelsnummer

a) Se bilden (D) på sidan i-5: Gå till kapitelnumret (15) som står vid sidan om huvudgruppen som innehåller den del du vill leta reda på.

Punkt b) och c) hänvisar till bilden (E) på sidan i-6.

b) På huvudgruppsbilden letar du efter den maskinundergrupp (17) som innehåller delen eller undergruppen du letar efter. Notera positionsnumret (18) och gå till listsidan som följer efter bilden.

c) Leta efter positionsnumret (16) eller undergruppsnamnet (19). Gå till motsvarande sidnummer (20) som listas i den högra kolumnen.

Punkt d) och e) hänvisar till bilden (F) på sidan i-6.

d) Leta reda på delen (21) i undergruppsbilden och notera delens positionsnummer.

e) Reservdelsnumret (29) och reservdelsbeskrivningen (30) står bredvid positionsnumret på listsidan.

TechPub-2660371-0101

Information i reservdelskatalogen

Listan nedan hänvisar till bilden (F) på sidan i-6. Reservdelskatalogen innehåller följande information om grupper, undergrupper och reservdelar för utrustningen:

- Gruppstrukturreferens (22). Anger nästa högre grupp i utrustningslistans struktur.
- Gruppnamn (23)
- Reservdelskod (24). Se avsnittet Reservdelskoder.
- Måttenhet (25)
- Kvantitet (26)
- Monteringsritningsnummer (27)
- Listsidesintervall (28). Står med om det finns flera sidor i gruppbilden eller listan.
- Reservdels- eller undergruppsnummer (29)
- Undergruppsnamn eller reservdelsbeskrivning (30)
- Gruppnummer (31)
- Utrustningsnummer (32)
- Gruppinformationsrubrik (33). Anger om avsnittet under rubriken gäller en viss maskinvariant eller om det är en lista över allmänna delar. Om en lista har fler än en variant och varje variant har sin egen monteringsritning, visas en sidhänvisning till variantens monteringsritning.
- Intern information (34)

Reservdelskoder

Tabellerna nedan visar de två typerna av reservdelskoder (SP) som kan finnas i SP-kolumnen på en listsida i reservdelskatalogen.

SP-kod	Betydelse
A	Primär reservdel
B	Sekundär reservdel

SP-kod	Betydelse
U	Startsats som ingår i maskinleveransen
P	Produktionssats som bör finnas på produktionsplatsen
S	Servicesats som bör finnas på servicestationen
C	Central lagringssats tillgänglig vid centrallagret

TechPub-2660371-0101

SPC
Spare Parts Catalogue

SUPERSTRUCTURE TBA/19 020V

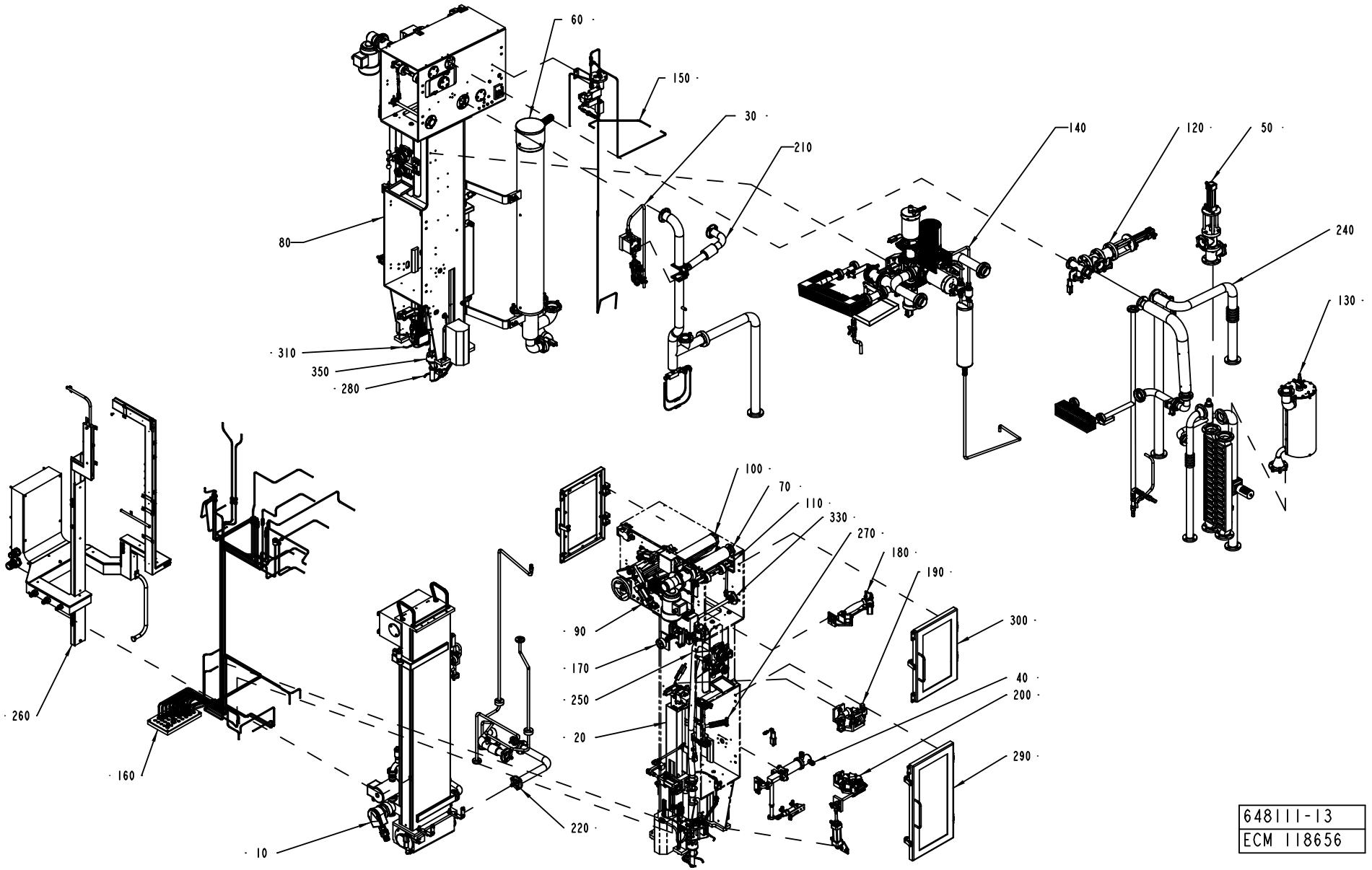

ECM: 143200 - 20040119
Group number: 648111-1200
Assembly Drawing: 648111-13_1_AA

This list covers pages from 1-2 to 1-5

Pos	Part No	UN	Qty	Description	Page No
HI (See drawing on page: 1-4)					
360	2619758-0100		1	HEAD SPACE BY INJECTION	**1-7**
Common Parts					
010	256014-0800		1	BATH	**1-21, 1-23, 1-25, 1-27, 1-29, 1-31**
020	256055-0700		1	HOT AIR ELEMENT	**1-35**
030	256084-0700		1	CHANGE-OVER VALVE	**1-37**
040	256095-0700		1	HOT AIR ELEMENT	**1-39**
050	271169-0500		1	VALVE	**1-41**
060	271181-0600		1	AIR SUPER-HEATER	**1-43, 1-45**
070	272004-0500		1	BENDING ROLLER	**1-47**
080	272021-0800		1	ASEPTIC CHAMBER	**1-49, 1-51, 1-53**
090	272024-0500		1	CALENDER ROLLER	**1-57**
100	272025-0400		1	AIR KNIFE	**1-59**
110	272028-0800		1	BENDING ROLLER	**1-61**
120	272337-0600		1	VALVE	**1-63**
130	272407-0400		1	GENERATOR	**1-65**
140	272560-0800		1	PRODUCT VALVE	**1-67, 1-69, 1-71, 1-73, 1-75, 1-77**
150	272623-0700		1	SPRAY SYSTEM	**1-95, 1-97**
160	295045-0900		1	PIPE WORK-PNEUMATIC	**1-99, 1-101, 1-103, 1-105**
170	441304-0400		1	MOVABLE FORMING RING	**1-107, 1-109, 1-111, 1-113**
180	441307-0300		1	UPPER TUBE SUPPORT	**1-115, 1-117, 1-119**
190	441486-0400		1	DIVIDED FORMING RING	**1-123, 1-125, 1-127**
200	456309-0600		1	LOWER FORMING RING	**1-129, 1-131**
210	456555-0600		1	SUCTION PIPE	**1-133**
220	456556-0400		1	PEROXIDE PIPE	**1-135**
230	456836-0600		1	CLEANING SYSTEM	**1-137**
240	456976-0700		1	HEAT EXCHANGER	**1-141**
250	469091-0500		1	FILLER TUBE	**1-145**
260	469374-0600		1	CABLE TRENCH	**1-147, 1-149**
270	469501-0400		1	AIR NOZZLE	**1-155**
280	469781-0400		1	TUBE FLUSHING DEVICE	**1-157, 1-159**
290	491570-0200		1	DOOR	**1-163**
300	491579-0200		1	DOOR	**1-165**
310	491976-0300		1	PHOTOCELL UNIT	**1-167, 1-169**
320	579625-0200		1	PROTECTIVE GRATING	**1-171, 1-173, 1-175**
330	1539920-0200		1	PENDULUM	**1-177**
350	925991-0200		1	LEVEL PROBE	**1-181**

Pos	Part No	UN	Qty	Description	Page No

Machine Type	Group Description	Used-In	Group Number	Page No

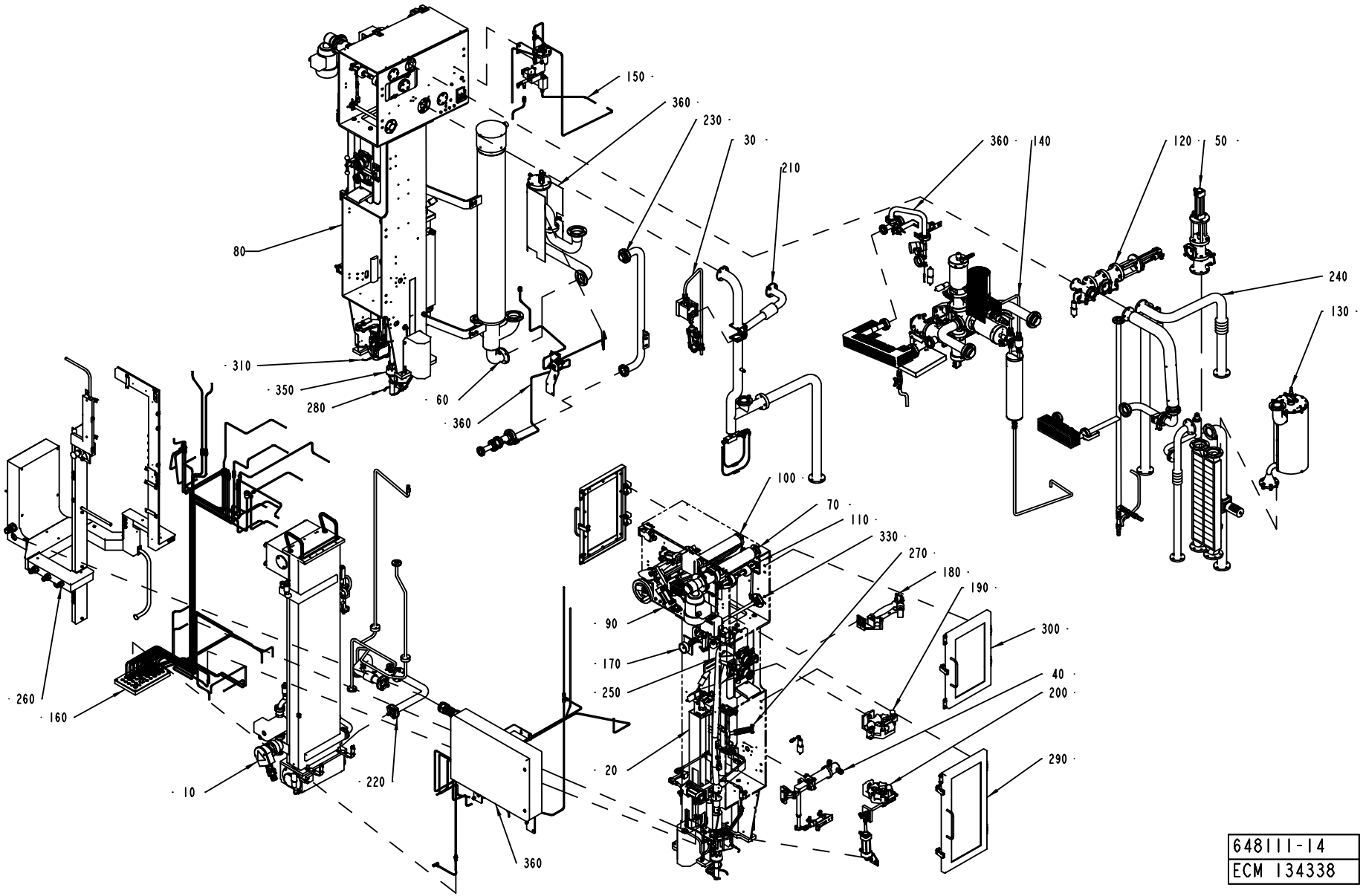
150
360
230
30
210
80
310
350
280
60
360
360
140
120
50
240
130
100
70
110
330
270
180
190
90
170
250
20
300
40
200
290
260
160
10
220
360
648111-14
ECM 134338

ECM: 143200 - 20040119
Group number: 648111-1200
Assembly Drawing: 648111-14_1_AA

This list covers pages from 1-2 to 1-5

Pos	Part No	UN	Qty	Description	Page No
HI (See drawing on page: 1-4)					
360	2619758-0100		1	HEAD SPACE BY INJECTION	**1-7**
Common Parts					
010	256014-0800		1	BATH	**1-21, 1-23, 1-25, 1-27, 1-29, 1-31**
020	256055-0700		1	HOT AIR ELEMENT	**1-35**
030	256084-0700		1	CHANGE-OVER VALVE	**1-37**
040	256095-0700		1	HOT AIR ELEMENT	**1-39**
050	271169-0500		1	VALVE	**1-41**
060	271181-0600		1	AIR SUPER-HEATER	**1-43, 1-45**
070	272004-0500		1	BENDING ROLLER	**1-47**
080	272021-0800		1	ASEPTIC CHAMBER	**1-49, 1-51, 1-53**
090	272024-0500		1	CALENDER ROLLER	**1-57**
100	272025-0400		1	AIR KNIFE	**1-59**
110	272028-0800		1	BENDING ROLLER	**1-61**
120	272337-0600		1	VALVE	**1-63**
130	272407-0400		1	GENERATOR	**1-65**
140	272560-0800		1	PRODUCT VALVE	**1-67, 1-69, 1-71, 1-73, 1-75, 1-77**
150	272623-0700		1	SPRAY SYSTEM	**1-95, 1-97**
160	295045-0900		1	PIPE WORK-PNEUMATIC	**1-99, 1-101, 1-103, 1-105**
170	441304-0400		1	MOVABLE FORMING RING	**1-107, 1-109, 1-111, 1-113**
180	441307-0300		1	UPPER TUBE SUPPORT	**1-115, 1-117, 1-119**
190	441486-0400		1	DIVIDED FORMING RING	**1-123, 1-125, 1-127**
200	456309-0600		1	LOWER FORMING RING	**1-129, 1-131**
210	456555-0600		1	SUCTION PIPE	**1-133**
220	456556-0400		1	PEROXIDE PIPE	**1-135**
230	456836-0600		1	CLEANING SYSTEM	**1-137**
240	456976-0700		1	HEAT EXCHANGER	**1-141**
250	469091-0500		1	FILLER TUBE	**1-145**
260	469374-0600		1	CABLE TRENCH	**1-147, 1-149**
270	469501-0400		1	AIR NOZZLE	**1-155**
280	469781-0400		1	TUBE FLUSHING DEVICE	**1-157, 1-159**
290	491570-0200		1	DOOR	**1-163**
300	491579-0200		1	DOOR	**1-165**
310	491976-0300		1	PHOTOCELL UNIT	**1-167, 1-169**
320	579625-0200		1	PROTECTIVE GRATING	**1-171, 1-173, 1-175**
330	1539920-0200		1	PENDULUM	**1-177**
350	925991-0200		1	LEVEL PROBE	**1-181**

Pos	Part No	UN	Qty	Description	Page No

Machine Type	Group Description	Used-In	Group Number	Page No

HEAD SPACE BY INJECTION

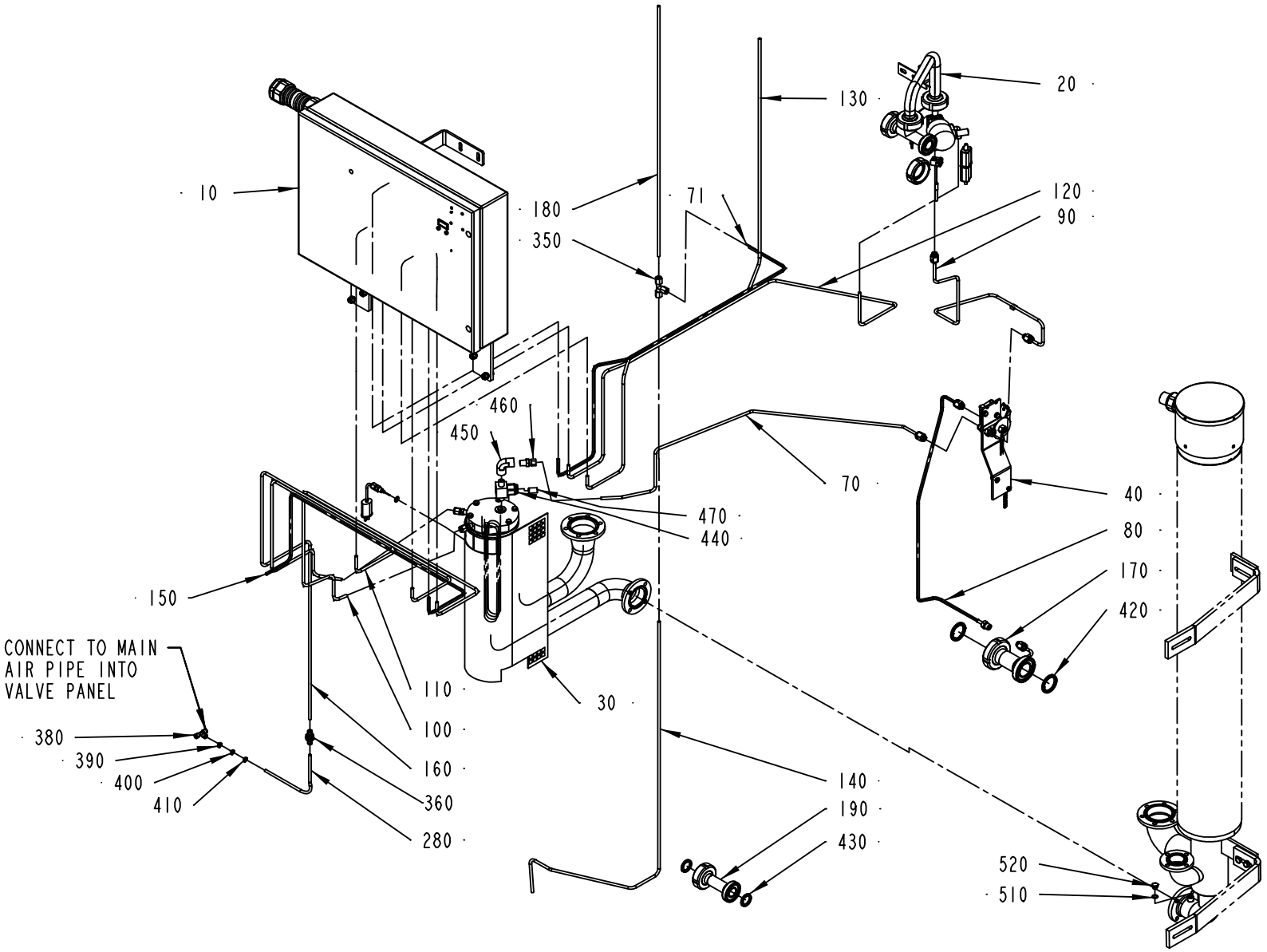

2619758-1
ECM 134338

ECM: 134338 - 20030701
Group number: 2619758-0100
Assembly Drawing: 2619758-1_1_AA

Pos	Part No	UN	Qty	Description	Page No
-					
	2568779-0000		1	DIAGRAM	
070	1539604-0000		1	PIPE	
071	2546472-0000		1	PIPE	
080	2545432-0000		1	CLEANING PIPE	
090	1539605-0000		1	COOLING PIPE	
10	2545083-0100		1	CONTROL CABINET	**1-9, 1-11**
100	2546444-0000		1	PIPE	
110	2546447-0000		1	SPRAY PIPE	
120	2546471-0000		1	AIR PIPE	
130	2546473-0000		1	FILLING PIPE	
140	2547007-0000		1	RETURN PIPE	
150	2546446-0000		1	PIPE	
160	2546445-0000		1	AIR PIPE	
170	2545062-0000		1	CLEANING PIPE	
180	2547006-0000		1	RETURN PIPE	
190	1539601-0000		1	CLEANING PIPE	
20	2545080-0100		1	INJECTION SYSTEM	**1-15**
260	90144-0073		1	TREBOFLON-TAPE W=13MM	
280	90166-0132	MM	2500	TUBE 6 MM PA,TRANSP.	
30	1539599-0100		1	HEAT EXCHANGER	**1-17**
340	342706-0130		1	ACCESSORIES, INSERT SLEEVE 6 MM	
350	90030-0076		1	CONN. T-PIPE T-6	
360	90457-0086		2	BULKHEAD CONNECTOR 6MM	
380	342748-0102		1	T-CONNECTION 6MM	
390	359000-0400		1	MARKING CO2/4"0"	
40	1539602-0100		1	CONNECTION SYSTEM	**1-19**
400	359000-0401		1	MARKING COLLAR 2/4 "1" YELLOW	
410	359000-0405		1	MARKING CO2/4"5"	
420	90217-0348		2	GASKET 35,4X46,8X4 MM	
430	90217-0347		2	GASKET 32X22,6X3,6 MM	
440	90277-0062		1	FILTER HOUSING, SS-4TF2-60	
	90277-0347		*1*	*FILTER*	
450	90330-0169		1	ELBOW, 90 INT. THREAD, 4-4FE. SS	
460	90030-0062		1	CONN. STR. GE 6-1/4-18 NPTF	
470	90277-0407		1	FILTER ELEMENT 60µ, SS-4F-K4-60	
510	315234-0109		1	WASHER,PL.RND.CU.10,3/13,5 H=1,0	
520	90136-0001		1	PLUG, EXT. THREAD, NO. 100727	

Machine Type	Group Description	Used-In	Group Number	Page No

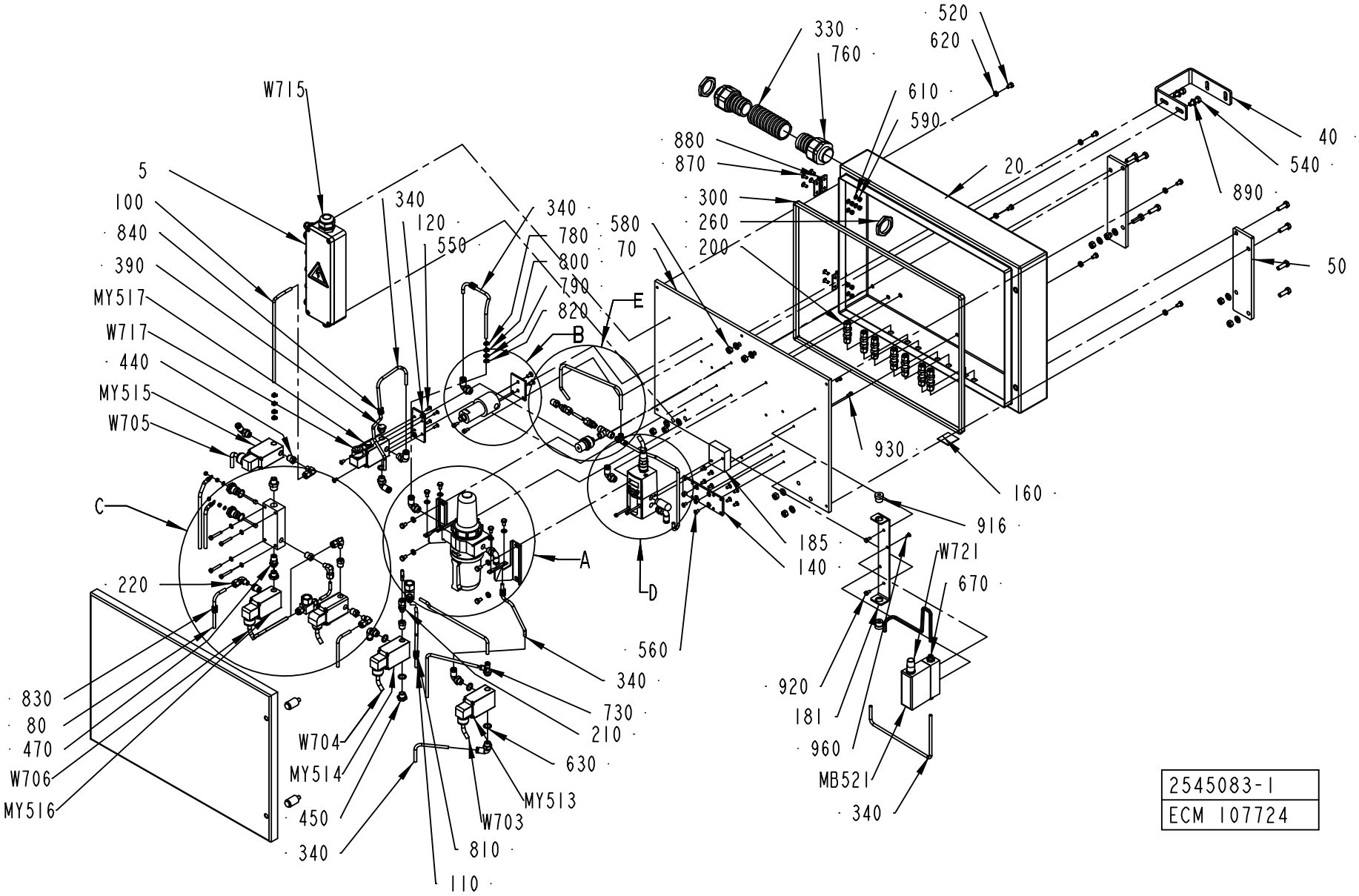
W715
5
100
840
390
MY517
W717
440
MY515
W705
C
220
830
80
470
W706
MY516
340
120
550
340
780
800
790
820
B
E
580
70
A
D
560
340
730
210
630
MY513
W703
810
110
W704
MY514
450
340
330
760
520
620
610
590
880
870
300
260
200
20
40
540
890
50
930
160
916
185
140
W721
670
920
181
960
MB521
340
2545083-1
ECM 107724

ECM: 107724 - 20030701
Group number: 2545083-0100
Assembly Drawing: 2545083-1_1_AA

This list covers pages from 1-8 to 1-11

Pos	Part No	UN	Qty	Description	Page No
-					
005	2623674-0100		1	CONNECTION BOX	**1-13**
010	2545423-0000		1	DOOR	
020	2545424-0000		1	CABINET	
030	2565736-0000		1	RESERVOIR	
040	2546448-0000		1	SUPPORT	
050	2547315-0000		2	SUPPORT	
070	2545426-0000		1	MOUNTING PLATE	
080	2545425-0000		1	SPRAY PIPE	
090	2545427-0000		1	FILLING PIPE	
100	2545428-0000		1	RETURN PIPE	
110	2545429-0000		1	PIPE	
120	978235-0000		1	VALVE PLATE	
140	2574348-0000		1	VALVE BRACKET	
150	979474-0000		1	BRACKET	
160	520072-0000		1	SIGN BOARD	
170	560931-0000		2	BRACKET	
181	2572676-0000		1	SUPPORT	
182	2570391-0000		1	PIPE	
185	2511330-0000		1	SPACER	
190	2558744-0000		1	PIPE	
195	2558745-0000		2	PIPE	
200	90030-0230		7	CONN. BULKHEAD SV 6-	
210	90030-0233		1	CONN. STR., 6-G1/8, EXT. THREAD	
220	90030-0234		1	CONN. ELBOW, 6-R1/8 , EXT.THREAD	
260	90099-0120		2	NUT PR 37 (PG29)	
290	90140-0015		1	T-PIPE, INT. THREAD, 2003-1/8	
300	90143-0059	M	2	SEAL STRIP 4610069	
310	90144-0073		1	TREBOFLON-TAPE W=13MM	
330	90152-0060	MM	1200	SPIRAL CONDUIT, 42X35, UL3529	
335	90153-0043		1	ADHESIVE, LOCTITE 495 20G	
340	90166-0132	M	10	TUBE 6 MM PA,TRANSP.	
350	90458-2957		11	ELBOW PIPE JOINT, EXT.THREAD, D=6MM-G1/4	
360	90226-0452		2	MOUNTING SCREW	
370	90236-0041		1	BRACKET	
390	90257-0001		1	FILTER PLUG PARTNO 8145-00-140 TYP F14	
410	90277-0104		1	FILTER F64B-2GN-ARO	
	90113-0457		*1*	*FILTER ELEMENTS*	
	90113-0458		*1*	*FILTER ELEMENTS*	
420	90277-0323		1	FILTER HOUSING / ART.NO 95S6-1/4 S 5430	
430	90277-0324		1	FILTER CARTRIDGE 050-11-A	
440	90330-0025		7	BUSHING, INT/EXT. THR. R1/4-RP1/8	
450	90330-0026		3	PLUG, EXT. G-THREAD, G1/4	
470	90330-0043		1	NIPPLES, EXT. THREAD. R-207R1/4	
480	90030-0234		5	CONN. ELBOW, 6-R1/8 , EXT.THREAD	
490	90330-0083		1	NIPPLES, EXT. THREAD. R3/8-R1/4	
510	312105-0335		4	SCREW M6S ISO 4014 M5X30 A480	
520	312105-0364		14	SCREW M6S ISO 4017 M6X10 A480	
530	312115-0325		2	SCREW ISO4762 M5X10 A4	
540	312105-0453		10	SCREW M6S ISO 4017 M8X25 A480	
550	312145-0291		12	SCREW ISO 2009 MFS M4X12 A4	
560	312145-0325		14	SCREW ISO 2009 MFS M5X10 A4	
570	312145-0366		2	SCREW ISO 2009 MFS M6X12 A4	
580	312605-0318		10	HEXAGON NUT, M6M M8 A280	
585	312605-0312		4	HEXAGON NUT, M6M M4 A280	
590	312605-0314		8	HEXAGON NUT, M6M M5 A280	
595	315105-0136		4	WASHER BRB4,3XRFR	
600	315105-0153		12	WASHER BRB6,4X12RFR	
610	315105-0146		12	WASHER BRB5,3X10RFR	
630	315237-0110		6	WASHER,PL.RND.AL.13,5/18,H=1,5	
660	342713-0210		1	PLUG, EXT THREAD HEX SOCKET 8638-00-140	
670	342722-0203		2	STRAIGHT COUPLING	
730	342772-0114		1	ELBOW FITTING, 6 - G1/4	
735	342772-0113		1	ELBOW FITTING, 6 - G1/8	
760	353243-0008		2	EXTENDED WITHOUT INSERT, PG29	
780	359000-0400		6	MARKING CO2/4"0"	
790	359000-0401		8	MARKING COLLAR 2/4 "1" YELLOW	
800	359000-0403		3	MARKING COLLAR PA2/4 "3" YELLOW	
810	359000-0404		8	MARKING COLLAR PA2/4 "4" YELLOW	
820	359000-0405		8	MARKING CO2/4"5"	
830	359000-0406		1	MARKING COLLAR PA2/4 "6" YELLOW	
840	359000-0407		1	MARKING COLLAR PA2/4 "7" YELLOW	
850	315204-0213		2	O-RING 15,2X2,4 MM	
860	90230-0064		2	CHECK VALVE, 6 MM HIGH TEMP.	
870	312155-0327		8	SCREW EN 10642 MF6S M5X12 A480	
880	90459-0075		2	HINGE, 1056-U30	
890	315105-0165		12	WASHER BRB8,4X16RFR	
900	342706-0130		3	ACCESSORIES, INSERT SLEEVE 6 MM	
916	353249-0017		2	INSERT, SINGEL HOLE, HI.TEMP, EK152I7	
920	312105-0325		2	SCREW M6S ISO 4017 M5X10 A480	
930	312115-0289		2	SCREW ISO4762 M4X10 A4	
940	312115-0305		2	SCREW ISO4762 M4X50 A4	
960	312155-0287		2	SCREW EN 10642 MF6S M4X8 A480	
980	90030-0184		2	CONN. STR. GA-6-G1/8	

Machine Type | Group Description | Used-In | Group Number | Page No

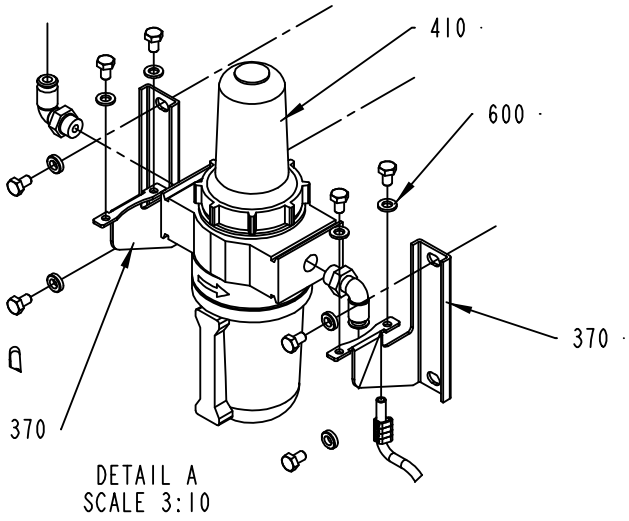

DETAIL A
SCALE 3:10

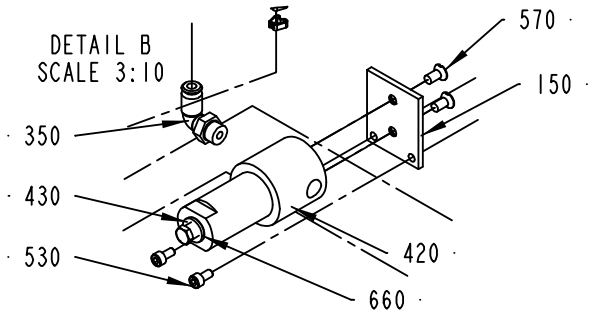

DETAIL B
SCALE 3:10

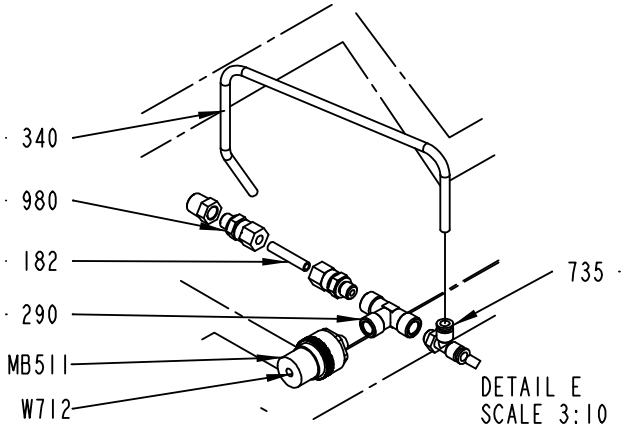

DETAIL E
SCALE 3:10

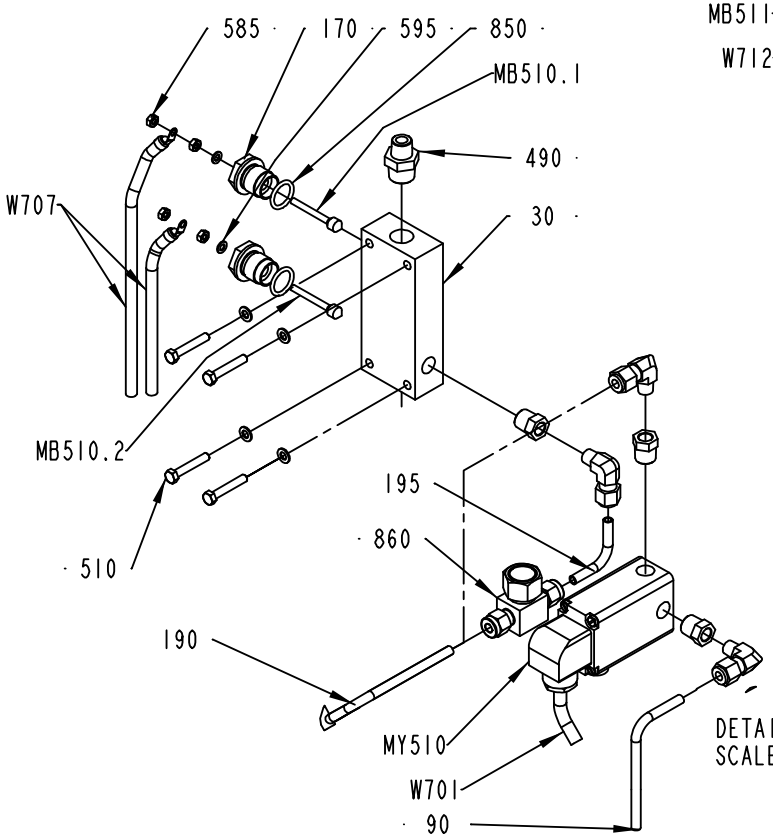

DETAIL C
SCALE 3:10

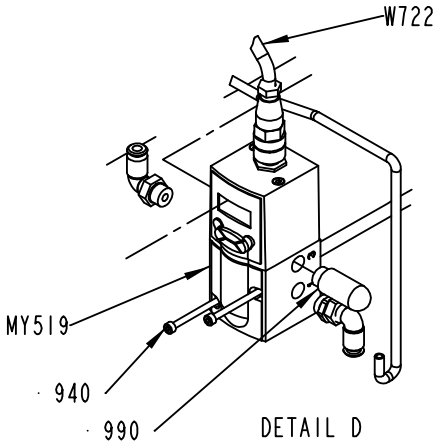

DETAIL D
SCALE 3:10

2545083-1
ECM 107724

Pos	Part No	UN	Qty	Description	Page No
- (Cont'd)					
990	90328-0026		1	SILENCER G1/4	
MB510.1	567070-0014		2	ELECTRODE	
MB510.2	567070-0014		1	ELECTRODE	
MB511	90274-0066		1	PRESSURE SWITCH, 5,516 - 689,5 KPA	
MB521	90458-2619		1	FLOW METER, D-6230-HGB-BB-AV-99-0-N2	
MY510	979956-0000		1	SOLENOID VALVE	
MY513	90042-0171		1	SOLENOID VALVE BUERKERT	
	90042-0466		*1*	*DIAPHRAGM 330.95.2 VITON*	
MY514	90042-0171		1	SOLENOID VALVE BUERKERT	
	90042-0466		*1*	*DIAPHRAGM 330.95.2 VITON*	
MY515	90042-0171		1	SOLENOID VALVE BUERKERT	
	90042-0466		*1*	*DIAPHRAGM 330.95.2 VITON*	
MY516	90042-0171		1	SOLENOID VALVE BUERKERT	
	90042-0466		*1*	*DIAPHRAGM 330.95.2 VITON*	
MY517	90042-0171		1	SOLENOID VALVE BUERKERT	
	90042-0466		*1*	*DIAPHRAGM 330.95.2 VITON*	
MY519	90459-1420		1	PROPORTIONAL VALVE 0 - 10V/0-6 BAR	
	90458-1262		*1*	*CONNECTOR 131028001 FOR PROP. VALVE*	
W701	351150-0403	MM	720	CABLE OLFLEX 3X0,75 MM2 LIGHT/GREY	
W703	351150-0403	MM	980	CABLE OLFLEX 3X0,75 MM2 LIGHT/GREY	
W704	351150-0403	MM	780	CABLE OLFLEX 3X0,75 MM2 LIGHT/GREY	
W705	351150-0403	MM	780	CABLE OLFLEX 3X0,75 MM2 LIGHT/GREY	
W706	351150-0403	MM	580	CABLE OLFLEX 3X0,75 MM2 LIGHT/GREY	
W707	351150-0404	MM	630	CABLE OLFLEX 4X0,75 MM2 LIGHT/GREY	
W715	351150-0425	M	4	CABLE OLFLEX 25X0,75 MM2 LIGHT/GREY	
W717	351150-0403	MM	860	CABLE OLFLEX 3X0,75 MM2 LIGHT/GREY	
W721	90220-0072	M	7	SCR. CABLE 4X0,34MM2	
W721.1	353300-0006	MM	150	SHRINKABLE HOSE	
W722	90220-0072	M	7	SCR. CABLE 4X0,34MM2	
W722.1	353300-0006	MM	150	SHRINKABLE HOSE	

Pos	Part No	UN	Qty	Description	Page No

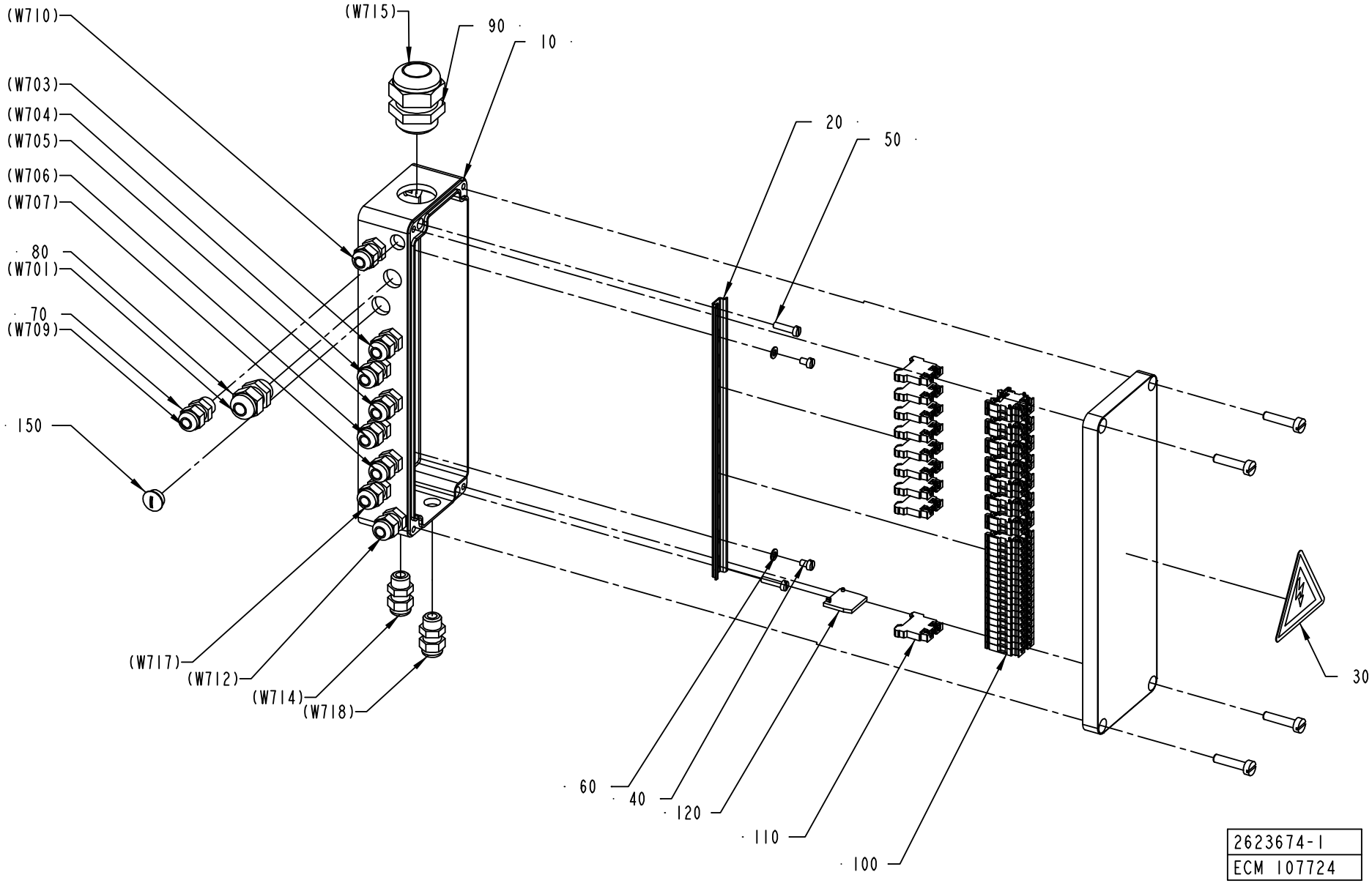
(W710)
(W715)
90
10
(W703)
(W704)
(W705)
(W706)
(W707)
80
(W701)
70
(W709)
150
20
50
30
(W717)
(W712)
(W714)
(W718)
60
40
120
110
100
2623674-1
ECM 107724

ECM: 133963 - 20030701
Group number: 2623674-0100
Assembly Drawing: 2623674-1_1_AA

Pos	Part No	UN	Qty	Description	Page No
-					
010	979475-0000		1	CONNECTION BOX	
020	979476-0000		1	RAIL	
030	90194-0016		1	WARNING SIGN, RISK OF ELECTRIC SHOCK	
040	312125-0285		2	SCREW ISO 1207 M4X6 A4	
050	312125-0293		2	SCREW ISO 1207 M4X16 A4	
060	315105-0136		2	WASHER BRB4,3XRFR	
070	352103-0096		5	CABLE GLAND, ST 7, PR 12,5/PG7	
080	352103-0101		7	CABLE GLAND, ST 9, PR15,2/PG9	
090	352103-0116		1	CABLE GLAND, ST 21, PR28,3/PG21	
100	90077-0123		32	FEED THROUGH TERMINAL, 017596	
110	90135-0042		9	EARTH TERMINAL, 130336	
120	90077-0122		1	END PLATE AP/AKZ 2,5	
130	359011-0807		2	MARKING PLATES 5-FW 1-50	
140	359011-0819		1	MARKING PLATES 5-GW (EARTH)	
150	90002-0018		1	BLANK-OFF PLUG, PR 12,5 SKINDICHT-BLK7	
160	351160-0102	MM	1200	CABLE (1UNIT = 100M)	

Pos	Part No	UN	Qty	Description	Page No

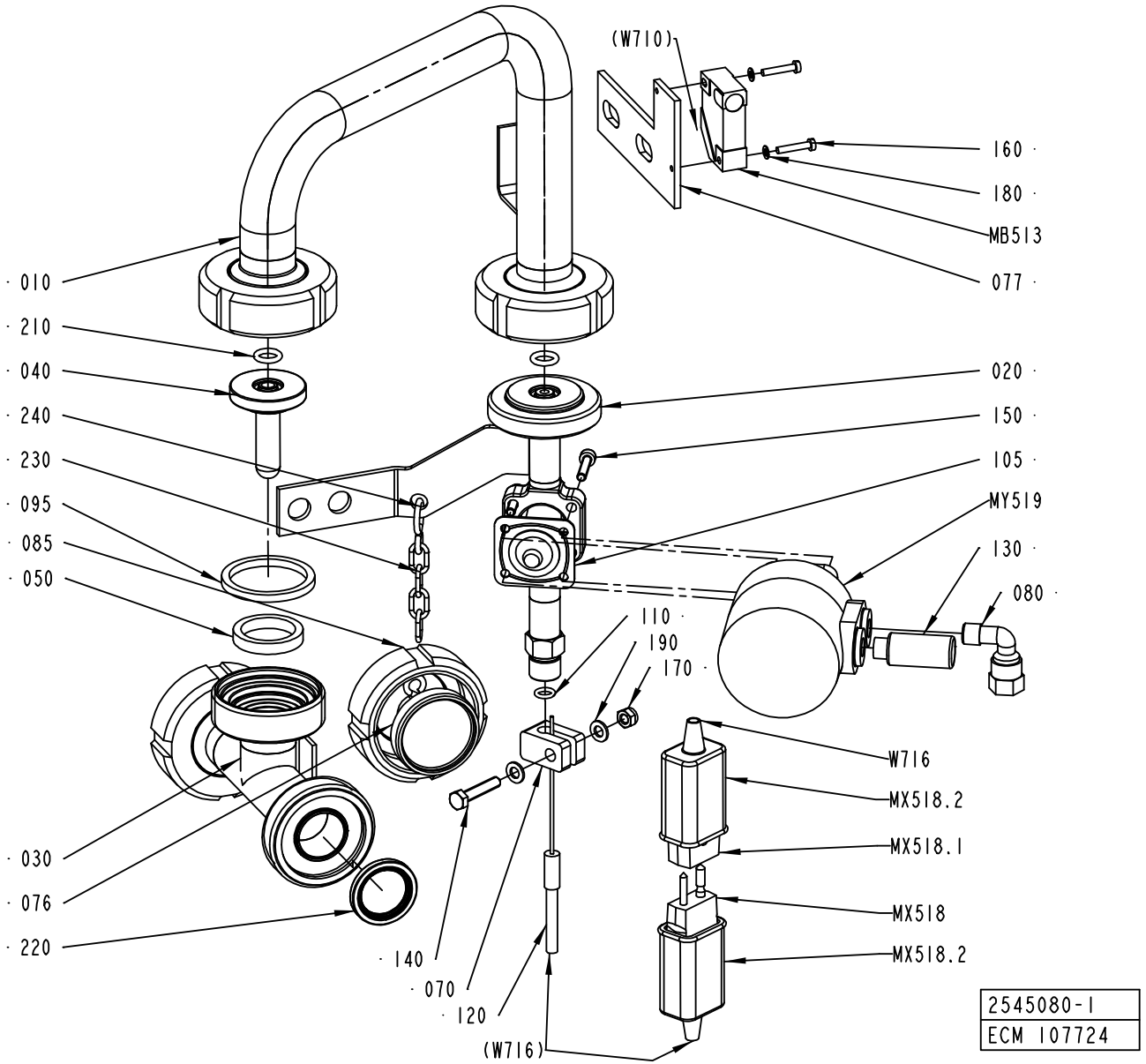
(W710)
160
180
MB513
077
010
210
040
240
230
095
085
050
020
150
105
MY519
130
080
110
190
170
W716
MX518.2
MX518.1
MX518
MX518.2
030
076
220
140
070
120
(W716)
2545080-1
ECM 107724

ECM: 107724 - 20030701
Group number: 2545080-0100
Assembly Drawing: 2545080-1_1_AA

Pos	Part No	UN	Qty	Description	Page No
-					
010	2545132-0000		1	TRANSITION PIPE	
020	2545131-0000		1	VALVE BODY	
030	1539597-0000		1	T-PIECE	
040	1539606-0002		1	SPRAY NOZZLE	
040	1539606-0003		1	SPRAY NOZZLE	
040	1539606-0004		1	SPRAY NOZZLE	
040	1539606-0005		1	SPRAY NOZZLE	
040	2545134-0000		1	SPRAY NOZZLE	
050	12242-0001		1	GASKET 32X25X5,5	
070	978440-0000		1	CRAMP	
076	2545155-0000		1	PLUG	
077	979814-0000		1	BRACKET	
080	90030-0137		1	CONN. ELBOW WA 6-R1/8	
085	90217-0203		1	UNION NUT, 1 APV, 07-01-276/17	
095	315229-0104		1	GASKETS, 35,8X42,8X3,7 MM 1"1/2 FD	
105	90187-0325		1	DIAPHRAGM, 214/300 AO08 4-B -20-150§C	
110	315205-0505		1	O-RING 6,07X1,78 MM	
130	90328-0012		1	SILENCER	
140	312105-0333		1	SCREW M6S ISO 4017 M5X25 A480	
150	312115-0295		4	SCREW ISO4762 M4X20 A4	
160	312125-0228		2	SCREW ISO 1207 M3X16 A4	
170	312812-0314		1	HEXAGON NUT, NY-LOCK M5 A480	
180	315105-0124		2	WASHER BRB3,2X6RFR	
190	315105-0146		2	WASHER BRB5,3X10RFR	
210	315204-0207		2	O-RING 8,3X2,4 MM	
220	90217-0347		2	GASKET 32X22,6X3,6 MM	
230	90155-0008	MM	200	HANGER CHAIN, 18	
240	209183-0000		2	RING	
MB153	90044-0104		1	PROX.SWITCH IFM IN 3002	
MB518	90326-0060		1	THERMOCOUPLE, CR-AL	
MX518	90326-0022		1	PLUG, MALE YELLOW CR-AL	
MX518.1	90326-0020		1	PLUG, FEMALE YELLOW CR-AL	
MX518.2	90326-0012		2	PROTECTIVE COVER, T31A4618	
MY519	90187-0176		1	ACTUATOR ECC 008 FOR DIAPHR. VALVE	
W716	90220-0059	MM	4500	THERMOCOUPLE CABLE K/ 2X0,81MM2	

Pos	Part No	UN	Qty	Description	Page No

Machine Type | Group Description | Used-In | Group Number | Page No

HEAT EXCHANGER

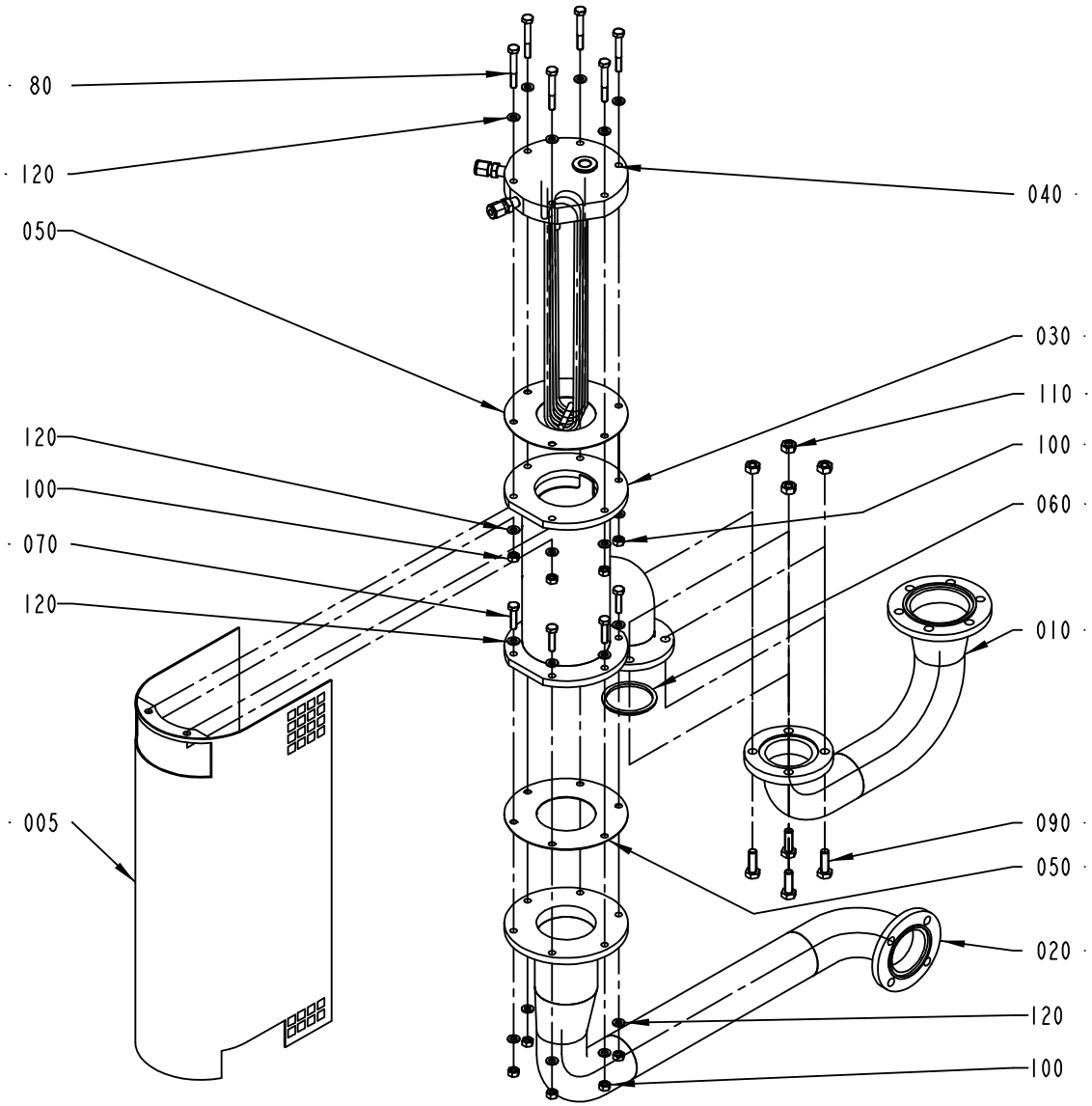

1539599-1
ECM 107724

ECM: 107732 - 20030701
Group number: 1539599-0100
Assembly Drawing: 1539599-1_1_AA

Pos	Part No	UN	Qty	Description	Page No
-					
005	581341-0000		1	TOUCH GUARD	
010	1539603-0000		1	PIPE	
020	1539596-0000		1	PIPE	
030	979247-0000		1	HOUSE	
040	2555310-0000		1	COIL	
050	751016-0000		2	GASKET	
060	315229-0205		1	GASKET 47,5X55,5X3,7 MM 2"	
070	312105-0372		6	SCREW M6S ISO 4017 M6X25 A480	
080	312105-0378		6	SCREW M6S ISO 4014 M6X40 A480	
090	312105-0453		4	SCREW M6S ISO 4017 M8X25 A480	
100	312605-0316		12	HEXAGON NUT, M6M M6 A280	
110	312605-0318		4	HEXAGON NUT, M6M M8 A280	
120	315105-0153		24	WASHER BRB6,4X12RFR	

Pos	Part No	UN	Qty	Description	Page No

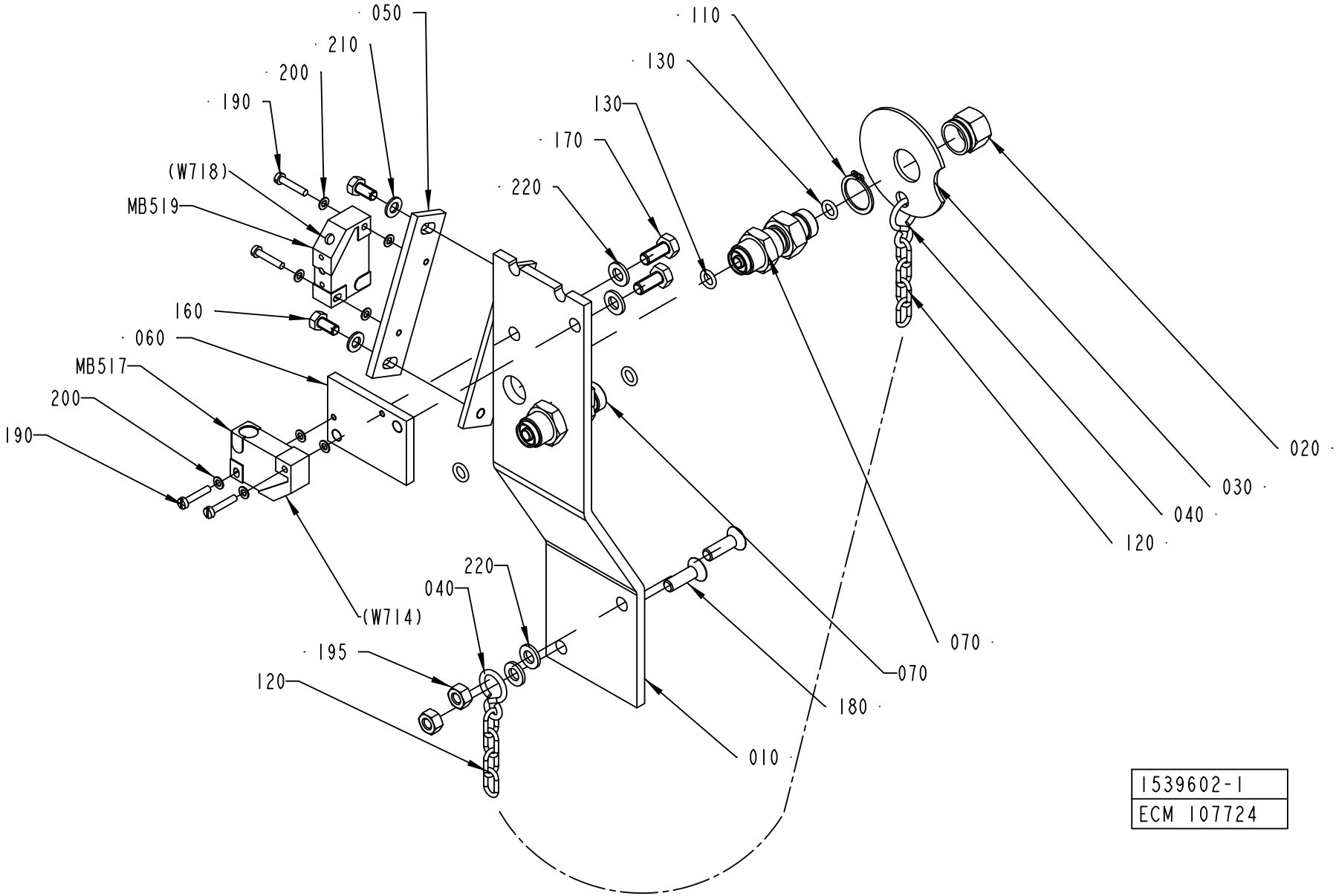
050
210
200
190
(W718)
MB519
160
060
MB517
200
190
(W714)
195
120
220
040
110
130
130
170
220
020
030
040
120
070
070
180
010
1539602-1
ECM 107724

ECM: 107733 - 20030701
Group number: 1539602-0100
Assembly Drawing: 1539602-1_1_AA

Pos	Part No	UN	Qty	Description	Page No
-					
010	1539600-0000		1	SUPPORT	
020	978380-0000		1	BLIND PLUG	
030	978381-0000		1	WASHER 56X2MM	
040	209183-0000		2	RING	
050	927081-0000		1	SUPPORT	
060	979254-0000		1	SUPPORT	
070	90030-0549		2	CONN. STRAIGHT, BULKHEAD, SS-4-VCO-61	
110	90141-0017		1	RETAINING RING FOR SHAFT DIN 471 17 A2	
120	90155-0008	MM	200	HANGER CHAIN, 18	
130	315205-0505		4	O-RING 6,07X1,78 MM	
160	312105-0325		2	SCREW M6S ISO 4017 M5X10 A480	
170	312105-0367		2	SCREW M6S ISO 4017 M6X14 A480	
180	312155-0370		2	SCREW EN 10642 MF6S M6X20 A480	
190	312125-0228		4	SCREW ISO 1207 M3X16 A4	
195	312605-0316		2	HEXAGON NUT, M6M M6 A280	
200	315105-0124		4	WASHER BRB3,2X6RFR	
210	315105-0146		2	WASHER BRB5,3X10RFR	
220	315105-0153		4	WASHER BRB6,4X12RFR	
MB517	90044-0104		1	PROX.SWITCH IFM IN 3002	
MB519	90044-0104		1	PROX.SWITCH IFM IN 3002	

Pos	Part No	UN	Qty	Description	Page No

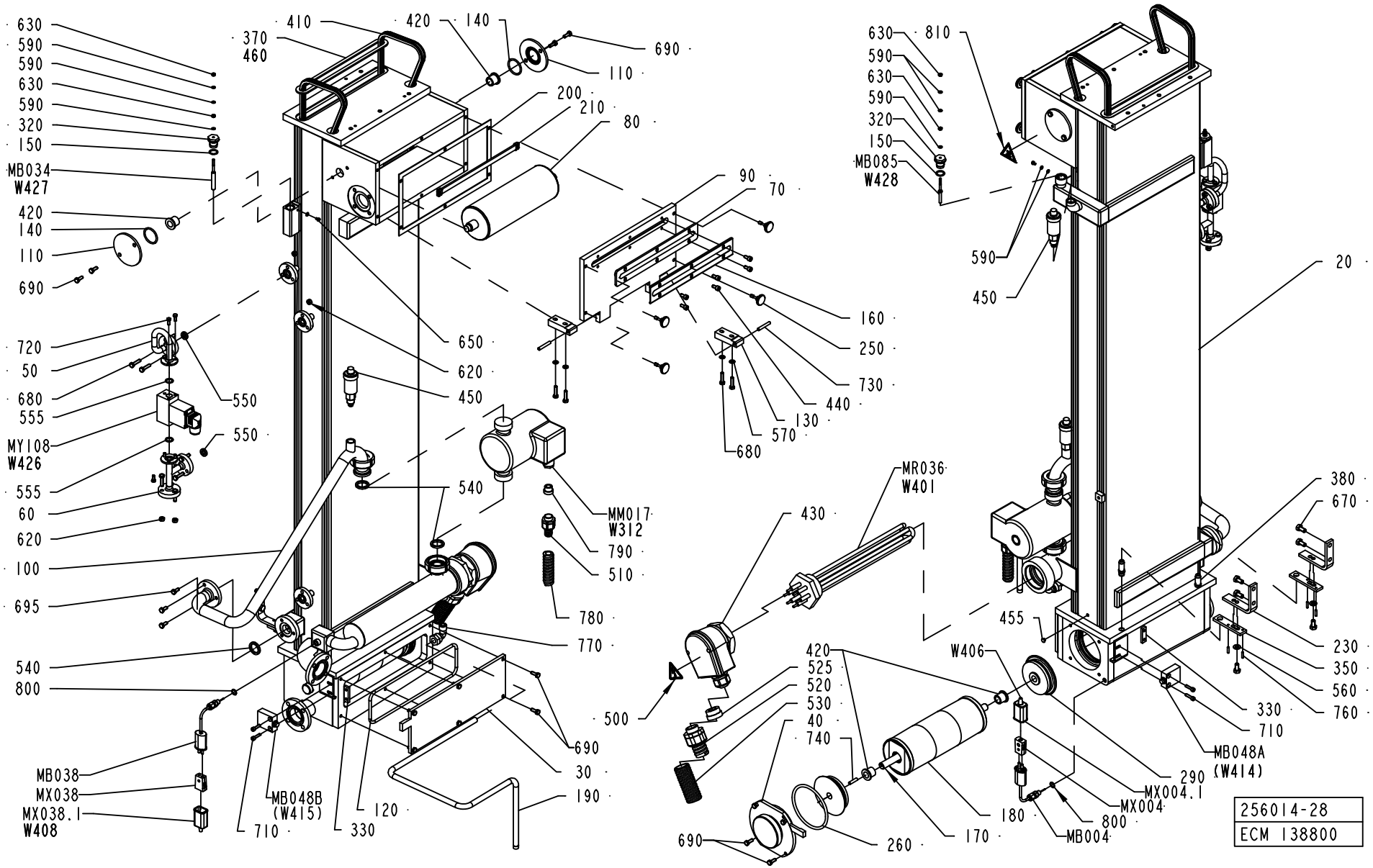
630
590
590
630
590
320
150
MB034
W427
420
140
110
690
720
50
680
555
MY108
W426
555
60
620
100
695
540
800
MB038
MX038
MX038.1
W408
410
370
460
420
140
690
110
200
210
80
650
620
450
550
550
540
MM017
W312
790
510
780
770
690
30
190
MB048B
(W415)
710
330
120
90
70
160
250
730
440
130
570
680
630
810
590
630
590
320
150
MB085
W428
590
450
20
MR036
W401
430
500
420
525
520
530
40
740
690
260
170
180
MB004
800
MX004
MX004.1
290
W406
455
380
670
230
350
560
760
330
710
MB048A
(W414)
256014-28
ECM 138800

ECM: 138800 - 20031117
Group number: 256014-0800
Assembly Drawing: 256014-28_1_AC

This list covers pages from 1-20 to 1-31

Pos	Part No	UN	Qty	Description	Page No
NOPT TBA 0100B, NOPT TBA 0200M, NOPT TBA 0200S, NOPT TBA 0125S, NOPT TBA 0160S, NOPT TBA 0180B, NOPT TBA 0200B, NOPT TBA 0250B, NOPT TBA 0330S (See drawing on pages: 1-20, 1-22, 1-24)					
MB034	567070-0019		1	ELECTRODE	
NOPT TBA 0250S, NOPT TBA 0284B, NOPT TBA 0300S (See drawing on pages: 1-20, 1-22, 1-24)					
MB034	567070-0011		1	ELECTRODE	
PT19 TBA 0125S, PT19 TBA 0160S, PT19 TBA 0180B, PT19 TBA 0200B, PT19 TBA 0100B, PT19 TBA 0330S, PT19 TBA 0200M, PT19 TBA 0200S, PT19 TBA 0250B (See drawing on pages: 1-26, 1-28, 1-30)					
010	530600-0100		1	GUIDING PULLTAB	**1-33**
MB034	567070-0019		1	ELECTRODE	
PT19 TBA 0250S, PT19 TBA 0284B, PT19 TBA 0300S (See drawing on pages: 1-26, 1-28, 1-30)					
010	530600-0100		1	GUIDING PULLTAB	**1-33**
MB034	567070-0011		1	ELECTRODE	
Common Parts					
020	1296855-0000		1	BATH	
030	578492-0000		1	LID	
040	578491-0000		1	LID	
050	1490840-0000		1	PIPE	
060	1490839-0000		1	PIPE	
070	273954-0000		1	SEAL	
080	1282581-0000		1	BENDING ROLLER	
090	582433-0000		1	LID	
100	2528094-0000		1	PIPE	
110	578490-0000		2	LID	
120	578494-0000		1	O-RING	
130	979559-0000		2	HINGE	
140	927422-0014		2	O-RING 34.2X3 SILICON	
150	927421-0004		2	O-RING 15.3X2.4 SILICON	
160	456784-0000		1	LID	
170	578493-0000		1	SHAFT	
180	566191-0000		1	BENDING ROLLER	
190	2532923-0000		1	PIPE	
200	751331-0000		1	GASKET	
210	456995-0000		1	CARRIER	
230	456472-0000		2	ANGLE	
250	751680-0000		4	SCREW	
260	578495-0000		1	O-RING	
290	578486-0000		2	WHEEL	
320	560931-0000		2	BRACKET	
330	490890-0000		2	NUT PLATE	
350	456474-0000		2	ADJUSTMENT PLATE	
370	256005-0000		1	GASKET	
380	247248-0000		2	PIN	
410	90288-0066		2	ROLLER CHAIN, SINGLE 3/8 -365	
420	90240-0146		4	FLANGE BUSHING,15X21X20 MM	
430	90206-0326		1	JUNCTION BOX FOR 90206-56	
440	312115-0366		6	SCREW ISO4762 M6X12 A4	
450	90187-0105		2	PURGING VALVE, G3/8 FOR WATER	
455	90261-0071		1	PLUG, BLIND, PLASTIC, NO. GPN500B58	
460	90153-0016		1	ADHESIVE,TUBE 100G RHODORSIL CAF 3	
470	90153-0023		1	ADHESIVE, SILICON 251470 TUB 90CC	
500	359705-0015		1	WARNING SIGN ISO, RISK OF ELECTRIC SHOCK	
510	353243-0003		1	EXTENDED WITHOUT INSERT, PG11	
520	353243-0007		1	EXTENDED WITHOUT INSERT, PG21	
525	353249-0016		1	INSERT, SINGEL HOLE, EK 155/18	
530	90152-0070	MM	800	METAL HOSE, 32,5X26, UL 2621	
540	315229-0103		3	GASKETS, 23,1X30,1X3,7 MM 1" FDA	
550	315229-0101		2	GASKETS, 10,4X17,4X3,7 MM 1/2" FDA	
555	927421-0003		2	O-RING 13.3X2.4 SILICON	
560	315105-0165		2	WASHER BRB8,4X16RFR	
570	315105-0153		4	WASHER BRB6,4X12RFR	
590	315105-0136		9	WASHER BRB4,3XRFR	
620	312605-0316		9	HEXAGON NUT, M6M M6 A280	
630	312605-0312		4	HEXAGON NUT, M6M M4 A280	
650	312125-0285		2	SCREW ISO 1207 M4X6 A4	
670	312105-0449		6	SCREW M6S ISO 4017 M8X16 A480	
680	312105-0372		13	SCREW M6S ISO 4017 M6X25 A480	
690	312105-0368		14	SCREW M6S ISO 4017 M6X16 A480	
695	312105-0367		3	SCREW M6S ISO 4017 M6X14 A480	
710	312115-0331		4	SCREW ISO4762 M5X20 A4	
720	312105-0327		6	SCREW M6S ISO 4017 M5X12 A480	
730	311103-0361		2	PARALLEL PIN ISO 2338 6M6X40 A1	
740	311103-0355		1	PARALLELL PIN, M6, 6X25 MM	
760	311103-0270		4	PARALLEL PIN ISO 2338 4M6X16 A1	
770	90030-0115		1	CONN. ELBOW WA 12-R3/8	
780	90152-0050	M		SPIRAL CONDUIT, 20X13, UL 1313	
790	353249-0011		1	INSERT, SINGEL HOLE, EK 153/11	
800	315234-0109		2	WASHER,PL.RND.CU.10,3/13,5 H=1,0	
810	359710-0001		1	WARNING SIGN ISO, HOT SURFACE	
MB004	90326-0052		1	THERMO ELEMENT	
MB038	90326-0052		1	THERMO ELEMENT	
MB048A	90044-0084		1	LIMIT SW. 14 CE1-4	
MB048B	90044-0084		1	LIMIT SW. 14 CE1-4	
MB085	979500-0001		1	ELECTRODE	
MM017	2526863-0000		1	PUMP	

Machine Type | Group Description | Used-In | Group Number | Page No

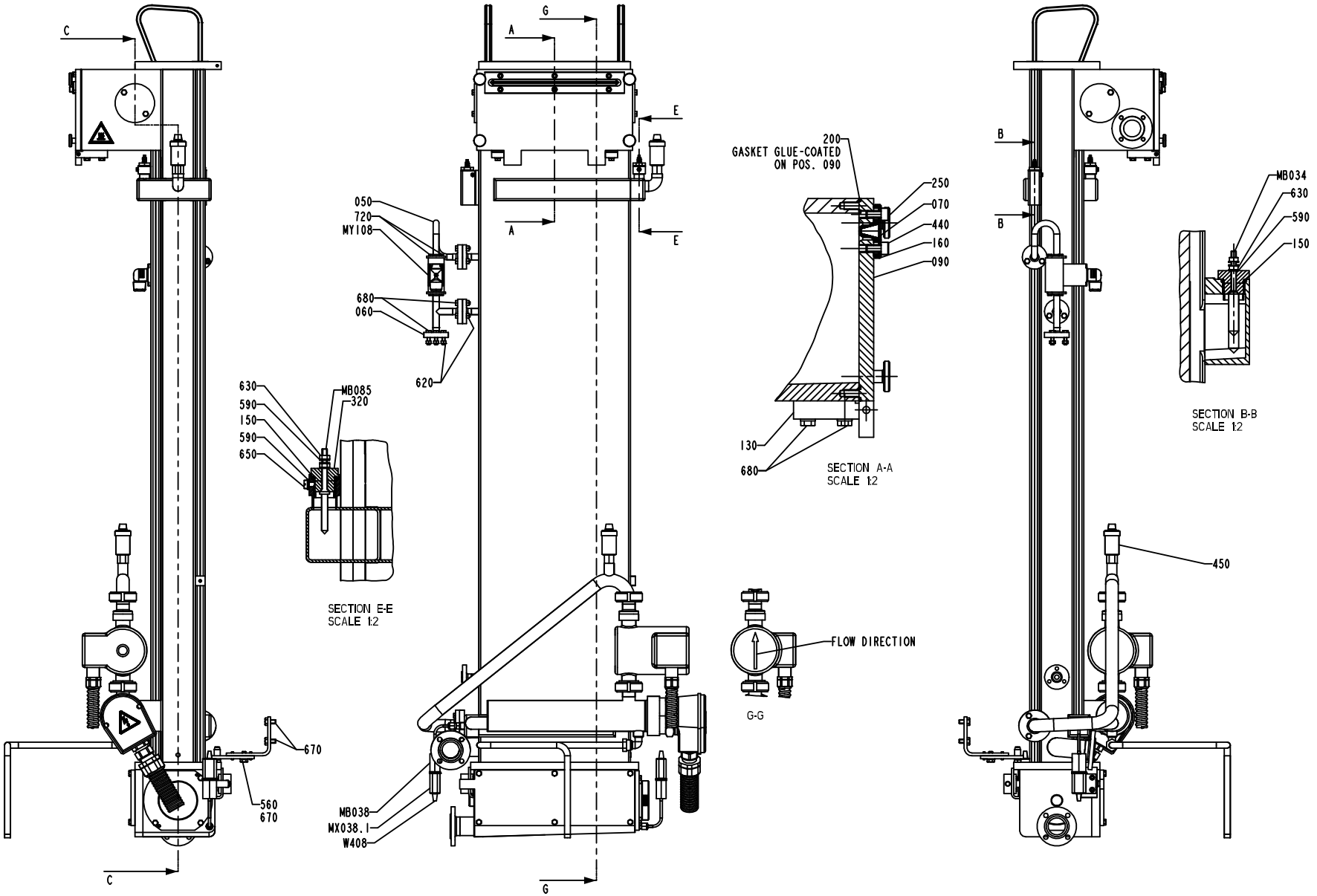
C
A
G
E
050
720
MY108
680
060
620
630
590
150
590
650
MB085
320
SECTION E-E
SCALE 1:2
200
GASKET GLUE-COATED
ON POS. 090
250
070
440
160
090
130
680
SECTION A-A
SCALE 1:2
B
MB034
630
590
150
SECTION B-B
SCALE 1:2
450
FLOW DIRECTION
G-G
670
560
670
MB038
MX038.1
W408

Pos	Part No	UN	Qty	Description	Page No
Common Parts (Cont'd)					
MR036	90206-0070		1	HEATING ELEMENT 6000W 380/220V	
	90206-0326		*1*	*JUNCTION BOX FOR 90206-56*	
	90269-0308		*1*	*GASKET 59X68X3 MM*	
MX004	90326-0020		1	PLUG, FEMALE YELLOW CR-AL	
MX004.1	90326-0012		1	PROTECTIVE COVER, T31A4618	
MX038	90326-0020		1	PLUG, FEMALE YELLOW CR-AL	
MX038.1	90326-0012		1	PROTECTIVE COVER, T31A4618	
MY108	544906-0000		1	SOLENOID VALVE	
	90042-0464		*1*	*DIAPHRAGM VITON 1211321*	
	90042-0465		*1*	*O-RING VITON 17,17X1,78*	
W312	351150-0412	M	5	CABLE OLFLEX 3X1,5 MM2 LIGHT/GREY	
W401	351120-0167	M	3	CABLE SIHF 4X6MM2 GREEN/YELLOW	
W406	90220-0059	M	3	THERMOCOUPLE CABLE K/ 2X0,81MM2	
W408	90220-0059	M	3	THERMOCOUPLE CABLE K/ 2X0,81MM2	
W426	351150-0403	M	3	CABLE OLFLEX 3X0,75 MM2 LIGHT/GREY	
W427	351150-0431	M	3	CABLE OLFLEX 2X0,75 MM2 LIGHT/GREY	
W428	351150-0431	M	3	CABLE OLFLEX 2X0,75 MM2 LIGHT/GREY	

Pos	Part No	UN	Qty	Description	Page No

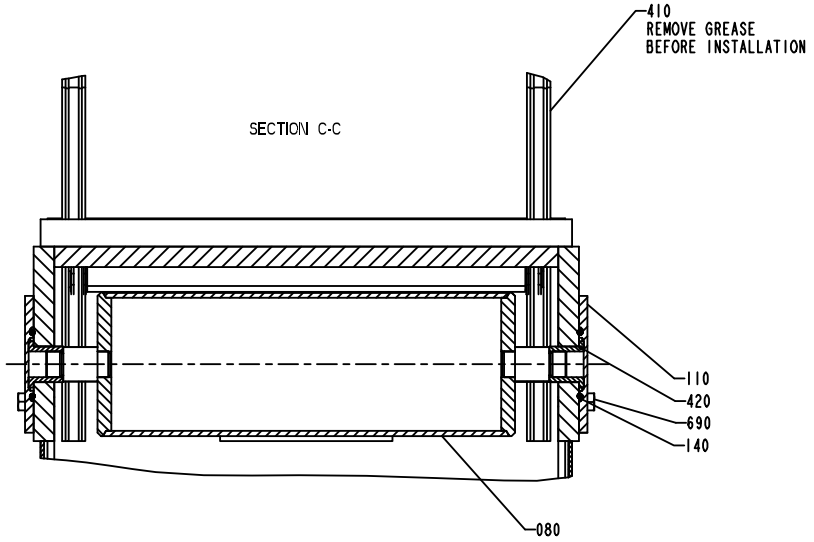
410
REMOVE GREASE
BEFORE INSTALLATION
SECTION C-C
110
420
690
140
080

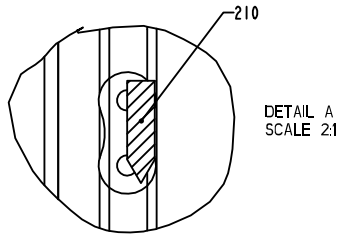
210
DETAIL A
SCALE 2:1

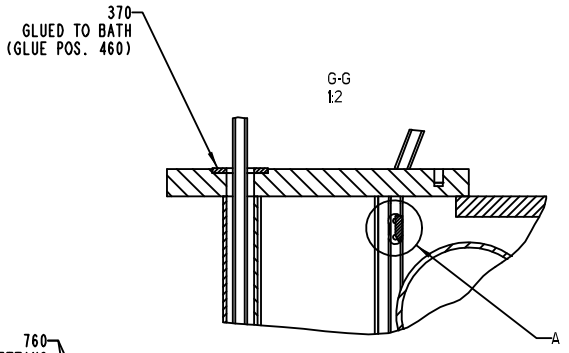
370
GLUED TO BATH
(GLUE POS. 460)
G-G
1:2
A

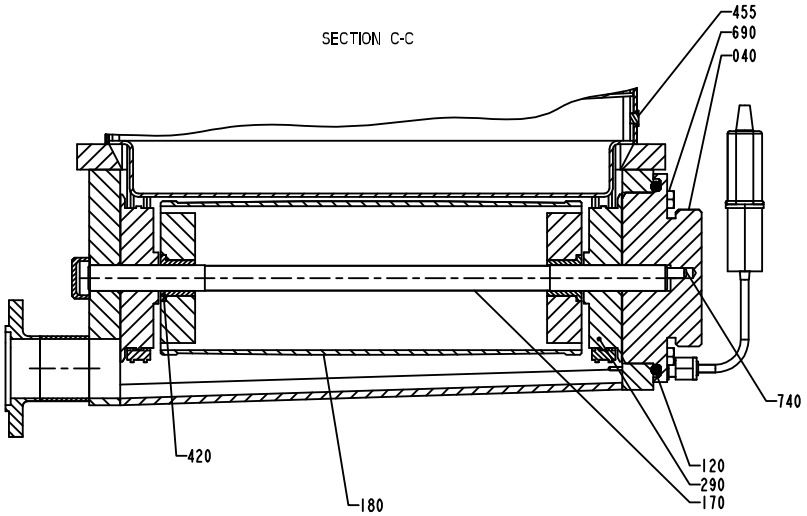
SECTION C-C
455
690
040
740
420
180
120
290
170

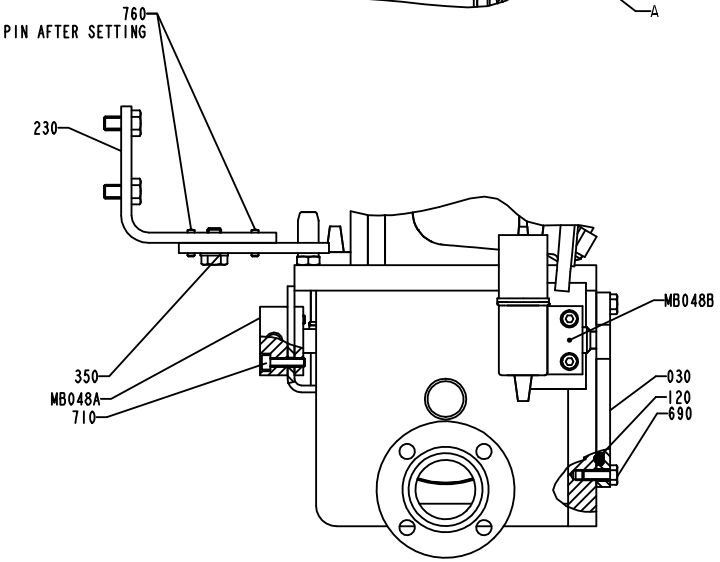
760
PIN AFTER SETTING
230
MB048B
350
MB048A
710
030
120
690

Pos	Part No	UN	Qty	Description	Page No	Pos	Part No	UN	Qty	Description	Page No

SEE PREVIOUS LISTS PAGES: 1-21, 1-23.

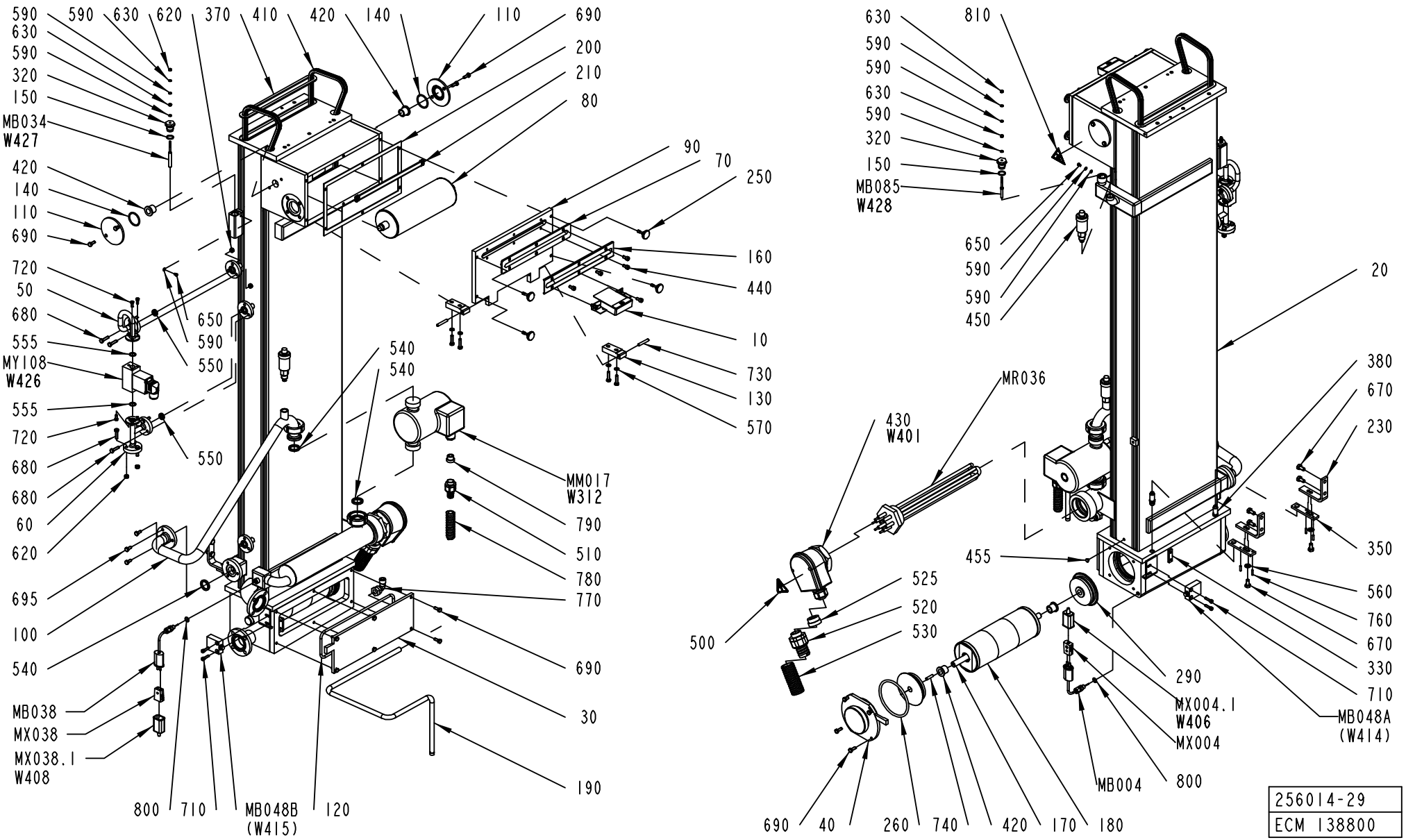
590
590
630
620
370
410
420
140
110
690
630
590
320
150
MB034
W427
420
140
110
690
720
50
680
555
MY108
W426
555
720
680
680
60
620
695
100
540
MB038
MX038
MX038.1
W408
800
710
MB048B
(W415)
120
190
30
690
770
780
510
790
MM017
W312
540
540
550
650
590
550
200
210
80
90
70
250
160
440
10
730
130
570
630
590
590
630
590
320
150
MB085
W428
650
590
590
450
810
20
380
670
230
MR036
430
W401
500
525
520
530
455
350
560
760
670
330
710
290
MX004.1
W406
MX004
MB048A
(W414)
MB004
800
690
40
260
740
420
170
180
256014-29
ECM 138800

Pos	Part No	UN	Qty	Description	Page No	Pos	Part No	UN	Qty	Description	Page No

SEE PREVIOUS LISTS PAGES: 1-21, 1-23.

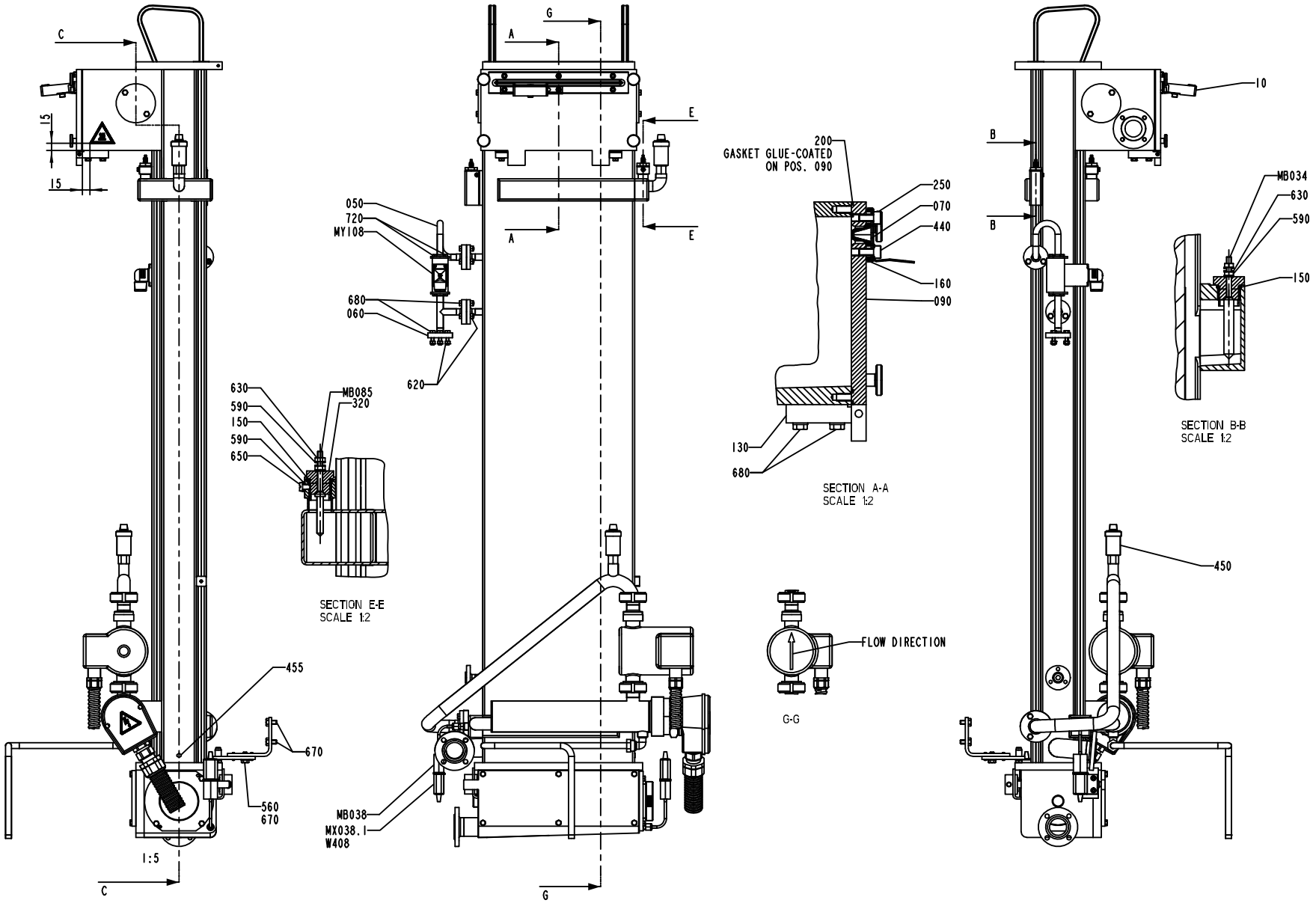
C
15
15
050
720
MY108
680
060
620
630
590
150
590
650
MB085
320
SECTION E-E
SCALE 1:2
455
670
560
670
1:5
C
MB038
MX038.1
W408
G
A
E
A
E
G
200
GASKET GLUE-COATED
ON POS. 090
250
070
440
160
090
130
680
SECTION A-A
SCALE 1:2
FLOW DIRECTION
G-G
10
B
B
MB034
630
590
150
SECTION B-B
SCALE 1:2
450

Pos	Part No	UN	Qty	Description	Page No	Pos	Part No	UN	Qty	Description	Page No

SEE PREVIOUS LISTS PAGES: 1-21, 1-23.

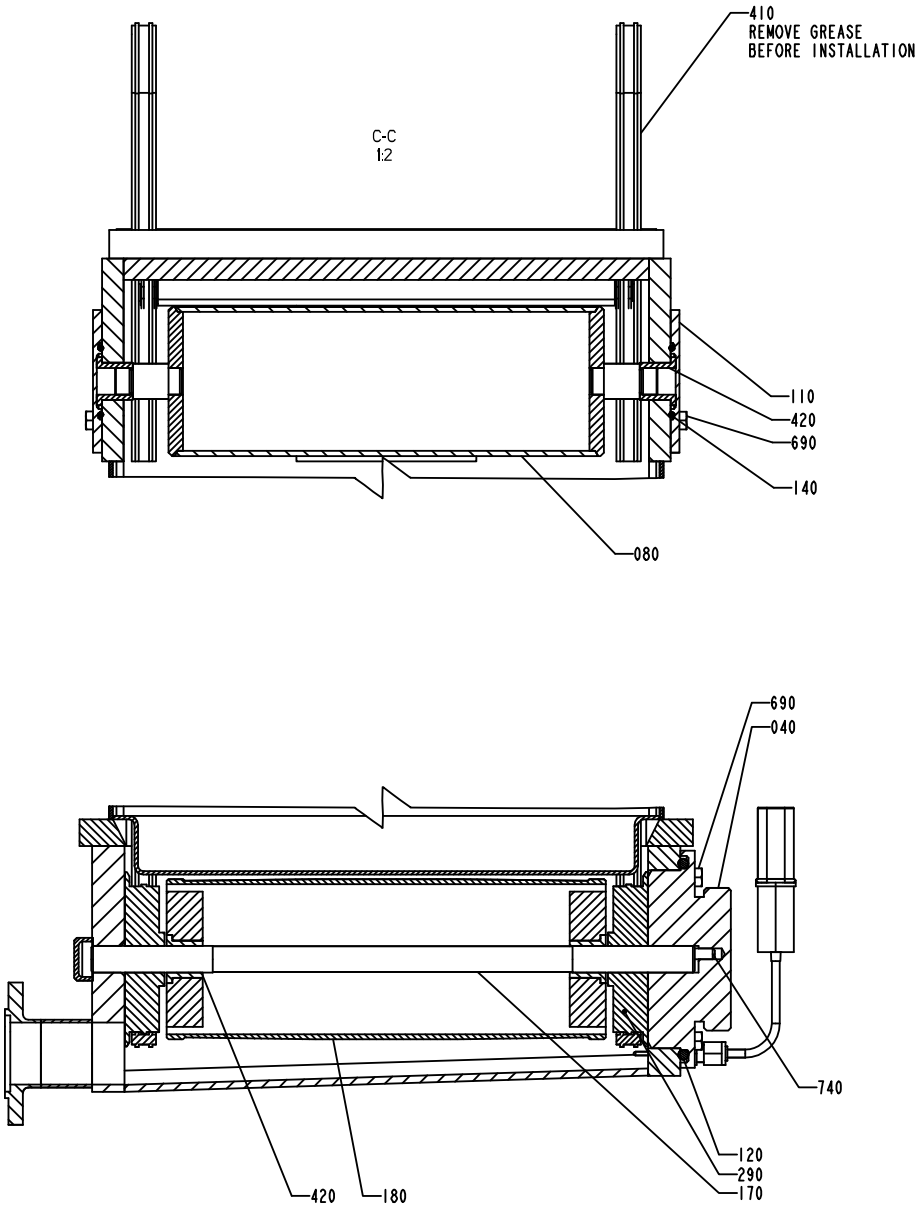
410
REMOVE GREASE
BEFORE INSTALLATION
C-C
1:2
110
420
690
140
080
690
040
740
120
290
170
420
180
DETAIL A
SCALE 2:1
210
370
GLUED TO BATH
(GLUE POS. 460)
G-G
1:2
A
760
PIN AFTER SETTING
230
MB048B
350
MB048A
710
030
120
690

Pos	Part No	UN	Qty	Description	Page No	Pos	Part No	UN	Qty	Description	Page No

SEE PREVIOUS LISTS PAGES: 1-21, 1-23.

GUIDING PULLTAB

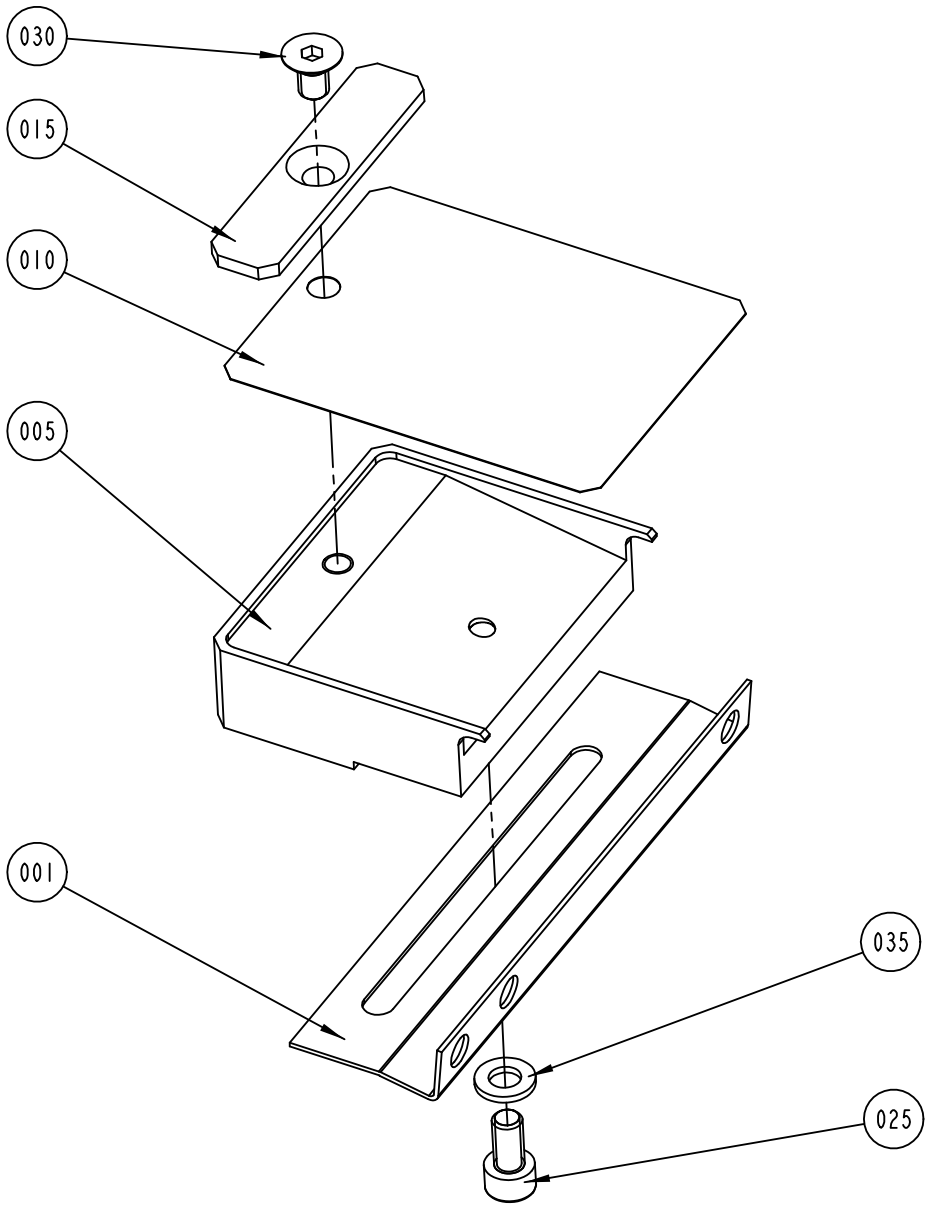

S-530600-I
ECN 72398

ECM: 72398 - 19990428
Group number: 530600-0100
Assembly Drawing: 530600-1_1_AB

Pos	Part No	UN	Qty	Description	Page No
-					
001	529146-0000		1	ANGLE BRACKET	
005	529147-0000		1	SPRING BRACKET	
010	529148-0000		1	STEERING	
015	529149-0000		1	DOLLY WASHER	
025	312115-0366		1	SCREW ISO4762 M6X12 A4	
030	312155-0364		1	SCREW EN 10642 MF6S M6X10 A480	
035	315105-0153		1	WASHER BRB6,4X12RFR	

Pos	Part No	UN	Qty	Description	Page No

HOT AIR ELEMENT

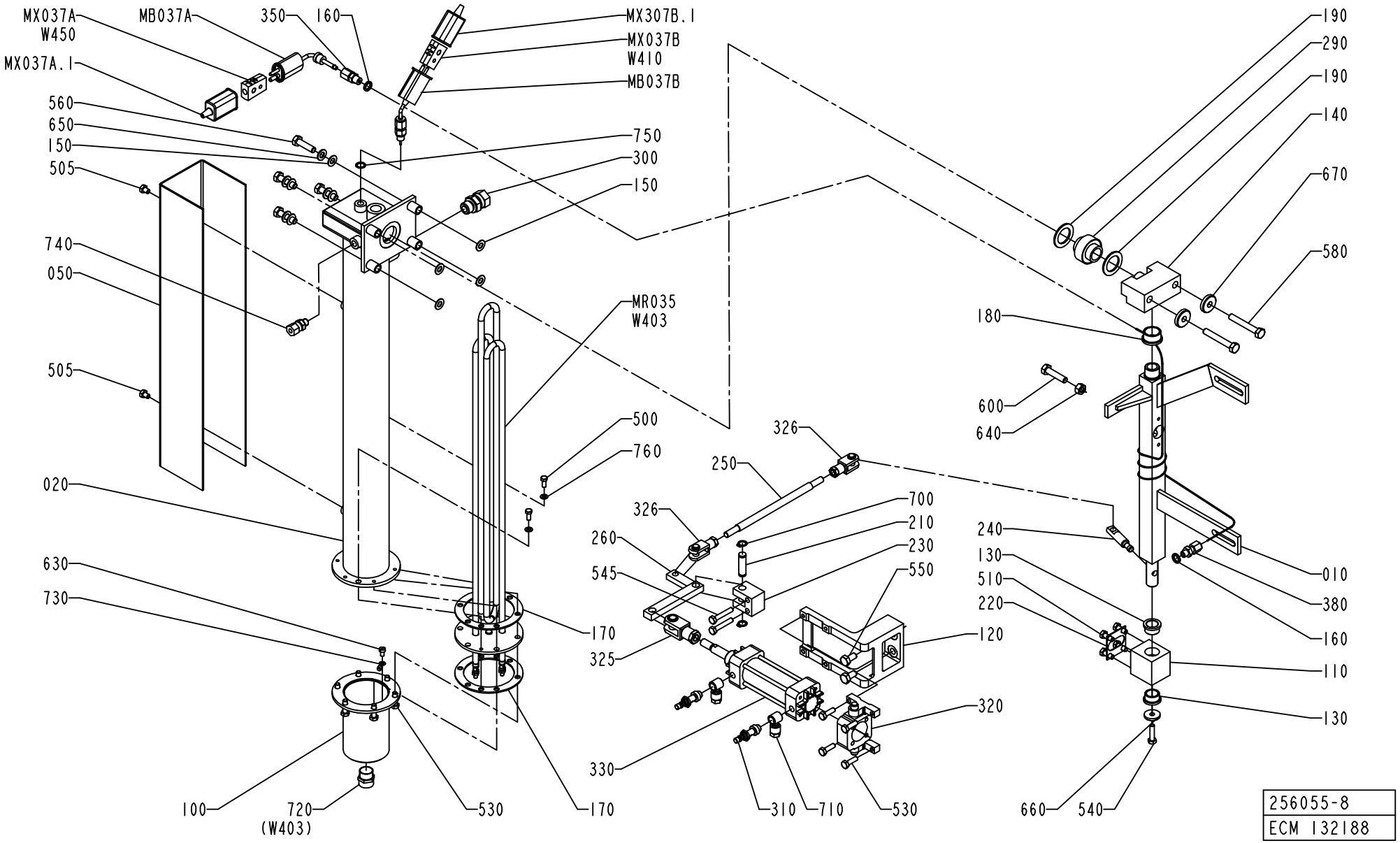

ECM: 132188 - 20030701
Group number: 256055-0700
Assembly Drawing: 256055-8_1_AB

Pos	Part No	UN	Qty	Description	Page No
-					
010	491169-0000		1	PIVOT ARM	
020	752174-0000		1	HEATING PIPE	
050	1260743-0000		1	HEAT GUARD	
100	491170-0000		1	COVER	
110	491171-0000		1	BEARING BLOCK	
120	978736-0000		1	BRACKET	
130	271269-0000		2	BUSHING	
140	272286-0000		1	AXLE SUPPORT	
150	751019-0000		8	WASHER	
160	273429-0000		2	WASHER	
170	751020-0000		2	GASKET	
180	295909-0000		1	BUSHING	
190	751023-0000		2	GASKET	
210	491931-0000		1	SHAFT	
220	491172-0000		1	GASKET	
230	491173-0000		1	BRACKET	
240	491174-0000		1	ARM	
250	491175-0000		1	LINK	
260	491177-0000		1	ARM	
290	491487-0000		1	BUSHING	
300	90030-0187		1	CONN. STR. GA-12-G3/8	
310	90235-0280		2	THROTTLE CHECK VALVES,M5	
320	90239-0460		1	BRACKET	
325	90239-0516		1	ROD END, CLEVIS WITH AXLE M10X1,25	
326	90239-0532		2	ROD END, CLEVIS WITH AXLE M8X1,25	
330	90239-0779		1	CYLINDER	
	90239-0442		*1*	*SEAL KIT*	
350	90326-0306		1	GLAND FITTING 9041-45-KS-KR.1/8" D=4,5MM	
380	90326-0304		1	LEAD IN, 9041-15-KS-UB60	
500	312105-0327		2	SCREW M6S ISO 4017 M5X12 A480	
505	312105-0362		2	SCREW M6S ISO 4017 M6X8 A480	
510	312105-0368		4	SCREW M6S ISO 4017 M6X16 A480	
530	312105-0370		10	SCREW M6S ISO 4017 M6X20 A480	
540	312105-0372		1	SCREW M6S ISO 4017 M6X25 A480	
545	312105-0376		2	SCREW M6S ISO 4014 M6X35 A480	
550	312105-0449		2	SCREW M6S ISO 4017 M8X16 A480	
560	312105-0455		4	SCREW M6S ISO 4017 M8X30 A480	
580	312105-0462		2	SCREW M6S ISO 4014 M8X55 A480	
600	312109-0457		1	SCREW M6S ISO 4017 M8X35 A480	
630	312125-0323		1	SCREW ISO 1207 M5X8 A4	
640	312605-0318		1	HEXAGON NUT, M6M M8 A280	
650	315105-0165		4	WASHER BRB8,4X16RFR	
660	315125-0153		1	WASHER TBRSB 6,4X22X4 A4	
670	315125-0165		2	WASHER TBRSB 8,4X26X5 A4	
700	90141-0016		2	RETAINING RING FOR SHAFT DIN 471 10 A2	
710	342797-0121		2	CONN. BANJO, RINGPIECE 6-1/8	
720	352100-0106		1	CABLE GLANR.18,6-10,5	
730	353101-0132		1	CABLE SHOE 1,5-2,5MM2 M5 BLUE	
740	90030-0184		1	CONN. STR. GA-6-G1/8	
750	315234-0109		1	WASHER,PL.RND.CU.10,3/13,5 H=1,0	
760	315105-0146		2	WASHER BRB5,3X10RFR	
MB037A	90326-0048		1	THERMOCOUPLE, 12826-31	
	90326-0304		*1*	*LEAD IN, 9041-15-KS-UB60*	
MB037B	90326-0057		1	THERMOCOUPLE, CR-AL	
MR035	90459-1094		1	HEATING ELEMENT, 3000W 240V	
MX037A	90326-0020		1	PLUG, FEMALE YELLOW CR-AL	
MX037A.1	90326-0012		1	PROTECTIVE COVER, T31A4618	
MX037B	90326-0020		1	PLUG, FEMALE YELLOW CR-AL	
MX037B.1	90326-0012		1	PROTECTIVE COVER, T31A4618	
W403	351120-0145	M	6	CABLE SIHF 3X2,5MM2 GREEN/YELLOW	
W410	90220-0059	MM	3500	THERMOCOUPLE CABLE K/ 2X0,81MM2	
W450	90220-0059	MM	3500	THERMOCOUPLE CABLE K/ 2X0,81MM2	

Machine Type | Group Description | Used-In | Group Number | Page No

CHANGE-OVER VALVE

Drawing file: 256084-7_1_AA.hpgl

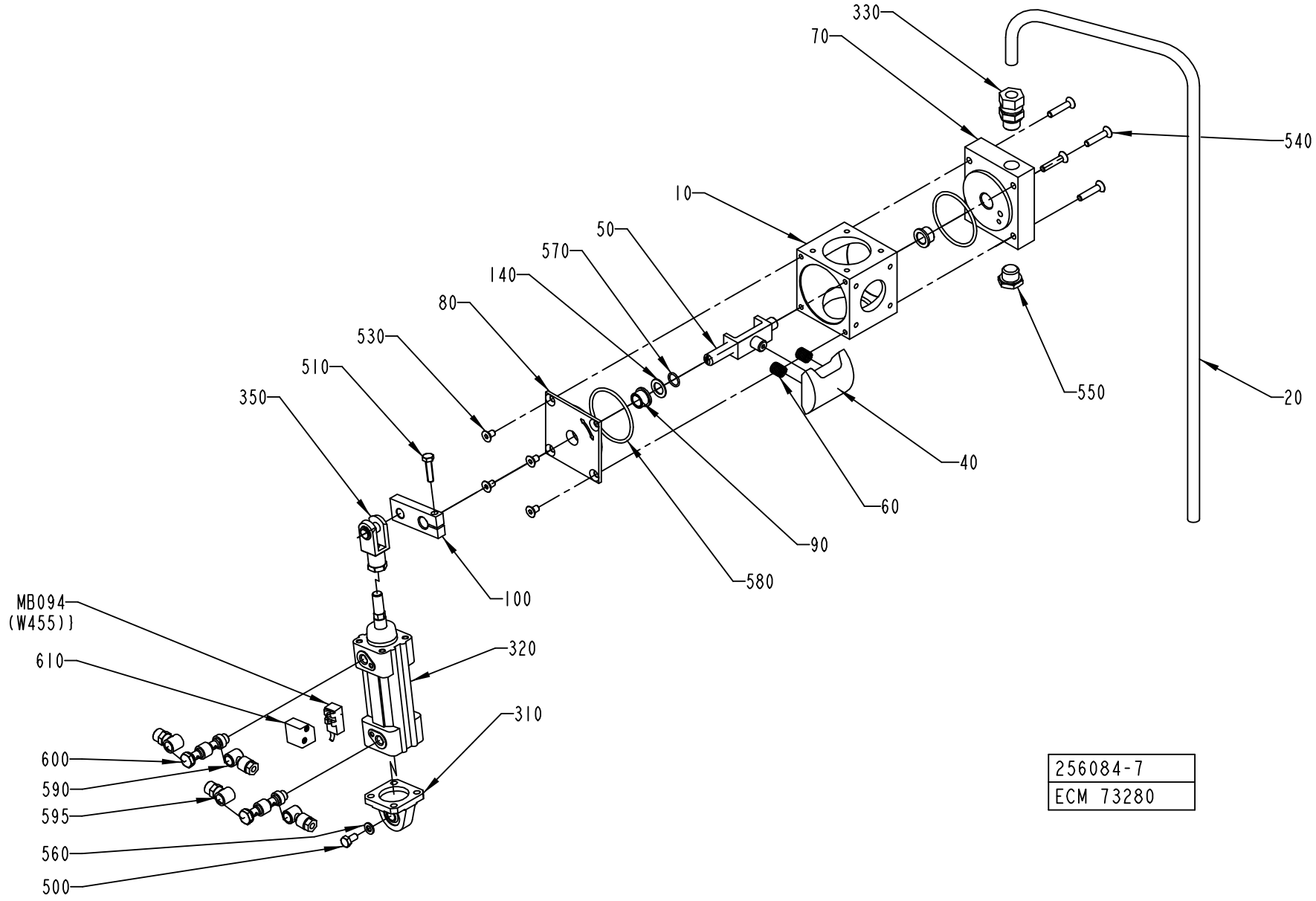

ECM: 114416 - 20020930
Group number: 256084-0700
Assembly Drawing: 256084-7_1_AA

Pos	Part No	UN	Qty	Description	Page No
-					
010	255870-0000		1	VALVE HOUSING	
020	1519934-0000		1	PIPE	
040	979722-0000		1	BLOCK	
050	751732-0000		1	BRACKET	
060	21521-0000		2	COMPRESSION SPRING	
070	751731-0000		1	BEARING COVER	
080	441957-0000		1	BEARING COVER	
090	255875-0000		2	BUSHING	
100	2527337-0000		1	CYLINDER BRACKET	
140	266737-0000		1	WASHER	
310	90450-0756		1	BRACKET, REAR EYE 32	
320	90450-0328		1	DOUBLE ACTING,PROFILE CYL32-25	
330	90030-0187		1	CONN. STR. GA-12-G3/8	
350	90239-0516		1	ROD END, CLEVIS WITH AXLE M10X1,25	
500	312105-0366		1	SCREW M6S ISO 4017 M6X12 A480	
510	312105-0372		1	SCREW M6S ISO 4017 M6X25 A480	
530	312155-0364		4	SCREW EN 10642 MF6S M6X10 A480	
540	312155-0374		4	SCREW EN 10642 MF6S M6X30 A480	
550	90330-0029		1	PLUG, EXT. G-THREAD, R-236R3/8	
560	315105-0153		1	WASHER BRB6,4X12RFR	
570	315204-0110		1	O-RING 12,1X1,6 MM	
580	315204-0302		2	O-RING 54,5X3 MM	
590	342797-0121		2	CONN. BANJO, RINGPIECE 6-1/8	
595	342980-0113		2	BANJO-CONNECTION,RING 6/4-G1/8"	
600	342980-0313		2	BANJO-HOLLOW BOLT COUPL,EXT.THR.02-G1/8"	
610	90450-0669		1	SENSOR, BRACKET SERIES 168	
MB094	90044-0116		1	CYLINDER,SENSOR	

Pos	Part No	UN	Qty	Description	Page No

HOT AIR ELEMENT

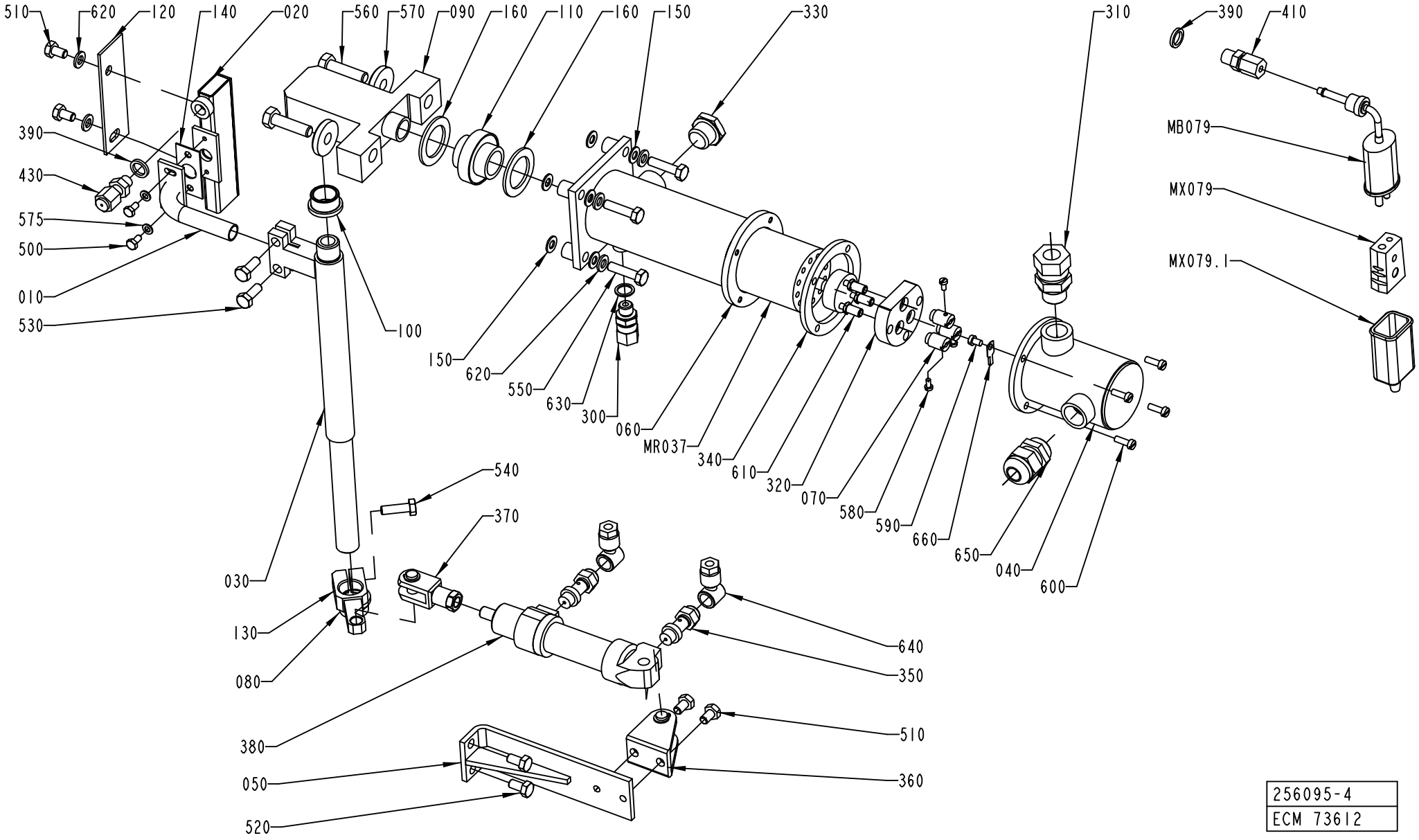

256095-4
ECM 73612

ECM: 114545 - 20020930
Group number: 256095-0700
Assembly Drawing: 256095-4_1_AA

Pos	Part No	UN	Qty	Description	Page No
TBA 0125S, TBA 0100B					
010	571533-0000		1	BRACKET	
TBA 0160S, TBA 0250S, TBA 0200S, TBA 0200M					
010	571532-0000		1	BRACKET	
TBA 0330S, TBA 0300S, TBA 0180B, TBA 0200B, TBA 0284B, TBA 0250B					
010	256112-0000		1	BRACKET	
Common Parts					
020	1524662-0000		1	AIR NOZZLE	
030	272948-0003		1	SHAFT	
040	491223-0000		1	COVER	
050	491224-0000		1	BRACKET	
060	751733-0000		1	HEATING PIPE	
070	266739-0000		3	CABLE GLAND	
080	271269-0000		1	BUSHING	
090	272287-0000		1	AXLE SUPPORT	
100	295910-0000		1	BUSHING	
110	295936-0000		1	BUSHING	
120	491097-0000		1	HEAT GUARD	
130	491545-0000		1	BRACKET	
140	751015-0000		1	GASKET	
150	751018-0000		8	WASHER	
160	751023-0000		2	GASKET	
300	90030-0184		1	CONN. STR. GA-6-G1/8	
310	90030-0187		1	CONN. STR. GA-12-G3/8	
320	90125-0020		1	PLATE	
	270926-0000		*6*	*NUT*	
	270927-0000		*3*	*SCREW*	
	294464-0000		*1*	*BASE PLATE*	
330	90330-0029		1	PLUG, EXT. G-THREAD, R-236R3/8	
340	90206-0322		1	GASKET	
350	90235-0274		2	THROTTLE CHECK VALVE, G1/8", SCU-604-1/8	
360	90239-0487		1	REAR,CLEVIS,MINI-ISO 20-25	
370	90239-0532		1	ROD END, CLEVIS WITH AXLE M8X1,25	
380	90239-0847		1	DOUBLE ACTING, MINI-ISO, CYL.20-50	
390	273429-0000		2	WASHER	
410	90326-0306		1	GLAND FITTING 9041-45-KS-KR.1/8" D=4,5MM	
430	90326-0304		1	LEAD IN, 9041-15-KS-UB60	
500	312105-0287		2	SCREW M6S ISO4017 M4X8 A470	
510	312105-0364		4	SCREW M6S ISO 4017 M6X10 A480	
520	312105-0366		2	SCREW M6S ISO 4017 M6X12 A480	
530	312105-0368		2	SCREW M6S ISO 4017 M6X16 A480	
540	312105-0370		1	SCREW M6S ISO 4017 M6X20 A480	
550	312105-0372		4	SCREW M6S ISO 4017 M6X25 A480	
560	312105-0455		2	SCREW M6S ISO 4017 M8X30 A480	
570	315125-0165		2	WASHER TBRSB 8,4X26X5 A4	
575	315105-0136		2	WASHER BRB4,3XRFR	
580	312125-0220		3	SCREW ISO 1207 M3X6 A4	
590	312125-0285		1	SCREW ISO 1207 M4X6 A4	
600	312125-0291		4	SCREW ISO 1207 M4X12 A4	
610	312145-0228		3	SCREW ISO 2009 MFS M3X16 A4	
620	315105-0153		6	WASHER BRB6,4X12RFR	
630	315234-0109		1	WASHER,PL.RND.CU.10,3/13,5 H=1,0	
640	342797-0121		2	CONN. BANJO, RINGPIECE 6-1/8	
650	352103-0106		1	CABLE GLAND, ST 11, PR18,6/PG11	
660	353104-0130		1	CABLE SHOE YAV 025 M 4*	
MBO79	90326-0048		1	THERMOCOUPLE, 12826-31	
	90326-0304		*1*	*LEAD IN, 9041-15-KS-UB60*	
MR037	90206-0031		1	HEATING ELEMENT 700+1200W,220V	
MX079.1	90326-0012		1	PROTECTIVE COVER, T31A4618	
MXO79	90326-0020		1	PLUG, FEMALE YELLOW CR-AL	
W402	351120-0144	M	6	CABLE SIHF 3X1,5MM2 GREEN/YELLOW	
W433	90220-0059	M	6	THERMOCOUPLE CABLE K/ 2X0,81MM2	

Machine Type | Group Description | Used-In | Group Number | Page No

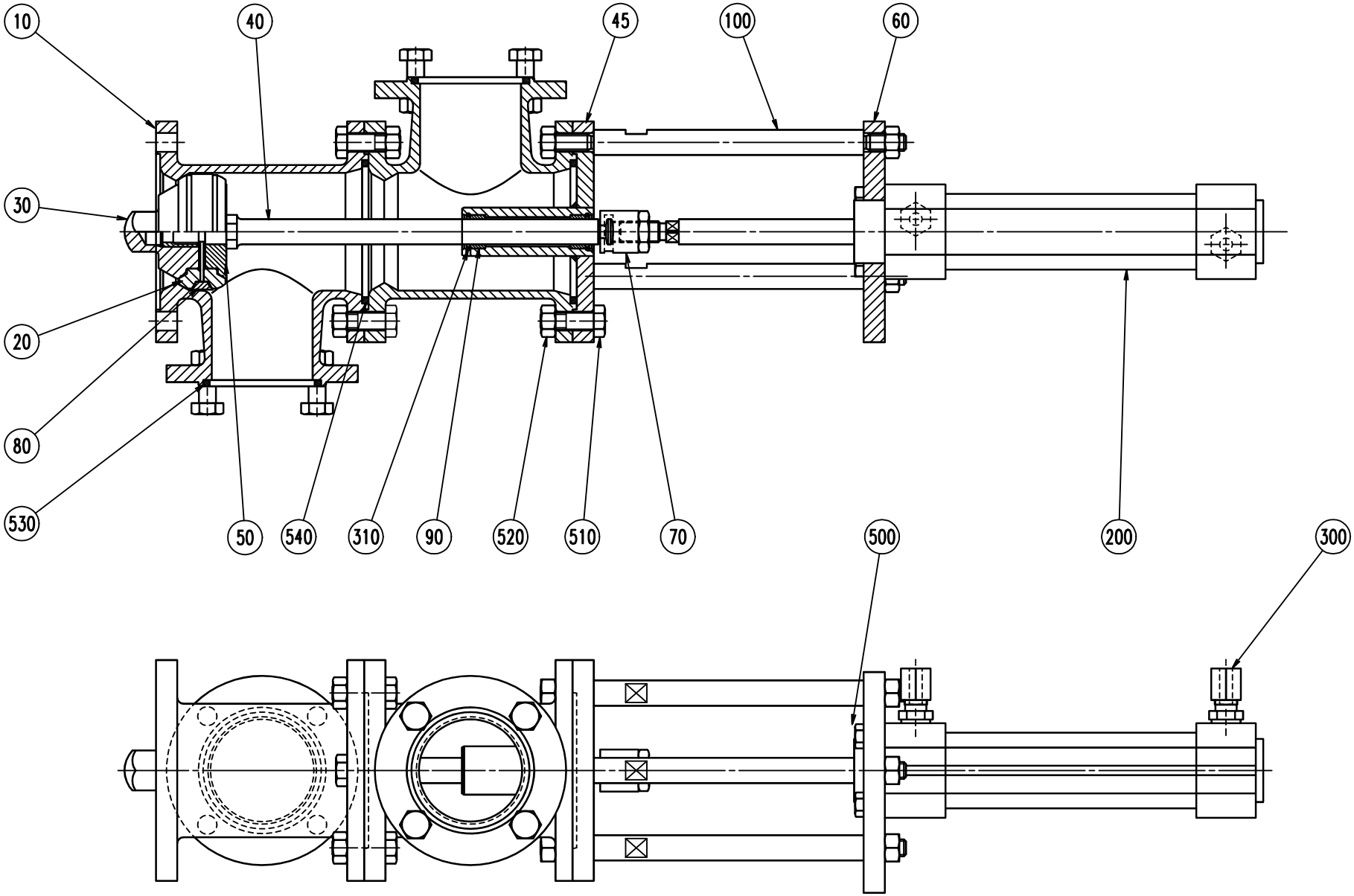
10
40
45
100
60
30
20
80
530
50
540
310
90
520
510
70
200
500
300

ECM: 114630 - 20020930
Group number: 271169-0500
Assembly Drawing: 271169-5_1_AA

Pos	Part No	UN	Qty	Description	Page No
-					
010	1036194-0000		2	T-PIPE	
020	530589-0000		2	SEAL RING	
030	530590-0000		1	VALVE CONE	
040	1036188-0000		1	SHAFT	
045	1036189-0000		1	SPINDLE GUIDE	
050	1036191-0000		1	SEAL HOLDER	
060	1036193-0000		1	CYLINDER BRACKET	
070	441871-0000		1	PENDULUM SUSPENSION	
080	530599-0000		1	RING	
090	532349-0000		2	PLAIN BEARING	
100	1036192-0000		3	SPACER ROD	
200	90450-0281		1	DOUBLE ACTING,PROF.CYL 32-80	
300	90030-0184		2	CONN. STR. GA-6-G1/8	
310	90141-0022		2	SNAP RING B 16	
500	312105-0370		4	SCREW M6S ISO 4017 M6X20 A480	
510	312105-0453		17	SCREW M6S ISO 4017 M8X25 A480	
520	312605-0318		23	HEXAGON NUT, M6M M8 A280	
530	315229-0205		2	GASKET 47,5X55,5X3,7 MM 2"	
540	315229-0206		2	GASKET 60,2X68,2X3,7 MM 2"1/2	

Pos	Part No	UN	Qty	Description	Page No

AIR SUPER-HEATER

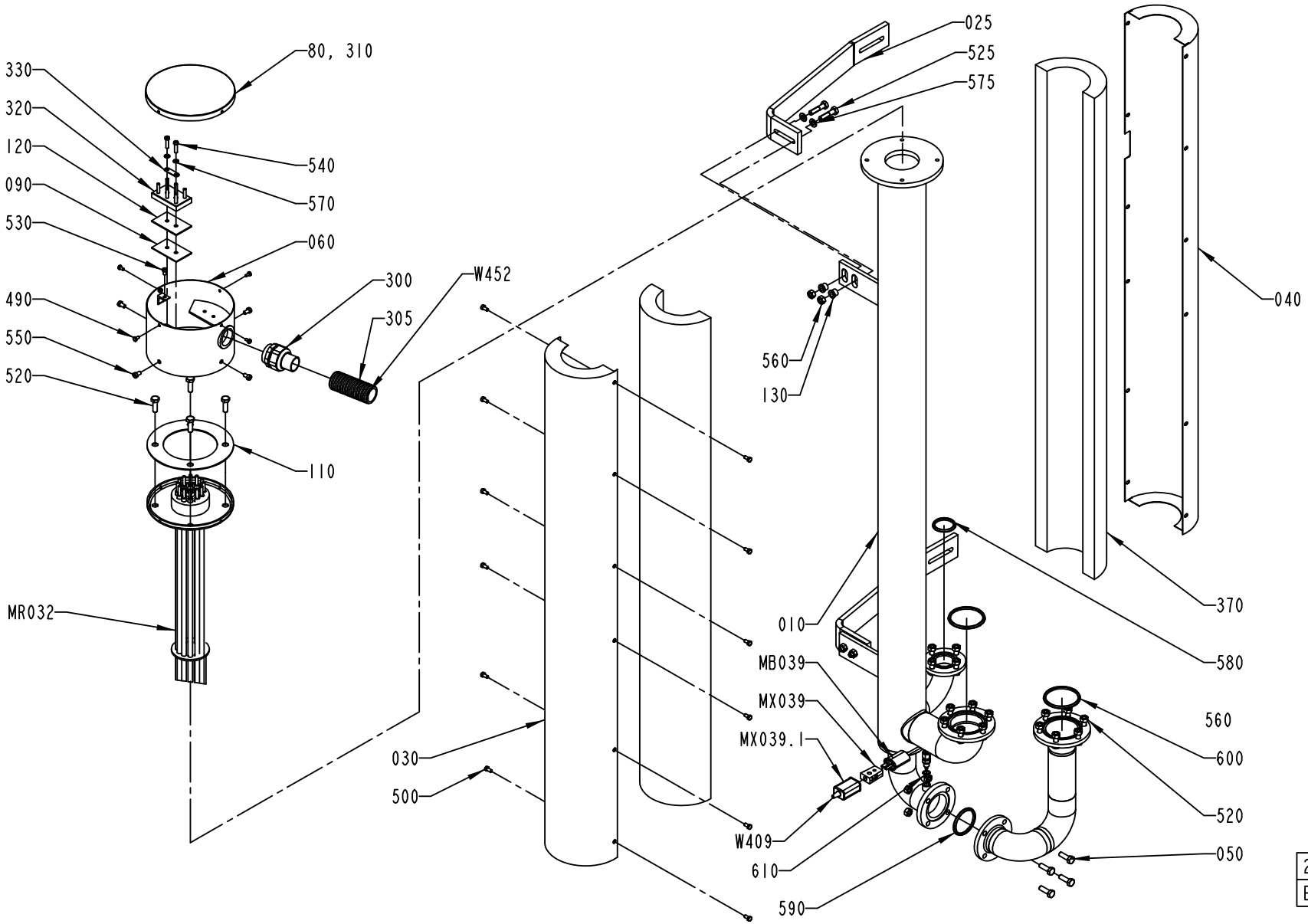

271181-6
ECM 134338

ECM: 134338 - 20030701
Group number: 271181-0600
Assembly Drawing: 271181-6_1_AB

This list covers pages from 1-42 to 1-45

Pos	Part No	UN	Qty	Description	Page No
HI (See drawing on page: 1-44)					
620	315234-0109		1	WASHER,PL.RND.CU.10,3/13,5 H=1,0	
630	90136-0001		1	PLUG, EXT. THREAD, NO. 100727	
NOHI (See drawing on page: 1-42)					
050	1519482-0000		1	PIPE	
Common Parts					
010	1519483-0000		1	HEATING PIPE	
025	1519484-0000		2	SUPPORT	
030	1296849-0000		1	DISCHARGE TRAY	
040	1296850-0000		1	DISCHARGE TRAY	
060	451430-0000		1	CONNECTION HOUS.(MINOR)	
080	29876-0000		1	COVER	
090	30298-0000		1	INSULATION	
100	491305-0000		1	CONN.DIAGRAM AIR SUPERH.	
110	531731-0000		1	GASKET	
120	751009-0000		1	INSULATION	
130	1519601-0000		2	BUSHING	
300	90012-0126		1	NORMAL WITHOUT INSERT, PG29	
305	90152-0070	MM	1700	METAL HOSE, 32,5X26, UL 2621	
310	90153-0020	ML	1	ADHESIVE, BOSTIK 1782 125ML	
320	90195-0028		1	TERM.BLOCK 6-POLE STEATIT	
330	90195-0029		3	CONN. LINK NO324 FOR -28	
370	90411-0005	MM	1100	INSULATOR	
490	312105-0287		4	SCREW M6S ISO4017 M4X8 A470	
500	312105-0325		12	SCREW M6S ISO 4017 M5X10 A480	
510	312105-0451		2	SCREW M6S ISO 4017 M8X20 A480	
520	312105-0453		26	SCREW M6S ISO 4017 M8X25 A480	
525	312105-0457		4	SCREW M6S ISO 4014 M8X35 A480	
530	312125-0323		1	SCREW ISO 1207 M5X8 A4	
540	312125-0331		2	SCREW ISO 1207 M5X20 A4	
550	312125-0364		4	SCREW ISO 1207 M6X10 A4	
560	312605-0318		30	HEXAGON NUT, M6M M8 A280	
570	315105-0146		2	WASHER BRB5,3X10RFR	
575	315105-0165		4	WASHER BRB8,4X16RFR	
580	315229-0204		1	GASKET 34,8X42,8X3,7 MM 1"1/2	
590	315229-0205		1	GASKET 47,5X55,5X3,7 MM 2"	
600	315229-0206		3	GASKET 60,2X68,2X3,7 MM 2"1/2	
610	315234-0109		1	WASHER,PL.RND.CU.10,3/13,5 H=1,0	
MB039	90326-0051		1	THERMOCOUPLE, 12826-33	
MR032	449939-0001		1	HEATING ELEMENT 15KW	
	449938-0003		*2*	*HEATING PIPE*	
	449938-0002		*2*	*HEATING PIPE*	
	449938-0001		*2*	*HEATING PIPE*	
MX039	90326-0020		1	PLUG, FEMALE YELLOW CR-AL	
MX039.1	90326-0012		1	PROTECTIVE COVER, T31A4618	
W409	90220-0059	M	4	THERMOCOUPLE CABLE K/ 2X0,81MM2	
W452	351120-0168	M	6	CABLE SIHF 4X10MM2 GREEN/YELLOW	

Machine Type | Group Description | Used-In | Group Number | Page No

AIR SUPER-HEATER

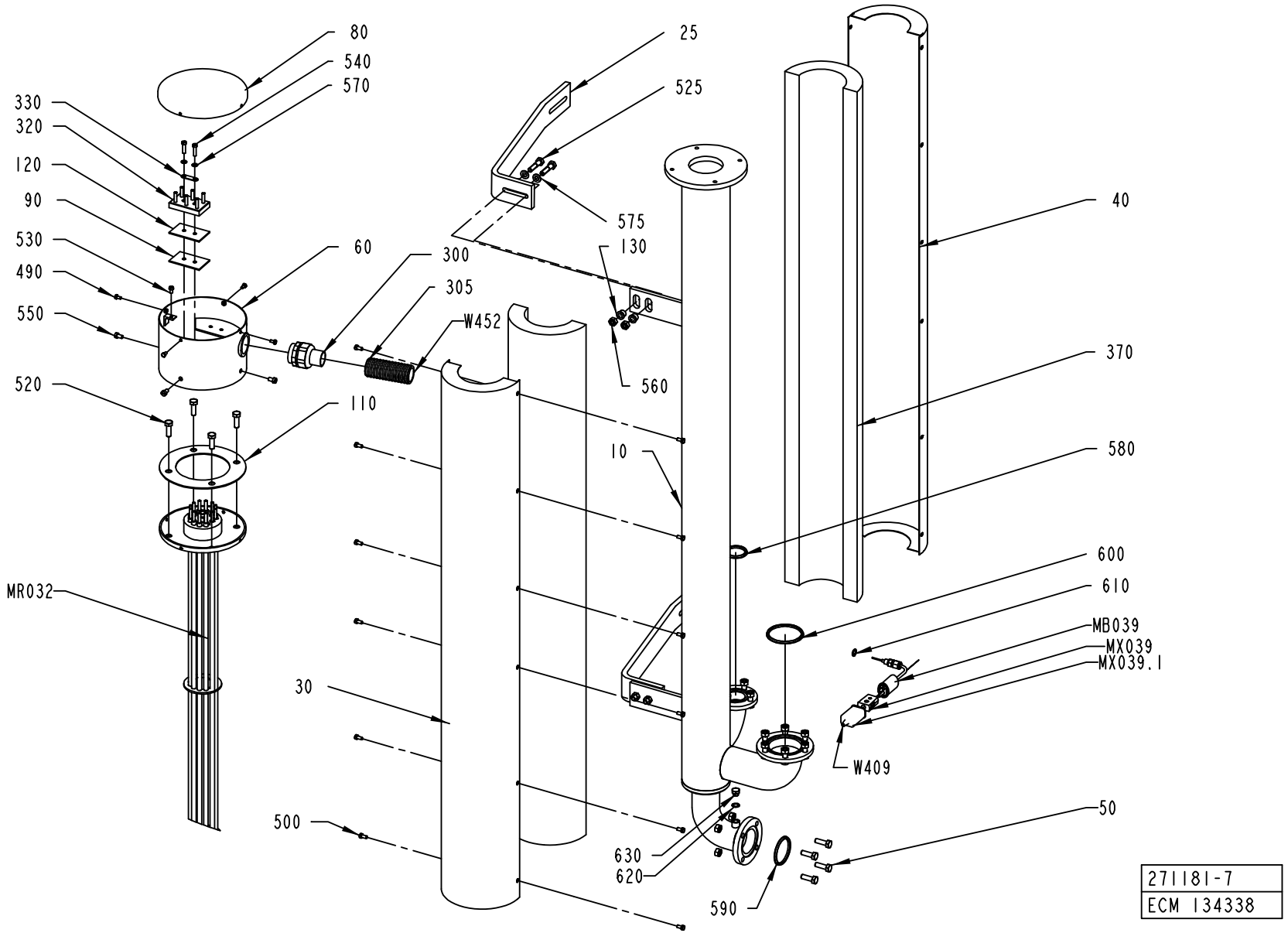

ECM: 134338 - 20030701
Group number: 271181-0600
Assembly Drawing: 271181-7_1_AA

This list covers pages from 1-42 to 1-45

Pos	Part No	UN	Qty	Description	Page No
HI (See drawing on page: 1-44)					
620	315234-0109		1	WASHER,PL.RND.CU.10,3/13,5 H=1,0	
630	90136-0001		1	PLUG, EXT. THREAD, NO. 100727	
NOHI (See drawing on page: 1-42)					
050	1519482-0000		1	PIPE	
Common Parts					
010	1519483-0000		1	HEATING PIPE	
025	1519484-0000		2	SUPPORT	
030	1296849-0000		1	DISCHARGE TRAY	
040	1296850-0000		1	DISCHARGE TRAY	
060	451430-0000		1	CONNECTION HOUS.(MINOR)	
080	29876-0000		1	COVER	
090	30298-0000		1	INSULATION	
100	491305-0000		1	CONN.DIAGRAM AIR SUPERH.	
110	531731-0000		1	GASKET	
120	751009-0000		1	INSULATION	
130	1519601-0000		2	BUSHING	
300	90012-0126		1	NORMAL WITHOUT INSERT, PG29	
305	90152-0070	MM	1700	METAL HOSE, 32,5X26, UL 2621	
310	90153-0020	ML	1	ADHESIVE, BOSTIK 1782 125ML	
320	90195-0028		1	TERM.BLOCK 6-POLE STEATIT	
330	90195-0029		3	CONN. LINK NO324 FOR -28	
370	90411-0005	MM	1100	INSULATOR	
490	312105-0287		4	SCREW M6S ISO4017 M4X8 A470	
500	312105-0325		12	SCREW M6S ISO 4017 M5X10 A480	
510	312105-0451		2	SCREW M6S ISO 4017 M8X20 A480	
520	312105-0453		26	SCREW M6S ISO 4017 M8X25 A480	
525	312105-0457		4	SCREW M6S ISO 4014 M8X35 A480	
530	312125-0323		1	SCREW ISO 1207 M5X8 A4	
540	312125-0331		2	SCREW ISO 1207 M5X20 A4	
550	312125-0364		4	SCREW ISO 1207 M6X10 A4	
560	312605-0318		30	HEXAGON NUT, M6M M8 A280	
570	315105-0146		2	WASHER BRB5,3X10RFR	
575	315105-0165		4	WASHER BRB8,4X16RFR	
580	315229-0204		1	GASKET 34,8X42,8X3,7 MM 1"1/2	
590	315229-0205		1	GASKET 47,5X55,5X3,7 MM 2"	
600	315229-0206		3	GASKET 60,2X68,2X3,7 MM 2"1/2	
610	315234-0109		1	WASHER,PL.RND.CU.10,3/13,5 H=1,0	
MB039	90326-0051		1	THERMOCOUPLE, 12826-33	
MR032	449939-0001		1	HEATING ELEMENT 15KW	
	449938-0003		*2*	*HEATING PIPE*	
	449938-0002		*2*	*HEATING PIPE*	
	449938-0001		*2*	*HEATING PIPE*	
MX039	90326-0020		1	PLUG, FEMALE YELLOW CR-AL	
MX039.1	90326-0012		1	PROTECTIVE COVER, T31A4618	
W409	90220-0059	M	4	THERMOCOUPLE CABLE K/ 2X0,81MM2	
W452	351120-0168	M	6	CABLE SIHF 4X10MM2 GREEN/YELLOW	

Machine Type	Group Description	Used-In	Group Number	Page No

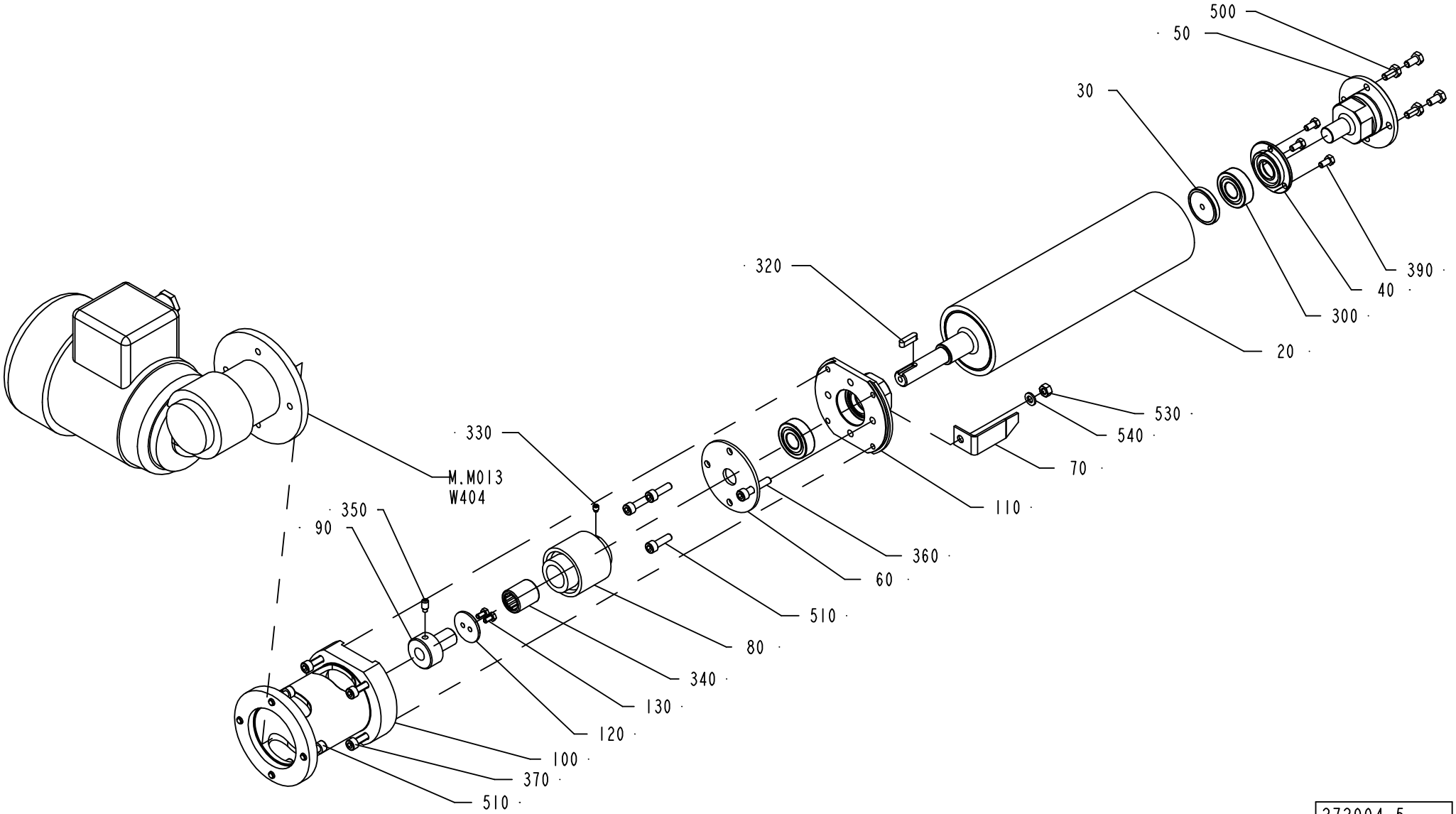

272004-5
ECM 73552

ECM: 107170 - 20021104
Group number: 272004-0500
Assembly Drawing: 272004-5_1_AA

Pos	Part No	UN	Qty	Description	Page No
TBA 0125S, TBA 0100B					
070	752859-0000		1	POINTER	
TBA 0160S, TBA 0200S					
070	752858-0000		1	POINTER	
TBA 0250S, TBA 0200M					
070	574415-0000		1	INDICATOR 250S	
TBA 0330S, TBA 0300S, TBA 0180B, TBA 0200B, TBA 0284B, TBA 0250B					
070	752857-0000		1	POINTER	
Common Parts					
020	1548284-0000		1	ROLLER	
030	1490407-0000		1	WASHER	
040	1548275-0000		1	SEAL COVER	
050	1548056-0000		1	AXLE SUPPORT	
060	250590-0000		1	BEARING COVER	
080	90458-2841		1	SHAFT COUPLING 22,225H9/15	
090	1334234-0000		1	HUB	
100	1523228-0000		1	FLANGE	
110	2501542-0000		1	AXLE SUPPORT	
120	250592-0000		1	WASHER	
130	312105-0287		2	SCREW M6S ISO4017 M4X8 A470	
300	90458-1704		2	BALL BEARING, 15X35X11 MM	
320	315705-0201		1	PARALLEL KEY W. ROUND ENDS 5X5X20 MM	
330	312311-0321		1	SCREW ISO4028 M5X6 FZB	
340	90348-0007		1	FREE WHEEL COUPLING	
350	312311-0366		1	SCREW ISO4028 M6X12 FZB	
360	312115-0374		1	SCREW ISO4762 M6X30 A4	
370	312115-0372		4	SCREW ISO4762 M6X25 A4	
380	90069-0600		1	GEARS, WORM MOTOR ODM90-60KE5	
390	312105-0325		3	SCREW M6S ISO 4017 M5X10 A480	
500	312105-0366		4	SCREW M6S ISO 4017 M6X12 A480	
510	312115-0370		7	SCREW ISO4762 M6X20 A4	
530	312605-0316		1	HEXAGON NUT, M6M M6 A280	
540	315105-0153		1	WASHER BRB6,4X12RFR	
M.M013	90069-0600		1	GEARS, WORM MOTOR ODM90-60KE5	
W404	90220-0104	M	4	SCR. CABLE 4X1,5MM2	

Pos	Part No	UN	Qty	Description	Page No

Machine Type | Group Description | Used-In | Group Number | Page No

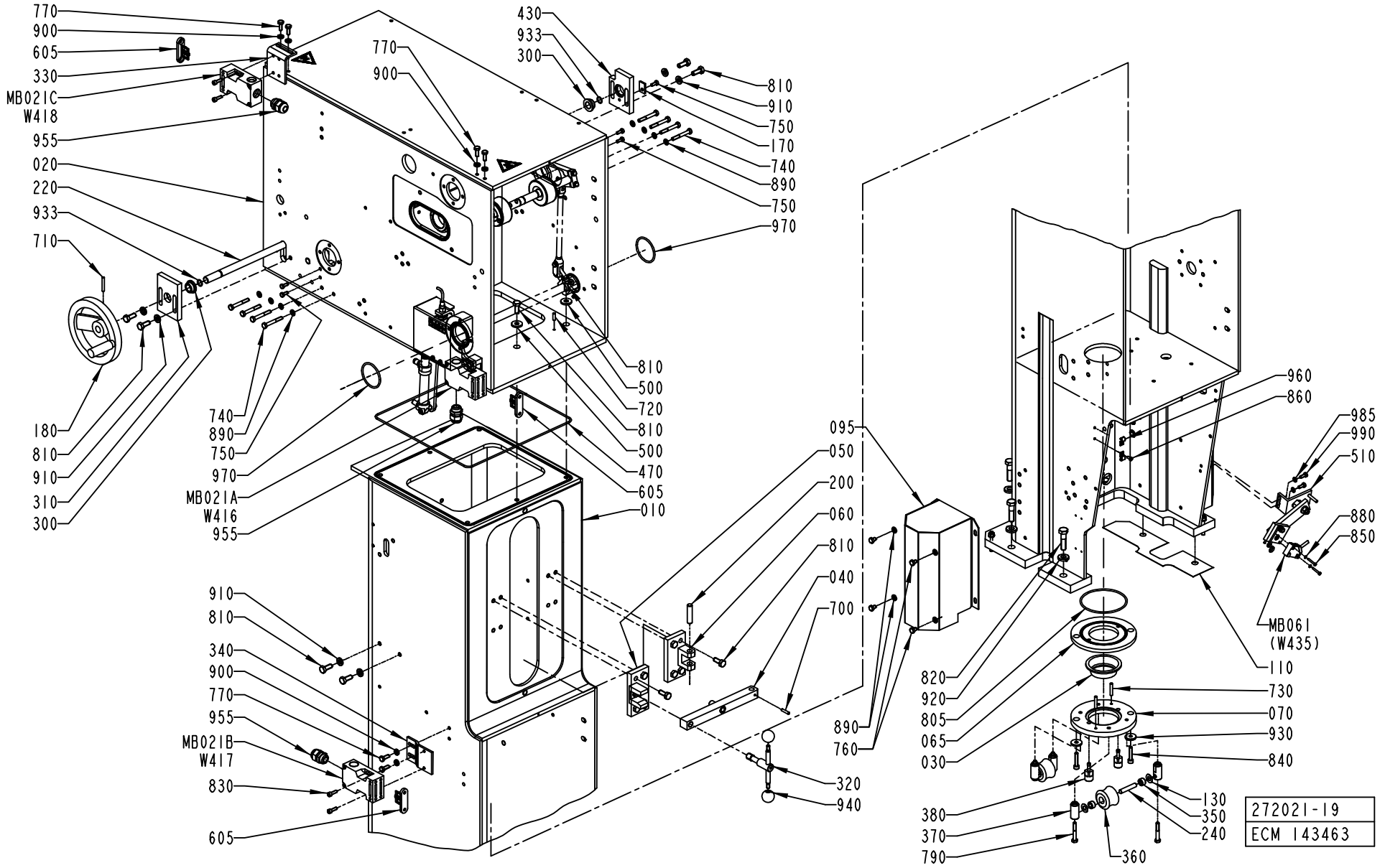
770
900
605
330
MB021C
W418
955
020
220
933
710
180
810
910
310
300
740
890
750
970
MB021A
W416
955
910
810
340
900
770
955
MB021B
W417
830
605
430
933
300
770
900
810
910
750
170
740
890
750
970
810
500
720
810
500
470
605
010
095
050
200
060
810
040
700
890
760
320
940
960
860
985
990
510
880
850
MB061
(W435)
110
820
920
805
065
030
730
070
930
840
130
350
240
380
370
790
360
272021-19
ECM 143463

ECM: 143466 - 20040428
Group number: 272021-0800
Assembly Drawing: 272021-19_1_AC

This list covers pages from 1-48 to 1-53

Pos	Part No	UN	Qty	Description	Page No
TBA 0125S, TBA 0100B					
030	490900-0000		1	SEALING RING	
065	571537-0000		1	RING	
070	571538-0000		1	RING	
240	490903-0000		2	SHAFT	
350	751230-0000		4	PLAIN BEARING	
360	441876-0000		2	ROLL	
370	490902-0000		4	AXLE SUPPORT	
380	571540-0000		2	PIN	
730	311103-0313		2	PARALLEL PIN ISO 2338 5M6X28 A1	
805	315204-0309		1	O-RING 89,5X3 MM	
840	312115-0374		2	SCREW ISO4762 M6X30 A4	
TBA 0160S, TBA 0200S					
030	490901-0000		1	SEAL	
065	571537-0000		1	RING	
070	571539-0000		1	RING	
240	490903-0000		2	SHAFT	
350	751230-0000		4	PLAIN BEARING	
360	456996-0000		2	ROLLER	
370	490902-0000		4	AXLE SUPPORT	
380	571540-0000		2	PIN	
730	311103-0313		2	PARALLEL PIN ISO 2338 5M6X28 A1	
805	315204-0309		1	O-RING 89,5X3 MM	
840	312115-0374		2	SCREW ISO4762 M6X30 A4	
TBA 0250S, TBA 0200M					
030	574336-0000		1	SEAL	
065	574334-0000		1	RING	
070	574335-0000		1	RING	
240	490903-0000		2	SHAFT	
350	751230-0000		4	PLAIN BEARING	
360	574333-0000		2	ROLL	
370	490902-0000		4	AXLE SUPPORT	
380	571540-0000		2	PIN	
730	311103-0313		2	PARALLEL PIN ISO 2338 5M6X28 A1	
805	315204-0309		1	O-RING 89,5X3 MM	
840	312115-0374		2	SCREW ISO4762 M6X30 A4	
TBA 0330S, TBA 0300S, TBA 0180B, TBA 0200B, TBA 0284B, TBA 0250B					
030	273953-0000		1	SEAL	
070	456794-0000		1	RING	
240	263655-0006		2	SHAFT	
360	456796-0000		2	ROLLER	
370	456797-0000		4	AXLE SUPPORT	
380	752519-0002		2	PIN	
730	311103-0310		2	PARALLEL PIN ISO 2338 5M6X20 A1	
840	312115-0370		2	SCREW ISO4762 M6X20 A4	
Common Parts					
010	1523494-0000		1	PILLAR	
015	12242-0005		1	GASKET 61X51X5,5	
020	978865-0000		1	HOUSE	
040	295426-0000		1	CAP	
050	295427-0000		1	LOCK	
060	295428-0000		1	HINGE	
095	490964-0000		2	COVER	
110	1523158-0001		1	SHIM	
110	1523158-0002		1	SHIM	
110	1523158-0003		1	SHIM	
130	2033-0007		8	WASHER	
140	247349-0000		2	STEERING	
150	491602-0000		2	GASKET HOLDER	
170	978872-0000		1	LOCK WASHER	
180	247358-0000		1	SHIFTER HANDLE	
190	255986-0000		2	WHEEL	
200	256163-0000		1	SHAFT	
210	247357-0000		2	SPROCKET	
220	751131-0000		1	SHAFT	
230	256170-0000		2	DRIP PLATE	
250	267033-0000		2	WASHER	
260	271863-0000		2	SHAFT	
270	271864-0000		2	WASHER	
280	272002-0000		1	PROTECTIVE COVER LEFT	
290	272003-0000		1	PROTECTIVE COVER RIGHT	
300	279008-0000		2	BUSHING	
310	978870-0000		1	BEARING PLATE	
320	295429-0000		1	HANDLE	
330	978532-0000		1	BRACKET	
340	978531-0000		1	BRACKET	
420	469159-0000		2	PIN	
430	978871-0000		1	BEARING PLATE	
460	491128-0000		2	GASKET	
470	491418-0002		1	O-RING	
500	28036-0000		6	WASHER	
510	2646247-0100		1	SUPPORT	**1-55**
605	90044-0310		3	KEY FOR SAFETY SWITCH, AZ 15/16 B1	
700	311112-0256		1	SPRING PIN, ISO 8752 4X20-C	

Machine Type | Group Description | Used-In | Group Number | Page No

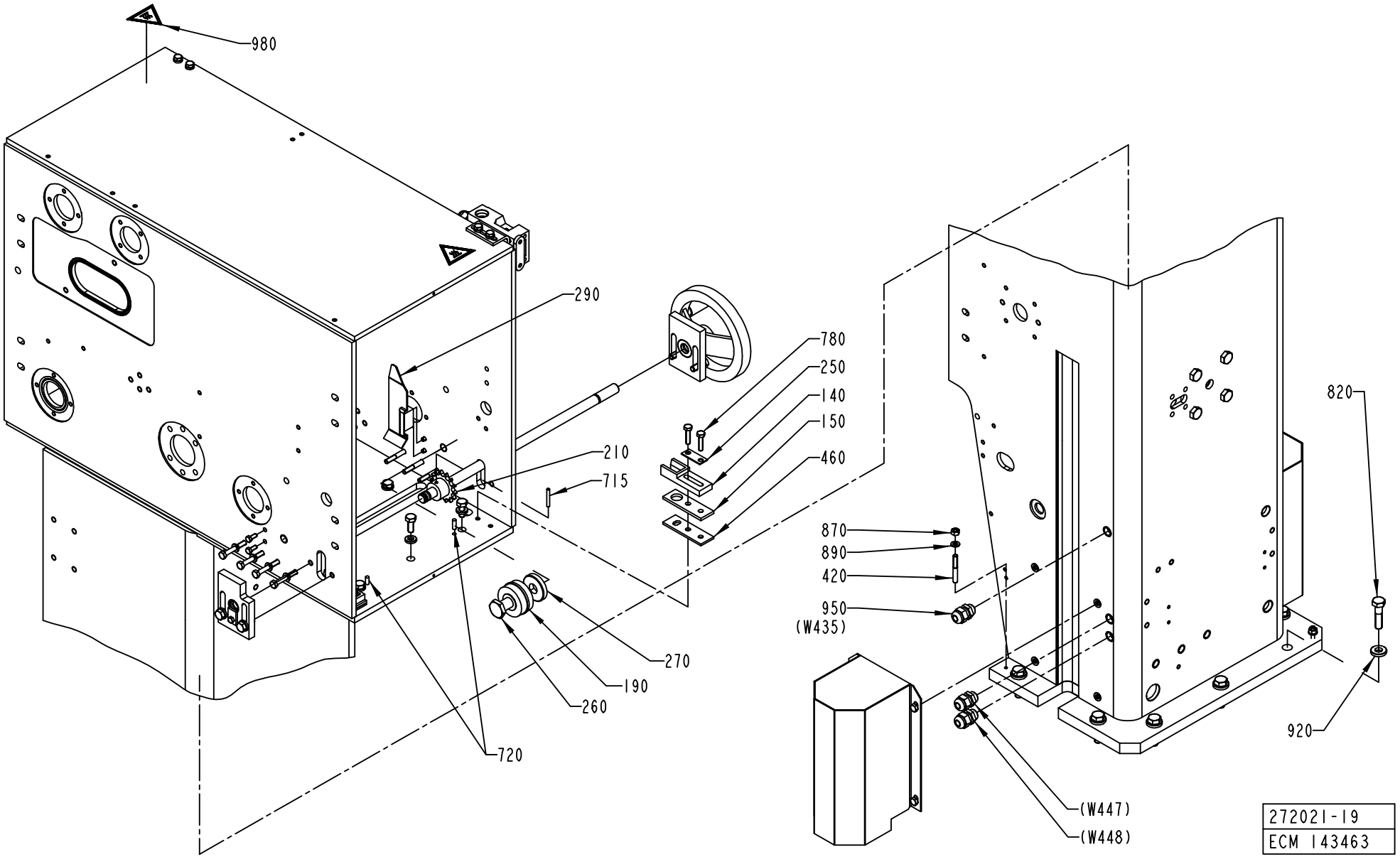
980
290
780
250
140
150
460
210
715
870
890
420
950
(W435)
820
270
190
260
720
920
(W447)
(W448)
272021-19
ECM 143463

Pos	Part No	UN	Qty	Description	Page No
Common Parts (Cont'd)					
710	311112-0262		1	SPRING PIN, ISO 8752 4X32-C	
715	311103-0276		2	PARALLEL PIN ISO 2338 4M6X30 A1	
720	311103-0308		4	PARALLEL PIN ISO 2338 5M6X16 A1	
740	312105-0379		8	SCREW M6S ISO 4014 M6X45 A480	
750	312105-0327		5	SCREW M6S ISO 4017 M5X12 A480	
760	312105-0362		8	SCREW M6S ISO 4017 M6X8 A480	
770	312105-0368		6	SCREW M6S ISO 4017 M6X16 A480	
780	312105-0372		4	SCREW M6S ISO 4017 M6X25 A480	
790	312105-0378		4	SCREW M6S ISO 4014 M6X40 A480	
810	312105-0451		26	SCREW M6S ISO 4017 M8X20 A480	
820	312105-0499		7	SCREW M6S ISO 4014 M10X40 A480	
830	312115-0329		6	SCREW ISO4762 M5X16 A4	
850	312125-0230		2	SCREW ISO 1207 M3X20 A4	
860	312125-0287		4	SCREW ISO 1207 M4X8 A4	
870	312605-0316		10	HEXAGON NUT, M6M M6 A280	
880	315105-0124		2	WASHER BRB3,2X6RFR	
890	315105-0153		18	WASHER BRB6,4X12RFR	
900	315115-0153		6	WASHER PLAIN, TBRB 6,4/12 H=3	
910	315115-0165		12	WASHER PLAIN, TBRB 8,4/16 H=3	
920	315115-0173		7	WASHER PLAIN, TBRB 10,5/22 H=4	
930	315125-0153		2	WASHER TBRSB 6,4X22X4 A4	
933	315204-0109		2	O-RING 11,1X1,6 MM	
940	318800-0103		2	HANDLES,SPHERICAL KNOB,INT.THRE.,D.25-M6	
950	352103-0101		3	CABLE GLAND, ST 9, PR15,2/PG9	
955	352103-0106		3	CABLE GLAND, ST 11, PR18,6/PG11	
960	352110-0100		4	CABLE CLIPS, D=5-7 MM	
970	315204-0301		2	O-RING 49,5X3 MM	
980	359710-0001		2	WARNING SIGN ISO, HOT SURFACE	
985	312105-0327		2	SCREW M6S ISO 4017 M5X12 A480	
990	315105-0146		2	WASHER BRB5,3X10RFR	
MB021A	90044-0139		1	KEY SAF.SW. AZ16-02 ZVR K-2254	
MB021B	90044-0139		1	KEY SAF.SW. AZ16-02 ZVR K-2254	
MB021C	90044-0139		1	KEY SAF.SW. AZ16-02 ZVR K-2254	
MB061	90044-0194		1	PROX.SW. IN5329/IN3002-BPKG	
W416	351150-0405	M	6	CABLE OLFLEX 5X0,75 MM2 LIGHT/GREY	
W417	351150-0405	M	6	CABLE OLFLEX 5X0,75 MM2 LIGHT/GREY	
W418	351150-0405	M	6	CABLE OLFLEX 5X0,75 MM2 LIGHT/GREY	

Pos	Part No	UN	Qty	Description	Page No

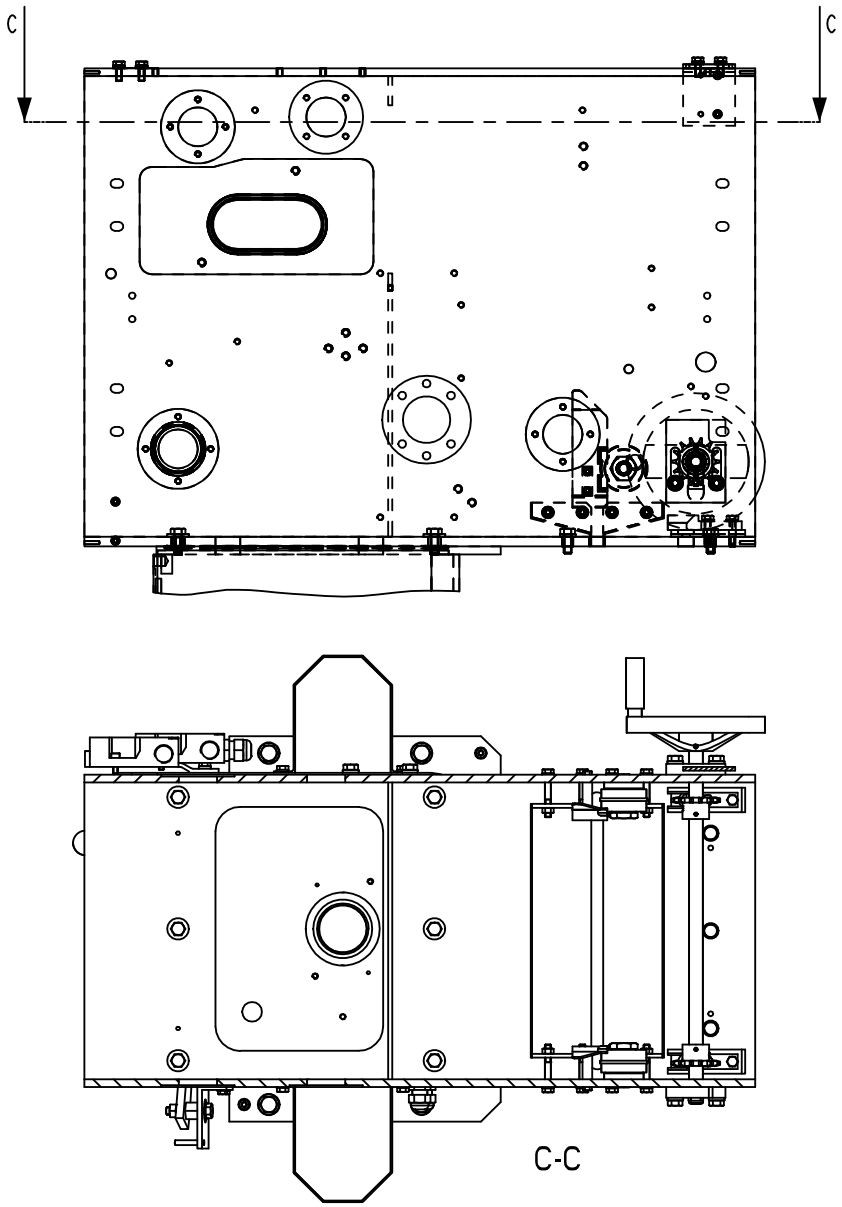

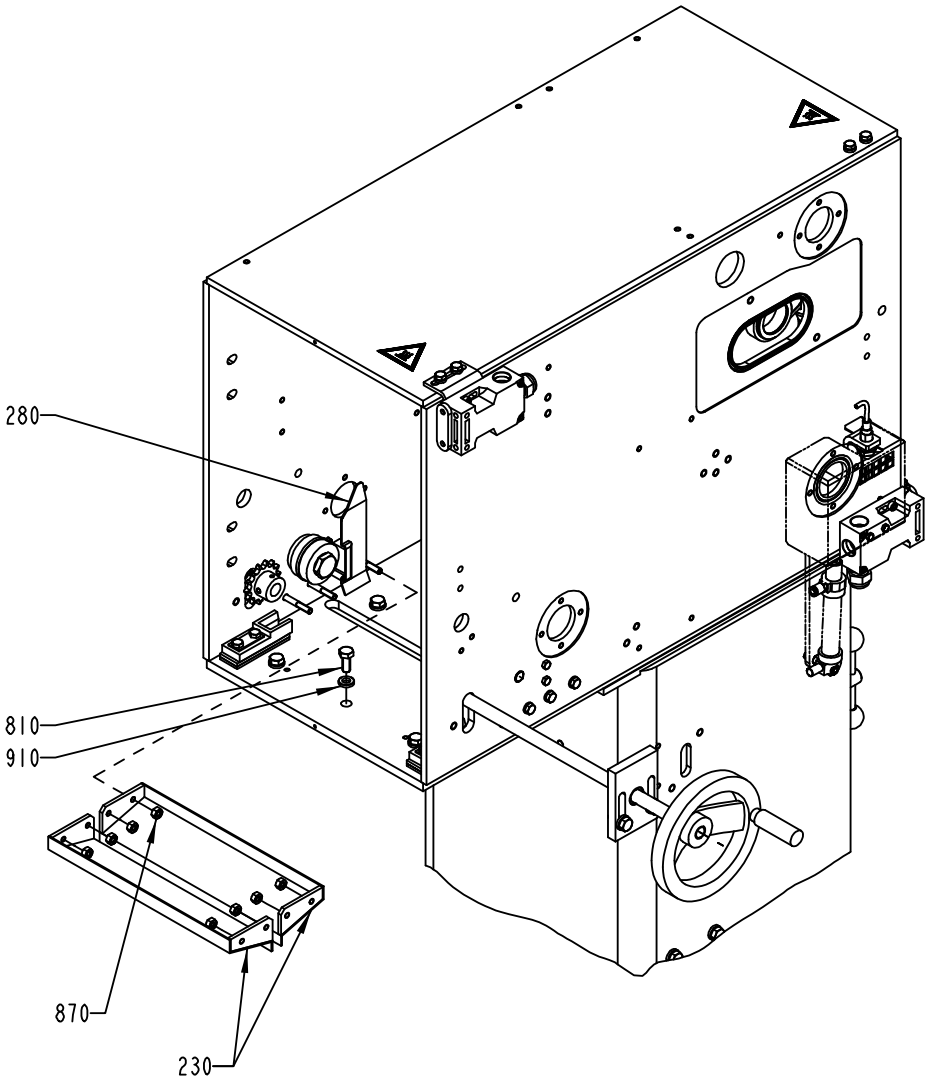

272021-19
ECM 143463

Pos	Part No	UN	Qty	Description	Page No	Pos	Part No	UN	Qty	Description	Page No

SEE PREVIOUS LISTS PAGES: 1-49, 1-51.

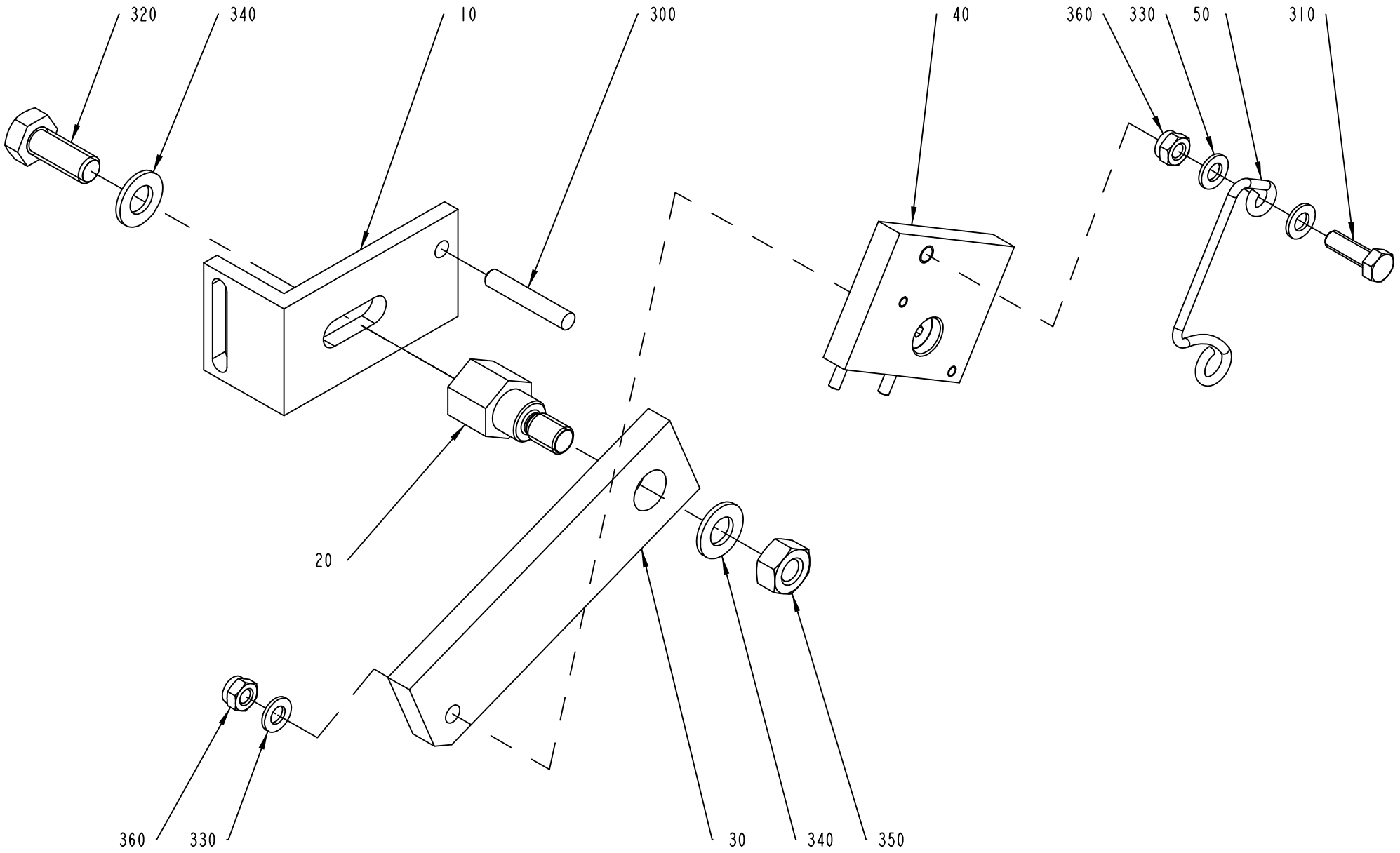
320
340
10
300
40
360
330
50
310
20
360
330
30
340
350

ECM: 143467 - 20040428
Group number: 2646247-0100
Assembly Drawing: 2646247-1_1_AA

Pos	Part No	UN	Qty	Description	Page No
-					
010	2646248-0000		1	MOUNTING BRACKET	
020	2640262-0000		1	AXLE PIN	
030	2640263-0000		1	SUPPORT BAR	
040	2640264-0000		1	SUPPORT PLATE	
050	2640265-0000		1	LOCKING SPRING	
300	311103-0314		1	PARALLEL PIN ISO 2338 5M6X30 A1	
310	312105-0329		1	SCREW M6S ISO 4017 M5X16 A480	
320	312105-0451		1	SCREW M6S ISO 4017 M8X20 A480	
330	315105-0146		3	WASHER BRB5,3X10RFR	
340	315105-0165		2	WASHER BRB8,4X16RFR	
350	312605-0318		1	HEXAGON NUT, M6M M8 A280	
360	312812-0314		2	HEXAGON NUT, NY-LOCK M5 A480	

Pos	Part No	UN	Qty	Description	Page No

CALENDER ROLLER

Drawing file: 272024-5_1_AB.hpgl

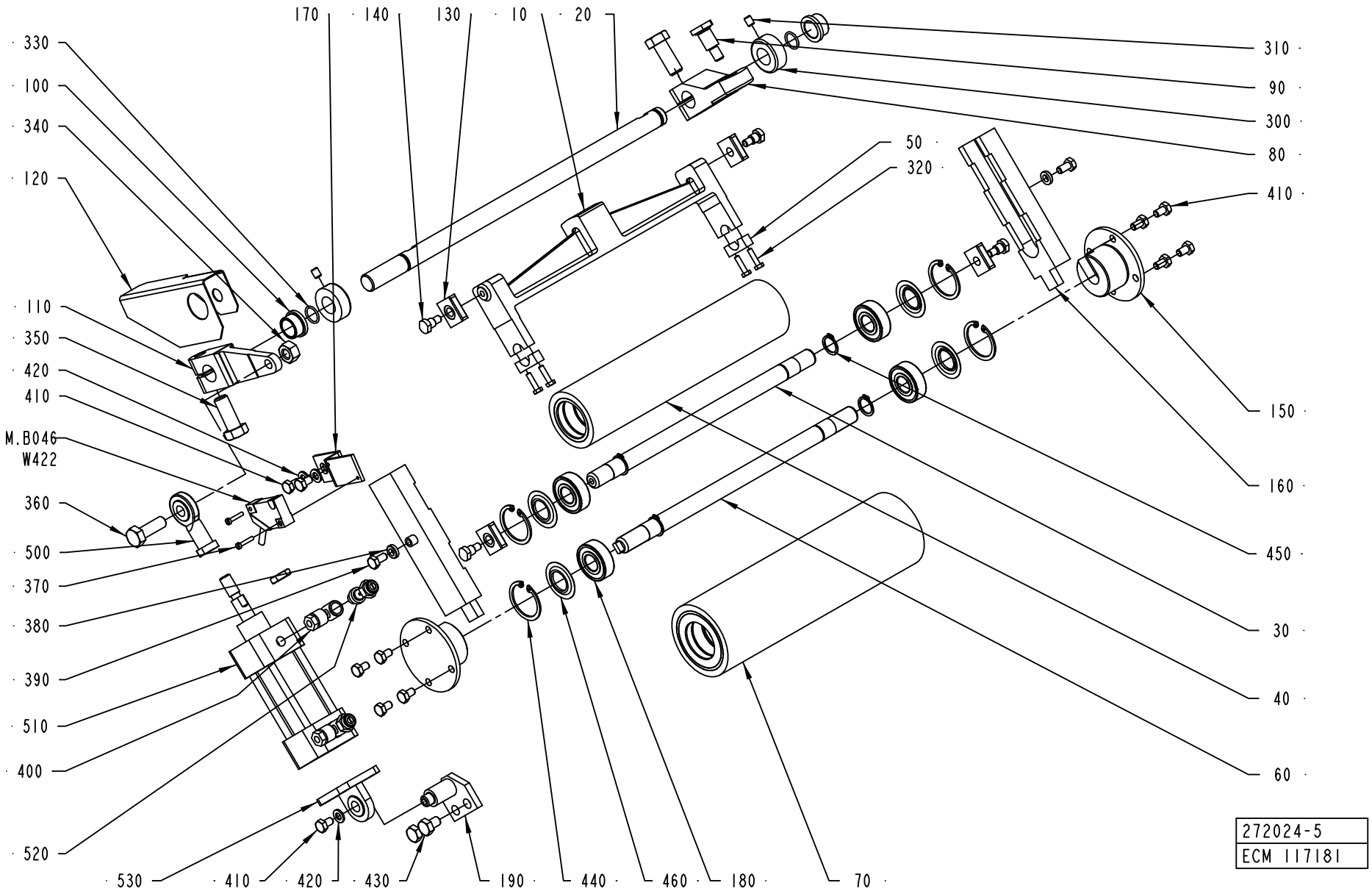

ECM: 117217 - 20030701
Group number: 272024-0500
Assembly Drawing: 272024-5_1_AB

Pos	Part No	UN	Qty	Description	Page No
-					
010	1538103-0000		1	FORK	
020	751132-0000		1	SHAFT	
030	2555634-0000		1	SHAFT	
040	1538097-0000		1	CALENDER ROLLER	
050	1538098-0000		2	CLAMP	
060	2555633-0000		1	SHAFT	
070	1538096-0000		1	CALENDER ROLLER	
080	272927-0000		1	PRESSURE ARM	
090	271898-0000		1	SCREW	
100	271269-0000		2	BUSHING	
110	441904-0000		1	ARM	
120	978462-0000		1	PROTECTION PLATE	
130	1538104-0000		4	GUIDE	
140	271899-0000		4	SCREW	
150	566697-0000		2	AXLE SUPPORT	
160	566696-0000		2	GUIDE CONSOLE	
170	272033-0000		1	BRACKET	
180	90458-1704		4	BALL BEARING, 15X35X11 MM	
190	441578-0002		1	CYLINDER BRACKET	
300	315742-0112		2	RETAINING RING 16 SMS 199	
310	312318-0362		2	SCREW ISO4029 M6X8 A4	
320	312105-0293		4	SCREW M6S ISO 4017 M4X16 A470	
330	315204-0111		2	O-RING 13,1X1,6 MM	
340	312605-0320		1	HEXAGON NUT, M6M M10 A280	
350	312105-0536		2	SCREW M6S ISO 4017 M12X30 A480	
360	312105-0495		1	SCREW M6S ISO 4017 M10X30 A480	
370	312125-0228		2	SCREW ISO 1207 M3X16 A4	
380	315115-0153		2	WASHER PLAIN, TBRB 6,4/12 H=3	
390	312105-0366		2	SCREW M6S ISO 4017 M6X12 A480	
400	342797-0121		2	CONN. BANJO, RINGPIECE 6-1/8	
410	312105-0364		11	SCREW M6S ISO 4017 M6X10 A480	
420	315105-0153		3	WASHER BRB6,4X12RFR	
430	312105-0447		2	SCREW M6S ISO 4017 M8X12 A480	
440	315753-0124		4	RETAINING RING FOR BORE DIN 472 35 A2	
450	315751-0112		4	RETAINING RING FOR SHAFT DIN 471 15 A2	
460	90214-0303		4	SEALING RING, 18,6X35X2 MM	
500	90239-0405		1	ROD END,BALL JOINT EYE M10X1,25	
510	90239-0773		1	CYLINDER	
	90239-0442		*1*	*SEAL KIT*	
520	90235-0274		2	THROTTLE CHECK VALVE, G1/8", SCU-604-1/8	
530	90239-0453		1	BRACKET	
MB046	90044-0194		1	PROX.SW. IN5329/IN3002-BPKG	

Machine Type	Group Description	Used-In	Group Number	Page No

AIR KNIFE

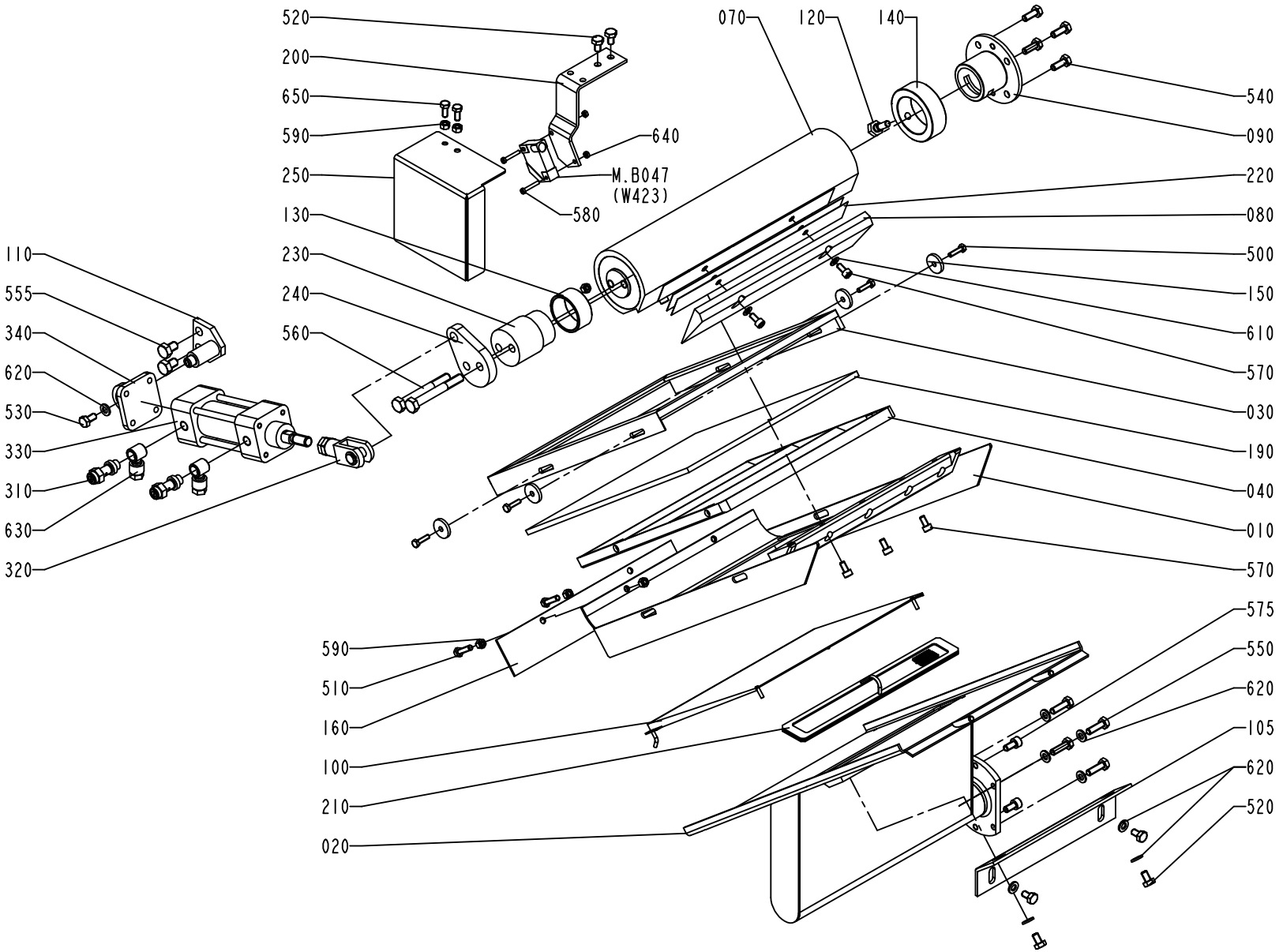
520
200
650
590
250
130
230
240
560
110
555
340
620
530
330
310
630
320
640
M.B047
(W423)
580
070
120
140
540
090
220
080
500
150
610
570
030
190
040
010
570
590
510
160
100
210
020
575
550
620
105
620
520
272025-5
ECM 73657

ECM: 114403 - 20020930
Group number: 272025-0400
Assembly Drawing: 272025-5_1_AA

Pos	Part No	UN	Qty	Description	Page No
TBA 0125S, TBA 0100B					
010	271824-0000		1	AIR KNIFE, MOVABLE	
020	271825-0000		1	FIXED AIR KNIFE	
030	271941-0001		1	FRAME	
040	271942-0001		1	AIR GUIDE	
070	272026-0001		1	AIR DISTRIBUTOR	
080	271820-0001		1	STEERING RAIL	
100	272140-0001		1	HEAD PLATE	
160	271827-0001		1	HEAD PLATE	
190	272027-0001		1	GLASS PANE	
210	272141-0001		1	FILTER	
220	272329-0001		2	LACE	
570	312115-0325		5	SCREW ISO4762 M5X10 A4	
TBA 0330S, TBA 0300S, TBA 0180B, TBA 0160S, TBA 0200B, TBA 0250S, TBA 0284B, TBA 0200S, TBA 0200M, TBA 0250B					
010	272022-0000		1	AIR KNIFE, MOVABLE	
020	272023-0000		1	FIXED AIR KNIFE	
030	271941-0002		1	FRAME	
040	271942-0002		1	AIR GUIDE	
070	272026-0002		1	AIR DISTRIBUTOR	
080	271820-0002		1	STEERING RAIL	
100	272140-0002		1	HEAD PLATE	
160	271827-0002		1	HEAD PLATE	
190	272027-0002		1	GLASS PANE	
210	272141-0002		1	FILTER	
220	272329-0002		3	LACE	
570	312115-0325		7	SCREW ISO4762 M5X10 A4	
Common Parts					
090	271858-0000		1	FLANGE	
105	272464-0000		1	ANGLE BRACKET	
110	441578-0001		1	CYLINDER BRACKET	
120	255995-0000		1	SCREW	
130	751165-0000		1	BUSHING	
140	256022-0000		1	BUSHING	
150	263311-0000		4	WASHER	
200	1524653-0000		1	BRACKET	
230	441576-0000		1	SPACER	
240	1524654-0000		1	ARM	
250	1524655-0000		1	PROTECTION PLATE	
310	90235-0274		2	THROTTLE CHECK VALVE, G1/8", SCU-604-1/8	
320	90239-0516		1	ROD END, CLEVIS WITH AXLE M10X1,25	
330	90239-0773		1	CYLINDER	
	90239-0442		*1*	*SEAL KIT*	
340	90239-0453		1	BRACKET	
500	312105-0293		4	SCREW M6S ISO 4017 M4X16 A470	
510	312105-0331		2	SCREW M6S ISO 4017 M5X20 A480	
520	312105-0364		6	SCREW M6S ISO 4017 M6X10 A480	
530	312105-0366		1	SCREW M6S ISO 4017 M6X12 A480	
540	312105-0368		4	SCREW M6S ISO 4017 M6X16 A480	
550	312105-0370		4	SCREW M6S ISO 4017 M6X20 A480	
555	312105-0447		2	SCREW M6S ISO 4017 M8X12 A480	
560	312105-0464		2	SCREW M6S ISO 4014 M8X65 A480	
575	312115-0366		2	SCREW ISO4762 M6X12 A4	
580	312125-0230		2	SCREW ISO 1207 M3X20 A4	
590	312605-0314		6	HEXAGON NUT, M6M M5 A280	
610	315105-0146		2	WASHER BRB5,3X10RFR	
620	315105-0153		9	WASHER BRB6,4X12RFR	
630	342797-0121		2	CONN. BANJO, RINGPIECE 6-1/8	
640	312605-0310		2	HEXAGON NUT, M6M M3 A280	
650	312105-0327		2	SCREW M6S ISO 4017 M5X12 A480	
MB047	90044-0104		1	PROX.SWITCH IFM IN 3002	

Machine Type	Group Description	Used-In	Group Number	Page No

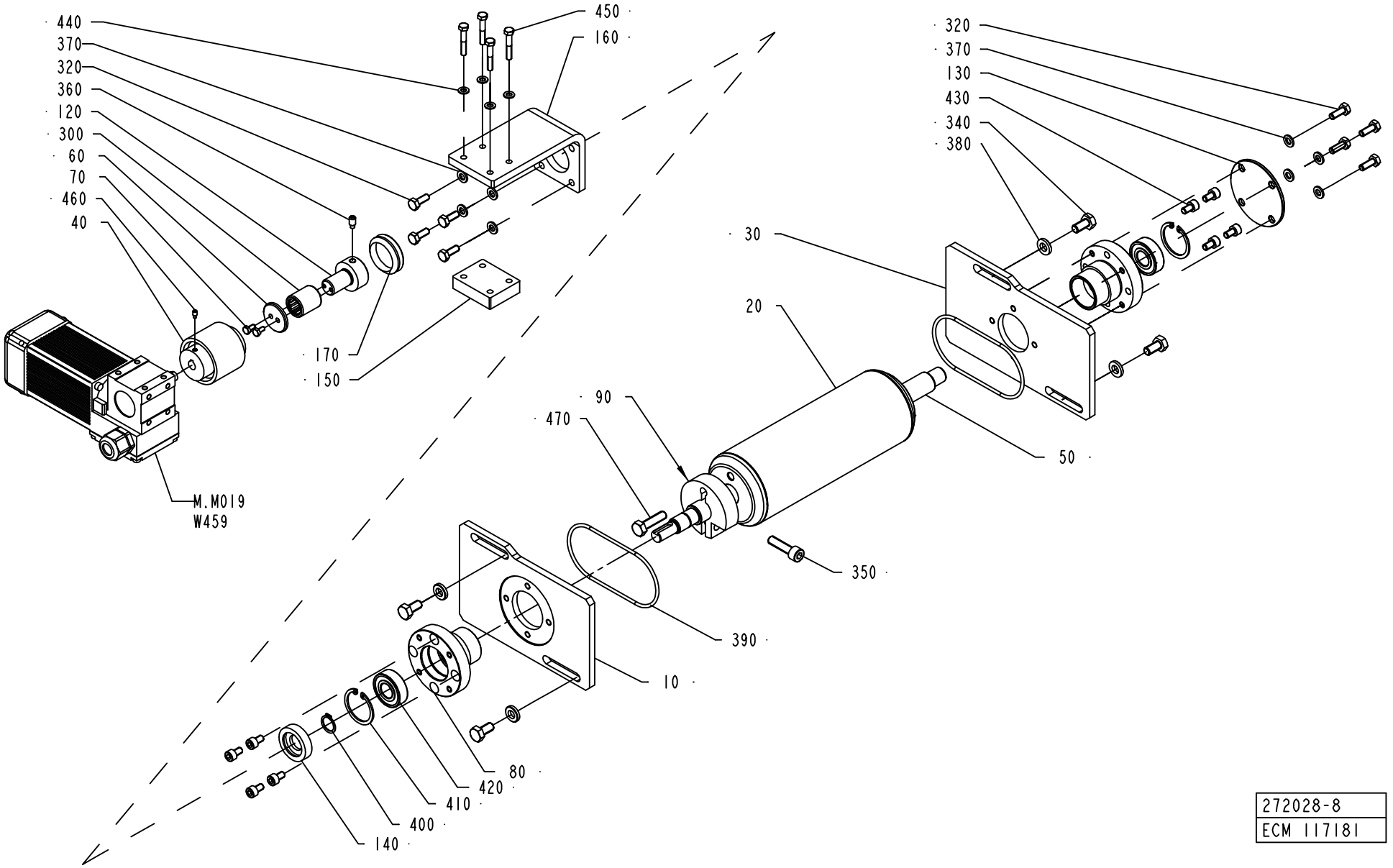

272028-8
ECM 117181

ECM: 117185 - 20030701
Group number: 272028-0800
Assembly Drawing: 272028-8_1_AB

Pos	Part No	UN	Qty	Description	Page No
TBA 0125S 6000/H, TBA 0125S 7500/H, TBA 0100B 7500/H					
010	1524780-0000		1	PLATE	
020	2559069-0000		1	BENDING ROLLER	
030	572157-0000		1	BEARING PANEL	
TBA 0160S 6000/H, TBA 0160S 7500/H, TBA 0200S 6000/H, TBA 0200S 7500/H					
010	1524780-0000		1	PLATE	
020	2559071-0000		1	BENDING ROLLER	
030	572157-0000		1	BEARING PANEL	
TBA 0250S 6000/H, TBA 0250S 7500/H, TBA 0200M 7500/H					
010	1524780-0000		1	PLATE	
020	2559070-0000		1	BENDING ROLLER	
030	572157-0000		1	BEARING PANEL	
TBA 0330S 7500/H, TBA 0300S 6000/H, TBA 0300S 7500/H, TBA 0180B 6000/H, TBA 0180B 7500/H, TBA 0200B 6000/H, TBA 0200B 7500/H, TBA 0250B 6000/H, TBA 0250B 7500/H, TBA 0284B 7500/H, TBA 0284B 6000/H					
010	1524805-0000		1	PLATE	
020	2559068-0000		1	BENDING ROLLER	
030	572158-0000		1	BEARING PANEL	
Common Parts					
040	90458-2840		1	SHAFT COUPLING 22,225H9/9	
050	2522249-0000		1	SHAFT	
060	250592-0000		1	WASHER	
070	312105-0287		2	SCREW M6S ISO4017 M4X8 A470	
080	1539997-0000		2	AXLE SUPPORT	
090	2559087-0000		1	CLAMP	
120	1334234-0000		1	HUB	
130	1548143-0000		1	END PLATE	
140	1558403-0000		1	DISC	
150	2527718-0000		1	SPACER	
160	2522248-0000		1	BRACKET	
170	315220-0167		1	V-RINGS 27X35X10,5 MM V-30S	
300	90348-0007		1	FREE WHEEL COUPLING	
320	312105-0368		8	SCREW M6S ISO 4017 M6X16 A480	
340	312105-0449		4	SCREW M6S ISO 4017 M8X16 A480	
350	312115-0455		2	SCREW ISO4762 M8X30 A4	
360	312311-0366		1	SCREW ISO4028 M6X12 FZB	
370	315105-0153		8	WASHER BRB6,4X12RFR	
380	315115-0165		4	WASHER PLAIN, TBRB 8,4/16 H=3	
390	315204-0309		2	O-RING 89,5X3 MM	
400	315751-0112		1	RETAINING RING FOR SHAFT DIN 471 15 A2	
410	315753-0124		2	RETAINING RING FOR BORE DIN 472 35 A2	
420	90458-1704		2	BALL BEARING, 15X35X11 MM	
430	312115-0364		8	SCREW ISO4762 M6X10 A4	
440	315105-0146		4	WASHER BRB5,3X10RFR	
450	312105-0335		4	SCREW M6S ISO 4014 M5X30 A480	
460	312311-0287		1	SCREW ISO4028 M4X8 FZB	
470	312105-0455		1	SCREW M6S ISO 4017 M8X30 A480	
MM019	90458-1879		1	GEARS, WORM MOTOR 528V--L06-B01	
W459	351150-0413	M	5	CABLE OLFLEX 4X1,5 MM2 LIGHT/GREY	

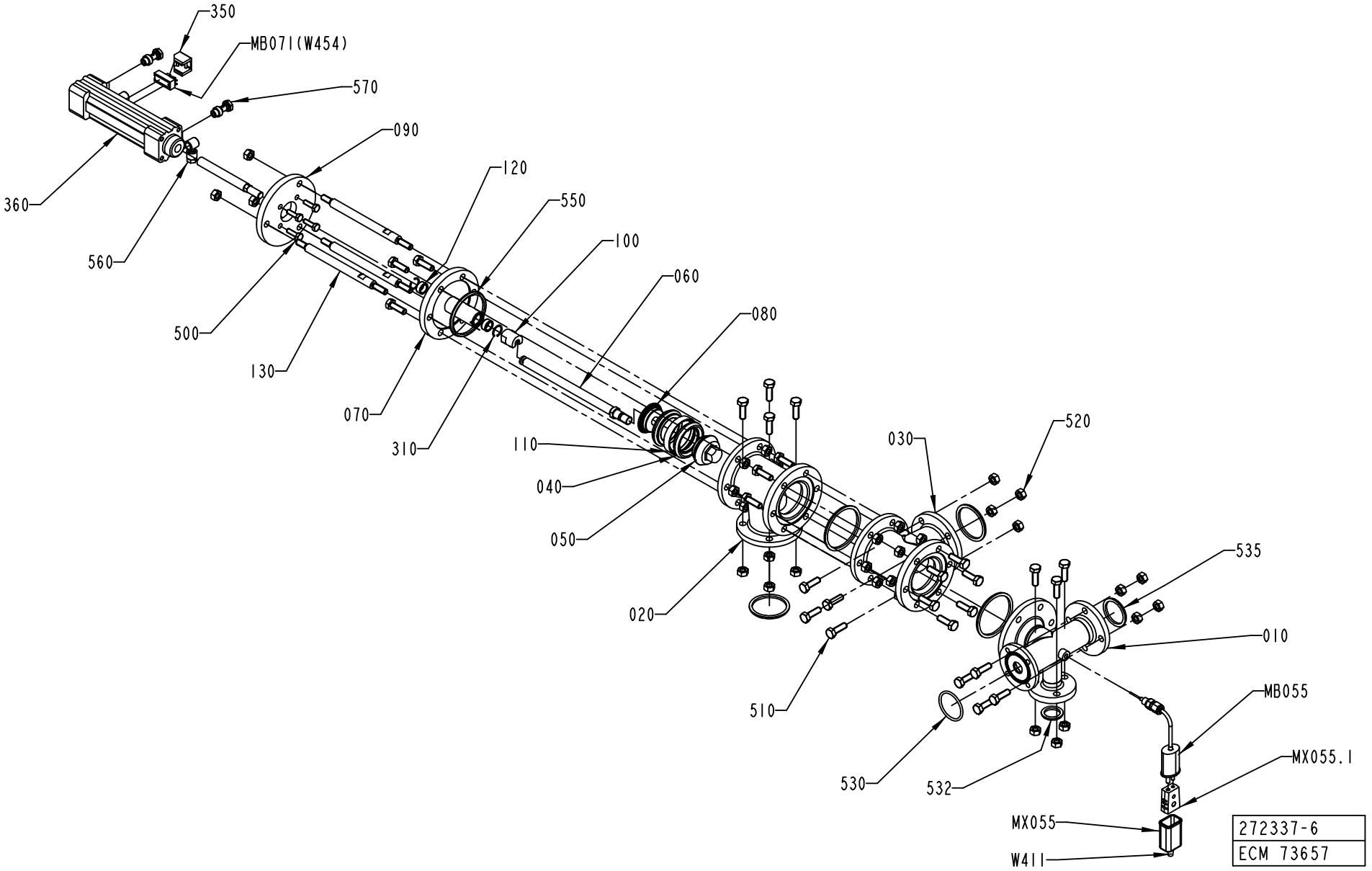
350
MB071(W454)
570
090
120
550
100
060
080
360
560
500
130
070
310
110
040
050
020
030
520
535
010
MB055
MX055.1
510
530
532
MX055
W411
272337-6
ECM 73657

ECM: 114631 - 20020930
Group number: 272337-0600
Assembly Drawing: 272337-6_1_AA

Pos	Part No	UN	Qty	Description	Page No
-					
010	978996-0000		1	BRANCH PIPE	
020	1036187-0000		1	T-PIPE	
030	1036194-0000		1	T-PIPE	
040	530589-0000		2	SEAL RING	
050	530590-0000		1	VALVE CONE	
060	1036188-0000		1	SHAFT	
070	1036189-0000		1	SPINDLE GUIDE	
080	1036191-0000		1	SEAL HOLDER	
090	1036193-0000		1	CYLINDER BRACKET	
100	441871-0000		1	PENDULUM SUSPENSION	
110	530599-0000		1	RING	
120	532349-0000		2	PLAIN BEARING	
130	1036192-0000		3	SPACER ROD	
310	90141-0022		2	SNAP RING B 16	
350	90450-0669		1	SENSOR, BRACKET SERIES 168	
360	90450-0281		1	DOUBLE ACTING,PROF.CYL 32-80	
500	312105-0370		4	SCREW M6S ISO 4017 M6X20 A480	
510	312105-0453		30	SCREW M6S ISO 4017 M8X25 A480	
520	312605-0318		36	HEXAGON NUT, M6M M8 A280	
530	315204-0223		1	O-RING 39,2X3 MM	
532	315229-0203		1	GASKET 22,1X31,1X3,7 MM 1"	
535	315229-0204		1	GASKET 34,8X42,8X3,7 MM 1"1/2	
540	315229-0205		2	GASKET 47,5X55,5X3,7 MM 2"	
550	315229-0206		3	GASKET 60,2X68,2X3,7 MM 2"1/2	
560	342797-0121		2	CONN. BANJO, RINGPIECE 6-1/8	
570	342980-0303		2	BANJO-HOLLOW BOLT COUPL,EXT.THR.01-G1/8"	
MB055	90326-0051		1	THERMOCOUPLE, 12826-33	
MB071	90457-0047		1	SENSOR 2750-1-5111-1 W.ADAPTER PNP	
MX055	90326-0020		1	PLUG, FEMALE YELLOW CR-AL	
MX055.1	90326-0012		1	PROTECTIVE COVER, T31A4618	
W411	90220-0059	M	5	THERMOCOUPLE CABLE K/ 2X0,81MM2	

Pos	Part No	UN	Qty	Description	Page No

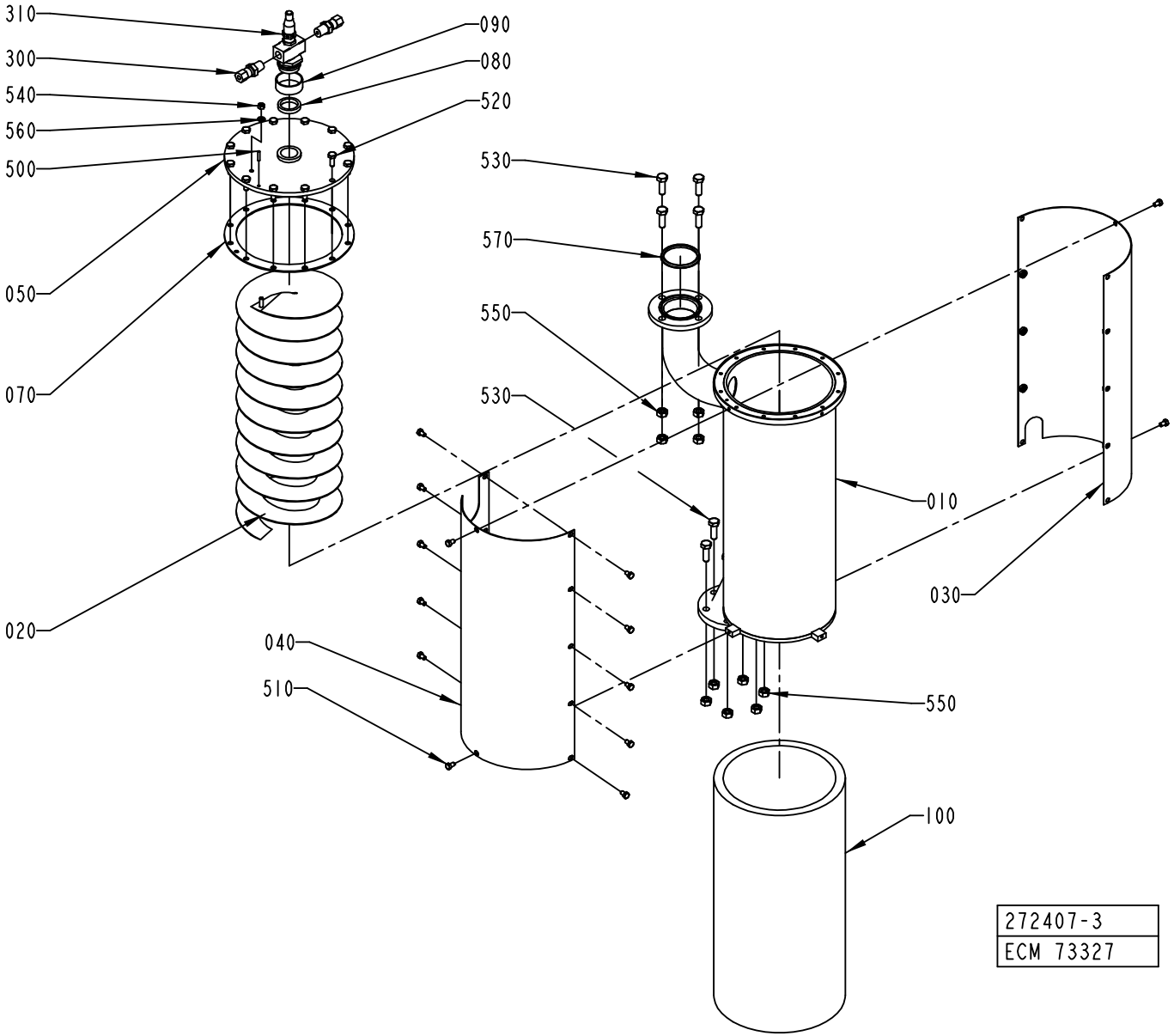
310
300
540
560
500
050
070
020
090
080
520
530
570
550
530
010
030
040
510
550
100
272407-3
ECM 73327

ECM: 114543 - 20020930
Group number: 272407-0400
Assembly Drawing: 272407-3_1_AC

Pos	Part No	UN	Qty	Description	Page No
-					
010	978879-0000		1	CONTAINER	
020	272325-0000		1	SPIRAL	
030	978971-0000		1	DISCHARGE TRAY	
040	978972-0000		1	DISCHARGE TRAY	
050	272275-0000		1	LID	
070	272277-0000		2	GASKET	
080	12242-0001		1	GASKET 32X25X5,5	
090	295993-0000		1	GASKET HOLDER	
100	441501-0000		1	INSULATION	
300	90030-0062		2	CONN. STR. GE 6-1/4-18 NPTF	
310	90424-0017		1	SPRAY NOZZLE	
	90424-0301		*1*	*SLEEVE*	
	90424-0302		*1*	*FLUID CAP GASKET, CP3612-AL*	
	90424-0303		*1*	*BACK SEAL GASKET, CP10439*	
	90424-0304		*1*	*GASKET*	
500	311103-0236		1	PARALLEL PIN ISO 2338 3M6X16 A1	
510	312105-0323		14	SCREW M6S ISO 4017 M5X8 A480	
520	312105-0368		12	SCREW M6S ISO 4017 M6X16 A480	
530	312105-0453		10	SCREW M6S ISO 4017 M8X25 A480	
540	312605-0314		1	HEXAGON NUT, M6M M5 A280	
550	312605-0318		10	HEXAGON NUT, M6M M8 A280	
560	315105-0146		1	WASHER BRB5,3X10RFR	
570	315229-0205		1	GASKET 47,5X55,5X3,7 MM 2"	

Pos	Part No	UN	Qty	Description	Page No

PRODUCT VALVE

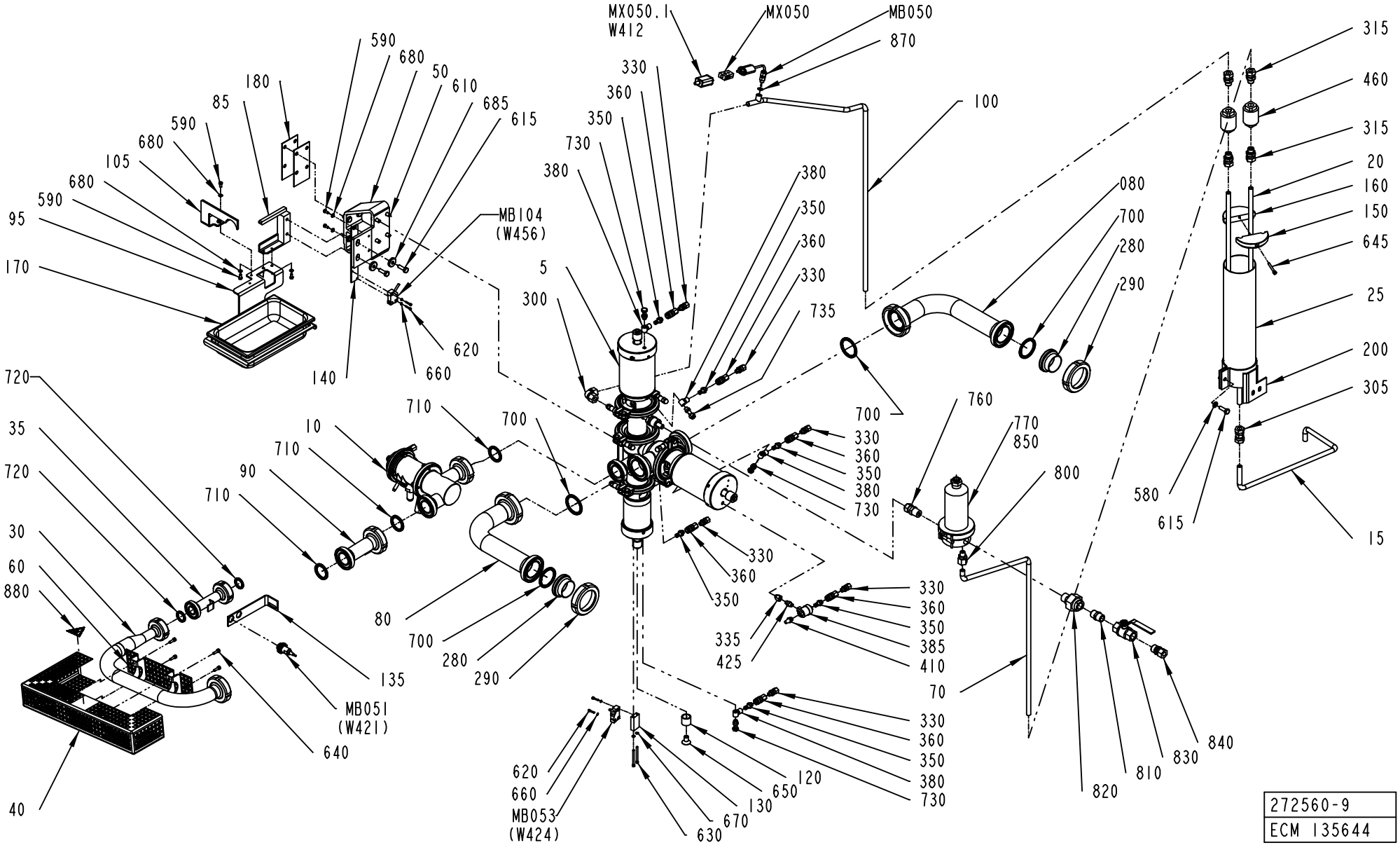

272560-9
ECM 135644

ECM: 145780 - 20031201
Group number: 272560-0800
Assembly Drawing: 272560-9_1_AC

This list covers pages from 1-66 to 1-77

Pos	Part No	UN	Qty	Description	Page No
NOTCSB HI (See drawing on page: 1-72)					
070	2618265-0000		1	PIPE	
760	90030-0213		1	CONN. STR. M12 MSC1/2K-316 EXT. TAPPERED	
800	90030-0088		1	CONN. STR., 12-R1/4, EXT. THREAD	
MB512	90458-0676		1	PROXIMITY SWITCH,E2EG-X5B1-6M	
NOTCSB NOHI (See drawing on page: 1-66)					
070	2618265-0000		1	PIPE	
760	90030-0213		1	CONN. STR. M12 MSC1/2K-316 EXT. TAPPERED	
800	90030-0088		1	CONN. STR., 12-R1/4, EXT. THREAD	
TCSB HI (See drawing on pages: 1-74, 1-76)					
070	2632811-0000		1	PIPE	
075	1539237-0000		1	PIPE	
190	1334841-0200		1	T.C.S.B. UNIT	**1-79**
210	1539238-0000		1	PIPE	
860	342737-0204		1	CONN. ELBOW W-6 LRFR	
MB512	90458-0676		1	PROXIMITY SWITCH,E2EG-X5B1-6M	
TCSB NOHI (See drawing on pages: 1-68, 1-70)					
070	2632811-0000		1	PIPE	
075	1539237-0000		1	PIPE	
190	1334841-0200		1	T.C.S.B. UNIT	**1-79**
210	1539238-0000		1	PIPE	
860	342737-0204		1	CONN. ELBOW W-6 LRFR	
Common Parts					
005	576434-0200		1	AP-VALVE 51-38	**1-81**
010	927205-0200		1	REGULATING VALVE	**1-93**
015	2618264-0000		1	PIPE	
020	1512411-0000		2	PIPE	
025	2618263-0000		1	CONTAINER	
030	1519969-0000		1	PIPE	
035	1317756-0000		1	PIPE	
040	1348476-0000		1	TOUCH GUARD	
050	577360-0000		1	CANTILEVER	
060	1348636-0000		1	TOUCH GUARD	
080	1519936-0000		2	PIPE	
085	2611709-0000		1	BRACKET	
090	1317663-0000		1	PIPE	
095	2603631-0000		1	BRACKET	
100	2618266-0000		1	PIPE	
105	2632796-0000		1	BRACKET	
120	440647-0000		1	SLEEVE	
130	440731-0000		1	PLATE	
135	1317905-0000		1	BRACKET	
140	578480-0000		1	BRACKET	
150	1317262-0000		1	COVER	
160	1512377-0000		1	COVER	
170	90459-2435		1	CONTAINER 1,8L , GN 1406	
180	490985-0000		2	SPACER SHEET	
200	2635109-0000		1	CLAMP	
280	90217-0207		2	ASEPT. MALE FITTING ISO, 03-32-456/42	
290	90217-0209		2	UNION NUT, 2 APV, 07-01-426/17	
300	90030-0096		1	CONN. ELBOW W-12	
305	90030-0106		1	CONN. PIPE G-12	
315	90030-0187		4	CONN. STR. GA-12-G3/8	
330	90030-0184		6	CONN. STR. GA-6-G1/8	
335	90030-0212		1	NIPPLES, REDUSING, INT. THR. NO. 2521	
350	90163-0057		6	QUICK COUPLING, (M) 5150-1/8	
355	90157-0037	L	1	SEALING COMPOUND	
360	90163-0062		6	QUICK COUPLING, (F) 5053-1/8	
380	90224-0308		4	CONN. BANJO, ART. NO. 2023-1/8-1/8	
385	90235-0259		1	VALVE	
410	90328-0003		1	SILENCER	
425	90330-0032		1	NIPPLES, EXT. THREAD. ISO 7/1 R1/8-R1/8	
460	90360-0020		2	STEAM TRAP / MK36/51 3/8"	
	90360-0310		*1*	*CAPSULE, FOR STEAM TRAP 90360-20*	
	90360-0309		*1*	*STRAINER, FOR STEAM TRAP 90360-20*	
580	315105-0165		1	WASHER BRB8,4X16RFR	
590	312105-0325		6	SCREW M6S ISO 4017 M5X10 A480	
610	312105-0451		8	SCREW M6S ISO 4017 M8X20 A480	
615	312105-0453		3	SCREW M6S ISO 4017 M8X25 A480	
620	312115-0228		4	SCREW ISO4762 M3X16 A4	
630	312115-0305		2	SCREW ISO4762 M4X50 A4	
640	312115-0329		4	SCREW ISO4762 M5X16 A4	
645	312115-0340		1	SCREW ISO4762 M5X45 A4	
650	312155-0532		1	SCREW EN 10642 MF6S M12X20 A480	
660	315105-0124		4	WASHER BRB3,2X6RFR	
670	315105-0136		2	WASHER BRB4,3XRFR	
680	315105-0146		6	WASHER BRB5,3X10RFR	
685	315125-0165		2	WASHER TBRSB 8,4X26X5 A4	
700	90217-0349		4	GASKET 48,4X59,8X4 MM	
710	90217-0348		3	GASKET 35,4X46,8X4 MM	
720	90217-0347		2	GASKET 32X22,6X3,6 MM	
730	342980-0303		3	BANJO-HOLLOW BOLT COUPL,EXT.THR.01-G1/8"	
735	90235-0274		1	THROTTLE CHECK VALVE, G1/8", SCU-604-1/8	
770	90277-0055		1	FILTER HOUSING / MDS 4463 G 08 H	

Machine Type | Group Description | Used-In | Group Number | Page No

PRODUCT VALVE

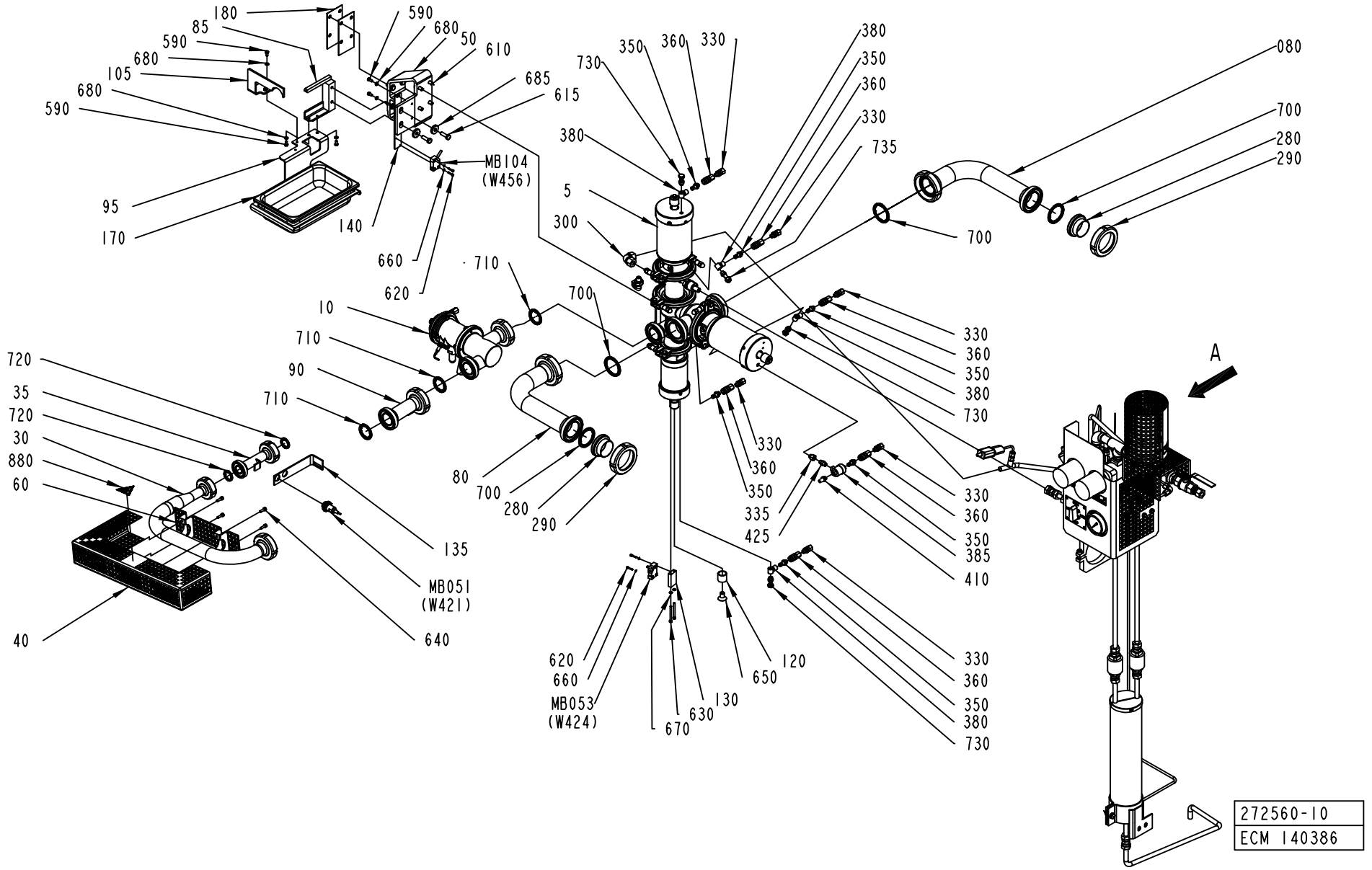

Pos	Part No	UN	Qty	Description	Page No
Common Parts (Cont'd)					
810	90330-0021		1	NIPPLES, EXT. THREAD. R-207R1/2	
820	90330-0106		1	PIPE COUPLING	
830	90187-0082		1	BALL VALVE G1/2	
840	90030-0109		1	STRAIGHT PIPE CONN. GE12LR1/271	
850	90337-0315		1	FILTERINSERT / MCS 4463	
870	315234-0109		1	WASHER,PL.RND.CU.10,3/13,5 H=1,0	
880	359710-0001		1	WARNING SIGN ISO, HOT SURFACE	
MB050	90326-0089		1	THERMOCOUPLE, 5110-089-000	
MB051	90458-0676		1	PROXIMITY SWITCH,E2EG-X5B1-6M	
MB053	90044-0194		1	PROX.SW. IN5329/IN3002-BPKG	
MB104	90044-0194		1	PROX.SW. IN5329/IN3002-BPKG	
MX050	90326-0020		1	PLUG, FEMALE YELLOW CR-AL	
MX050.1	90326-0012		1	PROTECTIVE COVER, T31A4618	
W412	90220-0059	M	5	THERMOCOUPLE CABLE K/ 2X0,81MM2	

Pos	Part No	UN	Qty	Description	Page No

PRODUCT VALVE

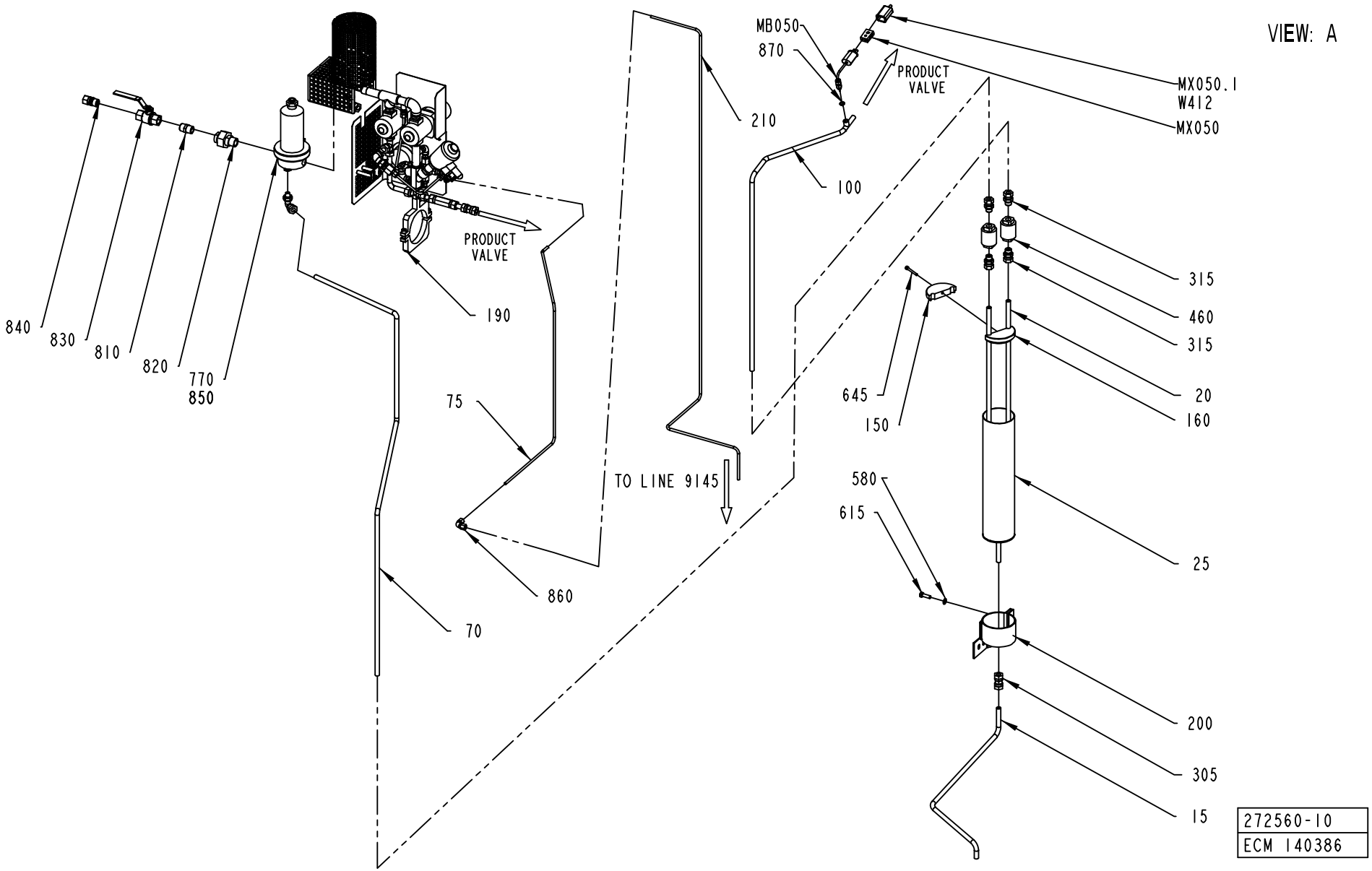

Pos	Part No	UN	Qty	Description	Page No	Pos	Part No	UN	Qty	Description	Page No

SEE PREVIOUS LISTS PAGES: 1-67, 1-69.

PRODUCT VALVE

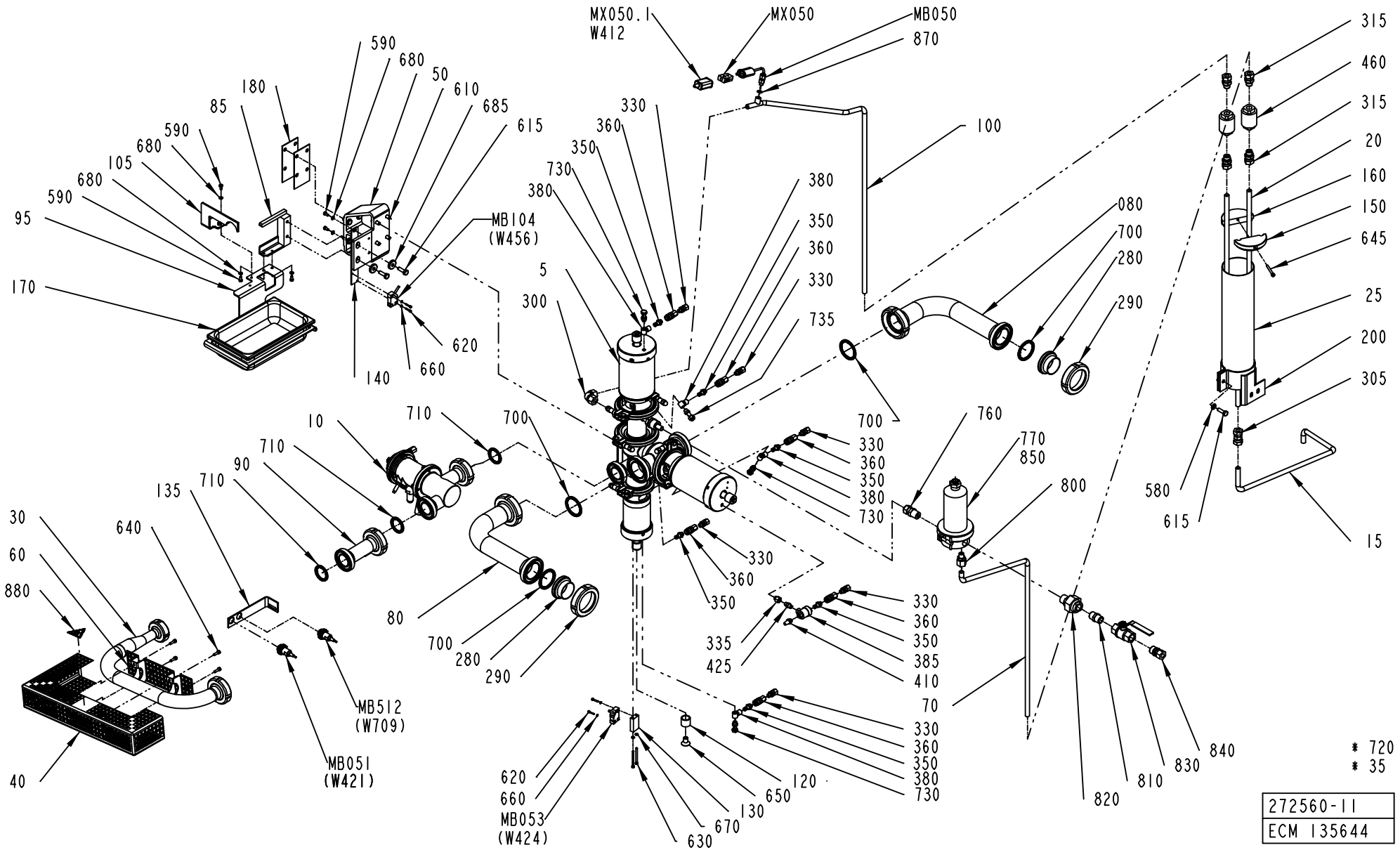

Pos	Part No	UN	Qty	Description	Page No	Pos	Part No	UN	Qty	Description	Page No

SEE PREVIOUS LISTS PAGES: 1-67, 1-69.

PRODUCT VALVE

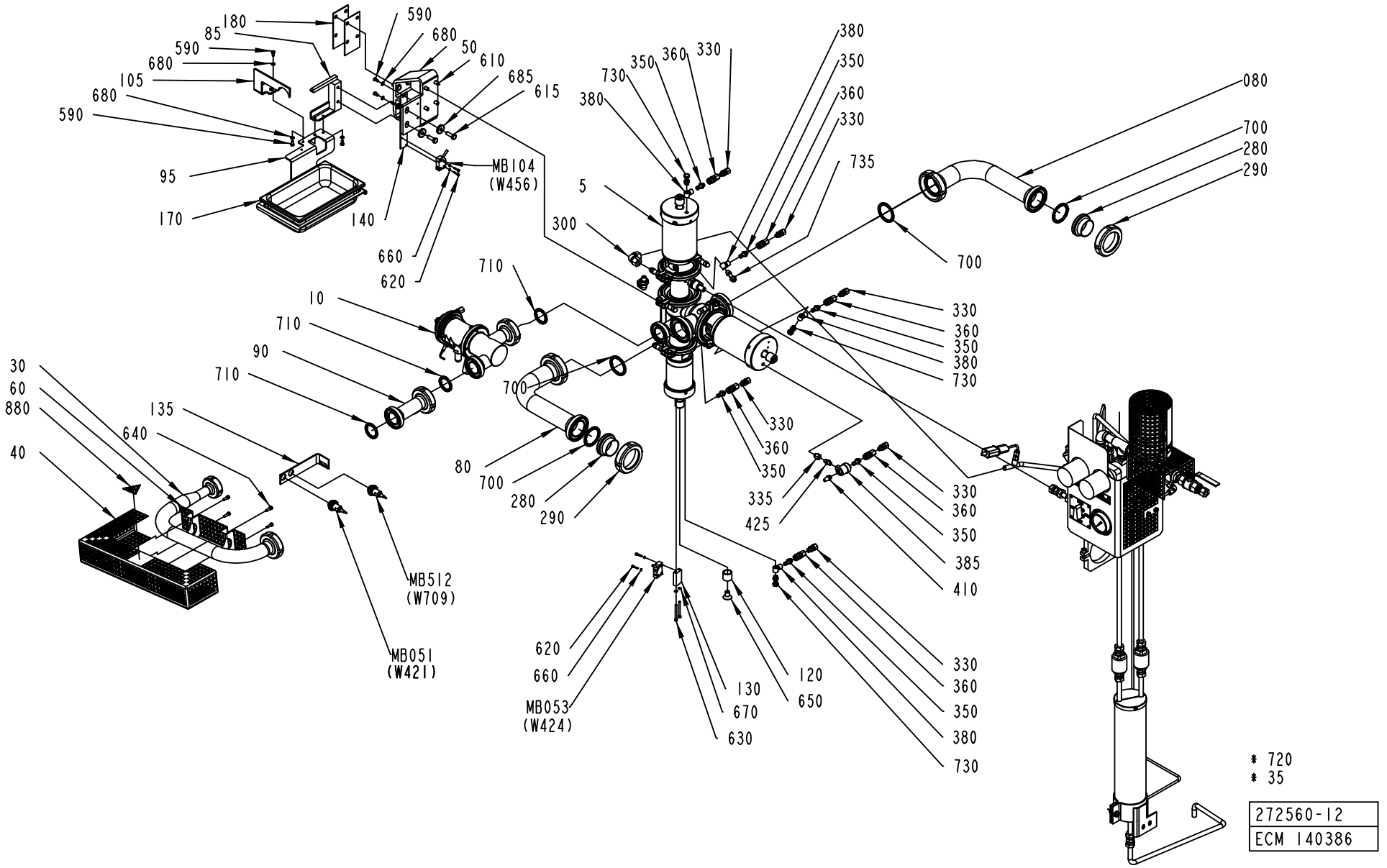

Pos	Part No	UN	Qty	Description	Page No	Pos	Part No	UN	Qty	Description	Page No

SEE PREVIOUS LISTS PAGES: 1-67, 1-69.

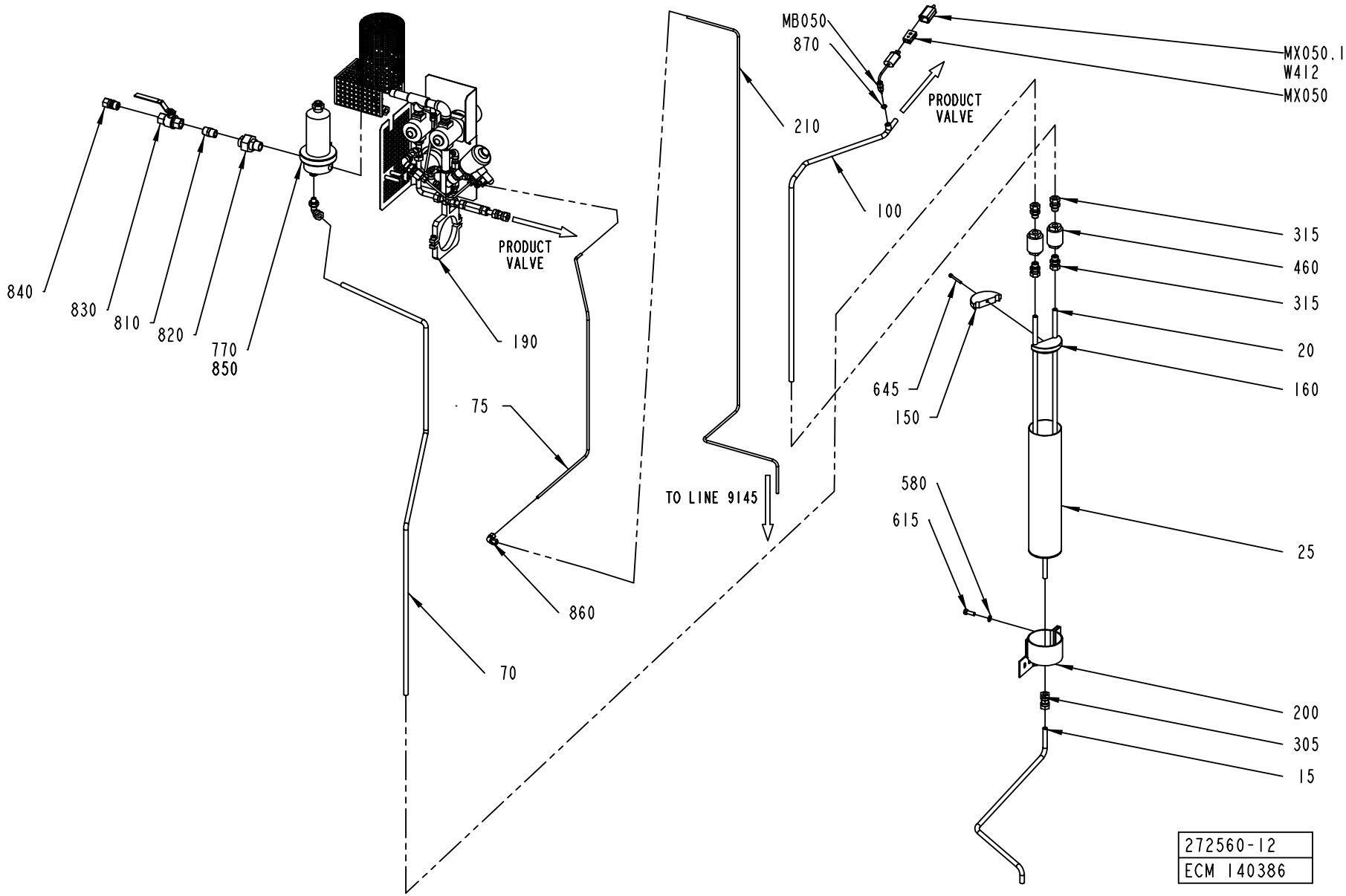
MB050
870
MX050.1
W412
MX050
PRODUCT VALVE
210
100
PRODUCT VALVE
840
830
810
820
770
850
190
75
TO LINE 9145
860
70
315
460
315
20
160
645
150
580
615
25
200
305
15
272560-12
ECM 140386

Pos	Part No	UN	Qty	Description	Page No	Pos	Part No	UN	Qty	Description	Page No

SEE PREVIOUS LISTS PAGES: 1-67, 1-69.

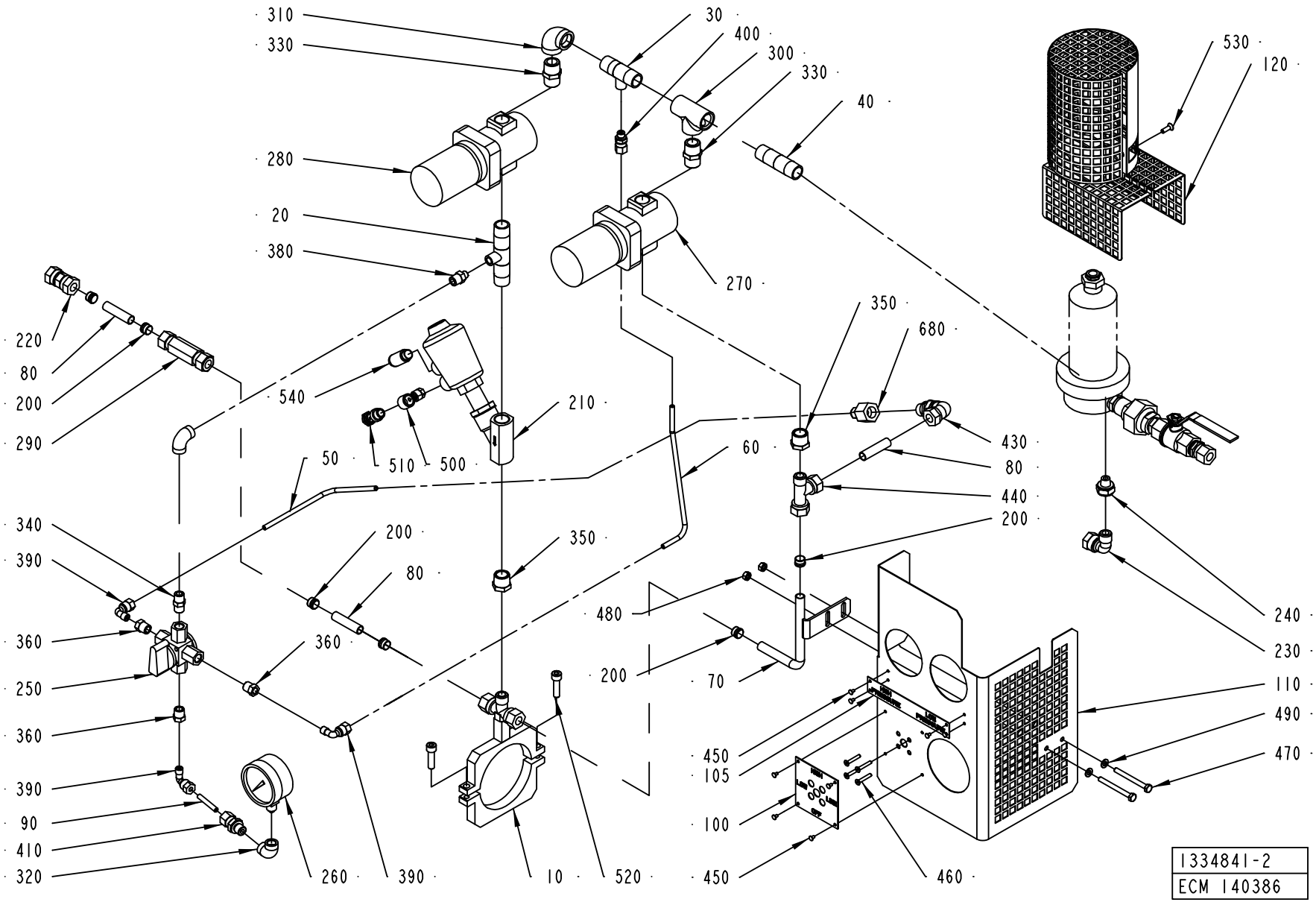
310
330
280
20
380
220
80
200
290
540
510
500
50
340
390
360
250
360
390
90
410
320
260
390
10
520
210
30
400
300
330
40
270
530
120
350
680
60
430
80
440
200
240
230
110
490
470
480
200
70
450
105
100
450
460
200
80
360
1334841-2
ECM 140386

ECM: 142664 - 20031201
Group number: 1334841-0200
Assembly Drawing: 1334841-2_1_AC

Pos	Part No	UN	Qty	Description	Page No
-					
010	1260443-0000		1	CLAMP HOLDER	
020	1260261-0000		1	T-PIPE	
030	1260262-0000		1	T-PIPE	
040	1260263-0000		1	PIPE	
050	1532583-0000		1	PIPE	
060	1260265-0000		1	PIPE	
070	1260266-0000		1	PIPE	
080	1260267-0000		3	PIPE	
090	1260268-0000		1	PIPE	
100	1255924-0000		1	LABEL	
105	1279456-0000		1	LABEL	
110	1255925-0000		1	COVER	
120	1260311-0000		1	COVER	
200	90030-0110		3	ACCESSORIES, FERRULE 12	
210	90459-0336		1	ANGLE SEAT VALVE G1/2, N.C. DN13	
220	90030-0106		1	CONN. PIPE G-12	
230	90030-0115		1	CONN. ELBOW WA 12-R3/8	
240	90030-0170		1	REDUCER 2521-1/4"X3/8"	
250	90187-0112		1	COCK VALVE, G1/4, 4-WAY, VITON	
260	90043-0082		1	PRESSURE GAUGE, 2740, D=63 MM	
270	2558134-0000		1	PRESSURE REGULATOR	
280	2558133-0000		1	PRESSURE REGULATOR	
290	90230-0025		1	NON-RETURN VALVE, 12MM, L=85	
300	90330-0049		1	T-PIPE, INT. THREAD, R-221R1/2	
310	90330-0020		1	ELBOW, 90 INT. THREAD, R-2221/2	
320	90330-0081		2	ELBOW, 90 INT. THREAD, R-222R1/4	
330	90330-0021		2	NIPPLES, EXT. THREAD. R-207R1/2	
340	90330-0043		1	NIPPLES, EXT. THREAD. R-207R1/4	
350	90330-0048		2	BUSHING, INT/EXT. THR. R1/2-RP3/8	
360	90330-0025		3	BUSHING, INT/EXT. THR. R1/4-RP1/8	
380	90330-0013		1	NIPPLES, EXT. THREAD. ISO 7/1 R1/4-R1/8	
390	90030-0137		3	CONN. ELBOW WA 6-R1/8	
400	90030-0051		1	CONN. STR., 6-R1/8, EXT. THREAD	
410	90030-0092		1	STRAIGHT CONN., 6-R1/4,EXT. TAPPERED	
420	90144-0073		2	TREBOFLON-TAPE W=13MM	
430	90030-0136		1	ADJUSTABLE ELBOW CONNECTION,EXT 12-G3/8	
440	342751-0215		1	CONN. L-PIPE, EXT. LE-12-R3/8	
450	311521-0142		8	BLANK RIVET 3,2X6	
460	312155-0297		4	SCREW EN 10642 MF6S M4X25 A480	
470	312105-0382		2	SCREW M6S ISO 4014 M6X60 A480	
480	312605-0316		2	HEXAGON NUT, M6M M6 A280	
490	315105-0153		2	WASHER BRB6,4X12RFR	
500	342797-0122		1	CONN. BANJO, RINGPIECE 6-1/4	
510	342980-0304		1	BANJO-HOLLOW BOLT COUPL,EXT.THR.01-G1/4"	
520	312115-0455		2	SCREW ISO4762 M8X30 A4	
530	312155-0329		1	SCREW EN 10642 MF6S M5X16 A480	
680	90030-0348		1	CONN. STR., 6-G3/8, INT. THREAD	

Machine Type | Group Description | Used-In | Group Number | Page No

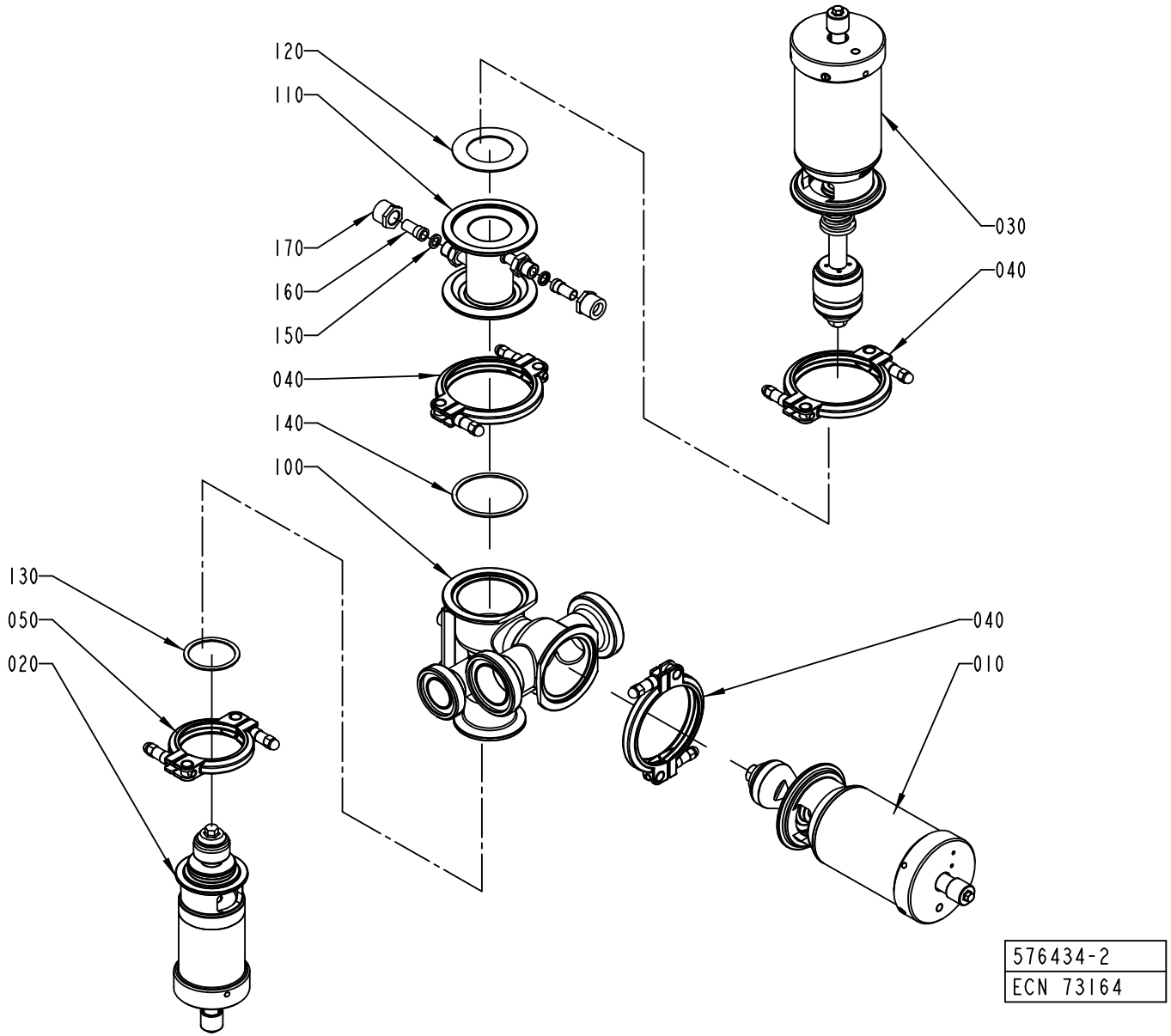
120
110
170
160
150
040
140
100
130
050
020
030
040
040
010
576434-2
ECN 73164

ECM: 156407 - 20040128
Group number: 576434-0200
Assembly Drawing: 576434-2_1_AA

Pos	Part No	UN	Qty	Description	Page No
-					
010	576436-0100		1	A-CYLINDER	**1-83**
020	576438-0100		1	B-CYLINDER	**1-85**
030	576437-0100		1	C-CYLINDER	**1-87**
040	541163-0200		3	CLAMP RING	**1-89**
050	541164-0200		1	CLAMP RING	**1-91**
100	1523057-0000		1	AP-VALVE-BODY (51-38)	
110	567018-0000		1	STEAM HOUSE	
120	539212-0000		1	GASKET	
130	90207-0365		1	GASKET	
140	90207-0363		1	GASKET	
150	90091-0266		2	SEAL RING 10,4X16,3X2,5 MM	
160	90030-0336		2	CONN. STRAIGHT, 316L-12M-BVCO-3	
170	90030-0338		2	NUT, PIPE & CONNECTORS, SS-8-BVCO-4	

Pos	Part No	UN	Qty	Description	Page No

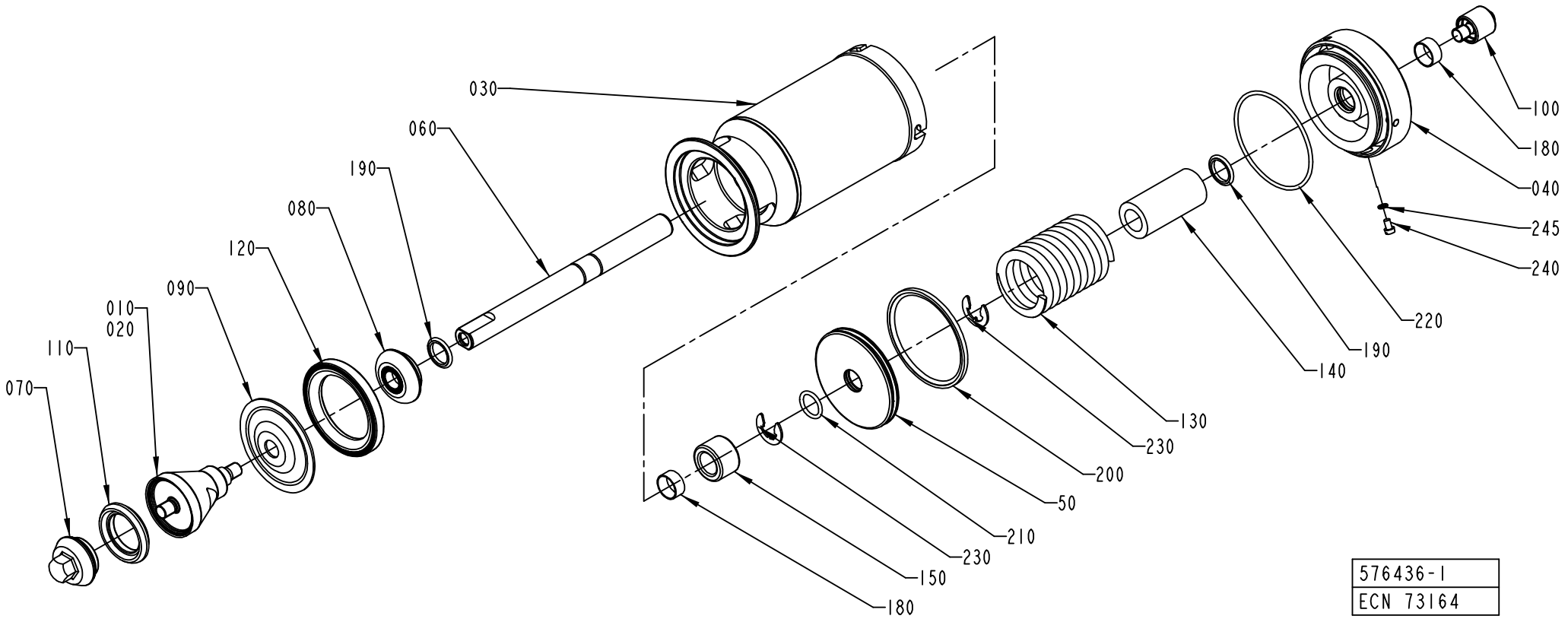
030
060
190
080
120
090
010
020
110
070
100
180
040
245
240
220
190
140
130
230
200
50
210
230
150
180
576436-1
ECN 73164

ECM: 156408 - 20040128
Group number: 576436-0100
Assembly Drawing: 576436-1_1_AB

Pos	Part No	UN	Qty	Description	Page No
2"					
	576436-0101		1	===CAD MODEL===	
010	530592-0000		1	SEAL RING HOLDER	
3"					
	576436-0102		1	===CAD MODEL===	
010	530595-0000		1	SEAL RING HOLDER	
Common Parts					
030	576439-0000		1	CYLINDER HOUSING	
040	576440-0000		1	END SECTION	
050	576441-0000		1	PISTON	
060	576446-0000		1	PISTON ROD	
070	530590-0000		1	VALVE CONE	
080	541166-0000		1	WASHER	
090	533169-0000		1	DIAPHRAGM	
100	553607-0000		1	SLEEVE	
110	530589-0000		1	SEAL RING	
120	440655-0000		1	RING	
130	440663-0000		1	COMPRESSION SPRING	
140	576448-0000		1	SPACER	
150	576449-0000		1	SPACER	
180	90091-0238		2	WEAR RING 20X22X10 MM	
190	90091-0237		2	ROD SEAL, GLIDORING 20X27,5X3 MM	
200	90091-0336		1	PISTON SEAL, GLIDORING 79X90X4 MM	
210	315204-0215		1	O-RING 19,2X3 MM	
220	315202-0308		1	O-RING 84,5X3 MM	
230	315754-0113		2	LOCKING WAE 15	
240	312125-0323		1	SCREW ISO 1207 M5X8 A4	
245	315233-0101		1	WASHER CAPTIVE SEALING M5	

Pos	Part No	UN	Qty	Description	Page No

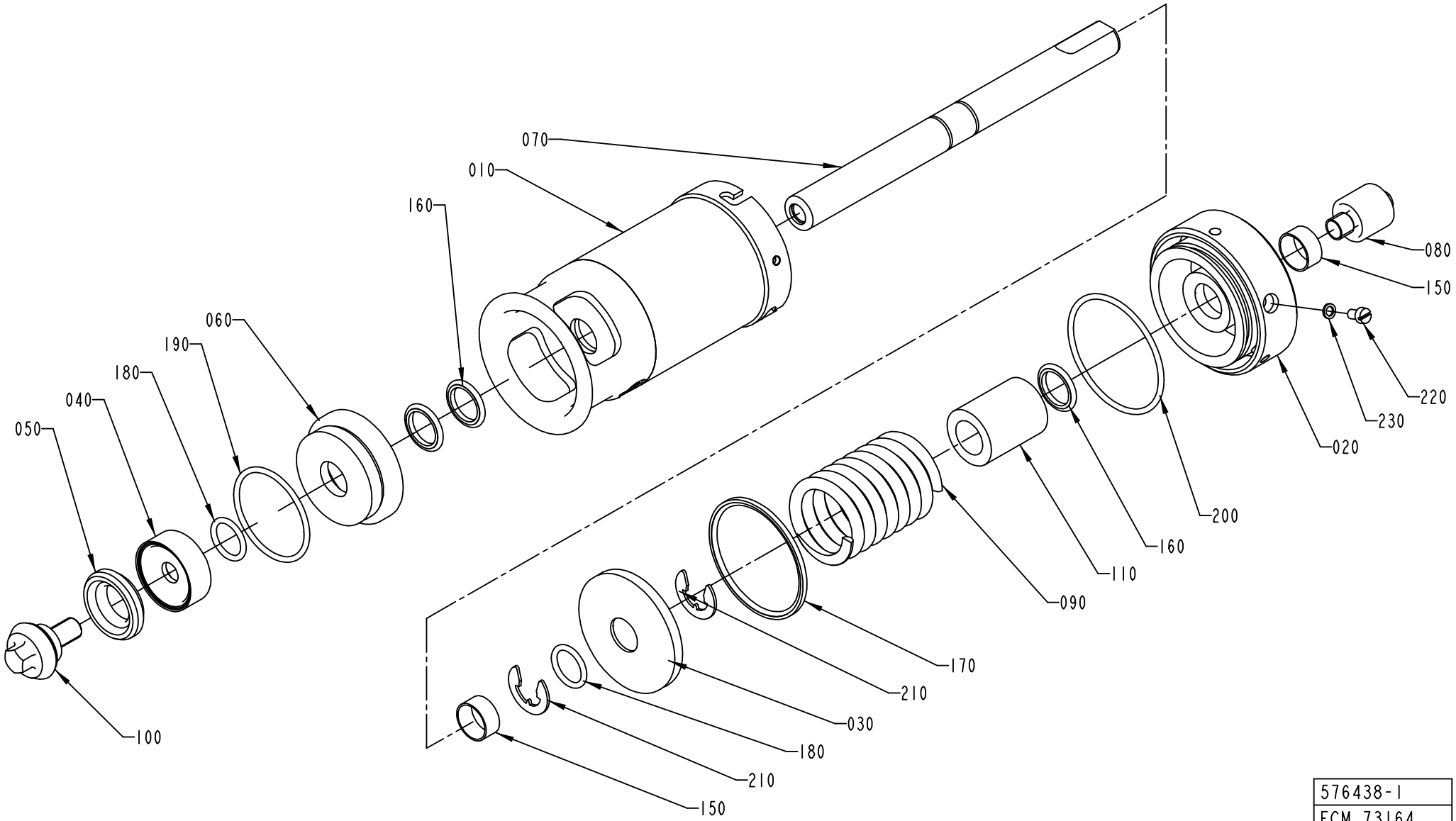

576438-1
ECM 73164

ECM: 156410 - 20040128
Group number: 576438-0100
Assembly Drawing: 576438-1_1_AB

Pos	Part No	UN	Qty	Description	Page No
-					
010	576443-0000		1	CYLINDER HOUSING	
020	576444-0000		1	END SECTION	
030	576445-0000		1	PISTON	
040	530587-0000		1	WASHER	
050	530588-0000		1	SEAL RING	
060	556133-0000		1	SEALING WASHER	
070	576447-0000		1	PISTON ROD	
080	553607-0000		1	SLEEVE	
090	440662-0000		1	COMPRESSION SPRING	
100	476185-0000		1	VALVE CONE	
110	576451-0000		1	SPACER	
150	90091-0238		2	WEAR RING 20X22X10 MM	
160	90091-0237		3	ROD SEAL, GLIDORING 20X27,5X3 MM	
170	90091-0335		1	PISTON SEAL,GLIDORING 62,5X70X3 MM	
180	315204-0215		2	O-RING 19,2X3 MM	
190	315204-0301		1	O-RING 49,5X3 MM	
200	315202-0304		1	O-RING 64,5X3 MM	
210	315754-0113		2	LOCKING WAE 15	
220	312125-0323		1	SCREW ISO 1207 M5X8 A4	
230	315233-0101		1	WASHER CAPTIVE SEALING M5	

Pos	Part No	UN	Qty	Description	Page No

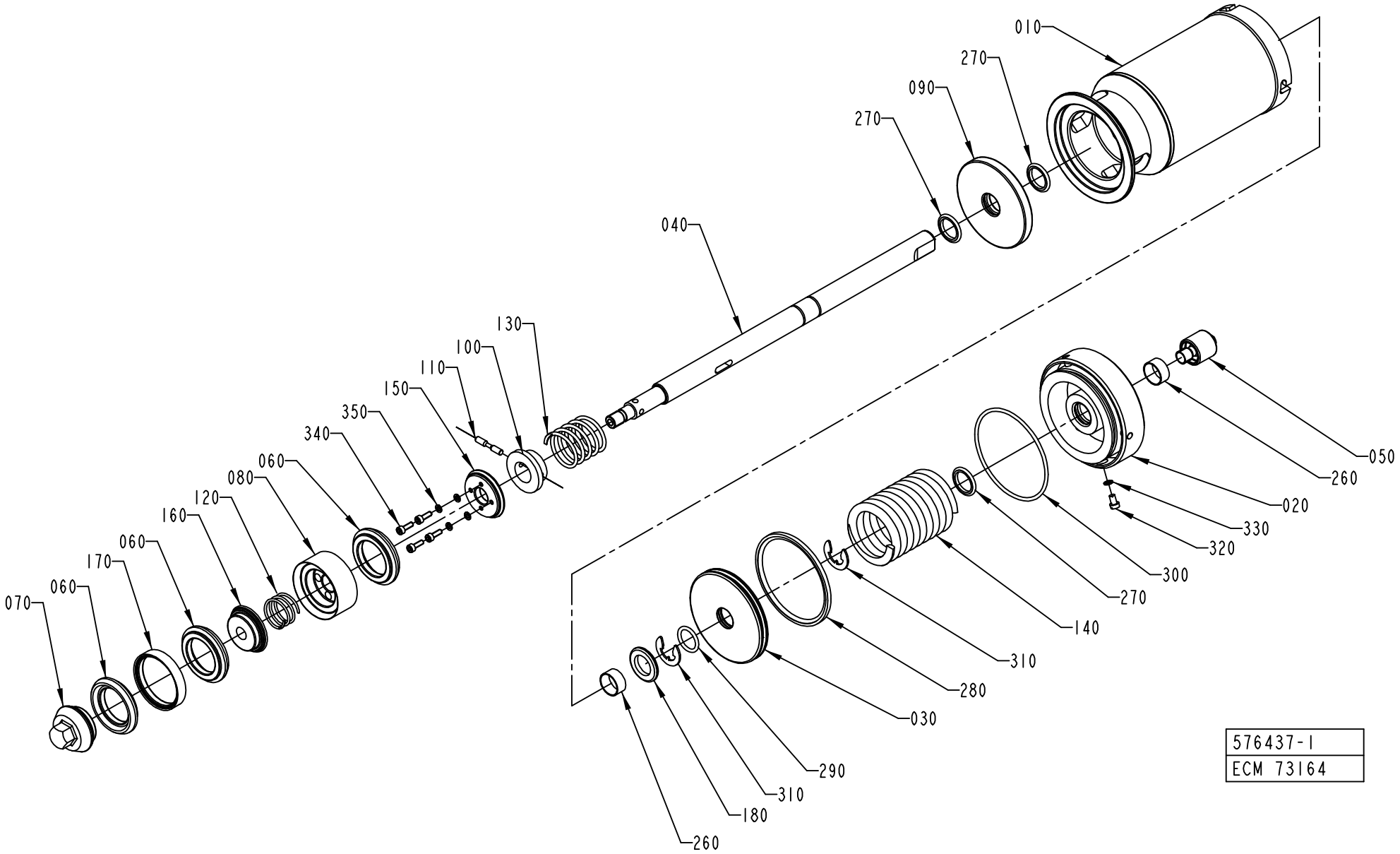
010
270
090
270
040
130
100
110
150
350
340
060
080
120
160
060
170
060
070
050
260
020
330
320
300
270
140
310
280
030
290
310
180
260
576437-1
ECM 73164

ECM: 156409 - 20040128
Group number: 576437-0100
Assembly Drawing: 576437-1_1_AB

Pos	Part No	UN	Qty	Description	Page No
-					
010	576439-0000		1	CYLINDER HOUSING	
020	576440-0000		1	END SECTION	
030	576441-0000		1	PISTON	
040	576442-0000		1	PISTON ROD	
050	553607-0000		1	SLEEVE	
060	530589-0000		3	SEAL RING	
070	530590-0000		1	VALVE CONE	
080	530591-0000		1	HOLDER	
090	555458-0000		1	SEALING WASHER	
100	440650-0000		1	WASHER	
110	440659-0000		1	CYLINDRICAL PIN	
120	440660-0000		1	COMPRESSION SPRING	
130	440661-0000		1	COMPRESSION SPRING	
140	440663-0000		1	COMPRESSION SPRING	
150	530597-0000		1	WASHER	
160	530598-0000		1	WASHER	
170	530599-0000		2	RING	
180	576450-0000		1	SPACER	
260	90091-0238		2	WEAR RING 20X22X10 MM	
270	90091-0237		3	ROD SEAL, GLIDORING 20X27,5X3 MM	
280	90091-0336		1	PISTON SEAL, GLIDORING 79X90X4 MM	
290	315204-0215		1	O-RING 19,2X3 MM	
300	315202-0308		1	O-RING 84,5X3 MM	
310	315754-0113		2	LOCKING WAE 15	
320	312125-0323		1	SCREW ISO 1207 M5X8 A4	
330	315233-0101		1	WASHER CAPTIVE SEALING M5	
340	312115-0291		4	SCREW ISO4762 M4X12 A4	
350	315402-0136		4	LOCK WASHER FBB 4,1	

Pos	Part No	UN	Qty	Description	Page No

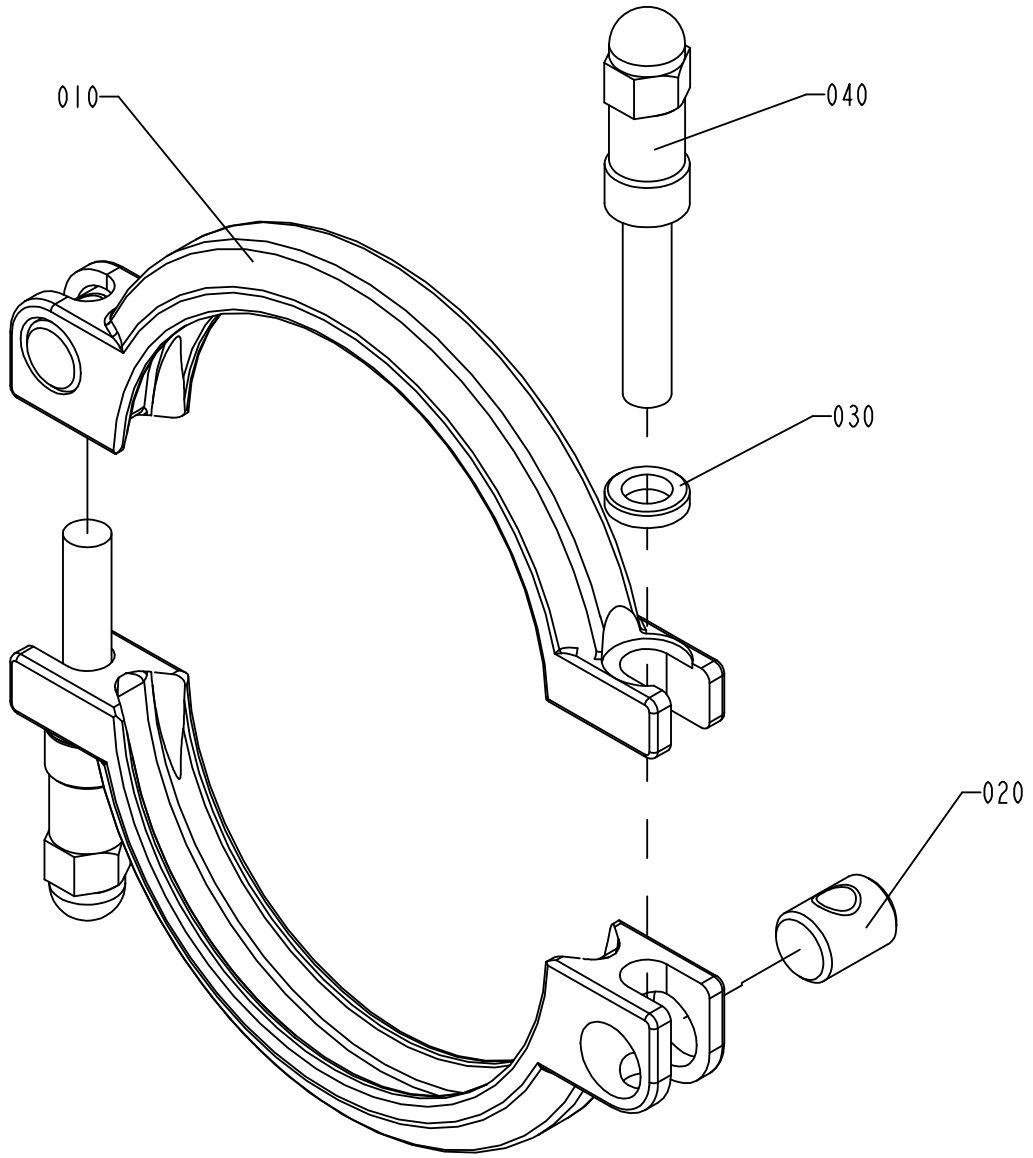

S-541163-2
ECN 71956

ECM: 156361 - 20040128
Group number: 541163-0200
Assembly Drawing: 541163-2_1_AB

Pos	Part No	UN	Qty	Description	Page No
-					
010	532117-0000		2	CLAMP RING	
020	497748-0000		2	PIN	
030	541165-0000		2	WASHER	
040	554162-0000		2	SCREW	

Pos	Part No	UN	Qty	Description	Page No

CLAMP RING

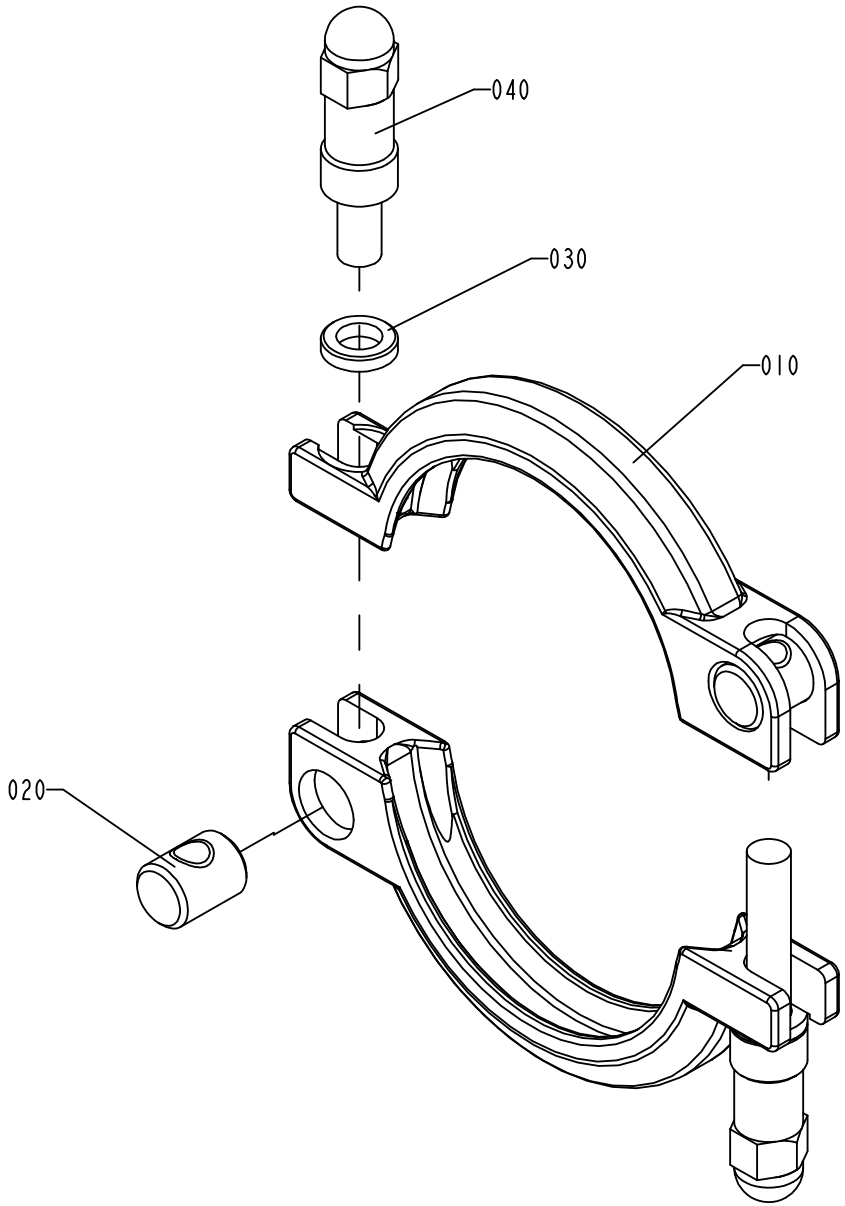

S-541164-2
ECN 71956

ECM: 156406 - 20040128
Group number: 541164-0200
Assembly Drawing: 541164-2_1_AB

Pos	Part No	UN	Qty	Description	Page No
-					
010	532118-0000		2	CLAMP RING	
020	497748-0000		2	PIN	
030	541165-0000		2	WASHER	
040	554162-0000		2	SCREW	

Pos	Part No	UN	Qty	Description	Page No

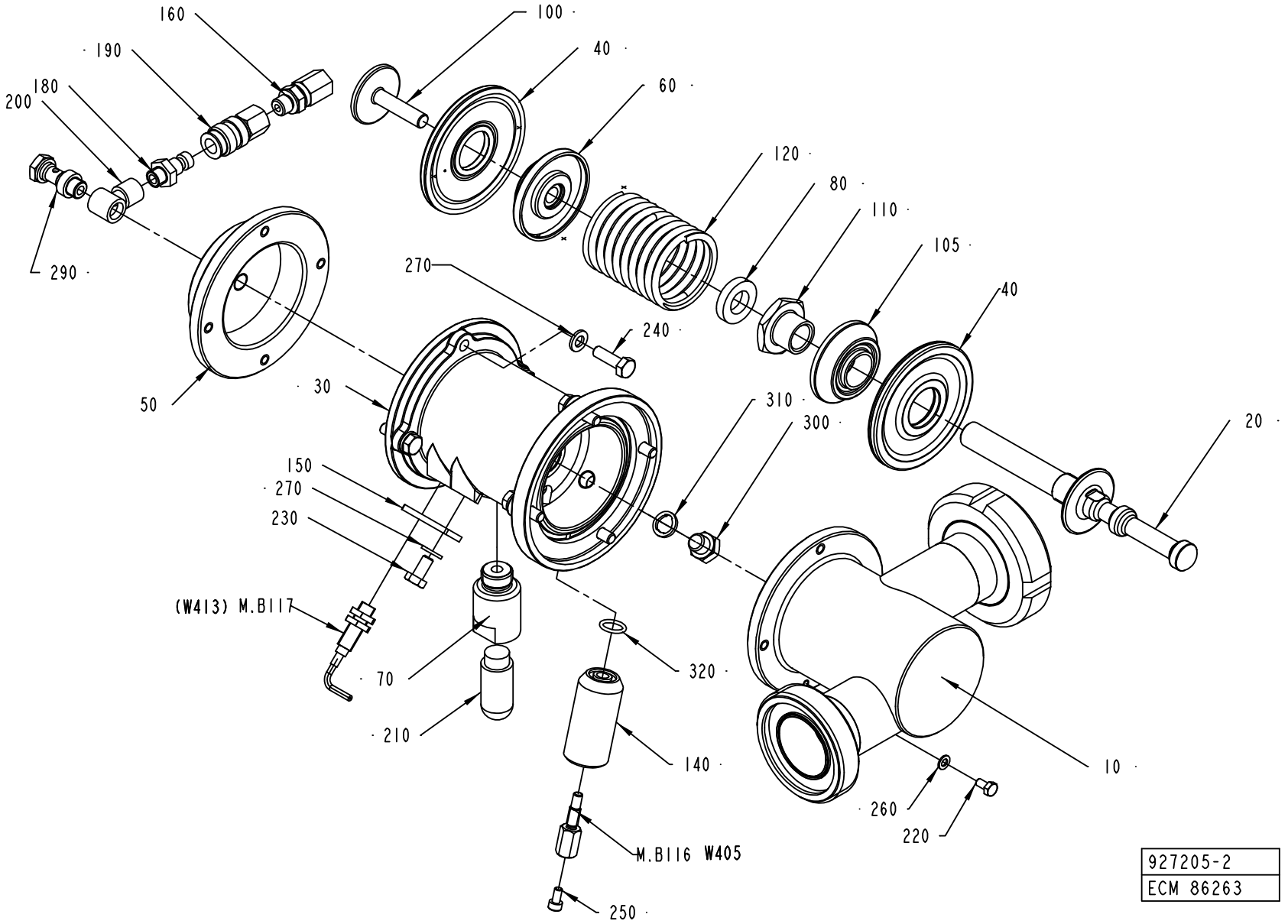
160
190
200
180
290
100
40
60
120
80
110
105
40
270
240
50
30
310
300
20
150
270
230
(W413) M.B117
70
210
320
140
M.B116 W405
250
10
260
220
927205-2
ECM 86263

ECM: 124100 - 20040110
Group number: 927205-0200
Assembly Drawing: 927205-2_1_AB

Pos	Part No	UN	Qty	Description	Page No
-					
010	1519937-0000		1	REGULATOR BODY	
020	927007-0000		1	SHUTTER	
030	927194-0000		1	BODY	
040	925998-0000		2	DIAPHRAGM	
050	927203-0000		1	COVER	
060	926906-0000		1	SPACER	
070	927044-0000		1	SPACER	
080	736514-0000		1	SHOCK ABSORBER	
100	926907-0000		1	SCREW	
105	1511600-0000		1	SPACER	
110	979434-0000		1	FERRULE	
120	926909-0000		1	COMPRESSION SPRING	
140	2576398-0000		1	SPACER	
150	926934-0000		1	SUPPORT	
160	90030-0089		1	STRAIGHT CONNECTION	
180	90163-0057		1	QUICK COUPLING, (M) 5150-1/8	
190	90163-0062		1	QUICK COUPLING, (F) 5053-1/8	
200	90224-0308		1	CONN. BANJO, ART. NO. 2023-1/8-1/8	
210	90328-0026		1	SILENCER G1/4	
220	312105-0287		1	SCREW M6S ISO4017 M4X8 A470	
230	312105-0366		1	SCREW M6S ISO 4017 M6X12 A480	
240	312105-0370		8	SCREW M6S ISO 4017 M6X20 A480	
250	312115-0287		1	SCREW ISO4762 M4X8 A4	
260	315105-0136		1	WASHER BRB4,3XRFR	
270	315105-0153		9	WASHER BRB6,4X12RFR	
290	342980-0303		1	BANJO-HOLLOW BOLT COUPL,EXT.THR.01-G1/8"	
300	90330-0066		1	PLUG, EXT. G-THREAD, G1/8	
310	315239-0109		1	NYLON WASHER G1/8	
320	315206-0701		1	O-RING 10,82X1,78 MM	
M.B116	1478814-0000		1	SENSOR	
M.B117	90458-0138		1	PROX.SW. E2EG-X1R5B1-5M	
W405	351150-0431	M	5	CABLE OLFLEX 2X0,75 MM2 LIGHT/GREY	

Pos	Part No	UN	Qty	Description	Page No

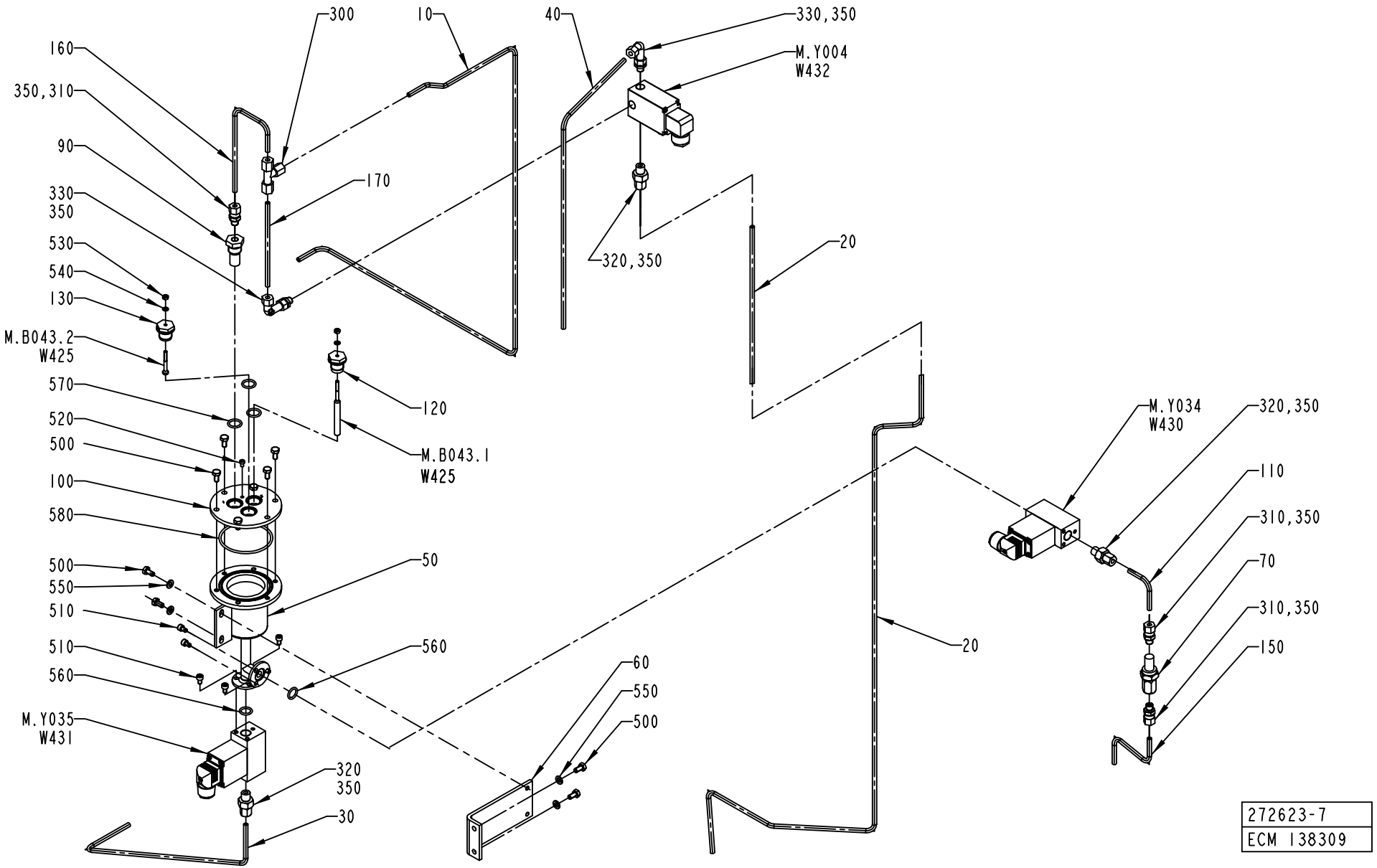
300
10
40
330,350
M.Y004
W432
160
350,310
90
170
330
350
530
540
130
M.B043.2
W425
320,350
20
570
520
500
100
580
120
M.B043.1
W425
M.Y034
W430
320,350
110
310,350
70
310,350
150
50
500
550
510
510
560
560
M.Y035
W431
320
350
30
60
550
500
20
272623-7
ECM 138309

ECM: 138311 - 20031201
Group number: 272623-0700
Assembly Drawing: 272623-7_1_AB

This list covers pages from 1-94 to 1-97

Pos	Part No	UN	Qty	Description	Page No
HI (See drawing on page: 1-96)					
590	90330-0013		1	NIPPLES, EXT. THREAD. ISO 7/1 R1/4-R1/8	
600	90330-0095		1	T-PIPE, INT. THREAD, R-221-R1/8	
610	90030-0234		1	CONN. ELBOW, 6-R1/8 , EXT.THREAD	
620	90330-0032		1	NIPPLES, EXT. THREAD. ISO 7/1 R1/8-R1/8	
NOHI (See drawing on page: 1-94)					
020	1517493-0000		1	PIPE	
110	456900-0000		1	PIPE	
310	90030-0184		3	CONN. STR. GA-6-G1/8	
320	90030-0202		3	CONN. STR., 6-G1/4, EXT. THREAD	
Common Parts					
010	1517494-0000		1	PIPE	
030	1517495-0000		1	PIPE	
040	578019-0000		1	TUBE40	
050	752576-0000		1	CONTAINER	
060	272844-0000		1	BRACKET	
070	484196-0000		1	FILTER	
090	450833-0000		1	FILTER	
100	450837-0000		1	LID	
120	560931-0000		1	BRACKET	
130	2638206-0000		1	BRACKET	
150	578026-0000		1	PIPE	
160	752675-0000		1	PIPE	
170	752676-0000		1	PIPE	
300	90030-0076		1	CONN. T-PIPE T-6	
330	90030-0203		2	ADJUSTABLE ELBOW CONNECTION,EXT 6-G1/4	
350	90144-0073		1	TREBOFLON-TAPE W=13MM	
500	312105-0366		10	SCREW M6S ISO 4017 M6X12 A480	
510	312115-0323		6	SCREW ISO4762 M5X8 A4	
520	312125-0285		1	SCREW ISO 1207 M4X6 A4	
530	312605-0312		6	HEXAGON NUT, M6M M4 A280	
540	315105-0136		6	WASHER BRB4,3XRFR	
550	315105-0153		4	WASHER BRB6,4X12RFR	
560	927421-0003		2	O-RING 13.3X2.4 SILICON	
570	927421-0004		3	O-RING 15.3X2.4 SILICON	
580	927422-0011		1	O-RING 69.5X3 SILICON	
MB043.1	567070-0010		1	ELECTRODE	
MB043.2	567070-0015		1	ELECTRODE	
MY004	544906-0000		1	SOLENOID VALVE	
	90042-0464		*1*	*DIAPHRAGM VITON 1211321*	
	90042-0465		*1*	*O-RING VITON 17,17X1,78*	
MY034	90042-0171		1	SOLENOID VALVE BUERKERT	
	90042-0466		*1*	*DIAPHRAGM 330.95.2 VITON*	
MY035	544906-0000		1	SOLENOID VALVE	
	90042-0464		*1*	*DIAPHRAGM VITON 1211321*	
	90042-0465		*1*	*O-RING VITON 17,17X1,78*	
W425	351150-0404	M	5	CABLE OLFLEX 4X0,75 MM2 LIGHT/GREY	
W430	351150-0403	M	4	CABLE OLFLEX 3X0,75 MM2 LIGHT/GREY	
W431	351150-0403	M	4	CABLE OLFLEX 3X0,75 MM2 LIGHT/GREY	
W432	351150-0403	M	4	CABLE OLFLEX 3X0,75 MM2 LIGHT/GREY	

Machine Type | Group Description | Used-In | Group Number | Page No

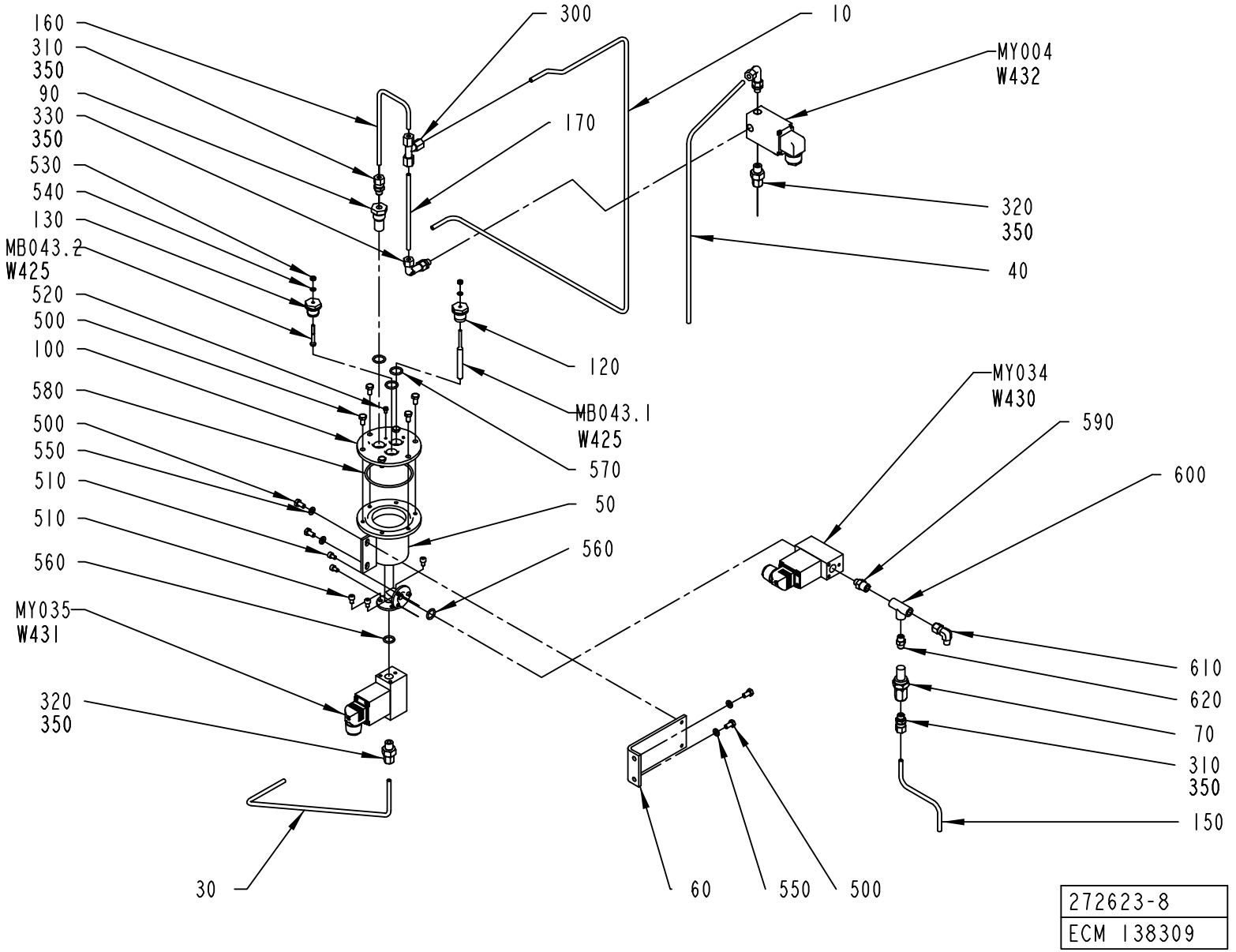
160
310
350
90
330
350
530
540
130
MB043.2
W425
520
500
100
580
500
550
510
510
560
MY035
W431
320
350
30
300
10
MY004
W432
170
320
350
40
120
MB043.1
W425
570
50
560
MY034
W430
590
600
610
620
70
310
350
150
60
550
500
272623-8
ECM 138309

ECM: 138311 - 20031201
Group number: 272623-0700
Assembly Drawing: 272623-8_1_AB

This list covers pages from 1-94 to 1-97

Pos	Part No	UN	Qty	Description	Page No
HI (See drawing on page: 1-96)					
590	90330-0013		1	NIPPLES, EXT. THREAD. ISO 7/1 R1/4-R1/8	
600	90330-0095		1	T-PIPE, INT. THREAD, R-221-R1/8	
610	90030-0234		1	CONN. ELBOW, 6-R1/8 , EXT.THREAD	
620	90330-0032		1	NIPPLES, EXT. THREAD. ISO 7/1 R1/8-R1/8	
NOHI (See drawing on page: 1-94)					
020	1517493-0000		1	PIPE	
110	456900-0000		1	PIPE	
310	90030-0184		3	CONN. STR. GA-6-G1/8	
320	90030-0202		3	CONN. STR., 6-G1/4, EXT. THREAD	
Common Parts					
010	1517494-0000		1	PIPE	
030	1517495-0000		1	PIPE	
040	578019-0000		1	TUBE40	
050	752576-0000		1	CONTAINER	
060	272844-0000		1	BRACKET	
070	484196-0000		1	FILTER	
090	450833-0000		1	FILTER	
100	450837-0000		1	LID	
120	560931-0000		1	BRACKET	
130	2638206-0000		1	BRACKET	
150	578026-0000		1	PIPE	
160	752675-0000		1	PIPE	
170	752676-0000		1	PIPE	
300	90030-0076		1	CONN. T-PIPE T-6	
330	90030-0203		2	ADJUSTABLE ELBOW CONNECTION,EXT 6-G1/4	
350	90144-0073		1	TREBOFLON-TAPE W=13MM	
500	312105-0366		10	SCREW M6S ISO 4017 M6X12 A480	
510	312115-0323		6	SCREW ISO4762 M5X8 A4	
520	312125-0285		1	SCREW ISO 1207 M4X6 A4	
530	312605-0312		6	HEXAGON NUT, M6M M4 A280	
540	315105-0136		6	WASHER BRB4,3XRFR	
550	315105-0153		4	WASHER BRB6,4X12RFR	
560	927421-0003		2	O-RING 13.3X2.4 SILICON	
570	927421-0004		3	O-RING 15.3X2.4 SILICON	
580	927422-0011		1	O-RING 69.5X3 SILICON	
MB043.1	567070-0010		1	ELECTRODE	
MB043.2	567070-0015		1	ELECTRODE	
MY004	544906-0000		1	SOLENOID VALVE	
	90042-0464		*1*	*DIAPHRAGM VITON 1211321*	
	90042-0465		*1*	*O-RING VITON 17,17X1,78*	
MY034	90042-0171		1	SOLENOID VALVE BUERKERT	
	90042-0466		*1*	*DIAPHRAGM 330.95.2 VITON*	
MY035	544906-0000		1	SOLENOID VALVE	
	90042-0464		*1*	*DIAPHRAGM VITON 1211321*	
	90042-0465		*1*	*O-RING VITON 17,17X1,78*	
W425	351150-0404	M	5	CABLE OLFLEX 4X0,75 MM2 LIGHT/GREY	
W430	351150-0403	M	4	CABLE OLFLEX 3X0,75 MM2 LIGHT/GREY	
W431	351150-0403	M	4	CABLE OLFLEX 3X0,75 MM2 LIGHT/GREY	
W432	351150-0403	M	4	CABLE OLFLEX 3X0,75 MM2 LIGHT/GREY	

Machine Type | Group Description | Used-In | Group Number | Page No

PIPE WORK-PNEUMATIC

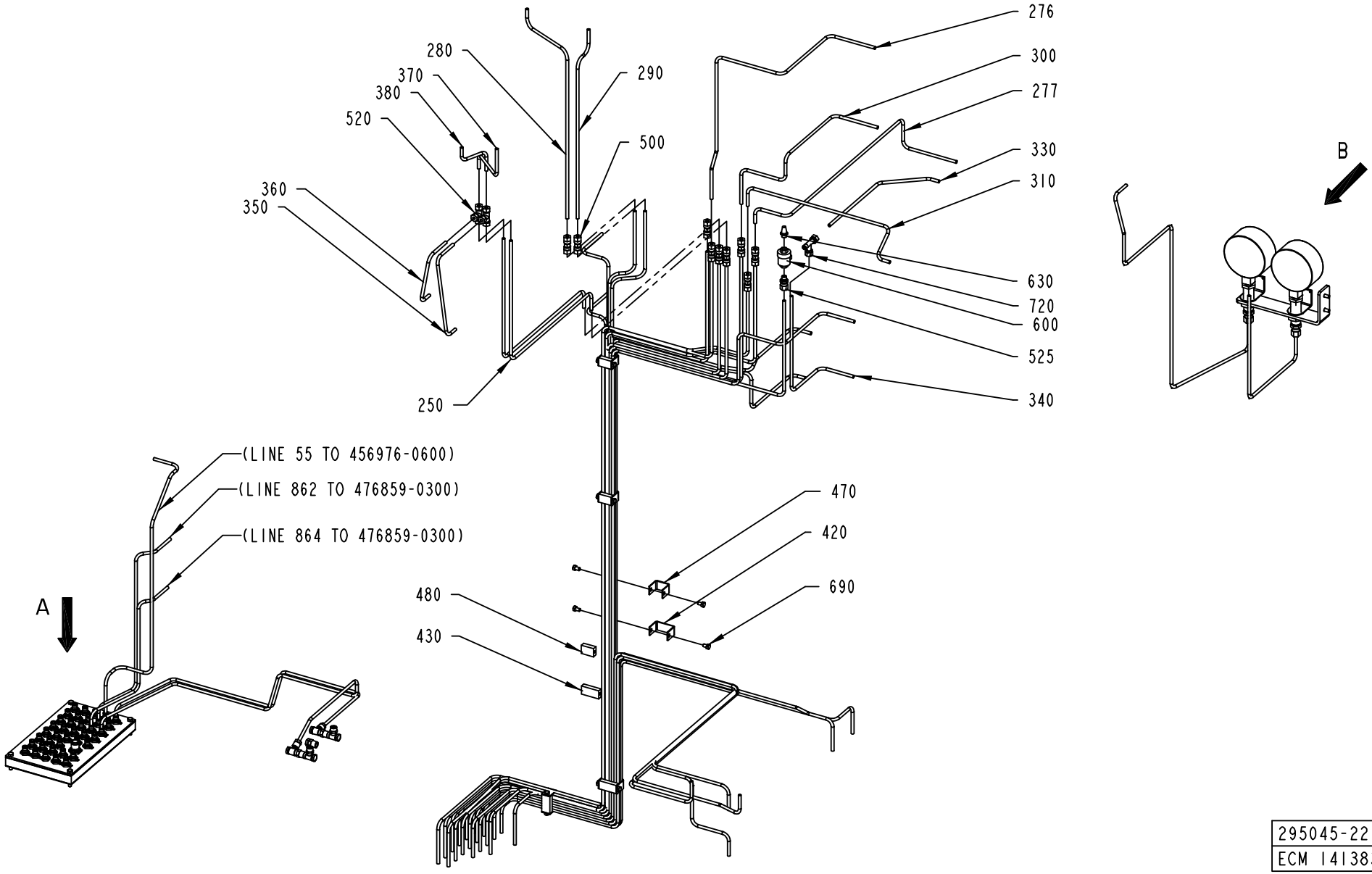

295045-22
ECM 141383

ECM: 141383 - 20040119
Group number: 295045-0900
Assembly Drawing: 295045-22_1_AB

This list covers pages from 1-98 to 1-105

Pos	Part No	UN	Qty	Description	Page No
TBA NOPT (See drawing on pages: 1-98, 1-100)					
650	90330-0066		1	PLUG, EXT. G-THREAD, G1/8	
730	342797-0121		2	CONN. BANJO, RINGPIECE 6-1/8	
760	342980-0113		2	BANJO-CONNECTION,RING 6/4-G1/8"	
770	342980-0303		4	BANJO-HOLLOW BOLT COUPL,EXT.THR.01-G1/8"	
TBA PT19 (See drawing on pages: 1-102, 1-104)					
010	2502199-0000		1	PIPE	
730	342797-0121		3	CONN. BANJO, RINGPIECE 6-1/8	
760	342980-0113		3	BANJO-CONNECTION,RING 6/4-G1/8"	
770	342980-0303		6	BANJO-HOLLOW BOLT COUPL,EXT.THR.01-G1/8"	
Common Parts					
020	2502197-0000		1	PIPE	
030	2502198-0000		1	PIPE	
050	577782-0000		1	TUBE 200	
060	577783-0000		1	TUBE 201	
070	577784-0000		1	TUBE260	
080	577785-0000		1	TUBE 261	
090	577786-0000		1	TUBE 240	
100	577787-0000		1	TUBE 241	
110	577788-0000		1	TUBE 80	
120	577789-0000		1	TUBE 90	
130	577790-0000		1	TUBE 70	
140	577791-0000		1	TUBE 40	
150	2544863-0000		1	PIPE	
160	2544864-0000		1	PIPE	
170	578004-0000		1	TUBE 211	
180	578005-0000		1	TUBE 213	
190	1524666-0000		1	TUBE 230	
200	1524667-0000		1	TUBE 231	
210	2544855-0000		1	PIPE	
220	2544856-0000		1	PIPE	
230	1524665-0000		1	TUBE 860	
240	1524664-0000		1	TUBE 861	
250	578013-0000		2	TUBE 213 AND 211	
260	578015-0000		1	TUBE 1071	
270	1524669-0000		1	PIPE	
275	580363-0000		1	PIPE 71	
276	580364-0000		1	PIPE 71	
277	581015-0000		1	PIPE 91	
278	581016-0000		1	PIPE 91	
279	1524663-0000		1	TUBE 55	
280	2544868-0000		1	PIPE	
290	2544869-0000		1	PIPE	
300	578020-0000		1	TUBE 70	
310	578021-0000		1	TUBE 1071	
320	1512356-0000		1	CONNECTION DEVICE	
330	577541-0000		1	TUBE 90	
340	577542-0000		1	TUBE 90	
350	578022-0000		1	TUBE 211	
360	578023-0000		1	TUBE 213	
370	1524672-0000		1	TUBE 211	
380	1524671-0000		1	TUBE 210	
390	578030-0000		2	GASKET	
400	1524670-0000		1	PIPE	
410	1524673-0000		1	BRACKET	
420	295604-0000		3	CRAMP	
430	295605-0000		3	BRACKET	
440	464173-0000		2	LABEL HOLDER	
450	464174-0000		1	SIGN	
460	464175-0000		1	SIGN	
470	578027-0000		3	CRAMP	
480	578028-0000		3	BRACKET	
490	1524674-0000		2	REDUCTION SLEEVE	
495	1539250-0000		1	SPACER	
500	90030-0075		9	PIPE CONNECTION G-6	
510	90030-0092		2	STRAIGHT CONN., 6-R1/4,EXT. TAPPERED	
520	90030-0164		2	CONN. T-PIPE T6-LL	
525	90030-0184		1	CONN. STR. GA-6-G1/8	
550	90043-0034		2	PRESSURE GAUGE	
560	90043-0302		2	SCREW	
580	90166-0119	MM	2100	HOSE PUR 4/6 BLACK	
590	90166-0132	MM	1500	TUBE 6 MM PA,TRANSP.	
600	90235-0259		1	VALVE	
630	90328-0003		1	SILENCER	
660	90330-0025		3	BUSHING, INT/EXT. THR. R1/4-RP1/8	
690	312105-0364		12	SCREW M6S ISO 4017 M6X10 A480	
700	312105-0368		2	SCREW M6S ISO 4017 M6X16 A480	
710	312502-0120		4	DRIVE SCREW ROUND HEAD KDS 0X5	
720	342751-0204		1	CONN. L-PIPE, EXT. LE-6-R1/8	
740	90457-0087		1	BULKHEAD CONNECTOR 12 MM	
750	90457-0086		38	BULKHEAD CONNECTOR 6MM	
780	359000-0401		36	MARKING COLLAR 2/4 "1" YELLOW	
780	359000-0400		16	MARKING CO2/4"0"	
780	359000-0771		2	MARKING CO2/4"V"	

Machine Type | Group Description | Used-In | Group Number | Page No

VIEW A

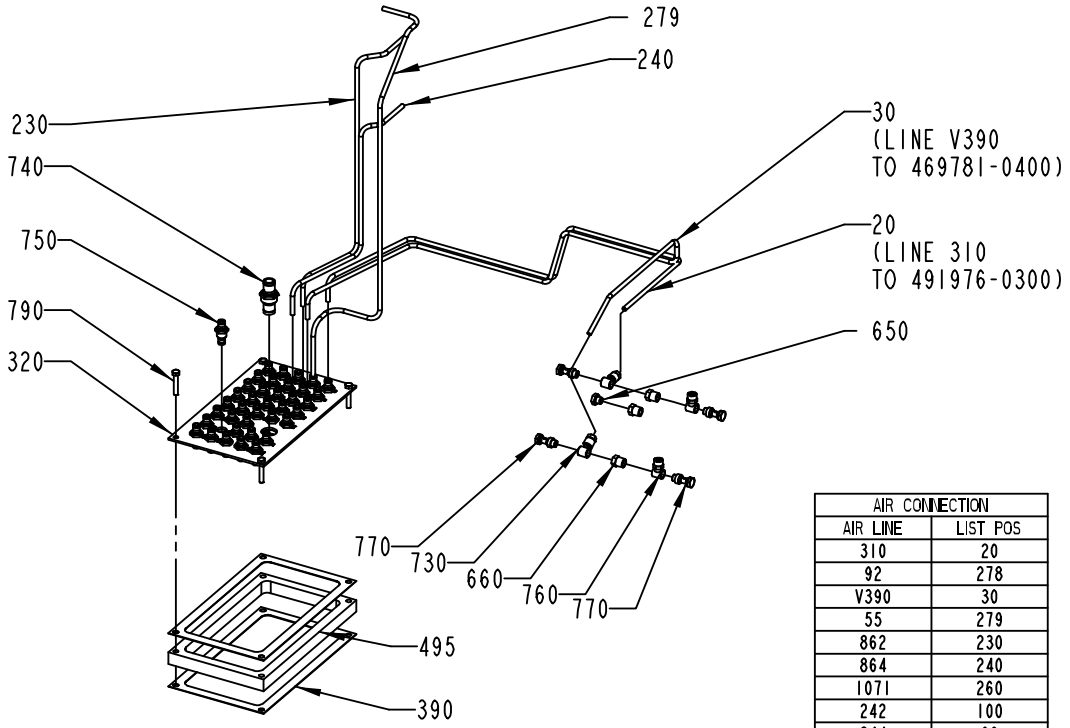

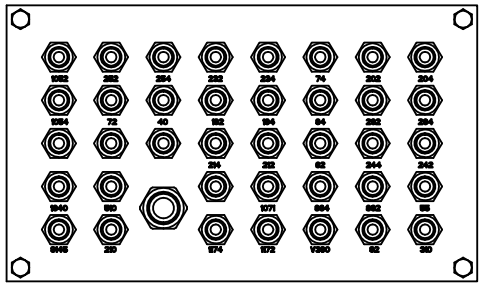

AIR CONNECTION	
AIR LINE	LIST POS
310	20
92	278
V390	30
55	279
862	230
864	240
1071	260
242	100
244	90
82	110
212	170
214	180
264	80
262	70
94	120
194	150
192	160
40	140
72	275
204	50
202	60
74	130
234	190
232	200
254	210
252	220

VOEW B

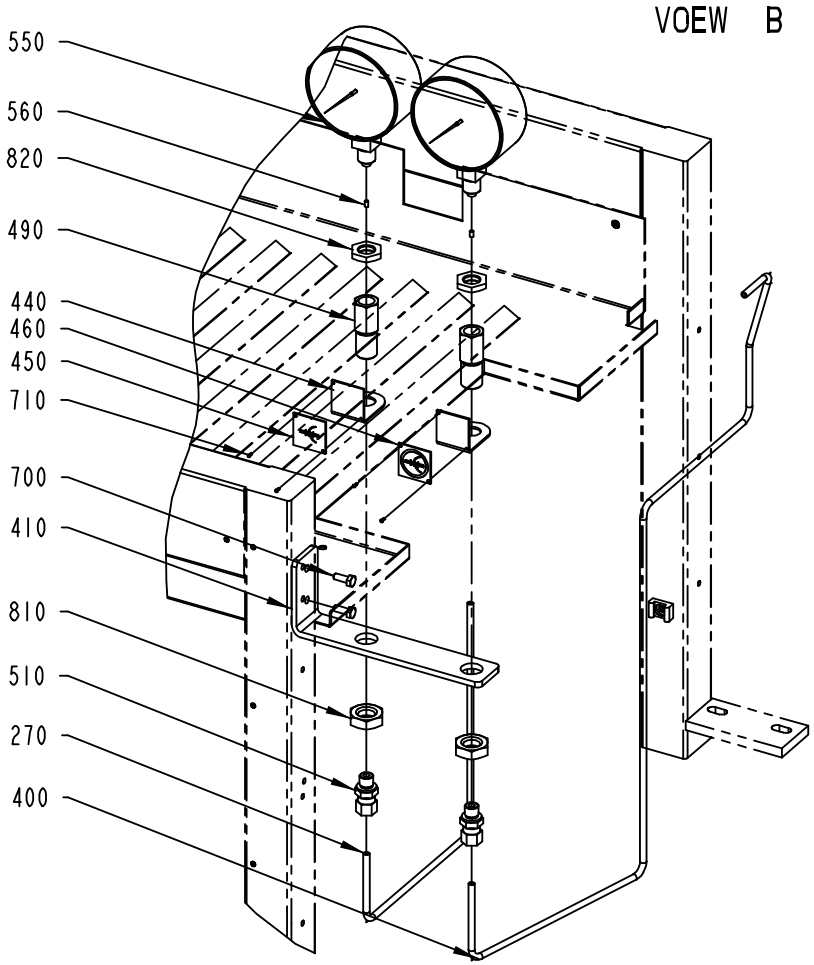

295045-22
ECM 141383

Pos	Part No	UN	Qty	Description	Page No
Common Parts (Cont'd)					
780	359000-0409		20	MARKING COLLAR PA2/4 "9" YELLOW	
780	359000-0408		6	MARKING COLLAR PA2/4 "8" YELLOW	
780	359000-0407		12	MARKING COLLAR PA2/4 "7" YELLOW	
780	359000-0406		8	MARKING COLLAR PA2/4 "6" YELLOW	
780	359000-0405		8	MARKING CO2/4"5"	
780	359000-0404		40	MARKING COLLAR PA2/4 "4" YELLOW	
780	359000-0403		8	MARKING COLLAR PA2/4 "3" YELLOW	
780	359000-0402		72	MARKING COLLAR 2/4 "2" YELLOW	
790	312109-0376		4	SCREW M6S ISO 4017 M6X35 A480	
810	312625-0326		2	HEXAGON THIN NUT, EN 24035 ML6M M20 A4	
820	90330-0105		2	NUT, HEXAGON, R3/8	

Pos	Part No	UN	Qty	Description	Page No

PIPE WORK-PNEUMATIC

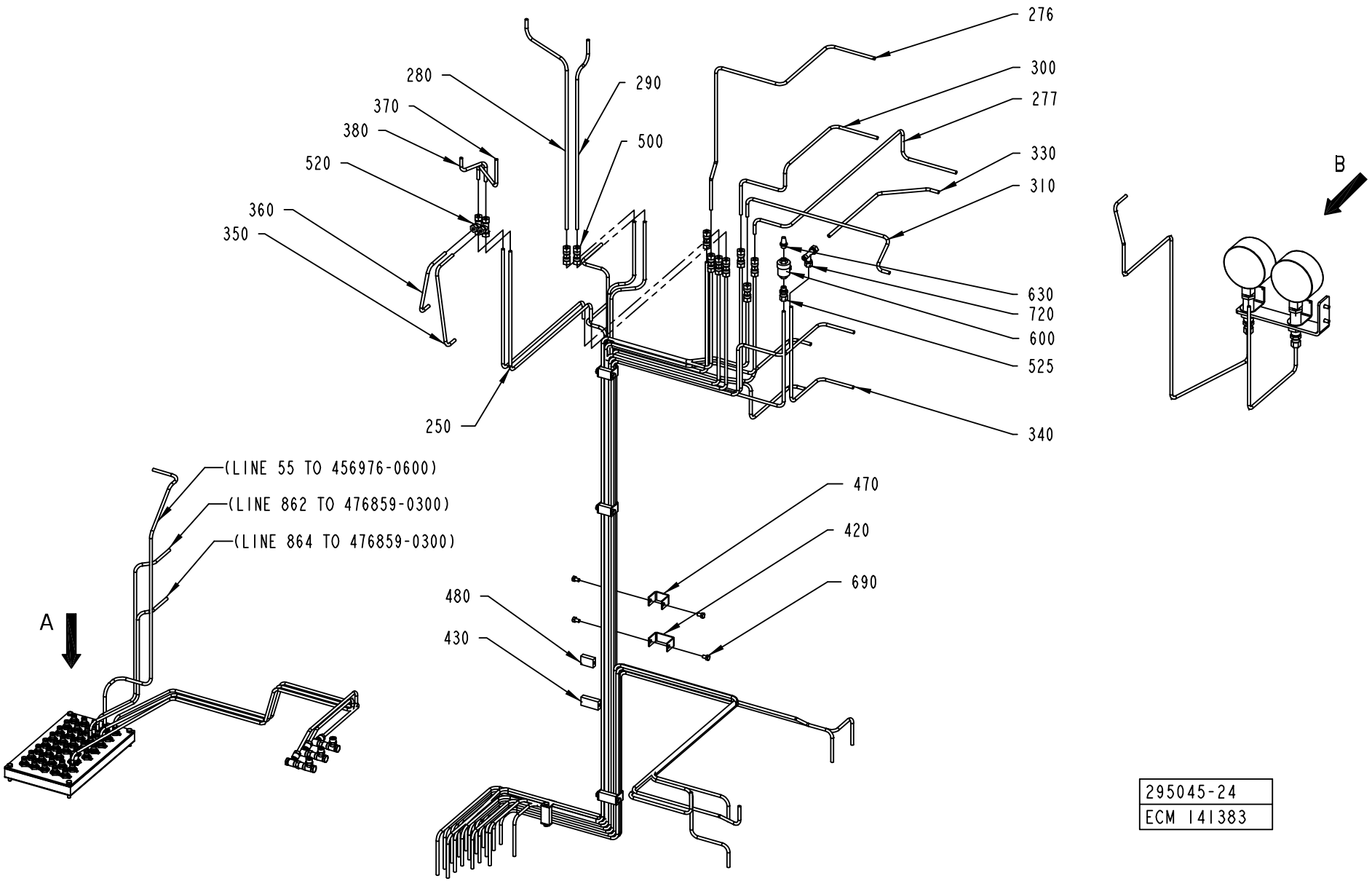

295045-24
ECM 141383

Pos	Part No	UN	Qty	Description	Page No	Pos	Part No	UN	Qty	Description	Page No

SEE PREVIOUS LISTS PAGES: 1-99, 1-101.

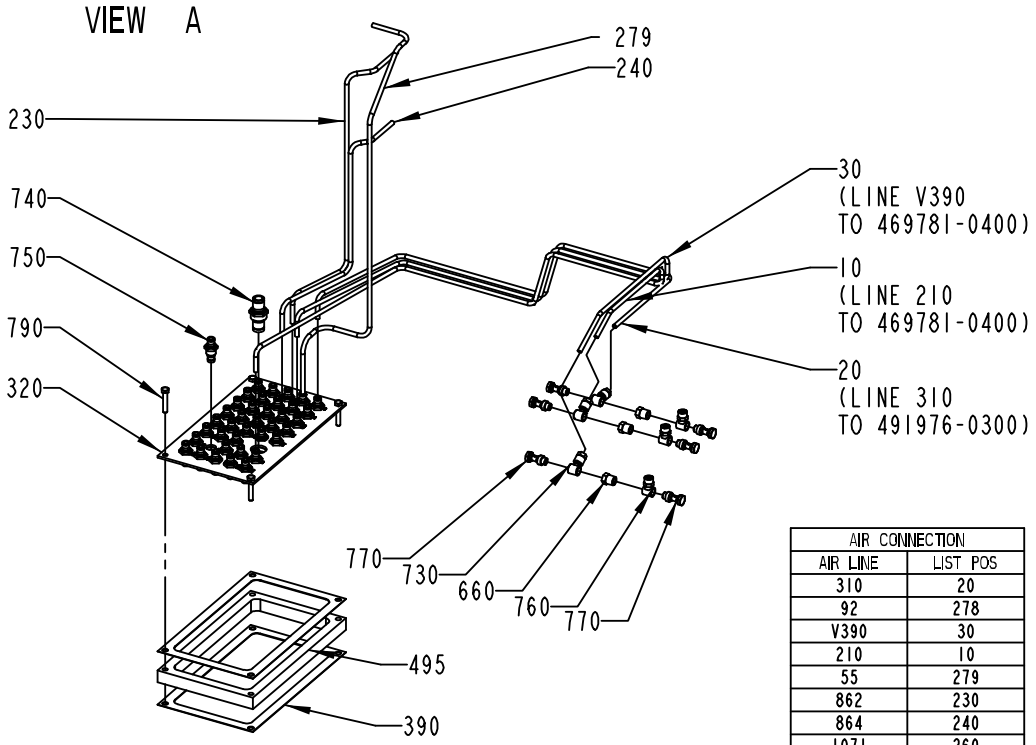

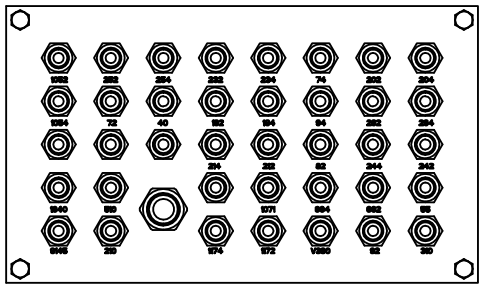

AIR CONNECTION	
AIR LINE	LIST POS
310	20
92	278
V390	30
210	10
55	279
862	230
864	240
1071	260
242	100
244	90
82	110
212	170
214	180
264	80
262	70
94	120
194	150
192	160
40	140
72	275
204	50
202	60
74	130
234	190
232	200
254	210
252	220

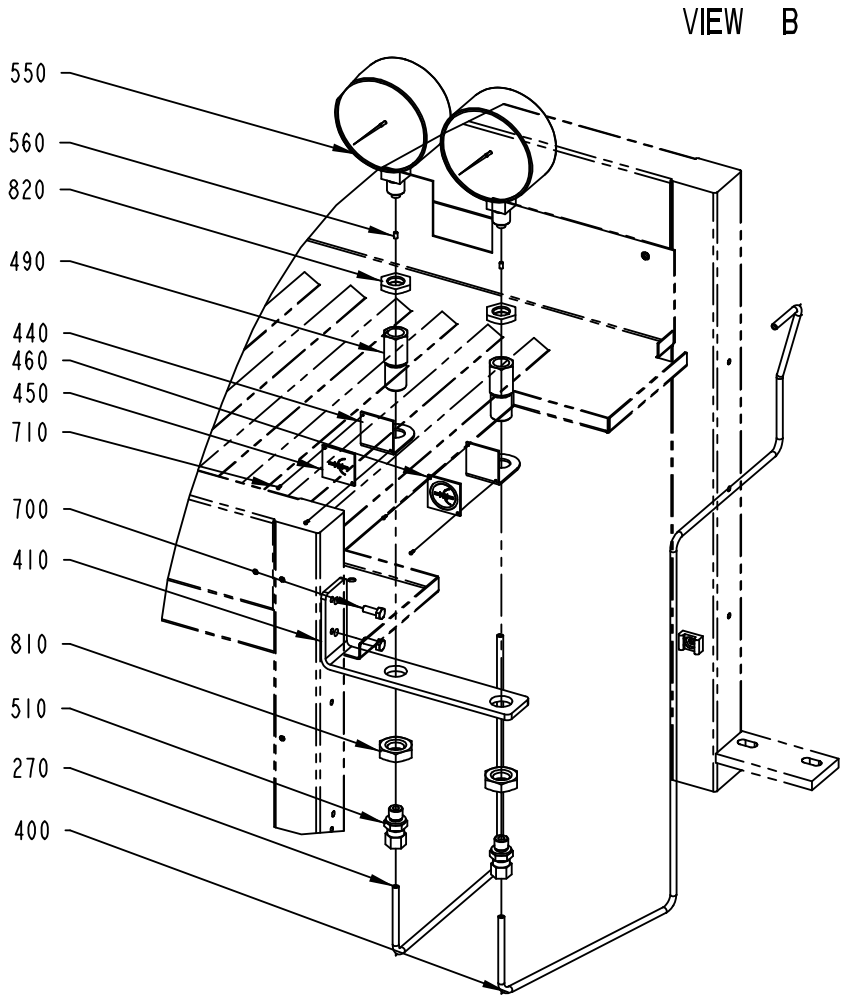

295045-24
ECM 141383

Pos	Part No	UN	Qty	Description	Page No	Pos	Part No	UN	Qty	Description	Page No

SEE PREVIOUS LISTS PAGES: 1-99, 1-101.

MOVABLE FORMING RING

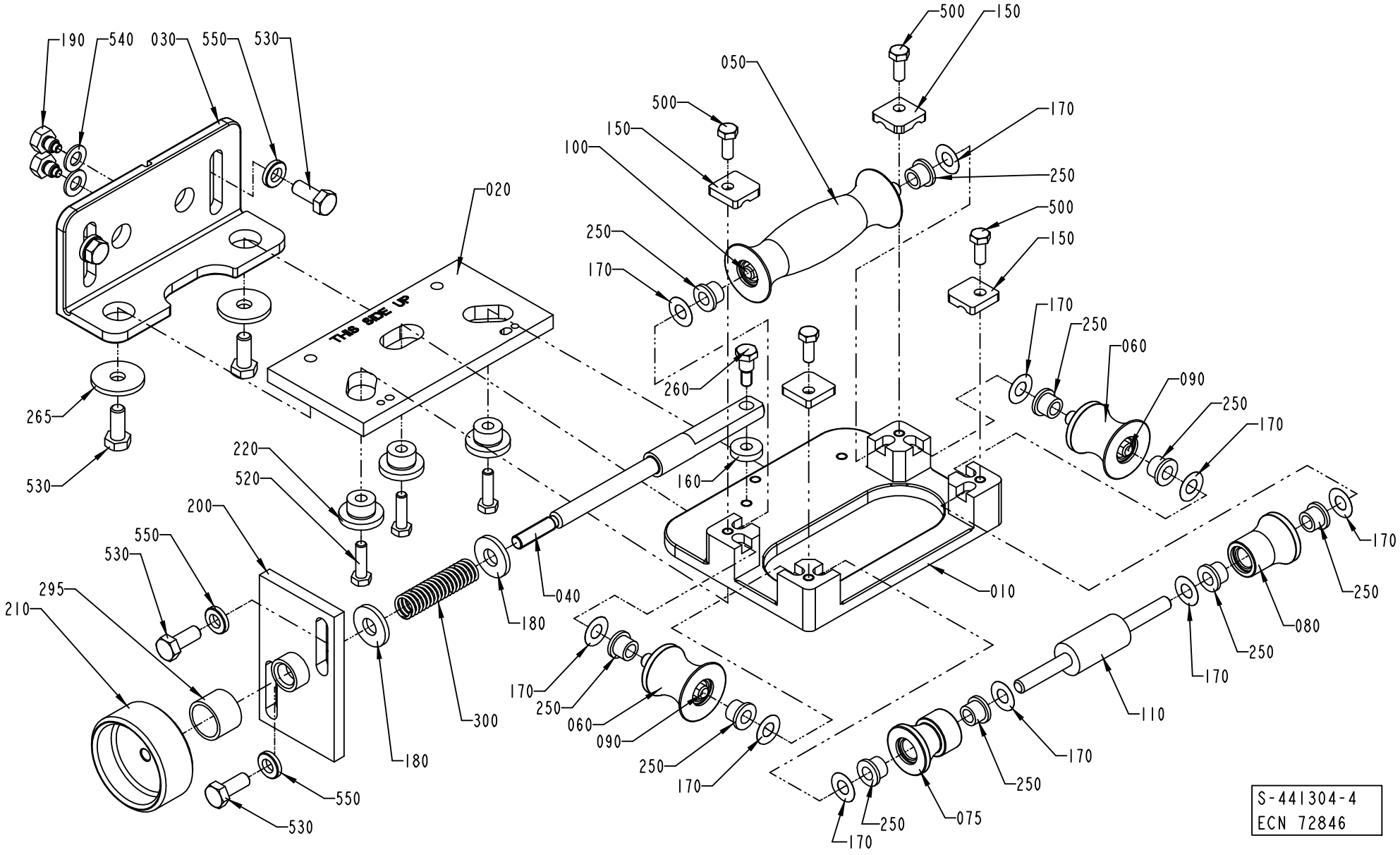

ECM: 124856 - 20030121
Group number: 441304-0400
Assembly Drawing: 441304-4_1_AD

This list covers pages from 1-106 to 1-113

Pos	Part No	UN	Qty	Description	Page No
TBA 0125S, TBA 0100B (See drawing on page: 1-112)					
010	456905-0000		1	FASTENING PLATE	
030	571536-0000		1	CANTILEVER	
050	752141-0000		1	FORMING ROLLER	
060	752142-0000		2	FORMING ROLLER	
075	1296912-0000		1	ROLL	
080	752143-0000		1	FORMING ROLLER	
090	752186-0002		2	SHAFT	
100	752186-0008		1	SHAFT	
110	752186-0006		2	SHAFT	
140	456907-0000		2	LOCK PLATE	
250	90240-0172		6	FLANGE BUSHING, 8X12X10 MM	
255	752156-0000		4	FLANGE BUSHING	
500	312105-0332		6	SCREW M6S ISO 4017 M5X22 A480	
TBA 0160S, TBA 0200S (See drawing on page: 1-108)					
010	456905-0000		1	FASTENING PLATE	
030	571535-0000		1	CANTILEVER	
050	752126-0000		1	FORMING ROLLER	
060	752127-0000		2	FORMING ROLLER	
075	1296914-0000		1	ROLL	
080	752128-0000		1	FORMING ROLLER	
090	752186-0002		2	SHAFT	
100	752186-0008		1	SHAFT	
110	752186-0006		2	SHAFT	
140	456907-0000		2	LOCK PLATE	
250	90240-0172		6	FLANGE BUSHING, 8X12X10 MM	
255	752156-0000		4	FLANGE BUSHING	
500	312105-0332		6	SCREW M6S ISO 4017 M5X22 A480	
TBA 0250S, TBA 0200M (See drawing on page: 1-110)					
010	574404-0000		1	BRACKET	
030	571535-0000		1	CANTILEVER	
050	574479-0000		1	ROLL	
060	574480-0000		2	ROLL	
075	1296915-0000		1	ROLL	
080	574481-0000		1	ROLL	
090	752186-0002		2	SHAFT	
100	752186-0008		1	SHAFT	
110	752186-0006		2	SHAFT	
140	1279087-0000		2	LOCKING PLATE	
250	90240-0172		6	FLANGE BUSHING, 8X12X10 MM	
255	752156-0000		4	FLANGE BUSHING	
500	312105-0332		6	SCREW M6S ISO 4017 M5X22 A480	

Pos	Part No	UN	Qty	Description	Page No
TBA 0330S, TBA 0300S, TBA 0180B, TBA 0200B, TBA 0284B, TBA 0250B (See drawing on page: 1-106)					
010	978792-0000		1	PLATE	
030	571535-0000		1	CANTILEVER	
050	751491-0000		1	ROLL	
060	751492-0000		2	ROLL	
075	1296913-0000		1	ROLL	
080	751494-0000		1	ROLL	
090	752186-0005		2	SHAFT	
100	752186-0009		1	SHAFT	
110	752187-0000		1	SHAFT	
250	90240-0172		10	FLANGE BUSHING, 8X12X10 MM	
500	312105-0368		4	SCREW M6S ISO 4017 M6X16 A480	
Common Parts					
020	751333-0000		1	SETTING PLATE	
040	256309-0000		1	SHAFT	
150	1279091-0000		4	LOCKING PLATE	
160	256312-0000		1	WASHER	
170	2033-0011		10	WASHER	
180	26490-0000		2	WASHER	
190	256280-0000		2	DOWEL	
200	571534-0000		1	PLATE	
210	257090-0000		1	SHIFTER HANDLE	
220	751334-0000		3	SPACER	
260	456042-0000		1	SCREW	
265	28037-0000		2	WASHER	
295	491153-0000		1	COMPRESSION GLAND	
300	90335-0008		1	COMP. SPRING 22490, 1,6X14,1X115	
520	312105-0371		3	SCREW M6S ISO 4017 M6X22 A480	
530	312105-0451		6	SCREW M6S ISO 4017 M8X20 A480	
540	315105-0165		2	WASHER BRB8,4X16RFR	
550	315115-0165		4	WASHER PLAIN, TBRB 8,4/16 H=3	

Machine Type | Group Description | Used-In | Group Number | Page No

MOVABLE FORMING RING

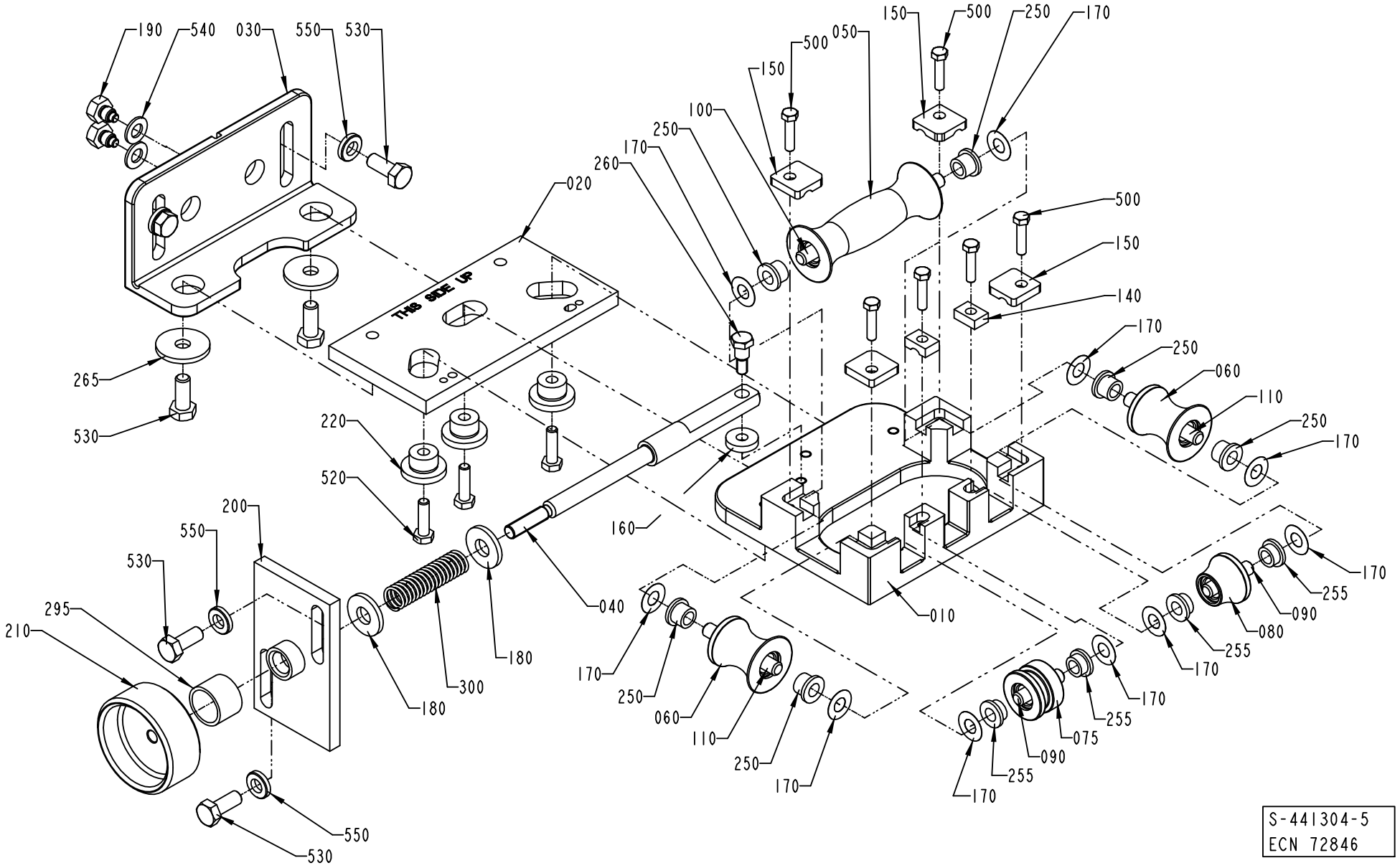

ECM: 124856 - 20030121
Group number: 441304-0400
Assembly Drawing: 441304-5_1_AD

This list covers pages from 1-106 to 1-113

Pos	Part No	UN	Qty	Description	Page No
TBA 0125S, TBA 0100B (See drawing on page: 1-112)					
010	456905-0000		1	FASTENING PLATE	
030	571536-0000		1	CANTILEVER	
050	752141-0000		1	FORMING ROLLER	
060	752142-0000		2	FORMING ROLLER	
075	1296912-0000		1	ROLL	
080	752143-0000		1	FORMING ROLLER	
090	752186-0002		2	SHAFT	
100	752186-0008		1	SHAFT	
110	752186-0006		2	SHAFT	
140	456907-0000		2	LOCK PLATE	
250	90240-0172		6	FLANGE BUSHING, 8X12X10 MM	
255	752156-0000		4	FLANGE BUSHING	
500	312105-0332		6	SCREW M6S ISO 4017 M5X22 A480	
TBA 0160S, TBA 0200S (See drawing on page: 1-108)					
010	456905-0000		1	FASTENING PLATE	
030	571535-0000		1	CANTILEVER	
050	752126-0000		1	FORMING ROLLER	
060	752127-0000		2	FORMING ROLLER	
075	1296914-0000		1	ROLL	
080	752128-0000		1	FORMING ROLLER	
090	752186-0002		2	SHAFT	
100	752186-0008		1	SHAFT	
110	752186-0006		2	SHAFT	
140	456907-0000		2	LOCK PLATE	
250	90240-0172		6	FLANGE BUSHING, 8X12X10 MM	
255	752156-0000		4	FLANGE BUSHING	
500	312105-0332		6	SCREW M6S ISO 4017 M5X22 A480	
TBA 0250S, TBA 0200M (See drawing on page: 1-110)					
010	574404-0000		1	BRACKET	
030	571535-0000		1	CANTILEVER	
050	574479-0000		1	ROLL	
060	574480-0000		2	ROLL	
075	1296915-0000		1	ROLL	
080	574481-0000		1	ROLL	
090	752186-0002		2	SHAFT	
100	752186-0008		1	SHAFT	
110	752186-0006		2	SHAFT	
140	1279087-0000		2	LOCKING PLATE	
250	90240-0172		6	FLANGE BUSHING, 8X12X10 MM	
255	752156-0000		4	FLANGE BUSHING	
500	312105-0332		6	SCREW M6S ISO 4017 M5X22 A480	

Pos	Part No	UN	Qty	Description	Page No
TBA 0330S, TBA 0300S, TBA 0180B, TBA 0200B, TBA 0284B, TBA 0250B (See drawing on page: 1-106)					
010	978792-0000		1	PLATE	
030	571535-0000		1	CANTILEVER	
050	751491-0000		1	ROLL	
060	751492-0000		2	ROLL	
075	1296913-0000		1	ROLL	
080	751494-0000		1	ROLL	
090	752186-0005		2	SHAFT	
100	752186-0009		1	SHAFT	
110	752187-0000		1	SHAFT	
250	90240-0172		10	FLANGE BUSHING, 8X12X10 MM	
500	312105-0368		4	SCREW M6S ISO 4017 M6X16 A480	
Common Parts					
020	751333-0000		1	SETTING PLATE	
040	256309-0000		1	SHAFT	
150	1279091-0000		4	LOCKING PLATE	
160	256312-0000		1	WASHER	
170	2033-0011		10	WASHER	
180	26490-0000		2	WASHER	
190	256280-0000		2	DOWEL	
200	571534-0000		1	PLATE	
210	257090-0000		1	SHIFTER HANDLE	
220	751334-0000		3	SPACER	
260	456042-0000		1	SCREW	
265	28037-0000		2	WASHER	
295	491153-0000		1	COMPRESSION GLAND	
300	90335-0008		1	COMP. SPRING 22490, 1,6X14,1X115	
520	312105-0371		3	SCREW M6S ISO 4017 M6X22 A480	
530	312105-0451		6	SCREW M6S ISO 4017 M8X20 A480	
540	315105-0165		2	WASHER BRB8,4X16RFR	
550	315115-0165		4	WASHER PLAIN, TBRB 8,4/16 H=3	

Machine Type | Group Description | Used-In | Group Number | Page No

MOVABLE FORMING RING

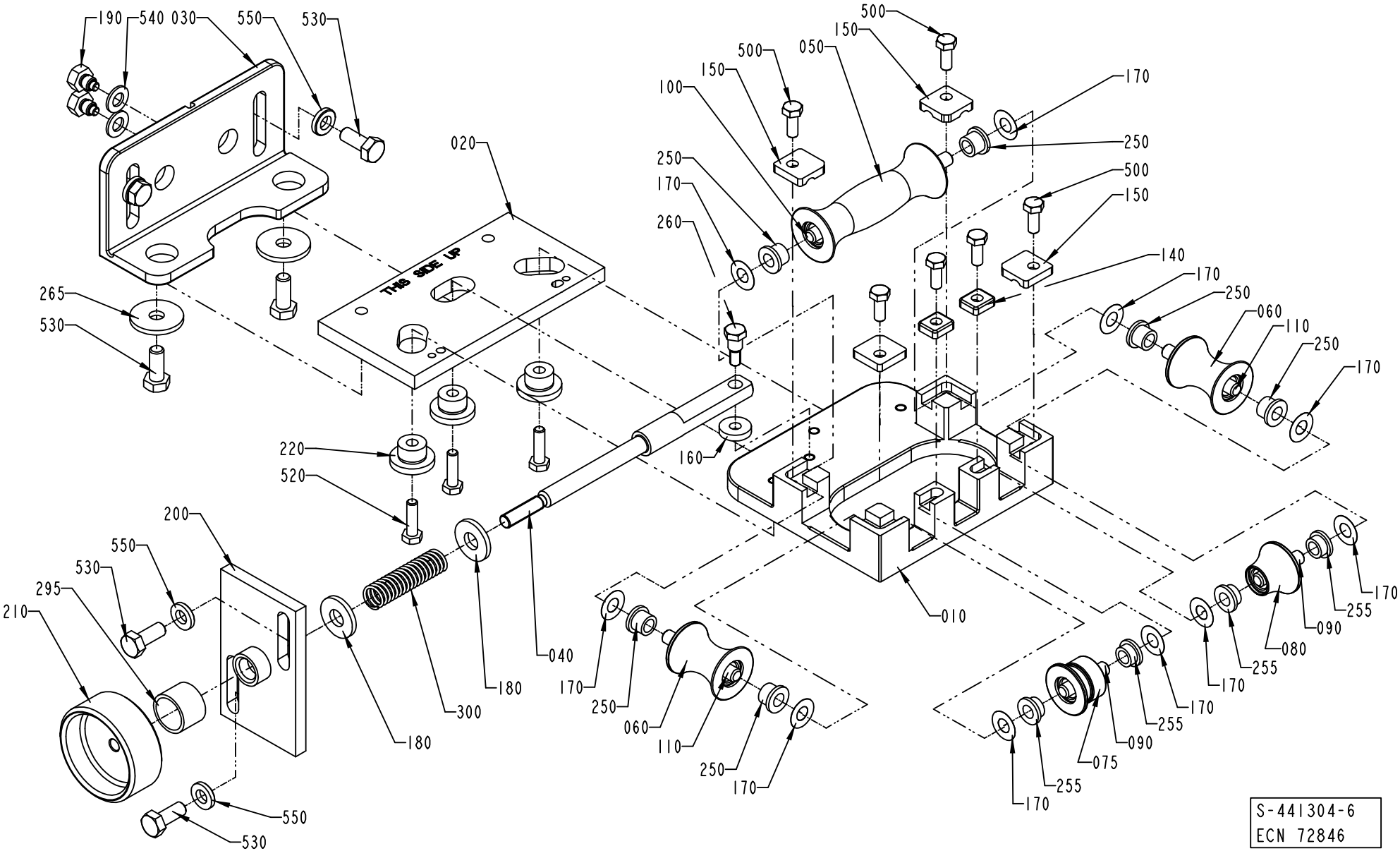

ECM: 124856 - 20030121
Group number: 441304-0400
Assembly Drawing: 441304-6_1_AD

This list covers pages from 1-106 to 1-113

Pos	Part No	UN	Qty	Description	Page No
TBA 0125S, TBA 0100B (See drawing on page: 1-112)					
010	456905-0000		1	FASTENING PLATE	
030	571536-0000		1	CANTILEVER	
050	752141-0000		1	FORMING ROLLER	
060	752142-0000		2	FORMING ROLLER	
075	1296912-0000		1	ROLL	
080	752143-0000		1	FORMING ROLLER	
090	752186-0002		2	SHAFT	
100	752186-0008		1	SHAFT	
110	752186-0006		2	SHAFT	
140	456907-0000		2	LOCK PLATE	
250	90240-0172		6	FLANGE BUSHING, 8X12X10 MM	
255	752156-0000		4	FLANGE BUSHING	
500	312105-0332		6	SCREW M6S ISO 4017 M5X22 A480	
TBA 0160S, TBA 0200S (See drawing on page: 1-108)					
010	456905-0000		1	FASTENING PLATE	
030	571535-0000		1	CANTILEVER	
050	752126-0000		1	FORMING ROLLER	
060	752127-0000		2	FORMING ROLLER	
075	1296914-0000		1	ROLL	
080	752128-0000		1	FORMING ROLLER	
090	752186-0002		2	SHAFT	
100	752186-0008		1	SHAFT	
110	752186-0006		2	SHAFT	
140	456907-0000		2	LOCK PLATE	
250	90240-0172		6	FLANGE BUSHING, 8X12X10 MM	
255	752156-0000		4	FLANGE BUSHING	
500	312105-0332		6	SCREW M6S ISO 4017 M5X22 A480	
TBA 0250S, TBA 0200M (See drawing on page: 1-110)					
010	574404-0000		1	BRACKET	
030	571535-0000		1	CANTILEVER	
050	574479-0000		1	ROLL	
060	574480-0000		2	ROLL	
075	1296915-0000		1	ROLL	
080	574481-0000		1	ROLL	
090	752186-0002		2	SHAFT	
100	752186-0008		1	SHAFT	
110	752186-0006		2	SHAFT	
140	1279087-0000		2	LOCKING PLATE	
250	90240-0172		6	FLANGE BUSHING, 8X12X10 MM	
255	752156-0000		4	FLANGE BUSHING	
500	312105-0332		6	SCREW M6S ISO 4017 M5X22 A480	

Pos	Part No	UN	Qty	Description	Page No
TBA 0330S, TBA 0300S, TBA 0180B, TBA 0200B, TBA 0284B, TBA 0250B (See drawing on page: 1-106)					
010	978792-0000		1	PLATE	
030	571535-0000		1	CANTILEVER	
050	751491-0000		1	ROLL	
060	751492-0000		2	ROLL	
075	1296913-0000		1	ROLL	
080	751494-0000		1	ROLL	
090	752186-0005		2	SHAFT	
100	752186-0009		1	SHAFT	
110	752187-0000		1	SHAFT	
250	90240-0172		10	FLANGE BUSHING, 8X12X10 MM	
500	312105-0368		4	SCREW M6S ISO 4017 M6X16 A480	
Common Parts					
020	751333-0000		1	SETTING PLATE	
040	256309-0000		1	SHAFT	
150	1279091-0000		4	LOCKING PLATE	
160	256312-0000		1	WASHER	
170	2033-0011		10	WASHER	
180	26490-0000		2	WASHER	
190	256280-0000		2	DOWEL	
200	571534-0000		1	PLATE	
210	257090-0000		1	SHIFTER HANDLE	
220	751334-0000		3	SPACER	
260	456042-0000		1	SCREW	
265	28037-0000		2	WASHER	
295	491153-0000		1	COMPRESSION GLAND	
300	90335-0008		1	COMP. SPRING 22490, 1,6X14,1X115	
520	312105-0371		3	SCREW M6S ISO 4017 M6X22 A480	
530	312105-0451		6	SCREW M6S ISO 4017 M8X20 A480	
540	315105-0165		2	WASHER BRB8,4X16RFR	
550	315115-0165		4	WASHER PLAIN, TBRB 8,4/16 H=3	

Machine Type | Group Description | Used-In | Group Number | Page No

MOVABLE FORMING RING

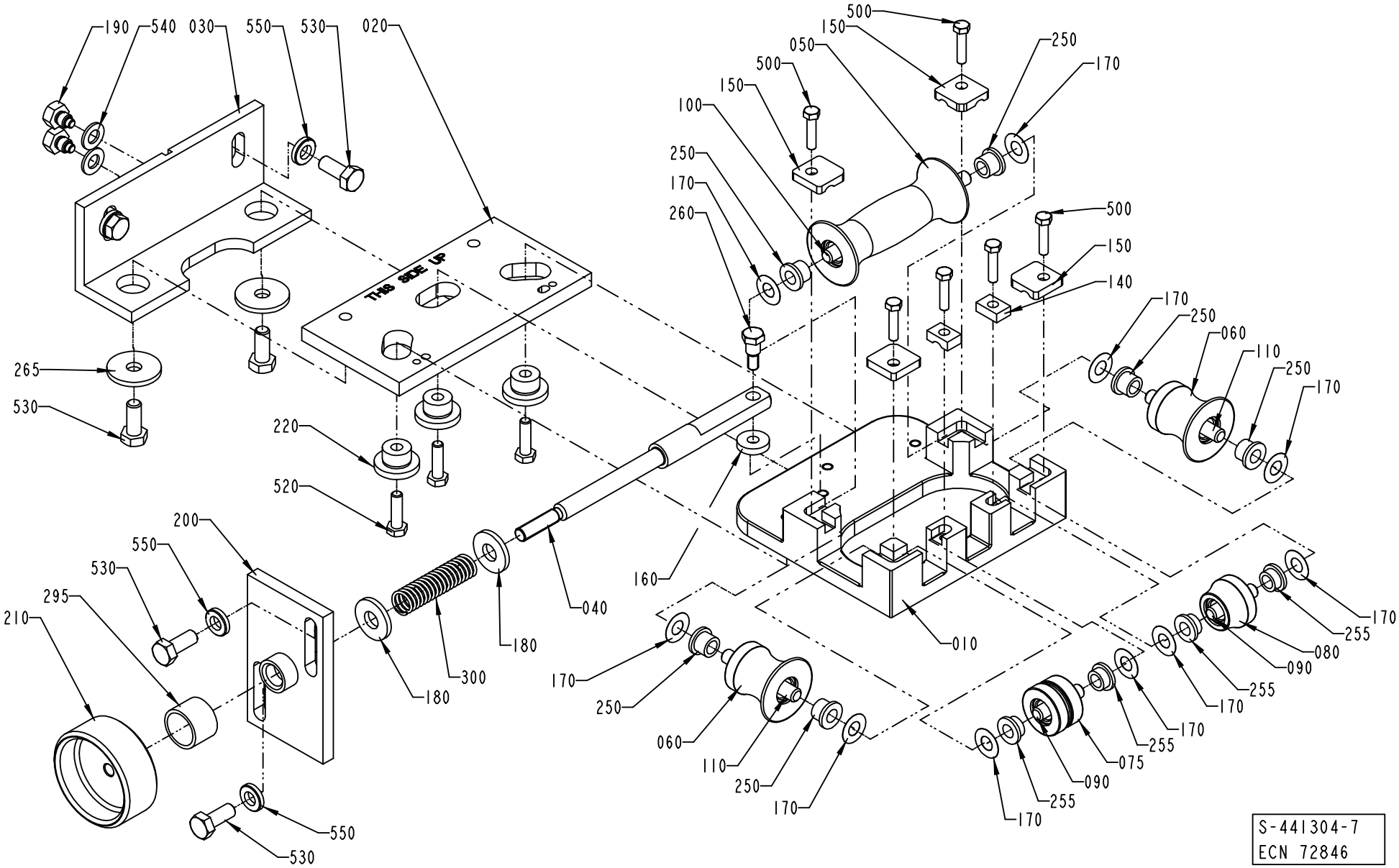

ECM: 124856 - 20030121
Group number: 441304-0400
Assembly Drawing: 441304-7_1_AB

This list covers pages from 1-106 to 1-113

Pos	Part No	UN	Qty	Description	Page No
TBA 0125S, TBA 0100B (See drawing on page: 1-112)					
010	456905-0000		1	FASTENING PLATE	
030	571536-0000		1	CANTILEVER	
050	752141-0000		1	FORMING ROLLER	
060	752142-0000		2	FORMING ROLLER	
075	1296912-0000		1	ROLL	
080	752143-0000		1	FORMING ROLLER	
090	752186-0002		2	SHAFT	
100	752186-0008		1	SHAFT	
110	752186-0006		2	SHAFT	
140	456907-0000		2	LOCK PLATE	
250	90240-0172		6	FLANGE BUSHING, 8X12X10 MM	
255	752156-0000		4	FLANGE BUSHING	
500	312105-0332		6	SCREW M6S ISO 4017 M5X22 A480	
TBA 0160S, TBA 0200S (See drawing on page: 1-108)					
010	456905-0000		1	FASTENING PLATE	
030	571535-0000		1	CANTILEVER	
050	752126-0000		1	FORMING ROLLER	
060	752127-0000		2	FORMING ROLLER	
075	1296914-0000		1	ROLL	
080	752128-0000		1	FORMING ROLLER	
090	752186-0002		2	SHAFT	
100	752186-0008		1	SHAFT	
110	752186-0006		2	SHAFT	
140	456907-0000		2	LOCK PLATE	
250	90240-0172		6	FLANGE BUSHING, 8X12X10 MM	
255	752156-0000		4	FLANGE BUSHING	
500	312105-0332		6	SCREW M6S ISO 4017 M5X22 A480	
TBA 0250S, TBA 0200M (See drawing on page: 1-110)					
010	574404-0000		1	BRACKET	
030	571535-0000		1	CANTILEVER	
050	574479-0000		1	ROLL	
060	574480-0000		2	ROLL	
075	1296915-0000		1	ROLL	
080	574481-0000		1	ROLL	
090	752186-0002		2	SHAFT	
100	752186-0008		1	SHAFT	
110	752186-0006		2	SHAFT	
140	1279087-0000		2	LOCKING PLATE	
250	90240-0172		6	FLANGE BUSHING, 8X12X10 MM	
255	752156-0000		4	FLANGE BUSHING	
500	312105-0332		6	SCREW M6S ISO 4017 M5X22 A480	

Pos	Part No	UN	Qty	Description	Page No
TBA 0330S, TBA 0300S, TBA 0180B, TBA 0200B, TBA 0284B, TBA 0250B (See drawing on page: 1-106)					
010	978792-0000		1	PLATE	
030	571535-0000		1	CANTILEVER	
050	751491-0000		1	ROLL	
060	751492-0000		2	ROLL	
075	1296913-0000		1	ROLL	
080	751494-0000		1	ROLL	
090	752186-0005		2	SHAFT	
100	752186-0009		1	SHAFT	
110	752187-0000		1	SHAFT	
250	90240-0172		10	FLANGE BUSHING, 8X12X10 MM	
500	312105-0368		4	SCREW M6S ISO 4017 M6X16 A480	
Common Parts					
020	751333-0000		1	SETTING PLATE	
040	256309-0000		1	SHAFT	
150	1279091-0000		4	LOCKING PLATE	
160	256312-0000		1	WASHER	
170	2033-0011		10	WASHER	
180	26490-0000		2	WASHER	
190	256280-0000		2	DOWEL	
200	571534-0000		1	PLATE	
210	257090-0000		1	SHIFTER HANDLE	
220	751334-0000		3	SPACER	
260	456042-0000		1	SCREW	
265	28037-0000		2	WASHER	
295	491153-0000		1	COMPRESSION GLAND	
300	90335-0008		1	COMP. SPRING 22490, 1,6X14,1X115	
520	312105-0371		3	SCREW M6S ISO 4017 M6X22 A480	
530	312105-0451		6	SCREW M6S ISO 4017 M8X20 A480	
540	315105-0165		2	WASHER BRB8,4X16RFR	
550	315115-0165		4	WASHER PLAIN, TBRB 8,4/16 H=3	

Machine Type | Group Description | Used-In | Group Number | Page No

UPPER TUBE SUPPORT

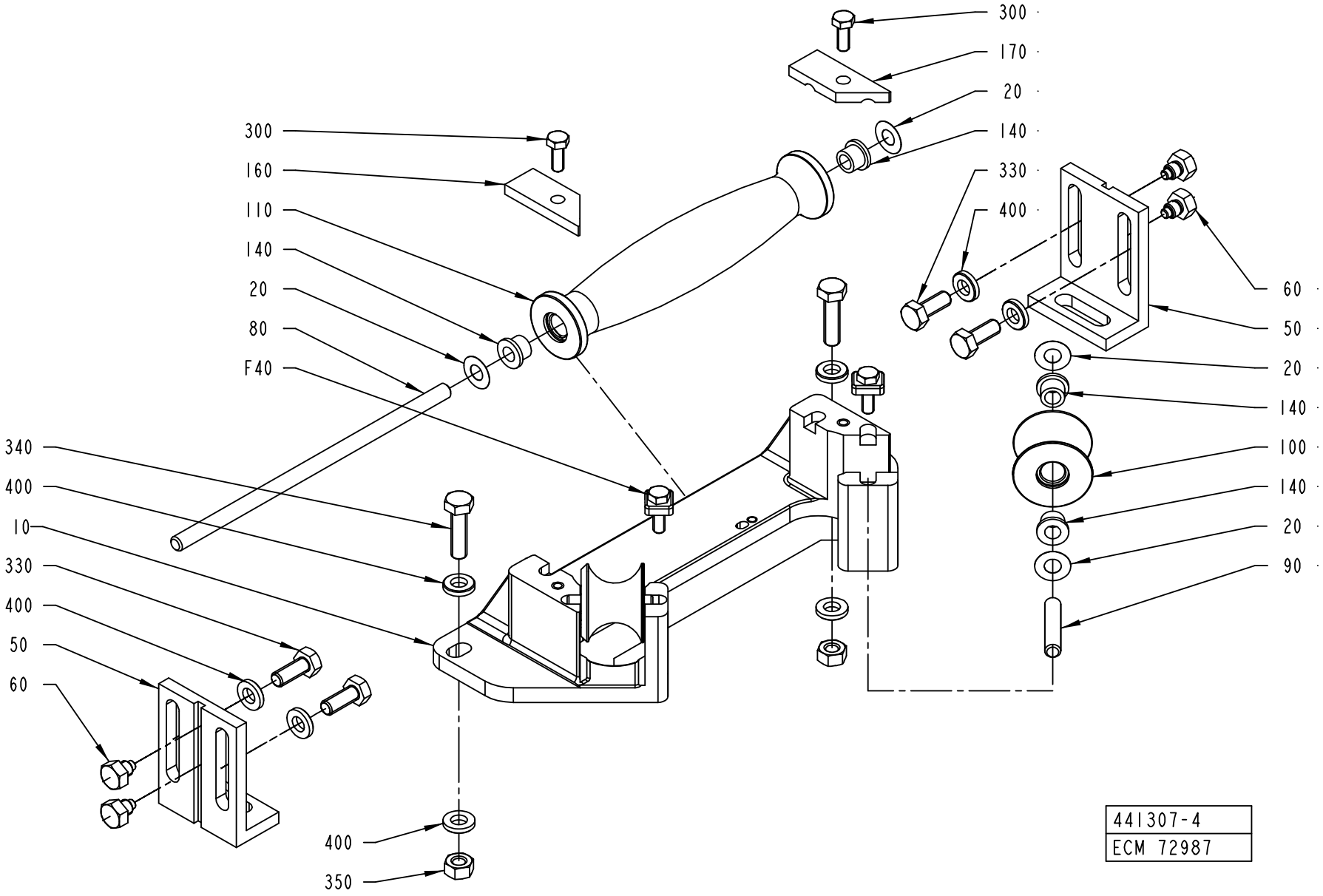

ECM: 124857 - 20030121
Group number: 441307-0300
Assembly Drawing: 441307-4_1_AC

This list covers pages from 1-114 to 1-119

Pos	Part No	UN	Qty	Description	Page No
TBA 0125S, TBA 0100B (See drawing on page: 1-116)					
010	469078-0000		1	HOLDER	
050	256279-0000		2	ANGLE	
080	752186-0010		1	SHAFT	
090	752186-0001		2	SHAFT	
100	752145-0000		2	FORMING ROLLER	
110	752144-0000		1	FORMING ROLLER	
160	1279089-0000		1	LOCKING PLATE	
170	1279088-0000		1	LOCKING PLATE	
290	312105-0368		2	SCREW M6S ISO 4017 M6X16 A480	
345	312105-0457		2	SCREW M6S ISO 4014 M8X35 A480	
TBA 0160S, TBA 0200S (See drawing on page: 1-118)					
010	469041-0000		1	HOLDER	
050	469047-0000		2	ANGLE	
080	752186-0010		1	SHAFT	
090	752186-0004		2	SHAFT	
100	752130-0000		2	FORMING ROLLER	
110	752129-0000		1	FORMING ROLLER	
160	1279089-0000		1	LOCKING PLATE	
170	1279088-0000		1	LOCKING PLATE	
300	312105-0368		2	SCREW M6S ISO 4017 M6X16 A480	
340	312105-0455		2	SCREW M6S ISO 4017 M8X30 A480	
TBA 0180B (See drawing on page: 1-114)					
010	978791-0000		1	HOLDER	
050	751267-0000		2	CANTILEVER	
080	752186-0011		1	SHAFT	
090	752186-0004		2	SHAFT	
160	751287-0000		1	PLATE	
170	751288-0000		1	PLATE	
300	312105-0368		2	SCREW M6S ISO 4017 M6X16 A480	
340	312105-0455		2	SCREW M6S ISO 4017 M8X30 A480	
TBA 0250S, TBA 0200M (See drawing on page: 1-118)					
010	574416-0000		1	BRACKET	
050	469047-0000		2	ANGLE	
080	752186-0010		1	SHAFT	
090	752186-0012		2	SHAFT	
100	574418-0000		2	ROLL	
110	574417-0000		1	ROLL	
160	1279089-0000		1	LOCKING PLATE	
170	1279088-0000		1	LOCKING PLATE	
300	312105-0368		2	SCREW M6S ISO 4017 M6X16 A480	
340	312105-0455		2	SCREW M6S ISO 4017 M8X30 A480	

Pos	Part No	UN	Qty	Description	Page No
TBA 0330S, TBA 0300S, TBA 0200B, TBA 0284B, TBA 0250B (See drawing on page: 1-114)					
010	978791-0000		1	HOLDER	
050	751267-0000		2	CANTILEVER	
080	752186-0011		1	SHAFT	
090	752186-0004		2	SHAFT	
100	751284-0000		2	ROLL	
110	751283-0000		1	ROLL	
160	751287-0000		1	PLATE	
170	751288-0000		1	PLATE	
300	312105-0368		2	SCREW M6S ISO 4017 M6X16 A480	
340	312105-0455		2	SCREW M6S ISO 4017 M8X30 A480	
Common Parts					
020	2033-0011		6	WASHER	
040	565462-0100		1	LOCK PLATE	**1-121**
060	256280-0000		4	DOWEL	
140	90240-0172		6	FLANGE BUSHING, 8X12X10 MM	
330	312105-0451		4	SCREW M6S ISO 4017 M8X20 A480	
350	312605-0318		2	HEXAGON NUT, M6M M8 A280	
400	315115-0165		8	WASHER PLAIN, TBRB 8,4/16 H=3	

UPPER TUBE SUPPORT

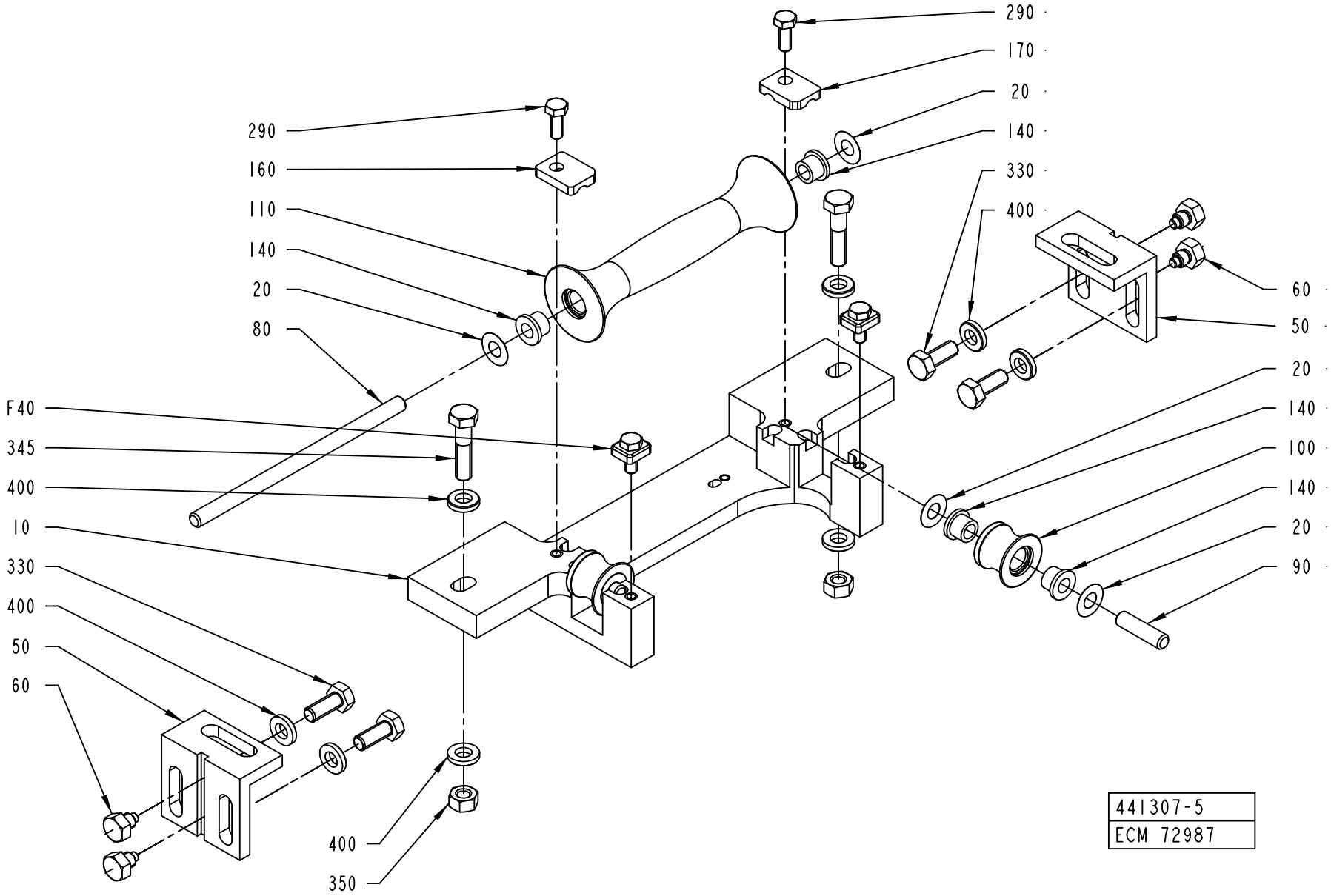

ECM: 124857 - 20030121
Group number: 441307-0300
Assembly Drawing: 441307-5_1_AC

This list covers pages from 1-114 to 1-119

Pos	Part No	UN	Qty	Description	Page No
TBA 0125S, TBA 0100B (See drawing on page: 1-116)					
010	469078-0000		1	HOLDER	
050	256279-0000		2	ANGLE	
080	752186-0010		1	SHAFT	
090	752186-0001		2	SHAFT	
100	752145-0000		2	FORMING ROLLER	
110	752144-0000		1	FORMING ROLLER	
160	1279089-0000		1	LOCKING PLATE	
170	1279088-0000		1	LOCKING PLATE	
290	312105-0368		2	SCREW M6S ISO 4017 M6X16 A480	
345	312105-0457		2	SCREW M6S ISO 4014 M8X35 A480	
TBA 0160S, TBA 0200S (See drawing on page: 1-118)					
010	469041-0000		1	HOLDER	
050	469047-0000		2	ANGLE	
080	752186-0010		1	SHAFT	
090	752186-0004		2	SHAFT	
100	752130-0000		2	FORMING ROLLER	
110	752129-0000		1	FORMING ROLLER	
160	1279089-0000		1	LOCKING PLATE	
170	1279088-0000		1	LOCKING PLATE	
300	312105-0368		2	SCREW M6S ISO 4017 M6X16 A480	
340	312105-0455		2	SCREW M6S ISO 4017 M8X30 A480	
TBA 0180B (See drawing on page: 1-114)					
010	978791-0000		1	HOLDER	
050	751267-0000		2	CANTILEVER	
080	752186-0011		1	SHAFT	
090	752186-0004		2	SHAFT	
160	751287-0000		1	PLATE	
170	751288-0000		1	PLATE	
300	312105-0368		2	SCREW M6S ISO 4017 M6X16 A480	
340	312105-0455		2	SCREW M6S ISO 4017 M8X30 A480	
TBA 0250S, TBA 0200M (See drawing on page: 1-118)					
010	574416-0000		1	BRACKET	
050	469047-0000		2	ANGLE	
080	752186-0010		1	SHAFT	
090	752186-0012		2	SHAFT	
100	574418-0000		2	ROLL	
110	574417-0000		1	ROLL	
160	1279089-0000		1	LOCKING PLATE	
170	1279088-0000		1	LOCKING PLATE	
300	312105-0368		2	SCREW M6S ISO 4017 M6X16 A480	
340	312105-0455		2	SCREW M6S ISO 4017 M8X30 A480	

Pos	Part No	UN	Qty	Description	Page No
TBA 0330S, TBA 0300S, TBA 0200B, TBA 0284B, TBA 0250B (See drawing on page: 1-114)					
010	978791-0000		1	HOLDER	
050	751267-0000		2	CANTILEVER	
080	752186-0011		1	SHAFT	
090	752186-0004		2	SHAFT	
100	751284-0000		2	ROLL	
110	751283-0000		1	ROLL	
160	751287-0000		1	PLATE	
170	751288-0000		1	PLATE	
300	312105-0368		2	SCREW M6S ISO 4017 M6X16 A480	
340	312105-0455		2	SCREW M6S ISO 4017 M8X30 A480	
Common Parts					
020	2033-0011		6	WASHER	
040	565462-0100		1	LOCK PLATE	**1-121**
060	256280-0000		4	DOWEL	
140	90240-0172		6	FLANGE BUSHING, 8X12X10 MM	
330	312105-0451		4	SCREW M6S ISO 4017 M8X20 A480	
350	312605-0318		2	HEXAGON NUT, M6M M8 A280	
400	315115-0165		8	WASHER PLAIN, TBRB 8,4/16 H=3	

Machine Type | Group Description | Used-In | Group Number | Page No

UPPER TUBE SUPPORT

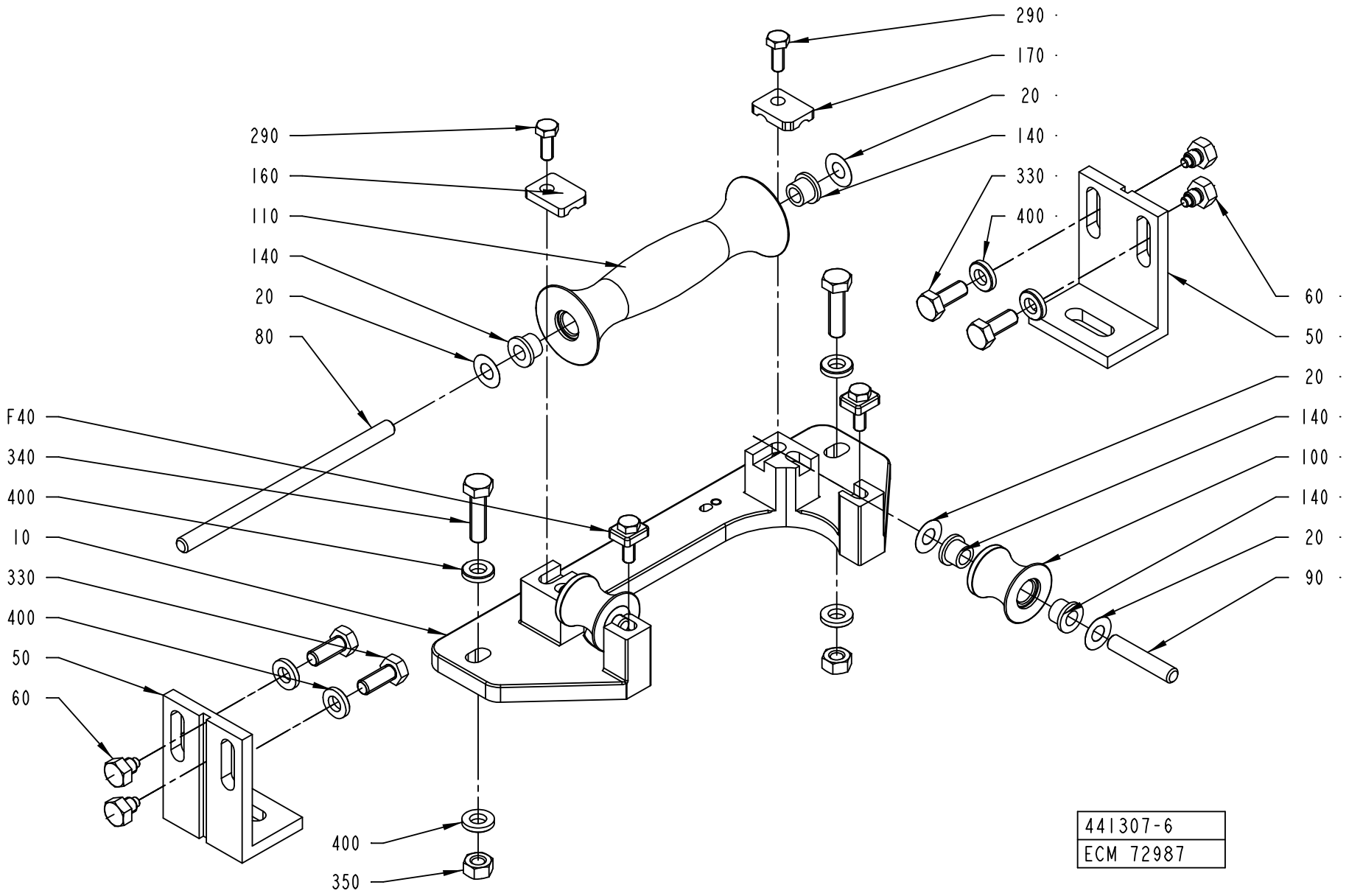

ECM: 124857 - 20030121
Group number: 441307-0300
Assembly Drawing: 441307-6_1_AC

This list covers pages from 1-114 to 1-119

Pos	Part No	UN	Qty	Description	Page No
TBA 0125S, TBA 0100B (See drawing on page: 1-116)					
010	469078-0000		1	HOLDER	
050	256279-0000		2	ANGLE	
080	752186-0010		1	SHAFT	
090	752186-0001		2	SHAFT	
100	752145-0000		2	FORMING ROLLER	
110	752144-0000		1	FORMING ROLLER	
160	1279089-0000		1	LOCKING PLATE	
170	1279088-0000		1	LOCKING PLATE	
290	312105-0368		2	SCREW M6S ISO 4017 M6X16 A480	
345	312105-0457		2	SCREW M6S ISO 4014 M8X35 A480	
TBA 0160S, TBA 0200S (See drawing on page: 1-118)					
010	469041-0000		1	HOLDER	
050	469047-0000		2	ANGLE	
080	752186-0010		1	SHAFT	
090	752186-0004		2	SHAFT	
100	752130-0000		2	FORMING ROLLER	
110	752129-0000		1	FORMING ROLLER	
160	1279089-0000		1	LOCKING PLATE	
170	1279088-0000		1	LOCKING PLATE	
300	312105-0368		2	SCREW M6S ISO 4017 M6X16 A480	
340	312105-0455		2	SCREW M6S ISO 4017 M8X30 A480	
TBA 0180B (See drawing on page: 1-114)					
010	978791-0000		1	HOLDER	
050	751267-0000		2	CANTILEVER	
080	752186-0011		1	SHAFT	
090	752186-0004		2	SHAFT	
160	751287-0000		1	PLATE	
170	751288-0000		1	PLATE	
300	312105-0368		2	SCREW M6S ISO 4017 M6X16 A480	
340	312105-0455		2	SCREW M6S ISO 4017 M8X30 A480	
TBA 0250S, TBA 0200M (See drawing on page: 1-118)					
010	574416-0000		1	BRACKET	
050	469047-0000		2	ANGLE	
080	752186-0010		1	SHAFT	
090	752186-0012		2	SHAFT	
100	574418-0000		2	ROLL	
110	574417-0000		1	ROLL	
160	1279089-0000		1	LOCKING PLATE	
170	1279088-0000		1	LOCKING PLATE	
300	312105-0368		2	SCREW M6S ISO 4017 M6X16 A480	
340	312105-0455		2	SCREW M6S ISO 4017 M8X30 A480	

Pos	Part No	UN	Qty	Description	Page No
TBA 0330S, TBA 0300S, TBA 0200B, TBA 0284B, TBA 0250B (See drawing on page: 1-114)					
010	978791-0000		1	HOLDER	
050	751267-0000		2	CANTILEVER	
080	752186-0011		1	SHAFT	
090	752186-0004		2	SHAFT	
100	751284-0000		2	ROLL	
110	751283-0000		1	ROLL	
160	751287-0000		1	PLATE	
170	751288-0000		1	PLATE	
300	312105-0368		2	SCREW M6S ISO 4017 M6X16 A480	
340	312105-0455		2	SCREW M6S ISO 4017 M8X30 A480	
Common Parts					
020	2033-0011		6	WASHER	
040	565462-0100		1	LOCK PLATE	**1-121**
060	256280-0000		4	DOWEL	
140	90240-0172		6	FLANGE BUSHING, 8X12X10 MM	
330	312105-0451		4	SCREW M6S ISO 4017 M8X20 A480	
350	312605-0318		2	HEXAGON NUT, M6M M8 A280	
400	315115-0165		8	WASHER PLAIN, TBRB 8,4/16 H=3	

Machine Type | Group Description | Used-In | Group Number | Page No

This page is intentionally left blank.

ECM: 114548 - 20020930
Group number: 565462-0100
Assembly Drawing:

Pos	Part No	UN	Qty	Description	Page No
TBA 0125S, TBA 0100B					
020	312105-0368		2	SCREW M6S ISO 4017 M6X16 A480	
TBA 0330S, TBA 0300S, TBA 0180B, TBA 0160S, TBA 0200B, TBA 0250S, TBA 0284B, TBA 0200S, TBA 0200M, TBA 0250B					
020	312105-0370		2	SCREW M6S ISO 4017 M6X20 A480	
Common Parts					
010	1279087-0000		2	LOCKING PLATE	

Pos	Part No	UN	Qty	Description	Page No

DIVIDED FORMING RING

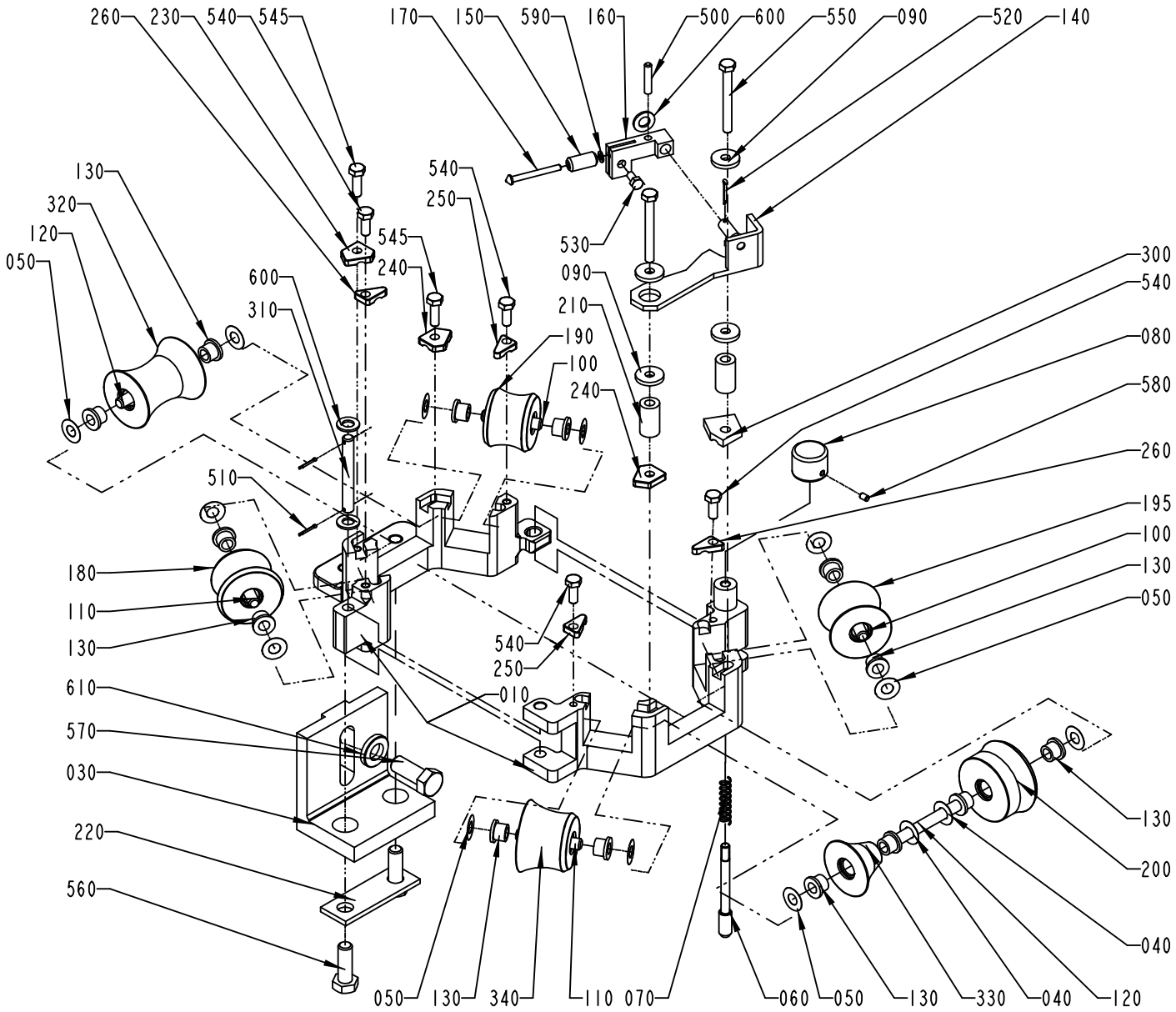

S-441486-7
ECN 72751

ECM: 124859 - 20030121
Group number: 441486-0400
Assembly Drawing: 441486-7_1_AC

This list covers pages from 1-122 to 1-127

Pos	Part No	UN	Qty	Description	Page No
TBA 0125S, TBA 0100B (See drawing on page: 1-124)					
010	469745-0000		1	BRACKET	
050	2033-0011		14	WASHER	
100	752186-0003		4	SHAFT	
120	752186-0006		1	SHAFT	
125	752185-0000		1	SHAFT	
130	90240-0172		12	FLANGE BUSHING, 8X12X10 MM	
180	752147-0000		1	FORMING ROLLER	
190	752148-0000		1	FORMING ROLLER	
195	752150-0000		1	FORMING ROLLER	
200	752151-0000		1	FORMING ROLLER	
300	456872-0000		1	LOCK PLATE	
320	752146-0000		1	FORMING ROLLER	
330	752152-0000		1	FORMING ROLLER	
340	752149-0000		1	FORMING ROLLER	
350	752156-0000		2	FLANGE BUSHING	
535	312105-0329		4	SCREW M6S ISO 4017 M5X16 A480	
536	312105-0332		4	SCREW M6S ISO 4017 M5X22 A480	
600	315105-0165		2	WASHER BRB8,4X16RFR	
TBA 0160S, TBA 0200S (See drawing on page: 1-124)					
010	469745-0000		1	BRACKET	
050	2033-0011		14	WASHER	
100	752186-0003		4	SHAFT	
120	752186-0006		1	SHAFT	
125	752185-0000		1	SHAFT	
130	90240-0172		12	FLANGE BUSHING, 8X12X10 MM	
180	752132-0000		1	FORMING ROLLER	
190	752133-0000		1	FORMING ROLLER	
195	752135-0000		1	FORMING ROLLER	
200	752136-0000		1	FORMING ROLLER	
300	456872-0000		1	LOCK PLATE	
320	752131-0000		1	FORMING ROLLER	
330	752137-0000		1	FORMING ROLLER	
340	752134-0000		1	FORMING ROLLER	
350	752156-0000		2	FLANGE BUSHING	
535	312105-0329		4	SCREW M6S ISO 4017 M5X16 A480	
536	312105-0332		4	SCREW M6S ISO 4017 M5X22 A480	
600	315105-0165		2	WASHER BRB8,4X16RFR	
TBA 0250S, TBA 0200M (See drawing on page: 1-126)					
010	574396-0000		1	BRACKET	
050	2033-0011		14	WASHER	
090	257175-0000		4	WASHER	
100	752186-0004		4	SHAFT	
120	752186-0006		1	SHAFT	
125	574395-0000		1	SHAFT	
130	90240-0172		12	FLANGE BUSHING, 8X12X10 MM	
140	574456-0000		1	BRACKET	
150	451117-0000		1	ROLL	
160	451148-0000		1	BRACKET	
170	451149-0000		1	SHAFT	
180	574397-0000		1	ROLL	
190	574399-0000		1	ROLL	
195	574400-0000		1	ROLL	
200	574401-0000		1	ROLL	
210	456181-0000		2	SPACER	
300	574393-0000		1	LOCK PLATE	
320	574398-0000		1	ROLL	
330	574402-0000		1	ROLL	
340	574403-0000		1	ROLL	
350	752156-0000		2	FLANGE BUSHING	
500	311103-0312		1	PARALLELL PIN, M6, 5X25 MM	
520	311411-0165		1	SPLIT PIN SP2,5X16RFR	
530	312105-0325		1	SCREW M6S ISO 4017 M5X10 A480	
535	312105-0329		4	SCREW M6S ISO 4017 M5X16 A480	
536	312105-0332		2	SCREW M6S ISO 4017 M5X22 A480	
550	312105-0381		2	SCREW M6S ISO 4014 M6X55 A480	
590	315105-0136		1	WASHER BRB4,3XRFR	
600	315105-0165		3	WASHER BRB8,4X16RFR	
TBA 0330S, TBA 0300S, TBA 0180B, TBA 0200B, TBA 0284B, TBA 0250B (See drawing on page: 1-122)					
010	978790-0000		1	BRACKET	
040	2033-0008		2	WASHER	
050	2033-0011		12	WASHER	
090	257175-0000		4	WASHER	
100	752186-0004		2	SHAFT	
110	752186-0005		2	SHAFT	
120	752186-0007		2	SHAFT	
130	90240-0172		14	FLANGE BUSHING, 8X12X10 MM	
140	441918-0000		1	BRACKET	
150	451117-0000		1	ROLL	
160	451148-0000		1	BRACKET	
170	451149-0000		1	SHAFT	
180	751499-0000		1	ROLL	
190	751497-0000		1	ROLL	
195	751496-0000		1	ROLL	

Machine Type | Group Description | Used-In | Group Number | Page No

DIVIDED FORMING RING

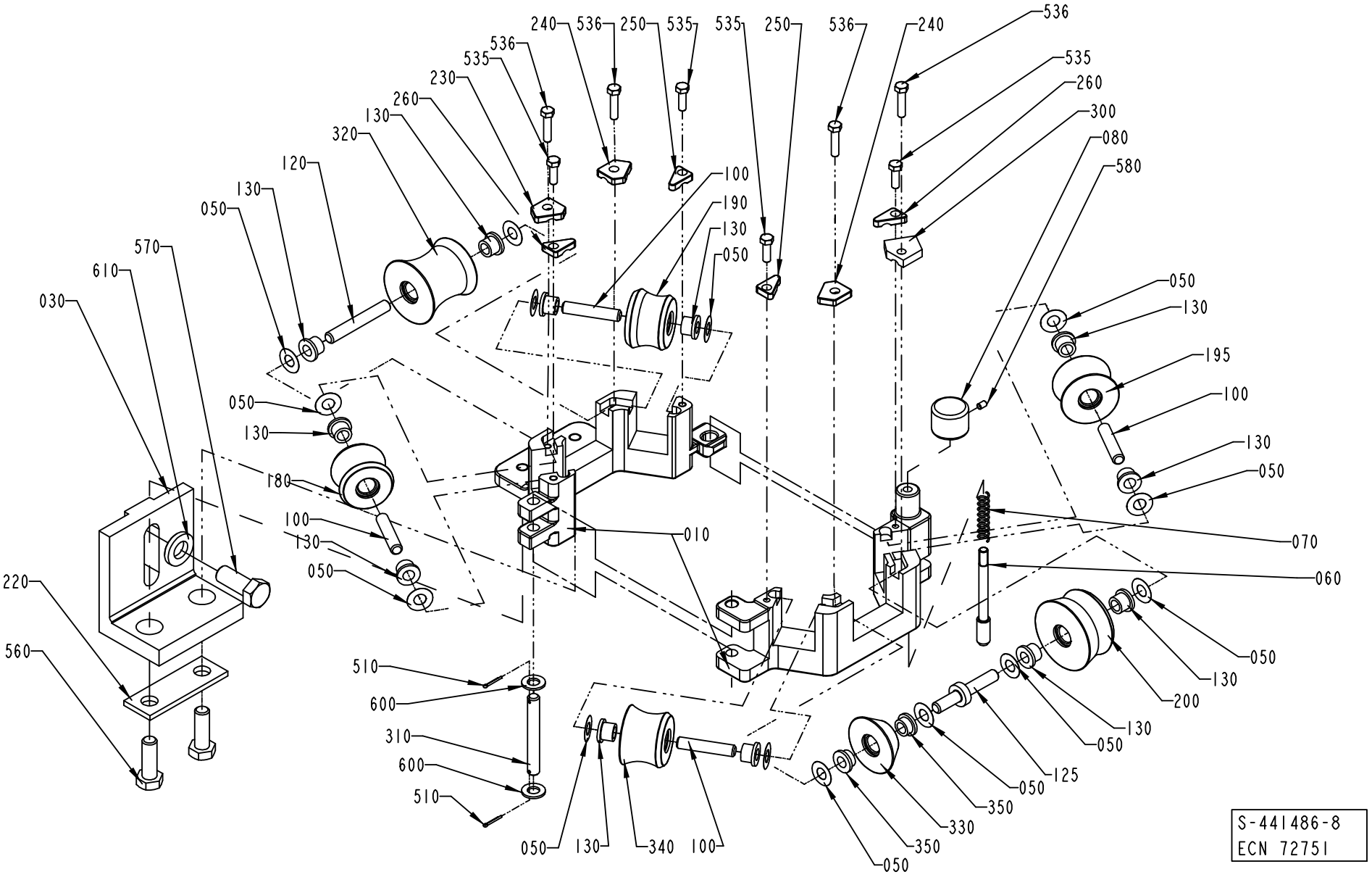

Pos	Part No	UN	Qty	Description	Page No
TBA 0330S, TBA 0300S, TBA 0180B, TBA 0200B, TBA 0284B, TBA 0250B (Cont'd) (See drawing on page: 1-122)					
200	751495-0000		1	ROLL	
210	456181-0000		2	SPACER	
300	456199-0000		1	LOCK PLATE	
320	751498-0000		1	ROLL	
330	751501-0000		1	ROLL	
340	751500-0000		1	ROLL	
500	311103-0312		1	PARALLELL PIN, M6, 5X25 MM	
520	311411-0165		1	SPLIT PIN SP2,5X16RFR	
530	312105-0325		1	SCREW M6S ISO 4017 M5X10 A480	
540	312105-0368		4	SCREW M6S ISO 4017 M6X16 A480	
545	312105-0370		2	SCREW M6S ISO 4017 M6X20 A480	
550	312105-0381		2	SCREW M6S ISO 4014 M6X55 A480	
590	315105-0136		1	WASHER BRB4,3XRFR	
600	315105-0165		3	WASHER BRB8,4X16RFR	
Common Parts					
030	456230-0000		1	ANGLE BRACKET	
060	35918-0000		1	SHAFT	
070	35919-0000		1	COMPRESSION SPRING	
080	36325-0000		1	KNOB	
220	456182-0000		1	PLATE	
230	1279086-0000		1	LOCKING PLATE	
240	1279090-0000		2	LOCKING PLATE	
250	1279093-0000		2	LOCKING PLATE	
260	1279094-0000		2	LOCKING PLATE	
310	751318-0000		1	SHAFT	
510	311411-0150		2	SPLIT PIN SP2X12RFR	
560	312105-0495		2	SCREW M6S ISO 4017 M10X30 A480	
570	312105-0536		1	SCREW M6S ISO 4017 M12X30 A480	
580	312318-0285		1	SCREW ISO4029 M4X6 A4	
610	315115-0178		1	WASHER PLAIN, TBRB 13/24 H=4	

Pos	Part No	UN	Qty	Description	Page No

DIVIDED FORMING RING

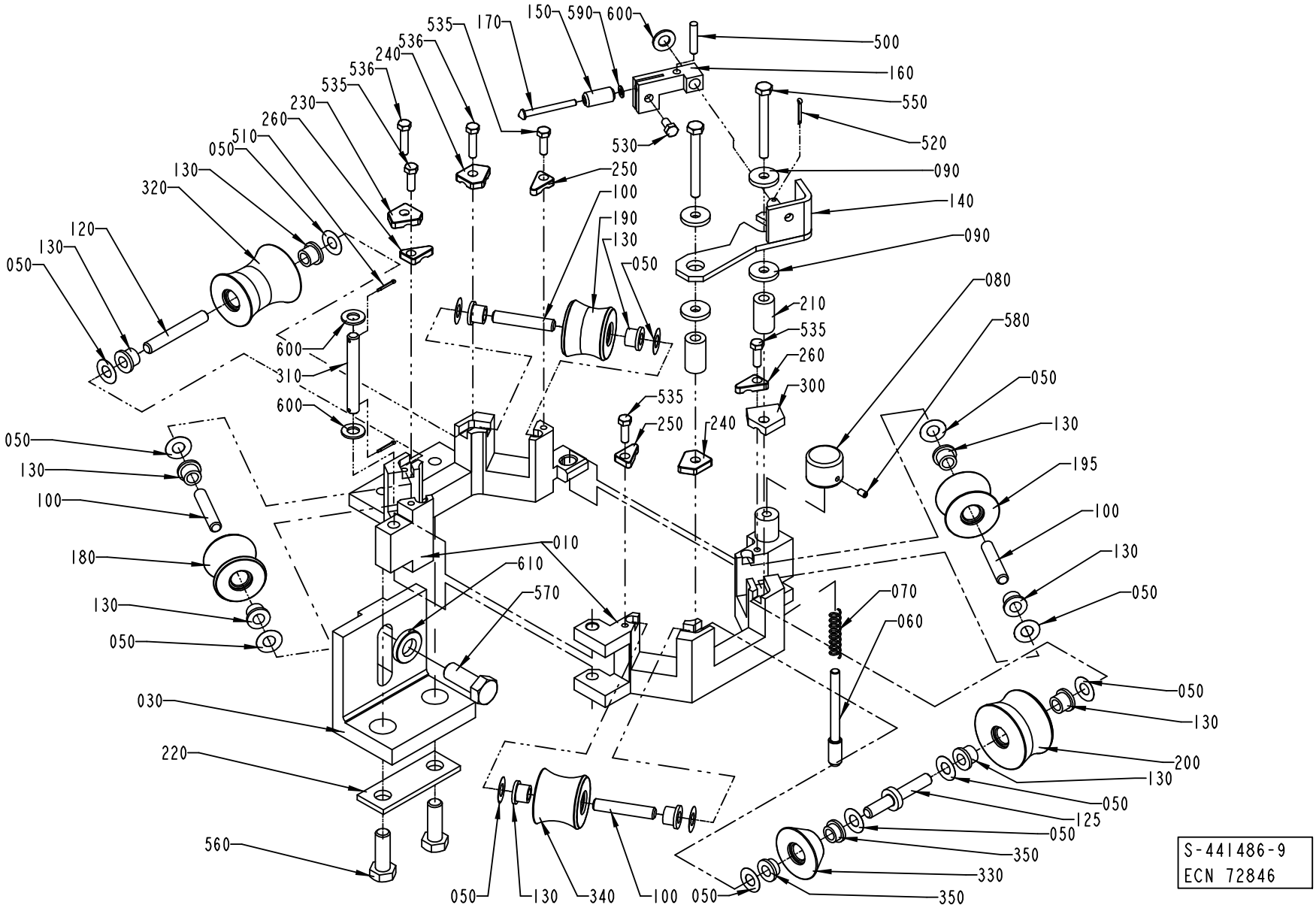

S-441486-9
ECN 72846

ECM: 124859 - 20030121
Group number: 441486-0400
Assembly Drawing: 441486-9_1_AC

This list covers pages from 1-122 to 1-127

Pos	Part No	UN	Qty	Description	Page No	Pos	Part No	UN	Qty	Description	Page No

SEE PREVIOUS LISTS PAGES: 1-123, 1-125.

LOWER FORMING RING

Drawing file: 456309-5_1_AC.hpgl

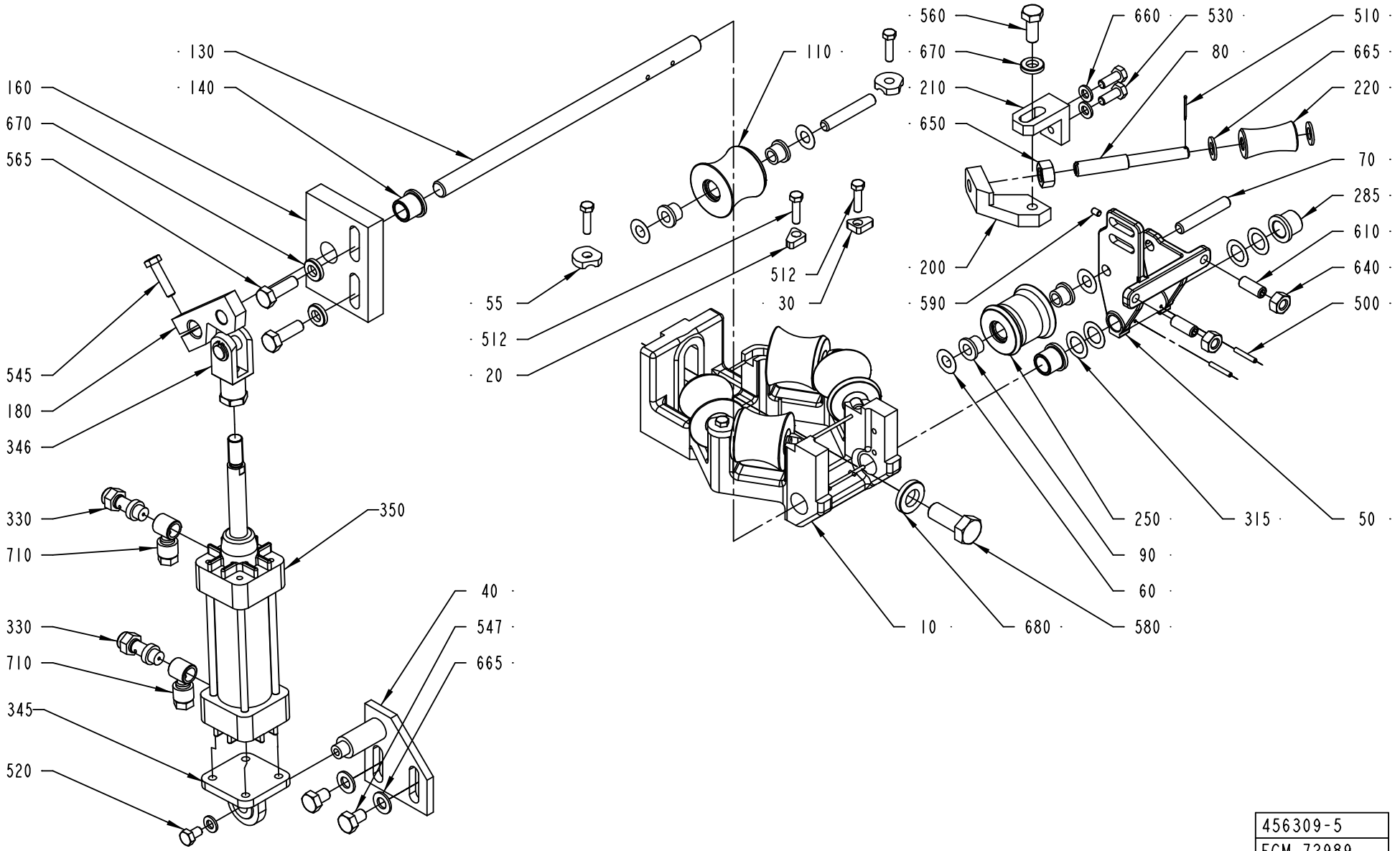

456309-5
ECM 72989

ECM: 114549 - 20020930
Group number: 456309-0600
Assembly Drawing: 456309-5_1_AC

This list covers pages from 1-128 to 1-131

Pos	Part No	UN	Qty	Description	Page No
TBA 0125S, TBA 0100B (See drawing on page: 1-130)					
010	456837-0000		1	HOLDER	
050	257041-0000		1	FORK	
070	752186-0003		4	SHAFT	
075	752186-0012		2	SHAFT	
110	752153-0000		5	FORMING ROLLER	
140	255970-0000		3	BUSHING	
160	571544-0000		1	BEARING PLATE	
250	752155-0000		1	COUNTER ROLLER	
512	312105-0331		2	SCREW M6S ISO 4017 M5X20 A480	
540	312105-0370		4	SCREW M6S ISO 4017 M6X20 A480	
600	312318-0368		2	SCREW ISO4029 M6X16 A4	
630	312605-0316		2	HEXAGON NUT, M6M M6 A280	
TBA 0160S, TBA 0200S (See drawing on page: 1-130)					
010	456837-0000		1	HOLDER	
050	257041-0000		1	FORK	
070	752186-0003		4	SHAFT	
075	752186-0012		2	SHAFT	
110	752138-0000		5	FORMING ROLLER	
140	255970-0000		3	BUSHING	
160	571544-0000		1	BEARING PLATE	
250	752140-0000		1	COUNTER ROLLER	
512	312105-0331		2	SCREW M6S ISO 4017 M5X20 A480	
540	312105-0370		4	SCREW M6S ISO 4017 M6X20 A480	
600	312318-0368		2	SCREW ISO4029 M6X16 A4	
630	312605-0316		2	HEXAGON NUT, M6M M6 A280	
TBA 0250S, TBA 0200M (See drawing on page: 1-130)					
010	574337-0000		1	BRACKET	
050	574341-0000		1	FORK	
070	752186-0003		1	SHAFT	
075	752186-0004		5	SHAFT	
110	574346-0000		5	ROLL	
140	255970-0000		3	BUSHING	
160	571544-0000		1	BEARING PLATE	
250	574347-0000		1	COUNTER ROLLER	
512	312105-0331		2	SCREW M6S ISO 4017 M5X20 A480	
540	312105-0370		4	SCREW M6S ISO 4017 M6X20 A480	
600	312318-0368		2	SCREW ISO4029 M6X16 A4	
630	312605-0316		2	HEXAGON NUT, M6M M6 A280	
TBA 0330S, TBA 0300S, TBA 0180B, TBA 0200B, TBA 0284B, TBA 0250B (See drawing on page: 1-128)					
010	490518-0000		1	HOLDER	
050	257040-0000		1	FORK	
070	752186-0005		6	SHAFT	
110	751502-0000		5	ROLLER	
140	255970-0000		1	BUSHING	
160	571543-0000		1	BEARING PLATE	
250	751503-0000		1	COUNTER ROLLER	
	90166-0179	*M*	*1*	*SHRINKABLE HOSE*	
285	752047-0000		2	BUSHING	
512	312105-0331		6	SCREW M6S ISO 4017 M5X20 A480	
610	312318-0451		2	SCREW ISO4029 M8X20 A4	
640	312605-0318		2	HEXAGON NUT, M6M M8 A280	
Common Parts					
020	1279095-0000		1	LOCKING PLATE	
030	1279096-0000		1	LOCKING PLATE	
040	491022-0000		1	CYLINDER BRACKET	
055	1279092-0000		4	LOCKING PLATE	
060	2033-0011		12	WASHER	
080	239440-0000		1	SHAFT	
090	90240-0172		12	FLANGE BUSHING, 8X12X10 MM	
130	255969-0000		1	SHAFT	
180	441483-0000		1	CYLINDER BRACKET	
200	257042-0000		1	BRACKET	
210	257043-0000		1	ANGLE BRACKET	
220	257044-0000		1	ROLL	
315	752038-0000		4	SHIM	
330	90235-0274		2	THROTTLE CHECK VALVE, G1/8", SCU-604-1/8	
345	90239-0453		1	BRACKET	
346	90239-0516		1	ROD END, CLEVIS WITH AXLE M10X1,25	
350	90239-0779		1	CYLINDER	
	90239-0442		*1*	*SEAL KIT*	
500	311103-0238		2	PARALLEL PIN ISO 2338 3M6X20 A1	
510	311411-0140		1	SPLIT PIN SP1,6X16RFR	
520	312105-0364		1	SCREW M6S ISO 4017 M6X10 A480	
530	312105-0368		2	SCREW M6S ISO 4017 M6X16 A480	
545	312105-0372		1	SCREW M6S ISO 4017 M6X25 A480	
547	312105-0447		2	SCREW M6S ISO 4017 M8X12 A480	
560	312105-0451		1	SCREW M6S ISO 4017 M8X20 A480	
565	312105-0453		2	SCREW M6S ISO 4017 M8X25 A480	
580	312105-0536		1	SCREW M6S ISO 4017 M12X30 A480	
590	312318-0285		1	SCREW ISO4029 M4X6 A4	
650	312605-0320		1	HEXAGON NUT, M6M M10 A280	
660	315105-0153		3	WASHER BRB6,4X12RFR	
665	315105-0165		4	WASHER BRB8,4X16RFR	

LOWER FORMING RING

Drawing file: 456309-6_1_AD.hpgl

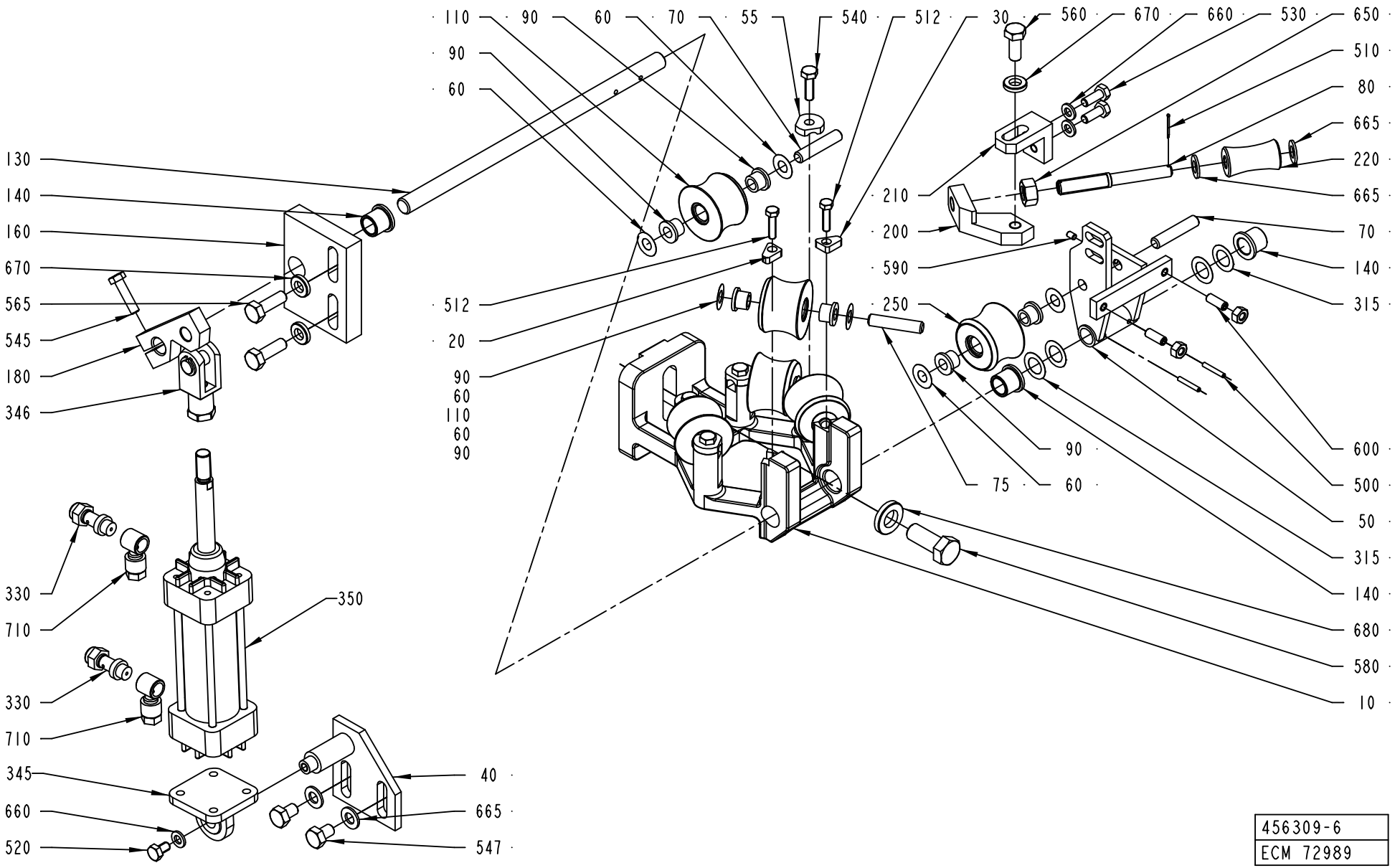

456309-6
ECM 72989

Pos	Part No	UN	Qty	Description	Page No
Common Parts (Cont'd)					
670	315115-0165		3	WASHER PLAIN, TBRB 8,4/16 H=3	
680	315115-0178		1	WASHER PLAIN, TBRB 13/24 H=4	
710	342797-0121		2	CONN. BANJO, RINGPIECE 6-1/8	

Pos	Part No	UN	Qty	Description	Page No

SUCTION PIPE

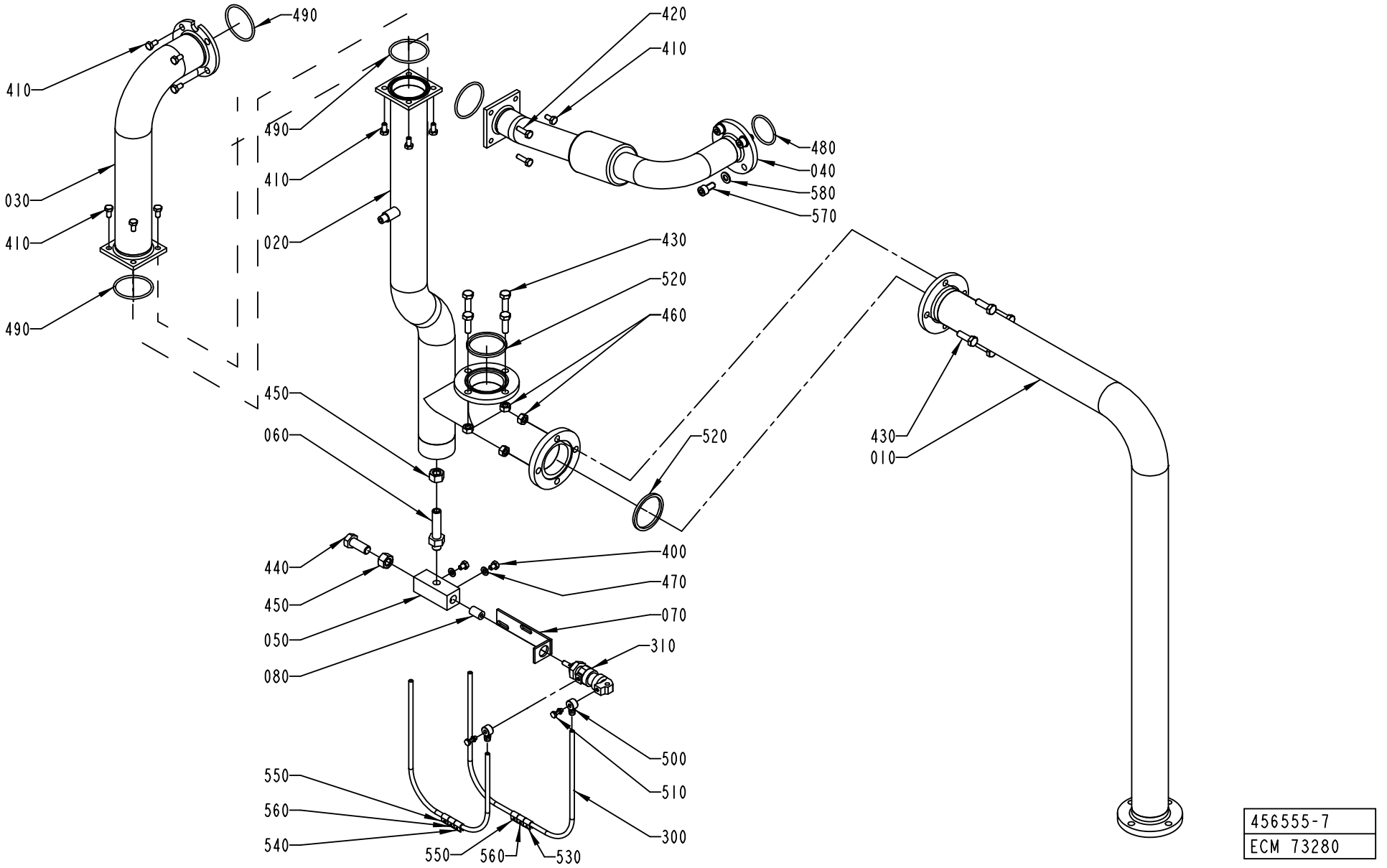

456555-7
ECM 73280

ECM: 114559 - 20020930
Group number: 456555-0600
Assembly Drawing: 456555-7_1_AA

Pos	Part No	UN	Qty	Description	Page No
-					
010	1519401-0000		1	SUCTION PIPE	
020	1519402-0000		1	SUCTION PIPE	
030	1519403-0000		1	SUCTION PIPE	
040	2528095-0000		1	PIPE	
050	572487-0000		1	THROTTLING	
060	566669-0000		1	NIPPLE	
070	572485-0000		1	BRACKET	
080	572486-0000		1	PISTON	
300	90166-0124	MM	2000	TUBE 6 MM PA,TRANSP.	
310	90239-0840		1	DOUBLE ACTING, MINI-ISO, CYL.16-12	
400	312105-0362		2	SCREW M6S ISO 4017 M6X8 A480	
410	312105-0366		14	SCREW M6S ISO 4017 M6X12 A480	
420	312105-0370		2	SCREW M6S ISO 4017 M6X20 A480	
430	312105-0453		8	SCREW M6S ISO 4017 M8X25 A480	
440	312105-0536		1	SCREW M6S ISO 4017 M12X30 A480	
450	312605-0322		2	HEXAGON NUT, M6M M12 A280	
460	312605-0318		8	HEXAGON NUT, M6M M8 A280	
470	315105-0153		2	WASHER BRB6,4X12RFR	
480	927422-0015		1	O-RING 39.2X3 SILICON	
490	927422-0008		4	O-RING 49.5X3 SILICON	
500	342980-0111		2	BANJO-CONNECTION,RING 6/4-M5	
510	342980-0301		2	BANJO-HOLLOW BOLT COUPL.,EXT.THREA.01-M5	
	315233-0101		*1*	*WASHER CAPTIVE SEALING M5*	
520	315229-0105		2	GASKETS, 48,5X55,5X3,7 MM 2" FDA	
530	359000-0400		1	MARKING CO2/4"0"	
540	359000-0401		1	MARKING COLLAR 2/4 "1" YELLOW	
550	359000-0402		2	MARKING COLLAR 2/4 "2" YELLOW	
560	359000-0403		2	MARKING COLLAR PA2/4 "3" YELLOW	
570	312115-0449		4	SCREW ISO4762 M8X16 A4	
580	315105-0165		4	WASHER BRB8,4X16RFR	

Pos	Part No	UN	Qty	Description	Page No

PEROXIDE PIPE

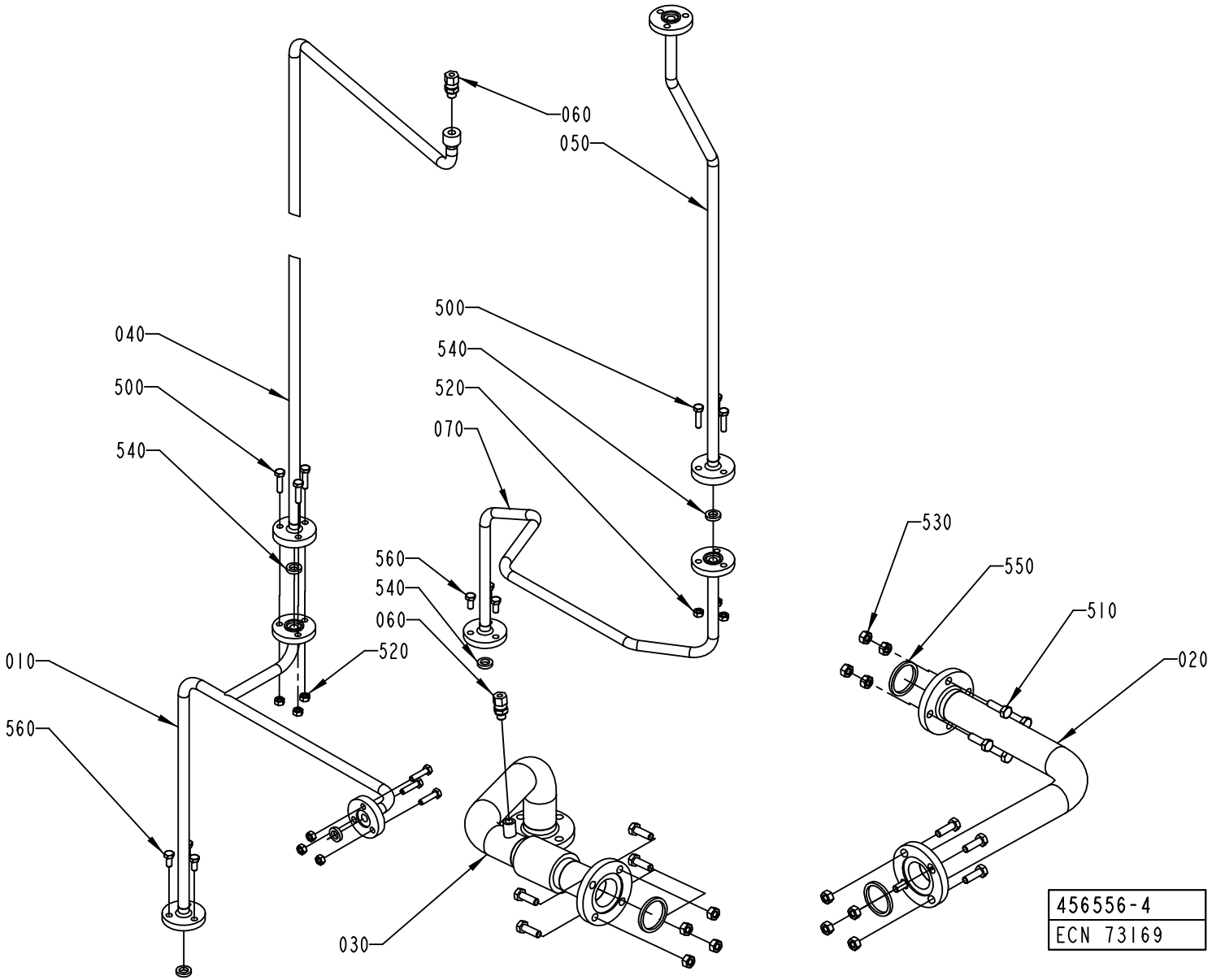

ECM: 114553 - 20020930
Group number: 456556-0400
Assembly Drawing: 456556-4_1_AA

Pos	Part No	UN	Qty	Description	Page No
-					
010	1523049-0000		1	PIPE	
020	1523050-0000		1	PIPE	
030	1523051-0000		1	PIPE	
040	1523052-0000		1	PIPE	
050	1523053-0000		1	PIPE	
060	90030-0184		2	CONN. STR. GA-6-G1/8	
070	1548315-0000		1	PIPE	
500	312105-0372		9	SCREW M6S ISO 4017 M6X25 A480	
510	312105-0453		8	SCREW M6S ISO 4017 M8X25 A480	
520	312605-0316		9	HEXAGON NUT, M6M M6 A280	
530	312605-0318		12	HEXAGON NUT, M6M M8 A280	
540	315229-0101		5	GASKETS, 10,4X17,4X3,7 MM 1/2" FDA	
550	315229-0104		3	GASKETS, 35,8X42,8X3,7 MM 1"1/2 FD	
560	312105-0367		6	SCREW M6S ISO 4017 M6X14 A480	

Pos	Part No	UN	Qty	Description	Page No

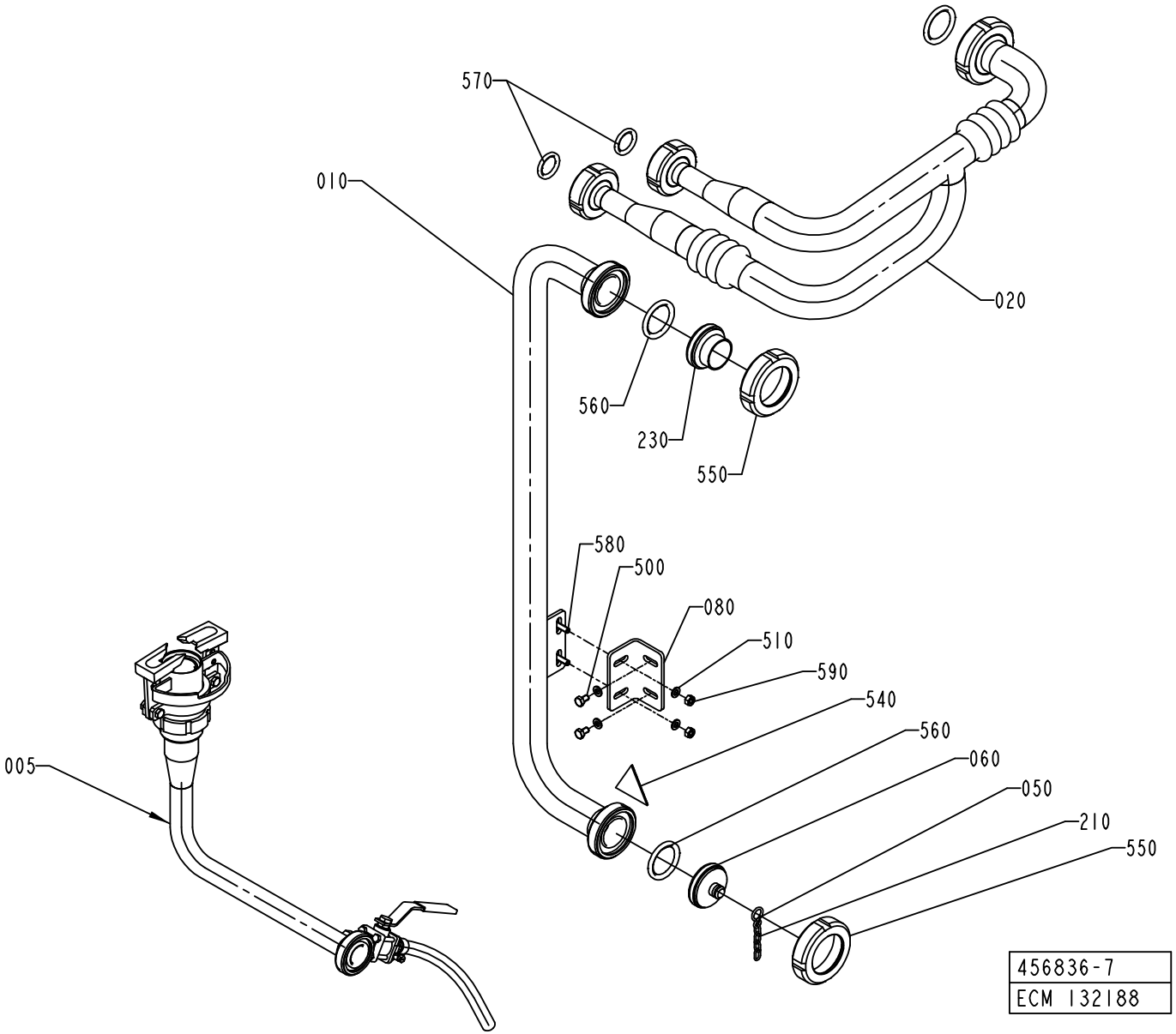
570
010
020
560
230
550
580
500
080
510
590
540
560
060
050
210
550
005
456836-7
ECM 132188

ECM: 132188 - 20030701
Group number: 456836-0600
Assembly Drawing: 456836-7_1_AB

Pos	Part No	UN	Qty	Description	Page No
-					
005	752495-0300		1	ATTACHMENT	**1-139**
010	1523365-0000		1	PIPE	
020	1523366-0000		1	PIPE	
050	209183-0000		1	RING	
060	1523364-0000		1	LID	
080	1548833-0000		1	BRACKET	
210	90155-0016	MM	300	HANGER CHAIN, HL3-2	
230	90217-0204		1	ASEPT. MALE FITTING ISO, 03-32-406/42	
500	312105-0364		2	SCREW M6S ISO 4017 M6X10 A480	
510	315105-0153		4	WASHER BRB6,4X12RFR	
540	359705-0003		1	WARNING SIGN ISO, DANGEROUS CHEMICALS	
550	90217-0206		2	UNION NUT, 1 1/2 APV, 07-01-376/17	
560	90217-0348		3	GASKET 35,4X46,8X4 MM	
570	90217-0347		2	GASKET 32X22,6X3,6 MM	
580	312105-0370		2	SCREW M6S ISO 4017 M6X20 A480	
590	312605-0316		2	HEXAGON NUT, M6M M6 A280	

Pos	Part No	UN	Qty	Description	Page No

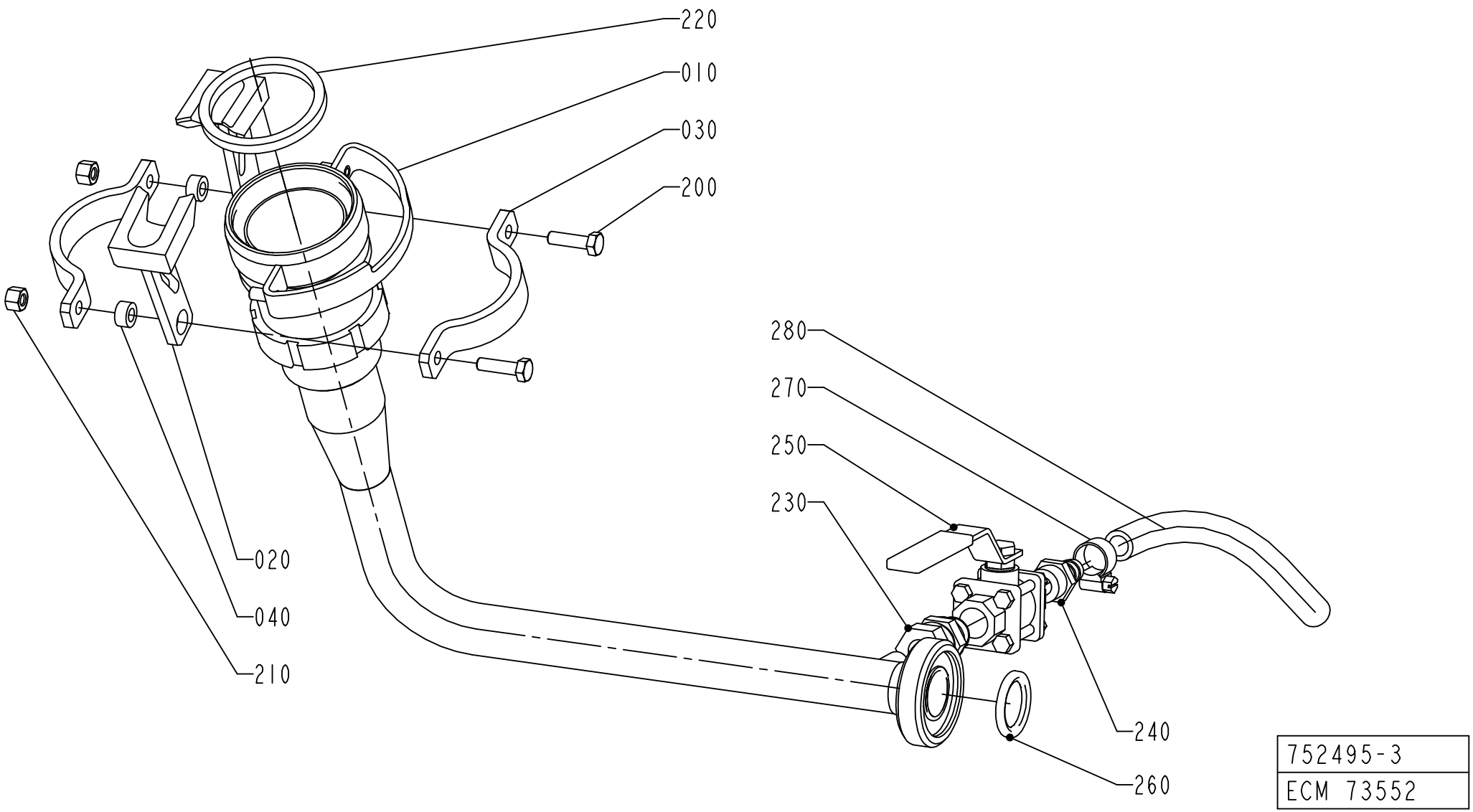
220
010
030
200
280
270
250
230
020
040
210
240
260
752495-3
ECM 73552

ECM: 114408 - 20020930
Group number: 752495-0300
Assembly Drawing: 752495-3_1_AA

Pos	Part No	UN	Qty	Description	Page No
TBA 0160S, TBA 0125S, TBA 0100B, TBA 0200S					
010	1499408-0000		1	CLEANING PIPE	
020	979728-0000		2	CATCH	
220	315229-0104		1	GASKETS, 35,8X42,8X3,7 MM 1"1/2 FD	
TBA 0250S, TBA 0200M					
010	1519938-0000		1	CLEANING PIPE	
020	579771-0000		2	CATCH	
220	12242-0003		1	GASKET 48X38X5,5	
TBA 0330S, TBA 0300S, TBA 0180B, TBA 0200B, TBA 0284B, TBA 0250B					
010	1512123-0000		1	CLEANING PIPE	
020	579637-0000		2	CATCH	
220	12242-0005		1	GASKET 61X51X5,5	
Common Parts					
030	752499-0000		2	RING	
040	553586-0000		2	SPACER	
200	312105-0371		2	SCREW M6S ISO 4017 M6X22 A480	
210	312811-0316		2	NUT HEX.LOCK HELI COIL MID GRIP M6 SS	
230	90030-0187		1	CONN. STR. GA-12-G3/8	
240	90163-0041		1	HOSE NIPPLE, EXT.THR. 3/8-12 MM	
250	90187-0051		1	BALL VALVE G3/8 PTFE	
260	90217-0347		1	GASKET 32X22,6X3,6 MM	
270	342991-0101		1	HOSE CLIP,WORM DRIVE TYPE (13)-16	
280	90166-0138	MM	1500	HOSE	

Pos	Part No	UN	Qty	Description	Page No

Machine Type | Group Description | Used-In | Group Number | Page No

HEAT EXCHANGER

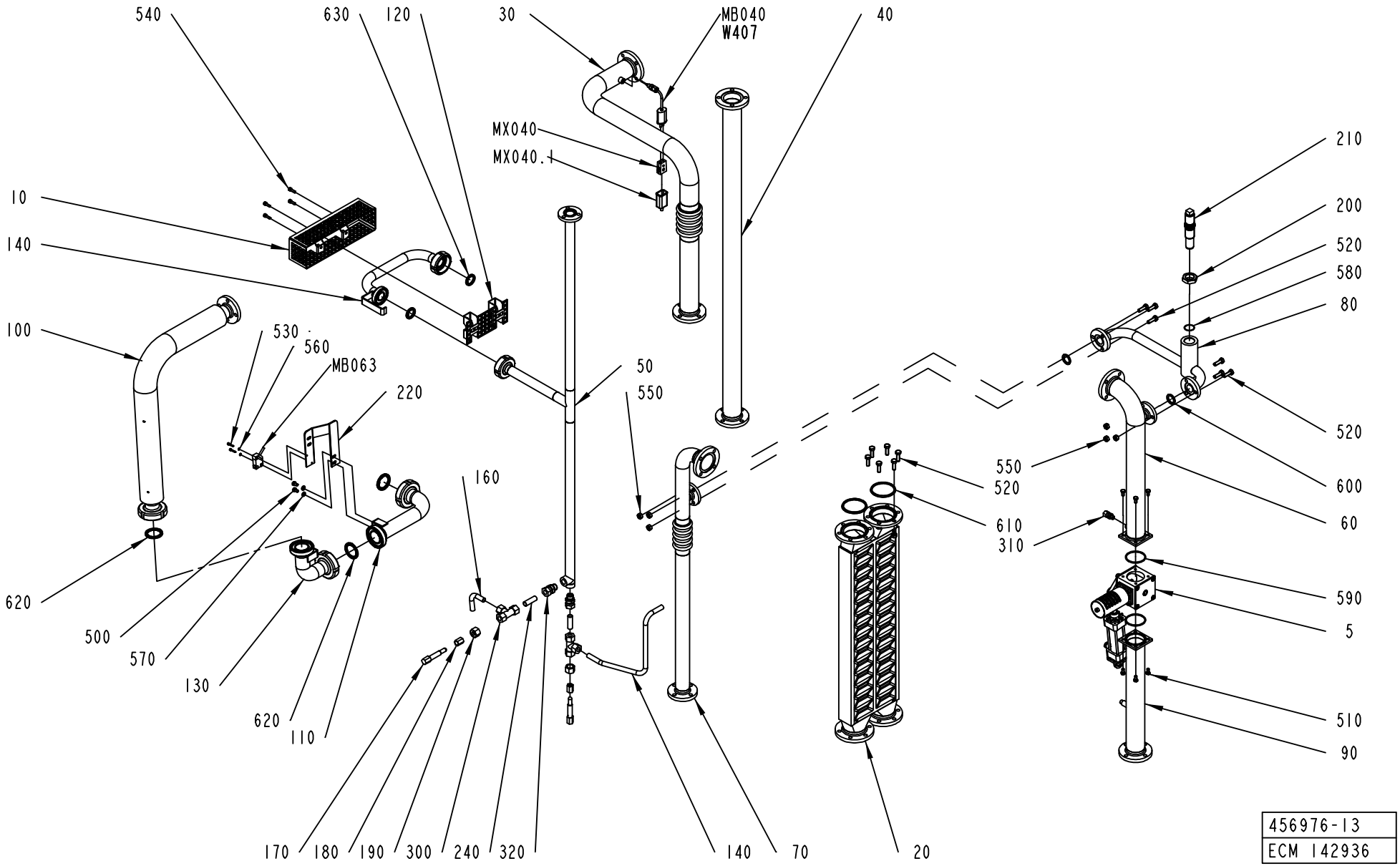

456976-13
ECM 142936

ECM: 142942 - 20040119
Group number: 456976-0700
Assembly Drawing: 456976-13_1_AB

Pos	Part No	UN	Qty	Description	Page No
-					
005	476859-0300		1	WEAC-VALVE	**1-143**
010	1348477-0000		1	TOUCH GUARD	
020	978838-0000		1	HEAT EXCHANGER	
030	1519380-0000		1	PIPE	
040	1519381-0000		1	PIPE	
050	1519382-0000		1	PIPE	
060	1519383-0000		1	PIPE	
070	979028-0000		1	PIPE	
080	979031-0000		1	PIPE	
090	1519384-0000		1	PIPE	
100	1519385-0000		1	PIPE	
110	1519386-0000		1	PIPE	
120	1348637-0000		1	TOUCH GUARD	
130	1519387-0000		1	PIPE	
140	1260481-0000		1	PIPE	
150	1519388-0000		1	PIPE	
160	1260480-0000		1	PIPE	
170	209145-0000		2	THROTTLE SCREW	
180	209146-0000		2	BARRIER NUT	
190	279589-0000		2	NUT	
200	442237-0000		1	NUT	
210	490998-0000		1	THROTTLE SCREW	
220	2640472-0000		1	HOLDER	
240	1260489-0000		2	PIPE	
300	90030-0058		2	CONN. T-PIPE T-12	
310	90030-0184		1	CONN. STR. GA-6-G1/8	
320	90030-0187		2	CONN. STR. GA-12-G3/8	
500	312105-0364		2	SCREW M6S ISO 4017 M6X10 A480	
510	312105-0366		8	SCREW M6S ISO 4017 M6X12 A480	
520	312105-0453		12	SCREW M6S ISO 4017 M8X25 A480	
530	312115-0228		2	SCREW ISO4762 M3X16 A4	
540	312115-0329		4	SCREW ISO4762 M5X16 A4	
550	312605-0318		12	HEXAGON NUT, M6M M8 A280	
560	315105-0124		2	WASHER BRB3,2X6RFR	
570	315105-0153		2	WASHER BRB6,4X12RFR	
580	315204-0119		1	O-RING 25,1X1,6 MM	
590	315204-0301		2	O-RING 49,5X3 MM	
600	315229-0203		2	GASKET 22,1X31,1X3,7 MM 1"	
610	315229-0206		2	GASKET 60,2X68,2X3,7 MM 2"1/2	
620	90217-0348		3	GASKET 35,4X46,8X4 MM	
630	90217-0347		2	GASKET 32X22,6X3,6 MM	
MB040	90326-0051		1	THERMOCOUPLE, 12826-33	
MB063	90044-0194		1	PROX.SW. IN5329/IN3002-BPKG	
MX040	90326-0020		1	PLUG, FEMALE YELLOW CR-AL	
MX040.1	90326-0012		1	PROTECTIVE COVER, T31A4618	
W407	90220-0059	M	5	THERMOCOUPLE CABLE K/ 2X0,81MM2	

Machine Type | Group Description | Used-In | Group Number | Page No

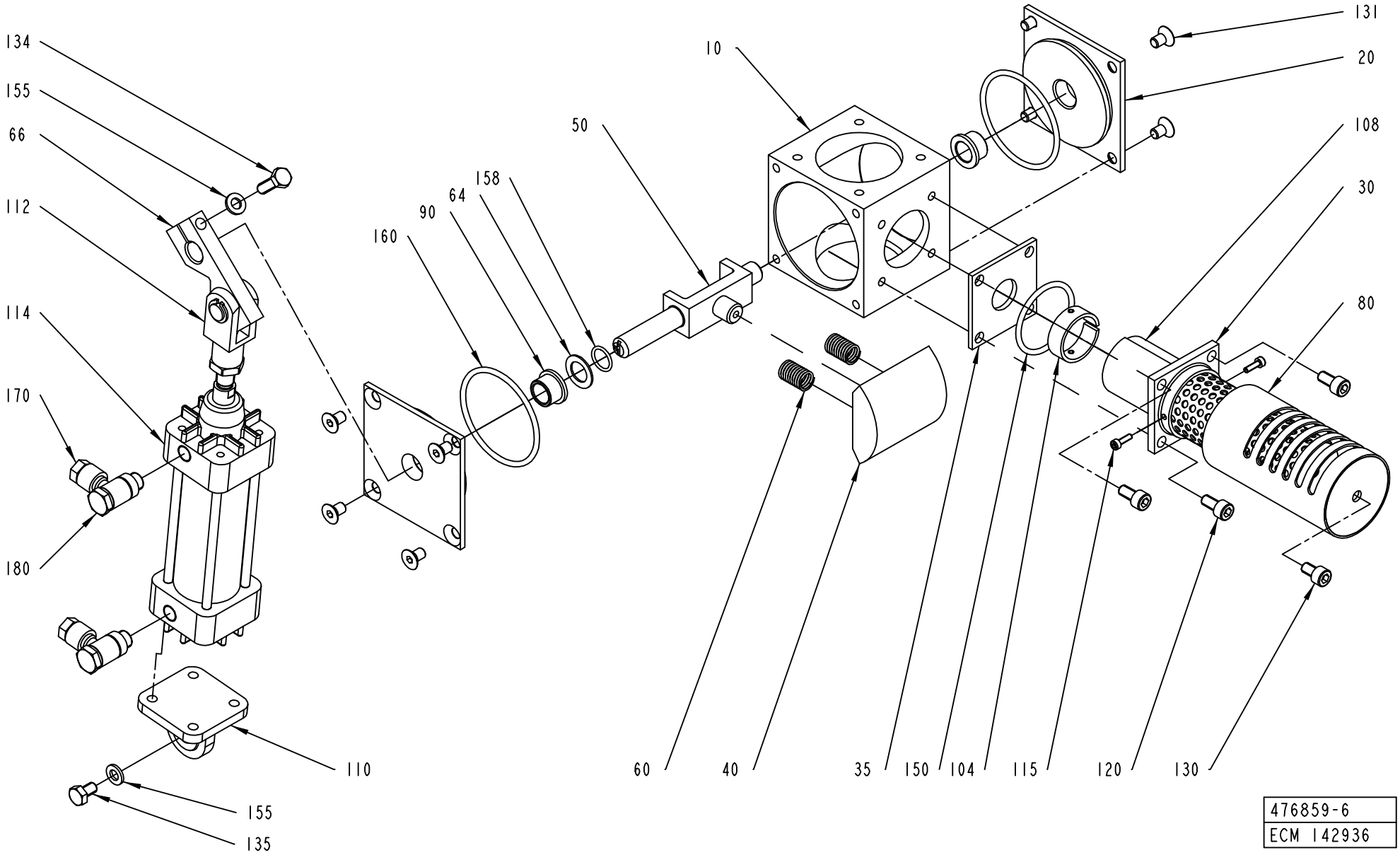
134
155
66
112
114
170
180
110
155
135
160
90
64
158
50
10
131
20
108
30
80
60
40
35
150
104
115
120
130
476859-6
ECM 142936

ECM: 143199 - 20040119
Group number: 476859-0300
Assembly Drawing: 476859-6_1_AD

Pos	Part No	UN	Qty	Description	Page No
-					
010	578031-0000		1	VALVE HOUSING	
020	255874-0000		2	BEARING COVER	
030	466477-0000		1	INNER PIPE	
035	979953-0000		1	WASHER	
040	466479-0000		1	PIECE	
050	555541-0000		1	BRACKET	
060	21521-0000		2	COMPRESSION SPRING	
064	266737-0000		1	WASHER	
066	441483-0000		1	CYLINDER BRACKET	
080	466478-0000		1	OUTER PIPE	
090	255875-0000		2	BUSHING	
104	466483-0000		1	CLAMPING PIECE	
108	466484-0000		1	NET	
110	90239-0453		1	BRACKET	
112	90239-0516		1	ROD END, CLEVIS WITH AXLE M10X1,25	
114	90239-0779		1	CYLINDER	
	90239-0442		*1*	*SEAL KIT*	
115	312115-0224		2	SCREW ISO4762 M3X10 A4	
120	312115-0366		4	SCREW ISO4762 M6X12 A4	
130	312115-0364		1	SCREW ISO4762 M6X10 A4	
131	312155-0364		8	SCREW EN 10642 MF6S M6X10 A480	
134	312105-0370		1	SCREW M6S ISO 4017 M6X20 A480	
135	312105-0364		1	SCREW M6S ISO 4017 M6X10 A480	
150	315204-0222		1	O-RING 36,2X3 MM	
155	315105-0153		2	WASHER BRB6,4X12RFR	
158	315204-0110		1	O-RING 12,1X1,6 MM	
160	315204-0302		2	O-RING 54,5X3 MM	
170	342797-0121		2	CONN. BANJO, RINGPIECE 6-1/8	
180	342980-0303		2	BANJO-HOLLOW BOLT COUPL,EXT.THR.01-G1/8"	

Pos	Part No	UN	Qty	Description	Page No

FILLER TUBE

Drawing file: 469091-7_1_AB.hpgl

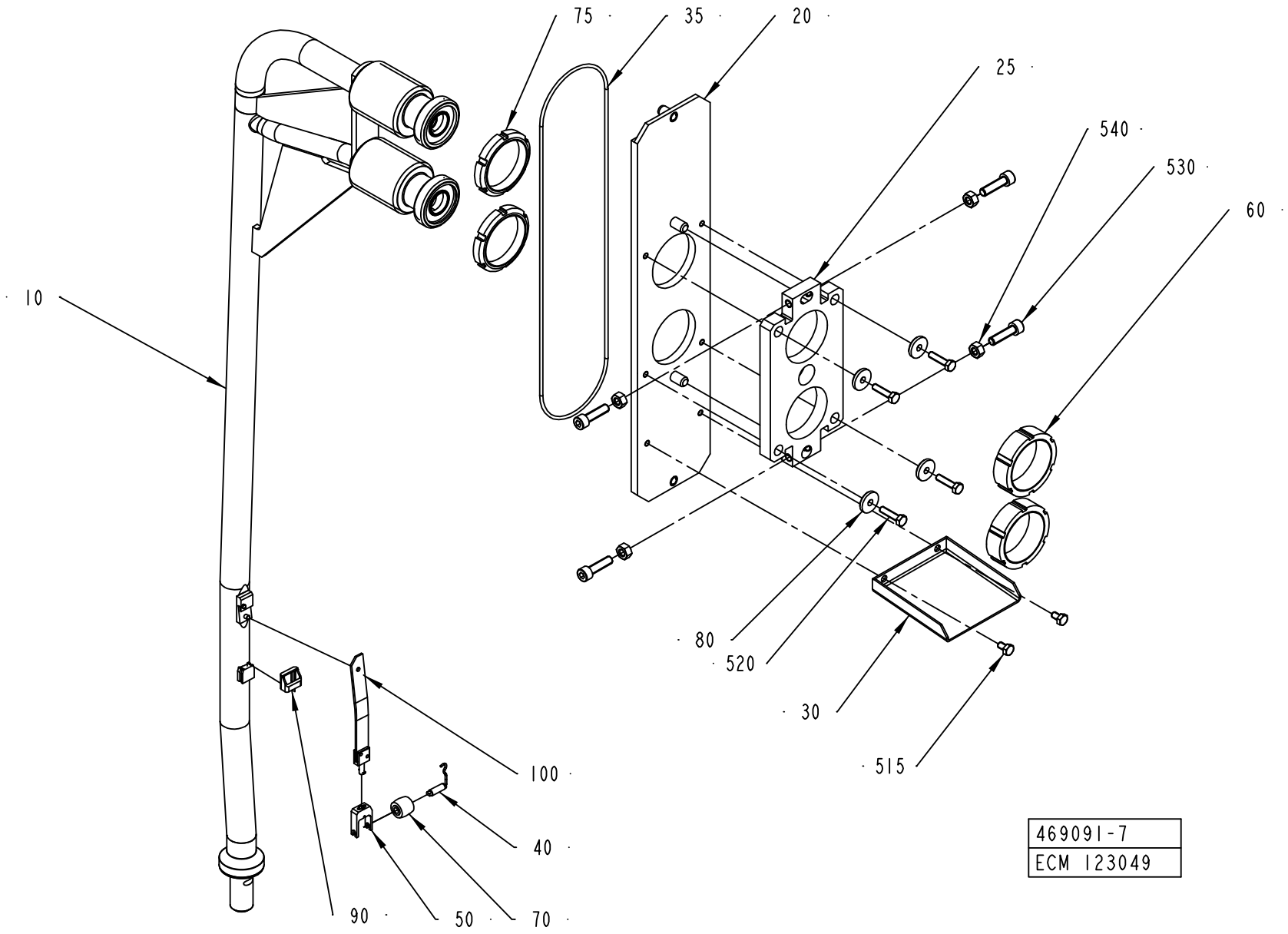

469091-7
ECM 123049

ECM: 123049 - 20030227
Group number: 469091-0500
Assembly Drawing: 469091-7_1_AB

Pos	Part No	UN	Qty	Description	Page No
TBA 0125S, TBA 0100B					
010	1317914-0000		1	UPPER FILLING TUBE	
040	255977-0000		1	SHAFT	
050	255978-0000		1	FORK	
070	272479-0000		1	PRESSURE ROLLER	
090	491441-0000		1	HOOD	
100	1285580-0000		1	SPRING	
TBA 0160S, TBA 0200S					
010	1317914-0000		1	UPPER FILLING TUBE	
040	255977-0000		1	SHAFT	
050	255978-0000		1	FORK	
070	272479-0000		1	PRESSURE ROLLER	
090	295377-0001		1	HOOD	
100	1285580-0000		1	SPRING	
TBA 0250S, TBA 0200M					
010	1558442-0000		1	UPPER FILLING TUBE	
040	255977-0000		1	SHAFT	
050	255978-0000		1	FORK	
070	272479-0000		1	PRESSURE ROLLER	
090	295377-0001		1	HOOD	
100	1285580-0000		1	SPRING	
TBA 0330S, TBA 0300S, TBA 0180B, TBA 0200B, TBA 0284B, TBA 0250B					
010	1317989-0000		1	UPPER FILLING TUBE	
040	295376-0000		1	SHAFT	
050	568583-0000		1	FORK	
070	257330-0000		1	PRESSURE ROLLER	
090	295377-0002		1	HOOD	
100	1317991-0000		1	SPRING	
Common Parts					
020	1523222-0000		1	PLATE	
025	1523225-0000		1	FASTENING PLATE	
030	295984-0000		1	DRIP GUARD	
035	491418-0001		1	O-RING	
060	1523223-0000		2	NUT	
075	1523224-0000		2	NUT	
080	315125-0153		4	WASHER TBRSB 6,4X22X4 A4	
515	312105-0364		2	SCREW M6S ISO 4017 M6X10 A480	
520	312105-0372		4	SCREW M6S ISO 4017 M6X25 A480	
530	312115-0455		4	SCREW ISO4762 M8X30 A4	
540	312605-0318		4	HEXAGON NUT, M6M M8 A280	

Pos	Part No	UN	Qty	Description	Page No

Machine Type | Group Description | Used-In | Group Number | Page No

CABLE TRENCH

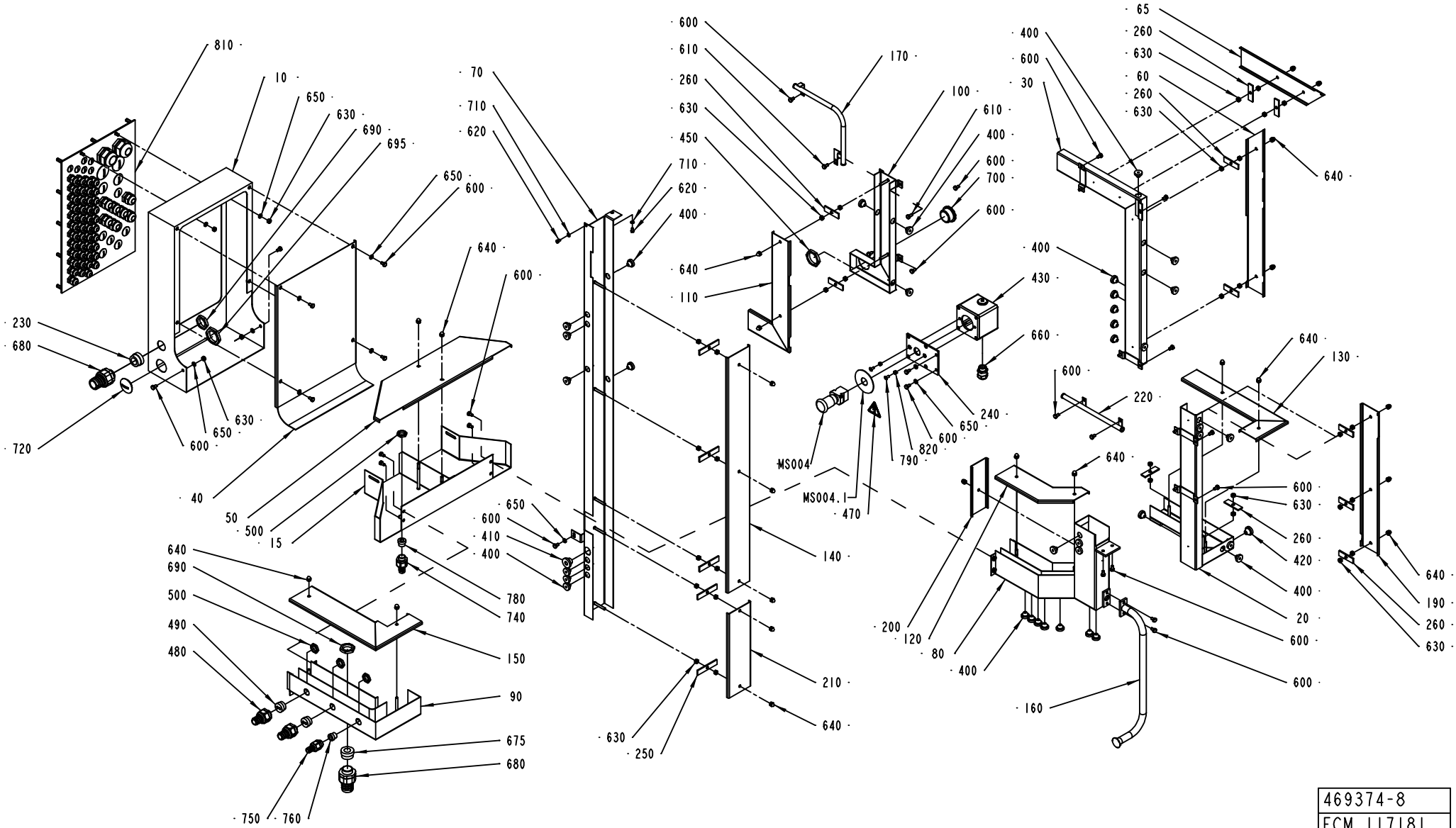

469374-8
ECM 117181

ECM: 117688 - 20030701
Group number: 469374-0600
Assembly Drawing: 469374-8_1_AB

This list covers pages from 1-146 to 1-149

Pos	Part No	UN	Qty	Description	Page No
NOHI (See drawing on pages: 1-146, 1-148)					
720	90002-0010		1	BLANK-OFF PLUG, PR 37 SKINDICHT-BLK29	
Common Parts					
010	1517268-0000		1	CABLE TRENCH	
015	1517269-0000		1	CABLE TRENCH	
020	577462-0000		1	CABLE TRENCH	
030	577463-0000		1	CABLE TRENCH	
040	1517270-0000		1	LID	
050	1517271-0000		1	LID	
060	1334768-0000		1	LID	
065	1334769-0000		1	LID	
070	2526845-0000		1	CABLE TRENCH	
080	2526847-0000		1	CABLE TRENCH	
090	2526848-0000		1	CABLE TRENCH	
100	2526843-0000		1	CABLE TRENCH	
110	2526844-0000		1	LID	
120	577467-0000		1	LID	
130	577468-0000		1	LID	
140	578035-0000		1	LID	
150	2526846-0000		1	LID	
160	578500-0000		1	PIPE	
170	978540-0000		1	CABLE CONDUIT	
190	577469-0000		1	LID	
200	577470-0000		1	LID	
210	578496-0000		1	LID	
220	978539-0000		1	CABLE CONDUIT	
230	353249-0061		1	INSERT, SINGEL HOLE, EK 155/20	
240	2559093-0000		1	PLATE	
250	272945-0000		5	LOCK	
260	295466-0000		11	LOCK	
400	90015-0020		36	LEAD-IN, TET5-7, E-1458016	
410	90015-0021		1	LEAD-IN, TET10-14, E-1458023	
420	90015-0023		1	LEAD-IN, TET7-10, E-1458019	
430	2562665-0000		1	PUSH BUTTON BOX	
450	90099-0011		1	NUT PR 37 BRASS	
470	359705-0015		1	WARNING SIGN ISO, RISK OF ELECTRIC SHOCK	
480	90457-0146		2	EXTENDED WITHOUT INSERT,	
490	90457-0147		2	GLAND, INSERT, MULTI HOLE, 2X7	
500	90099-0117		4	NUT, PR 18,6 (PG11)	
600	312105-0364		32	SCREW M6S ISO 4017 M6X10 A480	
610	312105-0366		2	SCREW M6S ISO 4017 M6X12 A480	
620	312125-0323		2	SCREW ISO 1207 M5X8 A4	
630	312605-0316		36	HEXAGON NUT, M6M M6 A280	
640	312705-0316		23	NUT HEX. DOMED CAP MHM-6 M6 A280	
650	315105-0153		11	WASHER BRB6,4X12RFR	
660	90458-0315		1	CABLE GLAND, M20X1,5, NO.5311 1120	
675	353249-0016		1	INSERT, SINGEL HOLE, EK 155/18	
680	353243-0007		2	EXTENDED WITHOUT INSERT, PG21	
690	90099-0119		2	NUT, PR 28,3 (PG21)	
695	90099-0120		1	NUT PR 37 (PG29)	
700	352101-0107		1	LEAD-IN, PR37/PG29, E-1457537	
710	315105-0146		2	WASHER BRB5,3X10RFR	
740	353243-0003		1	EXTENDED WITHOUT INSERT, PG11	
750	353243-0002		1	EXTENDED WITHOUT INSERT, PG11	
760	353249-0010		1	INSERT, SINGEL HOLE, EK 152/11	
780	353249-0011		1	INSERT, SINGEL HOLE, EK 153/11	
790	312155-0327		2	SCREW EN 10642 MF6S M5X12 A480	
810	1511786-0100		1	TOWER CABLE INLETS	**1-151, 1-153**
820	312605-0314		2	HEXAGON NUT, M6M M5 A280	
MS004	90064-0124		1	SWITCH, EM. STOP, ZB2-BS844+ZB2-BZ1045	
MS004.1	486826-0001		1	SIGN "EMERGENCY STOP"	
W434	351150-0405	M	4	CABLE OLFLEX 5X0,75 MM2 LIGHT/GREY	

CABLE TRENCH

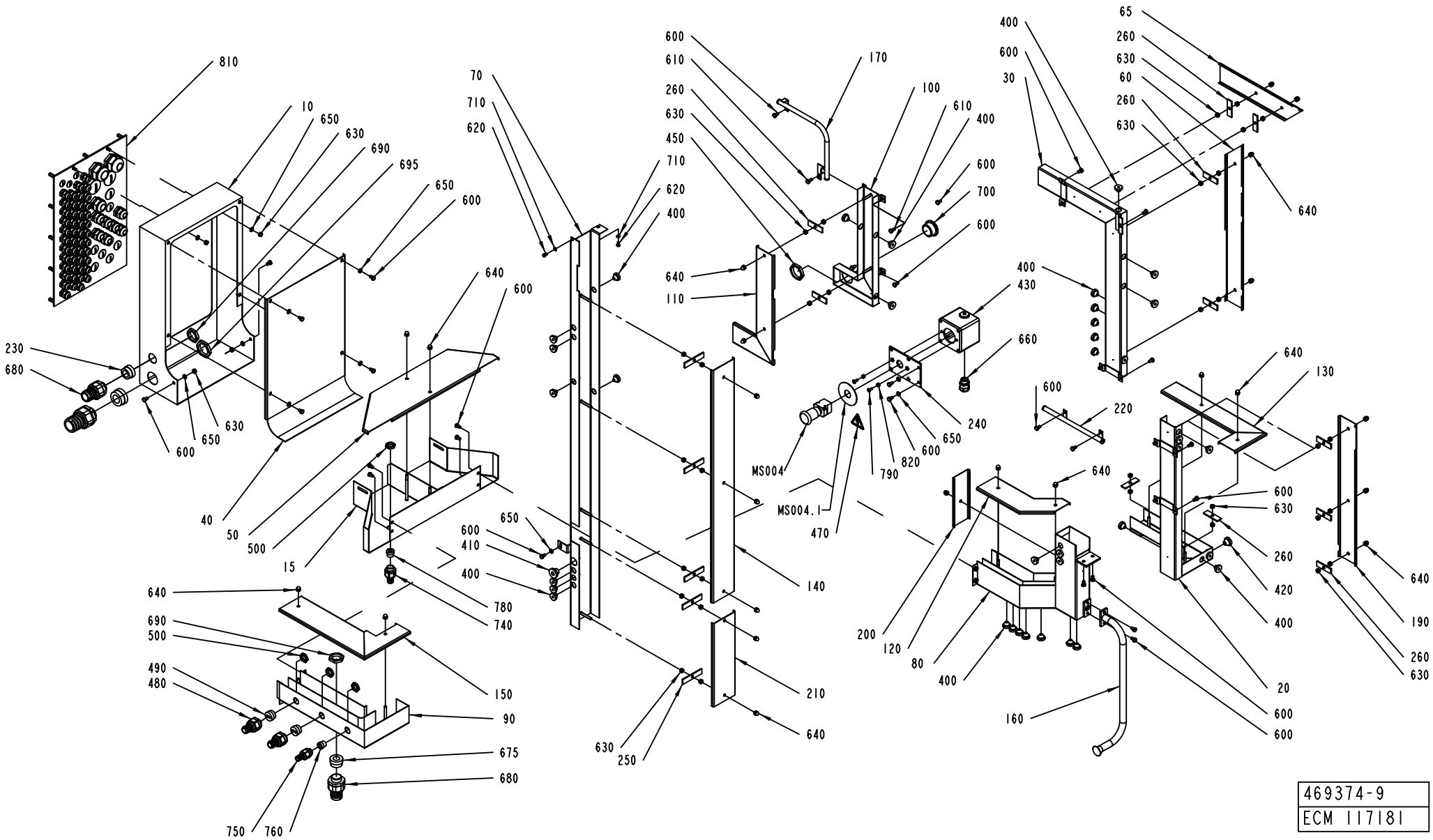

469374-9
ECM 117181

ECM: 117688 - 20030701
Group number: 469374-0600
Assembly Drawing: 469374-9_1_AB

This list covers pages from 1-146 to 1-149

Pos	Part No	UN	Qty	Description	Page No
NOHI (See drawing on pages: 1-146, 1-148)					
720	90002-0010		1	BLANK-OFF PLUG, PR 37 SKINDICHT-BLK29	
Common Parts					
010	1517268-0000		1	CABLE TRENCH	
015	1517269-0000		1	CABLE TRENCH	
020	577462-0000		1	CABLE TRENCH	
030	577463-0000		1	CABLE TRENCH	
040	1517270-0000		1	LID	
050	1517271-0000		1	LID	
060	1334768-0000		1	LID	
065	1334769-0000		1	LID	
070	2526845-0000		1	CABLE TRENCH	
080	2526847-0000		1	CABLE TRENCH	
090	2526848-0000		1	CABLE TRENCH	
100	2526843-0000		1	CABLE TRENCH	
110	2526844-0000		1	LID	
120	577467-0000		1	LID	
130	577468-0000		1	LID	
140	578035-0000		1	LID	
150	2526846-0000		1	LID	
160	578500-0000		1	PIPE	
170	978540-0000		1	CABLE CONDUIT	
190	577469-0000		1	LID	
200	577470-0000		1	LID	
210	578496-0000		1	LID	
220	978539-0000		1	CABLE CONDUIT	
230	353249-0061		1	INSERT, SINGEL HOLE, EK 155/20	
240	2559093-0000		1	PLATE	
250	272945-0000		5	LOCK	
260	295466-0000		11	LOCK	
400	90015-0020		36	LEAD-IN, TET5-7, E-1458016	
410	90015-0021		1	LEAD-IN, TET10-14, E-1458023	
420	90015-0023		1	LEAD-IN, TET7-10, E-1458019	
430	2562665-0000		1	PUSH BUTTON BOX	
450	90099-0011		1	NUT PR 37 BRASS	
470	359705-0015		1	WARNING SIGN ISO, RISK OF ELECTRIC SHOCK	
480	90457-0146		2	EXTENDED WITHOUT INSERT,	
490	90457-0147		2	GLAND, INSERT, MULTI HOLE, 2X7	
500	90099-0117		4	NUT, PR 18,6 (PG11)	
600	312105-0364		32	SCREW M6S ISO 4017 M6X10 A480	
610	312105-0366		2	SCREW M6S ISO 4017 M6X12 A480	
620	312125-0323		2	SCREW ISO 1207 M5X8 A4	
630	312605-0316		36	HEXAGON NUT, M6M M6 A280	
640	312705-0316		23	NUT HEX. DOMED CAP MHM-6 M6 A280	
650	315105-0153		11	WASHER BRB6,4X12RFR	
660	90458-0315		1	CABLE GLAND, M20X1,5, NO.5311 1120	
675	353249-0016		1	INSERT, SINGEL HOLE, EK 155/18	
680	353243-0007		2	EXTENDED WITHOUT INSERT, PG21	
690	90099-0119		2	NUT, PR 28,3 (PG21)	
695	90099-0120		1	NUT PR 37 (PG29)	
700	352101-0107		1	LEAD-IN, PR37/PG29, E-1457537	
710	315105-0146		2	WASHER BRB5,3X10RFR	
740	353243-0003		1	EXTENDED WITHOUT INSERT, PG11	
750	353243-0002		1	EXTENDED WITHOUT INSERT, PG11	
760	353249-0010		1	INSERT, SINGEL HOLE, EK 152/11	
780	353249-0011		1	INSERT, SINGEL HOLE, EK 153/11	
790	312155-0327		2	SCREW EN 10642 MF6S M5X12 A480	
810	1511786-0100		1	TOWER CABLE INLETS	**1-151, 1-153**
820	312605-0314		2	HEXAGON NUT, M6M M5 A280	
MS004	90064-0124		1	SWITCH, EM. STOP, ZB2-BS844+ZB2-BZ1045	
MS004.1	486826-0001		1	SIGN "EMERGENCY STOP"	
W434	351150-0405	M	4	CABLE OLFLEX 5X0,75 MM2 LIGHT/GREY	

TOWER CABLE INLETS

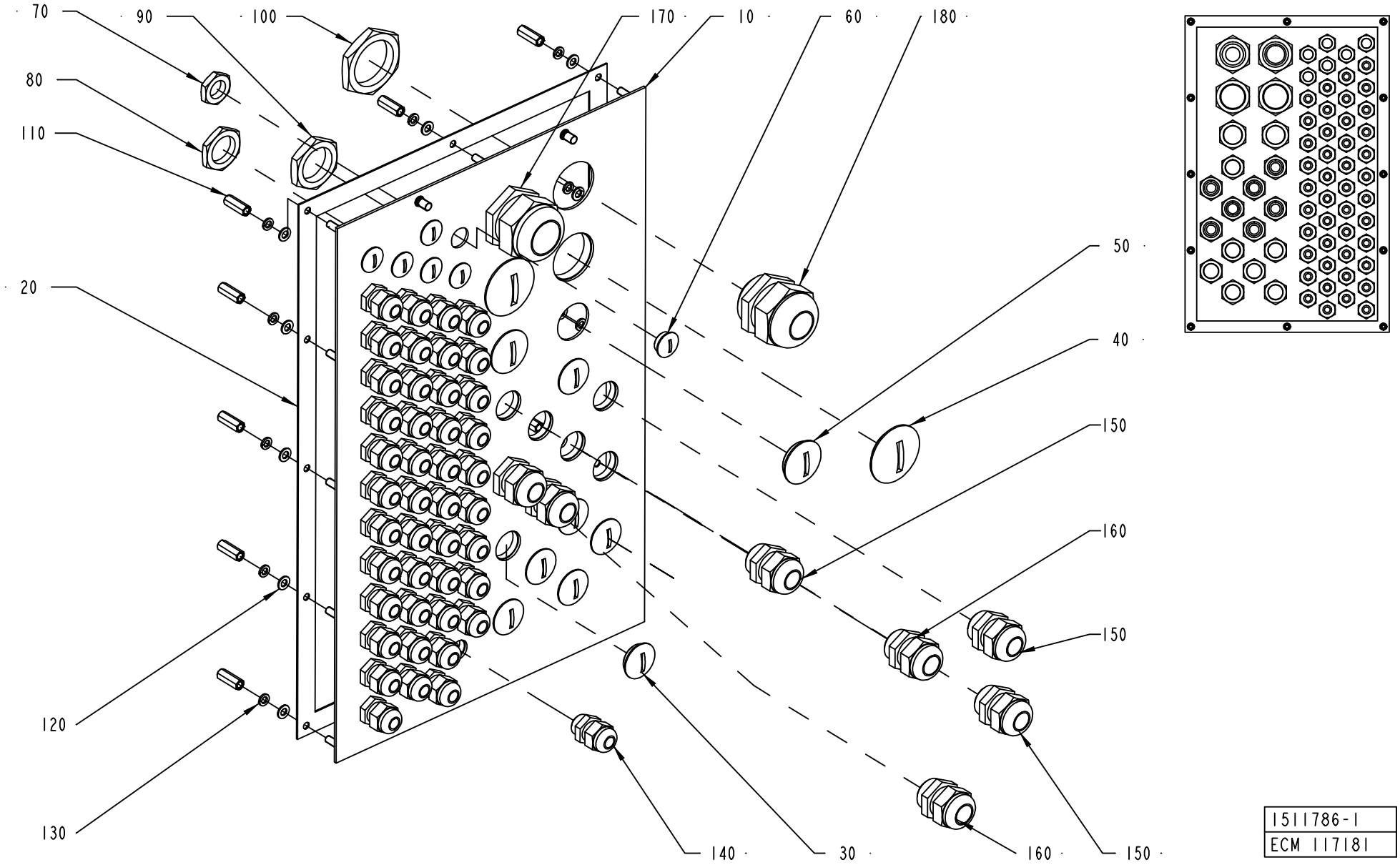

ECM: 134042 - 20030701
Group number: 1511786-0100
Assembly Drawing: 1511786-1_1_AC

This list covers pages from 1-150 to 1-153

Pos	Part No	UN	Qty	Description	Page No
HI (See drawing on page: 1-152)					
050	90002-0012		1	BLANK-OFF PLUG, PR 28,3 SKINDICHT-BLK21	
060	90002-0013		3	BLANK-OFF PLUG, PR 15,2 SKINDICHT-BLK9	
140	352103-0101		47	CABLE GLAND, ST 9, PR15,2/PG9	
190	352103-0116		1	CABLE GLAND, ST 21, PR28,3/PG21	
NOHI (See drawing on page: 1-150)					
050	90002-0012		2	BLANK-OFF PLUG, PR 28,3 SKINDICHT-BLK21	
060	90002-0013		6	BLANK-OFF PLUG, PR 15,2 SKINDICHT-BLK9	
140	352103-0101		44	CABLE GLAND, ST 9, PR15,2/PG9	
Common Parts					
010	1511835-0000		1	PLATE	
020	1511836-0000		1	GASKET	
030	90002-0004		7	BLANK-OFF PLUG, PR 22,5 SKINDICHT-BLK16	
040	90002-0010		2	BLANK-OFF PLUG, PR 37 SKINDICHT-BLK29	
070	90099-0104		50	NUT, PR 15,2 (PG9)	
080	90099-0110		14	NUT, PR 22,5 (PG16)	
090	90099-0119		2	NUT, PR 28,3 (PG21)	
100	90099-0120		4	NUT PR 37 (PG29)	
110	1517676-0000		12	SPACER	
120	315105-0146		12	WASHER BRB5,3X10RFR	
130	315402-0146		12	LOCK WASHER FBB 5,1	
150	352103-0110		5	CABLE GLAND, STR 16, PR22,5/PG16	
160	352103-0111		2	CABLE GLAND, ST 16, PR22,5/PG16	
170	352103-0121		1	CABLE GLAND, ST 29, PR37,0/PG29	
180	352103-0120		1	CABLE GLAND, STR 29, PR37,0/PG29	

Pos	Part No	UN	Qty	Description	Page No

TOWER CABLE INLETS

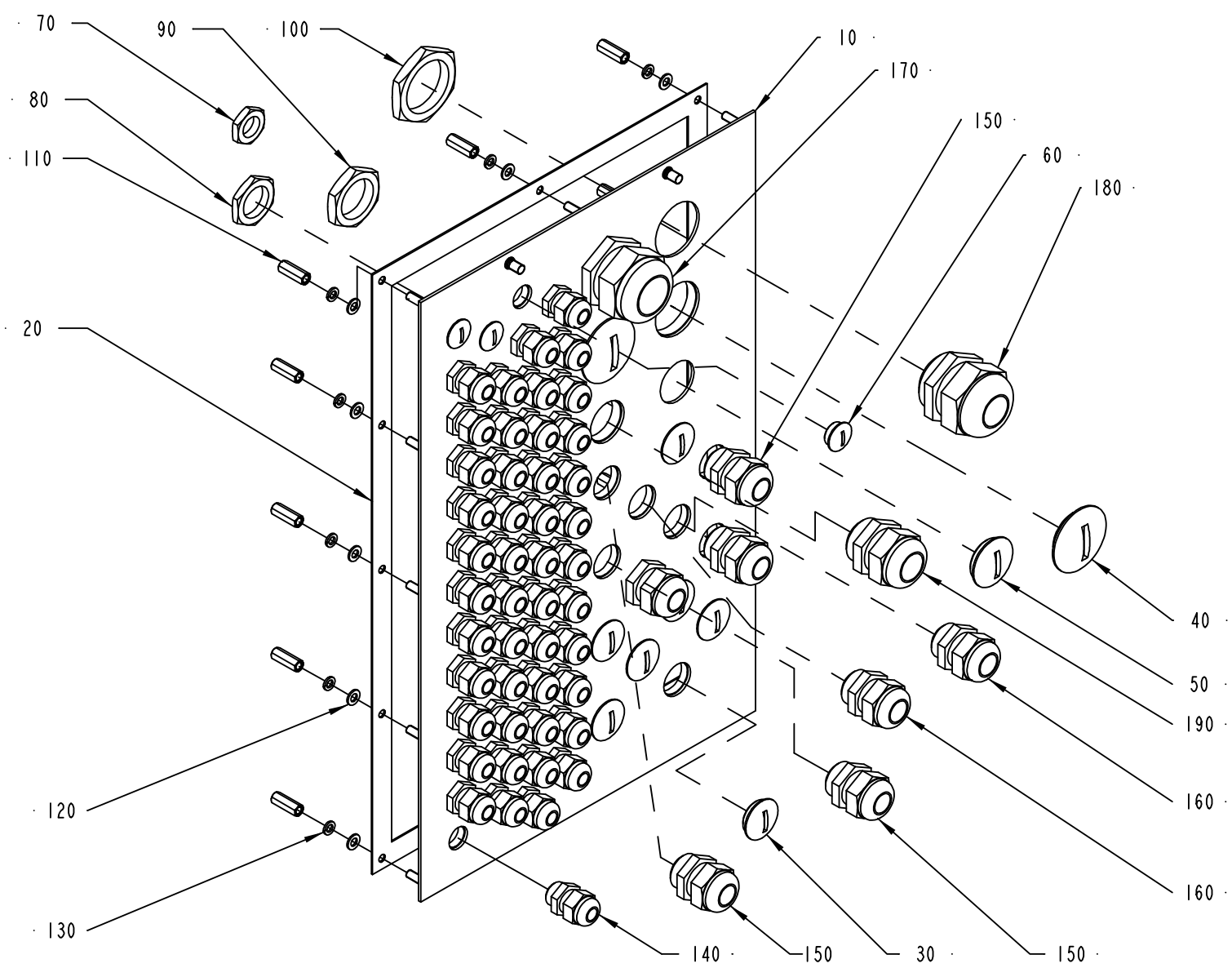

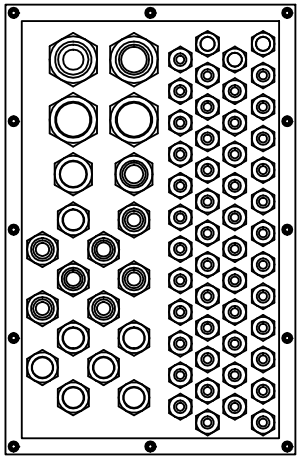

1511786-2
ECM 117181

ECM: 134042 - 20030701
Group number: 1511786-0100
Assembly Drawing: 1511786-2_1_AA

This list covers pages from 1-150 to 1-153

Pos	Part No	UN	Qty	Description	Page No
HI (See drawing on page: 1-152)					
050	90002-0012		1	BLANK-OFF PLUG, PR 28,3 SKINDICHT-BLK21	
060	90002-0013		3	BLANK-OFF PLUG, PR 15,2 SKINDICHT-BLK9	
140	352103-0101		47	CABLE GLAND, ST 9, PR15,2/PG9	
190	352103-0116		1	CABLE GLAND, ST 21, PR28,3/PG21	
NOHI (See drawing on page: 1-150)					
050	90002-0012		2	BLANK-OFF PLUG, PR 28,3 SKINDICHT-BLK21	
060	90002-0013		6	BLANK-OFF PLUG, PR 15,2 SKINDICHT-BLK9	
140	352103-0101		44	CABLE GLAND, ST 9, PR15,2/PG9	
Common Parts					
010	1511835-0000		1	PLATE	
020	1511836-0000		1	GASKET	
030	90002-0004		7	BLANK-OFF PLUG, PR 22,5 SKINDICHT-BLK16	
040	90002-0010		2	BLANK-OFF PLUG, PR 37 SKINDICHT-BLK29	
070	90099-0104		50	NUT, PR 15,2 (PG9)	
080	90099-0110		14	NUT, PR 22,5 (PG16)	
090	90099-0119		2	NUT, PR 28,3 (PG21)	
100	90099-0120		4	NUT PR 37 (PG29)	
110	1517676-0000		12	SPACER	
120	315105-0146		12	WASHER BRB5,3X10RFR	
130	315402-0146		12	LOCK WASHER FBB 5,1	
150	352103-0110		5	CABLE GLAND, STR 16, PR22,5/PG16	
160	352103-0111		2	CABLE GLAND, ST 16, PR22,5/PG16	
170	352103-0121		1	CABLE GLAND, ST 29, PR37,0/PG29	
180	352103-0120		1	CABLE GLAND, STR 29, PR37,0/PG29	

Pos	Part No	UN	Qty	Description	Page No

AIR NOZZLE

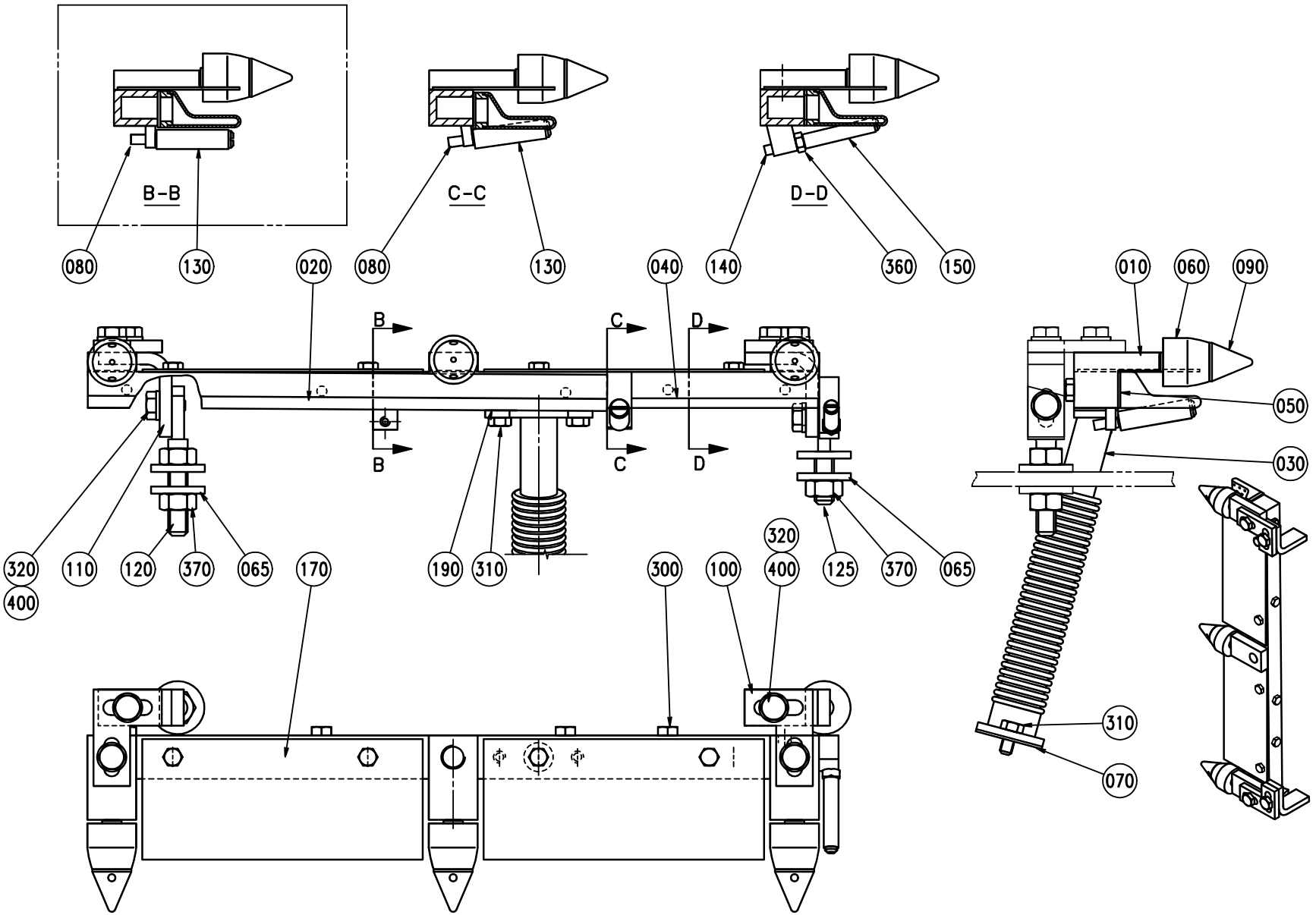
B-B
C-C
D-D
080
130
020
080
130
040
140
360
150
010
060
090
050
030
B
B
C
C
D
D
320
400
110
120
370
065
170
190
310
300
100
320
400
125
370
065
310
070

ECM: 124922 - 20030121
Group number: 469501-0400
Assembly Drawing: 469501-4_1_AA

Pos	Part No	UN	Qty	Description	Page No
TBA 0160S, TBA 0125S, TBA 0100B, TBA 0250S, TBA 0200S, TBA 0200M					
080	256899-0000		2	SHAFT	
130	469461-0000		2	ROLL	
TBA 0330S, TBA 0300S, TBA 0180B, TBA 0200B, TBA 0284B, TBA 0250B					
080	256899-0000		1	SHAFT	
130	469461-0000		1	ROLL	
Common Parts					
010	752218-0000		1	ATTACHMENT	
020	568577-0000		1	AIR NOZZLE	
030	751722-0000		1	PIPE-LINE	
040	568578-0000		1	AIR NOZZLE	
050	568581-0000		1	DISTRIBUTOR WING	
060	6161-0000		3	ROLL	
065	28036-0000		4	WASHER	
070	751010-0000		1	GASKET	
090	272095-0000		3	SHAFT	
100	469458-0000		2	BRACKET	
110	469459-0000		2	BRACKET	
120	469460-0000		1	BRACKET	
125	491143-0000		1	BRACKET	
140	469463-0000		1	SHAFT	
150	469464-0000		1	ROLL	
170	469466-0000		2	PLATE	
190	751024-0000		1	GASKET	
300	312105-0287		4	SCREW M6S ISO4017 M4X8 A470	
310	312105-0325		4	SCREW M6S ISO 4017 M5X10 A480	
315	312105-0333		5	SCREW M6S ISO 4017 M5X25 A480	
320	312105-0366		6	SCREW M6S ISO 4017 M6X12 A480	
360	312605-0312		1	HEXAGON NUT, M6M M4 A280	
370	312605-0318		3	HEXAGON NUT, M6M M8 A280	
400	315105-0153		6	WASHER BRB6,4X12RFR	

Pos	Part No	UN	Qty	Description	Page No

TUBE FLUSHING DEVICE

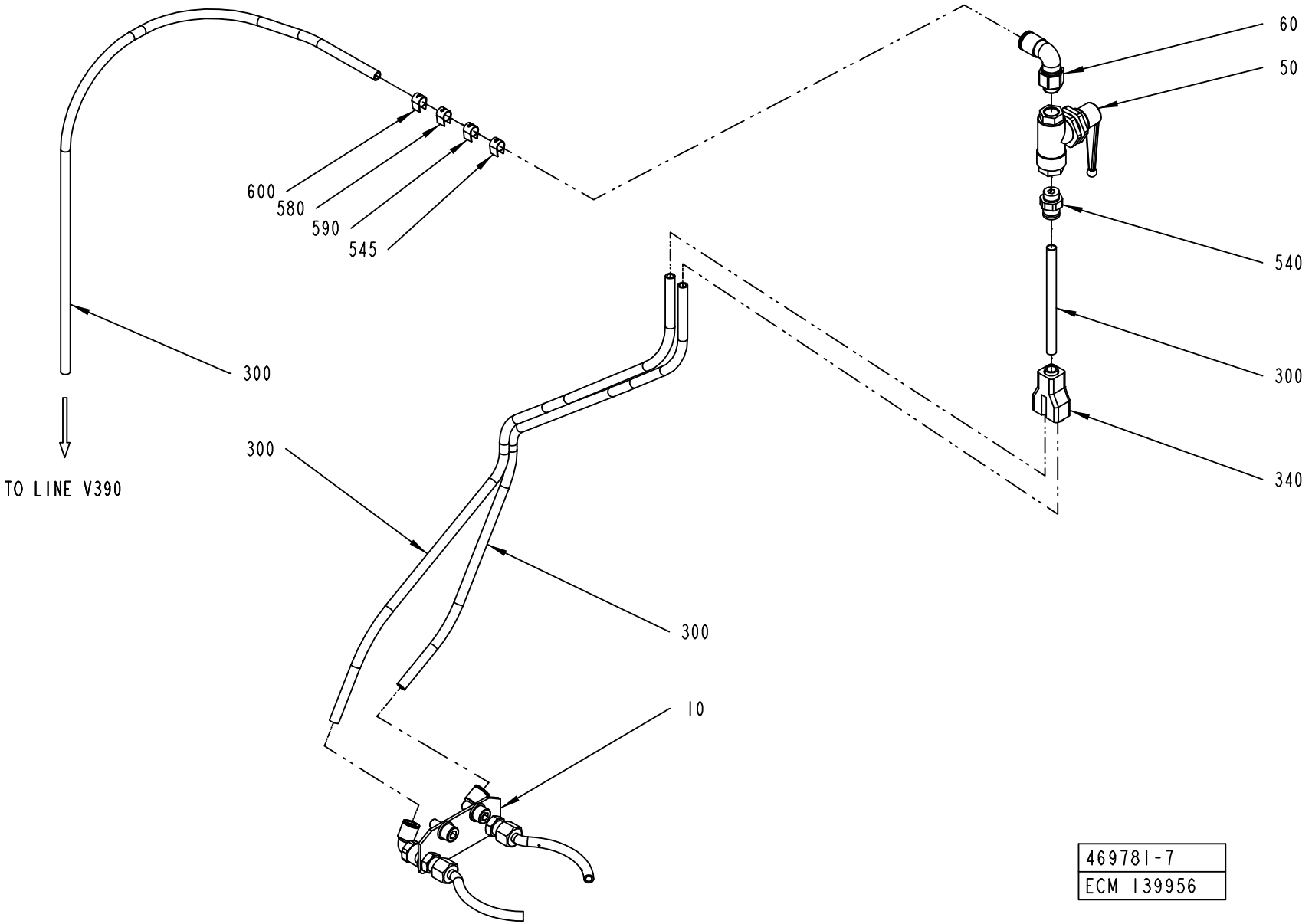

469781-7
ECM 139956

Pos	Part No	UN	Qty	Description	Page No
NOPT TBA 0100B, NOPT TBA 0200M, NOPT TBA 0200S, NOPT TBA 0125S, NOPT TBA 0160S, NOPT TBA 0180B, NOPT TBA 0200B, NOPT TBA 0250B, NOPT TBA 0330S, NOPT TBA 0250S, NOPT TBA 0284B, NOPT TBA 0300S (See drawing on page: 1-156)					
300	90166-0119	MM	1400	HOSE PUR 4/6 BLACK	
545	359000-0400		1	MARKING CO2/4"0"	
PT19 TBA 0125S, PT19 TBA 0160S, PT19 TBA 0180B, PT19 TBA 0200B, PT19 TBA 0100B, PT19 TBA 0250S, PT19 TBA 0284B, PT19 TBA 0300S, PT19 TBA 0330S, PT19 TBA 0200M, PT19 TBA 0200S, PT19 TBA 0250B (See drawing on page: 1-158)					
030	589449-0000		1	NOZZLE	
040	342946-0112		1	T-COUPLING,UNION 6/4	
300	90166-0119	MM	1650	HOSE PUR 4/6 BLACK	
310	90166-0132	MM	250	TUBE 6 MM PA,TRANSP.	
330	90235-0280		1	THROTTLE CHECK VALVES,M5	
545	359000-0400		2	MARKING CO2/4"0"	
550	342980-0113		2	BANJO-CONNECTION,RING 6/4-G1/8"	
555	342980-0303		1	BANJO-HOLLOW BOLT COUPL,EXT.THR.01-G1/8"	
560	359000-0401		1	MARKING COLLAR 2/4 "1" YELLOW	
570	359000-0402		1	MARKING COLLAR 2/4 "2" YELLOW	
610	2640155-0000		1	BRACKET	
620	312105-0328		4	SCREW M6S ISO 4017 M5X14 A480	
630	315105-0146		4	WASHER BRB5,3X10RFR	
Common Parts					
010	1558128-0100		1	NOZZLE	**1-161**
050	90459-0486		1	BALL VALVE PANEL MOUNTED G1/8	
060	90459-0487		1	ELBOW PIPE JOINT, EXT.THREAD, D=6MM G1/8	
340	90055-0100		1	Y-CONNECTION, 6-6	
540	342722-0202		1	PIPE COUPLING 1/8" D=6MM	
580	359000-0403		1	MARKING COLLAR PA2/4 "3" YELLOW	
590	359000-0409		1	MARKING COLLAR PA2/4 "9" YELLOW	
600	359000-0771		1	MARKING CO2/4"V"	

Pos	Part No	UN	Qty	Description	Page No

TUBE FLUSHING DEVICE

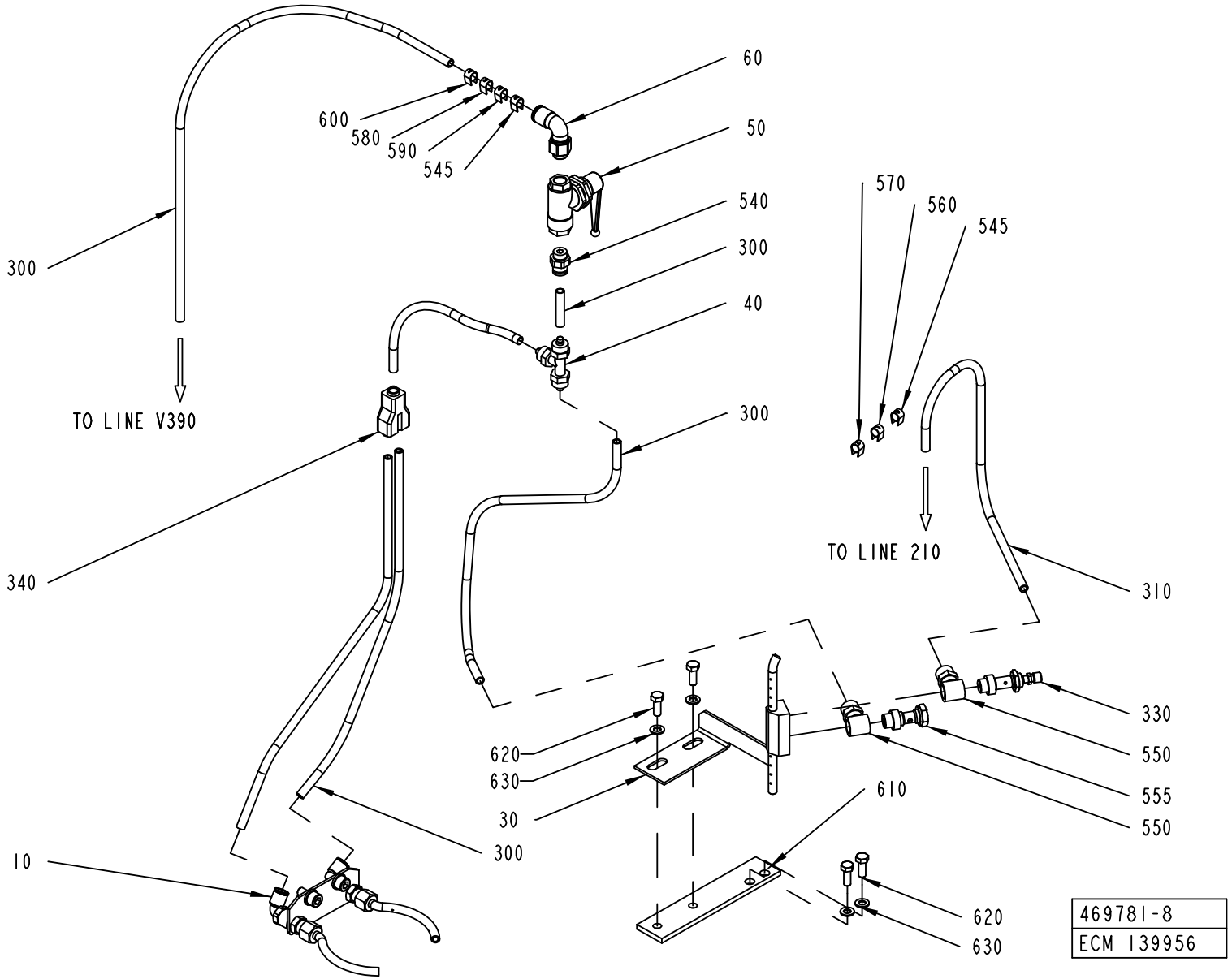

Pos	Part No	UN	Qty	Description	Page No
NOPT TBA 0100B, NOPT TBA 0200M, NOPT TBA 0200S, NOPT TBA 0125S, NOPT TBA 0160S, NOPT TBA 0180B, NOPT TBA 0200B, NOPT TBA 0250B, NOPT TBA 0330S, NOPT TBA 0250S, NOPT TBA 0284B, NOPT TBA 0300S (See drawing on page: 1-156)					
300	90166-0119	MM	1400	HOSE PUR 4/6 BLACK	
545	359000-0400		1	MARKING CO2/4"0"	
PT19 TBA 0125S, PT19 TBA 0160S, PT19 TBA 0180B, PT19 TBA 0200B, PT19 TBA 0100B, PT19 TBA 0250S, PT19 TBA 0284B, PT19 TBA 0300S, PT19 TBA 0330S, PT19 TBA 0200M, PT19 TBA 0200S, PT19 TBA 0250B (See drawing on page: 1-158)					
030	589449-0000		1	NOZZLE	
040	342946-0112		1	T-COUPLING,UNION 6/4	
300	90166-0119	MM	1650	HOSE PUR 4/6 BLACK	
310	90166-0132	MM	250	TUBE 6 MM PA,TRANSP.	
330	90235-0280		1	THROTTLE CHECK VALVES,M5	
545	359000-0400		2	MARKING CO2/4"0"	
550	342980-0113		2	BANJO-CONNECTION,RING 6/4-G1/8"	
555	342980-0303		1	BANJO-HOLLOW BOLT COUPL,EXT.THR.01-G1/8"	
560	359000-0401		1	MARKING COLLAR 2/4 "1" YELLOW	
570	359000-0402		1	MARKING COLLAR 2/4 "2" YELLOW	
610	2640155-0000		1	BRACKET	
620	312105-0328		4	SCREW M6S ISO 4017 M5X14 A480	
630	315105-0146		4	WASHER BRB5,3X10RFR	
Common Parts					
010	1558128-0100		1	NOZZLE	**1-161**
050	90459-0486		1	BALL VALVE PANEL MOUNTED G1/8	
060	90459-0487		1	ELBOW PIPE JOINT, EXT.THREAD, D=6MM G1/8	
340	90055-0100		1	Y-CONNECTION, 6-6	
540	342722-0202		1	PIPE COUPLING 1/8" D=6MM	
580	359000-0403		1	MARKING COLLAR PA2/4 "3" YELLOW	
590	359000-0409		1	MARKING COLLAR PA2/4 "9" YELLOW	
600	359000-0771		1	MARKING CO2/4"V"	

Pos	Part No	UN	Qty	Description	Page No

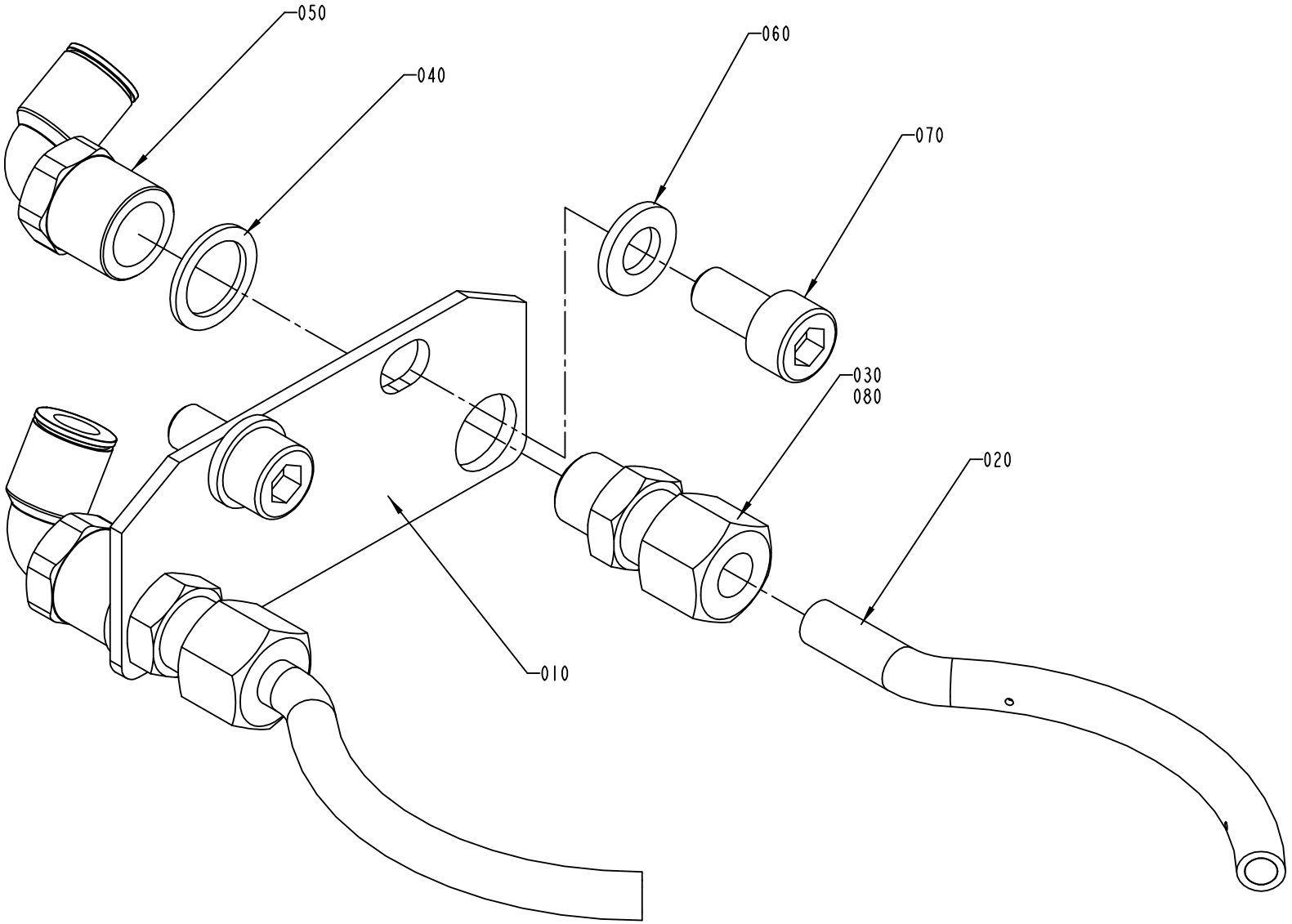
050
040
060
070
030
080
020
010
1558128-1
ECM 139956

ECM: 139956 - 20031001
Group number: 1558128-0100
Assembly Drawing: 1558128-1_1_AB

Pos	Part No	UN	Qty	Description	Page No
-					
010	2500293-0000		1	PLATE	
020	2500294-0000		2	PIPE	
030	90458-2039		2	CONN. STR., 6-R1/8, EXT. THREAD	
040	315233-0109		2	WASHER CAPTIVE SEALING G1/8	
050	90458-2040		2	ELBOW PIPE JOINT, INT.THREAD, G1/8"D=6MM	
060	315105-0153		2	WASHER BRB6,4X12RFR	
070	312115-0366		2	SCREW ISO4762 M6X12 A4	
080	90157-0016	ML	1	LOCKING FLUID	

Pos	Part No	UN	Qty	Description	Page No

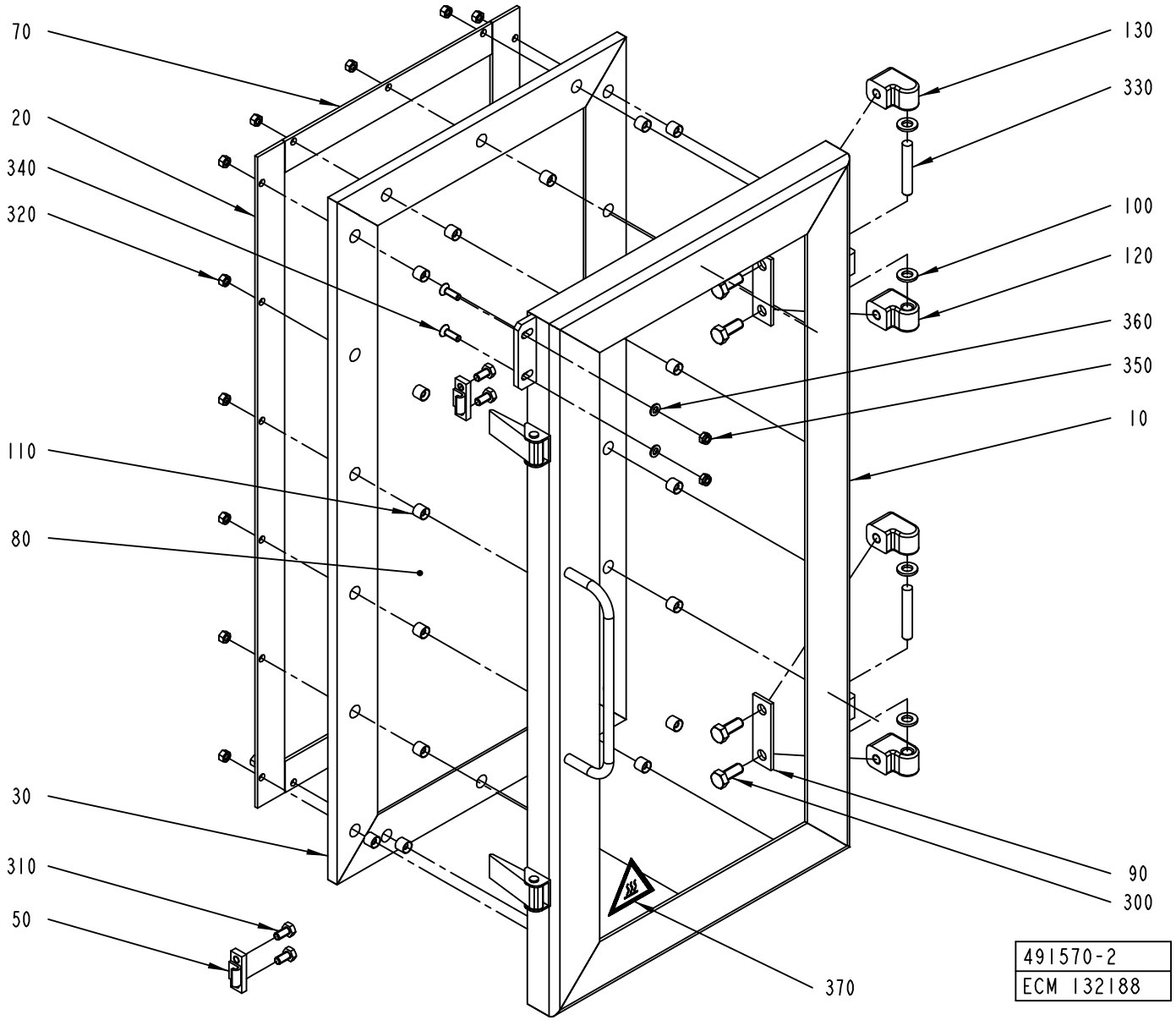
70
20
340
320
110
80
30
310
50
130
330
100
120
360
350
10
90
300
370
491570-2
ECM 132188

ECM: 136002 - 20030701
Group number: 491570-0200
Assembly Drawing: 491570-2_1_AC

Pos	Part No	UN	Qty	Description	Page No
-					
010	978542-0000		1	FRAME	
020	272780-0000		2	COVER SLIP	
030	272785-0000		1	RUBBER STRIP	
050	271860-0000		2	CLAMP BLOCK	
070	272782-0000		2	COVER SLIP	
080	272783-0003		1	GLASS PANE	
090	441737-0000		2	WASHER	
100	441739-0000		4	WASHER	
110	441718-0000		18	SPACER	
120	441740-0000		2	HINGE FLANGE	
130	441741-0000		2	HINGE FLANGE	
300	312105-0451		4	SCREW M6S ISO 4017 M8X20 A480	
310	312105-0366		4	SCREW M6S ISO 4017 M6X12 A480	
320	312605-0314		18	HEXAGON NUT, M6M M5 A280	
330	311103-0413		2	PARALLEL PIN ISO 2338 8M6X50 A1	
340	312155-0329		2	SCREW EN 10642 MF6S M5X16 A480	
350	312812-0314		2	HEXAGON NUT, NY-LOCK M5 A480	
360	315105-0146		2	WASHER BRB5,3X10RFR	
370	359710-0001		1	WARNING SIGN ISO, HOT SURFACE	

Pos	Part No	UN	Qty	Description	Page No

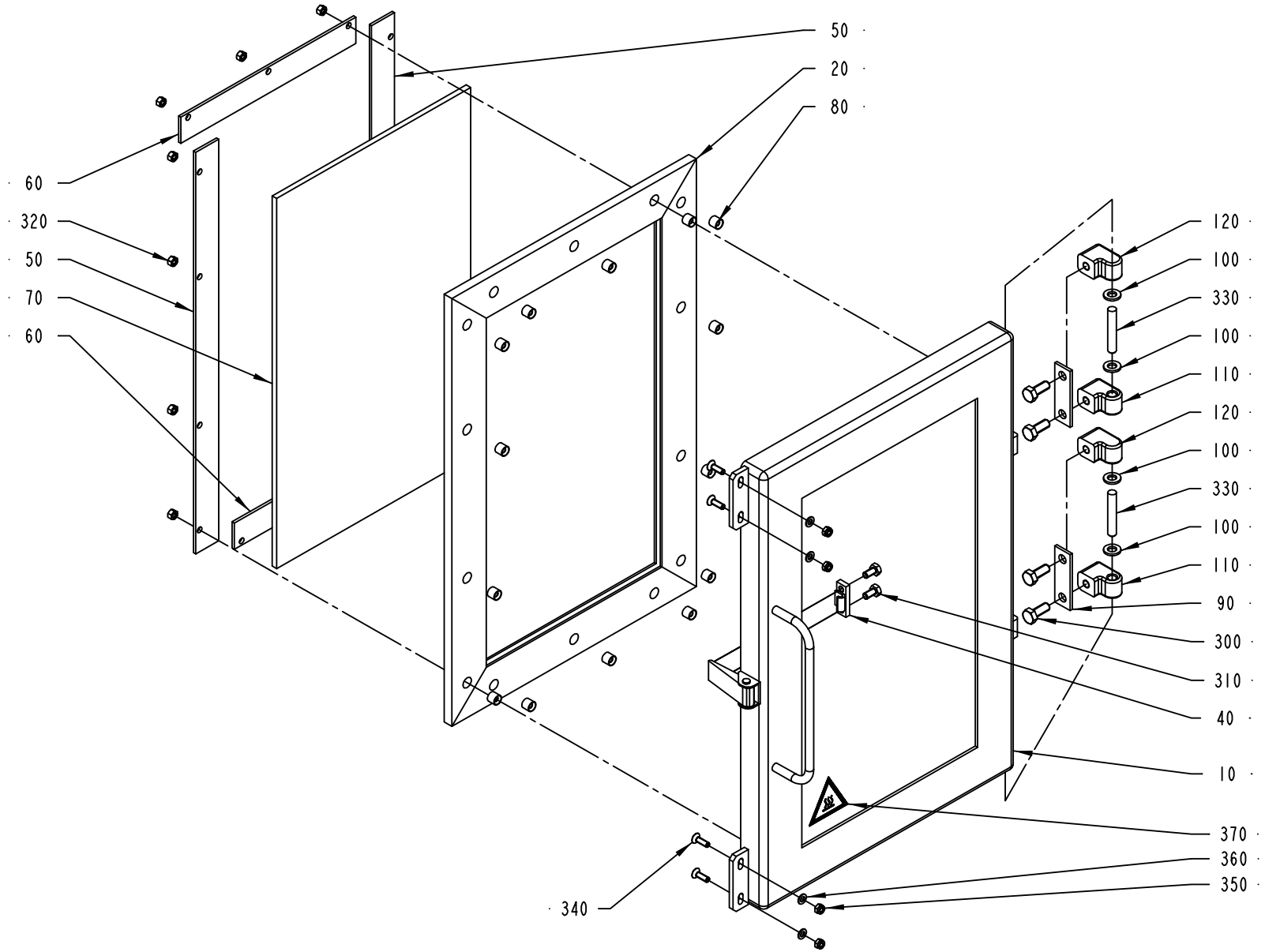

491579-2
ECM 132188

ECM: 132188 - 20030701
Group number: 491579-0200
Assembly Drawing: 491579-2_1_AC

Pos	Part No	UN	Qty	Description	Page No
-					
010	978543-0000		1	FRAME	
020	272784-0002		1	RUBBER STRIP	
040	271860-0000		1	CLAMP BLOCK	
050	272781-0002		2	COVER SLIP	
060	272782-0000		2	COVER SLIP	
070	272783-0002		1	GLASS PANE	
080	441718-0000		14	SPACER	
090	441737-0000		2	WASHER	
100	441739-0000		4	WASHER	
110	441740-0000		2	HINGE FLANGE	
120	441741-0000		2	HINGE FLANGE	
300	312105-0451		4	SCREW M6S ISO 4017 M8X20 A480	
310	312105-0366		2	SCREW M6S ISO 4017 M6X12 A480	
320	312605-0314		14	HEXAGON NUT, M6M M5 A280	
330	311103-0413		2	PARALLEL PIN ISO 2338 8M6X50 A1	
340	312155-0329		4	SCREW EN 10642 MF6S M5X16 A480	
350	312812-0314		4	HEXAGON NUT, NY-LOCK M5 A480	
360	315105-0146		4	WASHER BRB5,3X10RFR	
370	359710-0001		1	WARNING SIGN ISO, HOT SURFACE	

Pos	Part No	UN	Qty	Description	Page No

PHOTOCELL UNIT

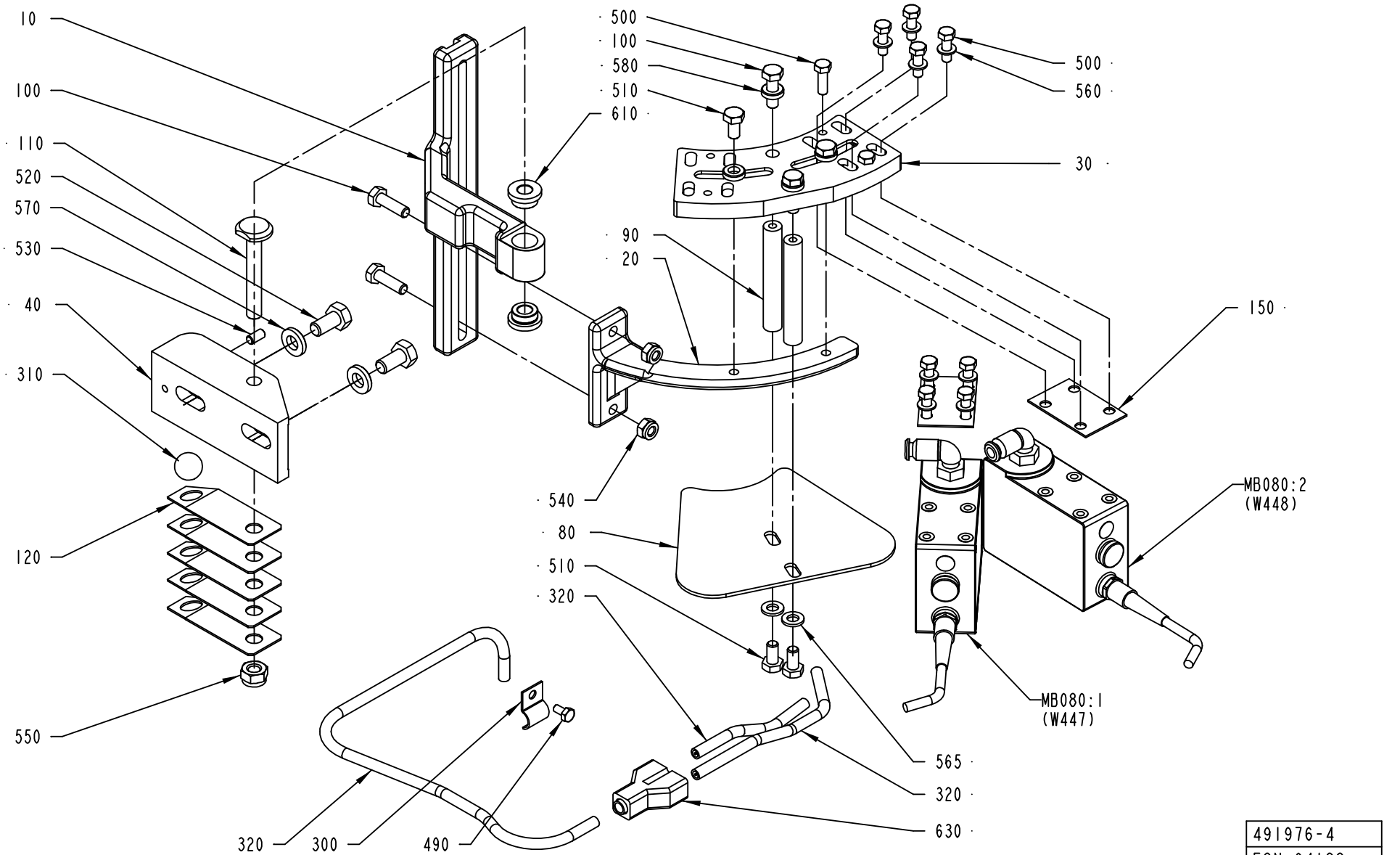

491976-4
ECN 94182

ECM: 114561 - 20020930
Group number: 491976-0300
Assembly Drawing: 491976-4_1_AC

This list covers pages from 1-166 to 1-169

Pos	Part No	UN	Qty	Description	Page No
TBA 0160S, TBA 0125S, TBA 0100B, TBA 0250S, TBA 0200S, TBA 0200M (See drawing on page: 1-168)					
010	751456-0000		1	HOLDER	
020	751476-0000		1	CANTILEVER	
030	491880-0000		1	FASTENING PLATE	
060	752554-0000		4	SPACER	
080	1260487-0000		1	PLATE	
090	1260491-0000		2	NUT	
100	312105-0370		4	SCREW M6S ISO 4017 M6X20 A480	
170	312109-0335		8	SCREW M6S ISO 4017 M5X30 A480	
500	312105-0329		2	SCREW M6S ISO 4017 M5X16 A480	
510	312105-0366		4	SCREW M6S ISO 4017 M6X12 A480	
580	315115-0153		4	WASHER PLAIN, TBRB 6,4/12 H=3	
TBA 0330S, TBA 0300S, TBA 0180B, TBA 0200B, TBA 0284B, TBA 0250B (See drawing on page: 1-166)					
010	751456-0000		1	HOLDER	
020	751457-0000		1	CANTILEVER	
030	978735-0000		1	FASTENING PLATE	
080	1260486-0000		1	PLATE	
090	1260490-0000		2	NUT	
100	312105-0370		4	SCREW M6S ISO 4017 M6X20 A480	
150	536374-0000		2	WASHER	
500	312105-0329		10	SCREW M6S ISO 4017 M5X16 A480	
510	312105-0366		4	SCREW M6S ISO 4017 M6X12 A480	
580	315115-0153		4	WASHER PLAIN, TBRB 6,4/12 H=3	
Common Parts					
040	490876-0000		1	BRACKET	
110	457367-0000		1	SHAFT	
120	457368-0000		5	SPRING	
300	90074-0001		1	CABLE CLIPS, D=10 MM	
310	90090-0016		1	BALL, D=15 MM	
320	90166-0132	MM	750	TUBE 6 MM PA,TRANSP.	
490	312105-0287		1	SCREW M6S ISO4017 M4X8 A470	
520	312105-0449		2	SCREW M6S ISO 4017 M8X16 A480	
530	312318-0325		1	SCREW ISO4029 M5X10 A4	
540	312812-0316		2	HEXAGON NUT, NY-LOCK M6 A480	
550	312812-0318		1	HEXAGON NUT, NY-LOCK M8 A480	
560	315105-0146		8	WASHER BRB5,3X10RFR	
565	315105-0153		2	WASHER BRB6,4X12RFR	
570	315115-0165		2	WASHER PLAIN, TBRB 8,4/16 H=3	
610	321101-0143		2	FLANGE BUSHING, 8X14X8 MM	
630	90055-0100		1	Y-CONNECTION, 6-6	
MB080:1	90458-0601		1	PHOTOCELL, SICK PHOTOCELL 1	
	342732-0102		*1*	*ELBOW PIPE JOINT, EXT.THREAD, D=6MM-G1/8*	
MB080:2	90458-0601		1	PHOTOCELL, SICK PHOTOCELL 1	
	342732-0102		*1*	*ELBOW PIPE JOINT, EXT.THREAD, D=6MM-G1/8*	

Machine Type | Group Description | Used-In | Group Number | Page No

PHOTOCELL UNIT

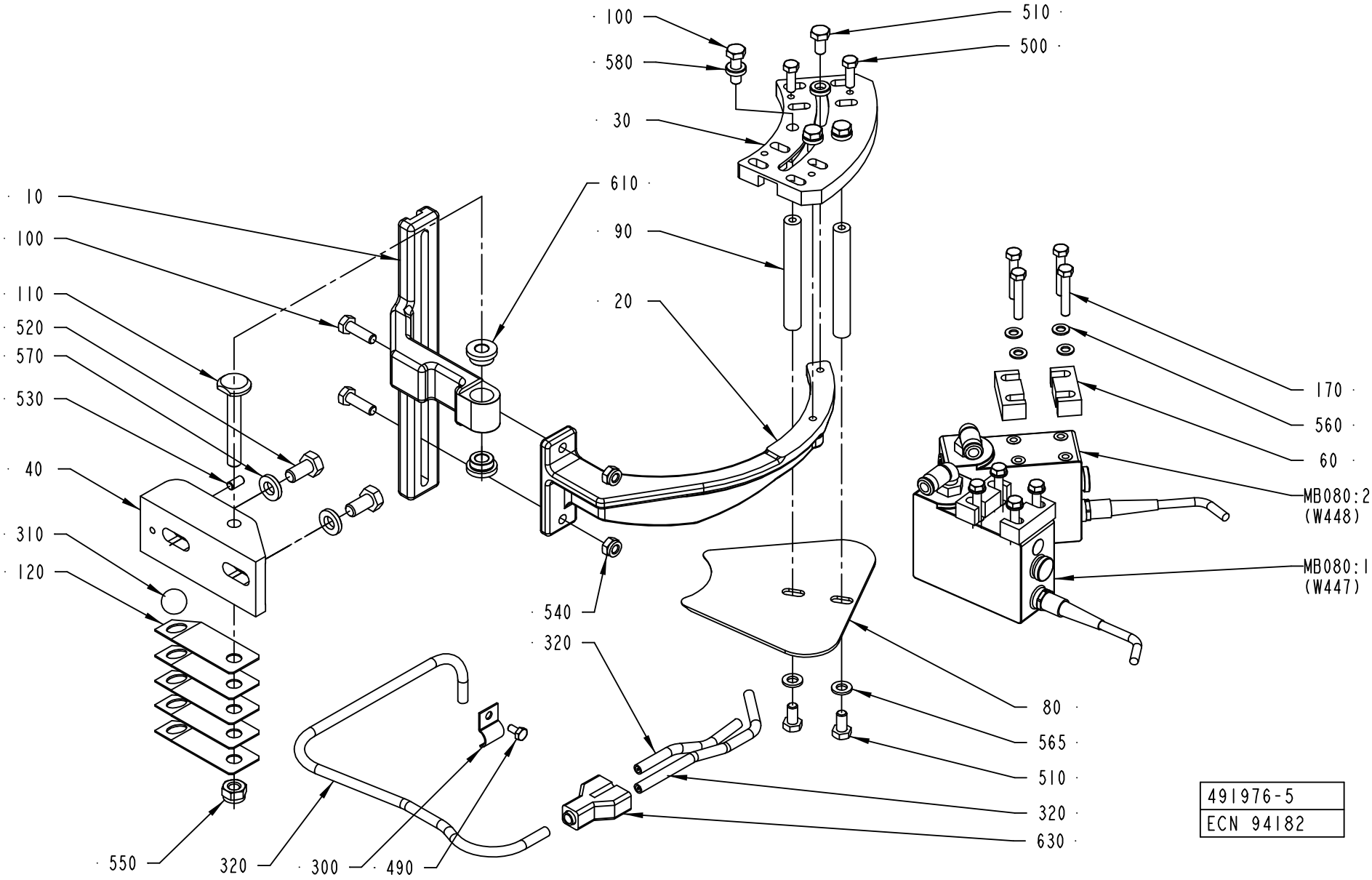

ECM: 114561 - 20020930
Group number: 491976-0300
Assembly Drawing: 491976-5_1_AC

This list covers pages from 1-166 to 1-169

Pos	Part No	UN	Qty	Description	Page No
TBA 0160S, TBA 0125S, TBA 0100B, TBA 0250S, TBA 0200S, TBA 0200M (See drawing on page: 1-168)					
010	751456-0000		1	HOLDER	
020	751476-0000		1	CANTILEVER	
030	491880-0000		1	FASTENING PLATE	
060	752554-0000		4	SPACER	
080	1260487-0000		1	PLATE	
090	1260491-0000		2	NUT	
100	312105-0370		4	SCREW M6S ISO 4017 M6X20 A480	
170	312109-0335		8	SCREW M6S ISO 4017 M5X30 A480	
500	312105-0329		2	SCREW M6S ISO 4017 M5X16 A480	
510	312105-0366		4	SCREW M6S ISO 4017 M6X12 A480	
580	315115-0153		4	WASHER PLAIN, TBRB 6,4/12 H=3	
TBA 0330S, TBA 0300S, TBA 0180B, TBA 0200B, TBA 0284B, TBA 0250B (See drawing on page: 1-166)					
010	751456-0000		1	HOLDER	
020	751457-0000		1	CANTILEVER	
030	978735-0000		1	FASTENING PLATE	
080	1260486-0000		1	PLATE	
090	1260490-0000		2	NUT	
100	312105-0370		4	SCREW M6S ISO 4017 M6X20 A480	
150	536374-0000		2	WASHER	
500	312105-0329		10	SCREW M6S ISO 4017 M5X16 A480	
510	312105-0366		4	SCREW M6S ISO 4017 M6X12 A480	
580	315115-0153		4	WASHER PLAIN, TBRB 6,4/12 H=3	
Common Parts					
040	490876-0000		1	BRACKET	
110	457367-0000		1	SHAFT	
120	457368-0000		5	SPRING	
300	90074-0001		1	CABLE CLIPS, D=10 MM	
310	90090-0016		1	BALL, D=15 MM	
320	90166-0132	MM	750	TUBE 6 MM PA,TRANSP.	
490	312105-0287		1	SCREW M6S ISO4017 M4X8 A470	
520	312105-0449		2	SCREW M6S ISO 4017 M8X16 A480	
530	312318-0325		1	SCREW ISO4029 M5X10 A4	
540	312812-0316		2	HEXAGON NUT, NY-LOCK M6 A480	
550	312812-0318		1	HEXAGON NUT, NY-LOCK M8 A480	
560	315105-0146		8	WASHER BRB5,3X10RFR	
565	315105-0153		2	WASHER BRB6,4X12RFR	
570	315115-0165		2	WASHER PLAIN, TBRB 8,4/16 H=3	
610	321101-0143		2	FLANGE BUSHING, 8X14X8 MM	
630	90055-0100		1	Y-CONNECTION, 6-6	
MB080:1	90458-0601		1	PHOTOCELL, SICK PHOTOCELL 1	
	342732-0102		*1*	*ELBOW PIPE JOINT, EXT.THREAD, D=6MM-G1/8*	
MB080:2	90458-0601		1	PHOTOCELL, SICK PHOTOCELL 1	
	342732-0102		*1*	*ELBOW PIPE JOINT, EXT.THREAD, D=6MM-G1/8*	

Machine Type | Group Description | Used-In | Group Number | Page No

PROTECTIVE GRATING

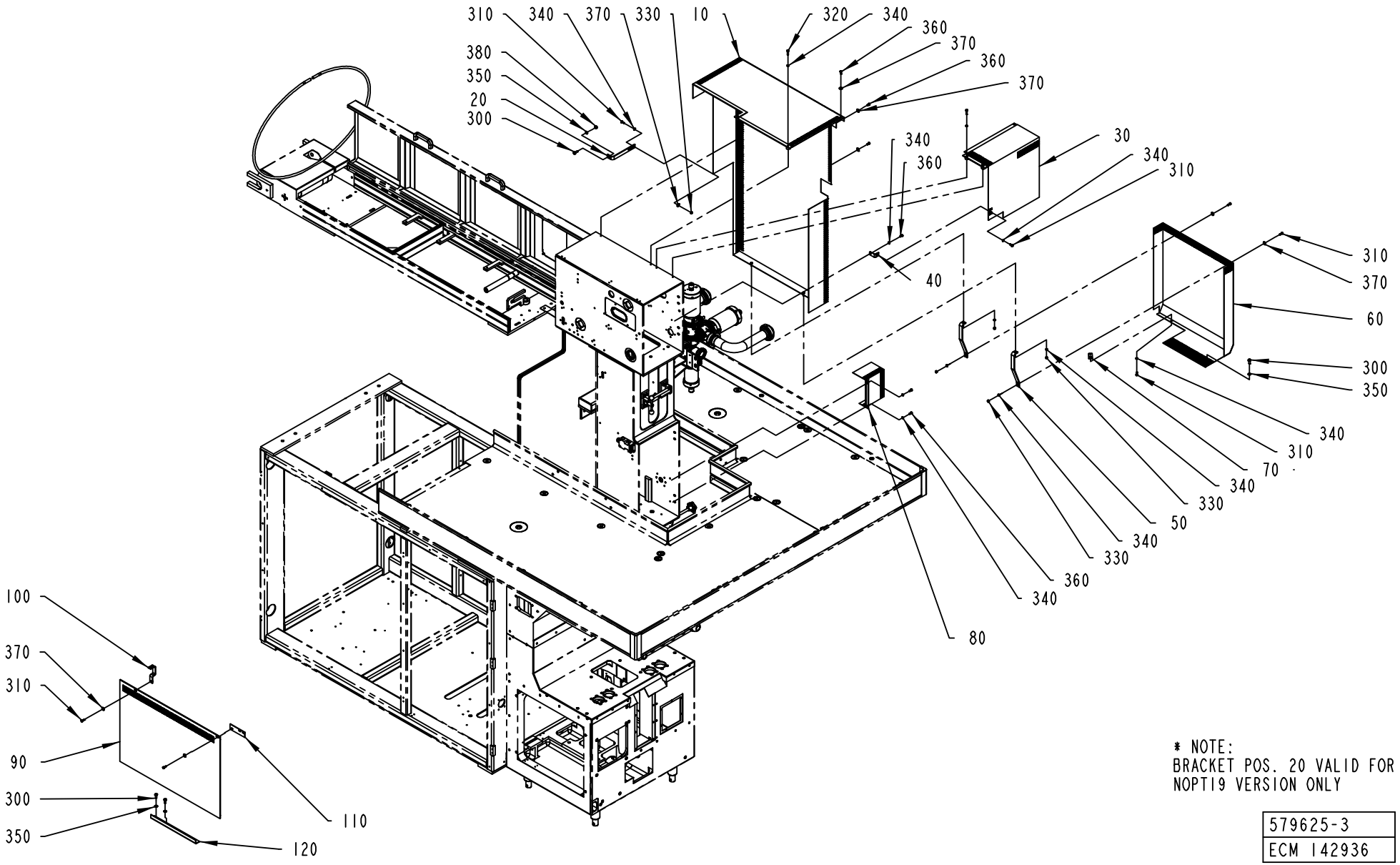

* NOTE:
BRACKET POS. 20 VALID FOR
NOPT19 VERSION ONLY

579625-3
ECM 142936

ECM: 142941 - 20040119
Group number: 579625-0200
Assembly Drawing: 579625-3_1_AA

This list covers pages from 1-170 to 1-175

Pos	Part No	UN	Qty	Description	Page No
NOTCSB					
030	2654046-0000		1	TOUCH GUARD	
TCSB					
030	2641300-0000		1	TOUCH GUARD	
Common Parts					
010	2565515-0000		1	TOUCH GUARD	
020	579630-0000		1	BRACKET	
040	579633-0000		1	BRACKET	
050	2582602-0000		2	BRACKET	
060	2565516-0000		1	TOUCH GUARD	
070	2611008-0000		1	BRACKET	
080	579629-0000		1	TOUCH GUARD	
090	2565517-0000		1	TOUCH GUARD	
100	2582639-0000		1	BRACKET	
110	2634940-0000		1	BRACKET	
120	2582603-0000		1	BRACKET	
300	312105-0451		4	SCREW M6S ISO 4017 M8X20 A480	
310	312105-0368		7	SCREW M6S ISO 4017 M6X16 A480	
320	312105-0372		4	SCREW M6S ISO 4017 M6X25 A480	
330	312605-0316		5	HEXAGON NUT, M6M M6 A280	
340	315105-0153		14	WASHER BRB6,4X12RFR	
350	315105-0165		4	WASHER BRB8,4X16RFR	
360	312105-0366		6	SCREW M6S ISO 4017 M6X12 A480	
370	90005-0060		8	WASHER PLAIN, RBS 6,4/M6)/18,H=1,5	
380	312605-0318		1	HEXAGON NUT, M6M M8 A280	

Pos	Part No	UN	Qty	Description	Page No

PROTECTIVE GRATING

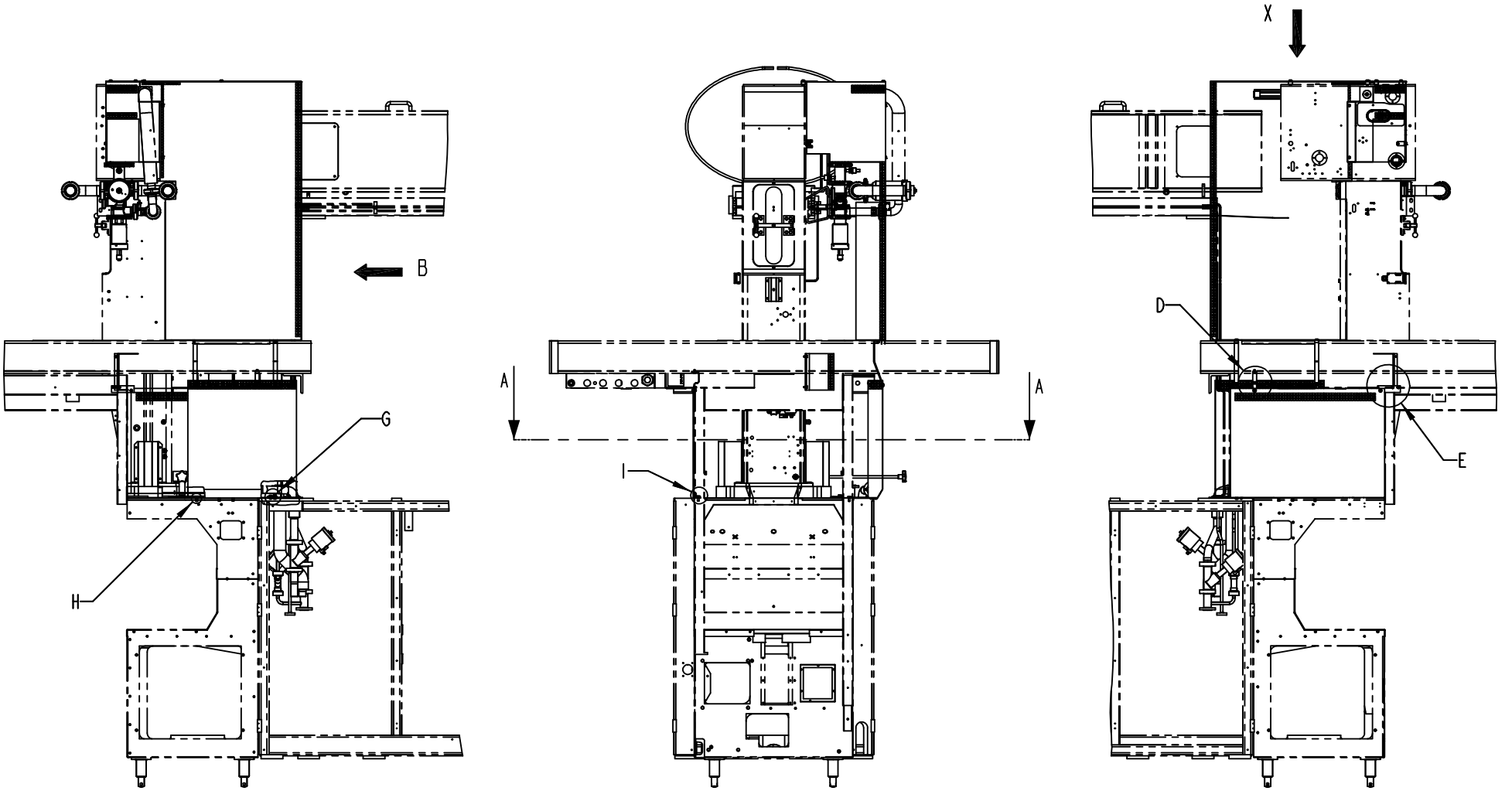

579625-3
ECM 142936

ECM: 142941 - 20040119
Group number: 579625-0200
Assembly Drawing: 579625-3_2_AA

This list covers pages from 1-170 to 1-175

Pos	Part No	UN	Qty	Description	Page No
NOTCSB					
030	2654046-0000		1	TOUCH GUARD	
TCSB					
030	2641300-0000		1	TOUCH GUARD	
Common Parts					
010	2565515-0000		1	TOUCH GUARD	
020	579630-0000		1	BRACKET	
040	579633-0000		1	BRACKET	
050	2582602-0000		2	BRACKET	
060	2565516-0000		1	TOUCH GUARD	
070	2611008-0000		1	BRACKET	
080	579629-0000		1	TOUCH GUARD	
090	2565517-0000		1	TOUCH GUARD	
100	2582639-0000		1	BRACKET	
110	2634940-0000		1	BRACKET	
120	2582603-0000		1	BRACKET	
300	312105-0451		4	SCREW M6S ISO 4017 M8X20 A480	
310	312105-0368		7	SCREW M6S ISO 4017 M6X16 A480	
320	312105-0372		4	SCREW M6S ISO 4017 M6X25 A480	
330	312605-0316		5	HEXAGON NUT, M6M M6 A280	
340	315105-0153		14	WASHER BRB6,4X12RFR	
350	315105-0165		4	WASHER BRB8,4X16RFR	
360	312105-0366		6	SCREW M6S ISO 4017 M6X12 A480	
370	90005-0060		8	WASHER PLAIN, RBS 6,4/M6)/18,H=1,5	
380	312605-0318		1	HEXAGON NUT, M6M M8 A280	

Pos	Part No	UN	Qty	Description	Page No

PROTECTIVE GRATING

VIEW B
SCALE 1:20

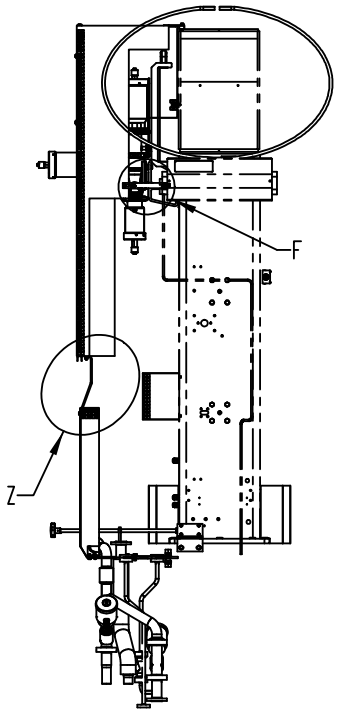

DETAIL H
1:2

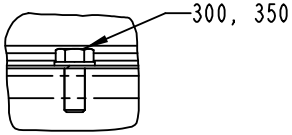

DETAIL F
1:5

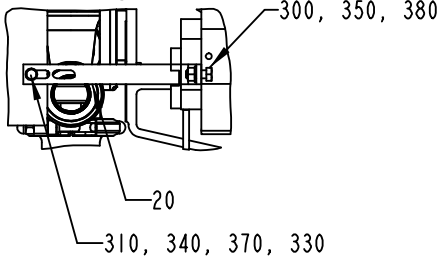

DETAIL G
1:2

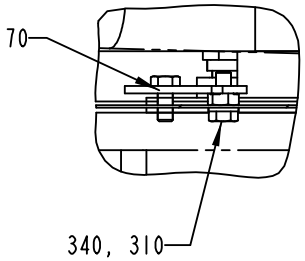

A-A

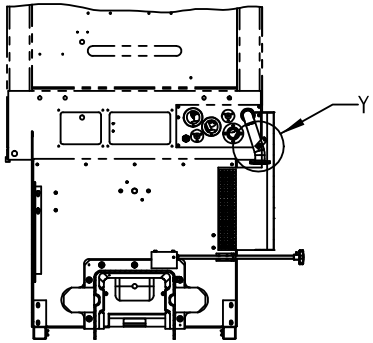

DETAIL Y
1:5

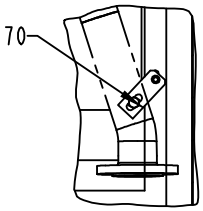

VIEW X
SCALE 1:15

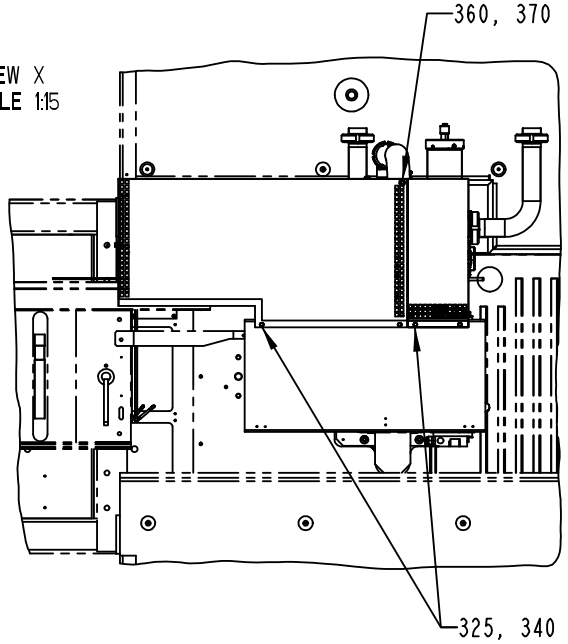

DETAIL D
1:5

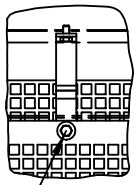

DETAIL E
1:5

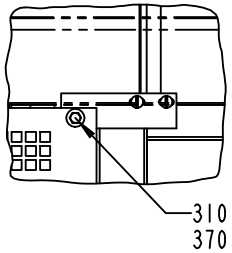

DETAIL I
1:2

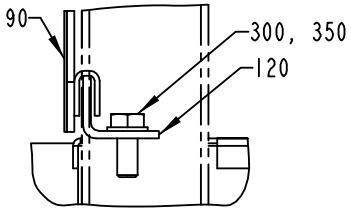

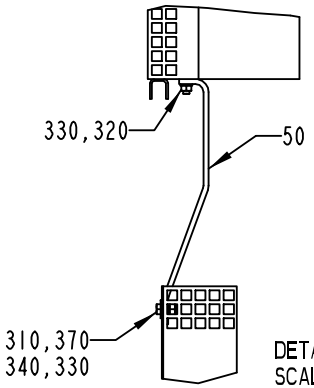

DETAIL Z
SCALE 1:5

579625-3
ECM 142936

ECM: 142941 - 20040119
Group number: 579625-0200
Assembly Drawing: 579625-3_3_AA

This list covers pages from 1-170 to 1-175

Pos	Part No	UN	Qty	Description	Page No
NOTCSB					
030	2654046-0000		1	TOUCH GUARD	
TCSB					
030	2641300-0000		1	TOUCH GUARD	
Common Parts					
010	2565515-0000		1	TOUCH GUARD	
020	579630-0000		1	BRACKET	
040	579633-0000		1	BRACKET	
050	2582602-0000		2	BRACKET	
060	2565516-0000		1	TOUCH GUARD	
070	2611008-0000		1	BRACKET	
080	579629-0000		1	TOUCH GUARD	
090	2565517-0000		1	TOUCH GUARD	
100	2582639-0000		1	BRACKET	
110	2634940-0000		1	BRACKET	
120	2582603-0000		1	BRACKET	
300	312105-0451		4	SCREW M6S ISO 4017 M8X20 A480	
310	312105-0368		7	SCREW M6S ISO 4017 M6X16 A480	
320	312105-0372		4	SCREW M6S ISO 4017 M6X25 A480	
330	312605-0316		5	HEXAGON NUT, M6M M6 A280	
340	315105-0153		14	WASHER BRB6,4X12RFR	
350	315105-0165		4	WASHER BRB8,4X16RFR	
360	312105-0366		6	SCREW M6S ISO 4017 M6X12 A480	
370	90005-0060		8	WASHER PLAIN, RBS 6,4/M6)/18,H=1,5	
380	312605-0318		1	HEXAGON NUT, M6M M8 A280	

Pos	Part No	UN	Qty	Description	Page No

PENDULUM

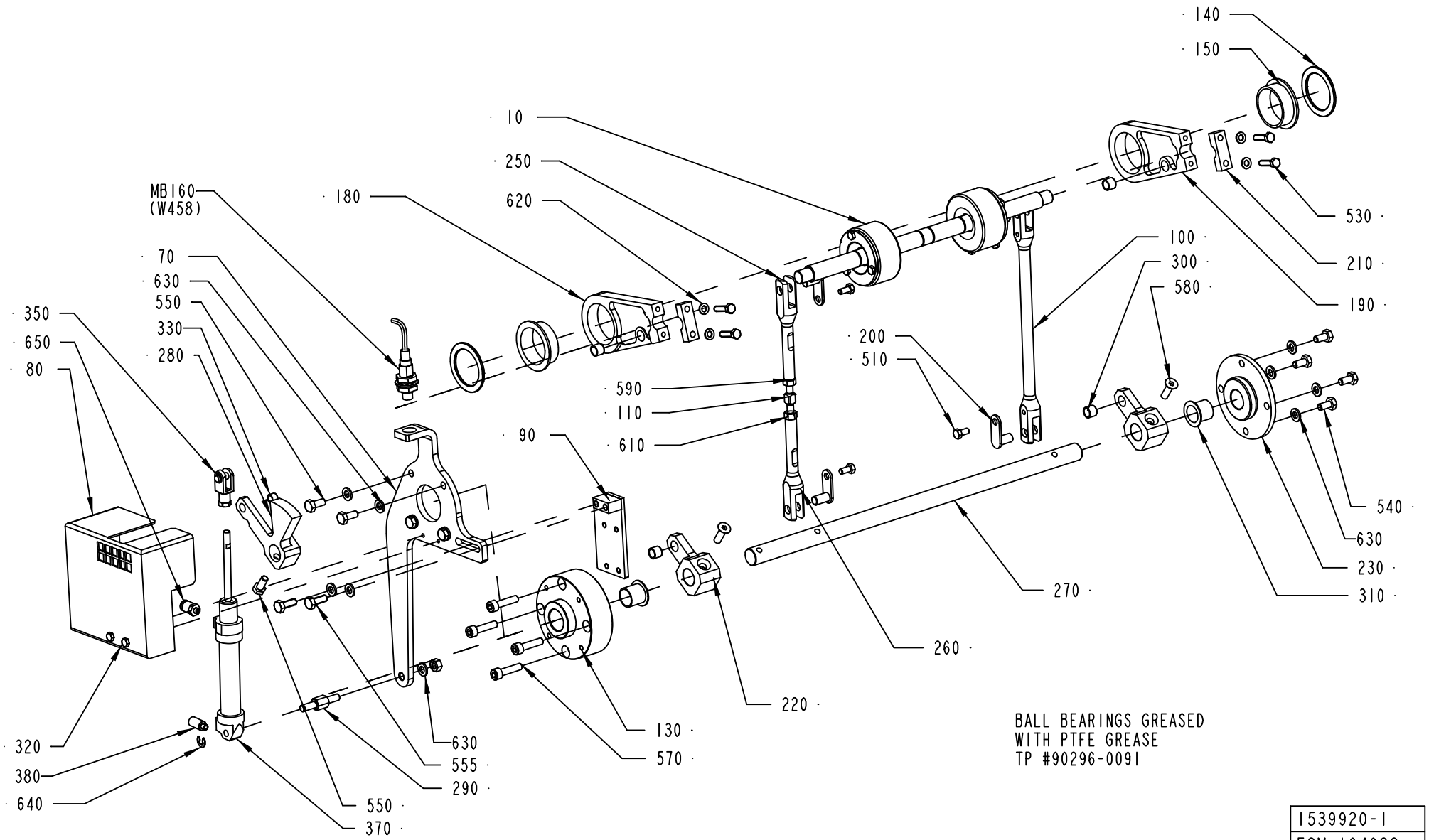

BALL BEARINGS GREASED
WITH PTFE GREASE
TP #90296-0091

1539920-1
ECM 104628

ECM: 112177 - 20020930
Group number: 1539920-0200
Assembly Drawing: 1539920-1_1_AB

Pos	Part No	UN	Qty	Description	Page No
-					
010	1548010-0200		1	PENDULUM ROLLER	**1-179**
070	1524829-0000		1	PLATE	
080	2510532-0000		1	PROTECTION	
090	1524814-0000		1	BRACKET	
100	1548003-0000		1	LINK	
110	1548006-0000		1	ADJUSTING SCREW	
130	1548059-0000		1	AXLE SUPPORT	
140	1548141-0000		2	WASHER	
150	1548142-0000		2	BUSHING	
180	1548147-0000		1	PLATE	
190	1548148-0000		1	PLATE	
200	1548152-0000		4	PIN	
210	1548225-0000		2	CLAMP	
220	1548276-0000		2	LEVER	
230	1548277-0000		1	FLANGE	
250	1548004-0001		1	LINK	
260	1548004-0002		1	LINK	
270	1548005-0000		1	SHAFT	
280	1548532-0000		1	LEVER	
290	1524830-0000		1	SHAFT	
300	90458-0824		4	BUSHING, 8X10X8 MM	
310	90458-0825		2	FLANGE BUSHING,16X18X17 MM	
320	312105-0301		2	SCREW M6S ISO 4017 M4X35 A470	
330	90458-1790		1	BUSHING, 6X8X6 MM	
350	90239-0489		1	ROD END, CLEVIS WITH AXLE M6X1,25	
360	90296-0091		1	LUBRICATION GREASE	
370	90239-0817		1	DOUBLE ACTING, MINI-ISO, CYL.16-50	
380	90328-0020		1	SILENCER	
510	312105-0325		4	SCREW M6S ISO 4017 M5X10 A480	
530	312105-0331		4	SCREW M6S ISO 4017 M5X20 A480	
540	312105-0366		4	SCREW M6S ISO 4017 M6X12 A480	
550	312105-0367		5	SCREW M6S ISO 4017 M6X14 A480	
555	312105-0368		4	SCREW M6S ISO 4017 M6X16 A480	
570	312115-0372		4	SCREW ISO4762 M6X25 A4	
580	312155-0370		2	SCREW EN 10642 MF6S M6X20 A480	
590	312605-0316		2	HEXAGON NUT, M6M M6 A280	
610	312902-0316		1	NUT HEX. LEFT THREAD, M6 A280	
620	315105-0146		4	WASHER BRB5,3X10RFR	
630	315105-0153		11	WASHER BRB6,4X12RFR	
640	315755-0107		1	RETAINING RING SHAFT DIN 6799 5 A2	
650	342722-0197		2	STRAIGHT COUPLING	

Pos	Part No	UN	Qty	Description	Page No
MB160	90458-0675		1	PROXIMITY SENSOR, E2EG-X5MB1-5M	

Machine Type	Group Description	Used-In	Group Number	Page No

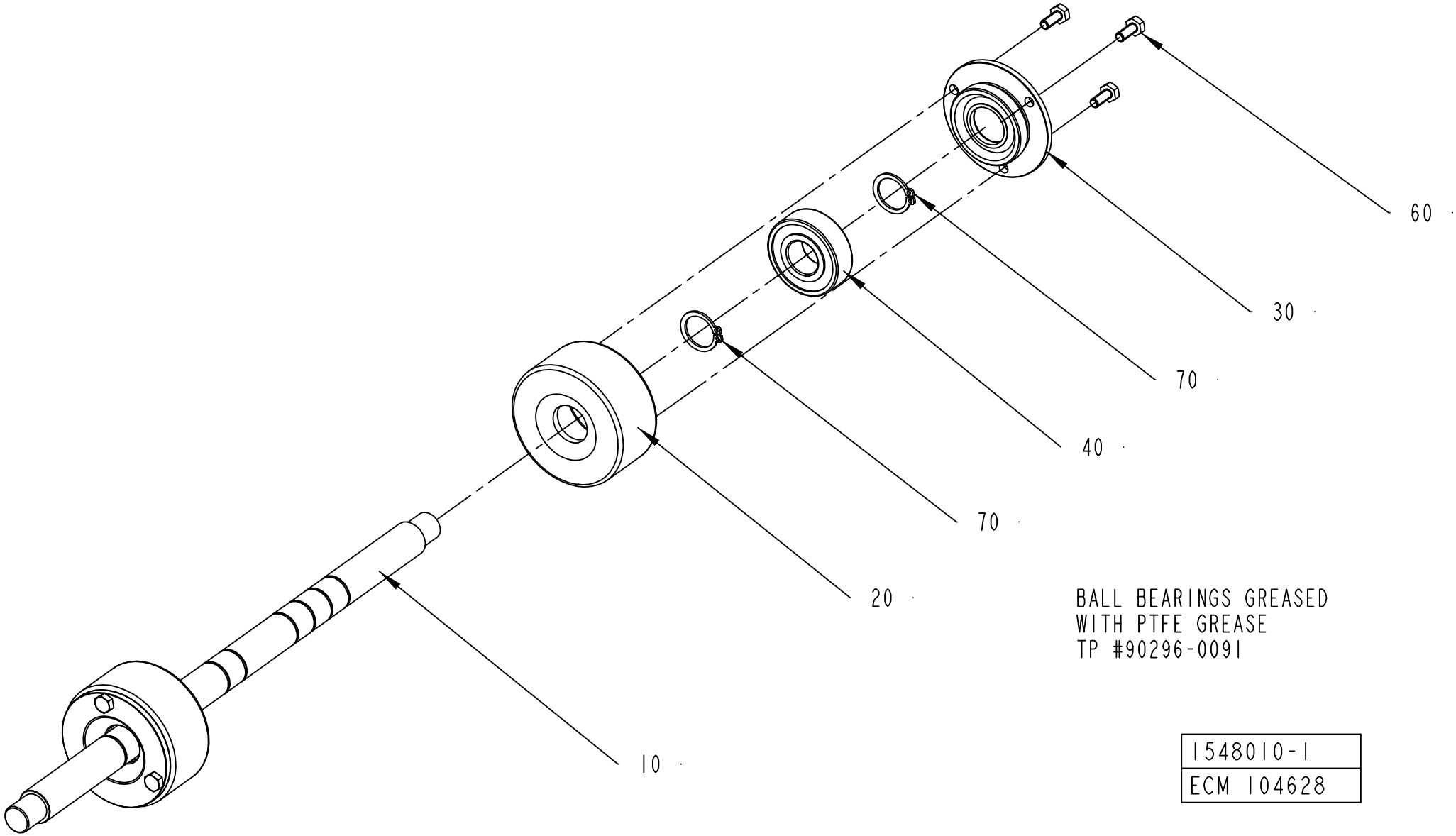
60
30
70
40
70
20
10
BALL BEARINGS GREASED
WITH PTFE GREASE
TP #90296-0091
1548010-1
ECM 104628

ECM: 112174 - 20020930
Group number: 1548010-0200
Assembly Drawing: 1548010-1_1_AB

Pos	Part No	UN	Qty	Description	Page No
-					
010	1539996-0000		1	SHAFT	
020	1548052-0000		2	ROLLER	
030	1548053-0000		2	COVER	
040	90458-1704		2	BALL BEARING, 15X35X11 MM	
050	90296-0091		1	LUBRICATION GREASE	
060	312105-0289		6	SCREW M6S ISO 4017 M4X10 A470	
070	315751-0112		4	RETAINING RING FOR SHAFT DIN 471 15 A2	

Pos	Part No	UN	Qty	Description	Page No

LEVEL PROBE

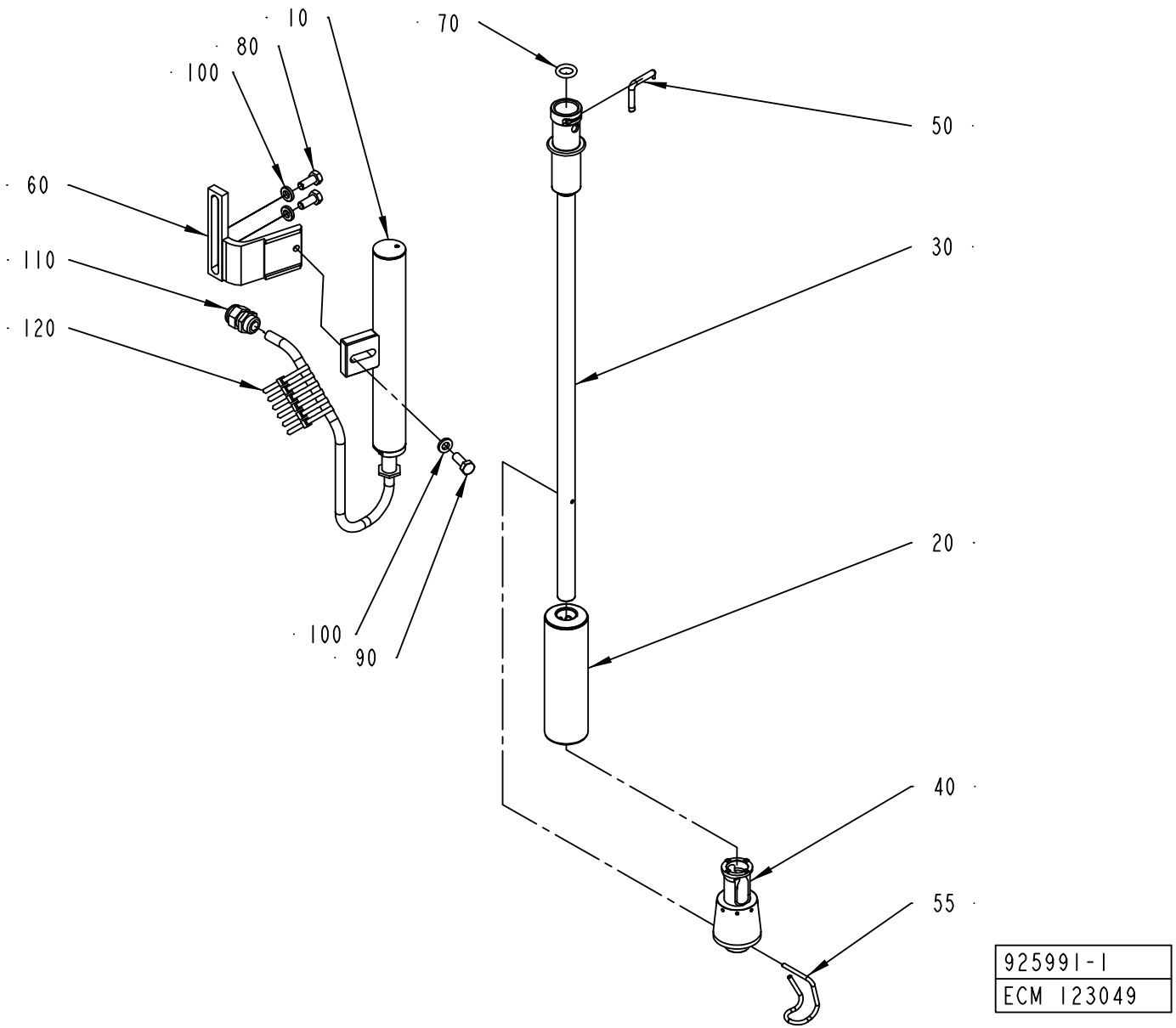

ECM: 123049 - 20030227
Group number: 925991-0200
Assembly Drawing: 925991-1_1_AF

Pos	Part No	UN	Qty	Description	Page No
TBA 0125S, TBA 0100B					
020	979330-0000		1	FLOATER	
030	2527717-0000		1	FILLING PIPE	
040	2510541-0000		1	PRESSURE FLANGE	
055	2506432-0000		1	LOCKING FINGER	
TBA 0160S, TBA 0200S					
020	979330-0000		1	FLOATER	
030	2527707-0000		1	FILLING PIPE	
040	2527708-0000		1	PRESSURE FLANGE	
055	2506432-0000		1	LOCKING FINGER	
TBA 0180B, TBA 0200B					
020	979326-0000		1	FLOAT	
030	2524342-0000		1	FILLING PIPE	
040	1548332-0000		1	PRESSURE FLANGE	
055	2506433-0000		1	LOCKING FINGER	
TBA 0200M					
020	979330-0000		1	FLOATER	
030	2524341-0000		1	FILLING PIPE	
040	1558444-0000		1	PRESSURE FLANGE	
055	2506432-0000		1	LOCKING FINGER	
TBA 0250B					
020	979326-0000		1	FLOAT	
030	2524343-0000		1	FILLING PIPE	
040	1558446-0000		1	PRESSURE FLANGE	
055	2506433-0000		1	LOCKING FINGER	
TBA 0250S					
020	979330-0000		1	FLOATER	
030	1558443-0000		1	FILLING PIPE	
040	1558444-0000		1	PRESSURE FLANGE	
055	2506432-0000		1	LOCKING FINGER	
TBA 0300S, TBA 0284B					
020	979326-0000		1	FLOAT	
030	2527706-0000		1	FILLING PIPE	
040	2514301-0000		1	PRESSURE FLANGE	
055	2506433-0000		1	LOCKING FINGER	
TBA 0330S					
020	979326-0000		1	FLOAT	
030	2527710-0000		1	FILLING PIPE	
040	2514301-0000		1	PRESSURE FLANGE	
055	2506433-0000		1	LOCKING FINGER	
Common Parts					
010	42062-0200		1	LEVEL PROBE	**1-183**
050	2506530-0000		1	LOCKING FINGER	
060	979368-0000		1	HOLDER	
070	90459-2045		1	O-RING 14X4 MM	
080	312105-0451		2	SCREW M6S ISO 4017 M8X20 A480	
090	312105-0452		1	SCREW M6S ISO 4017 M8X22 A4 80	
100	315115-0165		3	WASHER PLAIN, TBRB 8,4/16 H=3	
110	352103-0106		1	CABLE GLAND, ST 11, PR18,6/PG11	
120	352113-0102		6	CLIP-STRIP, BLACK 188X4,8 MM	

Machine Type | Group Description | Used-In | Group Number | Page No

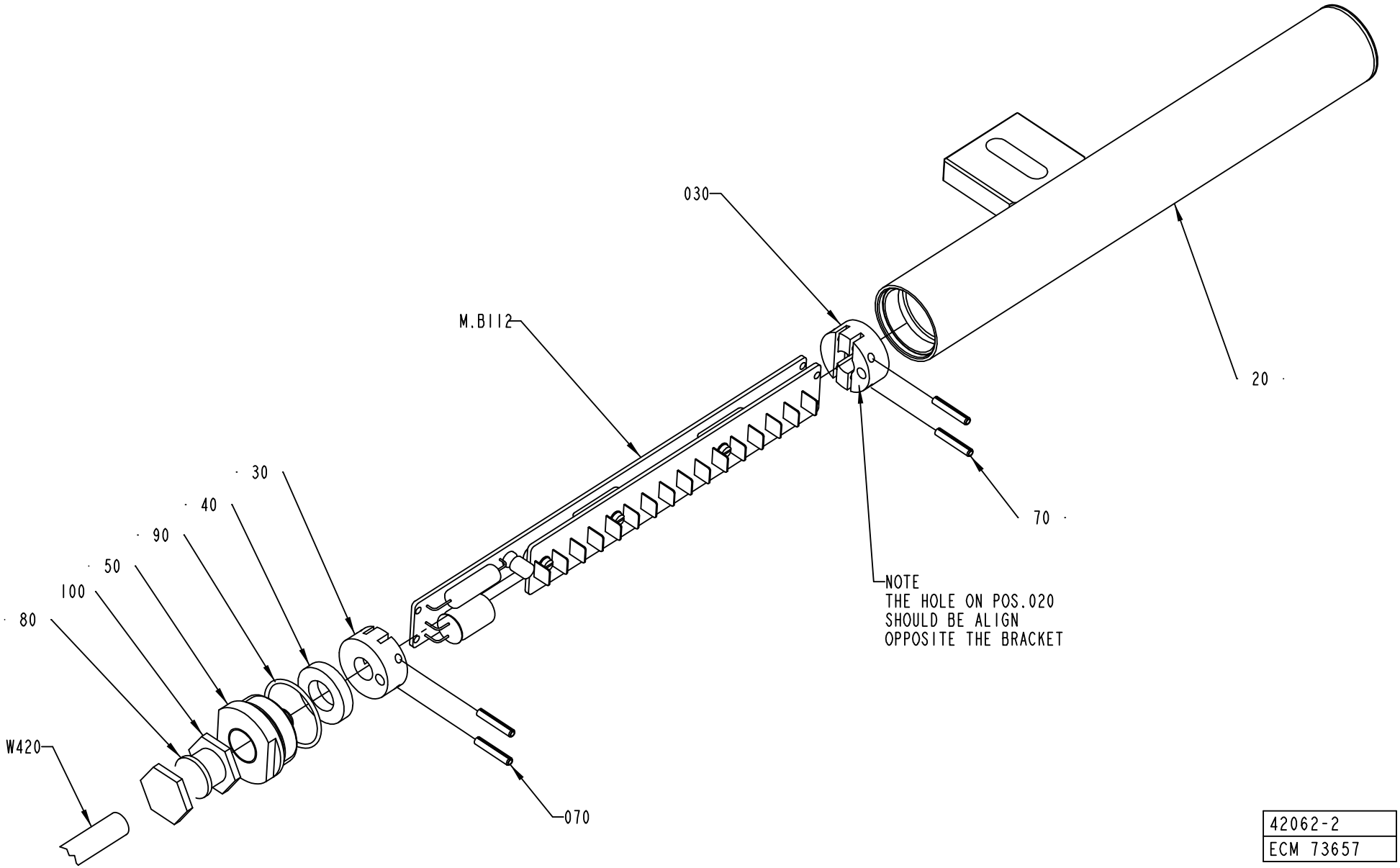

42062-2
ECM 73657

ECM: 73657 - 20020226
Group number: 42062-0200
Assembly Drawing: 42062-2_1_AA

Pos	Part No	UN	Qty	Description	Page No
TBA/19					
020	925999-0000		1	PROTECTION PIPE	
Common Parts					
030	925877-0000		2	SUPPORT	
040	736514-0000		1	SHOCK ABSORBER	
050	926820-0000		1	PLUG	
070	311111-0209		4	SPRING PIN ISO 8752 3X18-ST	
080	315105-0171		1	WASHER BRB10X18	
090	315202-0120		1	O-RING 27,1X1,6 MM	
100	90012-0119		1	GLAND, EXTENDED WITH INSERT, PG9	
MB112	42063-0100		1	LEVEL DETECTOR	**1-185**
W420	90220-0085	M	6	CABLES, MULTI-CONDUCTOR SCREENED	

Pos	Part No	UN	Qty	Description	Page No

LEVEL DETECTOR

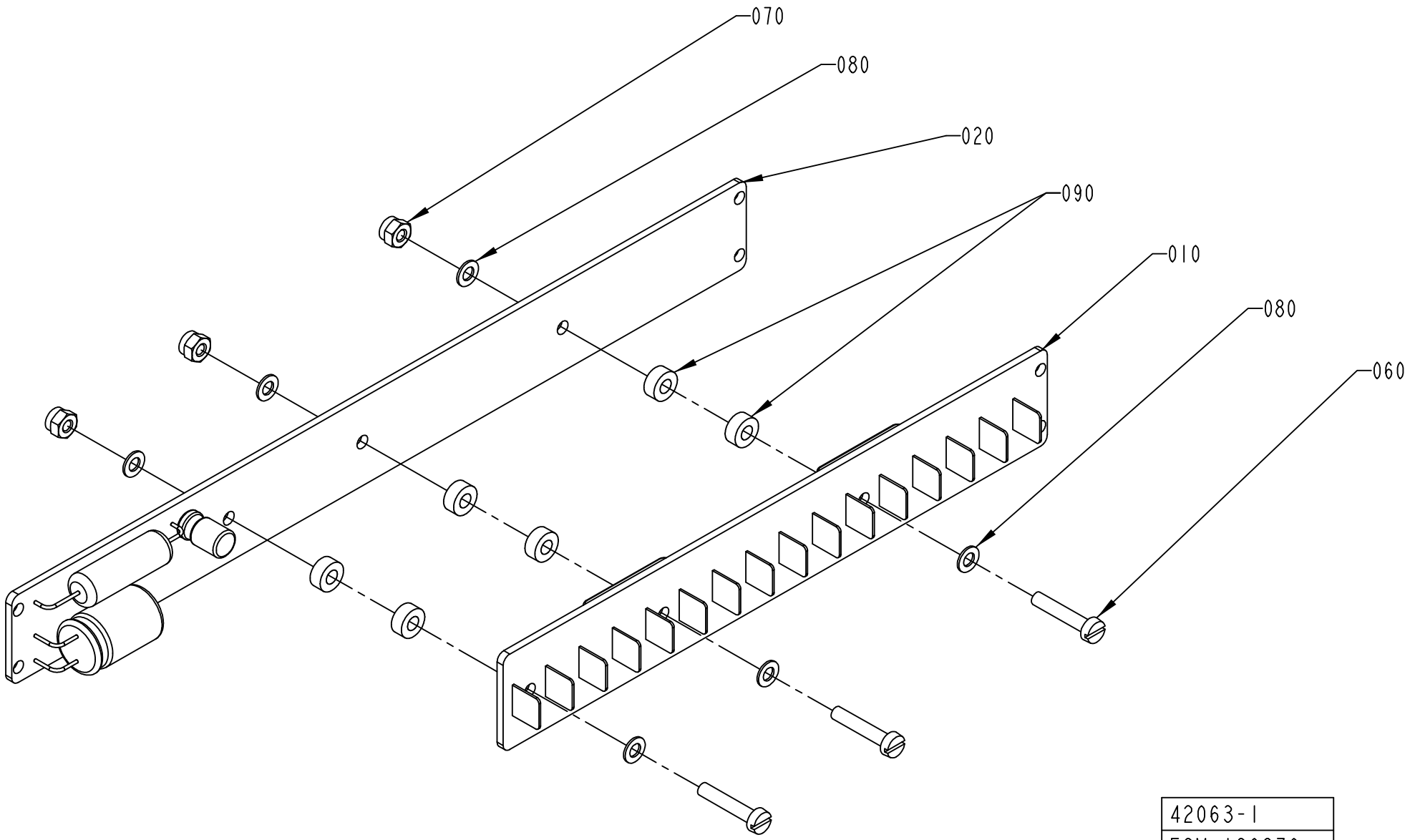

42063-1
ECM 139376

ECM: 142247 - 20031020
Group number: 42063-0100
Assembly Drawing: 42063-1_1_AB

Pos	Part No	UN	Qty	Description	Page No
-					
010	42067-0100		1	SENSOR BOARD	
020	42068-0100		1	CONVERTER BOARD	
060	312125-0228		3	SCREW ISO 1207 M3X16 A4	
070	312812-0310		3	HEXAGON NUT, NY-LOCK M3 A480	
080	315105-0124		6	WASHER BRB3,2X6RFR	
090	90005-0143		6	SPACER 3,3/7, H=3	

Pos	Part No	UN	Qty	Description	Page No

Tetra Pak

SPC
Spare Parts Catalogue

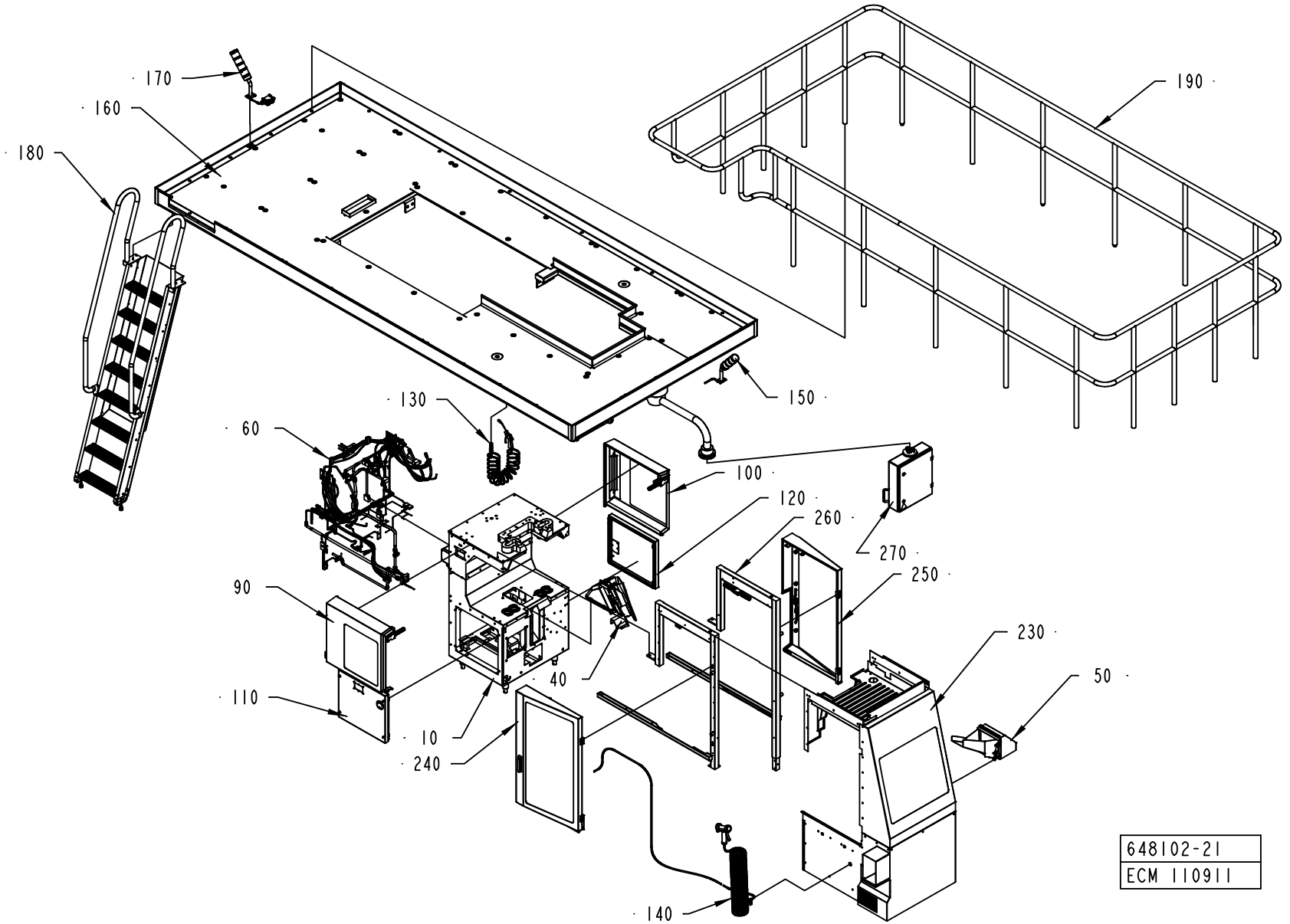
170
160
180
190
150
130
60
100
120
260
270
250
90
230
50
40
110
10
240
140
648102-21
ECM 110911

ECM: 111737 - 20030113
Group number: 648102-1200
Assembly Drawing: 648102-21_1_AB

Pos	Part No	UN	Qty	Description	Page No
-					
010	1532584-0100		1	MACHINE BODY	**2-5**
040	2526338-0100		1	DROP CHUTE	**2-11, 2-13**
050	2552699-0100		1	DISCHARGE CHUTE	**2-15**
060	1548576-0100		1	PIPE WORK	**2-17, 2-19, 2-21**
090	2552694-0100		1	DOOR	**2-27**
100	2552695-0100		1	DOOR	**2-29**
110	256665-0200		1	HATCH	**2-31**
120	1296815-0100		1	HATCH	**2-33**
130	271414-0300		1	AIR JET GUN	**2-35**
140	271387-0400		1	SPRAY GUN	**2-37**
150	1519086-0100		1	LAMP	**2-39**
160	1512660-0100		1	PLATFORM	**2-41, 2-43**
170	1549603-0100		1	LAMP	**2-51**
180	598762-0200		1	LADDER	**2-53**
190	1519602-0100		1	RAILING	**2-55**
230	2552700-0100		1	COVER PLATES	**2-57**
240	2552680-0100		1	DOOR	**2-61**
250	2552681-0100		1	DOOR	**2-63**
260	2553830-0100		1	FRAME	**2-65**
270	1364345-0300		1	TPOP PANEL 12"	**2-67**

Pos	Part No	UN	Qty	Description	Page No

MACHINE BODY

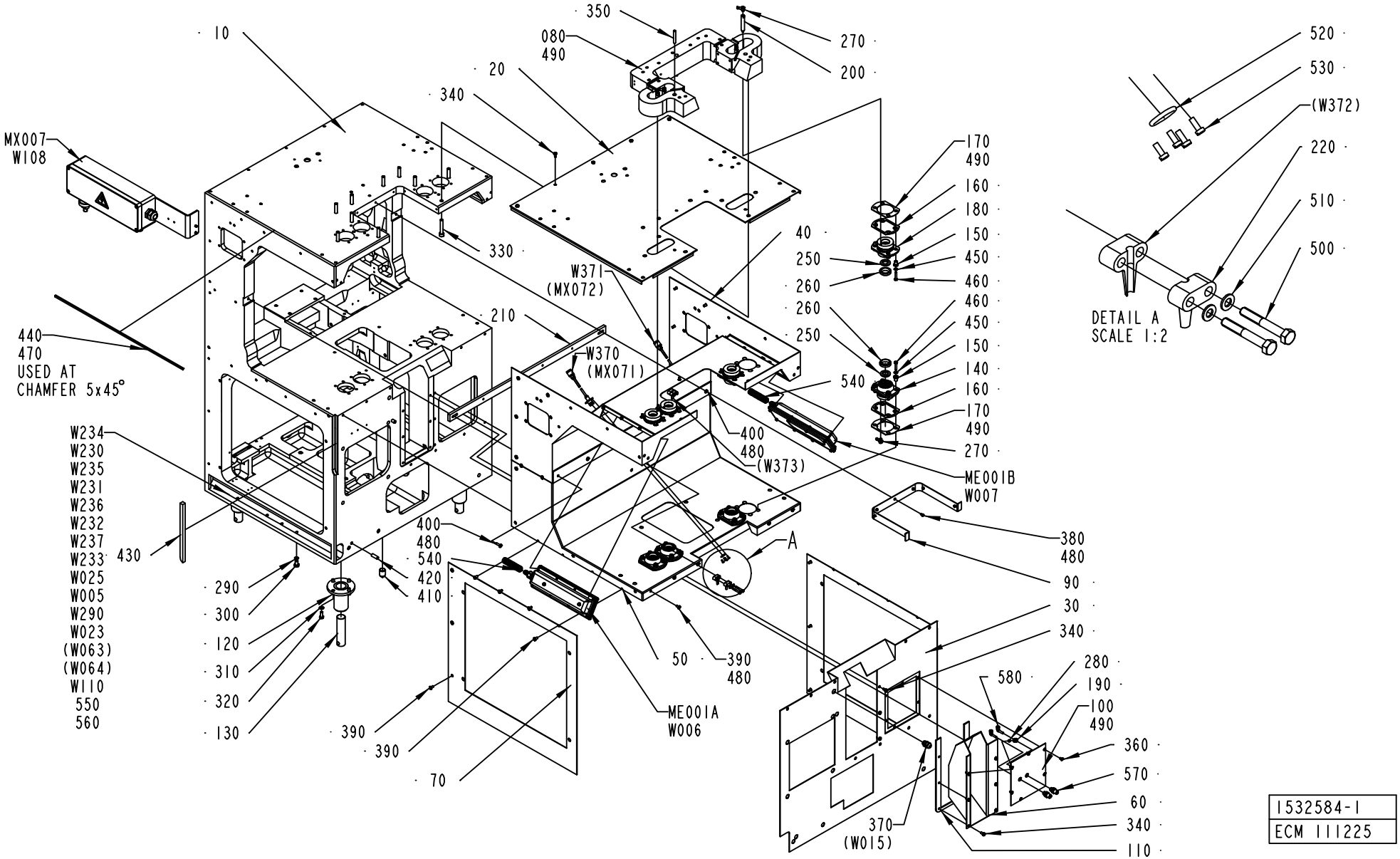

1532584-1
ECM 111225

ECM: 122864 - 20031001
Group number: 1532584-0100
Assembly Drawing: 1532584-1_1_AC

Pos	Part No	UN	Qty	Description	Page No
-					
0010	1523754-0000		1	MACHINE BODY	
0020	1523755-0000		1	COVERING PLATE	
0030	1523756-0000		1	COVER	
0040	1523757-0000		1	PLATE	
0050	1523758-0000		1	PLATE	
0060	1523759-0000		1	COVER	
0070	1523760-0000		1	FRONT PLATE	
0080	572294-0000		1	COLLAR	
0090	441677-0000		1	FRONT PLATE	
0100	2556246-0000		1	HATCH	
0110	1195428-0000		1	GASKET	
0120	469095-0000		4	HOLDER	
0130	469096-0000		4	LEG	
0140	441217-0000		4	BUSHING LOWER	
0150	751085-0000		32	BUSHING	
0160	441593-0000		8	GASKET	
0170	441221-0000		8	WASHER	
0180	441218-0000		4	BUSHING UPPER	
0190	441077-0000		1	NOZZLE BRACKET	
0200	469937-0000		4	PIPE	
0210	441212-0000		1	HOLDER	
0220	1282426-0000		4	CLIP	
0250	315259-0102		8	FELT SEAL 22-47 MM	
0260	90091-0106		8	SCRAPER 30X40X10 MM	
0270	90137-0010		8	BANJO CONN. M6, D=2,5 MM	
0280	90424-0027		1	SPRAY NOZZLE TIP, 8613-8V-TC	
0290	315233-0109		8	WASHER CAPTIVE SEALING G1/8	
0300	312105-0489		8	SCREW M6S ISO 4017 M10X16 A480	
0310	315105-0165		16	WASHER BRB8,4X16RFR	
0320	312105-0451		16	SCREW M6S ISO 4017 M8X20 A480	
0330	312115-0503		10	SCREW ISO4762 M10X60 A4	
0340	312105-0366		14	SCREW M6S M6X12 A280	
0350	311103-0415		3	PARALLEL PIN ISO 2338 8M6X55 A1	
0360	312155-0325		6	SCREW EN 10642 MF6S M5X10 A480	
0370	352103-0100		1	CABLE GLAND, STR 9, PR15,2/PG9	
0380	312125-0323		7	SCREW ISO 1207 M5X8 A4	
0390	90287-0075		38	SCREW SLOT. PAN HEAD LKCS M6X12	
0400	90287-0076		2	SCREW SLOT. PAN HEAD LKCS M6X20	
0410	90087-0002		3	PIPE PLUG	
0420	311103-0458		2	PARALLEL PIN ISO 2338 10M6X30 A1	
0430	90143-0010	MM	260	STRIP	
0440	90143-0012	MM	1900	STRIP	
0450	315105-0153		32	WASHER BRB6,4X12RFR	
0460	312105-0374		32	SCREW M6S ISO 4014 M6X30 A480	
0470	90153-0017	KG	1	ADHESIVE, 2963 TUBE 160G	
0480	90157-0016	L	1	LOCKING FLUID	
0490	90157-0022	ML	1	SEALING COMPOUND	
0500	312105-0337		4	SCREW M6S ISO 4014 M5X35 A480	
0510	315105-0146		4	BRICKA BRB5,3X10RFR	
0520	315202-0211		2	O-RING 13,3X2,4 MM	
0530	312125-0222		8	SCREW ISO 1207 M3X8 A4	
540	90152-0059	M	6	SPIRAL CONDUIT, 18X12, UL 1211	
550	90152-0051	M	8	SPIRAL CONDUIT, 25X18, UL 1816	
560	90152-0070	M	2	METAL HOSE, 32,5X26, UL 2621	
570	342768-0102		2	BULKHEAD CONNECTOR, 6 MM	
580	90055-0217		2	ELBOW PIPE JOINT	
ME001A	441534-0200		1	LIGHT FIXTURE	**2-7**
ME001B	441534-0200		1	LIGHT FIXTURE	**2-7**
MX007	456827-0400		1	CONNECTION BOX	**2-9**
W005	351150-0418	M	7	CABLE OLFLEX 4X2,5 MM2 LIGHT/GREY	
W006	351150-0412	M	4	CABLE OLFLEX 3X1,5 MM2 LIGHT/GREY	
W007	351150-0412	M	3	CABLE OLFLEX 3X1,5 MM2 LIGHT/GREY	
W023	90220-0104	M	8	SCR. CABLE 4X1,5MM2	
W025	351150-0428	M	6	CABLE OLFLEX 41X0,75 MM2 LIGHT/GREY	
W108	351150-0425	M	4	CABLE OLFLEX 25X0,75 MM2 LIGHT/GREY	
W110	351150-0413	M	6	CABLE OLFLEX 4X1,5 MM2 LIGHT/GREY	
W230	351150-0412	M	6	CABLE OLFLEX 3X1,5 MM2 LIGHT/GREY	
W231	351150-0412	M	6	CABLE OLFLEX 3X1,5 MM2 LIGHT/GREY	
W232	351150-0412	M	6	CABLE OLFLEX 3X1,5 MM2 LIGHT/GREY	
W233	351150-0412	M	6	CABLE OLFLEX 3X1,5 MM2 LIGHT/GREY	
W234	90220-0034	M	6	THERMOCOUPLE CABLE K/ 2X0,5MM2	
W235	90220-0034	M	6	THERMOCOUPLE CABLE K/ 2X0,5MM2	
W236	90220-0034	M	6	THERMOCOUPLE CABLE K/ 2X0,5MM2	
W237	90220-0034	M	6	THERMOCOUPLE CABLE K/ 2X0,5MM2	
W290	351162-0106	M	8	CABLE AWM 1X4 MM2 YELLOW-GREEN	
W370	551969-0006		1	COAXIAL CABLES	
W371	551969-0006		1	COAXIAL CABLES	

Machine Type	Group Description	Used-In	Group Number	Page No

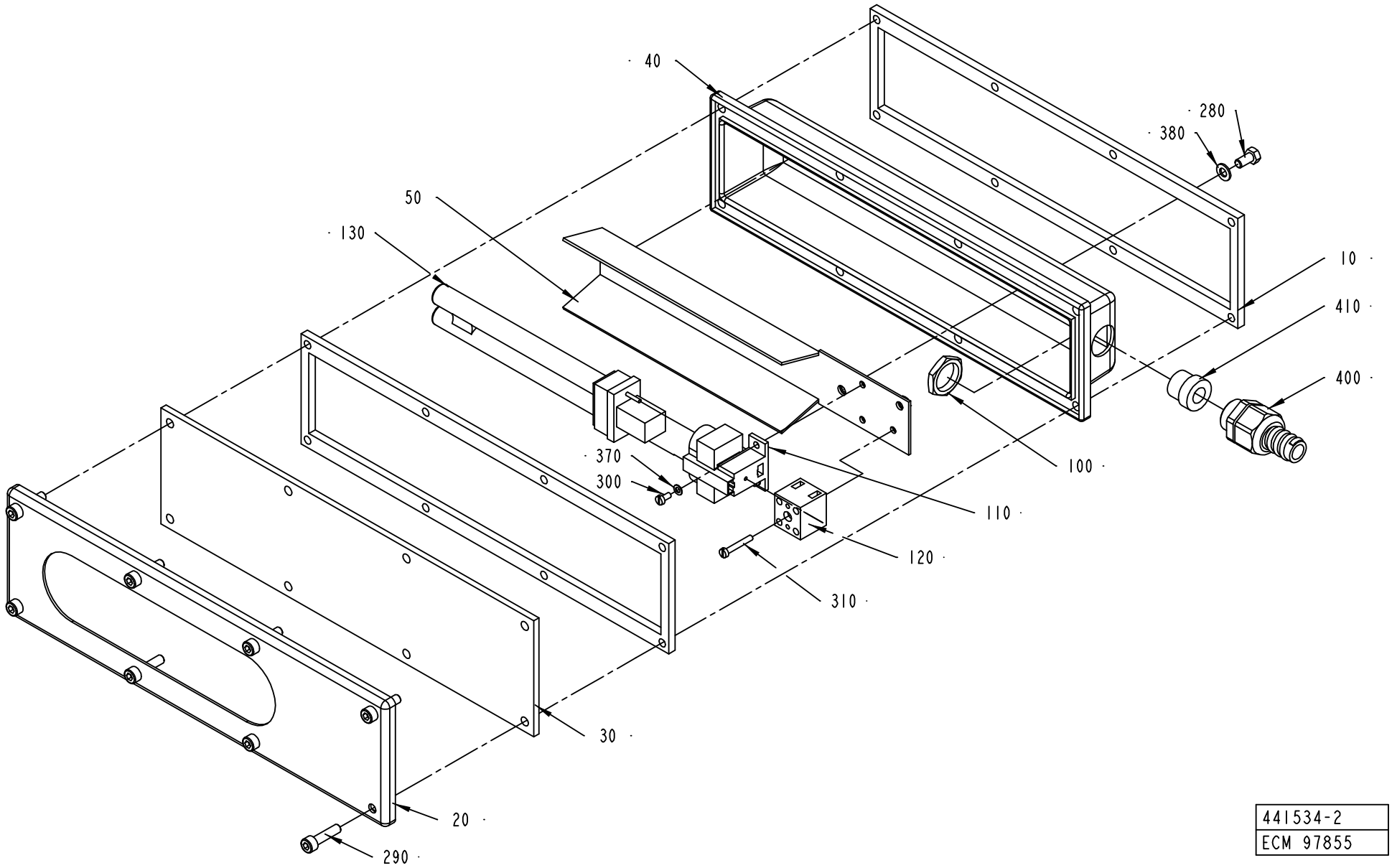

441534-2
ECM 97855

ECM: 106638 - 20020313
Group number: 441534-0200
Assembly Drawing: 441534-2_1_AA

Pos	Part No	UN	Qty	Description	Page No
-					
010	441536-0000		2	GASKET	
020	456263-0000		1	SHEET	
030	456264-0000		1	GLASS	
040	469336-0000		1	COVER	
050	469337-0000		1	REFLECTOR	
100	90099-0002		1	NUT PR 18,6 BRASS	
110	90164-0301		1	HOLDING FIXTURE	
120	90195-0020		1	TERMINAL BLOCK, 1977.2	
130	90297-0006		1	FLUORESCENT TUBE, PL9	
280	312105-0325		2	SCREW M6S ISO 4017 M5X10 A480	
290	312115-0331		8	SCREW ISO4762 M5X20 A4	
300	312125-0220		2	SCREW ISO 1207 M3X6 A4	
310	312125-0230		1	SCREW ISO 1207 M3X20 A4	
370	315105-0124		2	BRICKA BRB3,2X6RFR	
380	315105-0146		2	BRICKA BRB5,3X10RFR	
400	353243-0002		1	EXTENDED WITHOUT INSERT, PG11	
410	353249-0009		1	INSERT, SINGEL HOLE, EK 152/9	

Pos	Part No	UN	Qty	Description	Page No

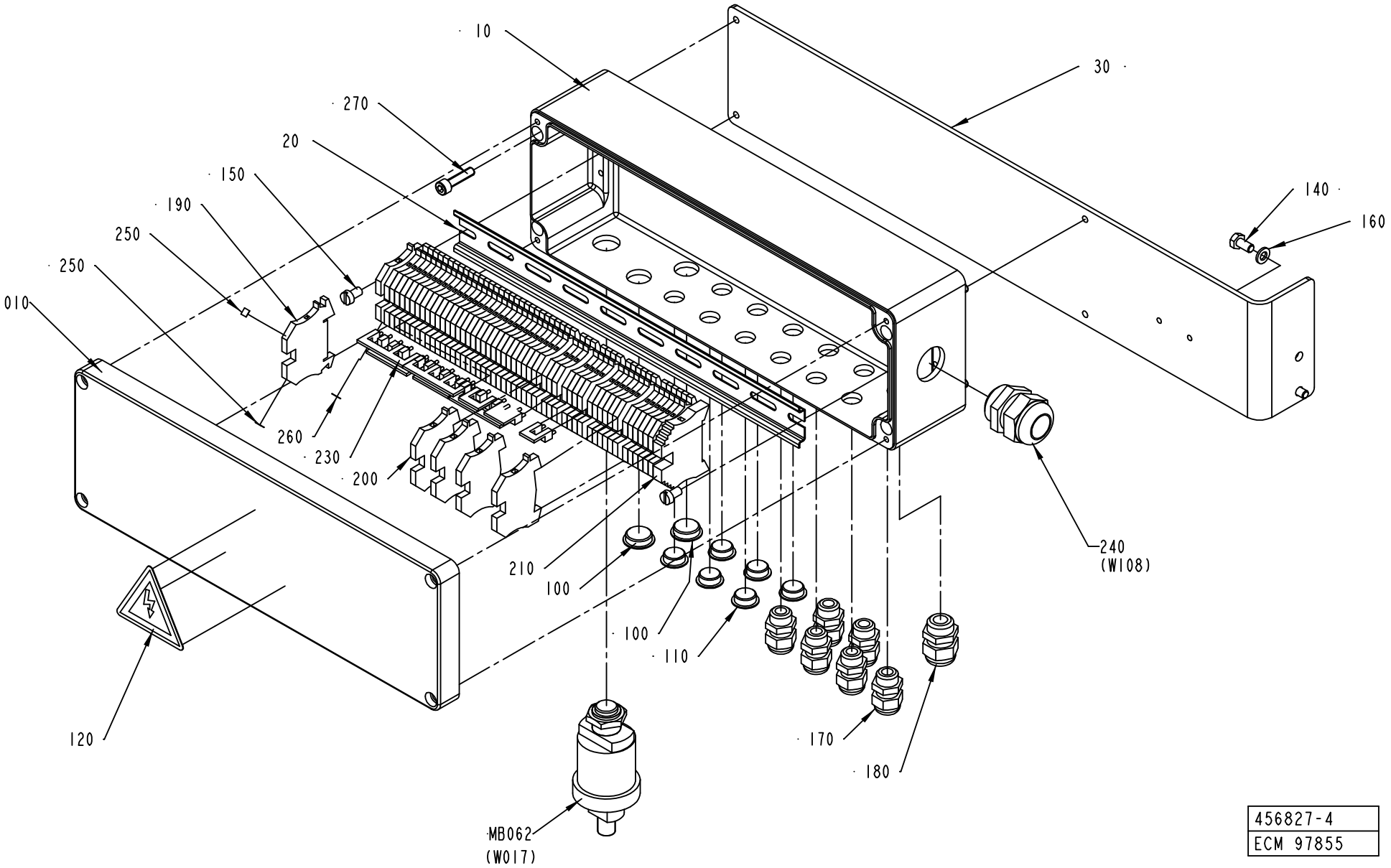

456827-4
ECM 97855

ECM: 115733 - 20020930
Group number: 456827-0400
Assembly Drawing: 456827-4_1_AA

Pos	Part No	UN	Qty	Description	Page No
-					
010	1512667-0000		1	CONNECTION BOX	
020	578676-0000		1	RAIL	
030	1512840-0000		1	BRACKET	
100	90002-0009		2	BLANK-OFF PLUG, PR 18.6 SKINDICHT-BLK11	
110	90002-0013		6	BLANK-OFF PLUG, PR 15,2 SKINDICHT-BLK9	
120	90194-0016		1	WARNING SIGN, RISK OF ELECTRIC SHOCK	
140	312105-0366		2	SCREW M6S M6X12 A280	
150	312125-0364		2	SCREW ISO 1207 M6X10 A4	
160	315105-0153		2	WASHER BRB6,4X12RFR	
170	352103-0101		6	CABLE GLAND, ST 9, PR15,2/PG9	
180	352103-0106		1	CABLE GLAND, ST 11, PR18,6/PG11	
190	353021-0212		50	FEED THROUGH TERMINAL, 10200.0	
200	353024-0204		5	EARTH TERMINAL WPE 2,5	
210	353031-0203		1	END SUPPORT, WEW 35/2	
230	353034-0030		6	BRIDGE CONNECTOR WQV 2,5/10, 10544.6	
240	352103-0116		1	CABLE GLAND, ST 21, PR28,3/PG21	
250	359011-0807		2	MARKING PLATES 5-FW 1-50	
260	359011-0819		1	MARKING PLATES 5-GW (EARTH)	
270	312115-0372		4	SCREW ISO4762 M6X25 A4	
MB062	90274-0045		1	PRESSURE GUARD, 14 KPA	

Pos	Part No	UN	Qty	Description	Page No

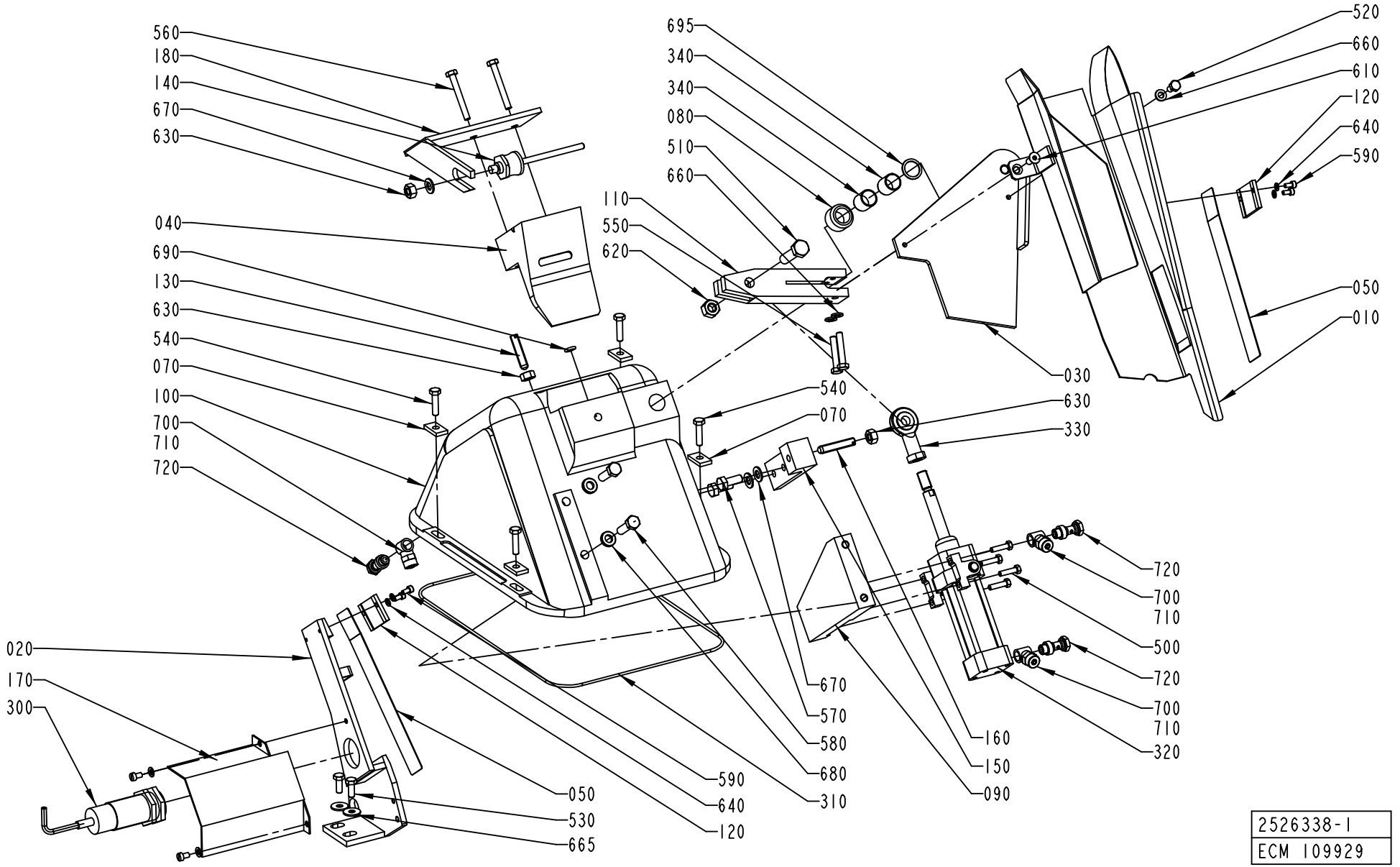
560
180
140
670
630
040
690
130
630
540
070
100
700
710
720
020
170
300
050
530
665
590
640
120
695
340
340
080
510
660
110
550
620
540
070
670
570
580
680
310
160
150
090
520
660
610
120
640
590
050
010
030
630
330
720
700
710
500
720
700
710
320
2526338-1
ECM 109929

ECM: 118410 - 20030113
Group number: 2526338-0100
Assembly Drawing: 2526338-1_1_AB

This list covers pages from 2-10 to 2-13

Pos	Part No	UN	Qty	Description	Page No
TBA 0100B					
010	2526310-0000		1	DROP CHUTE	
020	2522107-0000		1	HEAD PLATE	
040	255942-0000		1	SLIDER	
050	2526327-0000		2	LEAF SPRING	
170	295075-0000		1	PROTECTION	
560	312105-0380		2	SCREW M6S ISO 4014 M6X50 A480	
TBA 0125S					
010	2526300-0000		1	DROP CHUTE	
020	2506323-0000		1	HEAD PLATE	
040	255942-0000		1	SLIDER	
050	2526323-0000		2	LEAF SPRING	
170	295075-0000		1	PROTECTION	
560	312105-0380		2	SCREW M6S ISO 4014 M6X50 A480	
TBA 0160S					
010	2526303-0000		1	DROP CHUTE	
020	2522109-0000		1	HEAD PLATE	
040	469502-0000		1	SLIDER	
050	2526325-0000		2	LEAF SPRING	
170	295075-0000		1	PROTECTION	
560	312105-0380		2	SCREW M6S ISO 4014 M6X50 A480	
TBA 0180B					
010	2526305-0000		1	DROP CHUTE	
020	2506322-0000		1	HEAD PLATE	
040	295097-0000		1	SLIDER	
050	2526324-0000		2	LEAF SPRING	
170	295075-0000		1	PROTECTION	
560	312105-0380		2	SCREW M6S ISO 4014 M6X50 A480	
TBA 0200B					
010	2526306-0000		1	DROP CHUTE	
020	2506321-0000		1	HEAD PLATE	
040	295097-0000		1	SLIDER	
050	2526324-0000		2	LEAF SPRING	
170	295075-0000		1	PROTECTION	
560	312105-0380		2	SCREW M6S ISO 4014 M6X50 A480	
TBA 0200M					
010	2526311-0000		1	DROP CHUTE	
020	2522105-0000		1	HEAD PLATE	
040	574449-0000		1	SLIDER	
050	2526328-0000		2	LEAF SPRING	
170	574452-0000		1	PROTECTION	
560	312105-0380		2	SCREW M6S ISO 4014 M6X50 A480	
TBA 0200S					
010	2526301-0000		1	DROP CHUTE	
020	2504445-0000		1	PLATE	
040	469502-0000		1	SLIDER	
050	2526323-0000		2	LEAF SPRING	
170	295075-0000		1	PROTECTION	
560	312105-0380		2	SCREW M6S ISO 4014 M6X50 A480	
TBA 0250B					
010	2526308-0000		1	DROP CHUTE	
020	2506319-0000		1	HEAD PLATE	
040	295097-0000		1	SLIDER	
050	2526324-0000		2	LEAF SPRING	
170	295075-0000		1	PROTECTION	
560	312105-0380		2	SCREW M6S ISO 4014 M6X50 A480	
TBA 0250S					
010	2526302-0000		1	DROP CHUTE	
020	2522106-0000		1	HEAD PLATE	
040	574449-0000		1	SLIDER	
050	2526325-0000		2	LEAF SPRING	
170	574452-0000		1	PROTECTION	
560	312105-0380		2	SCREW M6S ISO 4014 M6X50 A480	
TBA 0300S, TBA 0284B					
010	2526309-0000		1	DROP CHUTE	
020	2506324-0000		1	HEAD PLATE	
040	295097-0000		1	SLIDER	
050	2526326-0000		2	LEAF SPRING	
170	295075-0000		1	PROTECTION	
560	312105-0380		2	SCREW M6S ISO 4014 M6X50 A480	
TBA 0330S					
010	2526304-0000		1	DROP CHUTE	
020	2522108-0000		1	HEAD PLATE	
040	979938-0000		1	SLIDER	
050	2526329-0000		2	LEAF SPRING	
170	574452-0000		1	PROTECTION	
560	312109-0378		2	SCREW M6S ISO4017 M6X40 A480	
Common Parts					
030	2547232-0000		1	PIVOT ARM	
070	255939-0000		4	WASHER	
080	255940-0000		1	SPACER	
090	255943-0000		1	HOLDER	
100	271163-0000		1	CANTILEVER	
110	272600-0000		1	ARM	

Machine Type | Group Description | Used-In | Group Number | Page No

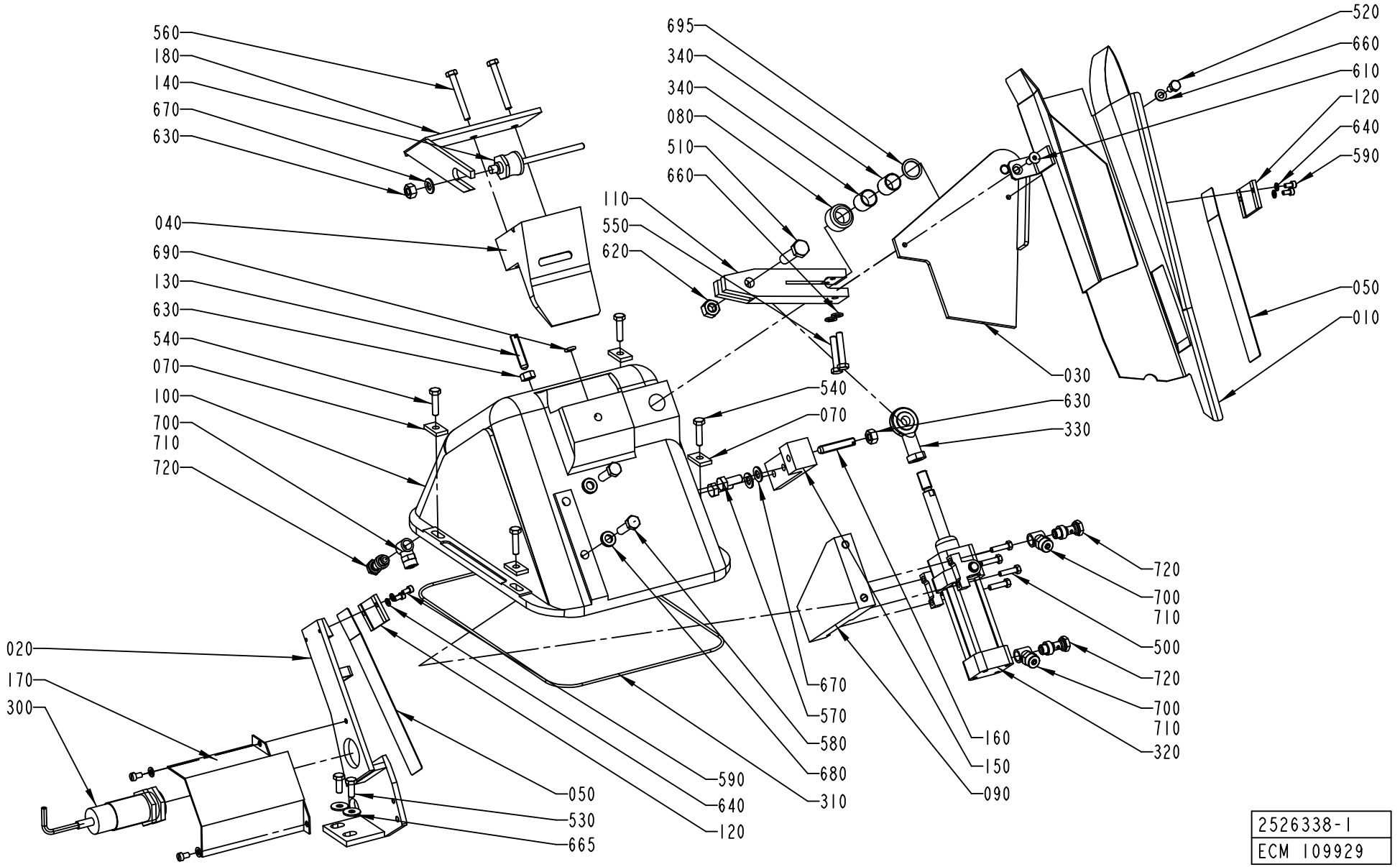

2526338-1
ECM 109929

Pos	Part No	UN	Qty	Description	Page No
Common Parts (Cont'd)					
120	2522110-0000		2	PLATE	
130	272602-0000		1	SCREW	
140	272742-0000		1	FINGER	
150	272852-0000		1	HOLDER	
160	272853-0000		1	SCREW	
180	295399-0000		1	HOLDER	
300	90458-0256		1	PROXIMITY SWITCH IIA 3010-BPKG/6M	
310	90161-0001	MM	1500	O-RING MATERIAL 3 MM	
320	90450-0033		1	CYLINDER	
330	90239-0405		1	ROD END,BALL JOINT EYE M10X1,25	
340	90240-0073		2	BEARING BUSHING W/O FL, 16X18X20 MM	
500	312101-0331		4	SCREW M6S M5X20 FZB	
510	312101-0499		1	SCREW M6S M10X40 FZB	
520	312105-0366		1	SCREW M6S M6X12 A280	
530	312105-0368		2	SCREW M6S M6X16 A280	
540	312105-0372		4	SCREW M6S ISO 4017 M6X25 A480	
550	312105-0376		2	SCREW M6S ISO 4014 M6X35 A480	
570	312105-0451		2	SCREW M6S ISO 4017 M8X20 A480	
580	312105-0455		2	SCREW M6S ISO 4017 M8X30 A480	
590	312115-0287		4	SCREW ISO4762 M4X8 A4	
600	312125-0323		2	SCREW ISO 1207 M5X8 A4	
610	312155-0368		1	SCREW EN 10642 MF6S M6X16 A480	
620	312601-0320		1	NUT M6M 10-8 FZB	
630	312605-0318		4	HEXAGON NUT, M6M M8 A280	
640	315105-0136		4	WASHER BRB4,3XRFR	
650	315105-0146		2	BRICKA BRB5,3X10RFR	
660	315105-0153		3	WASHER BRB6,4X12RFR	
665	90005-0060		2	WASHER PLAIN, RBS 6,4/M6)/18,H=1,5	
670	315105-0165		3	WASHER BRB8,4X16RFR	
680	315115-0165		2	WASHER PLAIN, TBRB 8,4/16 H=3	
690	315202-0206		1	O-RING 7,3X2,4 MM	
695	315233-0111		1	WASHER CAPTIVE SEALING G3/8	
700	342903-0121		3	NUT WITH SPRING 8/6-M12X1	
710	342980-0121		3	BANJO-CONNECTION,RING 8/6-G1/8"	
720	342980-0303		3	BANJO-HOLLOW BOLT COUPL,EXT.THR.01-G1/8"	

Pos	Part No	UN	Qty	Description	Page No

DISCHARGE CHUTE

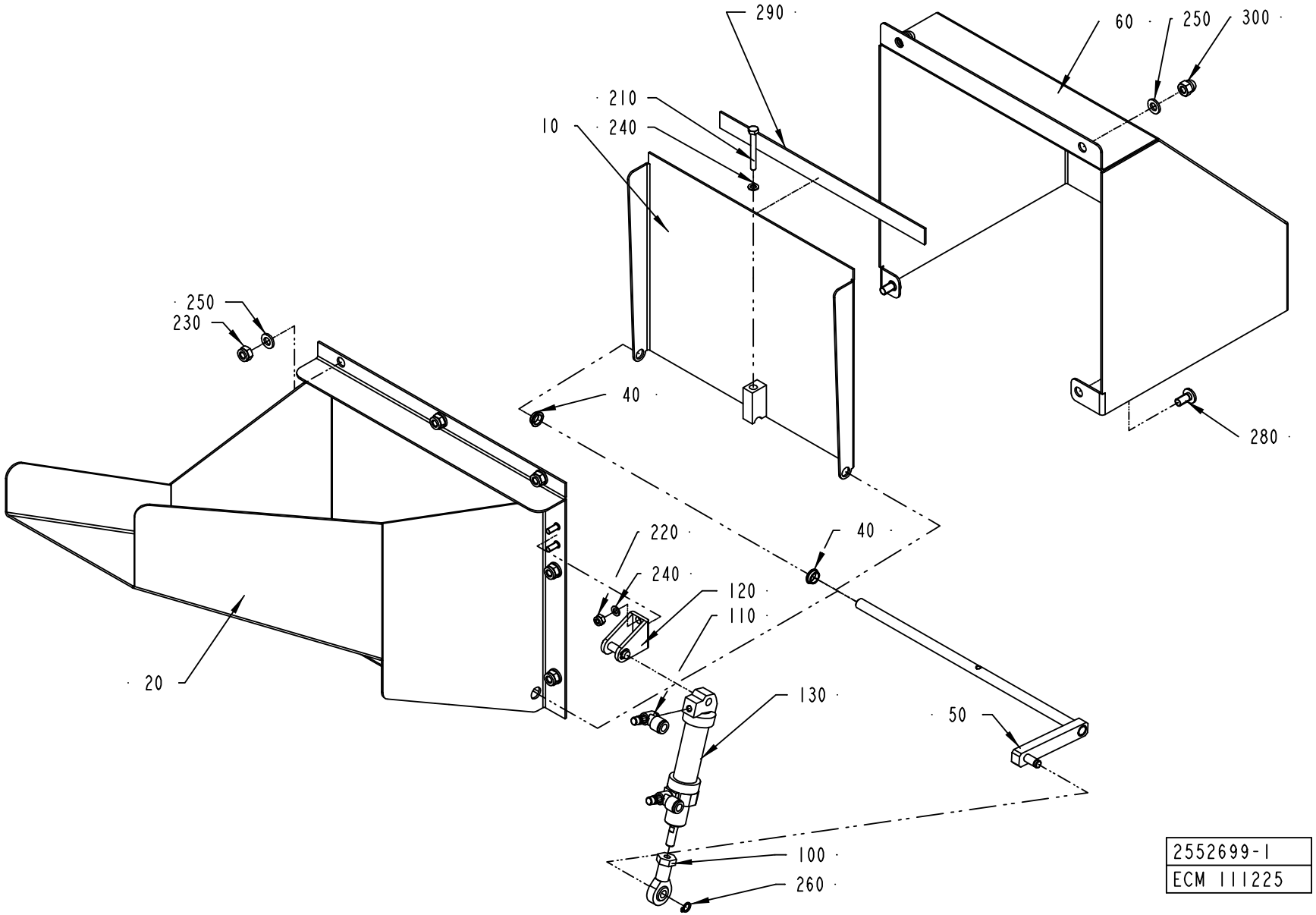

ECM: 123153 - 20031001
Group number: 2552699-0100
Assembly Drawing: 2552699-1_1_AB

Pos	Part No	UN	Qty	Description	Page No
-					
010	2552697-0000		1	LID	
020	2552698-0000		1	DISCHARGE CHUTE	
040	2552713-0000		2	BUSHING	
050	2552714-0000		1	BRACKET	
060	2554975-0000		1	COVER	
100	90115-0173		1	ROD END, ID=6 MM, M6X1	
110	90235-0844		2	THROTTLE CHECK VALVE, M5, MANUAL, 6MM	
120	90239-0486		1	REAR,CLEVIS,MINI-ISO 16	
130	90239-0842		1	DOUBLE ACTING, MINI-ISO, CYL.16-50	
210	312105-0301		1	SCREW M6S ISO 4017 M4X35 A480	
220	312812-0312		2	HEXAGON NUT, NY-LOCK M4 A480	
230	312812-0316		7	HEXAGON NUT, NY-LOCK M6 A480	
240	315105-0136		3	WASHER BRB4,3XRFR	
250	315105-0153		9	WASHER BRB6,4X12RFR	
260	315751-0103		1	RETAINING RING FOR SHAFT DIN 471 6 A2	
280	90287-0075		2	SCREW SLOT. PAN HEAD LKCS M6X12	
290	90458-0145		1	SEALING, 3X15 MM CLOSED CELL SPONGE	
300	312705-0316		2	NUT HEX. DOMED CAP MHM-6 M6 A280	

Pos	Part No	UN	Qty	Description	Page No

Machine Type | Group Description | Used-In | Group Number | Page No

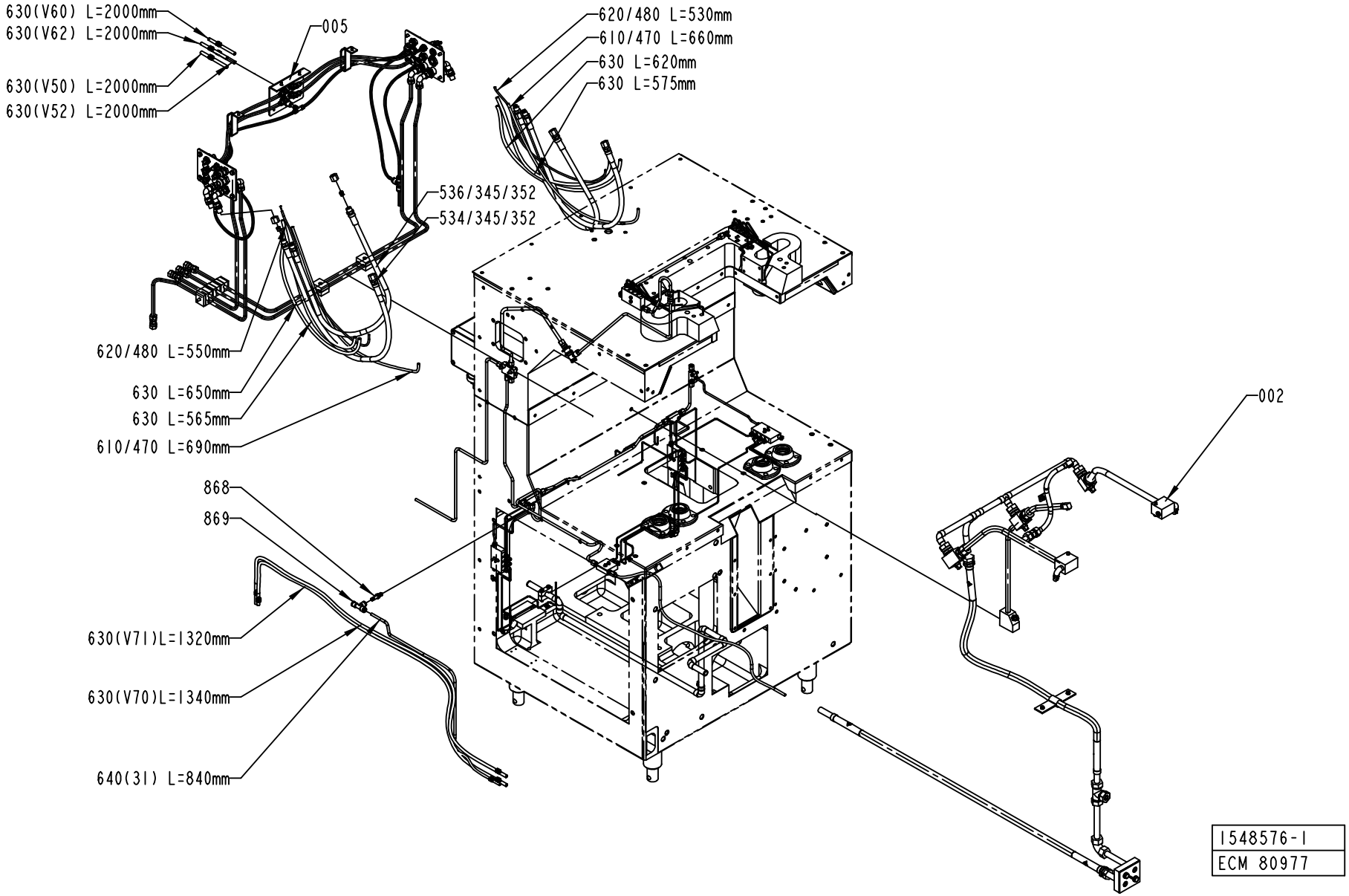
630(V60) L=2000mm
630(V62) L=2000mm
630(V50) L=2000mm
630(V52) L=2000mm
005
620/480 L=530mm
610/470 L=660mm
630 L=620mm
630 L=575mm
536/345/352
534/345/352
620/480 L=550mm
630 L=650mm
630 L=565mm
610/470 L=690mm
002
868
869
630(V71)L=1320mm
630(V70)L=1340mm
640(31) L=840mm
1548576-1
ECM 80977

ECM: 115744 - 20020930
Group number: 1548576-0100
Assembly Drawing: 1548576-1_1_AA

This list covers pages from 2-16 to 2-21

Pos	Part No	UN	Qty	Description	Page No
-					
002	271261-0700		1	CLEANING SYSTEM	**2-23**
005	1523829-0100		1	DISTRIBUTOR BLOCK	**2-25**
010	491854-0000		1	PIPE WATER	
020	979486-0000		1	LUBRICATING PIPE	
060	469133-0000		1	PIPE	
070	469132-0000		1	PIPE	
075	469131-0000		2	LACE	
090	271622-0000		1	LACE	
100	271623-0000		1	LACE	
120	295986-0000		1	HOLDER	
130	456407-0000		1	LACE	
140	491390-0000		1	PIPE CENTRAL LUBRICATION	
150	491859-0000		1	HOLDER	
160	491860-0000		1	HOLDER	
310	90028-0001		5	CONE 5/32"	
320	90028-0020		22	CONE TUBE 2,5MM	
330	90028-0021		5	CONE TUBE 4 MM	
340	90030-0051		1	CONN. STR., 6-R1/8, EXT. THREAD	
345	90030-0098		8	ACCESSORIES, FERRULE 8	
347	90136-0002		2	PLUG 5/16"24	
350	90030-0162		3	CONN. STR. 6-M10X1, EXT. THREAD	
352	342703-0208		8	NUT, PIPES & CONNECTORS,NUT M-8 SS	
355	90030-0200		2	CONN. ELBOW, 6-M10X1, EXT.THREAD	
360	90032-0014		1	DISTR. BLOCK & DIST.5/16-24UNF X6	
370	90032-0026		1	DISTR. BLOCK, 5/16-24UNF X2	
390	90032-0030		1	DISTR. BLOCK, 5/16-24UNF X3	
391	90032-0031		1	DISTR. BLOCK, 5/16-24UNF X5	
400	90032-0038		1	BLOCK 2 WAYS	
410	90032-0039		5	BLOCK 4 WAYS	
420	90090-0008		2	BALL, D=7,1 MM	
430	90092-0052		10	METERING VALVE 10 MM3	
440	90092-0053		12	METERING VALVE 30 MM3	
450	90134-0003		5	BUSHING	
470	90134-0030		2	SLEEVE FOR PLASTIC TUBE	
480	90134-0031		6	SLEEVE FOR PLASTIC TUBE	
490	90134-0034		11	NIPPLE	
	90030-0101		*1*	*TAPER*	
500	90134-0038		7	BUSHING/NUT INLET/OUTLET 4 MM	
510	90134-0039		22	BUSHING VALVE CONNECTION 2,5 MM	
534	90148-0037		2	HOSE	
536	90148-0038		2	HOSE	
540	90151-0001	MM	2200	BRASS PIPE DI=2,6 MM	
550	90266-0019	MM	7000	PIPE	
560	90165-0002		2	CLIP	
590	90165-0022		2	PIPE CLIP, FOR TUBE D=2,5 MM, B-3570	
600	90165-0023		2	CLIP	
605	90165-0039		1	PIPE CLAMP, RSGU 1.15/12, D=15 MM	
610	90166-0108	MM	2100	TUBE 6 MM PA,TRANSP.	
620	90166-0109	MM	1080	TUBE 4 MM PA,TRANSP.	
630	90166-0118	M	13	TUBE 8 MM PA BLACK	
640	90166-0081	MM	840	TUBE 6 MM PA BLUE	
650	90266-0006	MM	3400	TUBE	
660	312101-0337		2	SCREW M6S M5X35 FZB	
790	312115-0289		2	SCREW ISO4762 M4X10 A4	
800	312105-0295		8	SCREW M6S ISO4017 M4X20 A480	
805	312121-0289		1	SCREW ISO 1207 M4X10 4.8 - 5.8 Z.PL.	
810	312105-0297		10	SCREW M6S ISO 4017 M4X25 A480	
820	312105-0372		2	SCREW M6S ISO 4017 M6X25 A480	
840	312125-0287		6	SCREW ISO 1207 M4X8 A4	
845	312125-0323		1	SCREW ISO 1207 M5X8 A4	
854	315101-0146		2	WASHER PLAIN, BRB, 5,3/10 H=1	
860	315234-0109		1	WASHER,PL.RND.CU.10,3/13,5 H=1,0	
865	342727-0102		1	CONN. PIPE G-6-LFZB	
867	90165-0065		1	PIPE CLAMP, RSGU 1.8/9, D=8 MM	
868	342716-0203		1	REDUCER 6-8	
869	342748-0103		1	T-CONNECTION 8MM	
870	342767-0100		1	CONN. BULKHEAD G1/8	
880	342797-0121		1	CONN. BANJO, RINGPIECE 6-1/8	
890	342980-0303		1	BANJO-HOLLOW BOLT COUPL,EXT.THR.01-G1/8"	
900	352113-0101		10	CLIP STRIP, 92X2,5 MM	
910	359000-0400		5	MARKING CO2/4"0"	
920	359000-0401		3	MARKING COLLAR 2/4 "1" YELLOW	
930	359000-0402		2	MARKING COLLAR 2/4 "2" YELLOW	
940	359000-0403		1	MARKING COLLAR PA2/4 "3" YELLOW	
951	359000-0405		2	MARKING CO2/4"5"	
952	359000-0406		2	MARKING COLLAR PA2/4 "6" YELLOW	
965	359000-0407		4	MARKING COLLAR PA2/4 "7" YELLOW	
990	359000-0771		8	MARKING CO2/4"V"	

Machine Type	Group Description	Used-In	Group Number	Page No

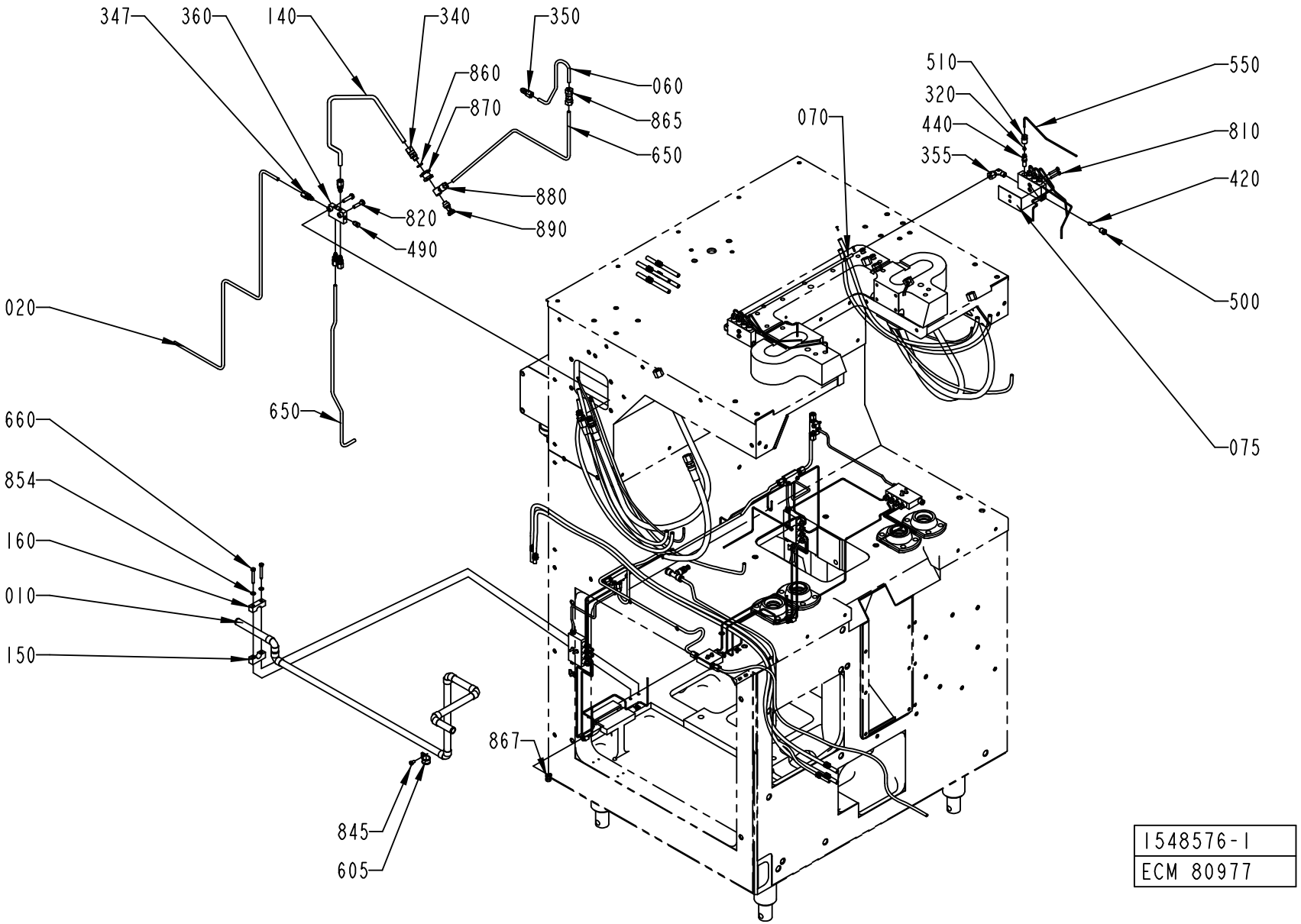

1548576-1
ECM 80977

ECM: 115744 - 20020930
Group number: 1548576-0100
Assembly Drawing: 1548576-1_2_AA

This list covers pages from 2-16 to 2-21

Pos	Part No	UN	Qty	Description	Page No
-					
002	271261-0700		1	CLEANING SYSTEM	**2-23**
005	1523829-0100		1	DISTRIBUTOR BLOCK	**2-25**
010	491854-0000		1	PIPE WATER	
020	979486-0000		1	LUBRICATING PIPE	
060	469133-0000		1	PIPE	
070	469132-0000		1	PIPE	
075	469131-0000		2	LACE	
090	271622-0000		1	LACE	
100	271623-0000		1	LACE	
120	295986-0000		1	HOLDER	
130	456407-0000		1	LACE	
140	491390-0000		1	PIPE CENTRAL LUBRICATION	
150	491859-0000		1	HOLDER	
160	491860-0000		1	HOLDER	
310	90028-0001		5	CONE 5/32"	
320	90028-0020		22	CONE TUBE 2,5MM	
330	90028-0021		5	CONE TUBE 4 MM	
340	90030-0051		1	CONN. STR., 6-R1/8, EXT. THREAD	
345	90030-0098		8	ACCESSORIES, FERRULE 8	
347	90136-0002		2	PLUG 5/16"24	
350	90030-0162		3	CONN. STR. 6-M10X1, EXT. THREAD	
352	342703-0208		8	NUT, PIPES & CONNECTORS,NUT M-8 SS	
355	90030-0200		2	CONN. ELBOW, 6-M10X1, EXT.THREAD	
360	90032-0014		1	DISTR. BLOCK & DIST.5/16-24UNF X6	
370	90032-0026		1	DISTR. BLOCK, 5/16-24UNF X2	
390	90032-0030		1	DISTR. BLOCK, 5/16-24UNF X3	
391	90032-0031		1	DISTR. BLOCK, 5/16-24UNF X5	
400	90032-0038		1	BLOCK 2 WAYS	
410	90032-0039		5	BLOCK 4 WAYS	
420	90090-0008		2	BALL, D=7,1 MM	
430	90092-0052		10	METERING VALVE 10 MM3	
440	90092-0053		12	METERING VALVE 30 MM3	
450	90134-0003		5	BUSHING	
470	90134-0030		2	SLEEVE FOR PLASTIC TUBE	
480	90134-0031		6	SLEEVE FOR PLASTIC TUBE	
490	90134-0034		11	NIPPLE	
	90030-0101		*1*	*TAPER*	
500	90134-0038		7	BUSHING/NUT INLET/OUTLET 4 MM	
510	90134-0039		22	BUSHING VALVE CONNECTION 2,5 MM	
534	90148-0037		2	HOSE	
536	90148-0038		2	HOSE	
540	90151-0001	MM	2200	BRASS PIPE DI=2,6 MM	
550	90266-0019	MM	7000	PIPE	
560	90165-0002		2	CLIP	
590	90165-0022		2	PIPE CLIP, FOR TUBE D=2,5 MM, B-3570	
600	90165-0023		2	CLIP	
605	90165-0039		1	PIPE CLAMP, RSGU 1.15/12, D=15 MM	
610	90166-0108	MM	2100	TUBE 6 MM PA,TRANSP.	
620	90166-0109	MM	1080	TUBE 4 MM PA,TRANSP.	
630	90166-0118	M	13	TUBE 8 MM PA BLACK	
640	90166-0081	MM	840	TUBE 6 MM PA BLUE	
650	90266-0006	MM	3400	TUBE	
660	312101-0337		2	SCREW M6S M5X35 FZB	
790	312115-0289		2	SCREW ISO4762 M4X10 A4	
800	312105-0295		8	SCREW M6S ISO4017 M4X20 A480	
805	312121-0289		1	SCREW ISO 1207 M4X10 4.8 - 5.8 Z.PL.	
810	312105-0297		10	SCREW M6S ISO 4017 M4X25 A480	
820	312105-0372		2	SCREW M6S ISO 4017 M6X25 A480	
840	312125-0287		6	SCREW ISO 1207 M4X8 A4	
845	312125-0323		1	SCREW ISO 1207 M5X8 A4	
854	315101-0146		2	WASHER PLAIN, BRB, 5,3/10 H=1	
860	315234-0109		1	WASHER,PL.RND.CU.10,3/13,5 H=1,0	
865	342727-0102		1	CONN. PIPE G-6-LFZB	
867	90165-0065		1	PIPE CLAMP, RSGU 1.8/9, D=8 MM	
868	342716-0203		1	REDUCER 6-8	
869	342748-0103		1	T-CONNECTION 8MM	
870	342767-0100		1	CONN. BULKHEAD G1/8	
880	342797-0121		1	CONN. BANJO, RINGPIECE 6-1/8	
890	342980-0303		1	BANJO-HOLLOW BOLT COUPL,EXT.THR.01-G1/8"	
900	352113-0101		10	CLIP STRIP, 92X2,5 MM	
910	359000-0400		5	MARKING CO2/4"0"	
920	359000-0401		3	MARKING COLLAR 2/4 "1" YELLOW	
930	359000-0402		2	MARKING COLLAR 2/4 "2" YELLOW	
940	359000-0403		1	MARKING COLLAR PA2/4 "3" YELLOW	
951	359000-0405		2	MARKING CO2/4"5"	
952	359000-0406		2	MARKING COLLAR PA2/4 "6" YELLOW	
965	359000-0407		4	MARKING COLLAR PA2/4 "7" YELLOW	
990	359000-0771		8	MARKING CO2/4"V"	

Machine Type	Group Description	Used-In	Group Number	Page No

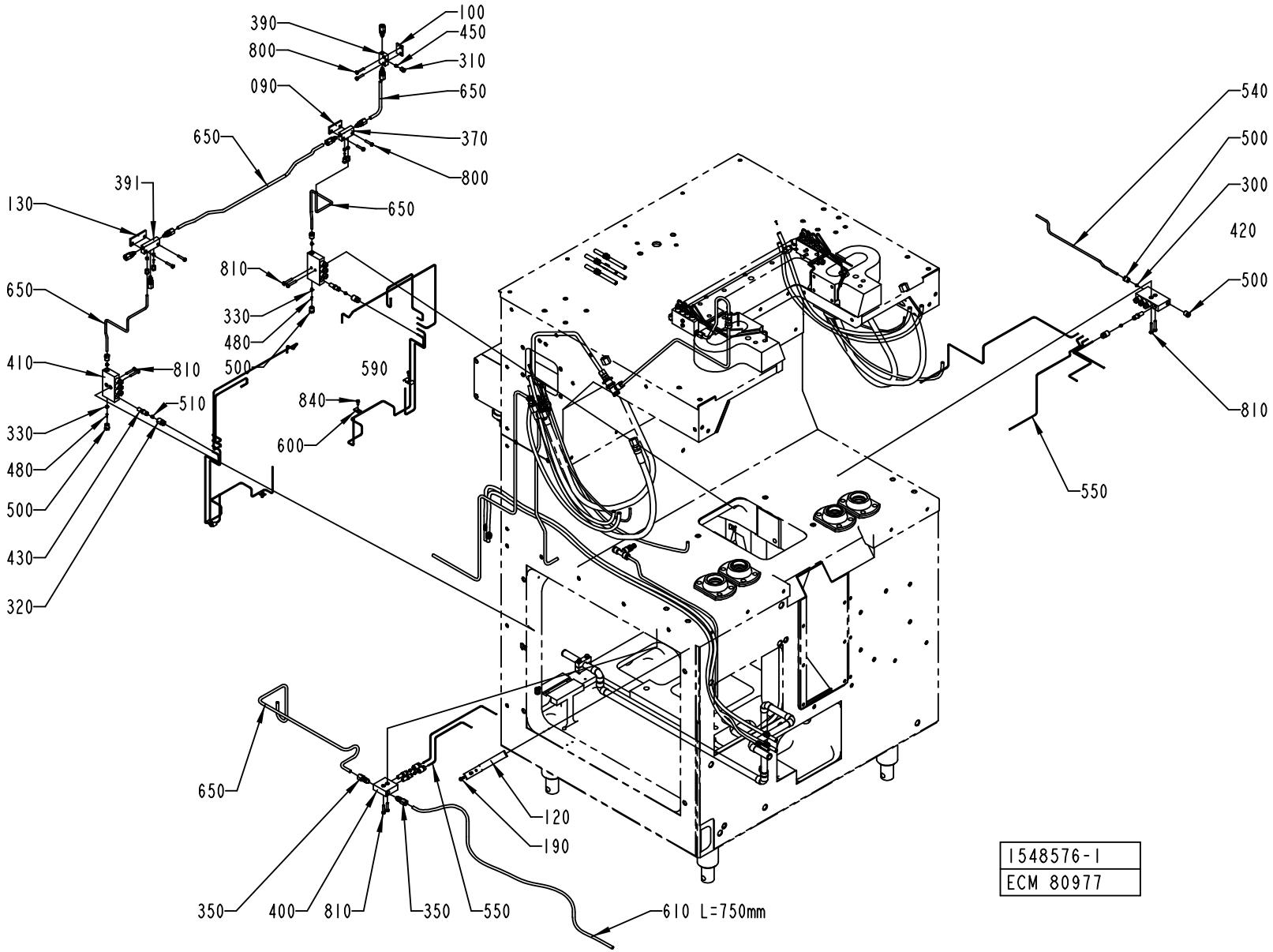
390
800
090
650
650
391
130
650
410
810
330
480
500
430
320
100
450
310
650
370
800
650
810
330
480
500
590
840
600
540
500
300
420
500
810
550
650
350
400
810
350
550
120
190
610 L=750mm
1548576-1
ECM 80977

ECM: 115744 - 20020930
Group number: 1548576-0100
Assembly Drawing: 1548576-1_3_AA

This list covers pages from 2-16 to 2-21

Pos	Part No	UN	Qty	Description	Page No
-					
002	271261-0700		1	CLEANING SYSTEM	**2-23**
005	1523829-0100		1	DISTRIBUTOR BLOCK	**2-25**
010	491854-0000		1	PIPE WATER	
020	979486-0000		1	LUBRICATING PIPE	
060	469133-0000		1	PIPE	
070	469132-0000		1	PIPE	
075	469131-0000		2	LACE	
090	271622-0000		1	LACE	
100	271623-0000		1	LACE	
120	295986-0000		1	HOLDER	
130	456407-0000		1	LACE	
140	491390-0000		1	PIPE CENTRAL LUBRICATION	
150	491859-0000		1	HOLDER	
160	491860-0000		1	HOLDER	
310	90028-0001		5	CONE 5/32"	
320	90028-0020		22	CONE TUBE 2,5MM	
330	90028-0021		5	CONE TUBE 4 MM	
340	90030-0051		1	CONN. STR., 6-R1/8, EXT. THREAD	
345	90030-0098		8	ACCESSORIES, FERRULE 8	
347	90136-0002		2	PLUG 5/16"24	
350	90030-0162		3	CONN. STR. 6-M10X1, EXT. THREAD	
352	342703-0208		8	NUT, PIPES & CONNECTORS,NUT M-8 SS	
355	90030-0200		2	CONN. ELBOW, 6-M10X1, EXT.THREAD	
360	90032-0014		1	DISTR. BLOCK & DIST.5/16-24UNF X6	
370	90032-0026		1	DISTR. BLOCK, 5/16-24UNF X2	
390	90032-0030		1	DISTR. BLOCK, 5/16-24UNF X3	
391	90032-0031		1	DISTR. BLOCK, 5/16-24UNF X5	
400	90032-0038		1	BLOCK 2 WAYS	
410	90032-0039		5	BLOCK 4 WAYS	
420	90090-0008		2	BALL, D=7,1 MM	
430	90092-0052		10	METERING VALVE 10 MM3	
440	90092-0053		12	METERING VALVE 30 MM3	
450	90134-0003		5	BUSHING	
470	90134-0030		2	SLEEVE FOR PLASTIC TUBE	
480	90134-0031		6	SLEEVE FOR PLASTIC TUBE	
490	90134-0034		11	NIPPLE	
	90030-0101		*1*	*TAPER*	
500	90134-0038		7	BUSHING/NUT INLET/OUTLET 4 MM	
510	90134-0039		22	BUSHING VALVE CONNECTION 2,5 MM	
534	90148-0037		2	HOSE	
536	90148-0038		2	HOSE	
540	90151-0001	MM	2200	BRASS PIPE DI=2,6 MM	
550	90266-0019	MM	7000	PIPE	
560	90165-0002		2	CLIP	
590	90165-0022		2	PIPE CLIP, FOR TUBE D=2,5 MM, B-3570	
600	90165-0023		2	CLIP	
605	90165-0039		1	PIPE CLAMP, RSGU 1.15/12, D=15 MM	
610	90166-0108	MM	2100	TUBE 6 MM PA,TRANSP.	
620	90166-0109	MM	1080	TUBE 4 MM PA,TRANSP.	
630	90166-0118	M	13	TUBE 8 MM PA BLACK	
640	90166-0081	MM	840	TUBE 6 MM PA BLUE	
650	90266-0006	MM	3400	TUBE	
660	312101-0337		2	SCREW M6S M5X35 FZB	
790	312115-0289		2	SCREW ISO4762 M4X10 A4	
800	312105-0295		8	SCREW M6S ISO4017 M4X20 A480	
805	312121-0289		1	SCREW ISO 1207 M4X10 4.8 - 5.8 Z.PL.	
810	312105-0297		10	SCREW M6S ISO 4017 M4X25 A480	
820	312105-0372		2	SCREW M6S ISO 4017 M6X25 A480	
840	312125-0287		6	SCREW ISO 1207 M4X8 A4	
845	312125-0323		1	SCREW ISO 1207 M5X8 A4	
854	315101-0146		2	WASHER PLAIN, BRB, 5,3/10 H=1	
860	315234-0109		1	WASHER,PL.RND.CU.10,3/13,5 H=1,0	
865	342727-0102		1	CONN. PIPE G-6-LFZB	
867	90165-0065		1	PIPE CLAMP, RSGU 1.8/9, D=8 MM	
868	342716-0203		1	REDUCER 6-8	
869	342748-0103		1	T-CONNECTION 8MM	
870	342767-0100		1	CONN. BULKHEAD G1/8	
880	342797-0121		1	CONN. BANJO, RINGPIECE 6-1/8	
890	342980-0303		1	BANJO-HOLLOW BOLT COUPL,EXT.THR.01-G1/8"	
900	352113-0101		10	CLIP STRIP, 92X2,5 MM	
910	359000-0400		5	MARKING CO2/4"0"	
920	359000-0401		3	MARKING COLLAR 2/4 "1" YELLOW	
930	359000-0402		2	MARKING COLLAR 2/4 "2" YELLOW	
940	359000-0403		1	MARKING COLLAR PA2/4 "3" YELLOW	
951	359000-0405		2	MARKING CO2/4"5"	
952	359000-0406		2	MARKING COLLAR PA2/4 "6" YELLOW	
965	359000-0407		4	MARKING COLLAR PA2/4 "7" YELLOW	
990	359000-0771		8	MARKING CO2/4"V"	

Machine Type	Group Description	Used-In	Group Number	Page No

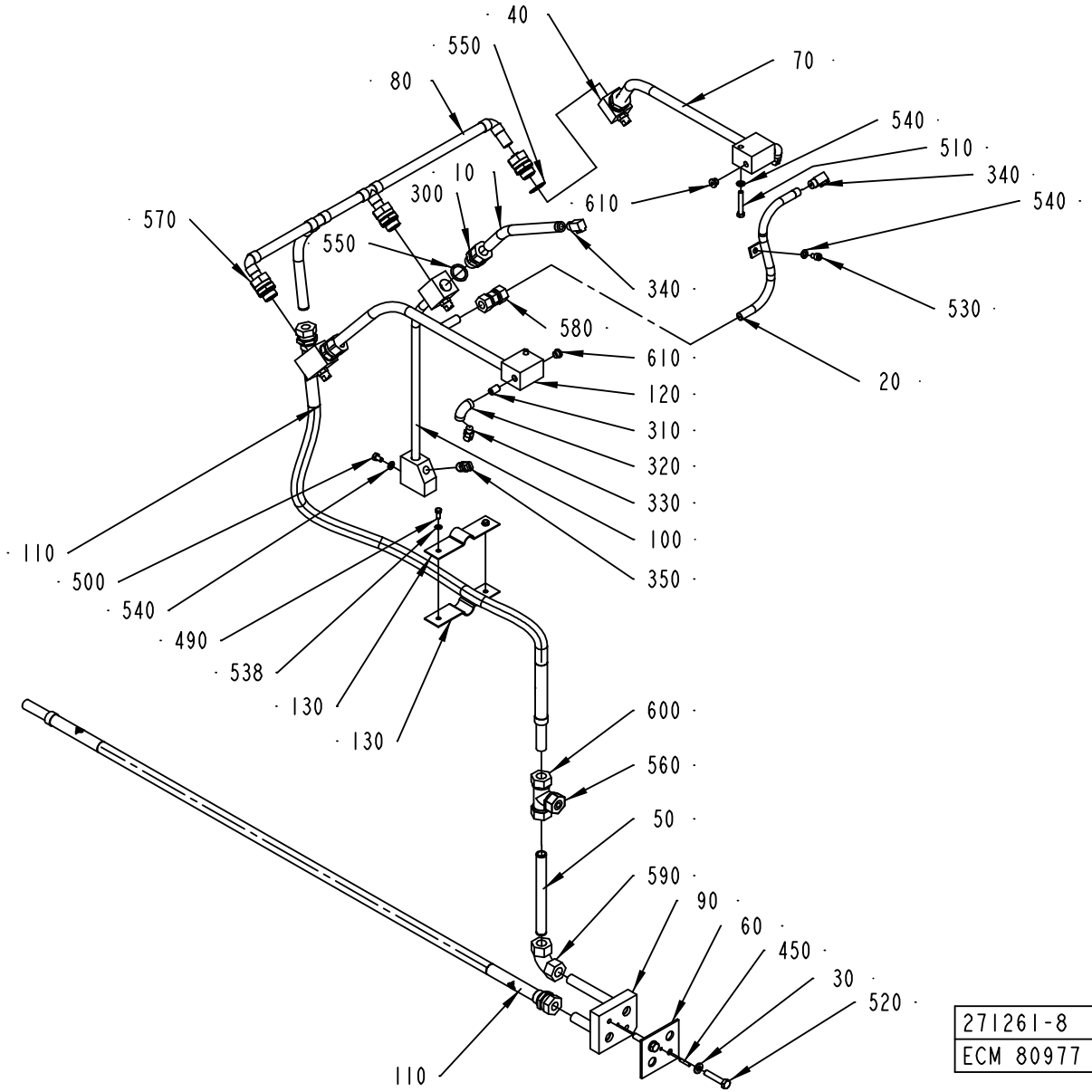
40
550
80
70
540
510
340
540
10
300
610
570
550
340
530
580
610
20
120
310
320
330
100
350
110
500
540
490
538
130
130
600
560
50
590
90
60
450
30
520
110
271261-8
ECM 80977

ECM: 115732 - 20020930
Group number: 271261-0700
Assembly Drawing: 271261-8_1_AA

Pos	Part No	UN	Qty	Description	Page No
TBA 0125S, TBA 0100B					
010	271121-0000		1	FORCE SPRING	
020	456129-0001		1	FORCE SPRING	
TBA 0330S, TBA 0300S, TBA 0180B, TBA 0160S, TBA 0200B, TBA 0250S, TBA 0284B, TBA 0200S, TBA 0200M, TBA 0250B					
010	295985-0000		1	FORCE SPRING	
020	456129-0002		1	FORCE SPRING	
Common Parts					
030	18542-0000		2	WASHER	
040	257190-0000		2	SEPARATION BLOCK	
050	272679-0000		1	PIPE	
060	295417-0000		1	GASKET	
070	295785-0000		1	FORCE SPRING	
080	295978-0000		1	PIPE	
090	578091-0000		1	BRANCH PIPE	
100	441665-0000		1	FORCE SPRING	
110	469146-0000		2	HOSE	
120	456128-0000		1	FORCE SPRING	
130	2516972-0000		2	HOSE HOLDER	
300	90030-0151		3	CONN. STR.,15-R1/2, EXT. THREAD	
310	90330-0097		2	NIPPLES, EXT. THREAD, G1/8	
320	90330-0099		2	ELBOW, 90 INT. THREAD, R-222R1/8	
330	90424-0032		2	SPRAY NOZZLE 95 DEG	
340	90424-0033		2	SPRAY NOZZLE 76 DEG	
350	90424-0035		4	SPRAY NOZZLE 95 DEG	
450	311103-0272		1	PARALLEL PIN ISO 2338 4M6X20 A1	
490	312105-0327		2	SCREW M6S ISO 4017 M5X12 A480	
500	312105-0364		1	SCREW M6S ISO 4017 M6X10 A480	
510	312105-0378		2	SCREW M6S ISO 4014 M6X40 A480	
520	312105-0459		2	SCREW M6S ISO 4014 M8X40 A480	
530	312115-0364		1	SCREW ISO4762 M6X10 A4	
538	315105-0146		2	BRICKA BRB5,3X10RFR	
540	315105-0153		4	WASHER BRB6,4X12RFR	
550	315233-0113		6	WASHER CAPTIVE SEALING G1/2	
560	342710-0115		1	REDUCTION RBM 16/8	
570	342720-0114		3	CONN. STR. GA-15-G1/2	
580	342726-0109		1	CONN. PIPE G-12	
590	342736-0114		1	CONN. ELBOW W-15	
600	342746-0114		1	CONN. T-PIPE T-15	
610	342713-0209		2	PLUG, EXT THREAD HEX SOCKET 8638-00-180	

Pos	Part No	UN	Qty	Description	Page No

Machine Type | Group Description | Used-In | Group Number | Page No

DISTRIBUTOR BLOCK

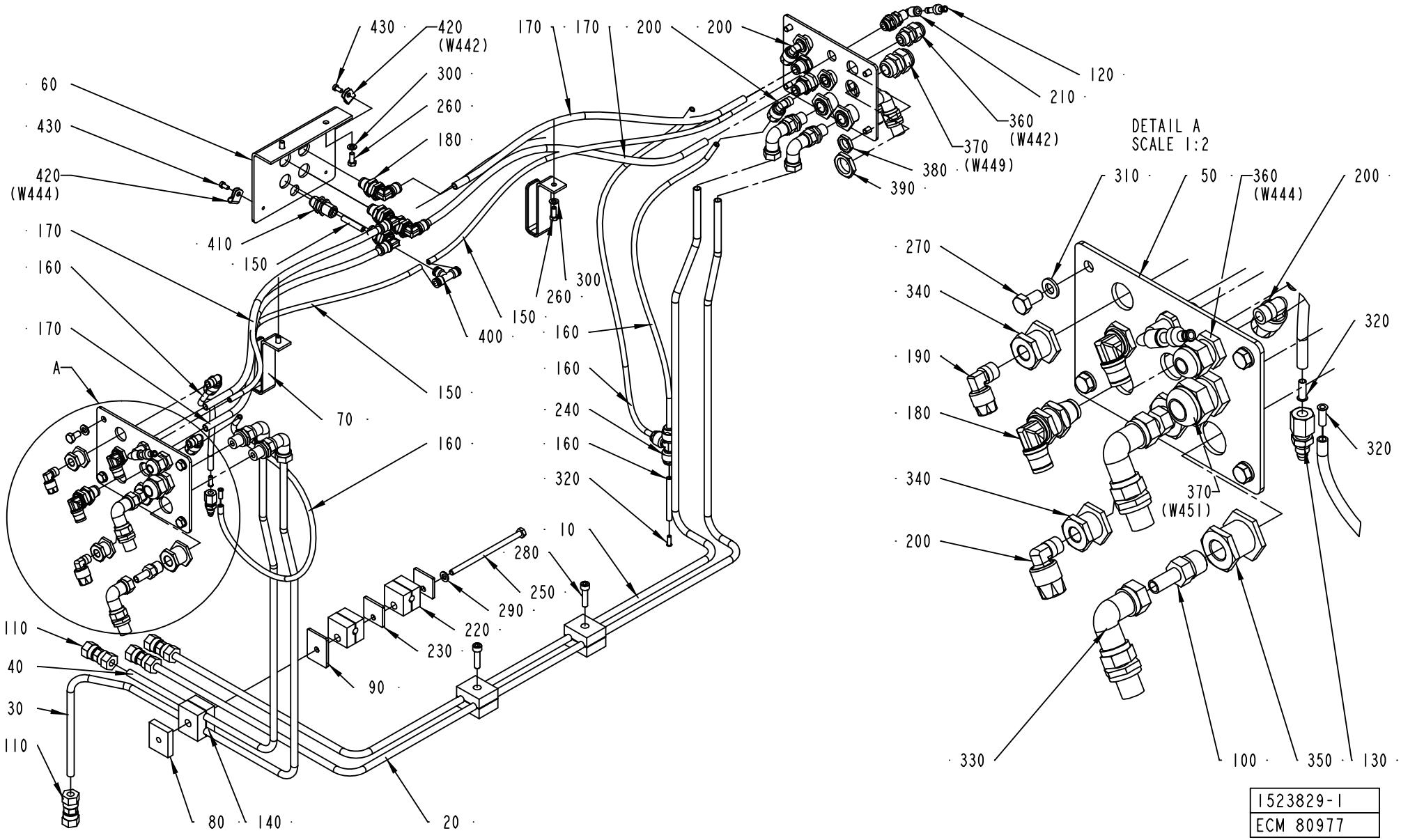

ECM: 115735 - 20020930
Group number: 1523829-0100
Assembly Drawing: 1523829-1_1_AA

Pos	Part No	UN	Qty	Description	Page No
-					
010	1523433-0000		1	PIPE	
020	1523434-0000		1	PIPE	
030	1523431-0000		1	PIPE	
040	1523432-0000		1	PIPE	
050	1523383-0000		2	CONNECTION PLATE	
060	1523384-0000		1	CONNECTION PLATE	
070	1523832-0000		2	HOSE HOLDER	
080	1523886-0000		1	SPACER PLATE	
090	1523887-0000		1	SPACER PLATE	
100	90030-0065		4	PIPE CONNECTION	
110	90030-0091		4	CONN. PIPE G-8	
120	342716-0202		2	REDUCER 4-6	
130	90134-0034		1	NIPPLE	
	90030-0101		*1*	*TAPER*	
140	90165-0099		3	PIPE CLAMP, DOUBLE, RBP-108, D=8 MM	
150	90166-0081	M	3	TUBE 6 MM PA BLUE	
160	90166-0108	M	2	TUBE 6 MM PA,TRANSP.	
170	90166-0118	M	2	TUBE 8 MM PA BLACK	
180	90457-0178		8	EQUAL BULKHEAD ELBOW CONNECTOR 36390800	
190	90457-0179		2	ELBOW COUPLING 6179 04 10	
200	90457-0180		6	ELBOW COUPLING 6179 06 10	
210	90457-0181		2	EQUAL BULKHEAD ELBOW CONNECTOR 31390600	
220	90457-0182		2	PIPE CLAMP, D=8 MM, RAPOD8X	
	90457-0183		*1*	*COVER PLATE DPA0X, FOR 90457-0182*	
230	90457-0183		2	COVER PLATE DPA0X, FOR 90457-0182	
240	90457-0184		1	T-CONNECTION 6 MM 6104 06 00	
250	312101-0392		1	SCREW M6S M6X110 FZB	
260	312105-0327		4	SCREW M6S ISO 4017 M5X12 A480	
270	312105-0366		8	SCREW M6S M6X12 A280	
280	312115-0372		2	SCREW ISO4762 M6X25 A4	
290	315101-0153		1	WASHER PLAIN, BRB, 6,4/12 H=1,5	
300	315105-0146		4	BRICKA BRB5,3X10RFR	
310	315105-0153		8	WASHER BRB6,4X12RFR	
320	342706-0130		3	ACCESSORIES, INSERT SLEEVE 6 MM	
330	342738-0208		8	ADJUSTABLE ELBOW CONNECTION,EXT 8-G1/4	
340	342767-0100		4	CONN. BULKHEAD G1/8	
350	342767-0104		4	CONN. BULKHEAD G1/4	
360	352103-0101		2	CABLE GLAND, ST 9, PR15,2/PG9	
370	352103-0108		2	CABLE GLAND, ST 13,5 , PR20,4/PG13,5	
380	90099-0001		2	NUT PR 15,2 MäSSING	
390	90099-0087		2	NUT PR=20,4	
400	342748-0102		1	T-CONNECTION 6MM	
410	342768-0102		1	BULKHEAD CONNECTOR, 6 MM	
420	90458-1489		2	CABLE CLIPS, D=4,75 MM	
430	312125-0287		2	SCREW ISO 1207 M4X8 A4	

Machine Type | Group Description | Used-In | Group Number | Page No

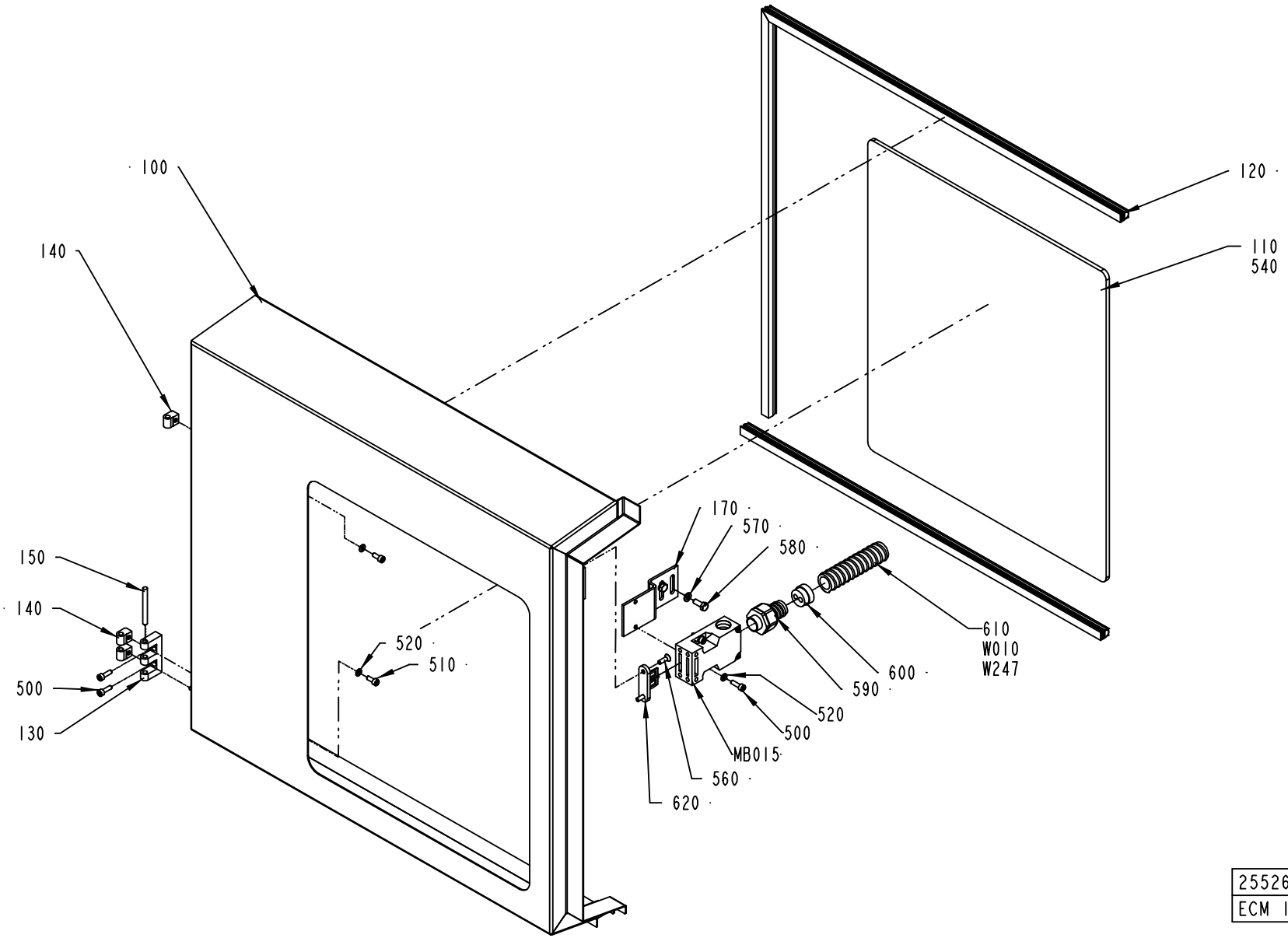

2552694-1
ECM 110911

ECM: 110918 - 20030113
Group number: 2552694-0100
Assembly Drawing: 2552694-1_1_AA

Pos	Part No	UN	Qty	Description	Page No
-					
100	2552693-0000		1	DOOR	
110	2553350-0000		1	GLASS	
120	90143-0068	M	2	RUBBERSTRIP EMKA 1011-06	
130	1035792-0000		1	E-HINGE	
140	1035794-0000		3	BLOCKING PIECE	
150	988685-0000		1	PIN	
170	1511437-0000		1	BRACKET	
500	312115-0329		4	SCREW ISO4762 M5X16 A4	
510	312115-0327		3	SCREW ISO4762 M5X12 A4	
520	315105-0146		5	BRICKA BRB5,3X10RFR	
540	90157-0041		1	SEALING COMPOUND	
560	312155-0329		2	SCREW EN 10642 MF6S M5X16 A480	
570	315105-0153		2	WASHER BRB6,4X12RFR	
580	312105-0368		2	SCREW M6S M6X16 A280	
590	90458-0430		1	EXTENDED WITHOUT INSERT, M20X1,5	
600	90457-0147		1	GLAND, INSERT, MULTI HOLE, 2X7	
610	90152-0051	M	1	SPIRAL CONDUIT, 25X18, UL 1816	
620	90044-0310		1	KEY FOR SAFETY SWITCH, AZ 15/16 B1	
MB015	90459-0472		1	KEY SAF.SW. AZ 16 02ZVRK-M20-2152-2254	
W010	351150-0431	M	1	CABLE OLFLEX 2X0,75 MM2 LIGHT/GREY	
W247	351150-0431	M	6	CABLE OLFLEX 2X0,75 MM2 LIGHT/GREY	

Pos	Part No	UN	Qty	Description	Page No

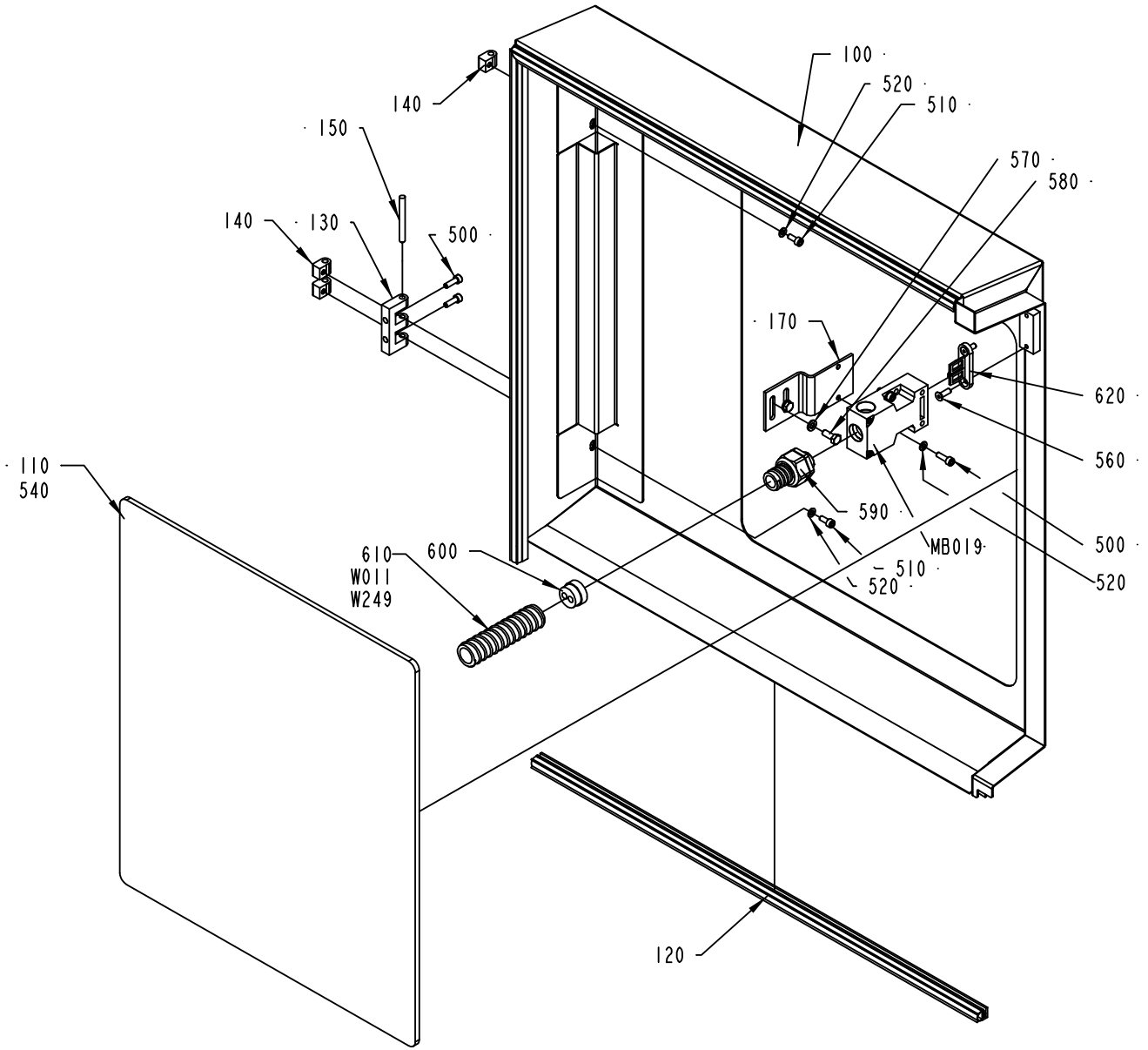

2552695-1
ECM 110911

ECM: 110919 - 20030113
Group number: 2552695-0100
Assembly Drawing: 2552695-1_1_AA

Pos	Part No	UN	Qty	Description	Page No
-					
100	2552696-0000		1	DOOR	
110	2553350-0000		1	GLASS	
120	90143-0068	M	2	RUBBERSTRIP EMKA 1011-06	
130	1035792-0000		1	E-HINGE	
140	1035794-0000		3	BLOCKING PIECE	
150	988685-0000		1	PIN	
170	1511437-0000		1	BRACKET	
500	312115-0329		4	SCREW ISO4762 M5X16 A4	
510	312115-0327		3	SCREW ISO4762 M5X12 A4	
520	315105-0146		5	BRICKA BRB5,3X10RFR	
540	90157-0041		1	SEALING COMPOUND	
560	312155-0329		2	SCREW EN 10642 MF6S M5X16 A480	
570	315105-0153		2	WASHER BRB6,4X12RFR	
580	312105-0368		2	SCREW M6S M6X16 A280	
590	90458-0430		1	EXTENDED WITHOUT INSERT, M20X1,5	
600	90457-0147		1	GLAND, INSERT, MULTI HOLE, 2X7	
610	90152-0051	M	1	SPIRAL CONDUIT, 25X18, UL 1816	
620	90044-0310		1	KEY FOR SAFETY SWITCH, AZ 15/16 B1	
MB019	90459-0472		1	KEY SAF.SW. AZ 16 02ZVRK-M20-2152-2254	
W011	351150-0431	M	1	CABLE OLFLEX 2X0,75 MM2 LIGHT/GREY	
W249	351150-0431	M	7	CABLE OLFLEX 2X0,75 MM2 LIGHT/GREY	

Pos	Part No	UN	Qty	Description	Page No

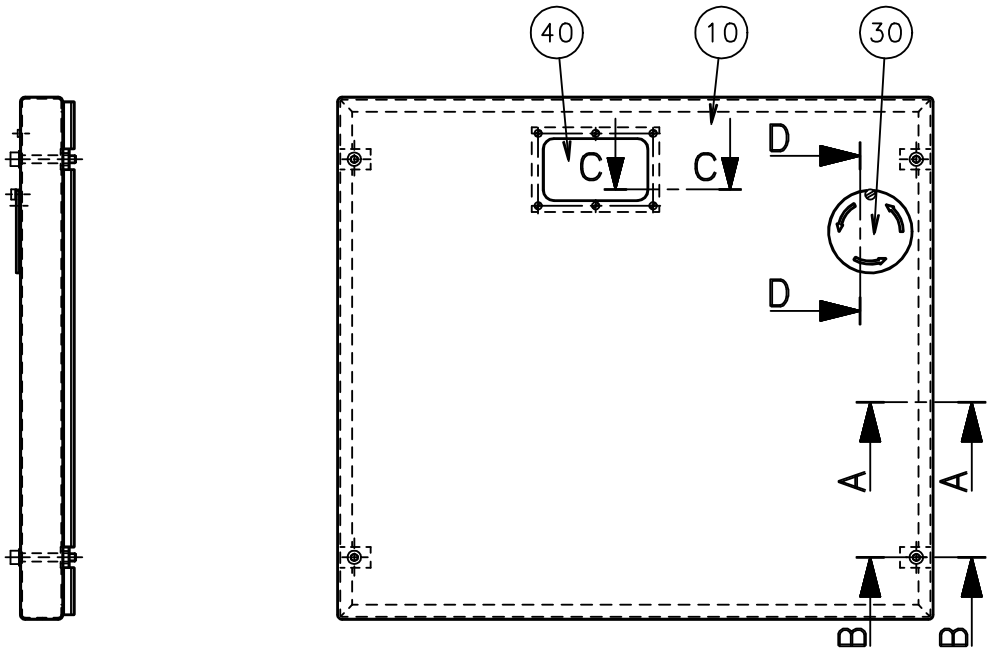

A-A
scale 1:2

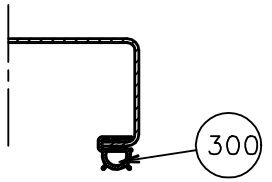

B-B
scale 1:2

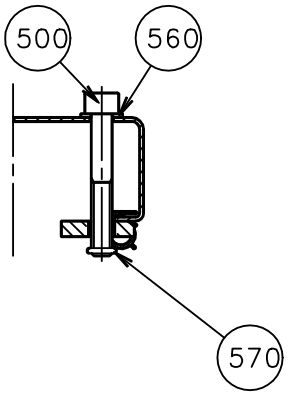

C-C
scale 1:1

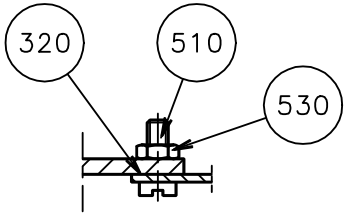

D-D
scale 1:1

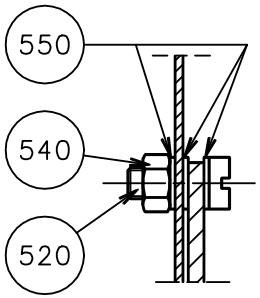

ECN 71482

ECM: 123414 - 20030120
Group number: 256665-0200
Assembly Drawing: 256665-4_1_AC

Pos	Part No	UN	Qty	Description	Page No
-					
010	1279044-0000		1	HATCH	
030	469964-0000		1	LID	
040	257231-0000		1	WINDOW	
300	90143-0068	MM	2200	RUBBERSTRIP EMKA 1011-06	
320	90157-0022	L		SEALING COMPOUND	
500	312115-0463		4	SCREW ISO4762 M8X60 A4	
510	312125-0291		6	SCREW ISO 1207 M4X12 A4	
520	312125-0329		1	SCREW ISO 1207 M5X16 A4	
530	312605-0312		6	HEXAGON NUT, M6M M4 A280	
540	312810-0314		1	HEXAGON NUT, NY-LOCK M5 FZB	
550	315105-0146		3	BRICKA BRB5,3X10RFR	
560	315105-0165		4	WASHER BRB8,4X16RFR	
570	315202-0105		4	O-RING 7,1X1,6 MM	

Pos	Part No	UN	Qty	Description	Page No

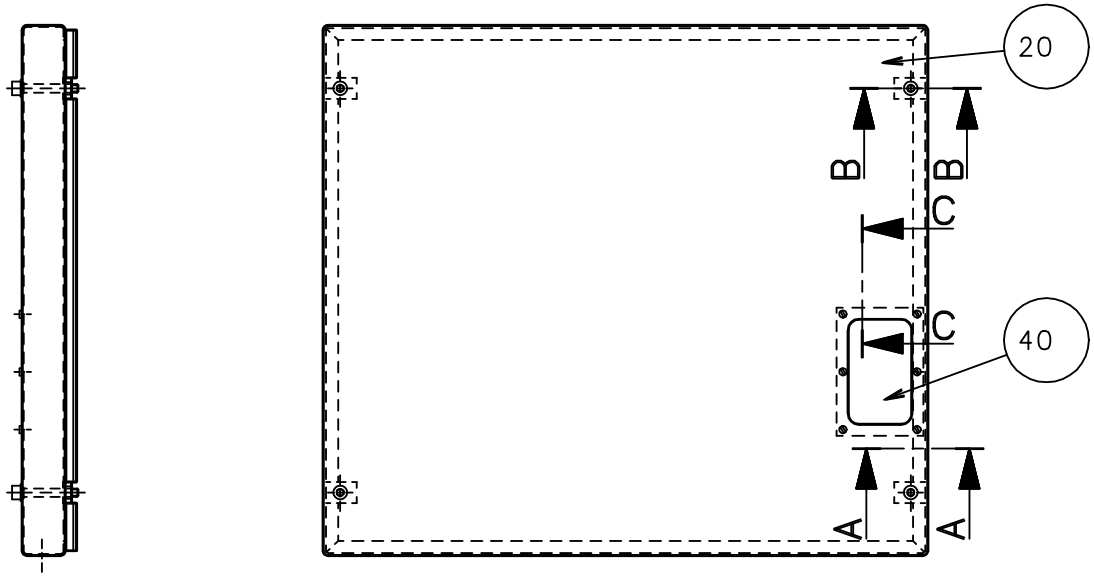

B–B
scale 1:2

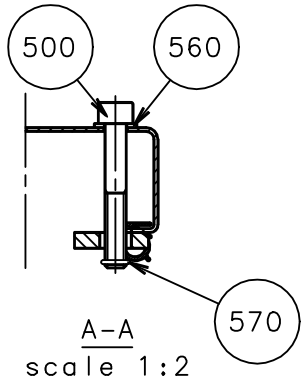

A–A
scale 1:2

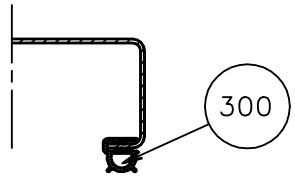

C–C
scale 2:1

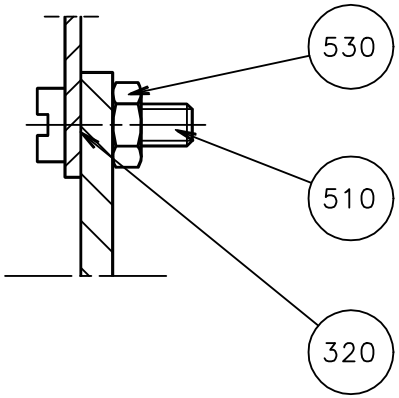

ECN 71730

ECM: 123444 - 20030120
Group number: 1296815-0100
Assembly Drawing: 1296815-1_1_AB

Pos	Part No	UN	Qty	Description	Page No
-					
020	1279045-0000		1	HATCH	
040	257231-0000		1	WINDOW	
300	90143-0068	MM	2200	RUBBERSTRIP EMKA 1011-06	
320	90157-0022	L		SEALING COMPOUND	
500	312115-0463		4	SCREW ISO4762 M8X60 A4	
510	312125-0291		6	SCREW ISO 1207 M4X12 A4	
530	312605-0312		6	HEXAGON NUT, M6M M4 A280	
560	315105-0165		4	WASHER BRB8,4X16RFR	
570	315202-0105		4	O-RING 7,1X1,6 MM	

Pos	Part No	UN	Qty	Description	Page No

AIR JET GUN

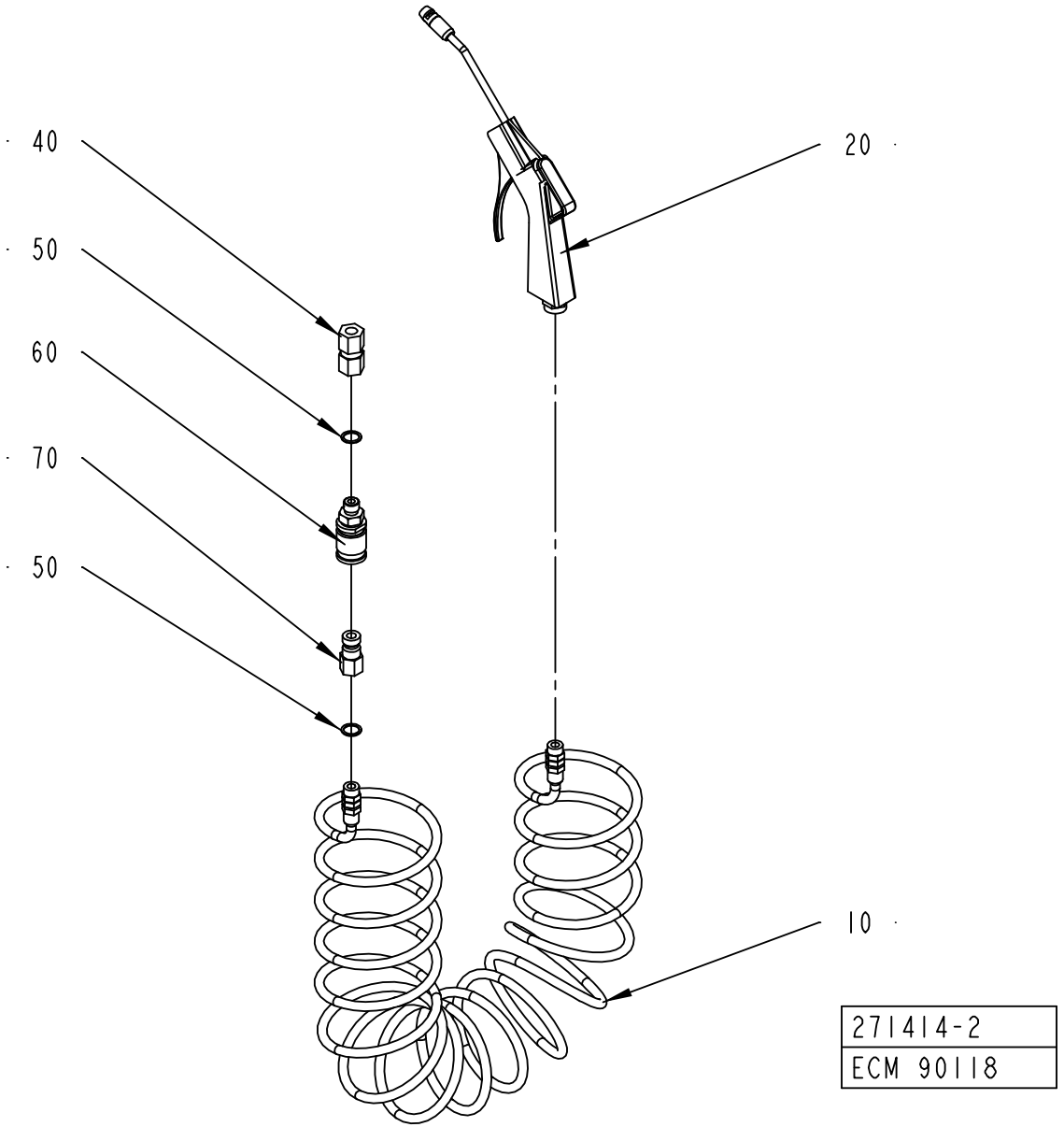

ECM: 115731 - 20020930
Group number: 271414-0300
Assembly Drawing: 271414-2_1_AA

Pos	Part No	UN	Qty	Description	Page No
-					
010	90152-0016		1	HOSE (SPIRAL)	
020	90243-0061		1	AIR GUN, CEJN SERIE 204 ED: 90459-0173	
040	342725-0108		1	CONN. STR. PIPE GI-10-G1/4	
050	315233-0110		2	WASHER CAPTIVE SEALING G1/4	
060	90163-0013		1	QUICK COUPLING, (F) LP 006-0-WR013-01-2	
	90163-0301		*1*	*GASKET VITON REPL.BY 90163-312*	
070	90163-0015		1	QUICK COUPLING, (M) LP-006-1-WR513	

Pos	Part No	UN	Qty	Description	Page No

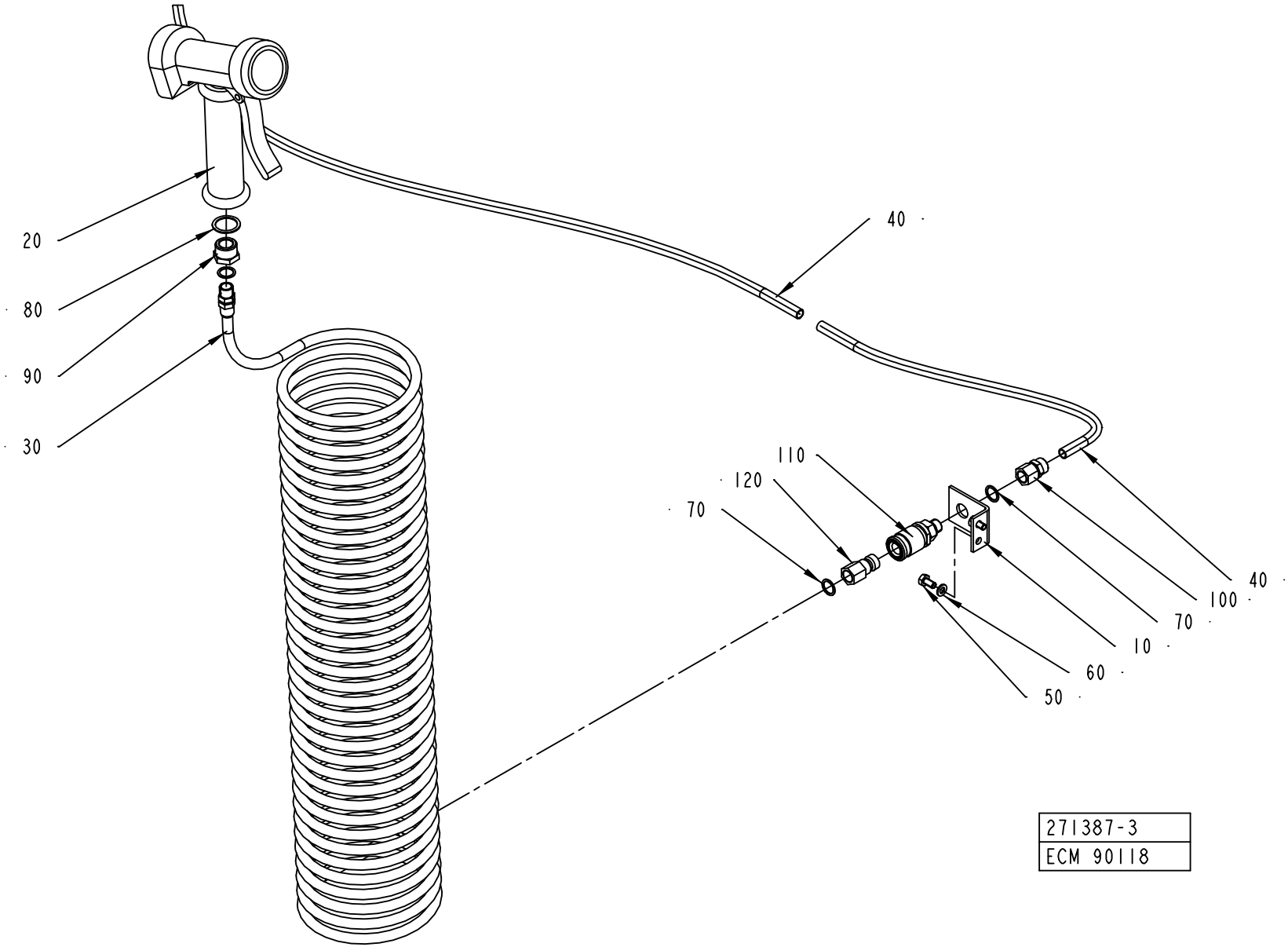
20
80
90
30
40
110
120
70
40
100
70
10
60
50
271387-3
ECM 90118

ECM: 115745 - 20020930
Group number: 271387-0400
Assembly Drawing: 271387-3_1_AA

Pos	Part No	UN	Qty	Description	Page No
-					
010	2524394-0000		1	BRACKET	
020	90426-0003		1	HAND SHOWER	
030	90152-0017		1	HOSE (SPIRAL)	
040	90166-0135	M	2	TUBE 10 MM PA BLACK	
050	312105-0366		2	SCREW M6S M6X12 A280	
060	315105-0153		2	WASHER BRB6,4X12RFR	
070	315233-0110		3	WASHER CAPTIVE SEALING G1/4	
080	315233-0113		1	WASHER CAPTIVE SEALING G1/2	
090	342701-0205		1	BUSHING,INT./EXT.G-THREAD G1/2"-G1/4"	
100	342923-0132		1	STRAIGHT COUPL.,INT.THREADED 10/8-G1/4"	
110	90163-0013		1	QUICK COUPLING, (F) LP 006-0-WR013-01-2	
	90163-0301		*1*	*GASKET VITON REPL.BY 90163-312*	
120	90163-0015		1	QUICK COUPLING, (M) LP-006-1-WR513	

Pos	Part No	UN	Qty	Description	Page No

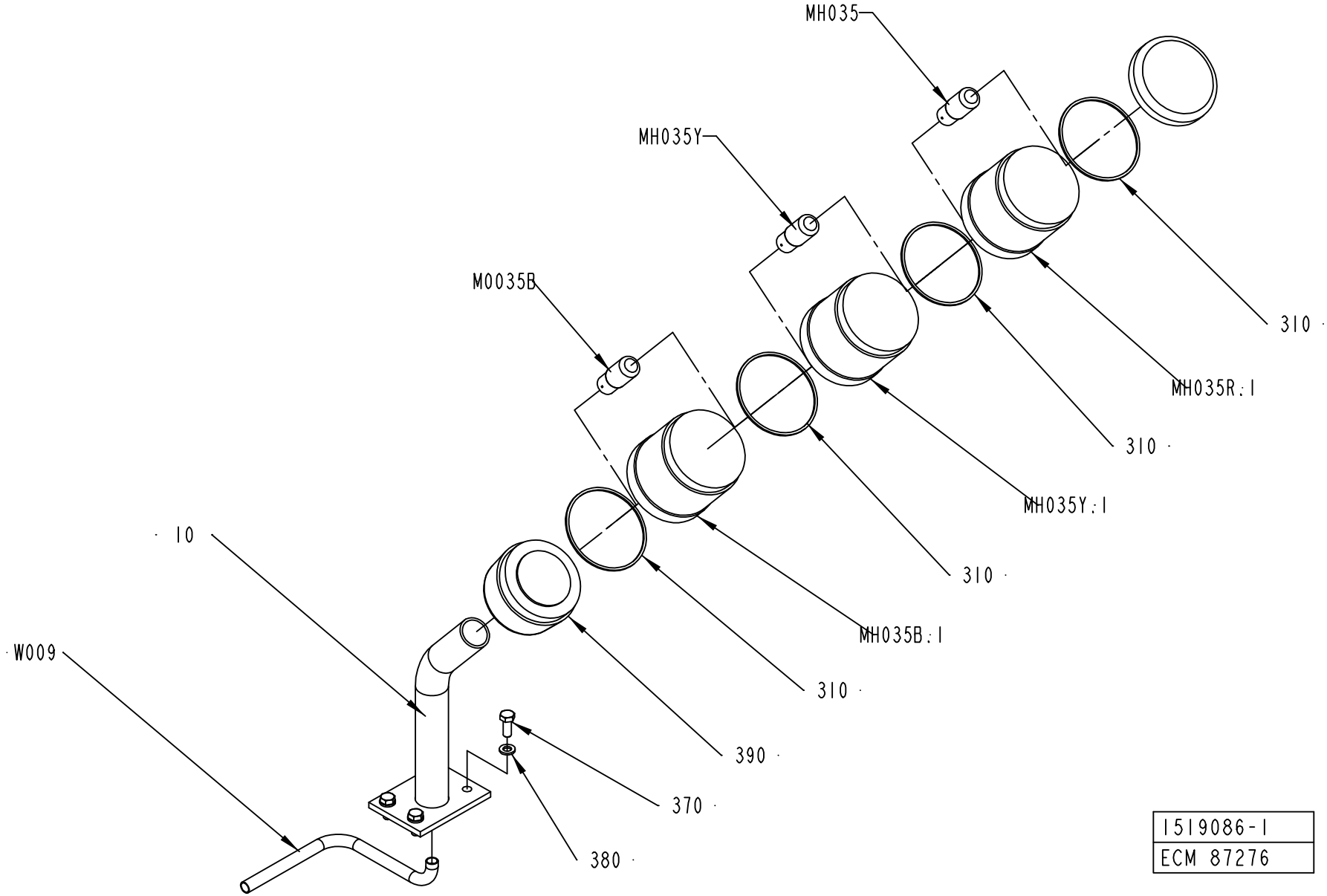
MH035
MH035Y
M0035B
310
MH035R:1
310
MH035Y:1
310
MH035B:1
10
310
W009
390
370
380
1519086-1
ECM 87276

ECM: 115741 - 20020930
Group number: 1519086-0100
Assembly Drawing: 1519086-1_1_AA

Pos	Part No	UN	Qty	Description	Page No
-					
010	1517248-0000		1	BRACKET	
310	90419-0307		4	GASKET	
370	312105-0368		4	SCREW M6S M6X16 A280	
380	315105-0153		4	WASHER BRB6,4X12RFR	
390	90458-0292		1	BASE, KT70-1001	
MH035B	90036-0068		1	BULB 6.5W 24V	
MH035B.1	90458-0295		1	LIGHT ELEMENT, BLUE, KL70-401L	
MH035R	90036-0068		1	BULB 6.5W 24V	
MH035R.1	90458-0293		1	LIGHT ELEMENT, RED, KL70-401R	
MH035Y	90036-0068		1	BULB 6.5W 24V	
MH035Y.1	90458-0294		1	LIGHT ELEMENT, YELLOW, KL70-401Y	
W009	351150-0406	M	5	CABLE OLFLEX 7X0,75 MM2 LIGHT/GREY	

Pos	Part No	UN	Qty	Description	Page No

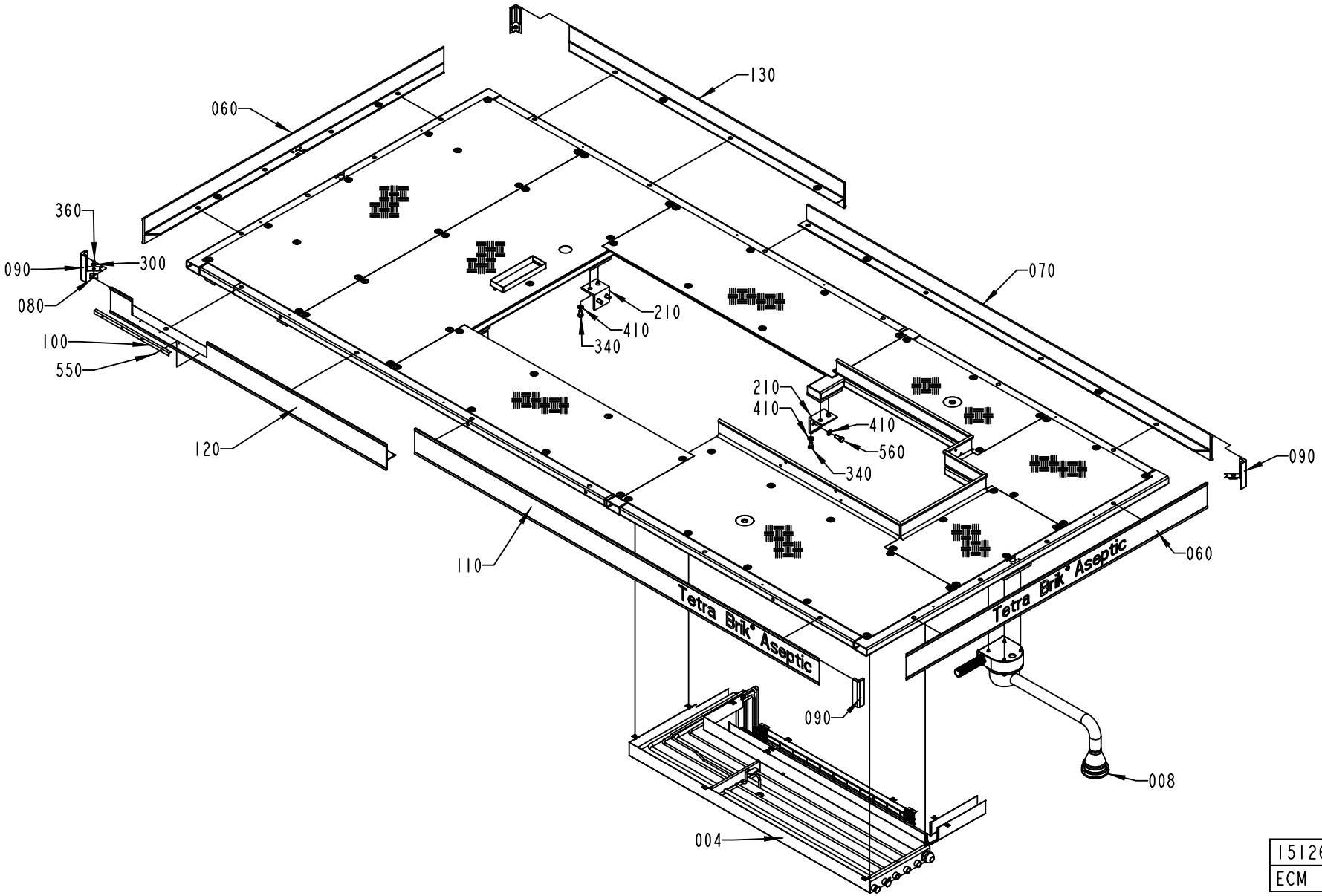

1512660-1
ECM 151617

ECM: 153666 - 20031219
Group number: 1512660-0100
Assembly Drawing: 1512660-1_1_AB

This list covers pages from 2-40 to 2-43

Pos	Part No	UN	Qty	Description	Page No
LEFT					
120	1512643-0000		1	TOE PLATE	
130	1512666-0000		1	TOE PLATE	
NOPT					
050	1512633-0000		1	CHECKER PLATE	
PT19					
055	2632603-0000		1	CHECKER PLATE	
RIGHT					
120	2514018-0000		1	TOP TIE PLATE	
130	2512805-0000		1	TOE PLATE	
Common Parts					
004	2500214-0100		1	PIPE WORK	**2-45, 2-47**
008	2500332-0100		1	PIVOT ARM	**2-49**
010	1512350-0000		1	PLATFORM	
020	1512351-0000		1	PLATFORM	
030	1512631-0000		2	CHECKER PLATE	
040	1512632-0000		1	CHECKER PLATE	
060	1512640-0000		2	TOE PLATE	
070	1512641-0000		1	TOE PLATE	
080	1254028-0000		4	FASTENING PLATE	
090	1254027-0000		4	CORNER STRIP	
100	2506646-0000		1	STRIP	
110	1512642-0000		1	TOE PLATE	
140	1512845-0000		1	CHECKER PLATE	
150	1512846-0000		1	CHECKER PLATE	
160	1512847-0000		1	BRACKET	
180	2506608-0000		4	PLATE	
190	2506609-0000		4	PLATE	
200	1512851-0000		1	COVER	
210	1517249-0000		4	BRACKET	
220	2505282-0000		1	CHECKER PLATE	
230	2505236-0000		1	PLATFORM	
300	38087-0000		4	WASHER	
310	312105-0371		2	SCREW M6S ISO 4017 M6X22 A480	
320	312105-0648		4	SCREW M6S M16X150 A280	
340	312105-0622		8	SCREW M6S ISO 4017 M16X25 A480	
360	312605-0316		6	HEXAGON NUT, M6M M6 A280	
370	312812-0324		4	HEXAGON NUT, NY-LOCK M16 A480	
380	312105-0534		16	SCREW M6S ISO 4017 M12X25 A480	
390	315105-0153		4	WASHER BRB6,4X12RFR	
410	315105-0186		24	WASHER BRB17X30RFR	
420	315105-0178		16	WASHER BRB13X24RFR	
510	90458-0072		78	SCREW ISO 7380 S M6X12 A2	
520	90458-0073		78	WASHER 6,4/30, H=1,5	
540	352103-0106		1	CABLE GLAND, ST 11, PR18,6/PG11	
550	312502-0221		4	DRIVE SCREW ROUND HEAD KDS 4X6	
560	312105-0628		8	SCREW M6S ISO 4017 M16X40 A480	
570	90143-0076	MM	7300	PROFILE	

Machine Type | Group Description | Used-In | Group Number | Page No

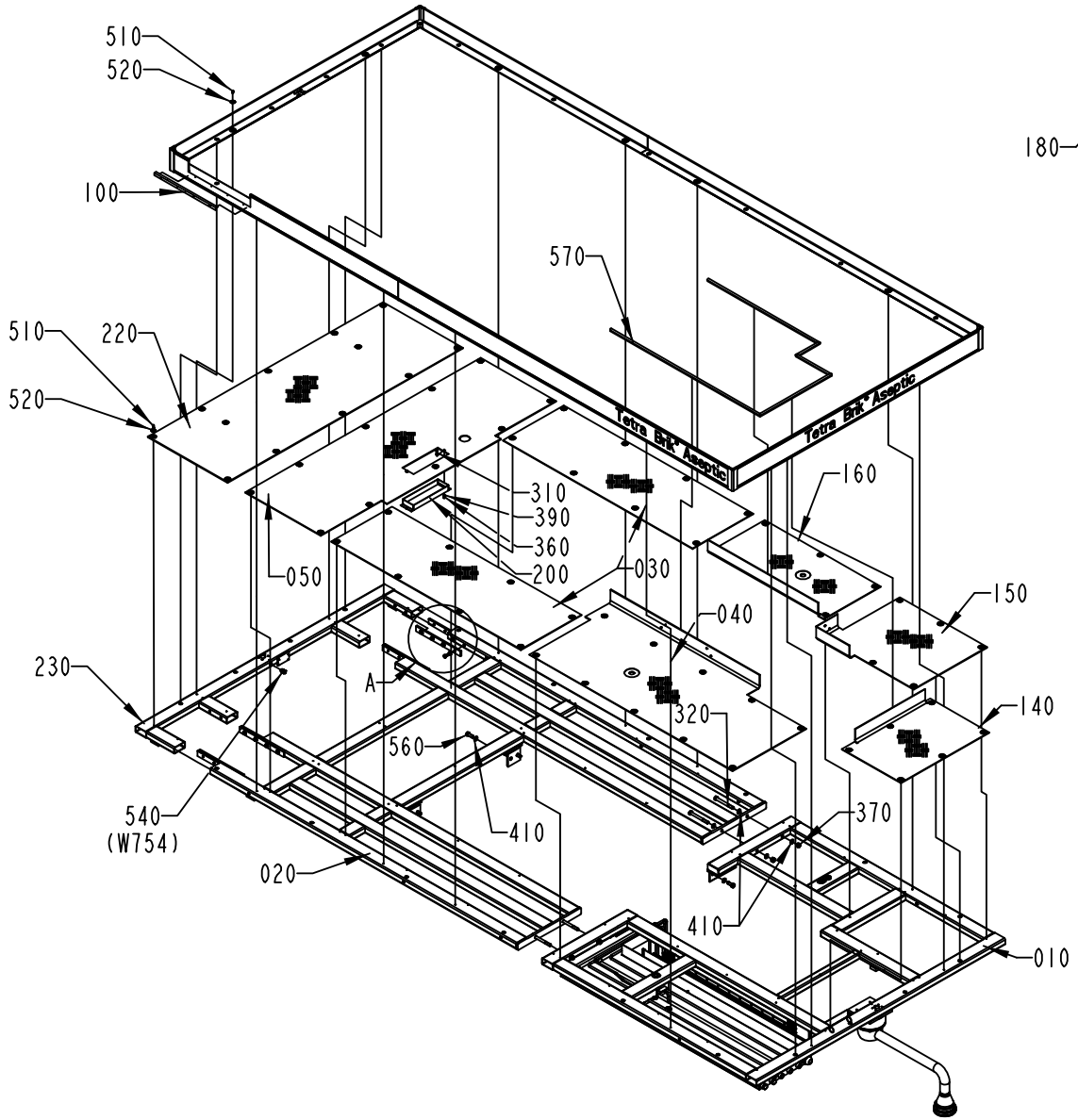

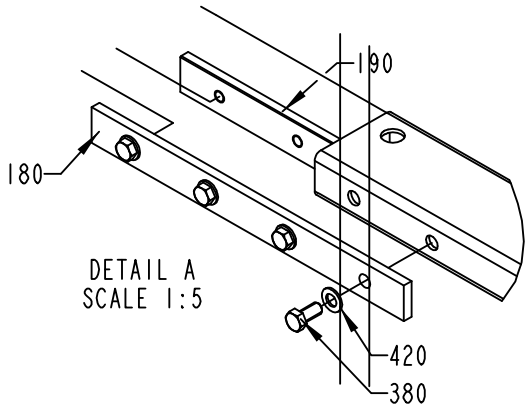

1512660-1
ECM 151617

ECM: 153666 - 20031219
Group number: 1512660-0100
Assembly Drawing: 1512660-1_2_AB

This list covers pages from 2-40 to 2-43

Pos	Part No	UN	Qty	Description	Page No
LEFT					
120	1512643-0000		1	TOE PLATE	
130	1512666-0000		1	TOE PLATE	
NOPT					
050	1512633-0000		1	CHECKER PLATE	
PT19					
055	2632603-0000		1	CHECKER PLATE	
RIGHT					
120	2514018-0000		1	TOP TIE PLATE	
130	2512805-0000		1	TOE PLATE	
Common Parts					
004	2500214-0100		1	PIPE WORK	**2-45, 2-47**
008	2500332-0100		1	PIVOT ARM	**2-49**
010	1512350-0000		1	PLATFORM	
020	1512351-0000		1	PLATFORM	
030	1512631-0000		2	CHECKER PLATE	
040	1512632-0000		1	CHECKER PLATE	
060	1512640-0000		2	TOE PLATE	
070	1512641-0000		1	TOE PLATE	
080	1254028-0000		4	FASTENING PLATE	
090	1254027-0000		4	CORNER STRIP	
100	2506646-0000		1	STRIP	
110	1512642-0000		1	TOE PLATE	
140	1512845-0000		1	CHECKER PLATE	
150	1512846-0000		1	CHECKER PLATE	
160	1512847-0000		1	BRACKET	
180	2506608-0000		4	PLATE	
190	2506609-0000		4	PLATE	
200	1512851-0000		1	COVER	
210	1517249-0000		4	BRACKET	
220	2505282-0000		1	CHECKER PLATE	
230	2505236-0000		1	PLATFORM	
300	38087-0000		4	WASHER	
310	312105-0371		2	SCREW M6S ISO 4017 M6X22 A480	
320	312105-0648		4	SCREW M6S M16X150 A280	
340	312105-0622		8	SCREW M6S ISO 4017 M16X25 A480	
360	312605-0316		6	HEXAGON NUT, M6M M6 A280	
370	312812-0324		4	HEXAGON NUT, NY-LOCK M16 A480	
380	312105-0534		16	SCREW M6S ISO 4017 M12X25 A480	
390	315105-0153		4	WASHER BRB6,4X12RFR	
410	315105-0186		24	WASHER BRB17X30RFR	
420	315105-0178		16	WASHER BRB13X24RFR	
510	90458-0072		78	SCREW ISO 7380 S M6X12 A2	
520	90458-0073		78	WASHER 6,4/30, H=1,5	
540	352103-0106		1	CABLE GLAND, ST 11, PR18,6/PG11	
550	312502-0221		4	DRIVE SCREW ROUND HEAD KDS 4X6	
560	312105-0628		8	SCREW M6S ISO 4017 M16X40 A480	
570	90143-0076	MM	7300	PROFILE	

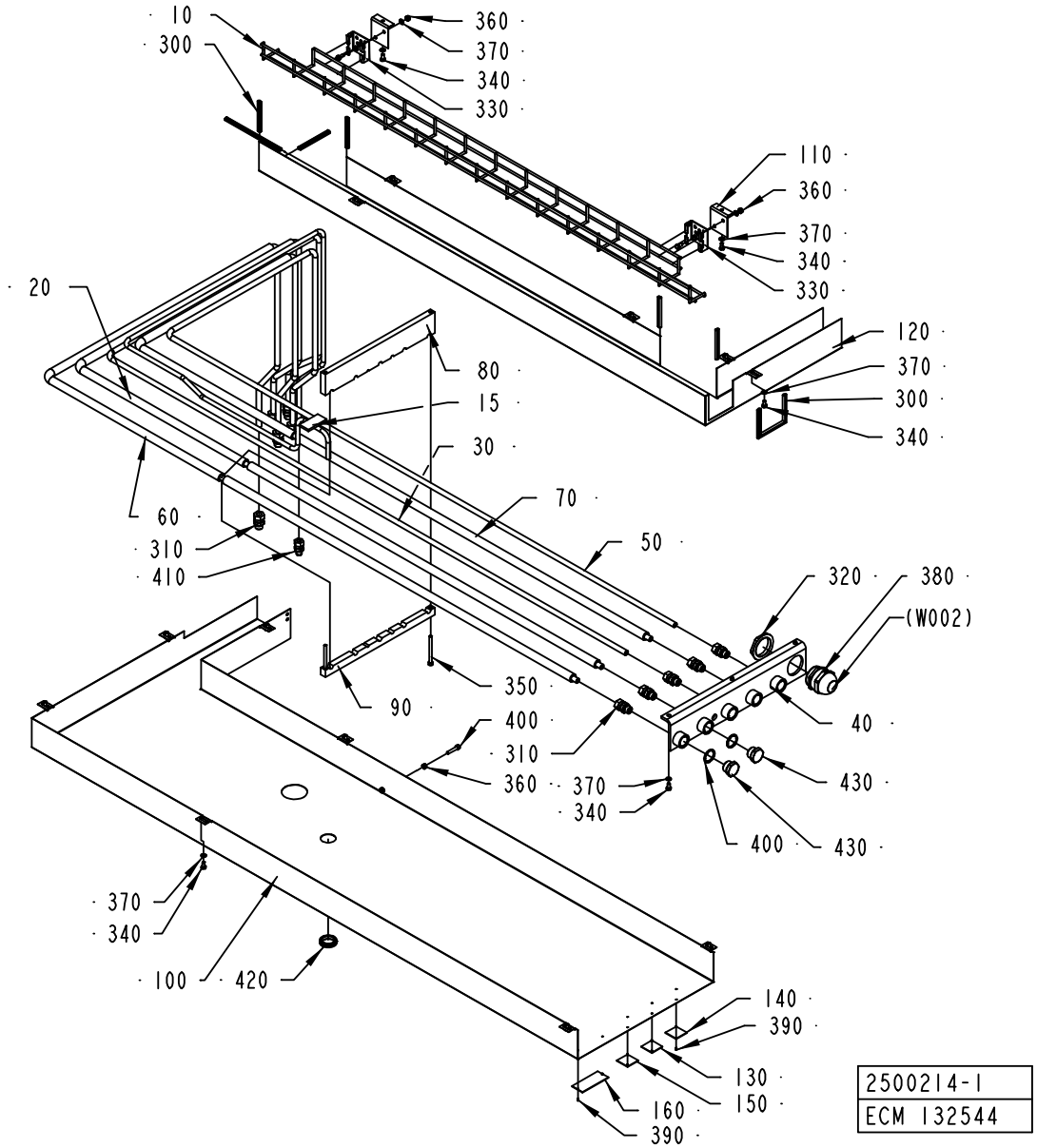
10
300
360
370
340
330
110
360
370
340
330
120
370
300
340
20
80
15
30
70
50
60
310
410
320
380
(W002)
90
350
400
310
360
370
340
40
430
400
430
370
340
100
420
140
390
130
150
160
390
2500214-1
ECM 132544

Pos	Part No	UN	Qty	Description	Page No
HI (See drawing on page: 2-46)					
170	2613035-0000		1	SUPPORT	
180	978010-0000		1	SIGN BOARD	
450	90030-0230		1	CONN. BULKHEAD SV 6-	
460	90166-0132	CM	250	TUBE 6 MM PA,TRANSP.	
470	90457-0086		1	BULKHEAD CONNECTOR 6MM	
480	312115-0325		2	SCREW ISO4762 M5X10 A4	
490	312605-0314		2	HEXAGON NUT, M6M M5 A280	
500	315105-0146		2	BRICKA BRB5,3X10RFR	
Common Parts					
010	2500218-0000		1	CABLE TRENCH	
015	2523703-0000		1	PIPE	
020	1286000-0000		1	PIPE	
030	1296854-0000		1	PIPE	
040	1334694-0000		1	CONNECTION PLATE	
050	1350307-0000		1	PIPE	
060	1350308-0000		1	PIPE	
070	1350309-0000		1	PIPE	
080	1350472-0000		1	HOLDER	
090	1350473-0000		1	HOLDER	
100	2500215-0000		1	CABLE DUCT	
110	2500217-0000		2	BRACKET	
120	2500216-0000		1	CABLE DUCT	
130	273455-0000		1	LABEL (COLD WATER)	
140	273456-0000		1	SIGN	
150	273458-0000		1	LABEL (AIR)	
160	2555070-0000		1	SIGN	
300	90143-0060	M	1	EDGE STRIP 9,5X6,3MM BLACK PVC	
310	90030-0187		10	CONN. STR. GA-12-G3/8	
320	90458-0327		1	NUT, M50X1,5	
330	90181-0190		2	CABLE DUCT, WALL BRACKET, B4 MINI	
340	312105-0366		21	SCREW M6S M6X12 A280	
350	312115-0385		2	SCREW ISO4762 M6X75 A4	
360	312605-0316		5	HEXAGON NUT, M6M M6 A280	
370	315105-0153		21	WASHER BRB6,4X12RFR	
380	90458-0311		1	CABLE GLAND, M50X1,5, NO.5311 1060	
390	312502-0120		8	DRIVE SCREW ROUND HEAD KDS 0X5	
400	312115-0374		1	SCREW ISO4762 M6X30 A4	
410	90030-0186		1	CONN. STR. GA-10-G1/4	
420	90459-1066		1	LEAD-IN, BUSHING, DA 300/350/10	
430	90330-0046		2	PLUG, EXT. G-THREAD, R-236G3/4	
440	315239-0115		2	NYLON WASHER G3/4	

Pos	Part No	UN	Qty	Description	Page No

Machine Type | Group Description | Used-In | Group Number | Page No

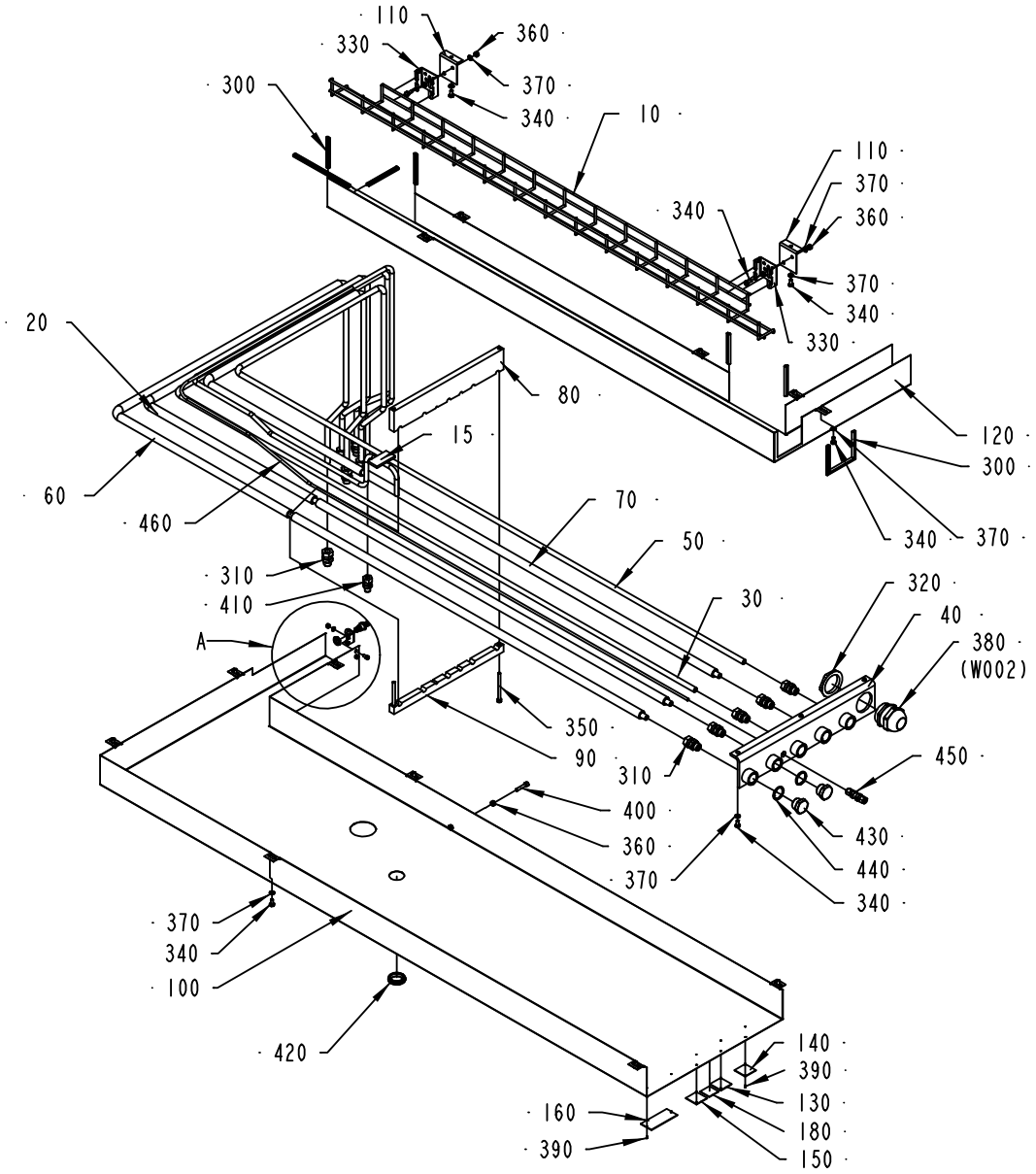

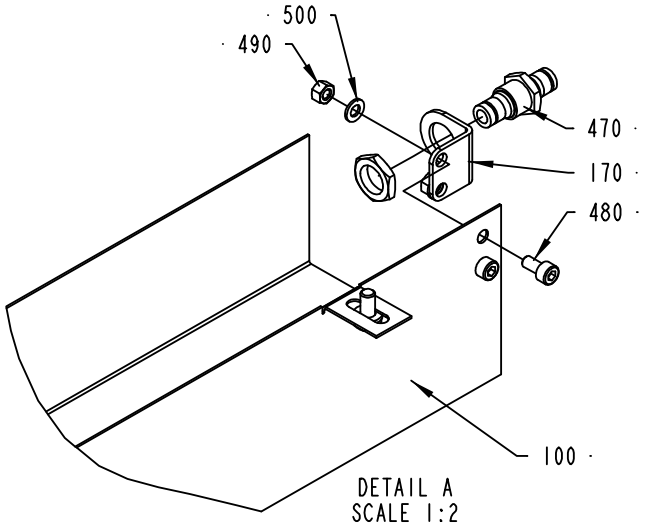

2500214-2
ECM 132544

Pos	Part No	UN	Qty	Description	Page No
HI (See drawing on page: 2-46)					
170	2613035-0000		1	SUPPORT	
180	978010-0000		1	SIGN BOARD	
450	90030-0230		1	CONN. BULKHEAD SV 6-	
460	90166-0132	CM	250	TUBE 6 MM PA,TRANSP.	
470	90457-0086		1	BULKHEAD CONNECTOR 6MM	
480	312115-0325		2	SCREW ISO4762 M5X10 A4	
490	312605-0314		2	HEXAGON NUT, M6M M5 A280	
500	315105-0146		2	BRICKA BRB5,3X10RFR	
Common Parts					
010	2500218-0000		1	CABLE TRENCH	
015	2523703-0000		1	PIPE	
020	1286000-0000		1	PIPE	
030	1296854-0000		1	PIPE	
040	1334694-0000		1	CONNECTION PLATE	
050	1350307-0000		1	PIPE	
060	1350308-0000		1	PIPE	
070	1350309-0000		1	PIPE	
080	1350472-0000		1	HOLDER	
090	1350473-0000		1	HOLDER	
100	2500215-0000		1	CABLE DUCT	
110	2500217-0000		2	BRACKET	
120	2500216-0000		1	CABLE DUCT	
130	273455-0000		1	LABEL (COLD WATER)	
140	273456-0000		1	SIGN	
150	273458-0000		1	LABEL (AIR)	
160	2555070-0000		1	SIGN	
300	90143-0060	M	1	EDGE STRIP 9,5X6,3MM BLACK PVC	
310	90030-0187		10	CONN. STR. GA-12-G3/8	
320	90458-0327		1	NUT, M50X1,5	
330	90181-0190		2	CABLE DUCT, WALL BRACKET, B4 MINI	
340	312105-0366		21	SCREW M6S M6X12 A280	
350	312115-0385		2	SCREW ISO4762 M6X75 A4	
360	312605-0316		5	HEXAGON NUT, M6M M6 A280	
370	315105-0153		21	WASHER BRB6,4X12RFR	
380	90458-0311		1	CABLE GLAND, M50X1,5, NO.5311 1060	
390	312502-0120		8	DRIVE SCREW ROUND HEAD KDS 0X5	
400	312115-0374		1	SCREW ISO4762 M6X30 A4	
410	90030-0186		1	CONN. STR. GA-10-G1/4	
420	90459-1066		1	LEAD-IN, BUSHING, DA 300/350/10	
430	90330-0046		2	PLUG, EXT. G-THREAD, R-236G3/4	
440	315239-0115		2	NYLON WASHER G3/4	

Pos	Part No	UN	Qty	Description	Page No

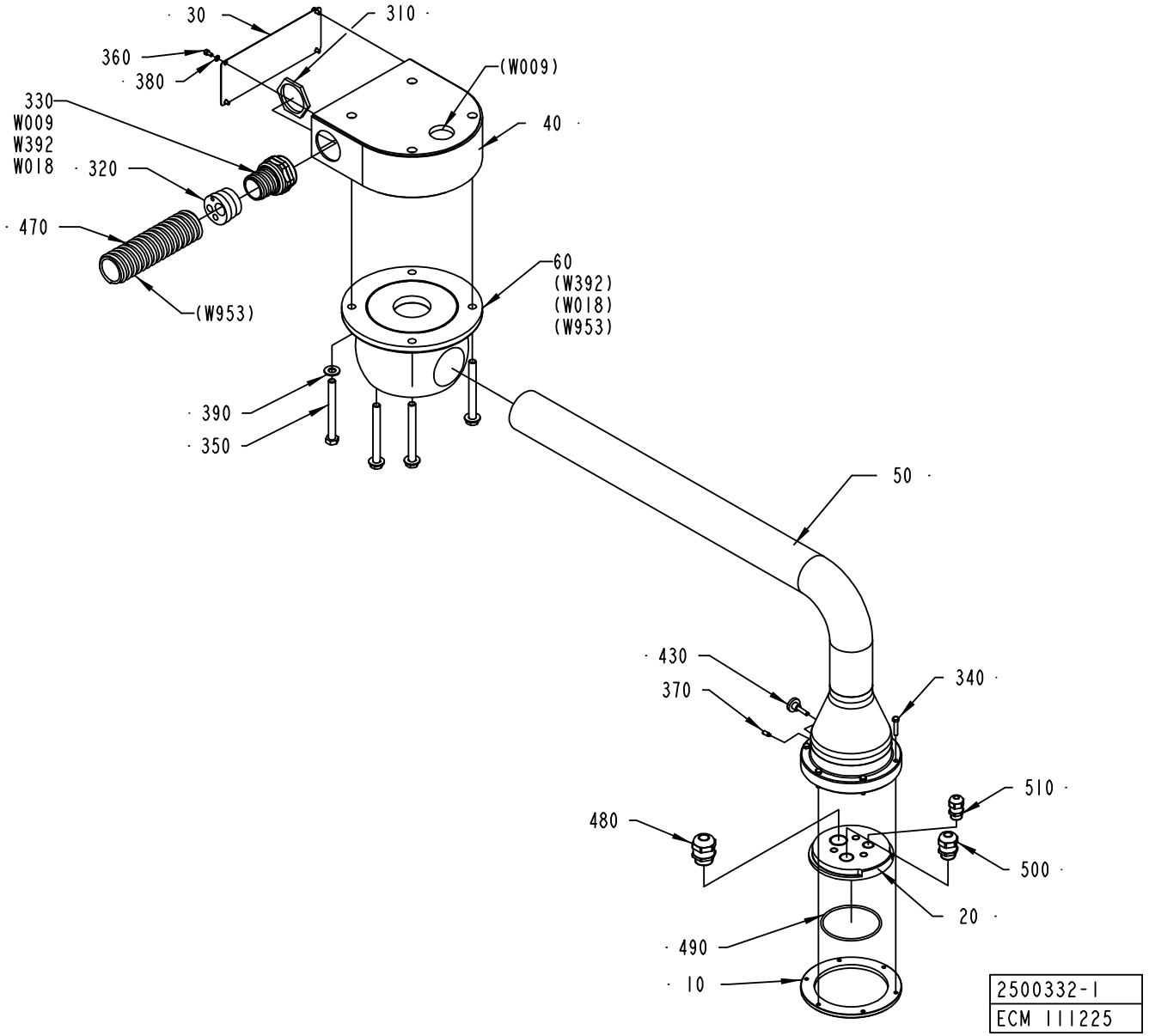
30
310
360
380
(W009)
330
W009
W392
W018
320
40
470
60
(W392)
(W018)
(W953)
(W953)
390
350
50
430
370
340
510
480
500
20
490
10
2500332-1
ECM 111225

ECM: 123048 - 20031001
Group number: 2500332-0100
Assembly Drawing: 2500332-1_1_AC

Pos	Part No	UN	Qty	Description	Page No
-					
010	1558949-0000		1	PLATE	
020	2500261-0000		1	FIXING RING	
030	1539113-0000		1	COVER	
040	2500259-0000		1	BRACKET	
050	2500260-0000		1	ARM	
060	90458-1958		1	ARTICULATION, 300DEG WITH STOP	
310	90099-0085		1	NUT	
320	90457-0029		1	INSERT, MULTI HOLE, E156M5,9,11,19	
330	90457-0031		1	NORMAL WITHOUT INSERT, PG 36	
340	312105-0333		6	SCREW M6S ISO 4017 M5X25 A480	
350	312105-0511		4	SCREW M6S ISO 4014 M10X100 A480	
360	312115-0287		4	SCREW ISO4762 M4X8 A4	
370	312311-0327		1	SCREW ISO4028 M5X12 FZB	
380	315105-0136		4	WASHER BRB4,3XRFR	
390	315105-0173		4	WASHER BRB10,5X22RFR	
430	318860-0106		1	KNOB, ADJUST.HI.EXT.THREAD, NO 8324-3674	
470	90152-0060	M	4	SPIRAL CONDUIT, 42X35, UL3529	
480	90458-0308		1	CABLE GLAND, M25X1,5, NO.5311 1030	
490	315202-0307		1	O-RING 79,5X3 MM	
500	90458-0307		1	CABLE GLAND, M20X1,5, NO.5311 1020	
510	90458-0314		1	CABLE GLAND, M16X1,5, NO.5311 1110	
W009	351150-0406	M	6	CABLE OLFLEX 7X0,75 MM2 LIGHT/GREY	
W018	90458-2557	M	7	CABLE OLFLEX 25X1 MM2	
W392	351162-0106	M	7	CABLE AWM 1X4 MM2 YELLOW-GREEN	

Pos	Part No	UN	Qty	Description	Page No

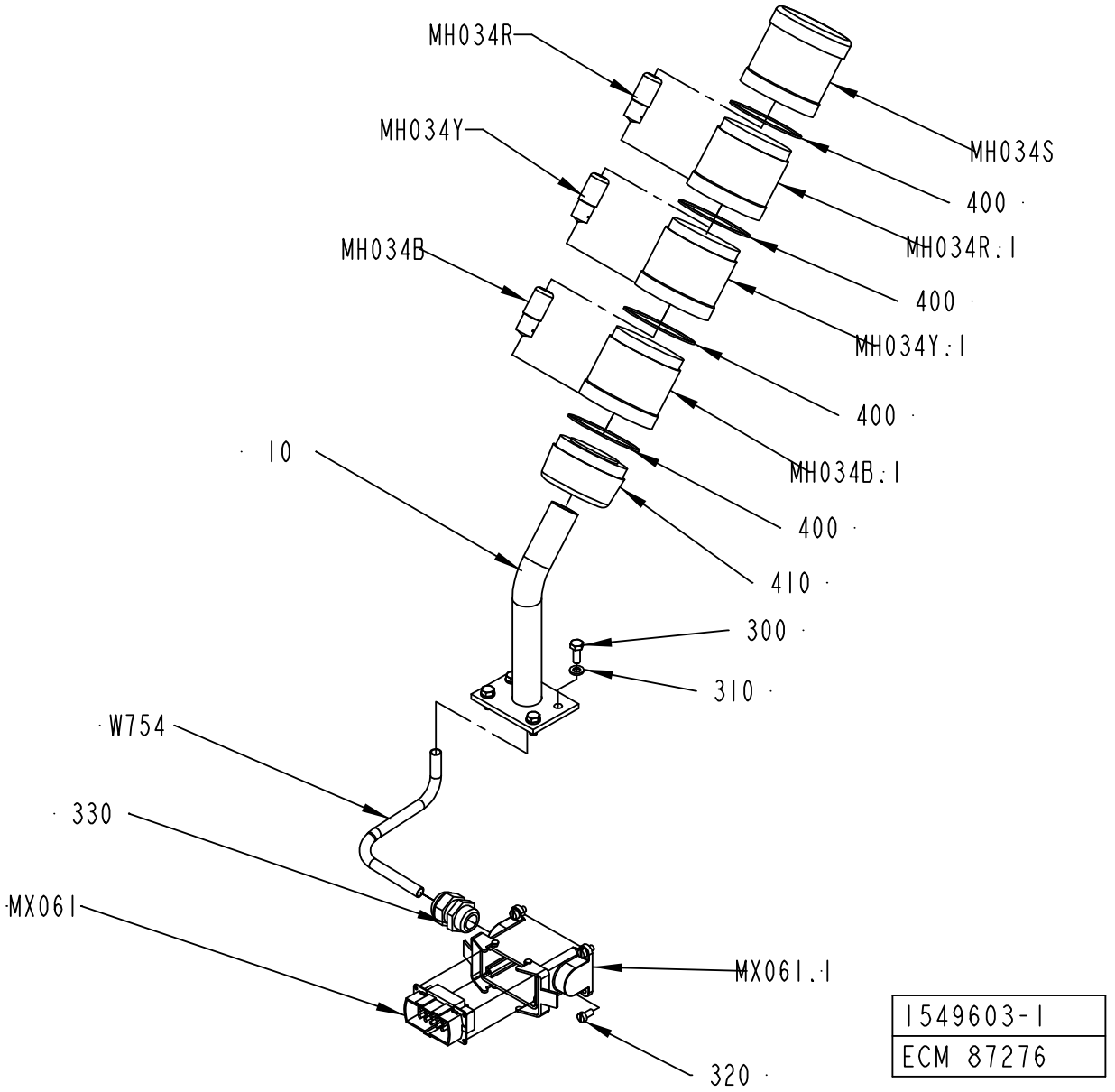

1549603-1
ECM 87276

ECM: 115742 - 20020930
Group number: 1549603-0100
Assembly Drawing: 1549603-1_1_AA

Pos	Part No	UN	Qty	Description	Page No
-					
10	1517248-0000		1	BRACKET	
300	312105-0368		4	SCREW M6S M6X16 A280	
310	315105-0153		4	WASHER BRB6,4X12RFR	
320	312125-0325		4	SCREW ISO 1207 M5X10 A4	
330	352103-0110		1	CABLE GLAND, STR 16, PR22,5/PG16	
400	90419-0307		4	GASKET	
410	90458-0292		1	BASE, KT70-1001	
MH034B	90036-0068		1	BULB 6.5W 24V	
MH034B.1	90458-0295		1	LIGHT ELEMENT, BLUE, KL70-401L	
MH034R	90036-0068		1	BULB 6.5W 24V	
MH034R.1	90458-0293		1	LIGHT ELEMENT, RED, KL70-401R	
MH034S	90458-0302		1	SIREN WITH ADJUSTABLE VOLUME KS 70-3004	
MH034Y	90036-0068		1	BULB 6.5W 24V	
MH034Y.1	90458-0294		1	LIGHT ELEMENT, YELLOW, KL70-401Y	
MX061	90110-0216		1	MALE INSERT 70 310 1040 0	
MX061.1	90458-2418		1	CHASSI HOUSING 10-POLE, 70.331.1028.0	
W754	351150-0406	M	2	CABLE OLFLEX 7X0,75 MM2 LIGHT/GREY	

Pos	Part No	UN	Qty	Description	Page No

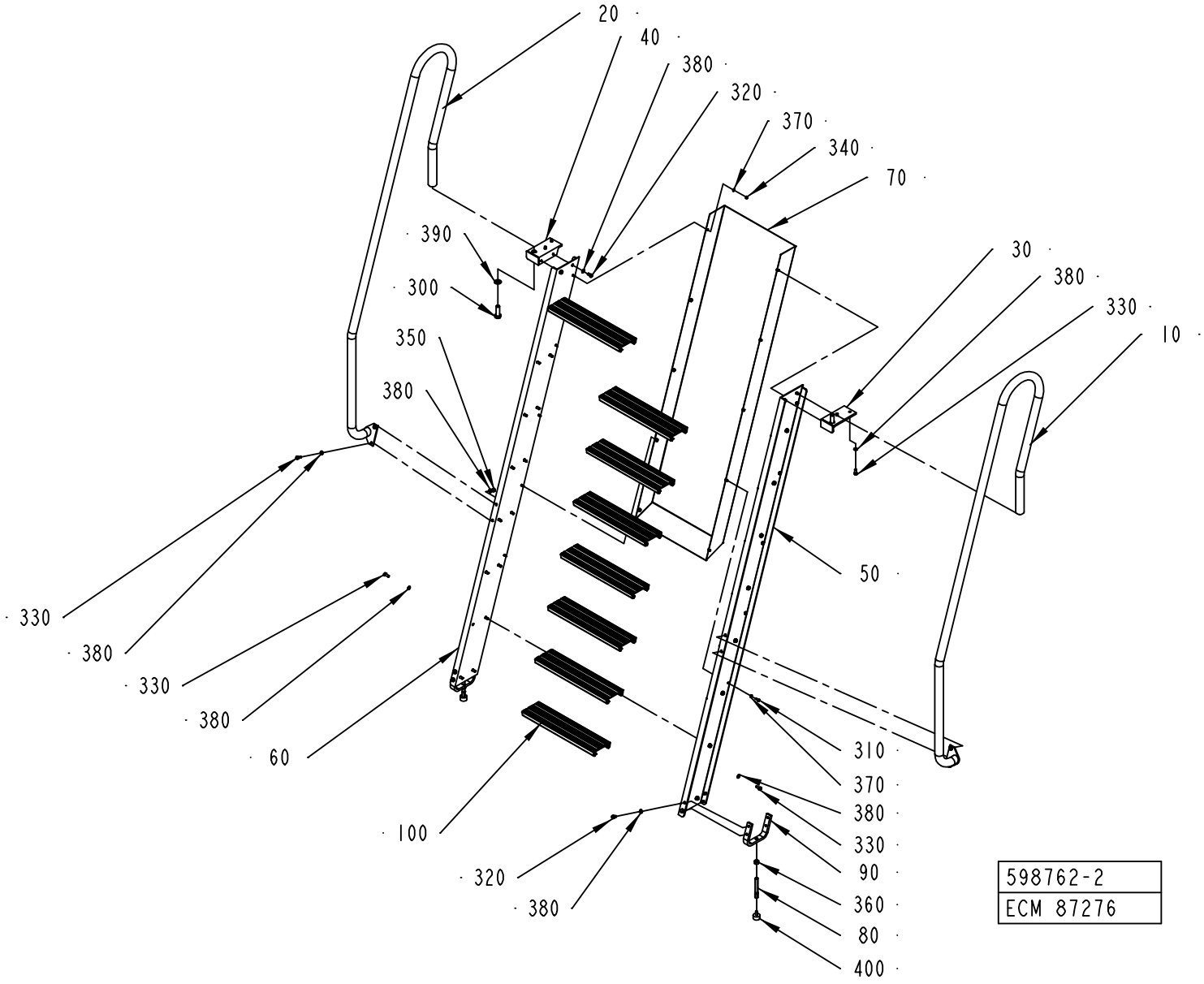
20
40
380
320
370
340
70
390
300
350
380
30
380
330
10
50
330
380
330
380
60
100
320
380
310
370
380
330
90
360
80
400
598762-2
ECM 87276

ECM: 87278 - 20011220
Group number: 598762-0200
Assembly Drawing: 598762-2_1_AA

Pos	Part No	UN	Qty	Description	Page No
-					
010	597874-0000		1	RAIL RIGHT	
020	597875-0000		1	RAIL LEFT	
030	597888-0000		1	BRACKET	
040	597889-0000		1	BRACKET	
050	2527513-0000		1	SIDE PIECE	
060	2527514-0000		1	SIDE PIECE	
070	2514112-0000		1	COVER	
080	441905-0000		2	RETARD PIN	
090	979966-0000		2	BRACKET	
100	441679-0000		8	STAIR	
300	312101-0630		2	SCREW M6S M16X50 FZB	
310	312105-0368		10	SCREW M6S M6X16 A280	
320	312105-0449		12	SCREW M6S ISO 4017 M8X16 A480	
330	312105-0451		40	SCREW M6S ISO 4017 M8X20 A480	
340	312605-0316		10	HEXAGON NUT, M6M M6 A280	
350	312605-0318		4	HEXAGON NUT, M6M M8 A280	
360	312605-0322		2	HEXAGON NUT, M6M M12 A280	
370	315105-0153		20	WASHER BRB6,4X12RFR	
380	315105-0165		56	WASHER BRB8,4X16RFR	
390	315105-0186		2	WASHER BRB17X30RFR	
400	90347-0004		2	VIBRATION DAMPER D=30 TH=M8 H=17 H2=21MM	

Pos	Part No	UN	Qty	Description	Page No

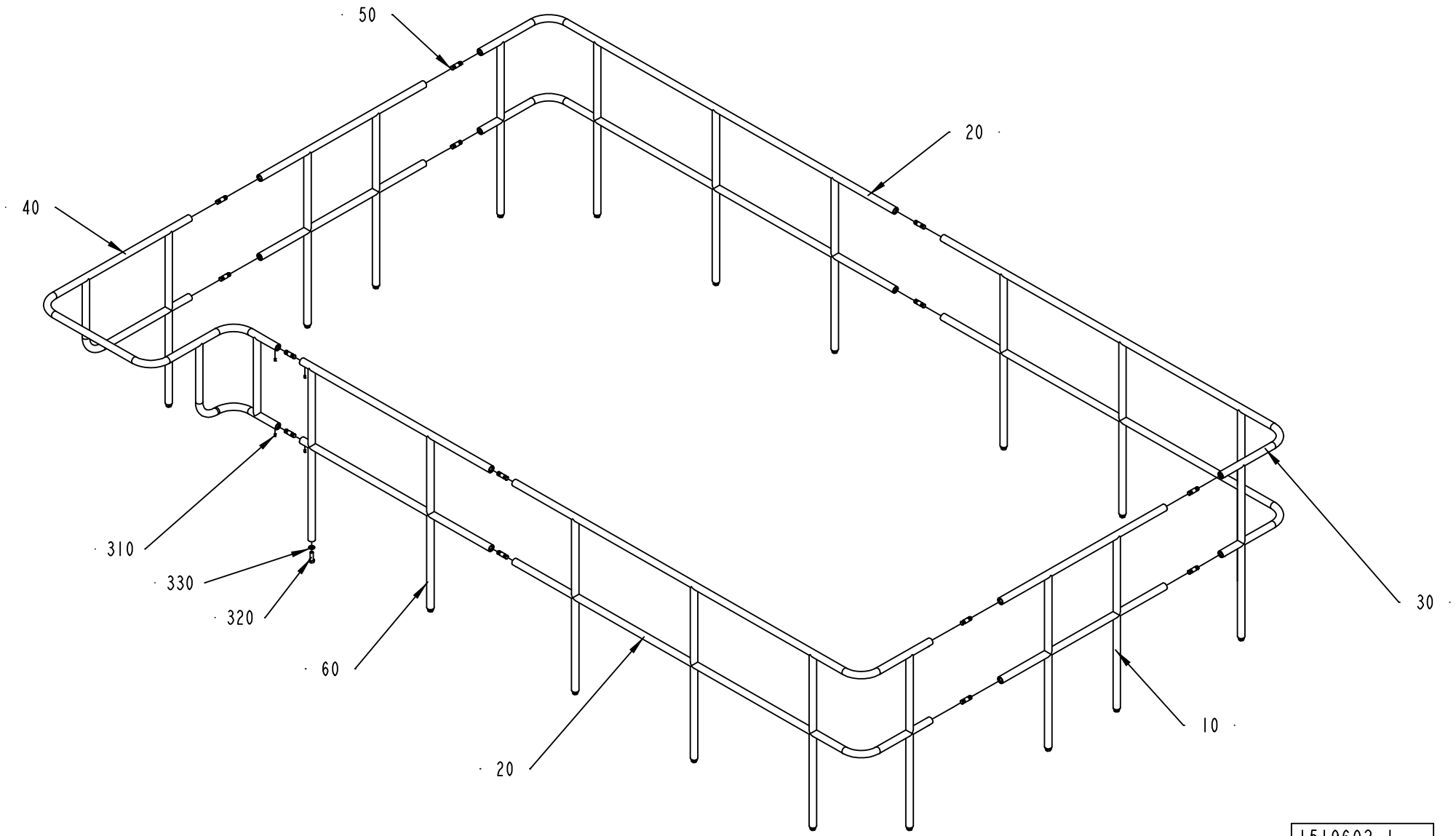

1519602-1
ECM 73437

ECM: 111429 - 20020930
Group number: 1519602-0100
Assembly Drawing: 1519602-1_1_AA

Pos	Part No	UN	Qty	Description	Page No
LEFT					
020	1512636-0000		2	RAILING	
030	1512637-0000		1	RAILING	
040	1512638-0000		1	RAILING	
RIGHT					
020	1512636-0000		1	RAILING	
030	1512637-0000		2	RAILING	
040	2510767-0000		1	RAILING	
Common Parts					
010	1512635-0000		2	RAILING	
050	2555063-0000		14	PIN	
060	1538924-0000		1	RAILING	
310	312318-0447		28	SCREW ISO4029 M8X12 A4	
320	312105-0630		19	SCREW M6S ISO 4017 M16X50 A480	
330	315105-0186		19	WASHER BRB17X30RFR	

Pos	Part No	UN	Qty	Description	Page No

COVER PLATES

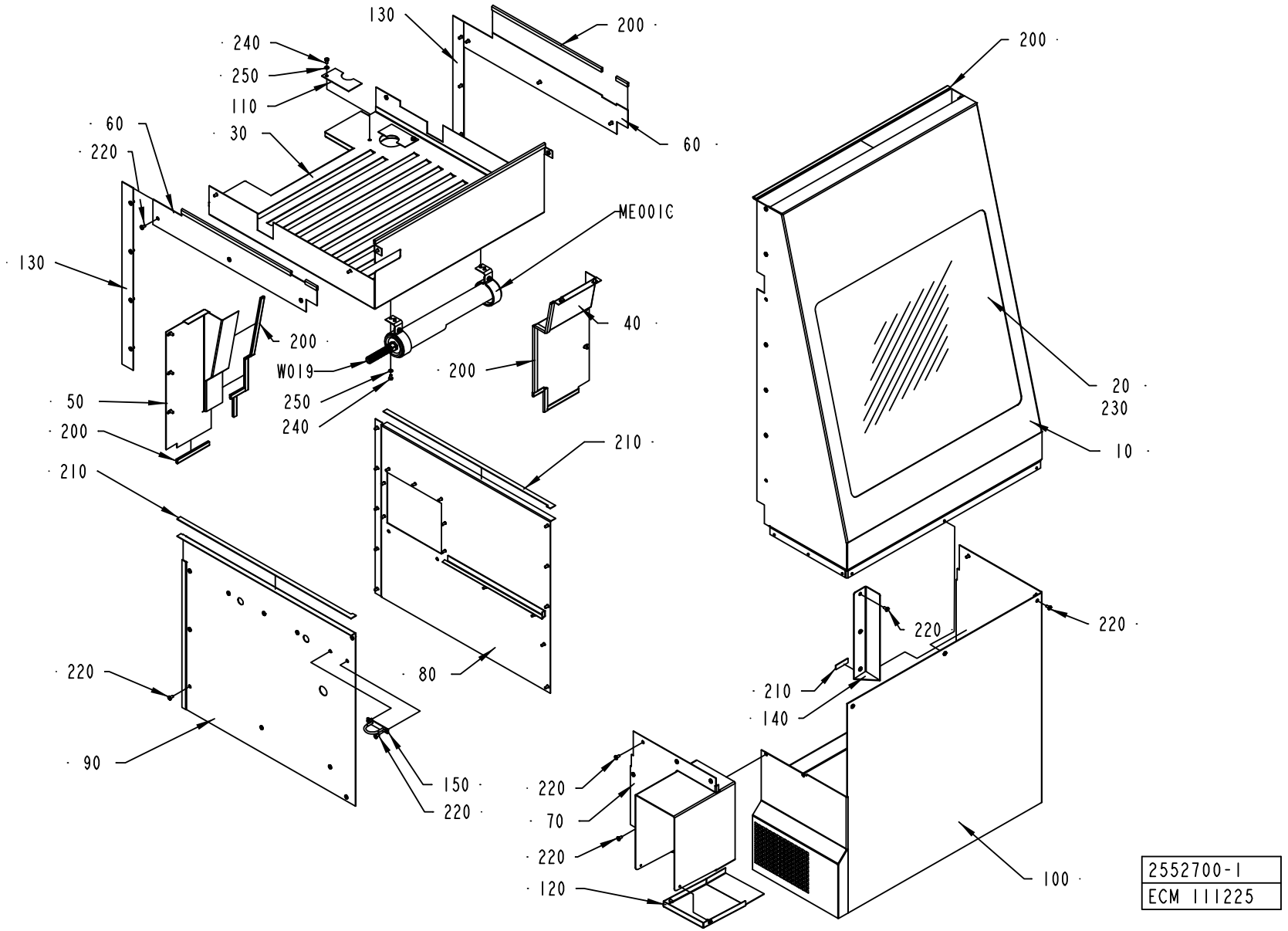

ECM: 123154 - 20031001
Group number: 2552700-0100
Assembly Drawing: 2552700-1_1_AB

Pos	Part No	UN	Qty	Description	Page No
-					
010	2552705-0000		1	FRONT COVER	
020	1549608-0000		1	GLASS PANE	
030	2552701-0000		1	TOP SECTION	
040	2552702-0000		1	COVER	
050	2552703-0000		1	COVER	
060	2552704-0000		2	COVER PLATE	
070	2552710-0000		1	COVER	
080	2552708-0000		1	COVERING PLATE	
090	2552709-0000		1	COVERING PLATE	
100	2552706-0000		1	COVER	
110	2552707-0000		2	COVER PLATE	
120	2552711-0000		1	COVER	
130	2553895-0000		2	COVER	
140	2594128-0000		1	COVER	
150	2594221-0000		1	BOW CLAMP	
200	90143-0059	MM	4500	SEAL STRIP 4610069	
210	90458-0145		1	SEALING, 3X15 MM CLOSED CELL SPONGE	
220	90287-0075		78	SCREW SLOT. PAN HEAD LKCS M6X12	
230	90157-0041		1	SEALING COMPOUND	
240	312105-0364		6	SCREW M6S ISO 4017 M6X10 A480	
250	315105-0153		6	WASHER BRB6,4X12RFR	
ME001C	595430-0200		1	LIGHT FIXTURE	**2-59**
W019	351150-0412	M	6	CABLE OLFLEX 3X1,5 MM2 LIGHT/GREY	

Pos	Part No	UN	Qty	Description	Page No

Machine Type | Group Description | Used-In | Group Number | Page No

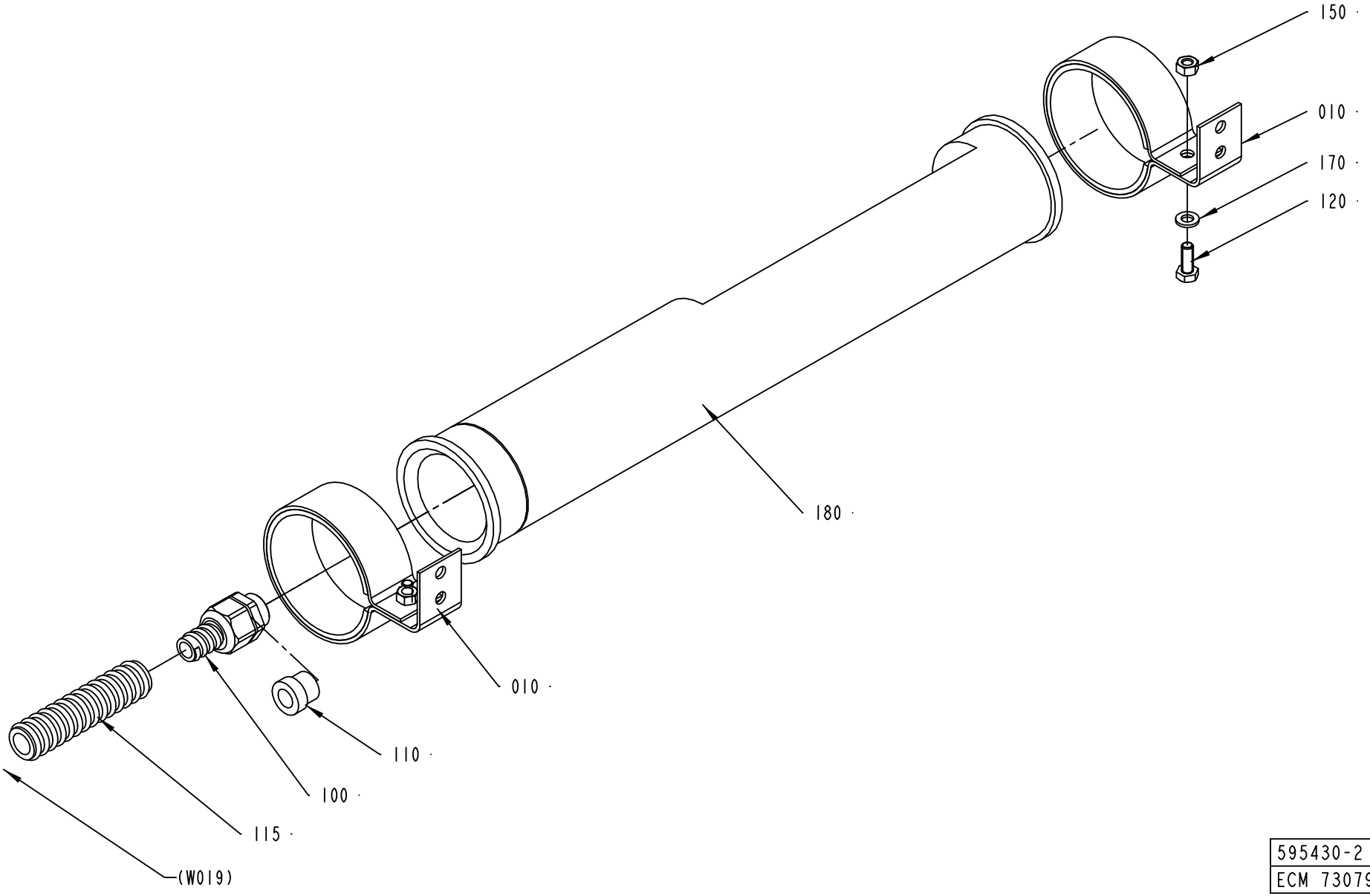

595430-2
ECM 73079

ECM: 115743 - 20020930
Group number: 595430-0200
Assembly Drawing: 595430-2_1_AA

Pos	Part No	UN	Qty	Description	Page No
-					
10	1140129-0000		2	HOLDER	
100	353243-0002		1	EXTENDED WITHOUT INSERT, PG11	
110	353249-0010		1	INSERT, SINGEL HOLE, EK 152/11	
115	90152-0059	MM	2150	SPIRAL CONDUIT, 18X12, UL 1211	
120	312105-0368		2	SCREW M6S M6X16 A280	
150	312605-0316		2	HEXAGON NUT, M6M M6 A280	
170	315105-0153		2	WASHER BRB6,4X12RFR	
180	90164-0015		1	LIGHT FIXTURE, DWDCV111B/230V 50HZ	
	90297-0007		*1*	*FLUORESCENT TUBE, PLS 11*	

Pos	Part No	UN	Qty	Description	Page No

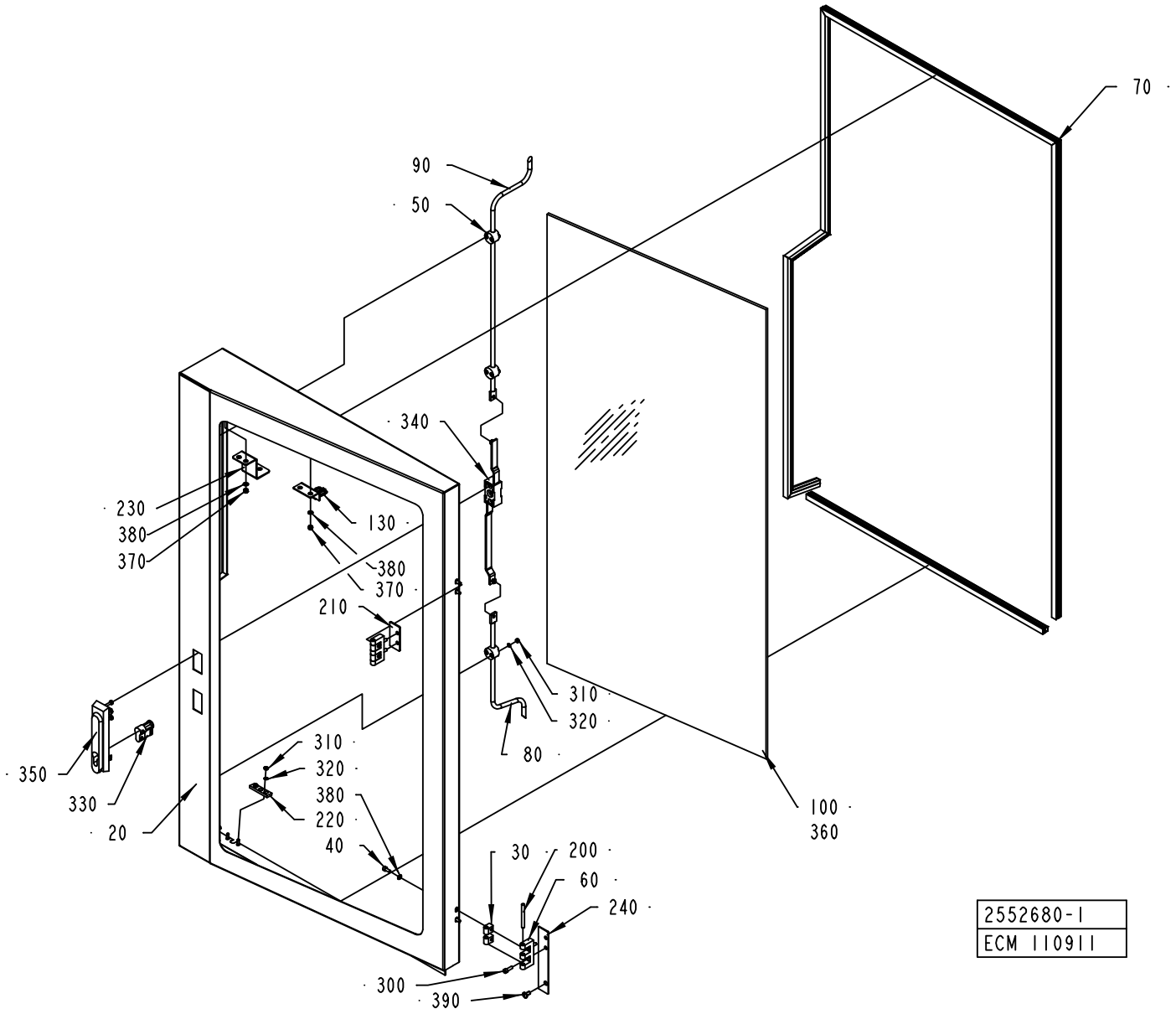
70
90
50
340
230
380
370
130
380
370
210
310
320
80
350
330
20
310
320
380
220
40
100
360
30
200
60
240
300
390
2552680-1
ECM 110911

ECM: 110921 - 20030113
Group number: 2552680-0100
Assembly Drawing: 2552680-1_1_AA

Pos	Part No	UN	Qty	Description	Page No
-					
020	2552691-0000		1	DOOR	
030	1035794-0000		4	BLOCKING PIECE	
040	312115-0327		4	SCREW ISO4762 M5X12 A4	
050	1129274-0000		3	GUIDE LUG	
060	1035792-0000		2	E-HINGE	
070	90143-0068	M	3	RUBBERSTRIP EMKA 1011-06	
080	2552683-0000		1	LOCKING ARM	
090	2552682-0000		1	LOCKING ARM	
100	2552679-0000		1	GLASS PANE	
130	2552686-0000		1	KEY	
200	988685-0000		2	PIN	
210	2552687-0000		1	SPACER	
220	2552688-0000		1	GUIDE BRACKET	
230	2554959-0000		1	GUIDE	
240	2556243-0000		1	SPACER	
300	312115-0329		4	SCREW ISO4762 M5X16 A4	
310	312605-0312		8	HEXAGON NUT, M6M M4 A280	
320	315105-0136		8	WASHER BRB4,3XRFR	
330	90237-0128		1	LOCK CYLINDER, 1109-U3	
340	90237-0153		1	LOCK HOUSING, 1121-U26-0B	
350	90237-0176		1	TURNING HANDLE	
360	90157-0041		1	SEALING COMPOUND	
370	312812-0314		4	HEXAGON NUT, NY-LOCK M5 A480	
380	315105-0146		8	BRICKA BRB5,3X10RFR	
390	90287-0075		1	SCREW SLOT. PAN HEAD LKCS M6X12	

Pos	Part No	UN	Qty	Description	Page No

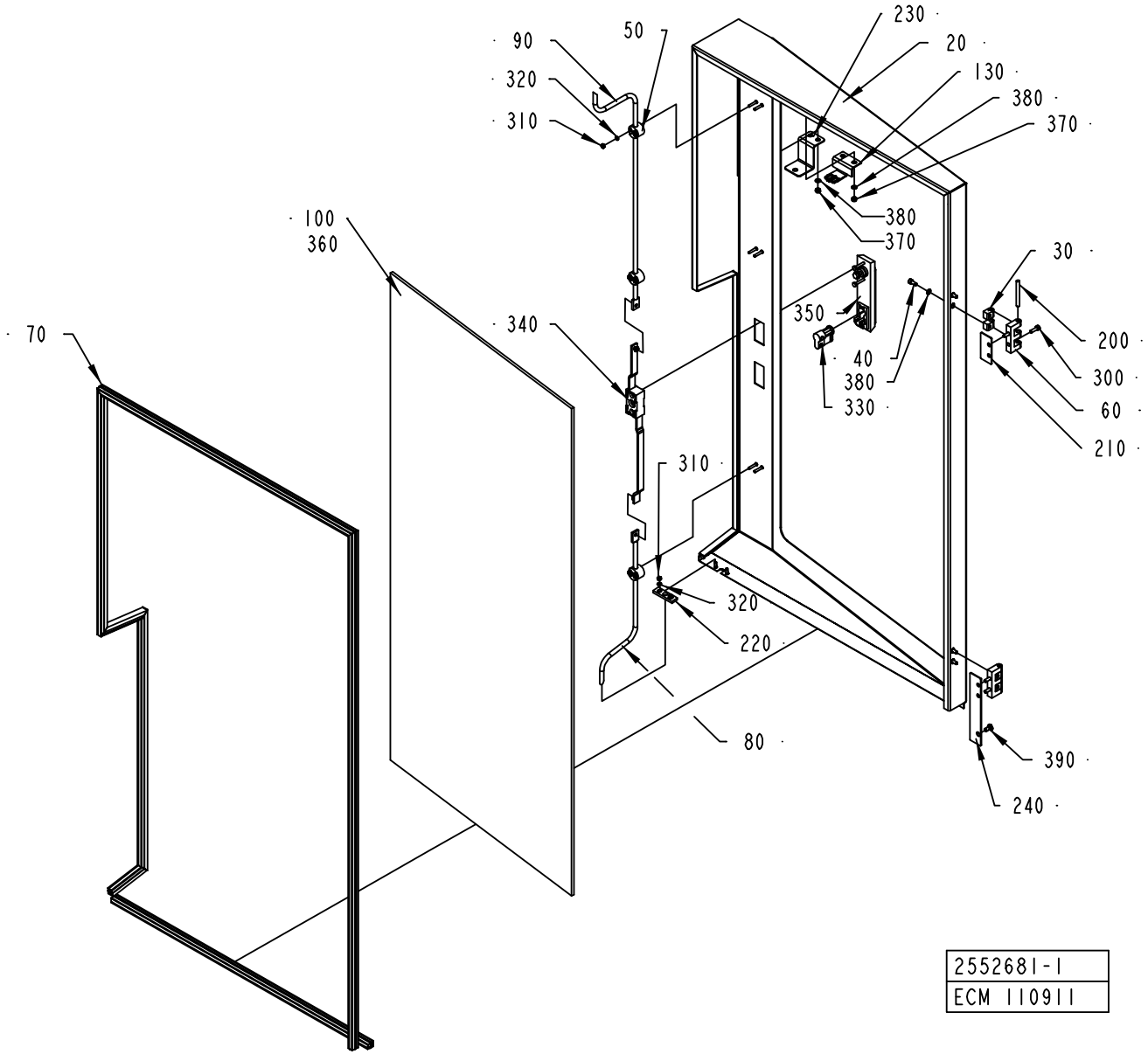
90
320
310
50
230
20
130
380
370
380
370
100
360
30
350
200
40
380
330
300
60
210
340
70
310
320
220
80
390
240
2552681-1
ECM 110911

ECM: 110922 - 20030113
Group number: 2552681-0100
Assembly Drawing: 2552681-1_1_AA

Pos	Part No	UN	Qty	Description	Page No
-					
020	2552692-0000		1	DOOR	
030	1035794-0000		4	BLOCKING PIECE	
040	312115-0327		4	SCREW ISO4762 M5X12 A4	
050	1129274-0000		3	GUIDE LUG	
060	1035792-0000		2	E-HINGE	
070	90143-0068	M	3	RUBBERSTRIP EMKA 1011-06	
080	2552683-0000		1	LOCKING ARM	
090	2552682-0000		1	LOCKING ARM	
100	2552679-0000		1	GLASS PANE	
130	2552686-0000		1	KEY	
200	988685-0000		2	PIN	
210	2552687-0000		1	SPACER	
220	2552688-0000		1	GUIDE BRACKET	
230	2554959-0000		1	GUIDE	
240	2556243-0000		1	SPACER	
300	312115-0329		4	SCREW ISO4762 M5X16 A4	
310	312605-0312		8	HEXAGON NUT, M6M M4 A280	
320	315105-0136		8	WASHER BRB4,3XRFR	
330	90237-0128		1	LOCK CYLINDER, 1109-U3	
340	90237-0153		1	LOCK HOUSING, 1121-U26-0B	
350	90237-0176		1	TURNING HANDLE	
360	90157-0041		1	SEALING COMPOUND	
370	312812-0314		4	HEXAGON NUT, NY-LOCK M5 A480	
380	315105-0146		8	BRICKA BRB5,3X10RFR	
390	90287-0075		1	SCREW SLOT. PAN HEAD LKCS M6X12	

Pos	Part No	UN	Qty	Description	Page No

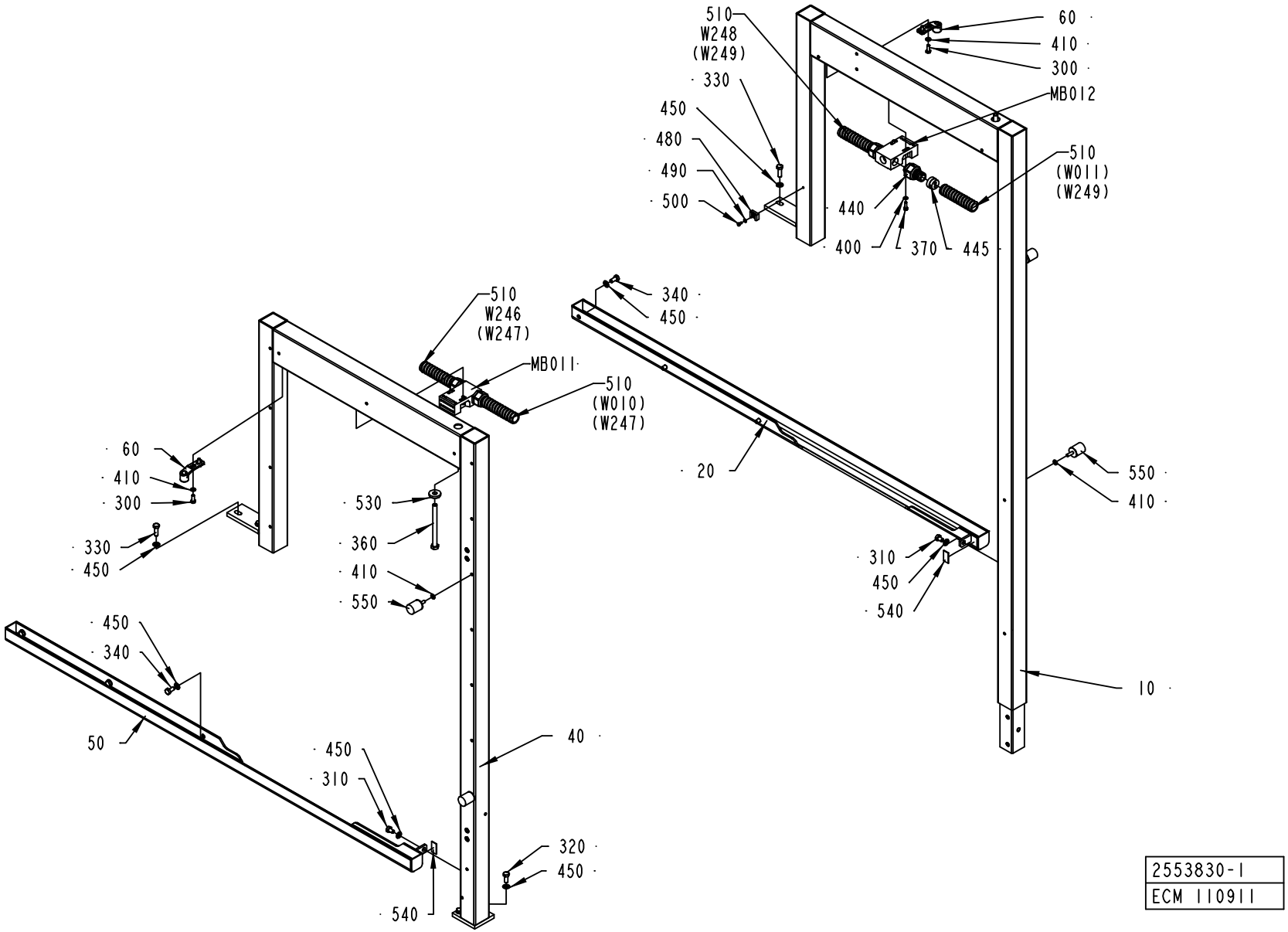

2553830-1
ECM 110911

ECM: 110923 - 20030113
Group number: 2553830-0100
Assembly Drawing: 2553830-1_1_AA

Pos	Part No	UN	Qty	Description	Page No
-					
010	2553831-0000		1	FRAME	
020	2552685-0000		1	CHUTE	
040	2553832-0000		1	FRAME	
050	2552684-0000		1	CHUTE	
060	1538868-0000		2	BRACKET	
300	312105-0368		4	SCREW M6S M6X16 A280	
310	312105-0447		2	SCREW M6S ISO 4017 M8X12 A480	
320	312105-0451		2	SCREW M6S ISO 4017 M8X20 A480	
330	312105-0453		4	SCREW M6S ISO 4017 M8X25 A480	
340	312105-0449		6	SCREW M6S ISO 4017 M8X16 A480	
360	312105-0515		2	SCREW M6S ISO 4014 M10X120 A480	
370	312115-0329		4	SCREW ISO4762 M5X16 A4	
400	315105-0146		4	BRICKA BRB5,3X10RFR	
410	315105-0153		8	WASHER BRB6,4X12RFR	
440	90458-0430		4	EXTENDED WITHOUT INSERT, M20X1,5	
445	90457-0147		4	GLAND, INSERT, MULTI HOLE, 2X7	
450	315105-0165		14	WASHER BRB8,4X16RFR	
480	352113-0204		2	ANCHOR PLATES FOR STRIPS, TYPE TM3S25-M	
490	315105-0136		2	WASHER BRB4,3XRFR	
500	312125-0287		2	SCREW ISO 1207 M4X8 A4	
510	90152-0051	M	6	SPIRAL CONDUIT, 25X18, UL 1816	
530	315125-0173		2	WASHER TBRSB 10,5X28X6 A4	
540	90458-0145		1	SEALING, 3X15 MM CLOSED CELL SPONGE	
550	90459-1060		4	VIBRATION DAMPER, T15688	
MB011	90459-0472		1	KEY SAF.SW. AZ 16 02ZVRK-M20-2152-2254	
MB012	90459-0472		1	KEY SAF.SW. AZ 16 02ZVRK-M20-2152-2254	
W246	351150-0431	M	5	CABLE OLFLEX 2X0,75 MM2 LIGHT/GREY	
W248	351150-0431	M	6	CABLE OLFLEX 2X0,75 MM2 LIGHT/GREY	

Pos	Part No	UN	Qty	Description	Page No

TPOP PANEL 12"

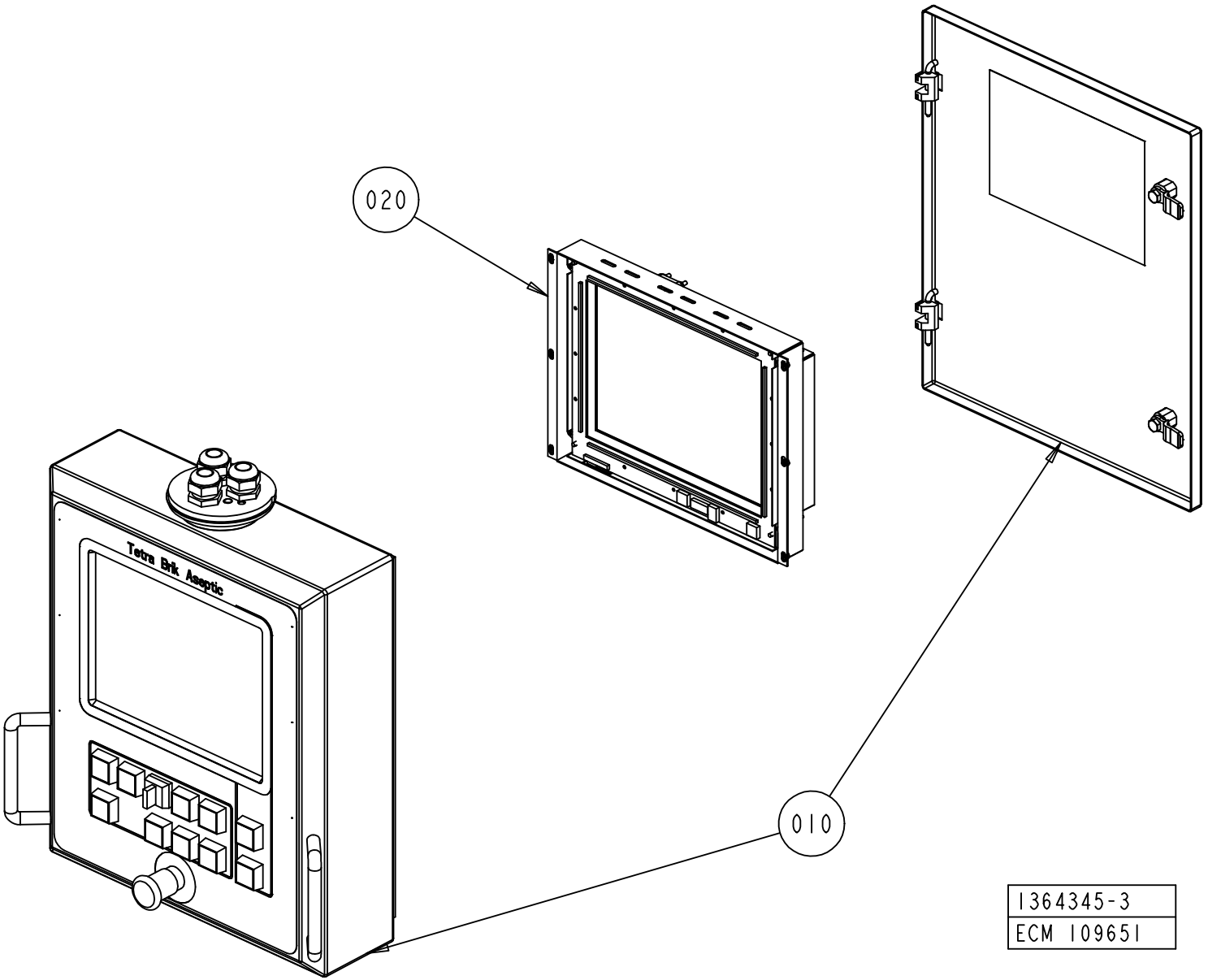

ECM: 120877 - 20021126
Group number: 1364345-0300
Assembly Drawing: 1364345-3_1_AA

Pos	Part No	UN	Qty	Description	Page No
TBA/19-0200					
010	1364346-0302		1	PANEL UNIT 12"	
Common Parts					
020	1348707-0101		1	DISPLAY UNIT 12"	**2-69**

Pos	Part No	UN	Qty	Description	Page No

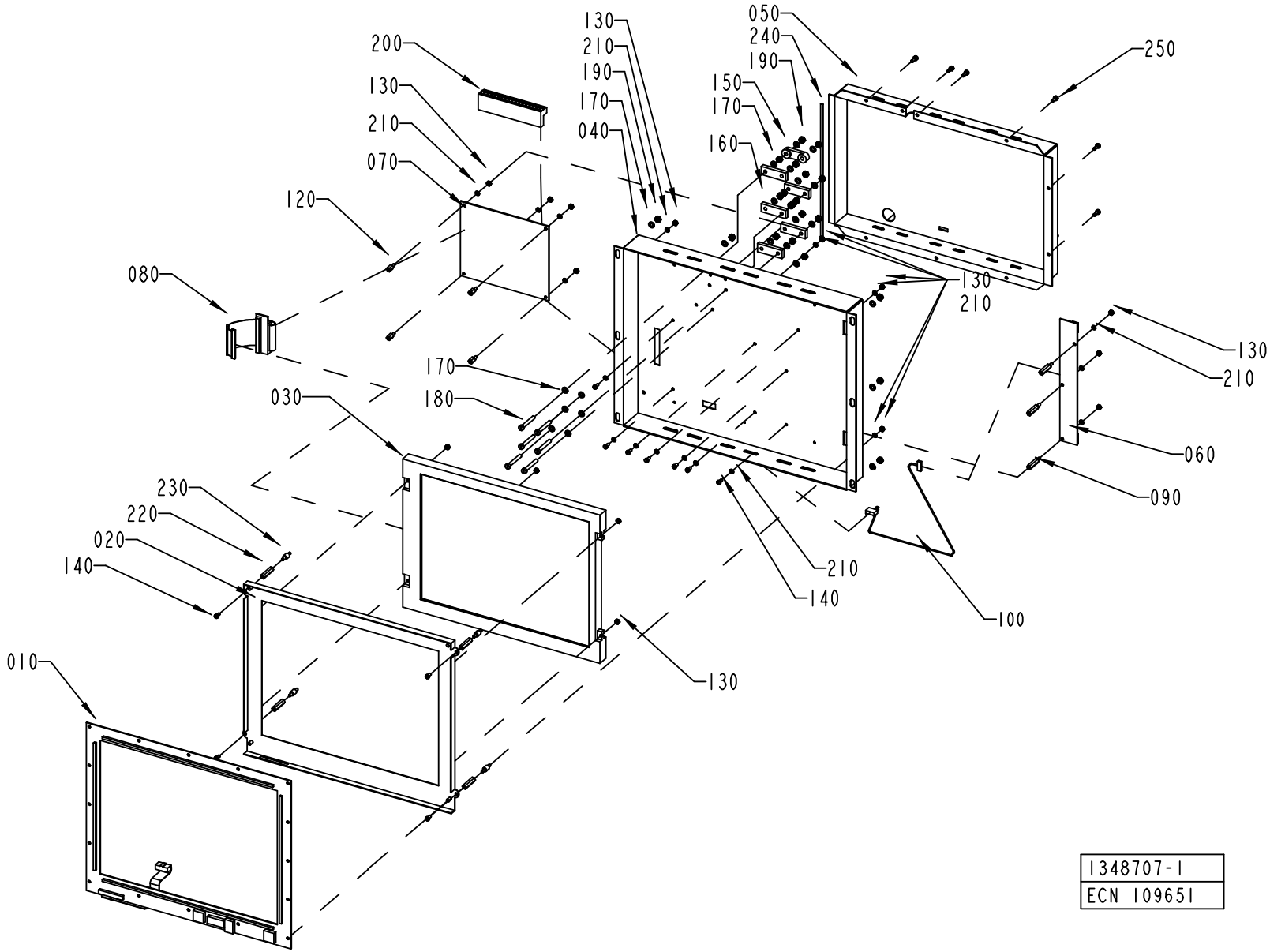
200
130
210
070
120
080
130
210
190
170
040
050
240
190
150
170
160
250
130
210
170
180
030
130
210
060
090
230
220
020
140
010
210
140
100
130
1348707-1
ECN 109651

ECM: 114458 - 20020828
Group number: 1348707-0101
Assembly Drawing: 1348707-1_1_AE

Pos	Part No	UN	Qty	Description	Page No
-					
010	90041-0099		1	IR TOUCH PCB, 12.1" , IRT 12I1-V2.1	
020	90041-0104		1	CHASSIS FOR TOUCH, 12,1" , M0089A39	
030	90041-0093		1	DISPLAY, TOSHIBA 12,1"	
040	1348708-0000		1	COVER PLATE	
050	1348709-0000		1	COVER PLATE	
060	90041-0079		1	ADAPTER BACKLIGHT, 50000007	
070	90041-0078		1	REMOTE COMMUNIKATION LINK BOARD,E000014B	
080	90041-0103		1	DATA CABLE DISPLAY, E000018B	
090	90316-0022		3	SPACER NUT DSNF M3060X20	
100	90041-0082		1	CABLE, DISPLAY POWER, 2223-0022-018	
120	90316-0023		4	SPACER NUT DSM M3055X8	
130	312605-0310		15	HEXAGON NUT, M6M M3 A280	
140	312125-0220		11	SCREW ISO 1207 M3X6 A4	
150	90220-0302		1	CLAMP FOR SCR.CABLE, 16MM, 55-016-89	
160	90220-0304		5	CLAMP FOR SCR.CABLE, 24MM,	
170	315105-0136		24	WASHER BRB4,3XRFR	
180	312125-0299		6	SCREW ISO 1207 M4X30 A4	
190	312605-0312		20	HEXAGON NUT, M6M M4 A280	
200	1129570-0000		1	LDS, LVDS TERMINAL 1	
210	315105-0124		18	BRICKA BRB3,2X6RFR	
220	90316-0029		4	SPACER NUT, M3X16	
230	90316-0030		4	ELASTIC SCREW, 15060002	
240	90144-0074		1	SHIELDING SEAL STRIP EMC, 3,17X3,17 MM	
250	312115-0222		9	SCREW ISO4762 M3X8 A4	

Pos	Part No	UN	Qty	Description	Page No

Tetra Pak

SPC
Spare Parts Catalogue

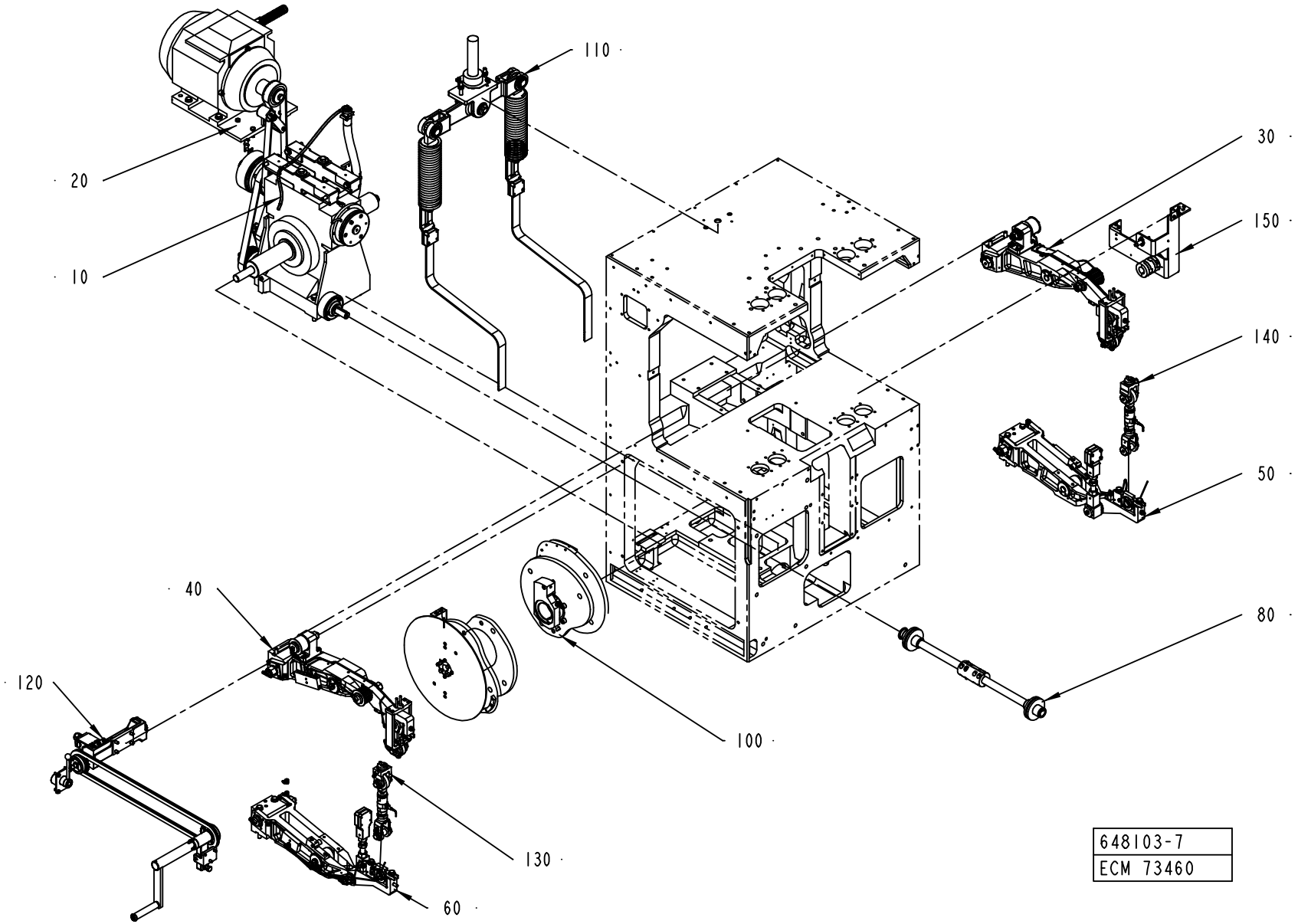
110
20
10
30
150
140
50
80
40
120
100
130
60
648103-7
ECM 73460

ECM: 73460 - 20011220
Group number: 648103-1100
Assembly Drawing: 648103-7_1_AA

Pos	Part No	UN	Qty	Description	Page No
-					
010	256173-0600		1	WORM GEAR	**3-5**
020	1523210-0100		1	MOTOR	**3-7**
030	256197-0500		1	ARM	**3-9**
040	929438-0100		1	ARM	**3-11**
050	491814-0300		1	SLEWING BRACKET RIGHT	**3-13**
060	491815-0300		1	SLEWING BRACKET LEFT	**3-15**
080	256200-0300		1	INTERMEDIARY SHAFT	**3-17**
100	256202-0700		1	CURVE PACK	**3-19, 3-21**
110	2506790-0100		1	HOLD-DOWN DEVICE	**3-23**
120	1512286-0100		1	CRANK	**3-27**
130	1490120-0100		1	DISCONNECTION LINK LEFT	**3-29**
140	1539766-0100		1	DISCONNECTION LINK RIGHT	**3-31**
150	1512284-0100		1	ANGLE ENCODER	**3-33**

Pos	Part No	UN	Qty	Description	Page No

WORM GEAR

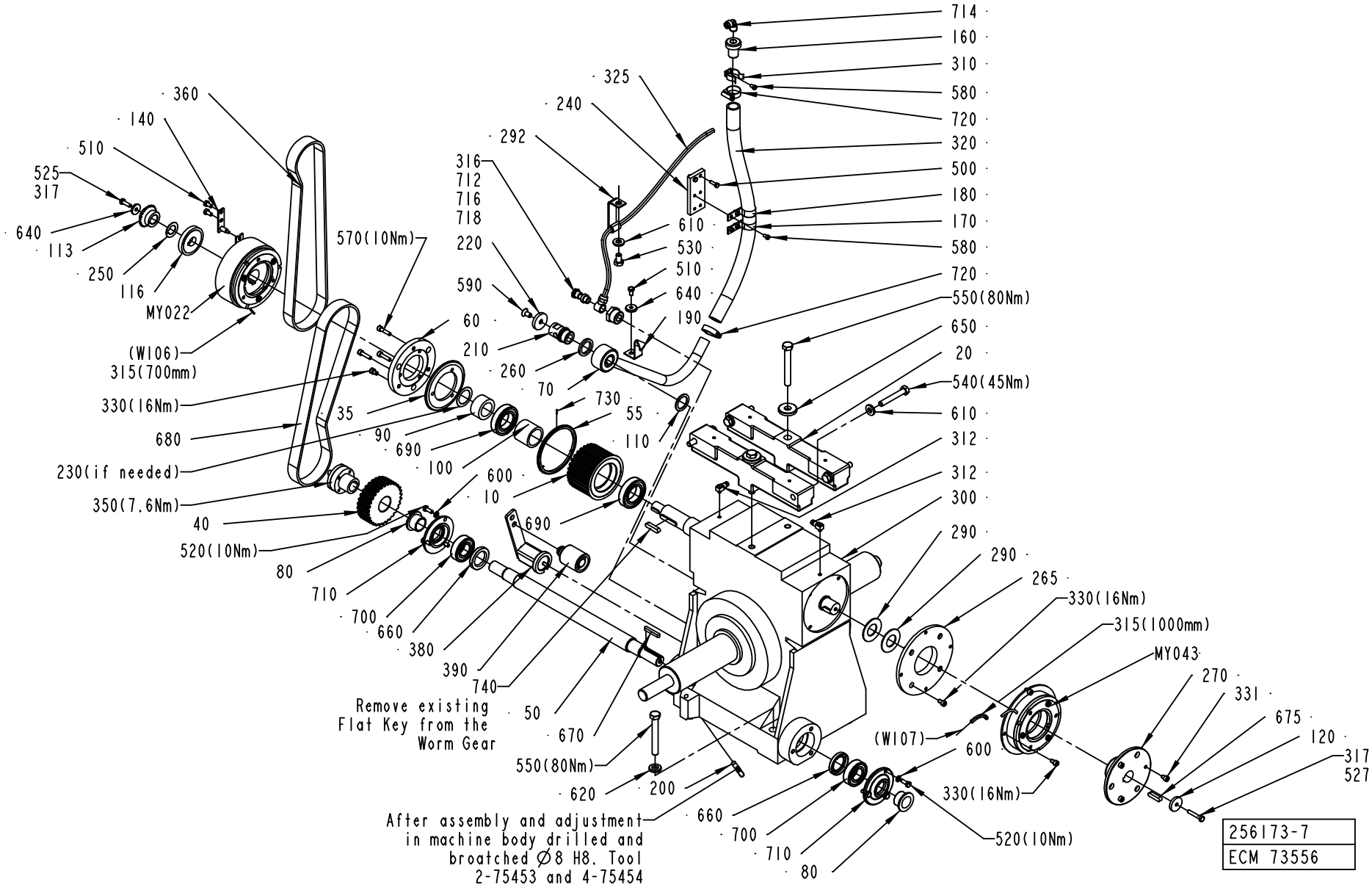
714
160
310
580
720
320
500
180
170
580
720
550(80Nm)
650
20
540(45Nm)
610
312
312
300
290
290
265
330(16Nm)
315(1000mm)
MY043
270
331
675
120
317
527
(W107)
600
330(16Nm)
520(10Nm)
660
700
710
80
620
200
550(80Nm)
670
50
Remove existing Flat Key from the Worm Gear
740
390
380
660
700
710
80
520(10Nm)
40
350(7.6Nm)
230(if needed)
680
330(16Nm)
315(700mm)
(W106)
MY022
116
250
113
640
317
525
510
140
360
570(10Nm)
60
590
220
316
712
716
718
292
240
325
610
530
510
640
190
210
260
70
730
55
110
35
90
690
100
600
10
690
After assembly and adjustment in machine body drilled and broatched Ø8 H8. Tool 2-75453 and 4-75454
256173-7
ECM 73556

ECM: 115563 - 20020930
Group number: 256173-0600
Assembly Drawing: 256173-7_1_AA

Pos	Part No	UN	Qty	Description	Page No
-					
010	1524018-0000		1	TIMING BELT PULLEY	
020	441356-0000		2	BRACKET	
035	751245-0000		1	FLANGE	
040	256176-0000		1	GEAR WHEEL	
050	256177-0000		1	SHAFT	
055	2518410-0000		1	FLANGE	
060	256178-0000		1	FIXING RING	
070	272372-0000		1	HOUSE	
080	256179-0000		2	SPACER SLEEVE	
090	2527651-0000		1	SPACER	
100	256181-0000		1	SPACER PIPE	
110	257174-0000		1	SEALING WASHER	
113	257179-0000		1	GEAR WHEEL	
116	491409-0000		1	WASHER	
120	271689-0000		1	WASHER	
140	2527652-0000		1	ARM	
160	272376-0000		1	SHUTTER	
170	272377-0001		1	CRAMP	
180	272377-0002		1	CRAMP	
190	272388-0000		1	CRAMP	
200	295140-0000		2	PIN	
210	295766-0000		1	SCREW	
220	295767-0000		1	SEALING WASHER	
230	441024-0000		1	LACE	
240	441360-0000		1	PLATE	
250	491410-0000		1	LACE	
260	456934-0000		1	SEALING WASHER	
265	469999-0000		1	FLANGE	
270	491274-0000		1	HUB	
290	90016-0010		2	DISC SPRINGS,50X25,4X2	
292	469867-0000		1	HOSE HOLDER	
300	90457-0151		1	WORM GEAR UCZ 151 SIZE 125 39:1	
310	90074-0026		1	PIPE CLIP FOR TUBE D=24-35 MM	
312	90134-0058		2	CONNECTION	
315	90142-0005	MM	1500	HOSE	
316	90144-0073	MM	1	TREBOFLON-TAPE W=13MM	
317	90157-0016	ML	1	LOCKING FLUID	
320	90166-0060	MM	530	HOSE 19/26-27 REINF.PVC	
325	90166-0133	MM	500	TUBE 8 MM PA,TRANSP.	
330	90287-0081		11	SCREW MC6S M6X10 129	
331	312115-0362		6	SCREW ISO4762 M6X8 A4	
334	90296-0068	G	1	GREASE UNIWAY LI62 CARTRID.400GR	
336	90296-0075	L	4	OIL 54322-320 ACC TO M 1254.322	
350	90208-0120		1	CONE CLAMP. ELEMENT 22/32, L=25	
360	90417-0076		1	TIMING BELT T10X920X25 POLYURETH	
380	90457-0127		1	TENSIONER, TYPE SE-F-15	
390	90457-0128		1	CLAMPING ROLL	
500	312101-0329		2	SCREW M6S M5X16 FZB	
510	312101-0366		3	SCREW M6S M6X12 FZB	
520	312101-0368		6	SCREW M6S M6X16 FZB	
525	312101-0370		1	SCREW M6S M6X20 FZB	
527	312101-0376		1	SCREW M6S M6X35 FZB	
530	312101-0489		1	SCREW M6S M10X16 FZB	
540	312101-0504		4	SCREW M6S M10X65 FZB	
550	312101-0550		6	SCREW M6S M12X90 FZB	
570	312115-0372		3	SCREW ISO4762 M6X25 A4	
580	312121-0323		5	SCREW ISO 1207 M5X8 4.8 - 5.8 Z.PL.	
590	312155-0449		1	SCREW EN 10642 MF6S M8X16 A480	
600	315101-0153		6	WASHER PLAIN, BRB, 6,4/12 H=1,5	
610	315111-0173		5	WASHER PLAIN, TBRB 10,5/22 H=4	
620	315111-0178		4	WASHER PLAIN, TBRB 13/24 H=4	
640	315121-0153		2	WASHER PLAIN, TBRSB 6,4/22 H=4	
650	315121-0178		2	WASHER PLAIN, TBRSB 13/36 H=6	
660	315221-0169		2	RADIAL SEAL 30X47X7 MM	
670	315701-0239		1	PARALLEL KEY W. ROUND ENDS 6X6X40 MM	
675	315701-0268		1	PARALLEL KEY W. ROUND ENDS 8X7X32 MM	
680	90458-1591		1	TIMING BELT T10X1000X25 POLYURETHANE	
690	321308-0207		2	BALL BEARING, 35X62X14 MM	
700	321313-0105		2	BALL BEARING, 25X52X15MM	
710	321600-0114		2	SEAL COVER LL3052	
712	342701-0208		1	BUSHING, INT/EXT. G-THREAD NO. 3/4-1/4	
714	342930-0122		1	ELBOW 90 COUPL.,EXT.THREAD 8/6-R1/4"	
716	342980-0122		1	BANJO-CONNECTION,RING 8/6-G1/4"	
718	342980-0304		1	BANJO-HOLLOW BOLT COUPL,EXT.THR.01-G1/4"	
720	342991-0104		2	HOSE CLIP,WORM DRIVE TYPE (23)-27	
730	311102-0153		3	PARALLEL PIN ISO 2338 1,5M6X10 ST	
740	315705-0269		1	PARALLEL KEY W. ROUND ENDS 8X7X35 MM	
MY022	90458-2200		1	ELECTROMAGNETIC CLUTCH, 30 MM/24 VDC	
MY043	90432-0023		1	BRAKE ORTLINGHAUS	

Machine Type	Group Description	Used-In	Group Number	Page No

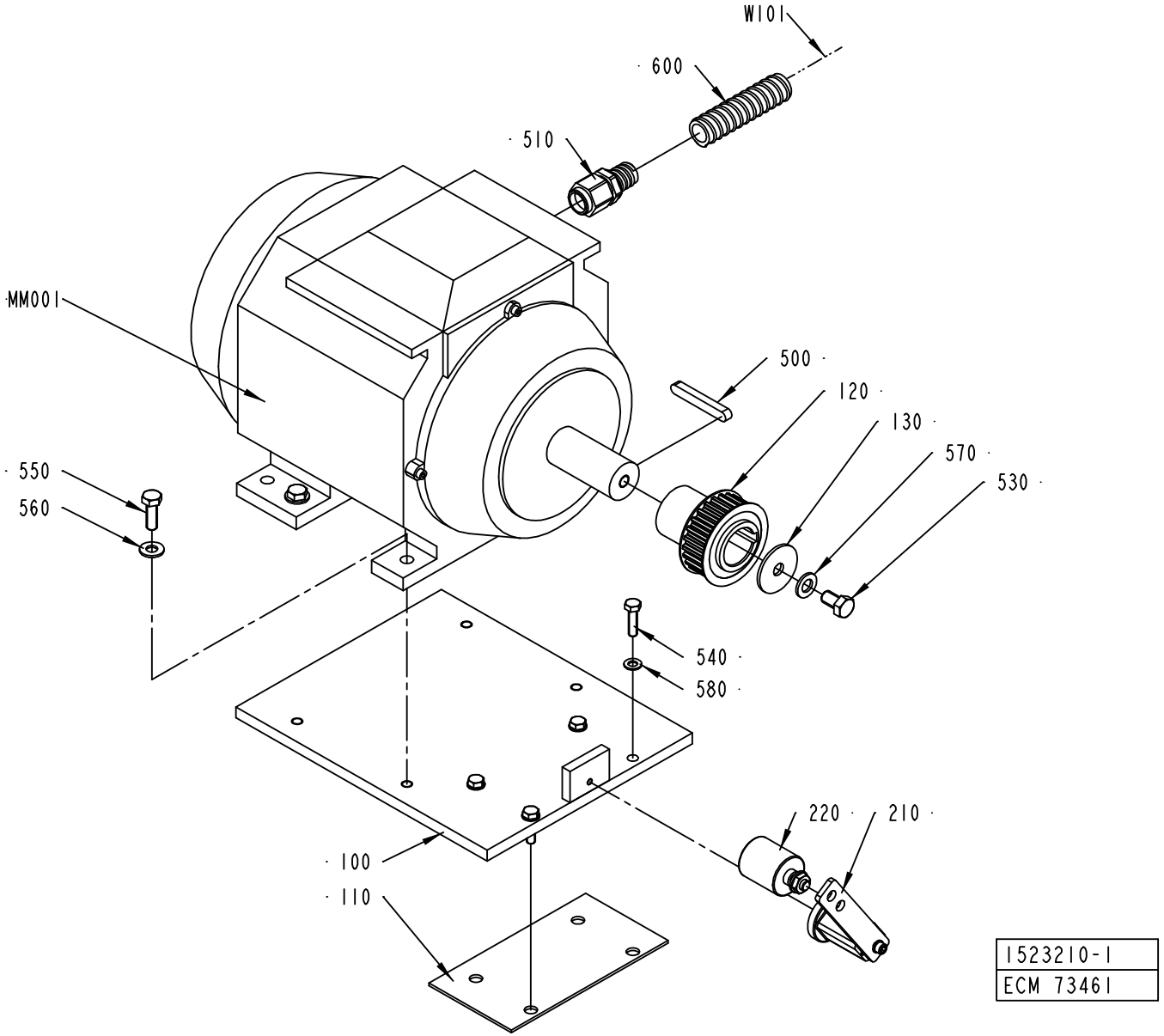
W101
600
510
MM001
500
120
130
570
530
550
560
540
580
220
210
100
110
1523210-1
ECM 73461

ECM: 115435 - 20020930
Group number: 1523210-0100
Assembly Drawing: 1523210-1_1_AA

Pos	Part No	UN	Qty	Description	Page No
-					
100	1517230-0000		1	BRACKET	
110	1517231-0000		1	RUBBER SHIM	
120	1523215-0000		1	TIMING PULLEY	
130	1523211-0000		1	WASHER	
210	90457-0127		1	TENSIONER, TYPE SE-F-15	
220	90457-0128		1	CLAMPING ROLL	
500	315705-0307		1	PARALLEL KEY W. ROUND ENDS 10X8X70 MM	
510	90458-0450		1	GLAND, M25X1,5, NO. 2255416S08UL16	
530	312105-0532		1	SCREW M6S ISO 4017 M12X20 A480	
540	312105-0455		4	SCREW M6S ISO 4017 M8X30 A480	
550	312105-0495		4	SCREW M6S ISO 4017 M10X30 A480	
560	315105-0173		4	WASHER BRB10,5X22RFR	
570	315105-0178		1	WASHER BRB13X24RFR	
580	315105-0165		4	WASHER BRB8,4X16RFR	
600	90152-0051	MM	2200	SPIRAL CONDUIT, 25X18, UL 1816	
MM001	90457-0172		1	MOTOR 3GAA 131001-ASA	
W101	90220-0105	M	6	SCR. CABLE 4X2,5MM2	

Pos	Part No	UN	Qty	Description	Page No

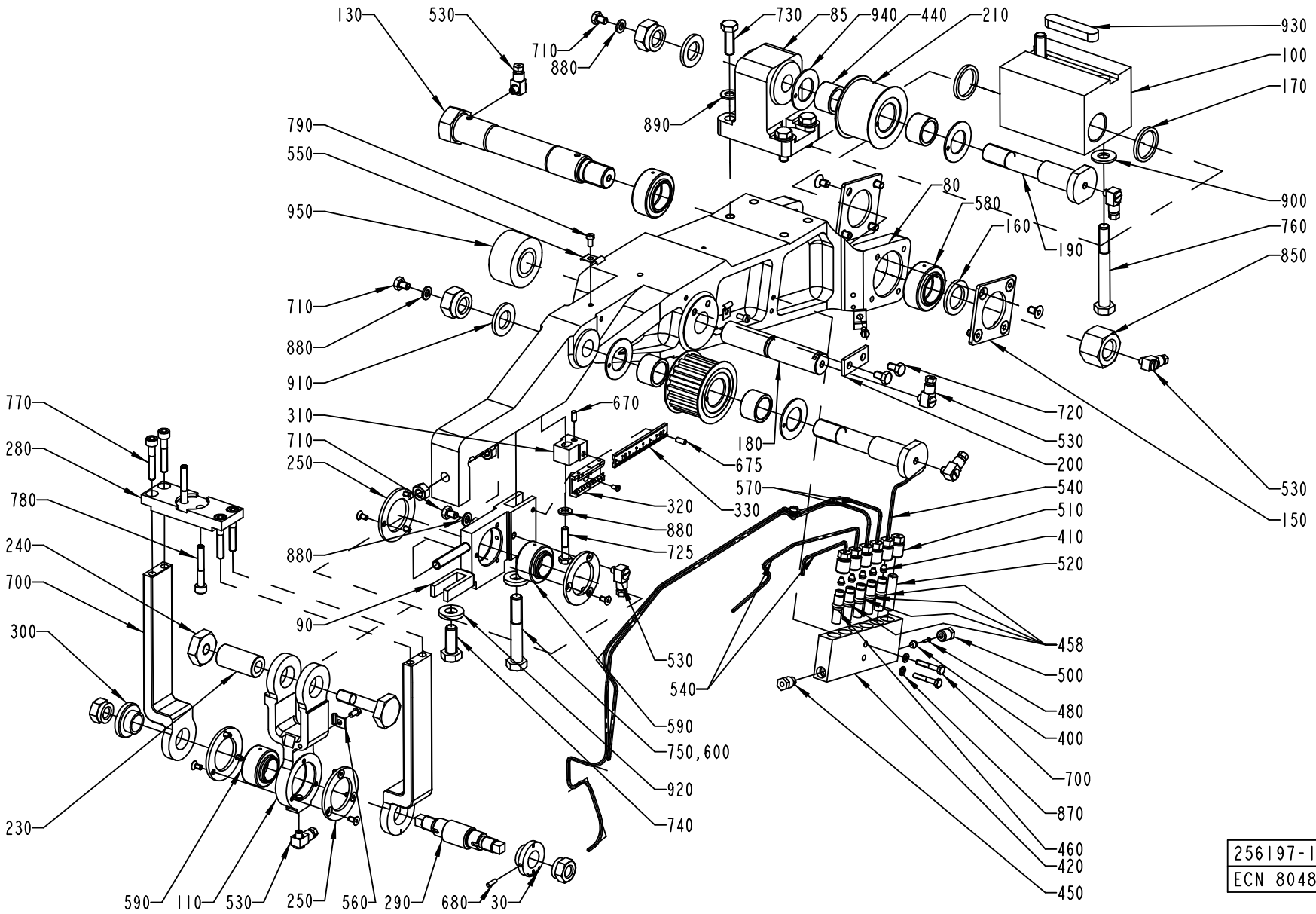

256197-19
ECN 80488

ECM: 115427 - 20020930
Group number: 256197-0500
Assembly Drawing: 256197-19_1_AA

Pos	Part No	UN	Qty	Description	Page No
-					
030	272459-0000		1	WASHER	
080	751212-0000		1	ARM	
085	272442-0000		1	CANTILEVER	
090	978275-0000		1	BEARING HOLDER	
100	272455-0000		1	BEARING BRACKET	
110	272456-0000		1	LINK	
120	272457-0000		2	BOW CLAMP	
130	295770-0000		1	AXLE BOLT	
140	256421-0000		1	PULLEY	
150	256422-0000		2	WASHER	
160	256426-0001		1	WASHER	
170	256426-0002		2	WASHER	
180	256427-0000		1	SHAFT	
190	490916-0000		2	AXLE PIN	
200	256472-0000		1	WASHER	
210	257306-0000		1	ROLL	
220	257308-0000		1	SCREW	
230	257309-0000		1	SHAFT	
240	257310-0000		1	NUT	
250	257311-0000		4	CAP	
280	272116-0000		1	CAP	
290	272458-0000		1	ECCENTRIC SHAFT	
300	272461-0000		1	WASHER	
310	978272-0000		1	BRACKET	
320	1484792-0000		1	SCALE	
330	1484791-0000		1	SCALE	
400	90028-0021		1	CONE TUBE 4 MM	
410	90028-0020		5	CONE TUBE 2,5MM	
420	90032-0040		1	BLOCK 6 WAYS	
440	321531-0248		4	NEEDLE SLEEVE W/O CONE, 20X26X16 MM	
450	90087-0019		1	PLUG M10X1 STAINLESS	
458	90092-0052		4	METERING VALVE 10 MM3	
460	90092-0053		1	METERING VALVE 30 MM3	
480	90134-0031		1	SLEEVE FOR PLASTIC TUBE	
500	90134-0038		1	BUSHING/NUT INLET/OUTLET 4 MM	
510	90134-0039		6	BUSHING VALVE CONNECTION 2,5 MM	
520	90134-0052		1	PLUG DOSING BLOCK	
530	90134-0058		7	CONNECTION	
540	90266-0019	MM	550	PIPE	
550	90165-0002		3	CLIP	
560	90165-0022		2	PIPE CLIP, FOR TUBE D=2,5 MM, B-3570	
570	90166-0143	MM	1100	TUBE 2,5 MM PA,TRANSP.	
580	90240-0048		2	PLAIN BEAR,SELF ADJ.SPHER. 25X42X20 MM	
590	90240-0050		2	PLAIN BEAR,SELF ADJ. 20X35X24	
600	90157-0016		1	LOCKING FLUID	
670	311101-0267		1	PARALLEL PIN ISO 8734 4H6X10 ST	
675	311103-0267		1	PARALLEL PIN ISO 2338 4M6X10 A1	
680	311303-0234		1	SLOTTED PIRPB3X12FZB	
700	312101-0297		2	SCREW M6S M4X25 FZB	
710	312101-0362		3	SCREW M6S M6X8 FZB	
720	312101-0364		2	SCREW M6S M6X10 FZB	
725	312105-0374		1	SCREW M6S ISO 4014 M6X30 A480	
730	312101-0453		4	SCREW M6S M8X25 FZB	
740	312101-0493		1	SCREW M6S M10X25 FZB	
750	312101-0504		1	SCREW M6S M10X65 FZB	
760	312101-0507		2	SCREW M6S M10X80 FZB	
770	312111-0376		4	SCREW HEX.SOCK.HD.MC6S-TT 6X35 88 FZB	
780	312111-0378		2	SCREW HEX.SOCK.HD.MC6S-TT 6X40 88 FZB	
790	312121-0287		5	SCREW ISO 1207 M4X8 4.8 - 5.8 Z.PL.	
795	312145-0220		1	SCREW ISO 2009 MFS M3X6 A4	
800	312151-0287		12	SCREW EN 10642 MF6S M4X8 10.9 EL.PL	
810	312151-0364		8	SCREW EN 10642 MF6S M6X10 10.9 EL.PL	
820	312601-0318		2	NUT M6M8FZB	
830	312811-0322		2	NUT HEX.LOCK HELI COIL MID GRIP M12 SS	
840	312811-0324		2	NUT HEX.LOCK HELI COIL MID GRIP M16 SS	
850	312811-0326		1	NUT HEX.LOCK HELI COIL MID GRIP M20 SS	
870	315101-0136		2	BRICKA BRB, 4,3/8 H=0,8	
880	315101-0153		4	WASHER PLAIN, BRB, 6,4/12 H=1,5	
890	315101-0165		4	WASHER PLAIN, BRB, 8,4/16 H=1,5	
900	315101-0173		2	WASHER PLAIN, BRB, 10,5/22 H=2	
910	315101-0186		2	WASHER PLAIN, BRB, 17/30 H=3	
920	315111-0173		2	WASHER PLAIN, TBRB 10,5/22 H=4	
930	315701-0335		1	PARALLEL KEY W. ROUND ENDS 12X8X56 MM	
940	321129-0137		4	THRUST WASHER, 22/38X1,5	
950	321576-0260		1	BEARING ROLLER, 20X47X25 MM	

Machine Type | Group Description | Used-In | Group Number | Page No

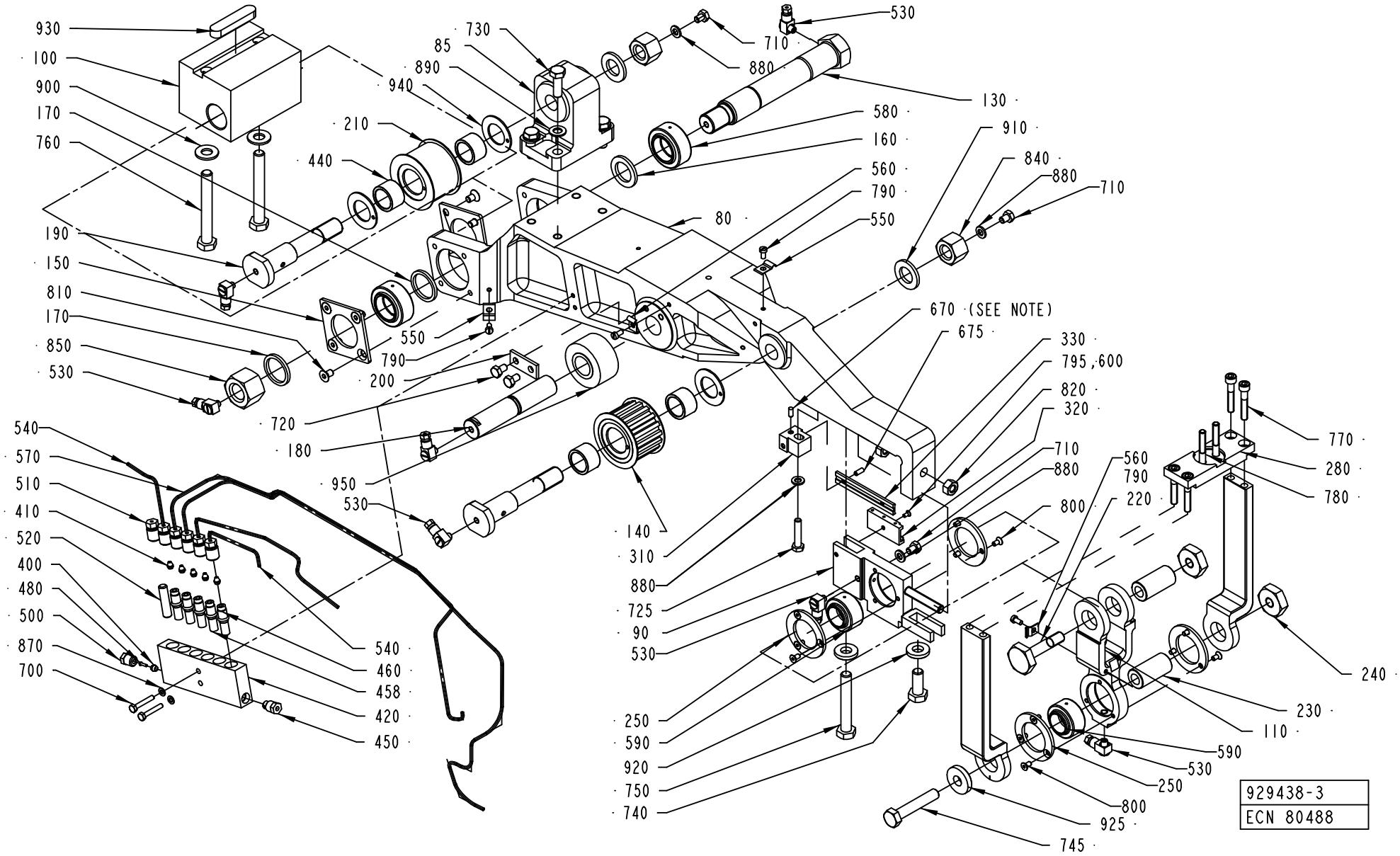
930
100
900
170
760
730
85
890
940
210
440
190
150
810
170
850
530
550
790
200
720
180
950
530
540
570
510
410
520
400
480
500
870
700
540
460
458
420
450
530
710
880
130
580
160
560
790
550
80
910
840
880
710
670 (SEE NOTE)
675
330
795,600
820
320
710
880
800
140
310
880
725
90
530
250
590
920
750
740
560
790
220
770
280
780
240
230
110
590
530
250
800
925
745
929438-3
ECN 80488

ECM: 115428 - 20020930
Group number: 929438-0100
Assembly Drawing: 929438-3_1_AA

Pos	Part No	UN	Qty	Description	Page No
-					
080	751212-0000		1	ARM	
085	272442-0000		1	CANTILEVER	
090	978275-0000		1	BEARING HOLDER	
100	272455-0000		1	BEARING BRACKET	
110	272456-0000		1	LINK	
120	272457-0000		2	BOW CLAMP	
130	295770-0000		1	AXLE BOLT	
140	256421-0000		1	PULLEY	
150	256422-0000		2	WASHER	
160	256426-0001		1	WASHER	
170	256426-0002		2	WASHER	
180	256427-0000		1	SHAFT	
190	490916-0000		2	AXLE PIN	
200	256472-0000		1	WASHER	
210	257306-0000		1	ROLL	
220	257308-0000		1	SCREW	
230	257309-0000		2	SHAFT	
240	257310-0000		2	NUT	
250	257311-0000		4	CAP	
280	272116-0000		1	CAP	
310	978272-0000		1	BRACKET	
320	1484792-0000		1	SCALE	
330	1484791-0000		1	SCALE	
400	90028-0021		1	CONE TUBE 4 MM	
410	90028-0020		5	CONE TUBE 2,5MM	
420	90032-0040		1	BLOCK 6 WAYS	
440	321531-0248		4	NEEDLE SLEEVE W/O CONE, 20X26X16 MM	
450	90087-0019		1	PLUG M10X1 STAINLESS	
458	90092-0052		4	METERING VALVE 10 MM3	
460	90092-0053		1	METERING VALVE 30 MM3	
480	90134-0031		1	SLEEVE FOR PLASTIC TUBE	
500	90134-0038		1	BUSHING/NUT INLET/OUTLET 4 MM	
510	90134-0039		6	BUSHING VALVE CONNECTION 2,5 MM	
520	90134-0052		1	PLUG DOSING BLOCK	
530	90134-0058		7	CONNECTION	
540	90266-0019	MM	550	PIPE	
550	90165-0002		3	CLIP	
560	90165-0022		2	PIPE CLIP, FOR TUBE D=2,5 MM, B-3570	
570	90166-0143	MM	1100	TUBE 2,5 MM PA,TRANSP.	
580	90240-0048		2	PLAIN BEAR,SELF ADJ.SPHER. 25X42X20 MM	
590	90240-0050		2	PLAIN BEAR,SELF ADJ. 20X35X24	
600	90157-0016		1	LOCKING FLUID	
670	311101-0267		1	PARALLEL PIN ISO 8734 4H6X10 ST	
675	311103-0267		1	PARALLEL PIN ISO 2338 4M6X10 A1	
700	312101-0297		2	SCREW M6S M4X25 FZB	
710	312101-0362		3	SCREW M6S M6X8 FZB	
720	312101-0364		2	SCREW M6S M6X10 FZB	
725	312105-0374		1	SCREW M6S ISO 4014 M6X30 A480	
730	312101-0453		4	SCREW M6S M8X25 FZB	
740	312101-0493		1	SCREW M6S M10X25 FZB	
745	312101-0502		1	SCREW M6S M10X55 FZB	
750	312101-0504		1	SCREW M6S M10X65 FZB	
760	312101-0507		2	SCREW M6S M10X80 FZB	
770	312111-0376		4	SCREW HEX.SOCK.HD.MC6S-TT 6X35 88 FZB	
780	312111-0378		2	SCREW HEX.SOCK.HD.MC6S-TT 6X40 88 FZB	
790	312121-0287		5	SCREW ISO 1207 M4X8 4.8 - 5.8 Z.PL.	
795	312145-0220		1	SCREW ISO 2009 MFS M3X6 A4	
800	312151-0287		12	SCREW EN 10642 MF6S M4X8 10.9 EL.PL	
810	312151-0364		8	SCREW EN 10642 MF6S M6X10 10.9 EL.PL	
820	312601-0318		2	NUT M6M8FZB	
840	312811-0324		2	NUT HEX.LOCK HELI COIL MID GRIP M16 SS	
850	312811-0326		1	NUT HEX.LOCK HELI COIL MID GRIP M20 SS	
870	315101-0136		2	BRICKA BRB, 4,3/8 H=0,8	
880	315101-0153		4	WASHER PLAIN, BRB, 6,4/12 H=1,5	
890	315101-0165		4	WASHER PLAIN, BRB, 8,4/16 H=1,5	
900	315101-0173		2	WASHER PLAIN, BRB, 10,5/22 H=2	
910	315101-0186		2	WASHER PLAIN, BRB, 17/30 H=3	
920	315111-0173		2	WASHER PLAIN, TBRB 10,5/22 H=4	
925	315121-0173		1	WASHER PLAIN, TBRSB 10,5/28 H=6	
930	315701-0335		1	PARALLEL KEY W. ROUND ENDS 12X8X56 MM	
940	321129-0137		4	THRUST WASHER, 22/38X1,5	
950	321576-0260		1	BEARING ROLLER, 20X47X25 MM	

Machine Type | Group Description | Used-In | Group Number | Page No

SLEWING BRACKET RIGHT

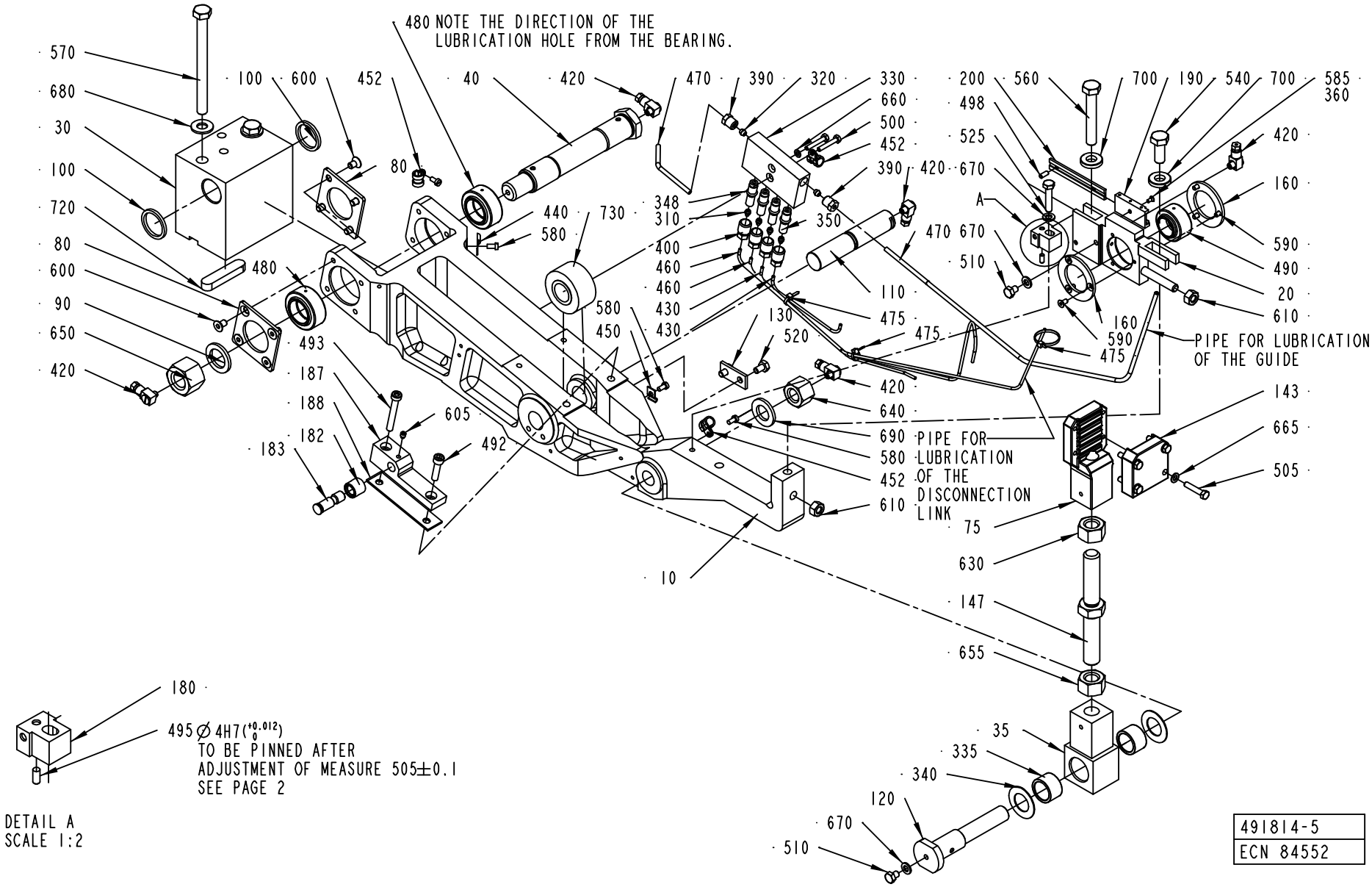

491814-5
ECN 84552

ECM: 115561 - 20020930
Group number: 491814-0300
Assembly Drawing: 491814-5_1_AA

Pos	Part No	UN	Qty	Description	Page No
-					
0010	751212-0000		1	ARM	
0020	978275-0000		1	BEARING HOLDER	
0030	256418-0000		1	BEARING BRACKET	
0035	256515-0000		1	END PIECE	
0040	272462-0000		1	AXLE BOLT	
0075	272607-0000		1	BELT HOLDER	
0080	256422-0000		2	WASHER	
0090	256426-0001		1	WASHER	
0100	256426-0002		2	WASHER	
0110	256427-0000		1	SHAFT	
0120	490916-0000		1	AXLE PIN	
0130	256472-0000		1	WASHER	
0143	256516-0000		1	CAP	
0147	256517-0000		1	SCREW	
0160	257311-0000		2	CAP	
0180	978272-0000		1	BRACKET	
0182	491165-0000		1	ROLL	
0183	491166-0000		1	SHAFT	
0187	751078-0000		1	BRACKET RIGHT	
0188	491319-0000		2	LACE	
0190	1484792-0000		1	SCALE	
0200	1484791-0000		1	SCALE	
0310	90028-0020		4	CONE TUBE 2,5MM	
0320	90028-0021		2	CONE TUBE 4 MM	
0330	90032-0039		1	BLOCK 4 WAYS	
0335	321531-0248		2	NEEDLE SLEEVE W/O CONE, 20X26X16 MM	
0340	90083-0016		2	PLATE FOR AXK 2035	
0348	90092-0052		3	METERING VALVE 10 MM3	
0350	90092-0053		1	METERING VALVE 30 MM3	
0360	90157-0016	L	1	LOCKING FLUID	
0390	90134-0038		2	BUSHING/NUT INLET/OUTLET 4 MM	
0400	90134-0039		4	BUSHING VALVE CONNECTION 2,5 MM	
0420	90134-0058		5	CONNECTION	
0430	90266-0019	MM	350	PIPE	
0440	90165-0002		1	CLIP	
0450	90165-0022		1	PIPE CLIP, FOR TUBE D=2,5 MM, B-3570	
0452	90165-0065		3	PIPE CLAMP, RSGU 1.8/9, D=8 MM	
0460	90166-0143	MM	1100	TUBE 2,5 MM PA,TRANSP.	
0470	90166-0109	MM	700	TUBE 4 MM PA,TRANSP.	
0475	352113-0101		3	CLIP STRIP, 92X2,5 MM	
0480	90240-0048		2	PLAIN BEAR,SELF ADJ.SPHER. 25X42X20 MM	
0490	90240-0050		1	PLAIN BEAR,SELF ADJ. 20X35X24	
0492	90287-0143		1	SCREW MC6S M6X25 129	
0493	90287-0144		1	SCREW MC6S M6X35 129	
0495	311101-0267		1	PARALLEL PIN ISO 8734 4H6X10 ST	
0498	311103-0267		1	PARALLEL PIN ISO 2338 4M6X10 A1	
0500	312101-0297		2	SCREW M6S M4X25 FZB	
0505	312101-0333		4	SCREW M6S M5X25 FZB	
0510	312101-0362		2	SCREW M6S M6X8 FZB	
0520	312101-0364		2	SCREW M6S M6X10 FZB	
0525	312105-0374		1	SCREW M6S ISO 4014 M6X30 A480	
0540	312101-0493		1	SCREW M6S M10X25 FZB	
0560	312101-0504		1	SCREW M6S M10X65 FZB	
0570	312101-0515		2	SCREW M6S M10X120 FZB	
0580	312121-0287		4	SCREW ISO 1207 M4X8 4.8 - 5.8 Z.PL.	
0585	312145-0220		1	SCREW ISO 2009 MFS M3X6 A4	
0590	312151-0287		6	SCREW EN 10642 MF6S M4X8 10.9 EL.PL	
0600	312151-0364		8	SCREW EN 10642 MF6S M6X10 10.9 EL.PL	
0605	312311-0321		1	SCREW ISO4028 M5X6 FZB	
0610	312601-0318		2	NUT M6M8FZB	
0630	312601-0324		1	NUT M6M 16-8 FZB	
0640	312811-0324		1	NUT HEX.LOCK HELI COIL MID GRIP M16 SS	
0650	312811-0326		1	NUT HEX.LOCK HELI COIL MID GRIP M20 SS	
0655	312901-0324		1	NUT M6M16VFZB	
0660	315101-0136		1	BRICKA BRB, 4,3/8 H=0,8	
0665	315101-0146		4	WASHER PLAIN, BRB, 5,3/10 H=1	
0670	315101-0153		3	WASHER PLAIN, BRB, 6,4/12 H=1,5	
0680	315101-0173		2	WASHER PLAIN, BRB, 10,5/22 H=2	
0690	315101-0186		1	WASHER PLAIN, BRB, 17/30 H=3	
0700	315111-0173		2	WASHER PLAIN, TBRB 10,5/22 H=4	
0720	315701-0335		1	PARALLEL KEY W. ROUND ENDS 12X8X56 MM	
0730	321576-0260		1	BEARING ROLLER, 20X47X25 MM	

Machine Type | Group Description | Used-In | Group Number | Page No

SLEWING BRACKET LEFT

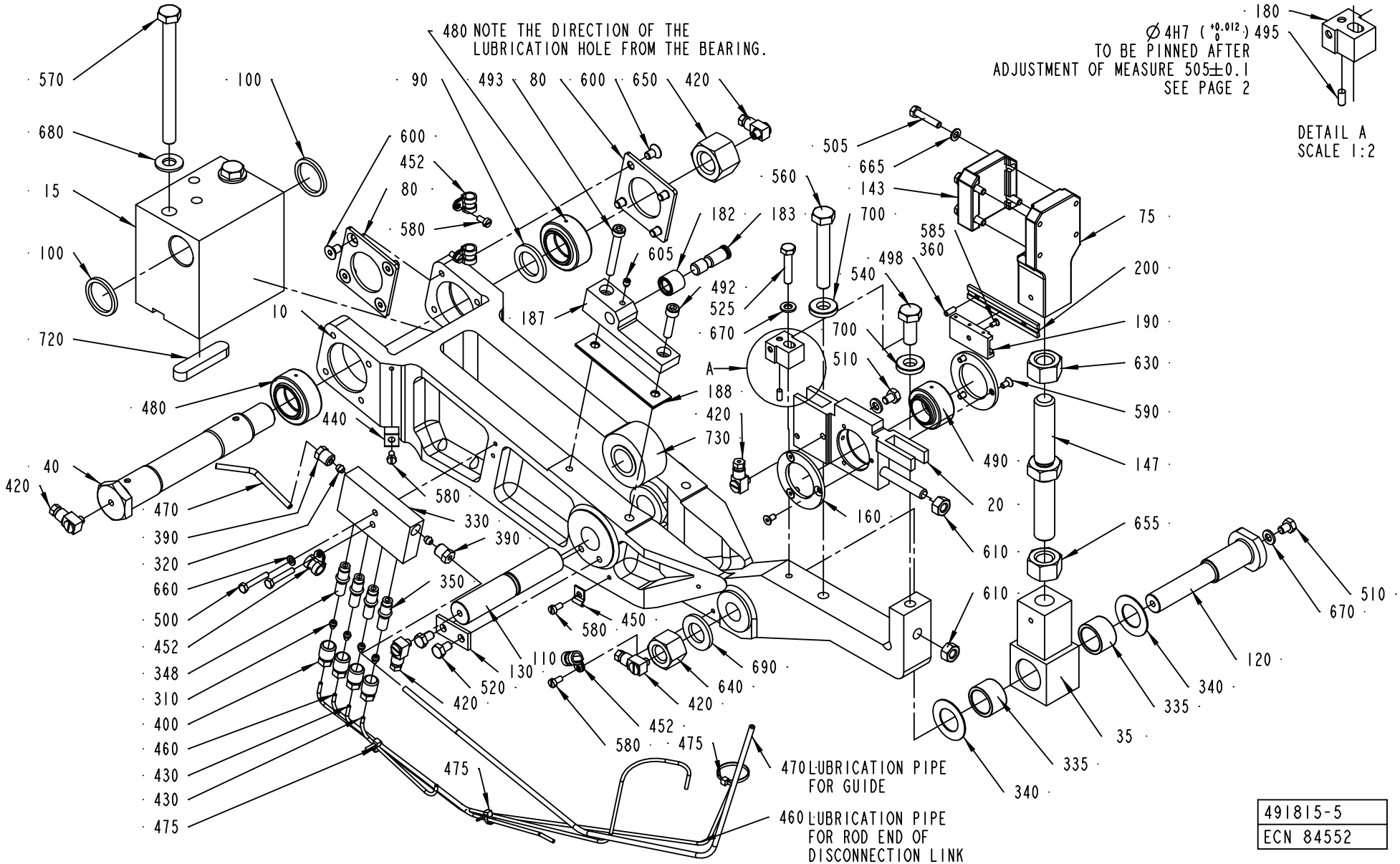

491815-5
ECN 84552

ECM: 115562 - 20020930
Group number: 491815-0300
Assembly Drawing: 491815-5_1_AA

Pos	Part No	UN	Qty	Description	Page No
-					
0010	751212-0000		1	ARM	
0015	256418-0000		1	BEARING BRACKET	
0020	978275-0000		1	BEARING HOLDER	
0035	256515-0000		1	END PIECE	
0040	272462-0000		1	AXLE BOLT	
0075	272607-0000		1	BELT HOLDER	
0080	256422-0000		2	WASHER	
0090	256426-0001		1	WASHER	
0100	256426-0002		2	WASHER	
0110	256427-0000		1	SHAFT	
0120	490916-0000		1	AXLE PIN	
0130	256472-0000		1	WASHER	
0143	256516-0000		1	CAP	
0147	256517-0000		1	SCREW	
0160	257311-0000		2	CAP	
0180	978272-0000		1	BRACKET	
0182	491165-0000		1	ROLL	
0183	491166-0000		1	SHAFT	
0187	751079-0000		1	BRACKET LEFT	
0188	491319-0000		2	LACE	
0190	1484792-0000		1	SCALE	
0200	1484791-0000		1	SCALE	
0310	90028-0020		4	CONE TUBE 2,5MM	
0320	90028-0021		2	CONE TUBE 4 MM	
0330	90032-0039		1	BLOCK 4 WAYS	
0335	321531-0248		2	NEEDLE SLEEVE W/O CONE, 20X26X16 MM	
0340	90083-0016		2	PLATE FOR AXK 2035	
0348	90092-0052		3	METERING VALVE 10 MM3	
0350	90092-0053		1	METERING VALVE 30 MM3	
0360	90157-0016		1	LOCKING FLUID	
0390	90134-0038		2	BUSHING/NUT INLET/OUTLET 4 MM	
0400	90134-0039		4	BUSHING VALVE CONNECTION 2,5 MM	
0420	90134-0058		5	CONNECTION	
0430	90266-0019	MM	350	PIPE	
0440	90165-0002		1	CLIP	
0450	90165-0022		1	PIPE CLIP, FOR TUBE D=2,5 MM, B-3570	
0452	90165-0065		4	PIPE CLAMP, RSGU 1.8/9, D=8 MM	
0460	90166-0143	MM	1100	TUBE 2,5 MM PA,TRANSP.	
0470	90166-0109	MM	700	TUBE 4 MM PA,TRANSP.	
0475	352113-0101		3	CLIP STRIP, 92X2,5 MM	
0480	90240-0048		2	PLAIN BEAR,SELF ADJ.SPHER. 25X42X20 MM	
0490	90240-0050		1	PLAIN BEAR,SELF ADJ. 20X35X24	
0492	90287-0143		1	SCREW MC6S M6X25 129	
0493	90287-0144		1	SCREW MC6S M6X35 129	
0495	311101-0267		1	PARALLEL PIN ISO 8734 4H6X10 ST	
0498	311103-0267		1	PARALLEL PIN ISO 2338 4M6X10 A1	
0500	312101-0297		2	SCREW M6S M4X25 FZB	
0505	312101-0333		4	SCREW M6S M5X25 FZB	
0510	312101-0362		2	SCREW M6S M6X8 FZB	
0520	312101-0364		2	SCREW M6S M6X10 FZB	
0525	312105-0374		1	SCREW M6S ISO 4014 M6X30 A480	
0540	312101-0493		1	SCREW M6S M10X25 FZB	
0560	312101-0504		1	SCREW M6S M10X65 FZB	
0570	312101-0515		2	SCREW M6S M10X120 FZB	
0580	312121-0287		5	SCREW ISO 1207 M4X8 4.8 - 5.8 Z.PL.	
0585	312145-0220		1	SCREW ISO 2009 MFS M3X6 A4	
0590	312151-0287		6	SCREW EN 10642 MF6S M4X8 10.9 EL.PL	
0600	312151-0364		8	SCREW EN 10642 MF6S M6X10 10.9 EL.PL	
0605	312311-0321		1	SCREW ISO4028 M5X6 FZB	
0610	312601-0318		2	NUT M6M8FZB	
0630	312601-0324		1	NUT M6M 16-8 FZB	
0640	312811-0324		1	NUT HEX.LOCK HELI COIL MID GRIP M16 SS	
0650	312811-0326		1	NUT HEX.LOCK HELI COIL MID GRIP M20 SS	
0655	312901-0324		1	NUT M6M16VFZB	
0660	315101-0136		1	BRICKA BRB, 4,3/8 H=0,8	
0665	315101-0146		4	WASHER PLAIN, BRB, 5,3/10 H=1	
0670	315101-0153		3	WASHER PLAIN, BRB, 6,4/12 H=1,5	
0680	315101-0173		2	WASHER PLAIN, BRB, 10,5/22 H=2	
0690	315101-0186		1	WASHER PLAIN, BRB, 17/30 H=3	
0700	315111-0173		2	WASHER PLAIN, TBRB 10,5/22 H=4	
0720	315701-0335		1	PARALLEL KEY W. ROUND ENDS 12X8X56 MM	
0730	321576-0260		1	BEARING ROLLER, 20X47X25 MM	

Machine Type | Group Description | Used-In | Group Number | Page No

INTERMEDIARY SHAFT

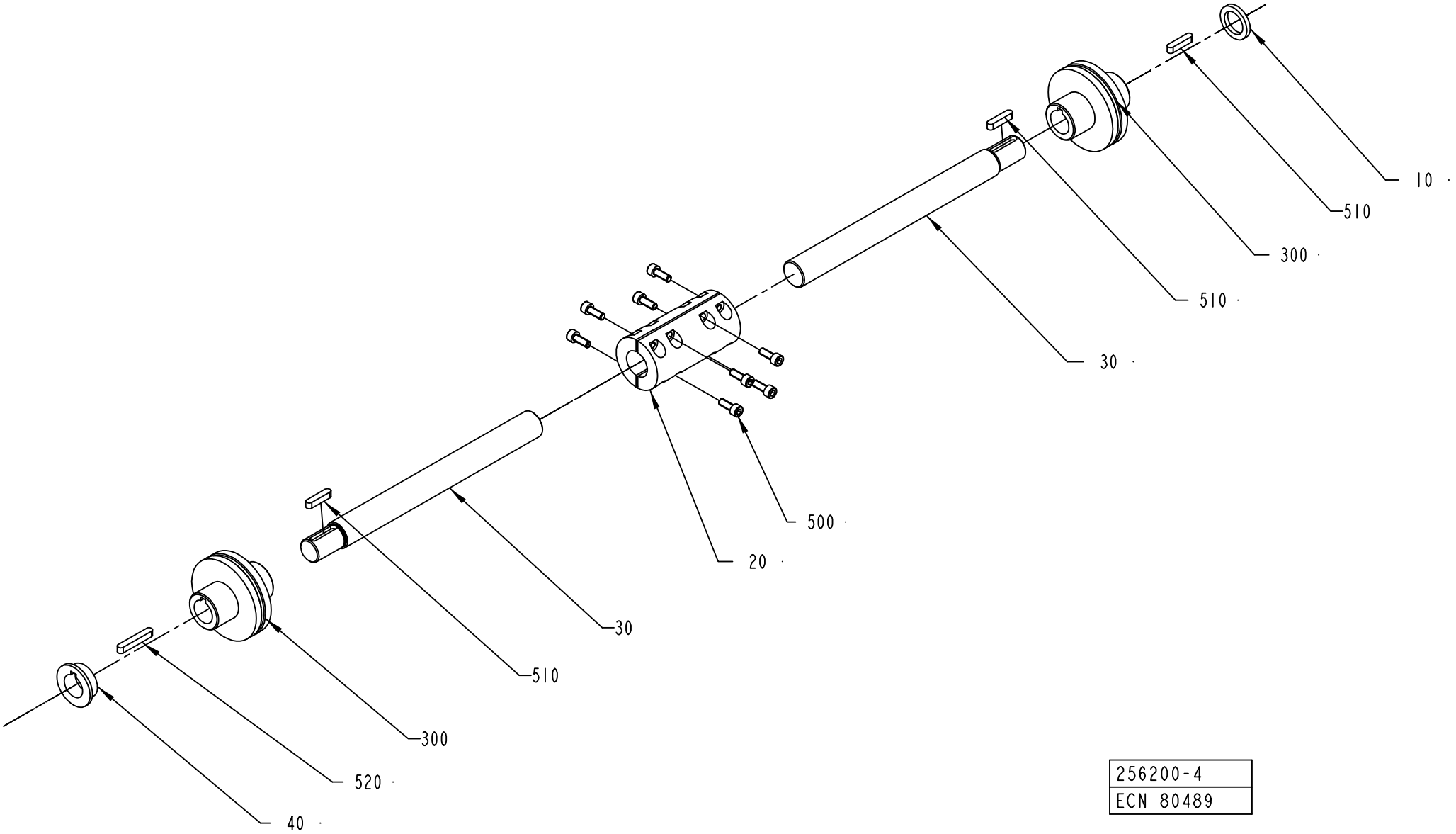

256200-4
ECN 80489

ECM: 119095 - 20021213
Group number: 256200-0300
Assembly Drawing: 256200-4_1_AB

Pos	Part No	UN	Qty	Description	Page No
TBA					
030	441339-0000		2	SHAFT	
Common Parts					
010	272857-0000		1	RING	
020	295983-0000		1	CONNECTION	
040	441720-0000		1	SPACER	
300	90355-0048		2	TORQUE RIGID COUPLING, 22X22 MM	
500	312111-0368		8	SCREW HEX.SOCK.HD.MC6S-TT 6X16 88 FZB	
510	315701-0235		3	PARALLEL KEY W. ROUND ENDS 6X6X28 MM	
520	315701-0239		1	PARALLEL KEY W. ROUND ENDS 6X6X40 MM	

Pos	Part No	UN	Qty	Description	Page No

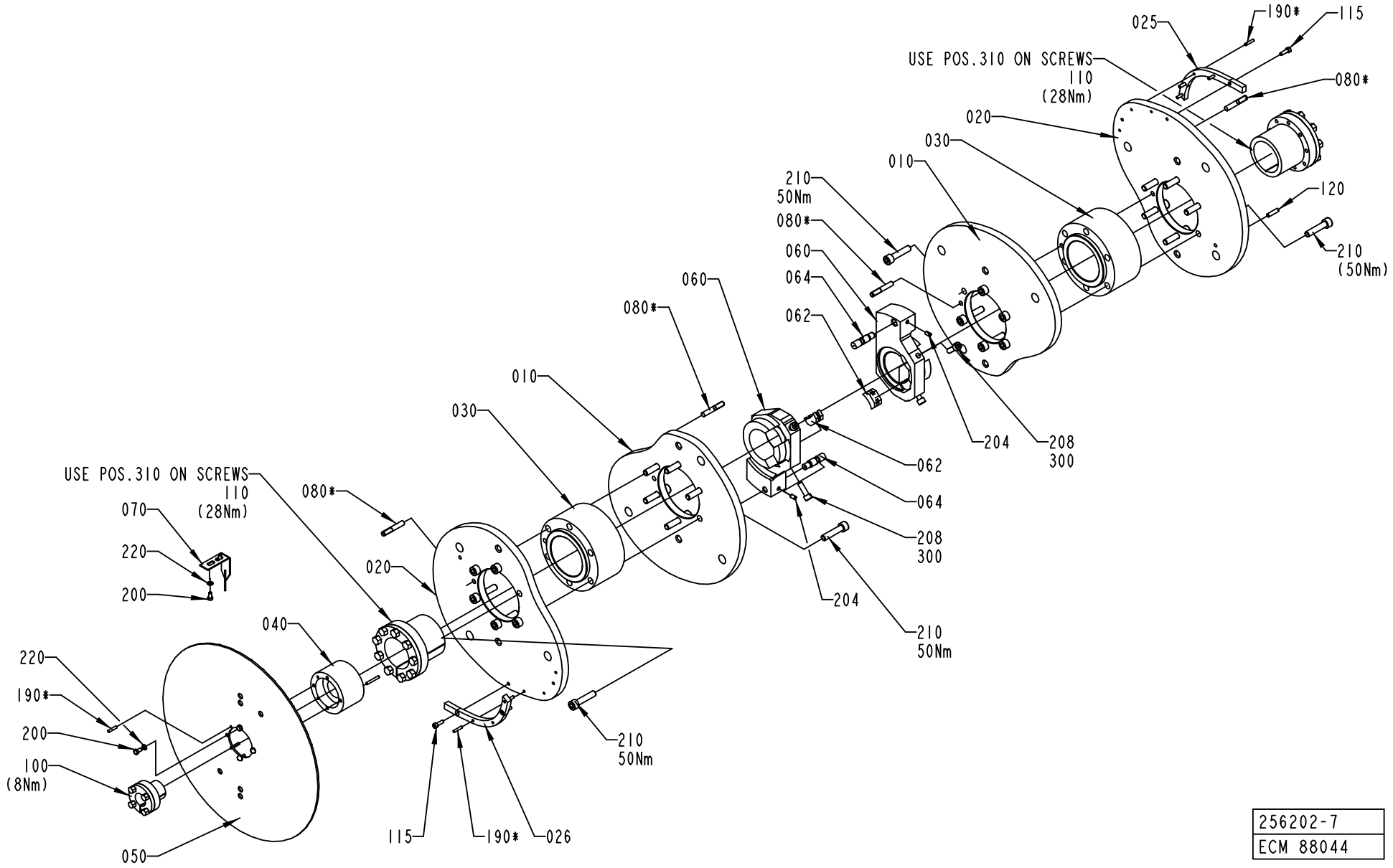
025
190*
115
USE POS.310 ON SCREWS
110
(28Nm)
080*
020
030
010
210
50Nm
080*
060
064
062
120
210
(50Nm)
060
080*
010
030
204
208
300
062
064
208
300
204
210
50Nm
USE POS.310 ON SCREWS
110
(28Nm)
070
220
200
080*
020
040
220
190*
200
100
(8Nm)
210
50Nm
115
190*
026
050
256202-7
ECM 88044

ECM: 115430 - 20020930
Group number: 256202-0700
Assembly Drawing: 256202-7_1_AA

This list covers pages from 3-18 to 3-21

Pos	Part No	UN	Qty	Description	Page No
TBA 0100B					
010	979778-0000		2	YOKE CAM 100	
020	979779-0000		2	ARM CAM 100	
025	979780-0000		1	CAM SEGMENT R 100	
026	979781-0000		1	CAM SEGMENT L 100	
210	312115-0500		24	SCREW ISO4762 M10X45 A4	
230	315101-0173		24	WASHER PLAIN, BRB, 10,5/22 H=2	
TBA 0125S					
010	978793-0000		2	YOKECURVE 125ML	
020	978794-0000		2	ARMCURVE 125ML	
025	978795-0000		1	CAMSEGMENT R	
026	978796-0000		1	CAMSEGMENT L	
192	311103-0276		1	PARALLEL PIN ISO 2338 4M6X30 A1	
210	312115-0500		24	SCREW ISO4762 M10X45 A4	
230	315101-0173		24	WASHER PLAIN, BRB, 10,5/22 H=2	
300	90157-0016		1	LOCKING FLUID	
TBA 0160S					
010	577217-0000		2	YOKECAM 160ML	
020	577218-0000		2	ARMCAM 160ML	
025	577219-0000		1	CAMSEGMENT R	
026	577220-0000		1	CAMSEGMENT L	
210	312115-0500		24	SCREW ISO4762 M10X45 A4	
230	315101-0173		24	WASHER PLAIN, BRB, 10,5/22 H=2	
TBA 0180B					
010	469369-0000		2	YOKECAM 180ML	
020	469370-0000		2	ARMCAM 180ML	
025	491918-0000		1	CAMSEGMENT R	
026	491919-0000		1	CAMSEGMENT L	
210	312115-0500		24	SCREW ISO4762 M10X45 A4	
230	315101-0173		24	WASHER PLAIN, BRB, 10,5/22 H=2	
TBA 0200B					
010	978768-0000		2	YOKECURVE200ML	
020	978769-0000		2	ARMCURVE 200ML	
025	978770-0000		1	CAMSEGMENTL	
026	978771-0000		1	CAMSEGMENTL	
192	311103-0276		1	PARALLEL PIN ISO 2338 4M6X30 A1	
210	312115-0500		24	SCREW ISO4762 M10X45 A4	
230	315101-0173		24	WASHER PLAIN, BRB, 10,5/22 H=2	
300	90157-0016		1	LOCKING FLUID	
TBA 0200M					
010	1282310-0000		2	YOKE CAM 200ML MID	
020	1282309-0000		2	ARM CAM 200 ML MID	
025	1282312-0000		1	CAM SEGMENT R	
026	1282311-0000		1	CAM SEGMENT L	
210	312115-0500		22	SCREW ISO4762 M10X45 A4	
230	315101-0173		22	WASHER PLAIN, BRB, 10,5/22 H=2	
TBA 0200S					
010	978772-0000		2	YOKECURVE 200SL	
020	978773-0000		2	ARMCURVE 200SL	
025	978774-0000		1	CAMSEGMENT R	
026	978775-0000		1	CAMSEGMENT L	
192	311103-0276		1	PARALLEL PIN ISO 2338 4M6X30 A1	
210	312115-0500		22	SCREW ISO4762 M10X45 A4	
230	315101-0173		22	WASHER PLAIN, BRB, 10,5/22 H=2	
300	90157-0016		1	LOCKING FLUID	
TBA 0250B					
010	978776-0000		2	YOKECURVE 250ML	
020	978777-0000		2	ARMCURVE 250ML	
025	978778-0000		1	CAMSEGMENT R	
026	978779-0000		1	CAMSEGMENT L	
192	311103-0276		1	PARALLEL PIN ISO 2338 4M6X30 A1	
210	312115-0500		24	SCREW ISO4762 M10X45 A4	
230	315101-0173		24	WASHER PLAIN, BRB, 10,5/22 H=2	
300	90157-0016		1	LOCKING FLUID	
TBA 0250S					
010	580356-0000		2	YOKECAM 250ML SLIM	
020	580357-0000		2	ARMCAM 250ML SLIM	
025	580359-0000		1	CAM SEGMENT R	
026	580358-0000		1	CAM SEGMENT L	
210	312115-0500		22	SCREW ISO4762 M10X45 A4	
230	315101-0173		22	WASHER PLAIN, BRB, 10,5/22 H=2	
TBA 0300S, TBA 0284B					
010	581533-0000		2	YOKE CAM 284ML	
020	581534-0000		2	ARM CAM 284ML	
025	581535-0000		1	CAMSEGMENT R 284ML	
026	581536-0000		1	CAMSEGMENT L 284ML	
192	311103-0276		1	PARALLEL PIN ISO 2338 4M6X30 A1	
210	312115-0500		22	SCREW ISO4762 M10X45 A4	
230	315101-0173		22	WASHER PLAIN, BRB, 10,5/22 H=2	
300	90157-0016		1	LOCKING FLUID	
TBA 0330S					
010	582197-0000		2	YOKE CAM 330S	
020	582195-0000		2	ARM CAM 330S	
025	582199-0000		1	CAM SEGMENT RIGHT	

Machine Type | Group Description | Used-In | Group Number | Page No

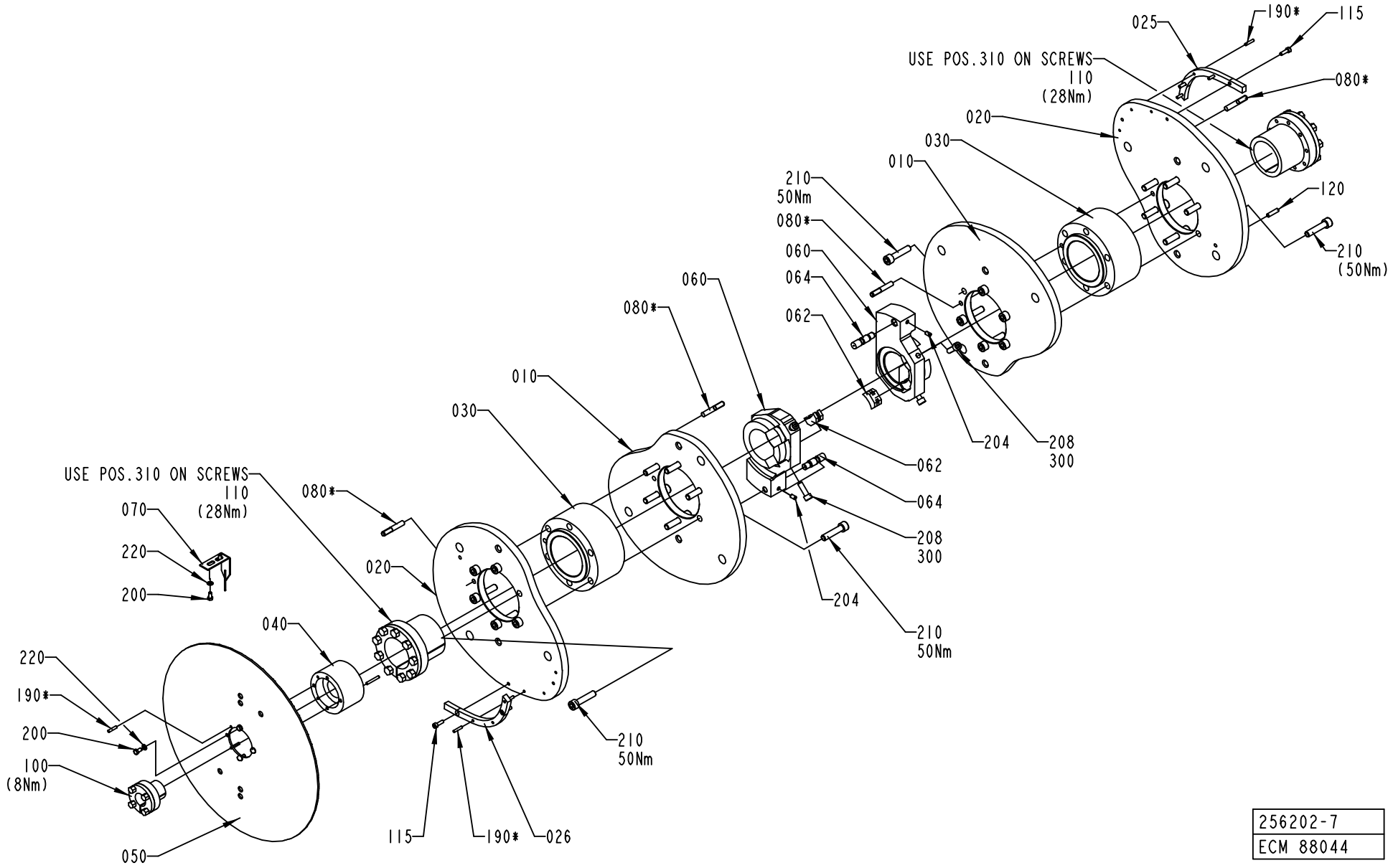
025
190*
115
USE POS.310 ON SCREWS
110
(28Nm)
080*
020
030
010
210
50Nm
080*
060
064
062
120
210
(50Nm)
060
080*
010
030
204
208
300
062
064
208
300
204
210
50Nm
USE POS.310 ON SCREWS
110
(28Nm)
070
220
200
080*
020
040
220
190*
200
100
(8Nm)
210
50Nm
115
190*
026
050
256202-7
ECM 88044

Pos	Part No	UN	Qty	Description	Page No
TBA 0330S (Cont'd)					
026	582200-0000		1	CAM SEGMENT LEFT	
210	312115-0500		24	SCREW ISO4762 M10X45 A4	
230	315101-0173		24	WASHER PLAIN, BRB, 10,5/22 H=2	
Common Parts					
030	456744-0000		2	HUB	
040	1523828-0000		1	SPACER	
050	2504952-0000		1	PROTRACTOR	
060	978609-0000		2	ALIGNMENT TEMPLATE	
062	752774-0000		4	PLUNGER	
064	978262-0000		2	GUIDE PIN	
070	271007-0000		1	POINTER	
080	295140-0000		4	PIN	
090	978340-0000		1	SPACER	
100	90208-0080		1	CLAMPING ELEMENT WITH SLEEVE, 25X34 MM	
110	90208-0091		2	CLAMPING ELEMENT WITH SLEEVE, 60X77 MM	
115	90287-0145		4	SCREW MC6S M5X16 129	
120	929444-0000		1	PIN	
190	311103-0272		6	PARALLEL PIN ISO 2338 4M6X20 A1	
200	312101-0325		6	SCREW M6S M5X10 FZB	
204	312318-0364		2	SCREW ISO4029 M6X10 A4	
208	312115-0453		4	SCREW ISO4762 M8X25 A4	
220	315101-0146		6	WASHER PLAIN, BRB, 5,3/10 H=1	

Pos	Part No	UN	Qty	Description	Page No

HOLD-DOWN DEVICE

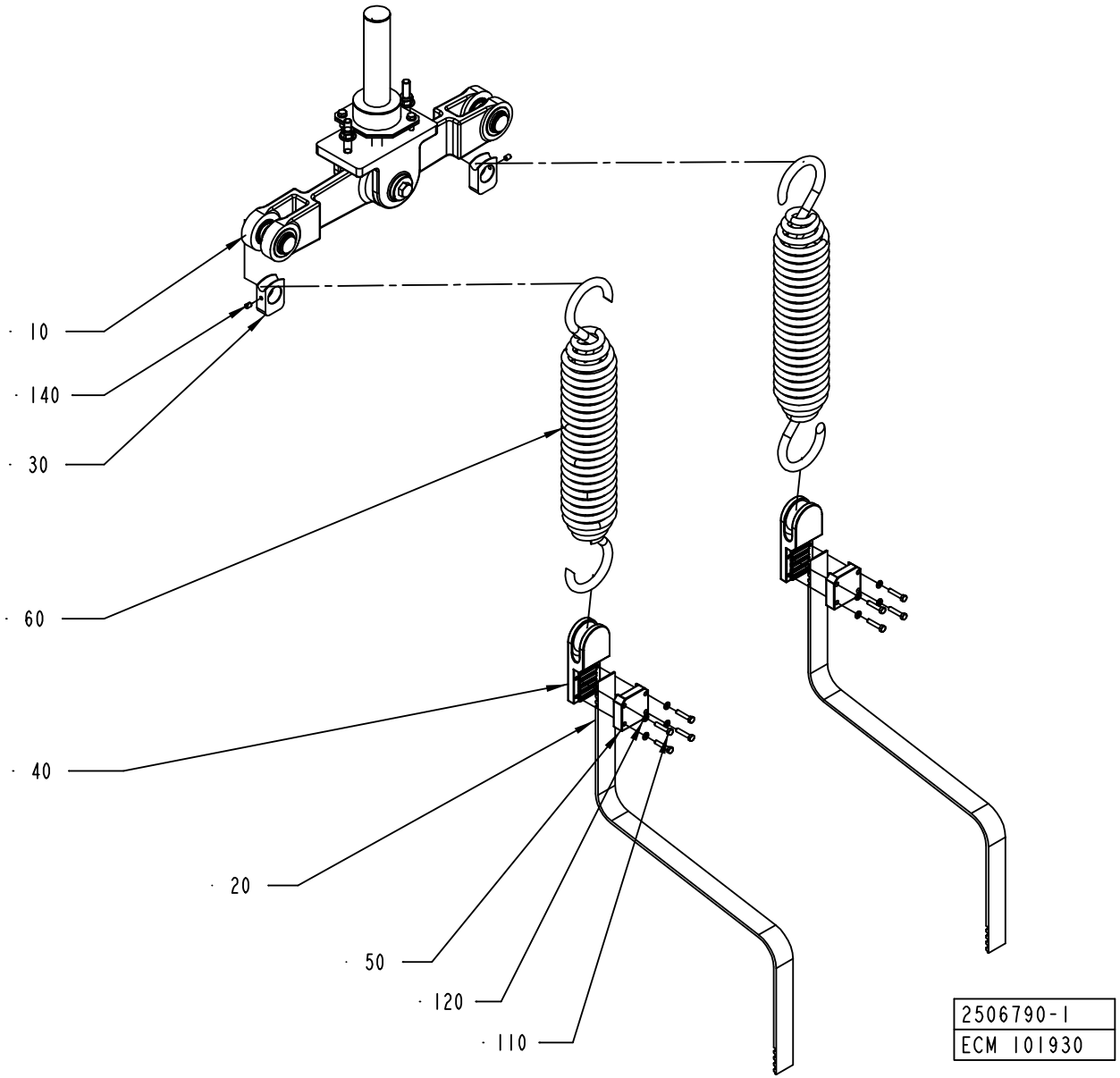

ECM: 115433 - 20020930
Group number: 2506790-0100
Assembly Drawing: 2506790-1_1_AC

Pos	Part No	UN	Qty	Description	Page No
TBA 0180B, TBA 0160S, TBA 0200B, TBA 0125S, TBA 0100B					
020	1539248-0001		2	TIMING BELT	
TBA 0250S, TBA 0200M					
020	1539248-0003		2	TIMING BELT	
TBA 0300S, TBA 0284B, TBA 0200S, TBA 0250B					
020	1539248-0002		2	TIMING BELT	
TBA 0330S					
020	1539248-0005		2	TIMING BELT	
Common Parts					
010	2507014-0100		1	ROCKER ARM	**3-25**
030	2519460-0000		2	SPRING BRACKET	
040	272608-0000		2	BELT HOLDER	
050	256516-0000		2	CAP	
060	441353-0000		2	TENSION SPRING	
110	312101-0333		8	SCREW M6S M5X25 FZB	
120	315101-0146		8	WASHER PLAIN, BRB, 5,3/10 H=1	
140	312318-0362		2	SCREW ISO4029 M6X8 A4	

Pos	Part No	UN	Qty	Description	Page No

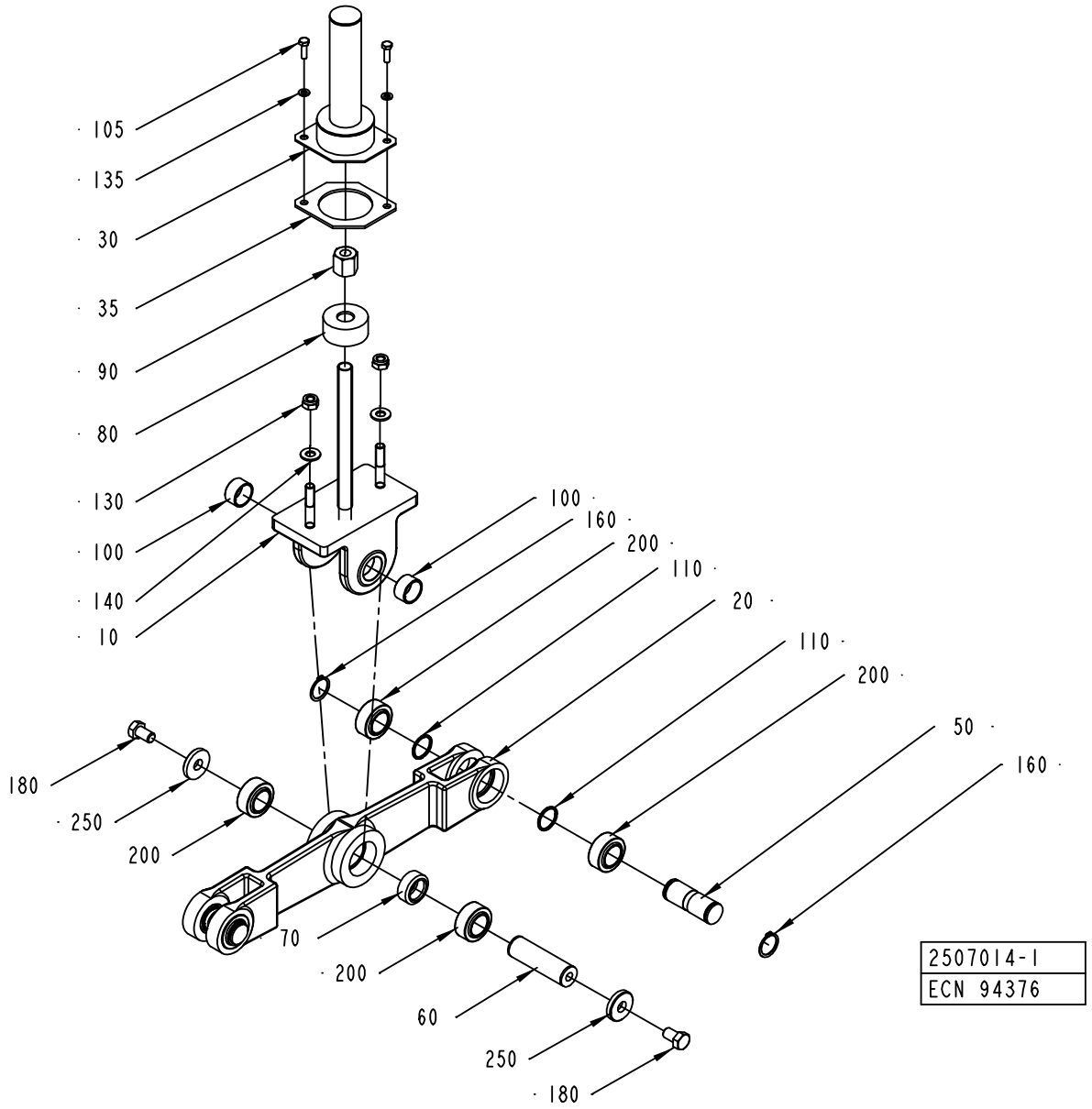
105
135
30
35
90
80
130
100
140
10
100
160
200
110
20
110
200
50
160
180
250
200
70
200
60
250
180
2507014-1
ECN 94376

ECM: 115560 - 20020930
Group number: 2507014-0100
Assembly Drawing: 2507014-1_1_AA

Pos	Part No	UN	Qty	Description	Page No
-					
010	1484457-0000		1	BRACKET	
020	1484454-0000		1	ROCKER ARM	
030	579623-0000		1	PROTECTIVE CASING	
035	579624-0000		1	GASKET	
050	1484456-0000		2	SHAFT	
060	1484452-0000		1	SHAFT	
070	1484453-0000		1	SPACER	
080	978207-0000		1	SPACER PIPE	
090	978209-0000		1	NUT	
100	1484455-0000		2	SPACER	
105	312105-0370		2	SCREW M6S ISO 4017 M6X20 A480	
110	1484461-0000		4	SPACER	
130	312812-0320		2	HEXAGON NUT, NY-LOCK M10 A480	
135	315105-0153		2	WASHER BRB6,4X12RFR	
140	315105-0173		2	WASHER BRB10,5X22RFR	
160	315751-0119		4	RETAINING RING FOR SHAFT DIN 471 25 A2	
180	312105-0532		2	SCREW M6S ISO 4017 M12X20 A480	
200	90457-0188		6	BEARING 25X42X20 MM	
250	315121-0178		2	WASHER PLAIN, TBRSB 13/36 H=6	

Pos	Part No	UN	Qty	Description	Page No

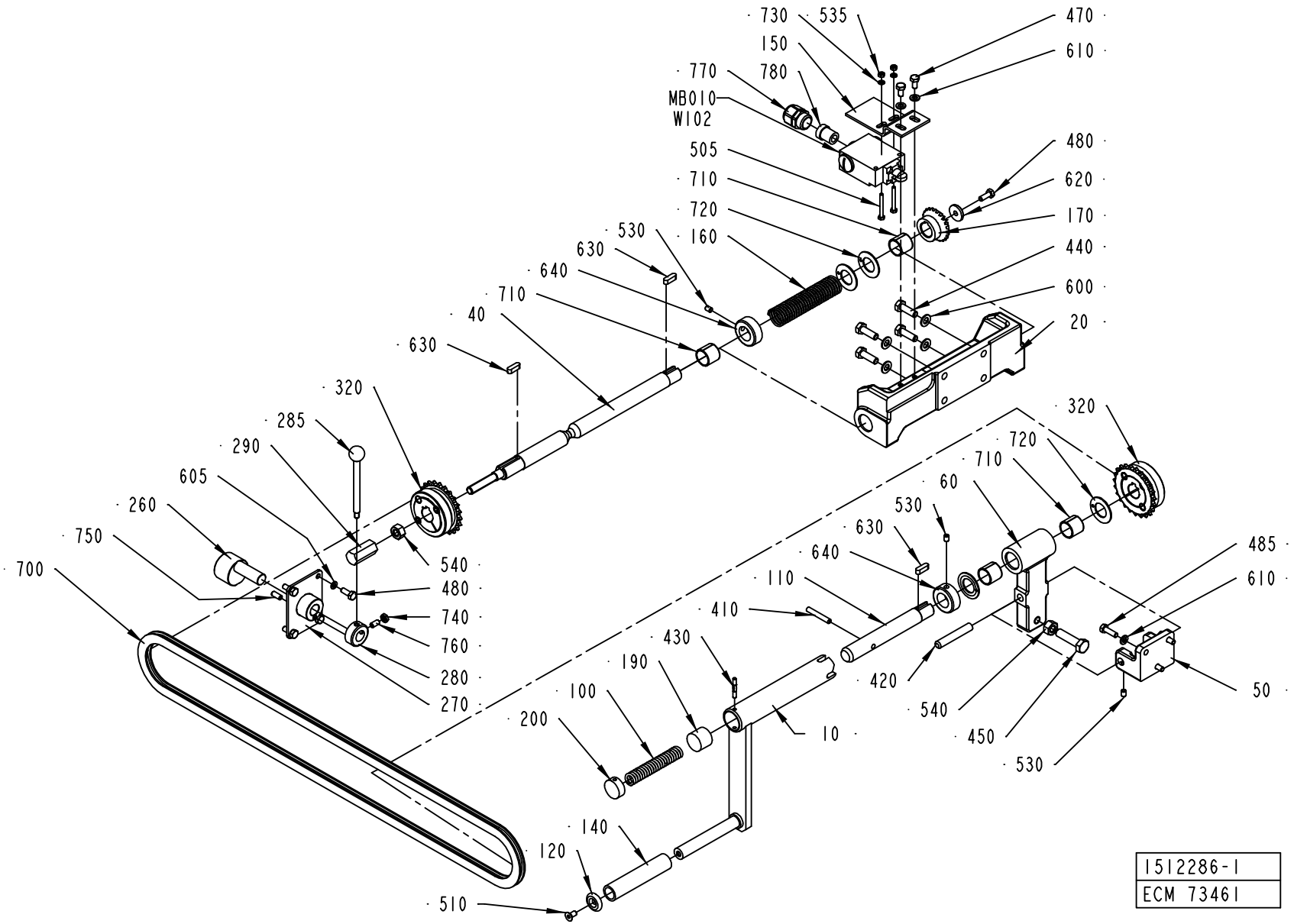
730
535
470
610
150
780
770
MB010
W102
505
480
620
710
720
170
160
530
440
630
640
600
710
40
20
630
320
285
290
605
260
750
700
540
480
740
760
280
270
320
720
710
60
530
630
640
485
610
110
410
430
190
100
200
420
540
450
530
50
10
140
120
510
1512286-1
ECM 73461

ECM: 115429 - 20020930
Group number: 1512286-0100
Assembly Drawing: 1512286-1_1_AA

Pos	Part No	UN	Qty	Description	Page No
-					
010	257326-0000		1	CRANK	
020	272664-0000		1	CANTILEVER	
040	1517984-0000		1	SHAFT	
050	272736-0000		1	CANTILEVER	
060	272737-0000		1	BRACKET	
100	12228-0000		1	COMPRESSION SPRING	
110	256812-0000		1	SHAFT	
120	256814-0000		1	WASHER	
140	256816-0000		1	PIPE	
150	1517983-0000		1	BRACKET	
160	256828-0000		1	SPRING	
170	257179-0000		1	GEAR WHEEL	
190	257327-0000		1	SLIDER	
200	257328-0000		1	END PIECE	
260	1512355-0000		1	ECCENTRIC SHAFT	
270	1512354-0000		1	BRACKET	
280	1517985-0000		1	SETTING RING	
285	90458-1590		1	KNOB WITH SHAFT, M6	
290	1517986-0000		1	SCREW BUSHING	
320	90344-0022		2	SPROCKET	
410	311103-0361		1	PARALLEL PIN ISO 2338 6M6X40 A1	
420	311103-0470		1	PARALLEL PIN ISO 2338 10M6X60 A1	
430	311307-0275		1	SLOTTED PIRPD4X28FZB	
440	312105-0453		4	SCREW M6S ISO 4017 M8X25 A480	
450	312104-0499		1	SCREW M6S M10X40H FZB	
470	312105-0366		2	SCREW M6S M6X12 A280	
480	312105-0368		5	SCREW M6S M6X16 A280	
485	312105-0370		3	SCREW M6S ISO 4017 M6X20 A480	
505	312105-0301		2	SCREW M6S ISO 4017 M4X35 A480	
510	312155-0366		1	SCREW EN 10642 MF6S M6X12 A480	
530	312318-0362		3	SCREW ISO4029 M6X8 A4	
535	312605-0312		2	HEXAGON NUT, M6M M4 A280	
540	312605-0320		2	HEXAGON NUT, M6M M10 A280	
600	315101-0165		4	WASHER PLAIN, BRB, 8,4/16 H=1,5	
605	315105-0146		4	BRICKA BRB5,3X10RFR	
610	315105-0153		5	WASHER BRB6,4X12RFR	
620	315125-0153		1	WASHER TBRSB 6,4X22X4 A4	
630	315705-0232		3	PARALLEL KEY W. ROUND ENDS 6X6X20 MM	
640	315742-0116		2	RETAINING RING 20 SMS 199	
700	318201-0150		1	ROLLER CHAIN, SINGLE 3/8 -150	
710	321141-0260		4	BEARING BUSHING W/O FL, 20X23X20 MM	
720	321130-0260		4	THRUST WASHER, 20X36X1,5 MM	
730	315105-0136		2	WASHER BRB4,3XRFR	
740	312625-0316		1	HEXAGON THIN NUT, EN 24035 ML6M M6 A4	
750	90287-0163		1	SCREW SPRINGLOAD. SLOTTED HEAD M6X14	
760	312318-0366		1	SCREW ISO4029 M6X12 A4	
770	353240-0003		1	NORMAL WITHOUT INSERT, PG 13,5	
780	353249-0065		1	INSERT, SINGEL HOLE, E152/09	
MB010	90044-0151		1	LIMIT SW. GLEB24C	
W102	351150-0405	MM	1500	CABLE OLFLEX 5X0,75 MM2 LIGHT/GREY	

Machine Type	Group Description	Used-In	Group Number	Page No

DISCONNECTION LINK LEFT

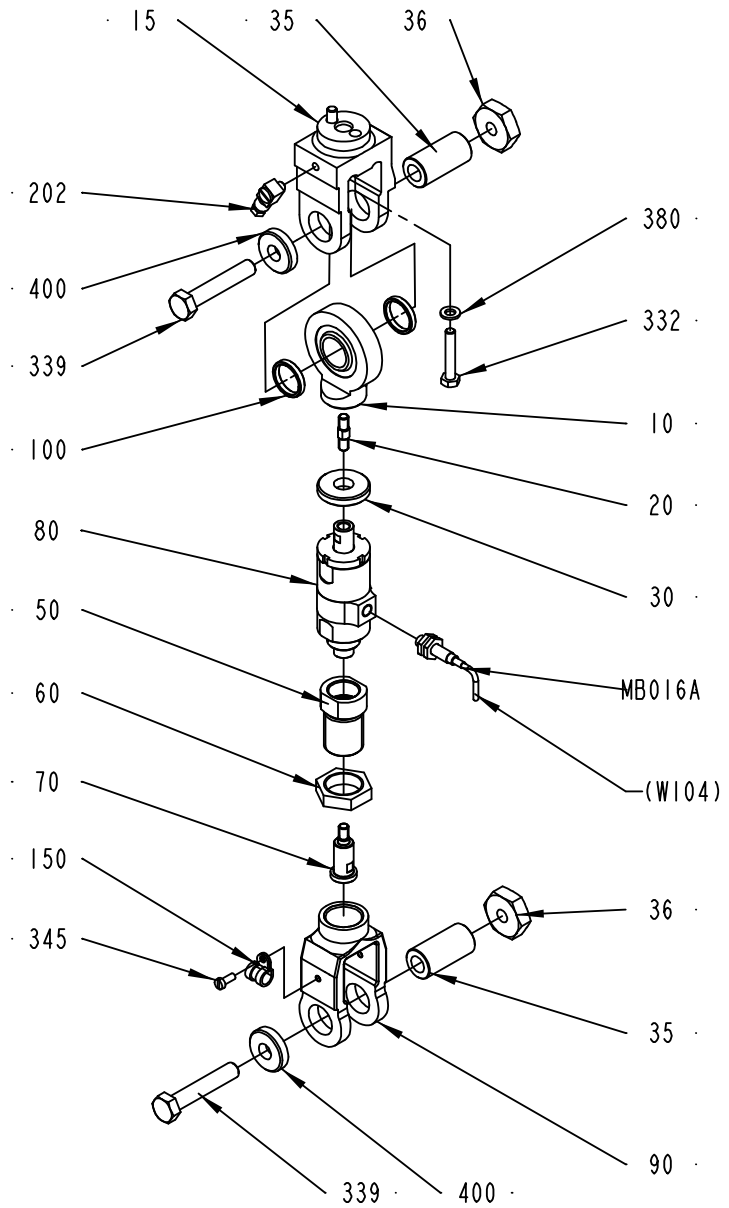

1490120-1
ECN 98301

ECM: 125569 - 20030127
Group number: 1490120-0100
Assembly Drawing: 1490120-1_1_AA

Pos	Part No	UN	Qty	Description	Page No
-					
010	1490113-0000		1	LINK HEAD	
015	272472-0000		1	END PIECE	
020	1490114-0000		1	PIN	
030	1498194-0000		1	SPACER	
035	257309-0000		2	SHAFT	
036	257310-0000		2	NUT	
050	1490116-0000		1	SPACER	
060	1490117-0000		1	NUT	
070	1490119-0000		1	SHAFT	
080	1548313-0000		1	FORCE LIMITING DEVICE	
090	1490118-0000		1	LINK	
100	1490133-0000		2	SPACER	
150	90165-0065		1	PIPE CLAMP, RSGU 1.8/9, D=8 MM	
202	90134-0068		1	CONNECTION	
332	312101-0376		2	SCREW M6S M6X35 FZB	
339	312101-0502		2	SCREW M6S M10X55 FZB	
345	312101-0289		1	SCREW M6S M4X10 FZB	
380	315101-0153		2	WASHER PLAIN, BRB, 6,4/12 H=1,5	
400	315121-0173		2	WASHER PLAIN, TBRSB 10,5/28 H=6	
MB016A	90458-0138		1	PROX.SW. E2EG-X1R5B1-5M	

Pos	Part No	UN	Qty	Description	Page No

DISCONNECTION LINK RIGHT

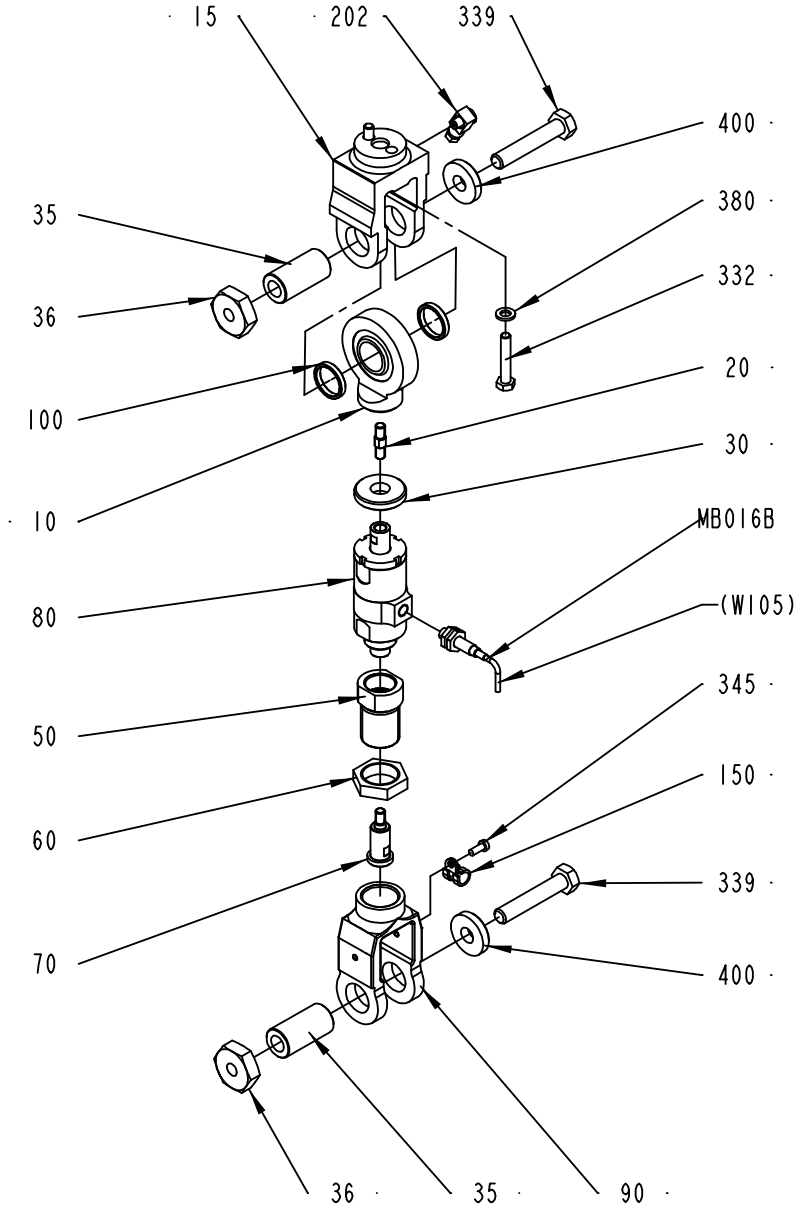

1539766-1
ECN 98301

ECM: 125570 - 20030127
Group number: 1539766-0100
Assembly Drawing: 1539766-1_1_AA

Pos	Part No	UN	Qty	Description	Page No
-					
010	1490113-0000		1	LINK HEAD	
015	272472-0000		1	END PIECE	
020	1490114-0000		1	PIN	
030	1498194-0000		1	SPACER	
035	257309-0000		2	SHAFT	
036	257310-0000		2	NUT	
050	1490116-0000		1	SPACER	
060	1490117-0000		1	NUT	
070	1490119-0000		1	SHAFT	
080	1548313-0000		1	FORCE LIMITING DEVICE	
090	1490118-0000		1	LINK	
100	1490133-0000		2	SPACER	
150	90165-0065		1	PIPE CLAMP, RSGU 1.8/9, D=8 MM	
202	90134-0068		1	CONNECTION	
332	312101-0376		2	SCREW M6S M6X35 FZB	
339	312101-0502		2	SCREW M6S M10X55 FZB	
345	312101-0289		1	SCREW M6S M4X10 FZB	
380	315101-0153		2	WASHER PLAIN, BRB, 6,4/12 H=1,5	
400	315121-0173		2	WASHER PLAIN, TBRSB 10,5/28 H=6	
MB016B	90458-0138		1	PROX.SW. E2EG-X1R5B1-5M	

Pos	Part No	UN	Qty	Description	Page No

Machine Type	Group Description	Used-In	Group Number	Page No

ANGLE ENCODER

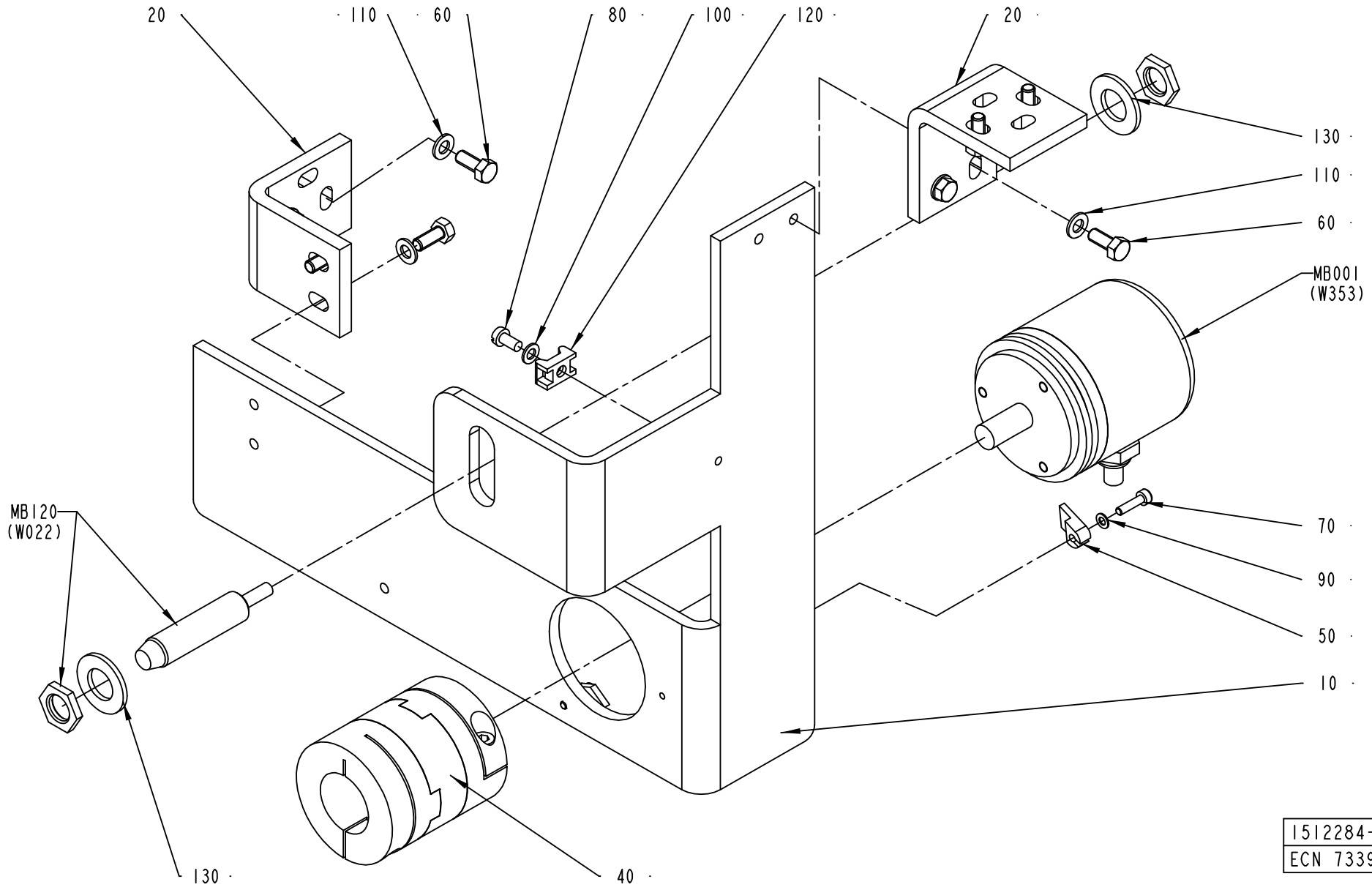

ECM: 115426 - 20020930
Group number: 1512284-0100
Assembly Drawing: 1512284-1_1_AA

Pos	Part No	UN	Qty	Description	Page No
-					
010	1523151-0000		1	BRACKET	
020	1523152-0000		2	ANGLE ENCODER	
040	90457-0150		1	FLEXIBLE COUPLING, 10X25 MM	
050	90457-0162		1	CLAMPING ELEMENT, 00203005	
060	312105-0327		8	SCREW M6S ISO 4017 M5X12 A480	
070	312115-0226		3	SCREW ISO4762 M3X12 A4	
080	312125-0287		2	SCREW ISO 1207 M4X8 A4	
090	315105-0124		3	BRICKA BRB3,2X6RFR	
100	315105-0136		2	WASHER BRB4,3XRFR	
110	315105-0146		8	BRICKA BRB5,3X10RFR	
120	352113-0205		2	ANCHOR PLATES FOR STRIPS, TYPE TM2S8-C10	
130	315105-0178		2	WASHER BRB13X24RFR	
MB001	90061-0027		1	ANGLE ENCODER 670900035	
MB120	90044-0124		1	PROX.SW. 922AB2XM-A9P-050-LZ-876	

Pos	Part No	UN	Qty	Description	Page No

Tetra Pak

SPC
Spare Parts Catalogue

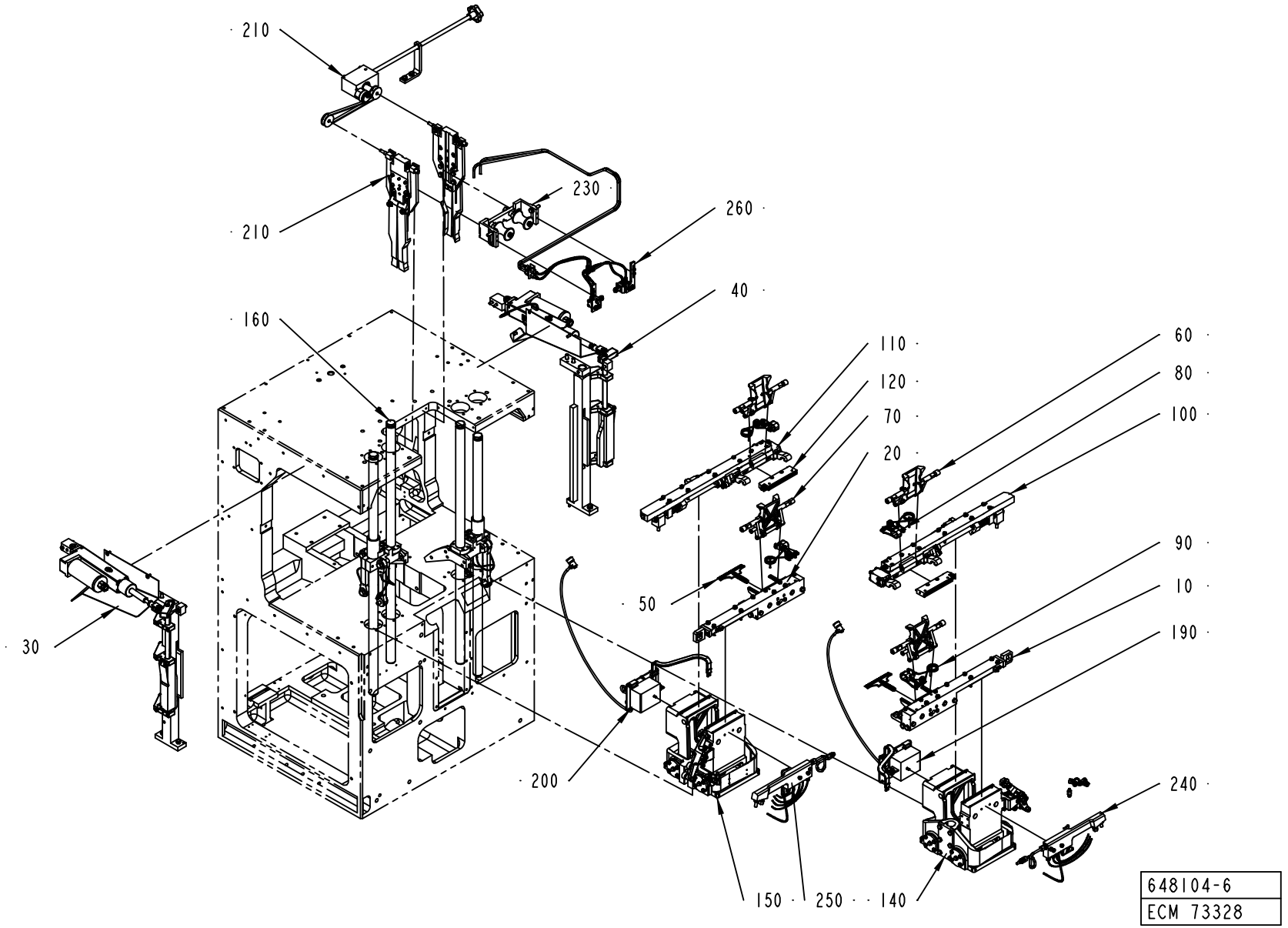
210
210
230
260
40
160
110
120
70
20
60
80
100
50
90
10
190
30
200
240
150
250
140
648104-6
ECM 73328

ECM: 113335 - 20020930
Group number: 648104-1200
Assembly Drawing: 648104-6_1_AA

Pos	Part No	UN	Qty	Description	Page No
-					
010	256204-0600		1	CUTTING JAW	**4-5, 4-7**
020	256205-0600		1	CUTTING JAW	**4-9, 4-11**
030	1512305-0100		1	MOTORIZED DESIGN CONTROL SYSTEM, LEFT	**4-13**
040	1512306-0100		1	MOTORIZED DESIGN CONTROL SYSTEM, RIGHT	**4-15**
050	256208-0400		1	KNIFE HOLDER	**4-17**
060	1519427-0100		2	VOLUME FLAP	**4-19, 4-21**
070	1549581-0100		2	VOLUME FLAP	**4-23, 4-25**
080	752671-0100		2	SHOCK ABSORBER	**4-27, 4-29**
090	752672-0100		2	SHOCK ABSORBER	**4-31, 4-33**
100	256212-0600		1	PRESSURE JAW	**4-35**
110	256213-0600		1	PRESSURE JAW	**4-37**
120	256214-0400		2	PRESSURE RAIL	**4-39**
140	256951-0500		1	YOKE RIGHT	**4-41, 4-43**
150	256952-0500		1	YOKE LEFT	**4-45, 4-47**
160	256217-0500		1	GUIDE	**4-49**
190	572642-0200		1	TRANSFER	**4-51**
200	572643-0200		1	TRANSFER	**4-53**
210	1519117-0100		1	VOLUME ADJUSTER	**4-55**
230	1511403-0100		1	SUPPORT ROLLER	**4-59**
240	257381-0300		1	MANIFOLD RIGHT	**4-61**
250	257382-0300		1	MANIFOLD LEFT	**4-63**
260	1511069-0100		1	TUBE FOLDING DEVICE	**4-65**
300	295523-0400		1	START-UP KIT	**4-67**

Pos	Part No	UN	Qty	Description	Page No

Machine Type | Group Description | Used-In | Group Number | Page No

CUTTING JAW

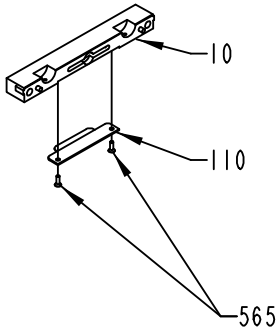

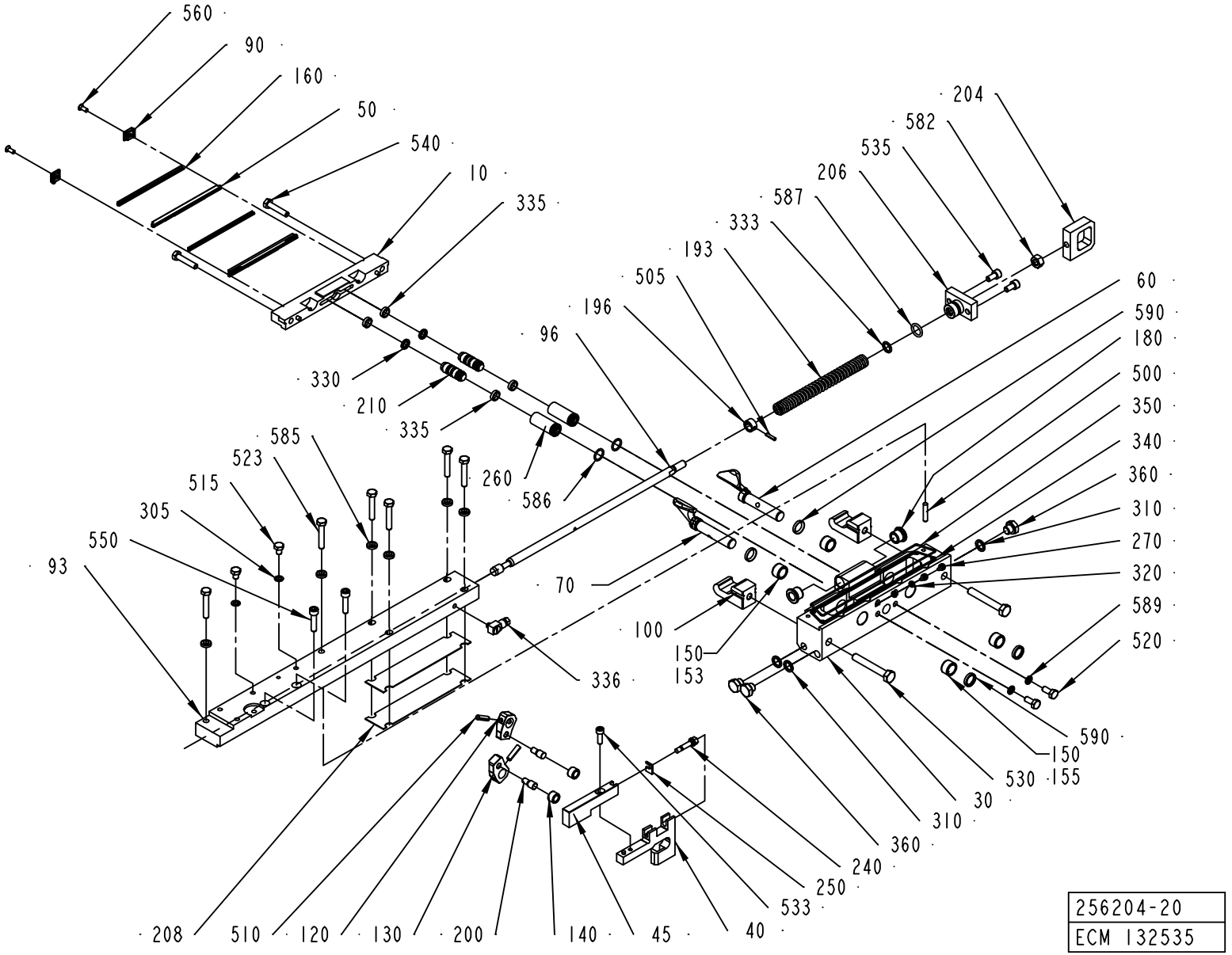

256204-20
ECM 132535

ECM: 156841 - 20040310
Group number: 256204-0600
Assembly Drawing: 256204-20_1_AH

This list covers pages from 4-4 to 4-7

Pos	Part No	UN	Qty	Description	Page No
TBA 0100B					
010	256487-0000		1	CUTTING JAW	
030	1478222-0000		1	BEARING HOUSING	
060	272420-0000		1	FOLDING FLAP	
070	272421-0000		1	FOLDING FLAP	
090	272427-0000		2	BRACKET	
100	978745-0000		2	CATCH	
130	272416-0000		1	CARRIER	
150	33408-0000		4	BEARING	
160	1520577-0001		2	DOLLY	
160	1520577-0001		2	DOLLY	
540	312105-0374		2	SCREW M6S ISO 4014 M6X30 A480	
560	312145-0289		2	SCREW ISO 2009 MFS M4X10 A4	
585	315115-0153		6	WASHER PLAIN, TBRB 6,4/12 H=3	
TBA 0125S					
010	256487-0000		1	CUTTING JAW	
030	1478222-0000		1	BEARING HOUSING	
090	272427-0000		2	BRACKET	
100	978745-0000		2	CATCH	
130	272416-0000		1	CARRIER	
150	33408-0000		4	BEARING	
160	1520577-0001		2	DOLLY	
160	1520577-0001		2	DOLLY	
540	312105-0374		2	SCREW M6S ISO 4014 M6X30 A480	
560	312145-0289		2	SCREW ISO 2009 MFS M4X10 A4	
585	315115-0153		6	WASHER PLAIN, TBRB 6,4/12 H=3	
TBA 0160S, TBA 0200S					
050	1110820-0000		2	CUTTING RAIL	
093	978715-0000		1	CARRIER RIGHT	
100	978745-0000		2	CATCH	
120	272419-0000		1	CARRIER	
150	33408-0000		4	BEARING	
550	312105-0376		2	SCREW M6S ISO 4014 M6X35 A480	
585	315115-0153		8	WASHER PLAIN, TBRB 6,4/12 H=3	
TBA 0200B, TBA 0250B					
050	1110820-0000		2	CUTTING RAIL	
093	978715-0000		1	CARRIER RIGHT	
100	978745-0000		2	CATCH	
120	272419-0000		1	CARRIER	
150	33408-0000		4	BEARING	
550	312105-0376		2	SCREW M6S ISO 4014 M6X35 A480	
585	315115-0153		8	WASHER PLAIN, TBRB 6,4/12 H=3	
TBA 0250S, TBA 0200M					
040	574369-0000		1	CARRIER RULER RIGHT	
045	574370-0000		1	CARRIER RULER RIGHT	
050	1110820-0000		2	CUTTING RAIL	
093	978715-0000		1	CARRIER RIGHT	
100	978745-0000		2	CATCH	
120	272419-0000		1	CARRIER	
150	33408-0000		4	BEARING	
550	312105-0376		2	SCREW M6S ISO 4014 M6X35 A480	
585	315115-0153		8	WASHER PLAIN, TBRB 6,4/12 H=3	
TBA 0330S, TBA 0300S, TBA 0180B, TBA 0284B					
050	1110820-0000		2	CUTTING RAIL	
060	272422-0000		1	FOLDING FLAP	
070	272423-0000		1	FOLDING FLAP	
093	978715-0000		1	CARRIER RIGHT	
100	978745-0000		2	CATCH	
120	272419-0000		1	CARRIER	
150	33408-0000		4	BEARING	
550	312105-0376		2	SCREW M6S ISO 4014 M6X35 A480	
585	315115-0153		8	WASHER PLAIN, TBRB 6,4/12 H=3	
Common Parts					
010	1548942-0000		1	CUTTING JAW	
010	574386-0000		1	CUTTING JAW	
010	441727-0000		1	CUTTING JAW	
010	256769-0000		1	CUTTING JAW	
030	1519215-0000		1	BEARING HOUSING	
030	1478225-0000		1	BEARING HOUSING	
030	1478224-0000		1	BEARING HOUSING	
030	1478223-0000		1	BEARING HOUSING	
040	1519216-0000		1	CARRIER RULER	
040	751575-0000		1	RULERPART R	
040	752014-0000		1	RULERPART R	
040	752009-0000		1	RULERPART R	
045	751577-0000		1	RULERPART R	
045	752015-0000		1	RULERPART R	
045	752010-0000		1	RULERPART R	
050	1110829-0000		2	CUTTING RAIL	
060	1532440-0000		1	FOLDING FLAP	
060	2532542-0000		1	FOLDING FLAP	
060	2532540-0000		1	FOLDING FLAP	
060	2597663-0000		1	FOLDING FLAP	
060	597993-0000		1	FOLDING FLAP	

Machine Type | Group Description | Used-In | Group Number | Page No

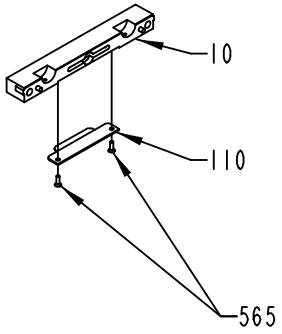

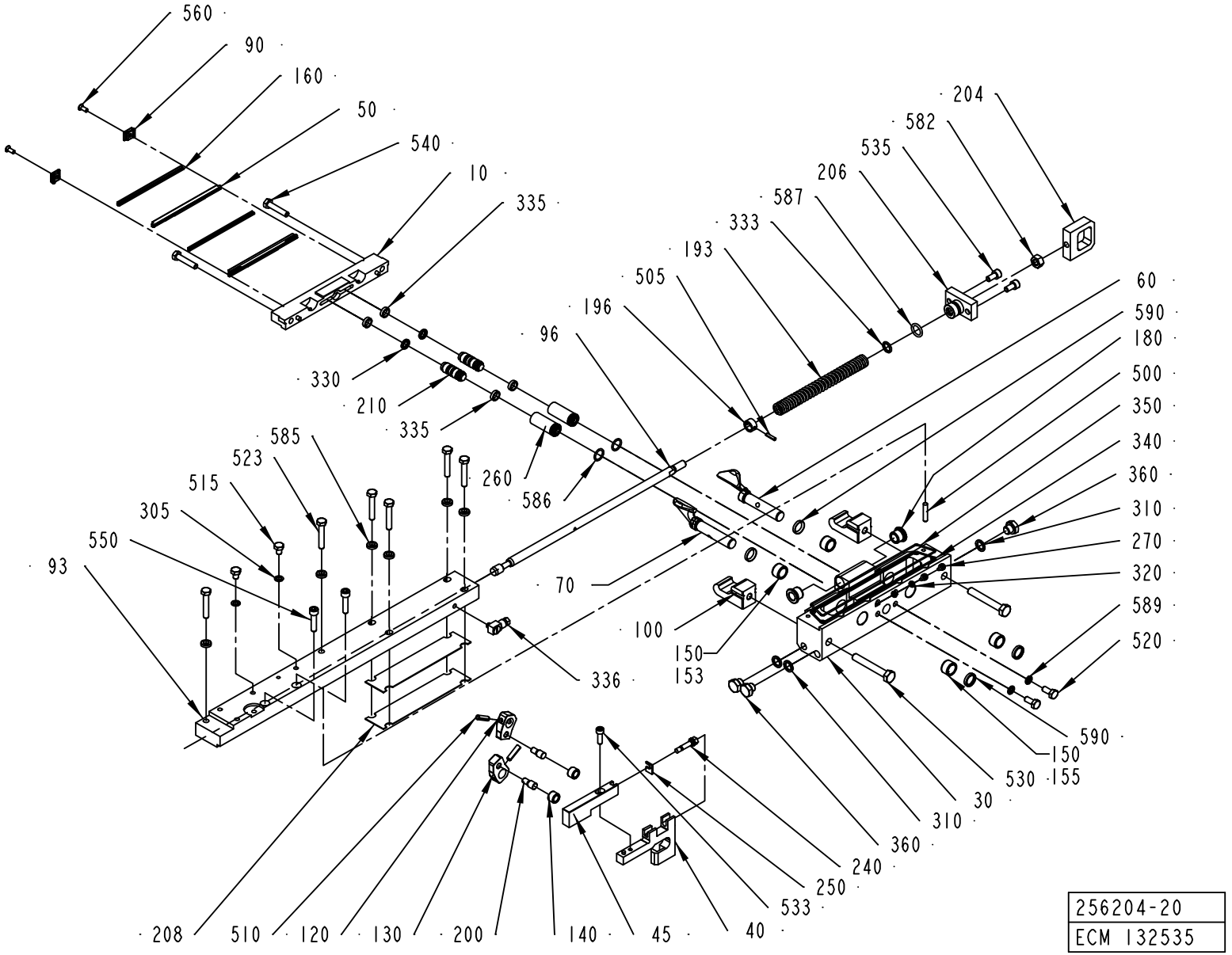

256204-20
ECM 132535

ECM: 156841 - 20040310
Group number: 256204-0600
Assembly Drawing: 256204-20_1_AH

This list covers pages from 4-4 to 4-7

Pos	Part No	UN	Qty	Description	Page No
Common Parts (Cont'd)					
070	2532543-0000		1	FOLDING FLAP	
070	1532441-0000		1	FOLDING FLAP	
070	597994-0000		1	FOLDING FLAP	
070	2532539-0000		1	FOLDING FLAP	
070	2532541-0000		1	FOLDING FLAP	
090	1348053-0000		2	BRACKET	
093	1519219-0000		1	CARRIER	
096	256659-0000		1	OPERATING ROD	
100	1523924-0000		2	CATCH	
120	2527724-0000		1	CARRIER	
130	272419-0000		1	CARRIER	
140	22463-0000		2	ROLL	
160	1110391-0000		2	DOLLY	
160	1110391-0000		2	DOLLY	
180	2532544-0000		2	BUSHING	
193	255742-0000		1	COMPRESSION SPRING	
196	255801-0000		1	RETAINING RING	
200	256607-0000		2	AXLE PIN	
204	256626-0000		1	EAR	
206	256706-0000		1	BEARING PLATE	
208	257362-0000		2	LACE	
210	752115-0000		2	PLUNGER	
240	751579-0000		1	ADJUSTING SCREW	
250	751580-0000		1	SHIM	
260	752288-0000		2	SLEEVE	
270	752476-0000		2	SCREW	
305	315237-0106		2	WASHER,PL.RND.AL.6/10,H=1	
310	315237-0109		3	WASHER,PL.RND.AL.10/14,H=1,5	
320	315211-0101		2	BONDED SEAL SS/NBR90 M4	
330	90091-0216		2	PISTON SEAL, GLIDORING 7,1X12X2,2 MM	
333	90091-0091		1	ROD SEAL, GLIDORING 10X14X1,7 MM	
335	90091-0169		4	WEAR RING 12X15X3,2 MM	
336	90134-0058		1	CONNECTION	
340	90153-0015	KG	1	ADHESIVE,LOCTITE IS 496/CYANOLOT 303	
350	90242-0093	MM	450	O-RING MATERIAL 1,5 MM	
360	90330-0066		3	PLUG, EXT. G-THREAD, G1/8	
500	311103-0312		1	PARALLELL PIN, M6, 5X25 MM	
505	311111-0207		1	SPRING PIN ISO 8752 3X14-ST	
510	311111-0308		2	SPRING PIN ISO 8752 5X20-ST	
515	312105-0362		2	SCREW M6S ISO 4017 M6X8 A480	
520	312105-0367		2	SCREW M6S ISO 4017 M6X14 A480	
523	312105-0376		6	SCREW M6S ISO 4014 M6X35 A480	
530	312105-0462		2	SCREW M6S ISO 4014 M8X55 A480	
533	312115-0329		1	SCREW ISO4762 M5X16 A4	
535	312115-0366		2	SCREW ISO4762 M6X12 A4	
540	312115-0370		2	SCREW ISO4762 M6X20 A4	
550	312115-0372		2	SCREW ISO4762 M6X25 A4	
560	312145-0291		2	SCREW ISO 2009 MFS M4X12 A4	
582	312605-0318		1	HEXAGON NUT, M6M M8 A280	
586	315202-0110		2	O-RING 12,1X1,6 MM	
587	315202-0265		1	O-RING 12,3X2,4 MM	
589	315211-0103		2	BONDED SEAL SS/NBR90 M6	
590	315230-0157		4	BEARING SEAL 12X16X3 MM	

Machine Type | Group Description | Used-In | Group Number | Page No

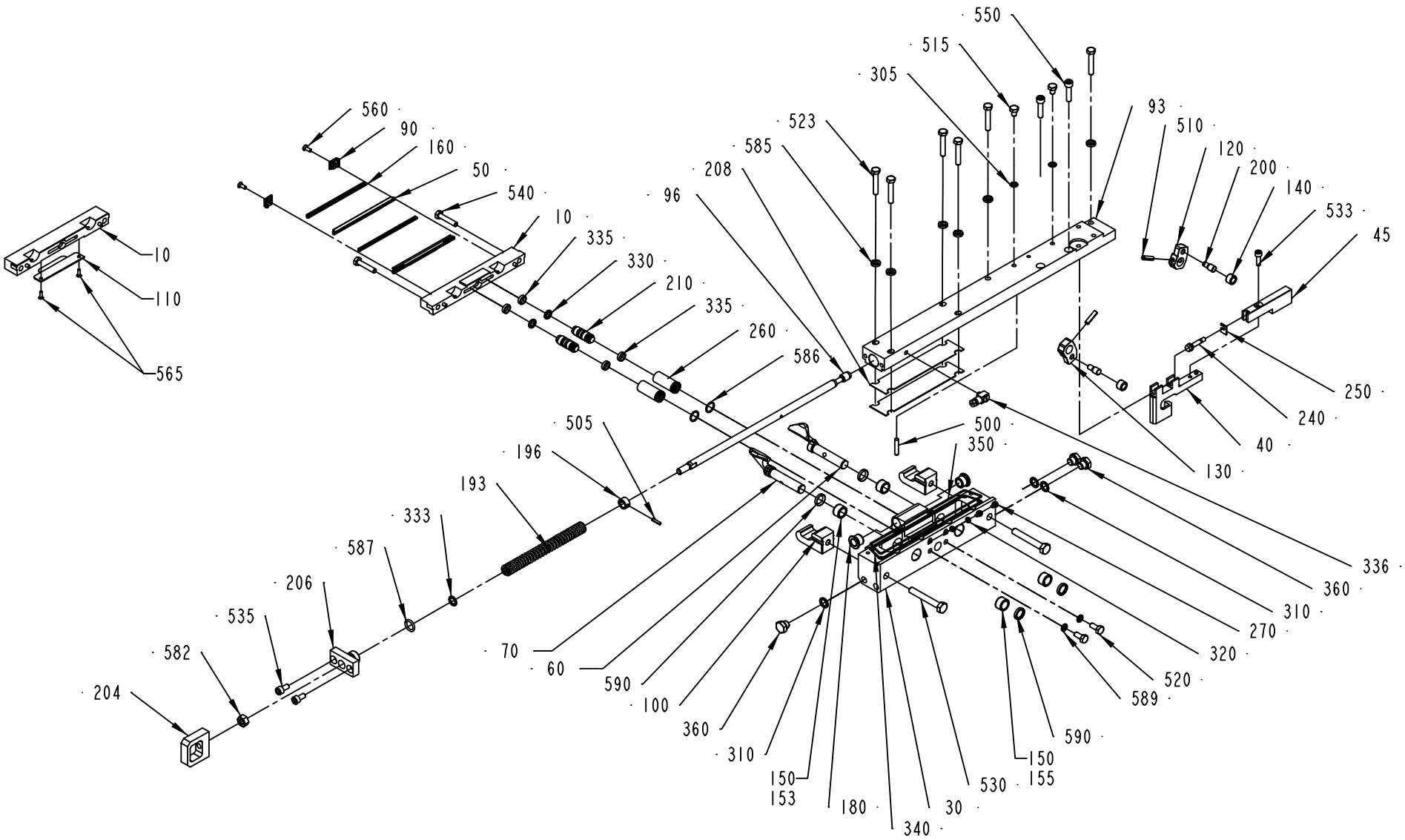

256205-20
ECM 132535

ECM: 156842 - 20040310
Group number: 256205-0600
Assembly Drawing: 256205-20_1_AH

This list covers pages from 4-8 to 4-11

Pos	Part No	UN	Qty	Description	Page No
TBA 0100B					
010	256487-0000		1	CUTTING JAW	
030	1478222-0000		1	BEARING HOUSING	
060	272420-0000		1	FOLDING FLAP	
070	272421-0000		1	FOLDING FLAP	
090	272427-0000		2	BRACKET	
093	979763-0000		1	CARRIER LEFT 100	
100	978745-0000		2	CATCH	
120	2527724-0000		1	CARRIER	
130	272416-0000		1	CARRIER	
150	33408-0000		4	BEARING	
160	1520577-0001		2	DOLLY	
160	1520577-0001		2	DOLLY	
180	2532544-0000		2	BUSHING	
540	312105-0374		2	SCREW M6S ISO 4014 M6X30 A480	
550	312115-0372		2	SCREW ISO4762 M6X25 A4	
560	312145-0289		2	SCREW ISO 2009 MFS M4X10 A4	
585	315115-0153		6	WASHER PLAIN, TBRB 6,4/12 H=3	
TBA 0125S					
010	256487-0000		1	CUTTING JAW	
030	1478222-0000		1	BEARING HOUSING	
060	2597663-0000		1	FOLDING FLAP	
070	2532539-0000		1	FOLDING FLAP	
090	272427-0000		2	BRACKET	
093	979763-0000		1	CARRIER LEFT 100	
100	978745-0000		2	CATCH	
120	2527724-0000		1	CARRIER	
130	272416-0000		1	CARRIER	
150	33408-0000		4	BEARING	
160	1520577-0001		2	DOLLY	
160	1520577-0001		2	DOLLY	
180	2532544-0000		2	BUSHING	
540	312105-0374		2	SCREW M6S ISO 4014 M6X30 A480	
550	312115-0372		2	SCREW ISO4762 M6X25 A4	
560	312145-0289		2	SCREW ISO 2009 MFS M4X10 A4	
585	315115-0153		6	WASHER PLAIN, TBRB 6,4/12 H=3	
TBA 0160S, TBA 0200S					
050	1110820-0000		2	CUTTING RAIL	
070	2532543-0000		1	FOLDING FLAP	
090	1348053-0000		2	BRACKET	
093	978714-0000		1	CARRIER LEFT	
100	978745-0000		2	CATCH	
120	272419-0000		1	CARRIER	
130	272419-0000		1	CARRIER	
150	33408-0000		4	BEARING	
160	1110391-0000		2	DOLLY	
160	1110391-0000		2	DOLLY	
180	2532544-0000		2	BUSHING	
540	312115-0370		2	SCREW ISO4762 M6X20 A4	
550	312105-0376		2	SCREW M6S ISO 4014 M6X35 A480	
560	312145-0291		2	SCREW ISO 2009 MFS M4X12 A4	
585	315115-0153		8	WASHER PLAIN, TBRB 6,4/12 H=3	
TBA 0200B, TBA 0250B					
050	1110820-0000		2	CUTTING RAIL	
070	2532541-0000		1	FOLDING FLAP	
090	1348053-0000		2	BRACKET	
093	978714-0000		1	CARRIER LEFT	
100	978745-0000		2	CATCH	
120	272419-0000		1	CARRIER	
130	272419-0000		1	CARRIER	
150	33408-0000		4	BEARING	
160	1110391-0000		2	DOLLY	
160	1110391-0000		2	DOLLY	
180	2532544-0000		2	BUSHING	
540	312115-0370		2	SCREW ISO4762 M6X20 A4	
550	312105-0376		2	SCREW M6S ISO 4014 M6X35 A480	
560	312145-0291		2	SCREW ISO 2009 MFS M4X12 A4	
585	315115-0153		8	WASHER PLAIN, TBRB 6,4/12 H=3	
TBA 0250S, TBA 0200M					
040	574371-0000		1	CARRIER RULER LEFT	
045	574372-0000		1	CARRIER RULER LEFT	
050	1110820-0000		2	CUTTING RAIL	
070	2532543-0000		1	FOLDING FLAP	
090	1348053-0000		2	BRACKET	
093	978714-0000		1	CARRIER LEFT	
100	978745-0000		2	CATCH	
120	272419-0000		1	CARRIER	
130	272419-0000		1	CARRIER	
150	33408-0000		4	BEARING	
160	1110391-0000		2	DOLLY	
160	1110391-0000		2	DOLLY	
180	2532544-0000		2	BUSHING	
540	312115-0370		2	SCREW ISO4762 M6X20 A4	
550	312105-0376		2	SCREW M6S ISO 4014 M6X35 A480	

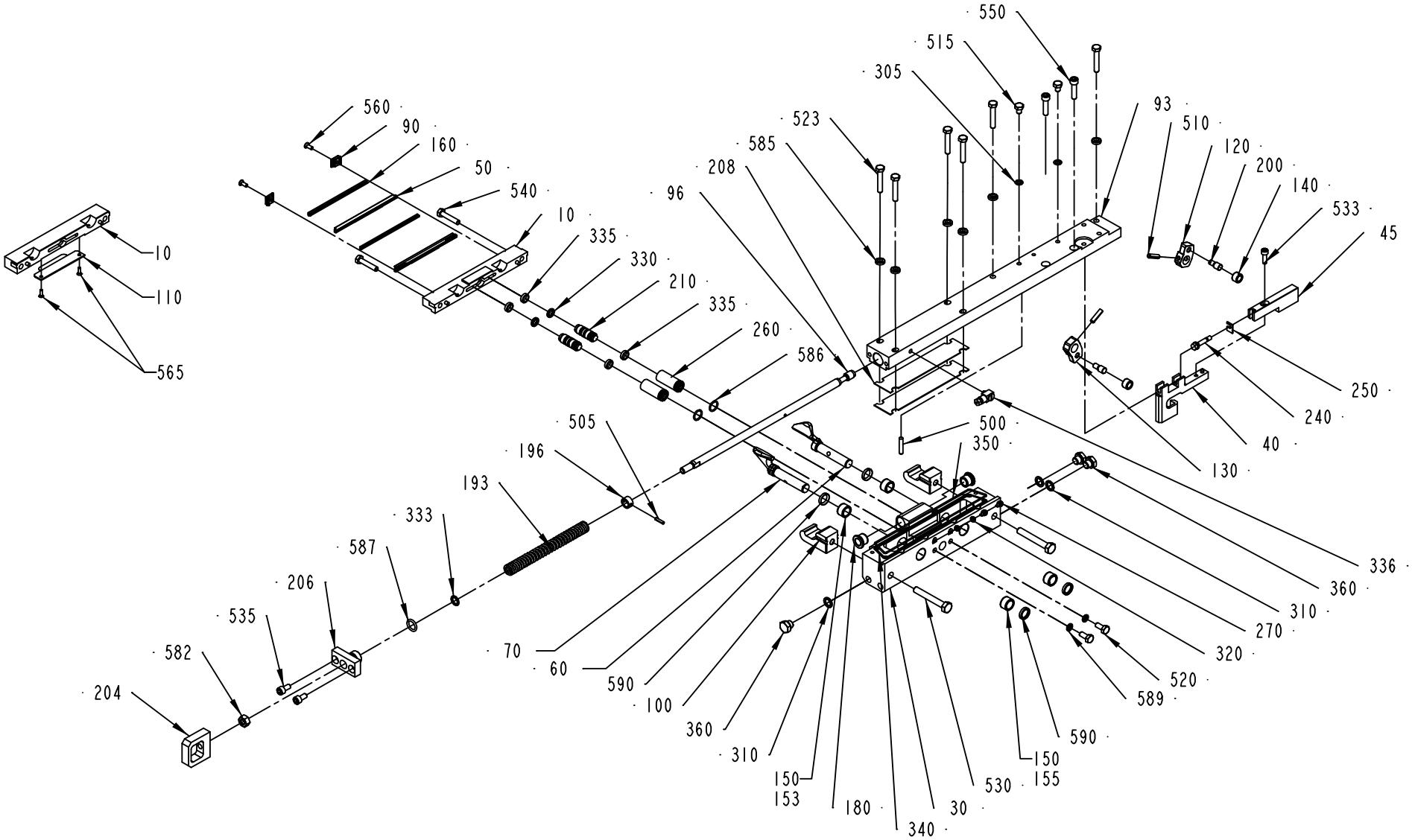

256205-20
ECM 132535

ECM: 156842 - 20040310
Group number: 256205-0600
Assembly Drawing: 256205-20_1_AH

This list covers pages from 4-8 to 4-11

Pos	Part No	UN	Qty	Description	Page No
TBA 0250S, TBA 0200M (Cont'd)					
560	312145-0291		2	SCREW ISO 2009 MFS M4X12 A4	
585	315115-0153		8	WASHER PLAIN, TBRB 6,4/12 H=3	
TBA 0330S, TBA 0300S, TBA 0180B, TBA 0284B					
050	1110820-0000		2	CUTTING RAIL	
060	272422-0000		1	FOLDING FLAP	
070	272423-0000		1	FOLDING FLAP	
090	1348053-0000		2	BRACKET	
093	978714-0000		1	CARRIER LEFT	
100	978745-0000		2	CATCH	
120	272419-0000		1	CARRIER	
130	272419-0000		1	CARRIER	
150	33408-0000		4	BEARING	
160	1110391-0000		2	DOLLY	
160	1110391-0000		2	DOLLY	
180	2532544-0000		2	BUSHING	
540	312115-0370		2	SCREW ISO4762 M6X20 A4	
550	312105-0376		2	SCREW M6S ISO 4014 M6X35 A480	
560	312145-0291		2	SCREW ISO 2009 MFS M4X12 A4	
585	315115-0153		8	WASHER PLAIN, TBRB 6,4/12 H=3	
Common Parts					
010	441727-0000		1	CUTTING JAW	
010	256769-0000		1	CUTTING JAW	
010	574386-0000		1	CUTTING JAW	
030	1478223-0000		1	BEARING HOUSING	
030	1478224-0000		1	BEARING HOUSING	
030	1478225-0000		1	BEARING HOUSING	
040	751576-0000		1	RULERPART L	
040	752011-0000		1	RULERPART L	
040	752016-0000		1	RULERPART L	
045	751578-0000		1	RULERPART L	
045	752012-0000		1	RULERPART L	
045	752017-0000		1	RULERPART L	
050	1110829-0000		2	CUTTING RAIL	
060	2532540-0000		1	FOLDING FLAP	
060	2532542-0000		1	FOLDING FLAP	
070	591446-0000		1	FOLDING FLAP LEFT	
070	597994-0000		1	FOLDING FLAP	
096	256659-0000		1	OPERATING ROD	
140	22463-0000		2	ROLL	
193	255742-0000		1	COMPRESSION SPRING	
196	255801-0000		1	RETAINING RING	
200	256607-0000		2	AXLE PIN	
204	256626-0000		1	EAR	
206	256706-0000		1	BEARING PLATE	
208	257362-0000		2	LACE	
210	752115-0000		2	PLUNGER	
240	751579-0000		1	ADJUSTING SCREW	
250	751580-0000		1	SHIM	
260	752288-0000		2	SLEEVE	
270	752476-0000		2	SCREW	
305	315237-0106		2	WASHER,PL.RND.AL.6/10,H=1	
310	315237-0109		3	WASHER,PL.RND.AL.10/14,H=1,5	
320	315211-0101		2	BONDED SEAL SS/NBR90 M4	
330	90091-0216		2	PISTON SEAL, GLIDORING 7,1X12X2,2 MM	
333	90091-0091		1	ROD SEAL, GLIDORING 10X14X1,7 MM	
335	90091-0169		4	WEAR RING 12X15X3,2 MM	
336	90134-0058		1	CONNECTION	
340	90153-0015	KG	1	ADHESIVE,LOCTITE IS 496/CYANOLOT 303	
350	90242-0093	MM	450	O-RING MATERIAL 1,5 MM	
360	90330-0066		3	PLUG, EXT. G-THREAD, G1/8	
500	311103-0312		1	PARALLELL PIN, M6, 5X25 MM	
505	311111-0207		1	SPRING PIN ISO 8752 3X14-ST	
510	311111-0308		2	SPRING PIN ISO 8752 5X20-ST	
515	312105-0362		2	SCREW M6S ISO 4017 M6X8 A480	
520	312105-0367		2	SCREW M6S ISO 4017 M6X14 A480	
523	312105-0376		6	SCREW M6S ISO 4014 M6X35 A480	
530	312105-0462		2	SCREW M6S ISO 4014 M8X55 A480	
533	312115-0329		1	SCREW ISO4762 M5X16 A4	
535	312115-0366		2	SCREW ISO4762 M6X12 A4	
582	312605-0318		1	HEXAGON NUT, M6M M8 A280	
586	315202-0110		2	O-RING 12,1X1,6 MM	
587	315202-0265		1	O-RING 12,3X2,4 MM	
589	315211-0103		2	BONDED SEAL SS/NBR90 M6	
590	315230-0157		4	BEARING SEAL 12X16X3 MM	

Machine Type | Group Description | Used-In | Group Number | Page No

MOTORIZED DESIGN CONTROL SYSTEM, LEFT

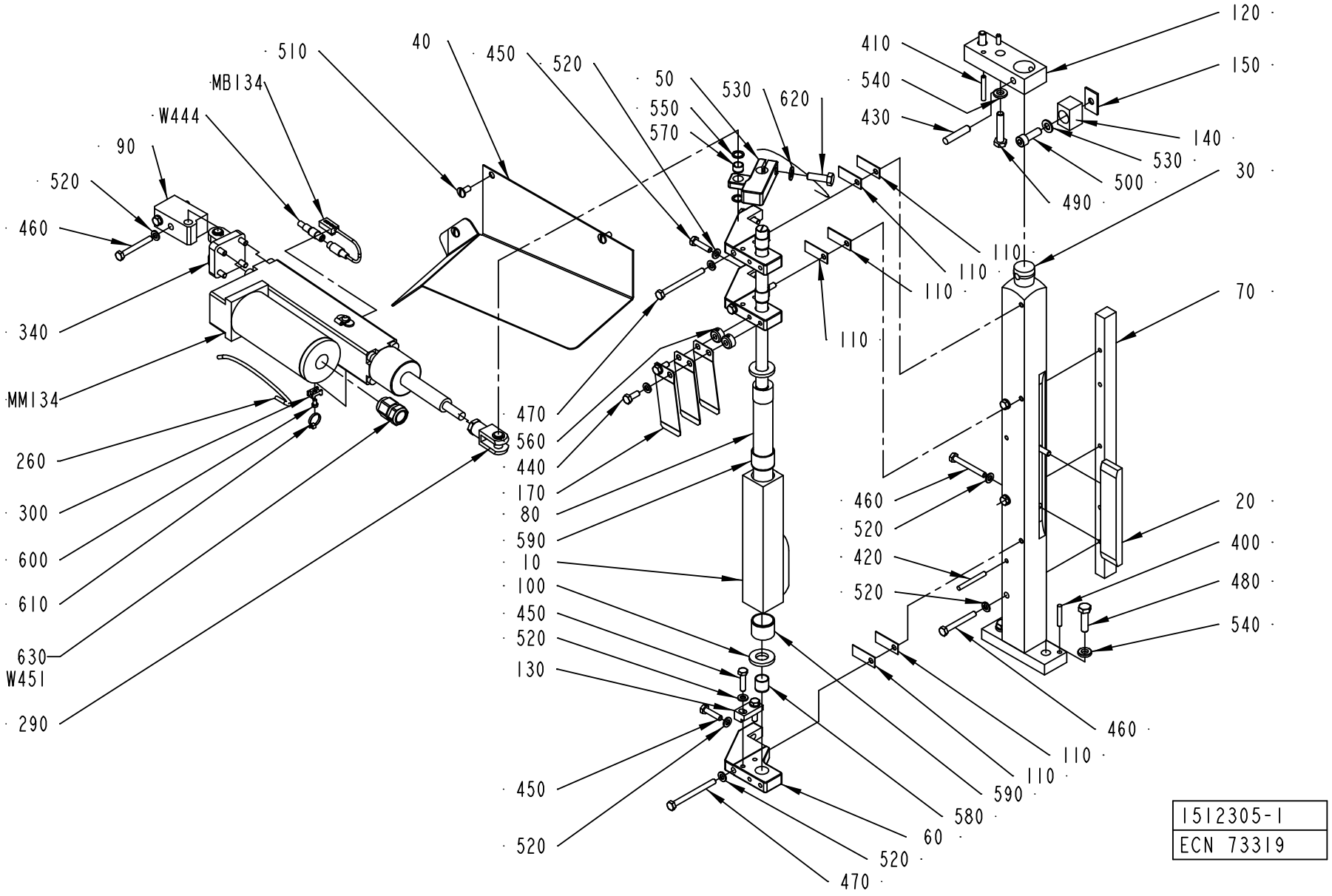

1512305-1
ECN 73319

ECM: 152512 - 20031219
Group number: 1512305-0100
Assembly Drawing: 1512305-1_1_AA

Pos	Part No	UN	Qty	Description	Page No
TBA 0100B					
010	979770-0000		1	FOLDING FLAP CAM 100	
020	979771-0000		1	COUNTER CAM 100	
TBA 0160S					
010	577225-0000		1	FOLDING FLAP CAM	
020	272640-0006		1	COUNTER CAM	
TBA 0180B					
010	456760-0010		1	FOLDING FLAP CAM 200B & 125S	
020	272640-0007		1	COUNTER CAM	
TBA 0200B, TBA 0125S					
010	456760-0010		1	FOLDING FLAP CAM 200B & 125S	
020	272640-0005		1	COUNTER CAM	
TBA 0200M					
010	456760-0011		1	FOLDING FLAP CAM 250B	
020	272640-0009		1	COUNTER CAM	
TBA 0200S					
010	456760-0003		1	FOLDING FLAP CAM 200S	
020	272640-0009		1	COUNTER CAM	
TBA 0250B					
010	456760-0011		1	FOLDING FLAP CAM 250B	
020	272640-0002		1	COUNTER CAM	
TBA 0250S					
010	574494-0000		1	FOLDING FLAP CAM	
020	272640-0009		1	COUNTER CAM	
TBA 0300S, TBA 0284B					
010	456760-0012		1	FOLDING FLAP CAM	
020	272640-0002		1	COUNTER CAM	
TBA 0330S					
010	582162-0000		1	FOLDING FLAP CAM	
020	272640-0001		1	COUNTER CAM	
Common Parts					
030	272642-0000		1	PILLAR	
040	2514041-0000		1	PROTECTION	
050	929402-0000		1	ARM	
060	272491-0000		3	BRACKET	
070	272645-0000		1	RAIL	
080	272654-0000		1	ECCENTRIC SHAFT	
090	2512787-0000		1	HOLDER	
100	256621-0000		2	WASHER	
110	256705-0000		6	LACE	
120	256707-0000		1	BRACKET	
130	271284-0000		1	BLOCKING PIECE	
140	978184-0000		1	STOPPER	
150	978185-0000		1	SHIM	
170	257334-0000		3	LEAF SPRING	
260	90166-0095	MM	250	TUBE 4 MM PA BLUE	
290	90239-0357		1	ROD END, CLEVIS WITH AXLE M10X1,25	
300	352113-0205		1	ANCHOR PLATES FOR STRIPS, TYPE TM2S8-C10	
340	90450-0654		1	BRACKET,REAR,EYE WITH AXLE 32	
400	311103-0314		2	PARALLEL PIN ISO 2338 5M6X30 A1	
410	311103-0316		2	PARALLEL PIN ISO 2338 5M6X35 A1	
420	311103-0320		2	PARALLEL PIN ISO 2338 5M6X45 A1	
430	311103-0409		1	PARALLEL PIN ISO 2338 8M6X40 A1	
440	312105-0368		2	SCREW M6S ISO 4017 M6X16 A480	
450	312105-0372		5	SCREW M6S ISO 4017 M6X25 A480	
460	312105-0380		7	SCREW M6S ISO 4014 M6X50 A480	
470	312105-0384		3	SCREW M6S ISO 4014 M6X70 A480	
480	312105-0455		2	SCREW M6S ISO 4017 M8X30 A480	
490	312105-0459		2	SCREW M6S ISO 4014 M8X40 A480	
500	312115-0453		1	SCREW ISO4762 M8X25 A4	
510	90287-0075		3	SCREW SLOT. PAN HEAD LKCS M6X12	
520	315105-0153		17	WASHER BRB6,4X12RFR	
530	315105-0165		2	WASHER BRB8,4X16RFR	
540	315115-0165		4	WASHER PLAIN, TBRB 8,4/16 H=3	
550	315233-0109		2	WASHER CAPTIVE SEALING G1/8	
560	315742-0102		2	RETAINING RING 6 SMS 199	
570	321120-0098		1	BEARING BUSHING W/O FL, 10/12X8	
580	321120-0118		3	BEARBUSHING W/O FL 14X16X15	
590	321120-0153		2	BEARBUSHING W/O FL 24X27X20	
600	312125-0285		1	SCREW ISO 1207 M4X6 A4	
610	352113-0101		1	CLIP STRIP, 92X2,5 MM	
620	312105-0453		1	SCREW M6S ISO 4017 M8X25 A480	
630	90458-0438		1	GLAND, EXTENDED WITH INSERT, M20X1,5	
MB134	90458-0747		1	SENSOR FOR CYLINDER, SMH-1PC	
MM134	90458-1301		1	CYLINDER ETS32-M10NA2X-FM50-AEUM1D	
W444	90458-1298		1	CONNECTOR AND CABLE 403000E 18M 080	
W451	90220-0107	M	3	SCR. CABLE 5X0,75MM2	

Machine Type	Group Description	Used-In	Group Number	Page No

MOTORIZED DESIGN CONTROL SYSTEM, RIGHT

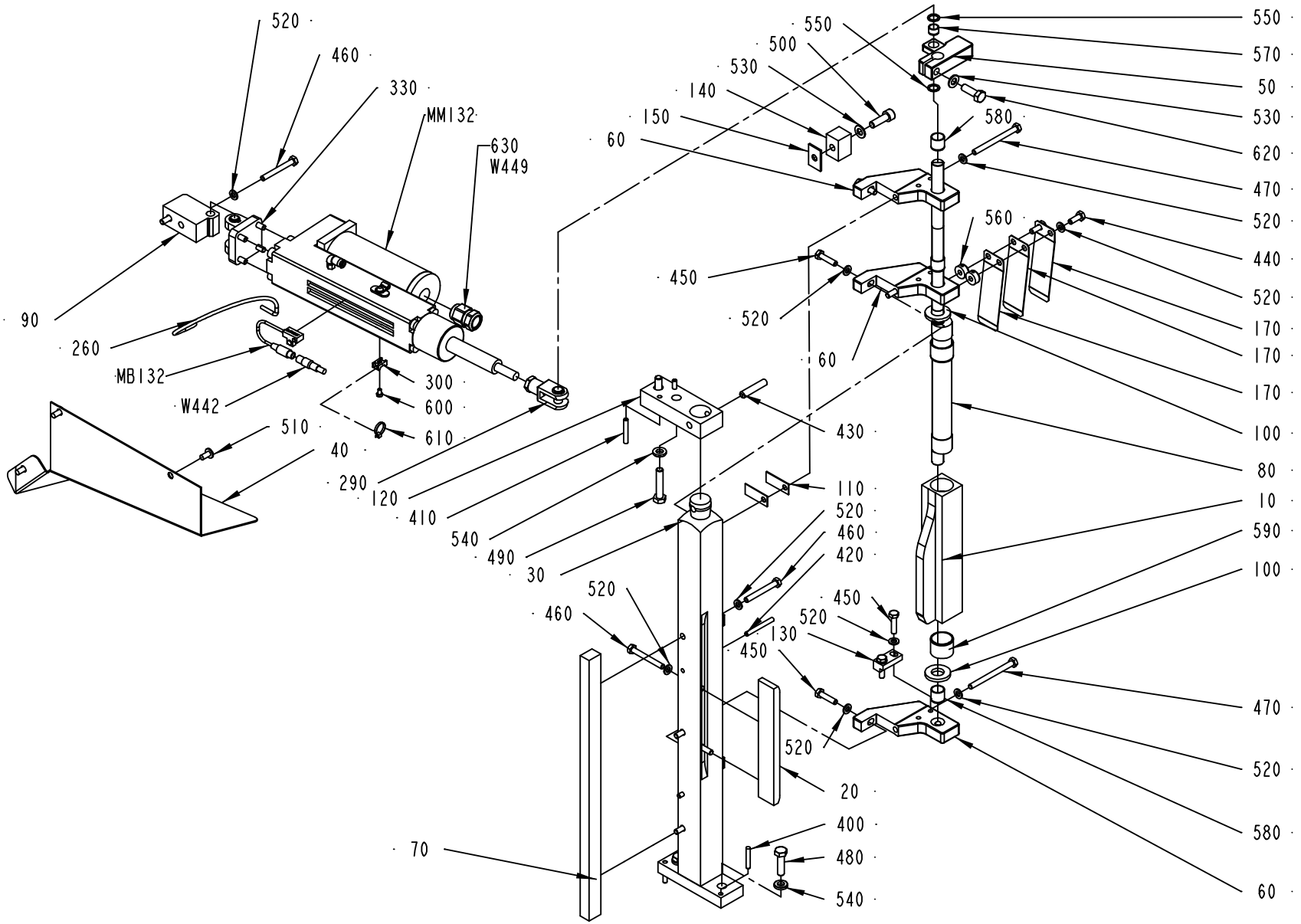

1512306-1
ECN 73319

ECM: 113340 - 20020930
Group number: 1512306-0100
Assembly Drawing: 1512306-1_1_AA

Pos	Part No	UN	Qty	Description	Page No
TBA 0100B					
010	979770-0000		1	FOLDING FLAP CAM 100	
020	979771-0000		1	COUNTER CAM 100	
TBA 0160S					
010	577225-0000		1	FOLDING FLAP CAM	
020	272640-0006		1	COUNTER CAM	
TBA 0180B					
010	456760-0010		1	FOLDING FLAP CAM 200B & 125S	
020	272640-0007		1	COUNTER CAM	
TBA 0200B, TBA 0125S					
010	456760-0010		1	FOLDING FLAP CAM 200B & 125S	
020	272640-0005		1	COUNTER CAM	
TBA 0200M					
010	456760-0011		1	FOLDING FLAP CAM 250B	
020	272640-0009		1	COUNTER CAM	
TBA 0200S					
010	456760-0003		1	FOLDING FLAP CAM 200S	
020	272640-0009		1	COUNTER CAM	
TBA 0250B					
010	456760-0011		1	FOLDING FLAP CAM 250B	
020	272640-0002		1	COUNTER CAM	
TBA 0250S					
010	574494-0000		1	FOLDING FLAP CAM	
020	272640-0009		1	COUNTER CAM	
TBA 0300S, TBA 0284B					
010	456760-0012		1	FOLDING FLAP CAM	
020	272640-0002		1	COUNTER CAM	
TBA 0330S					
010	582162-0000		1	FOLDING FLAP CAM	
020	272640-0001		1	COUNTER CAM	
Common Parts					
030	272641-0000		1	PILLAR	
040	2514042-0000		1	PROTECTION	
050	929402-0000		1	ARM	
060	272491-0000		3	BRACKET	
070	272645-0000		1	RAIL	
080	272654-0000		1	ECCENTRIC SHAFT	
090	2512787-0000		1	HOLDER	
100	256621-0000		2	WASHER	
110	256705-0000		6	LACE	
120	256707-0000		1	BRACKET	
130	271284-0000		1	BLOCKING PIECE	
140	978184-0000		1	STOPPER	
150	978185-0000		1	SHIM	
170	257334-0000		3	LEAF SPRING	
260	90166-0095	MM	250	TUBE 4 MM PA BLUE	
290	90239-0357		1	ROD END, CLEVIS WITH AXLE M10X1,25	
300	352113-0205		1	ANCHOR PLATES FOR STRIPS, TYPE TM2S8-C10	
340	90450-0654		1	BRACKET,REAR,EYE WITH AXLE 32	
400	311103-0314		2	PARALLEL PIN ISO 2338 5M6X30 A1	
410	311103-0316		2	PARALLEL PIN ISO 2338 5M6X35 A1	
420	311103-0320		2	PARALLEL PIN ISO 2338 5M6X45 A1	
430	311103-0409		1	PARALLEL PIN ISO 2338 8M6X40 A1	
440	312105-0368		2	SCREW M6S ISO 4017 M6X16 A480	
450	312105-0372		5	SCREW M6S ISO 4017 M6X25 A480	
460	312105-0380		7	SCREW M6S ISO 4014 M6X50 A480	
470	312105-0384		3	SCREW M6S ISO 4014 M6X70 A480	
480	312105-0455		2	SCREW M6S ISO 4017 M8X30 A480	
490	312105-0459		2	SCREW M6S ISO 4014 M8X40 A480	
500	312115-0453		1	SCREW ISO4762 M8X25 A4	
510	90287-0075		3	SCREW SLOT. PAN HEAD LKCS M6X12	
520	315105-0153		17	WASHER BRB6,4X12RFR	
530	315105-0165		2	WASHER BRB8,4X16RFR	
540	315115-0165		4	WASHER PLAIN, TBRB 8,4/16 H=3	
550	315233-0109		2	WASHER CAPTIVE SEALING G1/8	
560	315742-0102		2	RETAINING RING 6 SMS 199	
570	321120-0098		1	BEARING BUSHING W/O FL, 10/12X8	
580	321120-0118		3	BEARBUSHING W/O FL 14X16X15	
590	321120-0153		2	BEARBUSHING W/O FL 24X27X20	
600	312125-0285		1	SCREW ISO 1207 M4X6 A4	
610	352113-0101		1	CLIP STRIP, 92X2,5 MM	
620	312105-0453		1	SCREW M6S ISO 4017 M8X25 A480	
630	90458-0438		1	GLAND, EXTENDED WITH INSERT, M20X1,5	
MB132	90458-0747		1	SENSOR FOR CYLINDER, SMH-1PC	
MM132	90458-1301		1	CYLINDER ETS32-M10NA2X-FM50-AEUM1D	
W442	90458-1298		1	CONNECTOR AND CABLE 403000E 18M 080	
W449	90220-0107	M	4	SCR. CABLE 5X0,75MM2	

Machine Type	Group Description	Used-In	Group Number	Page No

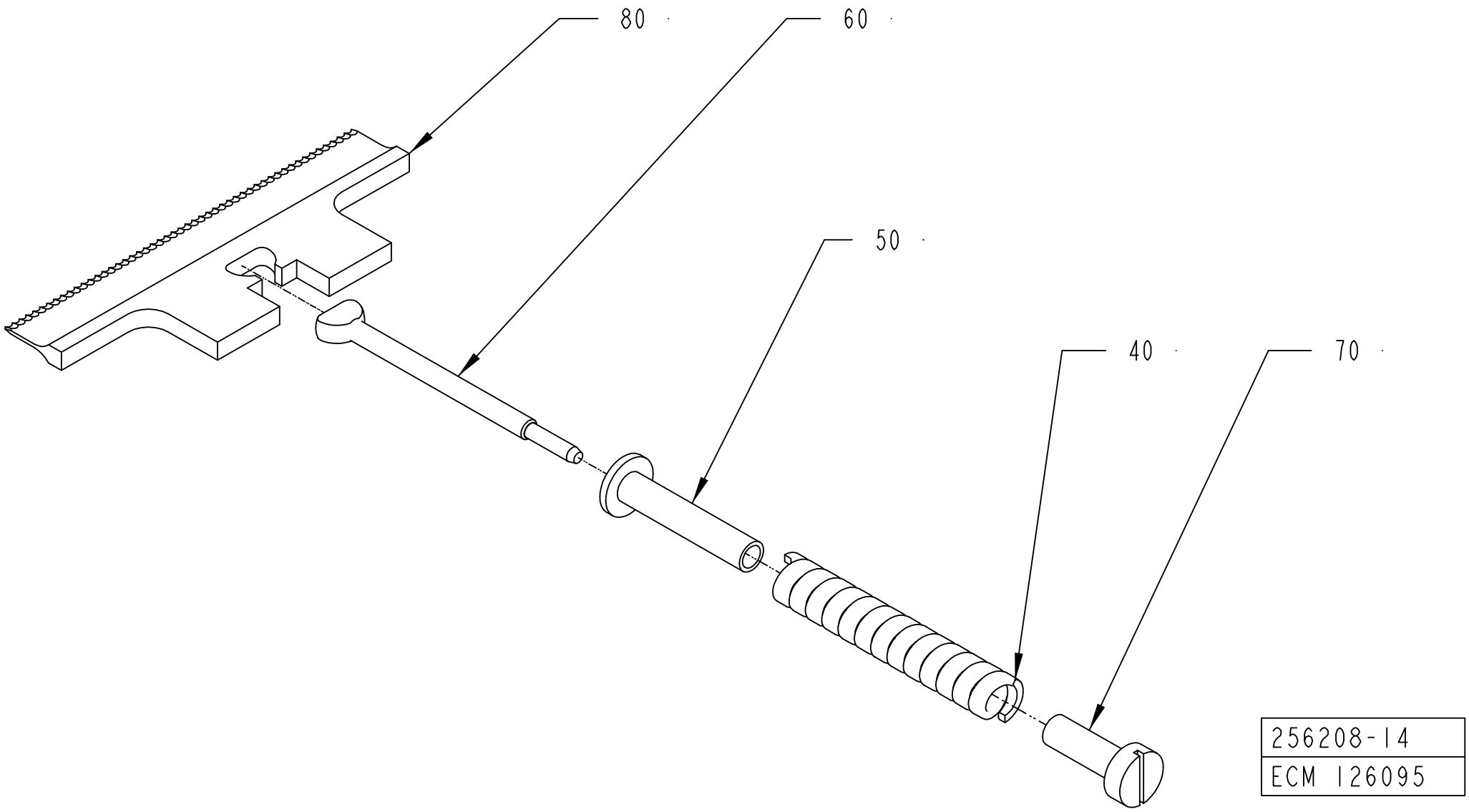
80
60
50
40
70
256208-14
ECM 126095

ECM: 161093 - 20040504
Group number: 256208-0400
Assembly Drawing: 256208-14_1_AE

Pos	Part No	UN	Qty	Description	Page No
TBA 0125S IH, TBA 0100B IH (See drawing on page: 4-16)					
080	1282645-0000		1	KNIFE	
TBA 0160S IH, TBA 0250S IH, TBA 0200M IH, TBA 0200S IH (See drawing on page: 4-16)					
080	1282647-0000		1	KNIFE	
TBA 0330S IH, TBA 0300S IH, TBA 0180B IH, TBA 0250B IH, TBA 0284B IH, TBA 0200B IH (See drawing on page: 4-16)					
080	1282646-0000		1	KNIFE	
Common Parts					
040	1538109-0000		1	COMPRESSION SPRING	
050	272753-0000		1	STEERING	
060	456009-0000		1	LINK	
070	272755-0000		1	NUT	

Pos	Part No	UN	Qty	Description	Page No

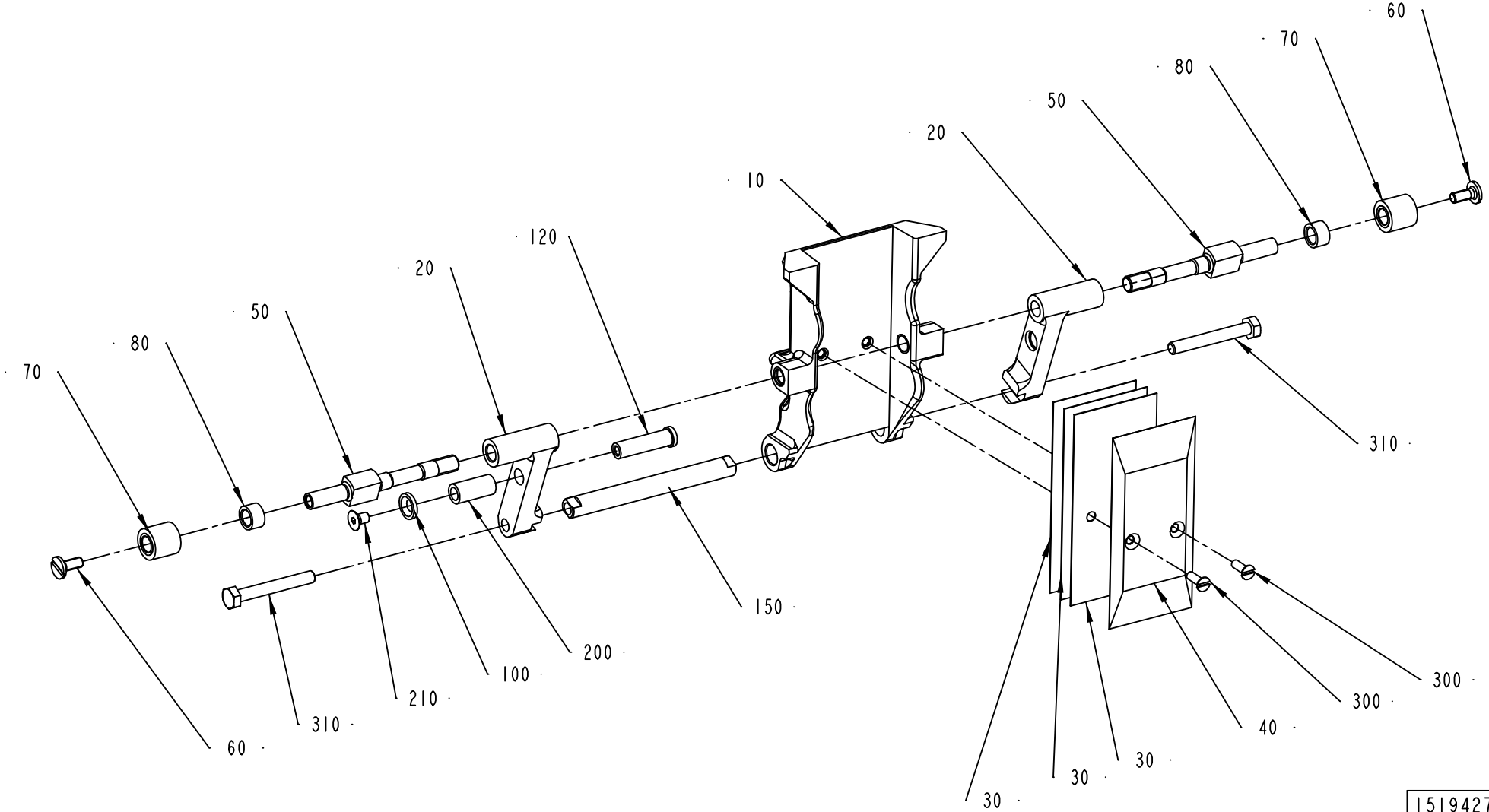

1519427-1
ECN 83326

ECM: 119391 - 20030113
Group number: 1519427-0100
Assembly Drawing: 1519427-1_1_AA

This list covers pages from 4-18 to 4-21

Pos	Part No	UN	Qty	Description	Page No
TBA 0100B (See drawing on page: 4-20)					
010	979751-0000		1	VOLUME FLAP 100	
020	1538942-0000		2	CARRIER	
030	979754-0000		3	VOLUME SHIM 100	
040	979755-0000		1	VOLUME BULGE 100	
050	979756-0000		2	SHAFT	
080	979757-0000		2	SPACER	
TBA 0125S (See drawing on page: 4-18)					
010	256849-0000		1	VOLUMEFLAP 125 ML	
020	1519374-0001		2	CARRIER	
030	272987-0000		3	VOLUME SHIM	
040	491868-0000		1	VOLUME BULGE	
050	752598-0000		2	SHAFT	
080	752615-0000		2	SPACER	
100	1519377-0000		1	WASHER	
120	1519376-0000		1	AXLE PIN	
210	312155-0323		1	SCREW EN 10642 MF6S M5X8 A480	
TBA 0160S (See drawing on page: 4-18)					
010	577211-0000		1	VOLUMEFLAP 160 ML	
020	1519374-0001		2	CARRIER	
030	577212-0000		3	VOLUME SHIM	
040	577213-0000		1	VOLUME BULGE 160 ML	
050	752598-0000		2	SHAFT	
080	752615-0000		2	SPACER	
100	1519377-0000		1	WASHER	
120	1519376-0000		1	AXLE PIN	
210	312155-0323		1	SCREW EN 10642 MF6S M5X8 A480	
TBA 0180B (See drawing on page: 4-18)					
010	752292-0000		1	VOLUMEFLAP 180 ML	
020	1519374-0002		2	CARRIER	
030	272986-0004		3	VOLUME SHIM	
040	272988-0004		1	VOLUME BULGE	
050	752598-0000		2	SHAFT	
080	752615-0000		2	SPACER	
100	1519377-0000		1	WASHER	
120	1519376-0000		1	AXLE PIN	
210	312155-0323		1	SCREW EN 10642 MF6S M5X8 A480	
TBA 0200B (See drawing on page: 4-18)					
010	752212-0000		1	VOLUME FLAP 200 ML	
020	1519374-0001		2	CARRIER	
030	272986-0003		3	VOLUME SHIM	
040	456005-0003		1	VOLUME BULGE	
050	752598-0000		2	SHAFT	
080	752615-0000		2	SPACER	
100	1519377-0000		1	WASHER	
120	1519376-0000		1	AXLE PIN	
210	312155-0323		1	SCREW EN 10642 MF6S M5X8 A480	
TBA 0200M (See drawing on page: 4-18)					
020	1519374-0001		2	CARRIER	
030	979861-0000		3	VOLUME SHIM	
040	979860-0000		1	VOLUME BULGE	
050	752598-0000		2	SHAFT	
080	752615-0000		2	SPACER	
100	1519377-0000		1	WASHER	
120	1519376-0000		1	AXLE PIN	
210	312155-0323		1	SCREW EN 10642 MF6S M5X8 A480	
TBA 0200S (See drawing on page: 4-18)					
010	752999-0000		1	VOLUME FLAP 200S	
020	1519374-0001		2	CARRIER	
030	272991-0000		3	VOLUME SHIM	
040	272990-0000		1	VOLUME BULGE	
050	752598-0000		2	SHAFT	
080	752615-0000		2	SPACER	
100	1519377-0000		1	WASHER	
120	1519376-0000		1	AXLE PIN	
210	312155-0323		1	SCREW EN 10642 MF6S M5X8 A480	
TBA 0250B (See drawing on page: 4-18)					
010	978366-0000		1	VOLUME FLAP 250 ML	
020	1519374-0001		2	CARRIER	
030	272986-0001		3	VOLUME SHIM	
040	456005-0001		1	VOLUME BULGE	
050	752598-0000		2	SHAFT	
080	752615-0000		2	SPACER	
100	1519377-0000		1	WASHER	
120	1519376-0000		1	AXLE PIN	
210	312155-0323		1	SCREW EN 10642 MF6S M5X8 A480	
TBA 0250S (See drawing on page: 4-18)					
010	574365-0000		1	VOLUMEFLAP 250S	
020	1519374-0001		2	CARRIER	
030	574366-0000		3	VOLUME SHIM	
040	574367-0000		1	VOLUME BULGE	
050	752598-0000		2	SHAFT	
080	752615-0000		2	SPACER	
100	1519377-0000		1	WASHER	

Machine Type | Group Description | Used-In | Group Number | Page No

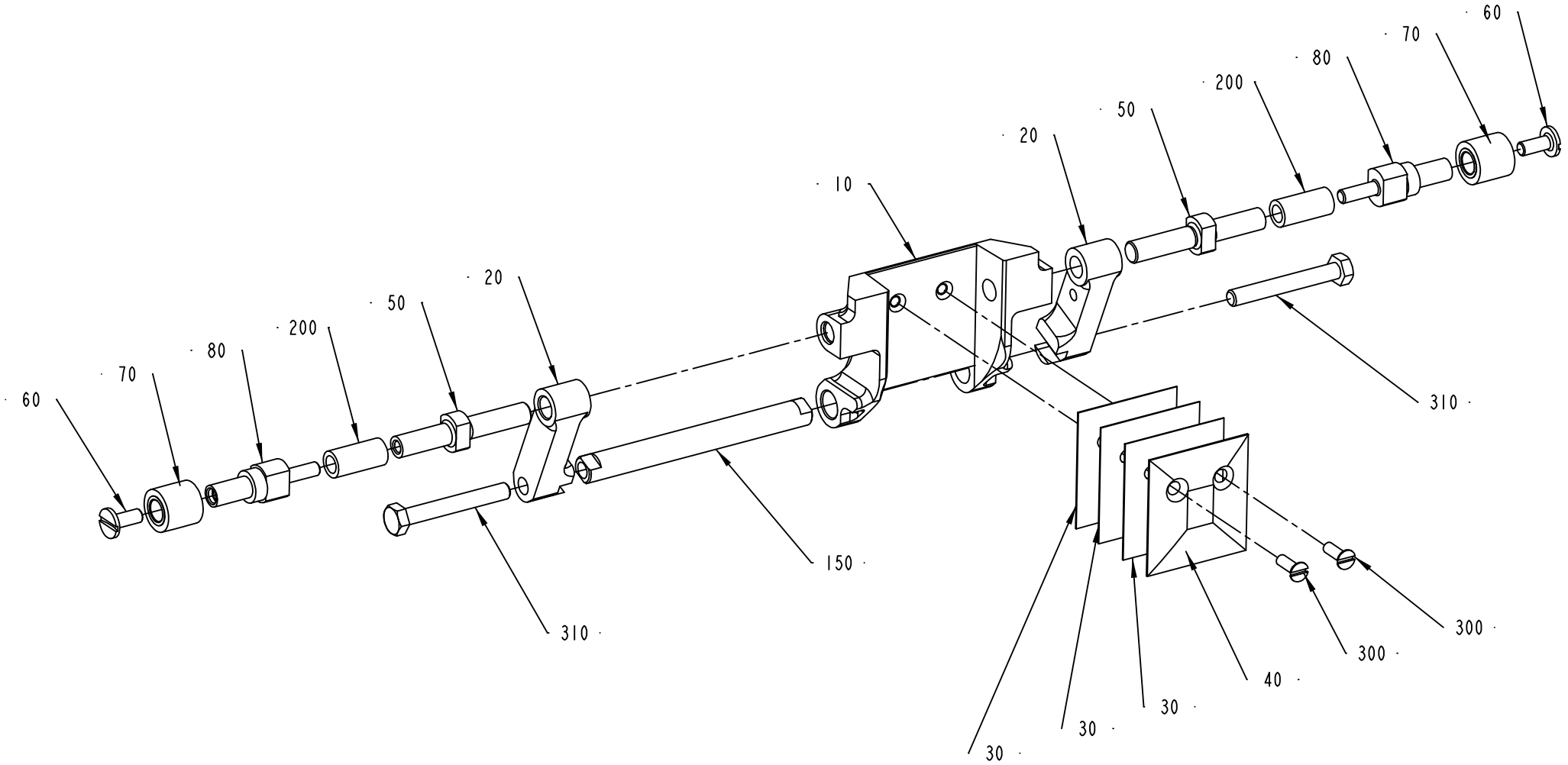

1519427-3
ECN 83326

Pos	Part No	UN	Qty	Description	Page No
TBA 0250S (Cont'd) (See drawing on page: 4-18)					
120	1519376-0000		1	AXLE PIN	
210	312155-0323		1	SCREW EN 10642 MF6S M5X8 A480	
TBA 0284B (See drawing on page: 4-18)					
010	978031-0000		1	VOLUMEFLAP 284 ML	
020	1519374-0001		2	CARRIER	
030	272986-0005		3	VOLUME SHIM	
040	752739-0000		1	VOLUME BULGE	
050	752598-0000		2	SHAFT	
080	752615-0000		2	SPACER	
100	1519377-0000		1	WASHER	
120	1519376-0000		1	AXLE PIN	
210	312155-0323		1	SCREW EN 10642 MF6S M5X8 A480	
TBA 0300S (See drawing on page: 4-18)					
010	978031-0000		1	VOLUMEFLAP 284 ML	
020	1519374-0001		2	CARRIER	
030	272986-0003		3	VOLUME SHIM	
040	979792-0000		1	VOLUME BULGE	
050	752598-0000		2	SHAFT	
080	752615-0000		2	SPACER	
100	1519377-0000		1	WASHER	
120	1519376-0000		1	AXLE PIN	
210	312155-0323		1	SCREW EN 10642 MF6S M5X8 A480	
TBA 0330S (See drawing on page: 4-18)					
010	582163-0000		1	VOLUME FLAP 330S	
020	1519374-0001		2	CARRIER	
030	272986-0006		3	VOLUME SHIM 330S	
040	979931-0000		1	VOLUME BULGE	
050	752598-0000		2	SHAFT	
080	752615-0000		2	SPACER	
100	1519377-0000		1	WASHER	
120	1519376-0000		1	AXLE PIN	
210	312155-0323		1	SCREW EN 10642 MF6S M5X8 A480	
Common Parts					
060	256859-0000		2	SCREW	
070	256860-0000		2	ROLL	
150	1519375-0001		1	SHAFT	
200	90166-0159	MM	25	RUBBER HOSE	
300	312145-0291		2	SCREW ISO 2009 MFS M4X12 A4	
310	312105-0379		2	SCREW M6S ISO 4014 M6X45 A480	

Pos	Part No	UN	Qty	Description	Page No

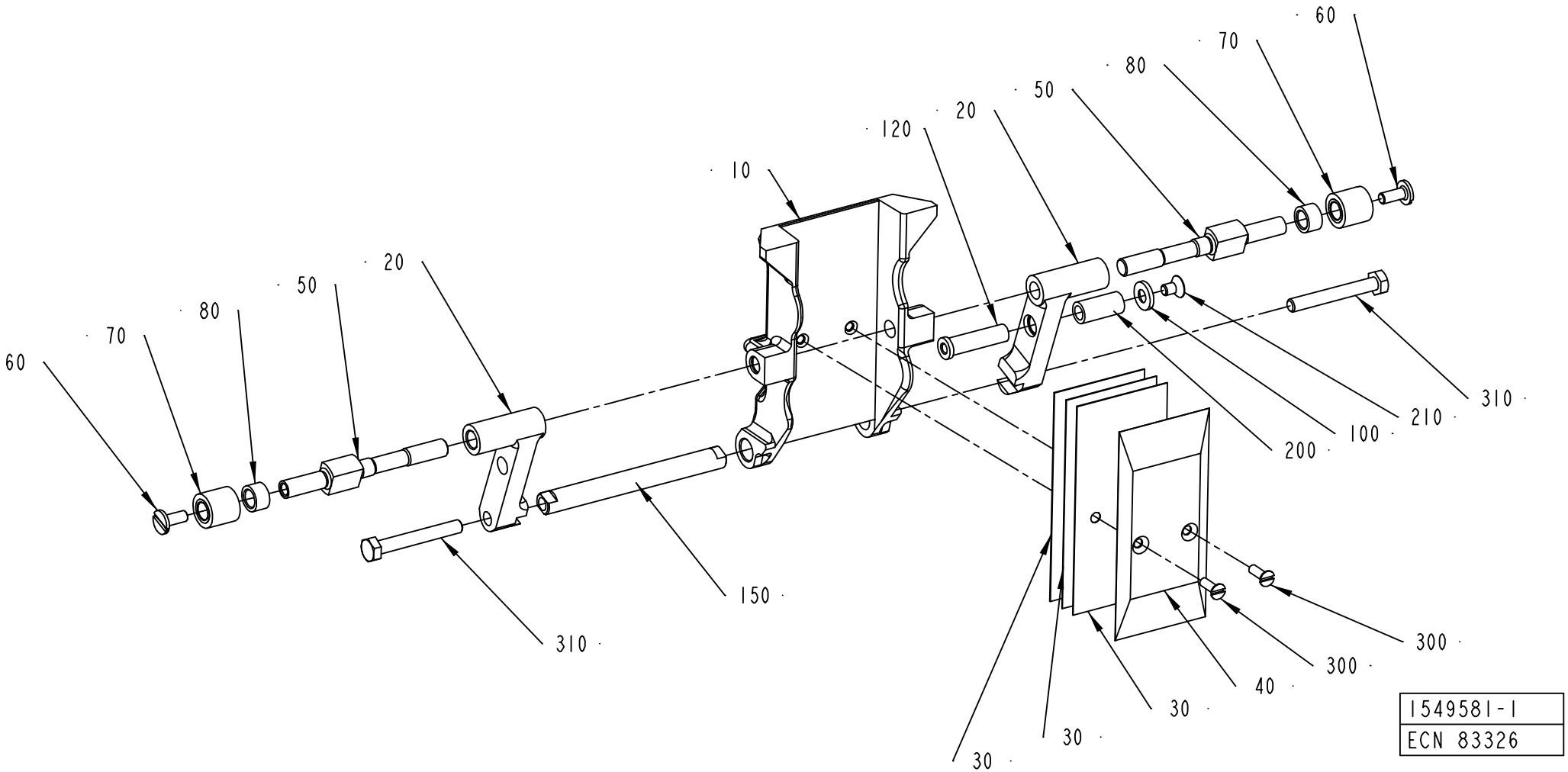
60
70
80
50
20
10
120
20
50
80
70
60
310
150
310
200
100
210
310
300
300
40
30
30
30
1549581-1
ECN 83326

ECM: 119338 - 20030113
Group number: 1549581-0100
Assembly Drawing: 1549581-1_1_AA

This list covers pages from 4-22 to 4-25

Pos	Part No	UN	Qty	Description	Page No
TBA 0100B (See drawing on page: 4-24)					
010	979751-0000		1	VOLUME FLAP 100	
020	1538942-0000		2	CARRIER	
030	979754-0000		3	VOLUME SHIM 100	
040	979755-0000		1	VOLUME BULGE 100	
050	979756-0000		2	SHAFT	
080	979757-0000		2	SPACER	
TBA 0125S (See drawing on page: 4-22)					
010	256849-0000		1	VOLUMEFLAP 125 ML	
020	1519374-0001		2	CARRIER	
030	272987-0000		3	VOLUME SHIM	
040	491868-0000		1	VOLUME BULGE	
050	752598-0000		2	SHAFT	
080	752615-0000		2	SPACER	
100	1519377-0000		1	WASHER	
120	1519376-0000		1	AXLE PIN	
210	312155-0323		1	SCREW EN 10642 MF6S M5X8 A480	
TBA 0160S (See drawing on page: 4-22)					
010	577211-0000		1	VOLUMEFLAP 160 ML	
020	1519374-0001		2	CARRIER	
030	577212-0000		3	VOLUME SHIM	
040	577213-0000		1	VOLUME BULGE 160 ML	
050	752598-0000		2	SHAFT	
080	752615-0000		2	SPACER	
100	1519377-0000		1	WASHER	
120	1519376-0000		1	AXLE PIN	
210	312155-0323		1	SCREW EN 10642 MF6S M5X8 A480	
TBA 0180B (See drawing on page: 4-22)					
010	752292-0000		1	VOLUMEFLAP 180 ML	
020	1519374-0002		2	CARRIER	
030	272986-0004		3	VOLUME SHIM	
040	272988-0004		1	VOLUME BULGE	
050	752598-0000		2	SHAFT	
080	752615-0000		2	SPACER	
100	1519377-0000		1	WASHER	
120	1519376-0000		1	AXLE PIN	
210	312155-0323		1	SCREW EN 10642 MF6S M5X8 A480	
TBA 0200B (See drawing on page: 4-22)					
010	752212-0000		1	VOLUME FLAP 200 ML	
020	1519374-0001		2	CARRIER	
030	272986-0003		3	VOLUME SHIM	
040	456005-0003		1	VOLUME BULGE	
050	752598-0000		2	SHAFT	
080	752615-0000		2	SPACER	
100	1519377-0000		1	WASHER	
120	1519376-0000		1	AXLE PIN	
210	312155-0323		1	SCREW EN 10642 MF6S M5X8 A480	
TBA 0200M (See drawing on page: 4-22)					
020	1519374-0001		2	CARRIER	
030	979861-0000		3	VOLUME SHIM	
040	979860-0000		1	VOLUME BULGE	
050	752598-0000		2	SHAFT	
080	752615-0000		2	SPACER	
100	1519377-0000		1	WASHER	
120	1519376-0000		1	AXLE PIN	
210	312155-0323		1	SCREW EN 10642 MF6S M5X8 A480	
TBA 0200S (See drawing on page: 4-22)					
010	752999-0000		1	VOLUME FLAP 200S	
020	1519374-0001		2	CARRIER	
030	272991-0000		3	VOLUME SHIM	
040	272990-0000		1	VOLUME BULGE	
050	752598-0000		2	SHAFT	
080	752615-0000		2	SPACER	
100	1519377-0000		1	WASHER	
120	1519376-0000		1	AXLE PIN	
210	312155-0323		1	SCREW EN 10642 MF6S M5X8 A480	
TBA 0250B (See drawing on page: 4-22)					
010	978366-0000		1	VOLUME FLAP 250 ML	
020	1519374-0001		2	CARRIER	
030	272986-0001		3	VOLUME SHIM	
040	456005-0001		1	VOLUME BULGE	
050	752598-0000		2	SHAFT	
080	752615-0000		2	SPACER	
100	1519377-0000		1	WASHER	
120	1519376-0000		1	AXLE PIN	
210	312155-0323		1	SCREW EN 10642 MF6S M5X8 A480	
TBA 0250S (See drawing on page: 4-22)					
010	574365-0000		1	VOLUMEFLAP 250S	
020	1519374-0001		2	CARRIER	
030	574366-0000		3	VOLUME SHIM	
040	574367-0000		1	VOLUME BULGE	
050	752598-0000		2	SHAFT	
080	752615-0000		2	SPACER	
100	1519377-0000		1	WASHER	

Machine Type | Group Description | Used-In | Group Number | Page No

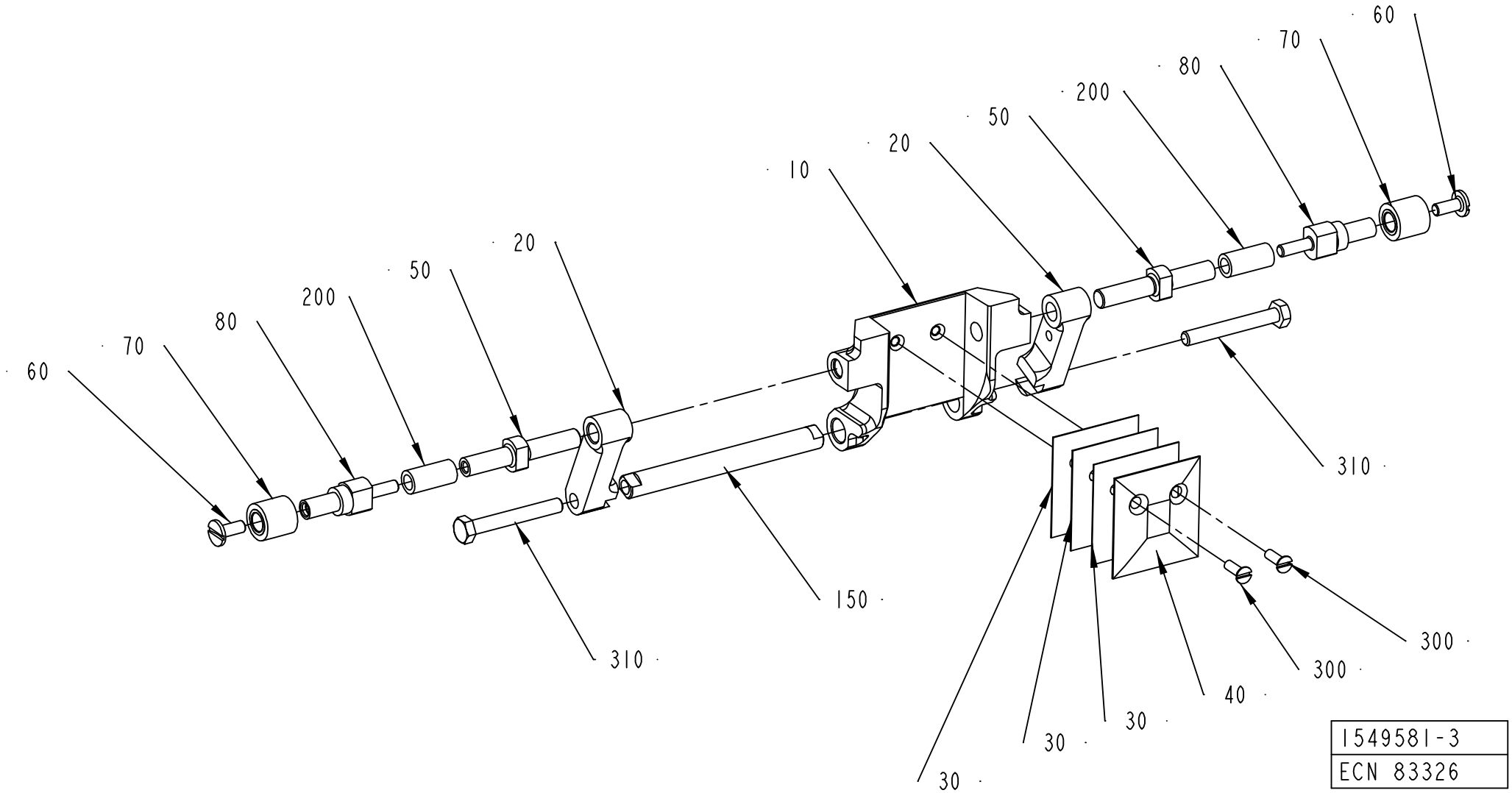
60
70
80
200
50
20
10
20
50
200
80
70
60
310
150
310
30
30
30
40
300
300
300
1549581-3
ECN 83326

Pos	Part No	UN	Qty	Description	Page No
TBA 0250S (Cont'd) (See drawing on page: 4-22)					
120	1519376-0000		1	AXLE PIN	
210	312155-0323		1	SCREW EN 10642 MF6S M5X8 A480	
TBA 0284B (See drawing on page: 4-22)					
010	978031-0000		1	VOLUMEFLAP 284 ML	
020	1519374-0001		2	CARRIER	
030	272986-0005		3	VOLUME SHIM	
040	752739-0000		1	VOLUME BULGE	
050	752598-0000		2	SHAFT	
080	752615-0000		2	SPACER	
100	1519377-0000		1	WASHER	
120	1519376-0000		1	AXLE PIN	
210	312155-0323		1	SCREW EN 10642 MF6S M5X8 A480	
TBA 0300S (See drawing on page: 4-22)					
010	978031-0000		1	VOLUMEFLAP 284 ML	
020	1519374-0001		2	CARRIER	
030	272986-0003		3	VOLUME SHIM	
040	979792-0000		1	VOLUME BULGE	
050	752598-0000		2	SHAFT	
080	752615-0000		2	SPACER	
100	1519377-0000		1	WASHER	
120	1519376-0000		1	AXLE PIN	
210	312155-0323		1	SCREW EN 10642 MF6S M5X8 A480	
TBA 0330S (See drawing on page: 4-22)					
010	582163-0000		1	VOLUME FLAP 330S	
020	1519374-0001		2	CARRIER	
030	272986-0006		3	VOLUME SHIM 330S	
040	979931-0000		1	VOLUME BULGE	
050	752598-0000		2	SHAFT	
080	752615-0000		2	SPACER	
100	1519377-0000		1	WASHER	
120	1519376-0000		1	AXLE PIN	
210	312155-0323		1	SCREW EN 10642 MF6S M5X8 A480	
Common Parts					
060	256859-0000		2	SCREW	
070	256860-0000		2	ROLL	
150	1519375-0001		1	SHAFT	
200	90166-0159	MM	25	RUBBER HOSE	
300	312145-0291		2	SCREW ISO 2009 MFS M4X12 A4	
310	312105-0379		2	SCREW M6S ISO 4014 M6X45 A480	

Pos	Part No	UN	Qty	Description	Page No

SHOCK ABSORBER

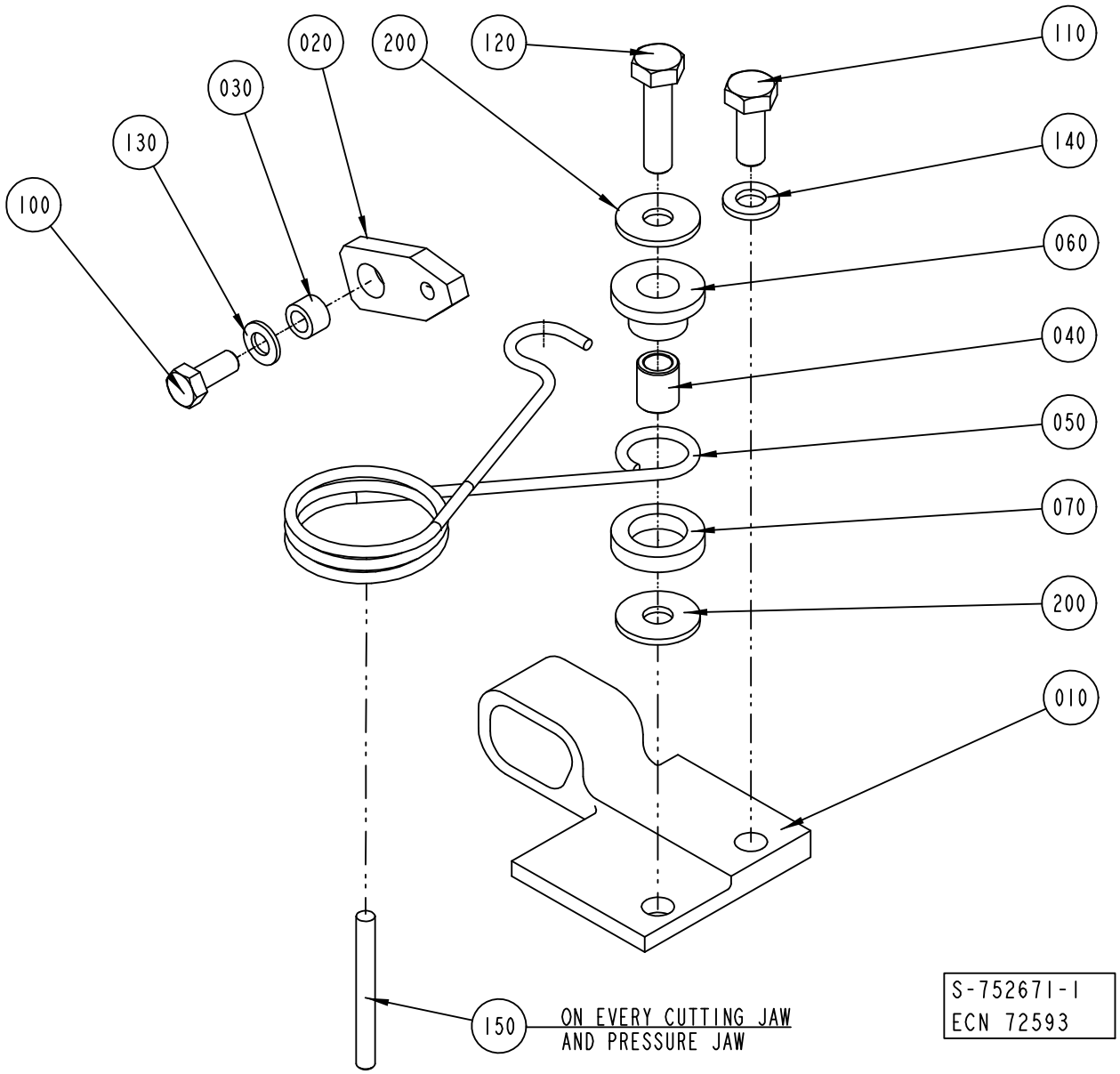

ECM: 115645 - 20020930
Group number: 752671-0100
Assembly Drawing: 752671-1_1_AC

This list covers pages from 4-26 to 4-29

Pos	Part No	UN	Qty	Description	Page No
TBA 0100B (See drawing on page: 4-28)					
010	979758-0000		1	STOP PERF 1	
040	979760-0000		1	SPACER	
050	752678-0000		1	SPRING PERF 1	
060	979761-0000		1	SLEEVE	
070	752681-0000		1	WASHER	
110	312155-0368		2	SCREW EN 10642 MF6S M6X16 A480	
150	311103-0278		1	PARALLEL PIN ISO 2338 4M6X35 A1	
TBA 0125S (See drawing on page: 4-26)					
010	752563-0000		1	STOP PERF 1	
040	752673-0000		1	SPACER	
050	752678-0000		1	SPRING PERF 1	
060	752680-0000		1	SLEEVE	
070	752681-0000		1	WASHER	
110	312105-0368		1	SCREW M6S ISO 4017 M6X16 A480	
120	312105-0372		1	SCREW M6S ISO 4017 M6X25 A480	
140	315105-0153		1	WASHER BRB6,4X12RFR	
150	311103-0280		1	PARALLEL PIN ISO 2338 4M6X40 A1	
200	90005-0060		2	WASHER PLAIN, RBS 6,4/M6)/18,H=1,5	
TBA 0180B (See drawing on page: 4-26)					
010	752561-0000		1	STOP PERF 1	
040	752673-0000		1	SPACER	
050	752678-0000		1	SPRING PERF 1	
060	752680-0000		1	SLEEVE	
070	752681-0000		1	WASHER	
110	312105-0368		1	SCREW M6S ISO 4017 M6X16 A480	
120	312105-0372		1	SCREW M6S ISO 4017 M6X25 A480	
140	315105-0153		1	WASHER BRB6,4X12RFR	
150	311103-0280		1	PARALLEL PIN ISO 2338 4M6X40 A1	
200	90005-0060		2	WASHER PLAIN, RBS 6,4/M6)/18,H=1,5	
TBA 0330S, TBA 0300S, TBA 0160S, TBA 0200B, TBA 0250S, TBA 0284B, TBA 0200S, TBA 0200M, TBA 0250B (See drawing on page: 4-26)					
010	752559-0000		1	STOP PERF 1	
040	752673-0000		1	SPACER	
050	752678-0000		1	SPRING PERF 1	
060	752680-0000		1	SLEEVE	
070	752681-0000		1	WASHER	
110	312105-0368		1	SCREW M6S ISO 4017 M6X16 A480	
120	312105-0372		1	SCREW M6S ISO 4017 M6X25 A480	
140	315115-0153		1	WASHER PLAIN, TBRB 6,4/12 H=3	
150	311103-0280		1	PARALLEL PIN ISO 2338 4M6X40 A1	
200	90005-0060		2	WASHER PLAIN, RBS 6,4/M6)/18,H=1,5	

Pos	Part No	UN	Qty	Description	Page No
Common Parts					
020	752425-0000		1	LINK	
030	752556-0000		1	SPACER	
100	312105-0327		1	SCREW M6S ISO 4017 M5X12 A480	
130	315105-0146		1	WASHER BRB5,3X10RFR	

SHOCK ABSORBER

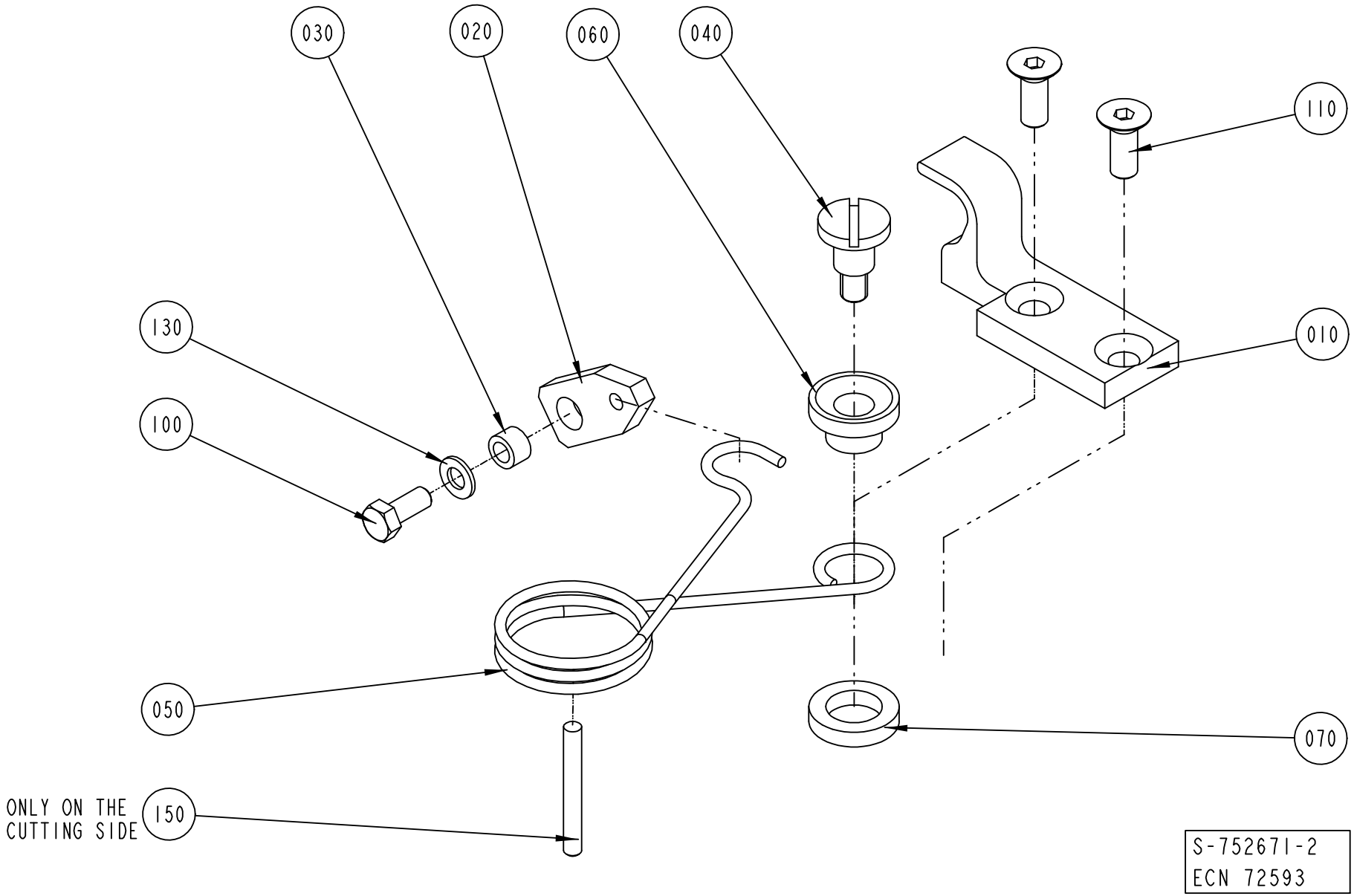

ECM: 115645 - 20020930
Group number: 752671-0100
Assembly Drawing: 752671-2_1_AB

This list covers pages from 4-26 to 4-29

Pos	Part No	UN	Qty	Description	Page No
TBA 0100B (See drawing on page: 4-28)					
010	979758-0000		1	STOP PERF 1	
040	979760-0000		1	SPACER	
050	752678-0000		1	SPRING PERF 1	
060	979761-0000		1	SLEEVE	
070	752681-0000		1	WASHER	
110	312155-0368		2	SCREW EN 10642 MF6S M6X16 A480	
150	311103-0278		1	PARALLEL PIN ISO 2338 4M6X35 A1	
TBA 0125S (See drawing on page: 4-26)					
010	752563-0000		1	STOP PERF 1	
040	752673-0000		1	SPACER	
050	752678-0000		1	SPRING PERF 1	
060	752680-0000		1	SLEEVE	
070	752681-0000		1	WASHER	
110	312105-0368		1	SCREW M6S ISO 4017 M6X16 A480	
120	312105-0372		1	SCREW M6S ISO 4017 M6X25 A480	
140	315105-0153		1	WASHER BRB6,4X12RFR	
150	311103-0280		1	PARALLEL PIN ISO 2338 4M6X40 A1	
200	90005-0060		2	WASHER PLAIN, RBS 6,4/M6)/18,H=1,5	
TBA 0180B (See drawing on page: 4-26)					
010	752561-0000		1	STOP PERF 1	
040	752673-0000		1	SPACER	
050	752678-0000		1	SPRING PERF 1	
060	752680-0000		1	SLEEVE	
070	752681-0000		1	WASHER	
110	312105-0368		1	SCREW M6S ISO 4017 M6X16 A480	
120	312105-0372		1	SCREW M6S ISO 4017 M6X25 A480	
140	315105-0153		1	WASHER BRB6,4X12RFR	
150	311103-0280		1	PARALLEL PIN ISO 2338 4M6X40 A1	
200	90005-0060		2	WASHER PLAIN, RBS 6,4/M6)/18,H=1,5	
TBA 0330S, TBA 0300S, TBA 0160S, TBA 0200B, TBA 0250S, TBA 0284B, TBA 0200S, TBA 0200M, TBA 0250B (See drawing on page: 4-26)					
010	752559-0000		1	STOP PERF 1	
040	752673-0000		1	SPACER	
050	752678-0000		1	SPRING PERF 1	
060	752680-0000		1	SLEEVE	
070	752681-0000		1	WASHER	
110	312105-0368		1	SCREW M6S ISO 4017 M6X16 A480	
120	312105-0372		1	SCREW M6S ISO 4017 M6X25 A480	
140	315115-0153		1	WASHER PLAIN, TBRB 6,4/12 H=3	
150	311103-0280		1	PARALLEL PIN ISO 2338 4M6X40 A1	
200	90005-0060		2	WASHER PLAIN, RBS 6,4/M6)/18,H=1,5	

Pos	Part No	UN	Qty	Description	Page No
Common Parts					
020	752425-0000		1	LINK	
030	752556-0000		1	SPACER	
100	312105-0327		1	SCREW M6S ISO 4017 M5X12 A480	
130	315105-0146		1	WASHER BRB5,3X10RFR	

SHOCK ABSORBER

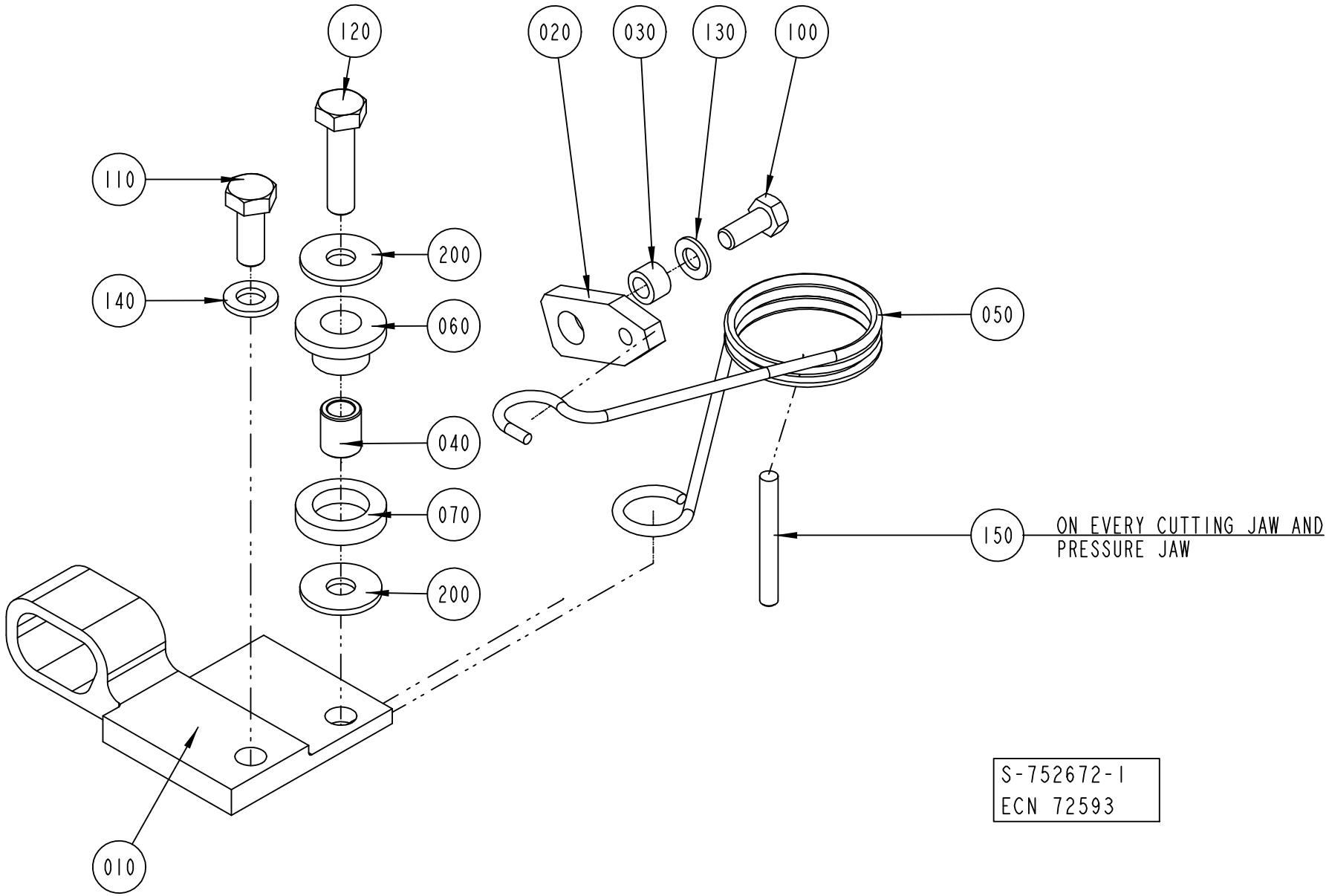

ECM: 115646 - 20020930
Group number: 752672-0100
Assembly Drawing: 752672-1_1_AC

This list covers pages from 4-30 to 4-33

Pos	Part No	UN	Qty	Description	Page No
TBA 0100B (See drawing on page: 4-32)					
010	979759-0000		1	STOP PERF 2	
040	979760-0000		1	SPACER	
050	752679-0000		1	SPRING PERF 2	
060	979761-0000		1	SLEEVE	
070	752681-0000		1	WASHER	
110	312155-0368		2	SCREW EN 10642 MF6S M6X16 A480	
150	311103-0278		1	PARALLEL PIN ISO 2338 4M6X35 A1	
TBA 0125S (See drawing on page: 4-30)					
010	752564-0000		1	STOP PERF 2	
040	752673-0000		1	SPACER	
050	752679-0000		1	SPRING PERF 2	
060	752680-0000		1	SLEEVE	
070	752681-0000		1	WASHER	
110	312105-0368		1	SCREW M6S ISO 4017 M6X16 A480	
120	312105-0372		1	SCREW M6S ISO 4017 M6X25 A480	
140	315105-0153		1	WASHER BRB6,4X12RFR	
150	311103-0280		1	PARALLEL PIN ISO 2338 4M6X40 A1	
200	90005-0060		2	WASHER PLAIN, RBS 6,4/M6)/18,H=1,5	
TBA 0180B (See drawing on page: 4-30)					
010	752562-0000		1	STOP PERF 2	
040	752673-0000		1	SPACER	
050	752679-0000		1	SPRING PERF 2	
060	752680-0000		1	SLEEVE	
070	752681-0000		1	WASHER	
110	312105-0368		1	SCREW M6S ISO 4017 M6X16 A480	
120	312105-0372		1	SCREW M6S ISO 4017 M6X25 A480	
140	315105-0153		1	WASHER BRB6,4X12RFR	
150	311103-0280		1	PARALLEL PIN ISO 2338 4M6X40 A1	
200	90005-0060		2	WASHER PLAIN, RBS 6,4/M6)/18,H=1,5	
TBA 0330S, TBA 0300S, TBA 0160S, TBA 0200B, TBA 0250S, TBA 0284B, TBA 0200S, TBA 0200M, TBA 0250B (See drawing on page: 4-30)					
010	752560-0000		1	STOP PERF 2	
040	752673-0000		1	SPACER	
050	752679-0000		1	SPRING PERF 2	
060	752680-0000		1	SLEEVE	
070	752681-0000		1	WASHER	
110	312105-0368		1	SCREW M6S ISO 4017 M6X16 A480	
120	312105-0372		1	SCREW M6S ISO 4017 M6X25 A480	
140	315115-0153		1	WASHER PLAIN, TBRB 6,4/12 H=3	
150	311103-0280		1	PARALLEL PIN ISO 2338 4M6X40 A1	
200	90005-0060		2	WASHER PLAIN, RBS 6,4/M6)/18,H=1,5	

Pos	Part No	UN	Qty	Description	Page No
Common Parts					
020	752425-0000		1	LINK	
030	752556-0000		1	SPACER	
100	312105-0327		1	SCREW M6S ISO 4017 M5X12 A480	
130	315105-0146		1	WASHER BRB5,3X10RFR	

SHOCK ABSORBER

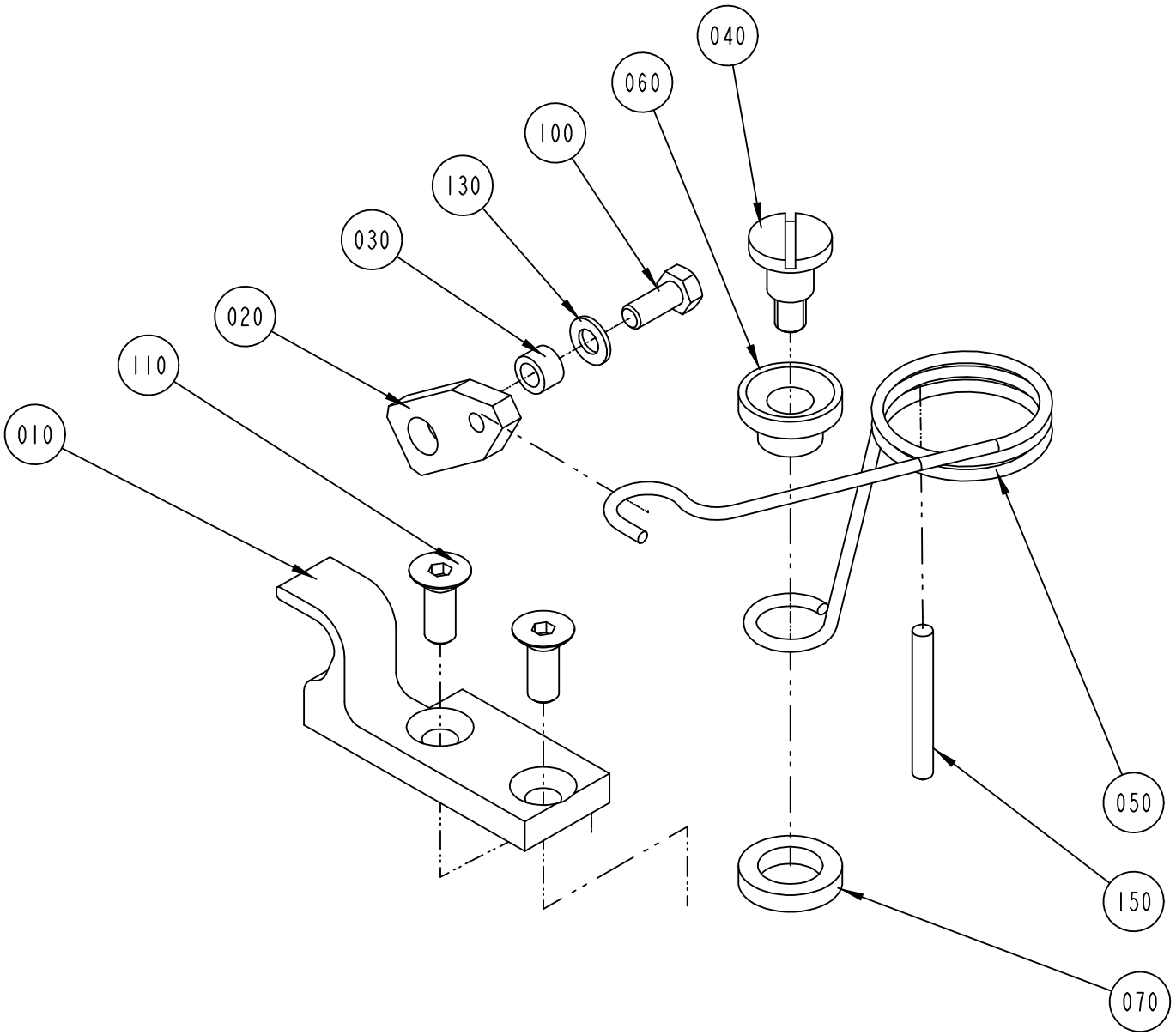

S-752672-2
ECN 72593

ECM: 115646 - 20020930
Group number: 752672-0100
Assembly Drawing: 752672-2_1_AB

This list covers pages from 4-30 to 4-33

Pos	Part No	UN	Qty	Description	Page No
TBA 0100B (See drawing on page: 4-32)					
010	979759-0000		1	STOP PERF 2	
040	979760-0000		1	SPACER	
050	752679-0000		1	SPRING PERF 2	
060	979761-0000		1	SLEEVE	
070	752681-0000		1	WASHER	
110	312155-0368		2	SCREW EN 10642 MF6S M6X16 A480	
150	311103-0278		1	PARALLEL PIN ISO 2338 4M6X35 A1	
TBA 0125S (See drawing on page: 4-30)					
010	752564-0000		1	STOP PERF 2	
040	752673-0000		1	SPACER	
050	752679-0000		1	SPRING PERF 2	
060	752680-0000		1	SLEEVE	
070	752681-0000		1	WASHER	
110	312105-0368		1	SCREW M6S ISO 4017 M6X16 A480	
120	312105-0372		1	SCREW M6S ISO 4017 M6X25 A480	
140	315105-0153		1	WASHER BRB6,4X12RFR	
150	311103-0280		1	PARALLEL PIN ISO 2338 4M6X40 A1	
200	90005-0060		2	WASHER PLAIN, RBS 6,4/M6)/18,H=1,5	
TBA 0180B (See drawing on page: 4-30)					
010	752562-0000		1	STOP PERF 2	
040	752673-0000		1	SPACER	
050	752679-0000		1	SPRING PERF 2	
060	752680-0000		1	SLEEVE	
070	752681-0000		1	WASHER	
110	312105-0368		1	SCREW M6S ISO 4017 M6X16 A480	
120	312105-0372		1	SCREW M6S ISO 4017 M6X25 A480	
140	315105-0153		1	WASHER BRB6,4X12RFR	
150	311103-0280		1	PARALLEL PIN ISO 2338 4M6X40 A1	
200	90005-0060		2	WASHER PLAIN, RBS 6,4/M6)/18,H=1,5	
TBA 0330S, TBA 0300S, TBA 0160S, TBA 0200B, TBA 0250S, TBA 0284B, TBA 0200S, TBA 0200M, TBA 0250B (See drawing on page: 4-30)					
010	752560-0000		1	STOP PERF 2	
040	752673-0000		1	SPACER	
050	752679-0000		1	SPRING PERF 2	
060	752680-0000		1	SLEEVE	
070	752681-0000		1	WASHER	
110	312105-0368		1	SCREW M6S ISO 4017 M6X16 A480	
120	312105-0372		1	SCREW M6S ISO 4017 M6X25 A480	
140	315115-0153		1	WASHER PLAIN, TBRB 6,4/12 H=3	
150	311103-0280		1	PARALLEL PIN ISO 2338 4M6X40 A1	
200	90005-0060		2	WASHER PLAIN, RBS 6,4/M6)/18,H=1,5	

Pos	Part No	UN	Qty	Description	Page No
Common Parts					
020	752425-0000		1	LINK	
030	752556-0000		1	SPACER	
100	312105-0327		1	SCREW M6S ISO 4017 M5X12 A480	
130	315105-0146		1	WASHER BRB5,3X10RFR	

PRESSURE JAW

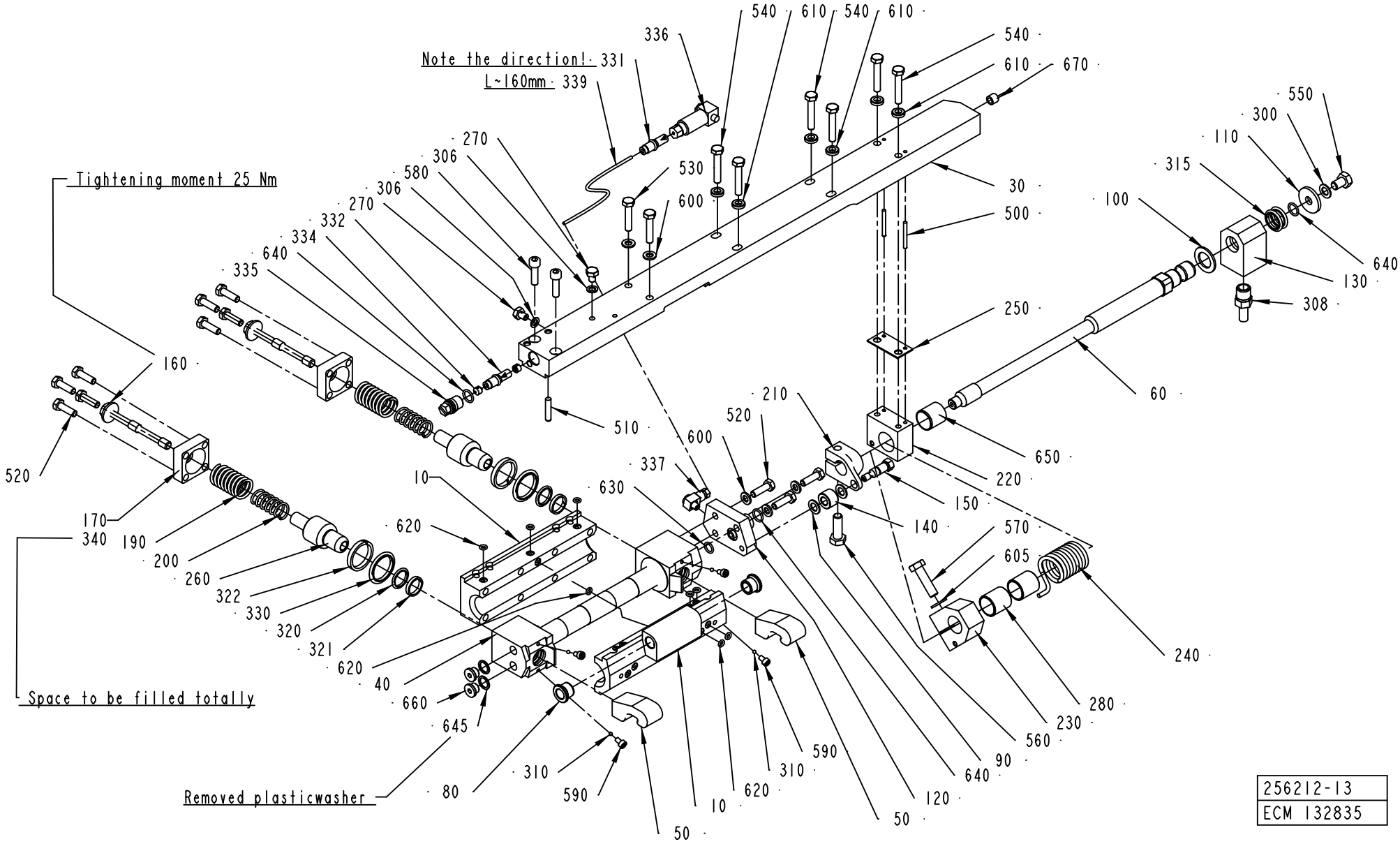

ECM: 132837 - 20031103
Group number: 256212-0600
Assembly Drawing: 256212-13_1_AE

Pos	Part No	UN	Qty	Description	Page No
TBA 0100B					
010	2552528-0000		1	BEARING HOUSING	
030	979764-0000		1	CARRIER RIGHT 100	
080	2532544-0000		2	BUSHING	
TBA 0125S					
010	2552528-0000		1	BEARING HOUSING	
030	979793-0000		1	CARRIER	
080	2532544-0000		2	BUSHING	
TBA 0160S, TBA 0200S					
010	2552530-0000		1	BEARING HOUSING	
030	979793-0000		1	CARRIER	
080	2532544-0000		2	BUSHING	
TBA 0250S, TBA 0200M					
010	2552527-0000		1	BEARING HOUSING	
030	979793-0000		1	CARRIER	
080	2532544-0000		2	BUSHING	
TBA 0330S, TBA 0300S, TBA 0180B, TBA 0200B, TBA 0284B, TBA 0250B					
010	2552529-0000		1	BEARING HOUSING	
030	979793-0000		1	CARRIER	
080	2532544-0000		2	BUSHING	
Common Parts					
040	490940-0000		1	CYLINDER	
050	978746-0000		2	CATCH	
060	752284-0000		1	SHAFT	
090	256557-0001		2	WASHER	
100	256557-0002		1	WASHER	
110	256557-0003		1	WASHER	
120	752282-0000		1	CONNECTION RIGHT	
130	441385-0000		1	HUB	
140	256576-0000		1	ROLL	
150	441764-0000		1	SHAFT	
160	257249-0000		2	SCREW	
170	257250-0000		2	LID	
190	490942-0000		2	COMPRESSION SPRING	
200	490943-0000		2	COMPRESSION SPRING	
210	752289-0000		1	CLAMP RIGHT	
220	272501-0000		1	BRACKET RIGHT	
230	272503-0000		1	CLAMPING PIECE	
240	456311-0000		1	TORSION SPRING RIGHT	
250	272506-0000		1	LACE	
260	751743-0000		2	PISTON	
270	441355-0000		2	BLEEDING SCREW	
280	751769-0000		2	SLEEVE	
300	315237-0107		1	WASHER,PL.RND.AL.8/14,H=1	
306	315237-0106		2	WASHER,PL.RND.AL.6/10,H=1	
308	90030-0065		1	PIPE CONNECTION	
310	90090-0005		4	BALL, D=3 MM	
315	90091-0089		2	ROD SEAL, GLIDORING 16X22X2,5 MM	
320	90091-0214		2	ROD SEAL, GLIDORING 16X20,9X2,2 MM	
321	90091-0162		2	WEAR RING 16X19X3,2 MM	
322	90091-0170		2	WEAR RING 25X30X4,2 MM	
330	90091-0215		2	ROD SEAL, GLIDORING 25X32,5X3,2 MM	
331	90092-0052		1	METERING VALVE 10 MM3	
332	90092-0053		1	METERING VALVE 30 MM3	
334	90134-0042		2	SPACER DOSING VALVE	
335	90134-0045		1	PLUG M12X1	
336	90134-0047		1	CONNECTION FOR DOSING VALVE	
337	90134-0058		1	CONNECTION	
339	90166-0143	MM	160	TUBE 2,5 MM PA,TRANSP.	
340	90296-0068	G	25	GREASE UNIWAY LI62 CARTRID.400GR	
500	311103-0242		2	PARALLEL PIN ISO 2338 3M6X30 A1	
510	311103-0312		1	PARALLELL PIN, M6, 5X25 MM	
520	312105-0370		11	SCREW M6S ISO 4017 M6X20 A480	
530	312105-0374		2	SCREW M6S ISO 4014 M6X30 A480	
540	312105-0376		6	SCREW M6S ISO 4014 M6X35 A480	
550	312105-0447		1	SCREW M6S ISO 4017 M8X12 A480	
560	312105-0453		1	SCREW M6S ISO 4017 M8X25 A480	
570	312105-0455		1	SCREW M6S ISO 4017 M8X30 A480	
580	312115-0371		2	SCREW ISO4762 M6X22 A4	
590	752476-0000		4	SCREW	
600	315105-0153		5	WASHER BRB6,4X12RFR	
605	315105-0165		1	WASHER BRB8,4X16RFR	
610	315115-0153		6	WASHER PLAIN, TBRB 6,4/12 H=3	
620	315202-0102		8	O-RING 4,1X1,6 MM	
630	315202-0106		1	O-RING 8,1X1,6 MM	
640	315202-0108		3	O-RING 10,1X1,6 MM	
645	315234-0109		2	WASHER,PL.RND.CU.10,3/13,5 H=1,0	
650	321120-0132		1	BEARBUSHING W/O FL 18X20X20	
660	342713-0209		2	PLUG (1UNIT = 10PC)	
670	2545249-0000		1	TEFLON HOSE	

Machine Type | Group Description | Used-In | Group Number | Page No

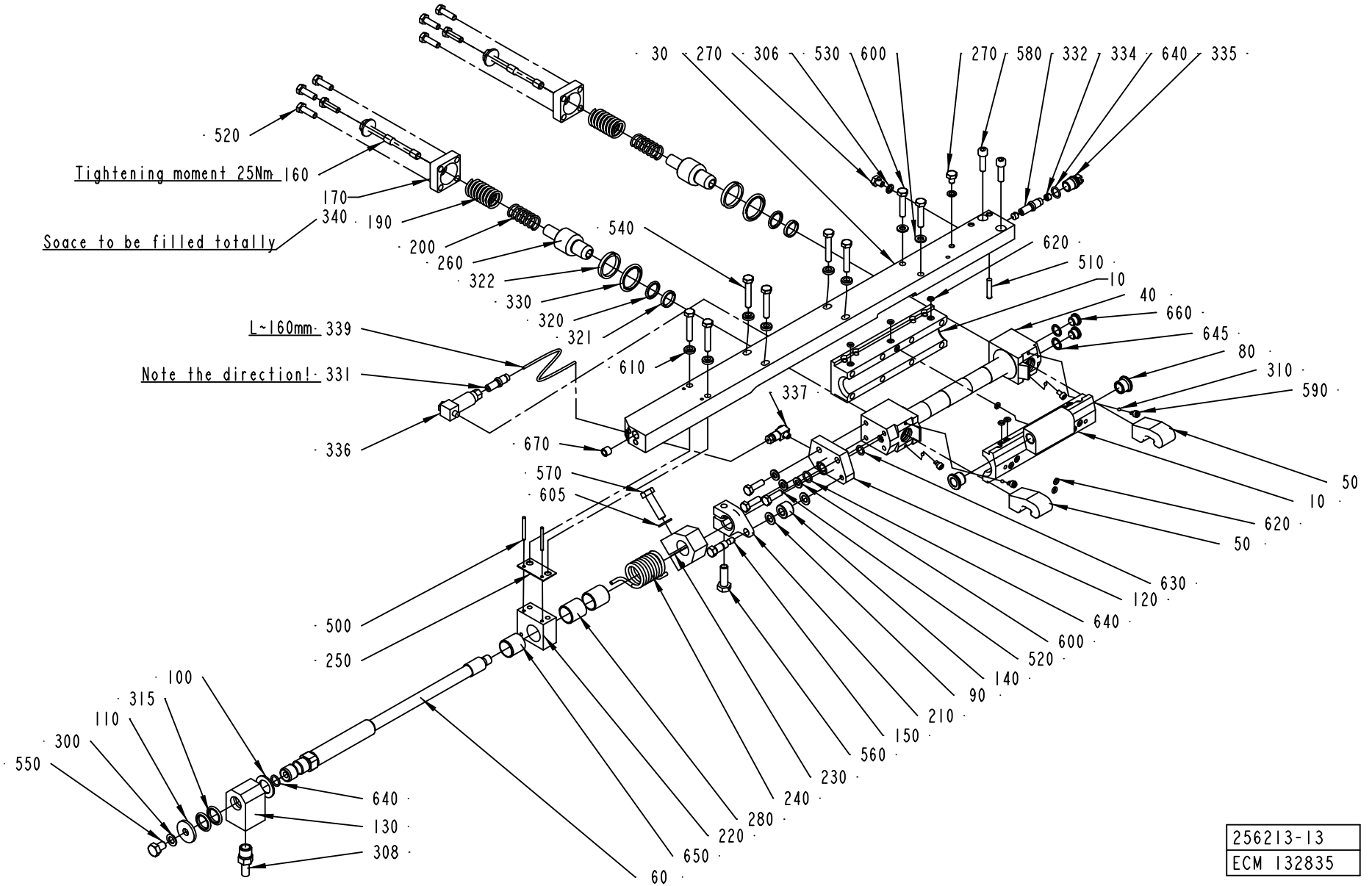
30
270
306
530
600
270
580
332
334
640
335
520
Tightening moment 25Nm
160
170
340
190
Space to be filled totally
200
260
322
330
320
321
540
620
510
10
40
660
645
80
310
590
L~160mm
339
Note the direction!
331
336
610
337
670
570
605
50
10
620
50
630
120
640
600
520
140
90
210
150
560
230
240
280
220
650
60
500
250
100
315
110
300
550
640
130
308
256213-13
ECM 132835

ECM: 132838 - 20031103
Group number: 256213-0600
Assembly Drawing: 256213-13_1_AE

Pos	Part No	UN	Qty	Description	Page No
TBA 0100B					
010	2552528-0000		1	BEARING HOUSING	
030	979765-0000		1	CARRIER LEFT 100	
080	2532544-0000		2	BUSHING	
TBA 0125S					
010	2552528-0000		1	BEARING HOUSING	
030	979794-0000		1	CARRIER	
080	2532544-0000		2	BUSHING	
TBA 0160S, TBA 0200S					
010	2552530-0000		1	BEARING HOUSING	
030	979794-0000		1	CARRIER	
080	2532544-0000		2	BUSHING	
TBA 0250S, TBA 0200M					
010	2552527-0000		1	BEARING HOUSING	
030	979794-0000		1	CARRIER	
080	2532544-0000		2	BUSHING	
TBA 0330S, TBA 0300S, TBA 0180B, TBA 0200B, TBA 0284B, TBA 0250B					
010	2552529-0000		1	BEARING HOUSING	
030	979794-0000		1	CARRIER	
080	2532544-0000		2	BUSHING	
Common Parts					
040	490940-0000		1	CYLINDER	
050	978746-0000		2	CATCH	
060	752284-0000		1	SHAFT	
090	256557-0001		2	WASHER	
100	256557-0002		1	WASHER	
110	256557-0003		1	WASHER	
120	752283-0000		1	CONNECTION LEFT	
130	441385-0000		1	HUB	
140	256576-0000		1	ROLL	
150	441764-0000		1	SHAFT	
160	257249-0000		2	SCREW	
170	257250-0000		2	LID	
190	490942-0000		2	COMPRESSION SPRING	
200	490943-0000		2	COMPRESSION SPRING	
210	752290-0000		1	CLAMP LEFT	
220	272502-0000		1	BRACKET LEFT	
230	272503-0000		1	CLAMPING PIECE	
240	456312-0000		1	TORSION SPRING LEFT	
250	272506-0000		1	LACE	
260	751743-0000		2	PISTON	
270	441355-0000		2	BLEEDING SCREW	
280	751769-0000		2	SLEEVE	
300	315237-0107		1	WASHER,PL.RND.AL.8/14,H=1	
306	315237-0106		2	WASHER,PL.RND.AL.6/10,H=1	
308	90030-0065		1	PIPE CONNECTION	
310	90090-0005		4	BALL, D=3 MM	
315	90091-0089		2	ROD SEAL, GLIDORING 16X22X2,5 MM	
320	90091-0214		2	ROD SEAL, GLIDORING 16X20,9X2,2 MM	
321	90091-0162		2	WEAR RING 16X19X3,2 MM	
322	90091-0170		2	WEAR RING 25X30X4,2 MM	
330	90091-0215		2	ROD SEAL, GLIDORING 25X32,5X3,2 MM	
331	90092-0052		1	METERING VALVE 10 MM3	
332	90092-0053		1	METERING VALVE 30 MM3	
334	90134-0042		2	SPACER DOSING VALVE	
335	90134-0045		1	PLUG M12X1	
336	90134-0047		1	CONNECTION FOR DOSING VALVE	
337	90134-0058		1	CONNECTION	
339	90166-0143	MM	160	TUBE 2,5 MM PA,TRANSP.	
340	90296-0068	G	25	GREASE UNIWAY LI62 CARTRID.400GR	
500	311103-0242		2	PARALLEL PIN ISO 2338 3M6X30 A1	
510	311103-0312		1	PARALLELL PIN, M6, 5X25 MM	
520	312105-0370		11	SCREW M6S ISO 4017 M6X20 A480	
530	312105-0374		2	SCREW M6S ISO 4014 M6X30 A480	
540	312105-0376		6	SCREW M6S ISO 4014 M6X35 A480	
550	312105-0447		1	SCREW M6S ISO 4017 M8X12 A480	
560	312105-0453		1	SCREW M6S ISO 4017 M8X25 A480	
570	312105-0455		1	SCREW M6S ISO 4017 M8X30 A480	
580	312115-0371		2	SCREW ISO4762 M6X22 A4	
590	752476-0000		4	SCREW	
600	315105-0153		5	WASHER BRB6,4X12RFR	
605	315105-0165		1	WASHER BRB8,4X16RFR	
610	315115-0153		6	WASHER PLAIN, TBRB 6,4/12 H=3	
620	315202-0102		8	O-RING 4,1X1,6 MM	
630	315202-0106		1	O-RING 8,1X1,6 MM	
640	315202-0108		3	O-RING 10,1X1,6 MM	
645	315234-0109		2	WASHER,PL.RND.CU.10,3/13,5 H=1,0	
650	321120-0132		1	BEARBUSHING W/O FL 18X20X20	
660	342713-0209		2	PLUG (1UNIT = 10PC)	
670	2545249-0000		1	TEFLON HOSE	

Machine Type | Group Description | Used-In | Group Number | Page No

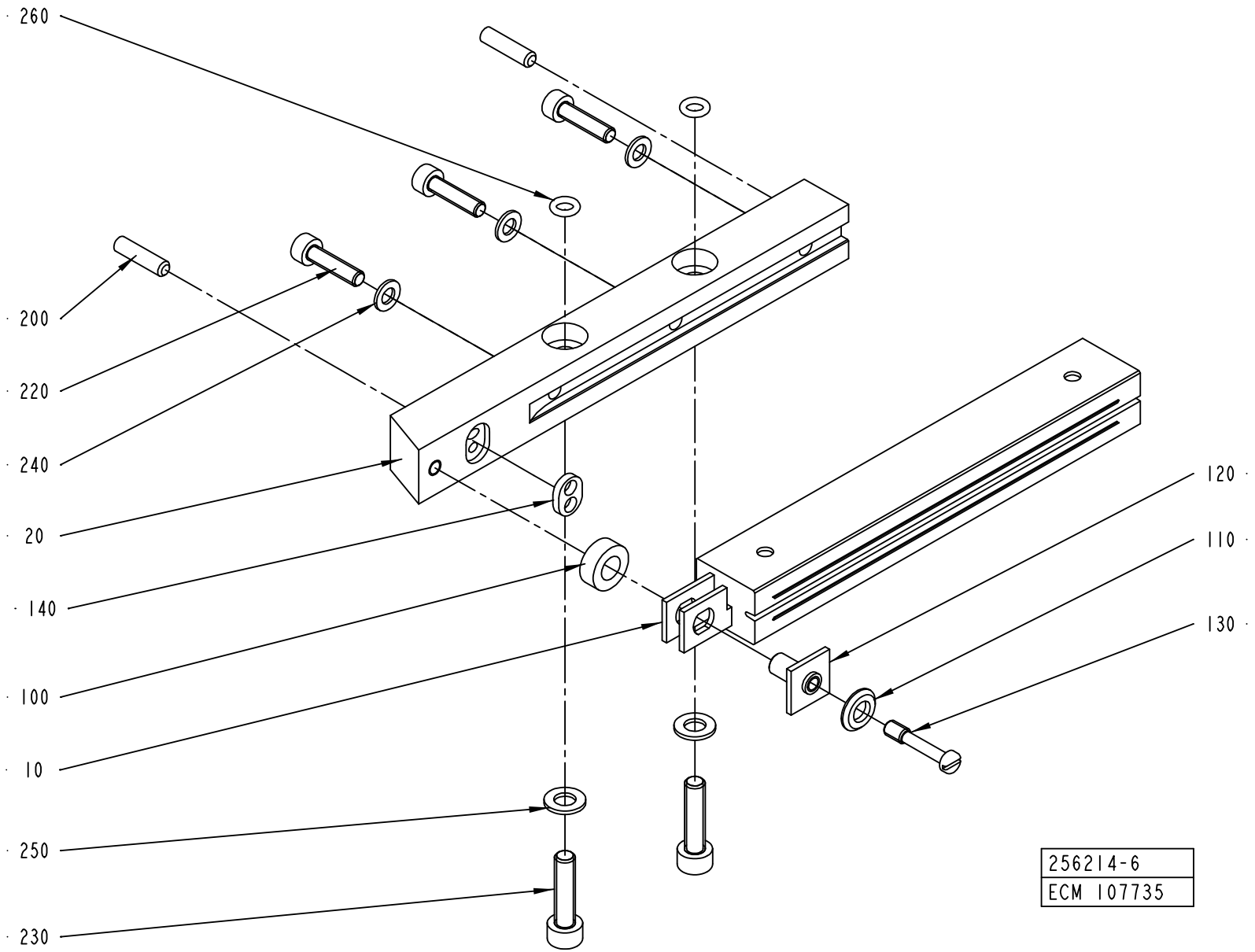
260
200
220
240
20
140
100
10
250
230
120
110
130
256214-6
ECM 107735

ECM: 125611 - 20030127
Group number: 256214-0400
Assembly Drawing: 256214-6_1_AD

Pos	Part No	UN	Qty	Description	Page No
TBA 0125S, TBA 0100B (See drawing on page: 4-38)					
010	1110530-0000		1	INDUCTOR	
010	1110530-0000		1	INDUCTOR	
020	2527135-0000		1	RAIL (TITANIUM)	
220	312115-0293		3	SCREW ISO4762 M4X16 A4	
230	312105-0329		2	SCREW M6S ISO 4017 M5X16 A480	
240	315105-0136		3	WASHER BRB4,3XRFR	
250	315105-0146		2	WASHER BRB5,3X10RFR	
TBA 0160S, TBA 0200S (See drawing on page: 4-38)					
010	1110532-0000		1	INDUCTOR	
010	1110532-0000		1	INDUCTOR	
020	2527137-0000		1	RAIL (TITANIUM)	
220	312115-0293		2	SCREW ISO4762 M4X16 A4	
230	312115-0331		2	SCREW ISO4762 M5X20 A4	
240	315105-0136		2	WASHER BRB4,3XRFR	
250	315105-0146		2	WASHER BRB5,3X10RFR	
260	315202-0102		2	O-RING 4,1X1,6 MM	
TBA 0250S, TBA 0200M (See drawing on page: 4-38)					
010	1110535-0000		1	INDUCTOR	
010	1110535-0000		1	INDUCTOR	
020	2527137-0000		1	RAIL (TITANIUM)	
220	312115-0293		2	SCREW ISO4762 M4X16 A4	
230	312115-0331		2	SCREW ISO4762 M5X20 A4	
240	315105-0136		2	WASHER BRB4,3XRFR	
250	315105-0146		2	WASHER BRB5,3X10RFR	
260	315202-0102		2	O-RING 4,1X1,6 MM	
TBA 0330S, TBA 0300S, TBA 0180B, TBA 0200B, TBA 0284B, TBA 0250B (See drawing on page: 4-38)					
010	1110534-0000		1	INDUCTOR	
010	1110534-0000		1	INDUCTOR	
020	2527136-0000		1	RAIL	
220	312115-0293		3	SCREW ISO4762 M4X16 A4	
230	312115-0331		2	SCREW ISO4762 M5X20 A4	
240	315105-0136		3	WASHER BRB4,3XRFR	
250	315105-0146		2	WASHER BRB5,3X10RFR	
260	315202-0102		2	O-RING 4,1X1,6 MM	
Common Parts					
100	32644-0000		1	WASHER	
110	256882-0000		1	WASHER	
120	271846-0000		1	INSULATION NUT	
130	271848-0000		1	SCREW	
140	491681-0000		1	GASKET	
200	311103-0270		2	PARALLEL PIN ISO 2338 4M6X16 A1	

Pos	Part No	UN	Qty	Description	Page No

Machine Type | Group Description | Used-In | Group Number | Page No

YOKE RIGHT

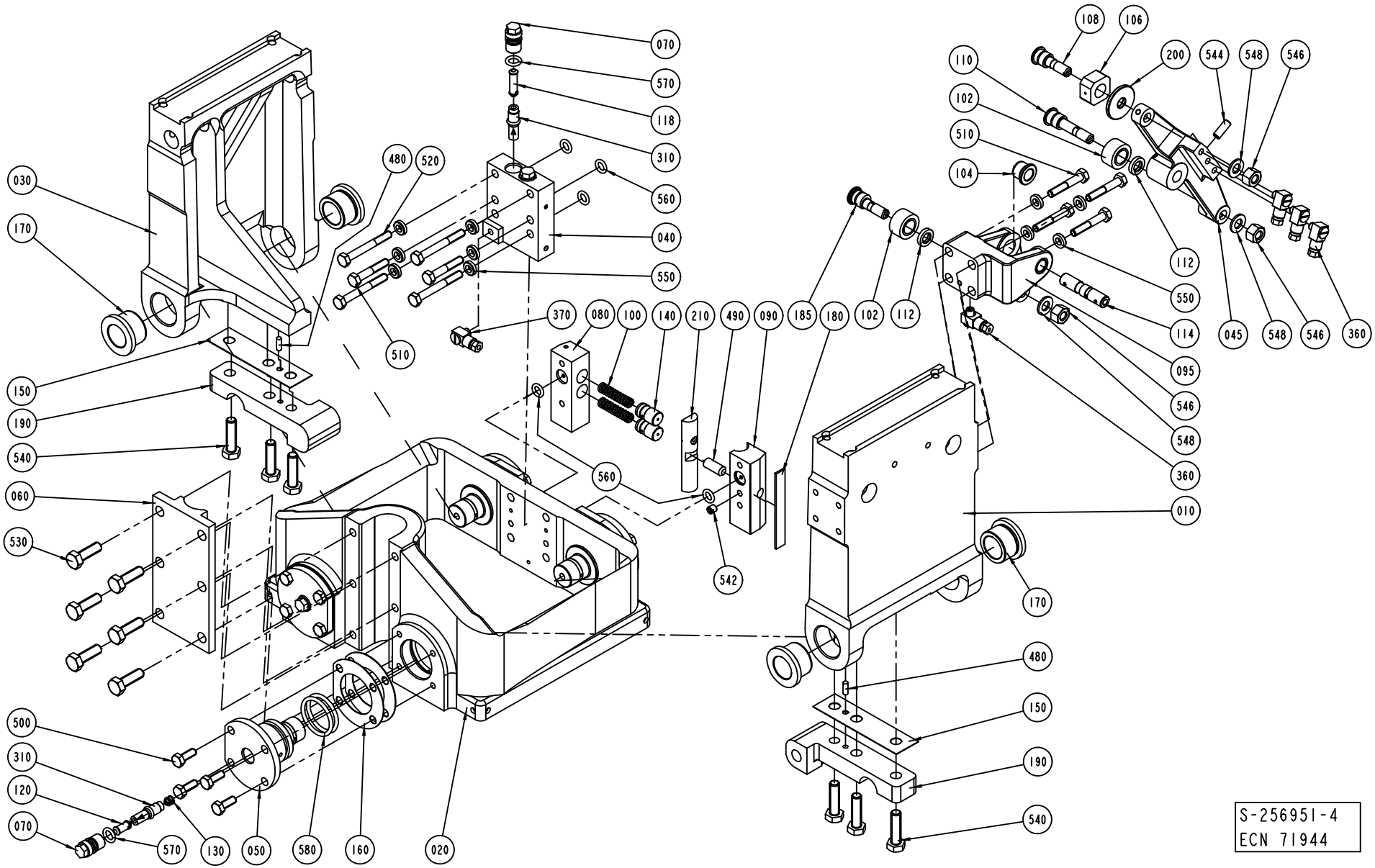
030
170
150
190
540
060
530
500
310
120
070
570
130
050
580
160
020
480
520
070
570
118
310
560
040
550
510
370
080
100
140
210
490
090
185
180
102
112
560
542
108
106
200
544
548
546
110
102
510
104
112
550
114
045
548
546
360
095
546
548
360
010
170
480
150
190
540
S-256951-4
ECN 71944

ECM: 113354 - 20020930
Group number: 256951-0500
Assembly Drawing: 256951-4_1_AB

This list covers pages from 4-40 to 4-43

Pos	Part No	UN	Qty	Description	Page No
TBA IH					
030	562120-0000		1	ARM PRESSURE JAW	
Common Parts					
010	255609-0000		1	ARM CUTTING JAW	
020	256834-0000		1	YOKE	
040	256953-0000		1	BLOCK RIGHT	
045	272492-0000		1	ARM RIGHT	
050	272454-0000		4	PIVOT PIN	
060	256082-0000		1	CAP	
070	256829-0000		6	SCREW	
080	256870-0000		1	BRACKET	
090	491349-0000		1	BEARING SEAT	
095	272496-0000		1	BRACKET RIGHT	
100	20239-0000		2	COMPRESSION SPRING	
102	22475-0000		2	CURVE ROLLER	
104	255653-0000		2	FLANGE BUSHING	
106	256628-0000		1	PIECE	
108	256629-0001		1	AXLE PIN	
110	256629-0003		1	AXLE PIN	
112	256704-0000		2	WASHER	
114	256710-0000		1	SHAFT	
118	256831-0001		2	SPACER	
120	256831-0002		4	SPACER	
130	256831-0003		4	SPACER	
140	256889-0000		2	PLUNGER	
150	256890-0000		2	LACE	
160	256891-0000		6	LACE	
170	257213-0000		4	BUSHING	
180	257317-0000		1	LACE	
185	271100-0000		1	DOWEL	
190	272415-0000		2	ARM	
200	441706-0000		1	WASHER	
210	491350-0000		1	SLIDER	
310	90092-0052		6	METERING VALVE 10 MM3	
360	90134-0058		4	CONNECTION	
370	90134-0068		1	CONNECTION	
480	311103-0268		2	PARALLEL PIN ISO 2338 4M6X12 A1	
490	311103-0401		1	PARALLEL PIN ISO 2338 8M6X20 A1	
500	312105-0368		16	SCREW M6S ISO 4017 M6X16 A480	
510	312105-0376		6	SCREW M6S ISO 4014 M6X35 A480	
520	312105-0380		4	SCREW M6S ISO 4014 M6X50 A480	
530	312105-0453		6	SCREW M6S ISO 4017 M8X25 A480	
540	312105-0455		6	SCREW M6S ISO 4017 M8X30 A480	
542	312318-0360		1	SCREW ISO4029 M6X6 A4	
544	312318-0368		1	SCREW ISO4029 M6X16 A4	
546	312811-0318		3	NUT HEX.LOCK HELI COIL M8 SS	
548	315105-0165		3	WASHER BRB8,4X16RFR	
550	315115-0153		10	WASHER PLAIN, TBRB 6,4/12 H=3	
560	315202-0206		5	O-RING 7,3X2,4 MM	
570	315202-0207		6	O-RING 8,3X2,4 MM	
580	315202-0219		8	O-RING 29,2X3 MM	

Machine Type | Group Description | Used-In | Group Number | Page No

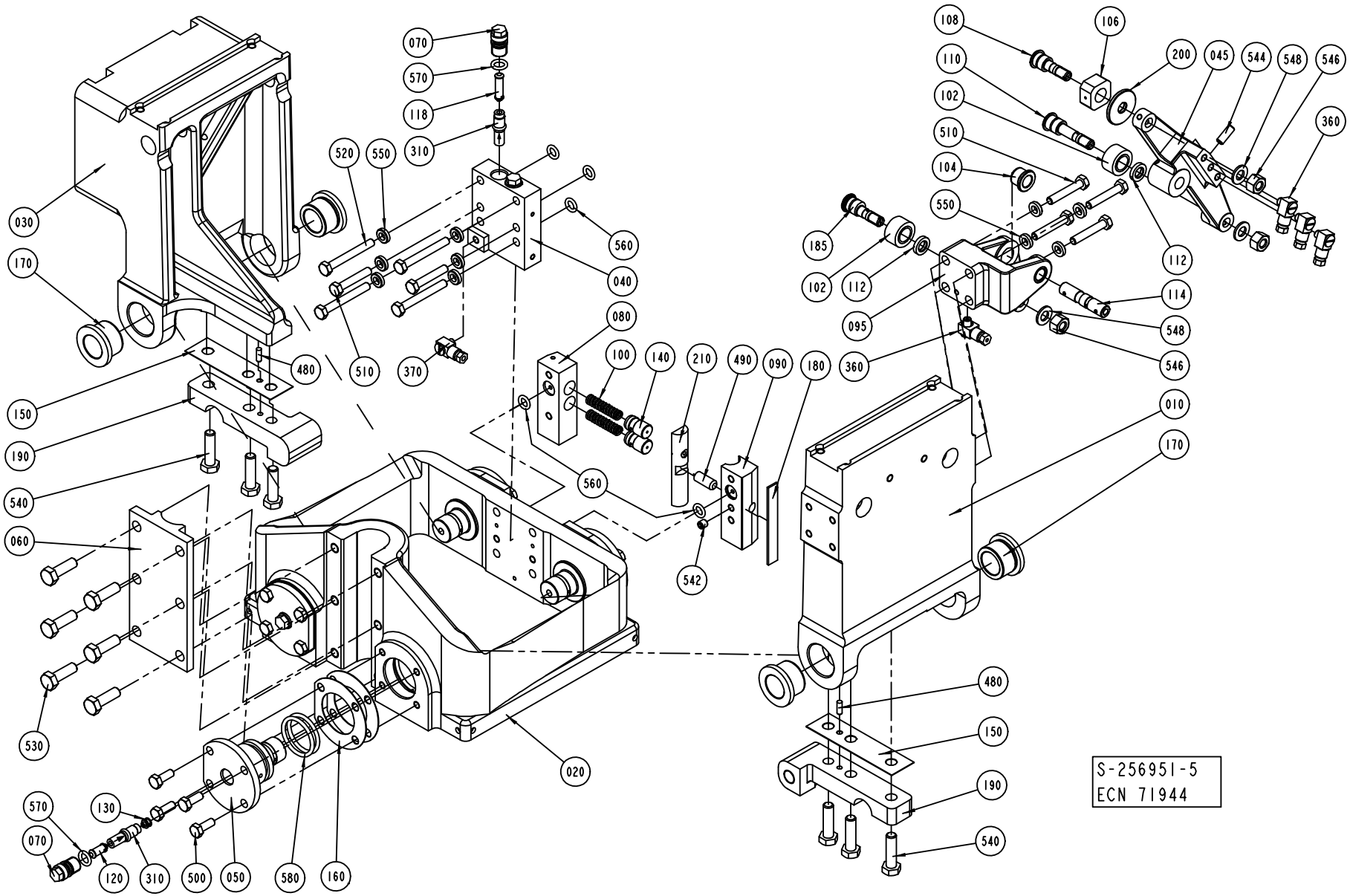
070
570
118
310
520
550
560
040
080
100
140
210
490
090
180
030
170
480
510
370
150
190
540
060
530
560
542
020
570
130
070
120
310
500
050
580
160
108
106
110
200
045
544
548
546
102
510
104
550
360
185
102
112
095
360
112
114
548
546
010
170
480
150
190
540
S-256951-5
ECN 71944

ECM: 113354 - 20020930
Group number: 256951-0500
Assembly Drawing: 256951-5_1_AC

This list covers pages from 4-40 to 4-43

Pos	Part No	UN	Qty	Description	Page No
TBA IH					
030	562120-0000		1	ARM PRESSURE JAW	
Common Parts					
010	255609-0000		1	ARM CUTTING JAW	
020	256834-0000		1	YOKE	
040	256953-0000		1	BLOCK RIGHT	
045	272492-0000		1	ARM RIGHT	
050	272454-0000		4	PIVOT PIN	
060	256082-0000		1	CAP	
070	256829-0000		6	SCREW	
080	256870-0000		1	BRACKET	
090	491349-0000		1	BEARING SEAT	
095	272496-0000		1	BRACKET RIGHT	
100	20239-0000		2	COMPRESSION SPRING	
102	22475-0000		2	CURVE ROLLER	
104	255653-0000		2	FLANGE BUSHING	
106	256628-0000		1	PIECE	
108	256629-0001		1	AXLE PIN	
110	256629-0003		1	AXLE PIN	
112	256704-0000		2	WASHER	
114	256710-0000		1	SHAFT	
118	256831-0001		2	SPACER	
120	256831-0002		4	SPACER	
130	256831-0003		4	SPACER	
140	256889-0000		2	PLUNGER	
150	256890-0000		2	LACE	
160	256891-0000		6	LACE	
170	257213-0000		4	BUSHING	
180	257317-0000		1	LACE	
185	271100-0000		1	DOWEL	
190	272415-0000		2	ARM	
200	441706-0000		1	WASHER	
210	491350-0000		1	SLIDER	
310	90092-0052		6	METERING VALVE 10 MM3	
360	90134-0058		4	CONNECTION	
370	90134-0068		1	CONNECTION	
480	311103-0268		2	PARALLEL PIN ISO 2338 4M6X12 A1	
490	311103-0401		1	PARALLEL PIN ISO 2338 8M6X20 A1	
500	312105-0368		16	SCREW M6S ISO 4017 M6X16 A480	
510	312105-0376		6	SCREW M6S ISO 4014 M6X35 A480	
520	312105-0380		4	SCREW M6S ISO 4014 M6X50 A480	
530	312105-0453		6	SCREW M6S ISO 4017 M8X25 A480	
540	312105-0455		6	SCREW M6S ISO 4017 M8X30 A480	
542	312318-0360		1	SCREW ISO4029 M6X6 A4	
544	312318-0368		1	SCREW ISO4029 M6X16 A4	
546	312811-0318		3	NUT HEX.LOCK HELI COIL M8 SS	
548	315105-0165		3	WASHER BRB8,4X16RFR	
550	315115-0153		10	WASHER PLAIN, TBRB 6,4/12 H=3	
560	315202-0206		5	O-RING 7,3X2,4 MM	
570	315202-0207		6	O-RING 8,3X2,4 MM	
580	315202-0219		8	O-RING 29,2X3 MM	

Machine Type | Group Description | Used-In | Group Number | Page No

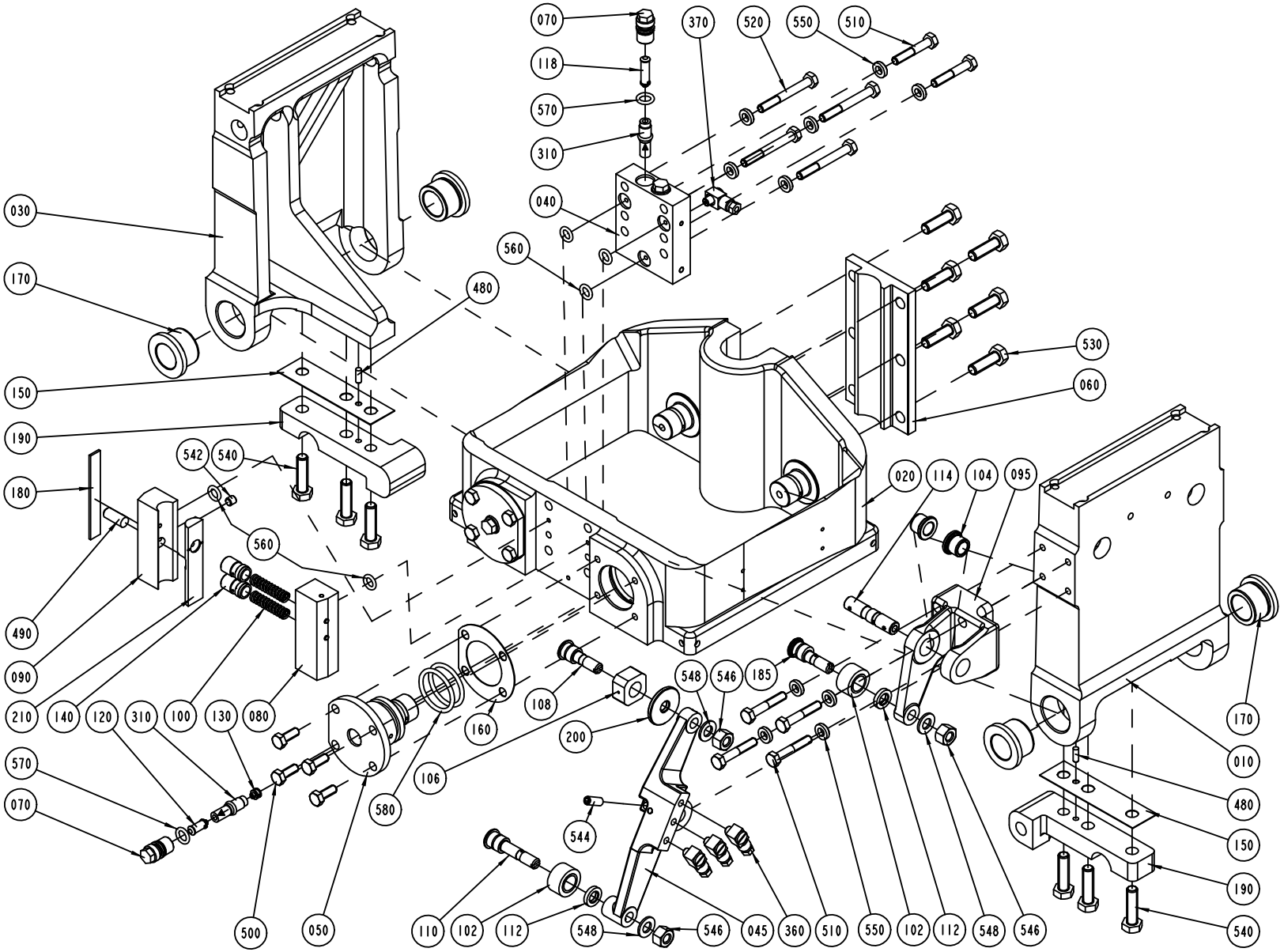

S-256952-4
ECN 71944

ECM: 113353 - 20020930
Group number: 256952-0500
Assembly Drawing: 256952-4_1_AB

This list covers pages from 4-44 to 4-47

Pos	Part No	UN	Qty	Description	Page No
TBA IH					
030	562120-0000		1	ARM PRESSURE JAW	
Common Parts					
010	255609-0000		1	ARM CUTTING JAW	
020	256834-0000		1	YOKE	
040	256954-0000		1	BLOCK LEFT	
045	272493-0000		1	ARM LEFT	
050	272454-0000		4	PIVOT PIN	
060	256082-0000		1	CAP	
070	256829-0000		6	SCREW	
080	256870-0000		1	BRACKET	
090	491349-0000		1	BEARING SEAT	
095	272497-0000		1	BRACKET LEFT	
100	20239-0000		2	COMPRESSION SPRING	
102	22475-0000		2	CURVE ROLLER	
104	255653-0000		2	FLANGE BUSHING	
106	256628-0000		1	PIECE	
108	256629-0001		1	AXLE PIN	
110	256629-0003		1	AXLE PIN	
112	256704-0000		2	WASHER	
114	256710-0000		1	SHAFT	
118	256831-0001		2	SPACER	
120	256831-0002		4	SPACER	
130	256831-0003		4	SPACER	
140	256889-0000		2	PLUNGER	
150	256890-0000		2	LACE	
160	256891-0000		6	LACE	
170	257213-0000		4	BUSHING	
180	257317-0000		1	LACE	
185	271100-0000		1	DOWEL	
190	272415-0000		2	ARM	
200	441706-0000		1	WASHER	
210	491350-0000		1	SLIDER	
310	90092-0052		6	METERING VALVE 10 MM3	
360	90134-0058		4	CONNECTION	
370	90134-0068		1	CONNECTION	
480	311103-0268		2	PARALLEL PIN ISO 2338 4M6X12 A1	
490	311103-0401		1	PARALLEL PIN ISO 2338 8M6X20 A1	
500	312105-0368		16	SCREW M6S ISO 4017 M6X16 A480	
510	312105-0376		6	SCREW M6S ISO 4014 M6X35 A480	
520	312105-0380		4	SCREW M6S ISO 4014 M6X50 A480	
530	312105-0453		6	SCREW M6S ISO 4017 M8X25 A480	
540	312105-0455		6	SCREW M6S ISO 4017 M8X30 A480	
542	312318-0360		1	SCREW ISO4029 M6X6 A4	
544	312318-0368		1	SCREW ISO4029 M6X16 A4	
546	312811-0318		3	NUT HEX.LOCK HELI COIL M8 SS	
548	315105-0165		3	WASHER BRB8,4X16RFR	
550	315115-0153		10	WASHER PLAIN, TBRB 6,4/12 H=3	
560	315202-0206		5	O-RING 7,3X2,4 MM	
570	315202-0207		6	O-RING 8,3X2,4 MM	
580	315202-0219		8	O-RING 29,2X3 MM	

Machine Type | Group Description | Used-In | Group Number | Page No

YOKE LEFT

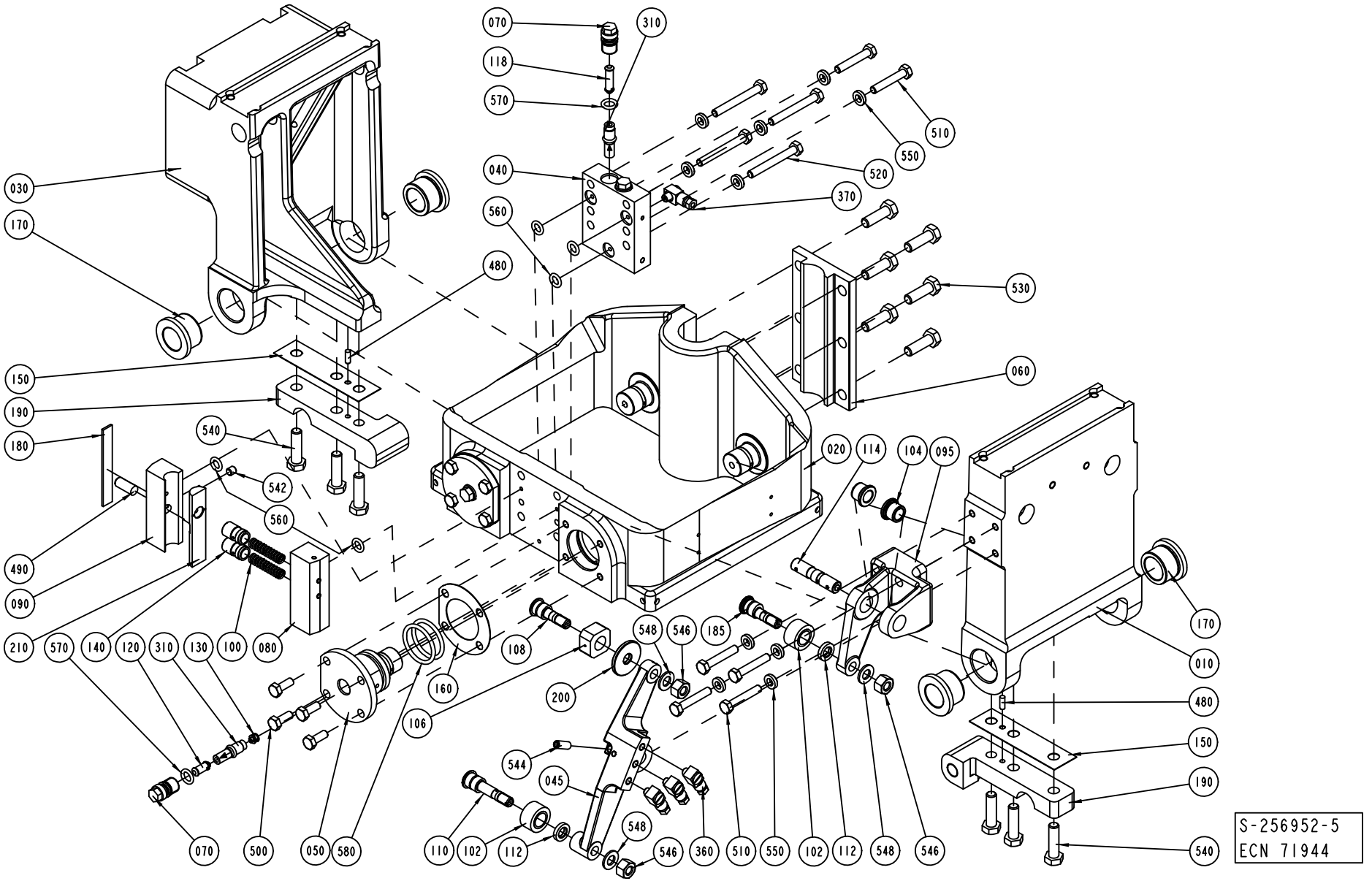
070
310
118
570
510
550
520
040
370
560
480
530
030
170
060
150
190
180
540
020
114
104
095
542
560
490
090
210
570
140
120
310
130
100
080
548
546
185
108
160
200
106
170
010
480
150
190
540
544
045
548
546
360
510
550
102
112
548
546
110
102
112
070
500
050
580
S-256952-5
ECN 71944

ECM: 113353 - 20020930
Group number: 256952-0500
Assembly Drawing: 256952-5_1_AC

This list covers pages from 4-44 to 4-47

Pos	Part No	UN	Qty	Description	Page No
TBA IH					
030	562120-0000		1	ARM PRESSURE JAW	
Common Parts					
010	255609-0000		1	ARM CUTTING JAW	
020	256834-0000		1	YOKE	
040	256954-0000		1	BLOCK LEFT	
045	272493-0000		1	ARM LEFT	
050	272454-0000		4	PIVOT PIN	
060	256082-0000		1	CAP	
070	256829-0000		6	SCREW	
080	256870-0000		1	BRACKET	
090	491349-0000		1	BEARING SEAT	
095	272497-0000		1	BRACKET LEFT	
100	20239-0000		2	COMPRESSION SPRING	
102	22475-0000		2	CURVE ROLLER	
104	255653-0000		2	FLANGE BUSHING	
106	256628-0000		1	PIECE	
108	256629-0001		1	AXLE PIN	
110	256629-0003		1	AXLE PIN	
112	256704-0000		2	WASHER	
114	256710-0000		1	SHAFT	
118	256831-0001		2	SPACER	
120	256831-0002		4	SPACER	
130	256831-0003		4	SPACER	
140	256889-0000		2	PLUNGER	
150	256890-0000		2	LACE	
160	256891-0000		6	LACE	
170	257213-0000		4	BUSHING	
180	257317-0000		1	LACE	
185	271100-0000		1	DOWEL	
190	272415-0000		2	ARM	
200	441706-0000		1	WASHER	
210	491350-0000		1	SLIDER	
310	90092-0052		6	METERING VALVE 10 MM3	
360	90134-0058		4	CONNECTION	
370	90134-0068		1	CONNECTION	
480	311103-0268		2	PARALLEL PIN ISO 2338 4M6X12 A1	
490	311103-0401		1	PARALLEL PIN ISO 2338 8M6X20 A1	
500	312105-0368		16	SCREW M6S ISO 4017 M6X16 A480	
510	312105-0376		6	SCREW M6S ISO 4014 M6X35 A480	
520	312105-0380		4	SCREW M6S ISO 4014 M6X50 A480	
530	312105-0453		6	SCREW M6S ISO 4017 M8X25 A480	
540	312105-0455		6	SCREW M6S ISO 4017 M8X30 A480	
542	312318-0360		1	SCREW ISO4029 M6X6 A4	
544	312318-0368		1	SCREW ISO4029 M6X16 A4	
546	312811-0318		3	NUT HEX.LOCK HELI COIL M8 SS	
548	315105-0165		3	WASHER BRB8,4X16RFR	
550	315115-0153		10	WASHER PLAIN, TBRB 6,4/12 H=3	
560	315202-0206		5	O-RING 7,3X2,4 MM	
570	315202-0207		6	O-RING 8,3X2,4 MM	
580	315202-0219		8	O-RING 29,2X3 MM	

Machine Type	Group Description	Used-In	Group Number	Page No

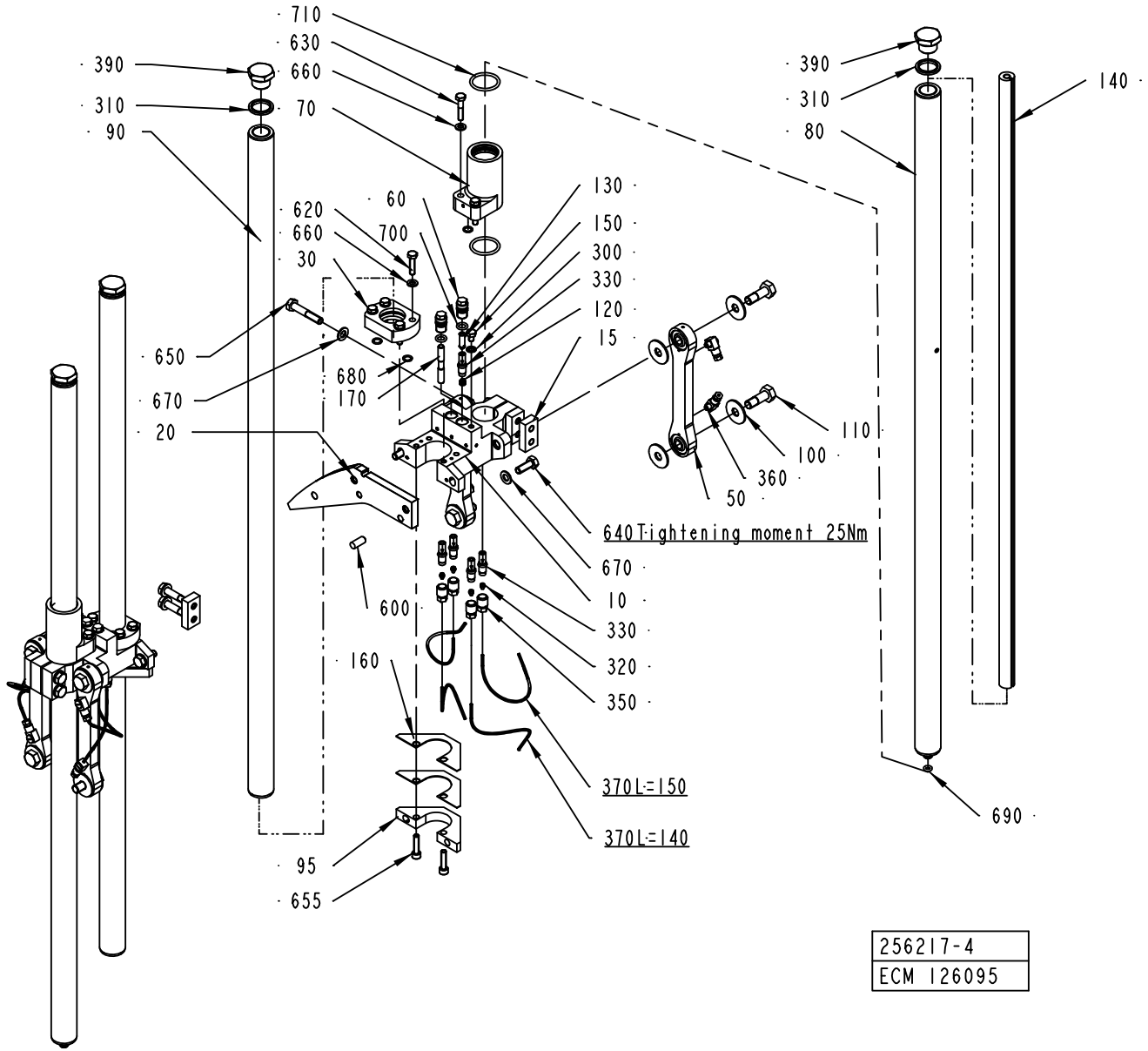
710
630
660
70
390
310
90
620
660
30
60
700
130
150
300
330
120
15
650
670
20
680
170
640 Tightening moment 25Nm
670
10
330
320
350
600
160
370 L=150
370 L=140
95
655
390
310
80
140
690
110
100
360
50
256217-4
ECM 126095

ECM: 129494 - 20031103
Group number: 256217-0500
Assembly Drawing: 256217-4_1_AG

Pos	Part No	UN	Qty	Description	Page No
TBA 0300S, TBA 0180B, TBA 0160S, TBA 0200B, TBA 0125S, TBA 0100B, TBA 0250S, TBA 0200S, TBA 0200M, TBA 0250B (See drawing on page: 4-48)					
020	1538039-0000		2	CURVE	
095	441750-0000		2	YOKE	
160	441751-0000		4	LACE	
600	311103-0401		4	PARALLEL PIN ISO 2338 8M6X20 A1	
640	312105-0452		4	SCREW M6S ISO 4017 M8X22 A4 80	
655	312115-0372		4	SCREW ISO4762 M6X25 A4	
670	315105-0165		8	WASHER BRB8,4X16RFR	
TBA 0330S, TBA 0284B (See drawing on page: 4-48)					
020	1538039-0000		2	CURVE	
095	441750-0000		2	YOKE	
160	441751-0000		4	LACE	
600	311103-0401		4	PARALLEL PIN ISO 2338 8M6X20 A1	
640	312105-0452		4	SCREW M6S ISO 4017 M8X22 A4 80	
655	312115-0372		4	SCREW ISO4762 M6X25 A4	
670	315105-0165		8	WASHER BRB8,4X16RFR	
Common Parts					
010	2514091-0000		2	BRACKET	
015	2514090-0000		2	FORCE PLATE	
030	456002-0000		2	BEARING	
050	441031-0000		4	LINK BEARING	
060	256829-0000		4	SCREW	
070	272490-0000		2	SLEEVE	
080	441269-0000		2	GUIDE	
090	441268-0000		2	GUIDE	
100	256738-0000		16	WASHER	
110	256739-0000		8	SCREW	
120	256831-0003		2	SPACER	
130	256831-0004		2	SPACER	
140	272840-0000		2	ROD	
150	441355-0000		2	BLEEDING SCREW	
170	456004-0000		2	SPACER	
300	90005-0003		2	BONDED SEAL SS/NBR M6	
310	90005-0014		4	BONDED SEAL SS/NBR G1/2"	
320	90028-0020		8	CONE TUBE 2,5MM	
330	90092-0052		10	METERING VALVE 10 MM3	
350	90134-0039		8	BUSHING VALVE CONNECTION 2,5 MM	
360	90134-0058		8	CONNECTION	
370	90166-0143	MM	1160	TUBE 2,5 MM PA,TRANSP.	
390	90330-0037		4	PLUG, EXT. G-THREAD, G1/2	
620	312105-0372		8	SCREW M6S ISO 4017 M6X25 A480	
630	312105-0374		4	SCREW M6S ISO 4014 M6X30 A480	
650	312105-0460		4	SCREW M6S ISO 4014 M8X45 A480	
660	315105-0153		12	WASHER BRB6,4X12RFR	
680	315202-0106		6	O-RING 8,1X1,6 MM	
690	315202-0204		2	O-RING 5,3X2,4 MM	
700	315202-0207		4	O-RING 8,3X2,4 MM	
710	315202-0219		4	O-RING 29,2X3 MM	

Machine Type | Group Description | Used-In | Group Number | Page No

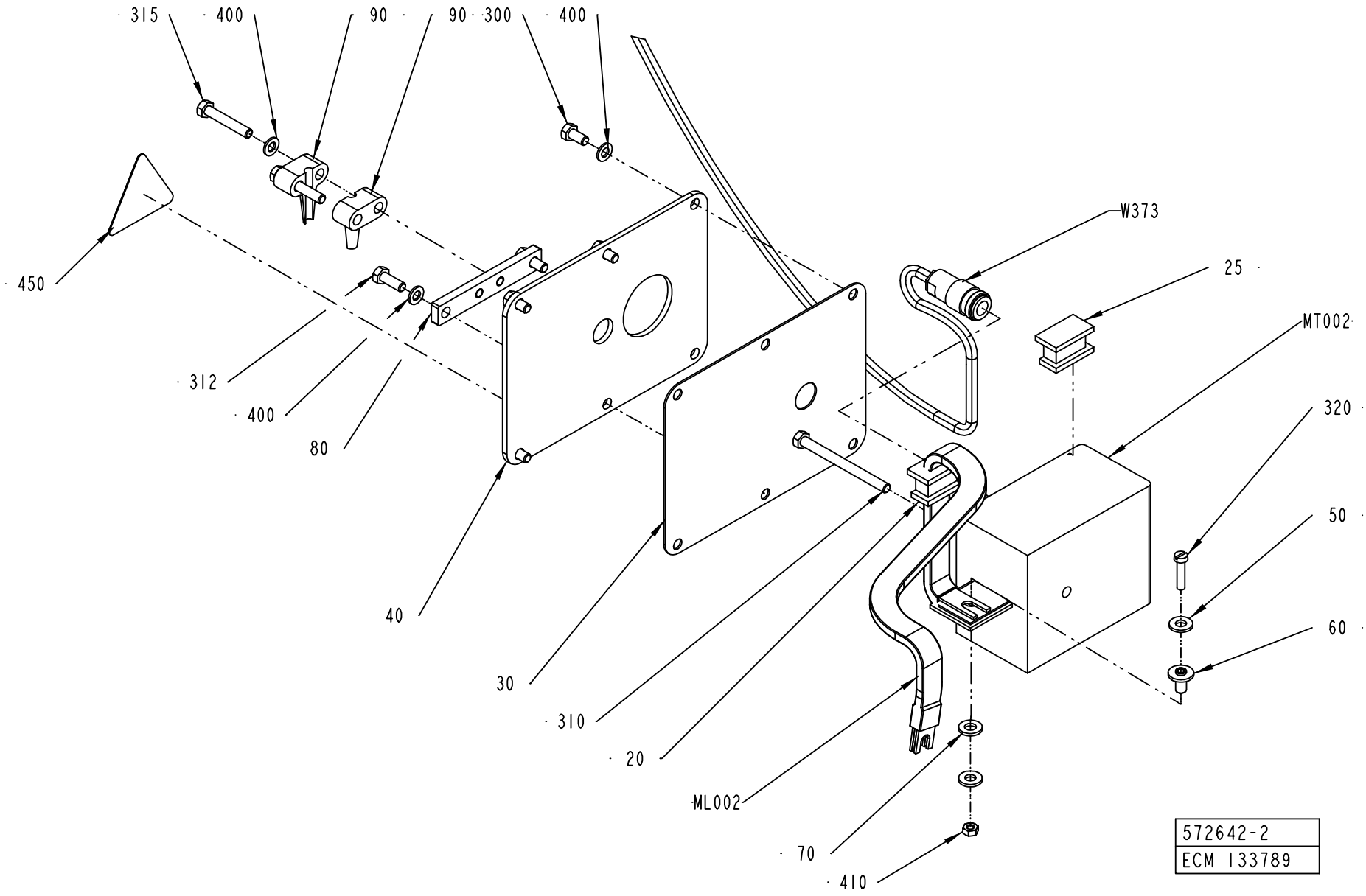
315
400
90
90
300
400
W373
25
MT002
320
50
60
450
312
400
80
40
30
310
20
ML002
70
410
572642-2
ECM 133789

ECM: 133791 - 20030515
Group number: 572642-0200
Assembly Drawing: 572642-2_1_AC

Pos	Part No	UN	Qty	Description	Page No
TBA 0125S, TBA 0100B					
ML002	2554961-0000		1	BUSBAR RIGHT	
MT002	67379-0262		1	TRANSFORMER	
MT002	67379-0262		1	TRANSFORMER	
TBA 0160S, TBA 0200S					
ML002	571871-0000		1	BUSBAR,RIGHT	
MT002	67379-0254		1	TRANSFORMER	
MT002	67379-0254		1	TRANSFORMER	
TBA 0250S, TBA 0200M					
ML002	571871-0000		1	BUSBAR,RIGHT	
MT002	67379-0265		1	TRANSFORMER	
MT002	67379-0265		1	TRANSFORMER	
TBA 0330S, TBA 0300S, TBA 0180B, TBA 0200B, TBA 0284B, TBA 0250B					
ML002	571871-0000		1	BUSBAR,RIGHT	
MT002	67379-0264		1	TRANSFORMER	
MT002	67379-0264		1	TRANSFORMER	
Common Parts					
020	571873-0000		1	SEAL	
025	571874-0000		1	SEALING PLUG	
030	562119-0000		1	GASKET	
040	562118-0000		1	LID	
050	28509-0000		2	WASHER	
060	32544-0000		1	INSULATION NUT	
070	32079-0000		1	WASHER	
080	578104-0000		1	SHEET	
090	1282426-0000		2	CLIP	
300	312105-0325		4	SCREW M6S ISO 4017 M5X10 A480	
310	312101-0343		1	SCREW M6S M5X60 FZB	
312	312105-0328		2	SCREW M6S ISO 4017 M5X14 A480	
315	312105-0335		2	SCREW M6S ISO 4014 M5X30 A480	
320	312122-0294		1	SCREW ISO 1207 M4X18 NI PL BRASS	
400	315105-0146		8	WASHER BRB5,3X10RFR	
410	312602-0312		1	HEXAGON NUT, EN 24032 M6M M4 NIPLBR	
450	359705-0015		1	WARNING SIGN ISO, RISK OF ELECTRIC SHOCK	
W373	1548155-0000		1	COAXIAL CABLE	

Pos	Part No	UN	Qty	Description	Page No

Machine Type | Group Description | Used-In | Group Number | Page No

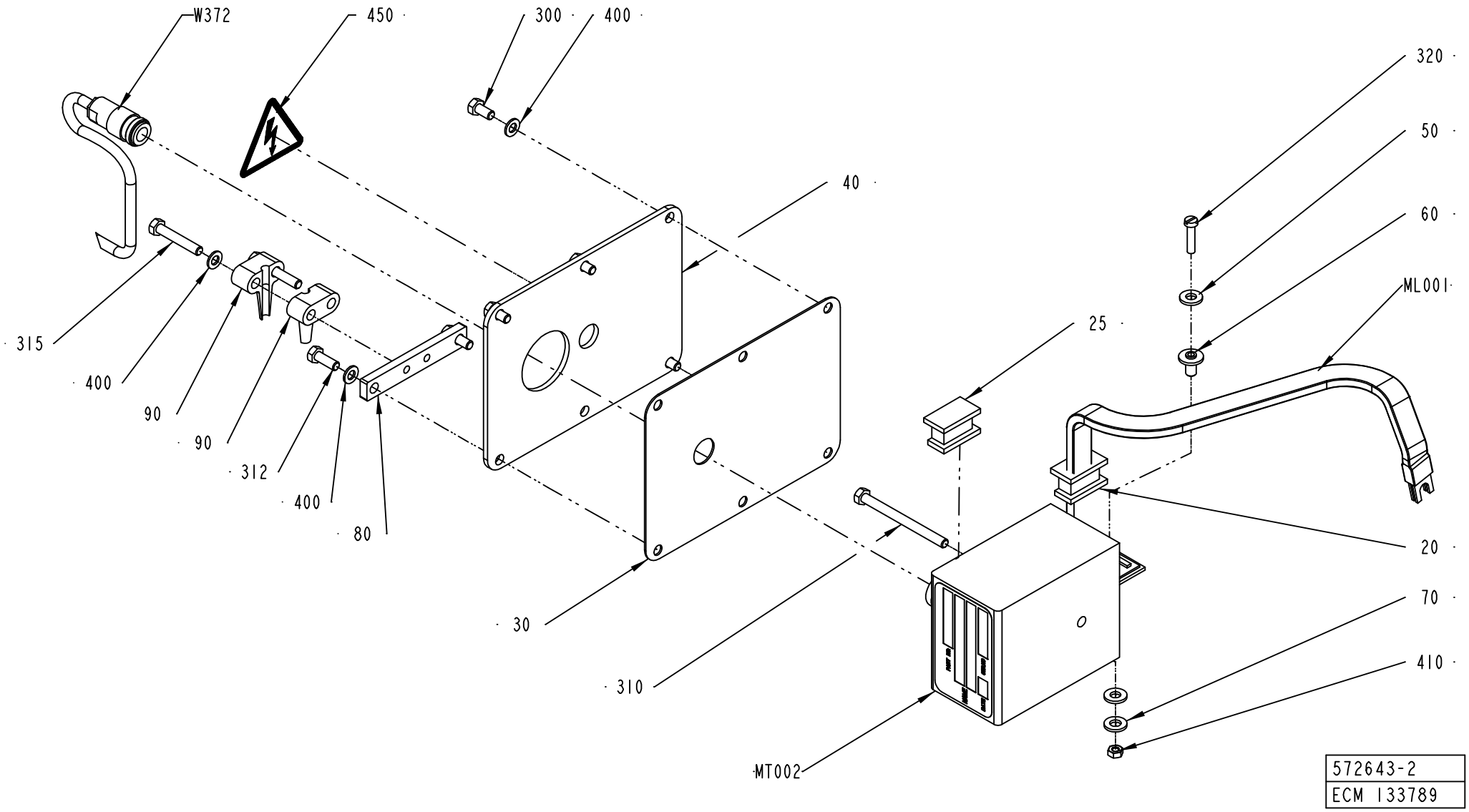
W372
450
300
400
320
50
60
ML001
40
315
400
90
90
312
400
80
25
30
310
MT002
20
70
410
572643-2
ECM 133789

ECM: 133792 - 20030515
Group number: 572643-0200
Assembly Drawing: 572643-2_1_AC

Pos	Part No	UN	Qty	Description	Page No
TBA 0125S, TBA 0100B					
ML001	2554960-0000		1	BUSBAR LEFT	
MT001	67379-0262		1	TRANSFORMER	
MT001	67379-0262		1	TRANSFORMER	
TBA 0160S, TBA 0200S					
ML001	571872-0000		1	BUSBAR,LEFT	
MT001	67379-0254		1	TRANSFORMER	
MT001	67379-0254		1	TRANSFORMER	
TBA 0250S, TBA 0200M					
ML001	571872-0000		1	BUSBAR,LEFT	
MT001	67379-0265		1	TRANSFORMER	
MT001	67379-0265		1	TRANSFORMER	
TBA 0330S, TBA 0300S, TBA 0180B, TBA 0200B, TBA 0284B, TBA 0250B					
ML001	571872-0000		1	BUSBAR,LEFT	
MT001	67379-0264		1	TRANSFORMER	
MT001	67379-0264		1	TRANSFORMER	
Common Parts					
020	571873-0000		1	SEAL	
025	571874-0000		1	SEALING PLUG	
030	562119-0000		1	GASKET	
040	562118-0000		1	LID	
050	28509-0000		2	WASHER	
060	32544-0000		1	INSULATION NUT	
070	32079-0000		1	WASHER	
080	578104-0000		1	SHEET	
090	1282426-0000		2	CLIP	
300	312105-0325		4	SCREW M6S ISO 4017 M5X10 A480	
310	312101-0343		1	SCREW M6S M5X60 FZB	
312	312105-0328		2	SCREW M6S ISO 4017 M5X14 A480	
315	312105-0335		2	SCREW M6S ISO 4014 M5X30 A480	
320	312122-0294		1	SCREW ISO 1207 M4X18 NI PL BRASS	
400	315105-0146		8	WASHER BRB5,3X10RFR	
410	312602-0312		1	HEXAGON NUT, EN 24032 M6M M4 NIPLBR	
450	359705-0015		1	WARNING SIGN ISO, RISK OF ELECTRIC SHOCK	
W372	1548155-0000		1	COAXIAL CABLE	

Pos	Part No	UN	Qty	Description	Page No

VOLUME ADJUSTER

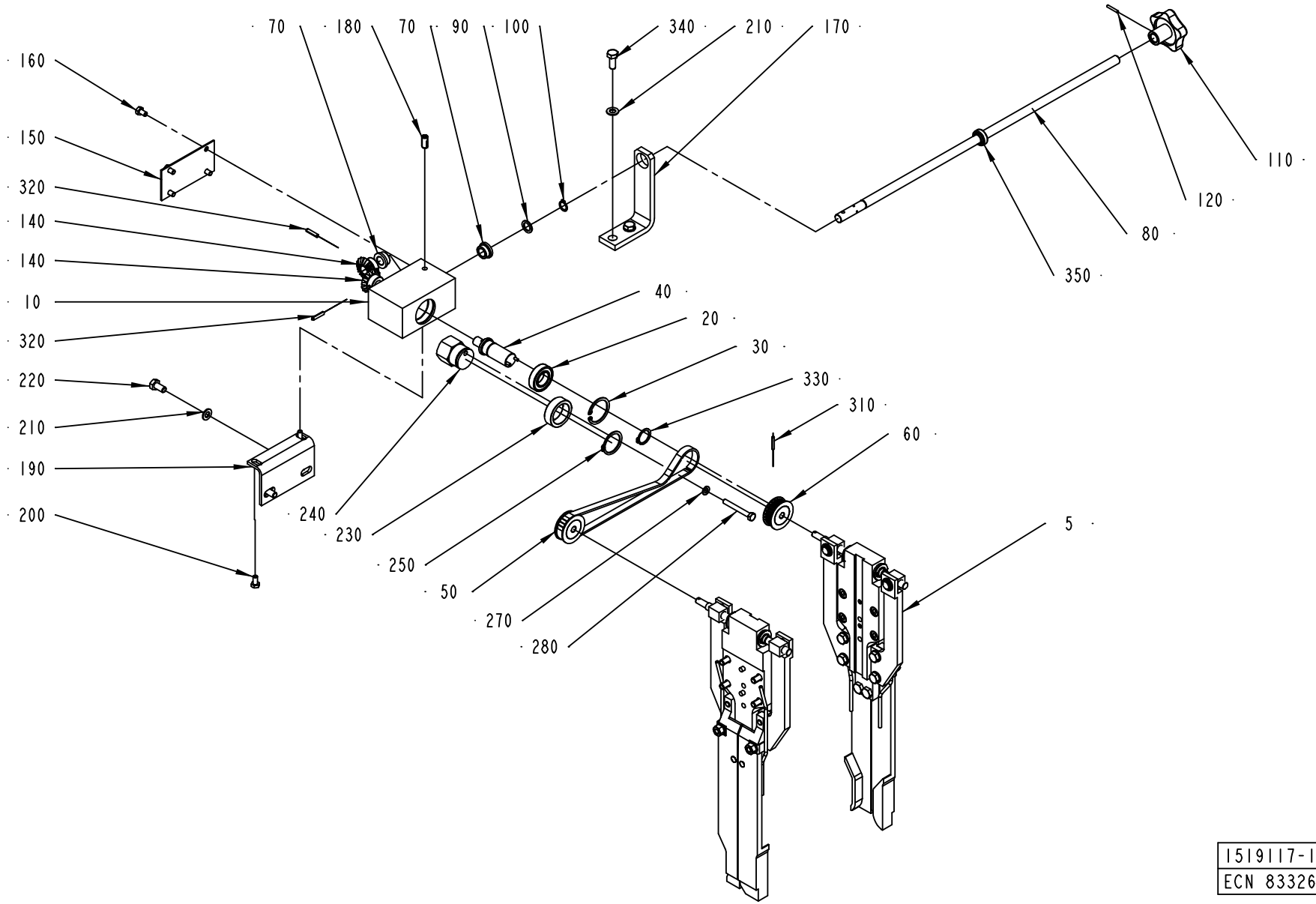

1519117-1
ECN 83326

ECM: 113350 - 20020930
Group number: 1519117-0100
Assembly Drawing: 1519117-1_1_AA

Pos	Part No	UN	Qty	Description	Page No
-					
005	1519118-0100		1	VOLUM CURVE PIECE	**4-57**
010	1539105-0000		1	BOX	
020	90214-0166		1	BALL BEARING, 20X37X12 MM	
030	315752-0125		1	RETAINING RING FOR BORE DIN 472 37 ST	
040	1539106-0000		1	SHAFT	
050	1539107-0000		1	TIMING BELT	
060	1539108-0000		2	TIMING BELT PULLEY	
070	321101-0172		2	FLANGE BUS 12F7X10	
080	1539109-0000		1	SHAFT	
090	90005-0047		1	WASHER,PL.RND.CU.12,2/ H=1,5	
100	315751-0109		1	RETAINING RING FOR SHAFT DIN 471 12 A2	
110	240797-0000		1	HANDLE	
120	311103-0238		1	PARALLEL PIN ISO 2338 3M6X20 A1	
140	293610-0000		2	GEAR WHEEL	
150	1539110-0000		1	LID	
160	312105-0364		4	SCREW M6S ISO 4017 M6X10 A480	
170	1539111-0000		1	SUPPORT	
180	90458-1517		1	SCREW SPRINGLOAD. SOCK. HEX HEAD M8X18	
190	1539112-0000		1	SUPPORT	
200	312105-0366		2	SCREW M6S ISO 4017 M6X12 A480	
210	315105-0165		4	WASHER BRB8,4X16RFR	
220	312105-0449		2	SCREW M6S ISO 4017 M8X16 A480	
230	1538948-0000		1	ECCENTRIC	
240	1538949-0000		1	ECCENTRIC	
250	315751-0122		1	RETAINING RING FOR SHAFT DIN 471 30 A2	
270	315105-0153		1	WASHER BRB6,4X12RFR	
280	312105-0380		1	SCREW M6S ISO 4014 M6X50 A480	
310	90258-0031		1	PIN, STRAIGHT SLOTTED SPRING FRP 3X20	
320	311112-0256		2	SPRING PIN, ISO 8752 4X20-C	
330	315751-0116		1	RETAINING RING FOR SHAFT DIN 471 20 A2	
340	312105-0451		2	SCREW M6S ISO 4017 M8X20 A480	
350	90240-0152		1	PLAIN BEAR,SELF ADJ.SPHER.12X22X10 MM	

Pos	Part No	UN	Qty	Description	Page No

Machine Type	Group Description	Used-In	Group Number	Page No

VOLUM CURVE PIECE

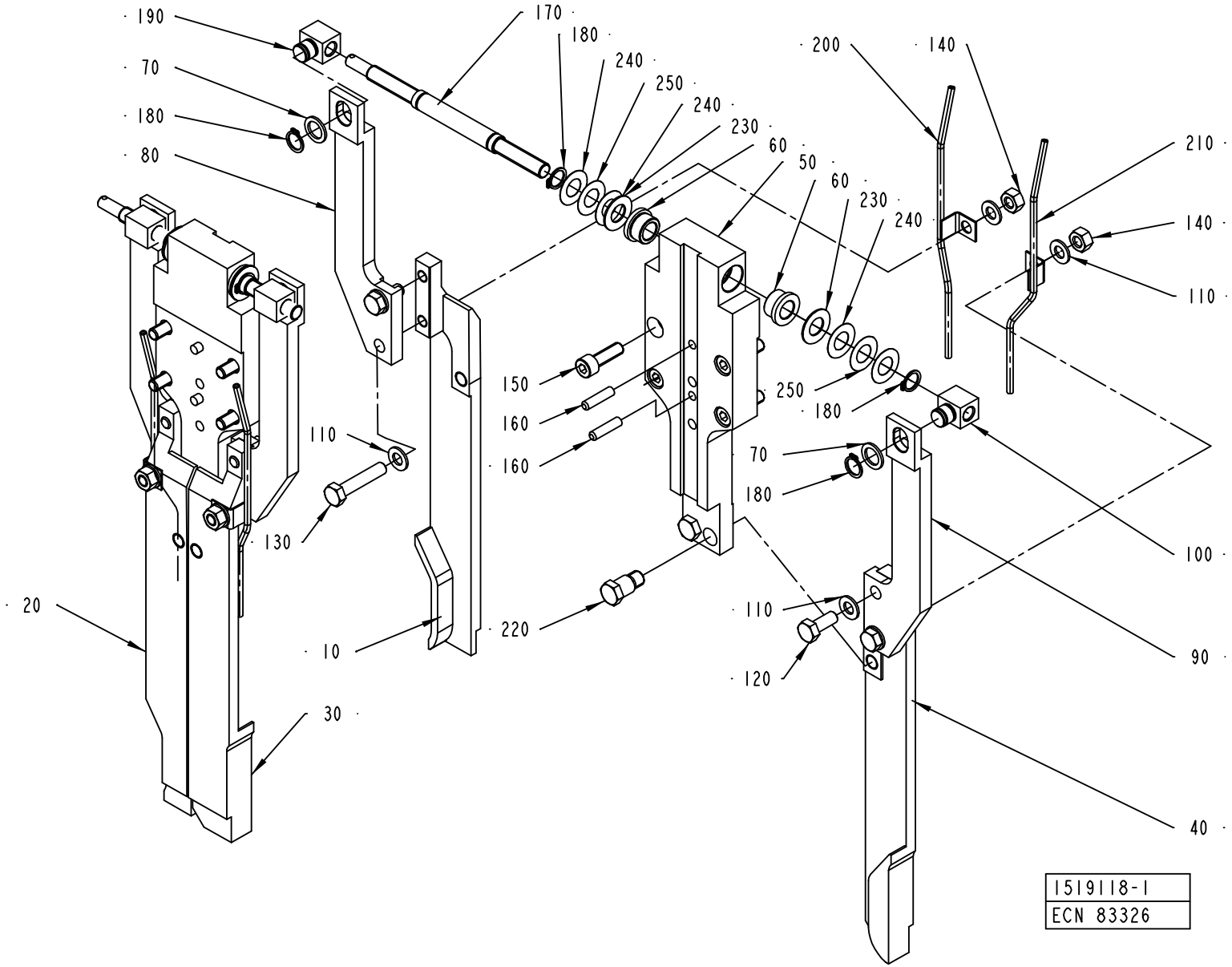

ECM: 110619 - 20030113
Group number: 1519118-0100
Assembly Drawing: 1519118-1_1_AA

Pos	Part No	UN	Qty	Description	Page No
TBA 0100B					
010	979772-0000		1	VOLUME CAM L 100	
020	979774-0000		1	VOLUME CAM R 100	
030	979773-0000		1	VOLUME CAM L WIDE 100	
040	979775-0000		1	VOLUME CAM R WIDE 100	
TBA 0125S					
010	1490235-0000		1	VOLUME CAM	
020	1490236-0000		1	VOLUME CAM	
030	1490237-0000		1	VOLUME CAM, WIDE	
040	1490238-0000		1	VOLUME CAM, WIDE	
TBA 0160S					
010	2506638-0000		1	VOLUME CAM	
020	2506639-0000		1	VOLUME CAM	
030	2506640-0000		1	VOLUME CAM	
040	2506641-0000		1	VOLUME CAM	
TBA 0180B					
010	272956-0000		1	VOLUME CAM LEFT	
020	272964-0000		1	VOLUME CAM RIGHT	
030	272965-0000		1	VOLUME CAM LEFT, WIDE	
040	272967-0000		1	VOLUME CAM RIGHT, WIDE	
TBA 0200B					
010	1490239-0000		1	VOLUME CAM	
020	1490240-0000		1	VOLUME CAM	
030	1490239-0000		1	VOLUME CAM	
040	1490240-0000		1	VOLUME CAM	
TBA 0200M, TBA 0250B					
010	1282315-0000		1	VOLUME CAM LEFT	
020	1282316-0000		1	VOLUME CAM RIGHT	
030	1282315-0000		1	VOLUME CAM LEFT	
040	1282316-0000		1	VOLUME CAM RIGHT	
TBA 0200S					
010	2506645-0000		1	VOLUME CAM	
020	2506643-0000		1	VOLUME CAM	
030	2506642-0000		1	VOLUME CAM	
040	2506644-0000		1	VOLUME CAM	
TBA 0250S					
010	2553111-0000		1	CAM	
020	2553110-0000		1	CAM	
30	2553111-0000		1	CAM	
40	2553110-0000		1	CAM	
TBA 0300S, TBA 0284B					
010	272949-0000		1	VOLUME CAM LEFT	
020	272957-0000		1	VOLUME CAM RIGHT	
030	272949-0000		1	VOLUME CAM LEFT	
040	272957-0000		1	VOLUME CAM RIGHT	
TBA 0330S					
010	582166-0000		1	VOLUME CAM L 330S	
020	582164-0000		1	VOLUME CAM R 330S	
030	582167-0000		1	VOLUME CAM L WIDE 330S	
040	582165-0000		1	VOLUME CAM R WIDE 330S	
Common Parts					
050	1539101-0000		2	BRACKET	
060	321101-0173		4	FLANGE BUS 12F7X12	
070	90005-0047		4	WASHER,PL.RND.CU.12,2/ H=1,5	
080	1539102-0000		2	ARM	
090	1539103-0000		2	ARM	
100	1519134-0000		2	JOINT	
110	315105-0165		12	WASHER BRB8,4X16RFR	
120	312155-0451		4	SCREW EN 10642 MF6S M8X20 A480	
130	312155-0459		4	SCREW EN 10642 MF6S M8X40 A480	
140	312605-0318		4	HEXAGON NUT, M6M M8 A280	
150	312115-0453		8	SCREW ISO4762 M8X25 A4	
160	311103-0355		4	PARALLELL PIN, M6, 6X25 MM	
170	1539104-0000		2	SPINDLE	
180	315751-0109		8	RETAINING RING FOR SHAFT DIN 471 12 A2	
190	1519133-0000		2	JOINT	
200	441759-0000		2	PIPE LEFT	
210	441758-0000		2	PIPE RIGHT	
220	272973-0000		4	DOWEL	
230	1755-0001		4	WASHER	
240	1755-0002		8	WASHER	
250	1755-0003		4	WASHER	
300	90157-0021	KG		LOCKING FLUID LOCTITE 270	

Machine Type | Group Description | Used-In | Group Number | Page No

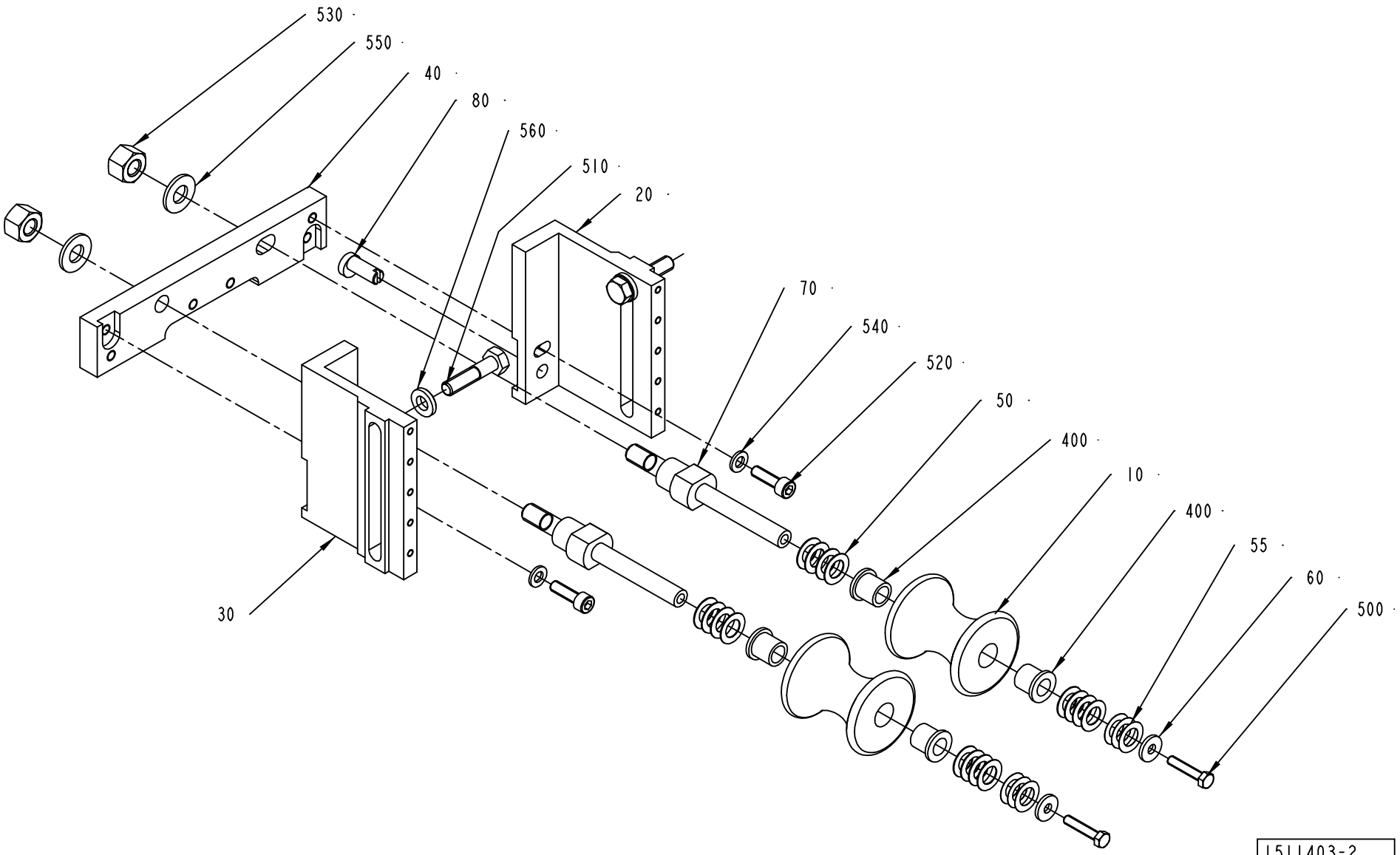
530
550
40
80
560
510
20
70
540
520
50
400
10
400
55
60
500
30
1511403-2
ECM 108577

ECM: 116315 - 20020930
Group number: 1511403-0100
Assembly Drawing: 1511403-2_1_AA

Pos	Part No	UN	Qty	Description	Page No
NOPT TBA 0100B IH, NOPT TBA 0125S IH					
010	978758-0000		2	ROLLER 125ML	
040	1511405-0003		1	BRACKET	
NOPT TBA 0200M IH, NOPT TBA 0250S IH					
010	574385-0000		2	ROLLER TBA250SL	
040	1511405-0001		1	BRACKET	
NOPT TBA 0200S IH, NOPT TBA 0160S IH					
010	978760-0000		2	ROLLER TBA200SL	
040	1511405-0004		1	BRACKET	
NOPT TBA 0200B IH, NOPT TBA 0180B IH, NOPT TBA 0330S IH, NOPT TBA 0250B IH, NOPT TBA 0284B IH, NOPT TBA 0300S IH					
010	978757-0000		2	ROLLER 180-284ML	
040	1511405-0002		1	BRACKET	
Common Parts					
020	1511406-0000		1	BRACKET	
030	1511407-0000		1	BRACKET	
050	2033-0009		16	WASHER	
055	2033-0014		6	WASHER	
060	27815-0000		2	WASHER	
070	978756-0000		2	PIN	
080	1511404-0000		1	ECCENTRIC SHAFT	
400	90240-0180		4	FLANGE BUSHING 10X14X15MM	
500	312105-0333		2	SCREW M6S ISO 4017 M5X25 A480	
510	312105-0457		2	SCREW M6S ISO 4014 M8X35 A480	
520	312115-0370		2	SCREW ISO4762 M6X20 A4	
530	312811-0320		2	NUT HEX.LOCK HELI COIL MID GRIP M10 SS	
540	315105-0153		2	WASHER BRB6,4X12RFR	
550	315105-0173		2	WASHER BRB10,5X22RFR	
560	315115-0165		2	WASHER PLAIN, TBRB 8,4/16 H=3	

Pos	Part No	UN	Qty	Description	Page No

MANIFOLD RIGHT

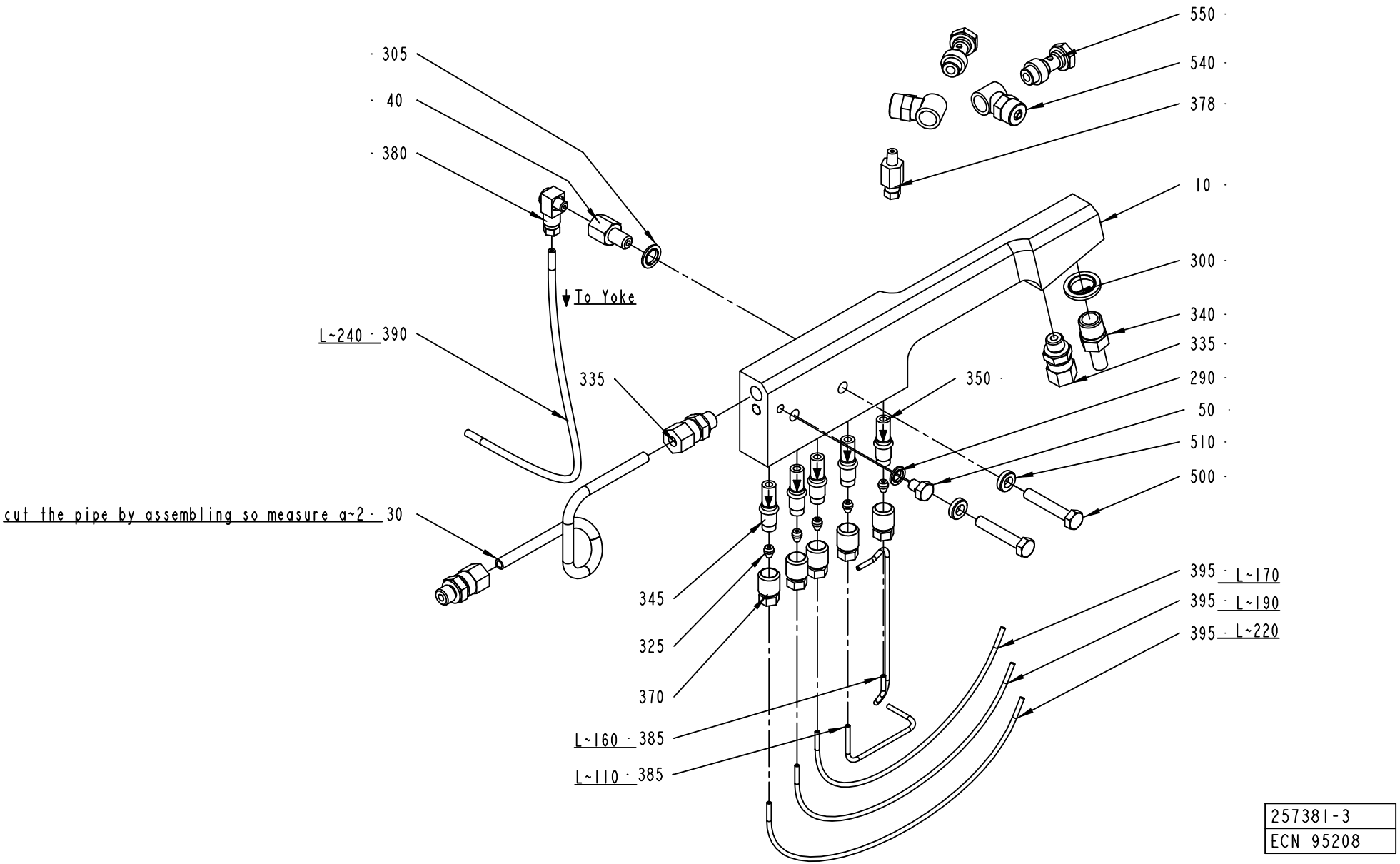

257381-3
ECN 95208

ECM: 123353 - 20030102
Group number: 257381-0300
Assembly Drawing: 257381-3_1_AC

Pos	Part No	UN	Qty	Description	Page No
-					
010	456017-0000		1	HOSE HOLDER RIGHT	
030	257379-0000		1	HYDRAULIC PIPE RIGHT	
040	257000-0000		1	NIPPLE	
050	441355-0000		1	BLEEDING SCREW	
290	90005-0003		1	BONDED SEAL SS/NBR M6	
300	90005-0005		1	BONDED SEAL SS/NBR G1/4	
305	90005-0007		1	BONDED SEAL SS/NBR M8	
325	90028-0020		5	CONE TUBE 2,5MM	
335	90030-0184		3	CONN. STR. GA-6-G1/8	
340	90030-0065		1	PIPE CONNECTION	
345	90092-0052		4	METERING VALVE 10 MM3	
350	90092-0053		1	METERING VALVE 30 MM3	
370	90134-0039		5	BUSHING VALVE CONNECTION 2,5 MM	
378	90134-0066		1	CONNECTION M6 TUBE 4 MM	
380	90134-0068		1	CONNECTION	
385	90266-0019	MM	270	PIPE	
390	90166-0109	MM	240	TUBE 4 MM PA,TRANSP.	
395	90166-0143	MM	580	TUBE 2,5 MM PA,TRANSP.	
500	312105-0376		2	SCREW M6S ISO 4014 M6X35 A480	
510	315115-0153		2	WASHER PLAIN, TBRB 6,4/12 H=3	
540	342980-0121		2	BANJO-CONNECTION,RING 8/6-G1/8"	
550	342980-0303		2	BANJO-HOLLOW BOLT COUPL,EXT.THR.01-G1/8"	

Pos	Part No	UN	Qty	Description	Page No

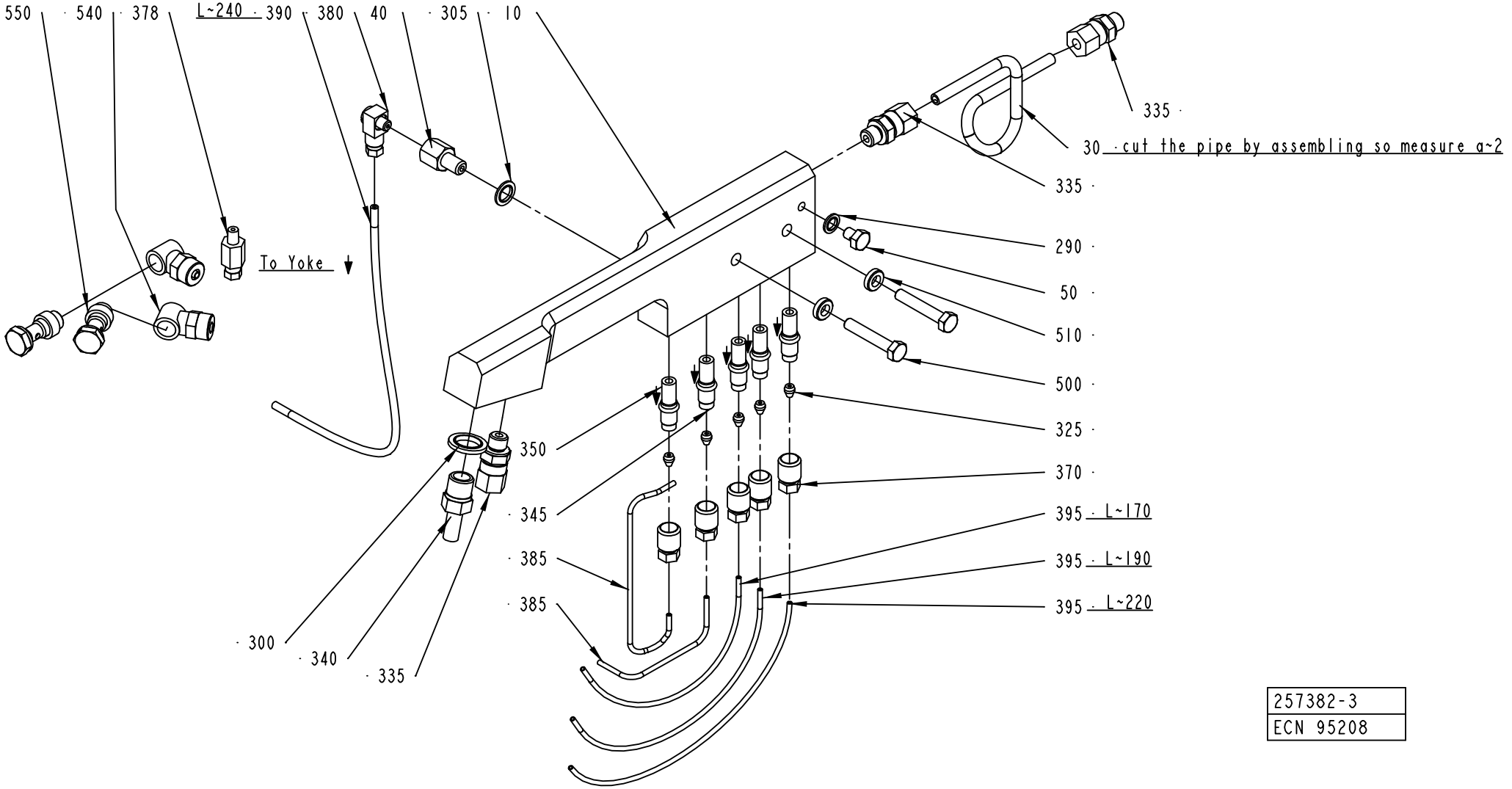

257382-3
ECN 95208

ECM: 123354 - 20030102
Group number: 257382-0300
Assembly Drawing: 257382-3_1_AC

Pos	Part No	UN	Qty	Description	Page No
-					
010	456018-0000		1	HOSE HOLDER LEFT	
030	257380-0000		1	HYDRAULIC PIPE LEFT	
040	257000-0000		1	NIPPLE	
050	441355-0000		1	BLEEDING SCREW	
290	90005-0003		1	BONDED SEAL SS/NBR M6	
300	90005-0005		1	BONDED SEAL SS/NBR G1/4	
305	90005-0007		1	BONDED SEAL SS/NBR M8	
325	90028-0020		5	CONE TUBE 2,5MM	
335	90030-0184		3	CONN. STR. GA-6-G1/8	
340	90030-0065		1	PIPE CONNECTION	
345	90092-0052		4	METERING VALVE 10 MM3	
350	90092-0053		1	METERING VALVE 30 MM3	
370	90134-0039		5	BUSHING VALVE CONNECTION 2,5 MM	
378	90134-0066		1	CONNECTION M6 TUBE 4 MM	
380	90134-0068		1	CONNECTION	
385	90266-0019	MM	270	PIPE	
390	90166-0109	MM	240	TUBE 4 MM PA,TRANSP.	
395	90166-0143	MM	580	TUBE 2,5 MM PA,TRANSP.	
500	312105-0376		2	SCREW M6S ISO 4014 M6X35 A480	
510	315115-0153		2	WASHER PLAIN, TBRB 6,4/12 H=3	
540	342980-0121		2	BANJO-CONNECTION,RING 8/6-G1/8"	
550	342980-0303		2	BANJO-HOLLOW BOLT COUPL,EXT.THR.01-G1/8"	

Pos	Part No	UN	Qty	Description	Page No

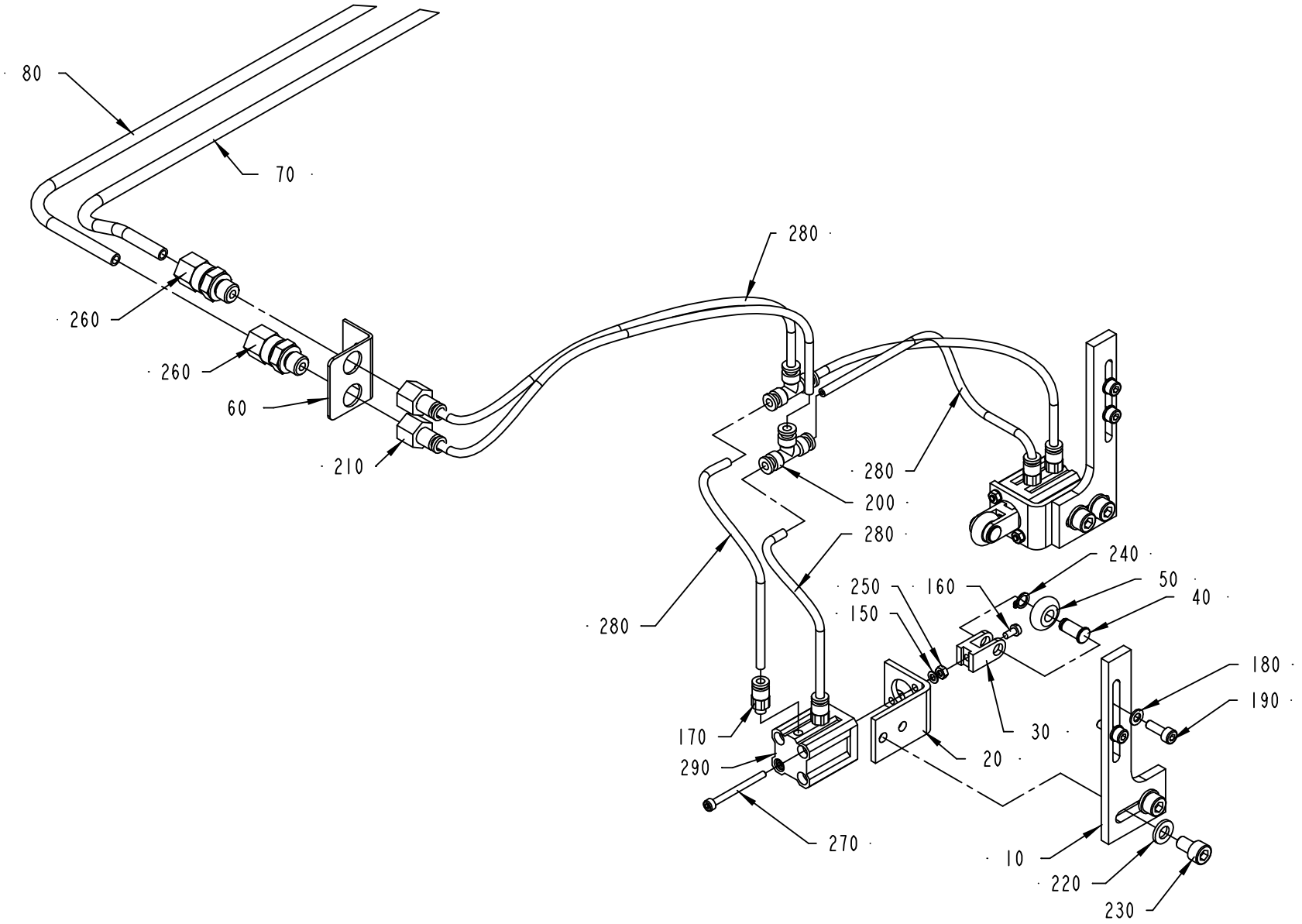

1511069-1
ECM 73438

ECM: 113349 - 20020930
Group number: 1511069-0100
Assembly Drawing: 1511069-1_1_AA

Pos	Part No	UN	Qty	Description	Page No
-					
010	1549540-0000		2	BRACKET	
020	1558130-0000		2	BRACKET	
030	1558124-0000		2	FORK HEAD	
040	1490932-0000		2	SHAFT	
050	1490931-0000		2	WHEEL	
060	1558129-0000		1	BRACKET	
070	1558127-0000		1	PIPE	
080	1558126-0000		1	PIPE	
150	315105-0124		4	WASHER BRB3,2X6RFR	
160	312125-0220		2	SCREW ISO 1207 M3X6 A4	
170	90458-2954		4	ELBOW PIPE JOINT, EXT.THREAD, D=4MM M5	
180	315105-0136		4	WASHER BRB4,3XRFR	
190	312115-0291		4	SCREW ISO4762 M4X12 A4	
200	342748-0100		2	T-CONNECTION 4MM	
210	342770-0101		2	STRAIGHT COUPLING INT, D=4 MM - G1/8	
220	315105-0153		4	WASHER BRB6,4X12RFR	
230	312115-0364		4	SCREW ISO4762 M6X10 A4	
240	315751-0103		2	RETAINING RING FOR SHAFT DIN 471 6 A2	
250	312605-0310		4	HEXAGON NUT, M6M M3 A280	
260	90030-0184		2	CONN. STR. GA-6-G1/8	
270	90457-0937		4	SCREW MC6S M3X40 A480	
280	90166-0095	M	1	TUBE 4 MM PA BLUE	
290	90459-0251		2	DOUBLE ACTING, COMPACT, CYL 12-15	

Pos	Part No	UN	Qty	Description	Page No

This page is intentionally left blank.

ECM: 92423 - 20011113
Group number: 295523-0400
Assembly Drawing:

Pos	Part No	UN	Qty	Description	Page No
TBA 0125S, TBA 0100B					
020	1110530-0000		2	INDUCTOR	
020	1110530-0000		2	INDUCTOR	
040	1520577-0001		4	DOLLY	
040	1520577-0001		4	DOLLY	
TBA 0160S, TBA 0200S					
025	1110532-0000		2	INDUCTOR	
025	1110532-0000		2	INDUCTOR	
055	1110391-0000		4	DOLLY	
055	1110391-0000		4	DOLLY	
TBA 0250S, TBA 0200M					
028	1110535-0000		2	INDUCTOR	
028	1110535-0000		2	INDUCTOR	
055	1110391-0000		4	DOLLY	
055	1110391-0000		4	DOLLY	
TBA 0330S, TBA 0300S, TBA 0180B, TBA 0200B, TBA 0284B, TBA 0250B					
010	1110534-0000		2	INDUCTOR	
010	1110534-0000		2	INDUCTOR	
055	1110391-0000		4	DOLLY	
055	1110391-0000		4	DOLLY	

Pos	Part No	UN	Qty	Description	Page No

Tetra Pak

SPC
Spare Parts Catalogue

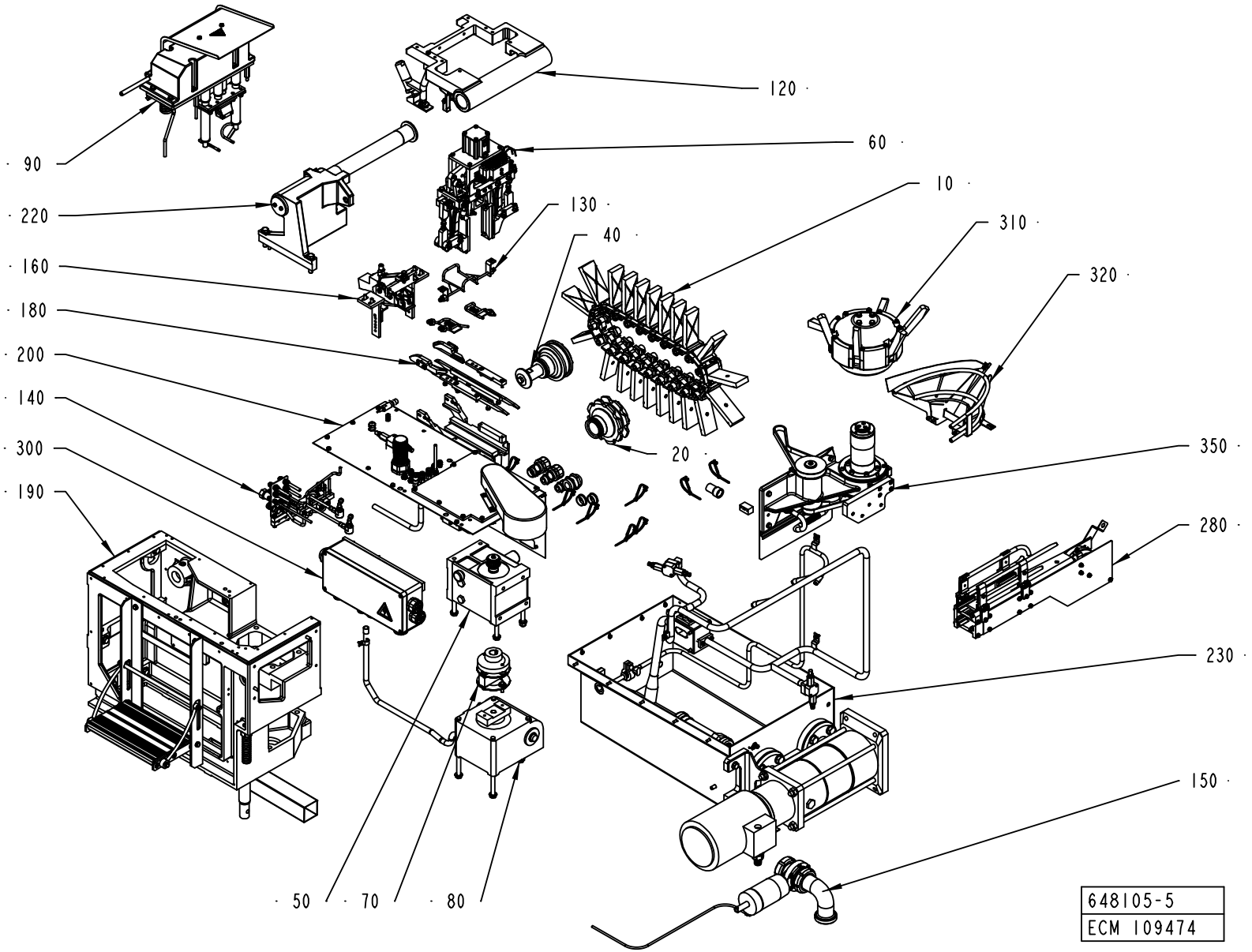
· 90
· 220
· 160
· 180
· 200
· 140
· 300
· 190
· 50
· 70
· 80
120 ·
60 ·
10 ·
130 ·
40 ·
310 ·
320 ·
20 ·
350 ·
280 ·
230 ·
150 ·
648105-5
ECM 109474

ECM: 129615 - 20031006
Group number: 648105-1200
Assembly Drawing: 648105-5_1_AB

Pos	Part No	UN	Qty	Description	Page No
-					
010	1317526-0100		1	STATION CHAIN	**5-5**
020	491850-0100		1	DRIVE WHEEL	**5-7**
040	491846-0300		1	TENSION SPROCKET	**5-9**
050	256410-0900		1	INDEXING UNIT	**5-11**
060	2523725-0200		1	PRESSURE DEVICE	**5-13, 5-15**
070	256437-0200		1	DISC COUPLING	**5-19**
080	256438-0300		1	WORM GEAR	**5-21**
090	1539968-0100		1	FLAP HEATER	**5-23, 5-25**
120	1548000-0100		1	FRAME	**5-27**
130	1539970-0100		1	FOLDING BAR	**5-29**
140	456455-0600		1	PIPE WORK	**5-31**
150	256674-0500		1	BOTTOM VALVE	**5-33**
160	1539975-0100		1	FORMING UNIT	**5-35**
180	1539969-0100		1	GUIDE	**5-37**
190	441695-0500		1	MACHINE BODY	**5-39**
200	1539995-0100		1	CANTILEVER	**5-43**
220	1539949-0100		1	FIXING UNIT	**5-49**
230	2544980-0100		1	CLEANING SYSTEM	**5-51**
280	2500233-0100		1	CONVEYOR	**5-55**
300	441850-0700		1	CABLE	**5-57**
310	1539265-0100		1	OUTFEED UNIT	**5-63**
320	2544961-0100		1	RAIL	**5-65**
350	2530400-0100		1	TRASMISSION UNIT	**5-67**

Pos	Part No	UN	Qty	Description	Page No

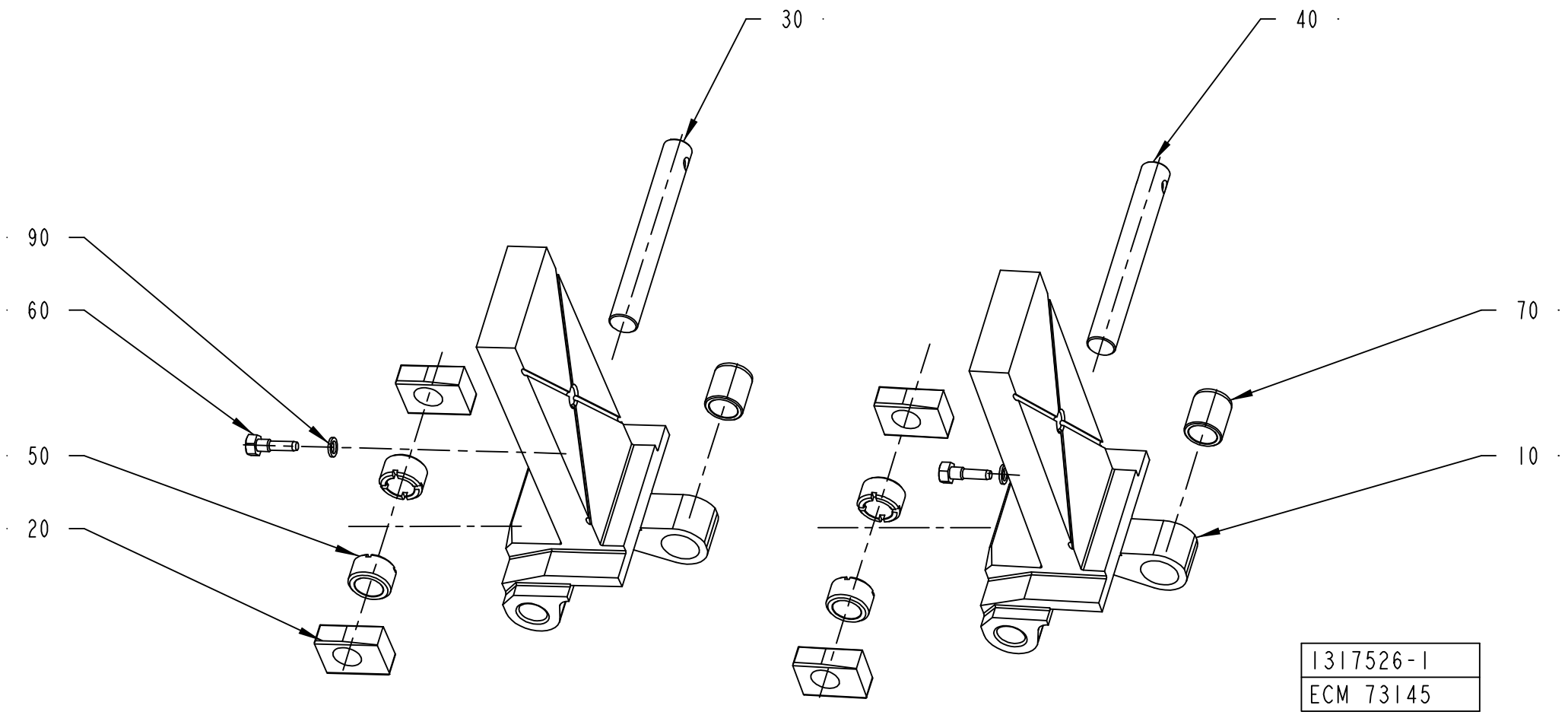
30
40
90
60
70
50
10
20
1317526-1
ECM 73145

ECM: 115050 - 20030113
Group number: 1317526-0100
Assembly Drawing: 1317526-1_1_AC

Pos	Part No	UN	Qty	Description	Page No
TBA 0100B					
010	1296313-0000		21	CARTON STATION	
TBA 0125S					
010	1296312-0000		21	CARTON STATION WITH BEVEL	
TBA 0160S					
010	1296311-0000		21	CARTON STATION WITH BEVEL	
TBA 0180B					
010	1296310-0006		21	CARTON STATION WITH BEVEL	
TBA 0200B					
010	1296310-0004		21	CARTON STATION WITH BEVEL	
TBA 0200M					
010	1282435-0002		21	CARTON STATION	
TBA 0200S					
010	1282444-0000		21	CARTON STATION WITH BEVEL	
TBA 0250B					
010	1296310-0002		21	CARTON STATION WITH BEVEL	
TBA 0250S					
010	1282435-0001		21	CARTON STATION	
TBA 0300S, TBA 0284B					
010	1296310-0001		21	CARTON STATION WITH BEVEL	
TBA 0330S					
010	1296310-0007		21	CARTON STATION WITH BEVEL	
Common Parts					
020	491227-0000		42	SLIDER	
030	491228-0001		18	SHAFT	
040	491228-0002		3	SHAFT	
050	491229-0000		42	BUSHING	
060	491230-0000		21	GRUB SCREW	
070	491231-0000		21	BUSHING	
090	315233-0101		21	WASHER CAPTIVE SEALING M5	

Pos	Part No	UN	Qty	Description	Page No

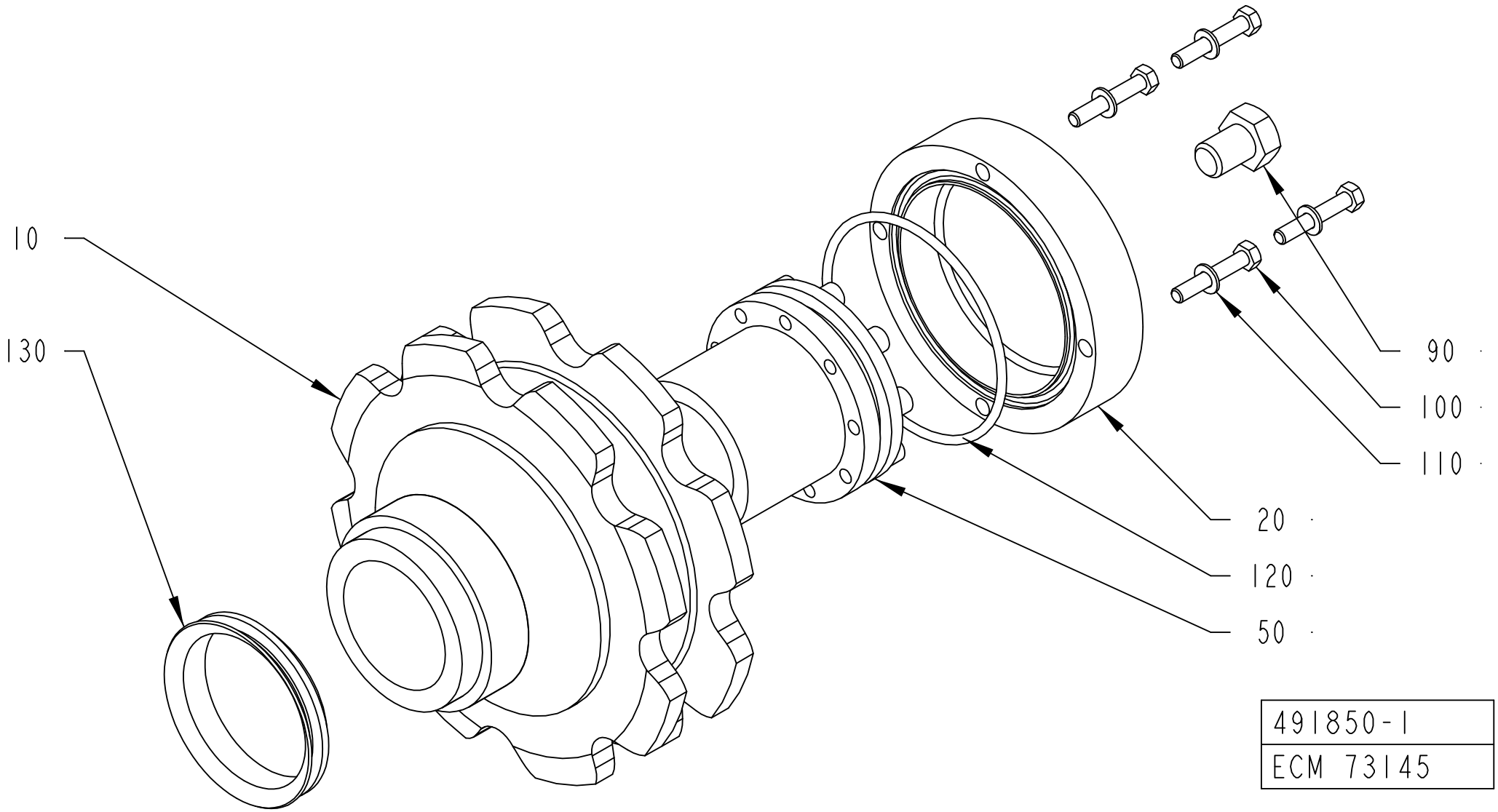
10
130
90
100
110
20
120
50
491850-1
ECM 73145

ECM: 115409 - 20030528
Group number: 491850-0100
Assembly Drawing: 491850-1_1_AC

Pos	Part No	UN	Qty	Description	Page No
TBA 0330S, TBA 0300S, TBA 0180B, TBA 0160S, TBA 0200B, TBA 0125S, TBA 0100B, TBA 0250S, TBA 0284B, TBA 0200S, TBA 0200M, TBA 0250B					
010	491258-0000		1	DRIVE WHEEL	
Common Parts					
020	491851-0000		1	LID	
050	90208-0031		1	BUSHING	
090	312101-0530		1	SCREW M6S M12X16 FZB	
100	312105-0335		4	SCREW M6S ISO 4014 M5X30 A480	
110	315105-0146		4	WASHER BRB5,3X10RFR	
120	315202-0306		1	O-RING 74,5X3 MM	
130	315220-0210		1	V-RINGS 54X64X13 MM V-60S	

Pos	Part No	UN	Qty	Description	Page No

TENSION SPROCKET

Drawing file: 491846-3_1_AA.hpgl

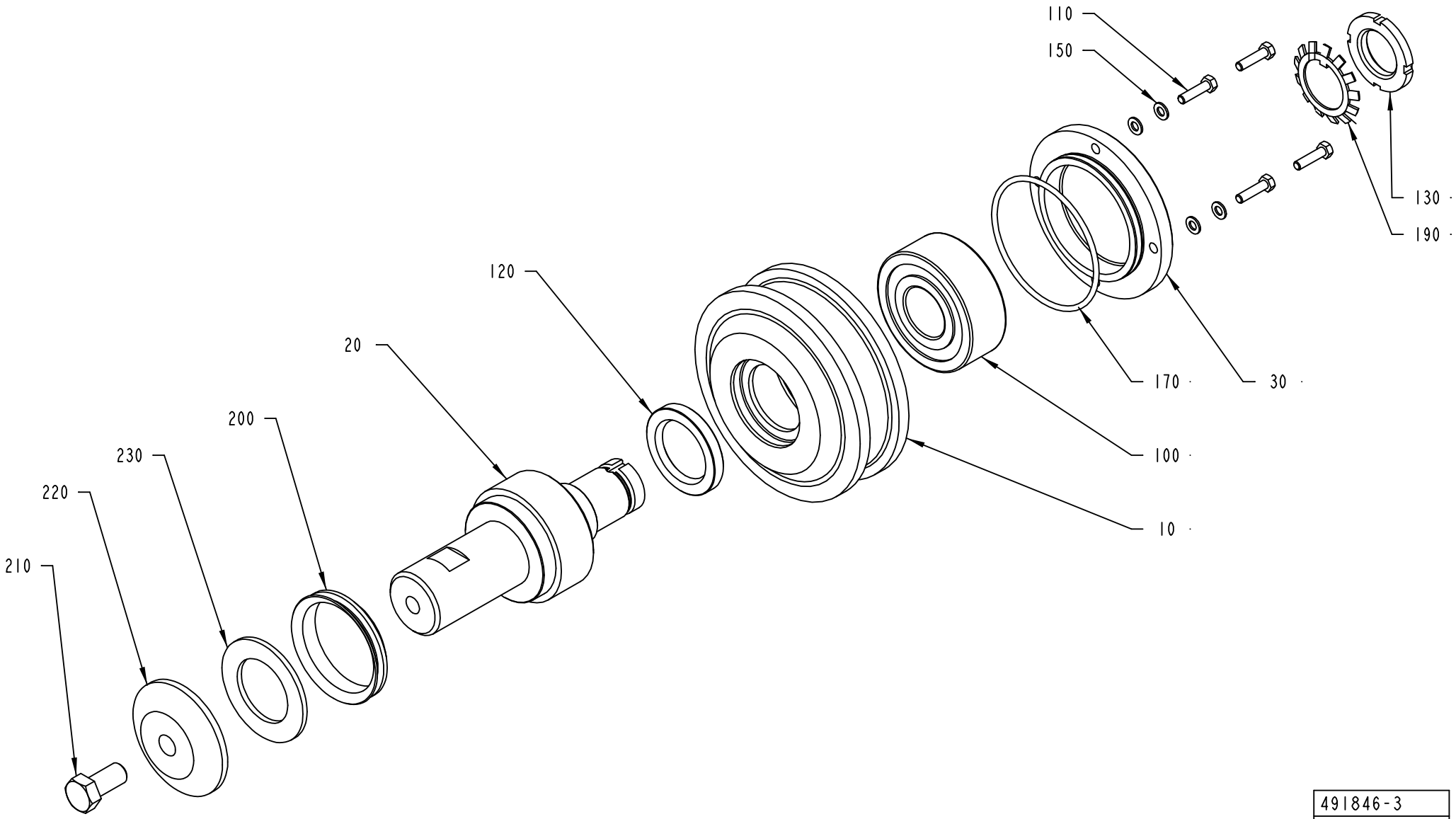

491846-3
ECM 73145

ECM: 126805 - 20030912
Group number: 491846-0300
Assembly Drawing: 491846-3_1_AA

Pos	Part No	UN	Qty	Description	Page No
-					
010	2569884-0000		1	TENSION SPROCKET	
020	1490928-0000		1	SHAFT	
030	491291-0000		1	LID	
100	90214-0122		1	BALL BEARING, 30X72X27 MM	
105	90296-0070		1	GREASE	
110	312105-0331		4	SCREW M6S ISO 4017 M5X20 A480	
120	315221-0177		1	RADIAL SEAL 35X52X7 MM	
130	312805-0106		1	NUT ROUND WITH SLOTS M30X1,5 FE	
150	315105-0146		4	WASHER BRB5,3X10RFR	
170	315202-0306		1	O-RING 74,5X3 MM	
190	315410-0106		1	LOCK WASHER MB 6 D=30 H=1,25	
200	315220-0210		1	V-RINGS 54X64X13 MM V-60S	
210	312105-0534		1	SCREW M6S ISO 4017 M12X25 A480	
220	1279701-0000		1	WASHER	
230	1517506-0000		1	SHIM	

Pos	Part No	UN	Qty	Description	Page No

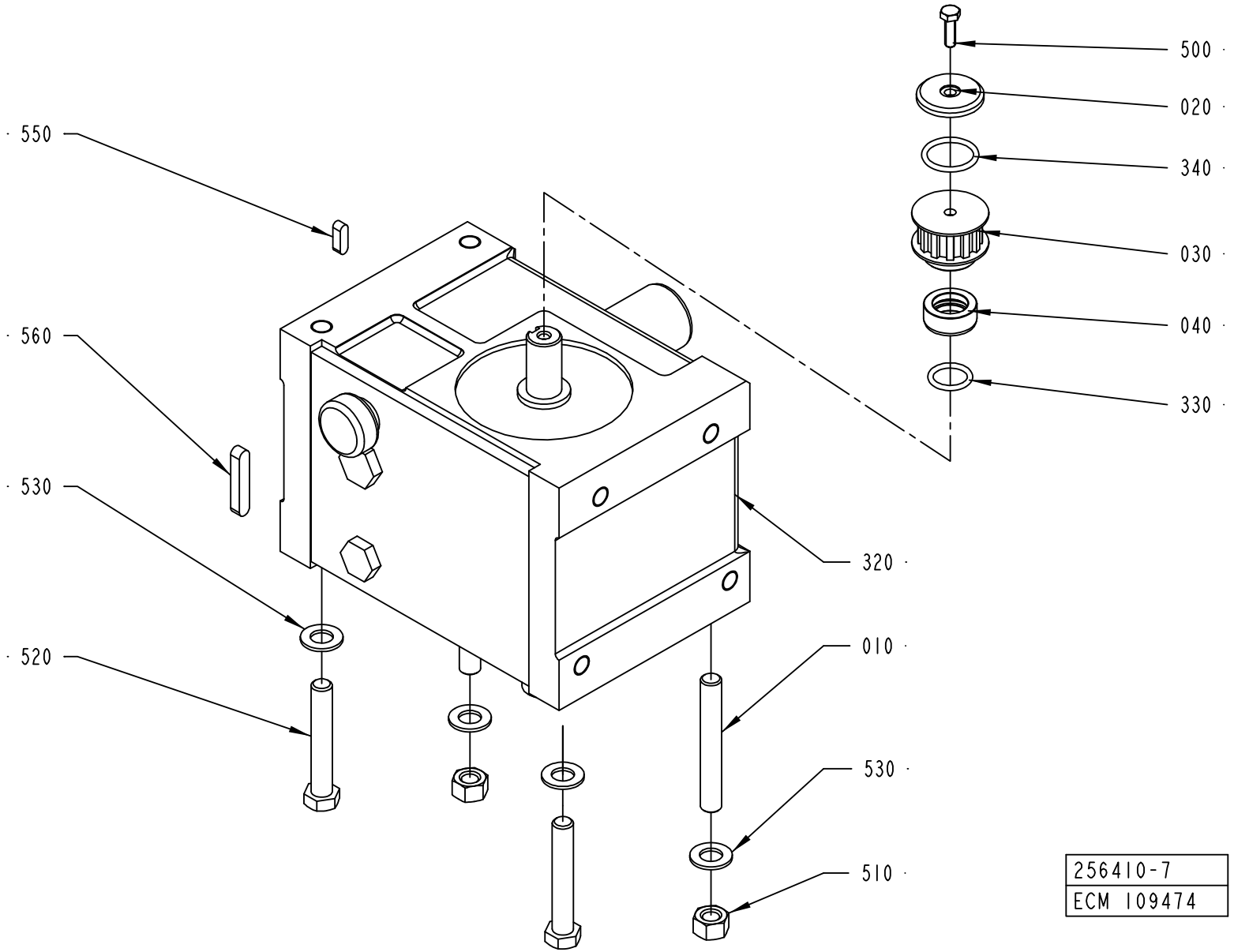
500
020
340
030
040
330
550
560
530
520
320
010
530
510
256410-7
ECM 109474

ECM: 112858 - 20030113
Group number: 256410-0900
Assembly Drawing: 256410-7_1_AB

Pos	Part No	UN	Qty	Description	Page No
-					
010	1511487-0000		2	STUD SCREW	
020	1539261-0000		1	WASHER	
030	1539301-0000		1	TOOTHED PULLEY	
040	1539302-0000		1	SPACER	
310	90296-0073	L	2	OIL	
320	90458-1721		1	INDEXING GEAR, 10.707.207	
010	*90459-2632*		*1*	*GASKET, 15.609.003*	
030	*90416-0373*		*8*	*CAM ROLLER*	
040	*321361-0104*		*1*	*TAPER ROLLER BEARING, 20X47X15,25 MM*	
050	*321361-0109*		*1*	*TAPER ROLLER BEARING, 45X85X20,75 MM*	
060	*90214-0083*		*1*	*TAPER ROLLER BEARING, 30X55X17 MM*	
070	*90416-0362*		*2*	*RING*	
080	*90416-0359*		*1*	*RING*	
090	*90416-0363*		*2*	*RING*	
100	*90416-0374*		*1*	*PROTECTIVE RING FOR90416-21*	
110	*90214-0314*		*1*	*SEALING RING, 30X54,5X4,5 MM*	
120	*312805-0104*		*1*	*NUT ROUND WITH SLOTS M20X1 FE*	
130	*312805-0107*		*1*	*NUT ROUND WITH SLOTS M35X1,5 FE*	
140	*312805-0108*		*1*	*NUT ROUND WITH SLOTS M40X1,5 FE*	
150	*315410-0104*		*1*	*LOCK WASHER MB 4 D=20 H=1*	
160	*315410-0107*		*1*	*LOCK WASHER MB 7 D=35 H=1,25*	
170	*315410-0108*		*1*	*LOCK WASHER MB 8 D=40 H=1,25*	
200	*90459-3205*		*1*	*SHIM SET, 10.707.116*	
330	315202-0215		1	O-RING 19,2X3 MM	
340	315202-0218		1	O-RING 26,2X3 MM	
500	312105-0370		1	SCREW M6S ISO 4017 M6X20 A480	
510	312605-0322		2	HEXAGON NUT, M6M M12 A280	
520	312105-0547		2	SCREW M6S ISO 4014 M12X75 A480	
530	315105-0178		4	WASHER BRB13X24RFR	
550	315705-0232		1	PARALLEL KEY W. ROUND ENDS 6X6X20 MM	
560	315705-0271		1	PARALLEL KEY W. ROUND ENDS 8X7X45 MM	

Pos	Part No	UN	Qty	Description	Page No

PRESSURE DEVICE

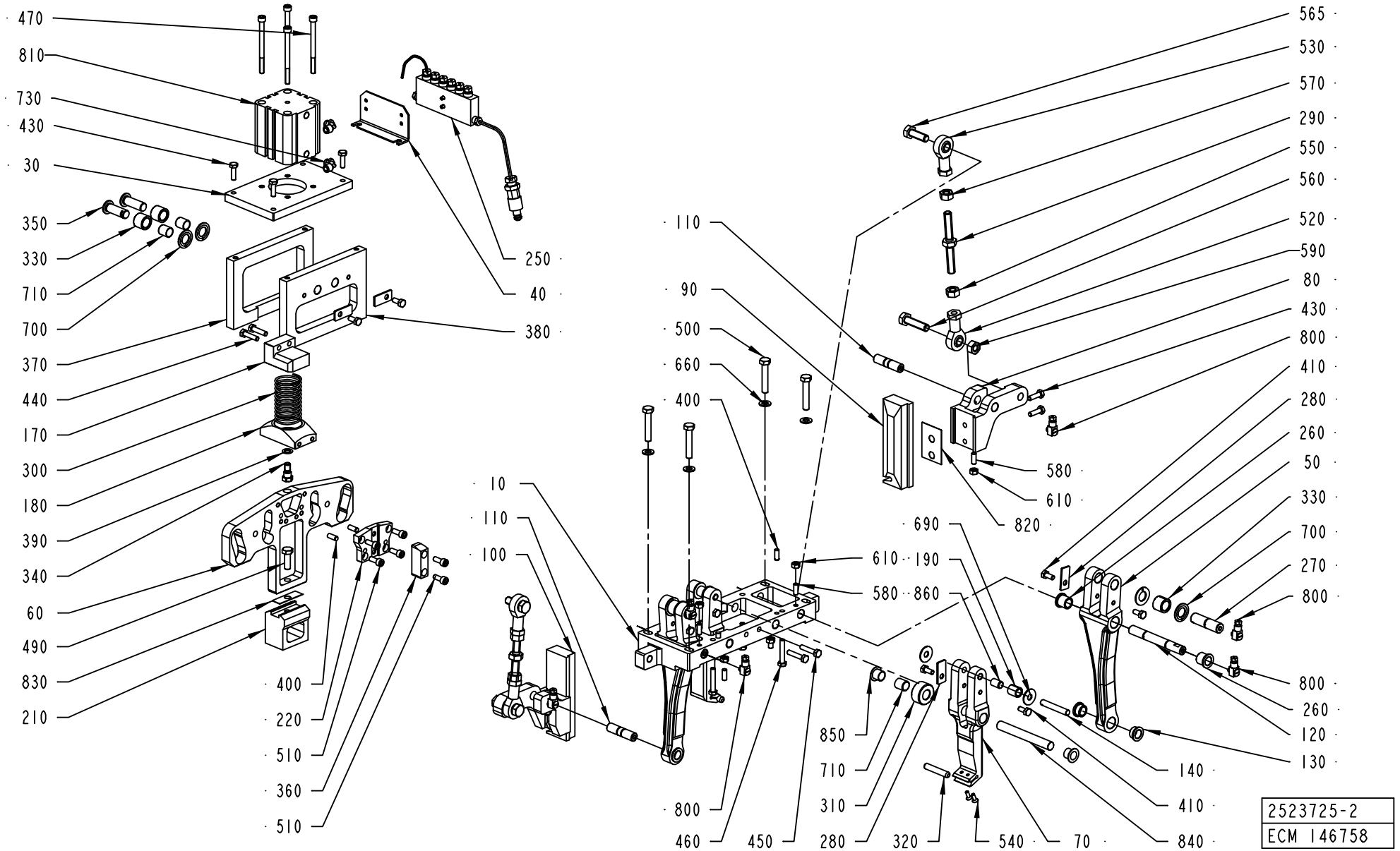

Pos	Part No	UN	Qty	Description	Page No
TBA 0100B					
070	2576344-0001		2	LEVER	
090	2575624-0001		1	BLOCK	
100	2575625-0001		1	BLOCK	
210	2552734-0001		1	BLOCK	
TBA 0125S					
070	2576344-0002		2	LEVER	
090	2575624-0002		1	BLOCK	
100	2575625-0002		1	BLOCK	
210	2552734-0002		1	BLOCK	
TBA 0160S					
070	2576344-0003		2	LEVER	
090	2575624-0003		1	BLOCK	
100	2575625-0003		1	BLOCK	
210	2554977-0001		1	BLOCK	
TBA 0180B					
070	2576344-0004		2	LEVER	
090	2575624-0004		1	BLOCK	
100	2575625-0004		1	BLOCK	
210	2524579-0004		1	BLOCK	
TBA 0200B					
070	2576344-0005		2	LEVER	
090	2575624-0005		1	BLOCK	
100	2575625-0005		1	BLOCK	
210	2524579-0005		1	BLOCK	
TBA 0200M					
070	2576344-0006		2	LEVER	
090	2575624-0006		1	BLOCK	
100	2575625-0006		1	BLOCK	
210	2554977-0002		1	BLOCK	
TBA 0200S					
070	2576344-0007		2	LEVER	
090	2575624-0007		1	BLOCK	
100	2575625-0007		1	BLOCK	
210	2554977-0003		1	BLOCK	
TBA 0250B					
070	2576344-0008		2	LEVER	
090	2575624-0008		1	BLOCK	
100	2575625-0008		1	BLOCK	
210	2524579-0008		1	BLOCK	
TBA 0250S					
070	2576344-0009		2	LEVER	
090	2575624-0009		1	BLOCK	
100	2575625-0009		1	BLOCK	
210	2554977-0004		1	BLOCK	
TBA 0300S, TBA 0284B					
070	2576344-0010		2	LEVER	
090	2575624-0010		1	BLOCK	
100	2575625-0010		1	BLOCK	
210	2524579-0010		1	BLOCK	
TBA 0330S					
070	2576344-0011		2	LEVER	
090	2575624-0011		1	BLOCK	
100	2575625-0011		1	BLOCK	
210	2524579-0011		1	BLOCK	
Common Parts					
010	2606879-0000		1	PLATE	
030	2652212-0000		1	PLATE	
040	2576353-0000		1	SUPPORT	
050	2523730-0000		2	LEVER	
060	2552721-0000		1	CAM	
080	2606880-0000		2	HOLDER	
110	2523736-0000		2	SHAFT	
120	2523737-0000		2	SHAFT	
130	2523738-0000		4	BUSHING	
140	2576348-0000		2	SHAFT	
170	2552723-0000		1	SPRING BRACKET	
180	2552732-0000		1	SPRING BRACKET	
190	2576349-0000		2	ROLLER	
220	2552724-0000		1	SUPPORT	
250	2502424-0200		1	LUBRICATION	**5-17**
260	1144507-0000		4	BUSHING	
270	2576345-0000		2	AXLE PIN	
280	1144521-0000		6	CLAMP	
290	2606881-0000		2	ADJUSTING SCREW	
300	1195044-0000		1	SPRING	
310	2576346-0000		2	ROLLER	
320	1511021-0000		2	SHAFT	
330	2576350-0000		4	ROLLER	
340	2552722-0000		1	AXLE PIN	
350	2576351-0000		2	AXLE PIN	
360	2552726-0000		1	GUIDE	
370	2552727-0000		1	PLATE	
380	2576352-0000		1	PLATE	

PRESSURE DEVICE

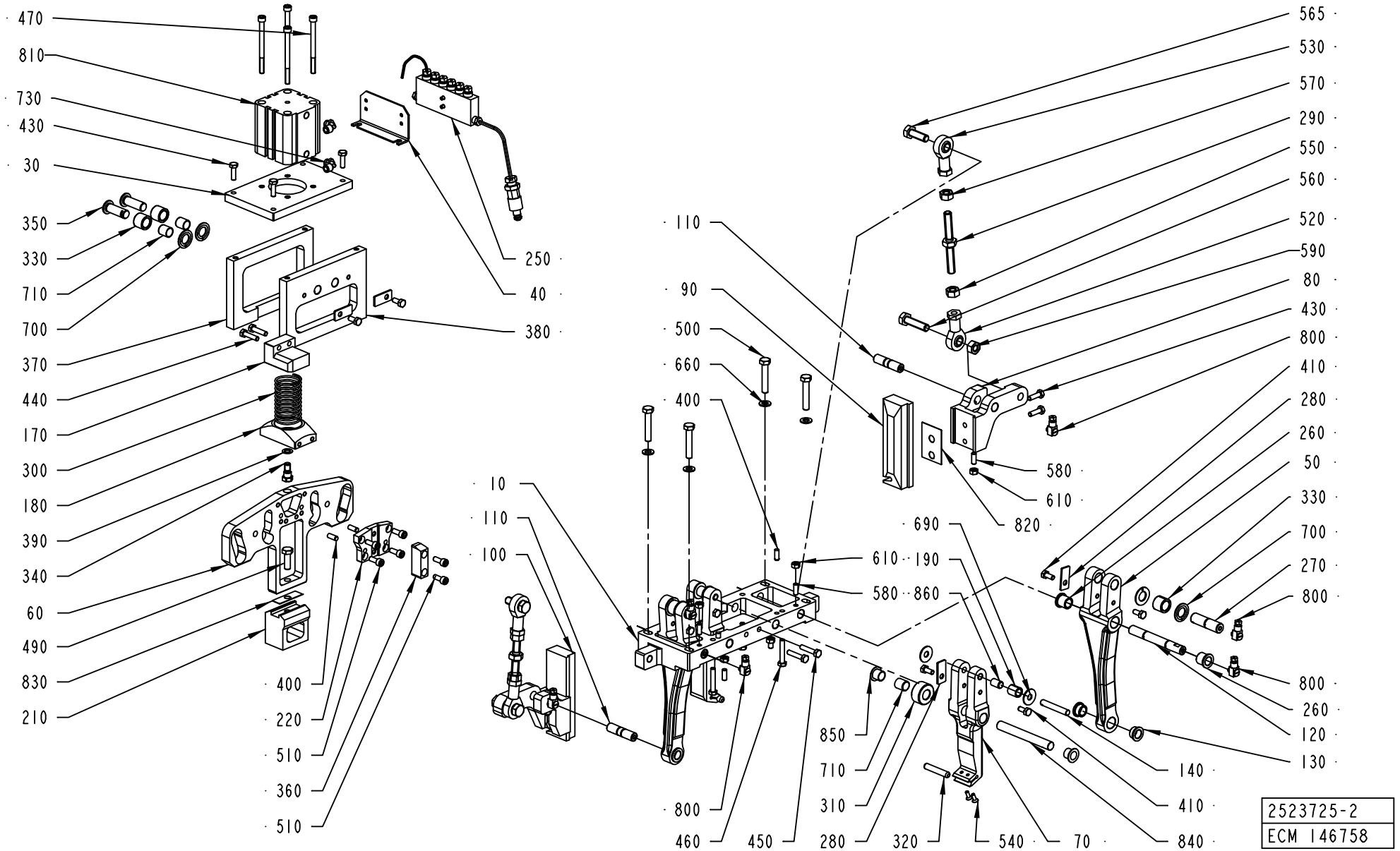

Pos	Part No	UN	Qty	Description	Page No
Common Parts (Cont'd)					
390	2552731-0000		1	WASHER	
400	311103-0351		4	PARALLEL PIN ISO 2338 6M6X16 A1	
410	312105-0367		10	SCREW M6S ISO 4017 M6X14 A480	
430	312105-0370		8	SCREW M6S ISO 4017 M6X20 A480	
440	312105-0372		2	SCREW M6S ISO 4017 M6X25 A480	
450	312105-0374		2	SCREW M6S ISO 4014 M6X30 A480	
460	312105-0376		4	SCREW M6S ISO 4014 M6X35 A480	
470	312115-0386		4	SCREW ISO4762 M6X80 A4	
490	312105-0453		1	SCREW M6S ISO 4017 M8X25 A480	
500	312105-0460		4	SCREW M6S ISO 4014 M8X45 A480	
510	312115-0368		6	SCREW ISO4762 M6X16 A4	
520	90115-0181		2	ROD END, ID=10 MM M10X1,5	
530	90115-0182		2	ROD END, ID=10 MM M10X1,5LH	
540	312155-0291		4	SCREW EN 10642 MF6S M4X12 A480	
550	312605-0320		2	HEXAGON NUT, M6M M10 A280	
560	312109-0499		2	SCREW M6S ISO 4017 M10X40 A480	
565	312105-0495		2	SCREW M6S ISO 4017 M10X30 A480	
570	312902-0320		2	NUT HEX. LEFT THREAD, M10 A280	
580	312318-0368		6	SCREW ISO4029 M6X16 A4	
590	312605-0320		2	HEXAGON NUT, M6M M10 A280	
610	312605-0316		6	HEXAGON NUT, M6M M6 A280	
660	315105-0165		4	WASHER BRB8,4X16RFR	
690	2652213-0000		4	THRUST WASHER	
700	321130-0200		6	THRUST WASHER, 14X26X1,5 MM	
710	321135-0183		4	BUSHING, 12X14X15 MM	
730	90458-2956		2	ELBOW PIPE JOINT, EXT.THREAD, D=6MM-G1/8	
800	90134-0058		6	CONNECTION	
810	90459-1845		1	DOUBLE ACTING, COMPACT, 50-30	
820	2527454-0000		6	SHIM	
830	2530401-0000		3	SHIM	
840	2576347-0000		2	SHAFT	
850	90240-0262		4	FLANGE BUSHING, 12X14X12 MM	
860	90240-0301		2	BUSHING, 8X10X15 MM	

Pos	Part No	UN	Qty	Description	Page No

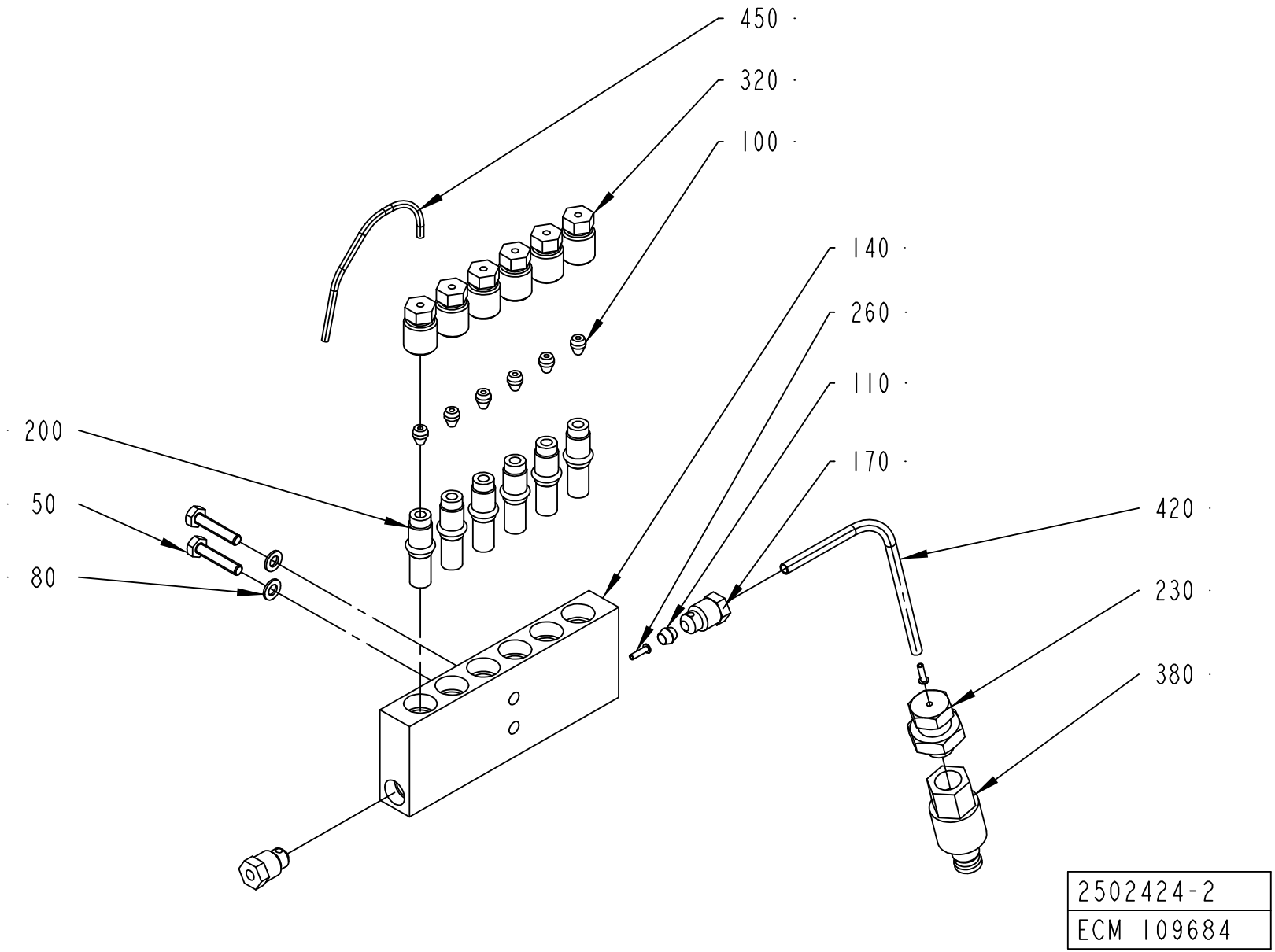
450
320
100
140
260
110
170
200
50
80
420
230
380
2502424-2
ECM 109684

ECM: 130013 - 20031006
Group number: 2502424-0200
Assembly Drawing: 2502424-2_1_AA

Pos	Part No	UN	Qty	Description	Page No
-					
050	312101-0295		2	SCREW M6S M4X20 FZB	
080	315105-0136		2	WASHER BRB4,3XRFR	
100	90028-0020		6	CONE TUBE 2,5MM	
110	90028-0021		1	CONE TUBE 4 MM	
140	90032-0040		1	BLOCK 6 WAYS	
170	90087-0019		2	PLUG M10X1 STAINLESS	
200	90092-0052		6	METERING VALVE 10 MM3	
230	90134-0004		1	PIPE CONNECTION R1/8	
260	90134-0031		2	SLEEVE FOR PLASTIC TUBE	
320	90134-0039		6	BUSHING VALVE CONNECTION 2,5 MM	
380	90163-0048		1	NIPPLE LP-004-2-WR 510-23-1	
420	90166-0109	M	1	TUBE 4 MM PA,TRANSP.	
450	90166-0143	M	2	TUBE 2,5 MM PA,TRANSP.	

Pos	Part No	UN	Qty	Description	Page No

DISC COUPLING

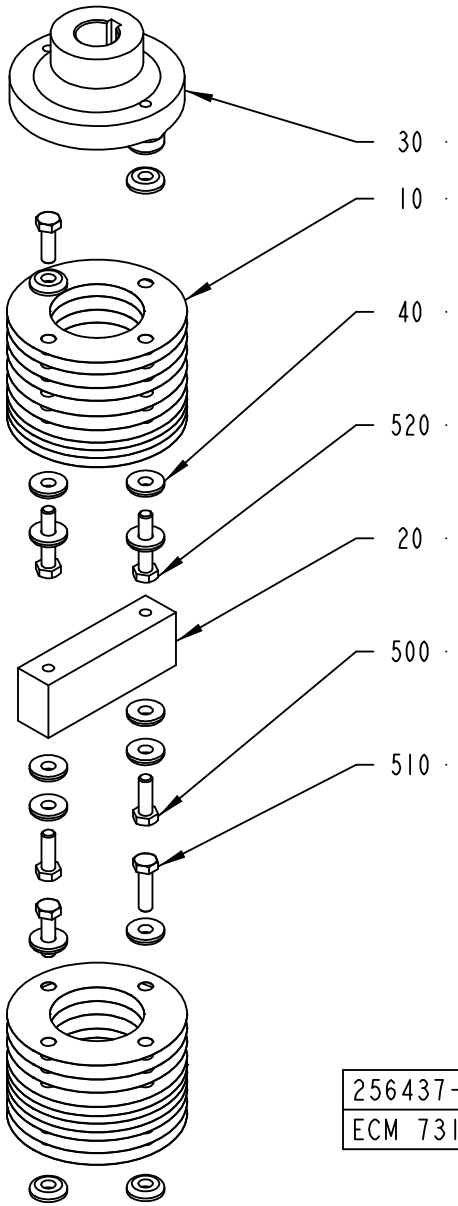

256437-2
ECM 73145

ECM: 102661 - 20020109
Group number: 256437-0200
Assembly Drawing: 256437-2_1_AC

Pos	Part No	UN	Qty	Description	Page No
-					
010	31559-0000		20	SPRING PLATE	
020	272746-0000		1	ROD	
030	272747-0000		1	CONNECTION	
040	31553-0001		14	WASHER	
500	312101-0453		4	SCREW M6S M8X25 FZB	
510	312101-0455		2	SCREW M6S M8X30 FZB	
520	312101-0459		2	SCREW M6S M8X40 FZB	

Pos	Part No	UN	Qty	Description	Page No

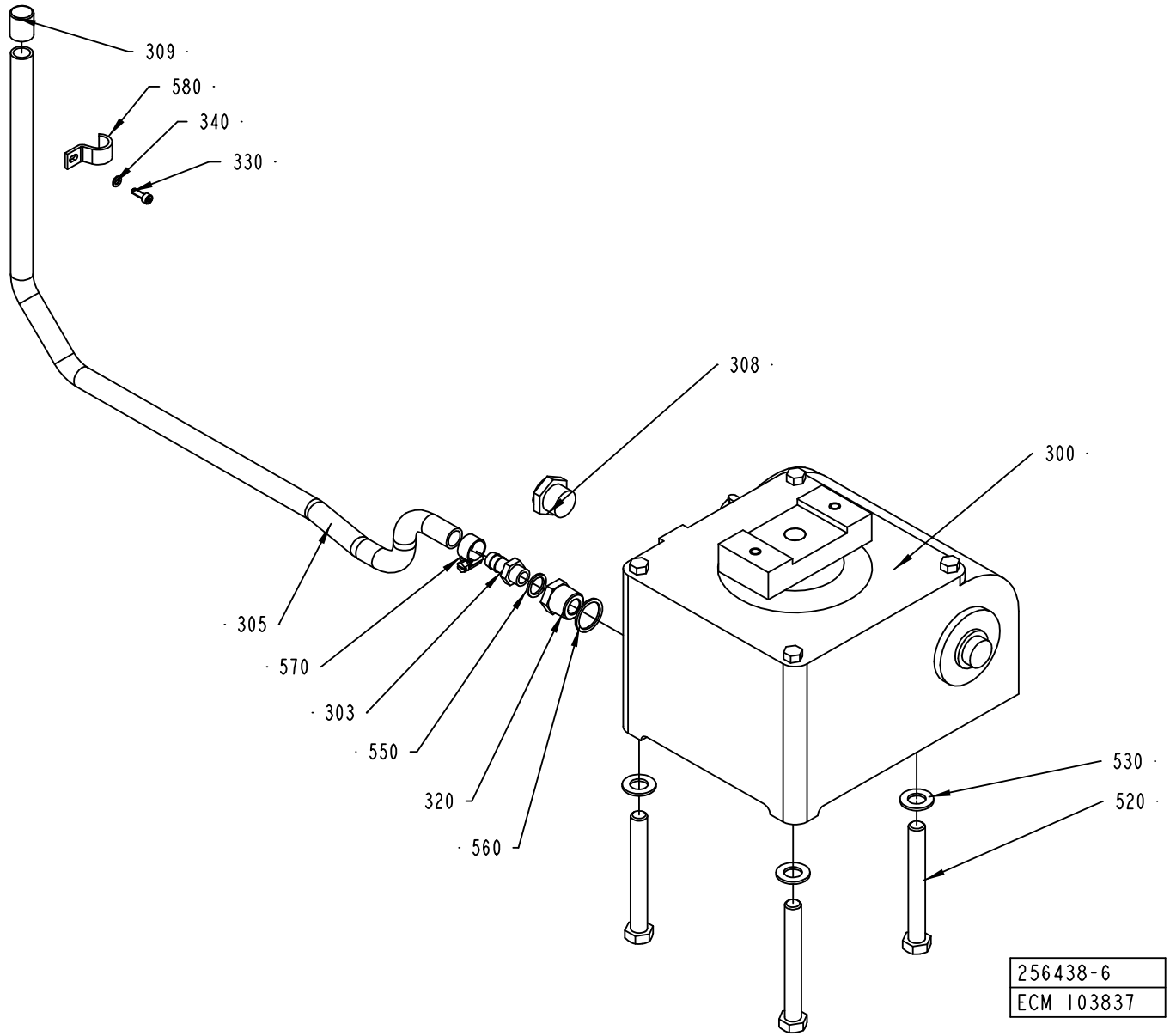
309
580
340
330
308
300
305
570
303
550
320
560
530
520
256438-6
ECM 103837

ECM: 103837 - 20020527
Group number: 256438-0300
Assembly Drawing: 256438-6_1_AD

Pos	Part No	UN	Qty	Description	Page No
-					
300	90056-0071		1	WORM GEAR	
303	90163-0052		1	HOSE NIPPLE, EXT.THR. 1/4-12 MM	
305	90166-0113	MM	800	HOSE	
308	90257-0002		1	FILTER PLUG, NO. 8145-00-120 TYP F12	
309	90261-0073		1	PLUG, BLIND, PLASTIC, NO. GPN250/15	
310	90296-0073	L	2	OIL	
320	90330-0085		1	BUSHING, INT/EXT. THR. R1/2-RP1/4	
330	312115-0291		1	SCREW ISO4762 M4X12 A4	
340	315105-0136		1	WASHER BRB4,3XRFR	
520	312101-0552		3	SCREW M6S M12X100 FZB	
530	315101-0178		3	WASHER PLAIN, BRB, 13/24 H=2	
550	315234-0110		1	WASHER,PL.RND.CU.13,5/18 H=1,5	
560	315234-0113		1	WASHER PL.RND.CU.21,3//26 H=1,5	
570	342991-0101		1	HOSE CLIP,WORM DRIVE TYPE (13)-16	
580	352110-0103		1	CABLE CLIPS, D=14-20 MM	

Pos	Part No	UN	Qty	Description	Page No

FLAP HEATER

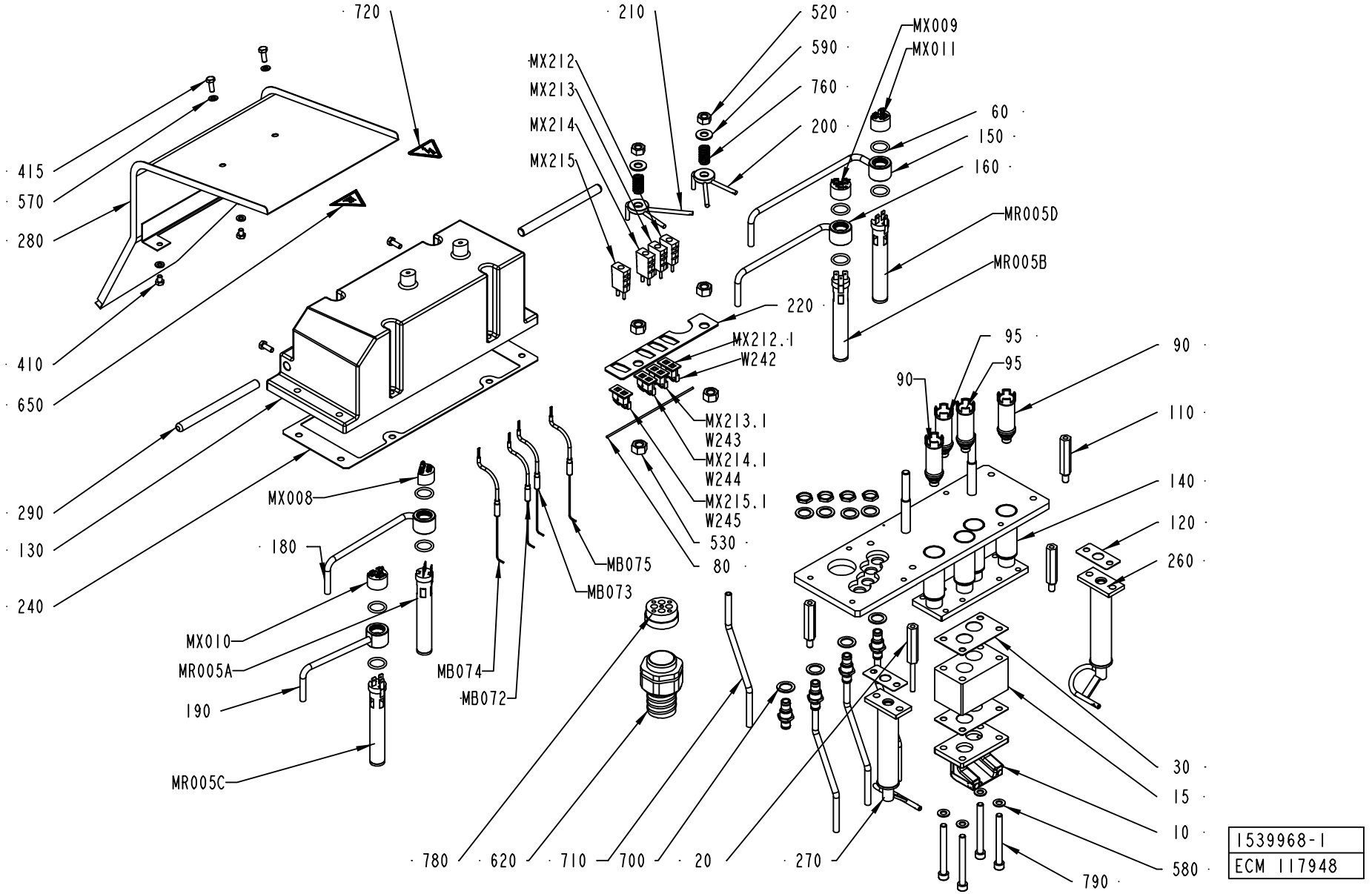
720
210
520
590
760
200
MX009
MX011
MX212
MX213
MX214
MX215
60
150
160
MR005D
MR005B
220
MX212.1
W242
MX213.1
W243
MX214.1
W244
MX215.1
W245
530
80
415
570
280
410
650
290
130
240
MX008
180
MB075
MB073
MB074
MB072
MX010
MR005A
190
MR005C
95
95
90
90
110
140
120
260
30
15
10
580
790
780
620
710
700
20
270
1539968-1
ECM 117948

ECM: 136742 - 20040901
Group number: 1539968-0100
Assembly Drawing: 1539968-1_1_AC

This list covers pages from 5-22 to 5-25

Pos	Part No	UN	Qty	Description	Page No
TBA 0100B					
010	2611151-0004		1	AIR NOZZLE	
015	2611190-0008		1	SPACER	
030	1539967-0000		4	GASKET	
260	1519307-0000		1	AIR NOZZLE	
270	1519308-0000		1	AIR NOZZLE	
480	312115-0451		4	SCREW ISO4762 M8X20 A4	
790	90287-0335		4	SCREW MC6S M8X90 A280	
TBA 0125S					
010	2611151-0004		1	AIR NOZZLE	
015	2611190-0009		1	SPACER	
030	1539967-0000		4	GASKET	
260	1519307-0000		1	AIR NOZZLE	
270	1519308-0000		1	AIR NOZZLE	
480	312115-0451		8	SCREW ISO4762 M8X20 A4	
790	312115-0465		4	SCREW ISO4762 M8X70 A4	
TBA 0160S					
010	2611151-0003		1	AIR NOZZLE	
015	2611190-0003		1	SPACER	
030	1539967-0000		4	GASKET	
260	1519318-0000		1	AIR NOZZLE	
270	1519319-0000		1	AIR NOZZLE	
480	312115-0451		4	SCREW ISO4762 M8X20 A4	
790	312115-0463		4	SCREW ISO4762 M8X60 A4	
TBA 0180B					
010	2611153-0000		1	AIR NOZZLE	
015	2611190-0006		1	SPACER	
030	1539967-0000		4	GASKET	
260	1519313-0000		1	AIR NOZZLE	
270	1519314-0000		1	AIR NOZZLE	
480	312115-0451		4	SCREW ISO4762 M8X20 A4	
790	312115-0467		4	SCREW ISO4762 M8X80 A4	
TBA 0200B					
010	2611153-0000		1	AIR NOZZLE	
015	2611190-0005		1	SPACER	
030	1539967-0000		4	GASKET	
260	1519313-0000		1	AIR NOZZLE	
270	1519314-0000		1	AIR NOZZLE	
480	312115-0451		4	SCREW ISO4762 M8X20 A4	
790	312115-0467		4	SCREW ISO4762 M8X80 A4	
TBA 0200M					
010	2611152-0000		1	AIR NOZZLE	
015	2611190-0002		1	SPACER	
030	1539967-0000		4	GASKET	
260	1517504-0000		1	AIR NOZZLE	
270	1517505-0000		1	AIR NOZZLE	
480	312115-0451		4	SCREW ISO4762 M8X20 A4	
790	312115-0460		4	SCREW ISO4762 M8X45 A4	
TBA 0200S					
010	2611151-0003		1	AIR NOZZLE	
015	2611190-0007		1	SPACER	
030	1539967-0000		4	GASKET	
260	1519318-0000		1	AIR NOZZLE	
270	1519319-0000		1	AIR NOZZLE	
480	312115-0451		8	SCREW ISO4762 M8X20 A4	
790	312115-0457		4	SCREW ISO4762 M8X35 A4	
TBA 0250B					
010	2611153-0000		1	AIR NOZZLE	
015	2611190-0004		1	SPACER	
030	1539967-0000		4	GASKET	
260	1519313-0000		1	AIR NOZZLE	
270	1519314-0000		1	AIR NOZZLE	
480	312115-0451		4	SCREW ISO4762 M8X20 A4	
790	312115-0461		4	SCREW ISO4762 M8X50 A4	
TBA 0250S					
010	2611152-0000		1	AIR NOZZLE	
030	1539967-0000		3	GASKET	
260	1517504-0000		1	AIR NOZZLE	
270	1517505-0000		1	AIR NOZZLE	
480	312115-0451		8	SCREW ISO4762 M8X20 A4	
790	312115-0451		4	SCREW ISO4762 M8X20 A4	
TBA 0300S, TBA 0284B					
010	2611153-0000		1	AIR NOZZLE	
015	2611190-0001		1	SPACER	
030	1539967-0000		4	GASKET	
260	1519313-0000		1	AIR NOZZLE	
270	1519314-0000		1	AIR NOZZLE	
480	312115-0451		4	SCREW ISO4762 M8X20 A4	
790	312115-0459		4	SCREW ISO4762 M8X40 A4	
TBA 0330S					
010	2611153-0000		1	AIR NOZZLE	
030	1539967-0000		3	GASKET	
260	1519313-0000		1	AIR NOZZLE	
270	1519314-0000		1	AIR NOZZLE	

Machine Type | Group Description | Used-In | Group Number | Page No

FLAP HEATER

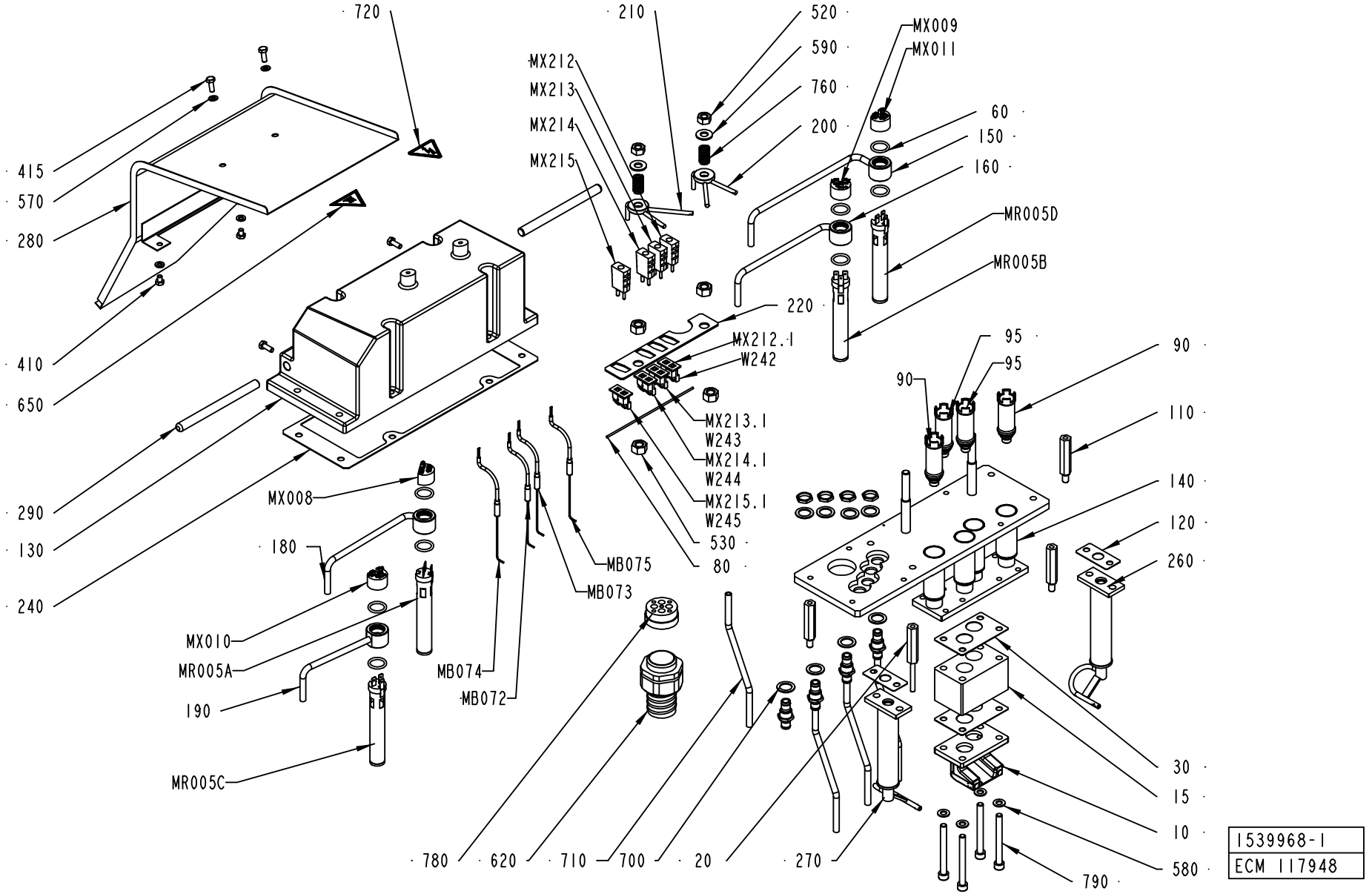
720
210
520
590
760
200
MX009
MX011
MX212
MX213
MX214
MX215
60
150
160
MR005D
MR005B
220
415
570
280
410
650
290
130
240
MX212.1
W242
MX213.1
W243
MX214.1
W244
MX215.1
W245
530
80
95
95
90
90
110
140
120
260
MX008
180
MB075
MB073
MX010
MR005A
190
MB074
MB072
MR005C
780
620
710
700
20
270
30
15
10
580
790
1539968-1
ECM 117948

ECM: 136742 - 20040901
Group number: 1539968-0100
Assembly Drawing: 1539968-1_1_AC

This list covers pages from 5-22 to 5-25

Pos	Part No	UN	Qty	Description	Page No
TBA 0330S (Cont'd)					
480	312115-0451		8	SCREW ISO4762 M8X20 A4	
790	312115-0451		4	SCREW ISO4762 M8X20 A4	
Common Parts					
020	1539966-0000		1	BRACKET	
060	927422-0001		8	O-RING 19.2X3 SILICON	
080	1144059-0000		1	WIRE	
090	1144122-0000		2	REDUCTION	
095	2552081-0000		2	REDUCTION	
110	1279702-0000		3	BRACKET	
120	1296415-0000		2	GASKET	
130	1498216-0000		1	LID	
140	1498217-0000		1	HEATING CHAMBER	
150	1498218-0000		1	PIPE	
160	1498219-0000		1	PIPE	
180	1498220-0000		1	PIPE	
190	1498221-0000		1	PIPE	
200	1498222-0000		1	PLATE	
210	1498223-0000		1	PLATE	
220	1498224-0000		1	PLATE	
230	2528198-0000		1	PLATE	
240	1498233-0000		1	GASKET	
290	2528199-0000		2	HANDLE	
400	312105-0368		2	SCREW M6S ISO 4017 M6X16 A480	
410	312105-0362		2	SCREW M6S ISO 4017 M6X8 A480	
420	312105-0453		2	SCREW M6S ISO 4017 M8X25 A480	
430	312105-0455		6	SCREW M6S ISO 4017 M8X30 A480	
440	312109-0457		2	SCREW M6S ISO 4017 M8X35 A480	
520	312605-0320		2	HEXAGON NUT, M6M M10 A280	
530	312605-0322		4	HEXAGON NUT, M6M M12 A280	
570	315105-0153		4	WASHER BRB6,4X12RFR	
580	315105-0165		17	WASHER BRB8,4X16RFR	
590	315105-0173		2	WASHER BRB10,5X22RFR	
620	90458-0459		1	EXTENDED WITHOUT INSERT, HIGH TEMP, 40X1	
650	359705-0007		1	WARNING SIGN ISO, HOT SURFACE	
700	2552073-0000		8	SEAL	
710	315400-0004	M	2	TUBE PUN-H-8X1,25-BL	
720	359705-0015		1	WARNING SIGN ISO, RISK OF ELECTRIC SHOCK	
760	90335-0036		2	COMP. SPRING 22450, 1,6X14,1X24	
770	90457-0141		4	BULKHEAD CONNECTOR, 8MM	
780	90457-0199		1	INSERT EK 156M 5X5/4X9	
MB072	90326-0080		1	THERMOCOUPLE, 5110080-000	
MB073	90326-0080		1	THERMOCOUPLE, 5110080-000	
MB074	90326-0080		1	THERMOCOUPLE, 5110080-000	
MB075	90326-0080		1	THERMOCOUPLE, 5110080-000	
MR005A	2638450-0000		1	HEATING ELEMENT	
MR005B	2638450-0000		1	HEATING ELEMENT	
MR005C	2638450-0000		1	HEATING ELEMENT	
MR005D	2638450-0000		1	HEATING ELEMENT	
MX008	1036443-0000		1	CONTACT UNIT	
MX009	1036443-0000		1	CONTACT UNIT	
MX010	1036443-0000		1	CONTACT UNIT	
MX011	1036443-0000		1	CONTACT UNIT	
MX212	90326-0022		1	PLUG, MALE YELLOW CR-AL	
MX212,1	90326-0077		1	CONTACT	
MX213	90326-0022		1	PLUG, MALE YELLOW CR-AL	
MX213,1	90326-0077		1	CONTACT	
MX214	90326-0022		1	PLUG, MALE YELLOW CR-AL	
MX214,1	90326-0077		1	CONTACT	
MX215	90326-0022		1	PLUG, MALE YELLOW CR-AL	
MX215,1	90326-0077		1	CONTACT	
W238	90220-0034	MM	2500	THERMOCABLE TEX/SITW-20F-KX 2X0,5MM2	
W239	90220-0034	MM	2500	THERMOCABLE TEX/SITW-20F-KX 2X0,5MM2	
W240	90220-0034	MM	2500	THERMOCABLE TEX/SITW-20F-KX 2X0,5MM2	
W241	90220-0034	MM	2500	THERMOCABLE TEX/SITW-20F-KX 2X0,5MM2	
W242	351120-0144	MM	2500	CABLE SIHF 3X1,5MM2 GREEN/YELLOW	
W243	351120-0144	MM	2500	CABLE SIHF 3X1,5MM2 GREEN/YELLOW	
W244	351120-0144	MM	2500	CABLE SIHF 3X1,5MM2 GREEN/YELLOW	
W245	351120-0144	MM	2500	CABLE SIHF 3X1,5MM2 GREEN/YELLOW	

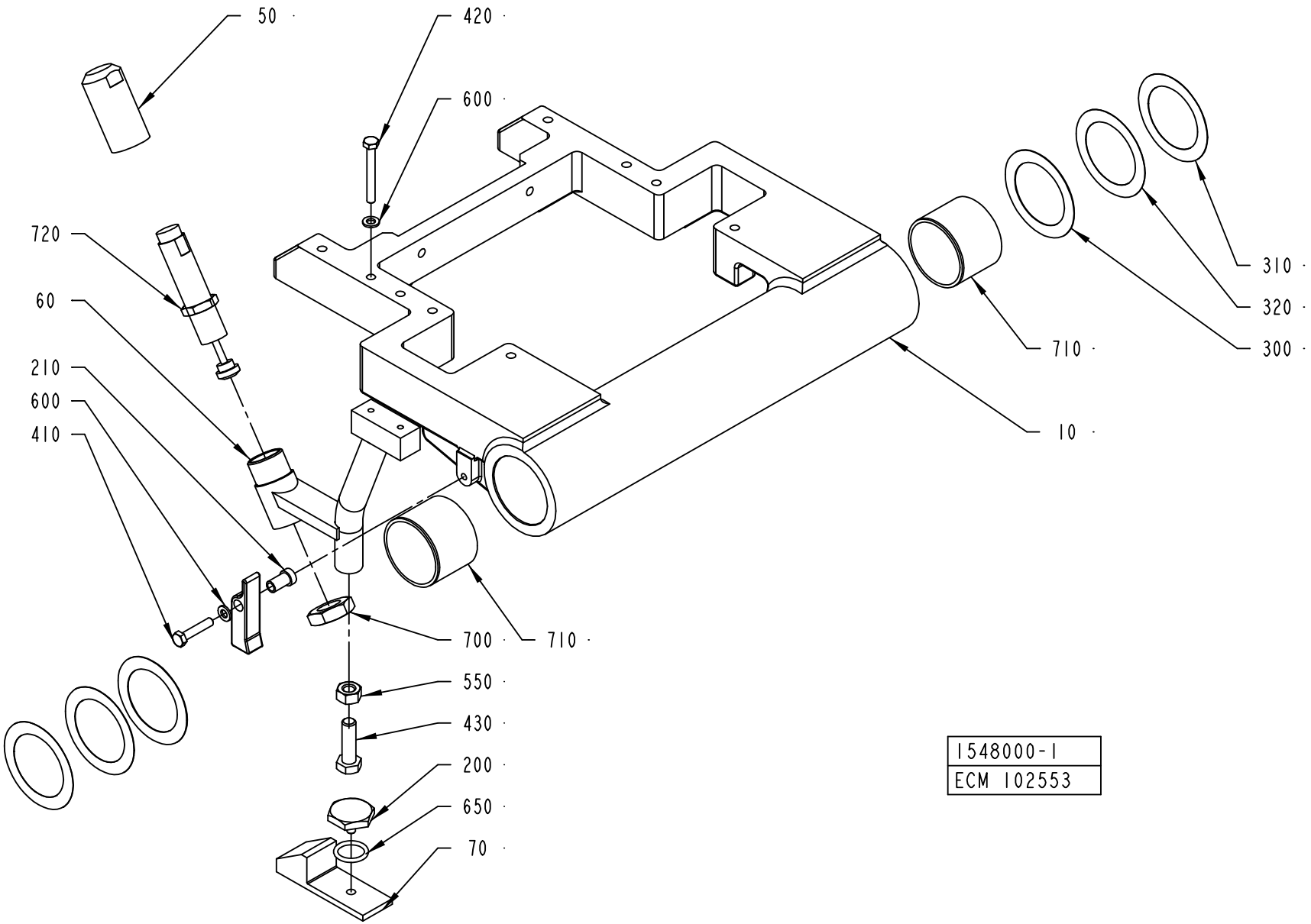
50
420
600
720
60
210
600
410
310
320
300
710
10
700
710
550
430
200
650
70
1548000-1
ECM 102553

ECM: 113160 - 20020731
Group number: 1548000-0100
Assembly Drawing: 1548000-1_1_AA

Pos	Part No	UN	Qty	Description	Page No
-					
010	1539296-0000		1	PIVOT ARM	
050	1512128-0000		1	PLUG	
060	1512129-0000		1	BRACKET	
070	1512133-0000		1	STOP	
200	272997-0000		1	STOPPER	
210	295205-0000		1	SPACER SLEEVE	
220	295206-0000		1	FLAP	
300	295204-0001		2	SHIM	
310	295204-0002		2	SHIM	
320	295204-0003		2	SHIM	
410	312105-0374		1	SCREW M6S ISO 4014 M6X30 A480	
420	312105-0380		1	SCREW M6S ISO 4014 M6X50 A480	
430	312105-0497		1	SCREW M6S ISO 4017 M10X35 A480	
550	312605-0320		1	HEXAGON NUT, M6M M10 A280	
600	315105-0153		2	WASHER BRB6,4X12RFR	
650	315202-0215		1	O-RING 19,2X3 MM	
700	90099-0057		1	NUT HEX. M20X1,5	
710	90240-0094		2	BEARING BUSHING W/O FL, 50X55X40 MM	
720	90347-0189		1	SHOCK ABSORBER, 370-050-400	

Pos	Part No	UN	Qty	Description	Page No

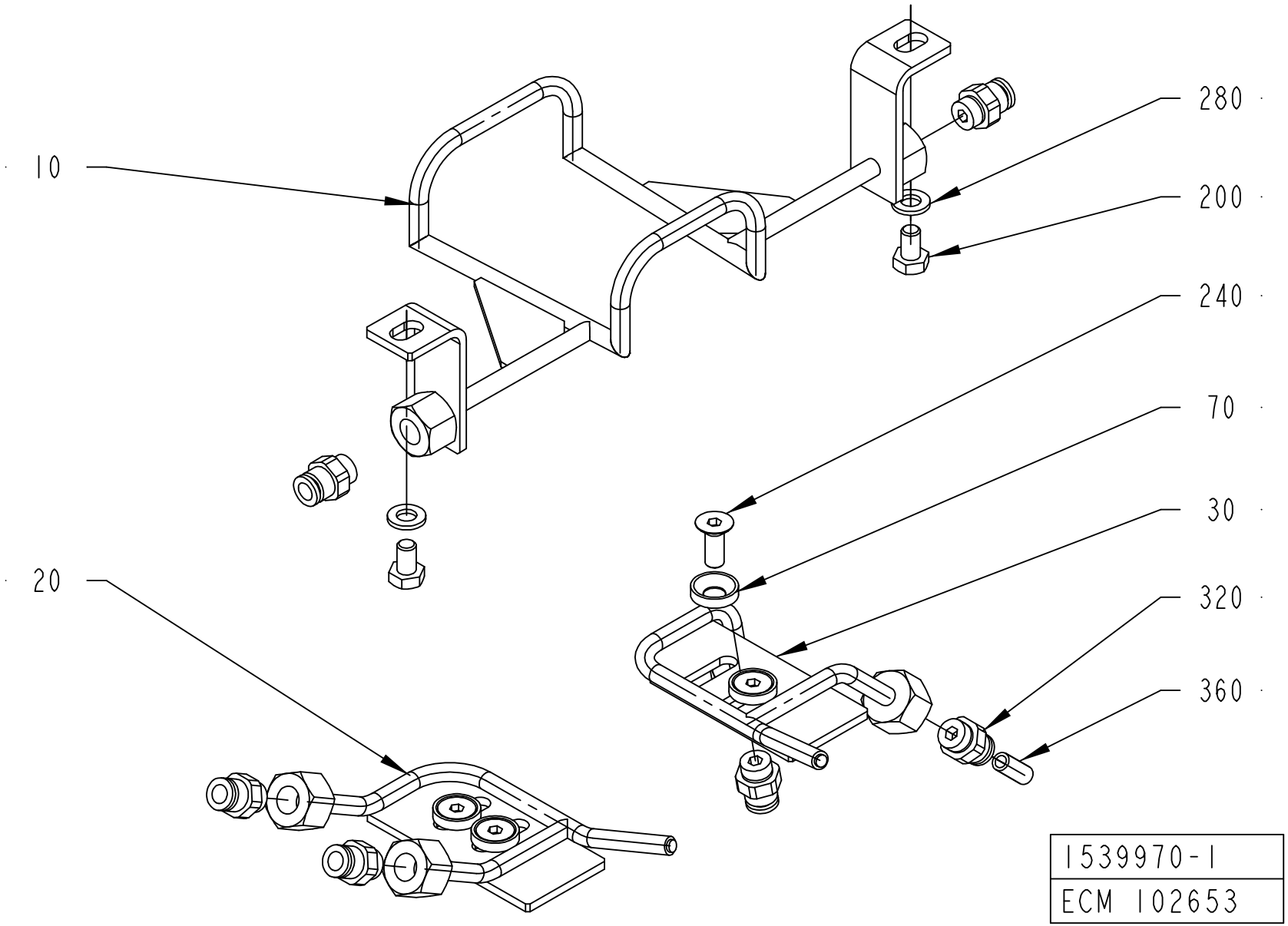
10
20
280
200
240
70
30
320
360
1539970-1
ECM 102653

ECM: 129872 - 20031006
Group number: 1539970-0100
Assembly Drawing: 1539970-1_1_AA

Pos	Part No	UN	Qty	Description	Page No
TBA 0100B					
010	2500243-0000		1	PIPE	
TBA 0125S					
010	1558200-0000		1	PIPE	
TBA 0160S					
010	2500244-0000		1	PIPE	
TBA 0180B					
010	2500245-0000		1	PIPE	
TBA 0200B					
010	1558196-0000		1	PIPE	
TBA 0200M					
010	1558201-0000		1	PIPE	
TBA 0200S					
010	1558203-0000		1	PIPE	
TBA 0250B					
010	2500246-0000		1	PIPE	
TBA 0250S					
010	1539972-0000		1	PIPE	
TBA 0300S, TBA 0284B					
010	2500247-0000		1	PIPE	
TBA 0330S					
010	2500248-0000		1	PIPE	
Common Parts					
020	2566107-0000		1	PIPE	
030	2566108-0000		1	PIPE	
070	1317228-0000		4	WASHER	
200	312105-0364		2	SCREW M6S ISO 4017 M6X10 A480	
240	312155-0368		4	SCREW EN 10642 MF6S M6X16 A480	
280	315105-0153		2	WASHER BRB6,4X12RFR	
320	342722-0202		6	PIPE COUPLING 1/8" D=6MM	
360	90166-0108	MM	3500	TUBE 6 MM PA,TRANSP.	

Pos	Part No	UN	Qty	Description	Page No

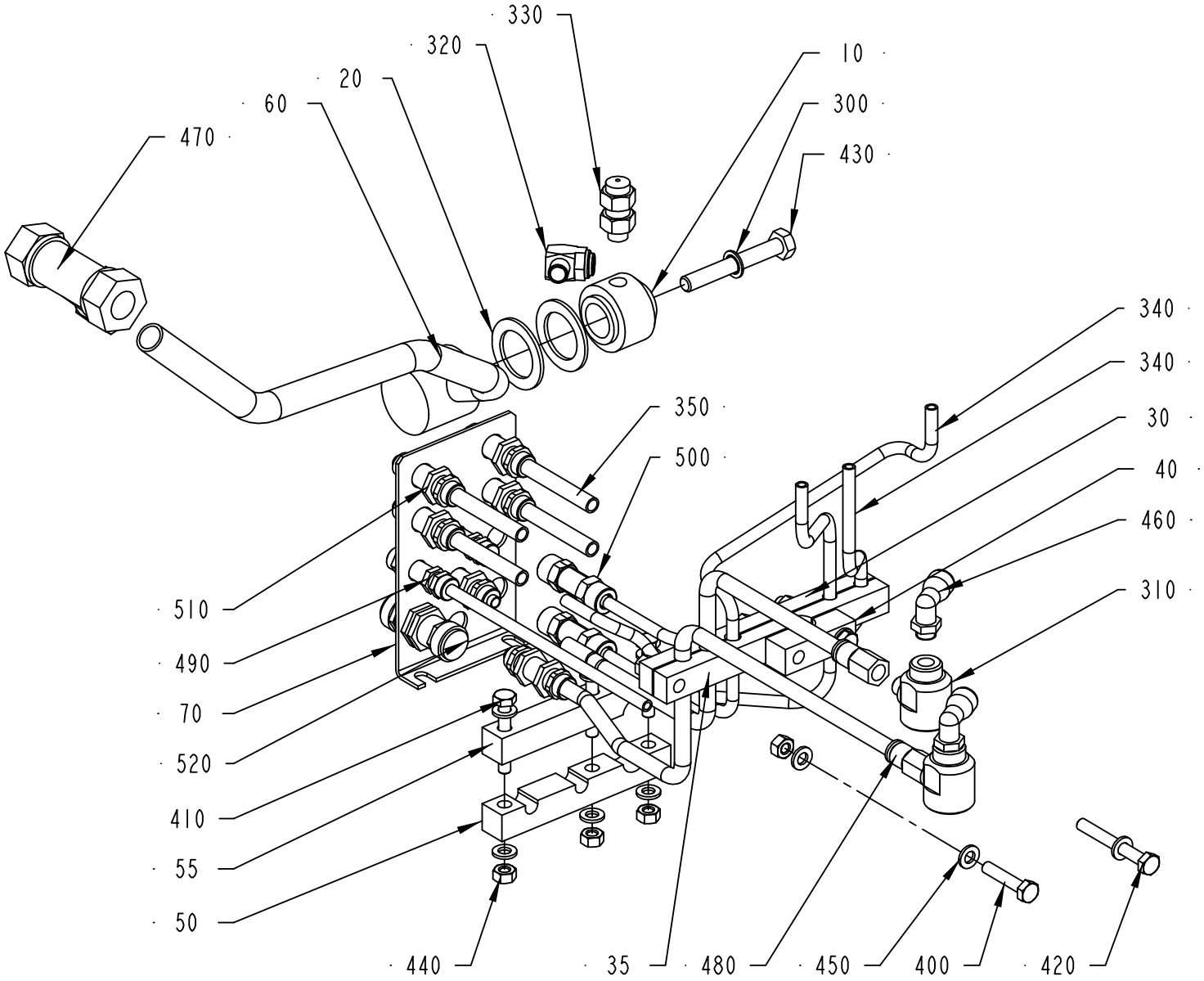

456455-5
ECM 103837

ECM: 113161 - 20020731
Group number: 456455-0600
Assembly Drawing: 456455-5_1_AB

Pos	Part No	UN	Qty	Description	Page No
-					
010	272191-0000		1	DISTRIBUTOR	
020	256907-0000		2	WASHER	
030	456853-0001		1	PIPE CLAMP	
035	456853-0002		1	PIPE CLAMP	
040	456853-0003		1	PIPE CLAMP	
050	456854-0001		1	CRAMP	
055	456854-0002		1	CRAMP	
060	1511887-0000		1	DISTRIBUTOR	
070	1517519-0000		1	PLATE	
300	90005-0007		1	BONDED SEAL SS/NBR M8	
310	90235-0206		2	QUICK EXHAUST VALVE, SEU-1/8	
320	90424-0009		1	SPRAY NOZZLE 103 DEG	
330	90424-0016		1	SPRAY NOZZLE 103 DEG R 1/8 GG8W	
340	90166-0089	M	2	HOSE 4/6.2 PE BLUE	
350	90166-0090	M	2	HOSE 6/8.4 PE BLUE	
400	312105-0374		1	SCREW M6S ISO 4014 M6X30 A480	
410	312105-0378		3	SCREW M6S ISO 4014 M6X40 A480	
420	312105-0380		2	SCREW M6S ISO 4014 M6X50 A480	
430	312105-0463		1	SCREW M6S ISO 4014 M8X60 A480	
440	312605-0316		7	HEXAGON NUT, M6M M6 A280	
450	315105-0153		13	WASHER BRB6,4X12RFR	
460	90458-2964		2	ELBOW PIPE JOINT, EXT.THREAD, D=8MM-G1/8	
470	342746-0114		1	CONN. T-PIPE T-15	
480	342770-0107		2	STRAIGHT COUPLING INT, D=8 MM - G1/8	
490	342960-0112		2	BULKHEAD COUPLING 6/4	
500	342960-0121		2	BULKHEAD COUPLING 8/6-6/4	
510	342960-0122		6	BULKHEAD COUPLING 8/6	
520	342960-0133		1	BULKHEAD COUPLING 10/8	

Pos	Part No	UN	Qty	Description	Page No

BOTTOM VALVE

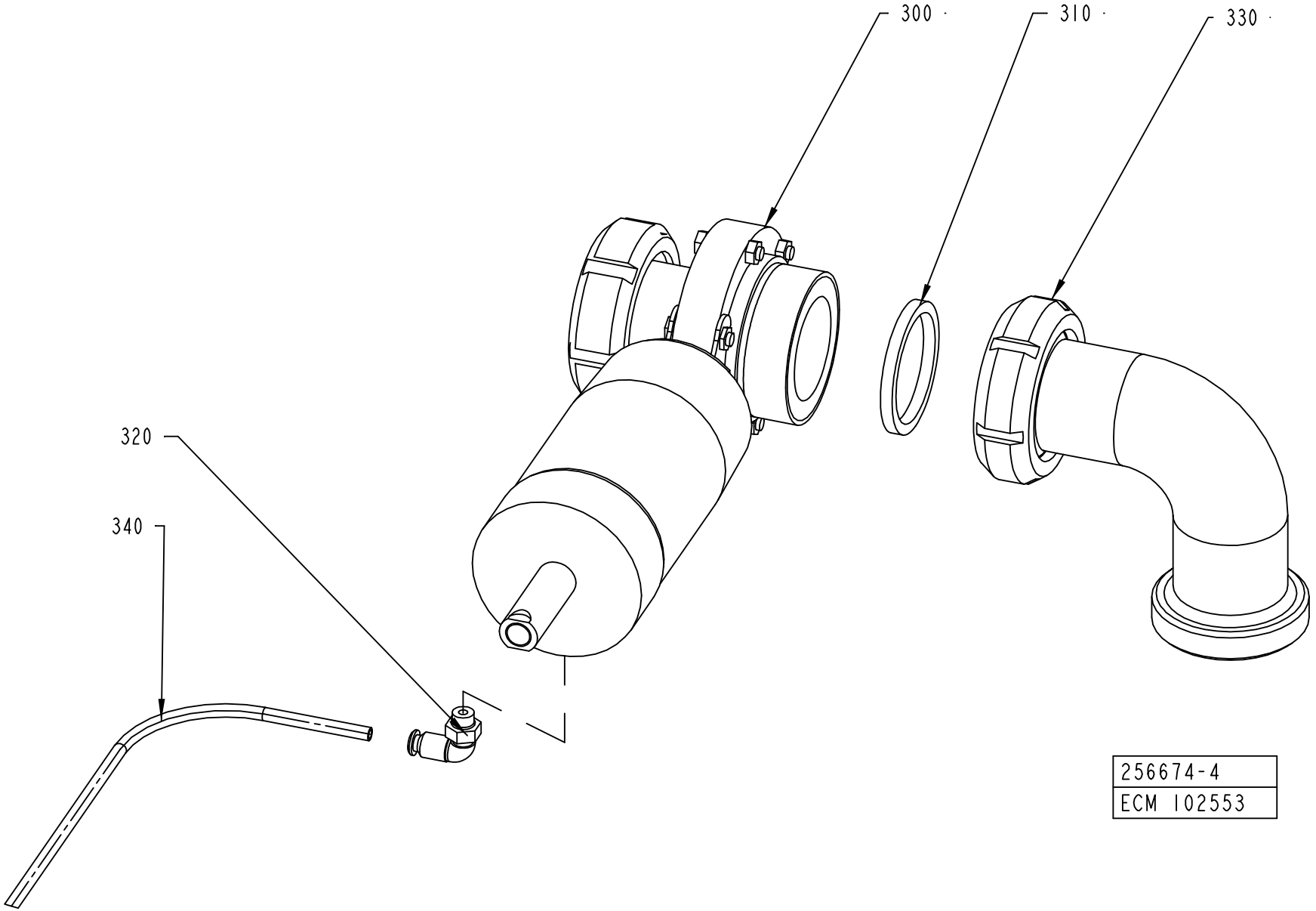

ECM: 113947 - 20030113
Group number: 256674-0500
Assembly Drawing: 256674-4_1_AA

Pos	Part No	UN	Qty	Description	Page No
-					
300	90457-0132		1	VALVE, BUTTERFLY, N.O. ZVF1200BSAAO	
310	315250-0104		1	GASKET 61X51X5,5 MM	
320	90458-2956		1	ELBOW PIPE JOINT, EXT.THREAD, D=6MM-G1/8	
330	342807-0104		1	PIPE ELBOW 90 DEGR. SMS1220, D=51 MM	
340	90166-0089	M	1	HOSE 4/6.2 PE BLUE	

Pos	Part No	UN	Qty	Description	Page No

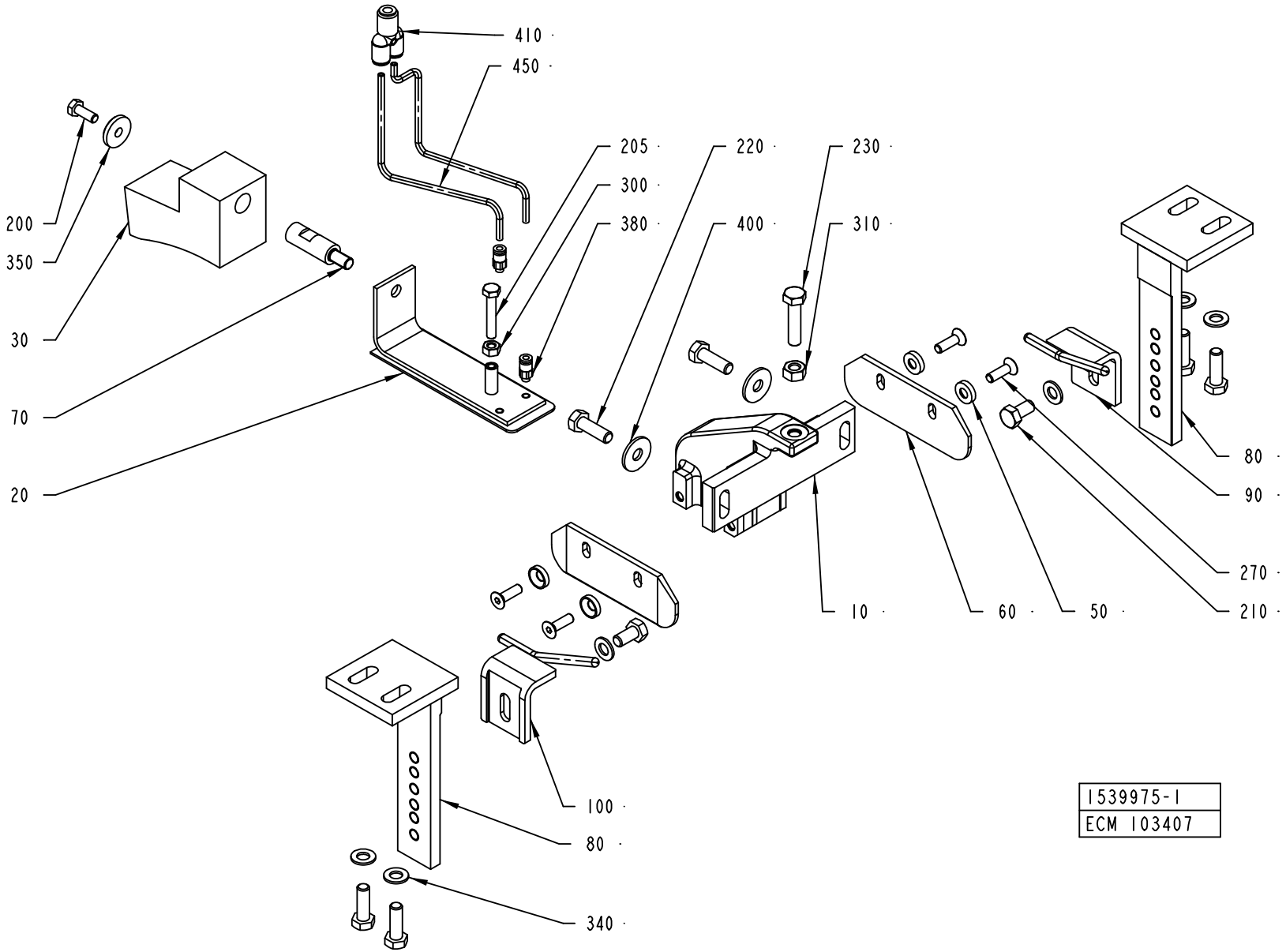
410
450
205
300
380
220
400
230
310
200
350
30
70
20
10
60
50
270
210
80
90
100
80
340
1539975-1
ECM 103407

ECM: 145826 - 20040901
Group number: 1539975-0100
Assembly Drawing: 1539975-1_1_AB

Pos	Part No	UN	Qty	Description	Page No
TBA 0100B					
010	1558190-0001		1	HOLDER	
020	1558202-0001		1	PRESSURE PLATE	
030	1558205-0000		1	BLOCK	
TBA 0125S					
010	1558190-0002		1	HOLDER	
020	1558202-0001		1	PRESSURE PLATE	
030	1558198-0000		1	BLOCK	
TBA 0160S					
010	1558190-0003		1	HOLDER	
020	1558202-0001		1	PRESSURE PLATE	
030	1558206-0000		1	BLOCK	
TBA 0180B					
010	1558190-0004		1	HOLDER	
020	1558202-0004		1	PRESSURE PLATE	
030	1558207-0000		1	BLOCK	
TBA 0200B					
010	1558190-0005		1	HOLDER	
020	1558202-0003		1	PRESSURE PLATE	
030	1558197-0000		1	BLOCK	
TBA 0200M					
010	1558190-0006		1	HOLDER	
020	1558202-0002		1	PRESSURE PLATE	
030	1558199-0000		1	BLOCK	
TBA 0200S					
010	1558190-0007		1	HOLDER	
020	1558202-0001		1	PRESSURE PLATE	
030	1558204-0000		1	BLOCK	
205	312105-0379		1	SCREW M6S ISO 4014 M6X45 A480	
TBA 0250B					
010	1558190-0008		1	HOLDER	
020	1558202-0003		1	PRESSURE PLATE	
030	1558208-0000		1	BLOCK	
TBA 0250S					
010	1558190-0009		1	HOLDER	
020	1558202-0002		1	PRESSURE PLATE	
030	1539789-0000		1	BLOCK	
205	312105-0376		1	SCREW M6S ISO 4014 M6X35 A480	
TBA 0300S, TBA 0284B					
010	1558190-0010		1	HOLDER	
020	1558202-0004		1	PRESSURE PLATE	
030	2500241-0000		1	BLOCK	
TBA 0330S					
010	1558190-0011		1	HOLDER	
020	1558202-0003		1	PRESSURE PLATE	
030	2500242-0000		1	BLOCK	
Common Parts					
050	1317228-0000		4	WASHER	
060	1558191-0000		2	PLATE	
070	1539792-0000		1	PIN	
080	1523505-0000		2	SUPPORT	
090	1539976-0000		1	GUIDE	
100	1539977-0000		1	GUIDE	
200	312105-0368		1	SCREW M6S ISO 4017 M6X16 A480	
210	312105-0449		2	SCREW M6S ISO 4017 M8X16 A480	
220	312105-0453		6	SCREW M6S ISO 4017 M8X25 A480	
230	312105-0457		1	SCREW M6S ISO 4014 M8X35 A480	
270	312155-0370		4	SCREW EN 10642 MF6S M6X20 A480	
300	312605-0316		1	HEXAGON NUT, M6M M6 A280	
310	312605-0318		1	HEXAGON NUT, M6M M8 A280	
340	315105-0165		6	WASHER BRB8,4X16RFR	
350	315125-0153		1	WASHER TBRSB 6,4X22X4 A4	
380	350003-0001		2	PUSH-IN FITTING QS-F-M5-4-I	
400	90005-0116		2	WASHER PLAIN ROUND 8,4(M8)/24, H=2	
410	90055-0154		1	HOSE COUPLING	
450	90459-3523	MM	2000	TUBE, 4 MM PTFE TRANSPARENT	

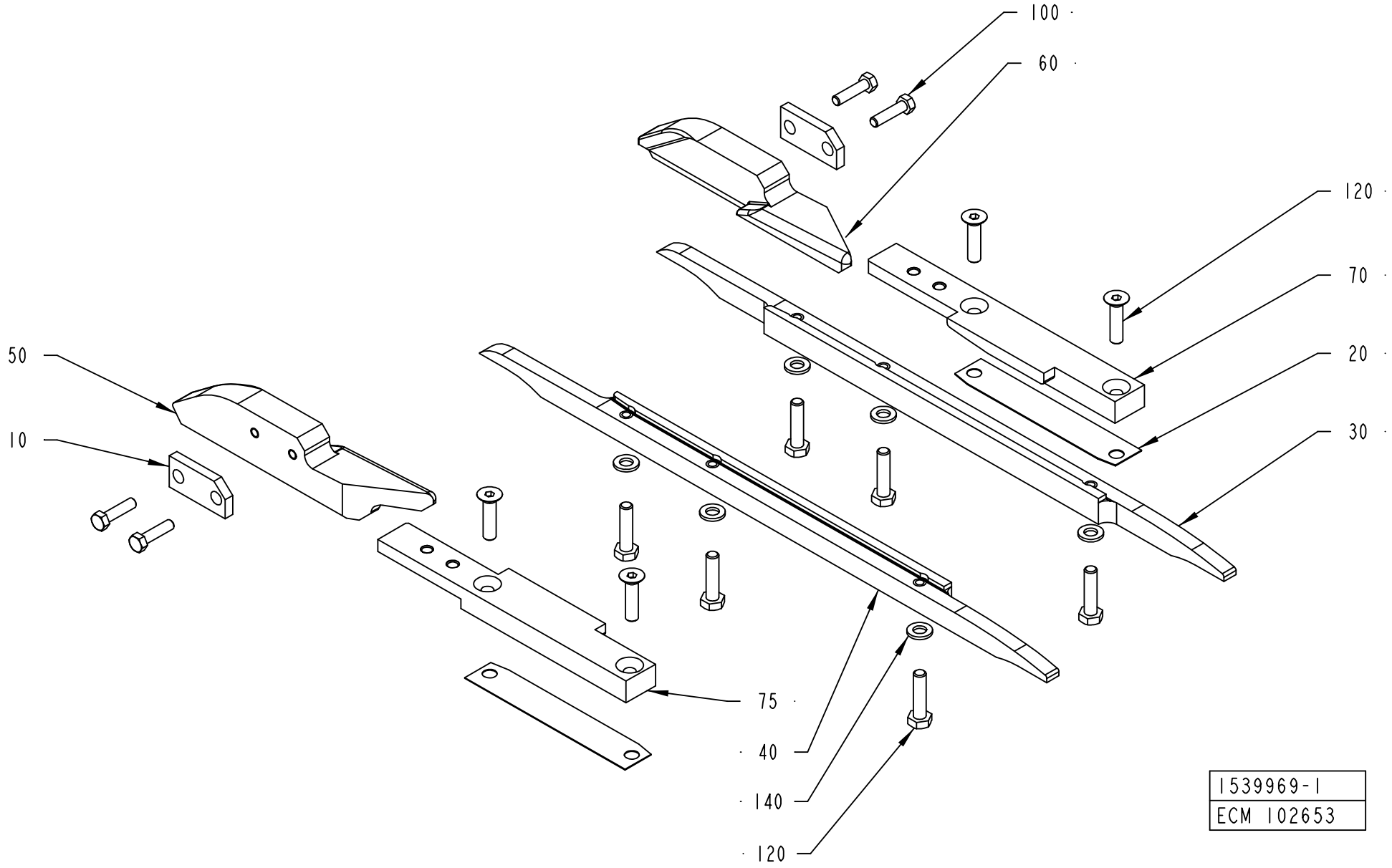
100
60
120
70
20
30
50
10
75
40
140
120
1539969-1
ECM 102653

ECM: 117951 - 20030801
Group number: 1539969-0100
Assembly Drawing: 1539969-1_1_AA

Pos	Part No	UN	Qty	Description	Page No
TBA 0125S, TBA 0100B					
050	2598198-0000		1	FOLDING BAR	
060	2598199-0000		1	FOLDING BAR	
TBA 0160S, TBA 0200S					
050	1558194-0001		1	FOLDING BAR	
060	1558195-0001		1	FOLDING BAR	
TBA 0250S, TBA 0200M					
050	1558194-0003		1	FOLDING BAR	
060	1558195-0003		1	FOLDING BAR	
TBA 0330S, TBA 0300S, TBA 0180B, TBA 0200B, TBA 0284B, TBA 0250B					
050	1558194-0002		1	FOLDING BAR	
060	1558195-0002		1	FOLDING BAR	
Common Parts					
010	295729-0000		2	WASHER	
020	491266-0000		4	SHIM	
030	751109-0000		1	RAIL RIGHT	
040	751110-0000		1	RAIL LEFT	
070	2526343-0000		1	PLATE	
075	2526344-0000		1	PLATE	
100	312105-0331		4	SCREW M6S ISO 4017 M5X20 A480	
110	312105-0362		2	SCREW M6S ISO 4017 M6X8 A480	
120	312105-0372		6	SCREW M6S ISO 4017 M6X25 A480	
130	312155-0372		4	SCREW EN 10642 MF6S M6X25 A480	
140	315105-0153		6	WASHER BRB6,4X12RFR	

Pos	Part No	UN	Qty	Description	Page No

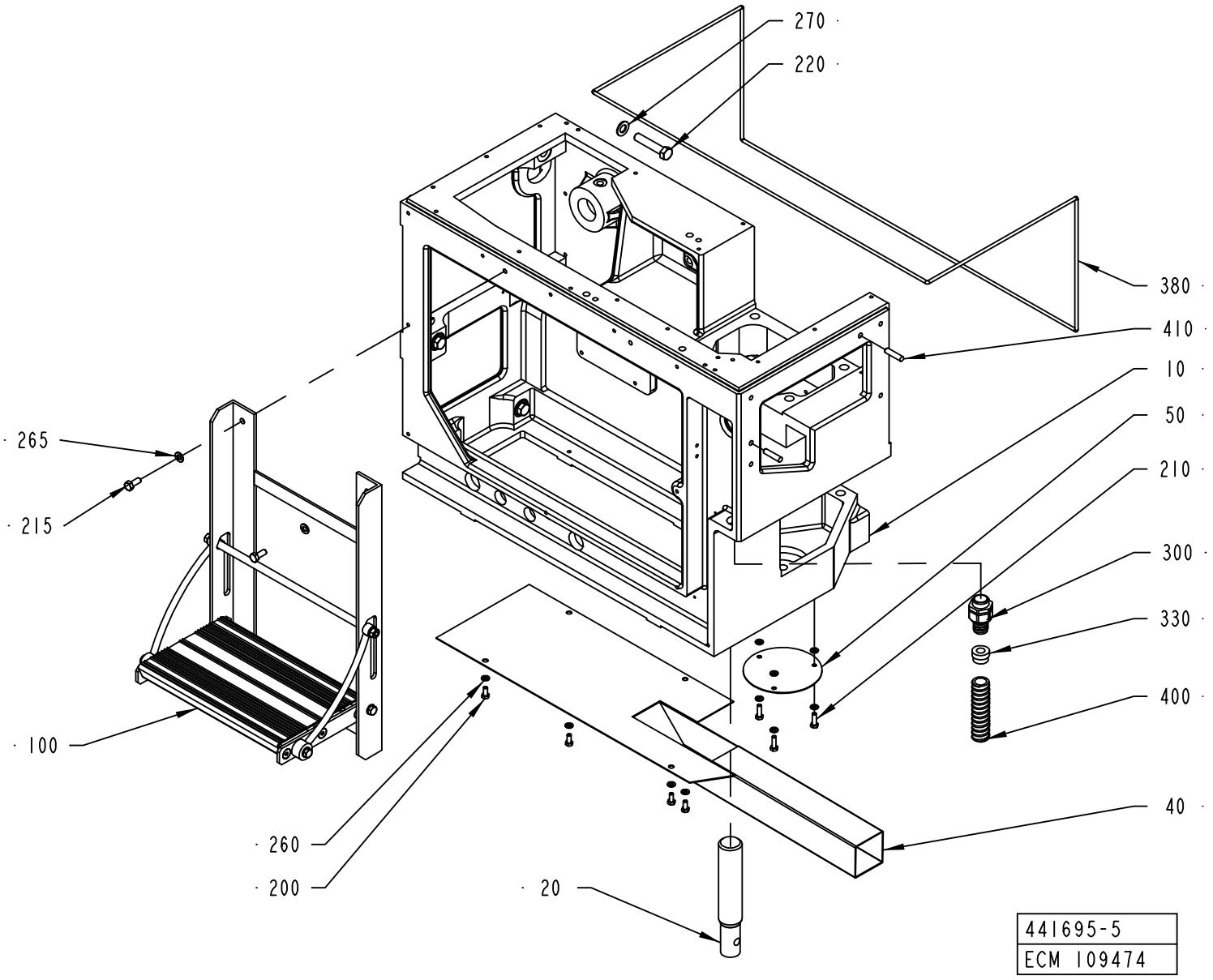
270
220
380
410
10
50
210
300
330
400
40
265
215
100
260
200
20
441695-5
ECM 109474

ECM: 110046 - 20030113
Group number: 441695-0500
Assembly Drawing: 441695-5_1_AC

Pos	Part No	UN	Qty	Description	Page No
-					
010	1539960-0000		1	MACHINE BODY	
020	272673-0000		1	LEG	
040	1519416-0000		1	BOTTOM PLATE	
050	272743-0000		1	LID	
100	1519426-0100		1	STAIR	**5-41**
200	312105-0367		4	SCREW M6S ISO 4017 M6X14 A480	
210	312105-0370		3	SCREW M6S ISO 4017 M6X20 A480	
215	312105-0451		2	SCREW M6S ISO 4017 M8X20 A480	
220	312105-0544		6	SCREW M6S ISO 4014 M12X60 A480	
260	315105-0153		7	WASHER BRB6,4X12RFR	
265	315105-0165		2	WASHER BRB8,4X16RFR	
270	315105-0178		6	WASHER BRB13X24RFR	
300	90458-0431		1	EXTENDED WITHOUT INSERT, M25X1,5	
330	353249-0013		1	INSERT, SINGEL HOLE, EK 154/13	
380	90143-0028	M	2	STRIP	
400	90152-0051	M	1	SPIRAL CONDUIT, 25X18, UL 1816	
410	311103-0407		2	PARALLEL PIN ISO 2338 8M6X35 A1	

Pos	Part No	UN	Qty	Description	Page No

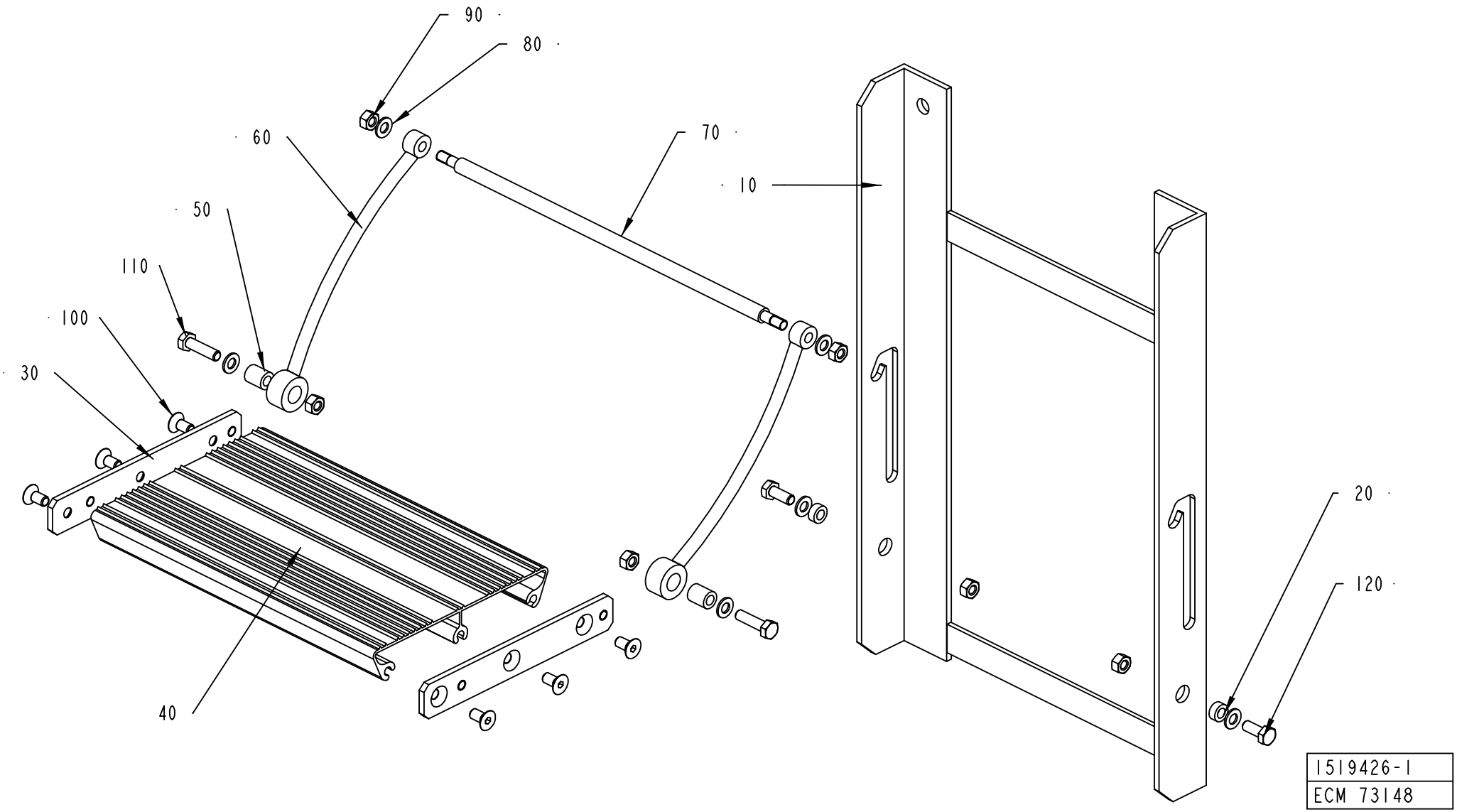
90
80
60
70
10
50
110
100
30
20
120
40
1519426-1
ECM 73148

ECM: 73148 - 20011221
Group number: 1519426-0100
Assembly Drawing: 1519426-1_1_AA

Pos	Part No	UN	Qty	Description	Page No
-					
010	1519423-0000		1	SUPPORT	
020	1519421-0000		2	BUSHING	
030	1519418-0000		2	PLATE	
040	1519417-0000		1	STAIR	
050	1519422-0000		2	BUSHING	
060	1519424-0000		2	SUPPORT	
070	1519425-0000		1	SPACER	
080	315105-0165		6	WASHER BRB8,4X16RFR	
090	312605-0318		6	HEXAGON NUT, M6M M8 A280	
100	312155-0449		6	SCREW EN 10642 MF6S M8X16 A480	
110	312105-0455		2	SCREW M6S ISO 4017 M8X30 A480	
120	312105-0451		2	SCREW M6S ISO 4017 M8X20 A480	

Pos	Part No	UN	Qty	Description	Page No

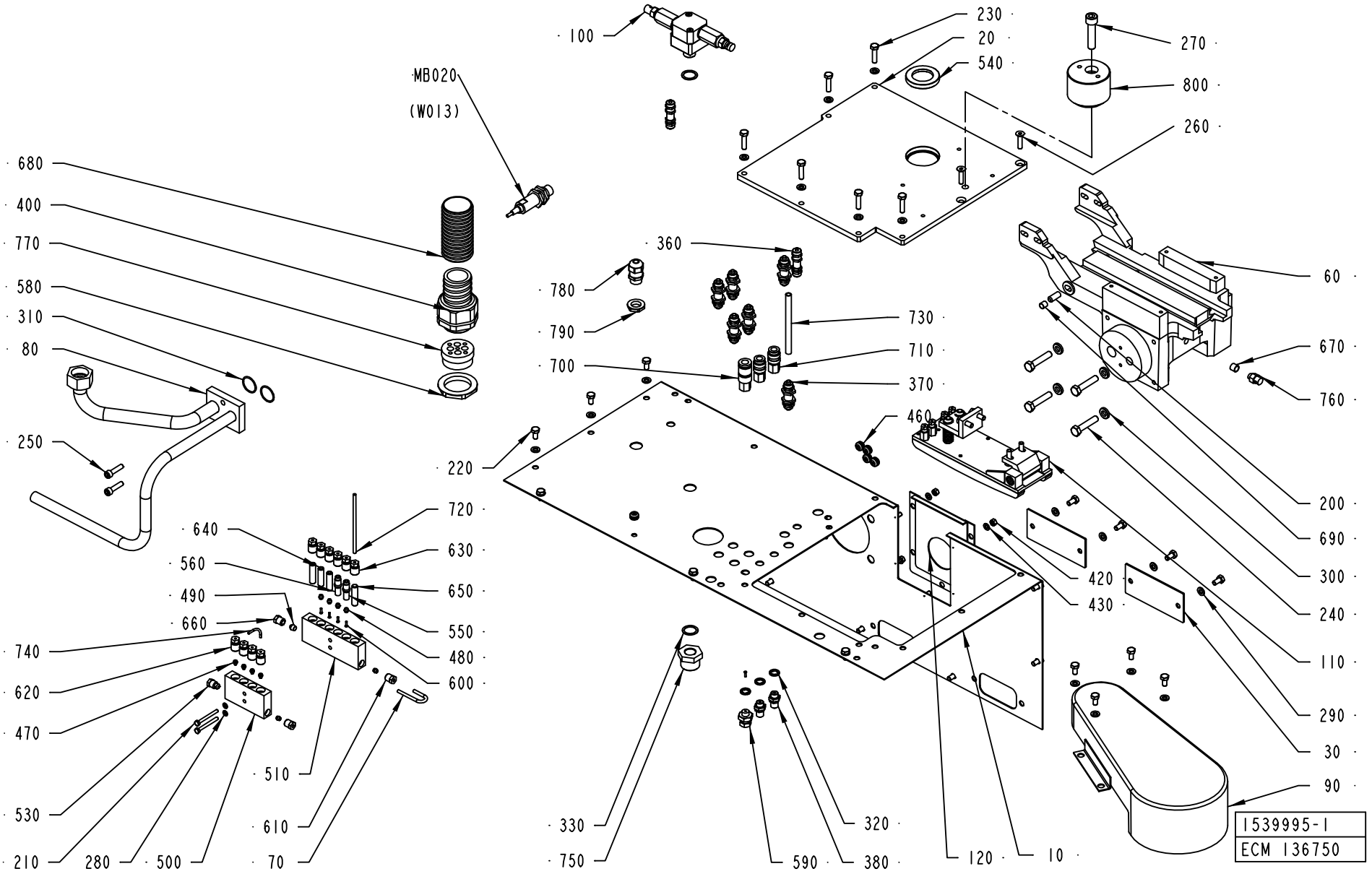
100
MB020
(W013)
680
400
770
580
310
80
250
230
20
540
270
800
260
360
780
790
700
730
710
370
460
60
670
760
200
690
300
240
110
290
30
90
220
720
640
630
560
650
490
550
660
480
740
600
620
470
510
530
610
210
280
500
70
330
750
320
590
380
120
10
420
430
1539995-1
ECM 136750

ECM: 136750 - 20040901
Group number: 1539995-0100
Assembly Drawing: 1539995-1_1_AD

Pos	Part No	UN	Qty	Description	Page No
-					
010	2633436-0000		1	SHIELD PLATE	
020	2544966-0000		1	PLATE	
030	1539957-0000		2	PLATE	
060	1498245-0000		1	SUPPORTING ARM	
070	1512442-0000		1	CONNECTING PIPE	
080	1512448-0000		1	PIPE CONNECTION	
090	1539953-0000		1	PROTECTIVE COVER	
100	441811-0100		1	ROTOR	**5-45**
110	1255876-0200		1	CHAIN TENSIONER	**5-47**
120	2633435-0000		1	PLATE	
200	311103-0401		1	PARALLEL PIN ISO 2338 8M6X20 A1	
210	312105-0303		2	SCREW M6S ISO 4017 M4X40 A470	
220	312105-0366		24	SCREW M6S ISO 4017 M6X12 A480	
230	312105-0372		6	SCREW M6S ISO 4017 M6X25 A480	
240	312105-0459		4	SCREW M6S ISO 4014 M8X40 A480	
250	312115-0372		2	SCREW ISO4762 M6X25 A4	
260	312155-0372		2	SCREW EN 10642 MF6S M6X25 A480	
270	312115-0500		1	SCREW ISO4762 M10X45 A4	
280	315105-0136		2	WASHER BRB4,3XRFR	
290	315105-0153		30	WASHER BRB6,4X12RFR	
300	315111-0165		4	WASHER PLAIN, TBRB 8,4/16 H=3	
310	315202-0118		2	O-RING 22,1X1,6 MM	
320	315239-0109		3	NYLON WASHER G1/8	
330	315239-0111		2	NYLON WASHER G3/8	
360	342960-0112		2	BULKHEAD COUPLING 6/4	
370	342960-0122		6	BULKHEAD COUPLING 8/6	
380	342921-0113		2	STRAIGHT COUPLING,EXT.THREADED 6/4-G1/8"	
400	90458-0459		1	EXTENDED WITHOUT INSERT, HIGH TEMP, 40X1	
420	312605-0314		5	HEXAGON NUT, M6M M5 A280	
430	315105-0146		5	WASHER BRB5,3X10RFR	
460	90015-0028		5	LEAD-IN BUSHING	
470	90028-0020		4	CONE TUBE 2,5MM	
480	90028-0021		6	CONE TUBE 4 MM	
490	90028-0025		1	CONE TUBE 6 MM	
500	90032-0039		1	BLOCK 4 WAYS	
510	90032-0040		1	BLOCK 6 WAYS	
530	90087-0019		1	PLUG M10X1 STAINLESS	
540	90091-0306		1	RADIAL SEAL 30X47X7 MM DUST LIP	
550	90092-0053		1	METERING VALVE 30 MM3	
560	90092-0054		1	METERING VALVE 50 MM3	
580	90458-0326		1	NUT, M40X1,5	
590	90134-0004		1	PIPE CONNECTION R1/8	
600	90134-0031		5	SLEEVE FOR PLASTIC TUBE	
610	90134-0038		2	BUSHING/NUT INLET/OUTLET 4 MM	
620	90134-0039		4	BUSHING VALVE CONNECTION 2,5 MM	
630	90134-0040		6	BUSHING VALVE CONNECTION 4 MM	
640	90134-0051		2	SPACING COLLAR DOSING BLOCK	
650	90134-0052		2	PLUG DOSING BLOCK	
660	90134-0055		1	BUSHING/NUT INLET/OUTLET 6 MM	
670	90144-0073	MM	1	TREBOFLON-TAPE W=13MM	
680	90152-0070	M	1	METAL HOSE, 32,5X26, UL 2621	
690	90157-0022		1	SEALING COMPOUND	
700	90163-0046		1	SLEEVE LP-004-0-WR 0510-21-1 BRASS	
710	90163-0062		2	QUICK COUPLING, (F) 5053-1/8	
720	90166-0109	M	2	TUBE 4 MM PA,TRANSP.	
730	90166-0013	M	2	TUBE 8 MM PA BLUE	
740	90166-0143	M	2	TUBE 2,5 MM PA,TRANSP.	
750	90330-0078		1	BUSHING, INT/EXT. THR. R3/4-RP3/8	
760	90424-0010		1	SPRAY NOZZLE 142 DEG BSPT 1/4 K5	
770	90457-0199		1	INSERT EK 156M 5X5/4X9	
780	90458-0314		1	CABLE GLAND, M16X1,5, NO.5311 1110	
790	90458-0322		1	NUT, M16X1,5	
800	90458-0220		1	TENSION ROLLER, M40/60-0-M EXCENTRIC	
MB020	90458-0894		1	PROXIMITY SENSOR E2E2-X10MB1-5M	

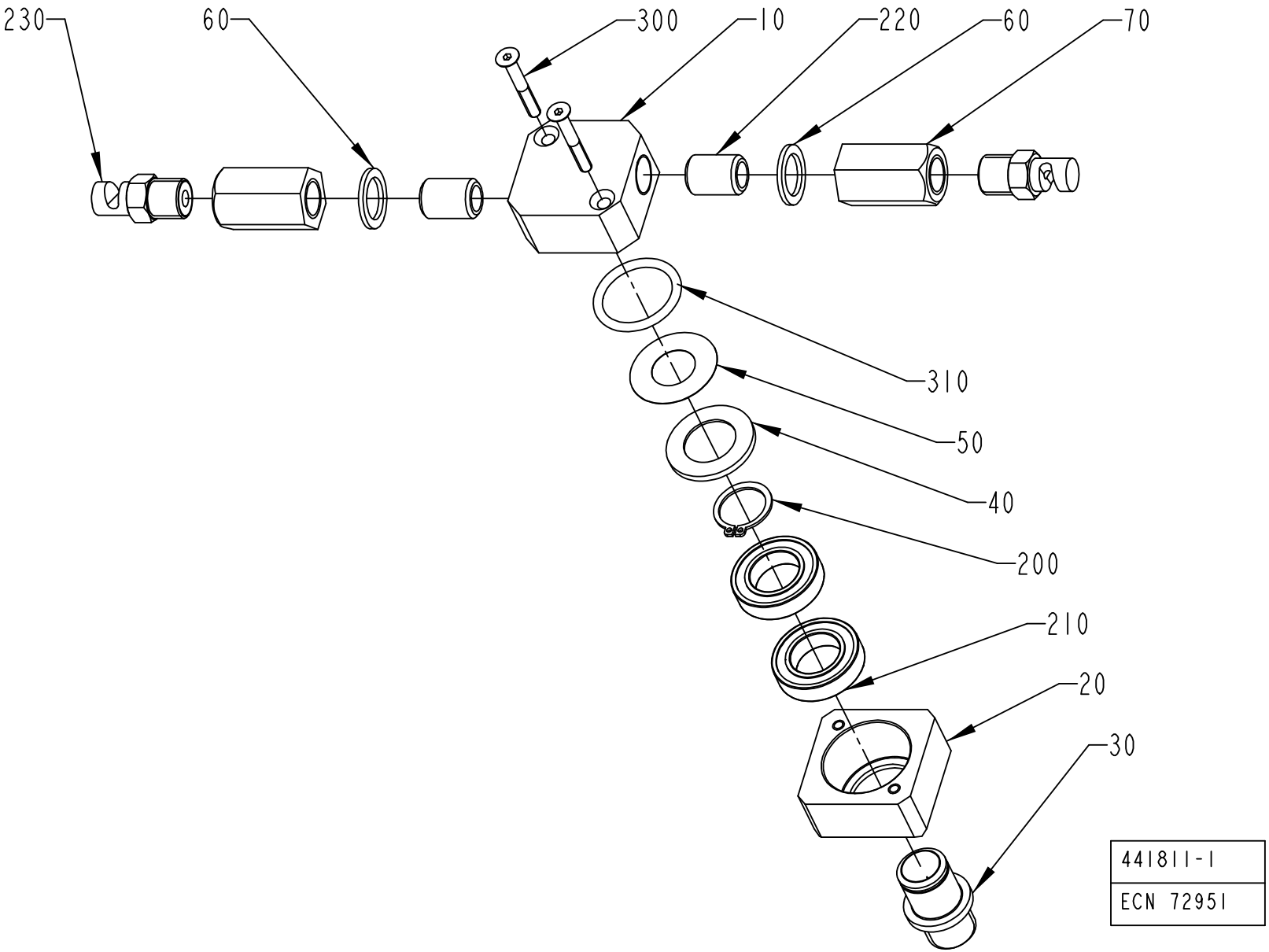
230
60
300
10
220
60
70
310
50
40
200
210
20
30
441811-1
ECN 72951

ECM: 140035 - 20040715
Group number: 441811-0100
Assembly Drawing: 441811-1_1_AB

Pos	Part No	UN	Qty	Description	Page No
-					
010	441792-0000		1	HEAD	
020	441793-0000		1	BEARING HOUSING	
030	441794-0000		1	PIVOT PIN	
040	441795-0000		1	WASHER	
050	441796-0000		1	SEAL	
060	441797-0000		2	SHIM	
070	441800-0000		2	STRAIGHT FITTING	
200	90141-0017		1	RETAINING RING FOR SHAFT DIN 471 17 A2	
210	90214-0092		2	BALL BEARING, 17X30X7 MM	
220	90330-0101		2	NIPPLES, EXT. THREAD, G1/4	
230	90424-0025		2	SPRAY NOZZLE 145 DEG	
300	312155-0299		2	SCREW EN 10642 MF6S M4X30 A480	
310	315202-0217		1	O-RING 24,2X3 MM	

Pos	Part No	UN	Qty	Description	Page No

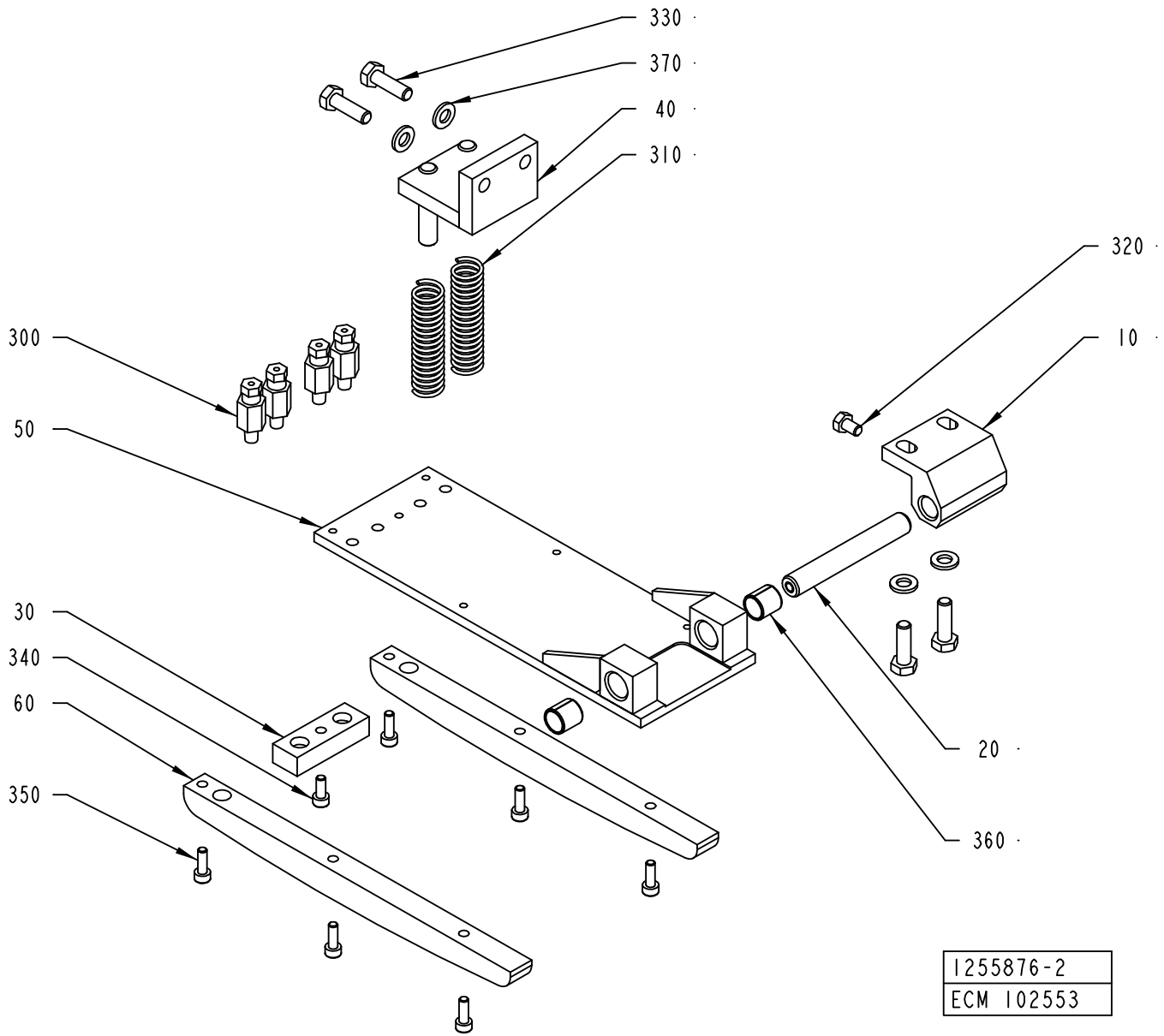
330
370
40
310
320
10
300
50
30
340
60
350
20
360
1255876-2
ECM 102553

ECM: 117950 - 20030801
Group number: 1255876-0200
Assembly Drawing: 1255876-2_1_AA

Pos	Part No	UN	Qty	Description	Page No
-					
010	1195454-0000		1	BRACKET	
020	1195456-0000		1	SHAFT	
030	1334721-0000		1	BLOCK	
040	1346933-0000		1	BRACKET	
050	1512443-0000		1	PLATE CHOKE	
060	1512444-0000		2	GUIDE RAIL	
300	90134-0065		4	CONNECTION M6 TUBE 2,5 MM	
310	90335-0152		2	COMP. SPRING 22300, 1,25X17,25X40,5	
320	312105-0323		1	SCREW M6S ISO 4017 M5X8 A480	
330	312105-0370		4	SCREW M6S ISO 4017 M6X20 A480	
340	312115-0289		1	SCREW ISO4762 M4X10 A4	
350	312115-0291		6	SCREW ISO4762 M4X12 A4	
360	321141-0142		2	BEARING BUSHING W/O FL, 10X12X12 MM	
370	315105-0153		4	WASHER BRB6,4X12RFR	

Pos	Part No	UN	Qty	Description	Page No

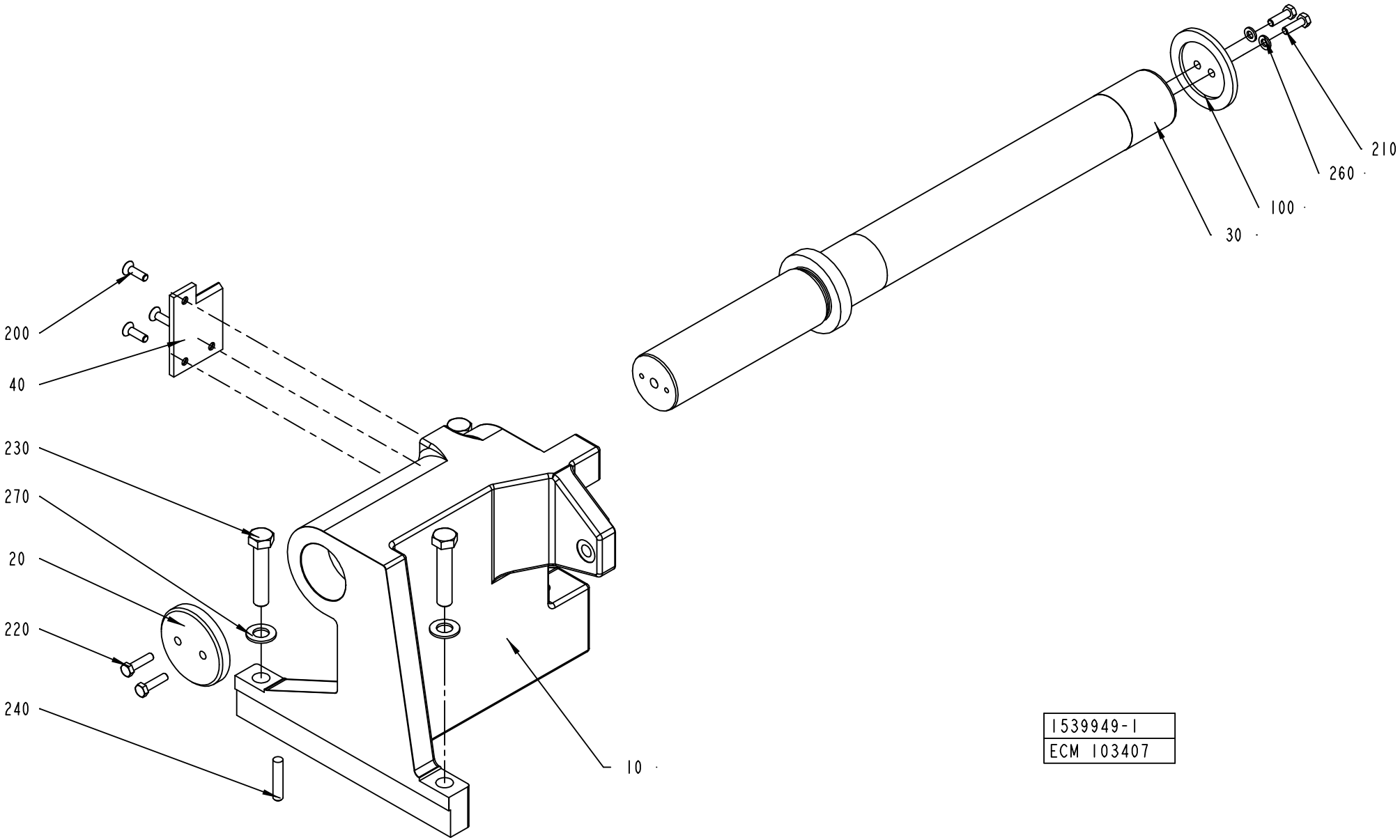

1539949-1
ECM 103407

ECM: 104089 - 20020226
Group number: 1539949-0100
Assembly Drawing: 1539949-1_1_AB

Pos	Part No	UN	Qty	Description	Page No
-					
010	1539951-0000		1	HOUSE	
020	1539950-0000		1	WASHER	
030	1539948-0000		1	SHAFT	
040	1539965-0000		1	PLATE	
100	295203-0000		1	LID	
200	312155-0370		3	SCREW EN 10642 MF6S M6X20 A480	
210	312105-0370		2	SCREW M6S ISO 4017 M6X20 A480	
220	312105-0372		2	SCREW M6S ISO 4017 M6X25 A480	
230	312105-0544		3	SCREW M6S ISO 4014 M12X60 A480	
240	311103-0409		2	PARALLEL PIN ISO 2338 8M6X40 A1	
260	315105-0153		2	WASHER BRB6,4X12RFR	
270	315105-0178		3	WASHER BRB13X24RFR	

Pos	Part No	UN	Qty	Description	Page No

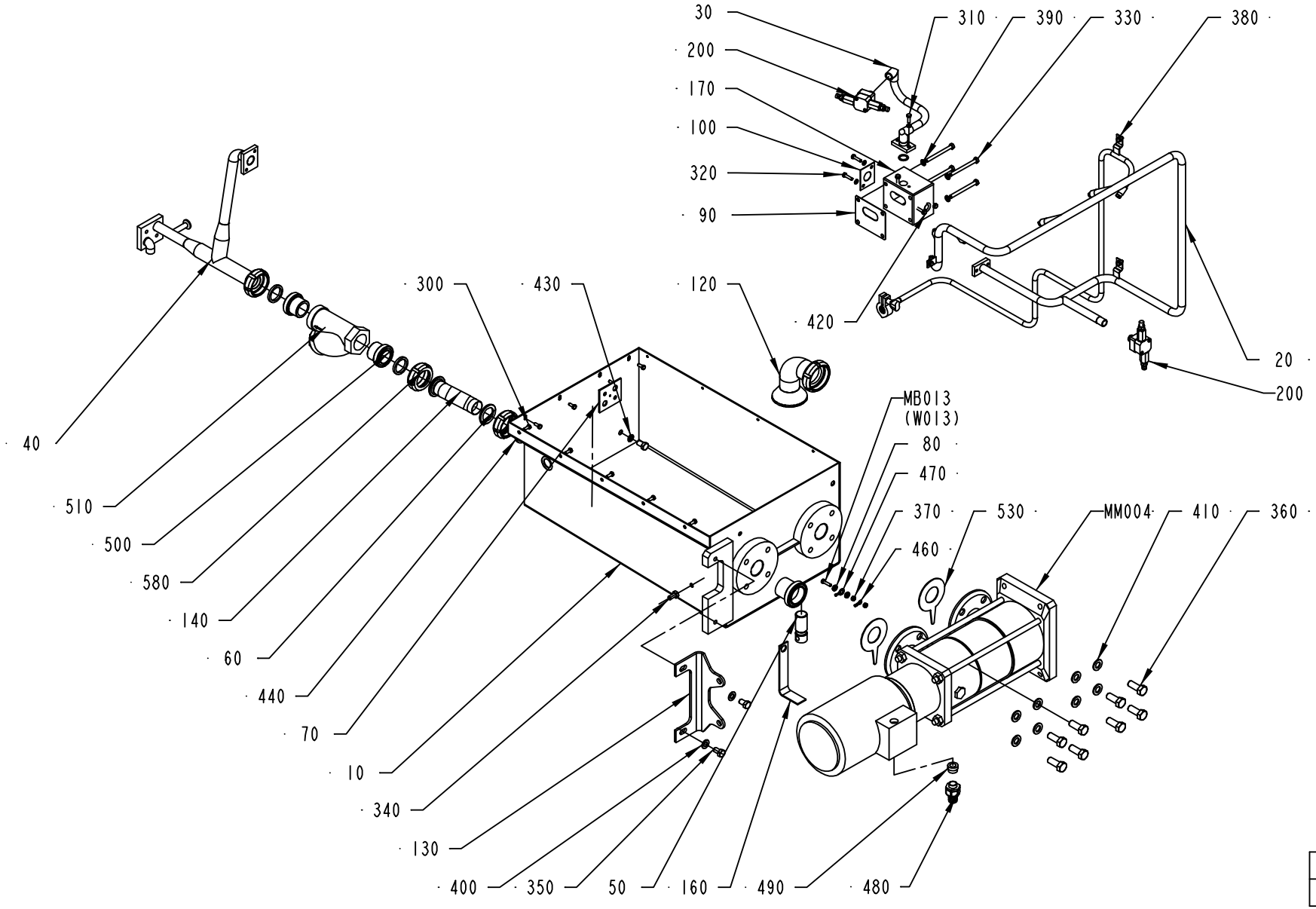

2544980-1
ECM 109474

ECM: 110048 - 20030113
Group number: 2544980-0100
Assembly Drawing: 2544980-1_1_AA

Pos	Part No	UN	Qty	Description	Page No
50HZ					
MM004	90457-0131		1	PUMP SV805 R22T 50HZ	
60HZ					
MM004	90458-2762		1	PUMP SV805 R406T 60HZ	
Common Parts					
010	2544960-0000		1	CLEANING BASIN	
020	2544981-0100		1	CLEANING CIRCUIT	**5-53**
030	1539947-0000		1	PIPE	
040	2544959-0000		1	PIPE	
050	256641-0000		1	LEG	
060	271435-0000		1	WASHER	
070	295417-0000		1	GASKET	
080	295434-0000		2	BUSHING	
090	456395-0000		1	GASKET	
100	456396-0000		1	GASKET	
120	1511291-0000		1	CURVE	
130	1511293-0000		1	BRACKET	
140	1511294-0000		1	CLEANING PIPE	
160	1512440-0000		1	BRACKET	
170	1517523-0000		1	BLOCK	
200	441811-0100		2	ROTOR	**5-45**
300	312105-0368		9	SCREW M6S ISO 4017 M6X16 A480	
310	312105-0370		2	SCREW M6S ISO 4017 M6X20 A480	
320	312105-0372		4	SCREW M6S ISO 4017 M6X25 A480	
330	312105-0469		4	SCREW M6S ISO 4014 M8X90 A480	
340	312105-0491		1	SCREW M6S ISO 4017 M10X20 A480	
350	312105-0532		3	SCREW M6S ISO 4017 M12X20 A480	
360	312105-0628		8	SCREW M6S ISO 4017 M16X40 A480	
370	312605-0316		2	HEXAGON NUT, M6M M6 A280	
380	315105-0153		6	WASHER BRB6,4X12RFR	
390	315105-0165		4	WASHER BRB8,4X16RFR	
400	315105-0178		2	WASHER BRB13X24RFR	
410	315105-0186		8	WASHER BRB17X30RFR	
420	315202-0215		2	O-RING 19,2X3 MM	
430	315211-0107		1	BONDED SEAL SS/NBR90 M12	
440	315250-0103		3	GASKET 48X38X5,5 MM	
460	353101-0123		1	CABLE SHOE 0,5-1,5MM2 M6 RED	
470	353101-0126		1	CABLE SHOE	
480	90458-0430		1	EXTENDED WITHOUT INSERT, M20X1,5	
490	353249-0014		1	INSERT, SINGEL HOLE, EK 154/16	
500	90217-0041		2	NIPPLE LKBN, RD 60-6 - R1 1/2 M	
510	90415-0022		1	FILTER / R1 1/2" TYP. 1012	
	90415-0320		*1*	*FILTER INSERT*	
530	90458-2199		2	GASKET, LOWARA 168061340	
580	342803-0103		2	UNION NUT, RD 60-6 (SMS 38)	
MB013	312105-0372		1	SCREW M6S ISO 4017 M6X25 A480	
W013	351150-0431	M	1	CABLE OLFLEX 2X0,75 MM2 LIGHT/GREY	

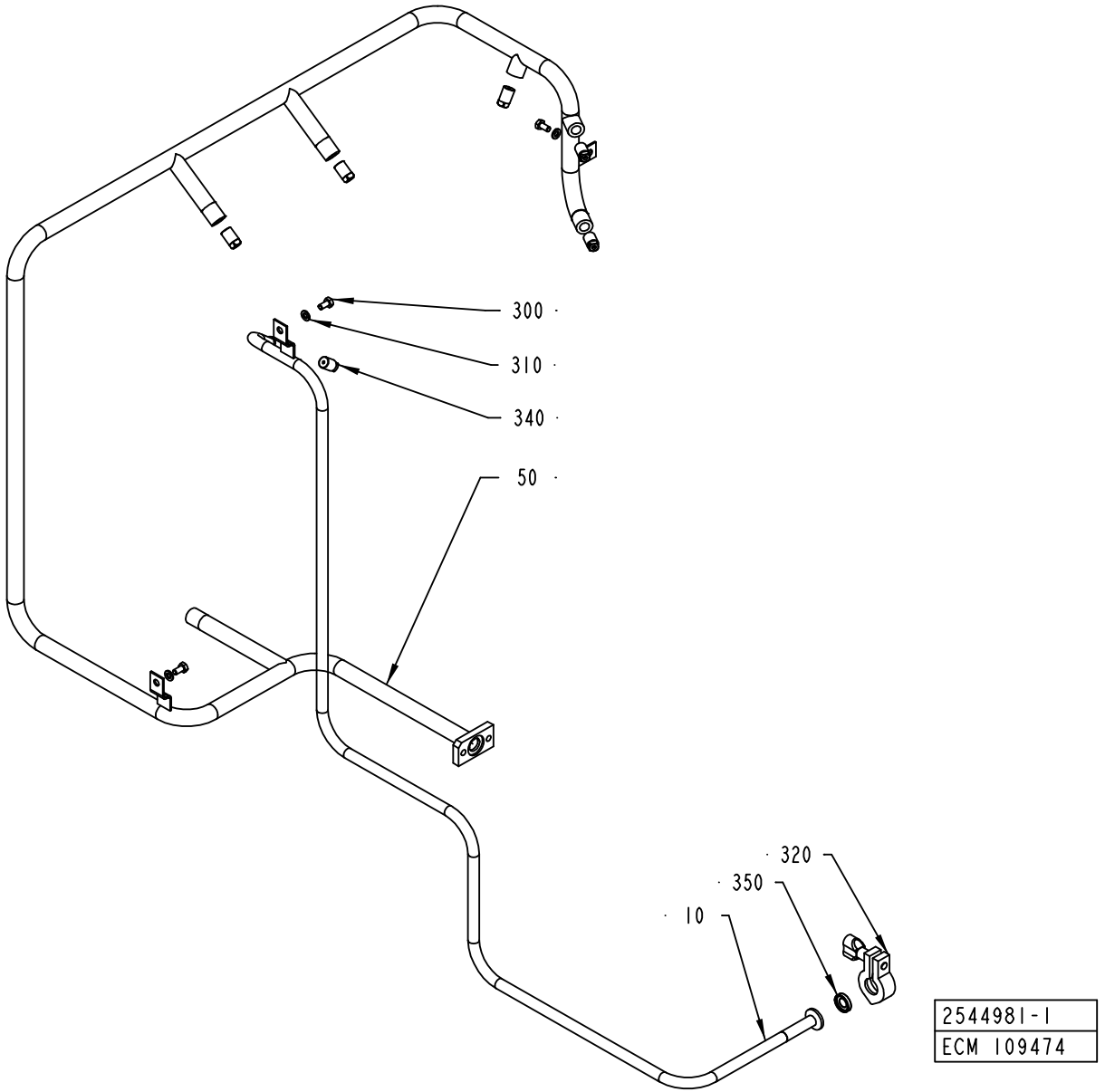
300
310
340
50
320
350
10
2544981-1
ECM 109474

ECM: 110049 - 20030113
Group number: 2544981-0100
Assembly Drawing: 2544981-1_1_AA

Pos	Part No	UN	Qty	Description	Page No
-					
010	1517510-0000		1	PIPE	
050	2544979-0000		1	PIPE	
300	312105-0366		3	SCREW M6S ISO 4017 M6X12 A480	
310	315105-0153		3	WASHER BRB6,4X12RFR	
320	342840-0101		1	CLAMP, 12,7 AND 19,1 MM 3-A PCS+PMCS	
340	90424-0070		6	SPRAY NOZZLE 61 DEG	
350	342850-0101		1	GASKET, FDA, 3-A, 1/2	

Pos	Part No	UN	Qty	Description	Page No

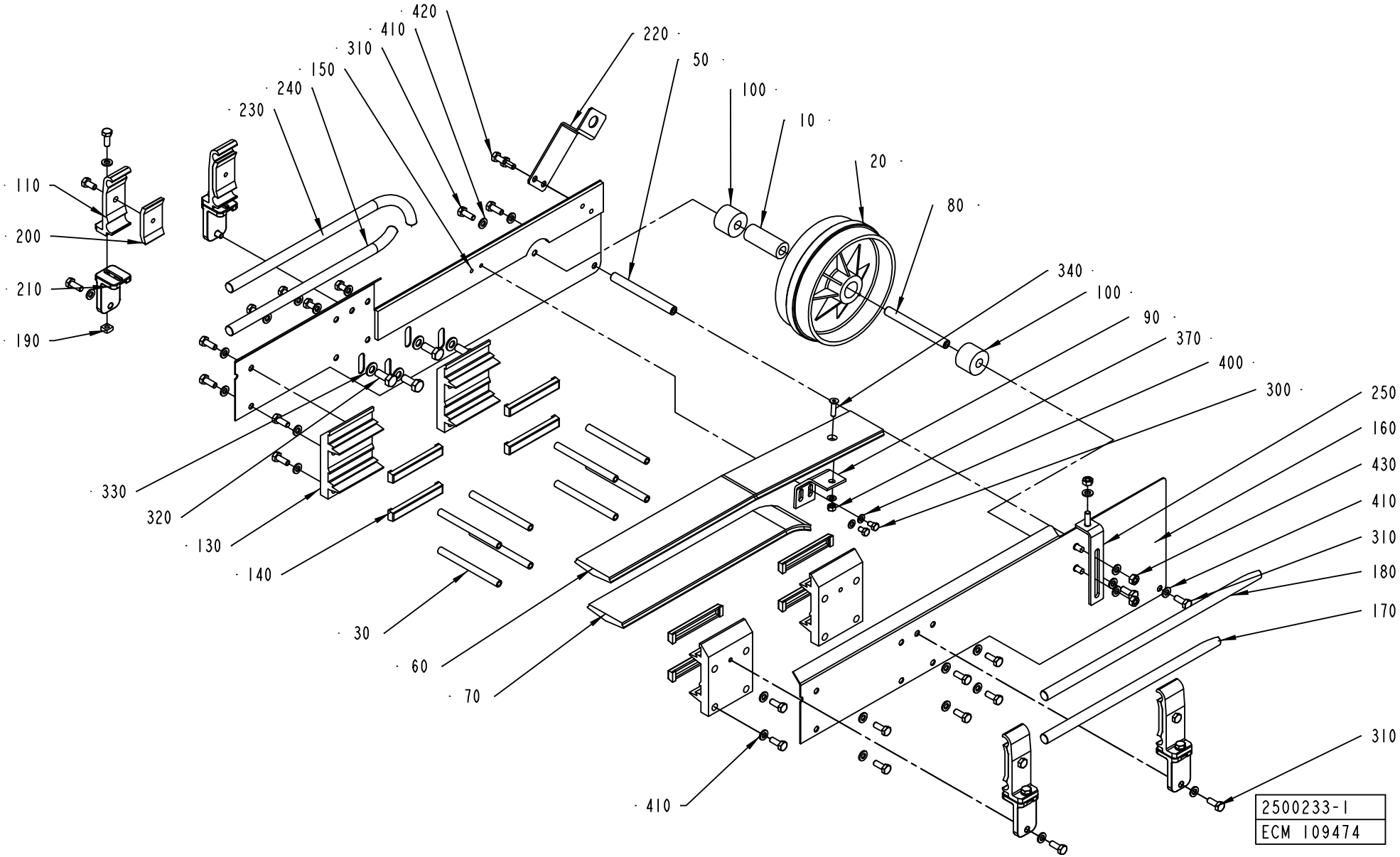
420
410
310
150
240
230
220
50
100
10
20
80
110
200
210
190
340
100
90
370
400
300
250
160
430
410
310
180
170
330
320
130
140
30
60
70
410
310
2500233-1
ECM 109474

ECM: 117953 - 20030801
Group number: 2500233-0100
Assembly Drawing: 2500233-1_1_AB

Pos	Part No	UN	Qty	Description	Page No
-					
010	229207-0000		1	BEARING SLEEVE	
020	245039-0000		1	GUIDE WHEEL	
030	476220-0000		8	SPACER	
050	1091683-0000		1	SPACER	
060	1091684-0000		1	RAIL	
070	1091685-0000		1	RAIL	
080	1091686-0000		1	SPACER	
090	1091719-0000		1	BRACKET	
100	1144943-0000		2	SPACER	
110	1366726-0000		4	HOLDER	
130	457696-0001		4	JOINT PIECE	
140	466074-0002		8	SLIDER	
150	2500234-0000		1	PLATE	
160	2500235-0000		1	PLATE	
170	2500236-0000		1	RAIL	
180	2500237-0000		1	RAIL	
190	1359565-0000		4	NUT	
200	1366727-0000		4	CLAMP	
210	2559121-0000		4	BRACKET	
220	2511668-0000		1	SUPPORT	
230	2518102-0000		1	RAIL	
240	2518103-0000		1	RAIL	
250	2546226-0000		1	SUPPORT	
300	312105-0323		2	SCREW M6S ISO 4017 M5X8 A480	
310	312105-0368		26	SCREW M6S ISO 4017 M6X16 A480	
320	312105-0447		4	SCREW M6S ISO 4017 M8X12 A480	
330	315105-0165		4	WASHER BRB8,4X16RFR	
340	312155-0331		1	SCREW EN 10642 MF6S M5X20 A480	
370	312605-0314		1	HEXAGON NUT, M6M M5 A280	
400	315105-0146		3	WASHER BRB5,3X10RFR	
410	315105-0153		33	WASHER BRB6,4X12RFR	
420	312105-0366		8	SCREW M6S ISO 4017 M6X12 A480	
430	312605-0316		3	HEXAGON NUT, M6M M6 A280	

Pos	Part No	UN	Qty	Description	Page No

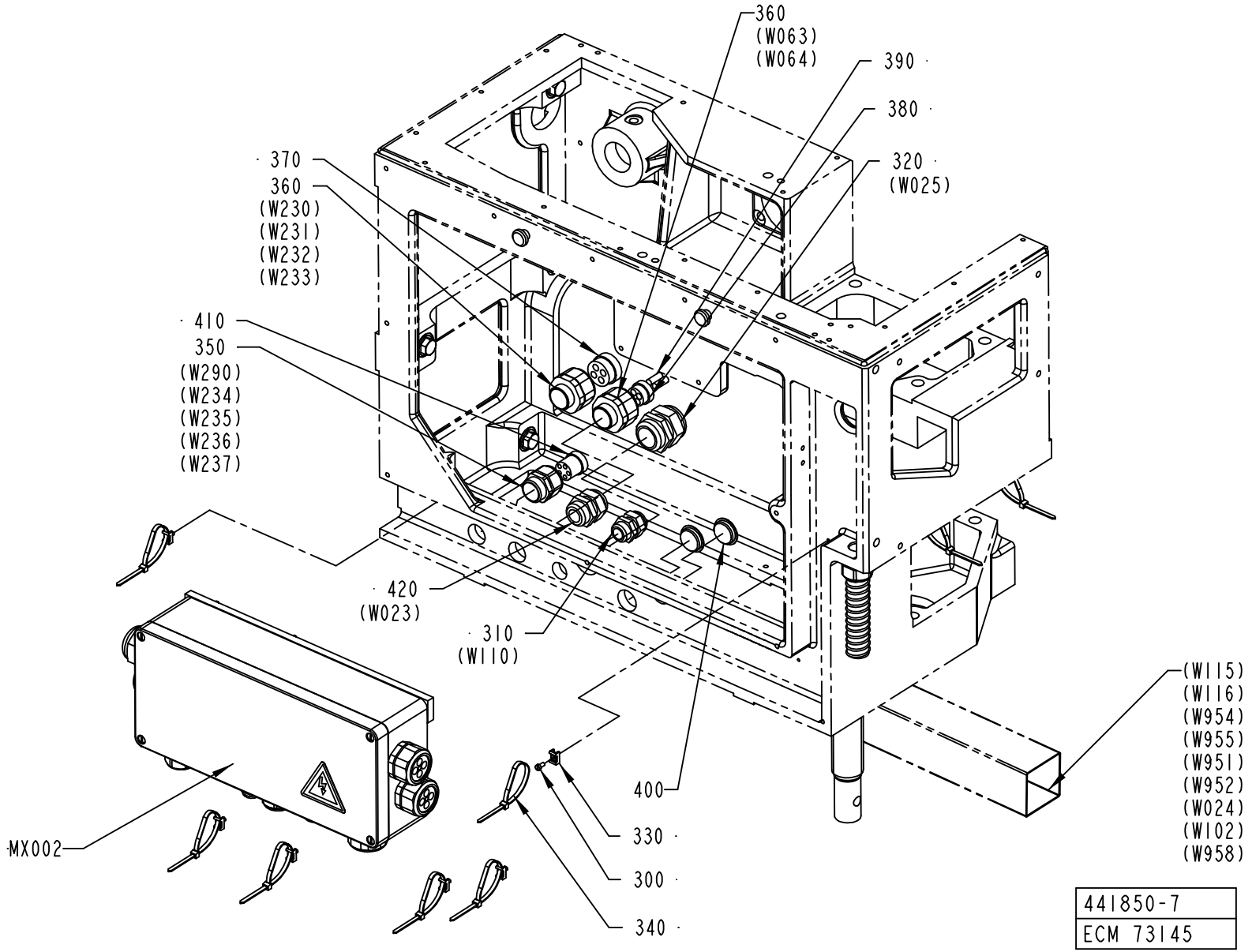
360
(W063)
(W064)
390
380
320
(W025)
370
360
(W230)
(W231)
(W232)
(W233)
410
350
(W290)
(W234)
(W235)
(W236)
(W237)
420
(W023)
310
(W110)
(W115)
(W116)
(W954)
(W955)
(W951)
(W952)
(W024)
(W102)
(W958)
400
330
300
340
MX002
441850-7
ECM 73145

ECM: 96554 - 20020109
Group number: 441850-0700
Assembly Drawing: 441850-7_1_AA

Pos	Part No	UN	Qty	Description	Page No
-					
300	312125-0287		8	SCREW ISO 1207 M4X8 A4	
310	352103-0111		1	CABLE GLAND, ST 16, PR22,5/PG16	
320	352103-0121		1	CABLE GLAND, ST 29, PR37,0/PG29	
330	352113-0205		8	ANCHOR PLATES FOR STRIPS, TYPE TM2S8-C10	
340	352113-0102		8	CLIP-STRIP, BLACK 188X4,8 MM	
350	353240-0005		1	NORMAL WITHOUT INSERT, PG 21	
360	353241-0003		2	EXTENDED WITHOUT INSERT, PG 21	
370	353249-0037		1	INSERT, MULTI HOLE, EK155M4X8	
380	353249-0084		1	INSERT, MULTI HOLE, EK 154M4X7,5	
390	353249-0307		2	SEALING PIN, 7,5X20	
400	90002-0012		2	BLANK-OFF PLUG, PR 28,3 SKINDICHT-BLK21	
410	90457-0028		1	INSERT, MULTI HOLE, E154M5X5	
420	352103-0115		1	CABLE GLAND, STR 21, PR28,3/PG21	
MX002	2506331-0200		1	CONNECTION BOX	**5-59, 5-61**

Pos	Part No	UN	Qty	Description	Page No

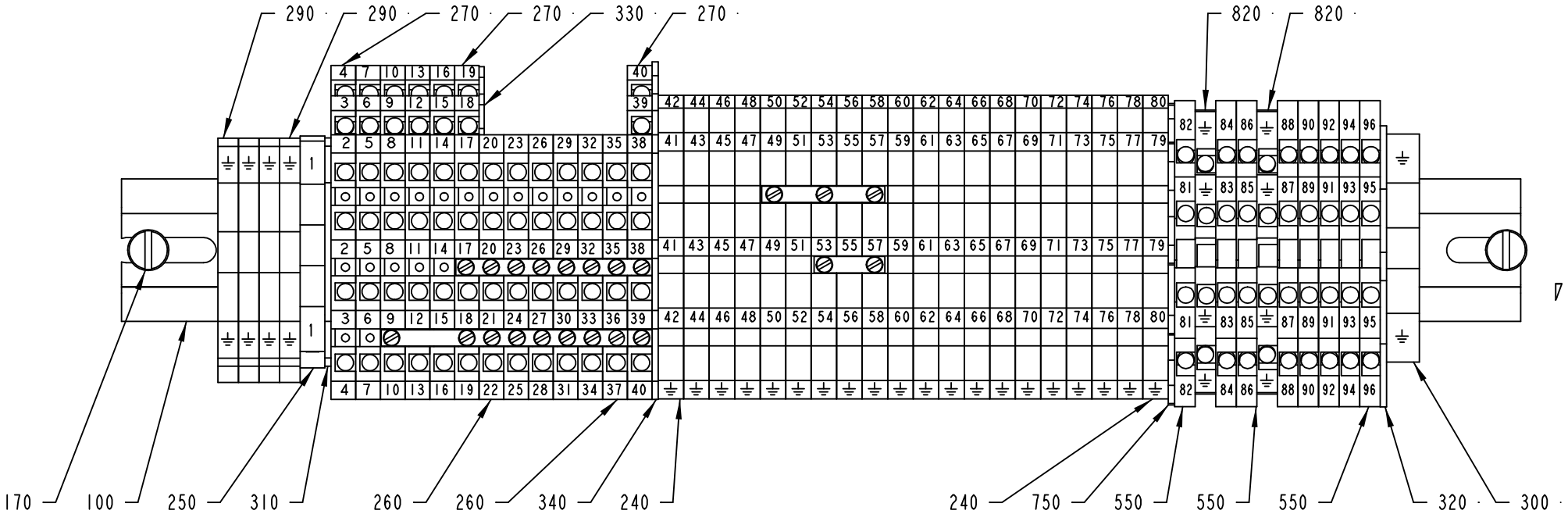

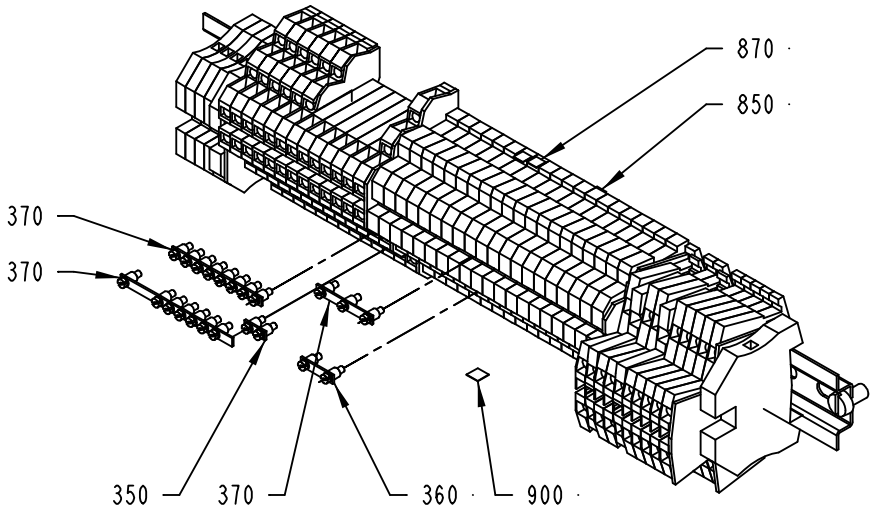

MX002

2506331-1
ECN 93276

ECM: 94021 - 20020109
Group number: 2506331-0200
Assembly Drawing: 2506331-1_1_AA

This list covers pages from 5-58 to 5-61

Pos	Part No	UN	Qty	Description	Page No
-					
0010	1255874-0000		1	SPACER	
0030	2506332-0000		1	BOX	
0100	353042-0005	MM	340	RAIL TS 35/7.5	
0130	312115-0366		2	SCREW ISO4762 M6X12 A4	
0140	312115-0372		2	SCREW ISO4762 M6X25 A4	
0170	312125-0364		2	SCREW ISO 1207 M6X10 A4	
0200	352103-0106		1	CABLE GLAND, ST 11, PR18,6/PG11	
0210	352103-0121		1	CABLE GLAND, ST 29, PR37,0/PG29	
0240	353021-0132		20	TERMINALS,TRIPLE-LEVEL, DLD 2,5/PE	
0250	353021-0213		1	FEED THROUGH TERMINAL, 10201.0	
0260	353021-0301		6	TERMINALS,TRIPLE-LEVEL, DLI 2,5/35 PA	
0270	353021-0302		7	TERMINALS,TRIPLE-LEVEL, DLD 2,5/35 PA	
0290	353024-0204		4	EARTH TERMINAL WPE 2,5	
0300	353024-0206		1	EARTH TERMINAL, 1010.2	
0310	353032-0004		1	END PLATE WAP 2,5-10 BEIGE	
0320	353032-0009		1	END PLATE, WAP FOR WDK	
0330	353032-0013		1	END PLATE, 13818.6	
0340	353032-0302		1	END PLATE WAP	
0350	353034-0401		1	BRIDGE CONNECTOR Q2, 13125.0	
0360	353034-0402		1	BRIDGE CONNECTOR Q3, 13126.0	
0370	353034-0404		3	BRIDGE CONNECTOR Q10, 13131.0	
0385	353240-0004		2	NORMAL WITHOUT INSERT, PG 16	
0390	353240-0005		3	NORMAL WITHOUT INSERT, PG 21	
0400	353240-0006		4	SCREW CAP PG 29	
0420	353241-0005		1	EXTENDED WITHOUT INSERT, PG 13,5	
0430	353241-0007		1	EXTENDED WITHOUT INSERT, PG 16/21	
0460	90458-0147		1	GLAND, INSERT, MULTI HOLE, 2X6,5	
0470	353249-0051		1	INSERT, MULTI HOLE, E154M4X8	
0480	353249-0059		1	GLAND, INSERT, MULTI HOLE, 4X8	
0490	353249-0060		1	INSERT, MULTI HOLE, E155M2X13	
0500	353249-0084		1	INSERT, MULTI HOLE, EK 154M4X7,5	
0550	90077-0113		8	FEED THROUGH TERMINAL, 10-00102150-1	
0600	90194-0016		1	WARNING SIGN, RISK OF ELECTRIC SHOCK	
0650	90457-0027		2	INSERT, MULTI HOLE, E155M1X5/4X9	
0700	90457-0030		1	INSERT, MULTI HOLE, EK155M4X9	
0750	90457-0051		1	END PLATE	
0820	90458-1136		2	TERMINAL BLOCK, 103630	
0830	90458-1906		2	GLAND, INSERT, MULTI HOLE, 4X5	
0850	359011-0807		2	MARKING PLATES 5-FW 1-50	
0870	359011-0808		2	MARKING PLATES 5-FW 51-100	
0900	359011-0818		1	SYMBOL 5-GW (-) 50PC	
1000	353249-0304		3	SEALING PIN, 6X25	
1010	353249-0308		2	SEALING PIN, 8X20	
1020	353249-0309		1	SEALING PIN, 9,3X20	
1070	90002-0004		1	BLANK-OFF PLUG, PR 22,5 SKINDICHT-BLK16	
1080	90002-0009		1	BLANK-OFF PLUG, PR 18.6 SKINDICHT-BLK11	
1090	90002-0010		1	BLANK-OFF PLUG, PR 37 SKINDICHT-BLK29	

Machine Type	Group Description	Used-In	Group Number	Page No

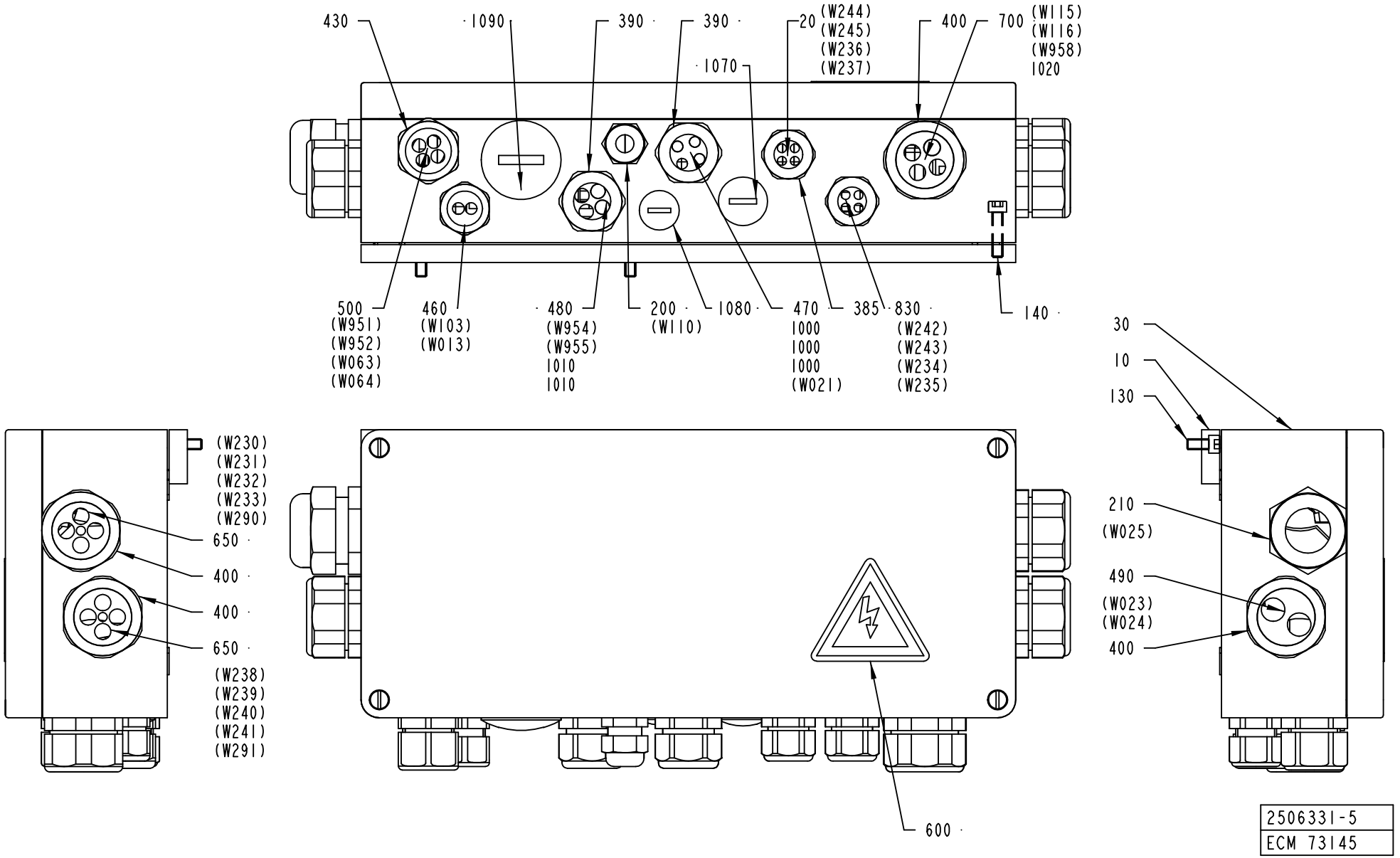
430
1090
390
390
1070
20 (W244) (W245) (W236) (W237)
400
700 (W115) (W116) (W958) 1020
500 (W951) (W952) (W063) (W064)
460 (W103) (W013)
480 (W954) (W955) 1010 1010
200 (W110)
1080
470 1000 1000 1000 (W021)
385
830 (W242) (W243) (W234) (W235)
140
(W230) (W231) (W232) (W233) (W290)
650
400
400
650
(W238) (W239) (W240) (W241) (W291)
600
30
10
130
210 (W025)
490 (W023) (W024)
400
2506331-5
ECM 73145

ECM: 94021 - 20020109
Group number: 2506331-0200
Assembly Drawing: 2506331-5_1_AA

This list covers pages from 5-58 to 5-61

Pos	Part No	UN	Qty	Description	Page No
-					
0010	1255874-0000		1	SPACER	
0030	2506332-0000		1	BOX	
0100	353042-0005	MM	340	RAIL TS 35/7.5	
0130	312115-0366		2	SCREW ISO4762 M6X12 A4	
0140	312115-0372		2	SCREW ISO4762 M6X25 A4	
0170	312125-0364		2	SCREW ISO 1207 M6X10 A4	
0200	352103-0106		1	CABLE GLAND, ST 11, PR18,6/PG11	
0210	352103-0121		1	CABLE GLAND, ST 29, PR37,0/PG29	
0240	353021-0132		20	TERMINALS,TRIPLE-LEVEL, DLD 2,5/PE	
0250	353021-0213		1	FEED THROUGH TERMINAL, 10201.0	
0260	353021-0301		6	TERMINALS,TRIPLE-LEVEL, DLI 2,5/35 PA	
0270	353021-0302		7	TERMINALS,TRIPLE-LEVEL, DLD 2,5/35 PA	
0290	353024-0204		4	EARTH TERMINAL WPE 2,5	
0300	353024-0206		1	EARTH TERMINAL, 1010.2	
0310	353032-0004		1	END PLATE WAP 2,5-10 BEIGE	
0320	353032-0009		1	END PLATE, WAP FOR WDK	
0330	353032-0013		1	END PLATE, 13818.6	
0340	353032-0302		1	END PLATE WAP	
0350	353034-0401		1	BRIDGE CONNECTOR Q2, 13125.0	
0360	353034-0402		1	BRIDGE CONNECTOR Q3, 13126.0	
0370	353034-0404		3	BRIDGE CONNECTOR Q10, 13131.0	
0385	353240-0004		2	NORMAL WITHOUT INSERT, PG 16	
0390	353240-0005		3	NORMAL WITHOUT INSERT, PG 21	
0400	353240-0006		4	SCREW CAP PG 29	
0420	353241-0005		1	EXTENDED WITHOUT INSERT, PG 13,5	
0430	353241-0007		1	EXTENDED WITHOUT INSERT, PG 16/21	
0460	90458-0147		1	GLAND, INSERT, MULTI HOLE, 2X6,5	
0470	353249-0051		1	INSERT, MULTI HOLE, E154M4X8	
0480	353249-0059		1	GLAND, INSERT, MULTI HOLE, 4X8	
0490	353249-0060		1	INSERT, MULTI HOLE, E155M2X13	
0500	353249-0084		1	INSERT, MULTI HOLE, EK 154M4X7,5	
0550	90077-0113		8	FEED THROUGH TERMINAL, 10-00102150-1	
0600	90194-0016		1	WARNING SIGN, RISK OF ELECTRIC SHOCK	
0650	90457-0027		2	INSERT, MULTI HOLE, E155M1X5/4X9	
0700	90457-0030		1	INSERT, MULTI HOLE, EK155M4X9	
0750	90457-0051		1	END PLATE	
0820	90458-1136		2	TERMINAL BLOCK, 103630	
0830	90458-1906		2	GLAND, INSERT, MULTI HOLE, 4X5	
0850	359011-0807		2	MARKING PLATES 5-FW 1-50	
0870	359011-0808		2	MARKING PLATES 5-FW 51-100	
0900	359011-0818		1	SYMBOL 5-GW (-) 50PC	
1000	353249-0304		3	SEALING PIN, 6X25	
1010	353249-0308		2	SEALING PIN, 8X20	
1020	353249-0309		1	SEALING PIN, 9,3X20	
1070	90002-0004		1	BLANK-OFF PLUG, PR 22,5 SKINDICHT-BLK16	
1080	90002-0009		1	BLANK-OFF PLUG, PR 18.6 SKINDICHT-BLK11	
1090	90002-0010		1	BLANK-OFF PLUG, PR 37 SKINDICHT-BLK29	

Machine Type	Group Description	Used-In	Group Number	Page No

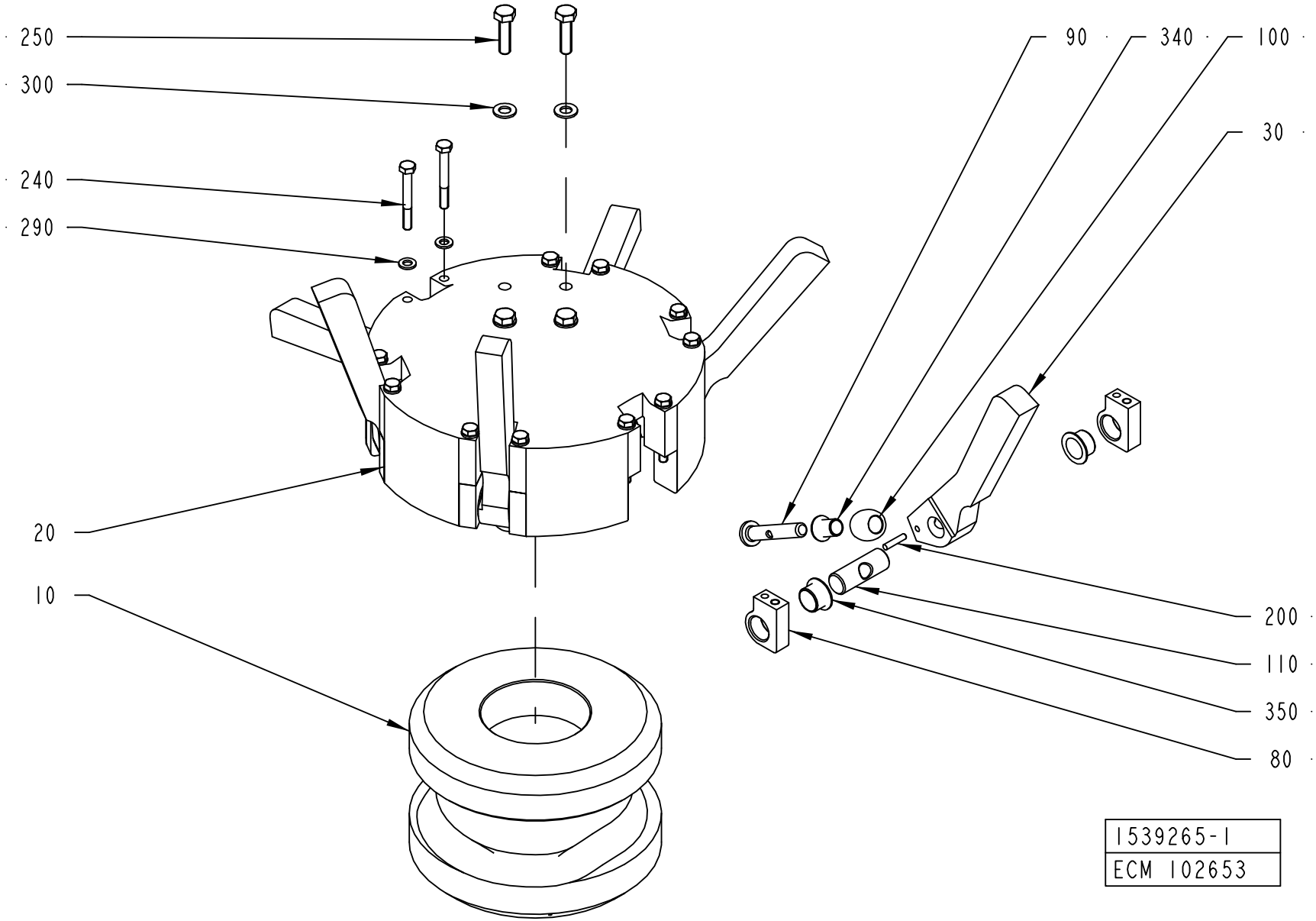
250
300
240
290
20
10
90
340
100
30
200
110
350
80
1539265-1
ECM 102653

ECM: 113965 - 20030113
Group number: 1539265-0100
Assembly Drawing: 1539265-1_1_AA

Pos	Part No	UN	Qty	Description	Page No
TBA 0100B					
030	1549186-0000		6	CARRIER	
TBA 0125S					
030	1549184-0000		6	CARRIER	
TBA 0160S					
030	2502192-0000		6	CARRIER	
TBA 0180B					
030	1549193-0000		6	CARRIER	
TBA 0200B					
030	1549183-0000		6	CARRIER	
TBA 0200M					
030	1549190-0000		6	CARRIER	
TBA 0200S					
030	1549182-0000		6	CARRIER	
TBA 0250B					
030	1549187-0000		6	CARRIER	
TBA 0250S					
030	1539268-0000		6	CARRIER	
TBA 0300S, TBA 0284B					
030	2502194-0000		6	CARRIER	
TBA 0330S					
030	1549191-0000		6	CARRIER	
Common Parts					
010	1539266-0000		1	CAM	
020	1539267-0000		1	DRUM	
080	1260065-0000		12	BRACKET	
090	1260068-0000		6	SHAFT	
100	1260069-0000		6	ROLLER	
110	1260070-0000		6	SHAFT	
200	311103-0272		6	PARALLEL PIN ISO 2338 4M6X20 A1	
240	312105-0380		12	SCREW M6S ISO 4014 M6X50 A480	
250	312105-0455		4	SCREW M6S ISO 4017 M8X30 A480	
290	315105-0153		12	WASHER BRB6,4X12RFR	
300	315105-0165		4	WASHER BRB8,4X16RFR	
340	90240-0331		6	FLANGE BUSHING, 10X12X17 MM	
350	90240-0332		12	FLANGE BUSHING, 16X18X12 MM	

Pos	Part No	UN	Qty	Description	Page No

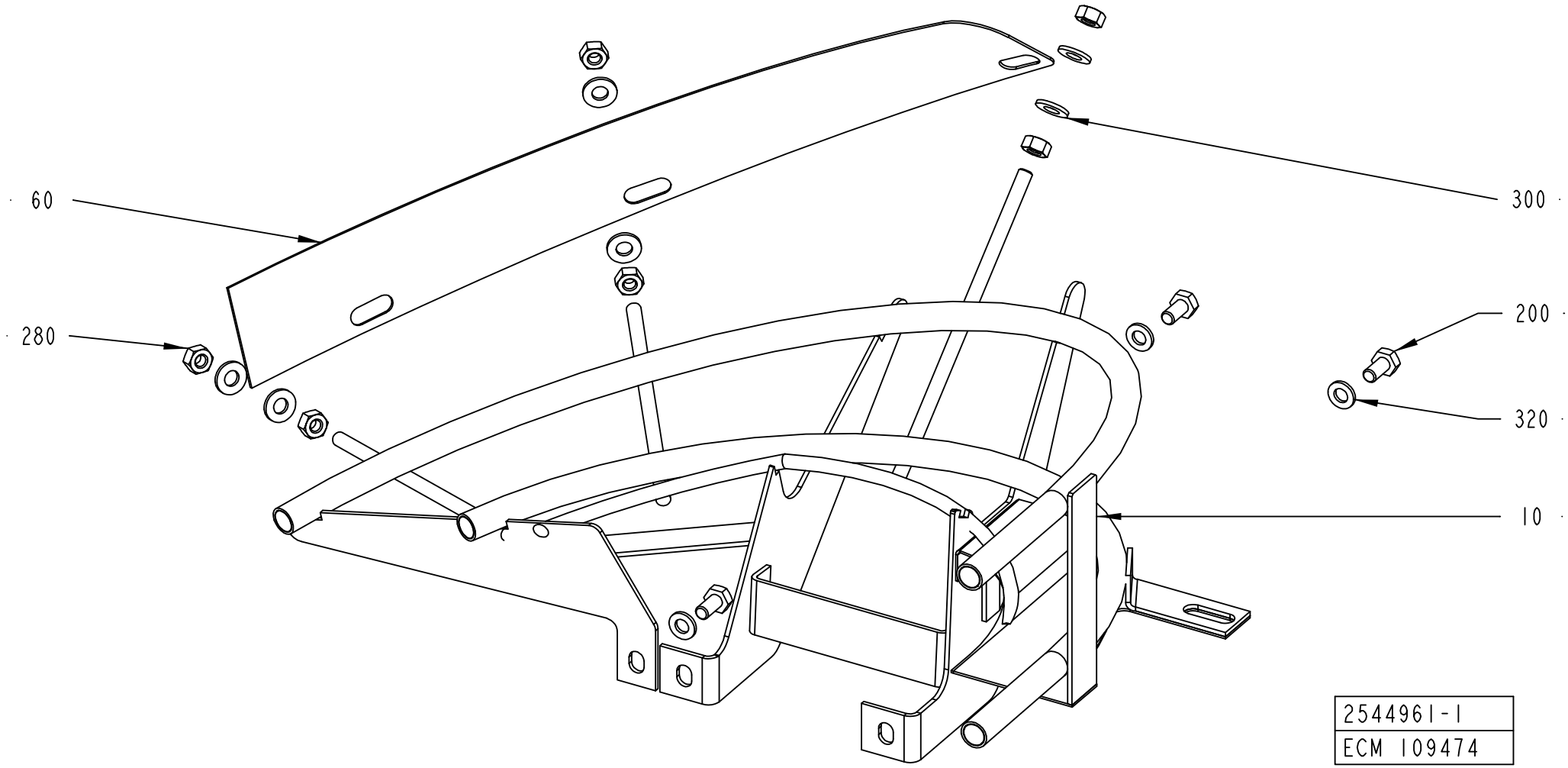
60
280
300
200
320
10
2544961-1
ECM 109474

ECM: 110050 - 20030113
Group number: 2544961-0100
Assembly Drawing: 2544961-1_1_AA

Pos	Part No	UN	Qty	Description	Page No
TBA 0100B					
010	2555564-0000		1	GUIDE	
TBA 0125S					
010	2555563-0000		1	GUIDE	
TBA 0160S					
010	2555568-0000		1	GUIDE	
TBA 0180B					
010	2555567-0000		1	GUIDE	
TBA 0200B					
010	2555562-0000		1	GUIDE	
TBA 0200M					
010	2555571-0000		1	GUIDE	
TBA 0200S					
010	2545667-0000		1	GUIDE	
TBA 0250B					
010	2555565-0000		1	GUIDE	
TBA 0300S, TBA 0284B					
010	2555569-0000		1	GUIDE	
TBA 0330S, TBA 0250S					
010	2555566-0000		1	GUIDE	
Common Parts					
060	1539956-0000		1	PLATE	
200	312105-0366		3	SCREW M6S ISO 4017 M6X12 A480	
280	312605-0316		6	HEXAGON NUT, M6M M6 A280	
300	315105-0156		6	WASHER BRB 6.7X14 RFR	
320	315105-0153		3	WASHER BRB6,4X12RFR	

Pos	Part No	UN	Qty	Description	Page No

TRASMISSION UNIT

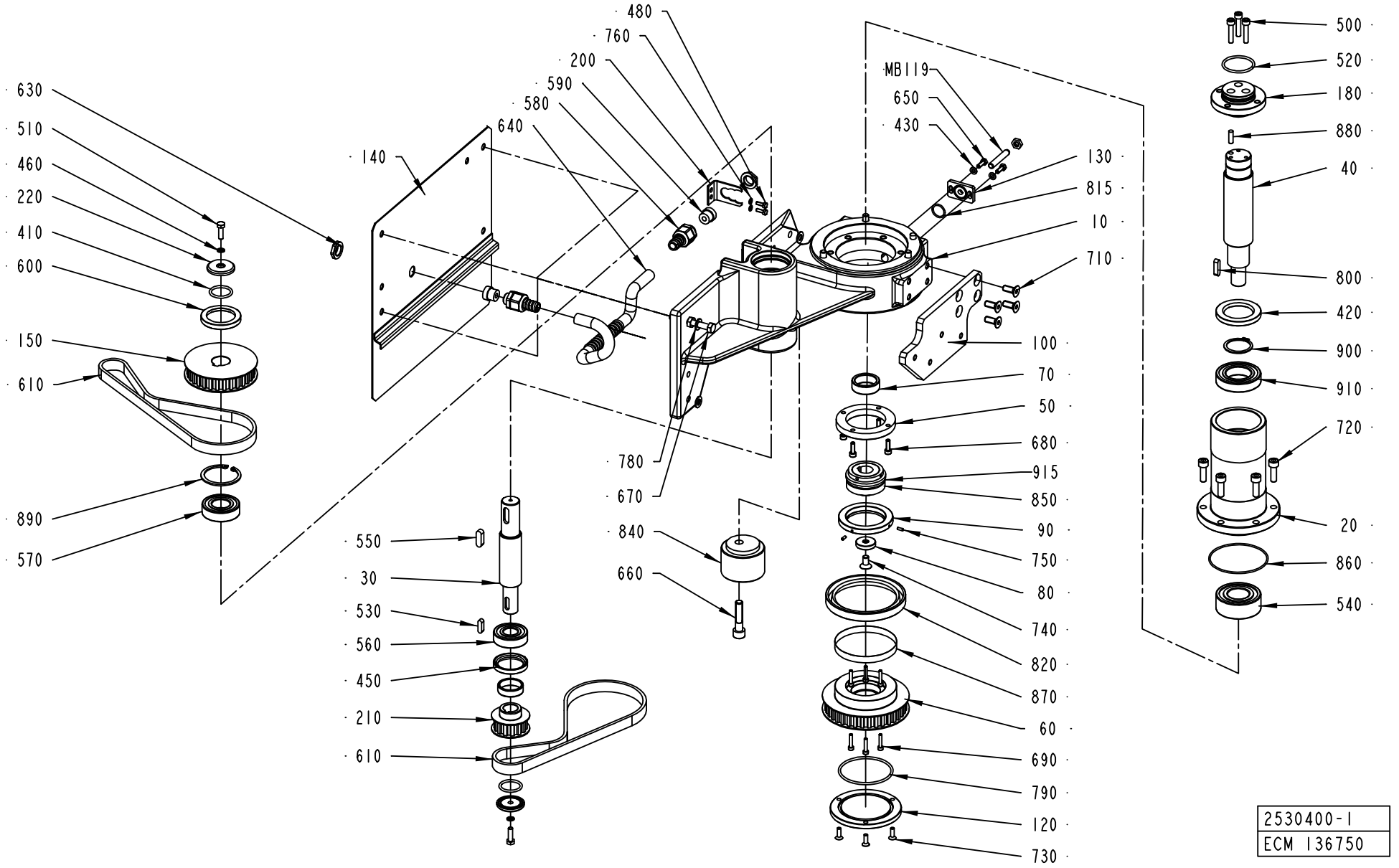

2530400-1
ECM 136750

ECM: 136750 - 20040901
Group number: 2530400-0100
Assembly Drawing: 2530400-1_1_AB

Pos	Part No	UN	Qty	Description	Page No
-					
010	2544957-0000		1	AXLE SUPPORT	
020	2544958-0000		1	BEARING FLANGE	
030	2544962-0000		1	SHAFT	
040	2544963-0000		1	SHAFT	
050	2544964-0000		1	FLANGE	
060	2544965-0000		1	TOOTHED PULLEY	
070	2544968-0000		1	INNER RING	
080	2544969-0000		1	SPACER	
090	2544970-0000		1	FLANGE	
100	2544971-0000		1	BRACKET	
120	2544973-0000		1	CUP	
130	2544974-0000		1	BLANK PLUG	
140	2544975-0000		1	SHEET	
150	1539260-0000		1	TOOTHED PULLEY	
180	2559122-0000		1	FLANGE	
200	977527-0000		1	BRACKET	
210	1539256-0000		1	TOOTHED PULLEY	
220	1539261-0000		3	WASHER	
410	315202-0218		3	O-RING 26,2X3 MM	
420	315221-0185		1	RADIAL SEAL 40X62X7 MM	
430	315105-0146		2	WASHER BRB5,3X10RFR	
450	315221-0175		1	RADIAL SEAL 35X47X7 MM	
460	315211-0103		2	BONDED SEAL SS/NBR90 M6	
480	312105-0291		2	SCREW M6S ISO 4017 M4X12 A470	
500	312115-0374		1	SCREW ISO4762 M6X30 A4	
510	312105-0370		2	SCREW M6S ISO 4017 M6X20 A480	
520	315202-0223		1	O-RING 39,2X3 MM	
530	315705-0232		1	PARALLEL KEY W. ROUND ENDS 6X6X20 MM	
540	321330-0106		1	ANG. BALL BEAR, 30X62X23,8 MM	
550	315705-0265		1	PARALLEL KEY W. ROUND ENDS 8X7X25 MM	
560	321309-0104		1	BALL BEARING, 20X47X14 MM	
570	321309-0105		1	BALL BEARING, 25X52X15 MM	
580	90458-0427		2	EXTENDED WITHOUT INSERT, M16X1,5	
590	353249-0008		2	INSERT, SINGEL HOLE, EK 152/7	
600	90091-0305		1	RADIAL SEAL 40X55X7 MM DUST LIP	
610	90417-0292		2	TIMING BELT T10X690X16 POLYURETHANE	
630	90458-0322		2	NUT, M16X1,5	
640	90152-0058	M	1	SPIRAL CONDUIT, 15X9, UL 0909	
650	312105-0328		2	SCREW M6S ISO 4017 M5X14 A480	
660	312115-0500		1	SCREW ISO4762 M10X45 A4	
670	312105-0455		4	SCREW M6S ISO 4017 M8X30 A480	
680	312115-0329		4	SCREW ISO4762 M5X16 A4	
690	312115-0295		6	SCREW ISO4762 M4X20 A4	
700	312115-0374		2	SCREW ISO4762 M6X30 A4	
710	312155-0451		4	SCREW EN 10642 MF6S M8X20 A480	
720	312115-0453		9	SCREW ISO4762 M8X25 A4	
730	312155-0329		3	SCREW EN 10642 MF6S M5X16 A480	
740	312155-0449		1	SCREW EN 10642 MF6S M8X16 A480	
750	312318-0222		2	SCREW ISO4029 M3X8 A4	
760	315101-0136		2	WASHER BRB, 4,3/8 H=0,8	
780	315105-0165		4	WASHER BRB8,4X16RFR	
790	315202-0305		1	O-RING 69,5X3 MM	
800	315701-0234		1	PARALLEL KEY W. ROUND ENDS 6X6X25 MM	
815	315205-0705		1	O-RING 17,17X1,78 MM	
820	90091-0233		1	RADIAL SEAL 85X110X12 MM DUST LIP	
840	90458-0220		1	TENSION ROLLER, M40/60-0-M EXCENTRIC	
850	90459-0737		1	SAFETY CLUTCH, SK1 15/D/20/5-20	
860	90459-0765		1	O-RING 78X2 MM	
870	90459-0766		1	SLEEVE, CR 99334	
880	311103-0353		1	PARALLEL PIN ISO 2338 6M6X20 A1	
890	315753-0132		1	RETAINING RING FOR BORE DIN 472 52 A2	
900	315751-0124		1	RETAINING RING FOR SHAFT DIN 471 35 A2	
910	321306-0107		1	BALL BEARING, 35X62X14 MM	
915	90296-0070	KG		GREASE	
MB119	90044-0117		1	PROX.SW. IX 0208	

Machine Type	Group Description	Used-In	Group Number	Page No

Tetra Pak

SPC
Spare Parts Catalogue

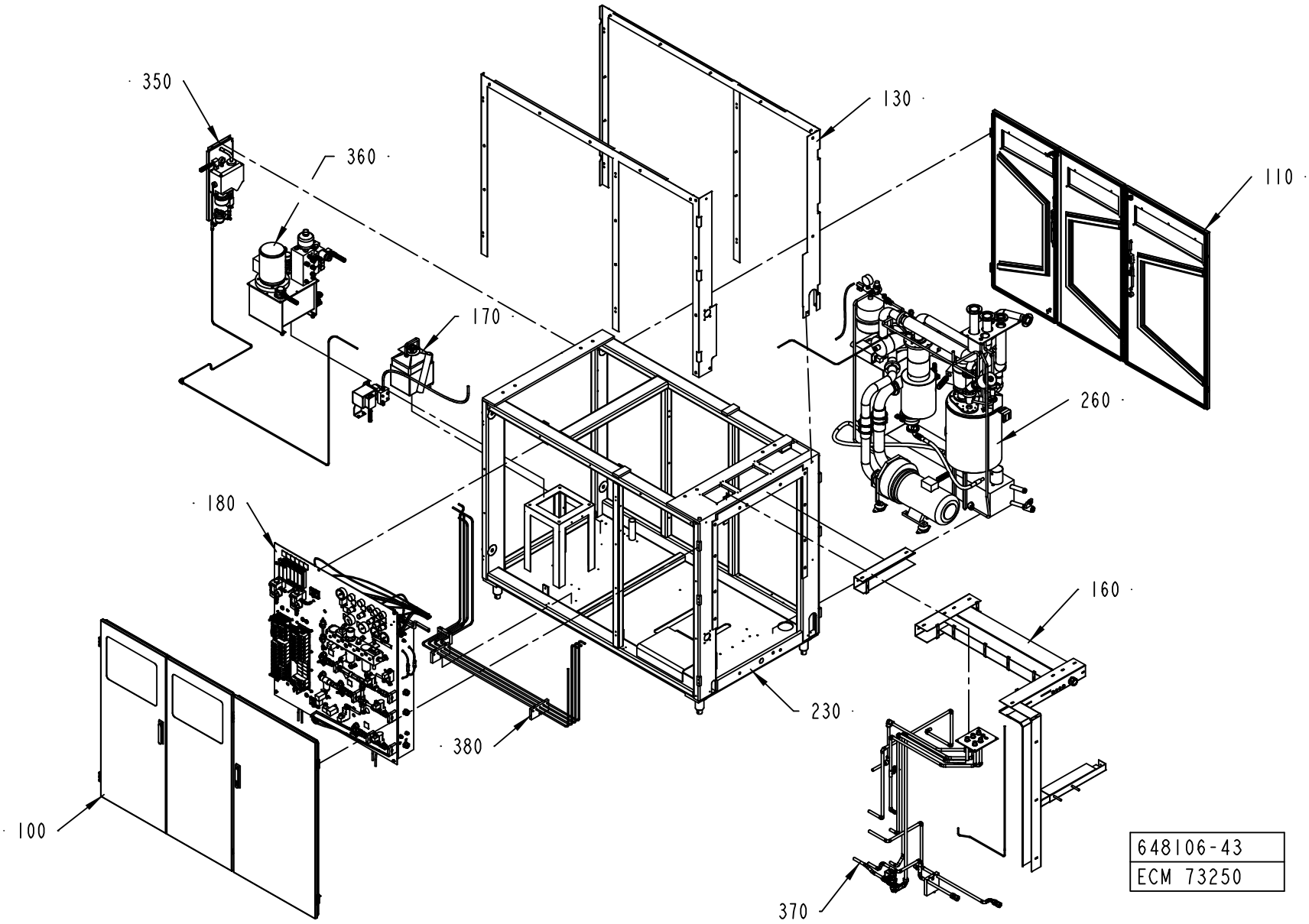
350
360
130
110
170
260
180
160
230
380
100
370
648106-43
ECM 73250

ECM: 73250 - 20011221
Group number: 648106-1200
Assembly Drawing: 648106-43_1_AA

Pos	Part No	UN	Qty	Description	Page No
-					
100	1350529-0100		1	DOORS LEFT SIDE	**6-5**
110	1350531-0100		1	DOORS RIGHT SIDE	**6-7**
130	979215-0200		1	COVER PLATE	**6-9**
160	1524319-0100		1	CABLE DUCT	**6-11**
170	490761-0200		1	DETERGENT PUMP	**6-13**
180	1349029-0100		1	VALVE PANEL	**6-15, 6-17, 6-19**
230	979216-0200		1	MACHINE BODY	**6-57**
260	978834-0200		1	PEROXID AND STERILESYSTEM	**6-59**
350	978823-0200		1	CENTRAL LUBRICATION	**6-89**
360	1512304-0100		1	HYDRAULIC SYSTEM	**6-91, 6-93**
370	1350184-0100		1	PIPE WORK,AIR WATER	**6-95**
380	1519663-0100		1	PIPE WORK-HYDRAULIC	**6-97**
600	469384-0100		1	START-UP KIT	**6-99**

Pos	Part No	UN	Qty	Description	Page No

DOORS LEFT SIDE

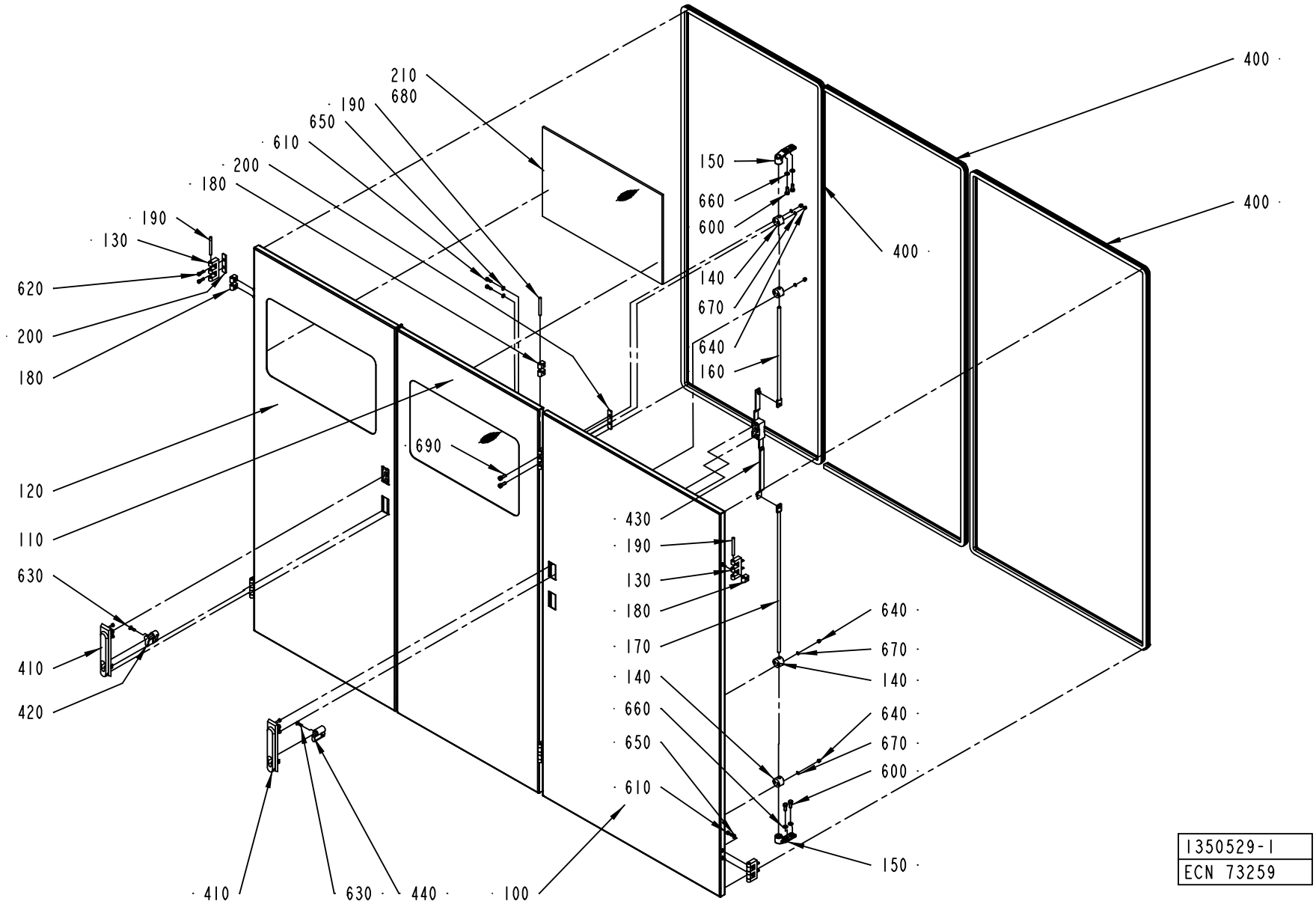

1350529-1
ECN 73259

ECM: 106562 - 20020313
Group number: 1350529-0100
Assembly Drawing: 1350529-1_1_AA

Pos	Part No	UN	Qty	Description	Page No
-					
100	1512826-0000		1	DOOR	
110	1512827-0000		1	DOOR	
120	1512828-0000		1	DOOR	
130	1035792-0000		6	E-HINGE	
140	1129274-0000		8	GUIDE LUG	
150	1538868-0000		4	BRACKET	
160	1511613-0000		2	LOCKING ARM	
170	1511614-0000		2	LOCKING ARM	
180	1035794-0000		11	BLOCKING PIECE	
190	988685-0000		6	PIN	
200	1517182-0000		4	SPACER	
210	2517063-0000		2	GLASS PANE	
400	90143-0068	M	9	RUBBERSTRIP EMKA 1011-06	
410	90237-0175		2	TURNING HANDLE	
420	90237-0128		1	LOCK CYLINDER, 1109-U3	
430	90237-0153		2	LOCK HOUSING, 1121-U26-0B	
440	90237-0129		1	LOCK CYLINDER, 1109-U6	
600	312105-0368		8	SCREW M6S M6X16 A280	
610	312115-0327		11	SCREW ISO4762 M5X12 A4	
620	312115-0329		8	SCREW ISO4762 M5X16 A4	
630	312155-0329		2	SCREW EN 10642 MF6S M5X16 A480	
640	312705-0312		16	NUT HEX. DOMED CAP MHM-6 M4 A280	
650	315105-0146		11	BRICKA BRB5,3X10RFR	
660	315105-0153		8	WASHER BRB6,4X12RFR	
670	315105-0136		16	WASHER BRB4,3XRFR	
680	90157-0041	ML	50	SEALING COMPOUND	
690	312115-0368		4	SCREW ISO4762 M6X16 A4	

Pos	Part No	UN	Qty	Description	Page No

DOORS RIGHT SIDE

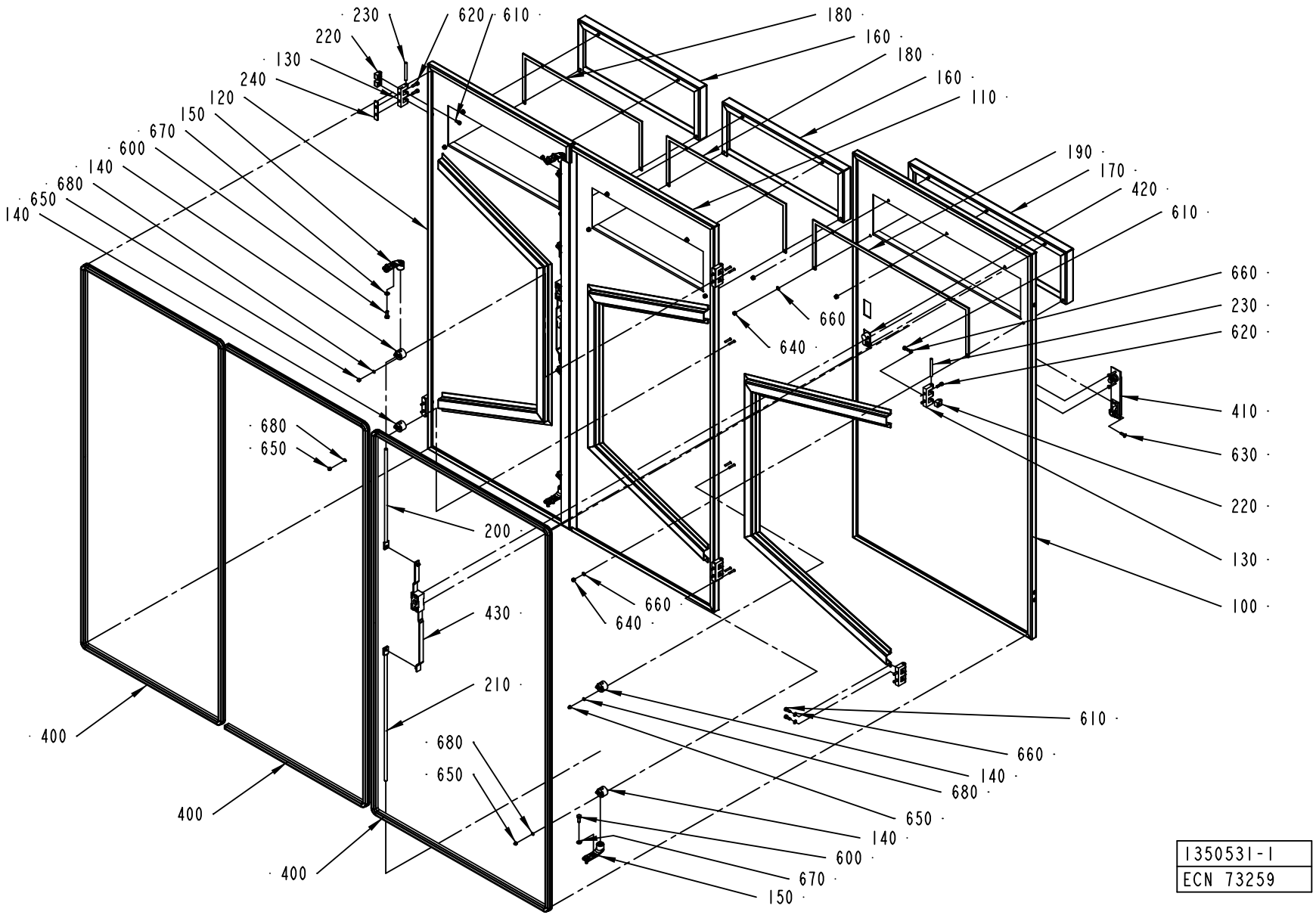

1350531-1
ECN 73259

ECM: 106563 - 20020313
Group number: 1350531-0100
Assembly Drawing: 1350531-1_1_AA

Pos	Part No	UN	Qty	Description	Page No
-					
100	1512829-0000		1	DOOR	
110	1512830-0000		1	DOOR	
120	1512831-0000		1	DOOR	
130	1035792-0000		6	E-HINGE	
140	1129274-0000		8	GUIDE LUG	
150	1538868-0000		4	BRACKET	
160	1511609-0000		2	COVER	
170	1511610-0000		1	COVER	
180	1511611-0000		2	GASKET	
190	1511612-0000		1	GASKET	
200	1511613-0000		2	LOCKING ARM	
210	1511681-0000		2	LOCKING ARM	
220	1035794-0000		11	BLOCKING PIECE	
230	988685-0000		6	PIN	
240	1517182-0000		4	SPACER	
400	90143-0068	M	9	RUBBERSTRIP EMKA 1011-06	
410	90237-0175		2	TURNING HANDLE	
420	90237-0128		2	LOCK CYLINDER, 1109-U3	
430	90237-0153		2	LOCK HOUSING, 1121-U26-0B	
600	312105-0368		8	SCREW M6S M6X16 A280	
610	312115-0327		11	SCREW ISO4762 M5X12 A4	
620	312115-0329		12	SCREW ISO4762 M5X16 A4	
630	312155-0329		2	SCREW EN 10642 MF6S M5X16 A480	
640	312605-0314		13	HEXAGON NUT, M6M M5 A280	
650	312705-0312		16	NUT HEX. DOMED CAP MHM-6 M4 A280	
660	315105-0146		24	BRICKA BRB5,3X10RFR	
670	315105-0153		8	WASHER BRB6,4X12RFR	
680	315105-0136		16	WASHER BRB4,3XRFR	

Pos	Part No	UN	Qty	Description	Page No

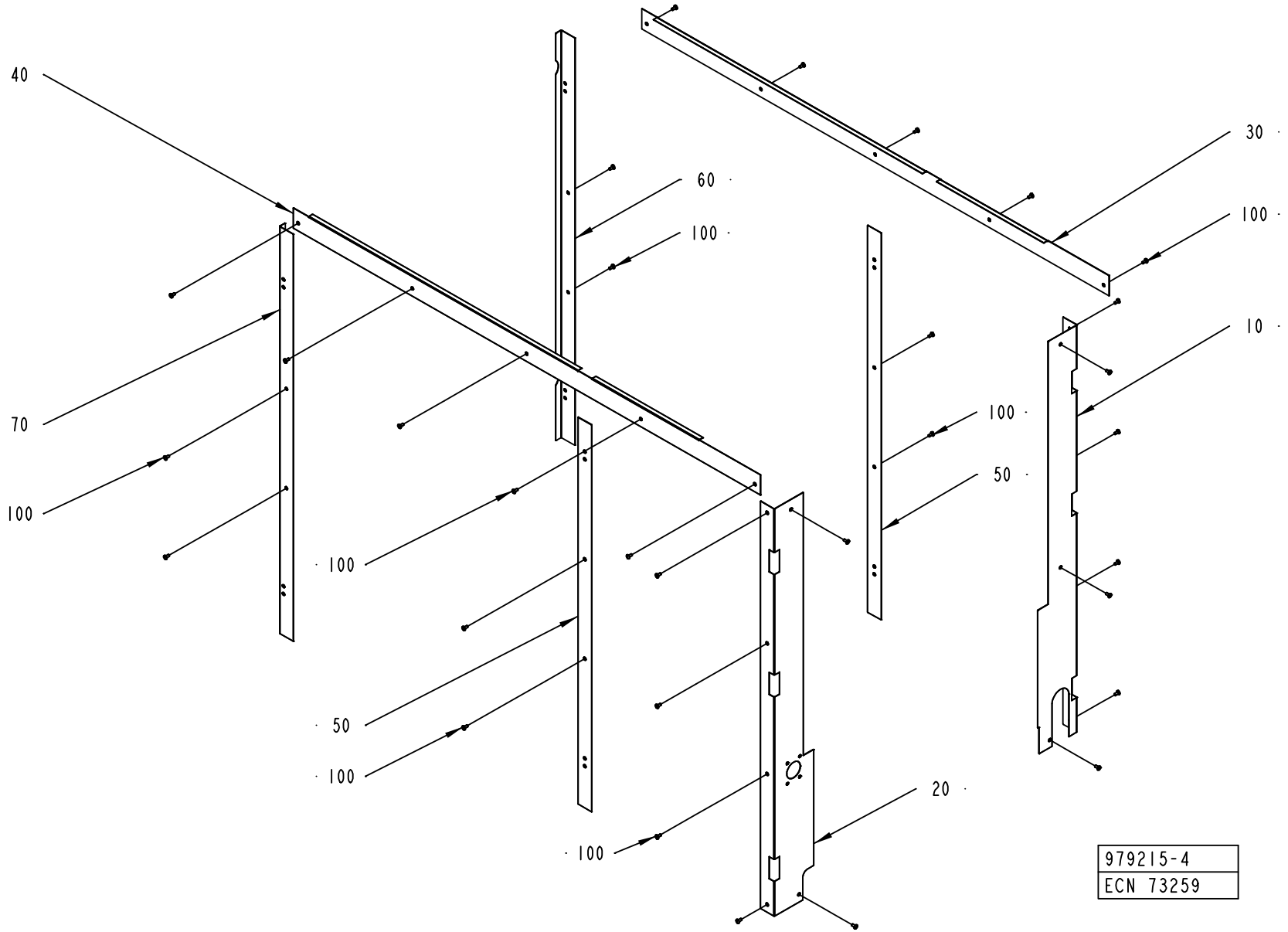
40
60
100
30
100
10
70
100
100
100
50
50
100
100
20
979215-4
ECN 73259

ECM: 73259 - 20011025
Group number: 979215-0200
Assembly Drawing: 979215-4_1_AA

Pos	Part No	UN	Qty	Description	Page No
-					
10	1538089-0000		1	PLATE	
100	90287-0075		31	SCREW SLOT. PAN HEAD LKCS M6X12	
20	1517072-0000		1	PLATE	
30	1517073-0000		1	PLATE	
40	1517074-0000		1	PLATE	
50	1517075-0000		2	PLATE	
60	1517076-0000		1	PLATE	
70	1517077-0000		1	PLATE	

Pos	Part No	UN	Qty	Description	Page No

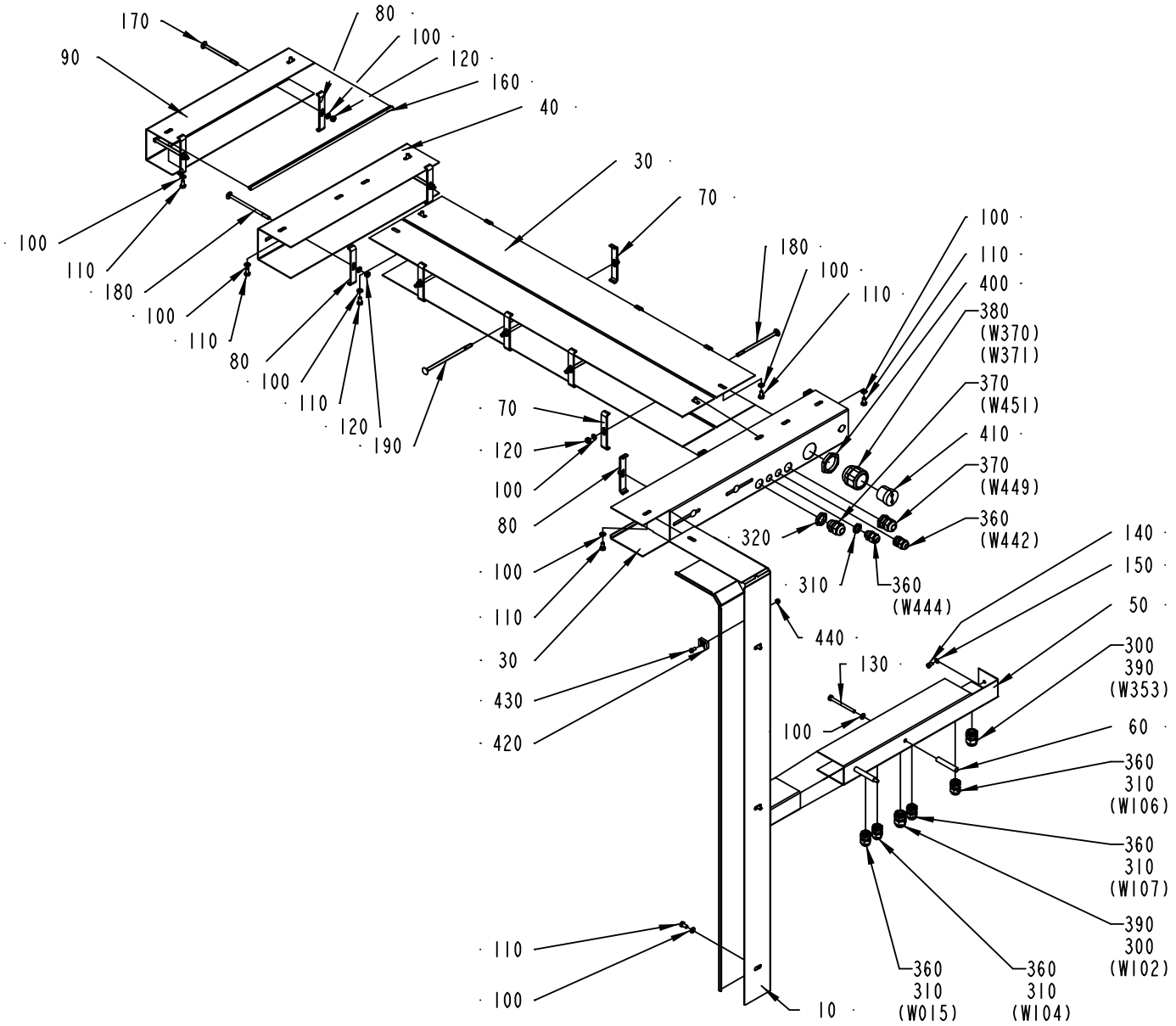

1524319-1
ECM 73260

ECM: 73260 - 20011220
Group number: 1524319-0100
Assembly Drawing: 1524319-1_1_AA

Pos	Part No	UN	Qty	Description	Page No
-					
010	1519758-0000		1	CABLE DUCT	
020	1519760-0000		1	CABLE DUCT	
030	1519761-0000		1	CABLE DUCT	
040	1519762-0000		1	CABLE DUCT	
050	1519759-0000		1	CABLE DUCT	
060	1519764-0000		2	SPACER	
070	1519765-0001		8	SUPPORT	
080	1519765-0002		7	SUPPORT	
090	1519763-0000		1	CABLE DUCT	
100	315105-0153		30	WASHER BRB6,4X12RFR	
110	312105-0366		13	SCREW M6S M6X12 A280	
120	312605-0316		15	HEXAGON NUT, M6M M6 A280	
130	312105-0384		2	SCREW M6S ISO 4014 M6X70 A480	
140	312105-0323		2	SCREW M6S ISO 4017 M5X8 A480	
150	315105-0146		2	BRICKA BRB5,3X10RFR	
160	90143-0060	M	12	EDGE STRIP 9,5X6,3MM BLACK PVC	
170	90457-0148		2	SCREW CAP HEAD SQ. NECK M6X100 SS	
180	90458-1612		9	SCREW CAP HEAD SQ. NECK M6X120 SS	
190	90458-1613		4	SCREW CAP HEAD SQ. NECK M6X140 SS	
300	90099-0002		2	NUT PR 18,6 BRASS	
310	90099-0001		6	NUT PR 15,2 MäSSING	
320	90099-0087		2	NUT PR=20,4	
360	352103-0101		6	CABLE GLAND, ST 9, PR15,2/PG9	
370	352103-0108		2	CABLE GLAND, ST 13,5 , PR20,4/PG13,5	
380	353240-0006		1	FöRSKRUVNING PG 29	
390	352103-0106		2	CABLE GLAND, ST 11, PR18,6/PG11	
400	90099-0011		1	NUT PR 37 BRASS	
410	2504449-0000		1	INSERT	
420	352113-0204		5	ANCHOR PLATES FOR STRIPS, TYPE TM3S25-M	
430	312125-0325		5	SCREW ISO 1207 M5X10 A4	
440	312605-0314		5	HEXAGON NUT, M6M M5 A280	

Pos	Part No	UN	Qty	Description	Page No

DETERGENT PUMP

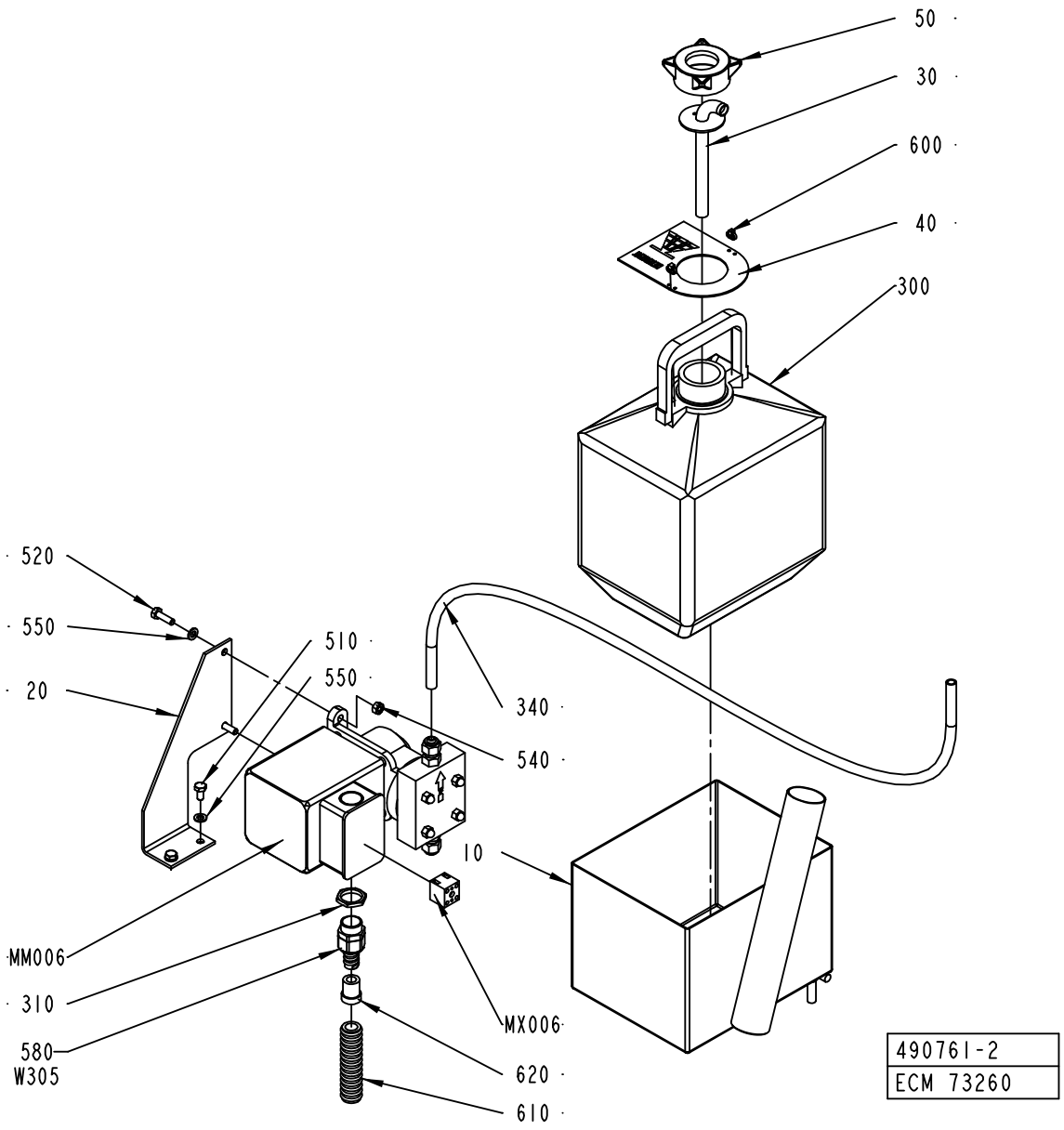

ECM: 106564 - 20020313
Group number: 490761-0200
Assembly Drawing: 490761-2_1_AA

Pos	Part No	UN	Qty	Description	Page No
-					
010	490768-0000		1	BOX	
020	490769-0000		1	BRACKET	
030	979217-0000		1	PIPE	
040	295387-0000		1	SIGN BOARD	
050	35962-0000		1	LID	
300	90050-0011		1	BOTTLE	
310	90099-0003		1	NUT	
340	90166-0008	CM	200	HOSE 7/10 PVC TRANSP.	
510	312105-0366		2	SCREW M6S M6X12 A280	
520	312105-0370		2	SCREW M6S ISO 4017 M6X20 A480	
540	312605-0316		2	HEXAGON NUT, M6M M6 A280	
550	315105-0153		4	WASHER BRB6,4X12RFR	
580	353242-0001		1	NORMAL WITHOUT INSERT, PG13,5	
	353249-0065		*1*	*INSERT, SINGEL HOLE, E152/09*	
600	352113-0101		2	CLIP STRIP, 92X2,5 MM	
610	90152-0059	MM	2500	SPIRAL CONDUIT, 18X12, UL 1211	
620	353249-0065		1	INSERT, SINGEL HOLE, E152/09	
MM006	90321-0037		1	PUMP C-6125P EP 220V;50HZ	
	90321-0396		*1*	*FILTER*	
	90321-0380		*1*	*DIAPHRAGM*	
	90166-0157	*MM*	*1500*	*HOSE*	
MX006	90195-0020		1	TERMINAL BLOCK, 1977.2	
W305	351150-0412	M	4	CABLE OLFLEX 3X1,5 MM2 LIGHT/GREY	

Pos	Part No	UN	Qty	Description	Page No

VALVE PANEL

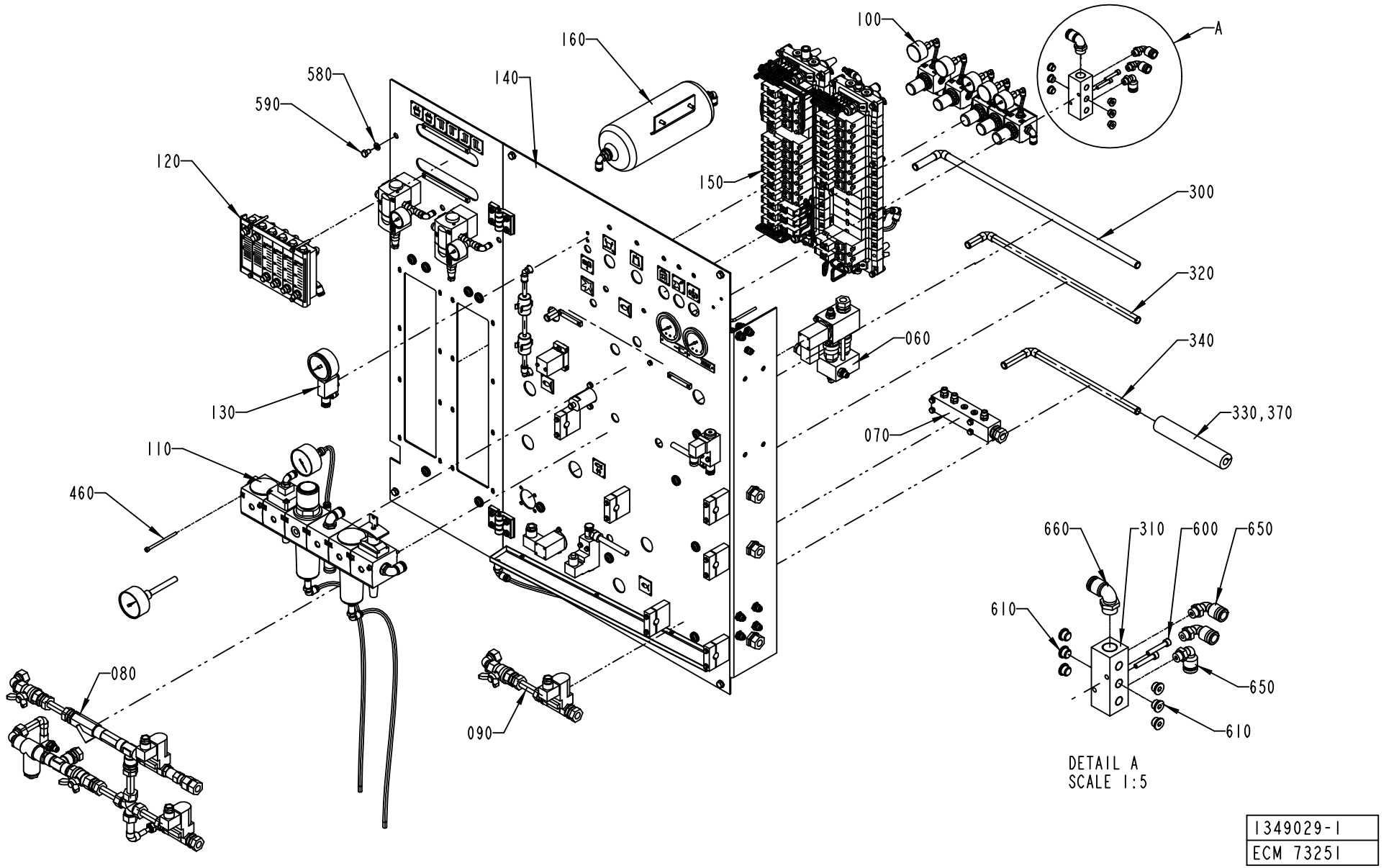

1349029-1
ECM 73251

ECM: 106552 - 20020313
Group number: 1349029-0100
Assembly Drawing: 1349029-1_1_AA

This list covers pages from 6-14 to 6-19

Pos	Part No	UN	Qty	Description	Page No
-					
010	580993-0000		1	WATER DIAGRAM	
020	1348964-0000		1	AIR DIAGRAM	
060	456757-0300		1	AIR INJECTOR	**6-21**
070	469121-0400		1	JUNCTION BLOCK	**6-25**
080	577824-0200		1	COOL WATER VALVE	**6-27**
090	577825-0200		1	HOT WATER VALVE	**6-29**
100	577822-0200		1	PRESSURE REGULATOR GROUP	**6-31**
110	1348237-0100		1	AIR INLET GROUP	**6-33**
120	1349090-0100		1	FLOW METER	**6-35**
130	1349091-0100		1	GAUGE GROUP	**6-37**
140	1349094-0100		1	VALVE PLATE	**6-39, 6-41**
150	1478717-0100		1	VALVE GROUP	**6-43, 6-45, 6-47, 6-49, 6-51, 6-53**
160	929415-0100		1	BALANCE TANK	**6-55**
290	342946-0122		1	T-COUPLING,UNION 8/6	
300	2517051-0000		1	PIPE	
310	90458-0281		1	DISTRIBUTOR 8933502114	
320	577832-0000		1	PIPE	
330	456137-0000		1	HOSE	
340	576293-0000		1	PIPE	
350	342735-0110		1	ELBOW PIPE	
360	90055-0118		2	ELBOW PIPE JOINT -8MM	
370	90153-0035		1	ADHESIVE, CLIMAFLEX 1632864	
380	90166-0013	M	38	TUBE 8 MM PA BLUE	
390	90166-0196	CM	500	TUBE 14MM PA BLUE	
400	90166-0068	M	3	TUBE 12 MM PA BLUE	
410	90166-0081	M	154	TUBE 6 MM PA BLUE	
420	90166-0118	M	9	TUBE 8 MM PA BLACK	
430	90166-0119	M	3	HOSE PUR 4/6 BLACK	
440	90230-0062		2	NON RETURN VALVE, 6, OP. PRESS. 0,2 BAR	
450	90235-0151		1	NON-RETURN VALVE	
460	90287-0212		4	SCREW MC6S M5X85 129	
470	90055-0101		3	Y-CONNECTION, 8-8	
580	315105-0165		6	WASHER BRB8,4X16RFR	
590	312105-0447		6	SCREW M6S ISO 4017 M8X12 A480	
600	312115-0376		2	SCREW ISO4762 M6X35 A4	
610	342713-0210		6	PLUG, EXT THREAD HEX SOCKET 8638-00-140	
620	342716-0203		4	REDUCER 6-8	
630	342716-0209		3	REDUCER 8-12	
640	342722-0205		1	STRAIGHT COUPLING D=8-G1/4"	
650	342732-0109		3	ELBOW PIPE JOINT, EXT.THREAD, D=1MM-G1/4	
660	342732-0161		1	ELBOW PIPE JOINT,EXT.THREAD,D=14 MM-G1/2	
670	342735-0102		2	ELBOW PIPE JOINT	
680	342735-0103		2	ELBOW PIPE JOINT	
690	342735-0109		9	ELBOW PIPE JOINT	
700	342742-0104		1	T-COUPLING,ADJUST,F.PLASTIC TUBE 8-G1/4"	
710	342748-0102		3	T-CONNECTION 6MM	
720	342748-0103		4	T-CONNECTION 8MM	
730	342748-0109		5	T-CONNECTION 12MM	
740	342946-0112		2	T-COUPLING,UNION 6/4	
750	352113-0104		15	CLIP STRIP, 300X4,8 MM	
760	359000-0400		78	MARKING CO2/4"0"	
770	359000-0401		59	MARKING COLLAR 2/4 "1" YELLOW	
780	359000-0402		44	MARKING COLLAR 2/4 "2" YELLOW	
790	359000-0403		13	MARKING COLLAR PA2/4 "3" YELLOW	
800	359000-0404		18	MARKING COLLAR PA2/4 "4" YELLOW	
810	359000-0405		22	MARKING CO2/4"5"	
820	359000-0406		20	MARKING COLLAR PA2/4 "6" YELLOW	
830	359000-0407		16	MARKING COLLAR PA2/4 "7" YELLOW	
840	359000-0408		6	MARKING COLLAR PA2/4 "8" YELLOW	
850	359000-0409		11	MARKING COLLAR PA2/4 "9" YELLOW	
860	359000-0771		27	MARKING CO2/4"V"	

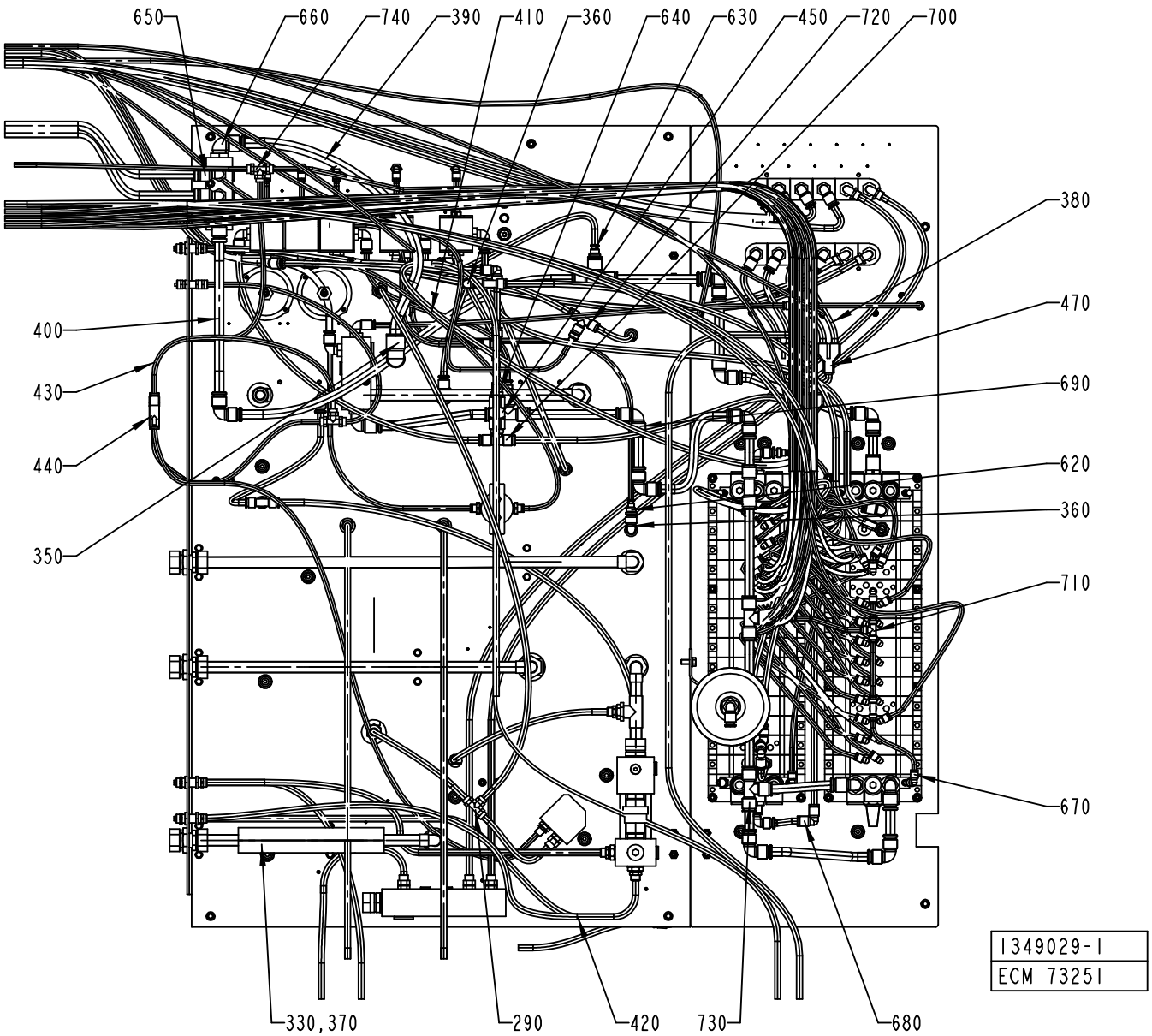
650
660
740
390
410
360
640
630
450
720
700
380
470
690
620
360
710
670
400
430
440
350
330,370
290
420
730
680
1349029-1
ECM 73251

ECM: 106552 - 20020313
Group number: 1349029-0100
Assembly Drawing: 1349029-1_2_AA

This list covers pages from 6-14 to 6-19

Pos	Part No	UN	Qty	Description	Page No
-					
010	580993-0000		1	WATER DIAGRAM	
020	1348964-0000		1	AIR DIAGRAM	
060	456757-0300		1	AIR INJECTOR	**6-21**
070	469121-0400		1	JUNCTION BLOCK	**6-25**
080	577824-0200		1	COOL WATER VALVE	**6-27**
090	577825-0200		1	HOT WATER VALVE	**6-29**
100	577822-0200		1	PRESSURE REGULATOR GROUP	**6-31**
110	1348237-0100		1	AIR INLET GROUP	**6-33**
120	1349090-0100		1	FLOW METER	**6-35**
130	1349091-0100		1	GAUGE GROUP	**6-37**
140	1349094-0100		1	VALVE PLATE	**6-39, 6-41**
150	1478717-0100		1	VALVE GROUP	**6-43, 6-45, 6-47, 6-49, 6-51, 6-53**
160	929415-0100		1	BALANCE TANK	**6-55**
290	342946-0122		1	T-COUPLING,UNION 8/6	
300	2517051-0000		1	PIPE	
310	90458-0281		1	DISTRIBUTOR 8933502114	
320	577832-0000		1	PIPE	
330	456137-0000		1	HOSE	
340	576293-0000		1	PIPE	
350	342735-0110		1	ELBOW PIPE	
360	90055-0118		2	ELBOW PIPE JOINT -8MM	
370	90153-0035		1	ADHESIVE, CLIMAFLEX 1632864	
380	90166-0013	M	38	TUBE 8 MM PA BLUE	
390	90166-0196	CM	500	TUBE 14MM PA BLUE	
400	90166-0068	M	3	TUBE 12 MM PA BLUE	
410	90166-0081	M	154	TUBE 6 MM PA BLUE	
420	90166-0118	M	9	TUBE 8 MM PA BLACK	
430	90166-0119	M	3	HOSE PUR 4/6 BLACK	
440	90230-0062		2	NON RETURN VALVE, 6, OP. PRESS. 0,2 BAR	
450	90235-0151		1	NON-RETURN VALVE	
460	90287-0212		4	SCREW MC6S M5X85 129	
470	90055-0101		3	Y-CONNECTION, 8-8	
580	315105-0165		6	WASHER BRB8,4X16RFR	
590	312105-0447		6	SCREW M6S ISO 4017 M8X12 A480	
600	312115-0376		2	SCREW ISO4762 M6X35 A4	
610	342713-0210		6	PLUG, EXT THREAD HEX SOCKET 8638-00-140	
620	342716-0203		4	REDUCER 6-8	
630	342716-0209		3	REDUCER 8-12	
640	342722-0205		1	STRAIGHT COUPLING D=8-G1/4"	
650	342732-0109		3	ELBOW PIPE JOINT, EXT.THREAD, D=1MM-G1/4	
660	342732-0161		1	ELBOW PIPE JOINT,EXT.THREAD,D=14 MM-G1/2	
670	342735-0102		2	ELBOW PIPE JOINT	
680	342735-0103		2	ELBOW PIPE JOINT	
690	342735-0109		9	ELBOW PIPE JOINT	
700	342742-0104		1	T-COUPLING,ADJUST,F.PLASTIC TUBE 8-G1/4"	
710	342748-0102		3	T-CONNECTION 6MM	
720	342748-0103		4	T-CONNECTION 8MM	
730	342748-0109		5	T-CONNECTION 12MM	
740	342946-0112		2	T-COUPLING,UNION 6/4	
750	352113-0104		15	CLIP STRIP, 300X4,8 MM	
760	359000-0400		78	MARKING CO2/4"0"	
770	359000-0401		59	MARKING COLLAR 2/4 "1" YELLOW	
780	359000-0402		44	MARKING COLLAR 2/4 "2" YELLOW	
790	359000-0403		13	MARKING COLLAR PA2/4 "3" YELLOW	
800	359000-0404		18	MARKING COLLAR PA2/4 "4" YELLOW	
810	359000-0405		22	MARKING CO2/4"5"	
820	359000-0406		20	MARKING COLLAR PA2/4 "6" YELLOW	
830	359000-0407		16	MARKING COLLAR PA2/4 "7" YELLOW	
840	359000-0408		6	MARKING COLLAR PA2/4 "8" YELLOW	
850	359000-0409		11	MARKING COLLAR PA2/4 "9" YELLOW	
860	359000-0771		27	MARKING CO2/4"V"	

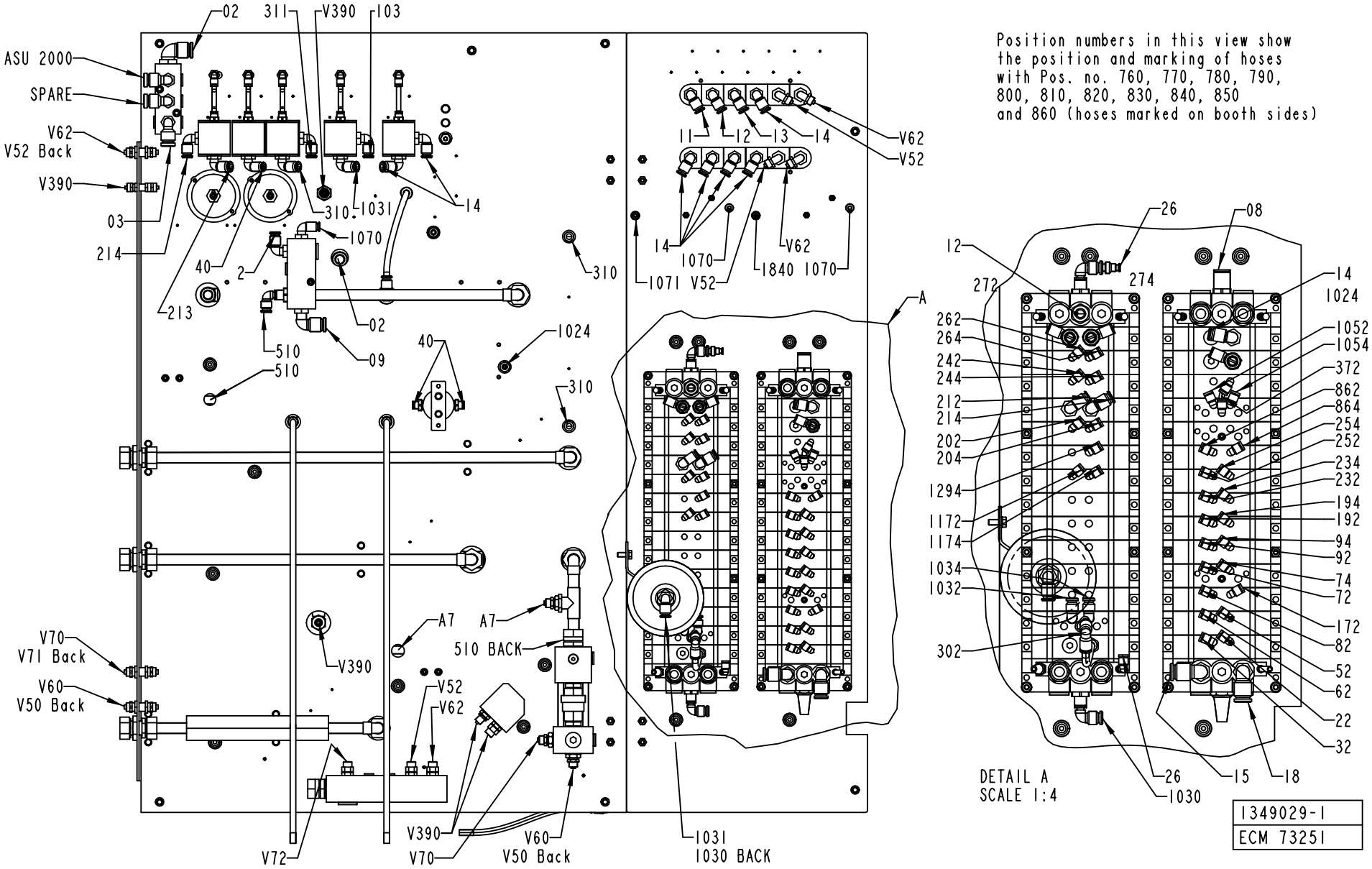
02
311
V390
103
ASU 2000
SPARE
V62
V52 Back
V390
03
214
213
40
2
310
1031
14
1070
02
09
510
510
310
1024
40
310
11
12
13
14
V62
V52
14
1070
1071 V52
V62
1840 1070
A
Position numbers in this view show the position and marking of hoses with Pos. no. 760, 770, 780, 790, 800, 810, 820, 830, 840, 850 and 860 (hoses marked on booth sides)
26
08
12
272
274
14
1024
262
264
242
244
212
214
202
204
1294
1172
1174
1034
1032
302
1052
1054
372
862
864
254
252
234
232
194
192
94
92
74
72
172
82
52
62
22
32
DETAIL A
SCALE 1:4
26
1030
15
18
V70
V71 Back
V60
V50 Back
A7
A7
510 BACK
V390
V52
V62
V72
V390
V70
V60
V50 Back
1031
1030 BACK
1349029-1
ECM 73251

ECM: 106552 - 20020313
Group number: 1349029-0100
Assembly Drawing: 1349029-1_3_AA

This list covers pages from 6-14 to 6-19

Pos	Part No	UN	Qty	Description	Page No
-					
010	580993-0000		1	WATER DIAGRAM	
020	1348964-0000		1	AIR DIAGRAM	
060	456757-0300		1	AIR INJECTOR	**6-21**
070	469121-0400		1	JUNCTION BLOCK	**6-25**
080	577824-0200		1	COOL WATER VALVE	**6-27**
090	577825-0200		1	HOT WATER VALVE	**6-29**
100	577822-0200		1	PRESSURE REGULATOR GROUP	**6-31**
110	1348237-0100		1	AIR INLET GROUP	**6-33**
120	1349090-0100		1	FLOW METER	**6-35**
130	1349091-0100		1	GAUGE GROUP	**6-37**
140	1349094-0100		1	VALVE PLATE	**6-39, 6-41**
150	1478717-0100		1	VALVE GROUP	**6-43, 6-45, 6-47, 6-49, 6-51, 6-53**
160	929415-0100		1	BALANCE TANK	**6-55**
290	342946-0122		1	T-COUPLING,UNION 8/6	
300	2517051-0000		1	PIPE	
310	90458-0281		1	DISTRIBUTOR 8933502114	
320	577832-0000		1	PIPE	
330	456137-0000		1	HOSE	
340	576293-0000		1	PIPE	
350	342735-0110		1	ELBOW PIPE	
360	90055-0118		2	ELBOW PIPE JOINT -8MM	
370	90153-0035		1	ADHESIVE, CLIMAFLEX 1632864	
380	90166-0013	M	38	TUBE 8 MM PA BLUE	
390	90166-0196	CM	500	TUBE 14MM PA BLUE	
400	90166-0068	M	3	TUBE 12 MM PA BLUE	
410	90166-0081	M	154	TUBE 6 MM PA BLUE	
420	90166-0118	M	9	TUBE 8 MM PA BLACK	
430	90166-0119	M	3	HOSE PUR 4/6 BLACK	
440	90230-0062		2	NON RETURN VALVE, 6, OP. PRESS. 0,2 BAR	
450	90235-0151		1	NON-RETURN VALVE	
460	90287-0212		4	SCREW MC6S M5X85 129	
470	90055-0101		3	Y-CONNECTION, 8-8	
580	315105-0165		6	WASHER BRB8,4X16RFR	
590	312105-0447		6	SCREW M6S ISO 4017 M8X12 A480	
600	312115-0376		2	SCREW ISO4762 M6X35 A4	
610	342713-0210		6	PLUG, EXT THREAD HEX SOCKET 8638-00-140	
620	342716-0203		4	REDUCER 6-8	
630	342716-0209		3	REDUCER 8-12	
640	342722-0205		1	STRAIGHT COUPLING D=8-G1/4"	
650	342732-0109		3	ELBOW PIPE JOINT, EXT.THREAD, D=1MM-G1/4	
660	342732-0161		1	ELBOW PIPE JOINT,EXT.THREAD,D=14 MM-G1/2	
670	342735-0102		2	ELBOW PIPE JOINT	
680	342735-0103		2	ELBOW PIPE JOINT	
690	342735-0109		9	ELBOW PIPE JOINT	
700	342742-0104		1	T-COUPLING,ADJUST,F.PLASTIC TUBE 8-G1/4"	
710	342748-0102		3	T-CONNECTION 6MM	
720	342748-0103		4	T-CONNECTION 8MM	
730	342748-0109		5	T-CONNECTION 12MM	
740	342946-0112		2	T-COUPLING,UNION 6/4	
750	352113-0104		15	CLIP STRIP, 300X4,8 MM	
760	359000-0400		78	MARKING CO2/4"0"	
770	359000-0401		59	MARKING COLLAR 2/4 "1" YELLOW	
780	359000-0402		44	MARKING COLLAR 2/4 "2" YELLOW	
790	359000-0403		13	MARKING COLLAR PA2/4 "3" YELLOW	
800	359000-0404		18	MARKING COLLAR PA2/4 "4" YELLOW	
810	359000-0405		22	MARKING CO2/4"5"	
820	359000-0406		20	MARKING COLLAR PA2/4 "6" YELLOW	
830	359000-0407		16	MARKING COLLAR PA2/4 "7" YELLOW	
840	359000-0408		6	MARKING COLLAR PA2/4 "8" YELLOW	
850	359000-0409		11	MARKING COLLAR PA2/4 "9" YELLOW	
860	359000-0771		27	MARKING CO2/4"V"	

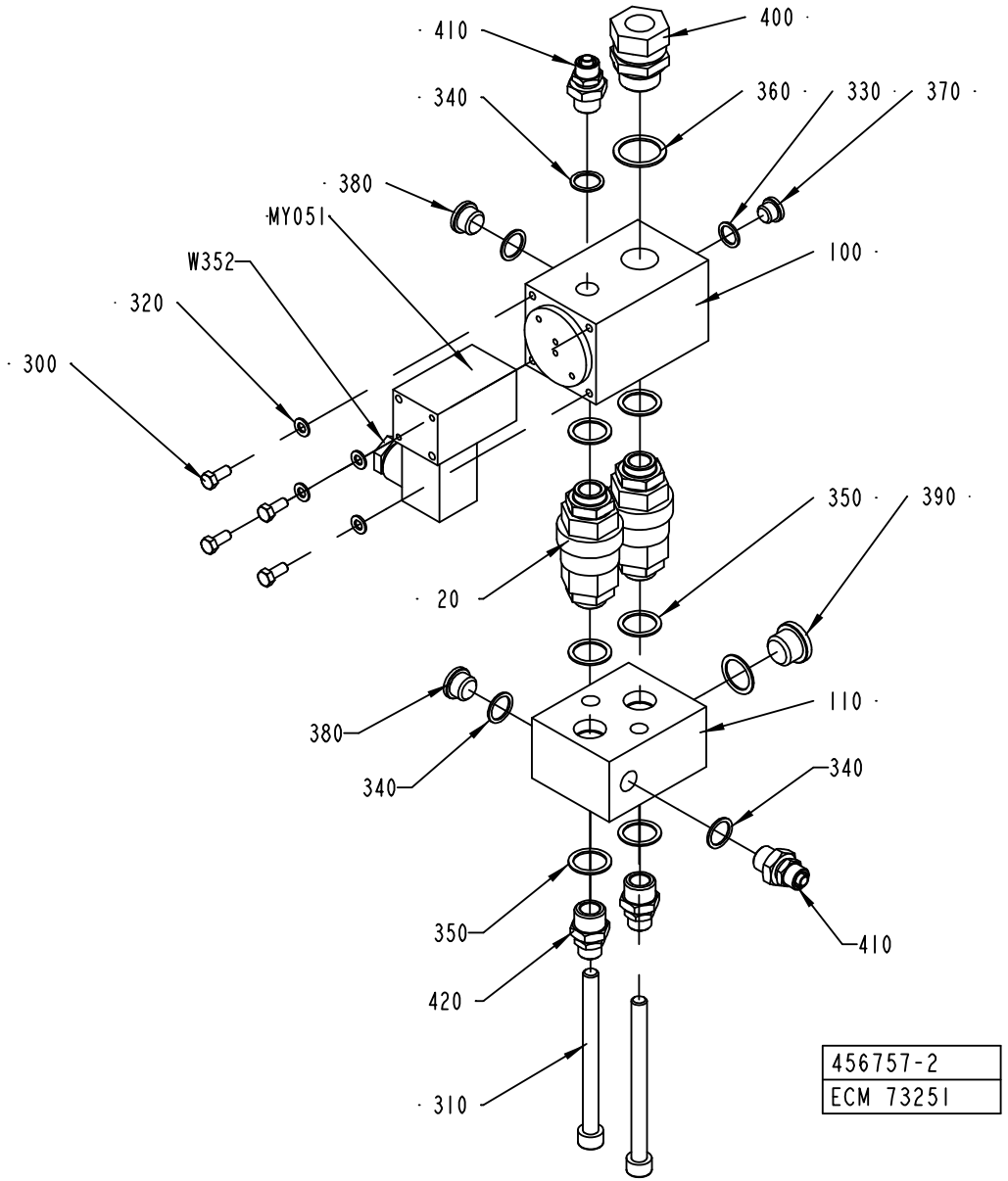
410
400
340
360
330
370
380
MY051
W352
100
320
300
350
390
20
380
110
340
340
350
410
420
310
456757-2
ECM 73251

ECM: 115746 - 20020930
Group number: 456757-0300
Assembly Drawing: 456757-2_1_AA

Pos	Part No	UN	Qty	Description	Page No
-					
020	491536-0200		2	NON-RETURN VALVE	**6-23**
100	456756-0000		1	BLOCK	
110	456755-0000		1	BLOCK	
300	312105-0327		4	SCREW M6S ISO 4017 M5X12 A480	
310	312111-0471		2	SCREW HEX.SOCK.HD.MC6S-TT 8X100 88 FZ	
320	315105-0146		4	BRICKA BRB5,3X10RFR	
330	315233-0109		1	WASHER CAPTIVE SEALING G1/8	
340	315233-0110		4	WASHER CAPTIVE SEALING G1/4	
350	315233-0111		7	WASHER CAPTIVE SEALING G3/8	
360	315233-0113		1	WASHER CAPTIVE SEALING G1/2	
370	342713-0209		1	PLUG, EXT THREAD HEX SOCKET 8638-00-180	
380	342713-0210		2	PLUG, EXT THREAD HEX SOCKET 8638-00-140	
390	342713-0211		1	PLUG, EXT THREAD HEX SOCKET 8638-00-380	
400	342720-0114		1	CONN. STR. GA-15-G1/2	
410	342921-0122		2	STRAIGHT COUPLING,EXT.THREADED 8/6-G1/4"	
420	342921-0123		2	STRAIGHT COUPLING,EXT.THREADED 8/6-G3/8"	
MY051	90042-0173		1	SOLENOID VALVE BURKERT	
W352	351150-0431	M	3	CABLE OLFLEX 2X0,75 MM2 LIGHT/GREY	

Pos	Part No	UN	Qty	Description	Page No

NON-RETURN VALVE

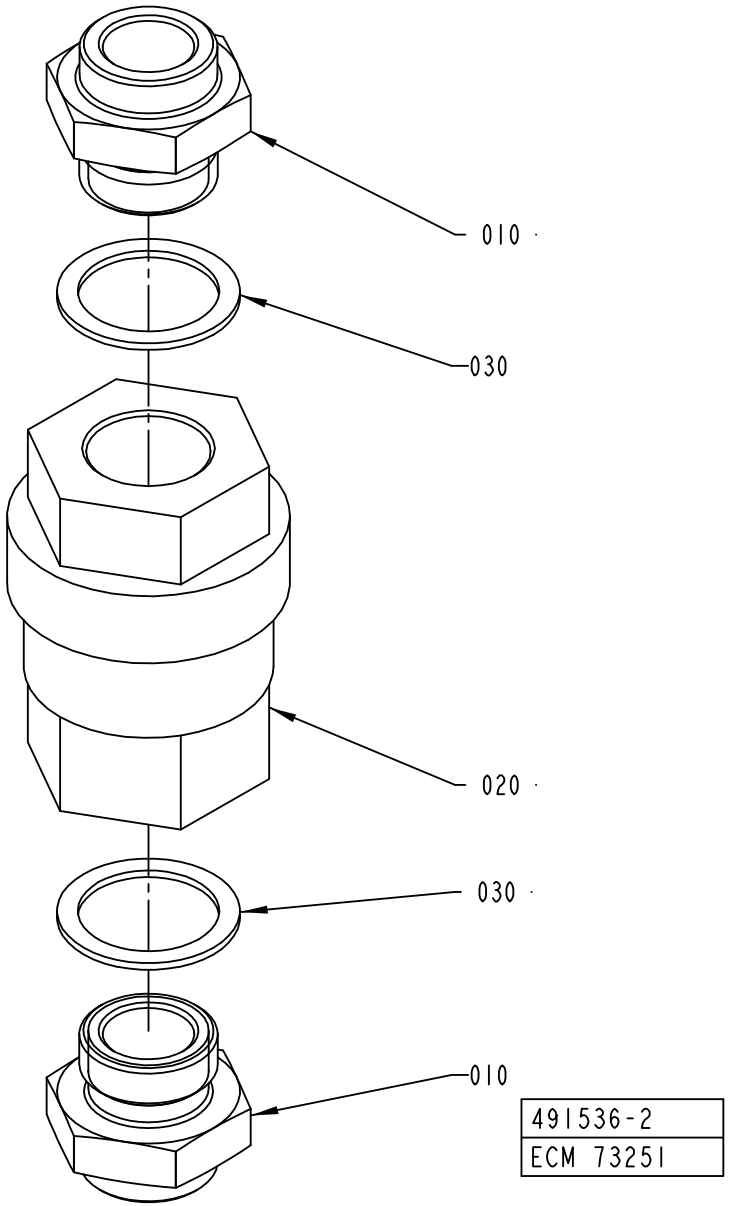

ECM: 115878 - 20020930
Group number: 491536-0200
Assembly Drawing: 491536-2_1_AA

Pos	Part No	UN	Qty	Description	Page No
-					
010	751086-0000		2	NIPPLE	
020	90230-0028		1	NON-RETURN VALVE H 151 R 3/8"	
030	315233-0111		2	WASHER CAPTIVE SEALING G3/8	

Pos	Part No	UN	Qty	Description	Page No

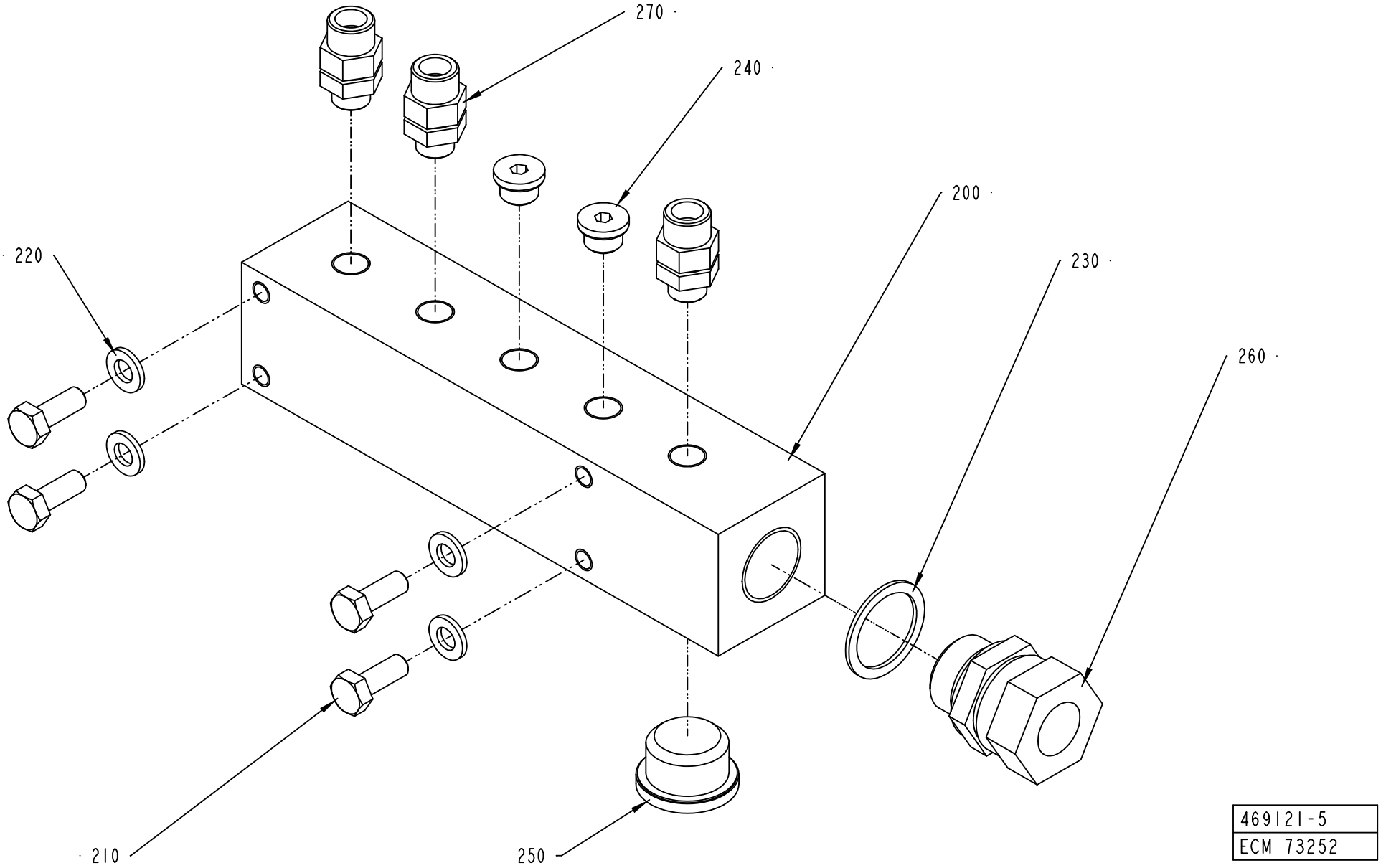
270
240
200
220
230
260
210
250
469121-5
ECM 73252

ECM: 73252 - 20011221
Group number: 469121-0400
Assembly Drawing: 469121-5_1_AA

Pos	Part No	UN	Qty	Description	Page No
-					
200	469122-0000		1	BLOCK	
210	312105-0368		4	SCREW M6S M6X16 A280	
220	315105-0153		4	WASHER BRB6,4X12RFR	
230	315233-0113		1	WASHER CAPTIVE SEALING G1/2	
240	342713-0209		2	PLUG, EXT THREAD HEX SOCKET 8638-00-180	
250	342713-0213		1	PLUG, EXT THREAD HEX SOCKET 8638-00-120	
260	342720-0114		1	CONN. STR. GA-15-G1/2	
270	342921-0121		3	STRAIGHT COUPLING,EXT.THREADED 8/6-G1/8"	

Pos	Part No	UN	Qty	Description	Page No

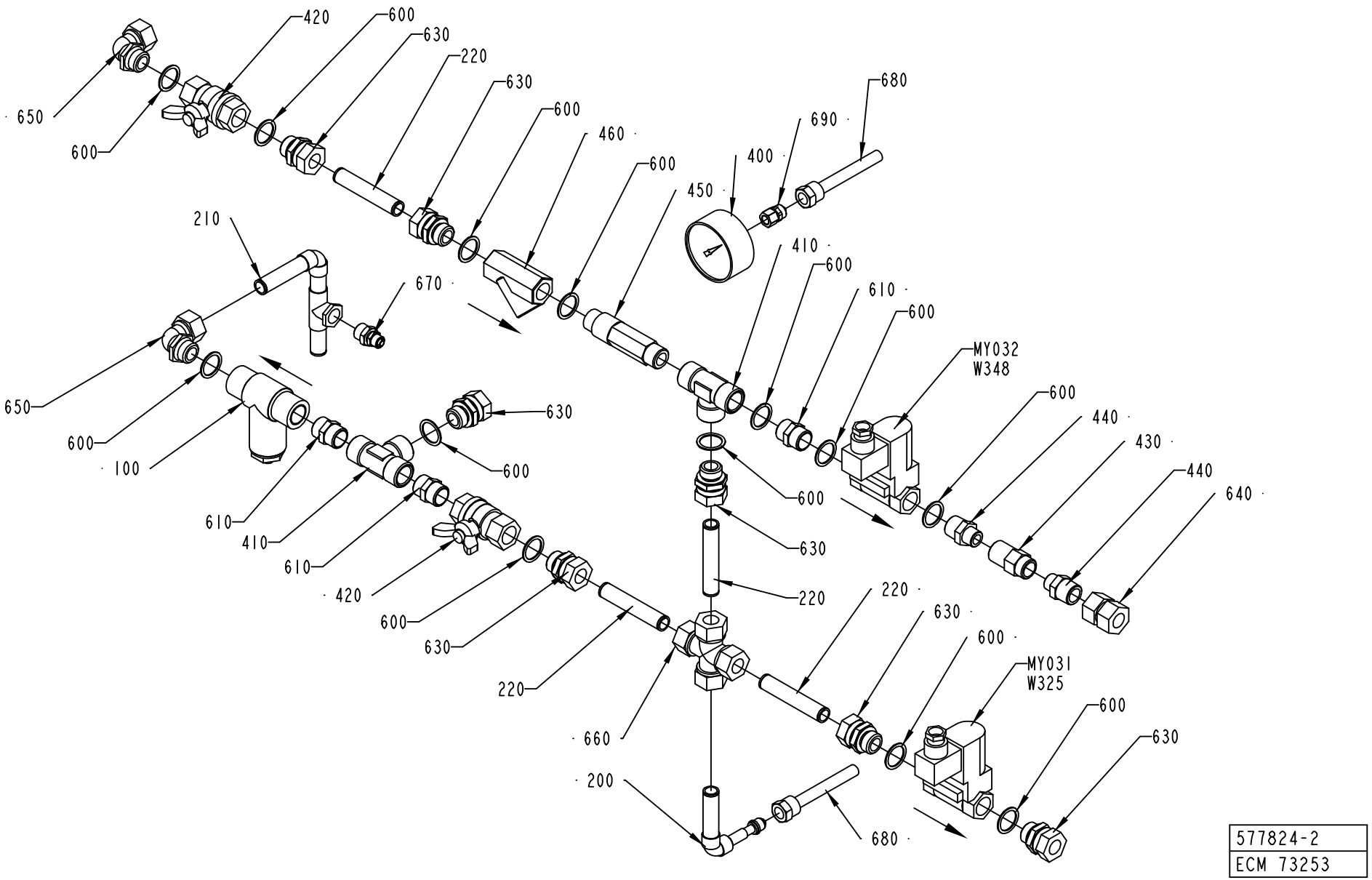
420
600
630
220
630
600
460
600
450
400
690
680
650
600
210
670
410
600
610
600
MY032
W348
600
440
430
440
640
650
600
100
630
600
610
410
610
420
600
630
220
630
600
MY031
W325
600
630
220
660
200
680
577824-2
ECM 73253

ECM: 115874 - 20020930
Group number: 577824-0200
Assembly Drawing: 577824-2_1_AA

Pos	Part No	UN	Qty	Description	Page No
-					
100	271823-0000		1	FILTER	
	90415-0314		*1*	*FILTER INSERT / 5594-36*	
	90415-0325		*1*	*GASKET*	
200	1512806-0000		1	PIPE	
210	1350188-0000		1	PIPE	
220	576287-0000		4	PIPE	
400	90043-0006		1	PRESSURE GAUGE, 2041 D=63 MM	
410	90140-0010		2	T-PIPE, INT. THREAD, 20031/2	
420	90187-0029		2	BALL VALVE G1/2, NPBR	
430	90270-0347		1	VALVE	
440	90330-0019		2	NIPPLES, EXT. THREAD. R1/2-R3/8	
450	90415-0018		1	FILTER FOR LIME SEPARATING / D MOD.AD	
460	90415-0019		1	FILTER / ART.NO. HH-M15-RG	
600	315233-0113		13	WASHER CAPTIVE SEALING G1/2	
610	342700-0113		3	NIPPLES,HEXAGON,EXT.G-THREAD G1/2"-G1/2"	
630	342720-0114		7	CONN. STR. GA-15-G1/2	
640	342723-0114		1	CONN. STR. PIPE GI-15-G1/2	
650	342730-0114		2	CONN. ELBOW WA-15-1/2	
660	342753-0114		1	CONN. CROSS K-15	
670	342921-0123		1	STRAIGHT COUPLING,EXT.THREADED 8/6-G3/8"	
680	342903-0121		2	NUT WITH SPRING 8/6-M12X1	
690	342923-0121		1	STRAIGHT COUPL.,INT.THREADED 8/6-G1/8"	
MY031	90042-0172		1	SOLENOID VALVE 4023/1005/1032 24VDC	
	90042-0467		*1*	*COIL 24VDC GSR*	
MY032	90042-0172		1	SOLENOID VALVE 4023/1005/1032 24VDC	
	90042-0467		*1*	*COIL 24VDC GSR*	
W325	351150-0403	M	3	CABLE OLFLEX 3X0,75 MM2 LIGHT/GREY	
W348	351150-0403	M	3	CABLE OLFLEX 3X0,75 MM2 LIGHT/GREY	

Pos	Part No	UN	Qty	Description	Page No

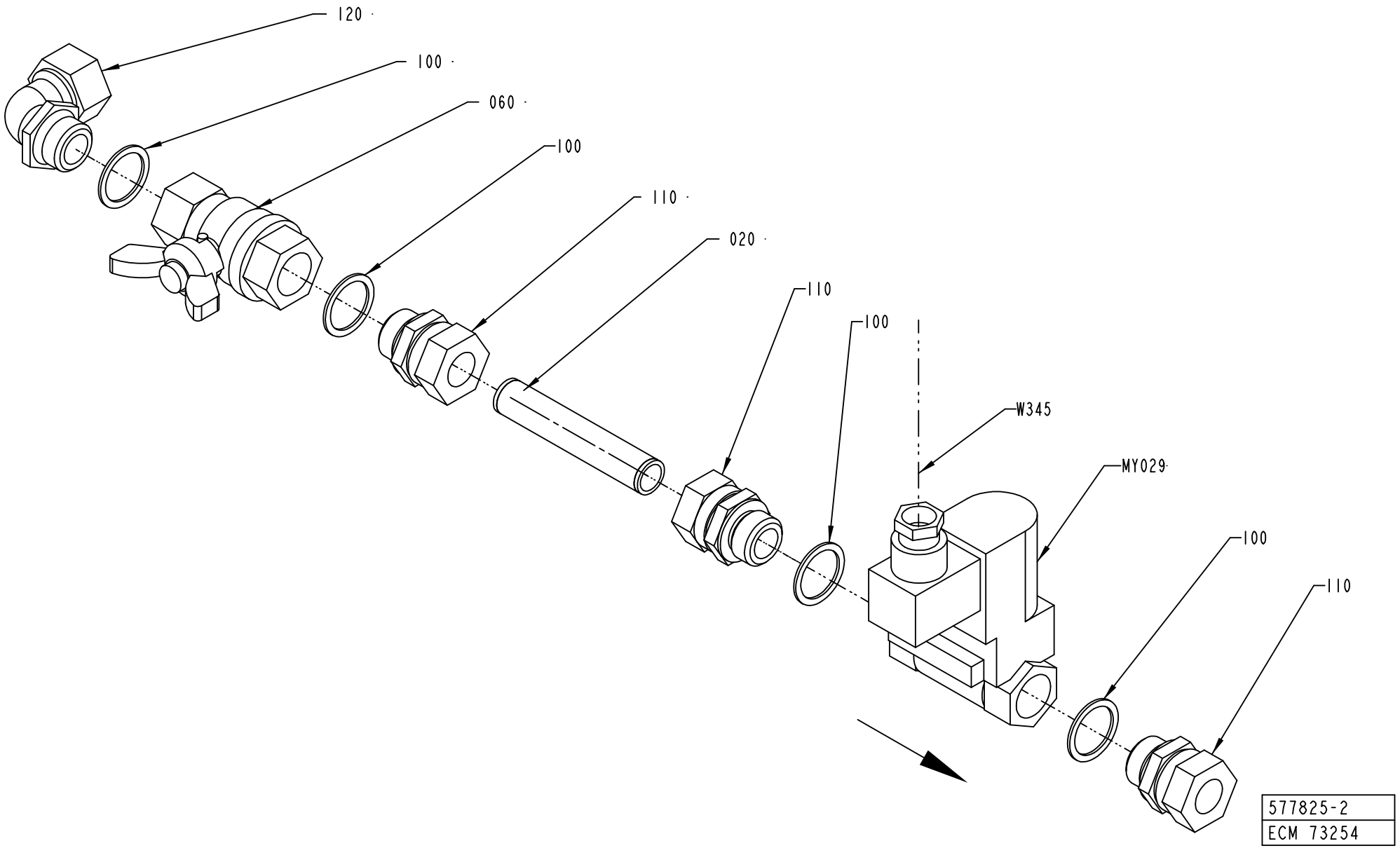
120
100
060
100
110
020
110
100
W345
MY029
100
110
577825-2
ECM 73254

ECM: 115876 - 20020930
Group number: 577825-0200
Assembly Drawing: 577825-2_1_AA

Pos	Part No	UN	Qty	Description	Page No
-					
100	315233-0113		4	WASHER CAPTIVE SEALING G1/2	
110	342720-0114		3	CONN. STR. GA-15-G1/2	
120	342730-0114		1	CONN. ELBOW WA-15-1/2	
20	576287-0000		1	PIPE	
60	90187-0029		1	BALL VALVE G1/2, NPBR	
MY029	90042-0172		1	SOLENOID VALVE 4023/1005/1032 24VDC	
	90042-0467		*1*	*COIL 24VDC GSR*	
W345	351150-0431	M	1	CABLE OLFLEX 2X0,75 MM2 LIGHT/GREY	

Pos	Part No	UN	Qty	Description	Page No

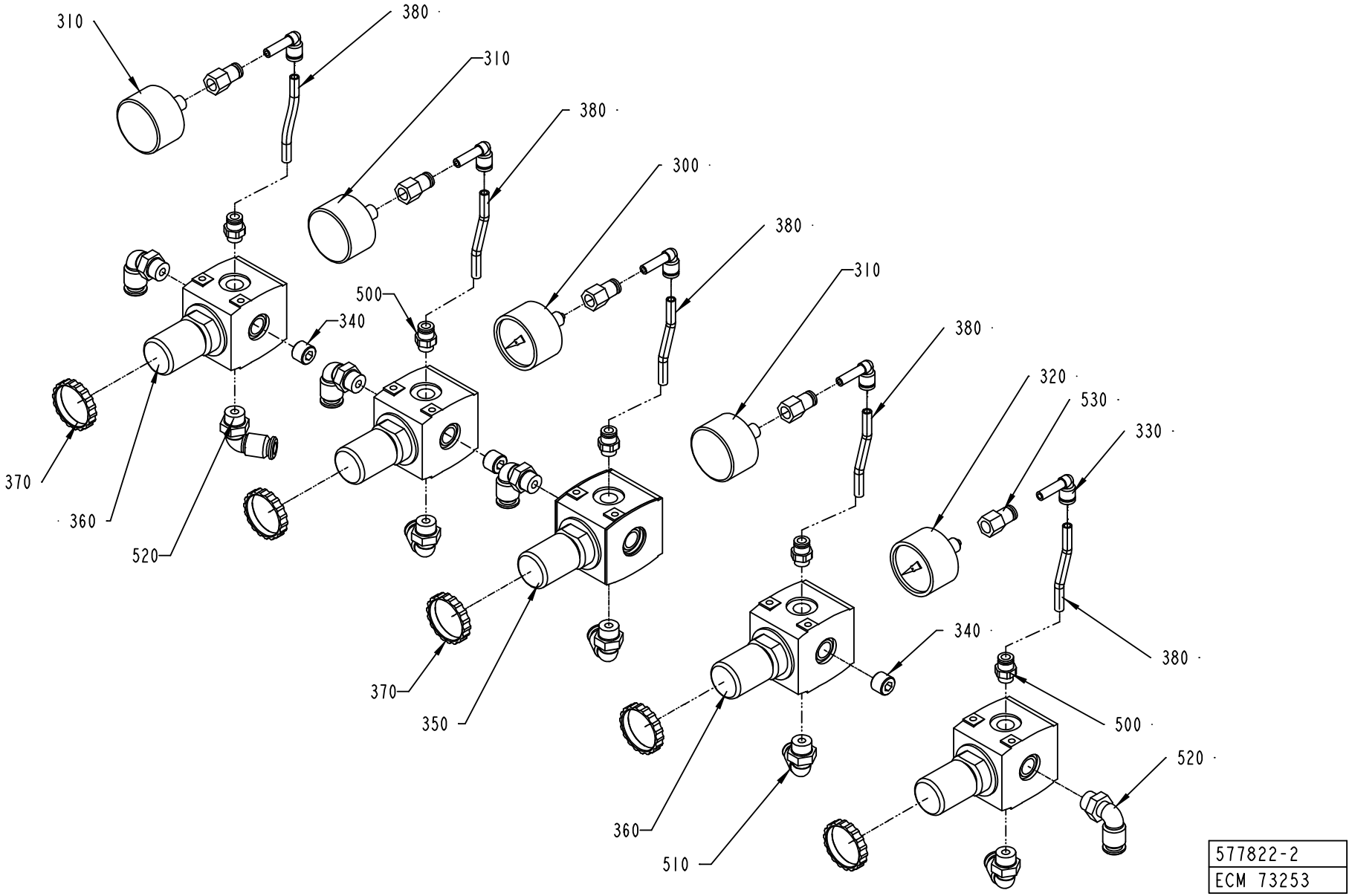
310
380
310
380
300
380
310
380
320
530
330
500
340
370
360
520
350
340
380
500
520
360
510
577822-2
ECM 73253

ECM: 106555 - 20020313
Group number: 577822-0200
Assembly Drawing: 577822-2_1_AA

Pos	Part No	UN	Qty	Description	Page No
-					
300	90043-0021		1	PRESSURE GAUGE WIEGAND 0-1 BAR 1/8"	
310	90043-0068		3	PRESSURE GAUGE	
320	90043-0069		1	PRESSURE GAUGE 0-4BAR WIEGAND 2040	
330	90055-0217		5	ELBOW PIPE JOINT	
340	90087-0036		3	PLUG	
350	90113-0076		1	PRESSURE REGULATOR	
360	90113-0069		4	PRESSURE REGULATOR	
370	90113-0379		5	NUT	
380	90166-0081	MM	300	TUBE 6 MM PA BLUE	
500	342722-0202		5	PIPE COUPLING 1/8" D=6MM	
510	342732-0103		1	ELBOW PIPE JOINT, EXT.THREAD, D=6MM-G1/4	
520	342732-0104		8	ELBOW PIPE JOINT, EXT.THREAD, D=8MM-G1/4	
530	342770-0105		5	STRAIGHT COUPLING INT, D=6 MM - G1/8	

Pos	Part No	UN	Qty	Description	Page No

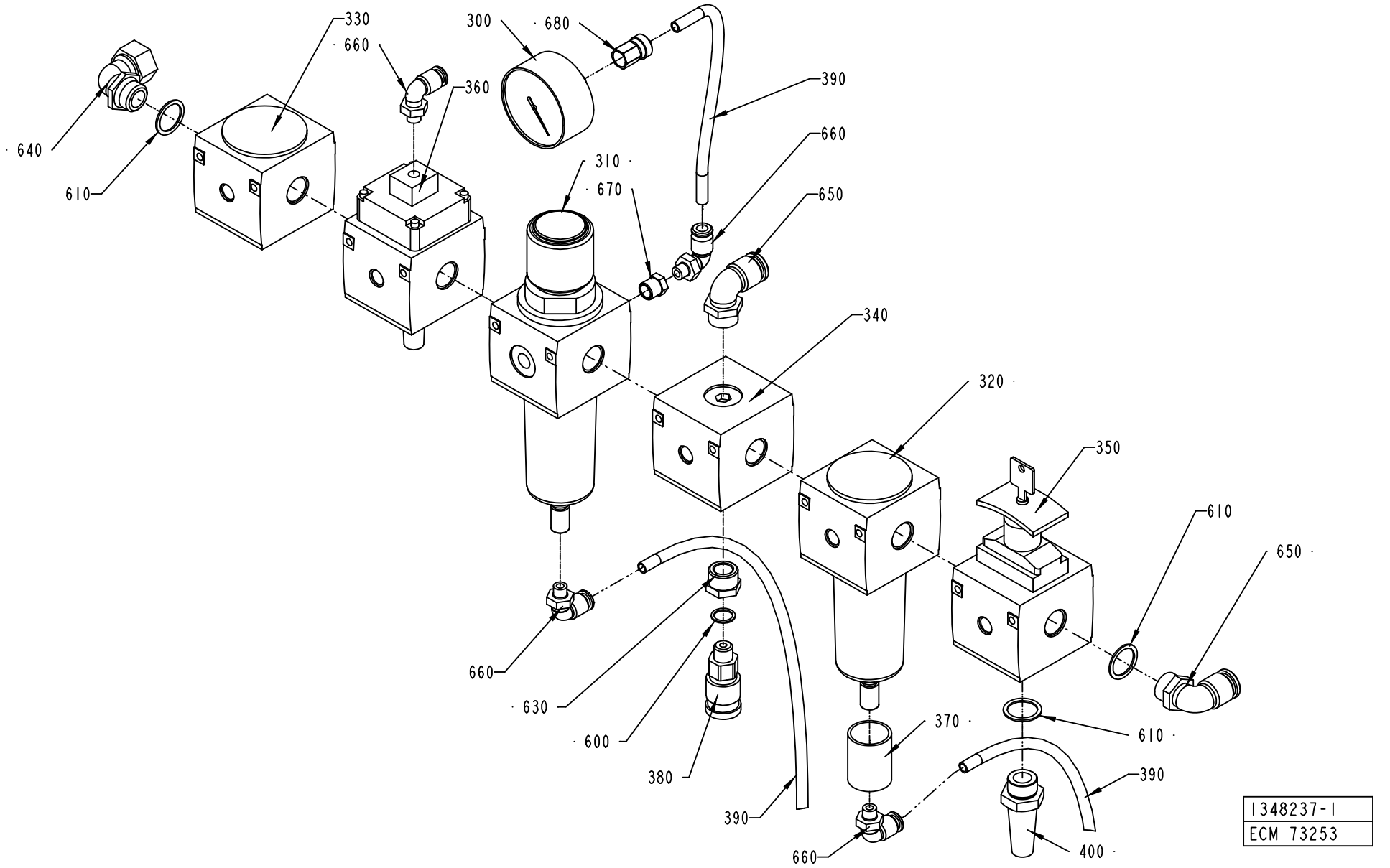
330
660
300
680
360
390
640
610
310
670
660
650
340
320
350
610
650
660
630
600
380
390
370
610
390
660
400
1348237-1
ECM 73253

ECM: 115869 - 20020930
Group number: 1348237-0100
Assembly Drawing: 1348237-1_1_AA

Pos	Part No	UN	Qty	Description	Page No
-					
300	90043-0036		1	PRESSURE GAUGE, 2041 D=63 MM	
310	90113-0085		1	PRESSURE REGULATOR	
	90113-0389		*1*	*FILTER ELEMENT 8æM FOR 90113-0085*	
	90113-0459		*1*	*O-RING*	
320	90113-0128		1	FILTER	
	90113-0389		*1*	*FILTER ELEMENT 8æM FOR 90113-0085*	
	90113-0459		*1*	*O-RING*	
330	90113-0374		1	SLOW STARTING VALVE	
340	90113-0375		1	PRESSURE DISTRIBUTION	
350	90113-0377		1	SHUT-OFF VALVE	
360	90113-0378		1	SHUT-OFF VALVE	
370	90113-0387		1	FILTER ELEMENT 40æM FOR 90113-0094	
380	90163-0016		1	QUICK COUPLING, (F) LP 006-0-WR013	
390	90166-0118	M	3	TUBE 8 MM PA BLACK	
400	90328-0001		1	SILENCER	
600	315233-0110		1	WASHER CAPTIVE SEALING G1/4	
610	315233-0113		3	WASHER CAPTIVE SEALING G1/2	
630	342701-0205		1	BUSHING,INT./EXT.G-THREAD G1/2"-G1/4"	
640	342730-0114		1	CONN. ELBOW WA-15-1/2	
650	342732-0161		2	ELBOW PIPE JOINT,EXT.THREAD,D=14 MM-G1/2	
660	342732-0801		4	ELBOW PIPE JOINT, EXT.THREAD, D=8MM-G1/8	
670	342701-0201		1	BUSHING,INT./EXT.G-THREAD G1/4"-G1/8"	
680	342923-0122		1	STRAIGHT COUPL.,INT.THREADED 8/6-G1/4"	

Pos	Part No	UN	Qty	Description	Page No

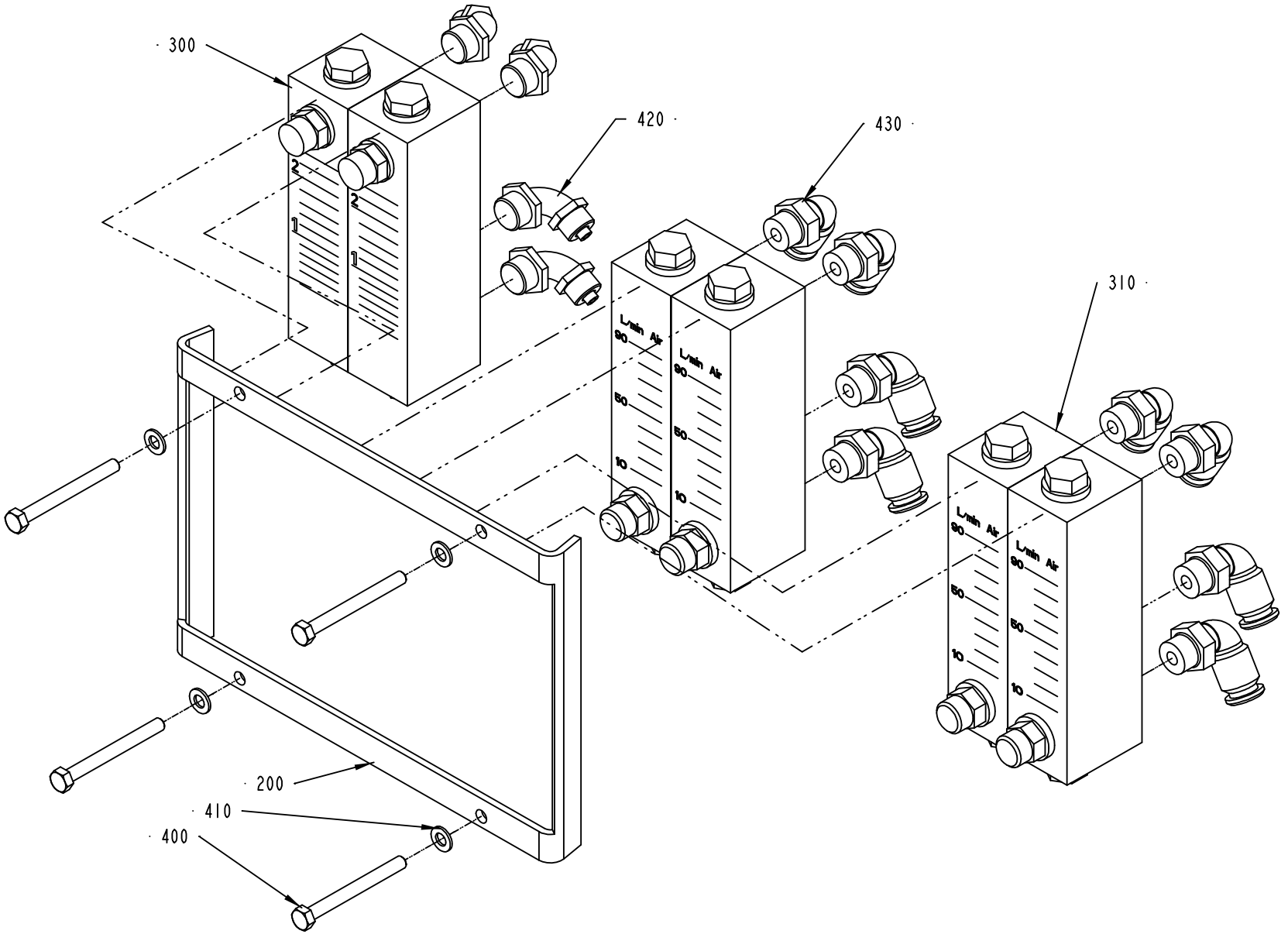

1349090-1
ECM 73254

ECM: 106561 - 20020313
Group number: 1349090-0100
Assembly Drawing: 1349090-1_1_AA

Pos	Part No	UN	Qty	Description	Page No
-					
200	1512488-0000		1	HOLDER	
300	90243-0134		2	FLOW METER	
310	90457-0101		4	FLOW METER FOR AIR	
400	312105-0341		4	SCREW M6S ISO 4014 M5X50 A480	
410	315105-0146		4	BRICKA BRB5,3X10RFR	
420	342931-0122		4	ELBOW 90 COUPL.,EXT.THREAD 8/6-G1/4"	
430	342732-0104		8	ELBOW PIPE JOINT, EXT.THREAD, D=8MM-G1/4	

Pos	Part No	UN	Qty	Description	Page No

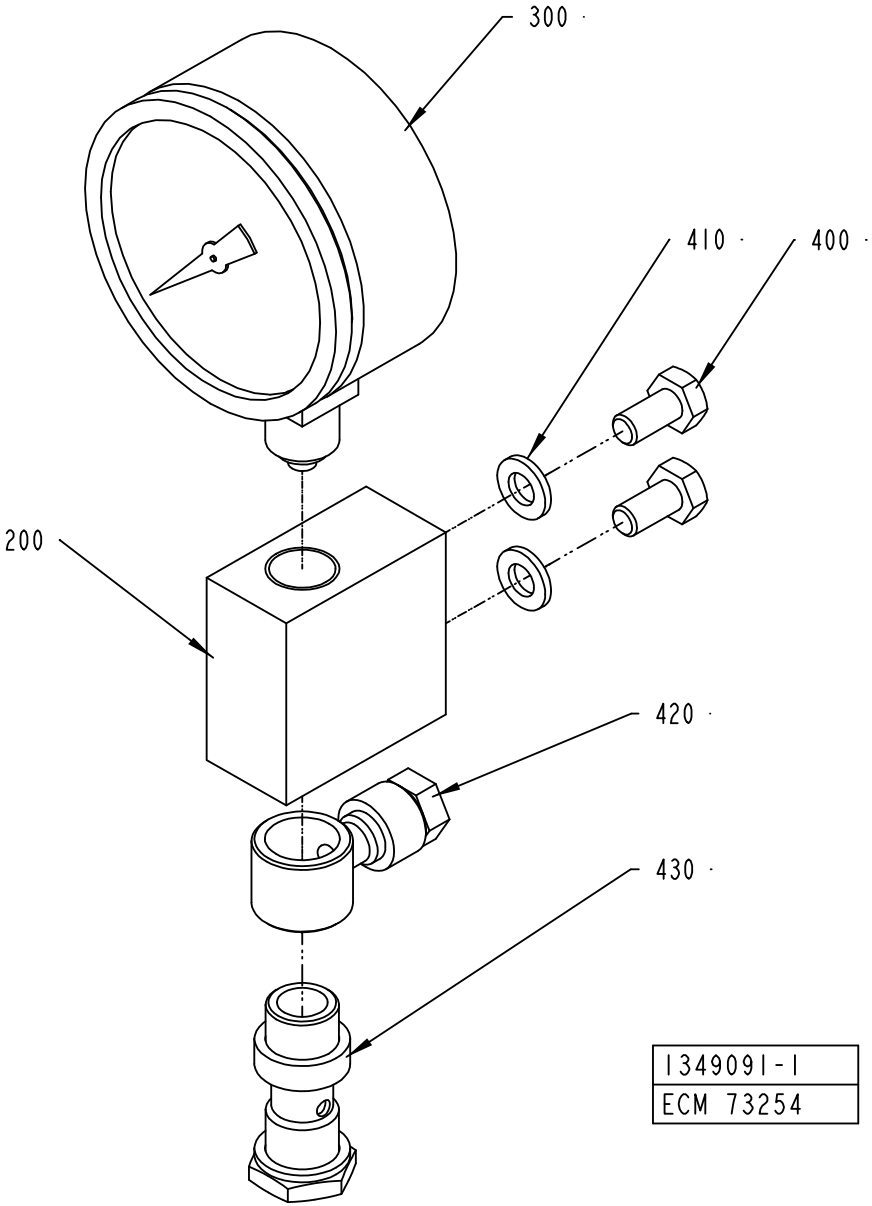
300
410
400
200
420
430
1349091-1
ECM 73254

ECM: 106560 - 20020313
Group number: 1349091-0100
Assembly Drawing: 1349091-1_1_AA

Pos	Part No	UN	Qty	Description	Page No
-					
200	1349092-0000		1	SUPPORT	
300	90043-0095		1	PRESSURE GAUGE, 2740, D=63 MM, GLYC.	
400	312105-0366		2	SCREW M6S M6X12 A280	
410	315105-0153		2	WASHER BRB6,4X12RFR	
420	342797-0122		1	CONN. BANJO, RINGPIECE 6-1/4	
430	342980-0304		1	BANJO-HOLLOW BOLT COUPL,EXT.THR.01-G1/4"	

Pos	Part No	UN	Qty	Description	Page No

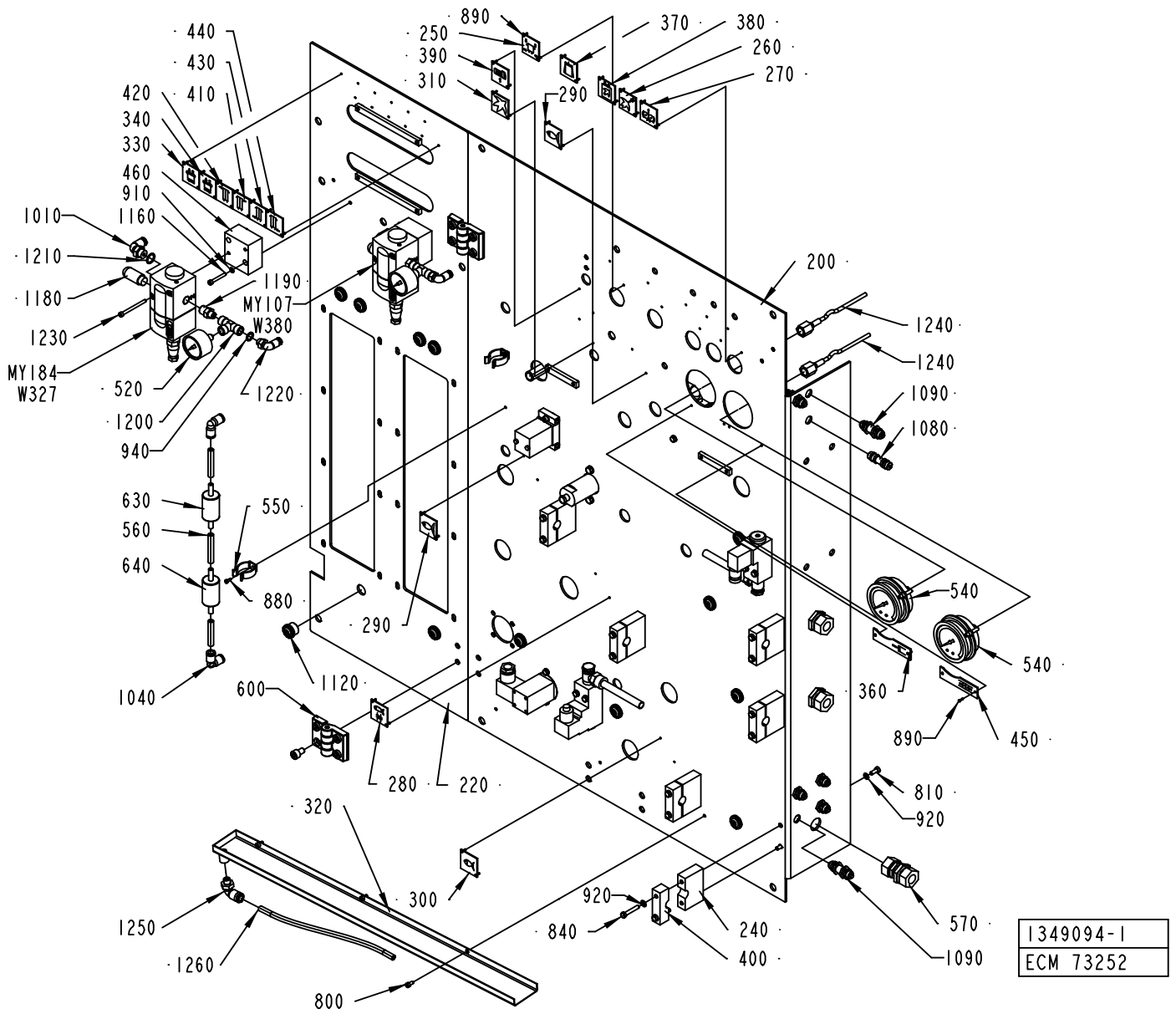
890
250
390
310
370
380
260
270
290
440
430
410
420
340
330
460
910
1160
1010
1210
1180
1230
MY184
W327
520
1200
940
1190
MY107
W380
1220
200
1240
1240
1090
1080
630
560
640
1040
550
880
290
1120
600
280
220
540
540
360
890
450
810
920
320
300
1250
1260
800
920
840
240
400
570
1090
1349094-1
ECM 73252

ECM: 115884 - 20020930
Group number: 1349094-0100
Assembly Drawing: 1349094-1_1_AA

This list covers pages from 6-38 to 6-41

Pos	Part No	UN	Qty	Description	Page No
-					
0200	1512487-0000		1	PLATE	
0210	576294-0000		1	JUNCTION BLOCK	
0220	1512490-0000		1	PLATE	
0230	295496-0000		1	BLOCKING PIECE	
0240	576286-0000		6	HOLDER	
0250	273449-0000		1	SIGN	
0260	273450-0000		1	SIGN	
0270	273452-0000		1	SIGN	
0280	273454-0000		1	SIGN	
0290	273455-0000		2	LABEL (COLD WATER)	
0300	273456-0000		1	SIGN	
0310	273458-0000		1	LABEL (AIR)	
0320	1346061-0000		1	DRAIN CHUTE	
0330	445533-0000		1	SIGN	
0340	445534-0000		1	SIGN	
0350	491649-0000		1	BRACKET	
0360	247385-0000		1	SIGN	
0370	929413-0000		1	SIGN	
0380	978603-0000		1	SIGN	
0390	979421-0000		1	SIGN	
0400	979446-0000		6	HOLDER	
0410	1517498-0000		1	SIGN FLEW-METER AIR	
0420	1517499-0000		1	SIGN FLEW-METER AIR	
0430	1517500-0000		1	SIGN FLEW-METER AIR	
0440	1517501-0000		1	SIGN FLEW-METER AIR	
0450	247386-0000		1	SIGN	
0460	1538758-0000		2	SPACER	
0520	90043-0069		2	PRESSURE GAUGE 0-4BAR WIEGAND 2040	
0530	90055-0118		1	ELBOW PIPE JOINT -8MM	
0540	90458-2421		2	PRESSURE GAUGE, 1453 W. BRACKET	
0550	90165-0019		2	TOOL CLIP, 81/3, OPEN, 20 - 30 MM	
0560	90166-0194	M	1	TUBE 8 MM PUR BLUE	
0570	90224-0296		3	CONN. BULKHEAD, ART.NO. 116 1500	
0580	90235-0450		1	PLATE	
0590	90235-0708		1	VALVE	
0600	90248-0034		2	HINGE, 66073	
0630	90277-0045		1	FILTER / 9900-05-BK	
0640	90277-0046		1	FILTER / 9933-05-101	
0650	90277-0323		1	FILTER HOUSING / ART.NO 95S6-1/4 S 5430	
0660	90277-0324		1	FILTER CARTRIDGE 050-11-A	
0800	312115-0287		3	SCREW ISO4762 M4X8 A4	
0810	312105-0327		16	SCREW M6S ISO 4017 M5X12 A480	
0820	312115-0329		2	SCREW ISO4762 M5X16 A4	
0830	312115-0447		8	SCREW ISO4762 M8X12 A4	
0840	312105-0335		12	SCREW M6S ISO 4014 M5X30 A480	
0850	312105-0339		4	SCREW M6S ISO 4014 M5X40 A480	
0860	312105-0341		1	SCREW M6S ISO 4014 M5X50 A480	
0870	312105-0380		2	SCREW M6S ISO 4014 M6X50 A480	
0880	312125-0222		2	SCREW ISO 1207 M3X8 A4	
0890	90457-0104		38	BLANK RIVET 2X7,4	
0900	312605-0314		5	HEXAGON NUT, M6M M5 A280	
0910	315105-0136		6	WASHER BRB4,3XRFR	
0920	315105-0146		35	BRICKA BRB5,3X10RFR	
0930	315105-0153		3	WASHER BRB6,4X12RFR	
0940	315233-0109		4	WASHER CAPTIVE SEALING G1/8	
0950	341001-0148	MM	17	COPPER TUBE	
0960	342713-0210		1	PLUG, EXT THREAD HEX SOCKET 8638-00-140	
0970	342713-0211		1	PLUG, EXT THREAD HEX SOCKET 8638-00-380	
0980	342722-0203		2	STRAIGHT COUPLING	
0990	342722-0204		1	PIPE COUPLING	
1000	342722-0206		1	STRAIGHT COUPLING D=8-G3/8"	
1010	342732-0103		3	ELBOW PIPE JOINT, EXT.THREAD, D=6MM-G1/4	
1020	342732-0104		1	ELBOW PIPE JOINT, EXT.THREAD, D=8MM-G1/4	
1030	342732-0110		1	ELBOW PIPE JOINT, EXT.THREAD,D=12MM-G3/8	
1040	342735-0103		2	ELBOW PIPE JOINT	
1050	342770-0105		2	STRAIGHT COUPLING INT, D=6 MM - G1/8	
1060	342921-0113		1	STRAIGHT COUPLING,EXT.THREADED 6/4-G1/8"	
1070	342921-0121		1	STRAIGHT COUPLING,EXT.THREADED 8/6-G1/8"	
1080	342960-0112		1	BULKHEAD COUPLING 6/4	
1090	342960-0122		6	BULKHEAD COUPLING 8/6	
1100	342980-0122		2	BANJO-CONNECTION,RING 8/6-G1/4"	
1110	342980-0304		2	BANJO-HOLLOW BOLT COUPL,EXT.THR.01-G1/4"	
1120	352101-0103		13	LEAD-IN, PR18,6/PG11, E-1457518	
1130	312605-0316		1	HEXAGON NUT, M6M M6 A280	
1140	312602-0316		8	MUTTER, EN 24032 M6M M6 NIPLBR	
1150	342903-0121		2	NUT WITH SPRING 8/6-M12X1	
1160	312115-0299		4	SCREW ISO4762 M4X30 A4	
1170	312812-0312		4	HEXAGON NUT, NY-LOCK M4 A480	
1180	90328-0026		2	SILENCER G1/4	
1190	90330-0013		2	NIPPLES, EXT. THREAD. ISO 7/1 R1/4-R1/8	
1200	90140-0015		2	T-PIPE, INT. THREAD, 2003-1/8	
1210	315233-0110		2	WASHER CAPTIVE SEALING G1/4	
1220	342732-0102		2	ELBOW PIPE JOINT, EXT.THREAD, D=6MM-G1/8	

Machine Type | Group Description | Used-In | Group Number | Page No

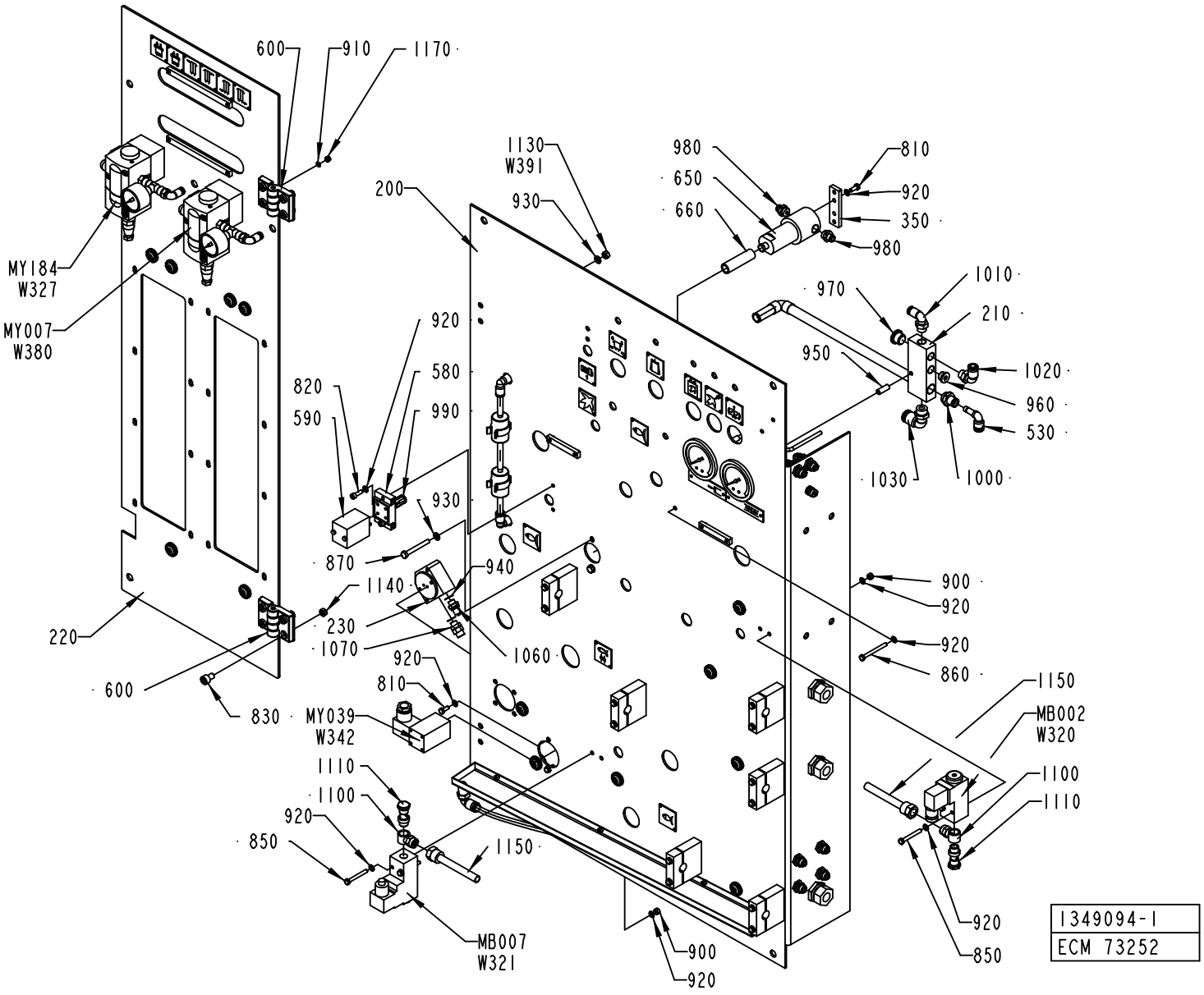
600
910
1170
1130
W391
930
200
980
650
660
810
920
350
980
MY184
W327
MY007
W380
970
1010
210
950
1020
960
530
1030
1000
920
580
990
820
590
930
870
940
1140
230
1070
1060
900
920
920
860
220
600
830
920
810
MY039
W342
1150
MB002
W320
1110
1100
920
850
1150
1100
1110
920
850
MB007
W321
900
920
1349094-1
ECM 73252

Pos	Part No	UN	Qty	Description	Page No
- (Cont'd)					
1230	312115-0305		4	SCREW ISO4762 M4X50 A4	
1240	90458-2488		2	MEASURING HOSE DN2 L=1500MM, MAX 400BAR	
1250	342732-0801		1	ELBOW PIPE JOINT, EXT.THREAD, D=8MM-G1/8	
1260	90166-0061	M	1	HOSE 4/8 PVC TRANSP.	
MB002	90274-0074		1	PRESSURE GUARD, 530 KPA	
MB007	90274-0056		1	PRESSURE SWITCH, 100 - 1200 KPA	
MY039	90042-0173		1	SOLENOID VALVE BURKERT	
MY107	90458-1092		1	PROPORTIONAL VALVE 0 - 10V/0-6 BAR	
	90458-1262		*1*	*CONNECTOR 131028001 FOR PROP. VALVE*	
MY184	90458-1092		1	PROPORTIONAL VALVE 0 - 10V/0-6 BAR	
	90458-1262		*1*	*CONNECTOR 131028001 FOR PROP. VALVE*	
W320	351150-0403	M	3	CABLE OLFLEX 3X0,75 MM2 LIGHT/GREY	
W321	351150-0403	M	3	CABLE OLFLEX 3X0,75 MM2 LIGHT/GREY	
W327	90220-0091	M	7	PAIR TWISTED CABLE 2X2X0,25MM2	
W342	351150-0403	M	3	CABLE OLFLEX 3X0,75 MM2 LIGHT/GREY	
W380	90220-0091	M	7	PAIR TWISTED CABLE 2X2X0,25MM2	
W391	351162-0106	M	4	CABLE AWM 1X4 MM2 YELLOW-GREEN	

Pos	Part No	UN	Qty	Description	Page No

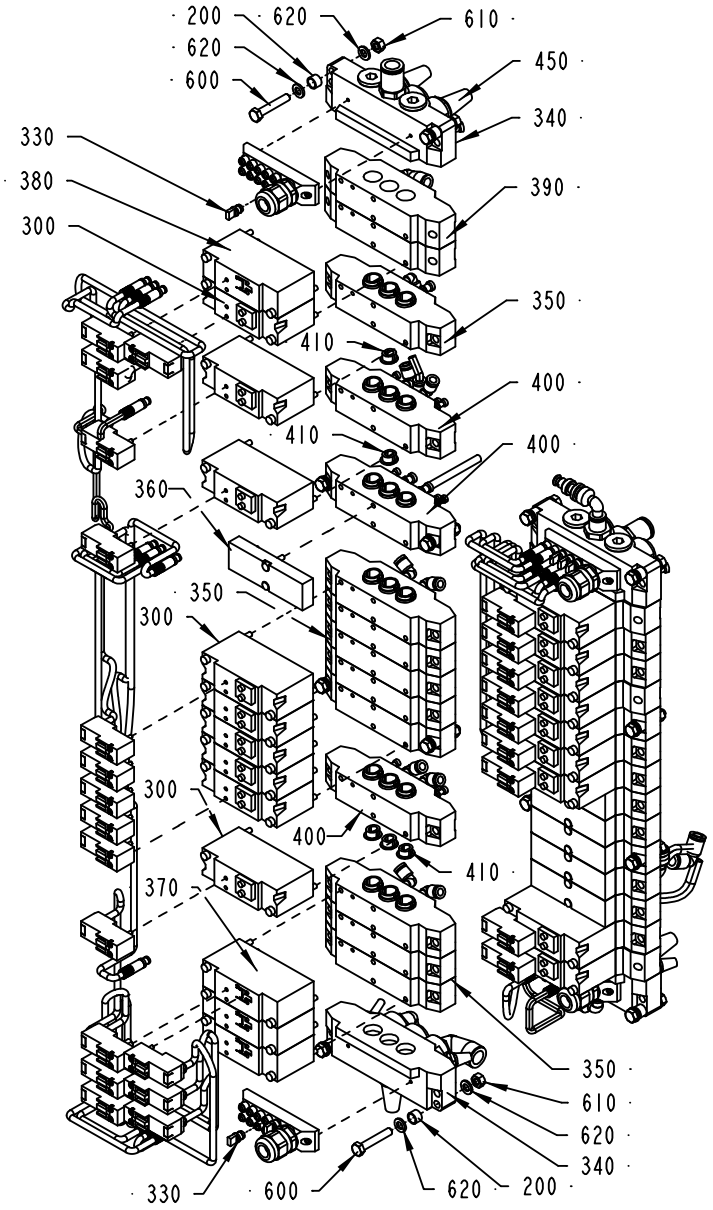

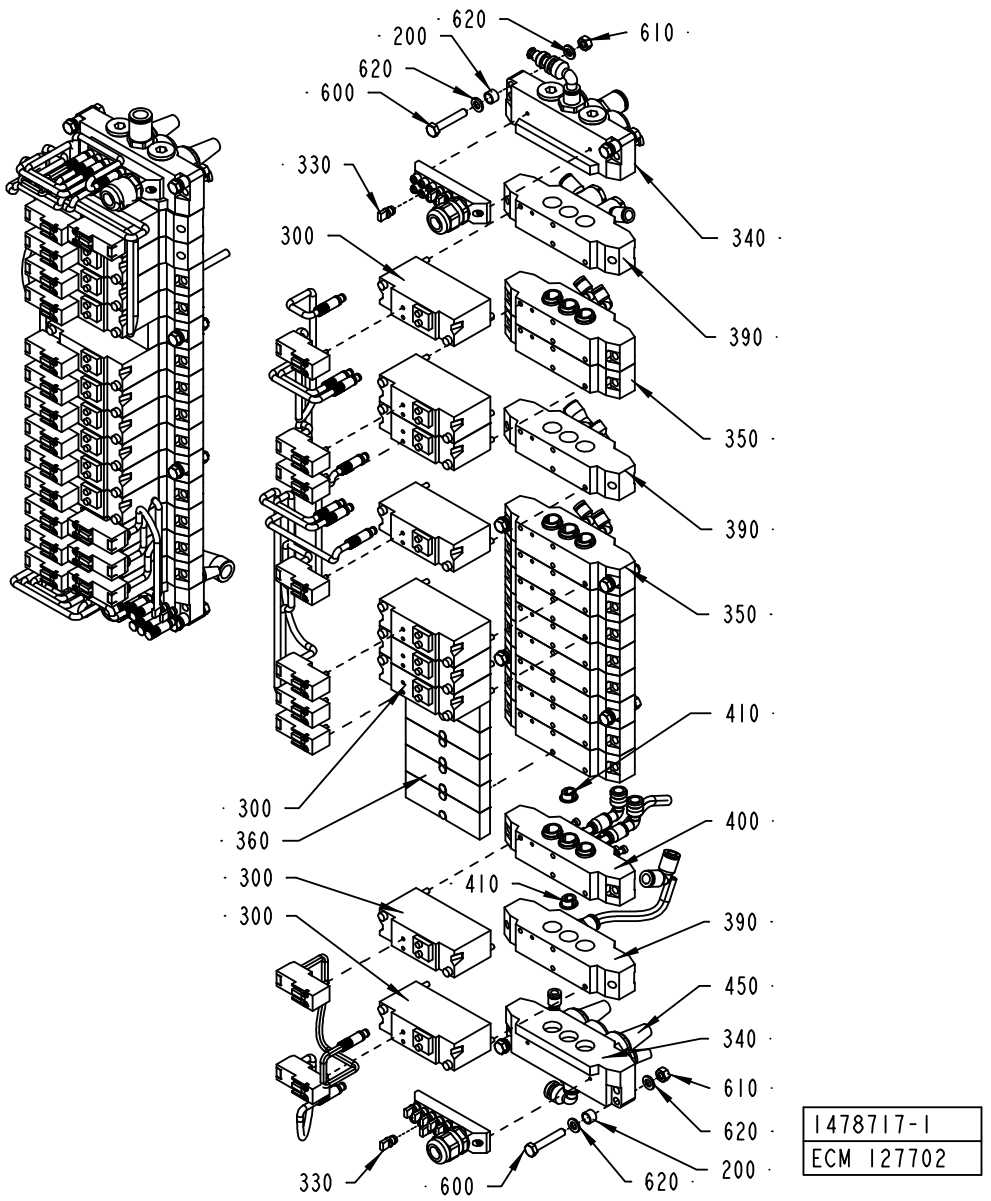

1478717-1
ECM 127702

ECM: 127702 - 20030624
Group number: 1478717-0100
Assembly Drawing: 1478717-1_1_AB

This list covers pages from 6-42 to 6-53

Pos	Part No	UN	Qty	Description	Page No
NOTCSB (See drawing on pages: 6-42, 6-44, 6-46)					
300	90042-0255		18	VALVE BODY 5/2 UNISTABLE	
330	90042-0550		14	PROTECTION PLUG FOR UNUSED CONNECTION	
360	90042-0567		6	BLANK PLATE VDMA SIZE 01	
420	90055-0217		32	ELBOW PIPE JOINT	
660	342715-0102		26	BLIND PLUG 6 MM	
TCSB (See drawing on pages: 6-48, 6-50, 6-52)					
300	90042-0255		19	VALVE BODY 5/2 UNISTABLE	
330	90042-0550		13	PROTECTION PLUG FOR UNUSED CONNECTION	
360	90042-0567		5	BLANK PLATE VDMA SIZE 01	
420	90055-0217		33	ELBOW PIPE JOINT	
660	342715-0102		25	BLIND PLUG 6 MM	
MY915	90042-0539		1	PILOT VALVE L=350MM	
Common Parts					
200	979219-0000		16	SPACER PIPE	
340	90042-0565		4	PORTED END PIECE ISO VDMA 01	
350	90042-0566		19	BASE PLATE ISO VDMA 01	
370	90042-0579		3	VALVE BODY 2X3/2 NORM CLOSE	
380	90042-0580		1	VALVE BODY 5/2 BISTABLE	
390	90042-0581		5	BASE PLATE ISO VDMA 01	
400	90042-0586		4	BASE PLATE ISO VDMA 01	
410	90042-0587		7	BLANKING KIT SEALS VDMA SIZE 01	
430	90055-0118		2	ELBOW PIPE JOINT -8MM	
440	90166-0081	M	4	TUBE 6 MM PA BLUE	
450	90328-0007		5	SILENCER	
460	90328-0017		2	SILENCER, D=6 MM	
600	312105-0376		16	SCREW M6S ISO 4014 M6X35 A480	
610	312605-0316		16	HEXAGON NUT, M6M M6 A280	
620	315105-0153		24	WASHER BRB6,4X12RFR	
630	342713-0210		3	PLUG, EXT THREAD HEX SOCKET 8638-00-140	
640	342713-0211		13	PLUG, EXT THREAD HEX SOCKET 8638-00-380	
650	342715-0100		8	BLIND PLUG 4 MM	
670	342722-0206		2	STRAIGHT COUPLING D=8-G3/8"	
680	342722-0210		2	STRAIGHT COUPLING, D=12 MM - G3/8"	
690	90458-2957		1	ELBOW PIPE JOINT, EXT.THREAD, D=6MM-G1/4	
700	90458-2958		2	ELBOW PIPE JOINT, EXT.THREAD, D=8MM-G1/4	
710	90458-2960		2	ELBOW PIPE JOINT, EXT.THREAD,D=12MM-G3/8	
720	342722-0205		1	STRAIGHT COUPLING D=8-G1/4"	
730	90458-2169		3	INCREASER 6-8	
740	90055-0172		2	ELBOW WITH TAILPIECE 8/8 MM	
750	342735-0103		1	ELBOW PIPE JOINT	
760	90166-0013	M		TUBE 8 MM PA BLUE	
770	342716-0203		1	REDUCER 6-8	
780	90458-2661		3	THROTTLE CHECK VALVE G1/4" MANUAL, 8	
MX032	90042-0535		1	TERMINAL BOARD 19 CORDS	
MX033	90042-0535		1	TERMINAL BOARD 19 CORDS	
MX034	90042-0535		1	TERMINAL BOARD 19 CORDS	
MX035	90042-0535		1	TERMINAL BOARD 19 CORDS	
MY001	90042-0539		1	PILOT VALVE L=350MM	
MY002	90042-0539		1	PILOT VALVE L=350MM	
MY003	90042-0539		1	PILOT VALVE L=350MM	
MY005	90042-0539		1	PILOT VALVE L=350MM	
MY006	90042-0539		1	PILOT VALVE L=350MM	
MY007	90042-0539		1	PILOT VALVE L=350MM	
MY008	90042-0539		1	PILOT VALVE L=350MM	
MY009	90042-0539		1	PILOT VALVE L=350MM	
MY017	90042-0539		1	PILOT VALVE L=350MM	
MY019	90042-0539		1	PILOT VALVE L=350MM	
MY020	90042-0539		1	PILOT VALVE L=350MM	
MY021	90042-0539		1	PILOT VALVE L=350MM	
MY023	90042-0539		1	PILOT VALVE L=350MM	
MY024	90042-0539		1	PILOT VALVE L=350MM	
MY025	90042-0539		1	PILOT VALVE L=350MM	
MY026	90042-0539		1	PILOT VALVE L=350MM	
MY027	90042-0539		1	PILOT VALVE L=350MM	
MY030	90042-0539		1	PILOT VALVE L=350MM	
MY037	90042-0539		1	PILOT VALVE L=350MM	
MY086	90042-0539		1	PILOT VALVE L=350MM	
MY100	90042-0539		1	PILOT VALVE L=350MM	
MY102	90042-0539		1	PILOT VALVE L=350MM	
MY103	90042-0539		1	PILOT VALVE L=350MM	
MY105	90042-0539		1	PILOT VALVE L=350MM	
MY129	90042-0539		1	PILOT VALVE L=350MM	
MY177	90042-0539		1	PILOT VALVE L=350MM	

Machine Type	Group Description	Used-In	Group Number	Page No

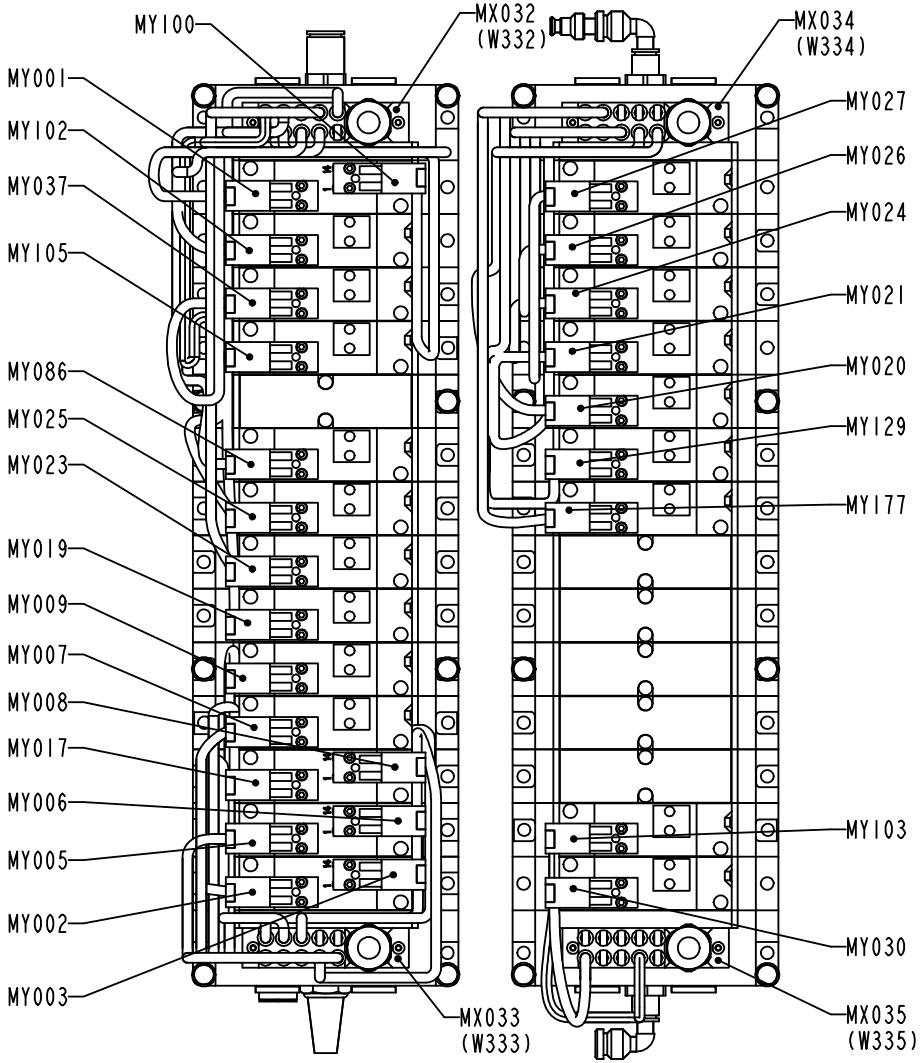
MY100
MX032
(W332)
MX034
(W334)
MY001
MY102
MY037
MY105
MY086
MY025
MY023
MY019
MY009
MY007
MY008
MY017
MY006
MY005
MY002
MY003
MY027
MY026
MY024
MY021
MY020
MY129
MY177
MY103
MY030
MX033
(W333)
MX035
(W335)

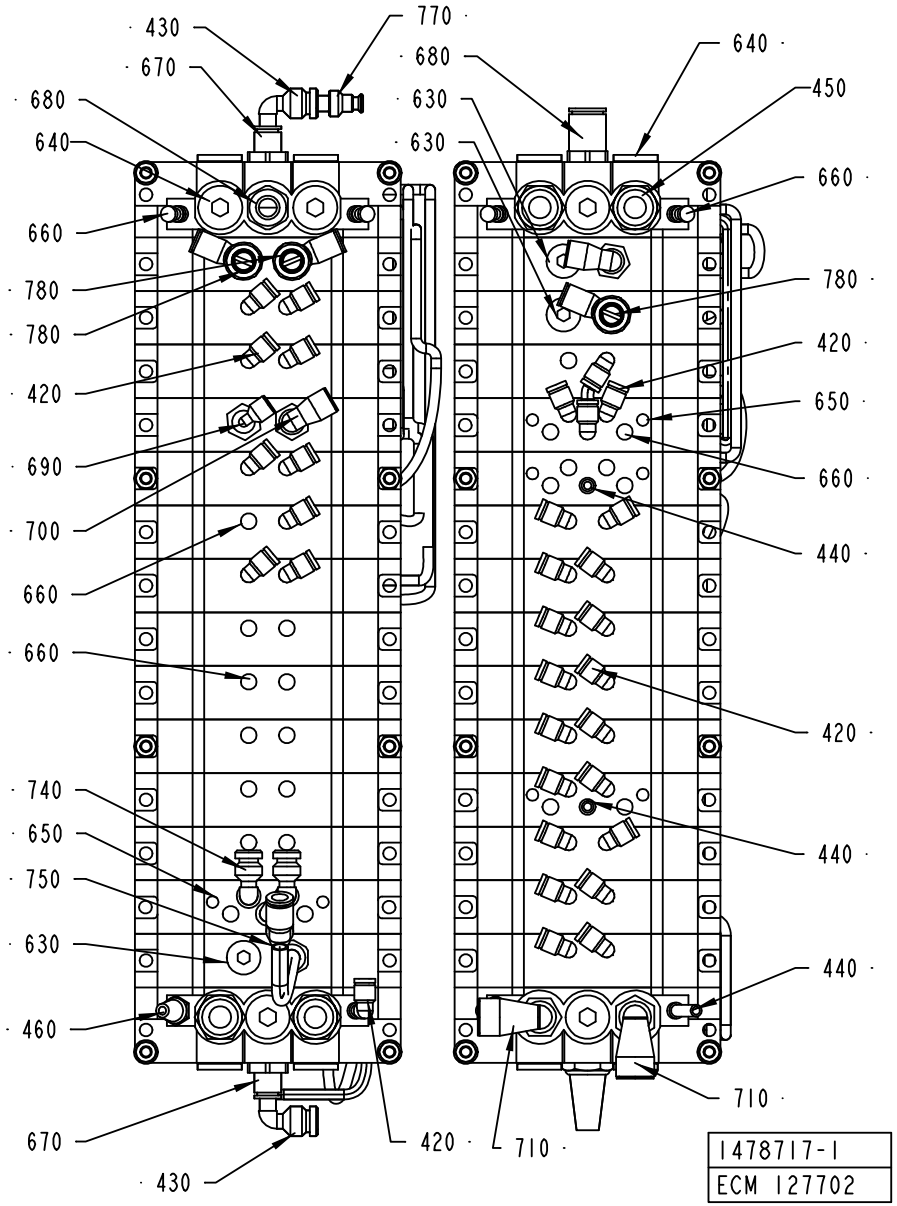
430
770
670
680
640
680
630
630
450
660
660
780
780
420
650
690
660
700
660
440
660
420
740
650
750
440
630
460
440
670
710
420
710
430
1478717-1
ECM 127702

ECM: 127702 - 20030624
Group number: 1478717-0100
Assembly Drawing: 1478717-1_2_AB

This list covers pages from 6-42 to 6-53

Pos	Part No	UN	Qty	Description	Page No
NOTCSB (See drawing on pages: 6-42, 6-44, 6-46)					
300	90042-0255		18	VALVE BODY 5/2 UNISTABLE	
330	90042-0550		14	PROTECTION PLUG FOR UNUSED CONNECTION	
360	90042-0567		6	BLANK PLATE VDMA SIZE 01	
420	90055-0217		32	ELBOW PIPE JOINT	
660	342715-0102		26	BLIND PLUG 6 MM	
TCSB (See drawing on pages: 6-48, 6-50, 6-52)					
300	90042-0255		19	VALVE BODY 5/2 UNISTABLE	
330	90042-0550		13	PROTECTION PLUG FOR UNUSED CONNECTION	
360	90042-0567		5	BLANK PLATE VDMA SIZE 01	
420	90055-0217		33	ELBOW PIPE JOINT	
660	342715-0102		25	BLIND PLUG 6 MM	
MY915	90042-0539		1	PILOT VALVE L=350MM	
Common Parts					
200	979219-0000		16	SPACER PIPE	
340	90042-0565		4	PORTED END PIECE ISO VDMA 01	
350	90042-0566		19	BASE PLATE ISO VDMA 01	
370	90042-0579		3	VALVE BODY 2X3/2 NORM CLOSE	
380	90042-0580		1	VALVE BODY 5/2 BISTABLE	
390	90042-0581		5	BASE PLATE ISO VDMA 01	
400	90042-0586		4	BASE PLATE ISO VDMA 01	
410	90042-0587		7	BLANKING KIT SEALS VDMA SIZE 01	
430	90055-0118		2	ELBOW PIPE JOINT -8MM	
440	90166-0081	M	4	TUBE 6 MM PA BLUE	
450	90328-0007		5	SILENCER	
460	90328-0017		2	SILENCER, D=6 MM	
600	312105-0376		16	SCREW M6S ISO 4014 M6X35 A480	
610	312605-0316		16	HEXAGON NUT, M6M M6 A280	
620	315105-0153		24	WASHER BRB6,4X12RFR	
630	342713-0210		3	PLUG, EXT THREAD HEX SOCKET 8638-00-140	
640	342713-0211		13	PLUG, EXT THREAD HEX SOCKET 8638-00-380	
650	342715-0100		8	BLIND PLUG 4 MM	
670	342722-0206		2	STRAIGHT COUPLING D=8-G3/8"	
680	342722-0210		2	STRAIGHT COUPLING, D=12 MM - G3/8"	
690	90458-2957		1	ELBOW PIPE JOINT, EXT.THREAD, D=6MM-G1/4	
700	90458-2958		2	ELBOW PIPE JOINT, EXT.THREAD, D=8MM-G1/4	
710	90458-2960		2	ELBOW PIPE JOINT, EXT.THREAD,D=12MM-G3/8	
720	342722-0205		1	STRAIGHT COUPLING D=8-G1/4"	
730	90458-2169		3	INCREASER 6-8	
740	90055-0172		2	ELBOW WITH TAILPIECE 8/8 MM	
750	342735-0103		1	ELBOW PIPE JOINT	
760	90166-0013	M		TUBE 8 MM PA BLUE	
770	342716-0203		1	REDUCER 6-8	
780	90458-2661		3	THROTTLE CHECK VALVE G1/4" MANUAL, 8	
MX032	90042-0535		1	TERMINAL BOARD 19 CORDS	
MX033	90042-0535		1	TERMINAL BOARD 19 CORDS	
MX034	90042-0535		1	TERMINAL BOARD 19 CORDS	
MX035	90042-0535		1	TERMINAL BOARD 19 CORDS	
MY001	90042-0539		1	PILOT VALVE L=350MM	
MY002	90042-0539		1	PILOT VALVE L=350MM	
MY003	90042-0539		1	PILOT VALVE L=350MM	
MY005	90042-0539		1	PILOT VALVE L=350MM	
MY006	90042-0539		1	PILOT VALVE L=350MM	
MY007	90042-0539		1	PILOT VALVE L=350MM	
MY008	90042-0539		1	PILOT VALVE L=350MM	
MY009	90042-0539		1	PILOT VALVE L=350MM	
MY017	90042-0539		1	PILOT VALVE L=350MM	
MY019	90042-0539		1	PILOT VALVE L=350MM	
MY020	90042-0539		1	PILOT VALVE L=350MM	
MY021	90042-0539		1	PILOT VALVE L=350MM	
MY023	90042-0539		1	PILOT VALVE L=350MM	
MY024	90042-0539		1	PILOT VALVE L=350MM	
MY025	90042-0539		1	PILOT VALVE L=350MM	
MY026	90042-0539		1	PILOT VALVE L=350MM	
MY027	90042-0539		1	PILOT VALVE L=350MM	
MY030	90042-0539		1	PILOT VALVE L=350MM	
MY037	90042-0539		1	PILOT VALVE L=350MM	
MY086	90042-0539		1	PILOT VALVE L=350MM	
MY100	90042-0539		1	PILOT VALVE L=350MM	
MY102	90042-0539		1	PILOT VALVE L=350MM	
MY103	90042-0539		1	PILOT VALVE L=350MM	
MY105	90042-0539		1	PILOT VALVE L=350MM	
MY129	90042-0539		1	PILOT VALVE L=350MM	
MY177	90042-0539		1	PILOT VALVE L=350MM	

Machine Type	Group Description	Used-In	Group Number	Page No

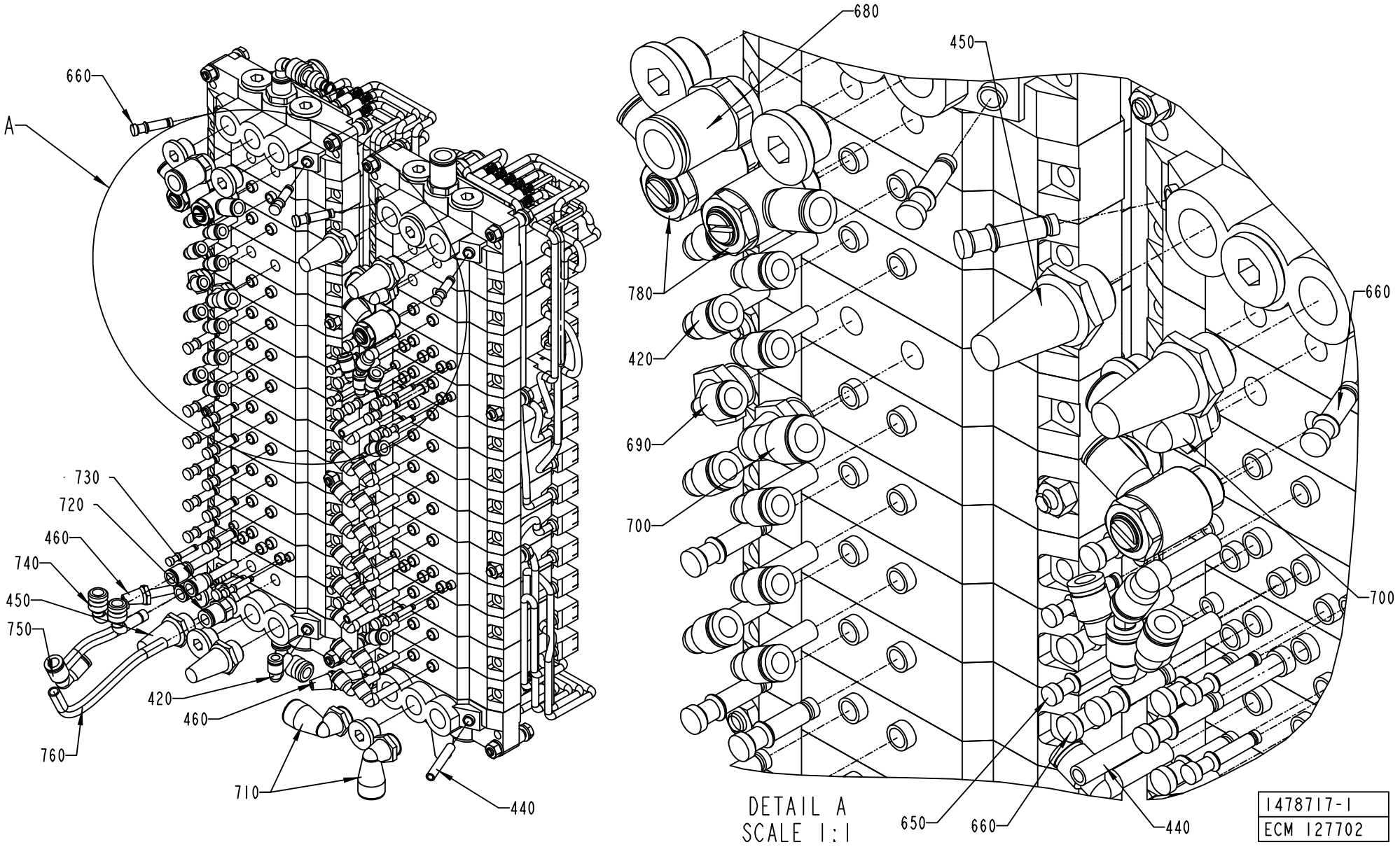
660
A
730
720
460
740
450
750
760
420
460
710
440
680
450
780
420
690
700
660
700
650
660
440
DETAIL A
SCALE 1:1
1478717-1
ECM 127702

ECM: 127702 - 20030624
Group number: 1478717-0100
Assembly Drawing: 1478717-1_3_AB

This list covers pages from 6-42 to 6-53

Pos	Part No	UN	Qty	Description	Page No
NOTCSB (See drawing on pages: 6-42, 6-44, 6-46)					
300	90042-0255		18	VALVE BODY 5/2 UNISTABLE	
330	90042-0550		14	PROTECTION PLUG FOR UNUSED CONNECTION	
360	90042-0567		6	BLANK PLATE VDMA SIZE 01	
420	90055-0217		32	ELBOW PIPE JOINT	
660	342715-0102		26	BLIND PLUG 6 MM	
TCSB (See drawing on pages: 6-48, 6-50, 6-52)					
300	90042-0255		19	VALVE BODY 5/2 UNISTABLE	
330	90042-0550		13	PROTECTION PLUG FOR UNUSED CONNECTION	
360	90042-0567		5	BLANK PLATE VDMA SIZE 01	
420	90055-0217		33	ELBOW PIPE JOINT	
660	342715-0102		25	BLIND PLUG 6 MM	
MY915	90042-0539		1	PILOT VALVE L=350MM	
Common Parts					
200	979219-0000		16	SPACER PIPE	
340	90042-0565		4	PORTED END PIECE ISO VDMA 01	
350	90042-0566		19	BASE PLATE ISO VDMA 01	
370	90042-0579		3	VALVE BODY 2X3/2 NORM CLOSE	
380	90042-0580		1	VALVE BODY 5/2 BISTABLE	
390	90042-0581		5	BASE PLATE ISO VDMA 01	
400	90042-0586		4	BASE PLATE ISO VDMA 01	
410	90042-0587		7	BLANKING KIT SEALS VDMA SIZE 01	
430	90055-0118		2	ELBOW PIPE JOINT -8MM	
440	90166-0081	M	4	TUBE 6 MM PA BLUE	
450	90328-0007		5	SILENCER	
460	90328-0017		2	SILENCER, D=6 MM	
600	312105-0376		16	SCREW M6S ISO 4014 M6X35 A480	
610	312605-0316		16	HEXAGON NUT, M6M M6 A280	
620	315105-0153		24	WASHER BRB6,4X12RFR	
630	342713-0210		3	PLUG, EXT THREAD HEX SOCKET 8638-00-140	
640	342713-0211		13	PLUG, EXT THREAD HEX SOCKET 8638-00-380	
650	342715-0100		8	BLIND PLUG 4 MM	
670	342722-0206		2	STRAIGHT COUPLING D=8-G3/8"	
680	342722-0210		2	STRAIGHT COUPLING, D=12 MM - G3/8"	
690	90458-2957		1	ELBOW PIPE JOINT, EXT.THREAD, D=6MM-G1/4	
700	90458-2958		2	ELBOW PIPE JOINT, EXT.THREAD, D=8MM-G1/4	
710	90458-2960		2	ELBOW PIPE JOINT, EXT.THREAD,D=12MM-G3/8	
720	342722-0205		1	STRAIGHT COUPLING D=8-G1/4"	
730	90458-2169		3	INCREASER 6-8	
740	90055-0172		2	ELBOW WITH TAILPIECE 8/8 MM	
750	342735-0103		1	ELBOW PIPE JOINT	
760	90166-0013	M		TUBE 8 MM PA BLUE	
770	342716-0203		1	REDUCER 6-8	
780	90458-2661		3	THROTTLE CHECK VALVE G1/4" MANUAL, 8	
MX032	90042-0535		1	TERMINAL BOARD 19 CORDS	
MX033	90042-0535		1	TERMINAL BOARD 19 CORDS	
MX034	90042-0535		1	TERMINAL BOARD 19 CORDS	
MX035	90042-0535		1	TERMINAL BOARD 19 CORDS	
MY001	90042-0539		1	PILOT VALVE L=350MM	
MY002	90042-0539		1	PILOT VALVE L=350MM	
MY003	90042-0539		1	PILOT VALVE L=350MM	
MY005	90042-0539		1	PILOT VALVE L=350MM	
MY006	90042-0539		1	PILOT VALVE L=350MM	
MY007	90042-0539		1	PILOT VALVE L=350MM	
MY008	90042-0539		1	PILOT VALVE L=350MM	
MY009	90042-0539		1	PILOT VALVE L=350MM	
MY017	90042-0539		1	PILOT VALVE L=350MM	
MY019	90042-0539		1	PILOT VALVE L=350MM	
MY020	90042-0539		1	PILOT VALVE L=350MM	
MY021	90042-0539		1	PILOT VALVE L=350MM	
MY023	90042-0539		1	PILOT VALVE L=350MM	
MY024	90042-0539		1	PILOT VALVE L=350MM	
MY025	90042-0539		1	PILOT VALVE L=350MM	
MY026	90042-0539		1	PILOT VALVE L=350MM	
MY027	90042-0539		1	PILOT VALVE L=350MM	
MY030	90042-0539		1	PILOT VALVE L=350MM	
MY037	90042-0539		1	PILOT VALVE L=350MM	
MY086	90042-0539		1	PILOT VALVE L=350MM	
MY100	90042-0539		1	PILOT VALVE L=350MM	
MY102	90042-0539		1	PILOT VALVE L=350MM	
MY103	90042-0539		1	PILOT VALVE L=350MM	
MY105	90042-0539		1	PILOT VALVE L=350MM	
MY129	90042-0539		1	PILOT VALVE L=350MM	
MY177	90042-0539		1	PILOT VALVE L=350MM	

Machine Type | Group Description | Used-In | Group Number | Page No

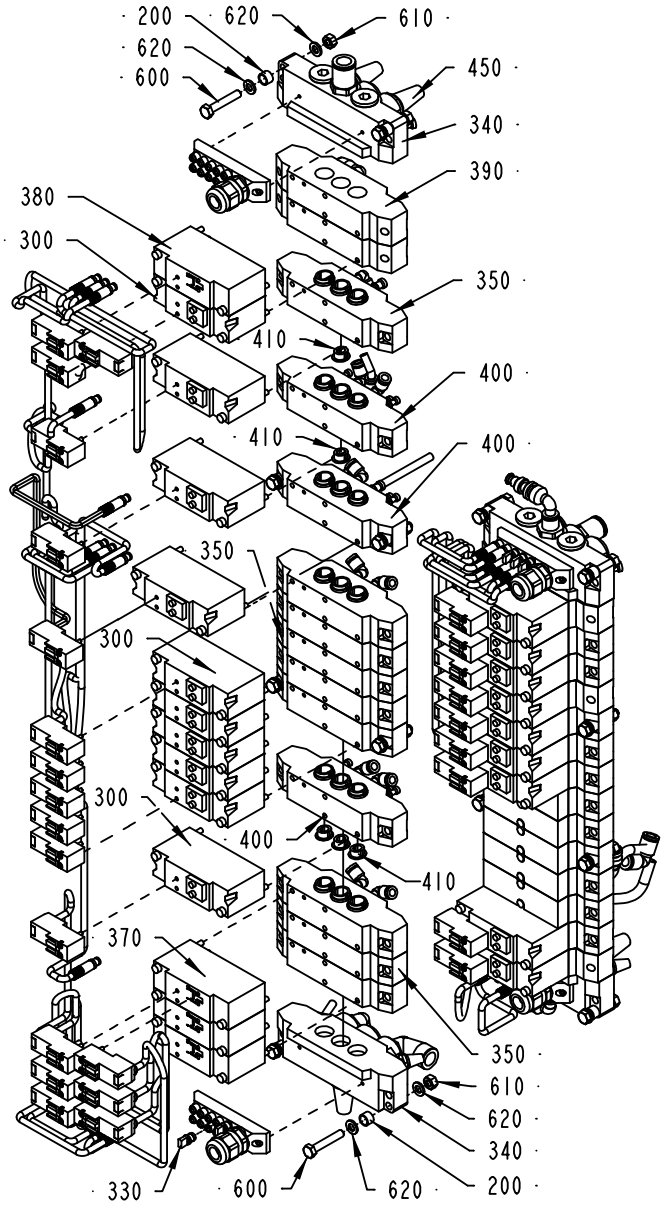

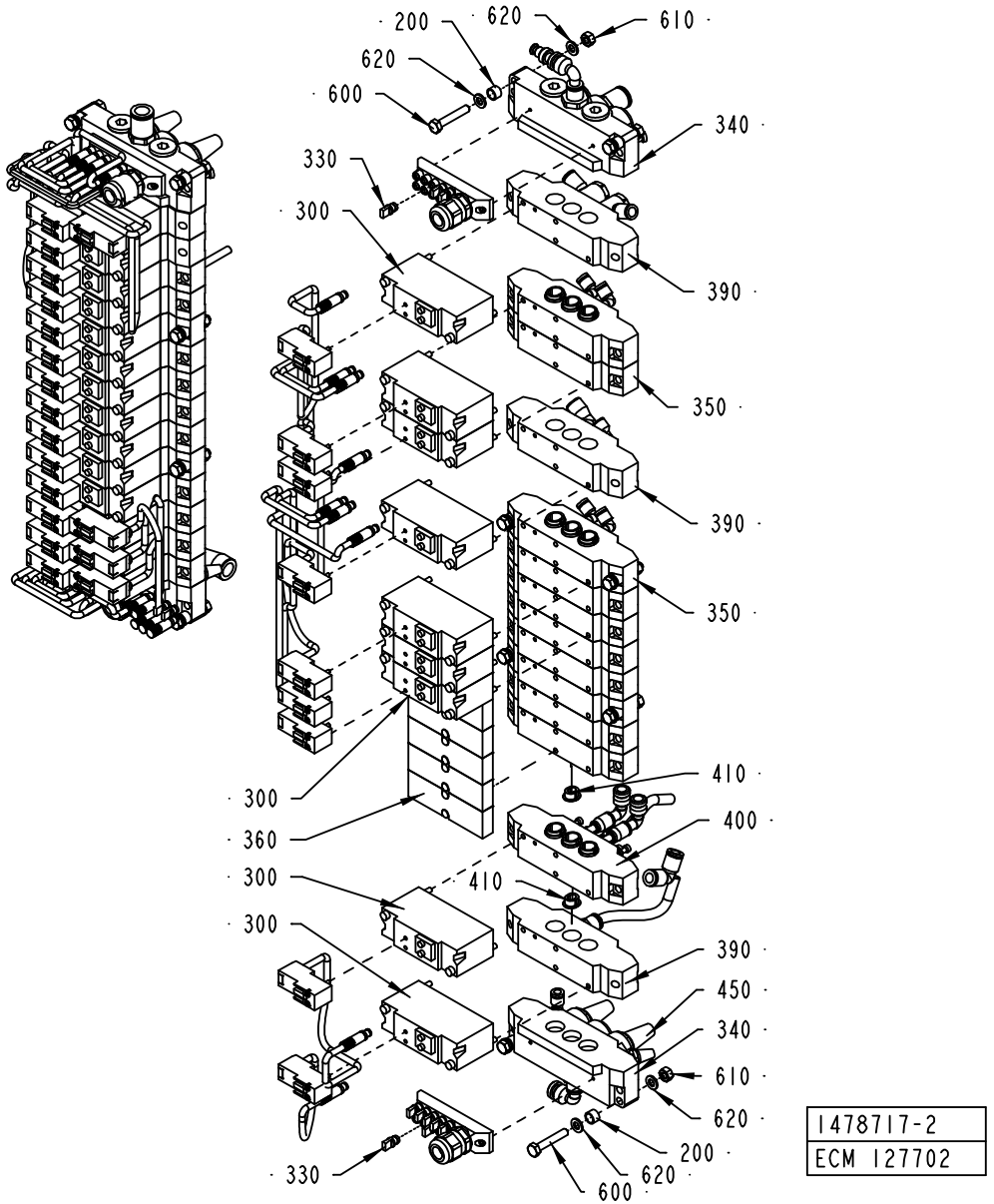

1478717-2
ECM 127702

ECM: 127702 - 20030624
Group number: 1478717-0100
Assembly Drawing: 1478717-2_1_AA

This list covers pages from 6-42 to 6-53

Pos	Part No	UN	Qty	Description	Page No
NOTCSB (See drawing on pages: 6-42, 6-44, 6-46)					
300	90042-0255		18	VALVE BODY 5/2 UNISTABLE	
330	90042-0550		14	PROTECTION PLUG FOR UNUSED CONNECTION	
360	90042-0567		6	BLANK PLATE VDMA SIZE 01	
420	90055-0217		32	ELBOW PIPE JOINT	
660	342715-0102		26	BLIND PLUG 6 MM	
TCSB (See drawing on pages: 6-48, 6-50, 6-52)					
300	90042-0255		19	VALVE BODY 5/2 UNISTABLE	
330	90042-0550		13	PROTECTION PLUG FOR UNUSED CONNECTION	
360	90042-0567		5	BLANK PLATE VDMA SIZE 01	
420	90055-0217		33	ELBOW PIPE JOINT	
660	342715-0102		25	BLIND PLUG 6 MM	
MY915	90042-0539		1	PILOT VALVE L=350MM	
Common Parts					
200	979219-0000		16	SPACER PIPE	
340	90042-0565		4	PORTED END PIECE ISO VDMA 01	
350	90042-0566		19	BASE PLATE ISO VDMA 01	
370	90042-0579		3	VALVE BODY 2X3/2 NORM CLOSE	
380	90042-0580		1	VALVE BODY 5/2 BISTABLE	
390	90042-0581		5	BASE PLATE ISO VDMA 01	
400	90042-0586		4	BASE PLATE ISO VDMA 01	
410	90042-0587		7	BLANKING KIT SEALS VDMA SIZE 01	
430	90055-0118		2	ELBOW PIPE JOINT -8MM	
440	90166-0081	M	4	TUBE 6 MM PA BLUE	
450	90328-0007		5	SILENCER	
460	90328-0017		2	SILENCER, D=6 MM	
600	312105-0376		16	SCREW M6S ISO 4014 M6X35 A480	
610	312605-0316		16	HEXAGON NUT, M6M M6 A280	
620	315105-0153		24	WASHER BRB6,4X12RFR	
630	342713-0210		3	PLUG, EXT THREAD HEX SOCKET 8638-00-140	
640	342713-0211		13	PLUG, EXT THREAD HEX SOCKET 8638-00-380	
650	342715-0100		8	BLIND PLUG 4 MM	
670	342722-0206		2	STRAIGHT COUPLING D=8-G3/8"	
680	342722-0210		2	STRAIGHT COUPLING, D=12 MM - G3/8"	
690	90458-2957		1	ELBOW PIPE JOINT, EXT.THREAD, D=6MM-G1/4	
700	90458-2958		2	ELBOW PIPE JOINT, EXT.THREAD, D=8MM-G1/4	
710	90458-2960		2	ELBOW PIPE JOINT, EXT.THREAD,D=12MM-G3/8	
720	342722-0205		1	STRAIGHT COUPLING D=8-G1/4"	
730	90458-2169		3	INCREASER 6-8	
740	90055-0172		2	ELBOW WITH TAILPIECE 8/8 MM	
750	342735-0103		1	ELBOW PIPE JOINT	
760	90166-0013	M		TUBE 8 MM PA BLUE	
770	342716-0203		1	REDUCER 6-8	
780	90458-2661		3	THROTTLE CHECK VALVE G1/4" MANUAL, 8	
MX032	90042-0535		1	TERMINAL BOARD 19 CORDS	
MX033	90042-0535		1	TERMINAL BOARD 19 CORDS	
MX034	90042-0535		1	TERMINAL BOARD 19 CORDS	
MX035	90042-0535		1	TERMINAL BOARD 19 CORDS	
MY001	90042-0539		1	PILOT VALVE L=350MM	
MY002	90042-0539		1	PILOT VALVE L=350MM	
MY003	90042-0539		1	PILOT VALVE L=350MM	
MY005	90042-0539		1	PILOT VALVE L=350MM	
MY006	90042-0539		1	PILOT VALVE L=350MM	
MY007	90042-0539		1	PILOT VALVE L=350MM	
MY008	90042-0539		1	PILOT VALVE L=350MM	
MY009	90042-0539		1	PILOT VALVE L=350MM	
MY017	90042-0539		1	PILOT VALVE L=350MM	
MY019	90042-0539		1	PILOT VALVE L=350MM	
MY020	90042-0539		1	PILOT VALVE L=350MM	
MY021	90042-0539		1	PILOT VALVE L=350MM	
MY023	90042-0539		1	PILOT VALVE L=350MM	
MY024	90042-0539		1	PILOT VALVE L=350MM	
MY025	90042-0539		1	PILOT VALVE L=350MM	
MY026	90042-0539		1	PILOT VALVE L=350MM	
MY027	90042-0539		1	PILOT VALVE L=350MM	
MY030	90042-0539		1	PILOT VALVE L=350MM	
MY037	90042-0539		1	PILOT VALVE L=350MM	
MY086	90042-0539		1	PILOT VALVE L=350MM	
MY100	90042-0539		1	PILOT VALVE L=350MM	
MY102	90042-0539		1	PILOT VALVE L=350MM	
MY103	90042-0539		1	PILOT VALVE L=350MM	
MY105	90042-0539		1	PILOT VALVE L=350MM	
MY129	90042-0539		1	PILOT VALVE L=350MM	
MY177	90042-0539		1	PILOT VALVE L=350MM	

Machine Type	Group Description	Used-In	Group Number	Page No

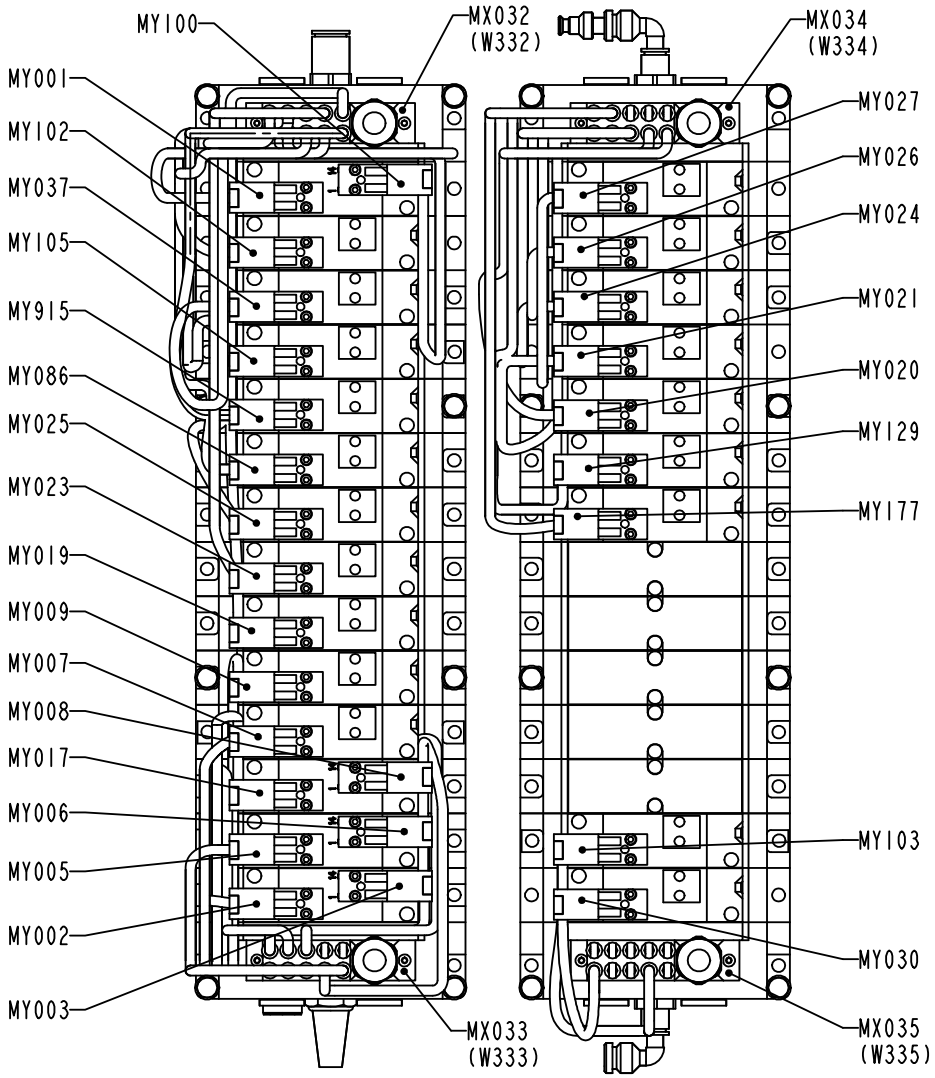
MY100
MX032 (W332)
MX034 (W334)
MY001
MY102
MY037
MY105
MY915
MY086
MY025
MY023
MY019
MY009
MY007
MY008
MY017
MY006
MY005
MY002
MY003
MY027
MY026
MY024
MY021
MY020
MY129
MY177
MY103
MY030
MX033 (W333)
MX035 (W335)

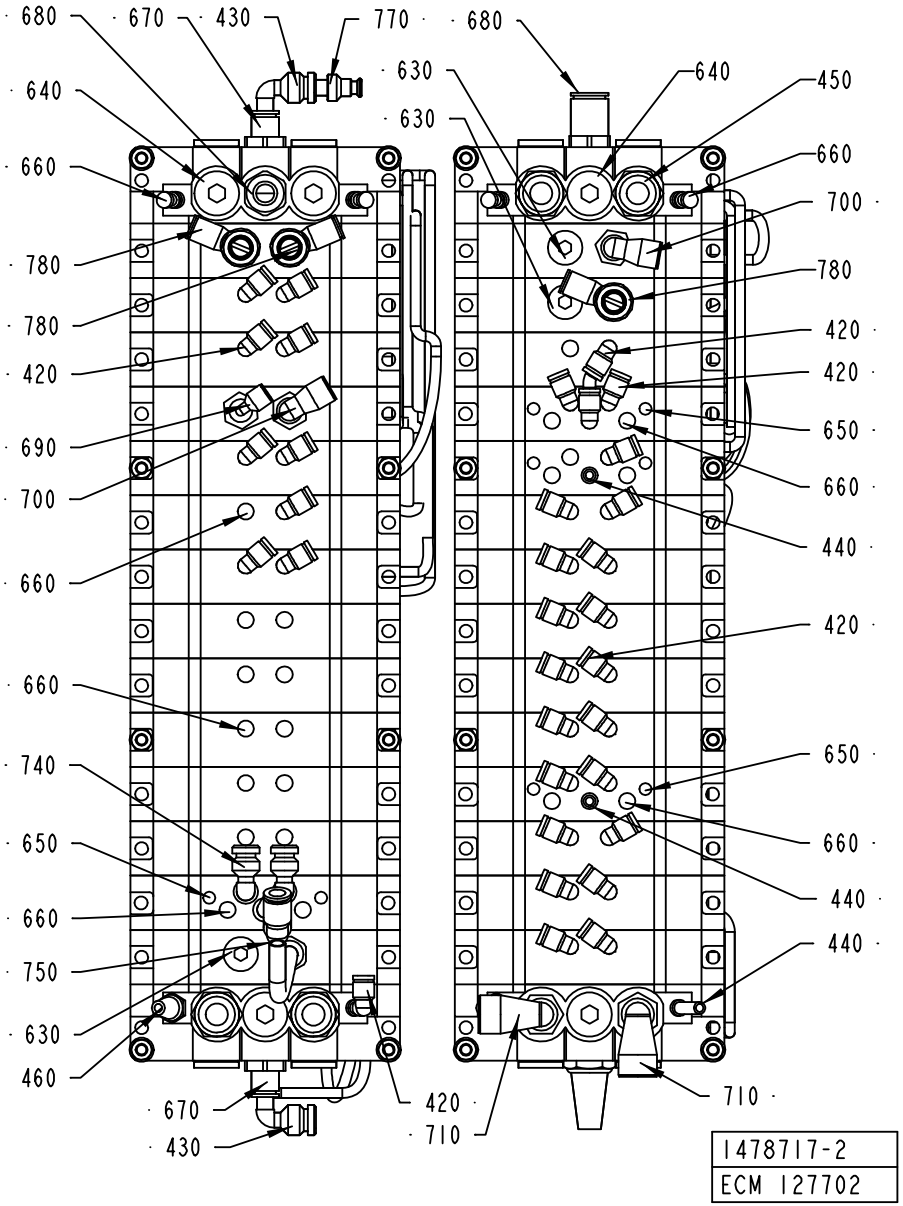
680
670
430
770
680
640
630
630
640
450
660
660
700
780
780
780
420
420
420
690
650
700
660
660
440
420
660
650
740
660
650
660
660
750
440
630
440
460
670
420
430
710
710
1478717-2
ECM 127702

ECM: 127702 - 20030624
Group number: 1478717-0100
Assembly Drawing: 1478717-2_2_AA

This list covers pages from 6-42 to 6-53

Pos	Part No	UN	Qty	Description	Page No
NOTCSB (See drawing on pages: 6-42, 6-44, 6-46)					
300	90042-0255		18	VALVE BODY 5/2 UNISTABLE	
330	90042-0550		14	PROTECTION PLUG FOR UNUSED CONNECTION	
360	90042-0567		6	BLANK PLATE VDMA SIZE 01	
420	90055-0217		32	ELBOW PIPE JOINT	
660	342715-0102		26	BLIND PLUG 6 MM	
TCSB (See drawing on pages: 6-48, 6-50, 6-52)					
300	90042-0255		19	VALVE BODY 5/2 UNISTABLE	
330	90042-0550		13	PROTECTION PLUG FOR UNUSED CONNECTION	
360	90042-0567		5	BLANK PLATE VDMA SIZE 01	
420	90055-0217		33	ELBOW PIPE JOINT	
660	342715-0102		25	BLIND PLUG 6 MM	
MY915	90042-0539		1	PILOT VALVE L=350MM	
Common Parts					
200	979219-0000		16	SPACER PIPE	
340	90042-0565		4	PORTED END PIECE ISO VDMA 01	
350	90042-0566		19	BASE PLATE ISO VDMA 01	
370	90042-0579		3	VALVE BODY 2X3/2 NORM CLOSE	
380	90042-0580		1	VALVE BODY 5/2 BISTABLE	
390	90042-0581		5	BASE PLATE ISO VDMA 01	
400	90042-0586		4	BASE PLATE ISO VDMA 01	
410	90042-0587		7	BLANKING KIT SEALS VDMA SIZE 01	
430	90055-0118		2	ELBOW PIPE JOINT -8MM	
440	90166-0081	M	4	TUBE 6 MM PA BLUE	
450	90328-0007		5	SILENCER	
460	90328-0017		2	SILENCER, D=6 MM	
600	312105-0376		16	SCREW M6S ISO 4014 M6X35 A480	
610	312605-0316		16	HEXAGON NUT, M6M M6 A280	
620	315105-0153		24	WASHER BRB6,4X12RFR	
630	342713-0210		3	PLUG, EXT THREAD HEX SOCKET 8638-00-140	
640	342713-0211		13	PLUG, EXT THREAD HEX SOCKET 8638-00-380	
650	342715-0100		8	BLIND PLUG 4 MM	
670	342722-0206		2	STRAIGHT COUPLING D=8-G3/8"	
680	342722-0210		2	STRAIGHT COUPLING, D=12 MM - G3/8"	
690	90458-2957		1	ELBOW PIPE JOINT, EXT.THREAD, D=6MM-G1/4	
700	90458-2958		2	ELBOW PIPE JOINT, EXT.THREAD, D=8MM-G1/4	
710	90458-2960		2	ELBOW PIPE JOINT, EXT.THREAD,D=12MM-G3/8	
720	342722-0205		1	STRAIGHT COUPLING D=8-G1/4"	
730	90458-2169		3	INCREASER 6-8	
740	90055-0172		2	ELBOW WITH TAILPIECE 8/8 MM	
750	342735-0103		1	ELBOW PIPE JOINT	
760	90166-0013	M		TUBE 8 MM PA BLUE	
770	342716-0203		1	REDUCER 6-8	
780	90458-2661		3	THROTTLE CHECK VALVE G1/4" MANUAL, 8	
MX032	90042-0535		1	TERMINAL BOARD 19 CORDS	
MX033	90042-0535		1	TERMINAL BOARD 19 CORDS	
MX034	90042-0535		1	TERMINAL BOARD 19 CORDS	
MX035	90042-0535		1	TERMINAL BOARD 19 CORDS	
MY001	90042-0539		1	PILOT VALVE L=350MM	
MY002	90042-0539		1	PILOT VALVE L=350MM	
MY003	90042-0539		1	PILOT VALVE L=350MM	
MY005	90042-0539		1	PILOT VALVE L=350MM	
MY006	90042-0539		1	PILOT VALVE L=350MM	
MY007	90042-0539		1	PILOT VALVE L=350MM	
MY008	90042-0539		1	PILOT VALVE L=350MM	
MY009	90042-0539		1	PILOT VALVE L=350MM	
MY017	90042-0539		1	PILOT VALVE L=350MM	
MY019	90042-0539		1	PILOT VALVE L=350MM	
MY020	90042-0539		1	PILOT VALVE L=350MM	
MY021	90042-0539		1	PILOT VALVE L=350MM	
MY023	90042-0539		1	PILOT VALVE L=350MM	
MY024	90042-0539		1	PILOT VALVE L=350MM	
MY025	90042-0539		1	PILOT VALVE L=350MM	
MY026	90042-0539		1	PILOT VALVE L=350MM	
MY027	90042-0539		1	PILOT VALVE L=350MM	
MY030	90042-0539		1	PILOT VALVE L=350MM	
MY037	90042-0539		1	PILOT VALVE L=350MM	
MY086	90042-0539		1	PILOT VALVE L=350MM	
MY100	90042-0539		1	PILOT VALVE L=350MM	
MY102	90042-0539		1	PILOT VALVE L=350MM	
MY103	90042-0539		1	PILOT VALVE L=350MM	
MY105	90042-0539		1	PILOT VALVE L=350MM	
MY129	90042-0539		1	PILOT VALVE L=350MM	
MY177	90042-0539		1	PILOT VALVE L=350MM	

Machine Type	Group Description	Used-In	Group Number	Page No

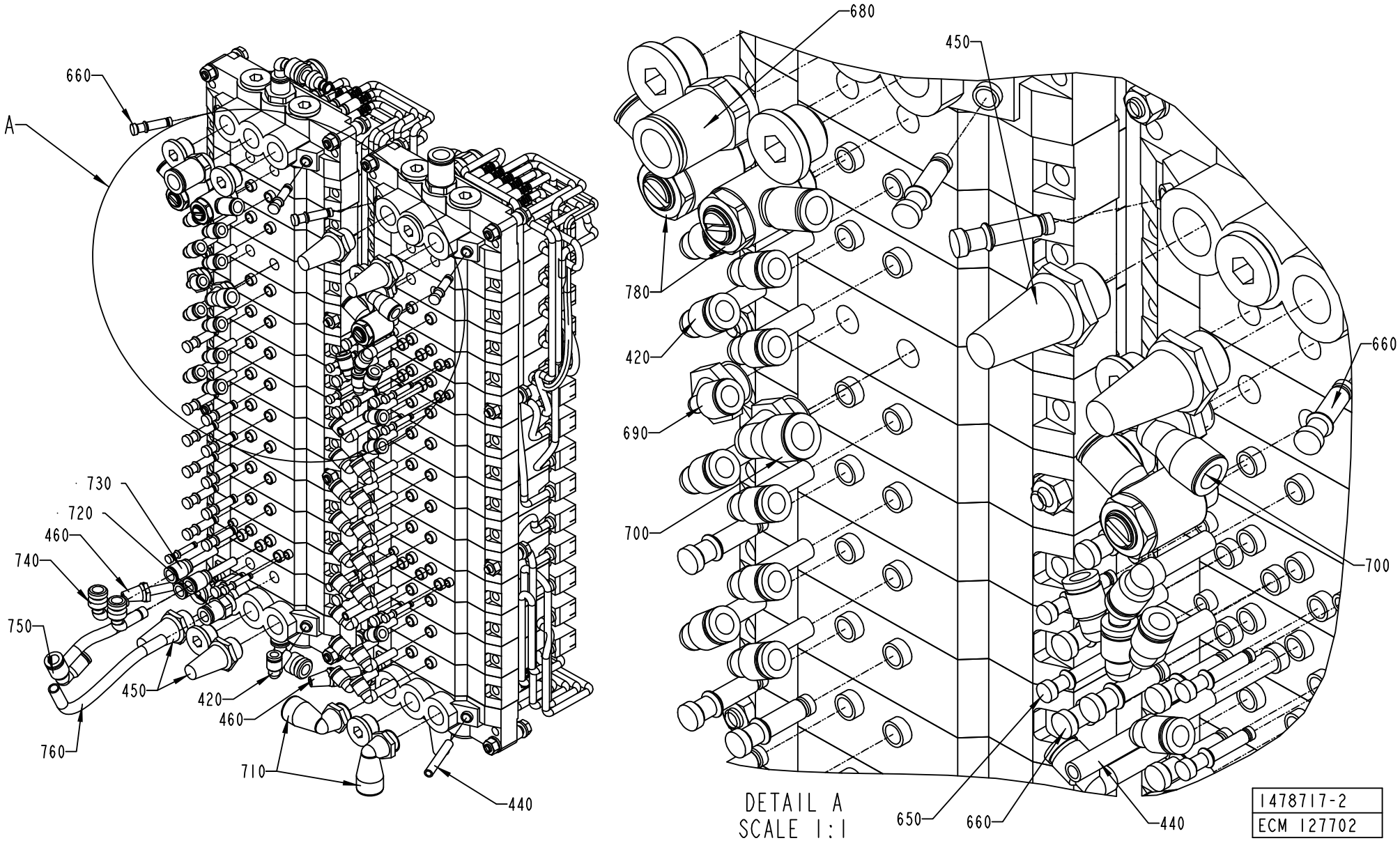
660
A
730
720
460
740
750
760
450
420
460
710
440
680
450
780
420
690
700
660
700
650
660
440
DETAIL A
SCALE 1:1
1478717-2
ECM 127702

ECM: 127702 - 20030624
Group number: 1478717-0100
Assembly Drawing: 1478717-2_3_AA

This list covers pages from 6-42 to 6-53

Pos	Part No	UN	Qty	Description	Page No
NOTCSB (See drawing on pages: 6-42, 6-44, 6-46)					
300	90042-0255		18	VALVE BODY 5/2 UNISTABLE	
330	90042-0550		14	PROTECTION PLUG FOR UNUSED CONNECTION	
360	90042-0567		6	BLANK PLATE VDMA SIZE 01	
420	90055-0217		32	ELBOW PIPE JOINT	
660	342715-0102		26	BLIND PLUG 6 MM	
TCSB (See drawing on pages: 6-48, 6-50, 6-52)					
300	90042-0255		19	VALVE BODY 5/2 UNISTABLE	
330	90042-0550		13	PROTECTION PLUG FOR UNUSED CONNECTION	
360	90042-0567		5	BLANK PLATE VDMA SIZE 01	
420	90055-0217		33	ELBOW PIPE JOINT	
660	342715-0102		25	BLIND PLUG 6 MM	
MY915	90042-0539		1	PILOT VALVE L=350MM	
Common Parts					
200	979219-0000		16	SPACER PIPE	
340	90042-0565		4	PORTED END PIECE ISO VDMA 01	
350	90042-0566		19	BASE PLATE ISO VDMA 01	
370	90042-0579		3	VALVE BODY 2X3/2 NORM CLOSE	
380	90042-0580		1	VALVE BODY 5/2 BISTABLE	
390	90042-0581		5	BASE PLATE ISO VDMA 01	
400	90042-0586		4	BASE PLATE ISO VDMA 01	
410	90042-0587		7	BLANKING KIT SEALS VDMA SIZE 01	
430	90055-0118		2	ELBOW PIPE JOINT -8MM	
440	90166-0081	M	4	TUBE 6 MM PA BLUE	
450	90328-0007		5	SILENCER	
460	90328-0017		2	SILENCER, D=6 MM	
600	312105-0376		16	SCREW M6S ISO 4014 M6X35 A480	
610	312605-0316		16	HEXAGON NUT, M6M M6 A280	
620	315105-0153		24	WASHER BRB6,4X12RFR	
630	342713-0210		3	PLUG, EXT THREAD HEX SOCKET 8638-00-140	
640	342713-0211		13	PLUG, EXT THREAD HEX SOCKET 8638-00-380	
650	342715-0100		8	BLIND PLUG 4 MM	
670	342722-0206		2	STRAIGHT COUPLING D=8-G3/8"	
680	342722-0210		2	STRAIGHT COUPLING, D=12 MM - G3/8"	
690	90458-2957		1	ELBOW PIPE JOINT, EXT.THREAD, D=6MM-G1/4	
700	90458-2958		2	ELBOW PIPE JOINT, EXT.THREAD, D=8MM-G1/4	
710	90458-2960		2	ELBOW PIPE JOINT, EXT.THREAD,D=12MM-G3/8	
720	342722-0205		1	STRAIGHT COUPLING D=8-G1/4"	
730	90458-2169		3	INCREASER 6-8	
740	90055-0172		2	ELBOW WITH TAILPIECE 8/8 MM	
750	342735-0103		1	ELBOW PIPE JOINT	
760	90166-0013	M		TUBE 8 MM PA BLUE	
770	342716-0203		1	REDUCER 6-8	
780	90458-2661		3	THROTTLE CHECK VALVE G1/4" MANUAL, 8	
MX032	90042-0535		1	TERMINAL BOARD 19 CORDS	
MX033	90042-0535		1	TERMINAL BOARD 19 CORDS	
MX034	90042-0535		1	TERMINAL BOARD 19 CORDS	
MX035	90042-0535		1	TERMINAL BOARD 19 CORDS	
MY001	90042-0539		1	PILOT VALVE L=350MM	
MY002	90042-0539		1	PILOT VALVE L=350MM	
MY003	90042-0539		1	PILOT VALVE L=350MM	
MY005	90042-0539		1	PILOT VALVE L=350MM	
MY006	90042-0539		1	PILOT VALVE L=350MM	
MY007	90042-0539		1	PILOT VALVE L=350MM	
MY008	90042-0539		1	PILOT VALVE L=350MM	
MY009	90042-0539		1	PILOT VALVE L=350MM	
MY017	90042-0539		1	PILOT VALVE L=350MM	
MY019	90042-0539		1	PILOT VALVE L=350MM	
MY020	90042-0539		1	PILOT VALVE L=350MM	
MY021	90042-0539		1	PILOT VALVE L=350MM	
MY023	90042-0539		1	PILOT VALVE L=350MM	
MY024	90042-0539		1	PILOT VALVE L=350MM	
MY025	90042-0539		1	PILOT VALVE L=350MM	
MY026	90042-0539		1	PILOT VALVE L=350MM	
MY027	90042-0539		1	PILOT VALVE L=350MM	
MY030	90042-0539		1	PILOT VALVE L=350MM	
MY037	90042-0539		1	PILOT VALVE L=350MM	
MY086	90042-0539		1	PILOT VALVE L=350MM	
MY100	90042-0539		1	PILOT VALVE L=350MM	
MY102	90042-0539		1	PILOT VALVE L=350MM	
MY103	90042-0539		1	PILOT VALVE L=350MM	
MY105	90042-0539		1	PILOT VALVE L=350MM	
MY129	90042-0539		1	PILOT VALVE L=350MM	
MY177	90042-0539		1	PILOT VALVE L=350MM	

Machine Type	Group Description	Used-In	Group Number	Page No

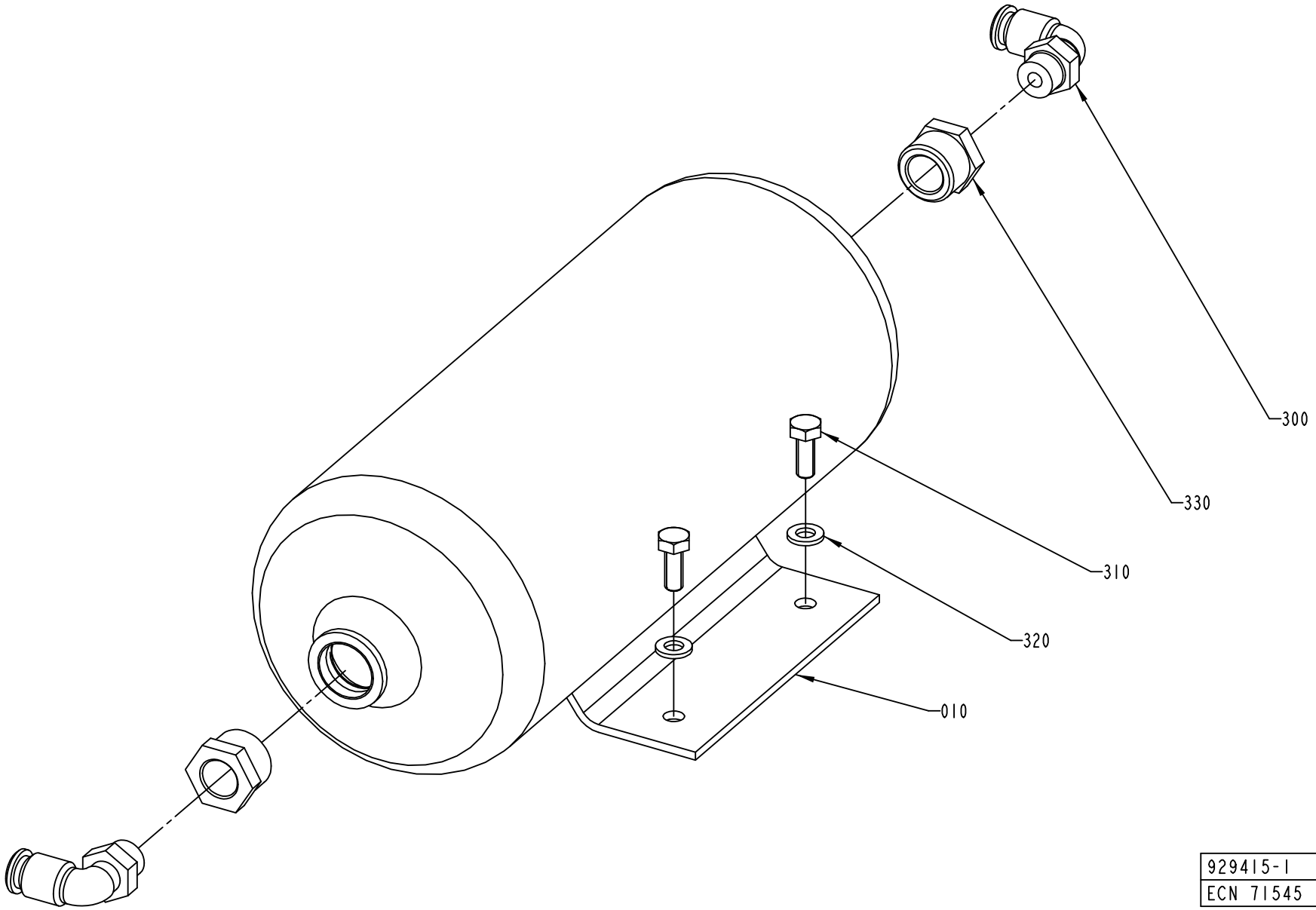
300
330
310
320
010
929415-1
ECN 71545

ECM: 71545 - 20010502
Group number: 929415-0100
Assembly Drawing: 929415-1_1_AC

Pos	Part No	UN	Qty	Description	Page No
-					
010	90457-0100		1	ACCUMULATOR CRVZS-2	
300	342732-0104		2	ELBOW PIPE JOINT, EXT.THREAD, D=8MM-G1/4	
310	312105-0368		2	SCREW M6S M6X16 A280	
320	315105-0153		2	WASHER BRB6,4X12RFR	
330	342701-0205		2	BUSHING,INT./EXT.G-THREAD G1/2"-G1/4"	

Pos	Part No	UN	Qty	Description	Page No

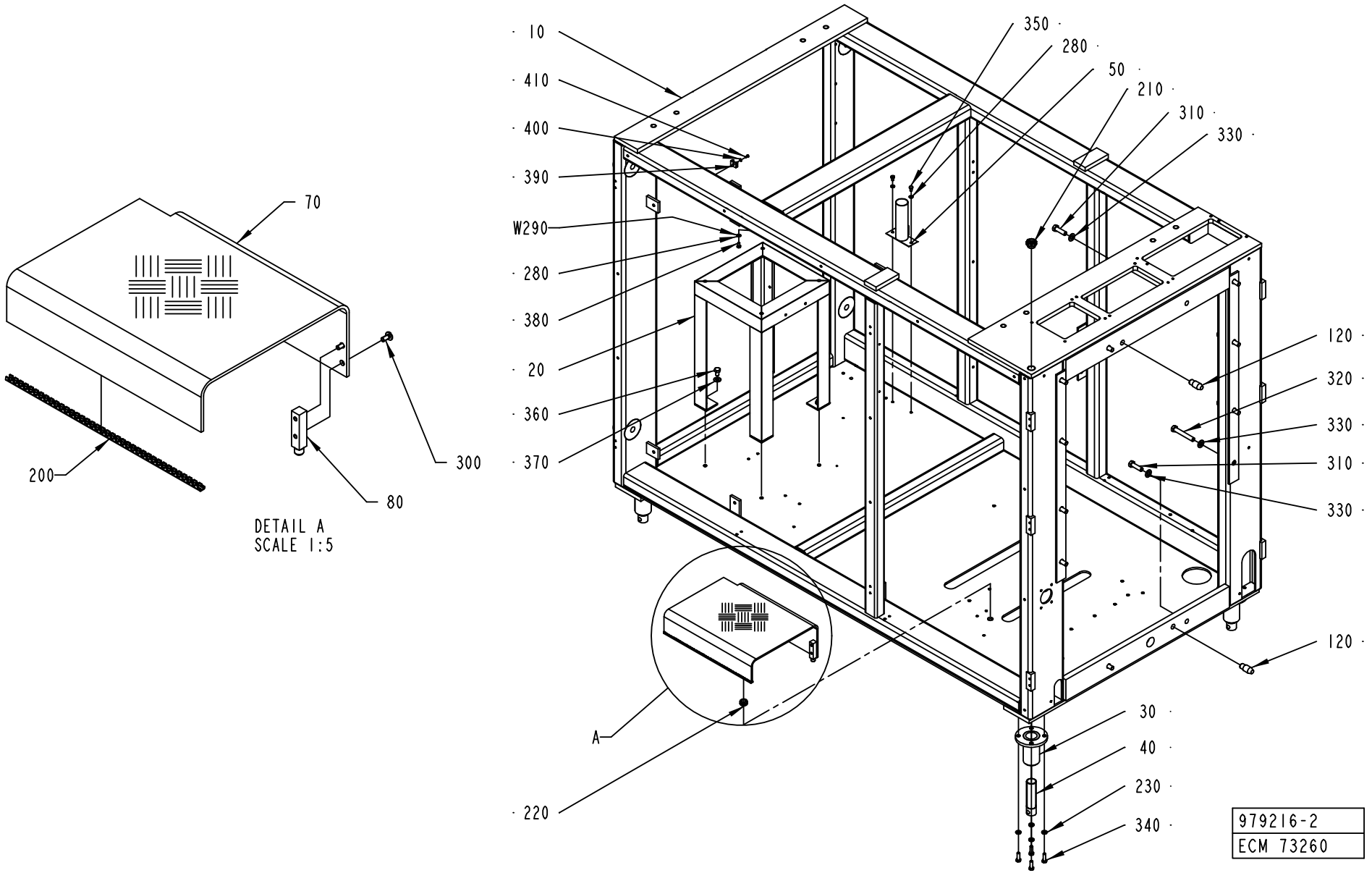
10
410
400
390
W290
280
380
20
360
370
350
280
50
210
310
330
120
320
330
310
330
120
30
40
230
340
220
A
70
200
300
80
DETAIL A
SCALE 1:5
979216-2
ECM 73260

ECM: 73260 - 20011220
Group number: 979216-0200
Assembly Drawing: 979216-2_1_AA

Pos	Part No	UN	Qty	Description	Page No
-					
010	1512486-0000		1	MACHINE BODY	
020	1512489-0000		1	LITTLE FRAME	
030	469095-0000		4	HOLDER	
040	469096-0000		4	LEG	
050	295259-0000		1	HOLDER	
070	2518415-0000		1	COVER PLATE	
080	2518416-0000		2	JOINT BOLT	
120	1517252-0000		2	BOLT Ø20H7	
200	90143-0062	MM	380	STRIP	
210	90458-2487		1	SCREW PLUG HD-PE, M24	
220	90458-1227		2	LEAD-IN, BUSHING, DA 130/170/50	
230	315105-0165		16	WASHER BRB8,4X16RFR	
280	315105-0153		3	WASHER BRB6,4X12RFR	
300	90287-0075		4	SCREW SLOT. PAN HEAD LKCS M6X12	
310	312105-0540		4	SCREW M6S ISO 4017 M12X40 A480	
320	312105-0548		8	SCREW M6S ISO 4014 M12X80 A480	
330	315105-0178		12	WASHER BRB13X24RFR	
340	312105-0453		16	SCREW M6S ISO 4017 M8X25 A480	
350	312105-0364		2	SCREW M6S ISO 4017 M6X10 A480	
360	312105-0489		4	SCREW M6S ISO 4017 M10X16 A480	
370	315105-0173		4	WASHER BRB10,5X22RFR	
380	312105-0366		1	SCREW M6S M6X12 A280	
390	352113-0203		2	ANCHOR PLATES FOR STRIPS, TYPE TM3S8-M0	
400	315105-0136		2	WASHER BRB4,3XRFR	
410	312125-0287		2	SCREW ISO 1207 M4X8 A4	
W390	351162-0109	M	4	CABLE AWM 1X16 MM2 YELLOW-GREEN	

Pos	Part No	UN	Qty	Description	Page No

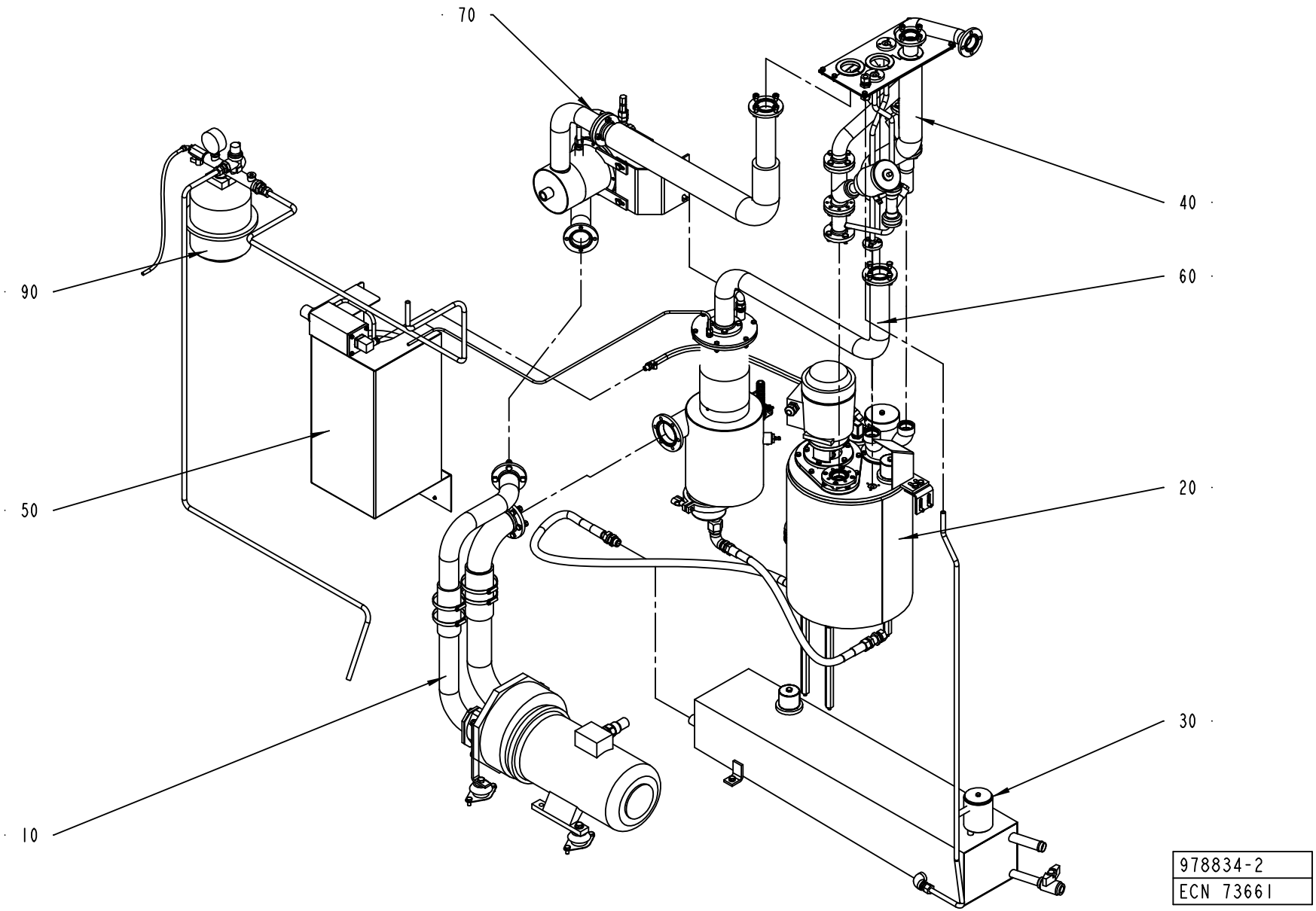
70
40
90
60
50
20
30
10
978834-2
ECN 7366I

ECM: 73661 - 20011025
Group number: 978834-0200
Assembly Drawing: 978834-2_1_AA

Pos	Part No	UN	Qty	Description	Page No
-					
010	469452-0500		1	COMPRESSOR UNIT	**6-61**
020	751373-0300		1	PEROXIDE TANK	**6-63**
030	751398-0400		1	TANK	**6-69**
040	978835-0200		1	PIPE WORK	**6-71**
050	979328-0200		1	CABINET	**6-73**
060	978988-0200		1	SEPARATOR	**6-79, 6-81**
070	978989-0200		1	SCRUBBER	**6-83, 6-85**
090	979026-0200		1	WATER CIRCULATION	**6-87**

Pos	Part No	UN	Qty	Description	Page No

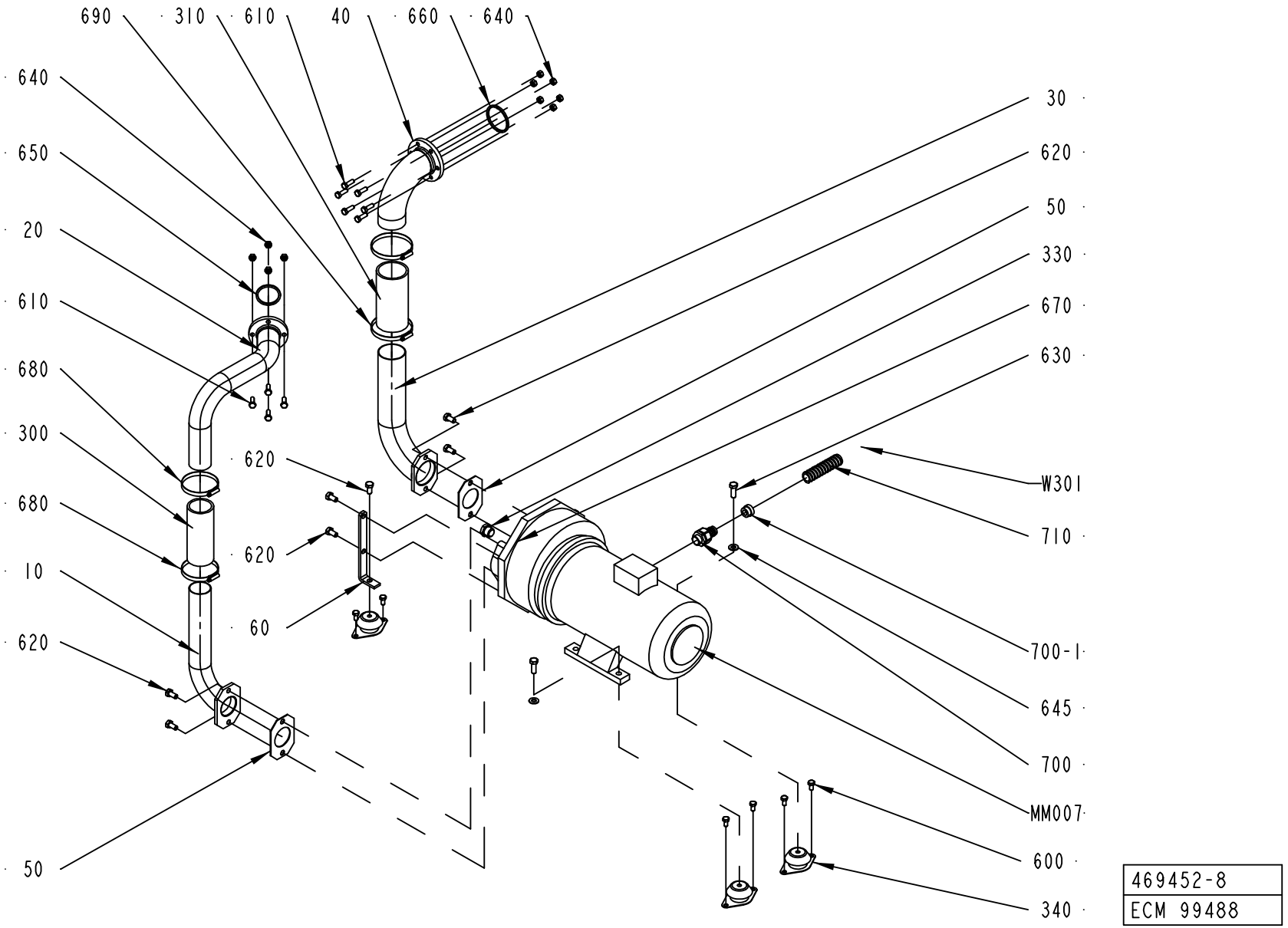
690
310
610
40
660
640
640
650
20
610
680
300
680
10
620
50
620
620
60
30
620
50
330
670
630
W301
710
700-1
645
700
MM007
600
340
469452-8
ECM 99488

ECM: 115872 - 20020930
Group number: 469452-0500
Assembly Drawing: 469452-8_1_AC

Pos	Part No	UN	Qty	Description	Page No
-					
010	978963-0000		1	PIPE	
020	1511774-0000		1	PIPE	
030	979069-0000		1	PIPE	
040	2514391-0000		1	PIPE	
050	230551-0000		2	GASKET	
060	269859-0000		2	BRACKET	
300	90166-0244	MM	200	RUBBER HOSE	
310	90166-0245	MM	200	RUBBER HOSE	
330	90330-0037		1	PLUG, EXT. G-THREAD, G1/2	
340	90347-0144		4	VIBRATION DAMPER, NO. RA 40EM-A	
600	312105-0449		8	SCREW M6S ISO 4017 M8X16 A480	
610	312105-0453		10	SCREW M6S ISO 4017 M8X25 A480	
620	312105-0491		10	SCREW M6S ISO 4017 M10X20 A480	
630	312105-0495		2	SCREW M6S ISO 4017 M10X30 A480	
640	312605-0318		10	HEXAGON NUT, M6M M8 A280	
645	315105-0173		2	WASHER BRB10,5X22RFR	
650	315229-0105		1	GASKETS, 48,5X55,5X3,7 MM 2" FDA	
660	315229-0106		1	GASKETS, 61,2X68,2X3,7 MM 2"1/2 FD	
670	315234-0113		1	WASHER PL.RND.CU.21,3//26 H=1,5	
680	342991-0112		2	HOSE CLIP,WORM DRIVE TYPE (73)-83	
690	342991-0113		2	HOSE CLIP,WORM DRIVE TYPE (83)-93	
700	353243-0005		1	EXTENDED WITHOUT INSERT, PG16	
700-1	353249-0013		1	INSERT, SINGEL HOLE, EK 154/13	
710	90152-0051	M	2	SPIRAL CONDUIT, 25X18, UL 1816	
MM007	90270-0017		1	COMPRESSOR NASH/ELMO 112 MB/4-2083	
W301	351150-0418	M	4	CABLE OLFLEX 4X2,5 MM2 LIGHT/GREY	

Pos	Part No	UN	Qty	Description	Page No

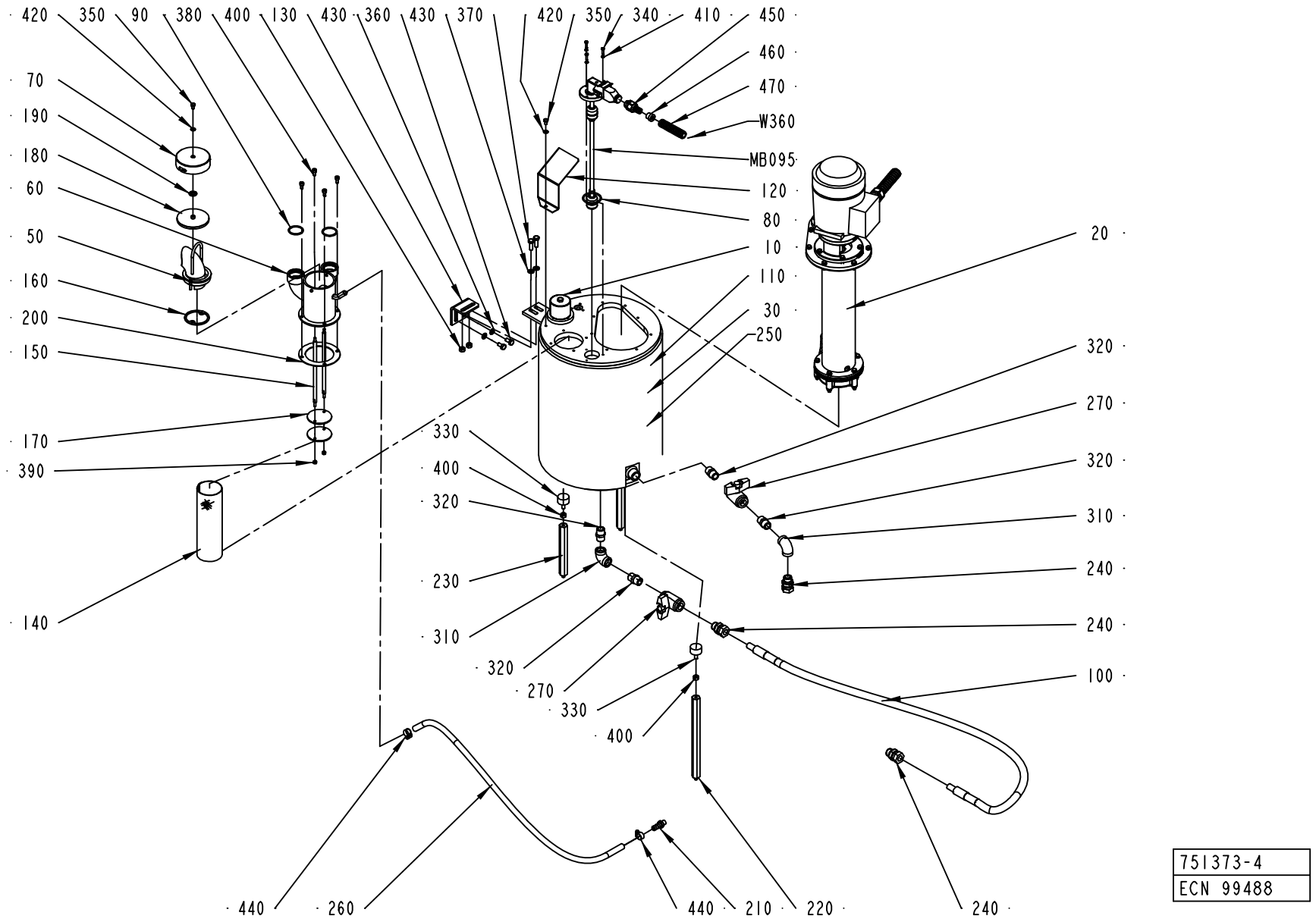

751373-4
ECN 99488

ECM: 115881 - 20020930
Group number: 751373-0300
Assembly Drawing: 751373-4_1_AC

Pos	Part No	UN	Qty	Description	Page No
-					
010	493652-0100		1	LID	**6-65**
020	751393-0300		1	PEROXIDE PUMP	**6-67**
030	1523058-0000		1	TANK	
050	1523059-0000		1	HOLDER	
060	1523060-0000		1	FILLER TUBE	
070	751220-0000		1	FILLER CAP	
080	927422-0007		1	O-RING 44.2X3 SILICON	
090	927422-0014		2	O-RING 34.2X3 SILICON	
100	978973-0001		1	HOSE	
110	1499899-0000		1	INSULATION CLOTH	
120	1296118-0000		1	PROTECTION	
130	1499060-0000		1	HOLDER	
140	257202-0000		1	STRAINER	
150	491203-0000		2	STRUT	
160	491303-0000		1	WASHER	
170	491304-0000		2	WASHER	
180	563286-0000		1	GASKET	
190	563287-0000		1	WASHER	
200	577773-0000		1	GASKET	
210	979336-0000		1	HOSE NIPPLE	
220	1499061-0000		2	PILLAR	
230	1499062-0000		1	PILLAR	
240	90030-0188		3	CONN. STR. GA-15-G1/2	
250	90153-0048		1	ADHESIVE,DEVCON TYPE 5-MIN-EPOXI 28G	
260	90166-0138	MM	1300	HOSE	
270	90187-0059		2	BALL VALVE FOR HYDR.PER. G1/2 3MM HOLE	
310	90330-0020		2	ELBOW, 90 INT. THREAD, R-2221/2	
320	90330-0021		4	NIPPLES, EXT. THREAD. R-207R1/2	
330	90347-0004		3	VIBRATION DAMPER D=30 TH=M8 H=17 H2=21MM	
340	312105-0293		3	SCREW M6S ISO 4017 M4X16 A480	
350	312105-0364		2	SCREW M6S ISO 4017 M6X10 A480	
360	312105-0449		2	SCREW M6S ISO 4017 M8X16 A480	
370	312105-0453		2	SCREW M6S ISO 4017 M8X25 A480	
380	312115-0366		4	SCREW ISO4762 M6X12 A4	
390	312605-0314		2	HEXAGON NUT, M6M M5 A280	
400	312605-0318		5	HEXAGON NUT, M6M M8 A280	
410	315105-0136		3	WASHER BRB4,3XRFR	
420	315105-0153		2	WASHER BRB6,4X12RFR	
430	315105-0165		4	WASHER BRB8,4X16RFR	
440	342991-0101		2	HOSE CLIP,WORM DRIVE TYPE (13)-16	
450	353243-0002		1	EXTENDED WITHOUT INSERT, PG11	
460	353249-0009		1	INSERT, SINGEL HOLE, EK 152/9	
470	90152-0059	M	2	SPIRAL CONDUIT, 18X12, UL 1211	
MB095	1282411-0000		1	FLOAT	
W360	351150-0405	M	3	CABLE OLFLEX 5X0,75 MM2 LIGHT/GREY	

Machine Type	Group Description	Used-In	Group Number	Page No

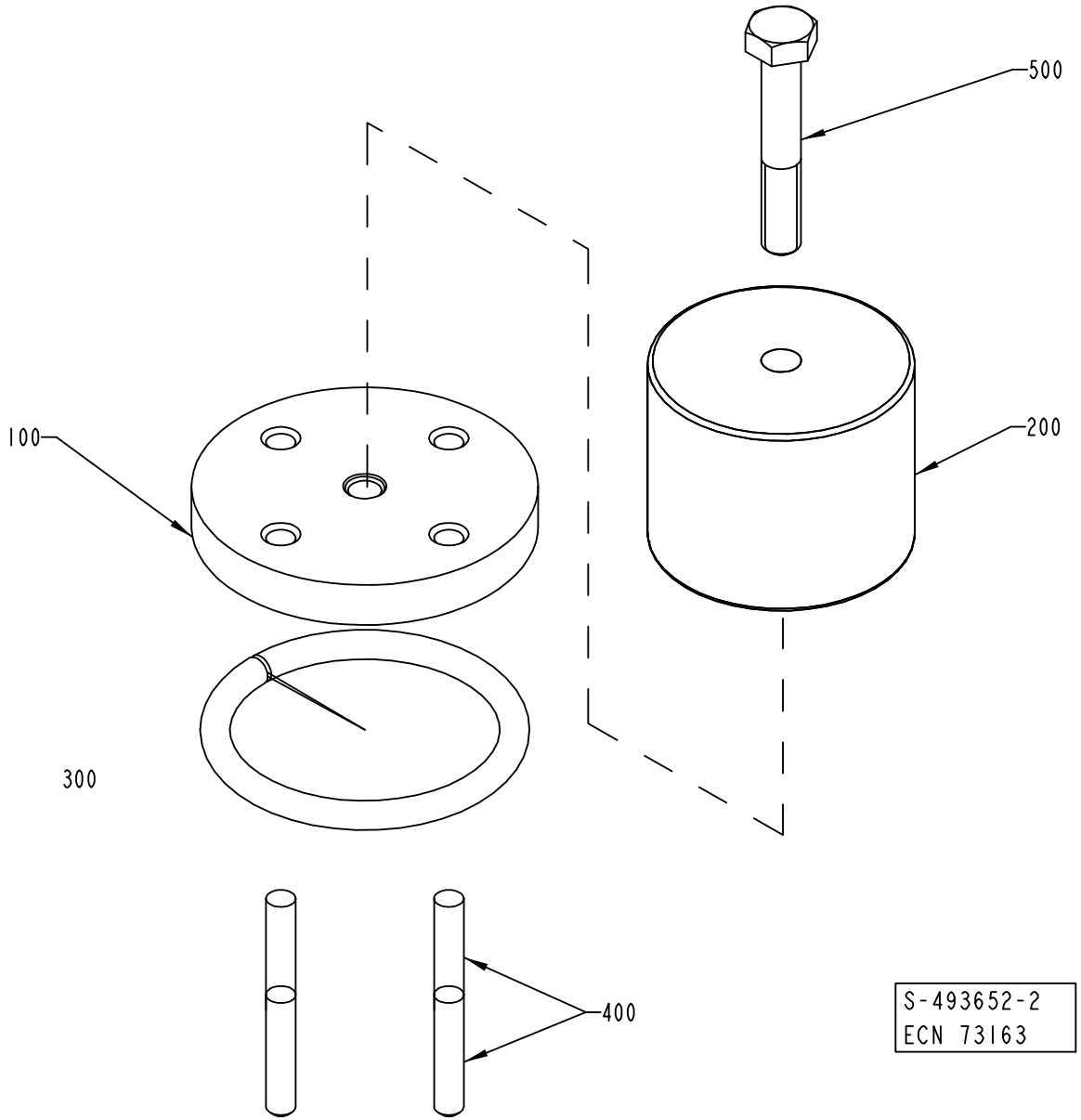
500
100
200
300
400
S-493652-2
ECN 73163

ECM: 73163 - 20000421
Group number: 493652-0100
Assembly Drawing: 493652-2_1_AB

Pos	Part No	UN	Qty	Description	Page No
-					
100	273964-0000		1	LID	
200	273965-0001		1	WEIGHT	
300	90143-0020	MM	190	STRIP	
400	311103-0357		4	PARALLEL PIN ISO 2338 6M6X30 A1	
500	312105-0461		1	SCREW M6S ISO 4014 M8X50 A480	

Pos	Part No	UN	Qty	Description	Page No

PEROXIDE PUMP

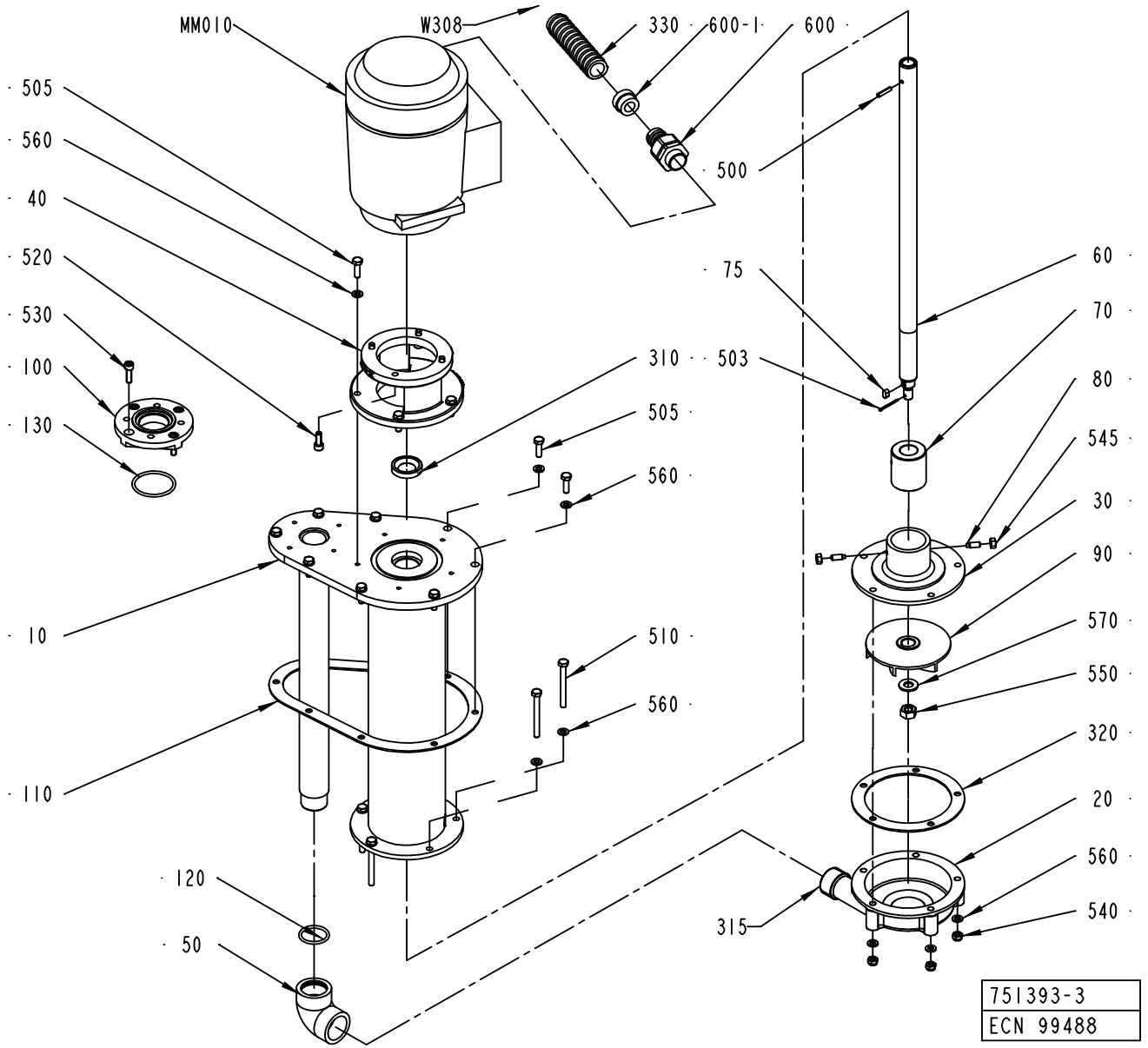

ECM: 115880 - 20020930
Group number: 751393-0300
Assembly Drawing: 751393-3_1_AB

Pos	Part No	UN	Qty	Description	Page No
-					
010	577769-0000		1	EXTENSION PIPE	
020	292449-0000		1	PUMP HOUSING	
030	292456-0000		1	BEARING COVER	
040	751395-0000		1	FLANGE	
050	751316-0000		1	ELBOW PIPE	
060	577771-0000		1	SHAFT	
070	491770-0000		1	BUSHING	
075	315705-0196		1	PARALLEL KEY W.ROUND ENDS 5X5X10	
080	312311-0368		2	SCREW ISO4028 M6X16 FZB	
090	491929-0000		1	IMPELLER WHEEL	
100	1523061-0000		1	FLANGE	
110	577770-0000		1	GASKET	
120	927422-0004		1	O-RING 29.2X3 SILICON	
130	927422-0007		1	O-RING 44.2X3 SILICON	
310	90091-0137		1	RADIAL SEAL VARILIP 20X35X7MM	
315	90144-0073	MM	1	TREBOFLON-TAPE W=13MM	
330	90152-0051	M	2	SPIRAL CONDUIT, 25X18, UL 1816	
500	311112-0256		1	SPRING PIN, ISO 8752 4X20-C	
503	311411-0169		1	SPLIT PIN SP2,5X25RFR	
505	312105-0370		14	SCREW M6S ISO 4017 M6X20 A480	
510	312105-0382		5	SCREW M6S ISO 4014 M6X60 A480	
520	312115-0368		4	SCREW ISO4762 M6X16 A4	
530	312115-0370		4	SCREW ISO4762 M6X20 A4	
540	312811-0316		5	NUT HEX.LOCK HELI COIL MID GRIP M6 SS	
545	312605-0316		2	HEXAGON NUT, M6M M6 A280	
550	312605-0320		1	HEXAGON NUT, M6M M10 A280	
560	315105-0153		24	WASHER BRB6,4X12RFR	
570	315105-0173		1	WASHER BRB10,5X22RFR	
600	353243-0005		1	EXTENDED WITHOUT INSERT, PG16	
600-1	353249-0013		1	INSERT, SINGEL HOLE, EK 154/13	
MM010	90045-0087		1	MOTOR 3GAA 071002-CSA M2AA 71B	
W308	351150-0418	M	3	CABLE OLFLEX 4X2,5 MM2 LIGHT/GREY	

Pos	Part No	UN	Qty	Description	Page No

Machine Type | Group Description | Used-In | Group Number | Page No

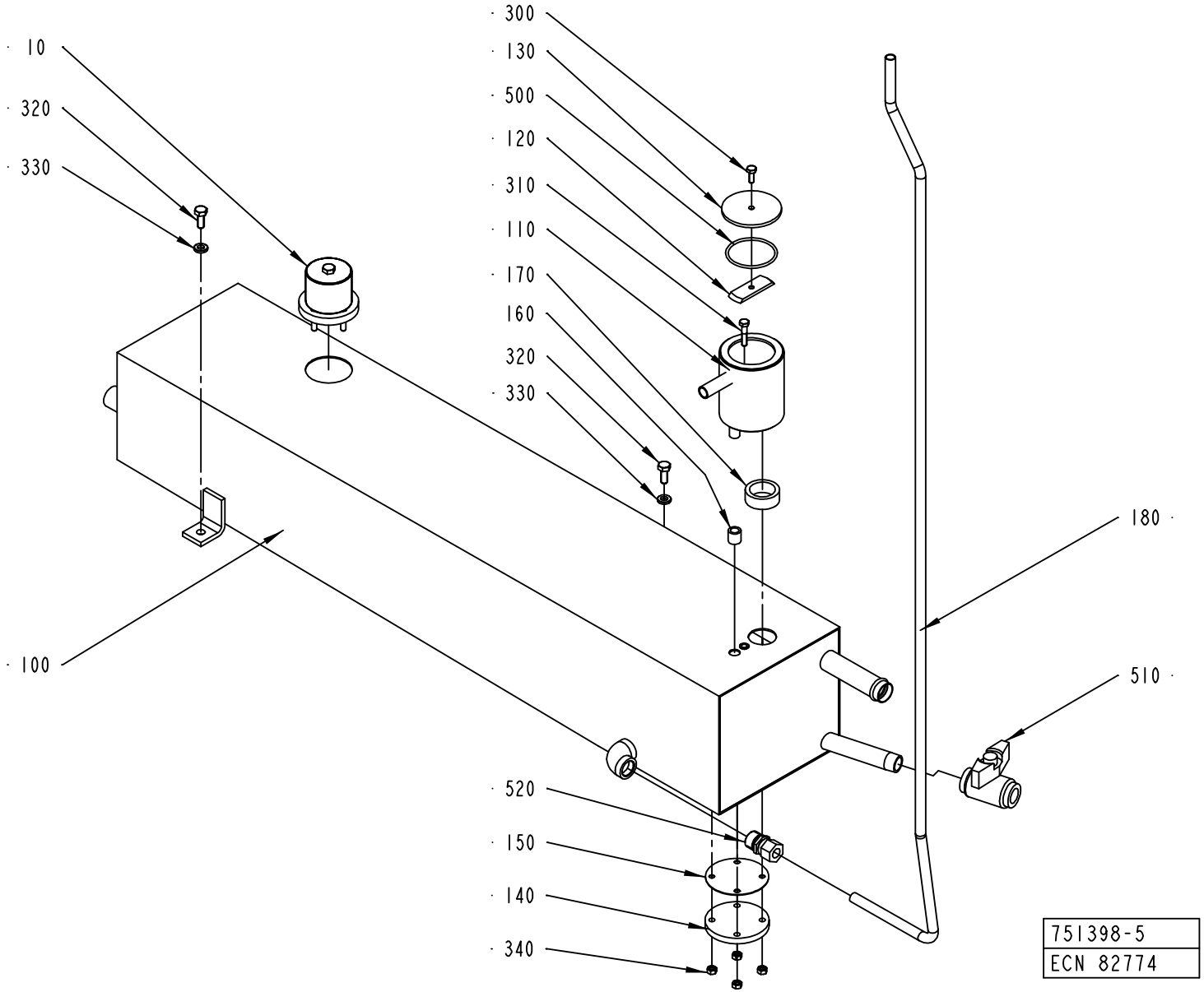
· 10
· 320
· 330
· 300
· 130
· 500
· 120
· 310
· 110
· 170
160
320
· 330
· 180
· 510
· 100
· 520
· 150
· 140
· 340
751398-5
ECN 82774

ECM: 106568 - 20020313
Group number: 751398-0400
Assembly Drawing: 751398-5_1_AB

Pos	Part No	UN	Qty	Description	Page No
-					
010	493652-0100		1	LID	**6-65**
100	1519389-0000		1	TANK	
110	978970-0000		1	METERING DEVICE	
120	751403-0000		1	BRACKET	
130	751223-0000		1	LID	
140	532205-0000		1	LID	
150	532206-0000		1	GASKET	
160	527906-0000		1	GASKET	
170	2514491-0000		1	METERING DEVICE	
180	1511683-0000		1	PIPE	
300	312105-0368		1	SCREW M6S M6X16 A280	
310	312105-0374		1	SCREW M6S ISO 4014 M6X30 A480	
320	312105-0451		2	SCREW M6S ISO 4017 M8X20 A480	
330	315115-0165		2	WASHER PLAIN, TBRB 8,4/16 H=3	
340	312605-0316		4	HEXAGON NUT, M6M M6 A280	
500	927422-0009		1	O-RING 54.5X3 SILICON	
510	90187-0059		1	BALL VALVE FOR HYDR.PER. G1/2 3MM HOLE	
520	90030-0109		1	STRAIGHT PIPE CONN. GE12LR1/271	

Pos	Part No	UN	Qty	Description	Page No

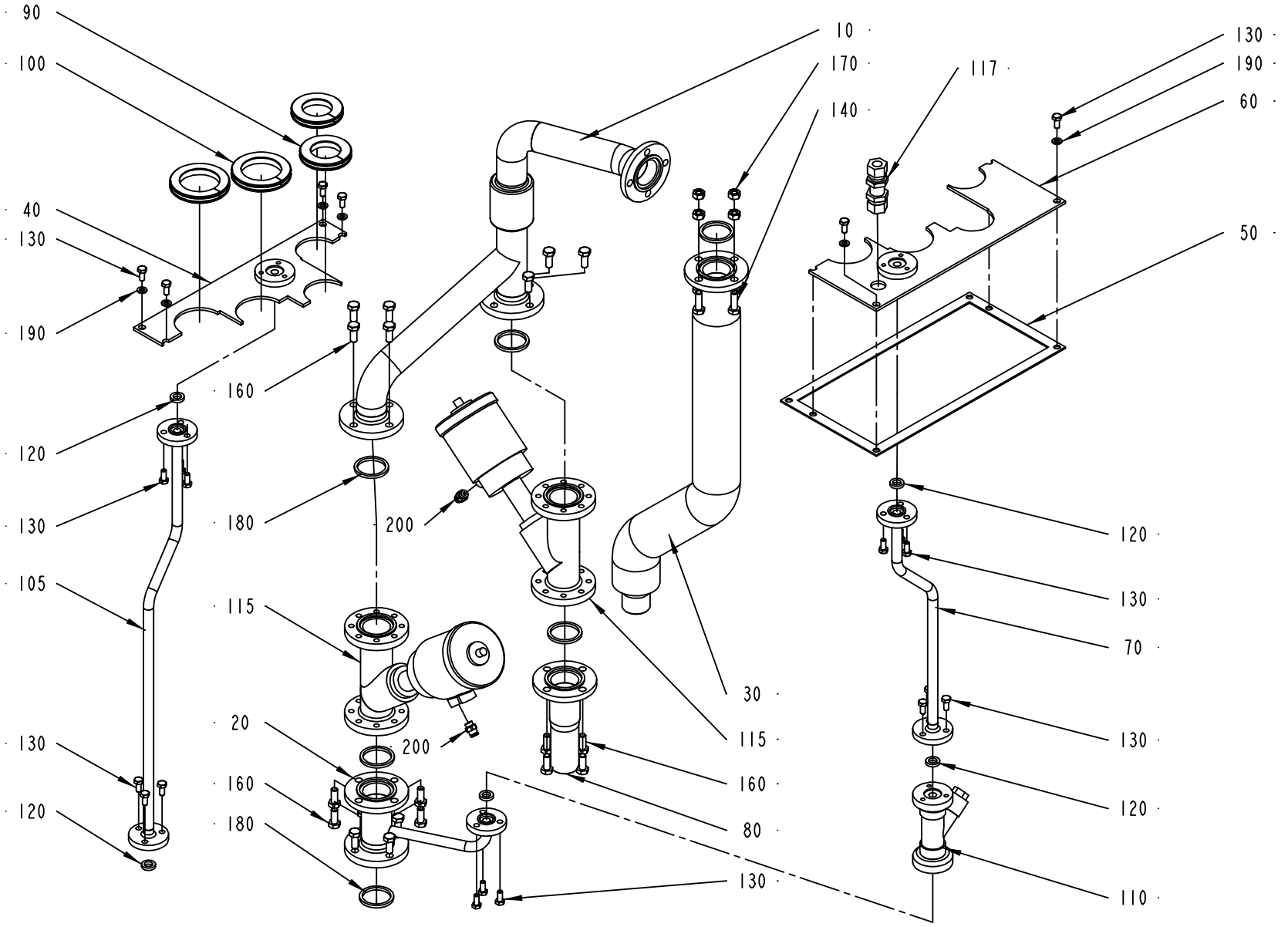

978835-2
ECN 82774

ECM: 115882 - 20020930
Group number: 978835-0200
Assembly Drawing: 978835-2_1_AB

Pos	Part No	UN	Qty	Description	Page No
-					
010	1523062-0000		1	FILLING PIPE	
020	1523063-0000		1	TUBE	
030	1523064-0000		1	RETURN PIPE	
040	1523065-0000		1	PLATE	
050	1523066-0000		1	GASKET	
060	1523067-0000		1	PLATE	
070	1523068-0000		1	PIPE	
080	1523069-0000		1	PIPE CONNECTION	
090	1517492-0000		2	GASKET	
095	2550181-0000		1	GASKET	
100	1517058-0000		2	GASKET	
105	1548316-0000		1	PIPE	
110	1511701-0000		1	FILTER	
115	1512673-0000		2	VALVE	
117	90030-0030		1	CONN. BULKHEAD SV 12-L/SY	
120	315229-0101		5	GASKETS, 10,4X17,4X3,7 MM 1/2" FDA	
130	312105-0367		21	SCREW M6S M6X14 A280	
140	312105-0453		4	SCREW M6S ISO 4017 M8X25 A480	
160	312105-0451		20	SCREW M6S ISO 4017 M8X20 A480	
170	312605-0318		4	HEXAGON NUT, M6M M8 A280	
180	315229-0104		6	GASKETS, 35,8X42,8X3,7 MM 1"1/2 FD	
190	315105-0153		6	WASHER BRB6,4X12RFR	
200	342722-0202		2	PIPE COUPLING 1/8" D=6MM	

Pos	Part No	UN	Qty	Description	Page No

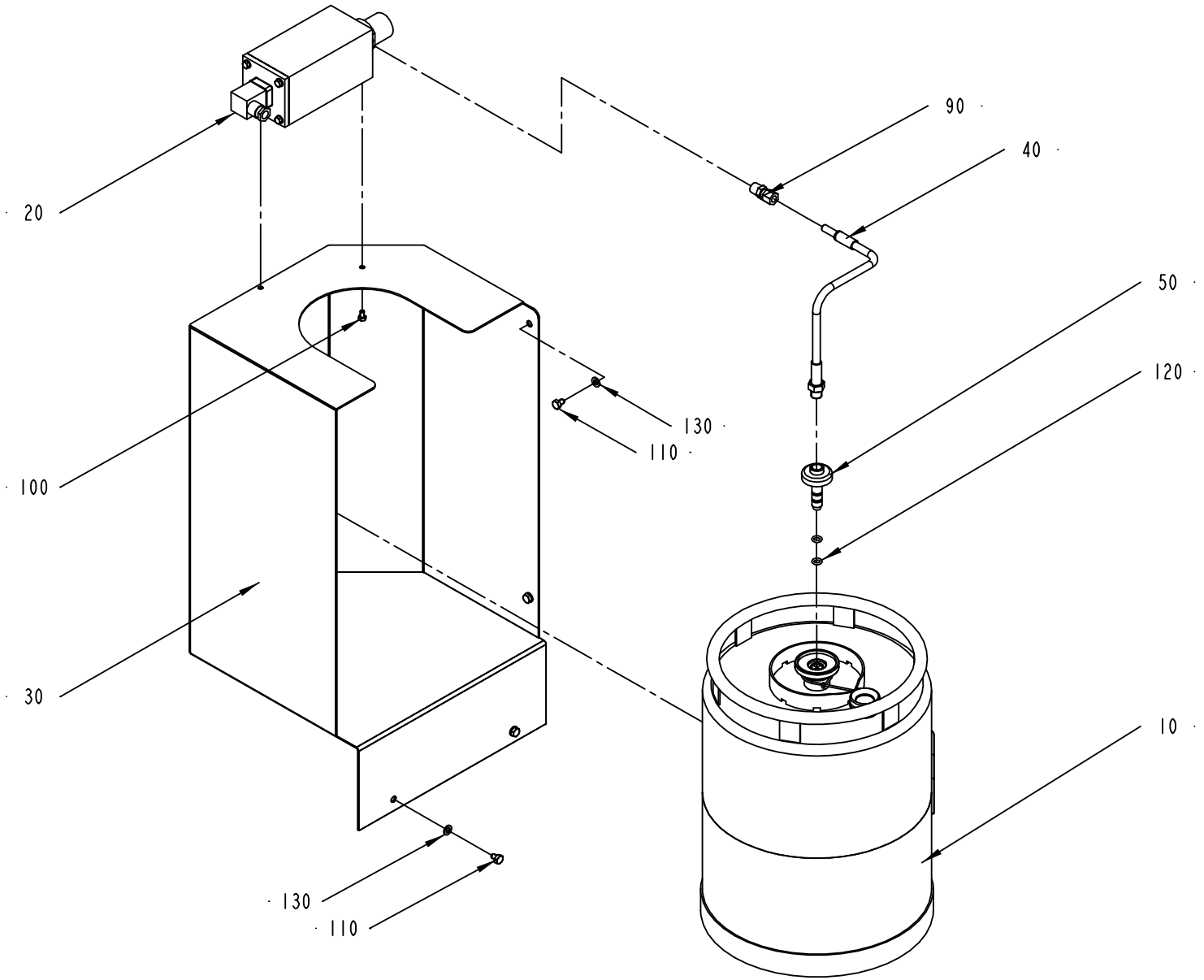

979328-2
ECN 82774

ECM: 115870 - 20020930
Group number: 979328-0200
Assembly Drawing: 979328-2_1_AB

Pos	Part No	UN	Qty	Description	Page No
-					
010	527898-0100		1	CONTAINER H2O2	**6-75**
020	979329-0200		1	FILLING UNIT	**6-77**
030	1512805-0000		1	CABINET (SMALL)	
040	979300-0000		1	PIPE	
050	1511773-0000		1	CONNECTOR	
090	90030-0086		1	CONN. STR., 8-R1/4, EXT. THREAD	
100	312105-0323		2	SCREW M6S ISO 4017 M5X8 A480	
110	312105-0362		4	SCREW M6S ISO 4017 M6X8 A480	
120	927421-0005		2	O-RING 7.3X2.4 SILICON	
130	315105-0153		4	WASHER BRB6,4X12RFR	

Pos	Part No	UN	Qty	Description	Page No

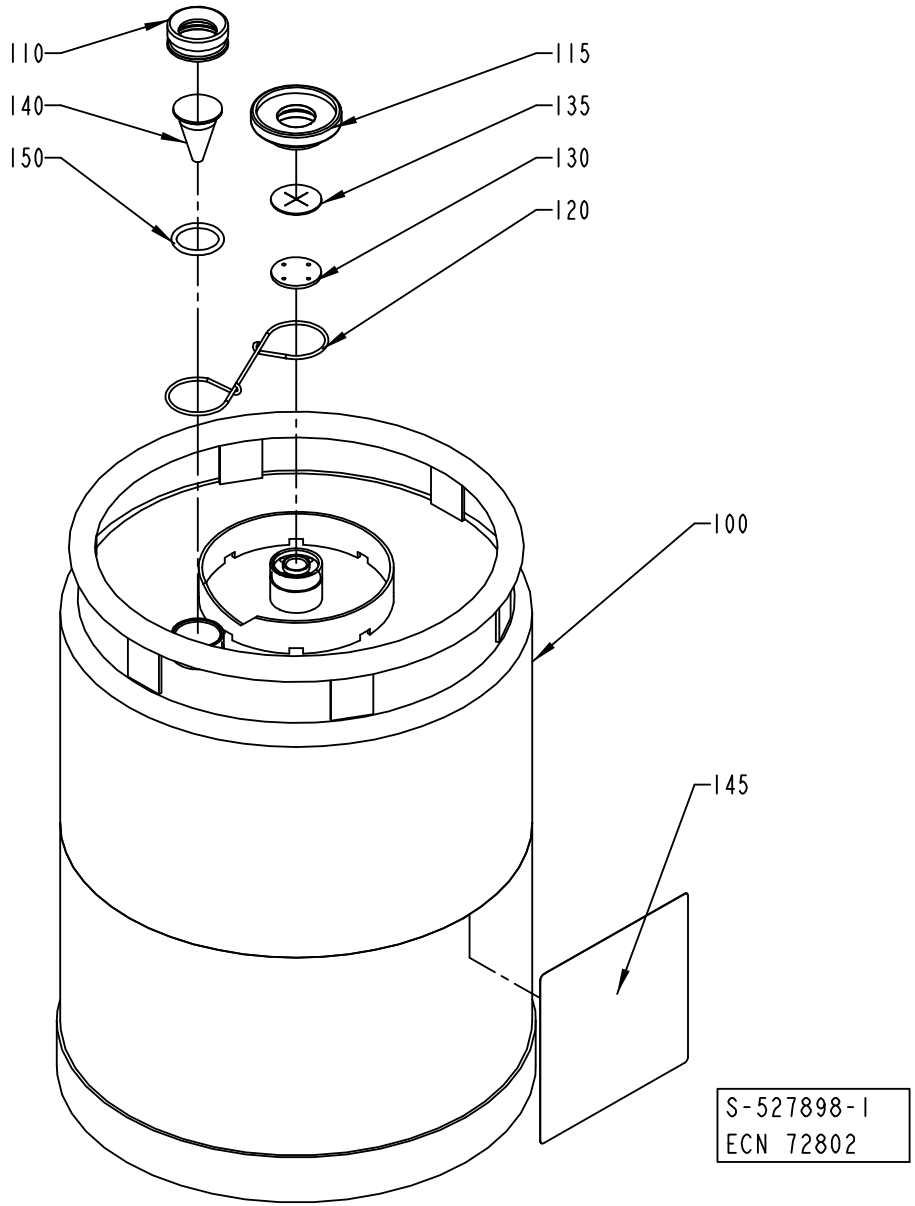
110
115
140
135
150
130
120
100
145
S-527898-1
ECN 72802

ECM: 115873 - 20020930
Group number: 527898-0100
Assembly Drawing: 527898-1_1_AB

Pos	Part No	UN	Qty	Description	Page No
-					
100	561427-0000		1	CONTAINER	
110	273977-0000		1	NUT	
115	273996-0000		1	NUT	
120	273980-0000		1	SPRING	
130	565250-0000		1	WASHER	
135	565251-0000		1	VALVE	
140	273978-0000		1	LEVEL GLASS	
145	532655-0000		1	CAUTION SIGN	
150	927422-0003		1	O.RING 24.2X3 SILICON	

Pos	Part No	UN	Qty	Description	Page No

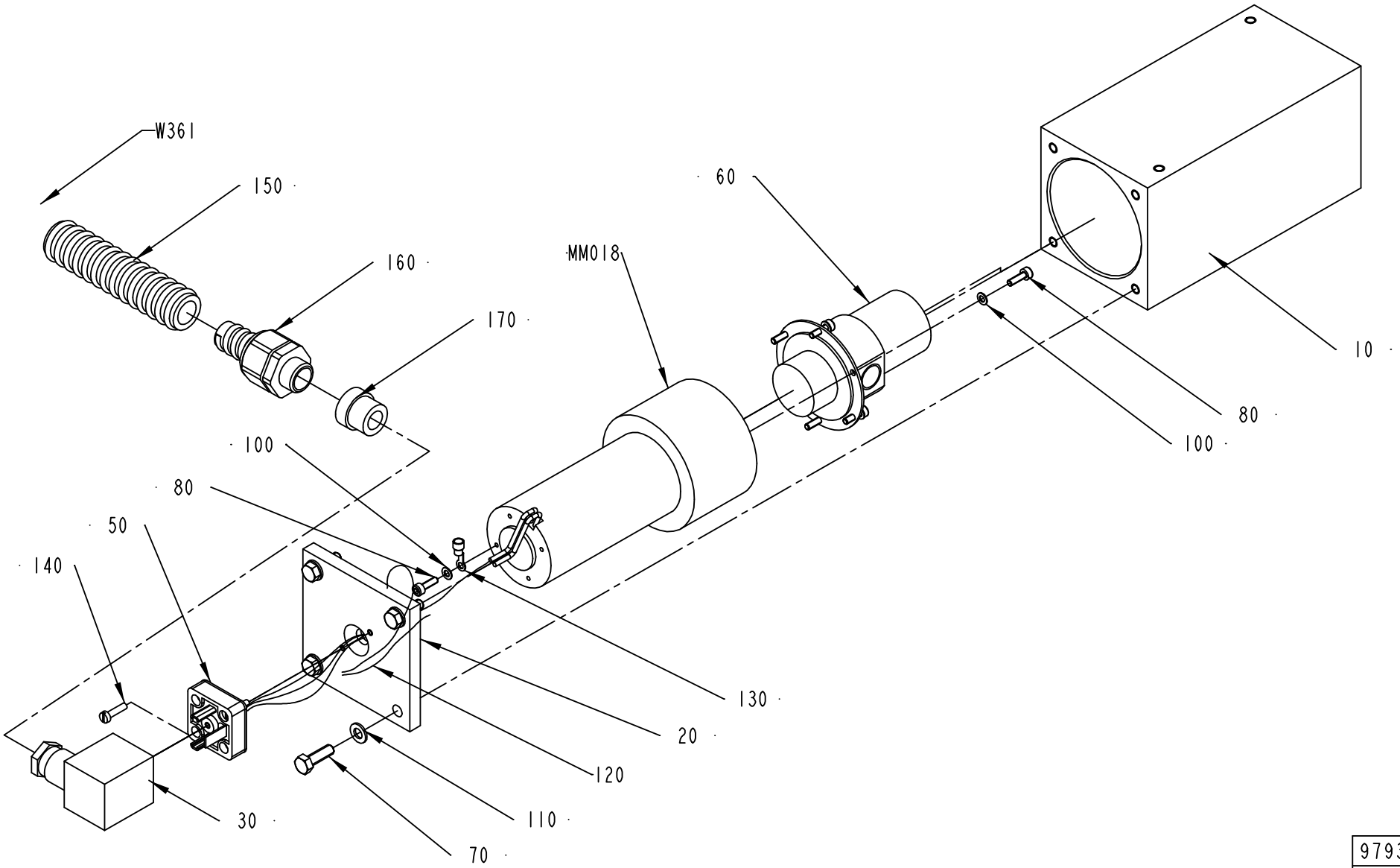

979329-2
ECN 99488

ECM: 115875 - 20020930
Group number: 979329-0200
Assembly Drawing: 979329-2_1_AB

Pos	Part No	UN	Qty	Description	Page No
-					
010	979279-0000		1	COVER HOUSING	
020	979280-0000		1	COVER	
030	90042-0398		1	CONTACT 3 POLE+EARTH	
050	90110-0207		1	SOCKET	
060	90321-0101		1	GEAR PUMP	
070	312105-0329		4	SCREW M6S ISO 4017 M5X16 A480	
080	312115-0224		7	SCREW ISO4762 M3X10 A4	
100	315105-0124		7	BRICKA BRB3,2X6RFR	
110	315105-0146		4	BRICKA BRB5,3X10RFR	
120	351175-0102	CM	15	CABLE AWM 1X 075 MM2 YELLOW-GREEN	
130	353101-0118		1	KABELSKO 0,75-1,5MM2 RED	
140	312125-0226		2	SCREW ISO 1207 M3X12 A4	
150	90152-0059	M	1	SPIRAL CONDUIT, 18X12, UL 1211	
160	353243-0001		1	EXTENDED WITHOUT INSERT, PG9	
170	353249-0009		1	INSERT, SINGEL HOLE, EK 152/9	
MM018	90045-0161		1	MOTOR MGC 11	
W361	351150-0403	M	3	CABLE OLFLEX 3X0,75 MM2 LIGHT/GREY	

Pos	Part No	UN	Qty	Description	Page No

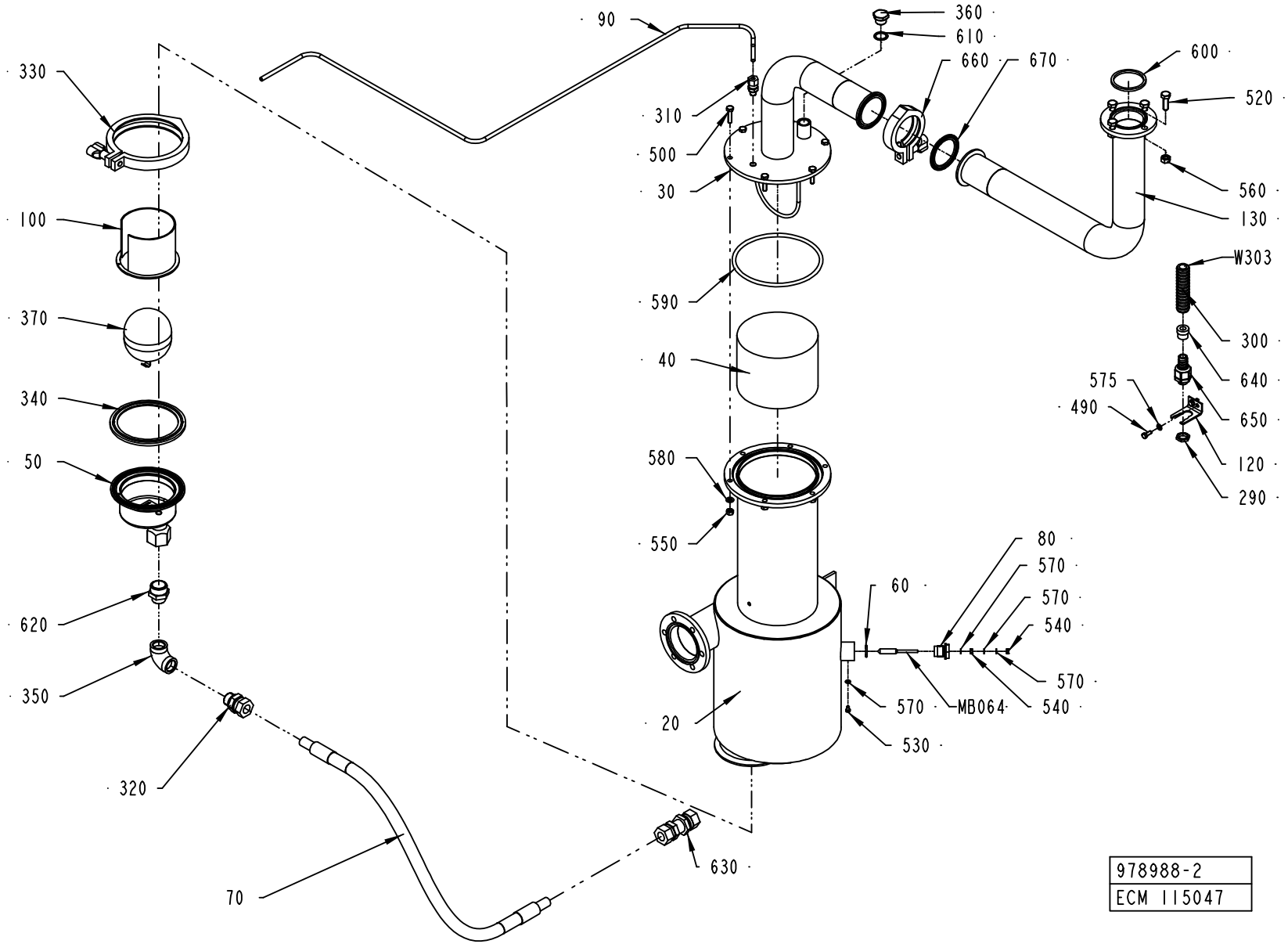
90
360
610
660
670
600
520
330
310
500
30
560
130
100
590
W303
370
40
300
640
575
490
650
340
580
120
50
290
550
80
570
60
570
620
540
570
350
570
MB064
540
20
530
320
630
70
978988-2
ECM 115047

ECM: 151146 - 20031219
Group number: 978988-0200
Assembly Drawing: 978988-2_1_AD

This list covers pages from 6-78 to 6-81

Pos	Part No	UN	Qty	Description	Page No
50HZ (See drawing on page: 6-78)					
360	90330-0029		1	PLUG, EXT. G-THREAD, R-236R3/8	
60HZ (See drawing on page: 6-80)					
110	90030-0136		1	ADJUSTABLE ELBOW CONNECTION,EXT 12-G3/8	
Common Parts					
020	1511775-0000		1	SEPARATOR	
030	2563209-0000		1	LID	
040	546929-0000		1	FILTER	
050	571088-0000		1	DRAINING	
	90360-0304		*1*	*SPARE PART KIT*	
060	927421-0004		1	O-RING 15.3X2.4 SILICON	
070	978973-0003		1	HOSE	
080	560931-0000		1	BRACKET	
090	2518125-0000		1	PIPE	
100	568828-0000		1	FLOAT GUARD	
120	977527-0000		1	BRACKET	
130	2563210-0000		1	PIPE	
290	90099-0001		1	NUT PR 15,2 MäSSING	
300	90152-0059	M	2	SPIRAL CONDUIT, 18X12, UL 1211	
310	90030-0184		1	CONN. STR. GA-6-G1/8	
320	90030-0188		1	CONN. STR. GA-15-G1/2	
330	90217-0312		1	CLAMP, ISO2852 FOR PIPE 101,6 MM	
340	90217-0313		1	GASKET 97,8X119X5,5 MM	
350	90330-0020		1	ELBOW, 90 INT. THREAD, R-2221/2	
370	90360-0305		1	FLOAT, ART NO 10739920	
490	312105-0327		2	SCREW M6S ISO 4017 M5X12 A480	
500	312105-0372		6	SCREW M6S ISO 4017 M6X25 A480	
520	312105-0453		4	SCREW M6S ISO 4017 M8X25 A480	
530	312125-0285		1	SCREW ISO 1207 M4X6 A4	
540	312605-0312		2	HEXAGON NUT, M6M M4 A280	
550	312605-0318		6	HEXAGON NUT, M6M M8 A280	
560	312605-0318		4	HEXAGON NUT, M6M M8 A280	
570	315105-0136		4	WASHER BRB4,3XRFR	
575	315105-0146		2	BRICKA BRB5,3X10RFR	
580	315105-0153		6	WASHER BRB6,4X12RFR	
590	315202-0244		1	O-RING 134,3X5,7 MM	
600	315229-0105		1	GASKETS, 48,5X55,5X3,7 MM 2" FDA	
610	315233-0111		1	WASHER CAPTIVE SEALING G3/8	
620	342700-0210		1	NIPPLES,HEXAGON,EXT.G-THREAD G3/4"-G1/2"	
630	342762-0114		1	CONN. BULKHEAD SV 15-LFZB	
640	353249-0009		1	INSERT, SINGEL HOLE, EK 152/9	
650	353243-0001		1	EXTENDED WITHOUT INSERT, PG9	
660	342840-0105		1	CLAMPING PIECE	
670	342850-0305		1	GASKET 47,8X62,6X5,2 MM 2" FDA	
MB064	567070-0012		1	ELECTRODE	
W303	351150-0431	M	3	CABLE OLFLEX 2X0,75 MM2 LIGHT/GREY	

Machine Type | Group Description | Used-In | Group Number | Page No

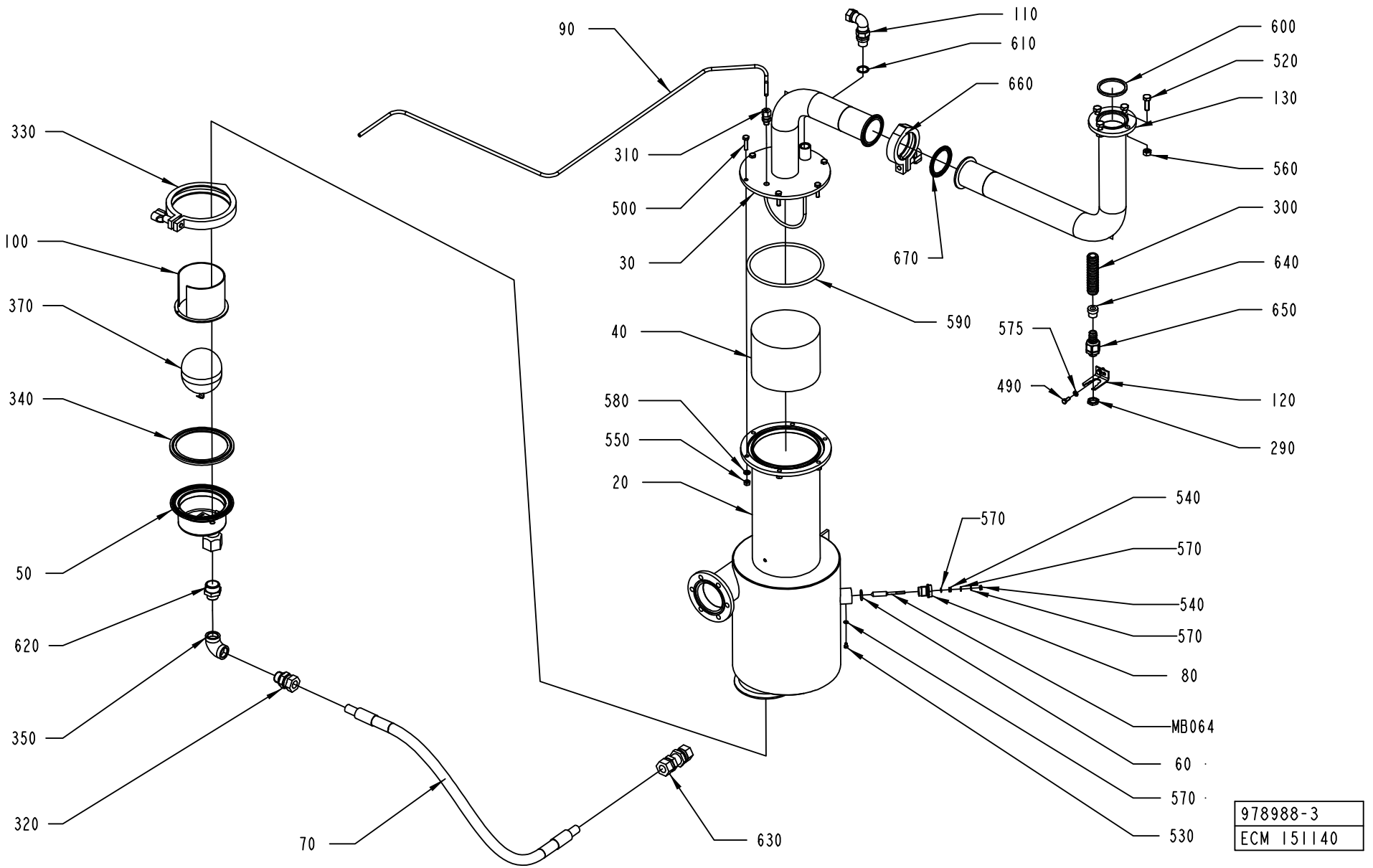
90
110
610
660
600
520
130
560
330
310
500
30
670
300
640
650
575
490
120
290
100
370
340
590
40
580
550
20
570
540
570
540
570
80
MB064
60
570
530
50
620
350
320
70
630
978988-3
ECM 151140

ECM: 151146 - 20031219
Group number: 978988-0200
Assembly Drawing: 978988-3_1_AA

This list covers pages from 6-78 to 6-81

Pos	Part No	UN	Qty	Description	Page No
50HZ (See drawing on page: 6-78)					
360	90330-0029		1	PLUG, EXT. G-THREAD, R-236R3/8	
60HZ (See drawing on page: 6-80)					
110	90030-0136		1	ADJUSTABLE ELBOW CONNECTION,EXT 12-G3/8	
Common Parts					
020	1511775-0000		1	SEPARATOR	
030	2563209-0000		1	LID	
040	546929-0000		1	FILTER	
050	571088-0000		1	DRAINING	
	90360-0304		*1*	*SPARE PART KIT*	
060	927421-0004		1	O-RING 15.3X2.4 SILICON	
070	978973-0003		1	HOSE	
080	560931-0000		1	BRACKET	
090	2518125-0000		1	PIPE	
100	568828-0000		1	FLOAT GUARD	
120	977527-0000		1	BRACKET	
130	2563210-0000		1	PIPE	
290	90099-0001		1	NUT PR 15,2 MäSSING	
300	90152-0059	M	2	SPIRAL CONDUIT, 18X12, UL 1211	
310	90030-0184		1	CONN. STR. GA-6-G1/8	
320	90030-0188		1	CONN. STR. GA-15-G1/2	
330	90217-0312		1	CLAMP, ISO2852 FOR PIPE 101,6 MM	
340	90217-0313		1	GASKET 97,8X119X5,5 MM	
350	90330-0020		1	ELBOW, 90 INT. THREAD, R-2221/2	
370	90360-0305		1	FLOAT, ART NO 10739920	
490	312105-0327		2	SCREW M6S ISO 4017 M5X12 A480	
500	312105-0372		6	SCREW M6S ISO 4017 M6X25 A480	
520	312105-0453		4	SCREW M6S ISO 4017 M8X25 A480	
530	312125-0285		1	SCREW ISO 1207 M4X6 A4	
540	312605-0312		2	HEXAGON NUT, M6M M4 A280	
550	312605-0318		6	HEXAGON NUT, M6M M8 A280	
560	312605-0318		4	HEXAGON NUT, M6M M8 A280	
570	315105-0136		4	WASHER BRB4,3XRFR	
575	315105-0146		2	BRICKA BRB5,3X10RFR	
580	315105-0153		6	WASHER BRB6,4X12RFR	
590	315202-0244		1	O-RING 134,3X5,7 MM	
600	315229-0105		1	GASKETS, 48,5X55,5X3,7 MM 2" FDA	
610	315233-0111		1	WASHER CAPTIVE SEALING G3/8	
620	342700-0210		1	NIPPLES,HEXAGON,EXT.G-THREAD G3/4"-G1/2"	
630	342762-0114		1	CONN. BULKHEAD SV 15-LFZB	
640	353249-0009		1	INSERT, SINGEL HOLE, EK 152/9	
650	353243-0001		1	EXTENDED WITHOUT INSERT, PG9	
660	342840-0105		1	CLAMPING PIECE	
670	342850-0305		1	GASKET 47,8X62,6X5,2 MM 2" FDA	
MB064	567070-0012		1	ELECTRODE	
W303	351150-0431	M	3	CABLE OLFLEX 2X0,75 MM2 LIGHT/GREY	

Machine Type | Group Description | Used-In | Group Number | Page No

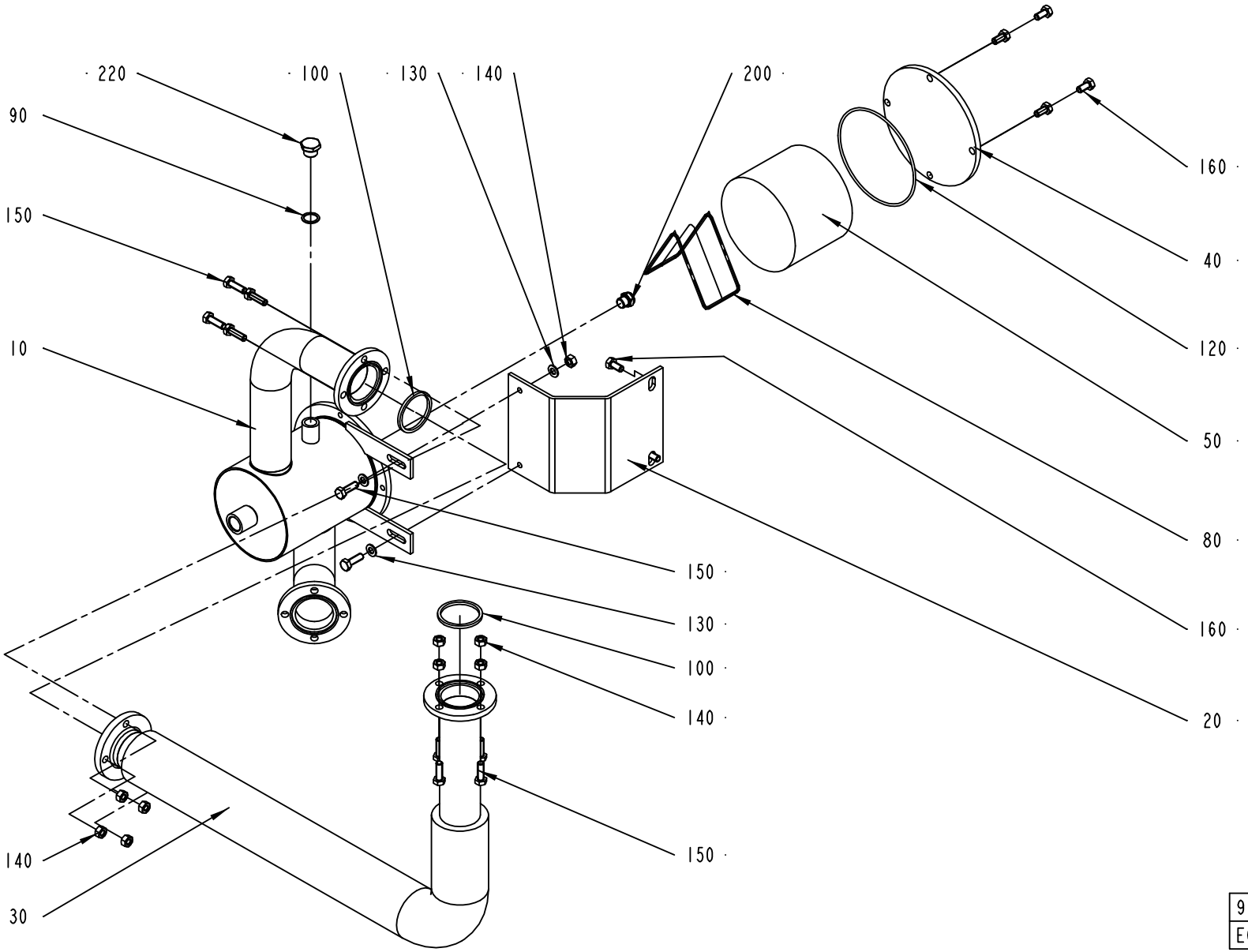

978989-2
ECN 82774

ECM: 151147 - 20031219
Group number: 978989-0200
Assembly Drawing: 978989-2_1_AB

This list covers pages from 6-82 to 6-85

Pos	Part No	UN	Qty	Description	Page No
50HZ (See drawing on page: 6-82)					
220	90330-0029		1	PLUG, EXT. G-THREAD, R-236R3/8	
60HZ (See drawing on page: 6-84)					
060	1519390-0000		1	PIPE(FOR 60HZ)	
070	1519391-0000		1	PIPE BEND	
170	279589-0000		1	NUT	
180	209146-0000		1	BARRIER NUT	
190	209145-0000		1	THROTTLE SCREW	
210	90030-0058		1	CONN. T-PIPE T-12	
230	90030-0181		1	CONN. STR. GE 12-3/8-18 NPTF	
Common Parts					
010	1519392-0000		1	SCRUBBER	
020	1519393-0000		1	PLATE	
030	1519394-0000		1	PIPE	
040	568806-0000		1	LID	
050	546929-0000		1	FILTER	
080	571087-0000		1	RETAINING RING	
090	315233-0111		1	WASHER CAPTIVE SEALING G3/8	
100	315229-0105		2	GASKETS, 48,5X55,5X3,7 MM 2" FDA	
120	315202-0317		1	O-RING 129,5X3 MM	
130	315105-0165		4	WASHER BRB8,4X16RFR	
140	312605-0318		10	HEXAGON NUT, M6M M8 A280	
150	312105-0453		10	SCREW M6S ISO 4017 M8X25 A480	
160	312105-0449		6	SCREW M6S ISO 4017 M8X16 A480	
200	90424-0054		1	SPRAY NOZZLE 120 DEG	

Pos	Part No	UN	Qty	Description	Page No

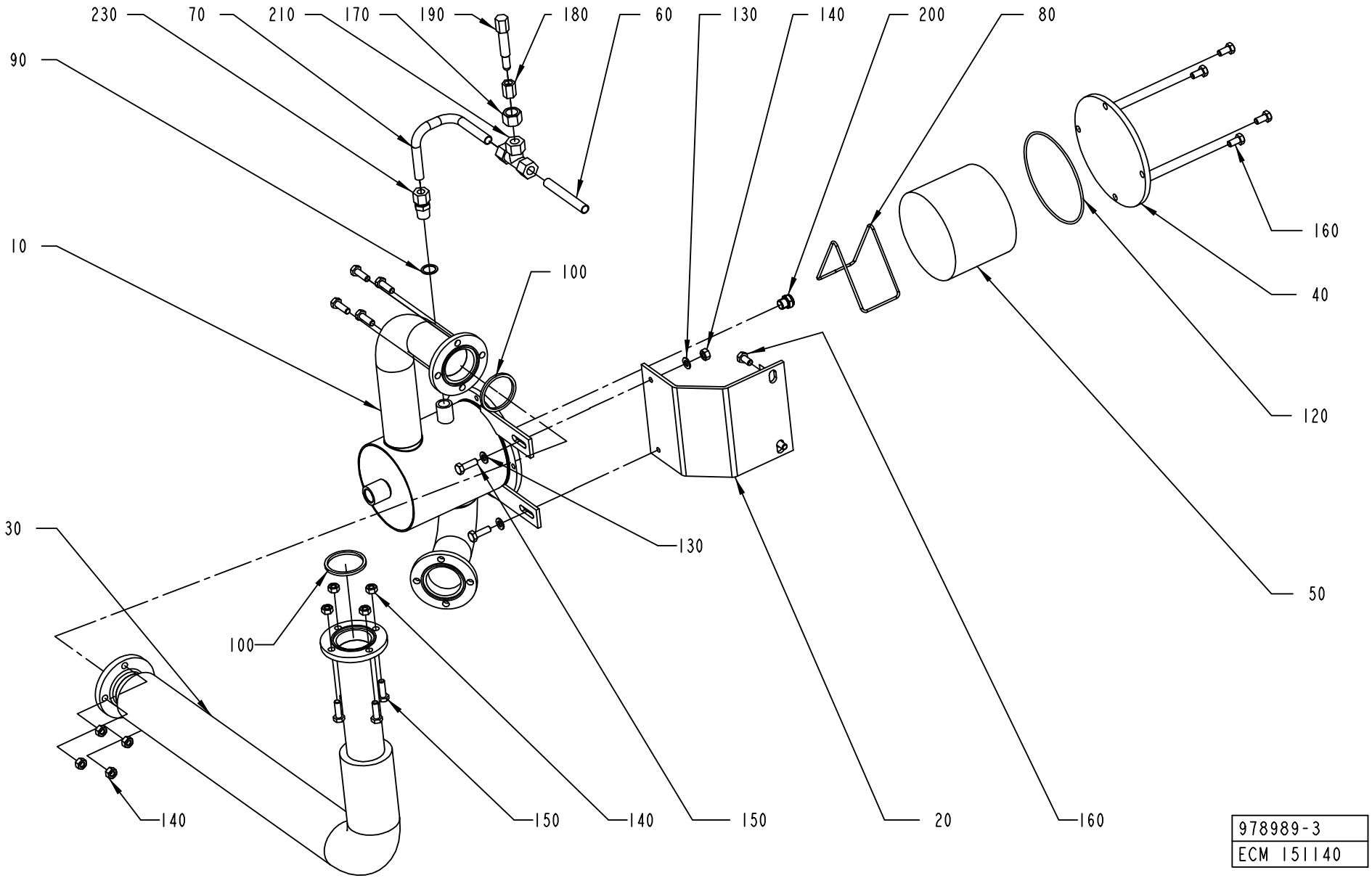
230
70
210
170
190
180
60
130
140
200
80
90
10
100
160
40
120
50
130
30
100
140
150
140
150
20
160
978989-3
ECM 151140

ECM: 151147 - 20031219
Group number: 978989-0200
Assembly Drawing: 978989-3_1_AA

This list covers pages from 6-82 to 6-85

Pos	Part No	UN	Qty	Description	Page No
50HZ (See drawing on page: 6-82)					
220	90330-0029		1	PLUG, EXT. G-THREAD, R-236R3/8	
60HZ (See drawing on page: 6-84)					
060	1519390-0000		1	PIPE(FOR 60HZ)	
070	1519391-0000		1	PIPE BEND	
170	279589-0000		1	NUT	
180	209146-0000		1	BARRIER NUT	
190	209145-0000		1	THROTTLE SCREW	
210	90030-0058		1	CONN. T-PIPE T-12	
230	90030-0181		1	CONN. STR. GE 12-3/8-18 NPTF	
Common Parts					
010	1519392-0000		1	SCRUBBER	
020	1519393-0000		1	PLATE	
030	1519394-0000		1	PIPE	
040	568806-0000		1	LID	
050	546929-0000		1	FILTER	
080	571087-0000		1	RETAINING RING	
090	315233-0111		1	WASHER CAPTIVE SEALING G3/8	
100	315229-0105		2	GASKETS, 48,5X55,5X3,7 MM 2" FDA	
120	315202-0317		1	O-RING 129,5X3 MM	
130	315105-0165		4	WASHER BRB8,4X16RFR	
140	312605-0318		10	HEXAGON NUT, M6M M8 A280	
150	312105-0453		10	SCREW M6S ISO 4017 M8X25 A480	
160	312105-0449		6	SCREW M6S ISO 4017 M8X16 A480	
200	90424-0054		1	SPRAY NOZZLE 120 DEG	

Pos	Part No	UN	Qty	Description	Page No

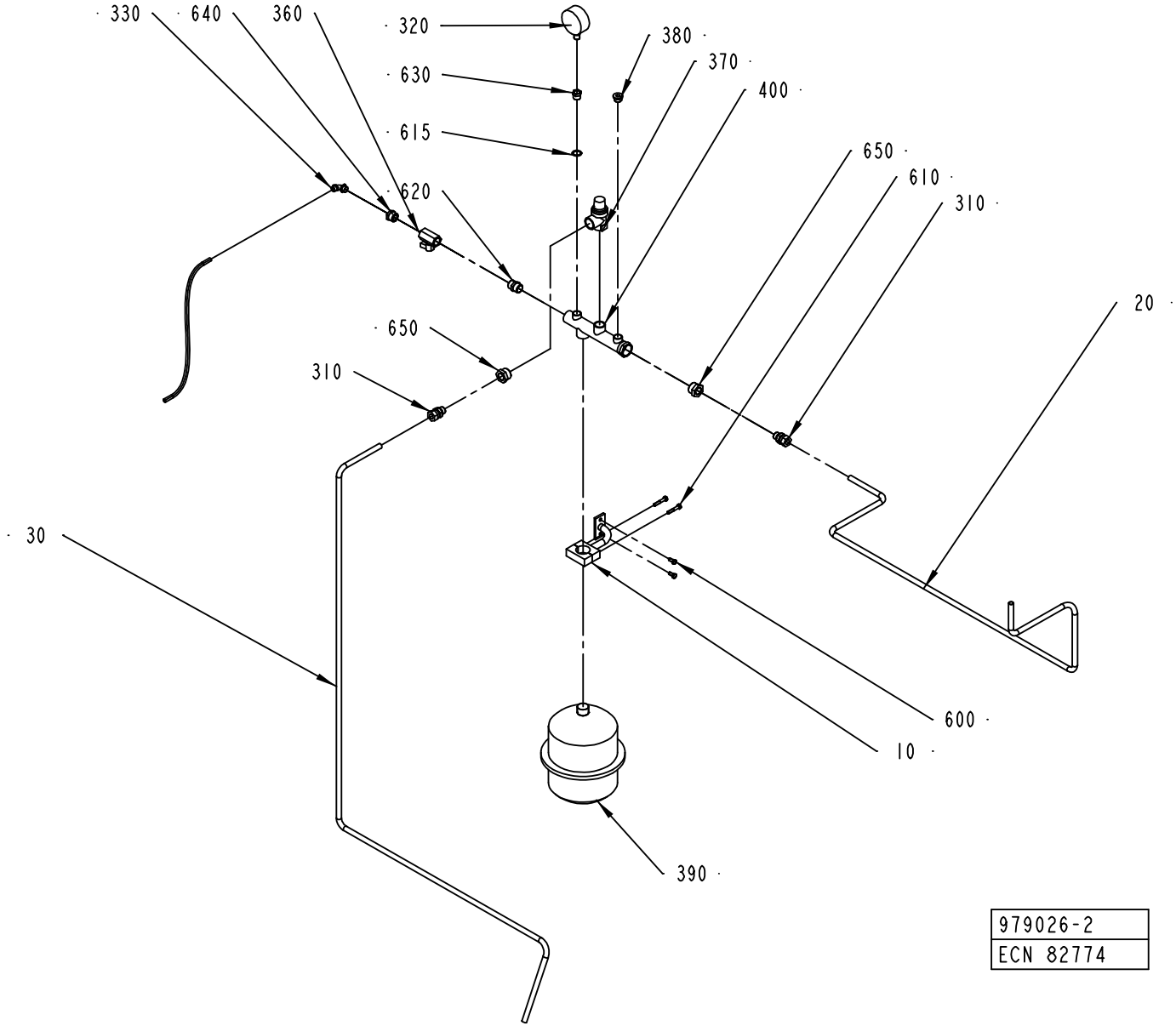

979026-2
ECN 82774

ECM: 115885 - 20020930
Group number: 979026-0200
Assembly Drawing: 979026-2_1_AB

Pos	Part No	UN	Qty	Description	Page No
-					
010	978953-0000		1	BRACKET	
020	1350187-0000		1	PIPE	
030	1350186-0000		1	PIPE	
310	342752-0110		2	CONN. STR. GA-12-G3/8	
320	90043-0002		1	PRESSURE GAUGE, 2040 D=63 MM	
330	342931-0122		1	ELBOW 90 COUPL.,EXT.THREAD 8/6-G1/4"	
350	90166-0118	MM	1800	TUBE 8 MM PA BLACK	
360	90187-0062		1	BALL VALVE G1/2, NPBR	
370	90187-0104		1	SAFETY VALVE, R3/4,	
380	342713-0211		1	PLUG, EXT THREAD HEX SOCKET 8638-00-380	
390	90304-0020		1	LIQUID CONTAINER	
400	90304-0307		1	ATTACHMENT PIPE	
600	312105-0367		2	SCREW M6S M6X14 A280	
610	312105-0376		2	SCREW M6S ISO 4014 M6X35 A480	
615	315233-0111		1	WASHER CAPTIVE SEALING G3/8	
620	342700-0113		1	NIPPLES,HEXAGON,EXT.G-THREAD G1/2"-G1/2"	
630	342701-0203		1	BUSHING, INT/EXT. G-THREAD NO. 3/8-1/4	
640	342701-0205		1	BUSHING,INT./EXT.G-THREAD G1/2"-G1/4"	
650	342701-0209		2	BUSHING,INT./EXT.G-THREAD G3/4"-G3/8"	

Pos	Part No	UN	Qty	Description	Page No

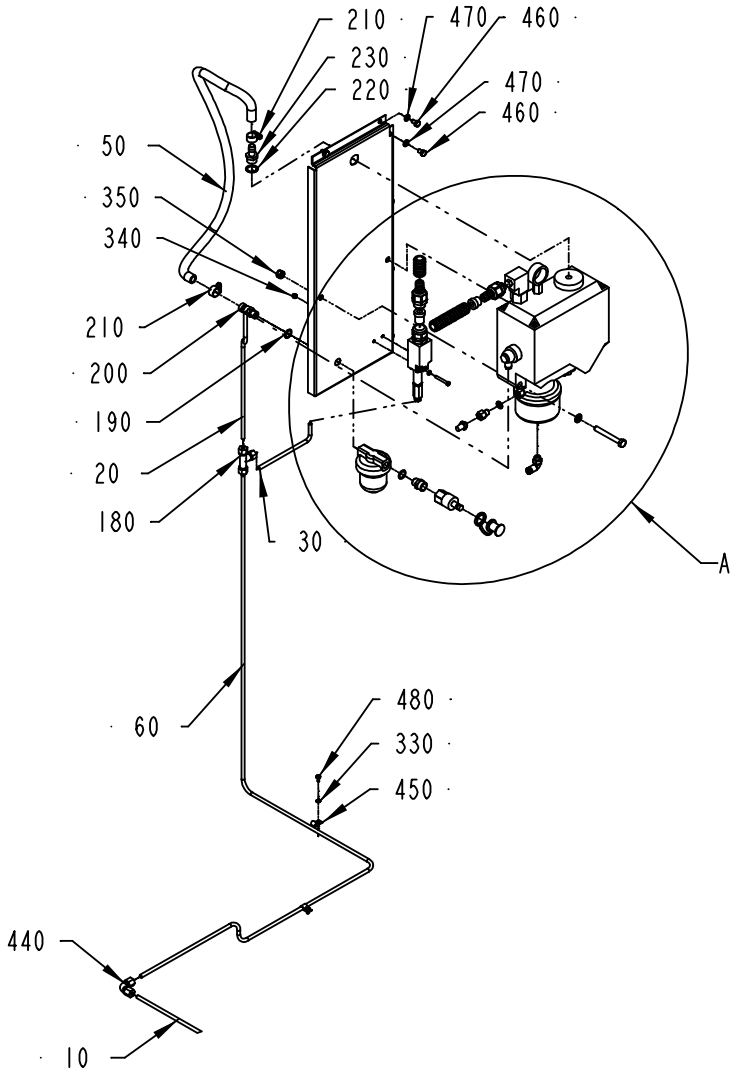

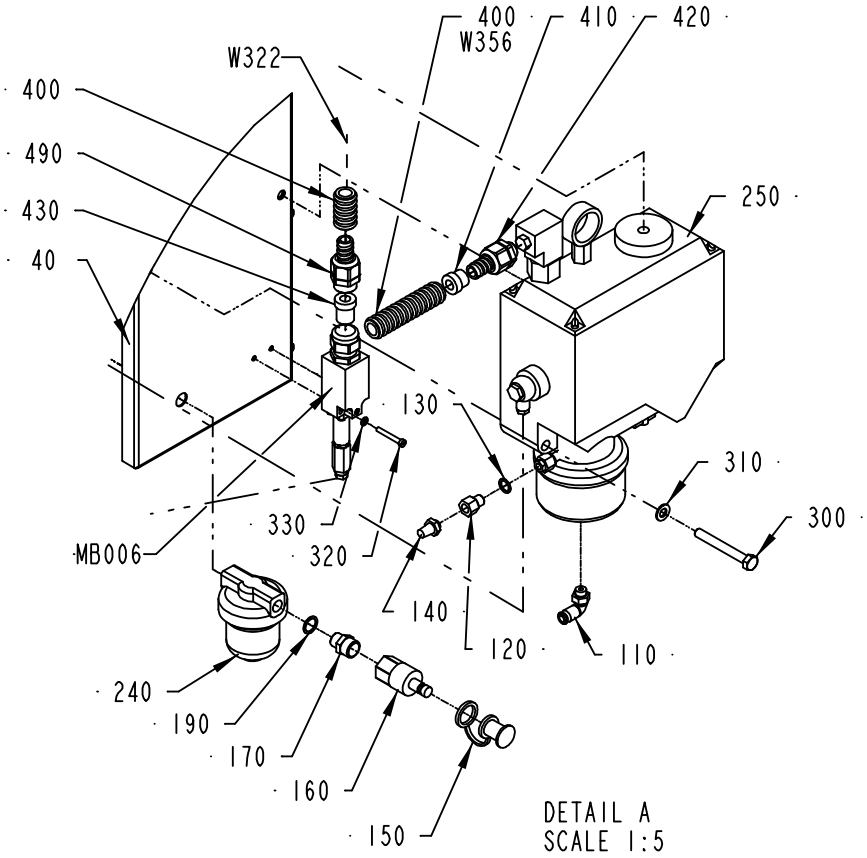

978823-2
ECM 73395

ECM: 115871 - 20020930
Group number: 978823-0200
Assembly Drawing: 978823-2_1_AA

Pos	Part No	UN	Qty	Description	Page No
-					
010	1538908-0000		1	PIPE	
020	1538907-0000		1	PIPE	
030	1538906-0000		1	PIPE	
040	1558125-0000		1	MOUNTING SHEET	
050	90166-0113	M		HOSE	
060	1539332-0000		1	PIPE	
110	342732-0102		1	ELBOW PIPE JOINT, EXT.THREAD, D=6MM-G1/8	
120	90134-0081		1	REDUCTION SLEEVE M10X1/R 1/8"	
130	315233-0109		1	WASHER CAPTIVE SEALING G1/8	
140	346800-0109		1	SILENCER FILTER R1/8"	
150	90163-0304		1	QUICK COUPLING, LP-006-5-74-KU (DUST CAP	
160	90163-0064		1	QUICK COUPLING, (M) LP-006-2-WR517	
170	342700-0203		1	NIPPLES,HEXAGON,EXT.G-THREAD G3/8"-G1/4"	
180	90030-0076		1	CONN. T-PIPE T-6	
190	315233-0110		2	WASHER CAPTIVE SEALING G1/4	
200	90163-0014		1	QUICK COUPLING, (M) LP-006-1-WR013	
210	342991-0101		2	HOSE CLIP,WORM DRIVE TYPE (13)-16	
220	315233-0111		1	WASHER CAPTIVE SEALING G3/8	
230	90163-0041		1	HOSE NIPPLE, EXT.THR. 3/8-12 MM	
240	90415-0033		1	OIL FILTER REFILLING UC-HP-1229-25	
	90415-0330		*1*	*FILTER INSERT ARTNO HR-1229-25UCC*	
250	90048-0046		1	OIL PUMP	
	90274-0105		*1*	*LEVEL GUARD*	
	90048-0041		*1*	*OIL PUMP NO CONTAINER*	
	90048-0450		*1*	*SPARE PARTS KIT*	
	90048-0452		*1*	*SEALING KIT*	
	90048-0523		*1*	*PISTON SPR. 4.581921.1 FOR PUMP 90048-18*	
	90048-0525		*1*	*PUMP HOUSING*	
	90048-0526		*1*	*O-RING*	
	90048-0527		*1*	*SEALING RING*	
	90048-0528		*1*	*PISTON SEAL*	
300	312105-0464		2	SCREW M6S ISO 4014 M8X65 A480	
310	315105-0165		2	WASHER BRB8,4X16RFR	
320	312125-0299		2	SCREW ISO 1207 M4X30 A4	
330	315105-0136		4	WASHER BRB4,3XRFR	
340	312812-0312		2	HEXAGON NUT, NY-LOCK M4 A480	
350	312812-0318		2	HEXAGON NUT, NY-LOCK M8 A480	
400	90152-0059	M	5	SPIRAL CONDUIT, 18X12, UL 1211	
410	353249-0009		1	INSERT, SINGEL HOLE, EK 152/9	
420	353243-0001		1	EXTENDED WITHOUT INSERT, PG9	
430	353249-0065		1	INSERT, SINGEL HOLE, E152/09	
440	342737-0204		1	CONN. ELBOW W-6 LRFR	
450	90165-0057		2	PIPE CLIP FOR TUBE D=6 MM	
460	312105-0364		6	SCREW M6S ISO 4017 M6X10 A480	
470	315105-0153		6	WASHER BRB6,4X12RFR	
480	312105-0287		2	SCREW M6S ISO4017 M4X8 A480	
490	353242-0001		1	NORMAL WITHOUT INSERT, PG13,5	
	353249-0065		*1*	*INSERT, SINGEL HOLE, E152/09*	
MB006	90274-0084		1	PRESSURE GUARD, 1800 KPA	
W322	351150-0403	M	4	CABLE OLFLEX 3X0,75 MM2 LIGHT/GREY	
W356	351150-0404	MM	3500	CABLE OLFLEX 4X0,75 MM2 LIGHT/GREY	

Machine Type	Group Description	Used-In	Group Number	Page No

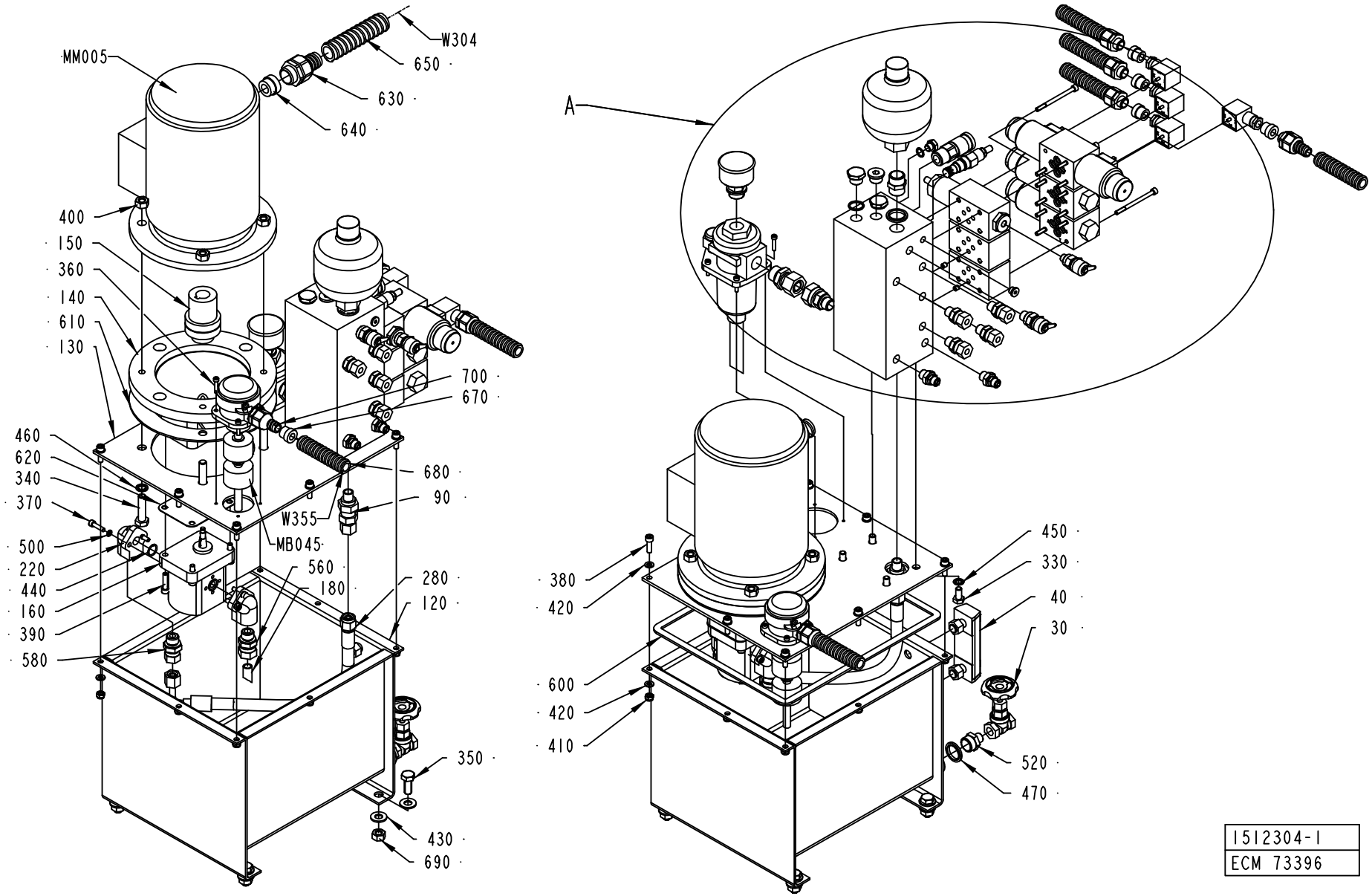

1512304-1
ECM 73396

ECM: 115877 - 20020930
Group number: 1512304-0100
Assembly Drawing: 1512304-1_1_AA

This list covers pages from 6-90 to 6-93

Pos	Part No	UN	Qty	Description	Page No
-					
020	90163-0076		1	QUICK COUPLING, (F) LP-006-0-WR021	
030	90187-0120		1	FLAP VALVE, G1/4, L=38	
040	90199-0020		1	LEVEL GLASS/THERMOM. FSA 76.1.1./T/12	
050	90201-0010		2	DIRECT CHECK VALVE, NO. DGMDC-3-Y-PK-41	
	90201-0300		*1*	*MOUNTING PLATE, NO. A1-89 57B*	
	90201-0301		*1*	*SPRING*	
	90201-0302		*1*	*WASHER*	
	90201-0303		*1*	*SPARE PARTS KIT*	
060	90201-0014		1	VALVE	
080	90201-0407		3	BOLT KIT	
090	90230-0026		1	NON-RETURN VALVE RHZ 10-PLR-ED	
100	90330-0029		2	PLUG, EXT. G-THREAD, R-236R3/8	
110	90330-0066		1	PLUG, EXT. G-THREAD, G1/8	
120	90457-0011		1	HYDRAULIC TANK, 12 LI, NO A3-14010	
130	90457-0012		1	TANK LID, LID-12L, NO A3-14011	
140	90457-0013		1	PUMP-MOTOR BRACKET, LS-211, NO 1711121	
150	90457-0014		1	FLEXIBLE COUPLING, ND5-A, CON.10X19 MM	
160	90457-0015		1	HYDR.PUMP, TFP100/2,2-S-C001, NO 1111250	
170	90457-0016		1	HYDR. VALVE MANIFOLD BLOCK, NO A1-17253	
180	90457-0017		1	TANK RET. OUTLET PIPE, NO 8185-0187	
190	90457-0018		1	HYDR.ACCU, NO SBO210-0,32EI/112A-210AK60	
220	90457-0021		2	PUMP CONN. ELBOW FLANGE T-26/12-3/8	
240	90030-0630		2	REDUCER, 1,5MM, M6, NO. 815406	
250	90201-0133		1	VALVE	
260	90201-0132		1	VALVE	
270	90201-0131		1	VALVE	
280	90457-0022		1	HYDR. HOSE, 6,4 & M16X1,5 STR+90DEGR.CON	
290	90458-0726		1	PRESSURE GAUGE, D=50 MM WITH FILTER	
300	90457-0024		1	RETURNFILTER UNIT, RF-P/30-BB-010E1.0/-T	
320	90457-0023		1	CONN.STRAIGHTG1/2-M22X1,5, VADKO15-RL/WD	
330	312101-0499		4	SCREW M6S M10X40 FZB	
340	312104-0499		4	SCREW M6S M10X40H FZB	
350	312105-0493		4	SCREW M6S ISO 4017 M10X25 A480	
360	312111-0295		8	SCREW HEX.SOCK.HD.MC6S-TT 4X20 88 FZB	
370	312111-0331		6	SCREW HEX.SOCK.HD.MC6S-TT 5X20 88 FZB	
380	312111-0370		8	SCREW HEX.SOCK.HD.MC6S-TT 6X20 88 FZB	
390	312111-0372		4	SCREW HEX.SOCK.HD.MC6S-TT 6X25 88 FZB	
400	312601-0320		4	NUT M6M 10-8 FZB	
410	312810-0316		8	HEXAGON NUT, NY-LOCK M6 FZB	
420	315101-0153		16	WASHER PLAIN, BRB, 6,4/12 H=1,5	
430	315105-0173		8	WASHER BRB10,5X22RFR	
440	315202-0112		2	O-RING 14,1X1,6 MM	
450	315211-0104		4	BONDED SEAL SS/NBR90 M8	
460	315211-0106		4	BONDED SEAL SS/NBR90 M10	
470	315211-0111		2	BONDED SEAL SS/NBR90 G1/2	
480	315234-0109		1	WASHER,PL.RND.CU.10,3/13,5 H=1,0	
490	315234-0111		2	WASHER,PL.RND.CU.17,5//21 H=1,5	
500	315402-0146		6	LOCK WASHER FBB 5,1	
510	342700-0113		1	NIPPLES,HEXAGON,EXT.G-THREAD G1/2"-G1/2"	
520	342700-0205		1	NIPPLES,HEXAGON,EXT.G-THREAD G1/2"-G1/4"	
530	342713-0209		1	PLUG, EXT THREAD HEX SOCKET 8638-00-180	
540	342713-0211		1	PLUG, EXT THREAD HEX SOCKET 8638-00-380	
550	342752-0103		4	CONN. STR. GA-8-G1/4	
560	342752-0110		1	CONN. STR. GA-12-G3/8	
570	342921-0122		2	STRAIGHT COUPLING,EXT.THREADED 8/6-G1/4"	
580	90457-0139		1	CONN.STRAIGHT G3/8-10 MM, A 10-L/R3/8/WD	
590	90457-0140		1	CONN.STRAIGHT G3/8-15 MM, A 15-L/R3/8/WD	
600	90457-0136		1	FLAT GASKET TAPE W. ADHESIVE, 10X3.0	
610	90457-0138		1	GASKET, DP-200	
620	90457-0137		1	GASKET, GP IP	
630	90458-0431		1	EXTENDED WITHOUT INSERT, M25X1,5	
640	353249-0013		1	INSERT, SINGEL HOLE, EK 154/13	
650	90152-0051	M	1	SPIRAL CONDUIT, 25X18, UL 1816	
660	353243-0001		4	EXTENDED WITHOUT INSERT, PG9	
670	353249-0009		5	INSERT, SINGEL HOLE, EK 152/9	
680	90152-0059	M	8	SPIRAL CONDUIT, 18X12, UL 1211	
690	312605-0320		4	HEXAGON NUT, M6M M10 A280	
700	353243-0002		1	EXTENDED WITHOUT INSERT, PG11	
MB045	90457-0019		1	LEVEL PROBE, HMFB-S=45-0=80-0=90-T70	
MM005	90045-0228		1	MOTOR 7AA80M4-B5	
MY052	90457-0170		1	DIRECTION VALVE, NO. 0 810 091 212	
	90457-0169		*1*	*SOL. COIL, 24VDC/1,4A, NO 1837001227*	
MY052A.1	90110-0095		1	CONNECTOR 3 POLE + EARTH	
MY052B.1	90110-0095		1	CONNECTOR 3 POLE + EARTH	
MY131	90458-2722		1	DIRECTION VALVE, NO. 0 810 091 222	
MY131.1	90110-0095		1	CONNECTOR 3 POLE + EARTH	
MY132	90458-2722		1	DIRECTION VALVE, NO. 0 810 091 222	
MY132.1	90110-0095		1	CONNECTOR 3 POLE + EARTH	
W304	351150-0418	M	3	CABLE OLFLEX 4X2,5 MM2 LIGHT/GREY	
W316	351150-0403	M	3	CABLE OLFLEX 3X0,75 MM2 LIGHT/GREY	
W317	351150-0403	M	3	CABLE OLFLEX 3X0,75 MM2 LIGHT/GREY	
W349	351150-0403	M	3	CABLE OLFLEX 3X0,75 MM2 LIGHT/GREY	
W350	351150-0403	M	3	CABLE OLFLEX 3X0,75 MM2 LIGHT/GREY	

Machine Type | Group Description | Used-In | Group Number | Page No

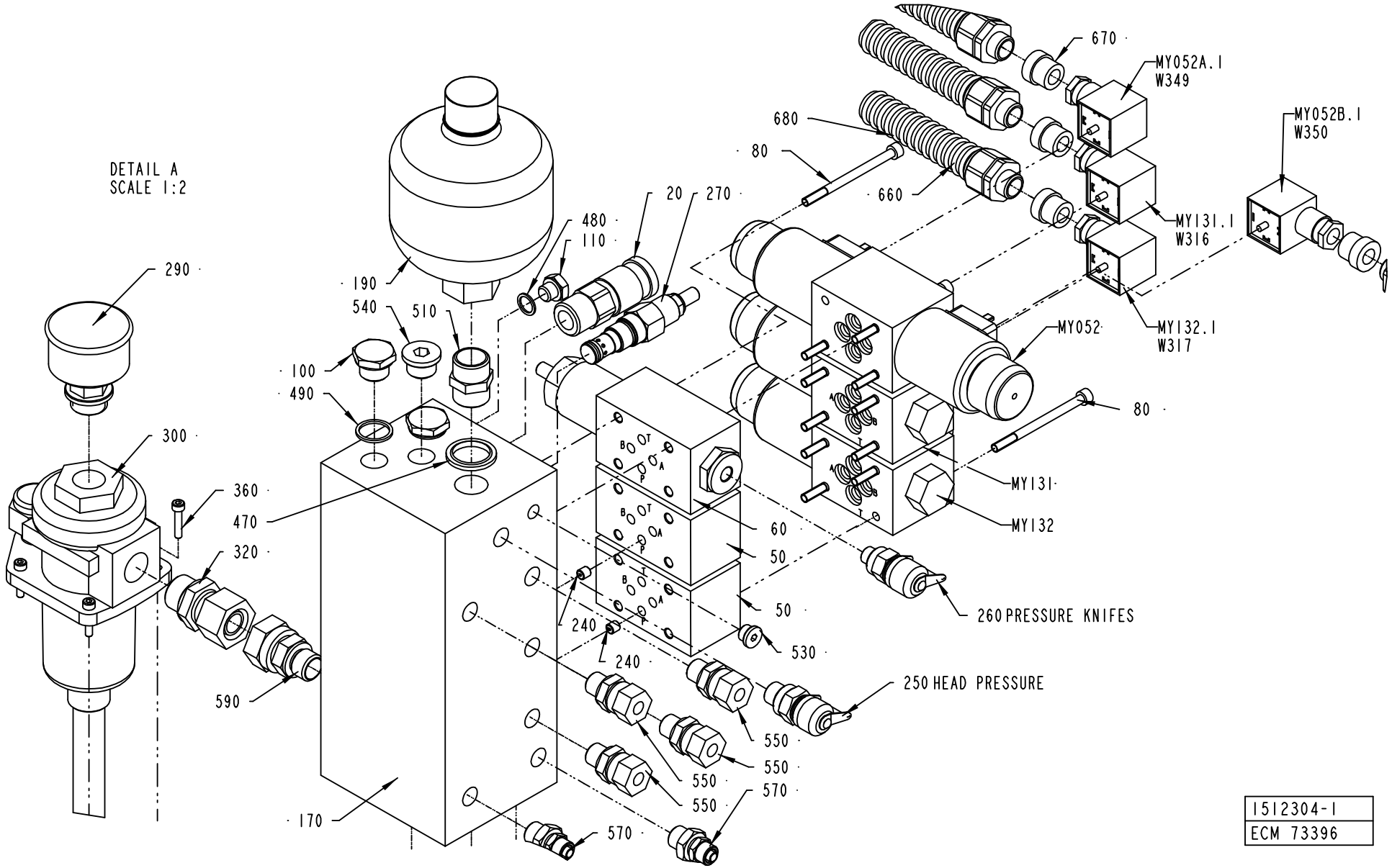

1512304-1
ECM 73396

Pos	Part No	UN	Qty	Description	Page No
- (Cont'd)					
W355	351150-0404	M	3	CABLE OLFLEX 4X0,75 MM2 LIGHT/GREY	

Pos	Part No	UN	Qty	Description	Page No

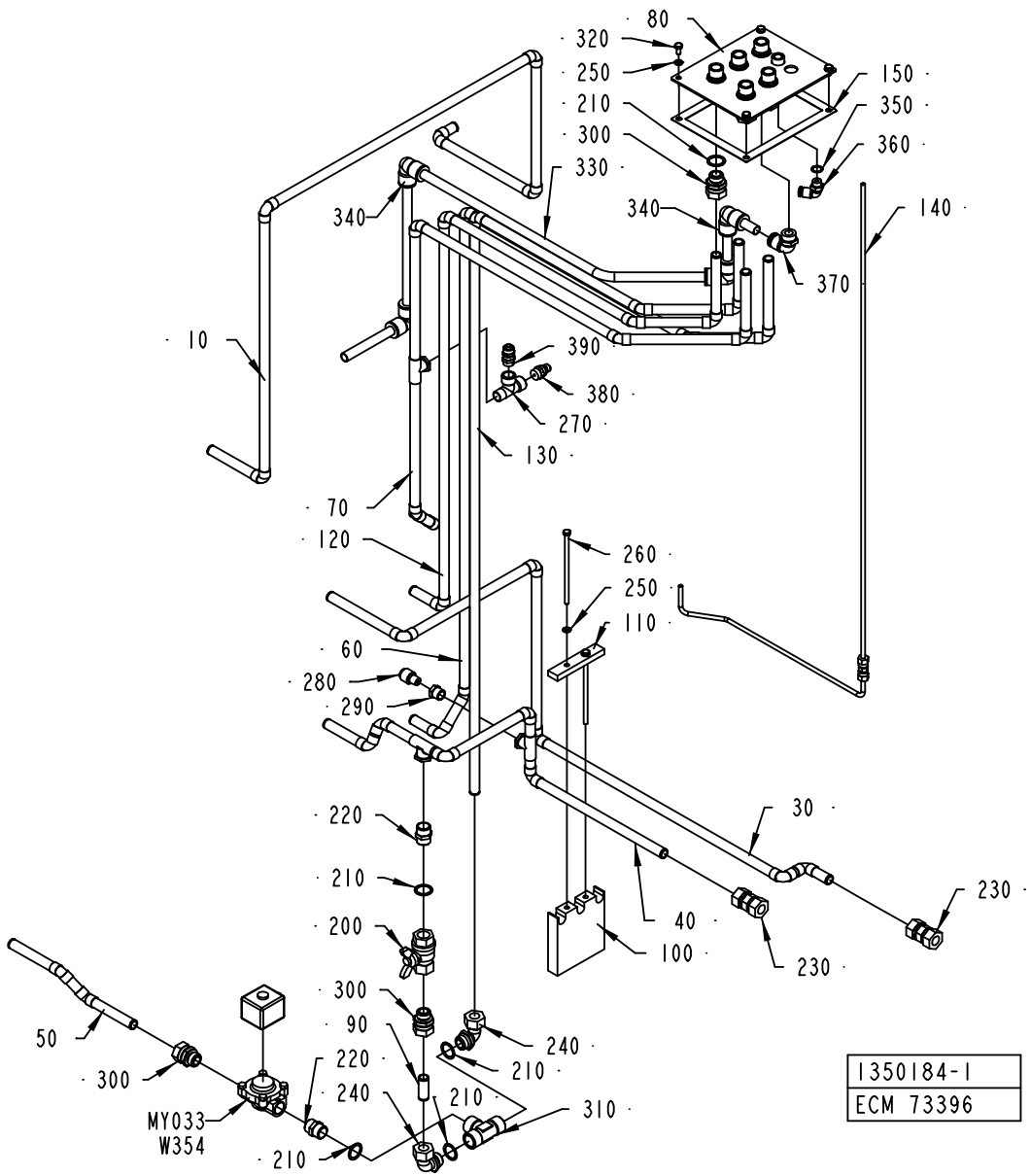
80
320
250
210
300
330
340
340
150
350
360
140
370
10
390
380
270
130
70
120
260
250
110
60
280
290
220
210
200
300
90
220
240
210
240
210
310
210
MY033
W354
300
50
30
230
40
100
230
1350184-1
ECM 73396

ECM: 106577 - 20020313
Group number: 1350184-0100
Assembly Drawing: 1350184-1_1_AA

Pos	Part No	UN	Qty	Description	Page No
-					
010	1517484-0000		1	PIPE	
030	1517486-0000		1	PIPE	
040	1517487-0000		1	PIPE	
050	1517488-0000		1	PIPE	
060	1517489-0000		1	PIPE	
070	1350185-0000		1	PIPE	
080	1519997-0000		1	CONNECTION PLATE	
090	1548156-0000		1	PIPE	
100	1517490-0000		1	INFERIOR HOLDER	
110	1517491-0000		1	INFERIOR HOLDER	
120	1519577-0000		1	PIPE	
130	1519576-0000		1	PIPE	
140	1512353-0000		1	PIPE	
150	1517181-0000		1	GASKET	
200	90187-0029		1	BALL VALVE G1/2, NPBR	
210	315233-0113		8	WASHER CAPTIVE SEALING G1/2	
220	342700-0113		2	NIPPLES,HEXAGON,EXT.G-THREAD G1/2"-G1/2"	
230	342726-0114		2	CONN. PIPE G-15	
240	342730-0114		2	CONN. ELBOW WA-15-1/2	
250	315105-0153		6	WASHER BRB6,4X12RFR	
260	90457-0143		2	SCREW M6S ISO 4014 M6X130 A480	
270	90140-0023		1	T-PIPE, INT. THREAD, NO. 2070-3/8-3/8	
280	90224-0094		1	NIPPLE	
290	342701-0203		1	BUSHING, INT/EXT. G-THREAD NO. 3/8-1/4	
300	342720-0114		6	CONN. STR. GA-15-G1/2	
310	90140-0010		1	T-PIPE, INT. THREAD, 20031/2	
320	312105-0366		4	SCREW M6S M6X12 A280	
330	90166-0196	MM	1800	TUBE 14MM PA BLUE	
340	342735-0110		4	ELBOW PIPE	
350	315233-0110		1	WASHER CAPTIVE SEALING G1/4	
360	342732-0104		1	ELBOW PIPE JOINT, EXT.THREAD, D=8MM-G1/4	
370	342732-0161		1	ELBOW PIPE JOINT,EXT.THREAD,D=14 MM-G1/2	
380	342920-0115		1	STRAIGHT COUPLING,EXT.THREADED 6/4-R3/8"	
390	342920-0133		1	STRAIGHT COUPL.,EXT.THREADED 10/8-R3/8"	
MY033	90042-0134		1	SOLENOID VALVE ASCO SCG 210 802 24VDC	
	90042-0428		*1*	*COIL ASCO 24VDC*	
W354	351150-0403	MM	3500	CABLE OLFLEX 3X0,75 MM2 LIGHT/GREY	

Pos	Part No	UN	Qty	Description	Page No

Machine Type | Group Description | Used-In | Group Number | Page No

PIPE WORK-HYDRAULIC

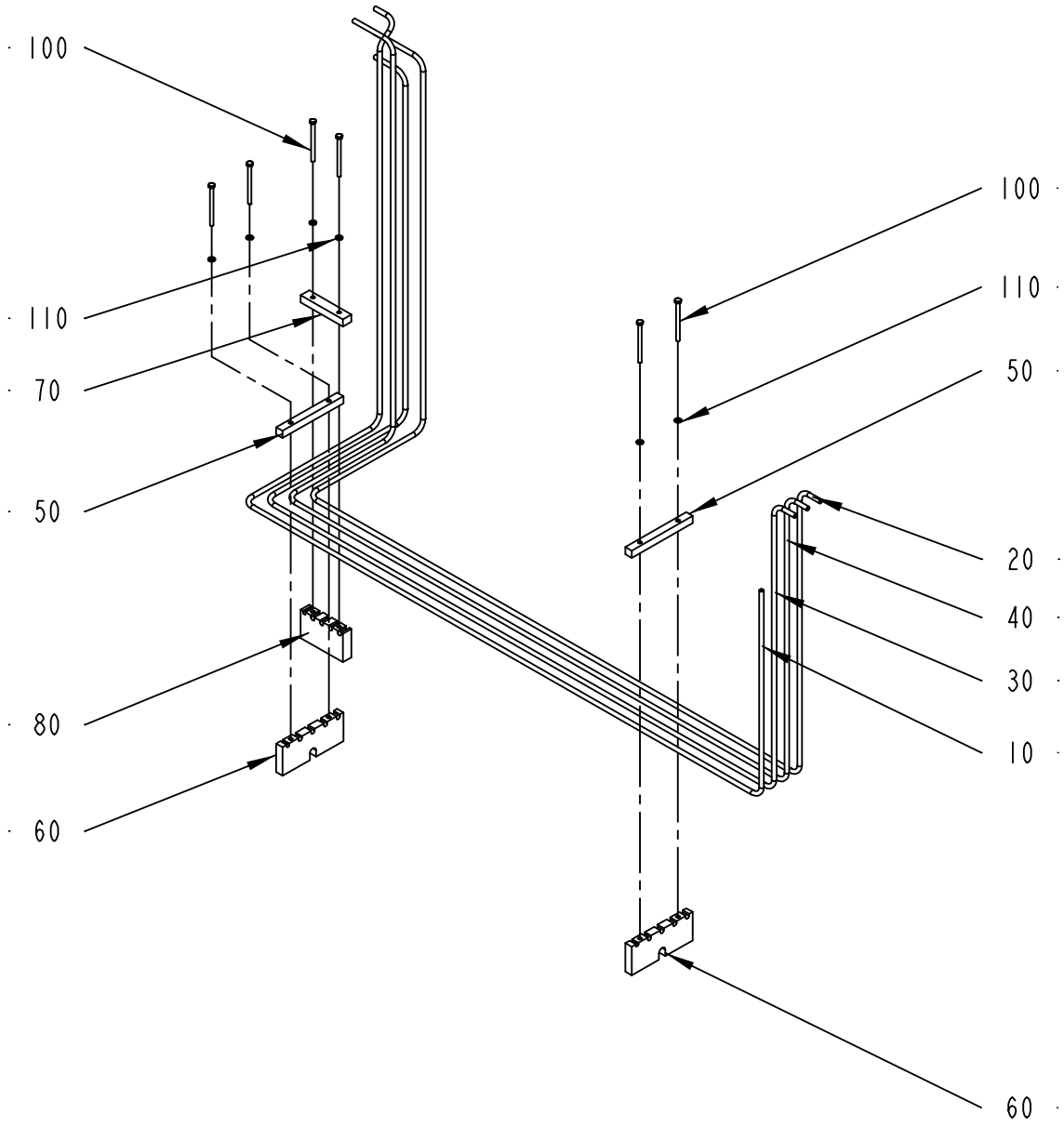

1519663-1
ECN 73396

ECM: 73396 - 20011221
Group number: 1519663-0100
Assembly Drawing: 1519663-1_1_AA

Pos	Part No	UN	Qty	Description	Page No
-					
010	1519664-0000		1	PIPE	
020	1519665-0000		1	PIPE	
030	1519666-0000		1	PIPE	
040	1519667-0000		1	PIPE	
050	1519668-0000		2	PIPE HOLDER	
060	1519669-0000		2	PIPE HOLDER	
070	1519670-0000		1	PIPE HOLDER	
080	1519671-0000		1	PIPE HOLDER	
100	312105-0386		6	SCREW M6S ISO 4014 M6X80 A480	
110	315105-0153		6	WASHER BRB6,4X12RFR	

Pos	Part No	UN	Qty	Description	Page No

This page is intentionally left blank.

ECM: 70475 - 19961031
Group number: 469384-0100
Assembly Drawing:

Pos	Part No	UN	Qty	Description	Page No
-					
010	90296-0053	L	10	OIL	
020	90296-0075	ML	2500	OIL 54322-320 ACC TO M 1254.322	
030	90298-0019		1	DETERGENT	
040	90144-0003		1	TAPE	

Pos	Part No	UN	Qty	Description	Page No

Tetra Pak

SPC
Spare Parts Catalogue

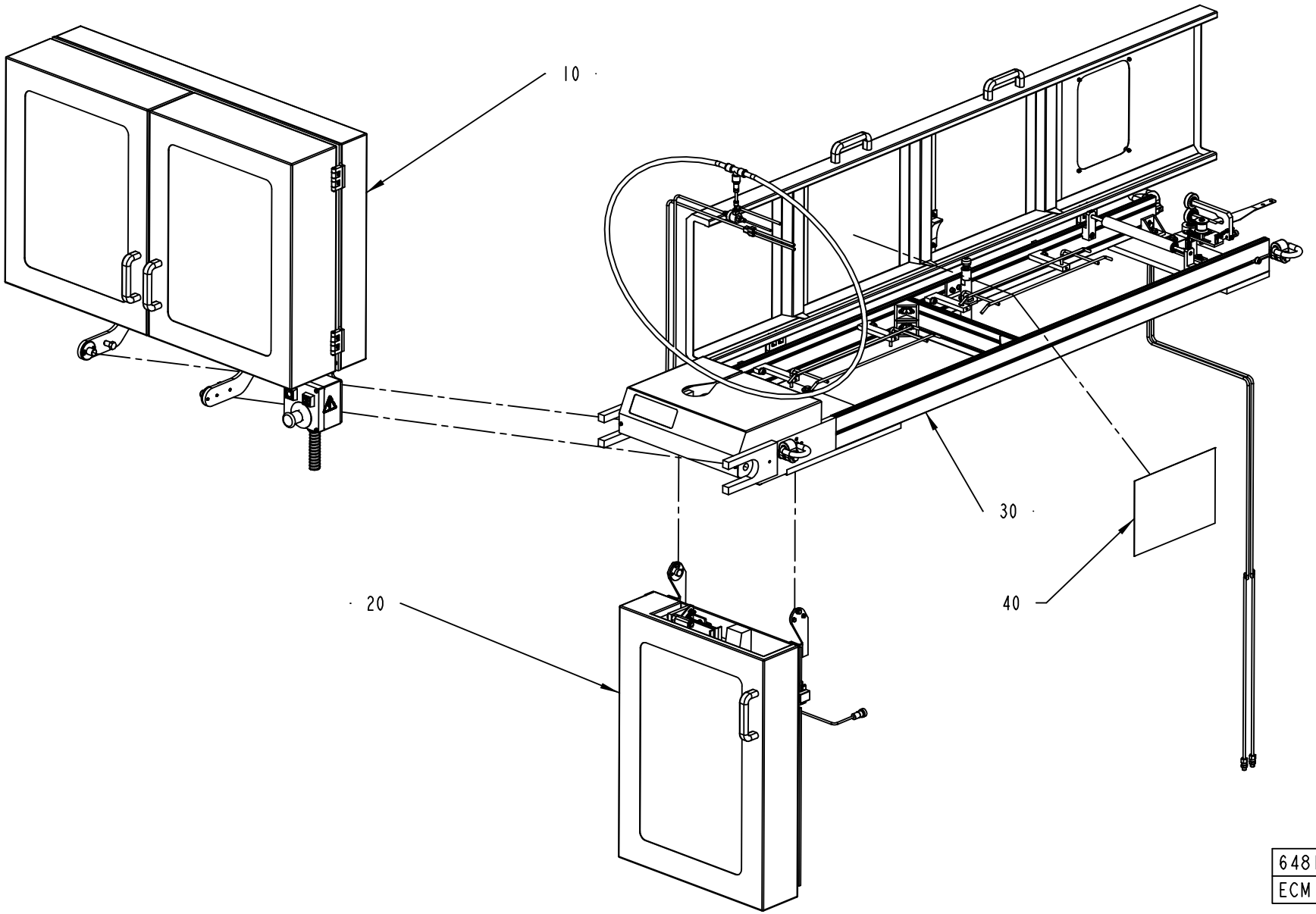
10
20
30
40
648107-16
ECM 99349

ECM: 109339 - 20020808
Group number: 648107-1200
Assembly Drawing: 648107-16_1_AB

Pos	Part No	UN	Qty	Description	Page No
-					
010	580037-0200		1	STRIP MAGAZINE	**7-5, 7-7**
020	580036-0200		1	STRIP APPLICATOR	**7-35, 7-37**
030	1499477-0100		1	WEB TUNNEL	**7-55**
040	2540724-0000		1	HOSE INSTALLATION	

Pos	Part No	UN	Qty	Description	Page No

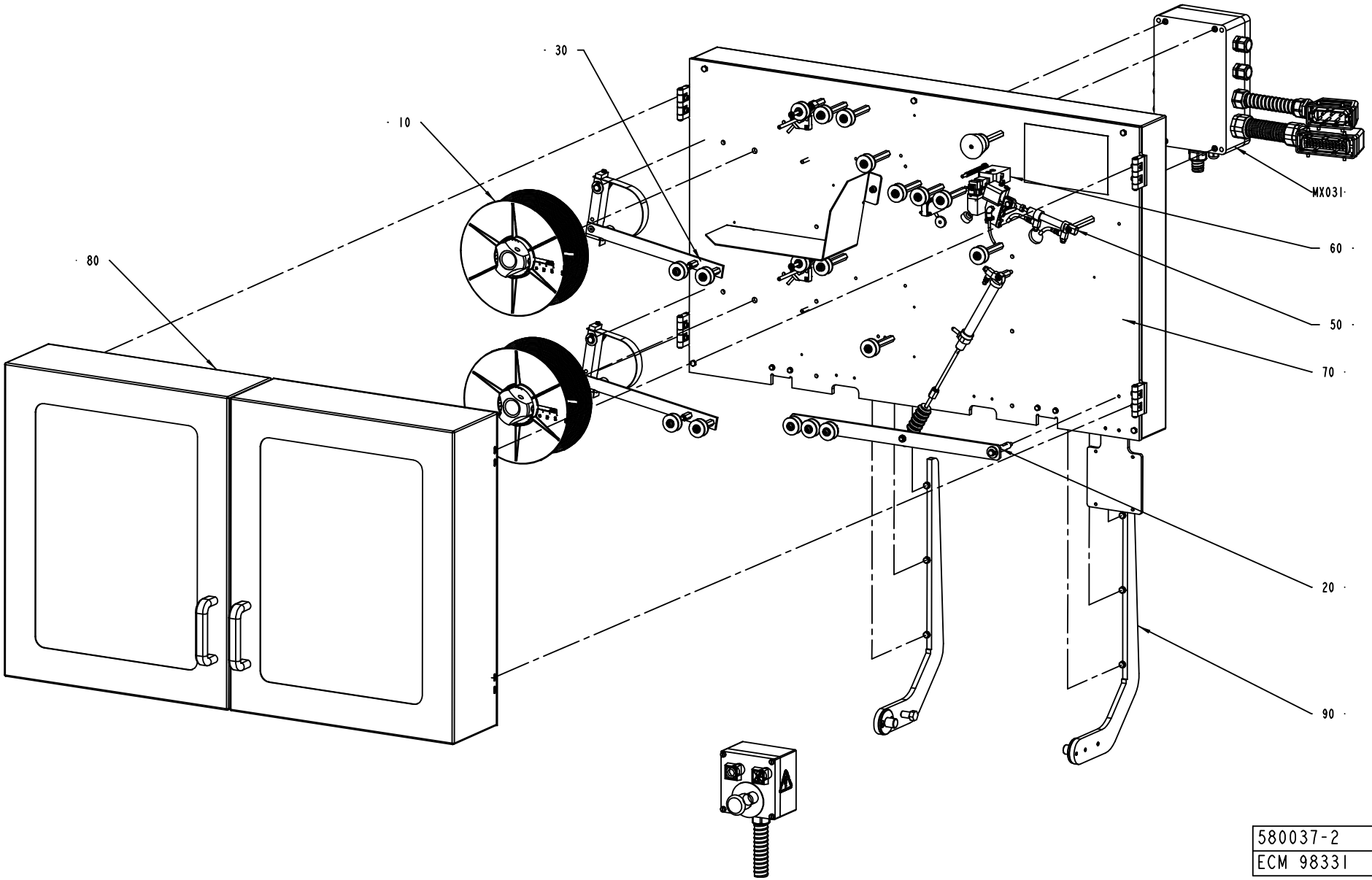
30
10
80
MX031
60
50
70
20
90
580037-2
ECM 98331

ECM: 131914 - 20030630
Group number: 580037-0200
Assembly Drawing: 580037-2_1_AC

This list covers pages from 7-4 to 7-7

Pos	Part No	UN	Qty	Description	Page No
NOPT (See drawing on page: 7-4)					
090	1498753-0100		1	MAGAZINE HOLDER	**7-9**
Common Parts					
010	580042-0100		2	HUB JUMBO	**7-11**
020	580044-0200		1	SPLICING MAGAZINE	**7-13**
030	580060-0200		2	BRAKE ARM	**7-15**
040	580329-0200		1	PUSH BUTTON BOX	**7-17**
050	1558897-0100		1	HEATING DEVICE	**7-19**
060	1524477-0100		1	CUTTING TABLE	**7-21**
070	1499480-0100		1	MOUNTING PLATE	**7-23, 7-25, 7-27, 7-29**
080	1498751-0100		1	DOORS	**7-31**
MX031	580064-0200		1	CONNECTION BOX	**7-33**

Pos	Part No	UN	Qty	Description	Page No

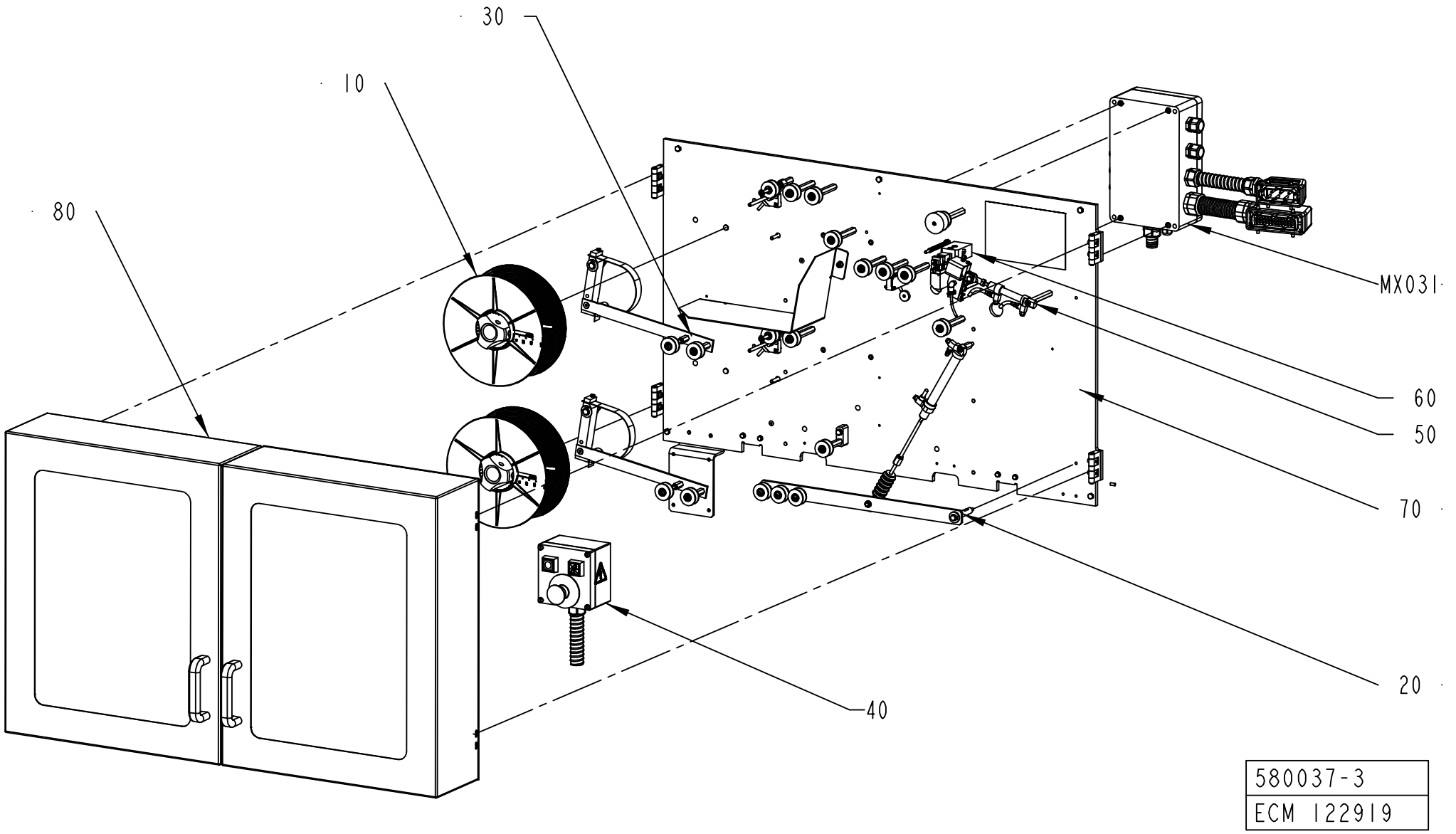

580037-3
ECM 122919

ECM: 131914 - 20030630
Group number: 580037-0200
Assembly Drawing: 580037-3_1_AA

This list covers pages from 7-4 to 7-7

Pos	Part No	UN	Qty	Description	Page No
NOPT (See drawing on page: 7-4)					
090	1498753-0100		1	MAGAZINE HOLDER	**7-9**
Common Parts					
010	580042-0100		2	HUB JUMBO	**7-11**
020	580044-0200		1	SPLICING MAGAZINE	**7-13**
030	580060-0200		2	BRAKE ARM	**7-15**
040	580329-0200		1	PUSH BUTTON BOX	**7-17**
050	1558897-0100		1	HEATING DEVICE	**7-19**
060	1524477-0100		1	CUTTING TABLE	**7-21**
070	1499480-0100		1	MOUNTING PLATE	**7-23, 7-25, 7-27, 7-29**
080	1498751-0100		1	DOORS	**7-31**
MX031	580064-0200		1	CONNECTION BOX	**7-33**

Pos	Part No	UN	Qty	Description	Page No

MAGAZINE HOLDER

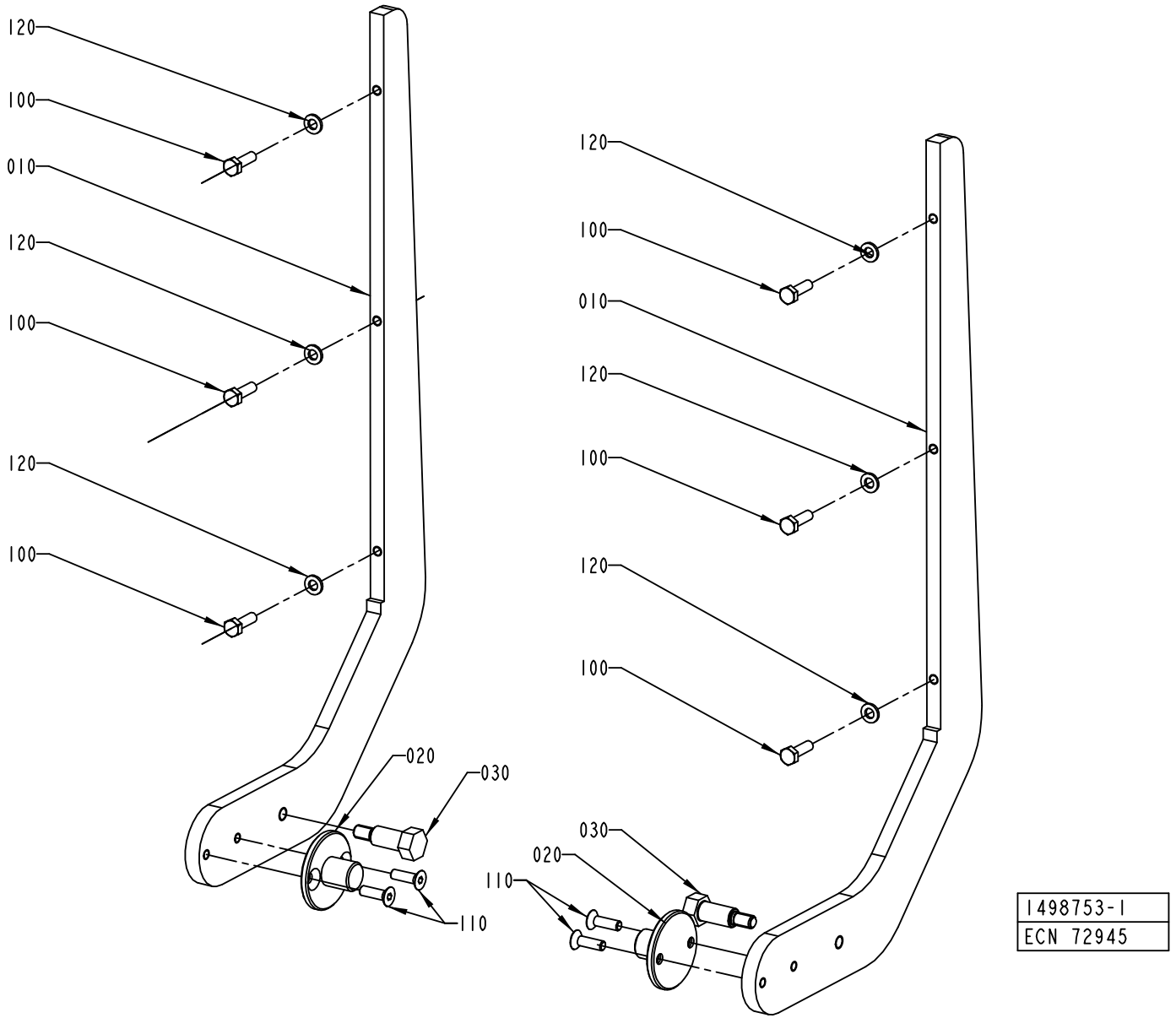

1498753-1
ECN 72945

ECM: 98335 - 20020808
Group number: 1498753-0100
Assembly Drawing: 1498753-1_1_AA

Pos	Part No	UN	Qty	Description	Page No
-					
010	1498761-0000		2	MAGAZINE HOLDER	
020	1498757-0000		2	FLANGE	
030	1498758-0000		2	AXLE PIN	
100	312105-0370		6	SCREW M6S ISO 4017 M6X20 A480	
110	312155-0368		4	SCREW EN 10642 MF6S M6X16 A480	
120	315105-0153		6	WASHER BRB6,4X12RFR	

Pos	Part No	UN	Qty	Description	Page No

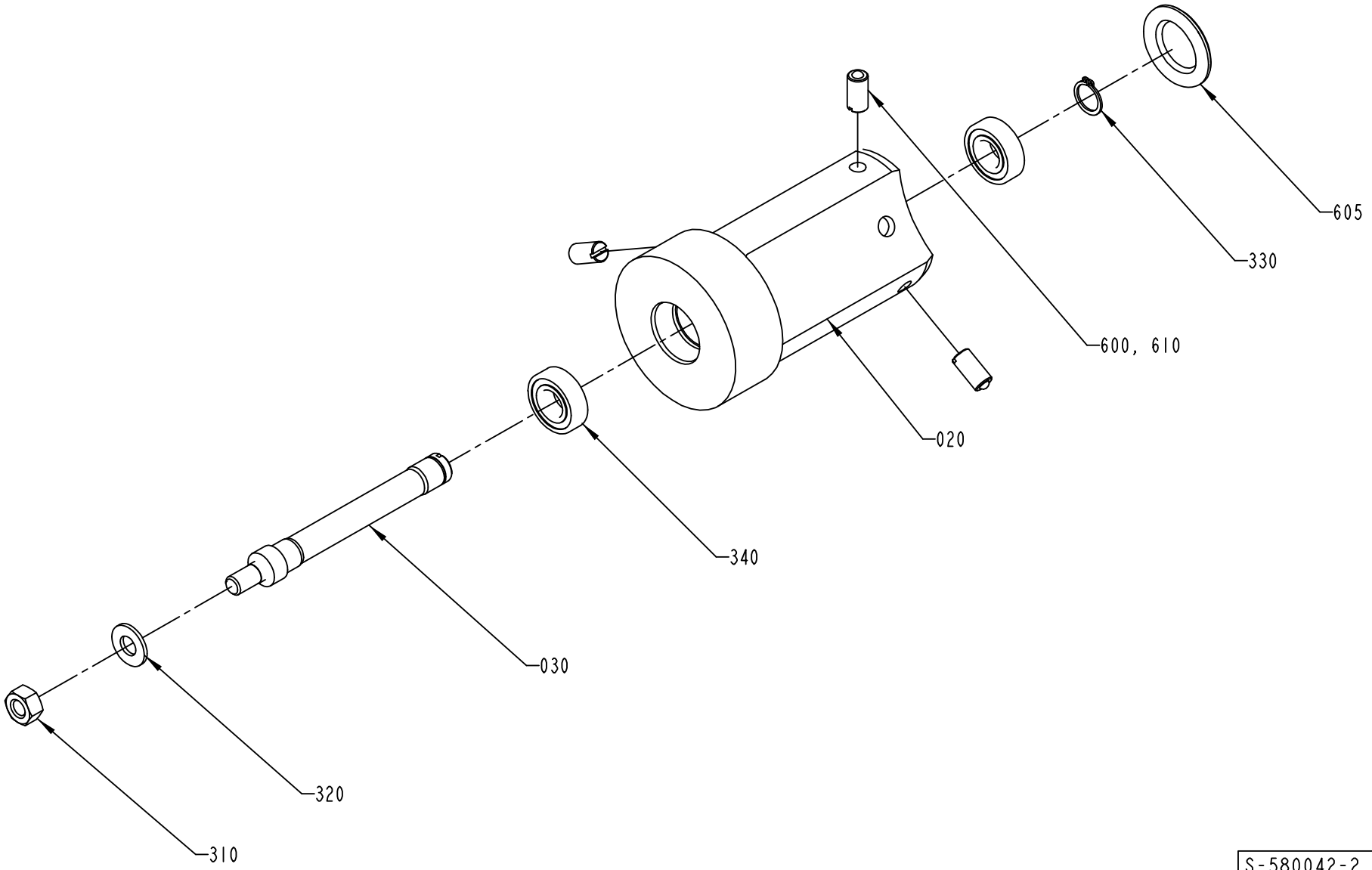

S-580042-2
ECN 72517

ECM: 146746 - 20031024
Group number: 580042-0100
Assembly Drawing: 580042-2_1_AB

Pos	Part No	UN	Qty	Description	Page No
TBA/19					
340	90214-0207		2	BALL BEARING, 15X32X9 MM	
Common Parts					
010	541751-0000		1	CONICAL BOBBIN	
020	536913-0000		1	HUB	
030	537327-0000		1	SHAFT	
310	312605-0320		1	HEXAGON NUT, M6M M10 A280	
320	315105-0173		1	WASHER BRB10,5X22RFR	
330	315751-0112		1	RETAINING RING FOR SHAFT DIN 471 15 A2	
600	90157-0016		1	LOCKING FLUID	
605	90261-0049		1	PLUG, BLIND, PLASTIC, NO. SR1750	
610	90287-0106		3	SCREW SPRINGLOAD. SLOTTED HEAD M10X21	

Pos	Part No	UN	Qty	Description	Page No

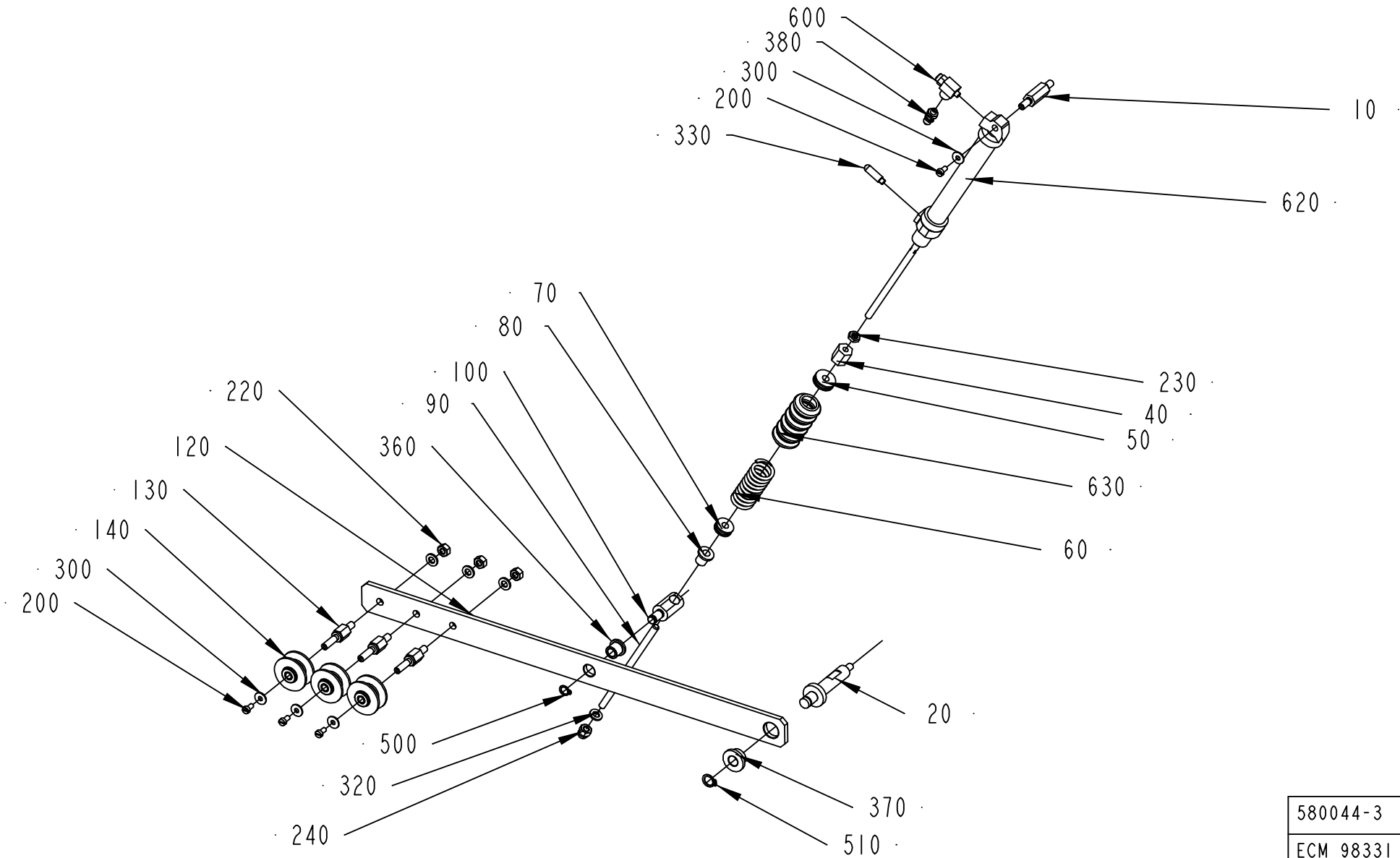

580044-3
ECM 98331

ECM: 113781 - 20030113
Group number: 580044-0200
Assembly Drawing: 580044-3_1_AC

Pos	Part No	UN	Qty	Description	Page No
-					
010	979576-0000		1	AXLE PIN	
020	979578-0000		1	AXLE PIN	
040	401186-0000		1	HEX NUT	
050	401371-0000		1	BUSHING	
060	400800-0000		1	SPRING	
070	401372-0000		1	BUSHING	
080	401370-0000		1	BUSHING	
090	1499515-0000		1	SHAFT	
100	401183-0000		1	GUIDE AXLE	
120	580055-0000		1	ARM	
130	579553-0000		3	SHAFT	
140	1512583-0000		3	ROLLER	
	321120-0101		*2*	*BEARING BUSHING W/O FLANGE,6/8X6*	
200	312125-0287		4	SCREW ISO 1207 M4X8 A4	
220	312605-0316		3	HEXAGON NUT, M6M M6 A280	
230	312625-0316		1	HEXAGON THIN NUT, EN 24035 ML6M M6 A4	
240	312705-0316		1	NUT HEX. DOMED CAP MHM-6 M6 A280	
300	90005-0082		4	WASHER PLAIN ROUND 4,3(M4)/12,H=1	
320	315105-0153		4	WASHER BRB6,4X12RFR	
330	90328-0029		1	SILENCER M5	
360	321111-0097		1	FLANGE BUSHING, 8X12X12 MM	
370	321111-0135		1	FLANGE BUSHING, 10X16X10 MM	
380	342921-0111		1	STRAIGHT COUPL,EXT.THREAD.6/4-M5	
500	90141-0015		1	RETAINING RING FOR SHAFT DIN 471 8 A2	
510	90141-0016		1	RETAINING RING FOR SHAFT DIN 471 10 A2	
600	90235-0289		2	VALVE	
620	90239-0819		1	DOUBLE ACTING, MINI-ISO, CYL.16-100	
630	90342-0013		1	BELLOWS	

Pos	Part No	UN	Qty	Description	Page No

BRAKE ARM

Drawing file: 580060-3_1_AB.hpgl

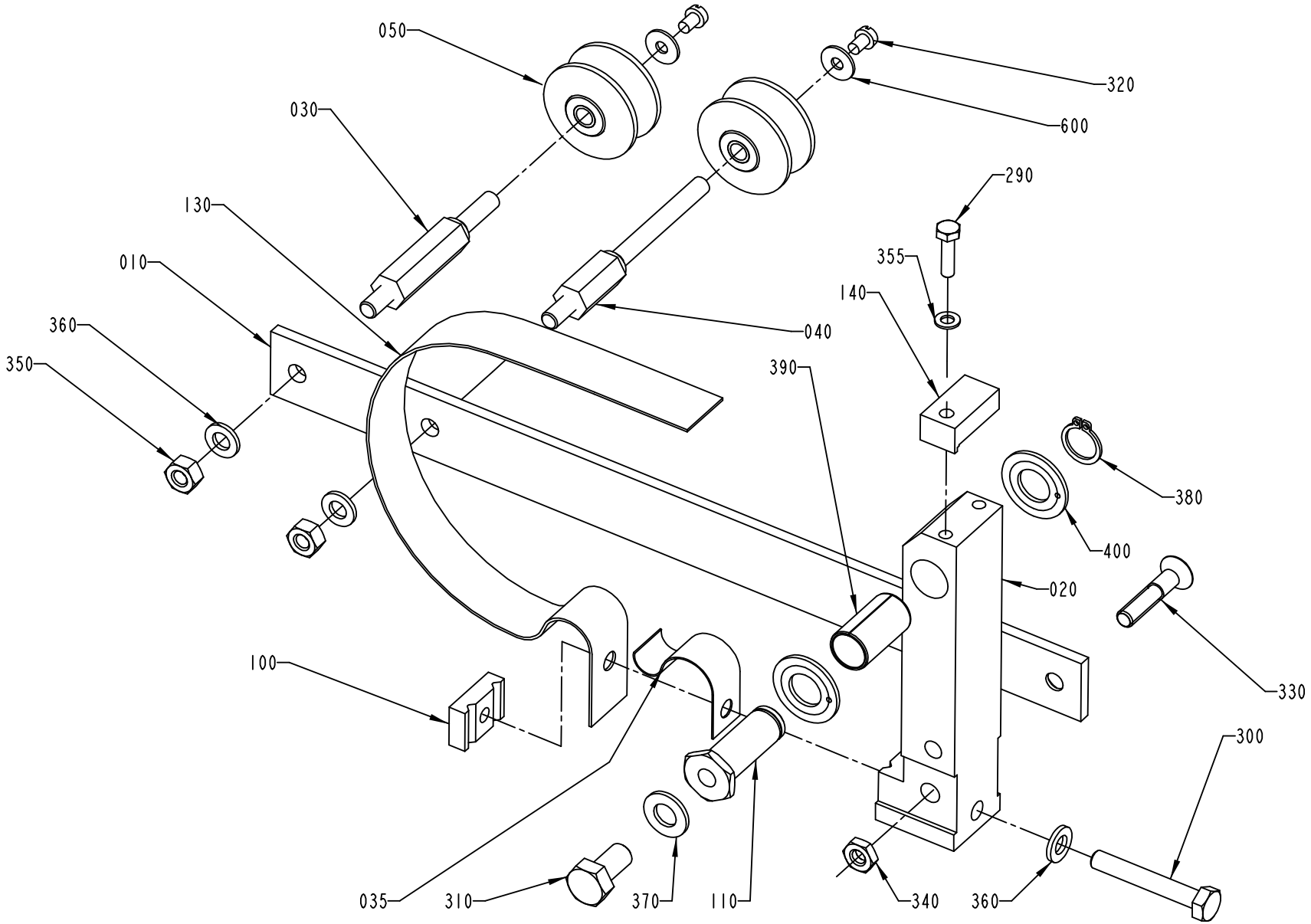

580060-3
ECM 98331

ECM: 114165 - 20020930
Group number: 580060-0200
Assembly Drawing: 580060-3_1_AB

Pos	Part No	UN	Qty	Description	Page No
-					
010	979994-0000		1	ARM	
020	1260678-0000		1	ARM	
030	536917-0000		1	AXLE PIN	
035	1484486-0000		1	SPRING	
040	544726-0000		1	AXLE PIN	
050	1512583-0000		2	ROLLER	
	321120-0101		*2*	*BEARING BUSHING W/O FLANGE,6/8X6*	
100	583878-0000		1	SPRING BRACKET	
110	541070-0000		1	SHAFT	
130	979990-0000		1	BELT BRAKE	
140	979991-0000		1	BLOCK	
290	312105-0293		1	SCREW M6S ISO 4017 M4X16 A480	
300	312105-0378		1	SCREW M6S ISO 4014 M6X40 A480	
310	312105-0449		1	SCREW M6S ISO 4017 M8X16 A480	
320	312125-0285		2	SCREW ISO 1207 M4X6 A4	
330	312155-0374		1	SCREW EN 10642 MF6S M6X30 A480	
340	312625-0316		1	HEXAGON THIN NUT, EN 24035 ML6M M6 A4	
350	312605-0316		2	HEXAGON NUT, M6M M6 A280	
355	315105-0136		1	WASHER BRB4,3XRFR	
360	315105-0153		3	WASHER BRB6,4X12RFR	
370	315105-0165		1	WASHER BRB8,4X16RFR	
380	315751-0109		1	RETAINING RING FOR SHAFT DIN 471 12 A2	
390	321141-0193		1	BEARING BUSHING W/O FL, 12X14X25 MM	
400	321130-0180		2	THRUST WASHER, 12X24X1,5 MM	
600	90005-0082		2	WASHER PLAIN ROUND 4,3(M4)/12,H=1	

Pos	Part No	UN	Qty	Description	Page No

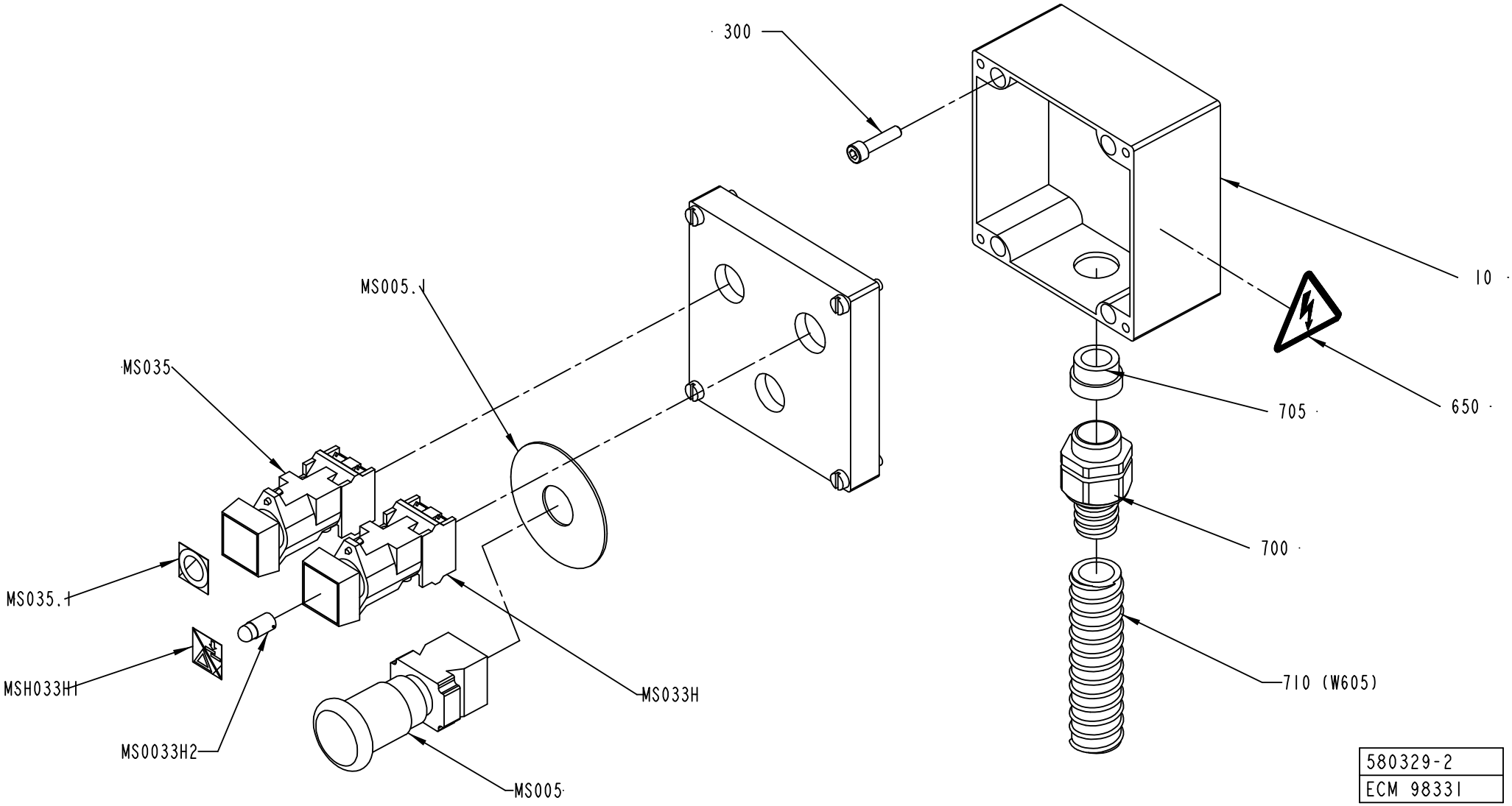
300
10
MS005.1
MS035
705
650
700
MS035.1
MSH033H1
MS033H
710 (W605)
MS0033H2
MS005
580329-2
ECM 98331

ECM: 116935 - 20030113
Group number: 580329-0200
Assembly Drawing: 580329-2_1_AB

Pos	Part No	UN	Qty	Description	Page No
-					
010	1558892-0000		1	CONNECTION BOX	
300	312115-0372		4	SCREW ISO4762 M6X25 A4	
650	359705-0015		1	WARNING SIGN ISO, RISK OF ELECTRIC SHOCK	
700	90458-0431		1	EXTENDED WITHOUT INSERT, M25X1,5	
705	353249-0014		1	INSERT, SINGEL HOLE, EK 154/16	
710	90152-0051	MM	1600	SPIRAL CONDUIT, 25X18, UL 1816	
MS005	90458-1651		1	EMERGENCY STOP, ZB4-BS-844 ZB4-BZ-104	
MS005.1	486826-0001		1	SIGN "EMERGENCY STOP"	
MS033H	90064-0098		1	PUSH BUTTON, CLEAR	
MS033H1	90459-0691		1	SIGN, STRIP SPLICE/ RESET ALARM	
MS033H2	90036-0057		1	LIGHT BULB, BA9S 28V	
MS035	90064-0085		1	PUSH BUTTON, RED	
MS035.1	359301-0110		1	SIGN "SHORT STOP"	
W605	351150-0407	MM	1900	CABLE OLFLEX 12X0,75 MM2 LIGHT/GREY	

Pos	Part No	UN	Qty	Description	Page No

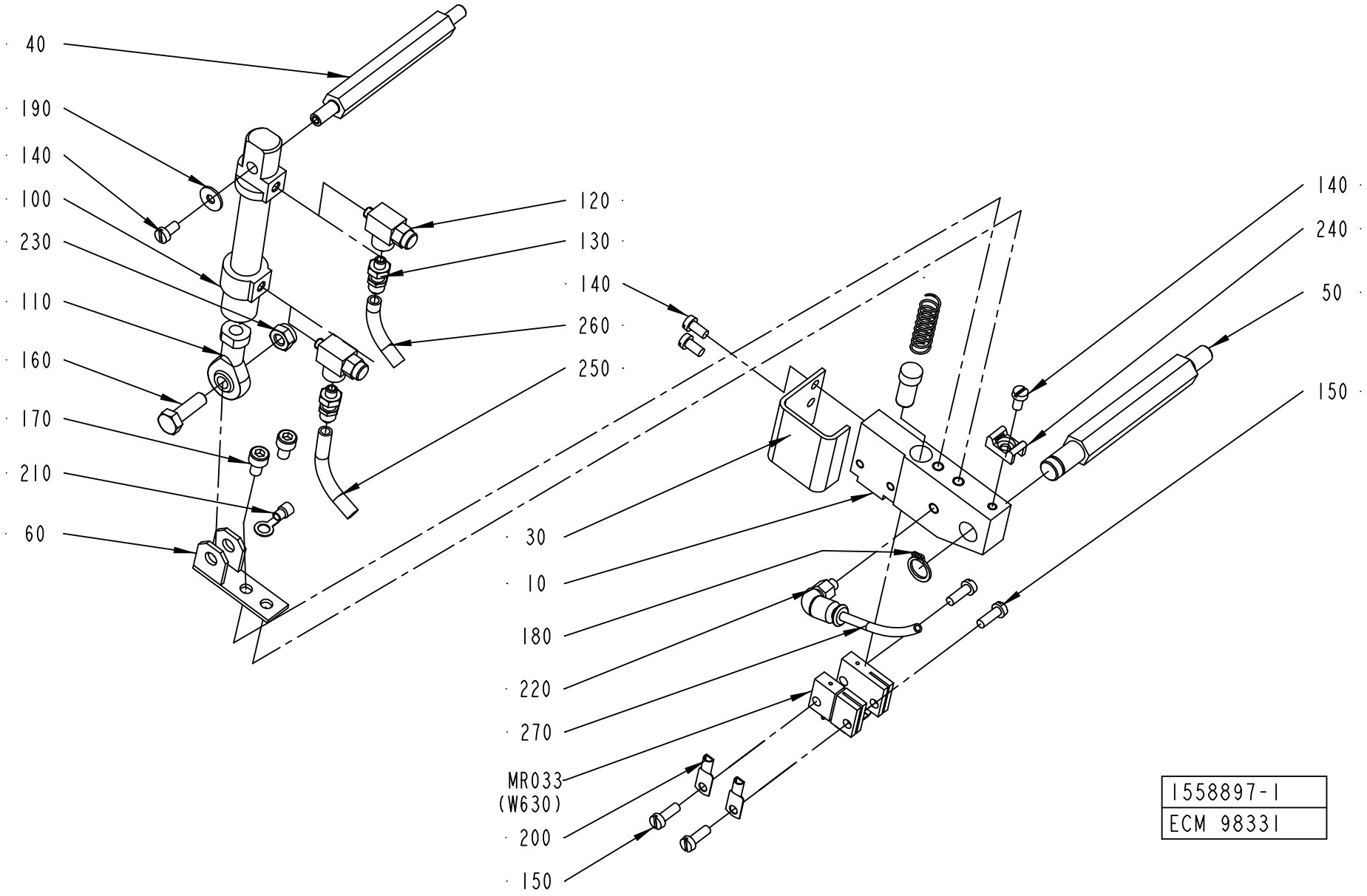
40
190
140
100
230
110
160
170
210
60
120
130
140
260
250
30
10
180
220
270
MR033
(W630)
200
150
140
240
50
150
1558897-1
ECM 98331

ECM: 98936 - 20020808
Group number: 1558897-0100
Assembly Drawing: 1558897-1_1_AA

Pos	Part No	UN	Qty	Description	Page No
-					
010	1490804-0000		1	HOLDER	
020	400833-0000		1	PLUNGER	
030	2523596-0000		1	COVER	
040	1037121-0000		1	SHAFT	
050	1037120-0000		1	SHAFT	
060	1037124-0000		1	HOLDER	
070	400828-0000		1	SPRING	
100	90450-0306		1	DOUBLE ACTING, MINI-ISO, CYL. 12-25	
110	90239-0491		1	ROD END,BALL JOINT EYE,MINI-ISO M6	
120	90235-0289		2	VALVE	
130	342921-0111		2	STRAIGHT COUPL,EXT.THREAD.6/4-M5	
140	312125-0287		4	SCREW ISO 1207 M4X8 A4	
150	312125-0291		4	SCREW ISO 1207 M4X12 A4	
160	312105-0370		1	SCREW M6S ISO 4017 M6X20 A480	
170	312115-0323		2	SCREW ISO4762 M5X8 A4	
180	90141-0016		1	RETAINING RING FOR SHAFT DIN 471 10 A2	
190	90005-0082		1	WASHER PLAIN ROUND 4,3(M4)/12,H=1	
200	353104-0140		2	CABLE SHOEYAV 06 M 4*	
210	353101-0132		1	CABLE SHOE, RING ø5,3MM	
220	342732-0099		1	ELBOW PIPE JOINT, EXT.THREAD, D=4MM-M5	
230	312812-0316		1	HEXAGON NUT, NY-LOCK M6 A480	
240	352113-0205		1	ANCHOR PLATES FOR STRIPS, TYPE TM2S8-C10	
250	90166-0193	MM	1000	TUBE 6 MM PUR BLUE	
260	90166-0193	MM	1000	TUBE 6 MM PUR BLUE	
270	90166-0095	MM	500	TUBE 4 MM PA BLUE	
MR033	1538473-0000		1	SEALING BLOCK	
W630	351120-0146	MM	1000	CABLE SIHF 3X4MM2 GREEN/YELLOW	

Pos	Part No	UN	Qty	Description	Page No

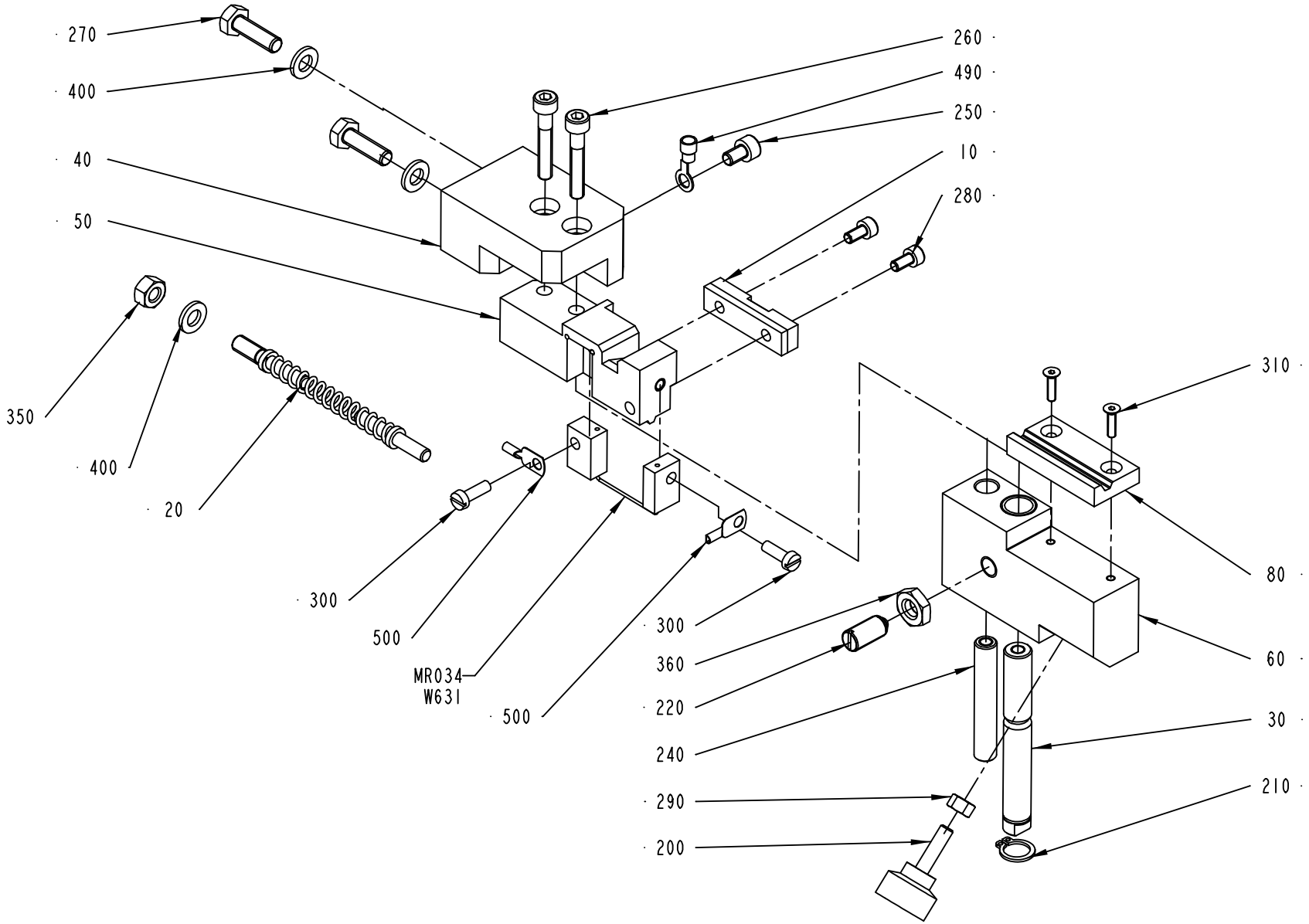
270
400
40
50
350
400
20
300
500
MR034
W631
500
260
490
250
10
280
310
80
60
30
210
300
360
220
240
290
200
1524477-1
ECM 98331

ECM: 113779 - 20030113
Group number: 1524477-0100
Assembly Drawing: 1524477-1_1_AC

Pos	Part No	UN	Qty	Description	Page No
-					
010	1349014-0000		1	PAD	
020	2540726-0000		1	FINGER	
030	1517751-0000		1	SHAFT	
040	2523599-0000		1	SUPPORT	
050	2523598-0000		1	SPLICING TABLE	
060	2523597-0000		1	SLIDER	
080	2523601-0000		1	PAD	
090	2523600-0000		1	PIN	
200	90051-0035		1	KNOB, EXTERNAL THREAD. NO. 8308-1135	
210	90141-0016		1	RETAINING RING FOR SHAFT DIN 471 10 A2	
220	90287-0112		1	SCREW SPRINGLOAD. SLOTTED HEAD M8X16	
250	312115-0323		1	SCREW ISO4762 M5X8 A4	
260	312115-0335		2	SCREW ISO4762 M5X30 A4	
270	312105-0370		2	SCREW M6S ISO 4017 M6X20 A480	
280	312115-0287		2	SCREW ISO4762 M4X8 A4	
290	312605-0314		1	HEXAGON NUT, M6M M5 A280	
300	312125-0291		1	SCREW ISO 1207 M4X12 A4	
305	312125-0293		1	SCREW ISO 1207 M4X16 A4	
310	312155-0226		2	SCREW EN 10642 MF6S M3X12 A480	
350	312605-0316		1	HEXAGON NUT, M6M M6 A280	
360	312625-0318		1	HEXAGON THIN NUT, EN 24035 ML6M M8 A4	
400	315101-0153		3	WASHER PLAIN, BRB, 6,4/12 H=1,5	
490	353101-0132		1	CABLE SHOE, RING ø5,3MM	
500	353101-0130		2	CABLE SHOE 1,5-2,5MM2 BLUE	
MR034	1524481-0000		1	SEALING BLOCK	
W631	351120-0145	MM	1000	CABLE SIHF 3X2,5MM2 GREEN/YELLOW	

Pos	Part No	UN	Qty	Description	Page No

MOUNTING PLATE

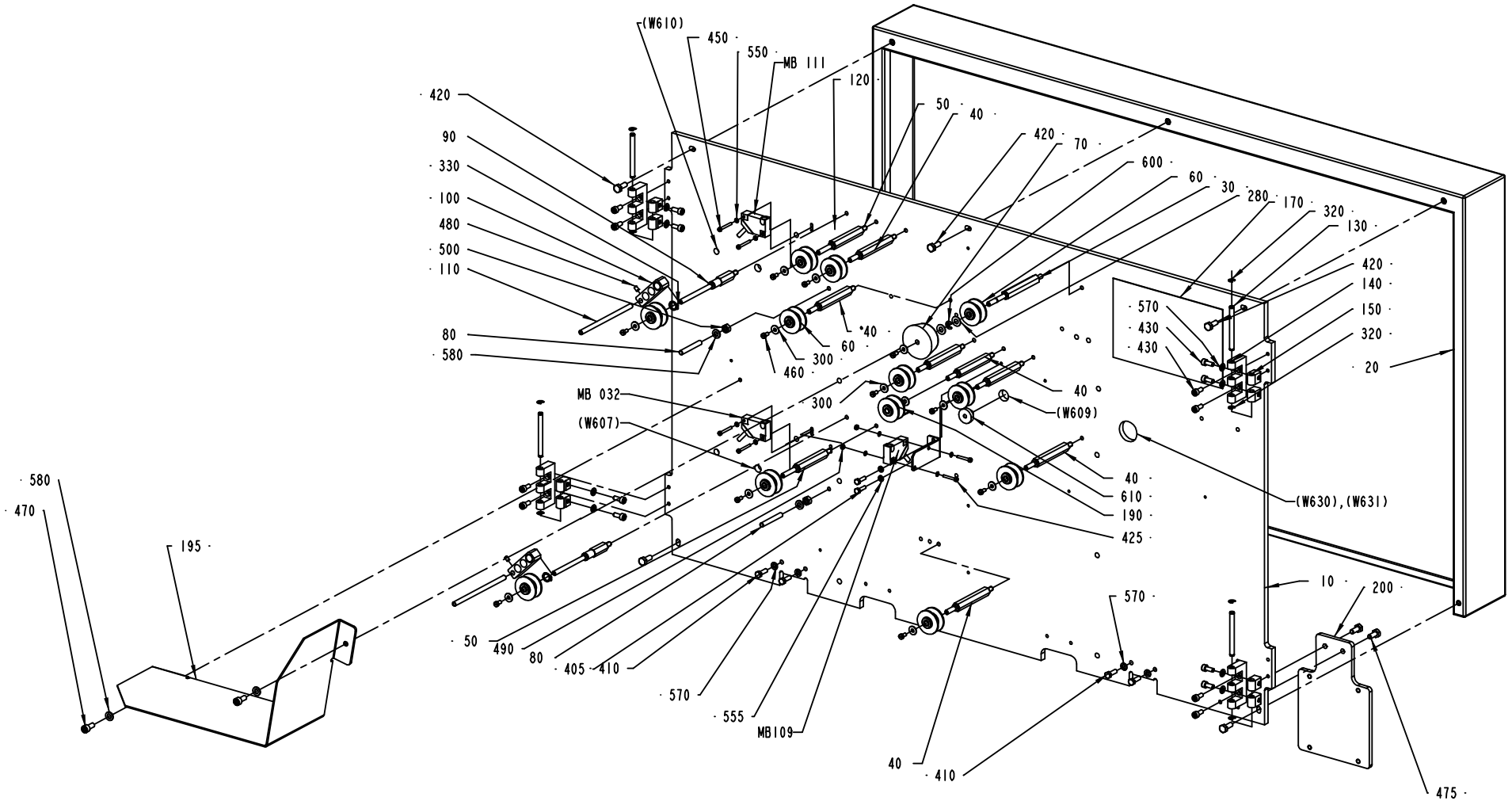

1499480-1
ECM 98331

ECM: 122919 - 20030630
Group number: 1499480-0100
Assembly Drawing: 1499480-1_1_AC

This list covers pages from 7-22 to 7-29

Pos	Part No	UN	Qty	Description	Page No
NOPT (See drawing on pages: 7-22, 7-24)					
020	1498764-0000		1	COVER	
200	1498775-0000		1	BOX BRACKET	
PT19 (See drawing on pages: 7-26, 7-28)					
200	2552624-0000		1	BOX BRACKET	
Common Parts					
010	1498748-0000		1	MOUNTING PLATE	
030	1498762-0000		1	AXLE PIN	
040	2547218-0000		7	AXLE PIN	
050	2547219-0000		2	AXLE PIN	
060	1512583-0000		11	ROLLER	
	321120-0101		*2*	*BEARING BUSHING W/O FLANGE,6/8X6*	
070	1499481-0000		1	ROLLER	
080	469159-0000		2	PIN	
090	2547217-0000		2	AXLE PIN	
100	979667-0000		2	ARM	
110	979668-0000		2	FINGER	
120	979669-0000		2	FORCE PLATE	
130	1499512-0000		4	PIN	
140	1499514-0000		4	E-HINGE	
150	1035794-0000		8	BLOCKING PIECE	
160	2519644-0000		2	BRACKET	
170	1517464-0000		1	SIGN	
180	1538219-0000		1	SWITCH BRACKET	
190	1517293-0000		1	ROLLER	
	1512583-0000		*1*	*ROLLER*	
	321120-0101		*2*	*BEARING BUSHING W/O FLANGE,6/8X6*	
195	2506478-0000		1	COVER	
220	2588000-0000		1	BRACKET	
230	2588001-0000		1	AXLE PIN	
280	2033-0013		2	WASHER	
290	352113-0206		9	ANCHOR PLATES FOR STRIPS, TYPE ABM100-AT	
300	90005-0082		12	WASHER PLAIN ROUND 4,3(M4)/12,H=1	
320	315755-0106		8	RETAINING RING 4	
330	90141-0016		2	RETAINING RING FOR SHAFT DIN 471 10 A2	
400	312155-0287		9	SCREW EN 10642 MF6S M4X8 A480	
405	312105-0293		2	SCREW M6S ISO 4017 M4X16 A480	
410	312105-0329		4	SCREW M6S ISO 4017 M5X16 A480	
420	312105-0368		5	SCREW M6S M6X16 A280	
425	312115-0230		2	SCREW ISO4762 M3X20 A4	
430	312115-0327		16	SCREW ISO4762 M5X12 A4	
450	312125-0232		4	SCREW ISO 1207 M3X25 A4	
460	312125-0287		12	SCREW ISO 1207 M4X8 A4	
470	312115-0367		2	SCREW ISO4762 M6X14 A4	
475	312105-0367		2	SCREW M6S M6X14 A280	
480	312318-0285		2	SCREW ISO4029 M4X6 A4	
490	312605-0310		2	HEXAGON NUT, M6M M3 A280	
500	312605-0316		2	HEXAGON NUT, M6M M6 A280	
550	315105-0124		8	BRICKA BRB3,2X6RFR	
555	315105-0136		2	WASHER BRB4,3XRFR	
570	315105-0146		12	BRICKA BRB5,3X10RFR	
580	315105-0153		4	WASHER BRB6,4X12RFR	
600	315755-0107		1	RETAINING RING 5	
610	90015-0020		1	LEAD-IN, TET5-7, E-1458016	
620	312105-0374		1	SCREW M6S ISO 4014 M6X30 A480	
MB032	90044-0194		1	PROX.SW. IN5329/IN3002-BPKG	
MB109	90044-0194		1	PROX.SW. IN5329/IN3002-BPKG	
MB111	90044-0194		1	PROX.SW. IN5329/IN3002-BPKG	

MOUNTING PLATE

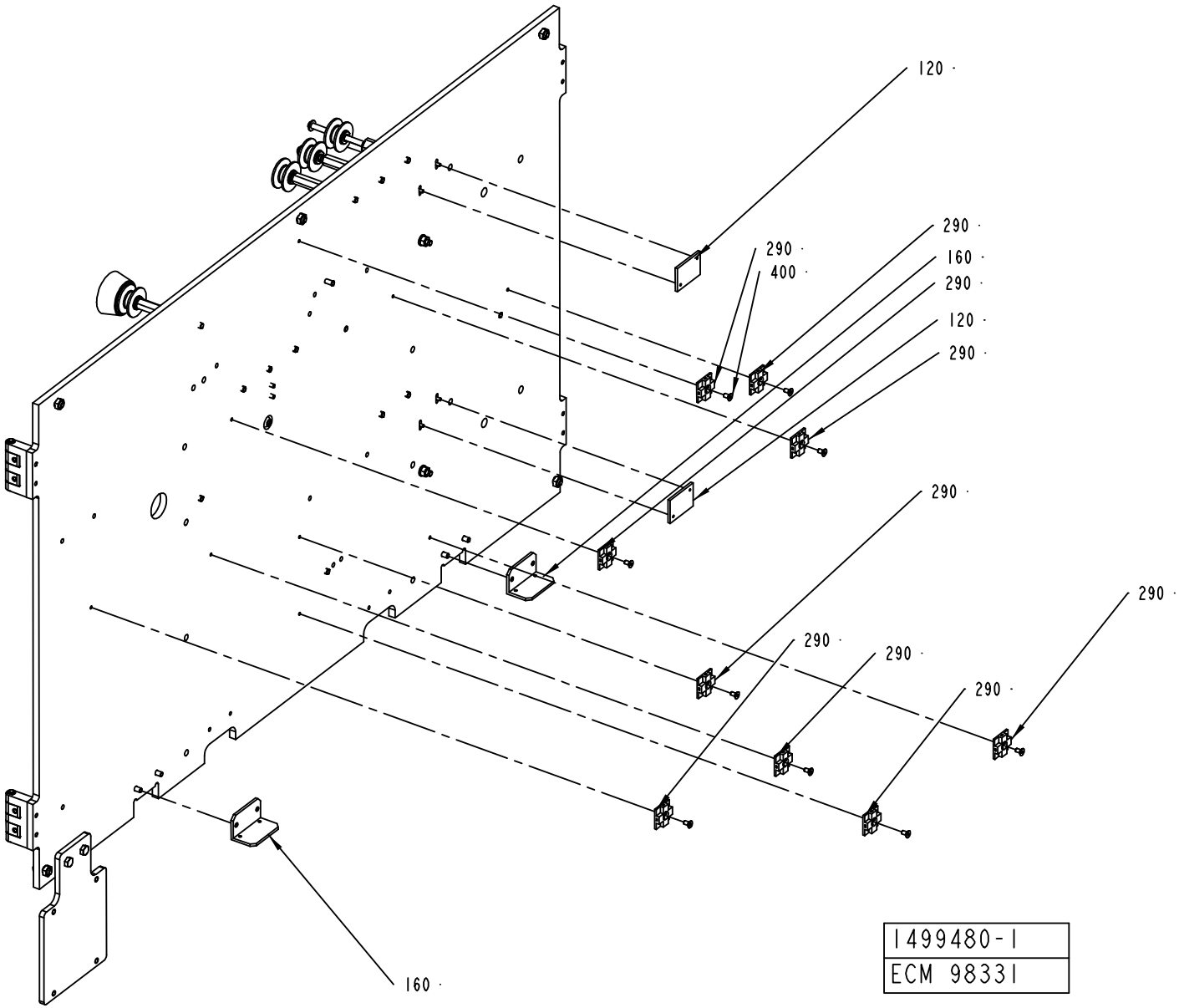

ECM: 122919 - 20030630
Group number: 1499480-0100
Assembly Drawing: 1499480-1_2_AC

This list covers pages from 7-22 to 7-29

Pos	Part No	UN	Qty	Description	Page No
NOPT (See drawing on pages: 7-22, 7-24)					
020	1498764-0000		1	COVER	
200	1498775-0000		1	BOX BRACKET	
PT19 (See drawing on pages: 7-26, 7-28)					
200	2552624-0000		1	BOX BRACKET	
Common Parts					
010	1498748-0000		1	MOUNTING PLATE	
030	1498762-0000		1	AXLE PIN	
040	2547218-0000		7	AXLE PIN	
050	2547219-0000		2	AXLE PIN	
060	1512583-0000		11	ROLLER	
	321120-0101		*2*	*BEARING BUSHING W/O FLANGE,6/8X6*	
070	1499481-0000		1	ROLLER	
080	469159-0000		2	PIN	
090	2547217-0000		2	AXLE PIN	
100	979667-0000		2	ARM	
110	979668-0000		2	FINGER	
120	979669-0000		2	FORCE PLATE	
130	1499512-0000		4	PIN	
140	1499514-0000		4	E-HINGE	
150	1035794-0000		8	BLOCKING PIECE	
160	2519644-0000		2	BRACKET	
170	1517464-0000		1	SIGN	
180	1538219-0000		1	SWITCH BRACKET	
190	1517293-0000		1	ROLLER	
	1512583-0000		*1*	*ROLLER*	
	321120-0101		*2*	*BEARING BUSHING W/O FLANGE,6/8X6*	
195	2506478-0000		1	COVER	
220	2588000-0000		1	BRACKET	
230	2588001-0000		1	AXLE PIN	
280	2033-0013		2	WASHER	
290	352113-0206		9	ANCHOR PLATES FOR STRIPS, TYPE ABM100-AT	
300	90005-0082		12	WASHER PLAIN ROUND 4,3(M4)/12,H=1	
320	315755-0106		8	RETAINING RING 4	
330	90141-0016		2	RETAINING RING FOR SHAFT DIN 471 10 A2	
400	312155-0287		9	SCREW EN 10642 MF6S M4X8 A480	
405	312105-0293		2	SCREW M6S ISO 4017 M4X16 A480	
410	312105-0329		4	SCREW M6S ISO 4017 M5X16 A480	
420	312105-0368		5	SCREW M6S M6X16 A280	
425	312115-0230		2	SCREW ISO4762 M3X20 A4	
430	312115-0327		16	SCREW ISO4762 M5X12 A4	
450	312125-0232		4	SCREW ISO 1207 M3X25 A4	
460	312125-0287		12	SCREW ISO 1207 M4X8 A4	
470	312115-0367		2	SCREW ISO4762 M6X14 A4	
475	312105-0367		2	SCREW M6S M6X14 A280	
480	312318-0285		2	SCREW ISO4029 M4X6 A4	
490	312605-0310		2	HEXAGON NUT, M6M M3 A280	
500	312605-0316		2	HEXAGON NUT, M6M M6 A280	
550	315105-0124		8	BRICKA BRB3,2X6RFR	
555	315105-0136		2	WASHER BRB4,3XRFR	
570	315105-0146		12	BRICKA BRB5,3X10RFR	
580	315105-0153		4	WASHER BRB6,4X12RFR	
600	315755-0107		1	RETAINING RING 5	
610	90015-0020		1	LEAD-IN, TET5-7, E-1458016	
620	312105-0374		1	SCREW M6S ISO 4014 M6X30 A480	
MB032	90044-0194		1	PROX.SW. IN5329/IN3002-BPKG	
MB109	90044-0194		1	PROX.SW. IN5329/IN3002-BPKG	
MB111	90044-0194		1	PROX.SW. IN5329/IN3002-BPKG	

MOUNTING PLATE

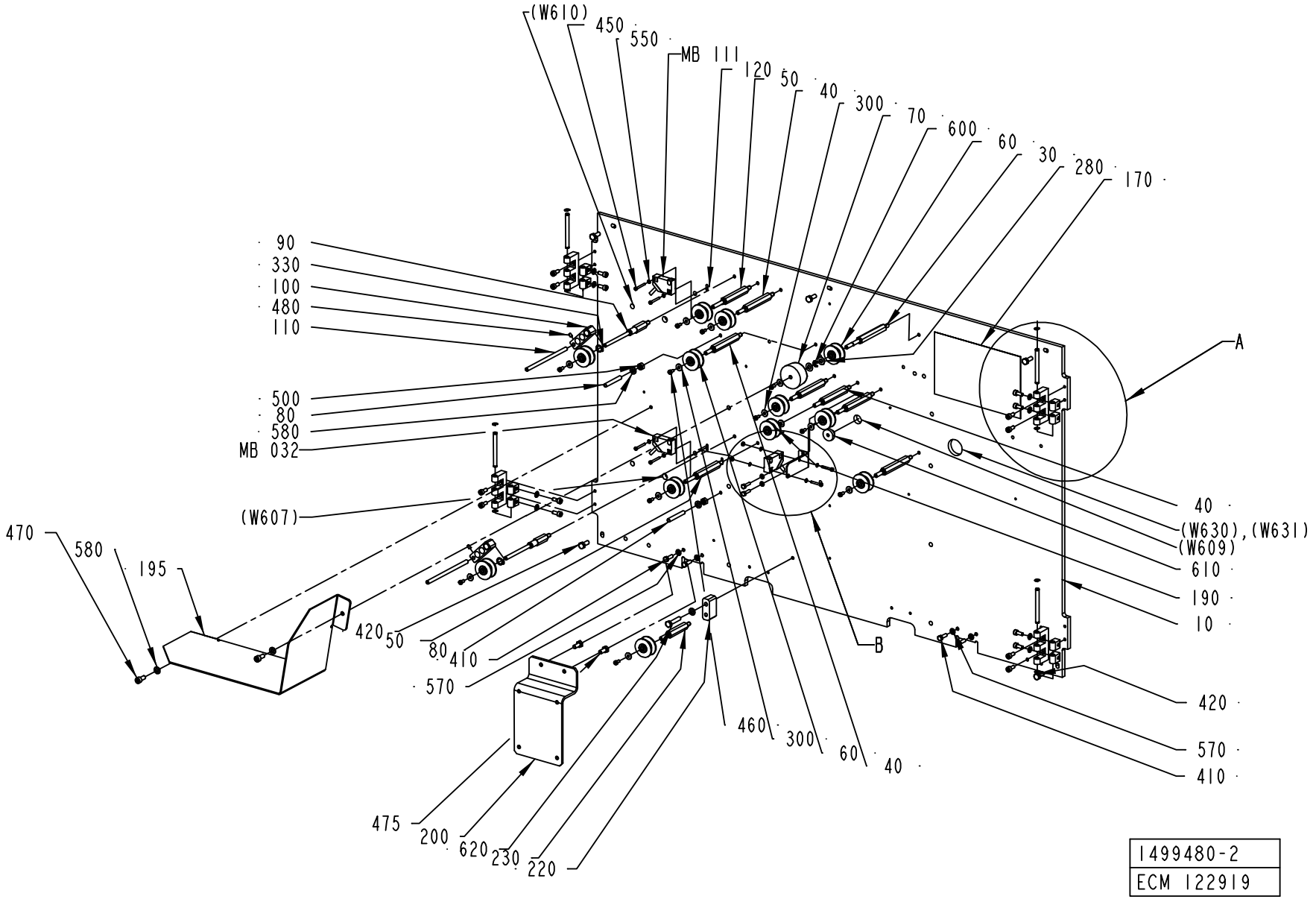

ECM: 122919 - 20030630
Group number: 1499480-0100
Assembly Drawing: 1499480-2_1_AA

This list covers pages from 7-22 to 7-29

Pos	Part No	UN	Qty	Description	Page No
NOPT (See drawing on pages: 7-22, 7-24)					
020	1498764-0000		1	COVER	
200	1498775-0000		1	BOX BRACKET	
PT19 (See drawing on pages: 7-26, 7-28)					
200	2552624-0000		1	BOX BRACKET	
Common Parts					
010	1498748-0000		1	MOUNTING PLATE	
030	1498762-0000		1	AXLE PIN	
040	2547218-0000		7	AXLE PIN	
050	2547219-0000		2	AXLE PIN	
060	1512583-0000		11	ROLLER	
	321120-0101		*2*	*BEARING BUSHING W/O FLANGE,6/8X6*	
070	1499481-0000		1	ROLLER	
080	469159-0000		2	PIN	
090	2547217-0000		2	AXLE PIN	
100	979667-0000		2	ARM	
110	979668-0000		2	FINGER	
120	979669-0000		2	FORCE PLATE	
130	1499512-0000		4	PIN	
140	1499514-0000		4	E-HINGE	
150	1035794-0000		8	BLOCKING PIECE	
160	2519644-0000		2	BRACKET	
170	1517464-0000		1	SIGN	
180	1538219-0000		1	SWITCH BRACKET	
190	1517293-0000		1	ROLLER	
	1512583-0000		*1*	*ROLLER*	
	321120-0101		*2*	*BEARING BUSHING W/O FLANGE,6/8X6*	
195	2506478-0000		1	COVER	
220	2588000-0000		1	BRACKET	
230	2588001-0000		1	AXLE PIN	
280	2033-0013		2	WASHER	
290	352113-0206		9	ANCHOR PLATES FOR STRIPS, TYPE ABM100-AT	
300	90005-0082		12	WASHER PLAIN ROUND 4,3(M4)/12,H=1	
320	315755-0106		8	RETAINING RING 4	
330	90141-0016		2	RETAINING RING FOR SHAFT DIN 471 10 A2	
400	312155-0287		9	SCREW EN 10642 MF6S M4X8 A480	
405	312105-0293		2	SCREW M6S ISO 4017 M4X16 A480	
410	312105-0329		4	SCREW M6S ISO 4017 M5X16 A480	
420	312105-0368		5	SCREW M6S M6X16 A280	
425	312115-0230		2	SCREW ISO4762 M3X20 A4	
430	312115-0327		16	SCREW ISO4762 M5X12 A4	
450	312125-0232		4	SCREW ISO 1207 M3X25 A4	
460	312125-0287		12	SCREW ISO 1207 M4X8 A4	
470	312115-0367		2	SCREW ISO4762 M6X14 A4	
475	312105-0367		2	SCREW M6S M6X14 A280	
480	312318-0285		2	SCREW ISO4029 M4X6 A4	
490	312605-0310		2	HEXAGON NUT, M6M M3 A280	
500	312605-0316		2	HEXAGON NUT, M6M M6 A280	
550	315105-0124		8	BRICKA BRB3,2X6RFR	
555	315105-0136		2	WASHER BRB4,3XRFR	
570	315105-0146		12	BRICKA BRB5,3X10RFR	
580	315105-0153		4	WASHER BRB6,4X12RFR	
600	315755-0107		1	RETAINING RING 5	
610	90015-0020		1	LEAD-IN, TET5-7, E-1458016	
620	312105-0374		1	SCREW M6S ISO 4014 M6X30 A480	
MB032	90044-0194		1	PROX.SW. IN5329/IN3002-BPKG	
MB109	90044-0194		1	PROX.SW. IN5329/IN3002-BPKG	
MB111	90044-0194		1	PROX.SW. IN5329/IN3002-BPKG	

MOUNTING PLATE

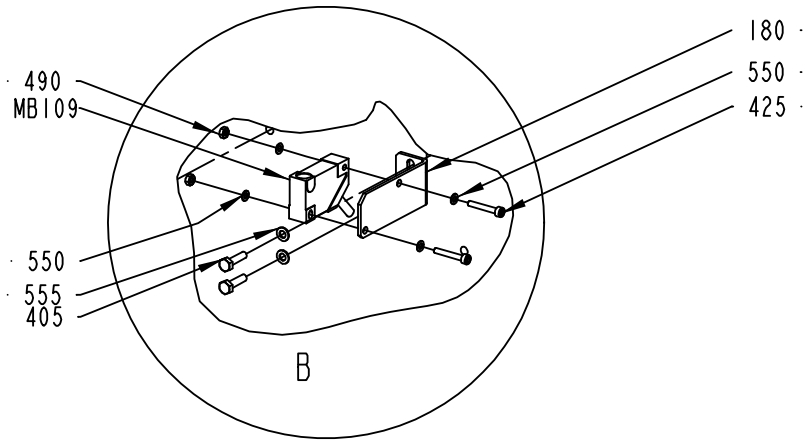

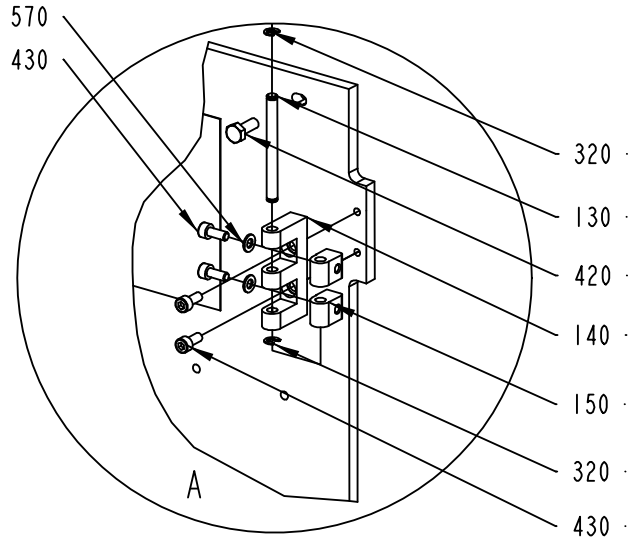

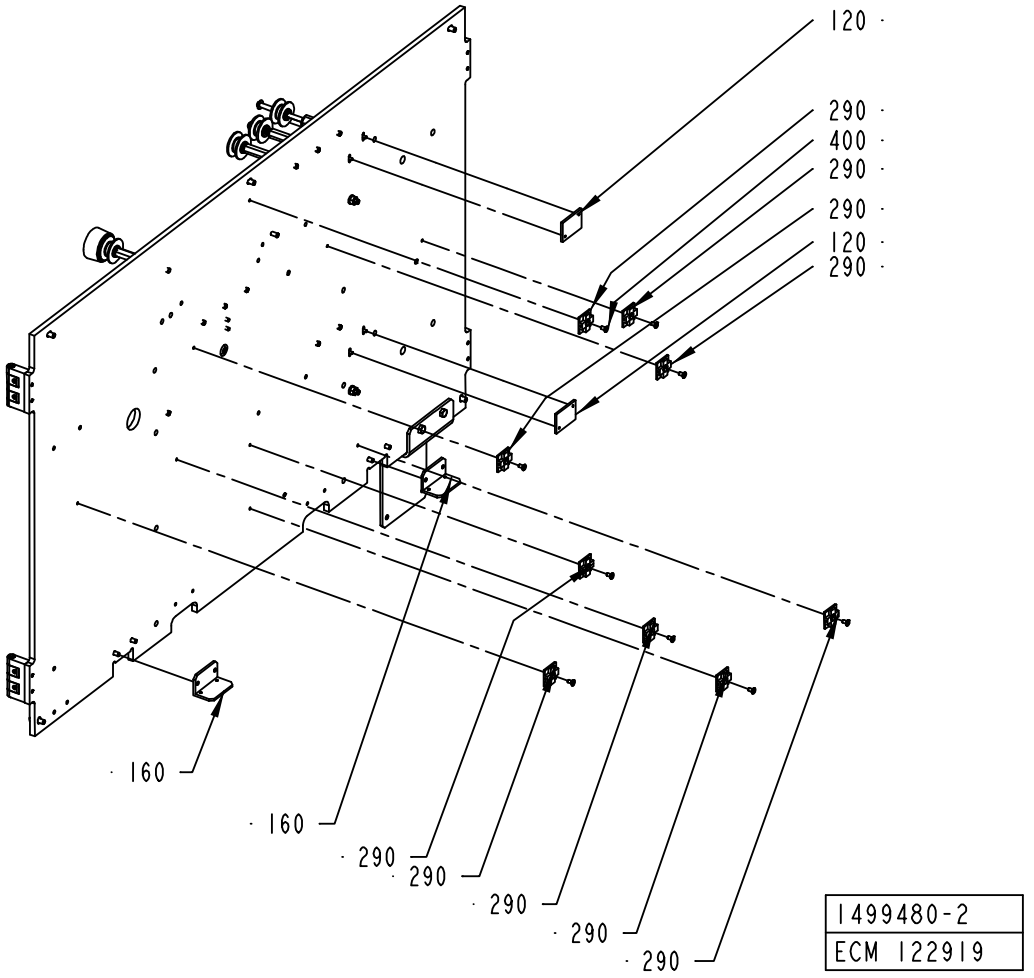

1499480-2
ECM 122919

ECM: 122919 - 20030630
Group number: 1499480-0100
Assembly Drawing: 1499480-2_2_AA

This list covers pages from 7-22 to 7-29

Pos	Part No	UN	Qty	Description	Page No
NOPT (See drawing on pages: 7-22, 7-24)					
020	1498764-0000		1	COVER	
200	1498775-0000		1	BOX BRACKET	
PT19 (See drawing on pages: 7-26, 7-28)					
200	2552624-0000		1	BOX BRACKET	
Common Parts					
010	1498748-0000		1	MOUNTING PLATE	
030	1498762-0000		1	AXLE PIN	
040	2547218-0000		7	AXLE PIN	
050	2547219-0000		2	AXLE PIN	
060	1512583-0000		11	ROLLER	
	321120-0101		*2*	*BEARING BUSHING W/O FLANGE,6/8X6*	
070	1499481-0000		1	ROLLER	
080	469159-0000		2	PIN	
090	2547217-0000		2	AXLE PIN	
100	979667-0000		2	ARM	
110	979668-0000		2	FINGER	
120	979669-0000		2	FORCE PLATE	
130	1499512-0000		4	PIN	
140	1499514-0000		4	E-HINGE	
150	1035794-0000		8	BLOCKING PIECE	
160	2519644-0000		2	BRACKET	
170	1517464-0000		1	SIGN	
180	1538219-0000		1	SWITCH BRACKET	
190	1517293-0000		1	ROLLER	
	1512583-0000		*1*	*ROLLER*	
	321120-0101		*2*	*BEARING BUSHING W/O FLANGE,6/8X6*	
195	2506478-0000		1	COVER	
220	2588000-0000		1	BRACKET	
230	2588001-0000		1	AXLE PIN	
280	2033-0013		2	WASHER	
290	352113-0206		9	ANCHOR PLATES FOR STRIPS, TYPE ABM100-AT	
300	90005-0082		12	WASHER PLAIN ROUND 4,3(M4)/12,H=1	
320	315755-0106		8	RETAINING RING 4	
330	90141-0016		2	RETAINING RING FOR SHAFT DIN 471 10 A2	
400	312155-0287		9	SCREW EN 10642 MF6S M4X8 A480	
405	312105-0293		2	SCREW M6S ISO 4017 M4X16 A480	
410	312105-0329		4	SCREW M6S ISO 4017 M5X16 A480	
420	312105-0368		5	SCREW M6S M6X16 A280	
425	312115-0230		2	SCREW ISO4762 M3X20 A4	
430	312115-0327		16	SCREW ISO4762 M5X12 A4	
450	312125-0232		4	SCREW ISO 1207 M3X25 A4	
460	312125-0287		12	SCREW ISO 1207 M4X8 A4	
470	312115-0367		2	SCREW ISO4762 M6X14 A4	
475	312105-0367		2	SCREW M6S M6X14 A280	
480	312318-0285		2	SCREW ISO4029 M4X6 A4	
490	312605-0310		2	HEXAGON NUT, M6M M3 A280	
500	312605-0316		2	HEXAGON NUT, M6M M6 A280	
550	315105-0124		8	BRICKA BRB3,2X6RFR	
555	315105-0136		2	WASHER BRB4,3XRFR	
570	315105-0146		12	BRICKA BRB5,3X10RFR	
580	315105-0153		4	WASHER BRB6,4X12RFR	
600	315755-0107		1	RETAINING RING 5	
610	90015-0020		1	LEAD-IN, TET5-7, E-1458016	
620	312105-0374		1	SCREW M6S ISO 4014 M6X30 A480	
MB032	90044-0194		1	PROX.SW. IN5329/IN3002-BPKG	
MB109	90044-0194		1	PROX.SW. IN5329/IN3002-BPKG	
MB111	90044-0194		1	PROX.SW. IN5329/IN3002-BPKG	

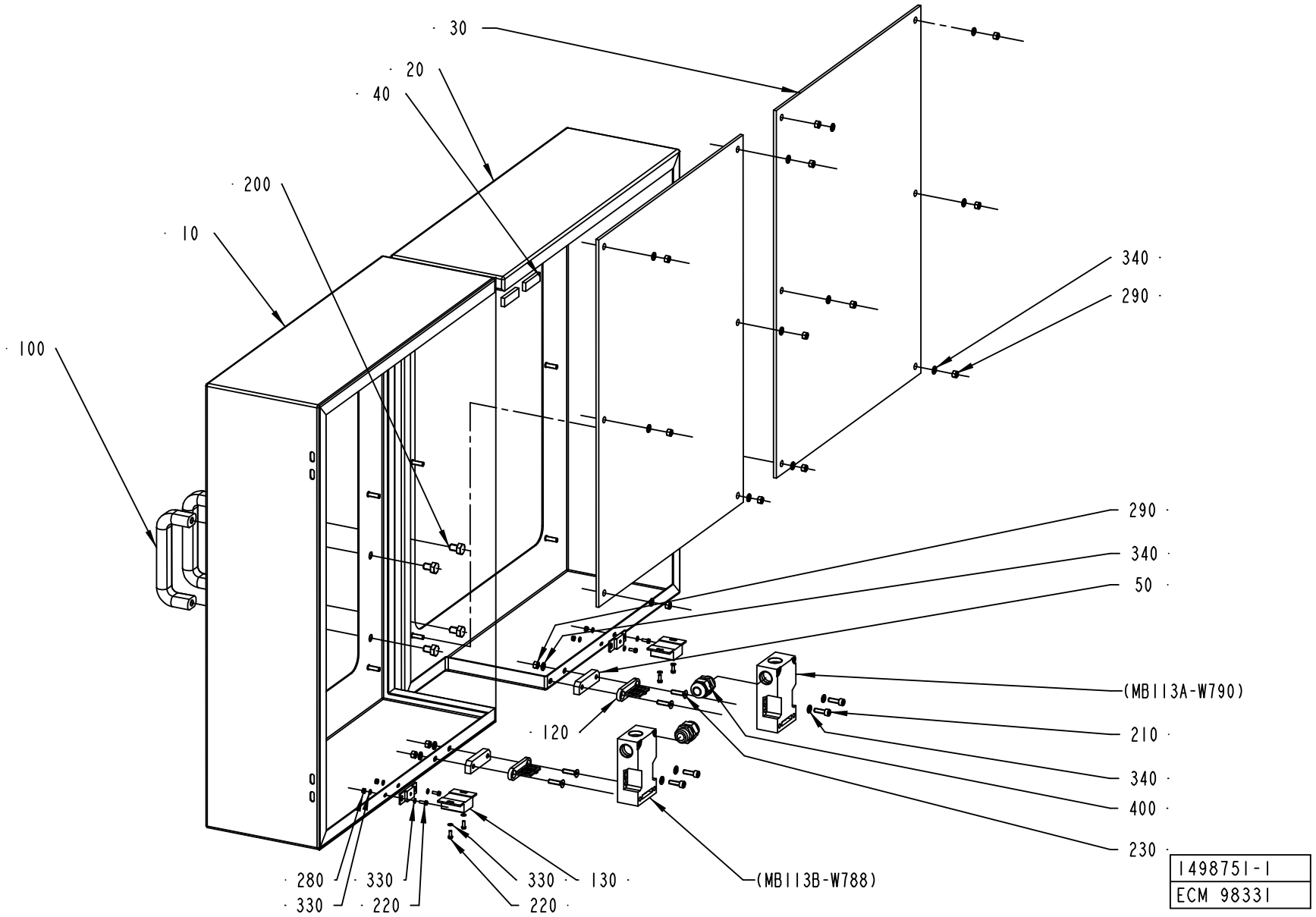
30
20
40
200
10
100
340
290
290
340
50
(MB113A-W790)
120
210
340
400
230
280
330
330
220
330
130
220
(MB113B-W788)
1498751-1
ECM 98331

ECM: 114166 - 20020930
Group number: 1498751-0100
Assembly Drawing: 1498751-1_1_AB

Pos	Part No	UN	Qty	Description	Page No
-					
010	1498749-0000		1	DOOR	
020	1498750-0000		1	DOOR	
030	1499511-0000		2	PANEL	
040	1511323-0000		2	STRIP ADHESIVE	
050	2506479-0000		2	PLATE	
100	90017-0022		2	HANDLE, NO. EL-037311	
120	90044-0310		2	KEY FOR SAFETY SWITCH, AZ 15/16 B1	
130	90237-0046		2	MAGNETIC LOCK, 46X33X15 MM	
200	312105-0447		4	SCREW M6S ISO 4017 M8X12 A480	
210	312115-0329		4	SCREW ISO4762 M5X16 A4	
220	312125-0222		8	SCREW ISO 1207 M3X8 A4	
230	312155-0331		4	SCREW EN 10642 MF6S M5X20 A480	
280	312605-0310		4	HEXAGON NUT, M6M M3 A280	
290	312605-0314		16	HEXAGON NUT, M6M M5 A280	
330	315105-0124		12	BRICKA BRB3,2X6RFR	
340	315105-0146		20	BRICKA BRB5,3X10RFR	
400	352103-0106		2	CABLE GLAND, ST 11, PR18,6/PG11	
MB113A	90044-0139		1	KEY SAF.SW. AZ16-02 ZVR K-2254	
MB113B	90044-0139		1	KEY SAF.SW. AZ16-02 ZVR K-2254	
W802	351150-0405	MM	600	CABLE OLFLEX 5X0,75 MM2 LIGHT/GREY	
W803	351150-0405	MM	600	CABLE OLFLEX 5X0,75 MM2 LIGHT/GREY	

Pos	Part No	UN	Qty	Description	Page No

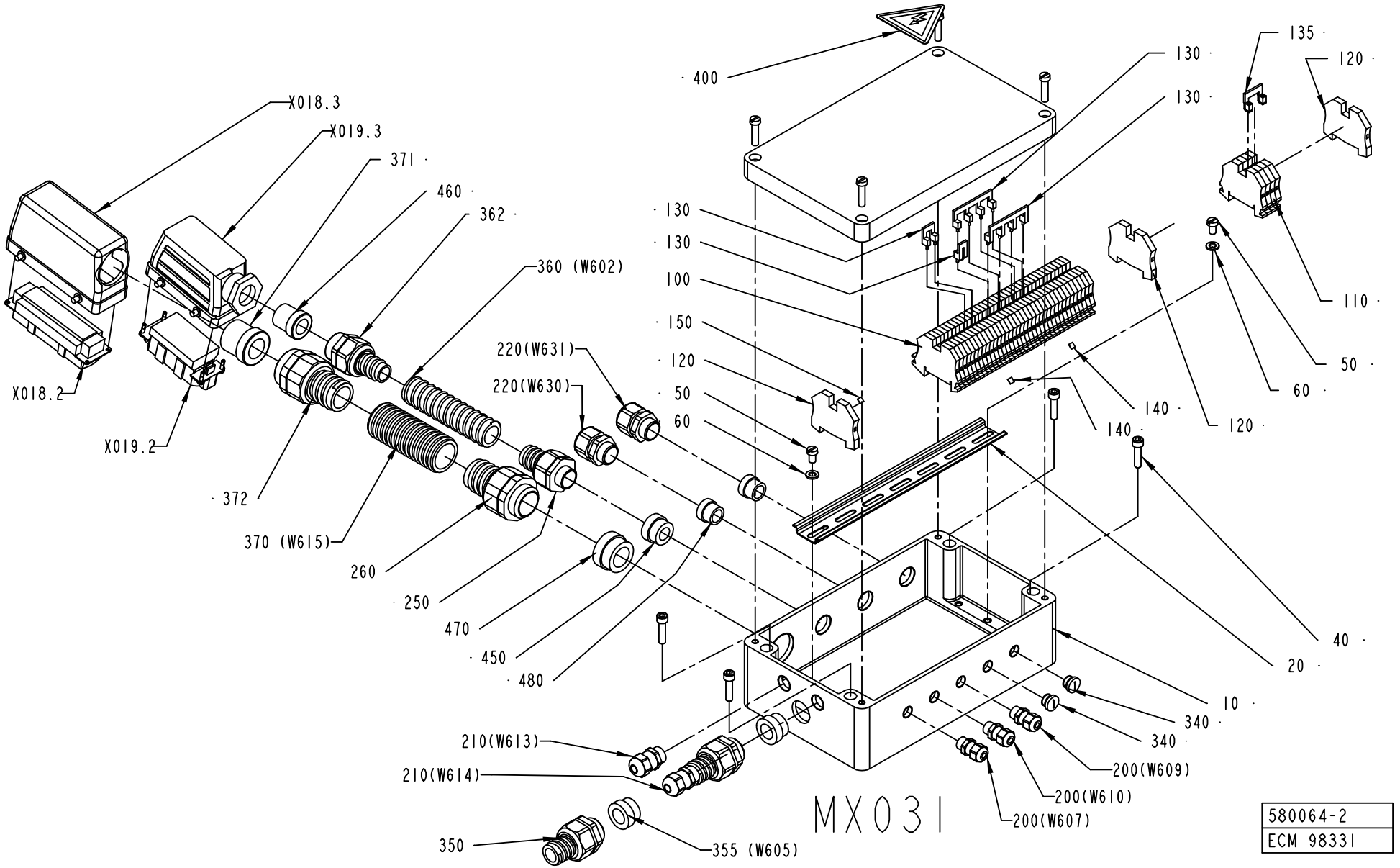
400
X018.3
X019.3
371
460
362
360 (W602)
130
130
100
150
120
50
60
220(W631)
220(W630)
X018.2
X019.2
372
370 (W615)
260
250
470
450
480
135
120
130
130
110
50
60
140
140
120
40
20
10
340
340
200(W609)
200(W610)
200(W607)
210(W613)
210(W614)
350
355 (W605)
MX031
580064-2
ECM 98331

ECM: 117147 - 20030113
Group number: 580064-0200
Assembly Drawing: 580064-2_1_AC

Pos	Part No	UN	Qty	Description	Page No
-					
010	1512283-0000		1	CONNECTION BOX	
020	1512352-0000		1	RAIL	
040	312115-0372		4	SCREW ISO4762 M6X25 A4	
050	312125-0364		2	SCREW ISO 1207 M6X10 A4	
060	315105-0153		2	WASHER BRB6,4X12RFR	
100	353021-0212		36	FEED THROUGH TERMINAL, 10200.0	
110	353021-0213		4	FEED THROUGH TERMINAL, 10201.0	
120	353024-0205		3	EARTH TERMINAL, 1010.1	
130	353034-0030		3	BRIDGE CONNECTOR WQV 2,5/10, 10544.6	
135	353034-0039		1	BRIDGE CONNECTOR WQV 4/4, 10546.6	
140	359011-0807		2	MARKING PLATES 5-FW 1-50	
150	359011-0819		1	MARKING PLATES 5-GW (EARTH)	
200	90458-0305		3	CABLE GLAND, M12X1,5, NO.5311 1000	
210	90458-0306		2	CABLE GLAND, M16X1,5, NO.5311 1010	
220	90458-0422		2	EXTENDED WITHOUT INSERT, M20X1,5	
250	90458-0430		1	EXTENDED WITHOUT INSERT, M20X1,5	
260	90458-0433		1	EXTENDED WITHOUT INSERT, M32X1,5	
340	90458-1306		2	BLIND PLUG CIRCULAR, M12X1,5 514GFK/212	
350	90458-0431		1	EXTENDED WITHOUT INSERT, M25X1,5	
355	353249-0014		1	INSERT, SINGEL HOLE, EK 154/16	
360	90152-0051	MM	1800	SPIRAL CONDUIT, 25X18, UL 1816	
362	90458-0146		1	GLAND, HOSE, WITHOUT INSERT, PG21	
370	90152-0070	MM	2100	METAL HOSE, 32,5X26, UL 2621	
371	353249-0072		1	INSERT, SINGEL HOLE, E155/20	
372	353242-0003		1	NORMAL WITHOUT INSERT, PG29	
400	359705-0015		1	WARNING SIGN ISO, RISK OF ELECTRIC SHOCK	
450	353249-0013		1	INSERT, SINGEL HOLE, EK 154/13	
460	353249-0070		1	INSERT, SINGEL HOLE, E154/16	
470	353249-0061		1	INSERT, SINGEL HOLE, EK 155/20	
480	353249-0075		2	INSERT, SINGEL HOLE, EK 153/13	
W602	351150-0422	MM	2300	CABLE OLFLEX 3X4 MM2 LIGHT/GREY	
W605	351150-0407	MM	1900	CABLE OLFLEX 12X0,75 MM2 LIGHT/GREY	
W615	351150-0425	MM	2600	CABLE OLFLEX 25X0,75 MM2 LIGHT/GREY	
X018.2	90110-0150		1	MALE INSERT 121110 0000	
X018.3	90110-0346		1	CABLE HOOD 1211220 00 00	
X019.2	90110-0156		1	MALE INSERT 70.210.0653.0	
X019.3	90110-0244		1	CABLE HOOD 6-POL 70.350.1628.0	

Pos	Part No	UN	Qty	Description	Page No

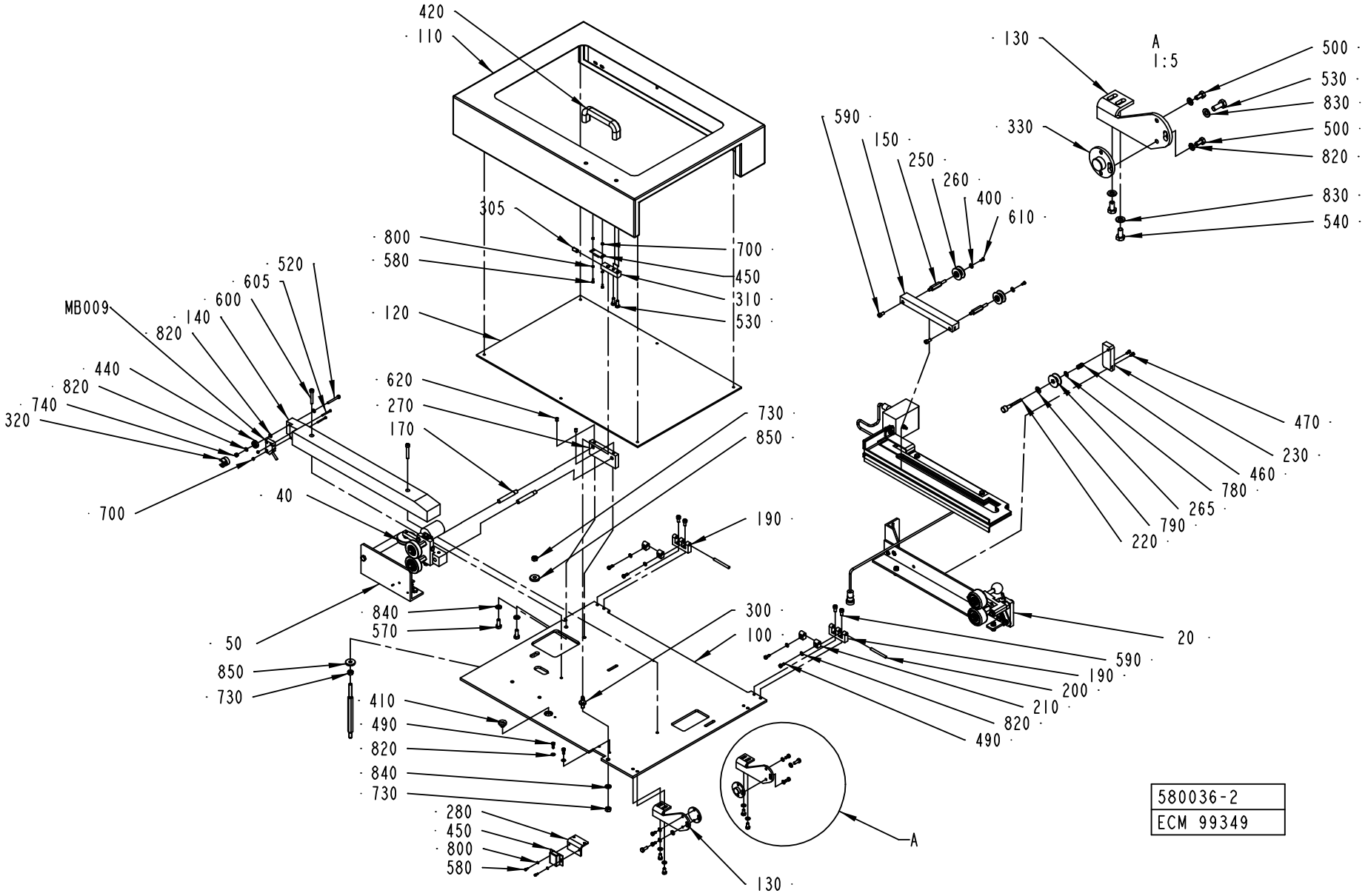
420
110
305
800
580
120
620
270
170
40
700
MB009
320
740
820
440
140
600
605
520
130
A
1:5
500
530
830
500
820
830
540
590
150
250
260
400
610
330
700
450
310
530
730
850
190
470
230
460
780
265
790
220
840
570
300
100
20
590
190
200
210
820
490
50
850
730
410
490
820
840
730
280
450
800
580
130
A
580036-2
ECM 99349

ECM: 134651 - 20030630
Group number: 580036-0200
Assembly Drawing: 580036-2_1_AC

This list covers pages from 7-34 to 7-37

Pos	Part No	UN	Qty	Description	Page No
NOPT (See drawing on page: 7-34)					
050	1279624-0200		1	SPLICE DETECTOR	**7-39, 7-41**
110	2552620-0000		1	DOOR	
120	1499483-0000		1	PANE	
180	2552619-0000		1	COVER	
190	90459-0075		2	HINGE, 1056-U30	
200	2552622-0000		1	HOLDER	
210	2552621-0000		1	HOLDER	
420	90017-0022		1	HANDLE, NO. EL-037311	
450	90237-0046		1	MAGNETIC LOCK, 46X33X15 MM	
540	312105-0366		11	SCREW M6S M6X12 A280	
560	312105-0449		2	SCREW M6S ISO 4017 M8X16 A480	
630	312115-0220		4	SCREW ISO4762 M3X6 A4 80	
640	312155-0325		4	SCREW EN 10642 MF6S M5X10 A480	
650	312155-0327		4	SCREW EN 10642 MF6S M5X12 A480	
660	312605-0314		10	HEXAGON NUT, M6M M5 A280	
700	312605-0310		4	HEXAGON NUT, M6M M3 A280	
820	315105-0146		17	BRICKA BRB5,3X10RFR	
830	315105-0153		13	WASHER BRB6,4X12RFR	
840	315105-0165		4	WASHER BRB8,4X16RFR	
PT19 (See drawing on page: 7-36)					
030	2576243-0100		1	STRIP GUIDE	**7-43**
540	312105-0366		6	SCREW M6S M6X12 A280	
560	312105-0449		3	SCREW M6S ISO 4017 M8X16 A480	
700	312605-0310		3	HEXAGON NUT, M6M M3 A280	
820	315105-0146		9	BRICKA BRB5,3X10RFR	
830	315105-0153		8	WASHER BRB6,4X12RFR	
840	315105-0165		4	WASHER BRB8,4X16RFR	
860	266737-0000		2	WASHER	
870	979899-0000		1	BRACKET	
880	1035897-0000		1	SHAFT	
890	2524478-0000		1	BRACKET	
900	312115-0228		1	SCREW ISO4762 M3X16 A4	
910	315751-0109		1	RETAINING RING FOR SHAFT DIN 471 12 A2	
920	321141-0183		2	BEARING BUSHING W/O FL, 12X14X15 MM	
930	90335-0216		1	TENSION SPRING 40910, 0,5X5,5X27,7	
940	312105-0328		1	SCREW M6S ISO 4017 M5X14 A480	
Common Parts					
010	580038-0200		1	INDUCTOR	**7-45**
020	2506475-0100		1	PRESSURE ROLLER	**7-47**
040	2524476-0100		1	WEB GUIDE	**7-49**
055	2576240-0100		1	STRIP GUIDE	**7-51, 7-53**
100	2552630-0000		1	MOUNTING PLATE	
130	1498773-0000		2	CANTILEVER	
140	1517535-0000		1	STEERING	
150	1282988-0000		1	RAIL	
170	1498778-0000		2	SHAFT	
250	1282989-0000		2	AXLE PIN	
260	1512583-0000		2	ROLLER	
	321120-0101		*2*	*BEARING BUSHING W/O FLANGE,6/8X6*	
270	1498777-0000		1	GUIDE HOLDER	
290	1498765-0000		1	AXLE PIN	
320	1517534-0000		1	RUNNER RING	
330	1334331-0000		2	FLANGE	
400	90005-0082		2	WASHER PLAIN ROUND 4,3(M4)/12,H=1	
410	90015-0020		1	LEAD-IN, TET5-7, E-1458016	
440	90214-0138		1	BALL BEARING, 5X19X6 MM	
500	312105-0325		4	SCREW M6S ISO 4017 M5X10 A480	
520	312105-0339		1	SCREW M6S ISO 4014 M5X40 A480	
530	312105-0368		2	SCREW M6S M6X16 A280	
570	312105-0451		2	SCREW M6S ISO 4017 M8X20 A480	
590	312115-0366		2	SCREW ISO4762 M6X12 A4	
600	312115-0378		2	SCREW ISO4762 M6X40 A4	
605	312125-0234		2	SCREW ISO 1207 M3X30 A4	
610	312125-0287		2	SCREW ISO 1207 M4X8 A4	
620	312318-0362		2	SCREW ISO4029 M6X8 A4	
730	312605-0318		2	HEXAGON NUT, M6M M8 A280	
740	312812-0314		1	HEXAGON NUT, NY-LOCK M5 A480	
850	315125-0165		2	WASHER TBRSB 8,4X26X5 A4	
MB009	90044-0194		1	PROX.SW. IN5329/IN3002-BPKG	

Machine Type | Group Description | Used-In | Group Number | Page No

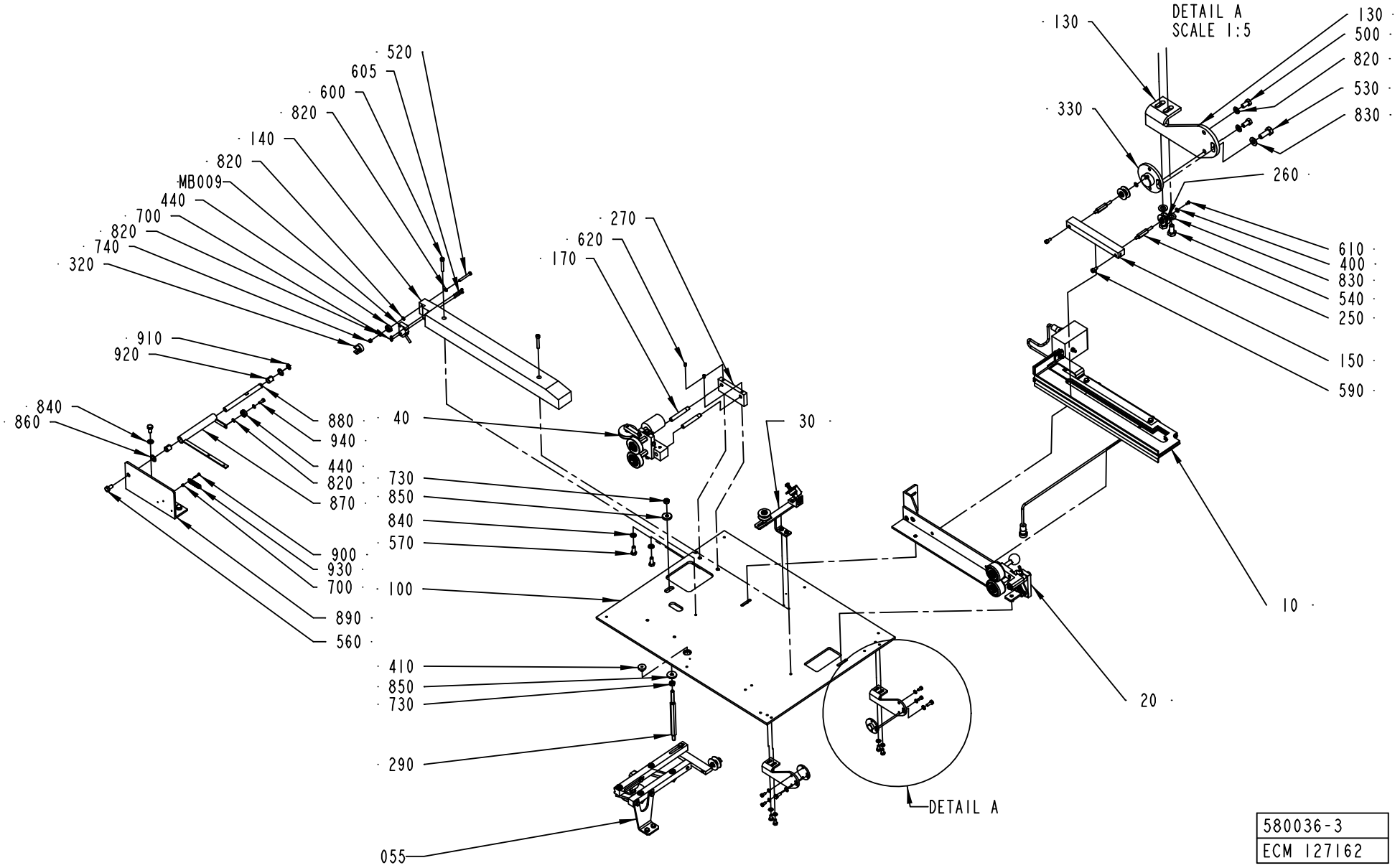
DETAIL A
SCALE 1:5
130
330
260
610
400
830
540
250
150
590
10
20
520
605
600
820
140
820
MB009
440
700
820
740
320
910
920
840
860
880
940
440
820
870
900
930
700
890
560
270
620
170
40
30
730
850
840
570
100
410
850
730
290
055
DETAIL A
130
500
820
530
830
580036-3
ECM 127162

ECM: 134651 - 20030630
Group number: 580036-0200
Assembly Drawing: 580036-3_1_AB

This list covers pages from 7-34 to 7-37

Pos	Part No	UN	Qty	Description	Page No
NOPT (See drawing on page: 7-34)					
050	1279624-0200		1	SPLICE DETECTOR	**7-39, 7-41**
110	2552620-0000		1	DOOR	
120	1499483-0000		1	PANE	
180	2552619-0000		1	COVER	
190	90459-0075		2	HINGE, 1056-U30	
200	2552622-0000		1	HOLDER	
210	2552621-0000		1	HOLDER	
420	90017-0022		1	HANDLE, NO. EL-037311	
450	90237-0046		1	MAGNETIC LOCK, 46X33X15 MM	
540	312105-0366		11	SCREW M6S M6X12 A280	
560	312105-0449		2	SCREW M6S ISO 4017 M8X16 A480	
630	312115-0220		4	SCREW ISO4762 M3X6 A4 80	
640	312155-0325		4	SCREW EN 10642 MF6S M5X10 A480	
650	312155-0327		4	SCREW EN 10642 MF6S M5X12 A480	
660	312605-0314		10	HEXAGON NUT, M6M M5 A280	
700	312605-0310		4	HEXAGON NUT, M6M M3 A280	
820	315105-0146		17	BRICKA BRB5,3X10RFR	
830	315105-0153		13	WASHER BRB6,4X12RFR	
840	315105-0165		4	WASHER BRB8,4X16RFR	
PT19 (See drawing on page: 7-36)					
030	2576243-0100		1	STRIP GUIDE	**7-43**
540	312105-0366		6	SCREW M6S M6X12 A280	
560	312105-0449		3	SCREW M6S ISO 4017 M8X16 A480	
700	312605-0310		3	HEXAGON NUT, M6M M3 A280	
820	315105-0146		9	BRICKA BRB5,3X10RFR	
830	315105-0153		8	WASHER BRB6,4X12RFR	
840	315105-0165		4	WASHER BRB8,4X16RFR	
860	266737-0000		2	WASHER	
870	979899-0000		1	BRACKET	
880	1035897-0000		1	SHAFT	
890	2524478-0000		1	BRACKET	
900	312115-0228		1	SCREW ISO4762 M3X16 A4	
910	315751-0109		1	RETAINING RING FOR SHAFT DIN 471 12 A2	
920	321141-0183		2	BEARING BUSHING W/O FL, 12X14X15 MM	
930	90335-0216		1	TENSION SPRING 40910, 0,5X5,5X27,7	
940	312105-0328		1	SCREW M6S ISO 4017 M5X14 A480	
Common Parts					
010	580038-0200		1	INDUCTOR	**7-45**
020	2506475-0100		1	PRESSURE ROLLER	**7-47**
040	2524476-0100		1	WEB GUIDE	**7-49**
055	2576240-0100		1	STRIP GUIDE	**7-51, 7-53**
100	2552630-0000		1	MOUNTING PLATE	
130	1498773-0000		2	CANTILEVER	
140	1517535-0000		1	STEERING	
150	1282988-0000		1	RAIL	
170	1498778-0000		2	SHAFT	
250	1282989-0000		2	AXLE PIN	
260	1512583-0000		2	ROLLER	
	321120-0101		*2*	*BEARING BUSHING W/O FLANGE,6/8X6*	
270	1498777-0000		1	GUIDE HOLDER	
290	1498765-0000		1	AXLE PIN	
320	1517534-0000		1	RUNNER RING	
330	1334331-0000		2	FLANGE	
400	90005-0082		2	WASHER PLAIN ROUND 4,3(M4)/12,H=1	
410	90015-0020		1	LEAD-IN, TET5-7, E-1458016	
440	90214-0138		1	BALL BEARING, 5X19X6 MM	
500	312105-0325		4	SCREW M6S ISO 4017 M5X10 A480	
520	312105-0339		1	SCREW M6S ISO 4014 M5X40 A480	
530	312105-0368		2	SCREW M6S M6X16 A280	
570	312105-0451		2	SCREW M6S ISO 4017 M8X20 A480	
590	312115-0366		2	SCREW ISO4762 M6X12 A4	
600	312115-0378		2	SCREW ISO4762 M6X40 A4	
605	312125-0234		2	SCREW ISO 1207 M3X30 A4	
610	312125-0287		2	SCREW ISO 1207 M4X8 A4	
620	312318-0362		2	SCREW ISO4029 M6X8 A4	
730	312605-0318		2	HEXAGON NUT, M6M M8 A280	
740	312812-0314		1	HEXAGON NUT, NY-LOCK M5 A480	
850	315125-0165		2	WASHER TBRSB 8,4X26X5 A4	
MB009	90044-0194		1	PROX.SW. IN5329/IN3002-BPKG	

Machine Type	Group Description	Used-In	Group Number	Page No

SPLICE DETECTOR

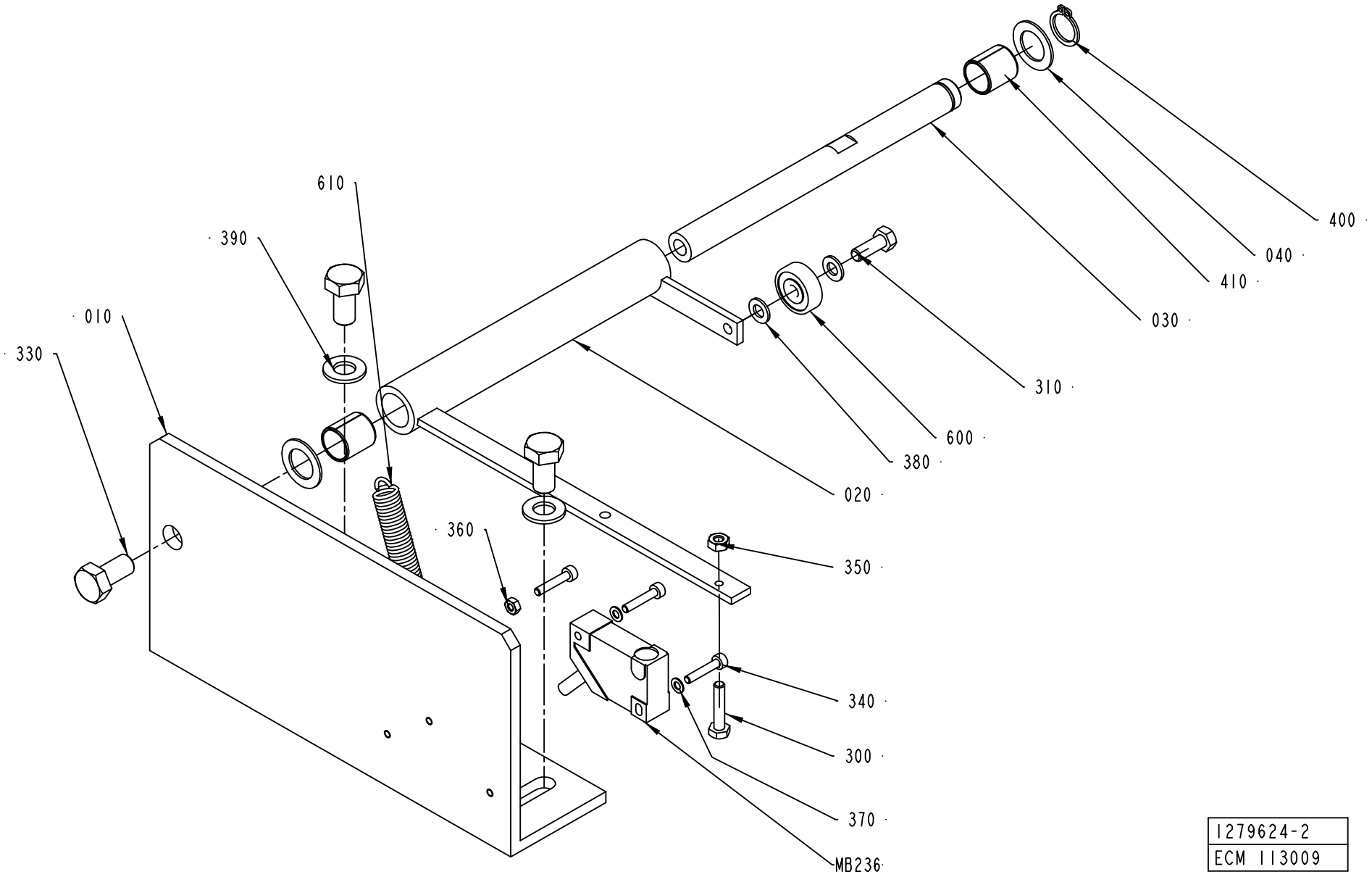

1279624-2
ECM 113009

ECM: 133424 - 20030630
Group number: 1279624-0200
Assembly Drawing: 1279624-2_1_AC

This list covers pages from 7-38 to 7-41

Pos	Part No	UN	Qty	Description	Page No
-					
010	2524478-0000		1	BRACKET	
020	979899-0000		1	BRACKET	
030	1035897-0000		1	SHAFT	
040	266737-0000		2	WASHER	
300	312105-0295		1	SCREW M6S ISO4017 M4X20 A480	
310	312105-0328		1	SCREW M6S ISO 4017 M5X14 A480	
330	312105-0449		3	SCREW M6S ISO 4017 M8X16 A480	
340	312115-0228		3	SCREW ISO4762 M3X16 A4	
350	312605-0312		1	HEXAGON NUT, M6M M4 A280	
360	312605-0310		1	HEXAGON NUT, M6M M3 A280	
370	315105-0124		2	BRICKA BRB3,2X6RFR	
380	315105-0146		2	BRICKA BRB5,3X10RFR	
390	315105-0165		2	WASHER BRB8,4X16RFR	
400	315751-0109		1	RETAINING RING FOR SHAFT DIN 471 12 A2	
410	321141-0183		2	BEARING BUSHING W/O FL, 12X14X15 MM	
600	90214-0138		1	BALL BEARING, 5X19X6 MM	
610	90335-0216		1	TENSION SPRING 40910, 0,5X5,5X27,7	
MB236	90044-0194		1	PROX.SW. IN5329/IN3002-BPKG	

Pos	Part No	UN	Qty	Description	Page No

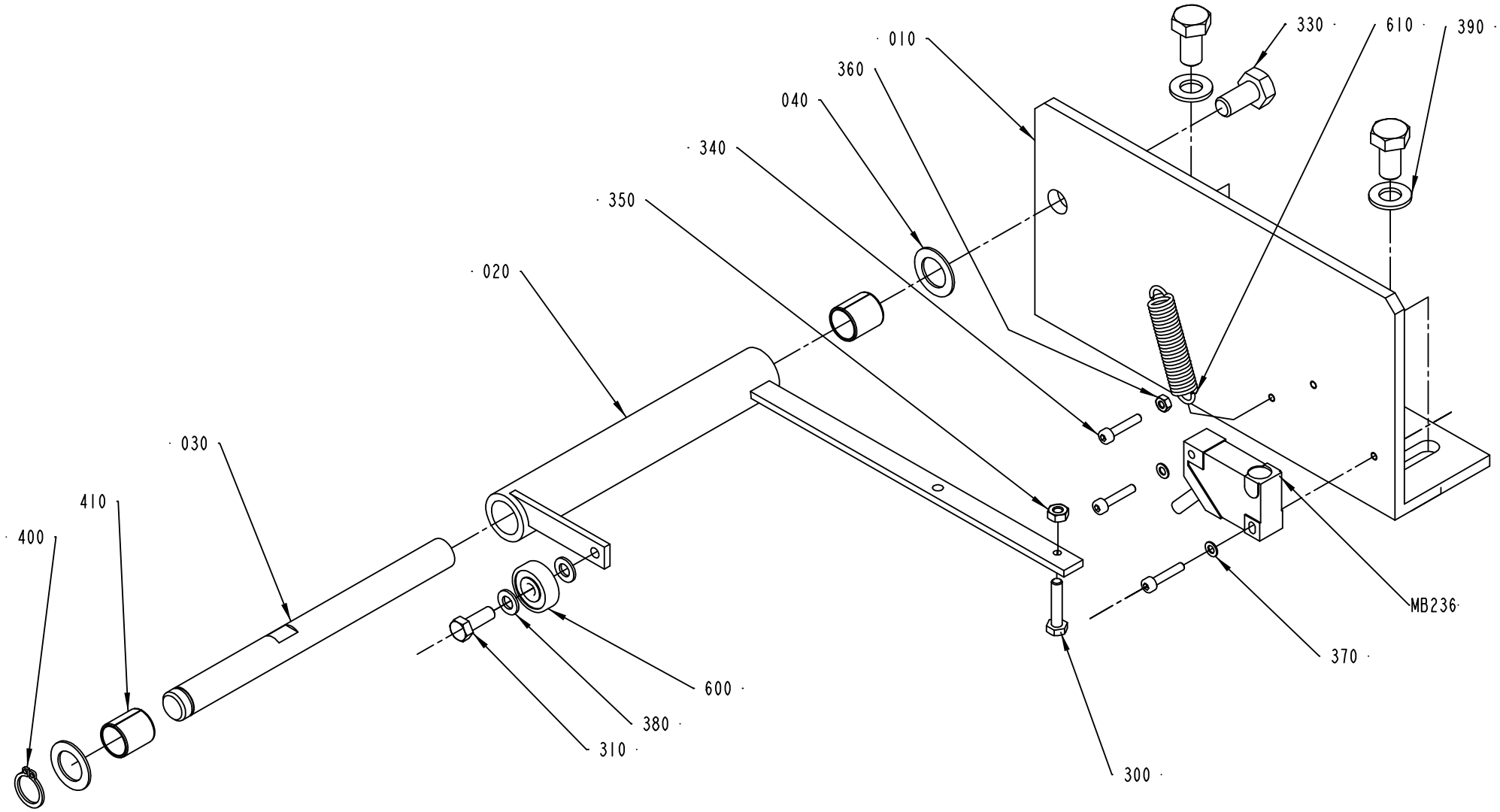

1279624-3
ECM 113009

ECM: 133424 - 20030630
Group number: 1279624-0200
Assembly Drawing: 1279624-3_1_AA

This list covers pages from 7-38 to 7-41

Pos	Part No	UN	Qty	Description	Page No
-					
010	2524478-0000		1	BRACKET	
020	979899-0000		1	BRACKET	
030	1035897-0000		1	SHAFT	
040	266737-0000		2	WASHER	
300	312105-0295		1	SCREW M6S ISO4017 M4X20 A480	
310	312105-0328		1	SCREW M6S ISO 4017 M5X14 A480	
330	312105-0449		3	SCREW M6S ISO 4017 M8X16 A480	
340	312115-0228		3	SCREW ISO4762 M3X16 A4	
350	312605-0312		1	HEXAGON NUT, M6M M4 A280	
360	312605-0310		1	HEXAGON NUT, M6M M3 A280	
370	315105-0124		2	BRICKA BRB3,2X6RFR	
380	315105-0146		2	BRICKA BRB5,3X10RFR	
390	315105-0165		2	WASHER BRB8,4X16RFR	
400	315751-0109		1	RETAINING RING FOR SHAFT DIN 471 12 A2	
410	321141-0183		2	BEARING BUSHING W/O FL, 12X14X15 MM	
600	90214-0138		1	BALL BEARING, 5X19X6 MM	
610	90335-0216		1	TENSION SPRING 40910, 0,5X5,5X27,7	
MB236	90044-0194		1	PROX.SW. IN5329/IN3002-BPKG	

Pos	Part No	UN	Qty	Description	Page No

STRIP GUIDE

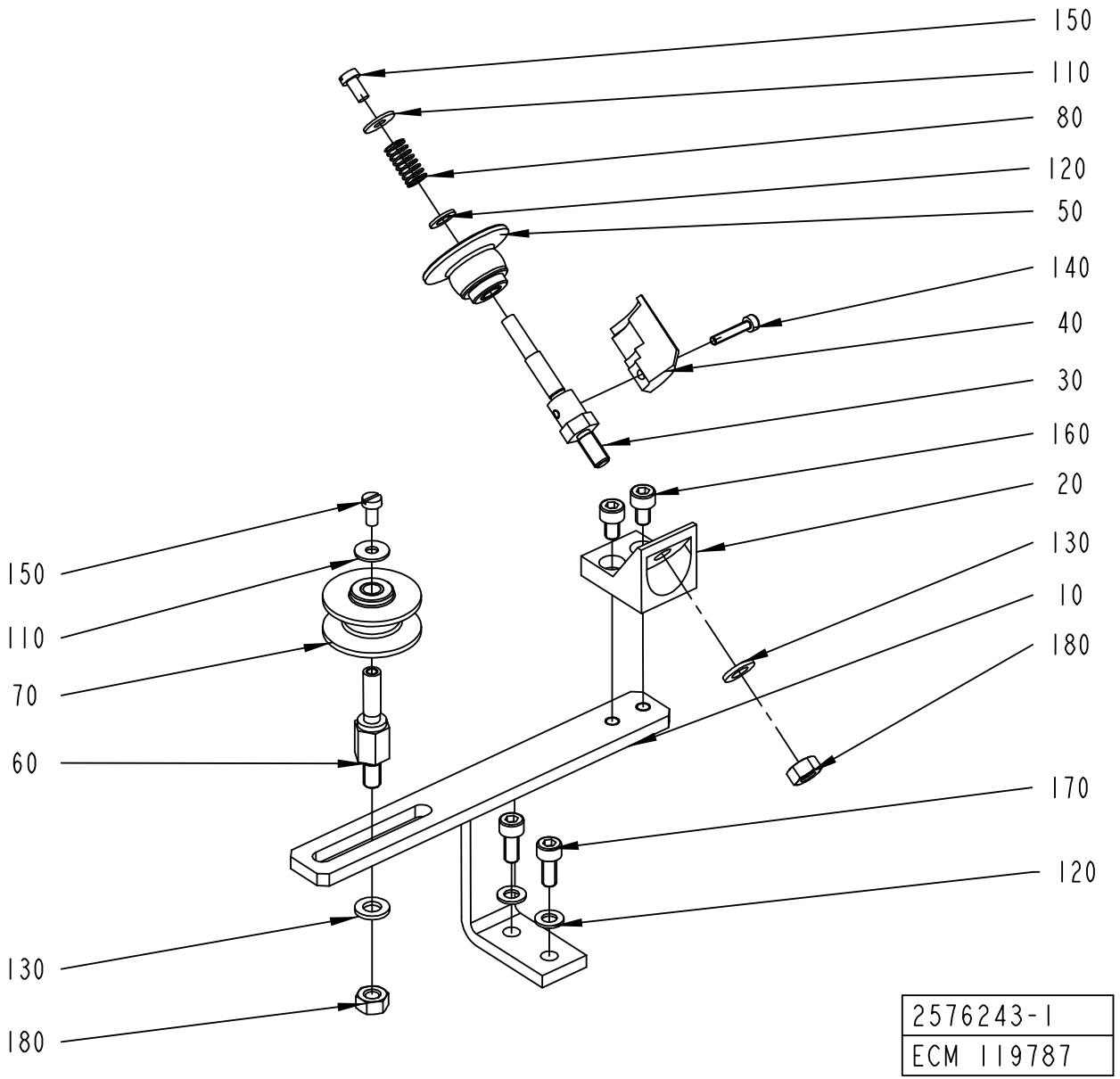
150
110
80
120
50
140
40
30
160
20
130
10
180
170
120
150
110
70
60
130
180
2576243-1
ECM 119787

ECM: 127165 - 20030303
Group number: 2576243-0100
Assembly Drawing: 2576243-1_1_AA

Pos	Part No	UN	Qty	Description	Page No
-					
010	2603016-0000		1	BRACKET	
020	979575-0000		1	ROLLER PLATE	
030	2552631-0000		1	AXLE PIN	
040	2552633-0000		1	ROLLER	
050	2552632-0000		1	ROLLER	
060	579553-0000		1	SHAFT	
070	1512583-0000		1	ROLLER	
	321120-0101		*2*	*BEARING BUSHING W/O FLANGE,6/8X6*	
080	90335-0146		1	COMP. SPRING, 0,6X7,2X20	
110	90005-0082		2	WASHER PLAIN ROUND 4,3(M4)/12,H=1	
120	315105-0146		3	BRICKA BRB5,3X10RFR	
130	315105-0153		2	WASHER BRB6,4X12RFR	
140	312115-0228		1	SCREW ISO4762 M3X16 A4	
150	312125-0287		2	SCREW ISO 1207 M4X8 A4	
160	312115-0323		2	SCREW ISO4762 M5X8 A4	
170	312115-0327		2	SCREW ISO4762 M5X12 A4	
180	312605-0316		2	HEXAGON NUT, M6M M6 A280	

Pos	Part No	UN	Qty	Description	Page No

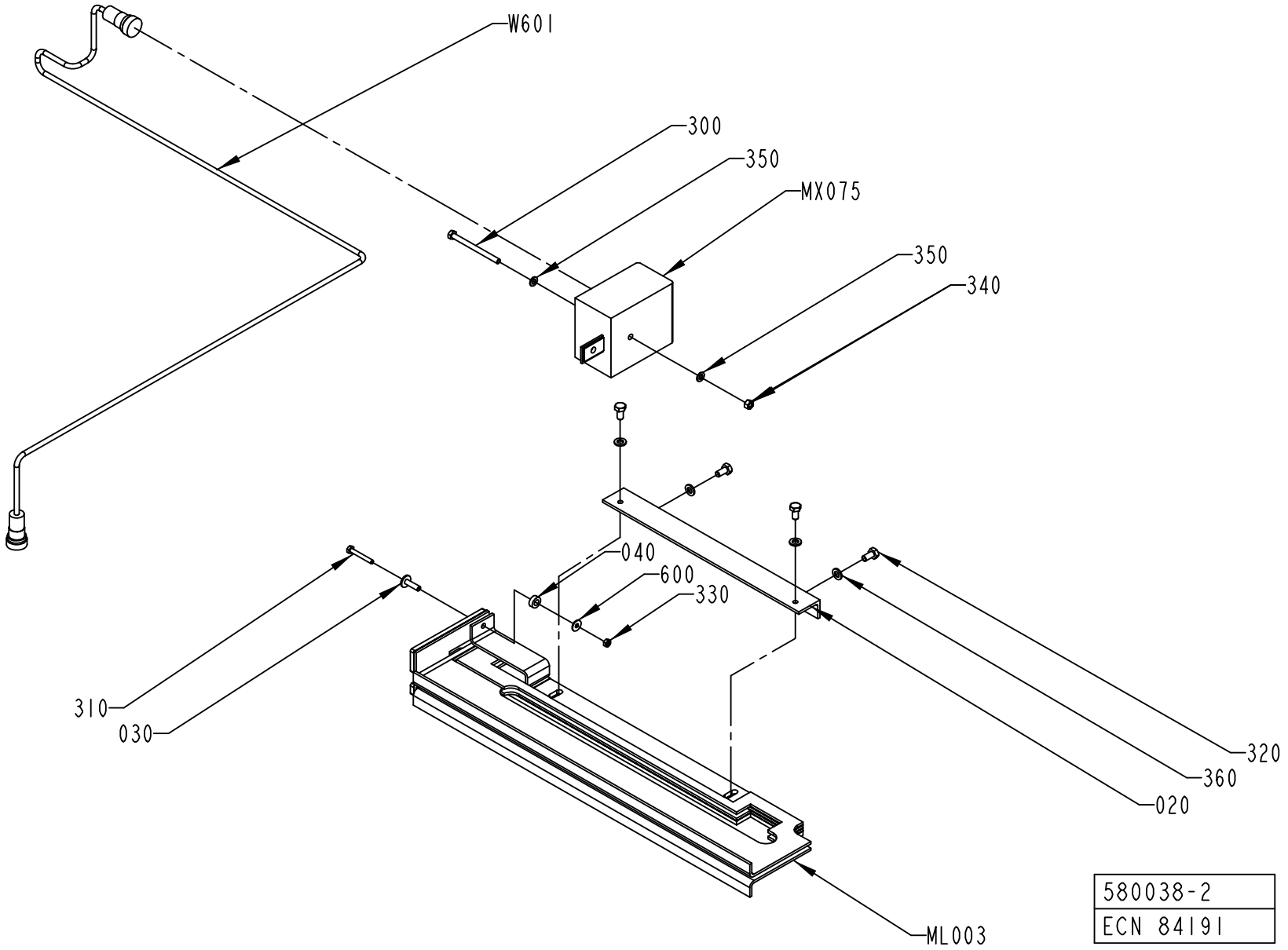
W601
300
350
MX075
350
340
040
600
330
310
030
320
360
020
ML003
580038-2
ECN 84191

ECM: 120692 - 20030113
Group number: 580038-0200
Assembly Drawing: 580038-2_1_AB

Pos	Part No	UN	Qty	Description	Page No
-					
020	1036588-0000		1	BRACKET	
030	1038016-0000		1	SPACER	
040	32644-0000		1	WASHER	
300	312101-0344		1	SCREW M6S M5X65 FZB	
310	312105-0299		1	SCREW M6S ISO 4017 M4X30 A480	
320	312105-0366		4	SCREW M6S M6X12 A280	
330	312605-0312		1	HEXAGON NUT, M6M M4 A280	
340	312605-0314		1	HEXAGON NUT, M6M M5 A280	
350	315105-0146		2	BRICKA BRB5,3X10RFR	
360	315105-0153		4	WASHER BRB6,4X12RFR	
600	90005-0082		1	WASHER PLAIN ROUND 4,3(M4)/12,H=1	
ML003	1035587-0000		1	INDUCTOR	
MX075	67380-0208		1	TRANSFORMER	
MX075	67380-0208		1	TRANSFORMER	
W601	548770-0006		1	COAXIAL CABLE L=1200 MM	

Pos	Part No	UN	Qty	Description	Page No

PRESSURE ROLLER

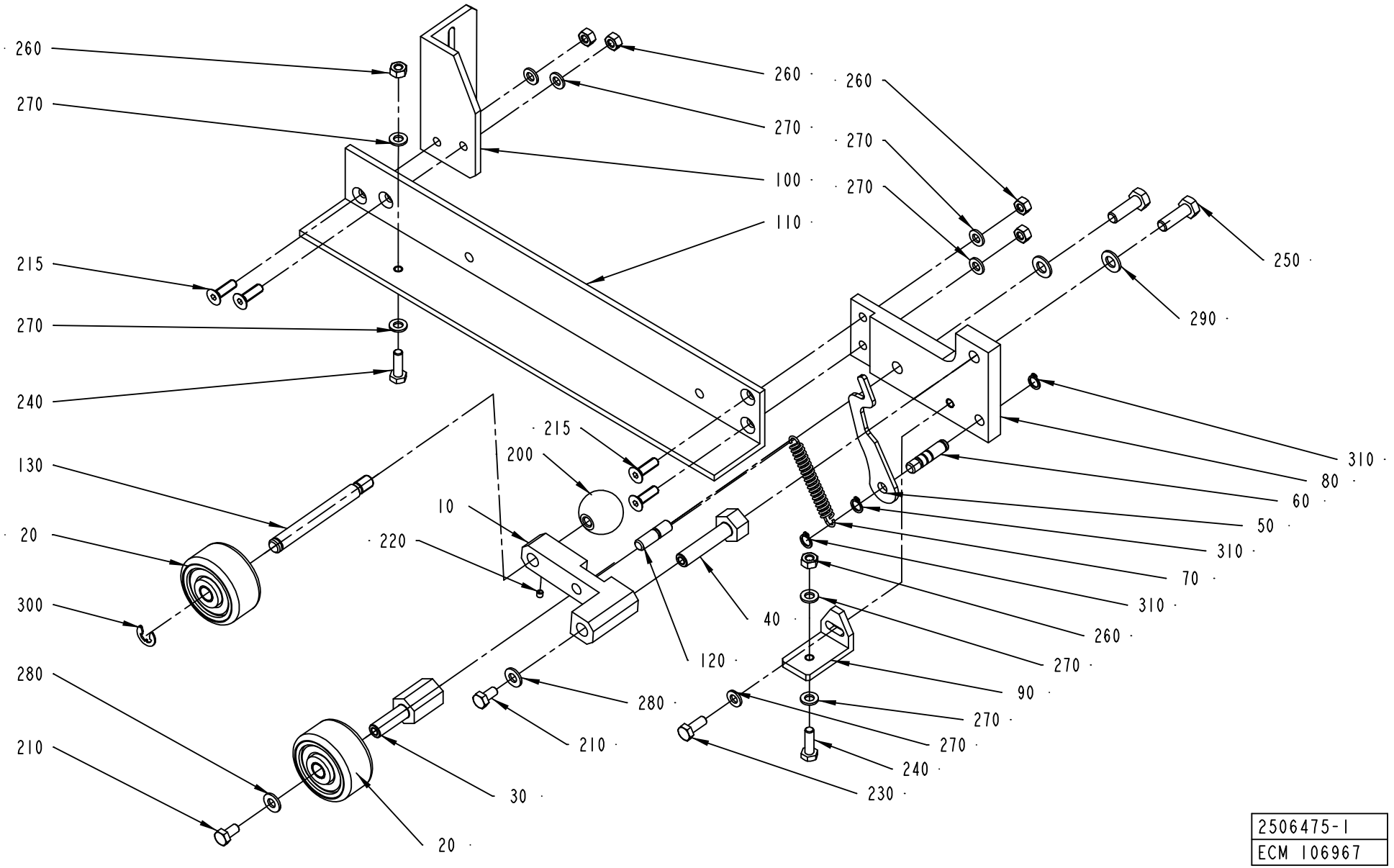

2506475-1
ECM 106967

ECM: 110380 - 20030113
Group number: 2506475-0100
Assembly Drawing: 2506475-1_1_AA

Pos	Part No	UN	Qty	Description	Page No
-					
010	2524482-0000		1	BRACKET	
020	1346988-0000		2	ROLL	
010	*90166-0056*	*MM*	*40*	*SHRINKABLE HOSE*	
020	*321120-0104*		*2*	*BEARBUSHING W/O FL,ANGE 10/12X10*	
030	1035895-0000		1	SHAFT	
040	2529646-0000		1	SHAFT	
050	2524479-0000		1	PLATE	
060	2524480-0000		1	PIN	
070	1478303-0000		1	TENSION SPRING	
080	2506471-0000		1	BRACKET	
090	2506472-0000		1	HOLDER	
100	2506473-0000		1	BRACKET	
110	2506474-0000		1	FASTENING BRACKET	
120	2524484-0000		1	PIN	
130	2524485-0000		1	PIN	
200	318800-0104		1	HANDLE,SPHERICAL KNOB,INT.THRE.,D.30-M8	
210	312105-0366		2	SCREW M6S M6X12 A280	
215	312155-0370		4	SCREW EN 10642 MF6S M6X20 A480	
220	312318-0283		1	SCREW ISO4029 M4X4 A4	
230	312105-0368		1	SCREW M6S M6X16 A280	
240	312105-0367		2	SCREW M6S M6X14 A280	
250	312105-0453		2	SCREW M6S ISO 4017 M8X25 A480	
260	312605-0316		4	HEXAGON NUT, M6M M6 A280	
270	315105-0153		7	WASHER BRB6,4X12RFR	
280	315105-0156		2	WASHER BRB 6.7X14 RFR	
290	315105-0165		2	WASHER BRB8,4X16RFR	
300	315755-0801		1	RETAINING RING 8	
310	90141-0015		3	RETAINING RING FOR SHAFT DIN 471 8 A2	

Pos	Part No	UN	Qty	Description	Page No

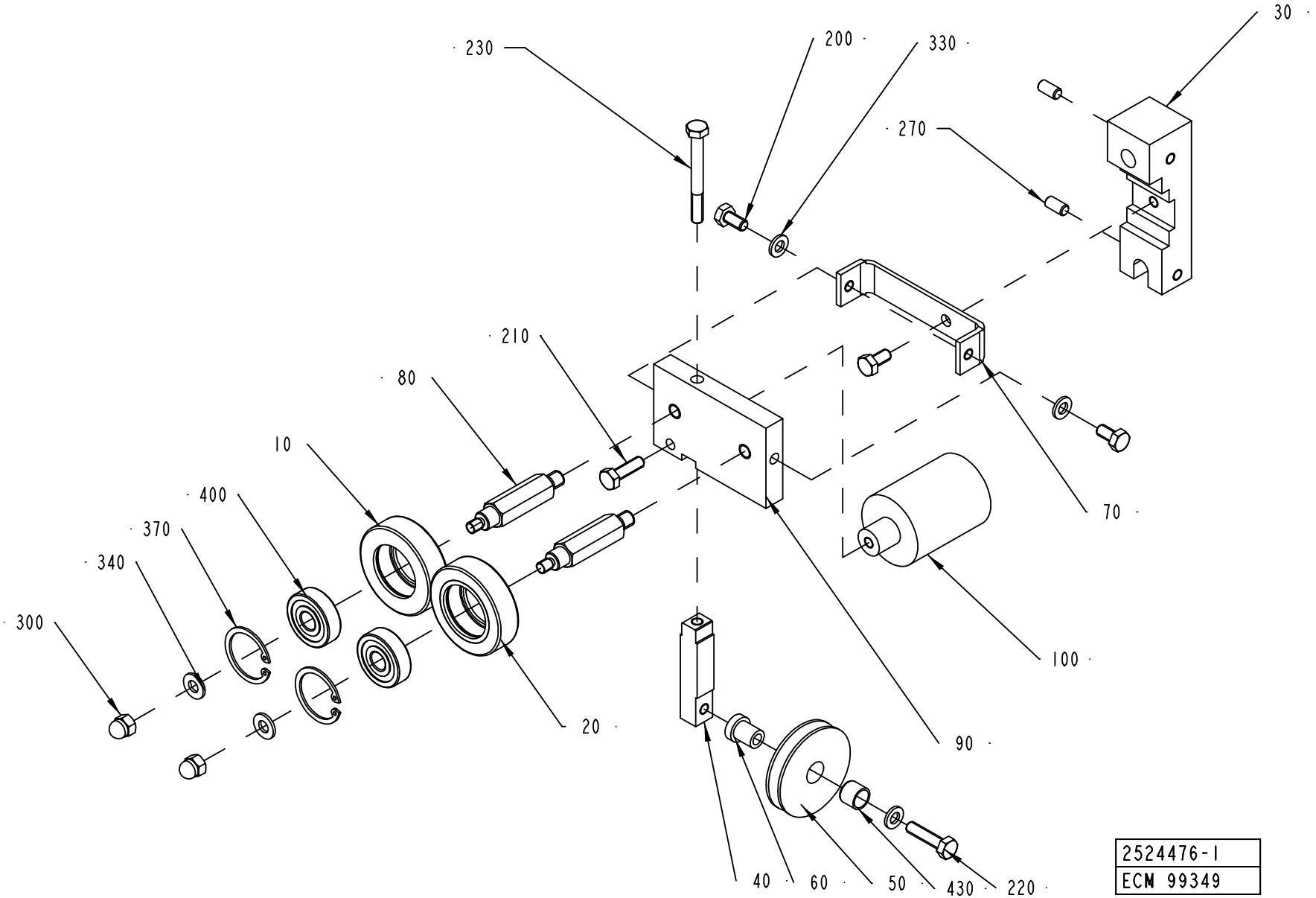
230
200
330
30
270
210
80
10
400
370
340
300
70
100
20
90
40
60
50
430
220
2524476-1
ECM 99349

ECM: 113780 - 20030113
Group number: 2524476-0100
Assembly Drawing: 2524476-1_1_AA

Pos	Part No	UN	Qty	Description	Page No
-					
010	1036622-0000		1	GUIDE ROLLER	
020	1036623-0000		1	GUIDE ROLLER	
030	1511002-0000		1	HOLDER	
040	1499024-0000		1	BAR	
050	2524477-0000		1	ROLLER	
060	1499026-0000		1	SHAFT	
070	1499027-0000		1	BRACKET	
080	1511001-0000		1	SHAFT	
090	1511000-0000		1	PLATE	
100	1511003-0000		1	WEIGHT	
110	2552628-0000		1	PIN	
120	1346612-0000		1	SHAFT	
200	312105-0366		3	SCREW M6S M6X12 A280	
210	312105-0370		1	SCREW M6S ISO 4017 M6X20 A480	
220	312105-0372		1	SCREW M6S ISO 4017 M6X25 A480	
230	312105-0381		1	SCREW M6S ISO 4014 M6X55 A480	
240	312105-0333		1	SCREW M6S ISO 4017 M5X25 A480	
270	312318-0366		2	SCREW ISO4029 M6X12 A4	
300	312705-0316		2	NUT HEX. DOMED CAP MHM-6 M6 A280	
330	315105-0153		3	WASHER BRB6,4X12RFR	
340	315105-0156		2	WASHER BRB 6.7X14 RFR	
350	315105-0156		1	WASHER BRB 6.7X14 RFR	
370	315753-0122		2	RETAINING RING FOR BORE DIN 472 30 A2	
400	321313-0100		2	BALL BEARING, 10X30X9 MM	
430	90240-0287		1	BUSHING, 10X12X10 MM	

Pos	Part No	UN	Qty	Description	Page No

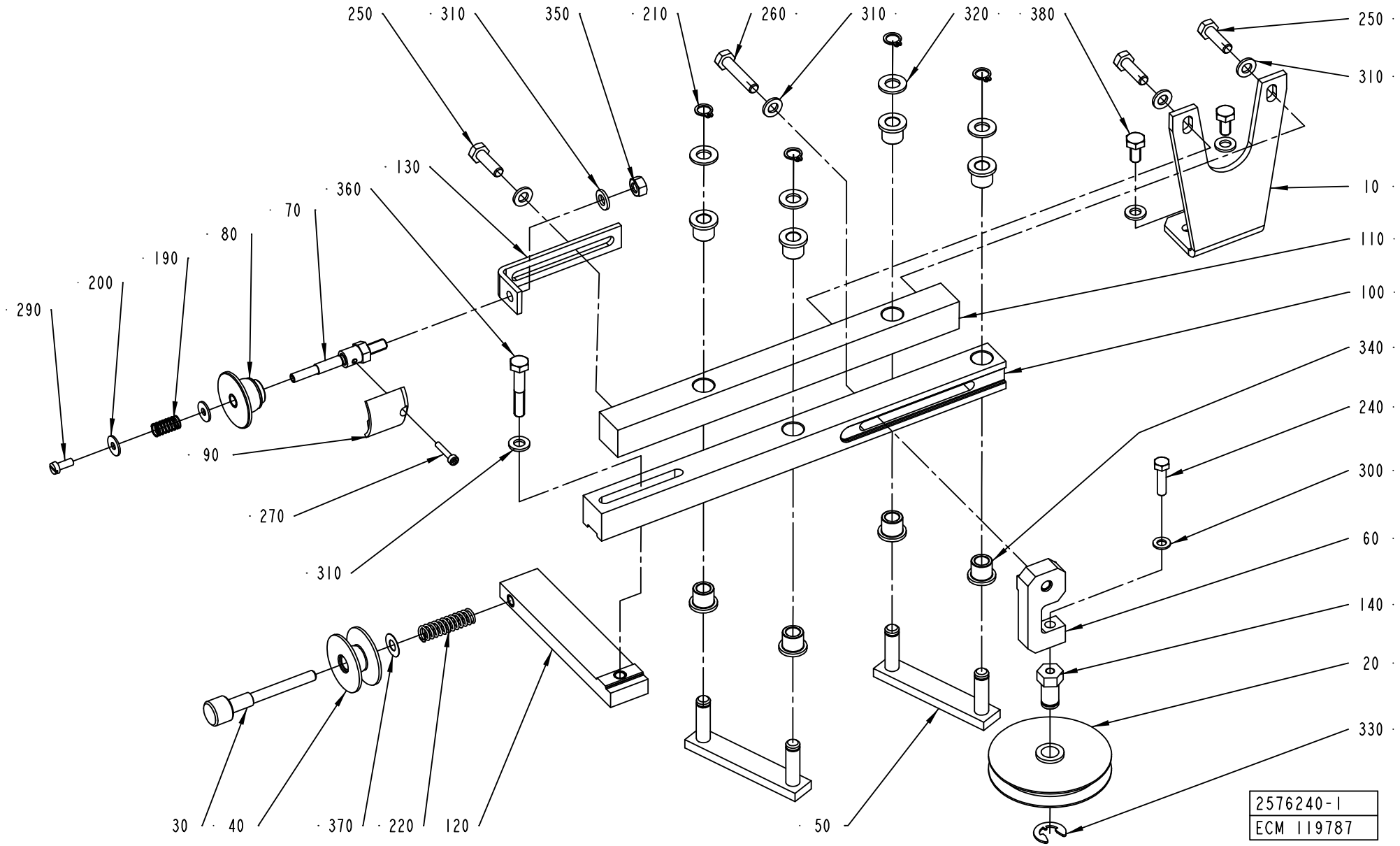
250
310
350
210
260
310
320
380
250
310
130
360
70
80
190
200
290
10
110
100
340
240
300
60
140
20
330
90
270
310
30
40
370
220
120
50
2576240-1
ECM 119787

ECM: 119789 - 20030303
Group number: 2576240-0100
Assembly Drawing: 2576240-1_1_AA

This list covers pages from 7-50 to 7-53

Pos	Part No	UN	Qty	Description	Page No
TBA NOPT (See drawing on page: 7-50)					
070	2552631-0000		1	AXLE PIN	
080	2552632-0000		1	ROLLER	
090	2552633-0000		1	ROLLER	
130	2575481-0000		1	BRACKET	
190	90335-0146		1	COMP. SPRING, 0,6X7,2X20	
200	90005-0082		2	WASHER PLAIN ROUND 4,3(M4)/12,H=1	
270	312115-0228		1	SCREW ISO4762 M3X16 A4	
290	312125-0289		1	SCREW ISO 1207 M4X10 A4	
350	312605-0316		1	HEXAGON NUT, M6M M6 A280	
Common Parts					
010	2576239-0000		1	HOLDER	
020	282635-0000		1	GUIDE WHEEL	
030	1035893-0000		1	ADJUSTING SCREW	
040	1285546-0000		1	ROLL	
050	1346746-0000		2	LEVER	
060	2575480-0000		1	HOLDER	
100	2570400-0000		1	ROD	
110	2570401-0000		1	ROD	
120	2575484-0000		1	HOLDER	
140	2575482-0000		1	PIN	
210	90141-0015		4	RETAINING RING FOR SHAFT DIN 471 8 A2	
220	90335-0027		1	COMP. SPRING 22170, 1,25X9,25X33	
240	312105-0331		1	SCREW M6S ISO 4017 M5X20 A480	
250	312105-0370		3	SCREW M6S ISO 4017 M6X20 A480	
260	312105-0374		1	SCREW M6S ISO 4014 M6X30 A480	
300	315105-0146		1	BRICKA BRB5,3X10RFR	
310	315105-0153		8	WASHER BRB6,4X12RFR	
320	315105-0165		4	WASHER BRB8,4X16RFR	
330	315755-0110		1	RETAINING RING 9	
340	321111-0097		8	FLANGE BUSHING, 8X12X12 MM	
360	312105-0376		1	SCREW M6S ISO 4014 M6X35 A480	
370	2033-0013		1	WASHER	
380	312105-0366		2	SCREW M6S M6X12 A280	

Pos	Part No	UN	Qty	Description	Page No

STRIP GUIDE

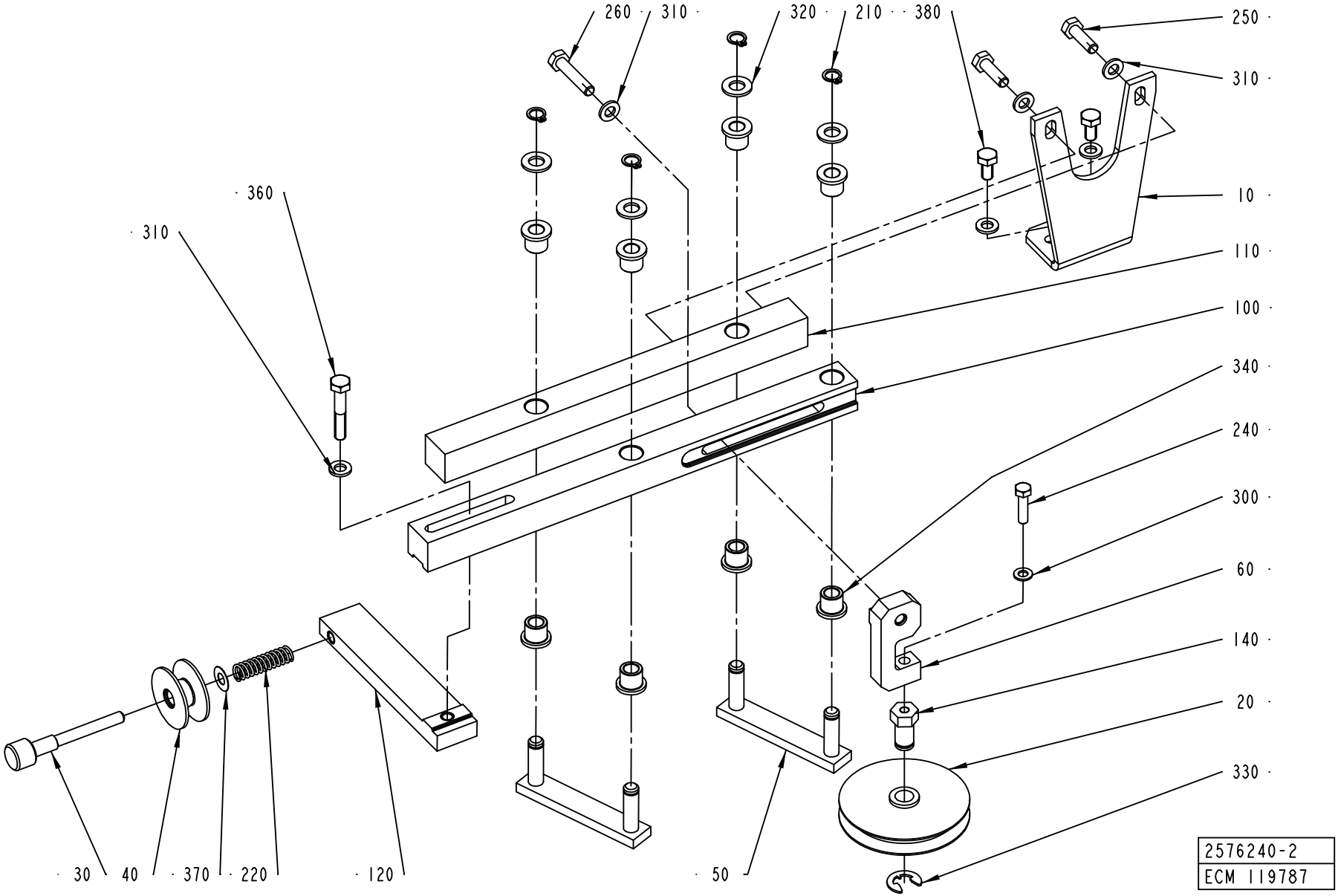
260
310
320
210
380
250
310
360
310
10
110
100
340
240
300
60
140
20
330
30
40
370
220
120
50
2576240-2
ECM 119787

ECM: 119789 - 20030303
Group number: 2576240-0100
Assembly Drawing: 2576240-2_1_AA

This list covers pages from 7-50 to 7-53

Pos	Part No	UN	Qty	Description	Page No
TBA NOPT (See drawing on page: 7-50)					
070	2552631-0000		1	AXLE PIN	
080	2552632-0000		1	ROLLER	
090	2552633-0000		1	ROLLER	
130	2575481-0000		1	BRACKET	
190	90335-0146		1	COMP. SPRING, 0,6X7,2X20	
200	90005-0082		2	WASHER PLAIN ROUND 4,3(M4)/12,H=1	
270	312115-0228		1	SCREW ISO4762 M3X16 A4	
290	312125-0289		1	SCREW ISO 1207 M4X10 A4	
350	312605-0316		1	HEXAGON NUT, M6M M6 A280	
Common Parts					
010	2576239-0000		1	HOLDER	
020	282635-0000		1	GUIDE WHEEL	
030	1035893-0000		1	ADJUSTING SCREW	
040	1285546-0000		1	ROLL	
050	1346746-0000		2	LEVER	
060	2575480-0000		1	HOLDER	
100	2570400-0000		1	ROD	
110	2570401-0000		1	ROD	
120	2575484-0000		1	HOLDER	
140	2575482-0000		1	PIN	
210	90141-0015		4	RETAINING RING FOR SHAFT DIN 471 8 A2	
220	90335-0027		1	COMP. SPRING 22170, 1,25X9,25X33	
240	312105-0331		1	SCREW M6S ISO 4017 M5X20 A480	
250	312105-0370		3	SCREW M6S ISO 4017 M6X20 A480	
260	312105-0374		1	SCREW M6S ISO 4014 M6X30 A480	
300	315105-0146		1	BRICKA BRB5,3X10RFR	
310	315105-0153		8	WASHER BRB6,4X12RFR	
320	315105-0165		4	WASHER BRB8,4X16RFR	
330	315755-0110		1	RETAINING RING 9	
340	321111-0097		8	FLANGE BUSHING, 8X12X12 MM	
360	312105-0376		1	SCREW M6S ISO 4014 M6X35 A480	
370	2033-0013		1	WASHER	
380	312105-0366		2	SCREW M6S M6X12 A280	

Pos	Part No	UN	Qty	Description	Page No

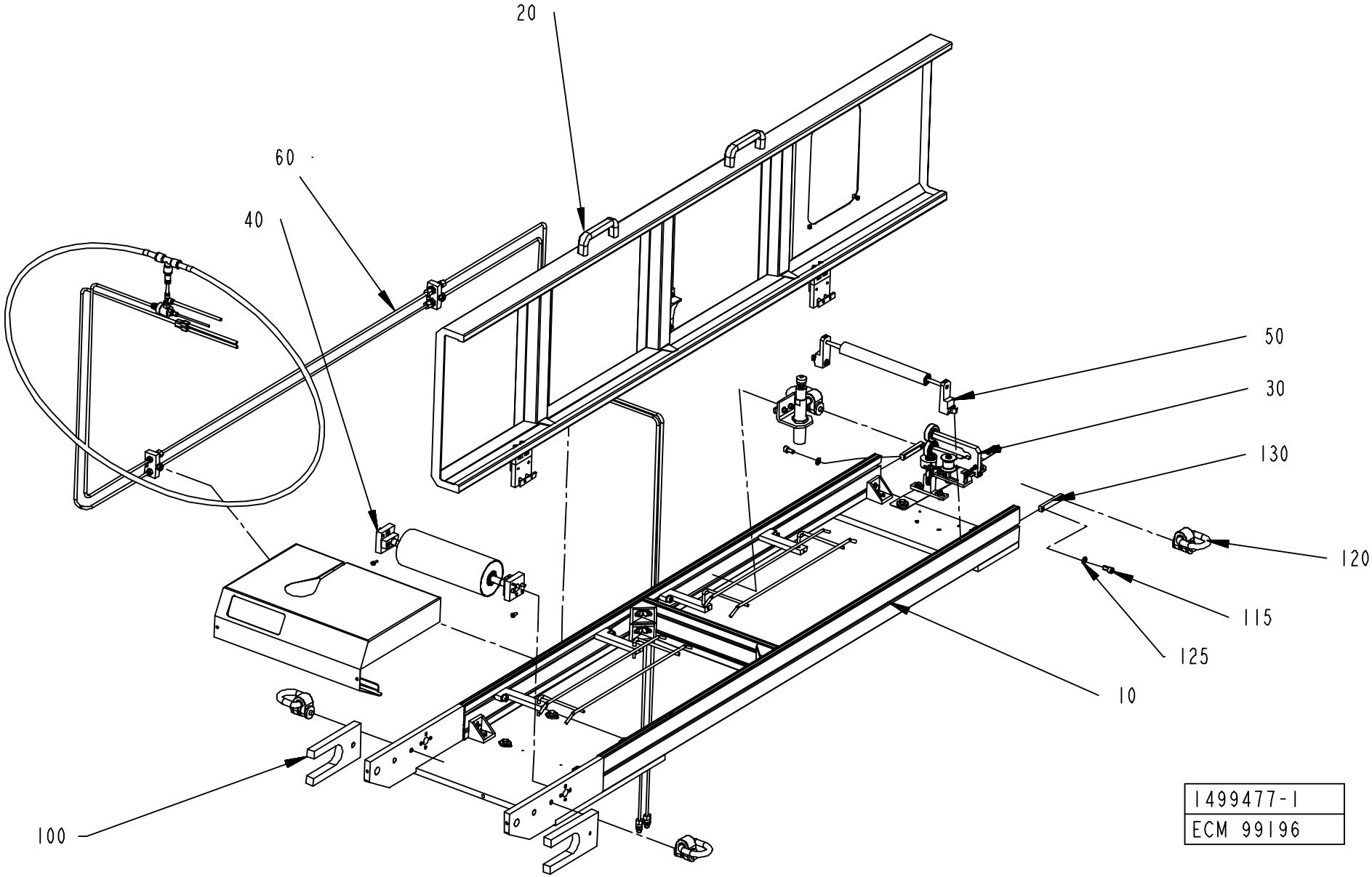
20
60
40
50
30
130
120
115
125
10
100
1499477-1
ECM 99196

ECM: 116565 - 20030113
Group number: 1499477-0100
Assembly Drawing: 1499477-1_1_AB

Pos	Part No	UN	Qty	Description	Page No
-					
010	1499484-0100		1	TUNNEL FRAME	**7-57**
020	1511319-0100		1	TUNNEL COVER	**7-59**
030	1517065-0100		1	WEB GUIDE	**7-61**
040	2570394-0100		1	BENDING ROLLER	**7-63**
050	1498756-0100		1	BENDING ROLLER	**7-65**
060	580335-0200		1	PIPE WORK-PNEUMATIC	**7-67**
100	1499485-0000		2	TRANSPORT BRACKET	

Pos	Part No	UN	Qty	Description	Page No

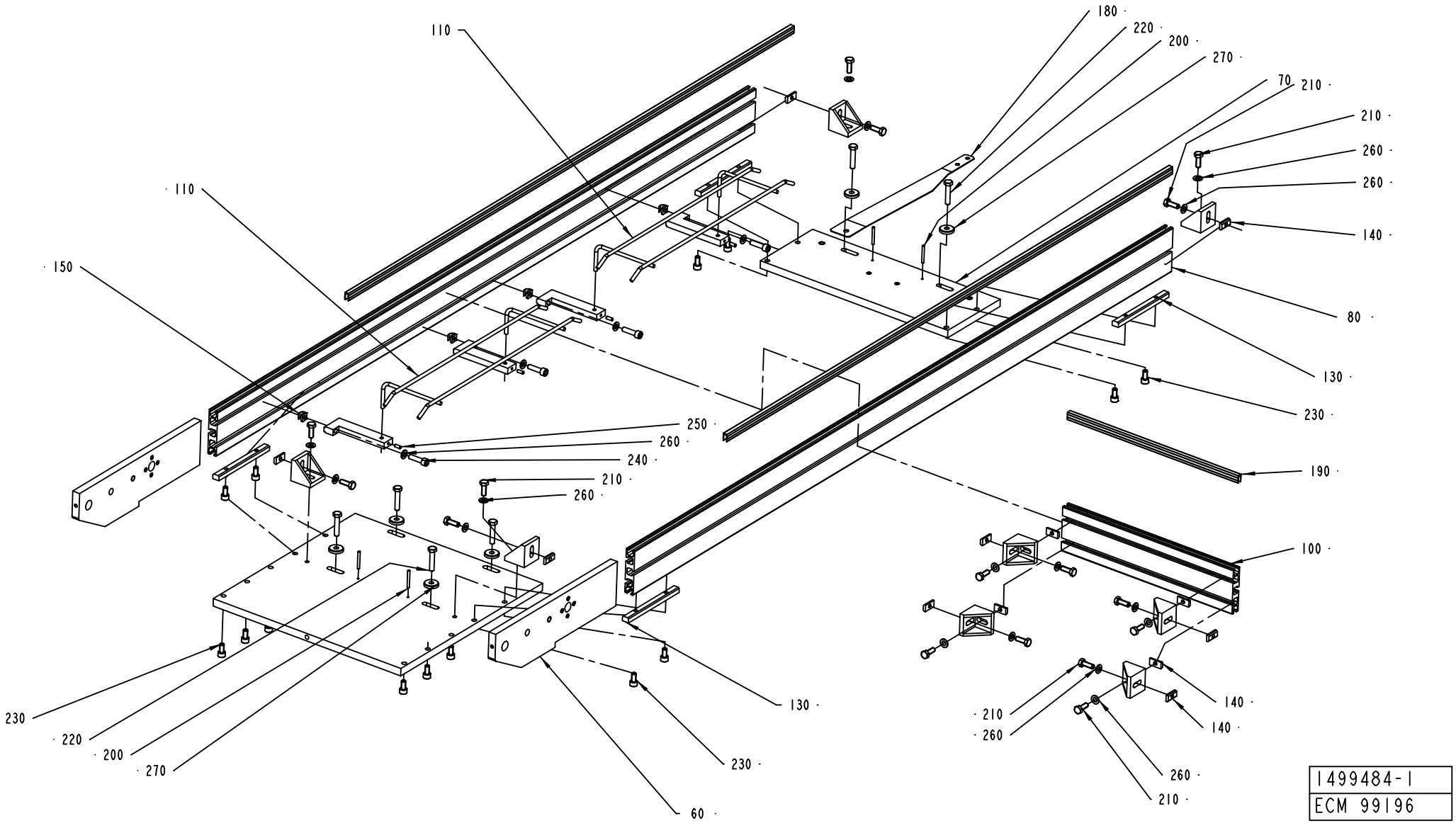
110
110
150
180
220
200
270
70
210
210
260
260
140
80
130
230
190
100
250
260
240
210
260
130
230
60
230
220
200
270
210
260
140
140
260
210
1499484-1
ECM 99196

ECM: 99200 - 20020808
Group number: 1499484-0100
Assembly Drawing: 1499484-1_1_AB

Pos	Part No	UN	Qty	Description	Page No
-					
050	1498766-0000		1	LOWER PLATE	
060	1498767-0000		2	SIDE PIECE	
070	1498768-0000		1	LOWER PLATE	
080	1498769-0000		2	WALL	
090	1498771-0000		4	HOLDER	
100	2540729-0000		1	WALL	
110	36316-0000		2	PAPER SUPPORT	
120	1498759-0000		8	ANGLE HOLDER	
130	1498763-0000		4	JOINT PIECE	
140	1511308-0000		12	NUT PLATE	
150	1511310-0000		4	NUT	
160	1511320-0000		2	STRIP	
180	1499371-0000		1	JOINT PLATE	
190	2540730-0000		1	STRIP	
200	311103-0278		4	PARALLEL PIN ISO 2338 4M6X35 A1	
210	312105-0452		16	SCREW M6S ISO 4017 M8X22 A4 80	
220	312109-0459		6	SCREW M6S ISO 4017 M8X40 A480	
230	312115-0449		14	SCREW ISO4762 M8X16 A4	
240	312115-0455		4	SCREW ISO4762 M8X30 A4	
250	312318-0327		4	SCREW ISO4029 M5X12 A4	
260	315105-0165		20	WASHER BRB8,4X16RFR	
270	315125-0165		6	WASHER TBRSB 8,4X26X5 A4	

Pos	Part No	UN	Qty	Description	Page No

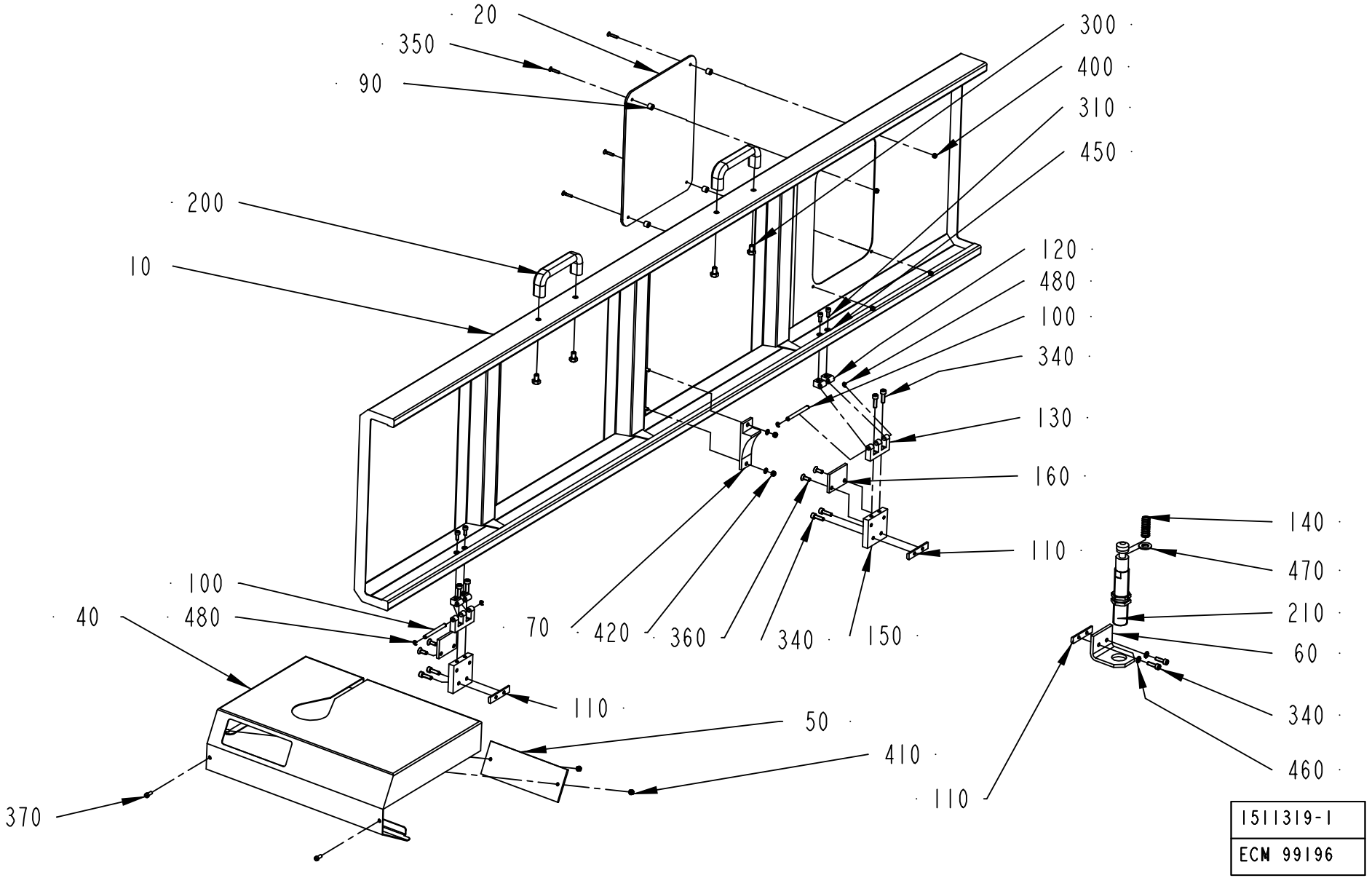
20
350
90
200
10
300
400
310
450
120
480
100
340
130
160
110
140
470
210
60
340
460
110
100
480
40
70
420
360
340
150
110
50
410
370
1511319-1
ECM 99196

ECM: 114179 - 20020930
Group number: 1511319-0100
Assembly Drawing: 1511319-1_1_AB

Pos	Part No	UN	Qty	Description	Page No
-					
010	1499486-0000		1	TOP COVER	
020	1511317-0000		1	PANE	
040	1498780-0000		1	BACK COVER	
050	1511311-0000		1	GLASS PANE	
060	1511314-0000		1	DAMPER BRACKET	
070	1511315-0000		1	SLIDE BLOCK	
090	1511318-0000		4	SPACER	
100	1499512-0000		2	PIN	
110	1499513-0000		3	NUT PLATE	
120	1035794-0000		4	BLOCKING PIECE	
130	1499514-0000		2	E-HINGE	
140	1511324-0000		1	SPRING	
150	2519647-0000		2	BRACKET	
160	2519646-0000		2	PLATE	
200	90017-0022		2	HANDLE, NO. EL-037311	
210	90347-0024		1	SHOCK ABSORBER, 370-120-400	
300	312105-0447		4	SCREW M6S ISO 4017 M8X12 A480	
310	312115-0327		4	SCREW ISO4762 M5X12 A4	
340	312115-0370		10	SCREW ISO4762 M6X20 A4	
350	312155-0295		4	SCREW EN 10642 MF6S M4X20 A480	
360	312155-0368		4	SCREW EN 10642 MF6S M6X16 A480	
370	312125-0327		2	SCREW ISO 1207 M5X12 A4	
400	312605-0312		4	HEXAGON NUT, M6M M4 A280	
410	312605-0314		2	HEXAGON NUT, M6M M5 A280	
420	312812-0314		2	HEXAGON NUT, NY-LOCK M5 A480	
450	315105-0146		6	BRICKA BRB5,3X10RFR	
460	315105-0153		2	WASHER BRB6,4X12RFR	
470	315105-0178		1	WASHER BRB13X24RFR	
480	315755-0106		4	RETAINING RING 4	

Pos	Part No	UN	Qty	Description	Page No

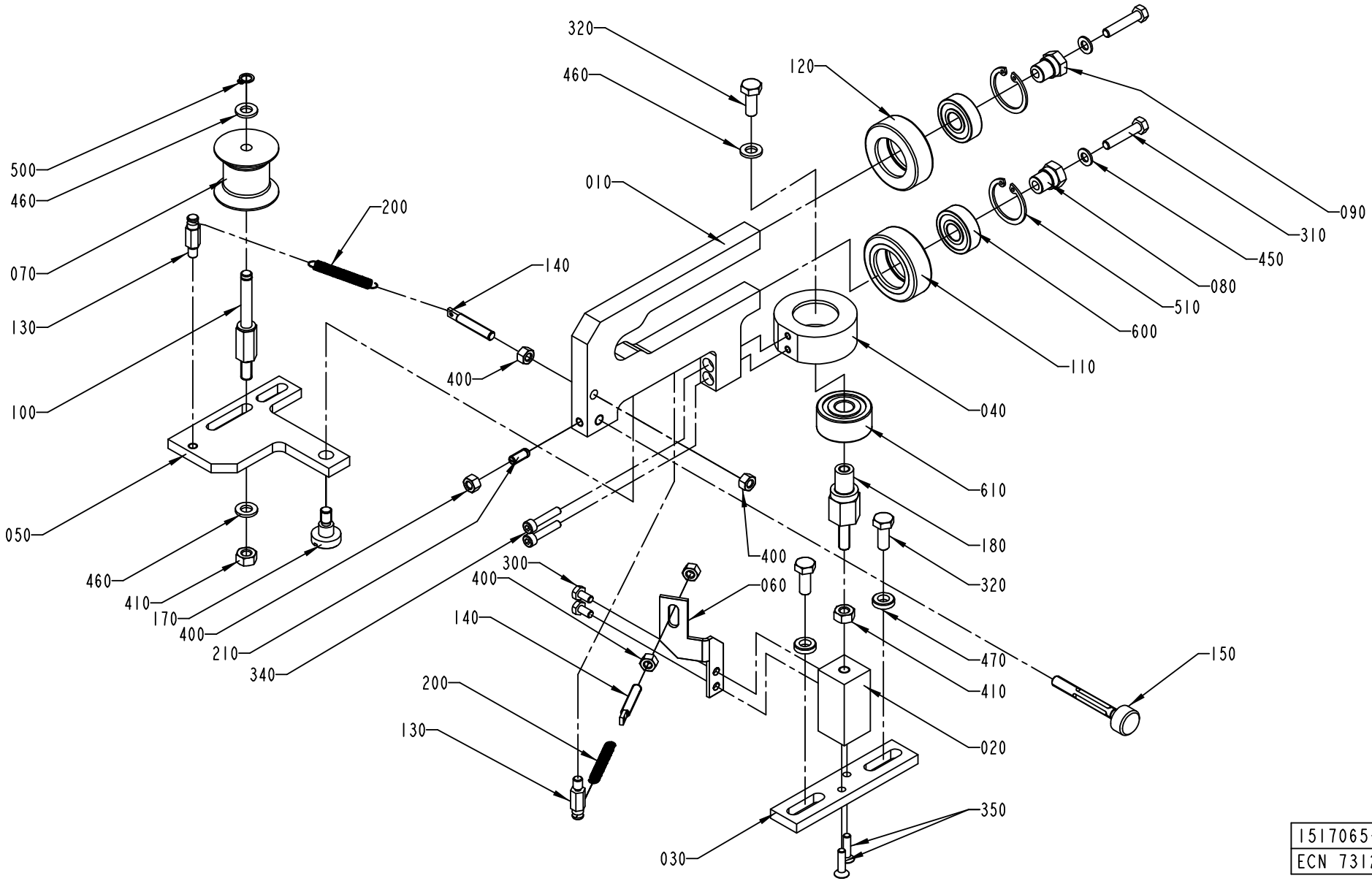

1517065-1
ECN 73123

ECM: 114180 - 20020930
Group number: 1517065-0100
Assembly Drawing: 1517065-1_1_AA

Pos	Part No	UN	Qty	Description	Page No
-					
010	1517071-0000		1	BOW CLAMP	
020	1517068-0000		1	PILLAR	
030	1517069-0000		1	CLAMP PLATE	
040	1517070-0000		1	BEARING SEAT	
050	1517066-0000		1	PIVOT ARM	
060	1517067-0000		1	SPRING HOLDER	
070	979582-0000		1	ROLLER	
080	1334256-0000		1	SHAFT	
090	1346612-0000		1	SHAFT	
100	1538107-0000		1	SHAFT	
110	583737-0000		1	ROLLER	
120	583738-0000		1	ROLLER	
130	583735-0000		2	PIN	
140	583749-0000		2	PIN	
150	589432-0000		1	SCREW	
170	556541-0000		1	SCREW	
180	1517753-0000		1	ADJUSTING NUT	
200	90335-0216		2	TENSION SPRING 40910, 0,5X5,5X27,7	
210	90287-0148		1	SCREW SPRINGLOAD. SLOTTED HEAD M5X12	
300	312105-0287		2	SCREW M6S ISO4017 M4X8 A480	
310	312105-0333		2	SCREW M6S ISO 4017 M5X25 A480	
320	312105-0368		3	SCREW M6S M6X16 A280	
340	312115-0295		2	SCREW ISO4762 M4X20 A4	
350	312155-0293		2	SCREW EN 10642 MF6S M4X16 A480	
400	312605-0314		5	HEXAGON NUT, M6M M5 A280	
410	312605-0316		2	HEXAGON NUT, M6M M6 A280	
450	315105-0146		2	BRICKA BRB5,3X10RFR	
460	315105-0153		3	WASHER BRB6,4X12RFR	
470	315115-0153		2	WASHER PLAIN, TBRB 6,4/12 H=3	
500	315751-0103		1	RETAINING RING FOR SHAFT DIN 471 6 A2	
510	315752-0120		2	RETAIN. RING, 26	
600	321308-0200		2	BALL BEARING, 10X26X8 MM	
610	321330-0100		1	ANG. BALL BEAR, 10X30X14 MM	

Pos	Part No	UN	Qty	Description	Page No

Machine Type | Group Description | Used-In | Group Number | Page No

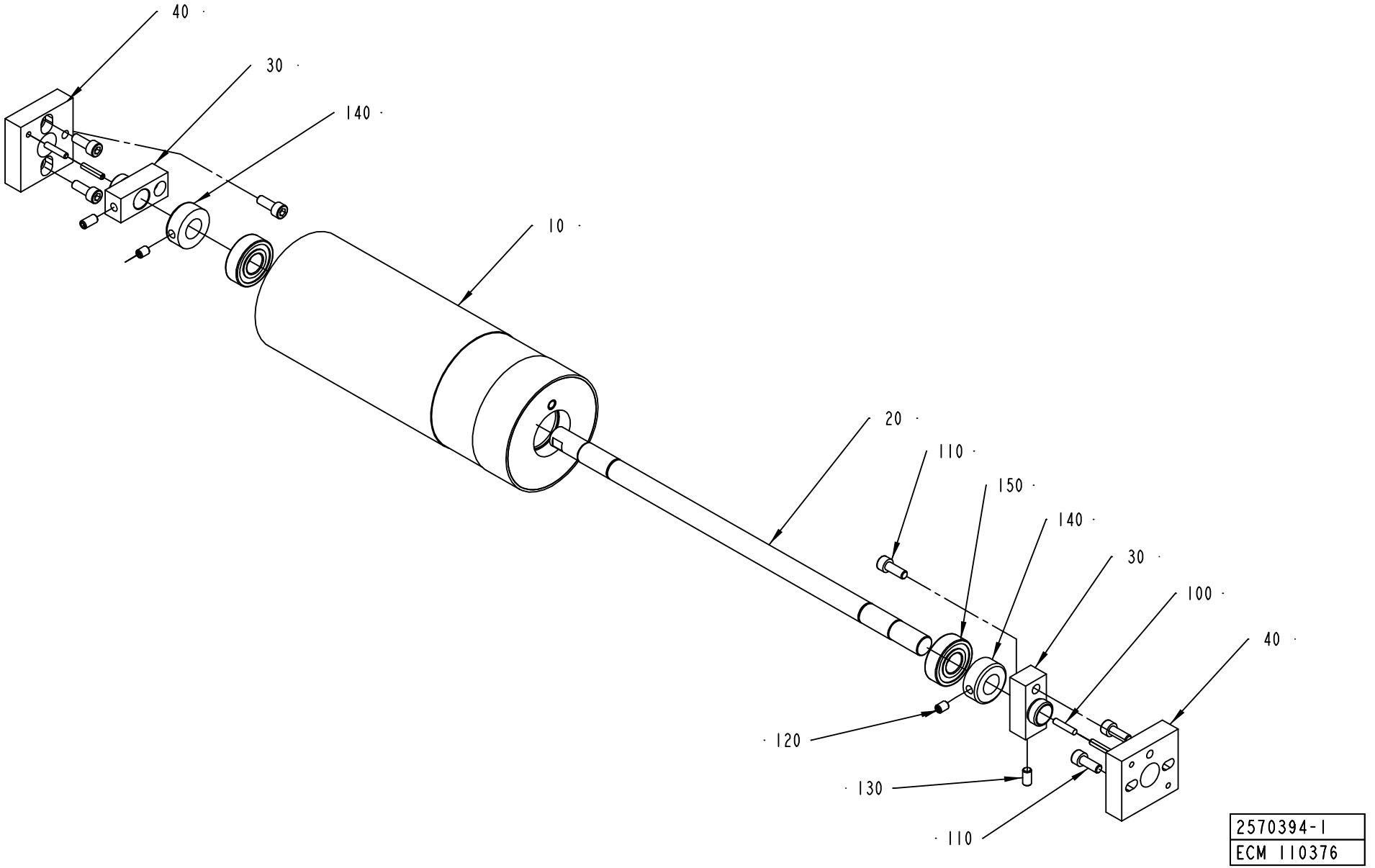
40
30
140
10
20
110
150
140
30
100
40
120
130
110
2570394-1
ECM 110376

ECM: 117146 - 20030113
Group number: 2570394-0100
Assembly Drawing: 2570394-1_1_AA

Pos	Part No	UN	Qty	Description	Page No
-					
010	2570393-0000		1	BENDING ROLLER	
020	583683-0000		1	SHAFT	
030	583684-0000		2	AXLE SUPPORT	
040	583685-0000		2	BEARING SEAT	
100	311103-0272		4	PARALLEL PIN ISO 2338 4M6X20 A1	
110	312115-0368		6	SCREW ISO4762 M6X16 A4	
120	312318-0362		2	SCREW ISO4029 M6X8 A4	
130	312318-0366		2	SCREW ISO4029 M6X12 A4	
140	315742-0111		2	RETAINING RING 15 SMS 199	
150	321313-0102		2	BALL BEARING, 15X35X11 MM	

Pos	Part No	UN	Qty	Description	Page No

BENDING ROLLER

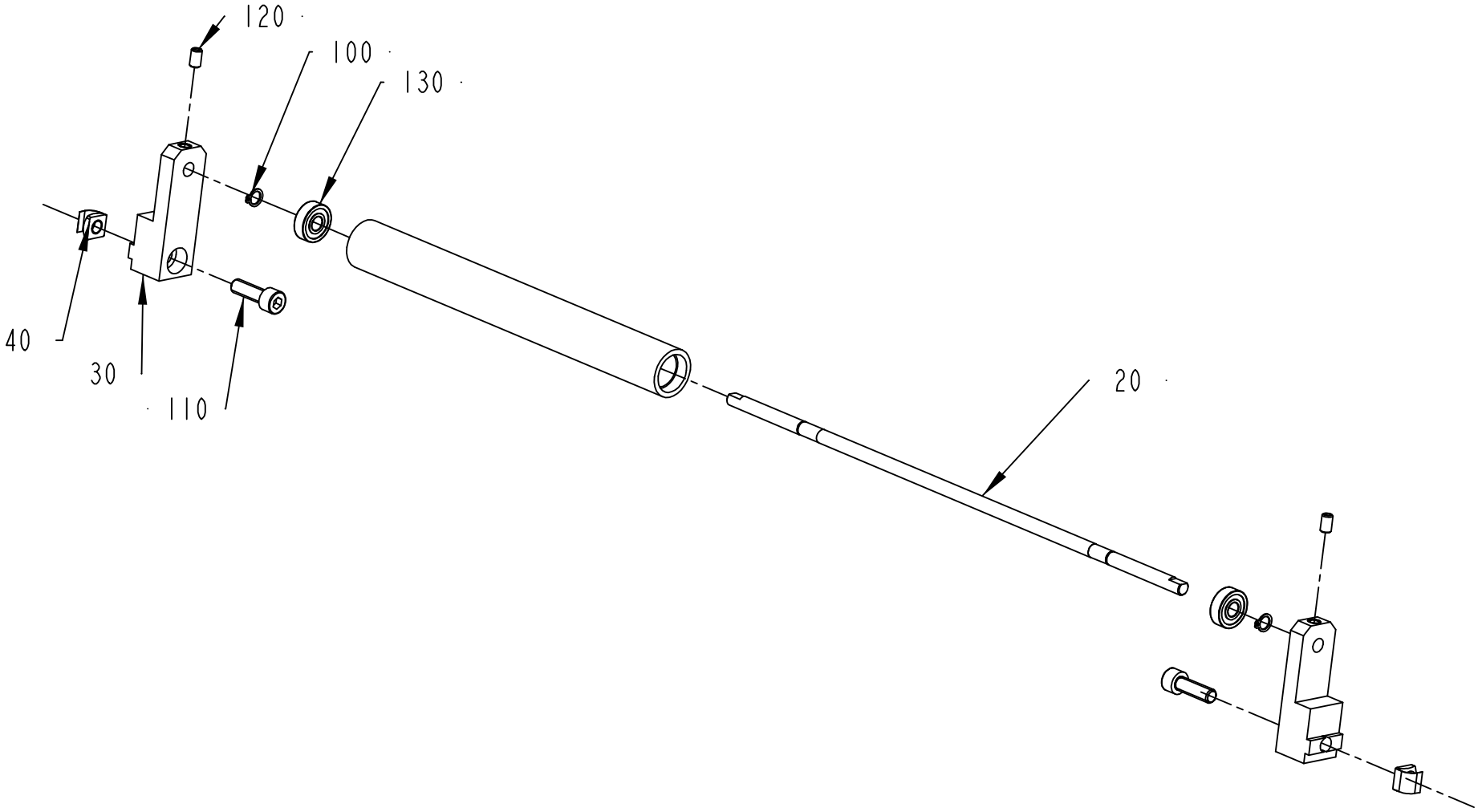

1498756-1
ECM 99196

ECM: 117145 - 20030113
Group number: 1498756-0100
Assembly Drawing: 1498756-1_1_AB

Pos	Part No	UN	Qty	Description	Page No
-					
010	1511307-0000		1	ROLLER	
020	1499517-0000		1	SHAFT	
030	2506480-0000		2	HOLDER	
040	1511310-0000		2	NUT	
050	2570392-0000		2	RETAINING RING	
110	312115-0453		2	SCREW ISO4762 M8X25 A4	
120	312318-0364		2	SCREW ISO4029 M6X10 A4	
130	321302-0298		2	BALL BEARING, 8X22X7 MM	
140	312311-0285		2	SCREW ISO4028 M4X6 FZB	

Pos	Part No	UN	Qty	Description	Page No

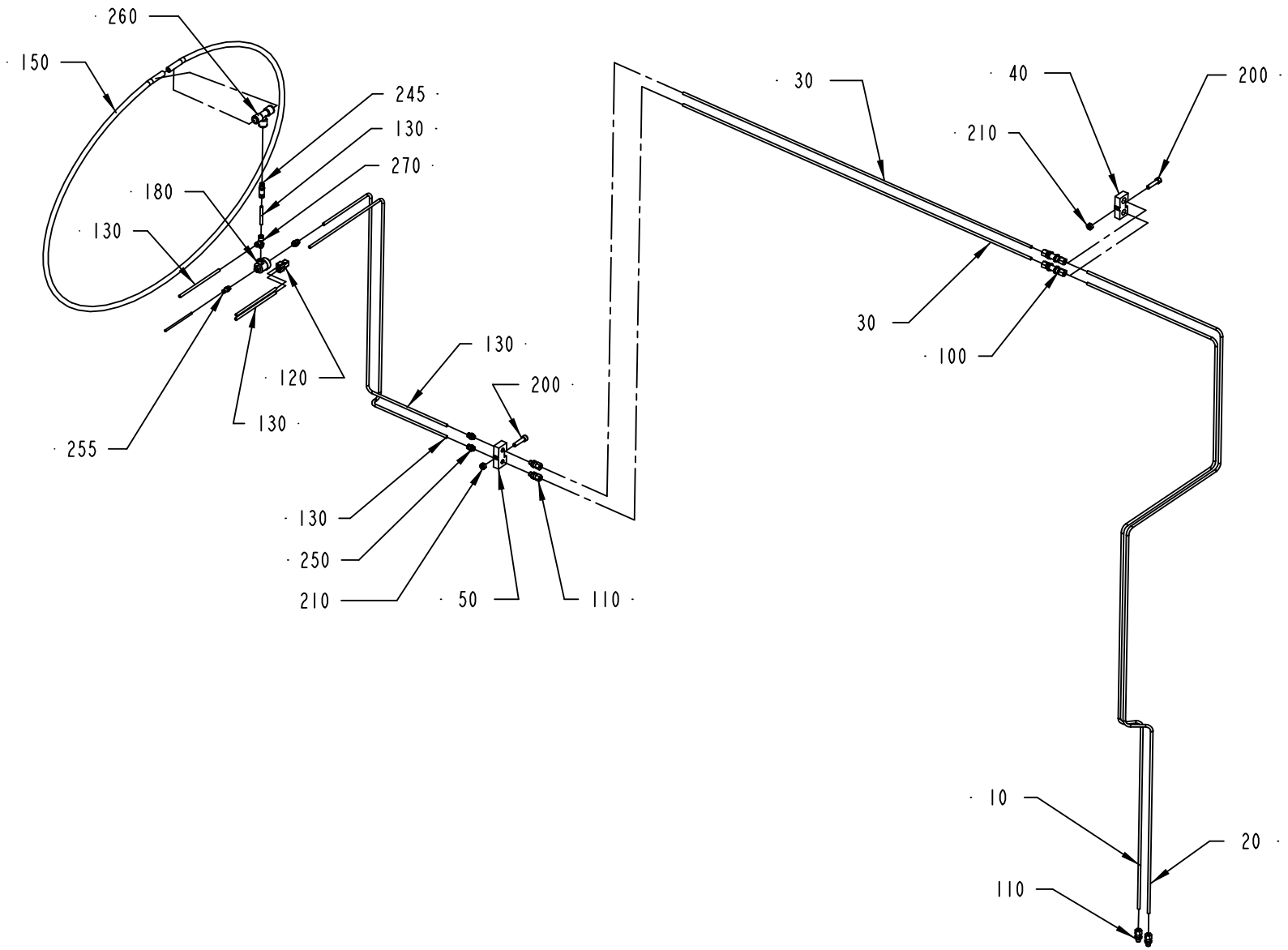

580335-2
ECM 99196

ECM: 116927 - 20030113
Group number: 580335-0200
Assembly Drawing: 580335-2_1_AB

Pos	Part No	UN	Qty	Description	Page No
-					
010	1511460-0000		1	PIPE 1050	
020	1511461-0000		1	PIPE 1051	
030	1511462-0000		2	STRAIGHT PIPE	
040	1511463-0000		1	PIPE HOLDER	
050	1511464-0000		1	PIPE HOLDER	
100	90030-0066		2	CONN. BULKHEAD SV 6-L/SY	
110	90030-0184		2	CONN. STR. GA-6-G1/8	
120	90055-0100		1	Y-CONNECTION, 6-6	
130	90166-0081	M	4	TUBE 6 MM PA BLUE	
140	90166-0095	M	1	TUBE 4 MM PA BLUE	
150	90166-0068	MM	2500	TUBE 12 MM PA BLUE	
180	90235-0259		1	VALVE	
200	312115-0457		2	SCREW ISO4762 M8X35 A4	
210	312605-0318		2	HEXAGON NUT, M6M M8 A280	
245	342716-0210		1	REDUCER 6-12	
250	342722-0202		3	PIPE COUPLING 1/8" D=6MM	
255	342722-0199		1	STRAIGHT COUPLING	
260	342748-0109		1	T-CONNECTION 12MM	
270	342772-0113		1	ELBOW FITTING, 6 - G1/8	
300	359000-0400		14	MARKING CO2/4"0"	
310	359000-0401		14	MARKING COLLAR 2/4 "1" YELLOW	
320	359000-0405		14	MARKING CO2/4"5"	
330	359000-0404		7	MARKING COLLAR PA2/4 "4" YELLOW	
340	359000-0402		7	MARKING COLLAR 2/4 "2" YELLOW	

Pos	Part No	UN	Qty	Description	Page No

Machine Type | Group Description | Used-In | Group Number | Page No

Tetra Pak

SPC
Spare Parts Catalogue

This page is intentionally left blank.

ECM: 104338 - 20030113
Group number: 648156-0100
Assembly Drawing:

Pos	Part No	UN	Qty	Description	Page No
-					
010	1549295-0100		1	MACHINE BODY	**8-5**
020	1549296-0100		1	COVER PLATE	**8-9**
030	1549305-0100		1	COVER	**8-11**
040	1549300-0100		1	PAPER MAGAZINE	**8-13**
050	579241-0200		1	DATING UNIT	**8-17**
060	2501836-0100		1	SPLICING DEVICE	**8-49**
070	979381-0100		1	PAPER REEL HOLDER	**8-61**
080	1549480-0100		1	ELECTRIC EQUIPMENT	**8-63**

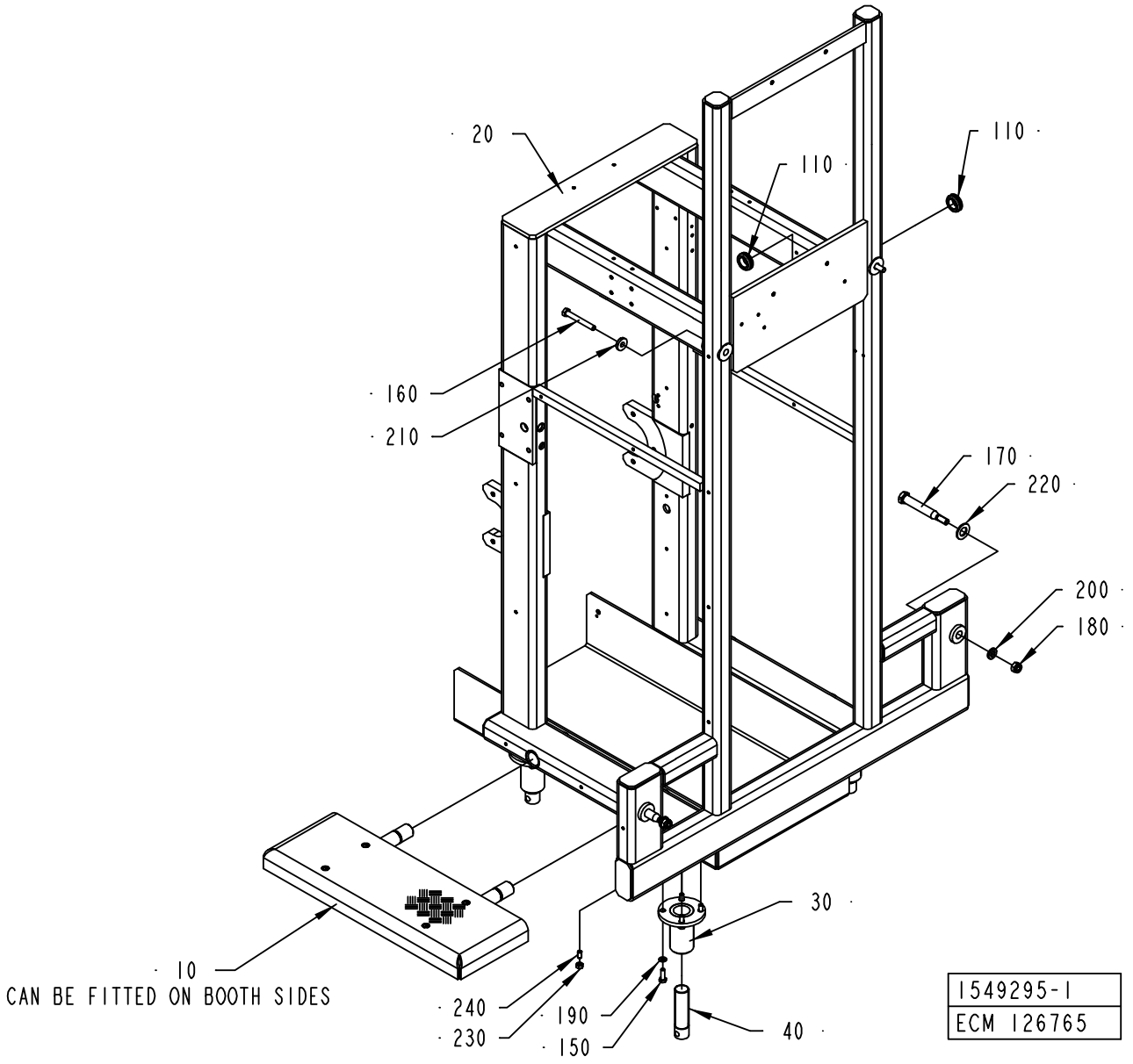
20
110
110
160
210
170
220
200
180
30
10
CAN BE FITTED ON BOOTH SIDES
240
230
190
150
40
1549295-1
ECM 126765

ECM: 132153 - 20031013
Group number: 1549295-0100
Assembly Drawing: 1549295-1_1_AB

Pos	Part No	UN	Qty	Description	Page No
-					
010	1558320-0100		1	PLATFORM	**8-7**
020	1549294-0000		1	MACHINE BODY	
030	469095-0000		4	HOLDER	
040	469096-0000		4	LEG	
110	90458-1228		2	LEAD-IN, BUSHING, DA 230/300/60	
150	312105-0453		16	SCREW M6S ISO 4017 M8X25 A480	
160	312105-0507		2	SCREW M6S ISO 4014 M10X80 A480	
170	1367022-0000		2	ALIGNMENT SCREW	
180	312812-0322		2	HEXAGON NUT, NY-LOCK M12 A480	
190	315105-0165		16	WASHER BRB8,4X16RFR	
200	315115-0178		2	WASHER PLAIN, TBRB 13/24 H=4	
210	315125-0173		2	WASHER TBRSB 10,5X28X6 A4	
220	315105-0191		2	WASHER PLAIN, BRB, 20/36 H=3	
230	312605-0318		2	HEXAGON NUT, M6M M8 A280	
240	90287-0112		2	SCREW SPRINGLOAD. SLOTTED HEAD M8X16	

Pos	Part No	UN	Qty	Description	Page No

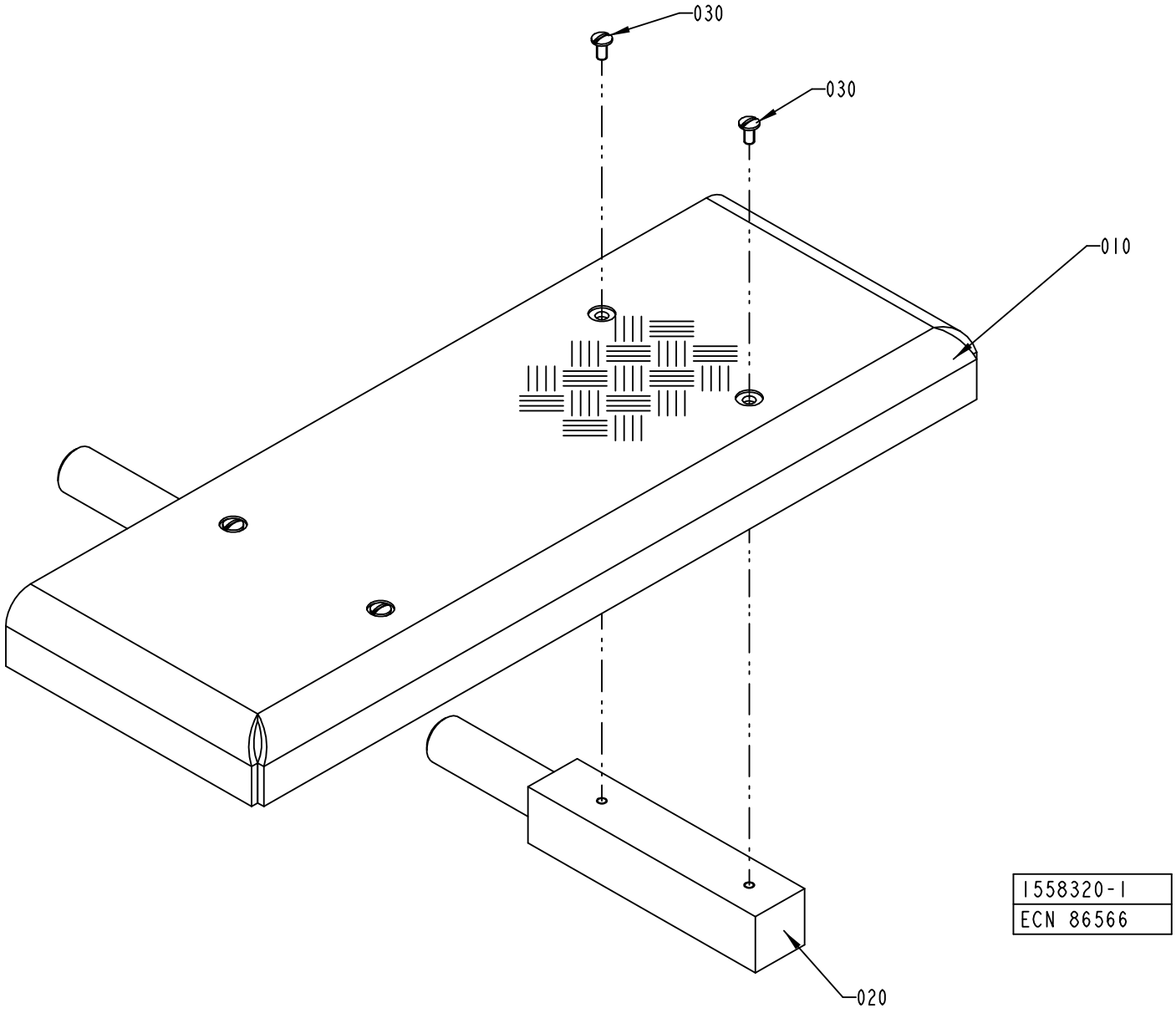
030
030
010
020
1558320-1
ECN 86566

ECM: 86574 - 20020111
Group number: 1558320-0100
Assembly Drawing: 1558320-1_1_AA

Pos	Part No	UN	Qty	Description	Page No
-					
010	1558321-0000		1	COVER PLATE	
020	1558322-0000		2	JOINT BOLT	
030	90287-0075		4	SCREW SLOT. PAN HEAD LKCS M6X12	

Pos	Part No	UN	Qty	Description	Page No

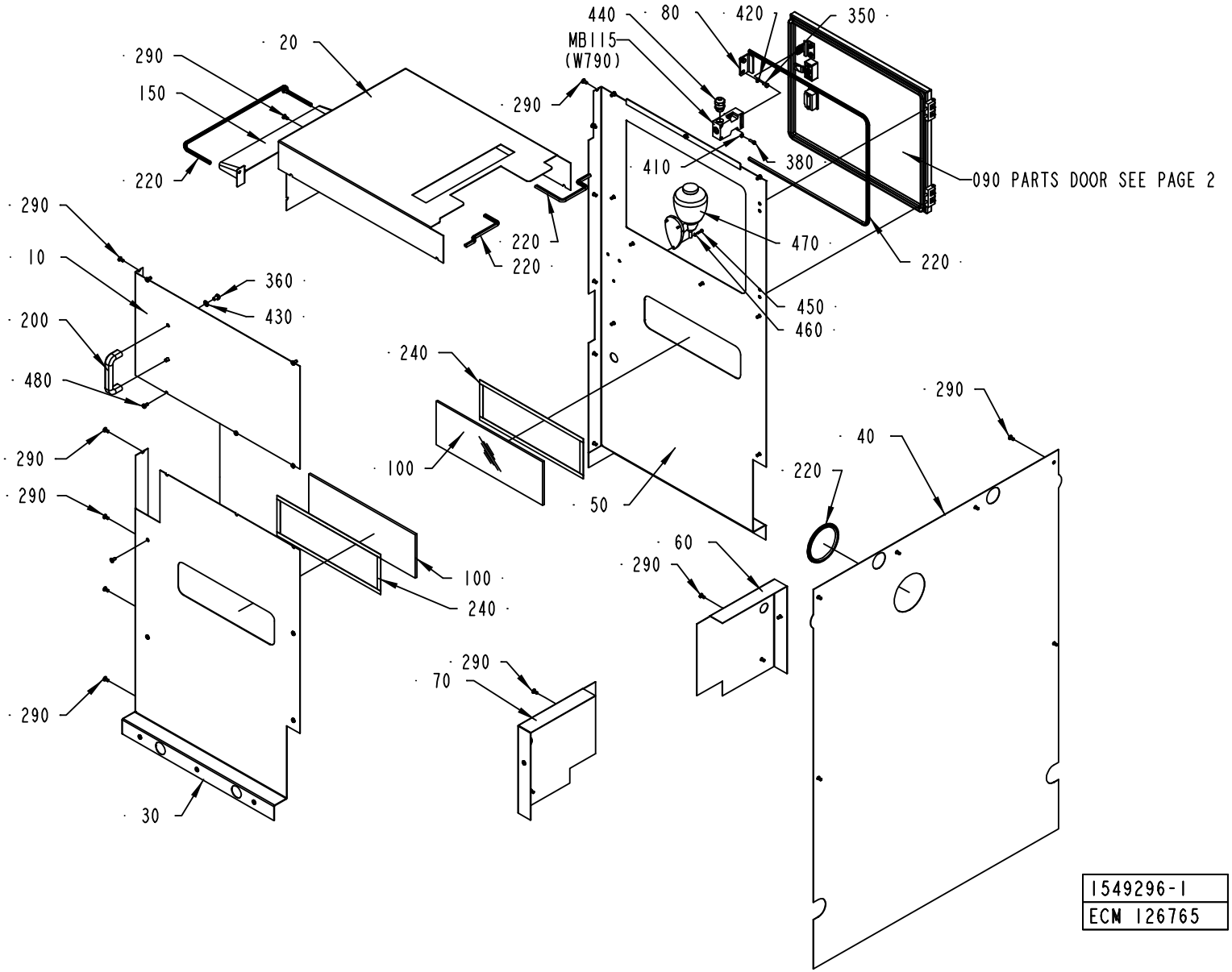
440
80
420
350
MB115
(W790)
20
290
150
290
220
410
380
090 PARTS DOOR SEE PAGE 2
220
220
470
220
290
10
360
430
450
460
200
240
480
290
290
100
50
290
40
220
60
290
100
240
290
70
290
30
1549296-1
ECM 126765

ECM: 126835 - 20031013
Group number: 1549296-0100
Assembly Drawing: 1549296-1_1_AC

Pos	Part No	UN	Qty	Description	Page No
-					
010	1549299-0000		1	PLATE	
020	1549483-0000		1	PLATE	
030	1549484-0000		1	PLATE	
040	1549485-0000		1	PLATE	
050	1549486-0000		1	PLATE	
060	1549487-0000		1	PLATE	
070	1549488-0000		1	PLATE	
080	1549489-0000		1	BRACKET	
090	1549490-0000		1	DOOR	
100	2500050-0000		2	GLASS	
110	975917-0000		1	KEY FOR SAFETY SWITCH 90044-103	
120	988685-0000		2	PIN	
130	1035792-0000		2	E-HINGE	
140	1035794-0000		4	BLOCKING PIECE	
150	2551088-0000		1	COVER	
200	90017-0022		1	HANDLE, NO. EL-037311	
220	90143-0060	MM	7000	EDGE STRIP 9,5X6,3MM BLACK PVC	
230	90143-0068	M	1	RUBBERSTRIP EMKA 1011-06	
240	90144-0072	M	2	TAPE SCOTCH VHBS 4945 W=12,7MM	
250	90237-0128		1	LOCK CYLINDER, 1109-U3	
260	90237-0150		1	TURNING HANDLE, NO. 1125-U190-0A	
270	90237-0155		1	LOCK ADAPTER, 1121-U40	
280	90237-0156		1	LOCK BOLT, 1000-16	
290	90287-0075		45	SCREW SLOT. PAN HEAD LKCS M6X12	
300	90237-0154		1	LOCK HOUSING, 1121-U60-0C	
350	312105-0366		2	SCREW M6S M6X12 A280	
360	312105-0447		2	SCREW M6S ISO 4017 M8X12 A480	
370	312115-0327		4	SCREW ISO4762 M5X12 A4	
380	312115-0329		2	SCREW ISO4762 M5X16 A4	
390	312115-0368		4	SCREW ISO4762 M6X16 A4	
400	312605-0316		2	HEXAGON NUT, M6M M6 A280	
410	315105-0146		6	BRICKA BRB5,3X10RFR	
420	315105-0153		4	WASHER BRB6,4X12RFR	
430	315105-0165		2	WASHER BRB8,4X16RFR	
440	90458-0315		1	CABLE GLAND, M20X1,5, NO.5311 1120	
450	312105-0293		3	SCREW M6S ISO 4017 M4X16 A480	
460	315105-0136		3	WASHER BRB4,3XRFR	
470	90243-0133		1	CONTAINER	
480	90287-0316		5	SCREW	
MB115	90459-0472		1	KEY SAF.SW. AZ 16 02ZVRK-M20-2152-2254	

Pos	Part No	UN	Qty	Description	Page No

Machine Type | Group Description | Used-In | Group Number | Page No

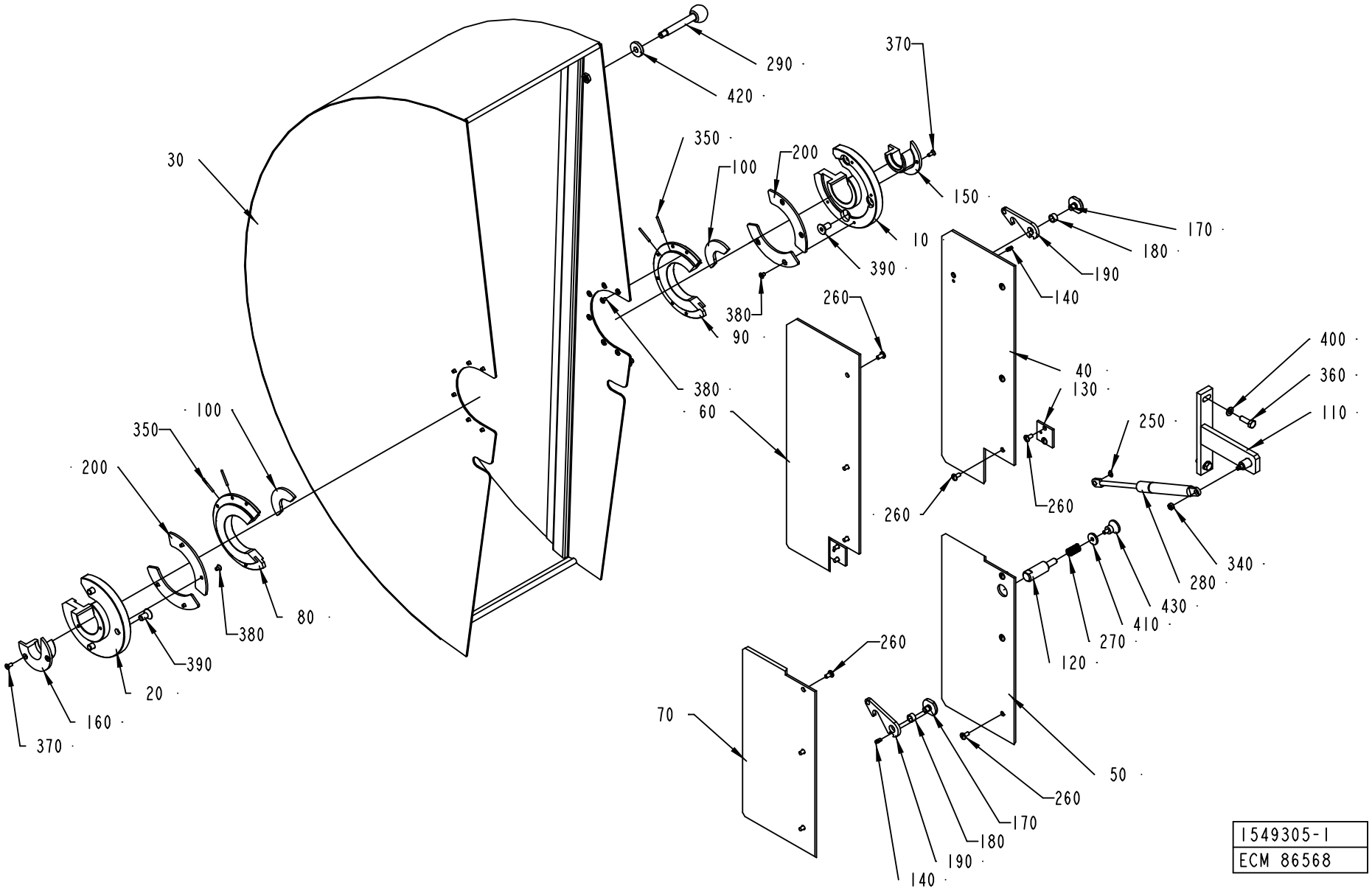
290
420
370
350
100
200
150
30
10
170
180
190
140
390
380
90
260
400
360
110
250
40
130
380
60
260
260
340
280
430
410
270
120
260
70
50
260
170
180
190
140
370
160
20
390
380
80
100
350
200
1549305-1
ECM 86568

ECM: 86576 - 20020111
Group number: 1549305-0100
Assembly Drawing: 1549305-1_1_AA

Pos	Part No	UN	Qty	Description	Page No
-					
010	1549297-0000		1	REEL HOLDER	
020	1549298-0000		1	REEL HOLDER	
030	1549306-0000		1	COVER	
040	1549476-0000		1	PLATE	
050	1549477-0000		1	PLATE	
060	1549478-0000		1	PLATE	
070	1549479-0000		1	PLATE	
080	1549481-0000		1	REEL HOLDER	
090	1549482-0000		1	REEL HOLDER	
100	1549491-0000		2	REEL HOLDER	
110	1549492-0000		1	HOLDER	
120	1558313-0000		1	SHAFT	
130	1558314-0000		2	BRACKET	
140	1013-0000		2	SHAFT	
150	440252-0000		1	SLEEVE	
160	440253-0000		1	SLEEVE	
170	440271-0000		2	SCREW	
180	457358-0000		2	SLEEVE	
190	476117-0000		2	CATCH	
200	2508118-0000		4	FIXING RING	
250	90141-0015		1	RETAINING RING FOR SHAFT DIN 471 8 A2	
260	90287-0075		16	SCREW SLOT. PAN HEAD LKCS M6X12	
270	90335-0036		1	COMP. SPRING 22450, 1,6X14,1X24	
280	90347-0108		1	GAS SPRING NO. 03-08-100-084174	
290	90458-1226		1	HANDLE, NO. GN 310-12-100-A-NI	
340	312605-0316		8	HEXAGON NUT, M6M M6 A280	
350	311103-0242		4	PARALLEL PIN ISO 2338 3M6X30 A1	
360	312105-0453		4	SCREW M6S ISO 4017 M8X25 A480	
370	312155-0327		4	SCREW EN 10642 MF6S M5X12 A480	
380	312155-0323		20	SCREW EN 10642 MF6S M5X8 A480	
390	312155-0491		6	SCREW EN 10642 MF6S M10X20 A480	
400	315105-0165		2	WASHER BRB8,4X16RFR	
410	315125-0153		1	WASHER TBRSB 6,4X22X4 A4	
420	315125-0173		1	WASHER TBRSB 10,5X28X6 A4	
430	318871-0104		1	KNOB CIRCULAR, EXT THREAD, NO. 8302-6118	

Pos	Part No	UN	Qty	Description	Page No

PAPER MAGAZINE

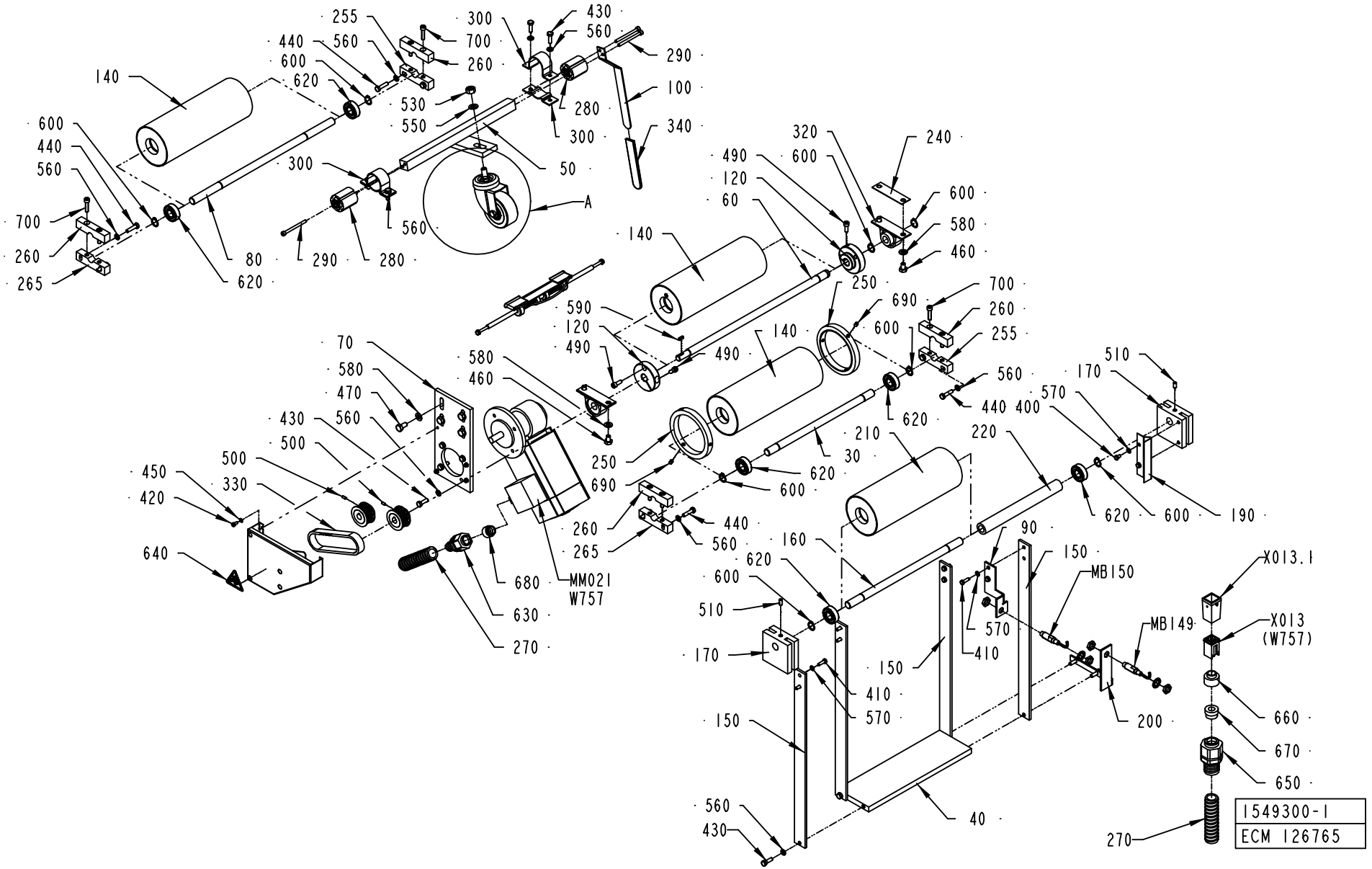

ECM: 126767 - 20031013
Group number: 1549300-0100
Assembly Drawing: 1549300-1_1_AC

Pos	Part No	UN	Qty	Description	Page No
-					
010	577800-0200		1	PAPER GUIDE	**8-15**
030	1549302-0000		1	SHAFT	
040	1549303-0000		1	PLATE	
050	1549304-0000		1	ARM	
060	2501613-0000		1	SHAFT	
070	1549307-0000		1	BRACKET	
080	1549474-0000		1	SHAFT	
090	1549475-0000		1	BRACKET	
100	1549493-0000		1	HANDSPIKE	
110	1558319-0000		2	BUSHING	
120	2501362-0000		2	CLAMP RING	
130	2555116-0000		1	WHEEL	
140	574932-0000		3	BENDING ROLLER	
150	2525340-0000		4	BRACKET	
160	574937-0000		1	SHAFT	
170	574940-0000		2	BLOCKING PIECE	
180	574945-0000		2	TOOTHED PULLY	
190	574946-0000		1	FLAG	
200	576274-0000		1	BRACKET	
210	979555-0000		1	WEB TENSION ROLLER	
220	979946-0000		1	STEEL TUBE	
230	2509543-0000		1	PROTECTION	
240	2547005-0000		2	LACE	
250	1140996-0000		2	FLANGE	
255	2610111-0000		2	BEARING BRACKET	
260	2610112-0000		4	BEARING BRACKET	
265	2610122-0000		2	BEARING BRACKET	
270	90152-0051	M	2	SPIRAL CONDUIT, 25X18, UL 1816	
280	90458-1240		2	RUBBERSPRING DK-A 15X40	
290	90458-0058		4	SCREW M5X60 A280	
300	90458-1230		2	CLAMPING ELEMENT, DI=36 MM	
310	90458-1231		1	FORK HOLDER 913588/04	
320	90458-1232		2	BEARING BRACKET AY15	
330	90458-1233		1	TIMING BELT T10 340X16 MM	
340	90458-1234		1	PROTECTIVE CAP 2X20X1.2X100	
400	312101-0323		2	SCREW M6S M5X8 FZB	
410	312105-0329		8	SCREW M6S ISO 4017 M5X16 A480	
420	312115-0287		4	SCREW ISO4762 M4X8 A4	
430	312105-0370		12	SCREW M6S ISO 4017 M6X20 A480	
440	312105-0372		8	SCREW M6S ISO 4017 M6X25 A480	
450	315105-0136		4	WASHER BRB4,3XRFR	
460	312105-0447		4	SCREW M6S ISO 4017 M8X12 A480	
470	312105-0449		4	SCREW M6S ISO 4017 M8X16 A480	
480	312115-0495		1	SCREW ISO4762 M10X30 A4	
490	312115-0368		3	SCREW ISO4762 M6X16 A4	
500	312318-0287		2	SCREW ISO4029 M4X8 A4	
510	312318-0366		2	SCREW ISO4029 M6X12 A4	
530	312605-0320		1	HEXAGON NUT, M6M M10 A280	
540	312625-0320		1	HEXAGON THIN NUT, EN 24035 ML6M M10 A4	
550	315105-0171		1	WASHER BRB10X18	
560	315105-0153		20	WASHER BRB6,4X12RFR	
570	315105-0146		10	BRICKA BRB5,3X10RFR	
580	315105-0165		8	WASHER BRB8,4X16RFR	
590	315705-0166		1	PARALLEL KEY W. ROUND ENDS 4X4X12 MM	
600	315751-0112		8	RETAINING RING FOR SHAFT DIN 471 15 A2	
610	321308-0202		2	BALL BEARING, 15X32X9 MM	
620	321313-0102		6	BALL BEARING, 15X35X11 MM	
630	353247-0008		1	GLAND, PG13,5, 15254P13S05UL16	
640	359705-0001		1	WARNING SIGN ISO, ENTAGLEMENT	
650	353243-0005		1	EXTENDED WITHOUT INSERT, PG16	
660	90089-0007		1	REDUCING SLEEVE, PR18,6/PR22,5	
670	353249-0013		1	INSERT, SINGEL HOLE, EK 154/13	
680	90459-1104		1	REDUCER, SKINDICHT-ME 11/13,5	
690	312318-0362		6	SCREW ISO4029 M6X8 A4	
700	312115-0372		8	SCREW ISO4762 M6X25 A4	
MB149	90458-0675		1	PROXIMITY SENSOR, E2EG-X5MB1-5M	
MB150	90458-0675		1	PROXIMITY SENSOR, E2EG-X5MB1-5M	
MM021	90458-1493		1	GEARS, WORM MOTOR IGL 80-60 + VE31-GR5	
W757	90220-0104	M	3	SCR. CABLE 4X1,5MM2	
X013	90459-2412		1	CONNECTOR 4 POLE + EARTH	
X013.1	90110-0371		1	PLUG HOOD	

Machine Type	Group Description	Used-In	Group Number	Page No

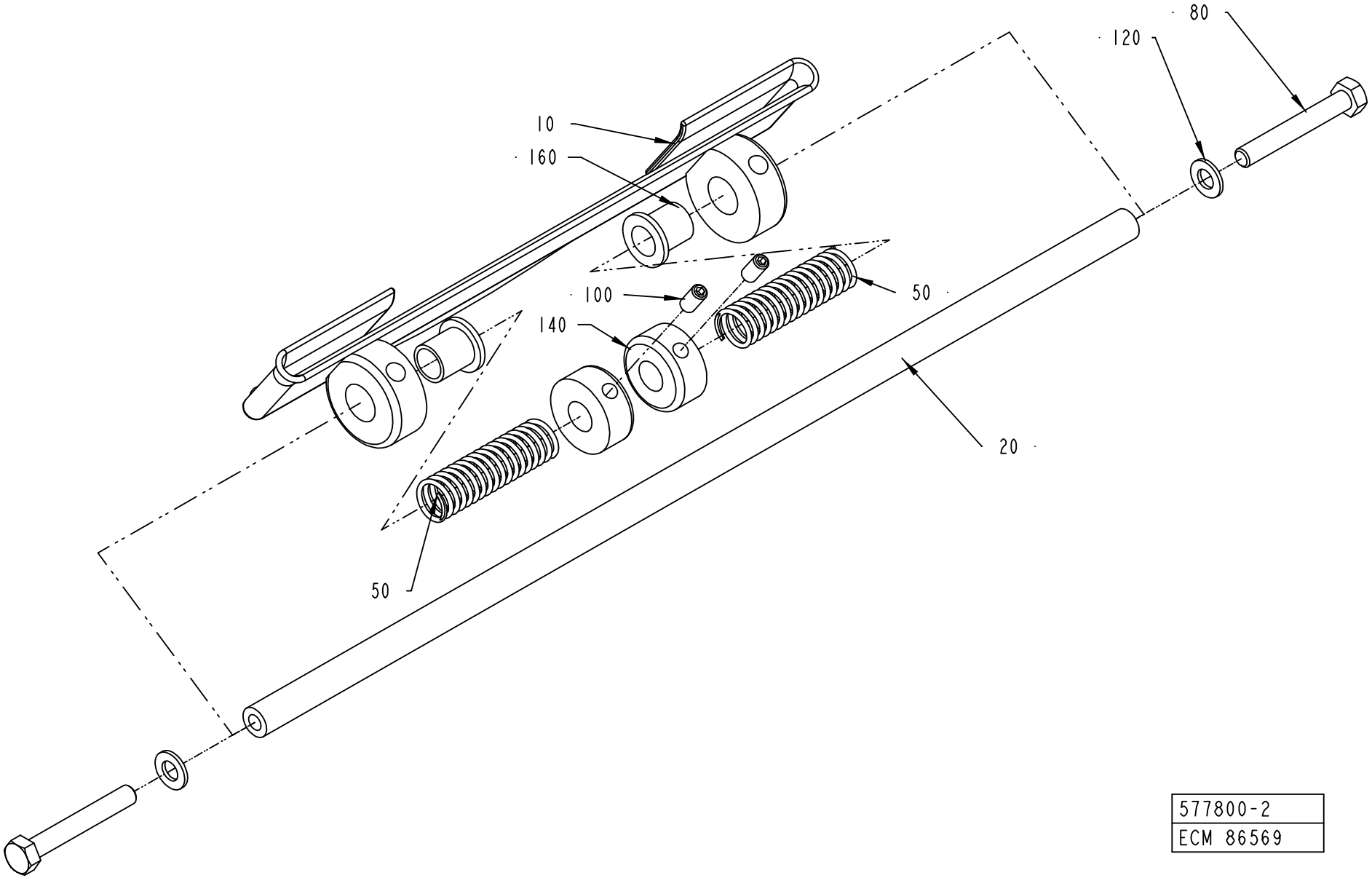

577800-2
ECM 86569

ECM: 112927 - 20020731
Group number: 577800-0200
Assembly Drawing: 577800-2_1_AA

Pos	Part No	UN	Qty	Description	Page No
TBA 0125S, TBA 0100B					
010	578685-0000		1	GUIDING ARBOR	
TBA 0160S, TBA 0200S					
010	577798-0000		1	GUIDING ARBOR	
TBA 0250S, TBA 0200M					
010	578687-0000		1	GUIDING ARBOR	
TBA 0330S, TBA 0300S, TBA 0180B, TBA 0200B, TBA 0284B, TBA 0250B					
010	578686-0000		1	GUIDING ARBOR	
Common Parts					
020	577799-0000		1	SHAFT	
050	752085-0000		2	SPRING	
080	312105-0337		2	SCREW M6S ISO 4014 M5X35 A480	
100	312318-0287		2	SCREW ISO4029 M4X8 A4	
120	315105-0146		2	BRICKA BRB5,3X10RFR	
140	315742-0104		2	RETAINING RING 8 SMS 199	
160	90240-0121		2	FLANGE BUSHING, 8X10X12 MM	

Pos	Part No	UN	Qty	Description	Page No

This page is intentionally left blank.

ECM: 104335 - 20030113
Group number: 579241-0200
Assembly Drawing:

Pos	Part No	UN	Qty	Description	Page No
NOPT TBA 0100B, NOPT TBA 0200M, NOPT TBA 0200S, NOPT TBA 0125S, NOPT TBA 0160S, NOPT TBA 0250S, PT19 TBA 0125S, PT19 TBA 0160S, PT19 TBA 0180B, PT19 TBA 0200B, PT19 TBA 0100B, PT19 TBA 0250S, PT19 TBA 0284B, PT19 TBA 0300S, PT19 TBA 0330S, PT19 TBA 0200M, PT19 TBA 0200S, PT19 TBA 0250B					
040	752646-0400		1	DATING UNIT	**8-19, 8-21, 8-23**
NOPT TBA 0180B, NOPT TBA 0200B, NOPT TBA 0250B, NOPT TBA 0330S, NOPT TBA 0284B, NOPT TBA 0300S					
030	752645-0400		1	DATING UNIT	**8-39, 8-41**

Pos	Part No	UN	Qty	Description	Page No

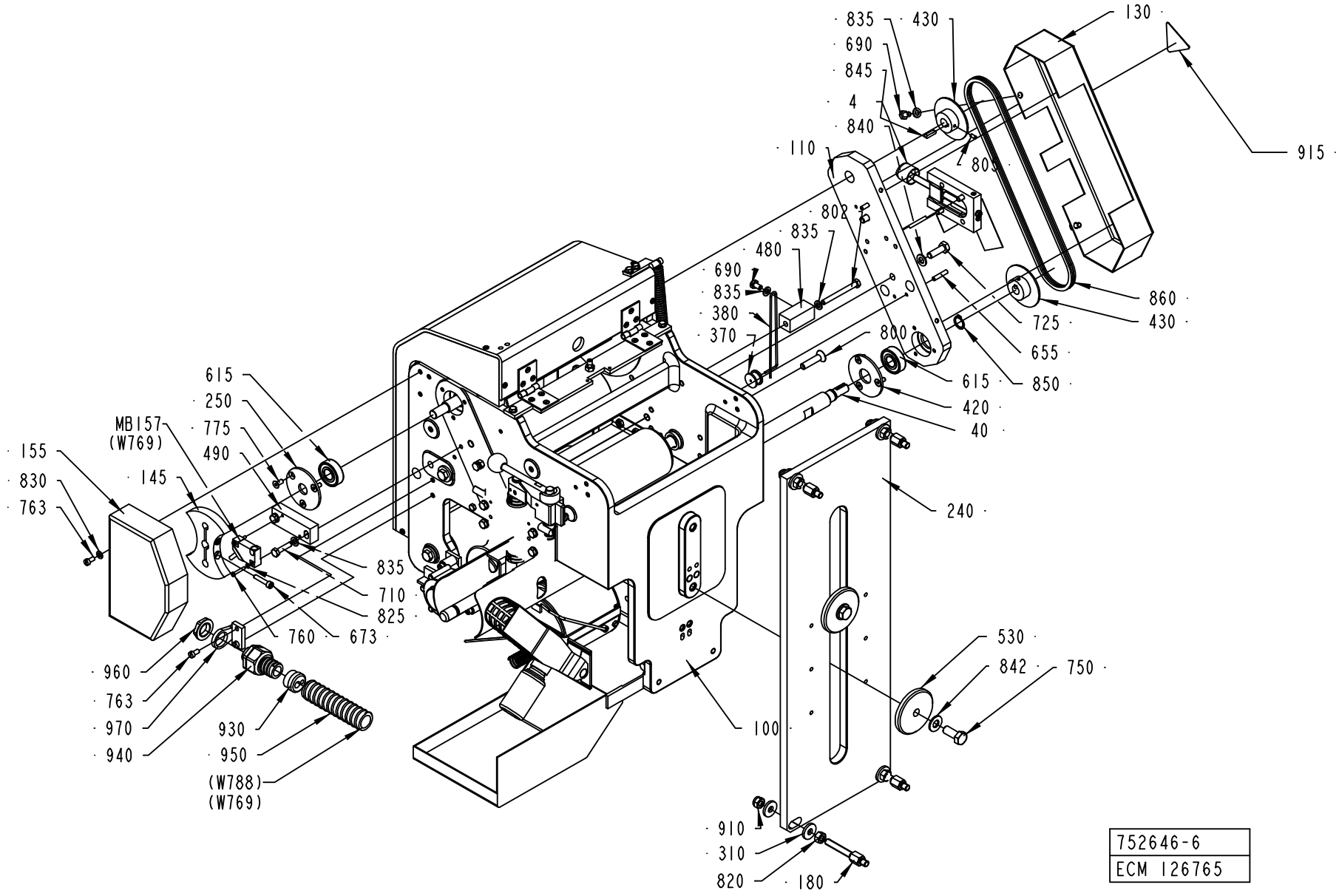

752646-6
ECM 126765

ECM: 132152 - 20031013
Group number: 752646-0400
Assembly Drawing: 752646-6_1_AC

This list covers pages from 8-18 to 8-23

Pos	Part No	UN	Qty	Description	Page No
TBA 0100B					
010	752542-0002		1	BENDING ROLLER	
020	752543-0002		1	SHAFT	
030	456327-0000		2	CREASE BAR	
040	752536-0002		1	SHAFT	
050	979769-0000		2	SPACER	
060	456334-0000		1	SHAFT	
070	90166-0059	MM	37	HOSE PVC 12/16MM TRANSP.	
075	90166-0059	MM	37	HOSE PVC 12/16MM TRANSP.	
520	752541-0000		1	CANTILEVER	
670	311103-0357		1	PARALLEL PIN ISO 2338 6M6X30 A1	
735	312105-0457		1	SCREW M6S ISO 4014 M8X35 A480	
TBA 0125S					
010	752542-0002		1	BENDING ROLLER	
020	752543-0002		1	SHAFT	
030	456327-0000		2	CREASE BAR	
040	752536-0002		1	SHAFT	
050	441556-0007		2	SPACER	
060	456334-0000		1	SHAFT	
070	90166-0059	MM	37	HOSE PVC 12/16MM TRANSP.	
075	90166-0059	MM	37	HOSE PVC 12/16MM TRANSP.	
520	752541-0000		1	CANTILEVER	
670	311103-0357		1	PARALLEL PIN ISO 2338 6M6X30 A1	
735	312105-0457		1	SCREW M6S ISO 4014 M8X35 A480	
TBA 0160S					
010	752542-0002		1	BENDING ROLLER	
020	752543-0002		1	SHAFT	
030	441554-0000		2	CREASE BAR	
040	752536-0001		1	SHAFT	
040	752536-0002		1	SHAFT	
050	441556-0011		2	SPACER	
060	456334-0000		1	SHAFT	
070	90166-0059	MM	37	HOSE PVC 12/16MM TRANSP.	
075	90166-0059	MM	37	HOSE PVC 12/16MM TRANSP.	
520	752541-0000		1	CANTILEVER	
670	311103-0357		1	PARALLEL PIN ISO 2338 6M6X30 A1	
735	312105-0457		1	SCREW M6S ISO 4014 M8X35 A480	
TBA 0180B					
010	752542-0001		1	BENDING ROLLER	
020	752543-0001		1	SHAFT	
030	456767-0000		2	CREASE BAR	
040	752536-0001		1	SHAFT	
050	441556-0006		2	SPACER	
060	256400-0000		1	SHAFT	
070	90166-0059	MM	24	HOSE PVC 12/16MM TRANSP.	
075	90166-0059	MM	24	HOSE PVC 12/16MM TRANSP.	
520	752541-0000		1	CANTILEVER	
670	311103-0357		1	PARALLEL PIN ISO 2338 6M6X30 A1	
735	312105-0457		1	SCREW M6S ISO 4014 M8X35 A480	
TBA 0200B					
010	752542-0001		1	BENDING ROLLER	
020	752543-0001		1	SHAFT	
030	456767-0000		2	CREASE BAR	
040	752536-0001		1	SHAFT	
050	441556-0004		2	SPACER	
060	256400-0000		1	SHAFT	
070	90166-0059	MM	24	HOSE PVC 12/16MM TRANSP.	
075	90166-0059	MM	24	HOSE PVC 12/16MM TRANSP.	
520	752541-0000		1	CANTILEVER	
670	311103-0357		1	PARALLEL PIN ISO 2338 6M6X30 A1	
735	312105-0457		1	SCREW M6S ISO 4014 M8X35 A480	
TBA 0200M					
010	752542-0003		1	BENDING ROLLER	
020	752543-0003		1	SHAFT	
030	441554-0000		2	CREASE BAR	
040	752536-0003		1	SHAFT	
050	441556-0002		2	SPACER	
060	574443-0000		1	SHAFT	
070	90166-0059	MM	30	HOSE PVC 12/16MM TRANSP.	
075	90166-0059	MM	30	HOSE PVC 12/16MM TRANSP.	
080	574444-0000		1	SPACER	
520	574445-0000		1	CANTILEVER	
670	311103-0361		1	PARALLEL PIN ISO 2338 6M6X40 A1	
736	312105-0460		1	SCREW M6S ISO 4014 M8X45 A480	
TBA 0200S					
010	752542-0002		1	BENDING ROLLER	
020	752543-0002		1	SHAFT	
030	441554-0000		2	CREASE BAR	
040	752536-0002		1	SHAFT	
050	441556-0009		2	SPACER	
060	456334-0000		1	SHAFT	
070	90166-0059	MM	37	HOSE PVC 12/16MM TRANSP.	
075	90166-0059	MM	37	HOSE PVC 12/16MM TRANSP.	
520	752541-0000		1	CANTILEVER	

Machine Type | Group Description | Used-In | Group Number | Page No

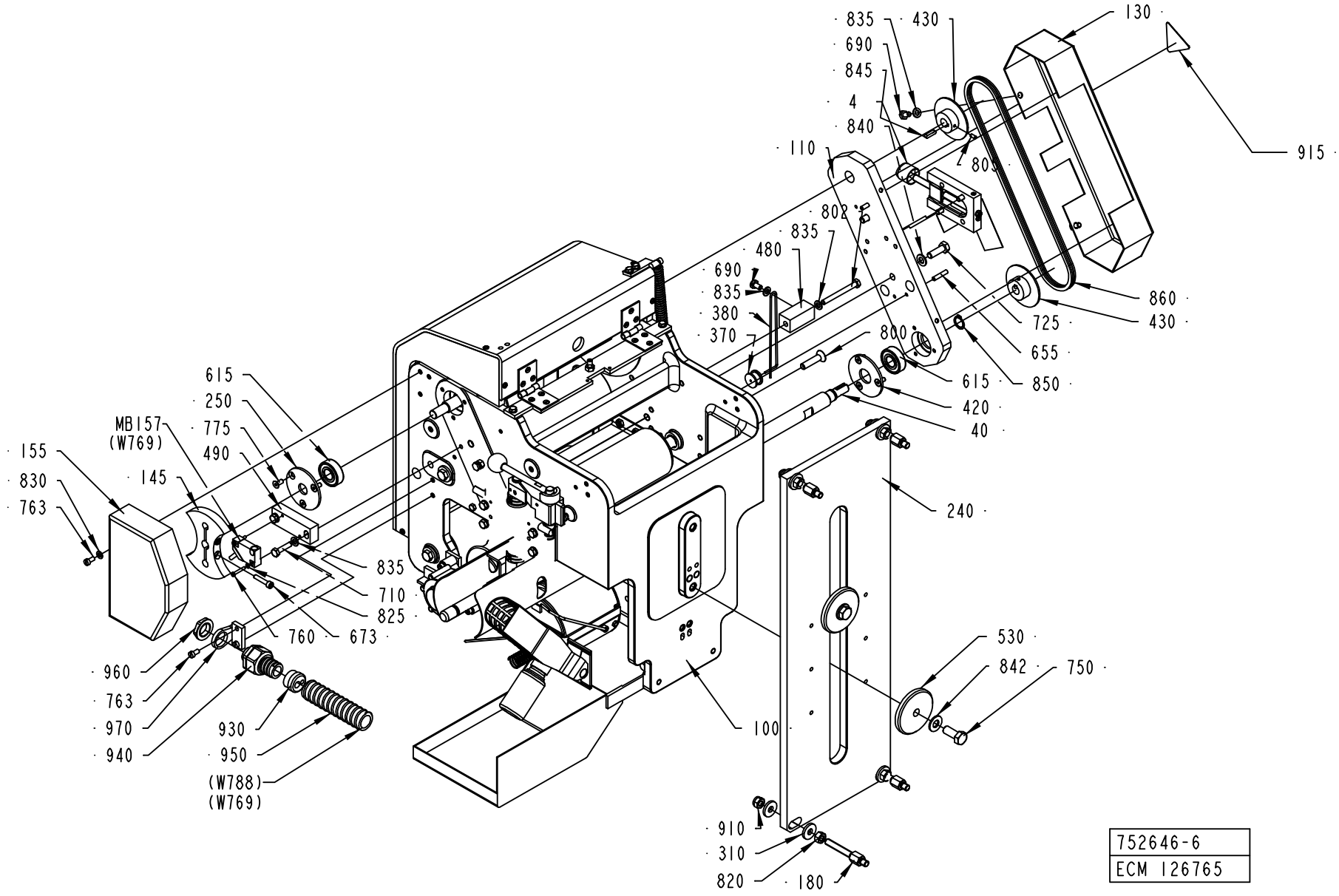
835
430
690
845
4
840
110
130
915
805
802
835
480
690
835
380
370
800
860
725
430
655
615
850
420
40
240
615
250
775
490
MB157
(W769)
145
155
830
763
835
710
825
760
673
960
763
970
940
930
950
(W788)
(W769)
100
530
842
750
910
310
820
180
752646-6
ECM 126765

Pos	Part No	UN	Qty	Description	Page No
TBA 0200S (Cont'd)					
670	311103-0357		1	PARALLEL PIN ISO 2338 6M6X30 A1	
735	312105-0457		1	SCREW M6S ISO 4014 M8X35 A480	
TBA 0250B					
010	752542-0001		1	BENDING ROLLER	
020	752543-0001		1	SHAFT	
030	456767-0000		2	CREASE BAR	
040	752536-0001		1	SHAFT	
050	441556-0002		2	SPACER	
060	256400-0000		1	SHAFT	
065	299643-0000		2	WASHER	
070	90166-0059	MM	24	HOSE PVC 12/16MM TRANSP.	
075	90166-0059	MM	24	HOSE PVC 12/16MM TRANSP.	
520	752541-0000		1	CANTILEVER	
670	311103-0357		1	PARALLEL PIN ISO 2338 6M6X30 A1	
735	312105-0457		1	SCREW M6S ISO 4014 M8X35 A480	
TBA 0250S					
010	752542-0003		1	BENDING ROLLER	
020	752543-0003		1	SHAFT	
030	441554-0000		2	CREASE BAR	
040	752536-0003		1	SHAFT	
050	441556-0010		2	SPACER	
060	574443-0000		1	SHAFT	
070	90166-0059	MM	30	HOSE PVC 12/16MM TRANSP.	
075	90166-0059	MM	30	HOSE PVC 12/16MM TRANSP.	
080	574444-0000		1	SPACER	
520	574445-0000		1	CANTILEVER	
670	311103-0361		1	PARALLEL PIN ISO 2338 6M6X40 A1	
736	312105-0460		1	SCREW M6S ISO 4014 M8X45 A480	
TBA 0330S, TBA 0300S, TBA 0284B					
010	752542-0001		1	BENDING ROLLER	
020	752543-0001		1	SHAFT	
030	456767-0000		2	CREASE BAR	
040	752536-0001		1	SHAFT	
050	441556-0001		2	SPACER	
060	256400-0000		1	SHAFT	
070	90166-0059	MM	24	HOSE PVC 12/16MM TRANSP.	
075	90166-0059	MM	24	HOSE PVC 12/16MM TRANSP.	
520	752541-0000		1	CANTILEVER	
670	311103-0357		1	PARALLEL PIN ISO 2338 6M6X30 A1	
735	312105-0457		1	SCREW M6S ISO 4014 M8X35 A480	
Common Parts					
001	293684-0200		2	PRINTING WHEEL NSS	**8-25, 8-27**
002	440286-0300		1	INK UNIT NSS	**8-29**
003	751718-0100		1	HOLDER	**8-31**
004	543143-0100		1	ADJUSTMENT DEVICE	**8-33, 8-35**
005	1549584-0100		1	PAPER BRAKE	**8-37**
090	979790-0000		1	COVER	
100	752200-0000		1	CANTILEVER	
110	752526-0000		1	PLATE	
120	572252-0000		1	BRACKET	
130	752528-0000		1	COVER	
140	752527-0000		1	CANTILEVER	
145	491965-0000		1	CAM	
150	979544-0000		1	SPLASH PLATE	
155	556422-0000		1	PROTECTION	
160	752529-0000		1	BEARING COVER	
180	2531115-0000		4	SCREW	
240	752539-0000		1	PLATE	
245	572460-0000		1	SHEET	
250	752240-0000		1	LID	
270	752538-0000		2	SHAFT	
280	752642-0000		1	BRACKET	
290	572253-0000		1	SHEET	
300	752535-0000		1	SHAFT	
306	979709-0000		2	BENDING ROLLER	
310	28036-0000		12	WASHER	
320	2033-0011		6	WASHER	
330	265568-0000		4	DUST COVER	
340	32925-0000		1	CARRIER	
350	32926-0000		1	ROLL	
360	32927-0000		1	SHAFT	
370	33182-0000		1	ROLL	
380	752237-0000		1	SPRING	
410	256248-0001		2	LID	
420	256398-0000		1	LID	
430	752530-0000		2	SPROCKET	
440	256406-0000		2	GABLE PLATE	
450	752644-0000		2	SCREW	
460	256409-0000		6	WASHER	
470	257141-0000		2	RETAINING RING	
480	752531-0000		1	BRACKET	
490	752534-0000		1	PLATE	
530	253107-0000		2	WASHER	

Machine Type | Group Description | Used-In | Group Number | Page No

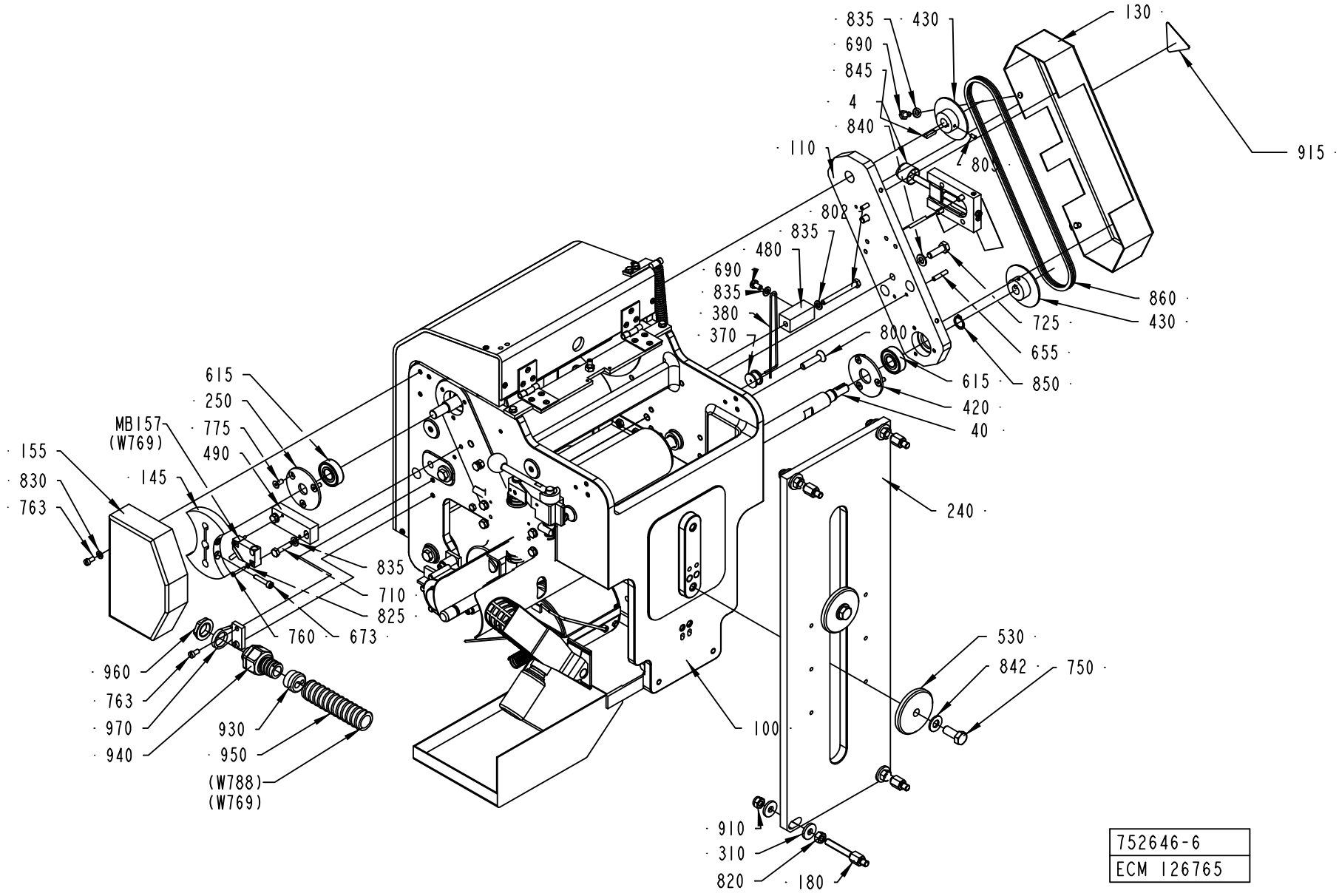
835
690
845
4
840
110
430
130
915
805
802
835
480
690
835
380
370
800
860
725
430
655
850
615
420
40
240
615
250
775
490
MB157
(W769)
145
155
830
763
835
710
825
760
673
960
763
970
940
930
950
(W788)
(W769)
100
530
842
750
910
310
820
180
752646-6
ECM 126765

Pos	Part No	UN	Qty	Description	Page No
Common Parts (Cont'd)					
540	752544-0001		6	SHIM	
550	752544-0002		6	SHIM	
555	979789-0000		1	SPRING HOLDER	
560	456817-0001		16	SHIM	
565	979788-0000		1	SPRING HOLDER	
590	572254-0000		1	HANDLE	
595	572255-0000		2	SPACER	
615	90458-1704		10	BALL BEARING, 15X35X11 MM	
630	90248-0026		2	HINGE, 1703-80X32	
640	90335-0041		1	TENSION SPRING 42350, 2X14X68	
645	312318-0372		1	SCREW ISO4029 M6X25 A4	
650	312605-0314		2	HEXAGON NUT, M6M M5 A280	
655	311103-0312		2	PARALLELL PIN, M6, 5X25 MM	
673	312115-0333		2	SCREW ISO4762 M5X25 A4	
675	312111-0471		1	SCREW HEX.SOCK.HD.MC6S-TT 8X100 88 FZ	
685	312105-0329		5	SCREW M6S ISO 4017 M5X16 A480	
686	312105-0331		4	SCREW M6S ISO 4017 M5X20 A480	
690	312105-0364		3	SCREW M6S ISO 4017 M6X10 A480	
700	312105-0366		4	SCREW M6S M6X12 A280	
705	312115-0372		2	SCREW ISO4762 M6X25 A4	
710	312105-0372		5	SCREW M6S ISO 4017 M6X25 A480	
725	312105-0453		2	SCREW M6S ISO 4017 M8X25 A480	
740	312105-0459		5	SCREW M6S ISO 4014 M8X40 A480	
750	312105-0493		2	SCREW M6S ISO 4017 M10X25 A480	
755	312109-0376		1	SCREW M6S ISO 4017 M6X35 A480	
760	312125-0230		2	SCREW ISO 1207 M3X20 A4	
761	312125-0329		2	SCREW ISO 1207 M5X16 A4	
763	312125-0325		4	SCREW ISO 1207 M5X10 A4	
765	312125-0366		4	SCREW ISO 1207 M6X12 A4	
770	312155-0291		6	SCREW EN 10642 MF6S M4X12 A480	
775	312155-0327		15	SCREW EN 10642 MF6S M5X12 A480	
800	312155-0457		2	SCREW EN 10642 MF6S M8X35 A480	
802	312105-0382		1	SCREW M6S ISO 4014 M6X60 A480	
805	312318-0287		2	SCREW ISO4029 M4X8 A4	
807	312318-0362		3	SCREW ISO4029 M6X8 A4	
810	312145-0285		6	SCREW ISO 2009 MFS M4X6 A4	
815	312605-0316		2	HEXAGON NUT, M6M M6 A280	
820	312605-0318		4	HEXAGON NUT, M6M M8 A280	
825	315105-0124		2	BRICKA BRB3,2X6RFR	
830	315105-0146		11	BRICKA BRB5,3X10RFR	
835	315105-0153		14	WASHER BRB6,4X12RFR	
840	315105-0165		5	WASHER BRB8,4X16RFR	
842	315105-0173		2	WASHER BRB10,5X22RFR	
845	315701-0169		2	PARALLEL KEY W. ROUND ENDS 4X4X18 MM	
850	315751-0112		1	RETAINING RING FOR SHAFT DIN 471 15 A2	
855	312145-0293		6	SCREW ISO 2009 MFS M4X16 A4	
860	318207-0168		1	ROLLER CHAIN, SINGLE 6MM-168	
865	312155-0329		2	SCREW EN 10642 MF6S M5X16 A480	
870	312812-0312		6	HEXAGON NUT, NY-LOCK M4 A480	
880	315101-0136		6	BRICKA BRB, 4,3/8 H=0,8	
900	90458-0315		1	CABLE GLAND, M20X1,5, NO.5311 1120	
910	312812-0318		4	HEXAGON NUT, NY-LOCK M8 A480	
915	359705-0001		1	WARNING SIGN ISO, ENTAGLEMENT	
920	90044-0310		1	KEY FOR SAFETY SWITCH, AZ 15/16 B1	
930	90458-1239		1	GLAND, INSERT, MULTI HOLE, 1X9/1X5,5	
940	90458-0430		1	EXTENDED WITHOUT INSERT, M20X1,5	
950	90152-0051	M	3	SPIRAL CONDUIT, 25X18, UL 1816	
960	90458-0323		1	NUT, M20X1,5	
970	352135-0202		1	CLIP, 16 MM, 913.016	
MB108	90044-0139		1	KEY SAF.SW. AZ16-02 ZVR K-2254	
MB154	90459-0472		1	KEY SAF.SW. AZ 16 02ZVRK-M20-2152-2254	

PRINTING WHEEL NSS

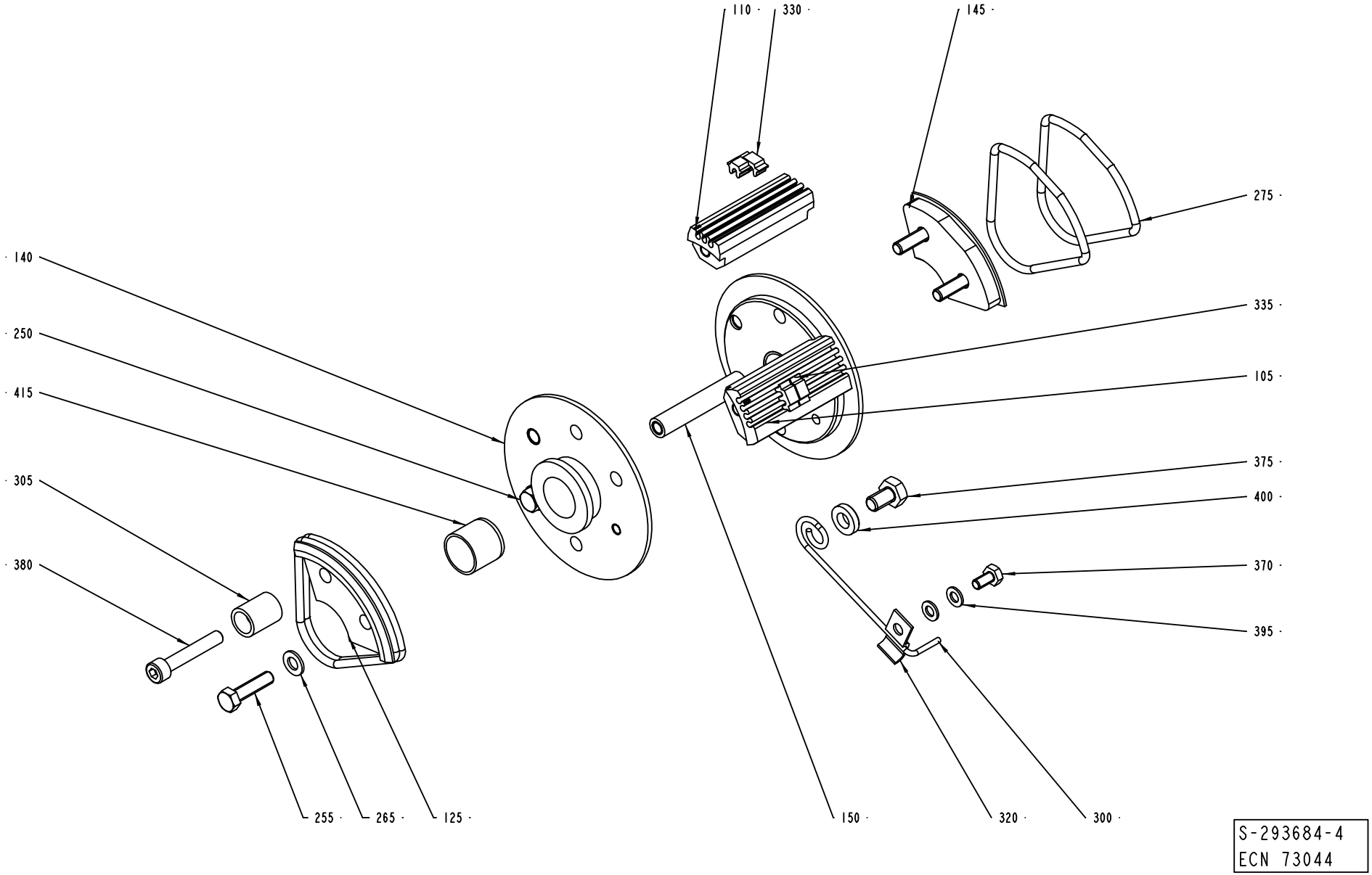

Pos	Part No	UN	Qty	Description	Page No
TBA 0284B (See drawing on pages: 8-24, 8-26)					
105	293395-0002		2	TYPE HOLDER	
110	293395-0001		2	TYPE HOLDER	
130	292412-0000		1	END SECTION	
135	292413-0000		1	END SECTION	
145	293659-0000		1	CARRIER	
255	312101-0331		7	SCREW M6S M5X20 FZB	
265	315101-0146		7	WASHER PLAIN, BRB, 5,3/10 H=1	
285	315202-0304		2	O-RING 64,5X3 MM	
410	315202-0305		2	O-RING 69,5X3 MM	
TBA 0330S, TBA 0300S, TBA 0180B, TBA 0160S, TBA 0200B, TBA 0125S, TBA 0100B, TBA 0250S, TBA 0200S, TBA 0200M, TBA 0250B (See drawing on pages: 8-24, 8-26)					
105	293395-0002		2	TYPE HOLDER	
110	293395-0001		2	TYPE HOLDER	
130	292412-0000		1	END SECTION	
135	292413-0000		1	END SECTION	
145	293659-0000		1	CARRIER	
255	312101-0331		7	SCREW M6S M5X20 FZB	
265	315101-0146		7	WASHER PLAIN, BRB, 5,3/10 H=1	
285	315202-0304		2	O-RING 64,5X3 MM	
410	315202-0305		2	O-RING 69,5X3 MM	
Common Parts					
300	32691-0000		1	LOCKING SPRING	
305	33011-0000		1	SLEEVE	
320	1511572-0000		1	CLIP	
330	90413-0033		1	CODE INSERT SET C 2/16	
330	90413-0043		1	CODE INSERT SET	
335	90413-0047		1	CODE INSERT SET A 2/16	
335	90413-0044		1	CODE INSERT SET	
370	312101-0287		1	SCREW M6S M4X8 FZB	
375	312101-0364		1	SCREW M6S M6X10 FZB	
380	312111-0335		1	SCREW HEX.SOCK.HD.MC6S-TT 5X30 88 FZB	
395	315101-0136		2	BRICKA BRB, 4,3/8 H=0,8	
400	315111-0153		1	WASHER PLAIN, TBRB 6,4/12 H=3	
415	321120-0122		2	BEARING BUSHING W/O FL, 15X17X15 MM	

Pos	Part No	UN	Qty	Description	Page No

Volume: TB- 180B. 200B. 200M. 200S. 236B. 250S. 300B.ml
TBA- 100B. 125S. 160S. 180B. 200B. 200M.
TBA- 200S. 250B. 250S. 284B. 300S. 330S.ml
TPA- 250SQ. 330SQ.ml

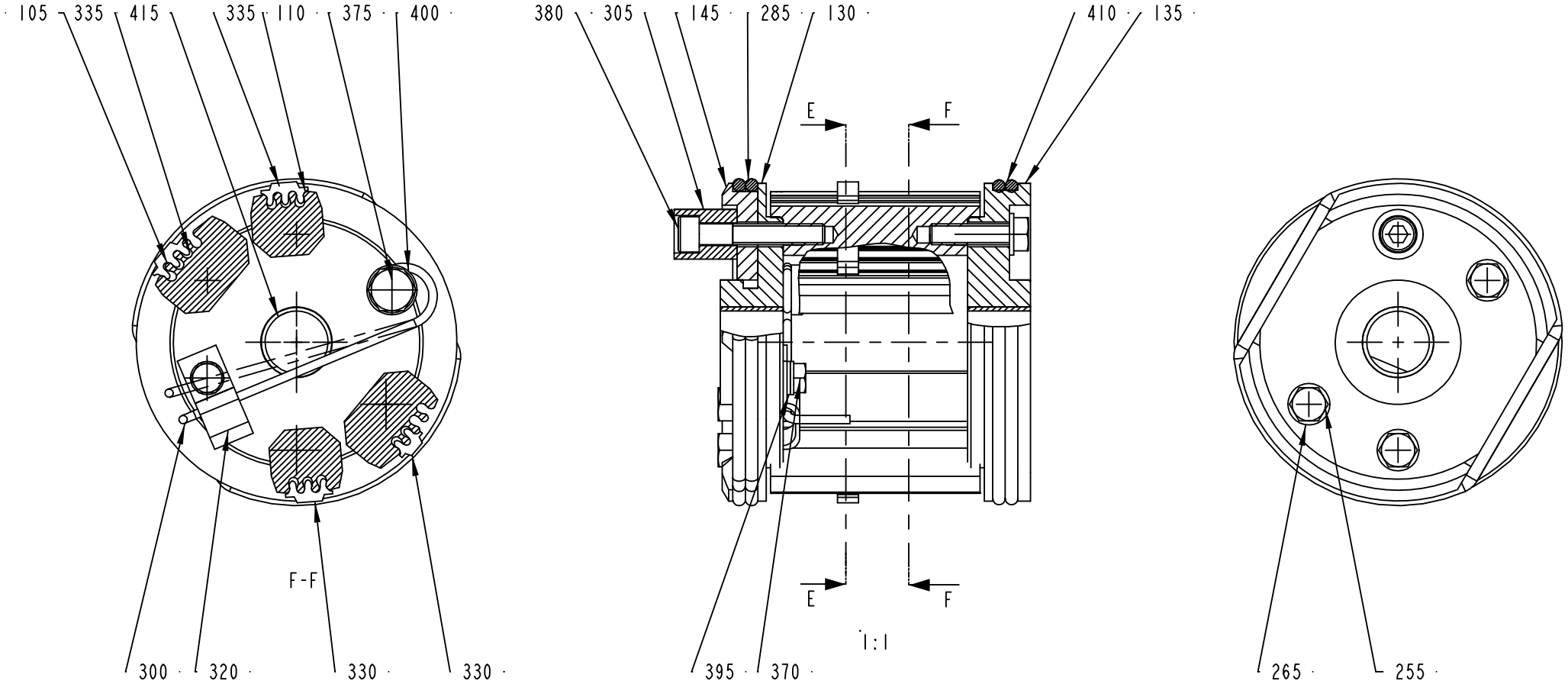

Pos	Part No	UN	Qty	Description	Page No
TBA 0284B (See drawing on pages: 8-24, 8-26)					
105	293395-0002		2	TYPE HOLDER	
110	293395-0001		2	TYPE HOLDER	
130	292412-0000		1	END SECTION	
135	292413-0000		1	END SECTION	
145	293659-0000		1	CARRIER	
255	312101-0331		7	SCREW M6S M5X20 FZB	
265	315101-0146		7	WASHER PLAIN, BRB, 5,3/10 H=1	
285	315202-0304		2	O-RING 64,5X3 MM	
410	315202-0305		2	O-RING 69,5X3 MM	
TBA 0330S, TBA 0300S, TBA 0180B, TBA 0160S, TBA 0200B, TBA 0125S, TBA 0100B, TBA 0250S, TBA 0200S, TBA 0200M, TBA 0250B (See drawing on pages: 8-24, 8-26)					
105	293395-0002		2	TYPE HOLDER	
110	293395-0001		2	TYPE HOLDER	
130	292412-0000		1	END SECTION	
135	292413-0000		1	END SECTION	
145	293659-0000		1	CARRIER	
255	312101-0331		7	SCREW M6S M5X20 FZB	
265	315101-0146		7	WASHER PLAIN, BRB, 5,3/10 H=1	
285	315202-0304		2	O-RING 64,5X3 MM	
410	315202-0305		2	O-RING 69,5X3 MM	
Common Parts					
300	32691-0000		1	LOCKING SPRING	
305	33011-0000		1	SLEEVE	
320	1511572-0000		1	CLIP	
330	90413-0033		1	CODE INSERT SET C 2/16	
330	90413-0043		1	CODE INSERT SET	
335	90413-0047		1	CODE INSERT SET A 2/16	
335	90413-0044		1	CODE INSERT SET	
370	312101-0287		1	SCREW M6S M4X8 FZB	
375	312101-0364		1	SCREW M6S M6X10 FZB	
380	312111-0335		1	SCREW HEX.SOCK.HD.MC6S-TT 5X30 88 FZB	
395	315101-0136		2	BRICKA BRB, 4,3/8 H=0,8	
400	315111-0153		1	WASHER PLAIN, TBRB 6,4/12 H=3	
415	321120-0122		2	BEARING BUSHING W/O FL, 15X17X15 MM	

Pos	Part No	UN	Qty	Description	Page No

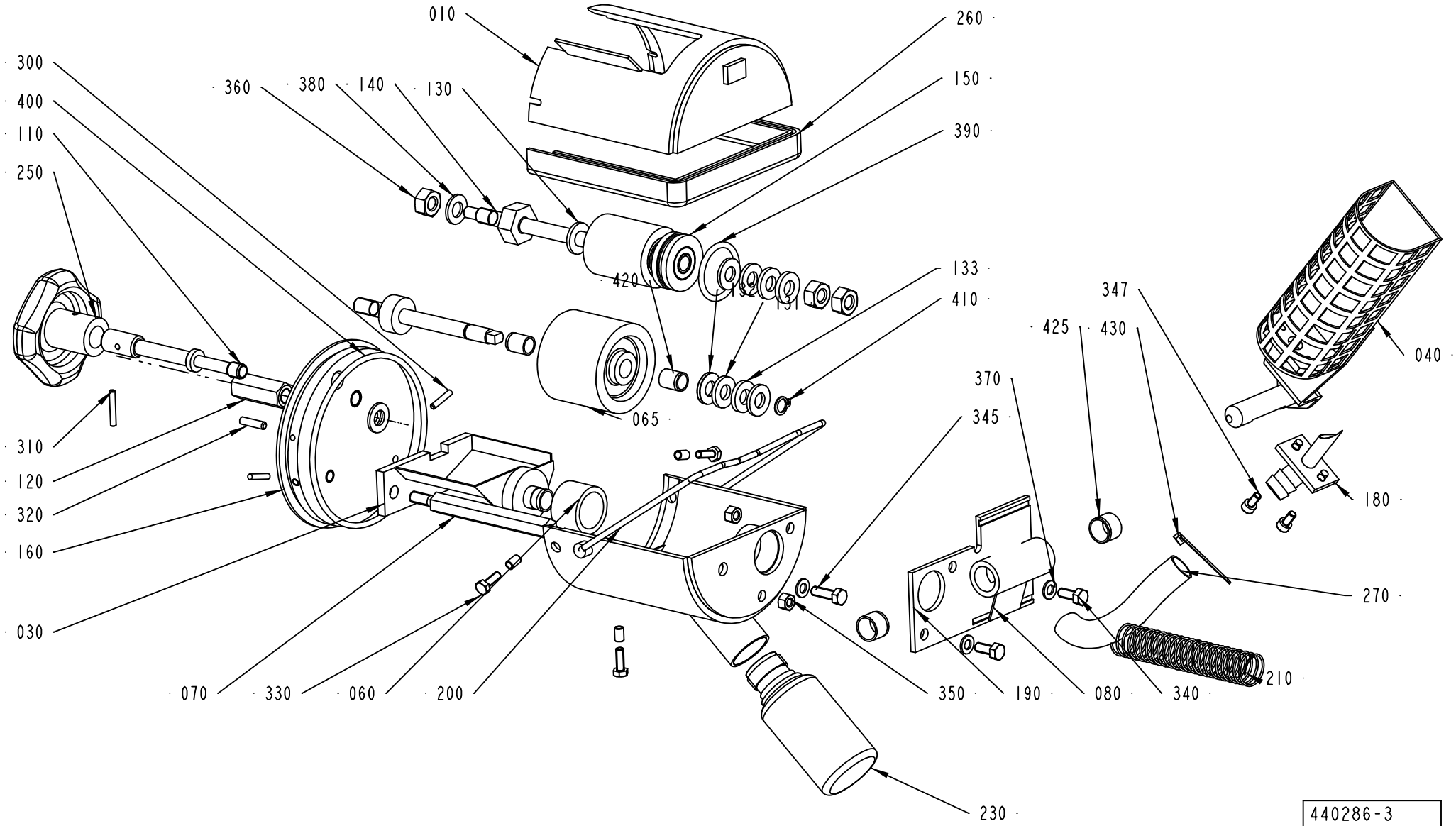

440286-3
ECN 95310

ECM: 104523 - 20021112
Group number: 440286-0300
Assembly Drawing: 440286-3_1_AC

Pos	Part No	UN	Qty	Description	Page No
TBA/19					
230	90050-0012		1	BOTTLE, 50ML PLASTIC	
Common Parts					
010	440287-0000		1	COVER	
030	297211-0000		1	INK WELL	
040	476356-0000		1	HOLDER FOR INK BOTTLE	
060	445542-0000		1	MANTEL RUBBER	
065	450355-0000		1	INK ROLLER	
070	33010-0000		1	SCREW	
080	35547-0000		1	SPRING	
100	292044-0000		1	SHAFT	
110	293667-0000		1	DOWEL	
120	436927-0000		1	NUT	
130	293669-0001		4	WASHER	
131	293669-0002		2	WASHER	
132	293669-0003		2	WASHER	
133	293669-0004		2	WASHER	
140	293670-0000		1	SHAFT	
150	543135-0000		1	INK TRANSFER ROLLER	
	90153-0050		*1*	*ADHESIVE, 3M TYPE SCOTCH-WELD 2216 B/A*	
	321120-0100		*1*	*BEARING BUSHING W/O FLANGE 8/10X12*	
160	293697-0000		1	END SECTION	
180	476354-0000		1	CANNULAR TUBE	
190	456773-0000		1	PIVOT BRACKET	
200	434747-0000		1	BOW CLAMP	
210	537308-0000		1	SPRING	
250	90051-0077		1	HANDLE	
260	90143-0029	MM	295	STRIP	
270	90166-0138	MM	100	HOSE	
280	90299-0072		48	INK	
300	311103-0236		2	PARALLEL PIN ISO 2338 3M6X16 A1	
310	311103-0238		1	PARALLEL PIN ISO 2338 3M6X20 A1	
320	311103-0270		1	PARALLEL PIN ISO 2338 4M6X16 A1	
330	312105-0291		3	SCREW M6S ISO 4017 M4X12 A480	
340	312105-0327		2	SCREW M6S ISO 4017 M5X12 A480	
345	312105-0329		1	SCREW M6S ISO 4017 M5X16 A480	
347	312115-0287		2	SCREW ISO4762 M4X8 A4	
350	312605-0314		2	HEXAGON NUT, M6M M5 A280	
360	312605-0318		3	HEXAGON NUT, M6M M8 A280	
370	315105-0146		3	BRICKA BRB5,3X10RFR	
380	315105-0165		2	WASHER BRB8,4X16RFR	
390	315202-0218		1	O-RING 26,2X3 MM	
400	315202-0309		1	O-RING 89,5X3 MM	
410	315750-0105		1	RETAIN. RING, 8	
420	321120-0100		2	BEARING BUSHING W/O FLANGE 8/10X12	
425	321120-0109		2	BEARING BUSHING W/O FLANGE,12/14X10	
430	352113-0101		1	CLIP STRIP, 92X2,5 MM	

Machine Type | Group Description | Used-In | Group Number | Page No

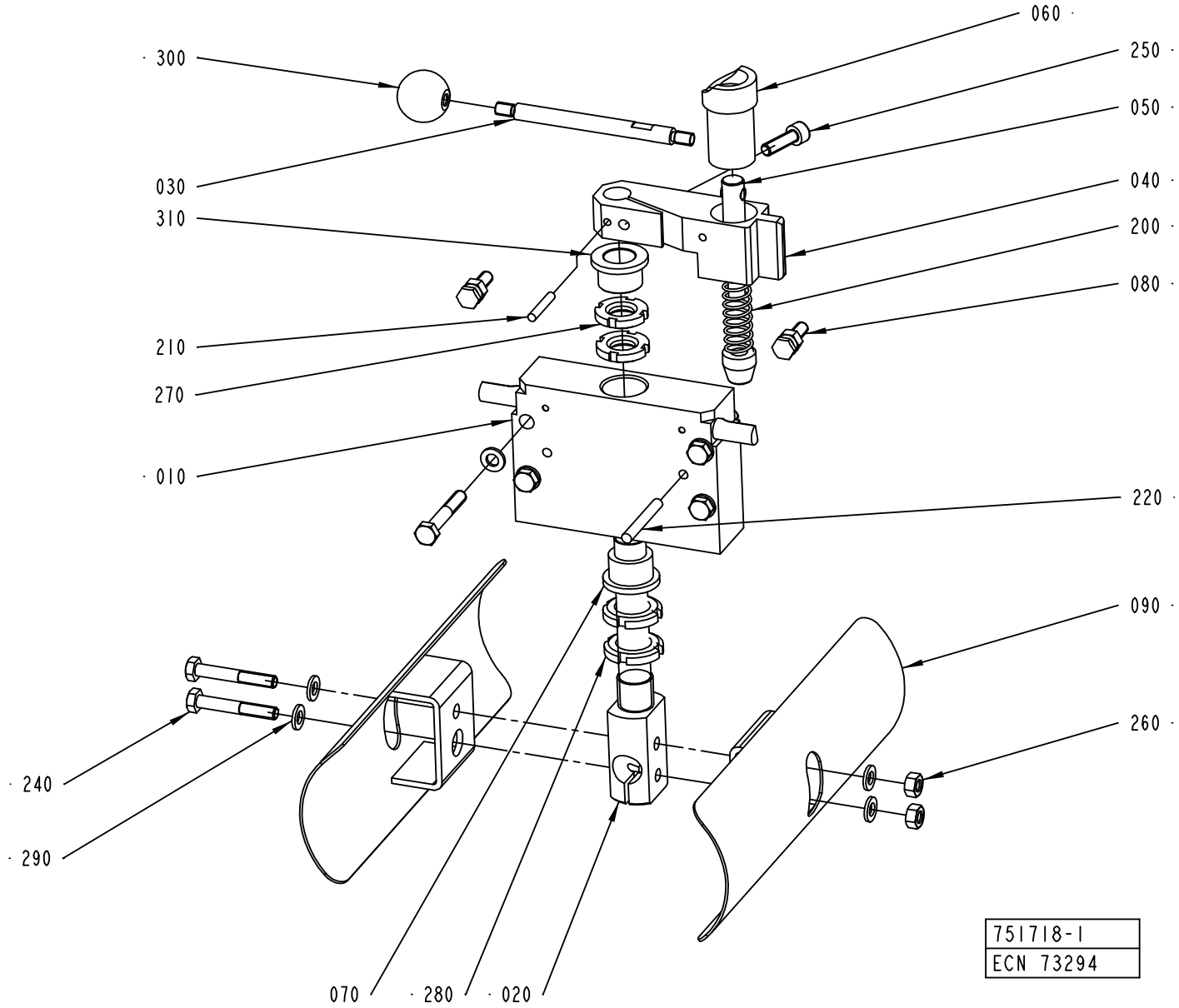
060
300
250
050
030
040
310
200
080
210
270
010
220
090
260
240
290
070
280
020
751718-1
ECN 73294

ECM: 114211 - 20020926
Group number: 751718-0100
Assembly Drawing: 751718-1_1_AD

Pos	Part No	UN	Qty	Description	Page No
-					
010	464009-0003		1	BLOCKING PIECE	
020	979960-0000		1	SHAFT	
030	450500-0000		1	DOWEL	
040	464010-0000		1	ARM	
050	464011-0000		1	LOCK STUD	
060	464012-0000		1	CURVE	
070	466430-0000		1	BUSHING	
080	476377-0000		2	SCREW	
090	979942-0000		2	COVER	
200	90335-0064		1	COMP. SPRING 22270, 1,25X13,75X62,5	
210	311103-0274		2	PARALLELL PIN, M6, 4X25 MM	
220	311103-0318		2	PARALLEL PIN ISO 2338 5M6X40 A1	
240	312105-0378		6	SCREW M6S ISO 4014 M6X40 A480	
250	312115-0370		1	SCREW ISO4762 M6X20 A4	
260	312605-0316		4	HEXAGON NUT, M6M M6 A280	
270	312805-0102		2	NUT ROUND WITH SLOTS M15X1 FE	
280	312805-0103		2	NUT ROUND WITH SLOTS M17X1 FE	
290	315105-0153		8	WASHER BRB6,4X12RFR	
300	318800-0103		1	HANDLES,SPHERICAL KNOB,INT.THRE.,D.25-M6	
310	321111-0212		1	FLANGE BUSHING, 15X21X15	

Pos	Part No	UN	Qty	Description	Page No

ADJUSTMENT DEVICE

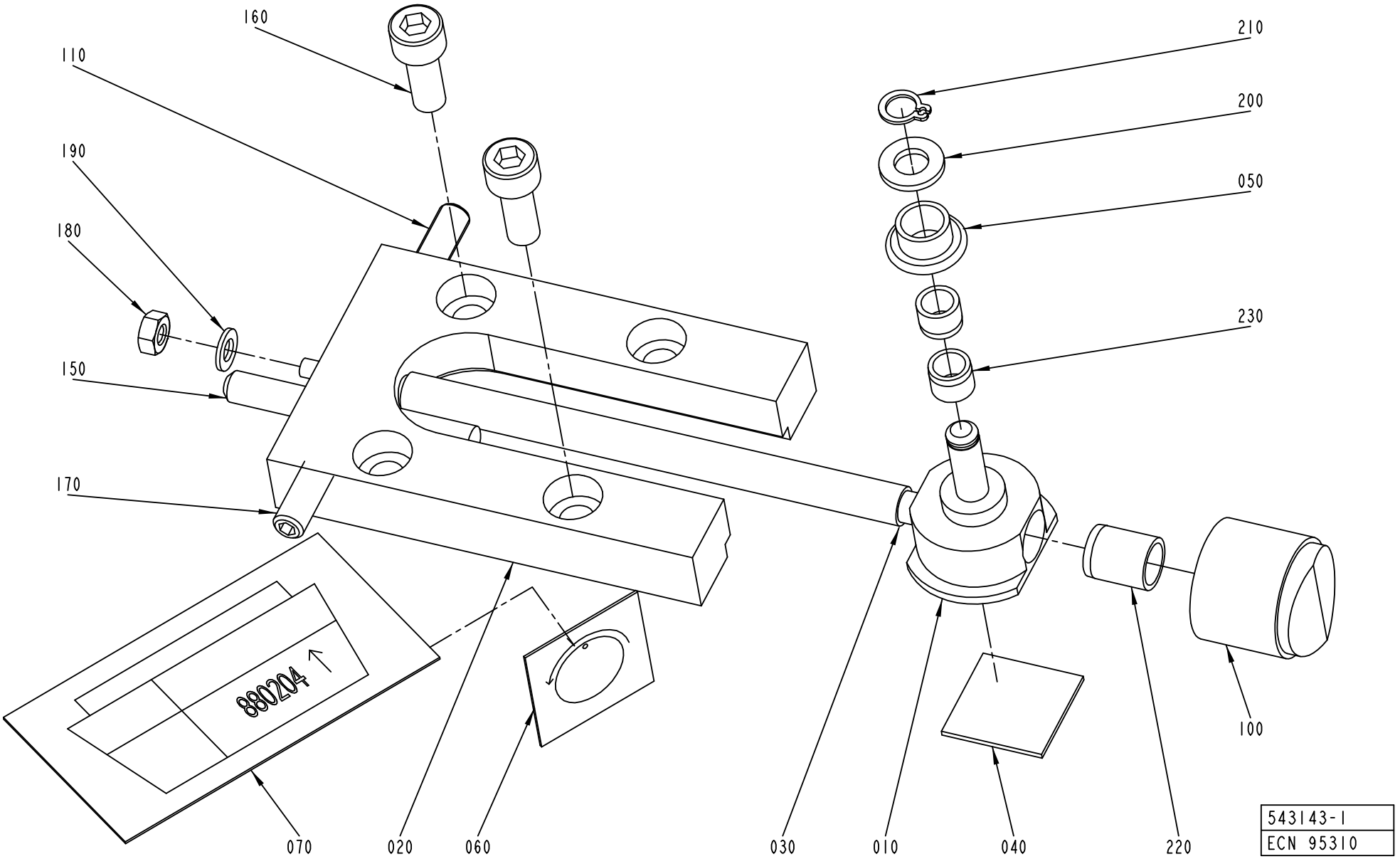

ECM: 99112 - 20011129
Group number: 543143-0100
Assembly Drawing: 543143-1_1_AC

This list covers pages from 8-32 to 8-35

Pos	Part No	UN	Qty	Description	Page No
-					
010	526984-0000		1	SADDLE	
020	526985-0000		1	PLATE	
030	526986-0001		1	SHAFT	
040	527649-0000		1	DISTANCE RUBBER	
050	529362-0000		1	SPROCKET	
060	543141-0000		1	SIGN	
070	543142-0000		1	SIGN	
100	90051-0089		1	SHIFTER HANDLE	
110	90287-0167		1	SCREW SPRINGLOAD. SOCK. HEX HEAD M6X20	
150	311103-0365		1	PARALLEL PIN ISO 2338 6M6X50 A1	
160	312115-0368		2	SCREW ISO4762 M6X16 A4	
170	312318-0368		1	SCREW ISO4029 M6X16 A4	
180	312605-0312		1	HEXAGON NUT, M6M M4 A280	
190	315105-0136		1	WASHER BRB4,3XRFR	
200	315105-0153		1	WASHER BRB6,4X12RFR	
210	315751-0103		1	RETAINING RING FOR SHAFT DIN 471 6 A2	
220	321120-0100		1	BEARING BUSHING W/O FLANGE 8/10X12	
230	321120-0101		2	BEARING BUSHING W/O FLANGE,6/8X6	

Pos	Part No	UN	Qty	Description	Page No

ADJUSTMENT DEVICE

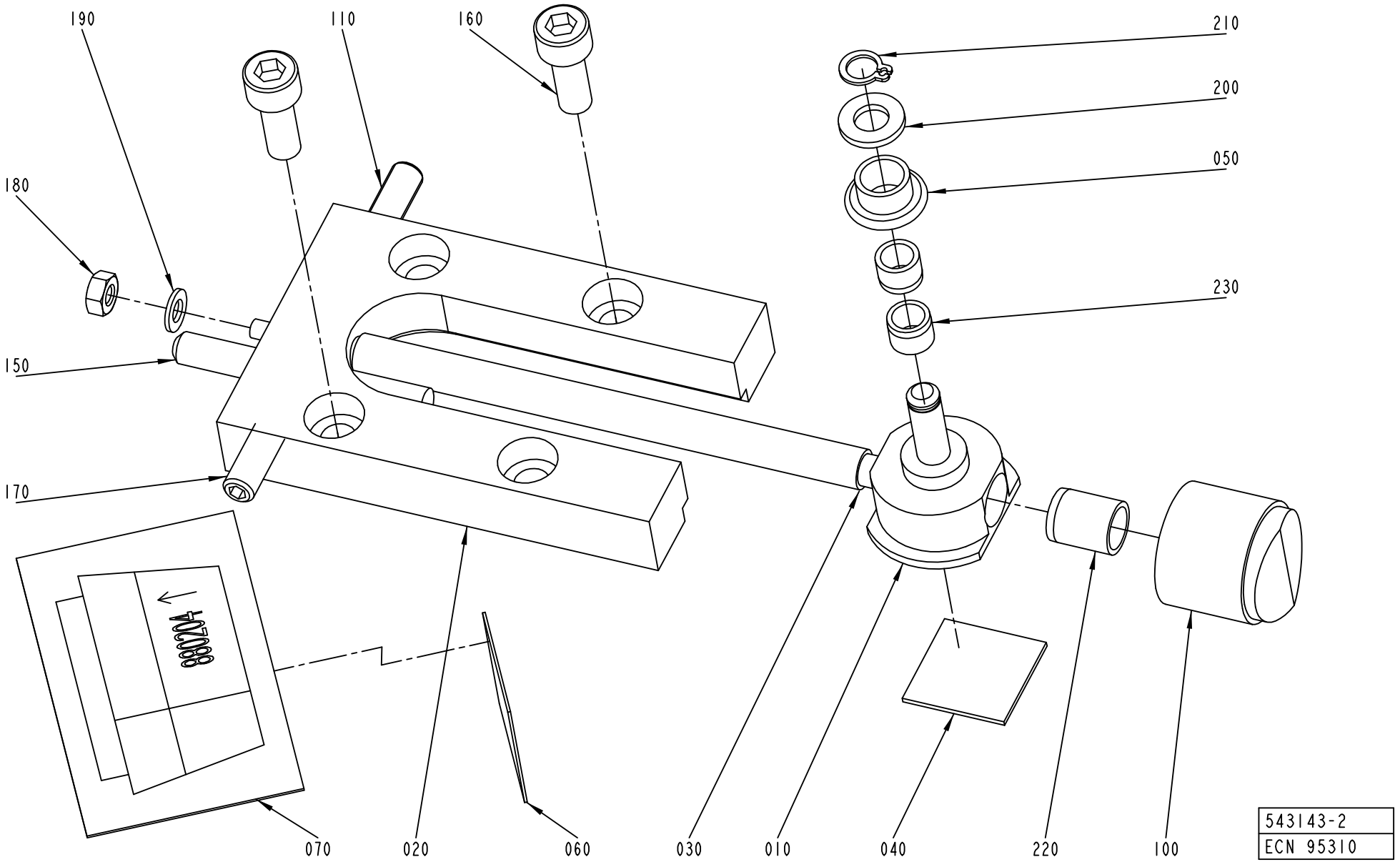

ECM: 99112 - 20011129
Group number: 543143-0100
Assembly Drawing: 543143-2_1_AB

This list covers pages from 8-32 to 8-35

Pos	Part No	UN	Qty	Description	Page No
-					
010	526984-0000		1	SADDLE	
020	526985-0000		1	PLATE	
030	526986-0001		1	SHAFT	
040	527649-0000		1	DISTANCE RUBBER	
050	529362-0000		1	SPROCKET	
060	543141-0000		1	SIGN	
070	543142-0000		1	SIGN	
100	90051-0089		1	SHIFTER HANDLE	
110	90287-0167		1	SCREW SPRINGLOAD. SOCK. HEX HEAD M6X20	
150	311103-0365		1	PARALLEL PIN ISO 2338 6M6X50 A1	
160	312115-0368		2	SCREW ISO4762 M6X16 A4	
170	312318-0368		1	SCREW ISO4029 M6X16 A4	
180	312605-0312		1	HEXAGON NUT, M6M M4 A280	
190	315105-0136		1	WASHER BRB4,3XRFR	
200	315105-0153		1	WASHER BRB6,4X12RFR	
210	315751-0103		1	RETAINING RING FOR SHAFT DIN 471 6 A2	
220	321120-0100		1	BEARING BUSHING W/O FLANGE 8/10X12	
230	321120-0101		2	BEARING BUSHING W/O FLANGE,6/8X6	

Pos	Part No	UN	Qty	Description	Page No

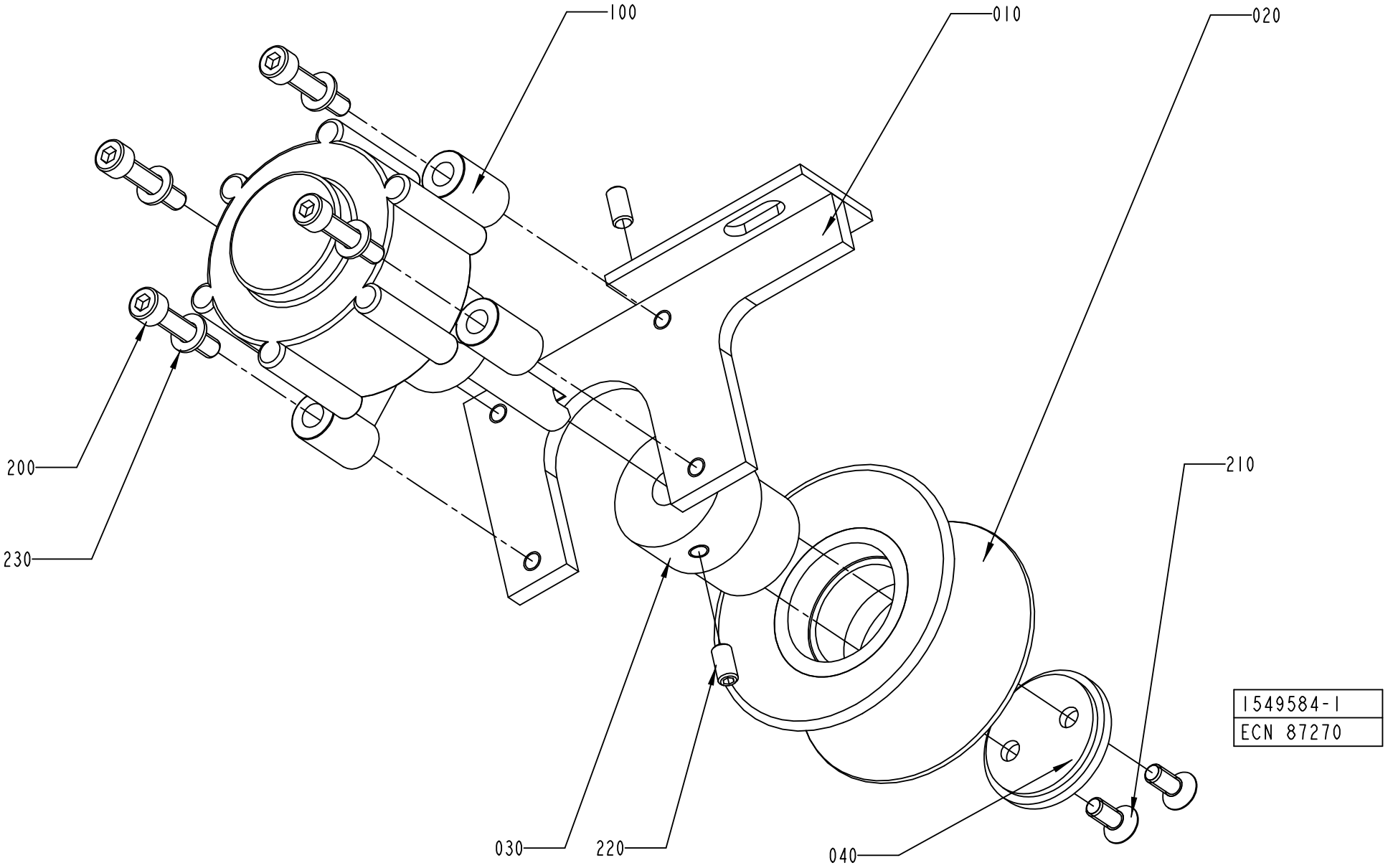
100
010
020
200
230
210
030
220
040
1549584-1
ECN 87270

ECM: 112931 - 20020731
Group number: 1549584-0100
Assembly Drawing: 1549584-1_1_AA

Pos	Part No	UN	Qty	Description	Page No
-					
010	980002-0000		1	BRACKET	
020	540719-0000		1	WHEEL	
030	980003-0000		1	SHAFT	
040	980004-0000		1	PLUG	
100	90347-0054		1	DAMPER	
200	312115-0333		4	SCREW ISO4762 M5X25 A4	
210	312155-0327		2	SCREW EN 10642 MF6S M5X12 A480	
220	312318-0325		2	SCREW ISO4029 M5X10 A4	
230	315105-0146		4	BRICKA BRB5,3X10RFR	

Pos	Part No	UN	Qty	Description	Page No

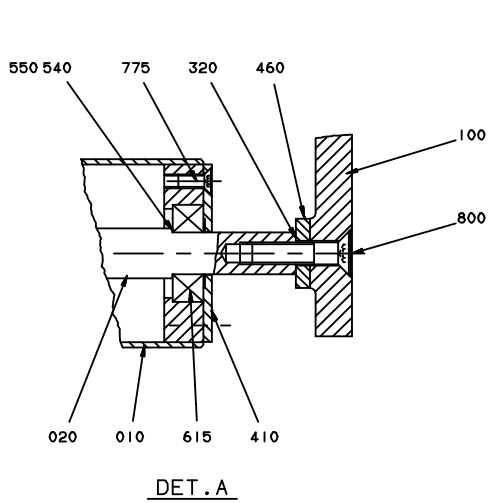
550 540
775
320
460
100
800
020
010
615
410
DET.A

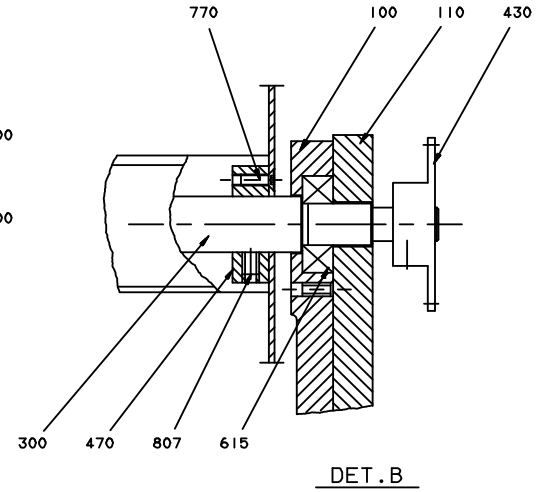
770
100
110
430
300
470
807
615
DET.B

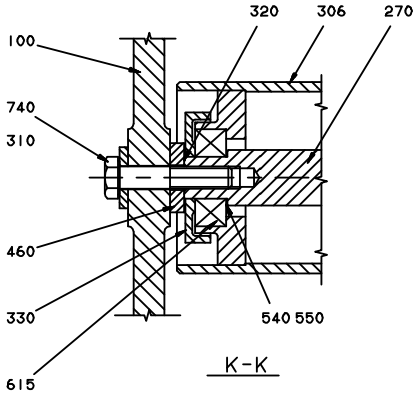
320
306
270
100
740
310
460
330
615
540 550
K-K

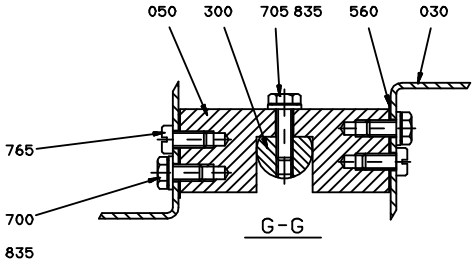
050
300
705 835
560
030
765
700
835
G-G

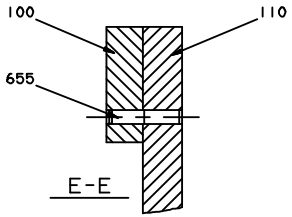
100
110
655
E-E

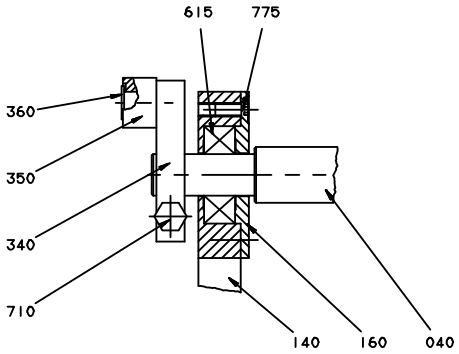
615
775
360
350
340
710
140
160
040
DET.C

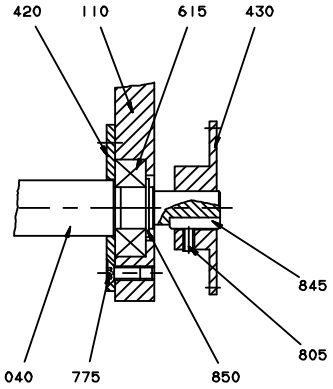
420
110
615
430
845
805
040
775
850
DET.D

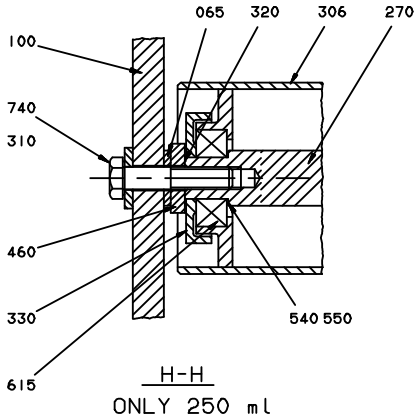
065
320
306
270
100
740
310
460
330
615
540 550
H-H
ONLY 250 ml

ECM: 104336 - 20030113
Group number: 752645-0400
Assembly Drawing: 752645-2_1_AH

This list covers pages from 8-38 to 8-41

Pos	Part No	UN	Qty	Description	Page No
TBA 0180B					
030	456767-0000		2	CREASE BAR	
TBA 0200B					
030	456767-0000		2	CREASE BAR	
TBA 0250B					
030	456767-0000		2	CREASE BAR	
065	299643-0000		2	WASHER	
TBA 0330S, TBA 0300S, TBA 0284B					
030	456767-0000		2	CREASE BAR	
050	441556-0001		2	SPACER	
Common Parts					
	1549584-0100		1	PAPER BRAKE	**8-37**
010	752542-0001		1	BENDING ROLLER	
020	752543-0001		1	SHAFT	
030	1523314-0000		2	CREASE BAR	
040	752536-0001		1	SHAFT	
050	441556-0002		2	SPACER	
050	441556-0004		2	SPACER	
050	441556-0006		2	SPACER	
050	1523315-0000		2	SPACER	
060	256400-0000		1	SHAFT	
070	90166-0059	MM	24	HOSE PVC 12/16MM TRANSP.	
075	90166-0059	MM	24	HOSE PVC 12/16MM TRANSP.	
090	979790-0000		1	COVER	
100	752200-0000		1	CANTILEVER	
110	752526-0000		1	PLATE	
120	572252-0000		1	BRACKET	
130	752528-0000		1	COVER	
140	752527-0000		1	CANTILEVER	
145	491965-0000		1	CAM	
150	979543-0000		1	SPLASH PLATE	
155	556422-0000		1	PROTECTION	
160	752529-0000		1	BEARING COVER	
170	578000-0000		1	BRACKET	
180	578001-0000		2	SCREW	
240	752539-0000		1	PLATE	
245	572460-0000		1	SHEET	
250	752240-0000		1	LID	
270	752538-0000		2	SHAFT	
280	752642-0000		1	BRACKET	
290	572253-0000		1	SHEET	
300	752535-0000		1	SHAFT	
305	979701-0000		1	CABLE CONDUIT	
306	979709-0000		2	BENDING ROLLER	
307	1260476-0000		4	SCREW	
310	28036-0000		12	WASHER	
320	2033-0011		20	WASHER	
330	265568-0000		4	DUST COVER	
340	32925-0000		1	CARRIER	
350	32926-0000		1	ROLL	
360	32927-0000		1	SHAFT	
370	33182-0000		1	ROLL	
380	752237-0000		1	SPRING	
410	256248-0001		2	LID	
420	256398-0000		1	LID	
430	752530-0000		2	SPROCKET	
440	256406-0000		2	GABLE PLATE	
450	752644-0000		2	SCREW	
460	256409-0000		6	WASHER	
470	257141-0000		2	RETAINING RING	
480	752531-0000		1	BRACKET	
490	752534-0000		1	PLATE	
520	752541-0000		1	CANTILEVER	
530	253107-0000		2	WASHER	
540	752544-0001		6	SHIM	
550	752544-0002		8	SHIM	
555	979788-0000		1	SPRING HOLDER	
560	456817-0001		16	SHIM	
565	979789-0000		1	SPRING HOLDER	
590	572254-0000		1	HANDLE	
595	572255-0000		2	SPACER	
600	90044-0104		1	PROX.SWITCH IFM IN 3002	
612	90165-0056		6	PIPE CLIP FOR TUBE D=4 MM	
613	90165-0008		2	PIPE CLIP FOR TUBE D=10 MM	
615	90214-0098		10	BALL BEARING, 15X35X11 MM	
620	90044-0103		1	KEY SAFETY SWITCH AZ 15 ZVR	
	90044-0310		*1*	*KEY FOR SAFETY SWITCH, AZ 15/16 B1*	
630	90248-0026		2	HINGE, 1703-80X32	
640	90335-0041		1	TENSION SPRING 42350, 2X14X68	
645	312318-0372		1	SCREW ISO4029 M6X25 A4	
650	312605-0314		2	HEXAGON NUT, M6M M5 A280	
655	311103-0312		2	PARALLELL PIN, M6, 5X25 MM	
670	311103-0357		1	PARALLEL PIN ISO 2338 6M6X30 A1	
671	311103-0353		2	PARALLEL PIN ISO 2338 6M6X20 A1	

Machine Type | Group Description | Used-In | Group Number | Page No

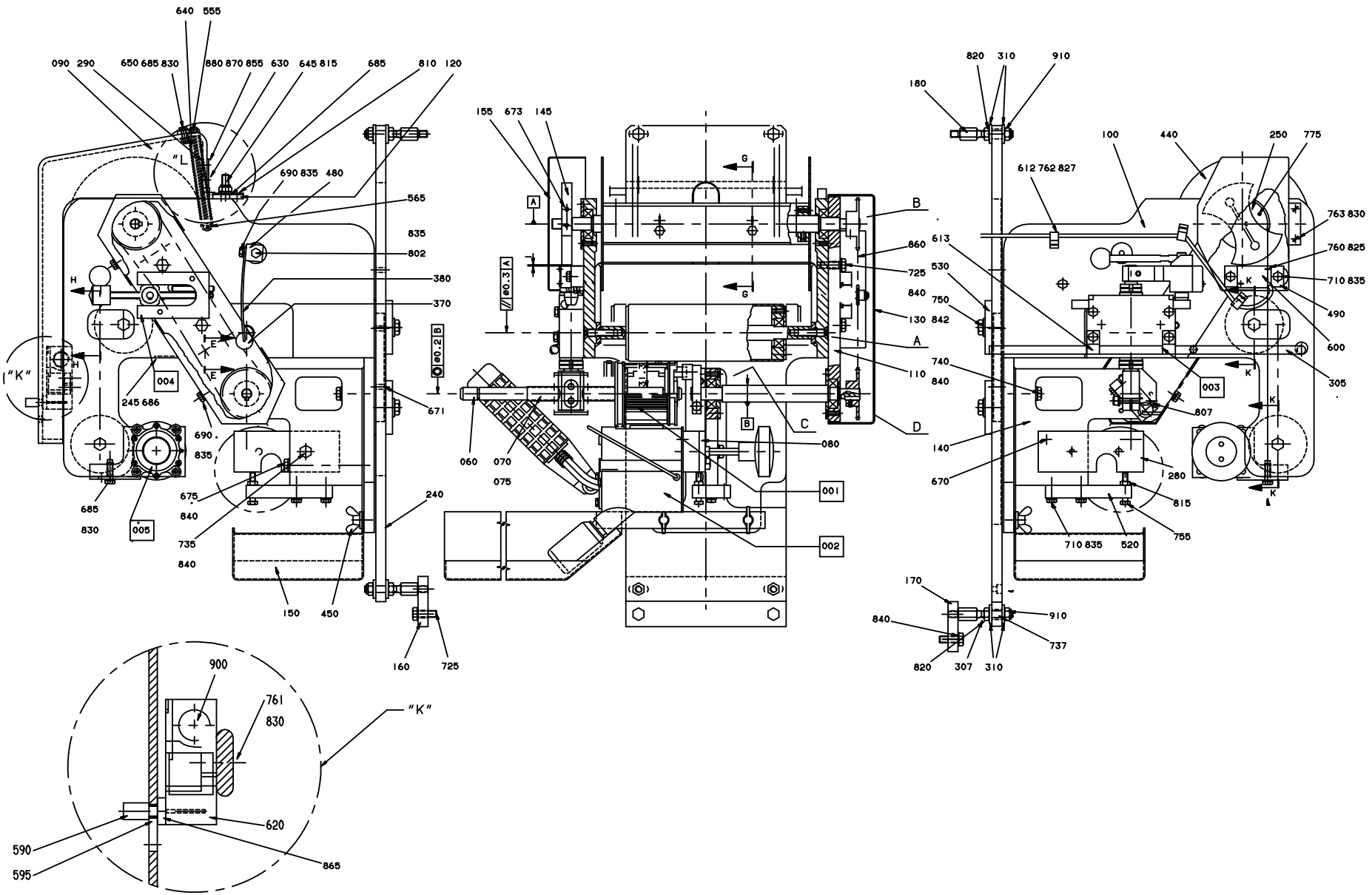
640 555
090 290
650 685 830
880 870 855
630
645 815
685
810 120
"L"
690 835 480
565
835
802
380
370
H
E
004
245 686
671
690
835
675
840
735
840
685
830
005
240
150
450
160
725
155 673 145
G
A
B
C
D
060.3 A
ø0.2 B
860
725
840
750
130 842
110
080
060
070
075
001
002
820 310 910
180
100
440
250 775
612 762 827
763 830
760 825
710 835
490
600
305
613
530
740
840
003
807
K
140
670
280
815
755
710 835
520
170
840
910
737
820
307
310
"K"
900
761
830
620
590
595
865

Pos	Part No	UN	Qty	Description	Page No
Common Parts (Cont'd)					
673	312115-0333		2	SCREW ISO4762 M5X25 A4	
675	312111-0471		1	SCREW HEX.SOCK.HD.MC6S-TT 8X100 88 FZ	
685	312105-0329		5	SCREW M6S ISO 4017 M5X16 A480	
686	312105-0331		4	SCREW M6S ISO 4017 M5X20 A480	
690	312105-0364		3	SCREW M6S ISO 4017 M6X10 A480	
700	312105-0366		4	SCREW M6S M6X12 A280	
705	312115-0370		2	SCREW ISO4762 M6X20 A4	
710	312105-0372		5	SCREW M6S ISO 4017 M6X25 A480	
725	312105-0453		2	SCREW M6S ISO 4017 M8X25 A480	
735	312105-0457		1	SCREW M6S ISO 4014 M8X35 A480	
737	312115-0329		2	SCREW ISO4762 M5X16 A4	
740	312105-0459		5	SCREW M6S ISO 4014 M8X40 A480	
750	312105-0493		2	SCREW M6S ISO 4017 M10X25 A480	
755	312109-0376		1	SCREW M6S ISO 4017 M6X35 A480	
760	312125-0230		2	SCREW ISO 1207 M3X20 A4	
761	312125-0329		2	SCREW ISO 1207 M5X16 A4	
762	312125-0289		6	SCREW ISO 1207 M4X10 A4	
763	312125-0325		2	SCREW ISO 1207 M5X10 A4	
765	312125-0366		4	SCREW ISO 1207 M6X12 A4	
770	312155-0291		6	SCREW EN 10642 MF6S M4X12 A480	
775	312155-0327		15	SCREW EN 10642 MF6S M5X12 A480	
800	312155-0457		2	SCREW EN 10642 MF6S M8X35 A480	
802	312105-0382		1	SCREW M6S ISO 4014 M6X60 A480	
805	312318-0287		2	SCREW ISO4029 M4X8 A4	
807	312318-0362		3	SCREW ISO4029 M6X8 A4	
810	312145-0285		6	SCREW ISO 2009 MFS M4X6 A4	
815	312605-0316		2	HEXAGON NUT, M6M M6 A280	
820	312605-0318		4	HEXAGON NUT, M6M M8 A280	
825	315105-0124		2	BRICKA BRB3,2X6RFR	
827	315105-0136		7	WASHER BRB4,3XRFR	
830	315105-0146		9	BRICKA BRB5,3X10RFR	
835	315105-0153		13	WASHER BRB6,4X12RFR	
840	315105-0165		5	WASHER BRB8,4X16RFR	
842	315105-0173		2	WASHER BRB10,5X22RFR	
845	315701-0169		2	PARALLEL KEY W. ROUND ENDS 4X4X18 MM	
850	315751-0112		1	RETAINING RING FOR SHAFT DIN 471 15 A2	
855	312145-0293		6	SCREW ISO 2009 MFS M4X16 A4	
860	318207-0168		1	ROLLER CHAIN, SINGLE 6MM-168	
865	312155-0329		4	SCREW EN 10642 MF6S M5X16 A480	
870	312812-0312		6	HEXAGON NUT, NY-LOCK M4 A480	
880	315101-0136		6	BRICKA BRB, 4,3/8 H=0,8	
900	352101-0103		1	LEAD-IN, PR18,6/PG11, E-1457518	
910	312812-0318		6	HEXAGON NUT, NY-LOCK M8 A480	
F001	293685-0200		2	PRINTING WHEEL SS	**8-43, 8-45**
F002	458192-0300		1	INK UNIT SS	**8-47**
F003	751718-0100		1	HOLDER	**8-31**
F004	543143-0100		1	ADJUSTMENT DEVICE	**8-33, 8-35**

Machine Type | Group Description | Used-In | Group Number | Page No

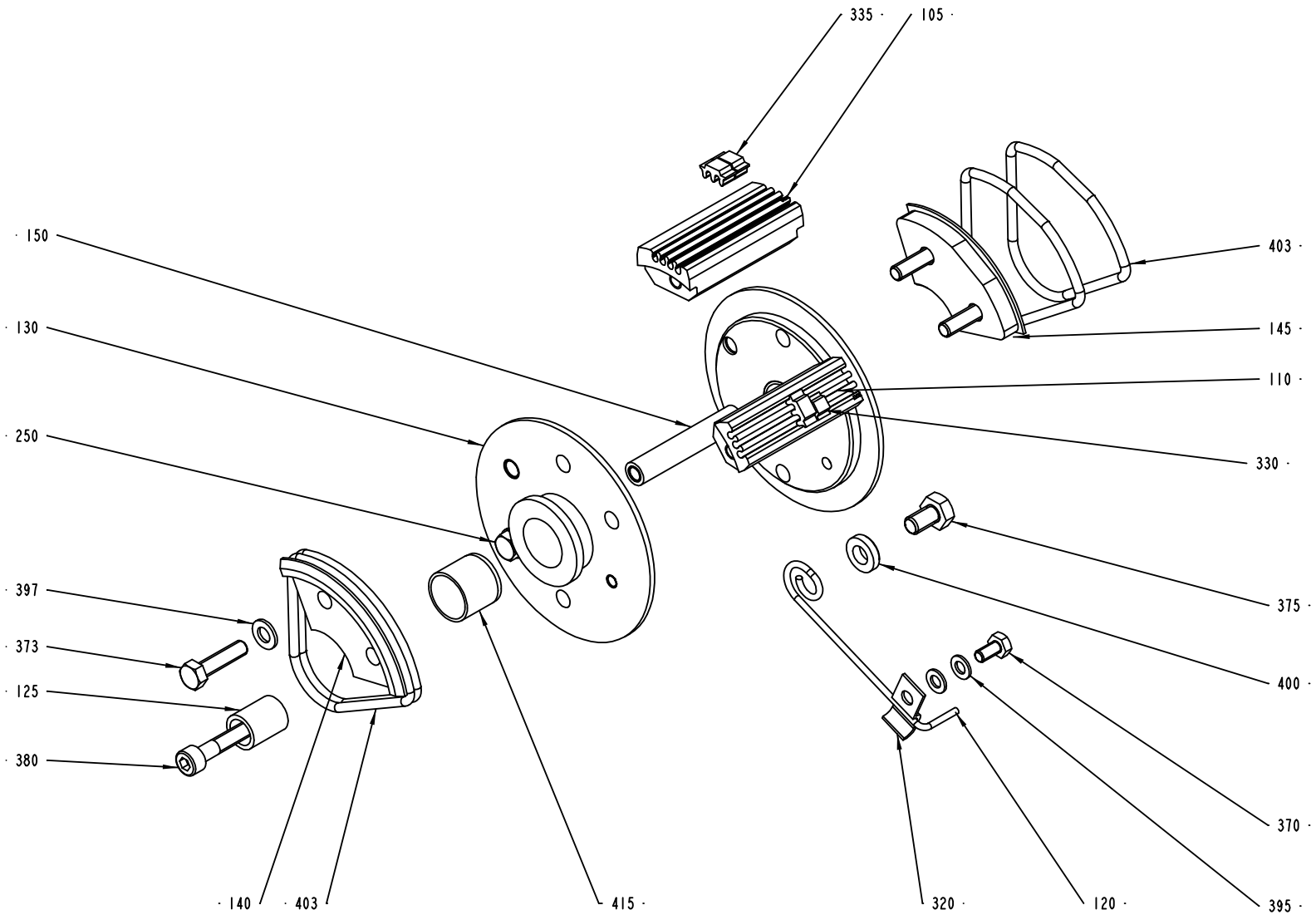

S-293685-2
ECN 73044

Pos	Part No	UN	Qty	Description	Page No
0125S, 0100B, 0200S, 0180B, 0200B, 0300S, 0330S, 0250B, 0284B					
105-02	293395-0002		2	TYPE HOLDER	
110-02	293395-0001		2	TYPE HOLDER	
130	292412-0000		1	END SECTION	
135	292413-0000		1	END SECTION	
140	292414-0000		1	CARRIER	
373-02	312101-0331		7	SCREW M6S M5X20 FZB	
397-02	315101-0146		7	WASHER PLAIN, BRB, 5,3/10 H=1	
405	315202-0304		2	O-RING 64,5X3 MM	
410	315202-0305		2	O-RING 69,5X3 MM	
Common Parts					
120	32691-0000		1	LOCKING SPRING	
125	33011-0000		1	SLEEVE	
320	90165-0010		1	CLIP	
330	90413-0033		1	CODE INSERT SET C 2/16	
330	90413-0043		1	CODE INSERT SET	
335	90413-0044		1	CODE INSERT SET	
335	90413-0047		1	CODE INSERT SET A 2/16	
370	312101-0287		1	SCREW M6S M4X8 FZB	
375	312101-0364		1	SCREW M6S M6X10 FZB	
380	312111-0335		1	SCREW HEX.SOCK.HD.MC6S-TT 5X30 88 FZB	
395	315101-0136		1	BRICKA BRB, 4,3/8 H=0,8	
400	315111-0153		1	WASHER PLAIN, TBRB 6,4/12 H=3	
415	321120-0122		2	BEARING BUSHING W/O FL, 15X17X15 MM	

Pos	Part No	UN	Qty	Description	Page No

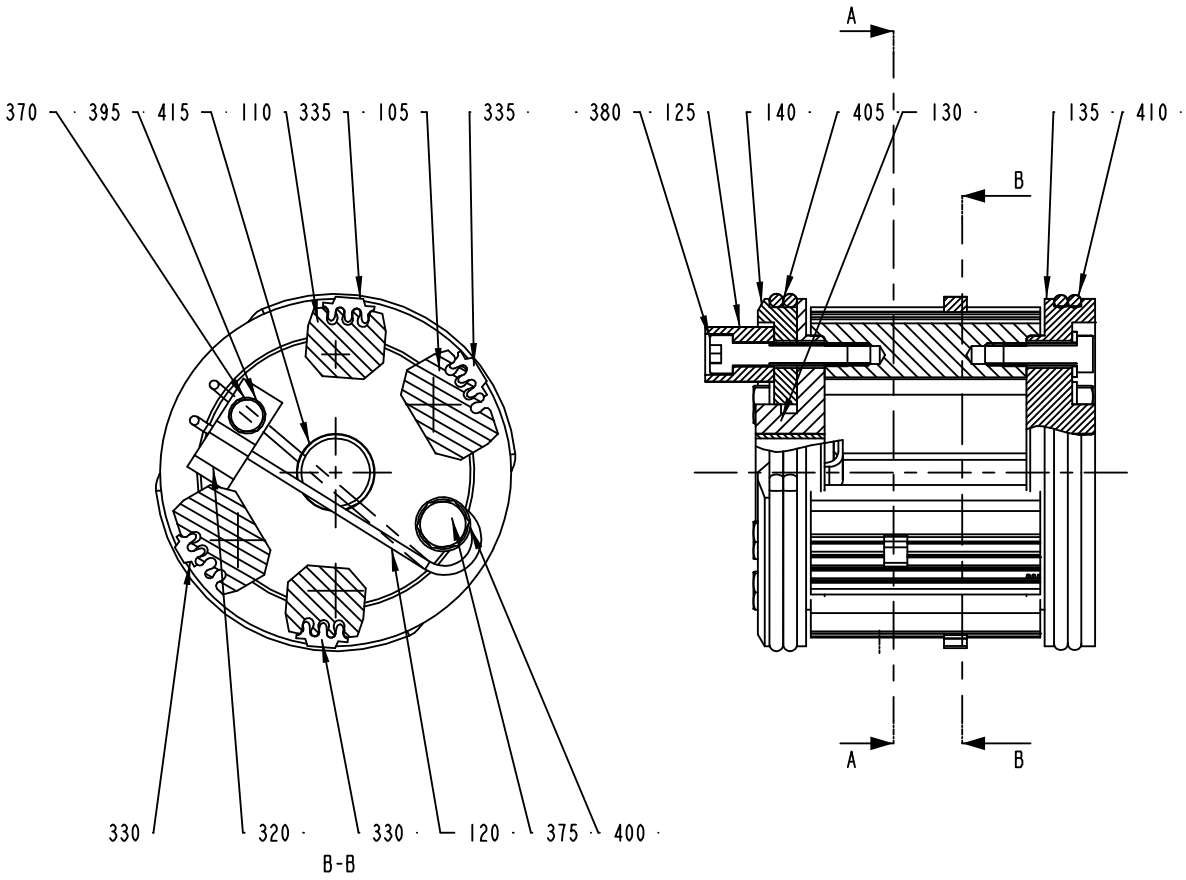

Volume: 100B. 125S. 180B. 189B. 200B. 236B. 250B.ml
284B. 300B. 300S. 330S.ml

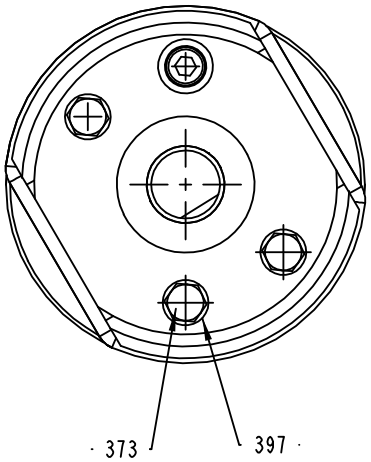

ECM: 124775 - 20030526
Group number: 293685-0200
Assembly Drawing: 293685-2_2_AB

This list covers pages from 8-42 to 8-45

Pos	Part No	UN	Qty	Description	Page No
0125S, 0100B, 0200S, 0180B, 0200B, 0300S, 0330S, 0250B, 0284B					
105-02	293395-0002		2	TYPE HOLDER	
110-02	293395-0001		2	TYPE HOLDER	
130	292412-0000		1	END SECTION	
135	292413-0000		1	END SECTION	
140	292414-0000		1	CARRIER	
373-02	312101-0331		7	SCREW M6S M5X20 FZB	
397-02	315101-0146		7	WASHER PLAIN, BRB, 5,3/10 H=1	
405	315202-0304		2	O-RING 64,5X3 MM	
410	315202-0305		2	O-RING 69,5X3 MM	
Common Parts					
120	32691-0000		1	LOCKING SPRING	
125	33011-0000		1	SLEEVE	
320	90165-0010		1	CLIP	
330	90413-0033		1	CODE INSERT SET C 2/16	
330	90413-0043		1	CODE INSERT SET	
335	90413-0044		1	CODE INSERT SET	
335	90413-0047		1	CODE INSERT SET A 2/16	
370	312101-0287		1	SCREW M6S M4X8 FZB	
375	312101-0364		1	SCREW M6S M6X10 FZB	
380	312111-0335		1	SCREW HEX.SOCK.HD.MC6S-TT 5X30 88 FZB	
395	315101-0136		1	BRICKA BRB, 4,3/8 H=0,8	
400	315111-0153		1	WASHER PLAIN, TBRB 6,4/12 H=3	
415	321120-0122		2	BEARING BUSHING W/O FL, 15X17X15 MM	

Pos	Part No	UN	Qty	Description	Page No

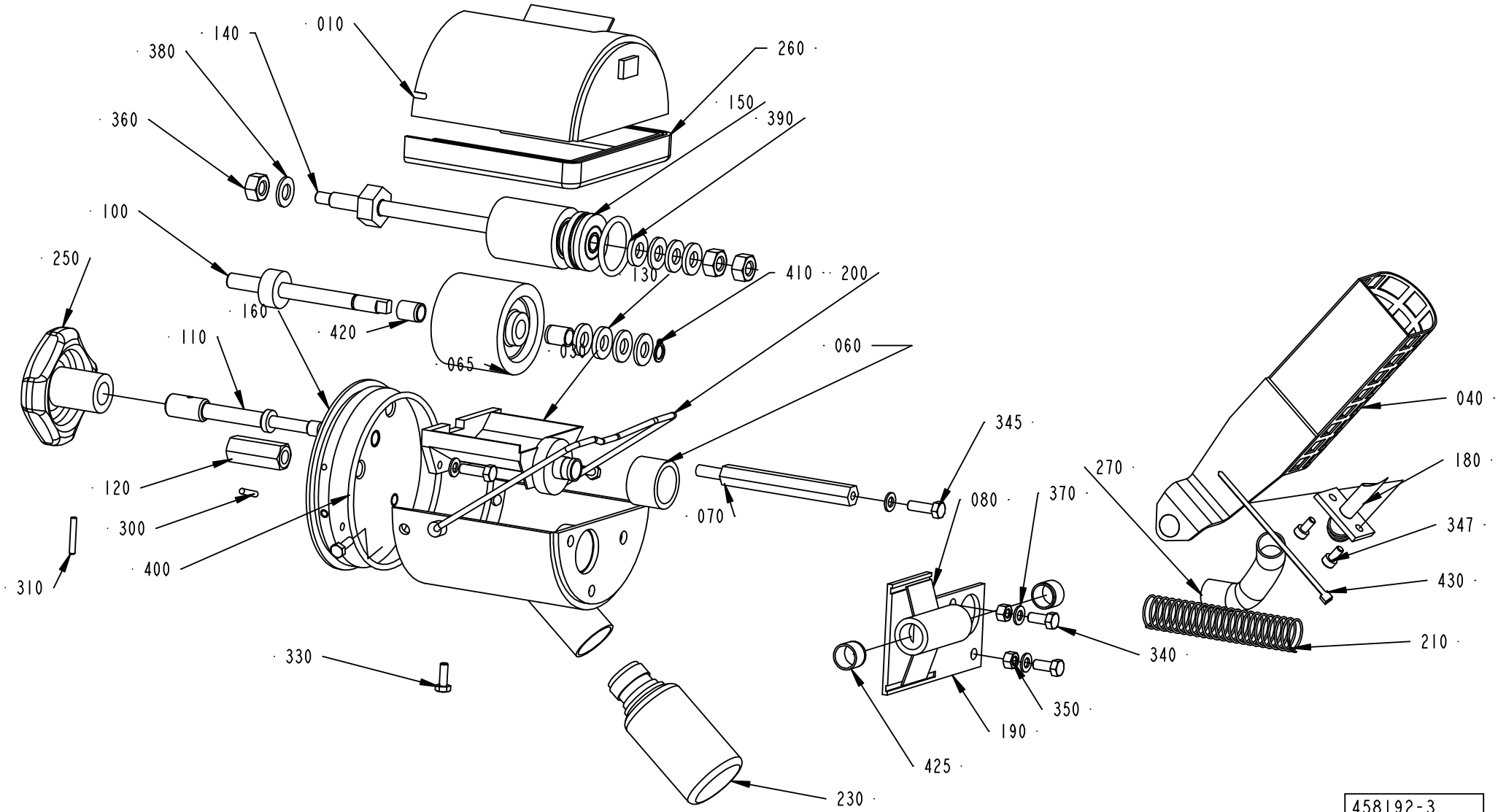

458192-3
ECN 73132

ECM: 106773 - 20021112
Group number: 458192-0300
Assembly Drawing: 458192-3_1_AB

Pos	Part No	UN	Qty	Description	Page No
TBA/19					
230	90050-0012		1	BOTTLE, 50ML PLASTIC	
Common Parts					
010	458364-0000		1	COVER	
030	297210-0000		1	INK WELL	
040	476356-0000		1	HOLDER FOR INK BOTTLE	
060	445542-0000		1	MANTEL RUBBER	
065	450355-0000		1	INK ROLLER	
070	33010-0000		1	SCREW	
080	35547-0000		1	SPRING	
100	292044-0000		1	SHAFT	
110	293667-0000		1	DOWEL	
120	436927-0000		1	NUT	
130	293669-0004		2	WASHER	
130	293669-0003		2	WASHER	
130	293669-0002		2	WASHER	
130	293669-0001		4	WASHER	
140	293670-0000		1	SHAFT	
150	543135-0000		1	INK TRANSFER ROLLER	
	90153-0050		*1*	*ADHESIVE, 3M TYPE SCOTCH-WELD 2216 B/A*	
	321120-0100		*1*	*BEARING BUSHING W/O FLANGE 8/10X12*	
160	297213-0000		1	END SECTION	
180	476355-0000		1	CANNULAR TUBE	
190	456772-0000		1	PIVOT BRACKET	
200	434747-0000		1	BOW CLAMP	
210	537308-0000		1	SPRING	
250	90051-0077		1	HANDLE	
260	90143-0029	MM	295	STRIP	
270	90166-0138	MM	100	HOSE	
280	90299-0072		48	INK	
300	311103-0236		2	PARALLEL PIN ISO 2338 3M6X16 A1	
310	311103-0238		1	PARALLEL PIN ISO 2338 3M6X20 A1	
320	311103-0270		1	PARALLEL PIN ISO 2338 4M6X16 A1	
330	312105-0291		3	SCREW M6S ISO 4017 M4X12 A480	
340	312105-0327		2	SCREW M6S ISO 4017 M5X12 A480	
345	312105-0329		1	SCREW M6S ISO 4017 M5X16 A480	
347	312115-0287		2	SCREW ISO4762 M4X8 A4	
350	312605-0314		2	HEXAGON NUT, M6M M5 A280	
360	312605-0318		3	HEXAGON NUT, M6M M8 A280	
370	315105-0146		3	BRICKA BRB5,3X10RFR	
380	315105-0165		2	WASHER BRB8,4X16RFR	
390	315202-0218		1	O-RING 26,2X3 MM	
400	315202-0309		1	O-RING 89,5X3 MM	
410	315750-0105		1	RETAIN. RING, 8	
420	321120-0100		2	BEARING BUSHING W/O FLANGE 8/10X12	
425	321120-0109		2	BEARING BUSHING W/O FLANGE,12/14X10	
430	352113-0101		1	CLIP STRIP, 92X2,5 MM	

Machine Type | Group Description | Used-In | Group Number | Page No

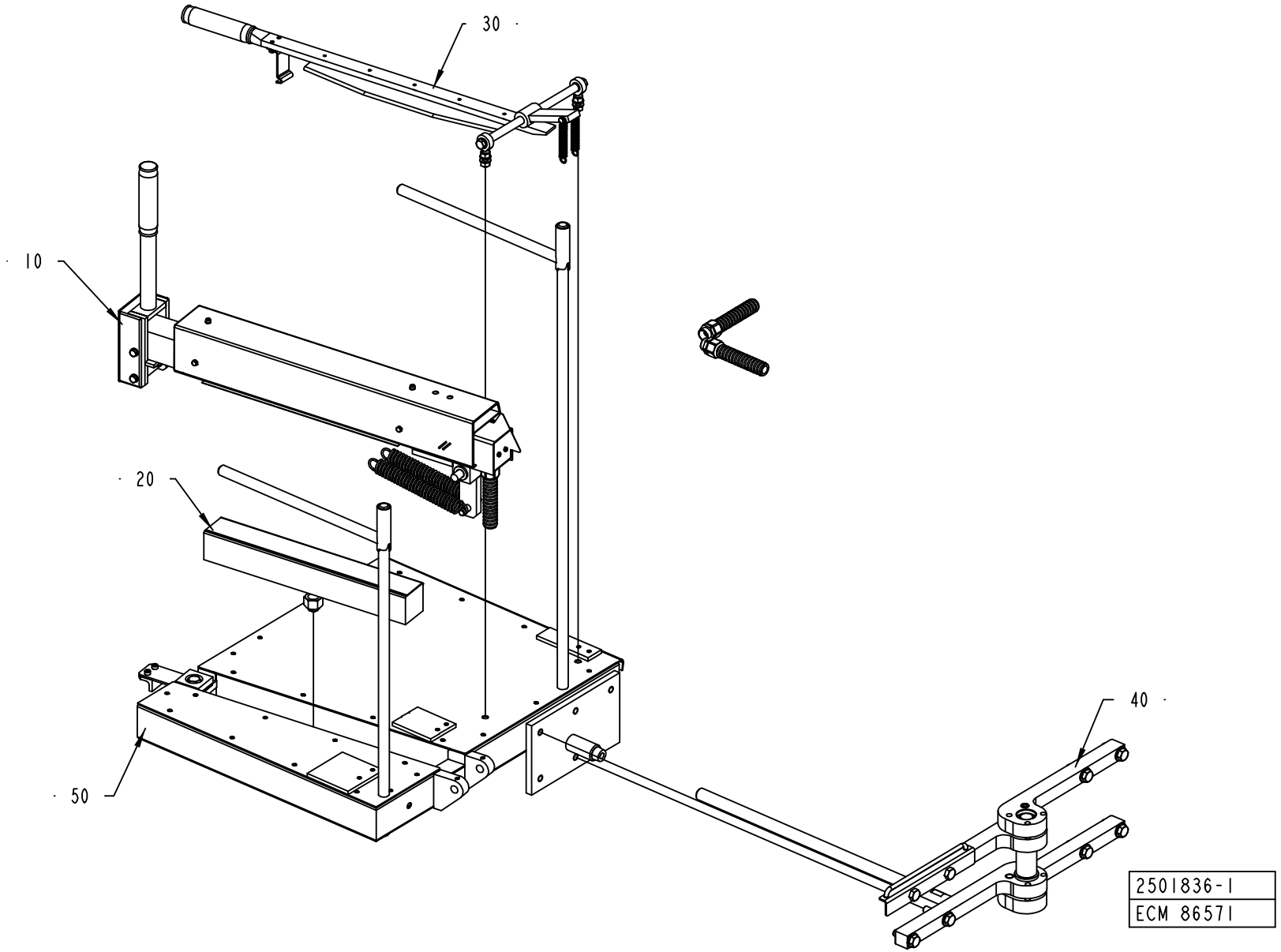
30
10
20
40
50
2501836-1
ECM 86571

ECM: 91613 - 20020111
Group number: 2501836-0100
Assembly Drawing: 2501836-1_1_AA

Pos	Part No	UN	Qty	Description	Page No
-					
010	37877-0400		1	HEATING BLOCK	**8-51**
020	37894-0100		1	COUNTER RAIL	**8-53**
030	450101-0300		1	TEARING DEVICE	**8-55**
040	2500587-0100		1	SUSPENSION ARM	**8-57**
050	271641-0500		1	SPLICING TABLE	**8-59**

Pos	Part No	UN	Qty	Description	Page No

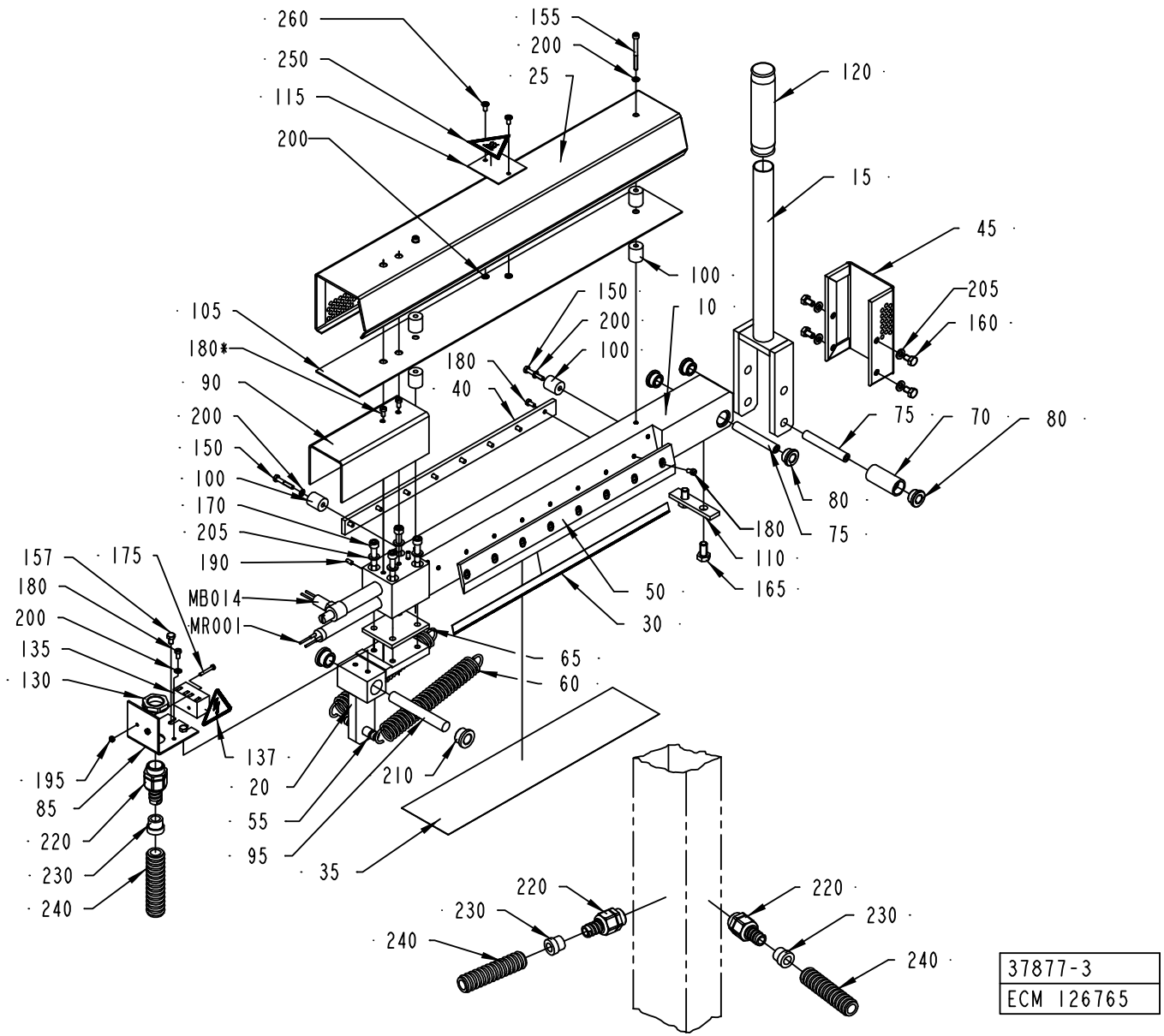
260
250
115
200
155
200
25
120
15
45
205
160
100
150
200
100
10
105
180*
90
200
150
100
170
205
190
180
40
75
70
80
80
75
180
110
165
50
30
157
175
180
200
135
130
MB014
MR001
65
60
137
20
55
95
35
210
195
85
220
230
240
220
230
240
220
230
240
37877-3
ECM 126765

ECM: 132150 - 20031013
Group number: 37877-0400
Assembly Drawing: 37877-3_1_AB

Pos	Part No	UN	Qty	Description	Page No
-					
010	255301-0000		1	HEATING RAIL	
015	37879-0000		1	LOCKING ARM	
020	37880-0000		1	HINGE	
025	243132-0000		1	PROTECTION PLATE	
030	31017-0000		1	KNIFE	
035	31723-0000		1	TEFLON STRIP	
040	31724-0000		1	LOCK BAR	
045	37882-0000		1	PROTECTION PLATE	
050	37883-0000		1	LOCK BAR	
055	37884-0000		1	SHAFT	
060	37885-0000		2	TENSION SPRING	
065	37886-0000		1	INSULATING DISK	
070	37888-0000		1	ROLL	
075	37889-0000		2	SHAFT	
080	37890-0000		4	FLANGE ROLLER	
085	2616035-0000		1	CONNECTION BOX	
090	37893-0000		1	LID	
095	208173-0000		1	SHAFT	
100	229775-0000		6	SPACER	
105	243133-0000		1	SHIELD PLATE	
110	245221-0000		1	STOP	
115	2641397-0000		1	PLATE	
120	90017-0001		1	BIKE HANDLE	
130	90458-0323		1	NUT, M20X1,5	
135	90077-0102		1	TERMINAL BLOCK, 1952.2	
137	359705-0015		1	WARNING SIGN ISO, RISK OF ELECTRIC SHOCK	
150	312105-0297		2	SCREW M6S ISO 4017 M4X25 A480	
155	312115-0304		2	SCREW ISO4762 M4X45 A4	
157	312105-0323		2	SCREW M6S ISO 4017 M5X8 A480	
160	312105-0364		4	SCREW M6S ISO 4017 M6X10 A480	
165	312105-0449		2	SCREW M6S ISO 4017 M8X16 A480	
170	312115-0380		4	SCREW ISO4762 M6X50 A4	
175	312125-0230		2	SCREW ISO 1207 M3X20 A4	
180	312125-0287		19	SCREW ISO 1207 M4X8 A4	
190	312318-0287		2	SCREW ISO4029 M4X8 A4	
195	312605-0310		2	HEXAGON NUT, M6M M3 A280	
200	315105-0136		7	WASHER BRB4,3XRFR	
205	315105-0153		8	WASHER BRB6,4X12RFR	
210	321101-0173		2	FLANGE BUS 12F7X12	
220	90458-0428		3	EXTENDED WITHOUT INSERT, M20X1,5	
230	353249-0010		3	INSERT, SINGEL HOLE, EK 152/11	
240	90152-0059	M	2	SPIRAL CONDUIT, 18X12, UL 1211	
250	359710-0001		1	WARNING SIGN ISO, HOT SURFACE	
260	311521-0152		2	BLANK RIVET 4X8	
MB014	90059-0001		1	THERMOSTAT	
MR001	90206-0053		1	HEATING ELEMENT 230V 1200W	

Machine Type | Group Description | Used-In | Group Number | Page No

COUNTER RAIL

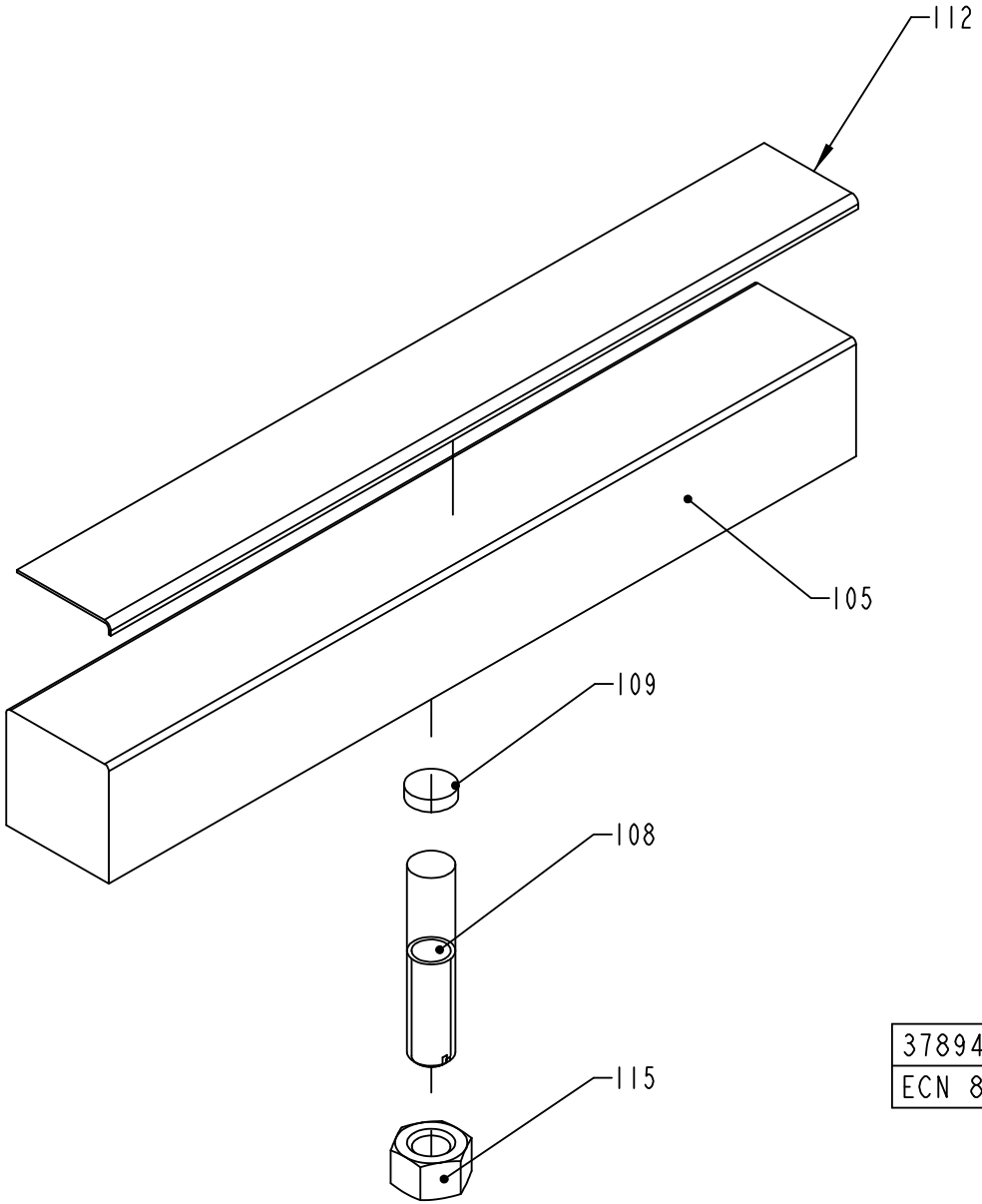

37894-1
ECN 89888

ECM: 102864 - 20020110
Group number: 37894-0100
Assembly Drawing: 37894-1_1_AB

Pos	Part No	UN	Qty	Description	Page No
-					
105	37895-0000		1	RAIL	
108	37896-0000		1	DOWEL	
109	37897-0000		1	WASHER	
112	90144-0030	MM	360	TAPE	
115	312605-0324		1	HEXAGON NUT, M6M M16 A280	

Pos	Part No	UN	Qty	Description	Page No

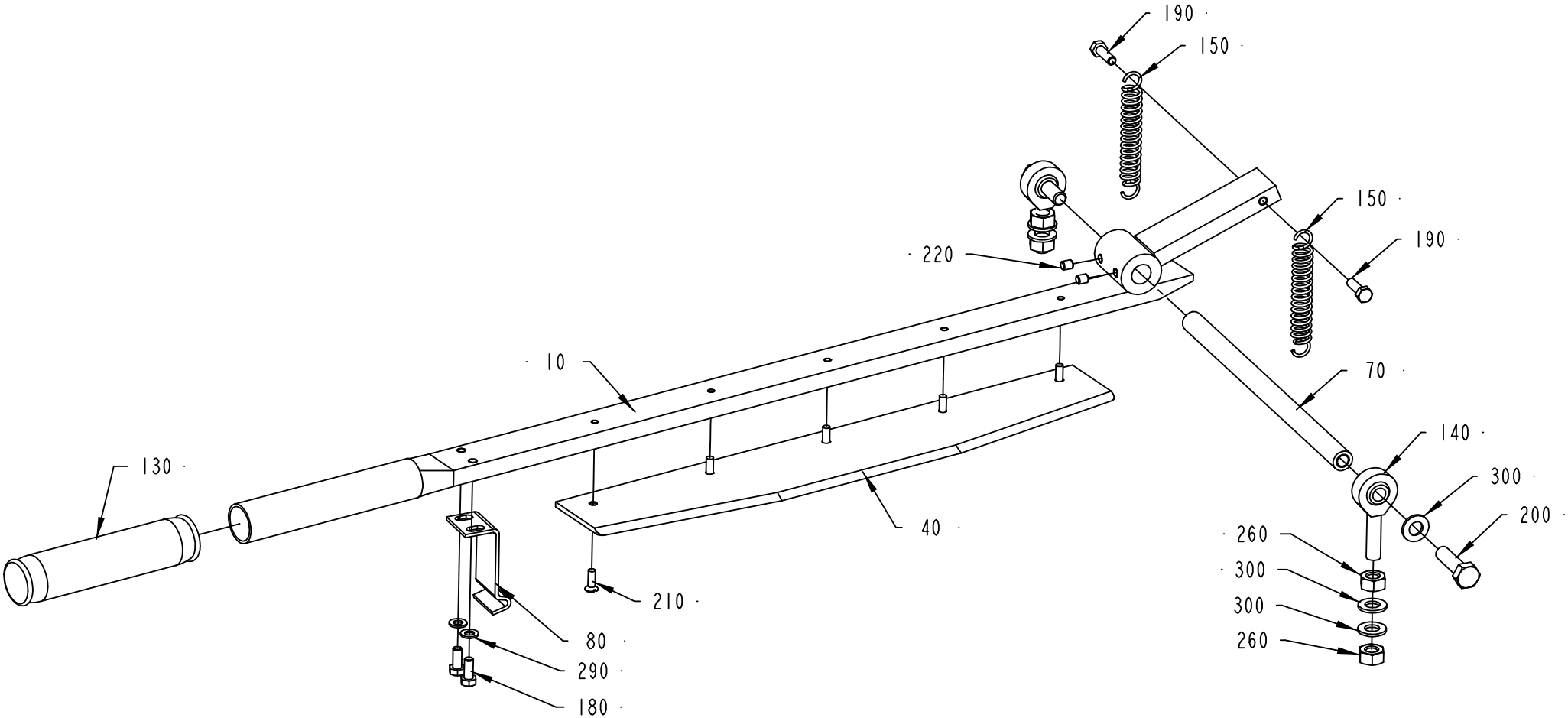

450101-3
ECM 86571

ECM: 91615 - 20020111
Group number: 450101-0300
Assembly Drawing: 450101-3_1_AA

Pos	Part No	UN	Qty	Description	Page No
-					
010	571920-0000		1	PRESSURE ARM	
040	37900-0000		1	KNIFE	
070	979784-0000		1	SHAFT	
080	206913-0000		1	LOCKING LOOP	
130	90017-0001		1	BIKE HANDLE	
140	90115-0054		2	ROD END, ID=8 MM, M8X1,25	
150	90458-1241		2	TENSION SPRING RZ-1221	
180	312101-0327		2	SCREW M6S M5X12 FZB	
190	312101-0329		2	SCREW M6S M5X16 FZB	
200	312105-0455		2	SCREW M6S ISO 4017 M8X30 A480	
210	312145-0291		5	SCREW ISO 2009 MFS M4X12 A4	
220	312316-0321		2	SCREW HEX.SOCK.SET CUP P.MSK6SS5X6 FZB	
260	312605-0318		4	HEXAGON NUT, M6M M8 A280	
290	315101-0146		2	WASHER PLAIN, BRB, 5,3/10 H=1	
300	315105-0165		6	WASHER BRB8,4X16RFR	

Pos	Part No	UN	Qty	Description	Page No

SUSPENSION ARM

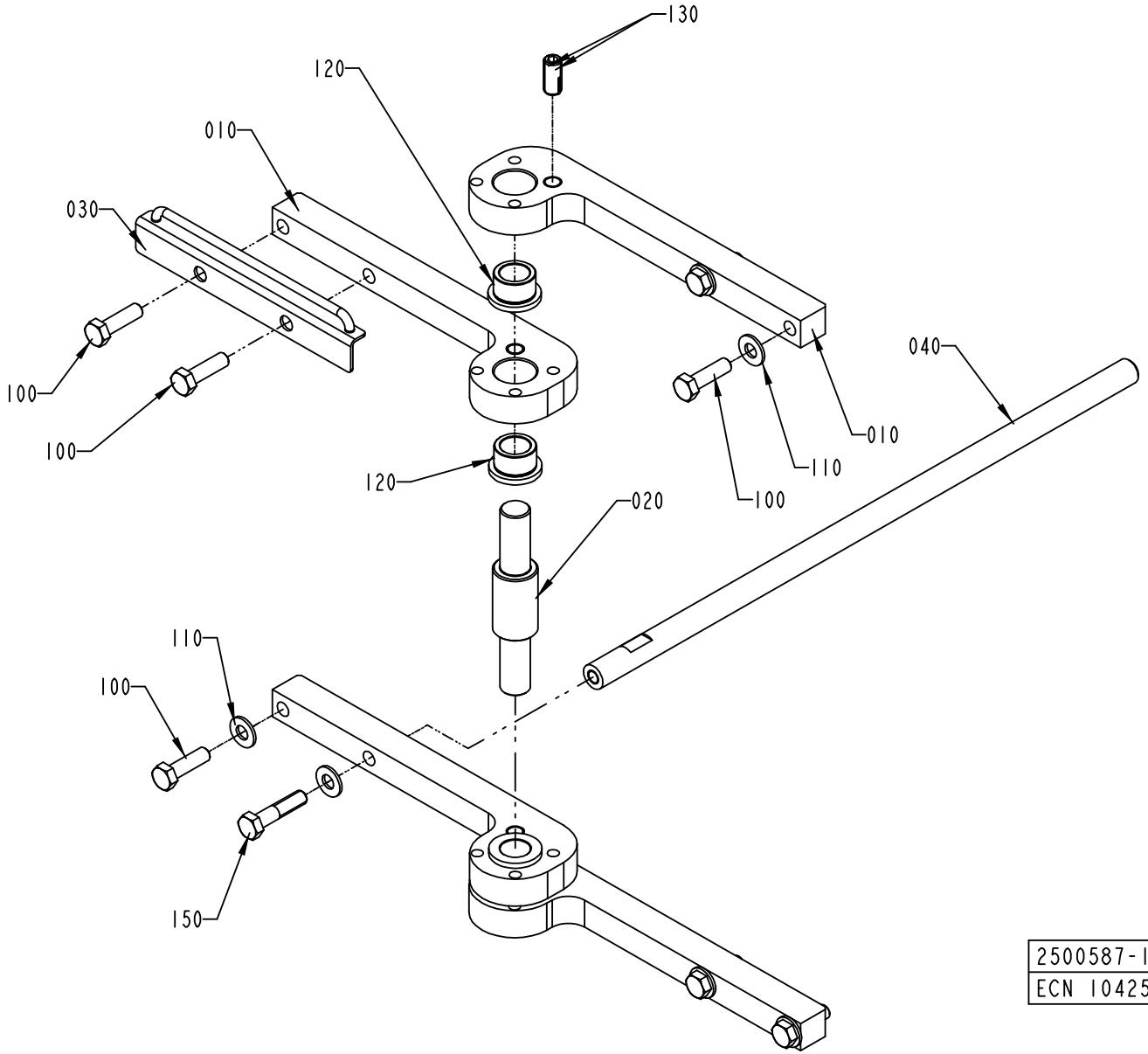

2500587-1
ECN 104253

ECM: 104333 - 20030113
Group number: 2500587-0100
Assembly Drawing: 2500587-1_1_AB

Pos	Part No	UN	Qty	Description	Page No
-					
010	1558317-0000		4	BRACKET	
020	2501385-0000		1	SHAFT	
030	2500593-0000		1	BOW CLAMP	
040	272862-0000		1	HOLDER	
100	312105-0497		7	SCREW M6S ISO 4017 M10X35 A480	
110	315105-0173		6	WASHER BRB10,5X22RFR	
120	321101-0233		4	FLANGE BUSHING, 20X28X20 MM	
130	90458-2078		2	SCREW SPRINGLOAD. SOCK. HEX HEAD M12X26	
150	312105-0500		1	SCREW M6S ISO 4014 M10X45 A480	

Pos	Part No	UN	Qty	Description	Page No

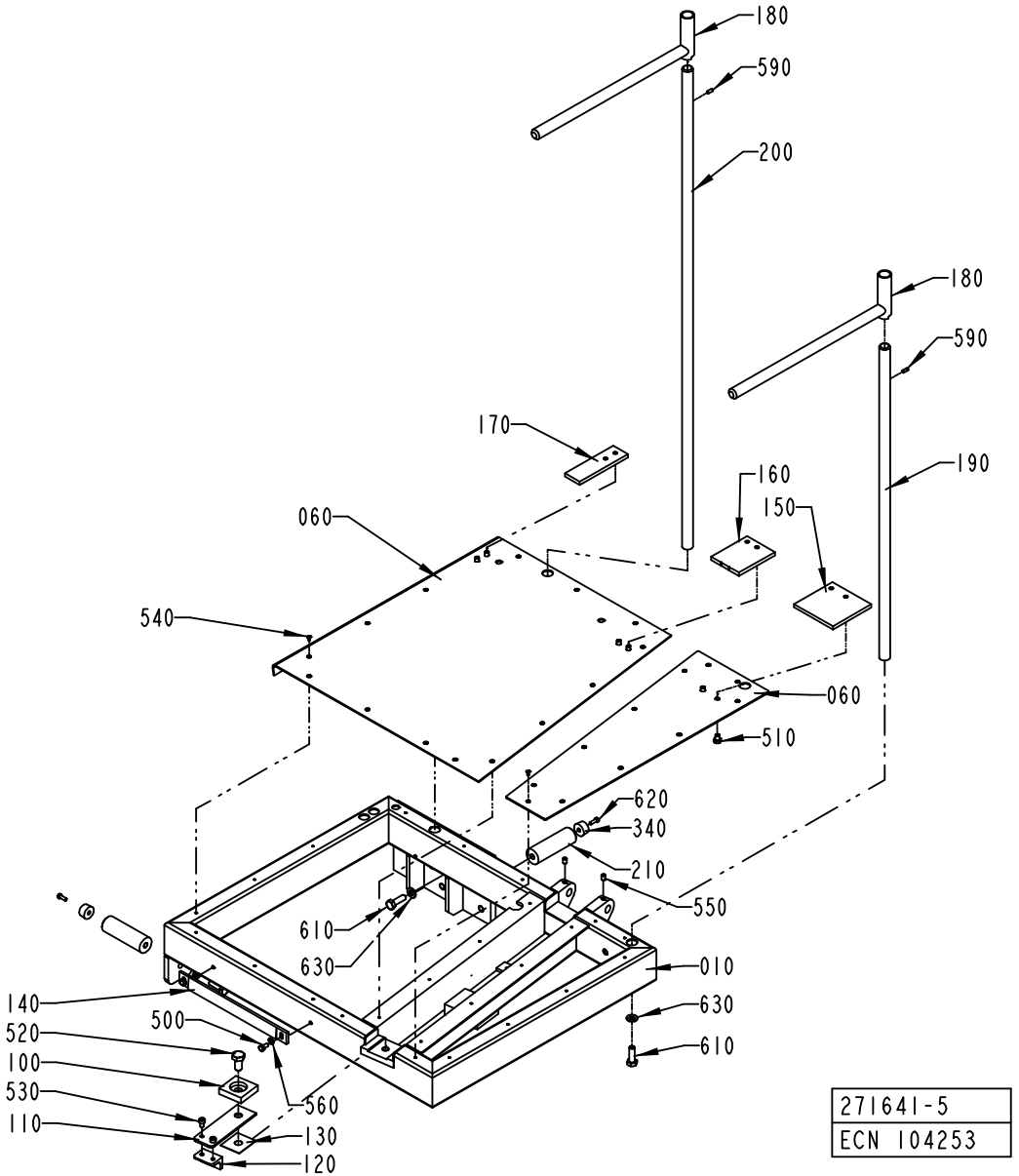
180
590
200
180
590
190
170
160
150
060
540
060
510
620
340
210
550
610
630
010
630
610
140
500
520
100
530
110
560
130
120
271641-5
ECN 104253

ECM: 127320 - 20031013
Group number: 271641-0500
Assembly Drawing: 271641-5_1_AB

Pos	Part No	UN	Qty	Description	Page No
TBA 0125S, TBA 0100B					
150	271642-0000		1	RULER	
160	271643-0000		1	RULER	
170	271644-0000		1	RULER	
TBA 0160S, TBA 0200S					
150	272886-0000		1	RULER	
160	272887-0000		1	RULER	
170	272888-0000		1	RULER	
TBA 0250S, TBA 0200M					
150	574426-0000		1	RULER	
160	574427-0000		1	RULER	
170	574428-0000		1	RULER	
TBA 0330S, TBA 0300S, TBA 0180B, TBA 0200B, TBA 0284B, TBA 0250B					
150	37913-0000		1	RULER	
160	37916-0000		1	RULER	
170	37917-0000		1	RULER	
Common Parts					
010	37905-0000		1	FRAME	
050	979783-0000		1	PLATE	
060	979204-0000		1	PLATE	
100	37908-0000		1	PLATE	
110	37909-0000		1	SPRING	
120	37910-0000		1	LOCK	
130	37911-0000		1	LACE	
140	37912-0000		1	LOCK PLATE	
180	469141-0000		2	HOLDER	
190	978876-0000		1	SHAFT	
200	978877-0000		1	SHAFT	
210	2501835-0000		2	SHAFT	
340	90347-0005		2	DAMPER, NO. F 1006 B	
500	312105-0325		2	SCREW M6S ISO 4017 M5X10 A480	
510	312105-0362		6	SCREW M6S ISO 4017 M6X8 A480	
520	312105-0491		1	SCREW M6S ISO 4017 M10X20 A480	
530	312115-0323		2	SCREW ISO4762 M5X8 A4	
540	312145-0220		25	SCREW ISO 2009 MFS M3X6 A4	
550	312318-0362		2	SCREW ISO4029 M6X8 A4	
560	315105-0146		2	BRICKA BRB5,3X10RFR	
590	311103-0267		2	PARALLEL PIN ISO 2338 4M6X10 A1	
600	312105-0461		1	SCREW M6S ISO 4014 M8X50 A480	
610	312105-0453		3	SCREW M6S ISO 4017 M8X25 A480	
620	312125-0291		2	SCREW ISO 1207 M4X12 A4	
630	315105-0165		4	WASHER BRB8,4X16RFR	

Pos	Part No	UN	Qty	Description	Page No

Machine Type	Group Description	Used-In	Group Number	Page No

PAPER REEL HOLDER

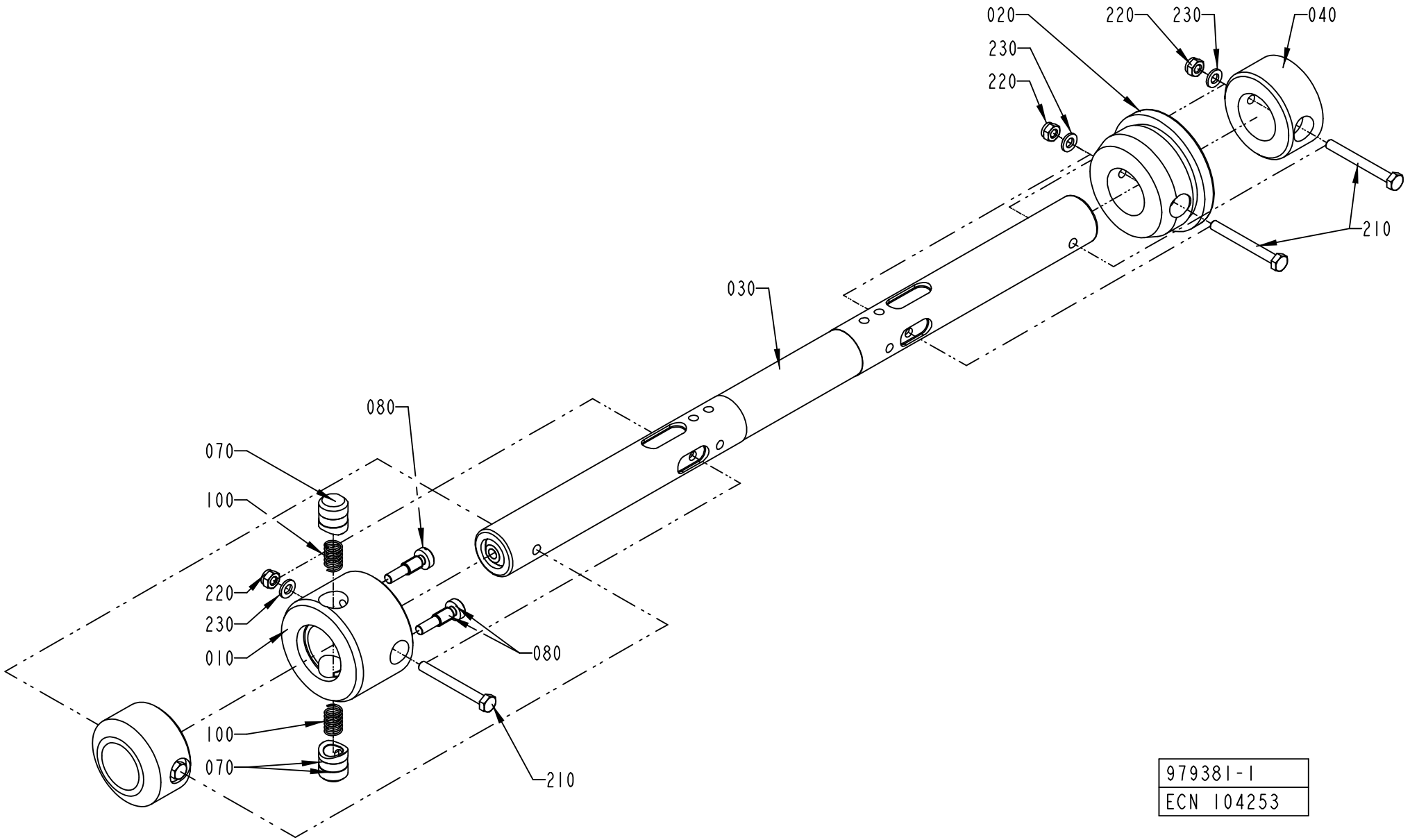

979381-1
ECN 104253

ECM: 104332 - 20030113
Group number: 979381-0100
Assembly Drawing: 979381-1_1_AC

Pos	Part No	UN	Qty	Description	Page No
-					
010	271239-0000		1	SLEEVE	
020	272810-0001		1	SLEEVE	
030	979382-0000		1	SHAFT	
040	440259-0000		2	RETAINING RING	
070	272813-0000		2	PLUNGER	
080	271241-0000		2	SCREW	
100	90335-0025		2	COMP. SPRING 22010, 1X11X26	
210	312101-0381		4	SCREW M6S M6X55 FZB	
220	312812-0316		4	HEXAGON NUT, NY-LOCK M6 A480	
230	315101-0153		4	WASHER PLAIN, BRB, 6,4/12 H=1,5	

Pos	Part No	UN	Qty	Description	Page No

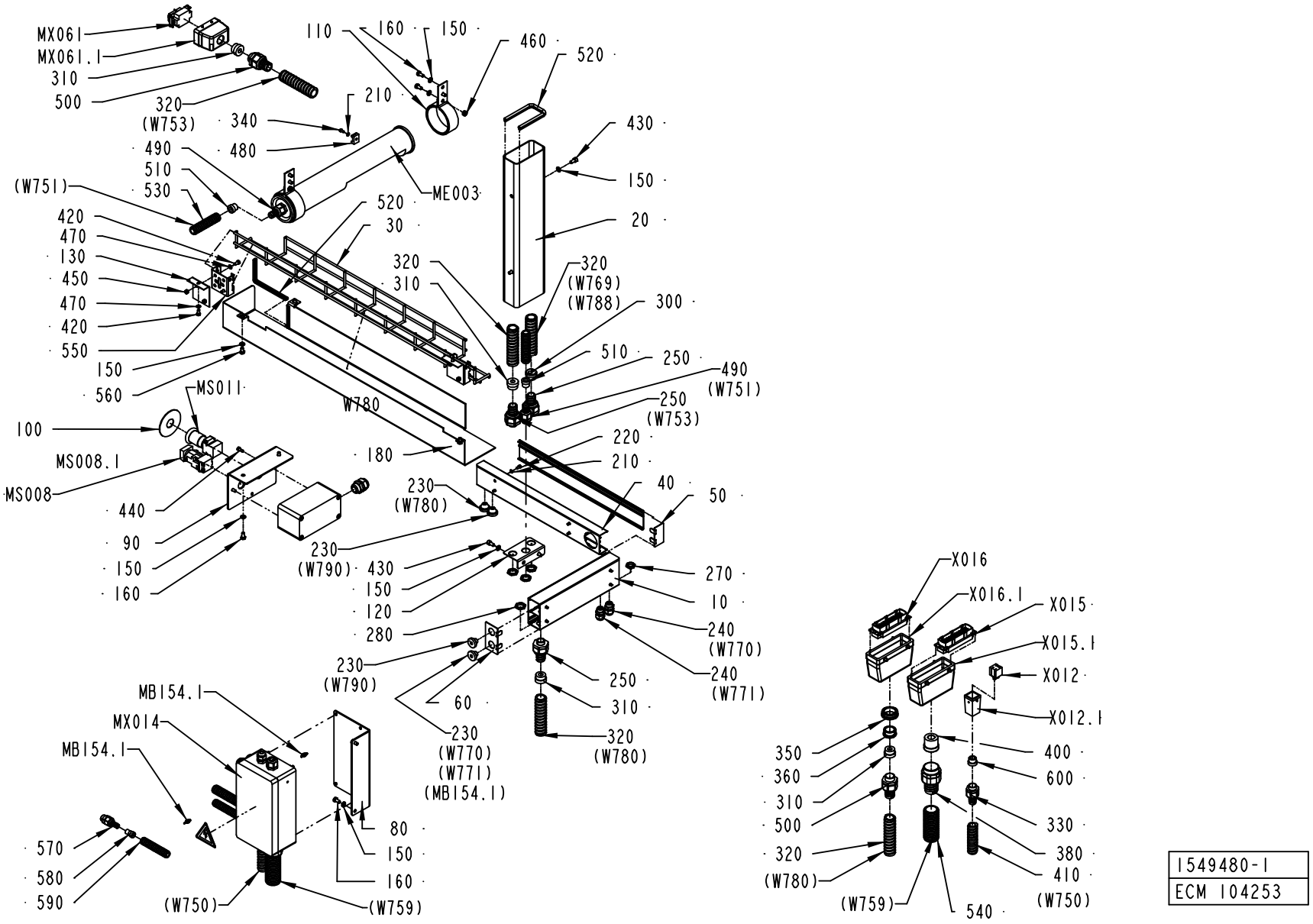

1549480-1
ECM 104253

ECM: 132151 - 20031013
Group number: 1549480-0100
Assembly Drawing: 1549480-1_1_AB

Pos	Part No	UN	Qty	Description	Page No
-					
010	2614227-0000		1	CABLE TRACK	
020	2614225-0000		1	CABLE TRACK	
040	2614228-0000		1	CABLE TRACK	
080	1558315-0000		1	BRACKET	
090	1558316-0000		1	BRACKET	
110	2526341-0000		2	LAMP HOLDER	
120	2526342-0000		1	BRACKET	
150	315105-0153		23	WASHER BRB6,4X12RFR	
160	312105-0366		18	SCREW M6S M6X12 A280	
170	359705-0015		1	WARNING SIGN ISO, RISK OF ELECTRIC SHOCK	
180	2529564-0000		1	COVER	
190	2614226-0000		1	CABLE TRACK	
210	315105-0136		1	WASHER BRB4,3XRFR	
230	90015-0023		2	LEAD-IN, TET7-10, E-1458019	
240	90458-0413		2	NORMAL WITHOUT INSERT, M20X1,5	
250	90458-0430		3	EXTENDED WITHOUT INSERT, M20X1,5	
260	2564115-0000		1	PUSH BUTTON BOX	
280	90458-0323		6	NUT, M20X1,5	
290	90458-0307		1	CABLE GLAND, M20X1,5, NO.5311 1020	
300	90458-1239		1	GLAND, INSERT, MULTI HOLE, 1X9/1X5,5	
310	353249-0012		4	INSERT, SINGEL HOLE, EK 154/11	
320	90152-0051	M	4	SPIRAL CONDUIT, 25X18, UL 1816	
330	353243-0003		1	EXTENDED WITHOUT INSERT, PG11	
340	312125-0287		1	SCREW ISO 1207 M4X8 A4	
350	90089-0005		1	REDUCING SLEEVE, PR37/PR28,3	
360	90089-0004		1	REDUCING SLEEVE, PR28,3/PR22,5	
380	353242-0003		1	NORMAL WITHOUT INSERT, PG29	
400	353249-0072		1	INSERT, SINGEL HOLE, E155/20	
430	312115-0366		2	SCREW ISO4762 M6X12 A4	
440	312125-0297		4	SCREW ISO 1207 M4X25 A4	
460	312605-0316		2	HEXAGON NUT, M6M M6 A280	
470	315105-0146		2	BRICKA BRB5,3X10RFR	
480	352113-0203		1	ANCHOR PLATES FOR STRIPS, TYPE TM3S8-M0	
490	353243-0002		2	EXTENDED WITHOUT INSERT, PG11	
500	353243-0005		2	EXTENDED WITHOUT INSERT, PG16	
510	353249-0010		2	INSERT, SINGEL HOLE, EK 152/11	
520	90143-0060	MM	850	EDGE STRIP 9,5X6,3MM BLACK PVC	
530	90152-0059	M	2	SPIRAL CONDUIT, 18X12, UL 1211	
560	312105-0364		3	SCREW M6S ISO 4017 M6X10 A480	
570	90458-0417		1	GLAND, HOSE, WITHOUT INSERT, M16X1,5	
580	90458-1238		2	GLAND, INSERT, SINGLE HOLE,	
590	90152-0058	M		SPIRAL CONDUIT, 15X9, UL 0909	
600	353249-0011		1	INSERT, SINGEL HOLE, EK 153/11	
610	312125-0329		2	SCREW ISO 1207 M5X16 A4	
620	352135-0202		1	CLIP, 16 MM, 913.016	
630	353249-0025		2	INSERT, MULTI HOLE, E152M3X4	
640	353249-0301		2	SEALING PIN, 4X20	
650	90458-0404		1	NORMAL WITHOUT INSERT, M16X1,5	
660	90458-0428		1	EXTENDED WITHOUT INSERT, M20X1,5	
MB154.1	90232-0347		1	FIBRE LL3-TB01 5 308050	
ME003	90164-0015		1	LIGHT FIXTURE, DWDCV111B/230V 50HZ	
	90297-0007		*1*	*FLUORESCENT TUBE, PLS 11*	
MS008	90064-0085		1	PUSH BUTTON, RED	
MS008.1	359301-0110		1	SIGN "SHORT STOP"	
MS011	90458-1651		1	EMERGENCY STOP, ZB4-BS-844 ZB4-BZ-104	
MS011.1	486826-0001		1	SIGN "EMERGENCY STOP"	
MX060	1558318-0100		1	CONNECTION BOX	**8-65**
MX061	90110-0170		1	FEMALE INSERT 10-POLE	
MX061.1	90110-0171		1	COVER 10-POLE	
W780	351150-0406	M	4	CABLE OLFLEX 7X0,75 MM2 LIGHT/GREY	
X012	90459-2412		1	CONNECTOR 4 POLE + EARTH	
X012.1	90110-0371		1	PLUG HOOD	
X015	90110-0150		1	MALE INSERT 121110 0000	
X015.1	90110-0152		1	CABLE HOOD 24-POL 70.352.2428.1	
X016	90110-0150		1	MALE INSERT 121110 0000	
X016.1	90110-0152		1	CABLE HOOD 24-POL 70.352.2428.1	

Machine Type | Group Description | Used-In | Group Number | Page No

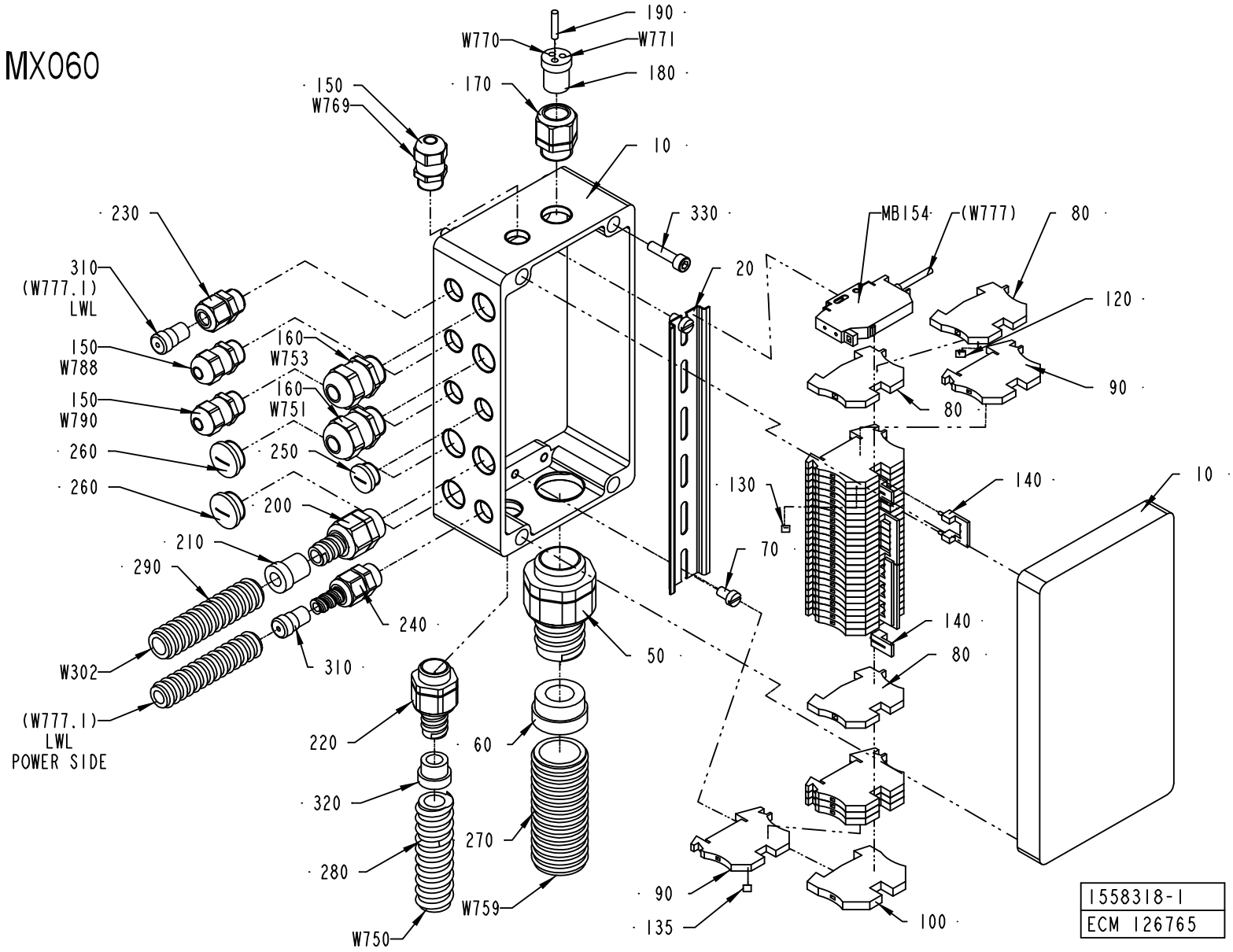
MX060
190
W770
W771
180
150
W769
170
10
230
330
MB154
(W777)
80
310
(W777.1)
LWL
20
120
160
W753
150
W788
160
W751
90
150
W790
80
260
250
130
140
10
260
200
210
70
290
140
240
80
50
W302
310
(W777.1)
LWL
POWER SIDE
220
60
320
270
280
90
W759
135
100
W750
1558318-1
ECM 126765

ECM: 130664 - 20031013
Group number: 1558318-0100
Assembly Drawing: 1558318-1_1_AC

Pos	Part No	UN	Qty	Description	Page No
-					
010	2501265-0000		1	CONNECTION BOX	
020	2501266-0000		1	RAIL	
050	90458-0433		1	EXTENDED WITHOUT INSERT, M32X1,5	
060	353249-0016		1	INSERT, SINGEL HOLE, EK 155/18	
070	312125-0364		2	SCREW ISO 1207 M6X10 A4	
080	353024-0204		3	EARTH TERMINAL WPE 2,5	
090	353021-0212		30	FEED THROUGH TERMINAL, 10200.0	
100	353024-0205		1	EARTH TERMINAL, 1010.1	
120	359011-0818		1	SYMBOL 5-GW (-) 50PC	
130	359011-0807		2	MARKING PLATES 5-FW 1-50	
135	359011-0809		2	MARKING PLATES 5-FW 101-150	
140	353034-0030		4	BRIDGE CONNECTOR WQV 2,5/10, 10544.6	
150	90458-0306		3	CABLE GLAND, M16X1,5, NO.5311 1010	
160	90458-0315		2	CABLE GLAND, M20X1,5, NO.5311 1120	
170	90458-0406		1	NORMAL WITHOUT INSERT, M20X1,5	
180	353249-0025		1	INSERT, MULTI HOLE, E152M3X4	
190	353249-0301		1	SEALING PIN, 4X20	
200	90458-0413		1	NORMAL WITHOUT INSERT, M20X1,5	
210	353249-0065		1	INSERT, SINGEL HOLE, E152/09	
220	90458-0429		1	EXTENDED WITHOUT INSERT, M20X1,5	
230	90458-0404		1	NORMAL WITHOUT INSERT, M16X1,5	
240	90458-0417		1	GLAND, HOSE, WITHOUT INSERT, M16X1,5	
250	90458-1307		1	BLIND PLUG CIRCULAR, M16X1,5 514GFK/216	
260	90458-1308		2	BLIND PLUG CIRCULAR, M20X1,5 514GFK/220	
270	90152-0070	M	1	METAL HOSE, 32,5X26, UL 2621	
280	90152-0050	M	2	SPIRAL CONDUIT, 20X13, UL 1313	
290	90152-0059	MM	500	SPIRAL CONDUIT, 18X12, UL 1211	
310	90458-1238		2	GLAND, INSERT, SINGLE HOLE,	
320	353249-0011		1	INSERT, SINGEL HOLE, EK 153/11	
330	312115-0372		4	SCREW ISO4762 M6X25 A4	
MB154	90232-0123		1	PH.CELL WLL170-P135-6011723	
W302	351120-0144	M	4	CABLE SIHF 3X1,5MM2 GREEN/YELLOW	
W750	351150-0414	M	2	CABLE OLFLEX 5X1,5 MM2 LIGHT/GREY	
W751	351150-0412	M	2	CABLE OLFLEX 3X1,5 MM2 LIGHT/GREY	
W753	351150-0406	M	4	CABLE OLFLEX 7X0,75 MM2 LIGHT/GREY	
W759	351150-0425	M	2	CABLE OLFLEX 25X0,75 MM2 LIGHT/GREY	
W788	351150-0405	M	4	CABLE OLFLEX 5X0,75 MM2 LIGHT/GREY	
W790	351150-0405	M	4	CABLE OLFLEX 5X0,75 MM2 LIGHT/GREY	

Pos	Part No	UN	Qty	Description	Page No

Machine Type | Group Description | Used-In | Group Number | Page No

Tetra Pak

SPC
Spare Parts Catalogue

TBA/19 020V

648160-2000

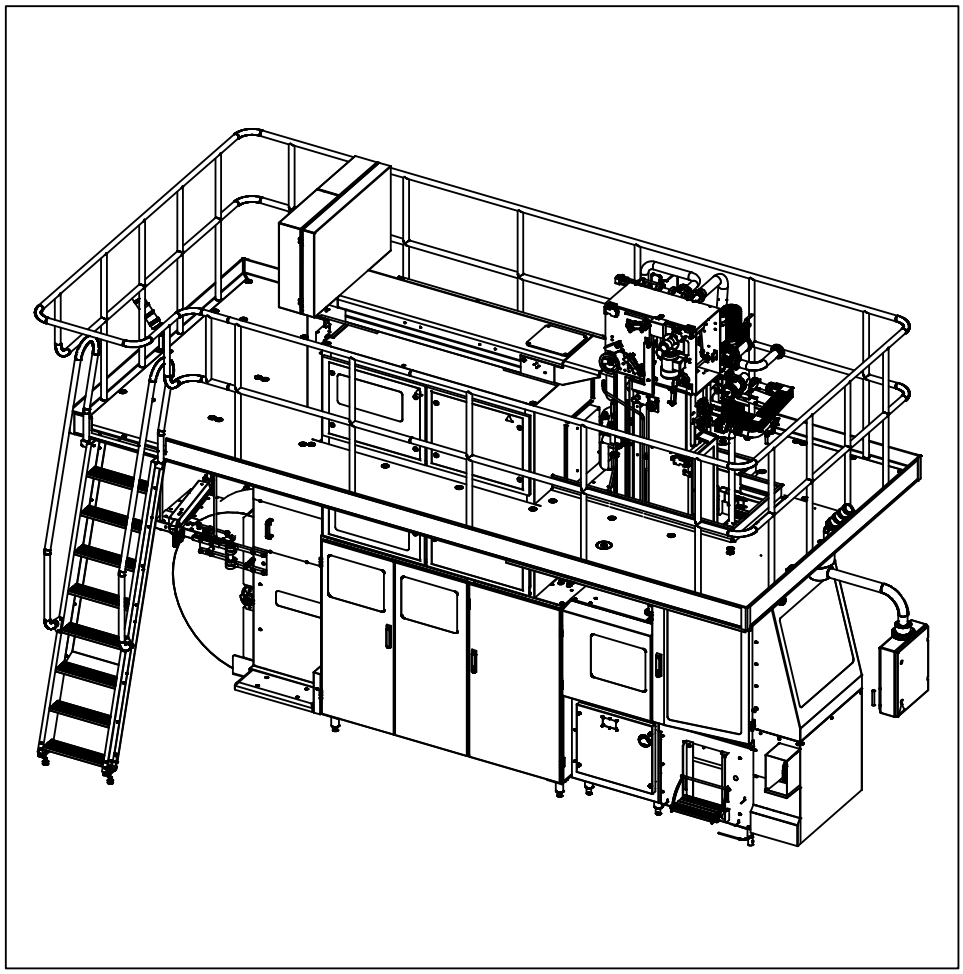

Tetra Pak

Doc. No: SPC-81656-0110

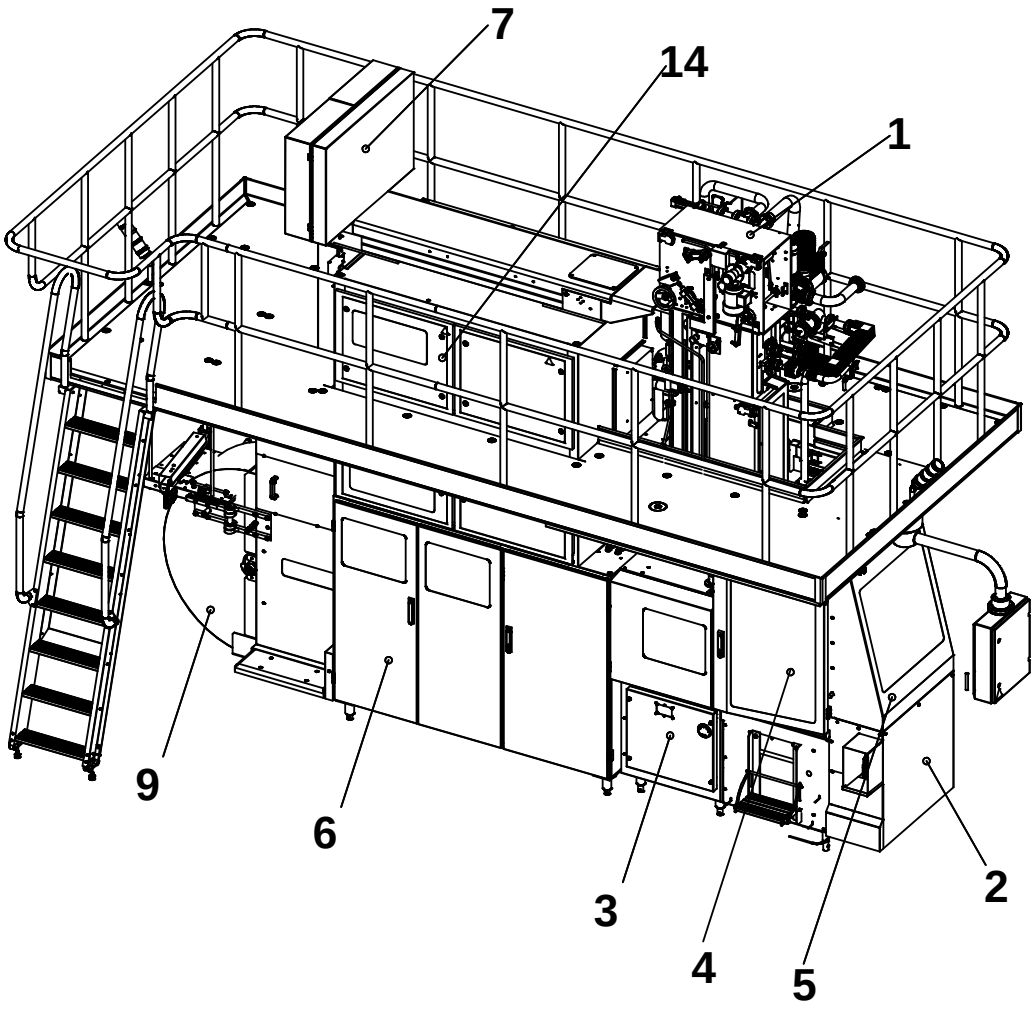

The position numbers in the illustration correspond with the chapter numbers listed on the next page.

Copyright © 2004 Tetra Pak Group

All rights reserved. No part of this document may be reproduced or copied in any form or by any means without written permission from Tetra Pak Carton Ambient AB.

Tetra Pak and all Tetra Pak products are trademarks belonging to the Tetra Pak Group.

The content of this manual is in accordance with the design and construction of the machine or equipment at the time of publishing. Tetra Pak reserves the right to introduce design modifications without prior notice.

This document was produced by:

Tetra Pak Carton Ambient AB
Technical Publications
Ruben Rausings gata
S-221 86 Lund / Sweden

This Tetra Pak equipment was manufactured by:

Tetra Pak Carton Ambient AB
Ruben Rausings gata
S-221 86 Lund / Sweden

Additional copies can be ordered from Tetra Pak Parts or the nearest Tetra Pak office. When ordering additional copies, always provide the document number. This can be found in the machine specification document. It is also printed on the front cover and in the footer on each page of the manual.

Doc. No. SPC-81656-0110

Issue 2004-09

This document is valid from:

21204/00152

Series No/Machine No Sign.

SPC

Spare Parts Catalogue

Tetra Brik Aseptic
TBA/19 020V
648160-2000

BINDER 1

i Introduction

1 Superstructure TBA/19 .
B-648111-1200

2 Machine Body
B-648102-1200

3 Drive
B-648103-1100

4 Jaw System
B-648104-1200

5 Final Folder
B-648105-1200

6 Service Unit
B-648106-1200

7 Strip Applicator
B-648107-1200

8 Packaging Material Infe.
B-648156-0100

BINDER 2

9 Regular Accessories
B-648109-1200

10 El. Cabinet
B-648114-0100

11 Optional Accessories
B-648119-1200

ii Part Number Index

iii Electrical Parts Index

A list of all optional equipment, optional kits, and rebuilding kits that this catalogue is valid for is found on the next page.

Doc. No: SPC-81656-0110

Issue 2004-09

Tetra Pak

Tetra Pak Carton Ambient S.p.A.

Valid for:

Headspace by Injection
2619758-0100

Temperature Controlled Steam Barrier
1334841-0200

SPC
Spare Parts Catalogue

This page is intentionally left blank.

ECM: 137792 - 20031117
Group number: 648109-1200
Assembly Drawing:

Pos	Part No	UN	Qty	Description	Page No
-					
010	1350086-0200		1	INSTALLATION DRAWING	**9-5**
020	1350087-0200		1	DIAGRAM	**9-7**
050	2543594-0100		1	ELECTRICAL COMPONENTS	**9-9**
060	90459-0308		1	PAPER TROLLEY, STOCKA 32.04.250.9	
	1558480-0100		*1*	*LIFTING CYLINDER*	
	90067-0372		*1*	*SHAFT, 32 04 174 1*	
	90067-0371		*1*	*SLEEVE, 32 04 175 8*	
	90067-0370		*1*	*WHEEL, 32 04 176 6*	
	90458-1473		*1*	*PUMP, 34 73 521 7*	
	90459-3874		*1*	*GUIDE ROLLER, 32441305*	
	90067-0365		*1*	*HYDRAULIC HOSE, 32 04 169 1*	
	90067-0363		*1*	*SLIDER, 32 04 160 1*	
	90067-0360		*1*	*MOUNTING KIT, 34 74 022 5*	
	90067-0359		*1*	*SINK ROD, 34 74 021 7*	
	90067-0349		*1*	*ROLLER KIT, 34 73 050 7*	
	90067-0334		*1*	*AXIAL BEARING KIT, 32 14 174 9*	
090	531345-0200		1	PERSONAL PROTECT. EQ H2O2	**9-11**
100	77099-0300		1	TOOL KIT	**9-13**
110	2541126-0100		1	INSTALLATION ACCESSORIES	**9-15**
110	1520972-0000		5	TPO-BAR	
110	1520972-0000		5	TPO-BAR	
120	2501528-0100		1	PLMS KIT	**9-17**
120	1519952-0000		5	DOLLY	
120	1519952-0000		5	DOLLY	
130	2541886-0100		1	START-UP KIT	**9-31**
310	579899-0000		1	LIFTING UNIT	
320	441725-0000		1	COVERING PLATE	
330	90220-0104	M	20	SCR. CABLE 4X1,5MM2	
340	351150-0405	M	100	CABLE OLFLEX 5X0,75 MM2 LIGHT/GREY	
50	2531465-0000		1	SUPPORT	
600	579765-0000		1	MACHINE SIGN CE	
610	979548-0000		8	MACHINE PLATE	
900	90003-0422		1	CORRUGATED CARDBOARD BOX	
910	90347-0079		10	DAMPER TFE 601	

Pos	Part No	UN	Qty	Description	Page No

Machine Type | Group Description | Used-In | Group Number | Page No

This page is intentionally left blank.

ECM: 103409 - 20020514
Group number: 1350086-0200
Assembly Drawing:

Pos	Part No	UN	Qty	Description	Page No
TBA ASU					
	577753-0013		1	INSTALLATION DRAWING	
Common Parts					
	577753-0014		1	INSTALLATION DRAWING	

Pos	Part No	UN	Qty	Description	Page No

This page is intentionally left blank.

ECM: 118282 - 20030228
Group number: 1350087-0200
Assembly Drawing:

Pos	Part No	UN	Qty	Description	Page No
ASU					
020	1511567-0000		1	AIR DIAGRAM ASU	
NOTCSB					
010	1348964-0000		1	AIR DIAGRAM	
TCSB					
080	2605572-0000		1	AIR DIAGRAM	
Common Parts					
030	2569978-0000		1	WATER DIAGRAM	
040	2569977-0000		1	ASEPTIC DIAGRAM	
050	2569976-0000		1	VALVE PANEL	
060	2569980-0000		1	LUBRIFICATION DIAGRAM	
070	2569979-0000		1	HYDRAULIC SYSTEM	

Pos	Part No	UN	Qty	Description	Page No

This page is intentionally left blank.

ECM: 106690 - 20020514
Group number: 2543594-0100
Assembly Drawing:

Pos	Part No	UN	Qty	Description	Page No
-					
010	90082-0301		3	OVERVOLTOLTAGE PROTECTOR	
020	90064-0315		1	LAMP REMOVER, NO:700	
030	90332-0325		1	PAPER FOR RECORDER 90332-20	
040	90332-0324		1	INK WHEEL	
050	779910-0101		1	PADLOCK	
060	90233-0027		5	TUBE FUSE, 16A	
	90233-0305		*1*	*INDICATOR*	
070	90233-0027		5	TUBE FUSE, 16A	
	90233-0305		*1*	*INDICATOR*	
080	90233-0029		5	TUBE FUSE, 25A	

Pos	Part No	UN	Qty	Description	Page No

This page is intentionally left blank.

ECM: 72190 - 19990628
Group number: 531345-0200
Assembly Drawing:

Pos	Part No	UN	Qty	Description	Page No	Pos	Part No	UN	Qty	Description	Page No
-											
	90303-0013		1	APRON							
	90303-0012		1	PROTECTIVE GLOVES							
	90303-0011		1	PROTECTIVE GOGGLES							

This page is intentionally left blank.

ECM: 103434 - 20020514
Group number: 77099-0300
Assembly Drawing:

Pos	Part No	UN	Qty	Description	Page No
TBA					
020	72947-0000		1	HOOK SPANNER	
040	76131-0000		1	ASSEMBLY CONE	
050	76132-0000		1	ASSEMBLY TOOL	
060	78801-0000		1	CALIBRATION TOOL	
130	777150-0801		2	KEY SET ,SEXKANT	

Pos	Part No	UN	Qty	Description	Page No

This page is intentionally left blank.

ECM: 103435 - 20020514
Group number: 2541126-0100
Assembly Drawing:

Pos	Part No	UN	Qty	Description	Page No
-					
010	1512848-0000		1	BRACKET	
300	90458-1960		2	STRETCHING SCREW, 468-697MM MAX2950KG	
310	90458-1959		8	LIFTING EYE BOLT, LGB (3) 3T M24	
320	312105-0463		4	SCREW M6S ISO 4014 M8X60 A480	

Pos	Part No	UN	Qty	Description	Page No

This page is intentionally left blank.

ECM: 91113 - 20020514
Group number: 2501528-0100
Assembly Drawing:

Pos	Part No	UN	Qty	Description	Page No
TBA					
	2501547-0100		1	QUEUE GUARD	**9-19**
	359000-0104		10	MARKING CO01/3"4"	
	359000-0105		10	MARKING CO01/3"5"	
	359000-0103		10	MARKING CO01/3"3"	
	359000-0102		10	MARKING CO01/3"2"	
	359000-0106		10	MARKING CO01/3"6"	
	359000-0101		10	MARKING CO01/3"1"	
	359000-0100		10	MARKING CO01/3"0"	
	359000-0107		10	MARKING CO01/3"7"	
	353001-0102		50	END SLEEVE 0,75 MM2	
	353001-0101		50	END SLEEVE 0,5 MM2	
	90110-0383		5	CONTACT COVER 15 PIN	
	90110-0518		5	PLINTH 15 PIN	
	359000-0109		10	MARKING CO01/3"9"	
	359000-0108		10	MARKING CO01/3"8"	
MA451	90453-0001		1	MODEM MA-12	
MX022	2510844-0100		1	CONNECTION BOX	**9-21**
Common Parts					
	2501472-0100		1	COUNTER	**9-23**
	2501471-0100		1	COUNTER	**9-25**
MX020	2501466-0100		1	CONNECTION BOX	**9-27**
MX021	2501465-0100		1	CONNECTION BOX	**9-29**
W951	90220-0091	M	200	PAIR TWISTED CABLE 2X2X0,25MM2	
W952	90220-0091	M	200	PAIR TWISTED CABLE 2X2X0,25MM2	
W956	90041-0068		1	DATACABLE MODEM PC	

Pos	Part No	UN	Qty	Description	Page No

QUEUE GUARD

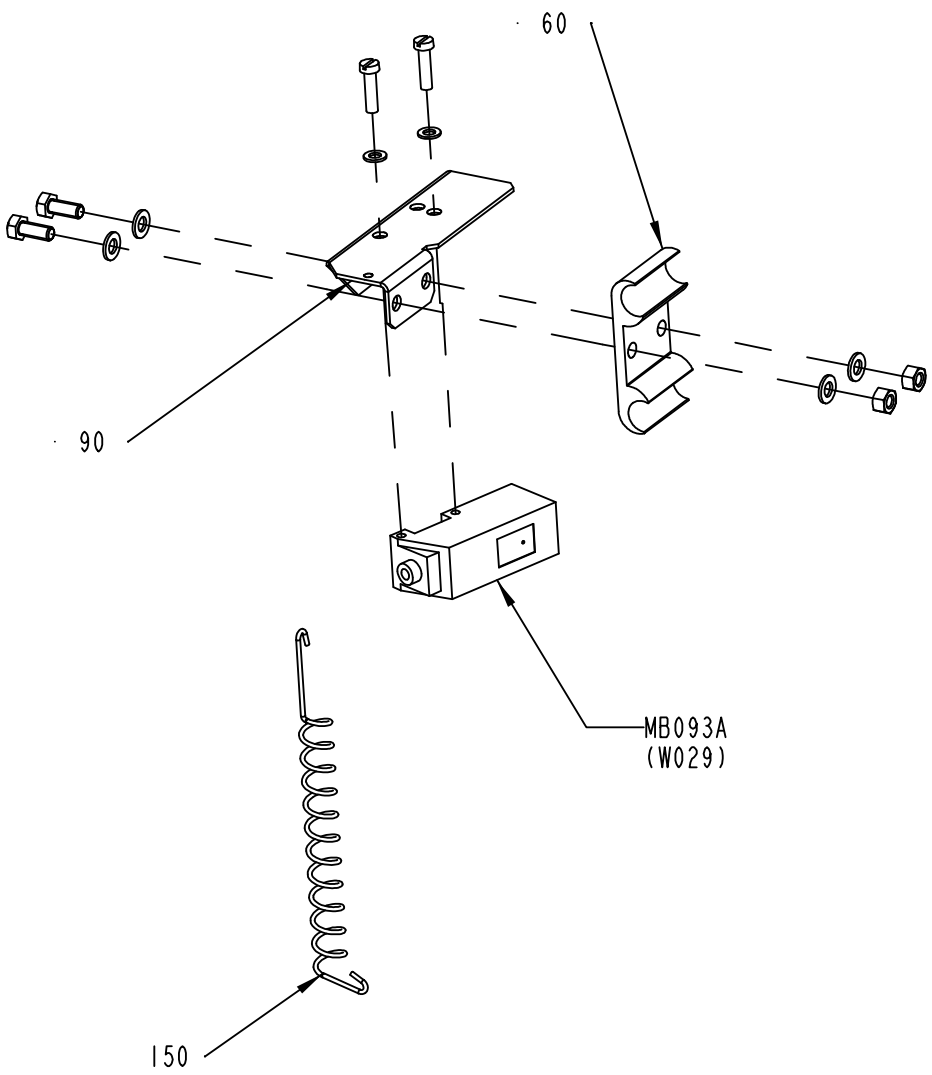

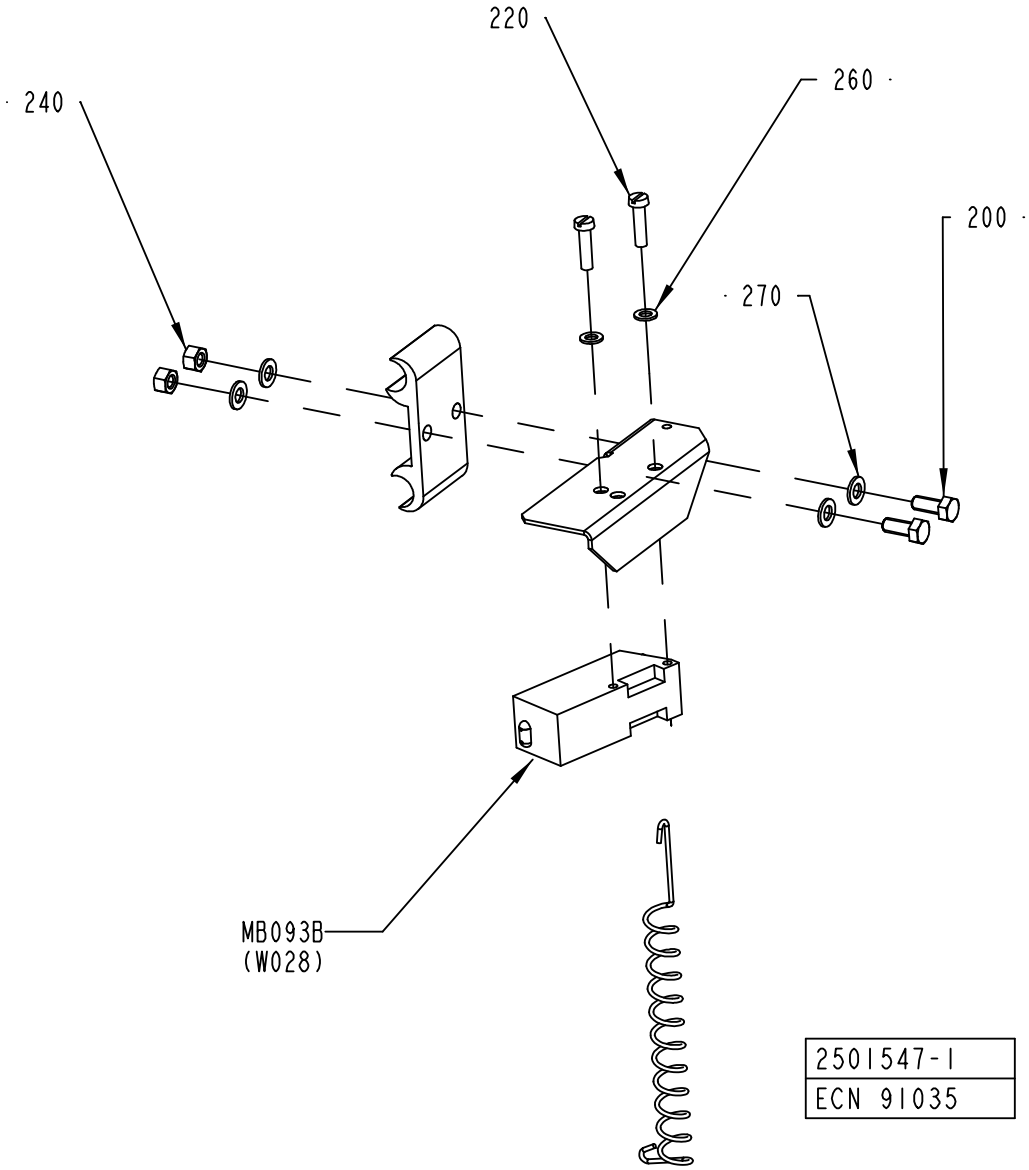

2501547-1
ECN 91035

ECM: 91168 - 20020514
Group number: 2501547-0100
Assembly Drawing: 2501547-1_1_AA

Pos	Part No	UN	Qty	Description	Page No
TBA 0125S, TBA 0100B					
060	1020638-0000		2	HOLDER	
TBA 0330S, TBA 0300S, TBA 0180B, TBA 0160S, TBA 0200B, TBA 0250S, TBA 0284B, TBA 0200S, TBA 0200M, TBA 0250B					
060	1020637-0000		2	HOLDER	
Common Parts					
090	1086888-0000		2	COVER	
150	532412-0000		2	SPRING	
200	312105-0327		4	SCREW M6S ISO 4017 M5X12 A480	
220	312125-0293		4	SCREW ISO 1207 M4X16 A4	
240	312605-0314		4	HEXAGON NUT, M6M M5 A280	
260	315105-0136		4	WASHER BRB4,3XRFR	
270	315105-0146		8	BRICKA BRB5,3X10RFR	
MB093A	90232-0103		1	PH.CELL E3S-CT61-L-5M	
MB093B	90232-0104		1	PH.CELL E3S-CT61-D-5M	

Pos	Part No	UN	Qty	Description	Page No

This page is intentionally left blank.

ECM: 95640 - 20020514
Group number: 2510844-0100
Assembly Drawing:

Pos	Part No	UN	Qty	Description	Page No
-					
	2510844-0001		1	CONNECTION BOX	
010	1349568-0000		1	CONNECTION BOX	
040	90077-0328	M	65	RAIL TS15/5	
050	90077-0079		8	FEED THROUGH TERMINAL, 02943.6	
060	90135-0026		2	EARTH TERMINAL, 3802.6	
080	312115-0293		2	SCREW ISO4762 M4X16 A4	
090	312125-0323		2	SCREW ISO 1207 M5X8 A4	
100	353240-0002		1	NORMAL WITHOUT INSERT, PG 11	
110	359011-0819		4	MARKING PLATES 5-GW (EARTH)	
120	359011-0821		2	SET OF SIGNS 6-FW 1-50	
130	359705-0015		1	WARNING SIGN ISO, RISK OF ELECTRIC SHOCK	
140	353249-0003		1	INSERT, SINGEL HOLE, E151/11	
150	90002-0009		1	BLANK-OFF PLUG, PR 18.6 SKINDICHT-BLK11	
160	353241-0002		2	EXTENDED WITHOUT INSERT, PG 11	
160	353249-0036		2	INSERT, MULTI HOLE, EK152 M 2X4	
180	353249-0301		4	SEALING PIN, 4X20	
200	353001-0113		2	END SLEEVE 0,75MM2	
210	359000-0201		1	MARKING CO02/3"1"	
220	359000-0204		1	MARKING CO02/3"4"	
W958	351150-0405	M	40	CABLE OLFLEX 5X0,75 MM2 LIGHT/GREY	

Pos	Part No	UN	Qty	Description	Page No

Machine Type	Group Description	Used-In	Group Number	Page No

This page is intentionally left blank.

ECM: 91093 - 20020514
Group number: 2501472-0100
Assembly Drawing:

Pos	Part No	UN	Qty	Description	Page No
-					
	2501472-0001		1	PACK COUNTER	
010	1020637-0000		6	HOLDER	
030	1020638-0000		6	HOLDER	
040	1086888-0000		2	COVER	
060	532412-0000		2	SPRING	
070	1478659-0000		4	BRACKET	
140	312105-0327		16	SCREW M6S ISO 4017 M5X12 A480	
150	312105-0323		2	SCREW M6S ISO 4017 M5X8 A480	
160	312125-0293		4	SCREW ISO 1207 M4X16 A4	
180	312605-0314		16	HEXAGON NUT, M6M M5 A280	
190	312705-0314		2	NUT HEX. DOMED CAP MHM-6 M5 A280	
200	315105-0136		8	WASHER BRB4,3XRFR	
210	315105-0146		12	BRICKA BRB5,3X10RFR	
MB092A	90232-0103		1	PH.CELL E3S-CT61-L-5M	
MB092B	90232-0104		1	PH.CELL E3S-CT61-D-5M	

Pos	Part No	UN	Qty	Description	Page No

This page is intentionally left blank.

ECM: 91092 - 20020514
Group number: 2501471-0100
Assembly Drawing:

Pos	Part No	UN	Qty	Description	Page No
-					
	2501471-0001		1	PACK COUNTER	
010	1020637-0000		6	HOLDER	
030	1020638-0000		6	HOLDER	
040	1086888-0000		2	COVER	
060	532412-0000		2	SPRING	
070	1478659-0000		4	BRACKET	
140	312105-0327		16	SCREW M6S ISO 4017 M5X12 A480	
150	312105-0323		2	SCREW M6S ISO 4017 M5X8 A480	
160	312125-0293		4	SCREW ISO 1207 M4X16 A4	
180	312605-0314		16	HEXAGON NUT, M6M M5 A280	
190	312705-0314		2	NUT HEX. DOMED CAP MHM-6 M5 A280	
200	315105-0136		8	WASHER BRB4,3XRFR	
210	315105-0146		12	BRICKA BRB5,3X10RFR	
MB091A	90232-0103		1	PH.CELL E3S-CT61-L-5M	
MB091B	90232-0104		1	PH.CELL E3S-CT61-D-5M	

Pos	Part No	UN	Qty	Description	Page No

This page is intentionally left blank.

ECM: 91048 - 20020514
Group number: 2501466-0100
Assembly Drawing:

Pos	Part No	UN	Qty	Description	Page No
-					
	2501466-0001		1	CONNECTION BOX	
010	1349568-0000		1	CONNECTION BOX	
040	90077-0328	M	65	RAIL TS15/5	
050	90077-0079		8	FEED THROUGH TERMINAL, 02943.6	
060	90135-0026		2	EARTH TERMINAL, 3802.6	
080	312115-0293		2	SCREW ISO4762 M4X16 A4	
090	312125-0323		2	SCREW ISO 1207 M5X8 A4	
100	353240-0002		1	NORMAL WITHOUT INSERT, PG 11	
110	359011-0819		4	MARKING PLATES 5-GW (EARTH)	
120	359011-0821		2	SET OF SIGNS 6-FW 1-50	
130	359705-0015		1	WARNING SIGN ISO, RISK OF ELECTRIC SHOCK	
140	353249-0003		1	INSERT, SINGEL HOLE, E151/11	
150	90002-0009		1	BLANK-OFF PLUG, PR 18.6 SKINDICHT-BLK11	
160	353241-0002		2	EXTENDED WITHOUT INSERT, PG 11	
160	353249-0036		2	INSERT, MULTI HOLE, EK152 M 2X4	
180	353249-0301		4	SEALING PIN, 4X20	
200	353001-0113		2	END SLEEVE 0,75MM2	
210	359000-0201		1	MARKING CO02/3"1"	
220	359000-0204		1	MARKING CO02/3"4"	
W954	351150-0405	M	20	CABLE OLFLEX 5X0,75 MM2 LIGHT/GREY	

Pos	Part No	UN	Qty	Description	Page No

Machine Type	Group Description	Used-In	Group Number	Page No

This page is intentionally left blank.

ECM: 91047 - 20020514
Group number: 2501465-0100
Assembly Drawing:

Pos	Part No	UN	Qty	Description	Page No
-					
	2501465-0001		1	CONNECTION BOX	
010	1349568-0000		1	CONNECTION BOX	
040	90077-0328	MM	65	RAIL TS15/5	
050	90077-0079		8	FEED THROUGH TERMINAL, 02943.6	
060	90135-0026		2	EARTH TERMINAL, 3802.6	
080	312115-0293		2	SCREW ISO4762 M4X16 A4	
090	312125-0323		2	SCREW ISO 1207 M5X8 A4	
100	353240-0002		1	NORMAL WITHOUT INSERT, PG 11	
110	359011-0819		4	MARKING PLATES 5-GW (EARTH)	
120	359011-0821		2	SET OF SIGNS 6-FW 1-50	
130	359705-0015		1	WARNING SIGN ISO, RISK OF ELECTRIC SHOCK	
140	353249-0003		1	INSERT, SINGEL HOLE, E151/11	
150	90002-0009		1	BLANK-OFF PLUG, PR 18.6 SKINDICHT-BLK11	
160	353241-0002		2	EXTENDED WITHOUT INSERT, PG 11	
170	353249-0036		2	INSERT, MULTI HOLE, EK152 M 2X4	
180	353249-0301		4	SEALING PIN, 4X20	
200	353001-0113		2	END SLEEVE 0,75MM2	
210	359000-0201		1	MARKING CO02/3"1"	
220	359000-0204		1	MARKING CO02/3"4"	
W955	351150-0405	M	130	CABLE OLFLEX 5X0,75 MM2 LIGHT/GREY	

Pos	Part No	UN	Qty	Description	Page No

This page is intentionally left blank.

ECM: 106019 - 20020514
Group number: 2541886-0100
Assembly Drawing:

Pos	Part No	UN	Qty	Description	Page No
-					
010	295778-0600		1	START-UP KIT	**9-33**
020	469384-0200		1	START-UP KIT	**9-37**
030	295523-0500		1	START-UP KIT	**9-39**

Pos	Part No	UN	Qty	Description	Page No

This page is intentionally left blank.

ECM: 106020 - 20020514
Group number: 295778-0600
Assembly Drawing:

Pos	Part No	UN	Qty	Description	Page No
TBA 0160S, TBA 0125S, TBA 0100B, TBA 0250S, TBA 0200S, TBA 0200M					
030	272479-0000		1	PRESSURE ROLLER	
TBA 0330S, TBA 0300S, TBA 0180B, TBA 0200B, TBA 0284B, TBA 0250B					
020	257330-0000		1	PRESSURE ROLLER	
Common Parts					
010	1296877-0100		1	SEAL KIT	**9-35**
040	441804-0000		1	COIL HEATER	
050	484197-0000		1	FILTER	
060	491418-0001		1	O-RING	
070	578494-0000		1	O-RING	
080	578495-0000		1	O-RING	
100	90206-0031		1	HEATING ELEMENT 700+1200W,220V	
110	90206-0070		1	HEATING ELEMENT 6000W 380/220V	
	90206-0326		*1*	*JUNCTION BOX FOR 90206-56*	
	90269-0308		*1*	*GASKET 59X68X3 MM*	
120	90424-0304		1	GASKET	
130	927421-0006		1	O-RING 17.3X2.4 SILICON	
140	927422-0003		1	O.RING 24.2X3 SILICON	
150	927422-0008		1	O-RING 49.5X3 SILICON	
160	925998-0000		6	DIAPHRAGM	
170	736514-0000		1	SHOCK ABSORBER	
180	90328-0026		3	SILENCER G1/4	
190	342850-0303		6	GASKET 22,7X49,1X5,2 MM 1" FDA	
200	342850-0304		6	GASKET 35,4X49,1X5,2 1"1/2 FDA	
210	342850-0305		2	GASKET 47,8X62,6X5,2 MM 2" FDA	
220	926822-0000		6	GASKET	
230	90458-0138		1	PROX.SW. E2EG-X1R5B1-5M	

Pos	Part No	UN	Qty	Description	Page No

Machine Type | Group Description | Used-In | Group Number | Page No

This page is intentionally left blank.

ECM: 70850 - 19970729
Group number: 1296877-0100
Assembly Drawing:

Pos	Part No	UN	Qty	Description	Page No
-					
010	530589-0000		4	SEAL RING	
020	530588-0000		1	SEAL RING	
030	533169-0000		1	DIAPHRAGM	
040	539212-0000		1	GASKET	
050	90091-0266		2	SEAL RING 10,4X16,3X2,5 MM	
060	90207-0363		1	GASKET	
070	90207-0365		1	GASKET	
100	315204-0215		1	O-RING 19,2X3 MM	
110	315204-0301		1	O-RING 49,5X3 MM	

Pos	Part No	UN	Qty	Description	Page No

This page is intentionally left blank.

ECM: 106107 - 20020514
Group number: 469384-0200
Assembly Drawing:

Pos	Part No	UN	Qty	Description	Page No
-					
010	90298-0019		1	DETERGENT	
020	90144-0003	MM	1	TAPE	

Pos	Part No	UN	Qty	Description	Page No

Machine Type | Group Description | Used-In | Group Number | Page No

This page is intentionally left blank.

ECM: 106108 - 20020514
Group number: 295523-0500
Assembly Drawing:

Pos	Part No	UN	Qty	Description	Page No
TBA 0125S, TBA 0100B					
020	1110530-0000		2	INDUCTOR	
020	1110530-0000		2	INDUCTOR	
040	1520577-0001		20	DOLLY	
040	1520577-0001		20	DOLLY	
TBA 0160S, TBA 0200S					
020	1110532-0000		2	INDUCTOR	
020	1110532-0000		2	INDUCTOR	
055	1110391-0000		20	DOLLY	
055	1110391-0000		20	DOLLY	
TBA 0250S, TBA 0200M					
028	1110535-0000		2	INDUCTOR	
028	1110535-0000		2	INDUCTOR	
055	1110391-0000		20	DOLLY	
055	1110391-0000		20	DOLLY	
TBA 0330S, TBA 0300S, TBA 0180B, TBA 0200B, TBA 0284B, TBA 0250B					
010	1110534-0000		2	INDUCTOR	
010	1110534-0000		2	INDUCTOR	
055	1110391-0000		20	DOLLY	
055	1110391-0000		20	DOLLY	

Pos	Part No	UN	Qty	Description	Page No

Tetra Pak

SPC
Spare Parts Catalogue

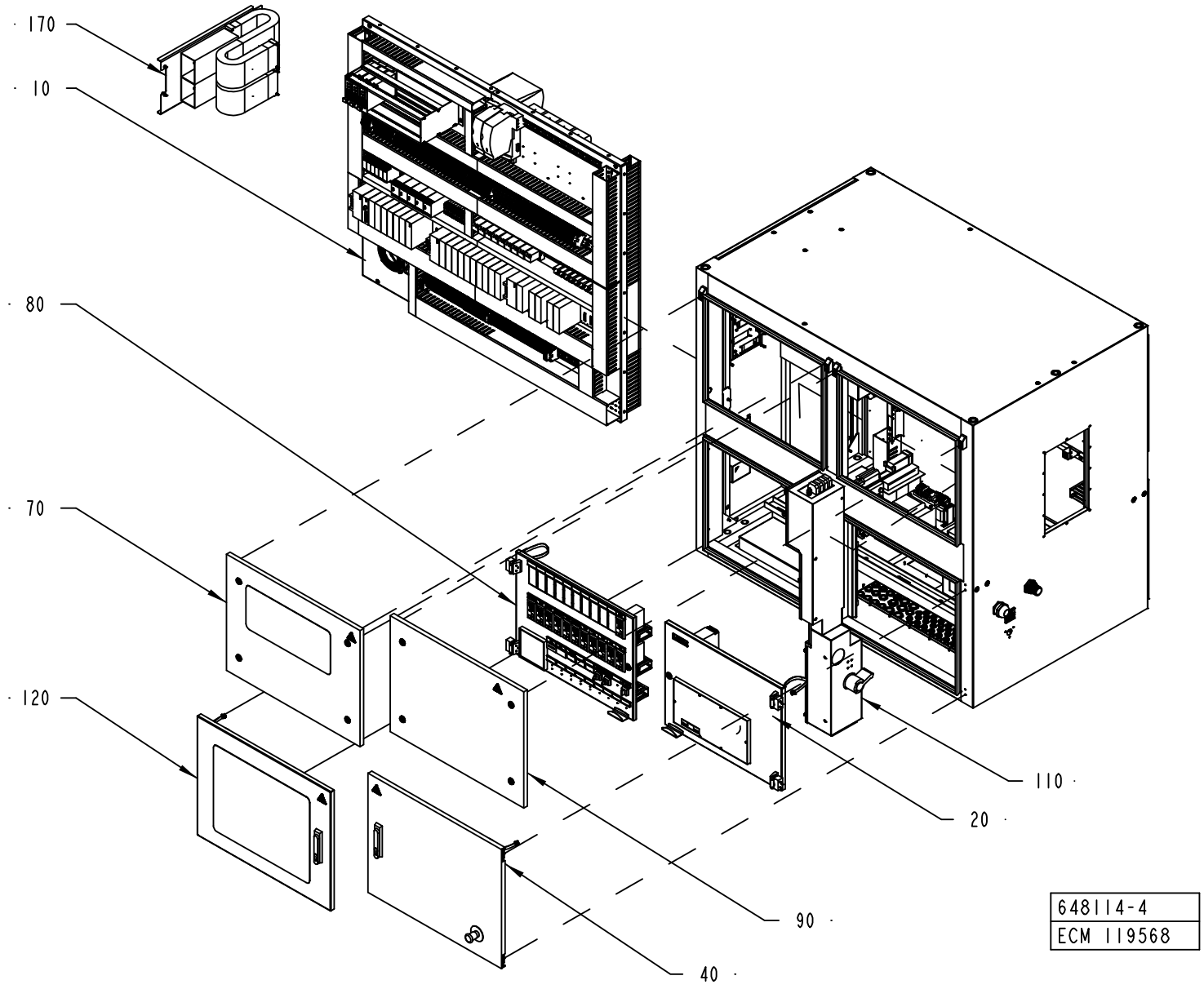
170
10
80
70
120
110
20
90
40
648114-4
ECM 119568

ECM: 119568 - 20030227
Group number: 648114-0100
Assembly Drawing: 648114-4_1_AC

This list covers pages from 10-2 to 10-5

Pos	Part No	UN	Qty	Description	Page No
-					
	1523972-0100		1	ELECTRICAL MATERIALS	**10-7, 10-9, 10-11**
010	1511779-0100		1	COMPONENT PLATE	**10-13, 10-15, 10-17, 10-19, 10-21**
020	1511790-0100		1	INTERNAL DOOR PLMS	**10-79**
030	1511795-0100		1	CABINET	**10-85, 10-87**
040	1511796-0100		1	EXTERNAL DOOR PLMS	**10-123**
050	1511799-0100		1	EXTERNAL DOOR SPARE FUSES	**10-125**
060	1511810-0100		1	INTERNAL DOOR FUSES	**10-127, 10-129**
070	1511811-0100		1	REAR UPPER CONTROL DOOR	**10-139**
080	1511814-0100		1	INTERNAL DOOR TERMOREGULATORS	**10-141, 10-143, 10-145**
090	1511819-0100		1	FRONT UPPER CONTROL DOOR	**10-147**
100	1511820-0100		1	UPPER DOOR POWER	**10-149**
110	1511821-0100		1	POWER BOX	**10-151**
120	1511830-0100		1	EXTERNAL DOOR TERMOREGULATORS	**10-155**
130	1517653-0100		1	EXTERNAL DOOR FUSES	**10-157**
140	1517677-0100		1	COOLER	**10-159**
150	1517678-0100		1	TPIH	**10-161**
160	1523961-0100		1	PLATE	**10-163**
170	2598113-0100		1	CABLE LEAD-IN PLATE	**10-165**

Pos	Part No	UN	Qty	Description	Page No

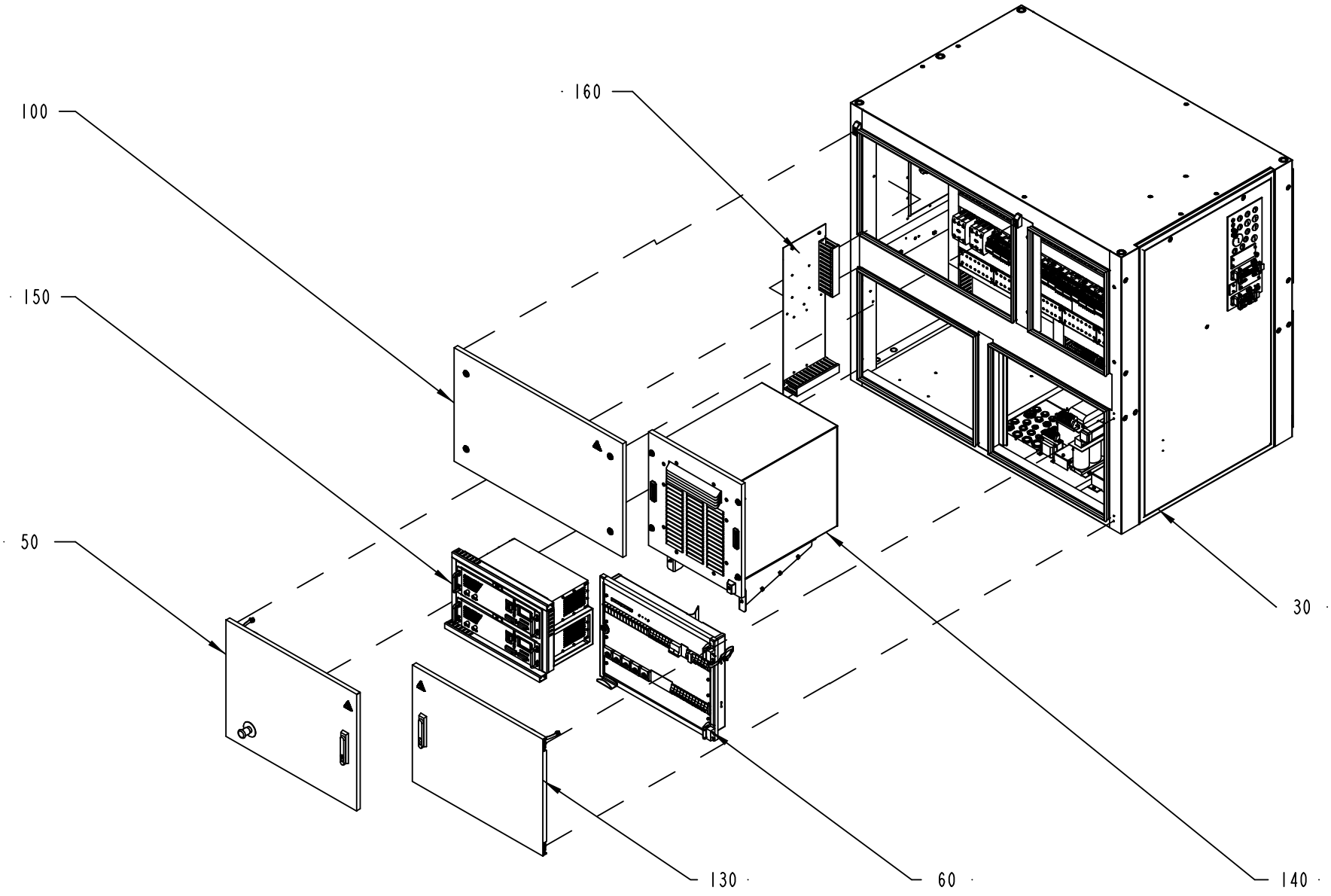

648114-4
ECM 119568

ECM: 119568 - 20030227
Group number: 648114-0100
Assembly Drawing: 648114-4_2_AC

This list covers pages from 10-2 to 10-5

Pos	Part No	UN	Qty	Description	Page No
-					
	1523972-0100		1	ELECTRICAL MATERIALS	**10-7, 10-9, 10-11**
010	1511779-0100		1	COMPONENT PLATE	**10-13, 10-15, 10-17, 10-19, 10-21**
020	1511790-0100		1	INTERNAL DOOR PLMS	**10-79**
030	1511795-0100		1	CABINET	**10-85, 10-87**
040	1511796-0100		1	EXTERNAL DOOR PLMS	**10-123**
050	1511799-0100		1	EXTERNAL DOOR SPARE FUSES	**10-125**
060	1511810-0100		1	INTERNAL DOOR FUSES	**10-127, 10-129**
070	1511811-0100		1	REAR UPPER CONTROL DOOR	**10-139**
080	1511814-0100		1	INTERNAL DOOR TERMOREGULATORS	**10-141, 10-143, 10-145**
090	1511819-0100		1	FRONT UPPER CONTROL DOOR	**10-147**
100	1511820-0100		1	UPPER DOOR POWER	**10-149**
110	1511821-0100		1	POWER BOX	**10-151**
120	1511830-0100		1	EXTERNAL DOOR TERMOREGULATORS	**10-155**
130	1517653-0100		1	EXTERNAL DOOR FUSES	**10-157**
140	1517677-0100		1	COOLER	**10-159**
150	1517678-0100		1	TPIH	**10-161**
160	1523961-0100		1	PLATE	**10-163**
170	2598113-0100		1	CABLE LEAD-IN PLATE	**10-165**

Pos	Part No	UN	Qty	Description	Page No

This page is intentionally left blank.

ECM: 132180 - 20030922
Group number: 1523972-0100
Assembly Drawing:

This list covers pages from 10-6 to 10-11

Pos	Part No	UN	Qty	Description	Page No
TBA NOPT ASU HI					
010	351160-0102	M	155	CABLE (1UNIT = 100M)	
030	351161-0104	M	4	CABLE AWM LIGTH BLUE 1,5MM2	
050	351164-0104	M	4	CABLE AWM 1X1,5 MM2 BLACK	
070	351161-0105	M	1	CABLE AWM 1X2,5 MM2 LIGHTBLUE	
080	351162-0105	M	2	CABLE AWM 1X2,5 MM2 YELLOW-GREEN	
090	351164-0105	M	6	CABLE (1UNIT = 100M)	
100	351162-0106	M	2	CABLE AWM 1X4 MM2 YELLOW-GREEN	
110	351164-0106	M	6	CABLE AWM 1X4 MM2 BLACK	
120	351161-0106	M	2	CABLE AWM 1X4 MM2 LIGHTBLUE	
210	351164-0111	M	11	8ABLE AWM 1X35 MM2 BLACK	
220	353001-0102		29	END SLEEVE 0,75 MM2	
250	353001-0115		7	END SLEEVE 2,5/14	
260	353001-0117		8	END SLEEVE H4.0/20 GREY	
280	353001-0119		72	END SLEEVE H 1.0/14 YELLOW	
290	353001-0120		6	END SLEEVE H 10/28	
320	353101-0130		1	CABLE SHOE 1,5-2,5MM2 M4 BLUE	
370	353103-0120		3	CABLE SHOE 1,25 MM2 RED	
390	353103-0138		2	CABLE SHOE	
TBA NOPT ASU NOHI					
010	351160-0102	M	105	CABLE (1UNIT = 100M)	
070	351161-0105	M	1	CABLE AWM 1X2,5 MM2 LIGHTBLUE	
080	351162-0105	M	2	CABLE AWM 1X2,5 MM2 YELLOW-GREEN	
090	351164-0105	M	6	CABLE (1UNIT = 100M)	
100	351162-0106	M	2	CABLE AWM 1X4 MM2 YELLOW-GREEN	
110	351164-0106	M	6	CABLE AWM 1X4 MM2 BLACK	
120	351161-0106	M	2	CABLE AWM 1X4 MM2 LIGHTBLUE	
210	351164-0111	M	11	8ABLE AWM 1X35 MM2 BLACK	
220	353001-0102		29	END SLEEVE 0,75 MM2	
250	353001-0115		7	END SLEEVE 2,5/14	
260	353001-0117		8	END SLEEVE H4.0/20 GREY	
280	353001-0119		72	END SLEEVE H 1.0/14 YELLOW	
290	353001-0120		6	END SLEEVE H 10/28	
320	353101-0130		1	CABLE SHOE 1,5-2,5MM2 M4 BLUE	
370	353103-0120		3	CABLE SHOE 1,25 MM2 RED	
390	353103-0138		2	CABLE SHOE	
TBA NOPT NOASU HI					
010	351160-0102	M	50	CABLE (1UNIT = 100M)	
030	351161-0104	M	4	CABLE AWM LIGTH BLUE 1,5MM2	
050	351164-0104	M	4	CABLE AWM 1X1,5 MM2 BLACK	
TBA PT19 ASU HI					
010	351160-0102	M	383	CABLE (1UNIT = 100M)	
030	351161-0104	M	9	CABLE AWM LIGTH BLUE 1,5MM2	
040	351162-0104	M	6	CABLE AWM 1X1,5 MM2 YELLOW-GREEN	
050	351164-0104	M	25	CABLE AWM 1X1,5 MM2 BLACK	
070	351161-0105	M	4	CABLE AWM 1X2,5 MM2 LIGHTBLUE	
080	351162-0105	M	2	CABLE AWM 1X2,5 MM2 YELLOW-GREEN	
090	351164-0105	M	23	CABLE (1UNIT = 100M)	
100	351162-0106	M	2	CABLE AWM 1X4 MM2 YELLOW-GREEN	
110	351164-0106	M	6	CABLE AWM 1X4 MM2 BLACK	
120	351161-0106	M	2	CABLE AWM 1X4 MM2 LIGHTBLUE	
130	351160-0107	M	4	CABLE AWM 1X6 MM2 DARKBLUE	
140	351162-0107	M	5	CABLE AWM 1X6 MM2 YELLOW-GREEN	
150	351164-0107	M	6	CABLE AWM 1X6 MM2 BLACK	
210	351164-0111	M	11	8ABLE AWM 1X35 MM2 BLACK	
220	353001-0102		76	END SLEEVE 0,75 MM2	
230	353001-0113		6	END SLEEVE 0,75MM2	
240	353001-0114		18	END SLEEVE 1,5MM2	
250	353001-0115		25	END SLEEVE 2,5/14	
260	353001-0117		8	END SLEEVE H4.0/20 GREY	
270	353001-0118		5	END SLEEVE 6MM2 BLACK	
280	353001-0119		243	END SLEEVE H 1.0/14 YELLOW	
290	353001-0120		6	END SLEEVE H 10/28	
300	353101-0120		1	CABLE SHOE 0,5-1,5MM2 M4 RED	
330	353101-0132		2	CABLE SHOE 1,5-2,5MM2 M5 BLUE	
340	353101-0150		2	CABLE SHOE 4,0-6,0MM2 M4 YELLOW	
350	353101-0152		1	CABLE SHOE 4,0-6,0MM2 M5 YELLOW	
370	353103-0120		19	CABLE SHOE 1,25 MM2 RED	
390	353103-0138		9	CABLE SHOE	
470	90097-0017		5	FLAT PIN PLUG 6,3MM	
480	90097-0019		20	FLAT PIN PLUG 2,8MM	
TBA PT19 ASU NOHI					
010	351160-0102	M	333	CABLE (1UNIT = 100M)	
030	351161-0104	M	5	CABLE AWM LIGTH BLUE 1,5MM2	
040	351162-0104	M	6	CABLE AWM 1X1,5 MM2 YELLOW-GREEN	
050	351164-0104	M	21	CABLE AWM 1X1,5 MM2 BLACK	
070	351161-0105	M	4	CABLE AWM 1X2,5 MM2 LIGHTBLUE	
080	351162-0105	M	2	CABLE AWM 1X2,5 MM2 YELLOW-GREEN	
090	351164-0105	M	23	CABLE (1UNIT = 100M)	
100	351162-0106	M	2	CABLE AWM 1X4 MM2 YELLOW-GREEN	
110	351164-0106	M	6	CABLE AWM 1X4 MM2 BLACK	
120	351161-0106	M	2	CABLE AWM 1X4 MM2 LIGHTBLUE	
130	351160-0107	M	4	CABLE AWM 1X6 MM2 DARKBLUE	
140	351162-0107	M	5	CABLE AWM 1X6 MM2 YELLOW-GREEN	

Machine Type | Group Description | Used-In | Group Number | Page No

This page is intentionally left blank.

ECM: 132180 - 20030922
Group number: 1523972-0100
Assembly Drawing:

This list covers pages from 10-6 to 10-11

Pos	Part No	UN	Qty	Description	Page No
TBA PT19 ASU NOHI (Cont'd)					
150	351164-0107	M	6	CABLE AWM 1X6 MM2 BLACK	
210	351164-0111	M	11	8ABLE AWM 1X35 MM2 BLACK	
220	353001-0102		76	END SLEEVE 0,75 MM2	
230	353001-0113		6	END SLEEVE 0,75MM2	
240	353001-0114		18	END SLEEVE 1,5MM2	
250	353001-0115		25	END SLEEVE 2,5/14	
260	353001-0117		8	END SLEEVE H4.0/20 GREY	
270	353001-0118		5	END SLEEVE 6MM2 BLACK	
280	353001-0119		243	END SLEEVE H 1.0/14 YELLOW	
290	353001-0120		6	END SLEEVE H 10/28	
300	353101-0120		1	CABLE SHOE 0,5-1,5MM2 M4 RED	
330	353101-0132		2	CABLE SHOE 1,5-2,5MM2 M5 BLUE	
340	353101-0150		2	CABLE SHOE 4,0-6,0MM2 M4 YELLOW	
350	353101-0152		1	CABLE SHOE 4,0-6,0MM2 M5 YELLOW	
370	353103-0120		19	CABLE SHOE 1,25 MM2 RED	
390	353103-0138		9	CABLE SHOE	
470	90097-0017		5	FLAT PIN PLUG 6,3MM	
480	90097-0019		20	FLAT PIN PLUG 2,8MM	
TBA PT19 NOASU HI					
010	351160-0102	M	278	CABLE (1UNIT = 100M)	
030	351161-0104	M	9	CABLE AWM LIGTH BLUE 1,5MM2	
040	351162-0104	M	6	CABLE AWM 1X1,5 MM2 YELLOW-GREEN	
050	351164-0104	M	25	CABLE AWM 1X1,5 MM2 BLACK	
070	351161-0105	M	2	CABLE AWM 1X2,5 MM2 LIGHTBLUE	
090	351164-0105	M	17	CABLE (1UNIT = 100M)	
130	351160-0107	M	4	CABLE AWM 1X6 MM2 DARKBLUE	
140	351162-0107	M	5	CABLE AWM 1X6 MM2 YELLOW-GREEN	
150	351164-0107	M	6	CABLE AWM 1X6 MM2 BLACK	
220	353001-0102		47	END SLEEVE 0,75 MM2	
230	353001-0113		6	END SLEEVE 0,75MM2	
240	353001-0114		18	END SLEEVE 1,5MM2	
250	353001-0115		18	END SLEEVE 2,5/14	
270	353001-0118		5	END SLEEVE 6MM2 BLACK	
280	353001-0119		171	END SLEEVE H 1.0/14 YELLOW	
300	353101-0120		1	CABLE SHOE 0,5-1,5MM2 M4 RED	
320	353101-0130		1	CABLE SHOE 1,5-2,5MM2 M4 BLUE	
330	353101-0132		2	CABLE SHOE 1,5-2,5MM2 M5 BLUE	
340	353101-0150		2	CABLE SHOE 4,0-6,0MM2 M4 YELLOW	
350	353101-0152		1	CABLE SHOE 4,0-6,0MM2 M5 YELLOW	
370	353103-0120		16	CABLE SHOE 1,25 MM2 RED	
390	353103-0138		7	CABLE SHOE	
470	90097-0017		5	FLAT PIN PLUG 6,3MM	
480	90097-0019		20	FLAT PIN PLUG 2,8MM	
TBA PT19 NOASU NOHI					
010	351160-0102	M	228	CABLE (1UNIT = 100M)	
030	351161-0104	M	5	CABLE AWM LIGTH BLUE 1,5MM2	
040	351162-0104	M	6	CABLE AWM 1X1,5 MM2 YELLOW-GREEN	
050	351164-0104	M	21	CABLE AWM 1X1,5 MM2 BLACK	
070	351161-0105	M	2	CABLE AWM 1X2,5 MM2 LIGHTBLUE	
090	351164-0105	M	17	CABLE (1UNIT = 100M)	
130	351160-0107	M	4	CABLE AWM 1X6 MM2 DARKBLUE	
140	351162-0107	M	5	CABLE AWM 1X6 MM2 YELLOW-GREEN	
150	351164-0107	M	6	CABLE AWM 1X6 MM2 BLACK	
220	353001-0102		47	END SLEEVE 0,75 MM2	
230	353001-0113		6	END SLEEVE 0,75MM2	
240	353001-0114		18	END SLEEVE 1,5MM2	
250	353001-0115		18	END SLEEVE 2,5/14	
270	353001-0118		5	END SLEEVE 6MM2 BLACK	
280	353001-0119		171	END SLEEVE H 1.0/14 YELLOW	
300	353101-0120		1	CABLE SHOE 0,5-1,5MM2 M4 RED	
320	353101-0130		1	CABLE SHOE 1,5-2,5MM2 M4 BLUE	
330	353101-0132		2	CABLE SHOE 1,5-2,5MM2 M5 BLUE	
340	353101-0150		2	CABLE SHOE 4,0-6,0MM2 M4 YELLOW	
350	353101-0152		1	CABLE SHOE 4,0-6,0MM2 M5 YELLOW	
370	353103-0120		16	CABLE SHOE 1,25 MM2 RED	
390	353103-0138		7	CABLE SHOE	
470	90097-0017		5	FLAT PIN PLUG 6,3MM	
480	90097-0019		20	FLAT PIN PLUG 2,8MM	
Common Parts					
010	351160-0102	M	1164	CABLE (1UNIT = 100M)	
020	351166-0102	M	28	CABLE AWM 1X0,75 MM2 ORANGE	
030	351161-0104	M	80	CABLE AWM LIGTH BLUE 1,5MM2	
040	351162-0104	M	41	CABLE AWM 1X1,5 MM2 YELLOW-GREEN	
050	351164-0104	M	153	CABLE AWM 1X1,5 MM2 BLACK	
060	351160-0105	M	7	CABLE AWM 1X2,5 MM2 DARKBLUE	
070	351161-0105	M	7	CABLE AWM 1X2,5 MM2 LIGHTBLUE	
080	351162-0105	M	15	CABLE AWM 1X2,5 MM2 YELLOW-GREEN	
090	351164-0105	M	158	CABLE (1UNIT = 100M)	
110	351164-0106	M	5	CABLE AWM 1X4 MM2 BLACK	
120	351161-0106	M	2	CABLE AWM 1X4 MM2 LIGHTBLUE	
130	351160-0107	M	6	CABLE AWM 1X6 MM2 DARKBLUE	
140	351162-0107	M	31	CABLE AWM 1X6 MM2 YELLOW-GREEN	
150	351164-0107	M	55	CABLE AWM 1X6 MM2 BLACK	

Machine Type | Group Description | Used-In | Group Number | Page No

This page is intentionally left blank.

Pos	Part No	UN	Qty	Description	Page No
Common Parts (Cont'd)					
160	351163-0107	M	1	CABLE AWM 1X6 MM2 RED	
170	351162-0109	M	8	CABLE AWM 1X16 MM2 YELLOW-GREEN	
180	351161-0109	M	1	CABLE AWM 1X16 MM2 LIGHTBLUE	
190	351164-0110	M	55	CABLE AWM 1X25 MM2 BLACK	
200	351161-0110	M	2	CABLE AWM 1X25 MM2 LIGHTBLUE	
210	351164-0111	M	11	8ABLE AWM 1X35 MM2 BLACK	
220	353001-0102		337	END SLEEVE 0,75 MM2	
230	353001-0113		44	END SLEEVE 0,75MM2	
240	353001-0114		191	END SLEEVE 1,5MM2	
250	353001-0115		155	END SLEEVE 2,5/14	
260	353001-0117		16	END SLEEVE H4.0/20 GREY	
270	353001-0118		47	END SLEEVE 6MM2 BLACK	
280	353001-0119		893	END SLEEVE H 1.0/14 YELLOW	
290	353001-0120		3	END SLEEVE H 10/28	
300	353101-0120		1	CABLE SHOE 0,5-1,5MM2 M4 RED	
310	353101-0129		1	CABLE SHOE 1,5-2,5MM2 M3 BLUE	
320	353101-0130		70	CABLE SHOE 1,5-2,5MM2 M4 BLUE	
340	353101-0150		2	CABLE SHOE 4,0-6,0MM2 M4 YELLOW	
350	353101-0152		11	CABLE SHOE 4,0-6,0MM2 M5 YELLOW	
360	353101-0153		7	CABLE SHOE 4,0-6,0MM2 M6 YELLOW	
370	353103-0120		36	CABLE SHOE 1,25 MM2 RED	
380	353103-0130		2	CABLE SHOE	
390	353103-0138		16	CABLE SHOE	
400	353104-0164		2	CABLE SHOE YAV 10 M10*	
410	353104-0168		3	CABLE SHOE YAV 16 M6*	
420	353104-0175		15	CABLE SHOE YAV 25 M6	
430	352113-0101		100	CLIP STRIP, 92X2,5 MM	
440	352113-0102		30	CLIP-STRIP, BLACK 188X4,8 MM	
450	90024-0062	MM	600	CABLE PROTECTION, 40MM	
460	90024-0063	M	6	CABLE PROTECTION, 25MM	
470	90097-0017		35	FLAT PIN PLUG 6,3MM	
480	90097-0019		68	FLAT PIN PLUG 2,8MM	
490	90459-2912		46	BAR, TR1	
500	90459-3092	M	17	CABLE PROTECTION, CP10	

Pos	Part No	UN	Qty	Description	Page No

COMPONENT PLATE

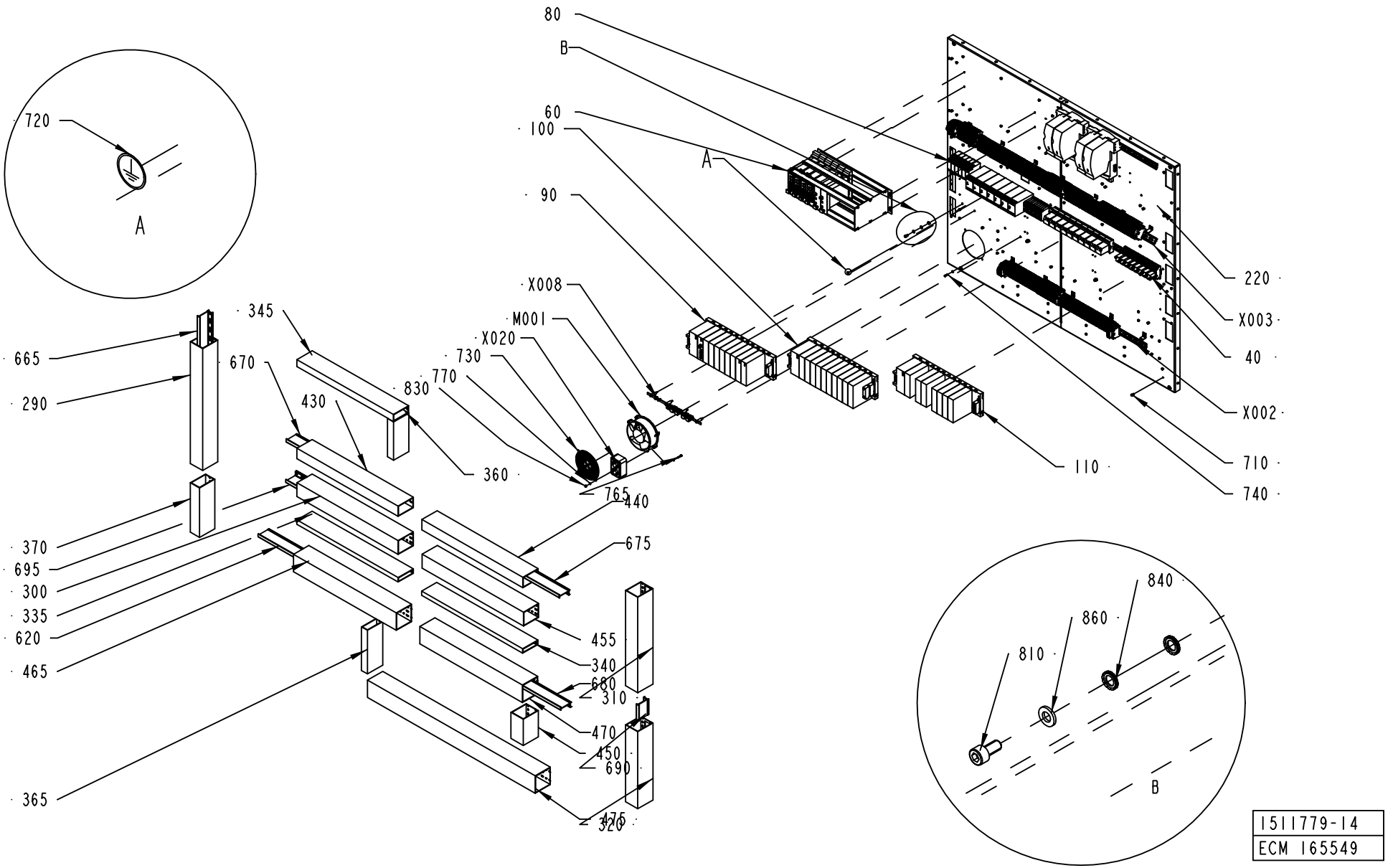

1511779-14
ECM 165549

ECM: 165555 - 20040915
Group number: 1511779-0100
Assembly Drawing: 1511779-14_1_AC

This list covers pages from 10-12 to 10-21

Pos	Part No	UN	Qty	Description	Page No
TBA NOPT ASU					
740	312115-0291		24	SCREW ISO4762 M4X12 A4	
750	312115-0325		40	SCREW ISO4762 M5X10 A4	
770	315105-0136		36	WASHER BRB4,3XRFR	
790	315402-0146		40	LOCK WASHER FBB 5,1	
G002	90459-3450		1	VARIABLE FREQUENCY DRIVE 22A-A4P5N104	
W069	90220-0183	M	3	SCR. CABLE 2X0,34MM2	
Z006	90458-1140		1	FERRITE, RI-26-28-13	
Z007	90458-1140		1	FERRITE, RI-26-28-13	
Z009	90459-3460		1	FOOTPRINT FILTER 22-RF010-AL	
TBA NOPT NOASU					
030	90458-1490		2	CABLE CLIPS, D=7,9 MM	
740	312115-0291		36	SCREW ISO4762 M4X12 A4	
750	312115-0325		32	SCREW ISO4762 M5X10 A4	
755	312115-0289		4	SCREW ISO4762 M4X10 A4	
770	315105-0136		34	WASHER BRB4,3XRFR	
775	312115-0333		8	SCREW ISO4762 M5X25 A4	
790	315402-0146		32	LOCK WASHER FBB 5,1	
850	315105-0146		3	WASHER BRB5,3X10RFR	
TBA PT19 ASU					
030	90458-1490		4	CABLE CLIPS, D=7,9 MM	
120	2553176-0100		1	EARTH BAR	**10-23**
740	312115-0291		26	SCREW ISO4762 M4X12 A4	
750	312115-0325		48	SCREW ISO4762 M5X10 A4	
755	312115-0291		8	SCREW ISO4762 M4X12 A4	
770	315105-0136		42	WASHER BRB4,3XRFR	
775	312122-0366		9	SCREW ISO 1207 M6X12 NI PL BRASS	
790	315402-0146		48	LOCK WASHER FBB 5,1	
850	315105-0146		9	WASHER BRB5,3X10RFR	
A002	90458-0397		1	SERVO DRIVE DMC2 50720 P	
A002.1	90045-0376		1	CONNECTOR KIT 9-032-011-970	
A015	90458-1300		1	2 AXIS DOCKING STATION D2/PLC	
	90458-1856		*1*	*ADHESIVE LABEL, CONNECTION DIAGRAM*	
A016	90458-0746		1	STEP MOTOR DRIVE L50	
A017	90458-0746		1	STEP MOTOR DRIVE L50	
G002	90459-3450		1	VARIABLE FREQUENCY DRIVE 22A-A4P5N104	
G006	90459-3450		1	VARIABLE FREQUENCY DRIVE 22A-A4P5N104	
W069	90220-0183	M	3	SCR. CABLE 2X0,34MM2	
W129	90220-0092	M	1	PAIR TWISTED CABLE 3X2X0,25MM2	
X023	90458-1279		1	PLUG CONNECTOR DP1	
Z009	90459-3460		1	FOOTPRINT FILTER 22-RF010-AL	
Z023	90458-1162		1	FILTER, 6 A, 250 VAC	
Z024	90458-1140		1	FERRITE, RI-26-28-13	
Z025	90458-1140		1	FERRITE, RI-26-28-13	
Z033	90459-3460		1	FOOTPRINT FILTER 22-RF010-AL	
Z034	90458-1140		1	FERRITE, RI-26-28-13	
Z035	90458-1140		1	FERRITE, RI-26-28-13	
Z036	90024-0037		1	INPUT FILTER, 8 A	
TBA PT19 NOASU					
030	90458-1490		4	CABLE CLIPS, D=7,9 MM	
120	2553176-0100		1	EARTH BAR	**10-23**
740	312115-0291		39	SCREW ISO4762 M4X12 A4	
750	312115-0325		40	SCREW ISO4762 M5X10 A4	
755	312115-0291		8	SCREW ISO4762 M4X12 A4	
770	315105-0136		40	WASHER BRB4,3XRFR	
775	312122-0366		9	SCREW ISO 1207 M6X12 NI PL BRASS	
790	315402-0146		40	LOCK WASHER FBB 5,1	
850	315105-0146		9	WASHER BRB5,3X10RFR	
A002	90458-0397		1	SERVO DRIVE DMC2 50720 P	
A002.1	90045-0376		1	CONNECTOR KIT 9-032-011-970	
A015	90458-1300		1	2 AXIS DOCKING STATION D2/PLC	
	90458-1856		*1*	*ADHESIVE LABEL, CONNECTION DIAGRAM*	
A016	90458-0746		1	STEP MOTOR DRIVE L50	
A017	90458-0746		1	STEP MOTOR DRIVE L50	
G006	90459-3450		1	VARIABLE FREQUENCY DRIVE 22A-A4P5N104	
W129	90220-0092	M	1	PAIR TWISTED CABLE 3X2X0,25MM2	
X023	90458-1279		1	PLUG CONNECTOR DP1	
Z023	90458-1162		1	FILTER, 6 A, 250 VAC	
Z024	90458-1140		1	FERRITE, RI-26-28-13	
Z025	90458-1140		1	FERRITE, RI-26-28-13	
Z033	90459-3460		1	FOOTPRINT FILTER 22-RF010-AL	
Z034	90458-1140		1	FERRITE, RI-26-28-13	
Z035	90458-1140		1	FERRITE, RI-26-28-13	
Z036	90024-0037		1	INPUT FILTER, 8 A	
Common Parts					
020	1511801-0100		1	SOLID STATE RELAY RAIL 1	**10-25**
040	1511803-0100		1	RELAYS RAIL	**10-27**
060	1511805-0100		1	RACK	**10-29, 10-31**
070	1511808-0100		1	FREQUENCY CONVERTER EARTH BAR	**10-35**
080	1511824-0100		1	LEVEL RELAYS RAIL	**10-37**
090	1511825-0100		1	PLC RACK 1	**10-39**
100	1511826-0100		1	PLC RACK 2	**10-41**
110	1511827-0100		1	PLC RACK 3	**10-43**
140	1511834-0100		1	CONTACTORS RAIL	**10-45**

Machine Type | Group Description | Used-In | Group Number | Page No

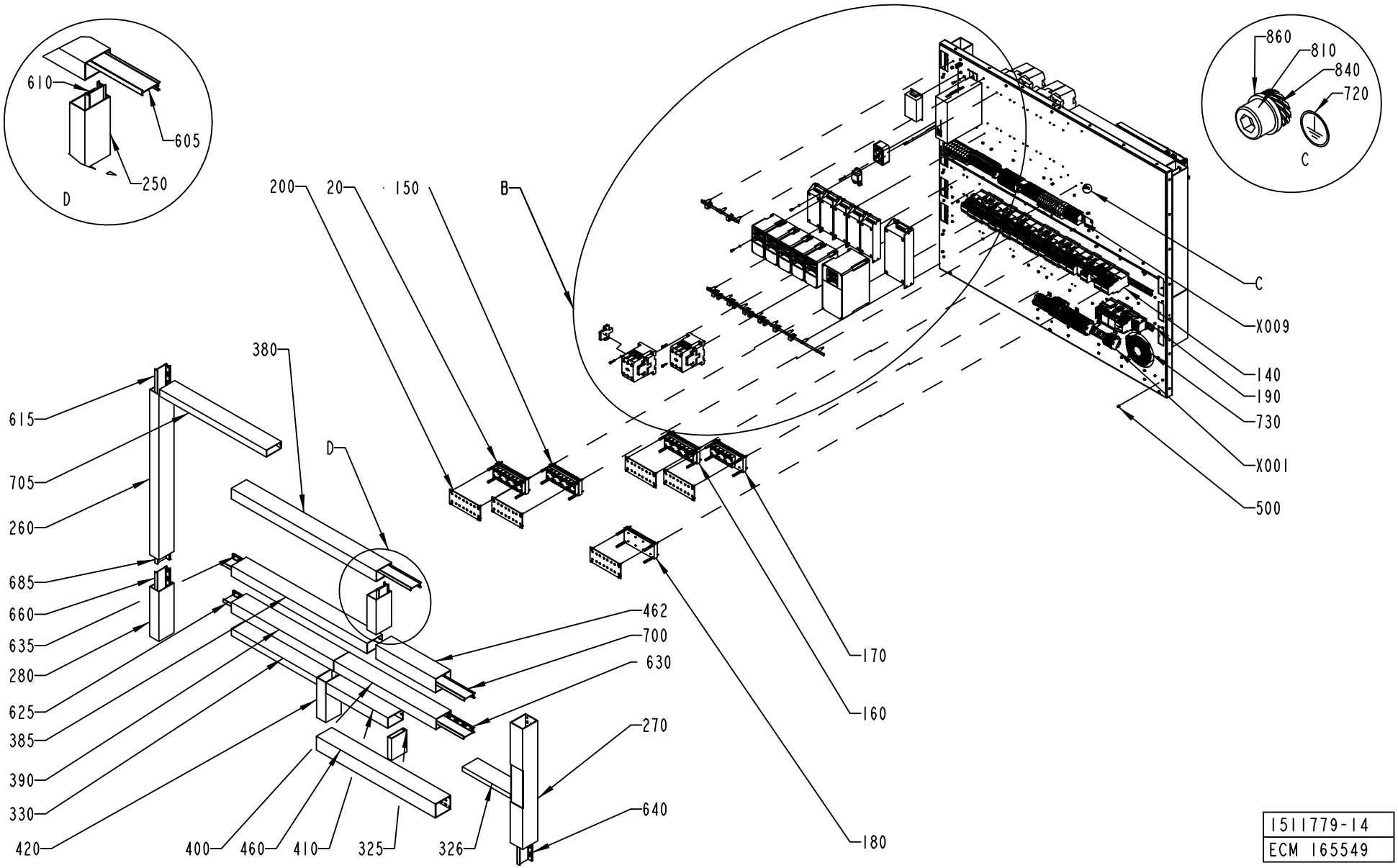

1511779-14
ECM 165549

Pos	Part No	UN	Qty	Description	Page No
Common Parts (Cont'd)					
150	1517651-0100		1	SOLID STATE RELAY RAIL 2	**10-47, 10-49**
160	1517652-0100		1	SOLID STATE RELAY RAIL 3	**10-51**
170	1523445-0100		1	SOLID STATE RELAY RAIL 4	**10-53**
180	1523446-0100		1	SOLID STATE RELAY RAIL 5	**10-55**
190	2531998-0100		1	RAIL	**10-57**
200	2531996-0000		5	COVER	
220	1523463-0000		1	PLATE	
250	2604462-0000		1	CABLE DUCT	
260	2604461-0000		1	CABLE DUCT	
270	2604468-0000		1	CABLE DUCT	
280	2604463-0000		1	CABLE DUCT	
290	2604464-0000		1	CABLE DUCT	
300	2604466-0000		1	CABLE DUCT	
310	2604465-0000		1	CABLE DUCT	
320	2604467-0000		1	CABLE DUCT	
325	90459-2452	MM	125	CABLE DUCT, 25X100MM	
326	90459-2452	MM	314	CABLE DUCT, 25X100MM	
330	90181-0060	MM	560	CABLE DUCT, 40X100MM	
335	90459-2452	MM	663	CABLE DUCT, 25X100MM	
340	90459-2452	MM	663	CABLE DUCT, 25X100MM	
345	90181-0060	MM	632	CABLE DUCT, 40X100MM	
360	90181-0060	MM	220	CABLE DUCT, 40X100MM	
365	90181-0060	MM	250	CABLE DUCT, 40X100MM	
370	2604460-0000		1	CABLE DUCT	
380	90181-0061	MM	950	CABLE DUCT, 60X100MM	
385	90181-0061	MM	890	CABLE DUCT, 60X100MM	
390	90181-0061	MM	670	CABLE DUCT, 60X100MM	
400	90181-0061	MM	670	CABLE DUCT, 60X100MM	
410	90181-0061	MM	406	CABLE DUCT, 60X100MM	
420	90181-0061	MM	230	CABLE DUCT, 60X100MM	
430	90181-0061	MM	663	CABLE DUCT, 60X100MM	
440	90181-0061	MM	663	CABLE DUCT, 60X100MM	
450	90181-0174	MM	150	CABLE DUCT	
455	90181-0174	MM	665	CABLE DUCT	
460	90181-0174	MM	780	CABLE DUCT	
462	90181-0174	MM	390	CABLE DUCT	
465	90181-0062	MM	674	CABLE DUCT, 100X100MM	
470	90181-0062	MM	674	CABLE DUCT, 100X100MM	
475	90181-0062	MM	1100	CABLE DUCT, 100X100MM	
500	90181-0064		42	LOCK ZP1 FOR CHANNEL T1	
605	90181-0067	MM	946	DIVIDING PLATE SEP80	
610	90181-0067	MM	61	DIVIDING PLATE SEP80	
615	90181-0067	MM	279	DIVIDING PLATE SEP80	
620	90181-0067	MM	660	DIVIDING PLATE SEP80	
625	90181-0067	MM	660	DIVIDING PLATE SEP80	
630	90181-0067	MM	660	DIVIDING PLATE SEP80	
635	90181-0067	MM	880	DIVIDING PLATE SEP80	
640	90181-0067	MM	233	DIVIDING PLATE SEP80	
660	90181-0067	MM	260	DIVIDING PLATE SEP80	
665	90181-0067	MM	586	DIVIDING PLATE SEP80	
670	90181-0067	MM	650	DIVIDING PLATE SEP80	
675	90181-0067	MM	650	DIVIDING PLATE SEP80	
680	90181-0067	MM	660	DIVIDING PLATE SEP80	
685	90181-0067	MM	89	DIVIDING PLATE SEP80	
690	90181-0067	MM	89	DIVIDING PLATE SEP80	
695	90181-0067	MM	386	DIVIDING PLATE SEP80	
700	90181-0067	MM	386	DIVIDING PLATE SEP80	
705	90181-0060	MM	700	CABLE DUCT, 40X100MM	
710	90181-0313		137	RIVET DUCTAFIX R4	
720	90194-0163		2	SIGN, EARTH WITHIN CIRCLE	
730	90457-0057		2	GRID FOR FAN LZ36	
735	312115-0323		3	SCREW ISO4762 M5X8 A4	
765	312115-0295		4	SCREW ISO4762 M4X20 A4	
810	312115-0366		4	SCREW ISO4762 M6X12 A4	
820	353042-0004	MM	650	RAIL TS 35/7,5	
830	312812-0312		4	HEXAGON NUT, NY-LOCK M4 A480	
840	90062-0061		8	LOCK WASHER NORD-LOCK,6,5/10,8, H=2,6	
860	315105-0153		4	WASHER BRB6,4X12RFR	
A012	90458-1300		1	2 AXIS DOCKING STATION D2/PLC	**10-59**
A013	90458-0746		1	STEP MOTOR DRIVE L50	
A014	90458-0746		1	STEP MOTOR DRIVE L50	
G001	90459-3450		1	VARIABLE FREQUENCY DRIVE 22A-A4P5N104	
G003	90459-3450		1	VARIABLE FREQUENCY DRIVE 22A-A4P5N104	
G004	90459-3446		1	FREQUENCY CONVERTER 5,5 KW	
G005	90459-3450		1	VARIABLE FREQUENCY DRIVE 22A-A4P5N104	
K003	90458-2924		1	CONTACTOR 30KW COIL 24VDC	
K003.1	90458-2925		2	AUXILIARY CONTACT, DIL M820-XHI11-SI	
K030	90458-2924		1	CONTACTOR 30KW COIL 24VDC	
K030.1	90458-2925		2	AUXILIARY CONTACT, DIL M820-XHI11-SI	
L001	90297-0306		1	BALLAST COIL 50/60 HZ	
M001	90457-0056		1	FAN 7450 ES	
W0127	90220-0183	M	3	SCR. CABLE 2X0,34MM2	
W067	90220-0183	M	3	SCR. CABLE 2X0,34MM2	

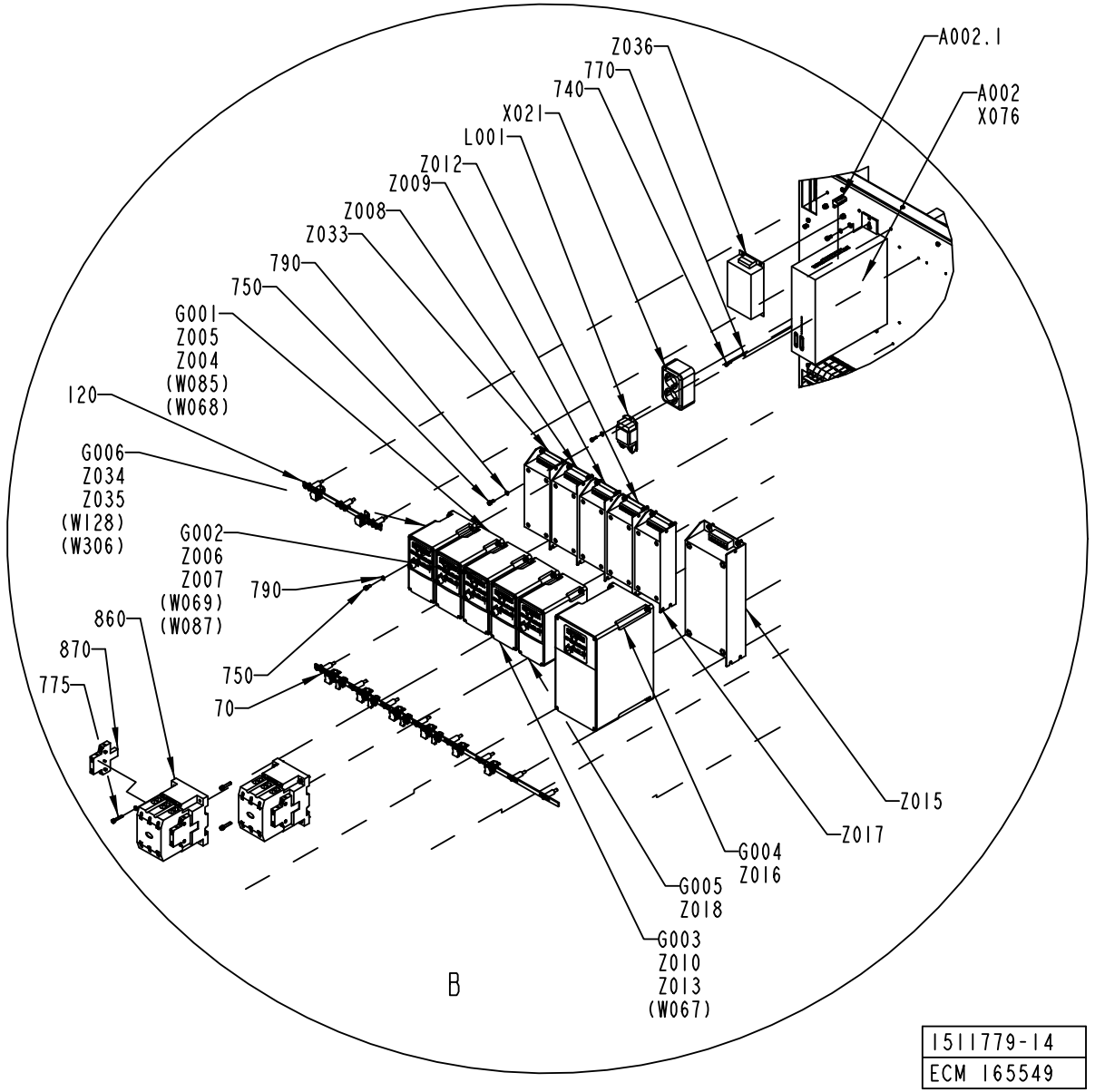

1511779-14
ECM 165549

Pos	Part No	UN	Qty	Description	Page No
Common Parts (Cont'd)					
W068	90220-0183	M	3	SCR. CABLE 2X0,34MM2	
W099	90220-0092	M	1	PAIR TWISTED CABLE 3X2X0,25MM2	
X001	1511800-0100		1	POWER SIDE,BOTTOM TERMINAL BLOCK .	**10-61, 10-63**
X002	1511802-0100		1	LOGIC BOTTOM TERMINAL BLOCK	**10-65, 10-67**
X003	1511804-0100		1	LOGIC SIDE,TOP TERMINAL BLOCK	**10-69, 10-71**
X008	1511828-0100		1	X008	**10-73**
X009	1511829-0100		1	POWER SIDE,TOP TERMINAL BLOCK	**10-75, 10-77**
X020	90001-0033		1	WALL SOCKET OUTLET	
X020.1	90459-1738		1	MANDATORY ACTION SIGN ISO, READ MAINTENA	
X021	90001-0033		1	WALL SOCKET OUTLET	
X021.1	90459-1738		1	MANDATORY ACTION SIGN ISO, READ MAINTENA	
X027	90458-1279		1	PLUG CONNECTOR DP1	
Z004	90024-0047		1	EMI SUPPRESSION FERRITE	
Z005	90458-1140		1	FERRITE, RI-26-28-13	
Z008	90459-3460		1	FOOTPRINT FILTER 22-RF010-AL	
Z010	90458-1140		1	FERRITE, RI-26-28-13	
Z012	90459-3460		1	FOOTPRINT FILTER 22-RF010-AL	
Z013	90458-1140		1	FERRITE, RI-26-28-13	
Z015	90459-3459		1	FOOTPRINT FILTER, 22-RF018-CL	
Z016	90458-1140		1	FERRITE, RI-26-28-13	
Z017	90459-3460		1	FOOTPRINT FILTER 22-RF010-AL	
Z018	90458-1140		1	FERRITE, RI-26-28-13	
Z019	90458-1162		1	FILTER, 6 A, 250 VAC	
Z020	90458-1140		1	FERRITE, RI-26-28-13	
Z021	90458-1140		1	FERRITE, RI-26-28-13	

Pos	Part No	UN	Qty	Description	Page No

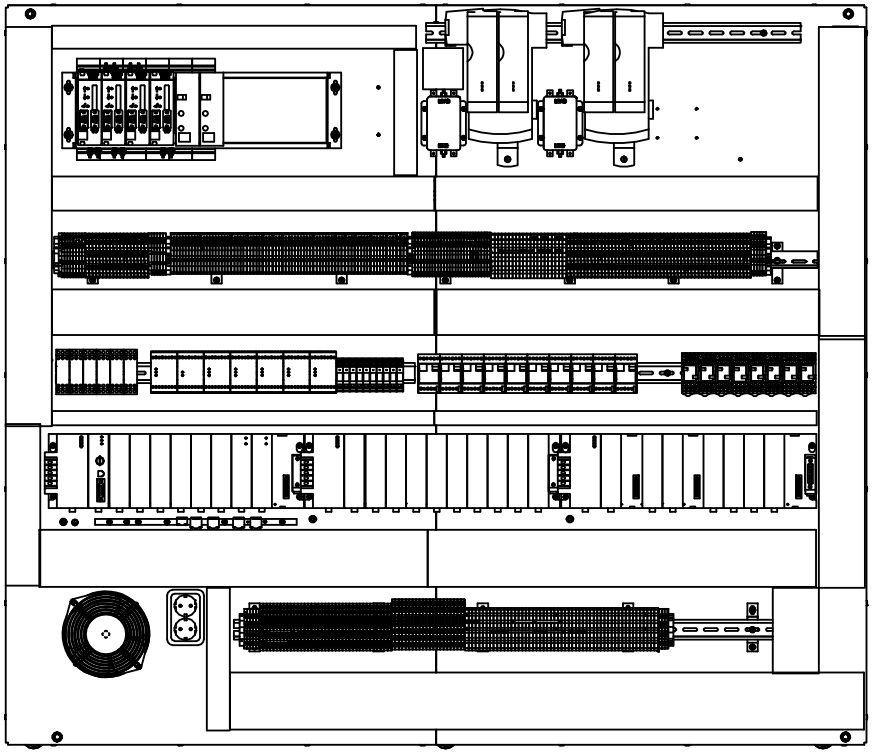

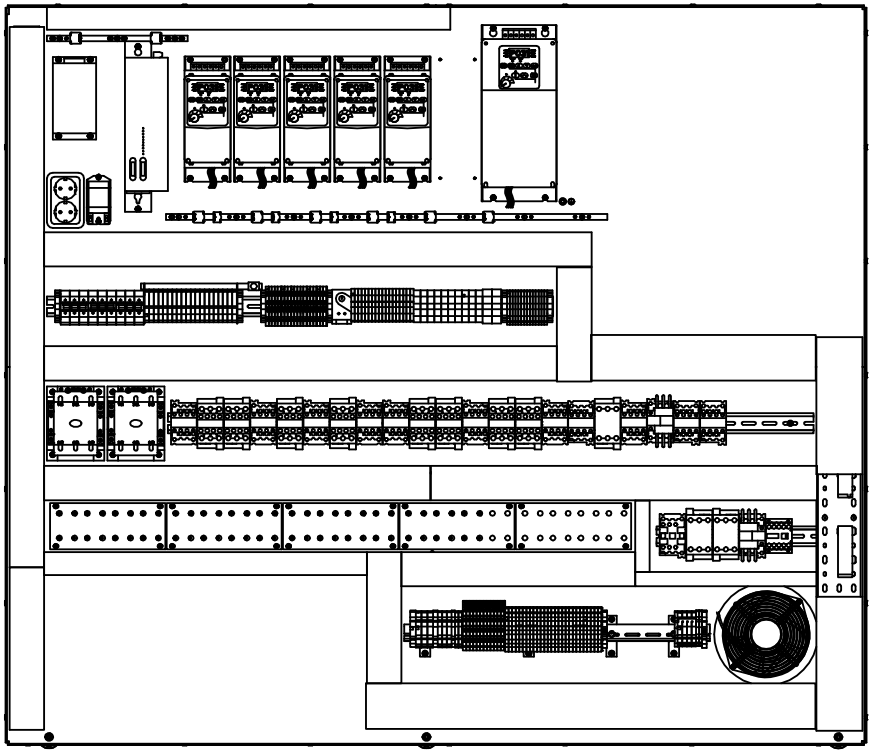

1511779-14
ECM 165549

ECM: 165555 - 20040915
Group number: 1511779-0100
Assembly Drawing: 1511779-14_4_AC

This list covers pages from 10-12 to 10-21

Pos	Part No	UN	Qty	Description	Page No	Pos	Part No	UN	Qty	Description	Page No
SEE PREVIOUS LISTS PAGES: 10-13, 10-15, 10-17.											

COMPONENT PLATE

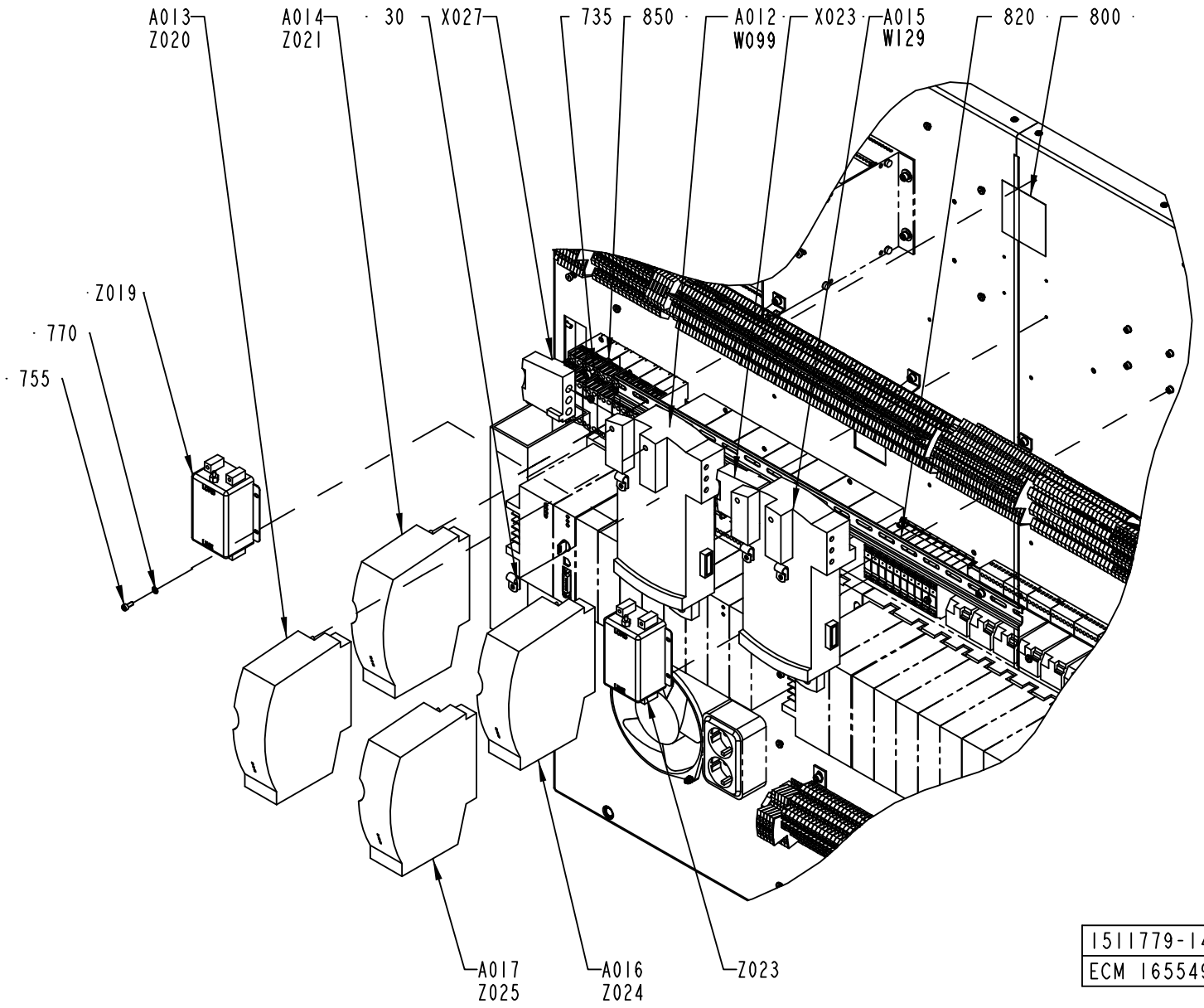

ECM: 165555 - 20040915
Group number: 1511779-0100
Assembly Drawing: 1511779-14_5_AC

This list covers pages from 10-12 to 10-21

Pos	Part No	UN	Qty	Description	Page No	Pos	Part No	UN	Qty	Description	Page No

SEE PREVIOUS LISTS PAGES: 10-13, 10-15, 10-17.

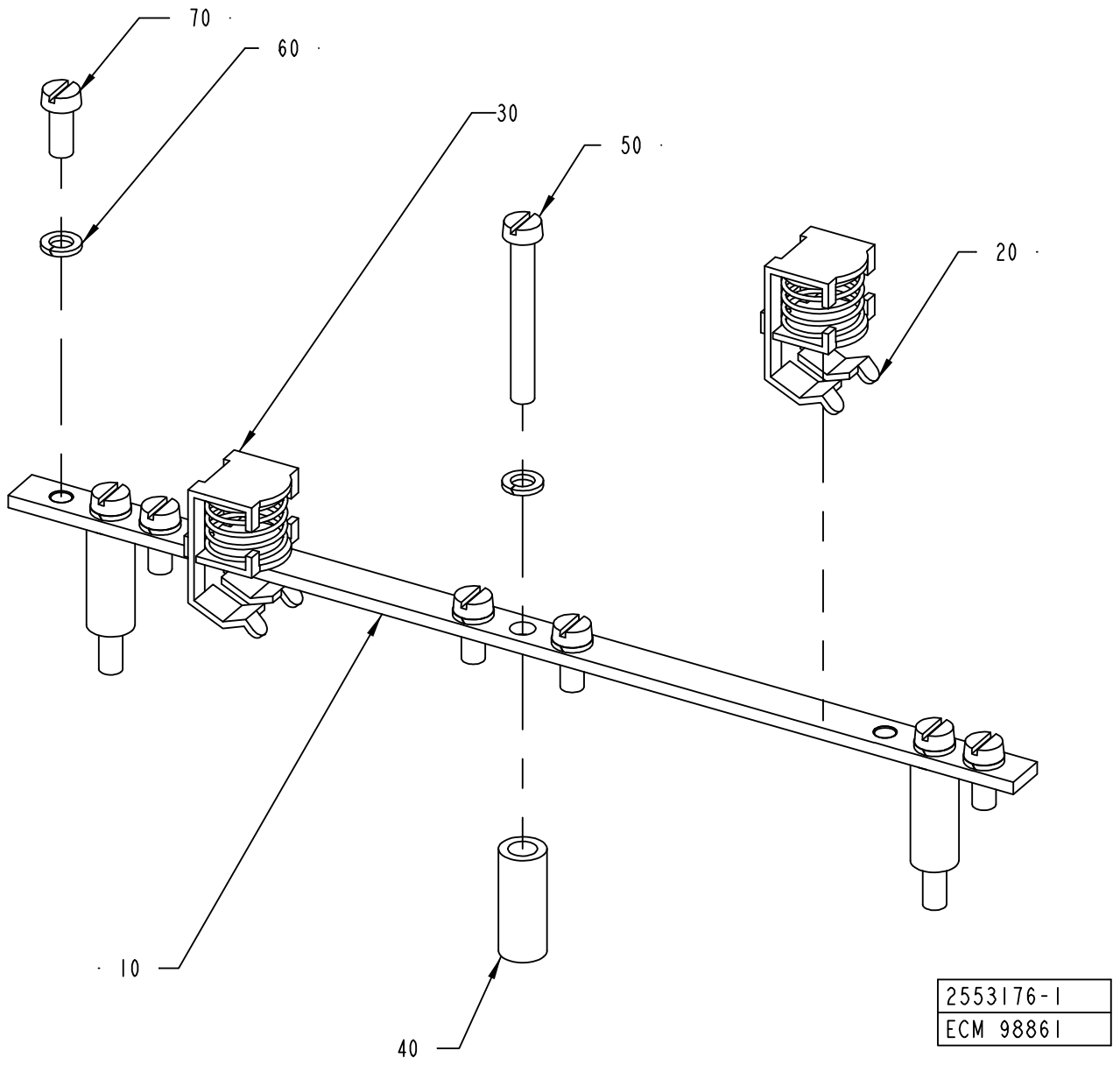
70
60
30
50
20
10
40
2553176-1
ECM 98861

ECM: 118446 - 20030922
Group number: 2553176-0100
Assembly Drawing: 2553176-1_1_AA

Pos	Part No	UN	Qty	Description	Page No
-					
010	2553175-0000		1	EARTH BAR	
020	90135-0039		1	SHIELD CLIP KLBU 4-13.5	
030	90135-0039		1	SHIELD CLIP KLBU 4-13.5	
040	988436-0000		3	SPACER SLEEVE	
050	312125-0339		3	SCREW ISO 1207 M5X40 A4	
060	315402-0146		8	LOCK WASHER FBB 5,1	
070	312125-0327		5	SCREW ISO 1207 M5X12 A4	

Pos	Part No	UN	Qty	Description	Page No

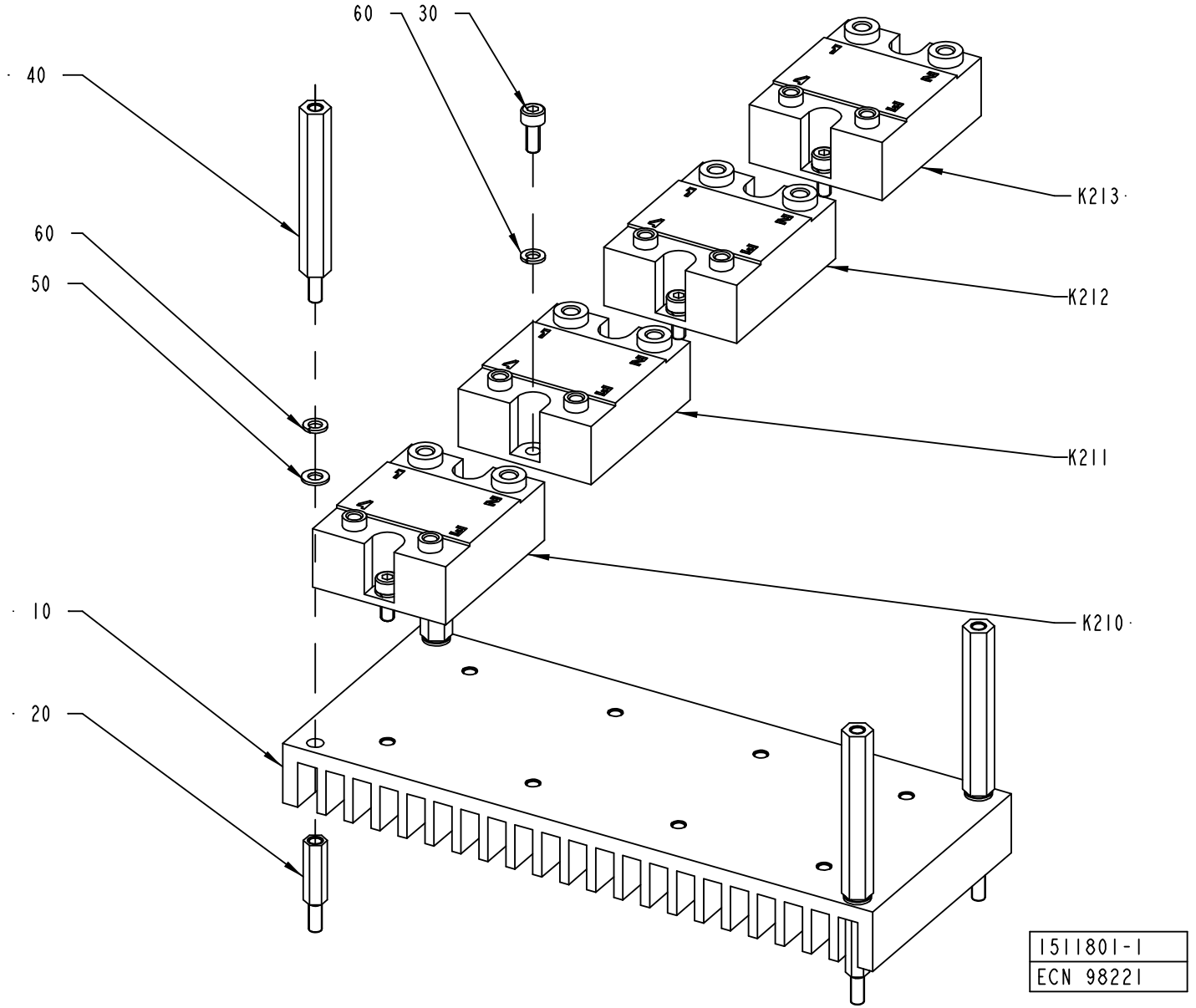
60
30
40
60
50
K213
K212
K211
K210
10
20
1511801-1
ECN 98221

ECM: 115723 - 20020930
Group number: 1511801-0100
Assembly Drawing: 1511801-1_1_AB

Pos	Part No	UN	Qty	Description	Page No
-					
010	1498819-0000		1	COOLING PLATE	
020	1517675-0000		4	SPACER	
030	312115-0289		8	SCREW ISO4762 M4X10 A4	
040	2531997-0000		4	SPACER	
050	315105-0136		4	WASHER BRB4,3XRFR	
060	315402-0136		12	LOCK WASHER FBB 4,1	
K210	90119-0067		1	SOLID-STATE RELAY, H12WD4850	
K211	90119-0067		1	SOLID-STATE RELAY, H12WD4850	
K212	90119-0067		1	SOLID-STATE RELAY, H12WD4850	
K213	90119-0067		1	SOLID-STATE RELAY, H12WD4850	

Pos	Part No	UN	Qty	Description	Page No

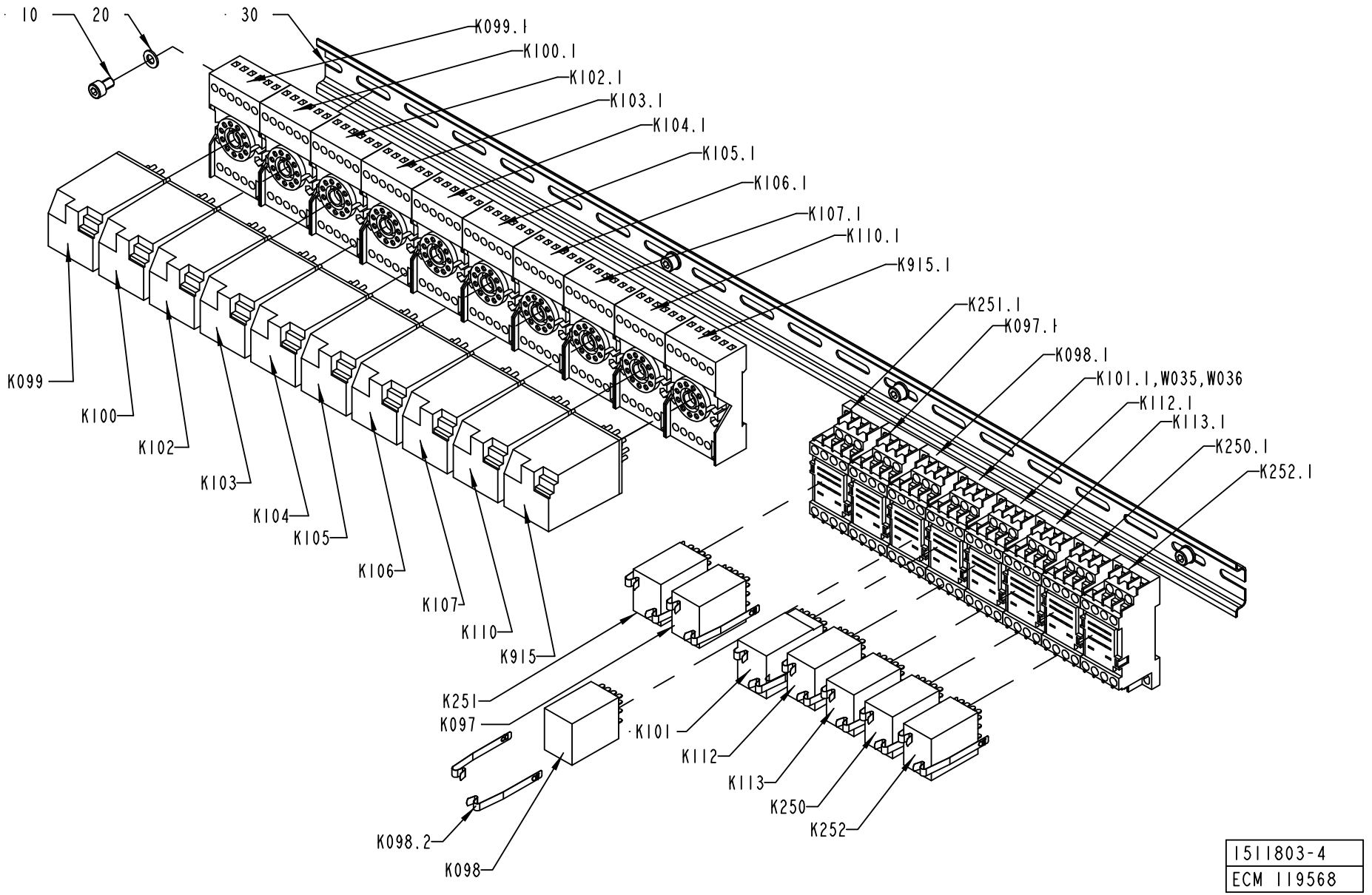

1511803-4
ECM 119568

ECM: 119568 - 20030922
Group number: 1511803-0100
Assembly Drawing: 1511803-4_1_AB

Pos	Part No	UN	Qty	Description	Page No
TBA ASU NOTCSB					
K112	90119-0086		1	RELAY, AUXILIARY MY4IN4 24VDC	
K112.1	90119-0309		1	BASE UNIT, TYPE PYF 14AE	
K112.2	90119-0310		1	CLAMP, TYPE PYC-A1	
TBA ASU TCSB					
K112	90119-0086		1	RELAY, AUXILIARY MY4IN4 24VDC	
K112.1	90119-0309		1	BASE UNIT, TYPE PYF 14AE	
K112.2	90119-0310		1	CLAMP, TYPE PYC-A1	
K915	90119-0056		1	RELAY, AUXILIARY MK3P5-S 24VDC	
K915	90119-0056		1	RELAY, AUXILIARY MK3P5-S 24VDC	
K915.1	90129-0006		1	BASE, S3-B	
TBA NOASU TCSB					
K915	90119-0056		1	RELAY, AUXILIARY MK3P5-S 24VDC	
K915	90119-0056		1	RELAY, AUXILIARY MK3P5-S 24VDC	
K915.1	90129-0006		1	BASE, S3-B	
Common Parts					
010	312115-0323		4	SCREW ISO4762 M5X8 A4	
020	315105-0146		4	WASHER BRB5,3X10RFR	
030	353042-0004	MM	690	RAIL TS 35/7,5	
K097	90119-0086		1	RELAY, AUXILIARY MY4IN4 24VDC	
K097.1	90119-0309		1	BASE UNIT, TYPE PYF 14AE	
K097.2	90119-0310		1	CLAMP, TYPE PYC-A1	
K098	90119-0086		1	RELAY, AUXILIARY MY4IN4 24VDC	
K098.1	90119-0309		1	BASE UNIT, TYPE PYF 14AE	
K098.2	90119-0310		1	CLAMP, TYPE PYC-A1	
K099	90119-0056		1	RELAY, AUXILIARY MK3P5-S 24VDC	
K099	90119-0056		1	RELAY, AUXILIARY MK3P5-S 24VDC	
K099.1	90129-0006		1	BASE, S3-B	
K100	90119-0056		1	RELAY, AUXILIARY MK3P5-S 24VDC	
K100	90119-0056		1	RELAY, AUXILIARY MK3P5-S 24VDC	
K100.1	90129-0006		1	BASE, S3-B	
K101	90119-0109		1	RELAY OMRON 24VDC MY4H	
K101.1	90119-0309		1	BASE UNIT, TYPE PYF 14AE	
K101.2	90119-0310		1	CLAMP, TYPE PYC-A1	
K102	90119-0056		1	RELAY, AUXILIARY MK3P5-S 24VDC	
K102	90119-0056		1	RELAY, AUXILIARY MK3P5-S 24VDC	
K102.1	90129-0006		1	BASE, S3-B	
K103	90119-0056		1	RELAY, AUXILIARY MK3P5-S 24VDC	
K103	90119-0056		1	RELAY, AUXILIARY MK3P5-S 24VDC	
K103.1	90129-0006		1	BASE, S3-B	
K104	90119-0056		1	RELAY, AUXILIARY MK3P5-S 24VDC	
K104	90119-0056		1	RELAY, AUXILIARY MK3P5-S 24VDC	
K104.1	90129-0006		1	BASE, S3-B	
K105	90119-0056		1	RELAY, AUXILIARY MK3P5-S 24VDC	
K105	90119-0056		1	RELAY, AUXILIARY MK3P5-S 24VDC	
K105.1	90129-0006		1	BASE, S3-B	
K106	90119-0056		1	RELAY, AUXILIARY MK3P5-S 24VDC	
K106	90119-0056		1	RELAY, AUXILIARY MK3P5-S 24VDC	
K106.1	90129-0006		1	BASE, S3-B	
K107	90119-0056		1	RELAY, AUXILIARY MK3P5-S 24VDC	
K107	90119-0056		1	RELAY, AUXILIARY MK3P5-S 24VDC	
K107.1	90129-0006		1	BASE, S3-B	
K110	90119-0056		1	RELAY, AUXILIARY MK3P5-S 24VDC	
K110	90119-0056		1	RELAY, AUXILIARY MK3P5-S 24VDC	
K110.1	90129-0006		1	BASE, S3-B	
K113	90119-0086		1	RELAY, AUXILIARY MY4IN4 24VDC	
K113.1	90119-0309		1	BASE UNIT, TYPE PYF 14AE	
K113.2	90119-0310		1	CLAMP, TYPE PYC-A1	
K250	90119-0086		1	RELAY, AUXILIARY MY4IN4 24VDC	
K250.1	90119-0309		1	BASE UNIT, TYPE PYF 14AE	
K250.2	90119-0310		1	CLAMP, TYPE PYC-A1	
K251	90119-0086		1	RELAY, AUXILIARY MY4IN4 24VDC	
K251.1	90119-0309		1	BASE UNIT, TYPE PYF 14AE	
K251.2	90119-0310		1	CLAMP, TYPE PYC-A1	
K252	90119-0086		1	RELAY, AUXILIARY MY4IN4 24VDC	
K252.1	90119-0309		1	BASE UNIT, TYPE PYF 14AE	
K252.2	90119-0310		1	CLAMP, TYPE PYC-A1	
W035	90220-0059	MM	2000	THERMOCOUPLE CABLE K/ 2X0,81MM2	
W036	90220-0059	MM	2000	THERMOCOUPLE CABLE K/ 2X0,81MM2	

Machine Type | Group Description | Used-In | Group Number | Page No

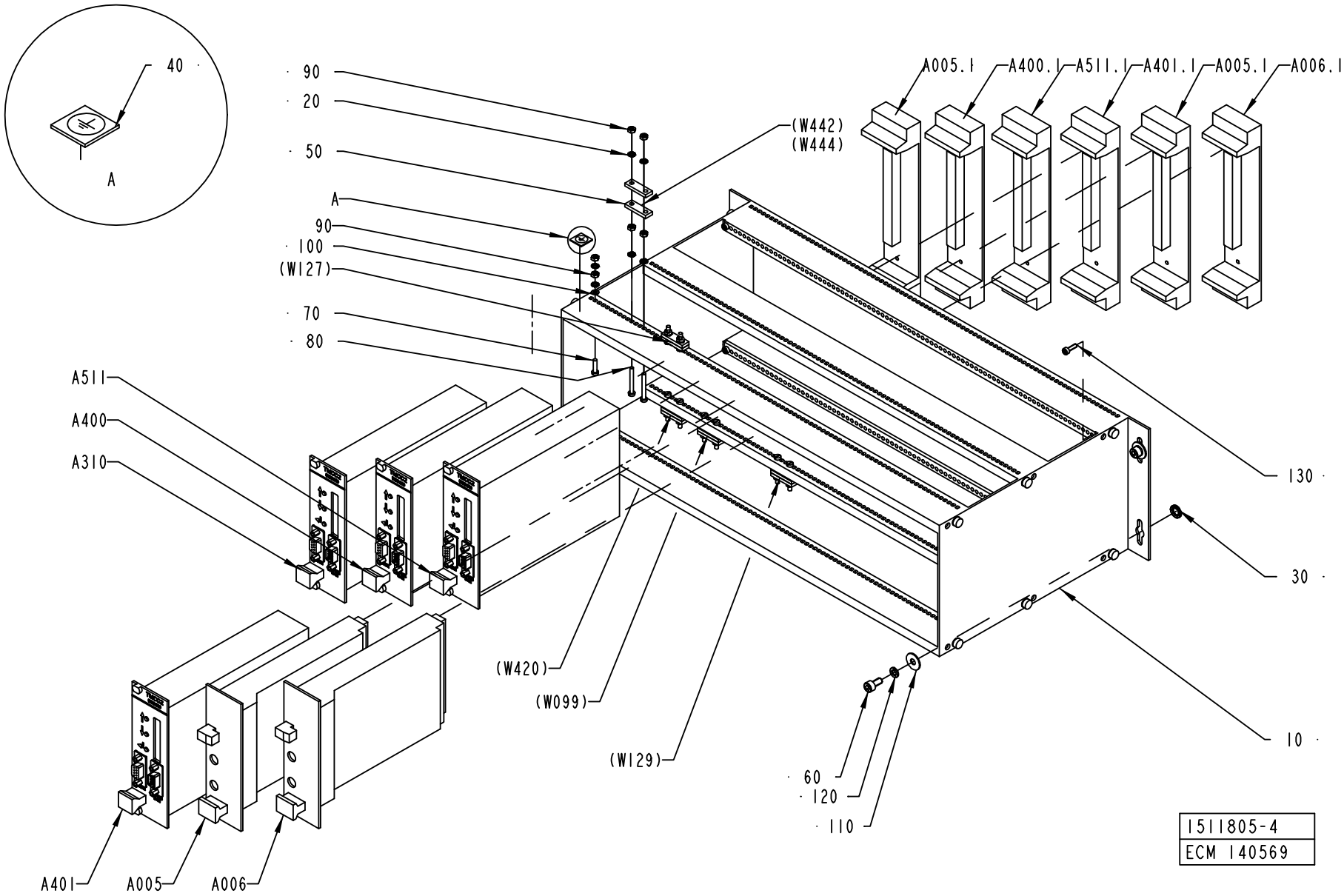
40
A
90
20
50
A
90
100
(W127)
70
80
(W442)
(W444)
A005.1
A400.1
A511.1
A401.1
A005.1
A006.1
A511
A400
A310
130
30
10
(W420)
(W099)
(W129)
60
120
110
A401
A005
A006
1511805-4
ECM 140569

ECM: 140635 - 20030929
Group number: 1511805-0100
Assembly Drawing: 1511805-4_1_AB

This list covers pages from 10-28 to 10-31

Pos	Part No	UN	Qty	Description	Page No
TBA NOPT ASU					
020	90062-0058		14	LOCK WASHER SERRAT.EXT.GEAR,3,2/6 H=0,4	
050	90220-0305		6	CLAMP FOR SCR.CABLE, 16MM,	
080	312125-0232		8	SCREW ISO 1207 M3X25 A4	
090	312605-0310		14	HEXAGON NUT, M6M M3 A280	
A511	559810-0101		1	TMCC2 CONTROLLER	
010	*559809-0101*		*1*	*CIRCUIT BOARD*	
150	*559807-0000*		*1*	*PRINTED CIRCUIT BOARD*	
180	*559811-0101*		*1*	*CIRCUIT BOARD*	
130	*559808-0000*		*1*	*PRINTED CIRCUIT BOARD*	
020	*2524654-0000*		*1*	*PLATE*	
030	*2524660-0000*		*1*	*CASING*	
070	*2524662-0000*		*1*	*COOLING BLOCK*	
100	*2524658-0000*		*1*	*COVER*	
170	*2524659-0000*		*1*	*CABLE*	
220	*2524664-0000*		*1*	*ASSEMBLY DRAWING*	
A511.1	67372-0101		1	BACKPLANE 8TE(32 POLE)	
0010	*543336-0001*		*1*	*COMPONENTS WITHOUT TP-NO*	
0020	*543319-0000*		*1*	*PRINTED CIRCUIT BOARD*	
0030	*543337-0000*		*1*	*TERMINAL LABELS 1-4*	
TBA NOPT NOASU					
020	90062-0058		14	LOCK WASHER SERRAT.EXT.GEAR,3,2/6 H=0,4	
050	90220-0305		6	CLAMP FOR SCR.CABLE, 16MM,	
080	312125-0232		8	SCREW ISO 1207 M3X25 A4	
090	312605-0310		14	HEXAGON NUT, M6M M3 A280	
TBA PT19 ASU					
020	90062-0058		22	LOCK WASHER SERRAT.EXT.GEAR,3,2/6 H=0,4	
050	90220-0305		10	CLAMP FOR SCR.CABLE, 16MM,	
080	312125-0232		10	SCREW ISO 1207 M3X25 A4	
090	312605-0310		22	HEXAGON NUT, M6M M3 A280	
A005	67347-0101		1	CARD BRAKEREG.MAGN.POWDER BRAKE	
A005:1	67372-0101		1	BACKPLANE 8TE(32 POLE)	
0010	*543336-0001*		*1*	*COMPONENTS WITHOUT TP-NO*	
0020	*543319-0000*		*1*	*PRINTED CIRCUIT BOARD*	
0030	*543337-0000*		*1*	*TERMINAL LABELS 1-4*	
A006	67347-0101		1	CARD BRAKEREG.MAGN.POWDER BRAKE	
A006.1	67372-0101		1	BACKPLANE 8TE(32 POLE)	
0010	*543336-0001*		*1*	*COMPONENTS WITHOUT TP-NO*	
0020	*543319-0000*		*1*	*PRINTED CIRCUIT BOARD*	
0030	*543337-0000*		*1*	*TERMINAL LABELS 1-4*	
A401	559810-0101		1	TMCC2 CONTROLLER	**10-33**
A401.1	67372-0101		1	BACKPLANE 8TE(32 POLE)	
0010	*543336-0001*		*1*	*COMPONENTS WITHOUT TP-NO*	
0020	*543319-0000*		*1*	*PRINTED CIRCUIT BOARD*	
0030	*543337-0000*		*1*	*TERMINAL LABELS 1-4*	
A511	559810-0101		1	TMCC2 CONTROLLER	**10-33**
A511.1	67372-0101		1	BACKPLANE 8TE(32 POLE)	
0010	*543336-0001*		*1*	*COMPONENTS WITHOUT TP-NO*	
0020	*543319-0000*		*1*	*PRINTED CIRCUIT BOARD*	
0030	*543337-0000*		*1*	*TERMINAL LABELS 1-4*	
TBA PT19 NOASU					
020	90062-0058		22	LOCK WASHER SERRAT.EXT.GEAR,3,2/6 H=0,4	
050	90220-0305		10	CLAMP FOR SCR.CABLE, 16MM,	
080	312125-0232		10	SCREW ISO 1207 M3X25 A4	
090	312605-0310		22	HEXAGON NUT, M6M M3 A280	
A005	67347-0101		1	CARD BRAKEREG.MAGN.POWDER BRAKE	
A005:1	67372-0101		1	BACKPLANE 8TE(32 POLE)	
0010	*543336-0001*		*1*	*COMPONENTS WITHOUT TP-NO*	
0020	*543319-0000*		*1*	*PRINTED CIRCUIT BOARD*	
0030	*543337-0000*		*1*	*TERMINAL LABELS 1-4*	
A006	67347-0101		1	CARD BRAKEREG.MAGN.POWDER BRAKE	
A006.1	67372-0101		1	BACKPLANE 8TE(32 POLE)	
0010	*543336-0001*		*1*	*COMPONENTS WITHOUT TP-NO*	
0020	*543319-0000*		*1*	*PRINTED CIRCUIT BOARD*	
0030	*543337-0000*		*1*	*TERMINAL LABELS 1-4*	
A401	559810-0101		1	TMCC2 CONTROLLER	**10-33**
A401.1	67372-0101		1	BACKPLANE 8TE(32 POLE)	
0010	*543336-0001*		*1*	*COMPONENTS WITHOUT TP-NO*	
0020	*543319-0000*		*1*	*PRINTED CIRCUIT BOARD*	
0030	*543337-0000*		*1*	*TERMINAL LABELS 1-4*	
Common Parts					
010	67369-0102		1	RACK WALLMOUNTED 84TE	
030 2	*540282-0002*		*1*	*COMPONENTS WITHOUT TP-NO*	
030	90062-0061		4	LOCK WASHER NORD-LOCK,6,5/10,8, H=2,6	
040	90194-0152		1	SIGN, EARTH	
060	312115-0325		4	SCREW ISO4762 M5X10 A4	
070	312125-0226		1	SCREW ISO 1207 M3X12 A4	
110	315105-0124		1	WASHER BRB3,2X6RFR	
110	315125-0146		4	WASHER TBRSB 5.3X15X1 A4	
120	315402-0146		4	LOCK WASHER FBB 5,1	
130	312115-0224		4	SCREW ISO4762 M3X10 A4	
A310	559810-0101		1	TMCC2 CONTROLLER	**10-33**
A310.1	67372-0101		1	BACKPLANE 8TE(32 POLE)	
0010	*543336-0001*		*1*	*COMPONENTS WITHOUT TP-NO*	

Machine Type Group Description Used-In Group Number Page No

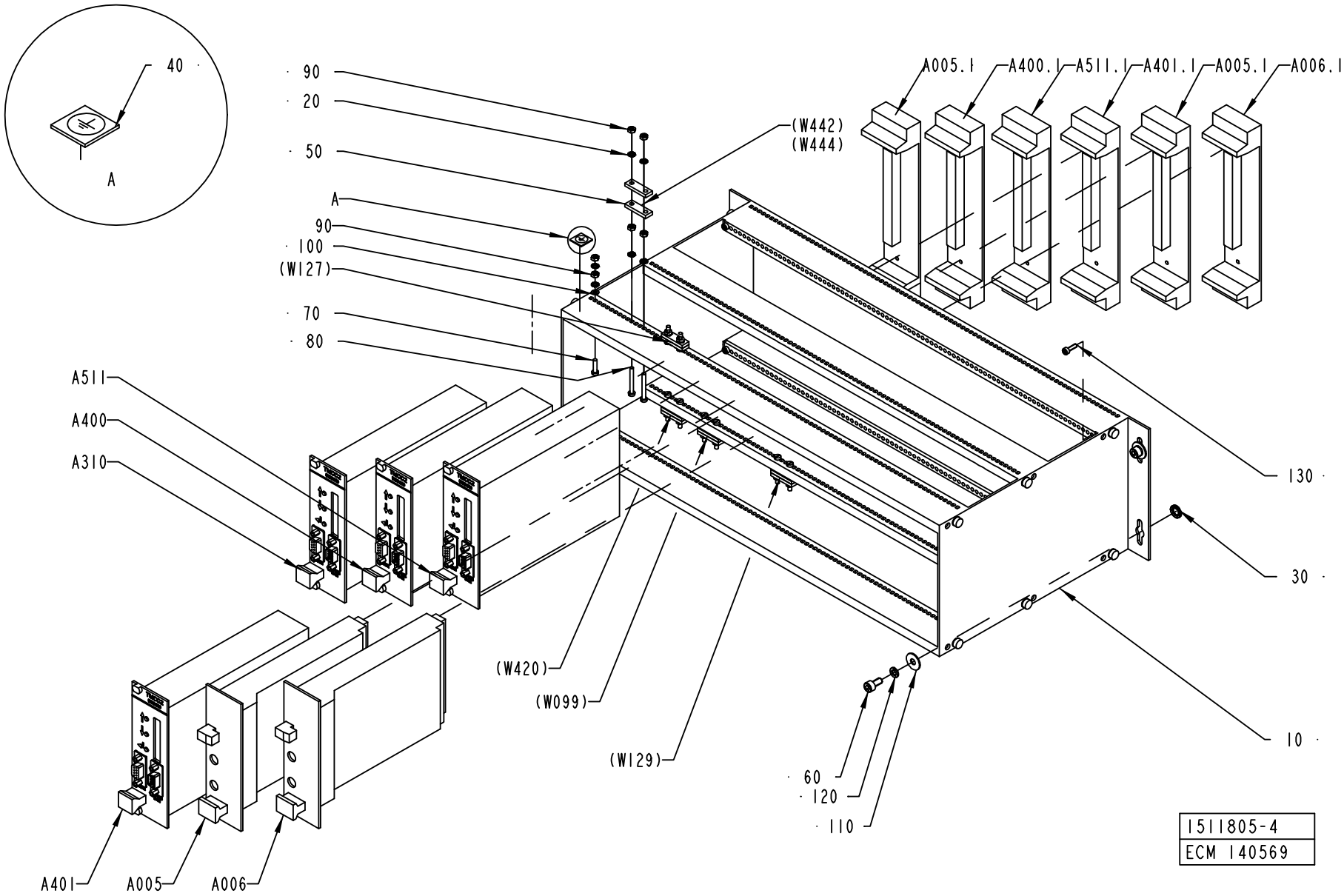
40
A
90
20
50
A
90
100
(W127)
70
80
(W442)
(W444)
A005.1
A400.1
A511.1
A401.1
A005.1
A006.1
A511
A400
A310
130
30
10
(W420)
(W099)
(W129)
60
120
110
A401
A005
A006
1511805-4
ECM 140569

Pos	Part No	UN	Qty	Description	Page No
Common Parts (Cont'd)					
A400	559810-0101		1	TMCC2 CONTROLLER	**10-33**
A400.1	67372-0101		1	BACKPLANE 8TE(32 POLE)	
0010	*543336-0001*		*1*	*COMPONENTS WITHOUT TP-NO*	
0020	*543319-0000*		*1*	*PRINTED CIRCUIT BOARD*	
0030	*543337-0000*		*1*	*TERMINAL LABELS 1-4*	

This page is intentionally left blank.

ECM: 107399 - 20020530
Group number: 559810-0101
Assembly Drawing:

Pos	Part No	UN	Qty	Description	Page No
-					
010	559809-0101		1	CIRCUIT BOARD	
150	*559807-0000*		*1*	*PRINTED CIRCUIT BOARD*	
180	*559811-0101*		*1*	*CIRCUIT BOARD*	
130	*559808-0000*		*1*	*PRINTED CIRCUIT BOARD*	
020	2524654-0000		1	PLATE	
030	2524660-0000		1	CASING	
070	2524662-0000		1	COOLING BLOCK	
100	2524658-0000		1	COVER	
170	2524659-0000		1	CABLE	
220	2524664-0000		1	ASSEMBLY DRAWING	

Pos	Part No	UN	Qty	Description	Page No

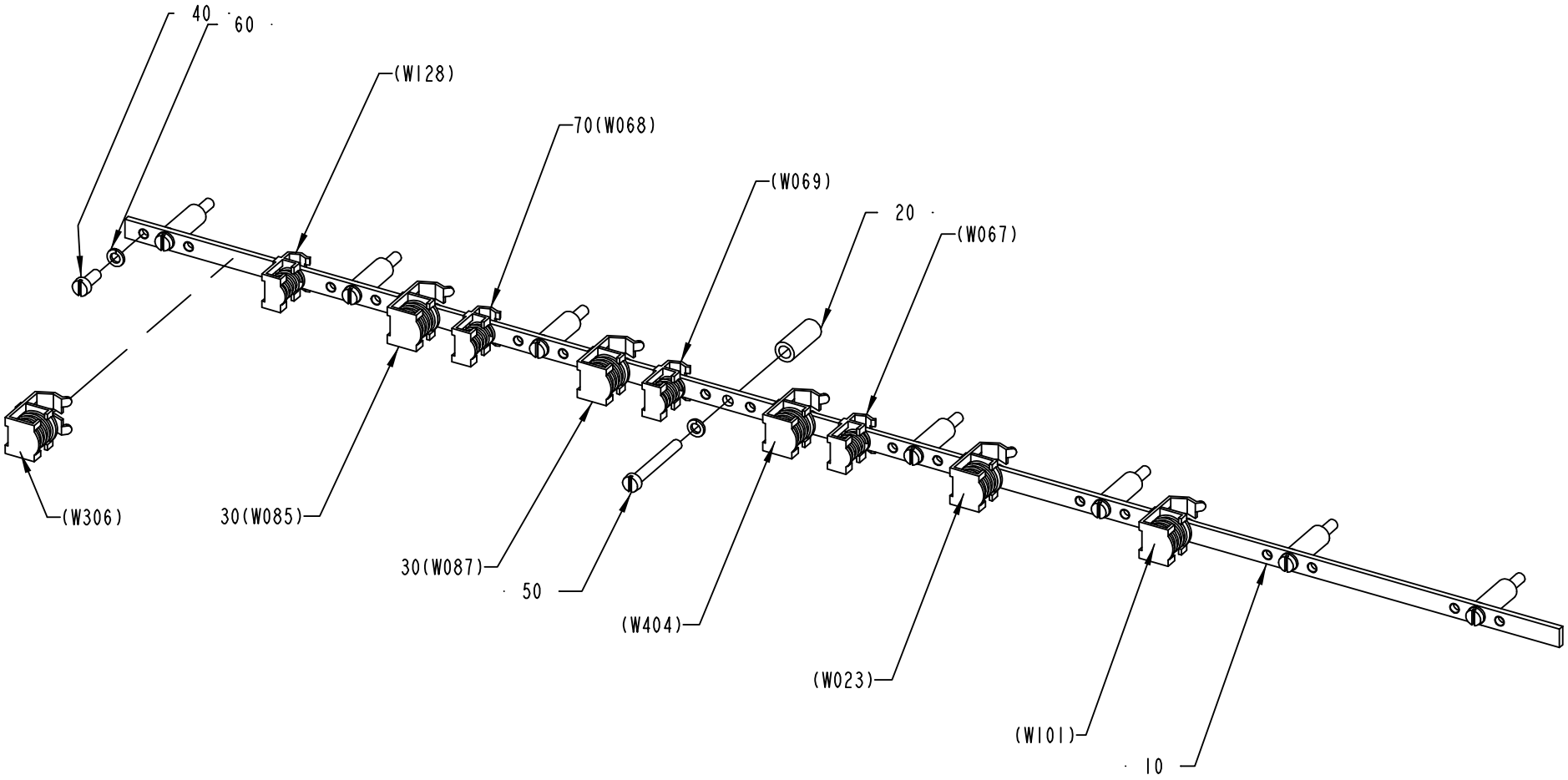

1511808-4
ECM 98861

ECM: 118391 - 20030922
Group number: 1511808-0100
Assembly Drawing: 1511808-4_1_AA

Pos	Part No	UN	Qty	Description	Page No
TBA NOPT NOASU					
030	90135-0039		4	SHIELD CLIP KLBU 4-13.5	
070	90135-0034		2	SHIELD CLAMP KLBU 3-8	
TBA PT19 ASU					
030	90135-0039		6	SHIELD CLIP KLBU 4-13.5	
070	90135-0034		4	SHIELD CLAMP KLBU 3-8	
TBA PT19 NOASU, TBA NOPT ASU					
030	90135-0039		5	SHIELD CLIP KLBU 4-13.5	
070	90135-0034		3	SHIELD CLAMP KLBU 3-8	
Common Parts					
010	1523947-0000		1	EARTH BAR	
020	988436-0000		8	SPACER SLEEVE	
040	312125-0327		1	SCREW ISO 1207 M5X12 A4	
050	312125-0339		8	SCREW ISO 1207 M5X40 A4	
060	315402-0146		8	LOCK WASHER FBB 5,1	

Pos	Part No	UN	Qty	Description	Page No

Machine Type | Group Description | Used-In | Group Number | Page No

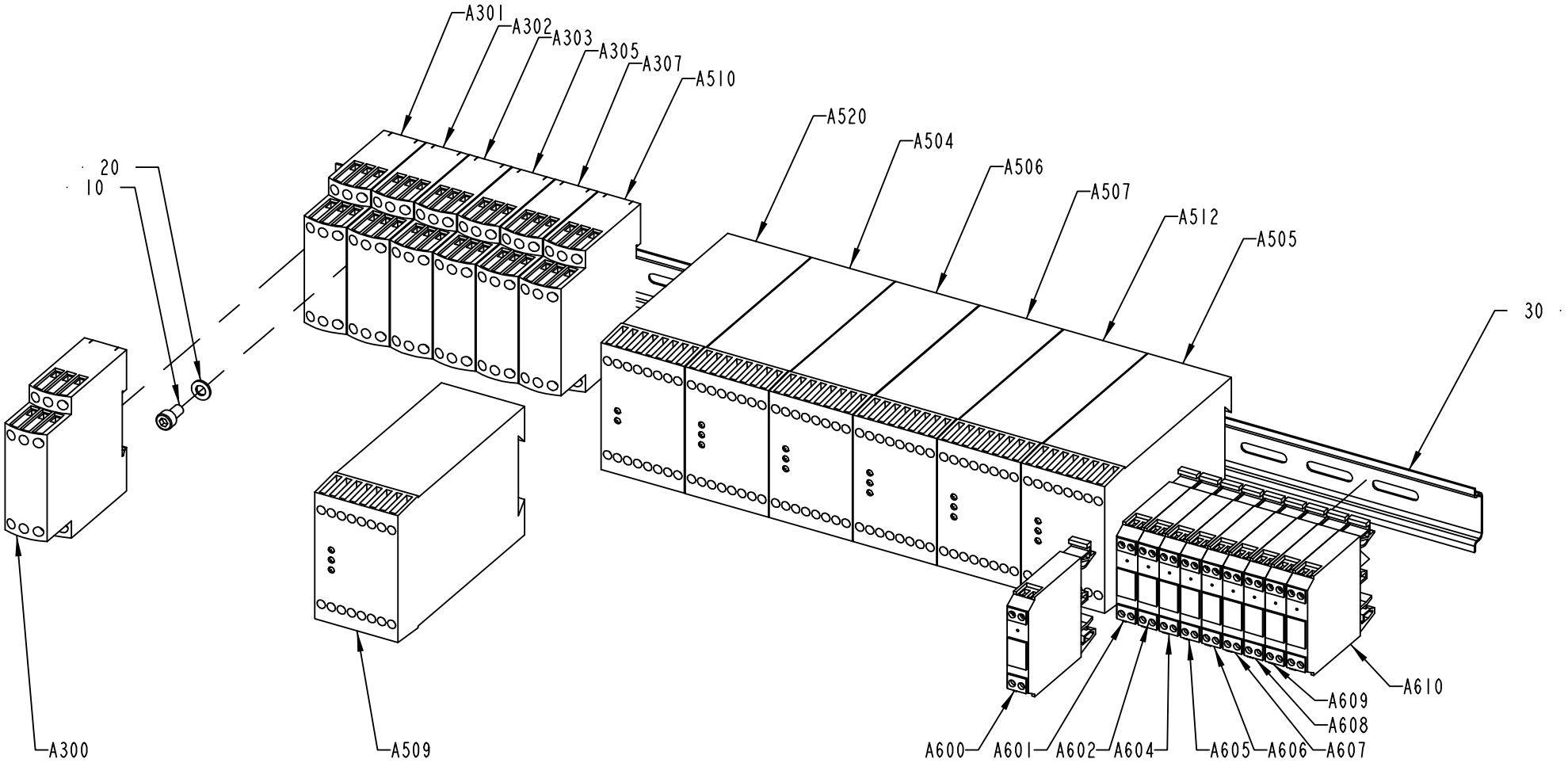

1511824-8
ECM 98861

ECM: 118682 - 20030922
Group number: 1511824-0100
Assembly Drawing: 1511824-8_1_AA

Pos	Part No	UN	Qty	Description	Page No
TBA NOPT ASU HI					
A505	90119-0072		1	SAFETY RELAY, JSBR4	
A510	90458-2580		1	LEVEL CONTROL RELAY RM4-LA32M	
TBA NOPT ASU NOHI					
A505	90119-0072		1	SAFETY RELAY, JSBR4	
TBA NOPT NOASU HI					
A510	90458-2580		1	LEVEL CONTROL RELAY RM4-LA32M	
TBA PT19 ASU HI					
A505	90119-0072		1	SAFETY RELAY, JSBR4	
A509	90119-0072		1	SAFETY RELAY, JSBR4	
A510	90458-2580		1	LEVEL CONTROL RELAY RM4-LA32M	
A520	90119-0084		1	EXPANSION RELAY, JSR1T-500MS	
TBA PT19 ASU NOHI					
A505	90119-0072		1	SAFETY RELAY, JSBR4	
A509	90119-0072		1	SAFETY RELAY, JSBR4	
A520	90119-0084		1	EXPANSION RELAY, JSR1T-500MS	
TBA PT19 NOASU HI					
A509	90119-0072		1	SAFETY RELAY, JSBR4	
A510	90458-2580		1	LEVEL CONTROL RELAY RM4-LA32M	
A520	90119-0084		1	EXPANSION RELAY, JSR1T-500MS	
TBA PT19 NOASU NOHI					
A509	90119-0072		1	SAFETY RELAY, JSBR4	
A520	90119-0084		1	EXPANSION RELAY, JSR1T-500MS	
Common Parts					
010	312115-0325		3	SCREW ISO4762 M5X10 A4	
020	315105-0146		3	WASHER BRB5,3X10RFR	
030	353042-0004	MM	623	RAIL TS 35/7,5	
A300	90458-2580		1	LEVEL CONTROL RELAY RM4-LA32M	
A301	90458-2580		1	LEVEL CONTROL RELAY RM4-LA32M	
A302	90458-2580		1	LEVEL CONTROL RELAY RM4-LA32M	
A303	90458-2580		1	LEVEL CONTROL RELAY RM4-LA32M	
A305	90458-2580		1	LEVEL CONTROL RELAY RM4-LA32M	
A307	90458-2580		1	LEVEL CONTROL RELAY RM4-LA32M	
A504	90119-0089		1	SAFETY RELAY, JSBT4 24VDC	
A506	90119-0072		1	SAFETY RELAY, JSBR4	
A507	90119-0072		1	SAFETY RELAY, JSBR4	
A512	90119-0072		1	SAFETY RELAY, JSBR4	
A600	90119-0104		1	OPTO COUPLER AMMS 50070	
A601	90119-0063		1	OPTO-RELAY, DC/DC AMMS-10-1/30VDC	
A602	90119-0063		1	OPTO-RELAY, DC/DC AMMS-10-1/30VDC	
A604	90119-0063		1	OPTO-RELAY, DC/DC AMMS-10-1/30VDC	
A605	90119-0063		1	OPTO-RELAY, DC/DC AMMS-10-1/30VDC	
A606	90119-0063		1	OPTO-RELAY, DC/DC AMMS-10-1/30VDC	
A607	90119-0104		1	OPTO COUPLER AMMS 50070	
A608	90119-0104		1	OPTO COUPLER AMMS 50070	
A609	90119-0104		1	OPTO COUPLER AMMS 50070	
A610	90119-0104		1	OPTO COUPLER AMMS 50070	

Machine Type | Group Description | Used-In | Group Number | Page No

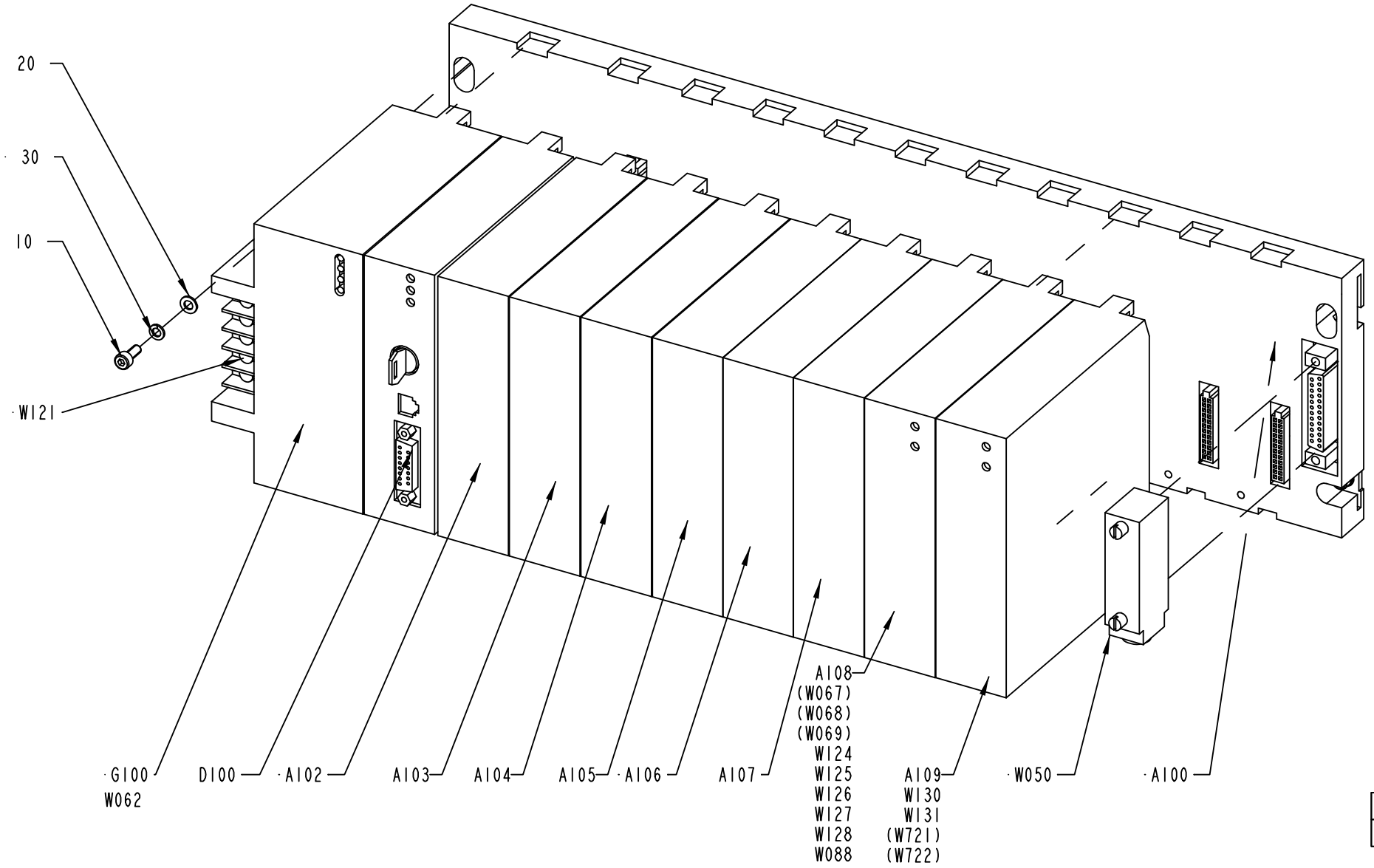

1511825-2
ECN 98861

ECM: 118395 - 20030922
Group number: 1511825-0100
Assembly Drawing: 1511825-2_1_AA

Pos	Part No	UN	Qty	Description	Page No
TBA NOPT ASU HI, TBA NOPT NOASU HI					
A109	90031-0063		1	PLC,ANALOG COMBO MODULE,IN-4PT/OUT-2PT	
W131	1512322-0000		1	COPPER BRAID	
TBA PT19 ASU HI, TBA PT19 ASU NOHI, TBA PT19 NOASU HI, TBA PT19 NOASU NOHI					
A109	90031-0063		1	PLC,ANALOG COMBO MODULE,IN-4PT/OUT-2PT	
W128	90220-0183	M	3	SCR. CABLE 2X0,34MM2	
W130	90220-0183	M	3	SCR. CABLE 2X0,34MM2	
W131	1512322-0000		1	COPPER BRAID	
Common Parts					
010	312115-0289		4	SCREW ISO4762 M4X10 A4	
020	315105-0136		4	WASHER BRB4,3XRFR	
030	315402-0136		4	LOCK WASHER FBB 4,1	
A100	90031-0051		1	BASEPLATE, 10-SLOT	
A102	90031-0057		1	PLC, DIGITAL INPUT MODULE	
A103	90031-0057		1	PLC, DIGITAL INPUT MODULE	
A104	90031-0057		1	PLC, DIGITAL INPUT MODULE	
A105	90031-0057		1	PLC, DIGITAL INPUT MODULE	
A106	90031-0058		1	PLC, DIGITAL INPUT MODULE	
A107	90031-0059		1	PLC, DIGITAL OUTPUT MODULE	
A108	90031-0062		1	PLC, ANALOG OUTPUT MODULE 8PT/CURR/VOLT	
D100	90031-0075		1	CPU363, SERIAL COMMUNICATION	
G100	90031-0068		1	PLC, POWER SUPPLY	
	90031-0301		*1*	*SPARE BATTERY CPU,PCM,2PCS*	
	352551-0134		*1*	*FINE-WIRE FUSE 2 A SLOW;5X20MM*	
W050	90031-0305		1	I/O EXPANSION CABLE	
W088	1512322-0000		1	COPPER BRAID	
W121	1512322-0000		1	COPPER BRAID	
W124	90220-0183	M	3	SCR. CABLE 2X0,34MM2	
W125	90220-0183	M	3	SCR. CABLE 2X0,34MM2	
W126	90220-0183	M	3	SCR. CABLE 2X0,34MM2	
W127	90220-0183	M	2	SCR. CABLE 2X0,34MM2	

Pos	Part No	UN	Qty	Description	Page No

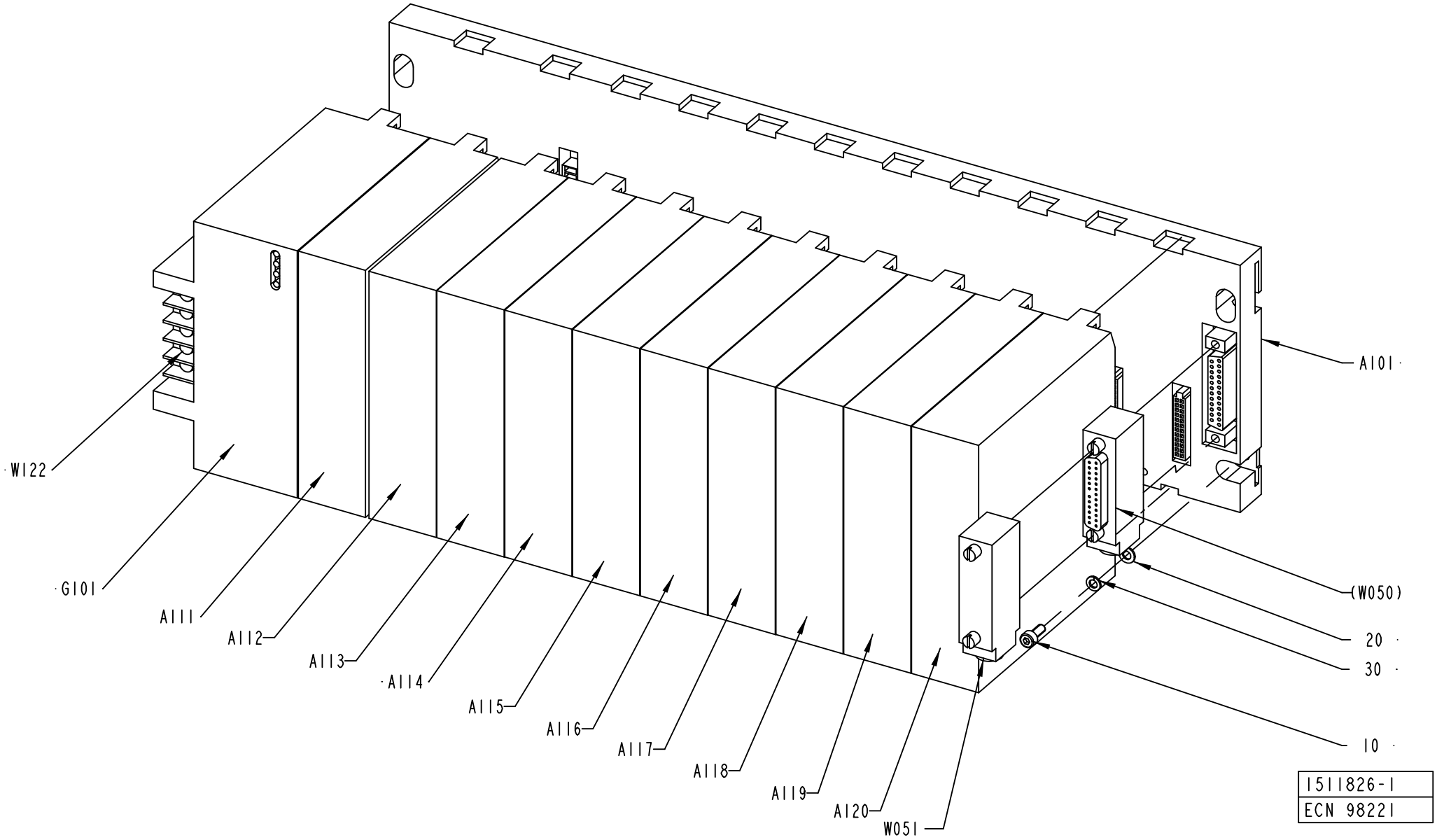
A101
W122
G101
A111
A112
A113
A114
A115
A116
A117
A118
A119
A120
W051
(W050)
20
30
10
1511826-1
ECN 98221

ECM: 115717 - 20020930
Group number: 1511826-0100
Assembly Drawing: 1511826-1_1_AB

Pos	Part No	UN	Qty	Description	Page No
-					
010	312115-0289		4	SCREW ISO4762 M4X10 A4	
020	315105-0136		4	WASHER BRB4,3XRFR	
030	315402-0136		4	LOCK WASHER FBB 4,1	
A101	90031-0053		1	BASEPLATE,10-SLOT	
	90031-0302		*1*	*I/O BUS TERMINATION PLUG*	
A111	90031-0057		1	PLC, DIGITAL INPUT MODULE	
A112	90031-0057		1	PLC, DIGITAL INPUT MODULE	
A113	90031-0057		1	PLC, DIGITAL INPUT MODULE	
A114	90031-0059		1	PLC, DIGITAL OUTPUT MODULE	
A115	90031-0059		1	PLC, DIGITAL OUTPUT MODULE	
A116	90031-0059		1	PLC, DIGITAL OUTPUT MODULE	
A117	90031-0059		1	PLC, DIGITAL OUTPUT MODULE	
A118	90031-0059		1	PLC, DIGITAL OUTPUT MODULE	
A119	90031-0059		1	PLC, DIGITAL OUTPUT MODULE	
A120	90031-0059		1	PLC, DIGITAL OUTPUT MODULE	
G101	90031-0068		1	PLC, POWER SUPPLY	
	90031-0301		*1*	*SPARE BATTERY CPU,PCM,2PCS*	
	352551-0134		*1*	*FINE-WIRE FUSE 2 A SLOW;5X20MM*	
W050	90031-0305		1	I/O EXPANSION CABLE	
W122	1512322-0000		1	COPPER BRAID	

Pos	Part No	UN	Qty	Description	Page No

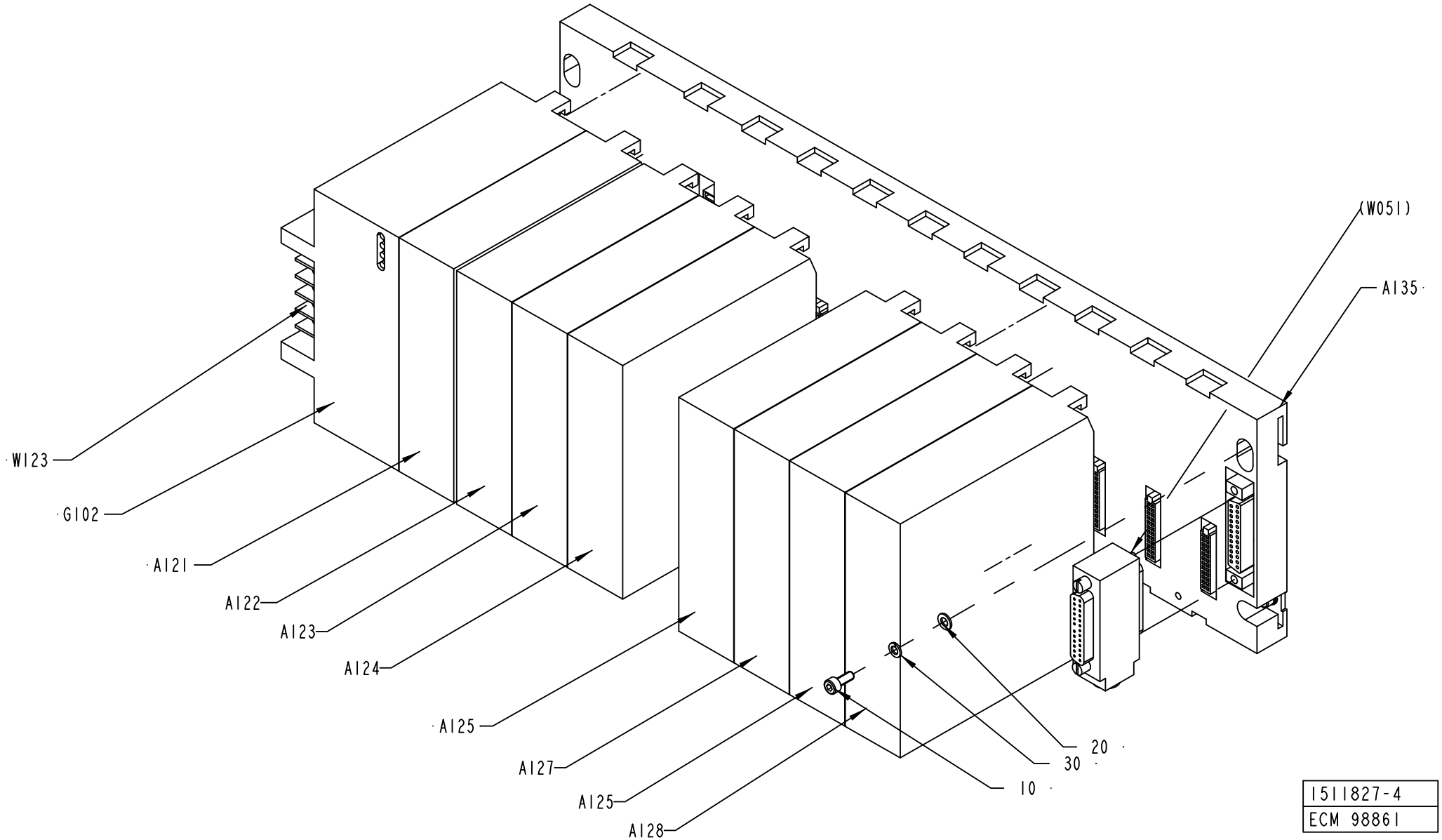
(W051)
A135
W123
G102
A121
A122
A123
A124
A125
A127
A125
A128
20
30
10
1511827-4
ECM 98861

ECM: 118396 - 20030922
Group number: 1511827-0100
Assembly Drawing: 1511827-4_1_AA

Pos	Part No	UN	Qty	Description	Page No
TBA NOPT HI					
A122	90031-0059		1	PLC, DIGITAL OUTPUT MODULE	
TBA PT19 HI					
A122	90031-0059		1	PLC, DIGITAL OUTPUT MODULE	
A125	90031-0057		1	PLC, DIGITAL INPUT MODULE	
A128	90031-0057		1	PLC, DIGITAL INPUT MODULE	
TBA PT19 NOHI					
A125	90031-0057		1	PLC, DIGITAL INPUT MODULE	
A128	90031-0057		1	PLC, DIGITAL INPUT MODULE	
Common Parts					
0010	312115-0289		4	SCREW ISO4762 M4X10 A4	
0020	315105-0136		4	WASHER BRB4,3XRFR	
030	315402-0136		4	LOCK WASHER FBB 4,1	
A121	90031-0059		1	PLC, DIGITAL OUTPUT MODULE	
A123	90031-0059		1	PLC, DIGITAL OUTPUT MODULE	
A124	90031-0059		1	PLC, DIGITAL OUTPUT MODULE	
A126	90031-0057		1	PLC, DIGITAL INPUT MODULE	
A127	90031-0057		1	PLC, DIGITAL INPUT MODULE	
A135	90031-0053		1	BASEPLATE,10-SLOT	
	90031-0302		*1*	*I/O BUS TERMINATION PLUG*	
G102	90031-0068		1	PLC, POWER SUPPLY	
	90031-0301		*1*	*SPARE BATTERY CPU,PCM,2PCS*	
	352551-0134		*1*	*FINE-WIRE FUSE 2 A SLOW;5X20MM*	
W123	1512322-0000		1	COPPER BRAID	

Pos	Part No	UN	Qty	Description	Page No

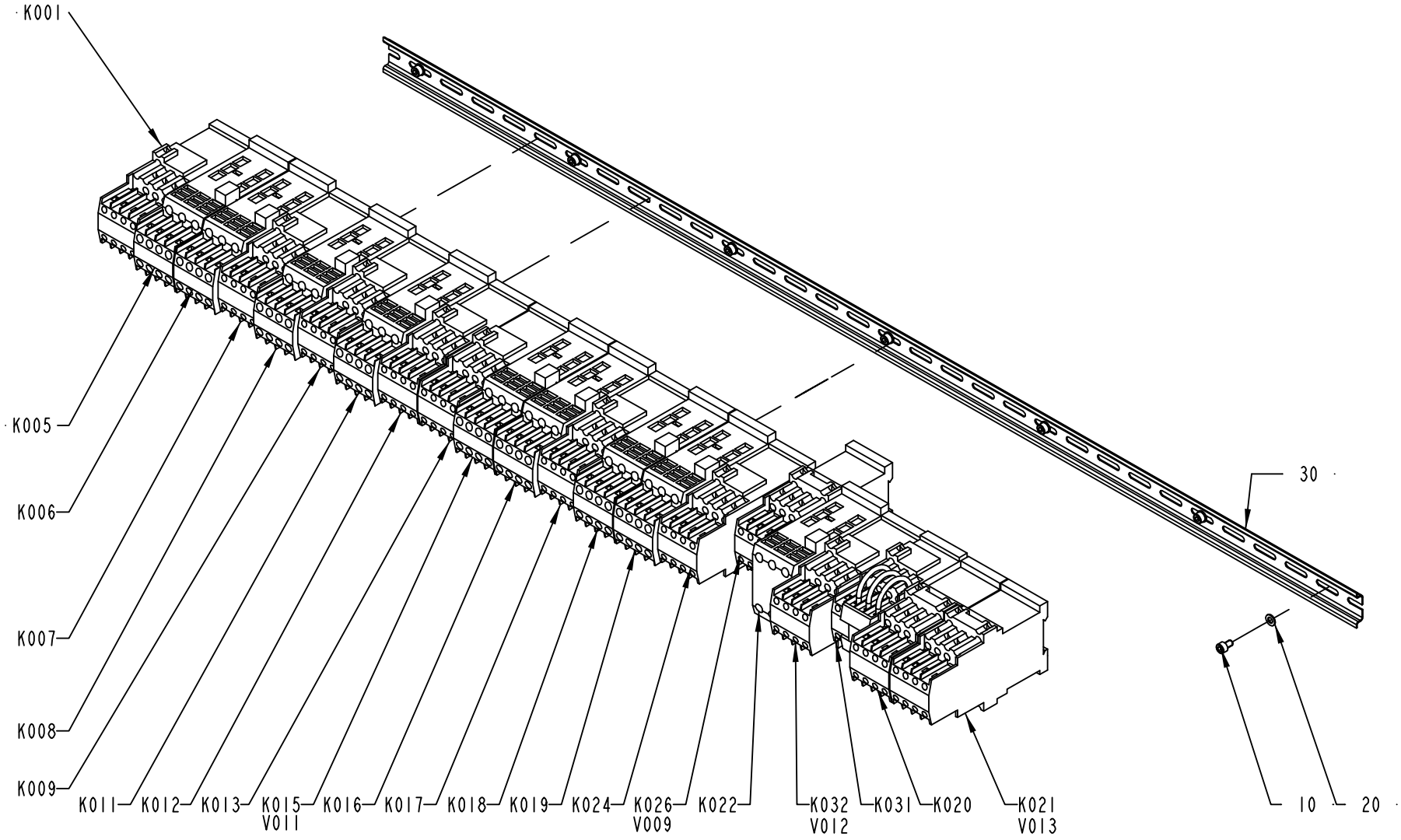

1511834-4
ECM 98861

ECM: 118443 - 20030922
Group number: 1511834-0100
Assembly Drawing: 1511834-4_1_AA

Pos	Part No	UN	Qty	Description	Page No
TBA NOPT ASU					
K022	90075-0128		1	CONTACTOR, 7,5KW 24VDC	
TBA PT19 ASU					
K020	90075-0127		1	CONTACTOR, 4KW 24VDC	
K021	90075-0127		1	CONTACTOR, 4KW 24VDC	
K022	90075-0128		1	CONTACTOR, 7,5KW 24VDC	
K031	90458-1302		1	CONTACTOR, 4KW 48VAC	
K032	90075-0125		1	CONTACTOR, 7,5KW 24VDC	
	90075-0313		*1*	*AUXILIARY CONTACT K&M 22 DILM.2NO;2NC*	
V013	90024-0034		1	DIODE SURGE SUPPRESSOR, FD B DIL	
TBA PT19 NOASU					
K020	90075-0127		1	CONTACTOR, 4KW 24VDC	
K021	90075-0127		1	CONTACTOR, 4KW 24VDC	
K031	90458-1302		1	CONTACTOR, 4KW 48VAC	
K032	90075-0125		1	CONTACTOR, 7,5KW 24VDC	
	90075-0313		*1*	*AUXILIARY CONTACT K&M 22 DILM.2NO;2NC*	
V013	90024-0034		1	DIODE SURGE SUPPRESSOR, FD B DIL	
Common Parts					
010	312115-0323		7	SCREW ISO4762 M5X8 A4	
020	315105-0146		7	WASHER BRB5,3X10RFR	
030	353042-0004	MM	1120	RAIL TS 35/7,5	
K001	90075-0124		1	CONTACTOR, 4KW 24VDC	
	90075-0313		*1*	*AUXILIARY CONTACT K&M 22 DILM.2NO;2NC*	
K005	90075-0125		1	CONTACTOR, 7,5KW 24VDC	
	90075-0313		*1*	*AUXILIARY CONTACT K&M 22 DILM.2NO;2NC*	
K006	90075-0125		1	CONTACTOR, 7,5KW 24VDC	
	90075-0313		*1*	*AUXILIARY CONTACT K&M 22 DILM.2NO;2NC*	
K007	90075-0124		1	CONTACTOR, 4KW 24VDC	
	90075-0313		*1*	*AUXILIARY CONTACT K&M 22 DILM.2NO;2NC*	
K008	90075-0125		1	CONTACTOR, 7,5KW 24VDC	
	90075-0313		*1*	*AUXILIARY CONTACT K&M 22 DILM.2NO;2NC*	
K009	90075-0124		1	CONTACTOR, 4KW 24VDC	
	90075-0313		*1*	*AUXILIARY CONTACT K&M 22 DILM.2NO;2NC*	
K011	90075-0125		1	CONTACTOR, 7,5KW 24VDC	
	90075-0313		*1*	*AUXILIARY CONTACT K&M 22 DILM.2NO;2NC*	
K012	90075-0124		1	CONTACTOR, 4KW 24VDC	
	90075-0313		*1*	*AUXILIARY CONTACT K&M 22 DILM.2NO;2NC*	
K013	90075-0124		1	CONTACTOR, 4KW 24VDC	
	90075-0313		*1*	*AUXILIARY CONTACT K&M 22 DILM.2NO;2NC*	
K015	90075-0125		1	CONTACTOR, 7,5KW 24VDC	
	90075-0313		*1*	*AUXILIARY CONTACT K&M 22 DILM.2NO;2NC*	
K016	90075-0125		1	CONTACTOR, 7,5KW 24VDC	
	90075-0313		*1*	*AUXILIARY CONTACT K&M 22 DILM.2NO;2NC*	
K017	90075-0124		1	CONTACTOR, 4KW 24VDC	
	90075-0313		*1*	*AUXILIARY CONTACT K&M 22 DILM.2NO;2NC*	
K018	90075-0125		1	CONTACTOR, 7,5KW 24VDC	
	90075-0313		*1*	*AUXILIARY CONTACT K&M 22 DILM.2NO;2NC*	
K019	90075-0125		1	CONTACTOR, 7,5KW 24VDC	
	90075-0313		*1*	*AUXILIARY CONTACT K&M 22 DILM.2NO;2NC*	
K024	90075-0124		1	CONTACTOR, 4KW 24VDC	
	90075-0313		*1*	*AUXILIARY CONTACT K&M 22 DILM.2NO;2NC*	
K026	90075-0124		1	CONTACTOR, 4KW 24VDC	
	90075-0313		*1*	*AUXILIARY CONTACT K&M 22 DILM.2NO;2NC*	
V009	90024-0034		1	DIODE SURGE SUPPRESSOR, FD B DIL	
V011	90024-0034		1	DIODE SURGE SUPPRESSOR, FD B DIL	
V012	90024-0034		1	DIODE SURGE SUPPRESSOR, FD B DIL	

Machine Type | Group Description | Used-In | Group Number | Page No

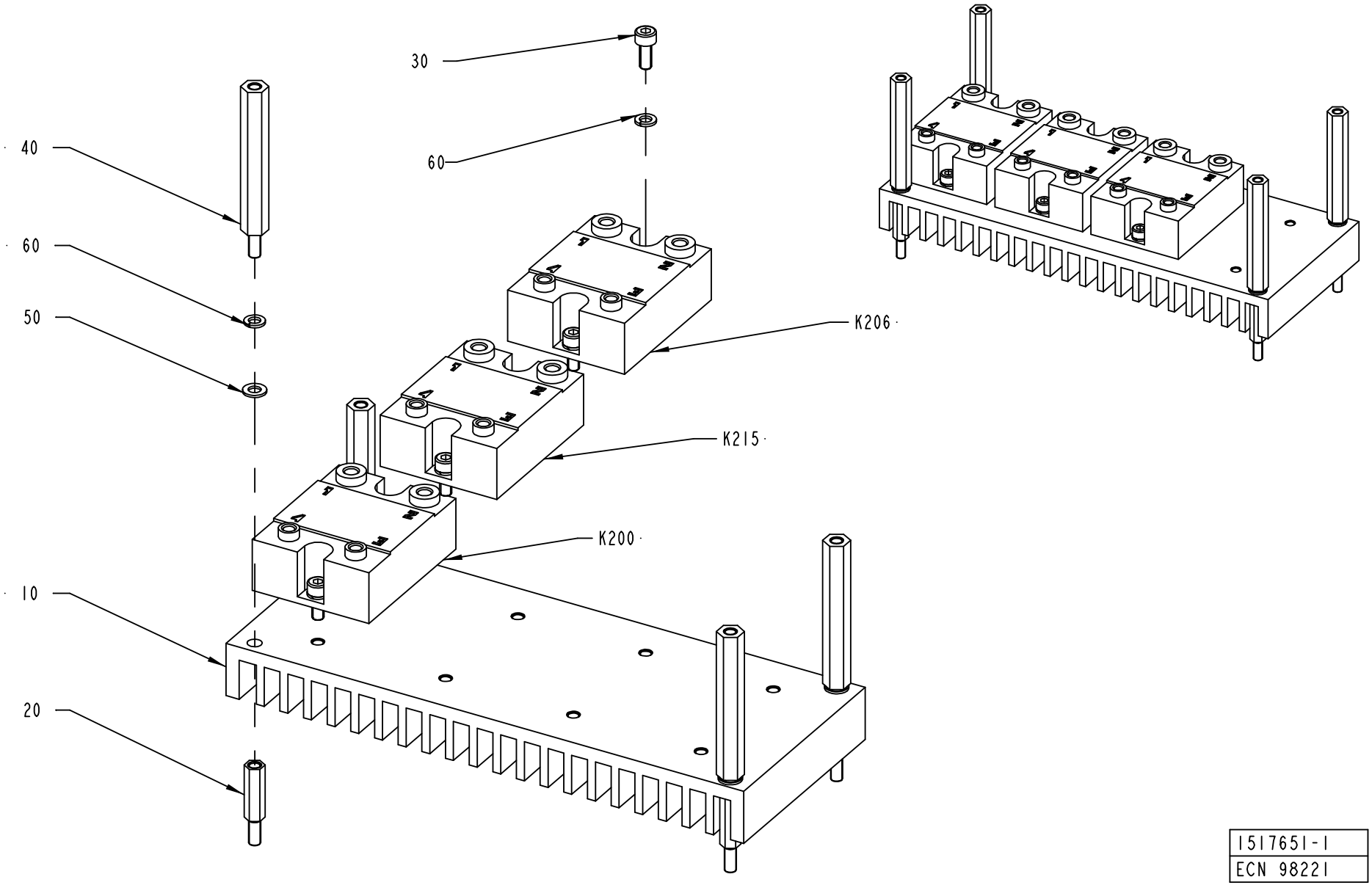

1517651-1
ECN 98221

ECM: 115724 - 20020930
Group number: 1517651-0100
Assembly Drawing: 1517651-1_1_AB

This list covers pages from 10-46 to 10-49

Pos	Part No	UN	Qty	Description	Page No
TBA NOPT ASU (See drawing on page: 10-48)					
030	312115-0289		8	SCREW ISO4762 M4X10 A4	
060	315402-0136		12	LOCK WASHER FBB 4,1	
K205	90119-0067		1	SOLID-STATE RELAY, H12WD4850	
TBA NOPT NOASU (See drawing on page: 10-46)					
030	312115-0289		6	SCREW ISO4762 M4X10 A4	
060	315402-0136		10	LOCK WASHER FBB 4,1	
Common Parts					
010	1498819-0000		1	COOLING PLATE	
020	1517675-0000		4	SPACER	
040	2531997-0000		4	SPACER	
050	315105-0136		4	WASHER BRB4,3XRFR	
K200	90119-0067		1	SOLID-STATE RELAY, H12WD4850	
K206	90119-0067		1	SOLID-STATE RELAY, H12WD4850	
K215	90119-0067		1	SOLID-STATE RELAY, H12WD4850	

Pos	Part No	UN	Qty	Description	Page No

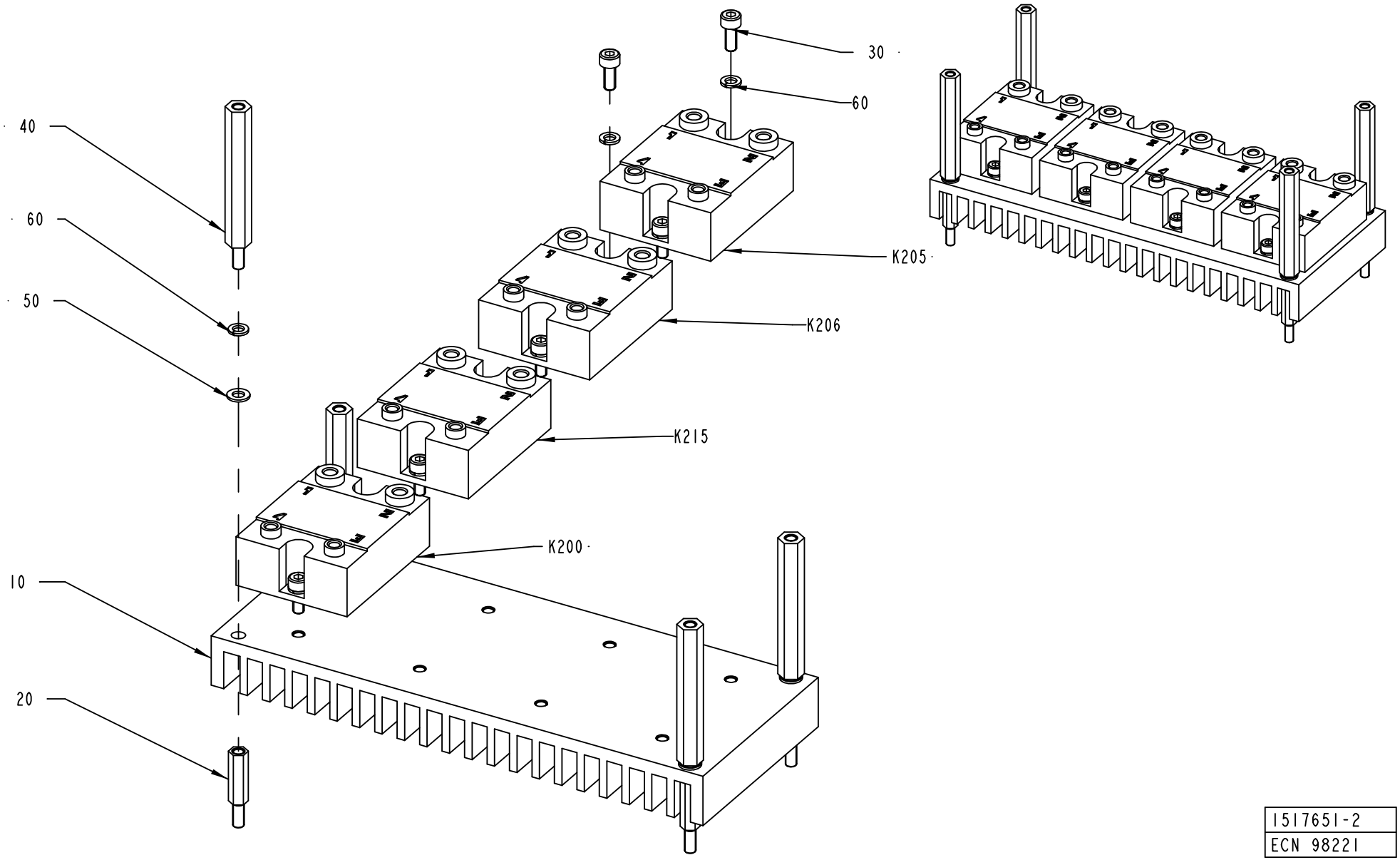

1517651-2
ECN 98221

ECM: 115724 - 20020930
Group number: 1517651-0100
Assembly Drawing: 1517651-2_1_AA

This list covers pages from 10-46 to 10-49

Pos	Part No	UN	Qty	Description	Page No
TBA NOPT ASU (See drawing on page: 10-48)					
030	312115-0289		8	SCREW ISO4762 M4X10 A4	
060	315402-0136		12	LOCK WASHER FBB 4,1	
K205	90119-0067		1	SOLID-STATE RELAY, H12WD4850	
TBA NOPT NOASU (See drawing on page: 10-46)					
030	312115-0289		6	SCREW ISO4762 M4X10 A4	
060	315402-0136		10	LOCK WASHER FBB 4,1	
Common Parts					
010	1498819-0000		1	COOLING PLATE	
020	1517675-0000		4	SPACER	
040	2531997-0000		4	SPACER	
050	315105-0136		4	WASHER BRB4,3XRFR	
K200	90119-0067		1	SOLID-STATE RELAY, H12WD4850	
K206	90119-0067		1	SOLID-STATE RELAY, H12WD4850	
K215	90119-0067		1	SOLID-STATE RELAY, H12WD4850	

Pos	Part No	UN	Qty	Description	Page No

SOLID STATE RELAY RAIL 3

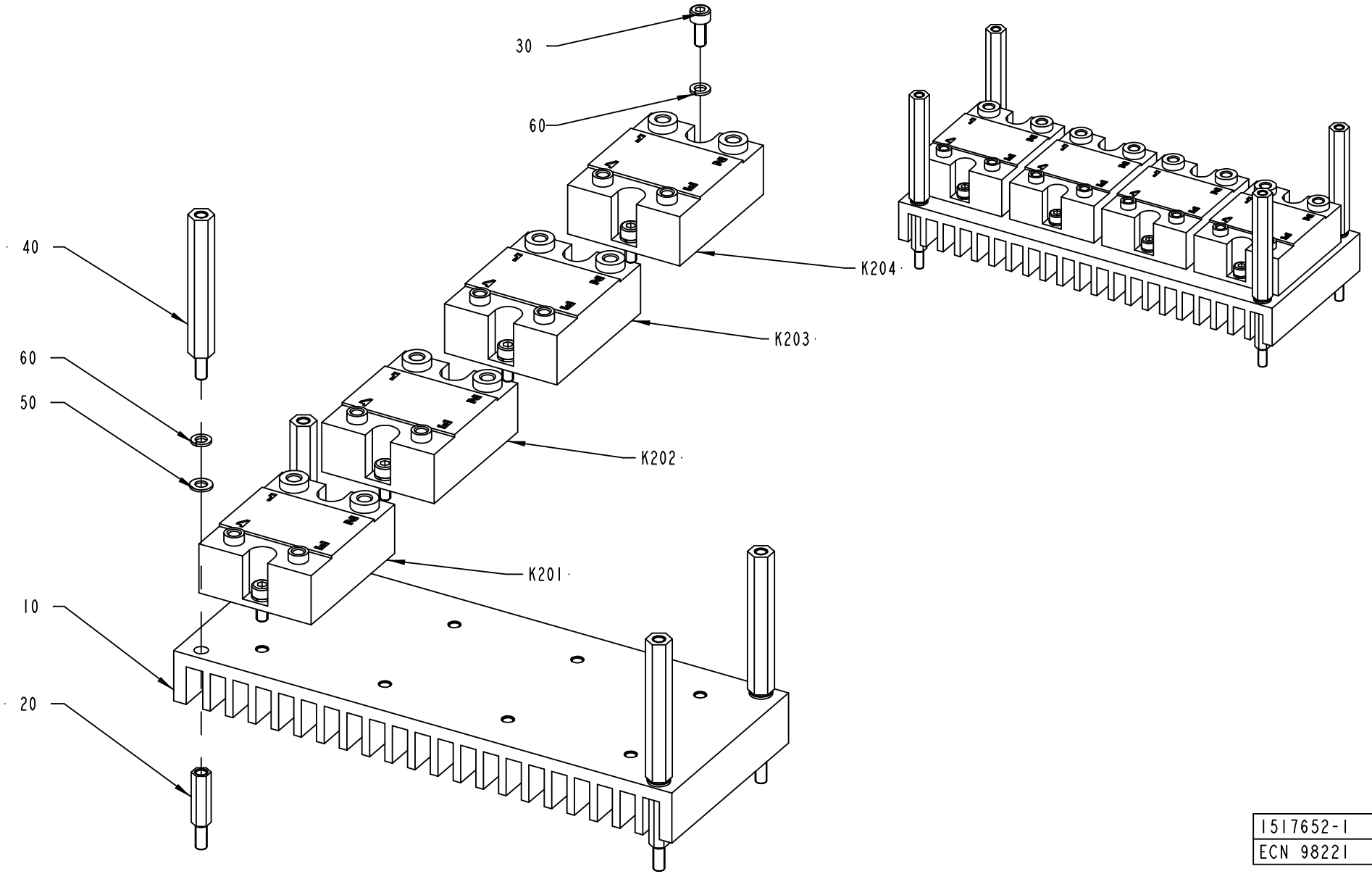

1517652-1
ECN 98221

ECM: 115727 - 20020930
Group number: 1517652-0100
Assembly Drawing: 1517652-1_1_AB

Pos	Part No	UN	Qty	Description	Page No
-					
010	1498819-0000		2	COOLING PLATE	
020	1517675-0000		4	SPACER	
030	312115-0289		8	SCREW ISO4762 M4X10 A4	
040	2531997-0000		4	SPACER	
050	315105-0136		12	WASHER BRB4,3XRFR	
060	315402-0136		12	LOCK WASHER FBB 4,1	
K201	90119-0067		1	SOLID-STATE RELAY, H12WD4850	
K202	90119-0067		1	SOLID-STATE RELAY, H12WD4850	
K203	90119-0067		1	SOLID-STATE RELAY, H12WD4850	
K204	90119-0067		1	SOLID-STATE RELAY, H12WD4850	

Pos	Part No	UN	Qty	Description	Page No

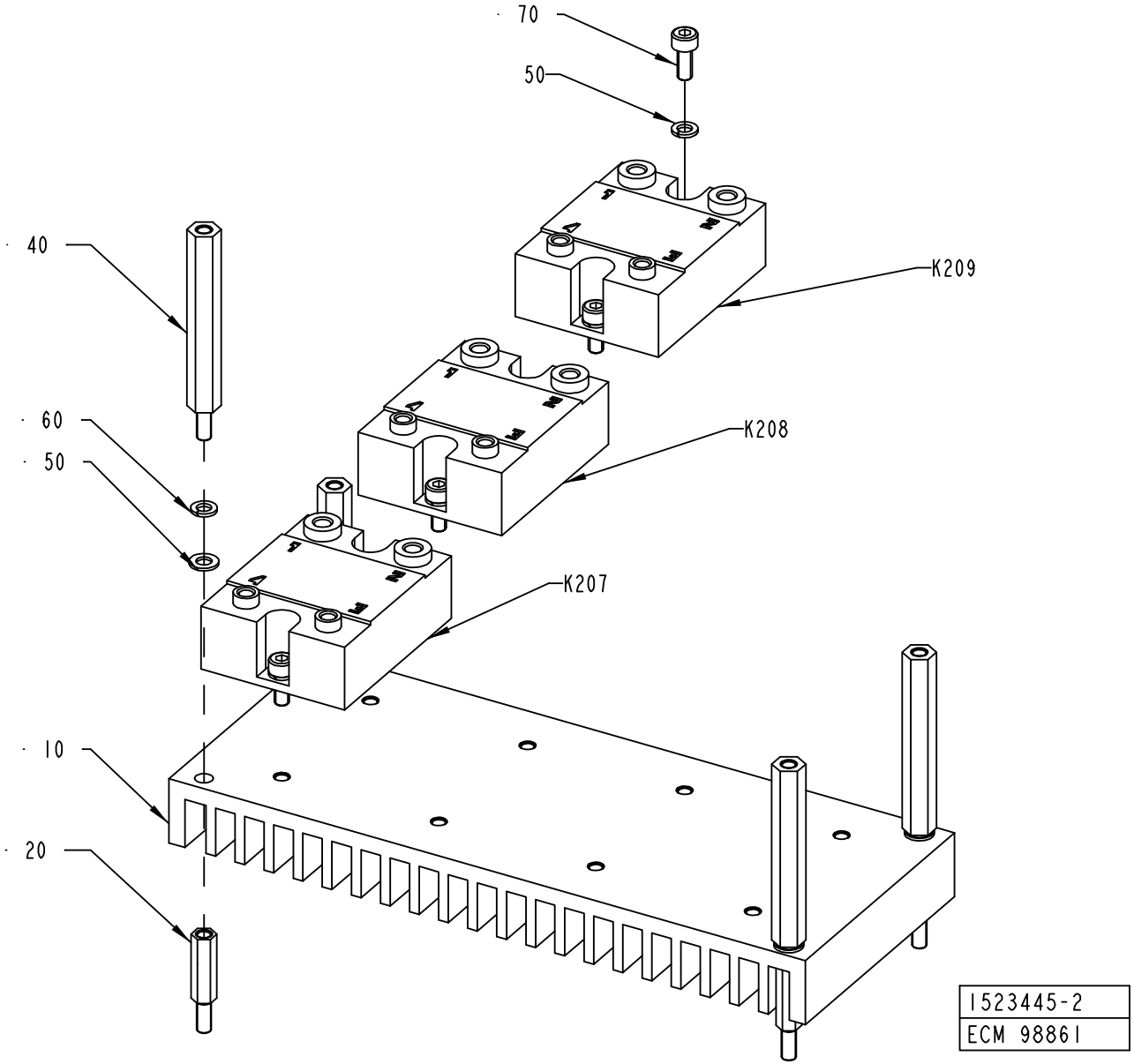
70
50
40
K209
60
50
K208
K207
10
20
1523445-2
ECM 98861

ECM: 118444 - 20030922
Group number: 1523445-0100
Assembly Drawing: 1523445-2_1_AA

Pos	Part No	UN	Qty	Description	Page No
TBA NOPT					
060	315402-0136		4	LOCK WASHER FBB 4,1	
TBA PT19					
060	315402-0136		10	LOCK WASHER FBB 4,1	
070	312115-0289		6	SCREW ISO4762 M4X10 A4	
K207	90119-0067		1	SOLID-STATE RELAY, H12WD4850	
K208	90119-0067		1	SOLID-STATE RELAY, H12WD4850	
K209	90119-0067		1	SOLID-STATE RELAY, H12WD4850	
Common Parts					
010	1498819-0000		1	COOLING PLATE	
020	1517675-0000		4	SPACER	
040	2531997-0000		4	SPACER	
050	315105-0136		4	WASHER BRB4,3XRFR	

Pos	Part No	UN	Qty	Description	Page No

SOLID STATE RELAY RAIL 5

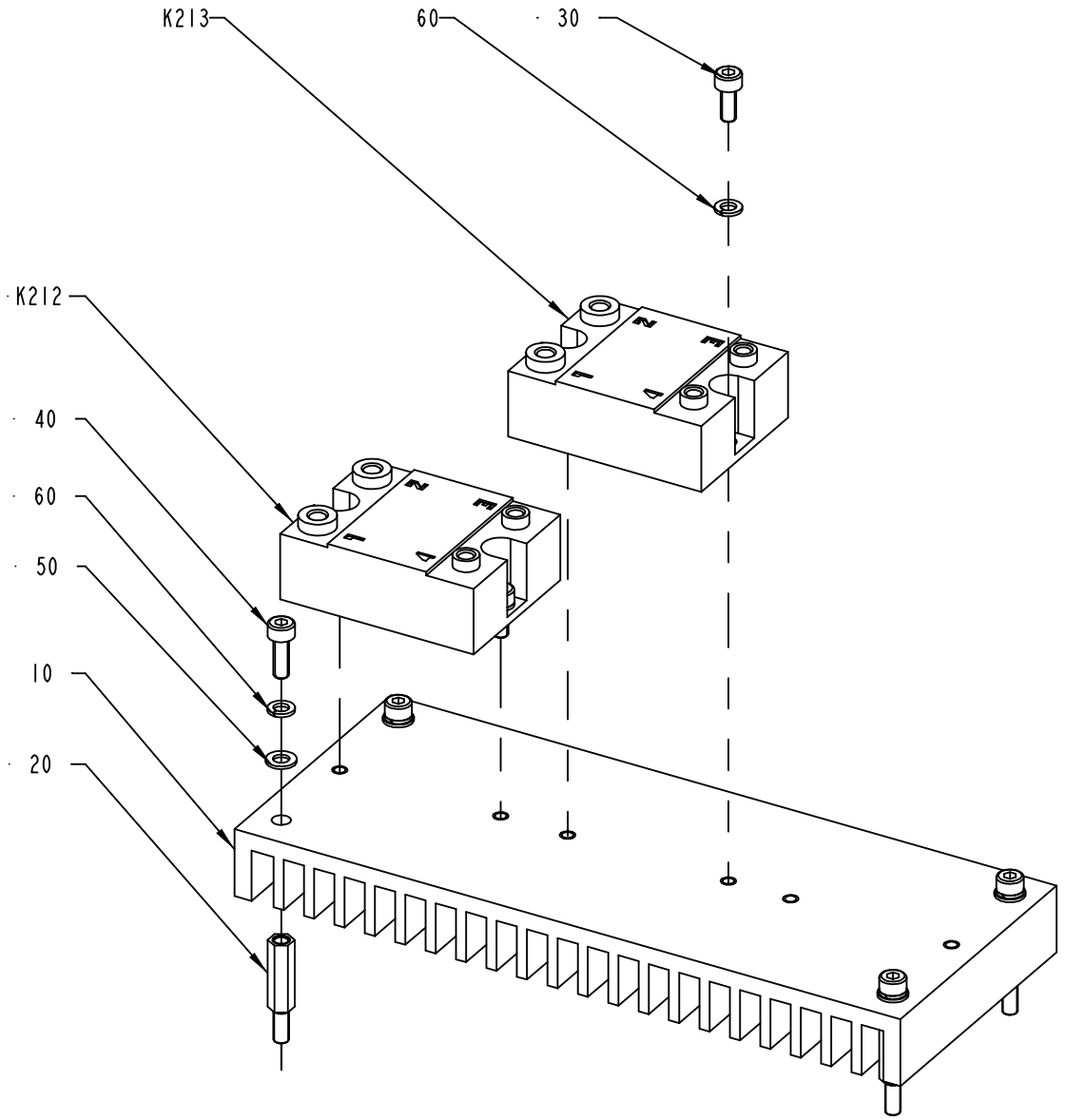

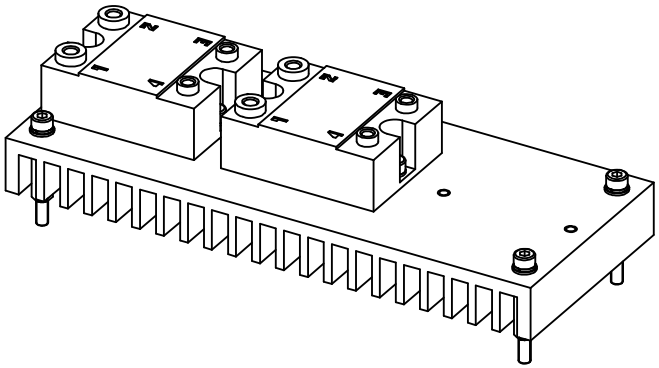

1523446-1
ECN 73191

ECM: 103857 - 20020521
Group number: 1523446-0100
Assembly Drawing: 1523446-1_1_AA

Pos	Part No	UN	Qty	Description	Page No
-					
010	1498819-0000		1	COOLING PLATE	
020	1517675-0000		4	SPACER	
040	2531997-0000		4	SPACER	
050	315105-0136		4	WASHER BRB4,3XRFR	
060	315402-0136		4	LOCK WASHER FBB 4,1	

Pos	Part No	UN	Qty	Description	Page No

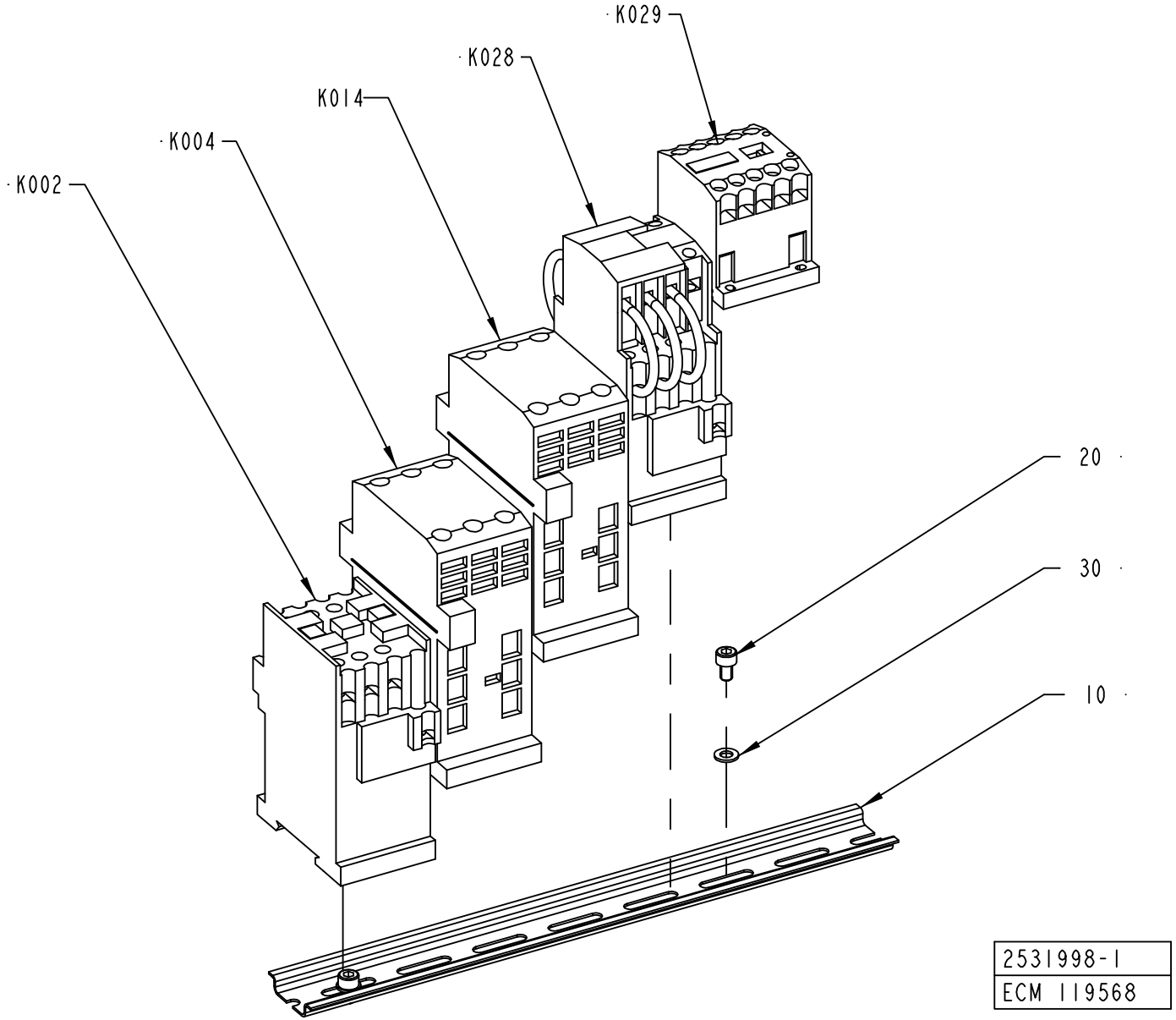
K029
K028
K014
K004
K002
20
30
10
2531998-1
ECM 119568

ECM: 119568 - 20030922
Group number: 2531998-0100
Assembly Drawing: 2531998-1_1_AB

Pos	Part No	UN	Qty	Description	Page No
-					
010	353042-0004	MM	280	RAIL TS 35/7,5	
020	312115-0323		2	SCREW ISO4762 M5X8 A4	
030	315105-0146		2	WASHER BRB5,3X10RFR	
K002	90075-0127		1	CONTACTOR, 4KW 24VDC	
K004	90075-0128		1	CONTACTOR, 7,5KW 24VDC	
K014	90075-0128		1	CONTACTOR, 7,5KW 24VDC	
K028	90458-1302		1	CONTACTOR, 4KW 48VAC	
K029	90075-0141		1	CONTACTOR, 4KW 24VDC	

Pos	Part No	UN	Qty	Description	Page No

This page is intentionally left blank.

ECM: 94531 - 20010601
Group number: 90458-1300
Assembly Drawing:

Pos	Part No	UN	Qty	Description	Page No	Pos	Part No	UN	Qty	Description	Page No
-											
	90458-1856		1	ADHESIVE LABEL, CONNECTION DIAGRAM							

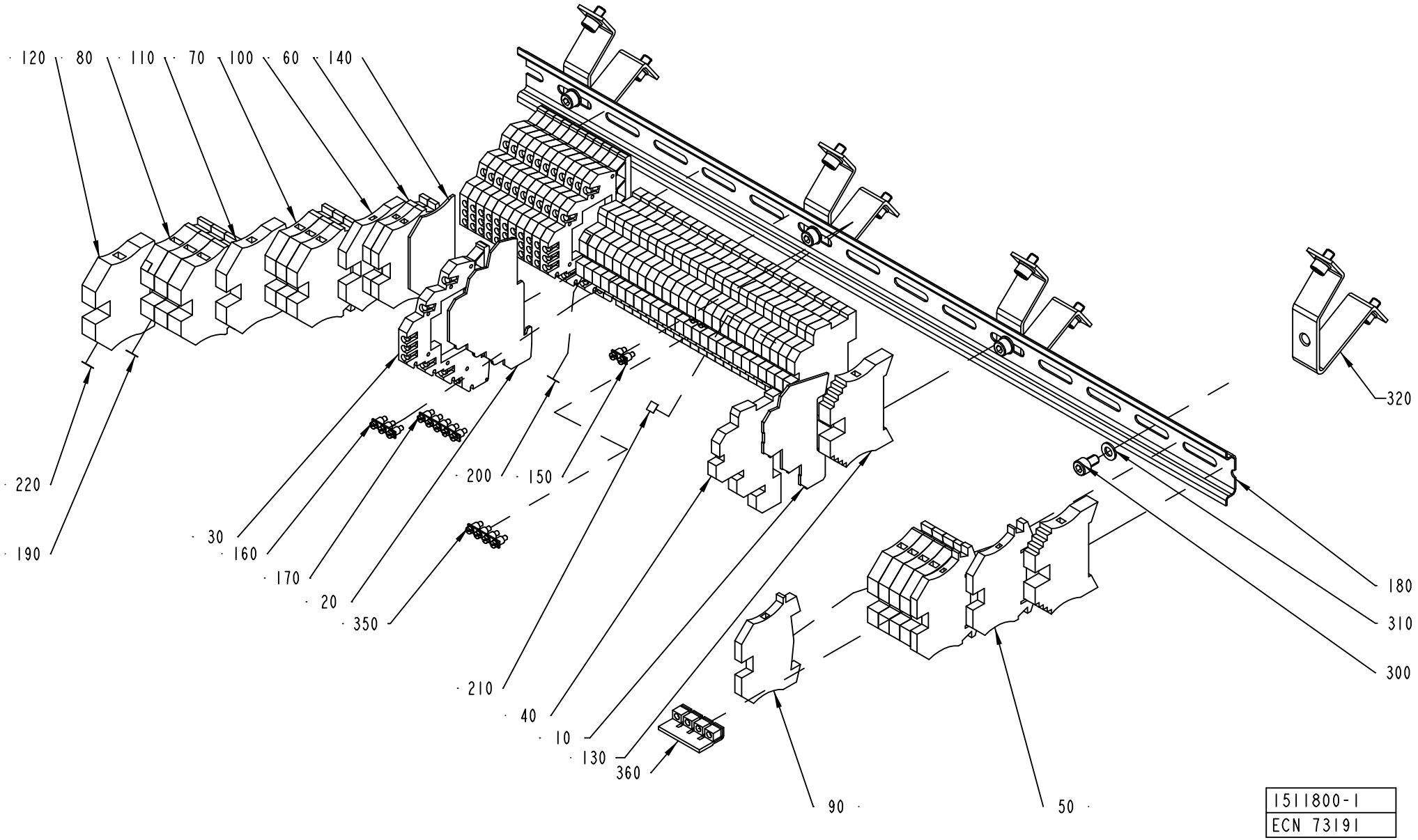
120
80
110
70
100
60
140
320
220
190
30
160
170
20
350
200
150
210
40
10
130
360
180
310
300
90
50
1511800-1
ECN 73191

ECM: 73191 - 20011221
Group number: 1511800-0100
Assembly Drawing: 1511800-1_1_AA

This list covers pages from 10-60 to 10-63

Pos	Part No	UN	Qty	Description	Page No
-					
010	90457-0051		1	END PLATE	
020	90457-0052		1	END PLATE	
030	90457-0054		12	FEED THROUGH TERMINAL, 161527	
040	353021-0132		27	TERMINALS,TRIPLE-LEVEL, DLD 2,5/PE	
050	353021-0212		2	FEED THROUGH TERMINAL, 10200.0	
060	353021-0213		2	FEED THROUGH TERMINAL, 10201.0	
070	353021-0214		3	FEED THROUGH TERMINAL, 10202.0	
080	353021-0215		3	FEED THROUGH TERMINAL, 10203.0	
090	353024-0204		1	EARTH TERMINAL WPE 2,5	
100	353024-0205		1	EARTH TERMINAL, 1010.1	
110	353024-0206		1	EARTH TERMINAL, 1010.2	
120	353024-0207		1	EARTH TERMINAL, 1010.3	
130	353031-0203		2	END SUPPORT, WEW 35/2	
140	353032-0004		1	END PLATE WAP 2,5-10 BEIGE	
150	353034-0401		3	BRIDGE CONNECTOR Q2, 13125.0	
160	353034-0402		1	BRIDGE CONNECTOR Q3, 13126.0	
170	353034-0404		1	BRIDGE CONNECTOR Q10, 13131.0	
180	353042-0004	MM	530	RAIL TS 35/7,5	
190	359011-0807		4	MARKING PLATES 5-FW 1-50	
200	359011-0808		2	MARKING PLATES 5-FW 51-100	
210	359011-0809		2	MARKING PLATES 5-FW 101-150	
220	359011-0819		1	MARKING PLATES 5-GW (EARTH)	
300	312115-0323		4	SCREW ISO4762 M5X8 A4	
310	315105-0146		4	WASHER BRB5,3X10RFR	
320	90094-0005		4	RAIL BRACKET	
330	312125-0327		4	SCREW ISO 1207 M5X12 A4	
340	90458-1447		4	MOUNTING RAIL SUPPORT TST 128660	
350	353034-0403		1	BRIDGE CONNECTOR Q4, 13127,0	
360	353034-0032		1	BRIDGE CONNECTOR, WQV 6/10, 10522.6	

Pos	Part No	UN	Qty	Description	Page No

Machine Type | Group Description | Used-In | Group Number | Page No

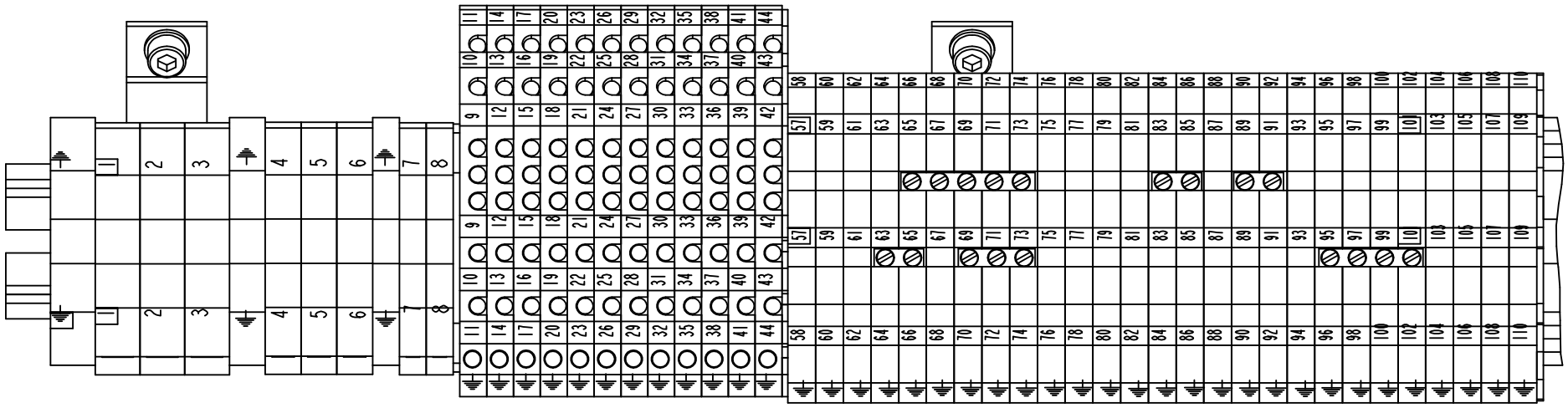

X001

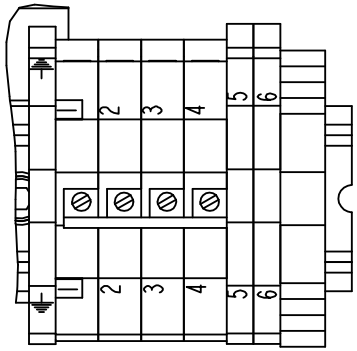

X006

1511800-1
ECN 73191

ECM: 73191 - 20011221
Group number: 1511800-0100
Assembly Drawing: 1511800-1_2_AA

This list covers pages from 10-60 to 10-63

Pos	Part No	UN	Qty	Description	Page No
-					
010	90457-0051		1	END PLATE	
020	90457-0052		1	END PLATE	
030	90457-0054		12	FEED THROUGH TERMINAL, 161527	
040	353021-0132		27	TERMINALS,TRIPLE-LEVEL, DLD 2,5/PE	
050	353021-0212		2	FEED THROUGH TERMINAL, 10200.0	
060	353021-0213		2	FEED THROUGH TERMINAL, 10201.0	
070	353021-0214		3	FEED THROUGH TERMINAL, 10202.0	
080	353021-0215		3	FEED THROUGH TERMINAL, 10203.0	
090	353024-0204		1	EARTH TERMINAL WPE 2,5	
100	353024-0205		1	EARTH TERMINAL, 1010.1	
110	353024-0206		1	EARTH TERMINAL, 1010.2	
120	353024-0207		1	EARTH TERMINAL, 1010.3	
130	353031-0203		2	END SUPPORT, WEW 35/2	
140	353032-0004		1	END PLATE WAP 2,5-10 BEIGE	
150	353034-0401		3	BRIDGE CONNECTOR Q2, 13125.0	
160	353034-0402		1	BRIDGE CONNECTOR Q3, 13126.0	
170	353034-0404		1	BRIDGE CONNECTOR Q10, 13131.0	
180	353042-0004	MM	530	RAIL TS 35/7,5	
190	359011-0807		4	MARKING PLATES 5-FW 1-50	
200	359011-0808		2	MARKING PLATES 5-FW 51-100	
210	359011-0809		2	MARKING PLATES 5-FW 101-150	
220	359011-0819		1	MARKING PLATES 5-GW (EARTH)	
300	312115-0323		4	SCREW ISO4762 M5X8 A4	
310	315105-0146		4	WASHER BRB5,3X10RFR	
320	90094-0005		4	RAIL BRACKET	
330	312125-0327		4	SCREW ISO 1207 M5X12 A4	
340	90458-1447		4	MOUNTING RAIL SUPPORT TST 128660	
350	353034-0403		1	BRIDGE CONNECTOR Q4, 13127,0	
360	353034-0032		1	BRIDGE CONNECTOR, WQV 6/10, 10522.6	

Pos	Part No	UN	Qty	Description	Page No

Machine Type | Group Description | Used-In | Group Number | Page No

LOGIC BOTTOM TERMINAL BLOCK

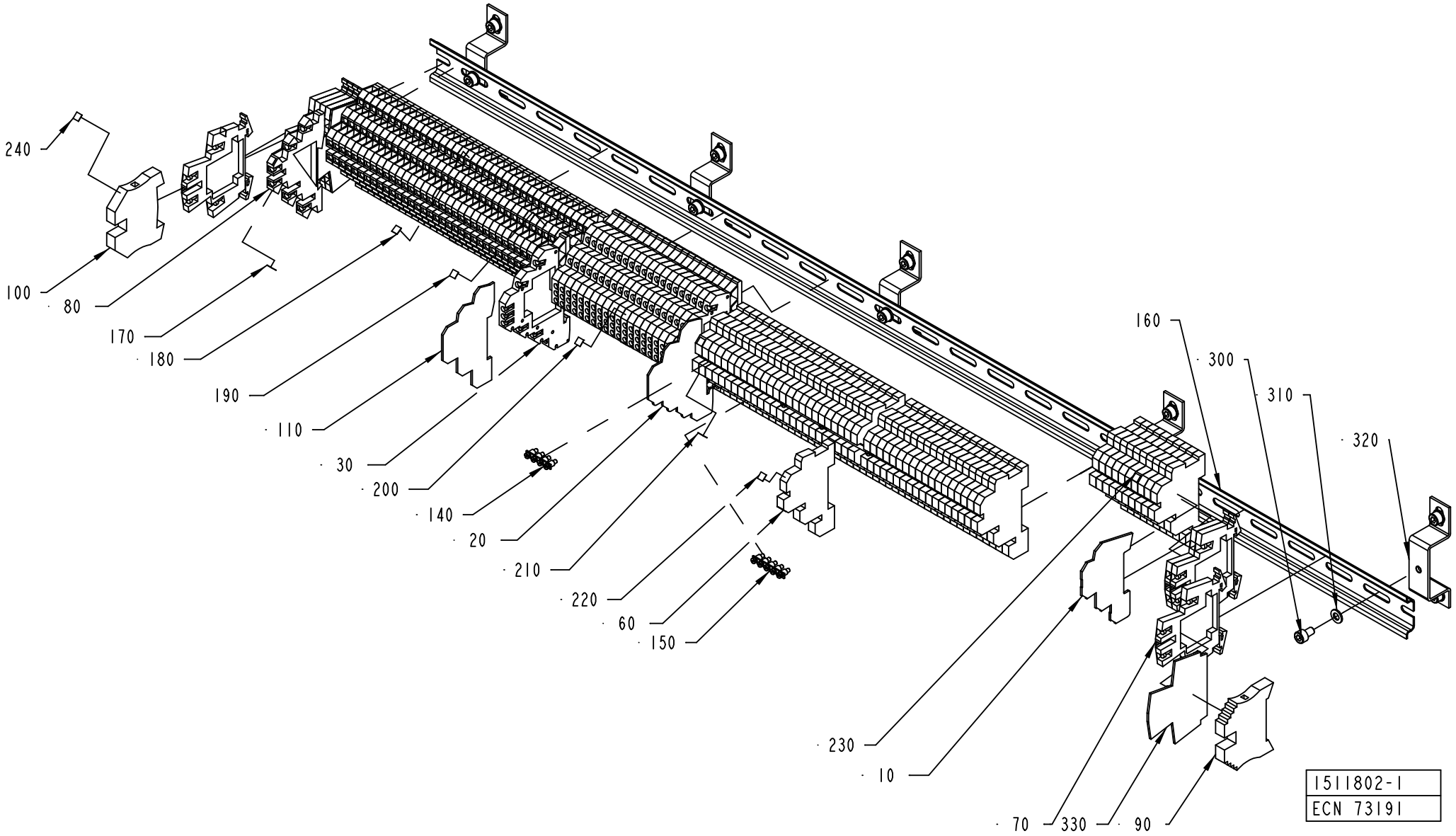

ECM: 104297 - 20020521
Group number: 1511802-0100
Assembly Drawing: 1511802-1_1_AA

This list covers pages from 10-64 to 10-67

Pos	Part No	UN	Qty	Description	Page No
-					
010	90457-0051		1	END PLATE	
020	90457-0052		1	END PLATE	
030	90457-0054		21	FEED THROUGH TERMINAL, 161527	
060	353021-0132		54	TERMINALS,TRIPLE-LEVEL, DLD 2,5/PE	
070	90458-1136		8	TERMINAL BLOCK, 103630	
080	353021-0302		38	TERMINALS,TRIPLE-LEVEL, DLD 2,5/35 PA	
090	353031-0203		1	END SUPPORT, WEW 35/2	
100	353024-0206		1	EARTH TERMINAL, 1010.2	
110	353032-0302		1	END PLATE WAP	
140	353034-0403		2	BRIDGE CONNECTOR Q4, 13127,0	
150	353034-0404		7	BRIDGE CONNECTOR Q10, 13131.0	
160	353042-0004	MM	935	RAIL TS 35/7,5	
170	359011-0807		2	MARKING PLATES 5-FW 1-50	
180	359011-0808		2	MARKING PLATES 5-FW 51-100	
190	359011-0809		2	MARKING PLATES 5-FW 101-150	
200	359011-0810		2	MARKING PLATES 5-FW 151-200	
210	359011-0811		2	MARKING PLATES 5-FW 201-250	
220	359011-0812		2	SET OF SIGNS 5-FW 251-300	
230	359011-0813		2	SET OF SIGNS 5-FW 301-350	
240	359011-0819		2	MARKING PLATES 5-GW (EARTH)	
300	312115-0323		15	SCREW ISO4762 M5X8 A4	
310	315105-0146		15	WASHER BRB5,3X10RFR	
320	90458-1447		5	MOUNTING RAIL SUPPORT TST 128660	
330	353032-0009		2	END PLATE, WAP FOR WDK	

Pos	Part No	UN	Qty	Description	Page No

LOGIC BOTTOM TERMINAL BLOCK

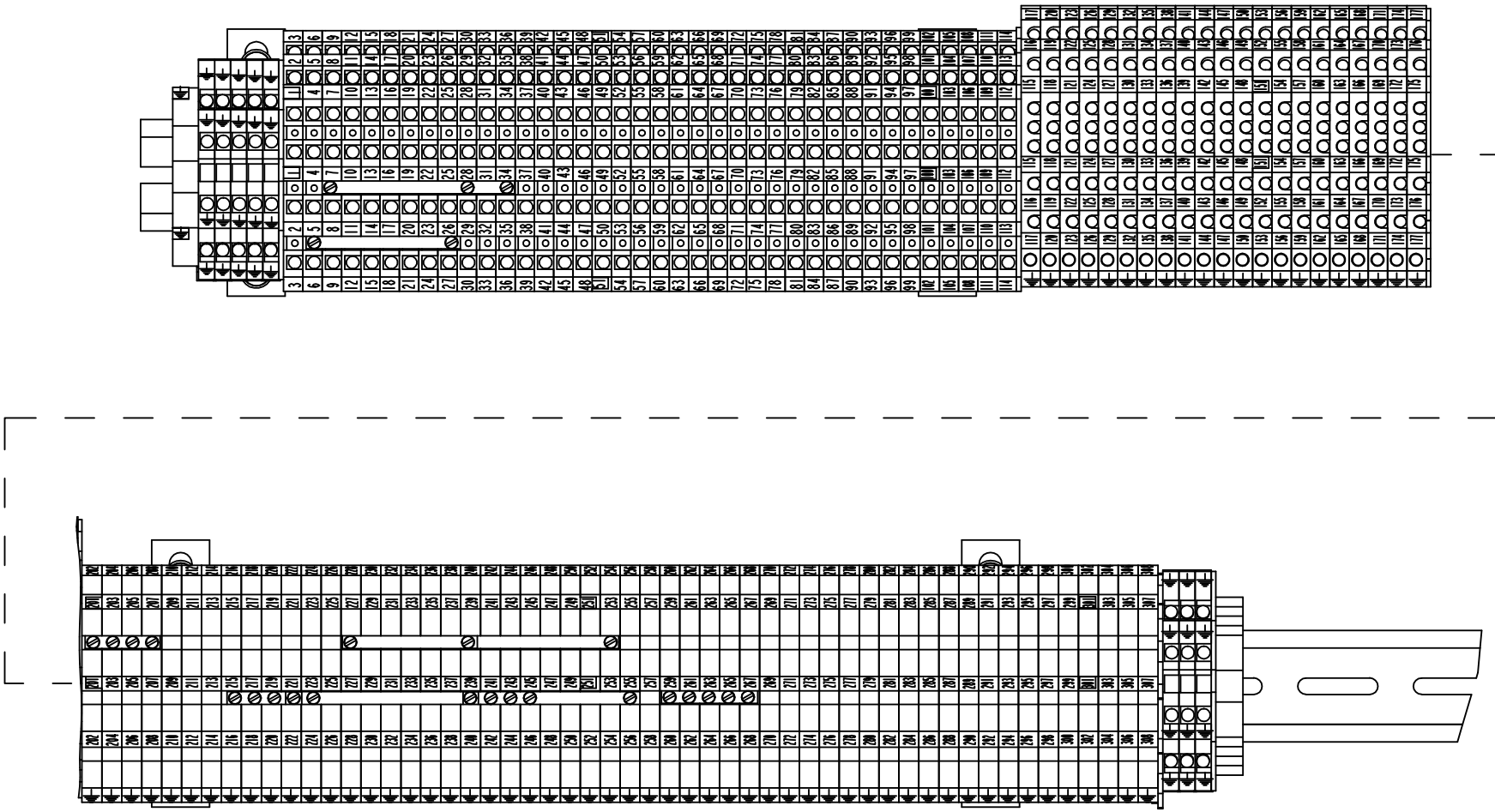

X002

1511802-1
ECN 73191

ECM: 104297 - 20020521
Group number: 1511802-0100
Assembly Drawing: 1511802-1_2_AA

This list covers pages from 10-64 to 10-67

Pos	Part No	UN	Qty	Description	Page No
-					
010	90457-0051		1	END PLATE	
020	90457-0052		1	END PLATE	
030	90457-0054		21	FEED THROUGH TERMINAL, 161527	
060	353021-0132		54	TERMINALS,TRIPLE-LEVEL, DLD 2,5/PE	
070	90458-1136		8	TERMINAL BLOCK, 103630	
080	353021-0302		38	TERMINALS,TRIPLE-LEVEL, DLD 2,5/35 PA	
090	353031-0203		1	END SUPPORT, WEW 35/2	
100	353024-0206		1	EARTH TERMINAL, 1010.2	
110	353032-0302		1	END PLATE WAP	
140	353034-0403		2	BRIDGE CONNECTOR Q4, 13127,0	
150	353034-0404		7	BRIDGE CONNECTOR Q10, 13131.0	
160	353042-0004	MM	935	RAIL TS 35/7,5	
170	359011-0807		2	MARKING PLATES 5-FW 1-50	
180	359011-0808		2	MARKING PLATES 5-FW 51-100	
190	359011-0809		2	MARKING PLATES 5-FW 101-150	
200	359011-0810		2	MARKING PLATES 5-FW 151-200	
210	359011-0811		2	MARKING PLATES 5-FW 201-250	
220	359011-0812		2	SET OF SIGNS 5-FW 251-300	
230	359011-0813		2	SET OF SIGNS 5-FW 301-350	
240	359011-0819		2	MARKING PLATES 5-GW (EARTH)	
300	312115-0323		15	SCREW ISO4762 M5X8 A4	
310	315105-0146		15	WASHER BRB5,3X10RFR	
320	90458-1447		5	MOUNTING RAIL SUPPORT TST 128660	
330	353032-0009		2	END PLATE, WAP FOR WDK	

Pos	Part No	UN	Qty	Description	Page No

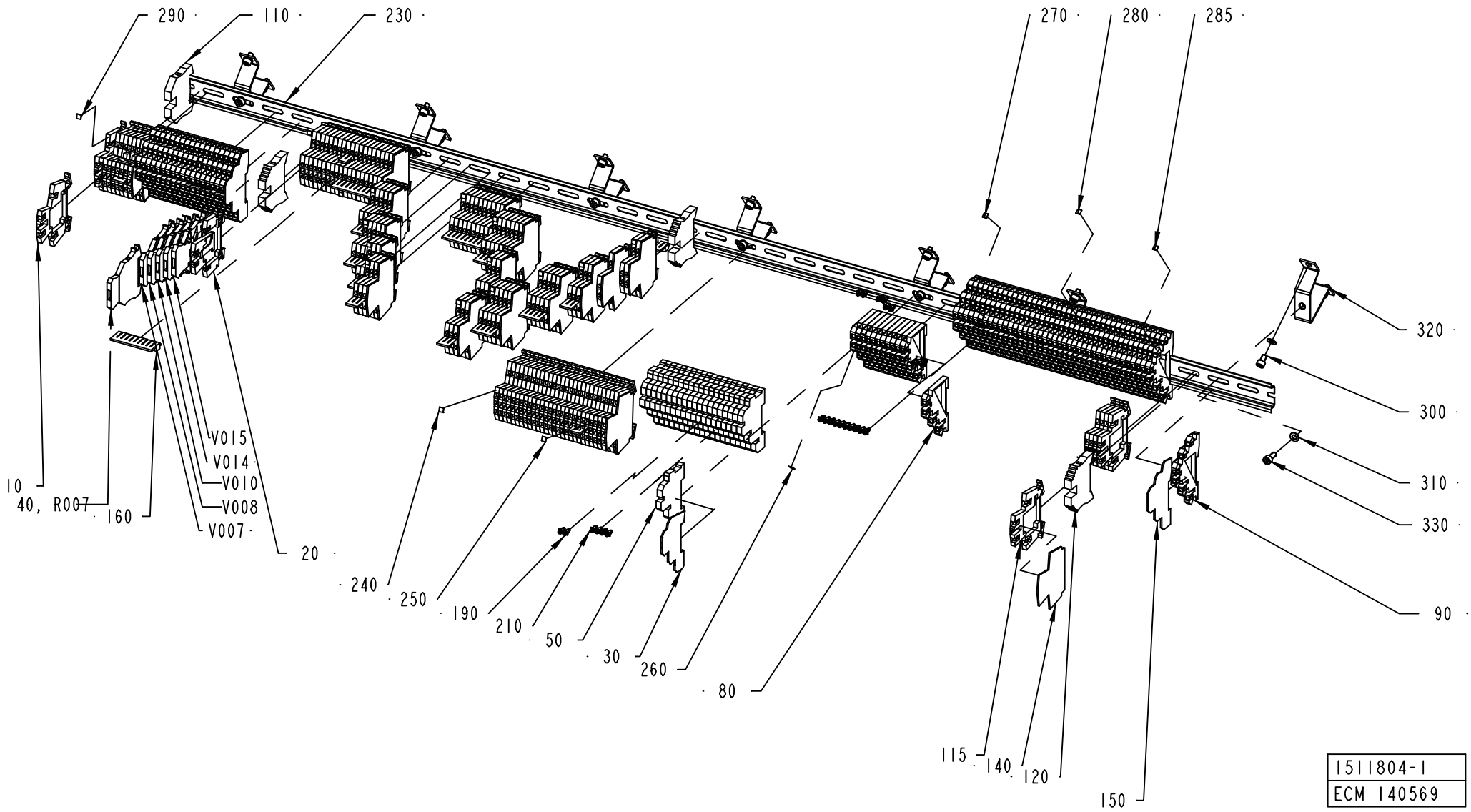
290
110
230
270
280
285
320
300
310
330
90
10
40, R007
160
V015
V014
V010
V008
V007
20
240
250
190
210
50
30
260
80
115
140
120
150
1511804-1
ECM 140569

ECM: 140895 - 20030929
Group number: 1511804-0100
Assembly Drawing: 1511804-1_1_AD

This list covers pages from 10-68 to 10-71

Pos	Part No	UN	Qty	Description	Page No
-					
010	90077-0113		35	FEED THROUGH TERMINAL, 10-00102150-1	
020	90457-0049		110	TERMINAL BLOCK, 102230	
030	90457-0051		1	END PLATE	
040	353021-0127		1	TERMINAL DISCONNECTBLE, WTR 2,5+WSD 2,5	
050	353021-0132		21	TERMINALS,TRIPLE-LEVEL, DLD 2,5/PE	
080	353021-0301		12	TERMINALS,TRIPLE-LEVEL, DLI 2,5/35 PA	
090	353021-0302		59	TERMINALS,TRIPLE-LEVEL, DLD 2,5/35 PA	
110	353024-0206		1	EARTH TERMINAL, 1010.2	
115	90458-1136		6	TERMINAL BLOCK, 103630	
120	353031-0203		3	END SUPPORT, WEW 35/2	
140	90077-0114		16	END PLATE, WAP/WDK 2,5	
150	353032-0302		2	END PLATE WAP	
160	353034-0030		19	BRIDGE CONNECTOR WQV 2,5/10, 10544.6	
190	353034-0401		11	BRIDGE CONNECTOR Q2, 13125.0	
210	353034-0403		2	BRIDGE CONNECTOR Q4, 13127,0	
220	353034-0404		9	BRIDGE CONNECTOR Q10, 13131.0	
230	353042-0004	MM	1328	RAIL TS 35/7,5	
240	359011-0807		18	MARKING PLATES 5-FW 1-50	
250	359011-0808		6	MARKING PLATES 5-FW 51-100	
260	359011-0809		3	MARKING PLATES 5-FW 101-150	
270	359011-0810		2	MARKING PLATES 5-FW 151-200	
280	359011-0811		2	MARKING PLATES 5-FW 201-250	
285	359011-0812		2	SET OF SIGNS 5-FW 251-300	
290	359011-0819		2	MARKING PLATES 5-GW (EARTH)	
300	312115-0323		14	SCREW ISO4762 M5X8 A4	
310	315105-0146		21	WASHER BRB5,3X10RFR	
320	90094-0005		7	RAIL BRACKET	
330	312115-0327		7	SCREW ISO4762 M5X12 A4	
R007	90121-0132		1	RESISTANCE FIXED, 0,51 KOHM, 0,25 W	
V007	353021-0122		1	TERMINAL DISCONNECTBLE, WTR 2,5 D	
V008	353021-0122		1	TERMINAL DISCONNECTBLE, WTR 2,5 D	
V010	353021-0122		1	TERMINAL DISCONNECTBLE, WTR 2,5 D	
V014	353021-0122		1	TERMINAL DISCONNECTBLE, WTR 2,5 D	
V015	353021-0122		1	TERMINAL DISCONNECTBLE, WTR 2,5 D	

Pos	Part No	UN	Qty	Description	Page No

Machine Type | Group Description | Used-In | Group Number | Page No

LOGIC SIDE,TOP TERMINAL BLOCK

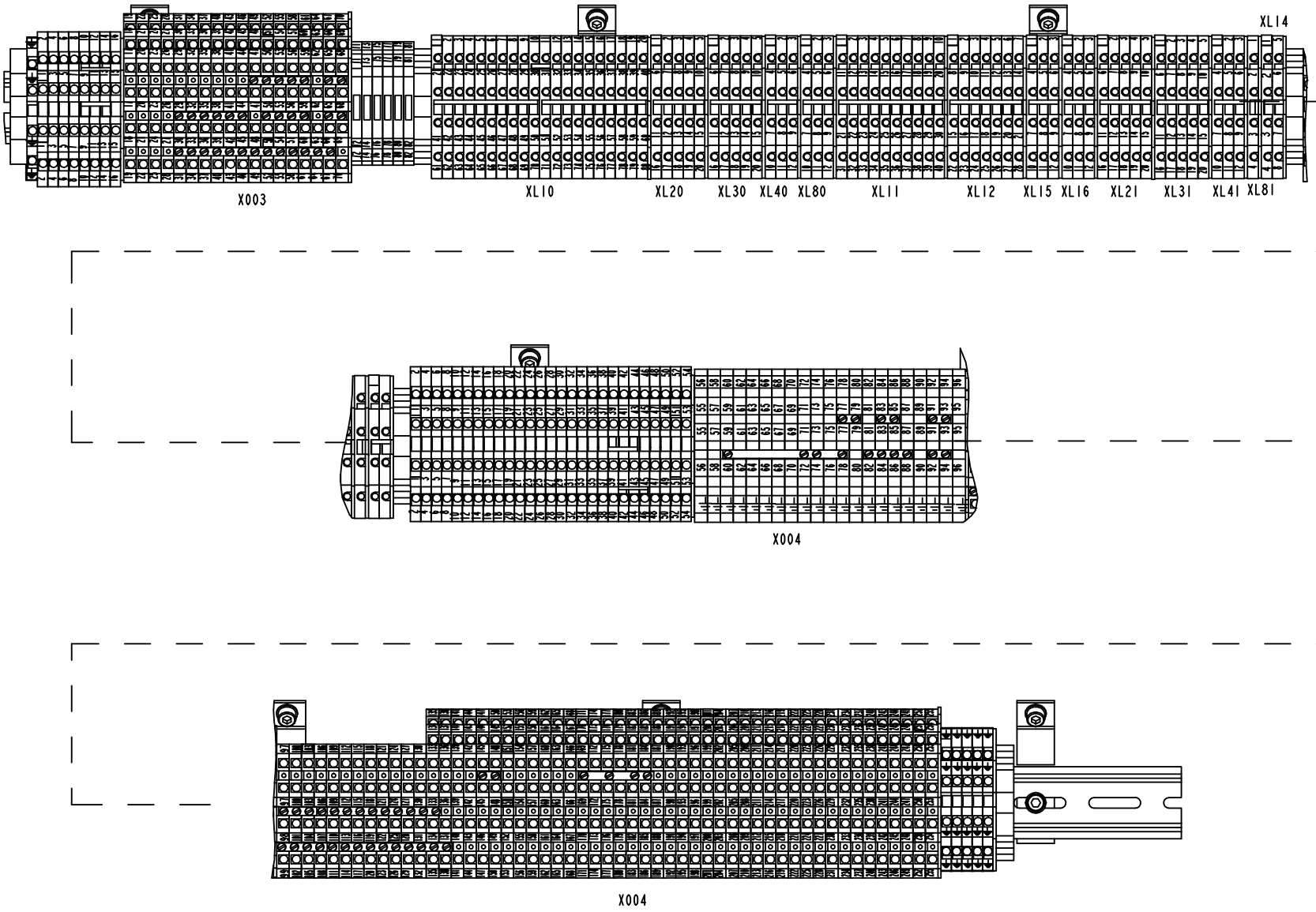

1511804-1
ECM 140569

ECM: 140895 - 20030929
Group number: 1511804-0100
Assembly Drawing: 1511804-1_2_AD

This list covers pages from 10-68 to 10-71

Pos	Part No	UN	Qty	Description	Page No
-					
010	90077-0113		35	FEED THROUGH TERMINAL, 10-00102150-1	
020	90457-0049		110	TERMINAL BLOCK, 102230	
030	90457-0051		1	END PLATE	
040	353021-0127		1	TERMINAL DISCONNECTBLE, WTR 2,5+WSD 2,5	
050	353021-0132		21	TERMINALS,TRIPLE-LEVEL, DLD 2,5/PE	
080	353021-0301		12	TERMINALS,TRIPLE-LEVEL, DLI 2,5/35 PA	
090	353021-0302		59	TERMINALS,TRIPLE-LEVEL, DLD 2,5/35 PA	
110	353024-0206		1	EARTH TERMINAL, 1010.2	
115	90458-1136		6	TERMINAL BLOCK, 103630	
120	353031-0203		3	END SUPPORT, WEW 35/2	
140	90077-0114		16	END PLATE, WAP/WDK 2,5	
150	353032-0302		2	END PLATE WAP	
160	353034-0030		19	BRIDGE CONNECTOR WQV 2,5/10, 10544.6	
190	353034-0401		11	BRIDGE CONNECTOR Q2, 13125.0	
210	353034-0403		2	BRIDGE CONNECTOR Q4, 13127,0	
220	353034-0404		9	BRIDGE CONNECTOR Q10, 13131.0	
230	353042-0004	MM	1328	RAIL TS 35/7,5	
240	359011-0807		18	MARKING PLATES 5-FW 1-50	
250	359011-0808		6	MARKING PLATES 5-FW 51-100	
260	359011-0809		3	MARKING PLATES 5-FW 101-150	
270	359011-0810		2	MARKING PLATES 5-FW 151-200	
280	359011-0811		2	MARKING PLATES 5-FW 201-250	
285	359011-0812		2	SET OF SIGNS 5-FW 251-300	
290	359011-0819		2	MARKING PLATES 5-GW (EARTH)	
300	312115-0323		14	SCREW ISO4762 M5X8 A4	
310	315105-0146		21	WASHER BRB5,3X10RFR	
320	90094-0005		7	RAIL BRACKET	
330	312115-0327		7	SCREW ISO4762 M5X12 A4	
R007	90121-0132		1	RESISTANCE FIXED, 0,51 KOHM, 0,25 W	
V007	353021-0122		1	TERMINAL DISCONNECTBLE, WTR 2,5 D	
V008	353021-0122		1	TERMINAL DISCONNECTBLE, WTR 2,5 D	
V010	353021-0122		1	TERMINAL DISCONNECTBLE, WTR 2,5 D	
V014	353021-0122		1	TERMINAL DISCONNECTBLE, WTR 2,5 D	
V015	353021-0122		1	TERMINAL DISCONNECTBLE, WTR 2,5 D	

Pos	Part No	UN	Qty	Description	Page No

Machine Type	Group Description	Used-In	Group Number	Page No

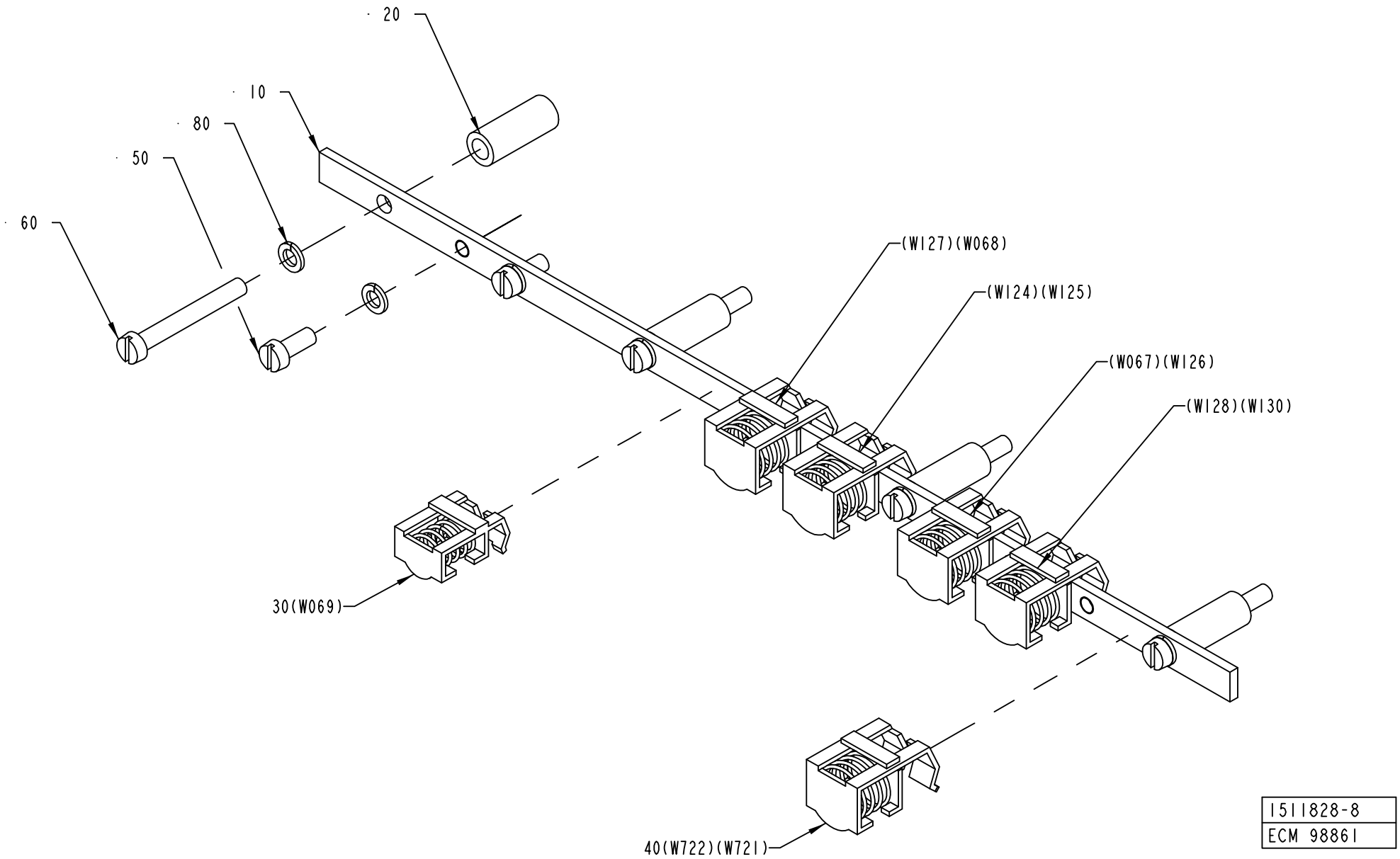
20
10
80
50
60
(W127)(W068)
(W124)(W125)
(W067)(W126)
(W128)(W130)
30(W069)
40(W722)(W721)
1511828-8
ECM 98861

ECM: 118397 - 20030922
Group number: 1511828-0100
Assembly Drawing: 1511828-8_1_AA

Pos	Part No	UN	Qty	Description	Page No
TBA NOPT ASU HI, TBA PT19 ASU NOHI					
030	90135-0034		1	SHIELD CLAMP KLBU 3-8	
040	90135-0039		4	SHIELD CLIP KLBU 4-13.5	
TBA NOPT ASU NOHI					
030	90135-0034		1	SHIELD CLAMP KLBU 3-8	
040	90135-0039		3	SHIELD CLIP KLBU 4-13.5	
TBA NOPT NOASU HI, TBA PT19 NOASU NOHI					
040	90135-0039		4	SHIELD CLIP KLBU 4-13.5	
TBA NOPT NOASU NOHI					
040	90135-0039		3	SHIELD CLIP KLBU 4-13.5	
TBA PT19 ASU HI					
030	90135-0034		1	SHIELD CLAMP KLBU 3-8	
040	90135-0039		5	SHIELD CLIP KLBU 4-13.5	
TBA PT19 NOASU HI					
040	90135-0039		5	SHIELD CLIP KLBU 4-13.5	
Common Parts					
010	1523948-0000		1	EARTH BAR	
020	988436-0000		4	SPACER SLEEVE	
050	312125-0327		2	SCREW ISO 1207 M5X12 A4	
060	312125-0339		4	SCREW ISO 1207 M5X40 A4	
080	315402-0146		6	LOCK WASHER FBB 5,1	

Pos	Part No	UN	Qty	Description	Page No

POWER SIDE,TOP TERMINAL BLOCK

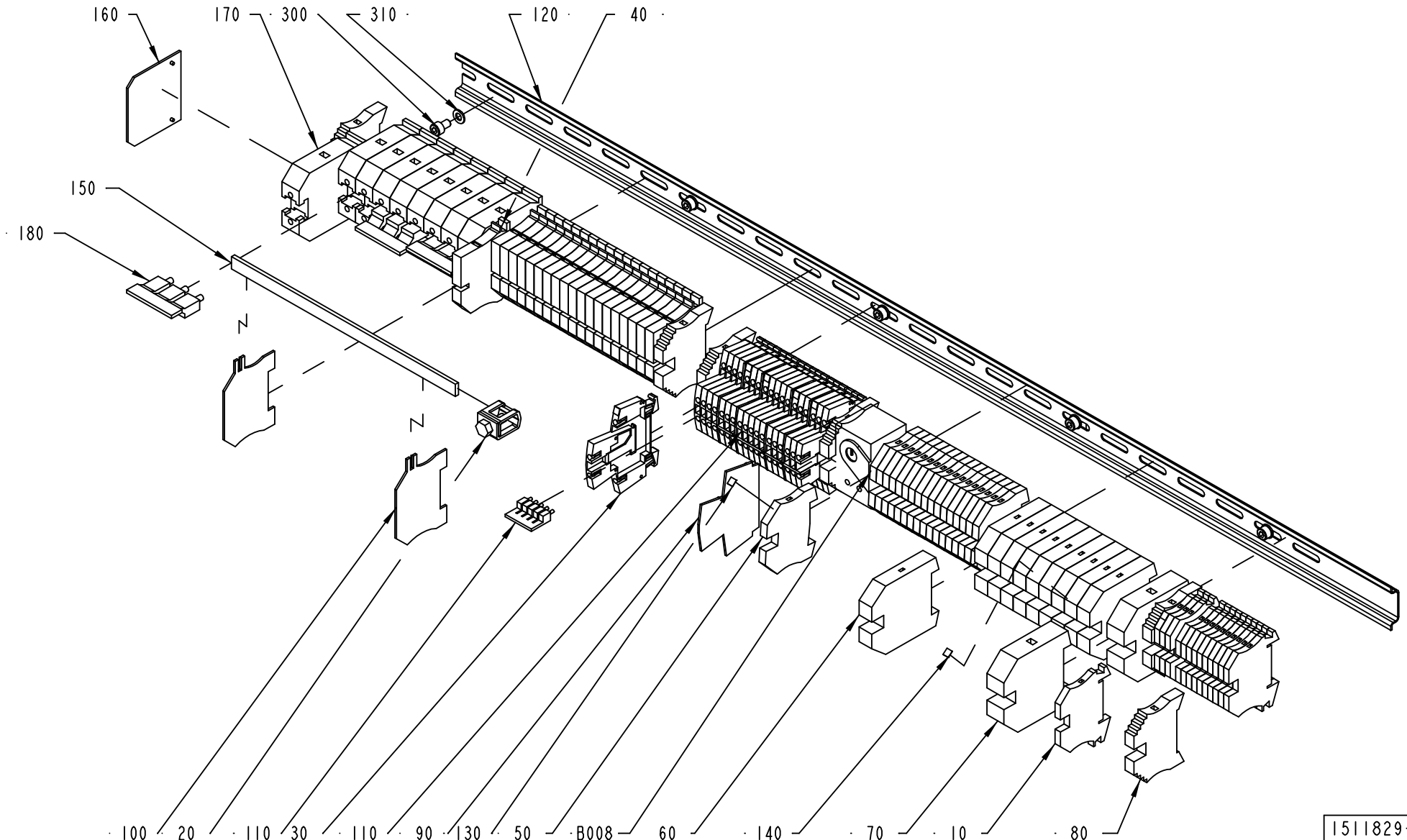

1511829-1
ECN 98221

ECM: 115721 - 20020930
Group number: 1511829-0100
Assembly Drawing: 1511829-1_1_AB

This list covers pages from 10-74 to 10-77

Pos	Part No	UN	Qty	Description	Page No
-					
010	353021-0212		14	FEED THROUGH TERMINAL, 10200.0	
020	90135-0019		1	CLAMP ZB 35	
030	90457-0049		19	TERMINAL BLOCK, 102230	
040	353022-0003		20	NEUTRAL TERMINAL, 10108.8	
050	353024-0205		18	EARTH TERMINAL, 1010.1	
060	353024-0208		10	EARTH TERMINAL, 1010.4	
070	353024-0209		2	EARTH TERMINAL, 1010.5	
080	353031-0203		7	END SUPPORT, WEW 35/2	
090	353032-0009		5	END PLATE, WAP FOR WDK	
100	353033-0104		2	END PLATE, 10502.8	
110	353034-0030		2	BRIDGE CONNECTOR WQV 2,5/10, 10544.6	
120	353042-0004	MM	880	RAIL TS 35/7,5	
130	359011-0807		11	MARKING PLATES 5-FW 1-50	
140	359011-0808		1	MARKING PLATES 5-FW 51-100	
150	495498-0021		1	CU-RAIL L=210MM	
160	353033-0105		1	PARTITITION, 10501.0	
170	353021-0219		9	FEED THROUGH TERMINAL, 10205.0	
180	353034-0035		1	BRIDGE CONNECTOR, WQV 35/10, 10531.6	
300	312115-0323		5	SCREW ISO4762 M5X8 A4	
310	315105-0146		5	WASHER BRB5,3X10RFR	
B008	90458-1114		1	BIMET. ELECTROMECH. THERMOSTAT K7H.020	

Pos	Part No	UN	Qty	Description	Page No

POWER SIDE,TOP TERMINAL BLOCK

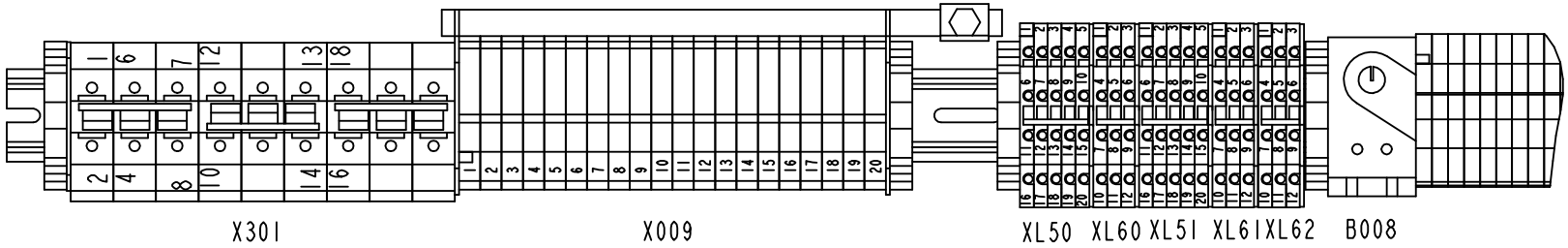

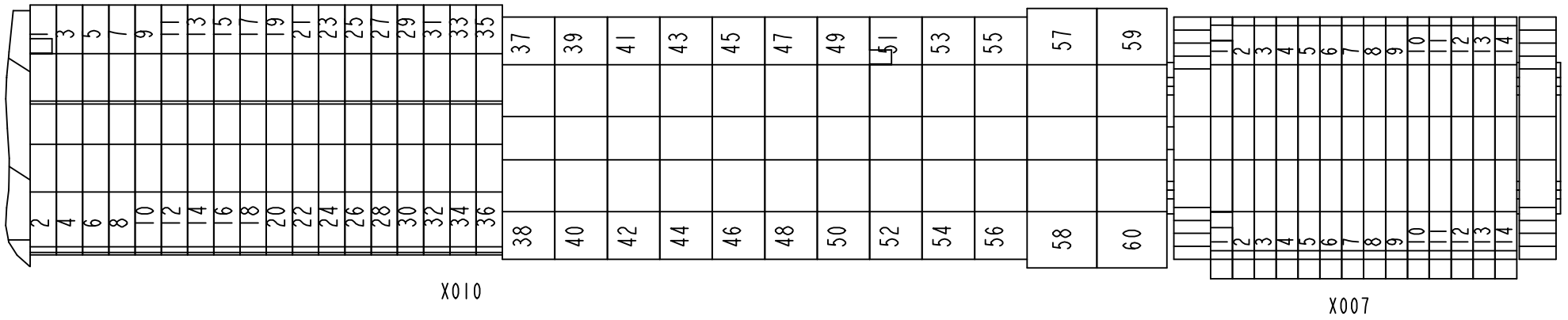

1511829-1
ECN 98221

ECM: 115721 - 20020930
Group number: 1511829-0100
Assembly Drawing: 1511829-1_2_AB

This list covers pages from 10-74 to 10-77

Pos	Part No	UN	Qty	Description	Page No
-					
010	353021-0212		14	FEED THROUGH TERMINAL, 10200.0	
020	90135-0019		1	CLAMP ZB 35	
030	90457-0049		19	TERMINAL BLOCK, 102230	
040	353022-0003		20	NEUTRAL TERMINAL, 10108.8	
050	353024-0205		18	EARTH TERMINAL, 1010.1	
060	353024-0208		10	EARTH TERMINAL, 1010.4	
070	353024-0209		2	EARTH TERMINAL, 1010.5	
080	353031-0203		7	END SUPPORT, WEW 35/2	
090	353032-0009		5	END PLATE, WAP FOR WDK	
100	353033-0104		2	END PLATE, 10502.8	
110	353034-0030		2	BRIDGE CONNECTOR WQV 2,5/10, 10544.6	
120	353042-0004	MM	880	RAIL TS 35/7,5	
130	359011-0807		11	MARKING PLATES 5-FW 1-50	
140	359011-0808		1	MARKING PLATES 5-FW 51-100	
150	495498-0021		1	CU-RAIL L=210MM	
160	353033-0105		1	PARTITITION, 10501.0	
170	353021-0219		9	FEED THROUGH TERMINAL, 10205.0	
180	353034-0035		1	BRIDGE CONNECTOR, WQV 35/10, 10531.6	
300	312115-0323		5	SCREW ISO4762 M5X8 A4	
310	315105-0146		5	WASHER BRB5,3X10RFR	
B008	90458-1114		1	BIMET. ELECTROMECH. THERMOSTAT K7H.020	

Pos	Part No	UN	Qty	Description	Page No

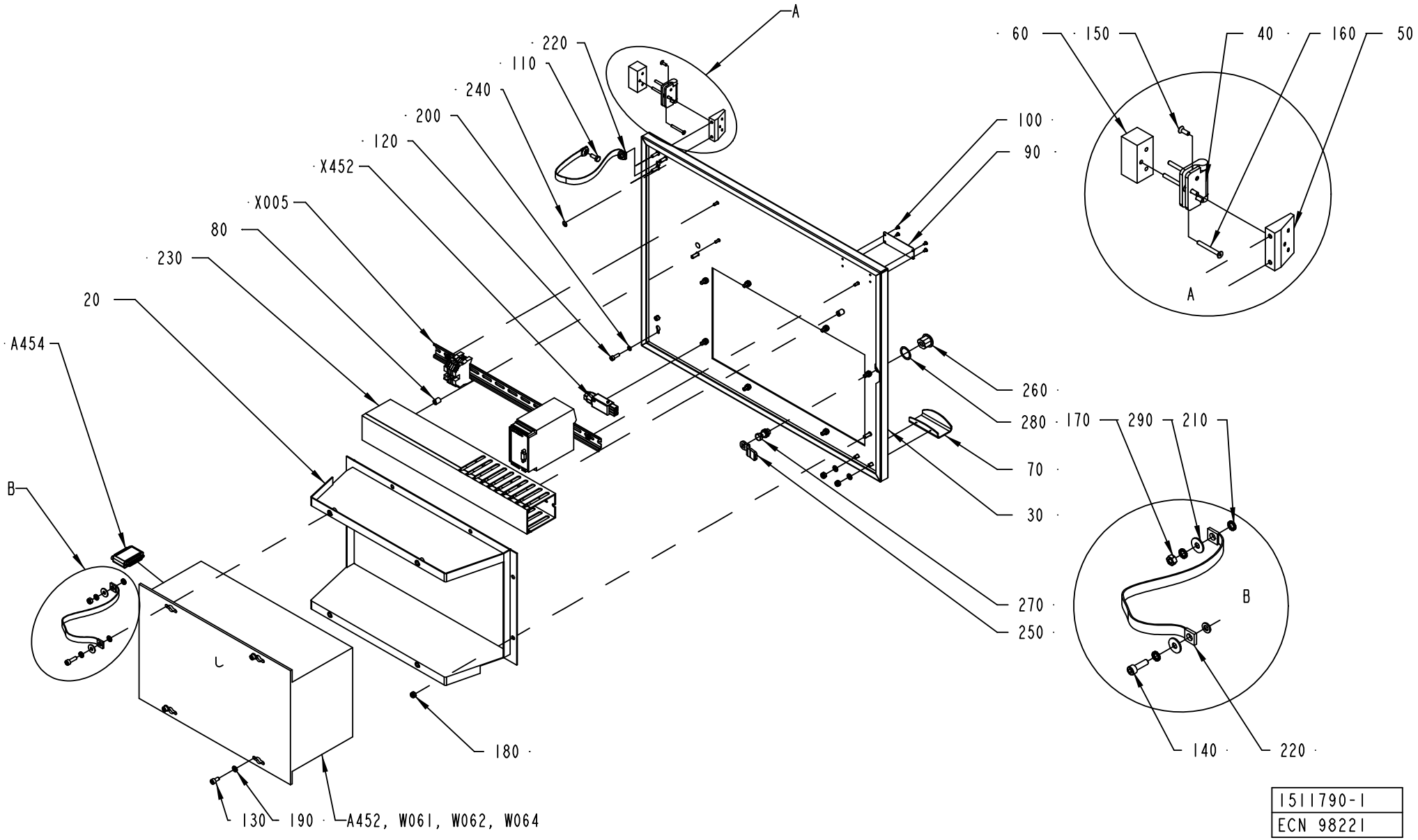

1511790-1
ECN 98221

ECM: 113245 - 20030113
Group number: 1511790-0100
Assembly Drawing: 1511790-1_1_AB

Pos	Part No	UN	Qty	Description	Page No
-					
020	1523435-0000		1	FRAME	
030	1523436-0000		1	DOOR	
040	1523437-0000		2	HINGE	
050	1523439-0000		2	SPACER	
060	1523440-0000		2	SPACER	
070	1523968-0000		1	HANDLE	
080	1285109-0000		2	NUT	
090	979548-0000		1	MACHINE PLATE	
100	311521-0142		4	BLANK RIVET 3,2X6	
110	312105-0368		1	SCREW M6S ISO 4017 M6X16 A480	
120	312115-0329		4	SCREW ISO4762 M5X16 A4	
130	312115-0366		3	SCREW ISO4762 M6X12 A4	
140	312115-0370		1	SCREW ISO4762 M6X20 A4	
150	312155-0291		6	SCREW EN 10642 MF6S M4X12 A480	
160	312155-0301		6	SCREW EN 10642 MF6S M4X35 A480	
170	312605-0316		2	HEXAGON NUT, M6M M6 A280	
180	312812-0316		10	HEXAGON NUT, NY-LOCK M6 A480	
190	315105-0153		6	WASHER BRB6,4X12RFR	
200	315402-0146		4	LOCK WASHER FBB 5,1	
210	90062-0015		7	LOCK WASHER SERRAT.EXT.GEAR,6,4/11 H=0,7	
220	90135-0044		2	EARTH WIRE, L=320 MM 16 MM2	
230	90181-0054	MM	465	CABLE DUCT, 60X80MM	
240	90194-0163		2	SIGN, EARTH WITHIN CIRCLE	
250	90237-0157		1	LOCK BOLT, 1000-230	
260	90237-0319		1	LOCK HOUSING, 1000-U134	
270	90237-0320		1	LOCK HOUSING, 1000-U136	
280	90237-0322		1	LOCK GASKET, 1000-U137	
290	90457-0192		4	WASHER PLAIN ROUND, 6,5/18, H=1,5	
A452	1363288-0301		1	FLEXBOX TETRA BRIK	**10-81**
A454	90456-0001		1	INTOUCH OEM 2000 V.5.6B/6.0B HW KEY	
W061	1254442-0000		1	CABLE SERIAL	
W062	1511793-0000		1	CABLE	
W064	1478661-0000		1	CABLE SERIAL	
W953	1366189-0000		1	CABLE LVDS 6M	
X005	1517659-0100		1	MODEM	**10-83**
X452	90110-0028		1	CONTACT UNIT 4-POLE	

Pos	Part No	UN	Qty	Description	Page No

Machine Type	Group Description	Used-In	Group Number	Page No

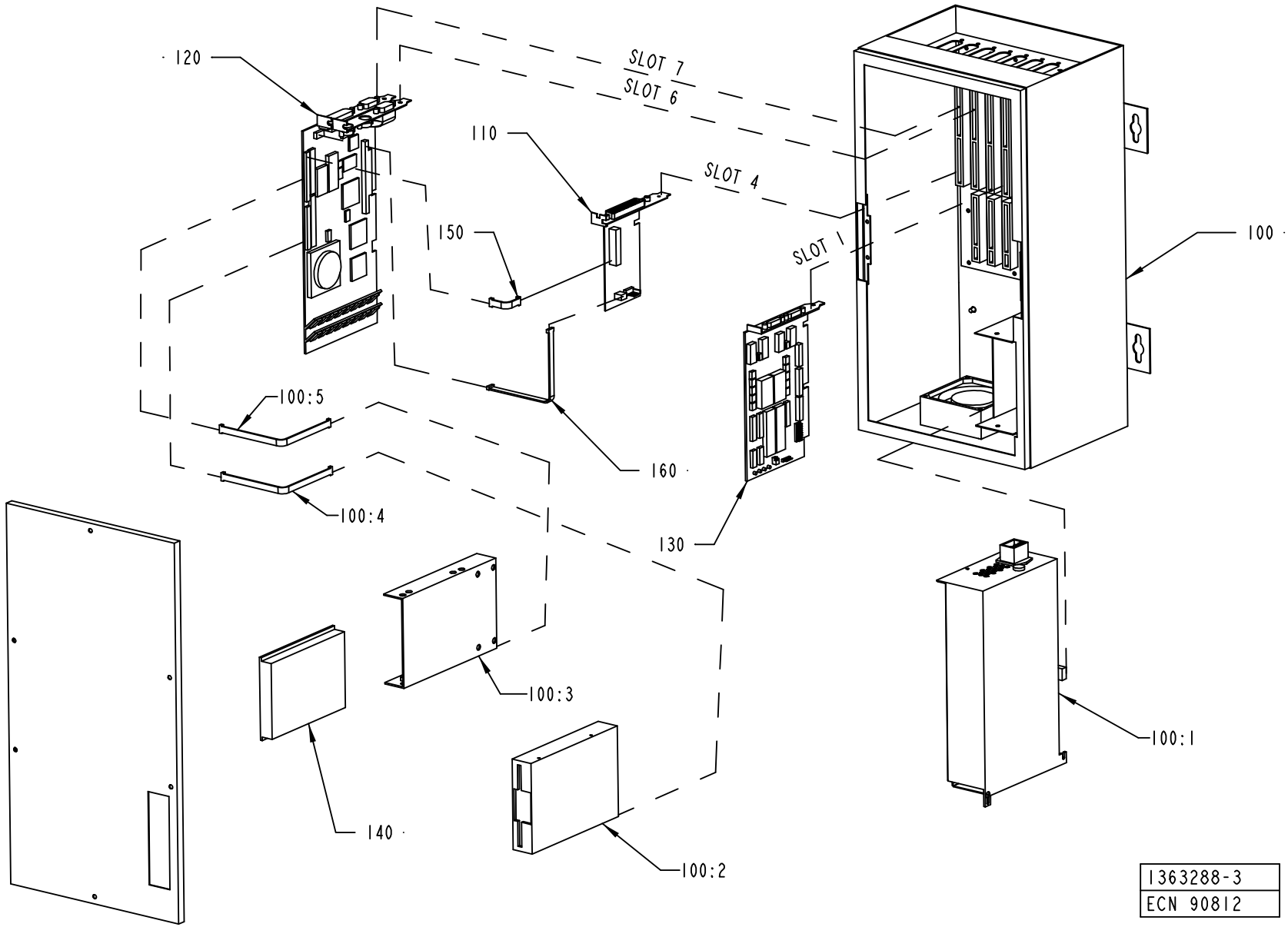
120
SLOT 7
SLOT 6
110
SLOT 4
150
SLOT 1
100
100:5
160
100:4
130
100:3
140
100:2
100:1
1363288-3
ECN 90812

ECM: 114457 - 20020828
Group number: 1363288-0301
Assembly Drawing: 1363288-3_1_AB

Pos	Part No	UN	Qty	Description	Page No
-					
	1367184-0000		1	JUMPER SETTINGS CPU	
100	90041-0092		1	FLEX BOX INNOSCAN E100006A	
	90458-0266		*1*	*POWER SUPPLY UNIT, U036407A*	
	90264-0064		*1*	*FAN / FL 12G308*	
	90041-0091		*1*	*PC 2,5" HD BAY, 3016-0028-013*	
	90041-0029		*1*	*FLOPPY DISC UNIT FD-235HF 1,4MB*	
	90041-0027		*1*	*BACK PLANE CARD 7-SLOT, 2120-0037-015*	
110	90041-0083		1	HOST COMM. LINK BOARD LVDS, E000013A-02	
120	90458-0259		1	PROCESSOR BOARD PMMX E000032B	
130	90041-0087		1	SERIAL CARD 2 CHANNEL RS486/422 BOARD	
140	90041-0090		1	HARD DISC 2,5" , U036403A	
150	90041-0080		1	CABLE, CPU-LVDSCARD+DISPLAY-LVDSCARD	
160	90041-0086		1	CABLE, COM 2, 2223-0012-015	

Pos	Part No	UN	Qty	Description	Page No

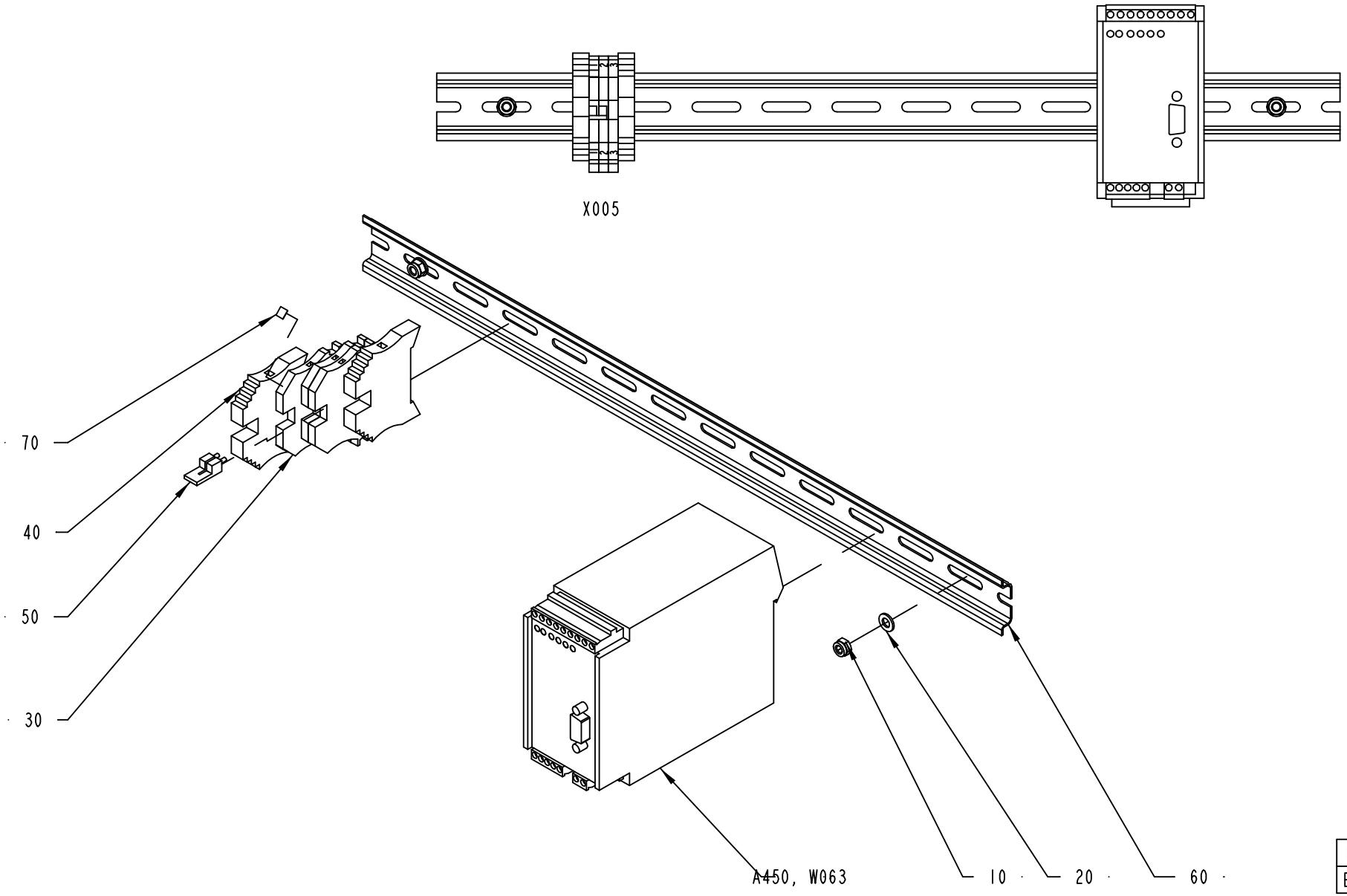
X005
70
40
50
30
A450, W063
10
20
60
1517659-1
ECN 73191

ECM: 115715 - 20020930
Group number: 1517659-0100
Assembly Drawing: 1517659-1_1_AA

Pos	Part No	UN	Qty	Description	Page No
-					
010	312812-0314		2	HEXAGON NUT, NY-LOCK M5 A480	
020	315105-0146		2	WASHER BRB5,3X10RFR	
030	353021-0212		3	FEED THROUGH TERMINAL, 10200.0	
040	353031-0203		2	END SUPPORT, WEW 35/2	
050	353034-0030		1	BRIDGE CONNECTOR WQV 2,5/10, 10544.6	
060	353042-0004	MM	465	RAIL TS 35/7,5	
070	359011-0807		2	MARKING PLATES 5-FW 1-50	
A450	90453-0002		1	MODEM MD-12 DC	
W063	90220-0091	M	10	PAIR TWISTED CABLE 2X2X0,25MM2	

Pos	Part No	UN	Qty	Description	Page No

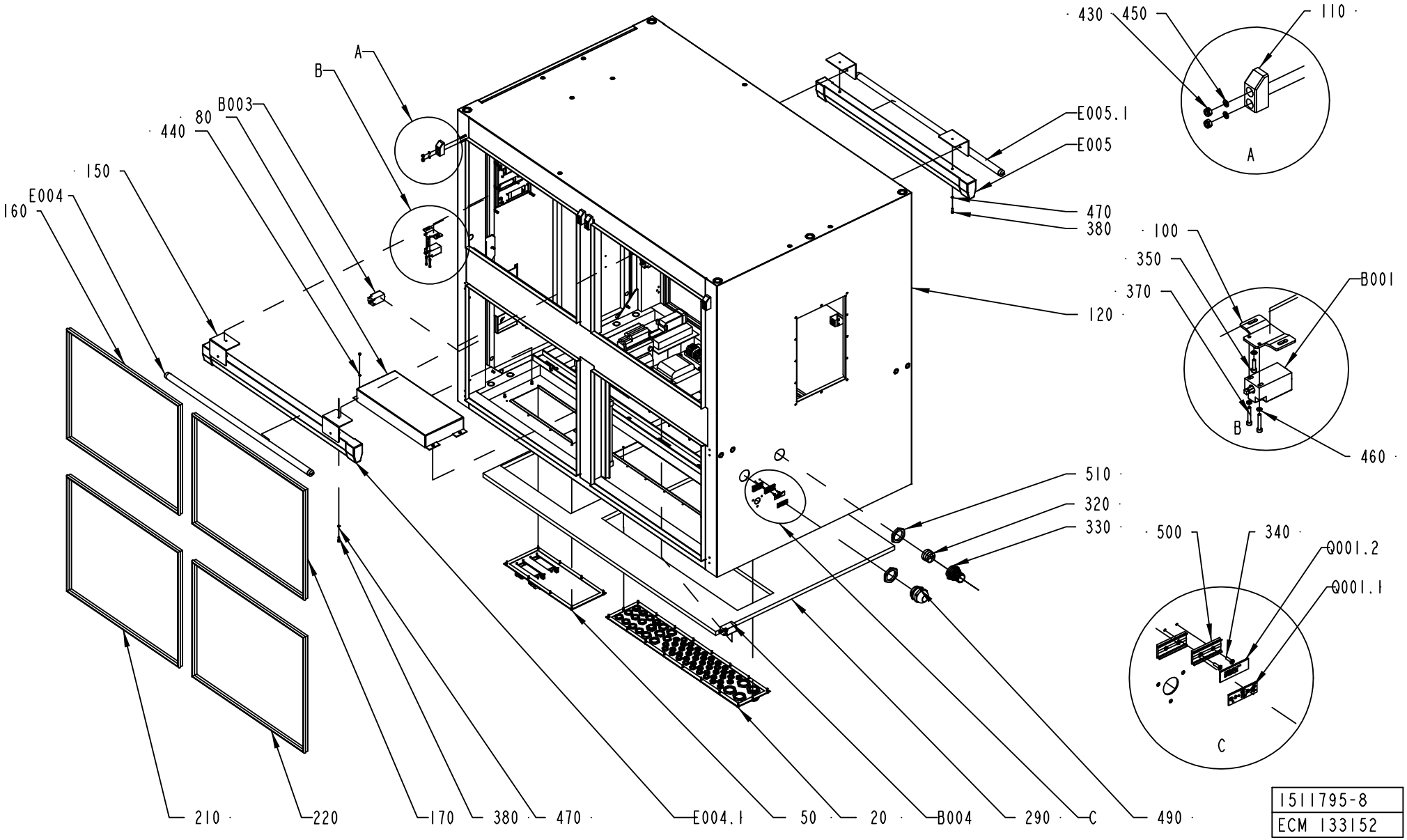
A
B
B003
80
440
150
E004
160
E005.1
E005
470
380
120
430
450
110
100
350
370
B001
460
510
320
330
500
340
Q001.2
Q001.1
Q
210
220
170
380
470
E004.1
50
20
B004
290
C
490
1511795-8
ECM 133152

ECM: 133152 - 20030922
Group number: 1511795-0100
Assembly Drawing: 1511795-8_1_AA

This list covers pages from 10-84 to 10-87

Pos	Part No	UN	Qty	Description	Page No
TBA NOPT ASU 50Hz, TBA NOPT ASU 60Hz					
400	312115-0368		6	SCREW ISO4762 M6X16 A4	
480	315402-0156		20	LOCK WASHER FBB 6,5	
520	90457-0192		4	WASHER PLAIN ROUND, 6,5/18, H=1,5	
T005	90245-0029		1	TRANSFORMER, 1280-3660/TP 182	
TBA NOPT NOASU 50Hz, TBA NOPT NOASU 60Hz					
400	312115-0368		2	SCREW ISO4762 M6X16 A4	
480	315402-0156		16	LOCK WASHER FBB 6,5	
Common Parts					
010	1511784-0100		1	POWER CABLE INLETS	**10-89, 10-91**
020	1511785-0100		1	CONTROL CABLE INLETS	**10-93, 10-95**
030	2532862-0000		2	SPACER	
031	2531999-0000		1	COVER	
040	1511788-0100		1	POWER CONNECTOR PLATE	**10-97, 10-99**
050	1511789-0100		1	CONTROL CONNECTOR PLATE	**10-101**
060	1511791-0100		1	BLIND DOOR	**10-103**
070	1517694-0000		2	END BLOCK	
080	1517697-0000		1	PROTECTION	
090	1517698-0000		1	PROTECTION	
100	1517699-0000		3	SUPPORT	
110	1517700-0000		6	EDGE GUIDE	
120	1517695-0000		1	WELDED CABINET	
130	1523459-0000		4	SUPPORT	
140	1523960-0000		1	SPACER	
150	1523974-0000		4	SUPPORT	
160	90143-0057	MM	2430	STRIP EMKA 1011-05 21X11MM	
170	90143-0057	MM	2430	STRIP EMKA 1011-05 21X11MM	
180	90143-0057	MM	2872	STRIP EMKA 1011-05 21X11MM	
190	90143-0057	MM	1960	STRIP EMKA 1011-05 21X11MM	
200	90143-0057	MM	4116	STRIP EMKA 1011-05 21X11MM	
210	90143-0057	MM	2850	STRIP EMKA 1011-05 21X11MM	
220	90143-0057	MM	2850	STRIP EMKA 1011-05 21X11MM	
230	90143-0057	MM	2850	STRIP EMKA 1011-05 21X11MM	
240	90143-0057	MM	2850	STRIP EMKA 1011-05 21X11MM	
250	90143-0073	MM	585	RUBBER STRIP	
260	90143-0073	MM	585	RUBBER STRIP	
270	90143-0073	MM	585	RUBBER STRIP	
280	90143-0073	MM	585	RUBBER STRIP	
290	1523464-0000		1	GASKET	
310	90194-0163		1	SIGN, EARTH WITHIN CIRCLE	
320	90457-0029		1	INSERT, MULTI HOLE, E156M5,9,11,19	
330	90458-1747		1	HOSE GLAND W/O INSERT M50 NORMAL	
340	311521-0146		4	BLANK RIVET 3,2X12	
350	312115-0293		8	SCREW ISO4762 M4X16 A4	
360	312115-0299		8	SCREW ISO4762 M4X30 A4	
370	312115-0297		6	SCREW ISO4762 M4X25 A4	
380	312115-0329		8	SCREW ISO4762 M5X16 A4	
390	312115-0366		10	SCREW ISO4762 M6X12 A4	
410	312155-0291		8	SCREW EN 10642 MF6S M4X12 A480	
420	312812-0312		16	HEXAGON NUT, NY-LOCK M4 A480	
430	312812-0316		12	HEXAGON NUT, NY-LOCK M6 A480	
440	315105-0136		20	WASHER BRB4,3XRFR	
450	315105-0146		12	WASHER BRB5,3X10RFR	
460	315402-0136		18	LOCK WASHER FBB 4,1	
470	315402-0146		8	LOCK WASHER FBB 5,1	
490	90458-0311		1	CABLE GLAND, M50X1,5, NO.5311 1060	
500	359240-0100		2	SIGN HOLDER FOR 359240-0001	
510	90458-0327		2	NUT, M50X1,5	
530	315105-0153		8	WASHER BRB6,4X12RFR	
540	312115-0289		4	SCREW ISO4762 M4X10 A4	
550	352113-0205		25	ANCHOR PLATES FOR STRIPS, TYPE TM2S8-C10	
B001	90044-0192		1	LIMIT SW. SZ2586.000	
B002	90044-0192		1	LIMIT SW. SZ2586.000	
B003	90044-0192		1	LIMIT SW. SZ2586.000	
B004	90044-0192		1	LIMIT SW. SZ2586.000	
B005	90044-0192		1	LIMIT SW. SZ2586.000	
B006	90044-0192		1	LIMIT SW. SZ2586.000	
B007	90044-0192		1	LIMIT SW. SZ2586.000	
E004	90459-2560		1	LIGHT FIXTURE, TMS121 1XTL-D30W/830 IP	
E005	90459-2560		1	LIGHT FIXTURE, TMS121 1XTL-D30W/830 IP	
E006	90459-3090		1	LIGHT FIXTURE, TMS121 1XTL8W/830 IP	
Q001.1	90457-0123		1	SIGN, MAIN SWITCH	
Q001.2	359241-0297		1	SIGN: " 50 HZ"	
T001	90458-0917		1	TRANSF. 3-PH 750VA SEC. 23A	
T004	90458-1273		1	TRANSFORMER, OFL-1350	
T006	90458-0258		1	TRANSFORMER, 220VAC/6-9-12VAC	
V001	90038-0024		1	RECTIFIER, 10/22A SKD 50/04A3	

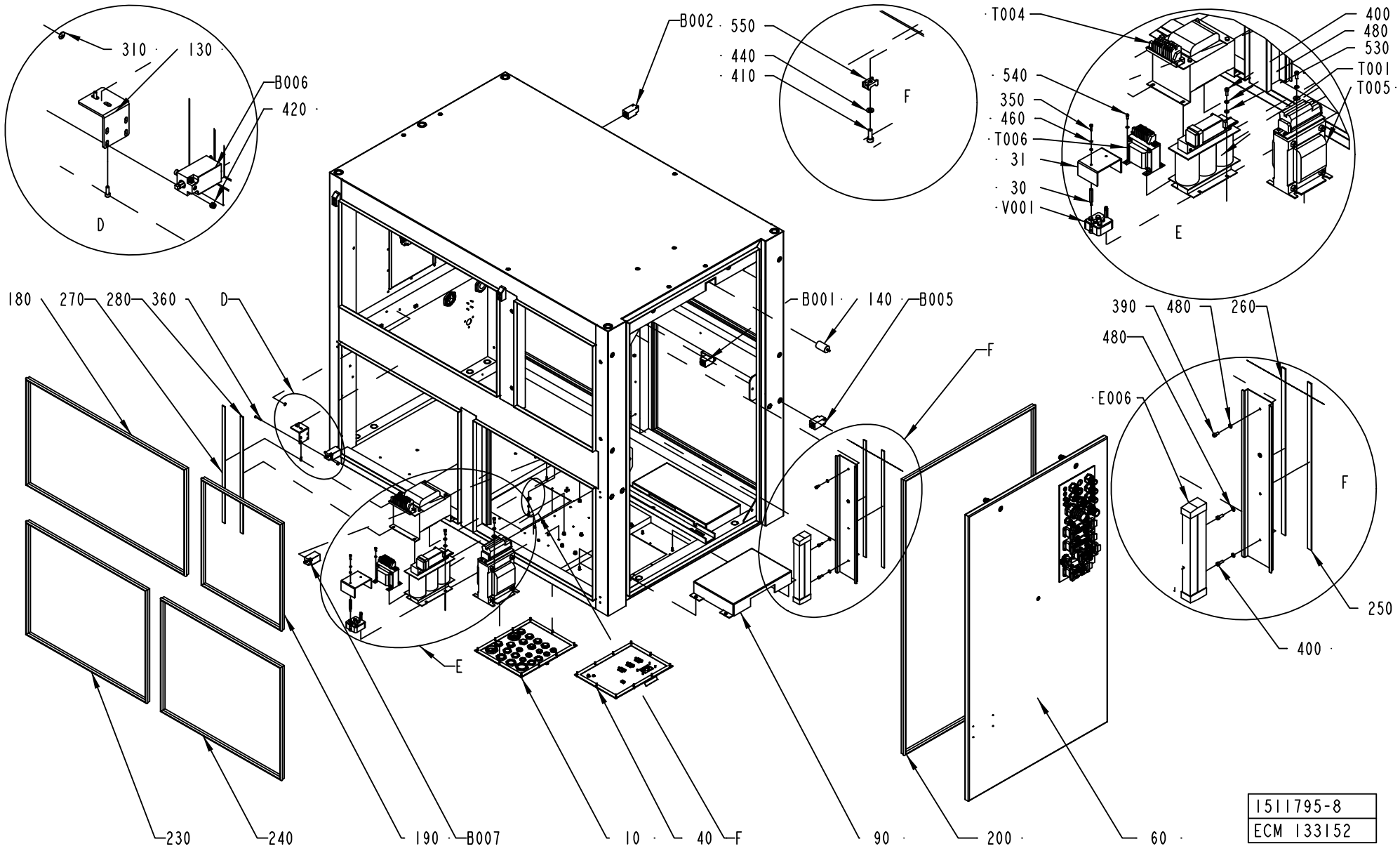
310
130
B006
420
D
B002
550
440
410
F
T004
400
480
530
T001
T005
540
350
460
T006
31
30
V001
E
180
270
280
360
D
B001
140
B005
F
390
480
260
480
E006
F
250
400
E
230
240
190
B007
10
40
F
90
200
60
1511795-8
ECM 133152

ECM: 133152 - 20030922
Group number: 1511795-0100
Assembly Drawing: 1511795-8_2_AA

This list covers pages from 10-84 to 10-87

Pos	Part No	UN	Qty	Description	Page No
TBA NOPT ASU 50Hz, TBA NOPT ASU 60Hz					
400	312115-0368		6	SCREW ISO4762 M6X16 A4	
480	315402-0156		20	LOCK WASHER FBB 6,5	
520	90457-0192		4	WASHER PLAIN ROUND, 6,5/18, H=1,5	
T005	90245-0029		1	TRANSFORMER, 1280-3660/TP 182	
TBA NOPT NOASU 50Hz, TBA NOPT NOASU 60Hz					
400	312115-0368		2	SCREW ISO4762 M6X16 A4	
480	315402-0156		16	LOCK WASHER FBB 6,5	
Common Parts					
010	1511784-0100		1	POWER CABLE INLETS	**10-89, 10-91**
020	1511785-0100		1	CONTROL CABLE INLETS	**10-93, 10-95**
030	2532862-0000		2	SPACER	
031	2531999-0000		1	COVER	
040	1511788-0100		1	POWER CONNECTOR PLATE	**10-97, 10-99**
050	1511789-0100		1	CONTROL CONNECTOR PLATE	**10-101**
060	1511791-0100		1	BLIND DOOR	**10-103**
070	1517694-0000		2	END BLOCK	
080	1517697-0000		1	PROTECTION	
090	1517698-0000		1	PROTECTION	
100	1517699-0000		3	SUPPORT	
110	1517700-0000		6	EDGE GUIDE	
120	1517695-0000		1	WELDED CABINET	
130	1523459-0000		4	SUPPORT	
140	1523960-0000		1	SPACER	
150	1523974-0000		4	SUPPORT	
160	90143-0057	MM	2430	STRIP EMKA 1011-05 21X11MM	
170	90143-0057	MM	2430	STRIP EMKA 1011-05 21X11MM	
180	90143-0057	MM	2872	STRIP EMKA 1011-05 21X11MM	
190	90143-0057	MM	1960	STRIP EMKA 1011-05 21X11MM	
200	90143-0057	MM	4116	STRIP EMKA 1011-05 21X11MM	
210	90143-0057	MM	2850	STRIP EMKA 1011-05 21X11MM	
220	90143-0057	MM	2850	STRIP EMKA 1011-05 21X11MM	
230	90143-0057	MM	2850	STRIP EMKA 1011-05 21X11MM	
240	90143-0057	MM	2850	STRIP EMKA 1011-05 21X11MM	
250	90143-0073	MM	585	RUBBER STRIP	
260	90143-0073	MM	585	RUBBER STRIP	
270	90143-0073	MM	585	RUBBER STRIP	
280	90143-0073	MM	585	RUBBER STRIP	
290	1523464-0000		1	GASKET	
310	90194-0163		1	SIGN, EARTH WITHIN CIRCLE	
320	90457-0029		1	INSERT, MULTI HOLE, E156M5,9,11,19	
330	90458-1747		1	HOSE GLAND W/O INSERT M50 NORMAL	
340	311521-0146		4	BLANK RIVET 3,2X12	
350	312115-0293		8	SCREW ISO4762 M4X16 A4	
360	312115-0299		8	SCREW ISO4762 M4X30 A4	
370	312115-0297		6	SCREW ISO4762 M4X25 A4	
380	312115-0329		8	SCREW ISO4762 M5X16 A4	
390	312115-0366		10	SCREW ISO4762 M6X12 A4	
410	312155-0291		8	SCREW EN 10642 MF6S M4X12 A480	
420	312812-0312		16	HEXAGON NUT, NY-LOCK M4 A480	
430	312812-0316		12	HEXAGON NUT, NY-LOCK M6 A480	
440	315105-0136		20	WASHER BRB4,3XRFR	
450	315105-0146		12	WASHER BRB5,3X10RFR	
460	315402-0136		18	LOCK WASHER FBB 4,1	
470	315402-0146		8	LOCK WASHER FBB 5,1	
490	90458-0311		1	CABLE GLAND, M50X1,5, NO.5311 1060	
500	359240-0100		2	SIGN HOLDER FOR 359240-0001	
510	90458-0327		2	NUT, M50X1,5	
530	315105-0153		8	WASHER BRB6,4X12RFR	
540	312115-0289		4	SCREW ISO4762 M4X10 A4	
550	352113-0205		25	ANCHOR PLATES FOR STRIPS, TYPE TM2S8-C10	
B001	90044-0192		1	LIMIT SW. SZ2586.000	
B002	90044-0192		1	LIMIT SW. SZ2586.000	
B003	90044-0192		1	LIMIT SW. SZ2586.000	
B004	90044-0192		1	LIMIT SW. SZ2586.000	
B005	90044-0192		1	LIMIT SW. SZ2586.000	
B006	90044-0192		1	LIMIT SW. SZ2586.000	
B007	90044-0192		1	LIMIT SW. SZ2586.000	
E004	90459-2560		1	LIGHT FIXTURE, TMS121 1XTL-D30W/830 IP	
E005	90459-2560		1	LIGHT FIXTURE, TMS121 1XTL-D30W/830 IP	
E006	90459-3090		1	LIGHT FIXTURE, TMS121 1XTL8W/830 IP	
Q001.1	90457-0123		1	SIGN, MAIN SWITCH	
Q001.2	359241-0297		1	SIGN: " 50 HZ"	
T001	90458-0917		1	TRANSF. 3-PH 750VA SEC. 23A	
T004	90458-1273		1	TRANSFORMER, OFL-1350	
T006	90458-0258		1	TRANSFORMER, 220VAC/6-9-12VAC	
V001	90038-0024		1	RECTIFIER, 10/22A SKD 50/04A3	

POWER CABLE INLETS

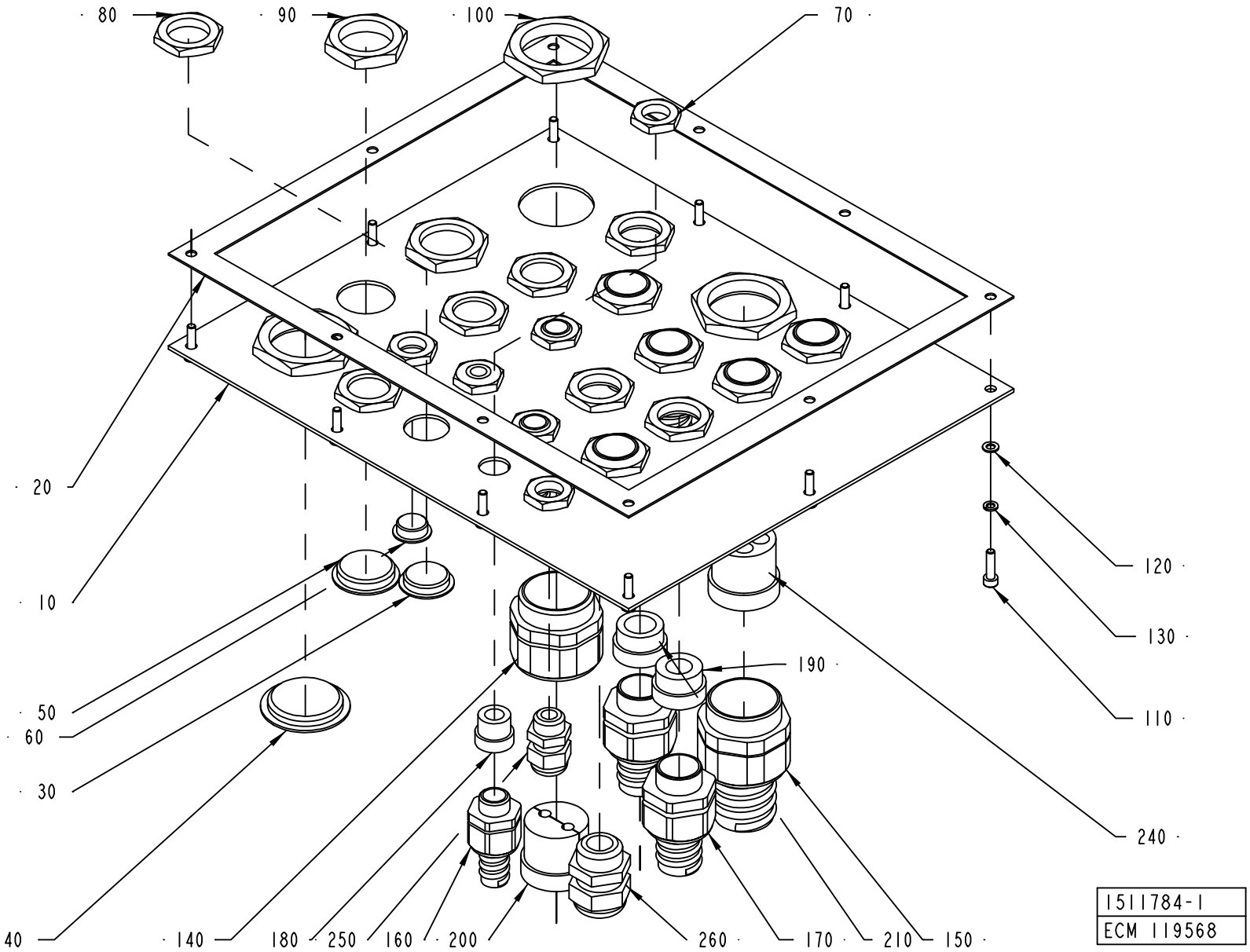

ECM: 125690 - 20030227
Group number: 1511784-0100
Assembly Drawing: 1511784-1_1_AB

This list covers pages from 10-88 to 10-91

Pos	Part No	UN	Qty	Description	Page No
-					
010	1511831-0000		1	PLATE	
020	1511841-0000		1	GASKET	
030	90002-0004		4	BLANK-OFF PLUG, PR 22,5 SKINDICHT-BLK16	
040	90002-0010		1	BLANK-OFF PLUG, PR 37 SKINDICHT-BLK29	
050	90002-0012		2	BLANK-OFF PLUG, PR 28,3 SKINDICHT-BLK21	
060	90002-0013		1	BLANK-OFF PLUG, PR 15,2 SKINDICHT-BLK9	
070	90099-0104		6	NUT, PR 15,2 (PG9)	
080	90099-0110		12	NUT, PR 22,5 (PG16)	
090	90099-0119		2	NUT, PR 28,3 (PG21)	
100	90099-0120		3	NUT PR 37 (PG29)	
110	312115-0293		10	SCREW ISO4762 M4X16 A4	
120	315105-0136		10	WASHER BRB4,3XRFR	
130	315402-0136		10	LOCK WASHER FBB 4,1	
140	353240-0006		1	GLAND W/O INSERT PG29 NORMAL	
150	353242-0003		1	HOSE GLAND W/O INSERT PG29 NORMAL	
160	353243-0001		3	HOSE GLAND W/O INSERT PG9 EXTENDED	
170	353243-0005		7	HOSE GLAND W/O INSERT PG16 EXTENDED	
180	353249-0009		3	INSERT, SINGEL HOLE, EK 152/9	
190	353249-0013		5	INSERT, SINGEL HOLE, EK 154/13	
200	2504449-0000		1	INSERT	
210	353249-0014		2	INSERT, SINGEL HOLE, EK 154/16	
240	90457-0027		1	INSERT, MULTI HOLE, E155M1X5/4X9	
250	352103-0101		2	CABLE GLAND, ST 9, PR15,2/PG9	
260	352103-0110		1	CABLE GLAND, STR 16, PR22,5/PG16	

Pos	Part No	UN	Qty	Description	Page No

POWER CABLE INLETS

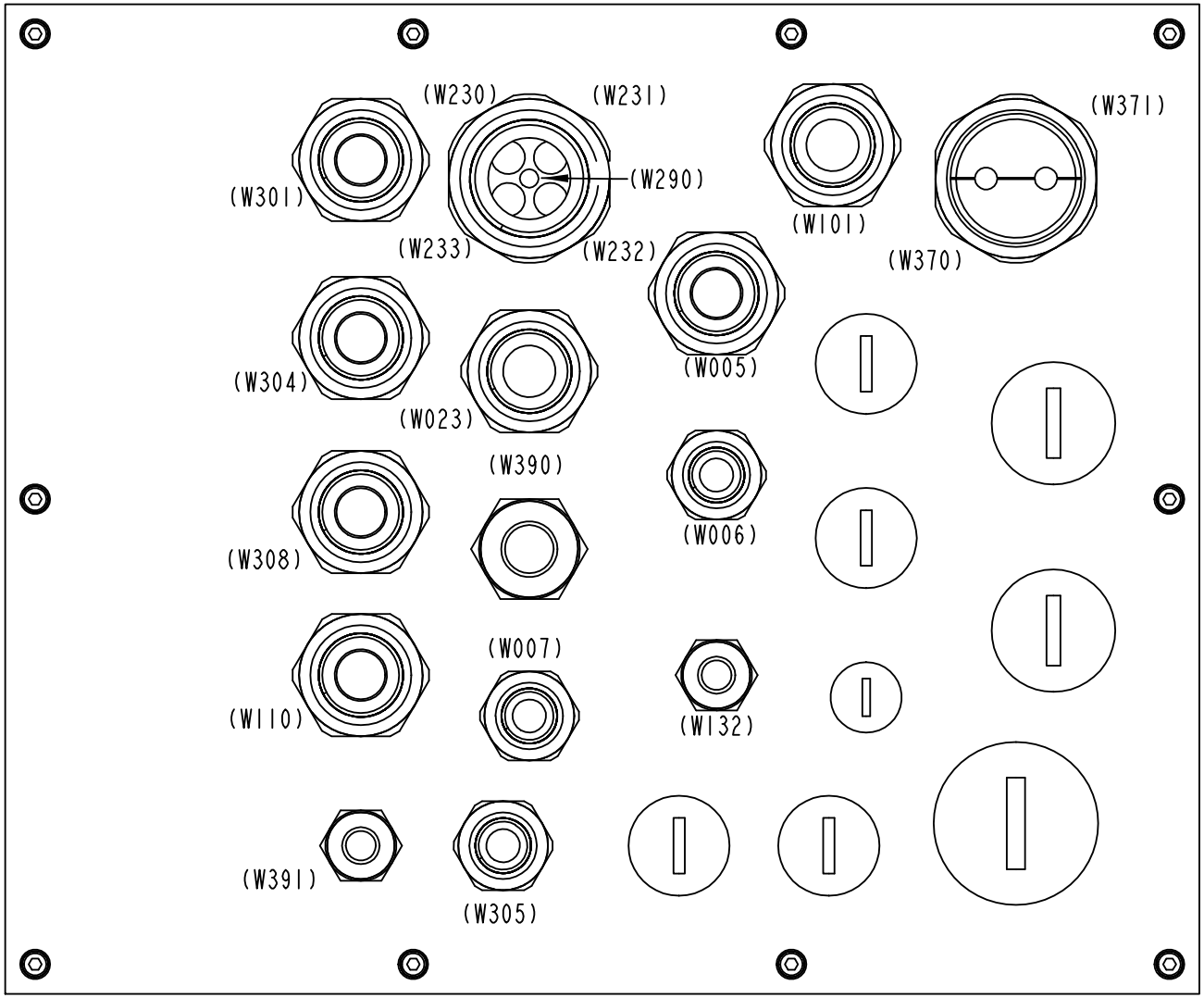

1511784-1
ECM 119568

ECM: 125690 - 20030227
Group number: 1511784-0100
Assembly Drawing: 1511784-1_2_AB

This list covers pages from 10-88 to 10-91

Pos	Part No	UN	Qty	Description	Page No
-					
010	1511831-0000		1	PLATE	
020	1511841-0000		1	GASKET	
030	90002-0004		4	BLANK-OFF PLUG, PR 22,5 SKINDICHT-BLK16	
040	90002-0010		1	BLANK-OFF PLUG, PR 37 SKINDICHT-BLK29	
050	90002-0012		2	BLANK-OFF PLUG, PR 28,3 SKINDICHT-BLK21	
060	90002-0013		1	BLANK-OFF PLUG, PR 15,2 SKINDICHT-BLK9	
070	90099-0104		6	NUT, PR 15,2 (PG9)	
080	90099-0110		12	NUT, PR 22,5 (PG16)	
090	90099-0119		2	NUT, PR 28,3 (PG21)	
100	90099-0120		3	NUT PR 37 (PG29)	
110	312115-0293		10	SCREW ISO4762 M4X16 A4	
120	315105-0136		10	WASHER BRB4,3XRFR	
130	315402-0136		10	LOCK WASHER FBB 4,1	
140	353240-0006		1	GLAND W/O INSERT PG29 NORMAL	
150	353242-0003		1	HOSE GLAND W/O INSERT PG29 NORMAL	
160	353243-0001		3	HOSE GLAND W/O INSERT PG9 EXTENDED	
170	353243-0005		7	HOSE GLAND W/O INSERT PG16 EXTENDED	
180	353249-0009		3	INSERT, SINGEL HOLE, EK 152/9	
190	353249-0013		5	INSERT, SINGEL HOLE, EK 154/13	
200	2504449-0000		1	INSERT	
210	353249-0014		2	INSERT, SINGEL HOLE, EK 154/16	
240	90457-0027		1	INSERT, MULTI HOLE, E155M1X5/4X9	
250	352103-0101		2	CABLE GLAND, ST 9, PR15,2/PG9	
260	352103-0110		1	CABLE GLAND, STR 16, PR22,5/PG16	

Pos	Part No	UN	Qty	Description	Page No

CONTROL CABLE INLETS

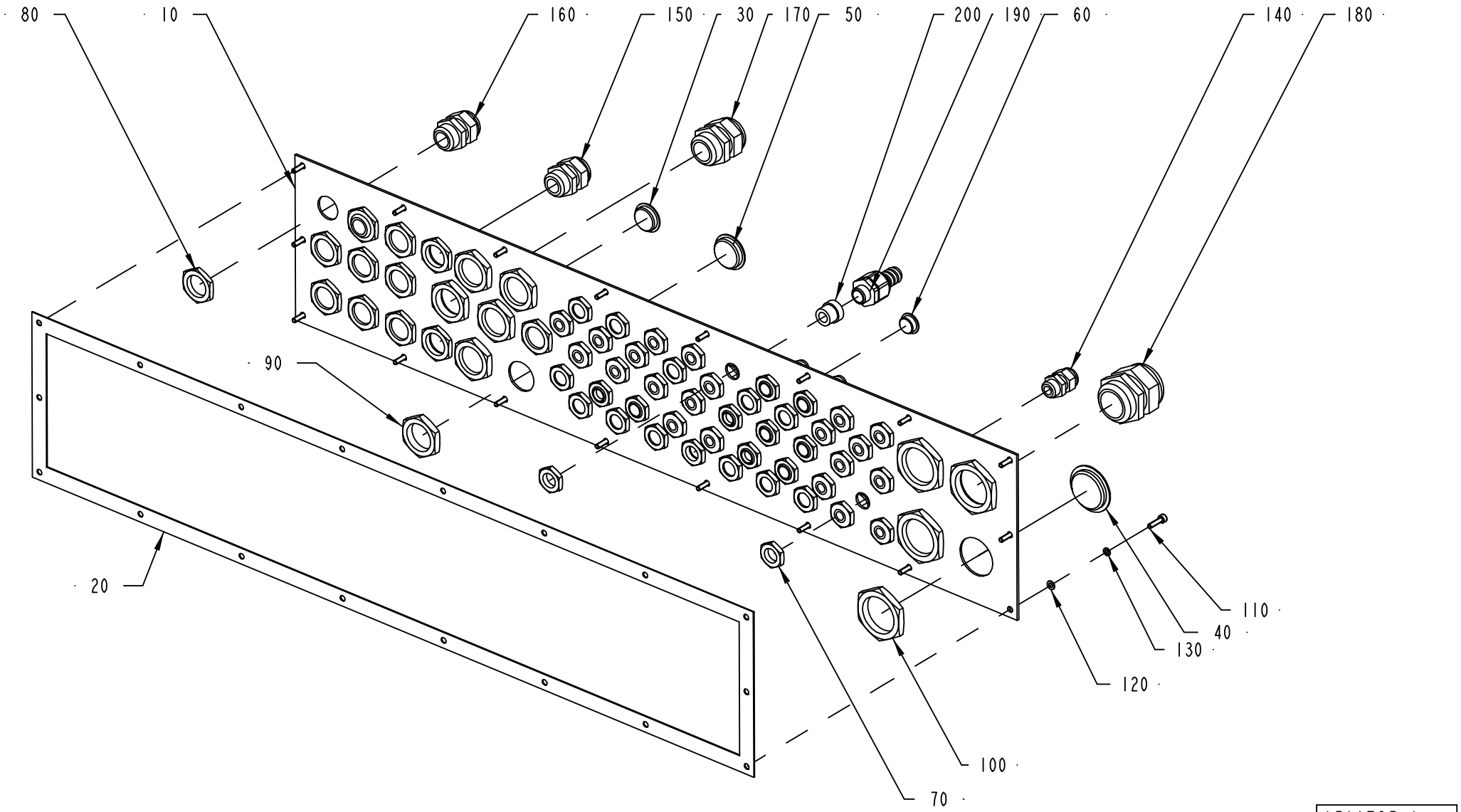

1511785-1
ECN 98221

ECM: 98221 - 20020521
Group number: 1511785-0100
Assembly Drawing: 1511785-1_1_AB

This list covers pages from 10-92 to 10-95

Pos	Part No	UN	Qty	Description	Page No
-					
010	1511842-0000		1	PLATE	
020	1511843-0000		1	GASKET	
030	90002-0004		9	BLANK-OFF PLUG, PR 22,5 SKINDICHT-BLK16	
040	90002-0010		3	BLANK-OFF PLUG, PR 37 SKINDICHT-BLK29	
050	90002-0012		5	BLANK-OFF PLUG, PR 28,3 SKINDICHT-BLK21	
060	90002-0013		12	BLANK-OFF PLUG, PR 15,2 SKINDICHT-BLK9	
070	90099-0104		45	NUT, PR 15,2 (PG9)	
080	90099-0110		12	NUT, PR 22,5 (PG16)	
090	90099-0119		6	NUT, PR 28,3 (PG21)	
100	90099-0120		4	NUT PR 37 (PG29)	
110	312115-0293		18	SCREW ISO4762 M4X16 A4	
120	315105-0136		18	WASHER BRB4,3XRFR	
130	315402-0136		18	LOCK WASHER FBB 4,1	
140	352103-0101		22	CABLE GLAND, ST 9, PR15,2/PG9	
150	352103-0110		1	CABLE GLAND, STR 16, PR22,5/PG16	
160	352103-0111		2	CABLE GLAND, ST 16, PR22,5/PG16	
170	352103-0116		1	CABLE GLAND, ST 21, PR28,3/PG21	
180	352103-0121		1	CABLE GLAND, ST 29, PR37,0/PG29	
190	353243-0001		10	HOSE GLAND W/O INSERT PG9 EXTENDED	
200	353249-0009		10	INSERT, SINGEL HOLE, EK 152/9	

Pos	Part No	UN	Qty	Description	Page No

▲ CHANGE POSITION W236 W237 W333 W325 W360 W322 W348 W442 W127 W303 W354 W352 W352 W234 W444 W332 W321 W316 W361 W354 W349 W235 W334 W380 W356 W350 W317 W342 W355 W335

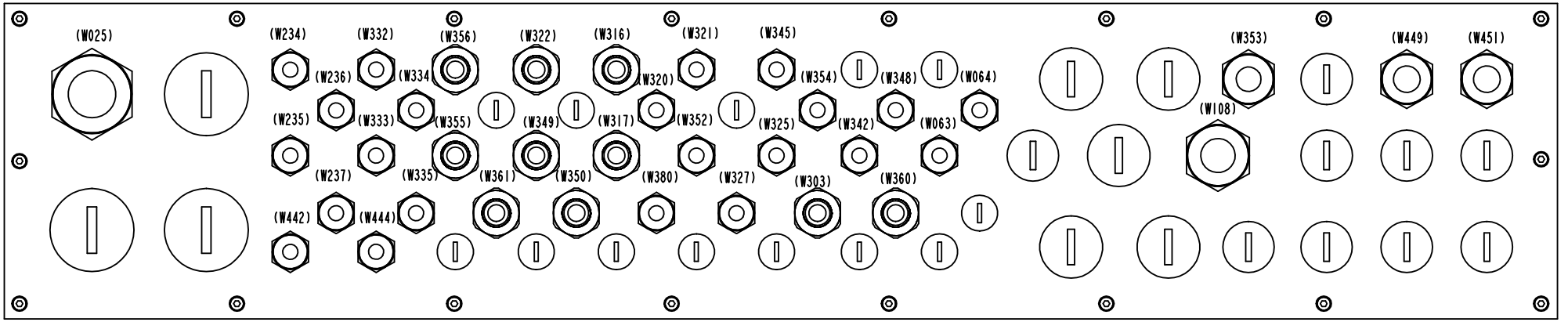

1511785-1
ECN 98221

ECM: 98221 - 20020521
Group number: 1511785-0100
Assembly Drawing: 1511785-1_2_AB

This list covers pages from 10-92 to 10-95

Pos	Part No	UN	Qty	Description	Page No
-					
010	1511842-0000		1	PLATE	
020	1511843-0000		1	GASKET	
030	90002-0004		9	BLANK-OFF PLUG, PR 22,5 SKINDICHT-BLK16	
040	90002-0010		3	BLANK-OFF PLUG, PR 37 SKINDICHT-BLK29	
050	90002-0012		5	BLANK-OFF PLUG, PR 28,3 SKINDICHT-BLK21	
060	90002-0013		12	BLANK-OFF PLUG, PR 15,2 SKINDICHT-BLK9	
070	90099-0104		45	NUT, PR 15,2 (PG9)	
080	90099-0110		12	NUT, PR 22,5 (PG16)	
090	90099-0119		6	NUT, PR 28,3 (PG21)	
100	90099-0120		4	NUT PR 37 (PG29)	
110	312115-0293		18	SCREW ISO4762 M4X16 A4	
120	315105-0136		18	WASHER BRB4,3XRFR	
130	315402-0136		18	LOCK WASHER FBB 4,1	
140	352103-0101		22	CABLE GLAND, ST 9, PR15,2/PG9	
150	352103-0110		1	CABLE GLAND, STR 16, PR22,5/PG16	
160	352103-0111		2	CABLE GLAND, ST 16, PR22,5/PG16	
170	352103-0116		1	CABLE GLAND, ST 21, PR28,3/PG21	
180	352103-0121		1	CABLE GLAND, ST 29, PR37,0/PG29	
190	353243-0001		10	HOSE GLAND W/O INSERT PG9 EXTENDED	
200	353249-0009		10	INSERT, SINGEL HOLE, EK 152/9	

Pos	Part No	UN	Qty	Description	Page No

POWER CONNECTOR PLATE

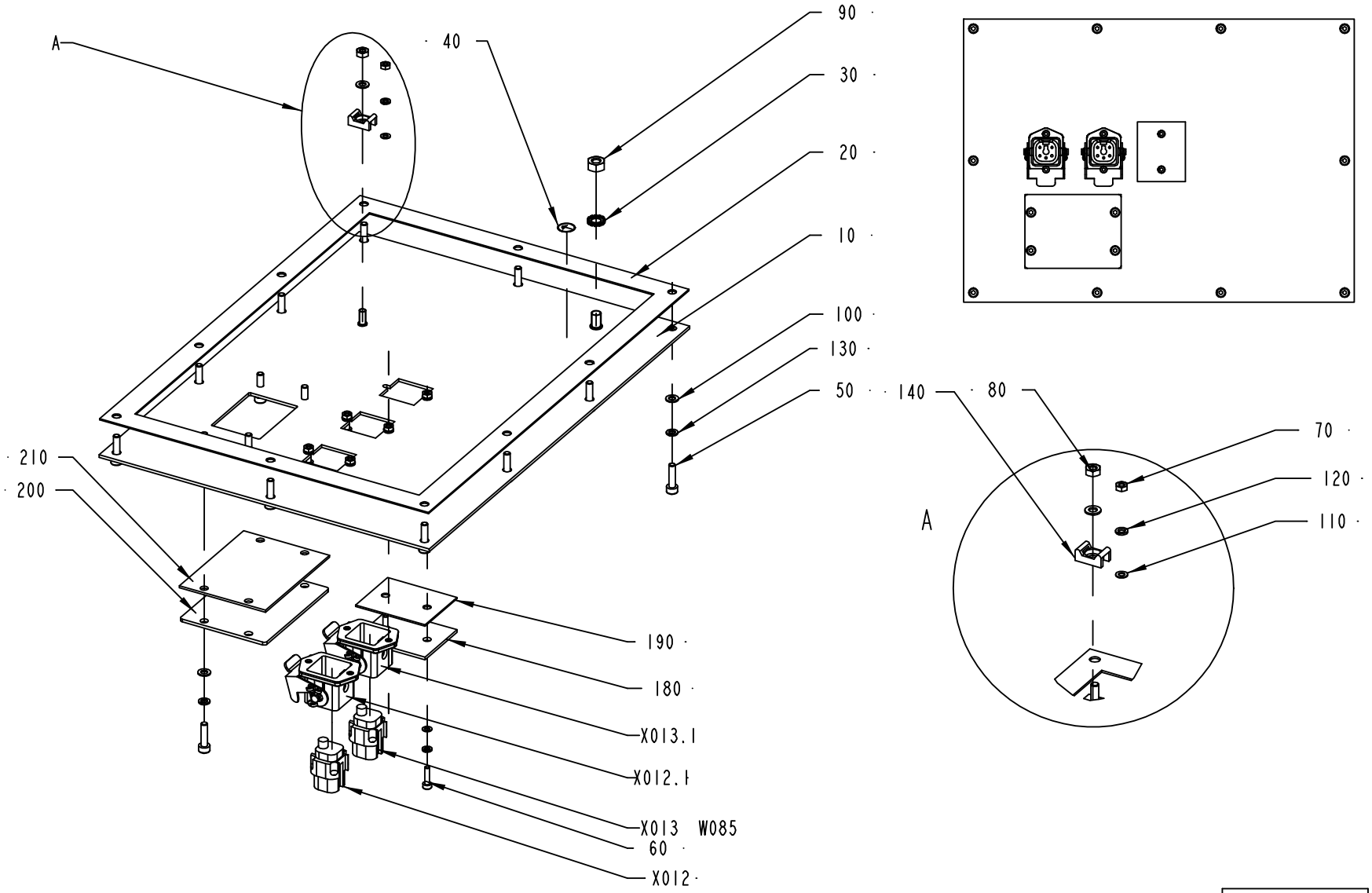

1511788-1
ECM 119568

ECM: 119568 - 20030922
Group number: 1511788-0100
Assembly Drawing: 1511788-1_1_AB

This list covers pages from 10-96 to 10-99

Pos	Part No	UN	Qty	Description	Page No
TBA NOPT ASU (See drawing on page: 10-98)					
X011	90458-0876		1	FEMALE INSERT HAN 6B 09 14002 2751	
X011.1	90458-0871		1	HOUSING BULKHEAD MOUNTING HAN 6B-AGG-RB	
X011.2	90458-0875		1	HINGED FRAME HAN 6B FOR HOUSING	
X014	90110-0296		1	CONTACT SCREW	
X014.1	90457-0050		1	BULKHEAD HOUSING 149760	
TBA NOPT NOASU (See drawing on page: 10-96)					
180	1487430-0000		1	COVER	
190	1487431-0000		1	GASKET	
200	1037572-0000		1	COVER PLATE	
210	1037573-0000		1	GASKET	
Common Parts					
010	1511837-0000		1	PLATE	
020	1511838-0000		1	GASKET	
030	90062-0015		1	LOCK WASHER SERRAT.EXT.GEAR,6,4/11 H=0,7	
040	90194-0163		1	SIGN, EARTH WITHIN CIRCLE	
050	312115-0293		14	SCREW ISO4762 M4X16 A4	
060	312115-0226		6	SCREW ISO4762 M3X12 A4	
070	312605-0310		6	HEXAGON NUT, M6M M3 A280	
080	312605-0312		1	HEXAGON NUT, M6M M4 A280	
090	312605-0316		1	HEXAGON NUT, M6M M6 A280	
100	315105-0136		15	WASHER BRB4,3XRFR	
110	315105-0124		12	WASHER BRB3,2X6RFR	
120	315402-0128		12	LOCK WASHER FBB 3,6	
130	315402-0136		14	LOCK WASHER FBB 4,1	
140	352113-0205		1	ANCHOR PLATES FOR STRIPS, TYPE TM2S8-C10	
W085	90220-0104	M	4	SCR. CABLE 4X1,5MM2	
X012	90110-0296		1	CONTACT SCREW	
X012.1	90457-0050		1	BULKHEAD HOUSING 149760	
X013	90110-0296		1	CONTACT SCREW	
X013.1	90457-0050		1	BULKHEAD HOUSING 149760	

Pos	Part No	UN	Qty	Description	Page No

POWER CONNECTOR PLATE

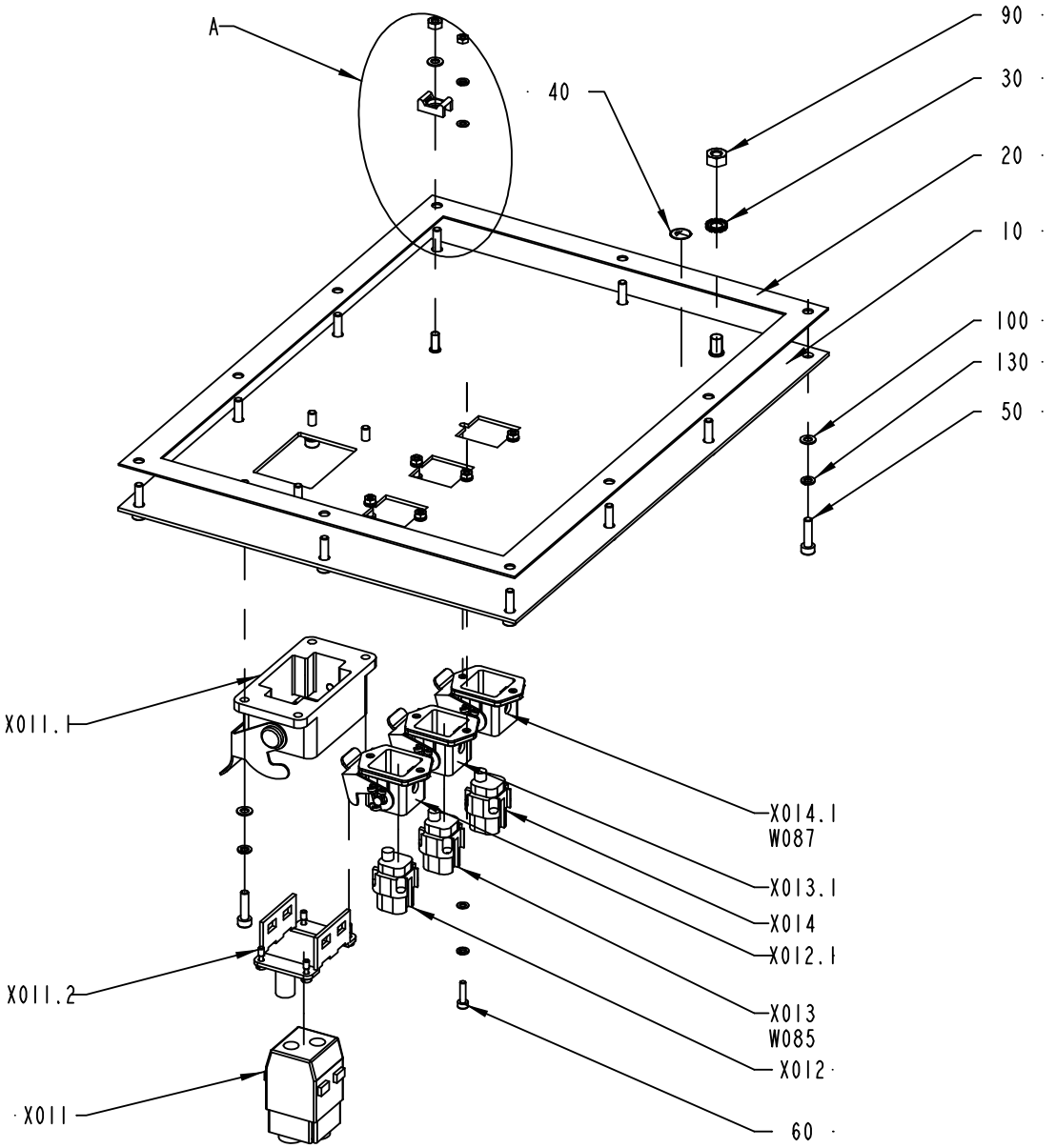

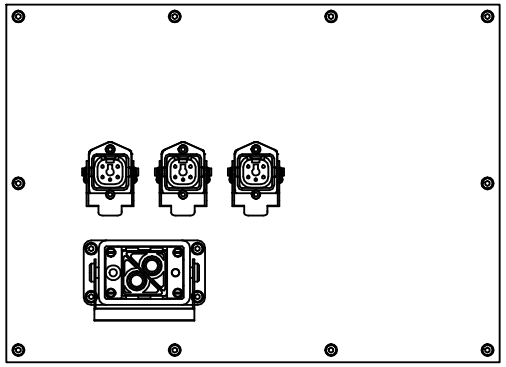

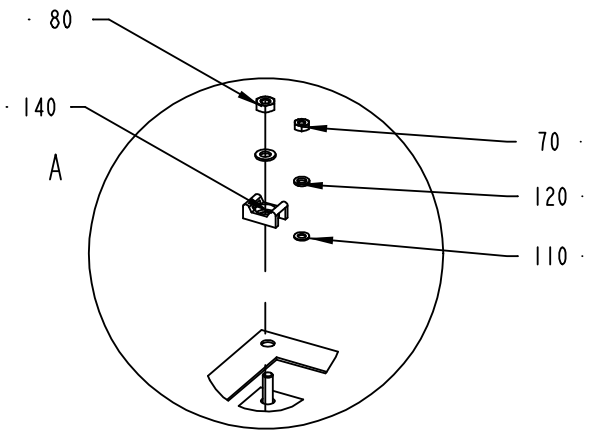

1511788-2
ECM 119568

ECM: 119568 - 20030922
Group number: 1511788-0100
Assembly Drawing: 1511788-2_1_AB

This list covers pages from 10-96 to 10-99

Pos	Part No	UN	Qty	Description	Page No
TBA NOPT ASU (See drawing on page: 10-98)					
X011	90458-0876		1	FEMALE INSERT HAN 6B 09 14002 2751	
X011.1	90458-0871		1	HOUSING BULKHEAD MOUNTING HAN 6B-AGG-RB	
X011.2	90458-0875		1	HINGED FRAME HAN 6B FOR HOUSING	
X014	90110-0296		1	CONTACT SCREW	
X014.1	90457-0050		1	BULKHEAD HOUSING 149760	
TBA NOPT NOASU (See drawing on page: 10-96)					
180	1487430-0000		1	COVER	
190	1487431-0000		1	GASKET	
200	1037572-0000		1	COVER PLATE	
210	1037573-0000		1	GASKET	
Common Parts					
010	1511837-0000		1	PLATE	
020	1511838-0000		1	GASKET	
030	90062-0015		1	LOCK WASHER SERRAT.EXT.GEAR,6,4/11 H=0,7	
040	90194-0163		1	SIGN, EARTH WITHIN CIRCLE	
050	312115-0293		14	SCREW ISO4762 M4X16 A4	
060	312115-0226		6	SCREW ISO4762 M3X12 A4	
070	312605-0310		6	HEXAGON NUT, M6M M3 A280	
080	312605-0312		1	HEXAGON NUT, M6M M4 A280	
090	312605-0316		1	HEXAGON NUT, M6M M6 A280	
100	315105-0136		15	WASHER BRB4,3XRFR	
110	315105-0124		12	WASHER BRB3,2X6RFR	
120	315402-0128		12	LOCK WASHER FBB 3,6	
130	315402-0136		14	LOCK WASHER FBB 4,1	
140	352113-0205		1	ANCHOR PLATES FOR STRIPS, TYPE TM2S8-C10	
W085	90220-0104	M	4	SCR. CABLE 4X1,5MM2	
X012	90110-0296		1	CONTACT SCREW	
X012.1	90457-0050		1	BULKHEAD HOUSING 149760	
X013	90110-0296		1	CONTACT SCREW	
X013.1	90457-0050		1	BULKHEAD HOUSING 149760	

Pos	Part No	UN	Qty	Description	Page No

CONTROL CONNECTOR PLATE

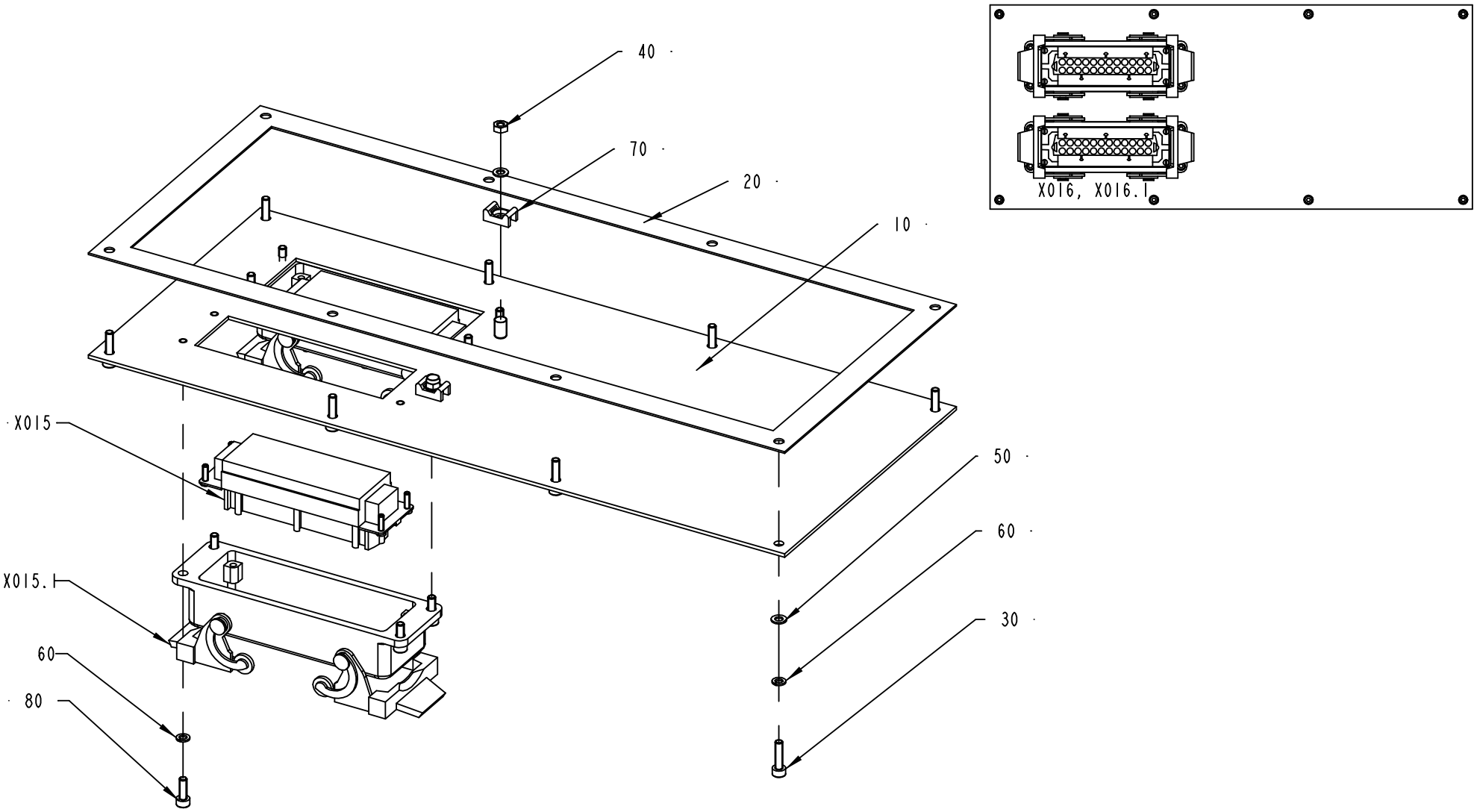

1511789-1
ECN 73363

ECM: 115706 - 20020930
Group number: 1511789-0100
Assembly Drawing: 1511789-1_1_AA

Pos	Part No	UN	Qty	Description	Page No
-					
010	1511839-0000		1	PLATE	
020	1511840-0000		1	GASKET	
030	312115-0293		8	SCREW ISO4762 M4X16 A4	
040	312605-0312		2	HEXAGON NUT, M6M M4 A280	
050	315105-0136		10	WASHER BRB4,3XRFR	
060	315402-0136		8	LOCK WASHER FBB 4,1	
070	352113-0205		2	ANCHOR PLATES FOR STRIPS, TYPE TM2S8-C10	
080	312115-0291		8	SCREW ISO4762 M4X12 A4	
X015	90110-0151		1	FEMALE INSERT 24-POL 121130 0000	
X015.1	90110-0153		1	CHASSIS HOUSING 24-P CHI 24, 121240 0000	
X016	90110-0151		1	FEMALE INSERT 24-POL 121130 0000	
X016.1	90110-0153		1	CHASSIS HOUSING 24-P CHI 24, 121240 0000	

Pos	Part No	UN	Qty	Description	Page No

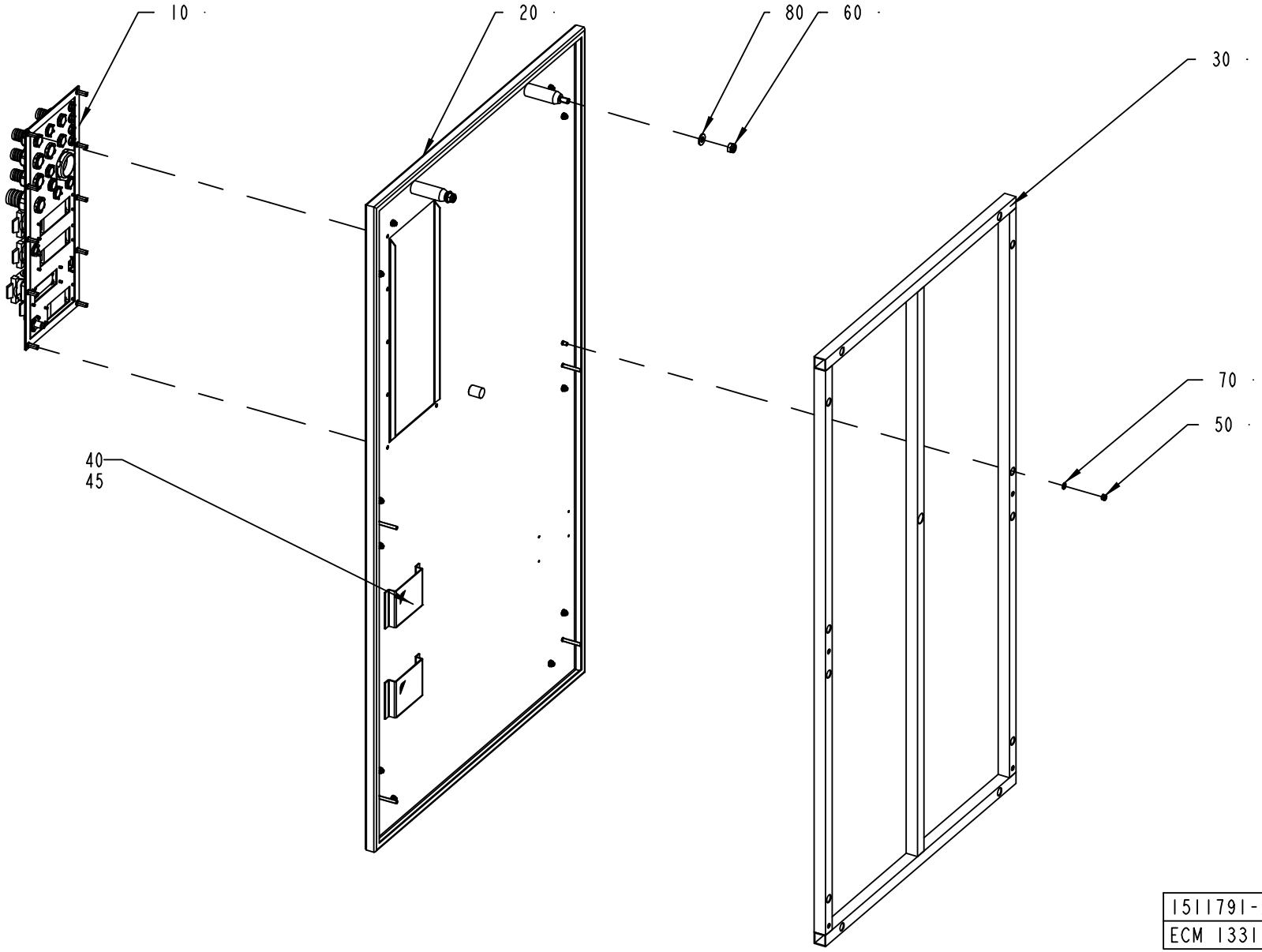
10
20
80
60
30
70
50
40
45
1511791-2
ECM 133152

ECM: 133152 - 20030922
Group number: 1511791-0100
Assembly Drawing: 1511791-2_1_AA

Pos	Part No	UN	Qty	Description	Page No
-					
010	1511787-0100		1	STRIP APPLICATOR CABLE INLETS	**10-105, 10-107** **10-109, 10-111, 10-113, 10-115, 10-117, 10-119, 10-121**
020	1511797-0000		1	DOOR	
030	1511798-0000		1	FRAME	
040	970802-0000		2	DISCETTE BOX 3,5"	
045	90144-0072	MM	400	TAPE SCOTCH VHBS 4945 W=12,7MM	
050	312812-0316		12	HEXAGON NUT, NY-LOCK M6 A480	
060	312812-0320		2	HEXAGON NUT, NY-LOCK M10 A480	
070	315105-0153		12	WASHER BRB6,4X12RFR	
080	315105-0173		2	WASHER BRB10,5X22RFR	

Pos	Part No	UN	Qty	Description	Page No

STRIP APPLICATOR CABLE INLETS

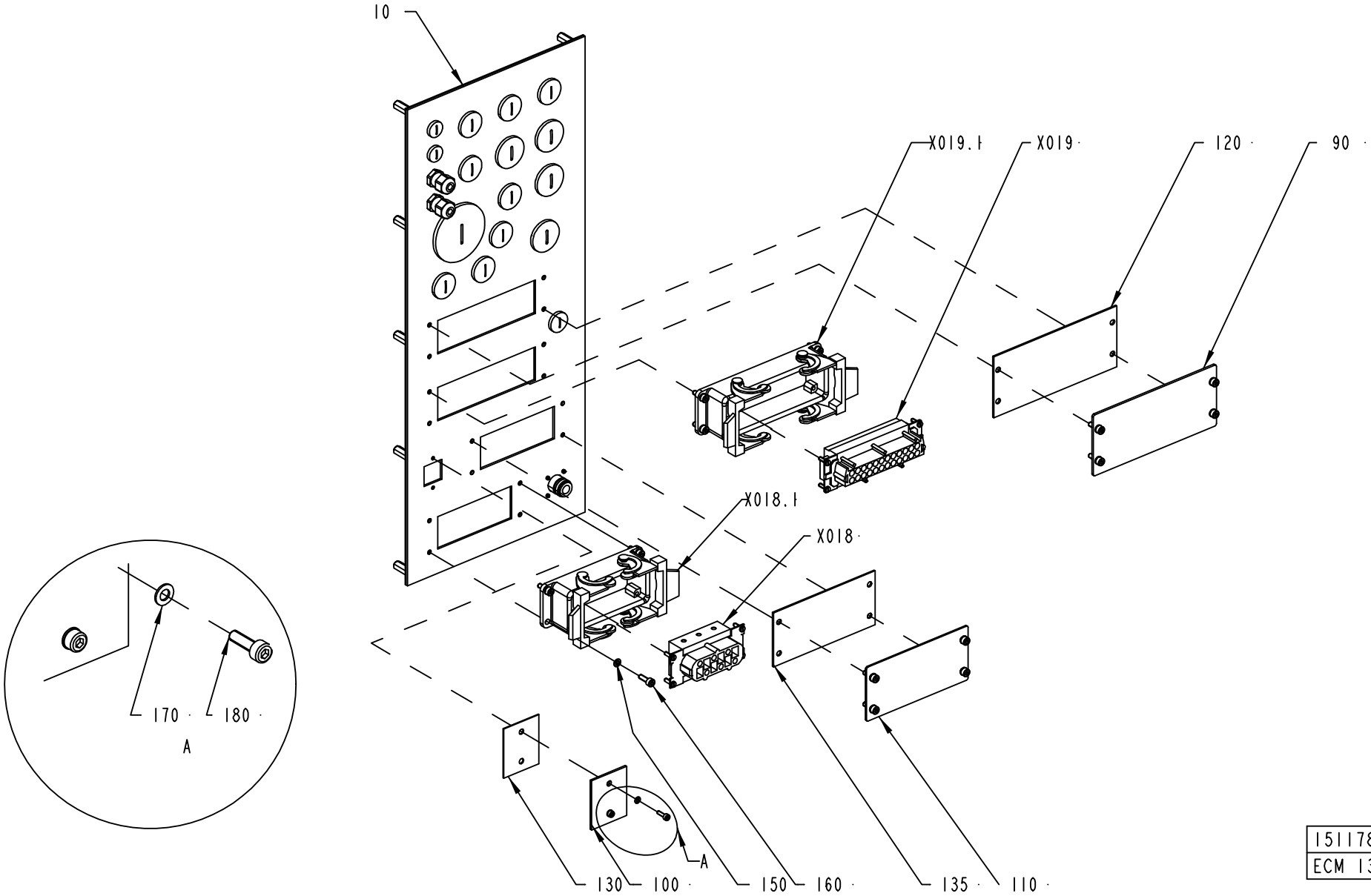

1511787-1
ECM 133152

ECM: 133152 - 20030922
Group number: 1511787-0100
Assembly Drawing: 1511787-1_1_AB

This list covers pages from 10-104 to 10-121

Pos	Part No	UN	Qty	Description	Page No
TBA NOPT (See drawing on pages: 10-104, 10-106, 10-108, 10-110)					
090	1037574-0000		1	COVER PLATE	
100	1487430-0000		1	COVER	
110	1129481-0000		1	COVERING PLATE	
120	1037575-0000		1	GASKET	
130	1487431-0000		1	GASKET	
135	1129478-0000		1	GASKET	
210	90458-0305		2	CABLE GLAND, M12X1,5, NO.5311 1000	
220	90458-1306		2	BLIND PLUG CIRCULAR, M12X1,5 514GFK/212	
240	90458-1308		8	BLIND PLUG CIRCULAR, M20X1,5 514GFK/220	
260	90458-1309		4	BLIND PLUG CIRCULAR, M25X1,5 514GFK/225	
280	90458-1312		1	BLIND PLUG CIRCULAR, M50X1,5 514GFK/250	
TBA PT19 (See drawing on pages: 10-112, 10-114, 10-116, 10-118, 10-120)					
210	90458-0305		1	CABLE GLAND, M12X1,5, NO.5311 1000	
220	90458-1306		3	BLIND PLUG CIRCULAR, M12X1,5 514GFK/212	
240	90458-1308		2	BLIND PLUG CIRCULAR, M20X1,5 514GFK/220	
260	90458-1309		1	BLIND PLUG CIRCULAR, M25X1,5 514GFK/225	
320	90458-0422		1	GLAND W/O INSERT M20 EXTENDED	
330	90458-0428		1	HOSE GLAND W/O INSERT M20 EXTENDED	
340	90458-0430		4	HOSE GLAND W/O INSERT M20 EXTENDED	
350	90458-0188		3	GLAND, INSERT, MULTI HOLE, 1X7/1X10,5	
360	90457-0147		1	GLAND, INSERT, MULTI HOLE, 2X7	
370	90458-0416		1	HOSE GLAND W/O INSERT M50 NORMAL	
380	2618387-0000		1	INSERT	
390	90458-0432		1	HOSE GLAND W/O INSERT M25 EXTENDED	
400	353249-0016		1	INSERT, SINGEL HOLE, EK 155/18	
410	353249-0075		1	INSERT, SINGEL HOLE, EK 153/13	
420	90458-0431		2	HOSE GLAND W/O INSERT M25 EXTENDED	
430	353249-0013		2	INSERT, SINGEL HOLE, EK 154/13	
X022	90110-0296		1	CONTACT SCREW	
X022.1	90458-1181		1	BULKHEAD HOUSING HDC-HA-3-AWVL1/11	
X025	90110-0151		1	FEMALE INSERT 24-POL 121130 0000	
X025.1	90110-0153		1	CHASSIS HOUSING 24-P CHI 24, 121240 0000	
X026	90458-1406		1	FEMALE INSERT 120770	
X026.1	90110-0243		1	CONTACT HOUSING 16-POL 70.320.1628.0	
Common Parts					
010	1511832-0000		1	PLATE	
020	1511833-0000		1	GASKET	
030	1517676-0000		10	SPACER	
140	315105-0146		10	WASHER BRB5,3X10RFR	
150	315402-0136		16	LOCK WASHER FBB 4,1	
160	312115-0291		16	SCREW ISO4762 M4X12 A4	
170	315105-0124		2	WASHER BRB3,2X6RFR	
180	312115-0224		2	SCREW ISO4762 M3X10 A4	
190	90110-0127		1	COAXIAL CONNECTOR, GE 15057C10HBN	
200	312115-0220		4	SCREW ISO4762 M3X6 A4 80	
230	90458-0321		4	NUT, M12X1,5	
250	90458-0461		8	GLAND, LOCKNUT, M20X1,5	
270	90458-0462		4	GLAND, LOCKNUT, M25X1,5	
290	90458-0465		1	GLAND, LOCKNUT, M50X1,5	
300	90458-0460		1	GLAND, LOCKNUT, M16X1,5	
310	90458-1307		1	BLIND PLUG CIRCULAR, M16X1,5 514GFK/216	
440	353249-0036		1	INSERT, MULTI HOLE, EK152 M 2X4	
X018	90110-0247		1	FEMALE INSERT 70.200.0653.0	
X018.1	90110-0243		1	CONTACT HOUSING 16-POL 70.320.1628.0	
X019	90110-0151		1	FEMALE INSERT 24-POL 121130 0000	
X019.1	90110-0153		1	CHASSIS HOUSING 24-P CHI 24, 121240 0000	

Machine Type | Group Description | Used-In | Group Number | Page No

STRIP APPLICATOR CABLE INLETS

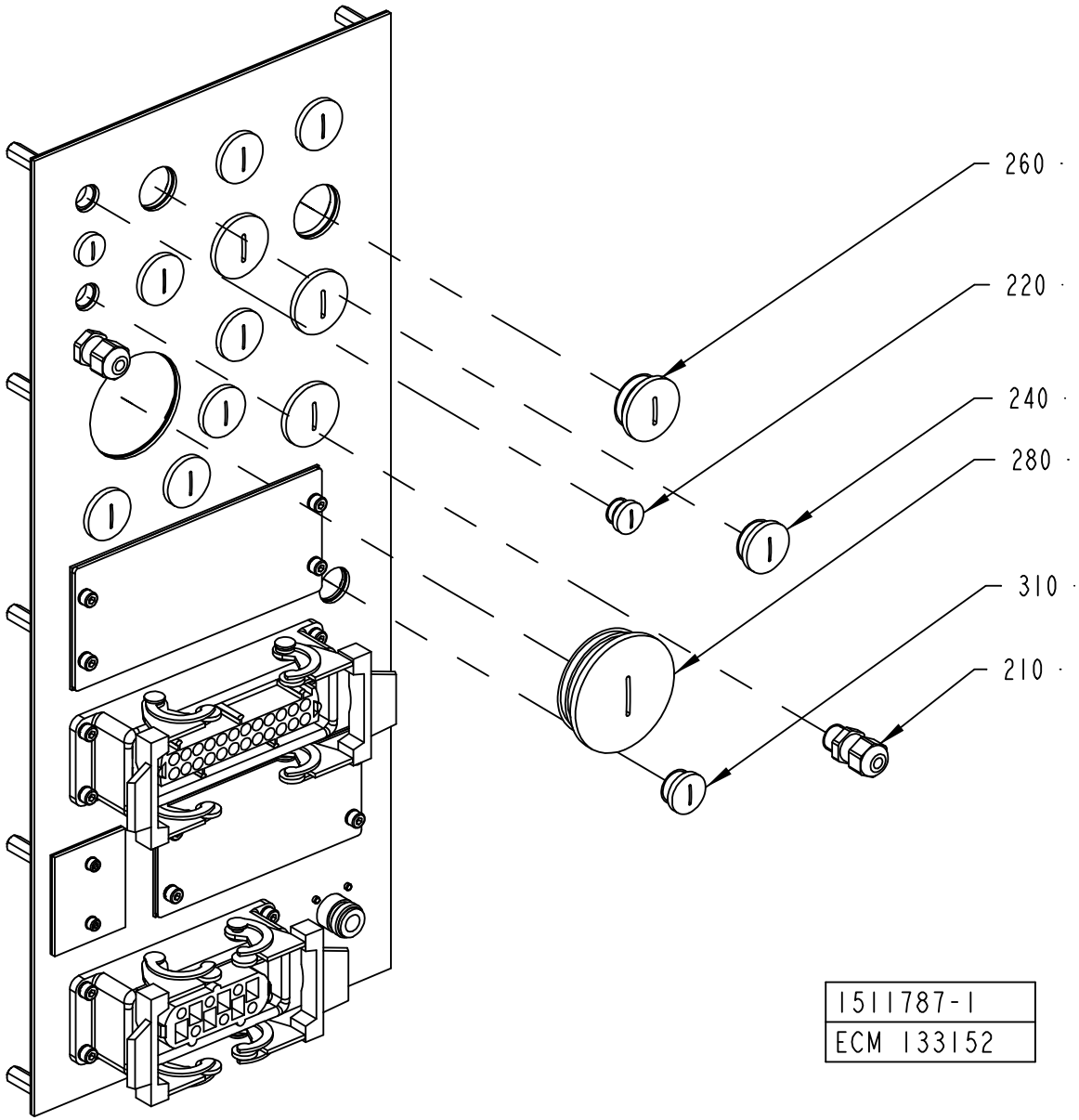

ECM: 133152 - 20030922
Group number: 1511787-0100
Assembly Drawing: 1511787-1_2_AB

This list covers pages from 10-104 to 10-121

Pos	Part No	UN	Qty	Description	Page No
TBA NOPT (See drawing on pages: 10-104, 10-106, 10-108, 10-110)					
090	1037574-0000		1	COVER PLATE	
100	1487430-0000		1	COVER	
110	1129481-0000		1	COVERING PLATE	
120	1037575-0000		1	GASKET	
130	1487431-0000		1	GASKET	
135	1129478-0000		1	GASKET	
210	90458-0305		2	CABLE GLAND, M12X1,5, NO.5311 1000	
220	90458-1306		2	BLIND PLUG CIRCULAR, M12X1,5 514GFK/212	
240	90458-1308		8	BLIND PLUG CIRCULAR, M20X1,5 514GFK/220	
260	90458-1309		4	BLIND PLUG CIRCULAR, M25X1,5 514GFK/225	
280	90458-1312		1	BLIND PLUG CIRCULAR, M50X1,5 514GFK/250	
TBA PT19 (See drawing on pages: 10-112, 10-114, 10-116, 10-118, 10-120)					
210	90458-0305		1	CABLE GLAND, M12X1,5, NO.5311 1000	
220	90458-1306		3	BLIND PLUG CIRCULAR, M12X1,5 514GFK/212	
240	90458-1308		2	BLIND PLUG CIRCULAR, M20X1,5 514GFK/220	
260	90458-1309		1	BLIND PLUG CIRCULAR, M25X1,5 514GFK/225	
320	90458-0422		1	GLAND W/O INSERT M20 EXTENDED	
330	90458-0428		1	HOSE GLAND W/O INSERT M20 EXTENDED	
340	90458-0430		4	HOSE GLAND W/O INSERT M20 EXTENDED	
350	90458-0188		3	GLAND, INSERT, MULTI HOLE, 1X7/1X10,5	
360	90457-0147		1	GLAND, INSERT, MULTI HOLE, 2X7	
370	90458-0416		1	HOSE GLAND W/O INSERT M50 NORMAL	
380	2618387-0000		1	INSERT	
390	90458-0432		1	HOSE GLAND W/O INSERT M25 EXTENDED	
400	353249-0016		1	INSERT, SINGEL HOLE, EK 155/18	
410	353249-0075		1	INSERT, SINGEL HOLE, EK 153/13	
420	90458-0431		2	HOSE GLAND W/O INSERT M25 EXTENDED	
430	353249-0013		2	INSERT, SINGEL HOLE, EK 154/13	
X022	90110-0296		1	CONTACT SCREW	
X022.1	90458-1181		1	BULKHEAD HOUSING HDC-HA-3-AWVL1/11	
X025	90110-0151		1	FEMALE INSERT 24-POL 121130 0000	
X025.1	90110-0153		1	CHASSIS HOUSING 24-P CHI 24, 121240 0000	
X026	90458-1406		1	FEMALE INSERT 120770	
X026.1	90110-0243		1	CONTACT HOUSING 16-POL 70.320.1628.0	
Common Parts					
010	1511832-0000		1	PLATE	
020	1511833-0000		1	GASKET	
030	1517676-0000		10	SPACER	
140	315105-0146		10	WASHER BRB5,3X10RFR	
150	315402-0136		16	LOCK WASHER FBB 4,1	
160	312115-0291		16	SCREW ISO4762 M4X12 A4	
170	315105-0124		2	WASHER BRB3,2X6RFR	
180	312115-0224		2	SCREW ISO4762 M3X10 A4	
190	90110-0127		1	COAXIAL CONNECTOR, GE 15057C10HBN	
200	312115-0220		4	SCREW ISO4762 M3X6 A4 80	
230	90458-0321		4	NUT, M12X1,5	
250	90458-0461		8	GLAND, LOCKNUT, M20X1,5	
270	90458-0462		4	GLAND, LOCKNUT, M25X1,5	
290	90458-0465		1	GLAND, LOCKNUT, M50X1,5	
300	90458-0460		1	GLAND, LOCKNUT, M16X1,5	
310	90458-1307		1	BLIND PLUG CIRCULAR, M16X1,5 514GFK/216	
440	353249-0036		1	INSERT, MULTI HOLE, EK152 M 2X4	
X018	90110-0247		1	FEMALE INSERT 70.200.0653.0	
X018.1	90110-0243		1	CONTACT HOUSING 16-POL 70.320.1628.0	
X019	90110-0151		1	FEMALE INSERT 24-POL 121130 0000	
X019.1	90110-0153		1	CHASSIS HOUSING 24-P CHI 24, 121240 0000	

Machine Type | Group Description | Used-In | Group Number | Page No

STRIP APPLICATOR CABLE INLETS

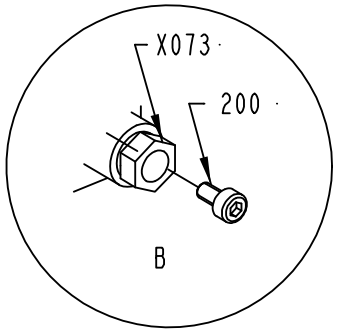

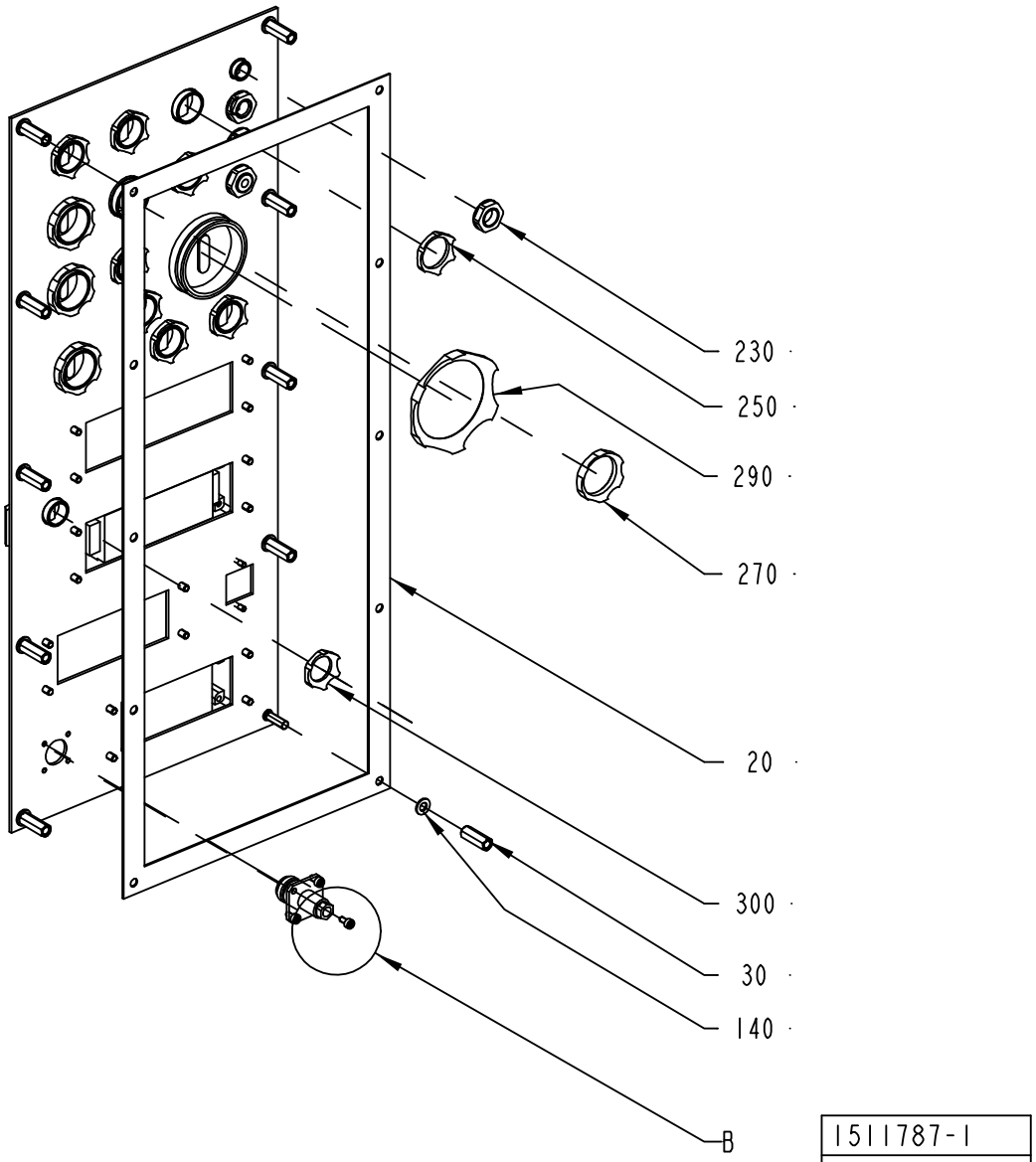

1511787-1
ECM 133152

ECM: 133152 - 20030922
Group number: 1511787-0100
Assembly Drawing: 1511787-1_3_AB

This list covers pages from 10-104 to 10-121

Pos	Part No	UN	Qty	Description	Page No
TBA NOPT (See drawing on pages: 10-104, 10-106, 10-108, 10-110)					
090	1037574-0000		1	COVER PLATE	
100	1487430-0000		1	COVER	
110	1129481-0000		1	COVERING PLATE	
120	1037575-0000		1	GASKET	
130	1487431-0000		1	GASKET	
135	1129478-0000		1	GASKET	
210	90458-0305		2	CABLE GLAND, M12X1,5, NO.5311 1000	
220	90458-1306		2	BLIND PLUG CIRCULAR, M12X1,5 514GFK/212	
240	90458-1308		8	BLIND PLUG CIRCULAR, M20X1,5 514GFK/220	
260	90458-1309		4	BLIND PLUG CIRCULAR, M25X1,5 514GFK/225	
280	90458-1312		1	BLIND PLUG CIRCULAR, M50X1,5 514GFK/250	
TBA PT19 (See drawing on pages: 10-112, 10-114, 10-116, 10-118, 10-120)					
210	90458-0305		1	CABLE GLAND, M12X1,5, NO.5311 1000	
220	90458-1306		3	BLIND PLUG CIRCULAR, M12X1,5 514GFK/212	
240	90458-1308		2	BLIND PLUG CIRCULAR, M20X1,5 514GFK/220	
260	90458-1309		1	BLIND PLUG CIRCULAR, M25X1,5 514GFK/225	
320	90458-0422		1	GLAND W/O INSERT M20 EXTENDED	
330	90458-0428		1	HOSE GLAND W/O INSERT M20 EXTENDED	
340	90458-0430		4	HOSE GLAND W/O INSERT M20 EXTENDED	
350	90458-0188		3	GLAND, INSERT, MULTI HOLE, 1X7/1X10,5	
360	90457-0147		1	GLAND, INSERT, MULTI HOLE, 2X7	
370	90458-0416		1	HOSE GLAND W/O INSERT M50 NORMAL	
380	2618387-0000		1	INSERT	
390	90458-0432		1	HOSE GLAND W/O INSERT M25 EXTENDED	
400	353249-0016		1	INSERT, SINGEL HOLE, EK 155/18	
410	353249-0075		1	INSERT, SINGEL HOLE, EK 153/13	
420	90458-0431		2	HOSE GLAND W/O INSERT M25 EXTENDED	
430	353249-0013		2	INSERT, SINGEL HOLE, EK 154/13	
X022	90110-0296		1	CONTACT SCREW	
X022.1	90458-1181		1	BULKHEAD HOUSING HDC-HA-3-AWVL1/11	
X025	90110-0151		1	FEMALE INSERT 24-POL 121130 0000	
X025.1	90110-0153		1	CHASSIS HOUSING 24-P CHI 24, 121240 0000	
X026	90458-1406		1	FEMALE INSERT 120770	
X026.1	90110-0243		1	CONTACT HOUSING 16-POL 70.320.1628.0	
Common Parts					
010	1511832-0000		1	PLATE	
020	1511833-0000		1	GASKET	
030	1517676-0000		10	SPACER	
140	315105-0146		10	WASHER BRB5,3X10RFR	
150	315402-0136		16	LOCK WASHER FBB 4,1	
160	312115-0291		16	SCREW ISO4762 M4X12 A4	
170	315105-0124		2	WASHER BRB3,2X6RFR	
180	312115-0224		2	SCREW ISO4762 M3X10 A4	
190	90110-0127		1	COAXIAL CONNECTOR, GE 15057C10HBN	
200	312115-0220		4	SCREW ISO4762 M3X6 A4 80	
230	90458-0321		4	NUT, M12X1,5	
250	90458-0461		8	GLAND, LOCKNUT, M20X1,5	
270	90458-0462		4	GLAND, LOCKNUT, M25X1,5	
290	90458-0465		1	GLAND, LOCKNUT, M50X1,5	
300	90458-0460		1	GLAND, LOCKNUT, M16X1,5	
310	90458-1307		1	BLIND PLUG CIRCULAR, M16X1,5 514GFK/216	
440	353249-0036		1	INSERT, MULTI HOLE, EK152 M 2X4	
X018	90110-0247		1	FEMALE INSERT 70.200.0653.0	
X018.1	90110-0243		1	CONTACT HOUSING 16-POL 70.320.1628.0	
X019	90110-0151		1	FEMALE INSERT 24-POL 121130 0000	
X019.1	90110-0153		1	CHASSIS HOUSING 24-P CHI 24, 121240 0000	

Machine Type | Group Description | Used-In | Group Number | Page No

STRIP APPLICATOR CABLE INLETS

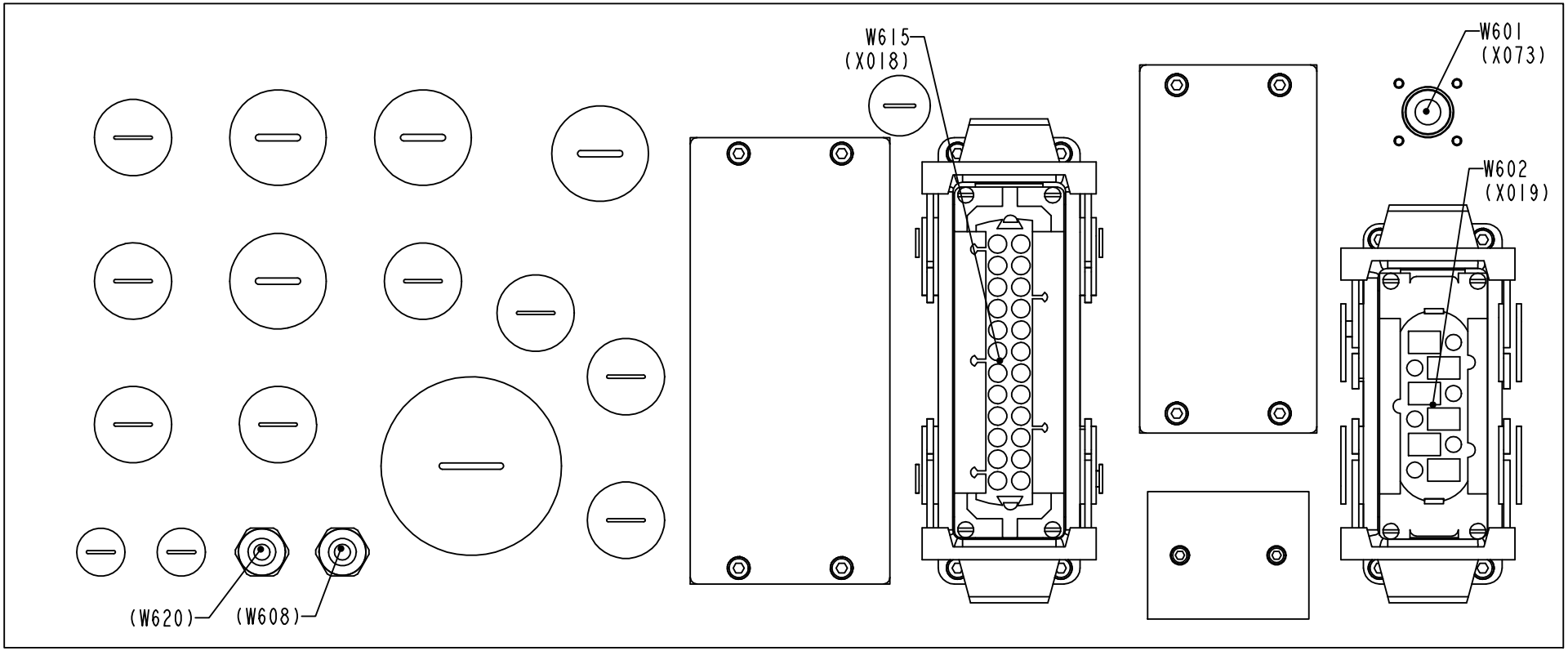

1511787-1
ECM 133152

ECM: 133152 - 20030922
Group number: 1511787-0100
Assembly Drawing: 1511787-1_4_AB

This list covers pages from 10-104 to 10-121

Pos	Part No	UN	Qty	Description	Page No
TBA NOPT (See drawing on pages: 10-104, 10-106, 10-108, 10-110)					
090	1037574-0000		1	COVER PLATE	
100	1487430-0000		1	COVER	
110	1129481-0000		1	COVERING PLATE	
120	1037575-0000		1	GASKET	
130	1487431-0000		1	GASKET	
135	1129478-0000		1	GASKET	
210	90458-0305		2	CABLE GLAND, M12X1,5, NO.5311 1000	
220	90458-1306		2	BLIND PLUG CIRCULAR, M12X1,5 514GFK/212	
240	90458-1308		8	BLIND PLUG CIRCULAR, M20X1,5 514GFK/220	
260	90458-1309		4	BLIND PLUG CIRCULAR, M25X1,5 514GFK/225	
280	90458-1312		1	BLIND PLUG CIRCULAR, M50X1,5 514GFK/250	
TBA PT19 (See drawing on pages: 10-112, 10-114, 10-116, 10-118, 10-120)					
210	90458-0305		1	CABLE GLAND, M12X1,5, NO.5311 1000	
220	90458-1306		3	BLIND PLUG CIRCULAR, M12X1,5 514GFK/212	
240	90458-1308		2	BLIND PLUG CIRCULAR, M20X1,5 514GFK/220	
260	90458-1309		1	BLIND PLUG CIRCULAR, M25X1,5 514GFK/225	
320	90458-0422		1	GLAND W/O INSERT M20 EXTENDED	
330	90458-0428		1	HOSE GLAND W/O INSERT M20 EXTENDED	
340	90458-0430		4	HOSE GLAND W/O INSERT M20 EXTENDED	
350	90458-0188		3	GLAND, INSERT, MULTI HOLE, 1X7/1X10,5	
360	90457-0147		1	GLAND, INSERT, MULTI HOLE, 2X7	
370	90458-0416		1	HOSE GLAND W/O INSERT M50 NORMAL	
380	2618387-0000		1	INSERT	
390	90458-0432		1	HOSE GLAND W/O INSERT M25 EXTENDED	
400	353249-0016		1	INSERT, SINGEL HOLE, EK 155/18	
410	353249-0075		1	INSERT, SINGEL HOLE, EK 153/13	
420	90458-0431		2	HOSE GLAND W/O INSERT M25 EXTENDED	
430	353249-0013		2	INSERT, SINGEL HOLE, EK 154/13	
X022	90110-0296		1	CONTACT SCREW	
X022.1	90458-1181		1	BULKHEAD HOUSING HDC-HA-3-AWVL1/11	
X025	90110-0151		1	FEMALE INSERT 24-POL 121130 0000	
X025.1	90110-0153		1	CHASSIS HOUSING 24-P CHI 24, 121240 0000	
X026	90458-1406		1	FEMALE INSERT 120770	
X026.1	90110-0243		1	CONTACT HOUSING 16-POL 70.320.1628.0	
Common Parts					
010	1511832-0000		1	PLATE	
020	1511833-0000		1	GASKET	
030	1517676-0000		10	SPACER	
140	315105-0146		10	WASHER BRB5,3X10RFR	
150	315402-0136		16	LOCK WASHER FBB 4,1	
160	312115-0291		16	SCREW ISO4762 M4X12 A4	
170	315105-0124		2	WASHER BRB3,2X6RFR	
180	312115-0224		2	SCREW ISO4762 M3X10 A4	
190	90110-0127		1	COAXIAL CONNECTOR, GE 15057C10HBN	
200	312115-0220		4	SCREW ISO4762 M3X6 A4 80	
230	90458-0321		4	NUT, M12X1,5	
250	90458-0461		8	GLAND, LOCKNUT, M20X1,5	
270	90458-0462		4	GLAND, LOCKNUT, M25X1,5	
290	90458-0465		1	GLAND, LOCKNUT, M50X1,5	
300	90458-0460		1	GLAND, LOCKNUT, M16X1,5	
310	90458-1307		1	BLIND PLUG CIRCULAR, M16X1,5 514GFK/216	
440	353249-0036		1	INSERT, MULTI HOLE, EK152 M 2X4	
X018	90110-0247		1	FEMALE INSERT 70.200.0653.0	
X018.1	90110-0243		1	CONTACT HOUSING 16-POL 70.320.1628.0	
X019	90110-0151		1	FEMALE INSERT 24-POL 121130 0000	
X019.1	90110-0153		1	CHASSIS HOUSING 24-P CHI 24, 121240 0000	

Machine Type | Group Description | Used-In | Group Number | Page No

STRIP APPLICATOR CABLE INLETS

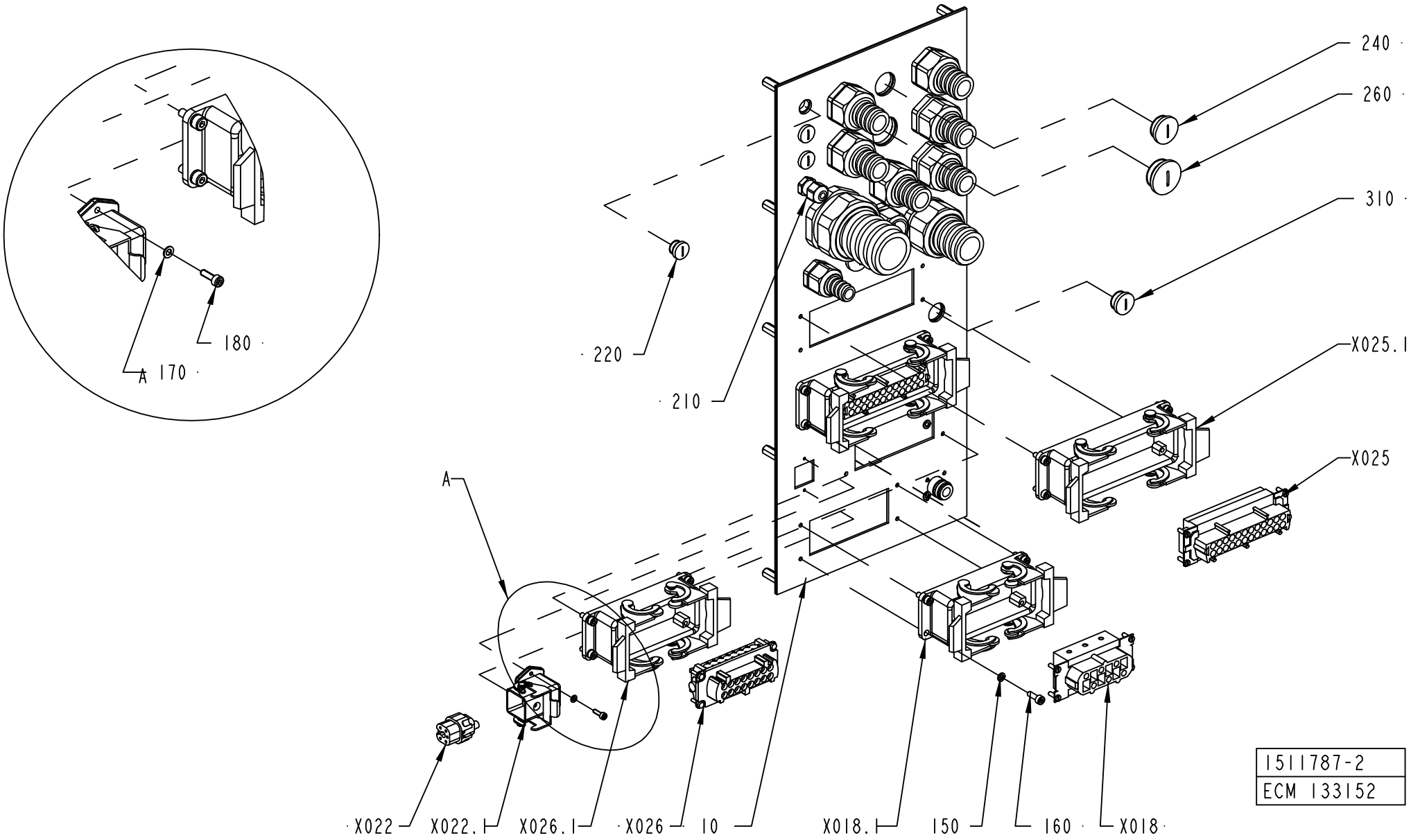

1511787-2
ECM 133152

ECM: 133152 - 20030922
Group number: 1511787-0100
Assembly Drawing: 1511787-2_1_AA

This list covers pages from 10-104 to 10-121

Pos	Part No	UN	Qty	Description	Page No
TBA NOPT (See drawing on pages: 10-104, 10-106, 10-108, 10-110)					
090	1037574-0000		1	COVER PLATE	
100	1487430-0000		1	COVER	
110	1129481-0000		1	COVERING PLATE	
120	1037575-0000		1	GASKET	
130	1487431-0000		1	GASKET	
135	1129478-0000		1	GASKET	
210	90458-0305		2	CABLE GLAND, M12X1,5, NO.5311 1000	
220	90458-1306		2	BLIND PLUG CIRCULAR, M12X1,5 514GFK/212	
240	90458-1308		8	BLIND PLUG CIRCULAR, M20X1,5 514GFK/220	
260	90458-1309		4	BLIND PLUG CIRCULAR, M25X1,5 514GFK/225	
280	90458-1312		1	BLIND PLUG CIRCULAR, M50X1,5 514GFK/250	
TBA PT19 (See drawing on pages: 10-112, 10-114, 10-116, 10-118, 10-120)					
210	90458-0305		1	CABLE GLAND, M12X1,5, NO.5311 1000	
220	90458-1306		3	BLIND PLUG CIRCULAR, M12X1,5 514GFK/212	
240	90458-1308		2	BLIND PLUG CIRCULAR, M20X1,5 514GFK/220	
260	90458-1309		1	BLIND PLUG CIRCULAR, M25X1,5 514GFK/225	
320	90458-0422		1	GLAND W/O INSERT M20 EXTENDED	
330	90458-0428		1	HOSE GLAND W/O INSERT M20 EXTENDED	
340	90458-0430		4	HOSE GLAND W/O INSERT M20 EXTENDED	
350	90458-0188		3	GLAND, INSERT, MULTI HOLE, 1X7/1X10,5	
360	90457-0147		1	GLAND, INSERT, MULTI HOLE, 2X7	
370	90458-0416		1	HOSE GLAND W/O INSERT M50 NORMAL	
380	2618387-0000		1	INSERT	
390	90458-0432		1	HOSE GLAND W/O INSERT M25 EXTENDED	
400	353249-0016		1	INSERT, SINGEL HOLE, EK 155/18	
410	353249-0075		1	INSERT, SINGEL HOLE, EK 153/13	
420	90458-0431		2	HOSE GLAND W/O INSERT M25 EXTENDED	
430	353249-0013		2	INSERT, SINGEL HOLE, EK 154/13	
X022	90110-0296		1	CONTACT SCREW	
X022.1	90458-1181		1	BULKHEAD HOUSING HDC-HA-3-AWVL1/11	
X025	90110-0151		1	FEMALE INSERT 24-POL 121130 0000	
X025.1	90110-0153		1	CHASSIS HOUSING 24-P CHI 24, 121240 0000	
X026	90458-1406		1	FEMALE INSERT 120770	
X026.1	90110-0243		1	CONTACT HOUSING 16-POL 70.320.1628.0	
Common Parts					
010	1511832-0000		1	PLATE	
020	1511833-0000		1	GASKET	
030	1517676-0000		10	SPACER	
140	315105-0146		10	WASHER BRB5,3X10RFR	
150	315402-0136		16	LOCK WASHER FBB 4,1	
160	312115-0291		16	SCREW ISO4762 M4X12 A4	
170	315105-0124		2	WASHER BRB3,2X6RFR	
180	312115-0224		2	SCREW ISO4762 M3X10 A4	
190	90110-0127		1	COAXIAL CONNECTOR, GE 15057C10HBN	
200	312115-0220		4	SCREW ISO4762 M3X6 A4 80	
230	90458-0321		4	NUT, M12X1,5	
250	90458-0461		8	GLAND, LOCKNUT, M20X1,5	
270	90458-0462		4	GLAND, LOCKNUT, M25X1,5	
290	90458-0465		1	GLAND, LOCKNUT, M50X1,5	
300	90458-0460		1	GLAND, LOCKNUT, M16X1,5	
310	90458-1307		1	BLIND PLUG CIRCULAR, M16X1,5 514GFK/216	
440	353249-0036		1	INSERT, MULTI HOLE, EK152 M 2X4	
X018	90110-0247		1	FEMALE INSERT 70.200.0653.0	
X018.1	90110-0243		1	CONTACT HOUSING 16-POL 70.320.1628.0	
X019	90110-0151		1	FEMALE INSERT 24-POL 121130 0000	
X019.1	90110-0153		1	CHASSIS HOUSING 24-P CHI 24, 121240 0000	

Machine Type | Group Description | Used-In | Group Number | Page No

STRIP APPLICATOR CABLE INLETS

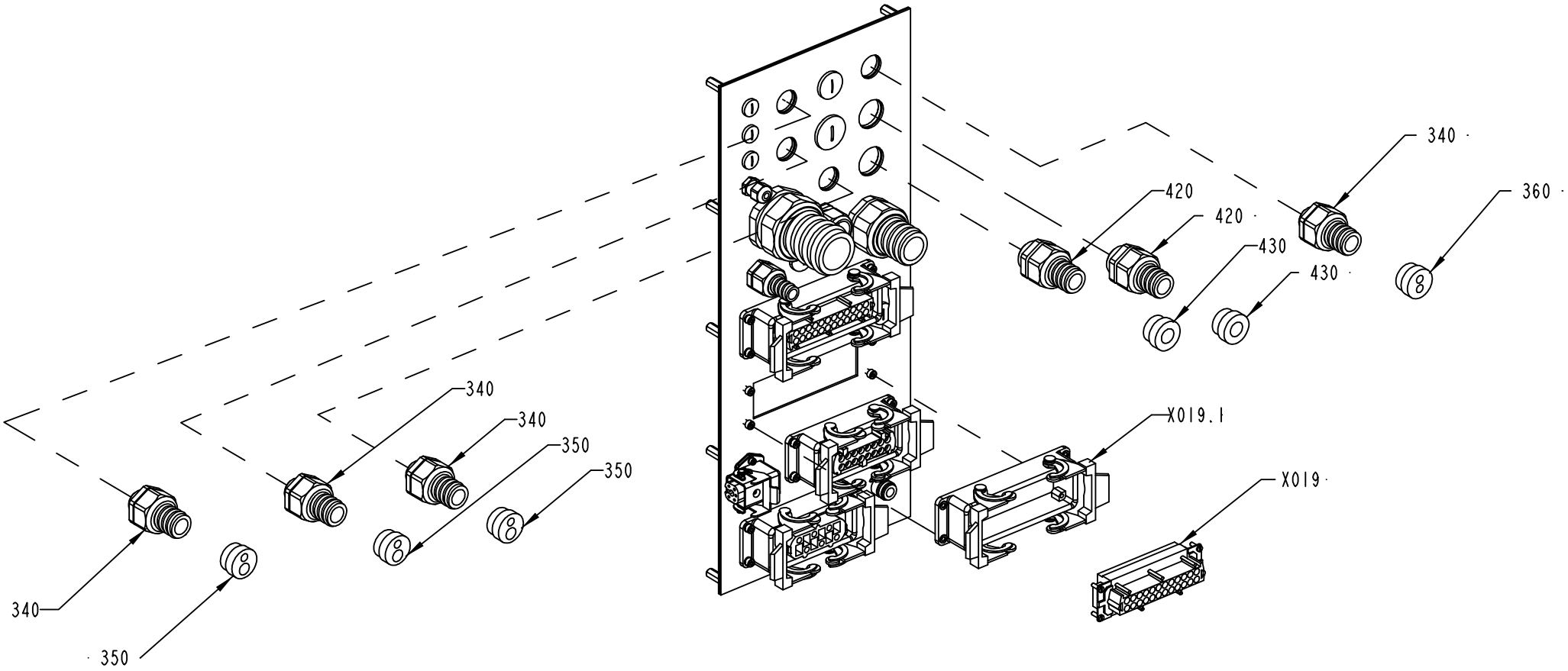

1511787-2
ECM 133152

ECM: 133152 - 20030922
Group number: 1511787-0100
Assembly Drawing: 1511787-2_2_AA

This list covers pages from 10-104 to 10-121

Pos	Part No	UN	Qty	Description	Page No
TBA NOPT (See drawing on pages: 10-104, 10-106, 10-108, 10-110)					
090	1037574-0000		1	COVER PLATE	
100	1487430-0000		1	COVER	
110	1129481-0000		1	COVERING PLATE	
120	1037575-0000		1	GASKET	
130	1487431-0000		1	GASKET	
135	1129478-0000		1	GASKET	
210	90458-0305		2	CABLE GLAND, M12X1,5, NO.5311 1000	
220	90458-1306		2	BLIND PLUG CIRCULAR, M12X1,5 514GFK/212	
240	90458-1308		8	BLIND PLUG CIRCULAR, M20X1,5 514GFK/220	
260	90458-1309		4	BLIND PLUG CIRCULAR, M25X1,5 514GFK/225	
280	90458-1312		1	BLIND PLUG CIRCULAR, M50X1,5 514GFK/250	
TBA PT19 (See drawing on pages: 10-112, 10-114, 10-116, 10-118, 10-120)					
210	90458-0305		1	CABLE GLAND, M12X1,5, NO.5311 1000	
220	90458-1306		3	BLIND PLUG CIRCULAR, M12X1,5 514GFK/212	
240	90458-1308		2	BLIND PLUG CIRCULAR, M20X1,5 514GFK/220	
260	90458-1309		1	BLIND PLUG CIRCULAR, M25X1,5 514GFK/225	
320	90458-0422		1	GLAND W/O INSERT M20 EXTENDED	
330	90458-0428		1	HOSE GLAND W/O INSERT M20 EXTENDED	
340	90458-0430		4	HOSE GLAND W/O INSERT M20 EXTENDED	
350	90458-0188		3	GLAND, INSERT, MULTI HOLE, 1X7/1X10,5	
360	90457-0147		1	GLAND, INSERT, MULTI HOLE, 2X7	
370	90458-0416		1	HOSE GLAND W/O INSERT M50 NORMAL	
380	2618387-0000		1	INSERT	
390	90458-0432		1	HOSE GLAND W/O INSERT M25 EXTENDED	
400	353249-0016		1	INSERT, SINGEL HOLE, EK 155/18	
410	353249-0075		1	INSERT, SINGEL HOLE, EK 153/13	
420	90458-0431		2	HOSE GLAND W/O INSERT M25 EXTENDED	
430	353249-0013		2	INSERT, SINGEL HOLE, EK 154/13	
X022	90110-0296		1	CONTACT SCREW	
X022.1	90458-1181		1	BULKHEAD HOUSING HDC-HA-3-AWVL1/11	
X025	90110-0151		1	FEMALE INSERT 24-POL 121130 0000	
X025.1	90110-0153		1	CHASSIS HOUSING 24-P CHI 24, 121240 0000	
X026	90458-1406		1	FEMALE INSERT 120770	
X026.1	90110-0243		1	CONTACT HOUSING 16-POL 70.320.1628.0	
Common Parts					
010	1511832-0000		1	PLATE	
020	1511833-0000		1	GASKET	
030	1517676-0000		10	SPACER	
140	315105-0146		10	WASHER BRB5,3X10RFR	
150	315402-0136		16	LOCK WASHER FBB 4,1	
160	312115-0291		16	SCREW ISO4762 M4X12 A4	
170	315105-0124		2	WASHER BRB3,2X6RFR	
180	312115-0224		2	SCREW ISO4762 M3X10 A4	
190	90110-0127		1	COAXIAL CONNECTOR, GE 15057C10HBN	
200	312115-0220		4	SCREW ISO4762 M3X6 A4 80	
230	90458-0321		4	NUT, M12X1,5	
250	90458-0461		8	GLAND, LOCKNUT, M20X1,5	
270	90458-0462		4	GLAND, LOCKNUT, M25X1,5	
290	90458-0465		1	GLAND, LOCKNUT, M50X1,5	
300	90458-0460		1	GLAND, LOCKNUT, M16X1,5	
310	90458-1307		1	BLIND PLUG CIRCULAR, M16X1,5 514GFK/216	
440	353249-0036		1	INSERT, MULTI HOLE, EK152 M 2X4	
X018	90110-0247		1	FEMALE INSERT 70.200.0653.0	
X018.1	90110-0243		1	CONTACT HOUSING 16-POL 70.320.1628.0	
X019	90110-0151		1	FEMALE INSERT 24-POL 121130 0000	
X019.1	90110-0153		1	CHASSIS HOUSING 24-P CHI 24, 121240 0000	

Machine Type | Group Description | Used-In | Group Number | Page No

STRIP APPLICATOR CABLE INLETS

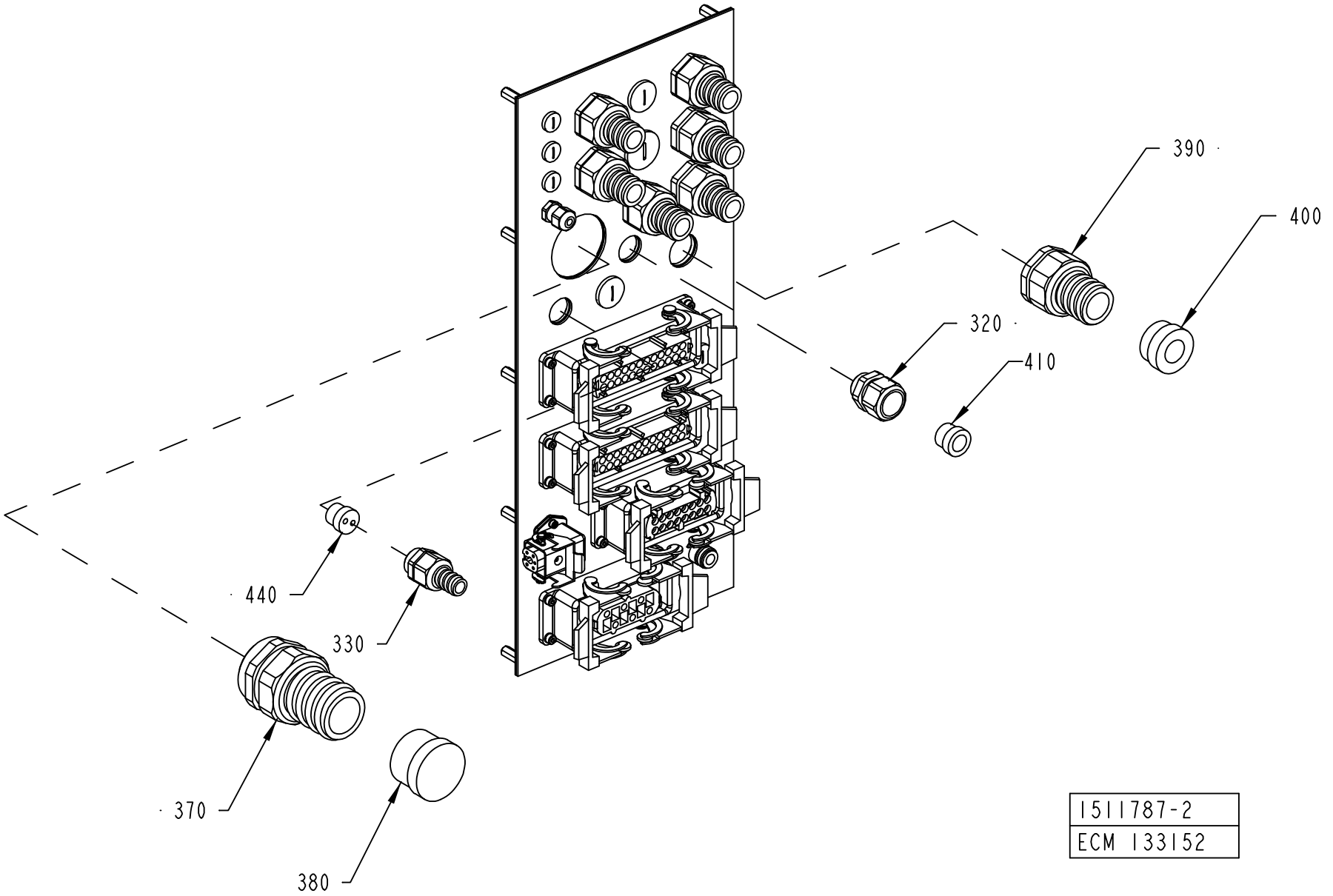

1511787-2
ECM 133152

ECM: 133152 - 20030922
Group number: 1511787-0100
Assembly Drawing: 1511787-2_3_AA

This list covers pages from 10-104 to 10-121

Pos	Part No	UN	Qty	Description	Page No
TBA NOPT (See drawing on pages: 10-104, 10-106, 10-108, 10-110)					
090	1037574-0000		1	COVER PLATE	
100	1487430-0000		1	COVER	
110	1129481-0000		1	COVERING PLATE	
120	1037575-0000		1	GASKET	
130	1487431-0000		1	GASKET	
135	1129478-0000		1	GASKET	
210	90458-0305		2	CABLE GLAND, M12X1,5, NO.5311 1000	
220	90458-1306		2	BLIND PLUG CIRCULAR, M12X1,5 514GFK/212	
240	90458-1308		8	BLIND PLUG CIRCULAR, M20X1,5 514GFK/220	
260	90458-1309		4	BLIND PLUG CIRCULAR, M25X1,5 514GFK/225	
280	90458-1312		1	BLIND PLUG CIRCULAR, M50X1,5 514GFK/250	
TBA PT19 (See drawing on pages: 10-112, 10-114, 10-116, 10-118, 10-120)					
210	90458-0305		1	CABLE GLAND, M12X1,5, NO.5311 1000	
220	90458-1306		3	BLIND PLUG CIRCULAR, M12X1,5 514GFK/212	
240	90458-1308		2	BLIND PLUG CIRCULAR, M20X1,5 514GFK/220	
260	90458-1309		1	BLIND PLUG CIRCULAR, M25X1,5 514GFK/225	
320	90458-0422		1	GLAND W/O INSERT M20 EXTENDED	
330	90458-0428		1	HOSE GLAND W/O INSERT M20 EXTENDED	
340	90458-0430		4	HOSE GLAND W/O INSERT M20 EXTENDED	
350	90458-0188		3	GLAND, INSERT, MULTI HOLE, 1X7/1X10,5	
360	90457-0147		1	GLAND, INSERT, MULTI HOLE, 2X7	
370	90458-0416		1	HOSE GLAND W/O INSERT M50 NORMAL	
380	2618387-0000		1	INSERT	
390	90458-0432		1	HOSE GLAND W/O INSERT M25 EXTENDED	
400	353249-0016		1	INSERT, SINGEL HOLE, EK 155/18	
410	353249-0075		1	INSERT, SINGEL HOLE, EK 153/13	
420	90458-0431		2	HOSE GLAND W/O INSERT M25 EXTENDED	
430	353249-0013		2	INSERT, SINGEL HOLE, EK 154/13	
X022	90110-0296		1	CONTACT SCREW	
X022.1	90458-1181		1	BULKHEAD HOUSING HDC-HA-3-AWVL1/11	
X025	90110-0151		1	FEMALE INSERT 24-POL 121130 0000	
X025.1	90110-0153		1	CHASSIS HOUSING 24-P CHI 24, 121240 0000	
X026	90458-1406		1	FEMALE INSERT 120770	
X026.1	90110-0243		1	CONTACT HOUSING 16-POL 70.320.1628.0	
Common Parts					
010	1511832-0000		1	PLATE	
020	1511833-0000		1	GASKET	
030	1517676-0000		10	SPACER	
140	315105-0146		10	WASHER BRB5,3X10RFR	
150	315402-0136		16	LOCK WASHER FBB 4,1	
160	312115-0291		16	SCREW ISO4762 M4X12 A4	
170	315105-0124		2	WASHER BRB3,2X6RFR	
180	312115-0224		2	SCREW ISO4762 M3X10 A4	
190	90110-0127		1	COAXIAL CONNECTOR, GE 15057C10HBN	
200	312115-0220		4	SCREW ISO4762 M3X6 A4 80	
230	90458-0321		4	NUT, M12X1,5	
250	90458-0461		8	GLAND, LOCKNUT, M20X1,5	
270	90458-0462		4	GLAND, LOCKNUT, M25X1,5	
290	90458-0465		1	GLAND, LOCKNUT, M50X1,5	
300	90458-0460		1	GLAND, LOCKNUT, M16X1,5	
310	90458-1307		1	BLIND PLUG CIRCULAR, M16X1,5 514GFK/216	
440	353249-0036		1	INSERT, MULTI HOLE, EK152 M 2X4	
X018	90110-0247		1	FEMALE INSERT 70.200.0653.0	
X018.1	90110-0243		1	CONTACT HOUSING 16-POL 70.320.1628.0	
X019	90110-0151		1	FEMALE INSERT 24-POL 121130 0000	
X019.1	90110-0153		1	CHASSIS HOUSING 24-P CHI 24, 121240 0000	

Machine Type | Group Description | Used-In | Group Number | Page No

STRIP APPLICATOR CABLE INLETS

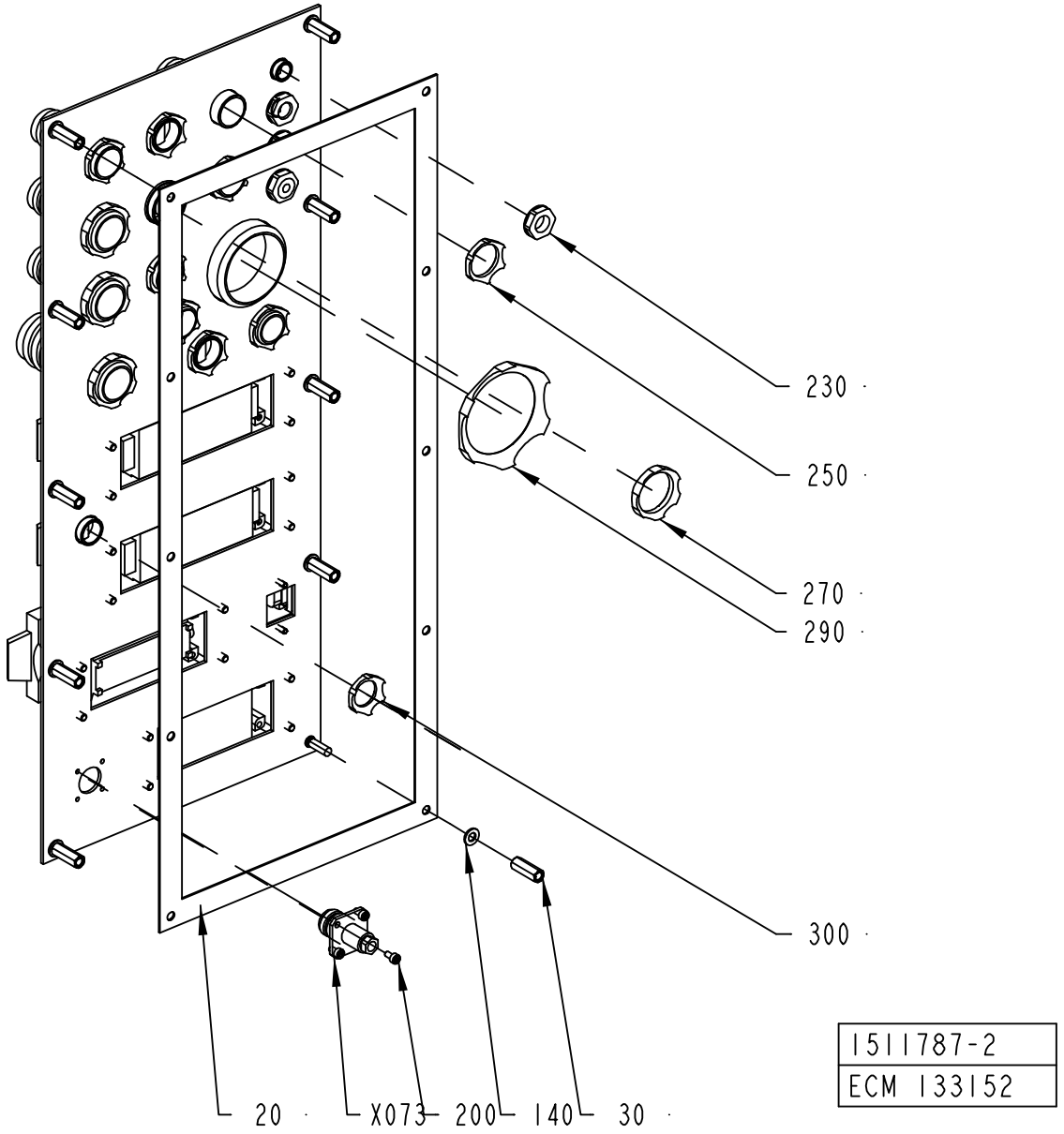

ECM: 133152 - 20030922
Group number: 1511787-0100
Assembly Drawing: 1511787-2_4_AA

This list covers pages from 10-104 to 10-121

Pos	Part No	UN	Qty	Description	Page No
TBA NOPT (See drawing on pages: 10-104, 10-106, 10-108, 10-110)					
090	1037574-0000		1	COVER PLATE	
100	1487430-0000		1	COVER	
110	1129481-0000		1	COVERING PLATE	
120	1037575-0000		1	GASKET	
130	1487431-0000		1	GASKET	
135	1129478-0000		1	GASKET	
210	90458-0305		2	CABLE GLAND, M12X1,5, NO.5311 1000	
220	90458-1306		2	BLIND PLUG CIRCULAR, M12X1,5 514GFK/212	
240	90458-1308		8	BLIND PLUG CIRCULAR, M20X1,5 514GFK/220	
260	90458-1309		4	BLIND PLUG CIRCULAR, M25X1,5 514GFK/225	
280	90458-1312		1	BLIND PLUG CIRCULAR, M50X1,5 514GFK/250	
TBA PT19 (See drawing on pages: 10-112, 10-114, 10-116, 10-118, 10-120)					
210	90458-0305		1	CABLE GLAND, M12X1,5, NO.5311 1000	
220	90458-1306		3	BLIND PLUG CIRCULAR, M12X1,5 514GFK/212	
240	90458-1308		2	BLIND PLUG CIRCULAR, M20X1,5 514GFK/220	
260	90458-1309		1	BLIND PLUG CIRCULAR, M25X1,5 514GFK/225	
320	90458-0422		1	GLAND W/O INSERT M20 EXTENDED	
330	90458-0428		1	HOSE GLAND W/O INSERT M20 EXTENDED	
340	90458-0430		4	HOSE GLAND W/O INSERT M20 EXTENDED	
350	90458-0188		3	GLAND, INSERT, MULTI HOLE, 1X7/1X10,5	
360	90457-0147		1	GLAND, INSERT, MULTI HOLE, 2X7	
370	90458-0416		1	HOSE GLAND W/O INSERT M50 NORMAL	
380	2618387-0000		1	INSERT	
390	90458-0432		1	HOSE GLAND W/O INSERT M25 EXTENDED	
400	353249-0016		1	INSERT, SINGEL HOLE, EK 155/18	
410	353249-0075		1	INSERT, SINGEL HOLE, EK 153/13	
420	90458-0431		2	HOSE GLAND W/O INSERT M25 EXTENDED	
430	353249-0013		2	INSERT, SINGEL HOLE, EK 154/13	
X022	90110-0296		1	CONTACT SCREW	
X022.1	90458-1181		1	BULKHEAD HOUSING HDC-HA-3-AWVL1/11	
X025	90110-0151		1	FEMALE INSERT 24-POL 121130 0000	
X025.1	90110-0153		1	CHASSIS HOUSING 24-P CHI 24, 121240 0000	
X026	90458-1406		1	FEMALE INSERT 120770	
X026.1	90110-0243		1	CONTACT HOUSING 16-POL 70.320.1628.0	
Common Parts					
010	1511832-0000		1	PLATE	
020	1511833-0000		1	GASKET	
030	1517676-0000		10	SPACER	
140	315105-0146		10	WASHER BRB5,3X10RFR	
150	315402-0136		16	LOCK WASHER FBB 4,1	
160	312115-0291		16	SCREW ISO4762 M4X12 A4	
170	315105-0124		2	WASHER BRB3,2X6RFR	
180	312115-0224		2	SCREW ISO4762 M3X10 A4	
190	90110-0127		1	COAXIAL CONNECTOR, GE 15057C10HBN	
200	312115-0220		4	SCREW ISO4762 M3X6 A4 80	
230	90458-0321		4	NUT, M12X1,5	
250	90458-0461		8	GLAND, LOCKNUT, M20X1,5	
270	90458-0462		4	GLAND, LOCKNUT, M25X1,5	
290	90458-0465		1	GLAND, LOCKNUT, M50X1,5	
300	90458-0460		1	GLAND, LOCKNUT, M16X1,5	
310	90458-1307		1	BLIND PLUG CIRCULAR, M16X1,5 514GFK/216	
440	353249-0036		1	INSERT, MULTI HOLE, EK152 M 2X4	
X018	90110-0247		1	FEMALE INSERT 70.200.0653.0	
X018.1	90110-0243		1	CONTACT HOUSING 16-POL 70.320.1628.0	
X019	90110-0151		1	FEMALE INSERT 24-POL 121130 0000	
X019.1	90110-0153		1	CHASSIS HOUSING 24-P CHI 24, 121240 0000	

Machine Type | Group Description | Used-In | Group Number | Page No

STRIP APPLICATOR CABLE INLETS

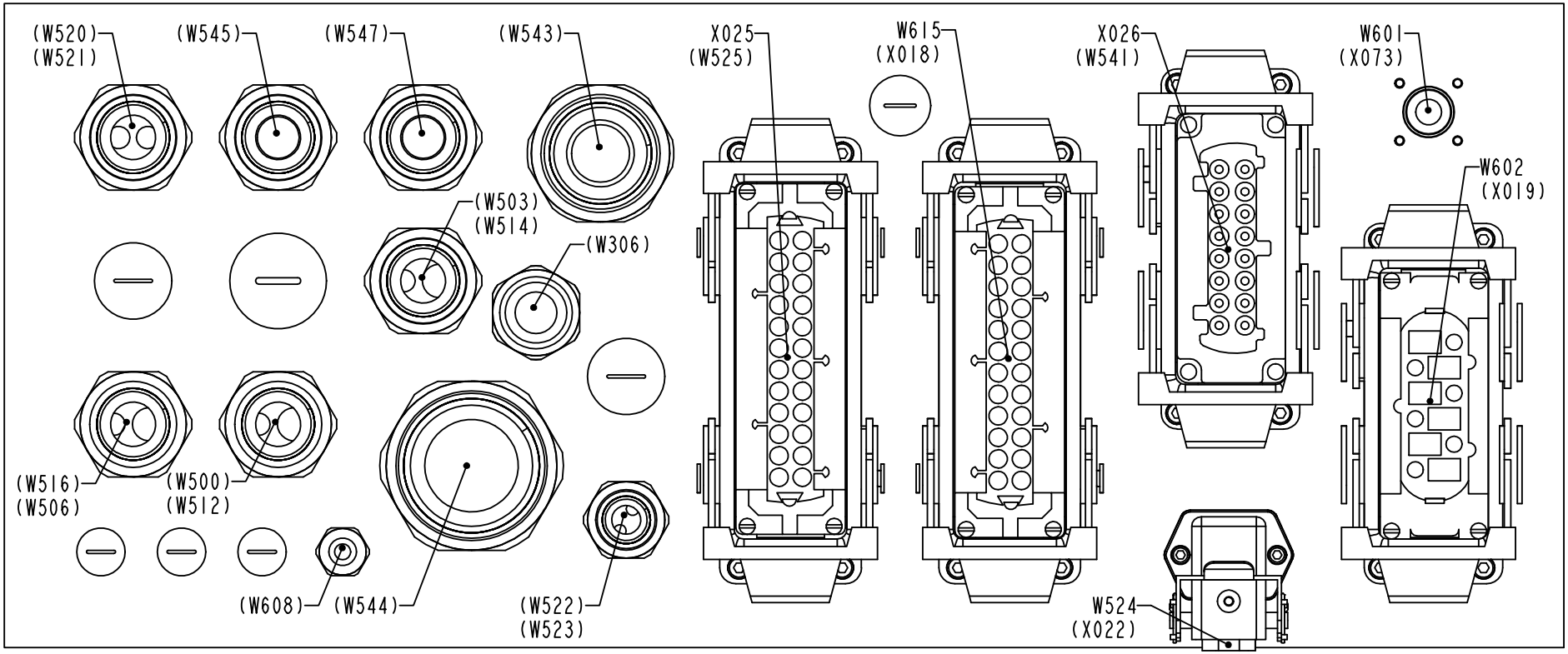

1511787-2
ECM 133152

ECM: 133152 - 20030922
Group number: 1511787-0100
Assembly Drawing: 1511787-2_5_AA

This list covers pages from 10-104 to 10-121

Pos	Part No	UN	Qty	Description	Page No
TBA NOPT (See drawing on pages: 10-104, 10-106, 10-108, 10-110)					
090	1037574-0000		1	COVER PLATE	
100	1487430-0000		1	COVER	
110	1129481-0000		1	COVERING PLATE	
120	1037575-0000		1	GASKET	
130	1487431-0000		1	GASKET	
135	1129478-0000		1	GASKET	
210	90458-0305		2	CABLE GLAND, M12X1,5, NO.5311 1000	
220	90458-1306		2	BLIND PLUG CIRCULAR, M12X1,5 514GFK/212	
240	90458-1308		8	BLIND PLUG CIRCULAR, M20X1,5 514GFK/220	
260	90458-1309		4	BLIND PLUG CIRCULAR, M25X1,5 514GFK/225	
280	90458-1312		1	BLIND PLUG CIRCULAR, M50X1,5 514GFK/250	
TBA PT19 (See drawing on pages: 10-112, 10-114, 10-116, 10-118, 10-120)					
210	90458-0305		1	CABLE GLAND, M12X1,5, NO.5311 1000	
220	90458-1306		3	BLIND PLUG CIRCULAR, M12X1,5 514GFK/212	
240	90458-1308		2	BLIND PLUG CIRCULAR, M20X1,5 514GFK/220	
260	90458-1309		1	BLIND PLUG CIRCULAR, M25X1,5 514GFK/225	
320	90458-0422		1	GLAND W/O INSERT M20 EXTENDED	
330	90458-0428		1	HOSE GLAND W/O INSERT M20 EXTENDED	
340	90458-0430		4	HOSE GLAND W/O INSERT M20 EXTENDED	
350	90458-0188		3	GLAND, INSERT, MULTI HOLE, 1X7/1X10,5	
360	90457-0147		1	GLAND, INSERT, MULTI HOLE, 2X7	
370	90458-0416		1	HOSE GLAND W/O INSERT M50 NORMAL	
380	2618387-0000		1	INSERT	
390	90458-0432		1	HOSE GLAND W/O INSERT M25 EXTENDED	
400	353249-0016		1	INSERT, SINGEL HOLE, EK 155/18	
410	353249-0075		1	INSERT, SINGEL HOLE, EK 153/13	
420	90458-0431		2	HOSE GLAND W/O INSERT M25 EXTENDED	
430	353249-0013		2	INSERT, SINGEL HOLE, EK 154/13	
X022	90110-0296		1	CONTACT SCREW	
X022.1	90458-1181		1	BULKHEAD HOUSING HDC-HA-3-AWVL1/11	
X025	90110-0151		1	FEMALE INSERT 24-POL 121130 0000	
X025.1	90110-0153		1	CHASSIS HOUSING 24-P CHI 24, 121240 0000	
X026	90458-1406		1	FEMALE INSERT 120770	
X026.1	90110-0243		1	CONTACT HOUSING 16-POL 70.320.1628.0	
Common Parts					
010	1511832-0000		1	PLATE	
020	1511833-0000		1	GASKET	
030	1517676-0000		10	SPACER	
140	315105-0146		10	WASHER BRB5,3X10RFR	
150	315402-0136		16	LOCK WASHER FBB 4,1	
160	312115-0291		16	SCREW ISO4762 M4X12 A4	
170	315105-0124		2	WASHER BRB3,2X6RFR	
180	312115-0224		2	SCREW ISO4762 M3X10 A4	
190	90110-0127		1	COAXIAL CONNECTOR, GE 15057C10HBN	
200	312115-0220		4	SCREW ISO4762 M3X6 A4 80	
230	90458-0321		4	NUT, M12X1,5	
250	90458-0461		8	GLAND, LOCKNUT, M20X1,5	
270	90458-0462		4	GLAND, LOCKNUT, M25X1,5	
290	90458-0465		1	GLAND, LOCKNUT, M50X1,5	
300	90458-0460		1	GLAND, LOCKNUT, M16X1,5	
310	90458-1307		1	BLIND PLUG CIRCULAR, M16X1,5 514GFK/216	
440	353249-0036		1	INSERT, MULTI HOLE, EK152 M 2X4	
X018	90110-0247		1	FEMALE INSERT 70.200.0653.0	
X018.1	90110-0243		1	CONTACT HOUSING 16-POL 70.320.1628.0	
X019	90110-0151		1	FEMALE INSERT 24-POL 121130 0000	
X019.1	90110-0153		1	CHASSIS HOUSING 24-P CHI 24, 121240 0000	

Machine Type | Group Description | Used-In | Group Number | Page No

EXTERNAL DOOR PLMS

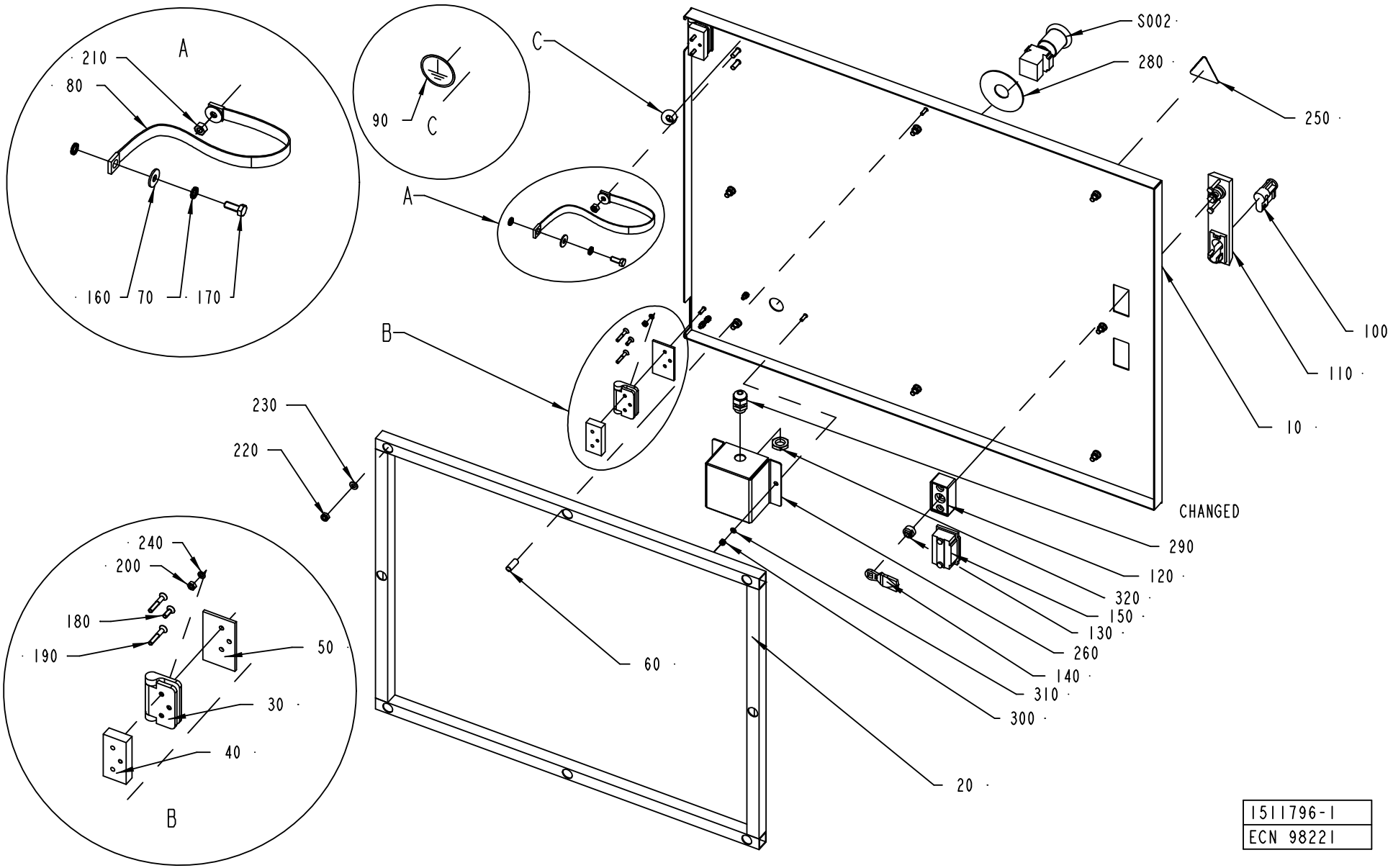

ECM: 115708 - 20020930
Group number: 1511796-0100
Assembly Drawing: 1511796-1_1_AB

Pos	Part No	UN	Qty	Description	Page No
-					
010	1523969-0000		1	DOOR	
020	1517664-0000		1	FRAME	
030	1523438-0000		2	HINGE	
040	1523441-0000		2	SPACER SHEET	
050	1523442-0000		2	SPACER SHEET	
060	1523957-0000		2	SPACER	
070	90062-0015		4	LOCK WASHER SERRAT.EXT.GEAR,6,4/11 H=0,7	
080	90135-0044		1	EARTH WIRE, L=320 MM 16 MM2	
090	90194-0163		1	SIGN, EARTH WITHIN CIRCLE	
100	90237-0128		1	LOCK CYLINDER, 1109-U3	
110	90237-0150		1	TURNING HANDLE, NO. 1125-U190-0A	
120	90237-0154		1	LOCK HOUSING, 1121-U60-0C	
130	90237-0155		1	LOCK ADAPTER, 1121-U40	
140	90237-0156		1	LOCK BOLT, 1000-16	
150	90237-0176		1	TURNING HANDLE, 1125-U190-A	
160	90457-0192		2	WASHER PLAIN ROUND, 6,5/18, H=1,5	
170	312105-0368		1	SCREW M6S ISO 4017 M6X16 A480	
180	312155-0291		2	SCREW EN 10642 MF6S M4X12 A480	
190	312155-0297		4	SCREW EN 10642 MF6S M4X25 A480	
200	312605-0312		6	HEXAGON NUT, M6M M4 A280	
210	312605-0316		1	HEXAGON NUT, M6M M6 A280	
220	312812-0316		8	HEXAGON NUT, NY-LOCK M6 A480	
230	315105-0153		8	WASHER BRB6,4X12RFR	
240	315402-0136		6	LOCK WASHER FBB 4,1	
250	359705-0015		1	WARNING SIGN ISO, RISK OF ELECTRIC SHOCK	
260	1523971-0000		1	CONNECTION BOX	
280	486826-0000		1	SIGN	
290	352103-0101		1	CABLE GLAND, ST 9, PR15,2/PG9	
300	312812-0312		2	HEXAGON NUT, NY-LOCK M4 A480	
310	315105-0136		2	WASHER BRB4,3XRFR	
320	90099-0104		1	NUT, PR 15,2 (PG9)	
S002	90064-0124		1	SWITCH, EM. STOP, ZB2-BS844+ZB2-BZ1045	

Pos	Part No	UN	Qty	Description	Page No

EXTERNAL DOOR SPARE FUSES

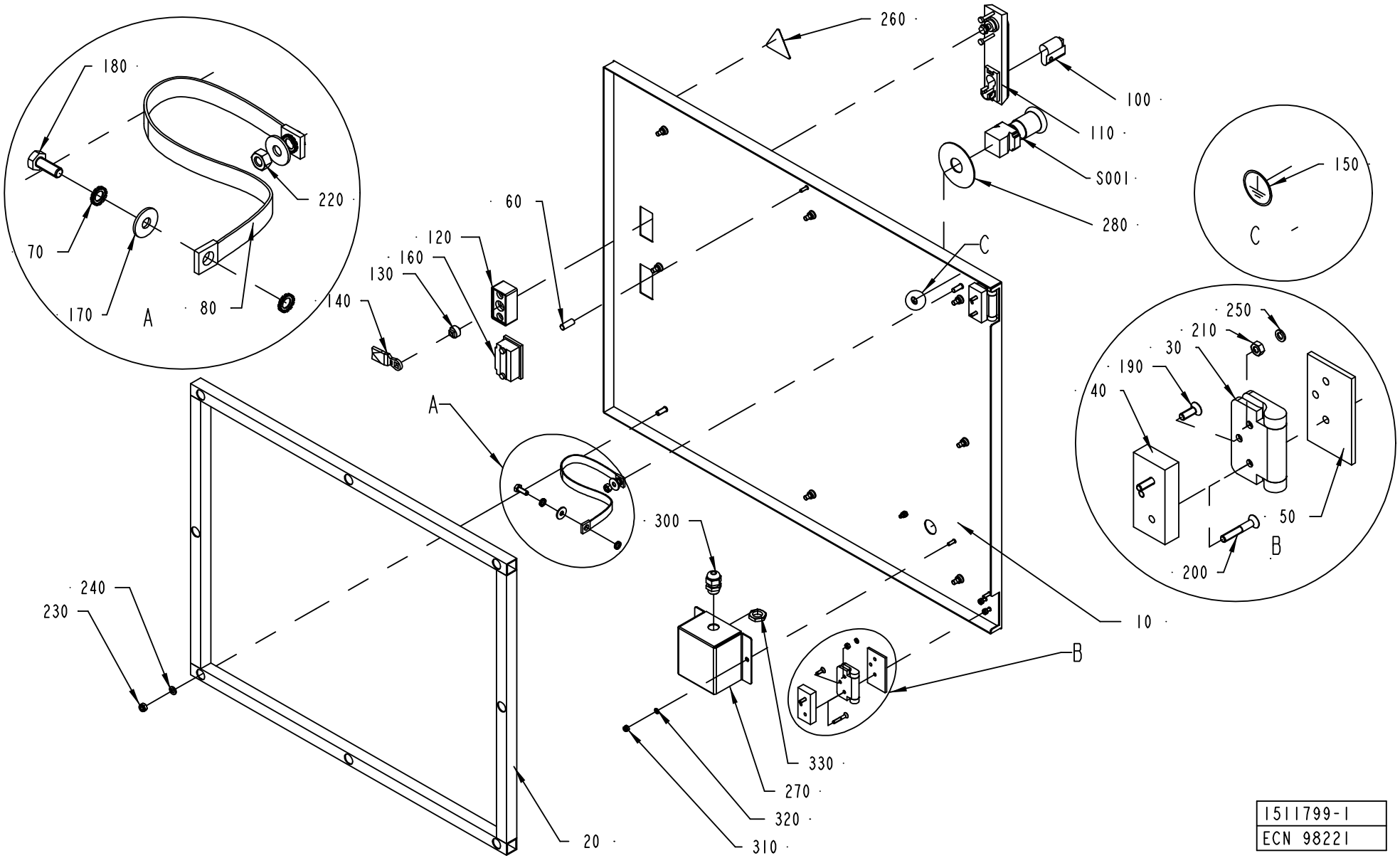

1511799-1
ECN 98221

ECM: 115709 - 20020930
Group number: 1511799-0100
Assembly Drawing: 1511799-1_1_AB

Pos	Part No	UN	Qty	Description	Page No
-					
020	1517664-0000		1	FRAME	
030	1523438-0000		2	HINGE	
040	1523441-0000		2	SPACER SHEET	
050	1523442-0000		2	SPACER SHEET	
060	1523957-0000		1	SPACER	
070	90062-0015		4	LOCK WASHER SERRAT.EXT.GEAR,6,4/11 H=0,7	
080	90135-0044		1	EARTH WIRE, L=320 MM 16 MM2	
090	1517667-0000		1	DOOR	
100	90237-0129		1	LOCK CYLINDER, 1109-U6	
110	90237-0150		1	TURNING HANDLE, NO. 1125-U190-0A	
120	90237-0154		1	LOCK HOUSING, 1121-U60-0C	
130	90237-0155		1	LOCK ADAPTER, 1121-U40	
140	90237-0156		1	LOCK BOLT, 1000-16	
150	90194-0163		1	SIGN, EARTH WITHIN CIRCLE	
160	90237-0176		1	TURNING HANDLE, 1125-U190-A	
170	90457-0192		2	WASHER PLAIN ROUND, 6,5/18, H=1,5	
180	312105-0368		1	SCREW M6S ISO 4017 M6X16 A480	
190	312155-0291		2	SCREW EN 10642 MF6S M4X12 A480	
200	312155-0297		4	SCREW EN 10642 MF6S M4X25 A480	
210	312605-0312		6	HEXAGON NUT, M6M M4 A280	
220	312605-0316		1	HEXAGON NUT, M6M M6 A280	
230	312812-0316		8	HEXAGON NUT, NY-LOCK M6 A480	
240	315105-0153		8	WASHER BRB6,4X12RFR	
250	315402-0136		6	LOCK WASHER FBB 4,1	
260	359705-0015		1	WARNING SIGN ISO, RISK OF ELECTRIC SHOCK	
270	1523971-0000		1	CONNECTION BOX	
290	486826-0000		1	SIGN	
300	352103-0101		1	CABLE GLAND, ST 9, PR15,2/PG9	
310	312812-0312		2	HEXAGON NUT, NY-LOCK M4 A480	
320	315105-0136		2	WASHER BRB4,3XRFR	
330	90099-0104		1	NUT, PR 15,2 (PG9)	
S001	90064-0124		1	SWITCH, EM. STOP, ZB2-BS844+ZB2-BZ1045	

Pos	Part No	UN	Qty	Description	Page No

Machine Type	Group Description	Used-In	Group Number	Page No

INTERNAL DOOR FUSES

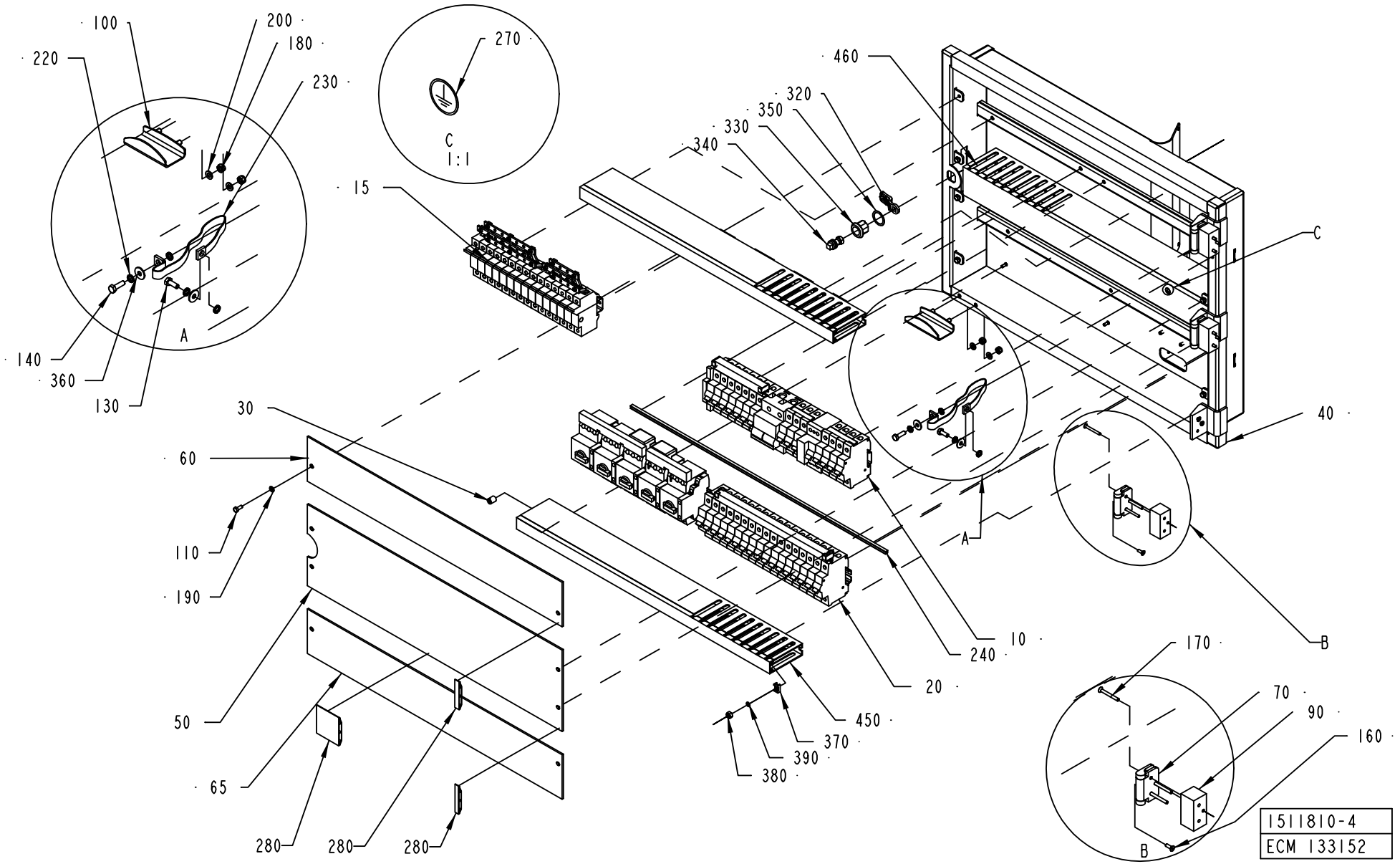

ECM: 133152 - 20030922
Group number: 1511810-0100
Assembly Drawing: 1511810-4_1_AA

This list covers pages from 10-126 to 10-129

Pos	Part No	UN	Qty	Description	Page No
-					
010	1511822-0100		1	FUSES RAIL	**10-131**
015	1487447-0100		1	FUSE	**10-133**
020	1511823-0100		1	OVERLOAD RAIL	**10-135**
030	1285109-0000		6	NUT	
040	2598114-0000		1	DOOR	
050	2542329-0000		1	COVER	
060	2542328-0000		1	COVER	
065	2542328-0000		1	COVER	
070	1523437-0000		2	HINGE	
090	1523440-0000		2	SPACER	
100	1523968-0000		1	HANDLE	
120	312105-0327		8	SCREW M6S ISO 4017 M5X12 A480	
130	312105-0368		1	SCREW M6S ISO 4017 M6X16 A480	
140	312105-0370		1	SCREW M6S ISO 4017 M6X20 A480	
160	312155-0291		6	SCREW EN 10642 MF6S M4X12 A480	
170	312155-0301		6	SCREW EN 10642 MF6S M4X35 A480	
180	312812-0316		2	HEXAGON NUT, NY-LOCK M6 A480	
190	315101-0146		10	WASHER PLAIN, BRB, 5,3/10 H=1	
200	315105-0153		2	WASHER BRB6,4X12RFR	
220	90062-0015		4	LOCK WASHER SERRAT.EXT.GEAR,6,4/11 H=0,7	
230	90135-0044		1	EARTH WIRE, L=320 MM 16 MM2	
240	90143-0094	MM	2330	SEAL	
270	90194-0163		1	SIGN, EARTH WITHIN CIRCLE	
280	90226-0455		1	BLIND PLATE ABB 1666060	
320	90237-0157		1	LOCK BOLT, 1000-230	
330	90237-0319		1	LOCK HOUSING, 1000-U134	
340	90237-0320		1	LOCK HOUSING, 1000-U136	
350	90237-0322		1	LOCK GASKET, 1000-U137	
360	90457-0192		2	WASHER PLAIN ROUND, 6,5/18, H=1,5	
370	352113-0205		3	ANCHOR PLATES FOR STRIPS, TYPE TM2S8-C10	
380	312605-0316		3	HEXAGON NUT, M6M M6 A280	
390	315105-0136		3	WASHER BRB4,3XRFR	
450	2598375-0000		2	CABLE DUCT	
460	2598376-0000		1	CABLE DUCT	
470	2598377-0000		1	CABLE DUCT	
480	90181-0313		4	RIVET DUCTAFIX R4	

Pos	Part No	UN	Qty	Description	Page No

Machine Type | Group Description | Used-In | Group Number | Page No

INTERNAL DOOR FUSES

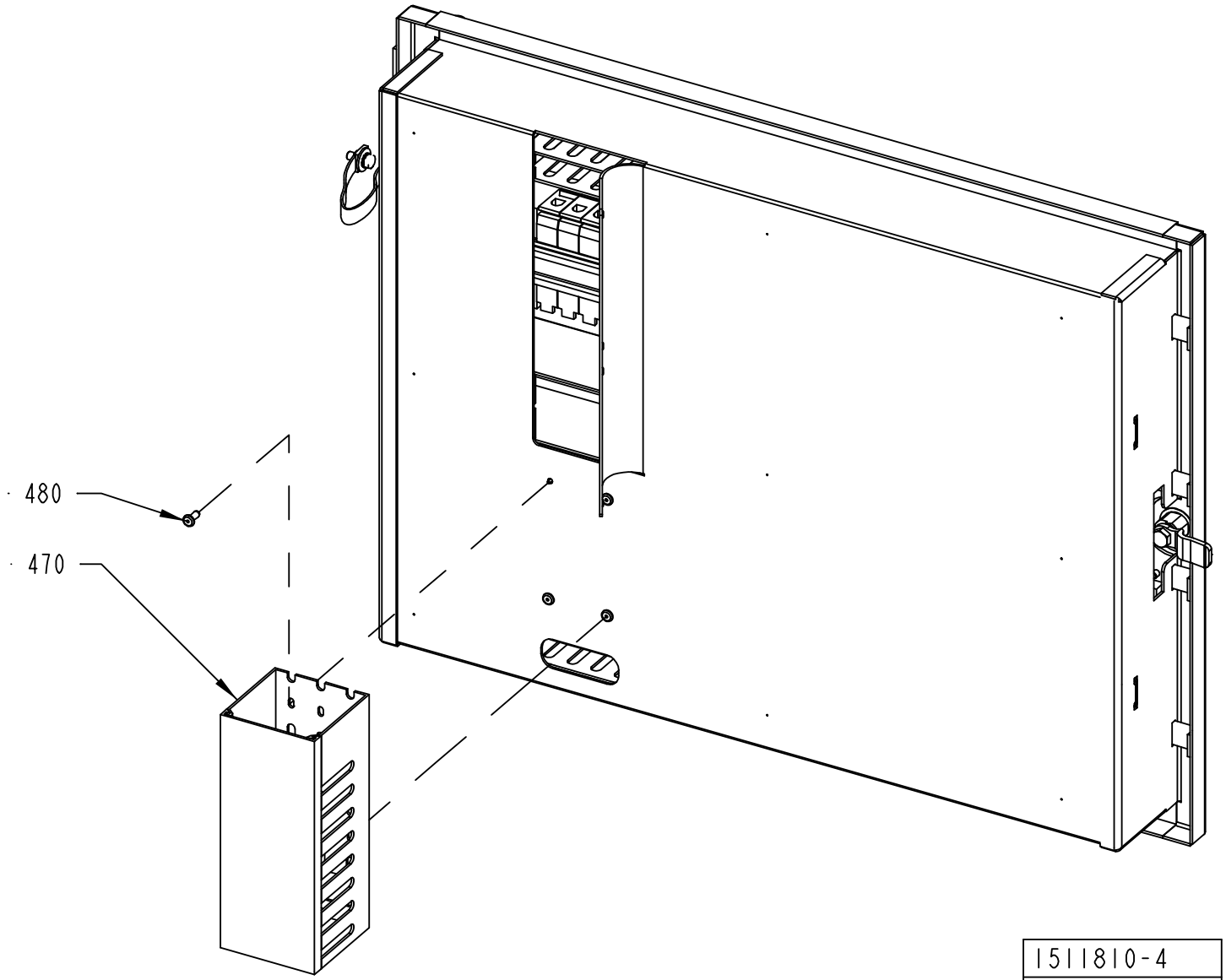

ECM: 133152 - 20030922
Group number: 1511810-0100
Assembly Drawing: 1511810-4_2_AA

This list covers pages from 10-126 to 10-129

Pos	Part No	UN	Qty	Description	Page No
-					
010	1511822-0100		1	FUSES RAIL	**10-131**
015	1487447-0100		1	FUSE	**10-133**
020	1511823-0100		1	OVERLOAD RAIL	**10-135**
030	1285109-0000		6	NUT	
040	2598114-0000		1	DOOR	
050	2542329-0000		1	COVER	
060	2542328-0000		1	COVER	
065	2542328-0000		1	COVER	
070	1523437-0000		2	HINGE	
090	1523440-0000		2	SPACER	
100	1523968-0000		1	HANDLE	
120	312105-0327		8	SCREW M6S ISO 4017 M5X12 A480	
130	312105-0368		1	SCREW M6S ISO 4017 M6X16 A480	
140	312105-0370		1	SCREW M6S ISO 4017 M6X20 A480	
160	312155-0291		6	SCREW EN 10642 MF6S M4X12 A480	
170	312155-0301		6	SCREW EN 10642 MF6S M4X35 A480	
180	312812-0316		2	HEXAGON NUT, NY-LOCK M6 A480	
190	315101-0146		10	WASHER PLAIN, BRB, 5,3/10 H=1	
200	315105-0153		2	WASHER BRB6,4X12RFR	
220	90062-0015		4	LOCK WASHER SERRAT.EXT.GEAR,6,4/11 H=0,7	
230	90135-0044		1	EARTH WIRE, L=320 MM 16 MM2	
240	90143-0094	MM	2330	SEAL	
270	90194-0163		1	SIGN, EARTH WITHIN CIRCLE	
280	90226-0455		1	BLIND PLATE ABB 1666060	
320	90237-0157		1	LOCK BOLT, 1000-230	
330	90237-0319		1	LOCK HOUSING, 1000-U134	
340	90237-0320		1	LOCK HOUSING, 1000-U136	
350	90237-0322		1	LOCK GASKET, 1000-U137	
360	90457-0192		2	WASHER PLAIN ROUND, 6,5/18, H=1,5	
370	352113-0205		3	ANCHOR PLATES FOR STRIPS, TYPE TM2S8-C10	
380	312605-0316		3	HEXAGON NUT, M6M M6 A280	
390	315105-0136		3	WASHER BRB4,3XRFR	
450	2598375-0000		2	CABLE DUCT	
460	2598376-0000		1	CABLE DUCT	
470	2598377-0000		1	CABLE DUCT	
480	90181-0313		4	RIVET DUCTAFIX R4	

Pos	Part No	UN	Qty	Description	Page No

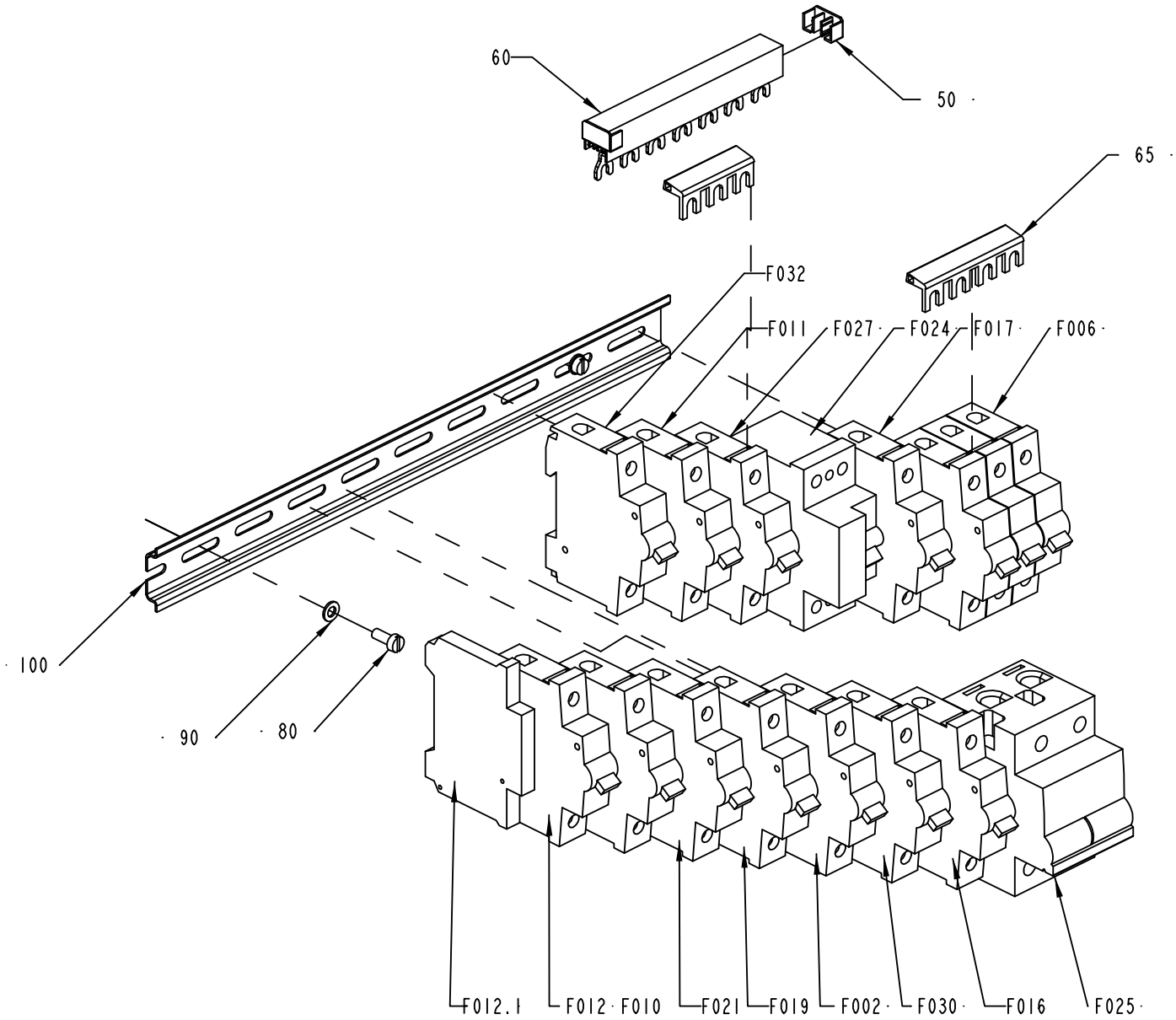

1511822-4
ECM 133152

ECM: 133152 - 20030922
Group number: 1511822-0100
Assembly Drawing: 1511822-4_1_AA

Pos	Part No	UN	Qty	Description	Page No
TBA NOPT ASU					
060	90457-0125	MM	119	POWER RAIL SZ-PSB 12 N	
	90457-0124		*1*	*END CAP PSB-END6*	
F016	90007-0131		1	CIRCUIT BREAKER, 1P 16 A K	
F025	90458-1448		1	MAGNETIC FUSE, S292 C100	
TBA NOPT NOASU					
060	90457-0125	MM	102	POWER RAIL SZ-PSB 12 N	
	90457-0124		*1*	*END CAP PSB-END6*	
TBA PT19 ASU					
060	90457-0125	MM	119	POWER RAIL SZ-PSB 12 N	
	90457-0124		*1*	*END CAP PSB-END6*	
F011	90007-0128		1	CIRCUIT BREAKER, 1P 6 A K	
F016	90007-0131		1	CIRCUIT BREAKER, 1P 16 A K	
F025	90458-1448		1	MAGNETIC FUSE, S292 C100	
F032	90007-0128		1	CIRCUIT BREAKER, 1P 6 A K	
TBA PT19 NOASU					
060	90457-0125	MM	102	POWER RAIL SZ-PSB 12 N	
	90457-0124		*1*	*END CAP PSB-END6*	
F011	90007-0128		1	CIRCUIT BREAKER, 1P 6 A K	
F032	90007-0128		1	CIRCUIT BREAKER, 1P 6 A K	
Common Parts					
050	90457-0124		2	END CAP PSB-END6	
065	90459-1901	MM	66	POWER RAIL SZ-KS 18/56N	
080	312125-0327		3	SCREW ISO 1207 M5X12 A4	
090	315105-0146		3	WASHER BRB5,3X10RFR	
100	353042-0004	MM	347	RAIL TS 35/7,5	
F002	90007-0129		1	CIRCUIT BREAKER, 1P 10 A K	
F006	90007-0146		1	CIRCUIT BREAKER, 3P 6 A K	
F010	90007-0129		1	CIRCUIT BREAKER, 1P 10 A K	
F012	90459-2063		1	CIRCUIT BREAKER, 1P 0,75 A K	
F012.1	90007-0312		1	AUXILIARY CONTACT	
F017	90007-0128		1	CIRCUIT BREAKER, 1P 6 A K	
F019	90007-0129		1	CIRCUIT BREAKER, 1P 10 A K	
F021	90007-0155		1	CIRCUIT BREAKER, 1P 0,5 A K	
F024	90111-0172		1	EARTH FAULT BREAKER, F 362-25/0.03	
F027	90007-0129		1	CIRCUIT BREAKER, 1P 10 A K	
F030	90007-0155		1	CIRCUIT BREAKER, 1P 0,5 A K	

Pos	Part No	UN	Qty	Description	Page No

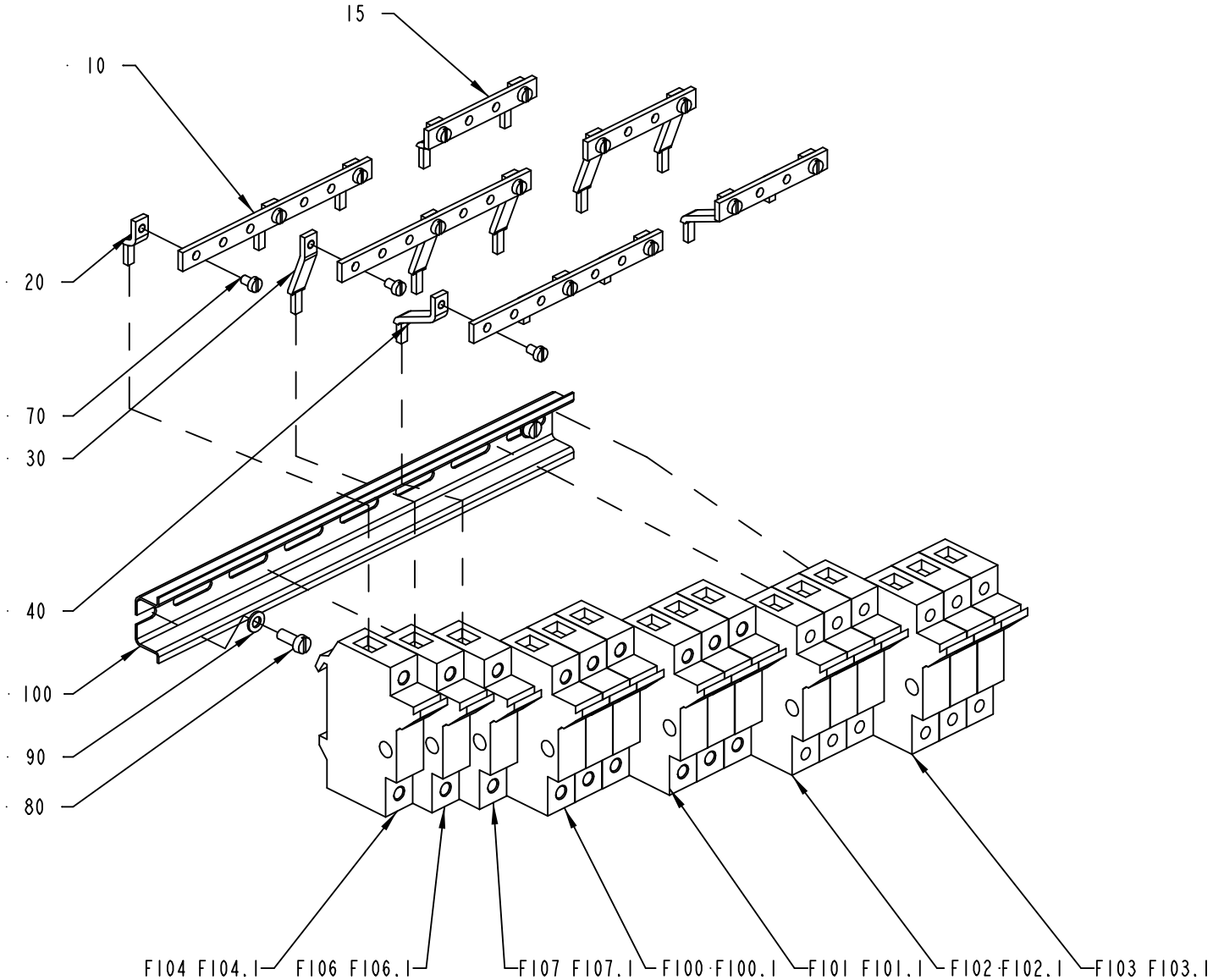

1487447-1
ECN 98221

ECM: 182826 - 20040823
Group number: 1487447-0100
Assembly Drawing: 1487447-1_1_AB

Pos	Part No	UN	Qty	Description	Page No
-					
010	732419-0007		3	RAIL	
015	732419-0004		3	RAIL	
020	971140-0000		5	PHASE BAR ANGLED	
030	971141-0000		5	PHASE BAR ANGLED	
040	971142-0000		5	PHASE BAR ANGLED	
070	312125-0285		15	SCREW ISO 1207 M4X6 A4	
080	312125-0327		2	SCREW ISO 1207 M5X12 A4	
090	315105-0146		2	WASHER BRB5,3X10RFR	
100	353042-0003	MM	269	RAIL TS35/15/1,5	
F100	90233-0027		3	TUBE FUSE, 16A	
	90233-0305		*1*	*INDICATOR*	
F100.1	90233-0303		3	FUSE HOLDER, ST 10 1-POLE	
F100.1	90459-3800		3	FUSE HOLDER, MSC 10 3-POLE D250151	
F101	90233-0029		3	TUBE FUSE, 25A	
F101.1	90233-0303		3	FUSE HOLDER, ST 10 1-POLE	
F101.1	90459-3800		3	FUSE HOLDER, MSC 10 3-POLE D250151	
F102	90459-1254		3	TUBE FUSE, 4A 500V	
F102.1	90233-0304		1	FUSE HOLDER, ST 10 3-POLE	
F102.1	90459-3800		1	FUSE HOLDER, MSC 10 3-POLE D250151	
F103	90459-1254		3	TUBE FUSE, 4A 500V	
F103.1	90459-3800		1	FUSE HOLDER, MSC 10 3-POLE D250151	
F103.1	90233-0304		1	FUSE HOLDER, ST 10 3-POLE	
F104	90233-0027		1	TUBE FUSE, 16A	
	90233-0305		*1*	*INDICATOR*	
F104.1	90233-0303		1	FUSE HOLDER, ST 10 1-POLE	
F104.1	90459-3799		1	FUSE HOLDER, MSC 10 1-POLE A250148	
F106	90233-0028		1	TUBE FUSE, 10A	
F106.1	90233-0303		1	FUSE HOLDER, ST 10 1-POLE	
F106.1	90459-3799		1	FUSE HOLDER, MSC 10 1-POLE A250148	
F107	90233-0028		1	TUBE FUSE, 10A	
F107.1	90233-0303		1	FUSE HOLDER, ST 10 1-POLE	
F107.1	90459-3799		1	FUSE HOLDER, MSC 10 1-POLE A250148	

Pos	Part No	UN	Qty	Description	Page No

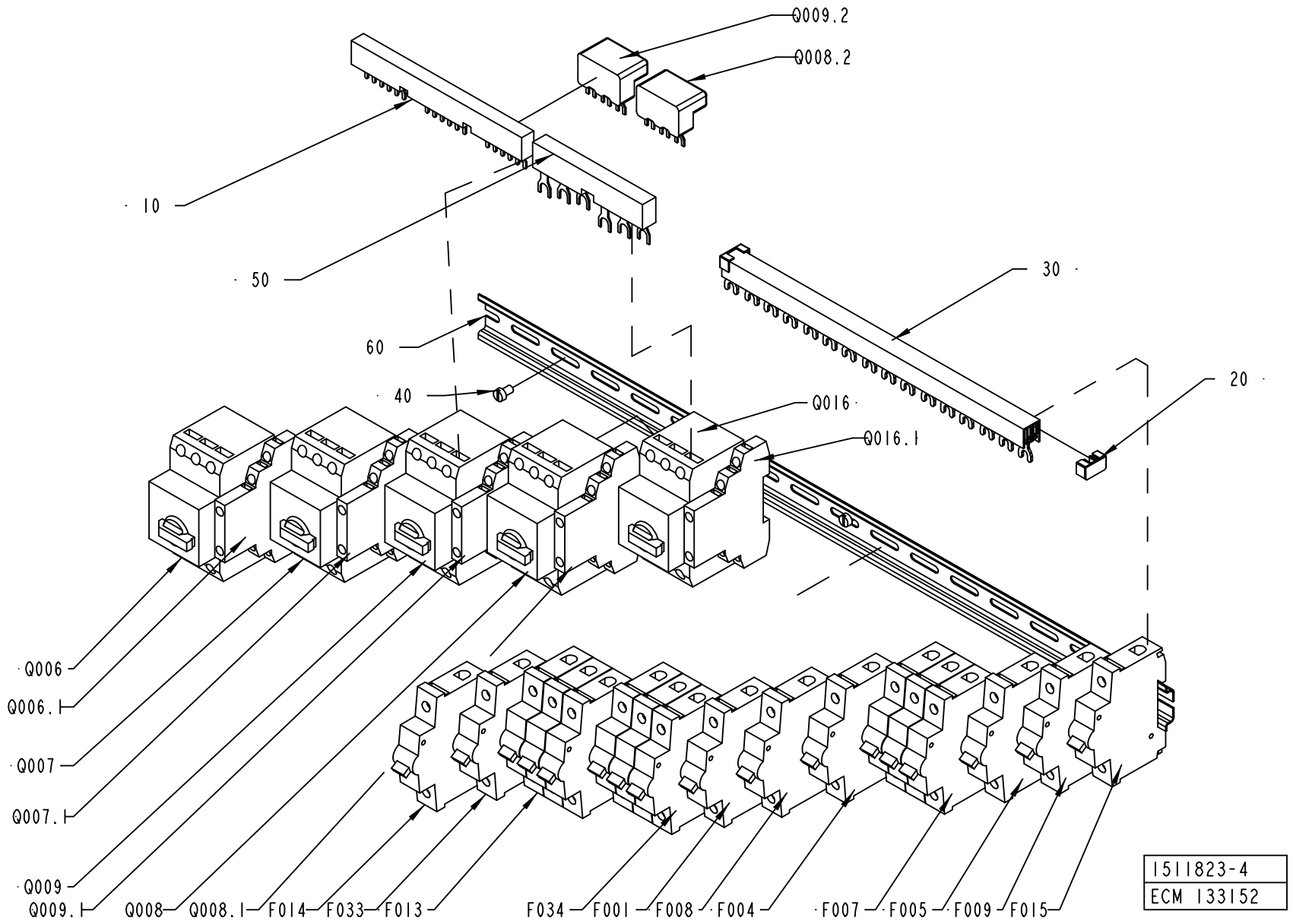
Q009.2
Q008.2
10
50
30
60
40
20
Q016
Q016.1
Q006
Q006.1
Q007
Q007.1
Q009
Q009.1
Q008
Q008.1
F014
F033
F013
F034
F001
F008
F004
F007
F005
F009
F015
1511823-4
ECM 133152

ECM: 133152 - 20030922
Group number: 1511823-0100
Assembly Drawing: 1511823-4_1_AA

Pos	Part No	UN	Qty	Description	Page No
TBA NOPT ASU					
030	90457-0125	MM	204	POWER RAIL SZ-PSB 12 N	**10-137**
F015	90007-0129		1	CIRCUIT BREAKER, 1P 10 A K	
TBA NOPT NOASU					
030	90457-0125	MM	204	POWER RAIL SZ-PSB 12 N	**10-137**
TBA PT19 ASU					
030	90457-0125	MM	272	POWER RAIL SZ-PSB 12 N	**10-137**
F013	90007-0146		1	CIRCUIT BREAKER, 3P 6 A K	
F014	90007-0128		1	CIRCUIT BREAKER, 1P 6 A K	
F015	90007-0129		1	CIRCUIT BREAKER, 1P 10 A K	
F033	90007-0129		1	CIRCUIT BREAKER, 1P 10 A K	
TBA PT19 NOASU					
030	90457-0125	MM	272	POWER RAIL SZ-PSB 12 N	**10-137**
F013	90007-0146		1	CIRCUIT BREAKER, 3P 6 A K	
F014	90007-0128		1	CIRCUIT BREAKER, 1P 6 A K	
F033	90007-0129		1	CIRCUIT BREAKER, 1P 10 A K	
Common Parts					
010	90259-0311		1	3 POLE BUSBAR K&M B3.1/5	
020	90457-0124		2	END CAP PSB-END6	
040	312125-0323		3	SCREW ISO 1207 M5X8 A4	
050	90259-0315		1	BUS BAR 3-POLE, K&M B 3.1/2-PKZM1	
060	353042-0004	MM	620	RAIL TS 35/7,5	
F001	90007-0129		1	CIRCUIT BREAKER, 1P 10 A K	
F004	90007-0129		1	CIRCUIT BREAKER, 1P 10 A K	
F005	90007-0128		1	CIRCUIT BREAKER, 1P 6 A K	
F007	90007-0149		1	CIRCUIT BREAKER, 3P 20 A K	
F008	90007-0129		1	CIRCUIT BREAKER, 1P 10 A K	
F009	90007-0129		1	CIRCUIT BREAKER, 1P 10 A K	
F034	90459-2195		1	CIRCUIT BREAKER, 3P 2 A K	
Q006	90095-0077		1	OVERLOAD PROTECTION, PKZM 6-10 A	
Q006.1	90259-0313		1	AUX. CONTACT K&M NHI21-PKZM0	
Q007	90095-0075		1	OVERLOAD PROTECTION, PKZM 4 A	
Q007.1	90259-0313		1	AUX. CONTACT K&M NHI21-PKZM0	
Q008	90095-0077		1	OVERLOAD PROTECTION, PKZM 6-10 A	
Q008.1	90259-0313		1	AUX. CONTACT K&M NHI21-PKZM0	
Q008.2	90259-0308		1	CONN.TERM.K&M BK 25/3-PKZ0	
Q009	90095-0073		1	OVERLOAD PROTECTION, PKZM 1,6 A	
Q009.1	90259-0313		1	AUX. CONTACT K&M NHI21-PKZM0	
Q009.2	90259-0308		1	CONN.TERM.K&M BK 25/3-PKZ0	
Q016	90095-0069		1	OVERLOAD PROTECTION, PKZM 0,25 A	
Q016.1	90259-0313		1	AUX. CONTACT K&M NHI21-PKZM0	

Pos	Part No	UN	Qty	Description	Page No

Machine Type | Group Description | Used-In | Group Number | Page No

This page is intentionally left blank.

ECM: 83329 - 20000919
Group number: 90457-0125
Assembly Drawing:

Pos	Part No	UN	Qty	Description	Page No
-					
	90457-0124		1	END CAP PSB-END6	

Pos	Part No	UN	Qty	Description	Page No

Machine Type	Group Description	Used-In	Group Number	Page No

REAR UPPER CONTROL DOOR

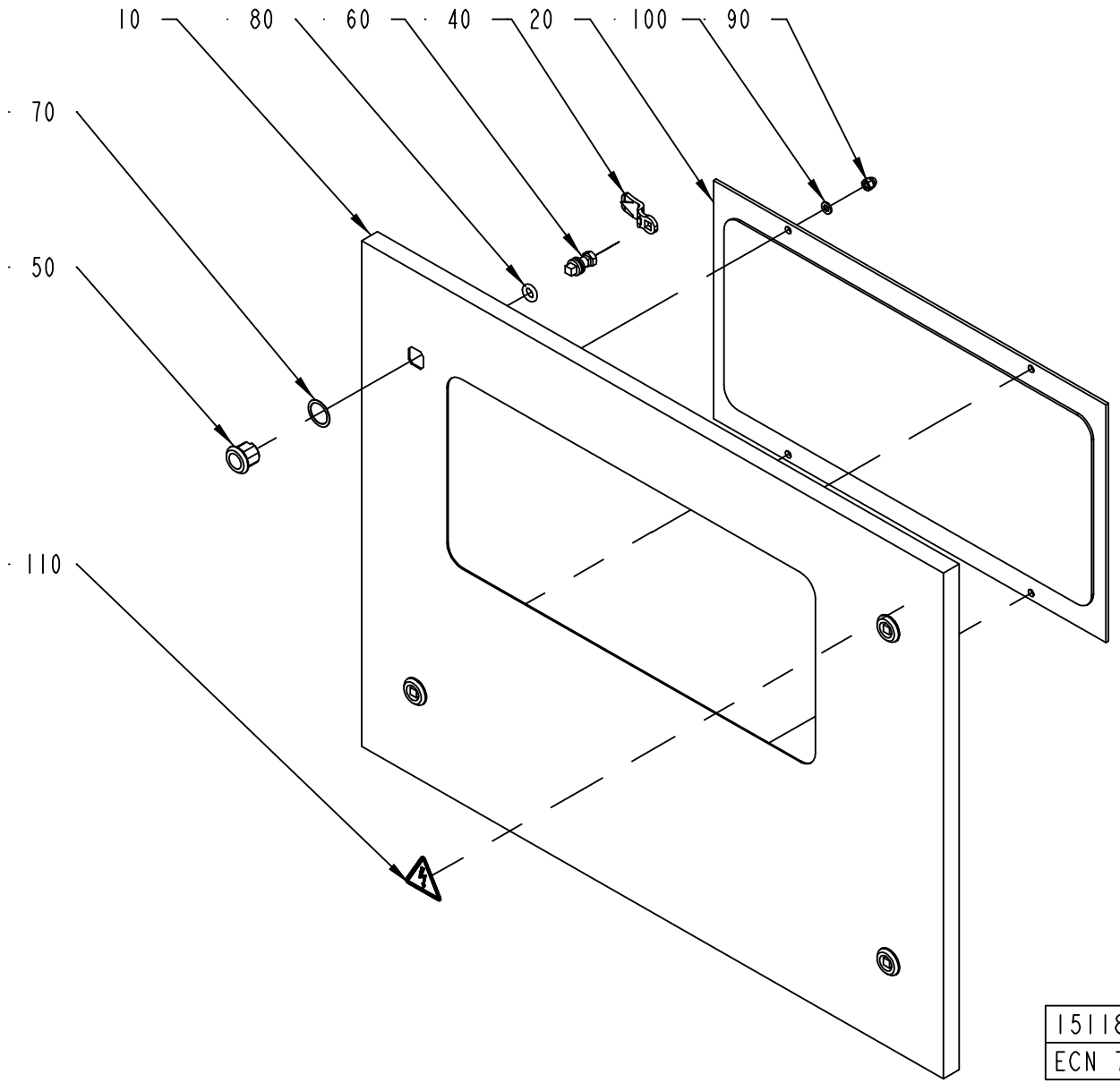

ECM: 115722 - 20020930
Group number: 1511811-0100
Assembly Drawing: 1511811-1_1_AA

Pos	Part No	UN	Qty	Description	Page No
-					
010	1511812-0000		1	DOOR	
020	1511813-0000		1	WINDOW	
030	90144-0072	MM	1500	TAPE SCOTCH VHBS 4945 W=12,7MM	
040	90237-0157		4	LOCK BOLT, 1000-230	
050	90237-0319		4	LOCK HOUSING, 1000-U134	
060	90237-0320		4	LOCK HOUSING, 1000-U136	
070	90237-0322		4	LOCK GASKET, 1000-U137	
080	90237-0323		4	LOCK O-RING, 1000-24	
090	312705-0316		4	NUT HEX. DOMED CAP MHM-6 M6 A280	
100	315105-0153		4	WASHER BRB6,4X12RFR	
110	359705-0015		1	WARNING SIGN ISO, RISK OF ELECTRIC SHOCK	

Pos	Part No	UN	Qty	Description	Page No

INTERNAL DOOR TERMOREGULATORS

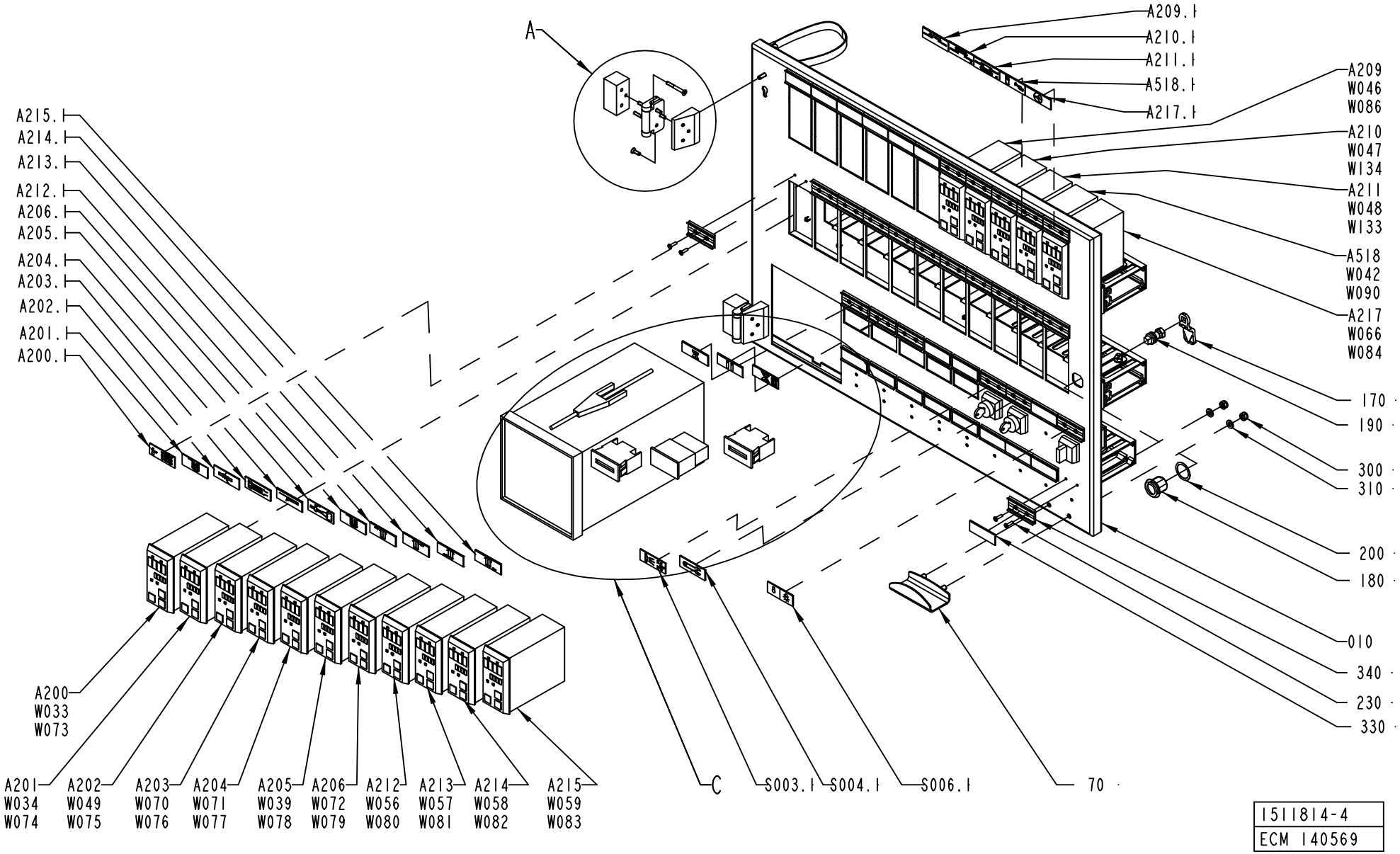

1511814-4
ECM 140569

ECM: 140571 - 20030929
Group number: 1511814-0100
Assembly Drawing: 1511814-4_1_AB

This list covers pages from 10-140 to 10-145

Pos	Part No	UN	Qty	Description	Page No
TBA NOPT HI					
090	90062-0022		13	LOCKING WASHER D=6,4/11	
290	312605-0316		13	HEXAGON NUT, M6M M6 A280	
330	359240-0001		22	SIGN, NOT ENGRAVED	
A518	90410-0051		1	TEMPERATURE CONTROLLER, KS 40	
A518.1	359241-0268		1	SIGN: " SPRAYING, HEAD SPACE"	
W042	90220-0059	M	3	THERMOCOUPLE CABLE K/ 2X0,81MM2	
W090	1143884-0000		1	COPPER BRAID	
TBA NOPT NOHI					
090	90062-0022		12	LOCKING WASHER D=6,4/11	
290	312605-0316		12	HEXAGON NUT, M6M M6 A280	
330	359240-0001		23	SIGN, NOT ENGRAVED	
TBA PT19 HI					
090	90062-0022		16	LOCKING WASHER D=6,4/11	
290	312605-0316		16	HEXAGON NUT, M6M M6 A280	
330	359240-0001		19	SIGN, NOT ENGRAVED	
A209	90410-0051		1	TEMPERATURE CONTROLLER, KS 40	
A209.1	359241-0439		1	SIGN"PATCH SEALER"	
A210	90410-0051		1	TEMPERATURE CONTROLLER, KS 40	
A210.1	359241-0460		1	SIGN "PATCH SEALER 2"	
A211	90410-0051		1	TEMPERATURE CONTROLLER, KS 40	
A211.1	359241-0444		1	SIGN"TAB RESEAL"	
A518	90410-0051		1	TEMPERATURE CONTROLLER, KS 40	
A518.1	359241-0268		1	SIGN: " SPRAYING, HEAD SPACE"	
P004	90053-0031		1	HOUR COUNTER, B 609.10 10-50VDC	
P004.1	359241-0459		1	SIGN "PT HOUR METER"	
W042	90220-0059	M	3	THERMOCOUPLE CABLE K/ 2X0,81MM2	
W046	90220-0059	M	5	THERMOCOUPLE CABLE K/ 2X0,81MM2	
W047	90220-0059	M	5	THERMOCOUPLE CABLE K/ 2X0,81MM2	
W048	90220-0059	M	5	THERMOCOUPLE CABLE K/ 2X0,81MM2	
W086	1143884-0000		1	COPPER BRAID	
W090	1143884-0000		1	COPPER BRAID	
W133	1143884-0000		1	COPPER BRAID	
W134	1143884-0000		1	COPPER BRAID	
TBA PT19 NOHI					
090	90062-0022		15	LOCKING WASHER D=6,4/11	
290	312605-0316		15	HEXAGON NUT, M6M M6 A280	
330	359240-0001		20	SIGN, NOT ENGRAVED	
A209	90410-0051		1	TEMPERATURE CONTROLLER, KS 40	
A209.1	359241-0439		1	SIGN"PATCH SEALER"	
A210	90410-0051		1	TEMPERATURE CONTROLLER, KS 40	
A210.1	359241-0460		1	SIGN "PATCH SEALER 2"	
A211	90410-0051		1	TEMPERATURE CONTROLLER, KS 40	
A211.1	359241-0444		1	SIGN"TAB RESEAL"	
P004	90053-0031		1	HOUR COUNTER, B 609.10 10-50VDC	
P004.1	359241-0459		1	SIGN "PT HOUR METER"	
W046	90220-0059	M	5	THERMOCOUPLE CABLE K/ 2X0,81MM2	
W047	90220-0059	M	5	THERMOCOUPLE CABLE K/ 2X0,81MM2	
W048	90220-0059	M	5	THERMOCOUPLE CABLE K/ 2X0,81MM2	
W086	1143884-0000		1	COPPER BRAID	
W133	1143884-0000		1	COPPER BRAID	
W134	1143884-0000		1	COPPER BRAID	
Common Parts					
010	1511815-0000		1	DOOR	
020	1511817-0000		1	CABLE DUCT	
030	1523437-0000		2	HINGE	
040	1523439-0000		2	SPACER	
050	1523440-0000		2	SPACER	
060	1523444-0000		3	SPACER	
065	1523443-0000		1	COVER	
070	1523968-0000		1	HANDLE	
080	1285109-0000		3	NUT	
100	90062-0015		4	LOCK WASHER SERRAT.EXT.GEAR,6,4/11 H=0,7	
110	90135-0044		1	EARTH WIRE, L=320 MM 16 MM2	
120	90181-0064		8	LOCK ZP1 FOR CHANNEL T1	
125	90181-0054	MM	555	CABLE DUCT, 60X80MM	
130	90181-0054	MM	555	CABLE DUCT, 60X80MM	
135	90181-0054	MM	210	CABLE DUCT, 60X80MM	
140	90181-0067	MM	555	DIVIDING PLATE SEP80	
145	90181-0067	MM	555	DIVIDING PLATE SEP80	
150	90181-0088		8	PLASTIC RIVET, PR 52314	
160	90194-0163		1	SIGN, EARTH WITHIN CIRCLE	
170	90237-0157		1	LOCK BOLT, 1000-230	
180	90237-0319		1	LOCK HOUSING, 1000-U134	
190	90237-0320		1	LOCK HOUSING, 1000-U136	
200	90237-0322		1	LOCK GASKET, 1000-U137	
210	90457-0055		3	PROTECTION, 704-9645	
220	90457-0192		2	WASHER PLAIN ROUND, 6,5/18, H=1,5	
230	311521-0146		80	BLANK RIVET 3,2X12	
240	312105-0368		1	SCREW M6S ISO 4017 M6X16 A480	
250	312115-0222		3	SCREW ISO4762 M3X8 A4	
260	312155-0291		6	SCREW EN 10642 MF6S M4X12 A480	
270	312155-0301		6	SCREW EN 10642 MF6S M4X35 A480	
280	312115-0329		4	SCREW ISO4762 M5X16 A4	

Machine Type | Group Description | Used-In | Group Number | Page No

INTERNAL DOOR TERMOREGULATORS

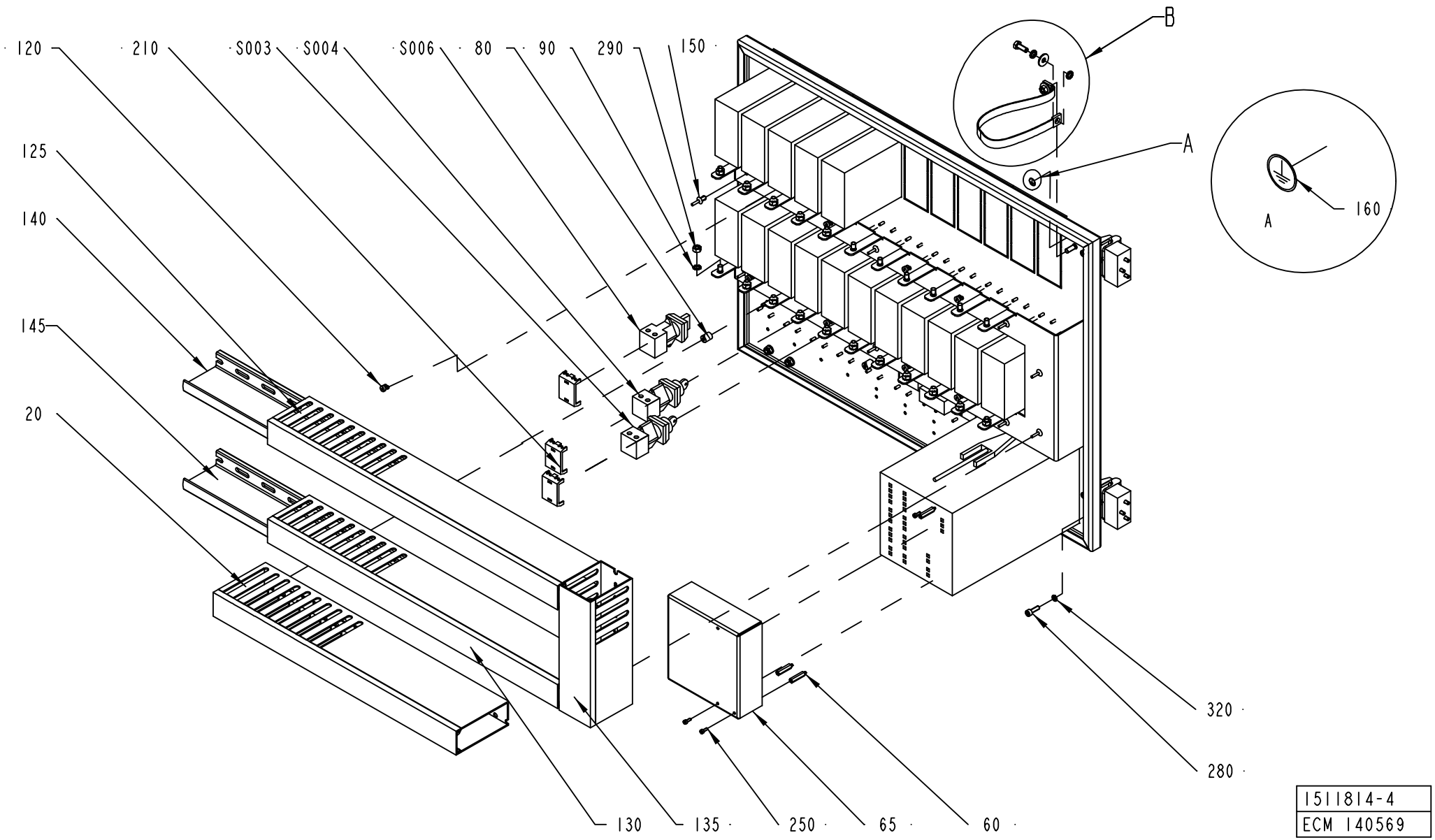

1511814-4
ECM 140569

ECM: 140571 - 20030929
Group number: 1511814-0100
Assembly Drawing: 1511814-4_2_AB

This list covers pages from 10-140 to 10-145

Pos	Part No	UN	Qty	Description	Page No
Common Parts (Cont'd)					
300	312812-0316		2	HEXAGON NUT, NY-LOCK M6 A480	
310	315105-0153		2	WASHER BRB6,4X12RFR	
320	315402-0146		4	LOCK WASHER FBB 5,1	
340	359240-0100		40	SIGN HOLDER FOR 359240-0001	
A200	90410-0051		1	TEMPERATURE CONTROLLER, KS 40	
A200.1	359241-0123		1	SIGN: " TEMP. PRESTERILISATION VALVE"	
A201	90410-0051		1	TEMPERATURE CONTROLLER, KS 40	
A201.1	359241-0141		1	SIGN: " WATER BATH"	
A202	90410-0051		1	TEMPERATURE CONTROLLER, KS 40	
A202.1	359241-0131		1	SIGN: " TEMP. LS"	
A203	90410-0051		1	TEMPERATURE CONTROLLER, KS 40	
A203.1	359241-0130		1	SIGN: " TEMP. AIR SUPER HEATER"	
A204	90410-0051		1	TEMPERATURE CONTROLLER, KS 40	
A204.1	359241-0126		1	SIGN: " TEMP. AIR KNIFE"	
A205	90410-0051		1	TEMPERATURE CONTROLLER, KS 40	
A205.1	359241-0121		1	SIGN: " STEAM"	
A206	90410-0051		1	TEMPERATURE CONTROLLER, KS 40	
A206.1	359241-0125		1	SIGN: " TEMP. PEROXIDE BATH"	
A212	90410-0051		1	TEMPERATURE CONTROLLER, KS 40	
A212.1	359241-0338		1	SIGN: " FLAP HEATING TOP LEFT"	
A213	90410-0051		1	TEMPERATURE CONTROLLER, KS 40	
A213.1	359241-0337		1	SIGN: " FLAP HEATING TOP RIGHT"	
A214	90410-0051		1	TEMPERATURE CONTROLLER, KS 40	
A214.1	359241-0340		1	SIGN: " FLAP HEATING BOTTOM LEFT"	
A215	90410-0051		1	TEMPERATURE CONTROLLER, KS 40	
A215.1	359241-0339		1	SIGN: " FLAP HEATING BOTTOM RIGHT"	
A216	90410-0051		1	TEMPERATURE CONTROLLER, KS 40	
A216.1	90457-0058		1	SIGN, LS SHORT STOP	
P002	90053-0031		1	HOUR COUNTER, B 609.10 10-50VDC	
P002.1	359241-0201		1	SIGN: " HOUR METER"	
P003	90053-0029		1	COUNTER, F524.800FA3C 24VDC	
P003.1	359241-0180		1	SIGN: " PRODUCTION"	
P005	90332-0020		1	RECORDER, 6 CHANNELS 85-264VAC/DC	
	90332-0324		*1*	*INK WHEEL*	
	90332-0325		*1*	*PAPER FOR RECORDER 90332-20*	
	90332-0326		*1*	*DOWNLOADE INTRFACE FOR RECORDER 90332-20*	
	90332-0328		*1*	*RECORDER CASSETTE PAPER ROLL FOR 90332-2*	
S003	90111-0124		1	KEY SWITCH, 1NO,1NC CONTACT	
S003.1	359241-0122		1	SIGN: " CLEANING STEAM BARRIER SPACE"	
S004	90111-0122		1	KEY SWITCH, 2 NO CONTACTS	
S004.1	359241-0133		1	SIGN: " SERVICE SWITCH"	
S006	90111-0120		1	SWITCH, 2 POS.704.510 .0A+704.901.5/A	
S006.1	359241-0140		1	SIGN: " LIGHT OFF/ON"	
W033	90220-0059	M	4	THERMOCOUPLE CABLE K/ 2X0,81MM2	
W034	90220-0059	M	4	THERMOCOUPLE CABLE K/ 2X0,81MM2	
W037	90220-0059	M	5	THERMOCOUPLE CABLE K/ 2X0,81MM2	
W038	90220-0059	M	5	THERMOCOUPLE CABLE K/ 2X0,81MM2	
W039	90220-0059	M	4	THERMOCOUPLE CABLE K/ 2X0,81MM2	
W040	90220-0059	M	5	THERMOCOUPLE CABLE K/ 2X0,81MM2	
W049	90220-0059	M	3	THERMOCOUPLE CABLE K/ 2X0,81MM2	
W056	90220-0059	M	3	THERMOCOUPLE CABLE K/ 2X0,81MM2	
W057	90220-0059	M	3	THERMOCOUPLE CABLE K/ 2X0,81MM2	
W058	90220-0059	M	3	THERMOCOUPLE CABLE K/ 2X0,81MM2	
W059	90220-0059	M	3	THERMOCOUPLE CABLE K/ 2X0,81MM2	
W066	90220-0059	M	4	THERMOCOUPLE CABLE K/ 2X0,81MM2	
W070	90220-0059	MM	500	THERMOCOUPLE CABLE K/ 2X0,81MM2	
W071	90220-0059	MM	500	THERMOCOUPLE CABLE K/ 2X0,81MM2	
W072	90220-0059	MM	500	THERMOCOUPLE CABLE K/ 2X0,81MM2	
W073	1143884-0000		1	COPPER BRAID	
W074	1143884-0000		1	COPPER BRAID	
W075	1143884-0000		1	COPPER BRAID	
W076	1143884-0000		1	COPPER BRAID	
W077	1143884-0000		1	COPPER BRAID	
W078	1143884-0000		1	COPPER BRAID	
W079	1143884-0000		1	COPPER BRAID	
W080	1143884-0000		1	COPPER BRAID	
W081	1143884-0000		1	COPPER BRAID	
W082	1143884-0000		1	COPPER BRAID	
W083	1143884-0000		1	COPPER BRAID	
W084	1143884-0000		1	COPPER BRAID	

Machine Type | Group Description | Used-In | Group Number | Page No

INTERNAL DOOR TERMOREGULATORS

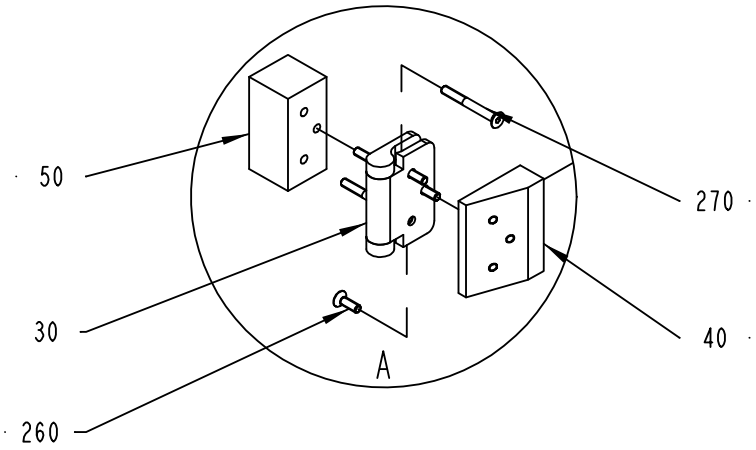

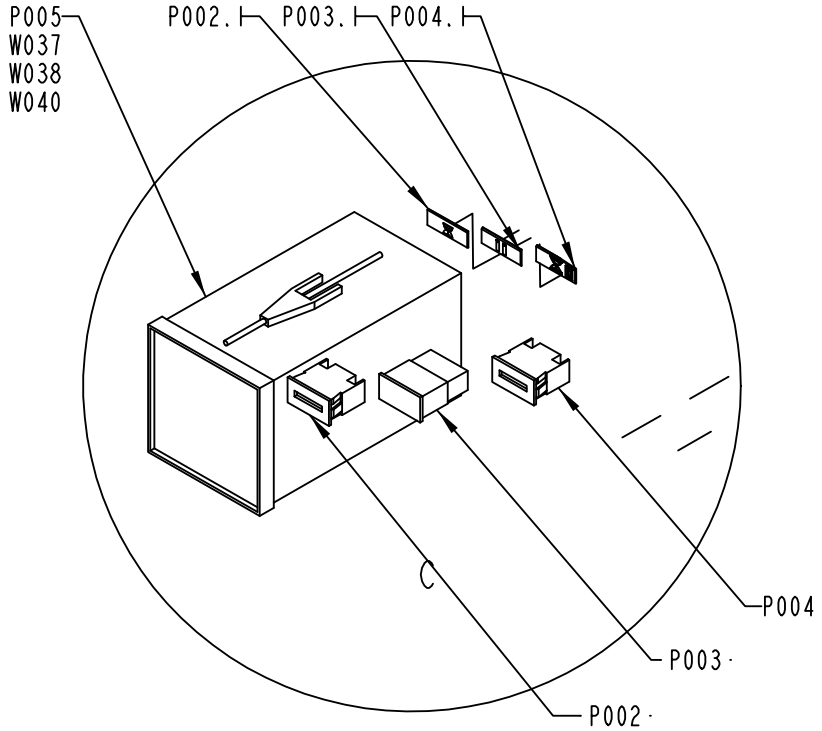

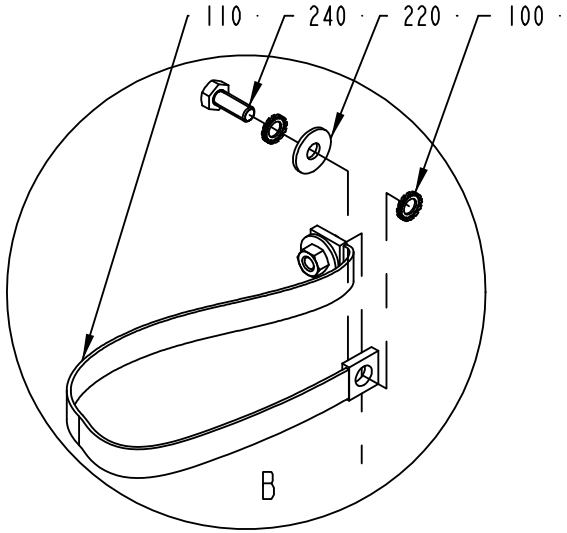

1511814-4
ECM 140569

Pos	Part No	UN	Qty	Description	Page No	Pos	Part No	UN	Qty	Description	Page No

SEE PREVIOUS LISTS PAGES: 10-141, 10-143.

Machine Type	Group Description	Used-In	Group Number	Page No

FRONT UPPER CONTROL DOOR

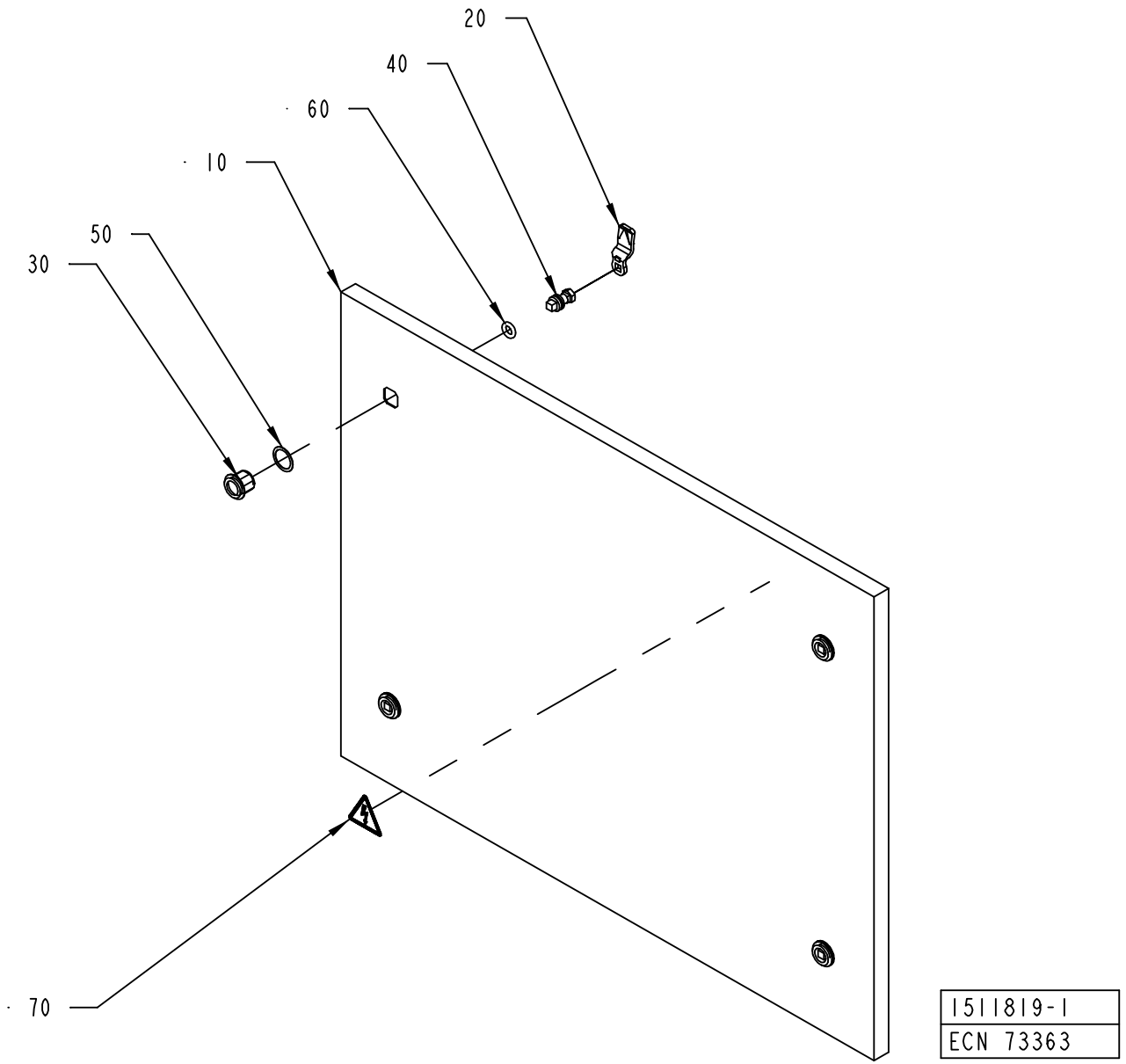

ECM: 115712 - 20020930
Group number: 1511819-0100
Assembly Drawing: 1511819-1_1_AA

Pos	Part No	UN	Qty	Description	Page No
-					
010	1517671-0000		1	DOOR	
020	90237-0157		4	LOCK BOLT, 1000-230	
030	90237-0319		4	LOCK HOUSING, 1000-U134	
040	90237-0320		4	LOCK HOUSING, 1000-U136	
050	90237-0322		4	LOCK GASKET, 1000-U137	
060	90237-0323		4	LOCK O-RING, 1000-24	
070	359705-0015		1	WARNING SIGN ISO, RISK OF ELECTRIC SHOCK	

Pos	Part No	UN	Qty	Description	Page No

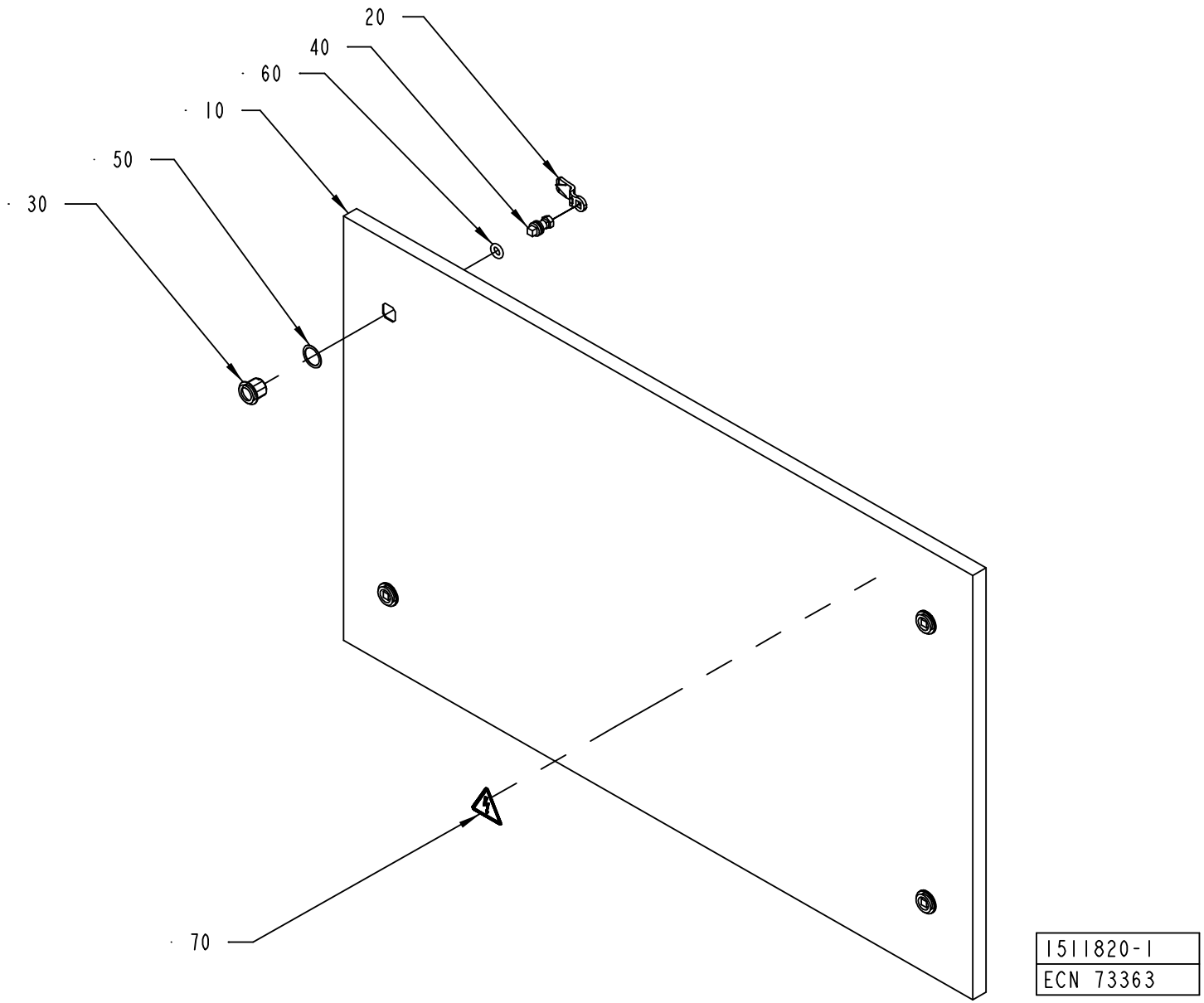
20
40
60
10
50
30
70
1511820-1
ECN 73363

ECM: 115729 - 20020930
Group number: 1511820-0100
Assembly Drawing: 1511820-1_1_AA

Pos	Part No	UN	Qty	Description	Page No
-					
010	1517672-0000		1	DOOR	
020	90237-0157		4	LOCK BOLT, 1000-230	
030	90237-0319		4	LOCK HOUSING, 1000-U134	
040	90237-0320		4	LOCK HOUSING, 1000-U136	
050	90237-0322		4	LOCK GASKET, 1000-U137	
060	90237-0323		4	LOCK O-RING, 1000-24	
070	359705-0015		1	WARNING SIGN ISO, RISK OF ELECTRIC SHOCK	

Pos	Part No	UN	Qty	Description	Page No

POWER BOX

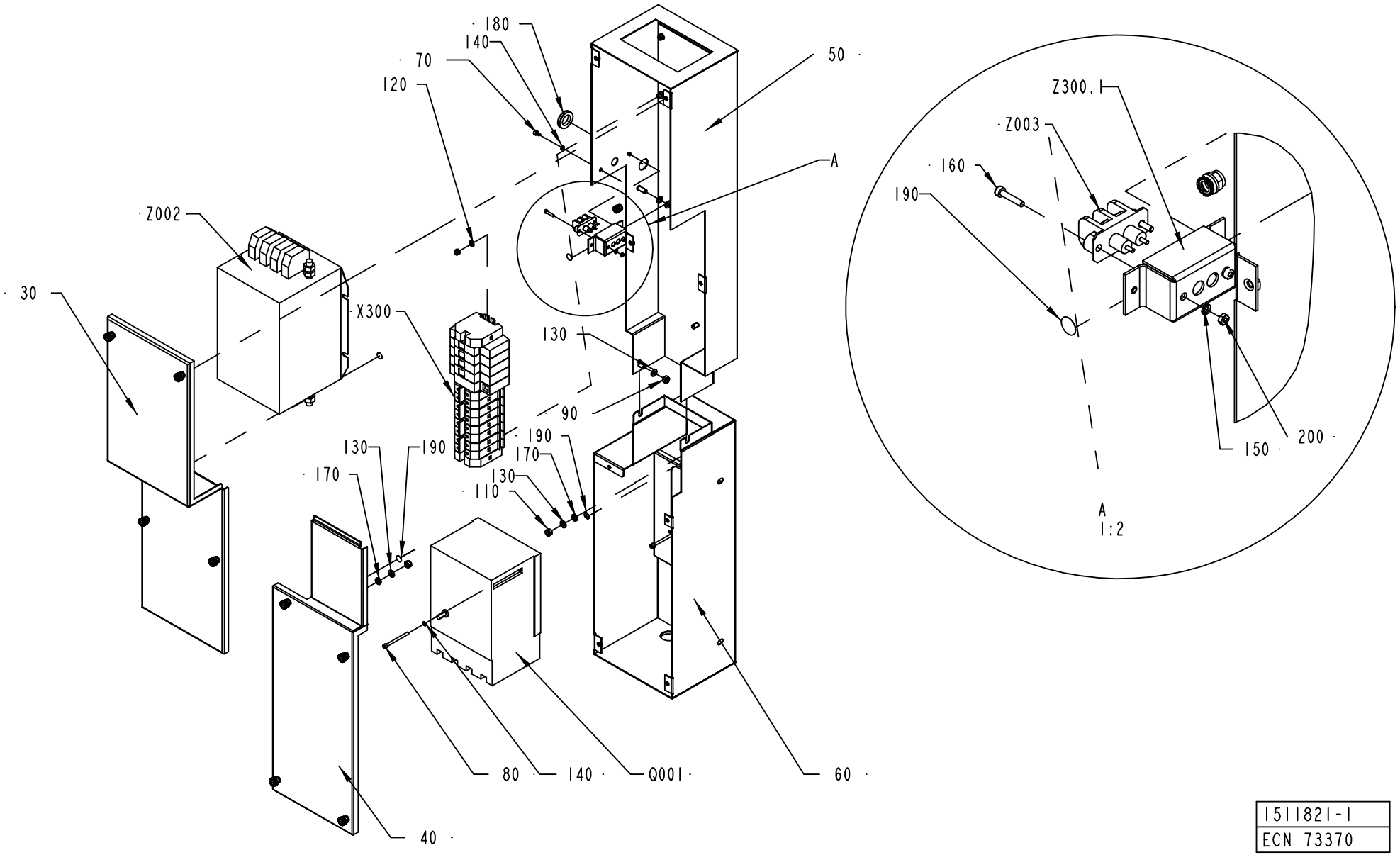

1511821-1
ECN 73370

ECM: 115719 - 20020930
Group number: 1511821-0100
Assembly Drawing: 1511821-1_1_AA

Pos	Part No	UN	Qty	Description	Page No
-					
030	1511780-0000		1	COVER	
040	1511781-0000		1	COVER	
050	1511782-0000		1	BOX	
060	1511783-0000		1	BOX	
070	312115-0285		2	SCREW ISO4762 M4X6 A4	
080	312115-0305		2	SCREW ISO4762 M4X50 A4	
090	312605-0316		2	HEXAGON NUT, M6M M6 A280	
100	312812-0314		4	HEXAGON NUT, NY-LOCK M5 A480	
110	312812-0316		4	HEXAGON NUT, NY-LOCK M6 A480	
120	315105-0146		4	WASHER BRB5,3X10RFR	
130	315105-0153		6	WASHER BRB6,4X12RFR	
140	315402-0136		4	LOCK WASHER FBB 4,1	
150	315402-0128		2	LOCK WASHER FBB 3,6	
160	312115-0228		2	SCREW ISO4762 M3X16 A4	
170	90062-0015		4	LOCK WASHER SERRAT.EXT.GEAR,6,4/11 H=0,7	
180	90143-0094	MM	100	SEAL	
190	90194-0163		4	SIGN, EARTH WITHIN CIRCLE	
200	312605-0310		2	HEXAGON NUT, M6M M3 A280	
Q001	90457-0198		1	MAIN SWITCH	
X300	1511806-0100		1	X300	**10-153**
Z002	90024-0060		1	POWER LINE FILTER, 80 A 250/440 VAC	
Z003	90024-0036		1	FILTERED TERMINAL BLOCK	
Z003.1	1285108-0000		1	COVER	

Pos	Part No	UN	Qty	Description	Page No

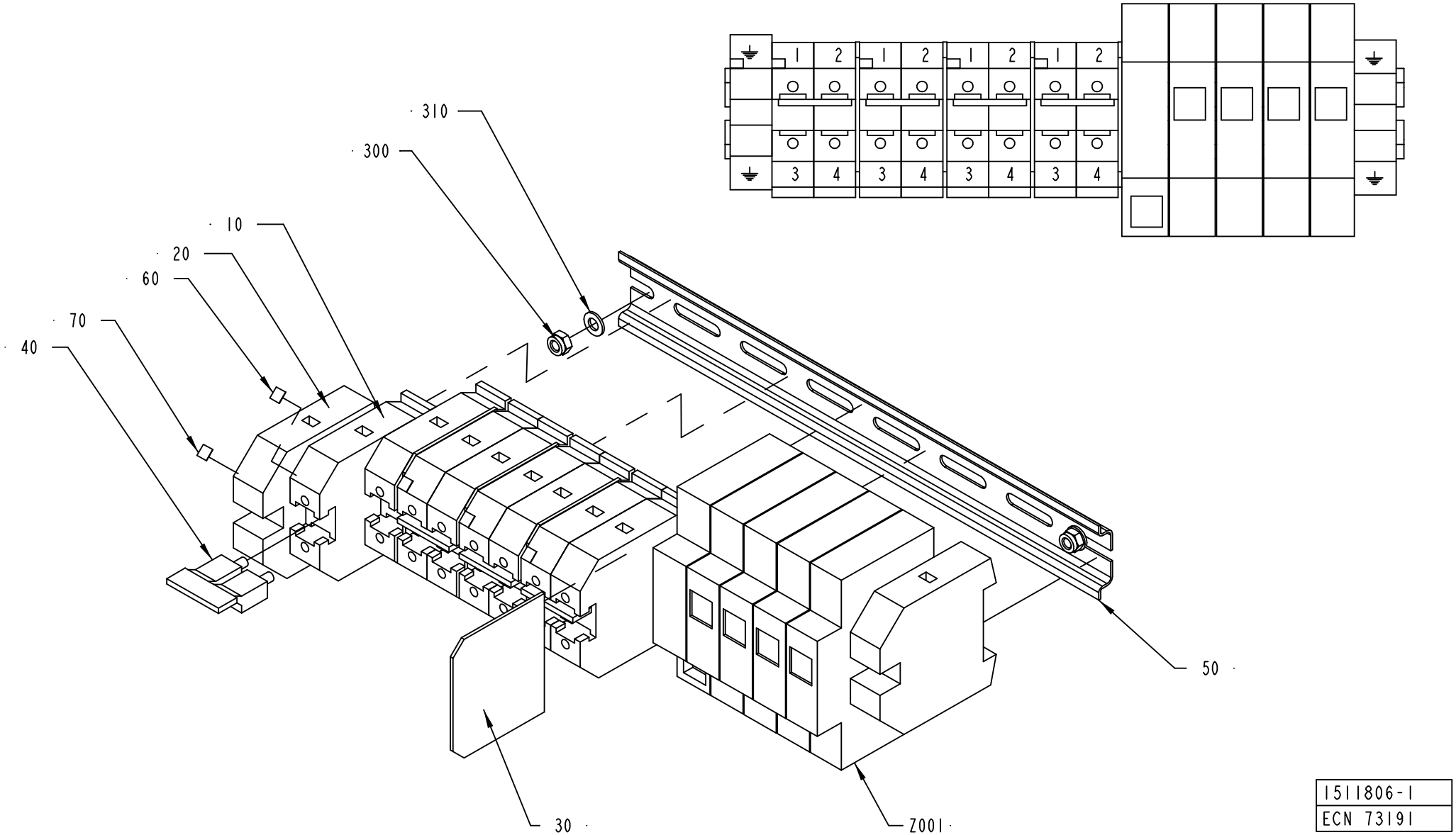

1511806-1
ECN 73191

ECM: 115730 - 20020930
Group number: 1511806-0100
Assembly Drawing: 1511806-1_1_AA

Pos	Part No	UN	Qty	Description	Page No
-					
010	353021-0219		8	FEED THROUGH TERMINAL, 10205.0	
020	353024-0209		2	EARTH TERMINAL, 1010.5	
030	353033-0105		1	PARTITITION, 10501.0	
040	353034-0026		4	BRIDGE CONNECTOR, WQV 35/2, 10530.6	
050	353042-0004	MM	260	RAIL TS 35/7,5	
060	359011-0807		4	MARKING PLATES 5-FW 1-50	
070	359011-0819		1	MARKING PLATES 5-GW (EARTH)	
300	312812-0314		2	HEXAGON NUT, NY-LOCK M5 A480	
310	315105-0146		2	WASHER BRB5,3X10RFR	
Z001	90082-0013		1	OVER VOLT. PROTECT. PU 4C-R 230 VAC	
	90082-0301		*3*	*OVER VOLT. PROTECT. PU 0 C 833951*	

Pos	Part No	UN	Qty	Description	Page No

EXTERNAL DOOR TERMOREGULATORS

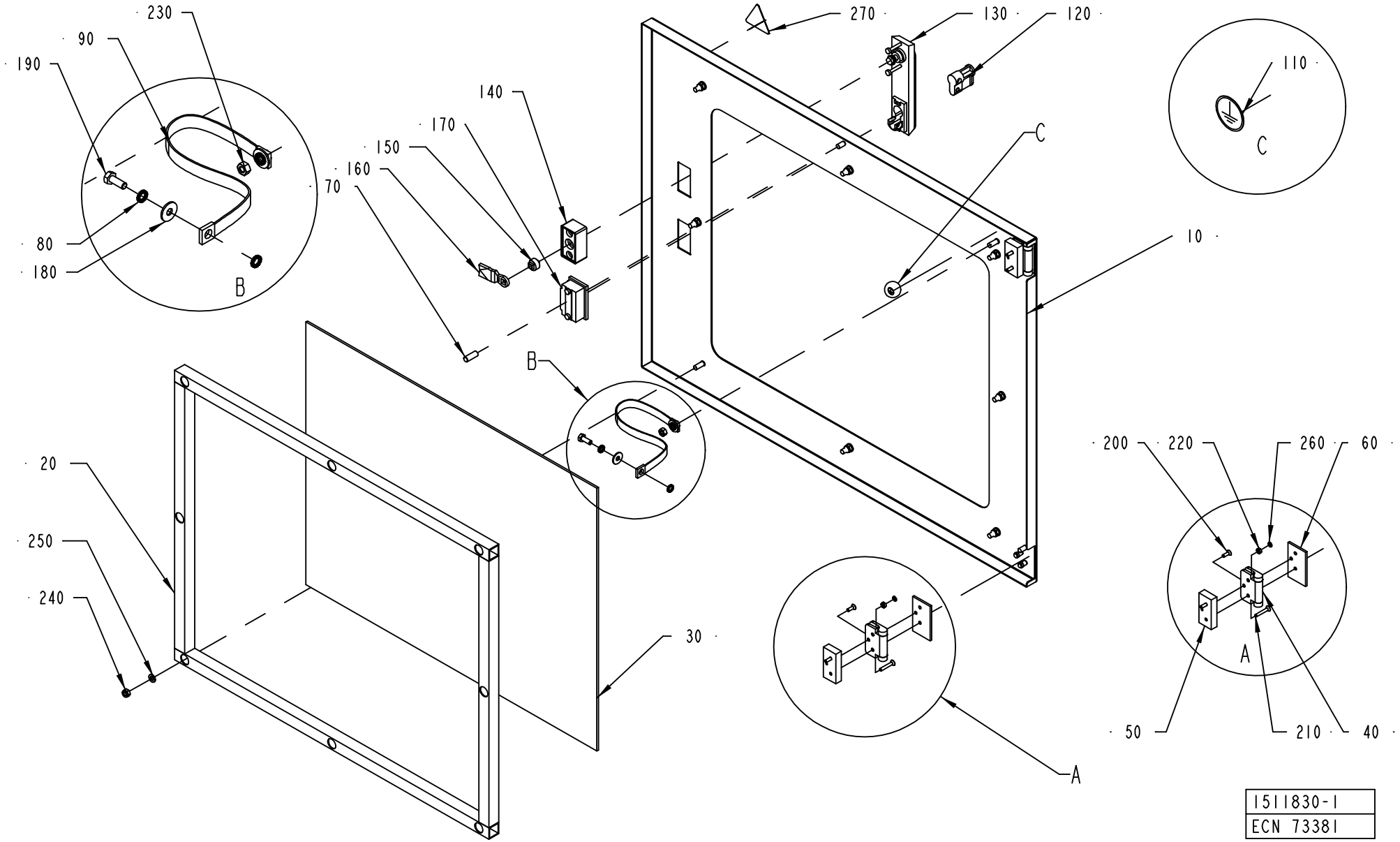

1511830-1
ECN 73381

ECM: 115710 - 20020930
Group number: 1511830-0100
Assembly Drawing: 1511830-1_1_AA

Pos	Part No	UN	Qty	Description	Page No
-					
010	1517663-0000		1	DOOR	
020	1517664-0000		1	FRAME	
030	1517665-0000		1	WINDOW	
040	1523438-0000		2	HINGE	
050	1523441-0000		2	SPACER SHEET	
060	1523442-0000		2	SPACER SHEET	
070	1523957-0000		1	SPACER	
080	90062-0015		4	LOCK WASHER SERRAT.EXT.GEAR,6,4/11 H=0,7	
090	90135-0044		1	EARTH WIRE, L=320 MM 16 MM2	
100	90144-0072	MM	2060	TAPE SCOTCH VHBS 4945 W=12,7MM	
110	90194-0163		1	SIGN, EARTH WITHIN CIRCLE	
120	90237-0128		1	LOCK CYLINDER, 1109-U3	
130	90237-0150		1	TURNING HANDLE, NO. 1125-U190-0A	
140	90237-0154		1	LOCK HOUSING, 1121-U60-0C	
150	90237-0155		1	LOCK ADAPTER, 1121-U40	
160	90237-0156		1	LOCK BOLT, 1000-16	
170	90237-0176		1	TURNING HANDLE, 1125-U190-A	
180	90457-0192		2	WASHER PLAIN ROUND, 6,5/18, H=1,5	
190	312105-0368		1	SCREW M6S ISO 4017 M6X16 A480	
200	312155-0291		2	SCREW EN 10642 MF6S M4X12 A480	
210	312155-0297		4	SCREW EN 10642 MF6S M4X25 A480	
220	312605-0312		6	HEXAGON NUT, M6M M4 A280	
230	312605-0316		1	HEXAGON NUT, M6M M6 A280	
240	312812-0316		8	HEXAGON NUT, NY-LOCK M6 A480	
250	315105-0153		8	WASHER BRB6,4X12RFR	
260	315402-0136		6	LOCK WASHER FBB 4,1	
270	359705-0015		1	WARNING SIGN ISO, RISK OF ELECTRIC SHOCK	

Pos	Part No	UN	Qty	Description	Page No

Machine Type | Group Description | Used-In | Group Number | Page No

EXTERNAL DOOR FUSES

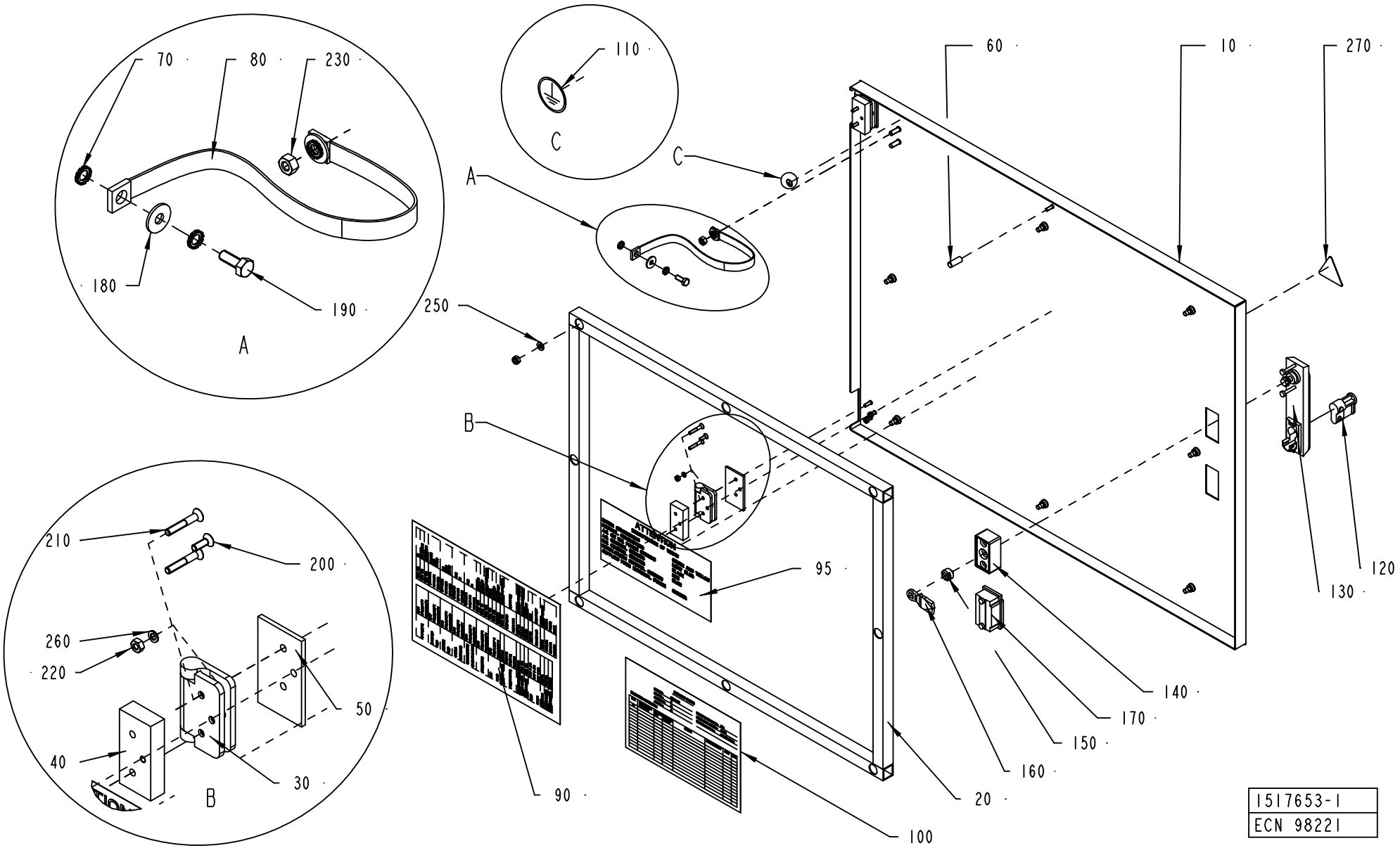

ECM: 115707 - 20020930
Group number: 1517653-0100
Assembly Drawing: 1517653-1_1_AB

Pos	Part No	UN	Qty	Description	Page No
-					
010	1517667-0000		1	DOOR	
020	1517664-0000		1	FRAME	
030	1523438-0000		2	HINGE	
040	1523441-0000		2	SPACER SHEET	
050	1523442-0000		2	SPACER SHEET	
060	1523957-0000		1	SPACER	
070	90062-0015		4	LOCK WASHER SERRAT.EXT.GEAR,6,4/11 H=0,7	
080	90135-0044		1	EARTH WIRE, L=320 MM 16 MM2	
090	1538212-0000		1	FUSE BOARD	
095	90194-0080		1	SIGN, IDENTIFICATION OF WIRING	
100	1517654-0000		1	DELIVERED DESIGN	
110	90194-0163		1	SIGN, EARTH WITHIN CIRCLE	
120	90237-0128		1	LOCK CYLINDER, 1109-U3	
130	90237-0150		1	TURNING HANDLE, NO. 1125-U190-0A	
140	90237-0154		1	LOCK HOUSING, 1121-U60-0C	
150	90237-0155		1	LOCK ADAPTER, 1121-U40	
160	90237-0156		1	LOCK BOLT, 1000-16	
170	90237-0176		1	TURNING HANDLE, 1125-U190-A	
180	90457-0192		2	WASHER PLAIN ROUND, 6,5/18, H=1,5	
190	312105-0368		1	SCREW M6S ISO 4017 M6X16 A480	
200	312155-0291		2	SCREW EN 10642 MF6S M4X12 A480	
210	312155-0297		4	SCREW EN 10642 MF6S M4X25 A480	
220	312605-0312		6	HEXAGON NUT, M6M M4 A280	
230	312605-0316		1	HEXAGON NUT, M6M M6 A280	
240	312812-0316		8	HEXAGON NUT, NY-LOCK M6 A480	
250	315105-0153		8	WASHER BRB6,4X12RFR	
260	315402-0136		6	LOCK WASHER FBB 4,1	
270	359705-0015		1	WARNING SIGN ISO, RISK OF ELECTRIC SHOCK	

Pos	Part No	UN	Qty	Description	Page No

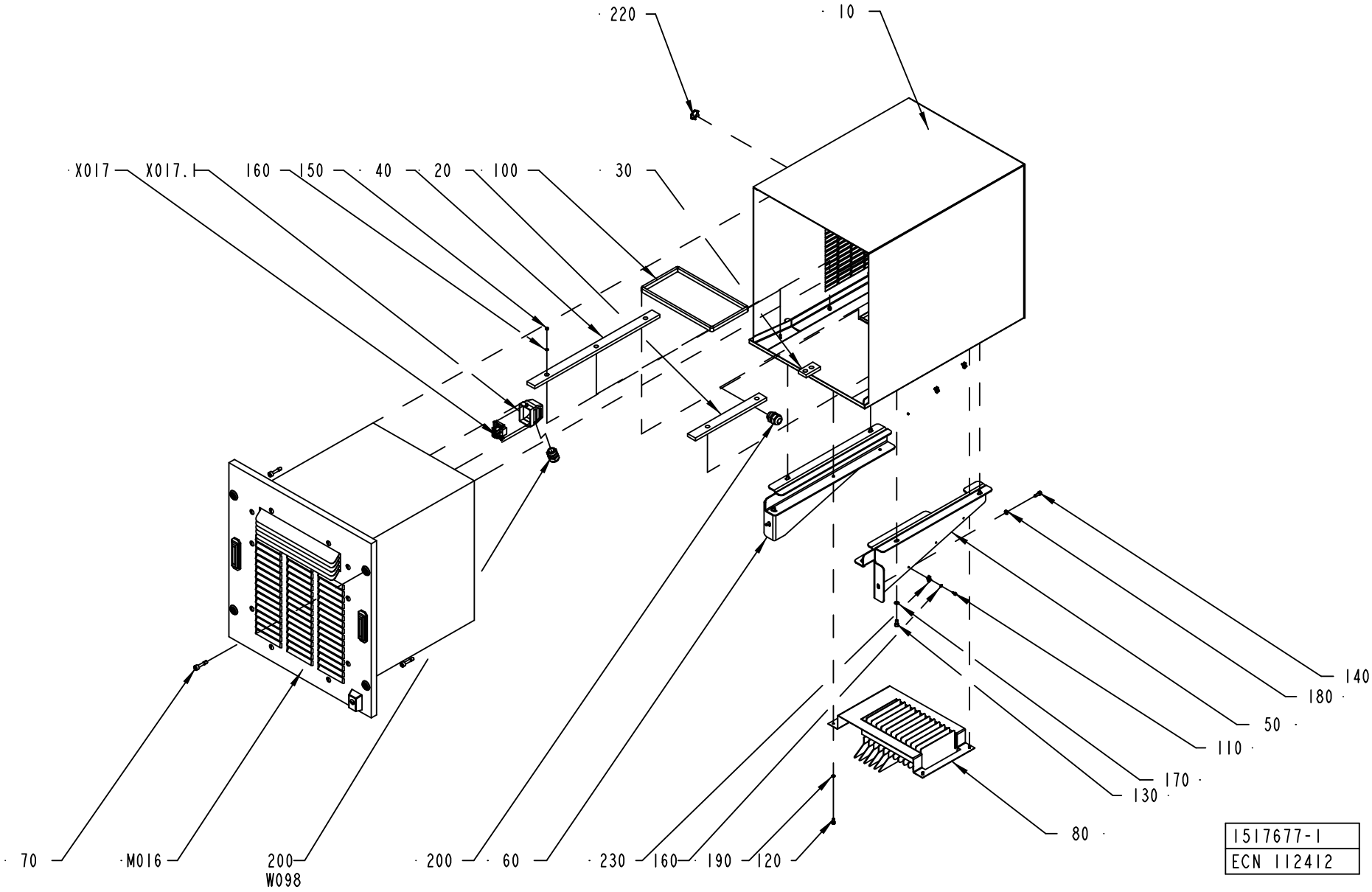
220
10
X017
X017.
160
150
40
20
100
30
140
180
50
110
170
130
80
70
M016
200
W098
200
60
230
160
190
120
1517677-1
ECN 112412

ECM: 113220 - 20030113
Group number: 1517677-0100
Assembly Drawing: 1517677-1_1_AB

Pos	Part No	UN	Qty	Description	Page No
-					
010	1523448-0000		1	FRAME	
020	1523449-0000		1	SLIDE	
030	1523450-0000		1	SLIDE	
040	1523451-0000		1	SLIDE	
050	1523452-0000		1	SUPPORT	
060	1523453-0000		1	SUPPORT	
070	1523454-0000		4	SCREW	
080	1523973-0000		1	FRAME	
100	90143-0059	MM	830	SEAL STRIP 4610069	
120	312115-0325		4	SCREW ISO4762 M5X10 A4	
130	312115-0366		4	SCREW ISO4762 M6X12 A4	
140	312115-0368		4	SCREW ISO4762 M6X16 A4	
150	312605-0312		7	HEXAGON NUT, M6M M4 A280	
160	315105-0136		7	WASHER BRB4,3XRFR	
170	315105-0153		4	WASHER BRB6,4X12RFR	
180	315401-0153		4	WASHER FBH6,1FZB	
190	315402-0146		4	LOCK WASHER FBB 5,1	
200	352103-0111		2	CABLE GLAND, ST 16, PR22,5/PG16	
220	90099-0110		1	NUT, PR 22,5 (PG16)	
M016	90457-0063		1	COOLING UNIT, KB17TB.CBB	
W098	351150-0415	MM	3000	CABLE OLFLEX 7X1,5 MM2 LIGHT/GREY	
X017	90110-0163		1	FEMALE INSERT 70 300 0640 0	
X017.1	90110-0226		1	CABLE HOOD 6-POL 70.350.0628.0	

Pos	Part No	UN	Qty	Description	Page No

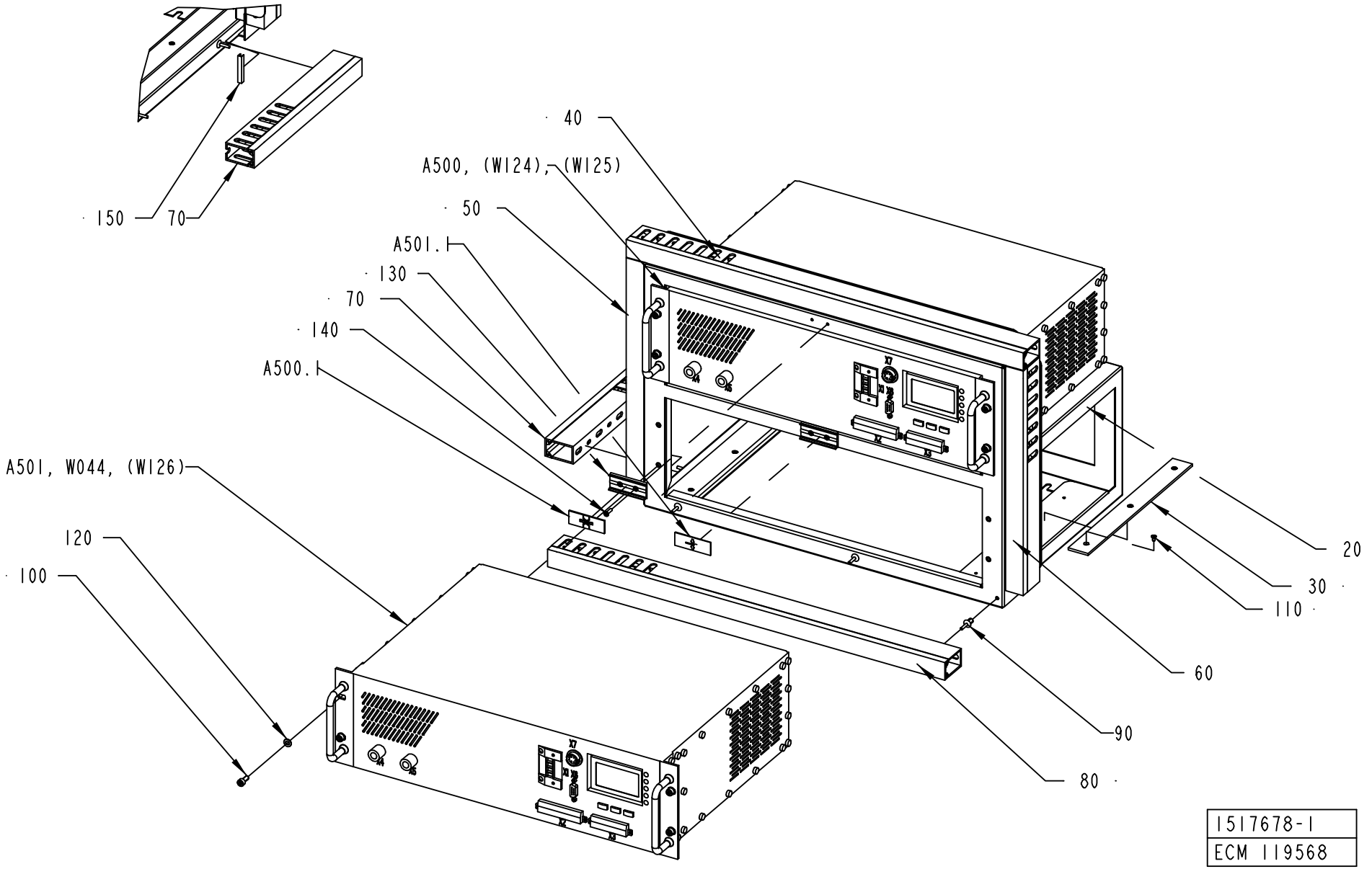
150
70
40
A500, (W124), (W125)
50
A501.1
130
70
140
A500.1
A501, W044, (W126)
120
100
20
30
110
60
90
80
1517678-1
ECM 119568

ECM: 120812 - 20030227
Group number: 1517678-0100
Assembly Drawing: 1517678-1_1_AC

Pos	Part No	UN	Qty	Description	Page No
-					
020	1523455-0000		1	FRAME	
030	1523456-0000		4	SLIDE	
040	90181-0037	MM	560	CABLE DUCT, 25X40MM	
050	90181-0037	MM	320	CABLE DUCT, 25X40MM	
060	90181-0037	MM	320	CABLE DUCT, 25X40MM	
070	90181-0037	MM	263	CABLE DUCT, 25X40MM	
080	90181-0037	MM	560	CABLE DUCT, 25X40MM	
090	90181-0088		14	PLASTIC RIVET, PR 52314	
100	312115-0327		8	SCREW ISO4762 M5X12 A4	
110	312155-0220		12	SCREW EN 10642 MF6S M3X6 A480	
120	315105-0146		8	WASHER BRB5,3X10RFR	
130	359240-0100		2	SIGN HOLDER FOR 359240-0001	
140	311521-0146		4	BLANK RIVET 3,2X12	
150	90143-0094	MM	38	SEAL	
A500	1499642-0101		1	TPIH 2500 HORIZONTAL MOUNTING	
A500.1	90458-1423		1	CONNECTOR, PC 4/4-STF-7.62	
A500.2	90458-1424		1	CONNECTOR, MSTB 2.5/10-STF-5.08	
A500.3	359241-0135		1	SIGN: " TRANSVERSAL SEALING"	
A501	1499642-0101		1	TPIH 2500 HORIZONTAL MOUNTING	
A501.1	90458-1423		1	CONNECTOR, PC 4/4-STF-7.62	
A501.2	90458-1424		1	CONNECTOR, MSTB 2.5/10-STF-5.08	
A501.3	359241-0132		1	SIGN: " TEMP. SA"	
W044	551969-0012		1	COAXIAL CABLE	
W102	90220-0183	M	4	SCR. CABLE 2X0,34MM2	
W103	90220-0183	M	4	SCR. CABLE 2X0,34MM2	
W104	90220-0183	M	4	SCR. CABLE 2X0,34MM2	

Pos	Part No	UN	Qty	Description	Page No

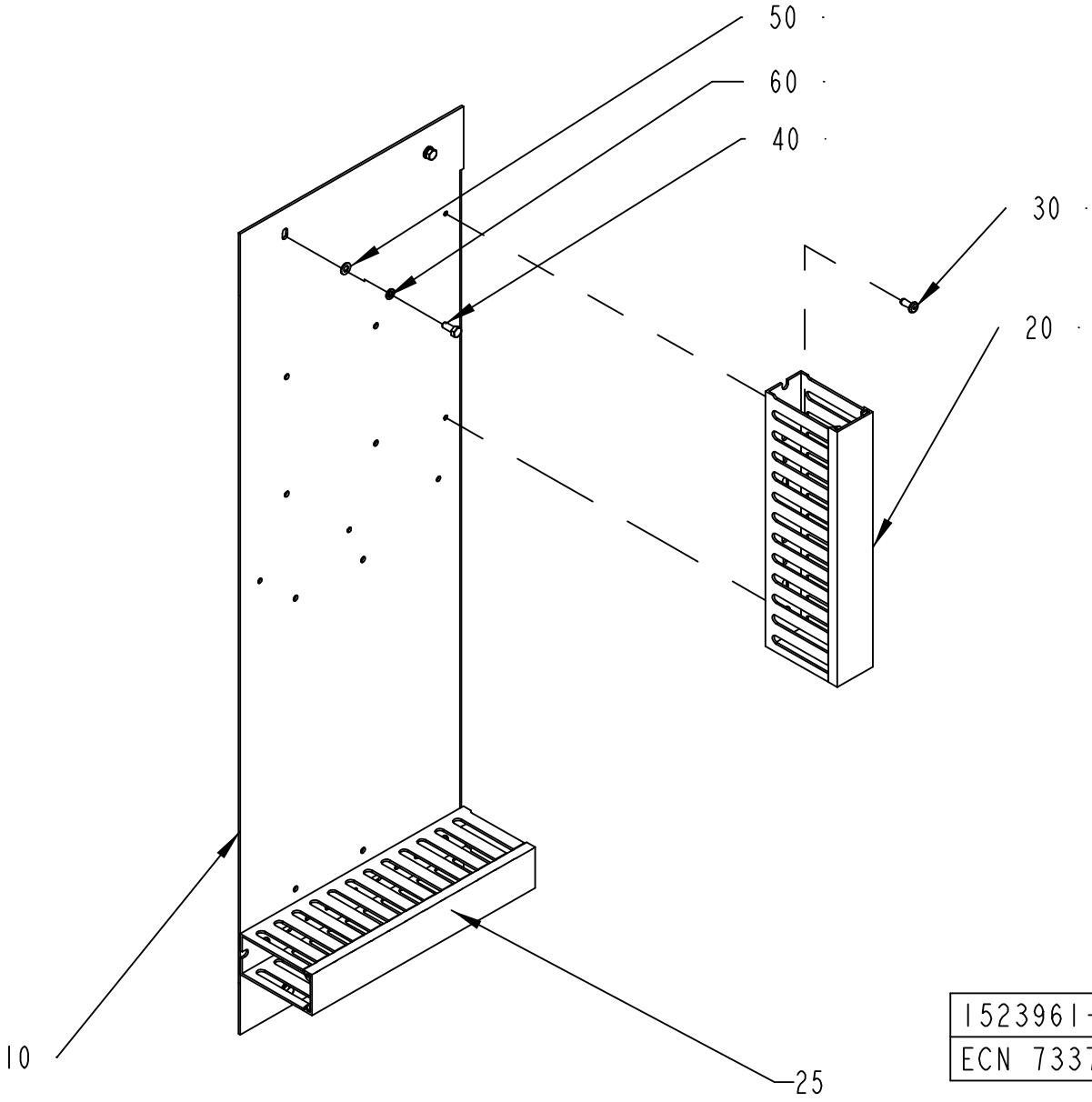

1523961-1
ECN 73370

ECM: 81707 - 20011221
Group number: 1523961-0100
Assembly Drawing: 1523961-1_1_AA

Pos	Part No	UN	Qty	Description	Page No
-					
010	1523963-0000		1	SUPPORT PLATE	
020	90181-0053	MM	250	CABLE DUCT, 40X80MM	
025	90181-0053	MM	250	CABLE DUCT, 40X80MM	
030	90181-0313		4	RIVET DUCTAFIX R4	
040	312105-0327		4	SCREW M6S ISO 4017 M5X12 A480	
050	315105-0146		4	WASHER BRB5,3X10RFR	
060	315402-0146		4	LOCK WASHER FBB 5,1	

Pos	Part No	UN	Qty	Description	Page No

CABLE LEAD-IN PLATE

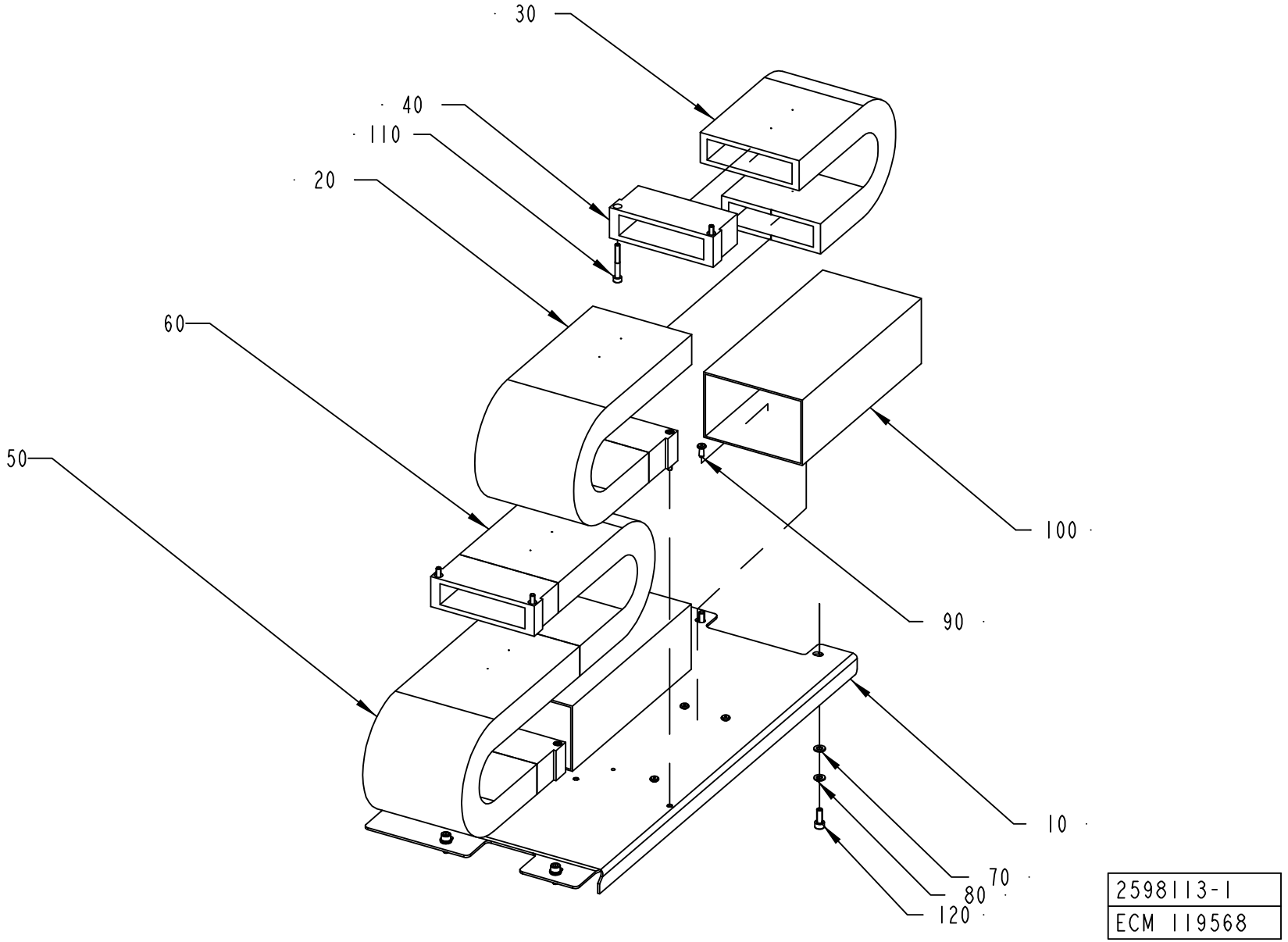

ECM: 126326 - 20030227
Group number: 2598113-0100
Assembly Drawing: 2598113-1_1_AA

Pos	Part No	UN	Qty	Description	Page No
-					
010	2598430-0000		1	SUPPORT	
020	90459-2309	MM	405	FLEXIBLE CHAIN, A325A103KM	
030	90459-2309	MM	360	FLEXIBLE CHAIN, A325A103KM	
040	90459-2350		4	END BRACKET, A325A103KM	
050	90459-2309	MM	405	FLEXIBLE CHAIN, A325A103KM	
060	90459-2309	MM	360	FLEXIBLE CHAIN, A325A103KM	
070	315101-0153		4	WASHER PLAIN, BRB, 6,4/12 H=1,5	
080	315401-0153		4	WASHER FBH6,1FZB	
090	90181-0313		8	RIVET DUCTAFIX R4	
100	90181-0057	MM	500	CABLE DUCT, 120X80MM	
110	312115-0339		8	SCREW ISO4762 M5X40 A4	
120	312115-0368		4	SCREW ISO4762 M6X16 A4	

Pos	Part No	UN	Qty	Description	Page No

Tetra Pak

SPC
Spare Parts Catalogue

This page is intentionally left blank.

ECM: 140598 - 20031001
Group number: 648119-1200
Assembly Drawing:

Pos	Part No	UN	Qty	Description	Page No
-					
	77092-0500		1	SERVICE PARTS	**11-5**
	77094-0300		1	PRODUCTION PARTS	**11-23**

Pos	Part No	UN	Qty	Description	Page No

This page is intentionally left blank.

ECM: 132179 - 20030820
Group number: 77092-0500
Assembly Drawing:

Pos	Part No	UN	Qty	Description	Page No
-					
010	2614370-0100		1	SERVICE PARTS	**11-7**

Pos	Part No	UN	Qty	Description	Page No

This page is intentionally left blank.

ECM: 140958 - 20030821
Group number: 2614370-0100
Assembly Drawing:

Pos	Part No	UN	Qty	Description	Page No
-					
010	2552943-0100		1	TOOL	**11-9**
010	2552941-0100		1	TOOL	**11-11**
020	2552944-0100		1	TOOL	**11-13**
030	2552946-0100		1	TOOL	**11-15**
040	2552947-0100		1	TOOL	**11-17**
050	2552949-0100		1	TOOL	**11-19**
060	2641477-0100		1	TOOL	**11-21**

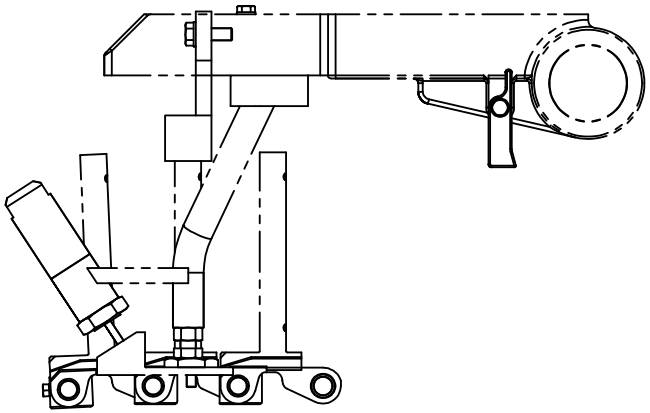

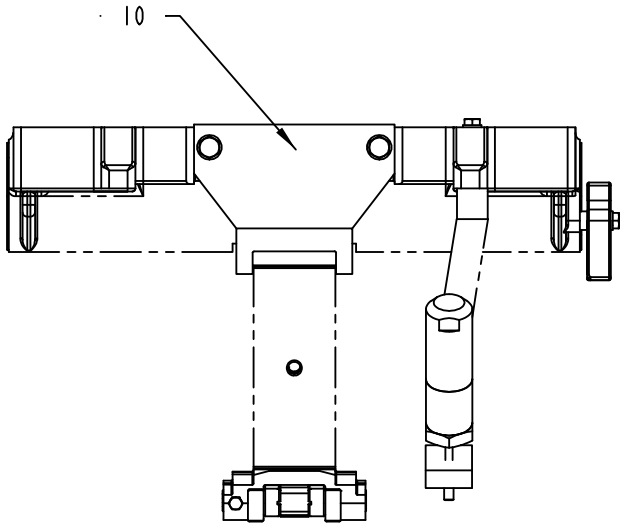

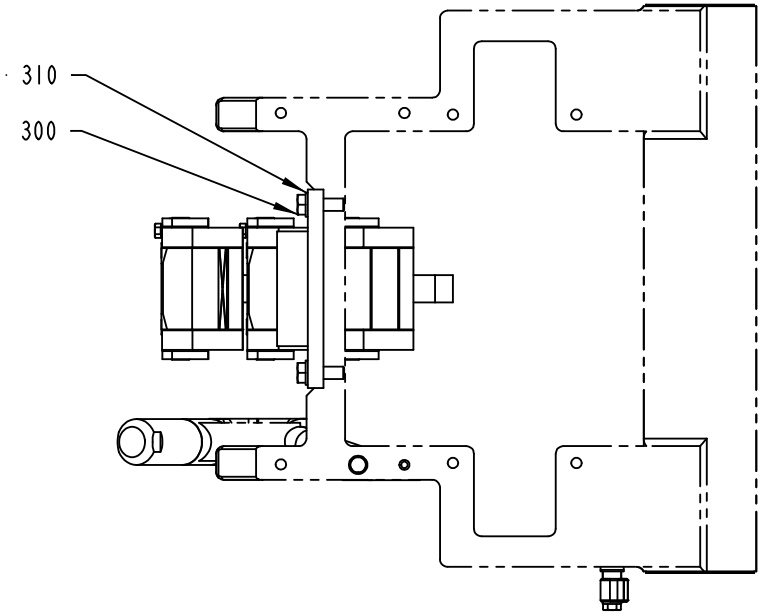

TOOL FOR ARM POSITION
UTENSILE PER POSIZIONE BRACCIO

2552943-1
ECM 111480

ECM: 140959 - 20030821
Group number: 2552943-0100
Assembly Drawing: 2552943-1_1_AA

Pos	Part No	UN	Qty	Description	Page No
TBA 0100B					
010	1512453-0002		1	TEMPLATE	
TBA 0125S					
010	1512453-0003		1	TEMPLATE	
TBA 0160S					
010	1512453-0004		1	TEMPLATE	
TBA 0180B					
010	1512453-0005		1	TEMPLATE	
TBA 0200B					
010	1512453-0006		1	TEMPLATE	
TBA 0200M					
010	1512453-0007		1	TEMPLATE	
TBA 0200S					
010	1512453-0008		1	TEMPLATE	
TBA 0250B					
010	1512453-0009		1	TEMPLATE	
TBA 0250S					
010	1512453-0001		1	TEMPLATE	
TBA 0300S					
010	1512453-0011		1	TEMPLATE	
TBA 0330S					
010	1512453-0010		1	TEMPLATE	
Common Parts					
300	312105-0453		2	SCREW M6S ISO 4017 M8X25 A480	
310	315105-0165		2	WASHER BRB8,4X16RFR	

Pos	Part No	UN	Qty	Description	Page No

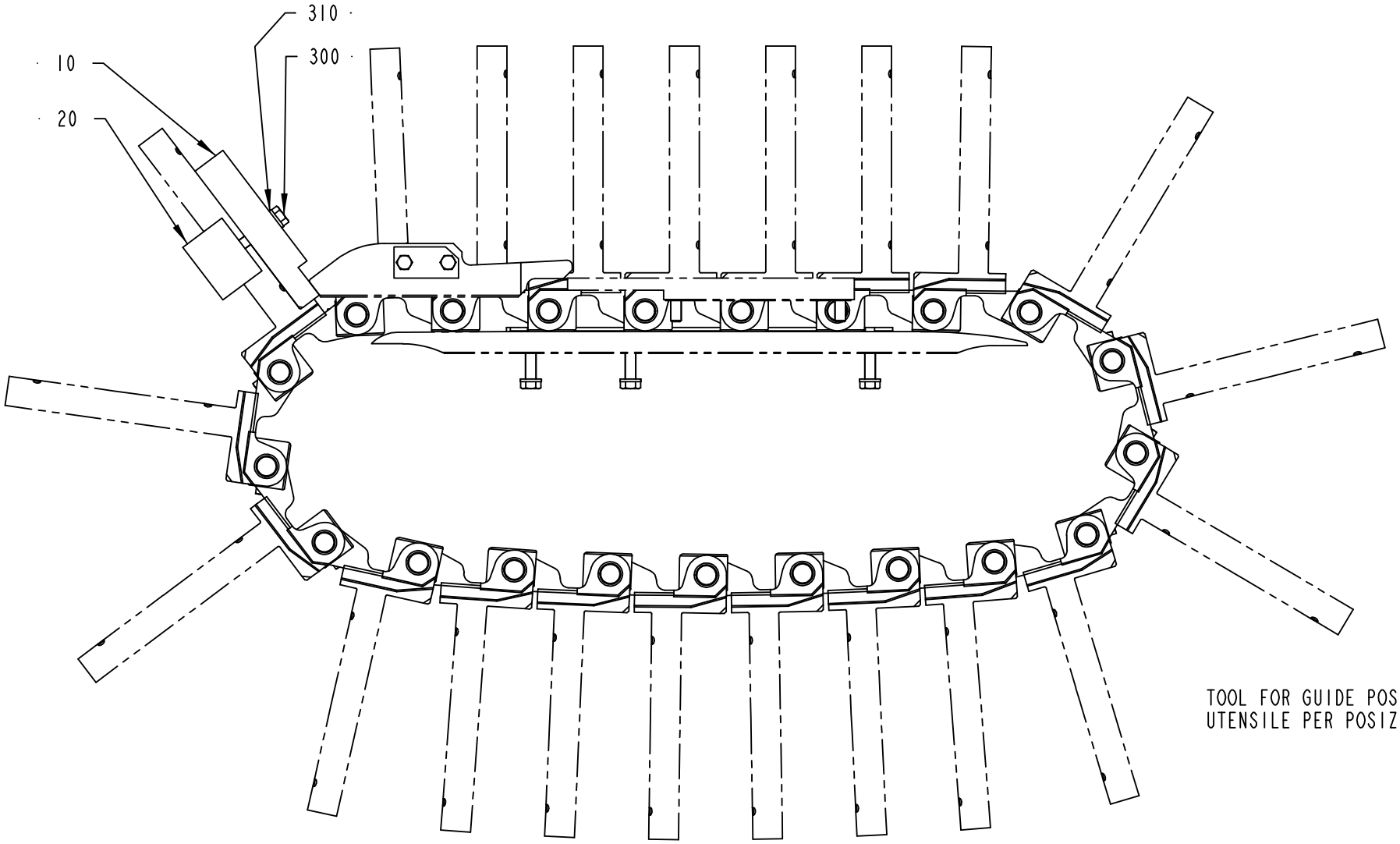

TOOL FOR GUIDE POSITION
UTENSILE PER POSIZIONE GUIDE

2552941-1
ECM 111480

ECM: 111571 - 20030820
Group number: 2552941-0100
Assembly Drawing: 2552941-1_1_AA

Pos	Part No	UN	Qty	Description	Page No
TBA 0160S, TBA 0125S, TBA 0100B, TBA 0200S					
020	1517518-0001		1	CLAMP	
TBA 0250S, TBA 0200M					
020	1517518-0003		1	CLAMP	
TBA 0330S, TBA 0300S, TBA 0180B, TBA 0200B, TBA 0284B, TBA 0250B					
020	1517518-0002		1	CLAMP	
Common Parts					
010	1517517-0000		1	TEMPLATE	
300	312105-0379		2	SCREW M6S ISO 4014 M6X45 A480	
310	315105-0153		2	WASHER BRB6,4X12RFR	

Pos	Part No	UN	Qty	Description	Page No

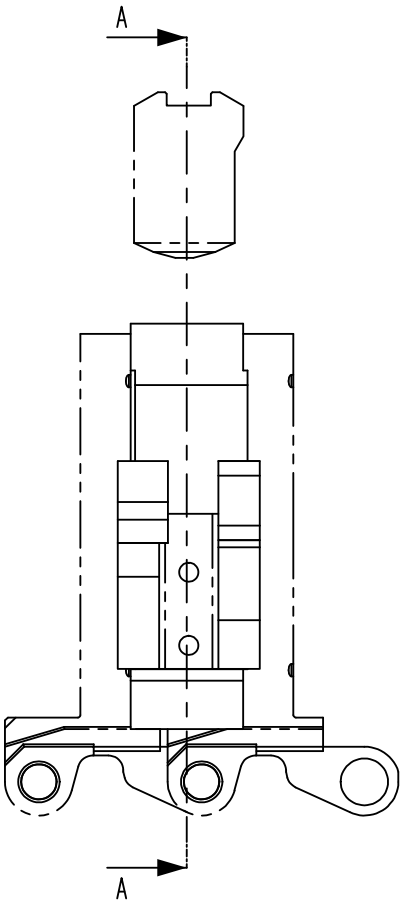

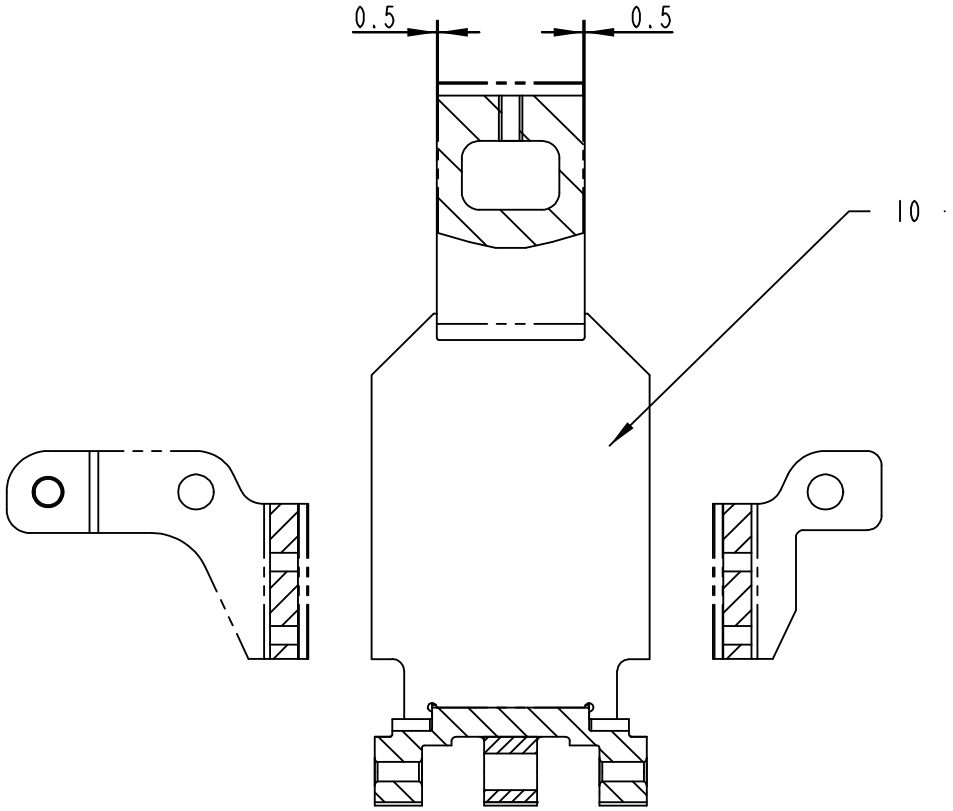

A-A

TOOL FOR PRESSURE DEVICE
UTENSILE PER SISTEMA DI PRESSIONE

2552944-1
ECM 111480

ECM: 140960 - 20030821
Group number: 2552944-0100
Assembly Drawing: 2552944-1_1_AA

Pos	Part No	UN	Qty	Description	Page No
TBA 0100B					
010	2552945-0002		1	TEMPLATE	
TBA 0125S					
010	2552945-0003		1	TEMPLATE	
TBA 0160S					
010	2552945-0004		1	TEMPLATE	
TBA 0180B					
010	2552945-0005		1	TEMPLATE	
TBA 0200B					
010	2552945-0006		1	TEMPLATE	
TBA 0200M					
010	2552945-0007		1	TEMPLATE	
TBA 0200S					
010	2552945-0008		1	TEMPLATE	
TBA 0250B					
010	2552945-0009		1	TEMPLATE	
TBA 0250S					
010	2552945-0001		1	TEMPLATE	
TBA 0300S					
010	2552945-0011		1	TEMPLATE	
TBA 0330S					
010	2552945-0010		1	TEMPLATE	
Common Parts					
	2610197-0000		1	TOOL	
	2610198-0000		1	TOOL	

Pos	Part No	UN	Qty	Description	Page No

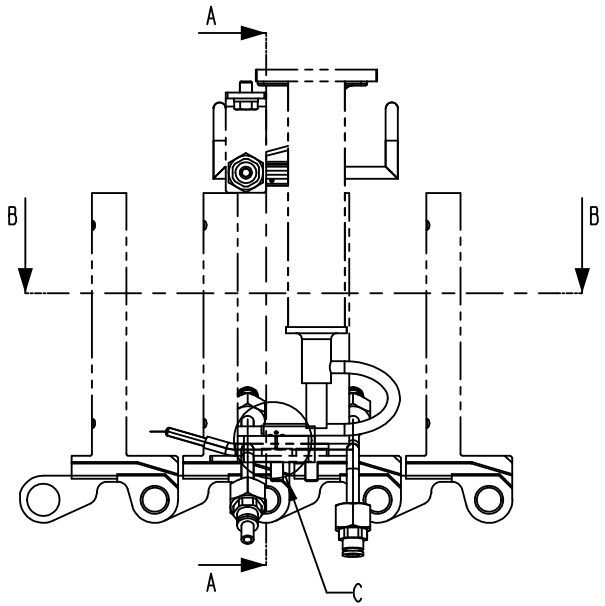

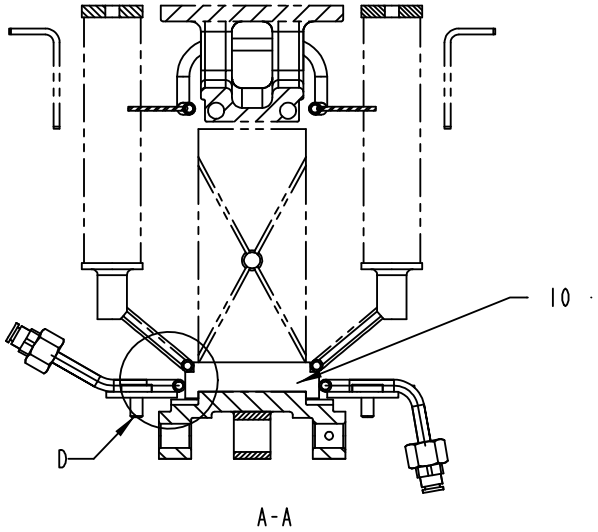

A-A

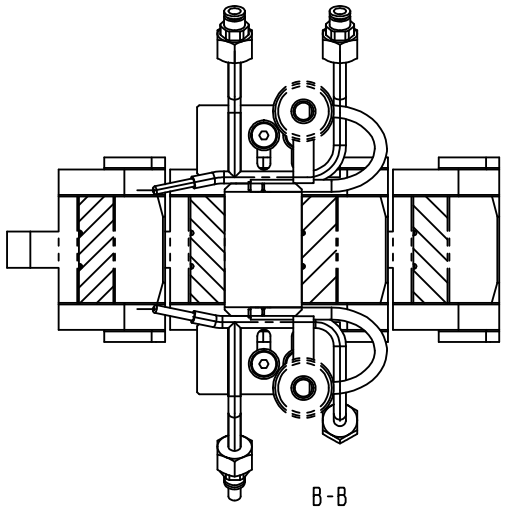

B-B

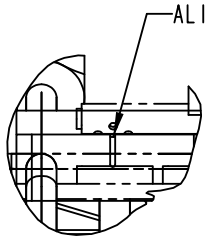

C
1:1

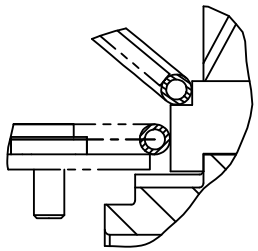

D
1:1

TOOL FOR:
LOWER AIR NOZZLE (left - right)
LOWER FOLDING BAR (left - right)

UTENSILI PER:
UGELLI SOFFIATORI INFERIORI (Sx-Dx)
GUIDE PIEGAORECCHIE INFERIORI (Sx-Dx)

2552946-1
ECM 111480

ECM: 140961 - 20030821
Group number: 2552946-0100
Assembly Drawing: 2552946-1_1_AA

Pos	Part No	UN	Qty	Description	Page No
TBA 0125S, TBA 0100B					
010	1512450-0002		1	TEMPLATE	
TBA 0160S, TBA 0200S					
010	1512450-0004		1	TEMPLATE	
TBA 0250S, TBA 0200M					
010	1512450-0001		1	TEMPLATE	
TBA 0330S, TBA 0300S, TBA 0180B, TBA 0200B, TBA 0284B, TBA 0250B					
010	1512450-0003		1	TEMPLATE	

Pos	Part No	UN	Qty	Description	Page No

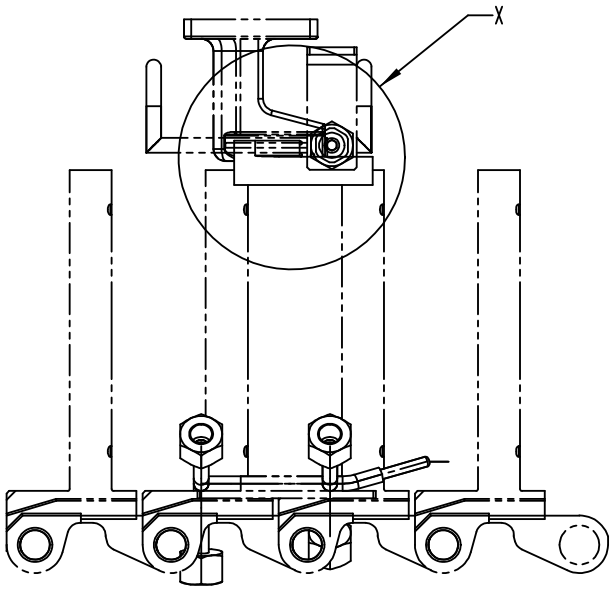

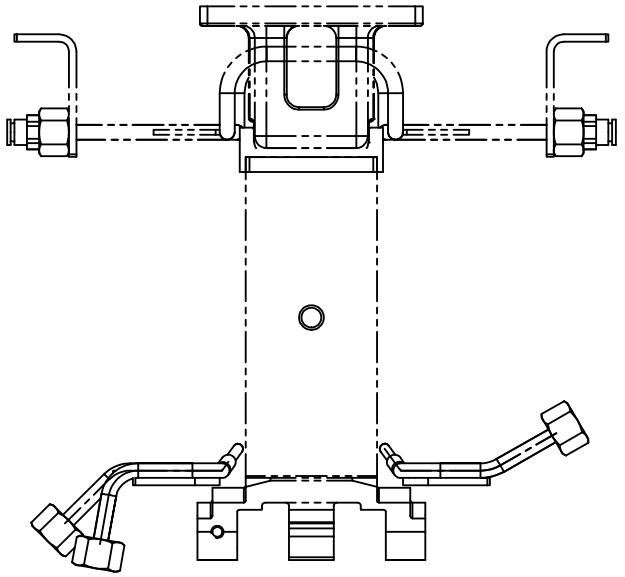

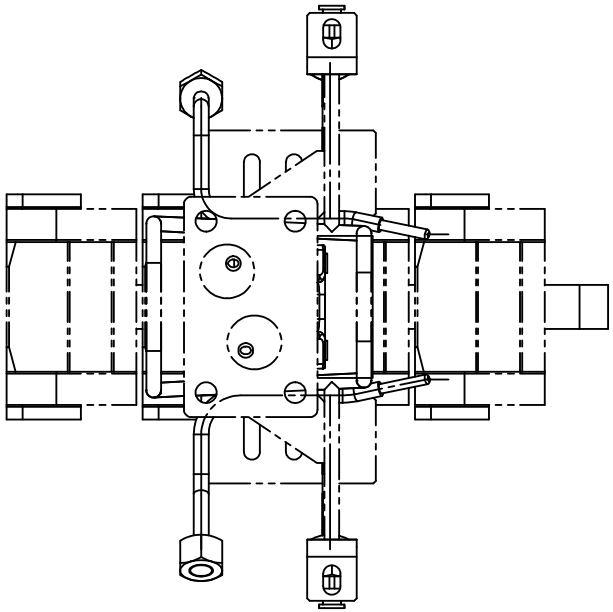

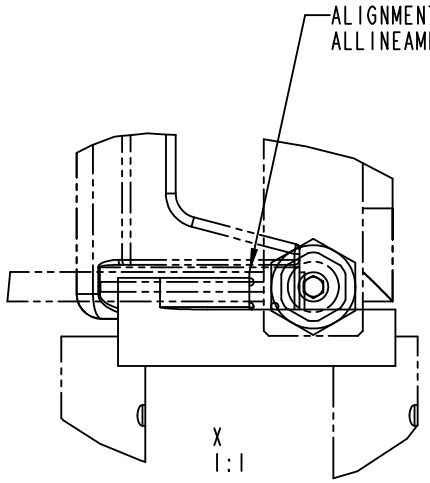

TOOL FOR:
UPPER AIR NOZZLE
UPPER FOLDING BAR

UTENSILE PER:
UGELLO SOFFIATORE SUPERIORE
GUIDA PIEGA ORECCHIE SUPERIORE

2552947-1
ECM 111480

ECM: 140962 - 20030821
Group number: 2552947-0100
Assembly Drawing: 2552947-1_1_AA

Pos	Part No	UN	Qty	Description	Page No
TBA 0125S, TBA 0100B					
010	2552948-0002		1	TEMPLATE	
TBA 0160S, TBA 0200S					
010	2552948-0004		1	TEMPLATE	
TBA 0250S, TBA 0200M					
010	2552948-0001		1	TEMPLATE	
TBA 0330S, TBA 0300S, TBA 0180B, TBA 0200B, TBA 0284B, TBA 0250B					
010	2552948-0003		1	TEMPLATE	

Pos	Part No	UN	Qty	Description	Page No

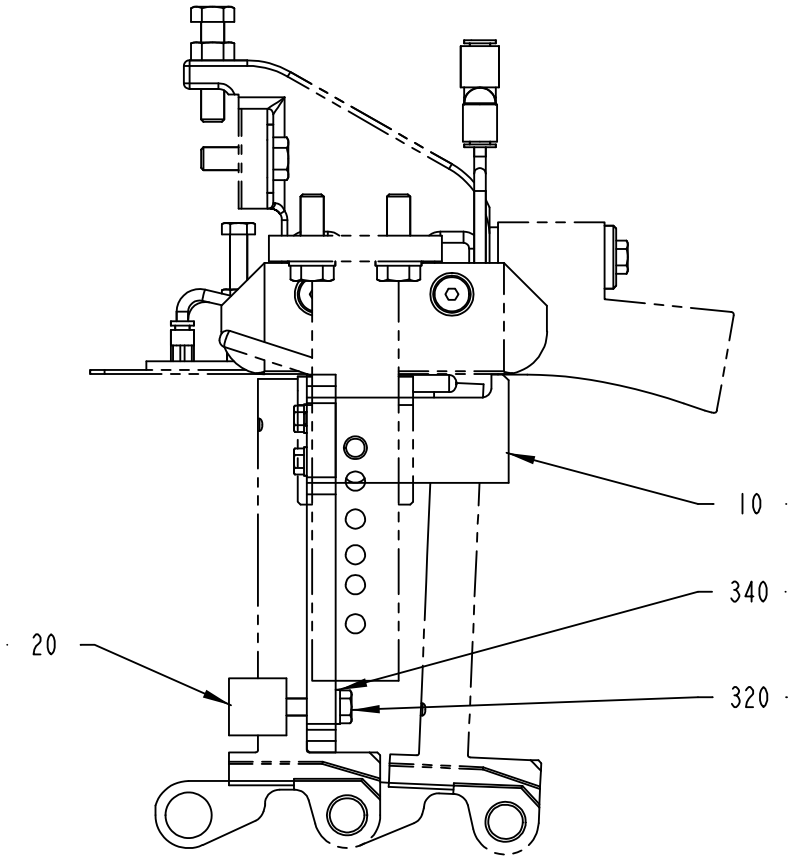

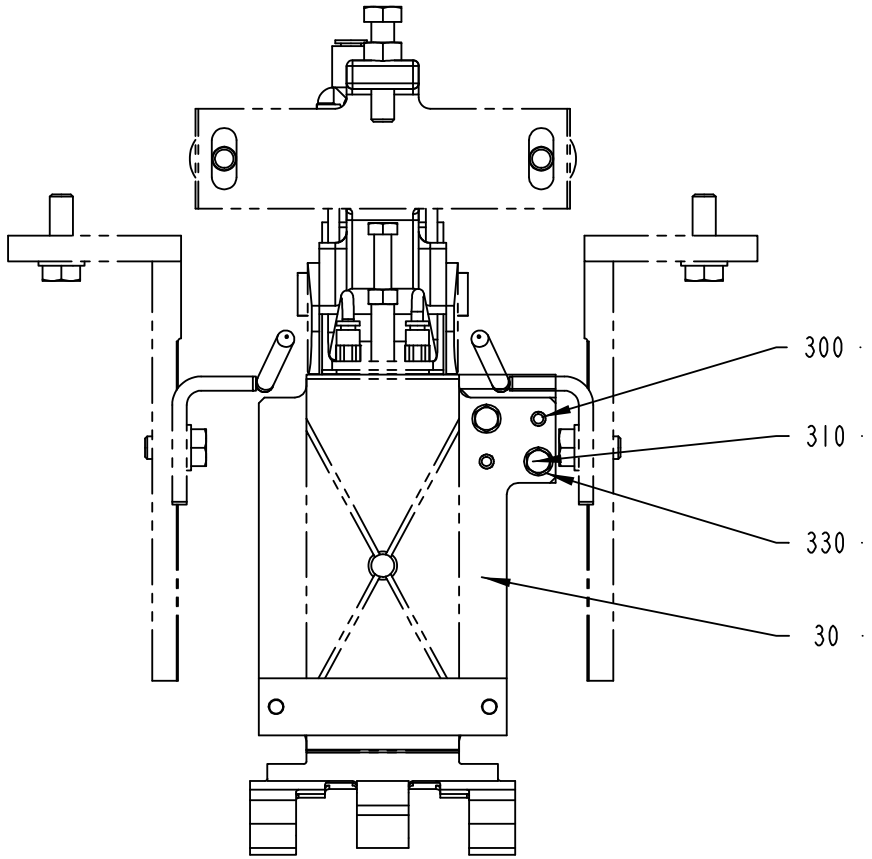

TOOL FOR ROOF POSITION

UTENSILE PER POSIZIONE TETTO

2552949-1
ECM 111480

ECM: 140963 - 20030821
Group number: 2552949-0100
Assembly Drawing: 2552949-1_1_AA

Pos	Part No	UN	Qty	Description	Page No
TBA 0100B					
010	2552950-0002		1	TEMPLATE	
020	2552951-0003		1	CLAMP	
030	2552952-0002		1	PLATE	
TBA 0125S					
010	2552950-0002		1	TEMPLATE	
020	2552951-0003		1	CLAMP	
030	2552952-0003		1	PLATE	
TBA 0160S					
010	2552950-0001		1	TEMPLATE	
020	2552951-0003		1	CLAMP	
030	2552952-0004		1	PLATE	
TBA 0180B					
010	2552950-0003		1	TEMPLATE	
020	2552951-0002		1	CLAMP	
030	2552952-0005		1	PLATE	
TBA 0200B					
010	2552950-0001		1	TEMPLATE	
020	2552951-0002		1	CLAMP	
030	2552952-0006		1	PLATE	
TBA 0200M					
010	2552950-0001		1	TEMPLATE	
020	2552951-0001		1	CLAMP	
030	2552952-0007		1	PLATE	
TBA 0200S					
010	2552950-0001		1	TEMPLATE	
020	2552951-0003		1	CLAMP	
030	2552952-0008		1	PLATE	
TBA 0250B					
010	2552950-0003		1	TEMPLATE	
020	2552951-0002		1	CLAMP	
030	2552952-0009		1	PLATE	
TBA 0250S					
010	2552950-0001		1	TEMPLATE	
020	2552951-0001		1	CLAMP	
030	2552952-0001		1	PLATE	
TBA 0300S, TBA 0284B					
010	2552950-0003		1	TEMPLATE	
020	2552951-0002		1	CLAMP	
030	2552952-0011		1	PLATE	
TBA 0330S					
010	2552950-0003		1	TEMPLATE	
020	2552951-0002		1	CLAMP	
030	2552952-0010		1	PLATE	
Common Parts					
300	311103-0308		2	PARALLEL PIN ISO 2338 5M6X16 A1	
310	312105-0331		2	SCREW M6S ISO 4017 M5X20 A480	
320	312105-0374		2	SCREW M6S ISO 4014 M6X30 A480	
330	315105-0146		2	BRICKA BRB5,3X10RFR	
340	315105-0153		2	WASHER BRB6,4X12RFR	

Machine Type | Group Description | Used-In | Group Number | Page No

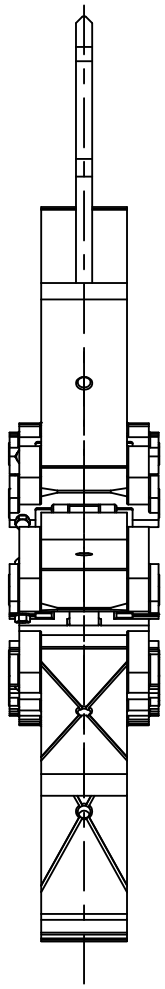

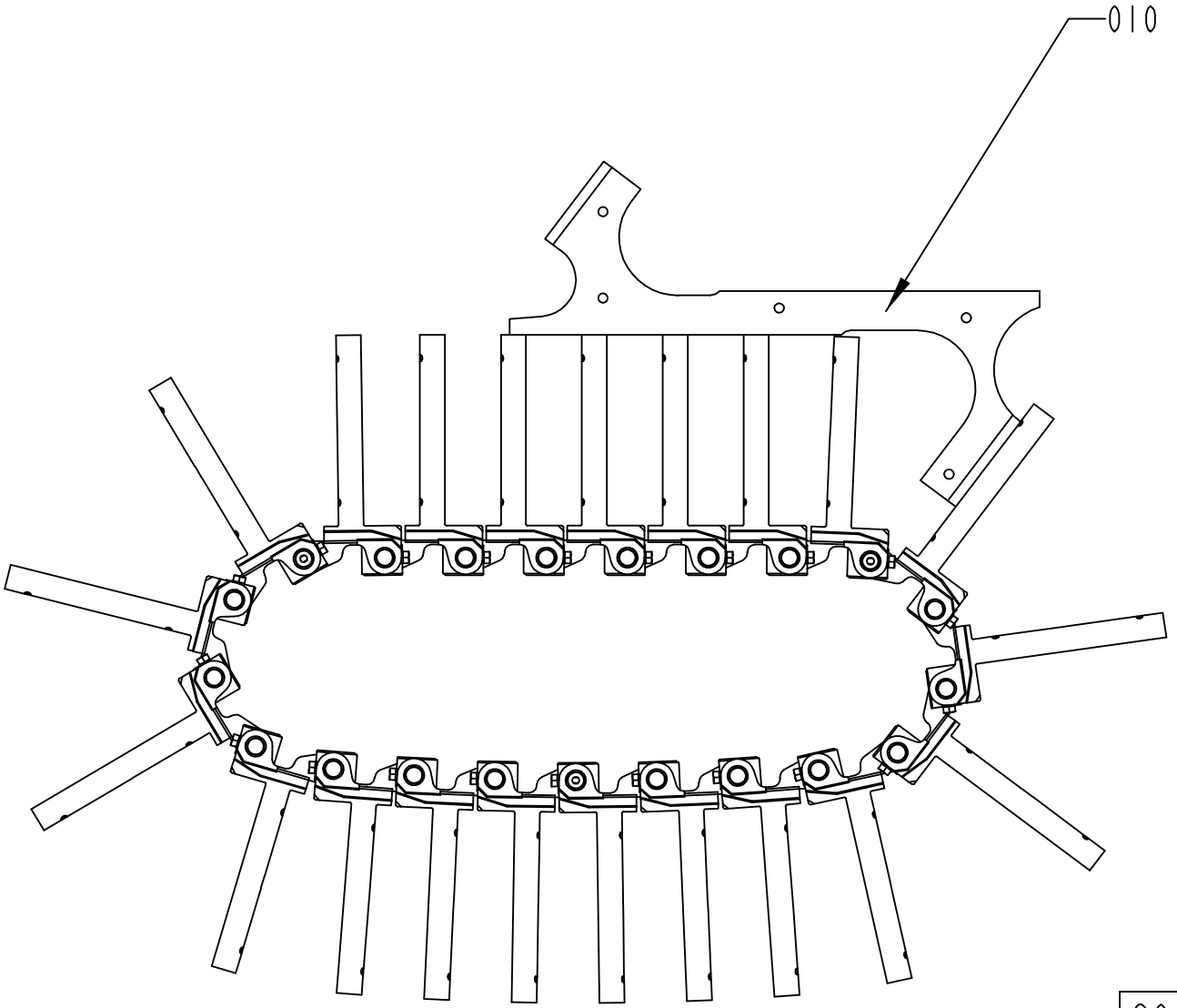

2641477-1
ECM 140998

ECM: 140998 - 20030821
Group number: 2641477-0100
Assembly Drawing: 2641477-1_1_AA

Pos	Part No	UN	Qty	Description	Page No
-					
010	76128-0000		1	TEMPLATE	

Pos	Part No	UN	Qty	Description	Page No

This page is intentionally left blank.

ECM: 140599 - 20031001
Group number: 77094-0300
Assembly Drawing:

Pos	Part No	UN	Qty	Description	Page No
-					
	2566433-0100		1	TEMPLATE PT19-020V	**11-25**

Pos	Part No	UN	Qty	Description	Page No

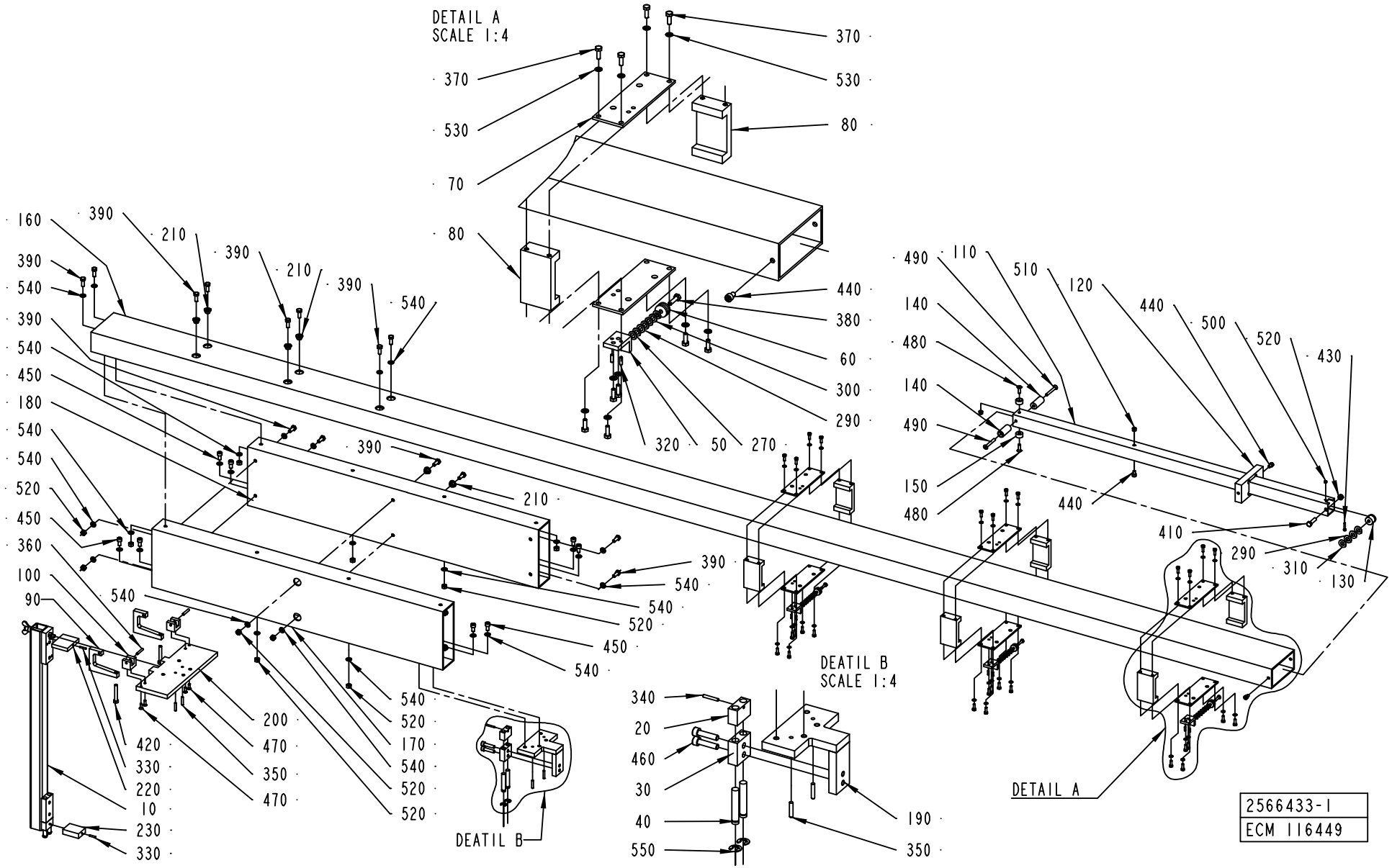
DETAIL A
SCALE 1:4
370
530
80
70
440
380
60
300
290
320
50
270
160
390
210
540
180
520
450
360
100
90
420
330
220
10
230
330
200
470
350
170
DEATIL B
340
20
460
30
40
550
190
DEATIL B
SCALE 1:4
490
110
510
120
440
500
520
430
140
480
150
410
290
310
130
DETAIL A
2566433-1
ECM 116449

ECM: 116451 - 20031001
Group number: 2566433-0100
Assembly Drawing: 2566433-1_1_AA

Pos	Part No	UN	Qty	Description	Page No
-					
010	589885-0100		1	TEMPLATE HOUSE/BENDING ROLLER	**11-27**
020	589908-0000		1	BLOCKING PIECE	
030	589909-0000		1	BLOCKING PIECE	
040	590205-0000		2	PIN	
050	590215-0000		3	SUPPORT	
060	590216-0000		3	ROLLER	
070	590217-0000		6	SHEET	
080	590218-0000		6	GUIDE	
090	2615467-0000		2	BRACKET	
100	590221-0000		2	BLOCK	
110	1350674-0000		1	EXTENSION	
120	1350675-0000		1	GUIDE	
130	1350676-0000		1	ROLLER	
140	1350677-0000		2	GUIDE	
150	1350678-0000		2	GUIDE	
160	2566434-0000		1	BEAM	
170	2566435-0000		1	BEAM	
180	2566436-0000		1	BEAM	
190	2566437-0000		1	ANGLE BRACKET	
200	2566438-0000		1	SUPPORT	
210	2566439-0000		6	BUSHING	
220	2594679-0000		1	BLOCK	
230	2594680-0000		1	BLOCK	
270	2033-0002		6	WASHER	
280	2033-0003		9	WASHER	
290	2033-0008		3	WASHER	
300	2033-0010		6	WASHER	
310	2033-0011		1	WASHER	
320	311103-0233		6	PARALLEL PIN ISO 2338 3M6X10 A1	
330	311103-0236		2	PARALLEL PIN ISO 2338 3M6X16 A1	
340	311103-0238		1	PARALLEL PIN ISO 2338 3M6X20 A1	
350	311103-0272		4	PARALLEL PIN ISO 2338 4M6X20 A1	
360	311103-1274		2	PARALLEL PIN ISO 2338 4M6X24 A1	
370	312105-0291		30	SCREW M6S ISO 4017 M4X12 A480	
380	312105-0293		3	SCREW M6S ISO 4017 M4X16 A480	
390	312105-0368		14	SCREW M6S M6X16 A280	
400	312105-0370		3	SCREW M6S ISO 4017 M6X20 A480	
410	312105-0372		1	SCREW M6S ISO 4017 M6X25 A480	
420	312109-0378		2	SCREW M6S ISO4017 M6X40 A480	
430	312115-0228		1	SCREW ISO4762 M3X16 A4	
440	312115-0323		3	SCREW ISO4762 M5X8 A4	
450	312115-0366		8	SCREW ISO4762 M6X12 A4	
460	312115-0372		2	SCREW ISO4762 M6X25 A4	
470	312155-0291		4	SCREW EN 10642 MF6S M4X12 A480	
480	312155-0329		2	SCREW EN 10642 MF6S M5X16 A480	
490	312155-0339		2	SCREW EN 10642 MF6S M5X40 A480	
500	312605-0310		1	HEXAGON NUT, M6M M3 A280	
510	312605-0314		5	HEXAGON NUT, M6M M5 A280	
520	312605-0316		15	HEXAGON NUT, M6M M6 A280	
530	315105-0136		30	WASHER BRB4,3XRFR	
540	315105-0153		30	WASHER BRB6,4X12RFR	
550	315755-0109		2	RETAINING RING 7	

Machine Type | Group Description | Used-In | Group Number | Page No

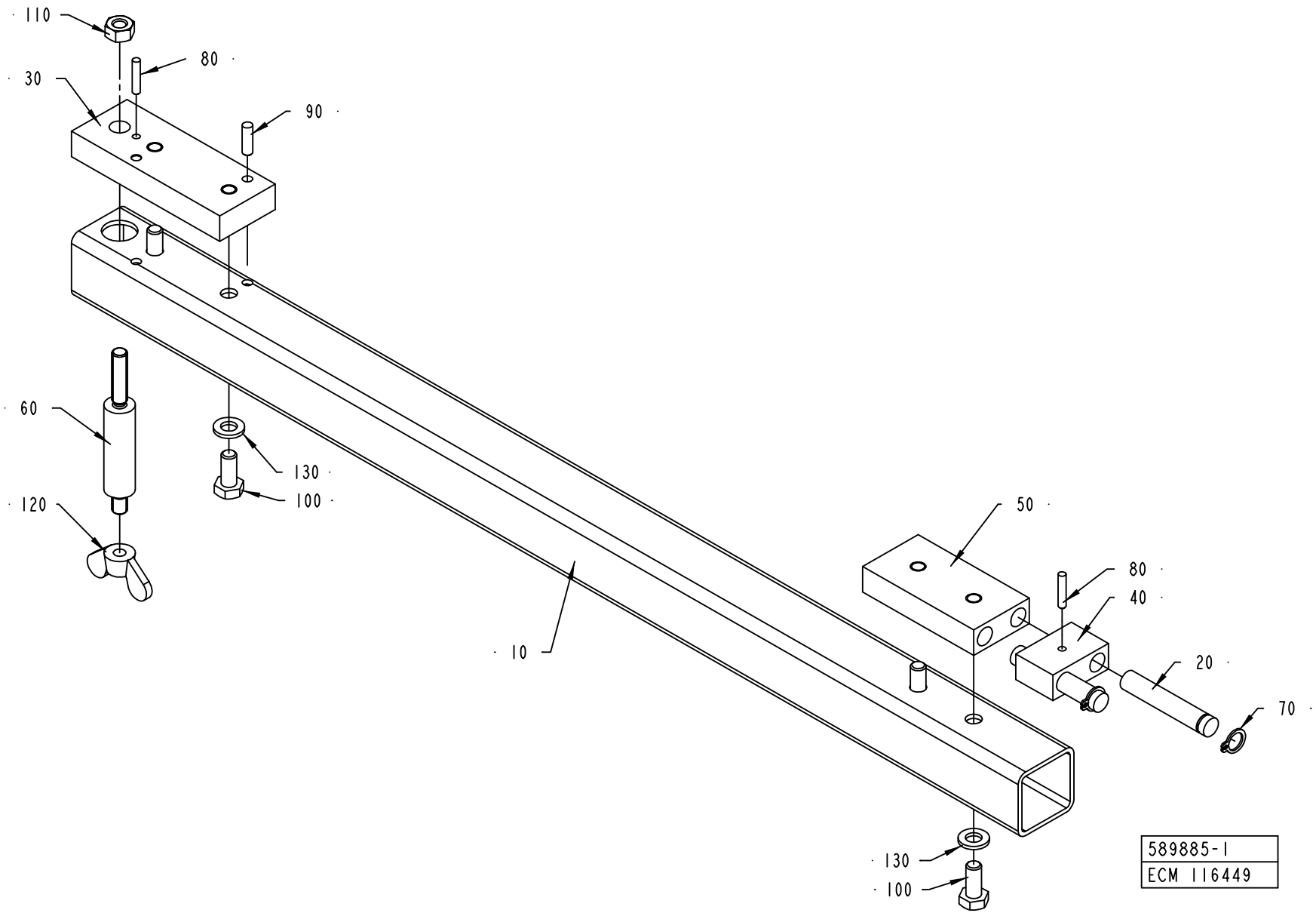
110
80
30
90
60
130
100
120
50
80
40
10
20
70
130
100
589885-1
ECM 116449

ECM: 117667 - 20031001
Group number: 589885-0100
Assembly Drawing: 589885-1_1_AB

Pos	Part No	UN	Qty	Description	Page No
-					
010	589910-0000		1	BEAM	
020	590205-0000		2	PIN	
030	590206-0000		1	BLOCK	
040	590207-0000		1	BLOCKING PIECE	
050	590208-0000		1	BLOCKING PIECE	
060	590219-0000		1	PIN	
070	90141-0015		2	RETAINING RING FOR SHAFT DIN 471 8 A2	
080	311103-0236		2	PARALLEL PIN ISO 2338 3M6X16 A1	
090	311103-0269		2	PARALLEL PIN ISO 2338 4M6X14 A1	
100	312115-0367		4	SCREW ISO4762 M6X14 A4	
110	312605-0316		1	HEXAGON NUT, M6M M6 A280	
120	312715-0116		1	NUT WING MVM-K M6	
130	315105-0153		4	WASHER BRB6,4X12RFR	

Pos	Part No	UN	Qty	Description	Page No

Machine Type	Group Description	Used-In	Group Number	Page No

Tetra Pak

SPC
Spare Parts Catalogue

Part No	Description	Page No
1013-0000	SHAFT	8-11
1755-0001	WASHER	4-57
1755-0002	WASHER	4-57
1755-0003	WASHER	4-57
2033-0002	WASHER	11-25
2033-0003	WASHER	11-25
2033-0007	WASHER	1-49, 1-51
2033-0008	WASHER	1-123, 1-125, 11-25
2033-0009	WASHER	4-59
2033-0010	WASHER	11-25
2033-0011	WASHER	1-107, 1-109, 1-111, 1-113, 1-115, 1-117, 1-119, 1-123, 1-125, 1-129, 1-131, 8-19, 8-21, 8-23, 8-39, 8-41, 11-25
2033-0013	WASHER	7-23, 7-25, 7-27, 7-29, 7-51, 7-53
2033-0014	WASHER	4-59
6161-0000	ROLL	1-155
12228-0000	COMPRESSION SPRING	3-27
12242-0001	GASKET 32X25X5,5	1-15, 1-65
12242-0003	GASKET 48X38X5,5	1-139
12242-0005	GASKET 61X51X5,5	1-49, 1-51, 1-139
18542-0000	WASHER	2-23
20239-0000	COMPRESSION SPRING	4-41, 4-43, 4-45, 4-47
21521-0000	COMPRESSION SPRING	1-37, 1-143
22463-0000	ROLL	4-5, 4-7, 4-9, 4-11
22475-0000	CURVE ROLLER	4-41, 4-43, 4-45, 4-47
26490-0000	WASHER	1-107, 1-109, 1-111, 1-113
27815-0000	WASHER	4-59
28036-0000	WASHER	1-49, 1-51, 1-155, 8-19, 8-21, 8-23, 8-39, 8-41
28037-0000	WASHER	1-107, 1-109, 1-111, 1-113
28509-0000	WASHER	4-51, 4-53
29876-0000	COVER	1-43, 1-45
30298-0000	INSULATION	1-43, 1-45
31017-0000	KNIFE	8-51
31553-0001	WASHER	5-19
31559-0000	SPRING PLATE	5-19
31723-0000	TEFLON STRIP	8-51
31724-0000	LOCK BAR	8-51
32079-0000	WASHER	4-51, 4-53
32544-0000	INSULATION NUT	4-51, 4-53
32644-0000	WASHER	4-39, 7-45
32691-0000	LOCKING SPRING	8-25, 8-27, 8-43, 8-45
32925-0000	CARRIER	8-19, 8-21, 8-23, 8-39, 8-41
32926-0000	ROLL	8-19, 8-21, 8-23, 8-39, 8-41
32927-0000	SHAFT	8-19, 8-21, 8-23, 8-39, 8-41
33010-0000	SCREW	8-29, 8-47
33011-0000	SLEEVE	8-25, 8-27, 8-43, 8-45
33182-0000	ROLL	8-19, 8-21, 8-23, 8-39, 8-41
33408-0000	BEARING	4-5, 4-7, 4-9, 4-11
35547-0000	SPRING	8-29, 8-47
35918-0000	SHAFT	1-123, 1-125
35919-0000	COMPRESSION SPRING	1-123, 1-125
35962-0000	LID	6-13
36316-0000	PAPER SUPPORT	7-57
36325-0000	KNOB	1-123, 1-125
37877-0400	HEATING BLOCK	8-49
37879-0000	LOCKING ARM	8-51
37880-0000	HINGE	8-51
37882-0000	PROTECTION PLATE	8-51
37883-0000	LOCK BAR	8-51
37884-0000	SHAFT	8-51
37885-0000	TENSION SPRING	8-51
37886-0000	INSULATING DISK	8-51
37888-0000	ROLL	8-51
37889-0000	SHAFT	8-51
37890-0000	FLANGE ROLLER	8-51
37893-0000	LID	8-51
37894-0100	COUNTER RAIL	8-49
37895-0000	RAIL	8-53
37896-0000	DOWEL	8-53
37897-0000	WASHER	8-53
37900-0000	KNIFE	8-55
37905-0000	FRAME	8-59
37908-0000	PLATE	8-59
37909-0000	SPRING	8-59
37910-0000	LOCK	8-59
37911-0000	LACE	8-59
37912-0000	LOCK PLATE	8-59
37913-0000	RULER	8-59
37916-0000	RULER	8-59
37917-0000	RULER	8-59
38087-0000	WASHER	2-41, 2-43
42062-0200	LEVEL PROBE	1-181
42063-0100	LEVEL DETECTOR	1-183
42067-0100	SENSOR BOARD	1-185
42068-0100	CONVERTER BOARD	1-185

Part No	Description	Page No
67347-0101	CARD BRAKEREG.MAGN.POWDER BRAKE	10-29, 10-31
67369-0102	RACK WALLMOUNTED 84TE	10-29, 10-31
67372-0101	BACKPLANE 8TE(32 POLE)	10-29, 10-31
67379-0254	TRANSFORMER	4-51, 4-53
67379-0262	TRANSFORMER	4-51, 4-53
67379-0264	TRANSFORMER	4-51, 4-53
67379-0265	TRANSFORMER	4-51, 4-53
67380-0208	TRANSFORMER	7-45
72947-0000	HOOK SPANNER	9-13
76128-0000	TEMPLATE	11-21
76131-0000	ASSEMBLY CONE	9-13
76132-0000	ASSEMBLY TOOL	9-13
77092-0500	SERVICE PARTS	11-3
77094-0300	PRODUCTION PARTS	11-3
77099-0300	TOOL KIT	9-3
78801-0000	CALIBRATION TOOL	9-13
90001-0033	WALL SOCKET OUTLET	10-13, 10-15, 10-17
90002-0004	BLANK-OFF PLUG, PR 22,5 SKINDICHT-BLK16	1-151, 1-153, 5-59, 5-61, 10-89, 10-91, 10-93, 10-95
90002-0009	BLANK-OFF PLUG, PR 18.6 SKINDICHT-BLK11	2-9, 5-59, 5-61, 9-21, 9-27, 9-29
90002-0010	BLANK-OFF PLUG, PR 37 SKINDICHT-BLK29	1-147, 1-149, 1-151, 1-153, 5-59, 5-61, 10-89, 10-91, 10-93, 10-95
90002-0012	BLANK-OFF PLUG, PR 28,3 SKINDICHT-BLK21	1-151, 1-153, 5-57, 10-89, 10-91, 10-93, 10-95
90002-0013	BLANK-OFF PLUG, PR 15,2 SKINDICHT-BLK9	1-151, 1-153, 2-9, 10-89, 10-91, 10-93, 10-95
90002-0018	BLANK-OFF PLUG, PR 12,5 SKINDICHT-BLK7	1-13
90003-0422	CORRUGATED CARDBOARD BOX	9-3
90005-0003	BONDED SEAL SS/NBR M6	4-49, 4-61, 4-63
90005-0005	BONDED SEAL SS/NBR G1/4	4-61, 4-63
90005-0007	BONDED SEAL SS/NBR M8	4-61, 4-63, 5-31
90005-0014	BONDED SEAL SS/NBR G1/2"	4-49
90005-0047	WASHER,PL.RND.CU.12,2/ H=1,5	4-55, 4-57
90005-0060	WASHER PLAIN, RBS 6,4/M6)/18,H=1,5	1-171, 1-173, 1-175, 2-11, 2-13, 4-27, 4-29, 4-31, 4-33
90005-0082	WASHER PLAIN ROUND 4,3(M4)/12,H=1	7-13, 7-15, 7-19, 7-23, 7-25, 7-27, 7-29, 7-35, 7-37, 7-43, 7-45, 7-51, 7-53
90005-0116	WASHER PLAIN ROUND 8,4(M8)/24, H=2	5-35
90005-0143	SPACER 3,3/7, H=3	1-185
90007-0128	CIRCUIT BREAKER, 1P 6 A K	10-131, 10-135
90007-0129	CIRCUIT BREAKER, 1P 10 A K	10-131, 10-135
90007-0131	CIRCUIT BREAKER, 1P 16 A K	10-131
90007-0146	CIRCUIT BREAKER, 3P 6 A K	10-131, 10-135
90007-0149	CIRCUIT BREAKER, 3P 20 A K	10-135
90007-0155	CIRCUIT BREAKER, 1P 0,5 A K	10-131
90007-0312	AUXILIARY CONTACT	10-131
90012-0119	GLAND, EXTENDED WITH INSERT, PG9	1-183
90012-0126	NORMAL WITHOUT INSERT, PG29	1-43, 1-45
90015-0020	LEAD-IN, TET5-7, E-1458016	1-147, 1-149, 7-23, 7-25, 7-27, 7-29, 7-35, 7-37
90015-0021	LEAD-IN, TET10-14, E-1458023	1-147, 1-149
90015-0023	LEAD-IN, TET7-10, E-1458019	1-147, 1-149, 8-63
90015-0028	LEAD-IN BUSHING	5-43
90016-0010	DISC SPRINGS,50X25,4X2	3-5
90017-0001	BIKE HANDLE	8-51, 8-55
90017-0022	HANDLE, NO. EL-037311	7-31, 7-35, 7-37, 7-59, 8-9
90024-0034	DIODE SURGE SUPPRESSOR, FD B DIL	10-45
90024-0036	FILTERED TERMINAL BLOCK	10-151
90024-0037	INPUT FILTER, 8 A	10-13, 10-15, 10-17
90024-0047	EMI SUPPRESSION FERRITE	10-13, 10-15, 10-17
90024-0060	POWER LINE FILTER, 80 A 250/440 VAC	10-151
90024-0062	CABLE PROTECTION, 40MM	10-7, 10-9, 10-11
90024-0063	CABLE PROTECTION, 25MM	10-7, 10-9, 10-11
90028-0001	CONE 5/32"	2-17, 2-19, 2-21
90028-0020	CONE TUBE 2,5MM	2-17, 2-19, 2-21, 3-9, 3-11, 3-13, 3-15, 4-49, 4-61, 4-63, 5-17, 5-43
90028-0021	CONE TUBE 4 MM	2-17, 2-19, 2-21, 3-9, 3-11, 3-13, 3-15, 5-17, 5-43
90028-0025	CONE TUBE 6 MM	5-43
90030-0030	CONN. BULKHEAD SV 12-L/SY	6-71
90030-0051	CONN. STR., 6-R1/8, EXT. THREAD	1-79, 2-17, 2-19, 2-21
90030-0058	CONN. T-PIPE T-12	1-141, 6-83, 6-85
90030-0062	CONN. STR. GE 6-1/4-18 NPTF	1-7, 1-65
90030-0065	PIPE CONNECTION	2-25, 4-35, 4-37, 4-61, 4-63
90030-0066	CONN. BULKHEAD SV 6-L/SY	7-67
90030-0075	PIPE CONNECTION G-6	1-99, 1-101
90030-0076	CONN. T-PIPE T-6	1-7, 1-95, 1-97, 6-89
90030-0086	CONN. STR., 8-R1/4, EXT. THREAD	6-73
90030-0088	CONN. STR., 12-R1/4, EXT. THREAD	1-67, 1-69
90030-0089	STRAIGHT CONNECTION	1-93
90030-0091	CONN. PIPE G-8	2-25
90030-0092	STRAIGHT CONN., 6-R1/4,EXT. TAPPERED	1-79, 1-99, 1-101
90030-0096	CONN. ELBOW W-12	1-67, 1-69
90030-0098	ACCESSORIES, FERRULE 8	2-17, 2-19, 2-21
90030-0106	CONN. PIPE G-12	1-67, 1-69, 1-79
90030-0109	STRAIGHT PIPE CONN. GE12LR1/271	1-67, 1-69, 6-69
90030-0110	ACCESSORIES, FERRULE 12	1-79
90030-0115	CONN. ELBOW WA 12-R3/8	1-21, 1-23, 1-79
90030-0136	ADJUSTABLE ELBOW CONNECTION,EXT 12-G3/8	1-79, 6-79, 6-81
90030-0137	CONN. ELBOW WA 6-R1/8	1-15, 1-79
90030-0151	CONN. STR.,15-R1/2, EXT. THREAD	2-23

Part No	Description	Page No
90030-0162	CONN. STR. 6-M10X1, EXT. THREAD	2-17, 2-19, 2-21
90030-0164	CONN. T-PIPE T6-LL	1-99, 1-101
90030-0170	REDUCER 2521-1/4"X3/8"	1-79
90030-0181	CONN. STR. GE 12-3/8-18 NPTF	6-83, 6-85
90030-0184	CONN. STR. GA-6-G1/8	1-9, 1-11, 1-35, 1-39, 1-41, 1-67, 1-69, 1-95, 1-97, 1-99, 1-101, 1-135, 1-141, 4-61, 4-63, 4-65, 6-79, 6-81, 7-67
90030-0186	CONN. STR. GA-10-G1/4	2-45, 2-47
90030-0187	CONN. STR. GA-12-G3/8	1-35, 1-37, 1-39, 1-67, 1-69, 1-139, 1-141, 2-45, 2-47
90030-0188	CONN. STR. GA-15-G1/2	6-63, 6-79, 6-81
90030-0200	CONN. ELBOW, 6-M10X1, EXT.THREAD	2-17, 2-19, 2-21
90030-0202	CONN. STR., 6-G1/4, EXT. THREAD	1-95, 1-97
90030-0203	ADJUSTABLE ELBOW CONNECTION,EXT 6-G1/4	1-95, 1-97
90030-0212	NIPPLES, REDUSING, INT. THR. NO. 2521	1-67, 1-69
90030-0213	CONN. STR. M12 MSC1/2K-316 EXT. TAPPERED	1-67, 1-69
90030-0230	CONN. BULKHEAD SV 6-	1-9, 1-11, 2-45, 2-47
90030-0233	CONN. STR., 6-G1/8, EXT. THREAD	1-9, 1-11
90030-0234	CONN. ELBOW, 6-R1/8 , EXT.THREAD	1-9, 1-11, 1-95, 1-97
90030-0336	CONN. STRAIGHT, 316L-12M-BVCO-3	1-81
90030-0338	NUT, PIPE & CONNECTORS, SS-8-BVCO-4	1-81
90030-0348	CONN. STR., 6-G3/8, INT. THREAD	1-79
90030-0549	CONN. STRAIGHT, BULKHEAD, SS-4-VCO-61	1-19
90030-0630	REDUCER, 1,5MM, M6, NO. 815406	6-91, 6-93
90031-0051	BASEPLATE, 10-SLOT	10-39
90031-0053	BASEPLATE,10-SLOT	10-41, 10-43
90031-0057	PLC, DIGITAL INPUT MODULE	10-39, 10-41, 10-43
90031-0058	PLC, DIGITAL INPUT MODULE	10-39
90031-0059	PLC, DIGITAL OUTPUT MODULE	10-39, 10-41, 10-43
90031-0062	PLC, ANALOG OUTPUT MODULE 8PT/CURR/VOLT	10-39
90031-0063	PLC,ANALOG COMBO MODULE,IN-4PT/OUT-2PT	10-39
90031-0068	PLC, POWER SUPPLY	10-39, 10-41, 10-43
90031-0075	CPU363, SERIAL COMMUNICATION	10-39
90031-0305	I/O EXPANSION CABLE	10-39, 10-41
90032-0014	DISTR. BLOCK & DIST.5/16-24UNF X6	2-17, 2-19, 2-21
90032-0026	DISTR. BLOCK, 5/16-24UNF X2	2-17, 2-19, 2-21
90032-0030	DISTR. BLOCK, 5/16-24UNF X3	2-17, 2-19, 2-21
90032-0031	DISTR. BLOCK, 5/16-24UNF X5	2-17, 2-19, 2-21
90032-0038	BLOCK 2 WAYS	2-17, 2-19, 2-21
90032-0039	BLOCK 4 WAYS	2-17, 2-19, 2-21, 3-13, 3-15, 5-43
90032-0040	BLOCK 6 WAYS	3-9, 3-11, 5-17, 5-43
90036-0057	LIGHT BULB, BA9S 28V	7-17
90036-0068	BULB 6.5W 24V	2-39, 2-51
90038-0024	RECTIFIER, 10/22A SKD 50/04A3	10-85, 10-87
90041-0068	DATACABLE MODEM PC	9-17
90041-0078	REMOTE COMMUNIKATION LINK BOARD,E000014B	2-69
90041-0079	ADAPTER BACKLIGHT, 50000007	2-69
90041-0080	CABLE, CPU-LVDSCARD+DISPLAY-LVDSCARD	10-81
90041-0082	CABLE, DISPLAY POWER, 2223-0022-018	2-69
90041-0083	HOST COMM. LINK BOARD LVDS, E000013A-02	10-81
90041-0086	CABLE, COM 2, 2223-0012-015	10-81
90041-0087	SERIAL CARD 2 CHANNEL RS486/422 BOARD	10-81
90041-0090	HARD DISC 2,5" , U036403A	10-81
90041-0092	FLEX BOX INNOSCAN E100006A	10-81
90041-0093	DISPLAY, TOSHIBA 12,1"	2-69
90041-0099	IR TOUCH PCB, 12.1" , IRT 12I1-V2.1	2-69
90041-0103	DATA CABLE DISPLAY, E000018B	2-69
90041-0104	CHASSIS FOR TOUCH, 12,1" , M0089A39	2-69
90042-0134	SOLENOID VALVE ASCO SCG 210 802 24VDC	6-95
90042-0171	SOLENOID VALVE BUERKERT	1-9, 1-11, 1-95, 1-97
90042-0172	SOLENOID VALVE 4023/1005/1032 24VDC	6-27, 6-29
90042-0173	SOLENOID VALVE BURKERT	6-21, 6-39, 6-41
90042-0255	VALVE BODY 5/2 UNISTABLE	6-43, 6-45, 6-47, 6-49, 6-51, 6-53
90042-0398	CONTACT 3 POLE+EARTH	6-77
90042-0535	TERMINAL BOARD 19 CORDS	6-43, 6-45, 6-47, 6-49, 6-51, 6-53
90042-0539	PILOT VALVE L=350MM	6-43, 6-45, 6-47, 6-49, 6-51, 6-53
90042-0550	PROTECTION PLUG FOR UNUSED CONNECTION	6-43, 6-45, 6-47, 6-49, 6-51, 6-53
90042-0565	PORTED END PIECE ISO VDMA 01	6-43, 6-45, 6-47, 6-49, 6-51, 6-53
90042-0566	BASE PLATE ISO VDMA 01	6-43, 6-45, 6-47, 6-49, 6-51, 6-53
90042-0567	BLANK PLATE VDMA SIZE 01	6-43, 6-45, 6-47, 6-49, 6-51, 6-53
90042-0579	VALVE BODY 2X3/2 NORM CLOSE	6-43, 6-45, 6-47, 6-49, 6-51, 6-53
90042-0580	VALVE BODY 5/2 BISTABLE	6-43, 6-45, 6-47, 6-49, 6-51, 6-53
90042-0581	BASE PLATE ISO VDMA 01	6-43, 6-45, 6-47, 6-49, 6-51, 6-53
90042-0586	BASE PLATE ISO VDMA 01	6-43, 6-45, 6-47, 6-49, 6-51, 6-53
90042-0587	BLANKING KIT SEALS VDMA SIZE 01	6-43, 6-45, 6-47, 6-49, 6-51, 6-53
90043-0002	PRESSURE GAUGE, 2040 D=63 MM	6-87
90043-0006	PRESSURE GAUGE, 2041 D=63 MM	6-27
90043-0021	PRESSURE GAUGE WIEGAND 0-1 BAR 1/8"	6-31
90043-0034	PRESSURE GAUGE	1-99, 1-101
90043-0036	PRESSURE GAUGE, 2041 D=63 MM	6-33
90043-0068	PRESSURE GAUGE	6-31
90043-0069	PRESSURE GAUGE 0-4BAR WIEGAND 2040	6-31, 6-39, 6-41
90043-0082	PRESSURE GAUGE, 2740, D=63 MM	1-79
90043-0095	PRESSURE GAUGE, 2740, D=63 MM, GLYC.	6-37
90043-0302	SCREW	1-99, 1-101
90044-0084	LIMIT SW. 14 CE1-4	1-21, 1-23

Part No	Description	Page No
90044-0103	KEY SAFETY SWITCH AZ 15 ZVR	8-39, 8-41
90044-0104	PROX.SWITCH IFM IN 3002	1-15, 1-19, 1-59, 8-39, 8-41
90044-0116	CYLINDER,SENSOR	1-37
90044-0117	PROX.SW. IX 0208	5-67
90044-0124	PROX.SW. 922AB2XM-A9P-050-LZ-876	3-33
90044-0139	KEY SAF.SW. AZ16-02 ZVR K-2254	1-49, 1-51, 7-31, 8-19, 8-21, 8-23
90044-0151	LIMIT SW. GLEB24C	3-27
90044-0192	LIMIT SW. SZ2586.000	10-85, 10-87
90044-0194	PROX.SW. IN5329/IN3002-BPKG	1-49, 1-51, 1-57, 1-67, 1-69, 1-141, 7-23, 7-25, 7-27, 7-29, 7-35, 7-37, 7-39, 7-41
90044-0310	KEY FOR SAFETY SWITCH, AZ 15/16 B1	1-49, 1-51, 2-27, 2-29, 7-31, 8-19, 8-21, 8-23
90045-0087	MOTOR 3GAA 071002-CSA M2AA 71B	6-67
90045-0161	MOTOR MGC 11	6-77
90045-0228	MOTOR 7AA80M4-B5	6-91, 6-93
90045-0376	CONNECTOR KIT 9-032-011-970	10-13, 10-15, 10-17
90048-0046	OIL PUMP	6-89
90050-0011	BOTTLE	6-13
90050-0012	BOTTLE, 50ML PLASTIC	8-29, 8-47
90051-0035	KNOB, EXTERNAL THREAD. NO. 8308-1135	7-21
90051-0077	HANDLE	8-29, 8-47
90051-0089	SHIFTER HANDLE	8-33, 8-35
90053-0029	COUNTER, F524.800FA3C 24VDC	10-141, 10-143
90053-0031	HOUR COUNTER, B 609.10 10-50VDC	10-141, 10-143
90055-0100	Y-CONNECTION, 6-6	1-157, 1-159, 1-167, 1-169, 7-67
90055-0101	Y-CONNECTION, 8-8	6-15, 6-17, 6-19
90055-0118	ELBOW PIPE JOINT -8MM	6-15, 6-17, 6-19, 6-39, 6-41, 6-43, 6-45, 6-47, 6-49, 6-51, 6-53
90055-0154	HOSE COUPLING	5-35
90055-0172	ELBOW WITH TAILPIECE 8/8 MM	6-43, 6-45, 6-47, 6-49, 6-51, 6-53
90055-0217	ELBOW PIPE JOINT	2-5, 6-31, 6-43, 6-45, 6-47, 6-49, 6-51, 6-53
90056-0071	WORM GEAR	5-21
90059-0001	THERMOSTAT	8-51
90061-0027	ANGLE ENCODER 670900035	3-33
90062-0015	LOCK WASHER SERRAT.EXT.GEAR,6,4/11 H=0,7	10-79, 10-97, 10-99, 10-123, 10-125, 10-127, 10-129, 10-141, 10-143, 10-151, 10-155, 10-157
90062-0022	LOCKING WASHER D=6,4/11	10-141, 10-143
90062-0058	LOCK WASHER SERRAT.EXT.GEAR,3,2/6 H=0,4	10-29, 10-31
90062-0061	LOCK WASHER NORD-LOCK,6,5/10,8, H=2,6	10-13, 10-15, 10-17, 10-29, 10-31
90064-0085	PUSH BUTTON, RED	7-17, 8-63
90064-0098	PUSH BUTTON, CLEAR	7-17
90064-0124	SWITCH, EM. STOP, ZB2-BS844+ZB2-BZ1045	1-147, 1-149, 10-123, 10-125
90064-0315	LAMP REMOVER, NO:700	9-9
90069-0600	GEARS, WORM MOTOR ODM90-60KE5	1-47
90074-0001	CABLE CLIPS, D=10 MM	1-167, 1-169
90074-0026	PIPE CLIP FOR TUBE D=24-35 MM	3-5
90075-0124	CONTACTOR, 4KW 24VDC	10-45
90075-0125	CONTACTOR, 7,5KW 24VDC	10-45
90075-0127	CONTACTOR, 4KW 24VDC	10-45, 10-57
90075-0128	CONTACTOR, 7,5KW 24VDC	10-45, 10-57
90075-0141	CONTACTOR, 4KW 24VDC	10-57
90077-0079	FEED THROUGH TERMINAL, 02943.6	9-21, 9-27, 9-29
90077-0102	TERMINAL BLOCK, 1952.2	8-51
90077-0113	FEED THROUGH TERMINAL, 10-00102150-1	5-59, 5-61, 10-69, 10-71
90077-0114	END PLATE, WAP/WDK 2,5	10-69, 10-71
90077-0122	END PLATE AP/AKZ 2,5	1-13
90077-0123	FEED THROUGH TERMINAL, 017596	1-13
90077-0328	RAIL TS15/5	9-21, 9-27, 9-29
90082-0013	OVER VOLT. PROTECT. PU 4C-R 230 VAC	10-153
90082-0301	OVERVOLTOLTAGE PROTECTOR	9-9
90083-0016	PLATE FOR AXK 2035	3-13, 3-15
90087-0002	PIPE PLUG	2-5
90087-0019	PLUG M10X1 STAINLESS	3-9, 3-11, 5-17, 5-43
90087-0036	PLUG	6-31
90089-0004	REDUCING SLEEVE, PR28,3/PR22,5	8-63
90089-0005	REDUCING SLEEVE, PR37/PR28,3	8-63
90089-0007	REDUCING SLEEVE, PR18,6/PR22,5	8-13
90090-0005	BALL, D=3 MM	4-35, 4-37
90090-0008	BALL, D=7,1 MM	2-17, 2-19, 2-21
90090-0016	BALL, D=15 MM	1-167, 1-169
90091-0089	ROD SEAL, GLIDORING 16X22X2,5 MM	4-35, 4-37
90091-0091	ROD SEAL, GLIDORING 10X14X1,7 MM	4-5, 4-7, 4-9, 4-11
90091-0106	SCRAPER 30X40X10 MM	2-5
90091-0137	RADIAL SEAL VARILIP 20X35X7MM	6-67
90091-0162	WEAR RING 16X19X3,2 MM	4-35, 4-37
90091-0169	WEAR RING 12X15X3,2 MM	4-5, 4-7, 4-9, 4-11
90091-0170	WEAR RING 25X30X4,2 MM	4-35, 4-37
90091-0214	ROD SEAL, GLIDORING 16X20,9X2,2 MM	4-35, 4-37
90091-0215	ROD SEAL, GLIDORING 25X32,5X3,2 MM	4-35, 4-37
90091-0216	PISTON SEAL, GLIDORING 7,1X12X2,2 MM	4-5, 4-7, 4-9, 4-11
90091-0233	RADIAL SEAL 85X110X12 MM DUST LIP	5-67
90091-0237	ROD SEAL, GLIDORING 20X27,5X3 MM	1-83, 1-85, 1-87
90091-0238	WEAR RING 20X22X10 MM	1-83, 1-85, 1-87
90091-0266	SEAL RING 10,4X16,3X2,5 MM	1-81, 9-35
90091-0305	RADIAL SEAL 40X55X7 MM DUST LIP	5-67
90091-0306	RADIAL SEAL 30X47X7 MM DUST LIP	5-43

Part No	Description	Page No
90091-0335	PISTON SEAL,GLIDORING 62,5X70X3 MM	1-85
90091-0336	PISTON SEAL, GLIDORING 79X90X4 MM	1-83, 1-87
90092-0052	METERING VALVE 10 MM3	2-17, 2-19, 2-21, 3-9, 3-11, 3-13, 3-15, 4-35, 4-37, 4-41, 4-43, 4-45, 4-47, 4-49, 4-61, 4-63, 5-17
90092-0053	METERING VALVE 30 MM3	2-17, 2-19, 2-21, 3-9, 3-11, 3-13, 3-15, 4-35, 4-37, 4-61, 4-63, 5-43
90092-0054	METERING VALVE 50 MM3	5-43
90094-0005	RAIL BRACKET	10-61, 10-63, 10-69, 10-71
90095-0069	OVERLOAD PROTECTION, PKZM 0,25 A	10-135
90095-0073	OVERLOAD PROTECTION, PKZM 1,6 A	10-135
90095-0075	OVERLOAD PROTECTION, PKZM 4 A	10-135
90095-0077	OVERLOAD PROTECTION, PKZM 6-10 A	10-135
90097-0017	FLAT PIN PLUG 6,3MM	10-7, 10-9, 10-11
90097-0019	FLAT PIN PLUG 2,8MM	10-7, 10-9, 10-11
90099-0001	NUT PR 15,2 MäSSING	2-25, 6-11, 6-79, 6-81
90099-0002	NUT PR 18,6 BRASS	2-7, 6-11
90099-0003	NUT	6-13
90099-0011	NUT PR 37 BRASS	1-147, 1-149, 6-11
90099-0057	NUT HEX. M20X1,5	5-27
90099-0085	NUT	2-49
90099-0087	NUT PR=20,4	2-25, 6-11
90099-0104	NUT, PR 15,2 (PG9)	1-151, 1-153, 10-89, 10-91, 10-93, 10-95, 10-123, 10-125
90099-0110	NUT, PR 22,5 (PG16)	1-151, 1-153, 10-89, 10-91, 10-93, 10-95, 10-159
90099-0117	NUT, PR 18,6 (PG11)	1-147, 1-149
90099-0119	NUT, PR 28,3 (PG21)	1-147, 1-149, 1-151, 1-153, 10-89, 10-91, 10-93, 10-95
90099-0120	NUT PR 37 (PG29)	1-9, 1-11, 1-147, 1-149, 1-151, 1-153, 10-89, 10-91, 10-93, 10-95
90110-0028	CONTACT UNIT 4-POLE	10-79
90110-0095	CONNECTOR 3 POLE + EARTH	6-91, 6-93
90110-0127	COAXIAL CONNECTOR, GE 15057C10HBN	10-105, 10-107, 10-109, 10-111, 10-113, 10-115, 10-117, 10-119, 10-121
90110-0150	MALE INSERT 121110 0000	7-33, 8-63
90110-0151	FEMALE INSERT 24-POL 121130 0000	10-101, 10-105, 10-107, 10-109, 10-111, 10-113, 10-115, 10-117, 10-119, 10-121
90110-0152	CABLE HOOD 24-POL 70.352.2428.1	8-63
90110-0153	CHASSIS HOUSING 24-P CHI 24, 121240 0000	10-101, 10-105, 10-107, 10-109, 10-111, 10-113, 10-115, 10-117, 10-119, 10-121
90110-0156	MALE INSERT 70.210.0653.0	7-33
90110-0163	FEMALE INSERT 70 300 0640 0	10-159
90110-0170	FEMALE INSERT 10-POLE	8-63
90110-0171	COVER 10-POLE	8-63
90110-0207	SOCKET	6-77
90110-0216	MALE INSERT 70 310 1040 0	2-51
90110-0226	CABLE HOOD 6-POL 70.350.0628.0	10-159
90110-0243	CONTACT HOUSING 16-POL 70.320.1628.0	10-105, 10-107, 10-109, 10-111, 10-113, 10-115, 10-117, 10-119, 10-121
90110-0244	CABLE HOOD 6-POL 70.350.1628.0	7-33
90110-0247	FEMALE INSERT 70.200.0653.0	10-105, 10-107, 10-109, 10-111, 10-113, 10-115, 10-117, 10-119, 10-121
90110-0296	CONTACT SCREW	10-97, 10-99, 10-105, 10-107, 10-109, 10-111, 10-113, 10-115, 10-117, 10-119, 10-121
90110-0346	CABLE HOOD 1211220 00 00	7-33
90110-0371	PLUG HOOD	8-13, 8-63
90110-0383	CONTACT COVER 15 PIN	9-17
90110-0518	PLINTH 15 PIN	9-17
90111-0120	SWITCH, 2 POS.704.510 .0A+704.901.5/A	10-141, 10-143
90111-0122	KEY SWITCH, 2 NO CONTACTS	10-141, 10-143
90111-0124	KEY SWITCH, 1NO,1NC CONTACT	10-141, 10-143
90111-0172	EARTH FAULT BREAKER, F 362-25/0.03	10-131
90113-0069	PRESSURE REGULATOR	6-31
90113-0076	PRESSURE REGULATOR	6-31
90113-0085	PRESSURE REGULATOR	6-33
90113-0128	FILTER	6-33
90113-0374	SLOW STARTING VALVE	6-33
90113-0375	PRESSURE DISTRIBUTION	6-33
90113-0377	SHUT-OFF VALVE	6-33
90113-0378	SHUT-OFF VALVE	6-33
90113-0379	NUT	6-31
90113-0387	FILTER ELEMENT 40æM FOR 90113-0094	6-33
90115-0054	ROD END, ID=8 MM, M8X1,25	8-55
90115-0173	ROD END, ID=6 MM, M6X1	2-15
90115-0181	ROD END, ID=10 MM M10X1,5	5-13, 5-15
90115-0182	ROD END, ID=10 MM M10X1,5LH	5-13, 5-15
90119-0056	RELAY, AUXILIARY MK3P5-S 24VDC	10-27
90119-0063	OPTO-RELAY, DC/DC AMMS-10-1/30VDC	10-37
90119-0067	SOLID-STATE RELAY, H12WD4850	10-25, 10-47, 10-49, 10-51, 10-53
90119-0072	SAFETY RELAY, JSBR4	10-37
90119-0084	EXPANSION RELAY, JSR1T-500MS	10-37
90119-0086	RELAY, AUXILIARY MY4IN4 24VDC	10-27
90119-0089	SAFETY RELAY, JSBT4 24VDC	10-37
90119-0104	OPTO COUPLER AMMS 50070	10-37
90119-0109	RELAY OMRON 24VDC MY4H	10-27
90119-0309	BASE UNIT, TYPE PYF 14AE	10-27
90119-0310	CLAMP, TYPE PYC-A1	10-27
90121-0132	RESISTANCE FIXED, 0,51 KOHM, 0,25 W	10-69, 10-71
90125-0020	PLATE	1-39

Part No	Description	Page No
90129-0006	BASE, S3-B	10-27
90134-0003	BUSHING	2-17, 2-19, 2-21
90134-0004	PIPE CONNECTION R1/8	5-17, 5-43
90134-0030	SLEEVE FOR PLASTIC TUBE	2-17, 2-19, 2-21
90134-0031	SLEEVE FOR PLASTIC TUBE	2-17, 2-19, 2-21, 3-9, 3-11, 5-17, 5-43
90134-0034	NIPPLE	2-17, 2-19, 2-21, 2-25
90134-0038	BUSHING/NUT INLET/OUTLET 4 MM	2-17, 2-19, 2-21, 3-9, 3-11, 3-13, 3-15, 5-43
90134-0039	BUSHING VALVE CONNECTION 2,5 MM	2-17, 2-19, 2-21, 3-9, 3-11, 3-13, 3-15, 4-49, 4-61, 4-63, 5-17, 5-43
90134-0040	BUSHING VALVE CONNECTION 4 MM	5-43
90134-0042	SPACER DOSING VALVE	4-35, 4-37
90134-0045	PLUG M12X1	4-35, 4-37
90134-0047	CONNECTION FOR DOSING VALVE	4-35, 4-37
90134-0051	SPACING COLLAR DOSING BLOCK	5-43
90134-0052	PLUG DOSING BLOCK	3-9, 3-11, 5-43
90134-0055	BUSHING/NUT INLET/OUTLET 6 MM	5-43
90134-0058	CONNECTION	3-5, 3-9, 3-11, 3-13, 3-15, 4-5, 4-7, 4-9, 4-11, 4-35, 4-37, 4-41, 4-43, 4-45, 4-47, 4-49, 5-13, 5-15
90134-0065	CONNECTION M6 TUBE 2,5 MM	5-47
90134-0066	CONNECTION M6 TUBE 4 MM	4-61, 4-63
90134-0068	CONNECTION	3-29, 3-31, 4-41, 4-43, 4-45, 4-47, 4-61, 4-63
90134-0081	REDUCTION SLEEVE M10X1/R 1/8"	6-89
90135-0019	CLAMP ZB 35	10-75, 10-77
90135-0026	EARTH TERMINAL, 3802.6	9-21, 9-27, 9-29
90135-0034	SHIELD CLAMP KLBU 3-8	10-35, 10-73
90135-0039	SHIELD CLIP KLBU 4-13.5	10-23, 10-35, 10-73
90135-0042	EARTH TERMINAL, 130336	1-13
90135-0044	EARTH WIRE, L=320 MM 16 MM2	10-79, 10-123, 10-125, 10-127, 10-129, 10-141, 10-143, 10-155, 10-157
90136-0001	PLUG, EXT. THREAD, NO. 100727	1-7, 1-43, 1-45
90136-0002	PLUG 5/16"24	2-17, 2-19, 2-21
90137-0010	BANJO CONN. M6, D=2,5 MM	2-5
90140-0010	T-PIPE, INT. THREAD, 20031/2	6-27, 6-95
90140-0015	T-PIPE, INT. THREAD, 2003-1/8	1-9, 1-11, 6-39, 6-41
90140-0023	T-PIPE, INT. THREAD, NO. 2070-3/8-3/8	6-95
90141-0015	RETAINING RING FOR SHAFT DIN 471 8 A2	7-13, 7-47, 7-51, 7-53, 8-11, 11-27
90141-0016	RETAINING RING FOR SHAFT DIN 471 10 A2	1-35, 7-13, 7-19, 7-21, 7-23, 7-25, 7-27, 7-29
90141-0017	RETAINING RING FOR SHAFT DIN 471 17 A2	1-19, 5-45
90141-0022	SNAP RING B 16	1-41, 1-63
90142-0005	HOSE	3-5
90143-0010	STRIP	2-5
90143-0012	STRIP	2-5
90143-0020	STRIP	6-65
90143-0028	STRIP	5-39
90143-0029	STRIP	8-29, 8-47
90143-0057	STRIP EMKA 1011-05 21X11MM	10-85, 10-87
90143-0059	SEAL STRIP 4610069	1-9, 1-11, 2-57, 10-159
90143-0060	EDGE STRIP 9,5X6,3MM BLACK PVC	2-45, 2-47, 6-11, 8-9, 8-63
90143-0062	STRIP	6-57
90143-0068	RUBBERSTRIP EMKA 1011-06	2-27, 2-29, 2-31, 2-33, 2-61, 2-63, 6-5, 6-7, 8-9
90143-0073	RUBBER STRIP	10-85, 10-87
90143-0076	PROFILE	2-41, 2-43
90143-0094	SEAL	10-127, 10-129, 10-151, 10-161
90144-0003	TAPE	6-99, 9-37
90144-0030	TAPE	8-53
90144-0072	TAPE SCOTCH VHBS 4945 W=12,7MM	8-9, 10-103, 10-139, 10-155
90144-0073	TREBOFLON-TAPE W=13MM	1-7, 1-9, 1-11, 1-79, 1-95, 1-97, 3-5, 5-43, 6-67
90144-0074	SHIELDING SEAL STRIP EMC, 3,17X3,17 MM	2-69
90148-0037	HOSE	2-17, 2-19, 2-21
90148-0038	HOSE	2-17, 2-19, 2-21
90151-0001	BRASS PIPE DI=2,6 MM	2-17, 2-19, 2-21
90152-0016	HOSE (SPIRAL)	2-35
90152-0017	HOSE (SPIRAL)	2-37
90152-0050	SPIRAL CONDUIT, 20X13, UL 1313	1-21, 1-23, 8-65
90152-0051	SPIRAL CONDUIT, 25X18, UL 1816	2-5, 2-27, 2-29, 2-65, 3-7, 5-39, 6-61, 6-67, 6-91, 6-93, 7-17, 7-33, 8-13, 8-19, 8-21, 8-23, 8-63
90152-0058	SPIRAL CONDUIT, 15X9, UL 0909	5-67, 8-63
90152-0059	SPIRAL CONDUIT, 18X12, UL 1211	2-5, 2-59, 6-13, 6-63, 6-77, 6-79, 6-81, 6-89, 6-91, 6-93, 8-51, 8-63, 8-65
90152-0060	SPIRAL CONDUIT, 42X35, UL3529	1-9, 1-11, 2-49
90152-0070	METAL HOSE, 32,5X26, UL 2621	1-21, 1-23, 1-43, 1-45, 2-5, 5-43, 7-33, 8-65
90153-0015	ADHESIVE,LOCTITE IS 496/CYANOLOT 303	4-5, 4-7, 4-9, 4-11
90153-0016	ADHESIVE,TUBE 100G RHODORSIL CAF 3	1-21, 1-23
90153-0017	ADHESIVE, 2963 TUBE 160G	2-5
90153-0020	ADHESIVE, BOSTIK 1782 125ML	1-43, 1-45
90153-0023	ADHESIVE, SILICON 251470 TUB 90CC	1-21, 1-23
90153-0035	ADHESIVE, CLIMAFLEX 1632864	6-15, 6-17, 6-19
90153-0043	ADHESIVE, LOCTITE 495 20G	1-9, 1-11
90153-0048	ADHESIVE,DEVCON TYPE 5-MIN-EPOXI 28G	6-63
90155-0008	HANGER CHAIN, 18	1-15, 1-19
90155-0016	HANGER CHAIN, HL3-2	1-137
90157-0016	LOCKING FLUID	1-161, 2-5, 3-5, 3-9, 3-11, 3-13, 3-15, 3-19, 3-21, 7-11
90157-0021	LOCKING FLUID LOCTITE 270	4-57
90157-0022	SEALING COMPOUND	2-5, 2-31, 2-33, 5-43

Part No	Description	Page No
90157-0037	SEALING COMPOUND	1-67, 1-69
90157-0041	SEALING COMPOUND	2-27, 2-29, 2-57, 2-61, 2-63, 6-5
90161-0001	O-RING MATERIAL 3 MM	2-11, 2-13
90163-0013	QUICK COUPLING, (F) LP 006-0-WR013-01-2	2-35, 2-37
90163-0014	QUICK COUPLING, (M) LP-006-1-WR013	6-89
90163-0015	QUICK COUPLING, (M) LP-006-1-WR513	2-35, 2-37
90163-0016	QUICK COUPLING, (F) LP 006-0-WR013	6-33
90163-0041	HOSE NIPPLE, EXT.THR. 3/8-12 MM	1-139, 6-89
90163-0046	SLEEVE LP-004-0-WR 0510-21-1 BRASS	5-43
90163-0048	NIPPLE LP-004-2-WR 510-23-1	5-17
90163-0052	HOSE NIPPLE, EXT.THR. 1/4-12 MM	5-21
90163-0057	QUICK COUPLING, (M) 5150-1/8	1-67, 1-69, 1-93
90163-0062	QUICK COUPLING, (F) 5053-1/8	1-67, 1-69, 1-93, 5-43
90163-0064	QUICK COUPLING, (M) LP-006-2-WR517	6-89
90163-0076	QUICK COUPLING, (F) LP-006-0-WR021	6-91, 6-93
90163-0304	QUICK COUPLING, LP-006-5-74-KU (DUST CAP	6-89
90164-0015	LIGHT FIXTURE, DWDCV111B/230V 50HZ	2-59, 8-63
90164-0301	HOLDING FIXTURE	2-7
90165-0002	CLIP	2-17, 2-19, 2-21, 3-9, 3-11, 3-13, 3-15
90165-0008	PIPE CLIP FOR TUBE D=10 MM	8-39, 8-41
90165-0010	CLIP	8-43, 8-45
90165-0019	TOOL CLIP, 81/3, OPEN, 20 - 30 MM	6-39, 6-41
90165-0022	PIPE CLIP, FOR TUBE D=2,5 MM, B-3570	2-17, 2-19, 2-21, 3-9, 3-11, 3-13, 3-15
90165-0023	CLIP	2-17, 2-19, 2-21
90165-0039	PIPE CLAMP, RSGU 1.15/12, D=15 MM	2-17, 2-19, 2-21
90165-0056	PIPE CLIP FOR TUBE D=4 MM	8-39, 8-41
90165-0057	PIPE CLIP FOR TUBE D=6 MM	6-89
90165-0065	PIPE CLAMP, RSGU 1.8/9, D=8 MM	2-17, 2-19, 2-21, 3-13, 3-15, 3-29, 3-31
90165-0099	PIPE CLAMP, DOUBLE, RBP-108, D=8 MM	2-25
90166-0008	HOSE 7/10 PVC TRANSP.	6-13
90166-0013	TUBE 8 MM PA BLUE	5-43, 6-15, 6-17, 6-19, 6-43, 6-45, 6-47, 6-49, 6-51, 6-53
90166-0059	HOSE PVC 12/16MM TRANSP.	8-19, 8-21, 8-23, 8-39, 8-41
90166-0060	HOSE 19/26-27 REINF.PVC	3-5
90166-0061	HOSE 4/8 PVC TRANSP.	6-39, 6-41
90166-0068	TUBE 12 MM PA BLUE	6-15, 6-17, 6-19, 7-67
90166-0081	TUBE 6 MM PA BLUE	2-17, 2-19, 2-21, 2-25, 6-15, 6-17, 6-19, 6-31, 6-43, 6-45, 6-47, 6-49, 6-51, 6-53, 7-67
90166-0089	HOSE 4/6.2 PE BLUE	5-31, 5-33
90166-0090	HOSE 6/8.4 PE BLUE	5-31
90166-0095	TUBE 4 MM PA BLUE	4-13, 4-15, 4-65, 7-19, 7-67
90166-0108	TUBE 6 MM PA,TRANSP.	2-17, 2-19, 2-21, 2-25, 5-29
90166-0109	TUBE 4 MM PA,TRANSP.	2-17, 2-19, 2-21, 3-13, 3-15, 4-61, 4-63, 5-17, 5-43
90166-0113	HOSE	5-21, 6-89
90166-0118	TUBE 8 MM PA BLACK	2-17, 2-19, 2-21, 2-25, 6-15, 6-17, 6-19, 6-33, 6-87
90166-0119	HOSE PUR 4/6 BLACK	1-99, 1-101, 1-157, 1-159, 6-15, 6-17, 6-19
90166-0124	TUBE 6 MM PA,TRANSP.	1-133
90166-0132	TUBE 6 MM PA,TRANSP.	1-7, 1-9, 1-11, 1-99, 1-101, 1-157, 1-159, 1-167, 1-169, 2-45, 2-47
90166-0133	TUBE 8 MM PA,TRANSP.	3-5
90166-0135	TUBE 10 MM PA BLACK	2-37
90166-0138	HOSE	1-139, 6-63, 8-29, 8-47
90166-0143	TUBE 2,5 MM PA,TRANSP.	3-9, 3-11, 3-13, 3-15, 4-35, 4-37, 4-49, 4-61, 4-63, 5-17, 5-43
90166-0159	RUBBER HOSE	4-19, 4-21, 4-23, 4-25
90166-0193	TUBE 6 MM PUR BLUE	7-19
90166-0194	TUBE 8 MM PUR BLUE	6-39, 6-41
90166-0196	TUBE 14MM PA BLUE	6-15, 6-17, 6-19, 6-95
90166-0244	RUBBER HOSE	6-61
90166-0245	RUBBER HOSE	6-61
90181-0037	CABLE DUCT, 25X40MM	10-161
90181-0053	CABLE DUCT, 40X80MM	10-163
90181-0054	CABLE DUCT, 60X80MM	10-79, 10-141, 10-143
90181-0057	CABLE DUCT, 120X80MM	10-165
90181-0060	CABLE DUCT, 40X100MM	10-13, 10-15, 10-17
90181-0061	CABLE DUCT, 60X100MM	10-13, 10-15, 10-17
90181-0062	CABLE DUCT, 100X100MM	10-13, 10-15, 10-17
90181-0064	LOCK ZP1 FOR CHANNEL T1	10-13, 10-15, 10-17, 10-141, 10-143
90181-0067	DIVIDING PLATE SEP80	10-13, 10-15, 10-17, 10-141, 10-143
90181-0088	PLASTIC RIVET, PR 52314	10-141, 10-143, 10-161
90181-0174	CABLE DUCT	10-13, 10-15, 10-17
90181-0190	CABLE DUCT, WALL BRACKET, B4 MINI	2-45, 2-47
90181-0313	RIVET DUCTAFIX R4	10-13, 10-15, 10-17, 10-127, 10-129, 10-163, 10-165
90187-0029	BALL VALVE G1/2, NPBR	6-27, 6-29, 6-95
90187-0051	BALL VALVE G3/8 PTFE	1-139
90187-0059	BALL VALVE FOR HYDR.PER. G1/2 3MM HOLE	6-63, 6-69
90187-0062	BALL VALVE G1/2, NPBR	6-87
90187-0082	BALL VALVE G1/2	1-67, 1-69
90187-0104	SAFETY VALVE, R3/4,	6-87
90187-0105	PURGING VALVE, G3/8 FOR WATER	1-21, 1-23
90187-0112	COCK VALVE, G1/4, 4-WAY, VITON	1-79
90187-0120	FLAP VALVE, G1/4, L=38	6-91, 6-93
90187-0176	ACTUATOR ECC 008 FOR DIAPHR. VALVE	1-15
90187-0325	DIAPHRAGM, 214/300 AO08 4-B -20-150§C	1-15
90194-0016	WARNING SIGN, RISK OF ELECTRIC SHOCK	1-13, 2-9, 5-59, 5-61
90194-0080	SIGN, IDENTIFICATION OF WIRING	10-157
90194-0152	SIGN, EARTH	10-29, 10-31

Part No	Description	Page No
90194-0163	SIGN, EARTH WITHIN CIRCLE	10-13, 10-15, 10-17, 10-79, 10-85, 10-87, 10-97, 10-99, 10-123, 10-125, 10-127, 10-129, 10-141, 10-143, 10-151, 10-155, 10-157
90195-0020	TERMINAL BLOCK, 1977.2	2-7, 6-13
90195-0028	TERM.BLOCK 6-POLE STEATIT	1-43, 1-45
90195-0029	CONN. LINK NO324 FOR -28	1-43, 1-45
90199-0020	LEVEL GLASS/THERMOM. FSA 76.1.1./T/12	6-91, 6-93
90201-0010	DIRECT CHECK VALVE, NO. DGMDC-3-Y-PK-41	6-91, 6-93
90201-0014	VALVE	6-91, 6-93
90201-0131	VALVE	6-91, 6-93
90201-0132	VALVE	6-91, 6-93
90201-0133	VALVE	6-91, 6-93
90201-0407	BOLT KIT	6-91, 6-93
90206-0031	HEATING ELEMENT 700+1200W,220V	1-39, 9-33
90206-0053	HEATING ELEMENT 230V 1200W	8-51
90206-0070	HEATING ELEMENT 6000W 380/220V	1-21, 1-23, 9-33
90206-0322	GASKET	1-39
90206-0326	JUNCTION BOX FOR 90206-56	1-21, 1-23
90207-0363	GASKET	1-81, 9-35
90207-0365	GASKET	1-81, 9-35
90208-0031	BUSHING	5-7
90208-0080	CLAMPING ELEMENT WITH SLEEVE, 25X34 MM	3-19, 3-21
90208-0091	CLAMPING ELEMENT WITH SLEEVE, 60X77 MM	3-19, 3-21
90208-0120	CONE CLAMP. ELEMENT 22/32, L=25	3-5
90214-0092	BALL BEARING, 17X30X7 MM	5-45
90214-0098	BALL BEARING, 15X35X11 MM	8-39, 8-41
90214-0122	BALL BEARING, 30X72X27 MM	5-9
90214-0138	BALL BEARING, 5X19X6 MM	7-35, 7-37, 7-39, 7-41
90214-0166	BALL BEARING, 20X37X12 MM	4-55
90214-0207	BALL BEARING, 15X32X9 MM	7-11
90214-0303	SEALING RING, 18,6X35X2 MM	1-57
90217-0041	NIPPLE LKBN, RD 60-6 - R1 1/2 M	5-51
90217-0203	UNION NUT, 1 APV, 07-01-276/17	1-15
90217-0204	ASEPT. MALE FITTING ISO, 03-32-406/42	1-137
90217-0206	UNION NUT, 1 1/2 APV, 07-01-376/17	1-137
90217-0207	ASEPT. MALE FITTING ISO, 03-32-456/42	1-67, 1-69
90217-0209	UNION NUT, 2 APV, 07-01-426/17	1-67, 1-69
90217-0312	CLAMP, ISO2852 FOR PIPE 101,6 MM	6-79, 6-81
90217-0313	GASKET 97,8X119X5,5 MM	6-79, 6-81
90217-0347	GASKET 32X22,6X3,6 MM	1-7, 1-15, 1-67, 1-69, 1-137, 1-139, 1-141
90217-0348	GASKET 35,4X46,8X4 MM	1-7, 1-67, 1-69, 1-137, 1-141
90217-0349	GASKET 48,4X59,8X4 MM	1-67, 1-69
90220-0034	THERMOCOUPLE CABLE K/ 2X0,5MM2	2-5, 5-23, 5-25
90220-0059	THERMOCOUPLE CABLE K/ 2X0,81MM2	1-15, 1-21, 1-23, 1-35, 1-39, 1-43, 1-45, 1-63, 1-67, 1-69, 1-141, 10-27, 10-141, 10-143
90220-0072	SCR. CABLE 4X0,34MM2	1-9, 1-11
90220-0085	CABLES, MULTI-CONDUCTOR SCREENED	1-183
90220-0091	PAIR TWISTED CABLE 2X2X0,25MM2	6-39, 6-41, 9-17, 10-83
90220-0092	PAIR TWISTED CABLE 3X2X0,25MM2	10-13, 10-15, 10-17
90220-0104	SCR. CABLE 4X1,5MM2	1-47, 2-5, 8-13, 9-3, 10-97, 10-99
90220-0105	SCR. CABLE 4X2,5MM2	3-7
90220-0107	SCR. CABLE 5X0,75MM2	4-13, 4-15
90220-0183	SCR. CABLE 2X0,34MM2	10-13, 10-15, 10-17, 10-39, 10-161
90220-0302	CLAMP FOR SCR.CABLE, 16MM, 55-016-89	2-69
90220-0304	CLAMP FOR SCR.CABLE, 24MM,	2-69
90220-0305	CLAMP FOR SCR.CABLE, 16MM,	10-29, 10-31
90224-0094	NIPPLE	6-95
90224-0296	CONN. BULKHEAD, ART.NO. 116 1500	6-39, 6-41
90224-0308	CONN. BANJO, ART. NO. 2023-1/8-1/8	1-67, 1-69, 1-93
90226-0452	MOUNTING SCREW	1-9, 1-11
90226-0455	BLIND PLATE ABB 1666060	10-127, 10-129
90230-0025	NON-RETURN VALVE, 12MM, L=85	1-79
90230-0026	NON-RETURN VALVE RHZ 10-PLR-ED	6-91, 6-93
90230-0028	NON-RETURN VALVE H 151 R 3/8"	6-23
90230-0062	NON RETURN VALVE, 6, OP. PRESS. 0,2 BAR	6-15, 6-17, 6-19
90230-0064	CHECK VALVE, 6 MM HIGH TEMP.	1-9, 1-11
90232-0103	PH.CELL E3S-CT61-L-5M	9-19, 9-23, 9-25
90232-0104	PH.CELL E3S-CT61-D-5M	9-19, 9-23, 9-25
90232-0123	PH.CELL WLL170-P135-6011723	8-65
90232-0347	FIBRE LL3-TB01 5 308050	8-63
90233-0027	TUBE FUSE, 16A	9-9, 10-133
90233-0028	TUBE FUSE, 10A	10-133
90233-0029	TUBE FUSE, 25A	9-9, 10-133
90233-0303	FUSE HOLDER, ST 10 1-POLE	10-133
90233-0304	FUSE HOLDER, ST 10 3-POLE	10-133
90235-0151	NON-RETURN VALVE	6-15, 6-17, 6-19
90235-0206	QUICK EXHAUST VALVE, SEU-1/8	5-31
90235-0259	VALVE	1-67, 1-69, 1-99, 1-101, 7-67
90235-0274	THROTTLE CHECK VALVE, G1/8", SCU-604-1/8	1-39, 1-57, 1-59, 1-67, 1-69, 1-129, 1-131
90235-0280	THROTTLE CHECK VALVES,M5	1-35, 1-157, 1-159
90235-0289	VALVE	7-13, 7-19
90235-0450	PLATE	6-39, 6-41
90235-0708	VALVE	6-39, 6-41
90235-0844	THROTTLE CHECK VALVE, M5, MANUAL, 6MM	2-15
90236-0041	BRACKET	1-9, 1-11

Part No	Description	Page No
90237-0046	MAGNETIC LOCK, 46X33X15 MM	7-31, 7-35, 7-37
90237-0128	LOCK CYLINDER, 1109-U3	2-61, 2-63, 6-5, 6-7, 8-9, 10-123, 10-155, 10-157
90237-0129	LOCK CYLINDER, 1109-U6	6-5, 10-125
90237-0150	TURNING HANDLE, NO. 1125-U190-0A	8-9, 10-123, 10-125, 10-155, 10-157
90237-0153	LOCK HOUSING, 1121-U26-0B	2-61, 2-63, 6-5, 6-7
90237-0154	LOCK HOUSING, 1121-U60-0C	8-9, 10-123, 10-125, 10-155, 10-157
90237-0155	LOCK ADAPTER, 1121-U40	8-9, 10-123, 10-125, 10-155, 10-157
90237-0156	LOCK BOLT, 1000-16	8-9, 10-123, 10-125, 10-155, 10-157
90237-0157	LOCK BOLT, 1000-230	10-79, 10-127, 10-129, 10-139, 10-141, 10-143, 10-147, 10-149
90237-0175	TURNING HANDLE	6-5, 6-7
90237-0176	TURNING HANDLE	2-61, 2-63, 10-123, 10-125, 10-155, 10-157
90237-0319	LOCK HOUSING, 1000-U134	10-79, 10-127, 10-129, 10-139, 10-141, 10-143, 10-147, 10-149
90237-0320	LOCK HOUSING, 1000-U136	10-79, 10-127, 10-129, 10-139, 10-141, 10-143, 10-147, 10-149
90237-0322	LOCK GASKET, 1000-U137	10-79, 10-127, 10-129, 10-139, 10-141, 10-143, 10-147, 10-149
90237-0323	LOCK O-RING, 1000-24	10-139, 10-147, 10-149
90239-0357	ROD END, CLEVIS WITH AXLE M10X1,25	4-13, 4-15
90239-0405	ROD END,BALL JOINT EYE M10X1,25	1-57, 2-11, 2-13
90239-0453	BRACKET	1-57, 1-59, 1-129, 1-131, 1-143
90239-0460	BRACKET	1-35
90239-0486	REAR,CLEVIS,MINI-ISO 16	2-15
90239-0487	REAR,CLEVIS,MINI-ISO 20-25	1-39
90239-0489	ROD END, CLEVIS WITH AXLE M6X1,25	1-177
90239-0491	ROD END,BALL JOINT EYE,MINI-ISO M6	7-19
90239-0516	ROD END, CLEVIS WITH AXLE M10X1,25	1-35, 1-37, 1-59, 1-129, 1-131, 1-143
90239-0532	ROD END, CLEVIS WITH AXLE M8X1,25	1-35, 1-39
90239-0773	CYLINDER	1-57, 1-59
90239-0779	CYLINDER	1-35, 1-129, 1-131, 1-143
90239-0817	DOUBLE ACTING, MINI-ISO, CYL.16-50	1-177
90239-0819	DOUBLE ACTING, MINI-ISO, CYL.16-100	7-13
90239-0840	DOUBLE ACTING, MINI-ISO, CYL.16-12	1-133
90239-0842	DOUBLE ACTING, MINI-ISO, CYL.16-50	2-15
90239-0847	DOUBLE ACTING, MINI-ISO, CYL.20-50	1-39
90240-0048	PLAIN BEAR,SELF ADJ.SPHER. 25X42X20 MM	3-9, 3-11, 3-13, 3-15
90240-0050	PLAIN BEAR,SELF ADJ. 20X35X24	3-9, 3-11, 3-13, 3-15
90240-0073	BEARING BUSHING W/O FL, 16X18X20 MM	2-11, 2-13
90240-0094	BEARING BUSHING W/O FL, 50X55X40 MM	5-27
90240-0121	FLANGE BUSHING, 8X10X12 MM	8-15
90240-0146	FLANGE BUSHING,15X21X20 MM	1-21, 1-23
90240-0152	PLAIN BEAR,SELF ADJ.SPHER.12X22X10 MM	4-55
90240-0172	FLANGE BUSHING, 8X12X10 MM	1-107, 1-109, 1-111, 1-113, 1-115, 1-117, 1-119, 1-123, 1-125, 1-129, 1-131
90240-0180	FLANGE BUSHING 10X14X15MM	4-59
90240-0262	FLANGE BUSHING, 12X14X12 MM	5-13, 5-15
90240-0287	BUSHING, 10X12X10 MM	7-49
90240-0301	BUSHING, 8X10X15 MM	5-13, 5-15
90240-0331	FLANGE BUSHING, 10X12X17 MM	5-63
90240-0332	FLANGE BUSHING, 16X18X12 MM	5-63
90242-0093	O-RING MATERIAL 1,5 MM	4-5, 4-7, 4-9, 4-11
90243-0061	AIR GUN, CEJN SERIE 204 ED: 90459-0173	2-35
90243-0133	CONTAINER	8-9
90243-0134	FLOW METER	6-35
90245-0029	TRANSFORMER, 1280-3660/TP 182	10-85, 10-87
90248-0026	HINGE, 1703-80X32	8-19, 8-21, 8-23, 8-39, 8-41
90248-0034	HINGE, 66073	6-39, 6-41
90257-0001	FILTER PLUG PARTNO 8145-00-140 TYP F14	1-9, 1-11
90257-0002	FILTER PLUG, NO. 8145-00-120 TYP F12	5-21
90258-0031	PIN, STRAIGHT SLOTTED SPRING FRP 3X20	4-55
90259-0308	CONN.TERM.K&M BK 25/3-PKZ0	10-135
90259-0311	3 POLE BUSBAR K&M B3.1/5	10-135
90259-0313	AUX. CONTACT K&M NHI21-PKZM0	10-135
90259-0315	BUS BAR 3-POLE, K&M B 3.1/2-PKZM1	10-135
90261-0049	PLUG, BLIND, PLASTIC, NO. SR1750	7-11
90261-0071	PLUG, BLIND, PLASTIC, NO. GPN500B58	1-21, 1-23
90261-0073	PLUG, BLIND, PLASTIC, NO. GPN250/15	5-21
90266-0006	TUBE	2-17, 2-19, 2-21
90266-0019	PIPE	2-17, 2-19, 2-21, 3-9, 3-11, 3-13, 3-15, 4-61, 4-63
90270-0017	COMPRESSOR NASH/ELMO 112 MB/4-2083	6-61
90270-0347	VALVE	6-27
90274-0045	PRESSURE GUARD, 14 KPA	2-9
90274-0056	PRESSURE SWITCH, 100 - 1200 KPA	6-39, 6-41
90274-0066	PRESSURE SWITCH, 5,516 - 689,5 KPA	1-9, 1-11
90274-0074	PRESSURE GUARD, 530 KPA	6-39, 6-41
90274-0084	PRESSURE GUARD, 1800 KPA	6-89
90277-0045	FILTER / 9900-05-BK	6-39, 6-41
90277-0046	FILTER / 9933-05-101	6-39, 6-41
90277-0055	FILTER HOUSING / MDS 4463 G 08 H	1-67, 1-69
90277-0062	FILTER HOUSING, SS-4TF2-60	1-7
90277-0104	FILTER F64B-2GN-ARO	1-9, 1-11
90277-0323	FILTER HOUSING / ART.NO 95S6-1/4 S 5430	1-9, 1-11, 6-39, 6-41
90277-0324	FILTER CARTRIDGE 050-11-A	1-9, 1-11, 6-39, 6-41
90277-0407	FILTER ELEMENT 60µ, SS-4F-K4-60	1-7
90287-0075	SCREW SLOT. PAN HEAD LKCS M6X12	2-5, 2-15, 2-57, 2-61, 2-63, 4-13, 4-15, 6-9, 6-57, 8-7, 8-9, 8-11
90287-0076	SCREW SLOT. PAN HEAD LKCS M6X20	2-5

Part No	Description	Page No
90287-0081	SCREW MC6S M6X10 129	3-5
90287-0106	SCREW SPRINGLOAD. SLOTTED HEAD M10X21	7-11
90287-0112	SCREW SPRINGLOAD. SLOTTED HEAD M8X16	7-21, 8-5
90287-0143	SCREW MC6S M6X25 129	3-13, 3-15
90287-0144	SCREW MC6S M6X35 129	3-13, 3-15
90287-0145	SCREW MC6S M5X16 129	3-19, 3-21
90287-0148	SCREW SPRINGLOAD. SLOTTED HEAD M5X12	7-61
90287-0163	SCREW SPRINGLOAD. SLOTTED HEAD M6X14	3-27
90287-0167	SCREW SPRINGLOAD. SOCK. HEX HEAD M6X20	8-33, 8-35
90287-0212	SCREW MC6S M5X85 129	6-15, 6-17, 6-19
90287-0316	SCREW	8-9
90287-0335	SCREW MC6S M8X90 A280	5-23, 5-25
90288-0066	ROLLER CHAIN, SINGLE 3/8 -365	1-21, 1-23
90296-0053	OIL	6-99
90296-0068	GREASE UNIWAY LI62 CARTRID.400GR	3-5, 4-35, 4-37
90296-0070	GREASE	5-9, 5-67
90296-0073	OIL	5-11, 5-21
90296-0075	OIL 54322-320 ACC TO M 1254.322	3-5, 6-99
90296-0091	LUBRICATION GREASE	1-177, 1-179
90297-0006	FLUORESCENT TUBE, PL9	2-7
90297-0306	BALLAST COIL 50/60 HZ	10-13, 10-15, 10-17
90298-0019	DETERGENT	6-99, 9-37
90299-0072	INK	8-29, 8-47
90303-0011	PROTECTIVE GOGGLES	9-11
90303-0012	PROTECTIVE GLOVES	9-11
90303-0013	APRON	9-11
90304-0020	LIQUID CONTAINER	6-87
90304-0307	ATTACHMENT PIPE	6-87
90316-0022	SPACER NUT DSNF M3060X20	2-69
90316-0023	SPACER NUT DSM M3055X8	2-69
90316-0029	SPACER NUT, M3X16	2-69
90316-0030	ELASTIC SCREW, 15060002	2-69
90321-0037	PUMP C-6125P EP 220V;50HZ	6-13
90321-0101	GEAR PUMP	6-77
90326-0012	PROTECTIVE COVER, T31A4618	1-15, 1-21, 1-23, 1-35, 1-39, 1-43, 1-45, 1-63, 1-67, 1-69, 1-141
90326-0020	PLUG, FEMALE YELLOW CR-AL	1-15, 1-21, 1-23, 1-35, 1-39, 1-43, 1-45, 1-63, 1-67, 1-69, 1-141
90326-0022	PLUG, MALE YELLOW CR-AL	1-15, 5-23, 5-25
90326-0048	THERMOCOUPLE, 12826-31	1-35, 1-39
90326-0051	THERMOCOUPLE, 12826-33	1-43, 1-45, 1-63, 1-141
90326-0052	THERMO ELEMENT	1-21, 1-23
90326-0057	THERMOCOUPLE, CR-AL	1-35
90326-0060	THERMOCOUPLE, CR-AL	1-15
90326-0077	CONTACT	5-23, 5-25
90326-0080	THERMOCOUPLE, 5110080-000	5-23, 5-25
90326-0089	THERMOCOUPLE, 5110-089-000	1-67, 1-69
90326-0304	LEAD IN, 9041-15-KS-UB60	1-35, 1-39
90326-0306	GLAND FITTING 9041-45-KS-KR.1/8" D=4,5MM	1-35, 1-39
90328-0001	SILENCER	6-33
90328-0003	SILENCER	1-67, 1-69, 1-99, 1-101
90328-0007	SILENCER	6-43, 6-45, 6-47, 6-49, 6-51, 6-53
90328-0012	SILENCER	1-15
90328-0017	SILENCER, D=6 MM	6-43, 6-45, 6-47, 6-49, 6-51, 6-53
90328-0020	SILENCER	1-177
90328-0026	SILENCER G1/4	1-9, 1-11, 1-93, 6-39, 6-41, 9-33
90328-0029	SILENCER M5	7-13
90330-0013	NIPPLES, EXT. THREAD. ISO 7/1 R1/4-R1/8	1-79, 1-95, 1-97, 6-39, 6-41
90330-0019	NIPPLES, EXT. THREAD. R1/2-R3/8	6-27
90330-0020	ELBOW, 90 INT. THREAD, R-2221/2	1-79, 6-63, 6-79, 6-81
90330-0021	NIPPLES, EXT. THREAD. R-207R1/2	1-67, 1-69, 1-79, 6-63
90330-0025	BUSHING, INT/EXT. THR. R1/4-RP1/8	1-9, 1-11, 1-79, 1-99, 1-101
90330-0026	PLUG, EXT. G-THREAD, G1/4	1-9, 1-11
90330-0029	PLUG, EXT. G-THREAD, R-236R3/8	1-37, 1-39, 6-79, 6-81, 6-83, 6-85, 6-91, 6-93
90330-0032	NIPPLES, EXT. THREAD. ISO 7/1 R1/8-R1/8	1-67, 1-69, 1-95, 1-97
90330-0037	PLUG, EXT. G-THREAD, G1/2	4-49, 6-61
90330-0043	NIPPLES, EXT. THREAD. R-207R1/4	1-9, 1-11, 1-79
90330-0046	PLUG, EXT. G-THREAD, R-236G3/4	2-45, 2-47
90330-0048	BUSHING, INT/EXT. THR. R1/2-RP3/8	1-79
90330-0049	T-PIPE, INT. THREAD, R-221R1/2	1-79
90330-0066	PLUG, EXT. G-THREAD, G1/8	1-93, 1-99, 1-101, 4-5, 4-7, 4-9, 4-11, 6-91, 6-93
90330-0078	BUSHING, INT/EXT. THR. R3/4-RP3/8	5-43
90330-0081	ELBOW, 90 INT. THREAD, R-222R1/4	1-79
90330-0083	NIPPLES, EXT. THREAD. R3/8-R1/4	1-9, 1-11
90330-0085	BUSHING, INT/EXT. THR. R1/2-RP1/4	5-21
90330-0095	T-PIPE, INT. THREAD, R-221-R1/8	1-95, 1-97
90330-0097	NIPPLES, EXT. THREAD, G1/8	2-23
90330-0099	ELBOW, 90 INT. THREAD, R-222R1/8	2-23
90330-0101	NIPPLES, EXT. THREAD, G1/4	5-45
90330-0105	NUT, HEXAGON, R3/8	1-99, 1-101
90330-0106	PIPE COUPLING	1-67, 1-69
90330-0169	ELBOW, 90 INT. THREAD, 4-4FE. SS	1-7
90332-0020	RECORDER, 6 CHANNELS 85-264VAC/DC	10-141, 10-143
90332-0324	INK WHEEL	9-9
90332-0325	PAPER FOR RECORDER 90332-20	9-9
90335-0008	COMP. SPRING 22490, 1,6X14,1X115	1-107, 1-109, 1-111, 1-113

Part No	Description	Page No
90335-0025	COMP. SPRING 22010, 1X11X26	8-61
90335-0027	COMP. SPRING 22170, 1,25X9,25X33	7-51, 7-53
90335-0036	COMP. SPRING 22450, 1,6X14,1X24	5-23, 5-25, 8-11
90335-0041	TENSION SPRING 42350, 2X14X68	8-19, 8-21, 8-23, 8-39, 8-41
90335-0064	COMP. SPRING 22270, 1,25X13,75X62,5	8-31
90335-0146	COMP. SPRING, 0,6X7,2X20	7-43, 7-51, 7-53
90335-0152	COMP. SPRING 22300, 1,25X17,25X40,5	5-47
90335-0216	TENSION SPRING 40910, 0,5X5,5X27,7	7-35, 7-37, 7-39, 7-41, 7-61
90337-0315	FILTERINSERT / MCS 4463	1-67, 1-69
90342-0013	BELLOWS	7-13
90344-0022	SPROCKET	3-27
90347-0004	VIBRATION DAMPER D=30 TH=M8 H=17 H2=21MM	2-53, 6-63
90347-0005	DAMPER, NO. F 1006 B	8-59
90347-0024	SHOCK ABSORBER, 370-120-400	7-59
90347-0054	DAMPER	8-37
90347-0079	DAMPER TFE 601	9-3
90347-0108	GAS SPRING NO. 03-08-100-084174	8-11
90347-0144	VIBRATION DAMPER, NO. RA 40EM-A	6-61
90347-0189	SHOCK ABSORBER, 370-050-400	5-27
90348-0007	FREE WHEEL COUPLING	1-47, 1-61
90355-0048	TORQUE RIGID COUPLING, 22X22 MM	3-17
90360-0020	STEAM TRAP / MK36/51 3/8"	1-67, 1-69
90360-0305	FLOAT, ART NO 10739920	6-79, 6-81
90410-0051	TEMPERATURE CONTROLLER, KS 40	10-141, 10-143
90411-0005	INSULATOR	1-43, 1-45
90413-0033	CODE INSERT SET C 2/16	8-25, 8-27, 8-43, 8-45
90413-0043	CODE INSERT SET	8-25, 8-27, 8-43, 8-45
90413-0044	CODE INSERT SET	8-25, 8-27, 8-43, 8-45
90413-0047	CODE INSERT SET A 2/16	8-25, 8-27, 8-43, 8-45
90415-0018	FILTER FOR LIME SEPARATING / D MOD.AD	6-27
90415-0019	FILTER / ART.NO. HH-M15-RG	6-27
90415-0022	FILTER / R1 1/2" TYP. 1012	5-51
90415-0033	OIL FILTER REFILLING UC-HP-1229-25	6-89
90417-0076	TIMING BELT T10X920X25 POLYURETH	3-5
90417-0292	TIMING BELT T10X690X16 POLYURETHANE	5-67
90419-0307	GASKET	2-39, 2-51
90424-0009	SPRAY NOZZLE 103 DEG	5-31
90424-0010	SPRAY NOZZLE 142 DEG BSPT 1/4 K5	5-43
90424-0016	SPRAY NOZZLE 103 DEG R 1/8 GG8W	5-31
90424-0017	SPRAY NOZZLE	1-65
90424-0025	SPRAY NOZZLE 145 DEG	5-45
90424-0027	SPRAY NOZZLE TIP, 8613-8V-TC	2-5
90424-0032	SPRAY NOZZLE 95 DEG	2-23
90424-0033	SPRAY NOZZLE 76 DEG	2-23
90424-0035	SPRAY NOZZLE 95 DEG	2-23
90424-0054	SPRAY NOZZLE 120 DEG	6-83, 6-85
90424-0070	SPRAY NOZZLE 61 DEG	5-53
90424-0304	GASKET	9-33
90426-0003	HAND SHOWER	2-37
90432-0023	BRAKE ORTLINGHAUS	3-5
90450-0033	CYLINDER	2-11, 2-13
90450-0281	DOUBLE ACTING,PROF.CYL 32-80	1-41, 1-63
90450-0306	DOUBLE ACTING, MINI-ISO, CYL. 12-25	7-19
90450-0328	DOUBLE ACTING,PROFILE CYL32-25	1-37
90450-0654	BRACKET,REAR,EYE WITH AXLE 32	4-13, 4-15
90450-0669	SENSOR, BRACKET SERIES 168	1-37, 1-63
90450-0756	BRACKET, REAR EYE 32	1-37
90453-0001	MODEM MA-12	9-17
90453-0002	MODEM MD-12 DC	10-83
90456-0001	INTOUCH OEM 2000 V.5.6B/6.0B HW KEY	10-79
90457-0011	HYDRAULIC TANK, 12 LI, NO A3-14010	6-91, 6-93
90457-0012	TANK LID, LID-12L, NO A3-14011	6-91, 6-93
90457-0013	PUMP-MOTOR BRACKET, LS-211, NO 1711121	6-91, 6-93
90457-0014	FLEXIBLE COUPLING, ND5-A, CON.10X19 MM	6-91, 6-93
90457-0015	HYDR.PUMP, TFP100/2,2-S-C001, NO 1111250	6-91, 6-93
90457-0016	HYDR. VALVE MANIFOLD BLOCK, NO A1-17253	6-91, 6-93
90457-0017	TANK RET. OUTLET PIPE, NO 8185-0187	6-91, 6-93
90457-0018	HYDR.ACCU, NO SBO210-0,32EI/112A-210AK60	6-91, 6-93
90457-0019	LEVEL PROBE, HMFB-S=45-0=80-0=90-T70	6-91, 6-93
90457-0021	PUMP CONN. ELBOW FLANGE T-26/12-3/8	6-91, 6-93
90457-0022	HYDR. HOSE, 6,4 & M16X1,5 STR+90DEGR.CON	6-91, 6-93
90457-0023	CONN.STRAIGHTG1/2-M22X1,5, VADKO15-RL/WD	6-91, 6-93
90457-0024	RETURNFILTER UNIT, RF-P/30-BB-010E1.0/-T	6-91, 6-93
90457-0027	INSERT, MULTI HOLE, E155M1X5/4X9	5-59, 5-61, 10-89, 10-91
90457-0028	INSERT, MULTI HOLE, E154M5X5	5-57
90457-0029	INSERT, MULTI HOLE, E156M5,9,11,19	2-49, 10-85, 10-87
90457-0030	INSERT, MULTI HOLE, EK155M4X9	5-59, 5-61
90457-0031	NORMAL WITHOUT INSERT, PG 36	2-49
90457-0047	SENSOR 2750-1-5111-1 W.ADAPTER PNP	1-63
90457-0049	TERMINAL BLOCK, 102230	10-69, 10-71, 10-75, 10-77
90457-0050	BULKHEAD HOUSING 149760	10-97, 10-99
90457-0051	END PLATE	5-59, 5-61, 10-61, 10-63, 10-65, 10-67, 10-69, 10-71
90457-0052	END PLATE	10-61, 10-63, 10-65, 10-67
90457-0054	FEED THROUGH TERMINAL, 161527	10-61, 10-63, 10-65, 10-67

Part No	Description	Page No
90457-0055	PROTECTION, 704-9645	10-141, 10-143
90457-0056	FAN 7450 ES	10-13, 10-15, 10-17
90457-0057	GRID FOR FAN LZ36	10-13, 10-15, 10-17
90457-0058	SIGN, LS SHORT STOP	10-141, 10-143
90457-0063	COOLING UNIT, KB17TB.CBB	10-159
90457-0086	BULKHEAD CONNECTOR 6MM	1-7, 1-99, 1-101, 2-45, 2-47
90457-0087	BULKHEAD CONNECTOR 12 MM	1-99, 1-101
90457-0100	ACCUMULATOR CRVZS-2	6-55
90457-0101	FLOW METER FOR AIR	6-35
90457-0104	BLANK RIVET 2X7,4	6-39, 6-41
90457-0123	SIGN, MAIN SWITCH	10-85, 10-87
90457-0124	END CAP PSB-END6	10-131, 10-135, 10-137
90457-0125	POWER RAIL SZ-PSB 12 N	10-131, 10-135
90457-0127	TENSIONER, TYPE SE-F-15	3-5, 3-7
90457-0128	CLAMPING ROLL	3-5, 3-7
90457-0131	PUMP SV805 R22T 50HZ	5-51
90457-0132	VALVE, BUTTERFLY, N.O. ZVF1200BSAAO	5-33
90457-0136	FLAT GASKET TAPE W. ADHESIVE, 10X3.0	6-91, 6-93
90457-0137	GASKET, GP IP	6-91, 6-93
90457-0138	GASKET, DP-200	6-91, 6-93
90457-0139	CONN.STRAIGHT G3/8-10 MM, A 10-L/R3/8/WD	6-91, 6-93
90457-0140	CONN.STRAIGHT G3/8-15 MM, A 15-L/R3/8/WD	6-91, 6-93
90457-0141	BULKHEAD CONNECTOR, 8MM	5-23, 5-25
90457-0143	SCREW M6S ISO 4014 M6X130 A480	6-95
90457-0146	EXTENDED WITHOUT INSERT,	1-147, 1-149
90457-0147	GLAND, INSERT, MULTI HOLE, 2X7	1-147, 1-149, 2-27, 2-29, 2-65, 10-105, 10-107, 10-109, 10-111, 10-113, 10-115, 10-117, 10-119, 10-121
90457-0148	SCREW CAP HEAD SQ. NECK M6X100 SS	6-11
90457-0150	FLEXIBLE COUPLING, 10X25 MM	3-33
90457-0151	WORM GEAR UCZ 151 SIZE 125 39:1	3-5
90457-0162	CLAMPING ELEMENT, 00203005	3-33
90457-0170	DIRECTION VALVE, NO. 0 810 091 212	6-91, 6-93
90457-0172	MOTOR 3GAA 131001-ASA	3-7
90457-0178	EQUAL BULKHEAD ELBOW CONNECTOR 36390800	2-25
90457-0179	ELBOW COUPLING 6179 04 10	2-25
90457-0180	ELBOW COUPLING 6179 06 10	2-25
90457-0181	EQUAL BULKHEAD ELBOW CONNECTOR 31390600	2-25
90457-0182	PIPE CLAMP, D=8 MM, RAPOD8X	2-25
90457-0183	COVER PLATE DPA0X, FOR 90457-0182	2-25
90457-0184	T-CONNECTION 6 MM 6104 06 00	2-25
90457-0188	BEARING 25X42X20 MM	3-25
90457-0192	WASHER PLAIN ROUND, 6,5/18, H=1,5	10-79, 10-85, 10-87, 10-123, 10-125, 10-127, 10-129, 10-141, 10-143, 10-155, 10-157
90457-0198	MAIN SWITCH	10-151
90457-0199	INSERT EK 156M 5X5/4X9	5-23, 5-25, 5-43
90457-0937	SCREW MC6S M3X40 A480	4-65
90458-0058	SCREW M5X60 A280	8-13
90458-0072	SCREW ISO 7380 S M6X12 A2	2-41, 2-43
90458-0073	WASHER 6,4/30, H=1,5	2-41, 2-43
90458-0138	PROX.SW. E2EG-X1R5B1-5M	1-93, 3-29, 3-31, 9-33
90458-0145	SEALING, 3X15 MM CLOSED CELL SPONGE	2-15, 2-57, 2-65
90458-0146	GLAND, HOSE, WITHOUT INSERT, PG21	7-33
90458-0147	GLAND, INSERT, MULTI HOLE, 2X6,5	5-59, 5-61
90458-0188	GLAND, INSERT, MULTI HOLE, 1X7/1X10,5	10-105, 10-107, 10-109, 10-111, 10-113, 10-115, 10-117, 10-119, 10-121
90458-0220	TENSION ROLLER, M40/60-0-M EXCENTRIC	5-43, 5-67
90458-0256	PROXIMITY SWITCH IIA 3010-BPKG/6M	2-11, 2-13
90458-0258	TRANSFORMER, 220VAC/6-9-12VAC	10-85, 10-87
90458-0259	PROCESSOR BOARD PMMX E000032B	10-81
90458-0281	DISTRIBUTOR 8933502114	6-15, 6-17, 6-19
90458-0292	BASE, KT70-1001	2-39, 2-51
90458-0293	LIGHT ELEMENT, RED, KL70-401R	2-39, 2-51
90458-0294	LIGHT ELEMENT, YELLOW, KL70-401Y	2-39, 2-51
90458-0295	LIGHT ELEMENT, BLUE, KL70-401L	2-39, 2-51
90458-0302	SIREN WITH ADJUSTABLE VOLUME KS 70-3004	2-51
90458-0305	CABLE GLAND, M12X1,5, NO.5311 1000	7-33, 10-105, 10-107, 10-109, 10-111, 10-113, 10-115, 10-117, 10-119, 10-121
90458-0306	CABLE GLAND, M16X1,5, NO.5311 1010	7-33, 8-65
90458-0307	CABLE GLAND, M20X1,5, NO.5311 1020	2-49, 8-63
90458-0308	CABLE GLAND, M25X1,5, NO.5311 1030	2-49
90458-0311	CABLE GLAND, M50X1,5, NO.5311 1060	2-45, 2-47, 10-85, 10-87
90458-0314	CABLE GLAND, M16X1,5, NO.5311 1110	2-49, 5-43
90458-0315	CABLE GLAND, M20X1,5, NO.5311 1120	1-147, 1-149, 8-9, 8-19, 8-21, 8-23, 8-65
90458-0321	NUT, M12X1,5	10-105, 10-107, 10-109, 10-111, 10-113, 10-115, 10-117, 10-119, 10-121
90458-0322	NUT, M16X1,5	5-43, 5-67
90458-0323	NUT, M20X1,5	8-19, 8-21, 8-23, 8-51, 8-63
90458-0326	NUT, M40X1,5	5-43
90458-0327	NUT, M50X1,5	2-45, 2-47, 10-85, 10-87
90458-0397	SERVO DRIVE DMC2 50720 P	10-13, 10-15, 10-17
90458-0404	NORMAL WITHOUT INSERT, M16X1,5	8-63, 8-65
90458-0406	NORMAL WITHOUT INSERT, M20X1,5	8-65
90458-0413	NORMAL WITHOUT INSERT, M20X1,5	8-63, 8-65
90458-0416	HOSE GLAND W/O INSERT M50 NORMAL	10-105, 10-107, 10-109, 10-111, 10-113, 10-115, 10-117, 10-119, 10-121

Part No	Description	Page No
90458-0417	GLAND, HOSE, WITHOUT INSERT, M16X1,5	8-63, 8-65
90458-0422	EXTENDED WITHOUT INSERT, M20X1,5	7-33, 10-105, 10-107, 10-109, 10-111, 10-113, 10-115, 10-117, 10-119, 10-121
90458-0427	EXTENDED WITHOUT INSERT, M16X1,5	5-67
90458-0428	EXTENDED WITHOUT INSERT, M20X1,5	8-51, 8-63, 10-105, 10-107, 10-109, 10-111, 10-113, 10-115, 10-117, 10-119, 10-121
90458-0429	EXTENDED WITHOUT INSERT, M20X1,5	8-65
90458-0430	EXTENDED WITHOUT INSERT, M20X1,5	2-27, 2-29, 2-65, 5-51, 7-33, 8-19, 8-21, 8-23, 8-63, 10-105, 10-107, 10-109, 10-111, 10-113, 10-115, 10-117, 10-119, 10-121
90458-0431	EXTENDED WITHOUT INSERT, M25X1,5	5-39, 6-91, 6-93, 7-17, 7-33, 10-105, 10-107, 10-109, 10-111, 10-113, 10-115, 10-117, 10-119, 10-121
90458-0432	HOSE GLAND W/O INSERT M25 EXTENDED	10-105, 10-107, 10-109, 10-111, 10-113, 10-115, 10-117, 10-119, 10-121
90458-0433	EXTENDED WITHOUT INSERT, M32X1,5	7-33, 8-65
90458-0438	GLAND, EXTENDED WITH INSERT, M20X1,5	4-13, 4-15
90458-0450	GLAND, M25X1,5, NO. 2255416S08UL16	3-7
90458-0459	EXTENDED WITHOUT INSERT, HIGH TEMP, 40X1	5-23, 5-25, 5-43
90458-0460	GLAND, LOCKNUT, M16X1,5	10-105, 10-107, 10-109, 10-111, 10-113, 10-115, 10-117, 10-119, 10-121
90458-0461	GLAND, LOCKNUT, M20X1,5	10-105, 10-107, 10-109, 10-111, 10-113, 10-115, 10-117, 10-119, 10-121
90458-0462	GLAND, LOCKNUT, M25X1,5	10-105, 10-107, 10-109, 10-111, 10-113, 10-115, 10-117, 10-119, 10-121
90458-0465	GLAND, LOCKNUT, M50X1,5	10-105, 10-107, 10-109, 10-111, 10-113, 10-115, 10-117, 10-119, 10-121
90458-0601	PHOTOCELL, SICK PHOTOCELL 1	1-167, 1-169
90458-0675	PROXIMITY SENSOR, E2EG-X5MB1-5M	1-177, 8-13
90458-0676	PROXIMITY SWITCH,E2EG-X5B1-6M	1-67, 1-69
90458-0726	PRESSURE GAUGE, D=50 MM WITH FILTER	6-91, 6-93
90458-0746	STEP MOTOR DRIVE L50	10-13, 10-15, 10-17
90458-0747	SENSOR FOR CYLINDER, SMH-1PC	4-13, 4-15
90458-0824	BUSHING, 8X10X8 MM	1-177
90458-0825	FLANGE BUSHING,16X18X17 MM	1-177
90458-0871	HOUSING BULKHEAD MOUNTING HAN 6B-AGG-RB	10-97, 10-99
90458-0875	HINGED FRAME HAN 6B FOR HOUSING	10-97, 10-99
90458-0876	FEMALE INSERT HAN 6B 09 14002 2751	10-97, 10-99
90458-0894	PROXIMITY SENSOR E2E2-X10MB1-5M	5-43
90458-0917	TRANSF. 3-PH 750VA SEC. 23A	10-85, 10-87
90458-1092	PROPORTIONAL VALVE 0 - 10V/0-6 BAR	6-39, 6-41
90458-1114	BIMET. ELECTROMECH. THERMOSTAT K7H.020	10-75, 10-77
90458-1136	TERMINAL BLOCK, 103630	5-59, 5-61, 10-65, 10-67, 10-69, 10-71
90458-1140	FERRITE, RI-26-28-13	10-13, 10-15, 10-17
90458-1162	FILTER, 6 A, 250 VAC	10-13, 10-15, 10-17
90458-1181	BULKHEAD HOUSING HDC-HA-3-AWVL1/11	10-105, 10-107, 10-109, 10-111, 10-113, 10-115, 10-117, 10-119, 10-121
90458-1226	HANDLE, NO. GN 310-12-100-A-NI	8-11
90458-1227	LEAD-IN, BUSHING, DA 130/170/50	6-57
90458-1228	LEAD-IN, BUSHING, DA 230/300/60	8-5
90458-1230	CLAMPING ELEMENT, DI=36 MM	8-13
90458-1231	FORK HOLDER 913588/04	8-13
90458-1232	BEARING BRACKET AY15	8-13
90458-1233	TIMING BELT T10 340X16 MM	8-13
90458-1234	PROTECTIVE CAP 2X20X1.2X100	8-13
90458-1238	GLAND, INSERT, SINGLE HOLE,	8-63, 8-65
90458-1239	GLAND, INSERT, MULTI HOLE, 1X9/1X5,5	8-19, 8-21, 8-23, 8-63
90458-1240	RUBBERSPRING DK-A 15X40	8-13
90458-1241	TENSION SPRING RZ-1221	8-55
90458-1273	TRANSFORMER, OFL-1350	10-85, 10-87
90458-1279	PLUG CONNECTOR DP1	10-13, 10-15, 10-17
90458-1298	CONNECTOR AND CABLE 403000E 18M 080	4-13, 4-15
90458-1300	2 AXIS DOCKING STATION D2/PLC	10-13, 10-15, 10-17
90458-1301	CYLINDER ETS32-M10NA2X-FM50-AEUM1D	4-13, 4-15
90458-1302	CONTACTOR, 4KW 48VAC	10-45, 10-57
90458-1306	BLIND PLUG CIRCULAR, M12X1,5 514GFK/212	7-33, 10-105, 10-107, 10-109, 10-111, 10-113, 10-115, 10-117, 10-119, 10-121
90458-1307	BLIND PLUG CIRCULAR, M16X1,5 514GFK/216	8-65, 10-105, 10-107, 10-109, 10-111, 10-113, 10-115, 10-117, 10-119, 10-121
90458-1308	BLIND PLUG CIRCULAR, M20X1,5 514GFK/220	8-65, 10-105, 10-107, 10-109, 10-111, 10-113, 10-115, 10-117, 10-119, 10-121
90458-1309	BLIND PLUG CIRCULAR, M25X1,5 514GFK/225	10-105, 10-107, 10-109, 10-111, 10-113, 10-115, 10-117, 10-119, 10-121
90458-1312	BLIND PLUG CIRCULAR, M50X1,5 514GFK/250	10-105, 10-107, 10-109, 10-111, 10-113, 10-115, 10-117, 10-119, 10-121
90458-1406	FEMALE INSERT 120770	10-105, 10-107, 10-109, 10-111, 10-113, 10-115, 10-117, 10-119, 10-121
90458-1423	CONNECTOR, PC 4/4-STF-7.62	10-161
90458-1424	CONNECTOR, MSTB 2.5/10-STF-5.08	10-161
90458-1447	MOUNTING RAIL SUPPORT TST 128660	10-61, 10-63, 10-65, 10-67
90458-1448	MAGNETIC FUSE, S292 C100	10-131
90458-1489	CABLE CLIPS, D=4,75 MM	2-25
90458-1490	CABLE CLIPS, D=7,9 MM	10-13, 10-15, 10-17
90458-1493	GEARS, WORM MOTOR IGL 80-60 + VE31-GR5	8-13
90458-1517	SCREW SPRINGLOAD. SOCK. HEX HEAD M8X18	4-55
90458-1590	KNOB WITH SHAFT, M6	3-27
90458-1591	TIMING BELT T10X1000X25 POLYURETHANE	3-5
90458-1612	SCREW CAP HEAD SQ. NECK M6X120 SS	6-11
90458-1613	SCREW CAP HEAD SQ. NECK M6X140 SS	6-11
90458-1651	EMERGENCY STOP, ZB4-BS-844 ZB4-BZ-104	7-17, 8-63
90458-1704	BALL BEARING, 15X35X11 MM	1-47, 1-57, 1-61, 1-179, 8-19, 8-21, 8-23

Part No	Description	Page No
90458-1721	INDEXING GEAR, 10.707.207	5-11
90458-1747	HOSE GLAND W/O INSERT M50 NORMAL	10-85, 10-87
90458-1790	BUSHING, 6X8X6 MM	1-177
90458-1856	ADHESIVE LABEL, CONNECTION DIAGRAM	10-59
90458-1879	GEARS, WORM MOTOR 528V--L06-B01	1-61
90458-1906	GLAND, INSERT, MULTI HOLE, 4X5	5-59, 5-61
90458-1958	ARTICULATION, 300DEG WITH STOP	2-49
90458-1959	LIFTING EYE BOLT, LGB (3) 3T M24	9-15
90458-1960	STRETCHING SCREW, 468-697MM MAX2950KG	9-15
90458-2039	CONN. STR., 6-R1/8, EXT. THREAD	1-161
90458-2040	ELBOW PIPE JOINT, INT.THREAD, G1/8"D=6MM	1-161
90458-2078	SCREW SPRINGLOAD. SOCK. HEX HEAD M12X26	8-57
90458-2169	INCREASER 6-8	6-43, 6-45, 6-47, 6-49, 6-51, 6-53
90458-2199	GASKET, LOWARA 168061340	5-51
90458-2200	ELECTROMAGNETIC CLUTCH, 30 MM/24 VDC	3-5
90458-2418	CHASSI HOUSING 10-POLE, 70.331.1028.0	2-51
90458-2421	PRESSURE GAUGE, 1453 W. BRACKET	6-39, 6-41
90458-2487	SCREW PLUG HD-PE, M24	6-57
90458-2488	MEASURING HOSE DN2 L=1500MM, MAX 400BAR	6-39, 6-41
90458-2557	CABLE OLFLEX 25X1 MM2	2-49
90458-2580	LEVEL CONTROL RELAY RM4-LA32M	10-37
90458-2619	FLOW METER, D-6230-HGB-BB-AV-99-0-N2	1-9, 1-11
90458-2661	THROTTLE CHECK VALVE G1/4" MANUAL, 8	6-43, 6-45, 6-47, 6-49, 6-51, 6-53
90458-2722	DIRECTION VALVE, NO. 0 810 091 222	6-91, 6-93
90458-2762	PUMP SV805 R406T 60HZ	5-51
90458-2840	SHAFT COUPLING 22,225H9/9	1-61
90458-2841	SHAFT COUPLING 22,225H9/15	1-47
90458-2924	CONTACTOR 30KW COIL 24VDC	10-13, 10-15, 10-17
90458-2925	AUXILIARY CONTACT, DIL M820-XHI11-SI	10-13, 10-15, 10-17
90458-2954	ELBOW PIPE JOINT, EXT.THREAD, D=4MM M5	4-65
90458-2956	ELBOW PIPE JOINT, EXT.THREAD, D=6MM-G1/8	5-13, 5-15, 5-33
90458-2957	ELBOW PIPE JOINT, EXT.THREAD, D=6MM-G1/4	1-9, 1-11, 6-43, 6-45, 6-47, 6-49, 6-51, 6-53
90458-2958	ELBOW PIPE JOINT, EXT.THREAD, D=8MM-G1/4	6-43, 6-45, 6-47, 6-49, 6-51, 6-53
90458-2960	ELBOW PIPE JOINT, EXT.THREAD,D=12MM-G3/8	6-43, 6-45, 6-47, 6-49, 6-51, 6-53
90458-2964	ELBOW PIPE JOINT, EXT.THREAD, D=8MM-G1/8	5-31
90459-0075	HINGE, 1056-U30	1-9, 1-11, 7-35, 7-37
90459-0251	DOUBLE ACTING, COMPACT, CYL 12-15	4-65
90459-0308	PAPER TROLLEY, STOCKA 32.04.250.9	9-3
90459-0336	ANGLE SEAT VALVE G1/2, N.C. DN13	1-79
90459-0472	KEY SAF.SW. AZ 16 02ZVRK-M20-2152-2254	2-27, 2-29, 2-65, 8-9, 8-19, 8-21, 8-23
90459-0486	BALL VALVE PANEL MOUNTED G1/8	1-157, 1-159
90459-0487	ELBOW PIPE JOINT, EXT.THREAD, D=6MM G1/8	1-157, 1-159
90459-0691	SIGN, STRIP SPLICE/ RESET ALARM	7-17
90459-0737	SAFETY CLUTCH, SK1 15/D/20/5-20	5-67
90459-0765	O-RING 78X2 MM	5-67
90459-0766	SLEEVE, CR 99334	5-67
90459-1060	VIBRATION DAMPER, T15688	2-65
90459-1066	LEAD-IN, BUSHING, DA 300/350/10	2-45, 2-47
90459-1094	HEATING ELEMENT, 3000W 240V	1-35
90459-1104	REDUCER, SKINDICHT-ME 11/13,5	8-13
90459-1254	TUBE FUSE, 4A 500V	10-133
90459-1420	PROPORTIONAL VALVE 0 - 10V/0-6 BAR	1-9, 1-11
90459-1738	MANDATORY ACTION SIGN ISO, READ MAINTENA	10-13, 10-15, 10-17
90459-1845	DOUBLE ACTING, COMPACT, 50-30	5-13, 5-15
90459-1901	POWER RAIL SZ-KS 18/56N	10-131
90459-2045	O-RING 14X4 MM	1-181
90459-2063	CIRCUIT BREAKER, 1P 0,75 A K	10-131
90459-2195	CIRCUIT BREAKER, 3P 2 A K	10-135
90459-2309	FLEXIBLE CHAIN, A325A103KM	10-165
90459-2350	END BRACKET, A325A103KM	10-165
90459-2412	CONNECTOR 4 POLE + EARTH	8-13, 8-63
90459-2435	CONTAINER 1,8L , GN 1406	1-67, 1-69
90459-2452	CABLE DUCT, 25X100MM	10-13, 10-15, 10-17
90459-2560	LIGHT FIXTURE, TMS121 1XTL-D30W/830 IP	10-85, 10-87
90459-2912	BAR, TR1	10-7, 10-9, 10-11
90459-3090	LIGHT FIXTURE, TMS121 1XTL8W/830 IP	10-85, 10-87
90459-3092	CABLE PROTECTION, CP10	10-7, 10-9, 10-11
90459-3446	FREQUENCY CONVERTER 5,5 KW	10-13, 10-15, 10-17
90459-3450	VARIABLE FREQUENCY DRIVE 22A-A4P5N104	10-13, 10-15, 10-17
90459-3459	FOOTPRINT FILTER, 22-RF018-CL	10-13, 10-15, 10-17
90459-3460	FOOTPRINT FILTER 22-RF010-AL	10-13, 10-15, 10-17
90459-3523	TUBE, 4 MM PTFE TRANSPARENT	5-35
90459-3799	FUSE HOLDER, MSC 10 1-POLE A250148	10-133
90459-3800	FUSE HOLDER, MSC 10 3-POLE D250151	10-133
206913-0000	LOCKING LOOP	8-55
208173-0000	SHAFT	8-51
209145-0000	THROTTLE SCREW	1-141, 6-83, 6-85
209146-0000	BARRIER NUT	1-141, 6-83, 6-85
209183-0000	RING	1-15, 1-19, 1-137
229207-0000	BEARING SLEEVE	5-55
229775-0000	SPACER	8-51
230551-0000	GASKET	6-61
239440-0000	SHAFT	1-129, 1-131
240797-0000	HANDLE	4-55

Part No	Description	Page No
243132-0000 ..	PROTECTION PLATE	8-51
243133-0000 ..	SHIELD PLATE	8-51
245039-0000 ..	GUIDE WHEEL	5-55
245221-0000 ..	STOP	8-51
247248-0000 ..	PIN	1-21, 1-23
247349-0000 ..	STEERING	1-49, 1-51
247357-0000 ..	SPROCKET	1-49, 1-51
247358-0000 ..	SHIFTER HANDLE	1-49, 1-51
247385-0000 ..	SIGN	6-39, 6-41
247386-0000 ..	SIGN	6-39, 6-41
250590-0000 ..	BEARING COVER	1-47
250592-0000 ..	WASHER	1-47, 1-61
253107-0000 ..	WASHER	8-19, 8-21, 8-23, 8-39, 8-41
255301-0000 ..	HEATING RAIL	8-51
255609-0000 ..	ARM CUTTING JAW	4-41, 4-43, 4-45, 4-47
255653-0000 ..	FLANGE BUSHING	4-41, 4-43, 4-45, 4-47
255742-0000 ..	COMPRESSION SPRING	4-5, 4-7, 4-9, 4-11
255801-0000 ..	RETAINING RING	4-5, 4-7, 4-9, 4-11
255870-0000 ..	VALVE HOUSING	1-37
255874-0000 ..	BEARING COVER	1-143
255875-0000 ..	BUSHING	1-37, 1-143
255939-0000 ..	WASHER	2-11, 2-13
255940-0000 ..	SPACER	2-11, 2-13
255942-0000 ..	SLIDER	2-11, 2-13
255943-0000 ..	HOLDER	2-11, 2-13
255969-0000 ..	SHAFT	1-129, 1-131
255970-0000 ..	BUSHING	1-129, 1-131
255977-0000 ..	SHAFT	1-145
255978-0000 ..	FORK	1-145
255986-0000 ..	WHEEL	1-49, 1-51
255995-0000 ..	SCREW	1-59
256005-0000 ..	GASKET	1-21, 1-23
256014-0800 ..	BATH	1-3, 1-5
256022-0000 ..	BUSHING	1-59
256055-0700 ..	HOT AIR ELEMENT	1-3, 1-5
256082-0000 ..	CAP	4-41, 4-43, 4-45, 4-47
256084-0700 ..	CHANGE-OVER VALVE	1-3, 1-5
256095-0700 ..	HOT AIR ELEMENT	1-3, 1-5
256112-0000 ..	BRACKET	1-39
256163-0000 ..	SHAFT	1-49, 1-51
256170-0000 ..	DRIP PLATE	1-49, 1-51
256173-0600 ..	WORM GEAR	3-3
256176-0000 ..	GEAR WHEEL	3-5
256177-0000 ..	SHAFT	3-5
256178-0000 ..	FIXING RING	3-5
256179-0000 ..	SPACER SLEEVE	3-5
256181-0000 ..	SPACER PIPE	3-5
256197-0500 ..	ARM	3-3
256200-0300 ..	INTERMEDIARY SHAFT	3-3
256202-0700 ..	CURVE PACK	3-3
256204-0600 ..	CUTTING JAW	4-3
256205-0600 ..	CUTTING JAW	4-3
256208-0400 ..	KNIFE HOLDER	4-3
256212-0600 ..	PRESSURE JAW	4-3
256213-0600 ..	PRESSURE JAW	4-3
256214-0400 ..	PRESSURE RAIL	4-3
256217-0500 ..	GUIDE	4-3
256248-0001 ..	LID	8-19, 8-21, 8-23, 8-39, 8-41
256279-0000 ..	ANGLE	1-115, 1-117, 1-119
256280-0000 ..	DOWEL	1-107, 1-109, 1-111, 1-113, 1-115, 1-117, 1-119
256309-0000 ..	SHAFT	1-107, 1-109, 1-111, 1-113
256312-0000 ..	WASHER	1-107, 1-109, 1-111, 1-113
256398-0000 ..	LID	8-19, 8-21, 8-23, 8-39, 8-41
256400-0000 ..	SHAFT	8-19, 8-21, 8-23, 8-39, 8-41
256406-0000 ..	GABLE PLATE	8-19, 8-21, 8-23, 8-39, 8-41
256409-0000 ..	WASHER	8-19, 8-21, 8-23, 8-39, 8-41
256410-0900 ..	INDEXING UNIT	5-3
256418-0000 ..	BEARING BRACKET	3-13, 3-15
256421-0000 ..	PULLEY	3-9, 3-11
256422-0000 ..	WASHER	3-9, 3-11, 3-13, 3-15
256426-0001 ..	WASHER	3-9, 3-11, 3-13, 3-15
256426-0002 ..	WASHER	3-9, 3-11, 3-13, 3-15
256427-0000 ..	SHAFT	3-9, 3-11, 3-13, 3-15
256437-0200 ..	DISC COUPLING	5-3
256438-0300 ..	WORM GEAR	5-3
256472-0000 ..	WASHER	3-9, 3-11, 3-13, 3-15
256487-0000 ..	CUTTING JAW	4-5, 4-7, 4-9, 4-11
256515-0000 ..	END PIECE	3-13, 3-15
256516-0000 ..	CAP	3-13, 3-15, 3-23
256517-0000 ..	SCREW	3-13, 3-15
256557-0001 ..	WASHER	4-35, 4-37
256557-0002 ..	WASHER	4-35, 4-37
256557-0003 ..	WASHER	4-35, 4-37
256576-0000 ..	ROLL	4-35, 4-37

Part No	Description	Page No
256607-0000 ..	AXLE PIN	4-5, 4-7, 4-9, 4-11
256621-0000 ..	WASHER	4-13, 4-15
256626-0000 ..	EAR	4-5, 4-7, 4-9, 4-11
256628-0000 ..	PIECE	4-41, 4-43, 4-45, 4-47
256629-0001 ..	AXLE PIN	4-41, 4-43, 4-45, 4-47
256629-0003 ..	AXLE PIN	4-41, 4-43, 4-45, 4-47
256641-0000 ..	LEG	5-51
256659-0000 ..	OPERATING ROD	4-5, 4-7, 4-9, 4-11
256665-0200 ..	HATCH	2-3
256674-0500 ..	BOTTOM VALVE	5-3
256704-0000 ..	WASHER	4-41, 4-43, 4-45, 4-47
256705-0000 ..	LACE	4-13, 4-15
256706-0000 ..	BEARING PLATE	4-5, 4-7, 4-9, 4-11
256707-0000 ..	BRACKET	4-13, 4-15
256710-0000 ..	SHAFT	4-41, 4-43, 4-45, 4-47
256738-0000 ..	WASHER	4-49
256739-0000 ..	SCREW	4-49
256769-0000 ..	CUTTING JAW	4-5, 4-7, 4-9, 4-11
256812-0000 ..	SHAFT	3-27
256814-0000 ..	WASHER	3-27
256816-0000 ..	PIPE	3-27
256828-0000 ..	SPRING	3-27
256829-0000 ..	SCREW	4-41, 4-43, 4-45, 4-47, 4-49
256831-0001 ..	SPACER	4-41, 4-43, 4-45, 4-47
256831-0002 ..	SPACER	4-41, 4-43, 4-45, 4-47
256831-0003 ..	SPACER	4-41, 4-43, 4-45, 4-47, 4-49
256831-0004 ..	SPACER	4-49
256834-0000 ..	YOKE	4-41, 4-43, 4-45, 4-47
256849-0000 ..	VOLUMEFLAP 125 ML	4-19, 4-21, 4-23, 4-25
256859-0000 ..	SCREW	4-19, 4-21, 4-23, 4-25
256860-0000 ..	ROLL	4-19, 4-21, 4-23, 4-25
256870-0000 ..	BRACKET	4-41, 4-43, 4-45, 4-47
256882-0000 ..	WASHER	4-39
256889-0000 ..	PLUNGER	4-41, 4-43, 4-45, 4-47
256890-0000 ..	LACE	4-41, 4-43, 4-45, 4-47
256891-0000 ..	LACE	4-41, 4-43, 4-45, 4-47
256899-0000 ..	SHAFT	1-155
256907-0000 ..	WASHER	5-31
256951-0500 ..	YOKE RIGHT	4-3
256952-0500 ..	YOKE LEFT	4-3
256953-0000 ..	BLOCK RIGHT	4-41, 4-43
256954-0000 ..	BLOCK LEFT	4-45, 4-47
257000-0000 ..	NIPPLE	4-61, 4-63
257040-0000 ..	FORK	1-129, 1-131
257041-0000 ..	FORK	1-129, 1-131
257042-0000 ..	BRACKET	1-129, 1-131
257043-0000 ..	ANGLE BRACKET	1-129, 1-131
257044-0000 ..	ROLL	1-129, 1-131
257090-0000 ..	SHIFTER HANDLE	1-107, 1-109, 1-111, 1-113
257141-0000 ..	RETAINING RING	8-19, 8-21, 8-23, 8-39, 8-41
257174-0000 ..	SEALING WASHER	3-5
257175-0000 ..	WASHER	1-123, 1-125
257179-0000 ..	GEAR WHEEL	3-5, 3-27
257190-0000 ..	SEPARATION BLOCK	2-23
257202-0000 ..	STRAINER	6-63
257213-0000 ..	BUSHING	4-41, 4-43, 4-45, 4-47
257231-0000 ..	WINDOW	2-31, 2-33
257249-0000 ..	SCREW	4-35, 4-37
257250-0000 ..	LID	4-35, 4-37
257306-0000 ..	ROLL	3-9, 3-11
257308-0000 ..	SCREW	3-9, 3-11
257309-0000 ..	SHAFT	3-9, 3-11, 3-29, 3-31
257310-0000 ..	NUT	3-9, 3-11, 3-29, 3-31
257311-0000 ..	CAP	3-9, 3-11, 3-13, 3-15
257317-0000 ..	LACE	4-41, 4-43, 4-45, 4-47
257326-0000 ..	CRANK	3-27
257327-0000 ..	SLIDER	3-27
257328-0000 ..	END PIECE	3-27
257330-0000 ..	PRESSURE ROLLER	1-145, 9-33
257334-0000 ..	LEAF SPRING	4-13, 4-15
257362-0000 ..	LACE	4-5, 4-7, 4-9, 4-11
257379-0000 ..	HYDRAULIC PIPE RIGHT	4-61
257380-0000 ..	HYDRAULIC PIPE LEFT	4-63
257381-0300 ..	MANIFOLD RIGHT	4-3
257382-0300 ..	MANIFOLD LEFT	4-3
263311-0000 ..	WASHER	1-59
263655-0006 ..	SHAFT	1-49, 1-51
265568-0000 ..	DUST COVER	8-19, 8-21, 8-23, 8-39, 8-41
266737-0000 ..	WASHER	1-37, 1-143, 7-35, 7-37, 7-39, 7-41
266739-0000 ..	CABLE GLAND	1-39
267033-0000 ..	WASHER	1-49, 1-51
269859-0000 ..	BRACKET	6-61
271007-0000 ..	POINTER	3-19, 3-21
271100-0000 ..	DOWEL	4-41, 4-43, 4-45, 4-47

Part No	Description	Page No
271121-0000 ..	FORCE SPRING	2-23
271163-0000 ..	CANTILEVER	2-11, 2-13
271169-0500 ..	VALVE	1-3, 1-5
271181-0600 ..	AIR SUPER-HEATER	1-3, 1-5
271239-0000 ..	SLEEVE	8-61
271241-0000 ..	SCREW	8-61
271261-0700 ..	CLEANING SYSTEM	2-17, 2-19, 2-21
271269-0000 ..	BUSHING	1-35, 1-39, 1-57
271284-0000 ..	BLOCKING PIECE	4-13, 4-15
271387-0400 ..	SPRAY GUN	2-3
271414-0300 ..	AIR JET GUN	2-3
271435-0000 ..	WASHER	5-51
271622-0000 ..	LACE	2-17, 2-19, 2-21
271623-0000 ..	LACE	2-17, 2-19, 2-21
271641-0500 ..	SPLICING TABLE	8-49
271642-0000 ..	RULER	8-59
271643-0000 ..	RULER	8-59
271644-0000 ..	RULER	8-59
271689-0000 ..	WASHER	3-5
271820-0001 ..	STEERING RAIL	1-59
271820-0002 ..	STEERING RAIL	1-59
271823-0000 ..	FILTER	6-27
271824-0000 ..	AIR KNIFE, MOVABLE	1-59
271825-0000 ..	FIXED AIR KNIFE	1-59
271827-0001 ..	HEAD PLATE	1-59
271827-0002 ..	HEAD PLATE	1-59
271846-0000 ..	INSULATION NUT	4-39
271848-0000 ..	SCREW	4-39
271858-0000 ..	FLANGE	1-59
271860-0000 ..	CLAMP BLOCK	1-163, 1-165
271863-0000 ..	SHAFT	1-49, 1-51
271864-0000 ..	WASHER	1-49, 1-51
271898-0000 ..	SCREW	1-57
271899-0000 ..	SCREW	1-57
271941-0001 ..	FRAME	1-59
271941-0002 ..	FRAME	1-59
271942-0001 ..	AIR GUIDE	1-59
271942-0002 ..	AIR GUIDE	1-59
272002-0000 ..	PROTECTIVE COVER LEFT	1-49, 1-51
272003-0000 ..	PROTECTIVE COVER RIGHT	1-49, 1-51
272004-0500 ..	BENDING ROLLER	1-3, 1-5
272021-0800 ..	ASEPTIC CHAMBER	1-3, 1-5
272022-0000 ..	AIR KNIFE, MOVABLE	1-59
272023-0000 ..	FIXED AIR KNIFE	1-59
272024-0500 ..	CALENDER ROLLER	1-3, 1-5
272025-0400 ..	AIR KNIFE	1-3, 1-5
272026-0001 ..	AIR DISTRIBUTOR	1-59
272026-0002 ..	AIR DISTRIBUTOR	1-59
272027-0001 ..	GLASS PANE	1-59
272027-0002 ..	GLASS PANE	1-59
272028-0800 ..	BENDING ROLLER	1-3, 1-5
272033-0000 ..	BRACKET	1-57
272095-0000 ..	SHAFT	1-155
272116-0000 ..	CAP	3-9, 3-11
272140-0001 ..	HEAD PLATE	1-59
272140-0002 ..	HEAD PLATE	1-59
272141-0001 ..	FILTER	1-59
272141-0002 ..	FILTER	1-59
272191-0000 ..	DISTRIBUTOR	5-31
272275-0000 ..	LID	1-65
272277-0000 ..	GASKET	1-65
272286-0000 ..	AXLE SUPPORT	1-35
272287-0000 ..	AXLE SUPPORT	1-39
272325-0000 ..	SPIRAL	1-65
272329-0001 ..	LACE	1-59
272329-0002 ..	LACE	1-59
272337-0600 ..	VALVE	1-3, 1-5
272372-0000 ..	HOUSE	3-5
272376-0000 ..	SHUTTER	3-5
272377-0001 ..	CRAMP	3-5
272377-0002 ..	CRAMP	3-5
272388-0000 ..	CRAMP	3-5
272407-0400 ..	GENERATOR	1-3, 1-5
272415-0000 ..	ARM	4-41, 4-43, 4-45, 4-47
272416-0000 ..	CARRIER	4-5, 4-7, 4-9, 4-11
272419-0000 ..	CARRIER	4-5, 4-7, 4-9, 4-11
272420-0000 ..	FOLDING FLAP	4-5, 4-7, 4-9, 4-11
272421-0000 ..	FOLDING FLAP	4-5, 4-7, 4-9, 4-11
272422-0000 ..	FOLDING FLAP	4-5, 4-7, 4-9, 4-11
272423-0000 ..	FOLDING FLAP	4-5, 4-7, 4-9, 4-11
272427-0000 ..	BRACKET	4-5, 4-7, 4-9, 4-11
272442-0000 ..	CANTILEVER	3-9, 3-11
272454-0000 ..	PIVOT PIN	4-41, 4-43, 4-45, 4-47
272455-0000 ..	BEARING BRACKET	3-9, 3-11

Part No	Description	Page No
272456-0000 ..	LINK	3-9, 3-11
272457-0000 ..	BOW CLAMP	3-9, 3-11
272458-0000 ..	ECCENTRIC SHAFT	3-9
272459-0000 ..	WASHER	3-9
272461-0000 ..	WASHER	3-9
272462-0000 ..	AXLE BOLT	3-13, 3-15
272464-0000 ..	ANGLE BRACKET	1-59
272472-0000 ..	END PIECE	3-29, 3-31
272479-0000 ..	PRESSURE ROLLER	1-145, 9-33
272490-0000 ..	SLEEVE	4-49
272491-0000 ..	BRACKET	4-13, 4-15
272492-0000 ..	ARM RIGHT	4-41, 4-43
272493-0000 ..	ARM LEFT	4-45, 4-47
272496-0000 ..	BRACKET RIGHT	4-41, 4-43
272497-0000 ..	BRACKET LEFT	4-45, 4-47
272501-0000 ..	BRACKET RIGHT	4-35
272502-0000 ..	BRACKET LEFT	4-37
272503-0000 ..	CLAMPING PIECE	4-35, 4-37
272506-0000 ..	LACE	4-35, 4-37
272560-0800 ..	PRODUCT VALVE	1-3, 1-5
272600-0000 ..	ARM	2-11, 2-13
272602-0000 ..	SCREW	2-11, 2-13
272607-0000 ..	BELT HOLDER	3-13, 3-15
272608-0000 ..	BELT HOLDER	3-23
272623-0700 ..	SPRAY SYSTEM	1-3, 1-5
272640-0001 ..	COUNTER CAM	4-13, 4-15
272640-0002 ..	COUNTER CAM	4-13, 4-15
272640-0005 ..	COUNTER CAM	4-13, 4-15
272640-0006 ..	COUNTER CAM	4-13, 4-15
272640-0007 ..	COUNTER CAM	4-13, 4-15
272640-0009 ..	COUNTER CAM	4-13, 4-15
272641-0000 ..	PILLAR	4-15
272642-0000 ..	PILLAR	4-13
272645-0000 ..	RAIL	4-13, 4-15
272654-0000 ..	ECCENTRIC SHAFT	4-13, 4-15
272664-0000 ..	CANTILEVER	3-27
272673-0000 ..	LEG	5-39
272679-0000 ..	PIPE	2-23
272736-0000 ..	CANTILEVER	3-27
272737-0000 ..	BRACKET	3-27
272742-0000 ..	FINGER	2-11, 2-13
272743-0000 ..	LID	5-39
272746-0000 ..	ROD	5-19
272747-0000 ..	CONNECTION	5-19
272753-0000 ..	STEERING	4-17
272755-0000 ..	NUT	4-17
272780-0000 ..	COVER SLIP	1-163
272781-0002 ..	COVER SLIP	1-165
272782-0000 ..	COVER SLIP	1-163, 1-165
272783-0002 ..	GLASS PANE	1-165
272783-0003 ..	GLASS PANE	1-163
272784-0002 ..	RUBBER STRIP	1-165
272785-0000 ..	RUBBER STRIP	1-163
272810-0001 ..	SLEEVE	8-61
272813-0000 ..	PLUNGER	8-61
272840-0000 ..	ROD	4-49
272844-0000 ..	BRACKET	1-95, 1-97
272852-0000 ..	HOLDER	2-11, 2-13
272853-0000 ..	SCREW	2-11, 2-13
272857-0000 ..	RING	3-17
272862-0000 ..	HOLDER	8-57
272886-0000 ..	RULER	8-59
272887-0000 ..	RULER	8-59
272888-0000 ..	RULER	8-59
272927-0000 ..	PRESSURE ARM	1-57
272945-0000 ..	LOCK	1-147, 1-149
272948-0003 ..	SHAFT	1-39
272949-0000 ..	VOLUME CAM LEFT	4-57
272956-0000 ..	VOLUME CAM LEFT	4-57
272957-0000 ..	VOLUME CAM RIGHT	4-57
272964-0000 ..	VOLUME CAM RIGHT	4-57
272965-0000 ..	VOLUME CAM LEFT, WIDE	4-57
272967-0000 ..	VOLUME CAM RIGHT, WIDE	4-57
272973-0000 ..	DOWEL	4-57
272986-0001 ..	VOLUME SHIM	4-19, 4-21, 4-23, 4-25
272986-0003 ..	VOLUME SHIM	4-19, 4-21, 4-23, 4-25
272986-0004 ..	VOLUME SHIM	4-19, 4-21, 4-23, 4-25
272986-0005 ..	VOLUME SHIM	4-19, 4-21, 4-23, 4-25
272986-0006 ..	VOLUME SHIM 330S	4-19, 4-21, 4-23, 4-25
272987-0000 ..	VOLUME SHIM	4-19, 4-21, 4-23, 4-25
272988-0004 ..	VOLUME BULGE	4-19, 4-21, 4-23, 4-25
272990-0000 ..	VOLUME BULGE	4-19, 4-21, 4-23, 4-25
272991-0000 ..	VOLUME SHIM	4-19, 4-21, 4-23, 4-25
272997-0000 ..	STOPPER	5-27

Part No	Description	Page No
273429-0000 ..	WASHER	1-35, 1-39
273449-0000 ..	SIGN	6-39, 6-41
273450-0000 ..	SIGN	6-39, 6-41
273452-0000 ..	SIGN	6-39, 6-41
273454-0000 ..	SIGN	6-39, 6-41
273455-0000 ..	LABEL (COLD WATER)	2-45, 2-47, 6-39, 6-41
273456-0000 ..	SIGN	2-45, 2-47, 6-39, 6-41
273458-0000 ..	LABEL (AIR)	2-45, 2-47, 6-39, 6-41
273953-0000 ..	SEAL	1-49, 1-51
273954-0000 ..	SEAL	1-21, 1-23
273964-0000 ..	LID	6-65
273965-0001 ..	WEIGHT	6-65
273977-0000 ..	NUT	6-75
273978-0000 ..	LEVEL GLASS	6-75
273980-0000 ..	SPRING	6-75
273996-0000 ..	NUT	6-75
279008-0000 ..	BUSHING	1-49, 1-51
279589-0000 ..	NUT	1-141, 6-83, 6-85
282635-0000 ..	GUIDE WHEEL	7-51, 7-53
292044-0000 ..	SHAFT	8-29, 8-47
292412-0000 ..	END SECTION	8-25, 8-27, 8-43, 8-45
292413-0000 ..	END SECTION	8-25, 8-27, 8-43, 8-45
292414-0000 ..	CARRIER	8-43, 8-45
292449-0000 ..	PUMP HOUSING	6-67
292456-0000 ..	BEARING COVER	6-67
293395-0001 ..	TYPE HOLDER	8-25, 8-27, 8-43, 8-45
293395-0002 ..	TYPE HOLDER	8-25, 8-27, 8-43, 8-45
293610-0000 ..	GEAR WHEEL	4-55
293659-0000 ..	CARRIER	8-25, 8-27
293667-0000 ..	DOWEL	8-29, 8-47
293669-0001 ..	WASHER	8-29, 8-47
293669-0002 ..	WASHER	8-29, 8-47
293669-0003 ..	WASHER	8-29, 8-47
293669-0004 ..	WASHER	8-29, 8-47
293670-0000 ..	SHAFT	8-29, 8-47
293684-0200 ..	PRINTING WHEEL NSS	8-19, 8-21, 8-23
293685-0200 ..	PRINTING WHEEL SS	8-39, 8-41
293697-0000 ..	END SECTION	8-29
295045-0900 ..	PIPE WORK-PNEUMATIC	1-3, 1-5
295075-0000 ..	PROTECTION	2-11, 2-13
295097-0000 ..	SLIDER	2-11, 2-13
295140-0000 ..	PIN	3-5, 3-19, 3-21
295203-0000 ..	LID	5-49
295204-0001 ..	SHIM	5-27
295204-0002 ..	SHIM	5-27
295204-0003 ..	SHIM	5-27
295205-0000 ..	SPACER SLEEVE	5-27
295206-0000 ..	FLAP	5-27
295259-0000 ..	HOLDER	6-57
295376-0000 ..	SHAFT	1-145
295377-0001 ..	HOOD	1-145
295377-0002 ..	HOOD	1-145
295387-0000 ..	SIGN BOARD	6-13
295399-0000 ..	HOLDER	2-11, 2-13
295417-0000 ..	GASKET	2-23, 5-51
295426-0000 ..	CAP	1-49, 1-51
295427-0000 ..	LOCK	1-49, 1-51
295428-0000 ..	HINGE	1-49, 1-51
295429-0000 ..	HANDLE	1-49, 1-51
295434-0000 ..	BUSHING	5-51
295466-0000 ..	LOCK	1-147, 1-149
295496-0000 ..	BLOCKING PIECE	6-39, 6-41
295523-0400 ..	START-UP KIT	4-3
295523-0500 ..	START-UP KIT	9-31
295604-0000 ..	CRAMP	1-99, 1-101
295605-0000 ..	BRACKET	1-99, 1-101
295729-0000 ..	WASHER	5-37
295766-0000 ..	SCREW	3-5
295767-0000 ..	SEALING WASHER	3-5
295770-0000 ..	AXLE BOLT	3-9, 3-11
295778-0600 ..	START-UP KIT	9-31
295785-0000 ..	FORCE SPRING	2-23
295909-0000 ..	BUSHING	1-35
295910-0000 ..	BUSHING	1-39
295936-0000 ..	BUSHING	1-39
295978-0000 ..	PIPE	2-23
295983-0000 ..	CONNECTION	3-17
295984-0000 ..	DRIP GUARD	1-145
295985-0000 ..	FORCE SPRING	2-23
295986-0000 ..	HOLDER	2-17, 2-19, 2-21
295993-0000 ..	GASKET HOLDER	1-65
297210-0000 ..	INK WELL	8-47
297211-0000 ..	INK WELL	8-29
297213-0000 ..	END SECTION	8-47

Part No	Description	Page No
299643-0000 ..	WASHER	8-19, 8-21, 8-23, 8-39, 8-41
311101-0267 ..	PARALLEL PIN ISO 8734 4H6X10 ST	3-9, 3-11, 3-13, 3-15
311102-0153 ..	PARALLEL PIN ISO 2338 1,5M6X10 ST	3-5
311103-0233 ..	PARALLEL PIN ISO 2338 3M6X10 A1	11-25
311103-0236 ..	PARALLEL PIN ISO 2338 3M6X16 A1	1-65, 8-29, 8-47, 11-25, 11-27
311103-0238 ..	PARALLEL PIN ISO 2338 3M6X20 A1	1-129, 1-131, 4-55, 8-29, 8-47, 11-25
311103-0242 ..	PARALLEL PIN ISO 2338 3M6X30 A1	4-35, 4-37, 8-11
311103-0267 ..	PARALLEL PIN ISO 2338 4M6X10 A1	3-9, 3-11, 3-13, 3-15, 8-59
311103-0268 ..	PARALLEL PIN ISO 2338 4M6X12 A1	4-41, 4-43, 4-45, 4-47
311103-0269 ..	PARALLEL PIN ISO 2338 4M6X14 A1	11-27
311103-0270 ..	PARALLEL PIN ISO 2338 4M6X16 A1	1-21, 1-23, 4-39, 8-29, 8-47
311103-0272 ..	PARALLEL PIN ISO 2338 4M6X20 A1	2-23, 3-19, 3-21, 5-63, 7-63, 11-25
311103-0274 ..	PARALLELL PIN, M6, 4X25 MM	8-31
311103-0276 ..	PARALLEL PIN ISO 2338 4M6X30 A1	1-49, 1-51, 3-19, 3-21
311103-0278 ..	PARALLEL PIN ISO 2338 4M6X35 A1	4-27, 4-29, 4-31, 4-33, 7-57
311103-0280 ..	PARALLEL PIN ISO 2338 4M6X40 A1	4-27, 4-29, 4-31, 4-33
311103-0308 ..	PARALLEL PIN ISO 2338 5M6X16 A1	1-49, 1-51, 11-19
311103-0310 ..	PARALLEL PIN ISO 2338 5M6X20 A1	1-49, 1-51
311103-0312 ..	PARALLELL PIN, M6, 5X25 MM	1-123, 1-125, 4-5, 4-7, 4-9, 4-11, 4-35, 4-37, 8-19, 8-21, 8-23, 8-39, 8-41
311103-0313 ..	PARALLEL PIN ISO 2338 5M6X28 A1	1-49, 1-51
311103-0314 ..	PARALLEL PIN ISO 2338 5M6X30 A1	1-55, 4-13, 4-15
311103-0316 ..	PARALLEL PIN ISO 2338 5M6X35 A1	4-13, 4-15
311103-0318 ..	PARALLEL PIN ISO 2338 5M6X40 A1	8-31
311103-0320 ..	PARALLEL PIN ISO 2338 5M6X45 A1	4-13, 4-15
311103-0351 ..	PARALLEL PIN ISO 2338 6M6X16 A1	5-13, 5-15
311103-0353 ..	PARALLEL PIN ISO 2338 6M6X20 A1	5-67, 8-39, 8-41
311103-0355 ..	PARALLELL PIN, M6, 6X25 MM	1-21, 1-23, 4-57
311103-0357 ..	PARALLEL PIN ISO 2338 6M6X30 A1	6-65, 8-19, 8-21, 8-23, 8-39, 8-41
311103-0361 ..	PARALLEL PIN ISO 2338 6M6X40 A1	1-21, 1-23, 3-27, 8-19, 8-21, 8-23
311103-0365 ..	PARALLEL PIN ISO 2338 6M6X50 A1	8-33, 8-35
311103-0401 ..	PARALLEL PIN ISO 2338 8M6X20 A1	4-41, 4-43, 4-45, 4-47, 4-49, 5-43
311103-0407 ..	PARALLEL PIN ISO 2338 8M6X35 A1	5-39
311103-0409 ..	PARALLEL PIN ISO 2338 8M6X40 A1	4-13, 4-15, 5-49
311103-0413 ..	PARALLEL PIN ISO 2338 8M6X50 A1	1-163, 1-165
311103-0415 ..	PARALLEL PIN ISO 2338 8M6X55 A1	2-5
311103-0458 ..	PARALLEL PIN ISO 2338 10M6X30 A1	2-5
311103-0470 ..	PARALLEL PIN ISO 2338 10M6X60 A1	3-27
311103-1274 ..	PARALLEL PIN ISO 2338 4M6X24 A1	11-25
311111-0207 ..	SPRING PIN ISO 8752 3X14-ST	4-5, 4-7, 4-9, 4-11
311111-0209 ..	SPRING PIN ISO 8752 3X18-ST	1-183
311111-0308 ..	SPRING PIN ISO 8752 5X20-ST	4-5, 4-7, 4-9, 4-11
311112-0256 ..	SPRING PIN, ISO 8752 4X20-C	1-49, 1-51, 4-55, 6-67
311112-0262 ..	SPRING PIN, ISO 8752 4X32-C	1-49, 1-51
311303-0234 ..	SLOTTED PIRPB3X12FZB	3-9
311307-0275 ..	SLOTTED PIRPD4X28FZB	3-27
311411-0140 ..	SPLIT PIN SP1,6X16RFR	1-129, 1-131
311411-0150 ..	SPLIT PIN SP2X12RFR	1-123, 1-125
311411-0165 ..	SPLIT PIN SP2,5X16RFR	1-123, 1-125
311411-0169 ..	SPLIT PIN SP2,5X25RFR	6-67
311521-0142 ..	BLANK RIVET 3,2X6	1-79, 10-79
311521-0146 ..	BLANK RIVET 3,2X12	10-85, 10-87, 10-141, 10-143, 10-161
311521-0152 ..	BLANK RIVET 4X8	8-51
312101-0287 ..	SCREW M6S M4X8 FZB	8-25, 8-27, 8-43, 8-45
312101-0289 ..	SCREW M6S M4X10 FZB	3-29, 3-31
312101-0295 ..	SCREW M6S M4X20 FZB	5-17
312101-0297 ..	SCREW M6S M4X25 FZB	3-9, 3-11, 3-13, 3-15
312101-0323 ..	SCREW M6S M5X8 FZB	8-13
312101-0325 ..	SCREW M6S M5X10 FZB	3-19, 3-21
312101-0327 ..	SCREW M6S M5X12 FZB	8-55
312101-0329 ..	SCREW M6S M5X16 FZB	3-5, 8-55
312101-0331 ..	SCREW M6S M5X20 FZB	2-11, 2-13, 8-25, 8-27, 8-43, 8-45
312101-0333 ..	SCREW M6S M5X25 FZB	3-13, 3-15, 3-23
312101-0337 ..	SCREW M6S M5X35 FZB	2-17, 2-19, 2-21
312101-0343 ..	SCREW M6S M5X60 FZB	4-51, 4-53
312101-0344 ..	SCREW M6S M5X65 FZB	7-45
312101-0362 ..	SCREW M6S M6X8 FZB	3-9, 3-11, 3-13, 3-15
312101-0364 ..	SCREW M6S M6X10 FZB	3-9, 3-11, 3-13, 3-15, 8-25, 8-27, 8-43, 8-45
312101-0366 ..	SCREW M6S M6X12 FZB	3-5
312101-0368 ..	SCREW M6S M6X16 FZB	3-5
312101-0370 ..	SCREW M6S M6X20 FZB	3-5
312101-0376 ..	SCREW M6S M6X35 FZB	3-5, 3-29, 3-31
312101-0381 ..	SCREW M6S M6X55 FZB	8-61
312101-0392 ..	SCREW M6S M6X110 FZB	2-25
312101-0453 ..	SCREW M6S M8X25 FZB	3-9, 3-11, 5-19
312101-0455 ..	SCREW M6S M8X30 FZB	5-19
312101-0459 ..	SCREW M6S M8X40 FZB	5-19
312101-0489 ..	SCREW M6S M10X16 FZB	3-5
312101-0493 ..	SCREW M6S M10X25 FZB	3-9, 3-11, 3-13, 3-15
312101-0499 ..	SCREW M6S M10X40 FZB	2-11, 2-13, 6-91, 6-93
312101-0502 ..	SCREW M6S M10X55 FZB	3-11, 3-29, 3-31
312101-0504 ..	SCREW M6S M10X65 FZB	3-5, 3-9, 3-11, 3-13, 3-15
312101-0507 ..	SCREW M6S M10X80 FZB	3-9, 3-11
312101-0515 ..	SCREW M6S M10X120 FZB	3-13, 3-15

Part No	Description	Page No
312101-0530 ..	SCREW M6S M12X16 FZB	5-7
312101-0550 ..	SCREW M6S M12X90 FZB	3-5
312101-0552 ..	SCREW M6S M12X100 FZB	5-21
312101-0630 ..	SCREW M6S M16X50 FZB	2-53
312104-0499 ..	SCREW M6S M10X40H FZB	3-27, 6-91, 6-93
312105-0287 ..	SCREW M6S ISO4017 M4X8 A470	1-39, 1-43, 1-45, 1-47, 1-61, 1-93, 1-155, 1-167, 1-169, 6-89, 7-61
312105-0289 ..	SCREW M6S ISO 4017 M4X10 A470	1-179
312105-0291 ..	SCREW M6S ISO 4017 M4X12 A470	5-67, 8-29, 8-47, 11-25
312105-0293 ..	SCREW M6S ISO 4017 M4X16 A470	1-57, 1-59, 6-63, 7-15, 7-23, 7-25, 7-27, 7-29, 8-9, 11-25
312105-0295 ..	SCREW M6S ISO4017 M4X20 A480	2-17, 2-19, 2-21, 7-39, 7-41
312105-0297 ..	SCREW M6S ISO 4017 M4X25 A480	2-17, 2-19, 2-21, 8-51
312105-0299 ..	SCREW M6S ISO 4017 M4X30 A480	7-45
312105-0301 ..	SCREW M6S ISO 4017 M4X35 A470	1-177, 2-15, 3-27
312105-0303 ..	SCREW M6S ISO 4017 M4X40 A470	5-43
312105-0323 ..	SCREW M6S ISO 4017 M5X8 A480	1-65, 5-47, 5-55, 6-11, 6-73, 8-51, 9-23, 9-25
312105-0325 ..	SCREW M6S ISO 4017 M5X10 A480	1-9, 1-11, 1-19, 1-43, 1-45, 1-47, 1-67, 1-69, 1-123, 1-125 1-155, 1-177, 2-7, 4-51, 4-53, 7-35, 7-37, 8-59
312105-0327 ..	SCREW M6S ISO 4017 M5X12 A480	1-21, 1-23, 1-35, 1-49, 1-51, 1-59, 2-23, 2-25, 3-33, 4-27 4-29, 4-31, 4-33, 6-21, 6-39, 6-41, 6-79, 6-81, 8-29, 8-47, 9-19, 9-23, 9-25, 10-127, 10-129, 10-163
312105-0328 ..	SCREW M6S ISO 4017 M5X14 A480	1-157, 1-159, 4-51, 4-53, 5-67, 7-35, 7-37, 7-39, 7-41
312105-0329 ..	SCREW M6S ISO 4017 M5X16 A480	1-55, 1-123, 1-125, 1-167, 1-169, 4-39, 6-77, 7-23, 7-25 7-27, 7-29, 8-13, 8-19, 8-21, 8-23, 8-29, 8-39, 8-41, 8-47
312105-0331 ..	SCREW M6S ISO 4017 M5X20 A480	1-59, 1-129, 1-131, 1-177, 5-9, 5-37, 7-51, 7-53, 8-19, 8-21 8-23, 8-39, 8-41, 11-19
312105-0332 ..	SCREW M6S ISO 4017 M5X22 A480	1-107, 1-109, 1-111, 1-113, 1-123, 1-125
312105-0333 ..	SCREW M6S ISO 4017 M5X25 A480	1-15, 1-155, 2-49, 4-59, 7-49, 7-61
312105-0335 ..	SCREW M6S ISO 4014 M5X30 A480	1-9, 1-11, 1-61, 4-51, 4-53, 5-7, 6-39, 6-41
312105-0337 ..	SCREW M6S ISO 4014 M5X35 A480	2-5, 8-15
312105-0339 ..	SCREW M6S ISO 4014 M5X40 A480	6-39, 6-41, 7-35, 7-37
312105-0341 ..	SCREW M6S ISO 4014 M5X50 A480	6-35, 6-39, 6-41
312105-0362 ..	SCREW M6S ISO 4017 M6X8 A480	1-35, 1-49, 1-51, 1-133, 4-5, 4-7, 4-9, 4-11, 5-23, 5-25, 5-37 6-73, 8-59
312105-0364 ..	SCREW M6S ISO 4017 M6X10 A480	1-9, 1-11, 1-39, 1-57, 1-59, 1-99, 1-101, 1-129, 1-131 1-137, 1-141, 1-143, 1-145, 1-147, 1-149, 2-23, 2-57, 4-55, 5-29, 6-57, 6-63, 6-89, 8-19, 8-21, 8-23 8-39, 8-41, 8-51, 8-63
312105-0366 ..	SCREW M6S ISO 4017 M6X12 A480	1-37, 1-39, 1-47, 1-57, 1-59, 1-93, 1-95, 1-97, 1-133, 1-141 1-147, 1-149, 1-155, 1-163, 1-165, 1-167, 1-169, 1-171, 1-173, 1-175, 1-177, 2-5, 2-9, 2-11, 2-13 2-25, 2-37, 2-45, 2-47, 3-27, 4-55, 5-43, 5-53, 5-55, 5-65, 6-11, 6-13, 6-37, 6-57, 6-95, 7-35, 7-37 7-45, 7-47, 7-49, 7-51, 7-53, 8-9, 8-19, 8-21, 8-23, 8-39, 8-41, 8-63
312105-0367 ..	SCREW M6S ISO 4017 M6X14 A480	1-19, 1-21, 1-23, 1-135, 1-177, 4-5, 4-7, 4-9, 4-11, 5-13 5-15, 5-39, 6-71, 6-87, 7-23, 7-25, 7-27, 7-29, 7-47
312105-0368 ..	SCREW M6S ISO 4017 M6X16 A480	1-21, 1-23, 1-35, 1-39, 1-49, 1-51, 1-59, 1-61, 1-65, 1-99 1-101, 1-107, 1-109, 1-111, 1-113, 1-115, 1-117, 1-119, 1-121, 1-123, 1-125, 1-129, 1-131, 1-171 1-173, 1-175, 1-177, 2-11, 2-13, 2-27, 2-29, 2-39, 2-51, 2-53, 2-59, 2-65, 3-27, 4-13, 4-15, 4-27 4-29, 4-31, 4-33, 4-41, 4-43, 4-45, 4-47, 5-23, 5-25, 5-35, 5-51, 5-55, 6-5, 6-7, 6-25, 6-55, 6-69 7-23, 7-25, 7-27, 7-29, 7-35, 7-37, 7-47, 7-61, 10-79, 10-123, 10-125, 10-127, 10-129, 10-141 10-143, 10-155, 10-157, 11-25
312105-0370 ..	SCREW M6S ISO 4017 M6X20 A480	1-35, 1-39, 1-41, 1-59, 1-63, 1-93, 1-121, 1-123, 1-125 1-129, 1-131, 1-133, 1-137, 1-143, 1-167, 1-169, 3-25, 3-27, 4-35, 4-37, 5-11, 5-13, 5-15, 5-39 . 5-47, 5-49, 5-51, 5-67, 6-13, 6-67, 7-9, 7-19, 7-21, 7-49, 7-51, 7-53, 8-13, 10-127, 10-129, 11-25
312105-0371 ..	SCREW M6S ISO 4017 M6X22 A480	1-107, 1-109, 1-111, 1-113, 1-139, 2-41, 2-43
312105-0372 ..	SCREW M6S ISO 4017 M6X25 A480	1-17, 1-21, 1-23, 1-35, 1-37, 1-39, 1-49, 1-51, 1-129 1-131, 1-135, 1-145, 1-171, 1-173, 1-175, 2-11, 2-13, 2-17, 2-19, 2-21, 4-13, 4-15, 4-27, 4-29 4-31, 4-33, 4-49, 5-13, 5-15, 5-37, 5-43, 5-49, 5-51, 6-79, 6-81, 7-49, 8-13, 8-19, 8-21, 8-23, 8-39 8-41, 11-25
312105-0374 ..	SCREW M6S ISO 4014 M6X30 A480	2-5, 3-9, 3-11, 3-13, 3-15, 4-5, 4-7, 4-9, 4-11, 4-35, 4-37 4-49, 5-13, 5-15, 5-27, 5-31, 6-69, 7-23, 7-25, 7-27, 7-29, 7-51, 7-53, 11-19
312105-0376 ..	SCREW M6S ISO 4014 M6X35 A480	1-35, 2-11, 2-13, 4-5, 4-7, 4-9, 4-11, 4-35, 4-37, 4-41, 4-43 4-45, 4-47, 4-61, 4-63, 5-13, 5-15, 5-35, 6-43, 6-45, 6-47, 6-49, 6-51, 6-53, 6-87, 7-51, 7-53
312105-0378 ..	SCREW M6S ISO 4014 M6X40 A480	1-17, 1-49, 1-51, 2-23, 5-31, 7-15, 8-31
312105-0379 ..	SCREW M6S ISO 4014 M6X45 A480	1-49, 1-51, 4-19, 4-21, 4-23, 4-25, 5-35, 11-11
312105-0380 ..	SCREW M6S ISO 4014 M6X50 A480	2-11, 2-13, 4-13, 4-15, 4-41, 4-43, 4-45, 4-47, 4-55, 5-27 5-31, 5-63, 6-39, 6-41
312105-0381 ..	SCREW M6S ISO 4014 M6X55 A480	1-123, 1-125, 7-49
312105-0382 ..	SCREW M6S ISO 4014 M6X60 A480	1-79, 6-67, 8-19, 8-21, 8-23, 8-39, 8-41
312105-0384 ..	SCREW M6S ISO 4014 M6X70 A480	4-13, 4-15, 6-11
312105-0386 ..	SCREW M6S ISO 4014 M6X80 A480	6-97
312105-0447 ..	SCREW M6S ISO 4017 M8X12 A480	1-57, 1-59, 1-129, 1-131, 2-65, 4-35, 4-37, 5-55, 6-15 6-17, 6-19, 7-31, 7-59, 8-9, 8-13
312105-0449 ..	SCREW M6S ISO 4017 M8X16 A480	1-21, 1-23, 1-35, 1-61, 1-167, 1-169, 2-53, 2-65, 4-55 5-35, 6-61, 6-63, 6-83, 6-85, 7-15, 7-35, 7-37, 7-39, 7-41, 8-13, 8-51
312105-0451 ..	SCREW M6S ISO 4017 M8X20 A480	1-43, 1-45, 1-49, 1-51, 1-55, 1-67, 1-69, 1-107, 1-109 1-111, 1-113, 1-115, 1-117, 1-119, 1-129, 1-131, 1-163, 1-165, 1-171, 1-173, 1-175, 1-181, 2-5 2-11, 2-13, 2-53, 2-65, 4-55, 5-39, 5-41, 6-69, 6-71, 7-35, 7-37
312105-0452 ..	SCREW M6S ISO 4017 M8X22 A4 80	1-181, 4-49, 7-57
312105-0453 ..	SCREW M6S ISO 4017 M8X25 A480	1-9, 1-11, 1-17, 1-41, 1-43, 1-45, 1-63, 1-65, 1-67, 1-69 1-129, 1-131, 1-133, 1-135, 1-141, 2-65, 3-27, 4-13, 4-15, 4-35, 4-37, 4-41, 4-43, 4-45, 4-47, 5-13 5-15, 5-23, 5-25, 5-35, 6-57, 6-61, 6-63, 6-71, 6-79, 6-81, 6-83, 6-85, 7-47, 8-5, 8-11, 8-19, 8-21 8-23, 8-39, 8-41, 8-59, 11-9
312105-0455 ..	SCREW M6S ISO 4017 M8X30 A480	1-35, 1-39, 1-61, 1-115, 1-117, 1-119, 2-11, 2-13, 3-7 4-13, 4-15, 4-35, 4-37, 4-41, 4-43, 4-45, 4-47, 5-23, 5-25, 5-41, 5-63, 5-67, 8-55
312105-0457 ..	SCREW M6S ISO 4014 M8X35 A480	1-43, 1-45, 1-115, 1-117, 1-119, 4-59, 5-35, 8-19, 8-21 8-23, 8-39, 8-41
312105-0459 ..	SCREW M6S ISO 4014 M8X40 A480	2-23, 4-13, 4-15, 5-43, 8-19, 8-21, 8-23, 8-39, 8-41

Part No	Description	Page No
312105-0460 ..	SCREW M6S ISO 4014 M8X45 A480	4-49, 5-13, 5-15, 8-19, 8-21, 8-23
312105-0461 ..	SCREW M6S ISO 4014 M8X50 A480	6-65, 8-59
312105-0462 ..	SCREW M6S ISO 4014 M8X55 A480	1-35, 4-5, 4-7, 4-9, 4-11
312105-0463 ..	SCREW M6S ISO 4014 M8X60 A480	5-31, 9-15
312105-0464 ..	SCREW M6S ISO 4014 M8X65 A480	1-59, 6-89
312105-0469 ..	SCREW M6S ISO 4014 M8X90 A480	5-51
312105-0489 ..	SCREW M6S ISO 4017 M10X16 A480	2-5, 6-57
312105-0491 ..	SCREW M6S ISO 4017 M10X20 A480	5-51, 6-61, 8-59
312105-0493 ..	SCREW M6S ISO 4017 M10X25 A480	6-91, 6-93, 8-19, 8-21, 8-23, 8-39, 8-41
312105-0495 ..	SCREW M6S ISO 4017 M10X30 A480	1-57, 1-123, 1-125, 3-7, 5-13, 5-15, 6-61
312105-0497 ..	SCREW M6S ISO 4017 M10X35 A480	5-27, 8-57
312105-0499 ..	SCREW M6S ISO 4014 M10X40 A480	1-49, 1-51
312105-0500 ..	SCREW M6S ISO 4014 M10X45 A480	8-57
312105-0507 ..	SCREW M6S ISO 4014 M10X80 A480	8-5
312105-0511 ..	SCREW M6S ISO 4014 M10X100 A480	2-49
312105-0515 ..	SCREW M6S ISO 4014 M10X120 A480	2-65
312105-0532 ..	SCREW M6S ISO 4017 M12X20 A480	3-7, 3-25, 5-51
312105-0534 ..	SCREW M6S ISO 4017 M12X25 A480	2-41, 2-43, 5-9
312105-0536 ..	SCREW M6S ISO 4017 M12X30 A480	1-57, 1-123, 1-125, 1-129, 1-131, 1-133
312105-0540 ..	SCREW M6S ISO 4017 M12X40 A480	6-57
312105-0544 ..	SCREW M6S ISO 4014 M12X60 A480	5-39, 5-49
312105-0547 ..	SCREW M6S ISO 4014 M12X75 A480	5-11
312105-0548 ..	SCREW M6S ISO 4014 M12X80 A480	6-57
312105-0622 ..	SCREW M6S ISO 4017 M16X25 A480	2-41, 2-43
312105-0628 ..	SCREW M6S ISO 4017 M16X40 A480	2-41, 2-43, 5-51
312105-0630 ..	SCREW M6S ISO 4017 M16X50 A480	2-55
312105-0648 ..	SCREW M6S M16X150 A280	2-41, 2-43
312109-0335 ..	SCREW M6S ISO 4017 M5X30 A480	1-167, 1-169
312109-0376 ..	SCREW M6S ISO 4017 M6X35 A480	1-99, 1-101, 8-19, 8-21, 8-23, 8-39, 8-41
312109-0378 ..	SCREW M6S ISO4017 M6X40 A480	2-11, 2-13, 11-25
312109-0457 ..	SCREW M6S ISO 4017 M8X35 A480	1-35, 5-23, 5-25
312109-0459 ..	SCREW M6S ISO 4017 M8X40 A480	7-57
312109-0499 ..	SCREW M6S ISO 4017 M10X40 A480	5-13, 5-15
312111-0295 ..	SCREW HEX.SOCK.HD.MC6S-TT 4X20 88 FZB	6-91, 6-93
312111-0331 ..	SCREW HEX.SOCK.HD.MC6S-TT 5X20 88 FZB	6-91, 6-93
312111-0335 ..	SCREW HEX.SOCK.HD.MC6S-TT 5X30 88 FZB	8-25, 8-27, 8-43, 8-45
312111-0368 ..	SCREW HEX.SOCK.HD.MC6S-TT 6X16 88 FZB	3-17
312111-0370 ..	SCREW HEX.SOCK.HD.MC6S-TT 6X20 88 FZB	6-91, 6-93
312111-0372 ..	SCREW HEX.SOCK.HD.MC6S-TT 6X25 88 FZB	6-91, 6-93
312111-0376 ..	SCREW HEX.SOCK.HD.MC6S-TT 6X35 88 FZB	3-9, 3-11
312111-0378 ..	SCREW HEX.SOCK.HD.MC6S-TT 6X40 88 FZB	3-9, 3-11
312111-0471 ..	SCREW HEX.SOCK.HD.MC6S-TT 8X100 88 FZ	6-21, 8-19, 8-21, 8-23, 8-39, 8-41
312115-0220 ..	SCREW ISO4762 M3X6 A4 80	7-35, 7-37, 10-105, 10-107, 10-109, 10-111, 10-113, 10-115, 10-117, 10-119, 10-121
312115-0222 ..	SCREW ISO4762 M3X8 A4	2-69, 10-141, 10-143
312115-0224 ..	SCREW ISO4762 M3X10 A4	1-143, 6-77, 10-29, 10-31, 10-105, 10-107, 10-109, 10-111, 10-113, 10-115, 10-117, 10-119, 10-121
312115-0226 ..	SCREW ISO4762 M3X12 A4	3-33, 10-97, 10-99
312115-0228 ..	SCREW ISO4762 M3X16 A4	1-67, 1-69, 1-141, 7-35, 7-37, 7-39, 7-41, 7-43, 7-51, 7-53, 10-151, 11-25
312115-0230 ..	SCREW ISO4762 M3X20 A4	7-23, 7-25, 7-27, 7-29
312115-0285 ..	SCREW ISO4762 M4X6 A4	10-151
312115-0287 ..	SCREW ISO4762 M4X8 A4	1-93, 2-11, 2-13, 2-49, 6-39, 6-41, 7-21, 8-13, 8-29, 8-47
312115-0289 ..	SCREW ISO4762 M4X10 A4	1-9, 1-11, 2-17, 2-19, 2-21, 5-47, 10-13, 10-15, 10-17, 10-25, 10-39, 10-41, 10-43, 10-47, 10-49, 10-51, 10-53, 10-85, 10-87
312115-0291 ..	SCREW ISO4762 M4X12 A4	1-87, 4-65, 5-21, 5-47, 10-13, 10-15, 10-17, 10-101, 10-105, 10-107, 10-109, 10-111, 10-113, 10-115, 10-117, 10-119, 10-121
312115-0293 ..	SCREW ISO4762 M4X16 A4	4-39, 9-21, 9-27, 9-29, 10-85, 10-87, 10-89, 10-91, 10-93, 10-95, 10-97, 10-99, 10-101
312115-0295 ..	SCREW ISO4762 M4X20 A4	1-15, 5-67, 7-61, 10-13, 10-15, 10-17
312115-0297 ..	SCREW ISO4762 M4X25 A4	10-85, 10-87
312115-0299 ..	SCREW ISO4762 M4X30 A4	6-39, 6-41, 10-85, 10-87
312115-0304 ..	SCREW ISO4762 M4X45 A4	8-51
312115-0305 ..	SCREW ISO4762 M4X50 A4	1-9, 1-11, 1-67, 1-69, 6-39, 6-41, 10-151
312115-0323 ..	SCREW ISO4762 M5X8 A4	1-95, 1-97, 7-19, 7-21, 7-43, 8-59, 10-13, 10-15, 10-17, 10-27, 10-45, 10-57, 10-61, 10-63, 10-65, 10-67, 10-69, 10-71, 10-75, 10-77, 11-25
312115-0325 ..	SCREW ISO4762 M5X10 A4	1-9, 1-11, 1-59, 2-45, 2-47, 10-13, 10-15, 10-17, 10-29, 10-31, 10-37, 10-159
312115-0327 ..	SCREW ISO4762 M5X12 A4	2-27, 2-29, 2-61, 2-63, 6-5, 6-7, 7-23, 7-25, 7-27, 7-29, 7-43, 7-59, 8-9, 10-69, 10-71, 10-161
312115-0329 ..	SCREW ISO4762 M5X16 A4	1-49, 1-51, 1-67, 1-69, 1-141, 2-27, 2-29, 2-61, 2-63, 2-65, 4-5, 4-7 ... 4-9, 4-11, 5-67, 6-5, 6-7, 6-39, 6-41, 7-31, 8-9, 8-39, 8-41, 10-79, 10-85, 10-87, 10-141, 10-143
312115-0331 ..	SCREW ISO4762 M5X20 A4	1-21, 1-23, 2-7, 4-39
312115-0333 ..	SCREW ISO4762 M5X25 A4	8-19, 8-21, 8-23, 8-37, 8-39, 8-41, 10-13, 10-15, 10-17
312115-0335 ..	SCREW ISO4762 M5X30 A4	7-21
312115-0339 ..	SCREW ISO4762 M5X40 A4	10-165
312115-0340 ..	SCREW ISO4762 M5X45 A4	1-67, 1-69
312115-0362 ..	SCREW ISO4762 M6X8 A4	3-5
312115-0364 ..	SCREW ISO4762 M6X10 A4	1-61, 1-143, 2-23, 4-65
312115-0366 ..	SCREW ISO4762 M6X12 A4	1-21, 1-23, 1-33, 1-59, 1-143, 1-161, 4-5, 4-7, 4-9, 4-11, 5-59, 5-61, 6-63, 7-35, 7-37, 8-63, 10-13, 10-15, 10-17, 10-79, 10-85, 10-87, 10-159, 11-25
312115-0367 ..	SCREW ISO4762 M6X14 A4	7-23, 7-25, 7-27, 7-29, 11-27
312115-0368 ..	SCREW ISO4762 M6X16 A4	5-13, 5-15, 6-5, 6-67, 7-63, 8-9, 8-13, 8-33, 8-35, 10-85, 10-87, 10-159, 10-165
312115-0370 ..	SCREW ISO4762 M6X20 A4	1-47, 1-49, 1-51, 4-5, 4-7, 4-9, 4-11, 4-59, 6-67, 7-59, 8-31, 8-39

Part No	Description	Page No
		8-41, 10-79
312115-0371 ..	SCREW ISO4762 M6X22 A4	4-35, 4-37
312115-0372 ..	SCREW ISO4762 M6X25 A4	1-47, 1-177, 2-9, 2-25, 3-5, 4-5, 4-7, 4-9, 4-11, 4-49, 5-43, 5-59
		5-61, 7-17, 7-33, 8-13, 8-19, 8-21, 8-23, 8-65, 11-25
312115-0374 ..	SCREW ISO4762 M6X30 A4	1-47, 1-49, 1-51, 2-45, 2-47, 5-67
312115-0376 ..	SCREW ISO4762 M6X35 A4	6-15, 6-17, 6-19
312115-0378 ..	SCREW ISO4762 M6X40 A4	7-35, 7-37
312115-0380 ..	SCREW ISO4762 M6X50 A4	8-51
312115-0385 ..	SCREW ISO4762 M6X75 A4	2-45, 2-47
312115-0386 ..	SCREW ISO4762 M6X80 A4	5-13, 5-15
312115-0447 ..	SCREW ISO4762 M8X12 A4	6-39, 6-41
312115-0449 ..	SCREW ISO4762 M8X16 A4	1-133, 7-57
312115-0451 ..	SCREW ISO4762 M8X20 A4	5-23, 5-25
312115-0453 ..	SCREW ISO4762 M8X25 A4	3-19, 3-21, 4-13, 4-15, 4-57, 5-67, 7-65
312115-0455 ..	SCREW ISO4762 M8X30 A4	1-61, 1-79, 1-145, 7-57
312115-0457 ..	SCREW ISO4762 M8X35 A4	5-23, 5-25, 7-67
312115-0459 ..	SCREW ISO4762 M8X40 A4	5-23, 5-25
312115-0460 ..	SCREW ISO4762 M8X45 A4	5-23, 5-25
312115-0461 ..	SCREW ISO4762 M8X50 A4	5-23, 5-25
312115-0463 ..	SCREW ISO4762 M8X60 A4	2-31, 2-33, 5-23, 5-25
312115-0465 ..	SCREW ISO4762 M8X70 A4	5-23, 5-25
312115-0467 ..	SCREW ISO4762 M8X80 A4	5-23, 5-25
312115-0495 ..	SCREW ISO4762 M10X30 A4	8-13
312115-0500 ..	SCREW ISO4762 M10X45 A4	3-19, 3-21, 5-43, 5-67
312115-0503 ..	SCREW ISO4762 M10X60 A4	2-5
312121-0287 ..	SCREW ISO 1207 M4X8 4.8 - 5.8 Z.PL.	3-9, 3-11, 3-13, 3-15
312121-0289 ..	SCREW ISO 1207 M4X10 4.8 - 5.8 Z.PL.	2-17, 2-19, 2-21
312121-0323 ..	SCREW ISO 1207 M5X8 4.8 - 5.8 Z.PL.	3-5
312122-0294 ..	SCREW ISO 1207 M4X18 NI PL BRASS	4-51, 4-53
312122-0366 ..	SCREW ISO 1207 M6X12 NI PL BRASS	10-13, 10-15, 10-17
312125-0220 ..	SCREW ISO 1207 M3X6 A4	1-39, 2-7, 2-69, 4-65
312125-0222 ..	SCREW ISO 1207 M3X8 A4	2-5, 6-39, 6-41, 7-31
312125-0226 ..	SCREW ISO 1207 M3X12 A4	6-77, 10-29, 10-31
312125-0228 ..	SCREW ISO 1207 M3X16 A4	1-15, 1-19, 1-57, 1-185
312125-0230 ..	SCREW ISO 1207 M3X20 A4	1-49, 1-51, 1-59, 2-7, 8-19, 8-21, 8-23, 8-39, 8-41, 8-51
312125-0232 ..	SCREW ISO 1207 M3X25 A4	7-23, 7-25, 7-27, 7-29, 10-29, 10-31
312125-0234 ..	SCREW ISO 1207 M3X30 A4	7-35, 7-37
312125-0285 ..	SCREW ISO 1207 M4X6 A4	1-13, 1-21, 1-23, 1-39, 1-95, 1-97, 4-13, 4-15, 6-79, 6-81, 7-15, 10-133
312125-0287 ..	SCREW ISO 1207 M4X8 A4	1-49, 1-51, 2-17, 2-19, 2-21, 2-25, 2-65, 3-33, 5-57, 6-57, 7-13, 7-19
		7-23, 7-25, 7-27, 7-29, 7-35, 7-37, 7-43, 8-51, 8-63
312125-0289 ..	SCREW ISO 1207 M4X10 A4	7-51, 7-53, 8-39, 8-41
312125-0291 ..	SCREW ISO 1207 M4X12 A4	1-39, 2-31, 2-33, 7-19, 7-21, 8-59
312125-0293 ..	SCREW ISO 1207 M4X16 A4	1-13, 7-21, 9-19, 9-23, 9-25
312125-0297 ..	SCREW ISO 1207 M4X25 A4	8-63
312125-0299 ..	SCREW ISO 1207 M4X30 A4	2-69, 6-89
312125-0323 ..	SCREW ISO 1207 M5X8 A4	1-35, 1-43, 1-45, 1-83, 1-85, 1-87, 1-147, 1-149, 2-5, 2-11, 2-13
		2-17, 2-19, 2-21, 9-21, 9-27, 9-29, 10-135
312125-0325 ..	SCREW ISO 1207 M5X10 A4	2-51, 6-11, 8-19, 8-21, 8-23, 8-39, 8-41
312125-0327 ..	SCREW ISO 1207 M5X12 A4	7-59, 10-23, 10-35, 10-61, 10-63, 10-73, 10-131, 10-133
312125-0329 ..	SCREW ISO 1207 M5X16 A4	2-31, 8-19, 8-21, 8-23, 8-39, 8-41, 8-63
312125-0331 ..	SCREW ISO 1207 M5X20 A4	1-43, 1-45
312125-0339 ..	SCREW ISO 1207 M5X40 A4	10-23, 10-35, 10-73
312125-0364 ..	SCREW ISO 1207 M6X10 A4	1-43, 1-45, 2-9, 5-59, 5-61, 7-33, 8-65
312125-0366 ..	SCREW ISO 1207 M6X12 A4	8-19, 8-21, 8-23, 8-39, 8-41
312145-0220 ..	SCREW ISO 2009 MFS M3X6 A4	3-9, 3-11, 3-13, 3-15, 8-59
312145-0228 ..	SCREW ISO 2009 MFS M3X16 A4	1-39
312145-0285 ..	SCREW ISO 2009 MFS M4X6 A4	8-19, 8-21, 8-23, 8-39, 8-41
312145-0289 ..	SCREW ISO 2009 MFS M4X10 A4	4-5, 4-7, 4-9, 4-11
312145-0291 ..	SCREW ISO 2009 MFS M4X12 A4	1-9, 1-11, 4-5, 4-7, 4-9, 4-11, 4-19, 4-21, 4-23, 4-25, 8-55
312145-0293 ..	SCREW ISO 2009 MFS M4X16 A4	8-19, 8-21, 8-23, 8-39, 8-41
312145-0325 ..	SCREW ISO 2009 MFS M5X10 A4	1-9, 1-11
312145-0366 ..	SCREW ISO 2009 MFS M6X12 A4	1-9, 1-11
312151-0287 ..	SCREW EN 10642 MF6S M4X8 10.9 EL.PL	3-9, 3-11, 3-13, 3-15
312151-0364 ..	SCREW EN 10642 MF6S M6X10 10.9 EL.PL	3-9, 3-11, 3-13, 3-15
312155-0220 ..	SCREW EN 10642 MF6S M3X6 A480	10-161
312155-0226 ..	SCREW EN 10642 MF6S M3X12 A480	7-21
312155-0287 ..	SCREW EN 10642 MF6S M4X8 A480	1-9, 1-11, 7-23, 7-25, 7-27, 7-29
312155-0291 ..	SCREW EN 10642 MF6S M4X12 A480	5-13, 5-15, 8-19, 8-21, 8-23, 8-39, 8-41, 10-79, 10-85
		10-87, 10-123, 10-125, 10-127, 10-129, 10-141, 10-143, 10-155, 10-157, 11-25
312155-0293 ..	SCREW EN 10642 MF6S M4X16 A480	7-61
312155-0295 ..	SCREW EN 10642 MF6S M4X20 A480	7-59
312155-0297 ..	SCREW EN 10642 MF6S M4X25 A480	1-79, 10-123, 10-125, 10-155, 10-157
312155-0299 ..	SCREW EN 10642 MF6S M4X30 A480	5-45
312155-0301 ..	SCREW EN 10642 MF6S M4X35 A480	10-79, 10-127, 10-129, 10-141, 10-143
312155-0323 ..	SCREW EN 10642 MF6S M5X8 A480	4-19, 4-21, 4-23, 4-25, 8-11
312155-0325 ..	SCREW EN 10642 MF6S M5X10 A480	2-5, 7-35, 7-37
312155-0327 ..	SCREW EN 10642 MF6S M5X12 A480	1-9, 1-11, 1-147, 1-149, 7-35, 7-37, 8-11, 8-19, 8-21
		8-23, 8-37, 8-39, 8-41
312155-0329 ..	SCREW EN 10642 MF6S M5X16 A480	1-79, 1-163, 1-165, 2-27, 2-29, 5-67, 6-5, 6-7, 8-19, 8-21
		8-23, 8-39, 8-41, 11-25
312155-0331 ..	SCREW EN 10642 MF6S M5X20 A480	5-55, 7-31
312155-0339 ..	SCREW EN 10642 MF6S M5X40 A480	11-25
312155-0364 ..	SCREW EN 10642 MF6S M6X10 A480	1-33, 1-37, 1-143
312155-0366 ..	SCREW EN 10642 MF6S M6X12 A480	3-27

Part No	Description	Page No
312155-0368 ..	SCREW EN 10642 MF6S M6X16 A480	2-11, 2-13, 4-27, 4-29, 4-31, 4-33, 5-29, 7-9, 7-59
312155-0370 ..	SCREW EN 10642 MF6S M6X20 A480	1-19, 1-177, 5-35, 5-49, 7-47
312155-0372 ..	SCREW EN 10642 MF6S M6X25 A480	5-37, 5-43
312155-0374 ..	SCREW EN 10642 MF6S M6X30 A480	1-37, 7-15
312155-0449 ..	SCREW EN 10642 MF6S M8X16 A480	3-5, 5-41, 5-67
312155-0451 ..	SCREW EN 10642 MF6S M8X20 A480	4-57, 5-67
312155-0457 ..	SCREW EN 10642 MF6S M8X35 A480	8-19, 8-21, 8-23, 8-39, 8-41
312155-0459 ..	SCREW EN 10642 MF6S M8X40 A480	4-57
312155-0491 ..	SCREW EN 10642 MF6S M10X20 A480	8-11
312155-0532 ..	SCREW EN 10642 MF6S M12X20 A480	1-67, 1-69
312311-0285 ..	SCREW ISO4028 M4X6 FZB	7-65
312311-0287 ..	SCREW ISO4028 M4X8 FZB	1-61
312311-0321 ..	SCREW ISO4028 M5X6 FZB	1-47, 3-13, 3-15
312311-0327 ..	SCREW ISO4028 M5X12 FZB	2-49
312311-0366 ..	SCREW ISO4028 M6X12 FZB	1-47, 1-61
312311-0368 ..	SCREW ISO4028 M6X16 FZB	6-67
312316-0321 ..	SCREW HEX.SOCK.SET CUP P.MSK6SS5X6 FZB	8-55
312318-0222 ..	SCREW ISO4029 M3X8 A4	5-67
312318-0283 ..	SCREW ISO4029 M4X4 A4	7-47
312318-0285 ..	SCREW ISO4029 M4X6 A4	1-123, 1-125, 1-129, 1-131, 7-23, 7-25, 7-27, 7-29
312318-0287 ..	SCREW ISO4029 M4X8 A4	8-13, 8-15, 8-19, 8-21, 8-23, 8-39, 8-41, 8-51
312318-0325 ..	SCREW ISO4029 M5X10 A4	1-167, 1-169, 8-37
312318-0327 ..	SCREW ISO4029 M5X12 A4	7-57
312318-0360 ..	SCREW ISO4029 M6X6 A4	4-41, 4-43, 4-45, 4-47
312318-0362 ..	SCREW ISO4029 M6X8 A4	1-157, 3-23, 3-27, 7-35, 7-37, 7-63, 8-13, 8-19, 8-21, 8-23, 8-39, 8-41, 8-59
312318-0364 ..	SCREW ISO4029 M6X10 A4	3-19, 3-21, 7-65
312318-0366 ..	SCREW ISO4029 M6X12 A4	3-27, 7-49, 7-63, 8-13
312318-0368 ..	SCREW ISO4029 M6X16 A4	1-129, 1-131, 4-41, 4-43, 4-45, 4-47, 5-13, 5-15, 8-33, 8-35
312318-0372 ..	SCREW ISO4029 M6X25 A4	8-19, 8-21, 8-23, 8-39, 8-41
312318-0447 ..	SCREW ISO4029 M8X12 A4	2-55
312318-0451 ..	SCREW ISO4029 M8X20 A4	1-129, 1-131
312502-0120 ..	DRIVE SCREW ROUND HEAD KDS 0X5	1-99, 1-101, 2-45, 2-47
312502-0221 ..	DRIVE SCREW ROUND HEAD KDS 4X6	2-41, 2-43
312601-0318 ..	NUT M6M8FZB	3-9, 3-11, 3-13, 3-15
312601-0320 ..	NUT M6M 10-8 FZB	2-11, 2-13, 6-91, 6-93
312601-0324 ..	NUT M6M 16-8 FZB	3-13, 3-15
312602-0312 ..	HEXAGON NUT, EN 24032 M6M M4 NIPLBR	4-51, 4-53
312602-0316 ..	MUTTER, EN 24032 M6M M6 NIPLBR	6-39, 6-41
312605-0310 ..	HEXAGON NUT, M6M M3 A280	1-59, 2-69, 4-65, 7-23, 7-25, 7-27, 7-29, 7-31, 7-35, 7-37, 7-39, 7-41, 8-51, 10-29, 10-31, 10-97, 10-99, 10-151, 11-25
312605-0312 ..	HEXAGON NUT, M6M M4 A280	1-9, 1-11, 1-21, 1-23, 1-95, 1-97, 1-155, 2-31, 2-33, 2-61, 2-63, 2-69, 3-27, 6-79, 6-81, 7-39, 7-41, 7-45, 7-59, 8-33, 8-35, 10-97, 10-99, 10-101, 10-123, 10-125
312605-0314 ..	HEXAGON NUT, M6M M5 A280	1-9, 1-11, 1-59, 1-65, 1-147, 1-149, 1-163, 1-165, 2-45, 2-47, 5-43, 5-55, 6-7, 6-11, 6-39, 6-41, 6-63, 7-21, 7-31, 7-35, 7-37, 7-45, 7-59, 7-61, 8-19, 8-21, 8-23, 8-29, 8-39, 8-41, 8-47, 9-19, 9-23, 9-25, 11-25
312605-0316 ..	HEXAGON NUT, M6M M6 A280	1-17, 1-19, 1-21, 1-23, 1-47, 1-49, 1-51, 1-79, 1-129, 1-131, 1-135, 1-137, 1-147, 1-149, 1-171, 1-173, 1-175, 1-177, 2-41, 2-43, 2-45, 2-47, 2-53, 2-59, 5-13, 5-15, 5-31, 5-35, 5-51, 5-55, 5-65, 6-11, 6-13, 6-39, 6-41, 6-43, 6-45, 6-47, 6-49, 6-51, 6-53, 6-67, 6-69, 7-13, 7-15, 7-21, 7-23, 7-25, 7-27, 7-29, 7-43, 7-47, 7-51, 7-53, 7-61, 8-9, 8-11, 8-19, 8-21, 8-23, 8-31, 8-39, 8-41, 8-63, 10-79, 10-97, 10-99, 10-123, 10-125, 10-127, 10-129, 10-141, 10-143, 10-151, 10-155, 10-157, 11-25, 11-27
312605-0318 ..	HEXAGON NUT, M6M M8 A280	1-9, 1-11, 1-17, 1-35, 1-41, 1-43, 1-45, 1-55, 1-63, 1-65, 1-115, 1-117, 1-119, 1-129, 1-131, 1-133, 1-135, 1-141, 1-145, 1-155, 1-171, 1-173, 1-175, 2-11, 2-13, 2-53, 4-5, 4-7, 4-9, 4-11, 4-57, 5-35, 5-41, 6-61, 6-63, 6-71, 6-79, 6-81, 6-83, 6-85, 7-35, 7-37, 7-67, 8-5, 8-19, 8-21, 8-23, 8-29, 8-39, 8-41, 8-47, 8-55
312605-0320 ..	HEXAGON NUT, M6M M10 A280	1-57, 1-129, 1-131, 3-27, 5-13, 5-15, 5-23, 5-25, 5-27, 6-67, 6-91, 6-93, 7-11, 8-13
312605-0322 ..	HEXAGON NUT, M6M M12 A280	1-133, 2-53, 5-11, 5-23, 5-25
312605-0324 ..	HEXAGON NUT, M6M M16 A280	8-53
312625-0316 ..	HEXAGON THIN NUT, EN 24035 ML6M M6 A4	3-27, 7-13, 7-15
312625-0318 ..	HEXAGON THIN NUT, EN 24035 ML6M M8 A4	7-21
312625-0320 ..	HEXAGON THIN NUT, EN 24035 ML6M M10 A4	8-13
312625-0326 ..	HEXAGON THIN NUT, EN 24035 ML6M M20 A4	1-99, 1-101
312705-0312 ..	NUT HEX. DOMED CAP MHM-6 M4 A280	6-5, 6-7
312705-0314 ..	NUT HEX. DOMED CAP MHM-6 M5 A280	9-23, 9-25
312705-0316 ..	NUT HEX. DOMED CAP MHM-6 M6 A280	1-147, 1-149, 2-15, 7-13, 7-49, 10-139
312715-0116 ..	NUT WING MVM-K M6	11-27
312805-0102 ..	NUT ROUND WITH SLOTS M15X1 FE	8-31
312805-0103 ..	NUT ROUND WITH SLOTS M17X1 FE	8-31
312805-0106 ..	NUT ROUND WITH SLOTS M30X1,5 FE	5-9
312810-0314 ..	HEXAGON NUT, NY-LOCK M5 FZB	2-31
312810-0316 ..	HEXAGON NUT, NY-LOCK M6 FZB	6-91, 6-93
312811-0316 ..	NUT HEX.LOCK HELI COIL MID GRIP M6 SS	1-139, 6-67
312811-0318 ..	NUT HEX.LOCK HELI COIL M8 SS	4-41, 4-43, 4-45, 4-47
312811-0320 ..	NUT HEX.LOCK HELI COIL MID GRIP M10 SS	4-59
312811-0322 ..	NUT HEX.LOCK HELI COIL MID GRIP M12 SS	3-9
312811-0324 ..	NUT HEX.LOCK HELI COIL MID GRIP M16 SS	3-9, 3-11, 3-13, 3-15
312811-0326 ..	NUT HEX.LOCK HELI COIL MID GRIP M20 SS	3-9, 3-11, 3-13, 3-15
312812-0310 ..	HEXAGON NUT, NY-LOCK M3 A480	1-185
312812-0312 ..	HEXAGON NUT, NY-LOCK M4 A480	2-15, 6-39, 6-41, 6-89, 8-19, 8-21, 8-23, 8-39, 8-41, 10-13, 10-15, 10-17, 10-85, 10-87, 10-123, 10-125
312812-0314 ..	HEXAGON NUT, NY-LOCK M5 A480	1-15, 1-55, 1-163, 1-165, 2-61, 2-63, 7-35, 7-37, 7-59, 10-83, 10-151, 10-153

Part No	Description	Page No
312812-0316 ..	HEXAGON NUT, NY-LOCK M6 A480	1-167, 1-169, 2-15, 7-19, 8-61, 10-79, 10-85, 10-87, 10-103 ..... 10-123, 10-125, 10-127, 10-129, 10-141, 10-143, 10-151, 10-155, 10-157
312812-0318 ..	HEXAGON NUT, NY-LOCK M8 A480	..... 1-167, 1-169, 6-89, 8-19, 8-21, 8-23, 8-39, 8-41
312812-0320 ..	HEXAGON NUT, NY-LOCK M10 A480	..... 3-25, 10-103
312812-0322 ..	HEXAGON NUT, NY-LOCK M12 A480	 8-5
312812-0324 ..	HEXAGON NUT, NY-LOCK M16 A480	..... 2-41, 2-43
312901-0324 ..	NUT M6M16VFZB	..... 3-13, 3-15
312902-0316 ..	NUT HEX. LEFT THREAD, M6 A280	 1-177
312902-0320 ..	NUT HEX. LEFT THREAD, M10 A280	..... 5-13, 5-15
315101-0136 ..	BRICKA BRB, 4,3/8 H=0,8	3-9, 3-11, 3-13, 3-15, 5-67, 8-19, 8-21, 8-23, 8-25, 8-27, 8-39, 8-41 ..... 8-43, 8-45
315101-0146 ..	WASHER PLAIN, BRB, 5,3/10 H=1	2-17, 2-19, 2-21, 3-13, 3-15, 3-19, 3-21, 3-23, 8-25, 8-27 ..... 8-43, 8-45, 8-55, 10-127, 10-129
315101-0153 ..	WASHER PLAIN, BRB, 6,4/12 H=1,5	2-25, 3-5, 3-9, 3-11, 3-13, 3-15, 3-29, 3-31, 6-91, 6-93 ..... 7-21, 8-61, 10-165
315101-0165 ..	WASHER PLAIN, BRB, 8,4/16 H=1,5	..... 3-9, 3-11, 3-27
315101-0173 ..	WASHER PLAIN, BRB, 10,5/22 H=2	..... 3-9, 3-11, 3-13, 3-15, 3-19, 3-21
315101-0178 ..	WASHER PLAIN, BRB, 13/24 H=2	 5-21
315101-0186 ..	WASHER PLAIN, BRB, 17/30 H=3	..... 3-9, 3-11, 3-13, 3-15
315105-0124 ..	WASHER BRB3,2X6RFR	1-15, 1-19, 1-49, 1-51, 1-67, 1-69, 1-141, 1-185, 2-7, 2-69, 3-33, 4-65 6-77, 7-23, 7-25, 7-27, 7-29, 7-31, 7-39, 7-41, 8-19, 8-21, 8-23, 8-39, 8-41, 10-29, 10-31, 10-97 ..... 10-99, 10-105, 10-107, 10-109, 10-111, 10-113, 10-115, 10-117, 10-119, 10-121
315105-0136 ..	WASHER BRB4,3XRFR	1-9, 1-11, 1-13, 1-21, 1-23, 1-39, 1-67, 1-69, 1-93, 1-95, 1-97, 1-123 1-125, 2-11, 2-13, 2-15, 2-49, 2-61, 2-63, 2-65, 2-69, 3-27, 3-33, 4-39, 4-65, 5-17, 5-21, 5-43, 6-5 6-7, 6-39, 6-41, 6-57, 6-63, 6-79, 6-81, 6-89, 7-15, 7-23, 7-25, 7-27, 7-29, 8-9, 8-13, 8-33, 8-35 8-39, 8-41, 8-51, 8-63, 9-19, 9-23, 9-25, 10-13, 10-15, 10-17, 10-25, 10-39, 10-41, 10-43, 10-47 10-49, 10-51, 10-53, 10-55, 10-85, 10-87, 10-89, 10-91, 10-93, 10-95, 10-97, 10-99, 10-101 ..... 10-123, 10-125, 10-127, 10-129, 10-159, 11-25
315105-0146 ..	WASHER BRB5,3X10RFR	1-9, 1-11, 1-15, 1-19, 1-35, 1-43, 1-45, 1-49, 1-51, 1-55, 1-59, 1-61 1-65, 1-67, 1-69, 1-147, 1-149, 1-151, 1-153, 1-157, 1-159, 1-163, 1-165, 1-167, 1-169, 1-177, 2-5 2-7, 2-11, 2-13, 2-23, 2-25, 2-27, 2-29, 2-31, 2-45, 2-47, 2-61, 2-63, 2-65, 3-27, 3-33, 4-27, 4-29 4-31, 4-33, 4-39, 4-51, 4-53, 5-7, 5-9, 5-43, 5-55, 5-67, 6-5, 6-7, 6-11, 6-21, 6-35, 6-39, 6-41, 6-77 6-79, 6-81, 7-23, 7-25, 7-27, 7-29, 7-31, 7-35, 7-37, 7-39, 7-41, 7-43, 7-45, 7-51, 7-53, 7-59, 7-61 8-9, 8-13, 8-15, 8-19, 8-21, 8-23, 8-29, 8-37, 8-39, 8-41, 8-47, 8-59, 8-63, 9-19, 9-23, 9-25, 10-13 10-15, 10-17, 10-27, 10-37, 10-45, 10-57, 10-61, 10-63, 10-65, 10-67, 10-69, 10-71, 10-75, 10-77 10-83, 10-85, 10-87, 10-105, 10-107, 10-109, 10-111, 10-113, 10-115, 10-117, 10-119, 10-121 ..... 10-131, 10-133, 10-151, 10-153, 10-161, 10-163, 11-19
315105-0153 ..	WASHER BRB6,4X12RFR	1-9, 1-11, 1-17, 1-19, 1-21, 1-23, 1-33, 1-37, 1-39, 1-47, 1-49, 1-51 1-57, 1-59, 1-61, 1-79, 1-93, 1-95, 1-97, 1-129, 1-131, 1-133, 1-137, 1-141, 1-143, 1-147, 1-149 1-155, 1-161, 1-167, 1-169, 1-171, 1-173, 1-175, 1-177, 2-5, 2-9, 2-11, 2-13, 2-15, 2-23, 2-25, 2-27 2-29, 2-37, 2-39, 2-41, 2-43, 2-45, 2-47, 2-51, 2-53, 2-57, 2-59, 2-65, 3-25, 3-27, 4-13, 4-15, 4-27 4-29, 4-31, 4-33, 4-35, 4-37, 4-49, 4-55, 4-59, 4-65, 5-23, 5-25, 5-27, 5-29, 5-31, 5-37, 5-39, 5-43
315105-0156 ..	WASHER BRB 6.7X14 RFR	..... 5-65, 7-47, 7-49
315105-0165 ..	WASHER BRB8,4X16RFR	1-9, 1-11, 1-21, 1-23, 1-35, 1-43, 1-45, 1-55, 1-67, 1-69, 1-107 1-109, 1-111, 1-113, 1-123, 1-125, 1-129, 1-131, 1-133, 1-171, 1-173, 1-175, 2-5, 2-11, 2-13, 2-31 2-33, 2-53, 2-65, 3-7, 4-13, 4-15, 4-35, 4-37, 4-41, 4-43, 4-45, 4-47, 4-49, 4-55, 4-57, 5-13, 5-15 5-23, 5-25, 5-35, 5-39, 5-41, 5-51, 5-55, 5-63, 5-67, 6-15, 6-17, 6-19, 6-57, 6-63, 6-83, 6-85, 6-89 7-15, 7-35, 7-37, 7-39, 7-41, 7-47, 7-51, 7-53, 7-57, 8-5, 8-9, 8-11, 8-13, 8-19, 8-21, 8-23, 8-29 ..... 8-39, 8-41, 8-47, 8-55, 8-59, 11-9
315105-0171 ..	WASHER BRB10X18	..... 1-183, 8-13
315105-0173 ..	WASHER BRB10,5X22RFR	2-49, 3-7, 3-25, 4-59, 5-23, 5-25, 6-57, 6-61, 6-67, 6-91, 6-93, 7-11 ..... 8-19, 8-21, 8-23, 8-39, 8-41, 8-57, 10-103
315105-0178 ..	WASHER BRB13X24RFR	..... 2-41, 2-43, 3-7, 3-33, 5-11, 5-39, 5-49, 5-51, 6-57, 7-59
315105-0186 ..	WASHER BRB17X30RFR	..... 2-41, 2-43, 2-53, 2-55, 5-51
315105-0191 ..	WASHER PLAIN, BRB, 20/36 H=3	 8-5
315111-0153 ..	WASHER PLAIN, TBRB 6,4/12 H=3	..... 8-25, 8-27, 8-43, 8-45
315111-0165 ..	WASHER PLAIN, TBRB 8,4/16 H=3	 5-43
315111-0173 ..	WASHER PLAIN, TBRB 10,5/22 H=4	..... 3-5, 3-9, 3-11, 3-13, 3-15
315111-0178 ..	WASHER PLAIN, TBRB 13/24 H=4	 3-5
315115-0153 ..	WASHER PLAIN, TBRB 6,4/12 H=3	1-49, 1-51, 1-57, 1-167, 1-169, 4-5, 4-7, 4-9, 4-11, 4-27 ..... 4-29, 4-31, 4-33, 4-35, 4-37, 4-41, 4-43, 4-45, 4-47, 4-61, 4-63, 7-61
315115-0165 ..	WASHER PLAIN, TBRB 8,4/16 H=3	1-49, 1-51, 1-61, 1-107, 1-109, 1-111, 1-113, 1-115, 1-117 ..... 1-119, 1-129, 1-131, 1-167, 1-169, 1-181, 2-11, 2-13, 4-13, 4-15, 4-59, 6-69
315115-0173 ..	WASHER PLAIN, TBRB 10,5/22 H=4	..... 1-49, 1-51
315115-0178 ..	WASHER PLAIN, TBRB 13/24 H=4	..... 1-123, 1-125, 1-129, 1-131, 8-5
315121-0153 ..	WASHER PLAIN, TBRSB 6,4/22 H=4	 3-5
315121-0173 ..	WASHER PLAIN, TBRSB 10,5/28 H=6	..... 3-11, 3-29, 3-31
315121-0178 ..	WASHER PLAIN, TBRSB 13/36 H=6	..... 3-5, 3-25
315125-0146 ..	WASHER TBRSB 5.3X15X1 A4	..... 10-29, 10-31
315125-0153 ..	WASHER TBRSB 6,4X22X4 A4	..... 1-35, 1-49, 1-51, 1-145, 3-27, 5-35, 8-11
315125-0165 ..	WASHER TBRSB 8,4X26X5 A4	..... 1-35, 1-39, 1-67, 1-69, 7-35, 7-37, 7-57
315125-0173 ..	WASHER TBRSB 10,5X28X6 A4	..... 2-65, 8-5, 8-11
315202-0102 ..	O-RING 4,1X1,6 MM	..... 4-35, 4-37, 4-39
315202-0105 ..	O-RING 7,1X1,6 MM	..... 2-31, 2-33
315202-0106 ..	O-RING 8,1X1,6 MM	..... 4-35, 4-37, 4-49
315202-0108 ..	O-RING 10,1X1,6 MM	..... 4-35, 4-37
315202-0110 ..	O-RING 12,1X1,6 MM	..... 4-5, 4-7, 4-9, 4-11
315202-0112 ..	O-RING 14,1X1,6 MM	..... 6-91, 6-93

Part No	Description	Page No
315202-0118 ..	O-RING 22,1X1,6 MM	5-43
315202-0120 ..	O-RING 27,1X1,6 MM	1-183
315202-0204 ..	O-RING 5,3X2,4 MM	4-49
315202-0206 ..	O-RING 7,3X2,4 MM	2-11, 2-13, 4-41, 4-43, 4-45, 4-47
315202-0207 ..	O-RING 8,3X2,4 MM	4-41, 4-43, 4-45, 4-47, 4-49
315202-0211 ..	O-RING 13,3X2,4 MM	2-5
315202-0215 ..	O-RING 19,2X3 MM	5-11, 5-27, 5-51
315202-0217 ..	O-RING 24,2X3 MM	5-45
315202-0218 ..	O-RING 26,2X3 MM	5-11, 5-67, 8-29, 8-47
315202-0219 ..	O-RING 29,2X3 MM	4-41, 4-43, 4-45, 4-47, 4-49
315202-0223 ..	O-RING 39,2X3 MM	5-67
315202-0244 ..	O-RING 134,3X5,7 MM	6-79, 6-81
315202-0265 ..	O-RING 12,3X2,4 MM	4-5, 4-7, 4-9, 4-11
315202-0304 ..	O-RING 64,5X3 MM	1-85, 8-25, 8-27, 8-43, 8-45
315202-0305 ..	O-RING 69,5X3 MM	5-67, 8-25, 8-27, 8-43, 8-45
315202-0306 ..	O-RING 74,5X3 MM	5-7, 5-9
315202-0307 ..	O-RING 79,5X3 MM	2-49
315202-0308 ..	O-RING 84,5X3 MM	1-83, 1-87
315202-0309 ..	O-RING 89,5X3 MM	8-29, 8-47
315202-0317 ..	O-RING 129,5X3 MM	6-83, 6-85
315204-0109 ..	O-RING 11,1X1,6 MM	1-49, 1-51
315204-0110 ..	O-RING 12,1X1,6 MM	1-37, 1-143
315204-0111 ..	O-RING 13,1X1,6 MM	1-57
315204-0119 ..	O-RING 25,1X1,6 MM	1-141
315204-0207 ..	O-RING 8,3X2,4 MM	1-15
315204-0213 ..	O-RING 15,2X2,4 MM	1-9, 1-11
315204-0215 ..	O-RING 19,2X3 MM	1-83, 1-85, 1-87, 9-35
315204-0222 ..	O-RING 36,2X3 MM	1-143
315204-0223 ..	O-RING 39,2X3 MM	1-63
315204-0301 ..	O-RING 49,5X3 MM	1-49, 1-51, 1-85, 1-141, 9-35
315204-0302 ..	O-RING 54,5X3 MM	1-37, 1-143
315204-0309 ..	O-RING 89,5X3 MM	1-49, 1-51, 1-61
315205-0505 ..	O-RING 6,07X1,78 MM	1-15, 1-19
315205-0705 ..	O-RING 17,17X1,78 MM	5-67
315206-0701 ..	O-RING 10,82X1,78 MM	1-93
315211-0101 ..	BONDED SEAL SS/NBR90 M4	4-5, 4-7, 4-9, 4-11
315211-0103 ..	BONDED SEAL SS/NBR90 M6	4-5, 4-7, 4-9, 4-11, 5-67
315211-0104 ..	BONDED SEAL SS/NBR90 M8	6-91, 6-93
315211-0106 ..	BONDED SEAL SS/NBR90 M10	6-91, 6-93
315211-0107 ..	BONDED SEAL SS/NBR90 M12	5-51
315211-0111 ..	BONDED SEAL SS/NBR90 G1/2	6-91, 6-93
315220-0167 ..	V-RINGS 27X35X10,5 MM V-30S	1-61
315220-0210 ..	V-RINGS 54X64X13 MM V-60S	5-7, 5-9
315221-0169 ..	RADIAL SEAL 30X47X7 MM	3-5
315221-0175 ..	RADIAL SEAL 35X47X7 MM	5-67
315221-0177 ..	RADIAL SEAL 35X52X7 MM	5-9
315221-0185 ..	RADIAL SEAL 40X62X7 MM	5-67
315229-0101 ..	GASKETS, 10,4X17,4X3,7 MM 1/2" FDA	1-21, 1-23, 1-135, 6-71
315229-0103 ..	GASKETS, 23,1X30,1X3,7 MM 1" FDA	1-21, 1-23
315229-0104 ..	GASKETS, 35,8X42,8X3,7 MM 1"1/2 FD	1-15, 1-135, 1-139, 6-71
315229-0105 ..	GASKETS, 48,5X55,5X3,7 MM 2" FDA	1-133, 6-61, 6-79, 6-81, 6-83, 6-85
315229-0106 ..	GASKETS, 61,2X68,2X3,7 MM 2"1/2 FD	6-61
315229-0203 ..	GASKET 22,1X31,1X3,7 MM 1"	1-63, 1-141
315229-0204 ..	GASKET 34,8X42,8X3,7 MM 1"1/2	1-43, 1-45, 1-63
315229-0205 ..	GASKET 47,5X55,5X3,7 MM 2"	1-17, 1-41, 1-43, 1-45, 1-63, 1-65
315229-0206 ..	GASKET 60,2X68,2X3,7 MM 2"1/2	1-41, 1-43, 1-45, 1-63, 1-141
315230-0157 ..	BEARING SEAL 12X16X3 MM	4-5, 4-7, 4-9, 4-11
315233-0101 ..	WASHER CAPTIVE SEALING M5	1-83, 1-85, 1-87, 5-5
315233-0109 ..	WASHER CAPTIVE SEALING G1/8	1-161, 2-5, 4-13, 4-15, 6-21, 6-39, 6-41, 6-89
315233-0110 ..	WASHER CAPTIVE SEALING G1/4	2-35, 2-37, 6-21, 6-33, 6-39, 6-41, 6-89, 6-95
315233-0111 ..	WASHER CAPTIVE SEALING G3/8	2-11, 2-13, 6-21, 6-23, 6-79, 6-81, 6-83, 6-85, 6-87, 6-89
315233-0113 ..	WASHER CAPTIVE SEALING G1/2	2-23, 2-37, 6-21, 6-25, 6-27, 6-29, 6-33, 6-95
315234-0109 ..	WASHER,PL.RND.CU.10,3/13,5 H=1,0	1-7, 1-21, 1-23, 1-35, 1-39, 1-43, 1-45, 1-67, 1-69, 2-17, 2-19, 2-21, 4-35, 4-37, 6-91, 6-93
315234-0110 ..	WASHER,PL.RND.CU.13,5/18 H=1,5	5-21
315234-0111 ..	WASHER,PL.RND.CU.17,5//21 H=1,5	6-91, 6-93
315234-0113 ..	WASHER PL.RND.CU.21,3//26 H=1,5	5-21, 6-61
315237-0106 ..	WASHER,PL.RND.AL.6/10,H=1	4-5, 4-7, 4-9, 4-11, 4-35, 4-37
315237-0107 ..	WASHER,PL.RND.AL.8/14,H=1	4-35, 4-37
315237-0109 ..	WASHER,PL.RND.AL.10/14,H=1,5	4-5, 4-7, 4-9, 4-11
315237-0110 ..	WASHER,PL.RND.AL.13,5/18,H=1,5	1-9, 1-11
315239-0109 ..	NYLON WASHER G1/8	1-93, 5-43
315239-0111 ..	NYLON WASHER G3/8	5-43
315239-0115 ..	NYLON WASHER G3/4	2-45, 2-47
315250-0103 ..	GASKET 48X38X5,5 MM	5-51
315250-0104 ..	GASKET 61X51X5,5 MM	5-33
315259-0102 ..	FELT SEAL 22-47 MM	2-5
315400-0004 ..	TUBE PUN-H-8X1,25-BL	5-23, 5-25
315401-0153 ..	WASHER FBH6,1FZB	10-159, 10-165
315402-0128 ..	LOCK WASHER FBB 3,6	10-97, 10-99, 10-151
315402-0136 ..	LOCK WASHER FBB 4,1	1-87, 10-25, 10-39, 10-41, 10-43, 10-47, 10-49, 10-51, 10-53, 10-55, 10-85, 10-87, 10-89, 10-91, 10-93, 10-95, 10-97, 10-99, 10-101, 10-105, 10-107, 10-109, 10-111, 10-113, 10-115, 10-117, 10-119, 10-121, 10-123, 10-125, 10-151, 10-155, 10-157
315402-0146 ..	LOCK WASHER FBB 5,1	1-151, 1-153, 6-91, 6-93, 10-13, 10-15, 10-17, 10-23, 10-29, 10-31

Part No	Description	Page No
		10-35, 10-73, 10-79, 10-85, 10-87, 10-141, 10-143, 10-159, 10-163
315402-0156 ..	LOCK WASHER FBB 6,5	10-85, 10-87
315410-0106 ..	LOCK WASHER MB 6 D=30 H=1,25	5-9
315701-0169 ..	PARALLEL KEY W. ROUND ENDS 4X4X18 MM	8-19, 8-21, 8-23, 8-39, 8-41
315701-0234 ..	PARALLEL KEY W. ROUND ENDS 6X6X25 MM	5-67
315701-0235 ..	PARALLEL KEY W. ROUND ENDS 6X6X28 MM	3-17
315701-0239 ..	PARALLEL KEY W. ROUND ENDS 6X6X40 MM	3-5, 3-17
315701-0268 ..	PARALLEL KEY W. ROUND ENDS 8X7X32 MM	3-5
315701-0335 ..	PARALLEL KEY W. ROUND ENDS 12X8X56 MM	3-9, 3-11, 3-13, 3-15
315705-0166 ..	PARALLEL KEY W. ROUND ENDS 4X4X12 MM	8-13
315705-0196 ..	PARALLEL KEY W.ROUND ENDS 5X5X10	6-67
315705-0201 ..	PARALLEL KEY W. ROUND ENDS 5X5X20 MM	1-47
315705-0232 ..	PARALLEL KEY W. ROUND ENDS 6X6X20 MM	3-27, 5-11, 5-67
315705-0265 ..	PARALLEL KEY W. ROUND ENDS 8X7X25 MM	5-67
315705-0269 ..	PARALLEL KEY W. ROUND ENDS 8X7X35 MM	3-5
315705-0271 ..	PARALLEL KEY W. ROUND ENDS 8X7X45 MM	5-11
315705-0307 ..	PARALLEL KEY W. ROUND ENDS 10X8X70 MM	3-7
315742-0102 ..	RETAINING RING 6 SMS 199	4-13, 4-15
315742-0104 ..	RETAINING RING 8 SMS 199	8-15
315742-0111 ..	RETAINING RING 15 SMS 199	7-63
315742-0112 ..	RETAINING RING 16 SMS 199	1-57
315742-0116 ..	RETAINING RING 20 SMS 199	3-27
315750-0105 ..	RETAIN. RING, 8	8-29, 8-47
315751-0103 ..	RETAINING RING FOR SHAFT DIN 471 6 A2	2-15, 4-65, 7-61, 8-33, 8-35
315751-0109 ..	RETAINING RING FOR SHAFT DIN 471 12 A2	4-55, 4-57, 7-15, 7-35, 7-37, 7-39, 7-41
315751-0112 ..	RETAINING RING FOR SHAFT DIN 471 15 A2	1-57, 1-61, 1-179, 7-11, 8-13, 8-19, 8-21, 8-23, 8-39, 8-41
315751-0116 ..	RETAINING RING FOR SHAFT DIN 471 20 A2	4-55
315751-0119 ..	RETAINING RING FOR SHAFT DIN 471 25 A2	3-25
315751-0122 ..	RETAINING RING FOR SHAFT DIN 471 30 A2	4-55
315751-0124 ..	RETAINING RING FOR SHAFT DIN 471 35 A2	5-67
315752-0120 ..	RETAIN. RING, 26	7-61
315752-0125 ..	RETAINING RING FOR BORE DIN 472 37 ST	4-55
315753-0122 ..	RETAINING RING FOR BORE DIN 472 30 A2	7-49
315753-0124 ..	RETAINING RING FOR BORE DIN 472 35 A2	1-57, 1-61
315753-0132 ..	RETAINING RING FOR BORE DIN 472 52 A2	5-67
315754-0113 ..	LOCKING WAE 15	1-83, 1-85, 1-87
315755-0106 ..	RETAINING RING 4	7-23, 7-25, 7-27, 7-29, 7-59
315755-0107 ..	RETAINING RING SHAFT DIN 6799 5 A2	1-177, 7-23, 7-25, 7-27, 7-29
315755-0109 ..	RETAINING RING 7	11-25
315755-0110 ..	RETAINING RING 9	7-51, 7-53
315755-0801 ..	RETAINING RING 8	7-47
318201-0150 ..	ROLLER CHAIN, SINGLE 3/8 -150	3-27
318207-0168 ..	ROLLER CHAIN, SINGLE 6MM-168	8-19, 8-21, 8-23, 8-39, 8-41
318800-0103 ..	HANDLES,SPHERICAL KNOB,INT.THRE.,D.25-M6	1-49, 1-51, 8-31
318800-0104 ..	HANDLE,SPHERICAL KNOB,INT.THRE.,D.30-M8	7-47
318860-0106 ..	KNOB, ADJUST.HI.EXT.THREAD, NO 8324-3674	2-49
318871-0104 ..	KNOB CIRCULAR, EXT THREAD, NO. 8302-6118	8-11
321101-0143 ..	FLANGE BUSHING, 8X14X8 MM	1-167, 1-169
321101-0172 ..	FLANGE BUS 12F7X10	4-55
321101-0173 ..	FLANGE BUS 12F7X12	4-57, 8-51
321101-0233 ..	FLANGE BUSHING, 20X28X20 MM	8-57
321111-0097 ..	FLANGE BUSHING, 8X12X12 MM	7-13, 7-51, 7-53
321111-0135 ..	FLANGE BUSHING, 10X16X10 MM	7-13
321111-0212 ..	FLANGE BUSHING, 15X21X15	8-31
321120-0098 ..	BEARING BUSHING W/O FL, 10/12X8	4-13, 4-15
321120-0100 ..	BEARING BUSHING W/O FLANGE 8/10X12	8-29, 8-33, 8-35, 8-47
321120-0101 ..	BEARING BUSHING W/O FLANGE,6/8X6	8-33, 8-35
321120-0109 ..	BEARING BUSHING W/O FLANGE,12/14X10	8-29, 8-47
321120-0118 ..	BEARBUSHING W/O FL 14X16X15	4-13, 4-15
321120-0122 ..	BEARING BUSHING W/O FL, 15X17X15 MM	8-25, 8-27, 8-43, 8-45
321120-0132 ..	BEARBUSHING W/O FL 18X20X20	4-35, 4-37
321120-0153 ..	BEARBUSHING W/O FL 24X27X20	4-13, 4-15
321129-0137 ..	THRUST WASHER, 22/38X1,5	3-9, 3-11
321130-0180 ..	THRUST WASHER, 12X24X1,5 MM	7-15
321130-0200 ..	THRUST WASHER, 14X26X1,5 MM	5-13, 5-15
321130-0260 ..	THRUST WASHER, 20X36X1,5 MM	3-27
321135-0183 ..	BUSHING, 12X14X15 MM	5-13, 5-15
321141-0142 ..	BEARING BUSHING W/O FL, 10X12X12 MM	5-47
321141-0183 ..	BEARING BUSHING W/O FL, 12X14X15 MM	7-35, 7-37, 7-39, 7-41
321141-0193 ..	BEARING BUSHING W/O FL, 12X14X25 MM	7-15
321141-0260 ..	BEARING BUSHING W/O FL, 20X23X20 MM	3-27
321302-0298 ..	BALL BEARING, 8X22X7 MM	7-65
321306-0107 ..	BALL BEARING, 35X62X14 MM	5-67
321308-0200 ..	BALL BEARING, 10X26X8 MM	7-61
321308-0202 ..	BALL BEARING, 15X32X9 MM	8-13
321308-0207 ..	BALL BEARING, 35X62X14 MM	3-5
321309-0104 ..	BALL BEARING, 20X47X14 MM	5-67
321309-0105 ..	BALL BEARING, 25X52X15 MM	5-67
321313-0100 ..	BALL BEARING, 10X30X9 MM	7-49
321313-0102 ..	BALL BEARING, 15X35X11 MM	7-63, 8-13
321313-0105 ..	BALL BEARING, 25X52X15MM	3-5
321330-0100 ..	ANG. BALL BEAR, 10X30X14 MM	7-61
321330-0106 ..	ANG. BALL BEAR, 30X62X23,8 MM	5-67

Part No	Description	Page No
321531-0248 ..	NEEDLE SLEEVE W/O CONE, 20X26X16 MM	3-9, 3-11, 3-13, 3-15
321576-0260 ..	BEARING ROLLER, 20X47X25 MM	3-9, 3-11, 3-13, 3-15
321600-0114 ..	SEAL COVER LL3052	3-5
341001-0148 ..	COPPER TUBE	6-39, 6-41
342700-0113 ..	NIPPLES,HEXAGON,EXT.G-THREAD G1/2"-G1/2"	6-27, 6-87, 6-91, 6-93, 6-95
342700-0203 ..	NIPPLES,HEXAGON,EXT.G-THREAD G3/8"-G1/4"	6-89
342700-0205 ..	NIPPLES,HEXAGON,EXT.G-THREAD G1/2"-G1/4"	6-91, 6-93
342700-0210 ..	NIPPLES,HEXAGON,EXT.G-THREAD G3/4"-G1/2"	6-79, 6-81
342701-0201 ..	BUSHING,INT./EXT.G-THREAD G1/4"-G1/8"	6-33
342701-0203 ..	BUSHING, INT/EXT. G-THREAD NO. 3/8-1/4	6-87, 6-95
342701-0205 ..	BUSHING,INT./EXT.G-THREAD G1/2"-G1/4"	2-37, 6-33, 6-55, 6-87
342701-0208 ..	BUSHING, INT/EXT. G-THREAD NO. 3/4-1/4	3-5
342701-0209 ..	BUSHING,INT./EXT.G-THREAD G3/4"-G3/8"	6-87
342703-0208 ..	NUT, PIPES & CONNECTORS,NUT M-8 SS	2-17, 2-19, 2-21
342706-0130 ..	ACCESSORIES, INSERT SLEEVE 6 MM	1-7, 1-9, 1-11, 2-25
342710-0115 ..	REDUCTION RBM 16/8	2-23
342713-0209 ..	PLUG, EXT THREAD HEX SOCKET 8638-00-180	2-23, 4-35, 4-37, 6-21, 6-25, 6-91, 6-93
342713-0210 ..	PLUG, EXT THREAD HEX SOCKET 8638-00-140	1-9, 1-11, 6-15, 6-17, 6-19, 6-21, 6-39, 6-41, 6-43, 6-45, 6-47, 6-49, 6-51, 6-53
342713-0211 ..	PLUG, EXT THREAD HEX SOCKET 8638-00-380	6-21, 6-39, 6-41, 6-43, 6-45, 6-47, 6-49, 6-51, 6-53, 6-87, 6-91, 6-93
342713-0213 ..	PLUG, EXT THREAD HEX SOCKET 8638-00-120	6-25
342715-0100 ..	BLIND PLUG 4 MM	6-43, 6-45, 6-47, 6-49, 6-51, 6-53
342715-0102 ..	BLIND PLUG 6 MM	6-43, 6-45, 6-47, 6-49, 6-51, 6-53
342716-0202 ..	REDUCER 4-6	2-25
342716-0203 ..	REDUCER 6-8	2-17, 2-19, 2-21, 6-15, 6-17, 6-19, 6-43, 6-45, 6-47, 6-49, 6-51, 6-53
342716-0209 ..	REDUCER 8-12	6-15, 6-17, 6-19
342716-0210 ..	REDUCER 6-12	7-67
342720-0114 ..	CONN. STR. GA-15-G1/2	2-23, 6-21, 6-25, 6-27, 6-29, 6-95
342722-0197 ..	STRAIGHT COUPLING	1-177
342722-0199 ..	STRAIGHT COUPLING	7-67
342722-0202 ..	PIPE COUPLING 1/8" D=6MM	1-157, 1-159, 5-29, 6-31, 6-71, 7-67
342722-0203 ..	STRAIGHT COUPLING	1-9, 1-11, 6-39, 6-41
342722-0204 ..	PIPE COUPLING	6-39, 6-41
342722-0205 ..	STRAIGHT COUPLING D=8-G1/4"	6-15, 6-17, 6-19, 6-43, 6-45, 6-47, 6-49, 6-51, 6-53
342722-0206 ..	STRAIGHT COUPLING D=8-G3/8"	6-39, 6-41, 6-43, 6-45, 6-47, 6-49, 6-51, 6-53
342722-0210 ..	STRAIGHT COUPLING, D=12 MM - G3/8"	6-43, 6-45, 6-47, 6-49, 6-51, 6-53
342723-0114 ..	CONN. STR. PIPE GI-15-G1/2	6-27
342725-0108 ..	CONN. STR. PIPE GI-10-G1/4	2-35
342726-0109 ..	CONN. PIPE G-12	2-23
342726-0114 ..	CONN. PIPE G-15	6-95
342727-0102 ..	CONN. PIPE G-6-LFZB	2-17, 2-19, 2-21
342730-0114 ..	CONN. ELBOW WA-15-1/2	6-27, 6-29, 6-33, 6-95
342732-0099 ..	ELBOW PIPE JOINT, EXT.THREAD, D=4MM-M5	7-19
342732-0102 ..	ELBOW PIPE JOINT, EXT.THREAD, D=6MM-G1/8	6-39, 6-41, 6-89
342732-0103 ..	ELBOW PIPE JOINT, EXT.THREAD, D=6MM-G1/4	6-31, 6-39, 6-41
342732-0104 ..	ELBOW PIPE JOINT, EXT.THREAD, D=8MM-G1/4	6-31, 6-35, 6-39, 6-41, 6-55, 6-95
342732-0109 ..	ELBOW PIPE JOINT, EXT.THREAD, D=1MM-G1/4	6-15, 6-17, 6-19
342732-0110 ..	ELBOW PIPE JOINT, EXT.THREAD,D=12MM-G3/8	6-39, 6-41
342732-0161 ..	ELBOW PIPE JOINT,EXT.THREAD,D=14 MM-G1/2	6-15, 6-17, 6-19, 6-33, 6-95
342732-0801 ..	ELBOW PIPE JOINT, EXT.THREAD, D=8MM-G1/8	6-33, 6-39, 6-41
342735-0102 ..	ELBOW PIPE JOINT	6-15, 6-17, 6-19
342735-0103 ..	ELBOW PIPE JOINT	6-15, 6-17, 6-19, 6-39, 6-41, 6-43, 6-45, 6-47, 6-49, 6-51, 6-53
342735-0109 ..	ELBOW PIPE JOINT	6-15, 6-17, 6-19
342735-0110 ..	ELBOW PIPE	6-15, 6-17, 6-19, 6-95
342736-0114 ..	CONN. ELBOW W-15	2-23
342737-0204 ..	CONN. ELBOW W-6 LRFR	1-67, 1-69, 6-89
342738-0208 ..	ADJUSTABLE ELBOW CONNECTION,EXT 8-G1/4	2-25
342742-0104 ..	T-COUPLING,ADJUST,F.PLASTIC TUBE 8-G1/4"	6-15, 6-17, 6-19
342746-0114 ..	CONN. T-PIPE T-15	2-23, 5-31
342748-0100 ..	T-CONNECTION 4MM	4-65
342748-0102 ..	T-CONNECTION 6MM	1-7, 2-25, 6-15, 6-17, 6-19
342748-0103 ..	T-CONNECTION 8MM	2-17, 2-19, 2-21, 6-15, 6-17, 6-19
342748-0109 ..	T-CONNECTION 12MM	6-15, 6-17, 6-19, 7-67
342751-0204 ..	CONN. L-PIPE, EXT. LE-6-R1/8	1-99, 1-101
342751-0215 ..	CONN. L-PIPE, EXT. LE-12-R3/8	1-79
342752-0103 ..	CONN. STR. GA-8-G1/4	6-91, 6-93
342752-0110 ..	CONN. STR. GA-12-G3/8	6-87, 6-91, 6-93
342753-0114 ..	CONN. CROSS K-15	6-27
342762-0114 ..	CONN. BULKHEAD SV 15-LFZB	6-79, 6-81
342767-0100 ..	CONN. BULKHEAD G1/8	2-17, 2-19, 2-21, 2-25
342767-0104 ..	CONN. BULKHEAD G1/4	2-25
342768-0102 ..	BULKHEAD CONNECTOR, 6 MM	2-5, 2-25
342770-0101 ..	STRAIGHT COUPLING INT, D=4 MM - G1/8	4-65
342770-0105 ..	STRAIGHT COUPLING INT, D=6 MM - G1/8	6-31, 6-39, 6-41
342770-0107 ..	STRAIGHT COUPLING INT, D=8 MM - G1/8	5-31
342772-0113 ..	ELBOW FITTING, 6 - G1/8	1-9, 1-11, 7-67
342772-0114 ..	ELBOW FITTING, 6 - G1/4	1-9, 1-11
342797-0121 ..	CONN. BANJO, RINGPIECE 6-1/8	1-35, 1-37, 1-39, 1-57, 1-59, 1-63, 1-99, 1-101, 1-129, 1-131, 1-143, 2-17, 2-19, 2-21
342797-0122 ..	CONN. BANJO, RINGPIECE 6-1/4	1-79, 6-37
342803-0103 ..	UNION NUT, RD 60-6 (SMS 38)	5-51
342807-0104 ..	PIPE ELBOW 90 DEGR. SMS1220, D=51 MM	5-33
342840-0101 ..	CLAMP, 12,7 AND 19,1 MM 3-A PCS+PMCS	5-53

Part No	Description	Page No
342840-0105	CLAMPING PIECE	6-79, 6-81
342850-0101	GASKET, FDA, 3-A, 1/2	5-53
342850-0303	GASKET 22,7X49,1X5,2 MM 1" FDA	9-33
342850-0304	GASKET 35,4X49,1X5,2 1"1/2 FDA	9-33
342850-0305	GASKET 47,8X62,6X5,2 MM 2" FDA	6-79, 6-81, 9-33
342903-0121	NUT WITH SPRING 8/6-M12X1	2-11, 2-13, 6-27, 6-39, 6-41
342920-0115	STRAIGHT COUPLING,EXT.THREADED 6/4-R3/8"	6-95
342920-0133	STRAIGHT COUPL.,EXT.THREADED 10/8-R3/8"	6-95
342921-0111	STRAIGHT COUPL,EXT.THREAD.6/4-M5	7-13, 7-19
342921-0113	STRAIGHT COUPLING,EXT.THREADED 6/4-G1/8"	5-43, 6-39, 6-41
342921-0121	STRAIGHT COUPLING,EXT.THREADED 8/6-G1/8"	6-25, 6-39, 6-41
342921-0122	STRAIGHT COUPLING,EXT.THREADED 8/6-G1/4"	6-21, 6-91, 6-93
342921-0123	STRAIGHT COUPLING,EXT.THREADED 8/6-G3/8"	6-21, 6-27
342923-0121	STRAIGHT COUPL.,INT.THREADED 8/6-G1/8"	6-27
342923-0122	STRAIGHT COUPL.,INT.THREADED 8/6-G1/4"	6-33
342923-0132	STRAIGHT COUPL.,INT.THREADED 10/8-G1/4"	2-37
342930-0122	ELBOW 90 COUPL.,EXT.THREAD 8/6-R1/4"	3-5
342931-0122	ELBOW 90 COUPL.,EXT.THREAD 8/6-G1/4"	6-35, 6-87
342946-0112	T-COUPLING,UNION 6/4	1-157, 1-159, 6-15, 6-17, 6-19
342946-0122	T-COUPLING,UNION 8/6	6-15, 6-17, 6-19
342960-0112	BULKHEAD COUPLING 6/4	5-31, 5-43, 6-39, 6-41
342960-0121	BULKHEAD COUPLING 8/6-6/4	5-31
342960-0122	BULKHEAD COUPLING 8/6	5-31, 5-43, 6-39, 6-41
342960-0133	BULKHEAD COUPLING 10/8	5-31
342980-0111	BANJO-CONNECTION,RING 6/4-M5	1-133
342980-0113	BANJO-CONNECTION,RING 6/4-G1/8"	1-37, 1-99, 1-101, 1-157, 1-159
342980-0121	BANJO-CONNECTION,RING 8/6-G1/8"	2-11, 2-13, 4-61, 4-63
342980-0122	BANJO-CONNECTION,RING 8/6-G1/4"	3-5, 6-39, 6-41
342980-0301	BANJO-HOLLOW BOLT COUPL.,EXT.THREA.01-M5	1-133
342980-0303	BANJO-HOLLOW BOLT COUPL,EXT.THR.01-G1/8"	1-63, 1-67, 1-69, 1-93, 1-99, 1-101, 1-143, 1-157, 1-159, 2-11, 2-13, 2-17, 2-19, 2-21, 4-61, 4-63
342980-0304	BANJO-HOLLOW BOLT COUPL,EXT.THR.01-G1/4"	1-79, 3-5, 6-37, 6-39, 6-41
342980-0313	BANJO-HOLLOW BOLT COUPL,EXT.THR.02-G1/8"	1-37
342991-0101	HOSE CLIP,WORM DRIVE TYPE (13)-16	1-139, 5-21, 6-63, 6-89
342991-0104	HOSE CLIP,WORM DRIVE TYPE (23)-27	3-5
342991-0112	HOSE CLIP,WORM DRIVE TYPE (73)-83	6-61
342991-0113	HOSE CLIP,WORM DRIVE TYPE (83)-93	6-61
346800-0109	SILENCER FILTER R1/8"	6-89
350003-0001	PUSH-IN FITTING QS-F-M5-4-I	5-35
351120-0144	CABLE SIHF 3X1,5MM2 GREEN/YELLOW	1-39, 5-23, 5-25, 8-65
351120-0145	CABLE SIHF 3X2,5MM2 GREEN/YELLOW	1-35, 7-21
351120-0146	CABLE SIHF 3X4MM2 GREEN/YELLOW	7-19
351120-0167	CABLE SIHF 4X6MM2 GREEN/YELLOW	1-21, 1-23
351120-0168	CABLE SIHF 4X10MM2 GREEN/YELLOW	1-43, 1-45
351150-0403	CABLE OLFLEX 3X0,75 MM2 LIGHT/GREY	1-9, 1-11, 1-21, 1-23, 1-95, 1-97, 6-27, 6-39, 6-41, 6-77, 6-89, 6-91, 6-93, 6-95
351150-0404	CABLE OLFLEX 4X0,75 MM2 LIGHT/GREY	1-9, 1-11, 1-95, 1-97, 6-89, 6-91, 6-93
351150-0405	CABLE OLFLEX 5X0,75 MM2 LIGHT/GREY	1-49, 1-51, 1-147, 1-149, 3-27, 6-63, 7-31, 8-65, 9-3, 9-21, 9-27, 9-29
351150-0406	CABLE OLFLEX 7X0,75 MM2 LIGHT/GREY	2-39, 2-49, 2-51, 8-63, 8-65
351150-0407	CABLE OLFLEX 12X0,75 MM2 LIGHT/GREY	7-17, 7-33
351150-0412	CABLE OLFLEX 3X1,5 MM2 LIGHT/GREY	1-21, 1-23, 2-5, 2-57, 6-13, 8-65
351150-0413	CABLE OLFLEX 4X1,5 MM2 LIGHT/GREY	1-61, 2-5
351150-0414	CABLE OLFLEX 5X1,5 MM2 LIGHT/GREY	8-65
351150-0415	CABLE OLFLEX 7X1,5 MM2 LIGHT/GREY	10-159
351150-0418	CABLE OLFLEX 4X2,5 MM2 LIGHT/GREY	2-5, 6-61, 6-67, 6-91, 6-93
351150-0422	CABLE OLFLEX 3X4 MM2 LIGHT/GREY	7-33
351150-0425	CABLE OLFLEX 25X0,75 MM2 LIGHT/GREY	1-9, 1-11, 2-5, 7-33, 8-65
351150-0428	CABLE OLFLEX 41X0,75 MM2 LIGHT/GREY	2-5
351150-0431	CABLE OLFLEX 2X0,75 MM2 LIGHT/GREY	1-21, 1-23, 1-93, 2-27, 2-29, 2-65, 5-51, 6-21, 6-29, 6-79, 6-81
351160-0102	CABLE (1UNIT = 100M)	1-13, 10-7, 10-9, 10-11
351160-0105	CABLE AWM 1X2,5 MM2 DARKBLUE	10-7, 10-9, 10-11
351160-0107	CABLE AWM 1X6 MM2 DARKBLUE	10-7, 10-9, 10-11
351161-0104	CABLE AWM LIGTH BLUE 1,5MM2	10-7, 10-9, 10-11
351161-0105	CABLE AWM 1X2,5 MM2 LIGHTBLUE	10-7, 10-9, 10-11
351161-0106	CABLE AWM 1X4 MM2 LIGHTBLUE	10-7, 10-9, 10-11
351161-0109	CABLE AWM 1X16 MM2 LIGHTBLUE	10-7, 10-9, 10-11
351161-0110	CABLE AWM 1X25 MM2 LIGHTBLUE	10-7, 10-9, 10-11
351162-0104	CABLE AWM 1X1,5 MM2 YELLOW-GREEN	10-7, 10-9, 10-11
351162-0105	CABLE AWM 1X2,5 MM2 YELLOW-GREEN	10-7, 10-9, 10-11
351162-0106	CABLE AWM 1X4 MM2 YELLOW-GREEN	2-5, 2-49, 6-39, 6-41, 10-7, 10-9, 10-11
351162-0107	CABLE AWM 1X6 MM2 YELLOW-GREEN	10-7, 10-9, 10-11
351162-0109	CABLE AWM 1X16 MM2 YELLOW-GREEN	6-57, 10-7, 10-9, 10-11
351163-0107	CABLE AWM 1X6 MM2 RED	10-7, 10-9, 10-11
351164-0104	CABLE AWM 1X1,5 MM2 BLACK	10-7, 10-9, 10-11
351164-0105	CABLE (1UNIT = 100M)	10-7, 10-9, 10-11
351164-0106	CABLE AWM 1X4 MM2 BLACK	10-7, 10-9, 10-11
351164-0107	CABLE AWM 1X6 MM2 BLACK	10-7, 10-9, 10-11
351164-0110	CABLE AWM 1X25 MM2 BLACK	10-7, 10-9, 10-11
351164-0111	8ABLE AWM 1X35 MM2 BLACK	10-7, 10-9, 10-11
351166-0102	CABLE AWM 1X0,75 MM2 ORANGE	10-7, 10-9, 10-11
351175-0102	CABLE AWM 1X 075 MM2 YELLOW-GREEN	6-77
352100-0106	CABLE GLANR.18,6-10,5	1-35

Part No	Description	Page No
352101-0103 ..	LEAD-IN, PR18,6/PG11, E-1457518	6-39, 6-41, 8-39, 8-41
352101-0107 ..	LEAD-IN, PR37/PG29, E-1457537	1-147, 1-149
352103-0096 ..	CABLE GLAND, ST 7, PR 12,5/PG7	1-13
352103-0100 ..	CABLE GLAND, STR 9, PR15,2/PG9	2-5
352103-0101 ..	CABLE GLAND, ST 9, PR15,2/PG9	1-13, 1-49, 1-51, 1-151, 1-153, 2-9, 2-25, 6-11, 10-89, 10-91, 10-93, 10-95, 10-123, 10-125
352103-0106 ..	CABLE GLAND, ST 11, PR18,6/PG11	1-39, 1-49, 1-51, 1-181, 2-9, 2-41, 2-43, 5-59, 5-61, 6-11, 7-31
352103-0108 ..	CABLE GLAND, ST 13,5 , PR20,4/PG13,5	2-25, 6-11
352103-0110 ..	CABLE GLAND, STR 16, PR22,5/PG16	1-151, 1-153, 2-51, 10-89, 10-91, 10-93, 10-95
352103-0111 ..	CABLE GLAND, ST 16, PR22,5/PG16	1-151, 1-153, 5-57, 10-93, 10-95, 10-159
352103-0115 ..	CABLE GLAND, STR 21, PR28,3/PG21	5-57
352103-0116 ..	CABLE GLAND, ST 21, PR28,3/PG21	1-13, 1-151, 1-153, 2-9, 10-93, 10-95
352103-0120 ..	CABLE GLAND, STR 29, PR37,0/PG29	1-151, 1-153
352103-0121 ..	CABLE GLAND, ST 29, PR37,0/PG29	1-151, 1-153, 5-57, 5-59, 5-61, 10-93, 10-95
352110-0100 ..	CABLE CLIPS, D=5-7 MM	1-49, 1-51
352110-0103 ..	CABLE CLIPS, D=14-20 MM	5-21
352113-0101 ..	CLIP STRIP, 92X2,5 MM2	2-17, 2-19, 2-21, 3-13, 3-15, 4-13, 4-15, 6-13, 8-29, 8-47, 10-7, 10-9, 10-11
352113-0102 ..	CLIP-STRIP, BLACK 188X4,8 MM	1-181, 5-57, 10-7, 10-9, 10-11
352113-0104 ..	CLIP STRIP, 300X4,8 MM	6-15, 6-17, 6-19
352113-0203 ..	ANCHOR PLATES FOR STRIPS, TYPE TM3S8-M0	6-57, 8-63
352113-0204 ..	ANCHOR PLATES FOR STRIPS, TYPE TM3S25-M	2-65, 6-11
352113-0205 ..	ANCHOR PLATES FOR STRIPS, TYPE TM2S8-C10	3-33, 4-13, 4-15, 5-57, 7-19, 10-85, 10-87, 10-97, 10-99, 10-101, 10-127, 10-129
352113-0206 ..	ANCHOR PLATES FOR STRIPS, TYPE ABM100-AT	7-23, 7-25, 7-27, 7-29
352135-0202 ..	CLIP, 16 MM, 913.016	8-19, 8-21, 8-23, 8-63
353001-0101 ..	END SLEEVE 0,5 MM2	9-17
353001-0102 ..	END SLEEVE 0,75 MM2	9-17, 10-7, 10-9, 10-11
353001-0113 ..	END SLEEVE 0,75MM2	9-21, 9-27, 9-29, 10-7, 10-9, 10-11
353001-0114 ..	END SLEEVE 1,5MM2	10-7, 10-9, 10-11
353001-0115 ..	END SLEEVE 2,5/14	10-7, 10-9, 10-11
353001-0117 ..	END SLEEVE H4.0/20 GREY	10-7, 10-9, 10-11
353001-0118 ..	END SLEEVE 6MM2 BLACK	10-7, 10-9, 10-11
353001-0119 ..	END SLEEVE H 1.0/14 YELLOW	10-7, 10-9, 10-11
353001-0120 ..	END SLEEVE H 10/28	10-7, 10-9, 10-11
353021-0122 ..	TERMINAL DISCONNECTBLE, WTR 2,5 D	10-69, 10-71
353021-0127 ..	TERMINAL DISCONNECTBLE, WTR 2,5+WSD 2,5	10-69, 10-71
353021-0132 ..	TERMINALS,TRIPLE-LEVEL, DLD 2,5/PE	5-59, 5-61, 10-61, 10-63, 10-65, 10-67, 10-69, 10-71
353021-0212 ..	FEED THROUGH TERMINAL, 10200.0	2-9, 7-33, 8-65, 10-61, 10-63, 10-75, 10-77, 10-83
353021-0213 ..	FEED THROUGH TERMINAL, 10201.0	5-59, 5-61, 7-33, 10-61, 10-63
353021-0214 ..	FEED THROUGH TERMINAL, 10202.0	10-61, 10-63
353021-0215 ..	FEED THROUGH TERMINAL, 10203.0	10-61, 10-63
353021-0219 ..	FEED THROUGH TERMINAL, 10205.0	10-75, 10-77, 10-153
353021-0301 ..	TERMINALS,TRIPLE-LEVEL, DLI 2,5/35 PA	5-59, 5-61, 10-69, 10-71
353021-0302 ..	TERMINALS,TRIPLE-LEVEL, DLD 2,5/35 PA	5-59, 5-61, 10-65, 10-67, 10-69, 10-71
353022-0003 ..	NEUTRAL TERMINAL, 10108.8	10-75, 10-77
353024-0204 ..	EARTH TERMINAL WPE 2,5	2-9, 5-59, 5-61, 8-65, 10-61, 10-63
353024-0205 ..	EARTH TERMINAL, 1010.1	7-33, 8-65, 10-61, 10-63, 10-75, 10-77
353024-0206 ..	EARTH TERMINAL, 1010.2	5-59, 5-61, 10-61, 10-63, 10-65, 10-67, 10-69, 10-71
353024-0207 ..	EARTH TERMINAL, 1010.3	10-61, 10-63
353024-0208 ..	EARTH TERMINAL, 1010.4	10-75, 10-77
353024-0209 ..	EARTH TERMINAL, 1010.5	10-75, 10-77, 10-153
353031-0203 ..	END SUPPORT, WEW 35/2	2-9, 10-61, 10-63, 10-65, 10-67, 10-69, 10-71, 10-75, 10-77, 10-83
353032-0004 ..	END PLATE WAP 2,5-10 BEIGE	5-59, 5-61, 10-61, 10-63
353032-0009 ..	END PLATE, WAP FOR WDK	5-59, 5-61, 10-65, 10-67, 10-75, 10-77
353032-0013 ..	END PLATE, 13818.6	5-59, 5-61
353032-0302 ..	END PLATE WAP	5-59, 5-61, 10-65, 10-67, 10-69, 10-71
353033-0104 ..	END PLATE, 10502.8	10-75, 10-77
353033-0105 ..	PARTITITION, 10501.0	10-75, 10-77, 10-153
353034-0026 ..	BRIDGE CONNECTOR, WQV 35/2, 10530.6	10-153
353034-0030 ..	BRIDGE CONNECTOR WQV 2,5/10, 10544.6	2-9, 7-33, 8-65, 10-69, 10-71, 10-75, 10-77, 10-83
353034-0032 ..	BRIDGE CONNECTOR, WQV 6/10, 10522.6	10-61, 10-63
353034-0035 ..	BRIDGE CONNECTOR, WQV 35/10, 10531.6	10-75, 10-77
353034-0039 ..	BRIDGE CONNECTOR WQV 4/4, 10546.6	7-33
353034-0401 ..	BRIDGE CONNECTOR Q2, 13125.0	5-59, 5-61, 10-61, 10-63, 10-69, 10-71
353034-0402 ..	BRIDGE CONNECTOR Q3, 13126.0	5-59, 5-61, 10-61, 10-63
353034-0403 ..	BRIDGE CONNECTOR Q4, 13127,0	10-61, 10-63, 10-65, 10-67, 10-69, 10-71
353034-0404 ..	BRIDGE CONNECTOR Q10, 13131.0	5-59, 5-61, 10-61, 10-63, 10-65, 10-67, 10-69, 10-71
353042-0003 ..	RAIL TS35/15/1,5	10-133
353042-0004 ..	RAIL TS 35/7,5	10-13, 10-15, 10-17, 10-27, 10-37, 10-45, 10-57, 10-61, 10-63, 10-65, 10-67, 10-69, 10-71, 10-75, 10-77, 10-83, 10-131, 10-135, 10-153
353042-0005 ..	RAIL TS 35/7.5	5-59, 5-61
353101-0118 ..	KABELSKO 0,75-1,5MM2 RED	6-77
353101-0120 ..	CABLE SHOE 0,5-1,5MM2 M4 RED	10-7, 10-9, 10-11
353101-0123 ..	CABLE SHOE 0,5-1,5MM2 M6 RED	5-51
353101-0126 ..	CABLE SHOE	5-51
353101-0129 ..	CABLE SHOE 1,5-2,5MM2 M3 BLUE	10-7, 10-9, 10-11
353101-0130 ..	CABLE SHOE 1,5-2,5MM2 BLUE	7-21, 10-7, 10-9, 10-11
353101-0132 ..	CABLE SHOE 1,5-2,5MM2 M5 BLUE	1-35, 7-19, 7-21, 10-7, 10-9, 10-11
353101-0150 ..	CABLE SHOE 4,0-6,0MM2 M4 YELLOW	10-7, 10-9, 10-11
353101-0152 ..	CABLE SHOE 4,0-6,0MM2 M5 YELLOW	10-7, 10-9, 10-11
353101-0153 ..	CABLE SHOE 4,0-6,0MM2 M6 YELLOW	10-7, 10-9, 10-11
353103-0120 ..	CABLE SHOE 1,25 MM2 RED	10-7, 10-9, 10-11
353103-0130 ..	CABLE SHOE	10-7, 10-9, 10-11
353103-0138 ..	CABLE SHOE	10-7, 10-9, 10-11

Part No	Description	Page No
353104-0130 ..	CABLE SHOE YAV 025 M 4*	1-39
353104-0140 ..	CABLE SHOEYAV 06 M 4*	7-19
353104-0164 ..	CABLE SHOE YAV 10 M10*	10-7, 10-9, 10-11
353104-0168 ..	CABLE SHOE YAV 16 M6*	10-7, 10-9, 10-11
353104-0175 ..	CABLE SHOE YAV 25 M6	10-7, 10-9, 10-11
353240-0002 ..	NORMAL WITHOUT INSERT, PG 11	9-21, 9-27, 9-29
353240-0003 ..	NORMAL WITHOUT INSERT, PG 13,5	3-27
353240-0004 ..	NORMAL WITHOUT INSERT, PG 16	5-59, 5-61
353240-0005 ..	NORMAL WITHOUT INSERT, PG 21	5-57, 5-59, 5-61
353240-0006 ..	SCREW CAP PG 29	5-59, 5-61, 6-11, 10-89, 10-91
353241-0002 ..	EXTENDED WITHOUT INSERT, PG 11	9-21, 9-27, 9-29
353241-0003 ..	EXTENDED WITHOUT INSERT, PG 21	5-57
353241-0005 ..	EXTENDED WITHOUT INSERT, PG 13,5	5-59, 5-61
353241-0007 ..	EXTENDED WITHOUT INSERT, PG 16/21	5-59, 5-61
353242-0001 ..	NORMAL WITHOUT INSERT, PG13,5	6-13, 6-89
353242-0003 ..	NORMAL WITHOUT INSERT, PG29	7-33, 8-63, 10-89, 10-91
353243-0001 ..	EXTENDED WITHOUT INSERT, PG9	6-77, 6-79, 6-81, 6-89, 6-91, 6-93, 10-89, 10-91, 10-93, 10-95
353243-0002 ..	EXTENDED WITHOUT INSERT, PG11	1-147, 1-149, 2-7, 2-59, 6-63, 6-91, 6-93, 8-63
353243-0003 ..	EXTENDED WITHOUT INSERT, PG11	1-21, 1-23, 1-147, 1-149, 8-63
353243-0005 ..	EXTENDED WITHOUT INSERT, PG16	6-61, 6-67, 8-13, 8-63, 10-89, 10-91
353243-0007 ..	EXTENDED WITHOUT INSERT, PG21	1-21, 1-23, 1-147, 1-149
353243-0008 ..	EXTENDED WITHOUT INSERT, PG29	1-9, 1-11
353247-0008 ..	GLAND, PG13,5, 15254P13S05UL16	8-13
353249-0003 ..	INSERT, SINGEL HOLE, E151/11	9-21, 9-27, 9-29
353249-0008 ..	INSERT, SINGEL HOLE, EK 152/7	5-67
353249-0009 ..	INSERT, SINGEL HOLE, EK 152/9	2-7, 6-63, 6-77, 6-79, 6-81, 6-89, 6-91, 6-93, 10-89, 10-91, 10-93, 10-95
353249-0010 ..	INSERT, SINGEL HOLE, EK 152/11	1-147, 1-149, 2-59, 8-51, 8-63
353249-0011 ..	INSERT, SINGEL HOLE, EK 153/11	1-21, 1-23, 1-147, 1-149, 8-63, 8-65
353249-0012 ..	INSERT, SINGEL HOLE, EK 154/11	8-63
353249-0013 ..	INSERT, SINGEL HOLE, EK 154/13	5-39, 6-61, 6-67, 6-91, 6-93, 7-33, 8-13, 10-89, 10-91, 10-105, 10-107, 10-109, 10-111, 10-113, 10-115, 10-117, 10-119, 10-121
353249-0014 ..	INSERT, SINGEL HOLE, EK 154/16	5-51, 7-17, 7-33, 10-89, 10-91
353249-0016 ..	INSERT, SINGEL HOLE, EK 155/18	1-21, 1-23, 1-147, 1-149, 8-65, 10-105, 10-107, 10-109, 10-111, 10-113, 10-115, 10-117, 10-119, 10-121
353249-0017 ..	INSERT, SINGEL HOLE, HI.TEMP, EK152I7	1-9, 1-11
353249-0025 ..	INSERT, MULTI HOLE, E152M3X4	8-63, 8-65
353249-0036 ..	INSERT, MULTI HOLE, EK152 M 2X4	9-21, 9-27, 9-29, 10-105, 10-107, 10-109, 10-111, 10-113, 10-115, 10-117, 10-119, 10-121
353249-0037 ..	INSERT, MULTI HOLE, EK155M4X8	5-57
353249-0051 ..	INSERT, MULTI HOLE, E154M4X8	5-59, 5-61
353249-0059 ..	GLAND, INSERT, MULTI HOLE, 4X8	5-59, 5-61
353249-0060 ..	INSERT, MULTI HOLE, E155M2X13	5-59, 5-61
353249-0061 ..	INSERT, SINGEL HOLE, EK 155/20	1-147, 1-149, 7-33
353249-0065 ..	INSERT, SINGEL HOLE, E152/09	3-27, 6-13, 6-89, 8-65
353249-0070 ..	INSERT, SINGEL HOLE, E154/16	7-33
353249-0072 ..	INSERT, SINGEL HOLE, E155/20	7-33, 8-63
353249-0075 ..	INSERT, SINGEL HOLE, EK 153/13	7-33, 10-105, 10-107, 10-109, 10-111, 10-113, 10-115, 10-117, 10-119, 10-121
353249-0084 ..	INSERT, MULTI HOLE, EK 154M4X7,5	5-57, 5-59, 5-61
353249-0301 ..	SEALING PIN, 4X20	8-63, 8-65, 9-21, 9-27, 9-29
353249-0304 ..	SEALING PIN, 6X25	5-59, 5-61
353249-0307 ..	SEALING PIN, 7,5X20	5-57
353249-0308 ..	SEALING PIN, 8X20	5-59, 5-61
353249-0309 ..	SEALING PIN, 9,3X20	5-59, 5-61
353300-0006 ..	SHRINKABLE HOSE	1-9, 1-11
359000-0100 ..	MARKING CO01/3"0"	9-17
359000-0101 ..	MARKING CO01/3"1"	9-17
359000-0102 ..	MARKING CO01/3"2"	9-17
359000-0103 ..	MARKING CO01/3"3"	9-17
359000-0104 ..	MARKING CO01/3"4"	9-17
359000-0105 ..	MARKING CO01/3"5"	9-17
359000-0106 ..	MARKING CO01/3"6"	9-17
359000-0107 ..	MARKING CO01/3"7"	9-17
359000-0108 ..	MARKING CO01/3"8"	9-17
359000-0109 ..	MARKING CO01/3"9"	9-17
359000-0201 ..	MARKING CO02/3"1"	9-21, 9-27, 9-29
359000-0204 ..	MARKING CO02/3"4"	9-21, 9-27, 9-29
359000-0400 ..	MARKING CO2/4"0"	1-7, 1-9, 1-11, 1-99, 1-101, 1-133, 1-157, 1-159, 2-17, 2-19, 2-21, 6-15, 6-17, 6-19, 7-67
359000-0401 ..	MARKING COLLAR 2/4 "1" YELLOW	1-7, 1-9, 1-11, 1-99, 1-101, 1-133, 1-157, 1-159, 2-17, 2-19, 2-21, 6-15, 6-17, 6-19, 7-67
359000-0402 ..	MARKING COLLAR 2/4 "2" YELLOW	1-99, 1-101, 1-133, 1-157, 1-159, 2-17, 2-19, 2-21, 6-15, 6-17, 6-19, 7-67
359000-0403 ..	MARKING COLLAR PA2/4 "3" YELLOW	1-9, 1-11, 1-99, 1-101, 1-133, 1-157, 1-159, 2-17, 2-19, 2-21, 6-15, 6-17, 6-19
359000-0404 ..	MARKING COLLAR PA2/4 "4" YELLOW	1-9, 1-11, 1-99, 1-101, 6-15, 6-17, 6-19, 7-67
359000-0405 ..	MARKING CO2/4"5"	1-7, 1-9, 1-11, 1-99, 1-101, 2-17, 2-19, 2-21, 6-15, 6-17, 6-19, 7-67
359000-0406 ..	MARKING COLLAR PA2/4 "6" YELLOW	1-9, 1-11, 1-99, 1-101, 2-17, 2-19, 2-21, 6-15, 6-17, 6-19
359000-0407 ..	MARKING COLLAR PA2/4 "7" YELLOW	1-9, 1-11, 1-99, 1-101, 2-17, 2-19, 2-21, 6-15, 6-17, 6-19
359000-0408 ..	MARKING COLLAR PA2/4 "8" YELLOW	1-99, 1-101, 6-15, 6-17, 6-19
359000-0409 ..	MARKING COLLAR PA2/4 "9" YELLOW	1-99, 1-101, 1-157, 1-159, 6-15, 6-17, 6-19
359000-0771 ..	MARKING CO2/4"V"	1-99, 1-101, 1-157, 1-159, 2-17, 2-19, 2-21, 6-15, 6-17, 6-19
359011-0807 ..	MARKING PLATES 5-FW 1-50	1-13, 2-9, 5-59, 5-61, 7-33, 8-65, 10-61, 10-63, 10-65, 10-67

Part No	Description	Page No
		10-69, 10-71, 10-75, 10-77, 10-83, 10-153
359011-0808 ..	MARKING PLATES 5-FW 51-100	5-59, 5-61, 10-61, 10-63, 10-65, 10-67, 10-69, 10-71, 10-75, 10-77
359011-0809 ..	MARKING PLATES 5-FW 101-150	8-65, 10-61, 10-63, 10-65, 10-67, 10-69, 10-71
359011-0810 ..	MARKING PLATES 5-FW 151-200	10-65, 10-67, 10-69, 10-71
359011-0811 ..	MARKING PLATES 5-FW 201-250	10-65, 10-67, 10-69, 10-71
359011-0812 ..	SET OF SIGNS 5-FW 251-300	10-65, 10-67, 10-69, 10-71
359011-0813 ..	SET OF SIGNS 5-FW 301-350	10-65, 10-67
359011-0818 ..	SYMBOL 5-GW (-) 50PC	5-59, 5-61, 8-65
359011-0819 ..	MARKING PLATES 5-GW (EARTH)	1-13, 2-9, 7-33, 9-21, 9-27, 9-29, 10-61, 10-63, 10-65, 10-67, 10-69, 10-71, 10-153
359011-0821 ..	SET OF SIGNS 6-FW 1-50	9-21, 9-27, 9-29
359240-0001 ..	SIGN, NOT ENGRAVED	10-141, 10-143
359240-0100 ..	SIGN HOLDER FOR 359240-0001	10-85, 10-87, 10-141, 10-143, 10-161
359241-0121 ..	SIGN: " STEAM"	10-141, 10-143
359241-0122 ..	SIGN: " CLEANING STEAM BARRIER SPACE"	10-141, 10-143
359241-0123 ..	SIGN: " TEMP. PRESTERILISATION VALVE"	10-141, 10-143
359241-0125 ..	SIGN: " TEMP. PEROXIDE BATH"	10-141, 10-143
359241-0126 ..	SIGN: " TEMP. AIR KNIFE"	10-141, 10-143
359241-0130 ..	SIGN: " TEMP. AIR SUPER HEATER"	10-141, 10-143
359241-0131 ..	SIGN: " TEMP. LS"	10-141, 10-143
359241-0132 ..	SIGN: " TEMP. SA"	10-161
359241-0133 ..	SIGN: " SERVICE SWITCH"	10-141, 10-143
359241-0135 ..	SIGN: " TRANSVERSAL SEALING"	10-161
359241-0140 ..	SIGN: " LIGHT OFF/ON"	10-141, 10-143
359241-0141 ..	SIGN: " WATER BATH"	10-141, 10-143
359241-0180 ..	SIGN: " PRODUCTION"	10-141, 10-143
359241-0201 ..	SIGN: " HOUR METER"	10-141, 10-143
359241-0268 ..	SIGN: " SPRAYING, HEAD SPACE"	10-141, 10-143
359241-0297 ..	SIGN: " 50 HZ"	10-85, 10-87
359241-0337 ..	SIGN: " FLAP HEATING TOP RIGHT"	10-141, 10-143
359241-0338 ..	SIGN: " FLAP HEATING TOP LEFT"	10-141, 10-143
359241-0339 ..	SIGN: " FLAP HEATING BOTTOM RIGHT"	10-141, 10-143
359241-0340 ..	SIGN: " FLAP HEATING BOTTOM LEFT"	10-141, 10-143
359241-0439 ..	SIGN"PATCH SEALER"	10-141, 10-143
359241-0444 ..	SIGN"TAB RESEAL"	10-141, 10-143
359241-0459 ..	SIGN "PT HOUR METER"	10-141, 10-143
359241-0460 ..	SIGN "PATCH SEALER 2"	10-141, 10-143
359301-0110 ..	SIGN "SHORT STOP"	7-17, 8-63
359705-0001 ..	WARNING SIGN ISO, ENTAGLEMENT	8-13, 8-19, 8-21, 8-23
359705-0003 ..	WARNING SIGN ISO, DANGEROUS CHEMICALS	1-137
359705-0007 ..	WARNING SIGN ISO, HOT SURFACE	5-23, 5-25
359705-0015 ..	WARNING SIGN ISO, RISK OF ELECTRIC SHOCK	1-21, 1-23, 1-147, 1-149, 4-51, 4-53, 5-23, 5-25, 7-17, 7-33, 8-51, 8-63, 9-21, 9-27, 9-29, 10-123, 10-125, 10-139, 10-147, 10-149, 10-155, 10-157
359710-0001 ..	WARNING SIGN ISO, HOT SURFACE	1-21, 1-23, 1-49, 1-51, 1-67, 1-69, 1-163, 1-165, 8-51
400800-0000 ..	SPRING	7-13
400828-0000 ..	SPRING	7-19
400833-0000 ..	PLUNGER	7-19
401183-0000 ..	GUIDE AXLE	7-13
401186-0000 ..	HEX NUT	7-13
401370-0000 ..	BUSHING	7-13
401371-0000 ..	BUSHING	7-13
401372-0000 ..	BUSHING	7-13
434747-0000 ..	BOW CLAMP	8-29, 8-47
436927-0000 ..	NUT	8-29, 8-47
440252-0000 ..	SLEEVE	8-11
440253-0000 ..	SLEEVE	8-11
440259-0000 ..	RETAINING RING	8-61
440271-0000 ..	SCREW	8-11
440286-0300 ..	INK UNIT NSS	8-19, 8-21, 8-23
440287-0000 ..	COVER	8-29
440647-0000 ..	SLEEVE	1-67, 1-69
440650-0000 ..	WASHER	1-87
440655-0000 ..	RING	1-83
440659-0000 ..	CYLINDRICAL PIN	1-87
440660-0000 ..	COMPRESSION SPRING	1-87
440661-0000 ..	COMPRESSION SPRING	1-87
440662-0000 ..	COMPRESSION SPRING	1-85
440663-0000 ..	COMPRESSION SPRING	1-83, 1-87
440731-0000 ..	PLATE	1-67, 1-69
441024-0000 ..	LACE	3-5
441031-0000 ..	LINK BEARING	4-49
441077-0000 ..	NOZZLE BRACKET	2-5
441212-0000 ..	HOLDER	2-5
441217-0000 ..	BUSHING LOWER	2-5
441218-0000 ..	BUSHING UPPER	2-5
441221-0000 ..	WASHER	2-5
441268-0000 ..	GUIDE	4-49
441269-0000 ..	GUIDE	4-49
441304-0400 ..	MOVABLE FORMING RING	1-3, 1-5
441307-0300 ..	UPPER TUBE SUPPORT	1-3, 1-5
441339-0000 ..	SHAFT	3-17
441353-0000 ..	TENSION SPRING	3-23
441355-0000 ..	BLEEDING SCREW	4-35, 4-37, 4-49, 4-61, 4-63
441356-0000 ..	BRACKET	3-5

Part No	Description	Page No
441360-0000 ..	PLATE	3-5
441385-0000 ..	HUB	4-35, 4-37
441483-0000 ..	CYLINDER BRACKET	1-129, 1-131, 1-143
441486-0400 ..	DIVIDED FORMING RING	1-3, 1-5
441501-0000 ..	INSULATION	1-65
441534-0200 ..	LIGHT FIXTURE	2-5
441536-0000 ..	GASKET	2-7
441554-0000 ..	CREASE BAR	8-19, 8-21, 8-23
441556-0001 ..	SPACER	8-19, 8-21, 8-23, 8-39, 8-41
441556-0002 ..	SPACER	8-19, 8-21, 8-23, 8-39, 8-41
441556-0004 ..	SPACER	8-19, 8-21, 8-23, 8-39, 8-41
441556-0006 ..	SPACER	8-19, 8-21, 8-23, 8-39, 8-41
441556-0007 ..	SPACER	8-19, 8-21, 8-23
441556-0009 ..	SPACER	8-19, 8-21, 8-23
441556-0010 ..	SPACER	8-19, 8-21, 8-23
441556-0011 ..	SPACER	8-19, 8-21, 8-23
441576-0000 ..	SPACER	1-59
441578-0001 ..	CYLINDER BRACKET	1-59
441578-0002 ..	CYLINDER BRACKET	1-57
441593-0000 ..	GASKET	2-5
441665-0000 ..	FORCE SPRING	2-23
441677-0000 ..	FRONT PLATE	2-5
441679-0000 ..	STAIR	2-53
441695-0500 ..	MACHINE BODY	5-3
441706-0000 ..	WASHER	4-41, 4-43, 4-45, 4-47
441718-0000 ..	SPACER	1-163, 1-165
441720-0000 ..	SPACER	3-17
441725-0000 ..	COVERING PLATE	9-3
441727-0000 ..	CUTTING JAW	4-5, 4-7, 4-9, 4-11
441737-0000 ..	WASHER	1-163, 1-165
441739-0000 ..	WASHER	1-163, 1-165
441740-0000 ..	HINGE FLANGE	1-163, 1-165
441741-0000 ..	HINGE FLANGE	1-163, 1-165
441750-0000 ..	YOKE	4-49
441751-0000 ..	LACE	4-49
441758-0000 ..	PIPE RIGHT	4-57
441759-0000 ..	PIPE LEFT	4-57
441764-0000 ..	SHAFT	4-35, 4-37
441792-0000 ..	HEAD	5-45
441793-0000 ..	BEARING HOUSING	5-45
441794-0000 ..	PIVOT PIN	5-45
441795-0000 ..	WASHER	5-45
441796-0000 ..	SEAL	5-45
441797-0000 ..	SHIM	5-45
441800-0000 ..	STRAIGHT FITTING	5-45
441804-0000 ..	COIL HEATER	9-33
441811-0100 ..	ROTOR	5-43, 5-51
441850-0700 ..	CABLE	5-3
441871-0000 ..	PENDULUM SUSPENSION	1-41, 1-63
441876-0000 ..	ROLL	1-49, 1-51
441904-0000 ..	ARM	1-57
441905-0000 ..	RETARD PIN	2-53
441918-0000 ..	BRACKET	1-123, 1-125
441957-0000 ..	BEARING COVER	1-37
442237-0000 ..	NUT	1-141
445533-0000 ..	SIGN	6-39, 6-41
445534-0000 ..	SIGN	6-39, 6-41
445542-0000 ..	MANTEL RUBBER	8-29, 8-47
449939-0001 ..	HEATING ELEMENT 15KW	1-43, 1-45
450101-0300 ..	TEARING DEVICE	8-49
450355-0000 ..	INK ROLLER	8-29, 8-47
450500-0000 ..	DOWEL	8-31
450833-0000 ..	FILTER	1-95, 1-97
450837-0000 ..	LID	1-95, 1-97
451117-0000 ..	ROLL	1-123, 1-125
451148-0000 ..	BRACKET	1-123, 1-125
451149-0000 ..	SHAFT	1-123, 1-125
451430-0000 ..	CONNECTION HOUS.(MINOR)	1-43, 1-45
456002-0000 ..	BEARING	4-49
456004-0000 ..	SPACER	4-49
456005-0001 ..	VOLUME BULGE	4-19, 4-21, 4-23, 4-25
456005-0003 ..	VOLUME BULGE	4-19, 4-21, 4-23, 4-25
456009-0000 ..	LINK	4-17
456017-0000 ..	HOSE HOLDER RIGHT	4-61
456018-0000 ..	HOSE HOLDER LEFT	4-63
456042-0000 ..	SCREW	1-107, 1-109, 1-111, 1-113
456128-0000 ..	FORCE SPRING	2-23
456129-0001 ..	FORCE SPRING	2-23
456129-0002 ..	FORCE SPRING	2-23
456137-0000 ..	HOSE	6-15, 6-17, 6-19
456181-0000 ..	SPACER	1-123, 1-125
456182-0000 ..	PLATE	1-123, 1-125
456199-0000 ..	LOCK PLATE	1-123, 1-125
456230-0000 ..	ANGLE BRACKET	1-123, 1-125

Part No	Description	Page No
456263-0000 ..	SHEET	2-7
456264-0000 ..	GLASS	2-7
456309-0600 ..	LOWER FORMING RING	1-3, 1-5
456311-0000 ..	TORSION SPRING RIGHT	4-35
456312-0000 ..	TORSION SPRING LEFT	4-37
456327-0000 ..	CREASE BAR	8-19, 8-21, 8-23
456334-0000 ..	SHAFT	8-19, 8-21, 8-23
456395-0000 ..	GASKET	5-51
456396-0000 ..	GASKET	5-51
456407-0000 ..	LACE	2-17, 2-19, 2-21
456455-0600 ..	PIPE WORK	5-3
456472-0000 ..	ANGLE	1-21, 1-23
456474-0000 ..	ADJUSTMENT PLATE	1-21, 1-23
456555-0600 ..	SUCTION PIPE	1-3, 1-5
456556-0400 ..	PEROXIDE PIPE	1-3, 1-5
456744-0000 ..	HUB	3-19, 3-21
456755-0000 ..	BLOCK	6-21
456756-0000 ..	BLOCK	6-21
456757-0300 ..	AIR INJECTOR	6-15, 6-17, 6-19
456760-0003 ..	FOLDING FLAP CAM 200S	4-13, 4-15
456760-0010 ..	FOLDING FLAP CAM 200B & 125S	4-13, 4-15
456760-0011 ..	FOLDING FLAP CAM 250B	4-13, 4-15
456760-0012 ..	FOLDING FLAP CAM	4-13, 4-15
456767-0000 ..	CREASE BAR	8-19, 8-21, 8-23, 8-39, 8-41
456772-0000 ..	PIVOT BRACKET	8-47
456773-0000 ..	PIVOT BRACKET	8-29
456784-0000 ..	LID	1-21, 1-23
456794-0000 ..	RING	1-49, 1-51
456796-0000 ..	ROLLER	1-49, 1-51
456797-0000 ..	AXLE SUPPORT	1-49, 1-51
456817-0001 ..	SHIM	8-19, 8-21, 8-23, 8-39, 8-41
456827-0400 ..	CONNECTION BOX	2-5
456836-0600 ..	CLEANING SYSTEM	1-3, 1-5
456837-0000 ..	HOLDER	1-129, 1-131
456853-0001 ..	PIPE CLAMP	5-31
456853-0002 ..	PIPE CLAMP	5-31
456853-0003 ..	PIPE CLAMP	5-31
456854-0001 ..	CRAMP	5-31
456854-0002 ..	CRAMP	5-31
456872-0000 ..	LOCK PLATE	1-123, 1-125
456900-0000 ..	PIPE	1-95, 1-97
456905-0000 ..	FASTENING PLATE	1-107, 1-109, 1-111, 1-113
456907-0000 ..	LOCK PLATE	1-107, 1-109, 1-111, 1-113
456934-0000 ..	SEALING WASHER	3-5
456976-0700 ..	HEAT EXCHANGER	1-3, 1-5
456995-0000 ..	CARRIER	1-21, 1-23
456996-0000 ..	ROLLER	1-49, 1-51
457358-0000 ..	SLEEVE	8-11
457367-0000 ..	SHAFT	1-167, 1-169
457368-0000 ..	SPRING	1-167, 1-169
457696-0001 ..	JOINT PIECE	5-55
458192-0300 ..	INK UNIT SS	8-39, 8-41
458364-0000 ..	COVER	8-47
464009-0003 ..	BLOCKING PIECE	8-31
464010-0000 ..	ARM	8-31
464011-0000 ..	LOCK STUD	8-31
464012-0000 ..	CURVE	8-31
464173-0000 ..	LABEL HOLDER	1-99, 1-101
464174-0000 ..	SIGN	1-99, 1-101
464175-0000 ..	SIGN	1-99, 1-101
466074-0002 ..	SLIDER	5-55
466430-0000 ..	BUSHING	8-31
466477-0000 ..	INNER PIPE	1-143
466478-0000 ..	OUTER PIPE	1-143
466479-0000 ..	PIECE	1-143
466483-0000 ..	CLAMPING PIECE	1-143
466484-0000 ..	NET	1-143
469041-0000 ..	HOLDER	1-115, 1-117, 1-119
469047-0000 ..	ANGLE	1-115, 1-117, 1-119
469078-0000 ..	HOLDER	1-115, 1-117, 1-119
469091-0500 ..	FILLER TUBE	1-3, 1-5
469095-0000 ..	HOLDER	2-5, 6-57, 8-5
469096-0000 ..	LEG	2-5, 6-57, 8-5
469121-0400 ..	JUNCTION BLOCK	6-15, 6-17, 6-19
469122-0000 ..	BLOCK	6-25
469131-0000 ..	LACE	2-17, 2-19, 2-21
469132-0000 ..	PIPE	2-17, 2-19, 2-21
469133-0000 ..	PIPE	2-17, 2-19, 2-21
469141-0000 ..	HOLDER	8-59
469146-0000 ..	HOSE	2-23
469159-0000 ..	PIN	1-49, 1-51, 7-23, 7-25, 7-27, 7-29
469336-0000 ..	COVER	2-7
469337-0000 ..	REFLECTOR	2-7
469369-0000 ..	YOKECAM 180ML	3-19, 3-21

Part No	Description	Page No
469370-0000 ..	ARMCAM 180ML	3-19, 3-21
469374-0600 ..	CABLE TRENCH	1-3, 1-5
469384-0100 ..	START-UP KIT	6-3
469384-0200 ..	START-UP KIT	9-31
469452-0500 ..	COMPRESSOR UNIT	6-59
469458-0000 ..	BRACKET	1-155
469459-0000 ..	BRACKET	1-155
469460-0000 ..	BRACKET	1-155
469461-0000 ..	ROLL	1-155
469463-0000 ..	SHAFT	1-155
469464-0000 ..	ROLL	1-155
469466-0000 ..	PLATE	1-155
469501-0400 ..	AIR NOZZLE	1-3, 1-5
469502-0000 ..	SLIDER	2-11, 2-13
469745-0000 ..	BRACKET	1-123, 1-125
469781-0400 ..	TUBE FLUSHING DEVICE	1-3, 1-5
469867-0000 ..	HOSE HOLDER	3-5
469937-0000 ..	PIPE	2-5
469964-0000 ..	LID	2-31
469999-0000 ..	FLANGE	3-5
476117-0000 ..	CATCH	8-11
476185-0000 ..	VALVE CONE	1-85
476220-0000 ..	SPACER	5-55
476354-0000 ..	CANNULAR TUBE	8-29
476355-0000 ..	CANNULAR TUBE	8-47
476356-0000 ..	HOLDER FOR INK BOTTLE	8-29, 8-47
476377-0000 ..	SCREW	8-31
476859-0300 ..	WEAC-VALVE	1-141
484196-0000 ..	FILTER	1-95, 1-97
484197-0000 ..	FILTER	9-33
486826-0000 ..	SIGN	10-123, 10-125
486826-0001 ..	SIGN "EMERGENCY STOP"	1-147, 1-149, 7-17, 8-63
490518-0000 ..	HOLDER	1-129, 1-131
490761-0200 ..	DETERGENT PUMP	6-3
490768-0000 ..	BOX	6-13
490769-0000 ..	BRACKET	6-13
490876-0000 ..	BRACKET	1-167, 1-169
490890-0000 ..	NUT PLATE	1-21, 1-23
490900-0000 ..	SEALING RING	1-49, 1-51
490901-0000 ..	SEAL	1-49, 1-51
490902-0000 ..	AXLE SUPPORT	1-49, 1-51
490903-0000 ..	SHAFT	1-49, 1-51
490916-0000 ..	AXLE PIN	3-9, 3-11, 3-13, 3-15
490940-0000 ..	CYLINDER	4-35, 4-37
490942-0000 ..	COMPRESSION SPRING	4-35, 4-37
490943-0000 ..	COMPRESSION SPRING	4-35, 4-37
490964-0000 ..	COVER	1-49, 1-51
490985-0000 ..	SPACER SHEET	1-67, 1-69
490998-0000 ..	THROTTLE SCREW	1-141
491022-0000 ..	CYLINDER BRACKET	1-129, 1-131
491097-0000 ..	HEAT GUARD	1-39
491128-0000 ..	GASKET	1-49, 1-51
491143-0000 ..	BRACKET	1-155
491153-0000 ..	COMPRESSION GLAND	1-107, 1-109, 1-111, 1-113
491165-0000 ..	ROLL	3-13, 3-15
491166-0000 ..	SHAFT	3-13, 3-15
491169-0000 ..	PIVOT ARM	1-35
491170-0000 ..	COVER	1-35
491171-0000 ..	BEARING BLOCK	1-35
491172-0000 ..	GASKET	1-35
491173-0000 ..	BRACKET	1-35
491174-0000 ..	ARM	1-35
491175-0000 ..	LINK	1-35
491177-0000 ..	ARM	1-35
491203-0000 ..	STRUT	6-63
491223-0000 ..	COVER	1-39
491224-0000 ..	BRACKET	1-39
491227-0000 ..	SLIDER	5-5
491228-0001 ..	SHAFT	5-5
491228-0002 ..	SHAFT	5-5
491229-0000 ..	BUSHING	5-5
491230-0000 ..	GRUB SCREW	5-5
491231-0000 ..	BUSHING	5-5
491258-0000 ..	DRIVE WHEEL	5-7
491266-0000 ..	SHIM	5-37
491274-0000 ..	HUB	3-5
491291-0000 ..	LID	5-9
491303-0000 ..	WASHER	6-63
491304-0000 ..	WASHER	6-63
491305-0000 ..	CONN.DIAGRAM AIR SUPERH.	1-43, 1-45
491319-0000 ..	LACE	3-13, 3-15
491349-0000 ..	BEARING SEAT	4-41, 4-43, 4-45, 4-47
491350-0000 ..	SLIDER	4-41, 4-43, 4-45, 4-47
491390-0000 ..	PIPE CENTRAL LUBRICATION	2-17, 2-19, 2-21

Part No	Description	Page No
491409-0000 ..	WASHER	3-5
491410-0000 ..	LACE	3-5
491418-0001 ..	O-RING	1-145, 9-33
491418-0002 ..	O-RING	1-49, 1-51
491441-0000 ..	HOOD	1-145
491487-0000 ..	BUSHING	1-35
491536-0200 ..	NON-RETURN VALVE	6-21
491545-0000 ..	BRACKET	1-39
491570-0200 ..	DOOR	1-3, 1-5
491579-0200 ..	DOOR	1-3, 1-5
491602-0000 ..	GASKET HOLDER	1-49, 1-51
491649-0000 ..	BRACKET	6-39, 6-41
491681-0000 ..	GASKET	4-39
491770-0000 ..	BUSHING	6-67
491814-0300 ..	SLEWING BRACKET RIGHT	3-3
491815-0300 ..	SLEWING BRACKET LEFT	3-3
491846-0300 ..	TENSION SPROCKET	5-3
491850-0100 ..	DRIVE WHEEL	5-3
491851-0000 ..	LID	5-7
491854-0000 ..	PIPE WATER	2-17, 2-19, 2-21
491859-0000 ..	HOLDER	2-17, 2-19, 2-21
491860-0000 ..	HOLDER	2-17, 2-19, 2-21
491868-0000 ..	VOLUME BULGE	4-19, 4-21, 4-23, 4-25
491880-0000 ..	FASTENING PLATE	1-167, 1-169
491918-0000 ..	CAMSEGMENT R	3-19, 3-21
491919-0000 ..	CAMSEGMENT L	3-19, 3-21
491929-0000 ..	IMPELLER WHEEL	6-67
491931-0000 ..	SHAFT	1-35
491965-0000 ..	CAM	8-19, 8-21, 8-23, 8-39, 8-41
491976-0300 ..	PHOTOCELL UNIT	1-3, 1-5
493652-0100 ..	LID	6-63, 6-69
495498-0021 ..	CU-RAIL L=210MM	10-75, 10-77
497748-0000 ..	PIN	1-89, 1-91
520072-0000 ..	SIGN BOARD	1-9, 1-11
526984-0000 ..	SADDLE	8-33, 8-35
526985-0000 ..	PLATE	8-33, 8-35
526986-0001 ..	SHAFT	8-33, 8-35
527649-0000 ..	DISTANCE RUBBER	8-33, 8-35
527898-0100 ..	CONTAINER H2O2	6-73
527906-0000 ..	GASKET	6-69
529146-0000 ..	ANGLE BRACKET	1-33
529147-0000 ..	SPRING BRACKET	1-33
529148-0000 ..	STEERING	1-33
529149-0000 ..	DOLLY WASHER	1-33
529362-0000 ..	SPROCKET	8-33, 8-35
530587-0000 ..	WASHER	1-85
530588-0000 ..	SEAL RING	1-85, 9-35
530589-0000 ..	SEAL RING	1-41, 1-63, 1-83, 1-87, 9-35
530590-0000 ..	VALVE CONE	1-41, 1-63, 1-83, 1-87
530591-0000 ..	HOLDER	1-87
530592-0000 ..	SEAL RING HOLDER	1-83
530595-0000 ..	SEAL RING HOLDER	1-83
530597-0000 ..	WASHER	1-87
530598-0000 ..	WASHER	1-87
530599-0000 ..	RING	1-41, 1-63, 1-87
530600-0100 ..	GUIDING PULLTAB	1-21, 1-23
531345-0200 ..	PERSONAL PROTECT. EQ H2O2	9-3
531731-0000 ..	GASKET	1-43, 1-45
532117-0000 ..	CLAMP RING	1-89
532118-0000 ..	CLAMP RING	1-91
532205-0000 ..	LID	6-69
532206-0000 ..	GASKET	6-69
532349-0000 ..	PLAIN BEARING	1-41, 1-63
532412-0000 ..	SPRING	9-19, 9-23, 9-25
532655-0000 ..	CAUTION SIGN	6-75
533169-0000 ..	DIAPHRAGM	1-83, 9-35
536374-0000 ..	WASHER	1-167, 1-169
536913-0000 ..	HUB	7-11
536917-0000 ..	AXLE PIN	7-15
537308-0000 ..	SPRING	8-29, 8-47
537327-0000 ..	SHAFT	7-11
539212-0000 ..	GASKET	1-81, 9-35
540719-0000 ..	WHEEL	8-37
541070-0000 ..	SHAFT	7-15
541163-0200 ..	CLAMP RING	1-81
541164-0200 ..	CLAMP RING	1-81
541165-0000 ..	WASHER	1-89, 1-91
541166-0000 ..	WASHER	1-83
541751-0000 ..	CONICAL BOBBIN	7-11
543135-0000 ..	INK TRANSFER ROLLER	8-29, 8-47
543141-0000 ..	SIGN	8-33, 8-35
543142-0000 ..	SIGN	8-33, 8-35
543143-0100 ..	ADJUSTMENT DEVICE	8-19, 8-21, 8-23, 8-39, 8-41
544726-0000 ..	AXLE PIN	7-15

Part No	Description	Page No
544906-0000 ..	SOLENOID VALVE	1-21, 1-23, 1-95, 1-97
546929-0000 ..	FILTER	6-79, 6-81, 6-83, 6-85
548770-0006 ..	COAXIAL CABLE L=1200 MM	7-45
551969-0006 ..	COAXIAL CABLES	2-5
551969-0012 ..	COAXIAL CABLE	10-161
553586-0000 ..	SPACER	1-139
553607-0000 ..	SLEEVE	1-83, 1-85, 1-87
554162-0000 ..	SCREW	1-89, 1-91
555458-0000 ..	SEALING WASHER	1-87
555541-0000 ..	BRACKET	1-143
556133-0000 ..	SEALING WASHER	1-85
556422-0000 ..	PROTECTION	8-19, 8-21, 8-23, 8-39, 8-41
556541-0000 ..	SCREW	7-61
559809-0101 ..	CIRCUIT BOARD	10-33
559810-0101 ..	TMCC2 CONTROLLER	10-29, 10-31
560931-0000 ..	BRACKET	1-9, 1-11, 1-21, 1-23, 1-95, 1-97, 6-79, 6-81
561427-0000 ..	CONTAINER	6-75
562118-0000 ..	LID	4-51, 4-53
562119-0000 ..	GASKET	4-51, 4-53
562120-0000 ..	ARM PRESSURE JAW	4-41, 4-43, 4-45, 4-47
563286-0000 ..	GASKET	6-63
563287-0000 ..	WASHER	6-63
565250-0000 ..	WASHER	6-75
565251-0000 ..	VALVE	6-75
565462-0100 ..	LOCK PLATE	1-115, 1-117, 1-119
566191-0000 ..	BENDING ROLLER	1-21, 1-23
566669-0000 ..	NIPPLE	1-133
566696-0000 ..	GUIDE CONSOLE	1-57
566697-0000 ..	AXLE SUPPORT	1-57
567018-0000 ..	STEAM HOUSE	1-81
567070-0010 ..	ELECTRODE	1-95, 1-97
567070-0011 ..	ELECTRODE	1-21, 1-23
567070-0012 ..	ELECTRODE	6-79, 6-81
567070-0014 ..	ELECTRODE	1-9, 1-11
567070-0015 ..	ELECTRODE	1-95, 1-97
567070-0019 ..	ELECTRODE	1-21, 1-23
568577-0000 ..	AIR NOZZLE	1-155
568578-0000 ..	AIR NOZZLE	1-155
568581-0000 ..	DISTRIBUTOR WING	1-155
568583-0000 ..	FORK	1-145
568806-0000 ..	LID	6-83, 6-85
568828-0000 ..	FLOAT GUARD	6-79, 6-81
571087-0000 ..	RETAINING RING	6-83, 6-85
571088-0000 ..	DRAINING	6-79, 6-81
571532-0000 ..	BRACKET	1-39
571533-0000 ..	BRACKET	1-39
571534-0000 ..	PLATE	1-107, 1-109, 1-111, 1-113
571535-0000 ..	CANTILEVER	1-107, 1-109, 1-111, 1-113
571536-0000 ..	CANTILEVER	1-107, 1-109, 1-111, 1-113
571537-0000 ..	RING	1-49, 1-51
571538-0000 ..	RING	1-49, 1-51
571539-0000 ..	RING	1-49, 1-51
571540-0000 ..	PIN	1-49, 1-51
571543-0000 ..	BEARING PLATE	1-129, 1-131
571544-0000 ..	BEARING PLATE	1-129, 1-131
571871-0000 ..	BUSBAR,RIGHT	4-51
571872-0000 ..	BUSBAR,LEFT	4-53
571873-0000 ..	SEAL	4-51, 4-53
571874-0000 ..	SEALING PLUG	4-51, 4-53
571920-0000 ..	PRESSURE ARM	8-55
572157-0000 ..	BEARING PANEL	1-61
572158-0000 ..	BEARING PANEL	1-61
572252-0000 ..	BRACKET	8-19, 8-21, 8-23, 8-39, 8-41
572253-0000 ..	SHEET	8-19, 8-21, 8-23, 8-39, 8-41
572254-0000 ..	HANDLE	8-19, 8-21, 8-23, 8-39, 8-41
572255-0000 ..	SPACER	8-19, 8-21, 8-23, 8-39, 8-41
572294-0000 ..	COLLAR	2-5
572460-0000 ..	SHEET	8-19, 8-21, 8-23, 8-39, 8-41
572485-0000 ..	BRACKET	1-133
572486-0000 ..	PISTON	1-133
572487-0000 ..	THROTTLING	1-133
572642-0200 ..	TRANSFER	4-3
572643-0200 ..	TRANSFER	4-3
574333-0000 ..	ROLL	1-49, 1-51
574334-0000 ..	RING	1-49, 1-51
574335-0000 ..	RING	1-49, 1-51
574336-0000 ..	SEAL	1-49, 1-51
574337-0000 ..	BRACKET	1-129, 1-131
574341-0000 ..	FORK	1-129, 1-131
574346-0000 ..	ROLL	1-129, 1-131
574347-0000 ..	COUNTER ROLLER	1-129, 1-131
574365-0000 ..	VOLUMEFLAP 250S	4-19, 4-21, 4-23, 4-25
574366-0000 ..	VOLUME SHIM	4-19, 4-21, 4-23, 4-25
574367-0000 ..	VOLUME BULGE	4-19, 4-21, 4-23, 4-25

Part No	Description	Page No
574369-0000 ..	CARRIER RULER RIGHT	4-5, 4-7
574370-0000 ..	CARRIER RULER RIGHT	4-5, 4-7
574371-0000 ..	CARRIER RULER LEFT	4-9, 4-11
574372-0000 ..	CARRIER RULER LEFT	4-9, 4-11
574385-0000 ..	ROLLER TBA250SL	4-59
574386-0000 ..	CUTTING JAW	4-5, 4-7, 4-9, 4-11
574393-0000 ..	LOCK PLATE	1-123, 1-125
574395-0000 ..	SHAFT	1-123, 1-125
574396-0000 ..	BRACKET	1-123, 1-125
574397-0000 ..	ROLL	1-123, 1-125
574398-0000 ..	ROLL	1-123, 1-125
574399-0000 ..	ROLL	1-123, 1-125
574400-0000 ..	ROLL	1-123, 1-125
574401-0000 ..	ROLL	1-123, 1-125
574402-0000 ..	ROLL	1-123, 1-125
574403-0000 ..	ROLL	1-123, 1-125
574404-0000 ..	BRACKET	1-107, 1-109, 1-111, 1-113
574415-0000 ..	INDICATOR 250S	1-47
574416-0000 ..	BRACKET	1-115, 1-117, 1-119
574417-0000 ..	ROLL	1-115, 1-117, 1-119
574418-0000 ..	ROLL	1-115, 1-117, 1-119
574426-0000 ..	RULER	8-59
574427-0000 ..	RULER	8-59
574428-0000 ..	RULER	8-59
574443-0000 ..	SHAFT	8-19, 8-21, 8-23
574444-0000 ..	SPACER	8-19, 8-21, 8-23
574445-0000 ..	CANTILEVER	8-19, 8-21, 8-23
574449-0000 ..	SLIDER	2-11, 2-13
574452-0000 ..	PROTECTION	2-11, 2-13
574456-0000 ..	BRACKET	1-123, 1-125
574479-0000 ..	ROLL	1-107, 1-109, 1-111, 1-113
574480-0000 ..	ROLL	1-107, 1-109, 1-111, 1-113
574481-0000 ..	ROLL	1-107, 1-109, 1-111, 1-113
574494-0000 ..	FOLDING FLAP CAM	4-13, 4-15
574932-0000 ..	BENDING ROLLER	8-13
574937-0000 ..	SHAFT	8-13
574940-0000 ..	BLOCKING PIECE	8-13
574945-0000 ..	TOOTHED PULLY	8-13
574946-0000 ..	FLAG	8-13
576274-0000 ..	BRACKET	8-13
576286-0000 ..	HOLDER	6-39, 6-41
576287-0000 ..	PIPE	6-27, 6-29
576293-0000 ..	PIPE	6-15, 6-17, 6-19
576294-0000 ..	JUNCTION BLOCK	6-39, 6-41
576434-0200 ..	AP-VALVE 51-38	1-67, 1-69
576436-0100 ..	A-CYLINDER	1-81
576436-0101 ..	===CAD MODEL===	1-83
576436-0102 ..	===CAD MODEL===	1-83
576437-0100 ..	C-CYLINDER	1-81
576438-0100 ..	B-CYLINDER	1-81
576439-0000 ..	CYLINDER HOUSING	1-83, 1-87
576440-0000 ..	END SECTION	1-83, 1-87
576441-0000 ..	PISTON	1-83, 1-87
576442-0000 ..	PISTON ROD	1-87
576443-0000 ..	CYLINDER HOUSING	1-85
576444-0000 ..	END SECTION	1-85
576445-0000 ..	PISTON	1-85
576446-0000 ..	PISTON ROD	1-83
576447-0000 ..	PISTON ROD	1-85
576448-0000 ..	SPACER	1-83
576449-0000 ..	SPACER	1-83
576450-0000 ..	SPACER	1-87
576451-0000 ..	SPACER	1-85
577211-0000 ..	VOLUMEFLAP 160 ML	4-19, 4-21, 4-23, 4-25
577212-0000 ..	VOLUME SHIM	4-19, 4-21, 4-23, 4-25
577213-0000 ..	VOLUME BULGE 160 ML	4-19, 4-21, 4-23, 4-25
577217-0000 ..	YOKECAM 160ML	3-19, 3-21
577218-0000 ..	ARMCAM 160ML	3-19, 3-21
577219-0000 ..	CAMSEGMENT R	3-19, 3-21
577220-0000 ..	CAMSEGMENT L	3-19, 3-21
577225-0000 ..	FOLDING FLAP CAM	4-13, 4-15
577360-0000 ..	CANTILEVER	1-67, 1-69
577462-0000 ..	CABLE TRENCH	1-147, 1-149
577463-0000 ..	CABLE TRENCH	1-147, 1-149
577467-0000 ..	LID	1-147, 1-149
577468-0000 ..	LID	1-147, 1-149
577469-0000 ..	LID	1-147, 1-149
577470-0000 ..	LID	1-147, 1-149
577541-0000 ..	TUBE 90	1-99, 1-101
577542-0000 ..	TUBE 90	1-99, 1-101
577753-0013 ..	INSTALLATION DRAWING	9-5
577753-0014 ..	INSTALLATION DRAWING	9-5
577769-0000 ..	EXTENSION PIPE	6-67
577770-0000 ..	GASKET	6-67

Part No	Description	Page No
577771-0000 ..	SHAFT	6-67
577773-0000 ..	GASKET	6-63
577782-0000 ..	TUBE 200	1-99, 1-101
577783-0000 ..	TUBE 201	1-99, 1-101
577784-0000 ..	TUBE260	1-99, 1-101
577785-0000 ..	TUBE 261	1-99, 1-101
577786-0000 ..	TUBE 240	1-99, 1-101
577787-0000 ..	TUBE 241	1-99, 1-101
577788-0000 ..	TUBE 80	1-99, 1-101
577789-0000 ..	TUBE 90	1-99, 1-101
577790-0000 ..	TUBE 70	1-99, 1-101
577791-0000 ..	TUBE 40	1-99, 1-101
577798-0000 ..	GUIDING ARBOR	8-15
577799-0000 ..	SHAFT	8-15
577800-0200 ..	PAPER GUIDE	8-13
577822-0200 ..	PRESSURE REGULATOR GROUP	6-15, 6-17, 6-19
577824-0200 ..	COOL WATER VALVE	6-15, 6-17, 6-19
577825-0200 ..	HOT WATER VALVE	6-15, 6-17, 6-19
577832-0000 ..	PIPE	6-15, 6-17, 6-19
578000-0000 ..	BRACKET	8-39, 8-41
578001-0000 ..	SCREW	8-39, 8-41
578004-0000 ..	TUBE 211	1-99, 1-101
578005-0000 ..	TUBE 213	1-99, 1-101
578013-0000 ..	TUBE 213 AND 211	1-99, 1-101
578015-0000 ..	TUBE 1071	1-99, 1-101
578019-0000 ..	TUBE40	1-95, 1-97
578020-0000 ..	TUBE 70	1-99, 1-101
578021-0000 ..	TUBE 1071	1-99, 1-101
578022-0000 ..	TUBE 211	1-99, 1-101
578023-0000 ..	TUBE 213	1-99, 1-101
578026-0000 ..	PIPE	1-95, 1-97
578027-0000 ..	CRAMP	1-99, 1-101
578028-0000 ..	BRACKET	1-99, 1-101
578030-0000 ..	GASKET	1-99, 1-101
578031-0000 ..	VALVE HOUSING	1-143
578035-0000 ..	LID	1-147, 1-149
578091-0000 ..	BRANCH PIPE	2-23
578104-0000 ..	SHEET	4-51, 4-53
578480-0000 ..	BRACKET	1-67, 1-69
578486-0000 ..	WHEEL	1-21, 1-23
578490-0000 ..	LID	1-21, 1-23
578491-0000 ..	LID	1-21, 1-23
578492-0000 ..	LID	1-21, 1-23
578493-0000 ..	SHAFT	1-21, 1-23
578494-0000 ..	O-RING	1-21, 1-23, 9-33
578495-0000 ..	O-RING	1-21, 1-23, 9-33
578496-0000 ..	LID	1-147, 1-149
578500-0000 ..	PIPE	1-147, 1-149
578676-0000 ..	RAIL	2-9
578685-0000 ..	GUIDING ARBOR	8-15
578686-0000 ..	GUIDING ARBOR	8-15
578687-0000 ..	GUIDING ARBOR	8-15
579241-0200 ..	DATING UNIT	8-3
579553-0000 ..	SHAFT	7-13, 7-43
579623-0000 ..	PROTECTIVE CASING	3-25
579624-0000 ..	GASKET	3-25
579625-0200 ..	PROTECTIVE GRATING	1-3, 1-5
579629-0000 ..	TOUCH GUARD	1-171, 1-173, 1-175
579630-0000 ..	BRACKET	1-171, 1-173, 1-175
579633-0000 ..	BRACKET	1-171, 1-173, 1-175
579637-0000 ..	CATCH	1-139
579765-0000 ..	MACHINE SIGN CE	9-3
579771-0000 ..	CATCH	1-139
579899-0000 ..	LIFTING UNIT	9-3
580036-0200 ..	STRIP APPLICATOR	7-3
580037-0200 ..	STRIP MAGAZINE	7-3
580038-0200 ..	INDUCTOR	7-35, 7-37
580042-0100 ..	HUB JUMBO	7-5, 7-7
580044-0200 ..	SPLICING MAGAZINE	7-5, 7-7
580055-0000 ..	ARM	7-13
580060-0200 ..	BRAKE ARM	7-5, 7-7
580064-0200 ..	CONNECTION BOX	7-5, 7-7
580329-0200 ..	PUSH BUTTON BOX	7-5, 7-7
580335-0200 ..	PIPE WORK-PNEUMATIC	7-55
580356-0000 ..	YOKECAM 250ML SLIM	3-19, 3-21
580357-0000 ..	ARMCAM 250ML SLIM	3-19, 3-21
580358-0000 ..	CAM SEGMENT L	3-19, 3-21
580359-0000 ..	CAM SEGMENT R	3-19, 3-21
580363-0000 ..	PIPE 71	1-99, 1-101
580364-0000 ..	PIPE 71	1-99, 1-101
580993-0000 ..	WATER DIAGRAM	6-15, 6-17, 6-19
581015-0000 ..	PIPE 91	1-99, 1-101
581016-0000 ..	PIPE 91	1-99, 1-101
581341-0000 ..	TOUCH GUARD	1-17

Part No	Description	Page No
581533-0000 ..	YOKE CAM 284ML	3-19, 3-21
581534-0000 ..	ARM CAM 284ML	3-19, 3-21
581535-0000 ..	CAMSEGMENT R 284ML	3-19, 3-21
581536-0000 ..	CAMSEGMENT L 284ML	3-19, 3-21
582162-0000 ..	FOLDING FLAP CAM	4-13, 4-15
582163-0000 ..	VOLUME FLAP 330S	4-19, 4-21, 4-23, 4-25
582164-0000 ..	VOLUME CAM R 330S	4-57
582165-0000 ..	VOLUME CAM R WIDE 330S	4-57
582166-0000 ..	VOLUME CAM L 330S	4-57
582167-0000 ..	VOLUME CAM L WIDE 330S	4-57
582195-0000 ..	ARM CAM 330S	3-19, 3-21
582197-0000 ..	YOKE CAM 330S	3-19, 3-21
582199-0000 ..	CAM SEGMENT RIGHT	3-19, 3-21
582200-0000 ..	CAM SEGMENT LEFT	3-19, 3-21
582433-0000 ..	LID	1-21, 1-23
583683-0000 ..	SHAFT	7-63
583684-0000 ..	AXLE SUPPORT	7-63
583685-0000 ..	BEARING SEAT	7-63
583735-0000 ..	PIN	7-61
583737-0000 ..	ROLLER	7-61
583738-0000 ..	ROLLER	7-61
583749-0000 ..	PIN	7-61
583878-0000 ..	SPRING BRACKET	7-15
589432-0000 ..	SCREW	7-61
589449-0000 ..	NOZZLE	1-157, 1-159
589885-0100 ..	TEMPLATE HOUSE/BENDING ROLLER	11-25
589908-0000 ..	BLOCKING PIECE	11-25
589909-0000 ..	BLOCKING PIECE	11-25
589910-0000 ..	BEAM	11-27
590205-0000 ..	PIN	11-25, 11-27
590206-0000 ..	BLOCK	11-27
590207-0000 ..	BLOCKING PIECE	11-27
590208-0000 ..	BLOCKING PIECE	11-27
590215-0000 ..	SUPPORT	11-25
590216-0000 ..	ROLLER	11-25
590217-0000 ..	SHEET	11-25
590218-0000 ..	GUIDE	11-25
590219-0000 ..	PIN	11-27
590221-0000 ..	BLOCK	11-25
591446-0000 ..	FOLDING FLAP LEFT	4-9, 4-11
595430-0200 ..	LIGHT FIXTURE	2-57
597874-0000 ..	RAIL RIGHT	2-53
597875-0000 ..	RAIL LEFT	2-53
597888-0000 ..	BRACKET	2-53
597889-0000 ..	BRACKET	2-53
597993-0000 ..	FOLDING FLAP	4-5, 4-7
597994-0000 ..	FOLDING FLAP	4-5, 4-7, 4-9, 4-11
598762-0200 ..	LADDER	2-3
732419-0004 ..	RAIL	10-133
732419-0007 ..	RAIL	10-133
736514-0000 ..	SHOCK ABSORBER	1-93, 1-183, 9-33
751009-0000 ..	INSULATION	1-43, 1-45
751010-0000 ..	GASKET	1-155
751015-0000 ..	GASKET	1-39
751016-0000 ..	GASKET	1-17
751018-0000 ..	WASHER	1-39
751019-0000 ..	WASHER	1-35
751020-0000 ..	GASKET	1-35
751023-0000 ..	GASKET	1-35, 1-39
751024-0000 ..	GASKET	1-155
751078-0000 ..	BRACKET RIGHT	3-13
751079-0000 ..	BRACKET LEFT	3-15
751085-0000 ..	BUSHING	2-5
751086-0000 ..	NIPPLE	6-23
751109-0000 ..	RAIL RIGHT	5-37
751110-0000 ..	RAIL LEFT	5-37
751131-0000 ..	SHAFT	1-49, 1-51
751132-0000 ..	SHAFT	1-57
751165-0000 ..	BUSHING	1-59
751212-0000 ..	ARM	3-9, 3-11, 3-13, 3-15
751220-0000 ..	FILLER CAP	6-63
751223-0000 ..	LID	6-69
751230-0000 ..	PLAIN BEARING	1-49, 1-51
751245-0000 ..	FLANGE	3-5
751267-0000 ..	CANTILEVER	1-115, 1-117, 1-119
751283-0000 ..	ROLL	1-115, 1-117, 1-119
751284-0000 ..	ROLL	1-115, 1-117, 1-119
751287-0000 ..	PLATE	1-115, 1-117, 1-119
751288-0000 ..	PLATE	1-115, 1-117, 1-119
751316-0000 ..	ELBOW PIPE	6-67
751318-0000 ..	SHAFT	1-123, 1-125
751331-0000 ..	GASKET	1-21, 1-23
751333-0000 ..	SETTING PLATE	1-107, 1-109, 1-111, 1-113
751334-0000 ..	SPACER	1-107, 1-109, 1-111, 1-113

Part No	Description	Page No
751373-0300 ..	PEROXIDE TANK	6-59
751393-0300 ..	PEROXIDE PUMP	6-63
751395-0000 ..	FLANGE	6-67
751398-0400 ..	TANK	6-59
751403-0000 ..	BRACKET	6-69
751456-0000 ..	HOLDER	1-167, 1-169
751457-0000 ..	CANTILEVER	1-167, 1-169
751476-0000 ..	CANTILEVER	1-167, 1-169
751491-0000 ..	ROLL	1-107, 1-109, 1-111, 1-113
751492-0000 ..	ROLL	1-107, 1-109, 1-111, 1-113
751494-0000 ..	ROLL	1-107, 1-109, 1-111, 1-113
751495-0000 ..	ROLL	1-123, 1-125
751496-0000 ..	ROLL	1-123, 1-125
751497-0000 ..	ROLL	1-123, 1-125
751498-0000 ..	ROLL	1-123, 1-125
751499-0000 ..	ROLL	1-123, 1-125
751500-0000 ..	ROLL	1-123, 1-125
751501-0000 ..	ROLL	1-123, 1-125
751502-0000 ..	ROLLER	1-129, 1-131
751503-0000 ..	COUNTER ROLLER	1-129, 1-131
751575-0000 ..	RULERPART R	4-5, 4-7
751576-0000 ..	RULERPART L	4-9, 4-11
751577-0000 ..	RULERPART R	4-5, 4-7
751578-0000 ..	RULERPART L	4-9, 4-11
751579-0000 ..	ADJUSTING SCREW	4-5, 4-7, 4-9, 4-11
751580-0000 ..	SHIM	4-5, 4-7, 4-9, 4-11
751680-0000 ..	SCREW	1-21, 1-23
751718-0100 ..	HOLDER	8-19, 8-21, 8-23, 8-39, 8-41
751722-0000 ..	PIPE-LINE	1-155
751731-0000 ..	BEARING COVER	1-37
751732-0000 ..	BRACKET	1-37
751733-0000 ..	HEATING PIPE	1-39
751743-0000 ..	PISTON	4-35, 4-37
751769-0000 ..	SLEEVE	4-35, 4-37
752009-0000 ..	RULERPART R	4-5, 4-7
752010-0000 ..	RULERPART R	4-5, 4-7
752011-0000 ..	RULERPART L	4-9, 4-11
752012-0000 ..	RULERPART L	4-9, 4-11
752014-0000 ..	RULERPART R	4-5, 4-7
752015-0000 ..	RULERPART R	4-5, 4-7
752016-0000 ..	RULERPART L	4-9, 4-11
752017-0000 ..	RULERPART L	4-9, 4-11

Part No	Description	Page No
752038-0000 ..	SHIM	1-129, 1-131
752047-0000 ..	BUSHING	1-129, 1-131
752085-0000 ..	SPRING	8-15
752115-0000 ..	PLUNGER	4-5, 4-7, 4-9, 4-11
752126-0000 ..	FORMING ROLLER	1-107, 1-109, 1-111, 1-113
752127-0000 ..	FORMING ROLLER	1-107, 1-109, 1-111, 1-113
752128-0000 ..	FORMING ROLLER	1-107, 1-109, 1-111, 1-113
752129-0000 ..	FORMING ROLLER	1-115, 1-117, 1-119
752130-0000 ..	FORMING ROLLER	1-115, 1-117, 1-119
752131-0000 ..	FORMING ROLLER	1-123, 1-125
752132-0000 ..	FORMING ROLLER	1-123, 1-125
752133-0000 ..	FORMING ROLLER	1-123, 1-125
752134-0000 ..	FORMING ROLLER	1-123, 1-125
752135-0000 ..	FORMING ROLLER	1-123, 1-125
752136-0000 ..	FORMING ROLLER	1-123, 1-125
752137-0000 ..	FORMING ROLLER	1-123, 1-125
752138-0000 ..	FORMING ROLLER	1-129, 1-131
752140-0000 ..	COUNTER ROLLER	1-129, 1-131
752141-0000 ..	FORMING ROLLER	1-107, 1-109, 1-111, 1-113
752142-0000 ..	FORMING ROLLER	1-107, 1-109, 1-111, 1-113
752143-0000 ..	FORMING ROLLER	1-107, 1-109, 1-111, 1-113
752144-0000 ..	FORMING ROLLER	1-115, 1-117, 1-119
752145-0000 ..	FORMING ROLLER	1-115, 1-117, 1-119
752146-0000 ..	FORMING ROLLER	1-123, 1-125
752147-0000 ..	FORMING ROLLER	1-123, 1-125
752148-0000 ..	FORMING ROLLER	1-123, 1-125
752149-0000 ..	FORMING ROLLER	1-123, 1-125
752150-0000 ..	FORMING ROLLER	1-123, 1-125
752151-0000 ..	FORMING ROLLER	1-123, 1-125
752152-0000 ..	FORMING ROLLER	1-123, 1-125
752153-0000 ..	FORMING ROLLER	1-129, 1-131
752155-0000 ..	COUNTER ROLLER	1-129, 1-131
752156-0000 ..	FLANGE BUSHING	1-107, 1-109, 1-111, 1-113, 1-123, 1-125
752174-0000 ..	HEATING PIPE	1-35
752185-0000 ..	SHAFT	1-123, 1-125
752186-0001 ..	SHAFT	1-115, 1-117, 1-119
752186-0002 ..	SHAFT	1-107, 1-109, 1-111, 1-113
752186-0003 ..	SHAFT	1-123, 1-125, 1-129, 1-131
752186-0004 ..	SHAFT	1-115, 1-117, 1-119, 1-123, 1-125, 1-129, 1-131
752186-0005 ..	SHAFT	1-107, 1-109, 1-111, 1-113, 1-123, 1-125, 1-129, 1-131
752186-0006 ..	SHAFT	1-107, 1-109, 1-111, 1-113, 1-123, 1-125
752186-0007 ..	SHAFT	1-123, 1-125

Part No	Description	Page No
752186-0008 ..	SHAFT	1-107, 1-109, 1-111, 1-113
752186-0009 ..	SHAFT	1-107, 1-109, 1-111, 1-113
752186-0010 ..	SHAFT	1-115, 1-117, 1-119
752186-0011 ..	SHAFT	1-115, 1-117, 1-119
752186-0012 ..	SHAFT	1-115, 1-117, 1-119, 1-129, 1-131
752187-0000 ..	SHAFT	1-107, 1-109, 1-111, 1-113
752200-0000 ..	CANTILEVER	8-19, 8-21, 8-23, 8-39, 8-41
752212-0000 ..	VOLUME FLAP 200 ML	4-19, 4-21, 4-23, 4-25
752218-0000 ..	ATTACHMENT	1-155
752237-0000 ..	SPRING	8-19, 8-21, 8-23, 8-39, 8-41
752240-0000 ..	LID	8-19, 8-21, 8-23, 8-39, 8-41
752282-0000 ..	CONNECTION RIGHT	4-35
752283-0000 ..	CONNECTION LEFT	4-37
752284-0000 ..	SHAFT	4-35, 4-37
752288-0000 ..	SLEEVE	4-5, 4-7, 4-9, 4-11
752289-0000 ..	CLAMP RIGHT	4-35
752290-0000 ..	CLAMP LEFT	4-37
752292-0000 ..	VOLUMEFLAP 180 ML	4-19, 4-21, 4-23, 4-25
752425-0000 ..	LINK	4-27, 4-29, 4-31, 4-33
752476-0000 ..	SCREW	4-5, 4-7, 4-9, 4-11, 4-35, 4-37
752495-0300 ..	ATTACHMENT	1-137
752499-0000 ..	RING	1-139
752519-0002 ..	PIN	1-49, 1-51
752526-0000 ..	PLATE	8-19, 8-21, 8-23, 8-39, 8-41
752527-0000 ..	CANTILEVER	8-19, 8-21, 8-23, 8-39, 8-41
752528-0000 ..	COVER	8-19, 8-21, 8-23, 8-39, 8-41
752529-0000 ..	BEARING COVER	8-19, 8-21, 8-23, 8-39, 8-41
752530-0000 ..	SPROCKET	8-19, 8-21, 8-23, 8-39, 8-41
752531-0000 ..	BRACKET	8-19, 8-21, 8-23, 8-39, 8-41
752534-0000 ..	PLATE	8-19, 8-21, 8-23, 8-39, 8-41
752535-0000 ..	SHAFT	8-19, 8-21, 8-23, 8-39, 8-41
752536-0001 ..	SHAFT	8-19, 8-21, 8-23, 8-39, 8-41
752536-0002 ..	SHAFT	8-19, 8-21, 8-23
752536-0003 ..	SHAFT	8-19, 8-21, 8-23
752538-0000 ..	SHAFT	8-19, 8-21, 8-23, 8-39, 8-41
752539-0000 ..	PLATE	8-19, 8-21, 8-23, 8-39, 8-41
752541-0000 ..	CANTILEVER	8-19, 8-21, 8-23, 8-39, 8-41
752542-0001 ..	BENDING ROLLER	8-19, 8-21, 8-23, 8-39, 8-41
752542-0002 ..	BENDING ROLLER	8-19, 8-21, 8-23
752542-0003 ..	BENDING ROLLER	8-19, 8-21, 8-23
752543-0001 ..	SHAFT	8-19, 8-21, 8-23, 8-39, 8-41
752543-0002 ..	SHAFT	8-19, 8-21, 8-23
752543-0003 ..	SHAFT	8-19, 8-21, 8-23
752544-0001 ..	SHIM	8-19, 8-21, 8-23, 8-39, 8-41
752544-0002 ..	SHIM	8-19, 8-21, 8-23, 8-39, 8-41
752554-0000 ..	SPACER	1-167, 1-169
752556-0000 ..	SPACER	4-27, 4-29, 4-31, 4-33
752559-0000 ..	STOP PERF 1	4-27, 4-29
752560-0000 ..	STOP PERF 2	4-31, 4-33
752561-0000 ..	STOP PERF 1	4-27, 4-29
752562-0000 ..	STOP PERF 2	4-31, 4-33
752563-0000 ..	STOP PERF 1	4-27, 4-29
752564-0000 ..	STOP PERF 2	4-31, 4-33
752576-0000 ..	CONTAINER	1-95, 1-97
752598-0000 ..	SHAFT	4-19, 4-21, 4-23, 4-25
752615-0000 ..	SPACER	4-19, 4-21, 4-23, 4-25
752642-0000 ..	BRACKET	8-19, 8-21, 8-23, 8-39, 8-41
752644-0000 ..	SCREW	8-19, 8-21, 8-23, 8-39, 8-41
752645-0400 ..	DATING UNIT	8-17
752646-0400 ..	DATING UNIT	8-17
752671-0100 ..	SHOCK ABSORBER	4-3
752672-0100 ..	SHOCK ABSORBER	4-3
752673-0000 ..	SPACER	4-27, 4-29, 4-31, 4-33
752675-0000 ..	PIPE	1-95, 1-97
752676-0000 ..	PIPE	1-95, 1-97
752678-0000 ..	SPRING PERF 1	4-27, 4-29
752679-0000 ..	SPRING PERF 2	4-31, 4-33
752680-0000 ..	SLEEVE	4-27, 4-29, 4-31, 4-33
752681-0000 ..	WASHER	4-27, 4-29, 4-31, 4-33
752739-0000 ..	VOLUME BULGE	4-19, 4-21, 4-23, 4-25
752774-0000 ..	PLUNGER	3-19, 3-21
752857-0000 ..	POINTER	1-47
752858-0000 ..	POINTER	1-47
752859-0000 ..	POINTER	1-47
752999-0000 ..	VOLUME FLAP 200S	4-19, 4-21, 4-23, 4-25
777150-0801 ..	KEY SET ,SEXKANT	9-13
779910-0101 ..	PADLOCK	9-9
925877-0000 ..	SUPPORT	1-183
925991-0200 ..	LEVEL PROBE	1-3, 1-5
925998-0000 ..	DIAPHRAGM	1-93, 9-33
925999-0000 ..	PROTECTION PIPE	1-183
926820-0000 ..	PLUG	1-183
926822-0000 ..	GASKET	9-33
926906-0000 ..	SPACER	1-93

Part No	Description	Page No
926907-0000 ..	SCREW	1-93
926909-0000 ..	COMPRESSION SPRING	1-93
926934-0000 ..	SUPPORT	1-93
927007-0000 ..	SHUTTER	1-93
927044-0000 ..	SPACER	1-93
927081-0000 ..	SUPPORT	1-19
927194-0000 ..	BODY	1-93
927203-0000 ..	COVER	1-93
927205-0200 ..	REGULATING VALVE	1-67, 1-69
927421-0003 ..	O-RING 13.3X2.4 SILICON	1-21, 1-23, 1-95, 1-97
927421-0004 ..	O-RING 15.3X2.4 SILICON	1-21, 1-23, 1-95, 1-97, 6-79, 6-81
927421-0005 ..	O-RING 7.3X2.4 SILICON	6-73
927421-0006 ..	O-RING 17.3X2.4 SILICON	9-33
927422-0001 ..	O-RING 19.2X3 SILICON	5-23, 5-25
927422-0003 ..	O.RING 24.2X3 SILICON	6-75, 9-33
927422-0004 ..	O-RING 29.2X3 SILICON	6-67
927422-0007 ..	O-RING 44.2X3 SILICON	6-63, 6-67
927422-0008 ..	O-RING 49.5X3 SILICON	1-133, 9-33
927422-0009 ..	O-RING 54.5X3 SILICON	6-69
927422-0011 ..	O-RING 69.5X3 SILICON	1-95, 1-97
927422-0014 ..	O-RING 34.2X3 SILICON	1-21, 1-23, 6-63
927422-0015 ..	O-RING 39.2X3 SILICON	1-133
929402-0000 ..	ARM	4-13, 4-15
929413-0000 ..	SIGN	6-39, 6-41
929415-0100 ..	BALANCE TANK	6-15, 6-17, 6-19
929438-0100 ..	ARM	3-3
929444-0000 ..	PIN	3-19, 3-21
970802-0000 ..	DISCETTE BOX 3,5"	10-103
971140-0000 ..	PHASE BAR ANGLED	10-133
971141-0000 ..	PHASE BAR ANGLED	10-133
971142-0000 ..	PHASE BAR ANGLED	10-133
975917-0000 ..	KEY FOR SAFETY SWITCH 90044-103	8-9
977527-0000 ..	BRACKET	5-67, 6-79, 6-81
978010-0000 ..	SIGN BOARD	2-45, 2-47
978031-0000 ..	VOLUMEFLAP 284 ML	4-19, 4-21, 4-23, 4-25
978184-0000 ..	STOPPER	4-13, 4-15
978185-0000 ..	SHIM	4-13, 4-15
978207-0000 ..	SPACER PIPE	3-25
978209-0000 ..	NUT	3-25
978235-0000 ..	VALVE PLATE	1-9, 1-11
978262-0000 ..	GUIDE PIN	3-19, 3-21
978272-0000 ..	BRACKET	3-9, 3-11, 3-13, 3-15
978275-0000 ..	BEARING HOLDER	3-9, 3-11, 3-13, 3-15
978340-0000 ..	SPACER	3-19, 3-21
978366-0000 ..	VOLUME FLAP 250 ML	4-19, 4-21, 4-23, 4-25
978380-0000 ..	BLIND PLUG	1-19
978381-0000 ..	WASHER 56X2MM	1-19
978440-0000 ..	CRAMP	1-15
978462-0000 ..	PROTECTION PLATE	1-57
978531-0000 ..	BRACKET	1-49, 1-51
978532-0000 ..	BRACKET	1-49, 1-51
978539-0000 ..	CABLE CONDUIT	1-147, 1-149
978540-0000 ..	CABLE CONDUIT	1-147, 1-149
978542-0000 ..	FRAME	1-163
978543-0000 ..	FRAME	1-165
978603-0000 ..	SIGN	6-39, 6-41
978609-0000 ..	ALIGNMENT TEMPLATE	3-19, 3-21
978714-0000 ..	CARRIER LEFT	4-9, 4-11
978715-0000 ..	CARRIER RIGHT	4-5, 4-7
978735-0000 ..	FASTENING PLATE	1-167, 1-169
978736-0000 ..	BRACKET	1-35
978745-0000 ..	CATCH	4-5, 4-7, 4-9, 4-11
978746-0000 ..	CATCH	4-35, 4-37
978756-0000 ..	PIN	4-59
978757-0000 ..	ROLLER 180-284ML	4-59
978758-0000 ..	ROLLER 125ML	4-59
978760-0000 ..	ROLLER TBA200SL	4-59
978768-0000 ..	YOKECURVE200ML	3-19, 3-21
978769-0000 ..	ARMCURVE 200ML	3-19, 3-21
978770-0000 ..	CAMSEGMENTL	3-19, 3-21
978771-0000 ..	CAMSEGMENTL	3-19, 3-21
978772-0000 ..	YOKECURVE 200SL	3-19, 3-21
978773-0000 ..	ARMCURVE 200SL	3-19, 3-21
978774-0000 ..	CAMSEGMENT R	3-19, 3-21
978775-0000 ..	CAMSEGMENT L	3-19, 3-21
978776-0000 ..	YOKECURVE 250ML	3-19, 3-21
978777-0000 ..	ARMCURVE 250ML	3-19, 3-21
978778-0000 ..	CAMSEGMENT R	3-19, 3-21
978779-0000 ..	CAMSEGMENT L	3-19, 3-21
978790-0000 ..	BRACKET	1-123, 1-125
978791-0000 ..	HOLDER	1-115, 1-117, 1-119
978792-0000 ..	PLATE	1-107, 1-109, 1-111, 1-113
978793-0000 ..	YOKECURVE 125ML	3-19, 3-21
978794-0000 ..	ARMCURVE 125ML	3-19, 3-21

Part No	Description	Page No
978795-0000 ..	CAMSEGMENT R	3-19, 3-21
978796-0000 ..	CAMSEGMENT L	3-19, 3-21
978823-0200 ..	CENTRAL LUBRICATION	6-3
978834-0200 ..	PEROXID AND STERILESYSTEM	6-3
978835-0200 ..	PIPE WORK	6-59
978838-0000 ..	HEAT EXCHANGER	1-141
978865-0000 ..	HOUSE	1-49, 1-51
978870-0000 ..	BEARING PLATE	1-49, 1-51
978871-0000 ..	BEARING PLATE	1-49, 1-51
978872-0000 ..	LOCK WASHER	1-49, 1-51
978876-0000 ..	SHAFT	8-59
978877-0000 ..	SHAFT	8-59
978879-0000 ..	CONTAINER	1-65
978953-0000 ..	BRACKET	6-87
978963-0000 ..	PIPE	6-61
978970-0000 ..	METERING DEVICE	6-69
978971-0000 ..	DISCHARGE TRAY	1-65
978972-0000 ..	DISCHARGE TRAY	1-65
978973-0001 ..	HOSE	6-63
978973-0003 ..	HOSE	6-79, 6-81
978988-0200 ..	SEPARATOR	6-59
978989-0200 ..	SCRUBBER	6-59
978996-0000 ..	BRANCH PIPE	1-63
979026-0200 ..	WATER CIRCULATION	6-59
979028-0000 ..	PIPE	1-141
979031-0000 ..	PIPE	1-141
979069-0000 ..	PIPE	6-61
979204-0000 ..	PLATE	8-59
979215-0200 ..	COVER PLATE	6-3
979216-0200 ..	MACHINE BODY	6-3
979217-0000 ..	PIPE	6-13
979219-0000 ..	SPACER PIPE	6-43, 6-45, 6-47, 6-49, 6-51, 6-53
979247-0000 ..	HOUSE	1-17
979254-0000 ..	SUPPORT	1-19
979279-0000 ..	COVER HOUSING	6-77
979280-0000 ..	COVER	6-77
979300-0000 ..	PIPE	6-73
979326-0000 ..	FLOAT	1-181
979328-0200 ..	CABINET	6-59
979329-0200 ..	FILLING UNIT	6-73
979330-0000 ..	FLOATER	1-181
979336-0000 ..	HOSE NIPPLE	6-63
979368-0000 ..	HOLDER	1-181
979381-0100 ..	PAPER REEL HOLDER	8-3
979382-0000 ..	SHAFT	8-61
979421-0000 ..	SIGN	6-39, 6-41
979434-0000 ..	FERRULE	1-93
979446-0000 ..	HOLDER	6-39, 6-41
979474-0000 ..	BRACKET	1-9, 1-11
979475-0000 ..	CONNECTION BOX	1-13
979476-0000 ..	RAIL	1-13
979486-0000 ..	LUBRICATING PIPE	2-17, 2-19, 2-21
979500-0001 ..	ELECTRODE	1-21, 1-23
979543-0000 ..	SPLASH PLATE	8-39, 8-41
979544-0000 ..	SPLASH PLATE	8-19, 8-21, 8-23
979548-0000 ..	MACHINE PLATE	9-3, 10-79
979555-0000 ..	WEB TENSION ROLLER	8-13
979559-0000 ..	HINGE	1-21, 1-23
979575-0000 ..	ROLLER PLATE	7-43
979576-0000 ..	AXLE PIN	7-13
979578-0000 ..	AXLE PIN	7-13
979582-0000 ..	ROLLER	7-61
979667-0000 ..	ARM	7-23, 7-25, 7-27, 7-29
979668-0000 ..	FINGER	7-23, 7-25, 7-27, 7-29
979669-0000 ..	FORCE PLATE	7-23, 7-25, 7-27, 7-29
979701-0000 ..	CABLE CONDUIT	8-39, 8-41
979709-0000 ..	BENDING ROLLER	8-19, 8-21, 8-23, 8-39, 8-41
979722-0000 ..	BLOCK	1-37
979728-0000 ..	CATCH	1-139
979751-0000 ..	VOLUME FLAP 100	4-19, 4-21, 4-23, 4-25
979754-0000 ..	VOLUME SHIM 100	4-19, 4-21, 4-23, 4-25
979755-0000 ..	VOLUME BULGE 100	4-19, 4-21, 4-23, 4-25
979756-0000 ..	SHAFT	4-19, 4-21, 4-23, 4-25
979757-0000 ..	SPACER	4-19, 4-21, 4-23, 4-25
979758-0000 ..	STOP PERF 1	4-27, 4-29
979759-0000 ..	STOP PERF 2	4-31, 4-33
979760-0000 ..	SPACER	4-27, 4-29, 4-31, 4-33
979761-0000 ..	SLEEVE	4-27, 4-29, 4-31, 4-33
979763-0000 ..	CARRIER LEFT 100	4-9, 4-11
979764-0000 ..	CARRIER RIGHT 100	4-35
979765-0000 ..	CARRIER LEFT 100	4-37
979769-0000 ..	SPACER	8-19, 8-21, 8-23
979770-0000 ..	FOLDING FLAP CAM 100	4-13, 4-15
979771-0000 ..	COUNTER CAM 100	4-13, 4-15

Part No	Description	Page No
979772-0000 ..	VOLUME CAM L 100	4-57
979773-0000 ..	VOLUME CAM L WIDE 100	4-57
979774-0000 ..	VOLUME CAM R 100	4-57
979775-0000 ..	VOLUME CAM R WIDE 100	4-57
979778-0000 ..	YOKE CAM 100	3-19, 3-21
979779-0000 ..	ARM CAM 100	3-19, 3-21
979780-0000 ..	CAM SEGMENT R 100	3-19, 3-21
979781-0000 ..	CAM SEGMENT L 100	3-19, 3-21
979783-0000 ..	PLATE	8-59
979784-0000 ..	SHAFT	8-55
979788-0000 ..	SPRING HOLDER	8-19, 8-21, 8-23, 8-39, 8-41
979789-0000 ..	SPRING HOLDER	8-19, 8-21, 8-23, 8-39, 8-41
979790-0000 ..	COVER	8-19, 8-21, 8-23, 8-39, 8-41
979792-0000 ..	VOLUME BULGE	4-19, 4-21, 4-23, 4-25
979793-0000 ..	CARRIER	4-35
979794-0000 ..	CARRIER	4-37
979814-0000 ..	BRACKET	1-15
979860-0000 ..	VOLUME BULGE	4-19, 4-21, 4-23, 4-25
979861-0000 ..	VOLUME SHIM	4-19, 4-21, 4-23, 4-25
979899-0000 ..	BRACKET	7-35, 7-37, 7-39, 7-41
979931-0000 ..	VOLUME BULGE	4-19, 4-21, 4-23, 4-25
979938-0000 ..	SLIDER	2-11, 2-13
979942-0000 ..	COVER	8-31
979946-0000 ..	STEEL TUBE	8-13
979953-0000 ..	WASHER	1-143
979956-0000 ..	SOLENOID VALVE	1-9, 1-11
979960-0000 ..	SHAFT	8-31
979966-0000 ..	BRACKET	2-53
979990-0000 ..	BELT BRAKE	7-15
979991-0000 ..	BLOCK	7-15
979994-0000 ..	ARM	7-15
980002-0000 ..	BRACKET	8-37
980003-0000 ..	SHAFT	8-37
980004-0000 ..	PLUG	8-37
988436-0000 ..	SPACER SLEEVE	10-23, 10-35, 10-73
988685-0000 ..	PIN	2-27, 2-29, 2-61, 2-63, 6-5, 6-7, 8-9
1020637-0000 .	HOLDER	9-19, 9-23, 9-25
1020638-0000 .	HOLDER	9-19, 9-23, 9-25
1035587-0000 .	INDUCTOR	7-45
1035792-0000 .	E-HINGE	2-27, 2-29, 2-61, 2-63, 6-5, 6-7, 8-9
1035794-0000 .	BLOCKING PIECE	2-27, 2-29, 2-61, 2-63, 6-5, 6-7, 7-23, 7-25, 7-27, 7-29, 7-59, 8-9
1035893-0000 .	ADJUSTING SCREW	7-51, 7-53
1035895-0000 .	SHAFT	7-47
1035897-0000 .	SHAFT	7-35, 7-37, 7-39, 7-41
1036187-0000 .	T-PIPE	1-63
1036188-0000 .	SHAFT	1-41, 1-63
1036189-0000 .	SPINDLE GUIDE	1-41, 1-63
1036191-0000 .	SEAL HOLDER	1-41, 1-63
1036192-0000 .	SPACER ROD	1-41, 1-63
1036193-0000 .	CYLINDER BRACKET	1-41, 1-63
1036194-0000 .	T-PIPE	1-41, 1-63
1036443-0000 .	CONTACT UNIT	5-23, 5-25
1036588-0000 .	BRACKET	7-45
1036622-0000 .	GUIDE ROLLER	7-49
1036623-0000 .	GUIDE ROLLER	7-49
1037120-0000 .	SHAFT	7-19
1037121-0000 .	SHAFT	7-19
1037124-0000 .	HOLDER	7-19
1037572-0000 .	COVER PLATE	10-97, 10-99
1037573-0000 .	GASKET	10-97, 10-99
1037574-0000 .	COVER PLATE	10-105, 10-107, 10-109, 10-111, 10-113, 10-115, 10-117, 10-119, 10-121
1037575-0000 .	GASKET	10-105, 10-107, 10-109, 10-111, 10-113, 10-115, 10-117, 10-119, 10-121
1038016-0000 .	SPACER	7-45
1086888-0000 .	COVER	9-19, 9-23, 9-25
1091683-0000 .	SPACER	5-55
1091684-0000 .	RAIL	5-55
1091685-0000 .	RAIL	5-55
1091686-0000 .	SPACER	5-55
1091719-0000 .	BRACKET	5-55
1110391-0000 .	DOLLY	4-5, 4-7, 4-9, 4-11, 4-67, 9-39
1110530-0000 .	INDUCTOR	4-39, 4-67, 9-39
1110532-0000 .	INDUCTOR	4-39, 4-67, 9-39
1110534-0000 .	INDUCTOR	4-39, 4-67, 9-39
1110535-0000 .	INDUCTOR	4-39, 4-67, 9-39
1110820-0000 .	CUTTING RAIL	4-5, 4-7, 4-9, 4-11
1110829-0000 .	CUTTING RAIL	4-5, 4-7, 4-9, 4-11
1129274-0000 .	GUIDE LUG	2-61, 2-63, 6-5, 6-7
1129478-0000 .	GASKET	10-105, 10-107, 10-109, 10-111, 10-113, 10-115, 10-117, 10-119, 10-121
1129481-0000 .	COVERING PLATE	10-105, 10-107, 10-109, 10-111, 10-113, 10-115, 10-117, 10-119, 10-121
1129570-0000 .	LDS, LVDS TERMINAL 1	2-69
1140129-0000 .	HOLDER	2-59
1140996-0000 .	FLANGE	8-13
1143884-0000 .	COPPER BRAID	10-141, 10-143
1144059-0000 .	WIRE	5-23, 5-25

Part No	Description	Page No
1144122-0000	.REDUCTION	5-23, 5-25
1144507-0000	.BUSHING	5-13, 5-15
1144521-0000	.CLAMP	5-13, 5-15
1144943-0000	.SPACER	5-55
1195044-0000	.SPRING	5-13, 5-15
1195428-0000	.GASKET	2-5
1195454-0000	.BRACKET	5-47
1195456-0000	.SHAFT	5-47
1254027-0000	.CORNER STRIP	2-41, 2-43
1254028-0000	.FASTENING PLATE	2-41, 2-43
1254442-0000	.CABLE SERIAL	10-79
1255874-0000	.SPACER	5-59, 5-61
1255876-0200	.CHAIN TENSIONER	5-43
1255924-0000	.LABEL	1-79
1255925-0000	.COVER	1-79
1260065-0000	.BRACKET	5-63
1260068-0000	.SHAFT	5-63
1260069-0000	.ROLLER	5-63
1260070-0000	.SHAFT	5-63
1260261-0000	.T-PIPE	1-79
1260262-0000	.T-PIPE	1-79
1260263-0000	.PIPE	1-79
1260265-0000	.PIPE	1-79
1260266-0000	.PIPE	1-79
1260267-0000	.PIPE	1-79
1260268-0000	.PIPE	1-79
1260311-0000	.COVER	1-79
1260443-0000	.CLAMP HOLDER	1-79
1260476-0000	.SCREW	8-39, 8-41
1260480-0000	.PIPE	1-141
1260481-0000	.PIPE	1-141
1260486-0000	.PLATE	1-167, 1-169
1260487-0000	.PLATE	1-167, 1-169
1260489-0000	.PIPE	1-141
1260490-0000	.NUT	1-167, 1-169
1260491-0000	.NUT	1-167, 1-169
1260678-0000	.ARM	7-15
1260743-0000	.HEAT GUARD	1-35
1279044-0000	.HATCH	2-31
1279045-0000	.HATCH	2-33
1279086-0000	.LOCKING PLATE	1-123, 1-125
1279087-0000	.LOCKING PLATE	1-107, 1-109, 1-111, 1-113, 1-121
1279088-0000	.LOCKING PLATE	1-115, 1-117, 1-119
1279089-0000	.LOCKING PLATE	1-115, 1-117, 1-119
1279090-0000	.LOCKING PLATE	1-123, 1-125
1279091-0000	.LOCKING PLATE	1-107, 1-109, 1-111, 1-113
1279092-0000	.LOCKING PLATE	1-129, 1-131
1279093-0000	.LOCKING PLATE	1-123, 1-125
1279094-0000	.LOCKING PLATE	1-123, 1-125
1279095-0000	.LOCKING PLATE	1-129, 1-131
1279096-0000	.LOCKING PLATE	1-129, 1-131
1279456-0000	.LABEL	1-79
1279624-0200	.SPLICE DETECTOR	7-35, 7-37
1279701-0000	.WASHER	5-9
1279702-0000	.BRACKET	5-23, 5-25
1282309-0000	.ARM CAM 200 ML MID	3-19, 3-21
1282310-0000	.YOKE CAM 200ML MID	3-19, 3-21
1282311-0000	.CAM SEGMENT L	3-19, 3-21
1282312-0000	.CAM SEGMENT R	3-19, 3-21
1282315-0000	.VOLUME CAM LEFT	4-57
1282316-0000	.VOLUME CAM RIGHT	4-57
1282411-0000	.FLOAT	6-63
1282426-0000	.CLIP	2-5, 4-51, 4-53
1282435-0001	.CARTON STATION	5-5
1282435-0002	.CARTON STATION	5-5
1282444-0000	.CARTON STATION WITH BEVEL	5-5
1282581-0000	.BENDING ROLLER	1-21, 1-23
1282645-0000	.KNIFE	4-17
1282646-0000	.KNIFE	4-17
1282647-0000	.KNIFE	4-17
1282988-0000	.RAIL	7-35, 7-37
1282989-0000	.AXLE PIN	7-35, 7-37
1285108-0000	.COVER	10-151
1285109-0000	.NUT	10-79, 10-127, 10-129, 10-141, 10-143
1285546-0000	.ROLL	7-51, 7-53
1285580-0000	.SPRING	1-145
1286000-0000	.PIPE	2-45, 2-47
1296118-0000	.PROTECTION	6-63
1296310-0001	.CARTON STATION WITH BEVEL	5-5
1296310-0002	.CARTON STATION WITH BEVEL	5-5
1296310-0004	.CARTON STATION WITH BEVEL	5-5
1296310-0006	.CARTON STATION WITH BEVEL	5-5
1296310-0007	.CARTON STATION WITH BEVEL	5-5
1296311-0000	.CARTON STATION WITH BEVEL	5-5

Part No	Description	Page No
1296312-0000	.CARTON STATION WITH BEVEL	5-5
1296313-0000	.CARTON STATION	5-5
1296415-0000	.GASKET	5-23, 5-25
1296815-0100	.HATCH	2-3
1296849-0000	.DISCHARGE TRAY	1-43, 1-45
1296850-0000	.DISCHARGE TRAY	1-43, 1-45
1296854-0000	.PIPE	2-45, 2-47
1296855-0000	.BATH	1-21, 1-23
1296877-0100	.SEAL KIT	9-33
1296912-0000	.ROLL	1-107, 1-109, 1-111, 1-113
1296913-0000	.ROLL	1-107, 1-109, 1-111, 1-113
1296914-0000	.ROLL	1-107, 1-109, 1-111, 1-113
1296915-0000	.ROLL	1-107, 1-109, 1-111, 1-113
1317228-0000	.WASHER	5-29, 5-35
1317262-0000	.COVER	1-67, 1-69
1317526-0100	.STATION CHAIN	5-3
1317663-0000	.PIPE	1-67, 1-69
1317756-0000	.PIPE	1-67, 1-69
1317905-0000	.BRACKET	1-67, 1-69
1317914-0000	.UPPER FILLING TUBE	1-145
1317989-0000	.UPPER FILLING TUBE	1-145
1317991-0000	.SPRING	1-145
1334234-0000	.HUB	1-47, 1-61
1334256-0000	.SHAFT	7-61
1334331-0000	.FLANGE	7-35, 7-37
1334694-0000	.CONNECTION PLATE	2-45, 2-47
1334721-0000	.BLOCK	5-47
1334768-0000	.LID	1-147, 1-149
1334769-0000	.LID	1-147, 1-149
1334841-0200	.T.C.S.B. UNIT	1-67, 1-69
1346061-0000	.DRAIN CHUTE	6-39, 6-41
1346612-0000	.SHAFT	7-49, 7-61
1346746-0000	.LEVER	7-51, 7-53
1346933-0000	.BRACKET	5-47
1346988-0000	.ROLL	7-47
1348053-0000	.BRACKET	4-5, 4-7, 4-9, 4-11
1348237-0100	.AIR INLET GROUP	6-15, 6-17, 6-19
1348476-0000	.TOUCH GUARD	1-67, 1-69
1348477-0000	.TOUCH GUARD	1-141
1348636-0000	.TOUCH GUARD	1-67, 1-69
1348637-0000	.TOUCH GUARD	1-141
1348707-0101	.DISPLAY UNIT 12"	2-67
1348708-0000	.COVER PLATE	2-69
1348709-0000	.COVER PLATE	2-69
1348964-0000	.AIR DIAGRAM	6-15, 6-17, 6-19, 9-7
1349014-0000	.PAD	7-21
1349029-0100	.VALVE PANEL	6-3
1349090-0100	.FLOW METER	6-15, 6-17, 6-19
1349091-0100	.GAUGE GROUP	6-15, 6-17, 6-19
1349092-0000	.SUPPORT	6-37
1349094-0100	.VALVE PLATE	6-15, 6-17, 6-19
1349568-0000	.CONNECTION BOX	9-21, 9-27, 9-29
1350086-0200	.INSTALLATION DRAWING	9-3
1350087-0200	.DIAGRAM	9-3
1350184-0100	.PIPE WORK,AIR WATER	6-3
1350185-0000	.PIPE	6-95
1350186-0000	.PIPE	6-87
1350187-0000	.PIPE	6-87
1350188-0000	.PIPE	6-27
1350307-0000	.PIPE	2-45, 2-47
1350308-0000	.PIPE	2-45, 2-47
1350309-0000	.PIPE	2-45, 2-47
1350472-0000	.HOLDER	2-45, 2-47
1350473-0000	.HOLDER	2-45, 2-47
1350529-0100	.DOORS LEFT SIDE	6-3
1350531-0100	.DOORS RIGHT SIDE	6-3
1350674-0000	.EXTENSION	11-25
1350675-0000	.GUIDE	11-25
1350676-0000	.ROLLER	11-25
1350677-0000	.GUIDE	11-25
1350678-0000	.GUIDE	11-25
1359565-0000	.NUT	5-55
1363288-0301	.FLEXBOX TETRA BRIK	10-79
1364345-0300	.TPOP PANEL 12"	2-3
1364346-0302	.PANEL UNIT 12"	2-67
1366189-0000	.CABLE LVDS 6M	10-79
1366726-0000	.HOLDER	5-55
1366727-0000	.CLAMP	5-55
1367022-0000	.ALIGNMENT SCREW	8-5
1367184-0000	.JUMPER SETTINGS CPU	10-81
1478222-0000	.BEARING HOUSING	4-5, 4-7, 4-9, 4-11
1478223-0000	.BEARING HOUSING	4-5, 4-7, 4-9, 4-11
1478224-0000	.BEARING HOUSING	4-5, 4-7, 4-9, 4-11
1478225-0000	.BEARING HOUSING	4-5, 4-7, 4-9, 4-11

Part No	Description	Page No
1478303-0000	.TENSION SPRING	7-47
1478659-0000	.BRACKET	9-23, 9-25
1478661-0000	.CABLE SERIAL	10-79
1478717-0100	.VALVE GROUP	6-15, 6-17, 6-19
1478814-0000	.SENSOR	1-93
1484452-0000	.SHAFT	3-25
1484453-0000	.SPACER	3-25
1484454-0000	.ROCKER ARM	3-25
1484455-0000	.SPACER	3-25
1484456-0000	.SHAFT	3-25
1484457-0000	.BRACKET	3-25
1484461-0000	.SPACER	3-25
1484486-0000	.SPRING	7-15
1484791-0000	.SCALE	3-9, 3-11, 3-13, 3-15
1484792-0000	.SCALE	3-9, 3-11, 3-13, 3-15
1487430-0000	.COVER	10-97, 10-99, 10-105, 10-107, 10-109, 10-111, 10-113, 10-115, 10-117, 10-119, 10-121
1487431-0000	.GASKET	10-97, 10-99, 10-105, 10-107, 10-109, 10-111, 10-113, 10-115, 10-117, 10-119, 10-121
1487447-0100	.FUSE	10-127, 10-129
1490113-0000	.LINK HEAD	3-29, 3-31
1490114-0000	.PIN	3-29, 3-31
1490116-0000	.SPACER	3-29, 3-31
1490117-0000	.NUT	3-29, 3-31
1490118-0000	.LINK	3-29, 3-31
1490119-0000	.SHAFT	3-29, 3-31
1490120-0100	.DISCONNECTION LINK LEFT	3-3
1490133-0000	.SPACER	3-29, 3-31
1490235-0000	.VOLUME CAM	4-57
1490236-0000	.VOLUME CAM	4-57
1490237-0000	.VOLUME CAM, WIDE	4-57
1490238-0000	.VOLUME CAM, WIDE	4-57
1490239-0000	.VOLUME CAM	4-57
1490240-0000	.VOLUME CAM	4-57
1490407-0000	.WASHER	1-47
1490804-0000	.HOLDER	7-19
1490839-0000	.PIPE	1-21, 1-23
1490840-0000	.PIPE	1-21, 1-23
1490928-0000	.SHAFT	5-9
1490931-0000	.WHEEL	4-65
1490932-0000	.SHAFT	4-65
1498194-0000	.SPACER	3-29, 3-31
1498216-0000	.LID	5-23, 5-25
1498217-0000	.HEATING CHAMBER	5-23, 5-25
1498218-0000	.PIPE	5-23, 5-25
1498219-0000	.PIPE	5-23, 5-25
1498220-0000	.PIPE	5-23, 5-25
1498221-0000	.PIPE	5-23, 5-25
1498222-0000	.PLATE	5-23, 5-25
1498223-0000	.PLATE	5-23, 5-25
1498224-0000	.PLATE	5-23, 5-25
1498233-0000	.GASKET	5-23, 5-25
1498245-0000	.SUPPORTING ARM	5-43
1498748-0000	.MOUNTING PLATE	7-23, 7-25, 7-27, 7-29
1498749-0000	.DOOR	7-31
1498750-0000	.DOOR	7-31
1498751-0100	.DOORS	7-5, 7-7
1498753-0100	.MAGAZINE HOLDER	7-5, 7-7
1498756-0100	.BENDING ROLLER	7-55
1498757-0000	.FLANGE	7-9
1498758-0000	.AXLE PIN	7-9
1498759-0000	.ANGLE HOLDER	7-57
1498761-0000	.MAGAZINE HOLDER	7-9
1498762-0000	.AXLE PIN	7-23, 7-25, 7-27, 7-29
1498763-0000	.JOINT PIECE	7-57
1498764-0000	.COVER	7-23, 7-25, 7-27, 7-29
1498765-0000	.AXLE PIN	7-35, 7-37
1498766-0000	.LOWER PLATE	7-57
1498767-0000	.SIDE PIECE	7-57
1498768-0000	.LOWER PLATE	7-57
1498769-0000	.WALL	7-57
1498771-0000	.HOLDER	7-57
1498773-0000	.CANTILEVER	7-35, 7-37
1498775-0000	.BOX BRACKET	7-23, 7-25, 7-27, 7-29
1498777-0000	.GUIDE HOLDER	7-35, 7-37
1498778-0000	.SHAFT	7-35, 7-37
1498780-0000	.BACK COVER	7-59
1498819-0000	.COOLING PLATE	10-25, 10-47, 10-49, 10-51, 10-53, 10-55
1499024-0000	.BAR	7-49
1499026-0000	.SHAFT	7-49
1499027-0000	.BRACKET	7-49
1499060-0000	.HOLDER	6-63
1499061-0000	.PILLAR	6-63
1499062-0000	.PILLAR	6-63
1499371-0000	.JOINT PLATE	7-57
1499408-0000	.CLEANING PIPE	1-139

Part No	Description	Page No
1499477-0100	.WEB TUNNEL	7-3
1499480-0100	.MOUNTING PLATE	7-5, 7-7
1499481-0000	.ROLLER	7-23, 7-25, 7-27, 7-29
1499483-0000	.PANE	7-35, 7-37
1499484-0100	.TUNNEL FRAME	7-55
1499485-0000	.TRANSPORT BRACKET	7-55
1499486-0000	.TOP COVER	7-59
1499511-0000	.PANEL	7-31
1499512-0000	.PIN	7-23, 7-25, 7-27, 7-29, 7-59
1499513-0000	.NUT PLATE	7-59
1499514-0000	.E-HINGE	7-23, 7-25, 7-27, 7-29, 7-59
1499515-0000	.SHAFT	7-13
1499517-0000	.SHAFT	7-65
1499642-0101	.TPIH 2500 HORIZONTAL MOUNTING	10-161
1499899-0000	.INSULATION CLOTH	6-63
1511000-0000	.PLATE	7-49
1511001-0000	.SHAFT	7-49
1511002-0000	.HOLDER	7-49
1511003-0000	.WEIGHT	7-49
1511021-0000	.SHAFT	5-13, 5-15
1511069-0100	.TUBE FOLDING DEVICE	4-3
1511291-0000	.CURVE	5-51
1511293-0000	.BRACKET	5-51
1511294-0000	.CLEANING PIPE	5-51
1511307-0000	.ROLLER	7-65
1511308-0000	.NUT PLATE	7-57
1511310-0000	.NUT	7-57, 7-65
1511311-0000	.GLASS PANE	7-59
1511314-0000	.DAMPER BRACKET	7-59
1511315-0000	.SLIDE BLOCK	7-59
1511317-0000	.PANE	7-59
1511318-0000	.SPACER	7-59
1511319-0100	.TUNNEL COVER	7-55
1511320-0000	.STRIP	7-57
1511323-0000	.STRIP ADHESIVE	7-31
1511324-0000	.SPRING	7-59
1511403-0100	.SUPPORT ROLLER	4-3
1511404-0000	.ECCENTRIC SHAFT	4-59
1511405-0001	.BRACKET	4-59
1511405-0002	.BRACKET	4-59
1511405-0003	.BRACKET	4-59
1511405-0004	.BRACKET	4-59
1511406-0000	.BRACKET	4-59
1511407-0000	.BRACKET	4-59
1511437-0000	.BRACKET	2-27, 2-29
1511460-0000	.PIPE 1050	7-67
1511461-0000	.PIPE 1051	7-67
1511462-0000	.STRAIGHT PIPE	7-67
1511463-0000	.PIPE HOLDER	7-67
1511464-0000	.PIPE HOLDER	7-67
1511487-0000	.STUD SCREW	5-11
1511567-0000	.AIR DIAGRAM ASU	9-7
1511572-0000	.CLIP	8-25, 8-27
1511600-0000	.SPACER	1-93
1511609-0000	.COVER	6-7
1511610-0000	.COVER	6-7
1511611-0000	.GASKET	6-7
1511612-0000	.GASKET	6-7
1511613-0000	.LOCKING ARM	6-5, 6-7
1511614-0000	.LOCKING ARM	6-5
1511681-0000	.LOCKING ARM	6-7
1511683-0000	.PIPE	6-69
1511701-0000	.FILTER	6-71
1511773-0000	.CONNECTOR	6-73
1511774-0000	.PIPE	6-61
1511775-0000	.SEPARATOR	6-79, 6-81
1511779-0100	.COMPONENT PLATE	10-3, 10-5
1511780-0000	.COVER	10-151
1511781-0000	.COVER	10-151
1511782-0000	.BOX	10-151
1511783-0000	.BOX	10-151
1511784-0100	.POWER CABLE INLETS	10-85, 10-87
1511785-0100	.CONTROL CABLE INLETS	10-85, 10-87
1511786-0100	.TOWER CABLE INLETS	1-147, 1-149
1511787-0100	.STRIP APPLICATOR CABLE INLETS	10-103
1511788-0100	.POWER CONNECTOR PLATE	10-85, 10-87
1511789-0100	.CONTROL CONNECTOR PLATE	10-85, 10-87
1511790-0100	.INTERNAL DOOR PLMS	10-3, 10-5
1511791-0100	.BLIND DOOR	10-85, 10-87
1511793-0000	.CABLE	10-79
1511795-0100	.CABINET	10-3, 10-5
1511796-0100	.EXTERNAL DOOR PLMS	10-3, 10-5
1511797-0000	.DOOR	10-103
1511798-0000	.FRAME	10-103

Part No	Description	Page No
1511799-0100	.EXTERNAL DOOR SPARE FUSES	10-3, 10-5
1511800-0100	.POWER SIDE,BOTTOM TERMINAL BLOCK	10-13, 10-15, 10-17
1511801-0100	.SOLID STATE RELAY RAIL 1	10-13, 10-15, 10-17
1511802-0100	.LOGIC BOTTOM TERMINAL BLOCK	10-13, 10-15, 10-17
1511803-0100	.RELAYS RAIL	10-13, 10-15, 10-17
1511804-0100	.LOGIC SIDE,TOP TERMINAL BLOCK	10-13, 10-15, 10-17
1511805-0100	.RACK	10-13, 10-15, 10-17
1511806-0100	.X300	10-151
1511808-0100	.FREQUENCY CONVERTER EARTH BAR	10-13, 10-15, 10-17
1511810-0100	.INTERNAL DOOR FUSES	10-3, 10-5
1511811-0100	.REAR UPPER CONTROL DOOR	10-3, 10-5
1511812-0000	.DOOR	10-139
1511813-0000	.WINDOW	10-139
1511814-0100	.INTERNAL DOOR TERMOREGULATORS	10-3, 10-5
1511815-0000	.DOOR	10-141, 10-143
1511817-0000	.CABLE DUCT	10-141, 10-143
1511819-0100	.FRONT UPPER CONTROL DOOR	10-3, 10-5
1511820-0100	.UPPER DOOR POWER	10-3, 10-5
1511821-0100	.POWER BOX	10-3, 10-5
1511822-0100	.FUSES RAIL	10-127, 10-129
1511823-0100	.OVERLOAD RAIL	10-127, 10-129
1511824-0100	.LEVEL RELAYS RAIL	10-13, 10-15, 10-17
1511825-0100	.PLC RACK 1	10-13, 10-15, 10-17
1511826-0100	.PLC RACK 2	10-13, 10-15, 10-17
1511827-0100	.PLC RACK 3	10-13, 10-15, 10-17
1511828-0100	.X008	10-13, 10-15, 10-17
1511829-0100	.POWER SIDE,TOP TERMINAL BLOCK	10-13, 10-15, 10-17
1511830-0100	.EXTERNAL DOOR TERMOREGULATORS	10-3, 10-5
1511831-0000	.PLATE	10-89, 10-91
1511832-0000	.PLATE	10-105, 10-107, 10-109, 10-111, 10-113, 10-115, 10-117, 10-119, 10-121
1511833-0000	.GASKET	10-105, 10-107, 10-109, 10-111, 10-113, 10-115, 10-117, 10-119, 10-121
1511834-0100	.CONTACTORS RAIL	10-13, 10-15, 10-17
1511835-0000	.PLATE	1-151, 1-153
1511836-0000	.GASKET	1-151, 1-153
1511837-0000	.PLATE	10-97, 10-99
1511838-0000	.GASKET	10-97, 10-99
1511839-0000	.PLATE	10-101
1511840-0000	.GASKET	10-101
1511841-0000	.GASKET	10-89, 10-91
1511842-0000	.PLATE	10-93, 10-95
1511843-0000	.GASKET	10-93, 10-95
1511887-0000	.DISTRIBUTOR	5-31
1512123-0000	.CLEANING PIPE	1-139
1512128-0000	.PLUG	5-27
1512129-0000	.BRACKET	5-27
1512133-0000	.STOP	5-27
1512283-0000	.CONNECTION BOX	7-33
1512284-0100	.ANGLE ENCODER	3-3
1512286-0100	.CRANK	3-3
1512304-0100	.HYDRAULIC SYSTEM	6-3
1512305-0100	.MOTORIZED DESIGN CONTROL SYSTEM, LEFT	4-3
1512306-0100	.MOTORIZED DESIGN CONTROL SYSTEM, RIGHT	4-3
1512322-0000	.COPPER BRAID	10-39, 10-41, 10-43
1512350-0000	.PLATFORM	2-41, 2-43
1512351-0000	.PLATFORM	2-41, 2-43
1512352-0000	.RAIL	7-33
1512353-0000	.PIPE	6-95
1512354-0000	.BRACKET	3-27
1512355-0000	.ECCENTRIC SHAFT	3-27
1512356-0000	.CONNECTION DEVICE	1-99, 1-101
1512377-0000	.COVER	1-67, 1-69
1512411-0000	.PIPE	1-67, 1-69
1512440-0000	.BRACKET	5-51
1512442-0000	.CONNECTING PIPE	5-43
1512443-0000	.PLATE CHOKE	5-47
1512444-0000	.GUIDE RAIL	5-47
1512448-0000	.PIPE CONNECTION	5-43
1512450-0001	.TEMPLATE	11-15
1512450-0002	.TEMPLATE	11-15
1512450-0003	.TEMPLATE	11-15
1512450-0004	.TEMPLATE	11-15
1512453-0001	.TEMPLATE	11-9
1512453-0002	.TEMPLATE	11-9
1512453-0003	.TEMPLATE	11-9
1512453-0004	.TEMPLATE	11-9
1512453-0005	.TEMPLATE	11-9
1512453-0006	.TEMPLATE	11-9
1512453-0007	.TEMPLATE	11-9
1512453-0008	.TEMPLATE	11-9
1512453-0009	.TEMPLATE	11-9
1512453-0010	.TEMPLATE	11-9
1512453-0011	.TEMPLATE	11-9
1512486-0000	.MACHINE BODY	6-57
1512487-0000	.PLATE	6-39, 6-41

Machine Type Group Description Page No

Part No	Description	Page No
1512488-0000	.HOLDER	6-35
1512489-0000	.LITTLE FRAME	6-57
1512490-0000	.PLATE	6-39, 6-41
1512583-0000	.ROLLER	7-13, 7-15, 7-23, 7-25, 7-27, 7-29, 7-35, 7-37, 7-43
1512631-0000	.CHECKER PLATE	2-41, 2-43
1512632-0000	.CHECKER PLATE	2-41, 2-43
1512633-0000	.CHECKER PLATE	2-41, 2-43
1512635-0000	.RAILING	2-55
1512636-0000	.RAILING	2-55
1512637-0000	.RAILING	2-55
1512638-0000	.RAILING	2-55
1512640-0000	.TOE PLATE	2-41, 2-43
1512641-0000	.TOE PLATE	2-41, 2-43
1512642-0000	.TOE PLATE	2-41, 2-43
1512643-0000	.TOE PLATE	2-41, 2-43
1512660-0100	.PLATFORM	2-3
1512666-0000	.TOE PLATE	2-41, 2-43
1512667-0000	.CONNECTION BOX	2-9
1512673-0000	.VALVE	6-71
1512805-0000	.CABINET (SMALL)	6-73
1512806-0000	.PIPE	6-27
1512826-0000	.DOOR	6-5
1512827-0000	.DOOR	6-5
1512828-0000	.DOOR	6-5
1512829-0000	.DOOR	6-7
1512830-0000	.DOOR	6-7
1512831-0000	.DOOR	6-7
1512840-0000	.BRACKET	2-9
1512845-0000	.CHECKER PLATE	2-41, 2-43
1512846-0000	.CHECKER PLATE	2-41, 2-43
1512847-0000	.BRACKET	2-41, 2-43
1512848-0000	.BRACKET	9-15
1512851-0000	.COVER	2-41, 2-43
1517058-0000	.GASKET	6-71
1517065-0100	.WEB GUIDE	7-55
1517066-0000	.PIVOT ARM	7-61
1517067-0000	.SPRING HOLDER	7-61
1517068-0000	.PILLAR	7-61
1517069-0000	.CLAMP PLATE	7-61
1517070-0000	.BEARING SEAT	7-61
1517071-0000	.BOW CLAMP	7-61
1517072-0000	.PLATE	6-9
1517073-0000	.PLATE	6-9
1517074-0000	.PLATE	6-9
1517075-0000	.PLATE	6-9
1517076-0000	.PLATE	6-9
1517077-0000	.PLATE	6-9
1517181-0000	.GASKET	6-95
1517182-0000	.SPACER	6-5, 6-7
1517230-0000	.BRACKET	3-7
1517231-0000	.RUBBER SHIM	3-7
1517248-0000	.BRACKET	2-39, 2-51
1517249-0000	.BRACKET	2-41, 2-43
1517252-0000	.BOLT Ø20H7	6-57
1517268-0000	.CABLE TRENCH	1-147, 1-149
1517269-0000	.CABLE TRENCH	1-147, 1-149
1517270-0000	.LID	1-147, 1-149
1517271-0000	.LID	1-147, 1-149
1517293-0000	.ROLLER	7-23, 7-25, 7-27, 7-29
1517464-0000	.SIGN	7-23, 7-25, 7-27, 7-29
1517484-0000	.PIPE	6-95
1517486-0000	.PIPE	6-95
1517487-0000	.PIPE	6-95
1517488-0000	.PIPE	6-95
1517489-0000	.PIPE	6-95
1517490-0000	.INFERIOR HOLDER	6-95
1517491-0000	.INFERIOR HOLDER	6-95
1517492-0000	.GASKET	6-71
1517493-0000	.PIPE	1-95, 1-97
1517494-0000	.PIPE	1-95, 1-97
1517495-0000	.PIPE	1-95, 1-97
1517498-0000	.SIGN FLEW-METER AIR	6-39, 6-41
1517499-0000	.SIGN FLEW-METER AIR	6-39, 6-41
1517500-0000	.SIGN FLEW-METER AIR	6-39, 6-41
1517501-0000	.SIGN FLEW-METER AIR	6-39, 6-41
1517504-0000	.AIR NOZZLE	5-23, 5-25
1517505-0000	.AIR NOZZLE	5-23, 5-25
1517506-0000	.SHIM	5-9
1517510-0000	.PIPE	5-53
1517517-0000	.TEMPLATE	11-11
1517518-0001	.CLAMP	11-11
1517518-0002	.CLAMP	11-11
1517518-0003	.CLAMP	11-11
1517519-0000	.PLATE	5-31

Part No	Description	Page No
1517523-0000	.BLOCK	5-51
1517534-0000	.RUNNER RING	7-35, 7-37
1517535-0000	.STEERING	7-35, 7-37
1517651-0100	.SOLID STATE RELAY RAIL 2	10-13, 10-15, 10-17
1517652-0100	.SOLID STATE RELAY RAIL 3	10-13, 10-15, 10-17
1517653-0100	.EXTERNAL DOOR FUSES	10-3, 10-5
1517654-0000	.DELIVERED DESIGN	10-157
1517659-0100	.MODEM	10-79
1517663-0000	.DOOR	10-155
1517664-0000	.FRAME	10-123, 10-125, 10-155, 10-157
1517665-0000	.WINDOW	10-155
1517667-0000	.DOOR	10-125, 10-157
1517671-0000	.DOOR	10-147
1517672-0000	.DOOR	10-149
1517675-0000	.SPACER	10-25, 10-47, 10-49, 10-51, 10-53, 10-55
1517676-0000	.SPACER	1-151, 1-153, 10-105, 10-107, 10-109, 10-111, 10-113, 10-115, 10-117, 10-119, 10-121
1517677-0100	.COOLER	10-3, 10-5
1517678-0100	.TPIH	10-3, 10-5
1517694-0000	.END BLOCK	10-85, 10-87
1517695-0000	.WELDED CABINET	10-85, 10-87
1517697-0000	.PROTECTION	10-85, 10-87
1517698-0000	.PROTECTION	10-85, 10-87
1517699-0000	.SUPPORT	10-85, 10-87
1517700-0000	.EDGE GUIDE	10-85, 10-87
1517751-0000	.SHAFT	7-21
1517753-0000	.ADJUSTING NUT	7-61
1517983-0000	.BRACKET	3-27
1517984-0000	.SHAFT	3-27
1517985-0000	.SETTING RING	3-27
1517986-0000	.SCREW BUSHING	3-27
1519086-0100	.LAMP	2-3
1519117-0100	.VOLUME ADJUSTER	4-3
1519118-0100	.VOLUM CURVE PIECE	4-55
1519133-0000	.JOINT	4-57
1519134-0000	.JOINT	4-57
1519215-0000	.BEARING HOUSING	4-5, 4-7
1519216-0000	.CARRIER RULER	4-5, 4-7
1519219-0000	.CARRIER	4-5, 4-7
1519307-0000	.AIR NOZZLE	5-23, 5-25
1519308-0000	.AIR NOZZLE	5-23, 5-25
1519313-0000	.AIR NOZZLE	5-23, 5-25
1519314-0000	.AIR NOZZLE	5-23, 5-25
1519318-0000	.AIR NOZZLE	5-23, 5-25
1519319-0000	.AIR NOZZLE	5-23, 5-25
1519374-0001	.CARRIER	4-19, 4-21, 4-23, 4-25
1519374-0002	.CARRIER	4-19, 4-21, 4-23, 4-25
1519375-0001	.SHAFT	4-19, 4-21, 4-23, 4-25
1519376-0000	.AXLE PIN	4-19, 4-21, 4-23, 4-25
1519377-0000	.WASHER	4-19, 4-21, 4-23, 4-25
1519380-0000	.PIPE	1-141
1519381-0000	.PIPE	1-141
1519382-0000	.PIPE	1-141
1519383-0000	.PIPE	1-141
1519384-0000	.PIPE	1-141
1519385-0000	.PIPE	1-141
1519386-0000	.PIPE	1-141
1519387-0000	.PIPE	1-141
1519388-0000	.PIPE	1-141
1519389-0000	.TANK	6-69
1519390-0000	.PIPE(FOR 60HZ)	6-83, 6-85
1519391-0000	.PIPE BEND	6-83, 6-85
1519392-0000	.SCRUBBER	6-83, 6-85
1519393-0000	.PLATE	6-83, 6-85
1519394-0000	.PIPE	6-83, 6-85
1519401-0000	.SUCTION PIPE	1-133
1519402-0000	.SUCTION PIPE	1-133
1519403-0000	.SUCTION PIPE	1-133
1519416-0000	.BOTTOM PLATE	5-39
1519417-0000	.STAIR	5-41
1519418-0000	.PLATE	5-41
1519421-0000	.BUSHING	5-41
1519422-0000	.BUSHING	5-41
1519423-0000	.SUPPORT	5-41
1519424-0000	.SUPPORT	5-41
1519425-0000	.SPACER	5-41
1519426-0100	.STAIR	5-39
1519427-0100	.VOLUME FLAP	4-3
1519482-0000	.PIPE	1-43, 1-45
1519483-0000	.HEATING PIPE	1-43, 1-45
1519484-0000	.SUPPORT	1-43, 1-45
1519576-0000	.PIPE	6-95
1519577-0000	.PIPE	6-95
1519601-0000	.BUSHING	1-43, 1-45
1519602-0100	.RAILING	2-3

Part No	Description	Page No
1519663-0100	.PIPE WORK-HYDRAULIC	6-3
1519664-0000	.PIPE	6-97
1519665-0000	.PIPE	6-97
1519666-0000	.PIPE	6-97
1519667-0000	.PIPE	6-97
1519668-0000	.PIPE HOLDER	6-97
1519669-0000	.PIPE HOLDER	6-97
1519670-0000	.PIPE HOLDER	6-97
1519671-0000	.PIPE HOLDER	6-97
1519758-0000	.CABLE DUCT	6-11
1519759-0000	.CABLE DUCT	6-11
1519760-0000	.CABLE DUCT	6-11
1519761-0000	.CABLE DUCT	6-11
1519762-0000	.CABLE DUCT	6-11
1519763-0000	.CABLE DUCT	6-11
1519764-0000	.SPACER	6-11
1519765-0001	.SUPPORT	6-11
1519765-0002	.SUPPORT	6-11
1519934-0000	.PIPE	1-37
1519936-0000	.PIPE	1-67, 1-69
1519937-0000	.REGULATOR BODY	1-93
1519938-0000	.CLEANING PIPE	1-139
1519952-0000	.DOLLY	9-3
1519969-0000	.PIPE	1-67, 1-69
1519997-0000	.CONNECTION PLATE	6-95
1520577-0001	.DOLLY	4-5, 4-7, 4-9, 4-11, 4-67, 9-39
1520972-0000	.TPO-BAR	9-3
1523049-0000	.PIPE	1-135
1523050-0000	.PIPE	1-135
1523051-0000	.PIPE	1-135
1523052-0000	.PIPE	1-135
1523053-0000	.PIPE	1-135
1523057-0000	.AP-VALVE-BODY (51-38)	1-81
1523058-0000	.TANK	6-63
1523059-0000	.HOLDER	6-63
1523060-0000	.FILLER TUBE	6-63
1523061-0000	.FLANGE	6-67
1523062-0000	.FILLING PIPE	6-71
1523063-0000	.TUBE	6-71
1523064-0000	.RETURN PIPE	6-71
1523065-0000	.PLATE	6-71
1523066-0000	.GASKET	6-71
1523067-0000	.PLATE	6-71
1523068-0000	.PIPE	6-71
1523069-0000	.PIPE CONNECTION	6-71
1523151-0000	.BRACKET	3-33
1523152-0000	.ANGLE ENCODER	3-33
1523158-0001	.SHIM	1-49, 1-51
1523158-0002	.SHIM	1-49, 1-51
1523158-0003	.SHIM	1-49, 1-51
1523210-0100	.MOTOR	3-3
1523211-0000	.WASHER	3-7
1523215-0000	.TIMING PULLEY	3-7
1523222-0000	.PLATE	1-145
1523223-0000	.NUT	1-145
1523224-0000	.NUT	1-145
1523225-0000	.FASTENING PLATE	1-145
1523228-0000	.FLANGE	1-47
1523314-0000	.CREASE BAR	8-39, 8-41
1523315-0000	.SPACER	8-39, 8-41
1523364-0000	.LID	1-137
1523365-0000	.PIPE	1-137
1523366-0000	.PIPE	1-137
1523383-0000	.CONNECTION PLATE	2-25
1523384-0000	.CONNECTION PLATE	2-25
1523431-0000	.PIPE	2-25
1523432-0000	.PIPE	2-25
1523433-0000	.PIPE	2-25
1523434-0000	.PIPE	2-25
1523435-0000	.FRAME	10-79
1523436-0000	.DOOR	10-79
1523437-0000	.HINGE	10-79, 10-127, 10-129, 10-141, 10-143
1523438-0000	.HINGE	10-123, 10-125, 10-155, 10-157
1523439-0000	.SPACER	10-79, 10-141, 10-143
1523440-0000	.SPACER	10-79, 10-127, 10-129, 10-141, 10-143
1523441-0000	.SPACER SHEET	10-123, 10-125, 10-155, 10-157
1523442-0000	.SPACER SHEET	10-123, 10-125, 10-155, 10-157
1523443-0000	.COVER	10-141, 10-143
1523444-0000	.SPACER	10-141, 10-143
1523445-0100	.SOLID STATE RELAY RAIL 4	10-13, 10-15, 10-17
1523446-0100	.SOLID STATE RELAY RAIL 5	10-13, 10-15, 10-17
1523448-0000	.FRAME	10-159
1523449-0000	.SLIDE	10-159
1523450-0000	.SLIDE	10-159

Part No	Description	Page No
1523451-0000	.SLIDE	10-159
1523452-0000	.SUPPORT	10-159
1523453-0000	.SUPPORT	10-159
1523454-0000	.SCREW	10-159
1523455-0000	.FRAME	10-161
1523456-0000	.SLIDE	10-161
1523459-0000	.SUPPORT	10-85, 10-87
1523463-0000	.PLATE	10-13, 10-15, 10-17
1523464-0000	.GASKET	10-85, 10-87
1523494-0000	.PILLAR	1-49, 1-51
1523505-0000	.SUPPORT	5-35
1523754-0000	.MACHINE BODY	2-5
1523755-0000	.COVERING PLATE	2-5
1523756-0000	.COVER	2-5
1523757-0000	.PLATE	2-5
1523758-0000	.PLATE	2-5
1523759-0000	.COVER	2-5
1523760-0000	.FRONT PLATE	2-5
1523828-0000	.SPACER	3-19, 3-21
1523829-0100	.DISTRIBUTOR BLOCK	2-17, 2-19, 2-21
1523832-0000	.HOSE HOLDER	2-25
1523886-0000	.SPACER PLATE	2-25
1523887-0000	.SPACER PLATE	2-25
1523924-0000	.CATCH	4-5, 4-7
1523947-0000	.EARTH BAR	10-35
1523948-0000	.EARTH BAR	10-73
1523957-0000	.SPACER	10-123, 10-125, 10-155, 10-157
1523960-0000	.SPACER	10-85, 10-87
1523961-0100	.PLATE	10-3, 10-5
1523963-0000	.SUPPORT PLATE	10-163
1523968-0000	.HANDLE	10-79, 10-127, 10-129, 10-141, 10-143
1523969-0000	.DOOR	10-123
1523971-0000	.CONNECTION BOX	10-123, 10-125
1523972-0100	.ELECTRICAL MATERIALS	10-3, 10-5
1523973-0000	.FRAME	10-159
1523974-0000	.SUPPORT	10-85, 10-87
1524018-0000	.TIMING BELT PULLEY	3-5
1524319-0100	.CABLE DUCT	6-3
1524477-0100	.CUTTING TABLE	7-5, 7-7
1524481-0000	.SEALING BLOCK	7-21
1524653-0000	.BRACKET	1-59
1524654-0000	.ARM	1-59
1524655-0000	.PROTECTION PLATE	1-59
1524662-0000	.AIR NOZZLE	1-39
1524663-0000	.TUBE 55	1-99, 1-101
1524664-0000	.TUBE 861	1-99, 1-101
1524665-0000	.TUBE 860	1-99, 1-101
1524666-0000	.TUBE 230	1-99, 1-101
1524667-0000	.TUBE 231	1-99, 1-101
1524669-0000	.PIPE	1-99, 1-101
1524670-0000	.PIPE	1-99, 1-101
1524671-0000	.TUBE 210	1-99, 1-101
1524672-0000	.TUBE 211	1-99, 1-101
1524673-0000	.BRACKET	1-99, 1-101
1524674-0000	.REDUCTION SLEEVE	1-99, 1-101
1524780-0000	.PLATE	1-61
1524805-0000	.PLATE	1-61
1524814-0000	.BRACKET	1-177
1524829-0000	.PLATE	1-177
1524830-0000	.SHAFT	1-177
1532440-0000	.FOLDING FLAP	4-5, 4-7
1532441-0000	.FOLDING FLAP	4-5, 4-7
1532583-0000	.PIPE	1-79
1532584-0100	.MACHINE BODY	2-3
1538039-0000	.CURVE	4-49
1538089-0000	.PLATE	6-9
1538096-0000	.CALENDER ROLLER	1-57
1538097-0000	.CALENDER ROLLER	1-57
1538098-0000	.CLAMP	1-57
1538103-0000	.FORK	1-57
1538104-0000	.GUIDE	1-57
1538107-0000	.SHAFT	7-61
1538109-0000	.COMPRESSION SPRING	4-17
1538212-0000	.FUSE BOARD	10-157
1538219-0000	.SWITCH BRACKET	7-23, 7-25, 7-27, 7-29
1538473-0000	.SEALING BLOCK	7-19
1538758-0000	.SPACER	6-39, 6-41
1538868-0000	.BRACKET	2-65, 6-5, 6-7
1538906-0000	.PIPE	6-89
1538907-0000	.PIPE	6-89
1538908-0000	.PIPE	6-89
1538924-0000	.RAILING	2-55
1538942-0000	.CARRIER	4-19, 4-21, 4-23, 4-25
1538948-0000	.ECCENTRIC	4-55

Part No	Description	Page No
1538949-0000	.ECCENTRIC	4-55
1539101-0000	.BRACKET	4-57
1539102-0000	.ARM	4-57
1539103-0000	.ARM	4-57
1539104-0000	.SPINDLE	4-57
1539105-0000	.BOX	4-55
1539106-0000	.SHAFT	4-55
1539107-0000	.TIMING BELT	4-55
1539108-0000	.TIMING BELT PULLEY	4-55
1539109-0000	.SHAFT	4-55
1539110-0000	.LID	4-55
1539111-0000	.SUPPORT	4-55
1539112-0000	.SUPPORT	4-55
1539113-0000	.COVER	2-49
1539237-0000	.PIPE	1-67, 1-69
1539238-0000	.PIPE	1-67, 1-69
1539248-0001	.TIMING BELT	3-23
1539248-0002	.TIMING BELT	3-23
1539248-0003	.TIMING BELT	3-23
1539248-0005	.TIMING BELT	3-23
1539250-0000	.SPACER	1-99, 1-101
1539256-0000	.TOOTHED PULLEY	5-67
1539260-0000	.TOOTHED PULLEY	5-67
1539261-0000	.WASHER	5-11, 5-67
1539265-0100	.OUTFEED UNIT	5-3
1539266-0000	.CAM	5-63
1539267-0000	.DRUM	5-63
1539268-0000	.CARRIER	5-63
1539296-0000	.PIVOT ARM	5-27
1539301-0000	.TOOTHED PULLEY	5-11
1539302-0000	.SPACER	5-11
1539332-0000	.PIPE	6-89
1539596-0000	.PIPE	1-17
1539597-0000	.T-PIECE	1-15
1539599-0100	.HEAT EXCHANGER	1-7
1539600-0000	.SUPPORT	1-19
1539601-0000	.CLEANING PIPE	1-7
1539602-0100	.CONNECTION SYSTEM	1-7
1539603-0000	.PIPE	1-17
1539604-0000	.PIPE	1-7
1539605-0000	.COOLING PIPE	1-7
1539606-0002	.SPRAY NOZZLE	1-15
1539606-0003	.SPRAY NOZZLE	1-15
1539606-0004	.SPRAY NOZZLE	1-15
1539606-0005	.SPRAY NOZZLE	1-15
1539766-0100	.DISCONNECTION LINK RIGHT	3-3
1539789-0000	.BLOCK	5-35
1539792-0000	.PIN	5-35
1539920-0200	.PENDULUM	1-3, 1-5
1539947-0000	.PIPE	5-51
1539948-0000	.SHAFT	5-49
1539949-0100	.FIXING UNIT	5-3
1539950-0000	.WASHER	5-49
1539951-0000	.HOUSE	5-49
1539953-0000	.PROTECTIVE COVER	5-43
1539956-0000	.PLATE	5-65
1539957-0000	.PLATE	5-43
1539960-0000	.MACHINE BODY	5-39
1539965-0000	.PLATE	5-49
1539966-0000	.BRACKET	5-23, 5-25
1539967-0000	.GASKET	5-23, 5-25
1539968-0100	.FLAP HEATER	5-3
1539969-0100	.GUIDE	5-3
1539970-0100	.FOLDING BAR	5-3
1539972-0000	.PIPE	5-29
1539975-0100	.FORMING UNIT	5-3
1539976-0000	.GUIDE	5-35
1539977-0000	.GUIDE	5-35
1539995-0100	.CANTILEVER	5-3
1539996-0000	.SHAFT	1-179
1539997-0000	.AXLE SUPPORT	1-61
1548000-0100	.FRAME	5-3
1548003-0000	.LINK	1-177
1548004-0001	.LINK	1-177
1548004-0002	.LINK	1-177
1548005-0000	.SHAFT	1-177
1548006-0000	.ADJUSTING SCREW	1-177
1548010-0200	.PENDULUM ROLLER	1-177
1548052-0000	.ROLLER	1-179
1548053-0000	.COVER	1-179
1548056-0000	.AXLE SUPPORT	1-47
1548059-0000	.AXLE SUPPORT	1-177
1548141-0000	.WASHER	1-177
1548142-0000	.BUSHING	1-177

Part No	Description	Page No
1548143-0000	.END PLATE	1-61
1548147-0000	.PLATE	1-177
1548148-0000	.PLATE	1-177
1548152-0000	.PIN	1-177
1548155-0000	.COAXIAL CABLE	4-51, 4-53
1548156-0000	.PIPE	6-95
1548225-0000	.CLAMP	1-177
1548275-0000	.SEAL COVER	1-47
1548276-0000	.LEVER	1-177
1548277-0000	.FLANGE	1-177
1548284-0000	.ROLLER	1-47
1548313-0000	.FORCE LIMITING DEVICE	3-29, 3-31
1548315-0000	.PIPE	1-135
1548316-0000	.PIPE	6-71
1548332-0000	.PRESSURE FLANGE	1-181
1548532-0000	.LEVER	1-177
1548576-0100	.PIPE WORK	2-3
1548833-0000	.BRACKET	1-137
1548942-0000	.CUTTING JAW	4-5, 4-7
1549182-0000	.CARRIER	5-63
1549183-0000	.CARRIER	5-63
1549184-0000	.CARRIER	5-63
1549186-0000	.CARRIER	5-63
1549187-0000	.CARRIER	5-63
1549190-0000	.CARRIER	5-63
1549191-0000	.CARRIER	5-63
1549193-0000	.CARRIER	5-63
1549294-0000	.MACHINE BODY	8-5
1549295-0100	.MACHINE BODY	8-3
1549296-0100	.COVER PLATE	8-3
1549297-0000	.REEL HOLDER	8-11
1549298-0000	.REEL HOLDER	8-11
1549299-0000	.PLATE	8-9
1549300-0100	.PAPER MAGAZINE	8-3
1549302-0000	.SHAFT	8-13
1549303-0000	.PLATE	8-13
1549304-0000	.ARM	8-13
1549305-0100	.COVER	8-3
1549306-0000	.COVER	8-11
1549307-0000	.BRACKET	8-13
1549474-0000	.SHAFT	8-13
1549475-0000	.BRACKET	8-13
1549476-0000	.PLATE	8-11
1549477-0000	.PLATE	8-11
1549478-0000	.PLATE	8-11
1549479-0000	.PLATE	8-11
1549480-0100	.ELECTRIC EQUIPMENT	8-3
1549481-0000	.REEL HOLDER	8-11
1549482-0000	.REEL HOLDER	8-11
1549483-0000	.PLATE	8-9
1549484-0000	.PLATE	8-9
1549485-0000	.PLATE	8-9
1549486-0000	.PLATE	8-9
1549487-0000	.PLATE	8-9
1549488-0000	.PLATE	8-9
1549489-0000	.BRACKET	8-9
1549490-0000	.DOOR	8-9
1549491-0000	.REEL HOLDER	8-11
1549492-0000	.HOLDER	8-11
1549493-0000	.HANDSPIKE	8-13
1549540-0000	.BRACKET	4-65
1549581-0100	.VOLUME FLAP	4-3
1549584-0100	.PAPER BRAKE	8-19, 8-21, 8-23, 8-39, 8-41
1549603-0100	.LAMP	2-3
1549608-0000	.GLASS PANE	2-57
1558124-0000	.FORK HEAD	4-65
1558125-0000	.MOUNTING SHEET	6-89
1558126-0000	.PIPE	4-65
1558127-0000	.PIPE	4-65
1558128-0100	.NOZZLE	1-157, 1-159
1558129-0000	.BRACKET	4-65
1558130-0000	.BRACKET	4-65
1558190-0001	.HOLDER	5-35
1558190-0002	.HOLDER	5-35
1558190-0003	.HOLDER	5-35
1558190-0004	.HOLDER	5-35
1558190-0005	.HOLDER	5-35
1558190-0006	.HOLDER	5-35
1558190-0007	.HOLDER	5-35
1558190-0008	.HOLDER	5-35
1558190-0009	.HOLDER	5-35
1558190-0010	.HOLDER	5-35
1558190-0011	.HOLDER	5-35
1558191-0000	.PLATE	5-35

Part No	Description	Page No
1558194-0001	.FOLDING BAR	5-37
1558194-0002	.FOLDING BAR	5-37
1558194-0003	.FOLDING BAR	5-37
1558195-0001	.FOLDING BAR	5-37
1558195-0002	.FOLDING BAR	5-37
1558195-0003	.FOLDING BAR	5-37
1558196-0000	.PIPE	5-29
1558197-0000	.BLOCK	5-35
1558198-0000	.BLOCK	5-35
1558199-0000	.BLOCK	5-35
1558200-0000	.PIPE	5-29
1558201-0000	.PIPE	5-29
1558202-0001	.PRESSURE PLATE	5-35
1558202-0002	.PRESSURE PLATE	5-35
1558202-0003	.PRESSURE PLATE	5-35
1558202-0004	.PRESSURE PLATE	5-35
1558203-0000	.PIPE	5-29
1558204-0000	.BLOCK	5-35
1558205-0000	.BLOCK	5-35
1558206-0000	.BLOCK	5-35
1558207-0000	.BLOCK	5-35
1558208-0000	.BLOCK	5-35
1558313-0000	.SHAFT	8-11
1558314-0000	.BRACKET	8-11
1558315-0000	.BRACKET	8-63
1558316-0000	.BRACKET	8-63
1558317-0000	.BRACKET	8-57
1558318-0100	.CONNECTION BOX	8-63
1558319-0000	.BUSHING	8-13
1558320-0100	.PLATFORM	8-5
1558321-0000	.COVER PLATE	8-7
1558322-0000	.JOINT BOLT	8-7
1558403-0000	.DISC	1-61
1558442-0000	.UPPER FILLING TUBE	1-145
1558443-0000	.FILLING PIPE	1-181
1558444-0000	.PRESSURE FLANGE	1-181
1558446-0000	.PRESSURE FLANGE	1-181
1558892-0000	.CONNECTION BOX	7-17
1558897-0100	.HEATING DEVICE	7-5, 7-7
1558949-0000	.PLATE	2-49
2500050-0000	.GLASS	8-9
2500214-0100	.PIPE WORK	2-41, 2-43
2500215-0000	.CABLE DUCT	2-45, 2-47
2500216-0000	.CABLE DUCT	2-45, 2-47
2500217-0000	.BRACKET	2-45, 2-47
2500218-0000	.CABLE TRENCH	2-45, 2-47
2500233-0100	.CONVEYOR	5-3
2500234-0000	.PLATE	5-55
2500235-0000	.PLATE	5-55
2500236-0000	.RAIL	5-55
2500237-0000	.RAIL	5-55
2500241-0000	.BLOCK	5-35
2500242-0000	.BLOCK	5-35
2500243-0000	.PIPE	5-29
2500244-0000	.PIPE	5-29
2500245-0000	.PIPE	5-29
2500246-0000	.PIPE	5-29
2500247-0000	.PIPE	5-29
2500248-0000	.PIPE	5-29
2500259-0000	.BRACKET	2-49
2500260-0000	.ARM	2-49
2500261-0000	.FIXING RING	2-49
2500293-0000	.PLATE	1-161
2500294-0000	.PIPE	1-161
2500332-0100	.PIVOT ARM	2-41, 2-43
2500587-0100	.SUSPENSION ARM	8-49
2500593-0000	.BOW CLAMP	8-57
2501265-0000	.CONNECTION BOX	8-65
2501266-0000	.RAIL	8-65
2501362-0000	.CLAMP RING	8-13
2501385-0000	.SHAFT	8-57
2501465-0001	.CONNECTION BOX	9-29
2501465-0100	.CONNECTION BOX	9-17
2501466-0001	.CONNECTION BOX	9-27
2501466-0100	.CONNECTION BOX	9-17
2501471-0001	.PACK COUNTER	9-25
2501471-0100	.COUNTER	9-17
2501472-0001	.PACK COUNTER	9-23
2501472-0100	.COUNTER	9-17
2501528-0100	.PLMS KIT	9-3
2501542-0000	.AXLE SUPPORT	1-47
2501547-0100	.QUEUE GUARD	9-17
2501613-0000	.SHAFT	8-13
2501835-0000	.SHAFT	8-59

Part No	Description	Page No
2501836-0100	.SPLICING DEVICE	8-3
2502192-0000	.CARRIER	5-63
2502194-0000	.CARRIER	5-63
2502197-0000	.PIPE	1-99, 1-101
2502198-0000	.PIPE	1-99, 1-101
2502199-0000	.PIPE	1-99, 1-101
2502424-0200	.LUBRICATION	5-13, 5-15
2504445-0000	.PLATE	2-11, 2-13
2504449-0000	.INSERT	6-11, 10-89, 10-91
2504952-0000	.PROTRACTOR	3-19, 3-21
2505236-0000	.PLATFORM	2-41, 2-43
2505282-0000	.CHECKER PLATE	2-41, 2-43
2506319-0000	.HEAD PLATE	2-11, 2-13
2506321-0000	.HEAD PLATE	2-11, 2-13
2506322-0000	.HEAD PLATE	2-11, 2-13
2506323-0000	.HEAD PLATE	2-11, 2-13
2506324-0000	.HEAD PLATE	2-11, 2-13
2506331-0200	.CONNECTION BOX	5-57
2506332-0000	.BOX	5-59, 5-61
2506432-0000	.LOCKING FINGER	1-181
2506433-0000	.LOCKING FINGER	1-181
2506471-0000	.BRACKET	7-47
2506472-0000	.HOLDER	7-47
2506473-0000	.BRACKET	7-47
2506474-0000	.FASTENING BRACKET	7-47
2506475-0100	.PRESSURE ROLLER	7-35, 7-37
2506478-0000	.COVER	7-23, 7-25, 7-27, 7-29
2506479-0000	.PLATE	7-31
2506480-0000	.HOLDER	7-65
2506530-0000	.LOCKING FINGER	1-181
2506608-0000	.PLATE	2-41, 2-43
2506609-0000	.PLATE	2-41, 2-43
2506638-0000	.VOLUME CAM	4-57
2506639-0000	.VOLUME CAM	4-57
2506640-0000	.VOLUME CAM	4-57
2506641-0000	.VOLUME CAM	4-57
2506642-0000	.VOLUME CAM	4-57
2506643-0000	.VOLUME CAM	4-57
2506644-0000	.VOLUME CAM	4-57
2506645-0000	.VOLUME CAM	4-57
2506646-0000	.STRIP	2-41, 2-43
2506790-0100	.HOLD-DOWN DEVICE	3-3
2507014-0100	.ROCKER ARM	3-23
2508118-0000	.FIXING RING	8-11
2509543-0000	.PROTECTION	8-13
2510532-0000	.PROTECTION	1-177
2510541-0000	.PRESSURE FLANGE	1-181
2510767-0000	.RAILING	2-55
2510844-0001	.CONNECTION BOX	9-21
2510844-0100	.CONNECTION BOX	9-17
2511330-0000	.SPACER	1-9, 1-11
2511668-0000	.SUPPORT	5-55
2512787-0000	.HOLDER	4-13, 4-15
2512805-0000	.TOE PLATE	2-41, 2-43
2514018-0000	.TOP TIE PLATE	2-41, 2-43
2514041-0000	.PROTECTION	4-13
2514042-0000	.PROTECTION	4-15
2514090-0000	.FORCE PLATE	4-49
2514091-0000	.BRACKET	4-49
2514112-0000	.COVER	2-53
2514301-0000	.PRESSURE FLANGE	1-181
2514391-0000	.PIPE	6-61
2514491-0000	.METERING DEVICE	6-69
2516972-0000	.HOSE HOLDER	2-23
2517051-0000	.PIPE	6-15, 6-17, 6-19
2517063-0000	.GLASS PANE	6-5
2518102-0000	.RAIL	5-55
2518103-0000	.RAIL	5-55
2518125-0000	.PIPE	6-79, 6-81
2518410-0000	.FLANGE	3-5
2518415-0000	.COVER PLATE	6-57
2518416-0000	.JOINT BOLT	6-57
2519460-0000	.SPRING BRACKET	3-23
2519644-0000	.BRACKET	7-23, 7-25, 7-27, 7-29
2519646-0000	.PLATE	7-59
2519647-0000	.BRACKET	7-59
2522105-0000	.HEAD PLATE	2-11, 2-13
2522106-0000	.HEAD PLATE	2-11, 2-13
2522107-0000	.HEAD PLATE	2-11, 2-13
2522108-0000	.HEAD PLATE	2-11, 2-13
2522109-0000	.HEAD PLATE	2-11, 2-13
2522110-0000	.PLATE	2-11, 2-13
2522248-0000	.BRACKET	1-61
2522249-0000	.SHAFT	1-61

Part No	Description	Page No
2523596-0000	.COVER	7-19
2523597-0000	.SLIDER	7-21
2523598-0000	.SPLICING TABLE	7-21
2523599-0000	.SUPPORT	7-21
2523600-0000	.PIN	7-21
2523601-0000	.PAD	7-21
2523703-0000	.PIPE	2-45, 2-47
2523725-0200	.PRESSURE DEVICE	5-3
2523730-0000	.LEVER	5-13, 5-15
2523736-0000	.SHAFT	5-13, 5-15
2523737-0000	.SHAFT	5-13, 5-15
2523738-0000	.BUSHING	5-13, 5-15
2524341-0000	.FILLING PIPE	1-181
2524342-0000	.FILLING PIPE	1-181
2524343-0000	.FILLING PIPE	1-181
2524394-0000	.BRACKET	2-37
2524476-0100	.WEB GUIDE	7-35, 7-37
2524477-0000	.ROLLER	7-49
2524478-0000	.BRACKET	7-35, 7-37, 7-39, 7-41
2524479-0000	.PLATE	7-47
2524480-0000	.PIN	7-47
2524482-0000	.BRACKET	7-47
2524484-0000	.PIN	7-47
2524485-0000	.PIN	7-47
2524579-0004	.BLOCK	5-13, 5-15
2524579-0005	.BLOCK	5-13, 5-15
2524579-0008	.BLOCK	5-13, 5-15
2524579-0010	.BLOCK	5-13, 5-15
2524579-0011	.BLOCK	5-13, 5-15
2524654-0000	.PLATE	10-33
2524658-0000	.COVER	10-33
2524659-0000	.CABLE	10-33
2524660-0000	.CASING	10-33
2524662-0000	.COOLING BLOCK	10-33
2524664-0000	.ASSEMBLY DRAWING	10-33
2525340-0000	.BRACKET	8-13
2526300-0000	.DROP CHUTE	2-11, 2-13
2526301-0000	.DROP CHUTE	2-11, 2-13
2526302-0000	.DROP CHUTE	2-11, 2-13
2526303-0000	.DROP CHUTE	2-11, 2-13
2526304-0000	.DROP CHUTE	2-11, 2-13
2526305-0000	.DROP CHUTE	2-11, 2-13
2526306-0000	.DROP CHUTE	2-11, 2-13
2526308-0000	.DROP CHUTE	2-11, 2-13
2526309-0000	.DROP CHUTE	2-11, 2-13
2526310-0000	.DROP CHUTE	2-11, 2-13
2526311-0000	.DROP CHUTE	2-11, 2-13
2526323-0000	.LEAF SPRING	2-11, 2-13
2526324-0000	.LEAF SPRING	2-11, 2-13
2526325-0000	.LEAF SPRING	2-11, 2-13
2526326-0000	.LEAF SPRING	2-11, 2-13
2526327-0000	.LEAF SPRING	2-11, 2-13
2526328-0000	.LEAF SPRING	2-11, 2-13
2526329-0000	.LEAF SPRING	2-11, 2-13
2526338-0100	.DROP CHUTE	2-3
2526341-0000	.LAMP HOLDER	8-63
2526342-0000	.BRACKET	8-63
2526343-0000	.PLATE	5-37
2526344-0000	.PLATE	5-37
2526843-0000	.CABLE TRENCH	1-147, 1-149
2526844-0000	.LID	1-147, 1-149
2526845-0000	.CABLE TRENCH	1-147, 1-149
2526846-0000	.LID	1-147, 1-149
2526847-0000	.CABLE TRENCH	1-147, 1-149
2526848-0000	.CABLE TRENCH	1-147, 1-149
2526863-0000	.PUMP	1-21, 1-23
2527135-0000	.RAIL (TITANIUM)	4-39
2527136-0000	.RAIL	4-39
2527137-0000	.RAIL (TITANIUM)	4-39
2527337-0000	.CYLINDER BRACKET	1-37
2527454-0000	.SHIM	5-13, 5-15
2527513-0000	.SIDE PIECE	2-53
2527514-0000	.SIDE PIECE	2-53
2527651-0000	.SPACER	3-5
2527652-0000	.ARM	3-5
2527706-0000	.FILLING PIPE	1-181
2527707-0000	.FILLING PIPE	1-181
2527708-0000	.PRESSURE FLANGE	1-181
2527710-0000	.FILLING PIPE	1-181
2527717-0000	.FILLING PIPE	1-181
2527718-0000	.SPACER	1-61
2527724-0000	.CARRIER	4-5, 4-7, 4-9, 4-11
2528094-0000	.PIPE	1-21, 1-23
2528095-0000	.PIPE	1-133

Part No	Description	Page No
2528198-0000	.PLATE	5-23, 5-25
2528199-0000	.HANDLE	5-23, 5-25
2529564-0000	.COVER	8-63
2529646-0000	.SHAFT	7-47
2530400-0100	.TRASMISSION UNIT	5-3
2530401-0000	.SHIM	5-13, 5-15
2531115-0000	.SCREW	8-19, 8-21, 8-23
2531465-0000	.SUPPORT	9-3
2531996-0000	.COVER	10-13, 10-15, 10-17
2531997-0000	.SPACER	10-25, 10-47, 10-49, 10-51, 10-53, 10-55
2531998-0100	.RAIL	10-13, 10-15, 10-17
2531999-0000	.COVER	10-85, 10-87
2532539-0000	.FOLDING FLAP	4-5, 4-7, 4-9, 4-11
2532540-0000	.FOLDING FLAP	4-5, 4-7, 4-9, 4-11
2532541-0000	.FOLDING FLAP	4-5, 4-7, 4-9, 4-11
2532542-0000	.FOLDING FLAP	4-5, 4-7, 4-9, 4-11
2532543-0000	.FOLDING FLAP	4-5, 4-7, 4-9, 4-11
2532544-0000	.BUSHING	4-5, 4-7, 4-9, 4-11, 4-35, 4-37
2532862-0000	.SPACER	10-85, 10-87
2532923-0000	.PIPE	1-21, 1-23
2540724-0000	.HOSE INSTALLATION	7-3
2540726-0000	.FINGER	7-21
2540729-0000	.WALL	7-57
2540730-0000	.STRIP	7-57
2541126-0100	.INSTALLATION ACCESSORIES	9-3
2541886-0100	.START-UP KIT	9-3
2542328-0000	.COVER	10-127, 10-129
2542329-0000	.COVER	10-127, 10-129
2543594-0100	.ELECTRICAL COMPONENTS	9-3
2544855-0000	.PIPE	1-99, 1-101
2544856-0000	.PIPE	1-99, 1-101
2544863-0000	.PIPE	1-99, 1-101
2544864-0000	.PIPE	1-99, 1-101
2544868-0000	.PIPE	1-99, 1-101
2544869-0000	.PIPE	1-99, 1-101
2544957-0000	.AXLE SUPPORT	5-67
2544958-0000	.BEARING FLANGE	5-67
2544959-0000	.PIPE	5-51
2544960-0000	.CLEANING BASIN	5-51
2544961-0100	.RAIL	5-3
2544962-0000	.SHAFT	5-67
2544963-0000	.SHAFT	5-67
2544964-0000	.FLANGE	5-67
2544965-0000	.TOOTHED PULLEY	5-67
2544966-0000	.PLATE	5-43
2544968-0000	.INNER RING	5-67
2544969-0000	.SPACER	5-67
2544970-0000	.FLANGE	5-67
2544971-0000	.BRACKET	5-67
2544973-0000	.CUP	5-67
2544974-0000	.BLANK PLUG	5-67
2544975-0000	.SHEET	5-67
2544979-0000	.PIPE	5-53
2544980-0100	.CLEANING SYSTEM	5-3
2544981-0100	.CLEANING CIRCUIT	5-51
2545062-0000	.CLEANING PIPE	1-7
2545080-0100	.INJECTION SYSTEM	1-7
2545083-0100	.CONTROL CABINET	1-7
2545131-0000	.VALVE BODY	1-15
2545132-0000	.TRANSITION PIPE	1-15
2545134-0000	.SPRAY NOZZLE	1-15
2545155-0000	.PLUG	1-15
2545249-0000	.TEFLON HOSE	4-35, 4-37
2545423-0000	.DOOR	1-9, 1-11
2545424-0000	.CABINET	1-9, 1-11
2545425-0000	.SPRAY PIPE	1-9, 1-11
2545426-0000	.MOUNTING PLATE	1-9, 1-11
2545427-0000	.FILLING PIPE	1-9, 1-11
2545428-0000	.RETURN PIPE	1-9, 1-11
2545429-0000	.PIPE	1-9, 1-11
2545432-0000	.CLEANING PIPE	1-7
2545667-0000	.GUIDE	5-65
2546226-0000	.SUPPORT	5-55
2546444-0000	.PIPE	1-7
2546445-0000	.AIR PIPE	1-7
2546446-0000	.PIPE	1-7
2546447-0000	.SPRAY PIPE	1-7
2546448-0000	.SUPPORT	1-9, 1-11
2546471-0000	.AIR PIPE	1-7
2546472-0000	.PIPE	1-7
2546473-0000	.FILLING PIPE	1-7
2547005-0000	.LACE	8-13
2547006-0000	.RETURN PIPE	1-7
2547007-0000	.RETURN PIPE	1-7

Part No	Description	Page No
2547217-0000	.AXLE PIN	7-23, 7-25, 7-27, 7-29
2547218-0000	.AXLE PIN	7-23, 7-25, 7-27, 7-29
2547219-0000	.AXLE PIN	7-23, 7-25, 7-27, 7-29
2547232-0000	.PIVOT ARM	2-11, 2-13
2547315-0000	.SUPPORT	1-9, 1-11
2550181-0000	.GASKET	6-71
2551088-0000	.COVER	8-9
2552073-0000	.SEAL	5-23, 5-25
2552081-0000	.REDUCTION	5-23, 5-25
2552527-0000	.BEARING HOUSING	4-35, 4-37
2552528-0000	.BEARING HOUSING	4-35, 4-37
2552529-0000	.BEARING HOUSING	4-35, 4-37
2552530-0000	.BEARING HOUSING	4-35, 4-37
2552619-0000	.COVER	7-35, 7-37
2552620-0000	.DOOR	7-35, 7-37
2552621-0000	.HOLDER	7-35, 7-37
2552622-0000	.HOLDER	7-35, 7-37
2552624-0000	.BOX BRACKET	7-23, 7-25, 7-27, 7-29
2552628-0000	.PIN	7-49
2552630-0000	.MOUNTING PLATE	7-35, 7-37
2552631-0000	.AXLE PIN	7-43, 7-51, 7-53
2552632-0000	.ROLLER	7-43, 7-51, 7-53
2552633-0000	.ROLLER	7-43, 7-51, 7-53
2552679-0000	.GLASS PANE	2-61, 2-63
2552680-0100	.DOOR	2-3
2552681-0100	.DOOR	2-3
2552682-0000	.LOCKING ARM	2-61, 2-63
2552683-0000	.LOCKING ARM	2-61, 2-63
2552684-0000	.CHUTE	2-65
2552685-0000	.CHUTE	2-65
2552686-0000	.KEY	2-61, 2-63
2552687-0000	.SPACER	2-61, 2-63
2552688-0000	.GUIDE BRACKET	2-61, 2-63
2552691-0000	.DOOR	2-61
2552692-0000	.DOOR	2-63
2552693-0000	.DOOR	2-27
2552694-0100	.DOOR	2-3
2552695-0100	.DOOR	2-3
2552696-0000	.DOOR	2-29
2552697-0000	.LID	2-15
2552698-0000	.DISCHARGE CHUTE	2-15
2552699-0100	.DISCHARGE CHUTE	2-3
2552700-0100	.COVER PLATES	2-3
2552701-0000	.TOP SECTION	2-57
2552702-0000	.COVER	2-57
2552703-0000	.COVER	2-57
2552704-0000	.COVER PLATE	2-57
2552705-0000	.FRONT COVER	2-57
2552706-0000	.COVER	2-57
2552707-0000	.COVER PLATE	2-57
2552708-0000	.COVERING PLATE	2-57
2552709-0000	.COVERING PLATE	2-57
2552710-0000	.COVER	2-57
2552711-0000	.COVER	2-57
2552713-0000	.BUSHING	2-15
2552714-0000	.BRACKET	2-15
2552721-0000	.CAM	5-13, 5-15
2552722-0000	.AXLE PIN	5-13, 5-15
2552723-0000	.SPRING BRACKET	5-13, 5-15
2552724-0000	.SUPPORT	5-13, 5-15
2552726-0000	.GUIDE	5-13, 5-15
2552727-0000	.PLATE	5-13, 5-15
2552731-0000	.WASHER	5-13, 5-15
2552732-0000	.SPRING BRACKET	5-13, 5-15
2552734-0001	.BLOCK	5-13, 5-15
2552734-0002	.BLOCK	5-13, 5-15
2552941-0100	.TOOL	11-7
2552943-0100	.TOOL	11-7
2552944-0100	.TOOL	11-7
2552945-0001	.TEMPLATE	11-13
2552945-0002	.TEMPLATE	11-13
2552945-0003	.TEMPLATE	11-13
2552945-0004	.TEMPLATE	11-13
2552945-0005	.TEMPLATE	11-13
2552945-0006	.TEMPLATE	11-13
2552945-0007	.TEMPLATE	11-13
2552945-0008	.TEMPLATE	11-13
2552945-0009	.TEMPLATE	11-13
2552945-0010	.TEMPLATE	11-13
2552945-0011	.TEMPLATE	11-13
2552946-0100	.TOOL	11-7
2552947-0100	.TOOL	11-7
2552948-0001	.TEMPLATE	11-17
2552948-0002	.TEMPLATE	11-17

Part No	Description	Page No
2552948-0003	.TEMPLATE	11-17
2552948-0004	.TEMPLATE	11-17
2552949-0100	.TOOL	11-7
2552950-0001	.TEMPLATE	11-19
2552950-0002	.TEMPLATE	11-19
2552950-0003	.TEMPLATE	11-19
2552951-0001	.CLAMP	11-19
2552951-0002	.CLAMP	11-19
2552951-0003	.CLAMP	11-19
2552952-0001	.PLATE	11-19
2552952-0002	.PLATE	11-19
2552952-0003	.PLATE	11-19
2552952-0004	.PLATE	11-19
2552952-0005	.PLATE	11-19
2552952-0006	.PLATE	11-19
2552952-0007	.PLATE	11-19
2552952-0008	.PLATE	11-19
2552952-0009	.PLATE	11-19
2552952-0010	.PLATE	11-19
2552952-0011	.PLATE	11-19
2553110-0000	.CAM	4-57
2553111-0000	.CAM	4-57
2553175-0000	.EARTH BAR	10-23
2553176-0100	.EARTH BAR	10-13, 10-15, 10-17
2553350-0000	.GLASS	2-27, 2-29
2553830-0100	.FRAME	2-3
2553831-0000	.FRAME	2-65
2553832-0000	.FRAME	2-65
2553895-0000	.COVER	2-57
2554959-0000	.GUIDE	2-61, 2-63
2554960-0000	.BUSBAR LEFT	4-53
2554961-0000	.BUSBAR RIGHT	4-51
2554975-0000	.COVER	2-15
2554977-0001	.BLOCK	5-13, 5-15
2554977-0002	.BLOCK	5-13, 5-15
2554977-0003	.BLOCK	5-13, 5-15
2554977-0004	.BLOCK	5-13, 5-15
2555063-0000	.PIN	2-55
2555070-0000	.SIGN	2-45, 2-47
2555116-0000	.WHEEL	8-13
2555310-0000	.COIL	1-17
2555562-0000	.GUIDE	5-65
2555563-0000	.GUIDE	5-65
2555564-0000	.GUIDE	5-65
2555565-0000	.GUIDE	5-65
2555566-0000	.GUIDE	5-65
2555567-0000	.GUIDE	5-65
2555568-0000	.GUIDE	5-65
2555569-0000	.GUIDE	5-65
2555571-0000	.GUIDE	5-65
2555633-0000	.SHAFT	1-57
2555634-0000	.SHAFT	1-57
2556243-0000	.SPACER	2-61, 2-63
2556246-0000	.HATCH	2-5
2558133-0000	.PRESSURE REGULATOR	1-79
2558134-0000	.PRESSURE REGULATOR	1-79
2558744-0000	.PIPE	1-9, 1-11
2558745-0000	.PIPE	1-9, 1-11
2559068-0000	.BENDING ROLLER	1-61
2559069-0000	.BENDING ROLLER	1-61
2559070-0000	.BENDING ROLLER	1-61
2559071-0000	.BENDING ROLLER	1-61
2559087-0000	.CLAMP	1-61
2559093-0000	.PLATE	1-147, 1-149
2559121-0000	.BRACKET	5-55
2559122-0000	.FLANGE	5-67
2562665-0000	.PUSH BUTTON BOX	1-147, 1-149
2563209-0000	.LID	6-79, 6-81
2563210-0000	.PIPE	6-79, 6-81
2564115-0000	.PUSH BUTTON BOX	8-63
2565515-0000	.TOUCH GUARD	1-171, 1-173, 1-175
2565516-0000	.TOUCH GUARD	1-171, 1-173, 1-175
2565517-0000	.TOUCH GUARD	1-171, 1-173, 1-175
2565736-0000	.RESERVOIR	1-9, 1-11
2566107-0000	.PIPE	5-29
2566108-0000	.PIPE	5-29
2566433-0100	.TEMPLATE PT19-020V	11-23
2566434-0000	.BEAM	11-25
2566435-0000	.BEAM	11-25
2566436-0000	.BEAM	11-25
2566437-0000	.ANGLE BRACKET	11-25
2566438-0000	.SUPPORT	11-25
2566439-0000	.BUSHING	11-25
2568779-0000	.DIAGRAM	1-7

Part No	Description	Page No
2569884-0000	.TENSION SPROCKET	5-9
2569976-0000	.VALVE PANEL	9-7
2569977-0000	.ASEPTIC DIAGRAM	9-7
2569978-0000	.WATER DIAGRAM	9-7
2569979-0000	.HYDRAULIC SYSTEM	9-7
2569980-0000	.LUBRIFICATION DIAGRAM	9-7
2570391-0000	.PIPE	1-9, 1-11
2570392-0000	.RETAINING RING	7-65
2570393-0000	.BENDING ROLLER	7-63
2570394-0100	.BENDING ROLLER	7-55
2570400-0000	.ROD	7-51, 7-53
2570401-0000	.ROD	7-51, 7-53
2572676-0000	.SUPPORT	1-9, 1-11
2574348-0000	.VALVE BRACKET	1-9, 1-11
2575480-0000	.HOLDER	7-51, 7-53
2575481-0000	.BRACKET	7-51, 7-53
2575482-0000	.PIN	7-51, 7-53
2575484-0000	.HOLDER	7-51, 7-53
2575624-0001	.BLOCK	5-13, 5-15
2575624-0002	.BLOCK	5-13, 5-15
2575624-0003	.BLOCK	5-13, 5-15
2575624-0004	.BLOCK	5-13, 5-15
2575624-0005	.BLOCK	5-13, 5-15
2575624-0006	.BLOCK	5-13, 5-15
2575624-0007	.BLOCK	5-13, 5-15
2575624-0008	.BLOCK	5-13, 5-15
2575624-0009	.BLOCK	5-13, 5-15
2575624-0010	.BLOCK	5-13, 5-15
2575624-0011	.BLOCK	5-13, 5-15
2575625-0001	.BLOCK	5-13, 5-15
2575625-0002	.BLOCK	5-13, 5-15
2575625-0003	.BLOCK	5-13, 5-15
2575625-0004	.BLOCK	5-13, 5-15
2575625-0005	.BLOCK	5-13, 5-15
2575625-0006	.BLOCK	5-13, 5-15
2575625-0007	.BLOCK	5-13, 5-15
2575625-0008	.BLOCK	5-13, 5-15
2575625-0009	.BLOCK	5-13, 5-15
2575625-0010	.BLOCK	5-13, 5-15
2575625-0011	.BLOCK	5-13, 5-15
2576239-0000	.HOLDER	7-51, 7-53
2576240-0100	.STRIP GUIDE	7-35, 7-37
2576243-0100	.STRIP GUIDE	7-35, 7-37
2576344-0001	.LEVER	5-13, 5-15
2576344-0002	.LEVER	5-13, 5-15
2576344-0003	.LEVER	5-13, 5-15
2576344-0004	.LEVER	5-13, 5-15
2576344-0005	.LEVER	5-13, 5-15
2576344-0006	.LEVER	5-13, 5-15
2576344-0007	.LEVER	5-13, 5-15
2576344-0008	.LEVER	5-13, 5-15
2576344-0009	.LEVER	5-13, 5-15
2576344-0010	.LEVER	5-13, 5-15
2576344-0011	.LEVER	5-13, 5-15
2576345-0000	.AXLE PIN	5-13, 5-15
2576346-0000	.ROLLER	5-13, 5-15
2576347-0000	.SHAFT	5-13, 5-15
2576348-0000	.SHAFT	5-13, 5-15
2576349-0000	.ROLLER	5-13, 5-15
2576350-0000	.ROLLER	5-13, 5-15
2576351-0000	.AXLE PIN	5-13, 5-15
2576352-0000	.PLATE	5-13, 5-15
2576353-0000	.SUPPORT	5-13, 5-15
2576398-0000	.SPACER	1-93
2582602-0000	.BRACKET	1-171, 1-173, 1-175
2582603-0000	.BRACKET	1-171, 1-173, 1-175
2582639-0000	.BRACKET	1-171, 1-173, 1-175
2588000-0000	.BRACKET	7-23, 7-25, 7-27, 7-29
2588001-0000	.AXLE PIN	7-23, 7-25, 7-27, 7-29
2594128-0000	.COVER	2-57
2594221-0000	.BOW CLAMP	2-57
2594679-0000	.BLOCK	11-25
2594680-0000	.BLOCK	11-25
2597663-0000	.FOLDING FLAP	4-5, 4-7, 4-9, 4-11
2598113-0100	.CABLE LEAD-IN PLATE	10-3, 10-5
2598114-0000	.DOOR	10-127, 10-129
2598198-0000	.FOLDING BAR	5-37
2598199-0000	.FOLDING BAR	5-37
2598375-0000	.CABLE DUCT	10-127, 10-129
2598376-0000	.CABLE DUCT	10-127, 10-129
2598377-0000	.CABLE DUCT	10-127, 10-129
2598430-0000	.SUPPORT	10-165
2603016-0000	.BRACKET	7-43
2603631-0000	.BRACKET	1-67, 1-69

Part No	Description	Page No
2604460-0000	.CABLE DUCT	10-13, 10-15, 10-17
2604461-0000	.CABLE DUCT	10-13, 10-15, 10-17
2604462-0000	.CABLE DUCT	10-13, 10-15, 10-17
2604463-0000	.CABLE DUCT	10-13, 10-15, 10-17
2604464-0000	.CABLE DUCT	10-13, 10-15, 10-17
2604465-0000	.CABLE DUCT	10-13, 10-15, 10-17
2604466-0000	.CABLE DUCT	10-13, 10-15, 10-17
2604467-0000	.CABLE DUCT	10-13, 10-15, 10-17
2604468-0000	.CABLE DUCT	10-13, 10-15, 10-17
2605572-0000	.AIR DIAGRAM	9-7
2606879-0000	.PLATE	5-13, 5-15
2606880-0000	.HOLDER	5-13, 5-15
2606881-0000	.ADJUSTING SCREW	5-13, 5-15
2610111-0000	.BEARING BRACKET	8-13
2610112-0000	.BEARING BRACKET	8-13
2610122-0000	.BEARING BRACKET	8-13
2610197-0000	.TOOL	11-13
2610198-0000	.TOOL	11-13
2611008-0000	.BRACKET	1-171, 1-173, 1-175
2611151-0003	.AIR NOZZLE	5-23, 5-25
2611151-0004	.AIR NOZZLE	5-23, 5-25
2611152-0000	.AIR NOZZLE	5-23, 5-25
2611153-0000	.AIR NOZZLE	5-23, 5-25
2611190-0001	.SPACER	5-23, 5-25
2611190-0002	.SPACER	5-23, 5-25
2611190-0003	.SPACER	5-23, 5-25
2611190-0004	.SPACER	5-23, 5-25
2611190-0005	.SPACER	5-23, 5-25
2611190-0006	.SPACER	5-23, 5-25
2611190-0007	.SPACER	5-23, 5-25
2611190-0008	.SPACER	5-23, 5-25
2611190-0009	.SPACER	5-23, 5-25
2611709-0000	.BRACKET	1-67, 1-69
2613035-0000	.SUPPORT	2-45, 2-47
2614225-0000	.CABLE TRACK	8-63
2614226-0000	.CABLE TRACK	8-63
2614227-0000	.CABLE TRACK	8-63
2614228-0000	.CABLE TRACK	8-63
2614370-0100	.SERVICE PARTS	11-5
2615467-0000	.BRACKET	11-25
2616035-0000	.CONNECTION BOX	8-51
2618263-0000	.CONTAINER	1-67, 1-69
2618264-0000	.PIPE	1-67, 1-69
2618265-0000	.PIPE	1-67, 1-69
2618266-0000	.PIPE	1-67, 1-69
2618387-0000	.INSERT	10-105, 10-107, 10-109, 10-111, 10-113, 10-115, 10-117, 10-119, 10-121
2619758-0100	.HEAD SPACE BY INJECTION	1-3, 1-5
2623674-0100	.CONNECTION BOX	1-9, 1-11
2632603-0000	.CHECKER PLATE	2-41, 2-43
2632796-0000	.BRACKET	1-67, 1-69
2632811-0000	.PIPE	1-67, 1-69
2633435-0000	.PLATE	5-43
2633436-0000	.SHIELD PLATE	5-43
2634940-0000	.BRACKET	1-171, 1-173, 1-175
2635109-0000	.CLAMP	1-67, 1-69
2638206-0000	.BRACKET	1-95, 1-97
2638450-0000	.HEATING ELEMENT	5-23, 5-25
2640155-0000	.BRACKET	1-157, 1-159
2640262-0000	.AXLE PIN	1-55
2640263-0000	.SUPPORT BAR	1-55
2640264-0000	.SUPPORT PLATE	1-55
2640265-0000	.LOCKING SPRING	1-55
2640472-0000	.HOLDER	1-141
2641300-0000	.TOUCH GUARD	1-171, 1-173, 1-175
2641397-0000	.PLATE	8-51
2641477-0100	.TOOL	11-7
2646247-0100	.SUPPORT	1-49, 1-51
2646248-0000	.MOUNTING BRACKET	1-55
2652212-0000	.PLATE	5-13, 5-15
2652213-0000	.THRUST WASHER	5-13, 5-15
2654046-0000	.TOUCH GUARD	1-171, 1-173, 1-175

Tetra Pak

SPC
Spare Parts Catalogue

Pos	Part No	Description	Page No
A			
A002.1	90045-0376	CONNECTOR KIT 9-032-011-970	10-13, 10-15, 10-17
A002	90458-0397	SERVO DRIVE DMC2 50720 P	10-13, 10-15, 10-17
A005	67347-0101	CARD BRAKEREG.MAGN.POWDER BRAKE	10-29, 10-31
A005:1	67372-0101	BACKPLANE 8TE(32 POLE)	10-29, 10-31
A006	67347-0101	CARD BRAKEREG.MAGN.POWDER BRAKE	10-29, 10-31
A006.1	67372-0101	BACKPLANE 8TE(32 POLE)	10-29, 10-31
A012	90458-1300	2 AXIS DOCKING STATION D2/PLC	10-13, 10-15, 10-17
A013	90458-0746	STEP MOTOR DRIVE L50	10-13, 10-15, 10-17
A014	90458-0746	STEP MOTOR DRIVE L50	10-13, 10-15, 10-17
A015	90458-1300	2 AXIS DOCKING STATION D2/PLC	10-13, 10-15, 10-17
A016	90458-0746	STEP MOTOR DRIVE L50	10-13, 10-15, 10-17
A017	90458-0746	STEP MOTOR DRIVE L50	10-13, 10-15, 10-17
A100	90031-0051	BASEPLATE, 10-SLOT	10-39
A101	90031-0053	BASEPLATE,10-SLOT	10-41
A102	90031-0057	PLC, DIGITAL INPUT MODULE	10-39
A103	90031-0057	PLC, DIGITAL INPUT MODULE	10-39
A104	90031-0057	PLC, DIGITAL INPUT MODULE	10-39
A105	90031-0057	PLC, DIGITAL INPUT MODULE	10-39
A106	90031-0058	PLC, DIGITAL INPUT MODULE	10-39
A107	90031-0059	PLC, DIGITAL OUTPUT MODULE	10-39
A108	90031-0062	PLC, ANALOG OUTPUT MODULE 8PT/CURR/VOLT	10-39
A109	90031-0063	PLC,ANALOG COMBO MODULE,IN-4PT/OUT-2PT	10-39
A111	90031-0057	PLC, DIGITAL INPUT MODULE	10-41
A112	90031-0057	PLC, DIGITAL INPUT MODULE	10-41
A113	90031-0057	PLC, DIGITAL INPUT MODULE	10-41
A114	90031-0059	PLC, DIGITAL OUTPUT MODULE	10-41
A115	90031-0059	PLC, DIGITAL OUTPUT MODULE	10-41
A116	90031-0059	PLC, DIGITAL OUTPUT MODULE	10-41
A117	90031-0059	PLC, DIGITAL OUTPUT MODULE	10-41
A118	90031-0059	PLC, DIGITAL OUTPUT MODULE	10-41
A119	90031-0059	PLC, DIGITAL OUTPUT MODULE	10-41
A120	90031-0059	PLC, DIGITAL OUTPUT MODULE	10-41
A121	90031-0059	PLC, DIGITAL OUTPUT MODULE	10-43
A122	90031-0059	PLC, DIGITAL OUTPUT MODULE	10-43
A123	90031-0059	PLC, DIGITAL OUTPUT MODULE	10-43
A124	90031-0059	PLC, DIGITAL OUTPUT MODULE	10-43
A125	90031-0057	PLC, DIGITAL INPUT MODULE	10-43
A126	90031-0057	PLC, DIGITAL INPUT MODULE	10-43
A127	90031-0057	PLC, DIGITAL INPUT MODULE	10-43
A128	90031-0057	PLC, DIGITAL INPUT MODULE	10-43
A135	90031-0053	BASEPLATE,10-SLOT	10-43
A200	90410-0051	TEMPERATURE CONTROLLER, KS 40	10-141, 10-143
A200.1	359241-0123	SIGN: " TEMP. PRESTERILISATION VALVE"	10-141, 10-143
A201	90410-0051	TEMPERATURE CONTROLLER, KS 40	10-141, 10-143
A201.1	359241-0141	SIGN: " WATER BATH"	10-141, 10-143
A202	90410-0051	TEMPERATURE CONTROLLER, KS 40	10-141, 10-143
A202.1	359241-0131	SIGN: " TEMP. LS"	10-141, 10-143
A203	90410-0051	TEMPERATURE CONTROLLER, KS 40	10-141, 10-143
A203.1	359241-0130	SIGN: " TEMP. AIR SUPER HEATER"	10-141, 10-143
A204	90410-0051	TEMPERATURE CONTROLLER, KS 40	10-141, 10-143
A204.1	359241-0126	SIGN: " TEMP. AIR KNIFE"	10-141, 10-143
A205	90410-0051	TEMPERATURE CONTROLLER, KS 40	10-141, 10-143
A205.1	359241-0121	SIGN: " STEAM"	10-141, 10-143
A206	90410-0051	TEMPERATURE CONTROLLER, KS 40	10-141, 10-143
A206.1	359241-0125	SIGN: " TEMP. PEROXIDE BATH"	10-141, 10-143
A209	90410-0051	TEMPERATURE CONTROLLER, KS 40	10-141, 10-143
A209.1	359241-0439	SIGN"PATCH SEALER"	10-141, 10-143
A210	90410-0051	TEMPERATURE CONTROLLER, KS 40	10-141, 10-143
A210.1	359241-0460	SIGN "PATCH SEALER 2"	10-141, 10-143
A211	90410-0051	TEMPERATURE CONTROLLER, KS 40	10-141, 10-143
A211.1	359241-0444	SIGN"TAB RESEAL"	10-141, 10-143
A212	90410-0051	TEMPERATURE CONTROLLER, KS 40	10-141, 10-143
A212.1	359241-0338	SIGN: " FLAP HEATING TOP LEFT"	10-141, 10-143
A213	90410-0051	TEMPERATURE CONTROLLER, KS 40	10-141, 10-143
A213.1	359241-0337	SIGN: " FLAP HEATING TOP RIGHT"	10-141, 10-143
A214	90410-0051	TEMPERATURE CONTROLLER, KS 40	10-141, 10-143
A214.1	359241-0340	SIGN: " FLAP HEATING BOTTOM LEFT"	10-141, 10-143
A215	90410-0051	TEMPERATURE CONTROLLER, KS 40	10-141, 10-143
A215.1	359241-0339	SIGN: " FLAP HEATING BOTTOM RIGHT"	10-141, 10-143
A216	90410-0051	TEMPERATURE CONTROLLER, KS 40	10-141, 10-143
A216.1	90457-0058	SIGN, LS SHORT STOP	10-141, 10-143
A300	90458-2580	LEVEL CONTROL RELAY RM4-LA32M	10-37
A301	90458-2580	LEVEL CONTROL RELAY RM4-LA32M	10-37
A302	90458-2580	LEVEL CONTROL RELAY RM4-LA32M	10-37
A303	90458-2580	LEVEL CONTROL RELAY RM4-LA32M	10-37
A305	90458-2580	LEVEL CONTROL RELAY RM4-LA32M	10-37
A307	90458-2580	LEVEL CONTROL RELAY RM4-LA32M	10-37
A310.1	67372-0101	BACKPLANE 8TE(32 POLE)	10-29, 10-31
A310	559810-0101	TMCC2 CONTROLLER	10-29, 10-31
A400.1	67372-0101	BACKPLANE 8TE(32 POLE)	10-29, 10-31
A400	559810-0101	TMCC2 CONTROLLER	10-29, 10-31
A401.1	67372-0101	BACKPLANE 8TE(32 POLE)	10-29, 10-31

Pos	Part No	Description	Page No
A			
A401	559810-0101	TMCC2 CONTROLLER	10-29, 10-31
A450	90453-0002	MODEM MD-12 DC	10-83
A452	1363288-0301	FLEXBOX TETRA BRIK	10-79
A454	90456-0001	INTOUCH OEM 2000 V.5.6B/6.0B HW KEY	10-79
A500.1	90458-1423	CONNECTOR, PC 4/4-STF-7.62	10-161
A500.2	90458-1424	CONNECTOR, MSTB 2.5/10-STF-5.08	10-161
A500.3	359241-0135	SIGN: " TRANSVERSAL SEALING"	10-161
A500	1499642-0101	TPIH 2500 HORIZONTAL MOUNTING	10-161
A501.1	90458-1423	CONNECTOR, PC 4/4-STF-7.62	10-161
A501.2	90458-1424	CONNECTOR, MSTB 2.5/10-STF-5.08	10-161
A501.3	359241-0132	SIGN: " TEMP. SA"	10-161
A501	1499642-0101	TPIH 2500 HORIZONTAL MOUNTING	10-161
A504	90119-0089	SAFETY RELAY, JSBT4 24VDC	10-37
A505	90119-0072	SAFETY RELAY, JSBR4	10-37
A506	90119-0072	SAFETY RELAY, JSBR4	10-37
A507	90119-0072	SAFETY RELAY, JSBR4	10-37
A509	90119-0072	SAFETY RELAY, JSBR4	10-37
A510	90458-2580	LEVEL CONTROL RELAY RM4-LA32M	10-37
A511.1	67372-0101	BACKPLANE 8TE(32 POLE)	10-29, 10-31
A511	559810-0101	TMCC2 CONTROLLER	10-29, 10-31
A512	90119-0072	SAFETY RELAY, JSBR4	10-37
A518	90410-0051	TEMPERATURE CONTROLLER, KS 40	10-141, 10-143
A518.1	359241-0268	SIGN: " SPRAYING, HEAD SPACE"	10-141, 10-143
A520	90119-0084	EXPANSION RELAY, JSR1T-500MS	10-37
A600	90119-0104	OPTO COUPLER AMMS 50070	10-37
A601	90119-0063	OPTO-RELAY, DC/DC AMMS-10-1/30VDC	10-37
A602	90119-0063	OPTO-RELAY, DC/DC AMMS-10-1/30VDC	10-37
A604	90119-0063	OPTO-RELAY, DC/DC AMMS-10-1/30VDC	10-37
A605	90119-0063	OPTO-RELAY, DC/DC AMMS-10-1/30VDC	10-37
A606	90119-0063	OPTO-RELAY, DC/DC AMMS-10-1/30VDC	10-37
A607	90119-0104	OPTO COUPLER AMMS 50070	10-37
A608	90119-0104	OPTO COUPLER AMMS 50070	10-37
A609	90119-0104	OPTO COUPLER AMMS 50070	10-37
A610	90119-0104	OPTO COUPLER AMMS 50070	10-37
B			
B001	90044-0192	LIMIT SW. SZ2586.000	10-85, 10-87
B002	90044-0192	LIMIT SW. SZ2586.000	10-85, 10-87
B003	90044-0192	LIMIT SW. SZ2586.000	10-85, 10-87
B004	90044-0192	LIMIT SW. SZ2586.000	10-85, 10-87
B005	90044-0192	LIMIT SW. SZ2586.000	10-85, 10-87
B006	90044-0192	LIMIT SW. SZ2586.000	10-85, 10-87
B007	90044-0192	LIMIT SW. SZ2586.000	10-85, 10-87
B008	90458-1114	BIMET. ELECTROMECH. THERMOSTAT K7H.020	10-75, 10-77
D			
D100	90031-0075	CPU363, SERIAL COMMUNICATION	10-39
E			
E004	90459-2560	LIGHT FIXTURE, TMS121 1XTL-D30W/830 IP	10-85, 10-87
E005	90459-2560	LIGHT FIXTURE, TMS121 1XTL-D30W/830 IP	10-85, 10-87
E006	90459-3090	LIGHT FIXTURE, TMS121 1XTL8W/830 IP	10-85, 10-87
F			
F001	90007-0129	CIRCUIT BREAKER, 1P 10 A K	10-135
F001	293685-0200	PRINTING WHEEL SS	8-39, 8-41
F002	90007-0129	CIRCUIT BREAKER, 1P 10 A K	10-131
F002	458192-0300	INK UNIT SS	8-39, 8-41
F003	751718-0100	HOLDER	8-39, 8-41
F004	90007-0129	CIRCUIT BREAKER, 1P 10 A K	10-135
F004	543143-0100	ADJUSTMENT DEVICE	8-39, 8-41
F005	90007-0128	CIRCUIT BREAKER, 1P 6 A K	10-135
F006	90007-0146	CIRCUIT BREAKER, 3P 6 A K	10-131
F007	90007-0149	CIRCUIT BREAKER, 3P 20 A K	10-135
F008	90007-0129	CIRCUIT BREAKER, 1P 10 A K	10-135
F009	90007-0129	CIRCUIT BREAKER, 1P 10 A K	10-135
F010	90007-0129	CIRCUIT BREAKER, 1P 10 A K	10-131
F011	90007-0128	CIRCUIT BREAKER, 1P 6 A K	10-131
F012.1	90007-0312	AUXILIARY CONTACT	10-131
F012	90459-2063	CIRCUIT BREAKER, 1P 0,75 A K	10-131
F013	90007-0146	CIRCUIT BREAKER, 3P 6 A K	10-135
F014	90007-0128	CIRCUIT BREAKER, 1P 6 A K	10-135
F015	90007-0129	CIRCUIT BREAKER, 1P 10 A K	10-135
F016	90007-0131	CIRCUIT BREAKER, 1P 16 A K	10-131
F017	90007-0128	CIRCUIT BREAKER, 1P 6 A K	10-131
F019	90007-0129	CIRCUIT BREAKER, 1P 10 A K	10-131
F021	90007-0155	CIRCUIT BREAKER, 1P 0,5 A K	10-131
F024	90111-0172	EARTH FAULT BREAKER, F 362-25/0.03	10-131
F025	90458-1448	MAGNETIC FUSE, S292 C100	10-131
F027	90007-0129	CIRCUIT BREAKER, 1P 10 A K	10-131
F030	90007-0155	CIRCUIT BREAKER, 1P 0,5 A K	10-131
F032	90007-0128	CIRCUIT BREAKER, 1P 6 A K	10-131
F033	90007-0129	CIRCUIT BREAKER, 1P 10 A K	10-135
F034	90459-2195	CIRCUIT BREAKER, 3P 2 A K	10-135
F100	90233-0027	TUBE FUSE, 16A	10-133
F100.1	90233-0303	FUSE HOLDER, ST 10 1-POLE	10-133

Pos	Part No	Description	Page No
F			
F100.1	90459-3800	FUSE HOLDER, MSC 10 3-POLE D250151	10-133
F101	90233-0029	TUBE FUSE, 25A	10-133
F101.1	90233-0303	FUSE HOLDER, ST 10 1-POLE	10-133
F101.1	90459-3800	FUSE HOLDER, MSC 10 3-POLE D250151	10-133
F102.1	90233-0304	FUSE HOLDER, ST 10 3-POLE	10-133
F102	90459-1254	TUBE FUSE, 4A 500V	10-133
F102.1	90459-3800	FUSE HOLDER, MSC 10 3-POLE D250151	10-133
F103.1	90233-0304	FUSE HOLDER, ST 10 3-POLE	10-133
F103	90459-1254	TUBE FUSE, 4A 500V	10-133
F103.1	90459-3800	FUSE HOLDER, MSC 10 3-POLE D250151	10-133
F104	90233-0027	TUBE FUSE, 16A	10-133
F104.1	90233-0303	FUSE HOLDER, ST 10 1-POLE	10-133
F104.1	90459-3799	FUSE HOLDER, MSC 10 1-POLE A250148	10-133
F106	90233-0028	TUBE FUSE, 10A	10-133
F106.1	90233-0303	FUSE HOLDER, ST 10 1-POLE	10-133
F106.1	90459-3799	FUSE HOLDER, MSC 10 1-POLE A250148	10-133
F107	90233-0028	TUBE FUSE, 10A	10-133
F107.1	90233-0303	FUSE HOLDER, ST 10 1-POLE	10-133
F107.1	90459-3799	FUSE HOLDER, MSC 10 1-POLE A250148	10-133
G			
G001	90459-3450	VARIABLE FREQUENCY DRIVE 22A-A4P5N104	10-13, 10-15, 10-17
G002	90459-3450	VARIABLE FREQUENCY DRIVE 22A-A4P5N104	10-13, 10-15, 10-17
G003	90459-3450	VARIABLE FREQUENCY DRIVE 22A-A4P5N104	10-13, 10-15, 10-17
G004	90459-3446	FREQUENCY CONVERTER 5,5 KW	10-13, 10-15, 10-17
G005	90459-3450	VARIABLE FREQUENCY DRIVE 22A-A4P5N104	10-13, 10-15, 10-17
G006	90459-3450	VARIABLE FREQUENCY DRIVE 22A-A4P5N104	10-13, 10-15, 10-17
G100	90031-0068	PLC, POWER SUPPLY	10-39
G101	90031-0068	PLC, POWER SUPPLY	10-41
G102	90031-0068	PLC, POWER SUPPLY	10-43
K			
K001	90075-0124	CONTACTOR, 4KW 24VDC	10-45
K002	90075-0127	CONTACTOR, 4KW 24VDC	10-57
K003	90458-2924	CONTACTOR 30KW COIL 24VDC	10-13, 10-15, 10-17
K003.1	90458-2925	AUXILIARY CONTACT, DIL M820-XHI11-SI	10-13, 10-15, 10-17
K004	90075-0128	CONTACTOR, 7,5KW 24VDC	10-57
K005	90075-0125	CONTACTOR, 7,5KW 24VDC	10-45
K006	90075-0125	CONTACTOR, 7,5KW 24VDC	10-45
K007	90075-0124	CONTACTOR, 4KW 24VDC	10-45
K008	90075-0125	CONTACTOR, 7,5KW 24VDC	10-45
K009	90075-0124	CONTACTOR, 4KW 24VDC	10-45
K011	90075-0125	CONTACTOR, 7,5KW 24VDC	10-45
K012	90075-0124	CONTACTOR, 4KW 24VDC	10-45
K013	90075-0124	CONTACTOR, 4KW 24VDC	10-45
K014	90075-0128	CONTACTOR, 7,5KW 24VDC	10-57
K015	90075-0125	CONTACTOR, 7,5KW 24VDC	10-45
K016	90075-0125	CONTACTOR, 7,5KW 24VDC	10-45
K017	90075-0124	CONTACTOR, 4KW 24VDC	10-45
K018	90075-0125	CONTACTOR, 7,5KW 24VDC	10-45
K019	90075-0125	CONTACTOR, 7,5KW 24VDC	10-45
K020	90075-0127	CONTACTOR, 4KW 24VDC	10-45
K021	90075-0127	CONTACTOR, 4KW 24VDC	10-45
K022	90075-0128	CONTACTOR, 7,5KW 24VDC	10-45
K024	90075-0124	CONTACTOR, 4KW 24VDC	10-45
K026	90075-0124	CONTACTOR, 4KW 24VDC	10-45
K028	90458-1302	CONTACTOR, 4KW 48VAC	10-57
K029	90075-0141	CONTACTOR, 4KW 24VDC	10-57
K030	90458-2924	CONTACTOR 30KW COIL 24VDC	10-13, 10-15, 10-17
K030.1	90458-2925	AUXILIARY CONTACT, DIL M820-XHI11-SI	10-13, 10-15, 10-17
K031	90458-1302	CONTACTOR, 4KW 48VAC	10-45
K032	90075-0125	CONTACTOR, 7,5KW 24VDC	10-45
K097	90119-0086	RELAY, AUXILIARY MY4IN4 24VDC	10-27
K097.1	90119-0309	BASE UNIT, TYPE PYF 14AE	10-27
K097.2	90119-0310	CLAMP, TYPE PYC-A1	10-27
K098	90119-0086	RELAY, AUXILIARY MY4IN4 24VDC	10-27
K098.1	90119-0309	BASE UNIT, TYPE PYF 14AE	10-27
K098.2	90119-0310	CLAMP, TYPE PYC-A1	10-27
K099	90119-0056	RELAY, AUXILIARY MK3P5-S 24VDC	10-27
K099.1	90129-0006	BASE, S3-B	10-27
K100	90119-0056	RELAY, AUXILIARY MK3P5-S 24VDC	10-27
K100.1	90129-0006	BASE, S3-B	10-27
K101	90119-0109	RELAY OMRON 24VDC MY4H	10-27
K101.1	90119-0309	BASE UNIT, TYPE PYF 14AE	10-27
K101.2	90119-0310	CLAMP, TYPE PYC-A1	10-27
K102	90119-0056	RELAY, AUXILIARY MK3P5-S 24VDC	10-27
K102.1	90129-0006	BASE, S3-B	10-27
K103	90119-0056	RELAY, AUXILIARY MK3P5-S 24VDC	10-27
K103.1	90129-0006	BASE, S3-B	10-27
K104	90119-0056	RELAY, AUXILIARY MK3P5-S 24VDC	10-27
K104.1	90129-0006	BASE, S3-B	10-27
K105	90119-0056	RELAY, AUXILIARY MK3P5-S 24VDC	10-27
K105.1	90129-0006	BASE, S3-B	10-27
K106	90119-0056	RELAY, AUXILIARY MK3P5-S 24VDC	10-27

Pos	Part No	Description	Page No
K			
K106.1	90129-0006	BASE, S3-B	10-27
K107	90119-0056	RELAY, AUXILIARY MK3P5-S 24VDC	10-27
K107.1	90129-0006	BASE, S3-B	10-27
K110	90119-0056	RELAY, AUXILIARY MK3P5-S 24VDC	10-27
K110.1	90129-0006	BASE, S3-B	10-27
K112	90119-0086	RELAY, AUXILIARY MY4IN4 24VDC	10-27
K112.1	90119-0309	BASE UNIT, TYPE PYF 14AE	10-27
K112.2	90119-0310	CLAMP, TYPE PYC-A1	10-27
K113	90119-0086	RELAY, AUXILIARY MY4IN4 24VDC	10-27
K113.1	90119-0309	BASE UNIT, TYPE PYF 14AE	10-27
K113.2	90119-0310	CLAMP, TYPE PYC-A1	10-27
K200	90119-0067	SOLID-STATE RELAY, H12WD4850	10-47, 10-49
K201	90119-0067	SOLID-STATE RELAY, H12WD4850	10-51
K202	90119-0067	SOLID-STATE RELAY, H12WD4850	10-51
K203	90119-0067	SOLID-STATE RELAY, H12WD4850	10-51
K204	90119-0067	SOLID-STATE RELAY, H12WD4850	10-51
K205	90119-0067	SOLID-STATE RELAY, H12WD4850	10-47, 10-49
K206	90119-0067	SOLID-STATE RELAY, H12WD4850	10-47, 10-49
K207	90119-0067	SOLID-STATE RELAY, H12WD4850	10-53
K208	90119-0067	SOLID-STATE RELAY, H12WD4850	10-53
K209	90119-0067	SOLID-STATE RELAY, H12WD4850	10-53
K210	90119-0067	SOLID-STATE RELAY, H12WD4850	10-25
K211	90119-0067	SOLID-STATE RELAY, H12WD4850	10-25
K212	90119-0067	SOLID-STATE RELAY, H12WD4850	10-25
K213	90119-0067	SOLID-STATE RELAY, H12WD4850	10-25
K215	90119-0067	SOLID-STATE RELAY, H12WD4850	10-47, 10-49
K250	90119-0086	RELAY, AUXILIARY MY4IN4 24VDC	10-27
K250.1	90119-0309	BASE UNIT, TYPE PYF 14AE	10-27
K250.2	90119-0310	CLAMP, TYPE PYC-A1	10-27
K251	90119-0086	RELAY, AUXILIARY MY4IN4 24VDC	10-27
K251.1	90119-0309	BASE UNIT, TYPE PYF 14AE	10-27
K251.2	90119-0310	CLAMP, TYPE PYC-A1	10-27
K252	90119-0086	RELAY, AUXILIARY MY4IN4 24VDC	10-27
K252.1	90119-0309	BASE UNIT, TYPE PYF 14AE	10-27
K252.2	90119-0310	CLAMP, TYPE PYC-A1	10-27
K915	90119-0056	RELAY, AUXILIARY MK3P5-S 24VDC	10-27
K915.1	90129-0006	BASE, S3-B	10-27
L			
L001	90297-0306	BALLAST COIL 50/60 HZ	10-13, 10-15, 10-17
M			
MB080:1	90458-0601	PHOTOCELL, SICK PHOTOCELL 1	1-167, 1-169
MB080:2	90458-0601	PHOTOCELL, SICK PHOTOCELL 1	1-167, 1-169
M001	90457-0056	FAN 7450 ES	10-13, 10-15, 10-17
M016	90457-0063	COOLING UNIT, KB17TB.CBB	10-159
MA451	90453-0001	MODEM MA-12	9-17
MB001	90061-0027	ANGLE ENCODER 670900035	3-33
MB002	90274-0074	PRESSURE GUARD, 530 KPA	6-39, 6-41
MB004	90326-0052	THERMO ELEMENT	1-21, 1-23
MB006	90274-0084	PRESSURE GUARD, 1800 KPA	6-89
MB007	90274-0056	PRESSURE SWITCH, 100 - 1200 KPA	6-39, 6-41
MB009	90044-0194	PROX.SW. IN5329/IN3002-BPKG	7-35, 7-37
MB010	90044-0151	LIMIT SW. GLEB24C	3-27
MB011	90459-0472	KEY SAF.SW. AZ 16 02ZVRK-M20-2152-2254	2-65
MB012	90459-0472	KEY SAF.SW. AZ 16 02ZVRK-M20-2152-2254	2-65
MB013	312105-0372	SCREW M6S ISO 4017 M6X25 A480	5-51
MB014	90059-0001	THERMOSTAT	8-51
MB015	90459-0472	KEY SAF.SW. AZ 16 02ZVRK-M20-2152-2254	2-27
MB019	90459-0472	KEY SAF.SW. AZ 16 02ZVRK-M20-2152-2254	2-29
MB020	90458-0894	PROXIMITY SENSOR E2E2-X10MB1-5M	5-43
MB032	90044-0194	PROX.SW. IN5329/IN3002-BPKG	7-23, 7-25, 7-27, 7-29
MB034	567070-0011	ELECTRODE	1-21, 1-23
MB034	567070-0019	ELECTRODE	1-21, 1-23
MB038	90326-0052	THERMO ELEMENT	1-21, 1-23
MB039	90326-0051	THERMOCOUPLE, 12826-33	1-43, 1-45
MB040	90326-0051	THERMOCOUPLE, 12826-33	1-141
MB043.1	567070-0010	ELECTRODE	1-95, 1-97
MB043.2	567070-0015	ELECTRODE	1-95, 1-97
MB045	90457-0019	LEVEL PROBE, HMFB-S=45-0=80-0=90-T70	6-91, 6-93
MB046	90044-0194	PROX.SW. IN5329/IN3002-BPKG	1-57
MB047	90044-0104	PROX.SWITCH IFM IN 3002	1-59
MB050	90326-0089	THERMOCOUPLE, 5110-089-000	1-67, 1-69
MB051	90458-0676	PROXIMITY SWITCH,E2EG-X5B1-6M	1-67, 1-69
MB053	90044-0194	PROX.SW. IN5329/IN3002-BPKG	1-67, 1-69
MB055	90326-0051	THERMOCOUPLE, 12826-33	1-63
MB061	90044-0194	PROX.SW. IN5329/IN3002-BPKG	1-49, 1-51
MB062	90274-0045	PRESSURE GUARD, 14 KPA	2-9
MB063	90044-0194	PROX.SW. IN5329/IN3002-BPKG	1-141
MB064	567070-0012	ELECTRODE	6-79, 6-81
MB071	90457-0047	SENSOR 2750-1-5111-1 W.ADAPTER PNP	1-63
MB072	90326-0080	THERMOCOUPLE, 5110080-000	5-23, 5-25
MB073	90326-0080	THERMOCOUPLE, 5110080-000	5-23, 5-25
MB074	90326-0080	THERMOCOUPLE, 5110080-000	5-23, 5-25

Pos	Part No	Description	Page No
M			
MB075	90326-0080	THERMOCOUPLE, 5110080-000	5-23, 5-25
MB085	979500-0001	ELECTRODE	1-21, 1-23
MB094	90044-0116	CYLINDER,SENSOR	1-37
MB095	1282411-0000	FLOAT	6-63
MB104	90044-0194	PROX.SW. IN5329/IN3002-BPKG	1-67, 1-69
MB108	90044-0139	KEY SAF.SW. AZ16-02 ZVR K-2254	8-19, 8-21, 8-23
MB109	90044-0194	PROX.SW. IN5329/IN3002-BPKG	7-23, 7-25, 7-27, 7-29
MB111	90044-0194	PROX.SW. IN5329/IN3002-BPKG	7-23, 7-25, 7-27, 7-29
MB112	42063-0100	LEVEL DETECTOR	1-183
MB115	90459-0472	KEY SAF.SW. AZ 16 02ZVRK-M20-2152-2254	8-9
MB119	90044-0117	PROX.SW. IX 0208	5-67
MB120	90044-0124	PROX.SW. 922AB2XM-A9P-050-LZ-876	3-33
MB132	90458-0747	SENSOR FOR CYLINDER, SMH-1PC	4-15
MB134	90458-0747	SENSOR FOR CYLINDER, SMH-1PC	4-13
MB149	90458-0675	PROXIMITY SENSOR, E2EG-X5MB1-5M	8-13
MB150	90458-0675	PROXIMITY SENSOR, E2EG-X5MB1-5M	8-13
MB153	90044-0104	PROX.SWITCH IFM IN 3002	1-15
MB154	90232-0123	PH.CELL WLL170-P135-6011723	8-65
MB154.1	90232-0347	FIBRE LL3-TB01 5 308050	8-63
MB154	90459-0472	KEY SAF.SW. AZ 16 02ZVRK-M20-2152-2254	8-19, 8-21, 8-23
MB160	90458-0675	PROXIMITY SENSOR, E2EG-X5MB1-5M	1-177
MB236	90044-0194	PROX.SW. IN5329/IN3002-BPKG	7-39, 7-41
MB510.1	567070-0014	ELECTRODE	1-9, 1-11
MB510.2	567070-0014	ELECTRODE	1-11
MB511	90274-0066	PRESSURE SWITCH, 5,516 - 689,5 KPA	1-9, 1-11
MB512	90458-0676	PROXIMITY SWITCH,E2EG-X5B1-6M	1-67, 1-69
MB517	90044-0104	PROX.SWITCH IFM IN 3002	1-19
MB518	90326-0060	THERMOCOUPLE, CR-AL	1-15
MB519	90044-0104	PROX.SWITCH IFM IN 3002	1-19
MB521	90458-2619	FLOW METER, D-6230-HGB-BB-AV-99-0-N2	1-9, 1-11
ME003	90164-0015	LIGHT FIXTURE, DWDCV111B/230V 50HZ	8-63
ML001	571872-0000	BUSBAR,LEFT	4-53
ML001	2554960-0000	BUSBAR LEFT	4-53
ML002	571871-0000	BUSBAR,RIGHT	4-51
ML002	2554961-0000	BUSBAR RIGHT	4-51
ML003	1035587-0000	INDUCTOR	7-45
MM001	90457-0172	MOTOR 3GAA 131001-ASA	3-7
MM004	90457-0131	PUMP SV805 R22T 50HZ	5-51
MM004	90458-2762	PUMP SV805 R406T 60HZ	5-51
MM005	90045-0228	MOTOR 7AA80M4-B5	6-91, 6-93
MM006	90321-0037	PUMP C-6125P EP 220V;50HZ	6-13
MM007	90270-0017	COMPRESSOR NASH/ELMO 112 MB/4-2083	6-61
MM010	90045-0087	MOTOR 3GAA 071002-CSA M2AA 71B	6-67
MM017	2526863-0000	PUMP	1-21, 1-23
MM018	90045-0161	MOTOR MGC 11	6-77
MM019	90458-1879	GEARS, WORM MOTOR 528V--L06-B01	1-61
MM021	90458-1493	GEARS, WORM MOTOR IGL 80-60 + VE31-GR5	8-13
MM132	90458-1301	CYLINDER ETS32-M10NA2X-FM50-AEUM1D	4-15
MM134	90458-1301	CYLINDER ETS32-M10NA2X-FM50-AEUM1D	4-13
MR001	90206-0053	HEATING ELEMENT 230V 1200W	8-51
MR032	449939-0001	HEATING ELEMENT 15KW	1-43, 1-45
MR033	1538473-0000	SEALING BLOCK	7-19
MR034	1524481-0000	SEALING BLOCK	7-21
MR035	90459-1094	HEATING ELEMENT, 3000W 240V	1-35
MR036	90206-0070	HEATING ELEMENT 6000W 380/220V	1-21, 1-23
MR037	90206-0031	HEATING ELEMENT 700+1200W,220V	1-39
MS004	90064-0124	SWITCH, EM. STOP, ZB2-BS844+ZB2-BZ1045	1-147, 1-149
MS004.1	486826-0001	SIGN "EMERGENCY STOP"	1-147, 1-149
MS005	90458-1651	EMERGENCY STOP, ZB4-BS-844 ZB4-BZ-104	7-17
MS005.1	486826-0001	SIGN "EMERGENCY STOP"	7-17
MS008	90064-0085	PUSH BUTTON, RED	8-63
MS008.1	359301-0110	SIGN "SHORT STOP"	8-63
MS011	90458-1651	EMERGENCY STOP, ZB4-BS-844 ZB4-BZ-104	8-63
MS011.1	486826-0001	SIGN "EMERGENCY STOP"	8-63
MS035	90064-0085	PUSH BUTTON, RED	7-17
MS035.1	359301-0110	SIGN "SHORT STOP"	7-17
MT001	67379-0254	TRANSFORMER	4-53
MT001	67379-0262	TRANSFORMER	4-53
MT001	67379-0264	TRANSFORMER	4-53
MT001	67379-0265	TRANSFORMER	4-53
MT002	67379-0254	TRANSFORMER	4-51
MT002	67379-0262	TRANSFORMER	4-51
MT002	67379-0264	TRANSFORMER	4-51
MT002	67379-0265	TRANSFORMER	4-51
MX002	2506331-0200	CONNECTION BOX	5-57
MX004.1	90326-0012	PROTECTIVE COVER, T31A4618	1-21, 1-23
MX004	90326-0020	PLUG, FEMALE YELLOW CR-AL	1-21, 1-23
MX006	90195-0020	TERMINAL BLOCK, 1977.2	6-13
MX007	456827-0400	CONNECTION BOX	2-5
MX008	1036443-0000	CONTACT UNIT	5-23, 5-25
MX009	1036443-0000	CONTACT UNIT	5-23, 5-25
MX010	1036443-0000	CONTACT UNIT	5-23, 5-25

Pos	Part No	Description	Page No
M			
MX011	1036443-0000	CONTACT UNIT	5-23, 5-25
MX020	2501466-0100	CONNECTION BOX	9-17
MX021	2501465-0100	CONNECTION BOX	9-17
MX022	2510844-0100	CONNECTION BOX	9-17
MX031	580064-0200	CONNECTION BOX	7-5, 7-7
MX032	90042-0535	TERMINAL BOARD 19 CORDS	6-43, 6-45, 6-47, 6-49, 6-51, 6-53
MX033	90042-0535	TERMINAL BOARD 19 CORDS	6-43, 6-45, 6-47, 6-49, 6-51, 6-53
MX034	90042-0535	TERMINAL BOARD 19 CORDS	6-43, 6-45, 6-47, 6-49, 6-51, 6-53
MX035	90042-0535	TERMINAL BOARD 19 CORDS	6-43, 6-45, 6-47, 6-49, 6-51, 6-53
MX038.1	90326-0012	PROTECTIVE COVER, T31A4618	1-21, 1-23
MX038	90326-0020	PLUG, FEMALE YELLOW CR-AL	1-21, 1-23
MX039.1	90326-0012	PROTECTIVE COVER, T31A4618	1-43, 1-45
MX039	90326-0020	PLUG, FEMALE YELLOW CR-AL	1-43, 1-45
MX040.1	90326-0012	PROTECTIVE COVER, T31A4618	1-141
MX040	90326-0020	PLUG, FEMALE YELLOW CR-AL	1-141
MX050.1	90326-0012	PROTECTIVE COVER, T31A4618	1-67, 1-69
MX050	90326-0020	PLUG, FEMALE YELLOW CR-AL	1-67, 1-69
MX055.1	90326-0012	PROTECTIVE COVER, T31A4618	1-63
MX055	90326-0020	PLUG, FEMALE YELLOW CR-AL	1-63
MX060	1558318-0100	CONNECTION BOX	8-63
MX061	90110-0170	FEMALE INSERT 10-POLE	8-63
MX061.1	90110-0171	COVER 10-POLE	8-63
MX061	90110-0216	MALE INSERT 70 310 1040 0	2-51
MX061.1	90458-2418	CHASSI HOUSING 10-POLE, 70.331.1028.0	2-51
MX075	67380-0208	TRANSFORMER	7-45
MX079.1	90326-0012	PROTECTIVE COVER, T31A4618	1-39
MX212	90326-0022	PLUG, MALE YELLOW CR-AL	5-23, 5-25
MX213	90326-0022	PLUG, MALE YELLOW CR-AL	5-23, 5-25
MX214	90326-0022	PLUG, MALE YELLOW CR-AL	5-23, 5-25
MX215	90326-0022	PLUG, MALE YELLOW CR-AL	5-23, 5-25
MX518.2	90326-0012	PROTECTIVE COVER, T31A4618	1-15
MX518.1	90326-0020	PLUG, FEMALE YELLOW CR-AL	1-15
MX518	90326-0022	PLUG, MALE YELLOW CR-AL	1-15
MY001	90042-0539	PILOT VALVE L=350MM	6-43, 6-45, 6-47, 6-49, 6-51, 6-53
MY002	90042-0539	PILOT VALVE L=350MM	6-43, 6-45, 6-47, 6-49, 6-51, 6-53
MY003	90042-0539	PILOT VALVE L=350MM	6-43, 6-45, 6-47, 6-49, 6-51, 6-53
MY004	544906-0000	SOLENOID VALVE	1-95, 1-97
MY005	90042-0539	PILOT VALVE L=350MM	6-43, 6-45, 6-47, 6-49, 6-51, 6-53
MY006	90042-0539	PILOT VALVE L=350MM	6-43, 6-45, 6-47, 6-49, 6-51, 6-53
MY007	90042-0539	PILOT VALVE L=350MM	6-43, 6-45, 6-47, 6-49, 6-51, 6-53
MY008	90042-0539	PILOT VALVE L=350MM	6-43, 6-45, 6-47, 6-49, 6-51, 6-53
MY009	90042-0539	PILOT VALVE L=350MM	6-43, 6-45, 6-47, 6-49, 6-51, 6-53
MY017	90042-0539	PILOT VALVE L=350MM	6-43, 6-45, 6-47, 6-49, 6-51, 6-53
MY019	90042-0539	PILOT VALVE L=350MM	6-43, 6-45, 6-47, 6-49, 6-51, 6-53
MY020	90042-0539	PILOT VALVE L=350MM	6-43, 6-45, 6-47, 6-49, 6-51, 6-53
MY021	90042-0539	PILOT VALVE L=350MM	6-43, 6-45, 6-47, 6-49, 6-51, 6-53
MY022	90458-2200	ELECTROMAGNETIC CLUTCH, 30 MM/24 VDC	3-5
MY023	90042-0539	PILOT VALVE L=350MM	6-43, 6-45, 6-47, 6-49, 6-51, 6-53
MY024	90042-0539	PILOT VALVE L=350MM	6-43, 6-45, 6-47, 6-49, 6-51, 6-53
MY025	90042-0539	PILOT VALVE L=350MM	6-43, 6-45, 6-47, 6-49, 6-51, 6-53
MY026	90042-0539	PILOT VALVE L=350MM	6-43, 6-45, 6-47, 6-49, 6-51, 6-53
MY027	90042-0539	PILOT VALVE L=350MM	6-43, 6-45, 6-47, 6-49, 6-51, 6-53
MY029	90042-0172	SOLENOID VALVE 4023/1005/1032 24VDC	6-29
MY030	90042-0539	PILOT VALVE L=350MM	6-43, 6-45, 6-47, 6-49, 6-51, 6-53
MY031	90042-0172	SOLENOID VALVE 4023/1005/1032 24VDC	6-27
MY032	90042-0172	SOLENOID VALVE 4023/1005/1032 24VDC	6-27
MY033	90042-0134	SOLENOID VALVE ASCO SCG 210 802 24VDC	6-95
MY034	90042-0171	SOLENOID VALVE BUERKERT	1-95, 1-97
MY035	544906-0000	SOLENOID VALVE	1-95, 1-97
MY037	90042-0539	PILOT VALVE L=350MM	6-43, 6-45, 6-47, 6-49, 6-51, 6-53
MY039	90042-0173	SOLENOID VALVE BURKERT	6-39, 6-41
MY043	90432-0023	BRAKE ORTLINGHAUS	3-5
MY051	90042-0173	SOLENOID VALVE BURKERT	6-21
MY052	90457-0170	DIRECTION VALVE, NO. 0 810 091 212	6-91, 6-93
MY086	90042-0539	PILOT VALVE L=350MM	6-43, 6-45, 6-47, 6-49, 6-51, 6-53
MY100	90042-0539	PILOT VALVE L=350MM	6-43, 6-45, 6-47, 6-49, 6-51, 6-53
MY102	90042-0539	PILOT VALVE L=350MM	6-43, 6-45, 6-47, 6-49, 6-51, 6-53
MY103	90042-0539	PILOT VALVE L=350MM	6-43, 6-45, 6-47, 6-49, 6-51, 6-53
MY105	90042-0539	PILOT VALVE L=350MM	6-43, 6-45, 6-47, 6-49, 6-51, 6-53
MY107	90458-1092	PROPORTIONAL VALVE 0 - 10V/0-6 BAR	6-39, 6-41
MY108	544906-0000	SOLENOID VALVE	1-21, 1-23
MY129	90042-0539	PILOT VALVE L=350MM	6-43, 6-45, 6-47, 6-49, 6-51, 6-53
MY131.1	90110-0095	CONNECTOR 3 POLE + EARTH	6-91, 6-93
MY131	90458-2722	DIRECTION VALVE, NO. 0 810 091 222	6-91, 6-93
MY132.1	90110-0095	CONNECTOR 3 POLE + EARTH	6-91, 6-93
MY132	90458-2722	DIRECTION VALVE, NO. 0 810 091 222	6-91, 6-93
MY177	90042-0539	PILOT VALVE L=350MM	6-43, 6-45, 6-47, 6-49, 6-51, 6-53
MY184	90458-1092	PROPORTIONAL VALVE 0 - 10V/0-6 BAR	6-39, 6-41
MY510	979956-0000	SOLENOID VALVE	1-9, 1-11
MY513	90042-0171	SOLENOID VALVE BUERKERT	1-9, 1-11
MY514	90042-0171	SOLENOID VALVE BUERKERT	1-11
MY515	90042-0171	SOLENOID VALVE BUERKERT	1-11

Machine Type Group Description Page No

Pos	Part No	Description	Page No
M			
MY516	90042-0171	SOLENOID VALVE BUERKERT	1-11
MY517	90042-0171	SOLENOID VALVE BUERKERT	1-11
MY519	90187-0176	ACTUATOR ECC 008 FOR DIAPHR. VALVE	1-15
MY519	90459-1420	PROPORTIONAL VALVE 0 - 10V/0-6 BAR	1-9, 1-11
MY915	90042-0539	PILOT VALVE L=350MM	6-43, 6-45, 6-47, 6-49, 6-51, 6-53
P			
P002	90053-0031	HOUR COUNTER, B 609.10 10-50VDC	10-141, 10-143
P002.1	359241-0201	SIGN: " HOUR METER"	10-141, 10-143
P003	90053-0029	COUNTER, F524.800FA3C 24VDC	10-141, 10-143
P003.1	359241-0180	SIGN: " PRODUCTION"	10-141, 10-143
P004	90053-0031	HOUR COUNTER, B 609.10 10-50VDC	10-141, 10-143
P004.1	359241-0459	SIGN "PT HOUR METER"	10-141, 10-143
P005	90332-0020	RECORDER, 6 CHANNELS 85-264VAC/DC	10-141, 10-143
Q			
Q001.1	90457-0123	SIGN, MAIN SWITCH	10-85, 10-87
Q001	90457-0198	MAIN SWITCH	10-151
Q001.2	359241-0297	SIGN: " 50 HZ"	10-85, 10-87
Q006	90095-0077	OVERLOAD PROTECTION, PKZM 6-10 A	10-135
Q006.1	90259-0313	AUX. CONTACT K&M NHI21-PKZM0	10-135
Q007	90095-0075	OVERLOAD PROTECTION, PKZM 4 A	10-135
Q007.1	90259-0313	AUX. CONTACT K&M NHI21-PKZM0	10-135
Q008	90095-0077	OVERLOAD PROTECTION, PKZM 6-10 A	10-135
Q008.2	90259-0308	CONN.TERM.K&M BK 25/3-PKZ0	10-135
Q008.1	90259-0313	AUX. CONTACT K&M NHI21-PKZM0	10-135
Q009	90095-0073	OVERLOAD PROTECTION, PKZM 1,6 A	10-135
Q009.2	90259-0308	CONN.TERM.K&M BK 25/3-PKZ0	10-135
Q009.1	90259-0313	AUX. CONTACT K&M NHI21-PKZM0	10-135
Q016	90095-0069	OVERLOAD PROTECTION, PKZM 0,25 A	10-135
Q016.1	90259-0313	AUX. CONTACT K&M NHI21-PKZM0	10-135
R			
R007	90121-0132	RESISTANCE FIXED, 0,51 KOHM, 0,25 W	10-69, 10-71
S			
S001	90064-0124	SWITCH, EM. STOP, ZB2-BS844+ZB2-BZ1045	10-125
S002	90064-0124	SWITCH, EM. STOP, ZB2-BS844+ZB2-BZ1045	10-123
S003	90111-0124	KEY SWITCH, 1NO,1NC CONTACT	10-141, 10-143
S003.1	359241-0122	SIGN: " CLEANING STEAM BARRIER SPACE"	10-141, 10-143
S004	90111-0122	KEY SWITCH, 2 NO CONTACTS	10-141, 10-143
S004.1	359241-0133	SIGN: " SERVICE SWITCH"	10-141, 10-143
S006	90111-0120	SWITCH, 2 POS.704.510 .0A+704.901.5/A	10-141, 10-143
S006.1	359241-0140	SIGN: " LIGHT OFF/ON"	10-141, 10-143
T			
T001	90458-0917	TRANSF. 3-PH 750VA SEC. 23A	10-85, 10-87
T004	90458-1273	TRANSFORMER, OFL-1350	10-85, 10-87
T005	90245-0029	TRANSFORMER, 1280-3660/TP 182	10-85, 10-87
T006	90458-0258	TRANSFORMER, 220VAC/6-9-12VAC	10-85, 10-87
V			
V001	90038-0024	RECTIFIER, 10/22A SKD 50/04A3	10-85, 10-87
V007	353021-0122	TERMINAL DISCONNECTBLE, WTR 2,5 D	10-69, 10-71
V008	353021-0122	TERMINAL DISCONNECTBLE, WTR 2,5 D	10-69, 10-71
V009	90024-0034	DIODE SURGE SUPPRESSOR, FD B DIL	10-45
V010	353021-0122	TERMINAL DISCONNECTBLE, WTR 2,5 D	10-69, 10-71
V011	90024-0034	DIODE SURGE SUPPRESSOR, FD B DIL	10-45
V012	90024-0034	DIODE SURGE SUPPRESSOR, FD B DIL	10-45
V013	90024-0034	DIODE SURGE SUPPRESSOR, FD B DIL	10-45
V014	353021-0122	TERMINAL DISCONNECTBLE, WTR 2,5 D	10-69, 10-71
V015	353021-0122	TERMINAL DISCONNECTBLE, WTR 2,5 D	10-69, 10-71
W			
W005	351150-0418	CABLE OLFLEX 4X2,5 MM2 LIGHT/GREY	2-5
W006	351150-0412	CABLE OLFLEX 3X1,5 MM2 LIGHT/GREY	2-5
W007	351150-0412	CABLE OLFLEX 3X1,5 MM2 LIGHT/GREY	2-5
W009	351150-0406	CABLE OLFLEX 7X0,75 MM2 LIGHT/GREY	2-39, 2-49
W010	351150-0431	CABLE OLFLEX 2X0,75 MM2 LIGHT/GREY	2-27
W011	351150-0431	CABLE OLFLEX 2X0,75 MM2 LIGHT/GREY	2-29
W013	351150-0431	CABLE OLFLEX 2X0,75 MM2 LIGHT/GREY	5-51
W018	90458-2557	CABLE OLFLEX 25X1 MM2	2-49
W019	351150-0412	CABLE OLFLEX 3X1,5 MM2 LIGHT/GREY	2-57
W023	90220-0104	SCR. CABLE 4X1,5MM2	2-5
W025	351150-0428	CABLE OLFLEX 41X0,75 MM2 LIGHT/GREY	2-5
W033	90220-0059	THERMOCOUPLE CABLE K/ 2X0,81MM2	10-141, 10-143
W034	90220-0059	THERMOCOUPLE CABLE K/ 2X0,81MM2	10-141, 10-143
W035	90220-0059	THERMOCOUPLE CABLE K/ 2X0,81MM2	10-27
W036	90220-0059	THERMOCOUPLE CABLE K/ 2X0,81MM2	10-27
W037	90220-0059	THERMOCOUPLE CABLE K/ 2X0,81MM2	10-141, 10-143
W038	90220-0059	THERMOCOUPLE CABLE K/ 2X0,81MM2	10-141, 10-143
W039	90220-0059	THERMOCOUPLE CABLE K/ 2X0,81MM2	10-141, 10-143
W040	90220-0059	THERMOCOUPLE CABLE K/ 2X0,81MM2	10-141, 10-143
W042	90220-0059	THERMOCOUPLE CABLE K/ 2X0,81MM2	10-141, 10-143
W044	551969-0012	COAXIAL CABLE	10-161
W046	90220-0059	THERMOCOUPLE CABLE K/ 2X0,81MM2	10-141, 10-143
W047	90220-0059	THERMOCOUPLE CABLE K/ 2X0,81MM2	10-141, 10-143
W048	90220-0059	THERMOCOUPLE CABLE K/ 2X0,81MM2	10-141, 10-143
W049	90220-0059	THERMOCOUPLE CABLE K/ 2X0,81MM2	10-141, 10-143

Pos	Part No	Description	Page No
W			
W050	90031-0305	I/O EXPANSION CABLE	10-39, 10-41
W056	90220-0059	THERMOCOUPLE CABLE K/ 2X0,81MM2	10-141, 10-143
W057	90220-0059	THERMOCOUPLE CABLE K/ 2X0,81MM2	10-141, 10-143
W058	90220-0059	THERMOCOUPLE CABLE K/ 2X0,81MM2	10-141, 10-143
W059	90220-0059	THERMOCOUPLE CABLE K/ 2X0,81MM2	10-141, 10-143
W061	1254442-0000	CABLE SERIAL	10-79
W062	1511793-0000	CABLE	10-79
W063	90220-0091	PAIR TWISTED CABLE 2X2X0,25MM2	10-83
W064	1478661-0000	CABLE SERIAL	10-79
W066	90220-0059	THERMOCOUPLE CABLE K/ 2X0,81MM2	10-141, 10-143
W067	90220-0183	SCR. CABLE 2X0,34MM2	10-13, 10-15, 10-17
W068	90220-0183	SCR. CABLE 2X0,34MM2	10-13, 10-15, 10-17
W069	90220-0183	SCR. CABLE 2X0,34MM2	10-13, 10-15, 10-17
W070	90220-0059	THERMOCOUPLE CABLE K/ 2X0,81MM2	10-141, 10-143
W071	90220-0059	THERMOCOUPLE CABLE K/ 2X0,81MM2	10-141, 10-143
W072	90220-0059	THERMOCOUPLE CABLE K/ 2X0,81MM2	10-141, 10-143
W073	1143884-0000	COPPER BRAID	10-141, 10-143
W074	1143884-0000	COPPER BRAID	10-141, 10-143
W075	1143884-0000	COPPER BRAID	10-141, 10-143
W076	1143884-0000	COPPER BRAID	10-141, 10-143
W077	1143884-0000	COPPER BRAID	10-141, 10-143
W078	1143884-0000	COPPER BRAID	10-141, 10-143
W079	1143884-0000	COPPER BRAID	10-141, 10-143
W080	1143884-0000	COPPER BRAID	10-141, 10-143
W081	1143884-0000	COPPER BRAID	10-141, 10-143
W082	1143884-0000	COPPER BRAID	10-141, 10-143
W083	1143884-0000	COPPER BRAID	10-141, 10-143
W084	1143884-0000	COPPER BRAID	10-141, 10-143
W085	90220-0104	SCR. CABLE 4X1,5MM2	10-97, 10-99
W086	1143884-0000	COPPER BRAID	10-141, 10-143
W088	1512322-0000	COPPER BRAID	10-39
W090	1143884-0000	COPPER BRAID	10-141, 10-143
W098	351150-0415	CABLE OLFLEX 7X1,5 MM2 LIGHT/GREY	10-159
W099	90220-0092	PAIR TWISTED CABLE 3X2X0,25MM2	10-13, 10-15, 10-17
W101	90220-0105	SCR. CABLE 4X2,5MM2	3-7
W102	90220-0183	SCR. CABLE 2X0,34MM2	10-161
W102	351150-0405	CABLE OLFLEX 5X0,75 MM2 LIGHT/GREY	3-27
W103	90220-0183	SCR. CABLE 2X0,34MM2	10-161
W104	90220-0183	SCR. CABLE 2X0,34MM2	10-161
W108	351150-0425	CABLE OLFLEX 25X0,75 MM2 LIGHT/GREY	2-5
W110	351150-0413	CABLE OLFLEX 4X1,5 MM2 LIGHT/GREY	2-5
W121	1512322-0000	COPPER BRAID	10-39
W122	1512322-0000	COPPER BRAID	10-41
W123	1512322-0000	COPPER BRAID	10-43
W124	90220-0183	SCR. CABLE 2X0,34MM2	10-39
W125	90220-0183	SCR. CABLE 2X0,34MM2	10-39
W126	90220-0183	SCR. CABLE 2X0,34MM2	10-39
W0127	90220-0183	SCR. CABLE 2X0,34MM2	10-13, 10-15, 10-17
W127	90220-0183	SCR. CABLE 2X0,34MM2	10-39
W128	90220-0183	SCR. CABLE 2X0,34MM2	10-39
W129	90220-0092	PAIR TWISTED CABLE 3X2X0,25MM2	10-13, 10-15, 10-17
W130	90220-0183	SCR. CABLE 2X0,34MM2	10-39
W131	1512322-0000	COPPER BRAID	10-39
W133	1143884-0000	COPPER BRAID	10-141, 10-143
W134	1143884-0000	COPPER BRAID	10-141, 10-143
W230	351150-0412	CABLE OLFLEX 3X1,5 MM2 LIGHT/GREY	2-5
W231	351150-0412	CABLE OLFLEX 3X1,5 MM2 LIGHT/GREY	2-5
W232	351150-0412	CABLE OLFLEX 3X1,5 MM2 LIGHT/GREY	2-5
W233	351150-0412	CABLE OLFLEX 3X1,5 MM2 LIGHT/GREY	2-5
W234	90220-0034	THERMOCOUPLE CABLE K/ 2X0,5MM2	2-5
W235	90220-0034	THERMOCOUPLE CABLE K/ 2X0,5MM2	2-5
W236	90220-0034	THERMOCOUPLE CABLE K/ 2X0,5MM2	2-5
W237	90220-0034	THERMOCOUPLE CABLE K/ 2X0,5MM2	2-5
W238	90220-0034	THERMOCABLE TEX/SITW-20F-KX 2X0,5MM2	5-23, 5-25
W239	90220-0034	THERMOCABLE TEX/SITW-20F-KX 2X0,5MM2	5-23, 5-25
W240	90220-0034	THERMOCABLE TEX/SITW-20F-KX 2X0,5MM2	5-23, 5-25
W241	90220-0034	THERMOCABLE TEX/SITW-20F-KX 2X0,5MM2	5-23, 5-25
W242	351120-0144	CABLE SIHF 3X1,5MM2 GREEN/YELLOW	5-23, 5-25
W243	351120-0144	CABLE SIHF 3X1,5MM2 GREEN/YELLOW	5-23, 5-25
W244	351120-0144	CABLE SIHF 3X1,5MM2 GREEN/YELLOW	5-23, 5-25
W245	351120-0144	CABLE SIHF 3X1,5MM2 GREEN/YELLOW	5-23, 5-25
W246	351150-0431	CABLE OLFLEX 2X0,75 MM2 LIGHT/GREY	2-65
W247	351150-0431	CABLE OLFLEX 2X0,75 MM2 LIGHT/GREY	2-27
W248	351150-0431	CABLE OLFLEX 2X0,75 MM2 LIGHT/GREY	2-65
W249	351150-0431	CABLE OLFLEX 2X0,75 MM2 LIGHT/GREY	2-29
W290	351162-0106	CABLE AWM 1X4 MM2 YELLOW-GREEN	2-5
W301	351150-0418	CABLE OLFLEX 4X2,5 MM2 LIGHT/GREY	6-61
W302	351120-0144	CABLE SIHF 3X1,5MM2 GREEN/YELLOW	8-65
W303	351150-0431	CABLE OLFLEX 2X0,75 MM2 LIGHT/GREY	6-79, 6-81
W304	351150-0418	CABLE OLFLEX 4X2,5 MM2 LIGHT/GREY	6-91, 6-93
W305	351150-0412	CABLE OLFLEX 3X1,5 MM2 LIGHT/GREY	6-13
W308	351150-0418	CABLE OLFLEX 4X2,5 MM2 LIGHT/GREY	6-67

W

Pos	Part No	Description	Page No
W312	351150-0412	CABLE OLFLEX 3X1,5 MM2 LIGHT/GREY	1-21, 1-23
W316	351150-0403	CABLE OLFLEX 3X0,75 MM2 LIGHT/GREY	6-91, 6-93
W317	351150-0403	CABLE OLFLEX 3X0,75 MM2 LIGHT/GREY	6-91, 6-93
W320	351150-0403	CABLE OLFLEX 3X0,75 MM2 LIGHT/GREY	6-39, 6-41
W321	351150-0403	CABLE OLFLEX 3X0,75 MM2 LIGHT/GREY	6-39, 6-41
W322	351150-0403	CABLE OLFLEX 3X0,75 MM2 LIGHT/GREY	6-89
W325	351150-0403	CABLE OLFLEX 3X0,75 MM2 LIGHT/GREY	6-27
W327	90220-0091	PAIR TWISTED CABLE 2X2X0,25MM2	6-39, 6-41
W342	351150-0403	CABLE OLFLEX 3X0,75 MM2 LIGHT/GREY	6-39, 6-41
W345	351150-0431	CABLE OLFLEX 2X0,75 MM2 LIGHT/GREY	6-29
W348	351150-0403	CABLE OLFLEX 3X0,75 MM2 LIGHT/GREY	6-27
W349	351150-0403	CABLE OLFLEX 3X0,75 MM2 LIGHT/GREY	6-91, 6-93
W350	351150-0403	CABLE OLFLEX 3X0,75 MM2 LIGHT/GREY	6-91, 6-93
W352	351150-0431	CABLE OLFLEX 2X0,75 MM2 LIGHT/GREY	6-21
W354	351150-0403	CABLE OLFLEX 3X0,75 MM2 LIGHT/GREY	6-95
W355	351150-0404	CABLE OLFLEX 4X0,75 MM2 LIGHT/GREY	6-91, 6-93
W356	351150-0404	CABLE OLFLEX 4X0,75 MM2 LIGHT/GREY	6-89
W360	351150-0405	CABLE OLFLEX 5X0,75 MM2 LIGHT/GREY	6-63
W361	351150-0403	CABLE OLFLEX 3X0,75 MM2 LIGHT/GREY	6-77
W370	551969-0006	COAXIAL CABLES	2-5
W371	551969-0006	COAXIAL CABLES	2-5
W372	1548155-0000	COAXIAL CABLE	4-53
W373	1548155-0000	COAXIAL CABLE	4-51
W380	90220-0091	PAIR TWISTED CABLE 2X2X0,25MM2	6-39, 6-41
W390	351162-0109	CABLE AWM 1X16 MM2 YELLOW-GREEN	6-57
W391	351162-0106	CABLE AWM 1X4 MM2 YELLOW-GREEN	6-39, 6-41
W392	351162-0106	CABLE AWM 1X4 MM2 YELLOW-GREEN	2-49
W401	351120-0167	CABLE SIHF 4X6MM2 GREEN/YELLOW	1-21, 1-23
W402	351120-0144	CABLE SIHF 3X1,5MM2 GREEN/YELLOW	1-39
W403	351120-0145	CABLE SIHF 3X2,5MM2 GREEN/YELLOW	1-35
W404	90220-0104	SCR. CABLE 4X1,5MM2	1-47
W405	351150-0431	CABLE OLFLEX 2X0,75 MM2 LIGHT/GREY	1-93
W406	90220-0059	THERMOCOUPLE CABLE K/ 2X0,81MM2	1-21, 1-23
W407	90220-0059	THERMOCOUPLE CABLE K/ 2X0,81MM2	1-141
W408	90220-0059	THERMOCOUPLE CABLE K/ 2X0,81MM2	1-21, 1-23
W409	90220-0059	THERMOCOUPLE CABLE K/ 2X0,81MM2	1-43, 1-45
W410	90220-0059	THERMOCOUPLE CABLE K/ 2X0,81MM2	1-35
W411	90220-0059	THERMOCOUPLE CABLE K/ 2X0,81MM2	1-63
W412	90220-0059	THERMOCOUPLE CABLE K/ 2X0,81MM2	1-67, 1-69
W416	351150-0405	CABLE OLFLEX 5X0,75 MM2 LIGHT/GREY	1-49, 1-51
W417	351150-0405	CABLE OLFLEX 5X0,75 MM2 LIGHT/GREY	1-49, 1-51
W418	351150-0405	CABLE OLFLEX 5X0,75 MM2 LIGHT/GREY	1-49, 1-51
W420	90220-0085	CABLES, MULTI-CONDUCTOR SCREENED	1-183
W425	351150-0404	CABLE OLFLEX 4X0,75 MM2 LIGHT/GREY	1-95, 1-97
W426	351150-0403	CABLE OLFLEX 3X0,75 MM2 LIGHT/GREY	1-21, 1-23
W427	351150-0431	CABLE OLFLEX 2X0,75 MM2 LIGHT/GREY	1-21, 1-23
W428	351150-0431	CABLE OLFLEX 2X0,75 MM2 LIGHT/GREY	1-21, 1-23
W430	351150-0403	CABLE OLFLEX 3X0,75 MM2 LIGHT/GREY	1-95, 1-97
W431	351150-0403	CABLE OLFLEX 3X0,75 MM2 LIGHT/GREY	1-95, 1-97
W432	351150-0403	CABLE OLFLEX 3X0,75 MM2 LIGHT/GREY	1-95, 1-97
W433	90220-0059	THERMOCOUPLE CABLE K/ 2X0,81MM2	1-39
W434	351150-0405	CABLE OLFLEX 5X0,75 MM2 LIGHT/GREY	1-147, 1-149
W442	90458-1298	CONNECTOR AND CABLE 403000E 18M 080	4-15
W444	90458-1298	CONNECTOR AND CABLE 403000E 18M 080	4-13
W449	90220-0107	SCR. CABLE 5X0,75MM2	4-15
W450	90220-0059	THERMOCOUPLE CABLE K/ 2X0,81MM2	1-35
W451	90220-0107	SCR. CABLE 5X0,75MM2	4-13
W452	351120-0168	CABLE SIHF 4X10MM2 GREEN/YELLOW	1-43, 1-45
W459	351150-0413	CABLE OLFLEX 4X1,5 MM2 LIGHT/GREY	1-61
W601	548770-0006	COAXIAL CABLE L=1200 MM	7-45
W602	351150-0422	CABLE OLFLEX 3X4 MM2 LIGHT/GREY	7-33
W605	351150-0407	CABLE OLFLEX 12X0,75 MM2 LIGHT/GREY	7-17, 7-33
W615	351150-0425	CABLE OLFLEX 25X0,75 MM2 LIGHT/GREY	7-33
W630	351120-0146	CABLE SIHF 3X4MM2 GREEN/YELLOW	7-19
W631	351120-0145	CABLE SIHF 3X2,5MM2 GREEN/YELLOW	7-21
W701	351150-0403	CABLE OLFLEX 3X0,75 MM2 LIGHT/GREY	1-9, 1-11
W703	351150-0403	CABLE OLFLEX 3X0,75 MM2 LIGHT/GREY	1-11
W704	351150-0403	CABLE OLFLEX 3X0,75 MM2 LIGHT/GREY	1-11
W705	351150-0403	CABLE OLFLEX 3X0,75 MM2 LIGHT/GREY	1-11
W706	351150-0403	CABLE OLFLEX 3X0,75 MM2 LIGHT/GREY	1-11
W707	351150-0404	CABLE OLFLEX 4X0,75 MM2 LIGHT/GREY	1-9, 1-11
W715	351150-0425	CABLE OLFLEX 25X0,75 MM2 LIGHT/GREY	1-9, 1-11
W716	90220-0059	THERMOCOUPLE CABLE K/ 2X0,81MM2	1-15
W717	351150-0403	CABLE OLFLEX 3X0,75 MM2 LIGHT/GREY	1-9, 1-11
W721	90220-0072	SCR. CABLE 4X0,34MM2	1-9, 1-11
W721.1	353300-0006	SHRINKABLE HOSE	1-9, 1-11
W722	90220-0072	SCR. CABLE 4X0,34MM2	1-9, 1-11
W722.1	353300-0006	SHRINKABLE HOSE	1-9, 1-11
W750	351150-0414	CABLE OLFLEX 5X1,5 MM2 LIGHT/GREY	8-65
W751	351150-0412	CABLE OLFLEX 3X1,5 MM2 LIGHT/GREY	8-65
W753	351150-0406	CABLE OLFLEX 7X0,75 MM2 LIGHT/GREY	8-65
W754	351150-0406	CABLE OLFLEX 7X0,75 MM2 LIGHT/GREY	2-51

Pos	Part No	Description	Page No
W			
W757	90220-0104	SCR. CABLE 4X1,5MM2	8-13
W759	351150-0425	CABLE OLFLEX 25X0,75 MM2 LIGHT/GREY	8-65
W780	351150-0406	CABLE OLFLEX 7X0,75 MM2 LIGHT/GREY	8-63
W788	351150-0405	CABLE OLFLEX 5X0,75 MM2 LIGHT/GREY	8-65
W790	351150-0405	CABLE OLFLEX 5X0,75 MM2 LIGHT/GREY	8-65
W802	351150-0405	CABLE OLFLEX 5X0,75 MM2 LIGHT/GREY	7-31
W951	90220-0091	PAIR TWISTED CABLE 2X2X0,25MM2	9-17
W952	90220-0091	PAIR TWISTED CABLE 2X2X0,25MM2	9-17
W953	1366189-0000	CABLE LVDS 6M	10-79
W954	351150-0405	CABLE OLFLEX 5X0,75 MM2 LIGHT/GREY	9-27
W955	351150-0405	CABLE OLFLEX 5X0,75 MM2 LIGHT/GREY	9-29
W956	90041-0068	DATACABLE MODEM PC	9-17
W958	351150-0405	CABLE OLFLEX 5X0,75 MM2 LIGHT/GREY	9-21
X			
X001	1511800-0100	POWER SIDE,BOTTOM TERMINAL BLOCK	10-13, 10-15, 10-17
X002	1511802-0100	LOGIC BOTTOM TERMINAL BLOCK	10-13, 10-15, 10-17
X003	1511804-0100	LOGIC SIDE,TOP TERMINAL BLOCK	10-13, 10-15, 10-17
X005	1517659-0100	MODEM	10-79
X008	1511828-0100	X008	10-13, 10-15, 10-17
X009	1511829-0100	POWER SIDE,TOP TERMINAL BLOCK	10-13, 10-15, 10-17
X011.1	90458-0871	HOUSING BULKHEAD MOUNTING HAN 6B-AGG-RB	10-97, 10-99
X011.2	90458-0875	HINGED FRAME HAN 6B FOR HOUSING	10-97, 10-99
X011	90458-0876	FEMALE INSERT HAN 6B 09 14002 2751	10-97, 10-99
X012	90110-0296	CONTACT SCREW	10-97, 10-99
X012.1	90110-0371	PLUG HOOD	8-63
X012.1	90457-0050	BULKHEAD HOUSING 149760	10-97, 10-99
X012	90459-2412	CONNECTOR 4 POLE + EARTH	8-63
X013	90110-0296	CONTACT SCREW	10-97, 10-99
X013.1	90110-0371	PLUG HOOD	8-13
X013.1	90457-0050	BULKHEAD HOUSING 149760	10-97, 10-99
X013	90459-2412	CONNECTOR 4 POLE + EARTH	8-13
X014	90110-0296	CONTACT SCREW	10-97, 10-99
X014.1	90457-0050	BULKHEAD HOUSING 149760	10-97, 10-99
X015	90110-0150	MALE INSERT 121110 0000	8-63
X015	90110-0151	FEMALE INSERT 24-POL 121130 0000	10-101
X015.1	90110-0152	CABLE HOOD 24-POL 70.352.2428.1	8-63
X015.1	90110-0153	CHASSIS HOUSING 24-P CHI 24, 121240 0000	10-101
X016	90110-0150	MALE INSERT 121110 0000	8-63
X016	90110-0151	FEMALE INSERT 24-POL 121130 0000	10-101
X016.1	90110-0152	CABLE HOOD 24-POL 70.352.2428.1	8-63
X016.1	90110-0153	CHASSIS HOUSING 24-P CHI 24, 121240 0000	10-101
X017	90110-0163	FEMALE INSERT 70 300 0640 0	10-159
X017.1	90110-0226	CABLE HOOD 6-POL 70.350.0628.0	10-159
X018.2	90110-0150	MALE INSERT 121110 0000	7-33
X018.1	90110-0243	CONTACT HOUSING 16-POL 70.320.1628.0	10-105, 10-107, 10-109, 10-111, 10-113, 10-115, 10-117, 10-119, 10-121
X018	90110-0247	FEMALE INSERT 70.200.0653.0	10-105, 10-107, 10-109, 10-111, 10-113, 10-115, 10-117, 10-119, 10-121
X018.3	90110-0346	CABLE HOOD 1211220 00 00	7-33
X019	90110-0151	FEMALE INSERT 24-POL 121130 0000	10-105, 10-107, 10-109, 10-111, 10-113, 10-115, 10-117, 10-119, 10-121
X019.1	90110-0153	CHASSIS HOUSING 24-P CHI 24, 121240 0000	10-105, 10-107, 10-109, 10-111, 10-113, 10-115, 10-117, 10-119, 10-121
X019.2	90110-0156	MALE INSERT 70.210.0653.0	7-33
X019.3	90110-0244	CABLE HOOD 6-POL 70.350.1628.0	7-33
X020	90001-0033	WALL SOCKET OUTLET	10-13, 10-15, 10-17
X020.1	90459-1738	MANDATORY ACTION SIGN ISO, READ MAINTENA	10-13, 10-15, 10-17
X021	90001-0033	WALL SOCKET OUTLET	10-13, 10-15, 10-17
X021.1	90459-1738	MANDATORY ACTION SIGN ISO, READ MAINTENA	10-13, 10-15, 10-17
X022	90110-0296	CONTACT SCREW	10-105, 10-107, 10-109, 10-111, 10-113, 10-115, 10-117, 10-119, 10-121
X022.1	90458-1181	BULKHEAD HOUSING HDC-HA-3-AWVL1/11	10-105, 10-107, 10-109, 10-111, 10-113, 10-115, 10-117, 10-119, 10-121
X023	90458-1279	PLUG CONNECTOR DP1	10-13, 10-15, 10-17
X025	90110-0151	FEMALE INSERT 24-POL 121130 0000	10-105, 10-107, 10-109, 10-111, 10-113, 10-115, 10-117, 10-119, 10-121
X025.1	90110-0153	CHASSIS HOUSING 24-P CHI 24, 121240 0000	10-105, 10-107, 10-109, 10-111, 10-113, 10-115, 10-117, 10-119, 10-121
X026.1	90110-0243	CONTACT HOUSING 16-POL 70.320.1628.0	10-105, 10-107, 10-109, 10-111, 10-113, 10-115, 10-117, 10-119, 10-121
X026	90458-1406	FEMALE INSERT 120770	10-105, 10-107, 10-109, 10-111, 10-113, 10-115, 10-117, 10-119, 10-121
X027	90458-1279	PLUG CONNECTOR DP1	10-13, 10-15, 10-17
X300	1511806-0100	X300	10-151
X452	90110-0028	CONTACT UNIT 4-POLE	10-79
Z			
Z001	90082-0013	OVER VOLT. PROTECT. PU 4C-R 230 VAC	10-153
Z002	90024-0060	POWER LINE FILTER, 80 A 250/440 VAC	10-151
Z003	90024-0036	FILTERED TERMINAL BLOCK	10-151
Z003.1	1285108-0000	COVER	10-151
Z004	90024-0047	EMI SUPPRESSION FERRITE	10-13, 10-15, 10-17
Z005	90458-1140	FERRITE, RI-26-28-13	10-13, 10-15, 10-17

Pos	Part No	Description	Page No
Z			
Z006	90458-1140	FERRITE, RI-26-28-13	10-13, 10-15, 10-17
Z007	90458-1140	FERRITE, RI-26-28-13	10-15, 10-17
Z008	90459-3460	FOOTPRINT FILTER 22-RF010-AL	10-13, 10-15, 10-17
Z009	90459-3460	FOOTPRINT FILTER 22-RF010-AL	10-13, 10-15, 10-17
Z010	90458-1140	FERRITE, RI-26-28-13	10-13, 10-15, 10-17
Z012	90459-3460	FOOTPRINT FILTER 22-RF010-AL	10-13, 10-15, 10-17
Z013	90458-1140	FERRITE, RI-26-28-13	10-13, 10-15, 10-17
Z015	90459-3459	FOOTPRINT FILTER, 22-RF018-CL	10-13, 10-15, 10-17
Z016	90458-1140	FERRITE, RI-26-28-13	10-13, 10-15, 10-17
Z017	90459-3460	FOOTPRINT FILTER 22-RF010-AL	10-13, 10-15, 10-17
Z018	90458-1140	FERRITE, RI-26-28-13	10-13, 10-15, 10-17
Z019	90458-1162	FILTER, 6 A, 250 VAC	10-13, 10-15, 10-17
Z020	90458-1140	FERRITE, RI-26-28-13	10-13, 10-15, 10-17
Z021	90458-1140	FERRITE, RI-26-28-13	10-13, 10-15, 10-17
Z023	90458-1162	FILTER, 6 A, 250 VAC	10-13, 10-15, 10-17
Z024	90458-1140	FERRITE, RI-26-28-13	10-13, 10-15, 10-17
Z025	90458-1140	FERRITE, RI-26-28-13	10-13, 10-15, 10-17
Z033	90459-3460	FOOTPRINT FILTER 22-RF010-AL	10-13, 10-15, 10-17
Z034	90458-1140	FERRITE, RI-26-28-13	10-13, 10-15, 10-17
Z035	90458-1140	FERRITE, RI-26-28-13	10-13, 10-15, 10-17
Z036	90024-0037	INPUT FILTER, 8 A	10-13, 10-15, 10-17

Pos	Part No	Description	Page No

Pos	Part No	Description	Page No	Pos	Part No	Description	Page No

Tetra Pak

SPC binder labels. 40 mm Full width *Note! This page is generated* **automatically.**
using the **variable definitions** *made in the* **front page** *file!!*

TBA/19 020V 1(2)
648160-2000
Issue: 2004-09 Doc No: SPC-81656-0110

TBA/19 020V 1(2)
648160-2000
Issue: 2004-09 Doc No: SPC-81656-0110

TBA/19 020V 2(2)
648160-2000
Issue: 2004-09 Doc No: SPC-81656-0110

TBA/19 020V 2(2)
648160-2000
Issue: 2004-09 Doc No: SPC-81656-0110

TBA/19 020V 1(2)
648160-2000
Issue: 2004-09 Doc No: SPC-81656-0110

TBA/19 020V 1(2)
648160-2000
Issue: 2004-09 Doc No: SPC-81656-0110

TBA/19 020V 2(2)
648160-2000
Issue: 2004-09 Doc No: SPC-81656-0110

TBA/19 020V 2(2)
648160-2000
Issue: 2004-09 Doc No: SPC-81656-0110

TBA/19 020V 1(2)
648160-2000
Issue: 2004-09 Doc No: SPC-81656-0110

TBA/19 020V 1(2)
648160-2000
Issue: 2004-09 Doc No: SPC-81656-0110

TBA/19 020V 2(2)
648160-2000
Issue: 2004-09 Doc No: SPC-81656-0110

TBA/19 020V 2(2)
648160-2000
Issue: 2004-09 Doc No: SPC-81656-0110

SPC binder labels. 30 mm Half width *Note! This page is generated* **automatically.**
using the **variable definitions** *made in the* **front page** *file!!*

TBA/19 020V 1(2)
648160-2000
Issue: 2004-09 Doc No: SPC-81656-0110

TBA/19 020V 1(2)
648160-2000
Issue: 2004-09 Doc No: SPC-81656-0110

TBA/19 020V 2(2)
648160-2000
Issue: 2004-09 Doc No: SPC-81656-0110

TBA/19 020V 2(2)
648160-2000
Issue: 2004-09 Doc No: SPC-81656-0110

TBA/19 020V 1(2)
648160-2000
Issue: 2004-09 Doc No: SPC-81656-0110

TBA/19 020V 1(2)
648160-2000
Issue: 2004-09 Doc No: SPC-81656-0110

TBA/19 020V 2(2)
648160-2000
Issue: 2004-09 Doc No: SPC-81656-0110

TBA/19 020V 2(2)
648160-2000
Issue: 2004-09 Doc No: SPC-81656-0110

TBA/19 020V 1(2)
648160-2000
Issue: 2004-09 Doc No: SPC-81656-0110

TBA/19 020V 1(2)
648160-2000
Issue: 2004-09 Doc No: SPC-81656-0110

TBA/19 020V 2(2)
648160-2000
Issue: 2004-09 Doc No: SPC-81656-0110

TBA/19 020V 2(2)
648160-2000
Issue: 2004-09 Doc No: SPC-81656-0110

TBA/19 020V 1(2)
648160-2000
Issue: 2004-09 Doc No: SPC-81656-0110

TBA/19 020V 1(2)
648160-2000
Issue: 2004-09 Doc No: SPC-81656-0110

TBA/19 020V 2(2)
648160-2000
Issue: 2004-09 Doc No: SPC-81656-0110

TBA/19 020V 2(2)
648160-2000
Issue: 2004-09 Doc No: SPC-81656-0110