MM

Maintenance Manual

ASU

648116-0300

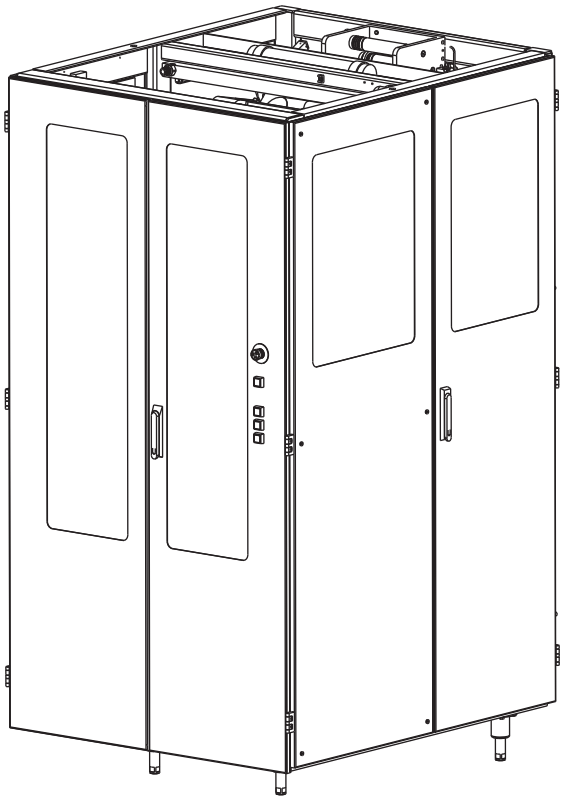

WARNING

Read and follow all safety precaution instructions throughout this manual and on safety signs attached to this equipment.
Failure to follow all safety precaution instructions could result in death or serious injury.

Tetra Pak

Doc. No. MM-1531305-0105

Copyright © 2011 Tetra Pak Group

All rights reserved. No part of this document may be reproduced or copied in any form or by any means without written permission from Tetra Pak Packaging Solutions AB.

Tetra Pak and all Tetra Pak products are trademarks belonging to the Tetra Pak Group.

The content of this manual is in accordance with the design and construction of the machine or equipment at the time of publishing. Tetra Pak reserves the right to introduce design modifications without prior notice.

The English language version of this document contains the original instructions. All other language versions are translations of the original instructions.

This document was produced by:

Tetra Pak Packaging Solutions AB
Ruben Rausings gata
SE-221 86 Lund
Sweden

Additional copies can be ordered from Tetra Pak. When ordering additional copies, always provide the document number.

Doc. No. MM-1531305-0105

Issue 2011-05

This manual is valid for:

Series No./ Machine No. Sign.

MM

Maintenance Manual

ASU
648116-0300

i Introduction

ii Safety Precautions

10 Automatic Splicing Unit

15 General

iii Index

Machine or equipment configurations that this manual is valid for are described on the next page.

Doc. No. MM-1531305-0105

Issue 2011-05

Tetra Pak

Tetra Pak Packaging Solutions AB

Valid for:

Name	Drawing Specification and Development Step	Additional Information
TBA/19 0400	648160-0400	Valid for all package shapes and volumes Valid from machine 21217/00070

Update Log for Doc. No. MM-1531305-0105

This table shows all changes made to this manual, including installed rebuilding kits, added or removed pages. Page numbering on added pages begins with UP.

Date	Installed Kit	Added Pages (Doc. No.)	Removed Pages	Signature

Date	Installed Kit	Added Pages (Doc. No.)	Removed Pages	Signature

i Introduction

About the Introduction Chapter

This chapter contains basic information about this manual and the related Tetra Pak equipment.

Abbreviations and Terminology . . . . . i - 5
Manual Information . . . . . i - 6
Delivered Manuals . . . . . i - 6
Page Layout . . . . . i - 7
Page Numbering. . . . . i - 8
Typographical Conventions . . . . . i - 8
Symbols . . . . . i - 8
Machine Introduction . . . . . i - 9
Intended Use of the Equipment . . . . . i - 9
Manufacturer . . . . . i - 9
Support and Feedback . . . . . i - 9
Declaration of Conformity . . . . . i - 9
Identification . . . . . i - 10
CE Classification . . . . . i - 10
3-A Compliance . . . . . i - 10
Machine Plate . . . . . i - 10
Orientation . . . . . i - 11
Hygiene. . . . . i - 12
Packaging Material. . . . . i - 12
Steam Barrier in the Product Valve . . . . . i - 12
How to Use This MM . . . . . i - 13
Procedures . . . . . i - 13
Procedure Start Table . . . . . i - 13
TPMS . . . . . i - 14
Planned Maintenance Program . . . . . i - 14
Checklists and Spare Parts Recommendations . . i - 14

This page intentionally left blank

Abbreviations and Terminology

Abbreviation/ Terminology	Meaning	Translation
ASU	Automatic Splicing Unit	
CE	Communautés Européennes/European Communities	
DCS	Design Correction System	
EN	Norme Européenne (European standard)	
EM	Electrical Manual	
HI	Headspace by Injection	
HVA	High Viscosity Aseptic	
IM	Installation Manual	
LED	Light Emitting Diode	
LH	Left Hand	
MM	Maintenance Manual	
OE	Optional Equipment	
OM	Operation Manual	
PC	Personal Computer	
PE	Polyethylene	
PLC	Programmable Logic Controller	
PT19	PullTab	
RH	Right Hand	
SPC	Spare Parts Catalogue	
TeM	Technical Manual	
TMCC	Tetra Pak Multi-purpose Compact Controller	
TP	Tetra Pak	
TPA	Tetra Prisma Aseptic	
TPMS	Tetra Pak Maintenance System	
TWA	Tetra Wedge Aseptic	
UP	Update Pages	

Manual Information

Tetra Pak recommends reading all delivered manuals carefully. Make sure that the delivered manuals are available to personnel who operate or maintain the equipment.

It is important to keep this manual for the lifetime of the equipment and to pass the manual on to any subsequent holder or user.

Tetra Pak will not be held responsible for any damage to the equipment caused by not following the instructions given in this manual.

Delivered Manuals

Manuals delivered with this equipment:

- EM
  The Electrical Manual provides technicians with information about the equipment's electrical system.
- IM
  The Installation Manual provides technicians with information required to safely install the equipment.
- MM
  The Maintenance Manual provides technicians with information on maintaining the equipment.
- OM
  The Operation Manual provides the operator with information on handling and operating the equipment before, during, and after production.
- SPC
  The Spare Parts Catalogue provides the information necessary to order spare parts from Tetra Pak

Page Layout

Every main page in a manual contains a header and a footer. The page header contains the chapter name (1) and the section name (2). The page footer contains the page number (3), and the document number (4). See also the Page Numbering section.

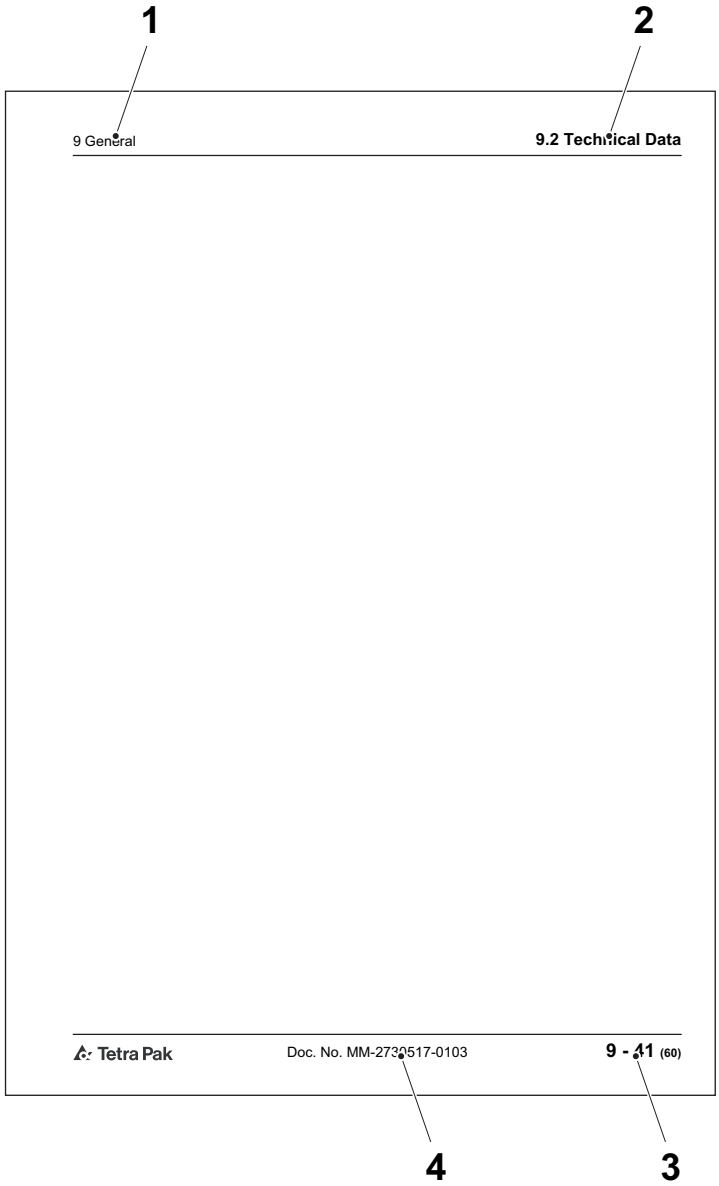

1 Chapter name
2 Section name
3 Page number
4 Document number

Page Numbering

A page number has three parts:

- chapter number (1)
- consecutive page number (2) within the chapter
- total number of pages (3) in the chapter.

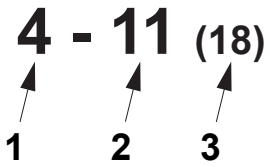

1 Chapter number
2 Consecutive page number
3 Total number of pages

Typographical Conventions

Controls on the operator panel, emergency stop devices, and program steps are printed in CAPITAL LETTERS.

Menu names, button names and other text displayed in software are printed in `Courier`.

Cross-references are underlined.

Symbols

Symbols used in illustrations.

	A pointer arrow indicates the position of an object.
	A zoom arrow indicates that an object view is enlarged. The arrow points towards the enlarged view of the object.
	A rotation movement arrow indicates rotational movement of an object. The arrow points in the direction of rotation.
	A straight movement arrow indicates movement of an object. The arrow points in the direction of movement.

Machine Introduction

Intended Use of the Equipment

The intended use of this Tetra Pak equipment is to automatically splice rolls of packaging material used for packing liquid food products with a Tetra Pak TBA/19 0400.

All other use is prohibited. Tetra Pak will not be held responsible for injury or damage if the equipment is used for any other purpose than the intended use described above.

Manufacturer

This Tetra Pak equipment has been manufactured by

Tetra Pak Packaging Solutions AB
Ruben Rausings gata
SE-221 86 Lund
Sweden

Support and Feedback

If you encounter problems when operating this equipment or have other inquiries, comments, or suggestions for improvement, contact Tetra Pak.

Declaration of Conformity

A copy of the Declaration of Conformity can be found in the Installation Manual. The signed Declaration of Conformity is delivered separately with the filling machine.

Identification

CE Classification

This equipment complies with the basic health and safety regulations of the European Economic Area (EEA).

3-A Compliance

This equipment complies with the 3-A Sanitary Standards for Formers, Fillers and Sealers of Containers for Fluid Milk and Fluid Milk Products, Number 17-10.

Machine Plate

The illustration below shows an example of the machine plate and its location on the equipment. The machine plate carries data needed when contacting Tetra Pak concerning this specific equipment.

Make sure that the equipment data in the front pages of this manual corresponds to the machine plate data and the machine specification.

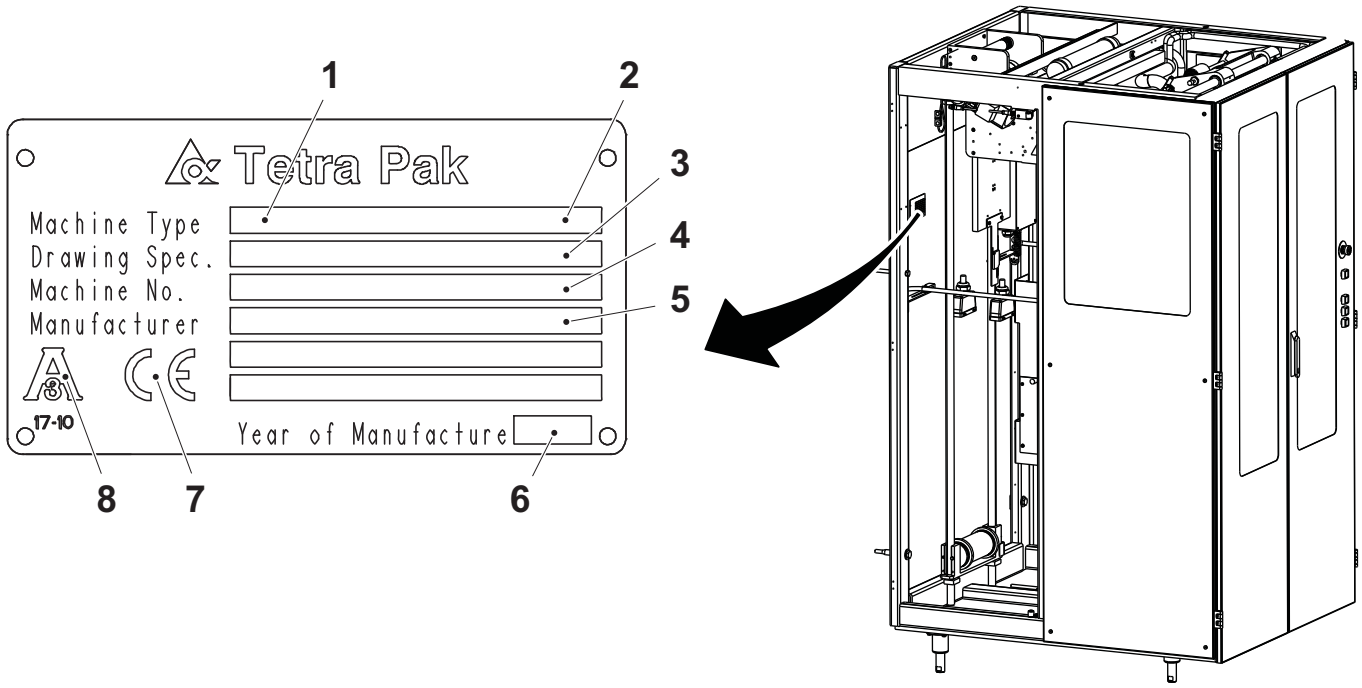

1 Machine type
2 Volume
3 Drawing specifications
4 Machine serial number
5 Manufactured by
6 Year of manufacture
7 CE mark
8 3-A mark (for certain markets)

Orientation

The illustration below shows the orientation of the equipment. This orientation information will be used throughout this manual. The arrows indicate the flow of material.

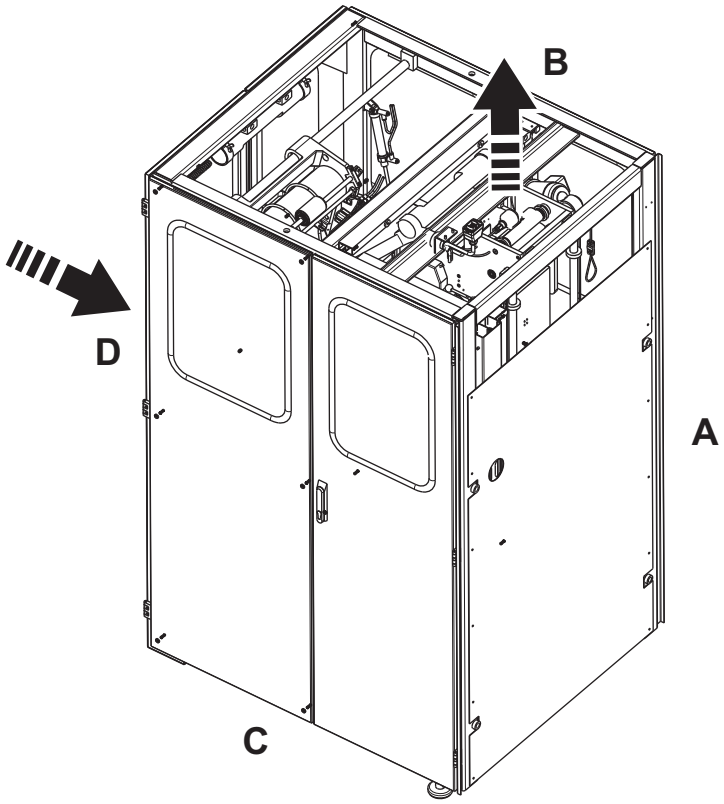

A Front
B Right-hand side
C Left-hand side
D Back

Hygiene

Packaging Material

Avoid microbiological contamination of the packaging material:

- Always protect your packaging material against contamination.
- Always keep the doors to the filling room (area) closed. To prevent contamination via air streams, never open a window when the machine is in production.
- Never clean the floors or the machine in the filling room (area) when the machine is in production.
- Compressed air used for cleaning purposes is to be used only for cleaning filters and should only be used outside of the filling room (area) or in the final folder compartment of the filling machine.
- Prepare the splicing of the packaging material as late as possible.
- Disinfect your hands before touching anything that may come into contact with the product. Use code H disinfectant. See the Technical Data chapter of the Maintenance Manual.
- Keep your hands clean.
- Always wear some type of hair protection (cap or hairnet) and clean clothes (preferably white).
- Do not wear a watch, ring, necklace, earrings, or any other exposed jewellery.

Steam Barrier in the Product Valve

The filling machine's product valve employs a steam barrier to separate the product supply line from the filling machine. The steam barrier allows the machine and the product supply line to be independently sterilised to commercial sterility conditions.

- Never disengage the steam barrier, and never interrupt the steam supply when the filling machine or the product supply line is being brought to the pre-sterilization phase, or when the machine is already in the production phase.
- If any maintenance activity requires disengagement of the steam barrier or the interruption of the steam supply to the machine, make sure that the product supply line is idle and empty of product.

How to Use This MM

Procedures

The name of the chapters and sections in the MM correspond to the groups in the structure of the equipment. Procedures correspond to a chapter or a section:

- The hyphens indicate that it is a procedure heading. The example shows a heading for Procedure number 3 in Section 1.5.
- The text after the second hyphen tells what type of procedure it is. Check, Change, and Set are common procedure types.

1.5-3 Outfeed Servo - Change Bearings

Maintenance procedures in this manual are connected to the Tetra Pak Maintenance System, TPMS. See the TPMS section.

Procedure Start Table

Procedures in this manual begin with a table providing information needed to perform the procedure.

- Machine Status (1) shows actuator status, program step, and any other machine status necessary to begin the procedure.
- Special Equipment (2) shows a list of personal protective equipment and special tools that are not normally carried by a service technician, but are needed in the procedure.
- Consumables (3) shows items, such as lubricants, that are required to perform the procedure. Consumables do not include replacement parts.
- SPC Reference (4) shows the assembly number, found in the index of the SPC.

1	Machine Status	Power supply disconnector OFF Air valve OFF Water valve OFF
2	Special Equipment	Hook spanner TP No. 777170-0105 Dial indicator
3	Consumables	Grease code F
4	SPC Reference	2501234-0100

1 Machine Status
2 Special Equipment
3 Consumables
4 SPC Reference

TPMS

To ensure uninterrupted production, all machines and equipment must be maintained on a regular basis.

Tetra Pak has developed a planned maintenance system to keep pace with the ongoing development of new and existing machines and equipment from Tetra Pak, and to meet the demands set by Tetra Pak's customers for higher efficiency and better economy.

Planned Maintenance Program

The Tetra Pak planned maintenance system reduces unplanned downtime and maintenance time for complete production lines, as well as for individual machines and equipment.

With the Tetra Pak planned maintenance system, preventive maintenance can be performed before production is affected. The system is continually updated based on experience with Tetra Pak machines and equipment worldwide.

The Tetra Pak planned maintenance system maintains records of when maintenance is performed, when parts are changed, whether alterations are made, and so on. These records, combined with usage statistics, enable reliable predictions of the service life of all machine and equipment parts.

Checklists and Spare Parts Recommendations

Customers using the Tetra Pak planned maintenance system receive checklists from their local Tetra Pak office whenever planned maintenance is due. These checklists are individualised for each of Tetra Pak's customer, according to the type of machine, equipment usage, and maintenance occasion. In addition, the system recommends spare parts, rotation units, tools, and templates according to the statistics collected.

Tip! Contact the local Tetra Pak office for additional information about the Tetra Pak Maintenance System and its planned maintenance program.

ii Safety Precautions

Safety Precaution Instructions

WARNING

Read all safety precaution instructions throughout this manual and on safety signs attached to this equipment.
Failure to follow all safety precaution instructions could result in death or serious injury.

Definition of Lockout Procedure

A lockout procedure is a procedure to put each necessary energy isolating device in its safe position to prevent the energisation of the equipment, such as when a maintenance procedure should be carried out.

A lockout is the use of a device, for example, a padlock, to make sure that an energy isolating device cannot be operated.

An energy isolating device is a mechanical device that physically prevents transmission or release of energy, such as an electrical supply disconnecting device.

Safety Messages Description . . . . . ii - 5

Personnel Requirements . . . . . ii - 6

Skilled Person . . . . . ii - 6

Instructed Person. . . . . ii- 6

Safety Signs . . . . . ii - 7

Locations of Safety Signs, Filling Machine . . . . . ii - 10

Location of Safety Signs, ASU (OE). . . . . ii - 14

Location of Safety Signs, HI (OE). . . . . ii - 15

Location of Safety Signs, PT19 (OE) . . . . . ii - 16

Location of Safety Signs, HVA (OE). . . . . ii - 17

Protective Devices. . . . . ii - 18

Emergency Stop. . . . . ii - 18

Emergency Stop Buttons . . . . . ii - 19

Safeguards . . . . . ii - 23

Safeguards, ASU (OE). . . . . ii - 25

Safeguards, PT19 (OE) . . . . . ii - 26

Indicating Tower. . . . . ii - 27

Audible Alarm. . . . . ii - 28

Safe Manual Handling . . . . . ii - 29

Personal Protection. . . . . ii - 30

Noise Hazard . . . . . ii - 30

Entanglement . . . . . ii - 30

Hazardous Substances . . . . . ii - 31

Disposal of Chemical Substances . . . . . ii - 32

Hydrogen Peroxide (H_2O_2) . . . . . ii - 33

Emergency Procedures. . . . . ii - 33

Personal Protective Equipment . . . . . ii - 34

Handling of Hydrogen Peroxide . . . . . ii - 35

Storage of Hydrogen Peroxide . . . . . ii - 36
Disposal of Hydrogen Peroxide . . . . . ii - 37
Nitrogen (N2) . . . . . ii - 38
Emergency Procedures . . . . . ii - 38
Handling and Storage of Nitrogen Gas . . . . . ii - 38
Disposal of Nitrogen Gas . . . . . ii - 38
Cooling Medium R134a . . . . . ii - 39
Emergency Procedures . . . . . ii - 39
Disposal of Cooling Medium R134a . . . . . ii - 39
Ink . . . . . ii - 40
Ink Container . . . . . ii - 40
Supply Systems . . . . . ii - 41
Electrical Supply . . . . . ii - 41
Residual Voltage . . . . . ii - 43
Electrical Cabinet . . . . . ii - 43
Socket Outlet . . . . . ii - 45
Air Supply . . . . . ii - 46
Steam Supply . . . . . ii - 48
Water Supply . . . . . ii - 49
Equipment for Lifting and Moving Loads . . . . ii - 50

Safety Messages Description

A safety message is always accompanied by a safety alert symbol and a signal word.

The safety alert symbol is used to alert about potential personal injury hazards. To avoid hazards, obey all safety messages that follow this symbol.

The following safety alert symbols and signal words are used in this manual to inform the user of hazards.

DANGER	Danger indicates an imminently hazardous situation which, if not avoided, will result in death or serious injury.
WARNING	Warning indicates a potentially hazardous situation which, if not avoided, **could** result in **death or serious injury**.
CAUTION	Caution indicates a potentially hazardous situation which, if not avoided, **may** result in **minor or moderate injury.** It may also be used to alert against unsafe practices.
CAUTION	Caution without the safety alert symbol indicates a potentially hazardous situation which, if not avoided, **may** result in **property damage**.

Personnel Requirements

Note! Personnel includes all persons working on or near this equipment.

Only skilled or instructed persons are allowed to work with this equipment.

Skilled Person

A skilled person must have relevant education and experience to enable him or her to identify hazards, analyse risks, and avoid hazards which electricity, machinery, chemicals, other energies, and supply systems on this equipment can create.

Skilled persons must meet local regulations, such as certifications and qualifications for working with these energies and systems.

Instructed Person

An instructed person must be adequately advised or supervised by a skilled person. The skilled person enables the instructed person to identify hazards, analyse risks, and avoid hazards which electricity, machinery, chemicals, other energies, and supply systems on this equipment can create.

Safety Signs

WARNING

Damaged or missing safety signs.
Safety signs are used to indicate safety hazards.
If the signs are missing or damaged, they can not fulfil this function. Replace all missing or damaged safety signs immediately.

Safety signs are attached to the equipment. The table below lists all the signs that are used, and illustrations show their locations on the equipment. Each position number refers to two variants of a safety sign in the table, but only one is used on the equipment.

- Make sure that each safety sign is legible and in its correct position after installation and maintenance.
- Replace all missing or damaged safety signs immediately.

Pos.	ISO sign	ANSI sign
1		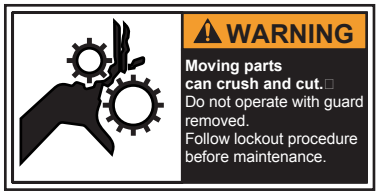
	Moving parts can crush and cut. Do not operate with guard removed. Follow lockout procedure before maintenance.	
2		
	Hazardous voltage. Will shock, burn, or cause death. Follow lockout procedure before maintenance.	
3		
	Chemical burn hazard. Wear personal protective equipment.	

Pos.	ISO sign	ANSI sign
4		
	Hot surface. Do not touch. Follow lockout procedure before maintenance.	
5		
	Moving part can crush and cut. Do not operate with guard removed. Follow lockout procedure before maintenance.	
6		
	Hazardous voltage. Can shock, burn, or cause death. Read Maintenance Manual (MM) before using this socket outlet.	
7		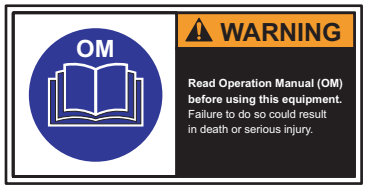
	Read Operation Manual (OM) before using this equipment. Failure to do so could result in death or serious injury.	
8		
	Hazardous residual voltage on capacitors. Will shock, burn or cause death. Do not touch until safe. Follow instructions for safe work practices.	
9		
	General warning.	

Pos.	ISO sign	ANSI sign
10		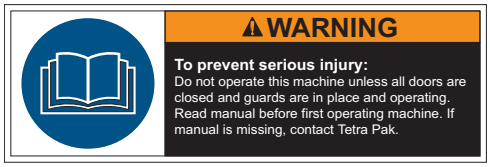
	To prevent serious injury: Do not operate this machine unless all doors are closed and guards are in place and operating. Read manual before first operating machine. If manual is missing, contact Tetra Pak.	
11		
	Risk of equipment damage. Do not let water into this area.	

Locations of Safety Signs, Filling Machine

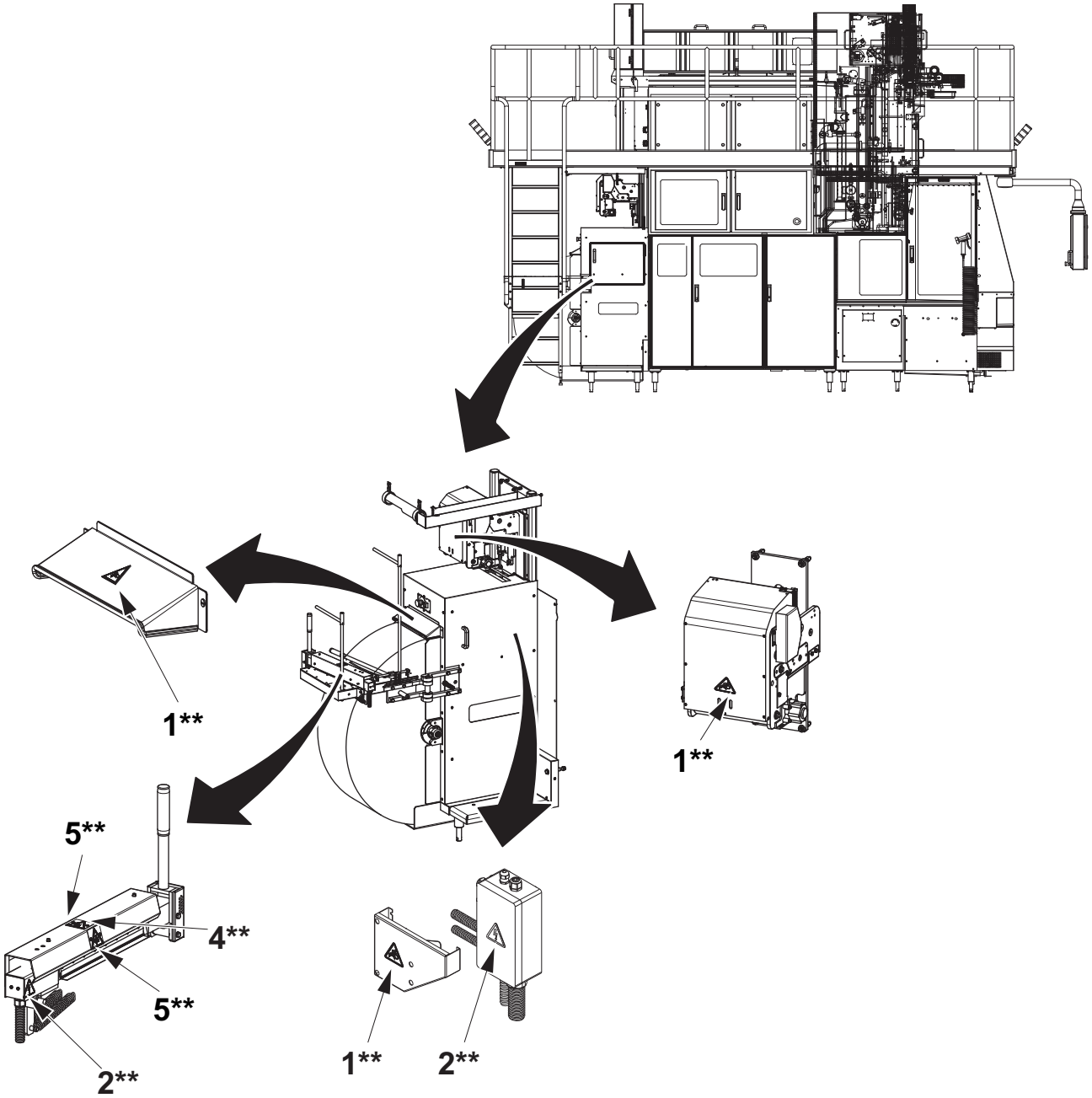

LH Side
**Not included in machine equipped with ASU (OE)

(Cont'd)

(Cont'd)

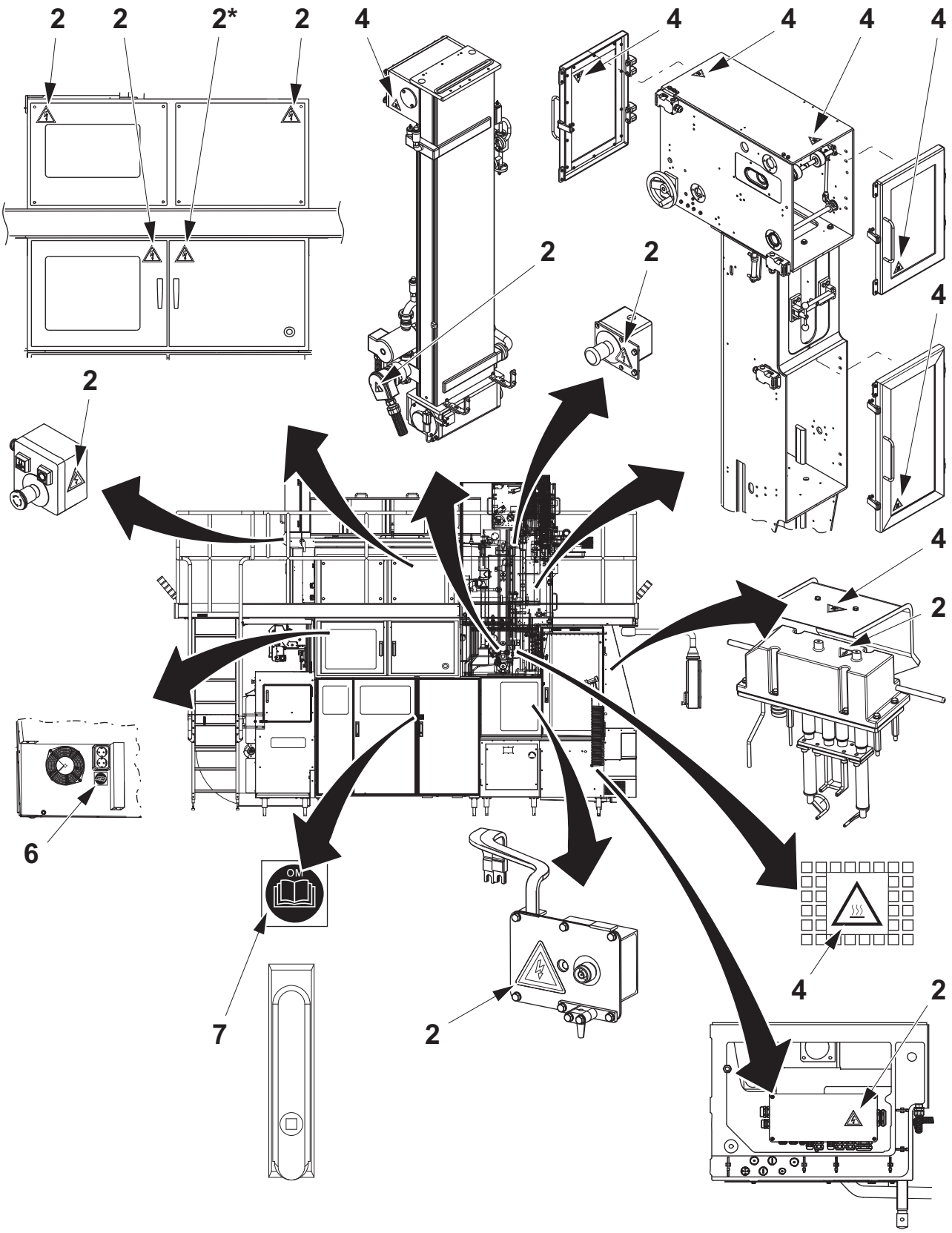

LH side
*Symbol located on the inside door

(Cont'd)

(Cont'd)

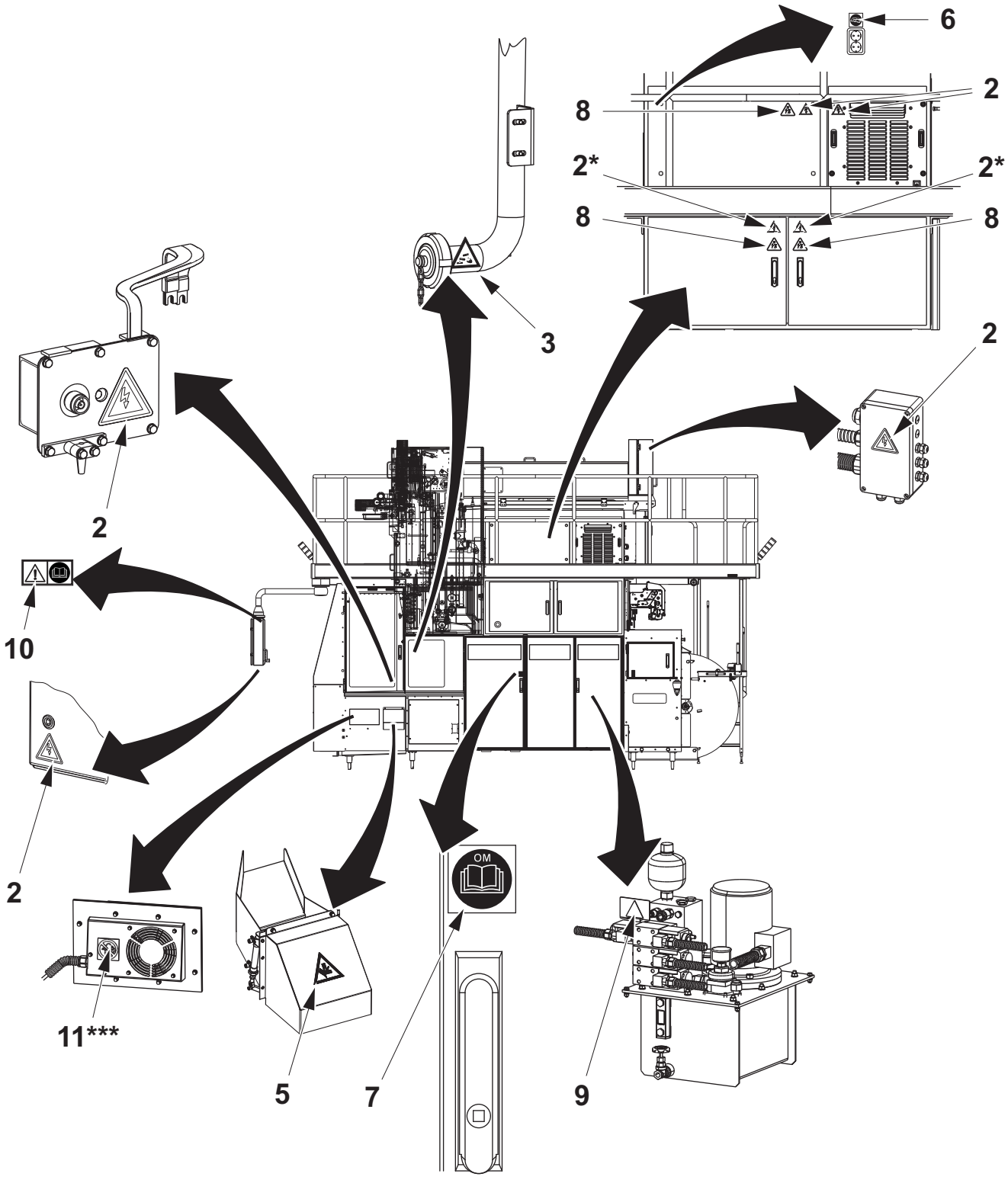

RH side
*Symbol located on the inside door
*** Only for machines equipped with OK Alcohol 20-45% Adaption

(Cont'd)

(Cont'd)

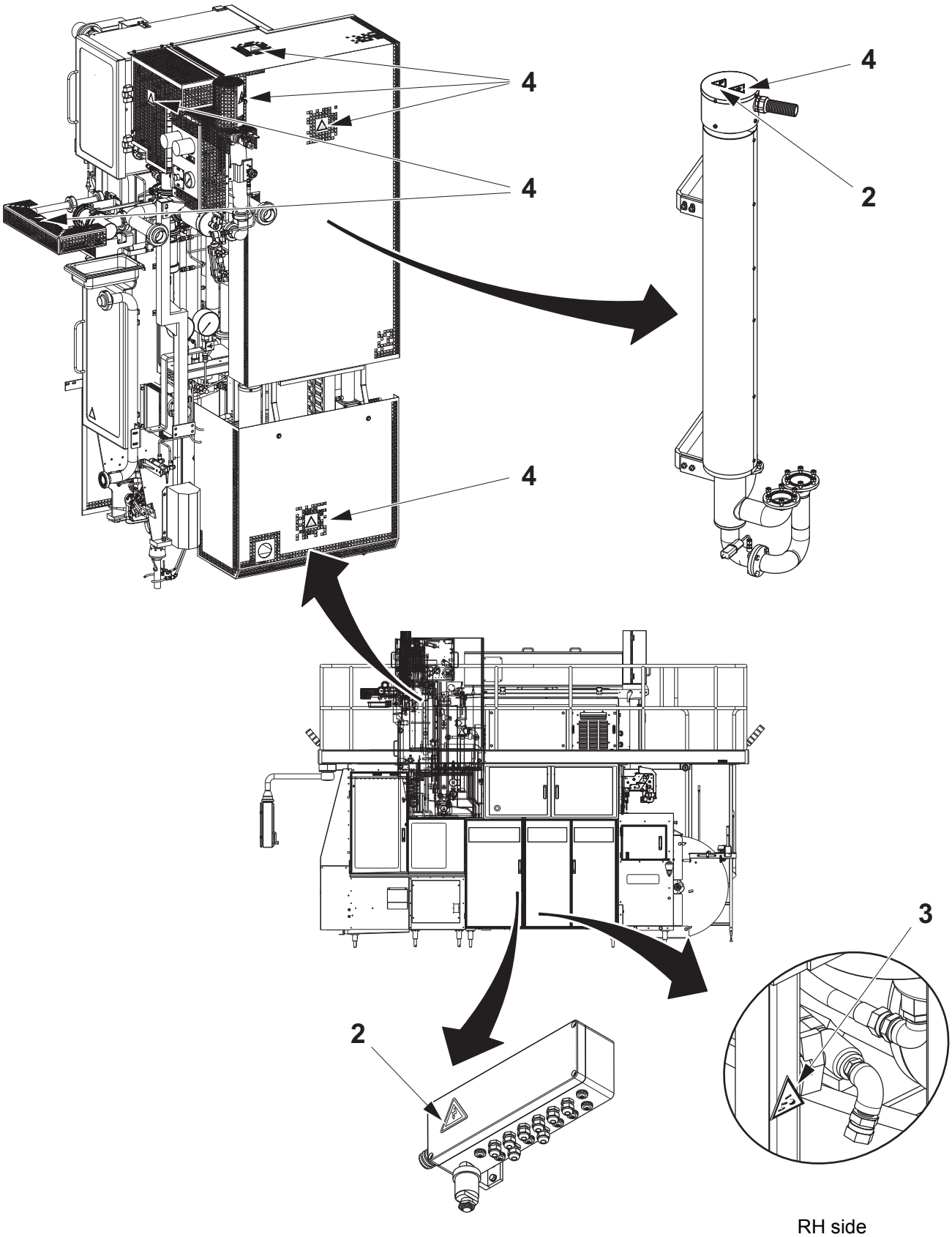

RH side

Location of Safety Signs, ASU (OE)

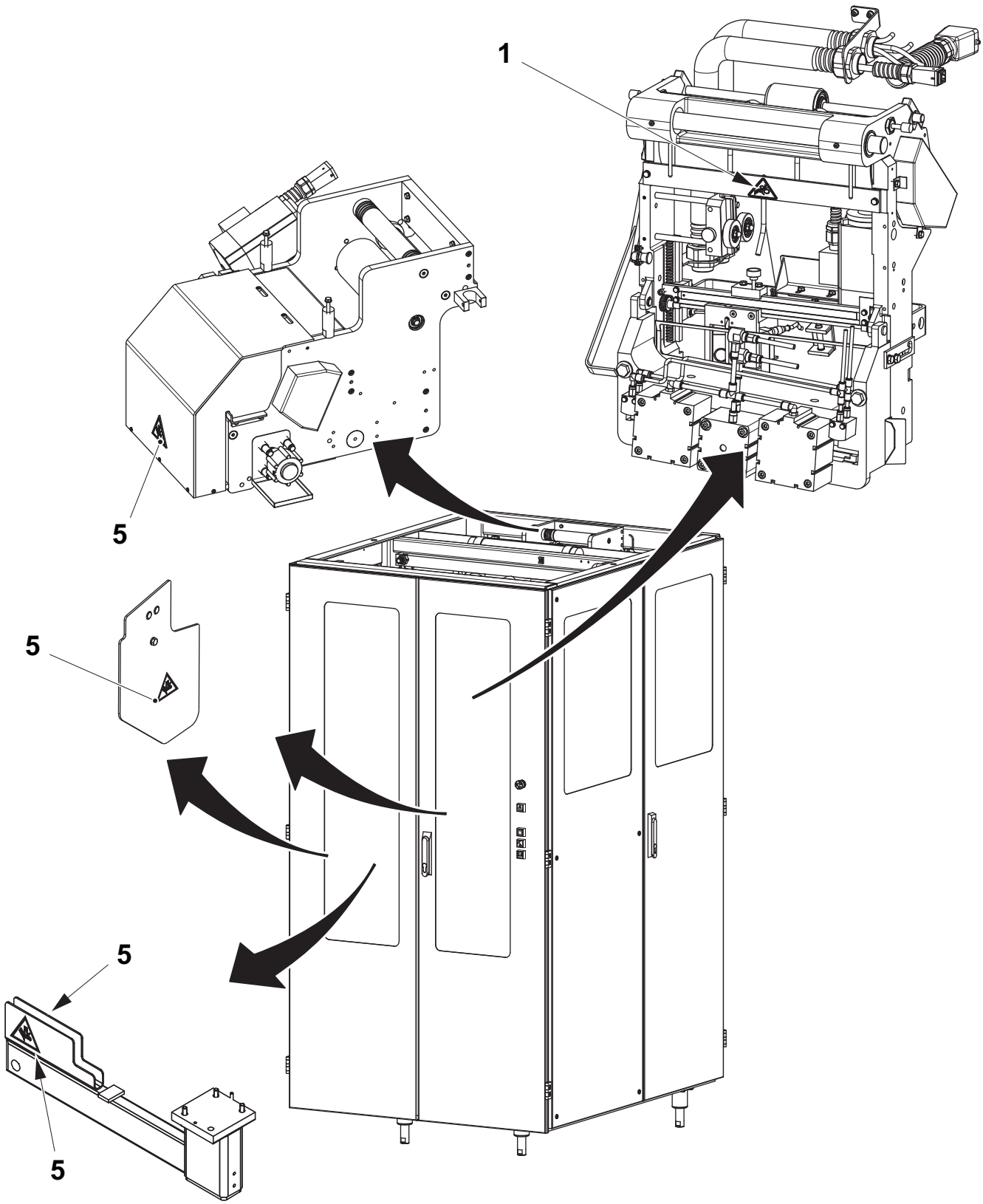

Location of Safety Signs, HI (OE)

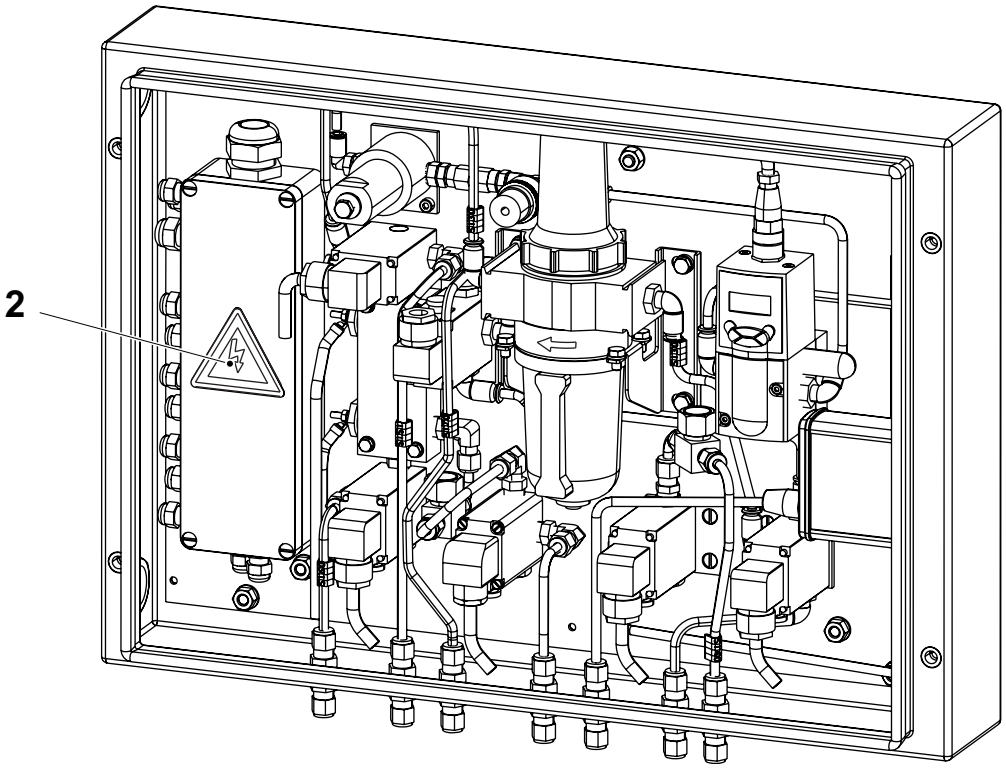

Location of Safety Signs, PT19 (OE)

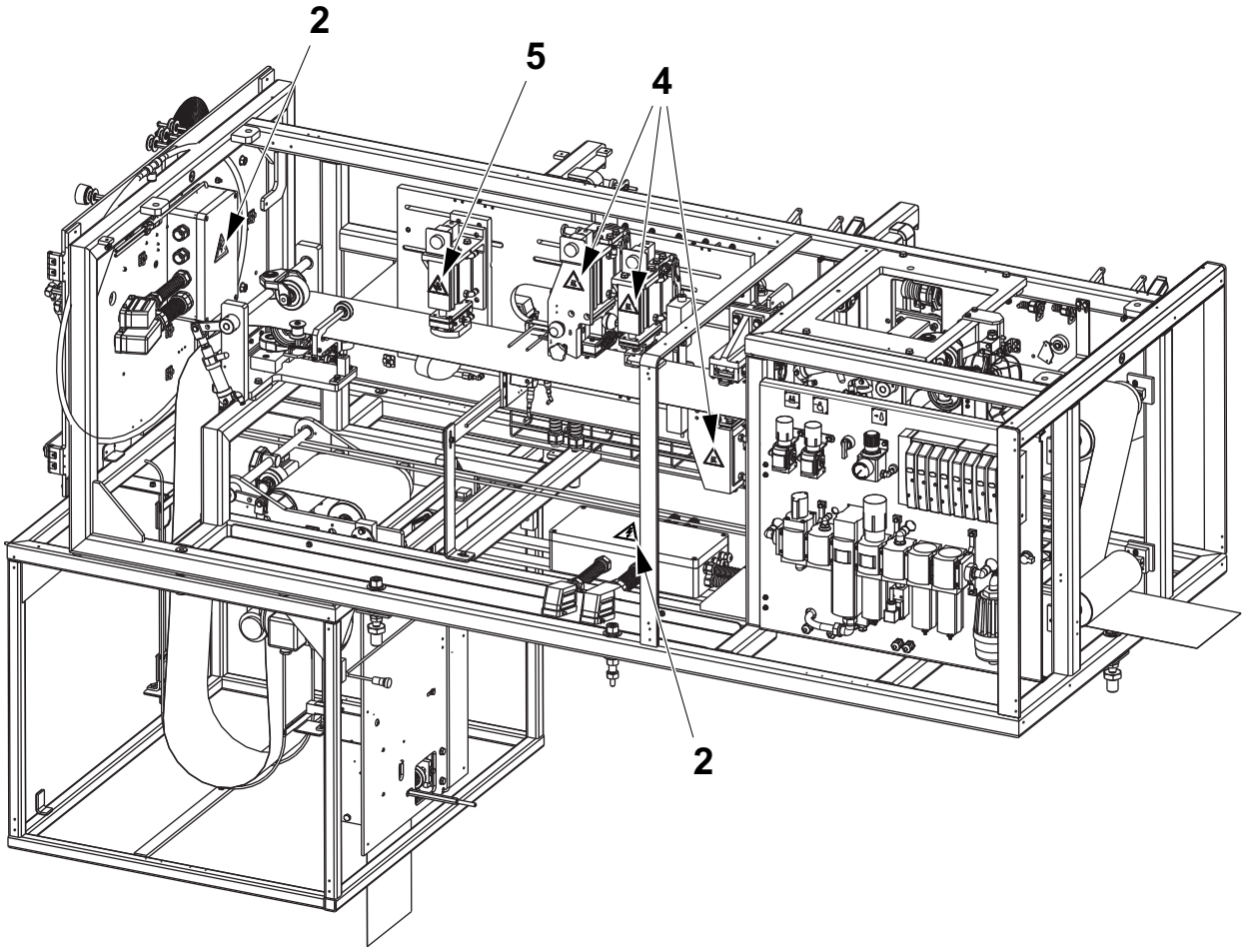

Location of Safety Signs, HVA (OE)

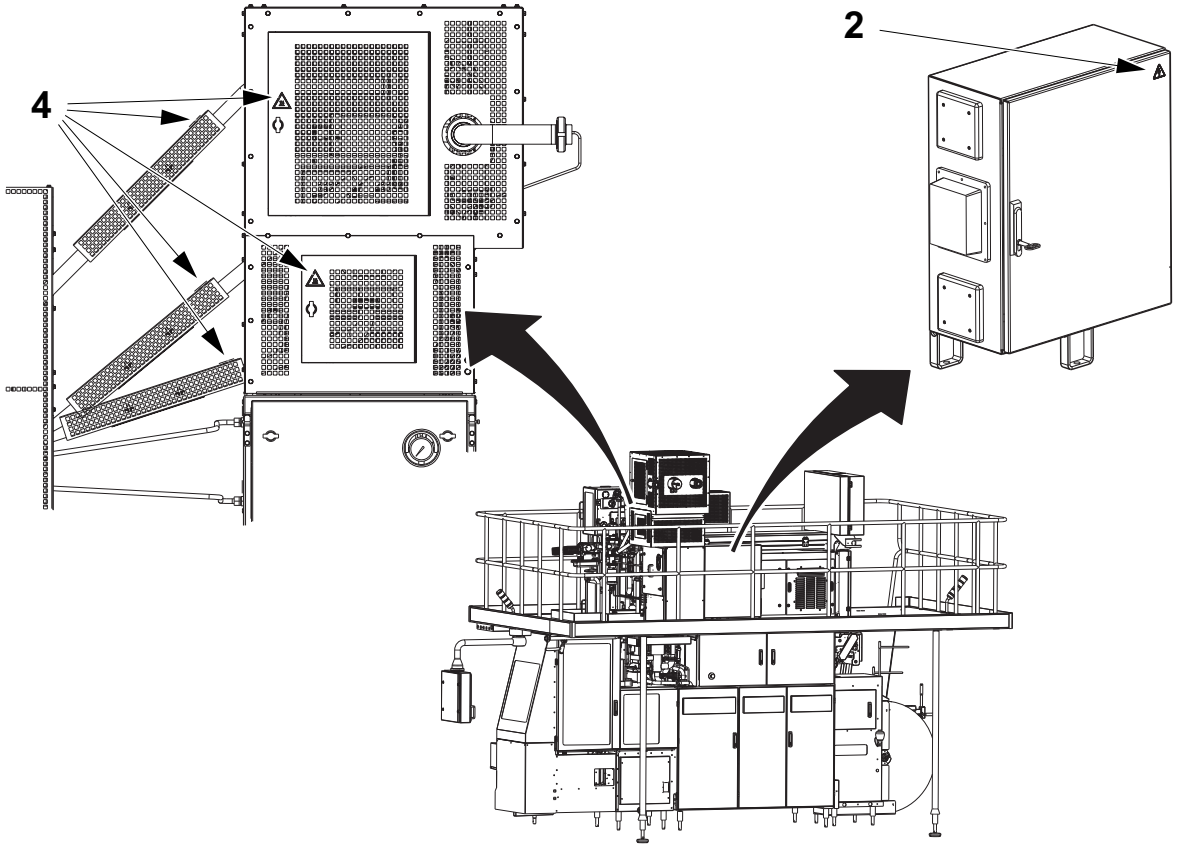

Protective Devices

There are different kinds of protective device designed to ensure safe use of the equipment. See the sections below.

WARNING

Hazardous zones.

Hazardous zones are safeguarded and provided with protective devices. Do not inch or run this equipment if any protective device is inoperative.

Change inoperative components of the safety system immediately.

For the locations of safeguards and/or other protective devices not mentioned in this section, see the Maintenance Manual for the filling machine.

WARNING

Hazardous voltage.

Hazardous voltage remains on this equipment after activating an EMERGENCY STOP or an interlocking device.

Emergency Stop

Emergency stop devices are used to stop this equipment immediately in an hazardous situation. Learn the positions of all emergency stop devices and how to use them.

Instructions for a normal production stop are included in the Stop chapter of the Operation Manual.

Emergency Stop Buttons

Push one of the EMERGENCY STOP buttons to stop this equipment immediately.

The location of each EMERGENCY STOP button is shown by an arrow.

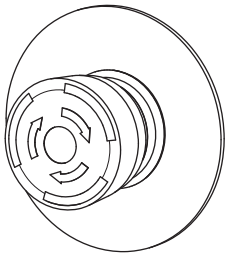

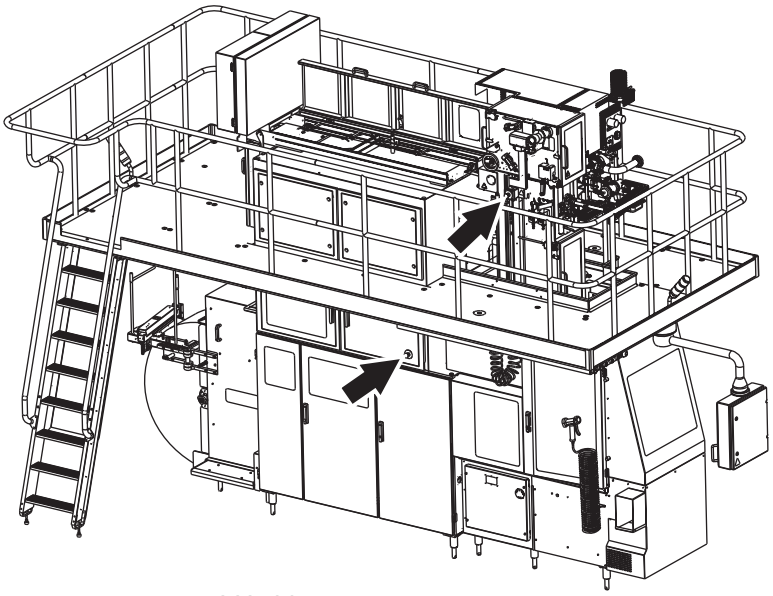

LH side
TBA/19 0400 Standard is shown

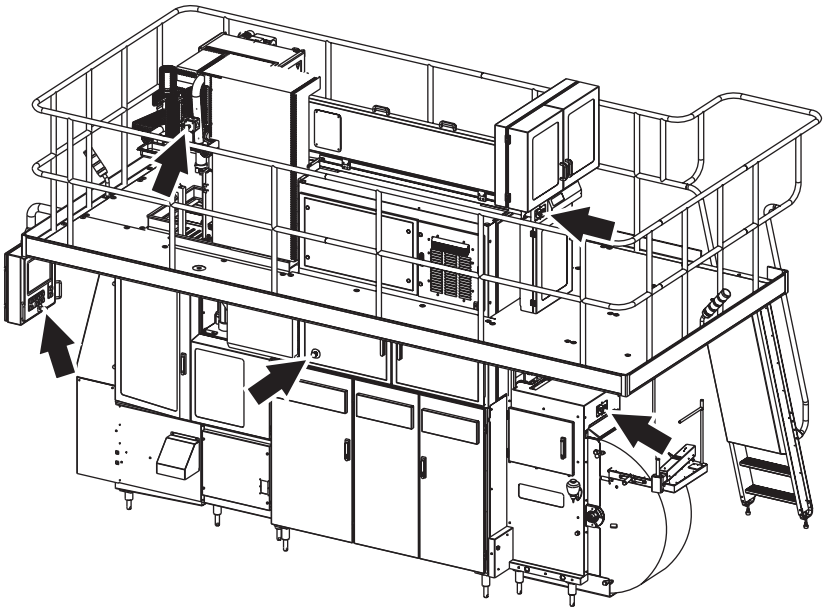

RH side

(Cont'd)

(Cont'd)

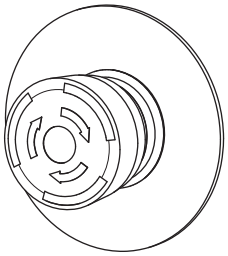

Emergency Stop Buttons, ASU (OE)

Push one of the EMERGENCY STOP buttons to stop this equipment immediately.

The location of each EMERGENCY STOP button is shown by an arrow.

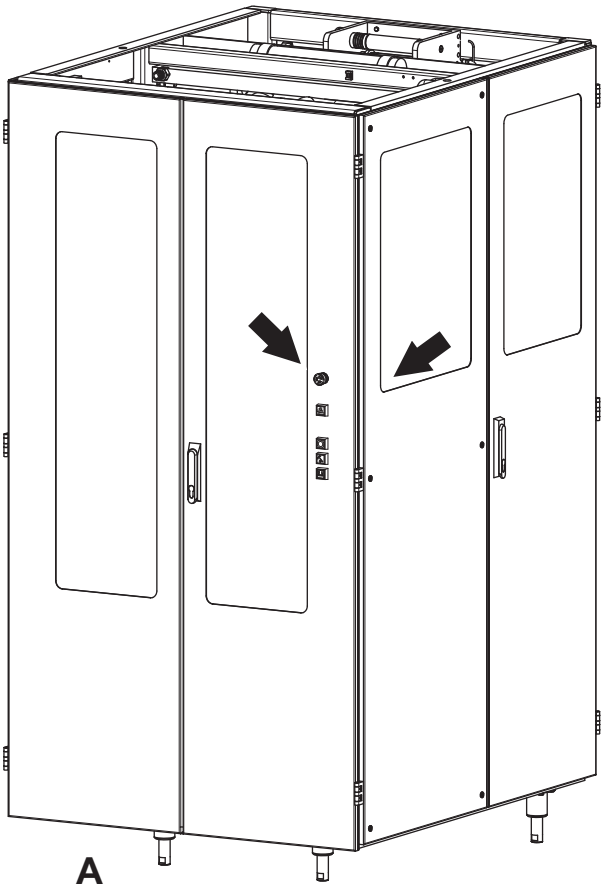

A Back

(Cont'd)

(Cont'd)

Emergency Stop Button PT19 (OE)

Push one of the EMERGENCY STOP buttons to stop this equipment immediately.

The location of each EMERGENCY STOP button is shown by an arrow.

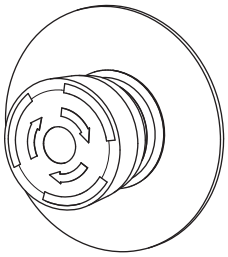

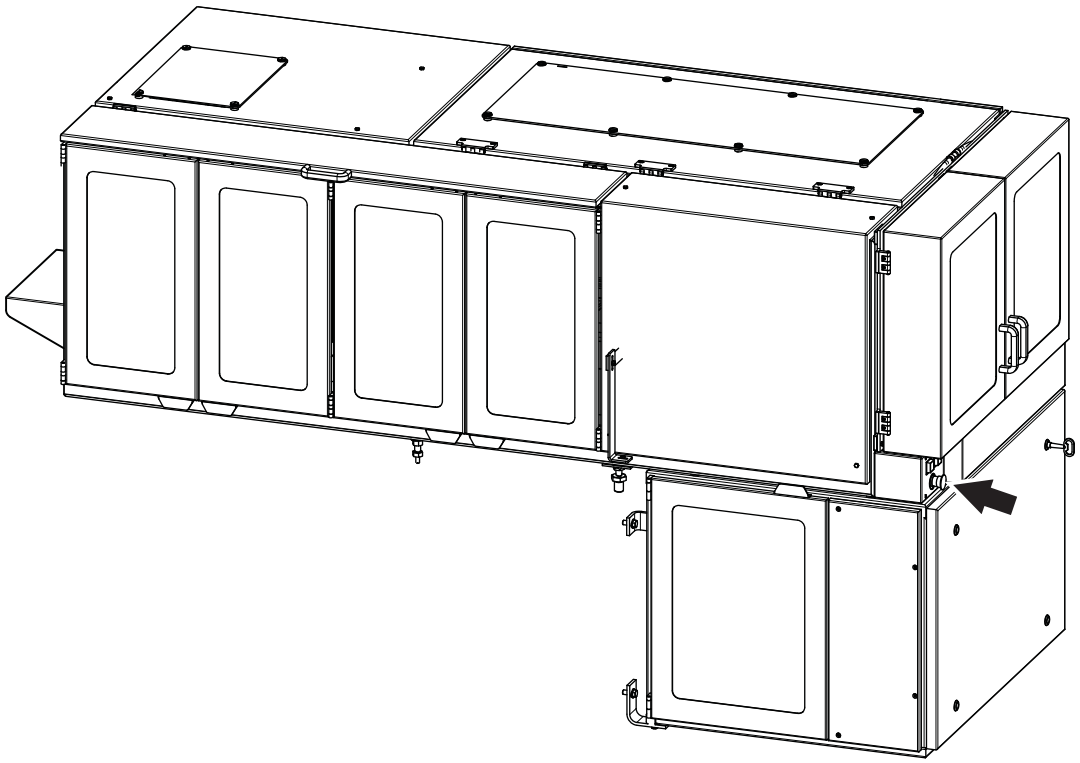

(Cont'd)

(Cont'd)

Emergency Stop Button HVA (OE)

Push one of the EMERGENCY STOP buttons to stop this equipment immediately.

The location of each EMERGENCY STOP button is shown by an arrow.

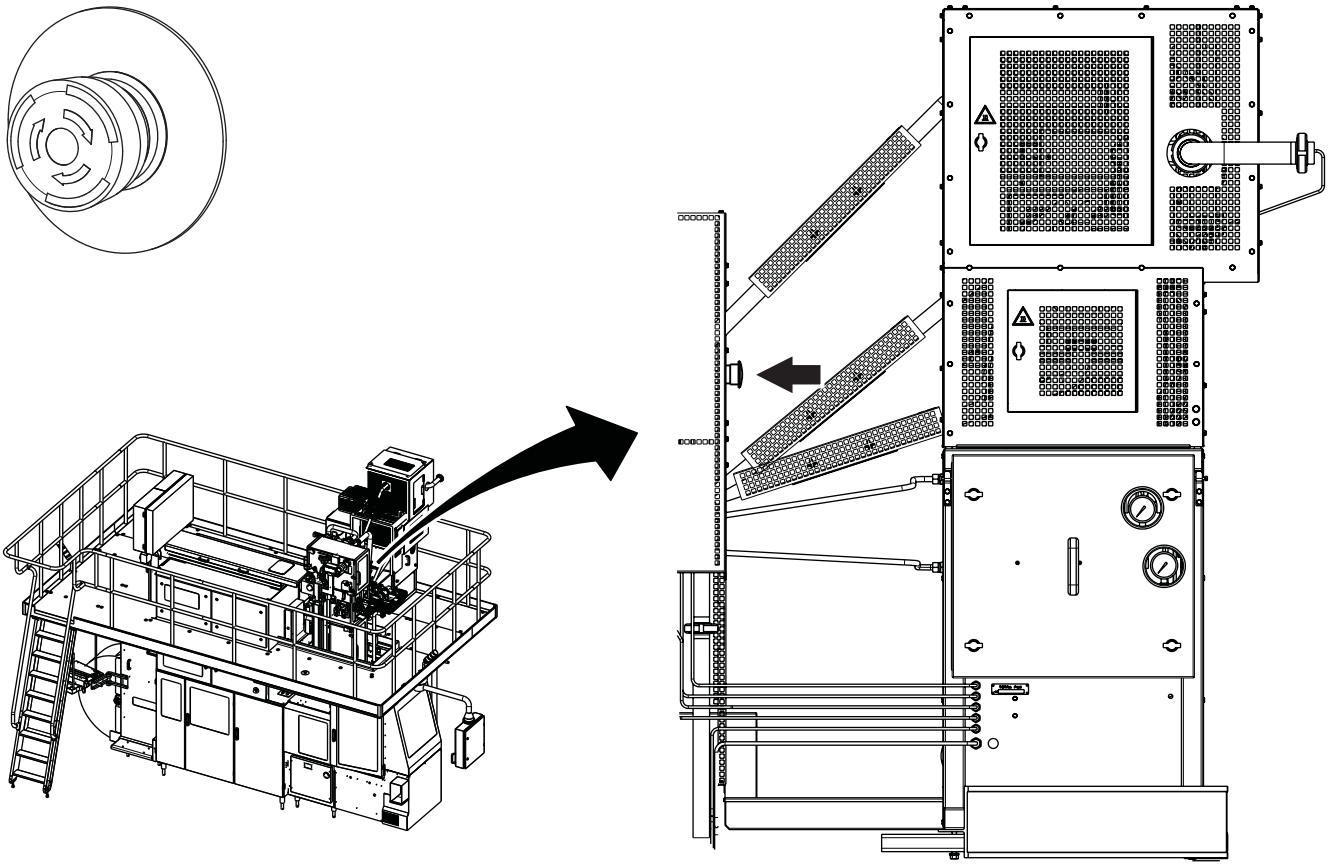

Safeguards

WARNING
Moving machinery.
Never defeat or bypass the interlocking devices.

Movable guards, for example, doors and covers leading to hazardous zones, are fitted with interlocking devices where required. These devices are usually electric safety switches that are parts of the safety system and must never be defeated, bypassed, or otherwise made inoperative.

WARNING
Corners and edges.
Close the doors, guards, or parts of the equipment unless they must be open during work.

CAUTION
Burn hazard.
Parts of this equipment protected by guards may be hot after operation.Allow components to cool down or use personal protective equipment.

After installation and maintenance, and before this equipment is inched or run, check that all safeguards are in place and that they operate correctly.

CAUTION
Equipment damage.
The equipment can be damaged if it is not stopped in the correct way. Never stop this equipment by opening a movable guard, for example a door or cover equipped with an interlocking device.

The interlocking devices have different effects on the equipment:

- Stops equipment and steps to ZERO
- Stops equipment
- Stops ASU splice function
- Stops SA splice function

For more detailed information about the safeguards, see the MM for the filling machine; section 14.11 Safety System.

(Cont'd)

(Cont'd)

The location of each interlocking device is shown below.

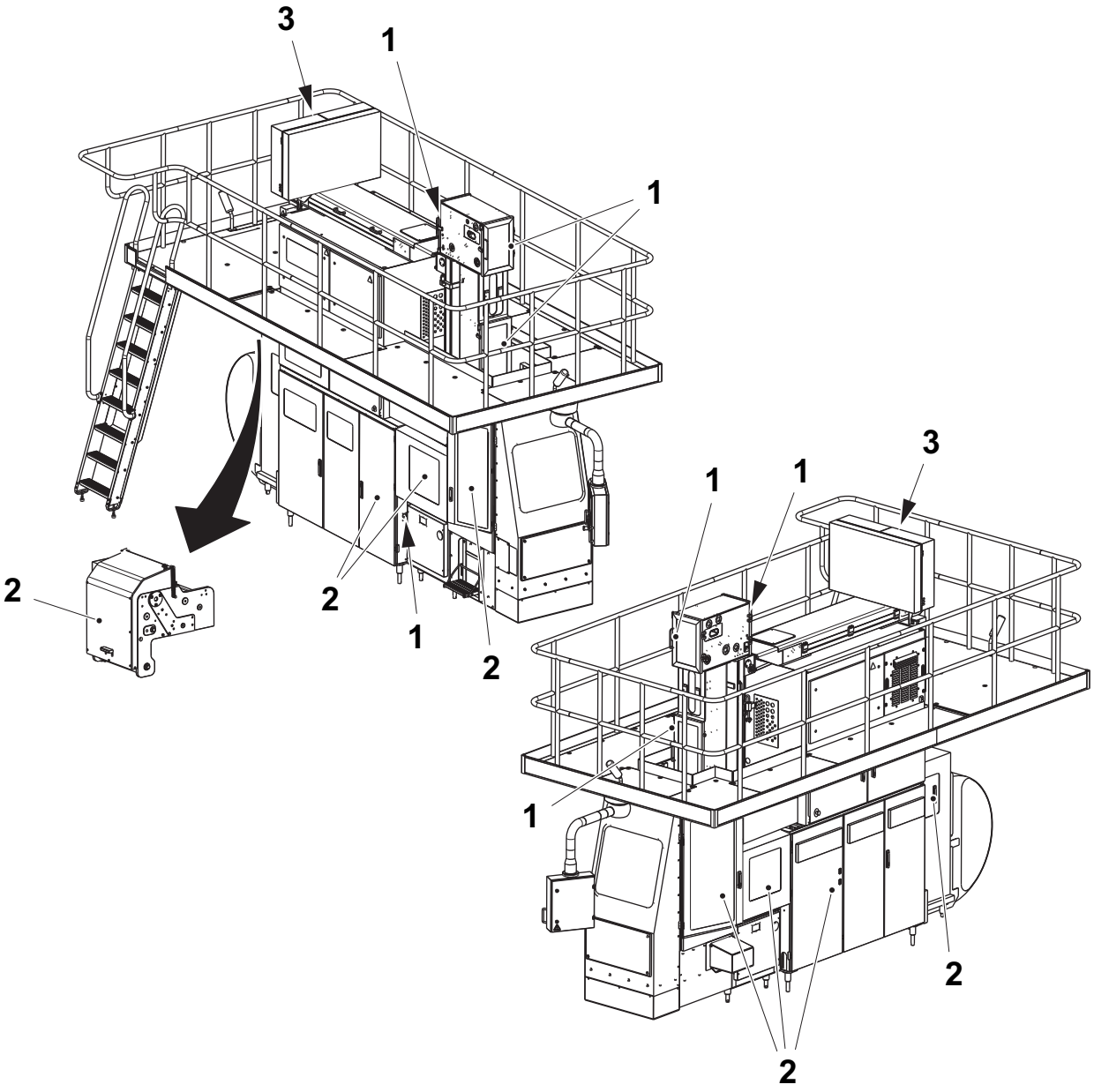

TBA/19 0400 Standard is shown

1 Stops equipment and steps to ZERO
2 Stops equipment
3 Stops SA splice function

Safeguards, ASU (OE)

The location of each interlocking device is shown below.

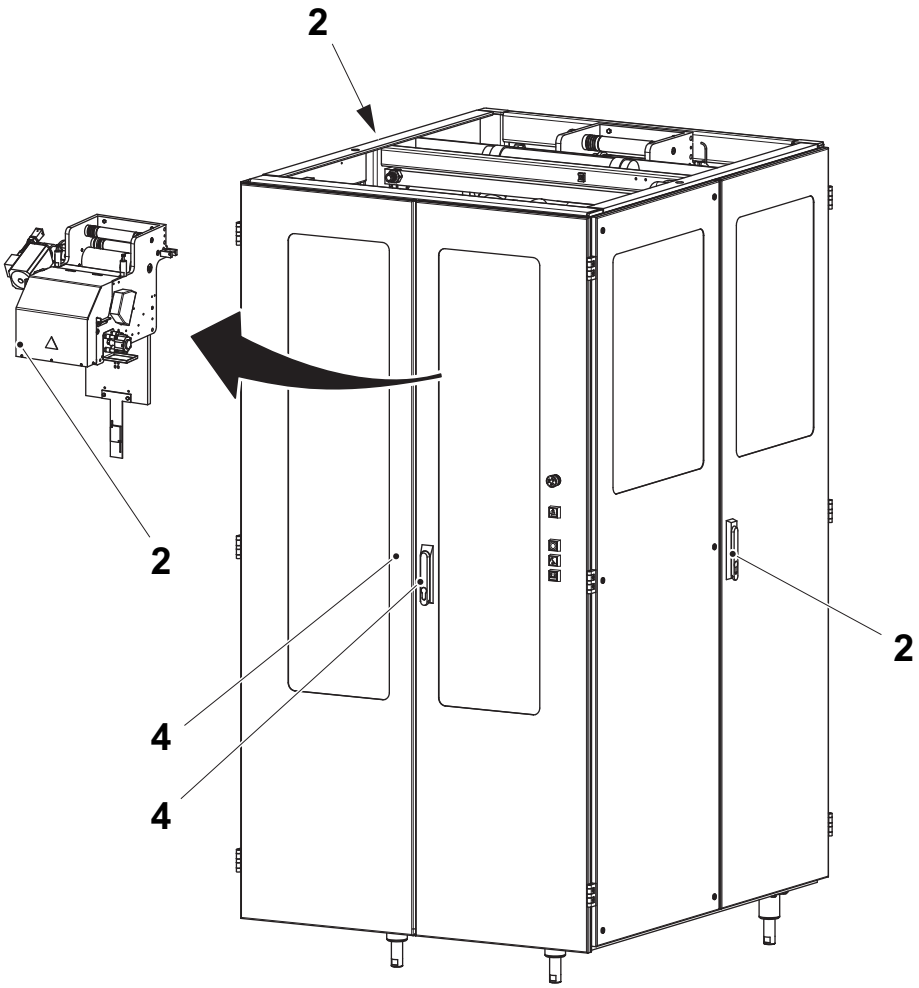

2 Stops equipment
4 Stops ASU splice function

Safeguards, PT19 (OE)

The location of each interlocking device is shown below.

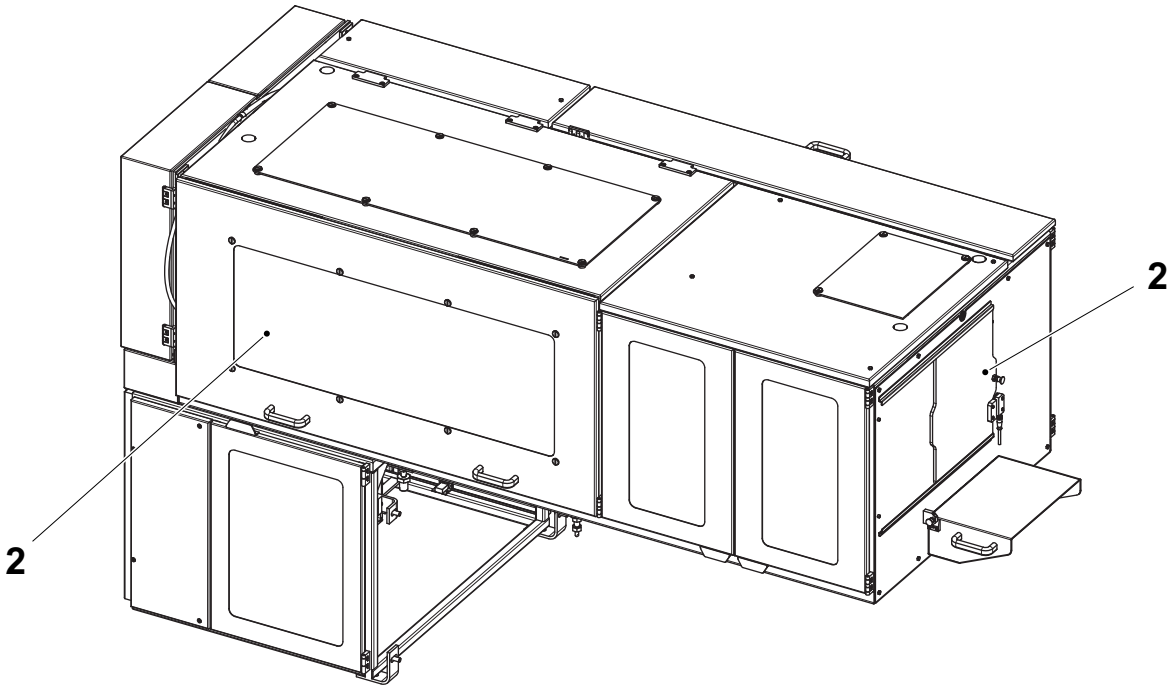

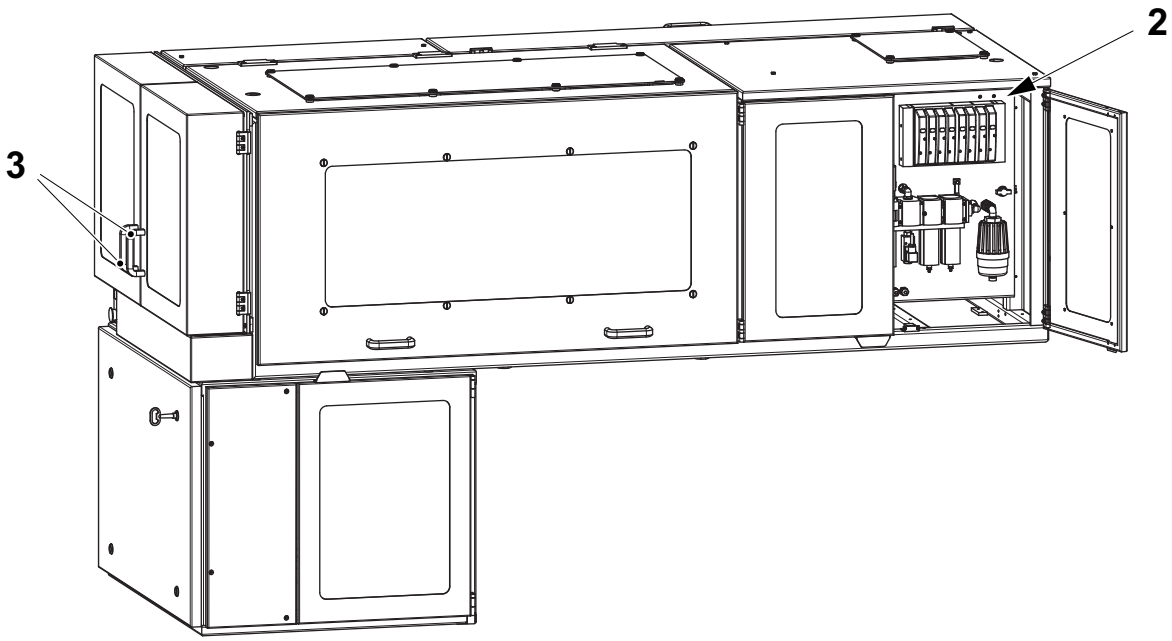

2 Stops equipment
3 Stops SA splice function

Indicating Tower

An indicating tower is a column of warning lights:

- A red light (1) indicates a hazardous condition. This is a situation that requires immediate action.
- A yellow light (2) indicates an abnormal or impending critical condition. This is a condition calling for action by the operator.
- A blue light (3) indicates that operator action is required.

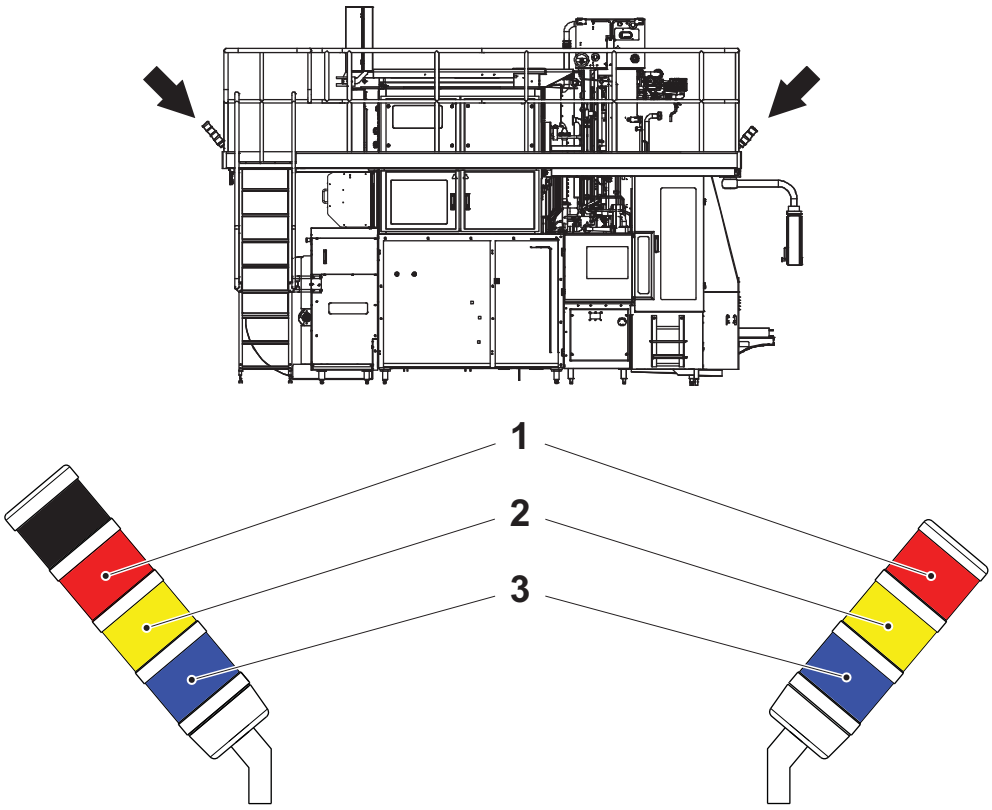

TBA/19 0400 Standard is shown

1 Red light
2 Yellow light
3 Blue light

Audible Alarm

The audible alarm (1) produces a warning signal every time this equipment is about to start. The warning signal sounds for approximately three seconds prior to starting to alert personnel.

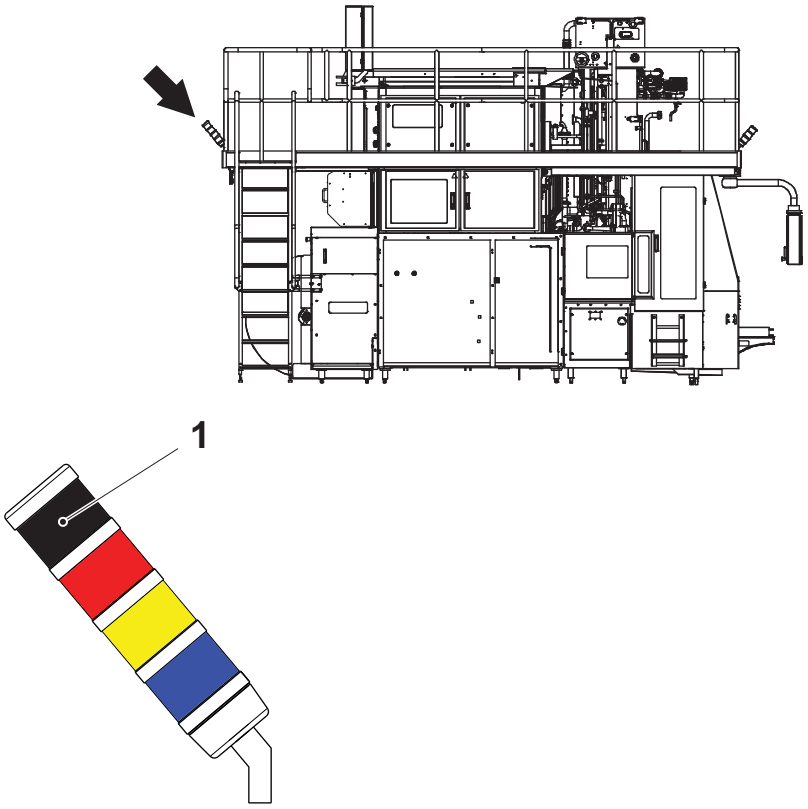

TBA/19 0400 Standard is shown

1 Audible alarm

Safe Manual Handling

Use mechanical lifting aids whenever possible. If mechanical lifting aids are not available, do not attempt to lift loads over 23 kg without the assistance of a colleague. Avoid lifting below knee height and above shoulder height. If it is necessary to lift from the floor, follow the instructions below to reduce the risk of back and disc injuries.

- Use safety shoes and be sure that the surface of the floor is not slippery.
- Get close to the load.
- Take a wide stance and find the best positions for your feet.
- Bend your hips and knees, and use your leg muscles.
- Keep the load close to your body.
- Do not twist your body while moving the load.
- Take small steps when turning.

In order to reduce the risk of injury to discs and back muscles, be careful to not bend or twist your back when lifting. Keep the load close to your body to reduce the strain on your back.

To reduce the ergonomic risks to each individual operator, job rotation is recommended, so that recovery and variety are provided.

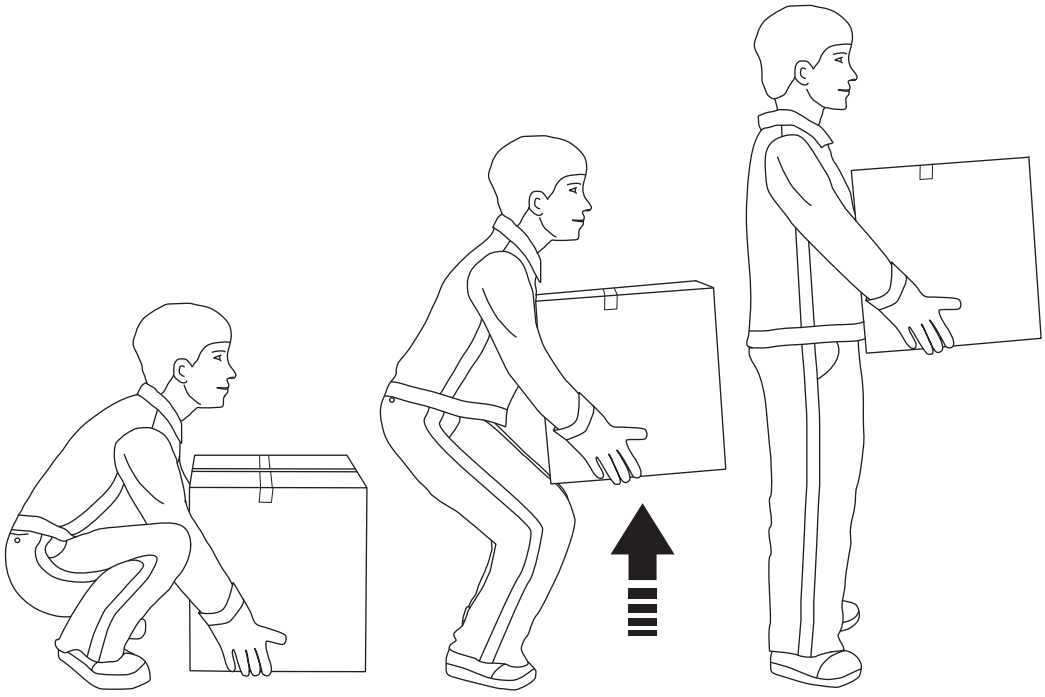

Personal Protection

This section applies to all personnel at all times when this equipment is in operation. For special personal protection required when handling hazardous substances, see the Hazardous Substances section.

Noise Hazard

CAUTION

Hazardous noise.

Risk of impaired hearing.

Hearing protection is recommended whenever this equipment is in operation.

Entanglement

WARNING

Risk of entanglement.

Do not wear jewellery or loose clothing when working on or near this equipment. Restrain long hair with, for example, clips or rubber bands.

Hazardous Substances

WARNING

Contact with chemicals can cause death, serious injury, or illness.
Always read and follow the instructions in the safety data sheet supplied by the manufacturer or local supplier, when handling chemicals.

Make sure that

- the safety data sheet is available
- the showers work
- an eyewash device, movable or wall-mounted, is available and operational
- additional washing facilities are nearby

Note! Learn the locations of all washing facilities in order to act immediately in case of an accident





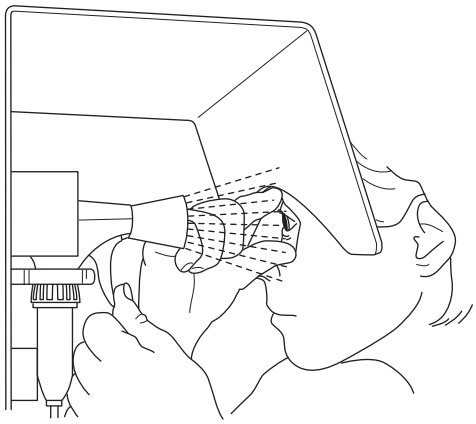

Disposal of Chemical Substances

Always read and follow the disposal instructions in the safety data sheet supplied by the manufacturer or local supplier.

It is strongly recommended that used chemical containers are

- disposed of according to the instructions immediately after use
- not used as disposal containers for other chemicals in order to avoid uncontrolled chemical reactions within the container

Hydrogen Peroxide (H_2O_2)

WARNING

Corrosive chemical.

Wear personal protective equipment.

In both liquid and gas states, hydrogen peroxide may cause irritation or damage if it comes into contact with skin, mucous membranes, eyes, or clothes. Call for medical attention immediately if there is an accident.

Liquid hydrogen peroxide in concentrations of less than 1% is generally considered harmless to humans.

Consult the instructions on the label of the tank or container.

Emergency Procedures

If there is an accident involving hydrogen peroxide, rinse the affected area as soon as possible with large amounts of water.

Eyes

If splashes or vapour from hydrogen peroxide come in contact with the eyes

- wash the eyes thoroughly with lukewarm water for 15 minutes (keep eyelids wide apart)
- call for medical attention immediately

Skin

If hydrogen peroxide comes into contact with skin or clothes

- rinse immediately with plenty of water
- call for medical attention immediately if skin burns appear
- thoroughly wash the clothes before wearing them again

Inhalation

If irritation or pain is experienced due to having **inhaled** hydrogen peroxide vapour

- leave the affected area and get some fresh air
- call for medical attention if the symptoms get worse

Ingestion

If hydrogen peroxide is swallowed

- do not attempt to cause vomiting
- drink large amounts of lukewarm water to dilute the peroxide
- call for medical attention immediately.

Personal Protective Equipment

The personal protective equipment for hydrogen peroxide is

- protective goggles (for instance, TP No. 90303-11), tight fitting
  If there is a risk of splashes, a visor is a suitable complement
- protective gloves made of neoprene (for instance, TP No. 90303-12), nitrile, or butyl rubber
- protective apron (for instance, TP No. 90303-13), or protective suit when handling larger amounts
- protective shoes or boots made of PVC, PE plastic, or rubber
- proper respiratory equipment, if ventilation is insufficient

Handling of Hydrogen Peroxide

WARNING

Sudden and violent chemical reaction.
Avoid any contamination of hydrogen peroxide.

Hydrogen peroxide can react very suddenly and violently in combination with many compounds, or if it is contaminated. Never pour surplus hydrogen peroxide back into the original container. There is a risk of a violent decomposition liberating oxygen and heat, with a big increase in volume due to the oxygen generated by the peroxide decomposition. This will cause a large overpressure if the contaminated hydrogen peroxide is in a closed container. If the integrity of the container fails, this could result in a dangerous hazard.

Ensure that equipment used for handling and diluting hydrogen peroxide is clean before it comes in contact with hydrogen peroxide. Pumps or other equipment used for handling hydrogen peroxide must be **used for this purpose only** and must be manufactured from appropriate materials, such as stainless steel 316 L, glass, polyethylene, or teflon. After use, make sure that all peroxide residue is rinsed away.

If hydrogen peroxide is spilled, dilute it with large amounts of water. Dispose of the diluted hydrogen peroxide according to local regulations.



WARNING

Self-ignition.
Never wipe up hydrogen peroxide with materials such as rags or paper as these may self-ignite several hours after contact.
If there is a fire, spray with large quantities of water.

Storage of Hydrogen Peroxide

WARNING

Containers may become overpressurised if they are not properly ventilated. If the integrity of a container fails, this could result in a dangerous hazard.

Keep the container upright and fitted with its proper ventilation cap. If there is a fire, cool all containers by spraying them with large quantities of water.

Hydrogen peroxide decomposes much faster with increasing temperature. There is a risk of a container becoming overpressurised at high temperatures, since the ventilation cap cannot release the gases produced quickly enough. If the integrity of the container fails, this could result in a dangerous hazard.

Hydrogen peroxide **must** be stored in the **original container** delivered by the supplier. Keep the container upright and fitted with its proper ventilation cap, which allows oxygen to escape. Otherwise there is a risk of overpressurisation of the container due to violent decomposition of the peroxide. If the integrity of the container fails, this could result in a dangerous hazard.

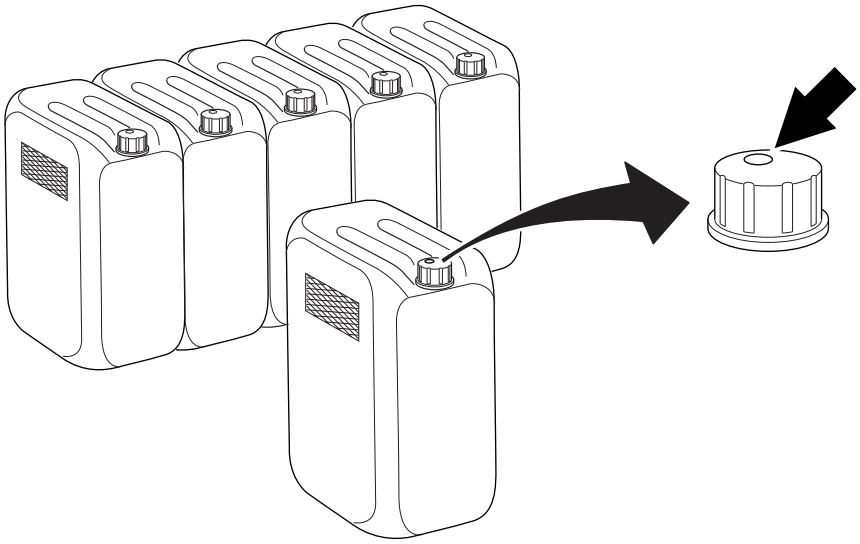

Make sure that the container is always properly closed.

(Cont'd)

(Cont'd)

Commercial food-grade hydrogen peroxide has been stabilized to inhibit the catalytic decomposition effects of metals and other impurities, but it can decompose into oxygen and water if it is exposed to heat or contaminated.

Make sure that the area used for storage of hydrogen peroxide is

- cool, clean, and well ventilated
- shielded from direct sunlight
- kept free from combustible materials

Disposal of Hydrogen Peroxide

Always read and follow the disposal instructions in the safety data sheet supplied by the manufacturer or local supplier.

Nitrogen (N_2)

WARNING

High pressure gas.

Nitrogen gas in high concentration can cause rapid suffocation. Make sure that the areas for storing and using this gas are adequately ventilated.

WARNING

Extremely cold high pressure gas.

Rapidly expanding nitrogen gas can cause frostbite injuries. Always wear personal protective equipment.

Emergency Procedures

Nitrogen gas in high concentrations can cause an oxygen deficient environment. Rapidly expanding nitrogen gas can cause frostbite injuries.

In the case of an accidental release of this gas:

- leave the affected area immediately
- never attempt to rescue victims of exposure to this gas without the proper personal protective equipment
- remove victims to fresh air and if necessary administer expired air resuscitation and/or cardiopulmonary resuscitation. Call for immediate medical attention
- in case of contact with eyes or skin, soak the exposed areas with luke warm water, not hot or cold. Call for immediate medical attention.
- allow the gas to dissipate, use auxiliary ventilation if available.

Handling and Storage of Nitrogen Gas

When handling nitrogen gas cylinders, make sure that:

- the areas used for the storage and handling of this gas are adequately ventilated (min. 19.5% oxygen)
- the cylinders are transported with the valves closed and with the valve protection caps securely in place
- the gas cylinders are connected only to connections marked for this gas
- the cylinder valves are opened slowly

Disposal of Nitrogen Gas

When returning nitrogen gas cylinders, make sure that:

- the cylinder valves are closed and the valve protection caps are securely in place
- there is still some gas in the cylinder.

Cooling Medium R134a

WARNING

Refrigerant gas.

Inhaling large quantities of cooling medium R134a vapour can cause dizziness, headache, confusion and unconsciousness. In liquid form R134a can cause frostbite injuries on contact with skin. Always wear personal protective equipment.

Emergency Procedures

In case of an accidental release of this refrigerant:

- leave the affected area immediately
- remove victims to fresh air and if necessary administer expired air resuscitation and/or cardiopulmonary resuscitation. Call for immediate medical attention
- in case of contact with eyes or skin, soak the exposed areas with luke warm water, not hot or cold. Call for immediate attention
- allow the vapour to dissipate, use auxiliary ventilation of available.

Disposal of Cooling Medium R134a

Cooling medium R134a should, whenever possible, be reprocessed or recycled. Contact the manufacturer or supplier for information on authorised refrigerant reclamation and recycling programs.

Ink

WARNING

Risk of personal injury.

Ink is inflammable and can be harmful if it comes into contact with the eyes or skin. Carefully follow the instructions on the container label.

Ink Container

- INFLAMMABLE
- Avoid direct contact with the product
- Use gloves and goggles
- Care for good ventilation
- Propylene glycol mono methyl ether >30%
- Ethanol 1-5%
- SHAKE BEFORE USE

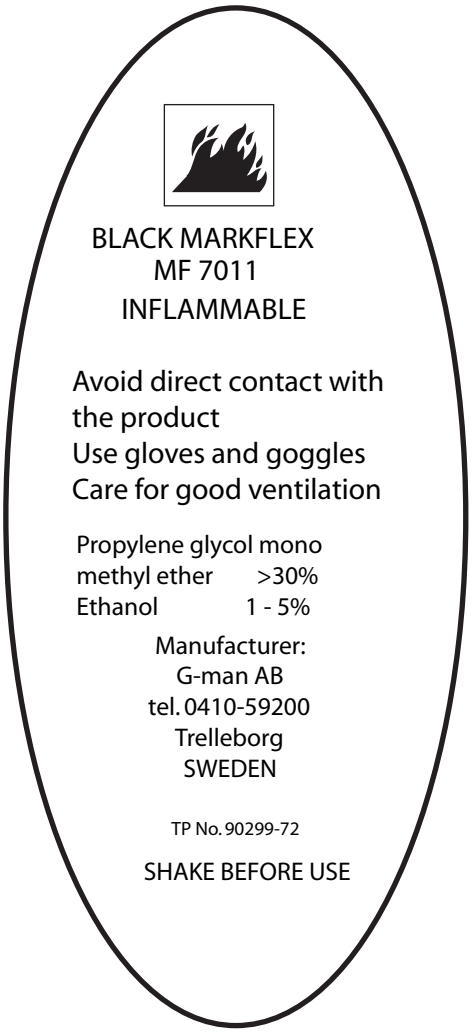

Supply Systems

Electrical Supply

DANGER

Hazardous voltage and moving machinery.
The electrical supply disconnecting device must be in position O (off) and secured with a lock before any maintenance.

Note! The key to the lock must be removed by the technician and retained in his/her possession until all work is completed.

DANGER

Hazardous voltage can be present with the electrical supply switched off.
Circuits identified by orange-coloured conductors are not disconnected by the main electrical supply disconnecting device. The location of the electrical supply disconnecting device or of these circuits is described in the Maintenance Manual procedures that include work on these types of circuit.

Certain maintenance procedures may require electrical supply systems to be on. These exceptions are clearly stated in the Maintenance Manual.

(Cont'd)

(Cont'd)

The illustration shows the electrical supply disconnecting device and its location.

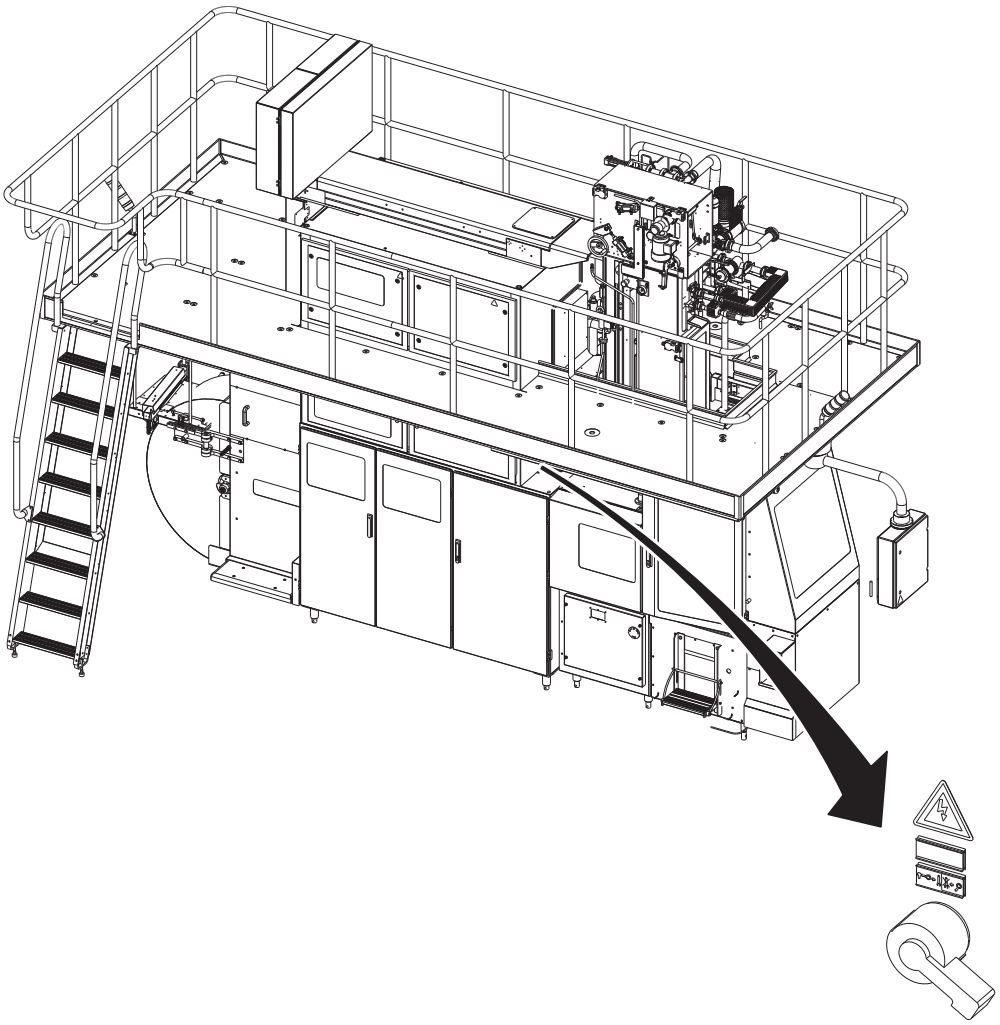

TBA/19 0400 Standard is shown

Residual Voltage

DANGER

Hazardous voltage.
Will shock, burn, or cause death.
After the electrical supply disconnecting device is in position O (OFF), residual voltage remains in the capacitor circuits.
Wait five minutes before opening the enclosure containing these circuits.
Ensure that no residual voltage remains on the capacitors before touching them.

Electrical Cabinet

DANGER

Hazardous voltage.
Will shock, burn, or cause death.
Parts behind doors to electrical enclosures may be live. The electrical supply disconnecting device must be in position O (OFF) and secured with a lock before performing maintenance inside the electrical cabinet.

Note! The key to the lock must be removed by the technician and retained in his/her possession until all work is completed.

The use of a key or a tool is necessary to access to the electrical cabinet.

Make sure that the electrical cabinet doors are closed after working inside the electrical cabinet. Doors with lock must be locked.

(Cont'd)

(Cont'd)

The location of each electrical cabinet is shown by an arrow.

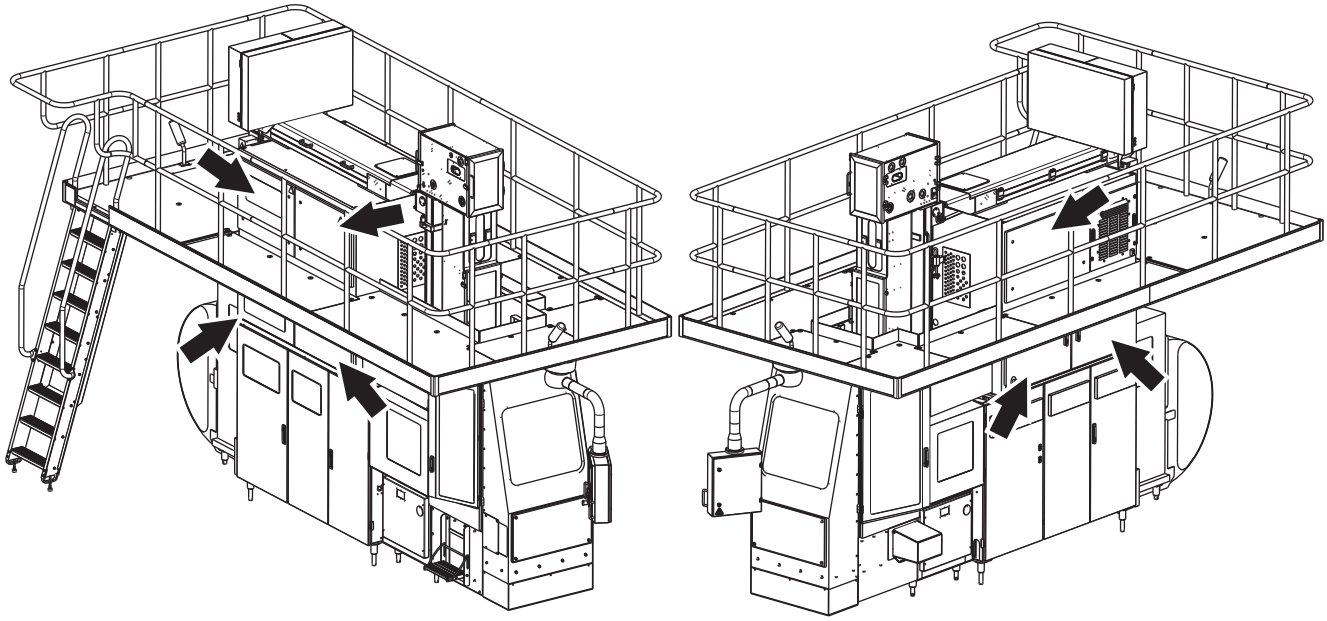

TBA/19 0400 Standard is shown

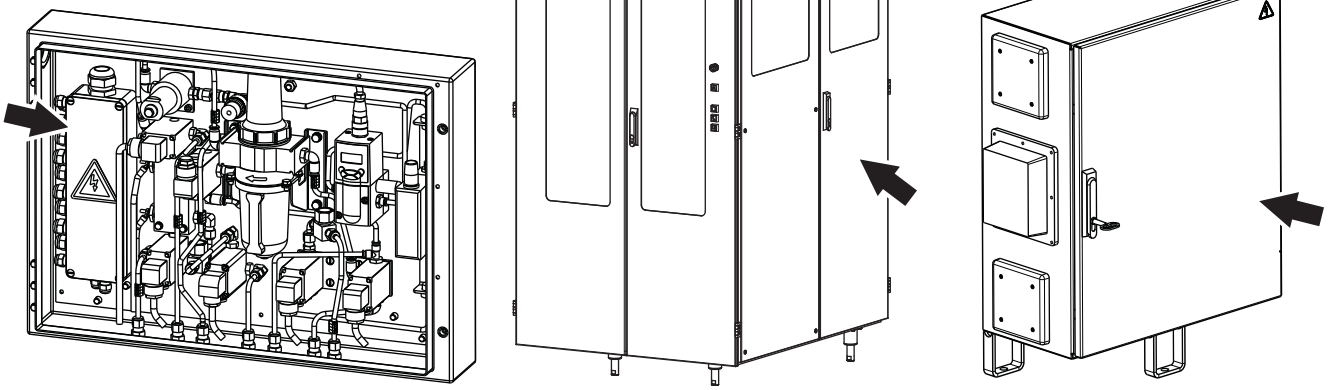

Electrical cabinet, HI (OE)

Electrical cabinet, ASU(OE)

Electrical cabinet, HVA (OE)

Socket Outlet

WARNING

Hazardous voltage.

Can shock, burn, or cause death. Read the Maintenance Manual before using this socket outlet.

The socket outlet (1) is connected to a residual current device (2) to protect users against electrical shock if there is an earth fault in the connected equipment. The residual current device shall be tested each time before the socket outlet is being used. See the MM for the filling machine for test procedure.

The illustrations show the socket outlet, the residual current device, and their location.

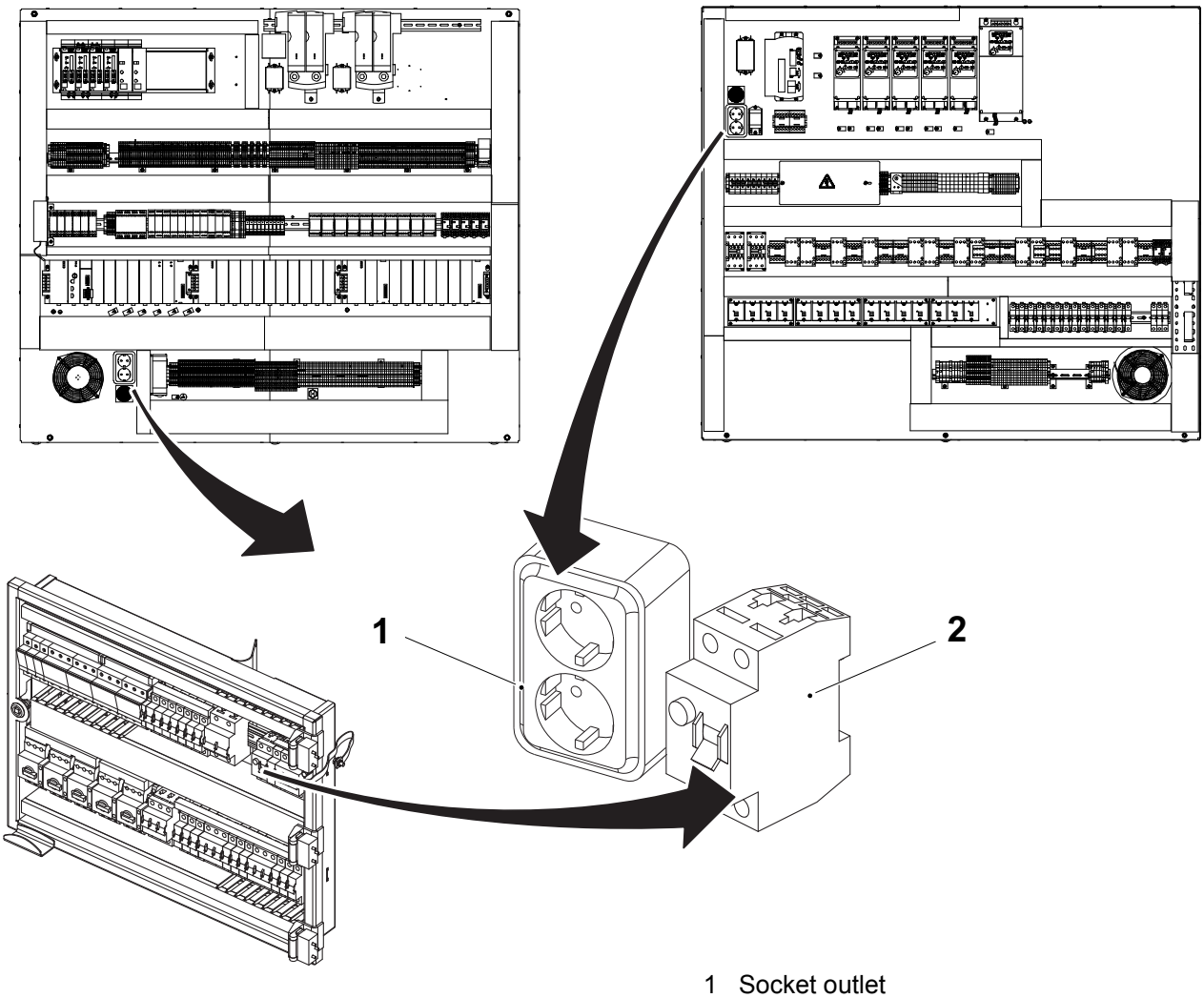

1 Socket outlet
2 Residual current device F024

Air Supply

WARNING

Compressed air and moving machinery.
Close the main air valve, the ASU (OE) air valve, and the PT19 (OE) air valve, and lock them before any maintenance.

Note! The key to the lock must be removed by the technician and retained in his/her possession until all work is completed.

Certain maintenance procedures may require air supply systems to be on. These exceptions are clearly stated in the Maintenance Manual.

The illustrations show the main air valve (1), the ASU (OE) air valve (2) and the PT19 (OE) air valve (3), and their location.

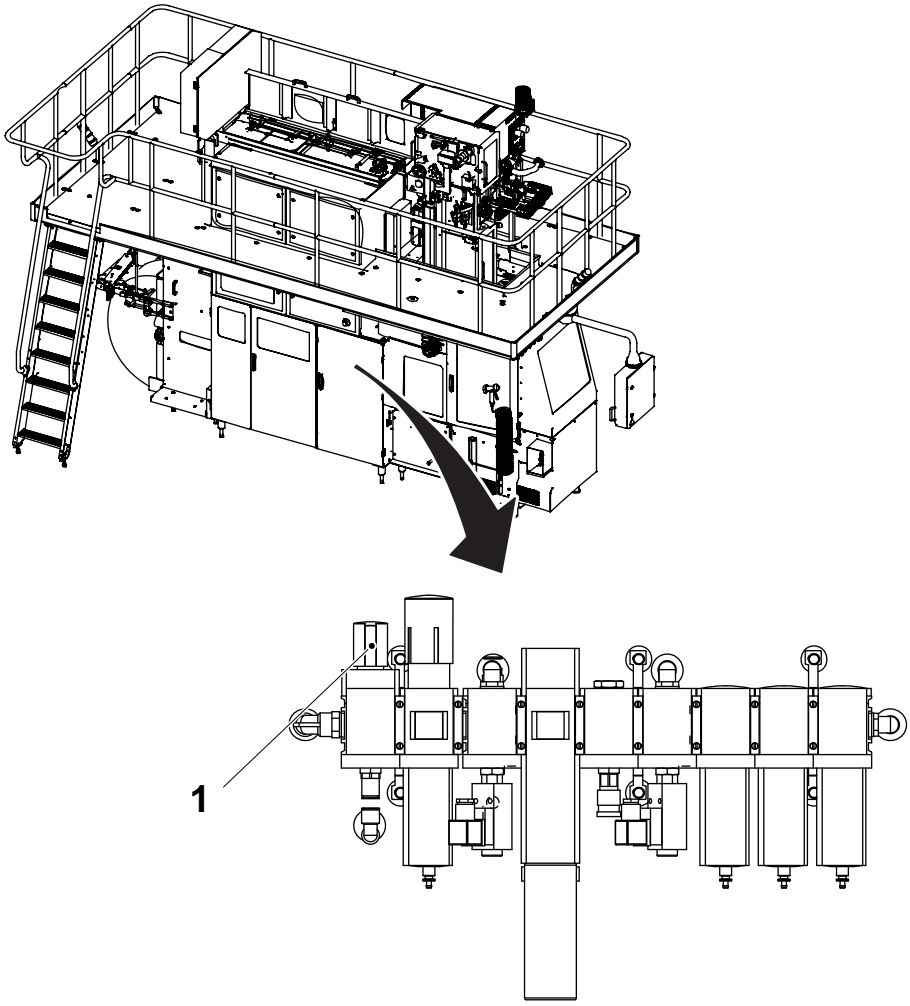

TBA/19 0400 Standard is shown
1 Main air valve

(Cont'd)

(Cont'd)

Air Supply Optional Equipment

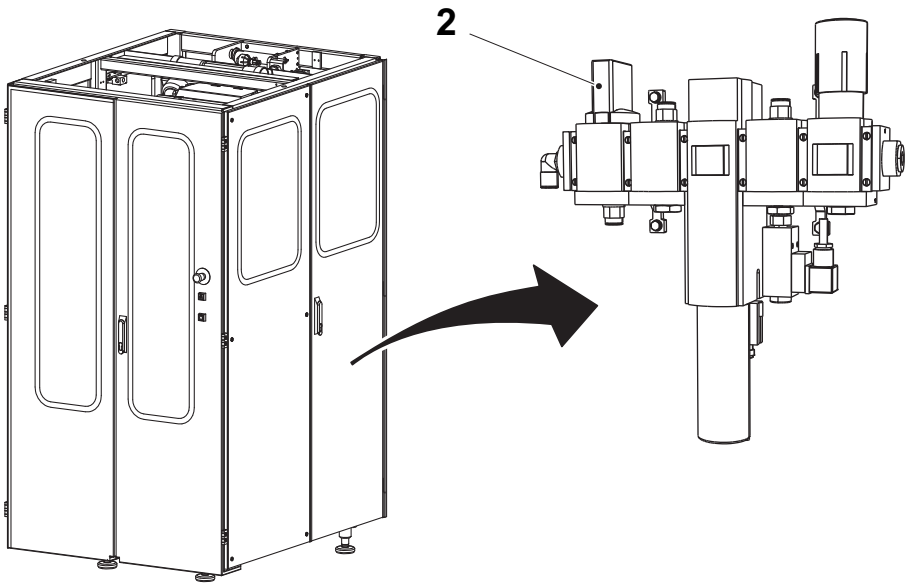

2 ASU (OE) air valve

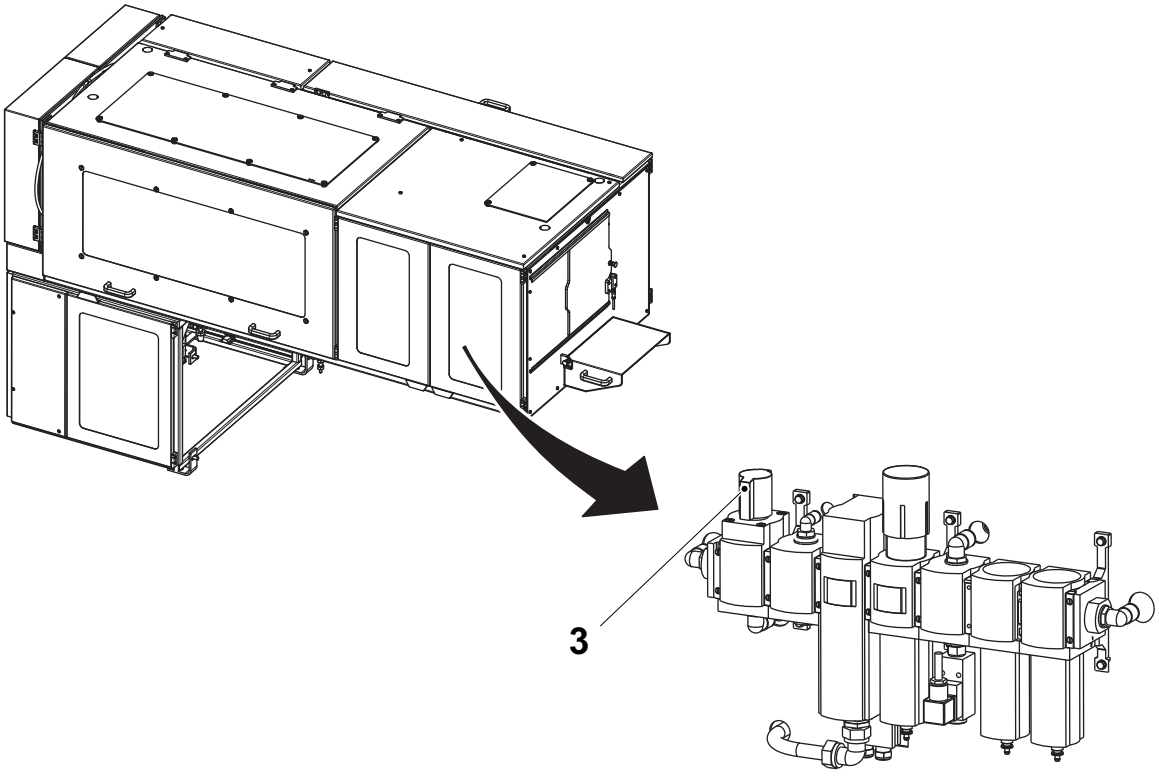

3 PT19 (OE) air valve

Steam Supply

WARNING

Hot steam can cause scalds.

Pressurized steam can be discharged unexpectedly.

Close the steam supply valve and lock it, depressurize and vent all steam safely before any maintenance on parts with steam, such as pipes and valves.

Note! The key to the lock must be removed by the technician and retained in his/her possession until all work is completed.

Certain maintenance procedures may require steam supply systems to be on. These exceptions are clearly stated in the Maintenance Manual.

The illustrations show the steam supply valve (1), and its location.

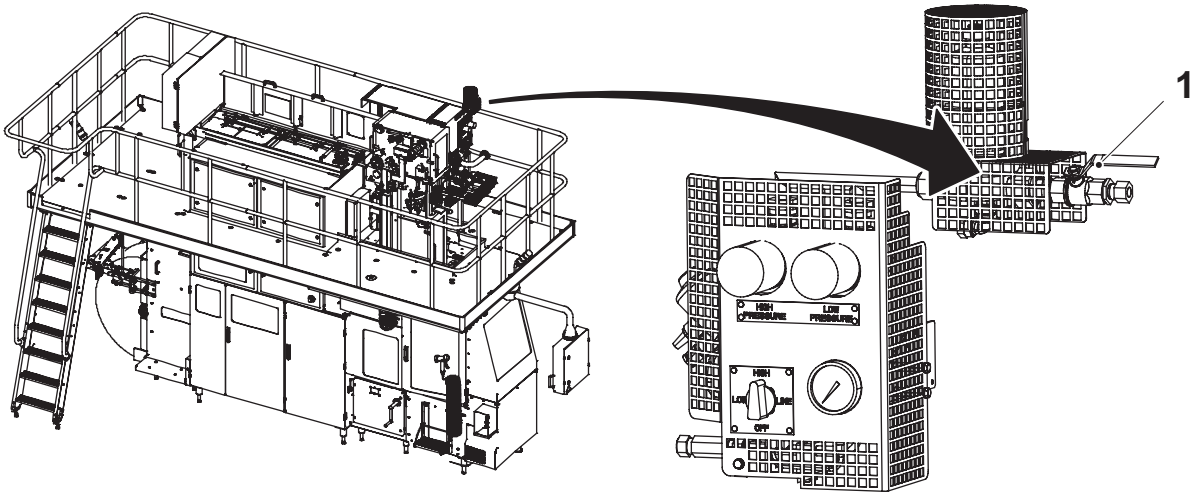

TBA/19 0400 Standard is shown

1 Steam supply valve

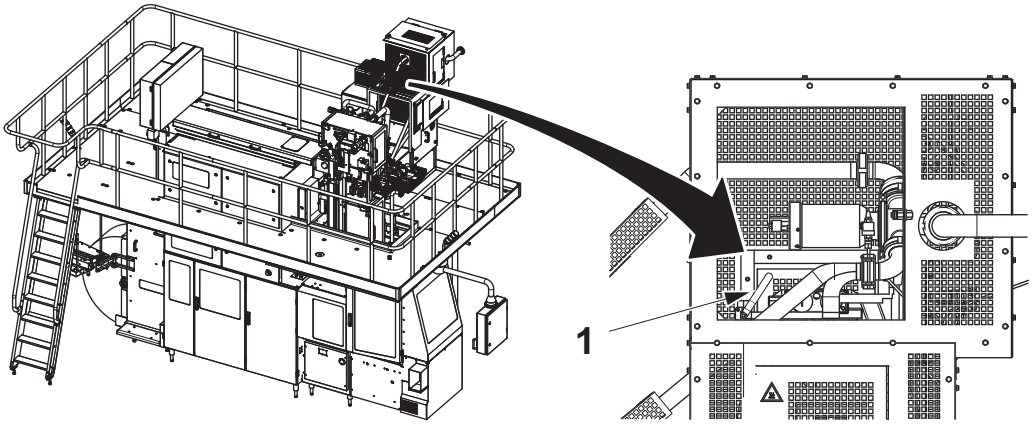

TBA/19 0400 HVA (OE)

1 Steam supply valve

Water Supply

CAUTION

Water under pressure.

Close the water supply valves before any maintenance.

Certain maintenance procedures may require water supply systems to be on. These exceptions are clearly stated in the Maintenance Manual.

The illustrations show the water supply valves (1) and (2), and their location.

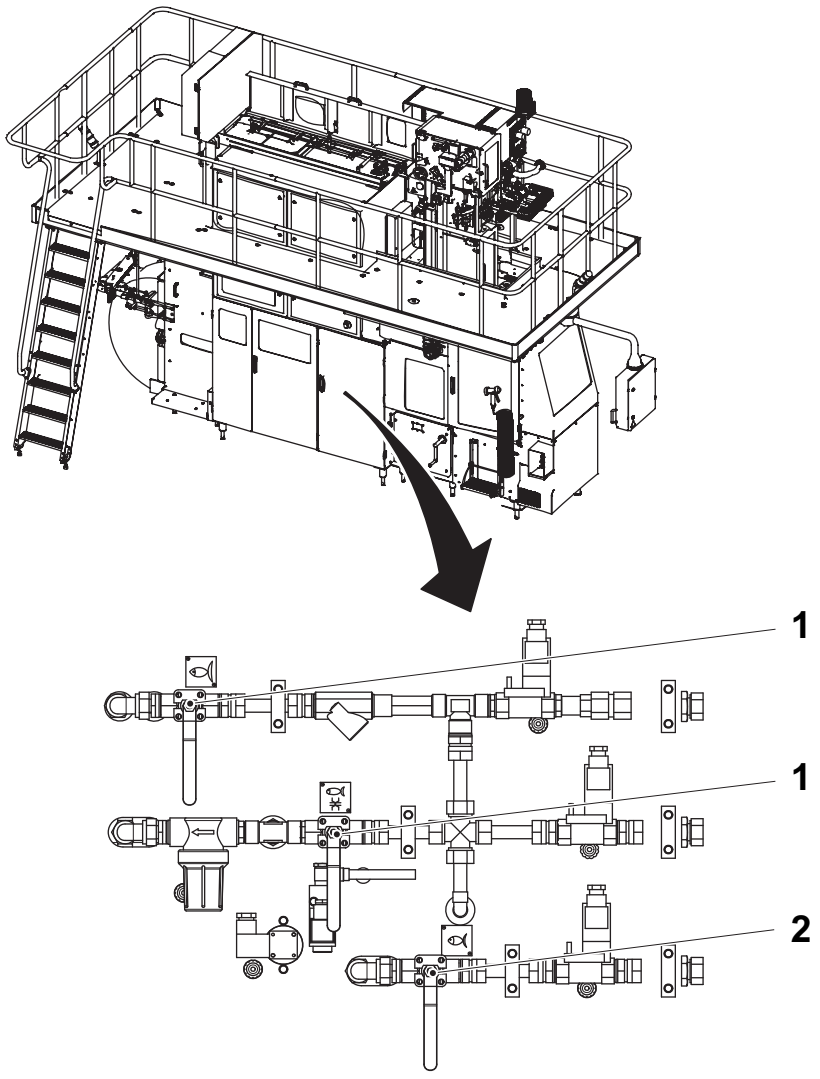

TBA/19 0400 Standard is shown

1 Water supply valve

2 Hot water supply valve

Equipment for Lifting and Moving Loads

WARNING

Risk of crushing injury.

Make sure that the capacity of the lifting equipment is adequate and that the equipment itself is in proper working order.

If lifting tackle must be joined to make up the necessary lengths, make sure that the joints are secure and have the same lifting capacity as the rest of the lifting tackle.

Always engage safety clips fitted to lifting hooks to prevent the lifting tackle from slipping off.

Use ropes or poles to steady and manoeuvre suspended loads. Do **not** use hands or feet.

Make sure that the route and destination are free from obstacles before moving a suspended load. It must always be possible to quickly and safely lower the load to the floor in an emergency.

When depositing loads, keep lifting tackle in place until the stability of the load has been substantiated.

10 Automatic Splicing Unit

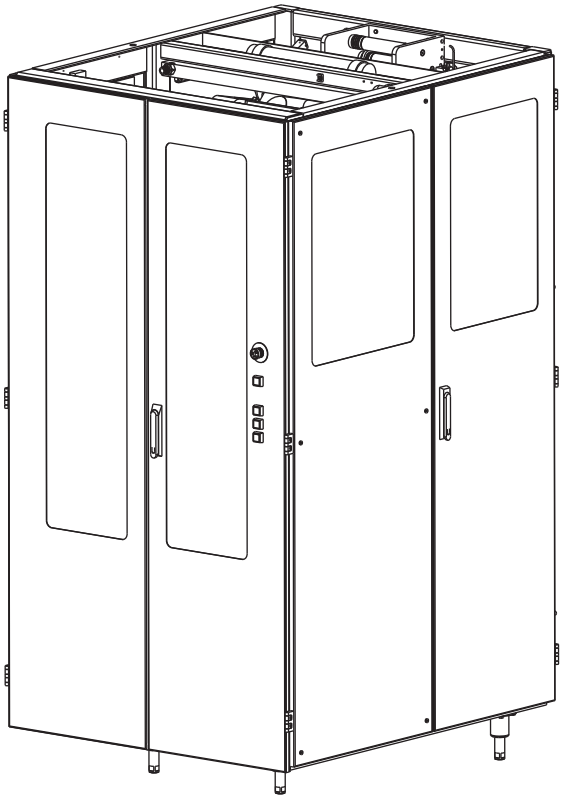

Description

This chapter contains the maintenance procedures for the Automatic Splicin Unit (ASU). The Functional Description on page 10-5 provides a technical description of the ASU.

The ASU consists of the following sections:

- Machine body (1), see 10.1 Machine Body
- Splicing device (2), see 10.2 Splicing Device
- Material holder (3), see 10.3 Material Holder
- Infeed unit (4), see 10.4 Infeed Unit
- Web magazine (5), see 10.5 Web Magazine
- Valve panel (6), see 10.6 Valve Panel
- Covering panel (7), see 10.7 Covering Panel

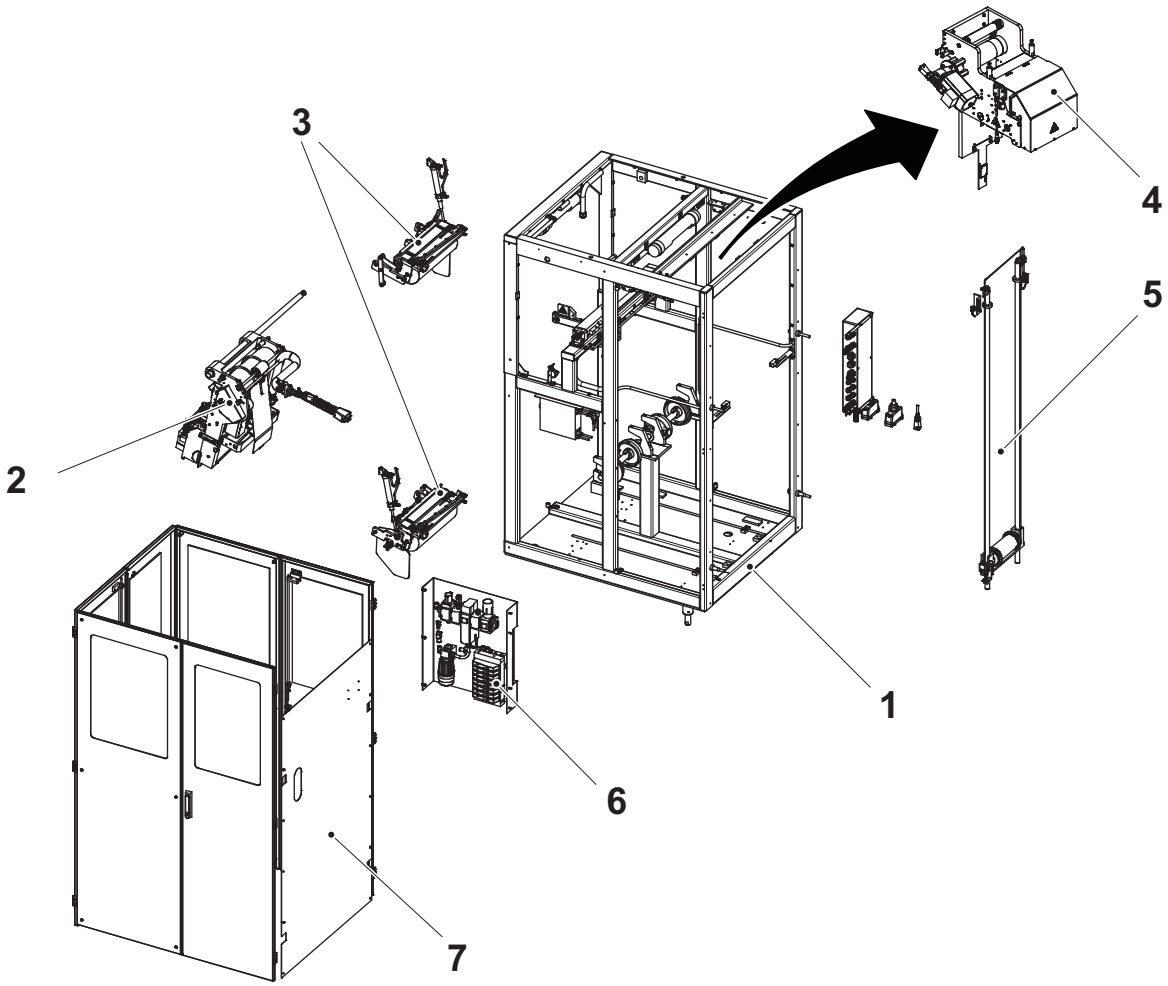

1 Machine body
2 Splicing device
3 Material holder
4 Infeed unit
5 Web magazine
6 Valve panel
7 Covering panel

Functional Description . . . . . 10 - 5
10-1 ASU - Setting Diagram . . . . . 10 - 6
10-2 ASU - Check Function . . . . . 10 - 7

10.1 Machine Body . . . . . 10 - 11

10.1-1 Machine Body - Check Bearing Blocks . . . . . 10 - 11
10.1-2 Machine Body - Change Cylinder . . . . . 10 - 12
10.1-3 Machine Body - Set Side Feeder . . . . . 10 - 14

10.2 Splicing Device . . . . . 10 - 17

10.2-1 Splicing Device - Check Drive Unit . . . . . 10 - 17
10.2-2 Splicing Device - Drive Unit Overhaul . . . . . 10 - 18
10.2-3 Splicing Device - Set Drive Unit . . . . . 10 - 20
10.2-4 Splicing Device - Change Photocell . . . . . 10 - 21
10.2-5 Splicing Device - Set Photocell Position . . . . . 10 - 22
10.2-6 Splicing Device - Set Photocell Sensitivity . . . 10 - 24
10.2-7 Splicing Device - Set Movement Time . . . . . 10 - 27

10.2.1 Web Guide . . . . . 10 - 28

10.2.1-1 Web Guide - Check . . . . . 10 - 28
10.2.1-2 Web Guide - Overhaul . . . . . 10 - 29
10.2.1-3 Web Guide - Set . . . . . 10 - 30

10.2.2 Pressure Jaw . . . . . 10 - 31

10.2.2-1 Pressure Jaw - Check Knife . . . . . 10 - 31
10.2.2-2 Pressure Jaw - Change Knife . . . . . 10 - 33
10.2.2-3 Pressure Jaw - Check TPO-bar . . . . . 10 - 36
10.2.2-4 Pressure Jaw - Change TPO-bar . . . . . 10 - 37
10.2.2-5 Pressure Jaw - Set TPO-bar . . . . . 10 - 38
10.2.2-6 Pressure Jaw - Change Cylinders . . . . . 10 - 39
10.2.2-7 Pressure Jaw - Change Dolly . . . . . 10 - 44

10.2.3 Pressure Roller. . . . . 10 - 46

10.2.3-1 Pressure Roller - Check . . . . . 10 - 46
10.2.3-2 Pressure Roller - Overhaul . . . . . 10 - 47

10.3 Material Holder. . . . . 10 - 48

10.3-1 Material Holder - Check . . . . . 10 - 48

10.3-2 Material Holder - Check Cutting Table . . . . . 10 - 49
10.3-3 Material Holder - Set Cutting Table . . . . . 10 - 51
10.3-4 Material Holder - Overhaul . . . . . 10 - 54
10.3-5 Material Holder - Set . . . . . 10 - 55
10.3-6 Material Holder - Set Lock Cylinders . . . . . 10 - 57

10.4 Infeed Unit . . . . . 10 - 58

10.4-1 Infeed Unit - Set . . . . . 10 - 58
10.4-2 Infeed Unit - Change Ball Bearings . . . . . 10 - 61

10.5 Web Magazine . . . . . 10 - 69

10.5-1 Web Magazine - Check . . . . . 10 - 69
10.5-2 Web Magazine - Change Bearings . . . . . 10 - 70
10.5-3 Switches - Set . . . . . 10 - 71

10.6 Valve Panel . . . . . 10 - 72

10.6-1 Valve Panel - Change Silencer Filter . . . . . 10 - 72
10.6-2 Valve Panel - Set Safety Valve . . . . . 10 - 73
10.6-3 Valve Panel - Change Air Inlet Filter Insert . . 10 - 74

10.7 Covering Panel. . . . . 10 - 75

10.7-1 Covering Panel - Check . . . . . 10 - 75

10.8 Electrical Equipment . . . . . 10 - 76

10.8.1 ASU RMD NP . . . . . 10 - 76

10.8.1-1 ASU RMD NP - Functional Description . . . . . 10 - 76
10.8.1-2 ASU RMD NP - Buttons and Display . . . . . 10 - 77
10.8.1-3 ASU RMD NP - Set Communication . . . . . 10 - 80
10.8.1-4 ASU RMD NP - Display Report . . . . . 10 - 82
10.8.1-5 ASU RMD NP - Load Program . . . . . 10 - 84

10.8.2 Frequency Converter . . . . . 10 - 87

10.8.2-1 Frequency Converter Rockwell - Set . . . . . 10 - 88

Functional Description

The ASU (Automatic Splicing Unit) contains two packaging material reels, one for production and another one prepared for splicing. When the reel in production is empty, the splicing device (3) moves sideways and automatically splices the prepared reel.

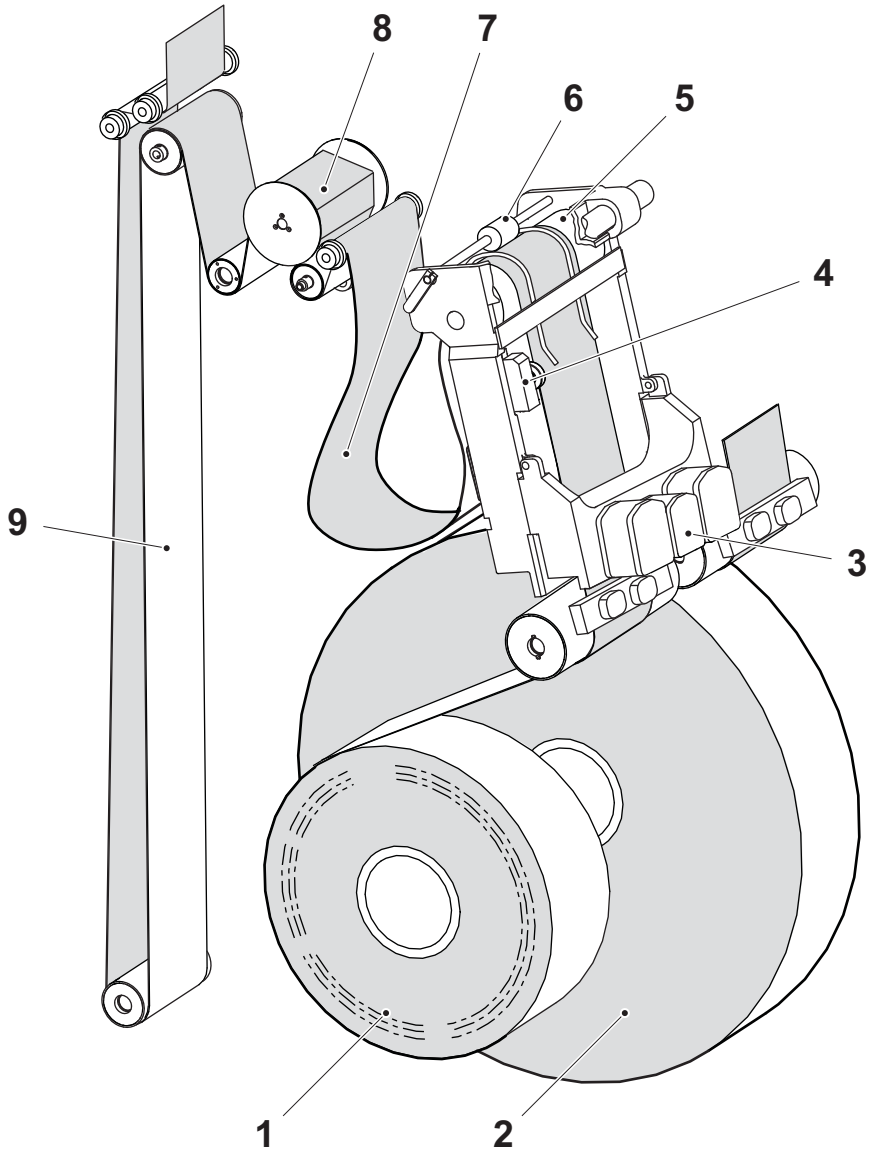

1 Packaging material reel in use
2 Packaging material reel prepared for splice
3 Splicing device
4 Web guide
5 Driven bending roller
6 Counter pressure roller
7 Loop
8 Driven bending roller, dating unit
9 Web magazine

10-1 ASU - Setting Diagram

- 10.3-5 Material Holder - Set
- 10.2.1-3 Web Guide - Set
- 10.3-3 Material Holder - Set Cutting Table
- 10.3-5 Material Holder - Set
- 10.2-5 Splicing Device - Set Photocell Position
- Perform at least two manual splices for each reel of packaging material.
- 10-2 ASU - Check Function
- 10.1-3 Machine Body - Set Side Feeder
- Web Tension Cylinder - set air pressure, see page 1-42.

10-2 ASU - Check Function

Machine Status	PRODUCTION
SPC Reference	648116-0300

Raise the empty material holder and thread the packaging material through. Push the MATERIAL LOCKING button and check that the packaging material is correctly locked.

If not, follow the procedure in 10.3-6 Material Holder - Set Lock Cylinders.

Perform a manual splice for each reel of packaging material, and check the following items.

- Sealing parallelism
- Sealing alignment
- Overlap
- Spliced package length
- Cutting
- Sealing

Sealing Parallelism

Check the parallelism, distance **A**, between the new and the old packaging material web (4).

Use a straight edge (1) to check that the **new** packaging material web (3) diverges by no more than the distance **A** within **1000 mm** of the splice (2).

Set the sealing parallelism as required, see 10.3-3 Material Holder - Set Cutting Table.

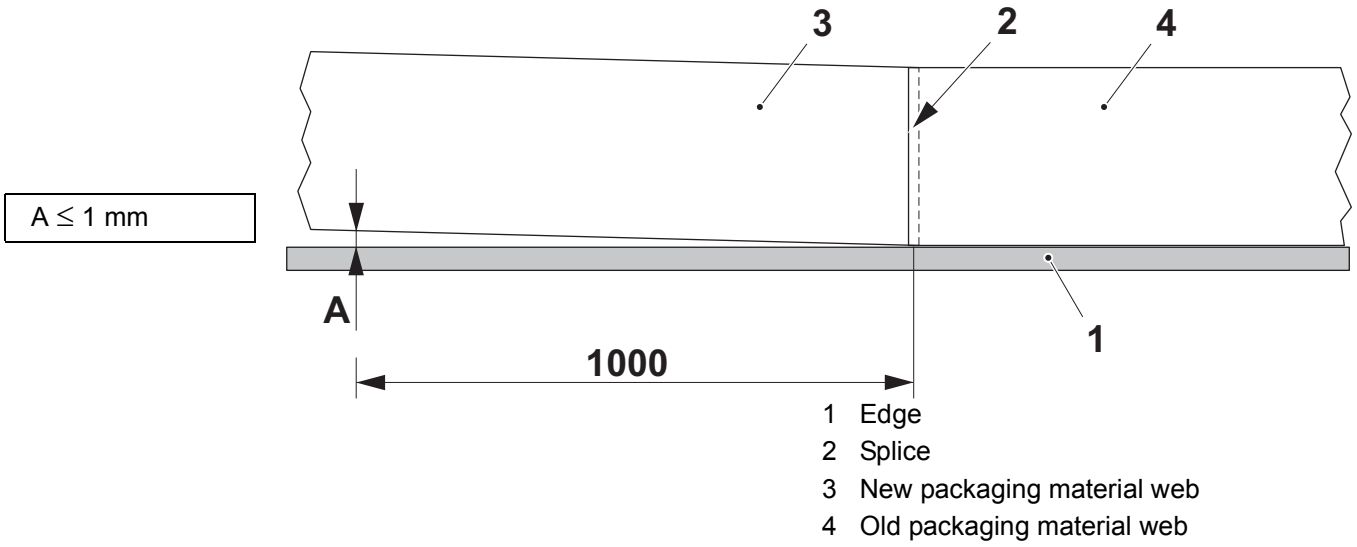

(Cont'd)

(Cont'd)

Sealing Alignment

Check the alignment, distance **B**, between the new and the old packaging material webs spliced on the two packages.

Set the sealing alignment as required see:

- 10.2.1-3 Web Guide - Set
- 10.3-3 Material Holder - Set Cutting Table

B = 0 ±0.5 mm

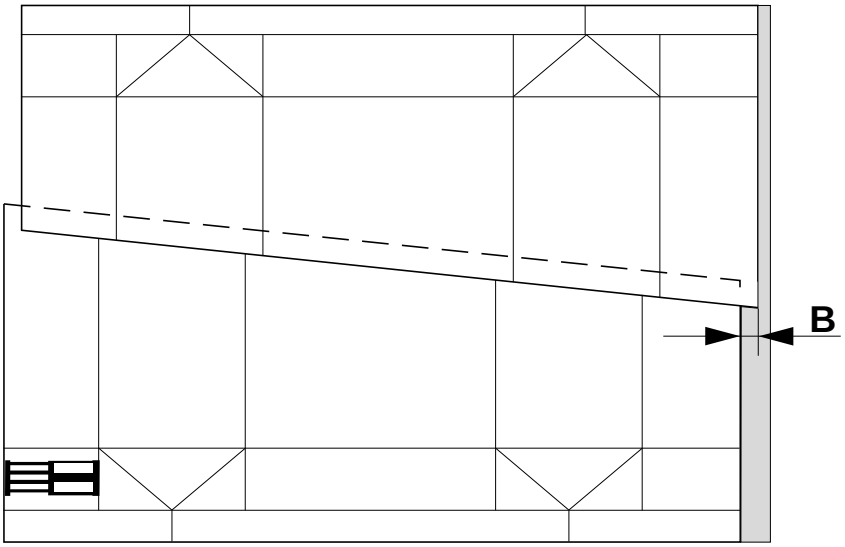

Overlap

Check the overlap, distance **C**, between the manual cutting (5) and the splicing device cutting (6). Set the material holder position as required, see 10.3-5 Material Holder - Set and Overlap - Fine Adjustment, page 1-56.

C = 9±0.5 mm

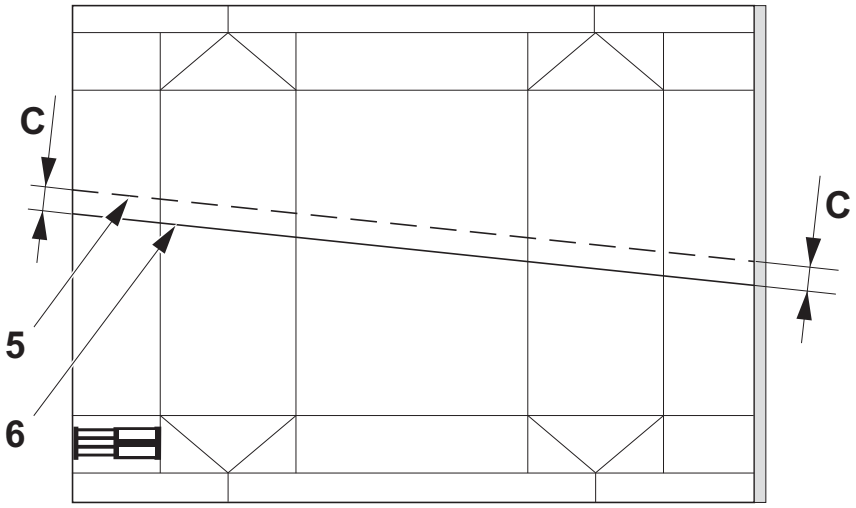

5 Manual cutting
6 Splicing device cutting

(Cont'd)

(Cont'd)

Spliced Package Length

Compare the distance **D**, between the top and the bottom creases of the package spliced by the ASU, to a normal package.
If the distance **D** diverges by **0.5 mm** from the normal package length, set the photocells, see on 10.2-5 Splicing Device - Set Photocell Position.

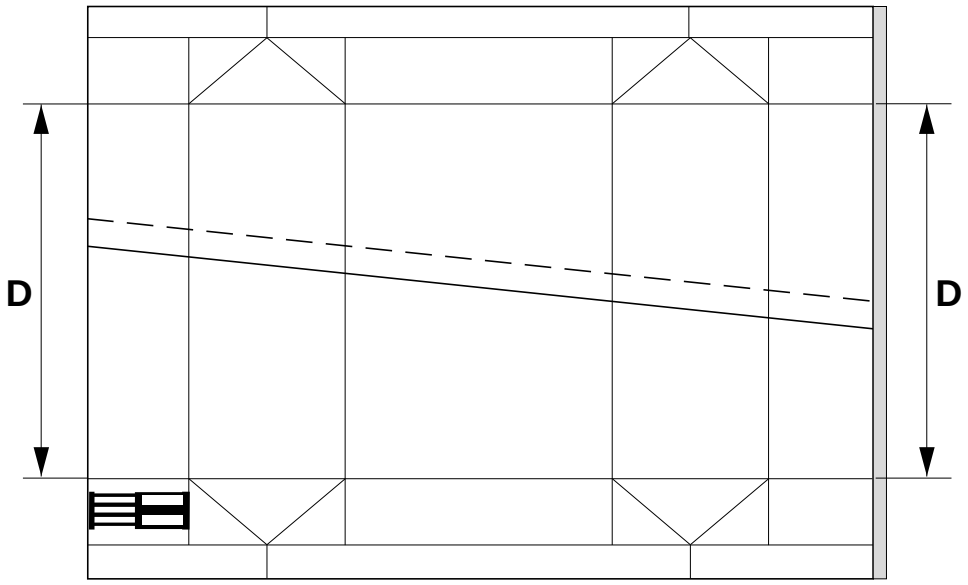

Cutting

Check that the manually cut paper edge is OK. If not, change the material holder knife, see 10.3-2 Material Holder - Check Cutting Table.

Check that the automatically cut paper edge is OK. If not, change the splicing device knife, see 10.2.2-2 Pressure Jaw - Change Knife.

(Cont'd)

(Cont'd)

Sealing

Pull apart and examine the sealing (7).

The sealing is acceptable if remains intact but:

- a delamination between the two inner coating takes place.
- a rupture takes place in the printed paper board layer.

The sealing is defective if:

- the seal is so weak that the two plastic layers separate without rupturing.

If the seal is defective, check the TPO-bar, see 10.2.2-3 Pressure Jaw - Check TPO-bar.

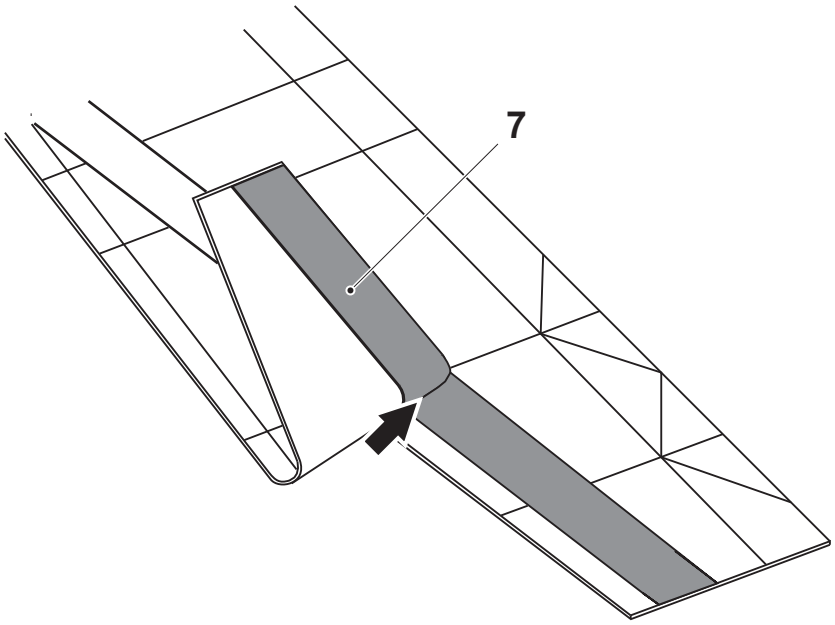

7 Sealing

10.1 Machine Body

10.1-1 Machine Body - Check Bearing Blocks

Machine Status	Electrical supply disconnecting device in position O (OFF) Main air valve OFF Main steam valve ON Main water valve OFF
SPC Reference	1519948-0300

Check that the bearing blocks (1) are not worn or damaged.
If distance **A** exceeds the given value, change the bearing blocks (1).

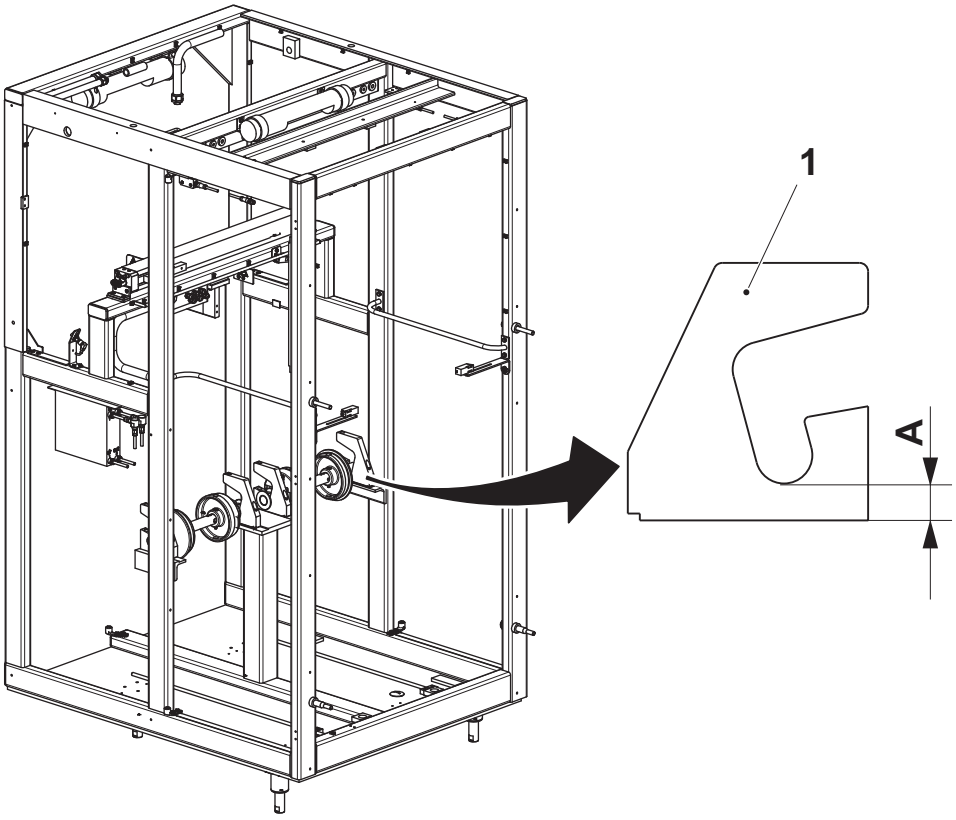

A = 17.5 +0/-2 mm

1 Bearing block

10.1-2 Machine Body - Change Cylinder

Machine Status	Electrical supply disconnecting device in position O (OFF) Main air valve OFF Main steam valve ON Main water valve OFF
Special Equipment	Ropes
SPC Reference	1519948-0300

WARNING

Moving part can crush and cut.

Do not operate with guard removed.

a) Attach ropes to the lower part of the splicing device (1) so that it can be swung upwards when it is disconnected from the cylinder (2).

b) Remove the screws (3) securing the splicing device (1) to the cylinder (2).

c) Using the ropes, swing the splicing device (1) away from the cylinder (2) on the shaft (4).

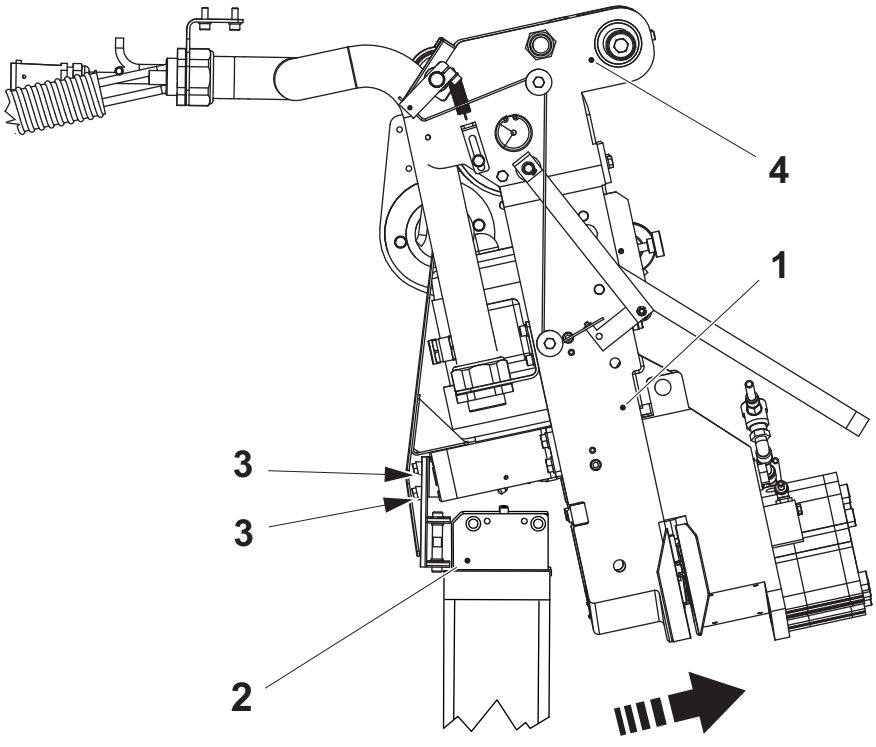

1 Splicing device
2 Cylinder
3 Screw
4 Shaft

(Cont'd)

(Cont'd)

d) Remove and change the non-return valves (5).

e) Remove and change the end position sensors (6).

f) At both ends, remove the screws (7) securing the cylinder (2) to the brackets (8) and manoeuvre the cylinder (2) out of the ASU.

g) Assemble in the reverse order.

h) Set the air dampers and the end position sensors (6), see 10.1-3 Machine Body - Set Side Feeder.

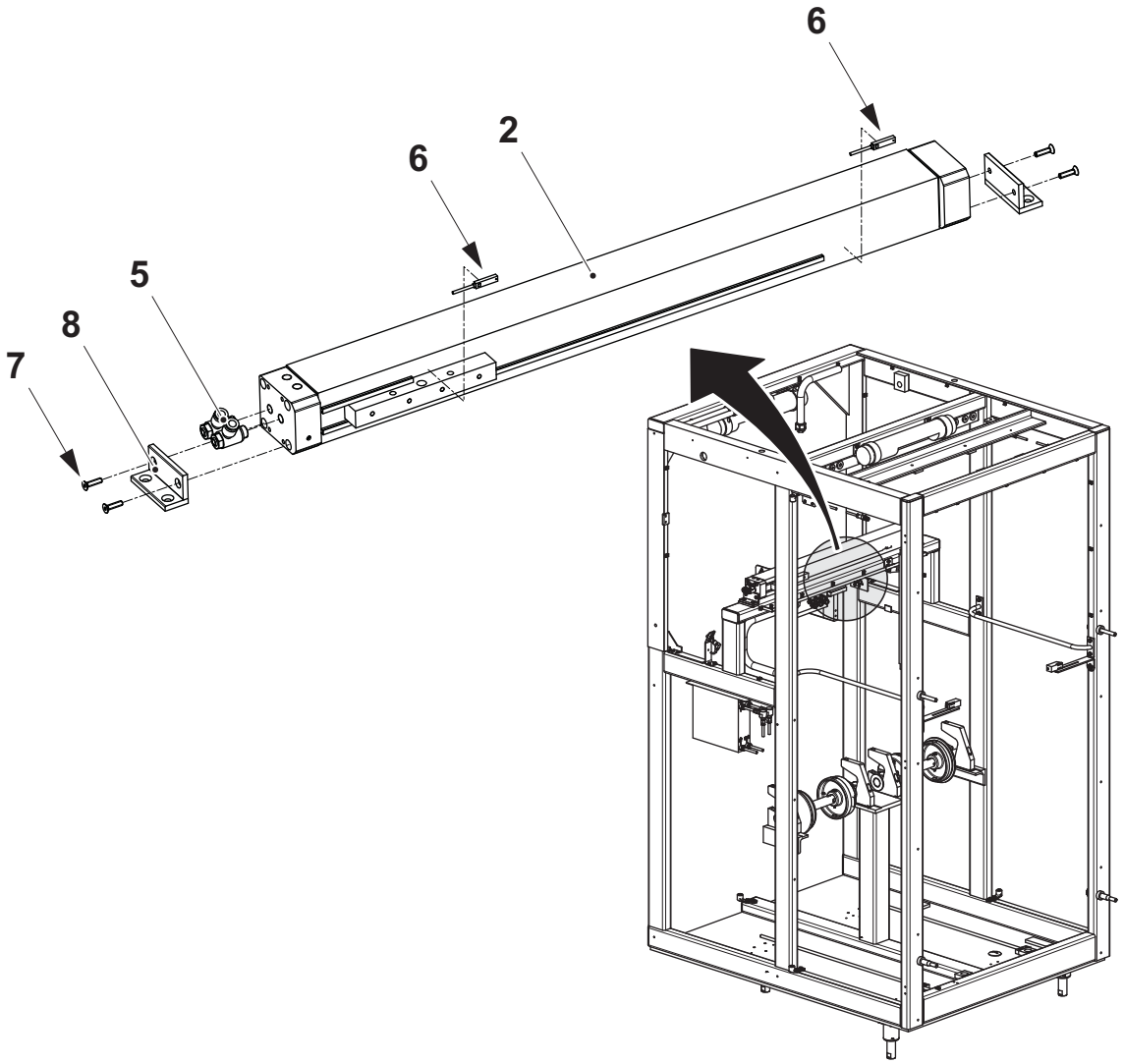

2 Cylinder
5 Non-return valve
6 Sensor
7 Screw
8 Bracket

10.1-3 Machine Body - Set Side Feeder

Machine Status	Electrical supply disconnecting device in position O (OFF) Main air valve OFF Main steam valve ON Main water valve OFF
SPC Reference	1519948-0300

WARNING

Risk of crushing.

If the splicing device is moved out of position it will return rapidly to its former position when the doors are closed.

Air Damper

a) Turn the setting screws (1) on the non-returning valves (2) and (3) fully to the right.

b) Turn the setting screws (1) to the left for 8 rotations.

c) Turn the screws (4) fully to the right.

d) Turn the screws (4) to the left for 6 rotations.

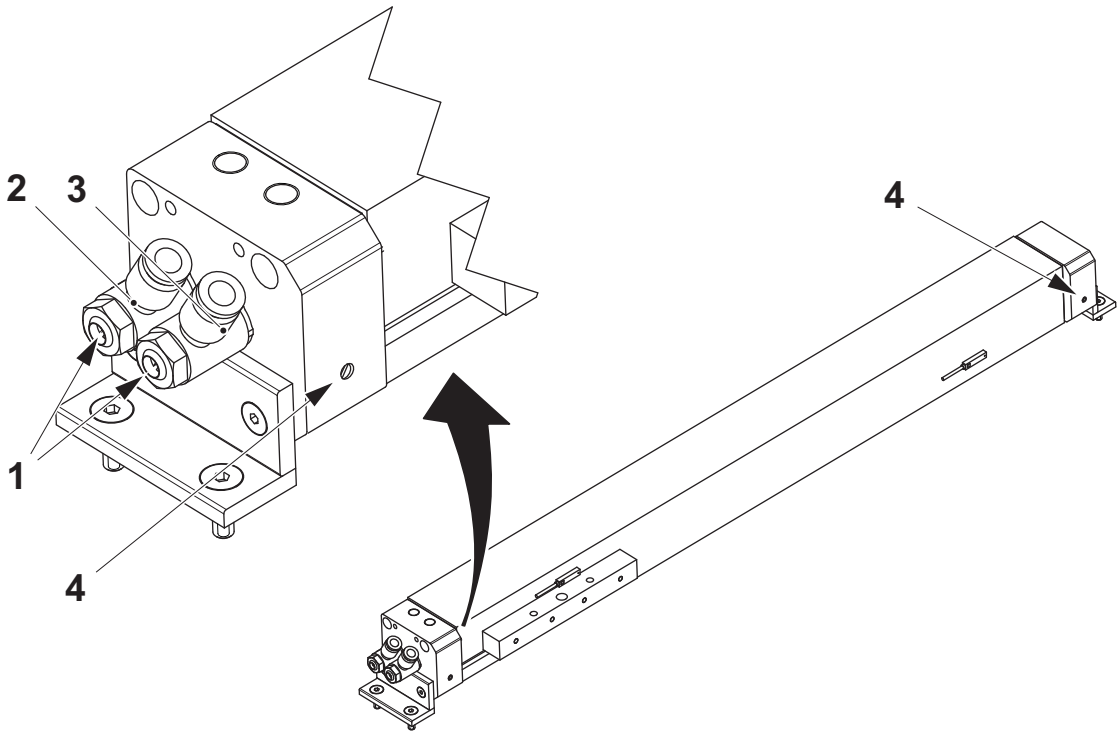

1 Setting screw
2 Non-returning valve
3 Non-returning valve
4 Screw

(Cont'd)

(Cont'd)

Sensor

a) Push the splicing device (1) to the left, if it is not already there.

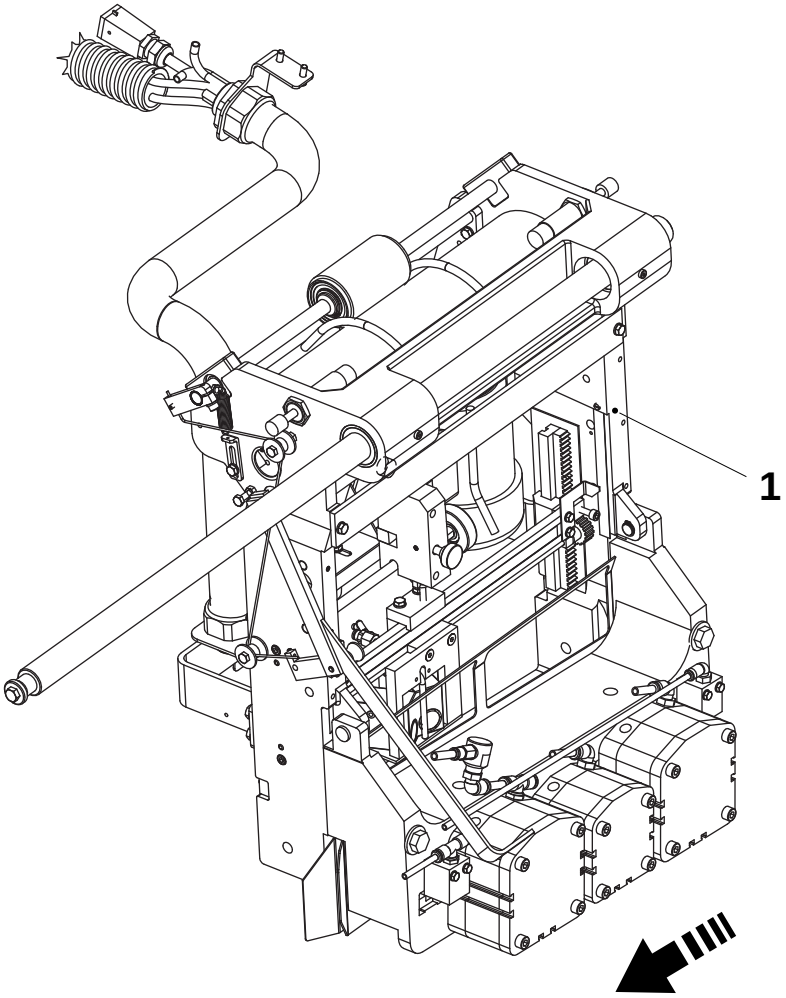

1 Splicing device

(Cont'd)

(Cont'd)

b) Loosen the screw (2) on the left hand sensor (3) and push the sensor to the left.

c) Move the sensor to the right until the LED (4) lights up and tighten the screw (2).

d) Repeat the procedure on the right hand side of the ASU for the other sensor (5).

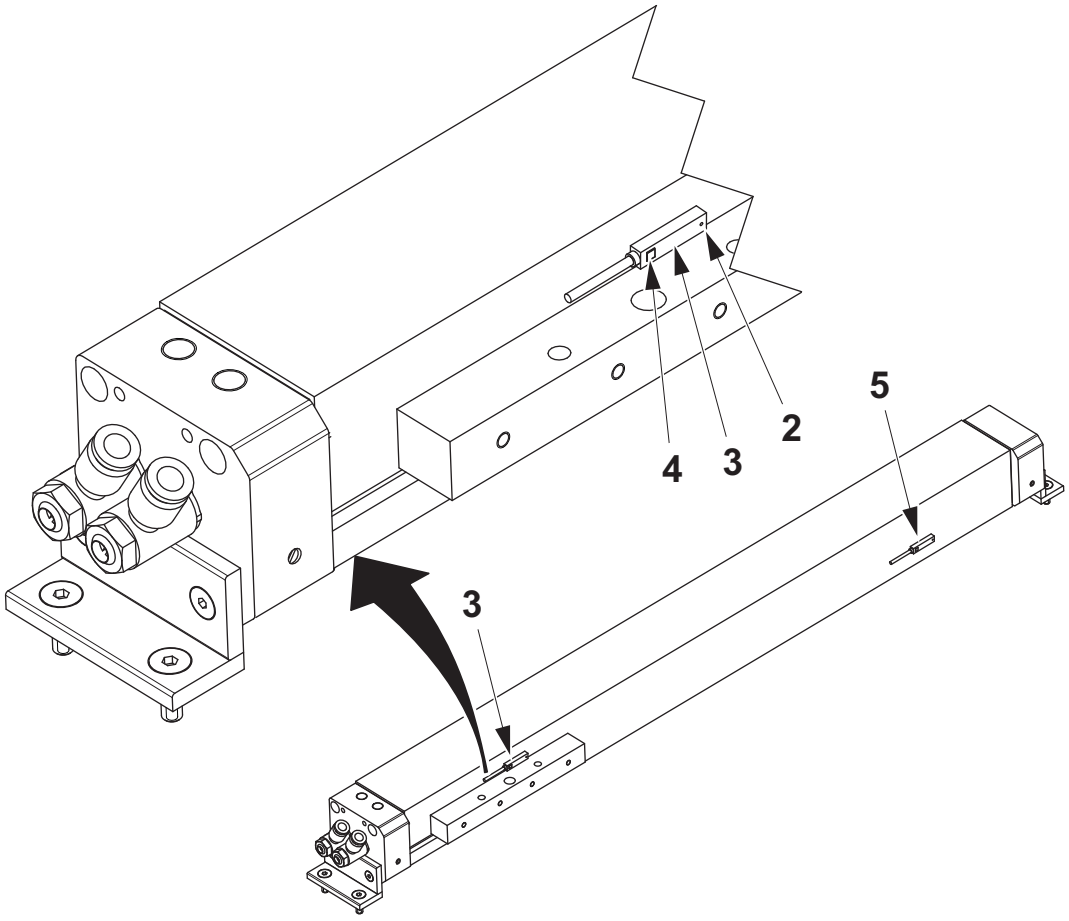

2 Screw
3 Sensor
4 LED
5 Sensor

10.2 Splicing Device

10.2-1 Splicing Device - Check Drive Unit

Machine Status	Electrical supply disconnecting device in position O (OFF) Main air valve OFF Steam supply ON Main water valve OFF
SPC Reference	1524388-0100

Remove the cover (1) and check the following parts for visual wear and/or damage:

- the worm gear motor (2).
- the ball bearings (3) for the driven roller (4); check for excessive radial play.
- the timing belt (5) for wear. Check the timing belt tension also, follow the procedure in 10.2-3 Splicing Device - Set Drive Unit.

Change as required according to 10.2-2 Splicing Device - Drive Unit Overhaul.

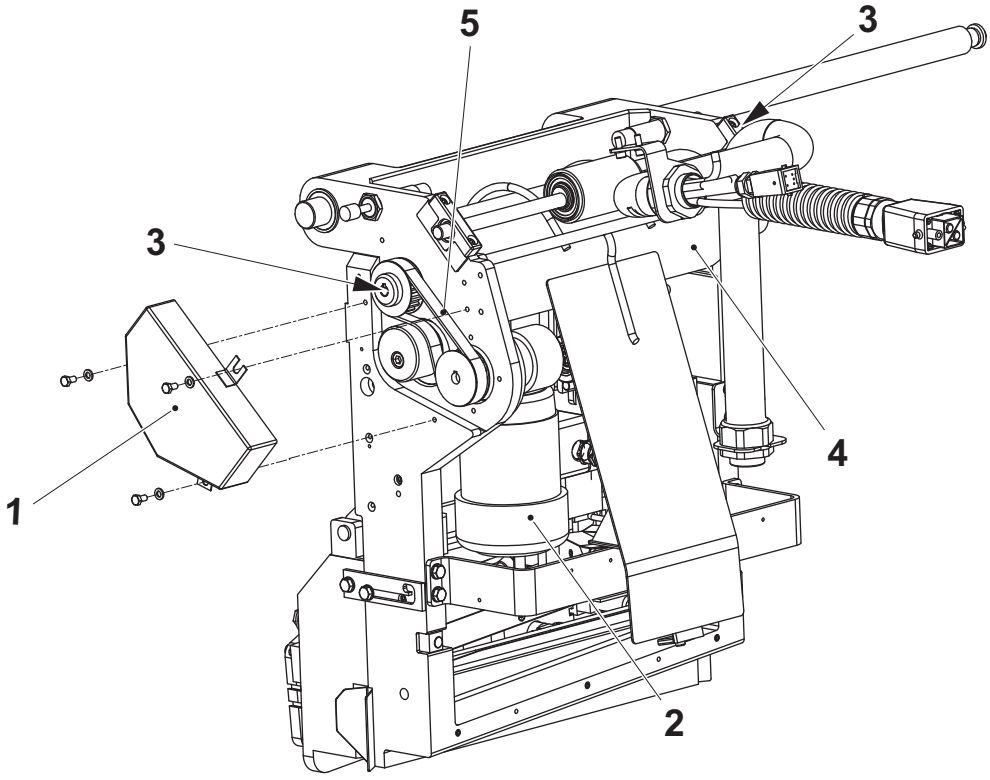

1 Cover
2 Worm gear motor
3 Ball bearing
4 Driven roller
5 Timing belt

10.2-2 Splicing Device - Drive Unit Overhaul

Machine Status	Electrical supply disconnecting device in position O (OFF) Main air valve OFF Main steam valve ON Main water valve OFF
SPC Reference	1524388-0100

a) Remove the cover (1), loosen the screw (3) in the eccentric straining pulley (4) and remove the timing belt (2).

b) Loosen the stop screw (6) and remove the toothed pulley (5) and the key (8).

c) Remove the retaining rings (7) and (9).

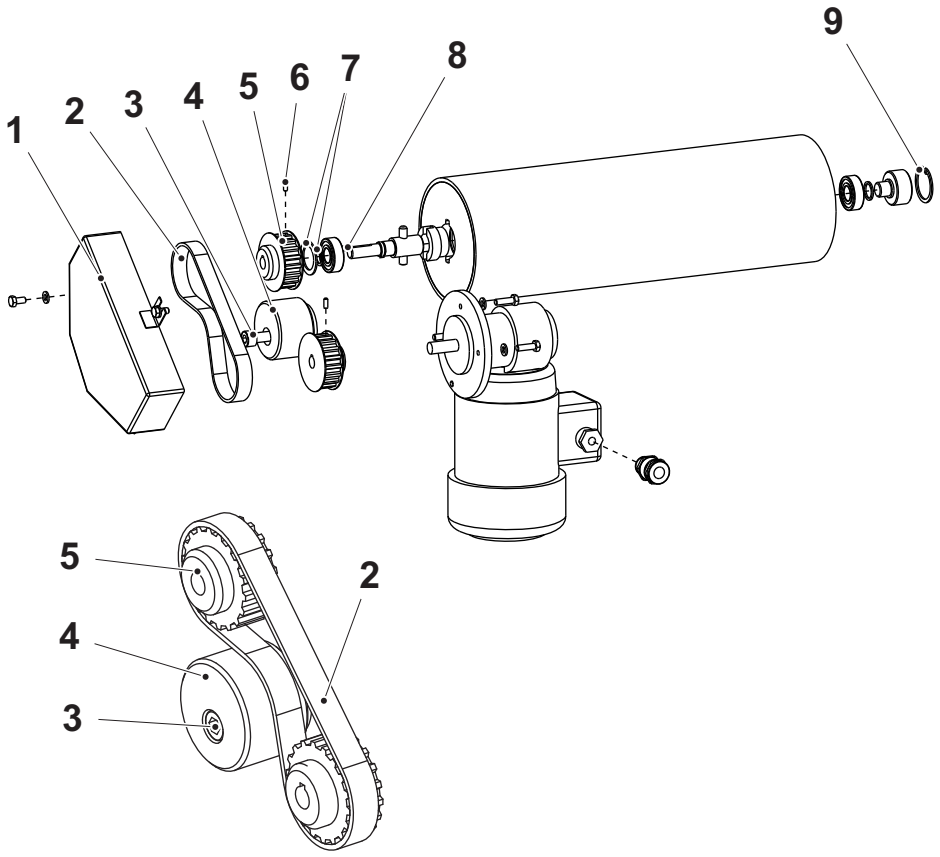

1 Cover
2 Timing belt
3 Screw
4 Eccentric straining pulley
5 Toothed pulley
6 Stop screw
7 Retaining ring
8 Key
9 Retaining ring

(Cont'd)

(Cont'd)

d) Remove the axle pin (13) and retaining ring (14).

e) Change the ball bearings (10) and (12) and, if needed, the dancer roller (11).

f) If required, change the timing belt (2) and the eccentric straining pulley (4).

g) Set the timing belt tension, see 10.2-3 Splicing Device - Set Drive Unit.

h) If required, change the worm gear motor (17); loosen the contact (16) and the four screws (15).

i) Assemble in the reverse order.

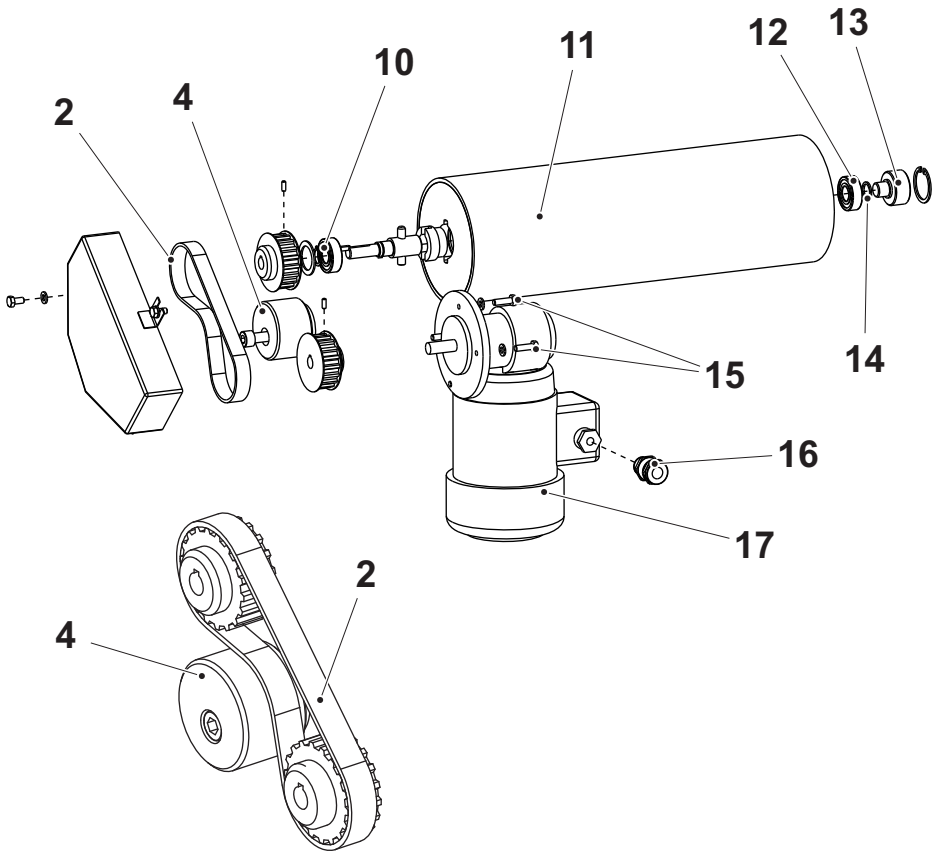

2	Timing belt	13	Axle pin
4	Eccentric straining pulley	14	Retaining ring
10	Ball bearing	15	Screw
11	Dancer roller	16	Contact
12	Ball bearing	17	Worm gear motor

10.2-3 Splicing Device - Set Drive Unit

Machine Status	Electrical supply disconnecting device in position O (OFF) Main air valve OFF Main steam valve ON Main water valve OFF
Special Equipment	Dynamometer, TP No. 74767-0000
SPC Reference	1524388-0100

a) Remove the cover (1).

b) Check the belt tension with a dynamometer (5).
The timing belt (4) shall deflect **5 mm** with a pressure of **40 N**.

c) To adjust, loosen the screw (3) and turn the eccentric straining pulley (2).

d) Tighten the screw (3) and fit the cover (2).

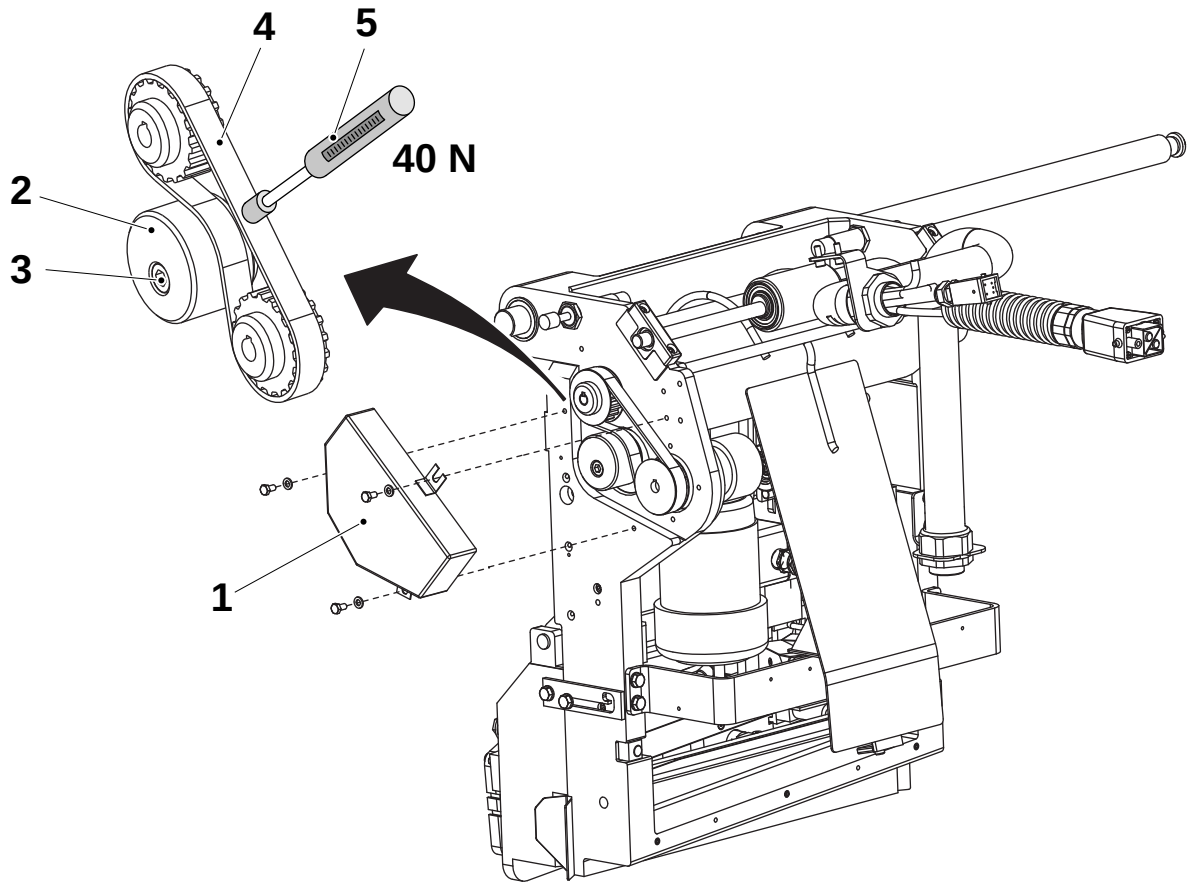

1 Cover
2 Eccentric straining pulley
3 Screw
4 Timing belt
5 Dynamometer

10.2-4 Splicing Device - Change Photocell

Machine Status	Electrical supply disconnecting device in position O (OFF) Main air valve OFF Main steam valve ON Main water valve OFF
SPC Reference	1484688-0300

WARNING

Risk of crushing.

If the splicing device is moved out of position it will return rapidly to its former position when the doors are closed.

a) Loosen the screws (2) and disconnect the cable from the cabinet.

b) Remove the photocell (1).

c) Assemble in reverse order.

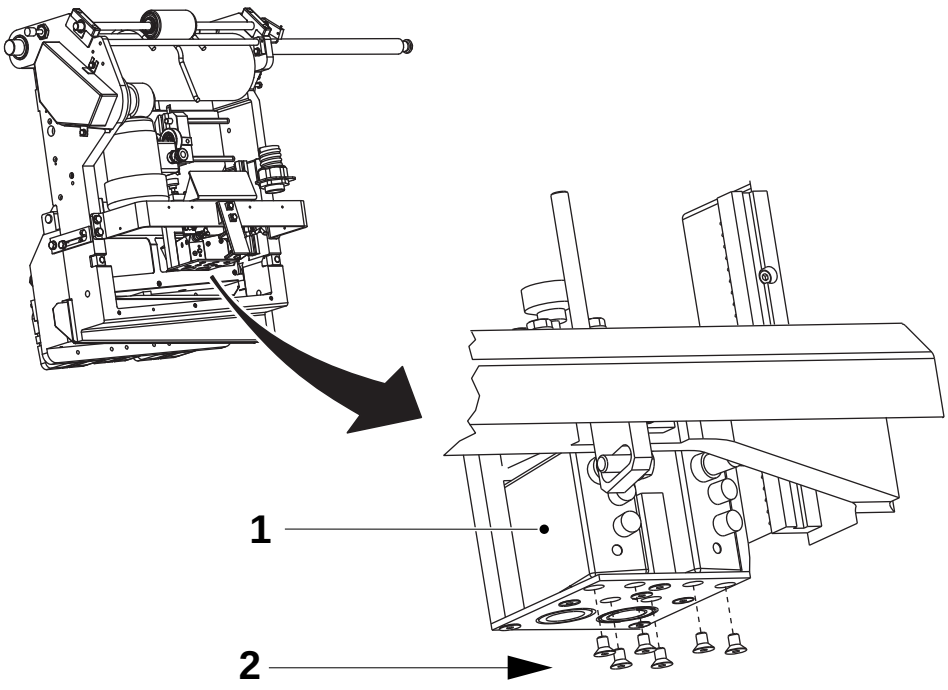

1 Photocell
2 Screw

10.2-5 Splicing Device - Set Photocell Position

Machine Status	Electrical supply disconnecting device in position O (OFF) Main air valve OFF Main steam valve ON Main water valve OFF
SPC Reference	1484688-0300

WARNING

Risk of crushing.

If the splicing device is moved out of position it will return rapidly to its former position when the doors are closed.

a) Loosen the knob (1) to adjust the photocells sideways, by moving the slider (2) along the ruler (5). Adjust value **A**, see the table below. Use the left side of the slider to set the value.

b) Tighten the knob (1).

c) Loosen the screws (3) to adjust the package length, by moving the rail (4) up or down along the ruler (6), see value **B** in the table below.

d) Tighten the screws (3).

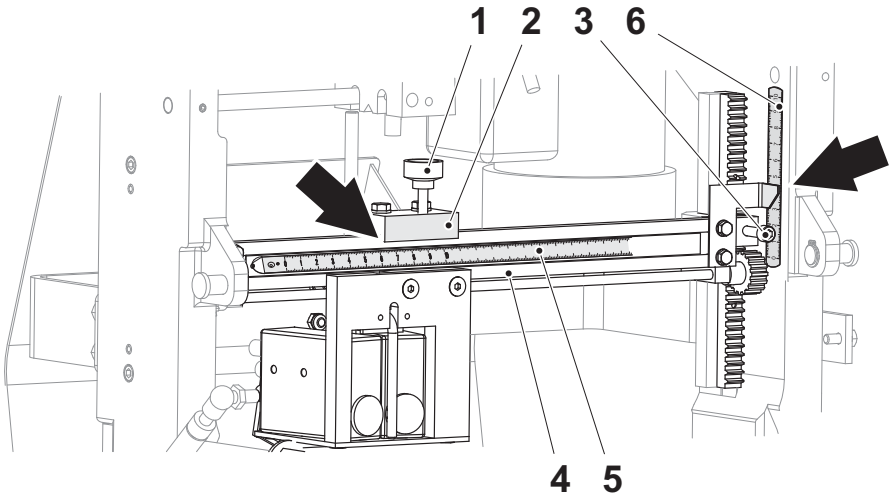

1 Knob
2 Slider
3 Screw
4 Rail
5 Ruler
6 Ruler

(Cont'd)

(Cont'd)

Package	A (mm)	B (mm)	Package	A (mm)	B (mm)
TBA 100 B			TBA 284 B	255	97
TBA 125 S	108	13	TBA 300 S		
TBA 160 S			TBA 330 S		
TBA 200 B	252	55	TPA 200 Sq	105	90
TBA 200 M			TPA 250 Sq		
TBA 200 S	103	94	TPA 330 Sq		
TBA 250 B	252	93	TWA 125 S	110	50
TBA 250 S	88	87	TWA 200 S	59	14

10.2-6 Splicing Device - Set Photocell Sensitivity

Machine Status	Electrical supply disconnecting device in position O (OFF) Main air valve OFF Main steam valve ON Main water valve OFF
SPC Reference	1484688-0300

Automatic Setting

By default, the photocell produces a **red** spotlight. For most packaging materials this is the correct setting and no further adjustment will be required.

If a packaging material is used and bar-code reading errors occur, the colour of the light spot can be changed to match the foreground colour of the bar-code. This is done through the menus on the TMCC2 card.

If errors continue to occur after the automatic setting, set the photocells manually, see Manual Setting on page 1-25.

Note! The photocells turn OFF after 20 minute stop. Inch or step up the machine to turn the photocells ON.

ASU Photocells

a) Press any of the buttons on the TMCC2 (**A511**) card.

b) Use the ARROW buttons to select **PHOT.** and press the ENTER button.

c) Select **CONF? Y** and press the ENTER button.

d) Select a colour that suits the current packaging material, see the table below.

e) Exit the menu on the TMCC2 (**A511**), see TMCC2 Menu System on page 1-79.

Bar-code Foreground Colour	Spot Colour
Black	Green, Red or Blue
Blue	Green or Red
Light blue/Cyan	Red
Green	Red or Blue
Yellow	Blue
Red	Green or Blue
Magenta	Green

Note! The default colour is **red**. The colour currently set can be checked either via PC or by checking the colour of the light beam.

(Cont'd)

(Cont'd)

Manual Setting

a) Press any of the buttons on the TMCC2 card.

b) Use the ARROW buttons to select **PHOT.** and press the ENTER button.

c) Use the ARROW buttons to select **CONF? Y** and press the ENTER button.

d) Use the ARROW buttons to select **CALIB.** and press the ENTER button.

e) Use the ARROW buttons to select **RUN CAL.** and press the ENTER button. This sets the photocells to teaching mode.

f) Make sure that the switch (1) is set to the position **Q1**.

g) Move the packaging material until the photocell spot is focused on a white part of the packaging material.

Note! The ON LED (2) is lit when power is supplied to the photocell.

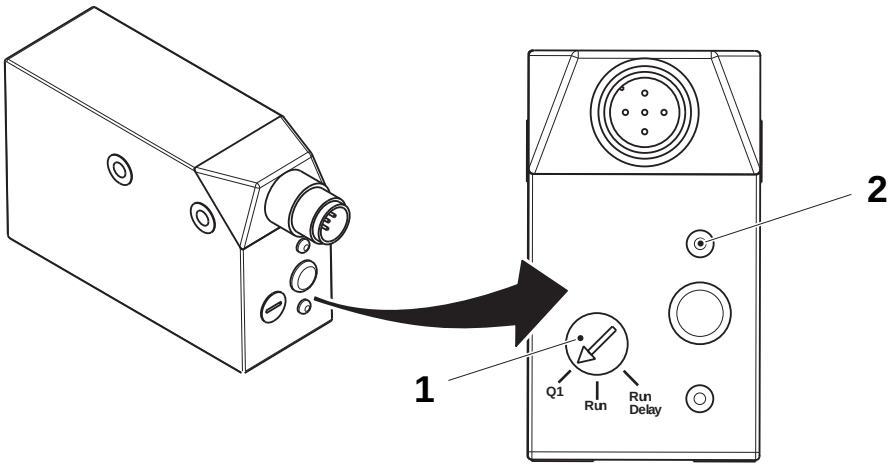

1 Switch
2 ON LED

(Cont'd)

(Cont'd)

h) Push and hold the TEACH button (3).

i) Move the packaging material until the complete barcode has passed in front of the photocell and then release the TEACH button.
The cell automatically calibrates itself.

Note! The Q/ok LED (4) is lit when the photocell spot is focused on a dark area of the packaging material.

j) Repeat the items from f) to i) for the other photocell.

k) Use the arrow buttons to select **USE CAL.** and press the enter button.

l) Exit the menu on the TMCC2, see TMCC2 Menu System on page 1-79.

Note! If false bar-codes are detected it is possible to change the sensitivity of the photocells. Use the command **PTH**: the value (xx) must be entered as hexadecimal, see 10.8.1-4 ASU RMD NP - Display Report. Type as follows:

PTH= xx<enter>
Changes the dynamic threshold of the photocells; higher values of xx means lower sensibility of the photocells (default setting value is 30).

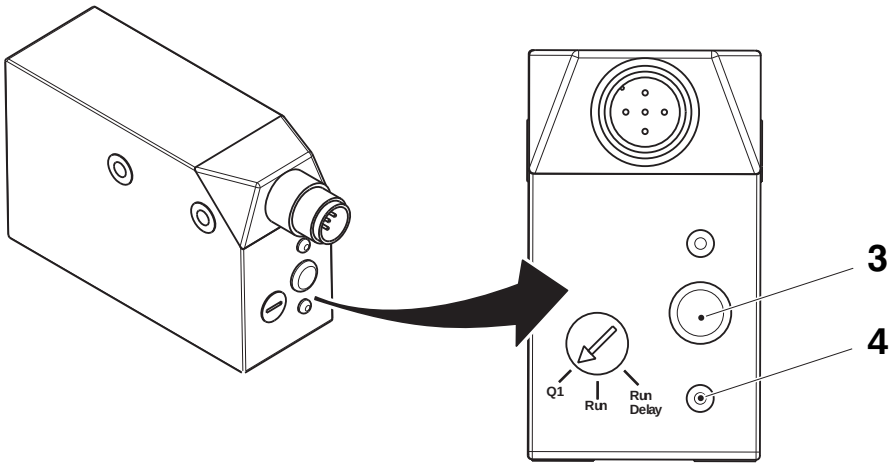

3 TEACH button
4 Q/ok LED

10.2-7 Splicing Device - Set Movement Time

Machine Status	PREHEATING I
SPC Reference	1484688-0300

Note! Make sure that there is no packaging material loop in the ASU.

a) On the TPOP, press the `Manoeuvre system` button (1).

b) Press the `ASU` button (2).

c) Press and hold the `Splicing device` button (3) for three seconds. The `movement time` (4) for the first direction is displayed.

d) Press and hold the `Splicing device` button (3) for three seconds. The `movement time` (4) for the second direction is displayed.

e) If the `movement times` (4) are not 1300 ms ± 50 ms, adjust the setting screws (5) on the non-return valves (6) on the side feeder (7) and repeat the procedure.

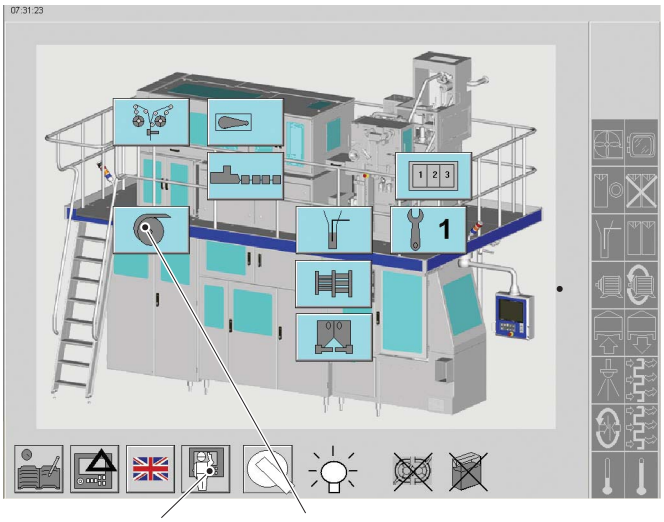

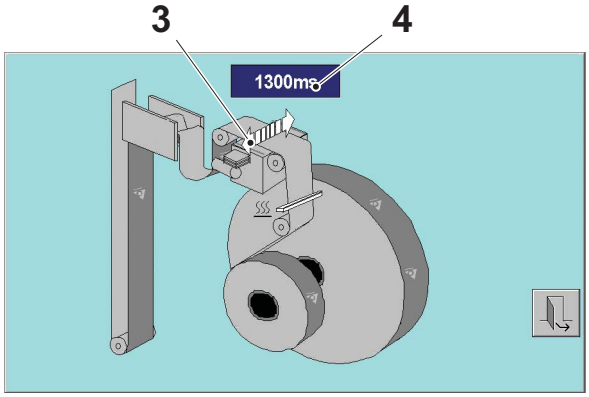

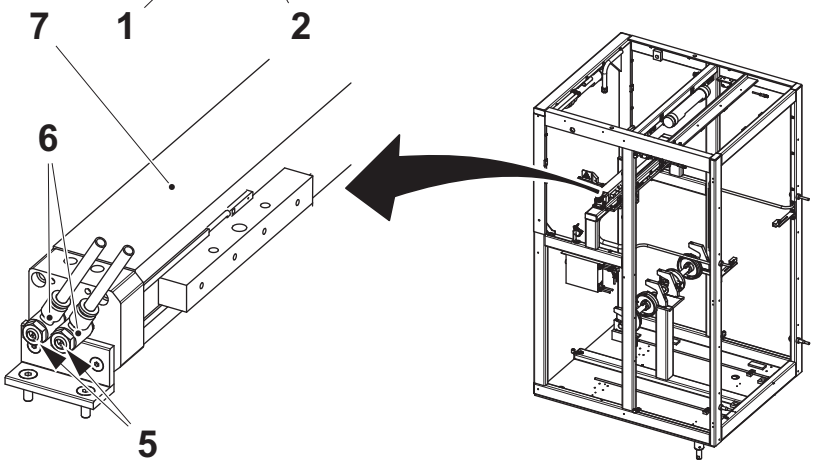

1 `Manoeuvre system` button
2 `ASU` button
3 `Splicing device` button
4 `Movement time`
5 Setting screw
6 Non-return valve
7 Side feeder

10.2.1 Web Guide

10.2.1-1 Web Guide - Check

Machine Status	Electrical supply disconnecting device in position O (OFF) Main air valve OFF Main steam valve ON Main water valve OFF
SPC Reference	1484745-0100

Check:

- that the surfaces of the LH roller (1) and the RH roller (4) are undamaged. If required, change the rollers.
- that the LH roller (1) and the RH roller (4) rotate freely. If required, change the roller bearings (9).
  - Loosen the nuts (11) and remove the retaining rings (10), Change the roller bearings (9).
- that the RH-roller (4) rotates when turning the LH-roller (1) by hand.
  - To adjust the distance between the rollers, loosen the nut (6), and turn the eccentric shaft (8).
- that the guide (5) is clean. If required, loosen the stop screw (7) and pull out and clean the guide (5).

Note! The guide (5) must be fitted so that the packaging material web (2) enters in the guide (5) from the cut-off side (3).

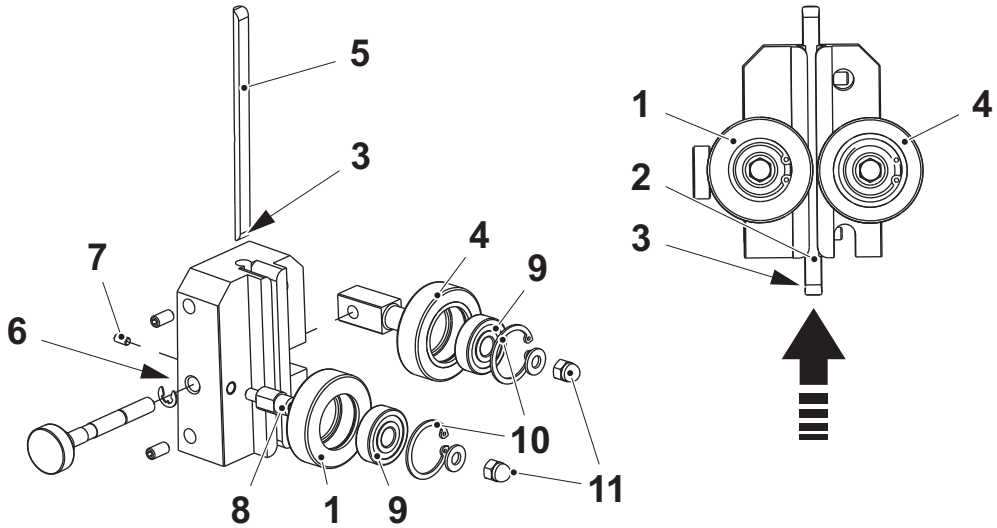

1 LH-roller
2 Packaging material web
3 Cut-off side
4 RH-roller
5 Guide
6 Nut
7 Stop screw
8 Eccentric shaft
9 Roller bearing
10 Retaining ring
11 Nut

10.2.1-2 Web Guide - Overhaul

Machine Status	Electrical supply disconnecting device in position O (OFF) Main air valve OFF Main steam valve ON Main water valve OFF
SPC Reference	1484745-0100

a) Remove the nuts (7), the washers and the circlips (6).

b) Change the ball bearings (5) and/or the rollers (1) and (4) as required.

Note! The rubber roller must be fitted on the printed side of the packaging material web.

c) Assemble in the reverse order.

d) Check that the RH-roller (1) rotates when turning the LH-roller (4) by hand.

– To adjust the distance between the rollers, loosen the nut (2) and turn the eccentric shaft (3).

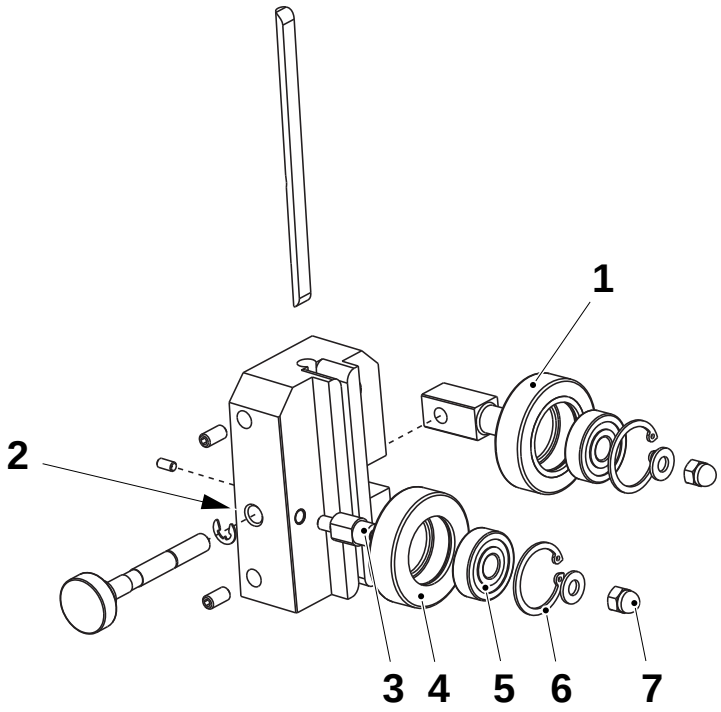

1 RH-roller
2 Nut
3 Eccentric shaft
4 LH-roller
5 Roller bearing
6 Circlip
7 Nut

10.2.1-3 Web Guide - Set

Machine Status	Electrical supply disconnecting device in position O (OFF) Main air valve OFF Main steam valve ON Main water valve OFF
SPC Reference	1484745-0100

a) Loosen the two stop screws (1).

b) Centre the packaging material (2) over the roller (3) by moving the web guide (4) sideways.

c) Tighten the two stop screws (1).

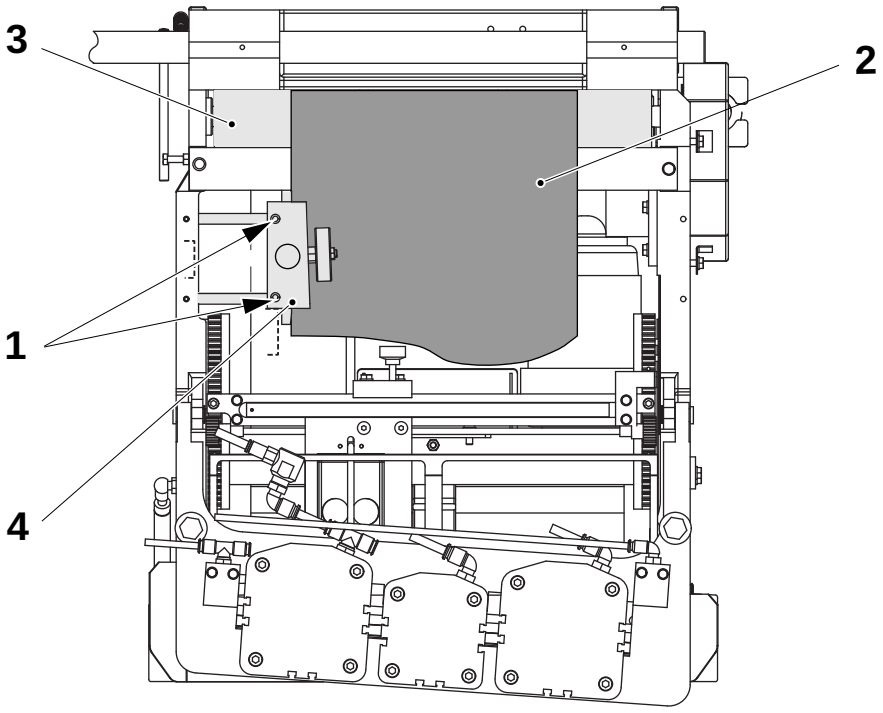

1 Stop screw
2 Packaging material
3 Roller
4 Web guide

10.2.2 Pressure Jaw

10.2.2-1 Pressure Jaw - Check Knife

Machine Status	Electrical supply disconnecting device in position O (OFF) Main air valve OFF Main steam valve ON Main water valve OFF
SPC Reference	1484690-0300

WARNING

Risk of crushing.

If the splicing device is moved out of position it will return rapidly to its former position when the doors are closed.

a) Loosen the two tie rods (1).

b) Lift up the pressure jaw (2) and lock it in the cleaning position with the catch (3).

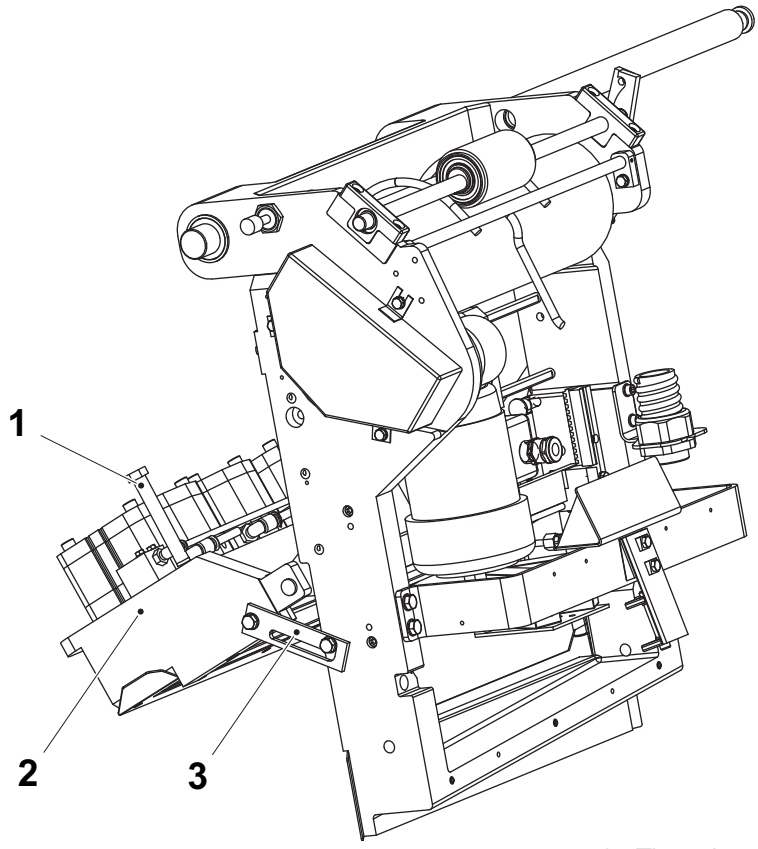

1 Tie rod
2 Pressure jaw
3 Catch

(Cont'd)

(Cont'd)

c) Check that the knife (at arrow) is not worn or damaged. Change if required.

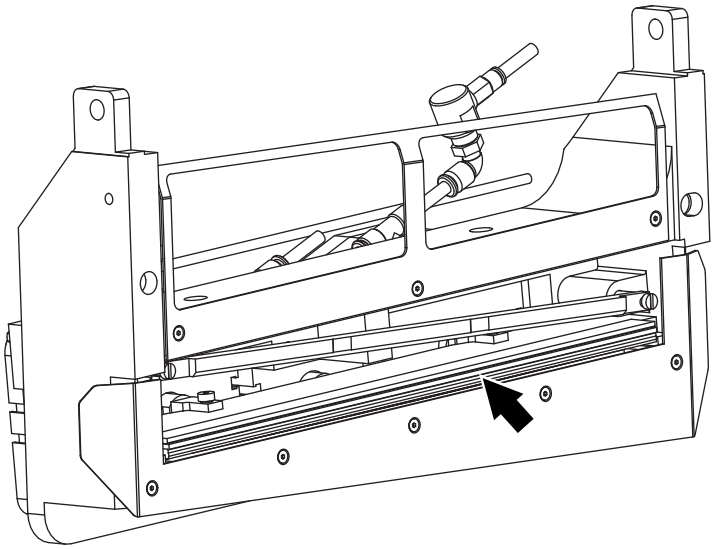

10.2.2-2 Pressure Jaw - Change Knife

Machine Status	Electrical supply disconnecting device in position O (OFF) Main air valve OFF Main steam valve ON Main water valve OFF
SPC Reference	1484690-0300

WARNING

Risk of crushing.

If the splicing device is moved out of position it will return rapidly to its former position when the doors are closed.

a) Loosen the two tie rods (1).

b) Lift up the pressure jaw (2) and lock it in the cleaning position with the catch (3).

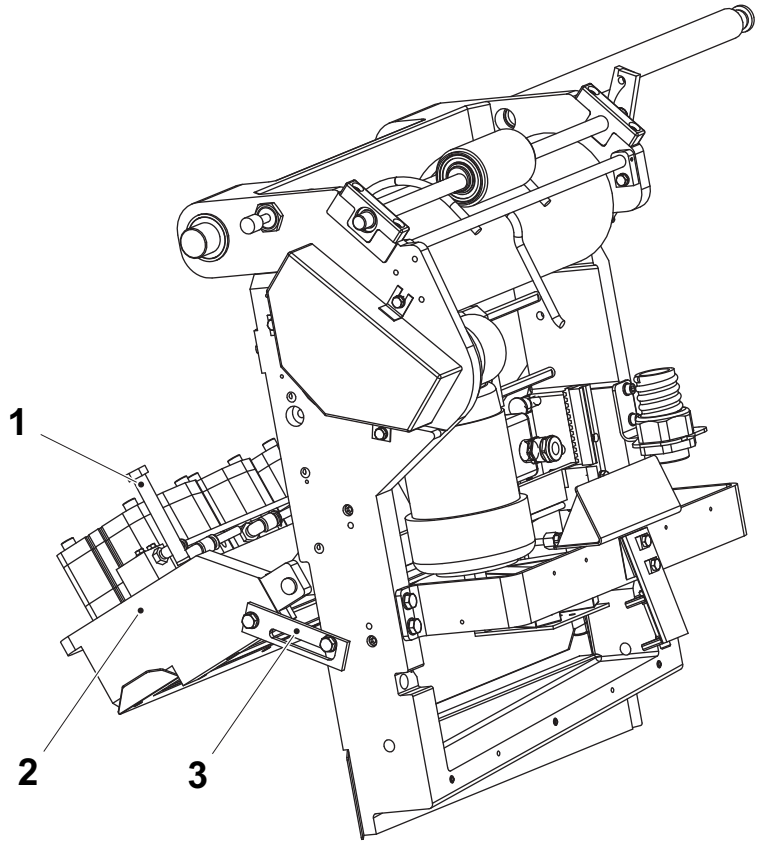

1 Tie rod
2 Pressure jaw
3 Catch

(Cont'd)

(Cont'd)

c) Remove the rule plate (4).

d) Loosen the screws (5) through the holes (6) and pull out the pressure rail (7).

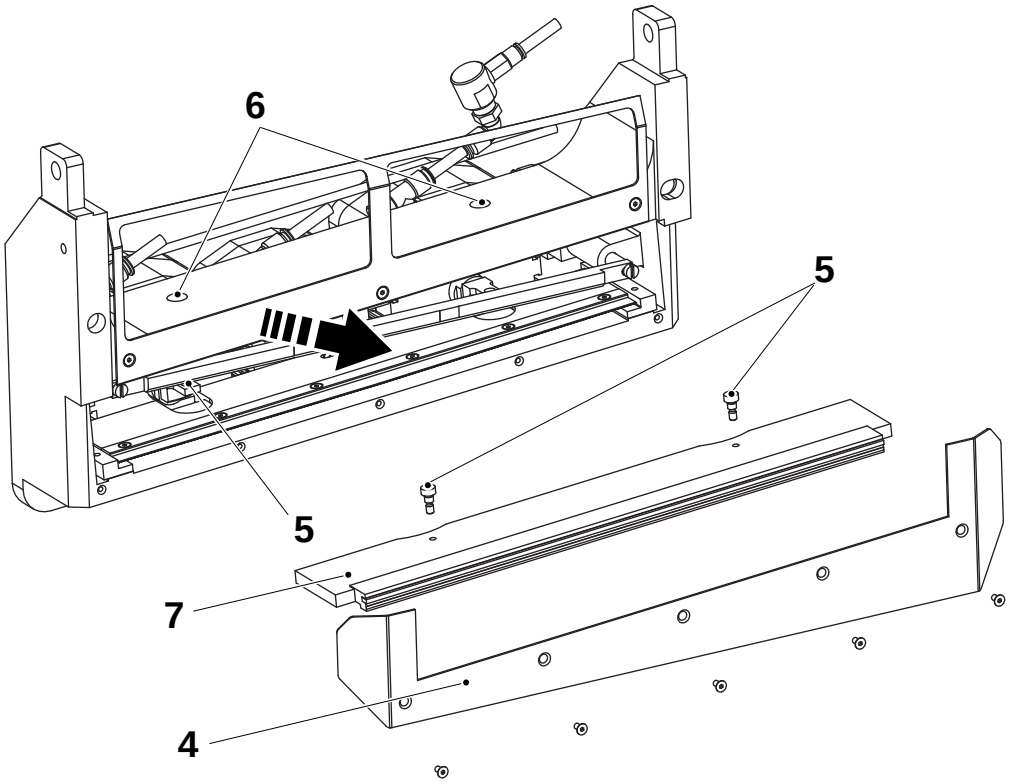

4 Rule plate
5 Screw
6 Hole
7 Pressure rail

(Cont'd)

(Cont'd)

e) Remove the knife holder (8) from the cylinder rod (9).

f) Loosen the screws (10) and remove the clamp (11).

g) Change the knife (12) and assemble in the reverse order.

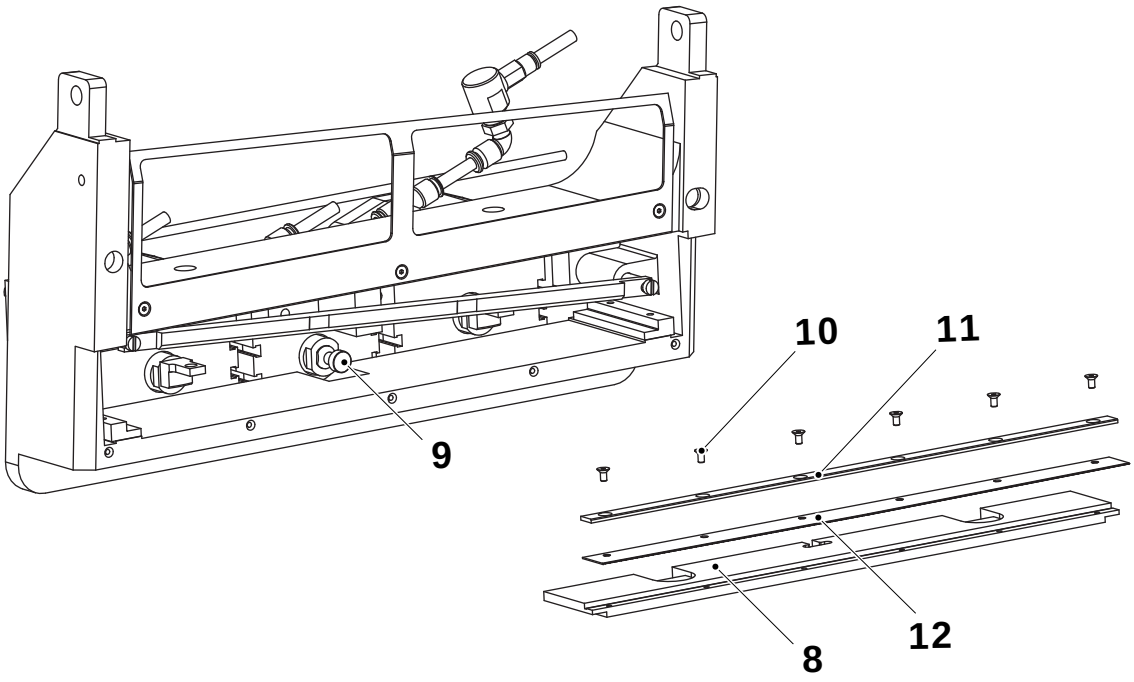

8 Knife holder
9 Cylinder rod
10 Screw
11 Clamp
12 Knife

10.2.2-3 Pressure Jaw - Check TPO-bar

Machine Status	Electrical supply disconnecting device in position O (OFF) Main air valve OFF Main steam valve ON Main water valve OFF
SPC Reference	1484690-0300

WARNING

Risk of crushing.

If the splicing device is moved out of position it will return rapidly to its former position when the doors are closed.

a) Loosen the two tie rods (1).

b) Lift up the pressure jaw (2) and lock it in the cleaning position with the catch (3).

c) Check that the TPO-bar (4) is not worn or damaged. Change if required, see 10.2.2-4 Pressure Jaw - Change TPO-bar.

d) Assemble in the reverse order.

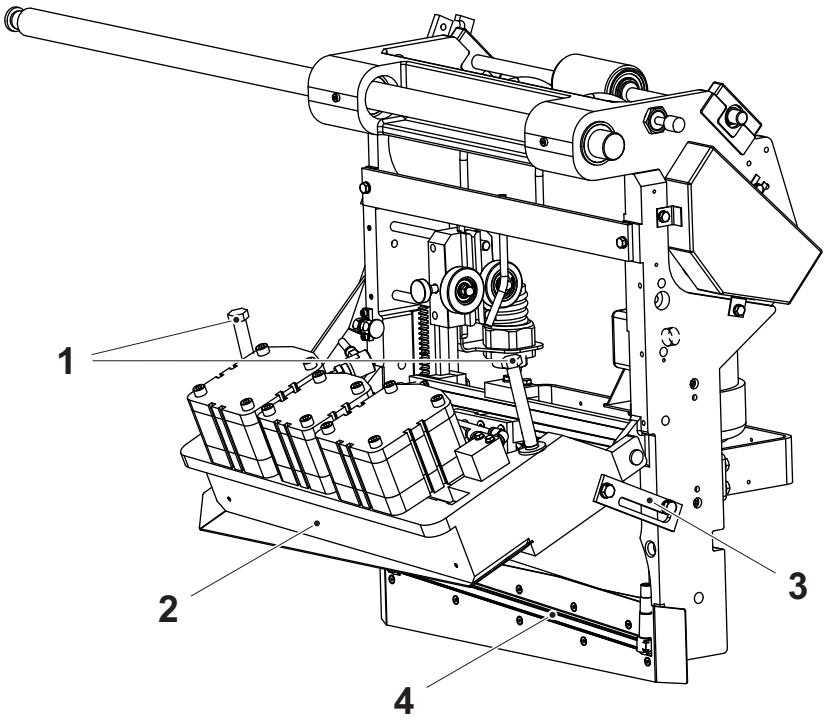

1 Tie rod
2 Pressure jaw
3 Catch
4 TPO-bar

10.2.2-4 Pressure Jaw - Change TPO-bar

Machine Status	Electrical supply disconnecting device in position O (OFF) Main air valve OFF Main steam valve ON Main water valve OFF
SPC Reference	1484690-0300

WARNING

Risk of crushing.

If the splicing device is moved out of position it will return rapidly to its former position when the doors are closed.

a) Loosen the two tie rods (1).

b) Lift up the pressure jaw (2) and lock it in the cleaning position with the catch (9). Remove the plate (3) using the nine screws (7).

c) Unscrew the three nuts (10) connecting the TPO-bar (4) to the frame.

d) Loosen the screws (6) with washers and the contact washers (5), and remove the cable connections (8).

e) Change the TPO-bar (4) and assemble in the reverse order.

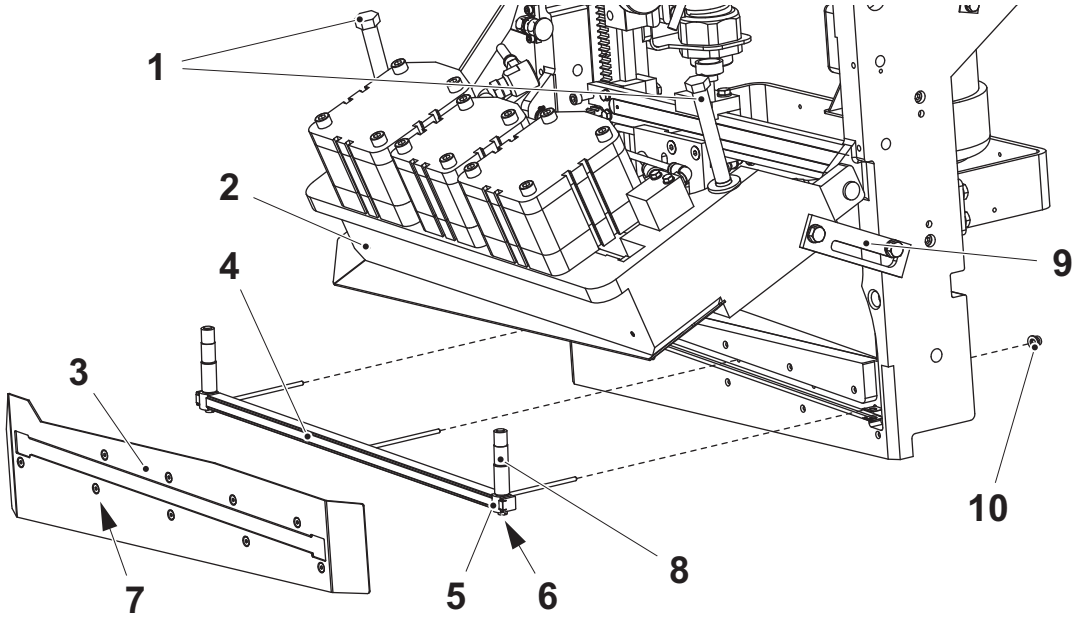

1 Tie rod
2 Pressure jaw
3 Plate
4 TPO-bar
5 Washer
6 Screw
7 Screw
8 Cable connection
9 Catch
10 Nut

10.2.2-5 Pressure Jaw - Set TPO-bar

Machine Status	Electrical supply disconnecting device in position I (ON) Main air valve OFF Main steam valve ON Main water valve OFF
SPC Reference	1484690-0300

Basic Setting

On the TPOP touch the ASU button (1) to set TPO bar splicing time according to the table below. For further details see OM section TPOP display.

Package	Set value (basic setting)	Package	Set value (basic setting)
TBA 100 B	9	TBA 284 B	9
TBA 125 S	9	TBA 300 S	9
TBA 160 S	9	TBA 330 S	9
TBA 200 B	9	TPA 200 Sq	15
TBA 200 M	9	TPA 250 Sq	15
TBA 200 S	9	TPA 330 Sq	15
TBA 250 B	9	TWA 125 S	9
TBA 250 S	9	TWA 200 S	9

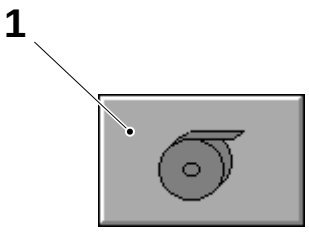

1 ASU button

Final Setting

In step PRODUCTION, evaluate the ASU splice; if required, fine set.

10.2.2-6 Pressure Jaw - Change Cylinders

Machine Status	Electrical supply disconnecting device in position O (OFF) Main air valve OFF Main steam valve ON Main water valve OFF
Consumables	Locking Fluid TP No. 90157-0016
SPC Reference	1484690-0300

WARNING

Risk of crushing.

If the splicing device is moved out of position it will return rapidly to its former position when the doors are closed.

Preparation

a) Loosen the tie rods (1).

b) Lift the pressure jaw (2) and lock it in the cleaning position with the catch (3).

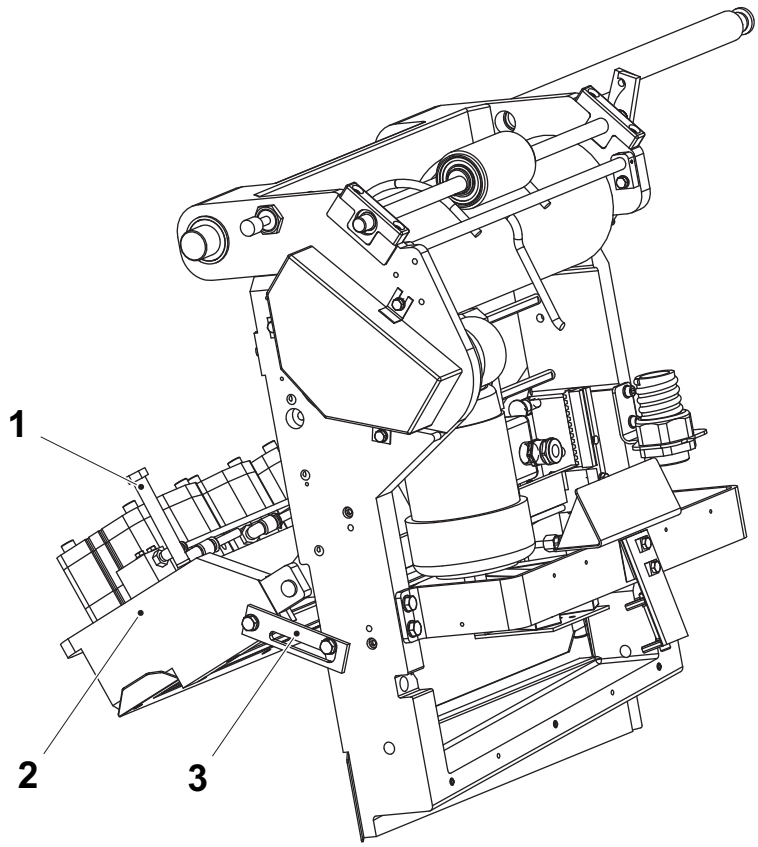

1 Tie rod
2 Pressure jaw
3 Catch

(Cont'd)

(Cont'd)

Pressure Cylinder

Note! Overhaul one cylinder completely before starting on the next.
The pressure rail (7) and the knife holder (8) are connected to the pressure cylinder by the coupling bolt (6).

a) Disconnect the air hose and remove the push-in fitting (1).

b) Remove the screw (2) visible through the hole (3).

c) Remove the four screws (4).

d) Remove and change the pressure cylinder (5).

e) Remove the coupling bolt (6) from the old cylinder.

f) Apply locking fluid to the threads of the coupling bolt (6) and fit it in the new cylinder.

g) Assemble the components in the reverse order.

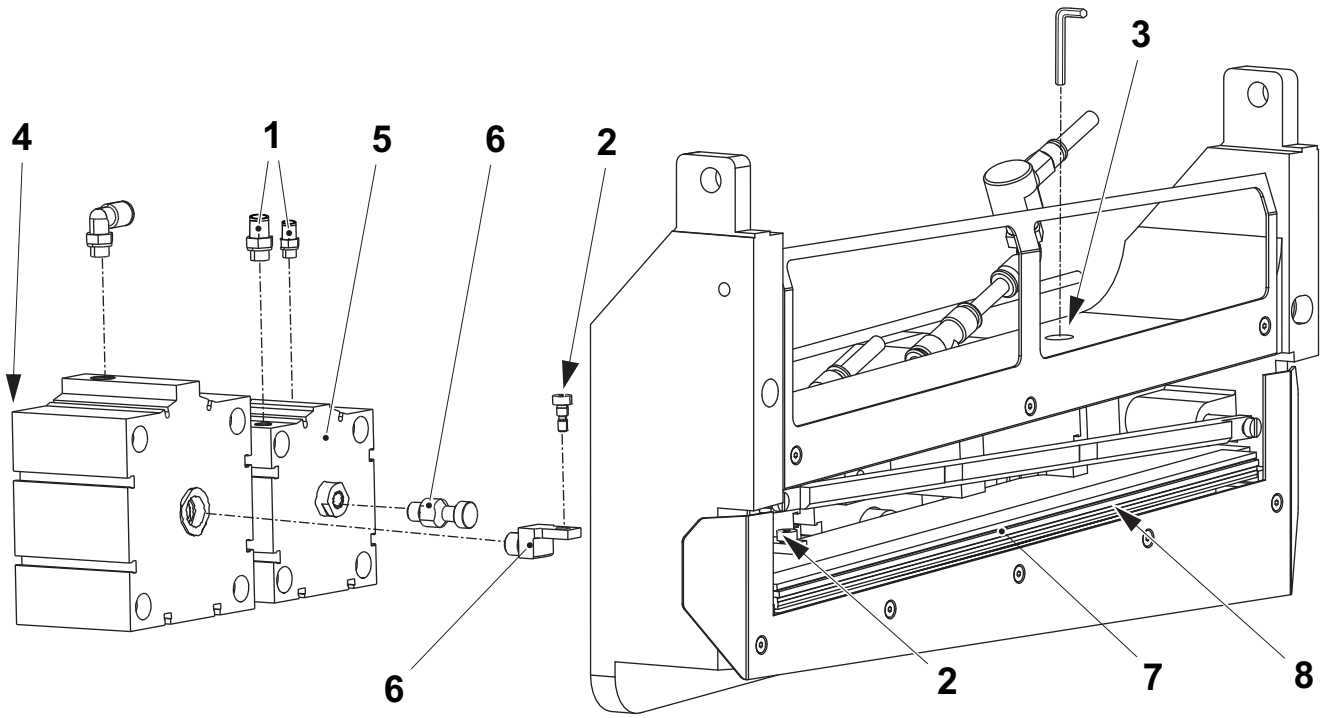

1 Push-in fitting
2 Screw
3 Hole
4 Screw
5 Pressure cylinder
6 Coupling bolt
7 Pressure rail
8 Knife holder

(Cont'd)

(Cont'd)

Cutting Cylinder

Note! The pressure rail (5) and the knife holder (6) are connected to the cutting cylinder by the spacer (4).

a) Disconnect the air hose and remove the push-in L-fitting (1).

b) Remove the four screws (2).

c) Un-hook the cutting cylinder (3) and remove it.

d) Remove the spacer (4) from the old cylinder.

e) Apply locking fluid to the threads of the spacer (4) and fit it in the new cylinder.

f) Assemble the components in the reverse order.

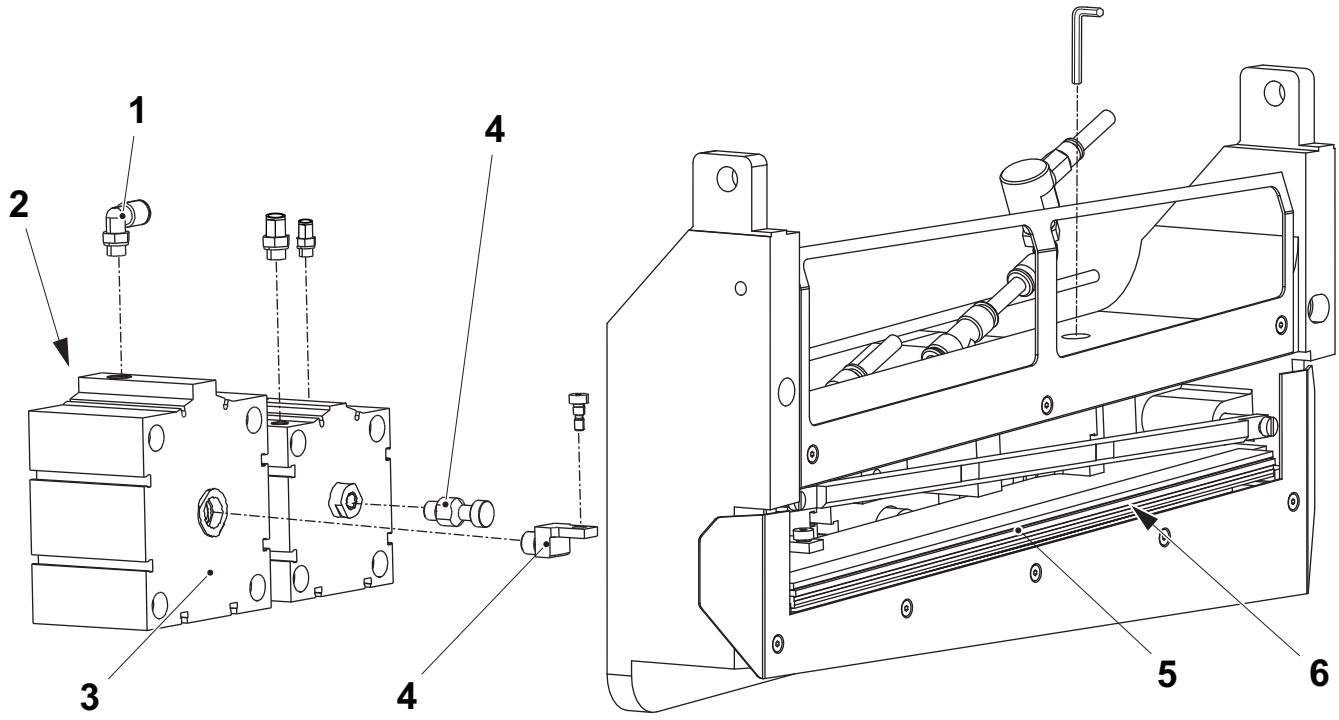

1 Push-in L-fitting
2 Screw
3 Cutting cylinder
4 Spacer
5 Pressure rail
6 Knife holder

(Cont'd)

(Cont'd)

Web Tension Cylinder

a) Remove the screws (1) and pull the cylinder (2) out as far as possible.

b) Hold the cylinder piston (3) with a spanner and turn the compression rod (4) to remove the cylinder (2).

c) Remove the rail (5).

d) Remove the other cylinder in the same way.

e) Remove the nut (6) and the spring (7) from the compression rod (4).

Note! When assembling, make sure the all components are tight.

f) Assemble in the reverse order.

g) Check that the compression rods move smoothly.

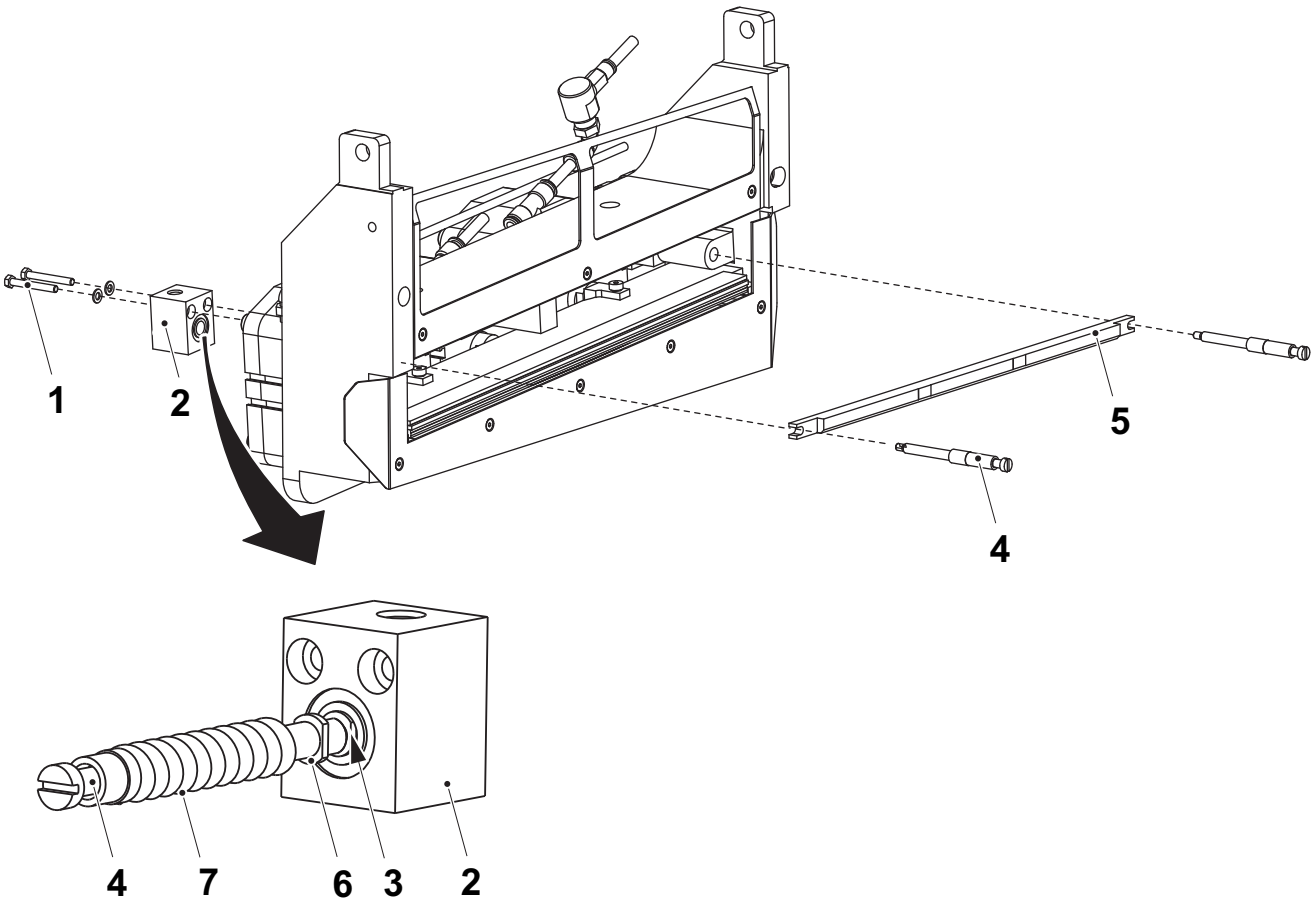

1 Screw
2 Cylinder
3 Cylinder piston
4 Compression rod
5 Rail
6 Nut
7 Spring

(Cont'd)

(Cont'd)

h) Check that the web tension cylinder pressure is set to 0.5 bar. If not, turn the control knob (8) until the pressure gauge (9) indicates the correct pressure.

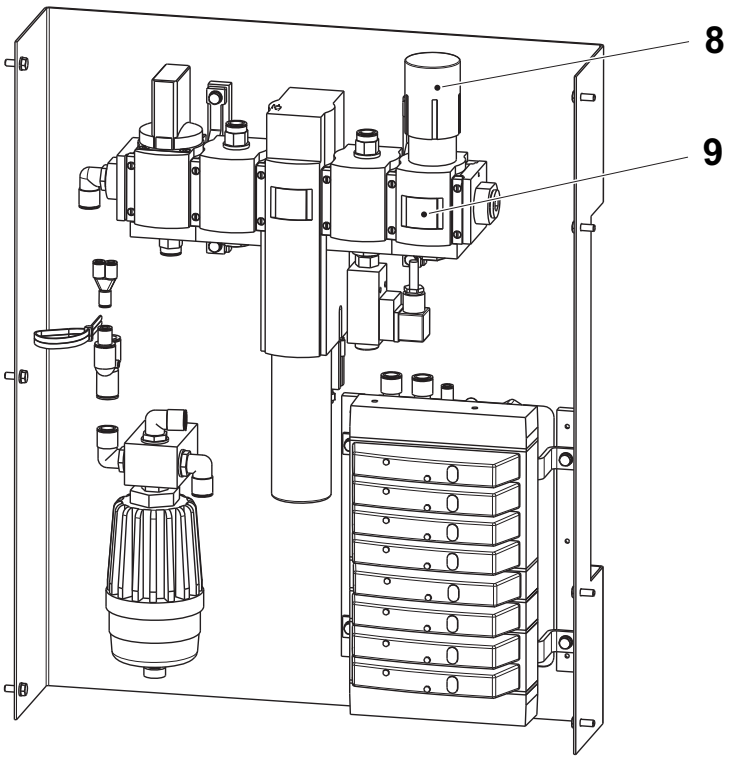

8 Control knob
9 Pressure gauge

10.2.2-7 Pressure Jaw - Change Dolly

Machine Status	Electrical supply disconnecting device in position O (OFF) Main air valve OFF Main steam valve ON Main water valve OFF
SPC Reference	1484690-0300

WARNING

Risk of crushing.

If the splicing device is moved out of position it will return rapidly to its former position when the doors are closed.

a) Loosen the two tie rods (1).

b) Lift up the pressure jaw (2) and lock it in the cleaning position with the catch (3).

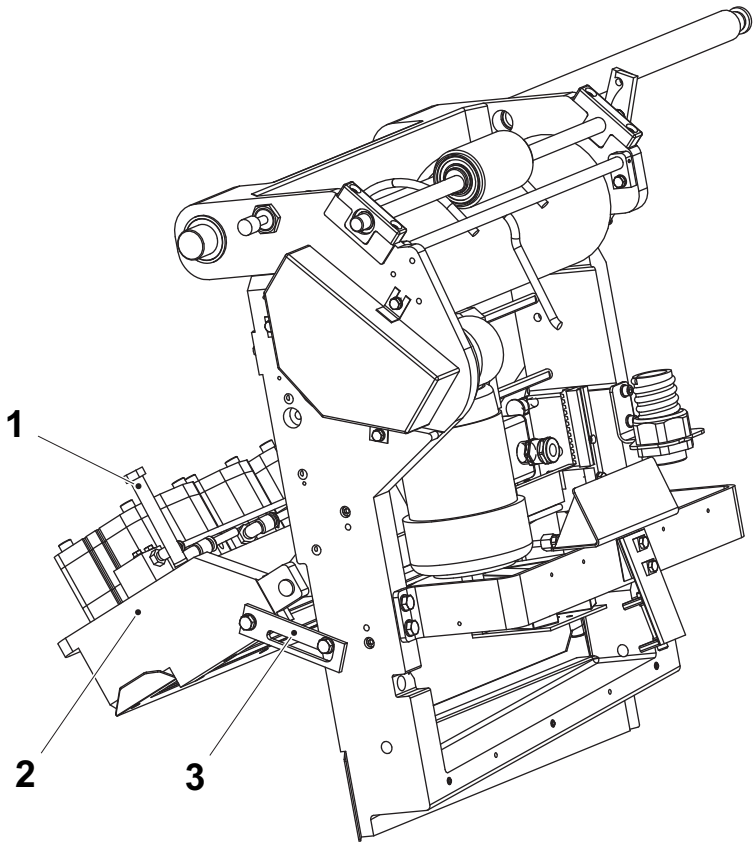

1 Tie rod
2 Pressure jaw
3 Catch

(Cont'd)

(Cont'd)

WARNING

Risk of cutting.

Sharp knife close to the dolly (4). Be careful not to touch the knife when changing the dolly (4).

c) Gently remove, using a screwdriver if necessary, the old dolly (4) from the pressure rail.

d) Press the new dolly (5) carefully into the channel of the pressure rail **by hand**. Do not stretch the dolly (5).

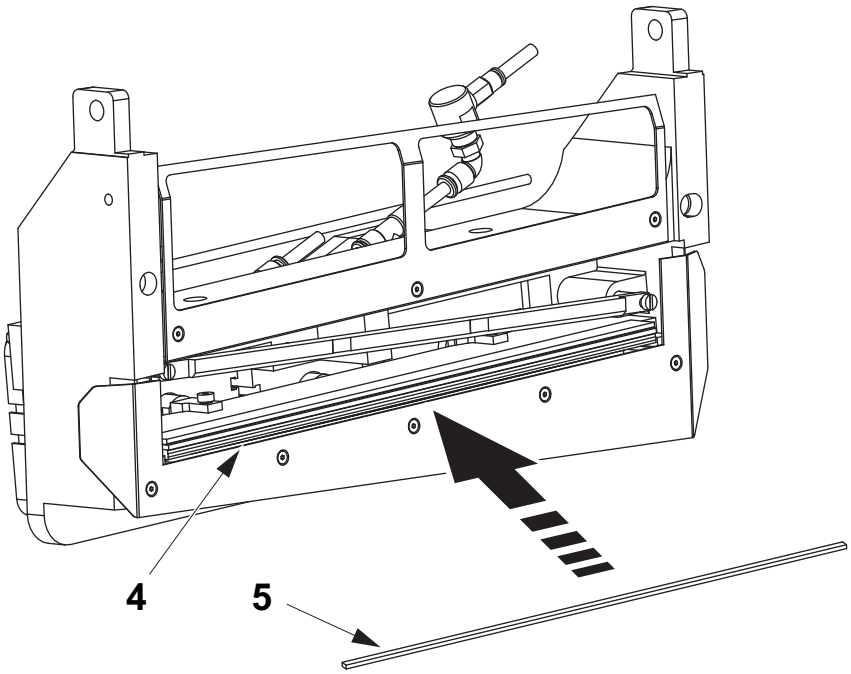

4 Dolly
5 Dolly

10.2.3 Pressure Roller

10.2.3-1 Pressure Roller - Check

Machine Status	Electrical supply disconnecting device in position O (OFF) Main air valve OFF Main steam valve ON Main water valve OFF
SPC Reference	2524600-0100

a) Check that the spring (3) and the shaft (2) function properly by operating the handle (4). If required, change the spring and clean the attachment points of the shaft, see 10.2.3-2 Pressure Roller - Overhaul.

b) Check that the surface of the guide roller (1) is not worn or damaged and that its ball bearings rotate freely. If not, change any worn parts, see 10.2.3-2 Pressure Roller - Overhaul.

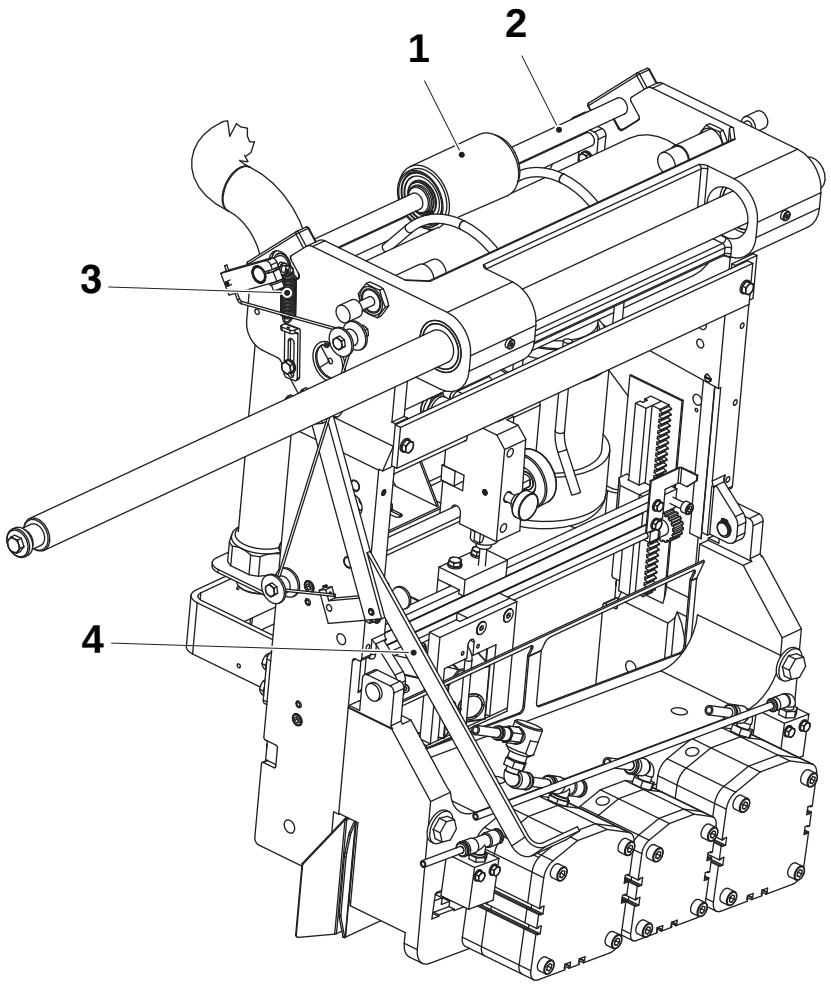

1 Guide roller
2 Shaft
3 Spring
4 Handle

10.2.3-2 Pressure Roller - Overhaul

Machine Status	Electrical supply disconnecting device in position O (OFF) Main air valve OFF Main steam valve ON Main water valve OFF
SPC Reference	2524600-0100

a) Remove the screws (1) and remove the pressure roller unit.

b) Replace the ball bearings (2) and the guide roller (3).

c) Assemble in the reverse order.

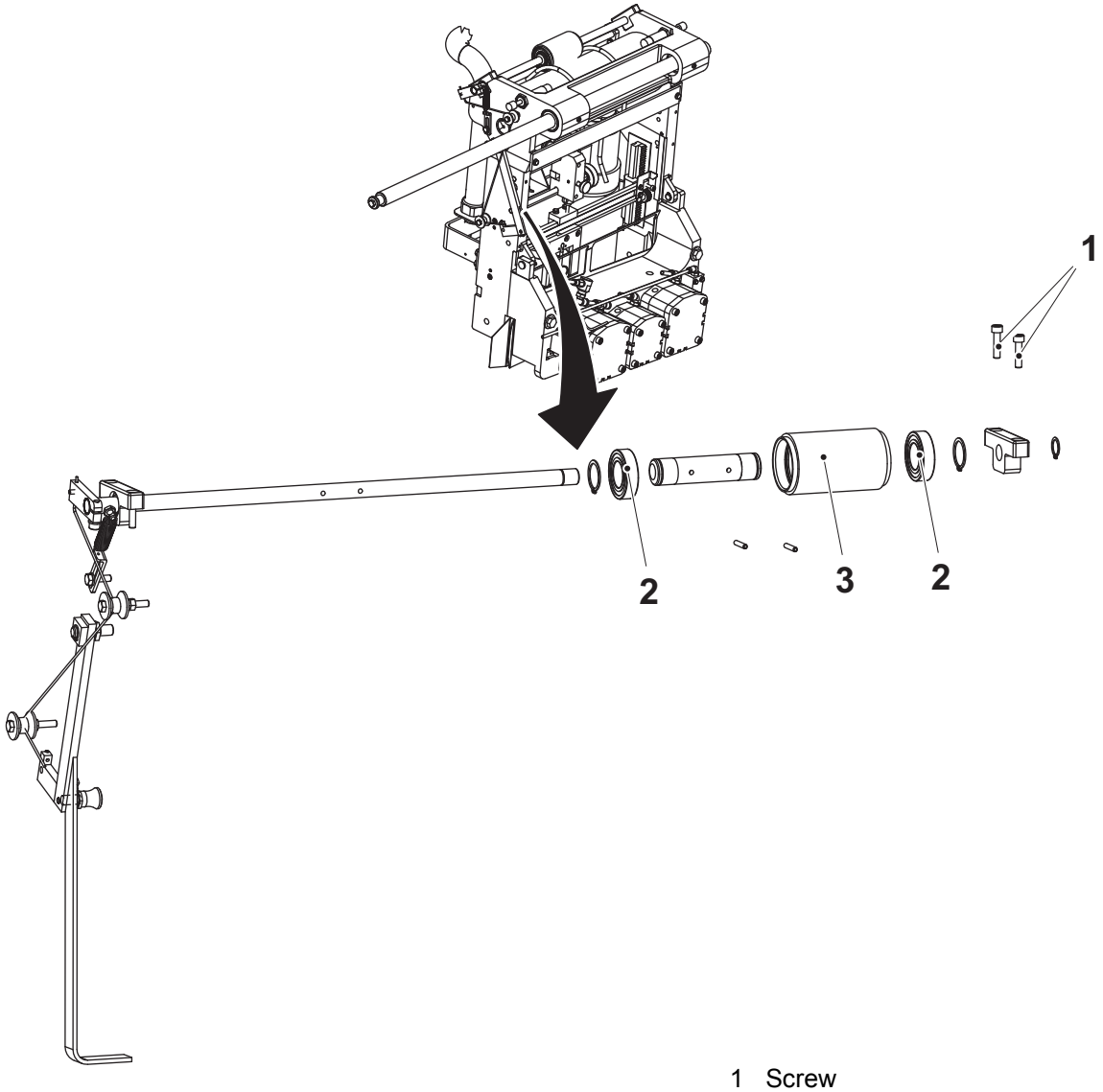

1 Screw
2 Ball bearing
3 Guide roller

10.3 Material Holder

10.3-1 Material Holder - Check

Machine Status	Electrical supply disconnecting device in position O (OFF) Main air valve OFF Main steam valve ON Main water valve OFF
SPC Reference	1487785-0300 1484699-0300

WARNING

Risk of crushing.

If the splicing device is moved out of position it will return rapidly to its former position when the doors are closed.

a) Activate and deactivate the cylinder (1) and check its function. Replace as required.

b) Lower the material holder and check that the screw (2) rests against the frame.

For adjustments, see 10.3-5 Material Holder - Set.

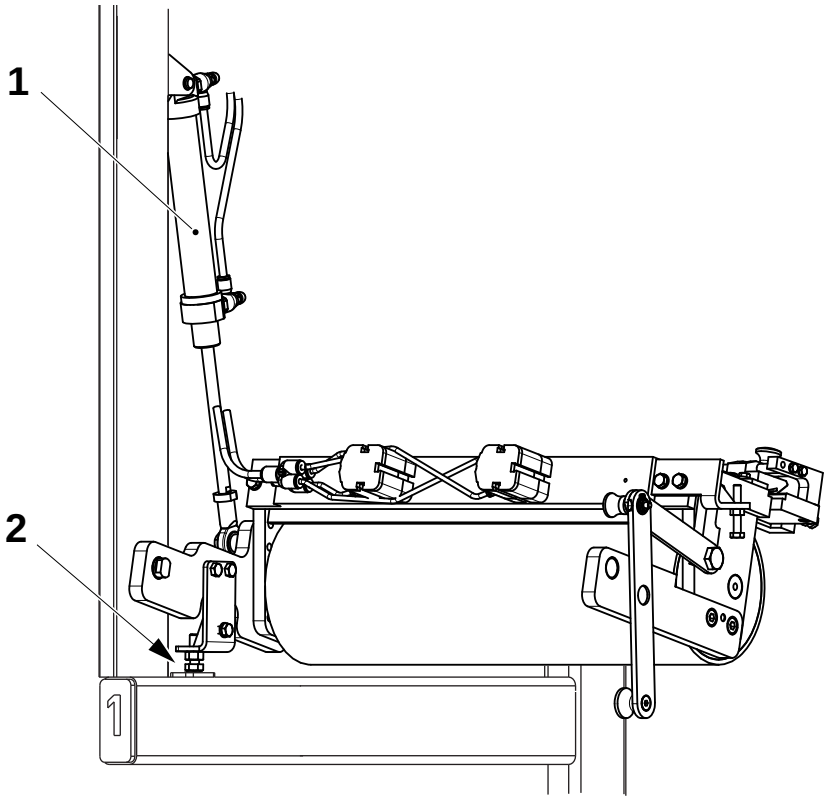

1 Air cylinder
2 Screw

10.3-2 Material Holder - Check Cutting Table

Machine Status	Electrical supply disconnecting device in position O (OFF) Main air valve OFF Main steam valve ON Main water valve OFF
SPC Reference	1487785-0300 1484699-0300

WARNING

Risk of crushing.

If the splicing device is moved out of position it will return rapidly to its former position when the doors are closed.

Check the sharpness of the knife (7) by moving the knife holder in both directions over a piece of packaging material. If required, change the knife.

a) Remove the screws (1) and bracket (2).

b) Remove the screw (3) and slide off the knife holder (4) from the shafts (5).

c) Remove the screw (6) and slide out and change the knife (7). Assemble in the reverse order.

d) Check that the knife holder (4) slides easily. Clean the knife holder (4) and the shafts (5) as required.

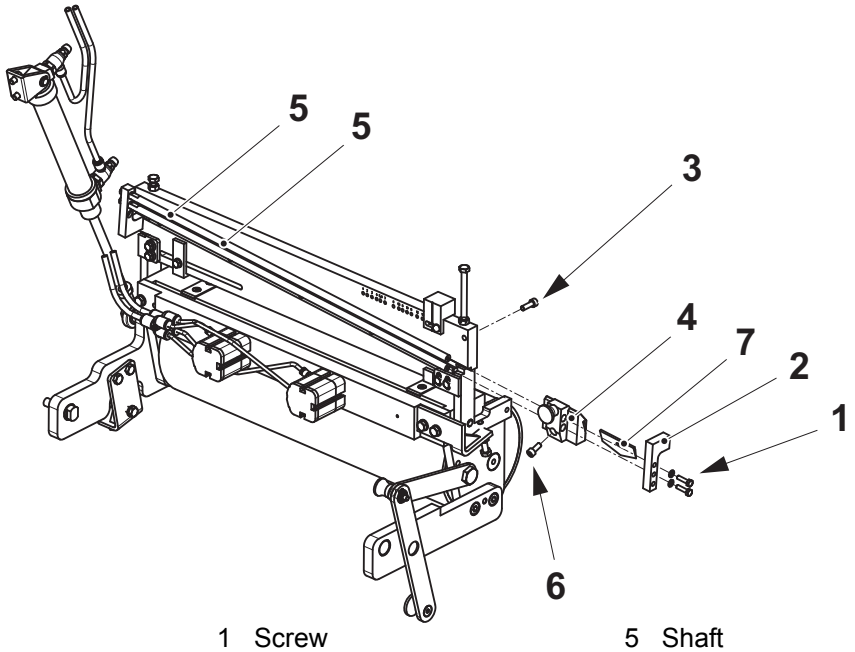

1 Screw
2 Bracket
3 Screw
4 Knife holder
5 Shaft
6 Screw
7 Knife

(Cont'd)

(Cont'd)

e) Lower the cutting table to its lowest position and check that the cutting table (8) does not touch the proximity switch (9) and the proximity switch is activated.
If not, loosen the nut (10) on the proximity switch (9) and rotate the switch until it is the distance **A** from the cutting table.

f) Tighten the nut (10).

g) Assemble in the reverse order.

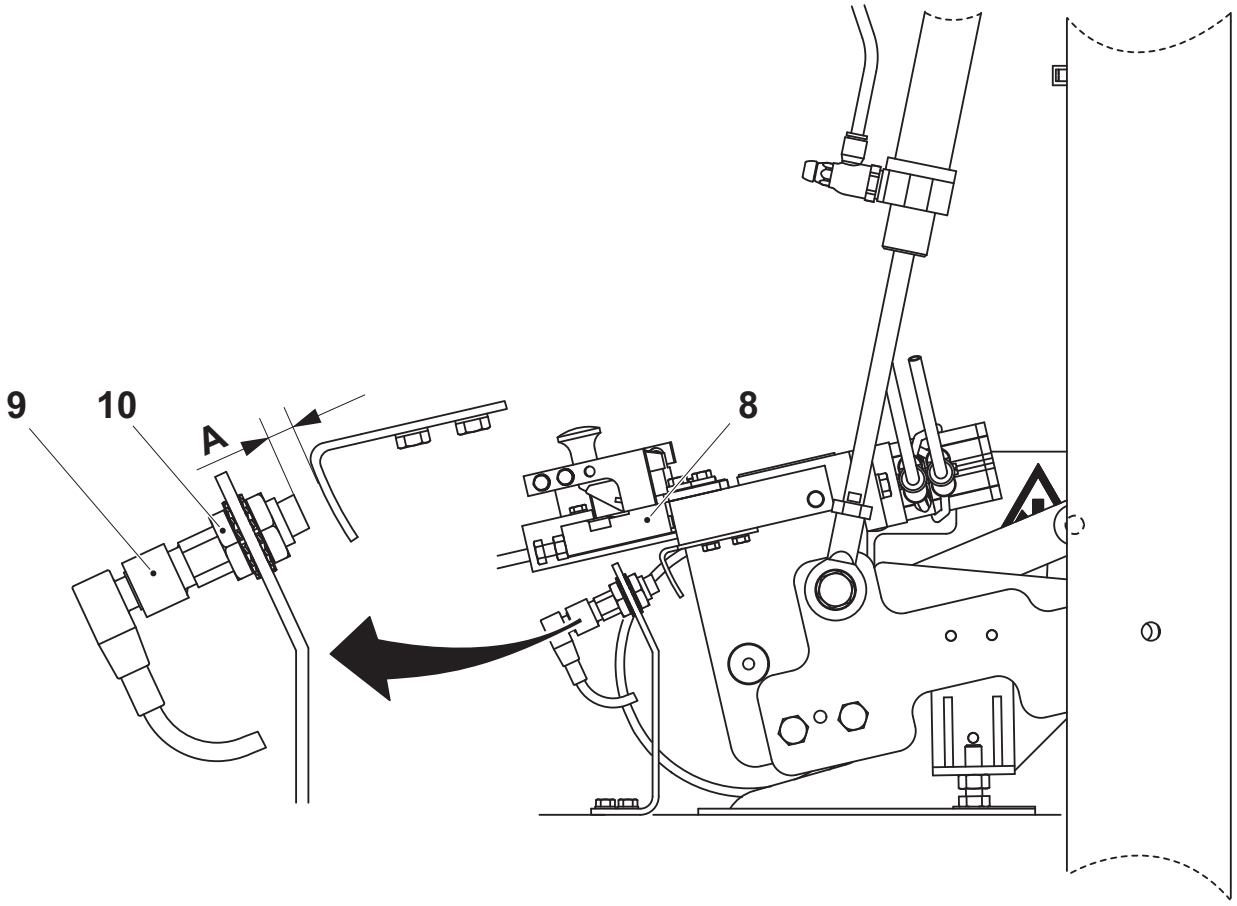

A = 1.5 ± 0.5 mm

8 Cutting table
9 Proximity switch
10 Nut

10.3-3 Material Holder - Set Cutting Table

Machine Status	Electrical supply disconnecting device in position O (OFF) Main air valve OFF Main steam valve ON Main water valve OFF
SPC Reference	1487785-0300 1484699-0300

a) Remove the screw (1) and move the angle guide (2) to the required stop lug position (3) for the size of packaging material to be used. See the table below.

Package	Stop lug position	Package	Stop lug position
TBA 100 B	-	TBA 284 B	5
TBA 125 S	-	TBA 300 S	5-6
TBA 160 S	-	TBA 330 S	-
TBA 200 B	5-6	TPA 200 Sq	-
TBA 200 M	2	TPA 250 Sq	2
TBA 200 S	2	TPA 330 Sq	-
TBA 250 B	5-6	TWA 125 S	-
TBA 250 S	3	TWA 200 S	2

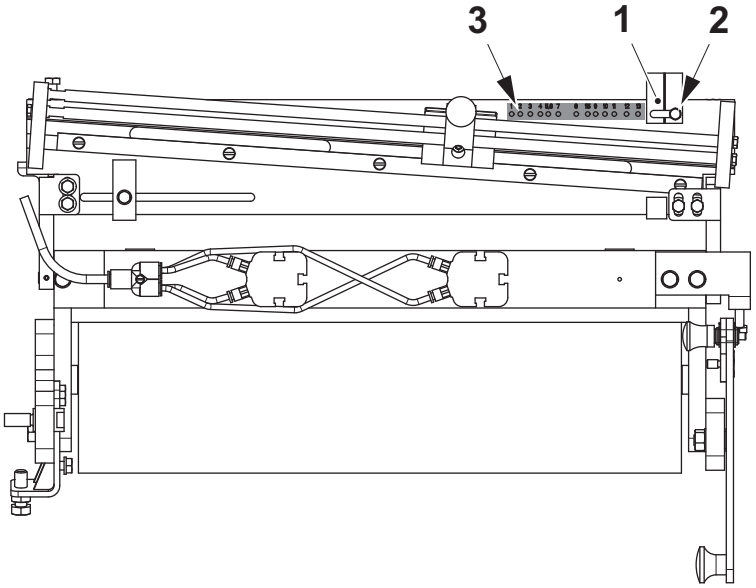

1 Screw
2 Angle guide
3 Stop lug position

(Cont'd)

(Cont'd)

b) With packaging material in the ASU, loosen the screw (4) and move the angle guide (5) until it just touches edge of the packaging material. Make sure the web is parallel between the two angle guides.

c) Repeat at the other material holder.

d) With the machine running, check the packaging material is spliced correctly, see Fine Setting.

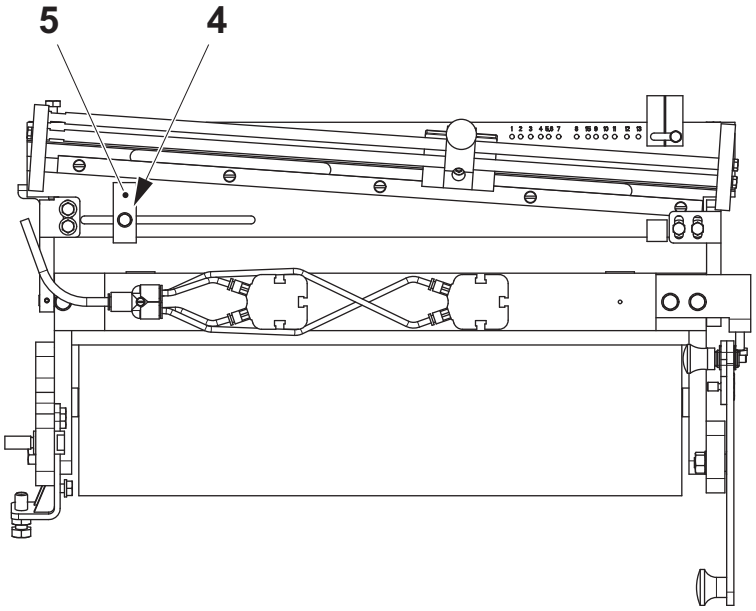

4 Screw
5 Angle guide

(Cont'd)

(Cont'd)

Fine Setting

a) Step up the machine to PRODUCTION and perform a splice.

b) See Sealing Alignment, page 1-8.

c) If an incorrect splice is obtained, loosen the screw (4) and move the angle guide (5) until an approved splice is obtained.

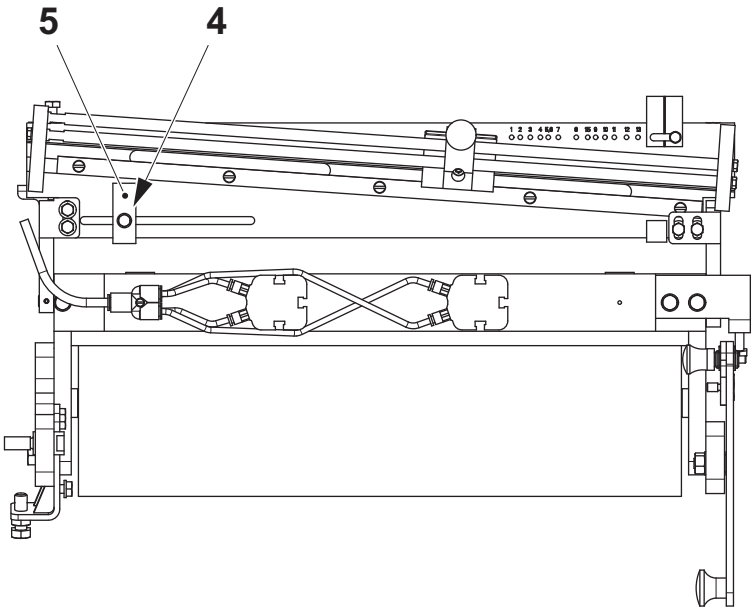

4 Screw
5 Angle guide

10.3-4 Material Holder - Overhaul

Machine Status	Electrical supply disconnecting device in position O (OFF) Main air valve OFF Main steam valve ON Main water valve OFF
SPC Reference	1487785-0300 1484699-0300

WARNING

Risk of crushing.

If the splicing device is moved out of position it will return rapidly to its former position when the doors are closed.

a) Remove the two stop screws (1) and the axle pins (2).

b) Remove and change the ball bearings (3).

c) If necessary, change the bending roller (4).

d) Assemble in the reverse order.

e) Set the material holder, see 10.3-5 Material Holder - Set.

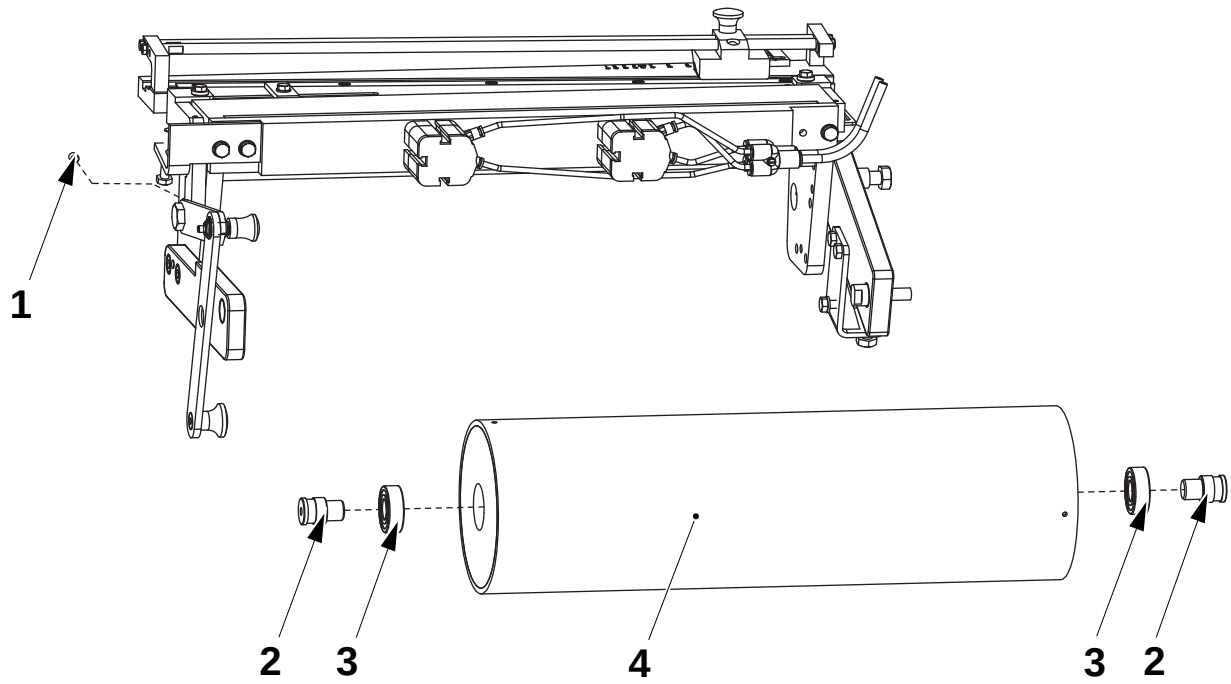

1 Stop screw
2 Axle pin
3 Ball bearing
4 Bending roller

10.3-5 Material Holder - Set

Machine Status	Electrical supply disconnecting device in position O (OFF) Main air valve OFF Main steam valve ON Main water valve OFF
SPC Reference	1487785-0300 1484699-0300

WARNING

Risk of crushing.

If the splicing device is moved out of position it will return rapidly to its former position when the doors are closed.

Note! The distance **A** is a basic setting required to obtain the correct overlap value, see Overlap - Fine Adjustment

a) With the table lowered, turn the screw (1) to set the distance **A** between the end of the bracket (2) and the frame (3).

b) Adjust the screw (4) until the bending roller (5) is levelled. Check that the screw (1) still rests against the frame.

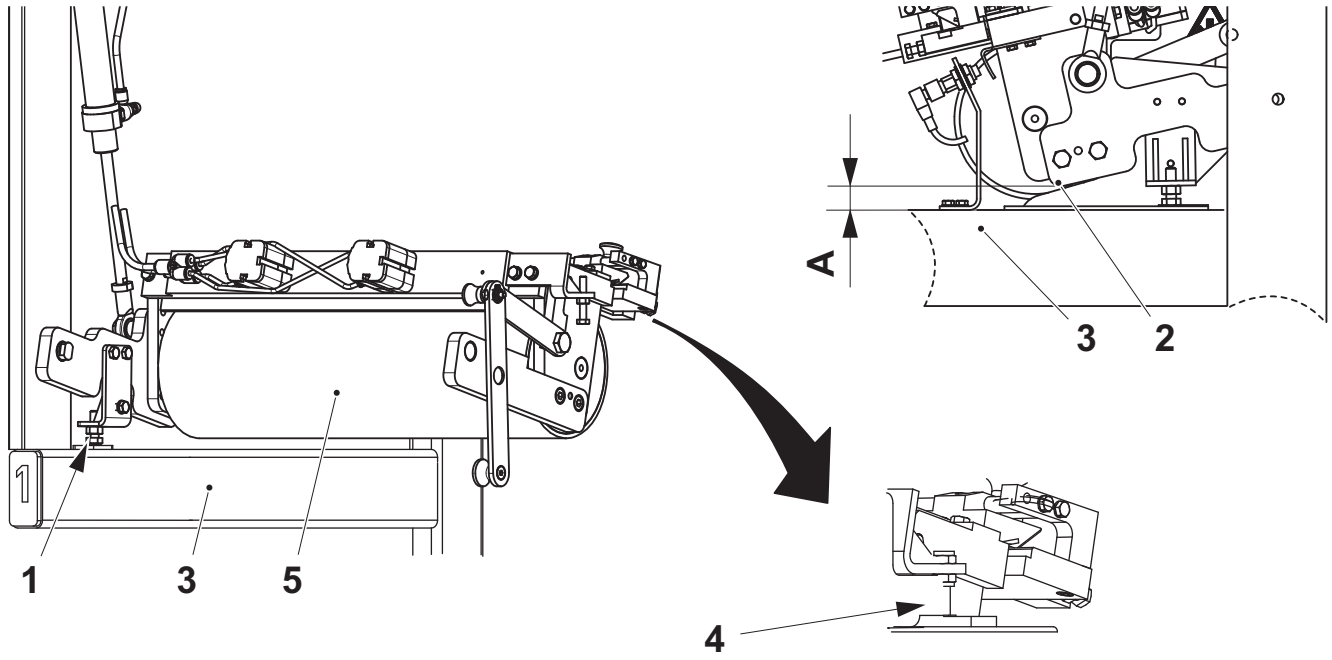

A = 24 mm

1 Screw
2 Bracket
3 Set square
4 Screw
5 Bending roller

(Cont'd)

(Cont'd)

c) Move the material holder up and down a number of times and check that it remains levelled.

d) Move the splicing device to the other side and repeat the settings on the other material holder.

Overlap - Fine Adjustment

a) Loosen the screws (1) and the lock nut (2) on the set screws (3) and adjust the position of the cutting table (4). Tighten the screws and lock the nuts on completion.

b) Step up the machine to PRODUCTION and perform a splice.

c) Check the splice overlap, see Overlap page 1-8.

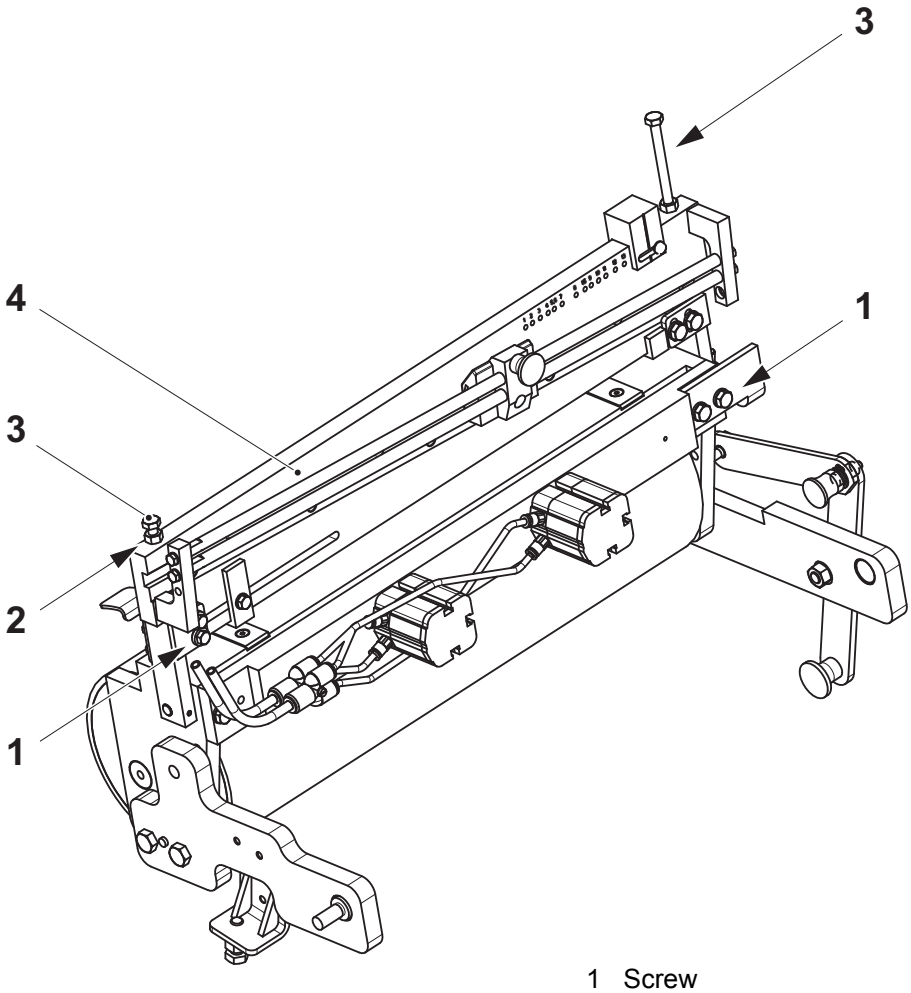

1 Screw
2 Lock nut
3 Set screw
4 Cutting table

10.3-6 Material Holder - Set Lock Cylinders

Machine Status	Electrical supply disconnecting device in position O (OFF) Main air valve OFF Main steam valve ON Main water valve OFF
SPC Reference	1487785-0300 1484699-0300

a) Remove the screws (1) and both cylinders (2).

b) Loosen the nut (3).

c) Turn the lock stud (4) to set the distance **A** between the cylinder edge and the top of the lock stud (4).

d) Tighten the nut (3).

e) Assemble in the reverse order.

A = 32 ±0.5 mm

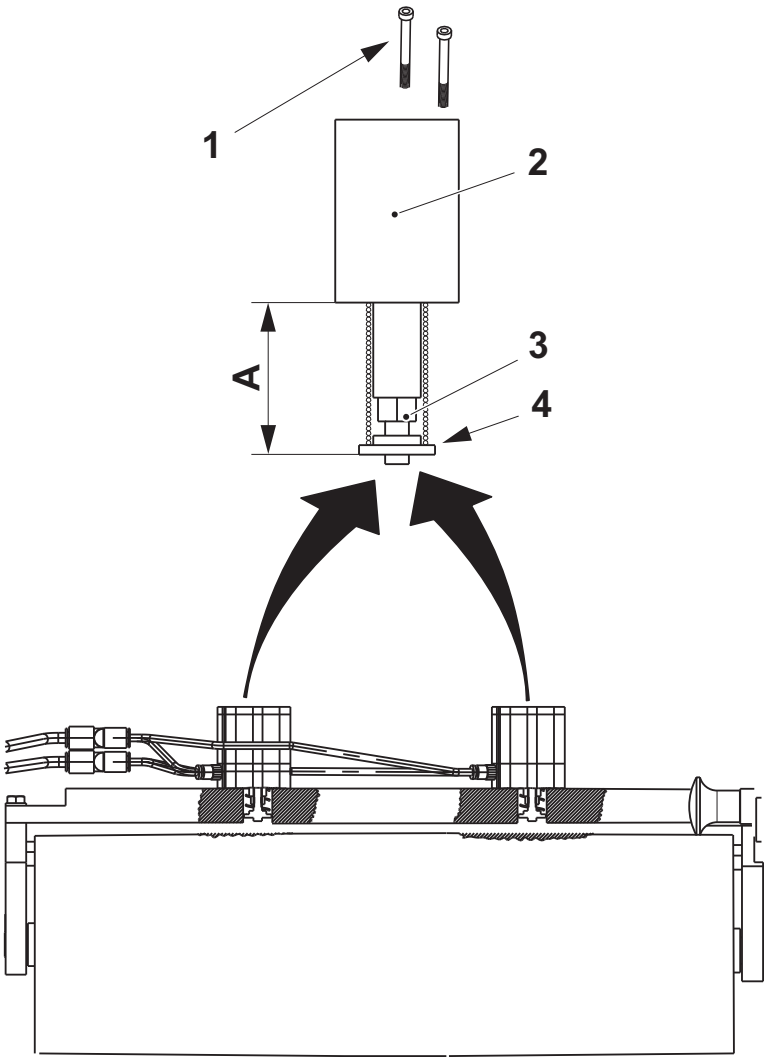

1 Screw
2 Cylinder
3 Nut
4 Lock stud

10.4 Infeed Unit

10.4-1 Infeed Unit - Set

Machine Status	Electrical supply disconnecting device in position O (OFF) Main air valve OFF Main steam valve ON Main water valve OFF
SPC Reference	3017331-0100

Crease Wheel

Note! Distance **A** may vary depending on the packaging material quality. Final adjustment may have to be carried out. Perform the adjustment on a plane surface.

WARNING

Risk of cutting and crushing.

Sharp moving parts can cut and crush. Take care when handling the crease wheel.

(Cont'd)

(Cont'd)

a) Set distance **A**. Adjust by putting shims (1) under the crease bars (2). Make sure that the crease bars are parallel within 0.2 mm.

Package	A ±0.2 (mm)	Package	A ±0.2 (mm)
TBA 100 B	69.3	TBA 284 B	118.9
TBA 125 S	86.0	TBA 300 S	118.9
TBA 160 S	93.5	TBA 330 S	135.5
TBA 200 B	83.0	TPA 200 Sq	101.6
TBA 200 M	105.3	TPA 250 Sq	127.0
TBA 200 S	118.6	TPA 330 Sq	125.35
TBA 250 B	106.0	TWA 125 S	102.5
TBA 250 S	130.2	TWA 200 S	138.2

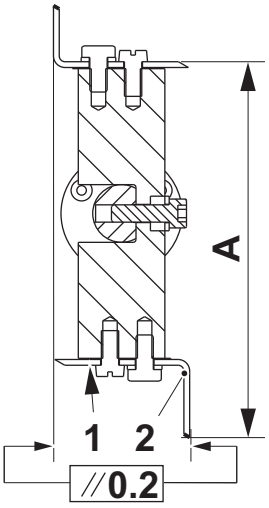

1 Shim
2 Crease bar

(Cont'd)

(Cont'd)

Paper Brake

a) Release the adjustable clutch lock screw (1). Refer to the table below, and set the value on the dial (2), according to the packaging material type.

b) Tighten the lock screw (1).

Paper type	Basic setting
Metallised	4
Non-metallised	1

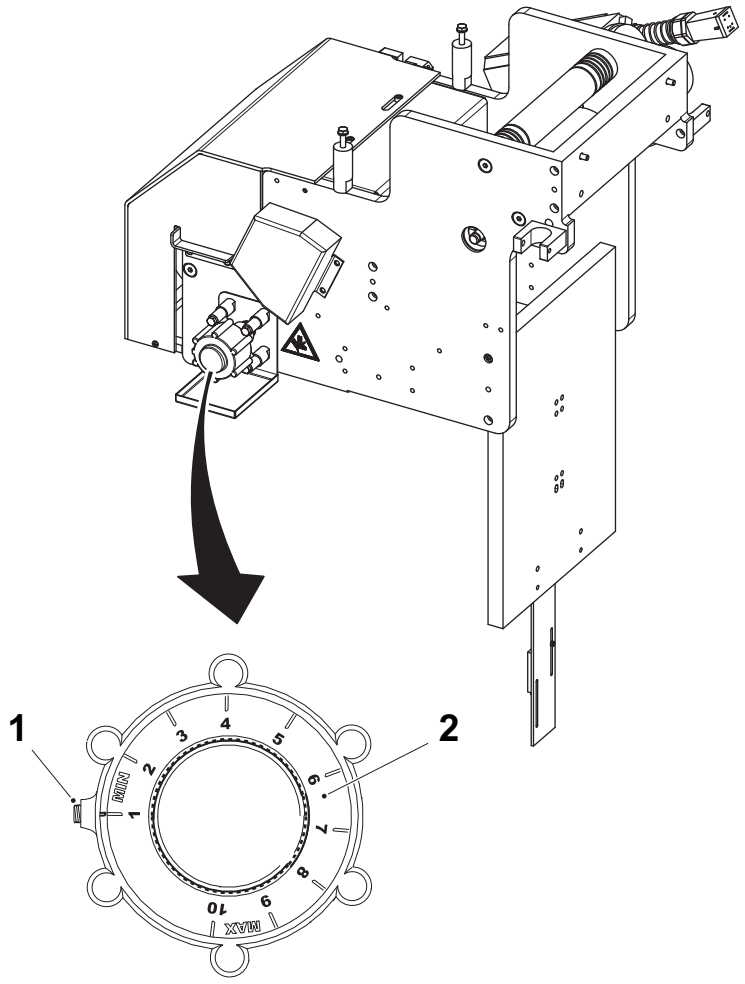

1 Lock screw
2 Clutch dial

10.4-2 Infeed Unit - Change Ball Bearings

Machine Status	Electrical supply disconnecting device in position O (OFF) Main air valve OFF Main steam valve ON Main water valve OFF
SPC Reference	3017331-0100

a) Disconnect the cable (1) and remove the cover (2).

b) Remove the screws (3) and the plate (4).

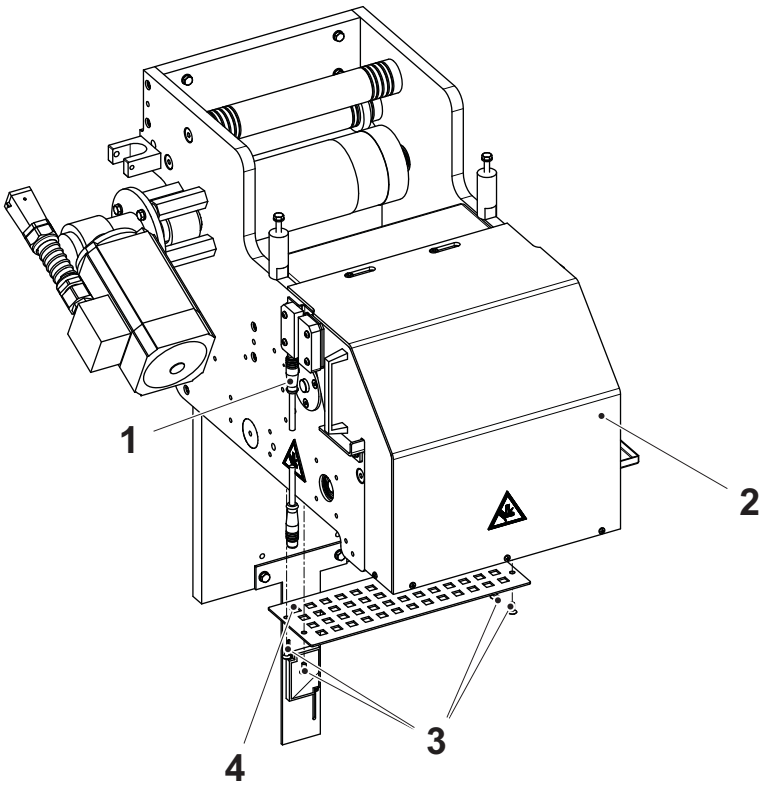

1 Cable
2 Cover
3 Screw
4 Plate

(Cont'd)

(Cont'd)

c) Remove the screws (5) and the bending roller (6).

d) Remove the retaining rings (7) and the ball bearings (8).

e) Change the ball bearings (8).

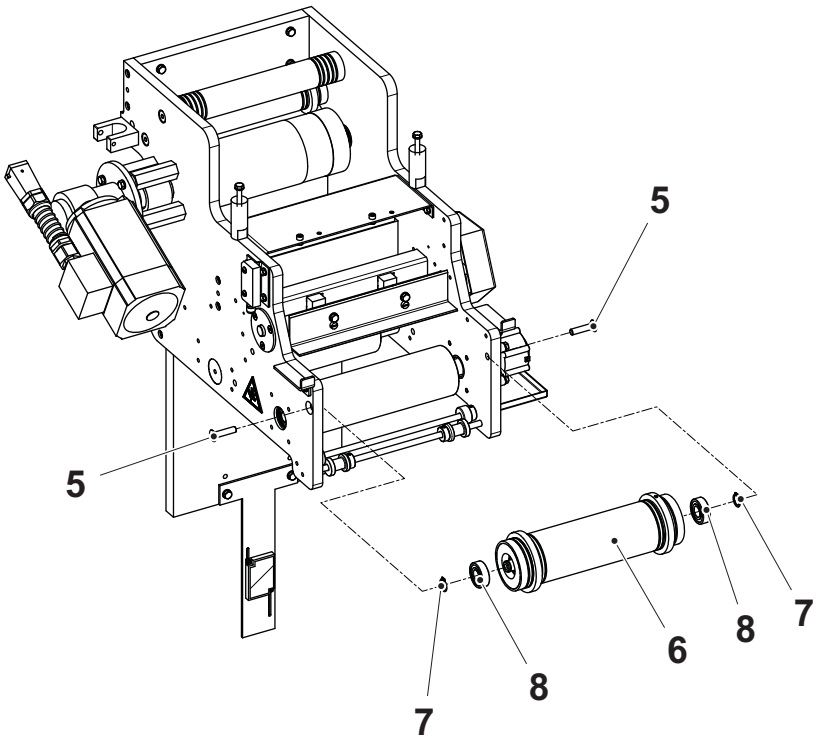

5 Screw
6 Bending roller
7 Retaining ring
8 Ball bearing

(Cont'd)

(Cont'd)

f) Remove the screws (9) and the washers (10).

g) Remove the rotary dashpot (11), the spacers (12), and the metalcup (13).

h) Remove the screws (14), the washers (15), and the protection (16).

Note! Record the position of the cam (18). Set the recorded position during the reassembly.

i) Remove the grub screw (17) and the cam (18).

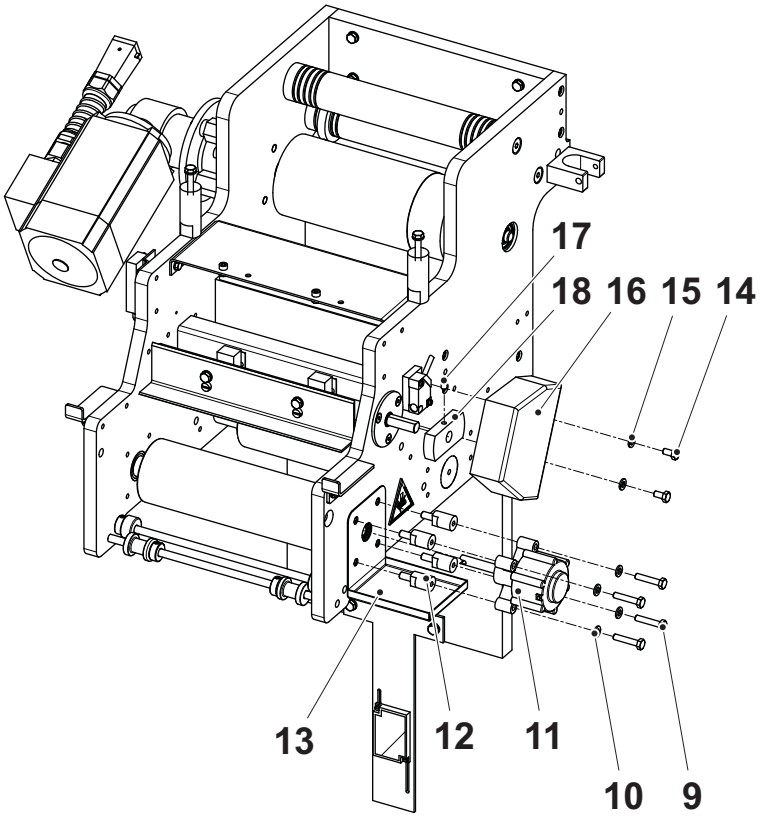

9 Screw
10 Washer
11 Rotary dashpot
12 Spacer
13 Metalcup
14 Screw
15 Washer
16 Protection
17 Grub screw
18 Cam

(Cont'd)

(Cont'd)

j) Remove the screws (19), the lids (20), and the ball bearings (21).

k) Remove the retaining rings (22), the ball bearings (23), and the roller (24).

l) Change the ball bearings (21) and (23).

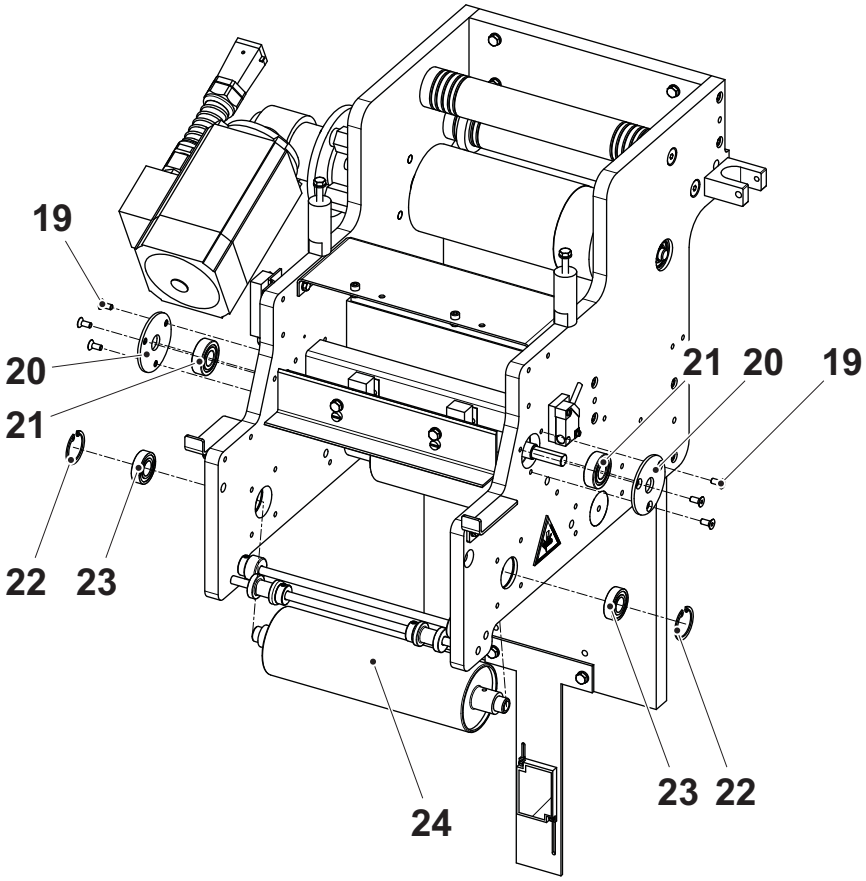

19 Screw
20 Lid
21 Ball bearing
22 Retaining ring
23 Ball bearing
24 Roller

(Cont'd)

(Cont'd)

m) Remove the grub screws (25).

n) Remove the axle pins (26), the ball bearings (27), and the bending roller (28).

o) Change the ball bearings (27).

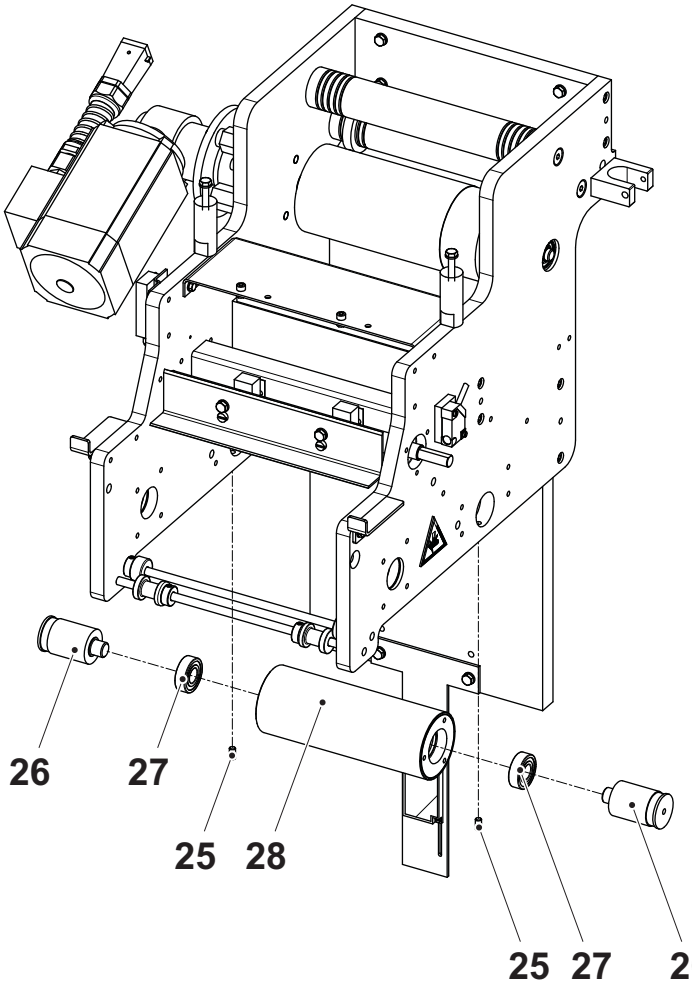

25 Grub screw
26 Axle pin
27 Ball bearing
28 Bending roller

(Cont'd)

(Cont'd)

p) Remove the grub screw (29), the screws (30), the washers (31), the motor (32), and the spacers (33).

q) Remove the retaining rings (34) and (35), and the ball bearings (36).

r) Change the ball bearings (36).

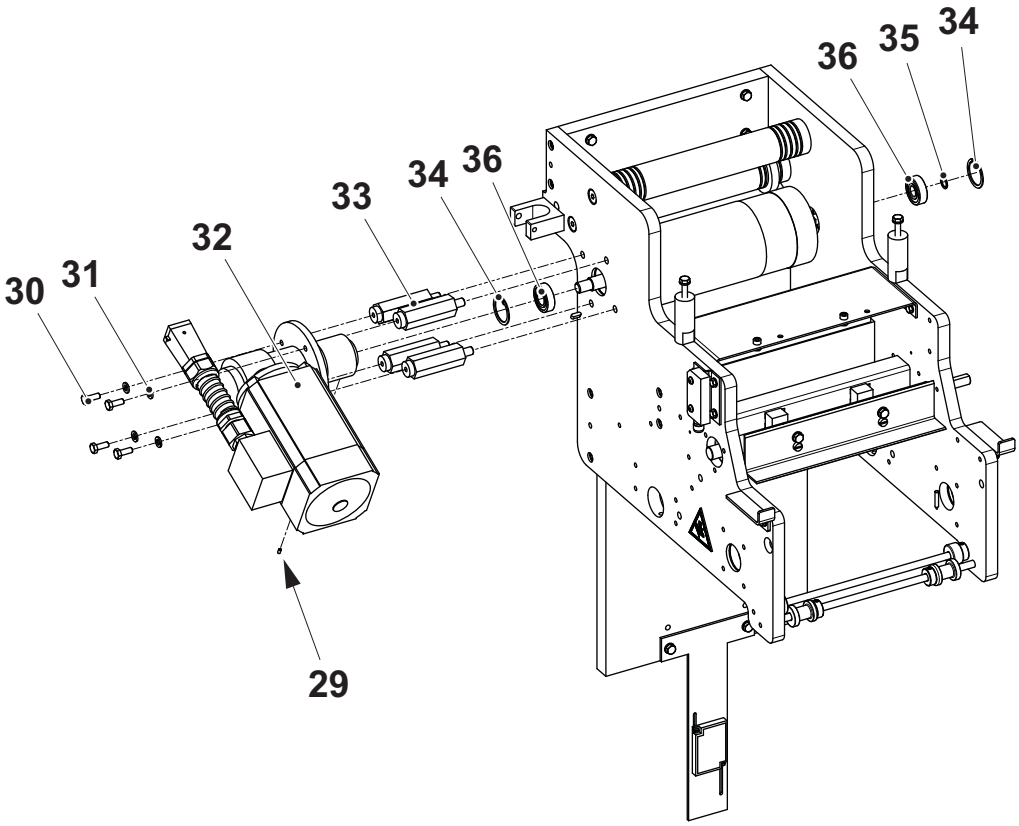

29 Grub screw
30 Screw
31 Washer
32 Motor
33 Spacer
34 Retaining ring
35 Retaining ring
36 Ball bearing

(Cont'd)

(Cont'd)

s) Loosen the screw (37).
t) Remove the shaft (38) and the roller (39).
u) Remove the screw (40) and the bracket (41).
v) Remove and change the ball bearings (42).

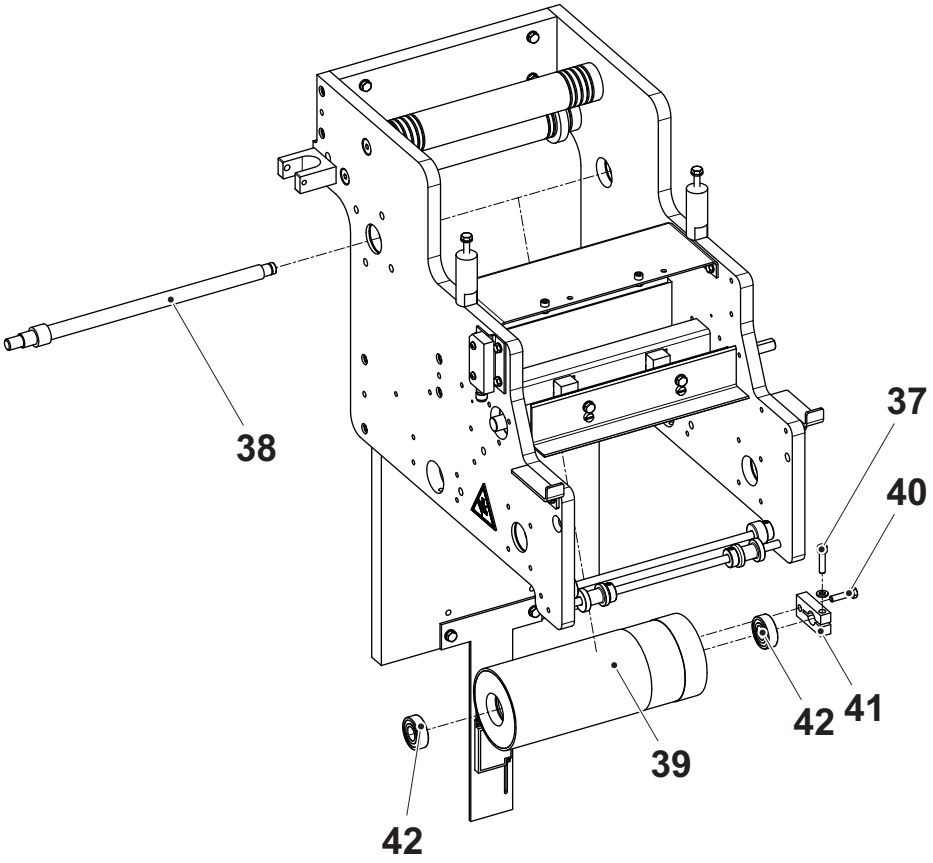

37 Screw
38 Shaft
39 Roller
40 Screw
41 Bracket
42 Ball bearing

(Cont'd)

(Cont'd)

w) Remove the screws (43) and (44), and the rollers (45) and (46).

x) Remove the retaining rings (47) and (48)

y) Remove and change the ball bearings (49) and (50).

z) Assemble in the reverse order.

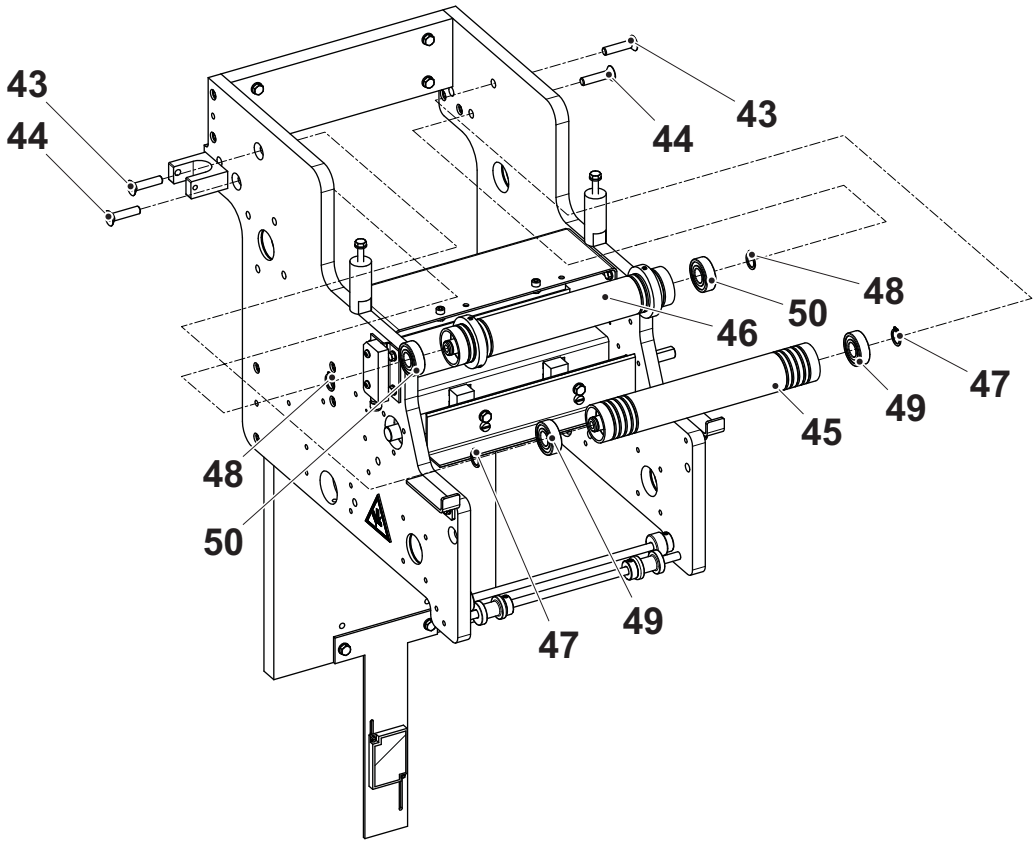

43 Screw
44 Screw
45 Roller
46 Roller
47 Retaining ring
48 Retaining ring
49 Ball bearing
50 Ball bearing

10.5 Web Magazine

10.5-1 Web Magazine - Check

Machine Status	Electrical supply disconnecting device in position O (OFF) Main air valve OFF Main steam valve ON Main water valve OFF
SPC Reference	1484735-0100

Check that the roller (3) rotates freely without play. Check also the surface of the roller (3) for wear and damage.

If required, change the bearings and/or the roller (3), see 10.5-2 Web Magazine - Change Bearings.

Check that the roller (3) moves smoothly when it is lifted/lowered using the rope (1). If required, change the roller bushings, 10.5-2 Web Magazine - Change Bearings.

Check function of the proximity switches (2) for top and bottom position. If required, set. See 10.5-3 Switches - Set.

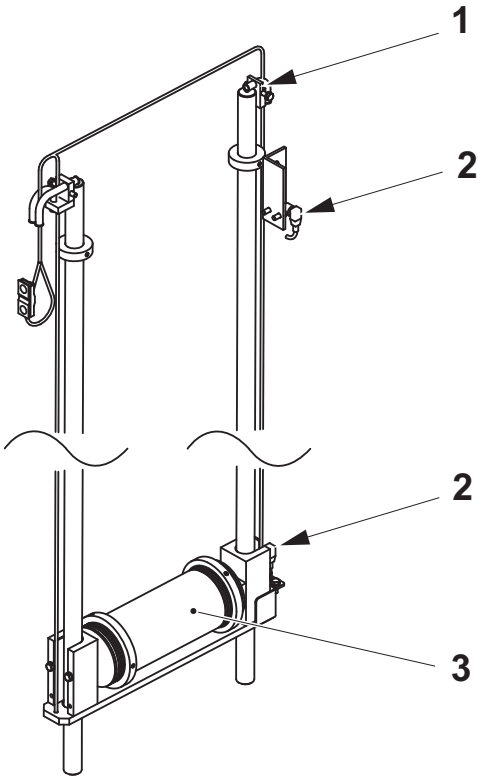

1 Rope
2 Proximity switch
3 Roller

10.5-2 Web Magazine - Change Bearings

Machine Status	Electrical supply disconnecting device in position O (OFF) Main air valve OFF Main steam valve ON Main water valve OFF
SPC Reference	1484735-0100

a) Remove the screws (1) and (2).
b) Lift out the brackets (3) and the roller (4).
c) Remove the retaining rings (5).
d) Change the bearings (6).
e) Change the roller (4) if required.
f) Assemble in the reverse order.

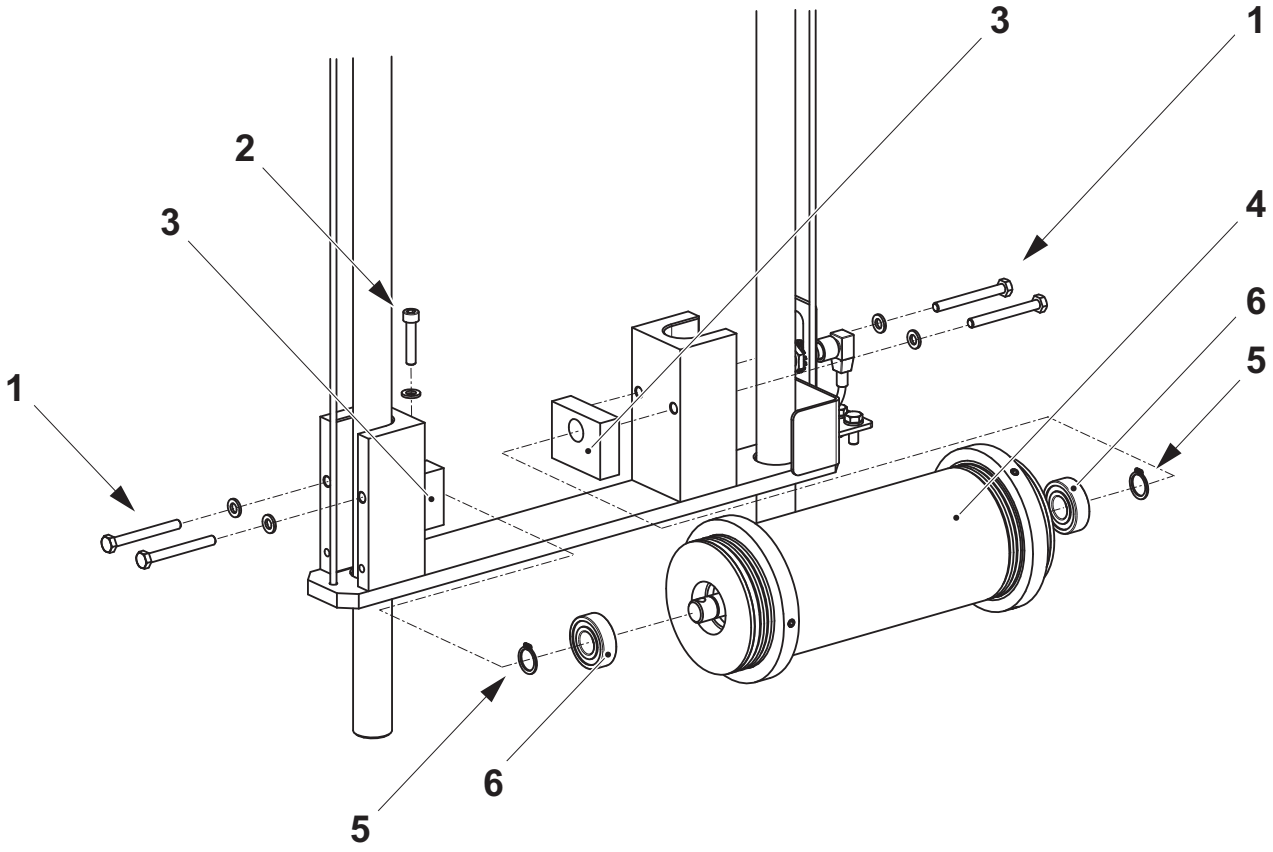

1 Screw
2 Screw
3 Bracket
4 Roller
5 Retaining ring
6 Bearing

10.5-3 Switches - Set

Machine Status	Electrical supply disconnecting device in position (O) OFF Main air valve OFF Main steam valve ON Main water valve OFF
SPC Reference	1484735-0100

a) Loosen the nuts (5), set distance **A** between the bracket (1) and the proximity switch (2).

b) Loosen the nuts (5), set distance **B** between the bracket (4) and the proximity switch (3).

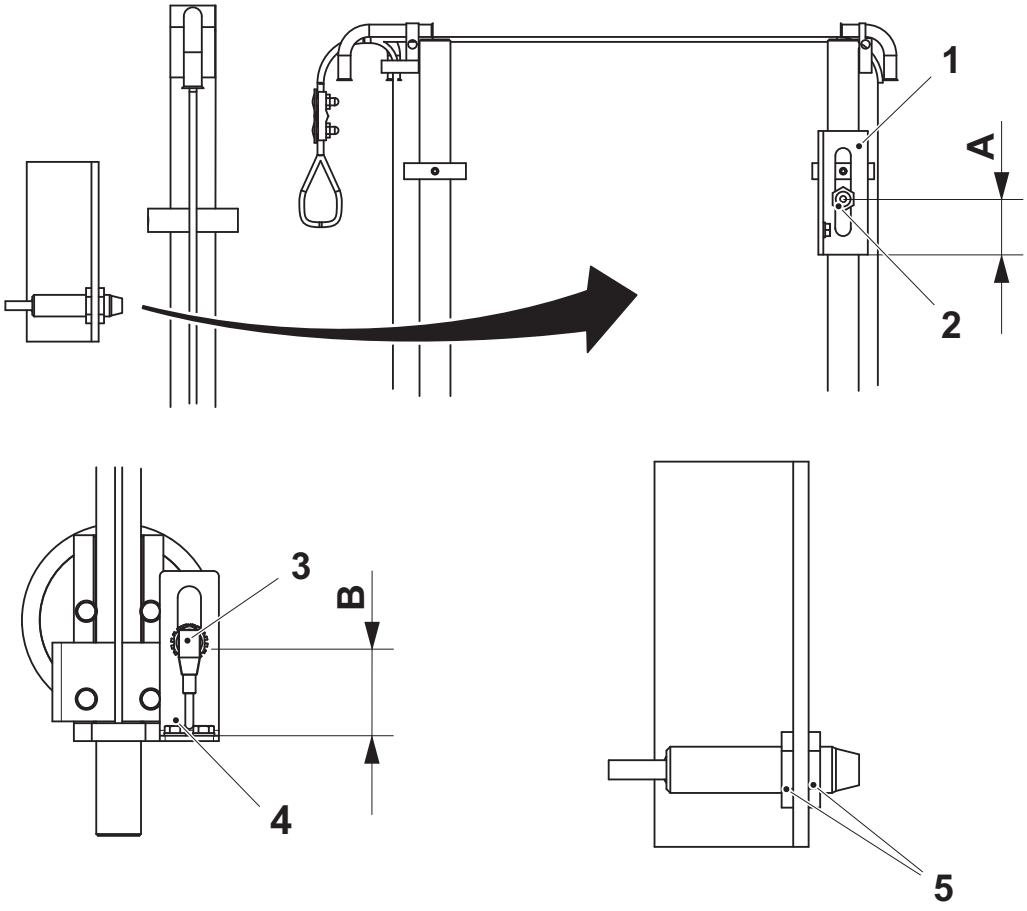

A = 45 ±1 mm
B = 80 ±1 mm

1 Bracket
2 Proximity switch
3 Proximity switch
4 Bracket
5 Nut

10.6 Valve Panel

10.6-1 Valve Panel - Change Silencer Filter

Machine Status	Electrical supply disconnecting device in position O (OFF) Main air valve OFF Main steam valve ON Main water valve OFF
SPC Reference	1511571-0300

a) Remove the clear plastic cover (1).

b) Unscrew the filter inside.

c) Replace with a new filter, and r-eattach the cover.

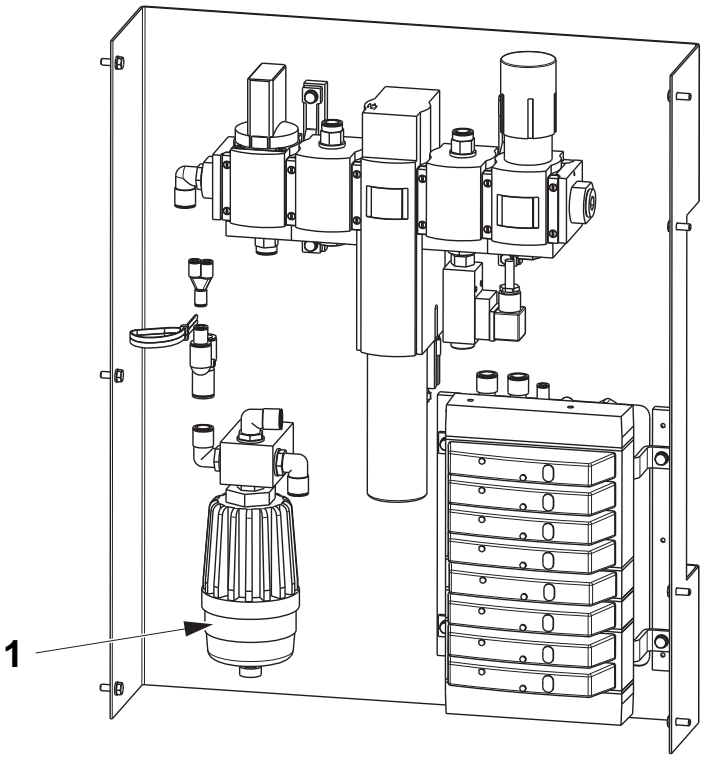

1 Cover

10.6-2 Valve Panel - Set Safety Valve

Machine Status	Electrical supply disconnecting device in position O (OFF) Main air valve OFF Main steam valve ON Main water valve OFF
SPC Reference	1511571-0300

Turning the set screw (1) on the safety valve (2) to the left increases the air flow, turning it to the right decreases the air flow. The safety valve (2) must be set so that the set screw (1) for the air flow is in its most open position.

a) Turn the set screw (1) on the safety valve (2) to the left as much as possible.

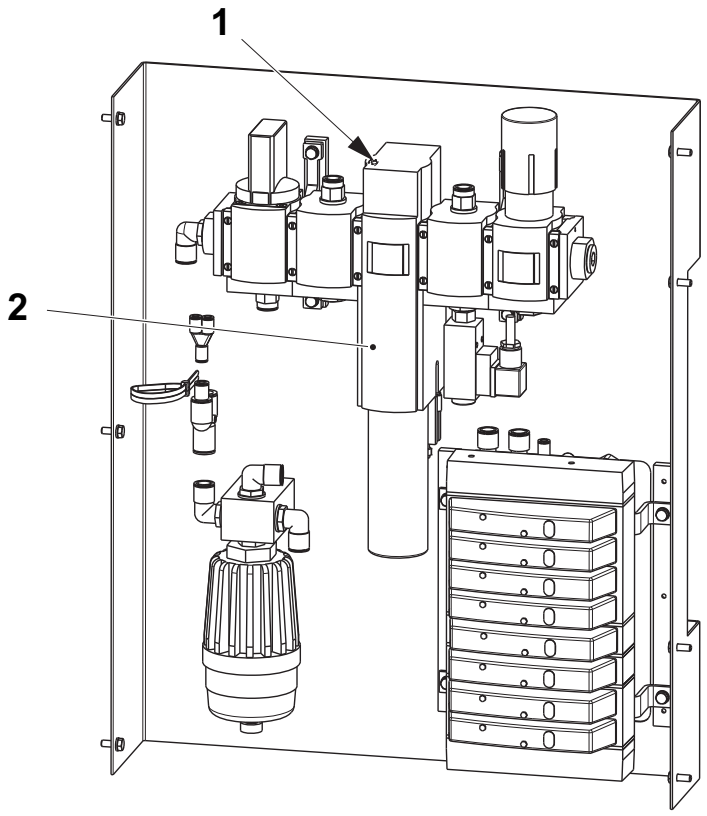

1 Set screw
2 Safety valve

10.6-3 Valve Panel - Change Air Inlet Filter Insert

Machine Status	Electrical supply disconnecting device in position O (OFF) Main air valve OFF Main steam valve ON Main water valve OFF
Consumables	Soap
SPC Reference	1511571-0300

a) Close the shut off valve (1).

b) Remove the filter (2).

c) Clean the filter (2) with soapy water. Rinse with clean water.

d) Remove and change the filter cartridge.

e) Assemble the filter (2) again.

f) Open the shut off valve (1) again. Make sure that there is no leakage.

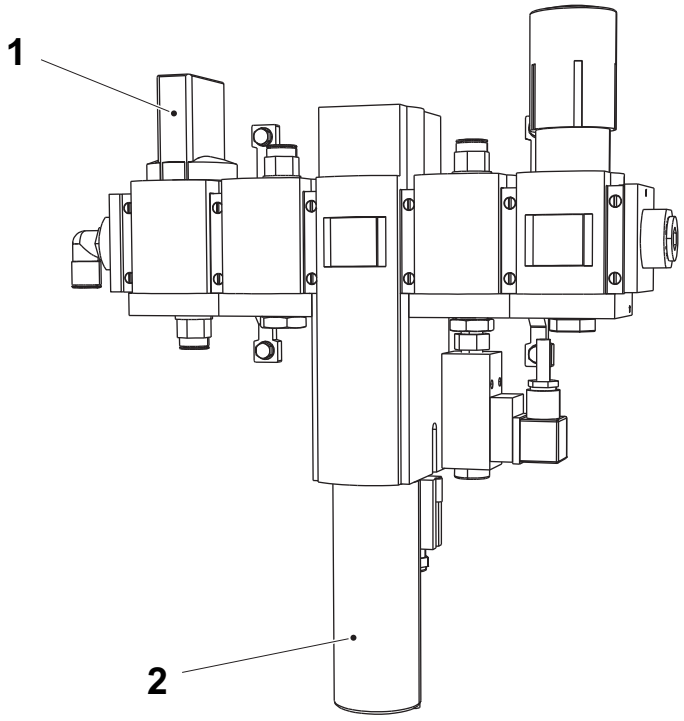

1 Shut off valve
2 Filter

10.7 Covering Panel

10.7-1 Covering Panel - Check

Machine Status	Electrical supply disconnecting device in position O (OFF) Main air valve OFF Main steam valve ON Main water valve OFF
SPC Reference	1519953-0300

Check that:

- the rubber strip (2) is not worn and/or damaged. If required, change the rubber strip (2).
- the rubber strip (2) is properly fit. If required, adjust the rubber strip (2).
- the locking arms (3) runs smoothly in the guide lugs (4).
- the latch (5) and the locking arms (3) in the locking positions (1) are engaged when the door is closed.

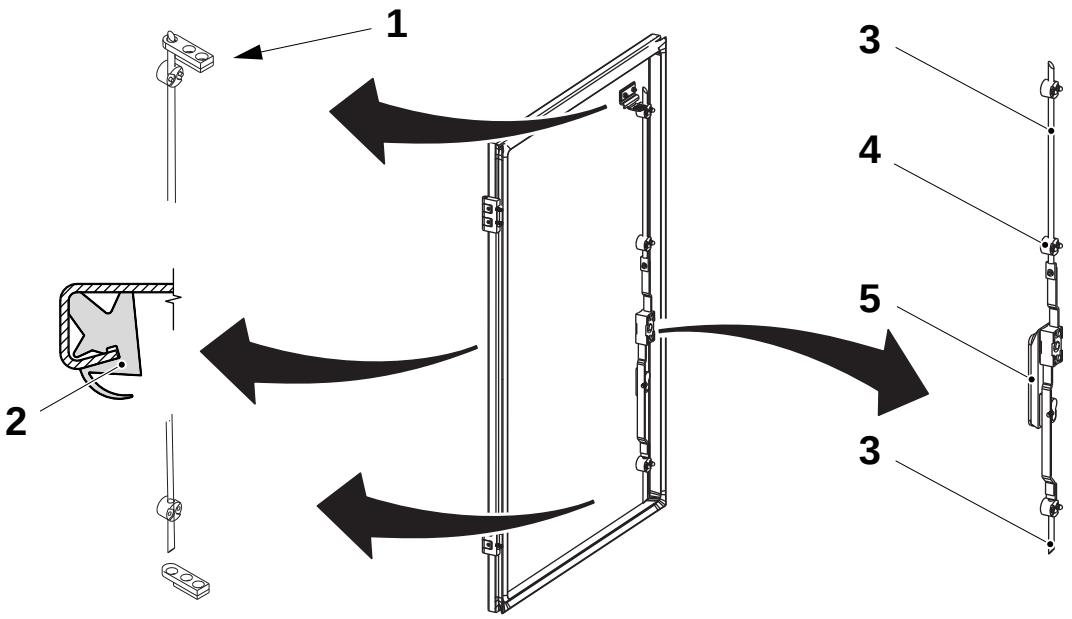

1 Locking position
2 Rubber strip
3 Locking arm
4 Guide lug
5 Latch

10.8 Electrical Equipment

Note! This section describes operations to be carried out on the filling machine electrical cabinet.

10.8.1 ASU RMD NP

10.8.1-1 ASU RMD NP - Functional Description

The TMCC2 card (1) **A511** is a microprocessor card that has the following functions:

- Decode the signals from the ASU and DCS photocells (2) and converting them into a readable signal.
- Communication with PLC (3) and terminal (PC) (4).

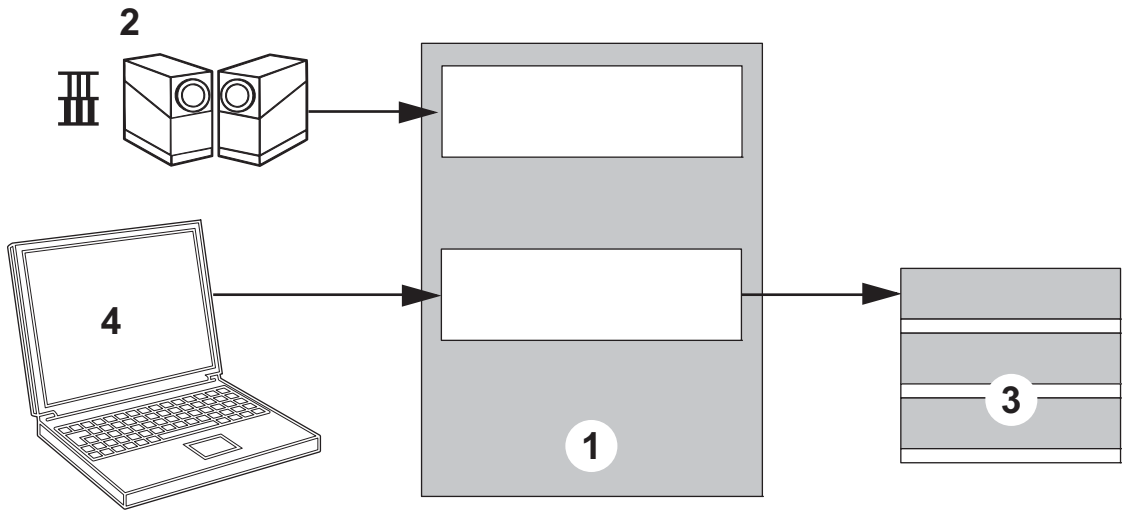

1 TMCC2 card
2 ASU and DCS Photocell
3 PLC
4 Terminal (PC)

10.8.1-2 ASU RMD NP - Buttons and Display

The buttons UP (1), DOWN (2), ENTER (3) and the Display/Led (4) are located on the front panel of the TMCC2, and are used to select one of several program functions.

The display (4) is used for the following purposes:

- When the TMCC2 is idle the display (4) shows program information.
- When the TMCC2 is working the display (4) is used as LEDs to display the operation of the TMCC2.
- When you push any of the buttons (1), (2), and (3) the display (4) is used to navigate through a menu structure that allows you to set up the TMCC2.
- To display an error message if the communication with the photocells fails. The message is displayed as follows:

Error message	Error
3 bar Ph.	The communication to the 3 bar photocell fails.
4 bar Ph.	The communication to the 4 bar photocell fails.
Ph. FAIL	Both photocells are in error status.

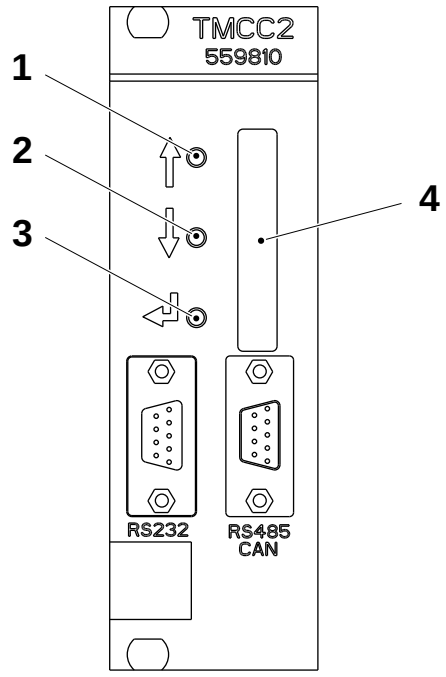

1 UP button
2 DOWN button
3 ENTER button
4 Display/Led

(Cont'd)

(Cont'd)

TMCC2 LED Display

The display, used as LEDs, provide the following information when the machine is in the normal PRODUCTION mode.

Card A511		
LED	Function	Description
S1	Register mark ASU	ASU register mark signal, the flash is approx. 40 ms
S2	-	Not used
S3	-	Not used
S4	-	Not used
S5	-	Not used
S6	-	Not used
S7	-	Not used
S8	-	Not used

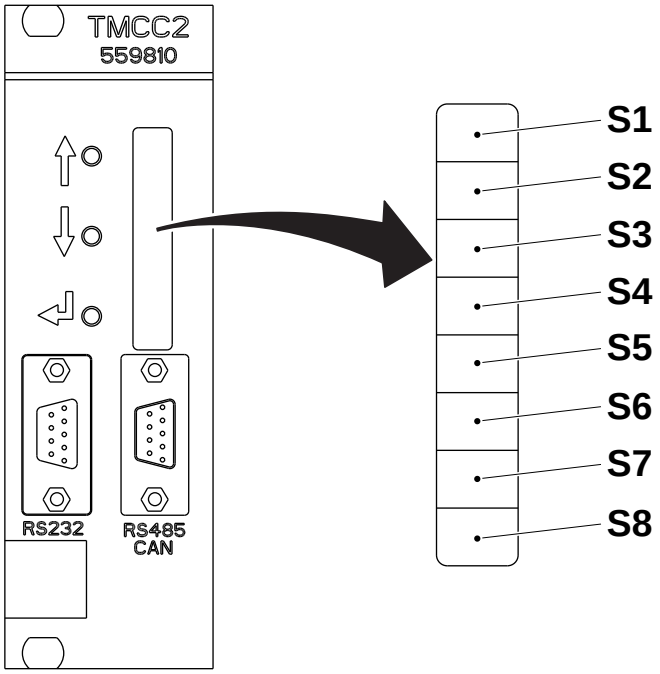

1 Register mark ASU
2 Not used
3 Not used
4 Not used
5 Not used
6 Not used
7 Not used
8 Not used

(Cont'd)

(Cont'd)

TMCC2 Menu System

By pushing any button on the TMCC2 you enter the first level of the menu. Then you use the arrow buttons to select an item and the enter button to access the sub-menus to that item.

Card A511				
Menu level				
1	2	3	4	Description
PHOT.				Sets up the photocells
	CONF? Y			Sets up the photocells
		GREEN		Sets the photocell colour to green
		BLUE		Sets the photocell colour to blue
		RED		Sets the photocell colour to red
		CALIB.		Calibrates the photocell (manual calibration)
			USE CAL.	Sends the taught values to both photocells
			RUN CAL.	Sets the photocells to teaching mode and waits for manual teaching
			BACK	Back to level 3
		BACK		Back to level 2
	CONF? N			Back to level 1
BACK				Exit menu

Note! Make sure to manually exit the menu, up to level 1, using the “back” command.

TMCC2 System Data

Commands and parameters are entered in the ASU RMD NP program and data can be read from the TMCC2 by using a PC, see 10.8.1-4 ASU RMD NP - Display Report.

10.8.1-3 ASU RMD NP - Set Communication

Machine Status	PRODUCTION
Special Equipment	PC with RS-232-C comm. port Communication cable RS 232-C
SPC Reference	559810-0101

Note! The following procedure should be used to communicate with a TMCC2 card.

DANGER

Hazardous voltage.
Will shock, burn, or cause death.
Take care when working inside the electrical cabinet. For personal protection, follow the local regulations.

a) Connect the TMCC2 to a PC with the connection cable (1).

b) The connections required are:

PC 9-pin female	TMCC2 9-pin male
2	3
3	2
5	5

Note! Do **not** connect any other pin.

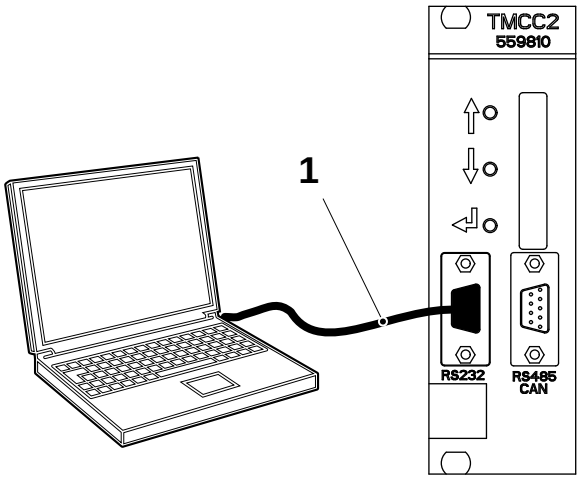

1 Connection cable

(Cont'd)

(Cont'd)

c) Set-up the program to use, e.g. Hyperterminal or TMCC2.exe, as follows:

Baud rate	9600
Parity	None
Bits	8
Stop bits	1
Flow control	None

10.8.1-4 ASU RMD NP - Display Report

Machine Status	PRODUCTION
Special Equipment	PC with RS-232-C comm. port Communication cable RS 232-C
SPC Reference	559810-0101

TMCC2

Configure a PC to be used as Windows terminal and connect it to the TMCC2, see 10.8.1-3 ASU RMD NP - Set Communication.

Enter the commands and parameters into the ASU program via the keyboard and execute them by pressing the **<ENTER>** key.
(The commands and parameters are not replicated on the terminal).
The functions described below are available:

(Cont'd)

(Cont'd)

Type **H**+**ENTER**: The Help Menu displays the commands available.

Type **L**+**ENTER**: Gives a description of the function of the display on the front panel.

Type **STOP**+**ENTER**: Stops the ASU program and enter in the firmware.

Type **S**+**ENTER**: Shows the program version and if there is a failure of the photocells.

Type **PTH= xx**: Sets the photocells dynamic threshold, 00-F2 (hex value); 10.2-6 Splicing Device - Set Photocell Sensitivity.

Type **Y**+**ENTER**: Displays a detailed status of the photocells for test and service purposes:

Commands OK:	Total number of commands executed by the photocells
Commands failed:	Total number of commands failed by the photocells
Barcode decoded:	Total number of barcodes decoded by the TMCC2
Dynamic Threshold:	Photocell threshold
Light Spot:	Colour of the light spot used by the photocells
Output:	Logic of the photocell outputs (Light/Dark switching)
3 bar Phot. Working Hours	Number of hours that every LED of the photocell has been working
4 bar Phot. Working Hours	Number of hours that every LED of the photocell has been working
3 bar Phot. I Software ver. / S.N.:	Software version of the photocell firmware and serial number
4 bar Phot. I Software ver. / S.N.:	Software version of the photocell firmware and serial number

10.8.1-5 ASU RMD NP - Load Program

Machine Status	PRODUCTION
Special Equipment	Communication cable RS 232-C AT compatible PC with CD-ROM drive
SPC Reference	559810-0101

Valid for TMCC2 Terminal (TMCC2.exe)

a) Connect a PC to the TMCC2 front panel connector (1), see 10.8.1-3 ASU RMD NP - Set Communication.

b) Start TMCC2.exe on the PC. If TMCC2.exe is not previously installed on the PC, see 14-1 Electrical Equipment - Install Software Programs in the MM for the filling machine.

c) Press SET COMM (arrow) and check the serial configuration, see 10.8.1-3 ASU RMD NP - Set Communication.

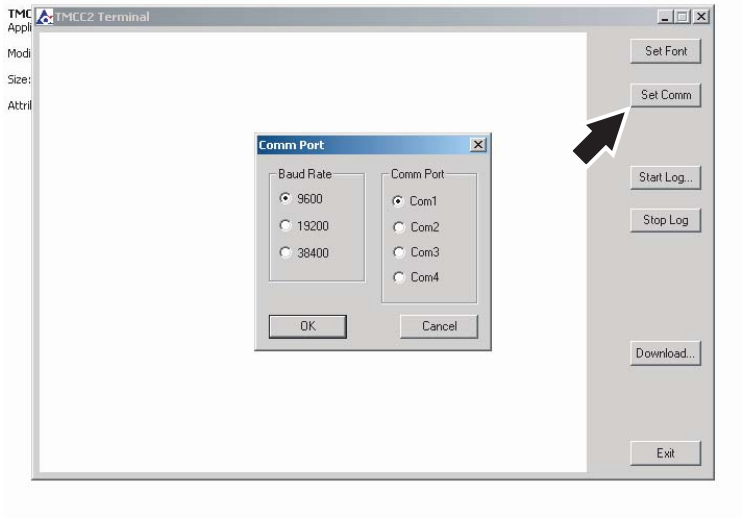

(Cont'd)

(Cont'd)

d) Type **STOP** at the TMCC2 prompt and press the enter key, or keep pressed the DOWN button (2) and the ENTER button (3) for a few seconds.

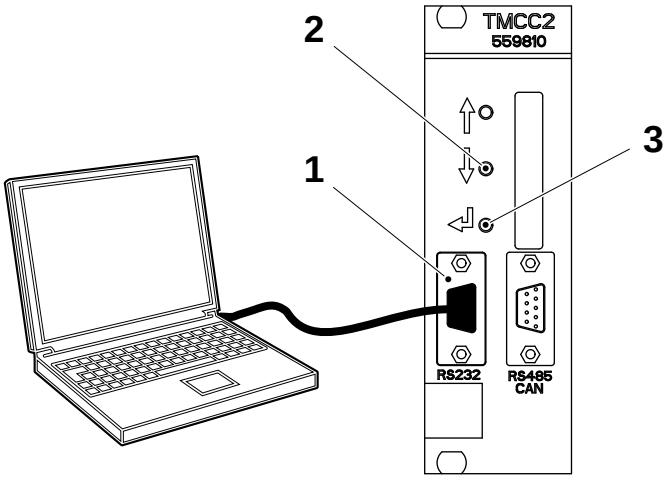

1 TMCC2 connector
2 DOWN button
3 ENTER button

e) Press DOWNLOAD and browse to where the program file is located. See Procedure 14-1 Electrical Equipment - Install Software Programs in the MM for the filling machine.

f) Choose "All Files (*.*)" in the Files of Type drop-down list.

g) Select the new software file **"2589434.1xxx"** and click OPEN.

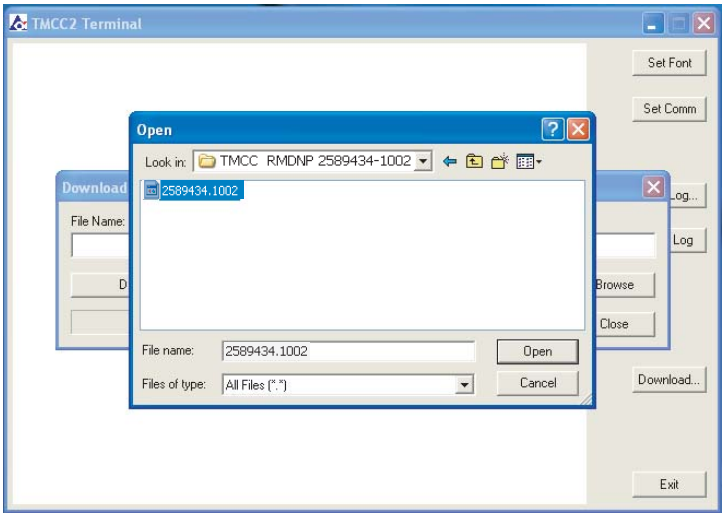

(Cont'd)

(Cont'd)

h) Press DOWNLOAD to download the new software to the TMCC2 card.

i) Wait until the download is completed, and then press CLOSE.

j) Type **RUN** at the TMCC2 prompt.

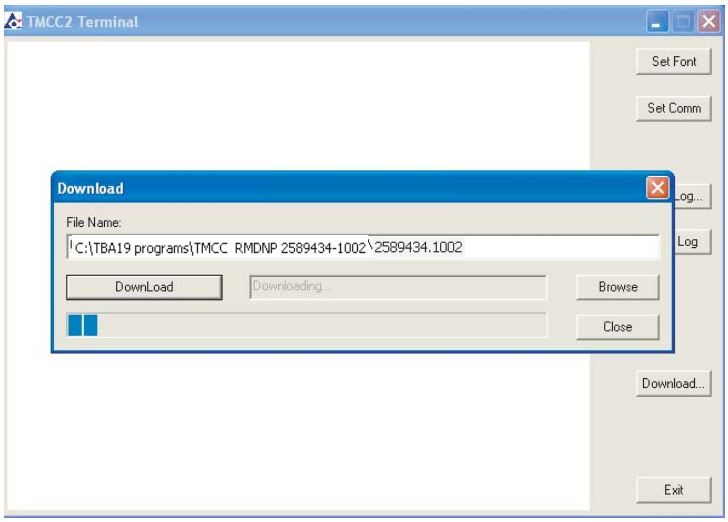

10.8.2 Frequency Converter

To check the frequency converter, follow the procedure described in the MM for the filling machine.

To set the ASU free loop (1) frequency converter, see 10.8.2-1 Frequency Converter Rockwell - Set.

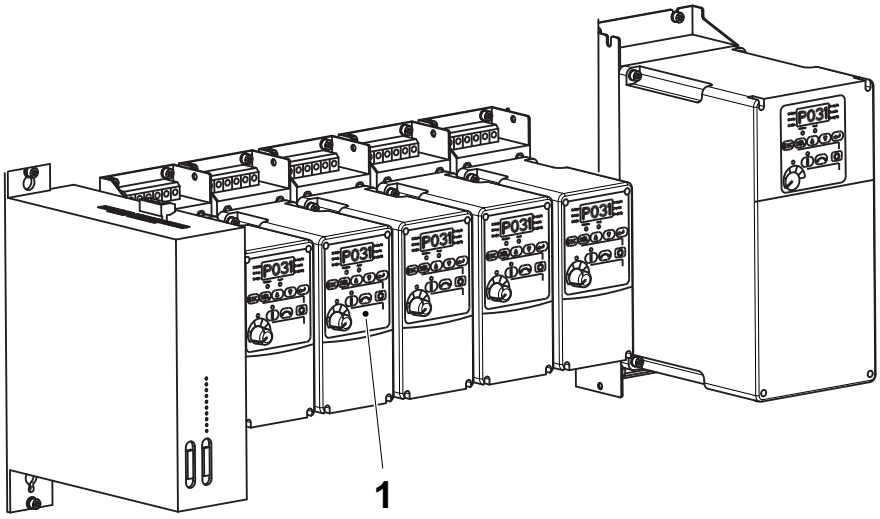

1 ASU free loop

10.8.2-1 Frequency Converter Rockwell - Set

Machine Status	Electrical supply disconnecting device in position I (ON) Main air valve OFF Steam supply ON Water supply OFF
SPC Reference	90459-3450

DANGER

Hazardous voltage.
Will shock, burn, or cause death.
Take care when working inside the electrical cabinet. For personal protection, follow the local regulations.

See the filling machine MM for the frequency converter setting procedure.

(Cont'd)

(Cont'd)

Note! For parameters not included in the tables, choose the default value. See the enclosed “Rockwell” manual for details.

Table for Customized Inverter Values - Basic program group

Parameter	Function	Default	ASU free loop
P032	Motor NP Hertz	60	50
P033	Motor OL Current	*	1.2
P035	Maximum Freq	60	50
P036	Start Source	0	2
P037	Stop Mode	0	1
P038	Speed Reference	0	3
P039	Accel Time 1	10	0.2
P040	Decel Time 1	10	0.2

* Different depending on Drive Amps.

Table for Customized Inverter Values - Advanced program group

Parameter	Function	Default	ASU free loop
A074	Preset Freq 4	30.0	**
A076	Preset Freq 6	50.0	**
A083	S-Curve %	0	50
A092	Auto Rstrt Tries	0	1
A093	Auto Rstrt Delay	1	0
A094	Start At Power Up	0	1
A096	Flying Start En	0	1

** Not possible to set.

This page intentionally left blank

15 General

Description

This chapter contains general information about the ASU.

15.1 Technical Data . . . . . 15 - 4

15.2 Safety Functions . . . . . 15 - 5

15.2-1 Safety Functions - Check . . . . . 15 - 5

15.3 Templates and Tools . . . . . 15 - 6

15.4 Diagrams. . . . . 15 - 7

15.4.1 Pneumatic Diagram. . . . . 15 - 7

15.1 Technical Data

Pressures	Unit	Value
Input air	MPa	0.60
Web tension	KPa (bar)	70 (0.7)

15.2 Safety Functions

15.2-1 Safety Functions - Check

Machine Status	PREHEATING II

Refer to the doors, covers and emergency stops shown in chapter ii Safety Precautions, sections Safeguards and Emergency Stop.

a) Check the EMERGENCY STOP buttons on the machine.
See the filling machine MM, procedure 14.11-11 EMERGENCY STOP Buttons - Check.

b) Check the safe guards on the machine. See the filling machine MM, procedure 14.11-12 Safe Guards - Check.

c) Check the pneumatic safety valves on the machine.
See the filling machine MM, procedure 14.11-13 Pneumatic Safety Valves - Check.

d) Check the HARDWARE RESET buttons on the machine.
See the filling machine MM, procedure 14.11-14 HARDWARE RESET Buttons - Check.

e) Check the safety relays on the machine.
See the filling machine MM, procedure 14.11-15 Safety Relays - Check.

15.3 Templates and Tools

Fig	Description
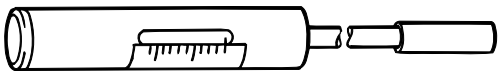	Dynamometer/Spring balance TP No. 74767-0102 10.2 Slicing Device
	Spirit level TP No. 90243-0165 10.4 Dating unit
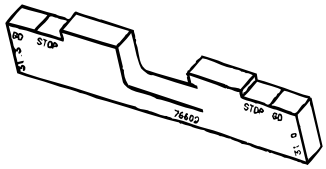	Template TP No. 76602-0000 10.4 Dating unit

15.4 Diagrams

15.4.1 Pneumatic Diagram

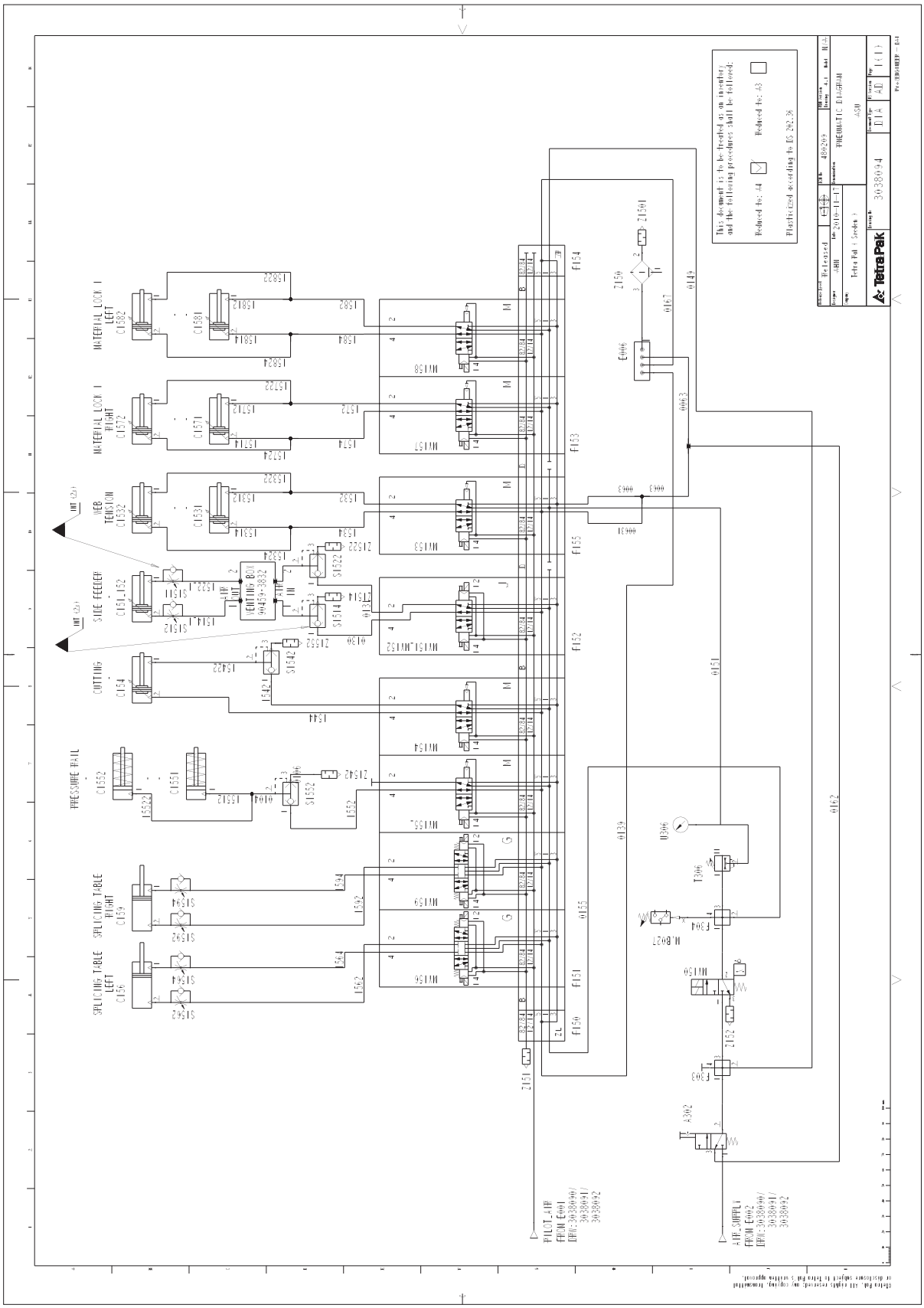

This page intentionally left blank

A

ASU - Check Function . . . . . 10 - 7
ASU - Setting Diagram . . . . . 10 - 6
ASU RMD NP - Buttons and Display . . . . . 10 - 77
ASU RMD NP - Display Report . . . . . 10 - 82
ASU RMD NP - Functional Description . . . . 10 - 76
ASU RMD NP - Load Program . . . . . 10 - 84
ASU RMD NP - Set Communication . . . . . 10 - 80

C

Covering Panel - Check . . . . . 10 - 75

F

Frequency Converter Rockwell - Set . . . . . 10 - 88

I

Infeed Unit - Change Ball Bearings . . . . . 10 - 61
Infeed Unit - Set . . . . . 10 - 58

M

Machine Body - Change Cylinder . . . . . 10 - 12
Machine Body - Check Bearing Blocks . . . . 10 - 11
Machine Body - Set Side Feeder . . . . . 10 - 14
Material Holder - Check . . . . . 10 - 48
Material Holder - Check Cutting Table . . . . . 10 - 49
Material Holder - Overhaul . . . . . 10 - 54
Material Holder - Set . . . . . 10 - 55
Material Holder - Set Cutting Table . . . . . 10 - 51
Material Holder - Set Lock Cylinders . . . . . 10 - 57

P

Pressure Jaw - Change Cylinders . . . . . 10 - 39
Pressure Jaw - Change Dolly . . . . . 10 - 44
Pressure Jaw - Change Knife . . . . . 10 - 33
Pressure Jaw - Change TPO-bar . . . . . 10 - 37
Pressure Jaw - Check Knife . . . . . 10 - 31
Pressure Jaw - Check TPO-bar . . . . . 10 - 36
Pressure Jaw - Set TPO-bar . . . . . 10 - 38
Pressure Roller - Check . . . . . 10 - 46
Pressure Roller - Overhaul . . . . . 10 - 47

S

Safety Functions - Check . . . . . 15 - 5
Splicing Device - Change Photocell . . . . . 10 - 21
Splicing Device - Check Drive Unit . . . . . 10 - 17
Splicing Device - Drive Unit Overhaul . . . . . 10 - 18
Splicing Device - Set Drive Unit . . . . . 10 - 20
Splicing Device - Set Movement Time . . . . . 10 - 27
Splicing Device - Set Photocell Position . . . . 10 - 22
Splicing Device - Set Photocell Sensitivity . . 10 - 24
Switches - Set . . . . . 10 - 71

V

Valve Panel - Change Air Inlet Filter Insert . . 10 - 74
Valve Panel - Change Silencer Filter . . . . . 10 - 72
Valve Panel - Set Safety Valve . . . . . 10 - 73

W

Web Guide - Check . . . . . 10 - 28
Web Guide - Overhaul . . . . . 10 - 29
Web Guide - Set . . . . . 10 - 30
Web Magazine - Change Bearings . . . . . 10 - 70
Web Magazine - Check . . . . . 10 - 69

This page intentionally left blank

Note! *This page is generated* ***automatically****.*
using the ***variable definitions*** *made in the* ***front page*** *file!*

ASU
648116-0300
Issue 2011-05 Doc. No. MM-1531305-0105

ASU 1(2)
648116-0300
Issue 2011-05 Doc. No. MM-1531305-0105

ASU
648116-0300
Issue 2011-05 Doc. No. MM-1531305-0105

ASU 1(2)
648116-0300
Issue 2011-05 Doc. No. MM-1531305-0105

ASU
648116-0300
Issue 2011-05 Doc. No. MM-1531305-0105

ASU 1(2)
648116-0300
Issue 2011-05 Doc. No. MM-1531305-0105

ASU
648116-0300
Issue 2011-05 Doc. No. MM-1531305-0105

ASU 1(2)
648116-0300
Issue 2011-05 Doc. No. MM-1531305-0105

ASU
648116-0300
Issue 2011-05 Doc. No. MM-1531305-0105

ASU 2(2)
648116-0300
Issue 2011-05 Doc. No. MM-1531305-0105

ASU
648116-0300
Issue 2011-05 Doc. No. MM-1531305-0105

ASU 2(2)
648116-0300
Issue 2011-05 Doc. No. MM-1531305-0105

ASU
648116-0300
Issue 2011-05 Doc. No. MM-1531305-0105

ASU 2(2)
648116-0300
Issue 2011-05 Doc. No. MM-1531305-0105

ASU
648116-0300
Issue 2011-05 Doc. No. MM-1531305-0105

ASU 2(2)
648116-0300
Issue 2011-05 Doc. No. MM-1531305-0105

40 mm Full width ***Note!*** *This page is generated* ***automatically****.*
using the ***variable definitions*** *made in the* ***front page*** *file!*

ASU
648116-0300

Issue 2011-05 Doc. No. MM-1531305-0105

ASU 1(2)
648116-0300

Issue 2011-05 Doc. No. MM-1531305-0105

ASU
648116-0300

Issue 2011-05 Doc. No. MM-1531305-0105

ASU 1(2)
648116-0300

Issue 2011-05 Doc. No. MM-1531305-0105

ASU
648116-0300

Issue 2011-05 Doc. No. MM-1531305-0105

ASU 1(2)
648116-0300

Issue 2011-05 Doc. No. MM-1531305-0105

ASU
648116-0300

Issue 2011-05 Doc. No. MM-1531305-0105

ASU 2(2)
648116-0300

Issue 2011-05 Doc. No. MM-1531305-0105

ASU
648116-0300

Issue 2011-05 Doc. No. MM-1531305-0105

ASU 2(2)
648116-0300

Issue 2011-05 Doc. No. MM-1531305-0105

ASU
648116-0300

Issue 2011-05 Doc. No. MM-1531305-0105

ASU 2(2)
648116-0300

Issue 2011-05 Doc. No. MM-1531305-0105