Your new MM TBA/19 Tetra Brik Aseptic 030V

Doc. No. MM-2771721-0102, Issue 2006-07.



This is a new edition of the Maintenance Manual for TBA/19 Tetra Brik Aseptic 030V.

This manual is updated to provide information about the latest improvements made to the machine. The following tables list the most important improvements to the manual and technical additions and corrections made since the last edition of the manual.

If you have any questions related to this edition of the MM, or any suggestions for improvements to future editions, please contact:

Technical Publications
8 & 19 Lines
Tetra Pak Carton Ambient AB
Ruben Rausings gata
SE-221 86 Lund
Sweden

Improvements and changes to Doc. No. MM-2771721-0102

Note! Minor corrections have not been added to the list.

Updated procedures	
Changed/ added procedure	**Change made**
1.4.1-1 Tube Supports and Forming Rings - Check	Setting value updated
1.16-2 Filling Pipe - Set	Procedure changed and updated
3.3-2 Link System - Check Bearings	Procedure updated
3.8-1 Angle Encoder - Remove Bracket	Procedure updated
4-1 Basic Jaw System Setting	Setting sequence changed and updated
4-9 Jaw System - Set Cutting Jaw and Pressure Jaw Alignment	Procedure updated
4-10 Jaw System - Check Parallelism in Movement	Procedure updated
4.4-6 Yoke - Set Turning Position	Procedure updated
4.7-1 Volume Flap - Set Package Volume	Procedure renamed and updated
5.1-1 Station Chain - Change	Procedure updated
9.6-1 Packaging Material Reel Trolley - Check Function	New procedure added
9.6-2 Packaging Material Reel Trolley - Change Pump Cylinder	New procedure added
9.6-3 Packaging Material Reel Trolley - Change Sink Valve	New procedure added
9.6-4 Packaging Material Reel Trolley - Overhaul Lifting Cylinder	New procedure added
9.6-5 Packaging Material Reel Trolley - Remove Fork Reel	New procedure added
9.6-6 Packaging Material Reel Trolley - Remove Guide Wheel	New procedure added
14.3-1 PLC - Load Program	Procedure updated
14.3-2 PLC - Set Queue Guard Photocell Delay	Procedure updated
14.3-4 PLC - Backup Program	Procedure updated
14.3-5 PLC - Establish Communication	New procedure added
14.3-6 PLC - Force an Output	New procedure added
14.9-5 TPOP - Set PLMS Date and Time	Procedure updated
14.9-7 TPOP - Calibrate Touch Screen	Procedure updated
14.9-10 TPOP - Install Software	Procedure updated
14.9-11 TPOP - Set Machine ID	Procedure updated
14.9-12 TPOP - Set Up Distribution Equipment	Procedure updated

Updated procedures	
Changed/ added procedure	**Change made**
14.9-17 TPOP - Import and Export PLMS Live Setup	Procedure renumbered
14.9-18 TPOP - Log On Procedure	New procedure added
15.3 Lubricants	Lubricants table updated
15.6.1 Water Diagram	Diagram added
15.6.2 Lubrication Diagram	Diagram added
15.6.3 Hydraulic System	Diagram added
15.6.4 Pneumatic Diagram	Diagram added
15.6.5 Aseptic Diagram	Diagram added

This page intentionally left blank

MM

Maintenance Manual

TBA/19 Tetra Brik Aseptic 030V

648160-0300

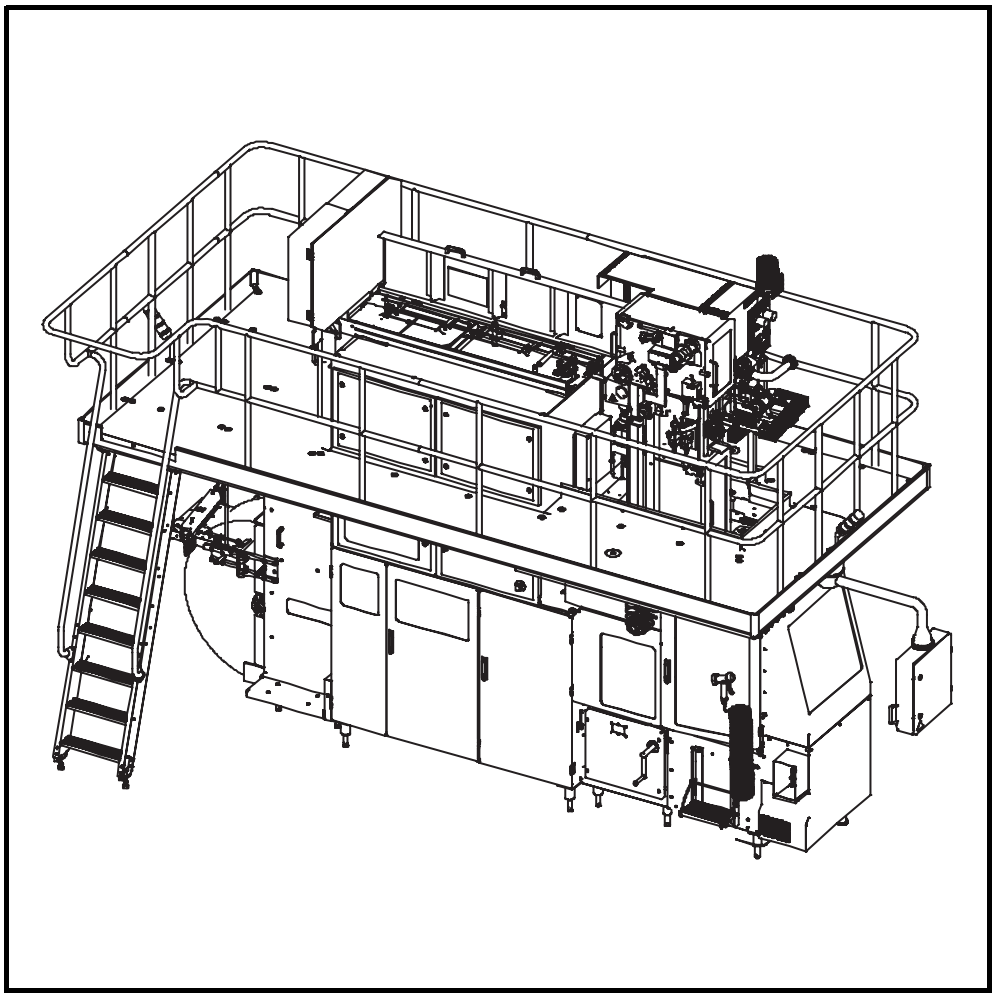

TechPub_2614345_0105 - MM_19_030V_0102_fro.fm

WARNING

Read and follow all safety precaution instructions throughout this manual and on safety signs attached to this equipment.
Failure to follow all safety precaution instructions could result in death or serious injury.

Tetra Pak

Doc. No. MM-2771721-0102

Copyright © 2006 Tetra Pak Group

All rights reserved. No part of this document may be reproduced or copied in any form or by any means without written permission from Tetra Pak Carton Ambient AB.

Tetra Pak and all Tetra Pak products are trademarks belonging to the Tetra Pak Group.

The content of this manual is in accordance with the design and construction of the machine or equipment at the time of publishing. Tetra Pak reserves the right to introduce design modifications without prior notice.

The English version of this document is the original language version.

This document was produced by:

Tetra Pak Carton Ambient AB
Ruben Rausings gata
SE-221 86 Lund
Sweden

Additional copies can be ordered from Tetra Pak. When ordering additional copies, always provide the document number.

Doc. No. MM-2771721-0102

Issue 2006-07

TechPub_2614345_0105 - MM_19_030V_0102_fro.fm

This manual is valid for:

Series No./ Machine No. Sign.

MM

Maintenance Manual

TBA/19 Tetra Brik Aseptic 030V
648160-0300

i Introduction

ii Safety Precautions

1 Superstructure

2 Machine Body

3 Drive Unit

4 Jaw System

5 Final Folder

6 Service Unit

7 Strip Applicator

9 Packaging Material Infeed

14 Electrical Equipment

15 General

iii Index

Machine or equipment configurations that this manual is valid for are described on the next page.

Doc. No. MM-2771721-0102

Issue 2006-07

Tetra Pak

Tetra Pak Carton Ambient AB

TechPub_2614345_0105 - MM_19_030V_0102_fro.fm

Valid for:

Name	Drawing Specification and Development Step	Additional Information
TBA/19 Tetra Brik Aseptic 030V	648160-0300	Valid for all TBA volumes and package shapes.

TechPub_2614345_0105 - MM_19_030V_0102_fro.fm

Update Log for Doc. No. MM-2771721-0102

This table shows all changes made to this manual, including installed rebuilding kits, added or removed pages. Page numbering on added pages begins with UP.

Date	Installed Kit	Added Pages (Doc. No.)	Removed Pages	Signature

TechPub_2614345_0105 - MM_19_030V_0102_fro.fm

Date	Installed Kit	Added Pages (Doc. No.)	Removed Pages	Signature

TechPub_2614345_0105 - MM_19_030V_0102_fro.fm

i Introduction

TechPub_2614345_0105 - int07_MM_19_030V_0102.fm

About the Introduction Chapter

This chapter contains basic information about this manual and the related Tetra Pak equipment.

TechPub_2614345_0105 - int07_MM_19_030V_0102.fm

Abbreviations and Terminology . . . . . i - 5

Manual Information . . . . . i - 6

Delivered Manuals . . . . . i - 6

Page Layout . . . . . i - 7

Page Numbering. . . . . i - 8

Typographical Conventions . . . . . i - 8

Symbols . . . . . i - 8

Machine Introduction . . . . . i - 9

Intended Use of the Equipment . . . . . i - 9

Manufacturer . . . . . i - 9

Support and Feedback . . . . . i - 9

Identification . . . . . i - 10

CE Classification . . . . . i - 10

3-A Compliance . . . . . i - 10

Machine Plate . . . . . i - 10

Orientation . . . . . i - 11

Hygiene. . . . . i - 12

Packaging Material. . . . . i - 12

Steam Barrier in the Product Valve . . . . . i - 12

How to Use This MM . . . . . i - 13

Procedures . . . . . i - 13

Procedure Start Table . . . . . i - 13

TPMS . . . . . i - 14

Planned Maintenance Program . . . . . i - 14

Checklists and Spare Parts Recommendations . . i - 14

TechPub_2614345_0105 - int07_MM_19_030V_0102.fm

This page intentionally left blank

TechPub_2614345_0105 - int07_MM_19_030V_0102.fm

Abbreviations and Terminology

Abbreviation/ Terminology	Meaning	Translation
ASU	Automatic Splicing Unit	
EN	Norme Européenne (European standard)	
HI	Headspace by Injection	
LH	Left Hand	
MM	Maintenance Manual	
OE	Optional Equipment	
OM	Operation Manual	
PC	Personal Computer	
PLC	Programmable Logic Controller	
PT	Pull Tab (optional)	
RH	Right Hand	
SP	Spare Part	
SPC	Spare Part Catalogue	
TP	Tetra Pak	
TPMS	Tetra Pak Maintenance System	

TechPub_2614345_0105 - int07_MM_19_030V_0102.fm

Manual Information

Tetra Pak recommends reading all delivered manuals carefully. Make sure that the delivered manuals are available to personnel who operate or maintain the equipment.

It is important to keep this manual for the lifetime of the equipment and to pass the manual on to any subsequent holder or user.

Tetra Pak will not be held responsible for any damage to the equipment caused by not following the instructions given in this manual.

Delivered Manuals

Manuals delivered with this equipment:

- MM
  The Maintenance Manual provides technicians with information on maintaining the equipment.
- OM
  The Operation Manual manual provides the operator with information on handling and operating the equipment before, during, and after production.
- SPC
  The Spare Parts Catalogue provides the information necessary to order spare parts from Tetra Pak
- RM
  The Rebuilding Manual provides the information necessary to install the kit.

TechPub_2614345_0105 - int07_MM_19_030V_0102.fm

Page Layout

Every main page in a manual contains a header and a footer. The page header contains the chapter name (1) and the section name (2). The page footer contains the page number (3), and the document number (4). See also the Page Numbering section.

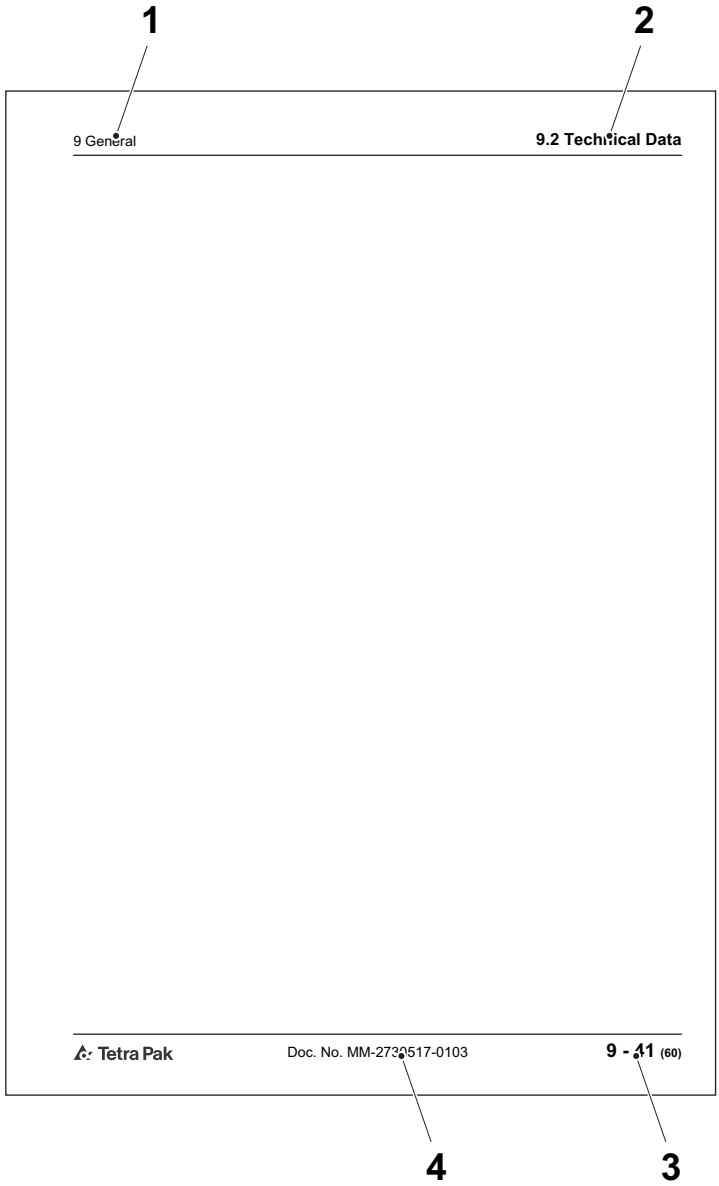

1 Chapter name
2 Section name
3 Page number
4 Document number

TechPub_2614345_0105 - int07_MM_19_030V_0102.fm

Page Numbering

A page number has three parts:

- chapter number (1)
- consecutive page number (2) within the chapter
- total number of pages (3) in the chapter.

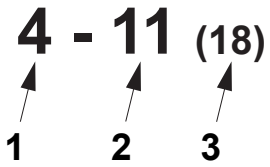

1 Chapter number
2 Consecutive page number
3 Total number of pages

Typographical Conventions

Controls on the operator panel, emergency stop devices, and program steps are printed in CAPITAL LETTERS.

Cross-references are underlined.

Symbols

Symbols used in illustrations.

	A pointer arrow indicates the position of an object.
	A zoom arrow indicates that an object view is enlarged. The arrow points towards the enlarged view of the object.
	A rotation movement arrow indicates rotational movement of an object. The arrow points in the direction of rotation.
	A straight movement arrow indicates movement of an object. The arrow points in the direction of movement.

TechPub_2614345_0105 - int07_MM_19_030V_0102.fm

Machine Introduction

Intended Use of the Equipment

The intended use of this Tetra Pak equipment is to automatically splice rolls of packaging material used for packing liquid food products with Tetra Pak TBA/19 030V.

All other use is prohibited. Tetra Pak will not be held responsible for injury or damage if the equipment is used for any other purpose.

Manufacturer

This Tetra Pak equipment has been manufactured by

Tetra Pak Carton Ambient AB
Ruben Rausings gata
SE-221 86 Lund
Sweden

Support and Feedback

If you encounter problems when operating this equipment or have other inquiries, comments, or suggestions for improvement, contact Tetra Pak.

TechPub_2614345_0105 - int07_MM_19_030V_0102.fm

Identification

CE Classification

This equipment complies with the basic health and safety regulations of the European Economic Area (EEA).

3-A Compliance

This equipment is in accordance with the 3-A Sanitary Standards for Formers, Fillers and Sealers of Containers for Fluid Milk and Fluid Milk Products, Number 17-10.

Machine Plate

The illustration below shows an example of the machine plate and its location on the equipment. The machine plate carries data needed when contacting Tetra Pak concerning this specific equipment.

Make sure that the equipment data in the front pages of this manual corresponds to the machine plate data and the machine specification.

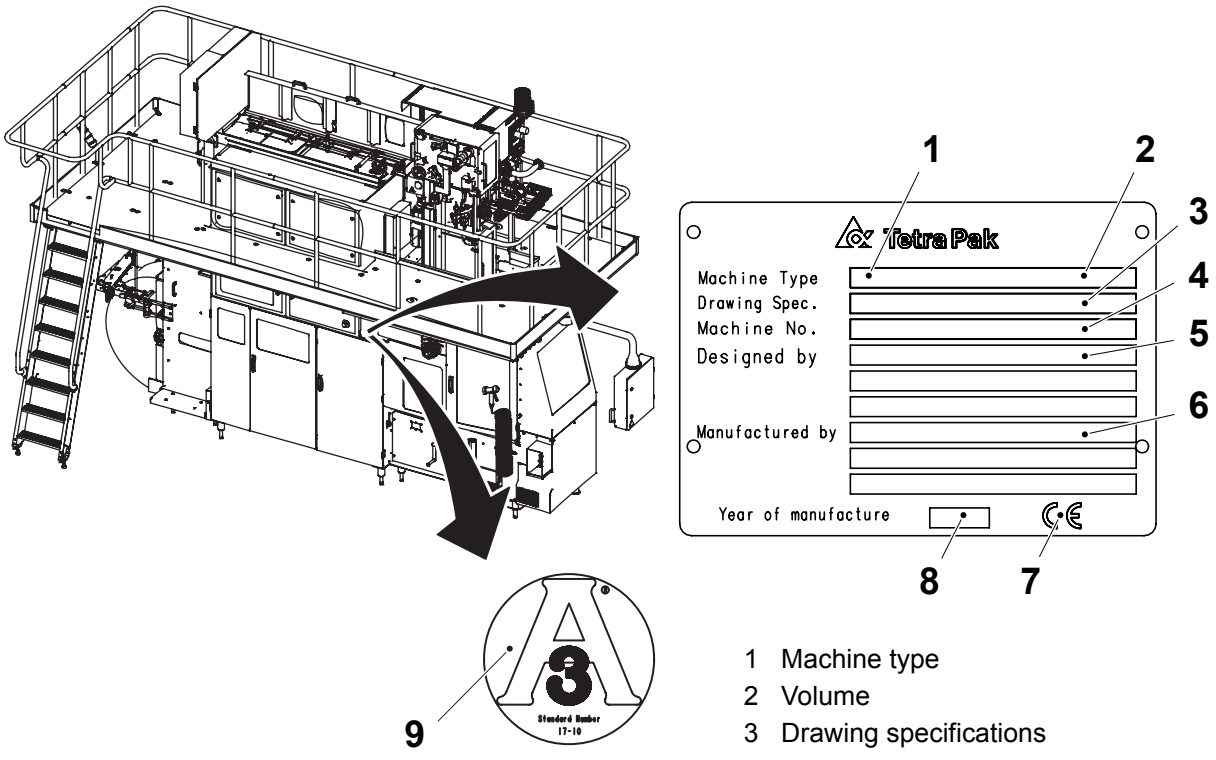

1 Machine type
2 Volume
3 Drawing specifications
4 Machine serial number
5 Designed by
6 Manufacturer
7 CE mark
8 Year of manufacture
9 3-A sign

TechPub_2614345_0105 - int07_MM_19_030V_0102.fm

Orientation

The illustration below shows the position of the equipment.

The illustration below shows the orientation of the equipment. This orientation information will be used throughout this manual.

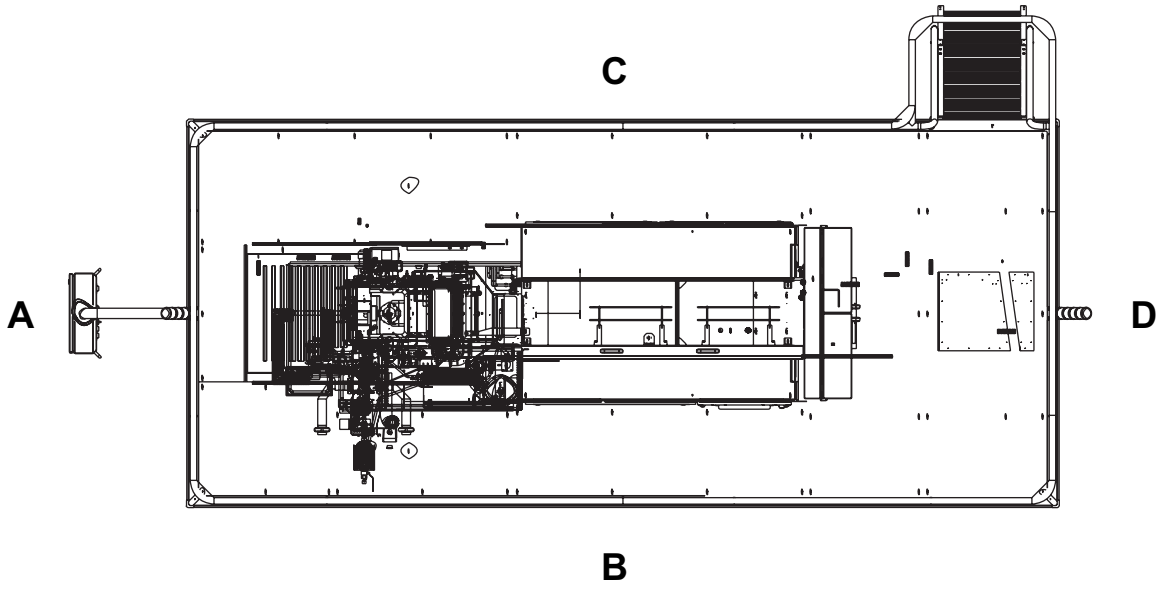

A Front
B Right-hand side
C Left-hand side
D Back

TechPub_2614345_0105 - int07_MM_19_030V_0102.fm

Hygiene

Packaging Material

Avoid microbiological contamination of the packaging material:

- Always protect your packaging material against contamination.
- Always keep the doors to the filling room (area) closed. To prevent contamination via air streams, never open a window when the machine is in production.
- Never clean the floors or the machine in the filling room (area) when the machine is in production.
- Compressed air used for cleaning purposes is to be used only for cleaning filters and should only be used outside of the filling room (area) or in the final folder compartment of the filling machine.
- Prepare the splicing of the packaging material as late as possible.
- Disinfect your hands before touching anything that may come into contact with the product. Use code H disinfectant. See the Technical Data chapter of the Maintenance Manual.
- Keep your hands clean.
- Always wear some type of hair protection (cap or hairnet) and clean clothes (preferably white).
- Do not wear a watch, ring, necklace, earrings, or any other exposed jewellery.

Steam Barrier in the Product Valve

The filling machine's product valve employs a steam barrier to separate the product supply line from the filling machine. The steam barrier allows the machine and the product supply line to be independently sterilised to commercial sterility conditions.

- Never disengage the steam barrier, and never interrupt the steam supply when the filling machine or the product supply line is being brought to the pre-sterilization phase, or when the machine is already in the production phase.
- If any maintenance activity requires disengagement of the steam barrier or the interruption of the steam supply to the machine, make sure that the product supply line is idle and empty of product.

TechPub_2614345_0105 - int07_MM_19_030V_0102.fm

How to Use This MM

Procedures

The name of the chapters and sections in the MM correspond to the groups in the structure of the equipment. Procedures correspond to a chapter or a section:

- The dashes indicate that it is a procedure heading. The example below shows a heading for Procedure number 3 in Section 1.5.
- The text after the second dash tells what type of procedure it is. Check, Change and Set are common procedure types.

1.5-3 Outfeed Servo - Change Bearings

Maintenance procedures in this manual are connected to the Tetra Pak Maintenance System, TPMS. See the TPMS section.

Procedure Start Table

Procedures in this manual begin with a table providing information needed to begin the procedure.

- Machine Status (1) shows actuator status, program step, and any other machine status necessary to begin the procedure.
- Special Equipment (2) shows a list of personal protective equipment and special tools that are not normally carried by a service technician, but are needed in the procedure.
- Consumables (3) shows items, such as lubricants, that are required to perform the procedure. Consumables do not include replacement parts.
- SPC Reference (4) shows the assembly number, found in the index of the SPC.

1	Machine Status	Power supply disconnector OFF Air valve OFF Water valve OFF
2	Special Equipment	Hook spanner TP No. 777170-0105 Dial indicator
3	Consumables	Grease code F
4	SPC Reference	2501234-0100

1 Machine Status
2 Special Equipment
3 Consumables
4 SPC Reference

TechPub_2614345_0105 - int07_MM_19_030V_0102.fm

TPMS

To ensure uninterrupted production, all machines and equipment must be maintained on a regular basis.

Tetra Pak has developed a planned maintenance system to keep pace with the ongoing development of new and existing machines and equipment from Tetra Pak, and to meet the demands set by customers for higher efficiency and better economy.

Planned Maintenance Program

The Tetra Pak planned maintenance system reduces unplanned downtime and maintenance time for complete production lines, as well as for individual machines and equipment.

With the Tetra Pak planned maintenance system, preventive maintenance can be performed before production is affected. The system is continually updated based on experience with Tetra Pak machines and equipment worldwide.

The Tetra Pak planned maintenance system maintains records of when maintenance is performed, when parts are changed, whether alterations are made, and so on. These records, combined with usage statistics, enable reliable predictions of the service life of all machine and equipment parts.

Checklists and Spare Parts Recommendations

Customers using the Tetra Pak planned maintenance system receive checklists from their local Tetra Pak office whenever planned maintenance is due. These checklists are individualised for each customer, according to the type of machine, equipment usage, and maintenance occasion. In addition, the system recommends spare parts, rotation units, tools, and templates according to the statistics collected.

Tip! Contact the local Tetra Pak office for additional information about the Tetra Pak Maintenance System and its planned maintenance program.

TechPub_2614345_0105 - int07_MM_19_030V_0102.fm

ii Safety Precautions

TechPub_2614345_0105 - sp05_MM_19_030V_0102.fm

Safety Precaution Instructions

WARNING

Read all safety precaution instructions throughout this manual and on safety signs attached to this equipment.
Failure to follow all safety precaution instructions could result in death or serious injury.

Definition of Lockout Procedure

A lockout procedure is a procedure to put each necessary energy isolating device in its safe position to prevent the energisation of the equipment, such as when a maintenance procedure should be carried out.

A lockout is the use of a device, for example, a padlock, to make sure that an energy isolating device cannot be operated.

An energy isolating device is a mechanical device that physically prevents transmission or release of energy, such as a power supply disconnector.

TechPub_2614345_0105 - sp05_MM_19_030V_0102.fm

Safety Messages Description . . . . . ii - 5

Personnel Requirements . . . . . ii - 6

Skilled Person . . . . . ii - 6

Instructed Person. . . . . ii - 6

Safety Signs . . . . . ii - 7

Locations of Safety Signs. . . . . ii - 9

Location of Safety Signs, ASU (OE). . . . . ii - 11

Location of Safety Signs, HI (OE). . . . . ii - 12

Location of Safety Signs, PT (OE) . . . . . ii - 13

Protective Devices. . . . . ii - 14

Emergency Stop. . . . . ii - 14

Emergency Stop Push-Buttons . . . . . ii - 15

Safeguards . . . . . ii - 18

Safeguards, ASU (OE) . . . . . ii - 20

Safeguards, PT (OE) . . . . . ii - 21

Warning Lamp . . . . . ii - 22

Audible Alarm. . . . . ii - 22

Personal Protection. . . . . ii - 23

Noise Hazard . . . . . ii - 23

Entanglement Hazard . . . . . ii - 23

Hazardous Substances . . . . . ii - 24

Disposal of Chemical Substances . . . . . ii - 25

Hydrogen Peroxide (H_2O_2) . . . . . ii - 26

Emergency Procedures. . . . . ii - 26

Personal Protective Equipment . . . . . ii - 27

Handling of Hydrogen Peroxide . . . . . ii - 28

Storage of Hydrogen Peroxide . . . . . ii - 29

Disposal of Hydrogen Peroxide . . . . . ii - 30

TechPub_2614345_0105 - sp05_MM_19_030V_0102.fm

Nitrogen (N2) . . . . . ii - 31

Emergency Procedures . . . . . ii - 31

Handling and Storage of Nitrogen Gas . . . . . ii - 31

Disposal of Nitrogen Gas . . . . . ii - 31

Cooling Media R134a . . . . . ii - 32

Emergency Procedures . . . . . ii - 32

Handling and Storage of Cooling Media R134a. . ii - 32

Disposal of Cooling Media R134a. . . . . ii - 32

Supply Systems . . . . . ii - 33

Power Supply. . . . . ii - 33

Residual Voltage. . . . . ii - 34

Electrical Cabinet . . . . . ii - 34

Socket Outlet . . . . . ii - 36

Air Supply . . . . . ii - 38

Steam Supply. . . . . ii - 39

Water Supply . . . . . ii - 40

Equipment for Lifting and Moving Loads . . . . ii - 41

Ink (if Internal Dating Unit is Installed). . . . . ii - 42

Ink Container . . . . . ii - 42

TechPub_2614345_0105 - sp05_MM_19_030V_0102.fm

Safety Messages Description

A safety message is always accompanied by a safety alert symbol and a signal word.

The safety alert symbol is used to alert about potential personal injury hazards. To avoid hazards, obey all safety messages that follow this symbol.

The following safety alert symbols and signal words are used in this manual to inform the user of hazards.

⚠ **DANGER**	Danger indicates an imminently hazardous situation which, if not avoided, will result in death or serious injury.
⚠ **WARNING**	Warning indicates a potentially hazardous situation which, if not avoided, **could** result in **death or serious injury**.
⚠ **CAUTION**	Caution indicates a potentially hazardous situation which, if not avoided, **may** result in **minor or moderate injury.** It may also be used to alert against unsafe practices.
CAUTION	Caution without the safety alert symbol indicates a potentially hazardous situation which, if not avoided, **may** result in **property damage**.

TechPub_2614345_0105 - sp05_MM_19_030V_0102.fm

Personnel Requirements

Note! Personnel includes all persons working on or near this equipment.

Only skilled or instructed persons are allowed to work with this equipment.

Skilled Person

A skilled person must have relevant education and experience to enable him or her to identify hazards, analyse risks, and avoid hazards which electricity, machinery, chemicals, other energies, and supply systems on this equipment can create.

Skilled persons must meet local regulations, such as certifications and qualifications for working with these energies and systems.

Instructed Person

An instructed person must be adequately advised or supervised by a skilled person. The skilled person enables the instructed person to identify hazards, analyse risks, and avoid hazards which electricity, machinery, chemicals, other energies, and supply systems on this equipment can create.

TechPub_2614345_0105 - sp05_MM_19_030V_0102.fm

Safety Signs

WARNING

Damaged or missing safety signs increase the risk of death or serious injury.

Replace all missing or damaged safety signs immediately.

Safety signs are attached to the equipment. The table below lists all the signs that are used, and illustrations show their locations on the equipment. Each position number refers to two variants of a safety sign in the table, but only one is used on the equipment.

- Make sure that each safety sign is legible and in its correct position after installation and maintenance.
- Replace all missing or damaged safety signs immediately.

Pos.	ISO sign	ANSI sign
1		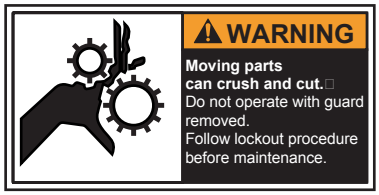
	Moving parts can crush and cut. Do not operate with guard removed. Follow lockout procedure before maintenance.	
2		
	Hazardous voltage. Will shock, burn, or cause death. Follow lockout procedure before maintenance.	
3		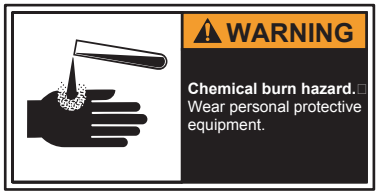
	Chemical burn hazard. Wear personal protective equipment.	
4		
	Hot surface. Do not touch. Follow lockout procedure before maintenance.	

TechPub_2614345_0105 - sp05_MM_19_030V_0102.fm

Pos.	ISO sign	ANSI sign
5		
	Moving part can crush and cut. Do not operate with guard removed. Follow lockout procedure before maintenance.	
6		
	Hazardous voltage. Can shock, burn, or cause death. Read Maintenance Manual before using this socket outlet.	

TechPub_2614345_0105 - sp05_MM_19_030V_0102.fm

Locations of Safety Signs

Note! Make sure that each safety sign is undamaged and in its correct position after installation and maintenance. Replace all missing or damaged safety signs immediately.

The illustration shows where the safety signs are located. The position numbers refer to the table in the Safety Signs section.

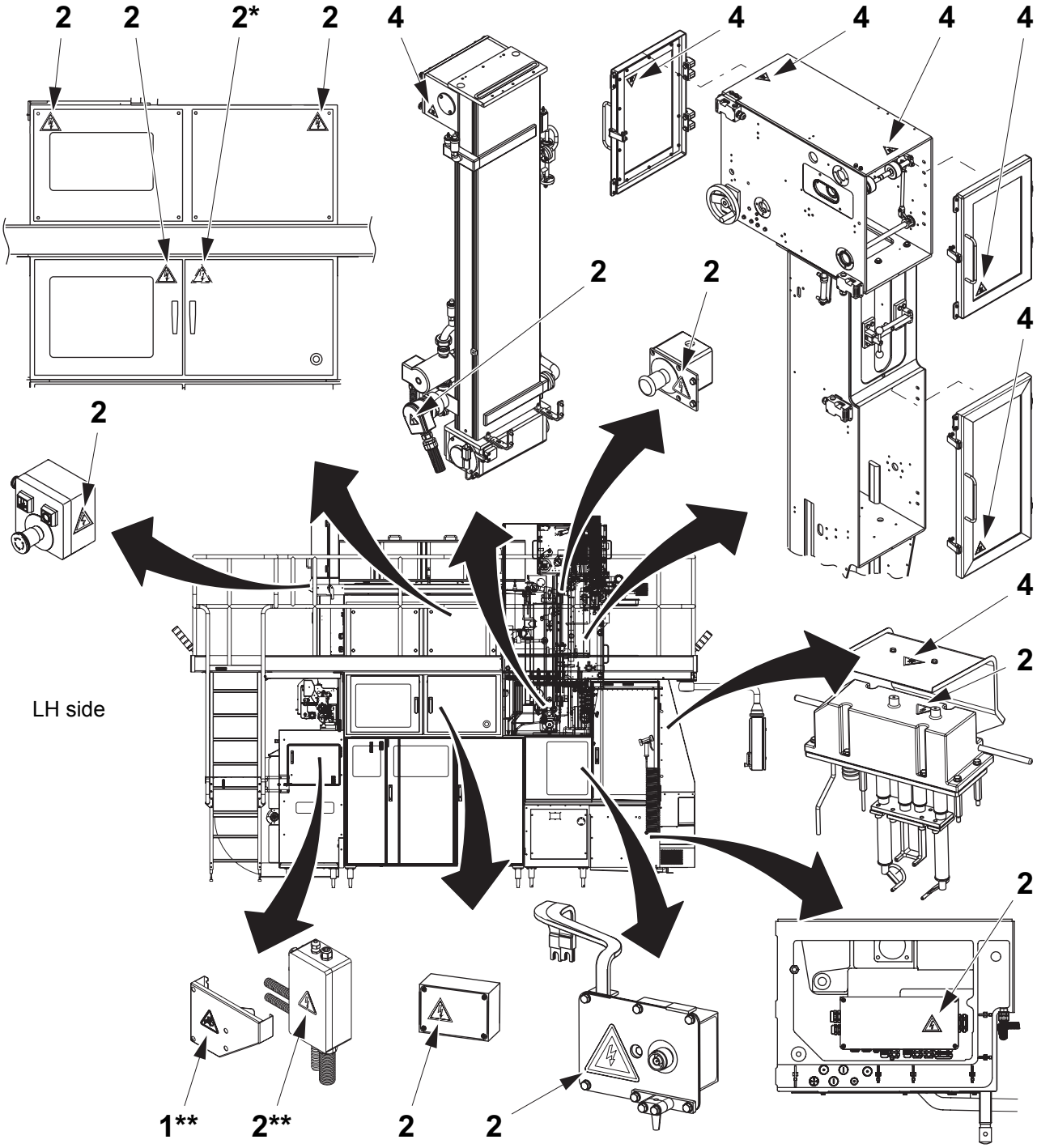

*Symbol located on the inside door
**Not included in machine equipped with ASU (OE)

(Cont'd)

TechPub_2614345_0105 - sp05_MM_19_030V_0102.fm

(Cont'd)

The illustration shows where the safety signs are located. The position numbers refer to the table in the Safety Signs section.

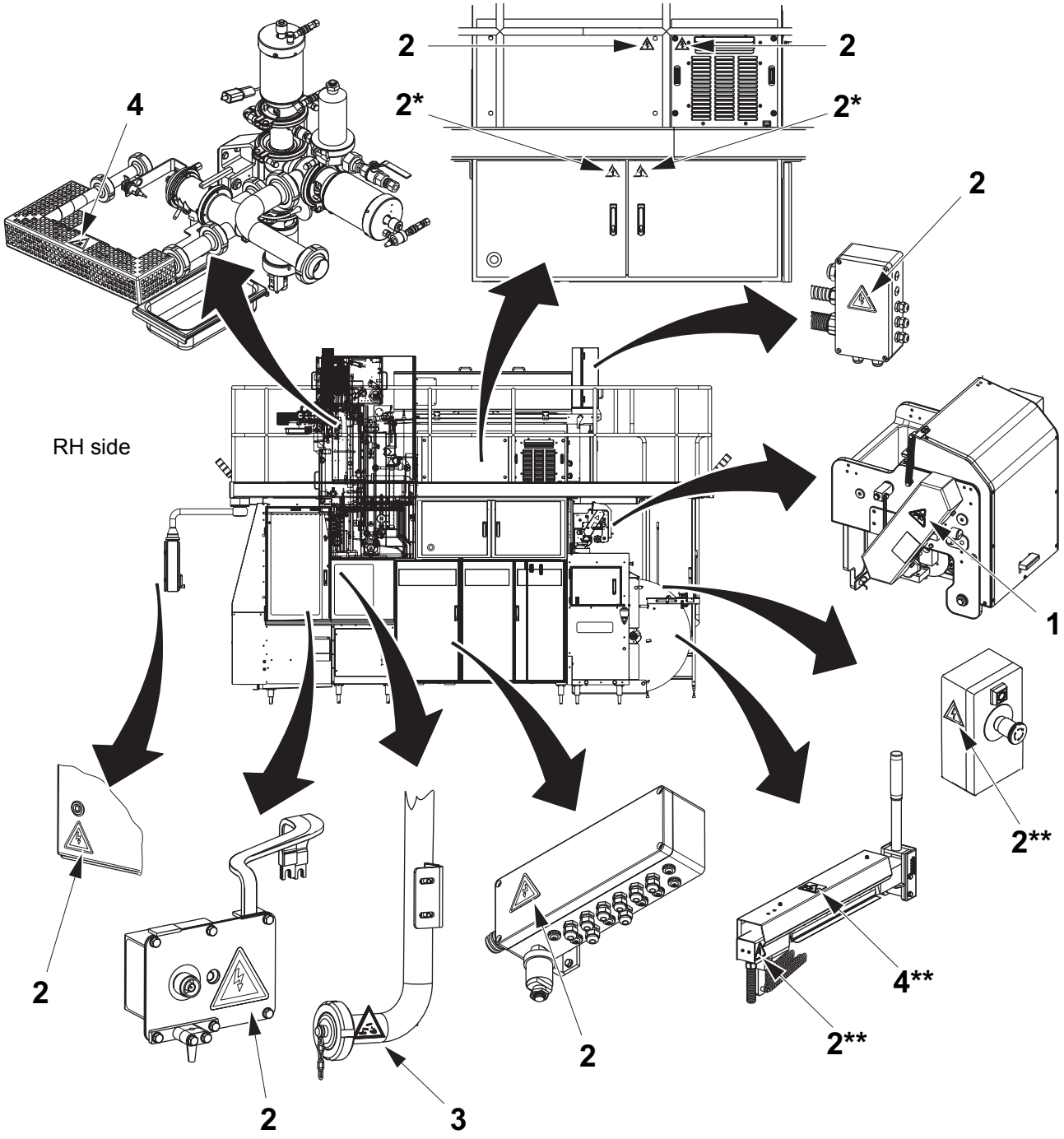

*Symbol located on the inside door
**Not included in machine equipped with ASU (OE)

TechPub_2614345_0105 - sp05_MM_19_030V_0102.fm

Location of Safety Signs, ASU (OE)

The illustration shows where the safety signs are located. The position numbers refer to the table in the Safety Signs section.

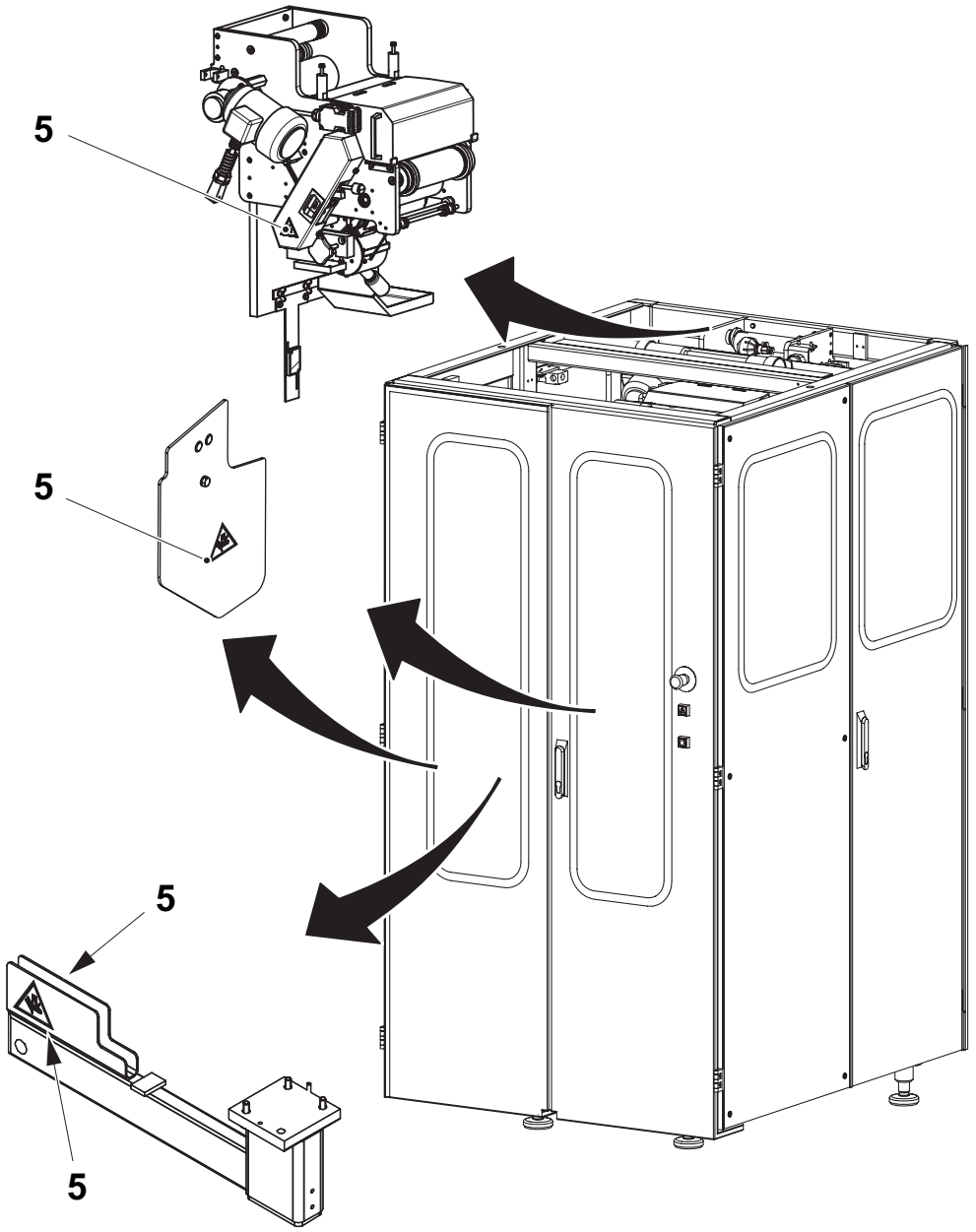

TechPub_2614345_0105 - sp05_MM_19_030V_0102.fm

Location of Safety Signs, HI (OE)

The illustration shows where the safety signs are located. The position numbers refer to the table in the Safety Signs section.

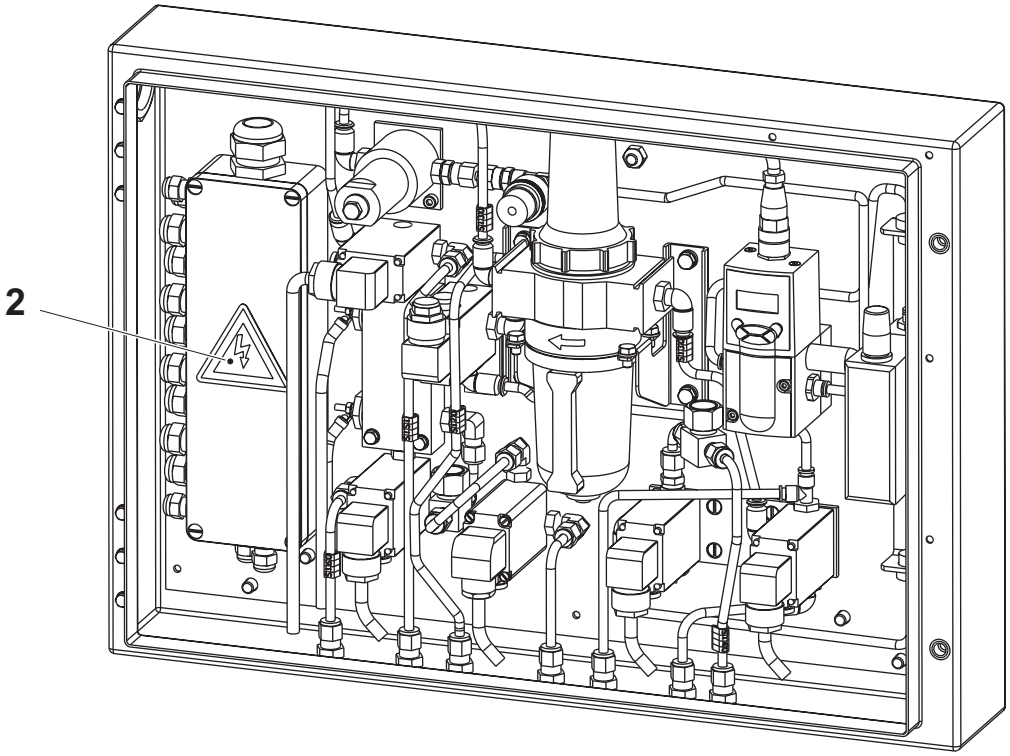

TechPub_2614345_0105 - sp05_MM_19_030V_0102.fm

Location of Safety Signs, PT (OE)

The illustration shows where the safety signs are located. The position numbers refer to the table in the Safety Signs section.

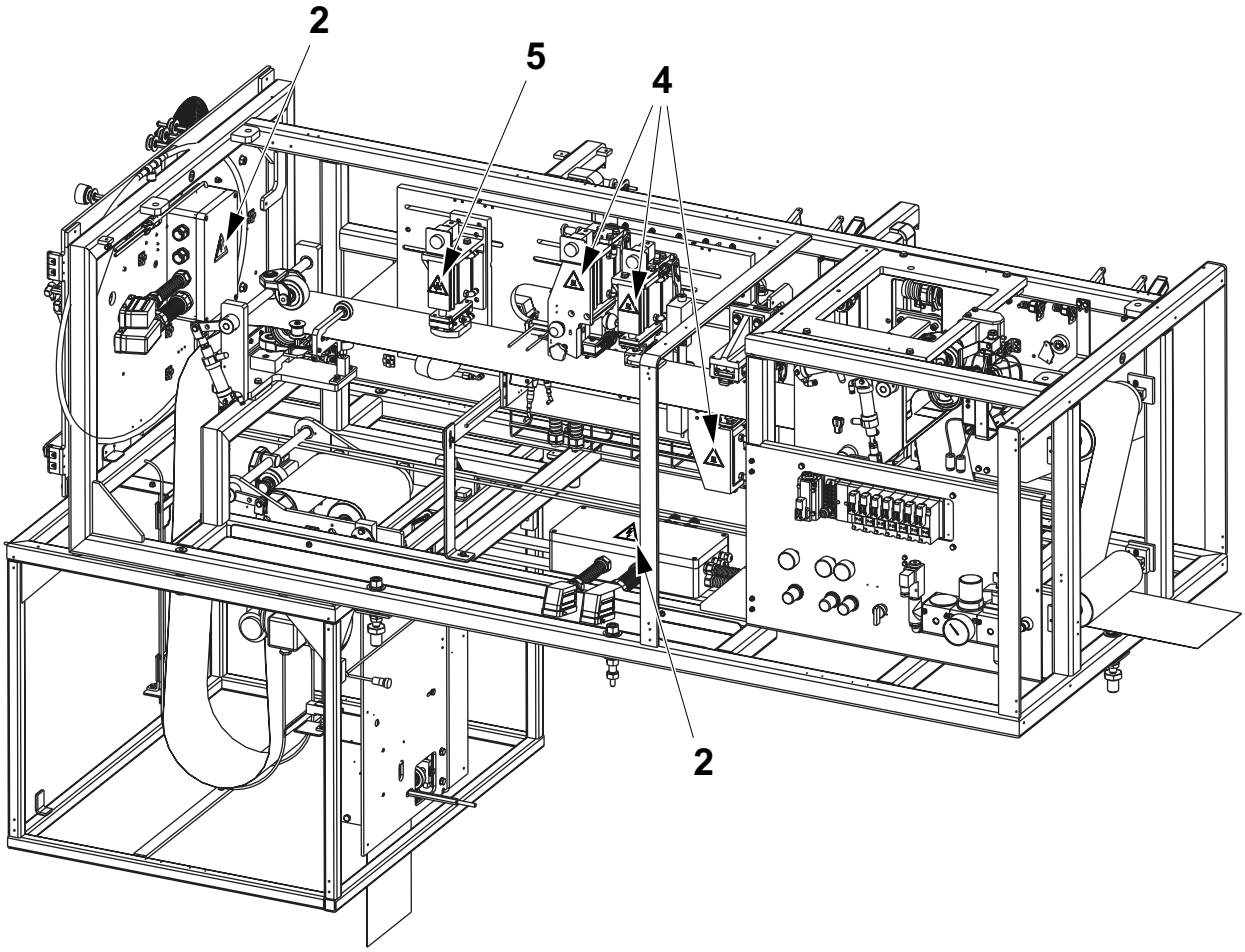

TechPub_2614345_0105 - sp05_MM_19_030V_0102.fm

Protective Devices

WARNING

Hazardous zones.

Hazardous zones are safeguarded and provided with protective devices. Do not inch or run this equipment if any protective device is inoperative.

Change inoperative components of the safety system immediately.

WARNING

Hazardous voltage.

Hazardous voltage remains on this equipment after activating an EMERGENCY STOP or an interlocking device.

Emergency Stop

Emergency stop devices are used to stop this equipment immediately in an hazardous situation. Learn the positions of all emergency stop devices and how to use them.

Instructions for a normal production stop are included in the Stop chapter of the Operation Manual.

TechPub_2614345_0105 - sp05_MM_19_030V_0102.fm

Emergency Stop Push-Buttons

Push one of the EMERGENCY STOP push-buttons to stop this equipment immediately.

The location of each EMERGENCY STOP push-button is shown by an arrow.

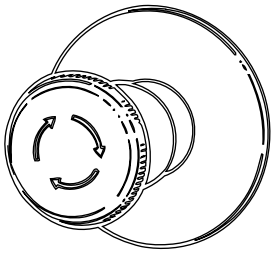

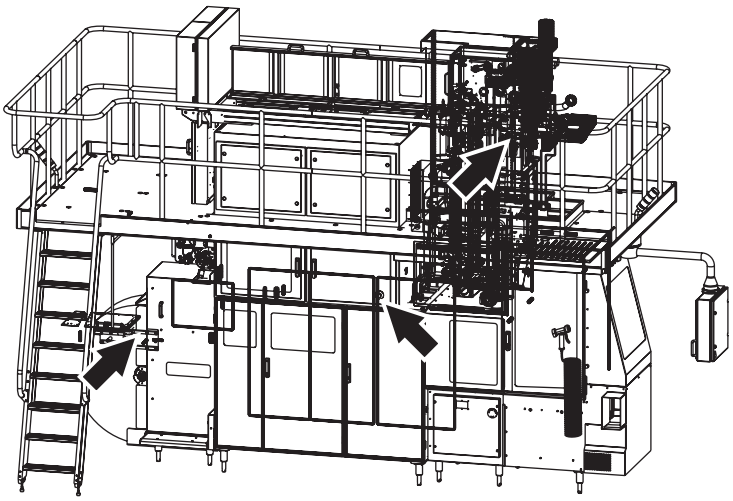

LH side

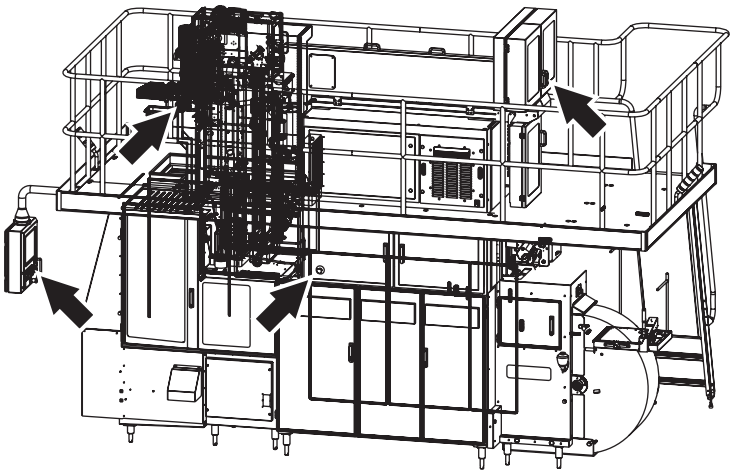

RH side

(Cont'd)

TechPub_2614345_0105 - sp05_MM_19_030V_0102.fm

(Cont'd)

ASU (OE)

The illustration shows an EMERGENCY STOP push-button. The location of each EMERGENCY STOP push-button is shown by an arrow.

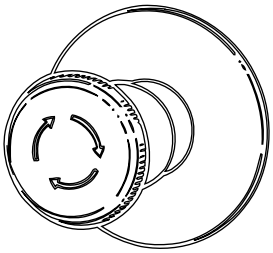

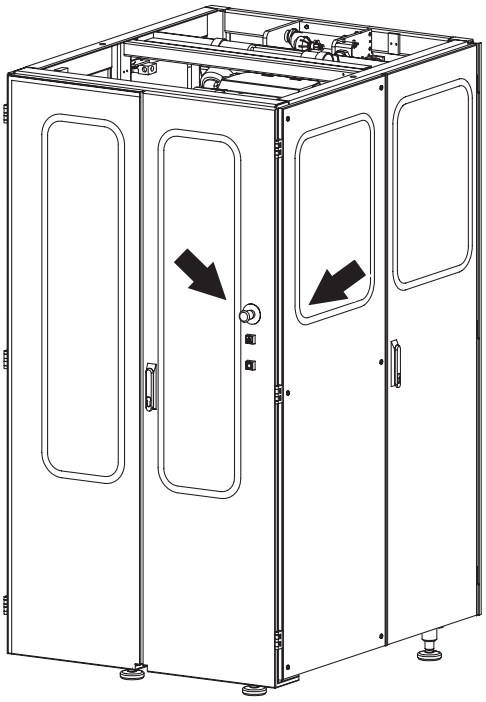

Rear

(Cont'd)

TechPub_2614345_0105 - sp05_MM_19_030V_0102.fm

(Cont'd)

PT (OE)
The illustration shows an EMERGENCY STOP push-button. The location of each EMERGENCY STOP push-button is shown by an arrow.

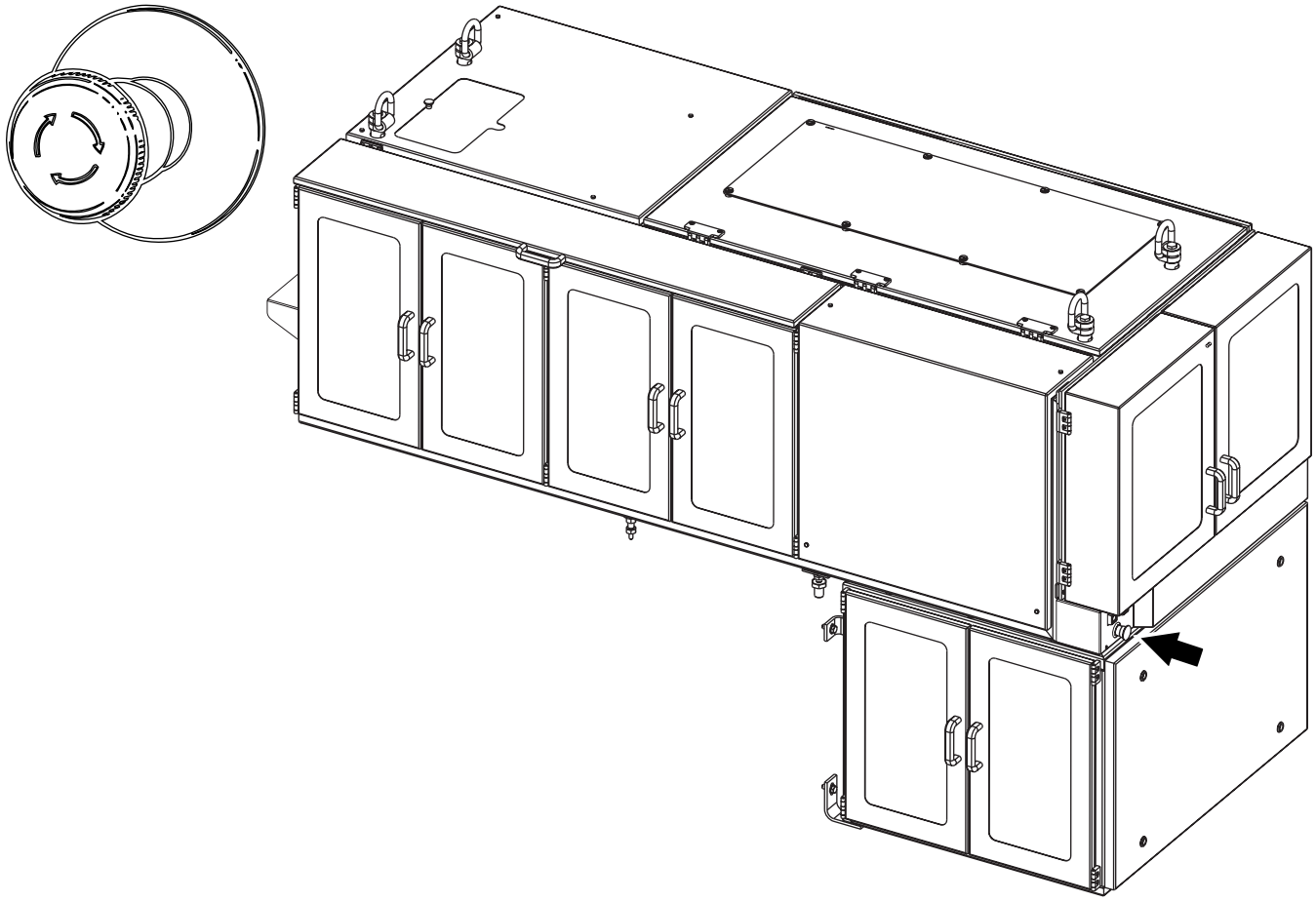

TechPub_2614345_0105 - sp05_MM_19_030V_0102.fm

Safeguards

WARNING
Moving machinery.
Never defeat or bypass the interlocking devices.

Movable guards, for example, doors and covers leading to hazardous zones, are fitted with interlocking devices where required. These devices are usually electric safety switches that are parts of the safety system and must never be defeated, bypassed, or otherwise made inoperative.

WARNING
Corners and edges.
To prevent injury from corners and edges of open doors and covers, close them unless they must be open during such work. Be careful when working under an open door, cover or elsewhere below parts of the equipment with corners and edges.

CAUTION
Burn hazard.
Parts of this equipment may be hot after operation.

After installation and maintenance, and before this equipment is inched or run, check that all safeguards are in place and that they operate correctly.

(Cont'd)

TechPub_2614345_0105 - sp05_MM_19_030V_0102.fm

(Cont'd)

CAUTION
Equipment damage.
Never stop this equipment by opening an interlocking guard.

The location of each interlocking guard is shown by an arrow.

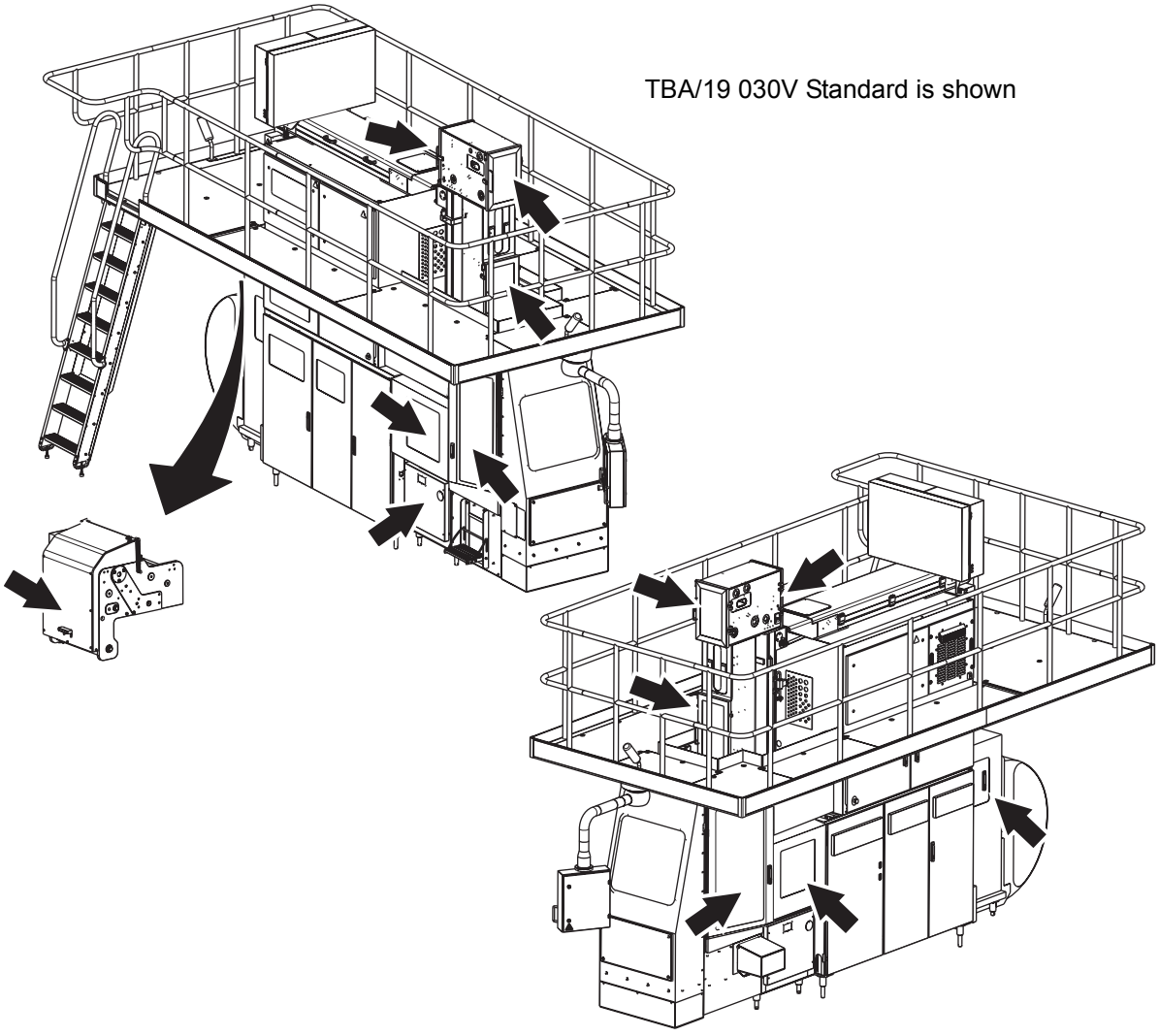

TechPub_2614345_0105 - sp05_MM_19_030V_0102.fm

Safeguards, ASU (OE)

The location of each movable guard is shown by an arrow.

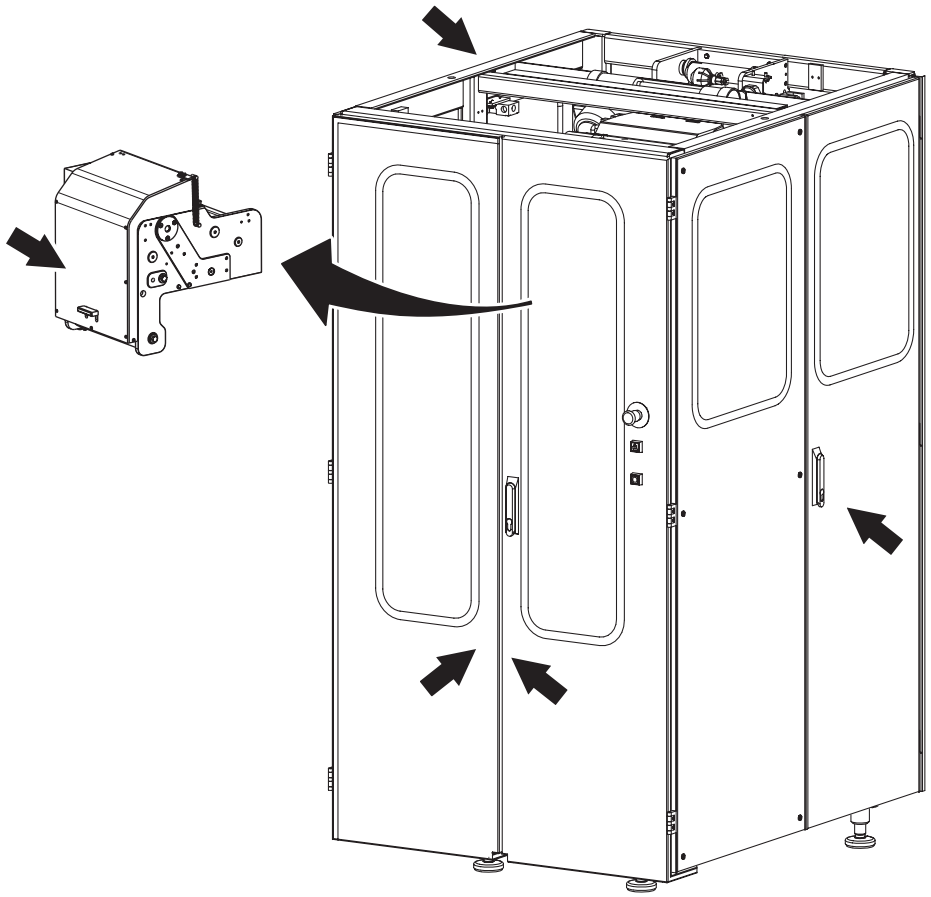

Valid for ASU (OE)

TechPub_2614345_0105 - sp05_MM_19_030V_0102.fm

Safeguards, PT (OE)

The location of each movable guard is shown by an arrow.

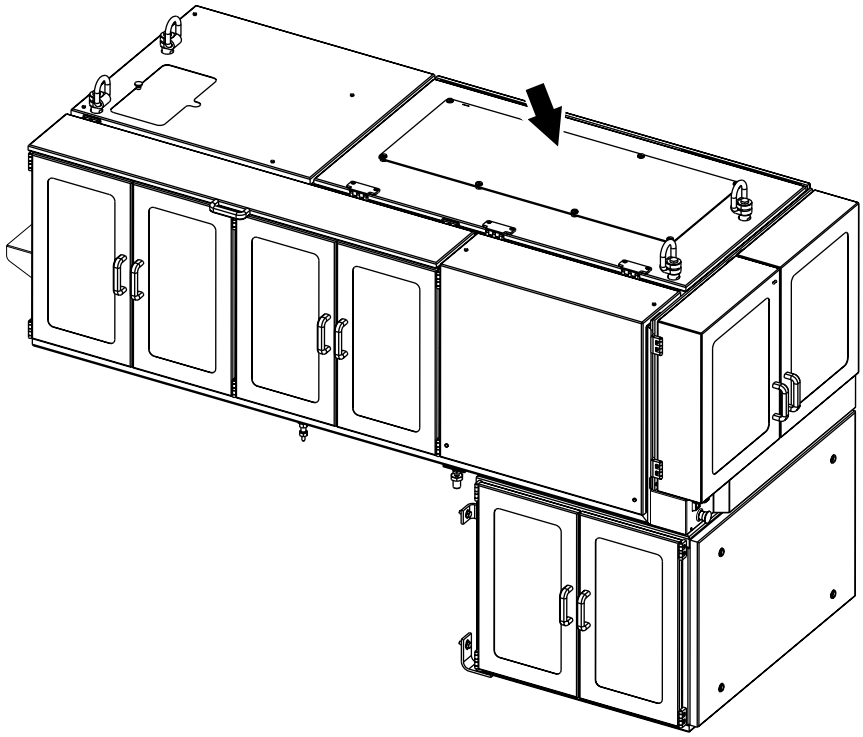

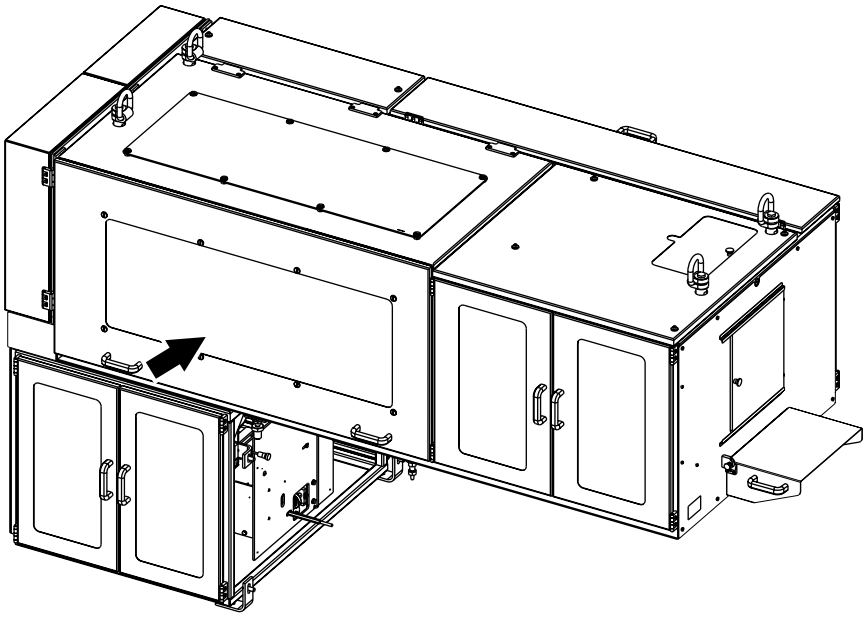

TechPub_2614345_0105 - sp05_MM_19_030V_0102.fm

Warning Lamp

A warning lamp is a column of warning lights:

- A red light (1) indicates a hazardous condition. This is a situation that requires immediate action.
- A yellow light (2) indicates an abnormal or impending critical condition. This is a condition calling for action by the operator.
- A blue light (3) indicates that operator action is required.

A warning light flashes when operator action is required. The light stops flashing and remains lit when the alarm is acknowledged. After the fault is corrected or the operator takes the appropriate action, the warning light goes off.

Audible Alarm

The audible alarm produces a warning signal every time this equipment is about to start. The warning signal sounds for approximately three seconds prior to starting to alert personnel.

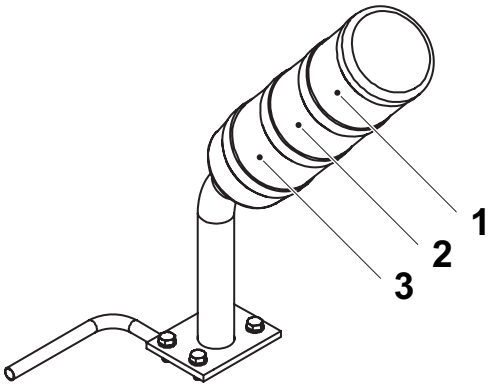

1 Red light
2 Yellow light
3 Blue light

TechPub_2614345_0105 - sp05_MM_19_030V_0102.fm

Personal Protection

This section applies to all personnel at all times when this equipment is in operation. For special personal protection required when handling hazardous substances, see the Hazardous Substances section.

Noise Hazard

WARNING

Hazardous noise.

Risk of impaired hearing.

Wear hearing protection whenever this equipment is in operation.

CAUTION

Hazardous noise.

Risk of impaired hearing.

Hearing protection is recommended whenever this equipment is in operation.

Entanglement Hazard

WARNING

Risk of entanglement.

Do not wear jewellery or loose clothing when working on or near this equipment. Long hair may not be loose.

TechPub_2614345_0105 - sp05_MM_19_030V_0102.fm

Hazardous Substances

WARNING

Contact with chemicals can cause death, serious injury, or illness.
Always read and follow the instructions in the safety data sheet supplied by the manufacturer or local supplier, when handling chemicals.

Make sure that

- the safety data sheet is available
- the showers work
- an eyewash device, movable or wall-mounted, is available and operational
- additional washing facilities are nearby

Note! Learn the locations of all washing facilities in order to act immediately in case of an accident





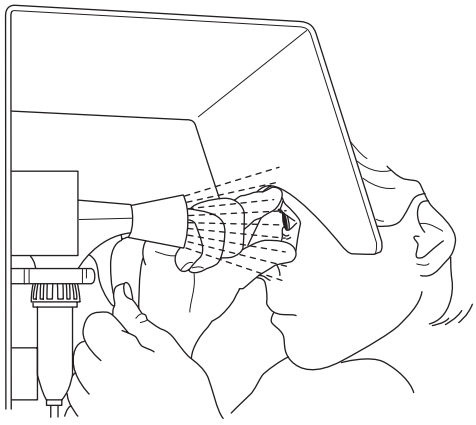

TechPub_2614345_0105 - sp05_MM_19_030V_0102.fm

Disposal of Chemical Substances

Always read and follow the disposal instructions in the safety data sheet supplied by the manufacturer or local supplier.

It is strongly recommended that used chemical containers are

- disposed of according to the instructions immediately after use
- not used as disposal containers for other chemicals in order to avoid uncontrolled chemical reactions within the container

TechPub_2614345_0105 - sp05_MM_19_030V_0102.fm

Hydrogen Peroxide (H_2O_2)

WARNING
Corrosive chemical.
Wear personal protective equipment.

In both liquid and gas states, hydrogen peroxide may cause irritation or damage if it comes into contact with skin, mucous membranes, eyes, or clothes. Call for medical attention immediately if there is an accident.

Liquid hydrogen peroxide in concentrations of less than 1% is generally considered harmless to humans.

Consult the instructions on the label of the tank or container.

Emergency Procedures

If there is an accident involving hydrogen peroxide, rinse the affected area as soon as possible with large amounts of water.

If hydrogen peroxide is swallowed

- do not attempt to cause vomiting
- drink large amounts of lukewarm water to dilute the peroxide
- call for medical attention immediately

If splashes or vapour from hydrogen peroxide come in contact with the eyes

- wash the eyes thoroughly with lukewarm water for 15 minutes (keep eyelids wide apart)
- call for medical attention immediately

If hydrogen peroxide comes into contact with skin or clothes

- rinse immediately with plenty of water
- call for medical attention immediately if skin burns appear
- thoroughly wash the clothes before wearing them again

If irritation or pain is experienced due to having **inhaled** hydrogen peroxide vapour

- leave the affected area and get some fresh air
- call for medical attention if the symptoms get worse

TechPub_2614345_0105 - sp05_MM_19_030V_0102.fm

Personal Protective Equipment

The personal protective equipment for hydrogen peroxide is

- protective goggles (TP No. 90303-11)
- protective gloves made of neoprene (TP No. 90303-12)
- protective apron (TP No. 90303-13)
- protective shoes made of PVC, PE plastic, or rubber

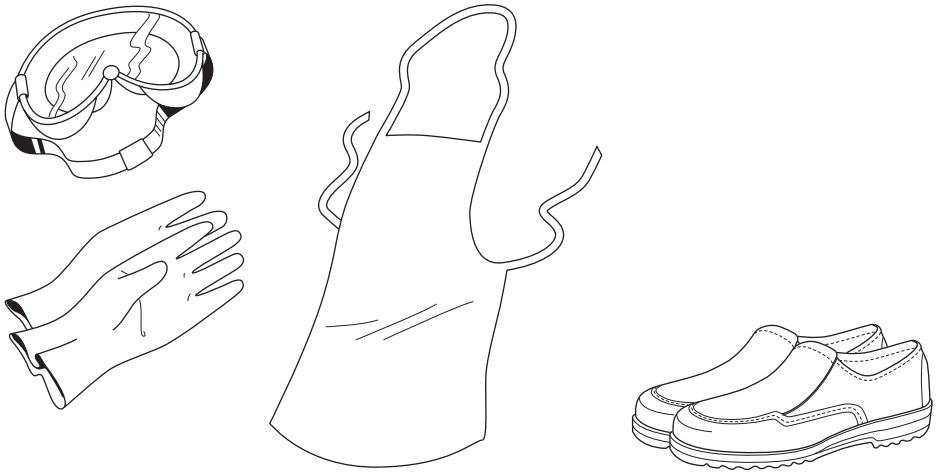

TechPub_2614345_0105 - sp05_MM_19_030V_0102.fm

Handling of Hydrogen Peroxide

WARNING

Sudden and violent chemical reaction.

Avoid any contamination of hydrogen peroxide.

Hydrogen peroxide reacts suddenly and violently with many compounds or if it is contaminated. The reaction is a violent decomposition liberating oxygen and heat, with a big increase in volume due to the oxygen produced by the peroxide decomposition.

Never pour surplus hydrogen peroxide back into the original container if it contains fresh hydrogen peroxide. There is a risk of explosion when hydrogen peroxide is in a closed container.

Ensure that equipment used for handling and diluting hydrogen peroxide is clean before it comes in contact with hydrogen peroxide. Pumps or other equipment used for handling hydrogen peroxide must be **used for this purpose only** and must be manufactured from appropriate materials, such as stainless steel 316 L, glass, polyethylene, or teflon. After use, make sure that all peroxide residue is rinsed away.

If hydrogen peroxide is spilled, dilute it with large amounts of water. Dispose of the diluted hydrogen peroxide according to local regulations.



WARNING

Self-ignition.

Never wipe up hydrogen peroxide with materials such as rags or paper as these may self-ignite several hours after contact.
If there is a fire, spray with large quantities of water.

TechPub_2614345_0105 - sp05_MM_19_030V_0102.fm

Storage of Hydrogen Peroxide

DANGER

Containers may explode if not properly ventilated.
Keep the container upright and fitted with its proper ventilation cap. If there is a fire, cool all containers by spraying them with large quantities of water.

Hydrogen peroxide decomposes much faster with increasing temperature. There is a risk of explosion at high temperatures, since the ventilation cap cannot release the gases produced quickly enough.

Hydrogen peroxide **must** be stored in the **original container** delivered by the supplier. Keep the container upright and fitted with its proper ventilation cap, which allows oxygen to escape. Otherwise, there can be an explosion if decomposition of the peroxide occurs violently.

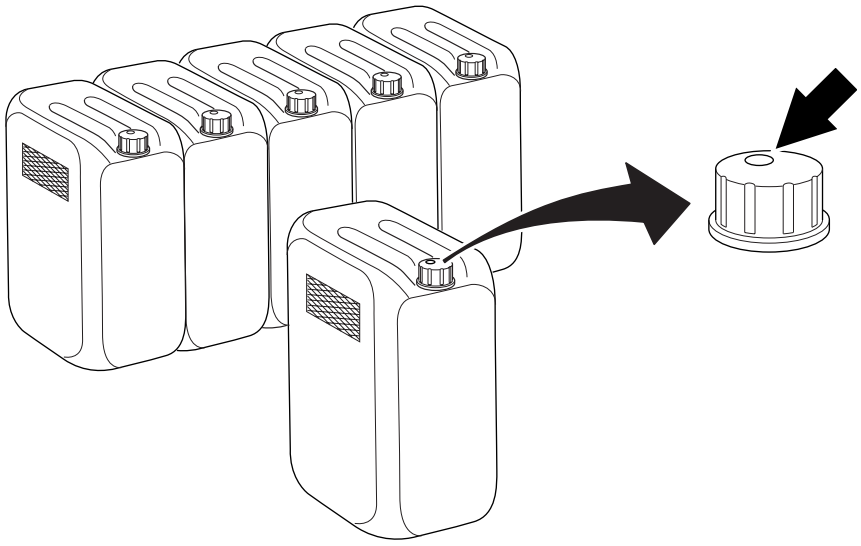

Make sure that the container is always properly closed.

(Cont'd)

TechPub_2614345_0105 - sp05_MM_19_030V_0102.fm

(Cont'd)

Commercial food-grade hydrogen peroxide has been stabilized to inhibit the catalytic decomposition effects of metals and other impurities, but it can decompose into oxygen and water if it is exposed to heat or contaminated.

Make sure that the area used for storage of hydrogen peroxide is

- cool, clean, and well ventilated
- shielded from direct sunlight
- kept free from combustible materials

Disposal of Hydrogen Peroxide

Always read and follow the disposal instructions in the safety data sheet supplied by the manufacturer or local supplier.

TechPub_2614345_0105 - sp05_MM_19_030V_0102.fm

Nitrogen (N_2)

WARNING

High pressure gas.

Nitrogen gas in high concentration can cause rapid suffocation. Make sure that the areas for storing and using this gas are adequately ventilated.

WARNING

Extremely cold high pressure gas.

Rapidly expanding nitrogen gas can cause frostbite injuries. Always wear personal protective equipment.

Emergency Procedures

Nitrogen gas in high concentrations can cause an oxygen deficient environment. Rapidly expanding nitrogen gas can cause frostbite injuries.

In the case of an accidental release of this gas:

- leave the affected area immediately
- never attempt to rescue victims of exposure to this gas without the proper personal protective equipment
- remove victims to fresh air and if necessary administer expired air resuscitation and/or cardiopulmonary resuscitation. Call for immediate medical attention
- in case of contact with eyes or skin, soak the exposed areas with luke warm water, not hot or cold. Call for immediate medical attention.
- allow the gas to dissipate, use auxiliary ventilation if available.

Handling and Storage of Nitrogen Gas

When handling nitrogen gas cylinders, make sure that:

- the areas used for the storage and handling of this gas are adequately ventilated (min. 19.5% oxygen)
- the cylinders are transported with the valves closed and with the valve protection caps securely in place
- the gas cylinders are connected only to connections marked for this gas
- the cylinder valves are opened slowly

Disposal of Nitrogen Gas

When returning nitrogen gas cylinders, make sure that:

- the cylinder valves are closed and the valve protection caps are securely in place
- there is still some gas in the cylinder.

TechPub_2614345_0105 - sp05_MM_19_030V_0102.fm

Cooling Media R134a

WARNING

Refrigerant gas.

High concentration of cooling media R134a vapour can cause dizziness, headache, confusion and unconsciousness. In liquid form R134a can cause frostbite injuries on contact with skin. Always wear personal protective equipment.

Emergency Procedures

Inhaling large quantities of cooling media R134a vapour can cause dizziness, headache, confusion and unconsciousness. In liquid form cooling media R134a can cause frostbite injuries on contact with skin.

In the case of an accidental release of this refrigerant:

- leave the affected area immediately
- remove victims to fresh air and if necessary administer expired air resuscitation and/or cardiopulmonary resuscitation. Call for immediate medical attention
- in case of contact with eyes or skin, soak the exposed areas with luke warm water, not hot or cold. Call for immediate medical attention
- allow the vapour to dissipate, use auxiliary ventilation if available.

Handling and Storage of Cooling Media R134a

When handling cooling media R134a, make sure that:

- the cylinders are stored in a cool dry place away from direct sunlight or sources of heat
- the areas used for the storage and handling of this refrigerant are adequately ventilated
- the cylinders are transported carefully
- the cylinder valves are opened slowly.

Disposal of Cooling Media R134a

Cooling media R134a should whenever possible be reprocessed or recycled. Contact the manufacturer or supplier for information on authorised refrigerant reclamation and recycling programs.

TechPub_2614345_0105 - sp05_MM_19_030V_0102.fm

Supply Systems

Power Supply

DANGER

Hazardous voltage and moving machinery.
The power supply disconnector must be turned off and secured with a lock before any maintenance.

Note! The key to the lock must be removed by the technician and retained in his/her possession until all work is completed.

Certain maintenance procedures may require power supply systems to be on. These exceptions are clearly stated in the Maintenance Manual.

The illustrations show the power supply disconnector and its location.

TBA/19 030V Standard is shown

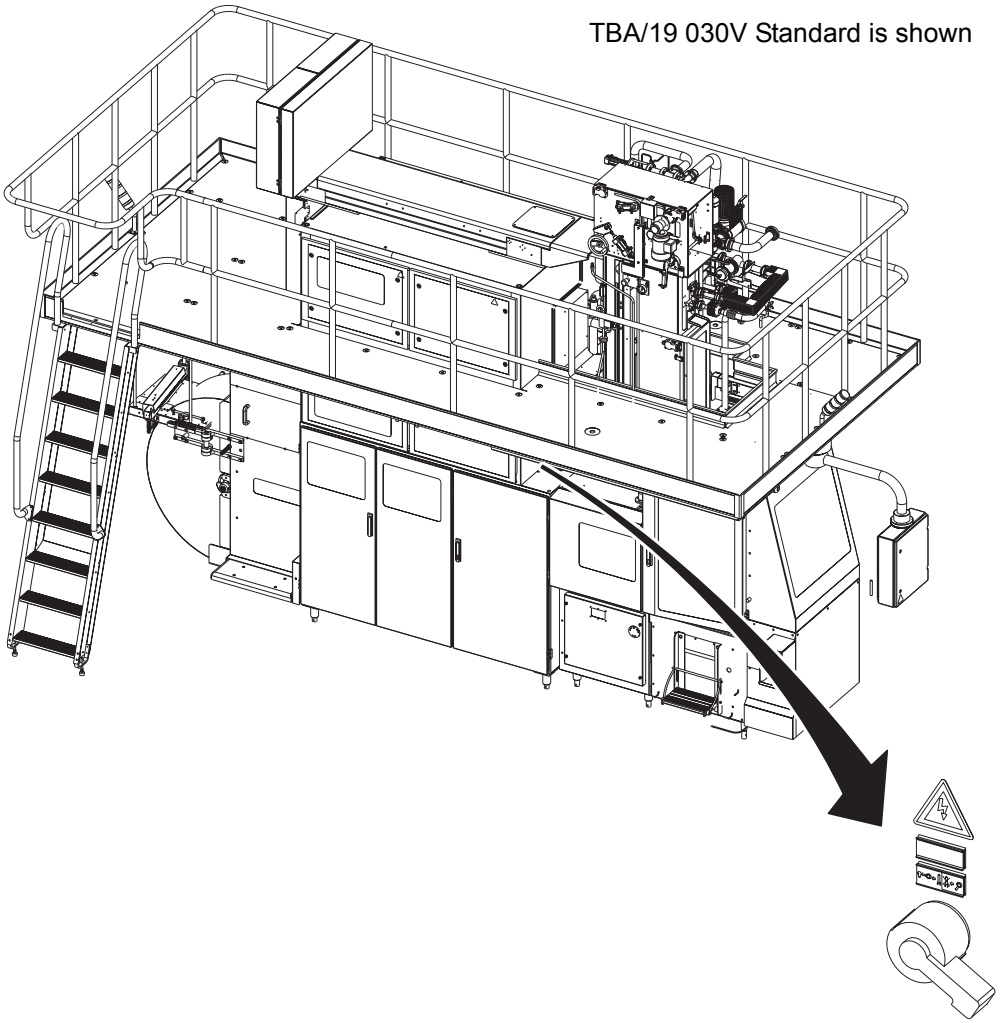

TechPub_2614345_0105 - sp05_MM_19_030V_0102.fm

Residual Voltage

DANGER

Hazardous voltage.
Do not touch any terminals immediately after the power supply disconnector is turned off. Ensure that no residual voltage remains on the capacitors before touching. Wait five minutes. Failure to observe this information will cause death or serious injury.

After the power supply disconnector is turned off, residual voltage remains in the capacitor circuits.

Electrical Cabinet

DANGER

Hazardous voltage.
Will shock, burn, or cause death.
The power supply disconnector must be turned off and secured with a lock before maintenance inside the electrical cabinet.

Note! The key to the lock must be removed by the technician and retained in his/her possession until all work is completed.

Make sure that the electrical cabinet doors are closed after working inside the electrical cabinet. Doors with lock must be locked.

The location of each electrical cabinet is shown by an arrow.

(Cont'd)

TechPub_2614345_0105 - sp05_MM_19_030V_0102.fm

(Cont'd)

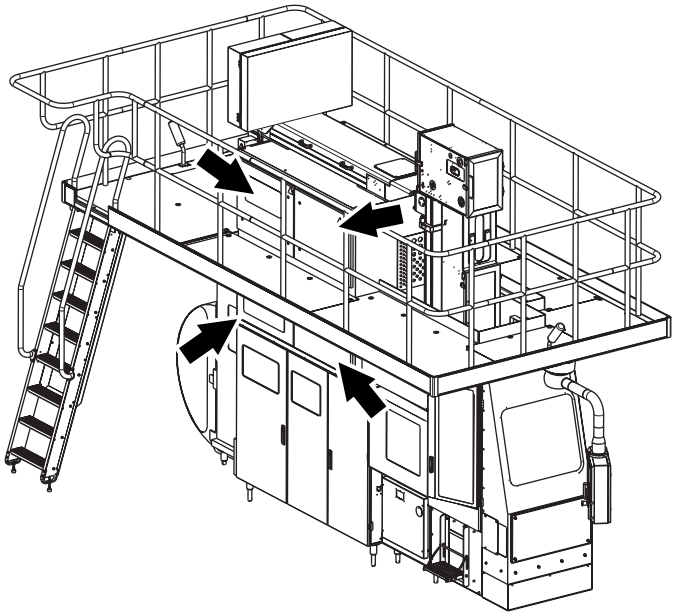

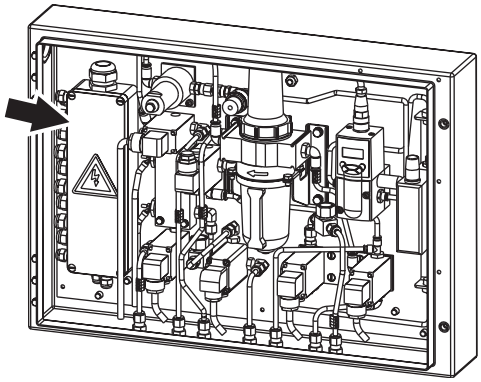

Electrical cabinet, HI (OE)

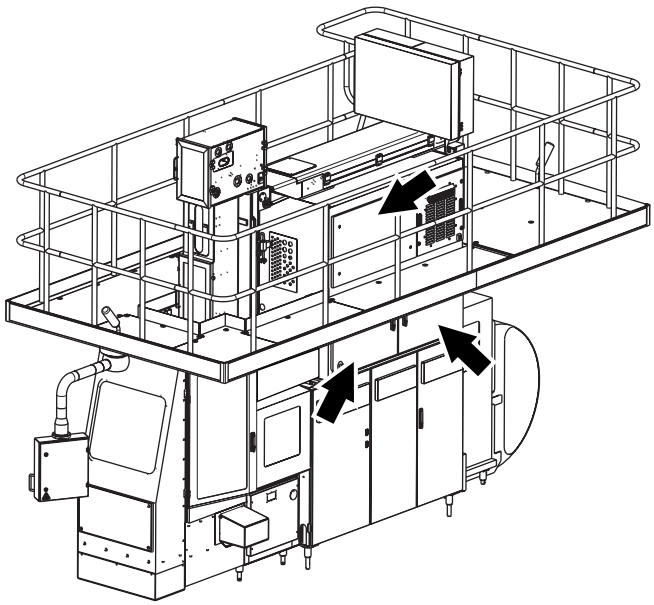

TBA/19 030V Standard is shown

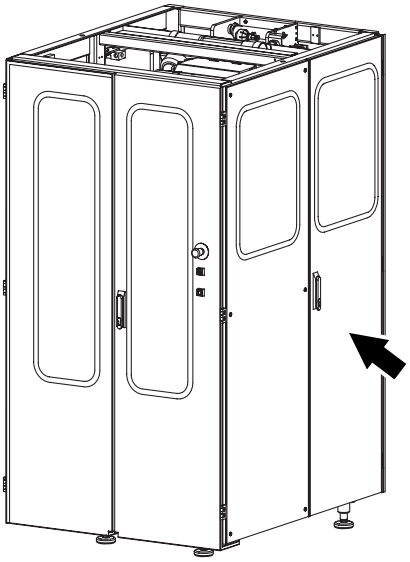

Electrical cabinet, ASU (OE)

TechPub_2614345_0105 - sp05_MM_19_030V_0102.fm

Socket Outlet

WARNING

Hazardous voltage.

Can shock, burn, or cause death. Read the Maintenance Manual before using this socket outlet.

The socket outlet (1) is connected to a residual current device (2) to protect users against electrical shock if there is an earth fault in the connected equipment. The residual current device shall be tested each time before the socket outlet is being used. See the MM for test procedure.

The illustrations show the socket outlet, the residual current device, and their location.

(Cont'd)

TechPub_2614345_0105 - sp05_MM_19_030V_0102.fm

(Cont'd)

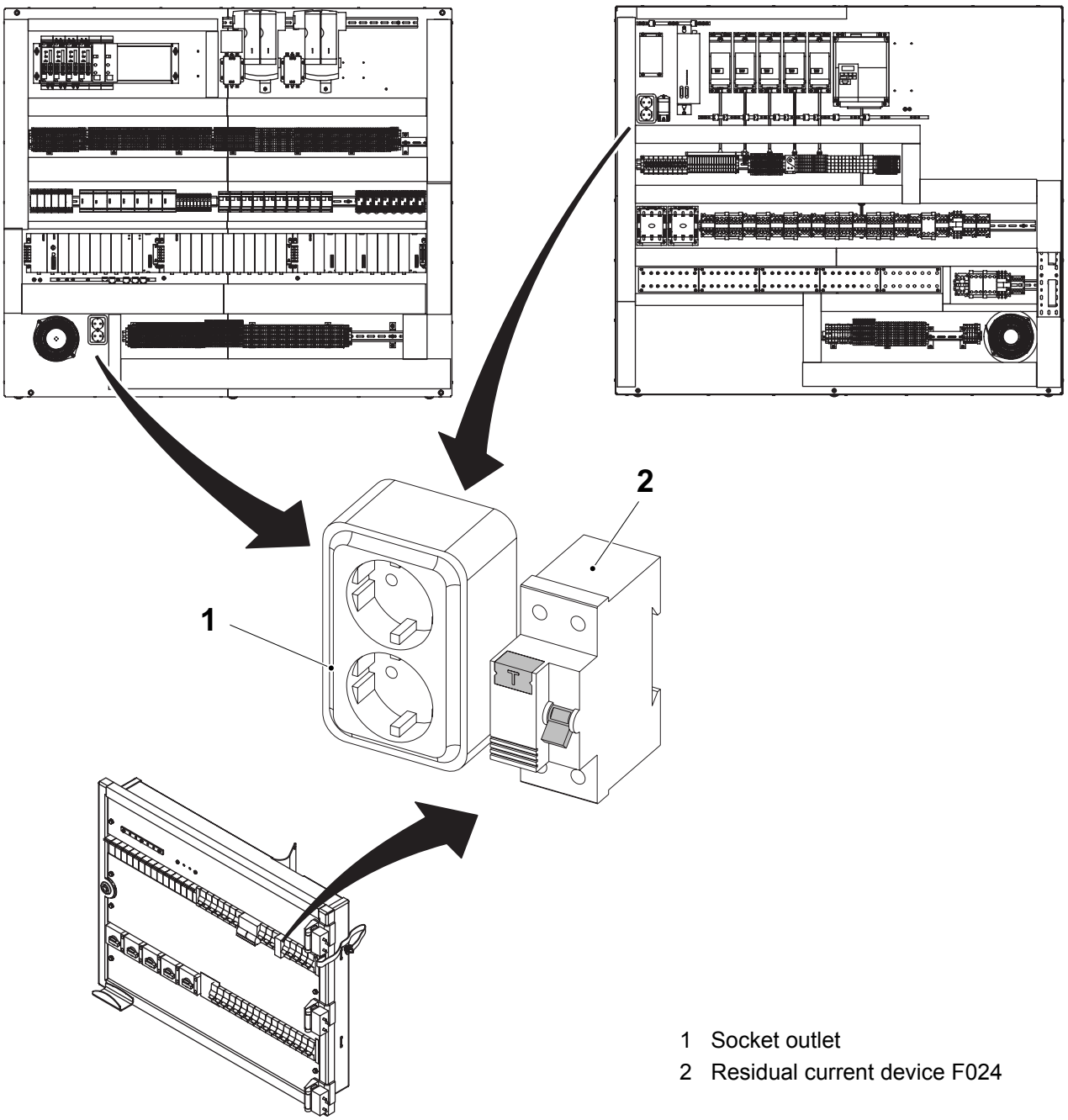

1 Socket outlet
2 Residual current device F024

TechPub_2614345_0105 - sp05_MM_19_030V_0102.fm

Air Supply

WARNING

Compressed air and moving machinery.
Close the main air valve and lock it before any maintenance.

Note! The key to the lock must be removed by the technician and retained in his/her possession until all work is completed.

Certain maintenance procedures may require air supply systems to be on. These exceptions are clearly stated in the Maintenance Manual.

The illustrations show the main air valve (1). Its location is shown by an arrow.

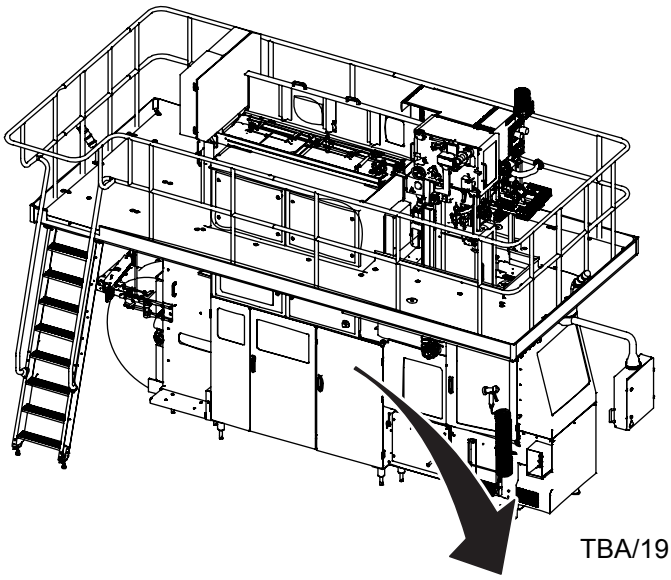

TBA/19 030V Standard is shown

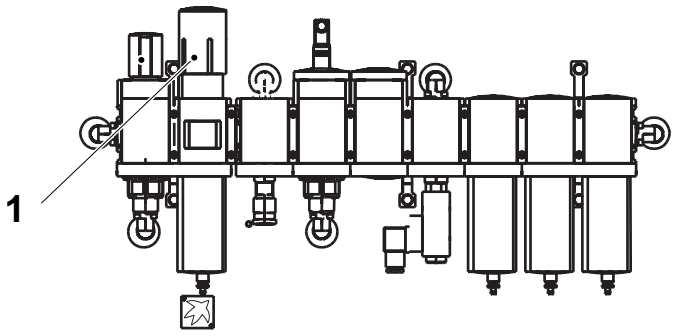

1 Main air valve

TechPub_2614345_0105 - sp05_MM_19_030V_0102.fm

Steam Supply

WARNING

Hot steam can cause scalds.
Pressurized steam can be discharged unexpectedly.
Close the steam supply valve and lock it, depressurize and vent all steam safely before any maintenance on parts with steam, such as pipes and valves.

Note! The key to the lock must be removed by the technician and retained in his/her possession until all work is completed.

Certain maintenance procedures may require steam supply systems to be on. These exceptions are clearly stated in the Maintenance Manual.

The illustrations show the steam supply valve (1), and its location.

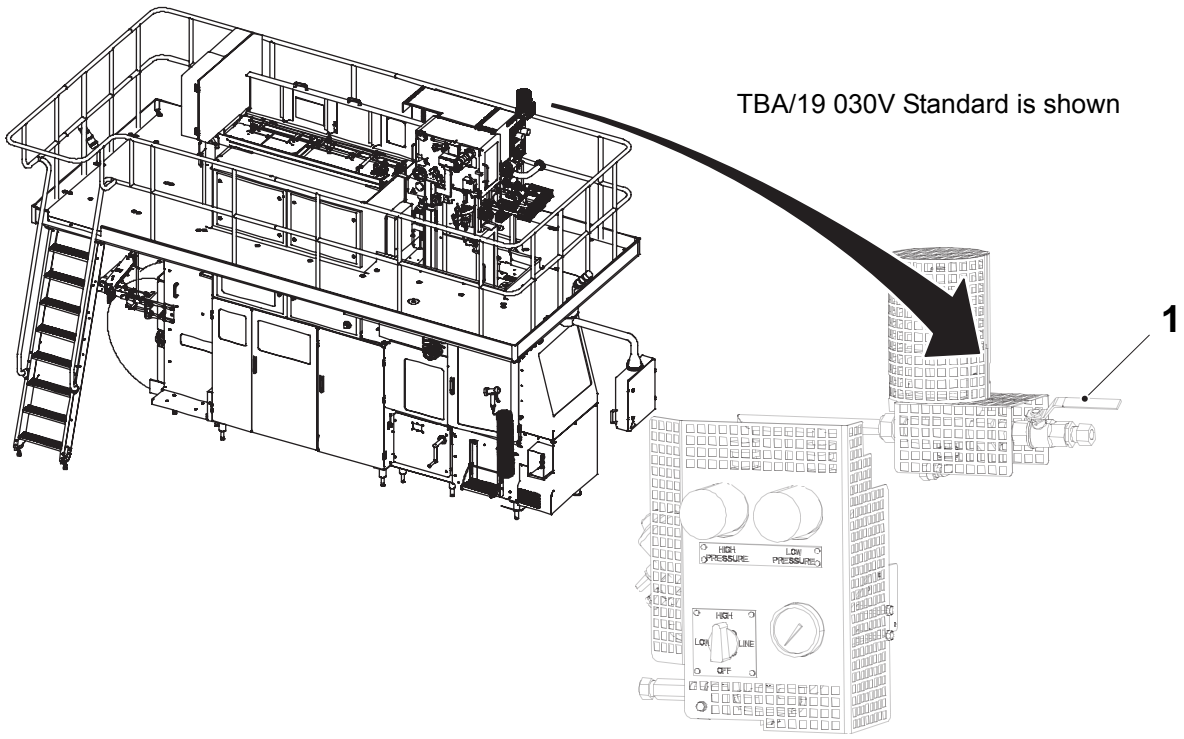

1 Steam supply valve

TechPub_2614345_0105 - sp05_MM_19_030V_0102.fm

Water Supply

CAUTION
Water under pressure.
Close the water supply valves before any maintenance.

Certain maintenance procedures may require water supply systems to be on. These exceptions are clearly stated in the Maintenance Manual.

The illustrations show the water supply valves (1) and (2), and their locations.

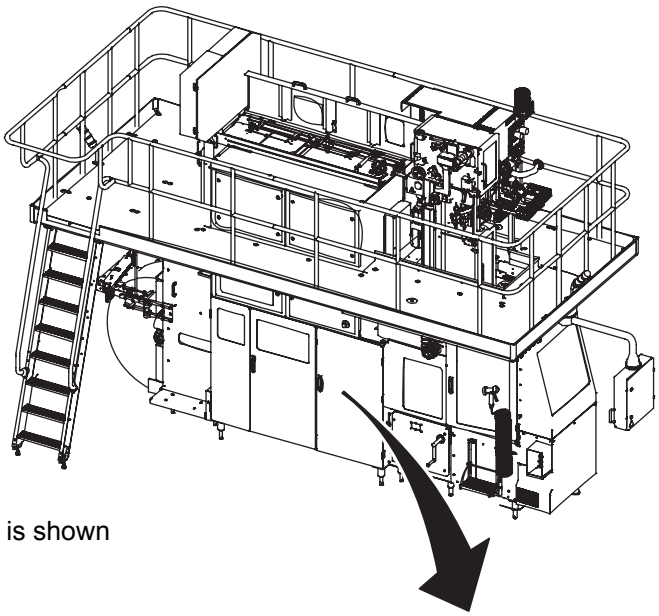

TBA/19 030V Standard is shown

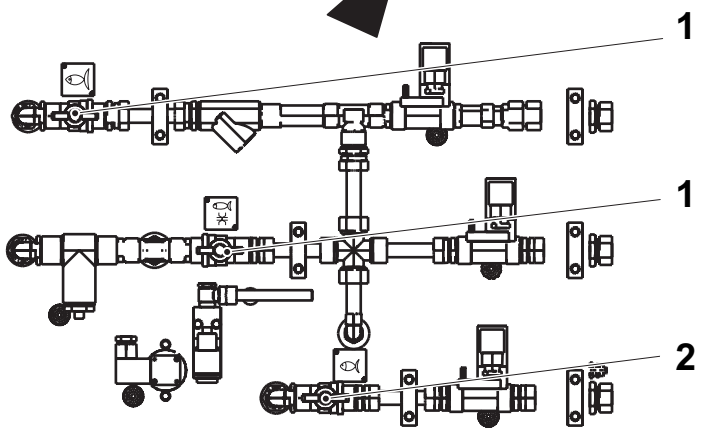

1 Water supply valve
2 Hot water supply valve

TechPub_2614345_0105 - sp05_MM_19_030V_0102.fm

Equipment for Lifting and Moving Loads

WARNING

Risk of crushing injury.

Make sure that the capacity of the lifting equipment is adequate and that the equipment itself is in proper working order.

If lifting tackle must be joined to make up the necessary lengths, make sure that the joints are secure and have the same lifting capacity as the rest of the lifting tackle.

Always engage safety clips fitted to lifting hooks to prevent the lifting tackle from slipping off.

Use ropes or poles to steady and manoeuvre suspended loads. Do **not** use hands or feet.

Make sure that the route and destination are free from obstacles before moving a suspended load. It must always be possible to quickly and safely lower the load to the floor in an emergency.

When depositing loads, keep lifting tackle in place until the stability of the load has been substantiated.

TechPub_2614345_0105 - sp05_MM_19_030V_0102.fm

Ink (if Internal Dating Unit is Installed)

WARNING

Risk of personal injury.

Ink is inflammable and can be harmful if it comes into contact with the eyes or skin. Carefully follow the instructions on the container label.

Ink Container

- INFLAMMABLE
- Avoid direct contact with the product
- Use gloves and goggles
- Care for good ventilation
- Propylene glycol mono methyl ether >30%
- Ethanol 1-5%
- SHAKE BEFORE USE

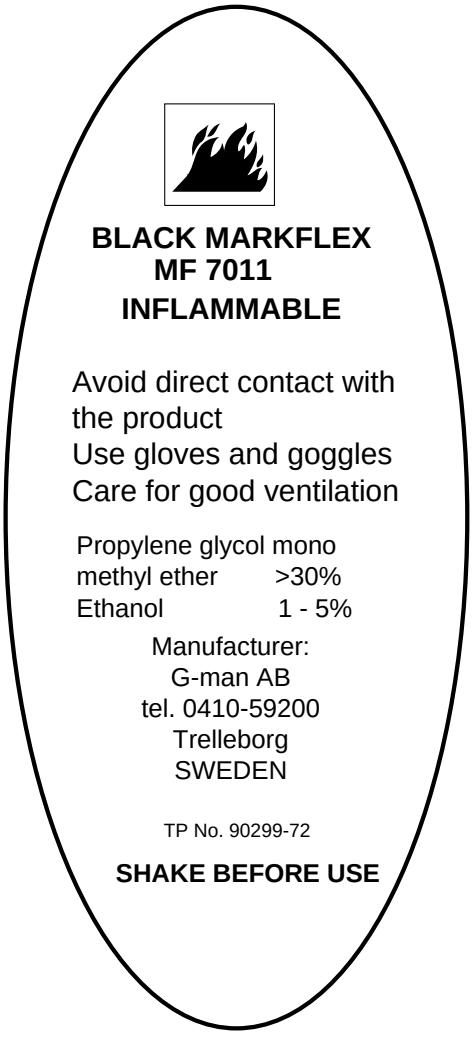

TechPub_2614345_0105 - sp05_MM_19_030V_0102.fm

1 Superstructure

TechPub_2614345_0105 - 01_2772031_01.fm

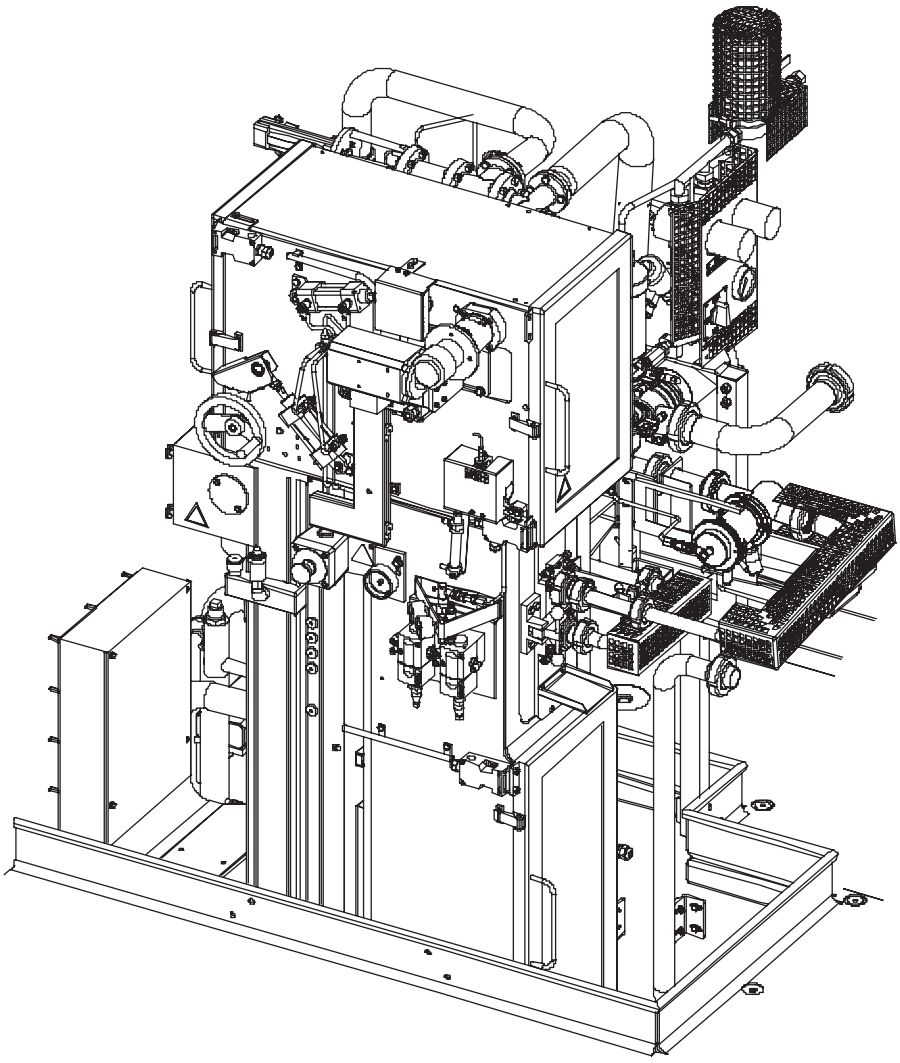

Superstructure - Description

SPC Reference	648111-1300

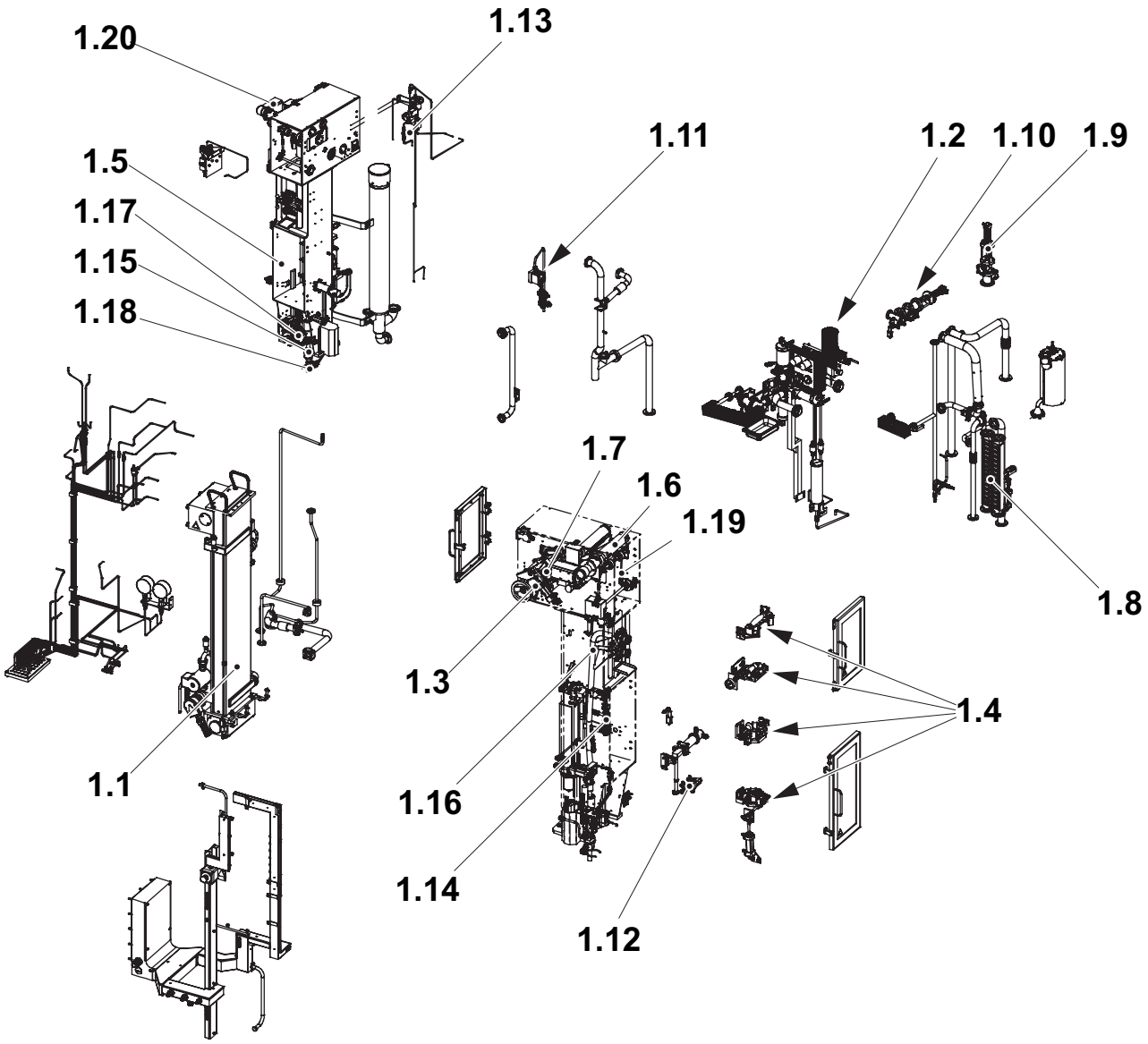

1.1 Bath
1.2 Product Valve
1.3 Calender Rollers
1.4 Tube Forming
1.5 Aseptic Chamber
1.6 Bending Roller
1.7 Air Knife
1.8 Heat Exchanger
1.9 Valve (Heat Exchanger)
1.10 Valve (Air Inlet)
1.11 Change-Over Valve (Suction)
1.12 Hot Air Element (LS SS)
1.13 Spray System
1.14 Air Nozzle (LS)
1.15 Level Probe
1.16 Filling Pipe
1.17 Photocell Unit
1.18 Tube Flushing Device
1.19 Web Tension Control (Pendulum)
1.20 Bending Roller (Driven)

TechPub_2614345_0105 - 01_2772031_01.fm

1-1 Superstructure - Check Bending Rollers . . . . . 1 - 7

1-2 Superstructure - Check Air Nozzle (LS) and Hot Air Element (LS SS) . . . . . 1 - 8

1-3 Superstructure - Check Pressures . . . . . 1 - 10

1-4 Aseptic Chamber - Measure Leakages . . . . . 1 - 15

1-5 Superstructure - Check DIN Fittings . . . . . 1 - 19

1.1 Bath. . . . . 1 - 20

1.1-1 Bath - Check Suction Box Seal . . . . . 1 - 20

1.1-2 Bath - Check Microswitches . . . . . 1 - 22

1.1-3 Bath - Set Microswitches . . . . . 1 - 23

1.1-4 Bath - Change Chain Seals . . . . . 1 - 24

1.1-5 Bath - Check Lower Bending Roller . . . . . 1 - 25

1.1-6 Bath - Change Lower Bending Roller Bushing and Shaft . . . . . 1 - 26

1.1-7 Bath - Change Upper Bending Roller Bushings 1 - 27

1.1-8 Bath - Check Upper Level Filling Valve for Leakage . . . . . 1 - 29

1.1-9 Bath - Check Air Vent Valves . . . . . 1 - 31

1.2 Product Valve. . . . . 1 - 33

1.2-1 Product Valve - Clean Steam Traps . . . . . 1 - 33

1.2-2 Product Valve - Check Steam Filter Cartridge . . 1 - 35

1.2-3 Product Valve - Change Filter Cartridge . . . . . 1 - 39

1.2.1 AP Valve . . . . . 1 - 41

1.2.1-1 AP Valve - Remove Cylinders . . . . . 1 - 41

1.2.1-2 AP Valve - Change Seals and Diaphragm . . . . . 1 - 43

1.2.1-4 AP Valve - Change A and B Cylinder Seals . . . 1 - 47

1.2.1-5 AP Valve - Change C Cylinder Seals . . . . . 1 - 50

1.2.2 Regulating Valve . . . . . 1 - 52

1.2.2-1 RegulatIng Valve - Overhaul . . . . . 1 - 52

1.2.2-2 Regulating Valve - Set Inductive Switch . . . . . 1 - 57

1.2.3 Temperature Controlled Steam Barrier . . . . . 1 - 58

1.2.3-1 Pressure Regulator - Overhaul . . . . . 1 - 58

1.2.3-2 Pressure Regulator - Set . . . . . 1 - 62

TechPub_2614345_0105 - 01_2772031_01.fm

1.3 Calender Rollers . . . . . 1 - 63

1.3-1 Calender Rollers - Check Rubber Surfaces . . . . 1 - 63
1.3-2 Calender Rollers - Check During Operation . . . 1 - 64
1.3-3 Calender Rollers - Change Bearings . . . . . 1 - 64
1.3-4 Calender Rollers - Set . . . . . 1 - 68

1.4 Tube Forming . . . . . 1 - 70

1.4.1 Tube Supports and Forming Rings . . . . . 1 - 70

1.4.1-1 Tube Supports and Forming Rings - Check . . . . 1 - 70
1.4.1-2 Tube Supports and Forming Rings - Set . . . . . 1 - 72

1.4.2 LS Overlap . . . . . 1 - 75

1.4.2-1 LS Overlap - Set . . . . . 1 - 75

1.4.3 Upper Tube Support . . . . . 1 - 77

1.4.3-1 Upper Tube Support - Overhaul . . . . . 1 - 77

1.4.4 Movable Forming Ring . . . . . 1 - 78

1.4.4-1 Movable Forming Ring - Overhaul . . . . . 1 - 78

1.4.5 Divided Forming Ring . . . . . 1 - 79

1.4.5-1 Divided Forming Ring - Overhaul . . . . . 1 - 79

1.4.6 Lower Forming Ring . . . . . 1 - 81

1.4.6-1 Lower Forming Ring - Overhaul . . . . . 1 - 81
1.4.6-2 Lower Forming Ring - Set Counter Roller . . . . 1 - 83

1.5 Aseptic Chamber . . . . . 1 - 84

1.5-1 Aseptic Chamber - Change Sealing Lip . . . . . 1 - 84
1.5-2 Aseptic Chamber - Check Support Roller . . . . . 1 - 85
1.5-3 Aseptic Chamber - Set Cleaning Cup Sensor . . 1 - 86
1.5-4 Aseptic Chamber - Check Cleaning Cup Sensor 1 - 88

1.6 Bending Roller . . . . . 1 - 89

1.6-1 Bending Roller - Overhaul . . . . . 1 - 89
1.6-2 Bending Roller - Set . . . . . 1 - 91

1.7 Air Knife . . . . . 1 - 92

1.7-1 Air Knife - Check . . . . . 1 - 92
1.7-2 Air Knife - Set Temperature . . . . . 1 - 95

TechPub_2614345_0105 - 01_2772031_01.fm

1.8 Heat Exchanger . . . . . 1 - 96
1.8-1 Heat Exchanger - Check Tightness . . . . . 1 - 96
1.8.1 WEAC Valve . . . . . 1 - 99
1.8.1-1 WEAC Valve - Overhaul . . . . . 1 - 99
1.9 Valve (Heat Exchanger) . . . . . 1 - 103
1.9-1 Valve (Heat Exchanger) - Overhaul . . . . . 1 - 103
1.9-2 Valve (Heat Exchanger) - Set . . . . . 1 - 105
1.10 Valve (Air Inlet) . . . . . 1 - 107
1.10-1 Valve (Air Inlet) - Overhaul . . . . . 1 - 107
1.10-2 Valve (Air Inlet) - Set . . . . . 1 - 110
1.11 Change-Over Valve (Suction) . . . . . 1 - 111
1.11-1 Change Over Valve (Suction) - Overhaul . . . . 1 - 111
1.12 Hot Air Element (LS SS) . . . . . 1 - 114
1.12-1 Hot Air Element (LS SS) - Check Packages . . 1 - 114
1.12-2 Hot Air Element (LS SS) - Set Nozzle . . . . . 1 - 115
1.13 Spray System . . . . . 1 - 118
1.13-1 Spray System - Clean Filter . . . . . 1 - 118
1.13-2 Spray System - Check for Leaks . . . . . 1 - 119
1.14 Air Nozzle (LS) . . . . . 1 - 120
1.14-1 Air Nozzle (LS) - Set . . . . . 1 - 120
1.14-2 Air Nozzle (LS) - Check Pressures . . . . . 1 - 129
1.15 Level Probe . . . . . 1 - 130
1.15-1 Level Probe - Set . . . . . 1 - 130
1.15-2 Level Probe - Check Lower Filling Pipe . . . . . 1 - 133
1.16 Filling Pipe . . . . . 1 - 134
1.16-1 Filling Pipe - Check . . . . . 1 - 134
1.16-2 Filling Pipe - Set . . . . . 1 - 135
1.16-3 Filler Pipe - Check Pressure Roller Spring Force . . . . . 1 - 140

TechPub_2614345_0105 - 01_2772031_01.fm

1.17 Photocell Unit . . . . . 1 - 141

1.17-1 Photocell Unit - Set . . . . . 1 - 141

1.17-2 Photocell Unit - Set Sensitivity . . . . . 1 - 146

1.18 Tube Flushing Device . . . . . 1 - 148

1.18-1 Tube Flushing Device - Check . . . . . 1 - 148

1.19 Web Tension Control (Pendulum) . . . . . 1 - 149

1.19-1 WTC (Pendulum) - Overhaul . . . . . 1 - 149

1.19-2 WTC (Pendulum) - Set . . . . . 1 - 151

1.19-3 WTC (Pendulum) - Set Proximity Switch . . . . 1 - 152

1.20 Bending Roller (Driven) . . . . . 1 - 153

1.20-1 Bending Roller (Driven) - Overhaul . . . . . 1 - 153

TechPub_2614345_0105 - 01_2772031_01.fm

1-1 Superstructure - Check Bending Rollers

Machine Status	Power supply disconnector OFF Air supply OFF Steam supply ON Water supply OFF
SPC Reference	648111-1300

WARNING

Dangerous chemicals (hydrogen peroxide).
Hydrogen peroxide can be fatal if inhaled or swallowed. Follow the instructions in chapter ii Safety Precautions.

Check that the bending rollers in the superstructure rotate smoothly and that the radial play is not excessive.

Make sure that the running surfaces of the rollers are not worn or damaged.

Change the bending roller bearings and bushings if needed, refer to:

- 1.1-6 Bath - Change Lower Bending Roller Bushing and Shaft
- 1.1-7 Bath - Change Upper Bending Roller Bushings
- 1.3-3 Calender Rollers - Change Bearings
- 1.19-1 WTC (Pendulum) - Overhaul

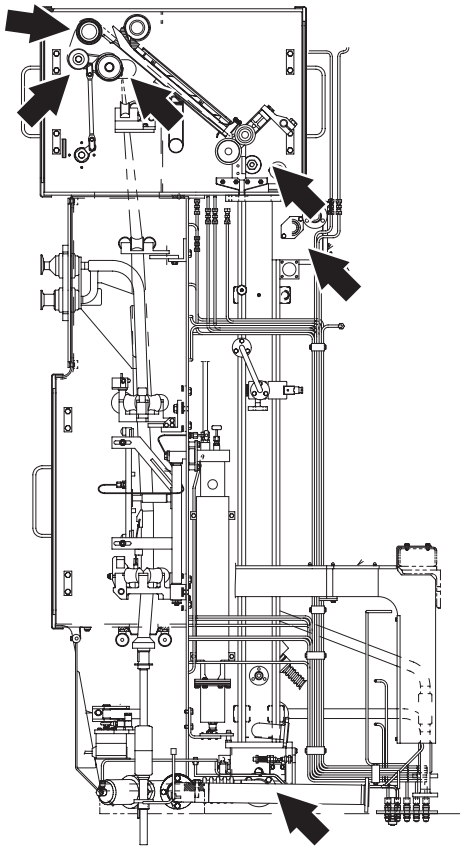

TechPub_2614345_0105 - 01_2772031_01.fm

1-2 Superstructure - Check Air Nozzle (LS) and Hot Air Element (LS SS)

Machine Status	Power supply disconnector OFF Air supply OFF Steam supply ON Water supply OFF
SPC Reference	469501-0400 256095-0700

a) Check that the rollers (1) and (2) rotate smoothly.

b) Remove the plates (3) and make sure that the air holes of the LS nozzles (4) and (5) are not clogged, and that the nozzles are clean and without defects. Clean, if necessary.

c) Make sure that the pipe-line (6) is not damaged.

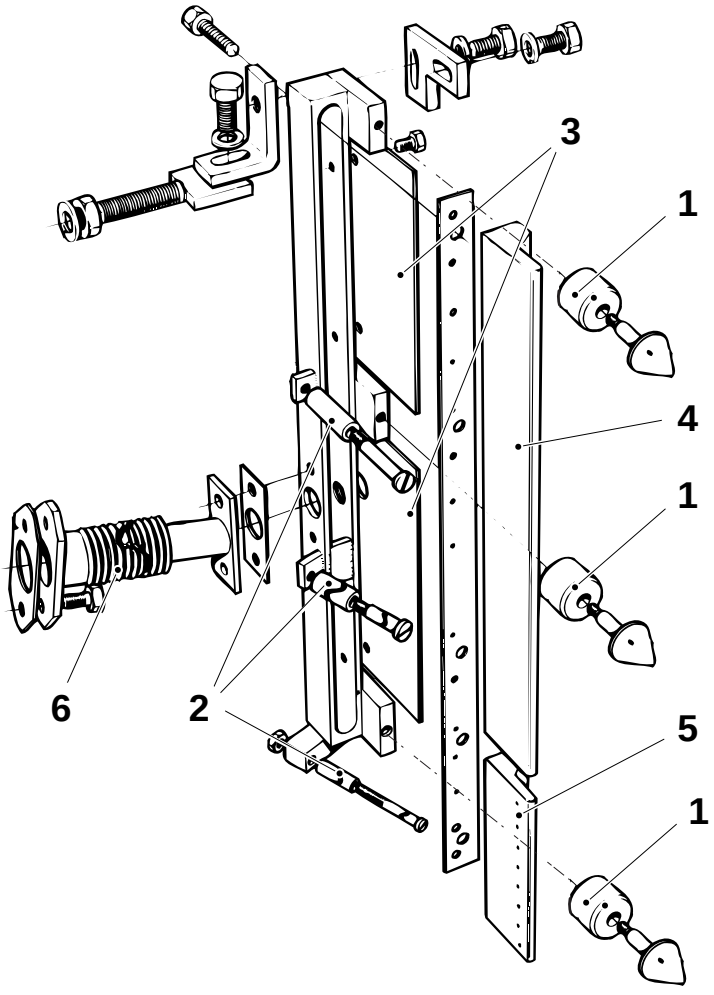

1 Roller
2 Roller
3 Plate
4 Air nozzle
5 Air nozzle
6 Pipe-line

(Cont'd)

TechPub_2614345_0105 - 01_2772031_01.fm

(Cont'd)

d) Make sure that the hot air element nozzle holes (7) are not clogged and the nozzle is clean and undamaged. Clean, if necessary.

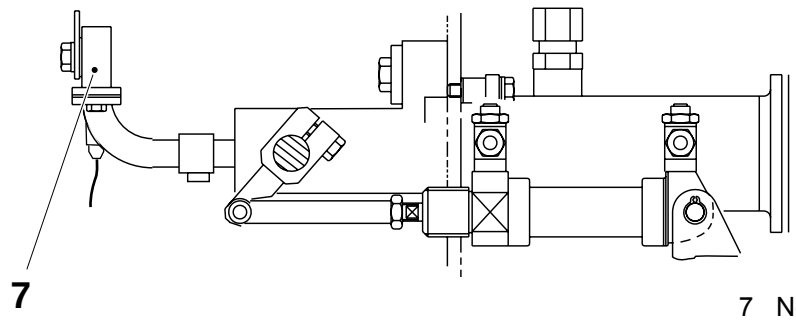

7 Nozzle

TechPub_2614345_0105 - 01_2772031_01.fm

1-3 Superstructure - Check Pressures

Machine Status	SHORT STOP
Special Equipment	Pressure gauge TP No. 90243-137 Hose connection 2 pcs
SPC Reference	648111-1300 978989-0200

Valid for 60 Hz machines only

Set the compressor air pressure, on the scrubber, to 0.34 bar using the regulating screw (1) at the 60 Hz bypass.

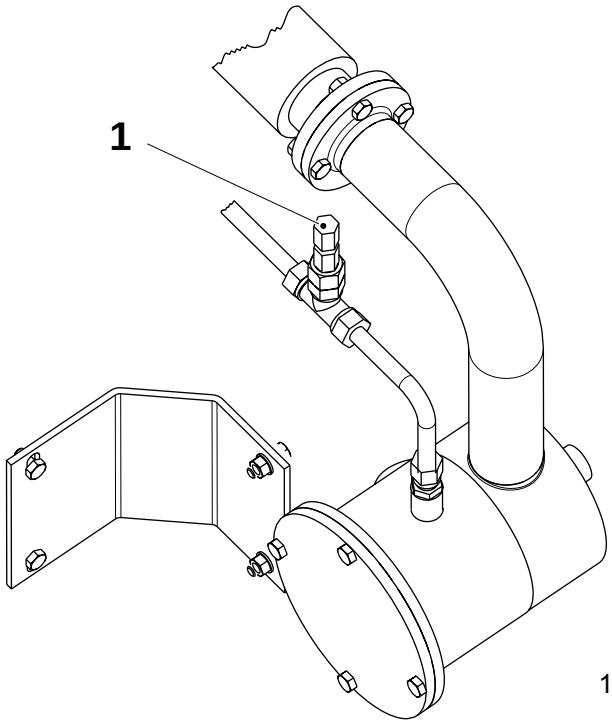

1 Regulating screw

(Cont'd)

TechPub_2614345_0105 - 01_2772031_01.fm

(Cont'd)

Valid for all machines

a) Remove the screw (2) on the aseptic chamber and the screw (3) in the bath. Install hose connections in each location.

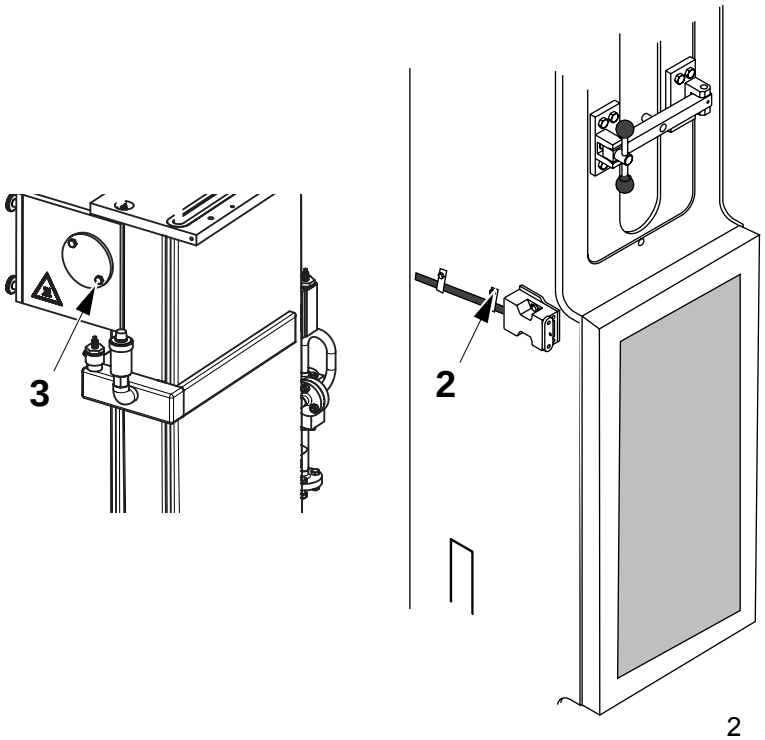

2 Screw
3 Screw

(Cont'd)

TechPub_2614345_0105 - 01_2772031_01.fm

(Cont'd)

b) Step the machine program to PRODUCTION.

c) Connect pressure gauges to the hoses and check:
   – the **overpressure** in the aseptic chamber is +20 to +30 mmWC
   – the **underpressure** in the bath is -5 to -40 mmWC.

d) The **underpressure** is reached by:
   – loosening the screw (4) on the change-over valve, and turning the valve shaft (5) to place it in the position shown, with the slot vertical.

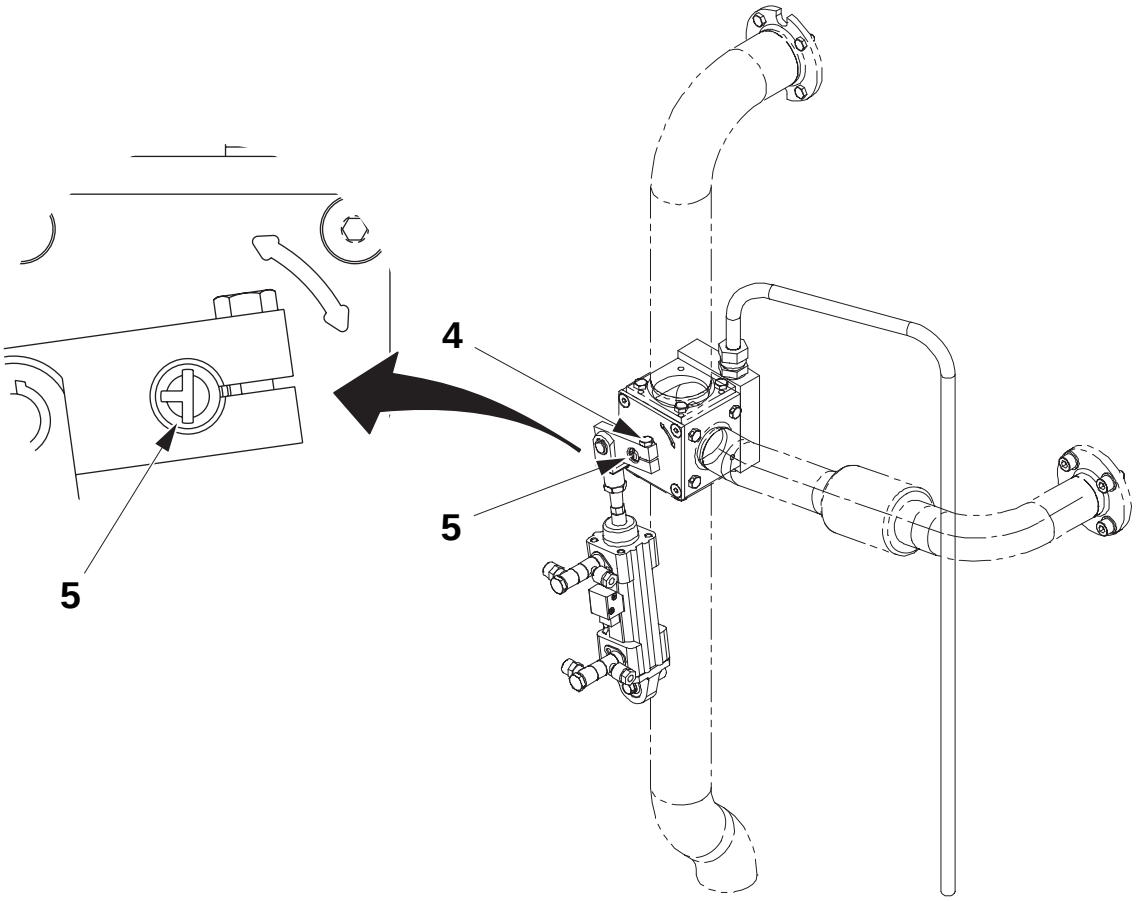

4 Screw
5 Valve shaft

TechPub_2614345_0105 - 01_2772031_01.fm

(Cont'd)

(Cont'd)

e) If necessary, set the **overpressure** by:

– using the screw (6) on the valve. **Screw in** to **decrease** the overpressure

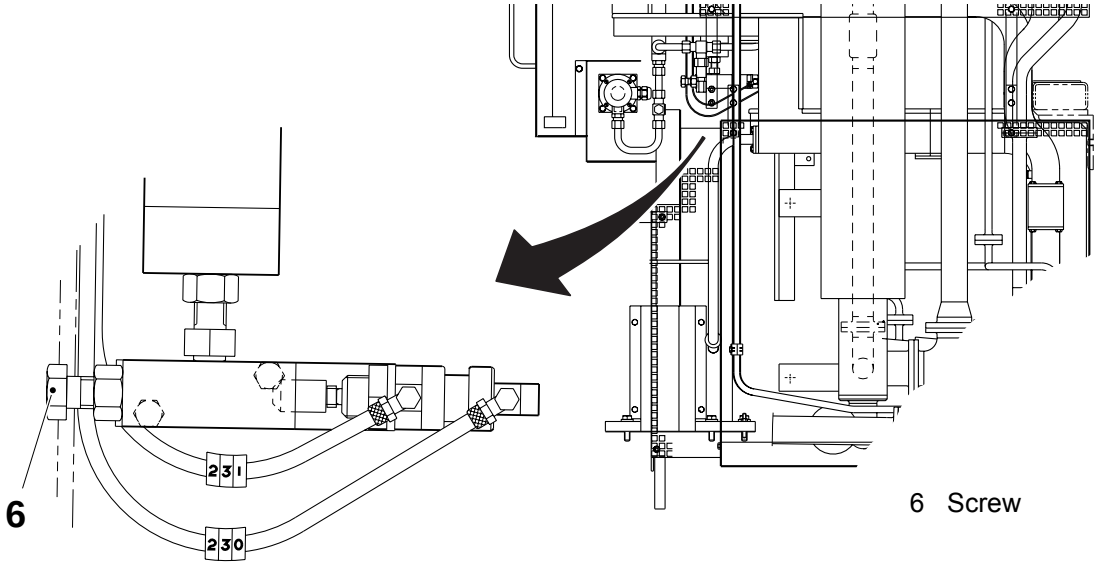

6 Screw

(Cont'd)

TechPub_2614345_0105 - 01_2772031_01.fm

(Cont'd)

f) Repeat until both pressures are within the limits.

g) Perform a SHORT STOP and set
   - the **overpressure** in the aseptic chamber to 4± 1 mmWC
   - the **underpressure** in the bath to -1÷ 0 mmWC.

   To set, loosen the screws (7) and shift the cylinder bracket (8).

h) If it is not possible to reach the correct pressures check for leakages, refer to 1-4 Aseptic Chamber - Measure Leakages.

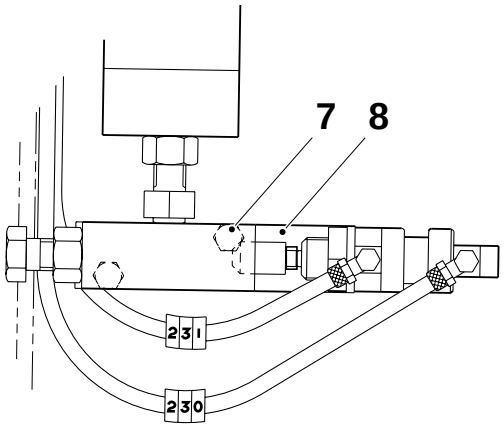

7 Screw
8 Cylinder bracket

TechPub_2614345_0105 - 01_2772031_01.fm

1-4 Aseptic Chamber - Measure Leakages

Machine Status	PREHEATING II
Special Equipment	Test equipment TP No. 533014-101
Consumables	Adhesive tape
SPC Reference	272021-0900

a) Step up the machine to TIGHT TUBE and step down to ZERO position.

b) Remove the thermocouple (1) at the air knife.

c) Connect the hose from the pressure gauge (2) to the thermocouple (1).

d) Connect a compressed air line to the regulator (3). Loosen the screw (4) in the aseptic chamber and install a hose connection in its place. Connect the hose to the pressure gauge (5).

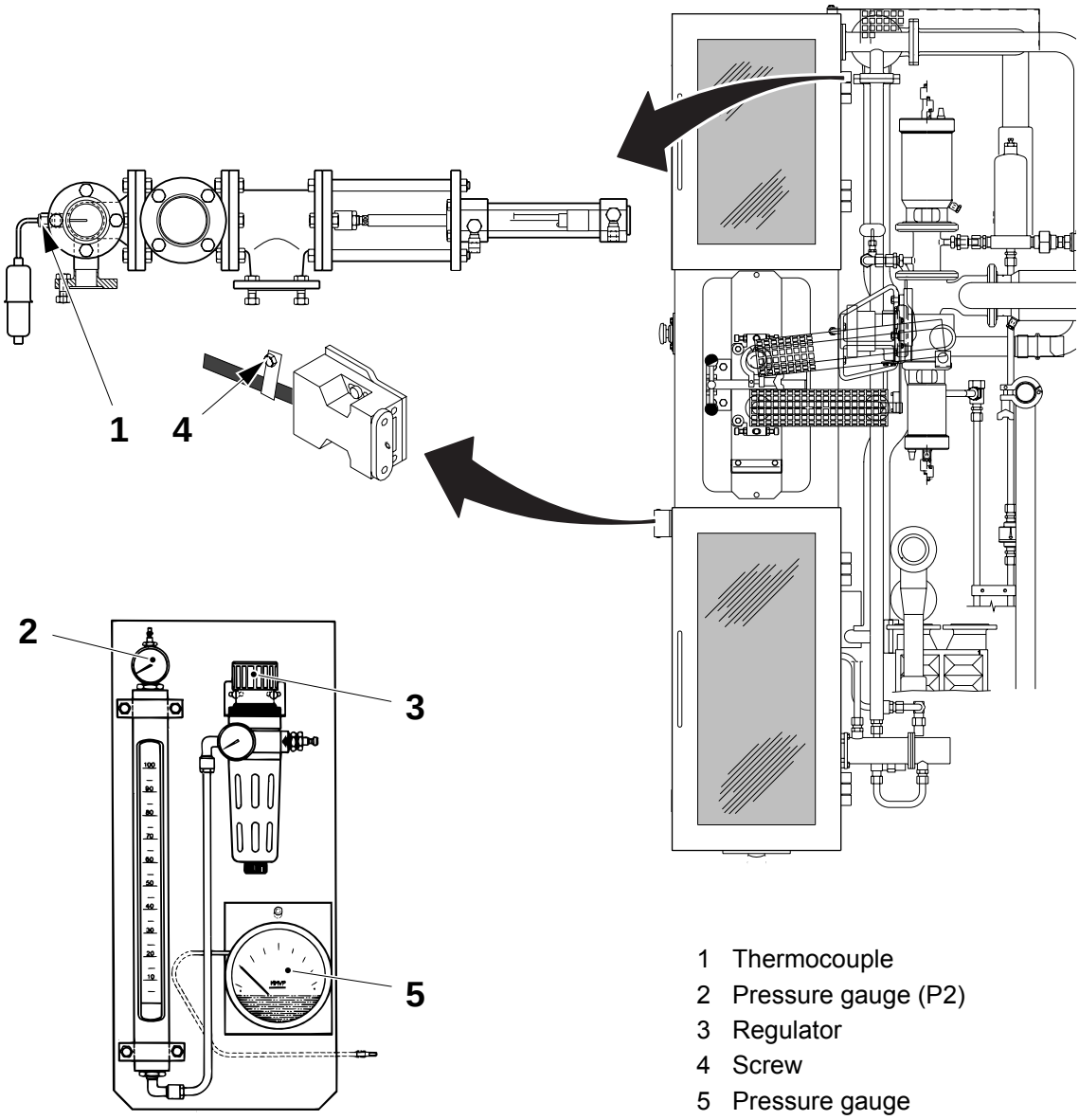

1 Thermocouple
2 Pressure gauge (P2)
3 Regulator
4 Screw
5 Pressure gauge

(Cont'd)

TechPub_2614345_0105 - 01_2772031_01.fm

(Cont'd)

e) Seal the valve holes (7) using adhesive tape.

f) Plug the outlet of the dilution tank.

g) Slowly open the regulator (3) until the pressure gauge (5) indicates **20 mmWC**.

h) Read the flow **(F%)** on the flow meter (8) and the pressure **(P)** on the pressure gauge (2), see table next page.

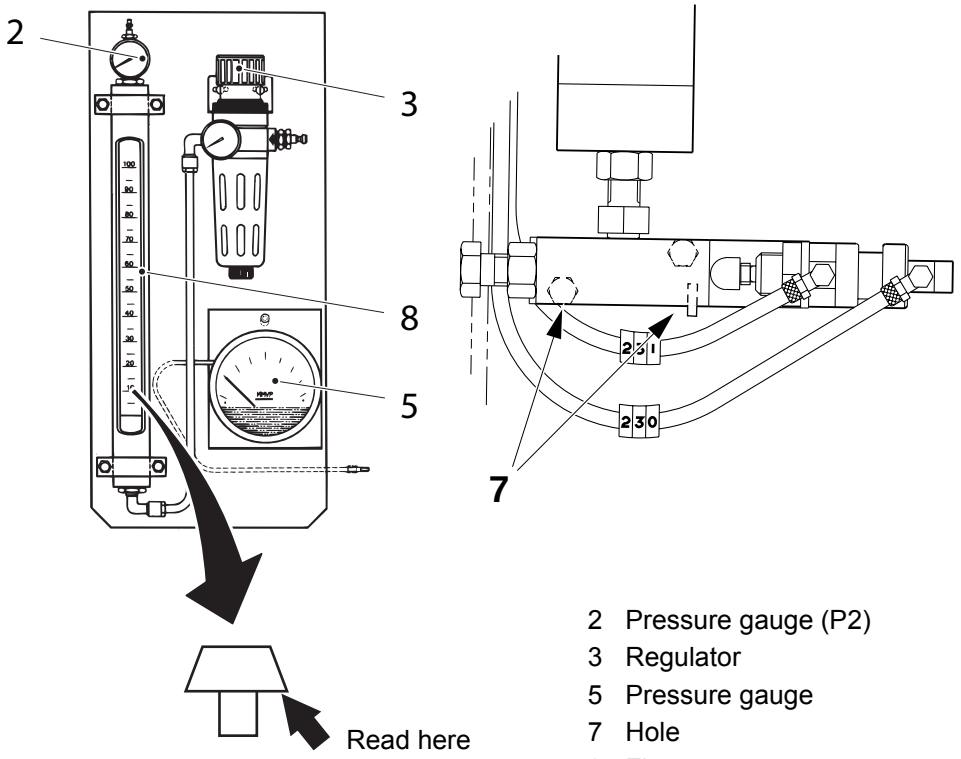

2 Pressure gauge (P2)
3 Regulator
5 Pressure gauge
7 Hole
8 Flow meter

(Cont'd)

TechPub_2614345_0105 - 01_2772031_01.fm

(Cont'd)

i) Enter these values in the diagram and read the leakage quantity (Q).

Note! The leakage quantity Q must be at least 2.5 m3/h.

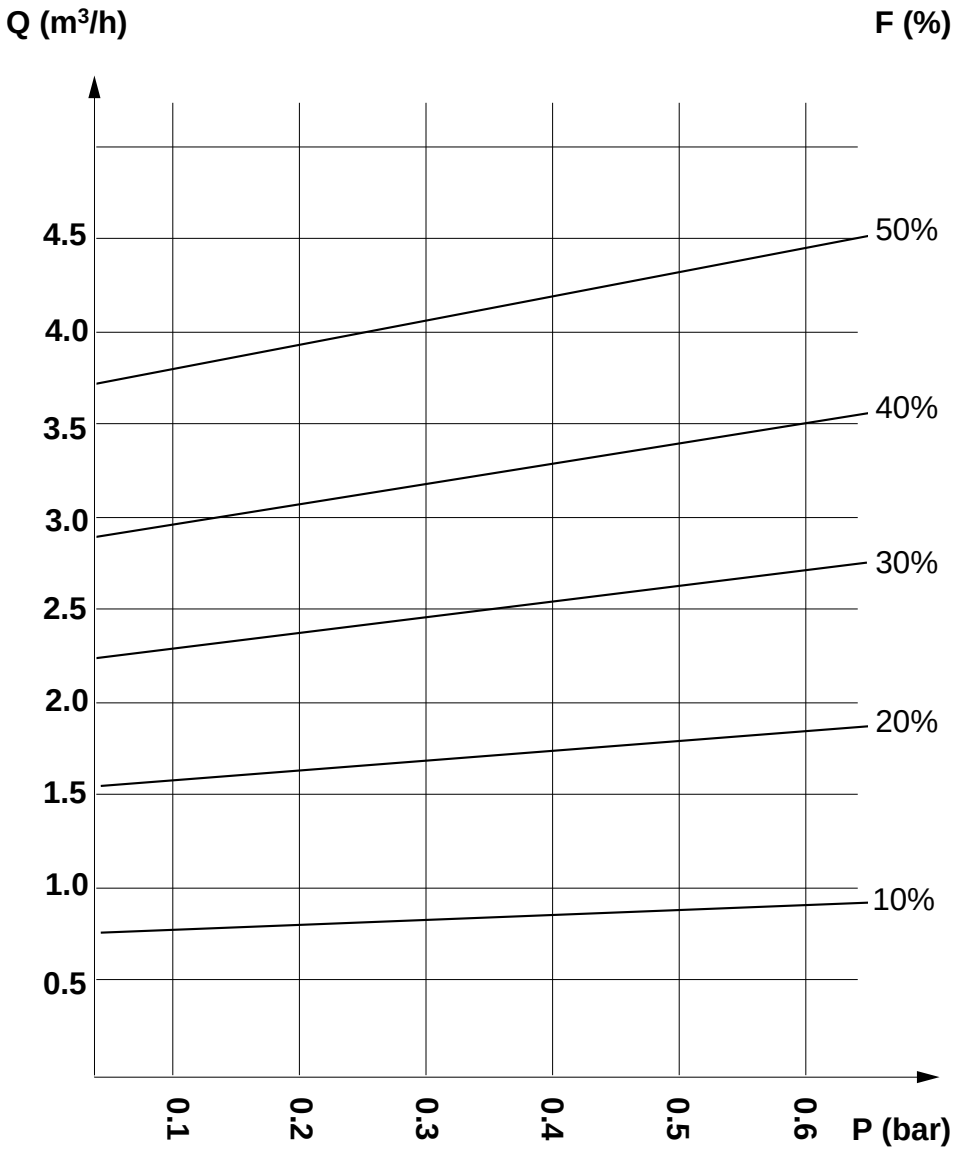

(Cont'd)

TechPub_2614345_0105 - 01_2772031_01.fm

(Cont'd)

WARNING

Dangerous chemicals (hydrogen peroxide).
Hydrogen peroxide can be fatal if inhaled or swallowed. Follow the instructions in chapter ii Safety Precautions.

If the leakage quantity is excessive, check the tightness at the following points:

- the safety valve in the hydrogen peroxide tank, refer to 6.2-2 Peroxide and Sterile Systems - Check Safety Lids
- the air inlet valve, refer to 1.10-2 Valve (Air Inlet) - Set
- the lead-in of the bending roller shaft (13) and of the driven bending roller shaft (14).
- the shaft lead-in cover (12).
- the aseptic chamber door hinges (11) and door seals (10).
- the aseptic chamber screws (9).
- the suction box seal, refer to 1.1-1 Bath - Check Suction Box Seal
- the chain seals, refer to 1.1-4 Bath - Change Chain Seals.

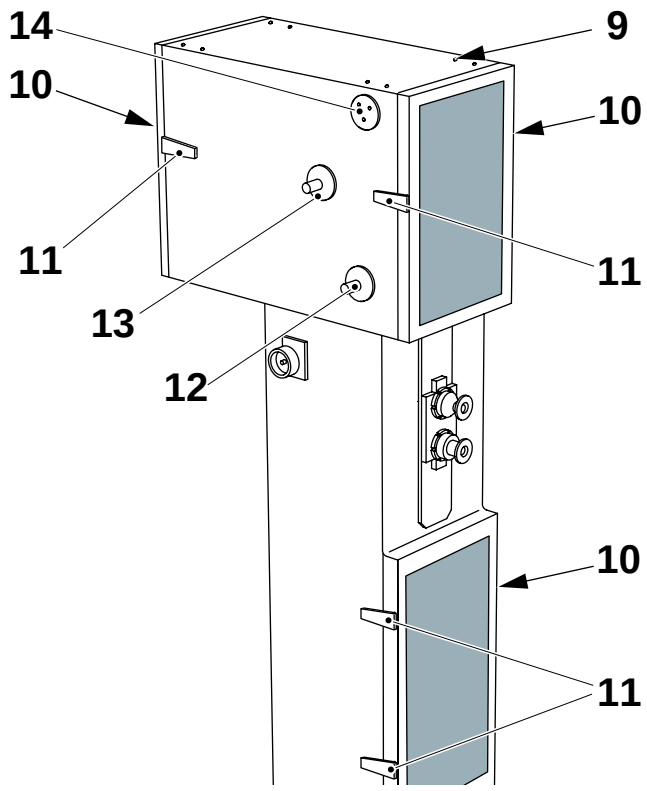

9 Screw
10 Door seal
11 Door hinge
12 Shaft
13 Bending roller
14 Bending roller - driven

TechPub_2614345_0105 - 01_2772031_01.fm

1-5 Superstructure - Check DIN Fittings

Machine Status	Power supply disconnector OFF Air supply OFF Steam supply OFF Water supply OFF
SPC Reference	272560-0900, 927205-0200 469091-0500, 456976-0700, 456836-0700

CAUTION
Risk of production fault.
Coordinate closing the steam supply valve with the process plant administrator to make sure that the production of other machines in the plant is not spoiled.

Each time a DIN fitting is dismantled Check the gaskets for dirt or wear and change them, if necessary.

Use the indicated slots to remove the gasket. Clean the surface and disinfect the gasket with cleaning agent code G, see OM Technical data.

TechPub_2614345_0105 - 01_2772031_01.fm

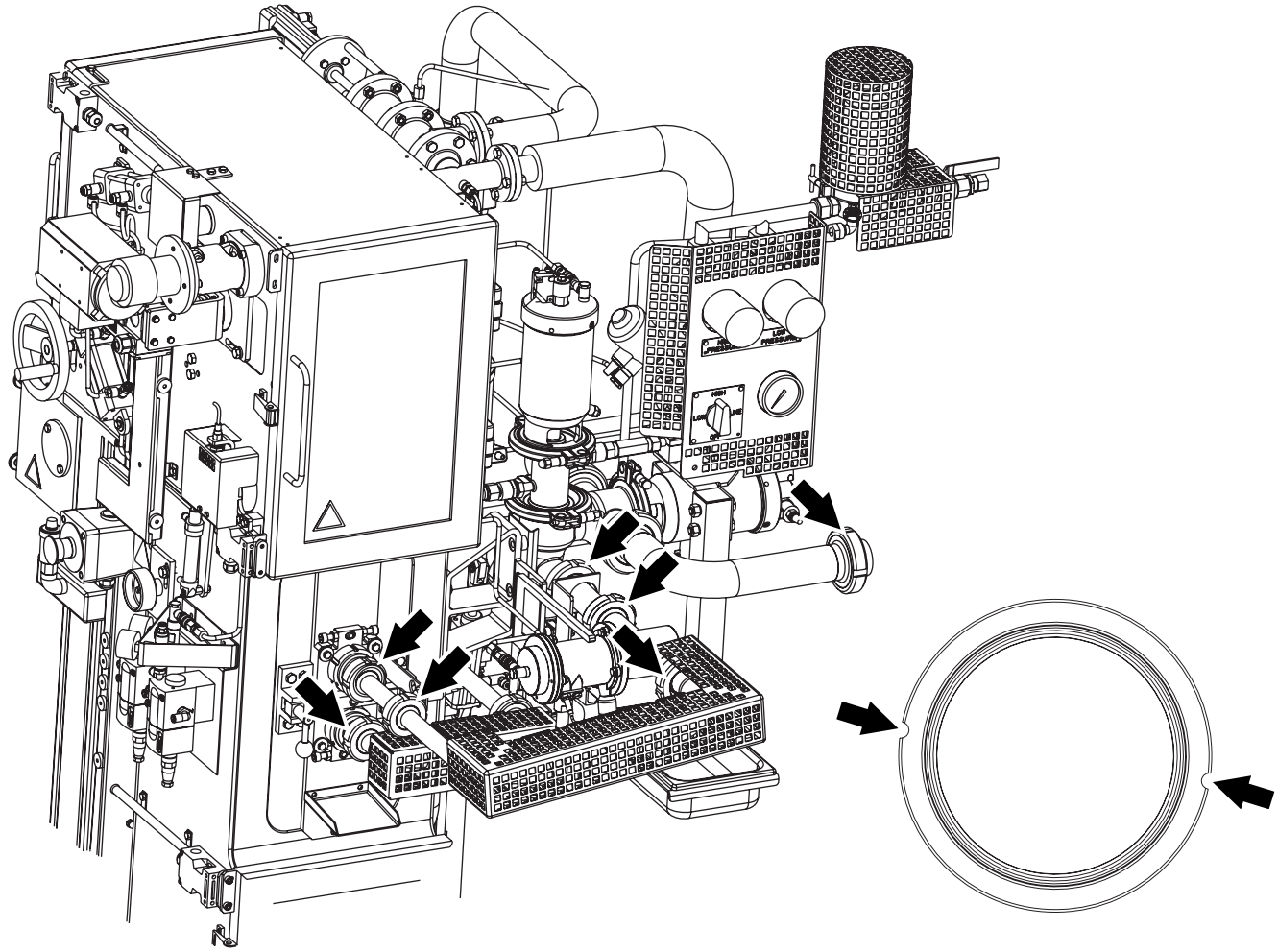

Note! Other DIN fittings are installed in the superstructure, refer to the mentioned lists. Standard configuration is shown, without HI.

1.1 Bath

1.1-1 Bath - Check Suction Box Seal

Machine Status	Power supply disconnector OFF Air supply OFF Steam supply ON Water supply OFF
Consumables	Adhesive TP No. 90153-23
SPC Reference	256014-0900

WARNING

Dangerous chemicals (hydrogen peroxide).
Hydrogen peroxide can be fatal if inhaled or swallowed. Follow the instructions in chapter ii Safety Precautions.

a) Loosen the knobs (1) and remove the lid (2). Check that the seal (3) is not worn or damaged. Change, if necessary. Use adhesive to attach.

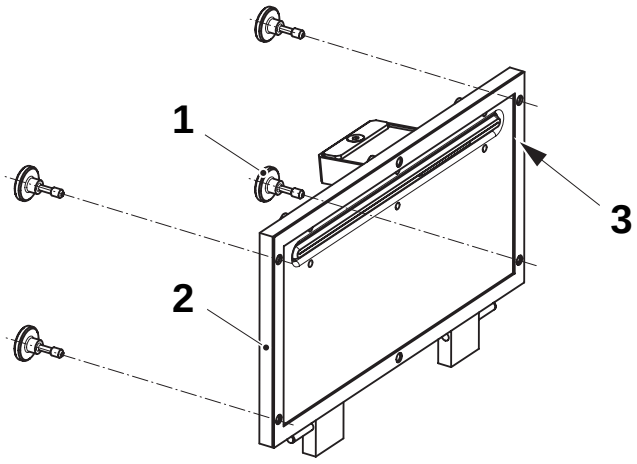

1 Knob
2 Lid
3 Seal

(Cont'd)

TechPub_2614345_0105 - 01_2772031_01.fm

(Cont'd)

b) Thread a piece of packaging material (4) through the seal (7). Make sure that the seal (7) closes tight and that the tapered edges (arrow) are not worn. If necessary, loosen the screws (6) remove, if present, the guiding PullTab (8) and the lid (5), and change the seal (7).

c) Assemble in the reverse order.

d) Check the underpressure in the bath, refer to 1-3 Superstructure - Check Pressures.

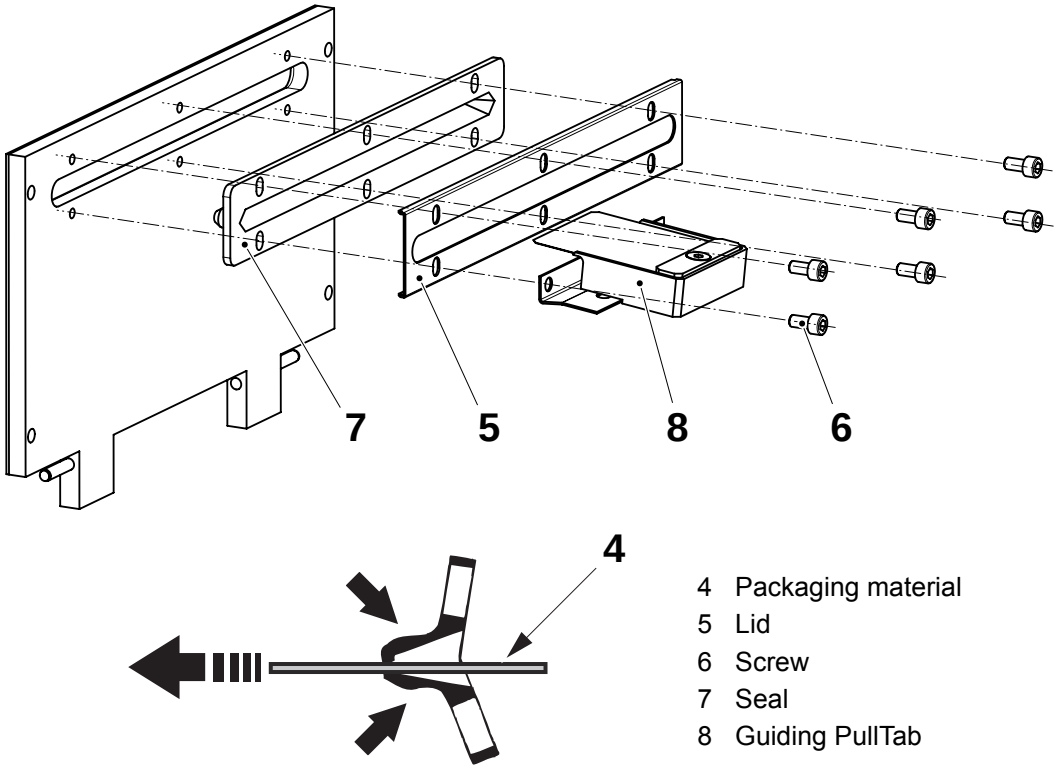

4 Packaging material
5 Lid
6 Screw
7 Seal
8 Guiding PullTab

TechPub_2614345_0105 - 01_2772031_01.fm

1.1-2 Bath - Check Microswitches

Machine Status	Power supply disconnector ON Air supply OFF Steam supply ON Water supply OFF
SPC Reference	256014-0900

WARNING

Dangerous chemicals (hydrogen peroxide).

Hydrogen peroxide can be fatal if inhaled or swallowed. Follow the instructions in chapter ii Safety Precautions.

a) Check that the microswitches (1) and (2) are clean.

b) With the machine in STEP 0 loosen the screws (3) and open the lid (4).

c) Check that the alarm on the TPOP is displayed. If not, adjust the position of the microswitch (1) with the screws (5).
If necessary, change the microswitch (1).

d) With the machine in STEP 0 loosen the screws (6) and open the lid (7).

e) Check that the alarm on the TPOP is displayed. If not, adjust the position of the microswitch (2), see 1.1-3 Bath - Set Microswitches.

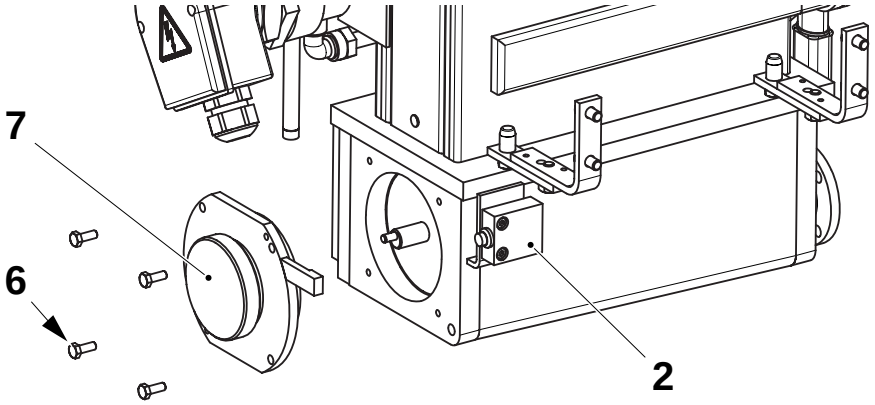

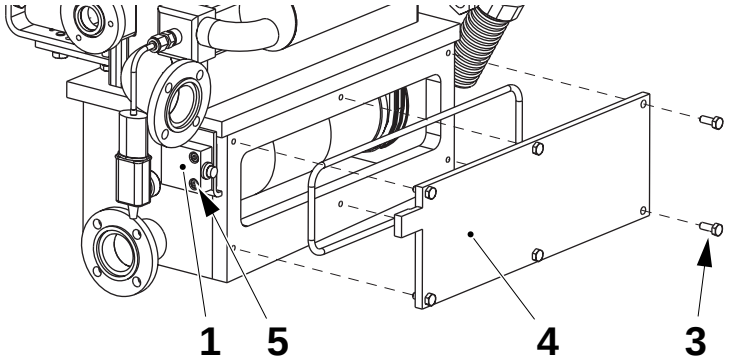

1 Microswitch
2 Microswitch
3 Screw
4 Lid
5 Screw
6 Screw
7 Lid

TechPub_2614345_0105 - 01_2772031_01.fm

1.1-3 Bath - Set Microswitches

Machine Status	Power supply disconnector ON Air supply OFF Steam supply ON Water supply OFF
SPC Reference	256014-0900

Set the microswitches (1) so that the alarm is:

- **activated** as soon as the covers (2) are **not** tightened in the correct position
- **not** activated when the covers are in the correct position

If necessary, set using the screws (3).

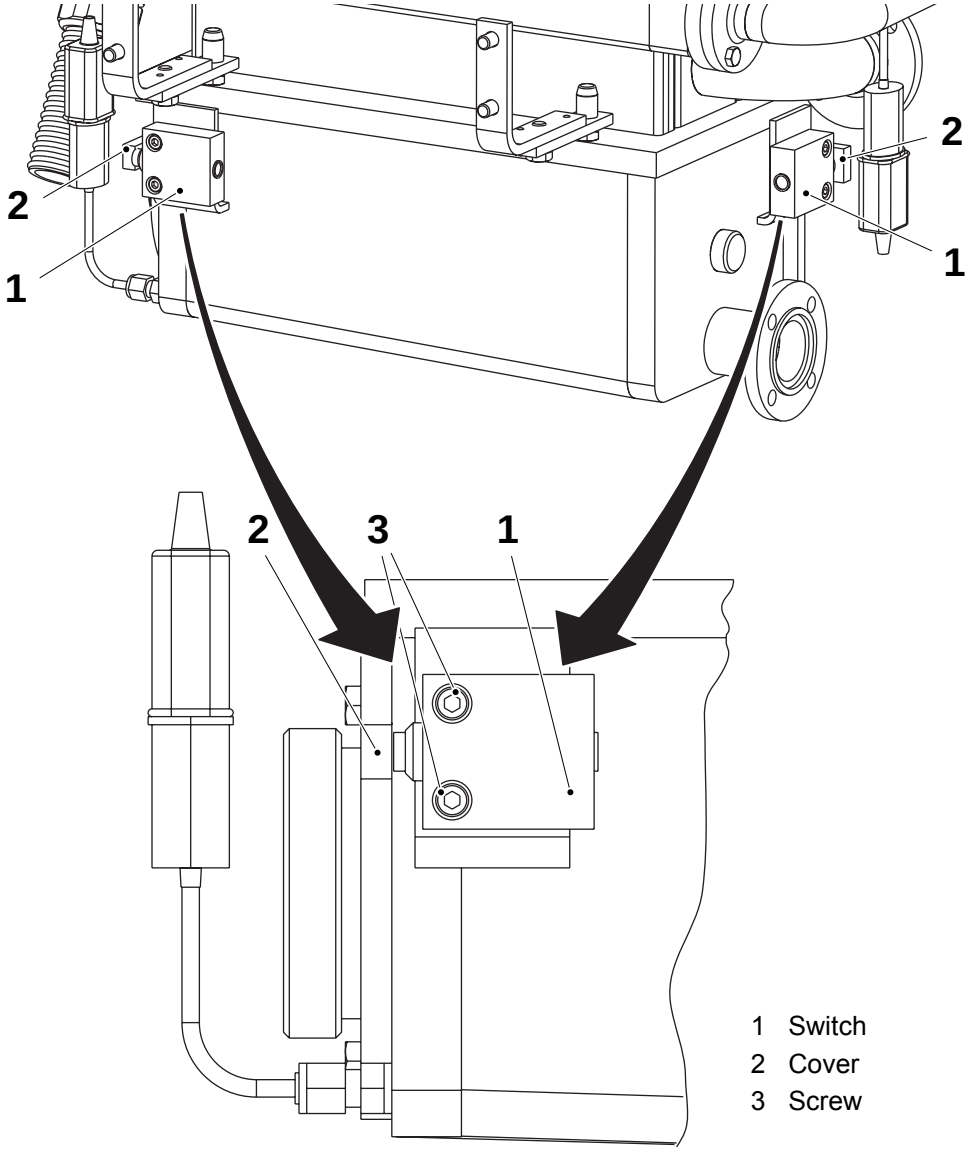

1 Switch
2 Cover
3 Screw

TechPub_2614345_0105 - 01_2772031_01.fm

1.1-4 Bath - Change Chain Seals

Machine Status	Power supply disconnector OFF Air supply OFF Steam supply ON Water supply OFF
SPC Reference	256014-0900

WARNING

Dangerous chemicals (hydrogen peroxide).
Hydrogen peroxide can be fatal if inhaled or swallowed. Follow the instructions in chapter ii Safety Precautions.

a) Make sure that the chain carrier is in its upper position. Release the tension on the peroxide bath chains by loosening the screws (3) on both sides and shifting the chain crank.

b) Tie up the chain ends so that they cannot drop down into the bath. Carefully remove the carrier and take the chains apart.

c) Remove the screws (1) and change the seals (2).

d) Assemble in the reverse order and tighten the chains.

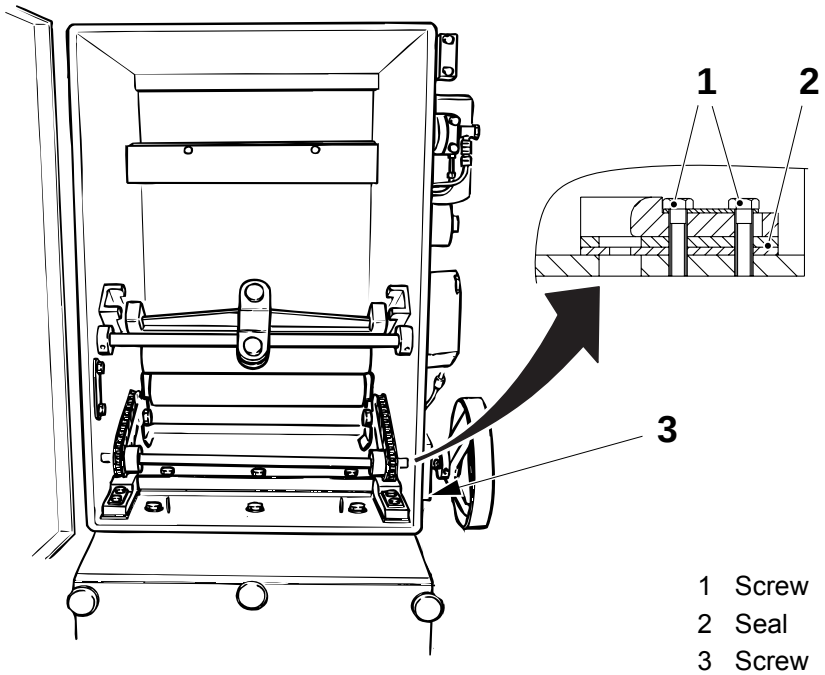

1 Screw
2 Seal
3 Screw

TechPub_2614345_0105 - 01_2772031_01.fm

1.1-5 Bath - Check Lower Bending Roller

Machine Status	Power supply disconnector OFF Air supply OFF Steam supply ON Water supply OFF
SPC Reference	256014-0900

WARNING

Dangerous chemicals (hydrogen peroxide).

Hydrogen peroxide can be fatal if inhaled or swallowed. Follow the instructions in chapter ii Safety Precautions.

a) Remove the cover (1) using the six screws (2).

WARNING

Risk of explosion.

Make sure that no oil or dirt comes into contact with parts in the bath.

b) Make sure that the lower bending roller (3) is clean and free from defects. Make sure that it rotates smoothly. Change the bushings and shaft in the roller, if necessary, refer to 1.1-6 Bath - Change Lower Bending Roller Bushing and Shaft.

c) Remove any strip remnants from the bottom of the bath.

d) Make sure that the gasket (4) is not worn or damaged. Change, if necessary. Put the cover back.

e) Make sure that the proximity switch (5) of the peroxide bath cover is activated when the cover is fitted, refer to 1.1-2 Bath - Check Microswitches.

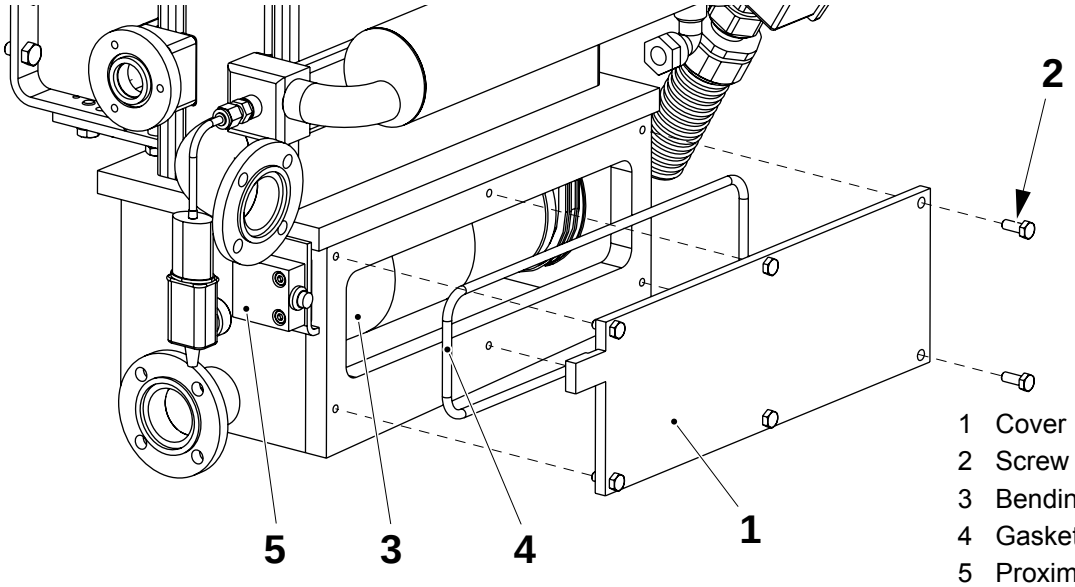

1 Cover
2 Screw
3 Bending roller
4 Gasket
5 Proximity switch

TechPub_2614345_0105 - 01_2772031_01.fm

1.1-6 Bath - Change Lower Bending Roller Bushing and Shaft

Machine Status	Power supply disconnector OFF Air supply OFF Steam supply ON Water supply OFF
SPC Reference	256014-0900

WARNING

Dangerous chemicals (hydrogen peroxide).

Hydrogen peroxide can be fatal if inhaled or swallowed. Follow the instructions in chapter ii Safety Precautions.

WARNING

Risk of explosion.

Make sure that no oil or dirt comes into contact with parts in the bath.

a) Remove the front cover (1) using the six screws (2).

b) Lift off the chains (3), see 1.1-4 Bath - Change Chain Seals.

c) Remove the four screws (4) and pull out the lid (5) together with the roller (6) and the two sprockets (7).

d) Change the shaft (8) and the bushings (9). Check the O-ring (10) for wear and damage. Change, if necessary, and assemble in the reverse order.

Note! Make sure to install the covers properly.

e) Set the microswitches, if necessary. See 1.1-3 Bath - Set Microswitches.

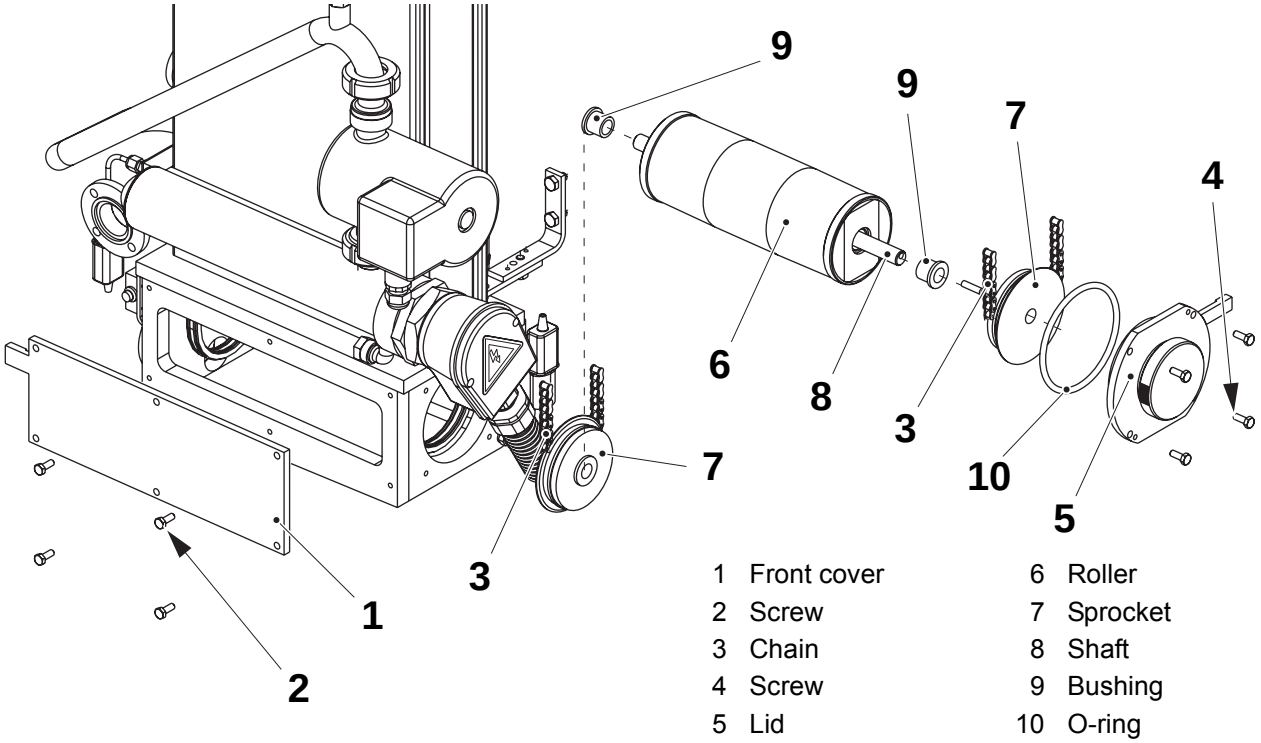

1 Front cover
2 Screw
3 Chain
4 Screw
5 Lid
6 Roller
7 Sprocket
8 Shaft
9 Bushing
10 O-ring

TechPub_2614345_0105 - 01_2772031_01.fm

1.1-7 Bath - Change Upper Bending Roller Bushings

Machine Status	Power supply disconnector OFF Air supply OFF Steam supply ON Water supply OFF
SPC Reference	256014-0900

WARNING

Dangerous chemicals (hydrogen peroxide).
Hydrogen peroxide can be fatal if inhaled or swallowed. Follow the instructions in chapter ii Safety Precautions.

a) Remove the six screws (2) and open the lid (1).

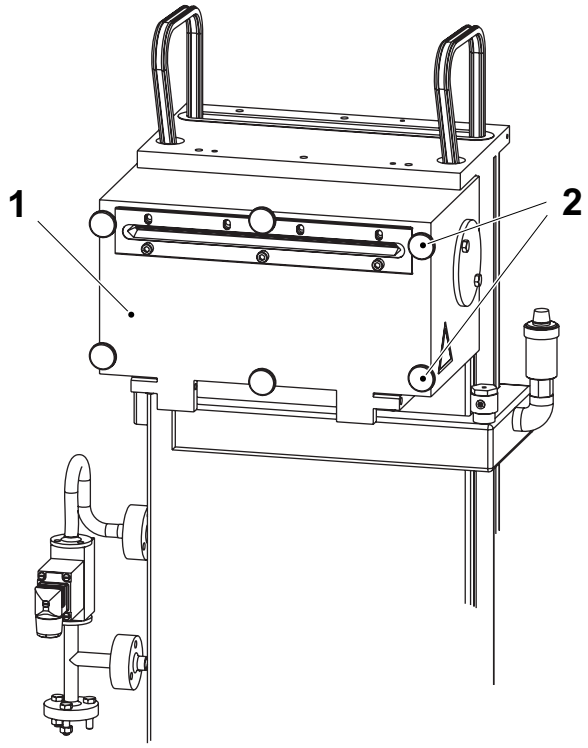

1 Lid
2 Screw

(Cont'd)

TechPub_2614345_0105 - 01_2772031_01.fm

(Cont'd)

WARNING
Risk of explosion.
Make sure that no oil or dirt comes into contact with parts in the bath.

b) Loosen the screws (3). Remove the lids (4) and the O-rings (5).

c) Change the flange bushings (6), if necessary.

d) Assemble in the reverse order.

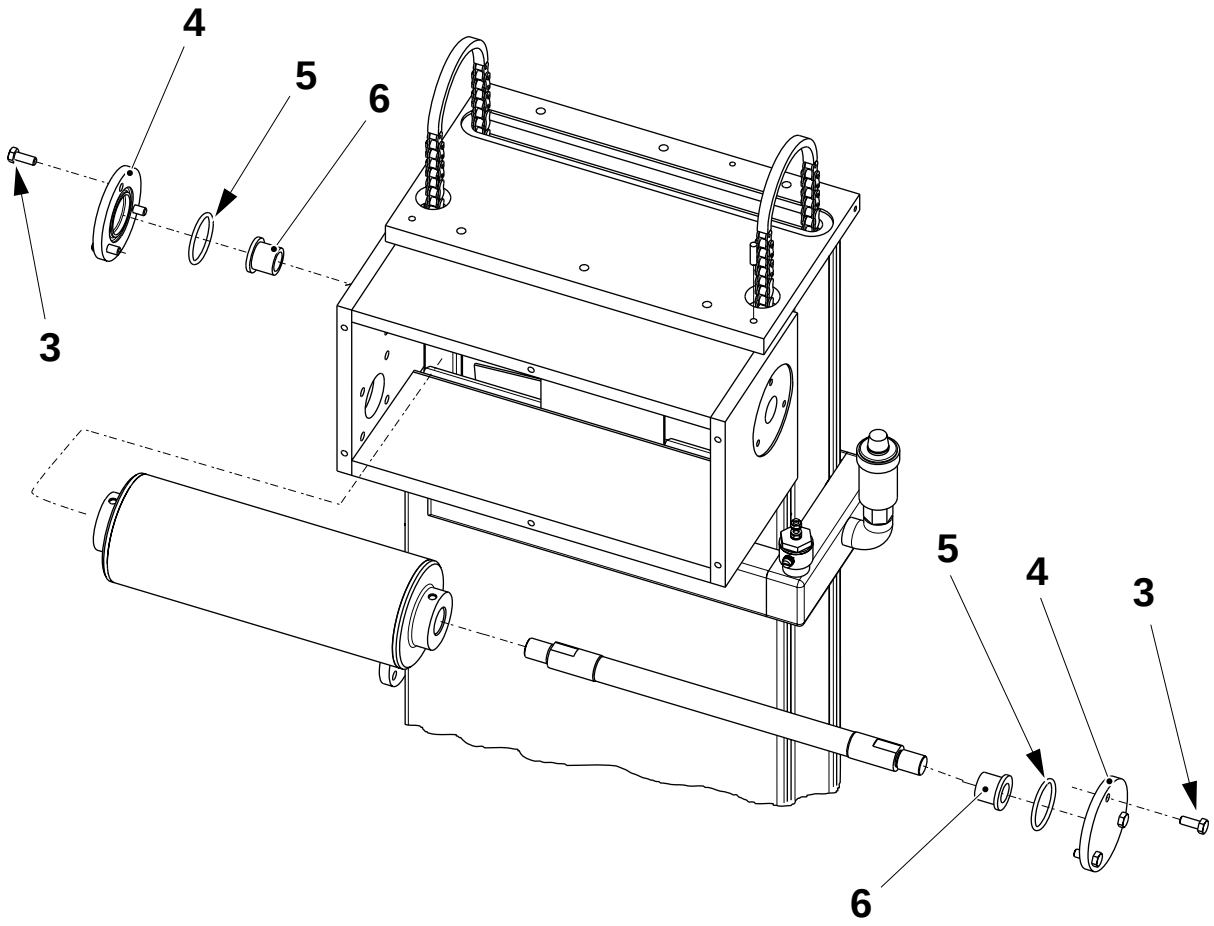

3 Screw
4 Lid
5 O-ring
6 Bushing

TechPub_2614345_0105 - 01_2772031_01.fm

1.1-8 Bath - Check Upper Level Filling Valve for Leakage

Machine Status	PRODUCTION
SPC Reference	256014-0900

CAUTION

Dangerous chemicals (acidified water).
This procedure is also valid for machines equipped with the Acidified Water sterilisation system. Wear personal protective equipment when working on the AW sterilisation system.

WARNING

Dangerous chemicals (hydrogen peroxide).
Hydrogen peroxide can be fatal if inhaled or swallowed. Follow the instructions in chapter ii Safety Precautions.

Make sure that there is no hydrogen peroxide leakage in the flange connection.

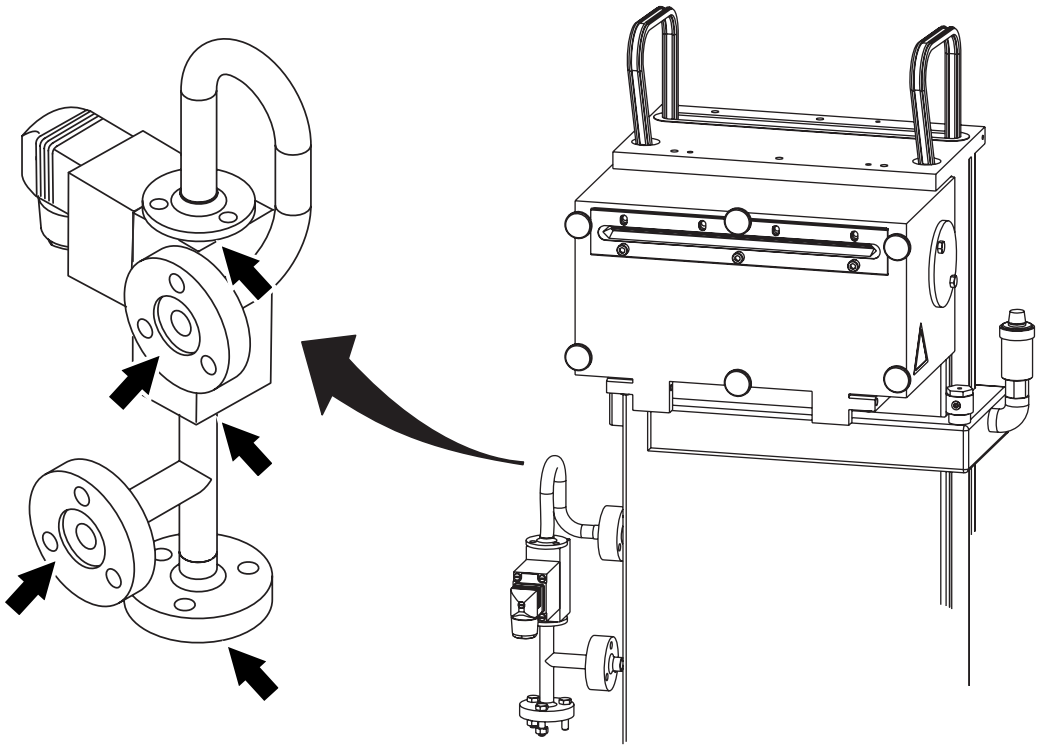

(Cont'd)

TechPub_2614345_0105 - 01_2772031_01.fm

(Cont'd)

e) Step down the machine.

f) If necessary, replace the seal rings (4) and the gaskets (3) as follows:
- Remove the upper level filling valve assembly.
- Disconnect the pipes (1) and (2).
- Replace the worn parts.
- Reassemble.

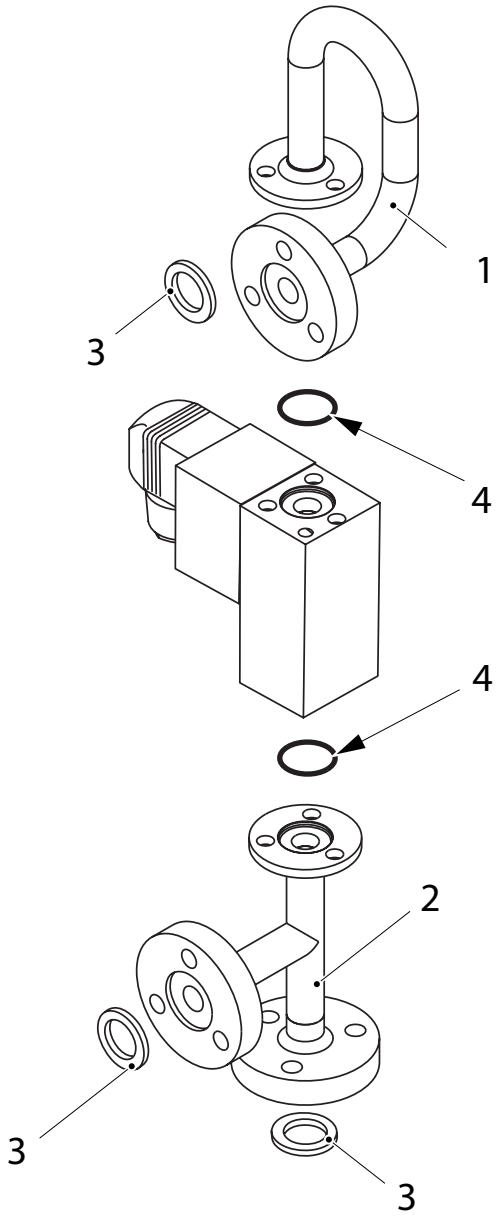

1 Pipe
2 Pipe
3 Gasket
4 Seal ring

TechPub_2614345_0105 - 01_2772031_01.fm

1.1-9 Bath - Check Air Vent Valves

Machine Status	Power supply disconnector OFF Air supply OFF Steam supply ON Water supply OFF
SPC Reference	256014-0900

a) Check both valves (1) and remove if present the O-ring (2) to allow the exit of the air. Remove the cap (3) and discard the O-ring (2) then install the cap (3).

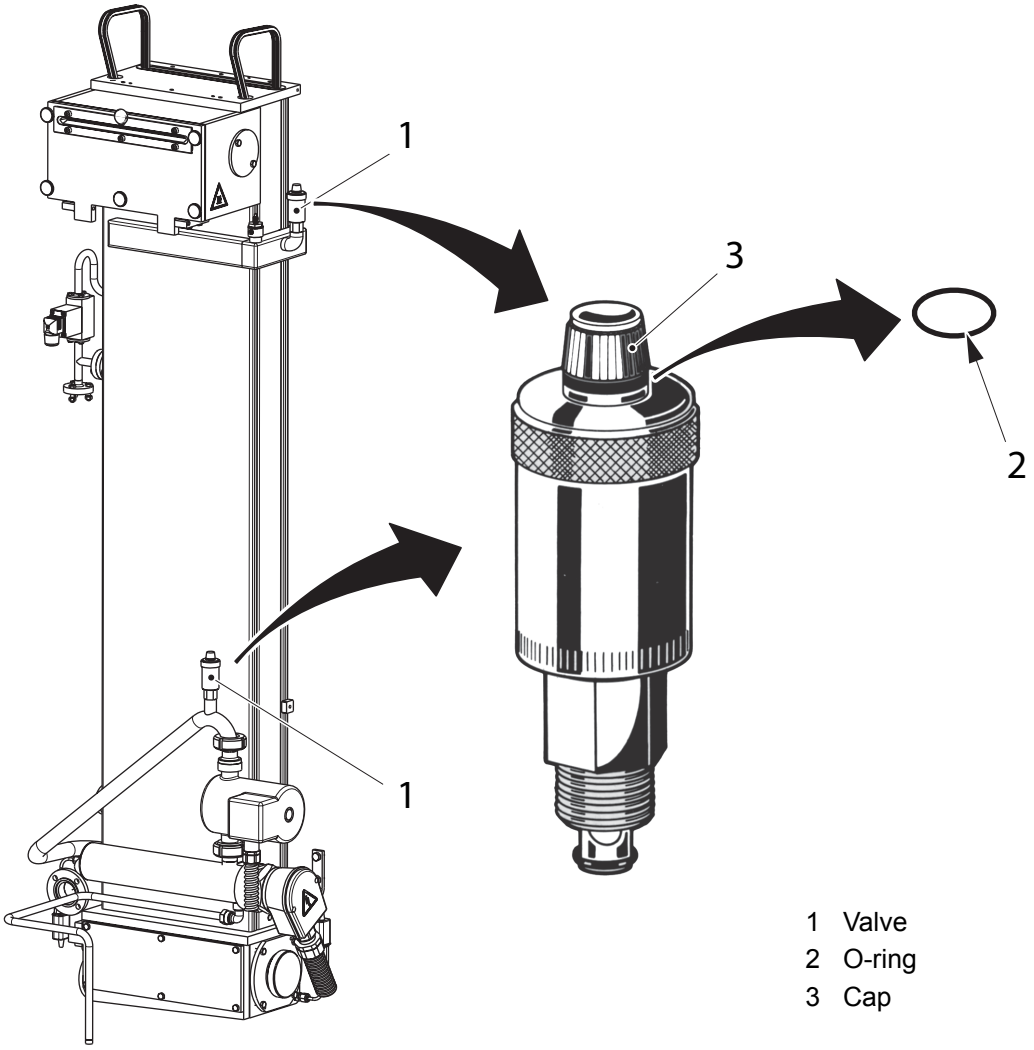

1 Valve
2 O-ring
3 Cap

(Cont'd)

TechPub_2614345_0105 - 01_2772031_01.fm

(Cont'd)

CAUTION

Hot surface.

Risk of burns. The water in the bath is hot and under pressure. Do not remove the check valve (4).

Note! When removing the body (5), it is normal that some water comes out through the check valve (4). If the water continues coming out, however, refit the body (5) and replace the complete air vent valves when the filling machine is switched OFF.

b) Quickly remove the body (5).

c) Remove the lid (6) and extract the floater (7).

d) Check the parts (5), (6), and (7) for lime deposits. If necessary, clean using a brush.

e) Assemble in the reverse order.

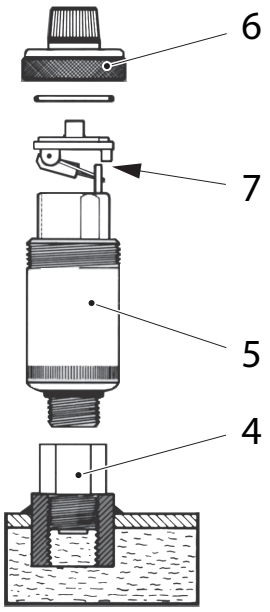

4 Check valve
5 Body
6 Lid
7 Floater

TechPub_2614345_0105 - 01_2772031_01.fm

1.2 Product Valve

See section 1-5 Superstructure - Check DIN Fittings.

1.2-1 Product Valve - Clean Steam Traps

Machine Status	Power supply disconnector OFF Air supply OFF Steam supply OFF
Consumables	Lubricant TP No. 90296-57
SPC Reference	272560-0900

WARNING

Compressed air and steam.

Can cause serious eye injury or burns. Before starting service work, make sure that the compressed air has been turned off. Make sure that there is no product, steam or cleaning liquid in the line. In case of an accident, call for medical attention.

CAUTION

Risk of production fault.

Coordinate closing the steam supply valve with the process plant administrator to make sure that the production of other machines in the plant is not spoiled.

(Cont'd)

TechPub_2614345_0105 - 01_2772032_01.fm

(Cont'd)

a) Remove the steam traps (1) from the line using the four nuts (2).
b) Disassemble the steam trap and clean the grid (3) and the valve (4).
c) Put a thin layer of lubricants on the threads of the steam traps (1).
d) Assemble in the reverse order.

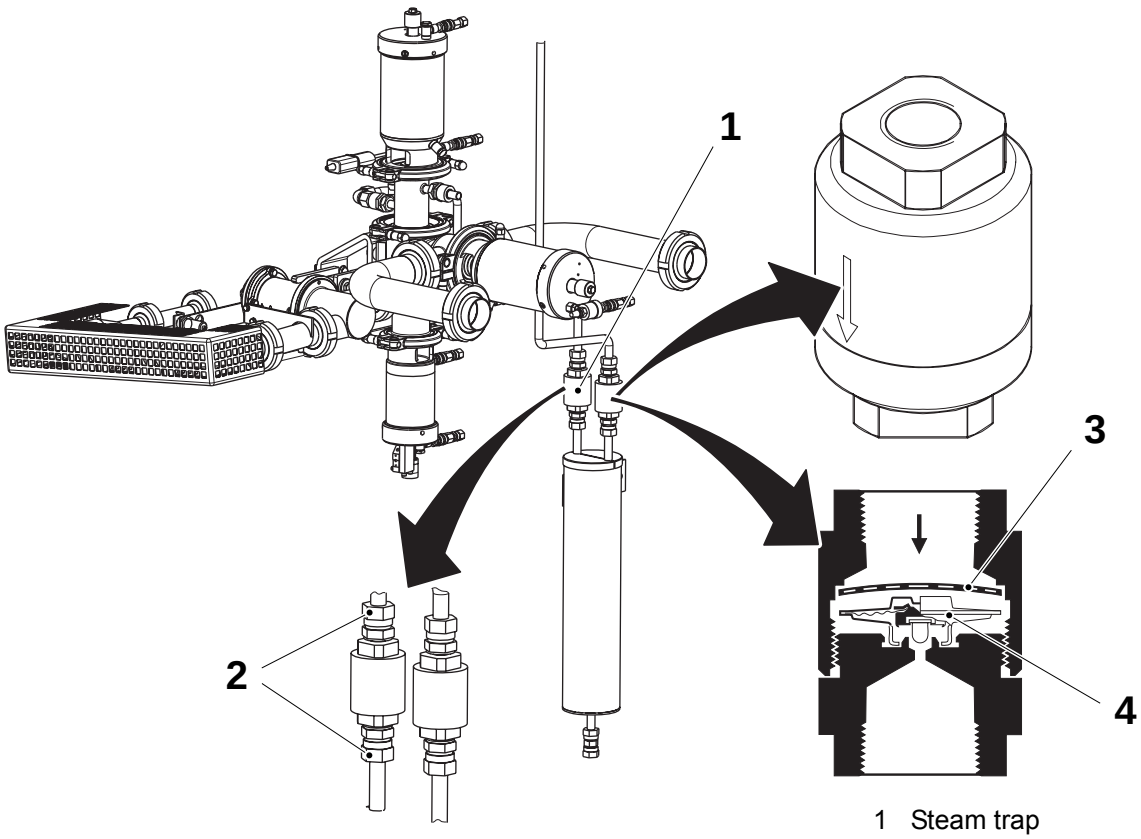

1 Steam trap
2 Nut
3 Grid
4 Valve

TechPub_2614345_0105 - 01_2772032_01.fm

1.2-2 Product Valve - Check Steam Filter Cartridge

Machine Status	Power supply disconnector OFF Air supply OFF Steam supply OFF
Special Equipment	Tank 50 litres Filter Pall Profile 10µm Coalecher element Pall SU range Thermometer Pressure gauge Air tight end section
Consumables	Nitric acid 14 - 15% (w/w)
SPC Reference	272560-0900

CAUTION
Risk of production fault.
Coordinate closing the steam supply valve with the process plant administrator to make sure that the production of other machines in the plant is not spoiled.

General Information

- To obtain optimum performance from the filter cartridge:
  - clean the filter cartridge thoroughly (or return to Pall for cleaning and testing) before reusing
  - label and store used cartridges **after** removing the O-ring
- Water used during the cleaning should be deionised **and** filtered.
- For rinsing, use a 50 later tank, designed to avoid “dead spaces”. Incoming water (renewal rate 5 l/min) must be filtered with Pall Profile 10µm.
- The contents of the tank should be agitated using compressed air, filtered through a Coalecher element from the Pall SU-range.

CAUTION
Risk of contamination.
If the cartridge is highly contaminated or if the recommended cleaning procedure cannot be executed correctly, contact Pall Scientific & Laboratory Services for advice.

(Cont'd)

TechPub_2614345_0105 - 01_2772032_01.fm

(Cont'd)

WARNING

Compressed air and steam.

Can cause serious eye injury or burns. Before starting service work, make sure that the compressed air has been turned off. Make sure that there is no product, steam or cleaning liquid in the line. In case of an accident, call for medical attention.

WARNING

Hot surfaces.

Risk of burns. Wear protective gloves.

a) Close the system inlet valve. Slowly open the vent and drain the valve to release the pressure.

b) Remove the protective cover (1) and filter cartridge (2).

c) Check the condition of the cartridge (2). Clean, if necessary, according to the following procedures.

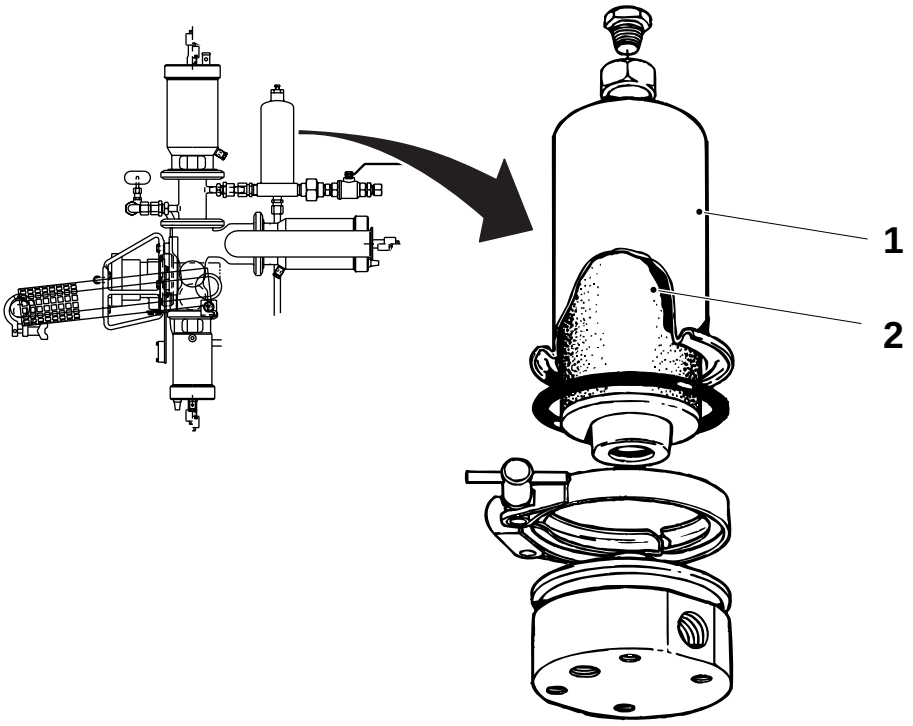

1 Protective cover
2 Filter cartridge

(Cont'd)

TechPub_2614345_0105 - 01_2772032_01.fm

(Cont'd)

d) Remove the O-ring (arrow) from the filter cartridge.

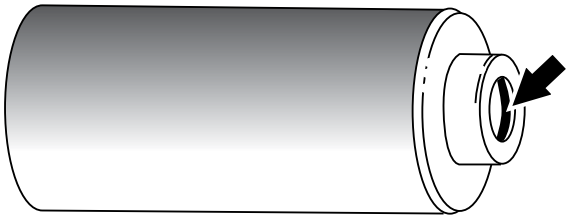

Cleaning with Nitric Acid

WARNING

Chemical hazard.

Nitric acid. See chapter ii Safety Precautions.

The cleaning procedures must not contravene any legal or local safety regulations.

a) Immerse the filter cartridge in 14 - 15% (w/w) of nitric acid at 60 - 70°C for 10 - 20 minutes.

b) Rinse the cartridge in water for **at least** 10 minutes.

c) Empty the tank and refill with water.

d) The pH of the tank contents should now be 6 - 8.

e) Rinse the cartridges again for at least two hours, or until the pH level of the tank contents is the same as that of the incoming water.

f) Flush the cartridges with water in the reverse direction.
If the water emerging from the cartridge is discoloured or contains visible contaminants, repeat items a) - b) in the cleaning procedure.

Reverse Bubble Point Testing

Note! Perform these items **immediately** after the cleaning procedure.

a) Thoroughly soak the filter cartridge in water.

b) Attach the air tight end section onto one end of the filter cartridge.

c) Seal the other end of the cartridge to a compressed air line. The pressure should be in the range of 0 - 13 kPa.

(Cont'd)

TechPub_2614345_0105 - 01_2772032_01.fm

(Cont'd)

d) Submerge the filter cartridge in water. The filter should be kept approximately 125 mm below the surface.

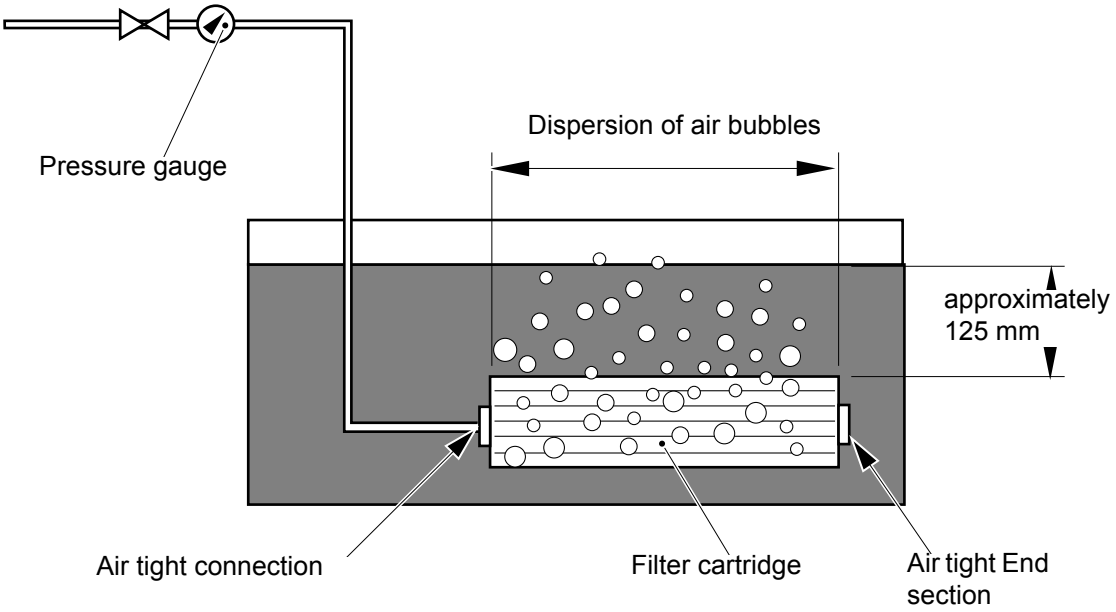

e) Gradually increase the air pressure while rotating the cartridge slowly, until air bubbles can be seen emerging from it.
Record the air pressure at this point.

f) Carefully inspect the filter cartridge to ensure that the air bubbles emerge at a similar rate from the entire cartridge. If not, contact **Pall Scientific & Laboratory Services** for advice.

g) Lower the pressure to half the recorded pressure. If air bubbles emerge from an isolated area of the cartridge at this pressure, contact **Pall Scientific & Laboratory Services** for advice.

Drying Procedure

Dry the filter at 105 - 120°C for 1 - 2 hours to constant weight.

After drying, visually check the filter cartridge for damage or corrosion. Change the cartridge, if necessary.

Before fitting the filter cartridge, install a new O-ring.

TechPub_2614345_0105 - 01_2772032_01.fm

1.2-3 Product Valve - Change Filter Cartridge

Machine Status	Power supply disconnector OFF Air supply OFF Steam supply OFF
SPC Reference	272560-0900

WARNING

Compressed air and steam.

Can cause serious eye injury or burns. Before starting service work, make sure that the compressed air has been turned off. Make sure that there is no product, steam or cleaning liquid in the line. In case of an accident, call for medical attention.

WARNING

Hot surfaces.

Risk of burns. Wear protective gloves.

CAUTION

Risk of production fault.

Coordinate closing the steam supply valve with the process plant administrator to make sure that the production of other machines in the plant is not spoiled.

(Cont'd)

TechPub_2614345_0105 - 01_2772032_01.fm

(Cont'd)

a) Close the system inlet valve. Slowly open the vent and drain the valve to release the pressure.

b) Loosen the T-nut (1) and remove the protective cover (2). Clean the inside of the cover (2).

c) Check the O-ring (4). Change it, if necessary.

d) Change the filter cartridge (3). Assemble in the reverse order.

Note! Tighten the T-nut (1) by hand only.

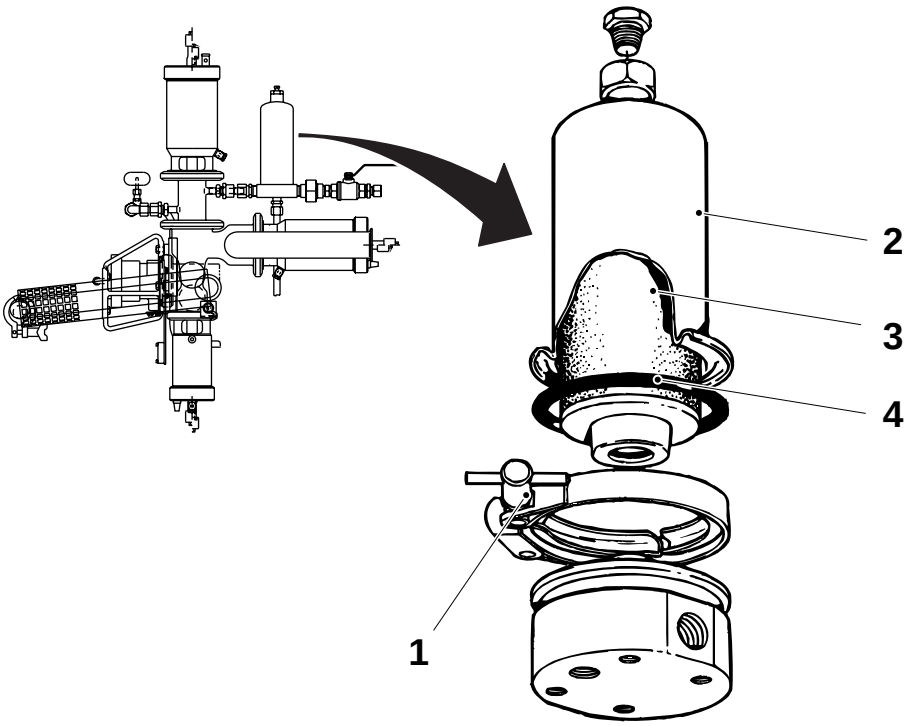

1 T-nut
2 Protective cover
3 Filter cartridge
4 O-ring

TechPub_2614345_0105 - 01_2772032_01.fm

1.2.1 AP Valve

1.2.1-1 AP Valve - Remove Cylinders

Machine Status	Power supply disconnector OFF Air supply OFF Steam supply OFF
Special Equipment	Tool TP No. 449969-101
SPC Reference	576434-0200

WARNING

Compressed air and steam.

Can cause serious eye injury or burns. Before starting service work, make sure that the compressed air has been turned off. Make sure that there is no product, steam or cleaning liquid in the line. In case of an accident, call for medical attention.

CAUTION

Risk of production fault.

Coordinate closing the steam supply valve with the process plant administrator to make sure that the production of other machines in the plant is not spoiled.

a) Remove the six air connections (1) from the cylinders.

b) Remove the three proximity switches (2).

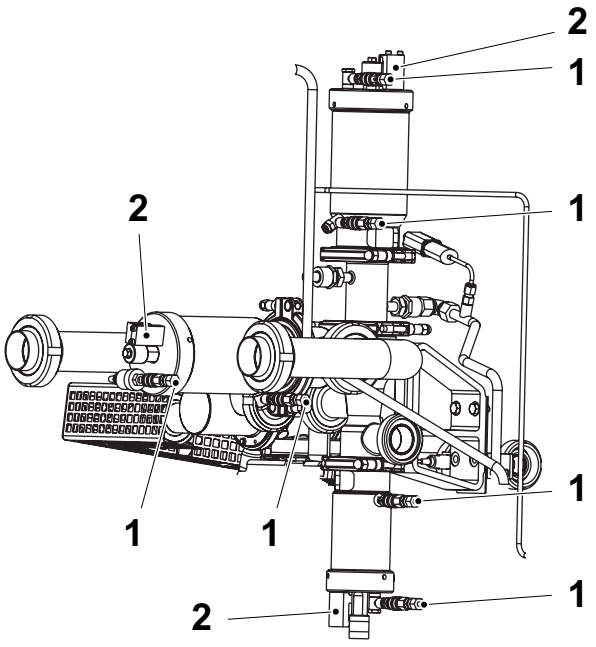

(Cont'd)

TechPub_2614345_0105 - 01_2772032_01.fm

(Cont'd)

c) Remove the sleeve (3).

d) Compress the cylinder spring (approximately 5 turns) using the tool (4). Remove the clamp ring (5) and the cylinder.

e) Check the gasket (6). Change it, if necessary.

f) Repeat items c) to e) for the B cylinder and the C cylinder.

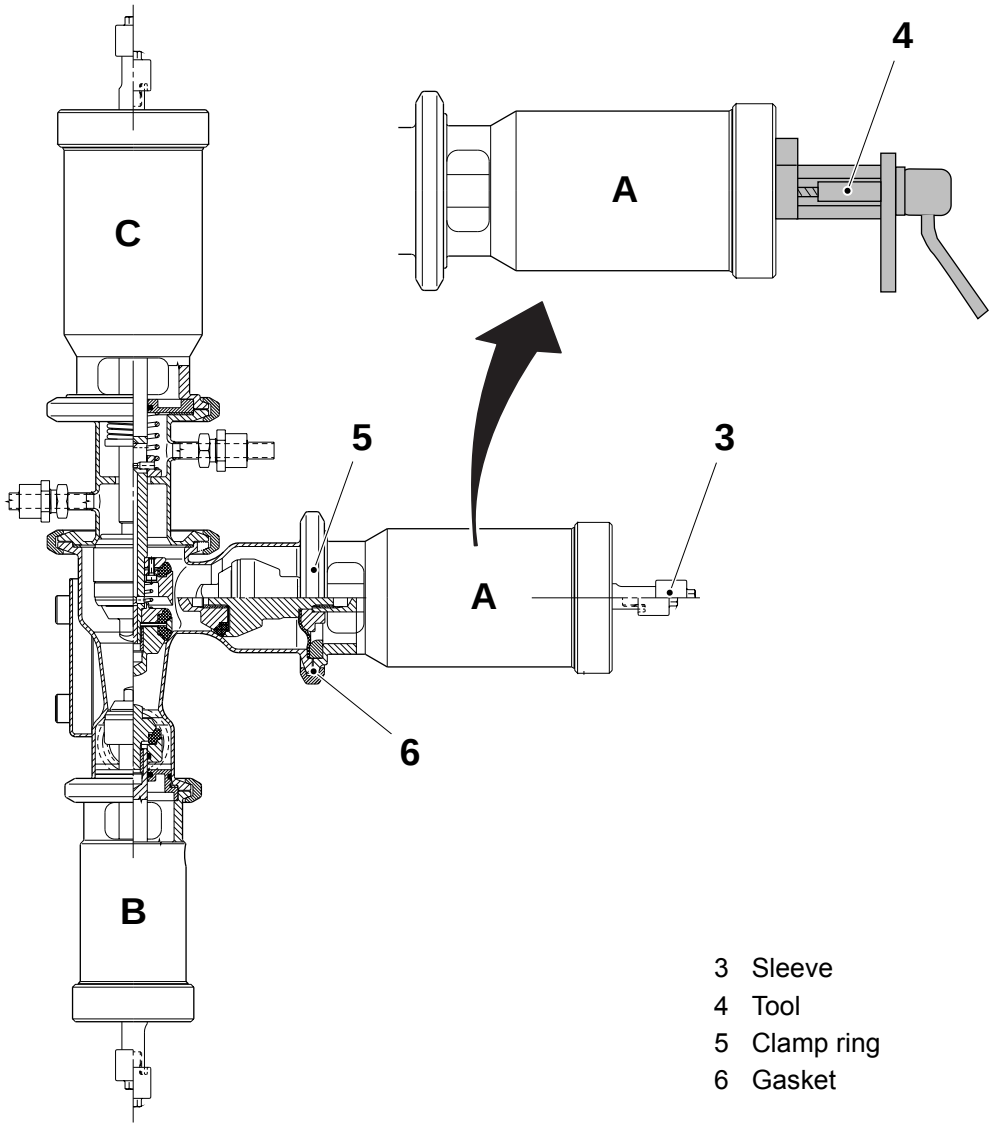

3 Sleeve
4 Tool
5 Clamp ring
6 Gasket

TechPub_2614345_0105 - 01_2772032_01.fm

1.2.1-2 AP Valve - Change Seals and Diaphragm

Machine Status	Power supply disconnector OFF Air supply OFF Steam supply OFF
Special Equipment	Torque wrench, minimum 55 Nm
SPC Reference	576434-0200

CAUTION
Risk of production fault.
Coordinate closing the steam supply valve with the process plant administrator to make sure that the production of other machines in the plant is not spoiled.

(Cont'd)

TechPub_2614345_0105 - 01_2772032_01.fm

(Cont'd)

A Cylinder (Product)

a) Remove the cylinder, see 1.2.1-1 AP Valve - Remove Cylinders.

b) Fully release the tool.

c) Remove the valve cone (1) and change the seal ring (2).

d) Remove the seal ring holder (3), the diaphragm (4), the ring (5), and the washer (6).

e) Change the diaphragm (4).

f) Install the ring (5) and the washer (6) to the cylinder housing with the grooves facing upwards.

g) Install the new diaphragm (4).

WARNING

Risk of serious product fault.

Install the diaphragm (4) with the bulge pointing away from the valve body.

h) Assemble the seal ring holder (3), the seal ring (2), and the valve cone (1) in the reverse order.

Note! Tighten the valve cone (1) with a torque wrench set to **50 ± 2 Nm**.

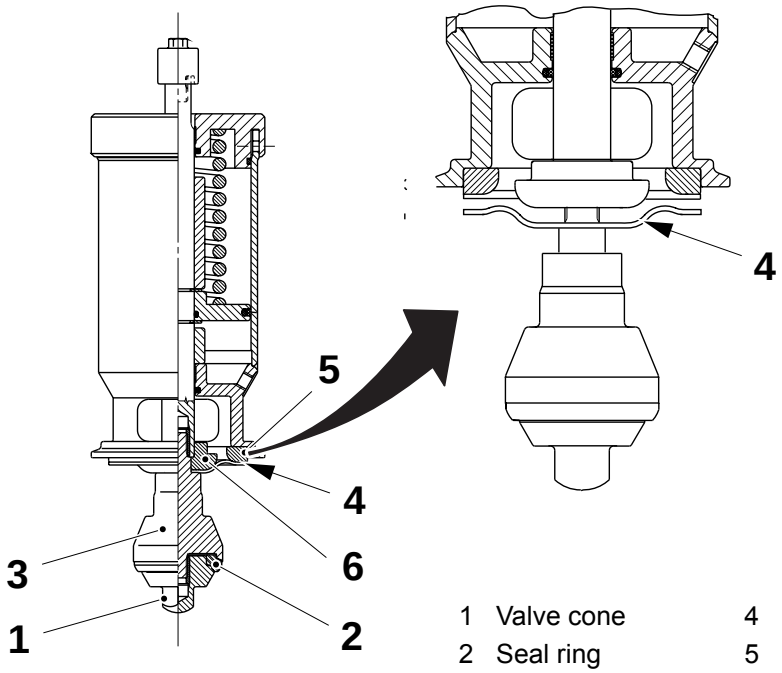

1 Valve cone
2 Seal ring
3 Seal ring holder
4 Diaphragm
5 Ring
6 Washer

(Cont'd)

TechPub_2614345_0105 - 01_2772032_01.fm

(Cont'd)

C Cylinder (Steam)

a) Remove the cylinder, see 1.2.1-1 AP Valve - Remove Cylinders.

b) Remove the valve cone (1) and the seal ring (6).

c) Change the seal rings (2).

d) Loosen the screws (4) and remove the holder (5).

e) Change the seal rings (3).

f) Reassemble in the reverse order.

Note! Tighten the valve cone (1) with a torque wrench set to **50 ± 2 Nm.**

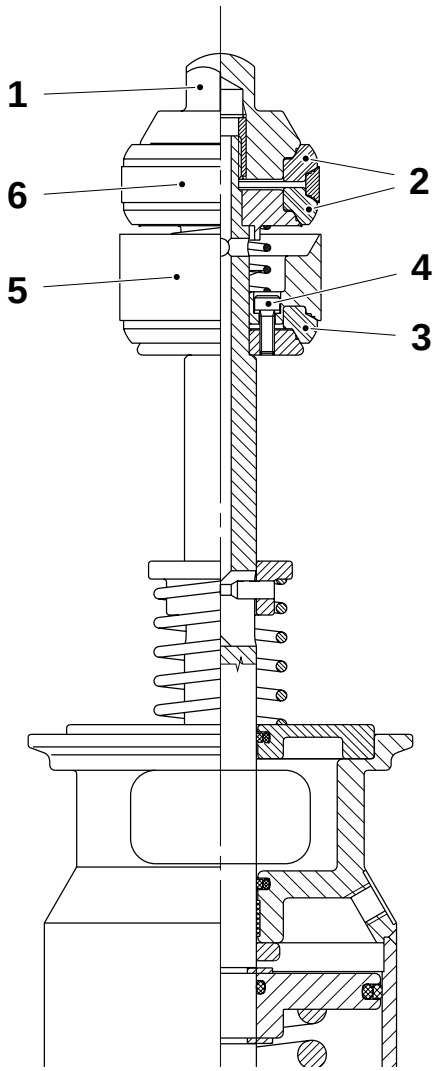

1 Valve cone
2 Seal ring
3 Seal ring
4 Screw
5 Holder
6 Seal ring

(Cont'd)

TechPub_2614345_0105 - 01_2772032_01.fm

(Cont'd)

B Cylinder (Sterile Air)

a) Remove the sterile air valves, see 1.2.1-1 AP Valve - Remove Cylinders.

b) Fully release the tool.

c) Change the O-ring (1).

d) Remove the valve cone (2) and change the seal ring (3).

e) Remove the washer (4) and change the O-ring (5).

f) Reassemble in the reverse order.

Note! Tighten the valve cone (1) with a torque wrench set to **50 ± 2 Nm.**

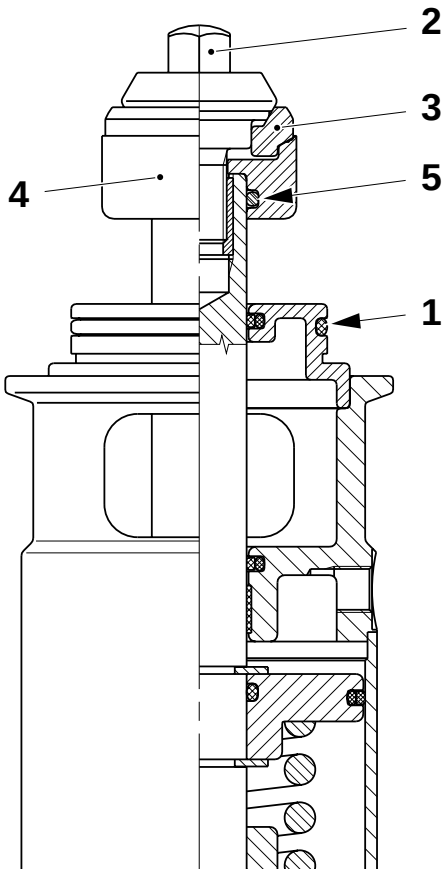

1 O-ring
2 Valve cone
3 Seal ring
4 Washer
5 O-ring

TechPub_2614345_0105 - 01_2772032_01.fm

1.2.1-4 AP Valve - Change A and B Cylinder Seals

Machine Status	Power supply disconnector OFF Air supply OFF Steam supply OFF
Special Equipment	Tool TP No. 449969-101
Consumables	Silicone grease code L
SPC Reference	576434-0200

WARNING

Compressed air and steam.

Can cause serious eye injury or burns. Before starting service work, make sure that the compressed air has been turned off. Make sure that there is no product, steam or cleaning liquid in the line. In case of an accident, call for medical attention.

CAUTION

Risk of production fault.

Coordinate closing the steam supply valve with the process plant administrator to make sure that the production of other machines in the plant is not spoiled.

(Cont'd)

TechPub_2614345_0105 - 01_2772032_01.fm

(Cont'd)

a) Remove the product valve, see 1.2.1-1 AP Valve - Remove Cylinders.
b) Remove the lock screw (2).
c) Loosen the tool and remove the end section (1).
d) Change the seal rings (3) and (4), and the O-ring (5).

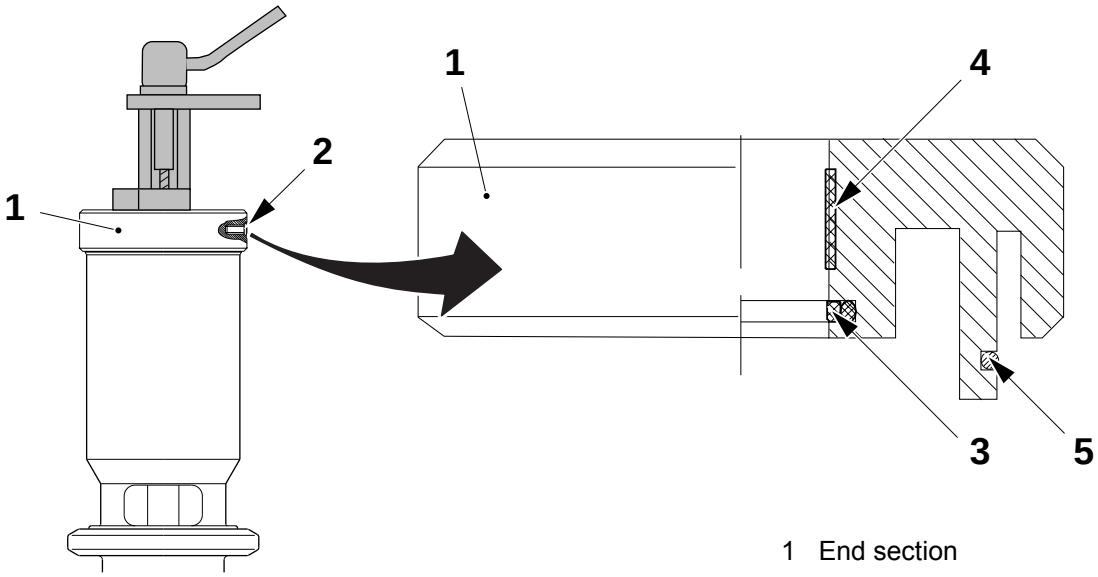

1 End section
2 Lock screw
3 Seal ring
4 Seal ring
5 O-ring

(Cont'd)

TechPub_2614345_0105 - 01_2772032_01.fm

(Cont'd)

e) Remove the rod (6) with the spring (7) and the piston (8).
f) Remove the circlip (9) and disassemble the piston (8) from the rod (6).
g) Change the O-rings (11) and the seal rings (10).
h) Lubricate the piston rod (6) with grease code L.
i) Assemble in the reverse order.

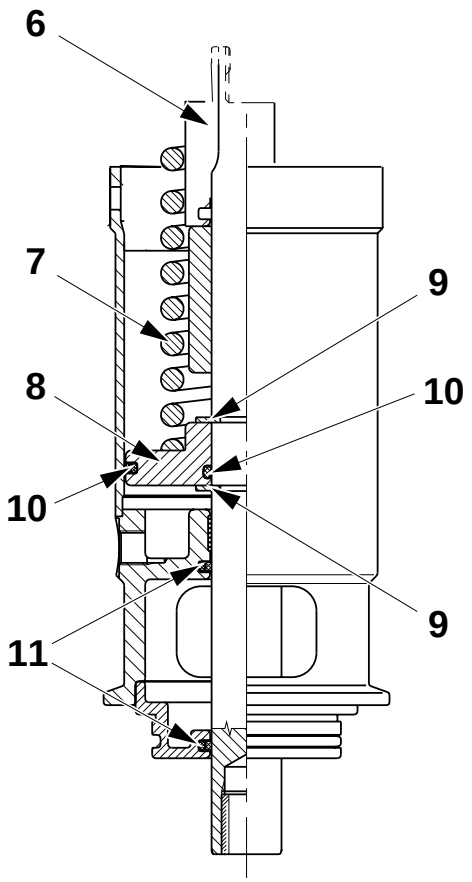

6 Rod
7 Spring
8 Piston
9 Circlip
10 Seal ring
11 O-ring

TechPub_2614345_0105 - 01_2772032_01.fm

1.2.1-5 AP Valve - Change C Cylinder Seals

Machine Status	Power supply disconnector OFF Air supply OFF Steam supply OFF
Special Equipment	Tool TP No. 449969-101
Consumables	Silicone grease code L
SPC Reference	576434-0200

CAUTION
Risk of production fault.
Coordinate closing the steam supply valve with the process plant administrator to make sure that the production of other machines in the plant is not spoiled.

a) Remove the valve, see 1.2.1-1 AP Valve - Remove Cylinders.
b) Remove the lock screw (2).
c) Loosen the tool and remove the end section (1).
d) Change the seal rings (3) and (4), and the O-ring (5).
e) Remove the cylindrical pin (7), the washer (6), and the spring (8).

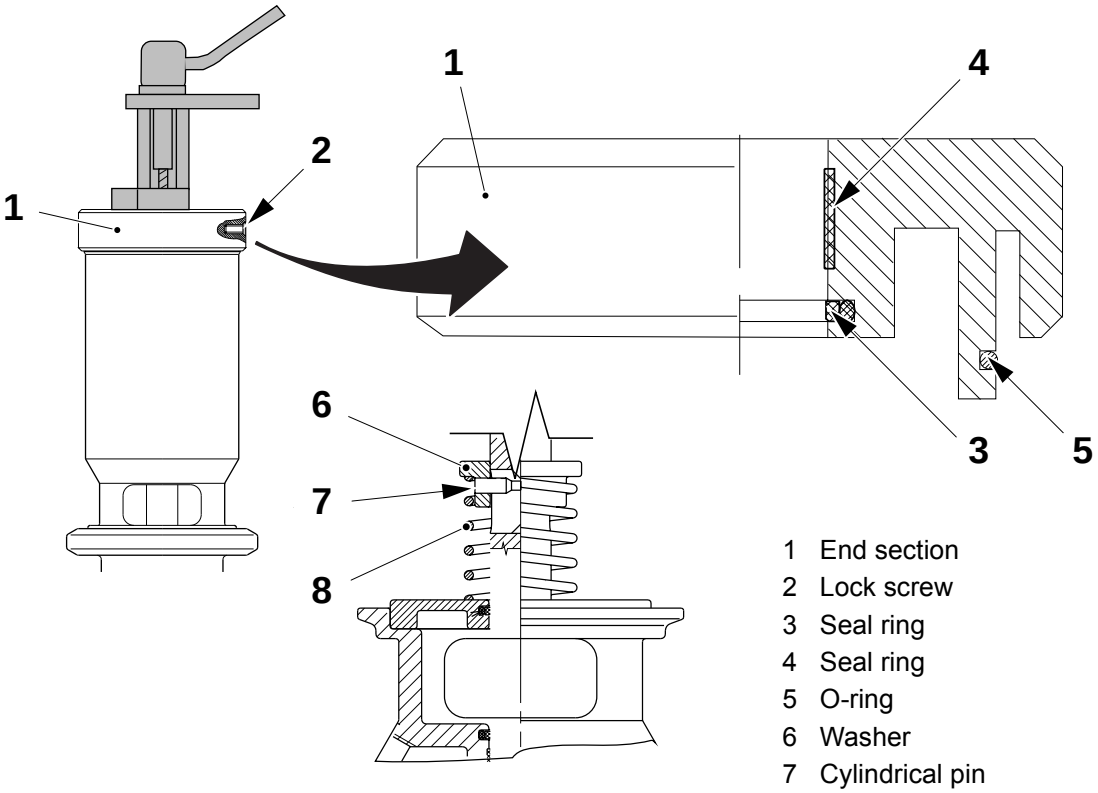

1 End section
2 Lock screw
3 Seal ring
4 Seal ring
5 O-ring
6 Washer
7 Cylindrical pin
8 Spring

(Cont'd)

TechPub_2614345_0105 - 01_2772032_01.fm

(Cont'd)

f) Remove the rod (12) with the spring (11) and the piston (13).
g) Remove the circlips (9) and remove the piston (13) from the rod (11).
h) Change the O-ring (14) and the seal rings (10).
i) Lubricate the piston rod (12) with grease code L.
j) Assemble in the reverse order.

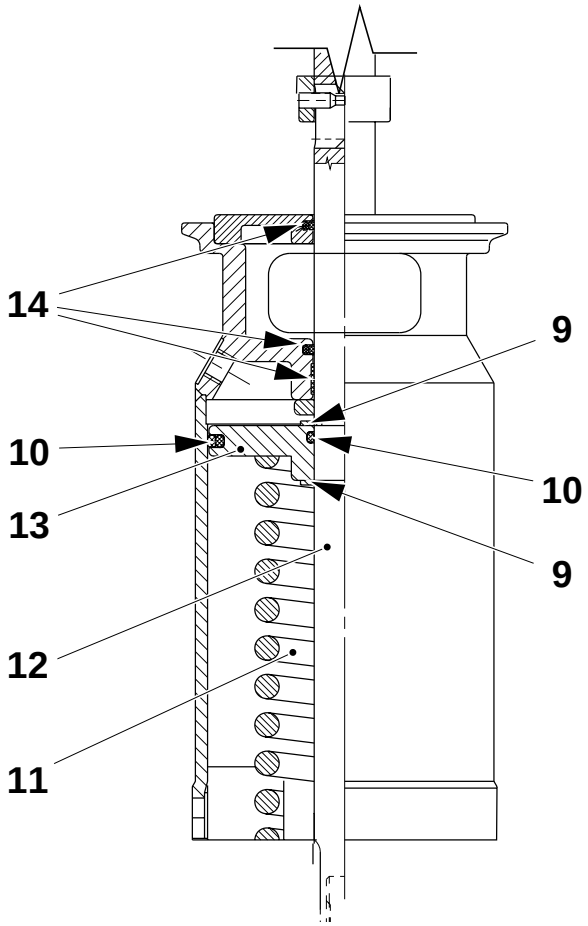

9 Circlips
10 Seal ring
11 Spring
12 Rod
13 Piston
14 O-ring

TechPub_2614345_0105 - 01_2772032_01.fm

1.2.2 Regulating Valve

See section 1-5 Superstructure - Check DIN Fittings.

1.2.2-1 RegulatIng Valve - Overhaul

Machine Status	Power supply disconnector OFF Air supply OFF Steam supply ON Water supply OFF
Special Equipment	Spirit level TP No. 90243-165
SPC Reference	927205-0200

a) Remove the quick-release connection (1).

b) Loosen the screw (2) and remove the proximity switch (3) from the regulating valve (4).

c) Remove the bleed connector (5)

d) Remove the sensor cables (6) from the regulating valve (4).

e) Remove regulating valve (4) using the connections (7).

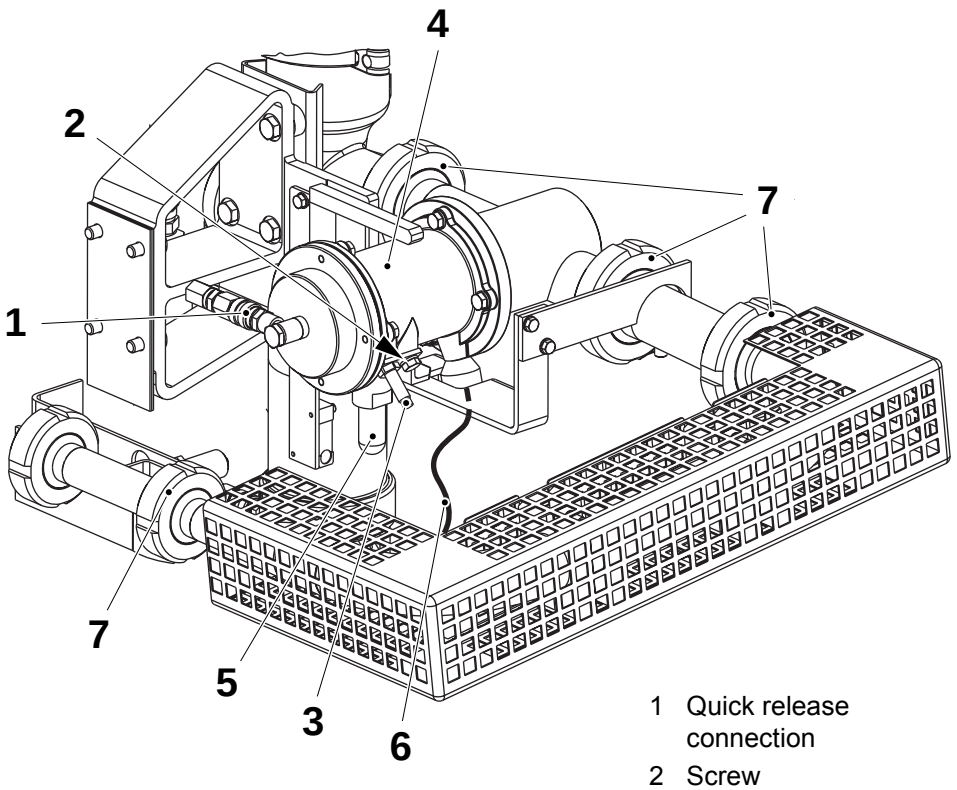

1 Quick release connection
2 Screw
3 Proximity switch
4 Regulating valve
5 Bleed connector
6 Sensor cable
7 Connection

(Cont'd)

TechPub_2614345_0105 - 01_2772032_01.fm

(Cont'd)

f) Loosen the screws (8) and remove the cover (9) from the regulating valve.

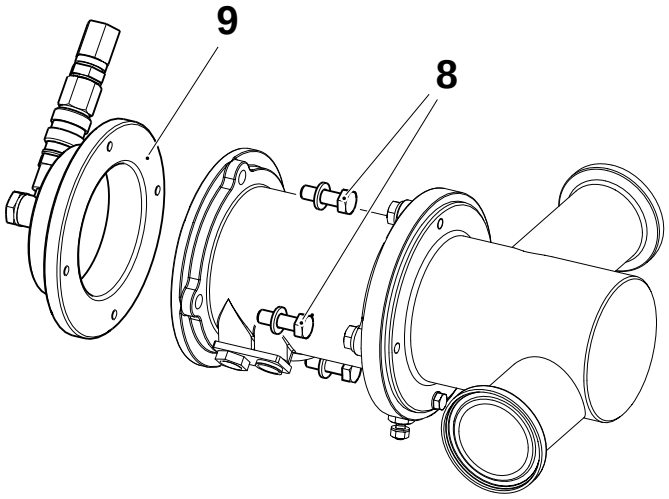

8 Screw
9 Cover

g) Loosen the screws (10) in small steps and in sequence, and **carefully** remove the regulator body from the central body (20).

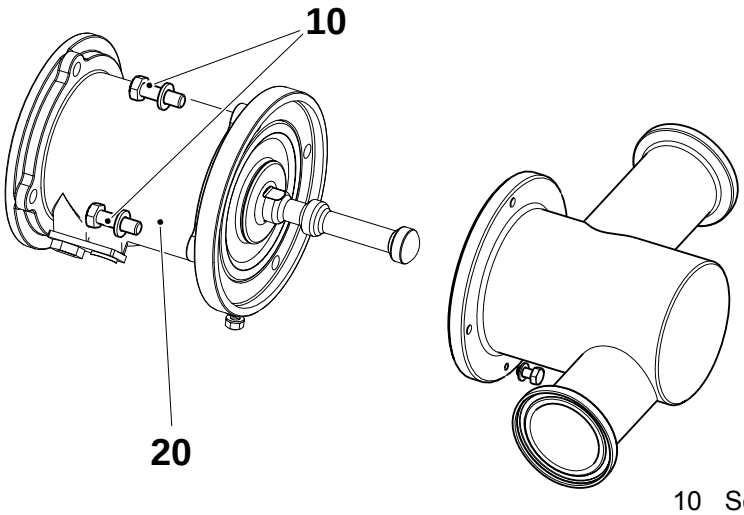

10 Screw
20 Central body

(Cont'd)

TechPub_2614345_0105 - 01_2772032_01.fm

(Cont'd)

WARNING
Spring force.
Can cause serious injury. Spring (15) is compressed. Be careful when releasing the spring force.

CAUTION
Risk of damage to equipment.
Be careful not to damage the shutter (11).

h) Remove the shutter (11) by locking the screw (12) and turning the shutter (11).

i) Remove the membrane (13), the spacer (14), the spring (15), and pull out the shutter (11).

j) Remove the shock absorber (16).Loosen the nut (17) and remove the spacer (18) and the membrane (19).

k) Change the membranes (13) and (19) and the shock absorber (16).

CAUTION
Risk of damage to equipment.
Make sure that all parts are clean and dry. Do not lubricate.

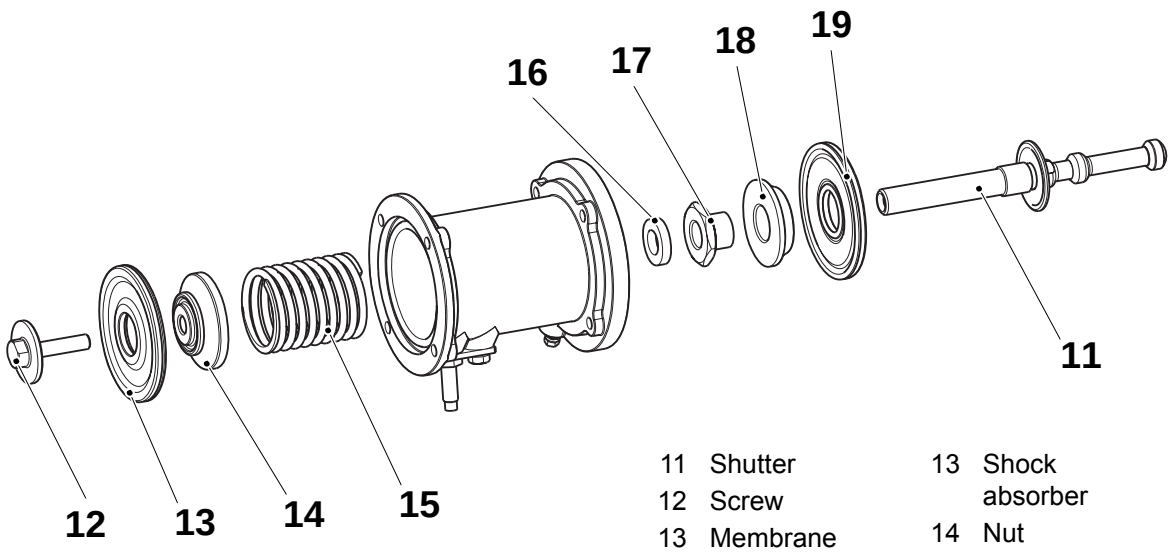

11	Shutter	13	Shock absorber
12	Screw	14	Nut
13	Membrane	15	Spacer
14	Spacer	16	Membrane
15	Spring		

(Cont'd)

TechPub_2614345_0105 - 01_2772032_01.fm

(Cont'd)

CAUTION
Risk of damage to equipment.
Make sure not to damage the membrane (19) and make sure that the membrane is turned in the correct direction.

l) Put the membrane (19) and the spacer (18) onto the shutter (11) and install the nut (17). Tighten until the bushing reaches its stop position.

CAUTION
Risk of damage to equipment.
Be careful not to bend the shutter (11).

m) Install the shock absorber (16) on the shutter (11) and insert the shutter (11) into the central body (20).

CAUTION
Risk of damage to equipment.
Make sure not to damage the membrane (13) and that it is turned in the correct direction (the transparent side of the membrane (13) must be against the air side).

n) Install the spring (15), the spacer (14), the membrane (13) using the screw (12).

TechPub_2614345_0105 - 01_2772032_01.fm

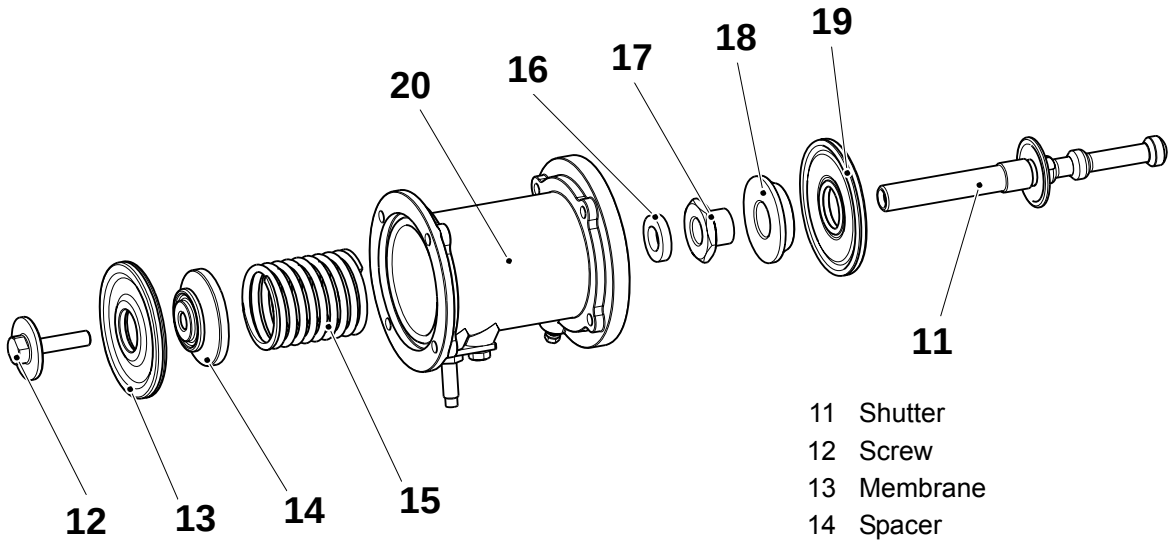

11 Shutter
12 Screw
13 Membrane
14 Spacer
15 Spring
16 Shock absorber
17 Nut
18 Spacer
19 Membrane
20 Central body

(Cont'd)

(Cont'd)

o) Install the regulator body on the central body (20). Tighten the screws (10) crosswise in small steps.

p) Check, by manually pushing the screw (arrow), that **the shutter moves smoothly**.

q) If not, change the shutter.

r) Install the cover (9) on the central body (20). Tighten the screws (8) crosswise.

s) Install the regulating valve.

t) Check the horizontal levelling of the level regulating valve using the spirit level.

Note! Install the proximity switch, see 1.2.2-2 Regulating Valve - Set Inductive Switch

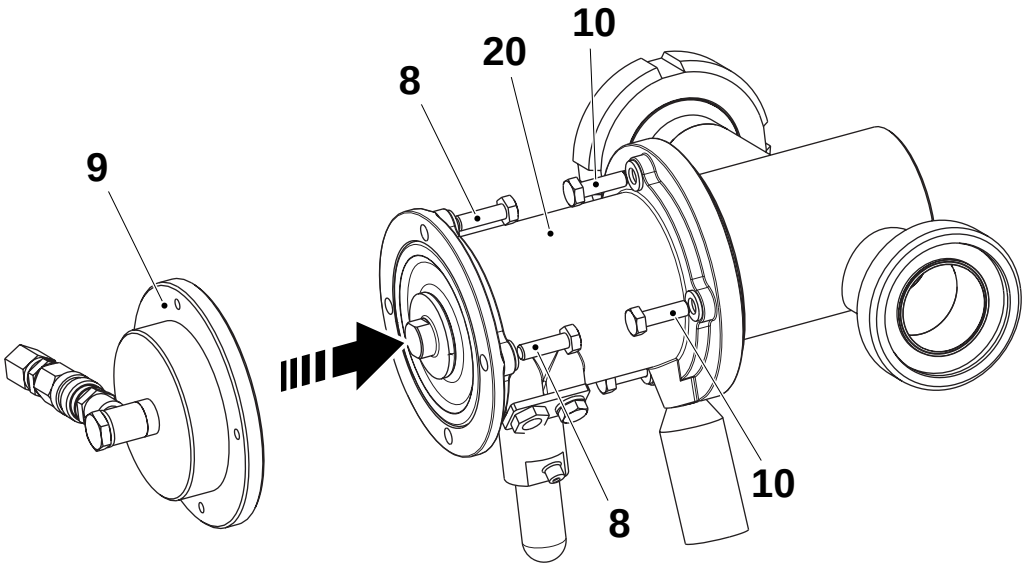

8 Screw
9 Cover
10 Screw
20 Central body

TechPub_2614345_0105 - 01_2772032_01.fm

(Cont'd)

1.2.2-2 Regulating Valve - Set Inductive Switch

Machine Status	PREHEATING II
SPC Reference	927205-0200

a) Set the distance **A** between the plate and the inductive switch (2).

b) Tighten the nut (1).

c) Install the inductive switch (2) on the regulator valve using the screw (3).

Note! Be careful not to damage the edge of the inductive switch (2) when fitting it.

d) Step up to PREHEATING II and make sure that the LED (4) lights. If not, adjust by loosening the nut (1) and **carefully** screwing in or out the inductive switch (2).

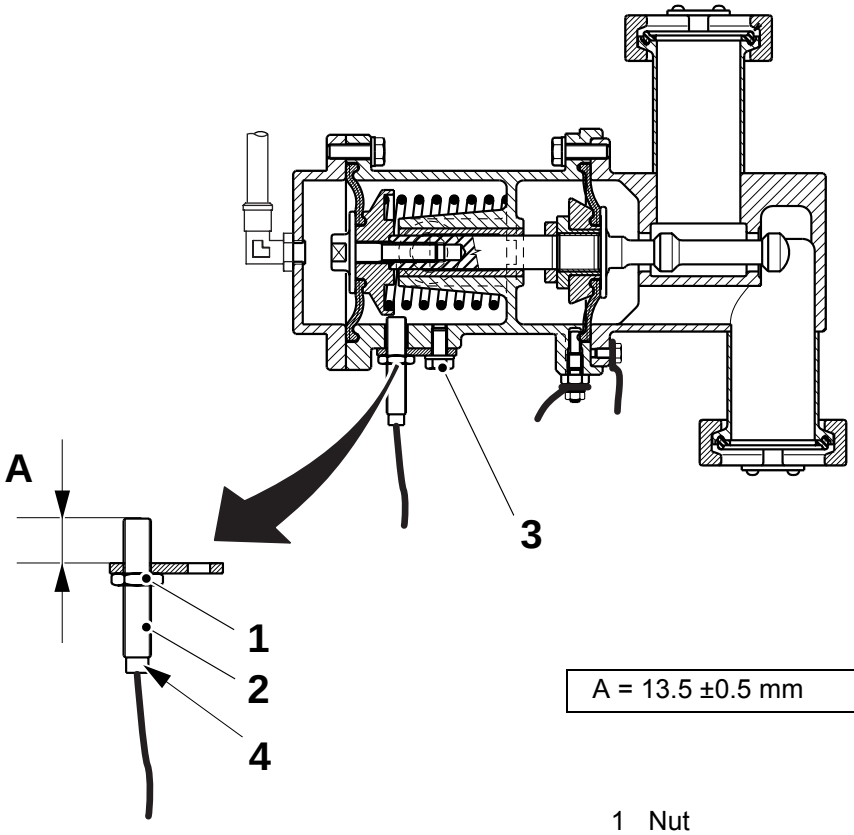

A = 13.5 ±0.5 mm

1 Nut
2 Inductive switch
3 Screw
4 LED

TechPub_2614345_0105 - 01_2772032_01.fm

1.2.3 Temperature Controlled Steam Barrier

1.2.3-1 Pressure Regulator - Overhaul

Machine Status	Power supply disconnector OFF Air supply OFF Steam supply OFF
SPC Reference	1334841-0300

WARNING
Hot surfaces.
Risk of burns. Wear protective gloves.

CAUTION
Risk of production fault.
Coordinate closing the steam supply valve with the process plant administrator to make sure that the production of other machines in the plant is not spoiled.

Remove Pressure Regulator

a) Close the steam supply valve (2).

b) Disconnect the air pipe (6) and the steam pipe (3).

Note! Do not remove pipes until the manometer indicates the lowest (zero) pressure value.

c) Loosen the nut (1) and the clamp (4).

d) Disconnect the pipe coupling (5).

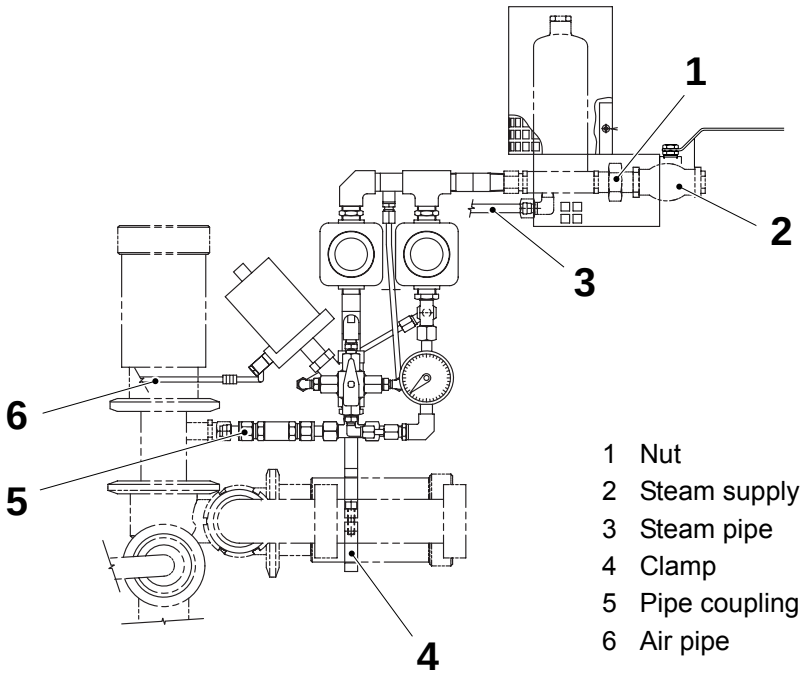

1 Nut
2 Steam supply valve
3 Steam pipe
4 Clamp
5 Pipe coupling
6 Air pipe

(Cont'd)

TechPub_2614345_0105 - 01_2772032_01.fm

(Cont'd)

e) Remove the TCSB unit and put it on a bench.

f) Remove the pressure regulator (7) from the TCSB unit.

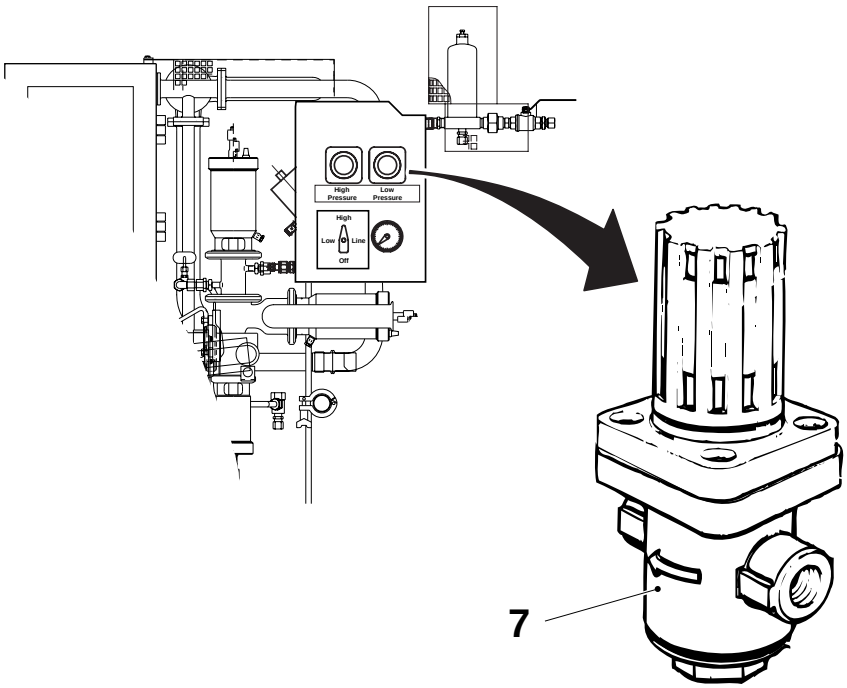

7 Pressure regulator

(Cont'd)

TechPub_2614345_0105 - 01_2772032_01.fm

(Cont'd)

Overhaul Pressure Regulator

a) Turn the handle (1) fully to the left to ensure a minimum spring pressure.
b) Mark the side of the top casting (3) corresponding to the label.
c) Loosen the screws (2) and remove the top casting (3).
d) Remove the spring (4) and the bellows (5).
e) Remove the pin (6) and clean it.
f) Check the seal (7). Change it, if necessary.

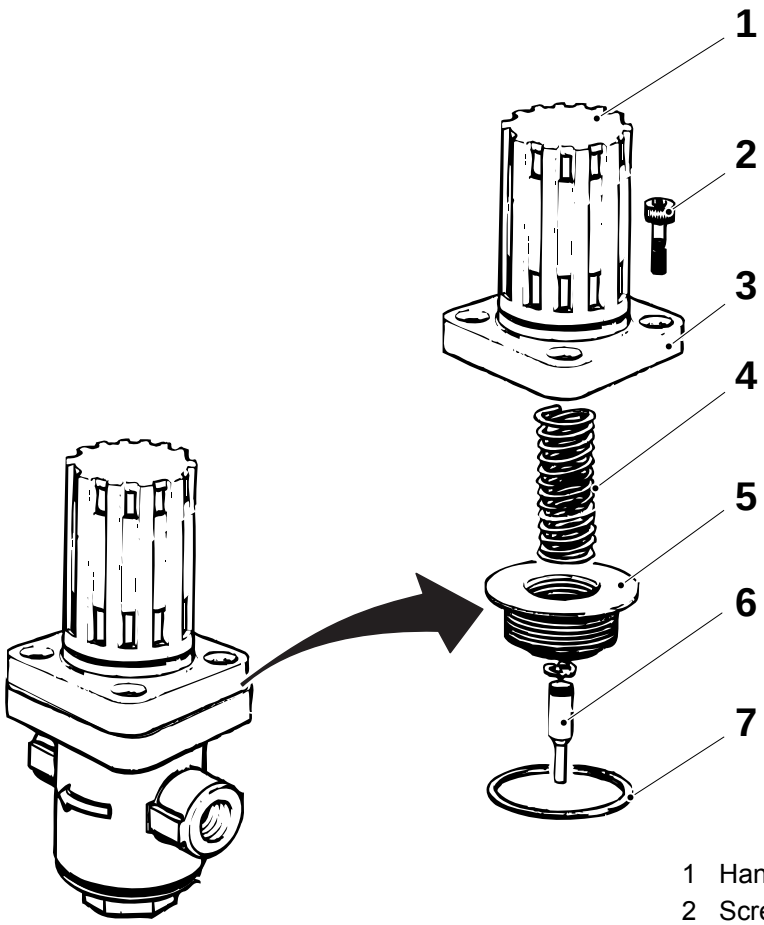

1 Handle
2 Screw
3 Top casting
4 Spring
5 Bellows
6 Pin
7 Seal

(Cont'd)

TechPub_2614345_0105 - 01_2772032_01.fm

(Cont'd)

g) Open the lid (12) and remove the spring (10), the ball (9), the filter (8). Clean the seat of the ball (9) if necessary.

h) Clean the filter (8) with hot water.

i) Check the seal (11). Change it, if necessary.

j) Assemble in the reverse order.

CAUTION
Assemble with care.
Make sure that the ball (9) is correctly positioned in its seat, and the mark previously made in the top casting is aligned with the label.

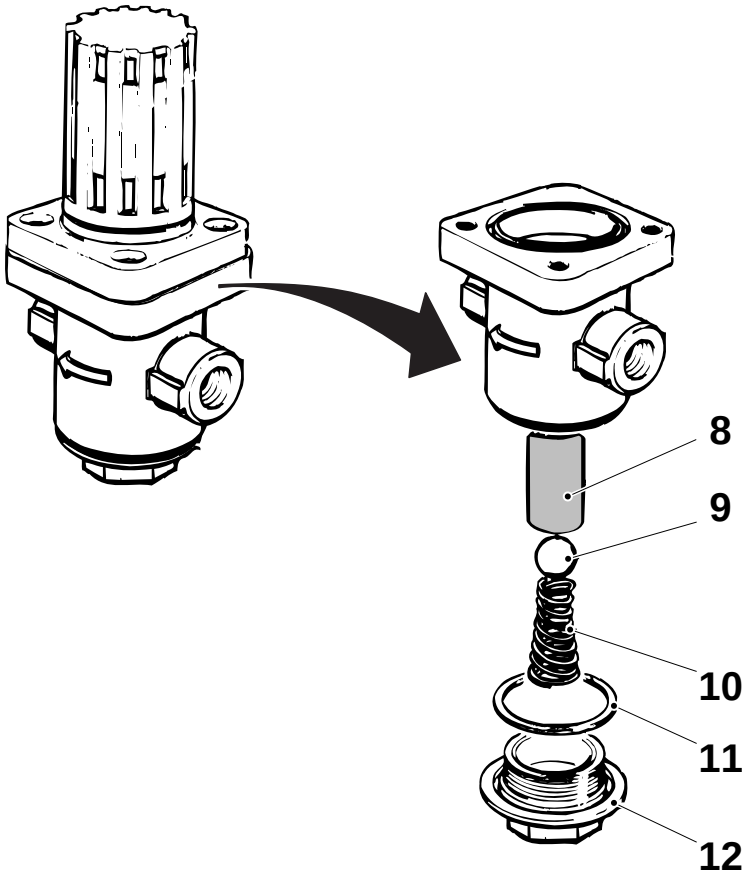

8 Filter
9 Ball
10 Spring
11 Seal
12 Lid

TechPub_2614345_0105 - 01_2772032_01.fm

1.2.3-2 Pressure Regulator - Set

Machine Status	Power supply disconnector OFF Air supply OFF Steam supply ON Water supply OFF
SPC Reference	1334841-0300

a) Open the steam supply valve.

b) Switch the selector (3) to **Line**. The value on the manometer (2) corresponds to the steam pressure in the line.

c) Switch the selector (3) to **Low** (**Pressure during** PRODUCTION). Set the steam pressure to 0.4 - 0.5 bar using the pressure regulator (1). This pressure value range corresponds to a temperature range of 109°- 111°C.

d) Switch the selector (3) to **High** (**Pressure during** STERILISATION). Set the steam pressure to 1.7 - 1.8 bar using the pressure regulator (4). This pressure value range corresponds to a temperature range of 130°- 131°C.

e) Switch the selector (3) to **Off**.

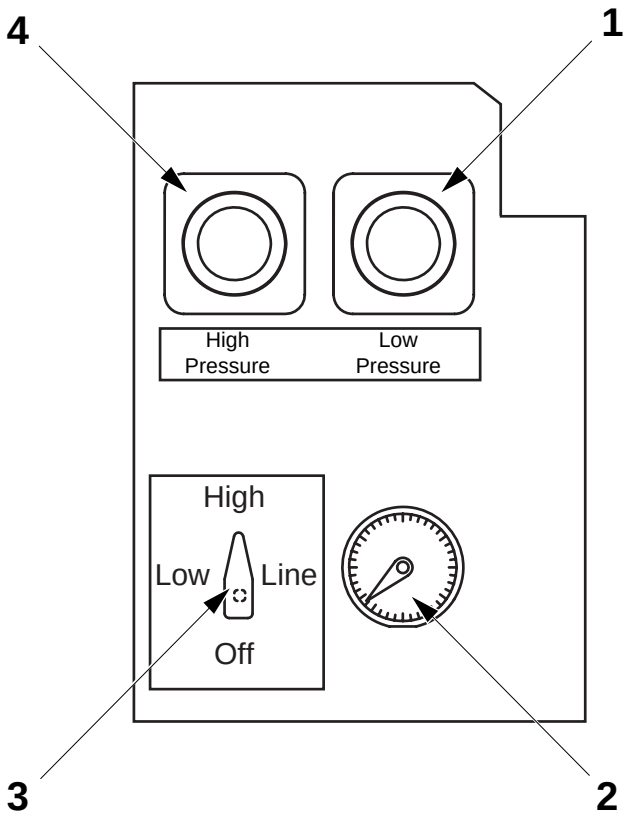

1 Pressure regulator - Low
2 Manometer
3 Selector
4 Pressure regulator - High

TechPub_2614345_0105 - 01_2772032_01.fm

1.3 Calender Rollers

1.3-1 Calender Rollers - Check Rubber Surfaces

Machine Status	Power supply disconnector OFF Air supply OFF Steam supply ON Water Supply OFF
SPC Reference	272024-0500

WARNING

Dangerous chemicals (hydrogen peroxide).
Hydrogen peroxide can be fatal if inhaled or swallowed. Follow the instructions in chapter ii Safety Precautions.

Check that the rubber surface of the fixed calender roller (2) and the movable calender roller (1) are not damaged or worn. Change, if necessary.

Make sure that the rollers rotate smoothly. If necessary, change the bearings, refer to 1.3-3 Calender Rollers - Change Bearings.

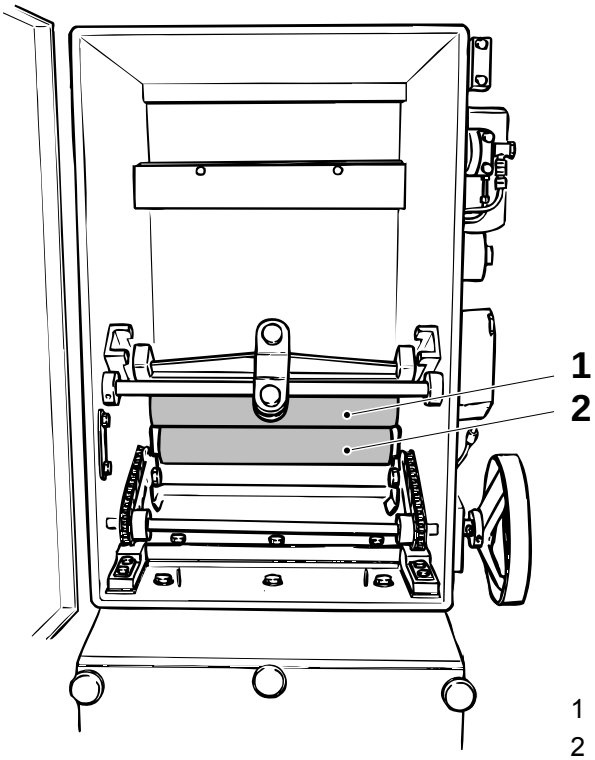

1 Movable calender roller
2 Fixed calender roller

TechPub_2614345_0105 - 01_2772033_01.fm

1.3-2 Calender Rollers - Check During Operation

Machine Status	PRODUCTION
SPC Reference	272024-0500

Check there are no drops of hydrogen peroxide on the packaging material and no visible peroxide passes the calender rollers.

If necessary, change the calender rollers. Follow the procedure in 1.3-3 Calender Rollers - Change Bearings.

1.3-3 Calender Rollers - Change Bearings

Machine Status	Power supply disconnector OFF Air supply OFF Steam supply ON Water Supply OFF
SPC Reference	272024-0500

WARNING

Dangerous chemicals (hydrogen peroxide).

Hydrogen peroxide can be fatal if inhaled or swallowed. Follow the instructions in chapter ii Safety Precautions.

a) Remove the protective cover (1).

b) Remove the screws (2) and (4).

c) Rotate the pressure arm (5) upwards.

d) Pull out the movable calender roller (6).

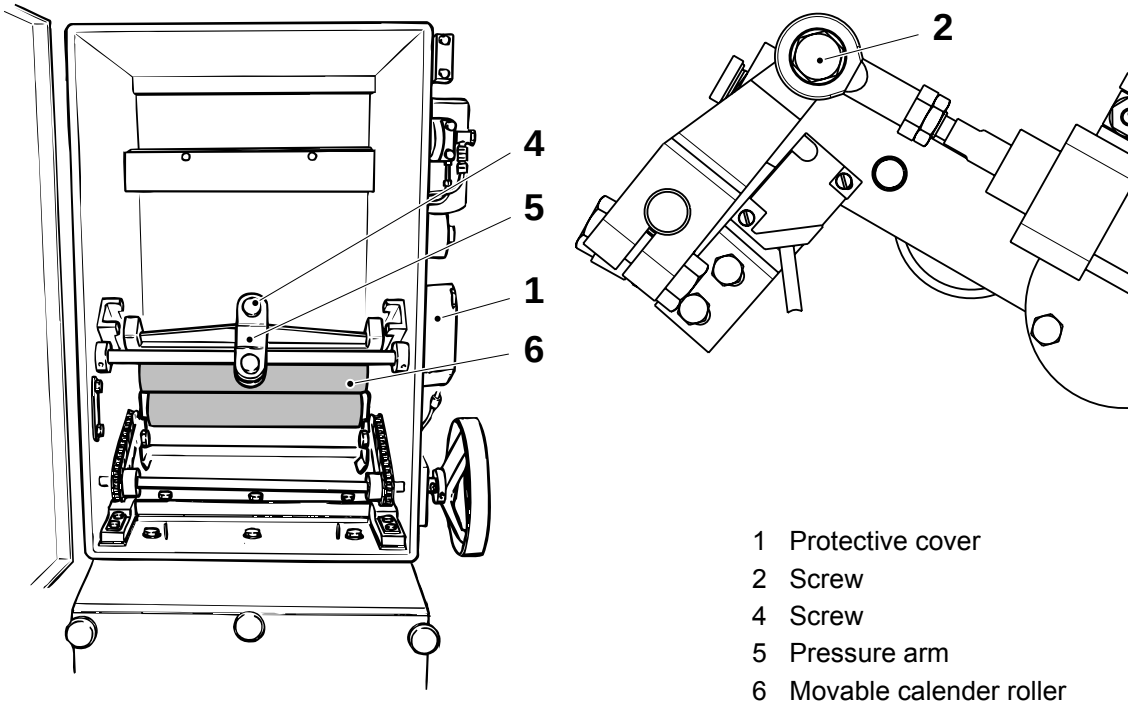

1 Protective cover
2 Screw
4 Screw
5 Pressure arm
6 Movable calender roller

(Cont'd)

TechPub_2614345_0105 - 01_2772033_01.fm

(Cont'd)

e) Loosen the screws (7) and remove the protective cover (8).

f) Loosen the screw (9) and remove the bracket (10).

g) Pull out the fixed calender roller (11). It may be necessary to push the air knife out of the way to make it easier to pull out the roller (11).

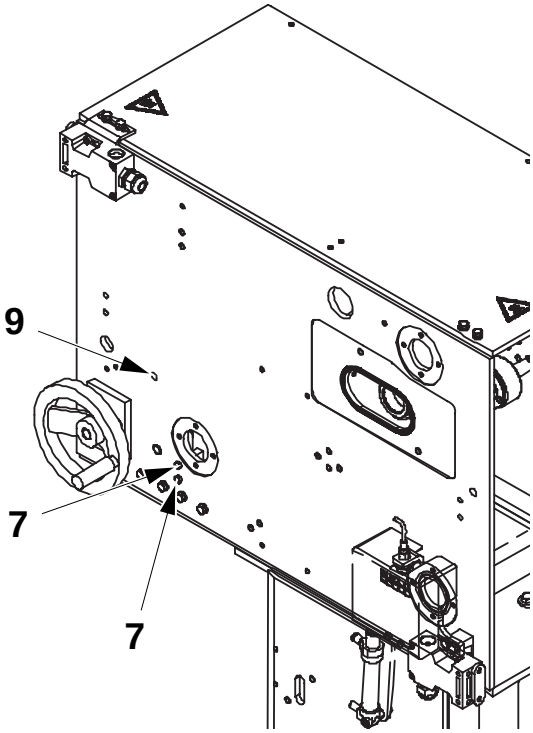

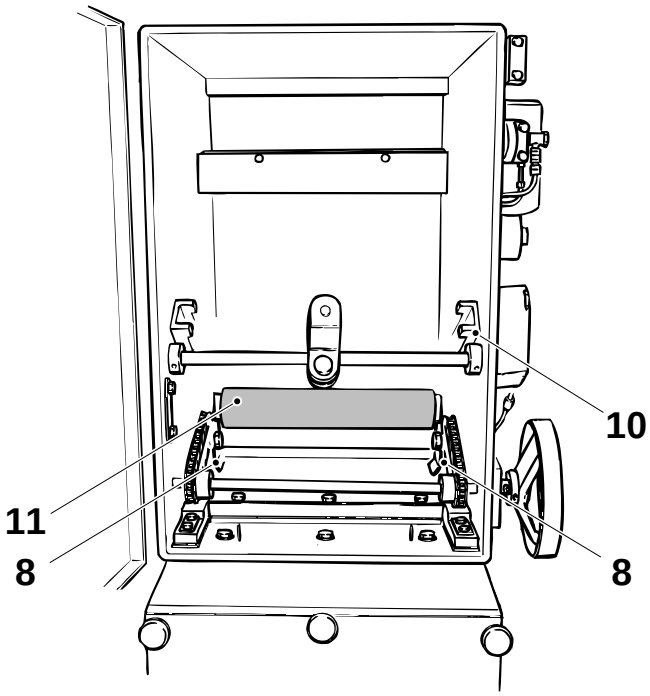

7 Screw
8 Protective cover
9 Screw
10 Bracket
11 Fixed calender roller

(Cont'd)

TechPub_2614345_0105 - 01_2772033_01.fm

(Cont'd)

Movable Calender Roller

a) Remove, on both sides:
   - the screws (1) and the brackets (2).
   - the screws (3) and the guides (4).
   - the retaining rings (6), and then the ball bearings (5).

b) Assemble in the reverse order.

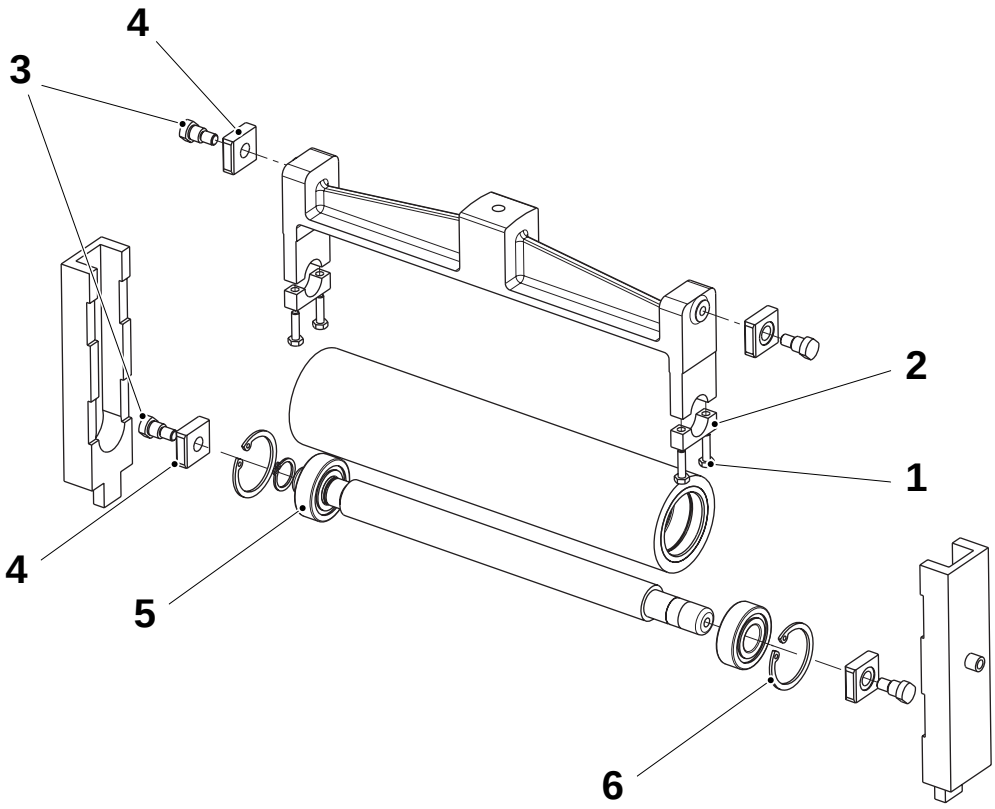

1 Screw
2 Bracket
3 Screw
4 Guide
5 Ball bearing
6 Retaining ring

TechPub_2614345_0105 - 01_2772033_01.fm

(Cont'd)

(Cont'd)

Fixed Calender Roller

a) Remove the ball bearings (1) using the retaining rings (2).

b) Assemble in the reverse order.

c) Set the calender rollers, see 1.3-4 Calender Rollers - Set.

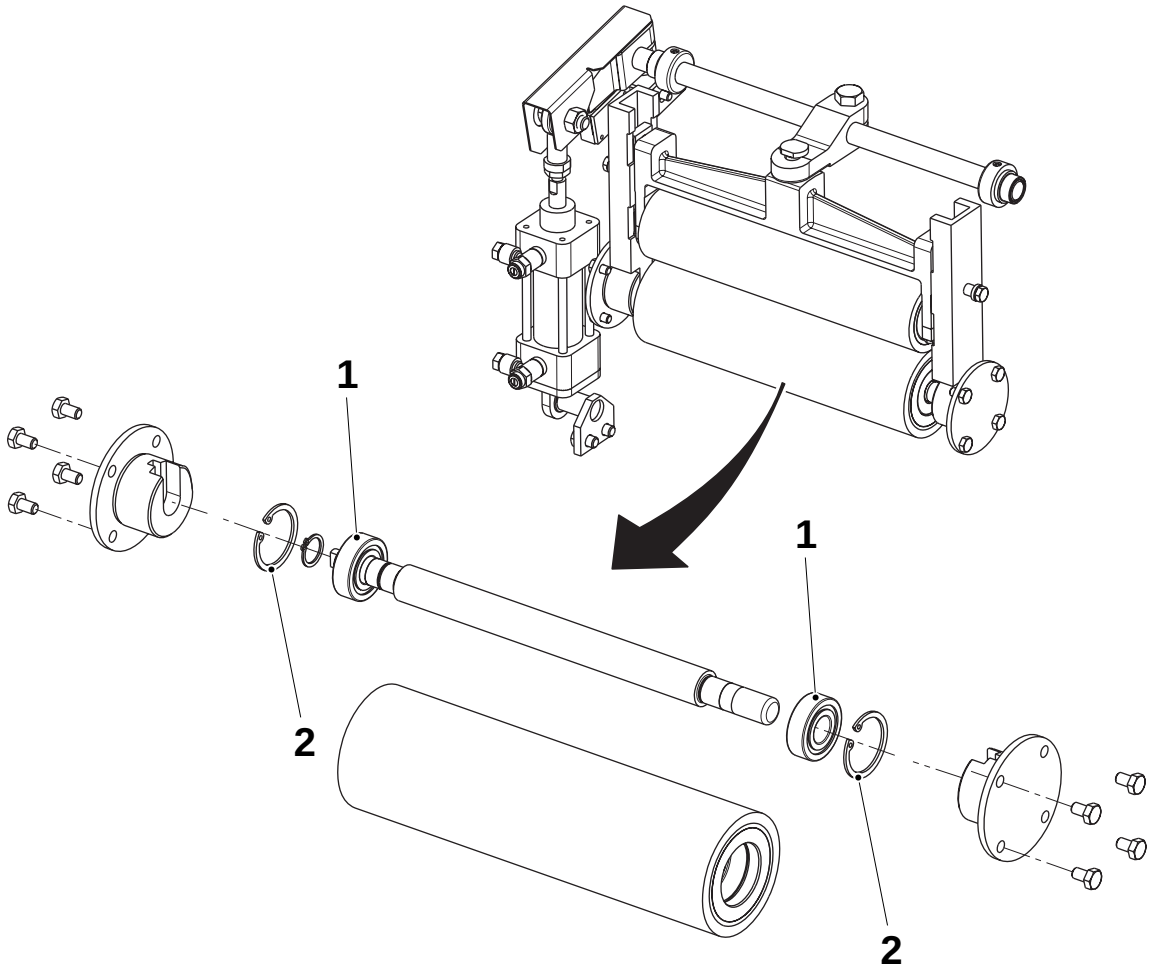

1 Ball bearing
2 Retaining ring

TechPub_2614345_0105 - 01_2772033_01.fm

1.3-4 Calender Rollers - Set

Machine Status	PREHEATING I
SPC Reference	272024-0500

WARNING

Dangerous chemicals (hydrogen peroxide).
Hydrogen peroxide can be fatal if inhaled or swallowed. Follow the instructions in chapter ii Safety Precautions.

a) Set the cylinder (1) at the distance **A**.

Note! The cylinder (1) must not be at the end of the stroke with the calender rollers pressed together. If necessary, adjust by moving the link head (2).

b) Set the proximity switch (3) at the distance **B**.

c) Turn off the calender roller air pressure.

d) Raise the movable calender roller (4) so that it does **not** touch the packaging material.

e) Select fast inching and inch the machine for about one minute.

f) Stop the machine and, without moving the packaging material web, measure the distance **C** between the web edge (5) and the aseptic chamber.

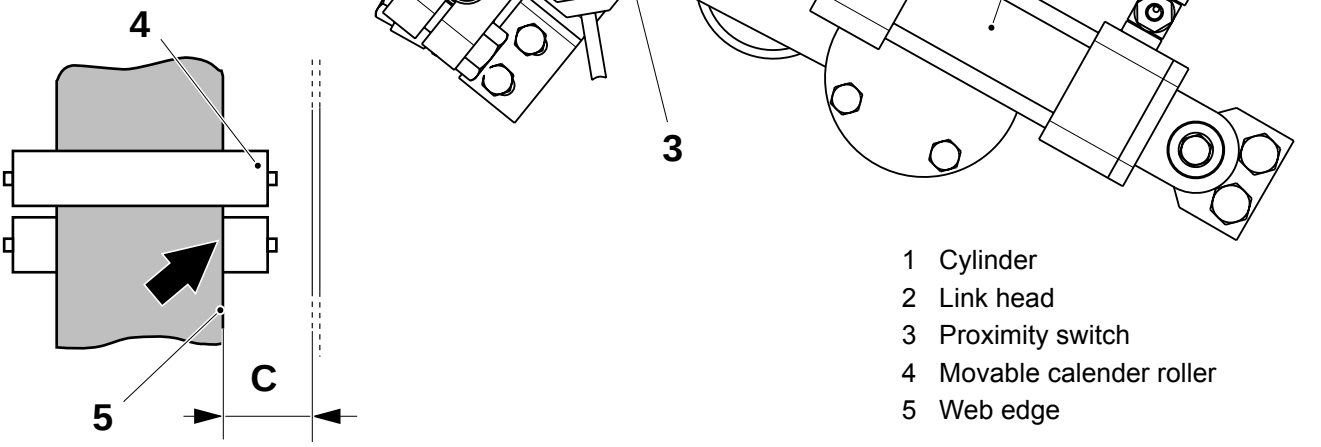

1 Cylinder
2 Link head
3 Proximity switch
4 Movable calender roller
5 Web edge

(Cont'd)

TechPub_2614345_0105 - 01_2772033_01.fm

(Cont'd)

g) Set the correct calender roller air pressure, see 15.1 Technical Data.

h) Select fast inching again and inch the machine for about one minute.

i) Stop the machine and check the distance **C** between the web edge (5) and the aseptic chamber.

j) If necessary, loosen the screws (6) on the outside of the aseptic chamber and correct the position of the movable calender roller by shifting the brackets (7). Tighten the screws (6).

k) Inch the machine and check again the distance **C** and that the web edge (8) is aligned with the finger (9).

l) If necessary, repeat items h) - k) until the correct setting has been reached.

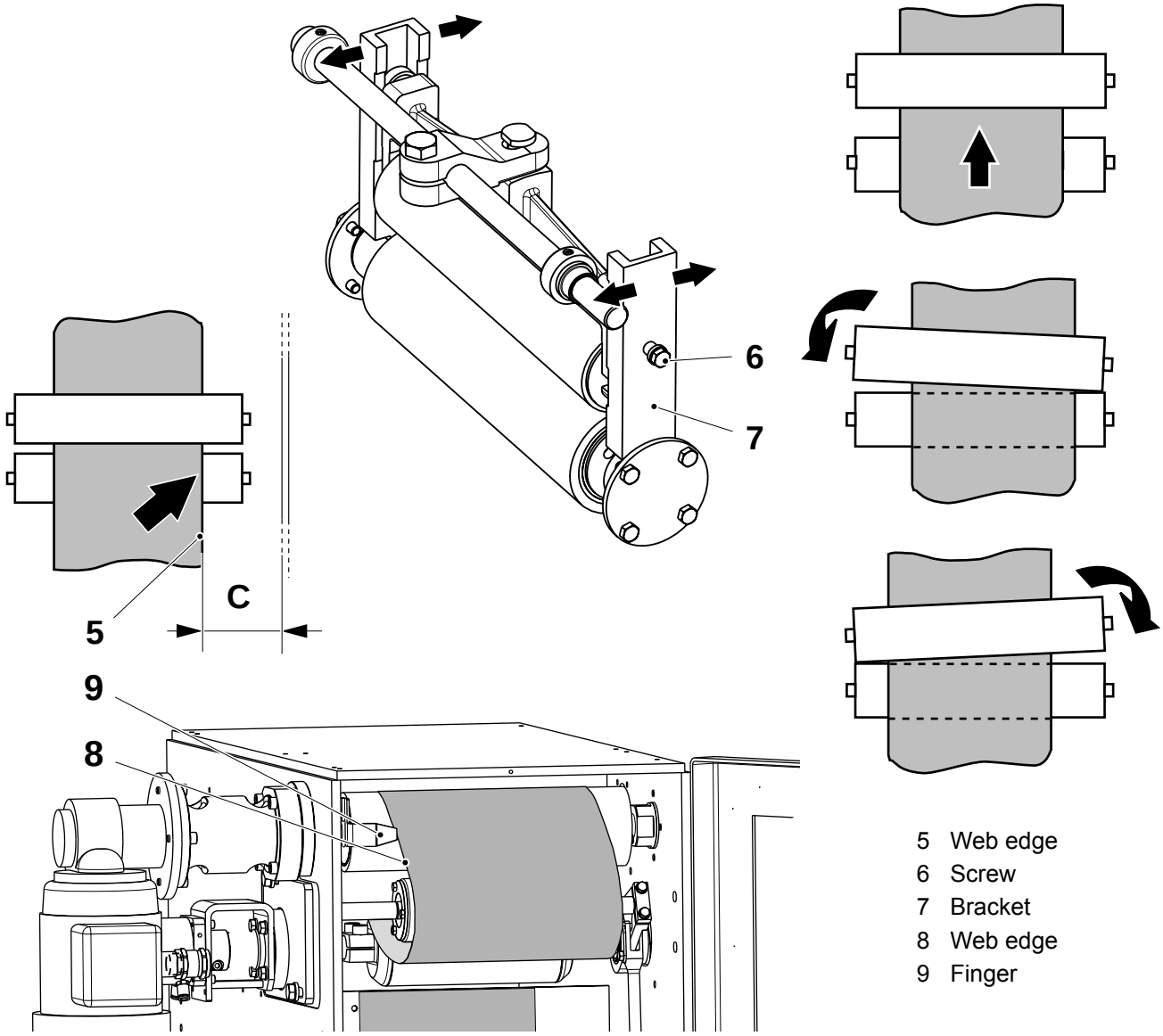

5 Web edge
6 Screw
7 Bracket
8 Web edge
9 Finger

TechPub_2614345_0105 - 01_2772033_01.fm

1.4 Tube Forming

1.4.1 Tube Supports and Forming Rings

1.4.1-1 Tube Supports and Forming Rings - Check

Machine Status	Power supply disconnector OFF Air supply OFF Steam supply ON Water supply OFF
SPC Reference	441304-0400 441307-0300 441486-0400 456309-0600

Note! Perform the following instructions with warm machine.

Check that the rollers rotate smoothly and that they are not damaged. Change, if necessary.

Check the bushing (1) and the shafts (2). Change, if necessary, refer to 1.4.3-1 Upper Tube Support - Overhaul, 1.4.4-1 Movable Forming Ring - Overhaul, 1.4.5-1 Divided Forming Ring - Overhaul and 1.4.6-1 Lower Forming Ring - Overhaul.

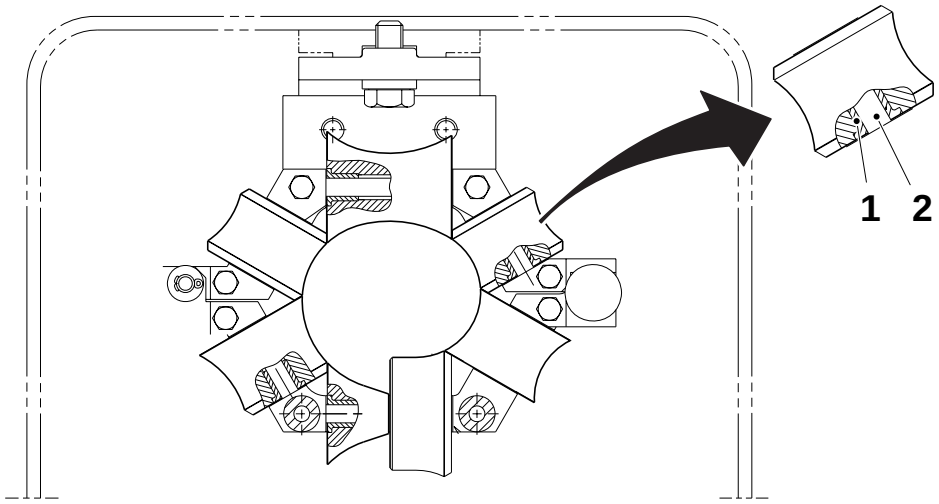

Fig. shows the Divided forming ring

1 Bushing
2 Shaft

(Cont'd)

TechPub_2614345_0105 - 01_2772034_01.fm

(Cont'd)

With the **cold** machine, check the distance **A** between the rollers.

Note! The play between the rollers must be the same all the way around and the passage between the rollers should be smooth.
Adjust using shimming washers (3), if necessary.

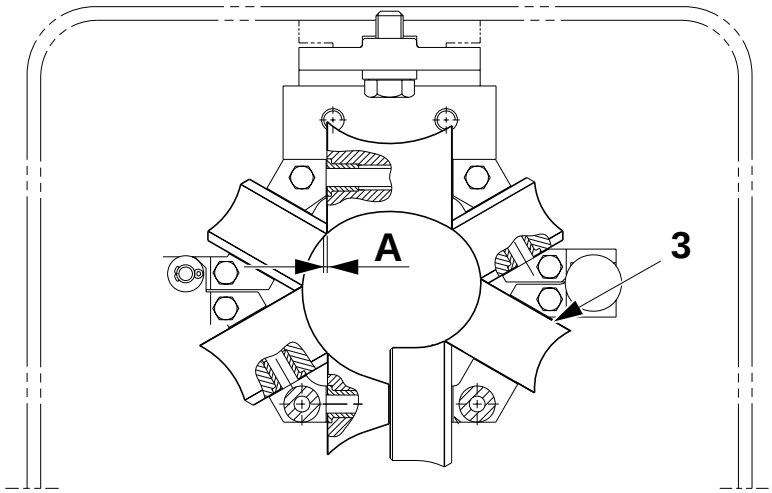

A = 0.15 to 0.30 mm

Fig. shows the Divided forming ring

3 Shim washer

TechPub_2614345_0105 - 01_2772034_01.fm

1.4.1-2 Tube Supports and Forming Rings - Set

Machine Status	Power supply disconnector OFF Air supply OFF Steam supply ON Water supply OFF
SPC Reference	441304-0400 441307-0300 441486-0400 456309-0600

a) Set the position of the forming rings, see table below.

Note! All the measures are from the bottom of the aseptic chamber. Distance **A** is a basic setting to be adapted when fitting the template, see 1.14-1 Air Nozzle (LS) - Set.

Package	A ±1.0 (mm)	B ±1.0 (mm)	C ±1.0 (mm)
TBA 100 B	540	962	1336
TBA 125 S	540	962	1336
TBA 160 S	541	977	1283
TBA 180 B	532	956	1292
TBA 200 B	532	956	1292
TBA 200 M	541	977	1283
TBA 200 S	541	977	1283
TBA 250 B	532	956	1292
TBA 250 S	541	977	1283
TBA 284 B	532	956	1292
TBA 300 S	532	956	1292
TBA 330 S	532	956	1292

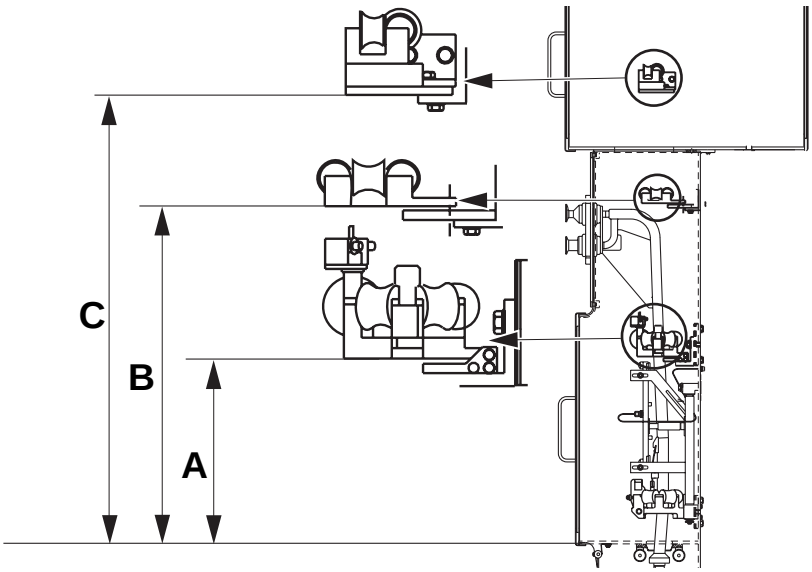

(Cont'd)

TechPub_2614345_0105 - 01_2772034_01.fm

(Cont'd)

b) Put a ruler (1) on the surface (2).

c) Measure the distance **D** between the ruler (1) and the pressure roller (3). Set the lower forming rings (4) height, see table.

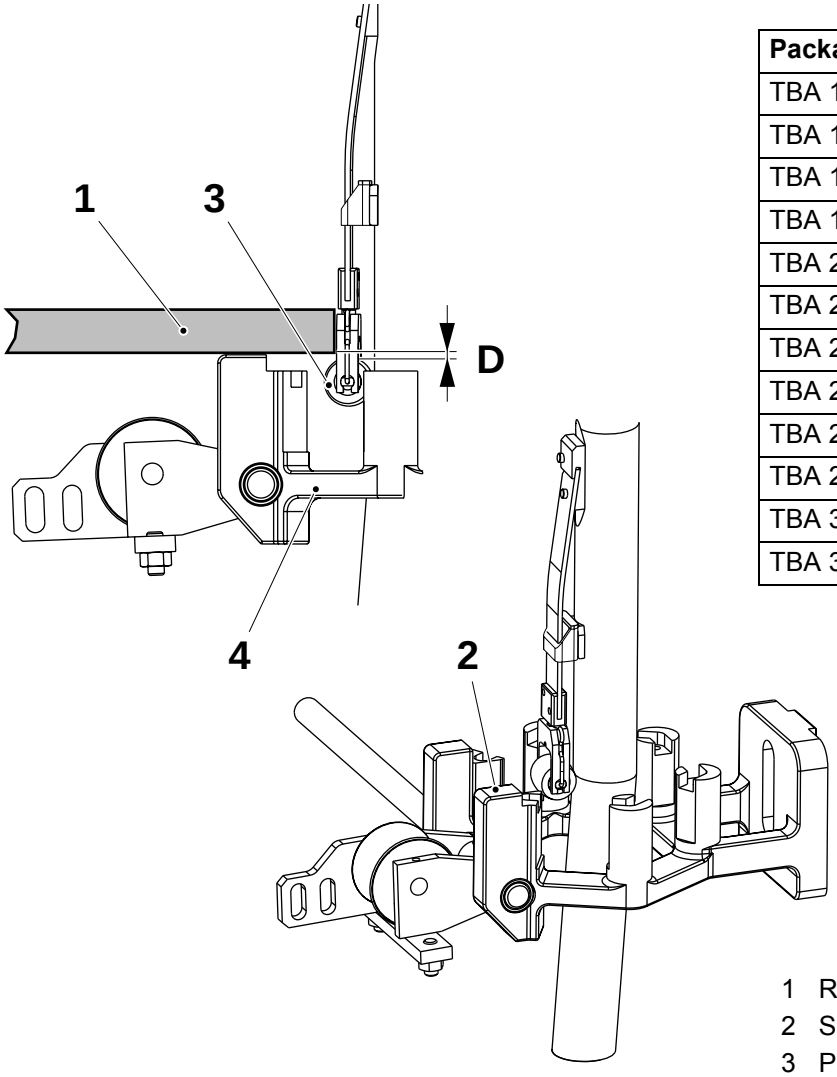

Package	D ±0.5 (mm)
TBA 100 B	1
TBA 125 S	1
TBA 160 S	1
TBA 180 B	0
TBA 200 B	0
TBA 200 M	1
TBA 200 S	1
TBA 250 B	0
TBA 250 S	1
TBA 284 B	0
TBA 300 S	0
TBA 330 S	0

1 Ruler
2 Surface
3 Pressure roller
4 Lower forming ring

(Cont'd)

TechPub_2614345_0105 - 01_2772034_01.fm

(Cont'd)

Support Roller, Lower Forming Ring

a) Thread the packaging material through the machine and make sure that it is straight in TIGHT TUBE.

b) Set the distance **E** between the support roller and the edge of the packaging material tube.

Note! The support roller must touch the tube **only** during a MACHINE STOP.

c) During PRODUCTION, check that the support roller (5) does not touch or guide the packaging material tube, or affect the overlap.

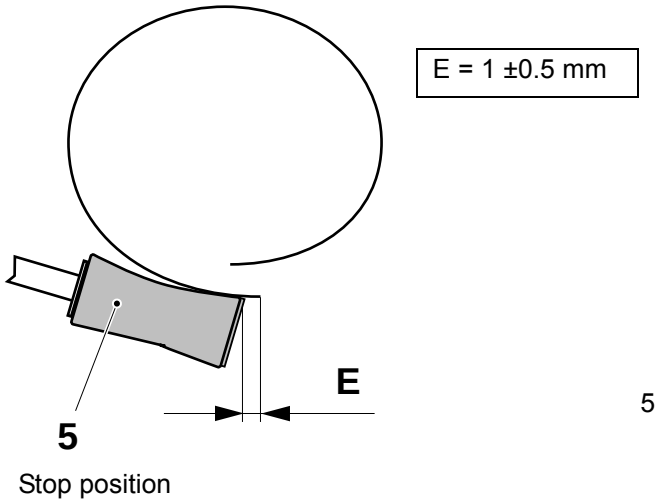

TechPub_2614345_0105 - 01_2772034_01.fm

1.4.2 LS Overlap

1.4.2-1 LS Overlap - Set

Machine Status	PRODUCTION
SPC Reference	456309-0600

Pick out one package and check the LS overlap **A**, see table below.

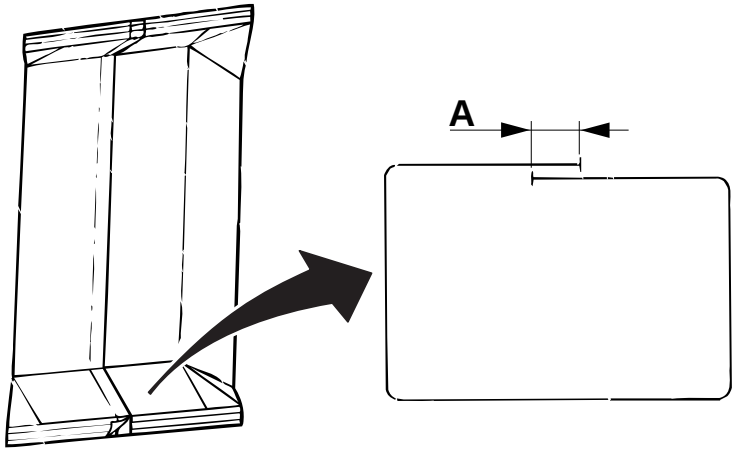

Set the LS overlap by changing trimming rollers in the lower forming ring according to the deviation from the nominal width of the packaging material.

Note! If the packaging material width varies (from the nominal), the overlap has to be increased or decreased correspondingly, see below.

Package	Overlap A (mm)	**Nominal width (mm)**	**Regular trim. roller, TP No.**	**Minus trim. roller, TP No.**	**Plus trim. roller, TP No.**
TBA 100 B TBA 125 S	3,5 - 4,5	162	752153	752467	752466
TBA 160 S TBA 200 S	3,5 - 4,5	174	752138	752465	752464
TBA 180 B, TBA 284 B TBA 300 S	5,0 - 7,0	214	751502	752463	752462
TBA 200 B, TBA 250 B	7,0 - 9,0	214	751502	752463	752462
TBA 200 M TBA 250 S	5,0 - 7,0	188	574346	574447	574446
TBA 330 S	5,0 - 7,0	212	751502	752463	752462

(Cont'd)

TechPub_2614345_0105 - 01_2772034_01.fm

(Cont'd)

CAUTION
Assemble with care.
Trimming rollers must always be fitted symmetrically relative the counter-pressure roller (4). Plus and minus trimming rollers must never be fitted at the same time in the forming ring.

- Change a maximum of three regular rollers in the lower forming ring with minus trimming rollers to **increase** the LS overlap.
- Change a maximum of three regular rollers with plus trimming rollers to **decrease** the LS overlap.

Check that the rollers rotate smoothly, refer to 1.4.1-1 Tube Supports and Forming Rings - Check.

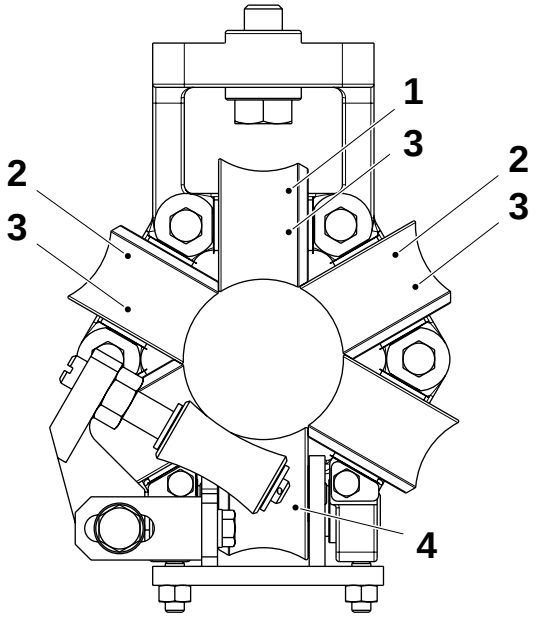

1 If changing **one** trimming roller, place here
2 If changing **two** trimming rollers. place here.
3 If changing **three** trimming rollers, place here.
4 Counter pressure roller

TechPub_2614345_0105 - 01_2772034_01.fm

1.4.3 Upper Tube Support

1.4.3-1 Upper Tube Support - Overhaul

Machine Status	Power supply disconnector OFF Air supply OFF Steam supply ON Water supply OFF
SPC Reference	441307-0300

Note! Do not remove the forming ring from the machine.
Note the position of the washers before removal.

a) Loosen the screws (1) and remove the lock plates (2).

b) Remove the forming roller (3) group and the washers. Change the roller (3), the flange bushings and the axle, if necessary.

c) Loosen the screws (4) and remove the lock plates (5).

d) Remove the rollers (6) group and the washers. Change the rollers (6), the flange bushings and the axles, if necessary.

e) Assemble in the reverse order.

f) Set the rollers, refer to 1.4.1-1 Tube Supports and Forming Rings - Check.

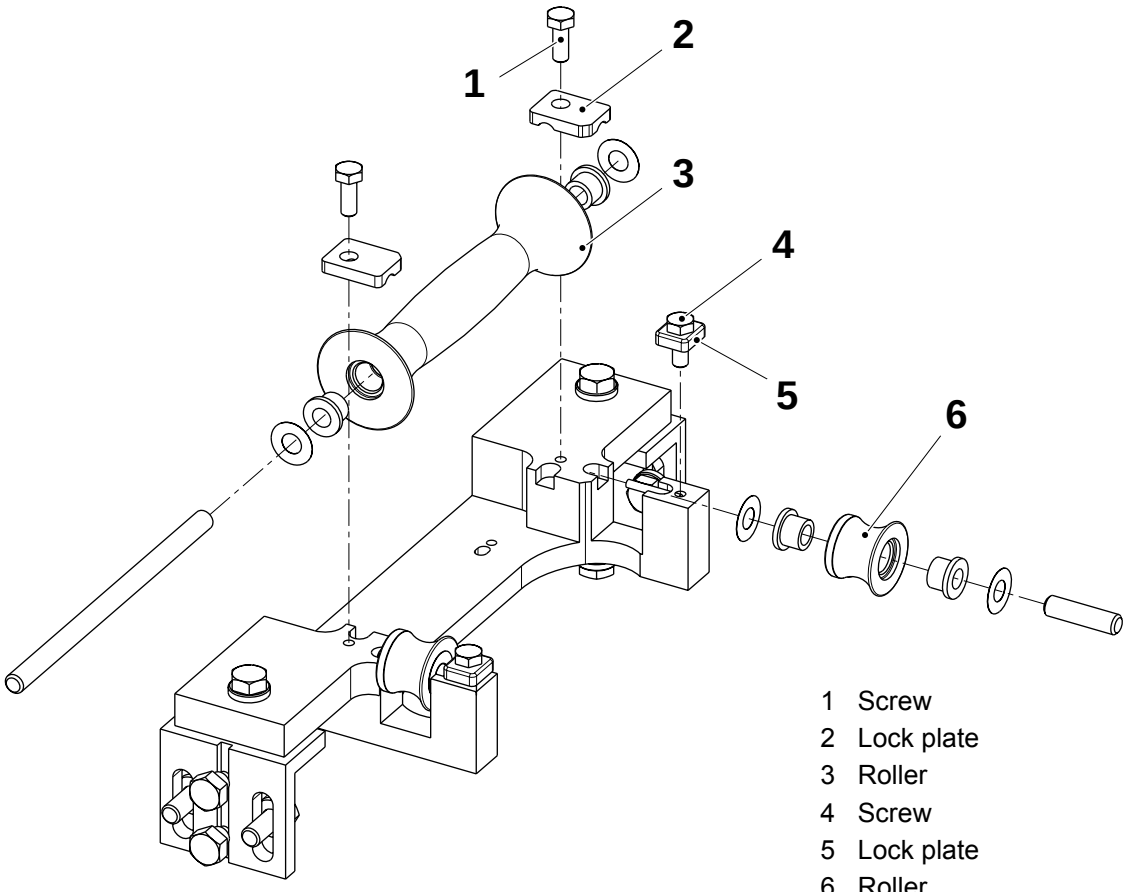

1 Screw
2 Lock plate
3 Roller
4 Screw
5 Lock plate
6 Roller

Fig. shows 200S variant

TechPub_2614345_0105 - 01_2772034_01.fm

1.4.4 Movable Forming Ring

1.4.4-1 Movable Forming Ring - Overhaul

Machine Status	Power supply disconnector OFF Air supply OFF Steam supply ON Water supply OFF
SPC Reference	441304-0400

Note! Do not remove the forming ring from the machine.
Note the position of the washers before removal.

a) Remove the screws (1) and remove the lock plates.

b) Remove the roller (2). Change the roller (2), the flange bushings and the axle, if necessary.

c) Remove the screws (3) and remove the lock plates.

d) Remove the rollers (4), the flange roller (5), and the roller (6). Change the rollers (4, 5, 6), the flange bushings and the axles, if necessary.

e) Assemble in the reverse order.

f) Set the rollers, refer to 1.4.1-1 Tube Supports and Forming Rings - Check.

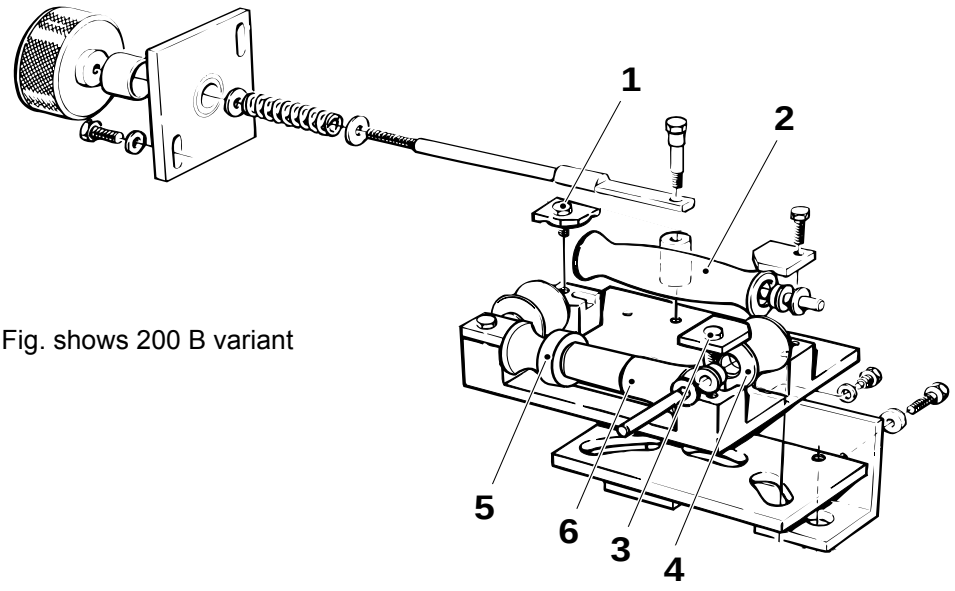

Fig. shows 200 B variant

1 Screw
2 Roller
3 Screw
4 Roller
5 Flange roller
6 Roller

TechPub_2614345_0105 - 01_2772034_01.fm

1.4.5 Divided Forming Ring

1.4.5-1 Divided Forming Ring - Overhaul

Machine Status	Power supply disconnector OFF Air supply OFF Steam supply ON Water supply OFF
SPC Reference	441486-0400

Note! Do not remove the forming ring from the machine.
Note the position of the washers before removal.

a) Remove the screws (1) and remove the lock plates.

b) Remove the roller (2) and the washers. Change the roller (2), the bushings and the axle, if necessary.

c) Remove the screws (3) and remove the lock plates.

d) Remove the rollers (4) and the washers. Change the rollers (4), the bushings and the axles, if necessary.

e) Remove the screws (5) and (6), and remove the lock plates.

f) Remove the rollers (7), (8), (9) (10), and (11) (if relevant for the current volume) and the washers. Change the rollers, the flange bushings and the axles, if necessary.

g) Assemble in the reverse order.

h) Set the rollers, see <u>1.4.1-1 Tube Supports and Forming Rings - Check</u>. To set the roller (11), refer to next page.

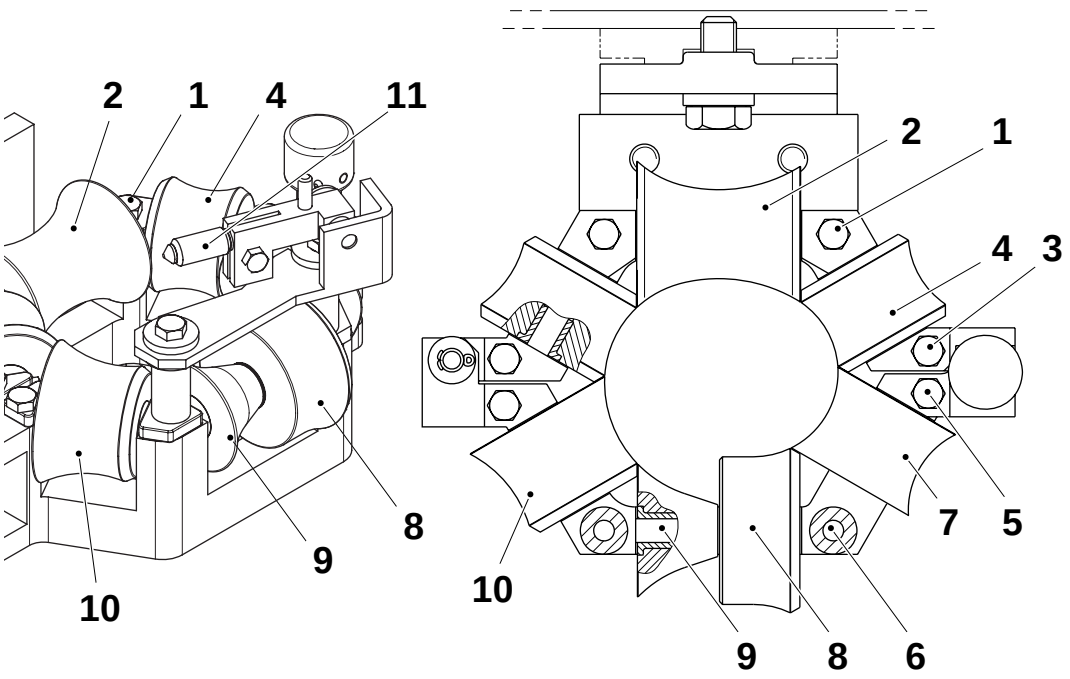

1 Screw
2 Roller
3 Screw
4 Roller
5 Screw
6 Screw
7 Roller
8 Roller
9 Roller
10 Roller
11 Roller

(Cont'd)

TechPub_2614345_0105 - 01_2772034_01.fm

(Cont'd)

Note! Make sure that the point of the roller (11) (arrow) does not touch the packaging material. The roller should not touch the packaging material under normal operating conditions.

i) Loosen the screws (12) and adjust the roller (11) so that it's parallel to the roller (9) and it pushes the packaging material slightly toward the roller (9).

j) Tighten the screws (12).

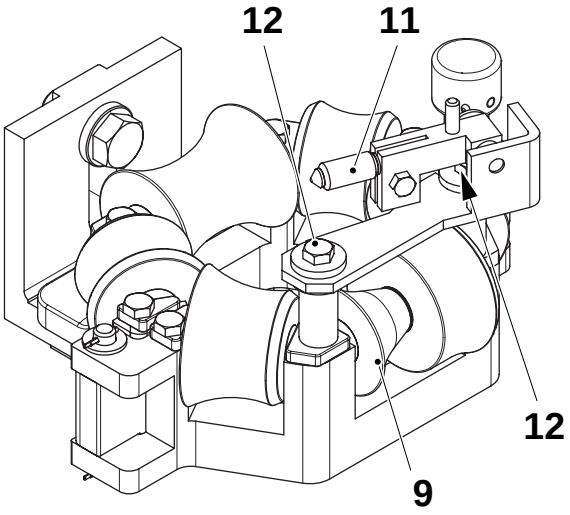

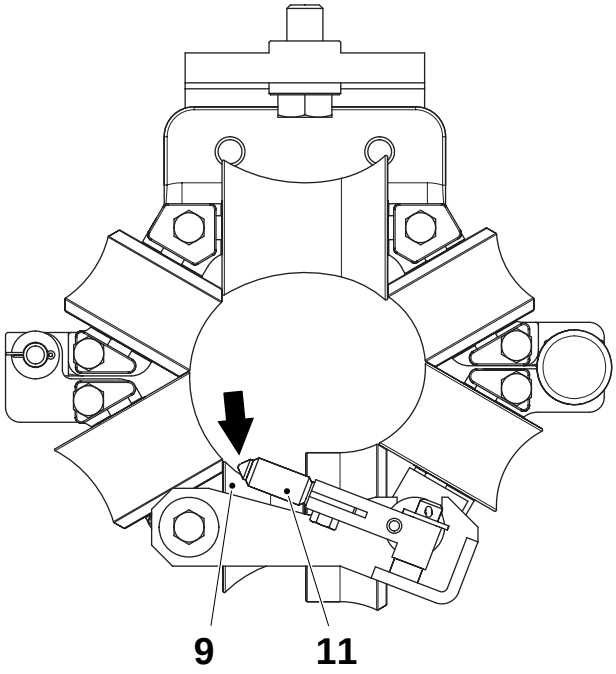

9 Roller
11 Roller
12 Screw

TechPub_2614345_0105 - 01_2772034_01.fm

1.4.6 Lower Forming Ring

1.4.6-1 Lower Forming Ring - Overhaul

Machine Status	Power supply disconnector OFF Air supply OFF Steam supply ON Water supply OFF
SPC Reference	456309-0600

Note! Do not remove the forming ring from the machine.
Note the position of the washers before removal.

a) Tap out the two pins (1). Loosen the screw (2) and pull out the axle (3). Change the bushings (4).

b) Remove the counter roller (5) group. Change the axle and the bushings, if necessary.

c) Remove the split pin (6) and change the roller (7).

d) Remove the four lock plates (9) using the screws (8).

e) Remove the two lock plates (11) using the screws (12)

f) Remove the five roller (10) groups. Change the bushings and the axles.

TechPub_2614345_0105 - 01_2772034_01.fm

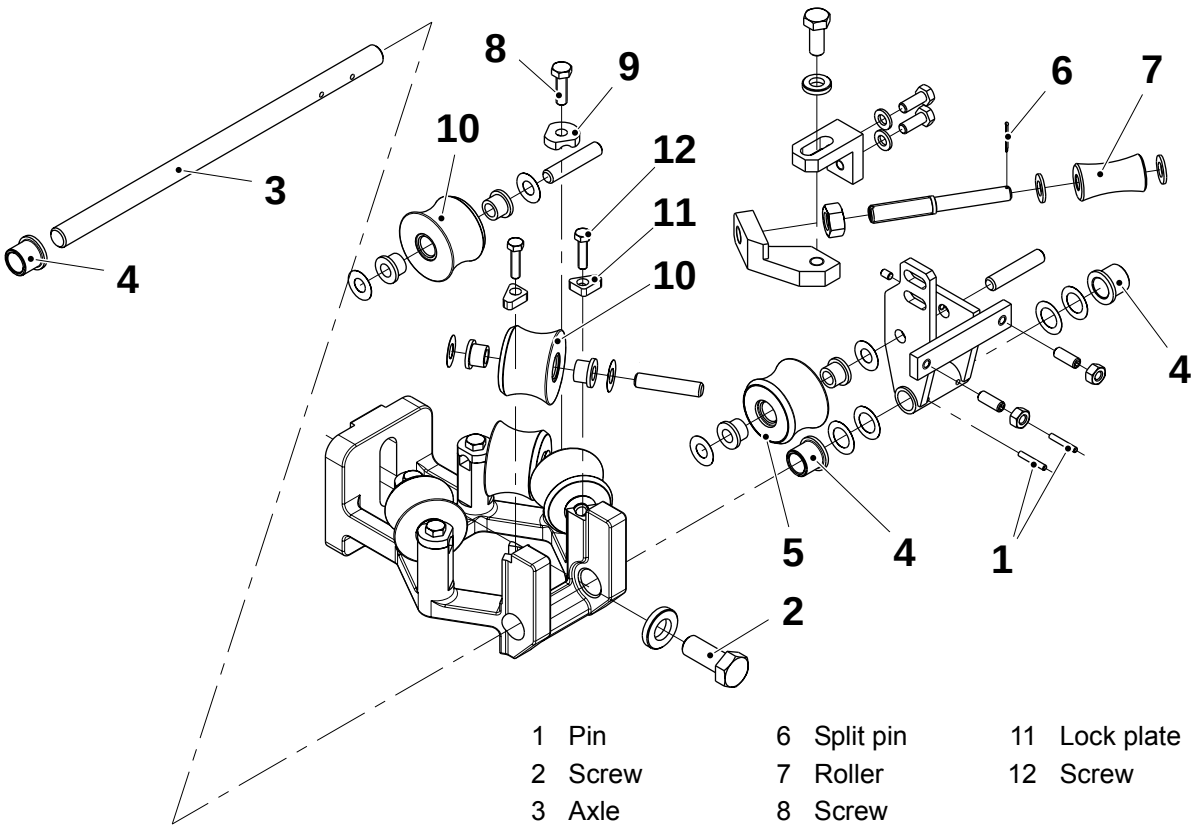

1	Pin	6	Split pin	11	Lock plate
2	Screw	7	Roller	12	Screw
3	Axle	8	Screw		
4	Bushing	9	Lock plate		
5	Roller	10	Roller		

(Cont'd)

(Cont'd)

Note! Before tightening the screw (2), fully extend the cylinder (13) and then push it inwards 3 ÷ 5 mm. The roller (5) must be in its upper position.

g) Assemble in the reverse order.

Set the rollers, refer to 1.4.6-2 Lower Forming Ring - Set Counter Roller and 1.4.1-1 Tube Supports and Forming Rings - Check.

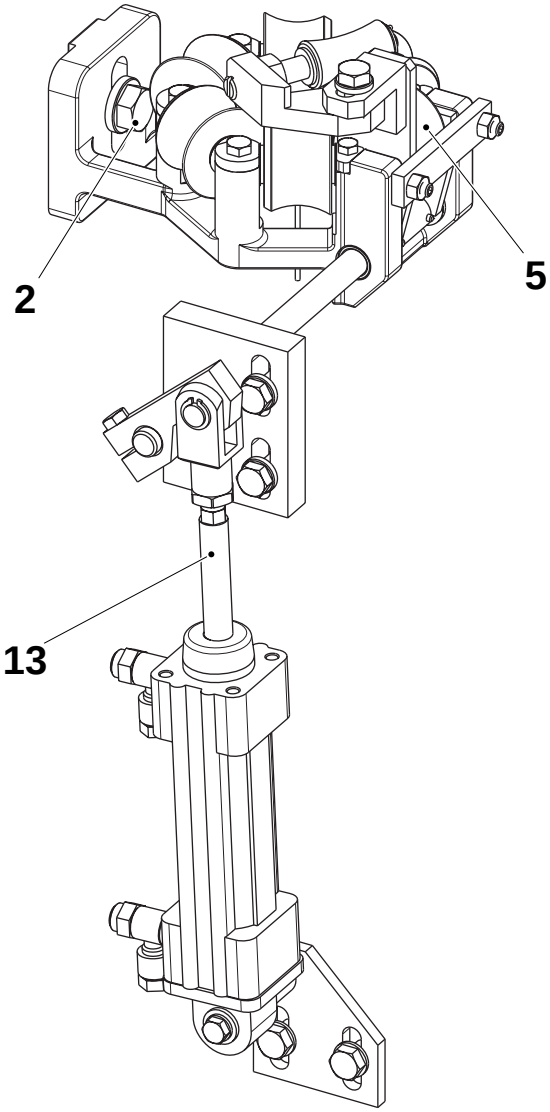

2 Screw
5 Roller
13 Cylinder

TechPub_2614345_0105 - 01_2772034_01.fm

1.4.6-2 Lower Forming Ring - Set Counter Roller

Machine Status	Power supply disconnector OFF Air supply OFF Steam supply ON Water supply OFF
SPC Reference	456309-0600

a) Make sure that the rollers (1) and (2) are aligned.

b) If necessary, set using the stop screws (3).

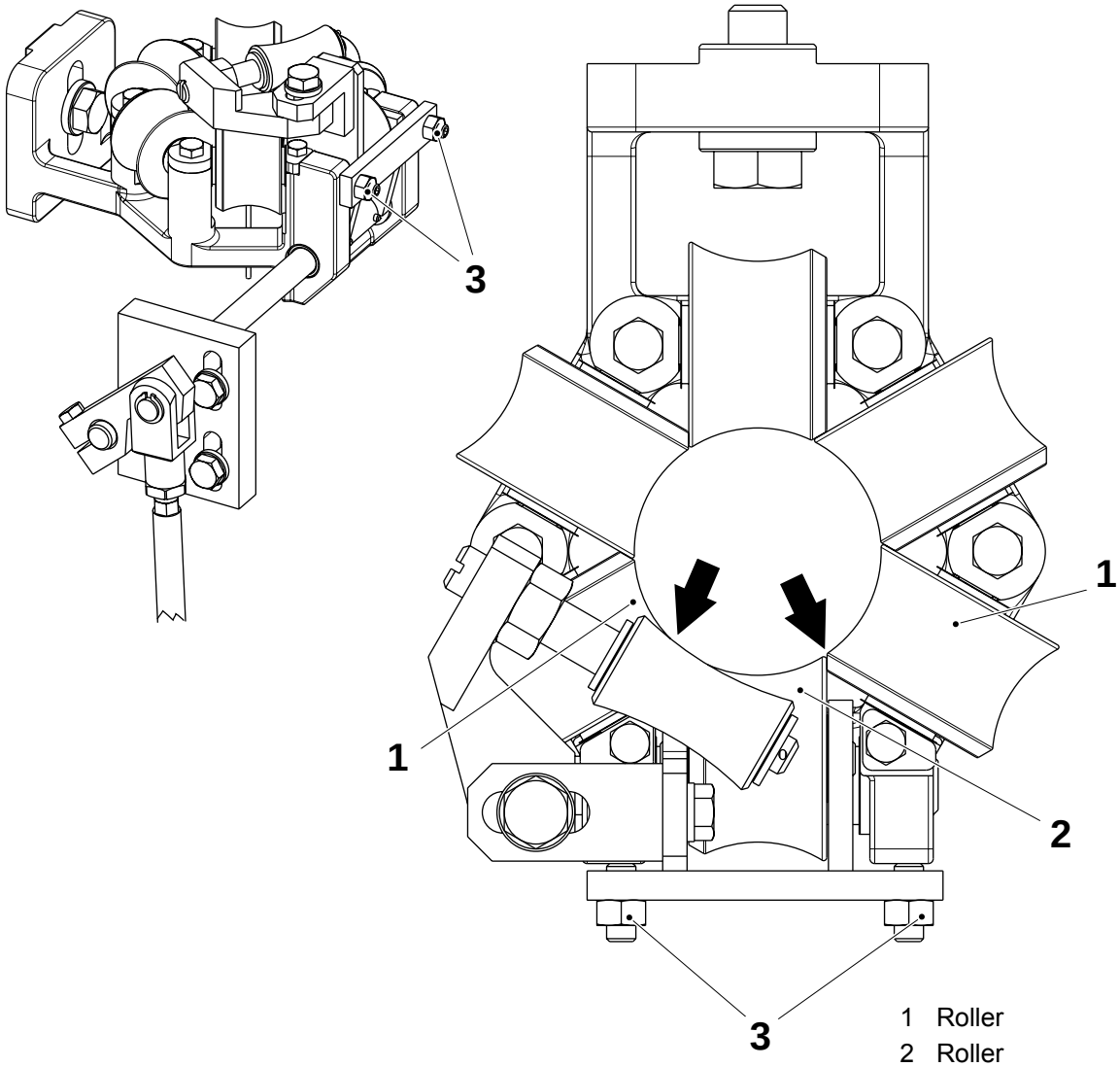

1 Roller
2 Roller
3 Screw

TechPub_2614345_0105 - 01_2772034_01.fm

1.5 Aseptic Chamber

1.5-1 Aseptic Chamber - Change Sealing Lip

Machine Status	Power supply disconnector OFF Air supply OFF Steam supply ON Water supply OFF
SPC Reference	272021-0900

a) Loosen the screws (1) and remove the ring (2).

b) Change the sealing lip (3).

c) Assemble in the reverse order.

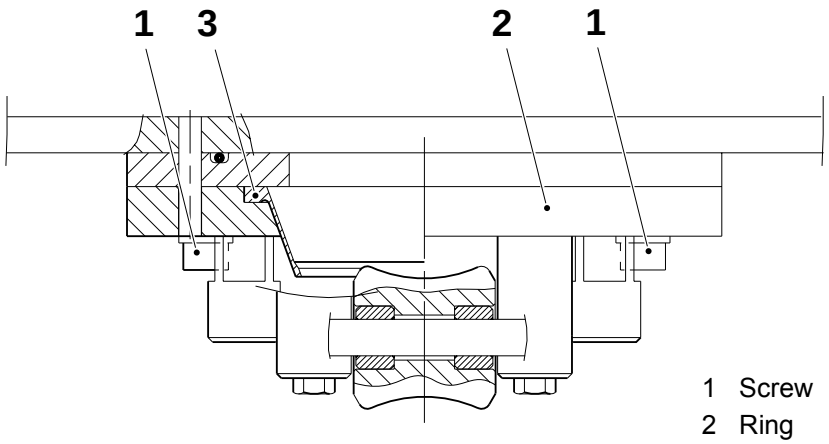

1 Screw
2 Ring
3 Sealing lip

TechPub_2614345_0105 - 01_2772035_01.fm

1.5-2 Aseptic Chamber - Check Support Roller

Machine Status	Power supply disconnector OFF Air supply OFF Steam supply ON Water supply OFF
SPC Reference	272021-0900

a) Check that the rollers (3) are not damaged and that their running surfaces are not worn.

b) Make sure that the rollers (3) rotate smoothly. If not, loosen the screws (1) and remove the axle support (2) and the roller (3).

c) Change the washers, the bearings, the axles (4), and the rollers (3).

d) Reassemble in the reverse order.

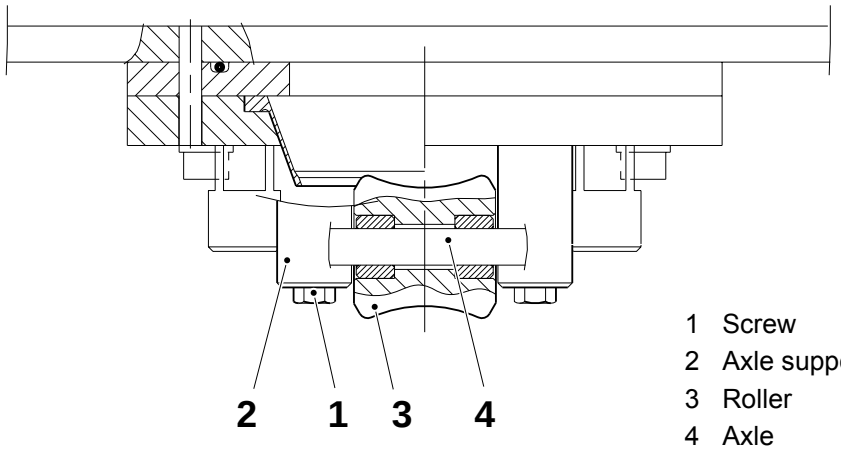

1 Screw
2 Axle support
3 Roller
4 Axle

TechPub_2614345_0105 - 01_2772035_01.fm

1.5-3 Aseptic Chamber - Set Cleaning Cup Sensor

Machine Status	Power supply disconnector OFF Air supply OFF Steam supply ON Water supply OFF
SPC Reference	272021-0900

a) Perform the setting with the cleaning cup (1) and the product pipe (2) installed, see the OM for more details.

Note! For a correct setting, the handle (5) in the closed position must be placed as shown in the illustration below. If necessary, adjust by rotating the valve (3).

b) Close the valve (3) and lower the bracket (4) over the handle (5).

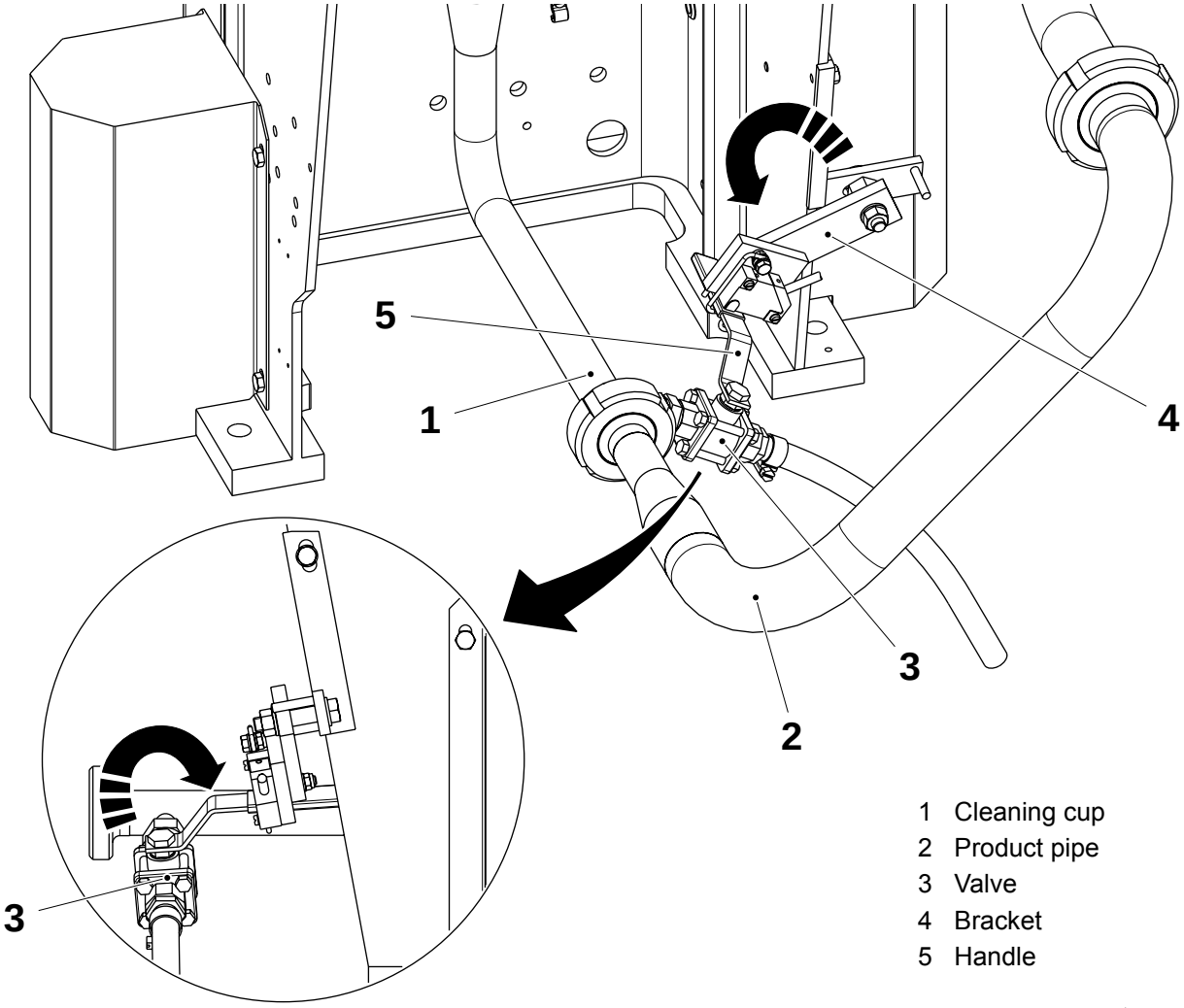

1 Cleaning cup
2 Product pipe
3 Valve
4 Bracket
5 Handle

(Cont'd)

TechPub_2614345_0105 - 01_2772035_01.fm

(Cont'd)

c) The plate (6) must be parallel to the handle (5) and at the same time the handle must be centered relative to the two pins (7). If necessary, adjust using the screws (8), (9), and (10).

d) The spring (11) has to rotate smoothly around the screw (12) without an excessive lateral play. If necessary, set using the screw (12) and its locking nut.

e) The spring (11) when closed must lock the plate (6) and the handle (5) together without play. If necessary, adjust by closing or enlarging the spring (11).

f) Make sure to tighten the screws (8), (9), (10), and (12).

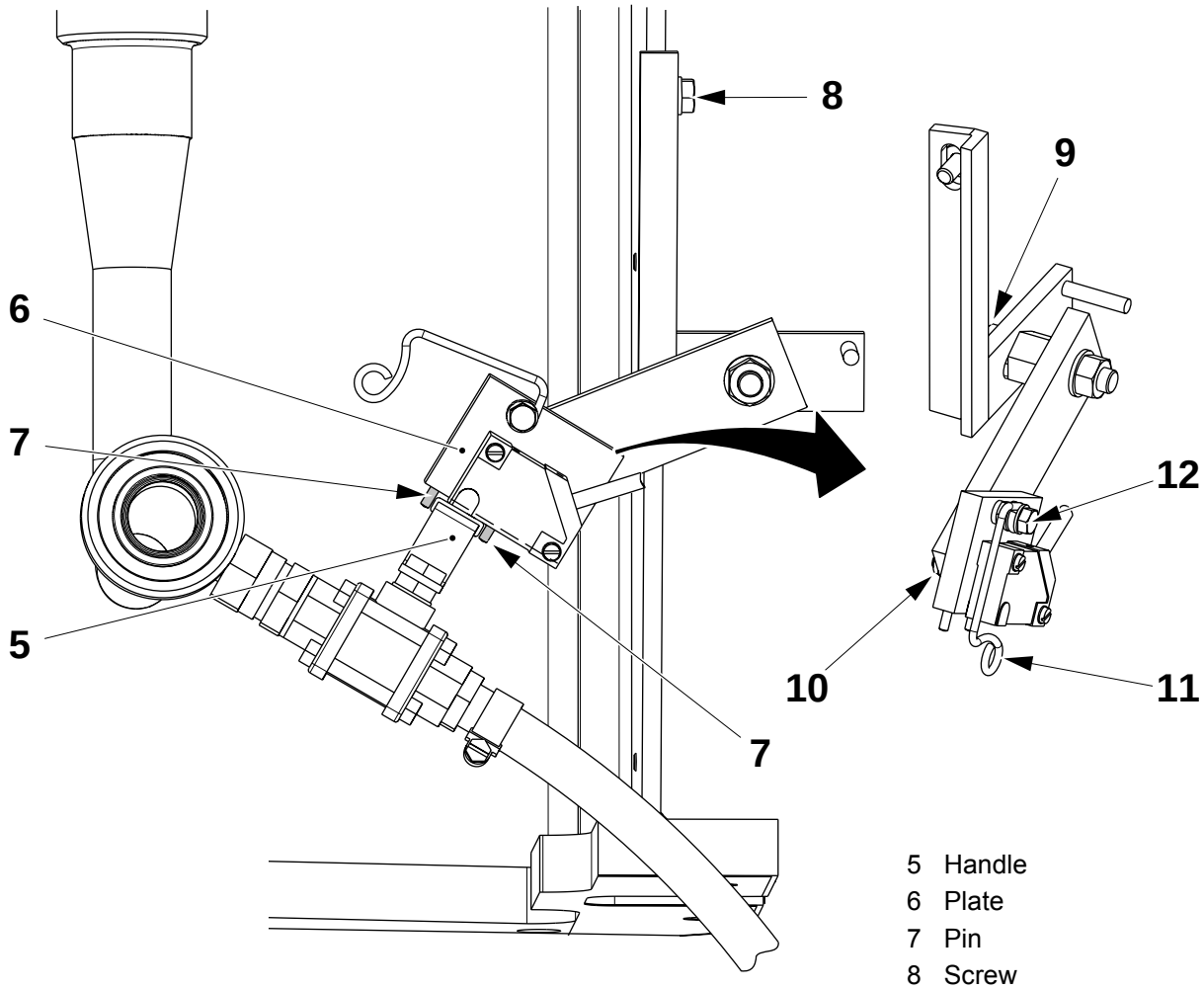

5 Handle
6 Plate
7 Pin
8 Screw
9 Screw
10 Screw
11 Spring
12 Screw

TechPub_2614345_0105 - 01_2772035_01.fm

1.5-4 Aseptic Chamber - Check Cleaning Cup Sensor

Machine Status	Power supply disconnector ON Air supply OFF Steam supply ON Water supply OFF
SPC Reference	272021-0900

Check that the proximity switch function correctly: the LED must switch **Off** when lifting the bar.

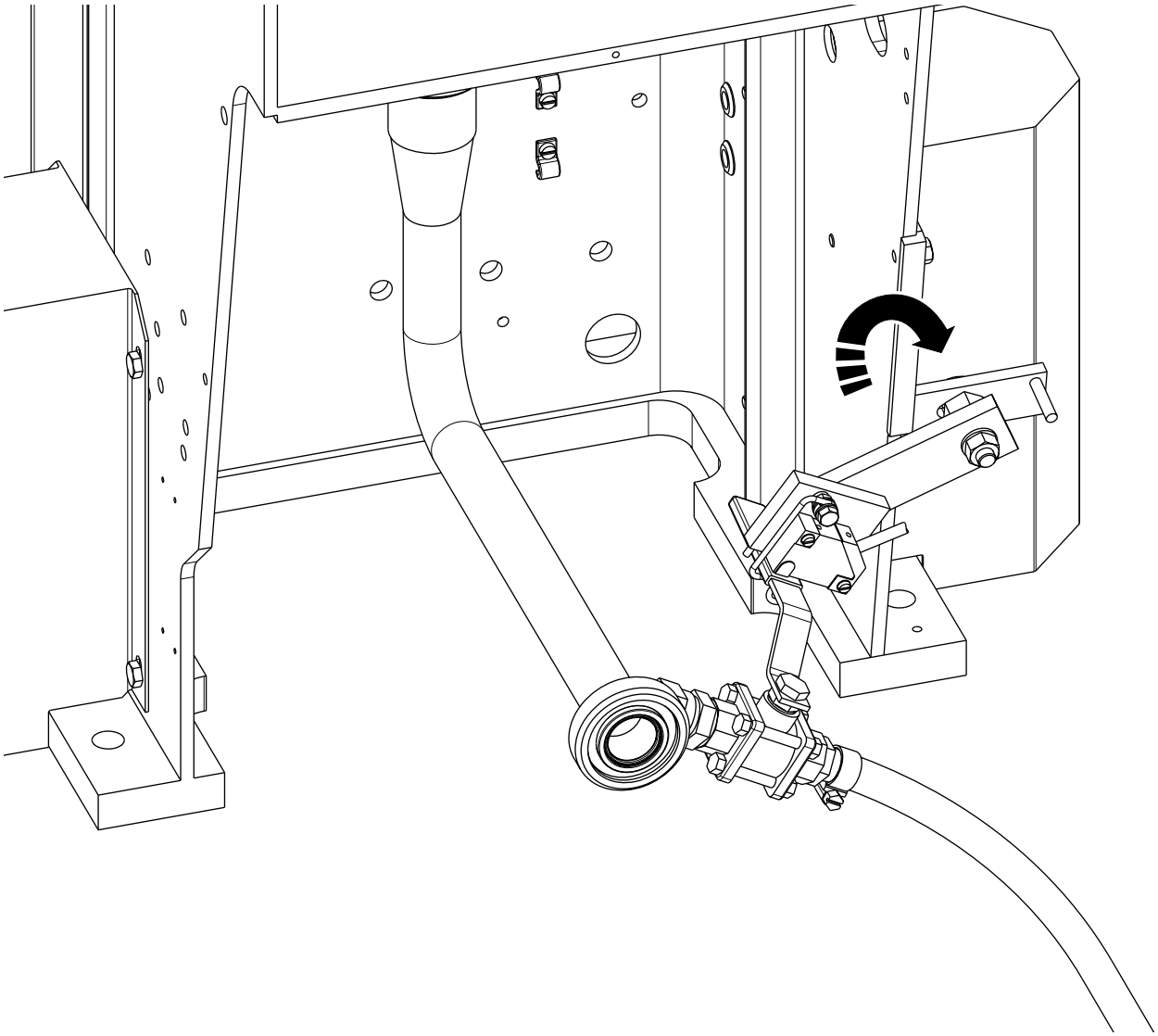

TechPub_2614345_0105 - 01_2772035_01.fm

1.6 Bending Roller

1.6-1 Bending Roller - Overhaul

Machine Status	Power supply disconnector OFF Air supply OFF Steam supply ON Water supply OFF
SPC Reference	272028-0800

a) Remove the screws (1) and remove the motor (2).

b) Remove the shaft coupling (3), and remove the shaft coupling (4) (motor side) loosening the screw (5).

c) Remove the screws (6), the washer (7), the shaft coupling (8) (roller side) together with the free wheel coupling (9), and the V-ring (10).

d) Remove the hub (11) loosening the screw (12).

Note! Take note of the position of the arrow drawn on the coupling (9) to install it back in the correct position.

e) Check the free wheel coupling (9) and the V-ring (10) for wear and damage, change, if necessary.

f) Remove the screws (13) and the bracket (14).

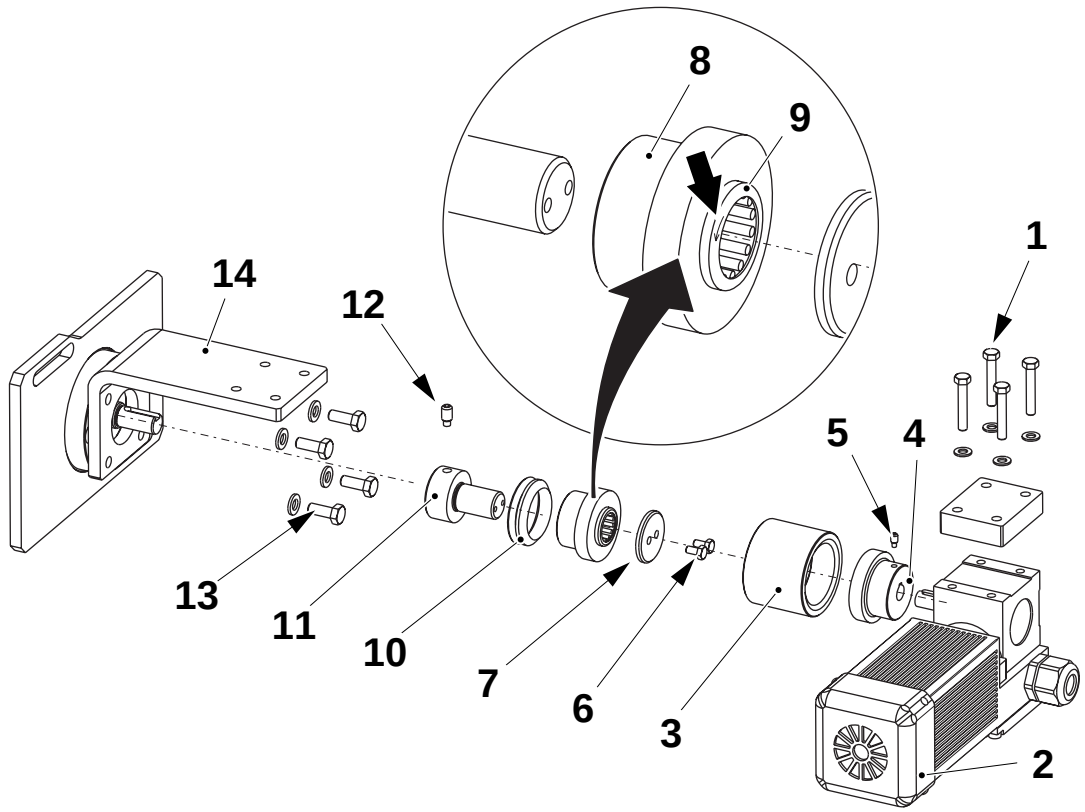

1 Screw
2 Motor
3 Shaft coupling
4 Shaft coupling (motor side)
5 Screw
6 Screw
7 Washer
8 Shaft coupling (roller side)
9 Free wheel coupling
10 V-ring
11 Hub
12 Screw
13 Screw
14 Bracket

(Cont'd)

TechPub_2614345_0105 - 01_2772036_01.fm

(Cont'd)

g) Remove the disc (15), the circlips (16) and the bearing (17).

h) Remove the screws (18), the bearing cover (19), the circlip (20), and the bearing (21).

i) Check the surface of the roller (22), the bearings (17) and (21) for wear and damage, change, if necessary.

j) Assemble in the reverse order.

k) Set the bending roller, see 1.6-2 Bending Roller - Set.

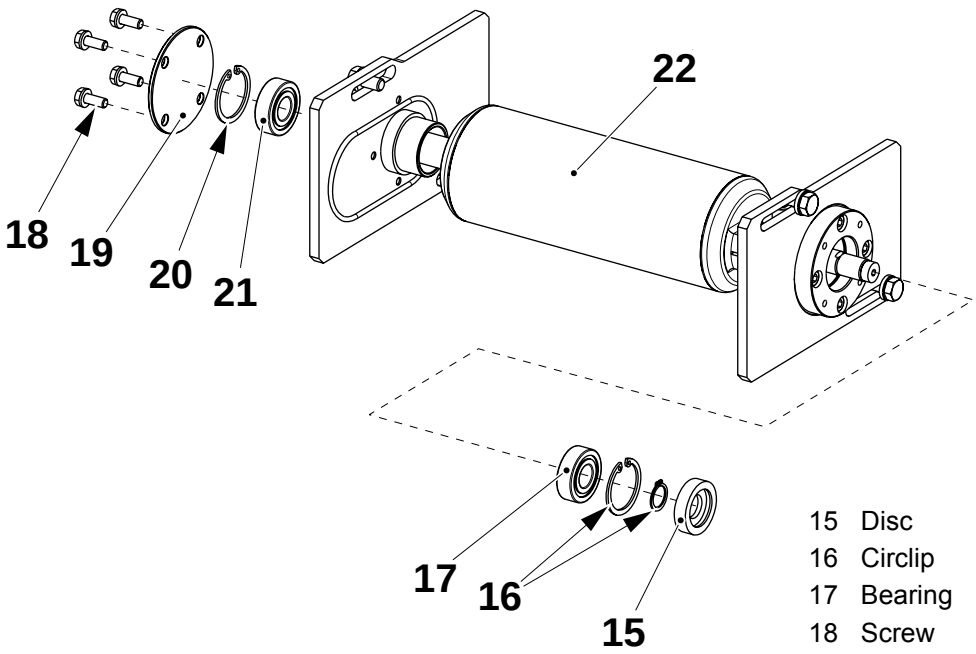

15 Disc
16 Circlip
17 Bearing
18 Screw
19 Bearing cover
20 Circlip
21 Bearing
22 Roller

TechPub_2614345_0105 - 01_2772036_01.fm

1.6-2 Bending Roller - Set

Machine Status	Power supply disconnector OFF Air supply OFF Steam supply ON Water supply OFF
SPC Reference	272028-0800

Check that the bending roller is centered within **1mm**. If necessary, loosen the screws (1) and move the roller sideways.

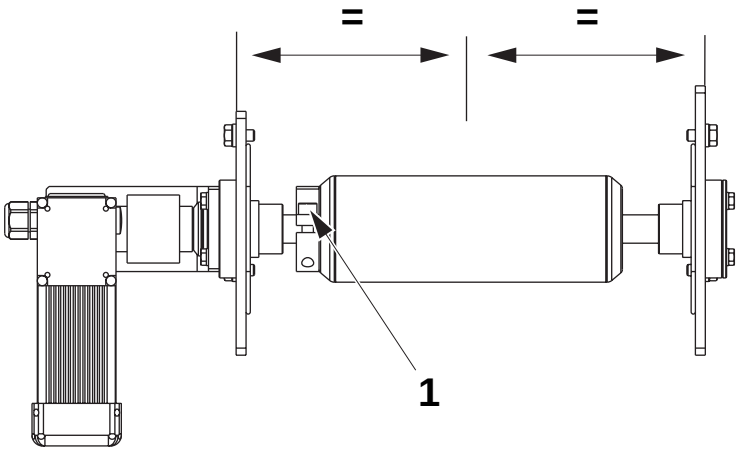

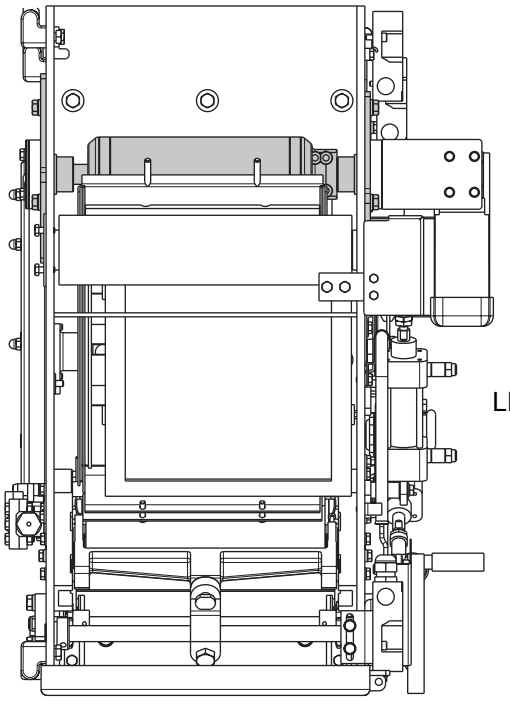

RH side

LH side

1 Screw

View from above

TechPub_2614345_0105 - 01_2772036_01.fm

1.7 Air Knife

1.7-1 Air Knife - Check

Machine Status	Power supply disconnector OFF Air supply OFF Steam supply ON Water supply OFF
SPC Reference	272025-0400

a) Make sure that the cylinder (1) moves smoothly.

b) Check the following details for wear and damage.
   - the fastening (2)
   - the bushings (3): make sure that there is no excessive play
   - the filter (5): make sure that it is clean

c) Change, if necessary.

d) Tighten the screws (4).

e) Check and, if necessary, set as follows:

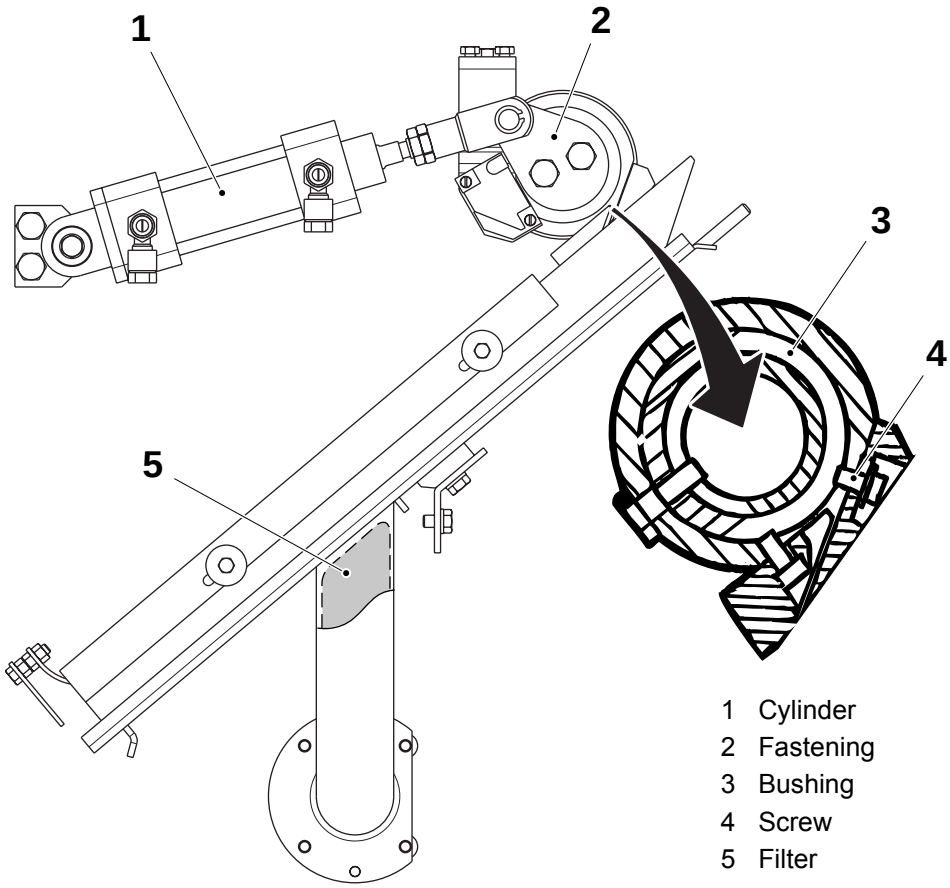

1 Cylinder
2 Fastening
3 Bushing
4 Screw
5 Filter

(Cont'd)

TechPub_2614345_0105 - 01_2772037_01.fm

(Cont'd)

Basic Setting

a) Set the distance **A** using the nuts (6).

b) Put a wire (7) between the calender roller (8) and the bending roller (9). Set the distance **B** by loosening the screws (10) and (11), and moving the bracket (12).

c) Set the distance **C** by loosening the nuts (13) and moving the air guide (14).

d) Set the distance **D** between the proximity switch and the plate.

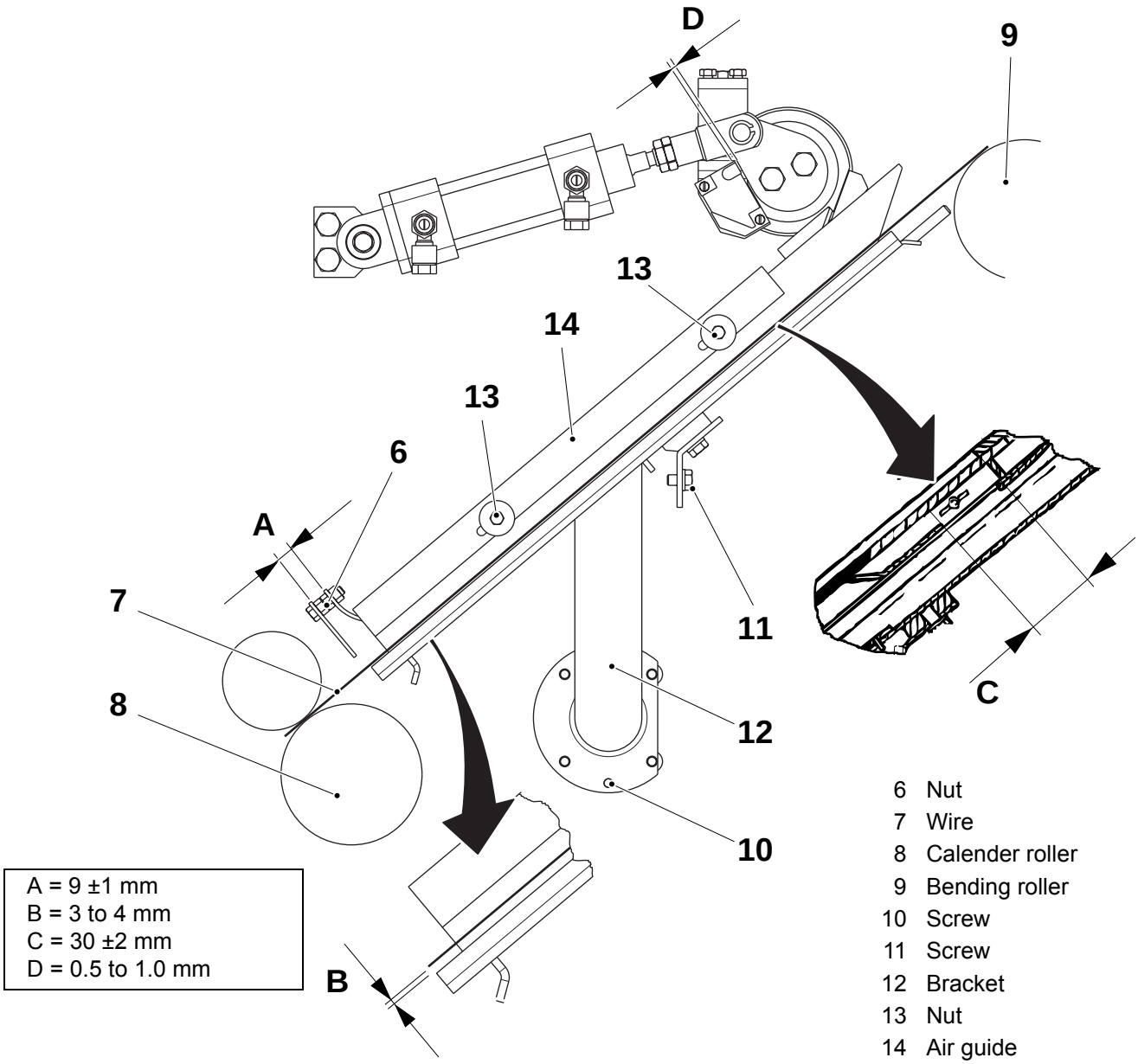

A = 9 ±1 mm
B = 3 to 4 mm
C = 30 ±2 mm
D = 0.5 to 1.0 mm

6 Nut
7 Wire
8 Calender roller
9 Bending roller
10 Screw
11 Screw
12 Bracket
13 Nut
14 Air guide

(Cont'd)

TechPub_2614345_0105 - 01_2772037_01.fm

(Cont'd)

e) Set the distance **E** along the whole width of the bending roller. Adjust by putting shims under the guide rail (15).

f) Put a ruler (16) on the guide rail (15). Loosen the screws (17) and shift the guide rail so that the ruler touches the lug (18) at the contact point (19). Tighten the screws (17).

g) Loosen the nut (20).

h) Set the air knife position to slightly touch the lower air knife (22), by adjusting the piston rod (21)

i) Tighten the nut (20).

WARNING
Risk of crushing.
Moving parts. Take great care.

j) Activate the solenoid valve MY21 and check that the air knife (22) does not touch the supports. If not repeat item h).

k) Check that the air knife (22) does not touch the calender roller (23).

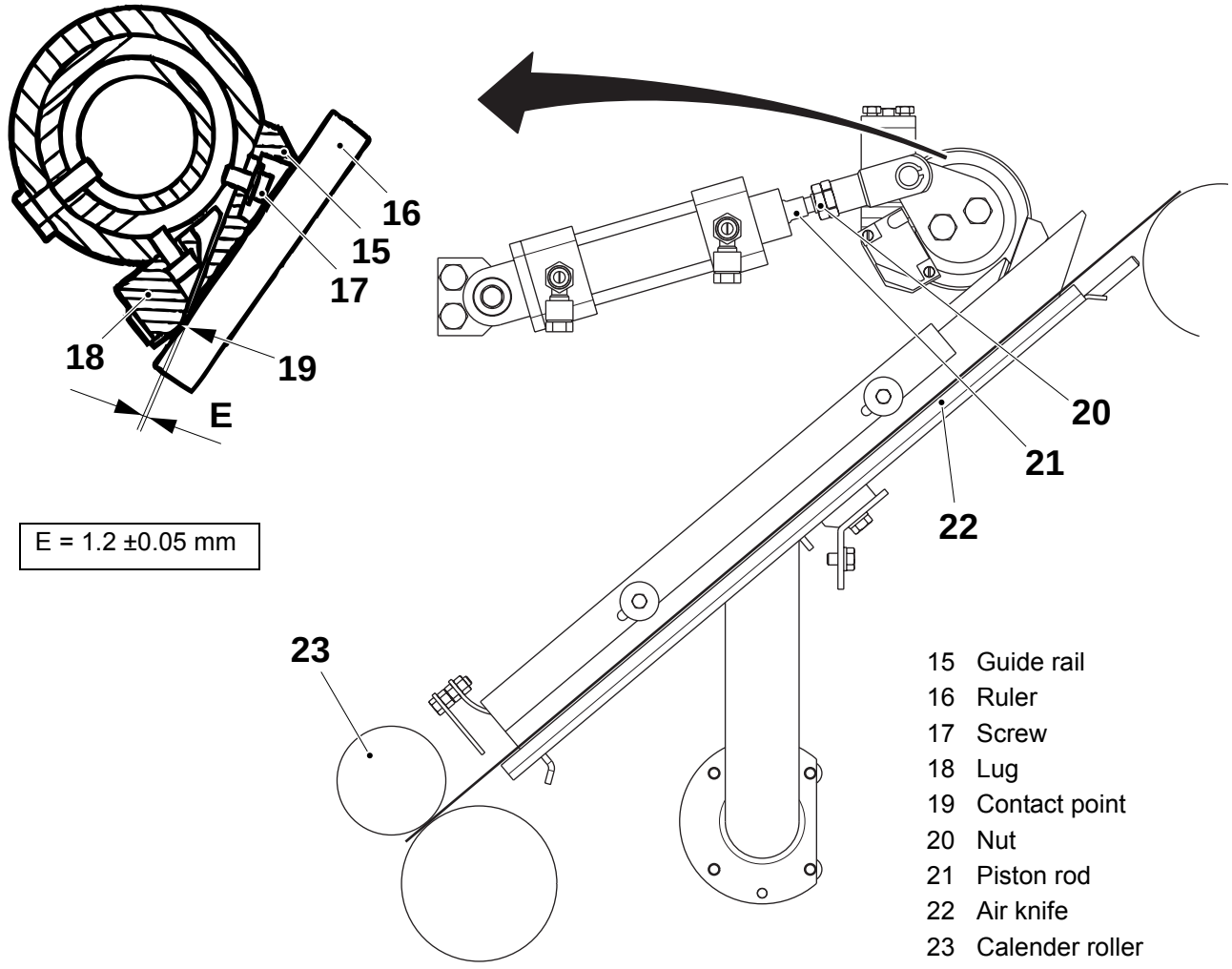

TechPub_2614345_0105 - 01_2772037_01.fm

1.7-2 Air Knife - Set Temperature

Machine Status	PRODUCTION
SPC Reference	272025-0400

a) With the machine in step PRODUCTION, let it run for approximately 15 minutes.

b) Set the air knife temperature, refer to 15.1 Technical Data, using the bypass throttle (arrow).

Note! Perform the adjustment and wait approximately 10 minutes for the change to take effect.

c) Check the air knife temperature.

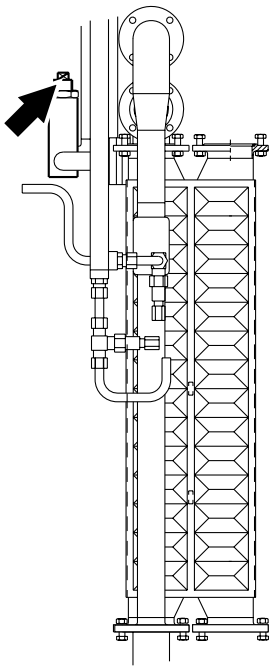

TechPub_2614345_0105 - 01_2772037_01.fm

1.8 Heat Exchanger

1.8-1 Heat Exchanger - Check Tightness

Machine Status	Power supply disconnector OFF Air supply OFF Steam supply ON Water supply OFF
Special Equipment	Flange TP No. 979952 Flange TP No. 979951 Hydrostatic test equipment TP No. 565536
SPC Reference	456976-0700

a) Remove the screws (1) and the heat exchanger from the machine.

b) Check the tightness as follows:

- Plug one of the connections (3) using a blanking flange TP No. 979952.
- Connect the hydrostatic test equipment with flange TP No. 979951, to the connection (2), positioned **diagonally** to the plugged connection (3).

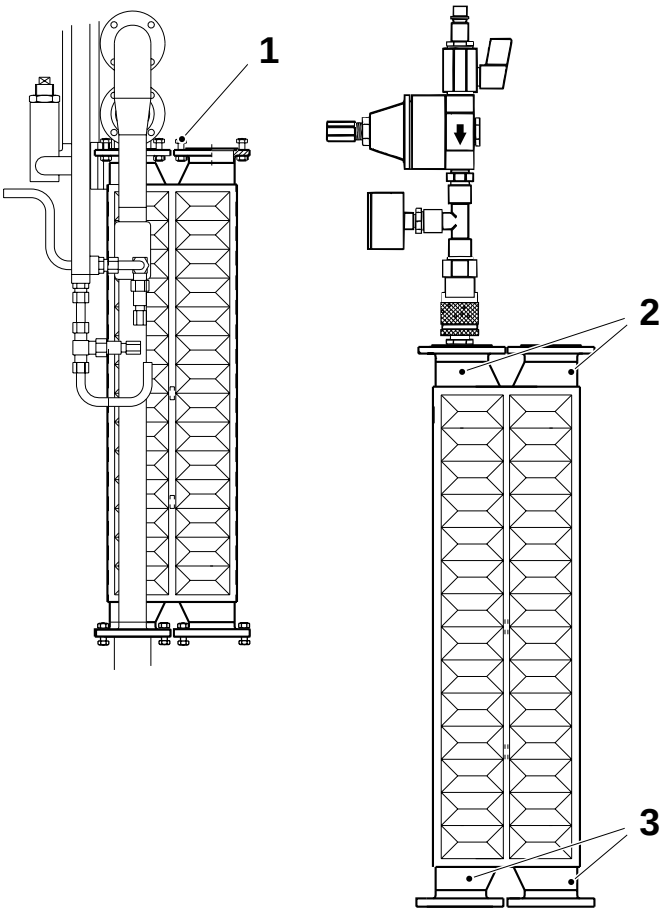

1 Screw
2 Connection
3 Plugged connection

(Cont'd)

TechPub_2614345_0105 - 01_2772038_01.fm

(Cont'd)

Note! Make sure that the equipment is connected in the correct direction - the flow must run **from** the valve (5) **towards** the pressure gauge (8) **(see arrow)**.

CAUTION
Pressurised system.
Before turning on compressed air, turn the adjustment screw (7) to the left until the spring load is released, and close the valve (5).

c) Connect compressed air to the connection (4).

d) Submerge the whole heat exchanger in water. Make sure **not** to drench the pressure controller (6). Let all air bubbles disappear.

e) Open the valve (5). Adjust the pressure to **50 kPa (0.5 bar)**, indicated on the pressure gauge (8), using the adjustment screw (7). Air bubbles will immediately show any leakages in the heat exchanger.

f) Repeat the procedure on the other side.

g) If leakage is suspected, change the heat exchanger.

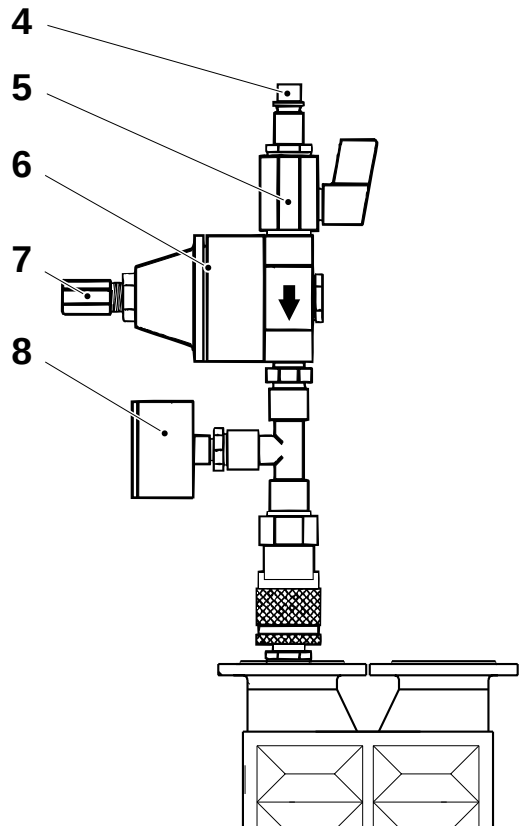

4 Compressed air connection
5 Valve
6 Pressure controller
7 Adjustment screw
8 Pressure gauge

(Cont'd)

TechPub_2614345_0105 - 01_2772038_01.fm

(Cont'd)

h) Change the joint gaskets.

i) Install the heat exchanger on the machine with the flange marked **number 4** positioned as illustrated.

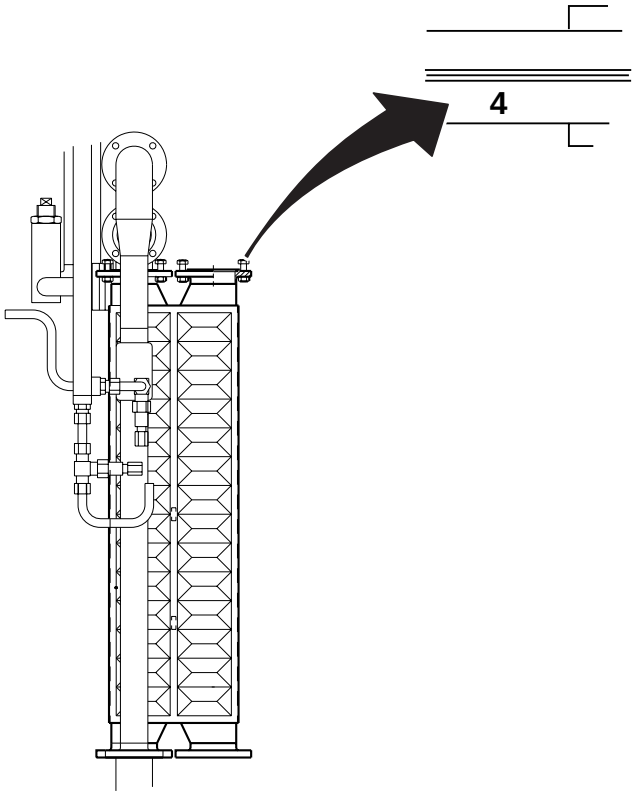

TechPub_2614345_0105 - 01_2772038_01.fm

1.8.1 WEAC Valve

1.8.1-1 WEAC Valve - Overhaul

Machine Status	Power supply disconnector OFF Air supply OFF Steam supply ON Water supply OFF
SPC Reference	476859-0300

Valve

a) Remove the four screws (1) and remove the filter assembly.

b) Remove the two air connections (2) from the cylinder.

c) Loosen the screw (3) and remove the cylinder assembly from the machine.

d) Remove the valve housing (4).

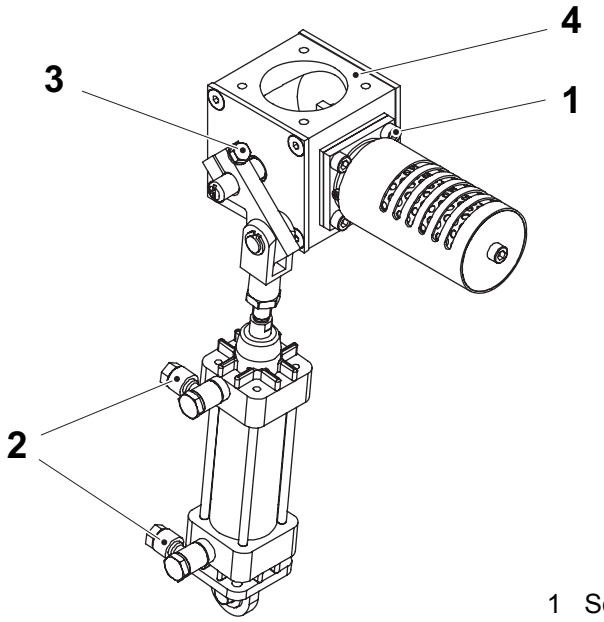

1 Screw
2 Air connection
3 Screw
4 Valve housing

(Cont'd)

TechPub_2614345_0105 - 01_2772038_01.fm

(Cont'd)

e) Remove the bearing cover (5), the slide piece (6), and the springs (7).

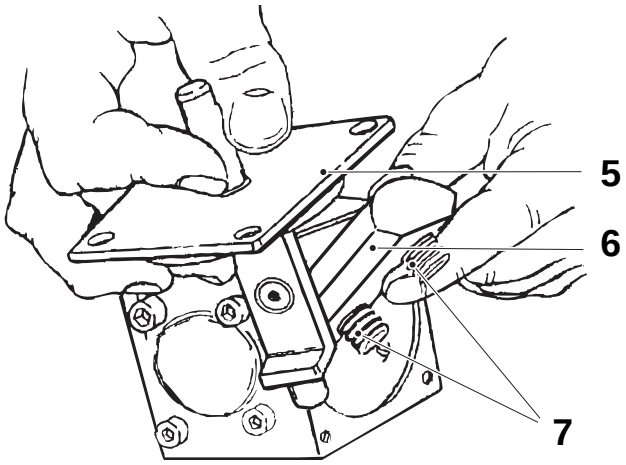

5 Bearing cover
6 Slide piece
7 Spring

f) Check the following details for wear or damage:
   – the bushing (8) and (10)
   – the O-rings (9) and (12)
   – the slide piece (6)
   – the inside of the valve housing

   Change, if necessary.

g) Assemble the valve in the reverse order.

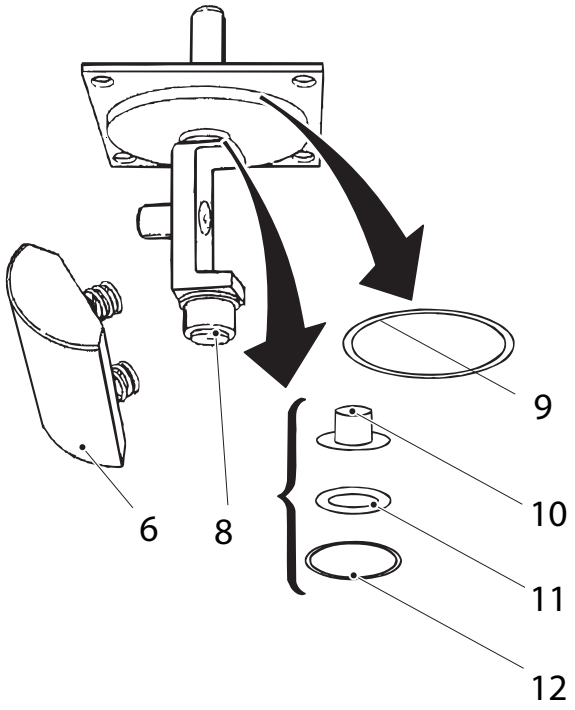

5 Slide piece
8 Bushing
9 O-ring
10 Bushing
11 Washer
12 O-ring

(Cont'd)

TechPub_2614345_0105 - 01_2772038_01.fm

(Cont'd)

Filter

a) Loosen the screw (13) and (15). Remove the filter cover (14).

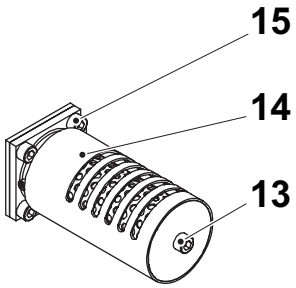

13 Screw
14 Filter cover
15 Screw

b) Loosen the screws (17). Remove the filter net, the ring, and the washer (18).

c) Make sure that the filter net is not clogged. Change the filter net, if necessary. When changing the filter net, also change the O-ring (16).

d) Assemble in the reverse order.

Note! Make sure that the cylinder piston moves smoothly.

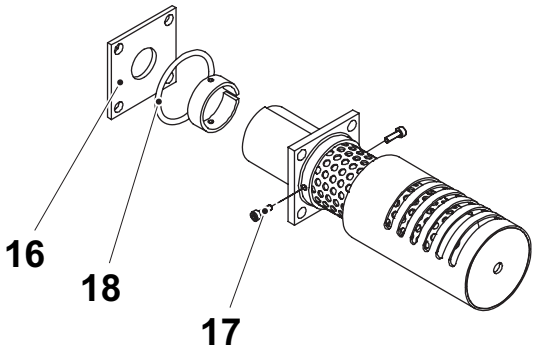

16 O-ring
17 Screw
18 Washer

(Cont'd)

TechPub_2614345_0105 - 01_2772038_01.fm

(Cont'd)

e) Assemble the WEAC valve on the machine.

f) Open the compressed air and check that there are no leakages at the cylinder connections.

Note! The adjustment screws of the cylinder end position damper must be **fully open**.

Setting

a) Make sure that the piston (23) is in its inner position.

b) Set the cylinder stroke by loosening the nut (21) and turning the piston. Set the distance **A** between the nut (21) and the key handle (22) on the piston rod.

c) Set the T-mark (20) into the position illustrated and tighten the screw (19).

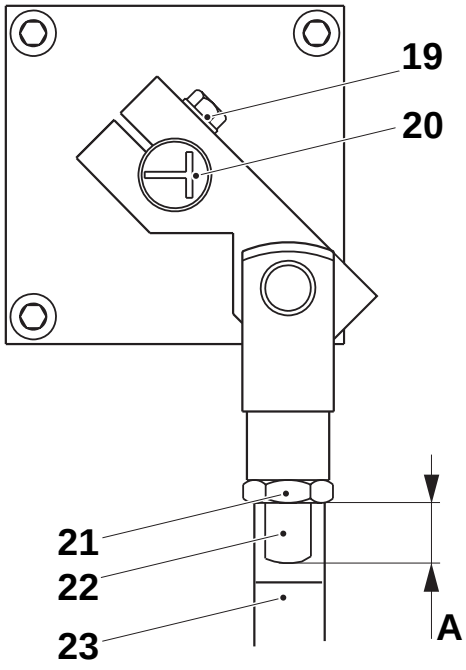

A = 11 ±1 mm

19 Screw
20 T-mark
21 Nut
22 Key handle
23 Piston

TechPub_2614345_0105 - 01_2772038_01.fm

1.9 Valve (Heat Exchanger)

1.9-1 Valve (Heat Exchanger) - Overhaul

Machine Status	Power supply disconnector OFF Air supply OFF Steam supply ON Water supply OFF
Consumables	PTFE grease code N
SPC Reference	271169-0500

a) Disconnect the cylinder air connections (1).

b) Remove the valve from the machine.

c) Remove the screws (2). Disconnect the pendulum bracket (3) from the shaft (4).

d) Check that the cylinder piston moves smoothly. Change the cylinder, if necessary.

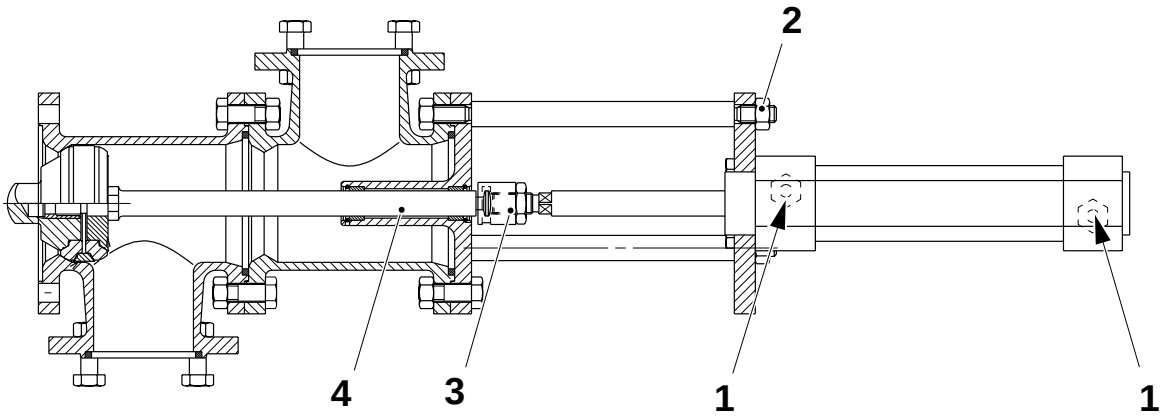

1 Air connection
2 Screw
3 Pendulum bracket
4 Shaft

(Cont'd)

TechPub_2614345_0105 - 01_2772039_01.fm

(Cont'd)

e) Remove the screws (5) and the spindle guide. Change the bushing (7).

WARNING
Lubricants.
Chemical products. Follow the Safety Precautions.

f) Change the O-ring (13). Lubricate with grease code N.

g) Dismantle the T-pipe (9) and pull out the shaft (4).

h) Remove the valve cone (10) and the lock ring (12). Change the seal rings (11).

i) Assemble in the reverse order.

Note! Before fitting the valve onto the machine, set the piston. Refer to 1.9-2 Valve (Heat Exchanger) - Set.

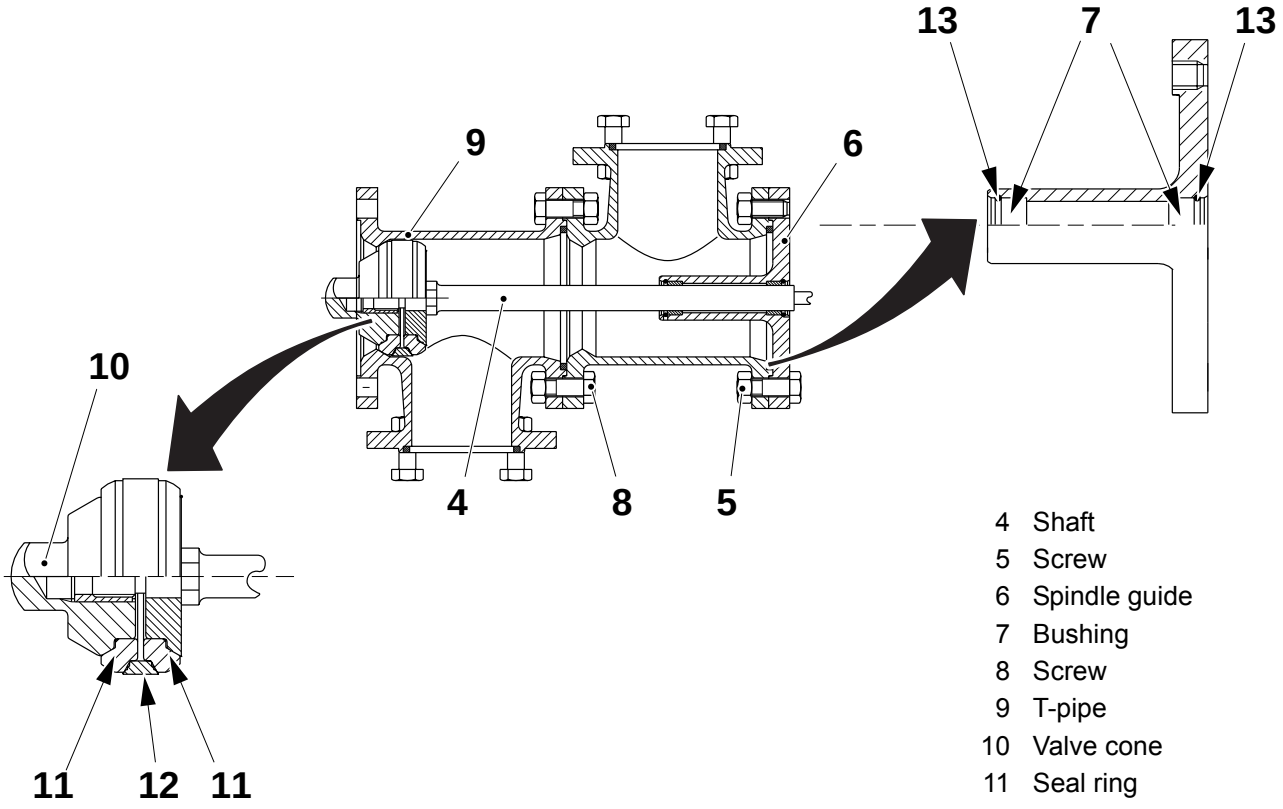

4 Shaft
5 Screw
6 Spindle guide
7 Bushing
8 Screw
9 T-pipe
10 Valve cone
11 Seal ring
12 Lock ring
13 O-ring

TechPub_2614345_0105 - 01_2772039_01.fm

1.9-2 Valve (Heat Exchanger) - Set

Machine Status	Power supply disconnector OFF Air supply OFF Steam supply ON Water supply OFF
Special Equipment	Plastic hose Wrench key
SPC Reference	271169-0500

a) Put the valve assembly on a bench

b) Loosen the counter nut (2).

WARNING

Moving parts can crush.

Be careful when activating the valve.

c) Connect the hose (1). Activate the valve by supplying compressed air to the connection.

d) Screw out the pendulum bracket (3) until it touches the bulge edge of the shaft (4). Screw out three turns more.

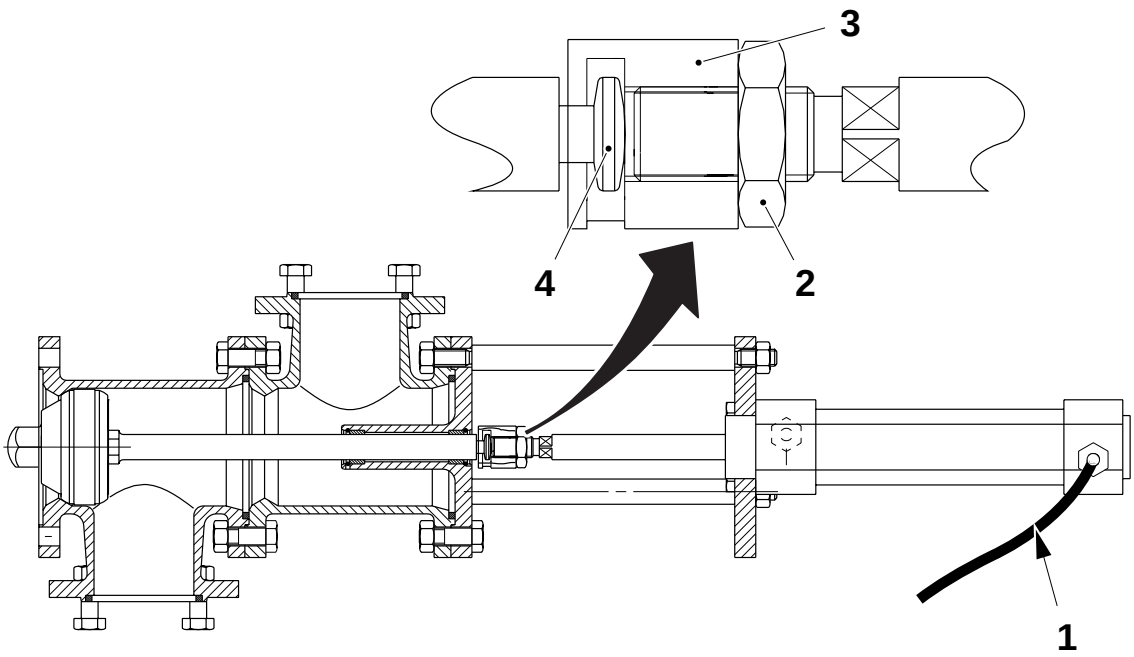

1 Hose
2 Counter nut
3 Pendulum bracket
4 Bulge edge

(Cont'd)

TechPub_2614345_0105 - 01_2772039_01.fm

(Cont'd)

e) Connect the hose (1) to the air supply and activate the valve.

f) Check that there is no gap between the pendulum bracket and the bulged edge of the shaft (4) by moving and rotating the shaft by hand. If necessary, screw in the pendulum bracket (3).

Note! To ensure a perfect seal, the shaft (5) must not rotate.

g) Repeat actions c) - f) until the valve has been set.

h) Tighten the counter nut (2) and disconnect the hose (1).

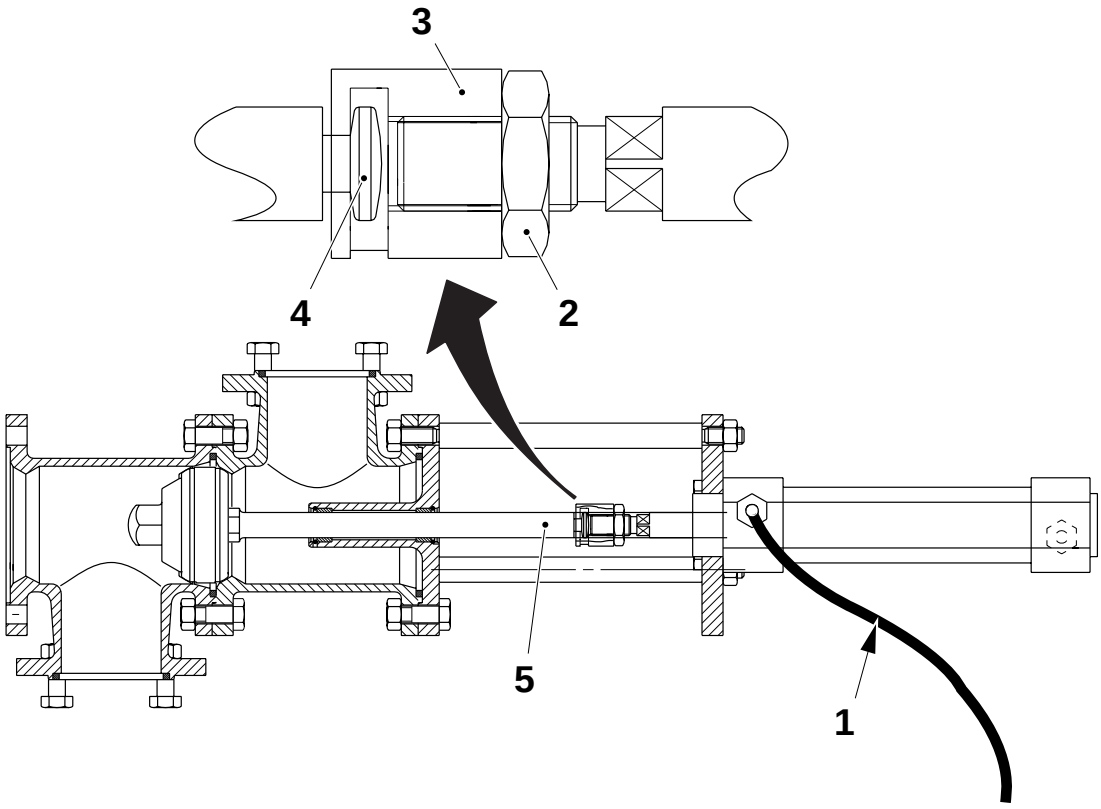

TechPub_2614345_0105 - 01_2772039_01.fm

1 Hose
2 Counter nut
3 Pendulum bracket
4 bulged edge
5 Shaft

1.10 Valve (Air Inlet)

1.10-1 Valve (Air Inlet) - Overhaul

Machine Status	Power supply disconnector OFF Air supply OFF Steam supply ON Water supply OFF
Consumables	Silicone grease code L
SPC Reference	272337-0600

a) Remove the socket (1) and the air connections (2) at the cylinder.

b) Remove the valve from the machine.

c) Loosen the screws (3). Disconnect the pendulum bracket (4) from the shaft (5).

d) Check that the cylinder piston moves smoothly. Change the cylinder, if necessary.

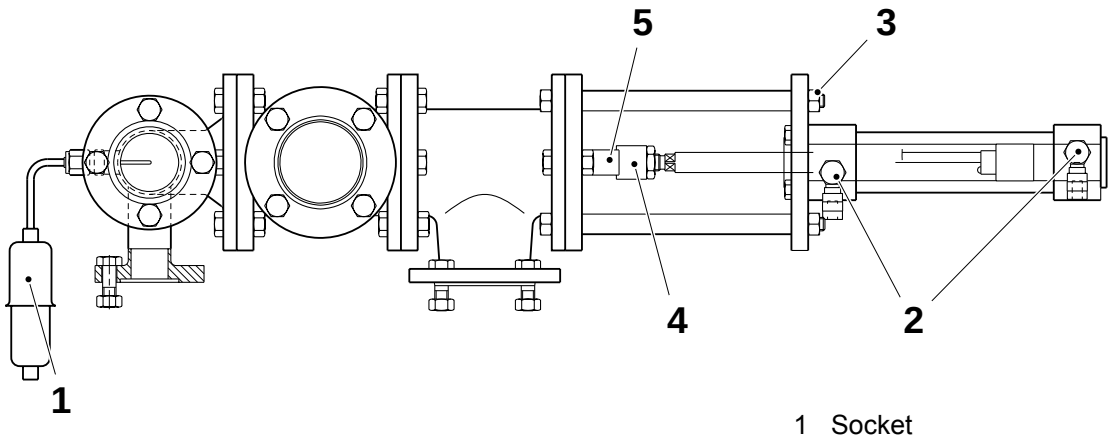

1 Socket
2 Air connection
3 Screw
4 Pendulum bracket
5 Shaft

(Cont'd)

TechPub_2614345_0105 - 01_2772040_01.fm

(Cont'd)

e) Loosen the nut (7). Check the probe (8). Change, if necessary.

f) Dismantle the T-pipe (6).

WARNING

Lubricant.

Chemical products. Follow the Safety Precautions.

g) Change the O-ring (9). Lubricate with grease code L.

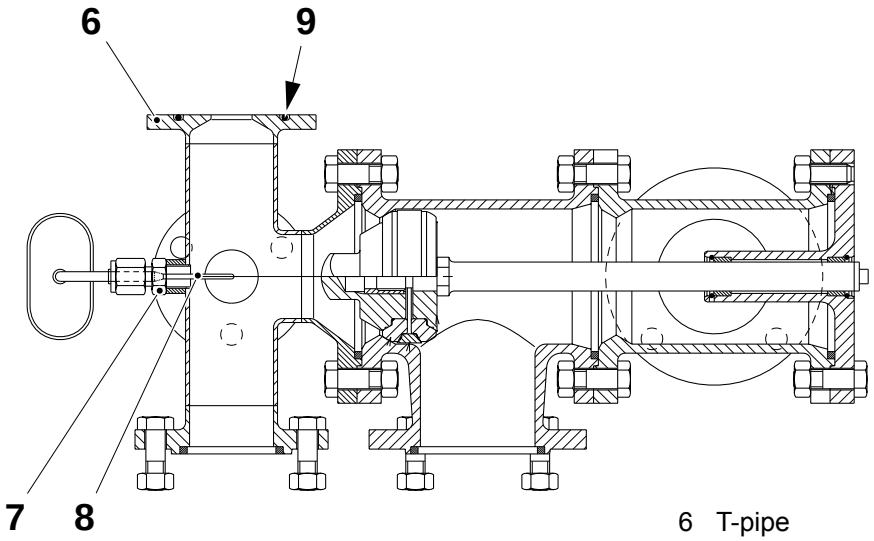

6 T-pipe
7 Nut
8 Probe
9 O-ring

(Cont'd)

TechPub_2614345_0105 - 01_2772040_01.fm

(Cont'd)

h) Remove the screws (10) and the spindle guide (11).
Change the bushing (12).

WARNING
Lubricant.
Chemical products. Follow the Safety Precautions.

i) Change the O-rings (13). Lubricate with grease code L.

j) Remove the screws (14) and the T-pipe (15).
Pull out the shaft (5).

k) Remove the valve cone (16) and the locking ring (17).
Change the seal rings (18).

l) Assemble in the reverse order.

Note! Before fitting the valve on the machine set the piston, see 1.10-2 Valve (Air Inlet) - Set.

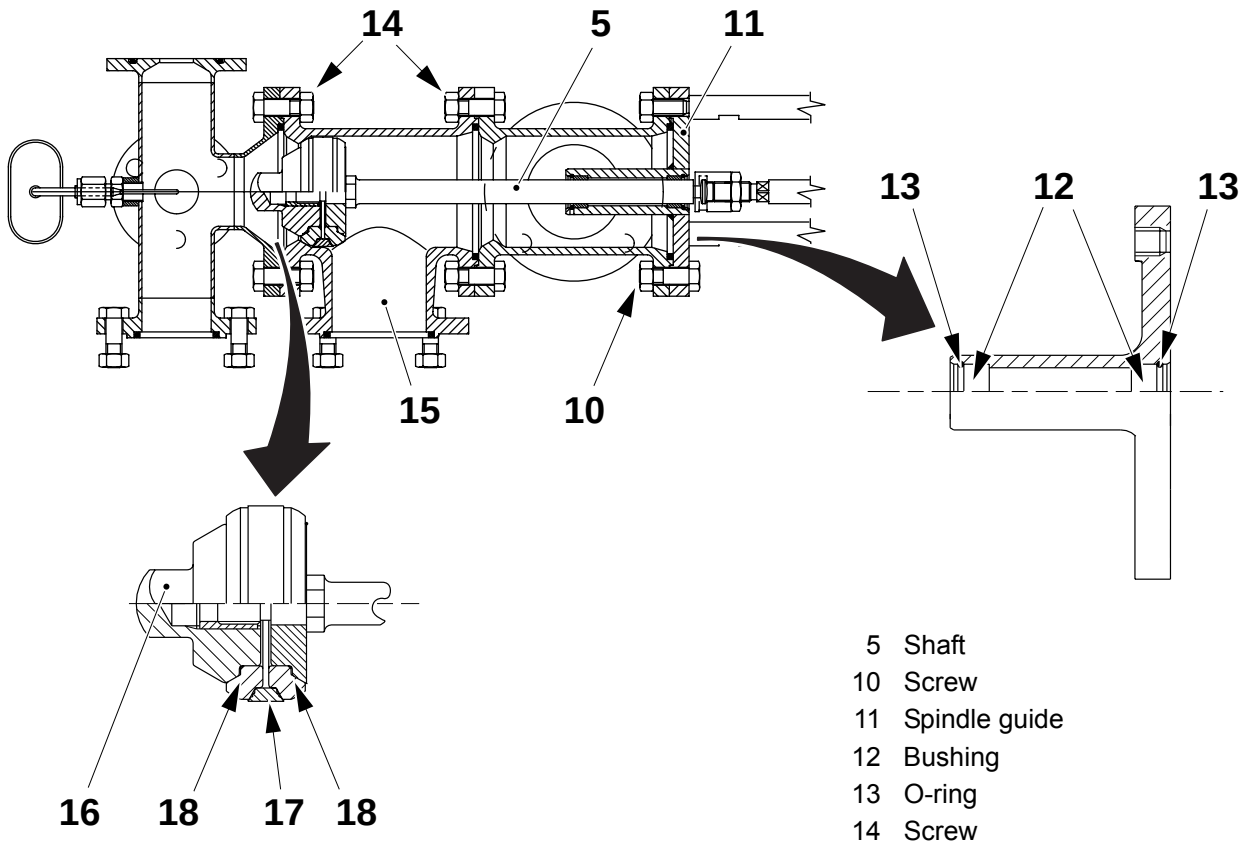

5 Shaft
10 Screw
11 Spindle guide
12 Bushing
13 O-ring
14 Screw
15 T-pipe
16 Valve cone
17 Lock ring
18 Seal ring

TechPub_2614345_0105 - 01_2772040_01.fm

1.10-2 Valve (Air Inlet) - Set

Machine Status	Power supply disconnector OFF Air supply OFF Steam supply ON Water supply OFF
Special Equipment	Plastic hose Wrench key
SPC Reference	272337-0600

Set the air inlet valve according to the procedures described in 1.9-2 Valve (Heat Exchanger) - Set.

TechPub_2614345_0105 - 01_2772040_01.fm

1.11 Change-Over Valve (Suction)

1.11-1 Change Over Valve (Suction) - Overhaul

Machine Status	Power supply disconnector OFF Air supply OFF Steam supply ON
SPC Reference	256084-0700

WARNING

Risk of burns.

Some parts may be hot. Do not touch the hot steam pipes in the proximity.

(Cont'd)

TechPub_2614345_0105 - 01_2772041_01.fm

(Cont'd)

a) Loosen the screw (1) and swing the cylinder bracket (2) aside.
b) Loosen the four screws (3) and remove the bearing cover (4).
c) Pull out the bracket (5), the block (6), and the springs (7).
d) Check the following items for wear and damage:
   – the inside of the housing (8)
   – the O-rings (9) and (10)
   – the bushings (11)
   – the cylinder (12): make sure that it moves smoothly.

   Change, if necessary.

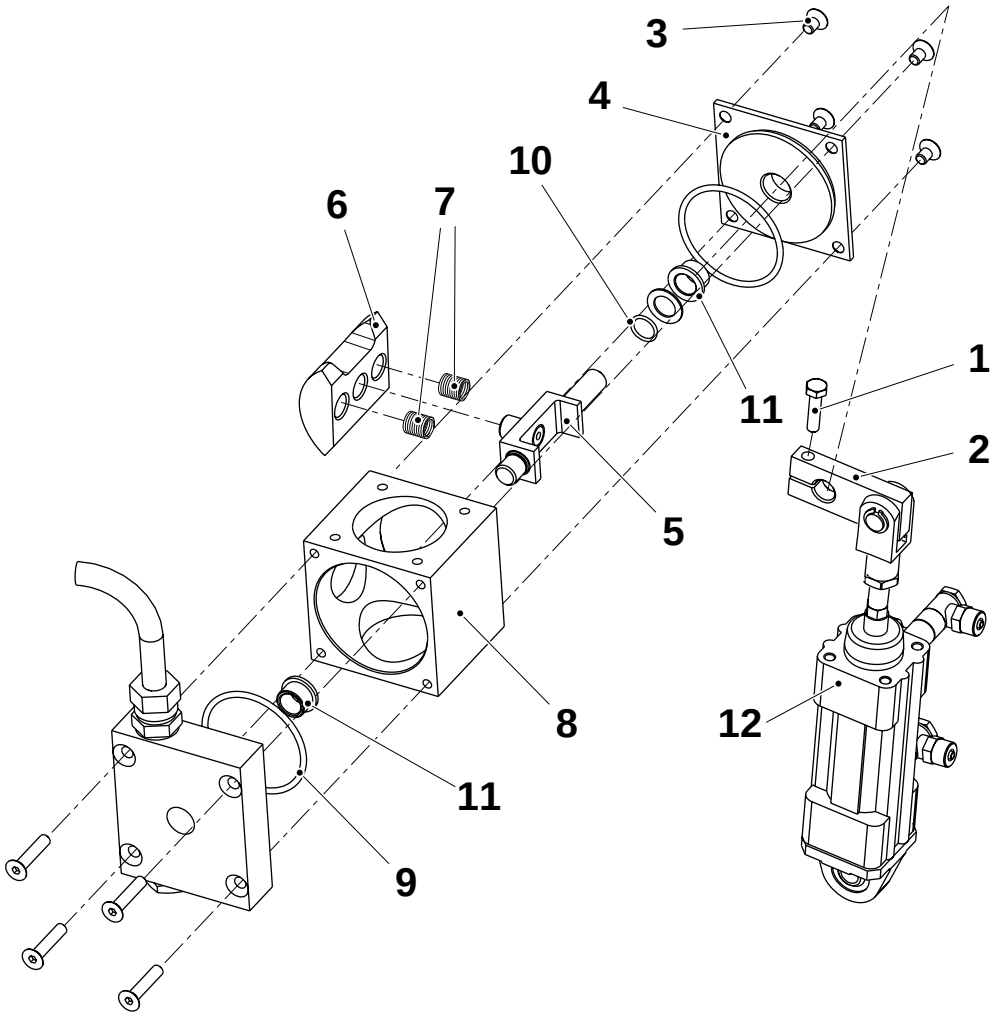

1 Screw
2 Cylinder bracket
3 Screw
4 Bearing cover
5 Bracket
6 Block
7 Spring
8 Housing
9 O-ring
10 O-ring
11 Bushing
12 Cylinder

TechPub_2614345_0105 - 01_2772041_01.fm

(Cont'd)

(Cont'd)

e) Assemble in the reverse order.

Note! During assembling, the block (6) must be positioned with the slot facing upwards (arrow).

f) Open the compressed air supply and make sure that the air cylinder connections do not leak.

g) Check that the sensor (13) is activated when the cylinder is fully extended, move the sensor, if necessary.

h) Set the pressure in the bath and aseptic chamber. Refer to 1-3 Superstructure - Check Pressures.

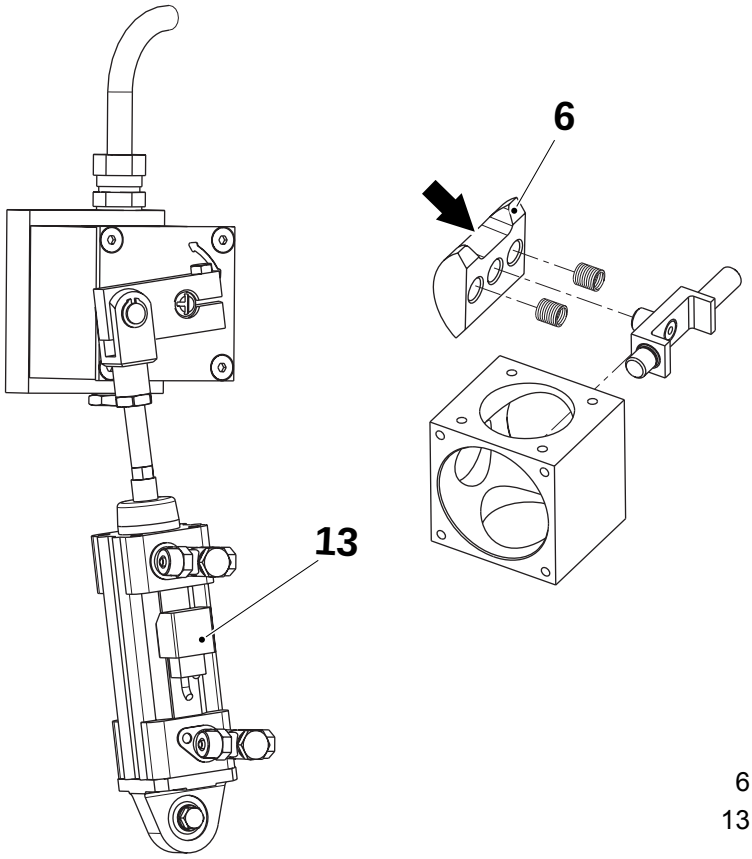

6 Block
13 Sensor

TechPub_2614345_0105 - 01_2772041_01.fm

1.12 Hot Air Element (LS SS)

1.12-1 Hot Air Element (LS SS) - Check Packages

Machine Status	PRODUCTION
SPC Reference	256095-0700

a) Make a SHORT STOP.

b) Step up the machine to step PRODUCTION again.

c) Pick out the discarded packages. Check the LS strip.

If there is no sealing at all, check the element.

If the sealing is not satisfactory, check:

– the LS SS air pressure, refer to 15.1 Technical Data.
(to obtain reliable data, this pressure must be **checked** after about **five minutes** of **production**).

– the setting of the nozzle and the cylinder movement, refer to 1.12-2 Hot Air Element (LS SS) - Set Nozzle.

TechPub_2614345_0105 - 01_2772042_01.fm

1.12-2 Hot Air Element (LS SS) - Set Nozzle

Machine Status	PREHEATING I
SPC Reference	256095-0700

a) Set the distances **A** and **B** from the heat shield (2) to the short stop nozzle (3) using the screws (1).

b) Inch the machine until the packaging material is correctly aligned as far as the jaws.

c) Activate the pneumatic valve **Y20** on the valve panel.

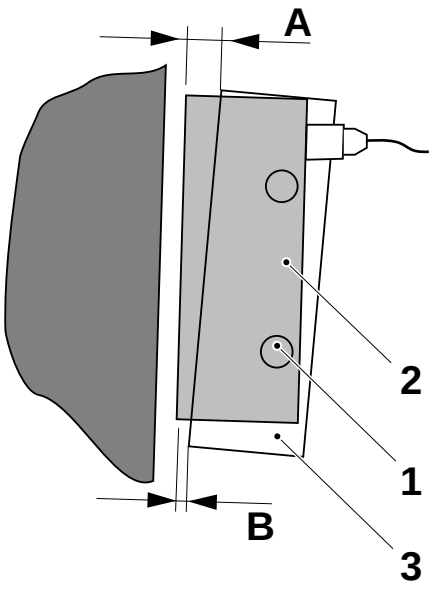

A = 8 ±0.5 mm
B = 3 ±0.5 mm

1 Screw
2 Heat shield
3 Short stop nozzle

(Cont'd)

TechPub_2614345_0105 - 01_2772042_01.fm

(Cont'd)

d) Loosen the screw (4) and shift the short stop nozzle (3) to align the edge of the heat shield (2) with the packaging material tube (5). At the same time, set the corner of the short stop nozzle (3) at the distance **C** from the edge of the packaging material.

e) Set the distance between the LS nozzle and the short stop nozzle (3), see 1.14-1 Air Nozzle (LS) - Set.

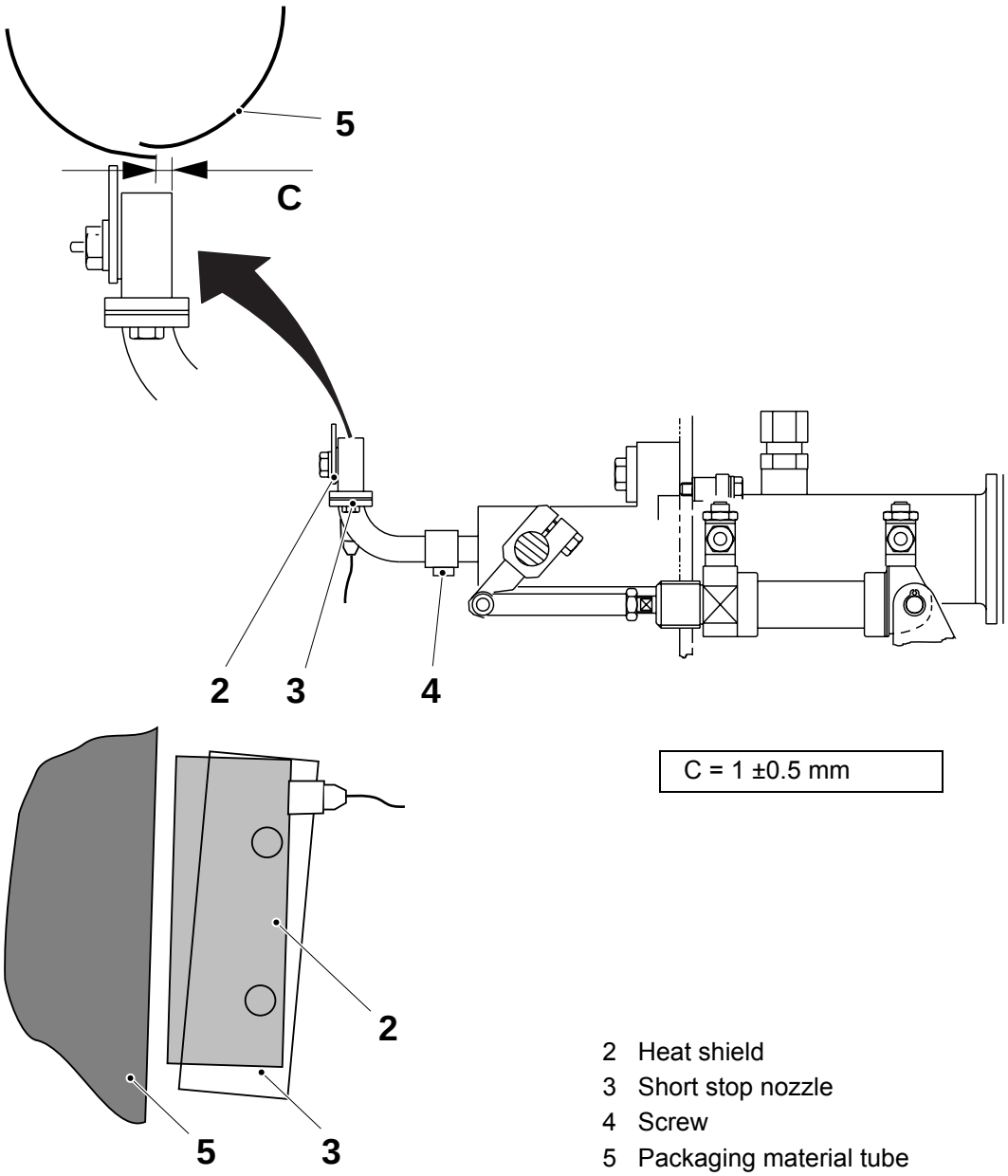

2 Heat shield
3 Short stop nozzle
4 Screw
5 Packaging material tube

(Cont'd)

TechPub_2614345_0105 - 01_2772042_01.fm

(Cont'd)

WARNING
Hot surfaces.
Risk of burns. Wear protective gloves.

f) Set distance **D** between the heat shield (2) and the packaging material tube (5). Adjust using the clamp union (6).

g) With the machine in step PRODUCTION, make a SHORT STOP and check that the nozzle moves without fouling the pressure roller and the LS nozzle. If necessary, adjust on the cylinder throttles.

h) Step the machine to step PRODUCTION again.

i) Pick out the packages that are discarded. Take the packages and check that the LS strip is properly sealed.

j) If necessary, adjust the temperature, see 14.1-2 Temperature Regulators - Set.

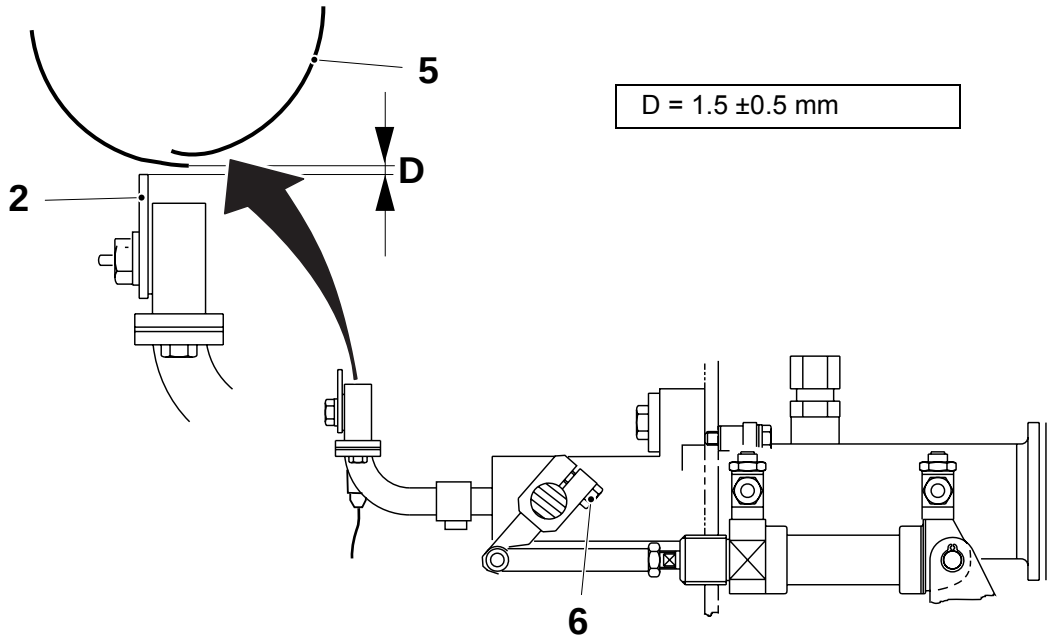

2 Heat shield
5 Packaging material tube
6 Clamp union

TechPub_2614345_0105 - 01_2772042_01.fm

1.13 Spray System

1.13-1 Spray System - Clean Filter

Machine Status	Power supply disconnector OFF Air supply OFF Steam supply ON Water supply OFF
SPC Reference	272623-0800

WARNING

Dangerous chemicals (hydrogen peroxide).

Hydrogen peroxide can be fatal if inhaled or swallowed. Follow the instructions in chapter ii Safety Precautions.

a) Remove the filters (1) and (2).

b) Rinse the cartridge (3) with deionised water and clean it using compressed air.

CAUTION

Risk of contamination.

Do not touch the filters (1) and (2) with your hands.

c) Rinse the filters (1), (2) with distilled water and clean them using compressed air. Rinse the filters with distilled water.
Replace them if they are clogged.

d) Assemble and tighten all connections properly.

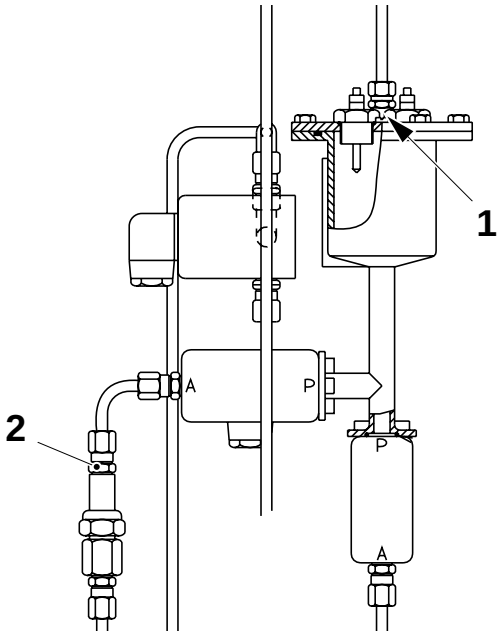

1 Filter
2 Filter
3 Cartridge

TechPub_2614345_0105 - 01_2772043_01.fm

1.13-2 Spray System - Check for Leaks

Machine Status	Power supply disconnector OFF Air supply ON Steam supply ON Water supply OFF
SPC Reference	272623-0800

WARNING

Dangerous chemicals (hydrogen peroxide).
Hydrogen peroxide can be fatal if inhaled or swallowed. Follow the instructions in chapter ii Safety Precautions.

a) Perform a spring.

b) Check all pipe connections in the spray system for leaks.

c) Make sure that all connections are properly tightened.

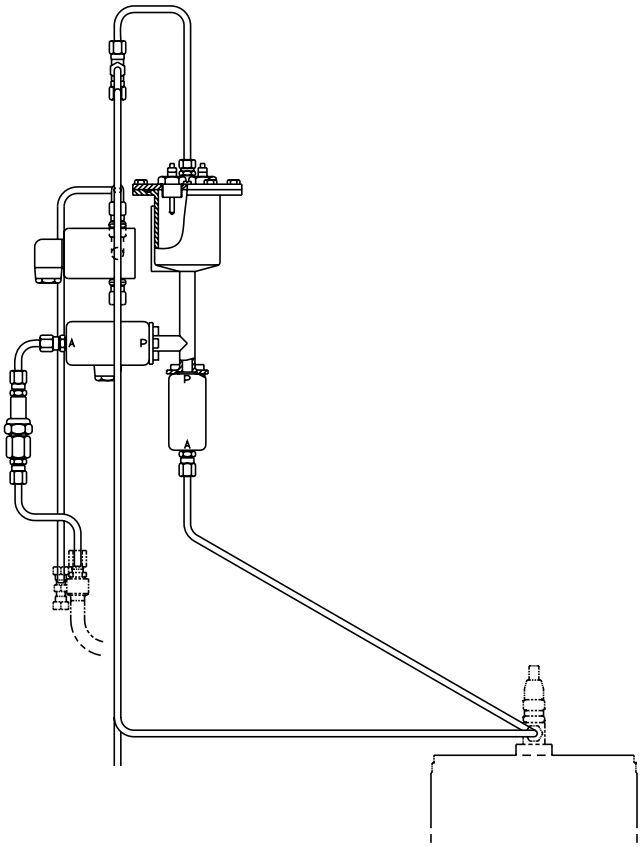

TechPub_2614345_0105 - 01_2772043_01.fm

1.14 Air Nozzle (LS)

1.14-1 Air Nozzle (LS) - Set

Machine Status	Power supply disconnector OFF Air supply OFF Steam supply ON Water supply OFF
Special Equipment	See table
SPC Reference	469501-0400

Basic Setting

a) Remove the cover plates from the LS nozzle.

b) Set the distances **A** and **B** between the nozzles (2) surface and the edge of the rollers (1).

c) To adjust, loosen the four screws (3) and shift the nozzles (2).

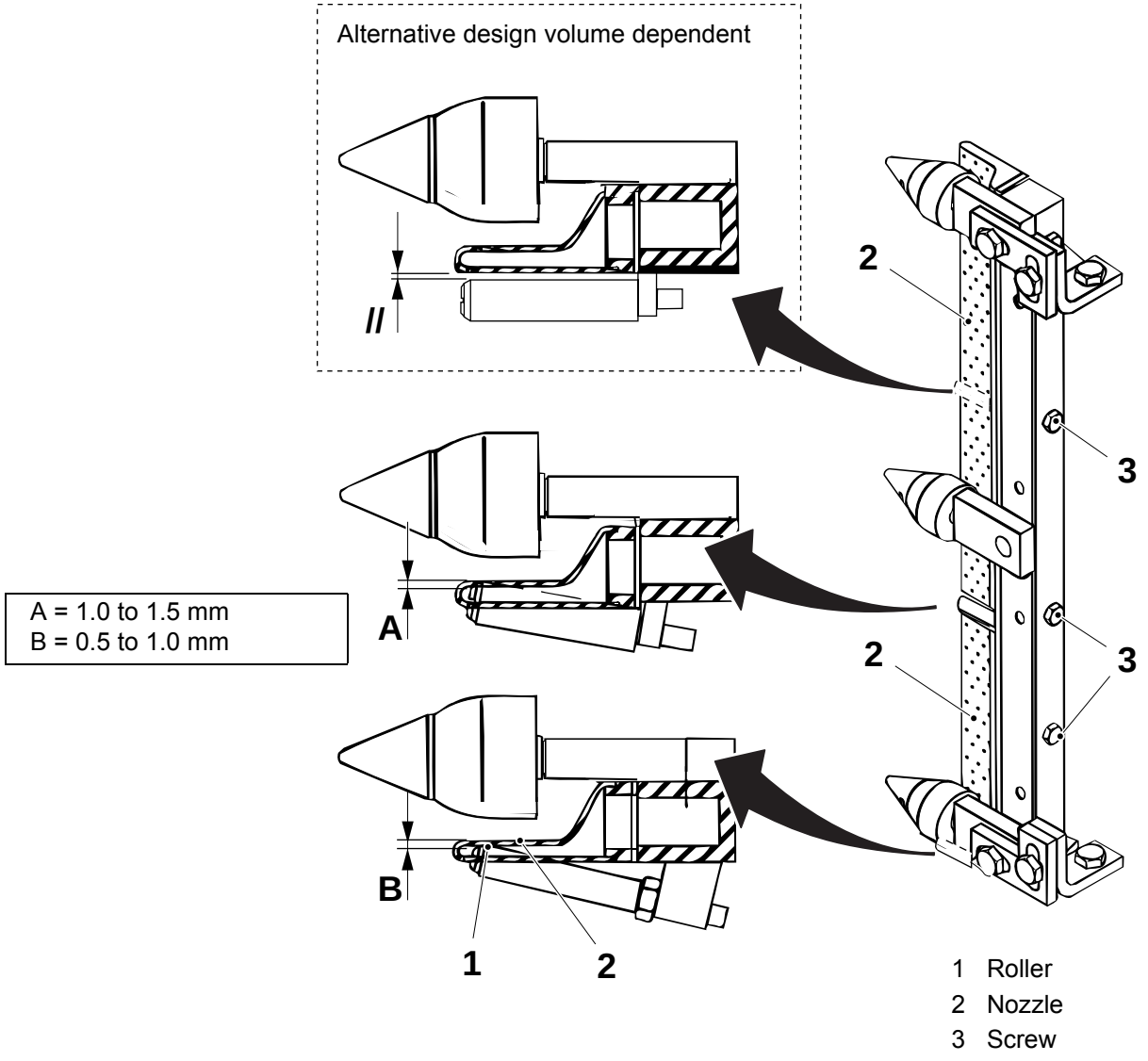

(Cont'd)

TechPub_2614345_0105 - 01_2772044_01.fm

(Cont'd)

d) Loosen the stop screw (4).

e) Remove the lock plates (6) and the roller (5) in the lower forming ring.

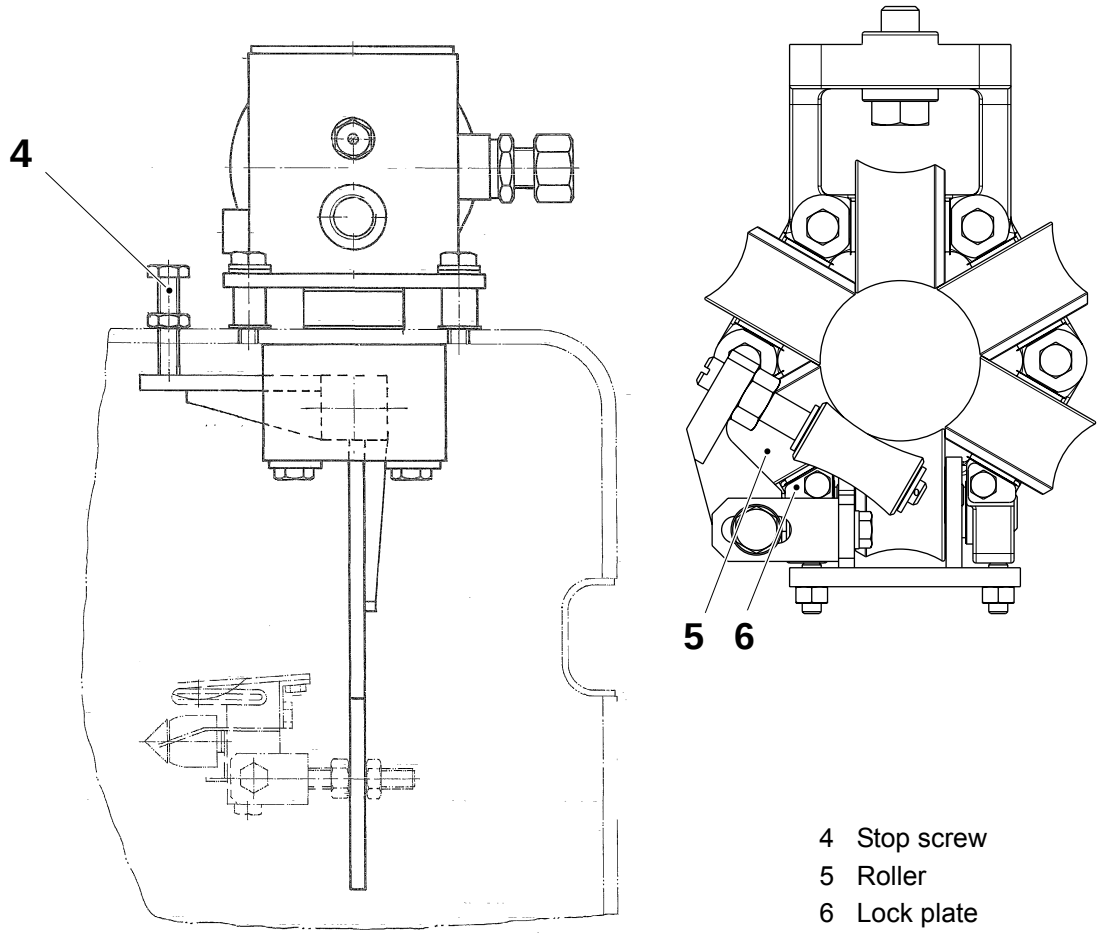

4 Stop screw
5 Roller
6 Lock plate

(Cont'd)

TechPub_2614345_0105 - 01_2772044_01.fm

(Cont'd)

f) Refer to the table below for the correct template for your machine.
Put the lower pin of the template (9), in the place of the roller in the forming ring.
Install the spacer (7) and secure the template (9) with the screw (8).

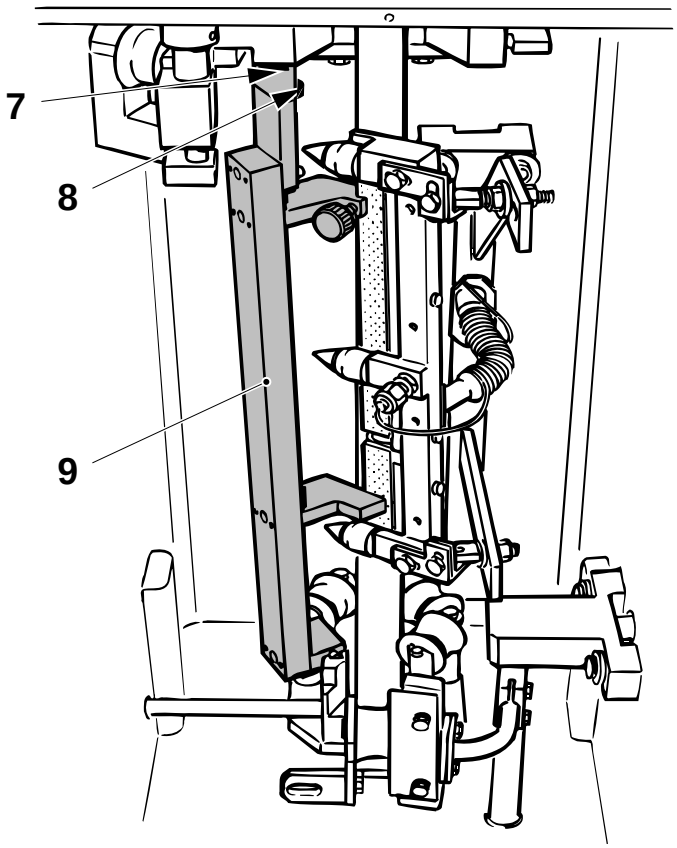

Package	Template, TP No.
TBA 100 B	76133-101
TBA 125 S	76133-101
TBA 160 S	76606-101
TBA 180 B	76595-101
TBA 200 B	76595-101
TBA 200 M	590222-201
TBA 200 S	76606-101
TBA 250 B	76595-101
TBA 250 S	590222-201
TBA 284 B	76595-101
TBA 300 S	76595-101
TBA 330 S	76595-101

7 Spacer
8 Screw
9 Template

(Cont'd)

TechPub_2614345_0105 - 01_2772044_01.fm

(Cont'd)

g) Disconnect the pipeline (10).

h) Loosen the screws (11) and (12), the nuts (13) and (14), the screws (15), (16), (17), and (18).

Note! Make sure that the nozzle is not “forced” towards the template. It should only touch.

i) Move the LS nozzle against the contact surfaces of the template. It may be necessary to adjust the cylinder stroke.

j) Tighten the screw (19).

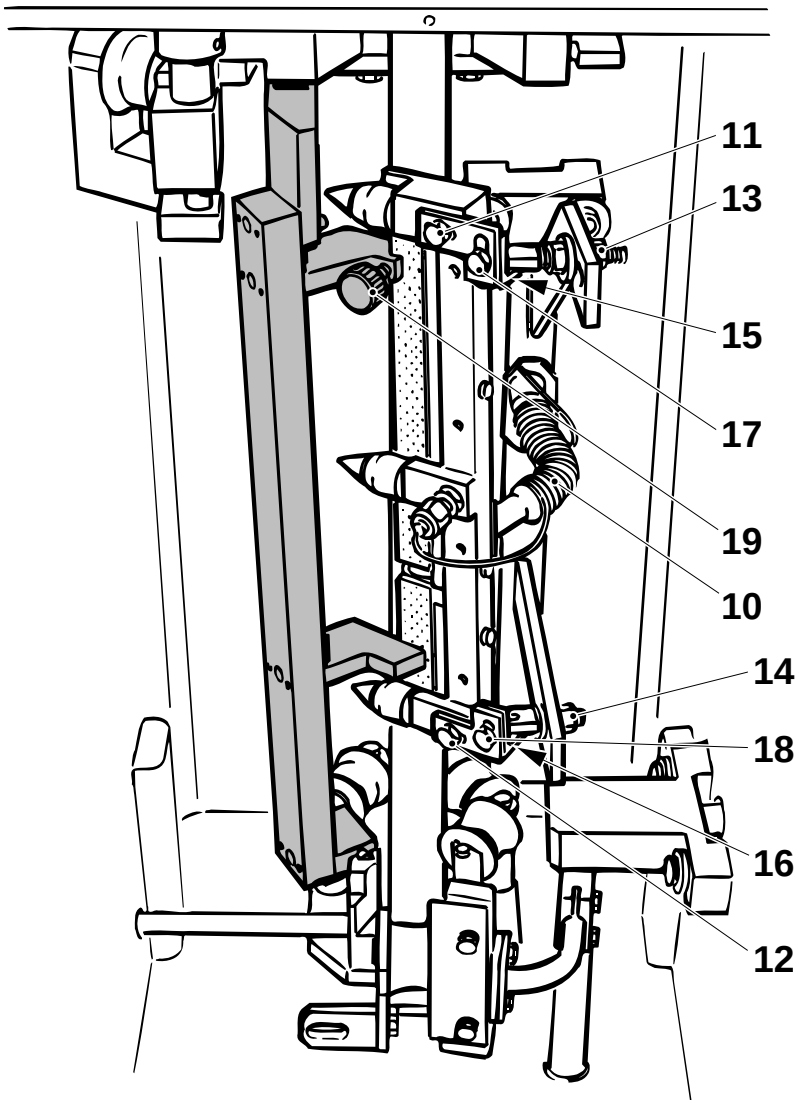

10 Pipe-line
11 Screw
12 Screw
13 Nut
14 Nut
15 Screw
16 Screw
17 Screw
18 Screw
19 Screw

(Cont'd)

TechPub_2614345_0105 - 01_2772044_01.fm

(Cont'd)

k) Tighten the screws (11) and (12). Make sure that there is space for final adjustment (the screws must be positioned centrally within the slot).

l) Tighten the nut (14) and the screws (16) and (18).

m) Tighten the nut (13) and the screws (15) and (17).

Note! Do not force the nozzle towards the template. It must make light contact only.

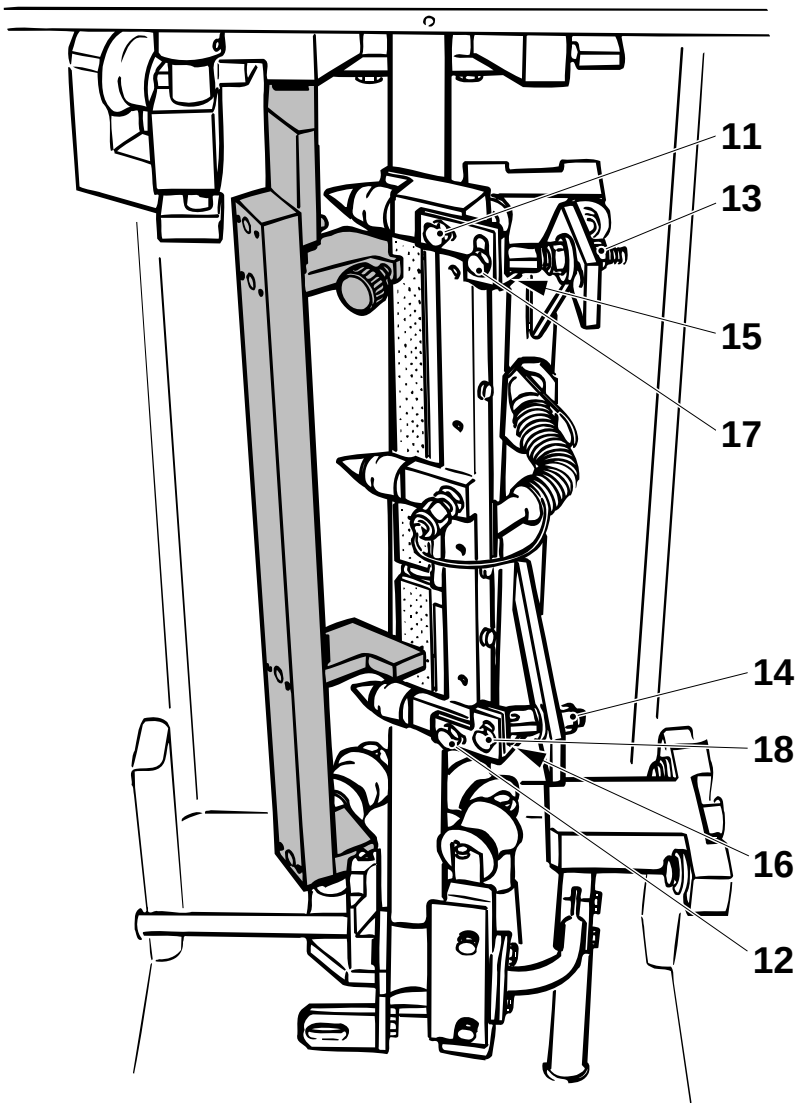

11 Screw
12 Screw
13 Nut
14 Nut
15 Screw
16 Screw
17 Screw
18 Screw

(Cont'd)

TechPub_2614345_0105 - 01_2772044_01.fm

(Cont'd)

n) Set the stop screw (4) so that it touches the contact point on the LS nozzle.

o) Remove the template.

p) Swing out the LS nozzle and make sure that it can move smoothly. Swing it back.

q) Reconnect the pipe line to the nozzle.

Note! Make sure that the gasket is correctly positioned.

r) Refit the roller in the forming ring and the cover plates of the LS nozzle.

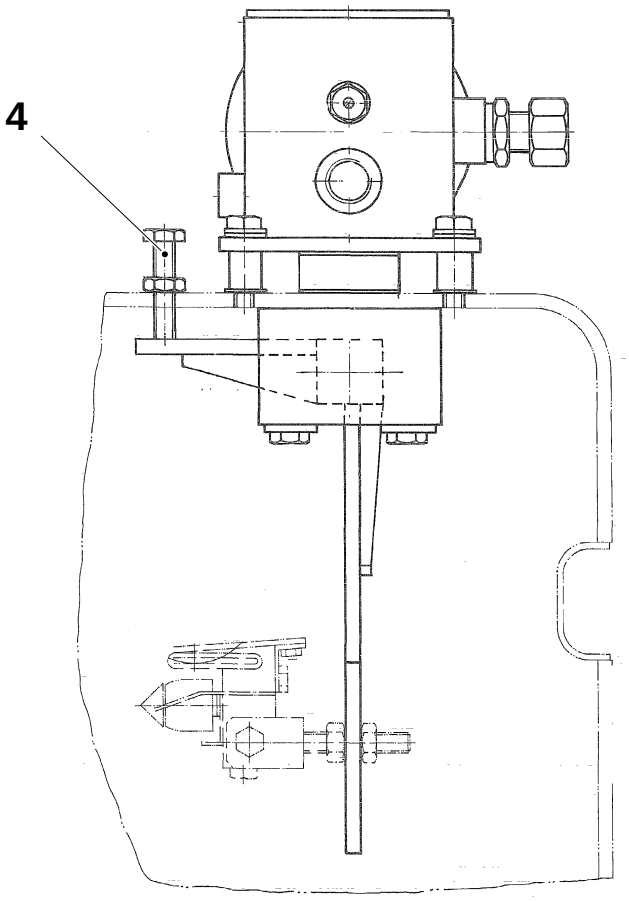

4 Stop screw

(Cont'd)

TechPub_2614345_0105 - 01_2772044_01.fm

(Cont'd)

s) When the machine is **cold,** remove the lower roller of the LS nozzle (2) and set the vertical gap **C** between the base of the LS nozzle (2) and top edge of the short stop nozzle (20).
To adjust, loosen the screws (17) and (18) and move the nozzle (2) up or down.

t) Refit the lower roller.

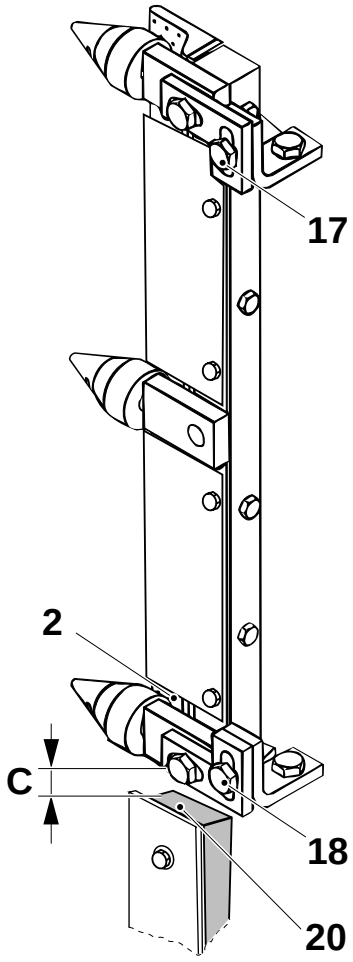

C = 2 ±0.1 mm

2 LS nozzle
17 Screw
18 Screw
20 Short stop nozzle

(Cont'd)

TechPub_2614345_0105 - 01_2772044_01.fm

(Cont'd)

Final Setting

Machine Status	PRODUCTION Service switch ON

WARNING

Hot surfaces.

Risk of burns. Wear protective gloves.

Verify the following details:

- The rows of holes on the nozzle must be parallel with the edge of the packaging material. If necessary, stop the machine and adjust by loosening the screws (11) and (12) and moving the nozzle.
- The inner row of holes **A** (for 100 B, 125 S, 160 S and 200 S, the second row of holes **B**) must be aligned directly underneath the edge of the packaging material. If necessary, adjust using the stop screw (4).

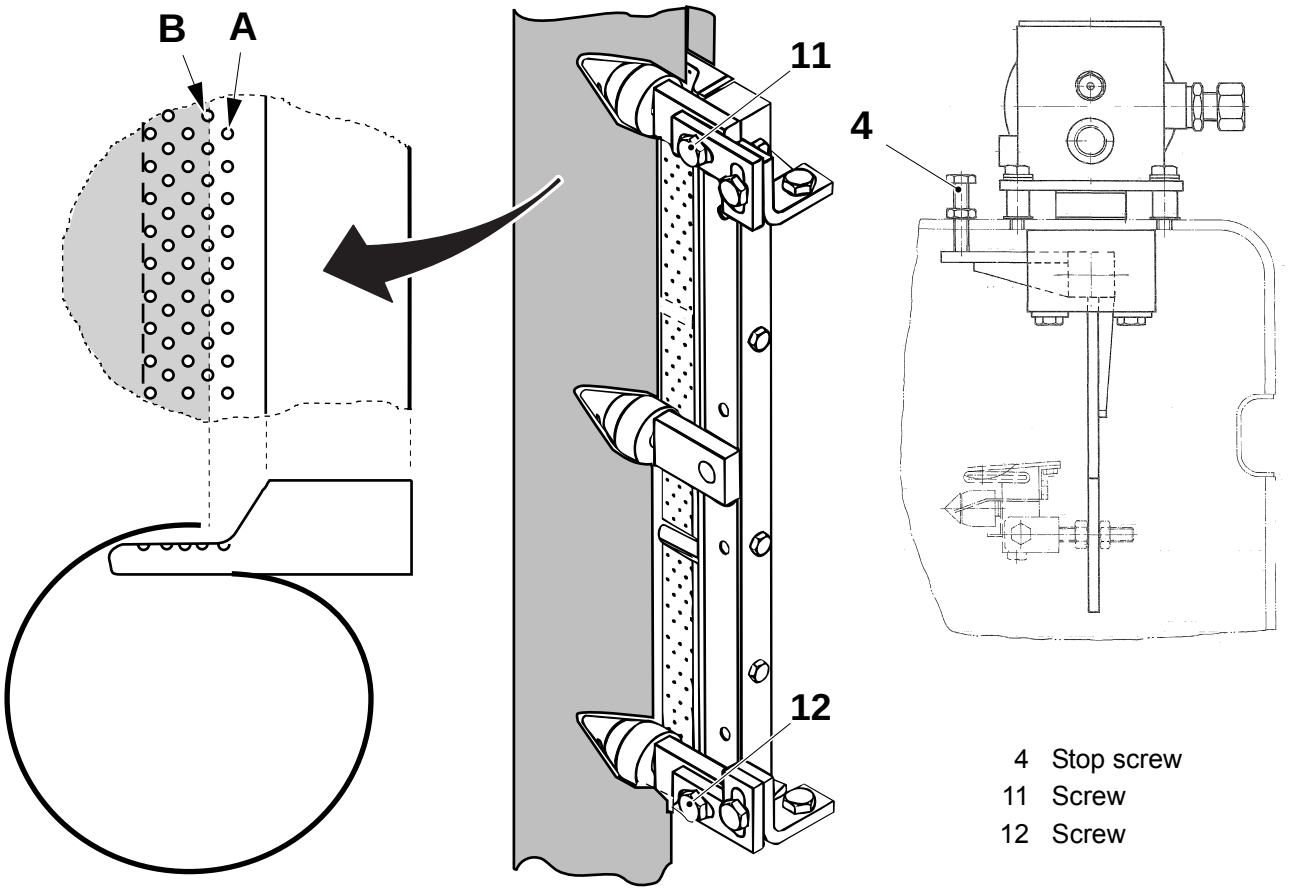

4 Stop screw
11 Screw
12 Screw

(Cont'd)

TechPub_2614345_0105 - 01_2772044_01.fm

(Cont'd)

- The upper and the lower rollers (21) should slightly touch the packaging material. If necessary, stop the machine and adjust by loosening the nuts (13) and (14) and moving the bracket.

After adjustment, run the machine and check again.

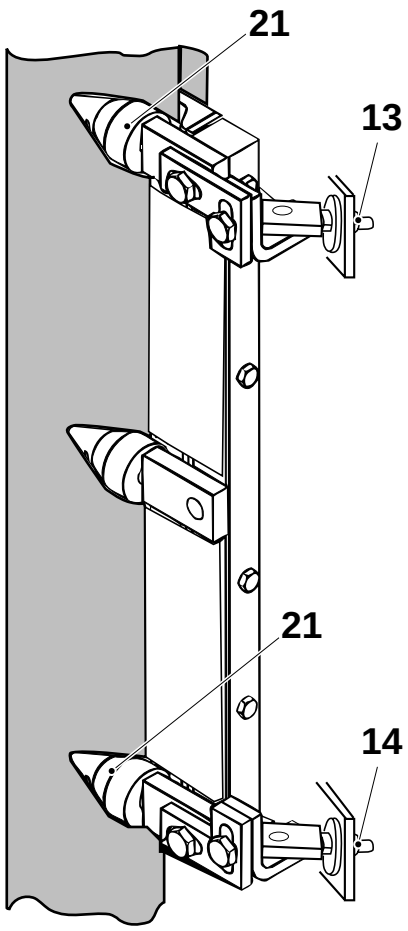

13 Nut
14 Nut
21 Roller

TechPub_2614345_0105 - 01_2772044_01.fm

1.14-2 Air Nozzle (LS) - Check Pressures

Machine Status	PRODUCTION
SPC Reference	469501-0400

Check the LS pressure (1) and the LS short stop pressure (2).
Record the values on the pressure gauges.

Refer to 15.1 Technical Data. for the correct values.
If necessary, adjust the LS pressure (1) using screw (4), and the LS short stop pressure (2) using adjustment screw (3).

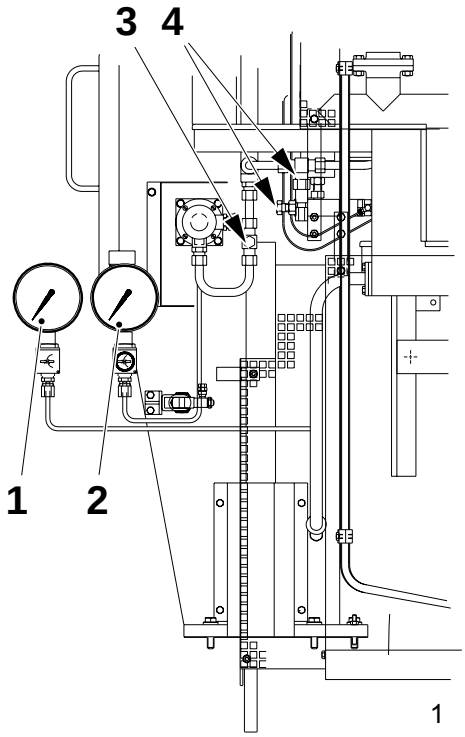

1 Pressure gauge, LS
2 Pressure gauge, LS short stop
3 Adjustment screw, LS short stop
4 Adjustment screw, LS

TechPub_2614345_0105 - 01_2772044_01.fm

1.15 Level Probe

1.15-1 Level Probe - Set

Machine Status	Power supply disconnector OFF Air supply OFF Steam supply ON Water supply OFF
Special Equipment	Spirit level TP No. 90243-165
SPC Reference	925991-0200

Note! The values in the tables are intended as a basic setting. It may be necessary to perform a final setting for correct function, see Function Check.

a) Put a spirit level on the level probe (2).

b) Loosen the screws (1) and set the level probe (2) vertical. At the same time, set the distance **A** between the level probe (2) and the pressure flange (3), refer to the table below.

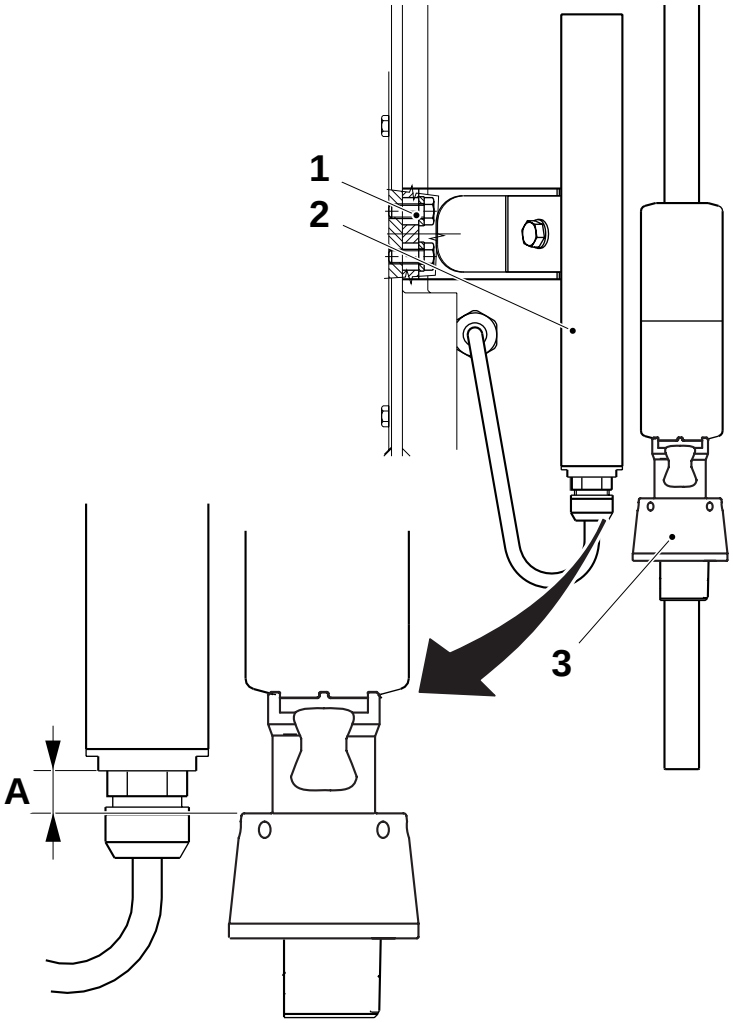

Package	A± 0.5 mm (basic setting)
TBA 100 B	39.5
TBA 125 S	39.5
TBA 160 S	21.5
TBA 180 B	22.5
TBA 200 B	22.5
TBA 200 M	21.5
TBA 200 S	21.5
TBA 250 B	13.5
TBA 250 S	21.5
TBA 284 B	31.0
TBA 300 S	31.0
TBA 330 S	31.0

1 Screw
2 Level probe
3 Pressure flange

(Cont'd)

TechPub_2614345_0105 - 01_2772045_01.fm

(Cont'd)

c) Pull down the packaging material and step up the machine to step TUBE SEALING.

d) Set the level detector (2) parallel to the packaging material.

e) Set the distance **B** between the level detector (2) and the packaging material tube (5), according to the table below. Adjust using the screw (4).

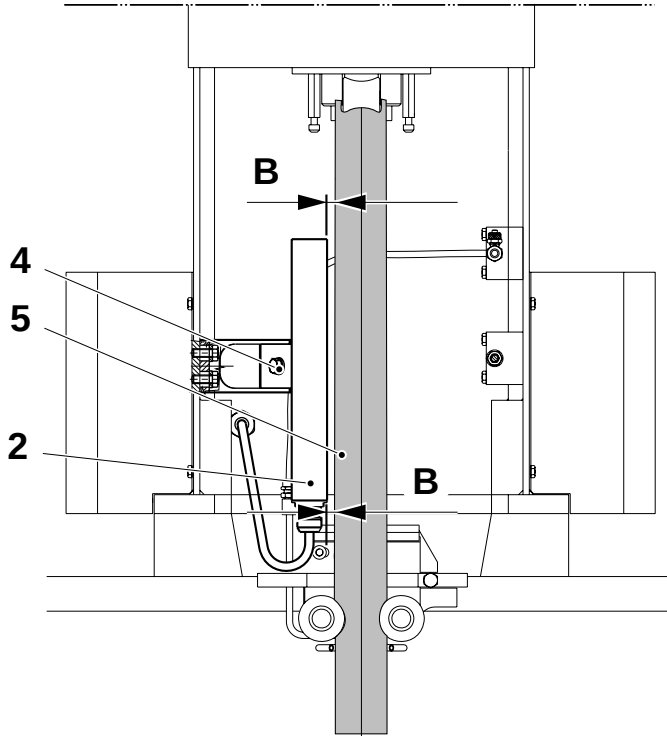

Package	B ±1 (mm)
TBA 100 B	7
TBA 125 S	7
TBA 160 S	5
TBA 180 B	9
TBA 200 B	9
TBA 200 M	3
TBA 200 S	5
TBA 250 B	9
TBA 250 S	3
TBA 284 B	9
TBA 300 S	9
TBA 330 S	9

2 Level detector
4 Screw
5 Packaging material tube

(Cont'd)

TechPub_2614345_0105 - 01_2772045_01.fm

(Cont'd)

Function Check

Machine Status	PREHEATING II

a) Connect the voltmeter to terminal connections 3 and 2 (Vdc) on the back plane of the TMCC2 card **A310**.

b) Cut a piece of packaging material just above the pressure flange, so that it is possible to reach the floater.

c) Step up the machine to step PREHEATING II.

d) Lift up the floater and let it drop down to its lower position. Check that the voltmeter shows approximately 0.6 Vdc.

e) Repeat the check (lifting and dropping the float) and, at the same time, move the pressure flange backward, forward and in sideways directions. The voltmeter should still show approximately 0.6.

Note! See TMCC2 LED Display at page 14-112 for LED description.

f) Verify the setting by moving the float up and down and check that the movement is indicated on the level indicator on the TMCC2 card **LED** is lit.

g) Rotate the floater one complete turn (360°) and verify that there are **NO LEDs** flashing.

h) Perform the TMCC2 card calibration see 14.7-8 Filling System - Floater Calibration.

TechPub_2614345_0105 - 01_2772045_01.fm

1.15-2 Level Probe - Check Lower Filling Pipe

Machine Status	Power supply disconnector OFF Air supply OFF Steam supply ON Water supply OFF
SPC Reference	929591-0200

a) Remove the lower filling pipe from the machine.

b) Check the following details:

- the float (1) for cracks and leaks. Weigh the float (1), and check that the measurements correspond to the table below.
- the locking fingers (2) and (3) for wear or damage.
- the measure of the hole diameter (4) it should not exceed **4.00** +0.0/ +0.1 mm.

c) Change, if necessary.

For what concerns the O-ring (5), see *OM* chapter *Daily care*.

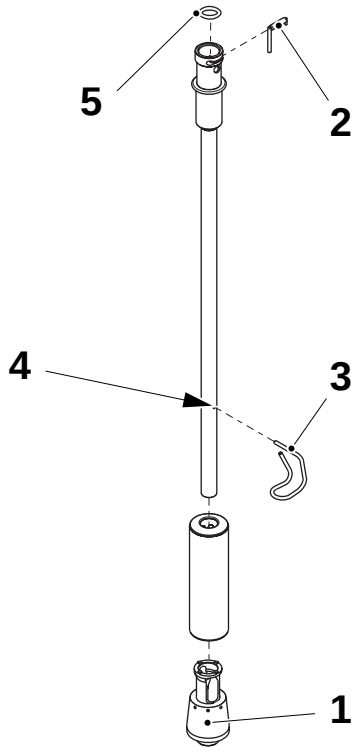

Package	Max weight (g)
TBA 100 B	137
TBA 125 S	137
TBA 160 S	137
TBA 180 B	208
TBA 200 B	208
TBA 200 M	137
TBA 200 S	137
TBA 250 B	208
TBA 250 S	137
TBA 284 B	208
TBA 300 S	208
TBA 330 S	208

1 Float
2 Locking finger
3 Locking finger
4 Hole
5 O-ring

TechPub_2614345_0105 - 01_2772045_01.fm

1.16 Filling Pipe

See section 1-5 Superstructure - Check DIN Fittings.

1.16-1 Filling Pipe - Check

Machine Status	Power supply disconnector OFF Air supply OFF Steam supply ON Water supply OFF
SPC Reference	469091-0500

Check the following items for wear or damage:

- the spring (1)
- the locking pin (2)
- the pressure roller (3): make sure that the roller (3) rotates smoothly. The play must not exceed **0.5** mm.
- the radius (4) must not exceed **3.2** mm.

Change the parts, if necessary.

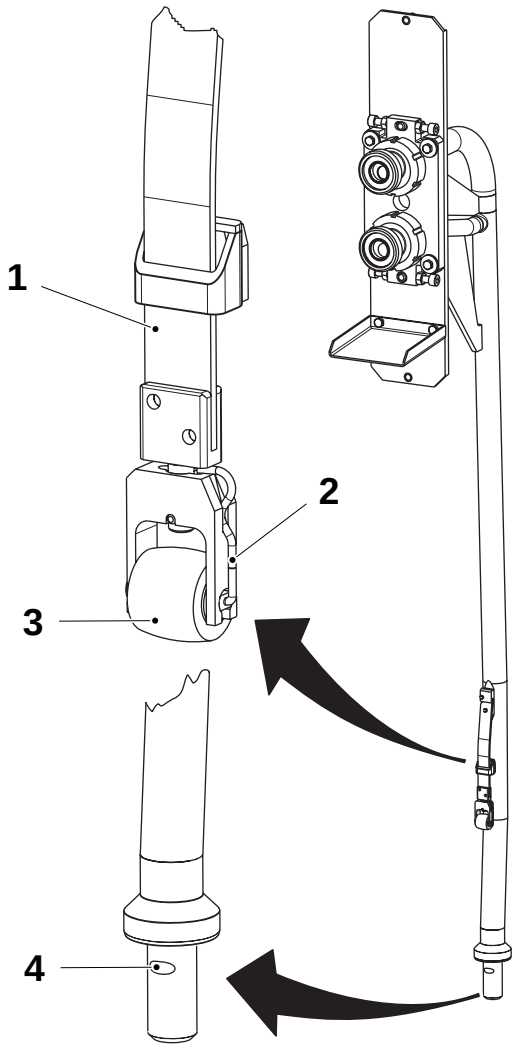

1 Spring
2 Locking pin
3 Pressure roller
4 Radius

TechPub_2614345_0105 - 01_2772046_01.fm

1.16-2 Filling Pipe - Set

Machine Status	PREHEATING I
Special Equipment	Template see table page 153
SPC Reference	469091-0500

a) Remove the filling pipe from the machine.

b) Make sure that the nuts (1), (2), (3), and (4) are turned with the tapered sides turned towards each other.

c) As a basic setting set the distance **A** using the nuts (1) and (2).

d) Hand tighten the nuts (3) and (4).

e) Adjust the nuts (5), so that the pin (6) is in the middle of the hole.

f) Install the filling pipe on the machine.

A = 65.0 ±10.0 mm

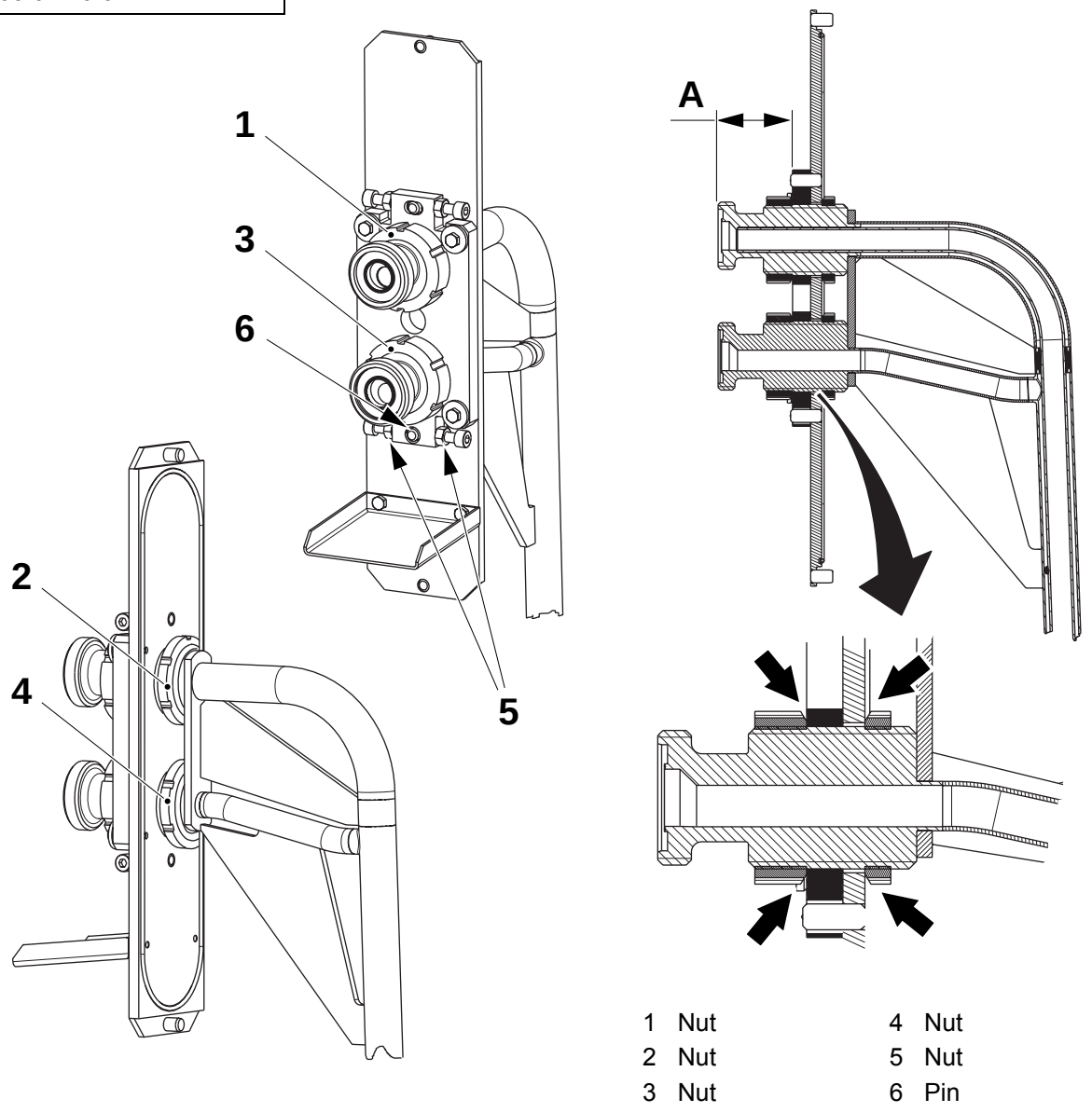

1 Nut
2 Nut
3 Nut
4 Nut
5 Nut
6 Pin

(Cont'd)

TechPub_2614345_0105 - 01_2772046_01.fm

(Cont'd)

g) Install the product pipe in position and check the distance **B** between the two fittings.

h) If necessary, adjust distance **A**, see item c).

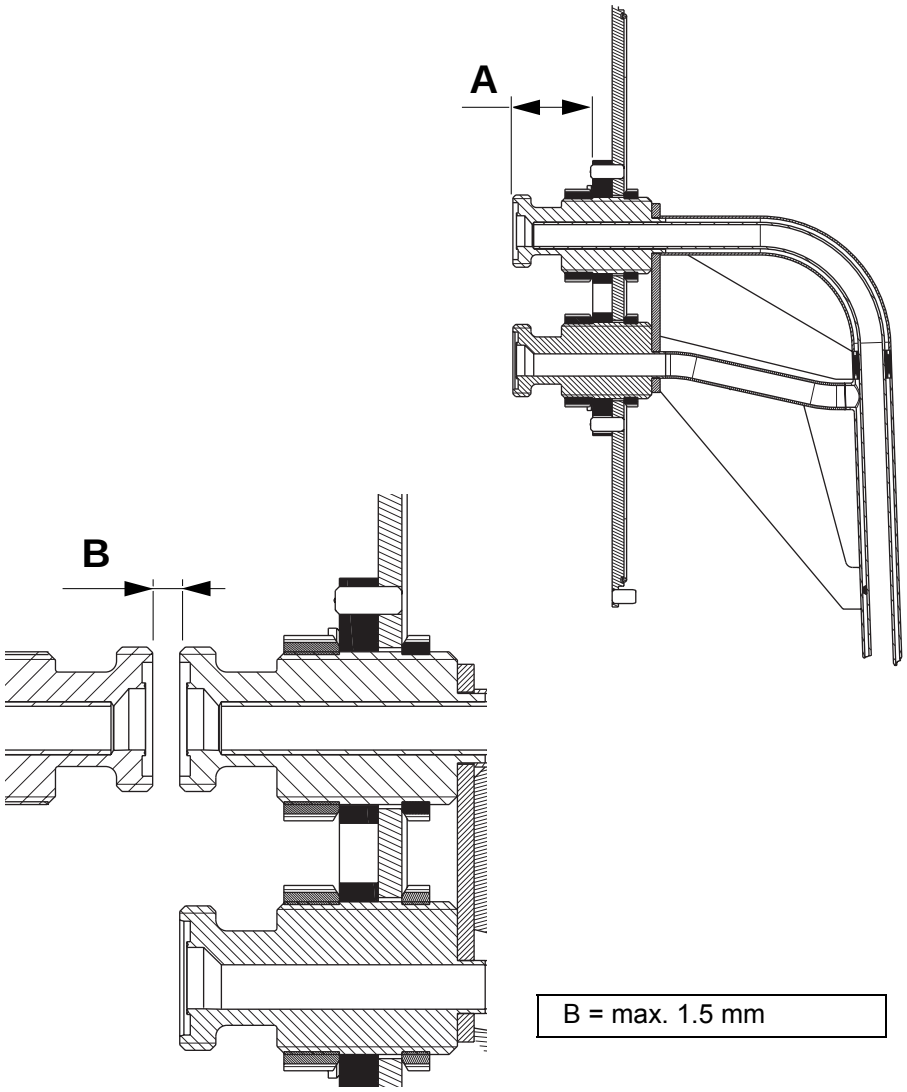

TechPub_2614345_0105 - 01_2772046_01.fm

(Cont'd)

(Cont'd)

i) Move up the counter roller (8) to the operation position by activating the valve **Y26**.

j) Check the height of the counter roller (8), refer to 1.4.1-2 Tube Supports and Forming Rings - Set.

k) Put a double thickness of packaging material between the counter roller (8) and the pressure roller (7).

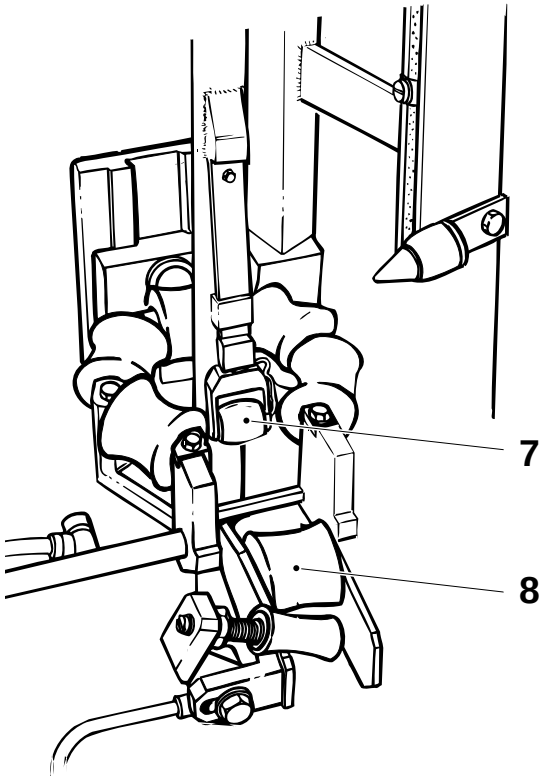

7 Pressure roller
8 Counter roller

(Cont'd)

TechPub_2614345_0105 - 01_2772046_01.fm

(Cont'd)

l) Install the template (9) between the upper filling pipe (10) and the environment ring (11).

m) Adjust the position of the upper filling pipe (10) using the nuts (3) and (4). Adjust sideways using the nuts (5).

n) Check the spring force using a dynamometer and set it, if necessary. See 1.16-3 Filler Pipe - Check Pressure Roller Spring Force.

o) Check that the upper filling pipe (10) is centred with the environment ring (11) by moving the template (9): it must move smoothly.

Note! If adjustments have been done check again item n) on page 1-138.

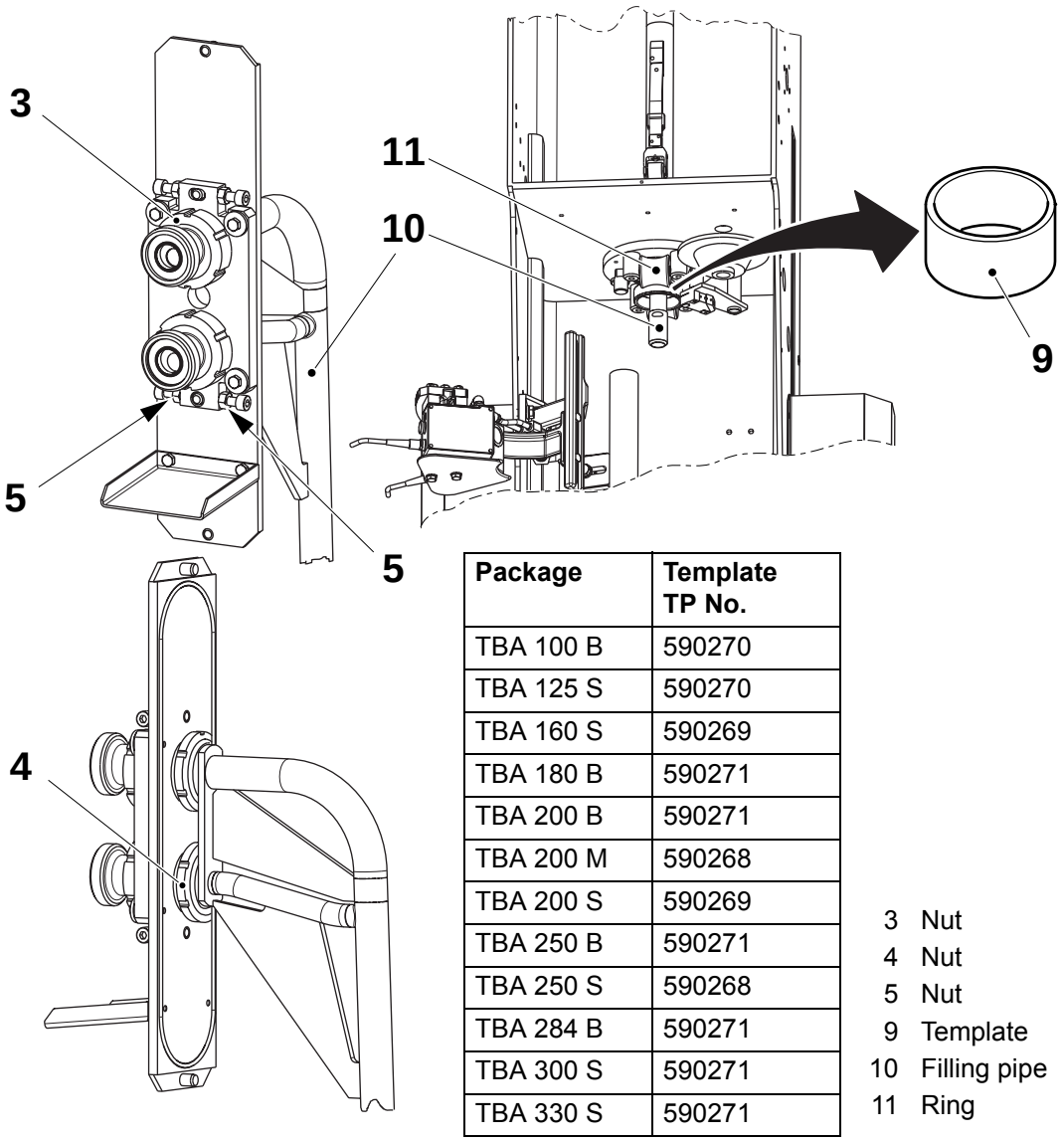

Package	Template TP No.
TBA 100 B	590270
TBA 125 S	590270
TBA 160 S	590269
TBA 180 B	590271
TBA 200 B	590271
TBA 200 M	590268
TBA 200 S	590269
TBA 250 B	590271
TBA 250 S	590268
TBA 284 B	590271
TBA 300 S	590271
TBA 330 S	590271

3 Nut
4 Nut
5 Nut
9 Template
10 Filling pipe
11 Ring

(Cont'd)

TechPub_2614345_0105 - 01_2772046_01.fm

(Cont'd)

p) Tighten the screws (14).

q) Check the condition of the locking finger, see 1.15-2 Level Probe - Check Lower Filling Pipe.

r) Set the position of the support roller, see 4.5-1 Support Roller - Set.

s) Install the lower filling pipe (12). Check that it is centred relative to the tube support rollers (13).

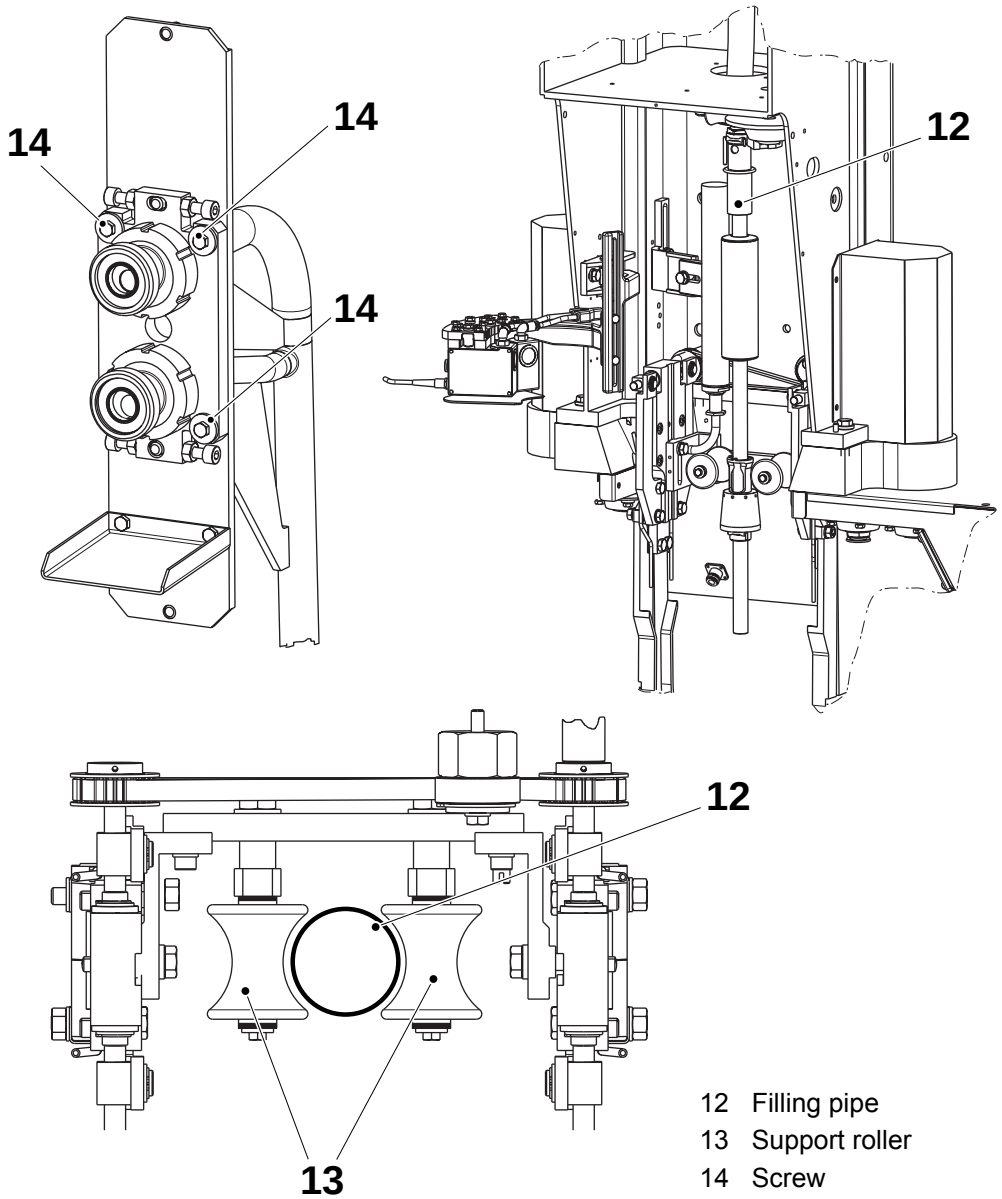

12 Filling pipe
13 Support roller
14 Screw

TechPub_2614345_0105 - 01_2772046_01.fm

1.16-3 Filler Pipe - Check Pressure Roller Spring Force

Machine Status	PREHEATING I
Special Equipment	Dynamometer TP No. 74767-102
SPC Reference	469091-0500

a) Put a double layer of packaging material between the pressure roller and the counter roller (4).

b) Activate the valve Y26 for the counter roller (4).

c) Measure the spring force by pushing with the dynamometer (3) against the fork head until the pressure roller (5) just eases off. Compare the value with those in the table below.

d) The spring must not touch the cover (2). Change the spring, if necessary.

e) Deactivate valve Y26, turn off the mains power and close for compressed air.

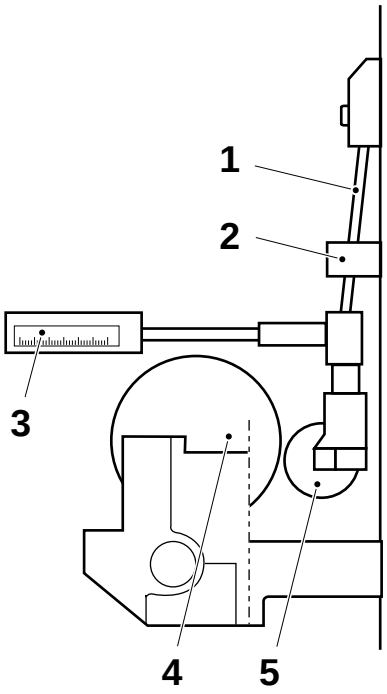

Package	Spring force, N
TBA 100 B	30 - 40
TBA 125 S	30 - 40
TBA 160 S	30 - 40
TBA 180 B	40 - 50
TBA 200 B	40 - 50
TBA 200 M	40 - 50
TBA 200 S	30 - 40
TBA 250 B	40 - 50
TBA 250 S	40 - 50
TBA 284 B	40 - 50
TBA 300 S	40 - 50
TBA 330 S	40 - 50

1 Spring
2 Cover
3 Dynamometer
4 Counter roller
5 Pressure roller

TechPub_2614345_0105 - 01_2772046_01.fm

1.17 Photocell Unit

1.17-1 Photocell Unit - Set

Machine Status	PREHEATING I
SPC Reference	491976-0300

Vertical Position

a) Set the limit screw (1) so that it bears against the bracket (2) in the production position. Eliminate any play.

b) Crank the machine to 0°.

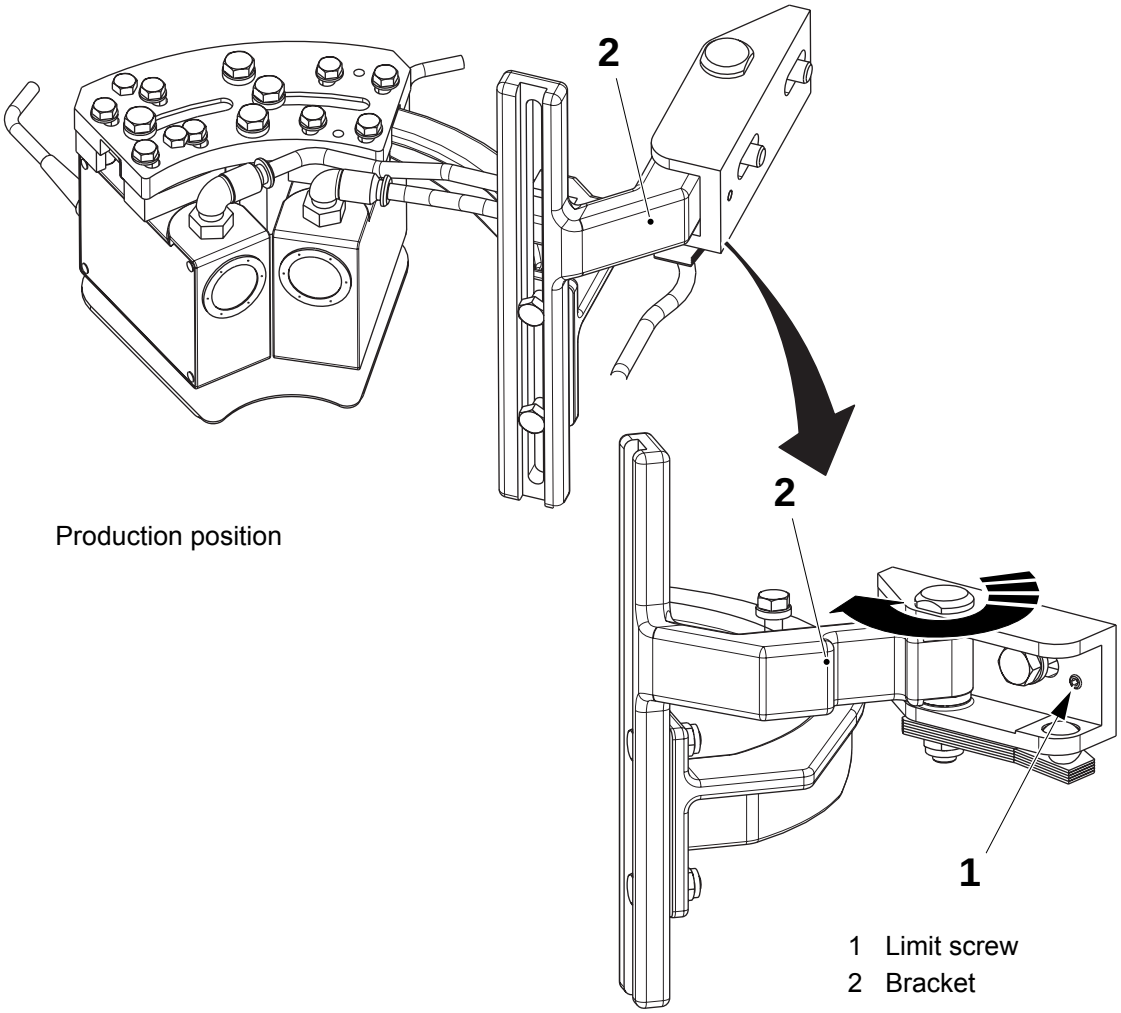

Production position

1 Limit screw
2 Bracket

(Cont'd)

TechPub_2614345_0105 - 01_2772047_01.fm

(Cont'd)

c) Loosen the screws (3) and set the distance **A** between the carrier and the photocell focal point. Refer to the table below.

Package	Gap A (mm)	Package	Gap A (mm)
TBA 100 B	505	TBA 200 S	447
TBA 125 S	460	TBA 250 B	415
TBA 160 S	506	TBA 250 S	480
TBA 180 B	567	TBA 284 B	455
TBA 200 B	489	TBA 300 S	455
TBA 200 M	571	TBA 330 S	512

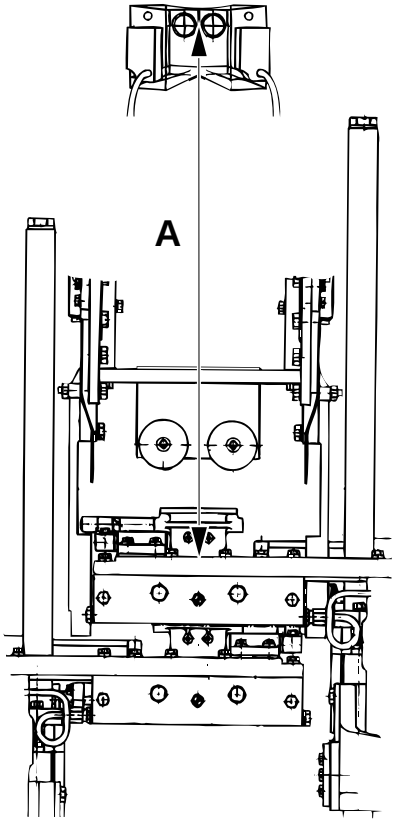

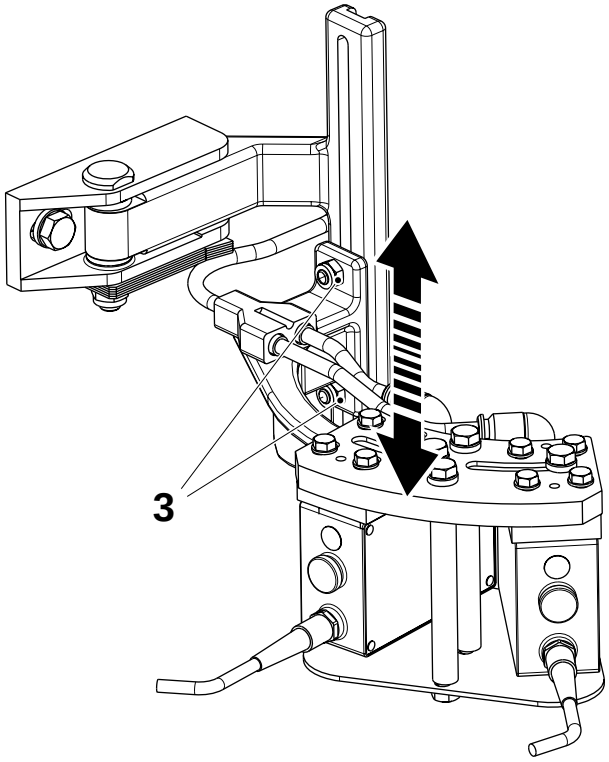

3 Screw

(Cont'd)

TechPub_2614345_0105 - 01_2772047_01.fm

(Cont'd)

d) Inch until a sealed tube (4) is reached.

e) Set the distance **B** between the photocells (5) and the sealed tube (4) using the screws (6) for each photocell.

f) Set the photocells (5) so that the spotlights (8) are centred on the photocell trigger marks on the packaging material tube. Adjust using the screws (6) and (7).

g) Check the distance **B** again.

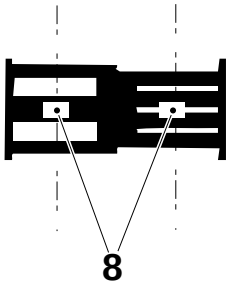

B = 11.5 ±1 mm

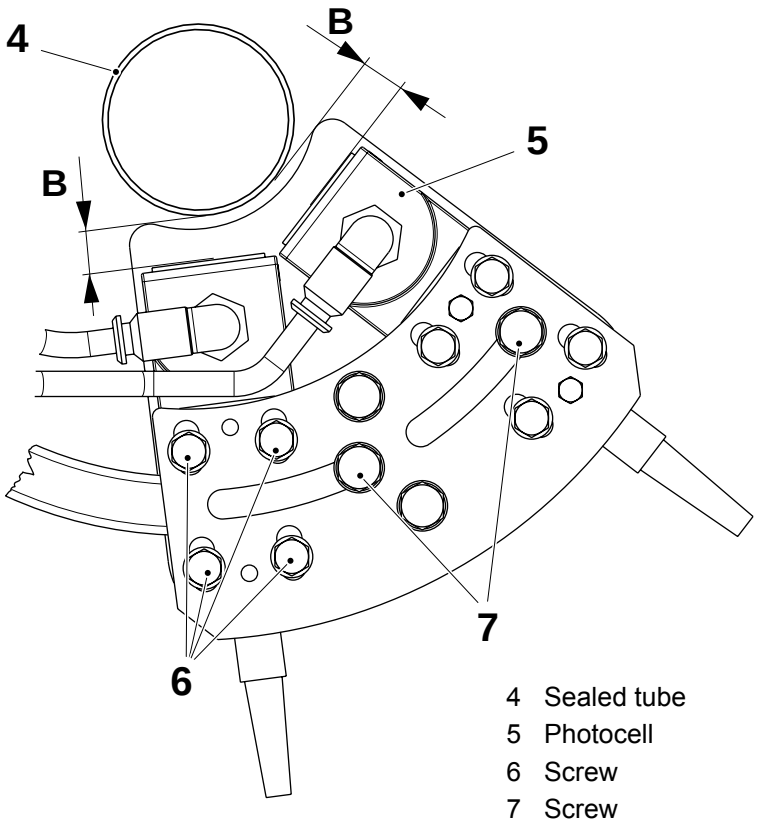

4 Sealed tube
5 Photocell
6 Screw
7 Screw
8 Light spot

(Cont'd)

TechPub_2614345_0105 - 01_2772047_01.fm

(Cont'd)

Levelling

h) Move the packaging material slowly upwards or downwards so that the photocell spotlights (1) passes across the horizontal borderline (2) between the black register code bars and the white background.

i) Stop and hold the paper when the LED on the **inner photocell** (3) lights.

j) The two photocells (3) and (5) must light up simultaneously.

Note! Vertical setting must be performed on the **outer photocell (5**) only.

k) If necessary, loosen the four screws (4) on the **outer photocell (5**) and adjust the position vertically using the screws (6).

l) Check the distance between the photocells and the packaging material tube, see 1.17-1 Photocell Unit - Set.

m) Tighten the screws (4).

n) Repeat the setting procedure until the LEDs of both photocells light up simultaneously.

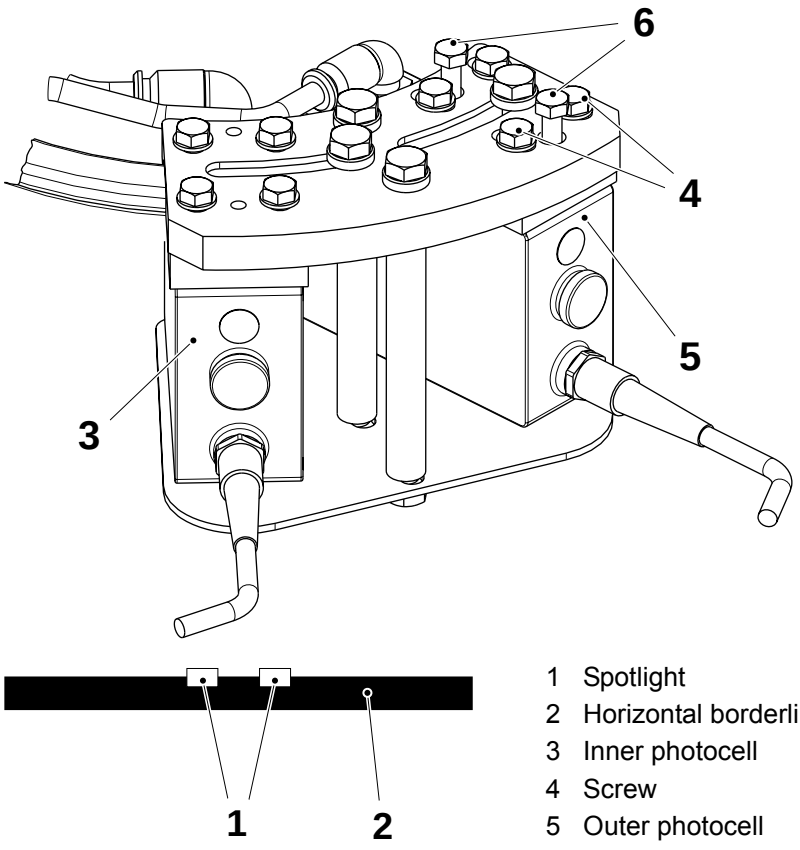

1 Spotlight
2 Horizontal borderline
3 Inner photocell
4 Screw
5 Outer photocell
6 Screw

TechPub_2614345_0105 - 01_2772047_01.fm

(Cont'd)

(Cont'd)

Final Setting

a) Step up the machine to step PRODUCTION.

b) Set the design correction on the TPOP to **0**, see *OM*.

c) Check the position of the creases on the packages.

d) If necessary, stop the machine and finally set the position of the creases by raising or lowering the photocells, see set Vertical Position on page 1-141.

e) Check the levelling, see Levelling on page 1-144.

f) After a short period of production, check that the spotlights are centred on the register code.

g) When the mechanical setting has been completed, final adjustment can be made using the ADJUSTMENT button on the TPOP, see *OM*.

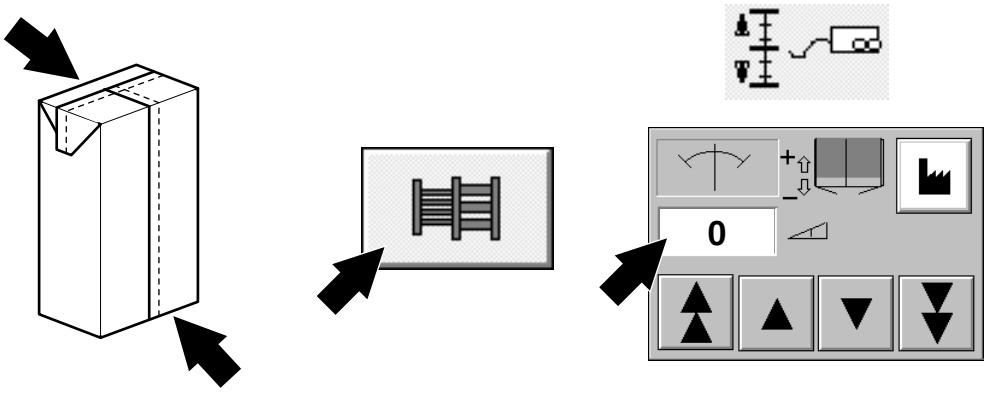

TechPub_2614345_0105 - 01_2772047_01.fm

1.17-2 Photocell Unit - Set Sensitivity

Machine Status	Power supply disconnector ON Air supply OFF Steam supply ON Water supply OFF
SPC Reference	559810-0101

Automatic Setting

By default, the photocell produces a red spotlight. For most packaging materials this is the correct setting and no further adjustment will be required.

If a packaging material is used and register code reading errors occur, the colour of the light spot can be changed to match the foreground colour of the register code. This is done through the menus on the TMCC2 card **A400**.

If errors continue to occur after the automatic setting, set the photocells manually, see Manual Setting on page 1-147.

The photocells turn **off** after 20 minute stop. Inch or step up the machine to turn the photocells **on**.

a) Press any of the buttons on the TMCC2 card.

b) Use the arrow buttons to select **PHOT.** and press the enter button.

c) Select **CONF? Y** and press the enter button.

d) Select a colour that suits the current packaging material, see the table below.

e) Exit the menu on the TMCC2, see TMCC2 Menu System at page 14-92.

Register Code Foreground Colour	Spot Colour
Black	Green, Red or Blue
Blue	Green or Red
Light blue/Cyan	Red
Green	Red or Blue
Yellow	Blue
Red	Green or Blue
Magenta	Green

Note! The colour currently set can be checked either via PC or by checking the colour of the light beam.

(Cont'd)

TechPub_2614345_0105 - 01_2772047_01.fm

(Cont'd)

Manual Setting

a) Press any of the buttons on the TMCC2 (DCS) card.

b) Use the arrow buttons to select **PHOT.** and press the enter button.

c) Use the arrow buttons to select **CONF? Y** and press the enter button.

d) Use the arrow buttons to select **CALIB.** and press the enter button.

e) Use the arrow buttons to select **RUN CAL.** and press the enter button. This sets the photocells to teaching mode.

f) Move the packaging material until the photocell spot is focused on a white part of the packaging material.

g) Push and hold the **TEACH** button (1).

h) Move the packaging material until the complete register code has passed in front of the photocell and then release the **TEACH** button. The cell automatically calibrates itself.

Note! The LED (2) is lit when the photocell spot is focused on a dark area of the packaging material.

i) Repeat steps from b) to h) for the other photocell.

j) Use the arrow buttons to select **USE CAL.** and press the enter button.

k) Exit the menu on the TMCC2, see TMCC2 Menu System at page 14-92.

Note! If false register codes are detected is possible to change the sensitivity of the photocells. Use the command **PTH**: the value (xx) must be entered as hexadecimal, see 14.6-3 MDCS - Display Report. Type as follows:

PTH= xx<enter> Changes the dynamic threshold of the photocells. Higher values of xx mean lower sensitivities of the photocells (the default setting value is 30).

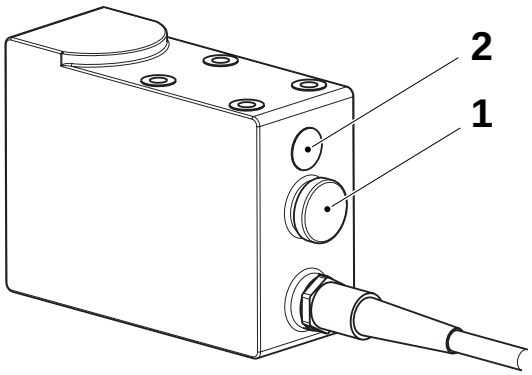

1 Teach button
2 LED

TechPub_2614345_0105 - 01_2772047_01.fm

1.18 Tube Flushing Device

1.18-1 Tube Flushing Device - Check

Machine Status	PRODUCTION
SPC Reference	469781-0400

a) Check that the holes of the tube flushing nozzles (2) and (3) are not blocked.

b) Make sure that the tube flushing nozzle (2) is centred around the packaging material tube. The nozzle (2) should not touch the tube support rollers (1) or the packaging material tube at any point.

c) Make sure that tube flushing nozzle (3) is parallel to the packaging material tube. The nozzle (3) should not touch the packaging material tube at any point.

d) Make sure that the water jets reach the tube. If necessary, adjust the jets using the valve (4).

Machine without PT

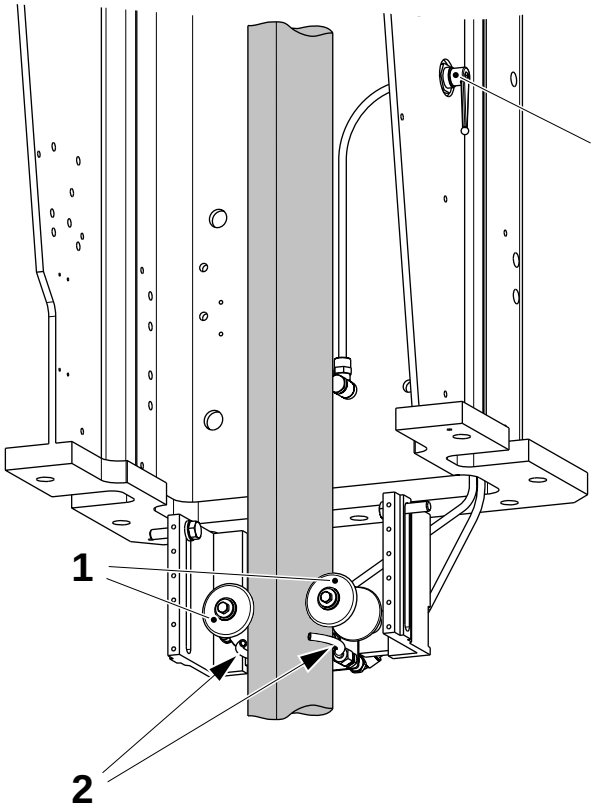

Machine with PT

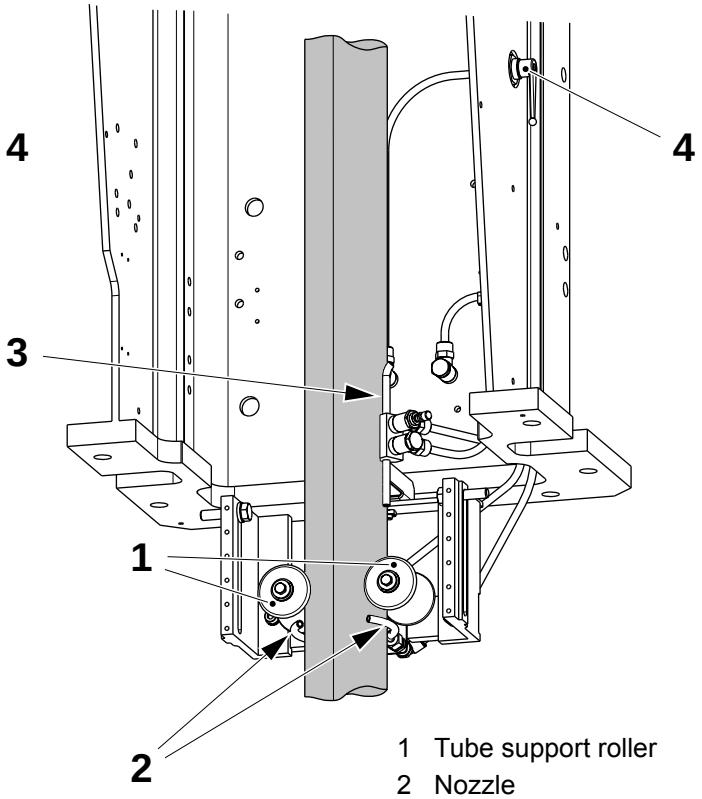

1 Tube support roller
2 Nozzle
3 Nozzle
4 Valve

TechPub_2614345_0105 - 01_2772048_01.fm

1.19 Web Tension Control (Pendulum)

For electrical setting see chapter 14.6 Motorised Design Control System (MDCS).

1.19-1 WTC (Pendulum) - Overhaul

Machine Status	Power supply disconnector OFF Air supply OFF Steam supply ON Water supply OFF
Consumables	PTFE grease code N
SPC Reference	1539920-0200

a) Remove the screws (1), the blocks (2), and the shaft (3) together with the rollers (4).

b) On both rollers (4), remove the screws (5), the bearing covers (6), the circlips (7), and the bearings (8).

c) Check the rollers (4) and the bearings (8) for wear and damage. Change, if necessary.

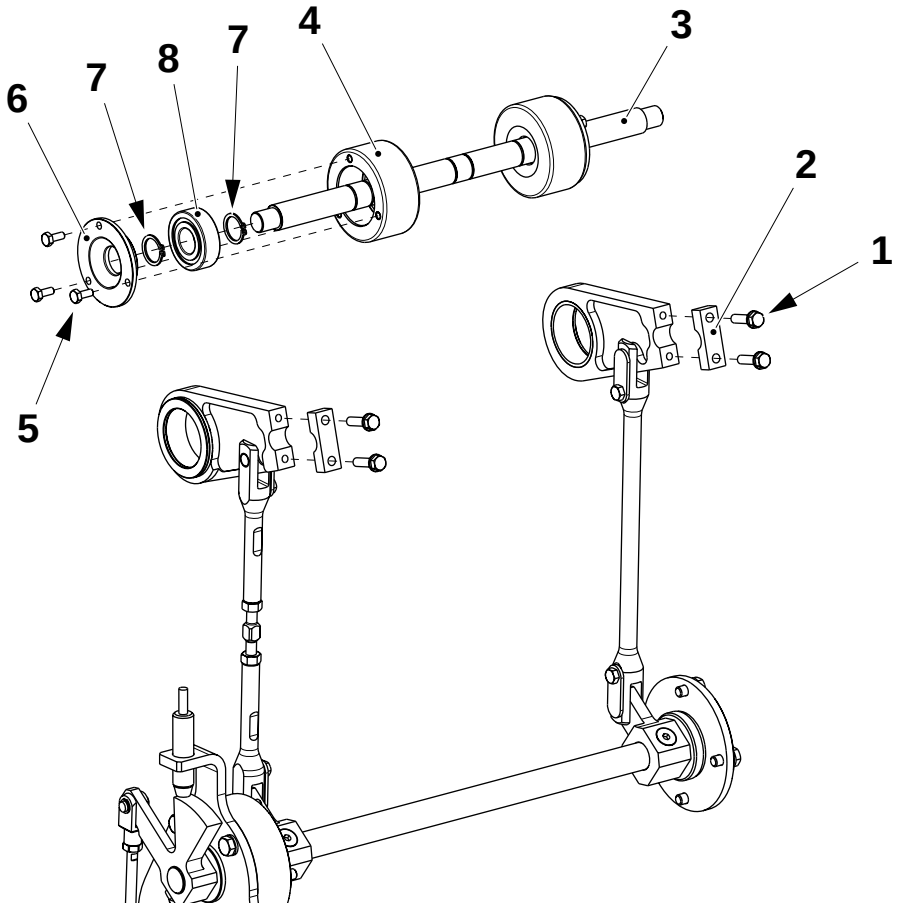

1 Screw
2 Block
3 Shaft
4 Roller
5 Screw
6 Bearing cover
7 Circlip
8 Bearing

(Cont'd)

TechPub_2614345_0105 - 01_2772049_01.fm

(Cont'd)

d) Remove the pneumatic pipe (9) from the cylinder (10).

e) Loosen the screw (11), remove the circlip/pin (12) and the lever (13).

f) Remove the screws (14) and move the plate (15) safely to one side.

g) Remove the screws (16), the axle supports (17) and the bushings (18).

h) Check the bushings (18) for wear and damage. Change, if necessary.

i) Assemble in the reverse order, set the pendulum roller, see 1.19-2 WTC (Pendulum) - Set.

j) Set the proximity switch, see 1.19-3 WTC (Pendulum) - Set Proximity Switch.

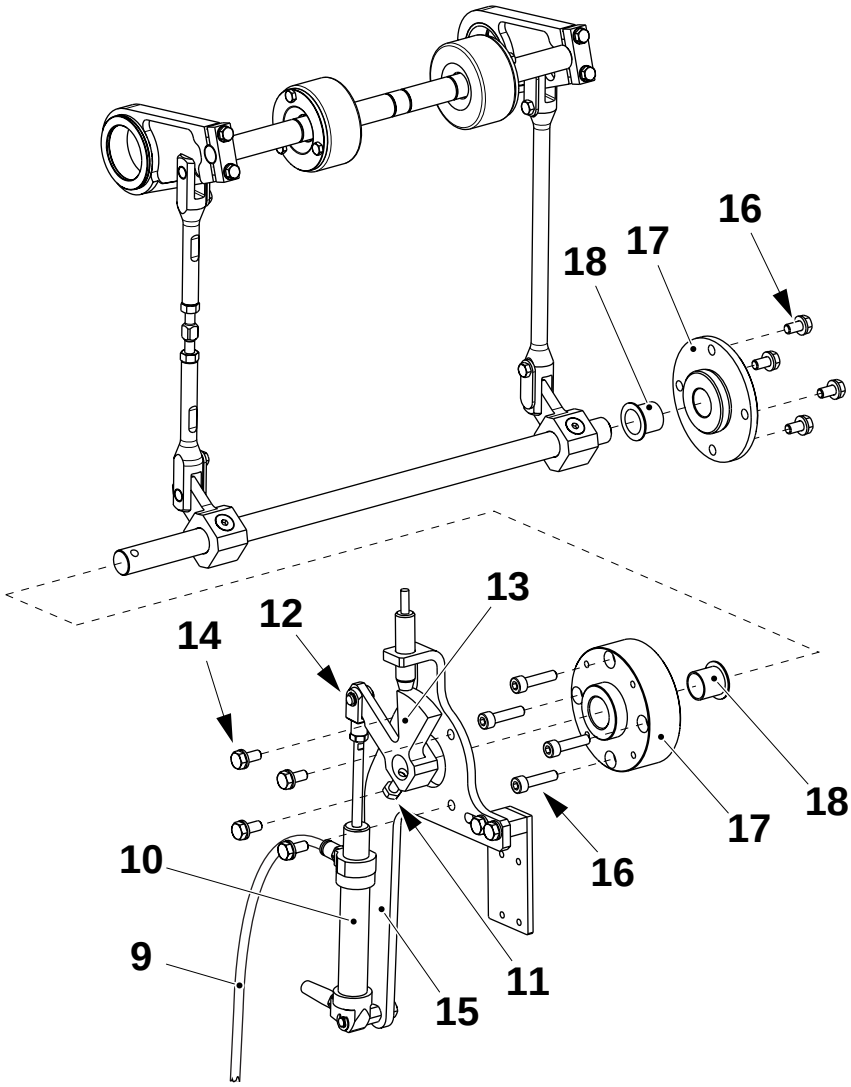

9 Pipe
10 Cylinder
11 Screw
12 Circlip/pin
13 Lever
14 Screw
15 Plate
16 Screw
17 Axle support
18 Bushing

TechPub_2614345_0105 - 01_2772049_01.fm

1.19-2 WTC (Pendulum) - Set

Machine Status	Power supply disconnector OFF Air supply OFF Steam supply ON Water supply OFF
SPC Reference	1539920-0200

Check that the pendulum moves smoothly. If necessary, set as follows:

a) Loosen the screws (1) and centre the shaft (2), that is, set the same distance **A** on each side.

b) Tighten the screws (1).

c) Loosen the two nuts (3) on the link arm (4).

Note! Make sure that the two halves of the link arm (4) are parallel.

d) Adjust the screw (5) until the pendulum moves smoothly.

e) Tighten the nuts (3).

Note! The pendulum rollers (6) should not touch the bending roller in the upper position and in the lower position the link arms (4) and (7) should stop before reaching the levers (8).

f) Check the movement again, If necessary, loosen the screws (1) and move the shaft (2) sideways until the pendulum moves smoothly.

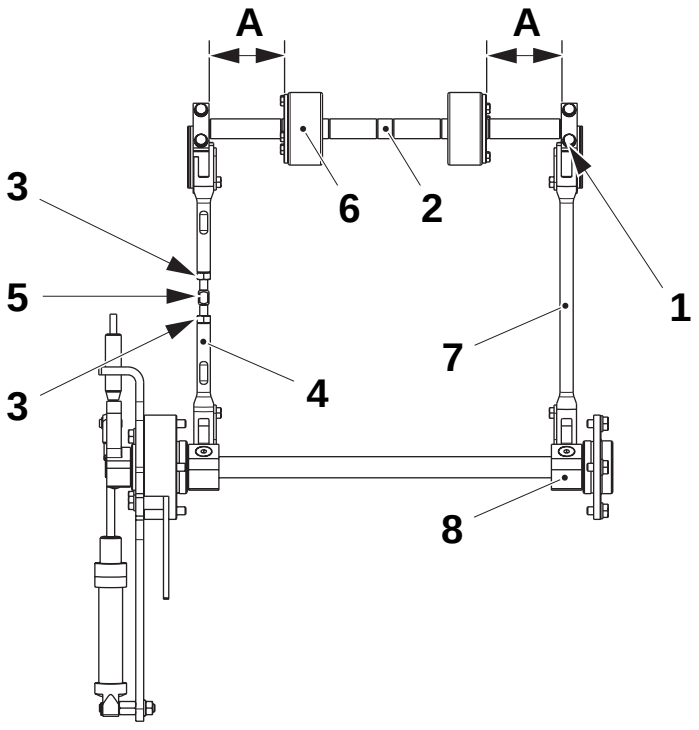

1 Screw
2 Shaft
3 Nut
4 Link arm
5 Screw
6 Rollers
7 Link arm
8 Levers

TechPub_2614345_0105 - 01_2772049_01.fm

1.19-3 WTC (Pendulum) - Set Proximity Switch

Machine Status	Power supply disconnector ON Air supply OFF Steam supply ON Water supply OFF
SPC Reference	1539920-0100

a) Check the distance **A** and, if necessary, loosen the screws (1) and adjust the position of the proximity switch (2).

b) Check that the LED (3) on the proximity switch (2) lights when the lever (4) is moved in front of the proximity switch (2).

c) Check that when the lever (4) activates the proximity switch (2) the distance **B** is correct. If necessary, loosen the nut (5) and adjust the piston rod (6).

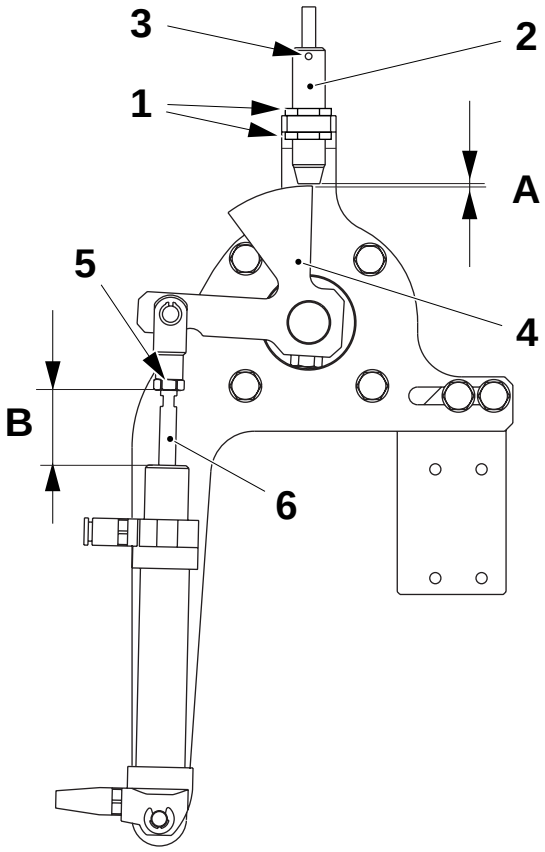

A = min. 1 mm
B = 30 mm

1 Screw
2 Proximity switch
3 LED
4 Lever
5 Nut
6 Piston rod

TechPub_2614345_0105 - 01_2772049_01.fm

1.20 Bending Roller (Driven)

1.20-1 Bending Roller (Driven) - Overhaul

Machine Status	Power supply disconnector OFF Air supply OFF Steam supply ON Water supply OFF
SPC Reference	272004-0500

a) Remove the four screws (1) and (2).

b) Remove the screws (3) to remove the free-wheel coupling (4) from the hub (5).

c) Check the free-wheel coupling (4) for wear and damage, change, if necessary.

d) Loosen the grub screw (6) and remove the four screws (7).

e) Check the bearing (8) for wear and damage, change, if necessary.

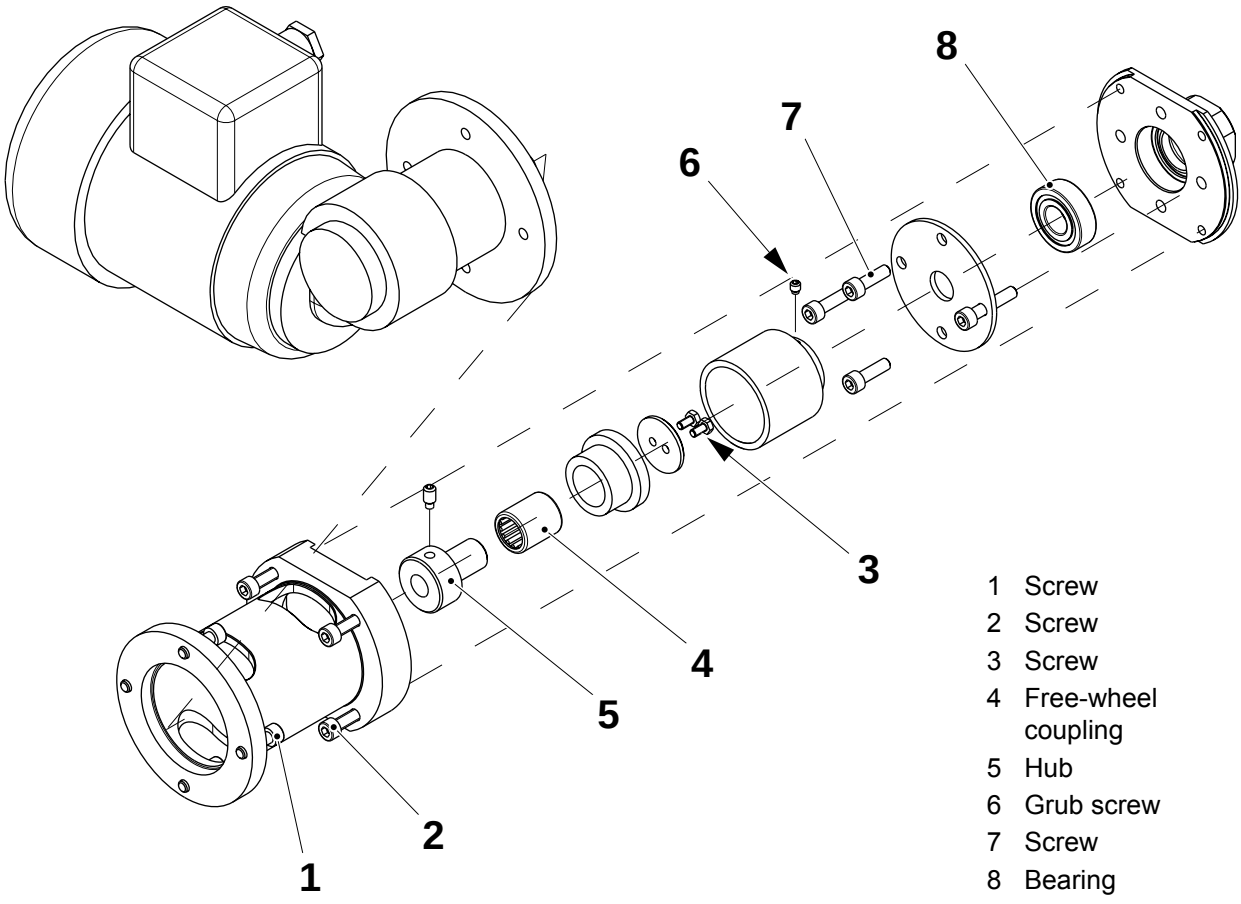

1 Screw
2 Screw
3 Screw
4 Free-wheel coupling
5 Hub
6 Grub screw
7 Screw
8 Bearing

(Cont'd)

TechPub_2614345_0105 - 01_2772050_01.fm

(Cont'd)

f) Remove the screws (9) and (10) to remove the bearing cover (11) and the bearing (12).

g) Check the bearing (12) for wear and damage, change it, if necessary.

h) Check the surface of the roller (13) for wear and damage, change it, if necessary.

Note! When assembling, install the free-wheel coupling (4) with the arrow towards the aseptic chamber, and check that it rotates smoothly in the direction of the packaging material movement.

i) Assemble in the reverse order.

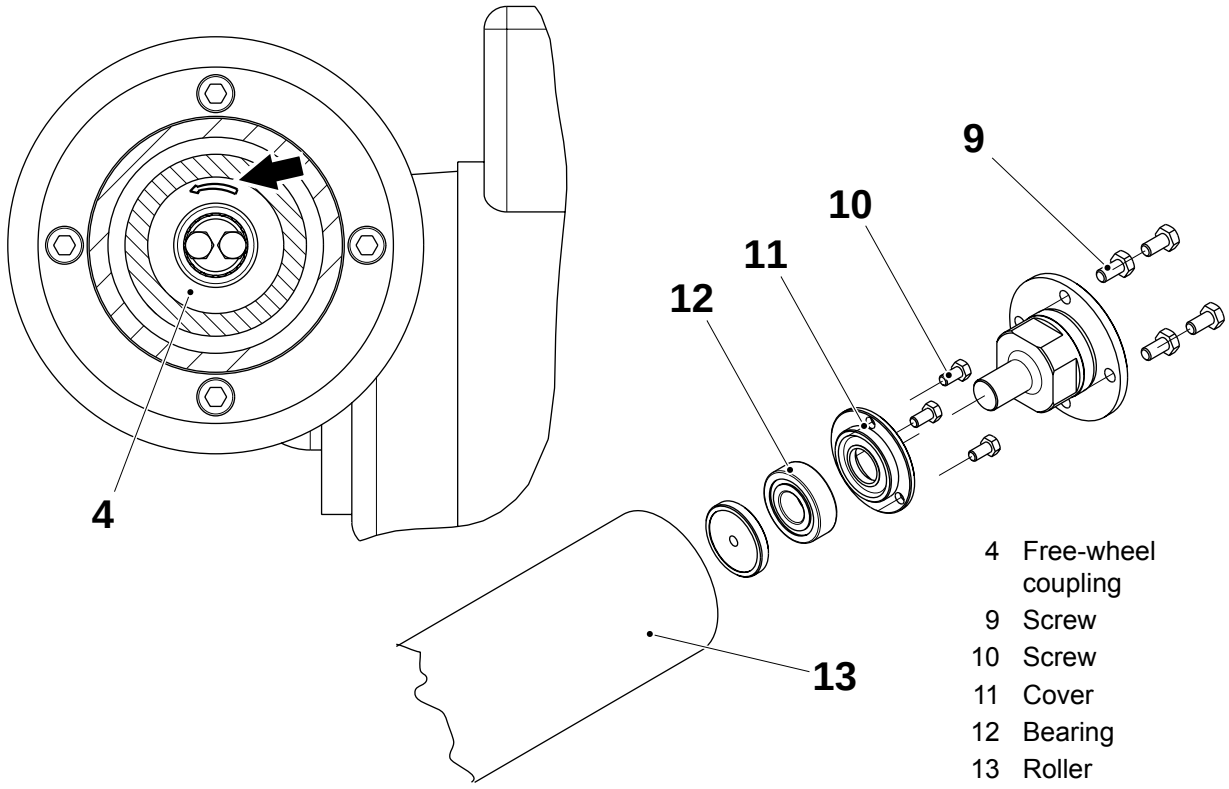

TechPub_2614345_0105 - 01_2772050_01.fm

2 Machine Body

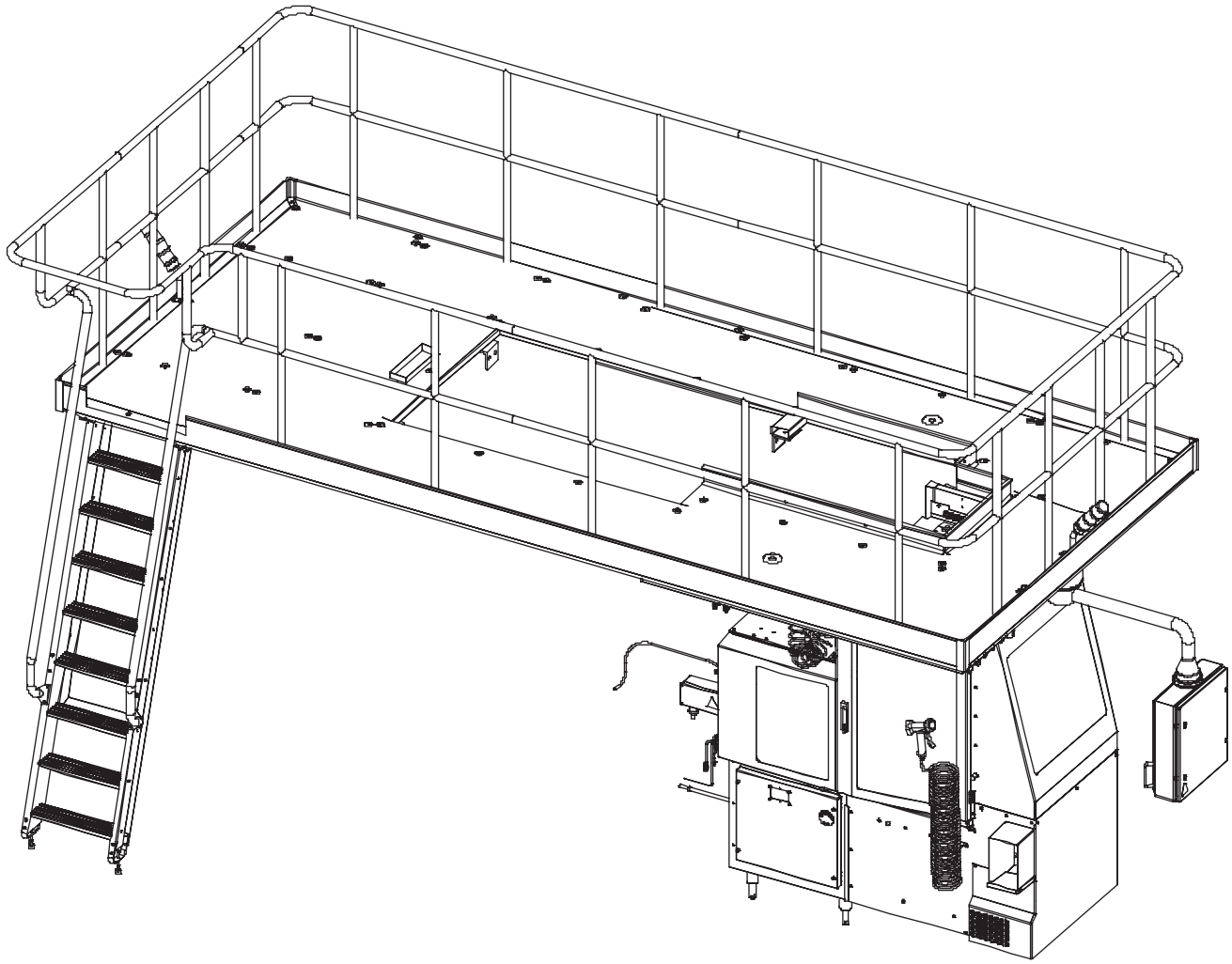

TechPub_2614345_0105 - 01_2772051_01.fm

Machine Body - Description

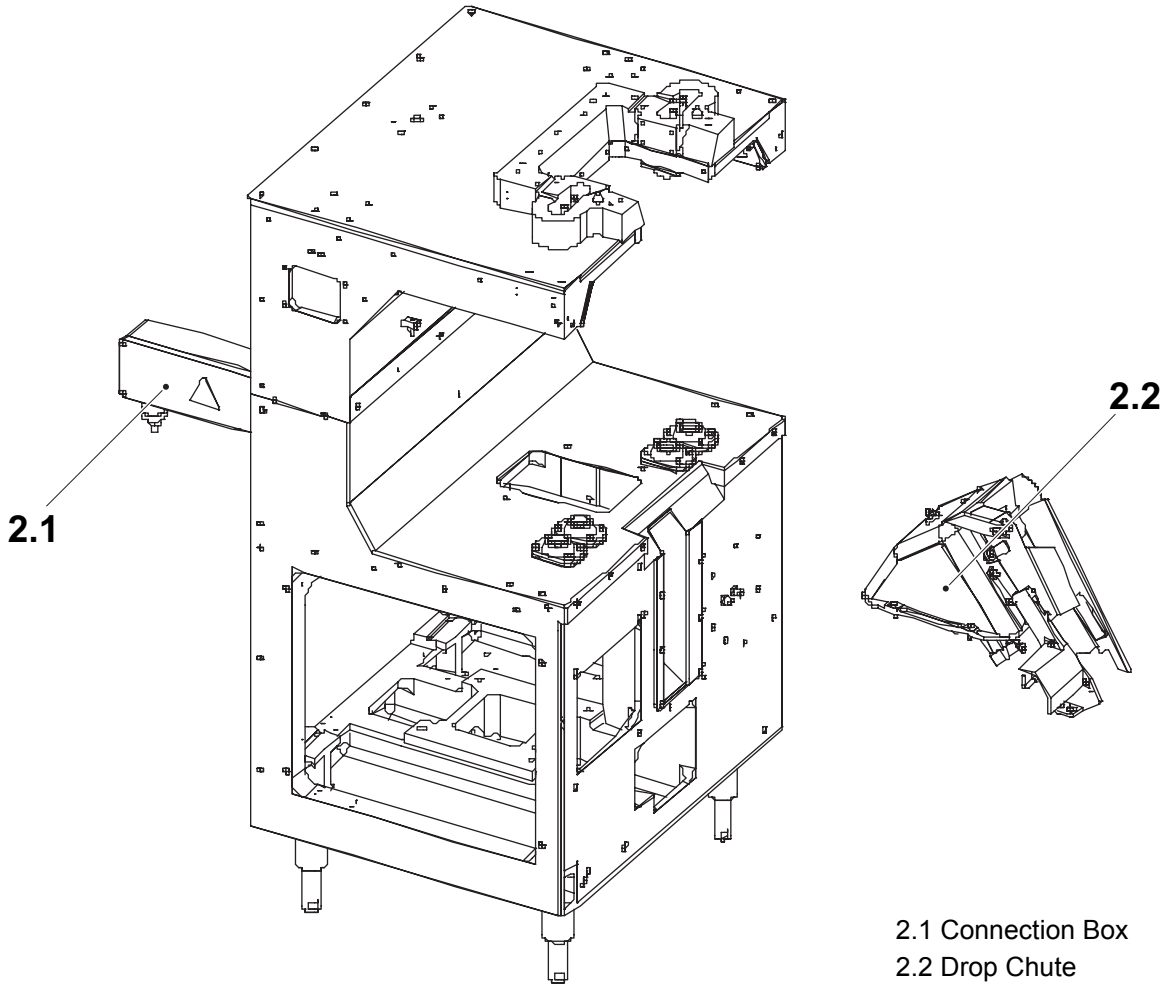

2.1 Connection Box
2.2 Drop Chute

TechPub_2614345_0105 - 01_2772051_01.fm

2.1 Connection Box . . . . . 2 - 5

2.1-1 Connection Box - Check Sterile Air Pressure Switch . . . . . 2 - 5

2.2 Drop Chute . . . . . 2 - 6

2.2-1 Drop Chute - Remove . . . . . 2 - 6

2.2-2 Drop Chute - Set . . . . . 2 - 8

TechPub_2614345_0105 - 01_2772051_01.fm

This page intentionally left blank

TechPub_2614345_0105 - 01_2772051_01.fm

2.1 Connection Box

2.1-1 Connection Box - Check Sterile Air Pressure Switch

Machine Status	PREHEATING II
SPC Reference	456827-0400

a) Close the water supply (1).

b) The pressure on the pressure gauge (2) should decrease.

c) Check that the machine steps to the ZERO POSITION when the pressure indicated on the pressure gauge (2) has dropped to about **13-14** kPa. If not, change the pressure switch (3).

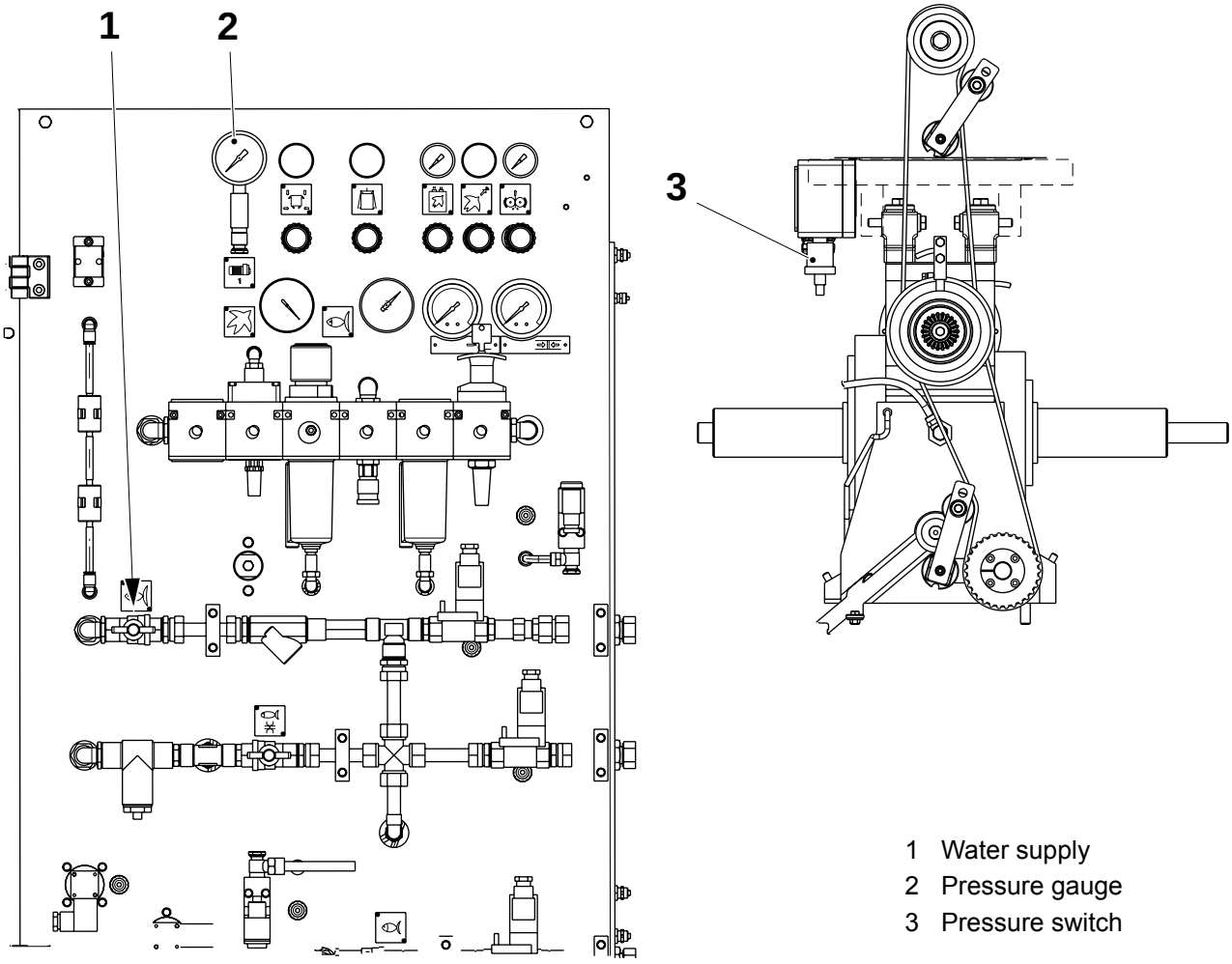

1 Water supply
2 Pressure gauge
3 Pressure switch

TechPub_2614345_0105 - 01_2772051_01.fm

2.2 Drop Chute

2.2-1 Drop Chute - Remove

Machine Status	Power supply disconnector OFF Air supply OFF Steam supply ON Water supply OFF
Consumables	Silicone grease code L
SPC Reference	2526338-0100

a) Mark the position of the cantilever (1) at the bottom plate.

b) Remove the following parts:
- the slide lug (2)
- the O-ring (3)
- the holder (4)
- the drop chute (5)
- the head plate (6).

c) Loosen the four screws (7) and lift the cantilever (1). Remove the O-ring (8).

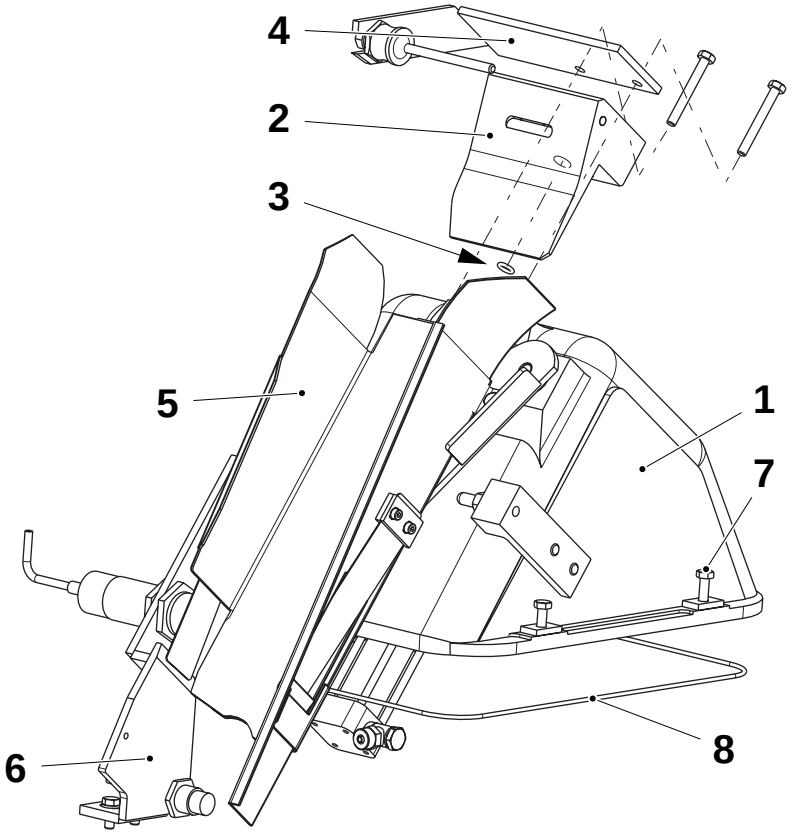

1 Cantilever
2 Slide lug
3 O-ring
4 Holder
5 Drop chute
6 Head plate
7 Screw
8 O-ring

(Cont'd)

TechPub_2614345_0105 - 01_2772052_01.fm

(Cont'd)

d) Loosen the screws (9). Remove the pivot arm (10), the friction bearings (11), the washer (12), and the spacer (13).

e) Disconnect the air connection (16) from the cylinder (15).

f) Loosen the screws (14) and remove the cylinder (15).

Note! Put silicone grease on the O-ring underneath the cantilever (1) before fitting according to the marks on the plate.

g) Assemble in the reverse order.

h) Set the drop chute, see 2.2-2 Drop Chute - Set.

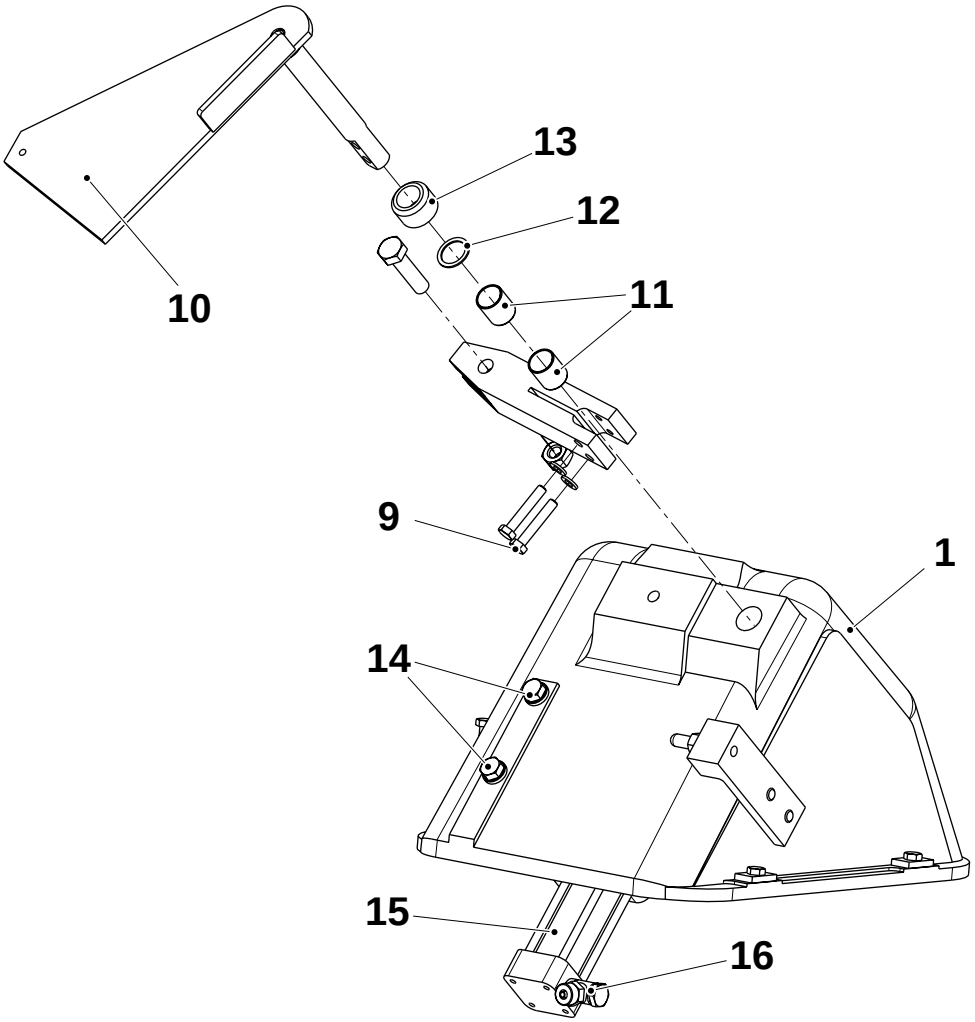

1	Cantilever	13	Spacer
9	Screw	14	Screw
10	Pivot arm	15	Cylinder
11	Friction bearing	16	Air connection
12	washer		

TechPub_2614345_0105 - 01_2772052_01.fm

2.2-2 Drop Chute - Set

Machine Status	PREHEATING I
Consumables	Silicone TP No. 90296-6
SPC Reference	2526338-0100

Activate the valve **Y27** so that the drop chute is in the production position.

Setting in Depth

a) Crank until the station chain (2) stops indexing.

b) Set the distance **A** between the drop chute plate (1) and the chain station (2) by loosening the four screws (3) and moving the cantilever (4).

Note! The drop chute plate (1) must be parallel to the chain station (2), within **0.5** mm.

c) Tighten the screws (3). Seal with silicone around the edge of the cantilever.

d) Set distance **B** between the chain station (2) and the leaf spring (5) using the two screws (6) to adjust.

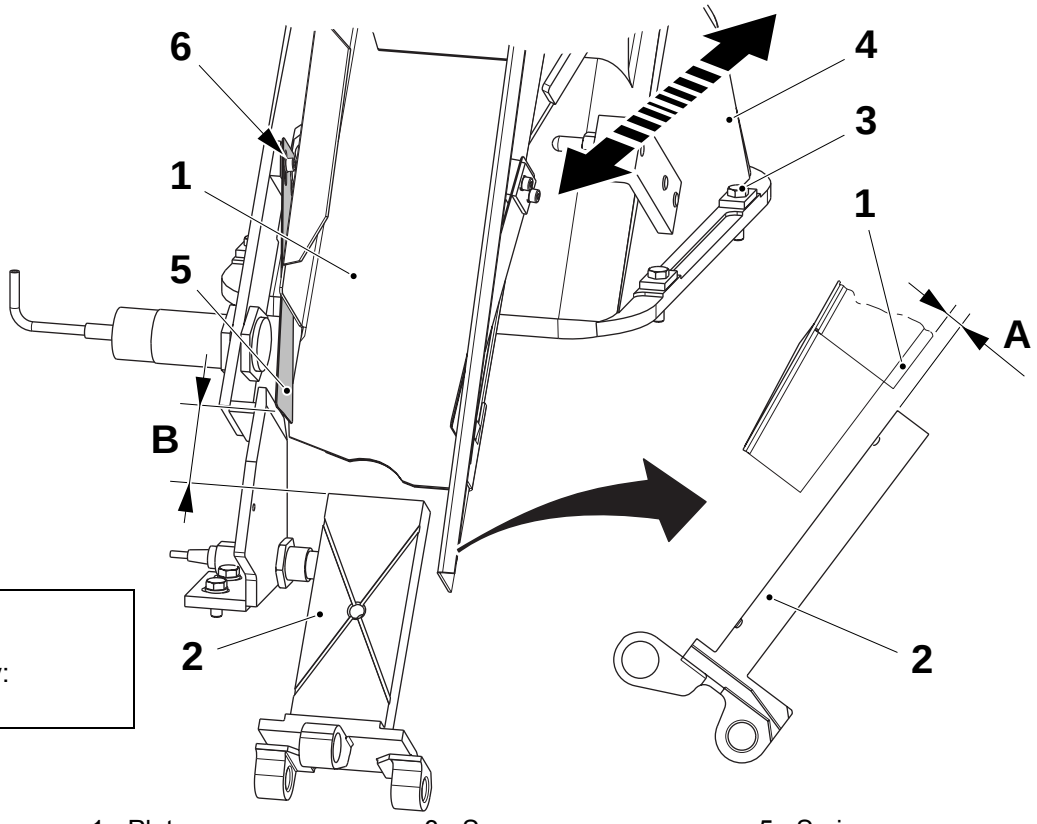

A = 0 to 1 mm
B = 17 ±0.5 mm
for TBA 330 S only:
B = 19 ±0.5 mm

1 Plate
2 Station chain
3 Screw
4 Cantilever
5 Spring
6 Screw

(Cont'd)

TechPub_2614345_0105 - 01_2772052_01.fm

(Cont'd)

Setting Sideways

a) Put a ruler (1) against the RH side of the drop chute.

b) Set the RH side of the drop chute in alignment with the RH guide plate (2) on the final folder using the adjustment screw (3).

c) Put the ruler (1) against the LH side of the drop chute.

d) Set the head plate (4) aligned to the LH guide plate (5). To adjust, loosen the screws (6) and move the head plate (4).

Congestion Monitor

a) Take a semi-finished package and move it slowly down the drop chute.

b) Set the congestion monitor (7) so that it transmits a signal when the package passes, and stops transmitting when the package has passed.

c) Deactivate valve **Y27**.

Final Folder Chain Position

The setting of the final folder chain position sensor is described in the Final Folder section, see 5.1-1 Station Chain - Change.

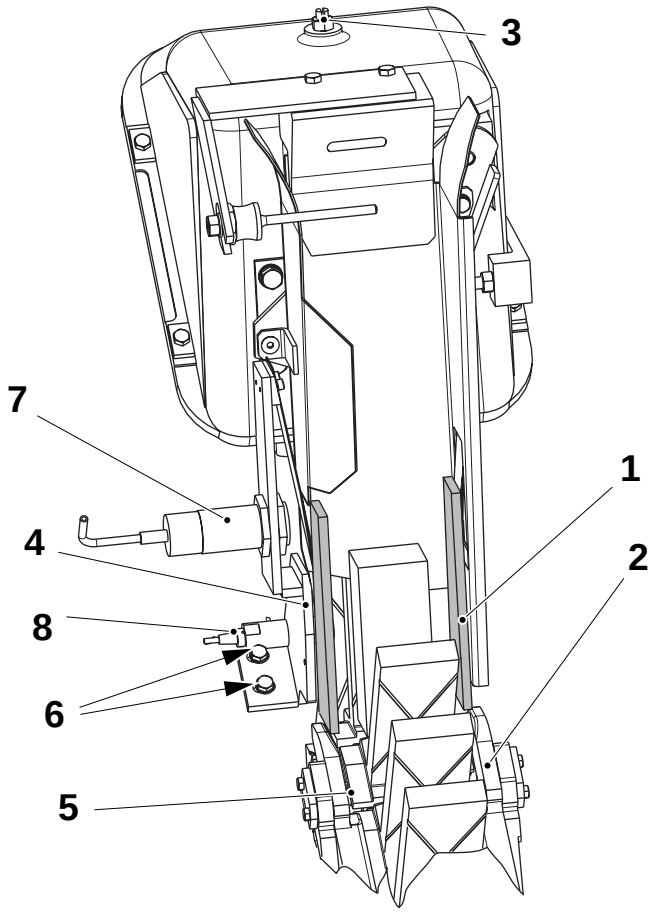

1 Ruler
2 Guide plate
3 Screw
4 Head plate
5 Guide plate
6 screw
7 Congestion monitor
8 Final folder chain position

TechPub_2614345_0105 - 01_2772052_01.fm

This page intentionally left blank

TechPub_2614345_0105 - 01_2772052_01.fm

3 Drive Unit

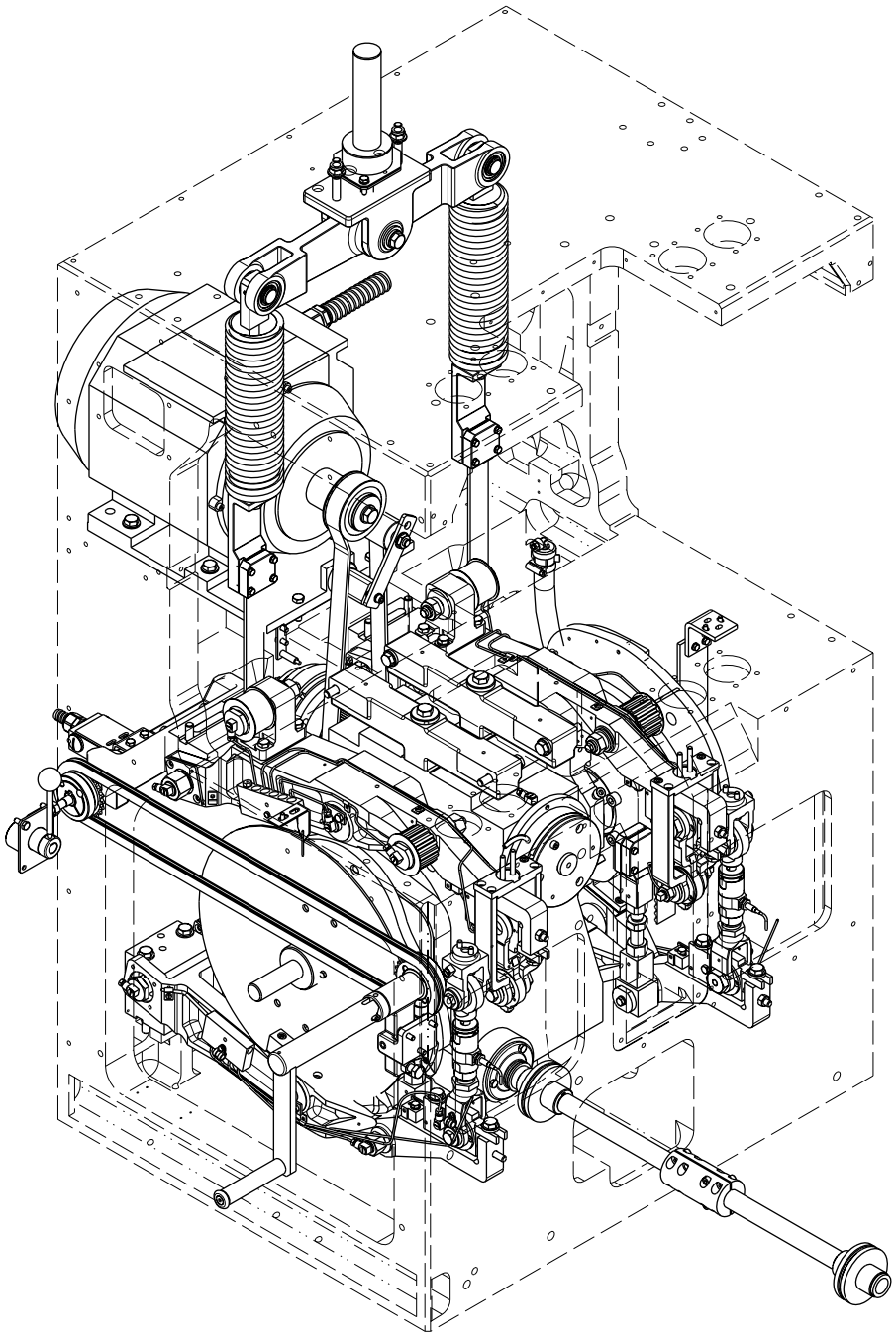

TechPub_2614345_0105 - 01_2772053_01.fm

Drive - Description

SPC Reference	648103-1200

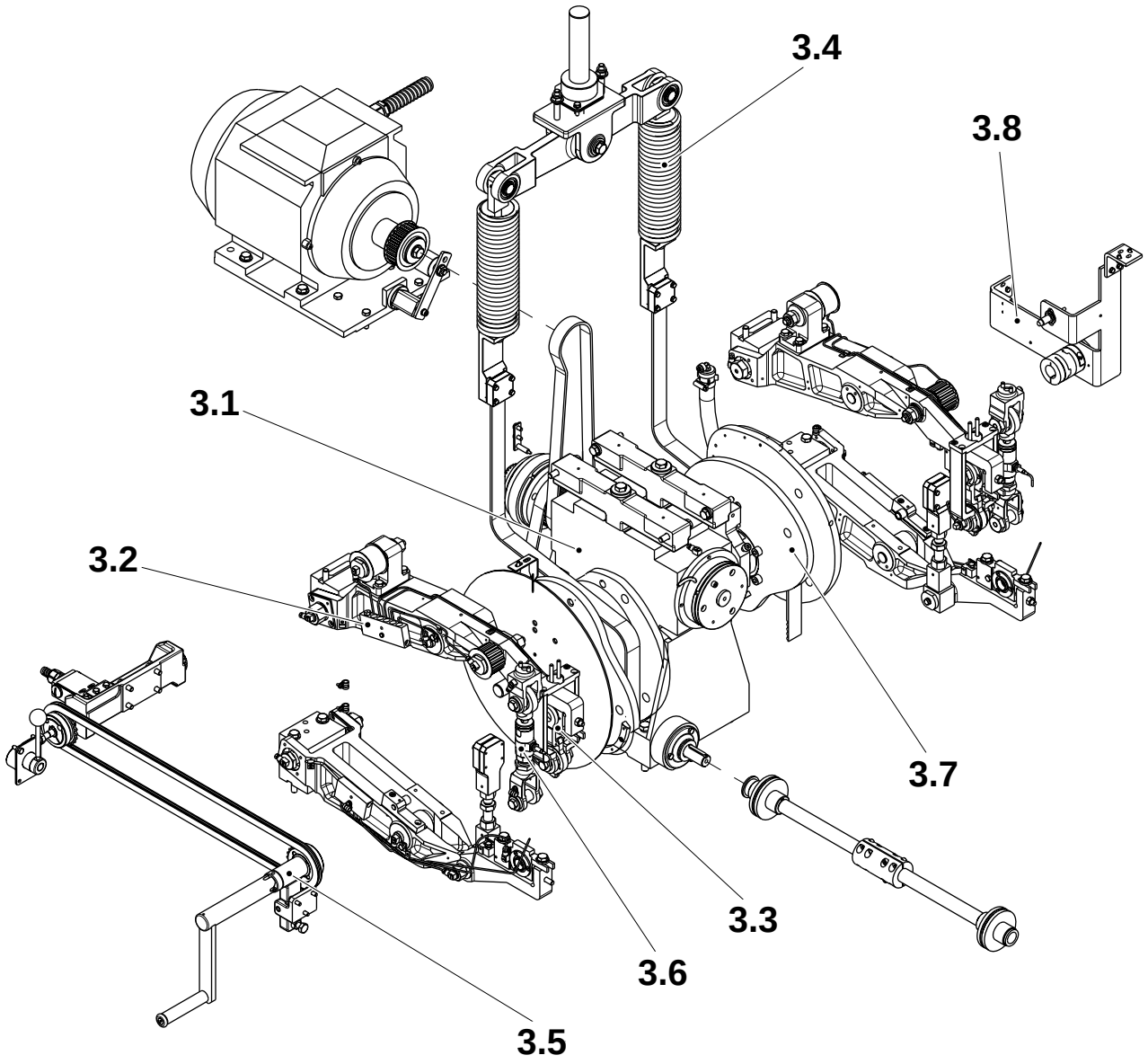

3.1 Worm Gear
3.2 Arm
3.3 Link System
3.4 Hold-Down Device
3.5 Crank
3.6 Disconnection Link
3.7 Curve Pack
3.7 Curve Pack

TechPub_2614345_0105 - 01_2772053_01.fm

3-1 Drive - Check Oil Distribution . . . . . 3 - 5

3.1 Worm Gear . . . . . 3 - 6

3.1-1 Worm Gear - Set Brake Gap . . . . . 3 - 6

3.1-2 Worm Gear - Change Brake . . . . . 3 - 7

3.1-3 Worm Gear - Change Clutch . . . . . 3 - 8

3.1-4 Worm Gear - Change Clutch Bearing . . . . . 3 - 11

3.1-5 Worm Gear - Change Bearings . . . . . 3 - 12

3.1-6 Worm Gear - Change Timing Belt . . . . . 3 - 14

3.1-7 Worm Gear - Check Belt Tension . . . . . 3 - 16

3.1-8 Worm Gear - Set . . . . . 3 - 17

3.1-9 Worm Gear - Check Oil Level . . . . . 3 - 19

3.1-10 Worm Gear - Check Clutch and Brake Gap . . . . 3 - 20

3.1-11 Worm Gear - Change Oil . . . . . 3 - 21

3.2 Arm . . . . . 3 - 22

3.2-1 Arm - Check Timing Belt Rollers . . . . . 3 - 22

3.3 Link System . . . . . 3 - 24

3.3-1 Link System - Check Cam Roller Condition . . . 3 - 24

3.3-2 Link System - Check Bearings . . . . . 3 - 26

3.3-3 Link System - Change Arm Bearings . . . . . 3 - 28

3.3-4 Link System - Change Slewing Bracket Bearings . . . . . 3 - 32

3.4 Hold-Down Device . . . . . 3 - 35

3.4-1 Hold-Down Device - Change Timing Belts . . . . 3 - 35

3.4.1 Rocker Arm . . . . . 3 - 37

3.4.1-1 Rocker Arm - Change Bearings . . . . . 3 - 37

3.5 Crank . . . . . 3 - 39

3.5-1 Crank - Check Mechanism and Switch . . . . . 3 - 39

3.5-2 Crank - Set Switch . . . . . 3 - 40

3.6 Disconnection Link . . . . . 3 - 41

3.6-1 Disconnection Link - Check . . . . . 3 - 41

3.6-2 Disconnection Link - Set . . . . . 3 - 43

TechPub_2614345_0105 - 01_2772053_01.fm

3.6-3 Disconnection Link - Change Force Limiting Device . . . . . 3 - 45

3.7 Curve Pack . . . . . 3 - 46

3.7-1 Curve Pack - Change . . . . . 3 - 46
3.7-2 Curve Pack - Set Cam Segment . . . . . 3 - 53
3.7-3 Curve Pack - Set Degree Scale . . . . . 3 - 55
3.7-4 Curve Pack - Set Pointer . . . . . 3 - 57
3.7-5 Curve Pack - Synchronise . . . . . 3 - 58
3.7-6 Curve Pack - Set Worm Gear Alignment . . . . . 3 - 61

3.8 Angle Encoder . . . . . 3 - 62

3.8-1 Angle Encoder - Remove Bracket . . . . . 3 - 62
3.8-2 Angle Encoder - Set Sensor . . . . . 3 - 63
3.8-3 Angle Encoder - Synchronise . . . . . 3 - 64
3.8-4 Angle Encoder - Change . . . . . 3 - 65

TechPub_2614345_0105 - 01_2772053_01.fm

3-1 Drive - Check Oil Distribution

Machine Status	PREHEATING I
SPC Reference	648103-1200

a) Start the manual lubrication sequence, see OM TPOP display

b) Make sure that the oil reaches all the banjo connections. Check carefully for any oil leakages.

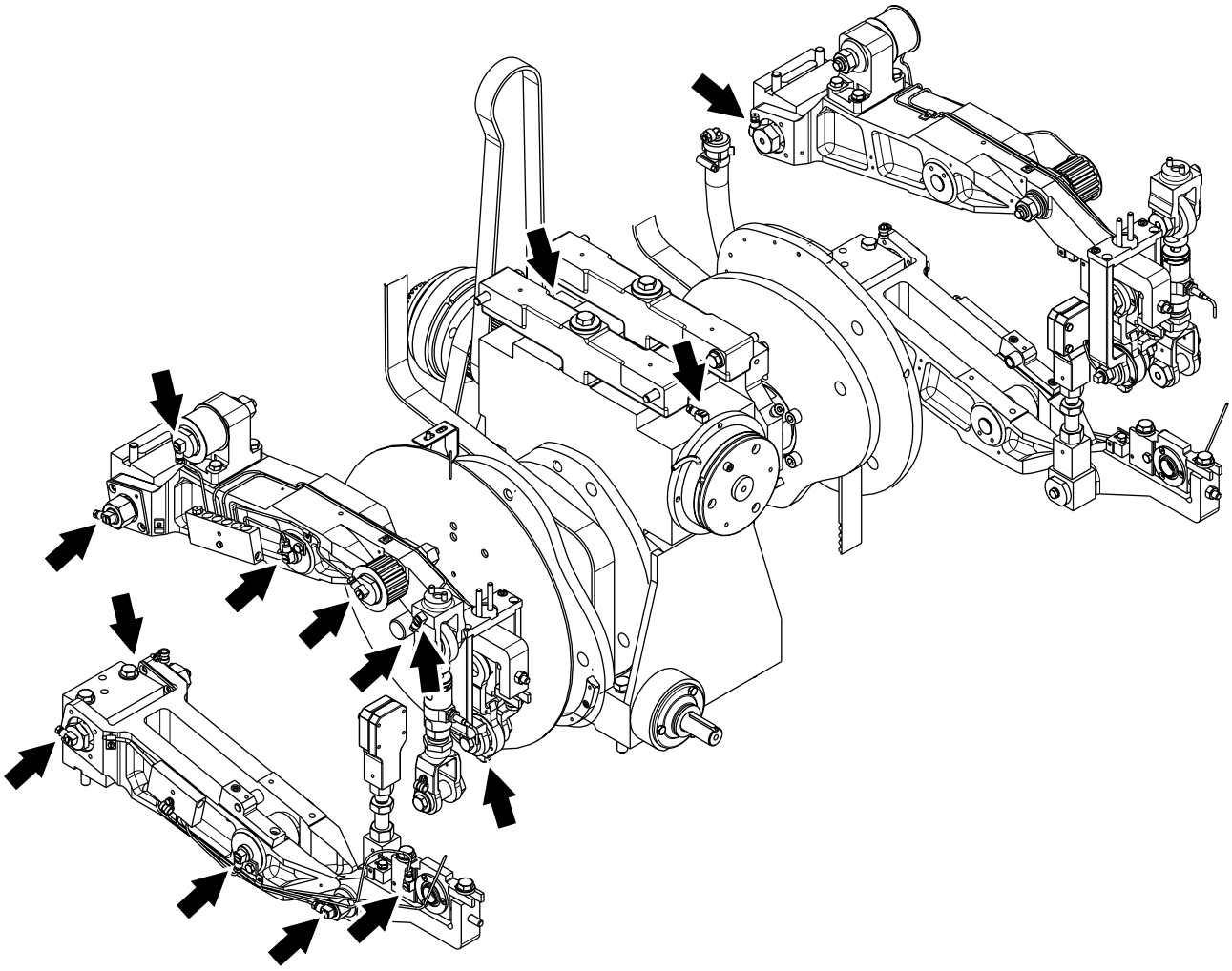

TechPub_2614345_0105 - 01_2772053_01.fm

3.1 Worm Gear

3.1-1 Worm Gear - Set Brake Gap

Machine Status	Power supply disconnector ON Air supply OFF Steam supply ON Water supply OFF
Consumables	Locking fluid TP No. 90157-16
SPC Reference	256173-0700

WARNING

Moving parts can crush.

Be careful when working inside the drive unit.

a) Remove the screw (1) and clean it. Apply locking fluid then refit it.

b) Activate the crank switch. Measure the distance **A** using a feeler gauge, make sure that it is unchanged.

c) Set the distance **A** using the screw (1). Make sure that the distance is within the tolerances all the way around. If not, change the brake. Refer to 3.1-2 Worm Gear - Change Brake.

d) Step up the machine to step PREHEATING I.

e) Inch the machine at high speed, push the Emergency Stop button and check that the machine stops immediately.

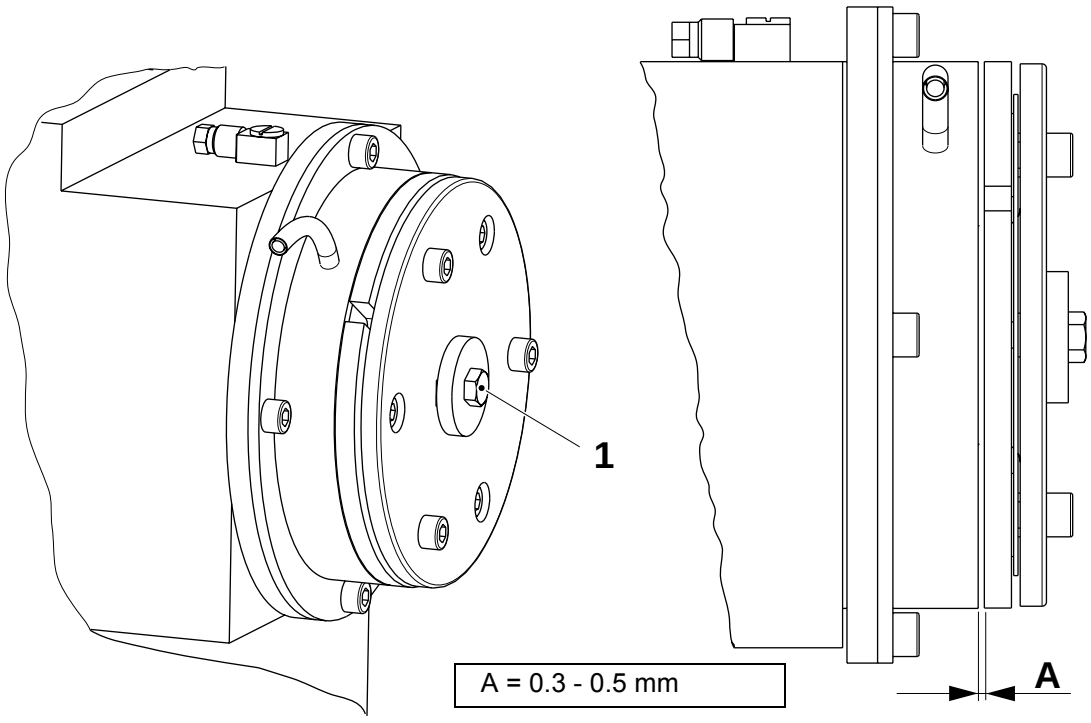

1 Screw

TechPub_2614345_0105 - 01_2772054_01.fm

3.1-2 Worm Gear - Change Brake

Machine Status	Power supply disconnector OFF Air supply OFF Steam supply ON Water supply OFF
Consumables	Locking fluid TP No. 90157-16
SPC Reference	256173-0700

WARNING

Moving parts can crush.

Be careful when working inside the drive unit.

Note! Mark the position of the wires on the terminal block MX007.

a) Disconnect the cable (1) between the brake and the connection box (2).

b) Remove the screw (3) and the four screws (4) to remove the brake.

c) Assemble in the reverse order and set the brake gap, see 3.1-1 Worm Gear - Set Brake Gap.

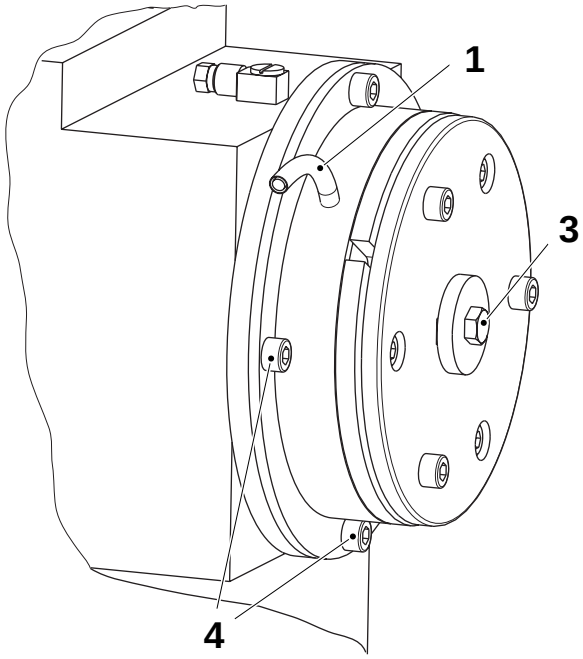

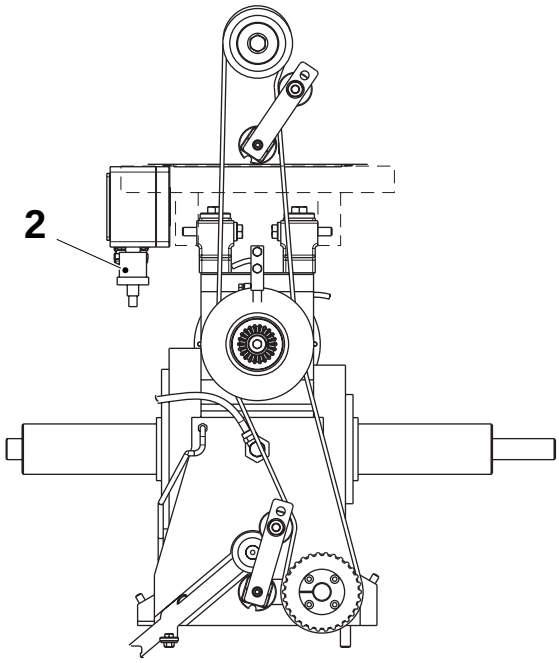

1 Cable
2 Connection box
3 Screw
4 Screw

TechPub_2614345_0105 - 01_2772054_01.fm

3.1-3 Worm Gear - Change Clutch

Machine Status	Power supply disconnector OFF Air supply OFF Steam supply ON Water supply OFF
Special Equipment	Puller
SPC Reference	256173-0700

WARNING
Moving parts can crush.
Be careful when working inside the drive unit.

CAUTION
Risk of damage to equipment.
Carefully follow the procedures to prevent damage to the machine.

Removal

a) Remove the degree scale (1).

CAUTION
Risk of damage to equipment.
Be careful not to damage the pointer (2) or to change its setting.

b) Remove the belts and the crank mechanism, see 3.1-6 Worm Gear - Change Timing Belt.

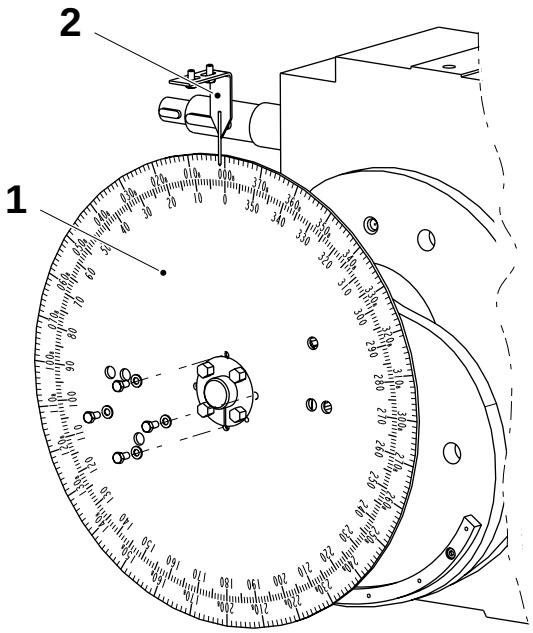

1 Degree scale
2 Pointer

(Cont'd)

TechPub_2614345_0105 - 01_2772054_01.fm

(Cont'd)

Note! Mark the position of the wires on the terminal block MX007.

c) Disconnect the cable (5) and the carrier (6).

d) Remove the following components:
- the screw (7) and its washer
- the gear wheel (8)
- the key (9)
- the washer (10)

Note! Be careful not to lose the shims (11).

e) Install the puller (12) and remove the magnetic clutch (3).

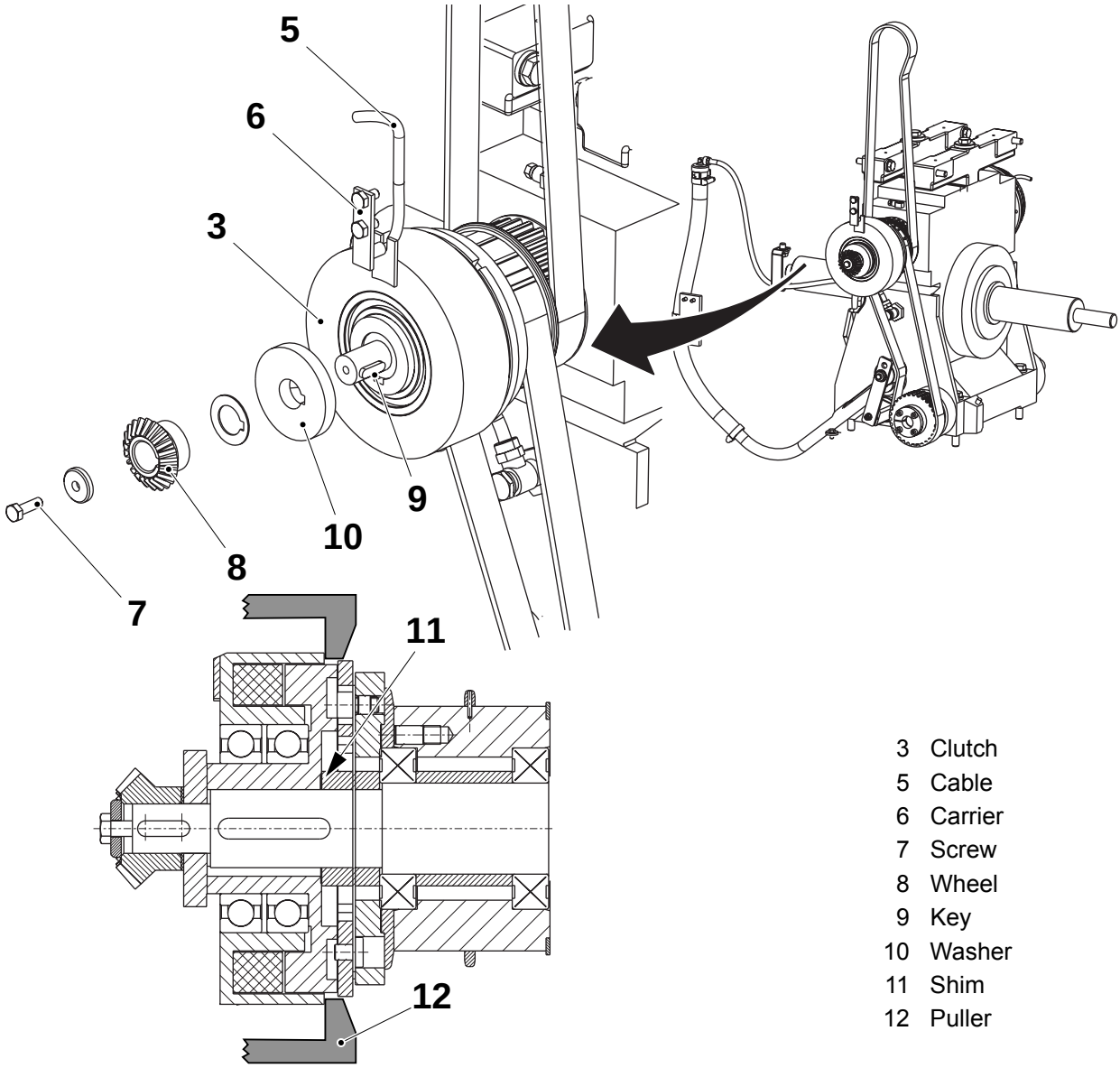

3 Clutch
5 Cable
6 Carrier
7 Screw
8 Wheel
9 Key
10 Washer
11 Shim
12 Puller

(Cont'd)

TechPub_2614345_0105 - 01_2772054_01.fm

(Cont'd)

f) Assemble in the reverse order.

Note! During assembling check the distance **A** between the clutch (3) and the disc (4). If necessary, adjust by means shims (11). Tighten the screw (5) using locking fluid.

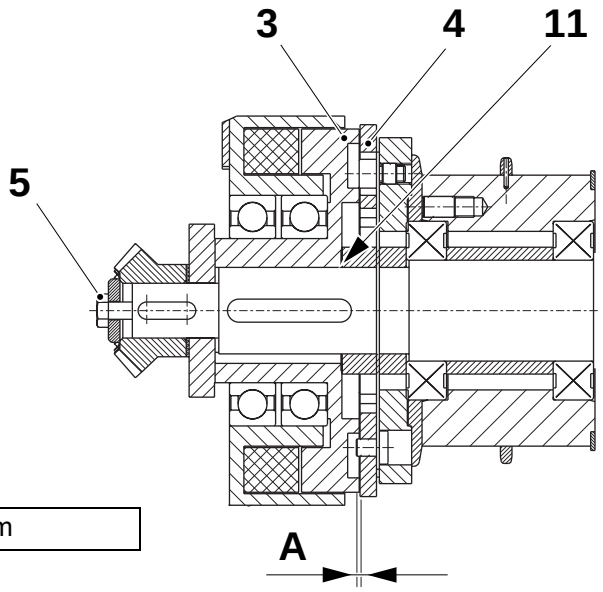

3 Clutch
4 Disc
5 Screw
11 Shim

A = 0.20 - 0.45 mm

TechPub_2614345_0105 - 01_2772054_01.fm

3.1-4 Worm Gear - Change Clutch Bearing

Machine Status	Power supply disconnector OFF Air supply OFF Steam supply ON Water supply OFF
Special Equipment	Puller TP No. 76175
Consumables	Locking fluid TP No. 90157-16
SPC Reference	256173-0700

a) Remove the clutch, see 3.1-3 Worm Gear - Change Clutch.

b) Remove the retaining ring (1) to remove the bearing (2).

c) Remove the spacer (3) and the bearing (4).

Note! Be careful to install the spacer (3) when assembling.

d) Change the bearings and assemble in the reverse order.

e) Assemble the clutch, see 3.1-3 Worm Gear - Change Clutch.

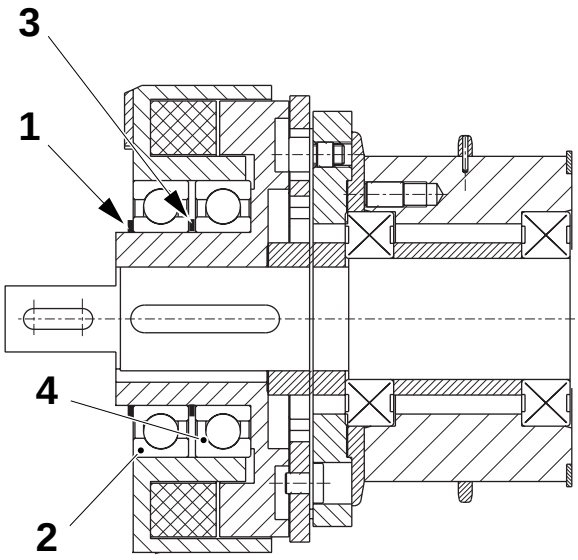

1 Retaining ring
2 Bearing
3 Spacer
4 Bearing

TechPub_2614345_0105 - 01_2772054_01.fm

3.1-5 Worm Gear - Change Bearings

Machine Status	Power supply disconnector OFF Air supply OFF Steam supply ON Water supply OFF
Special Equipment	Puller TP No. 979537-101 Torque wrench > 18 Nm
Consumables	Locking fluid TP No. 90157-16
SPC Reference	256173-0700

WARNING

Moving parts can crush.

Be careful when working inside the drive unit.

Manually turn the pulley (3) and check that it rotates easily and without any abnormal noise. If necessary, change the bearings as follows.

a) Release the tension on the belts using the tensioner (1) and (2), see 3.1-6 Worm Gear - Change Timing Belt.

b) Remove the magnetic clutch, see 3.1-3 Worm Gear - Change Clutch.

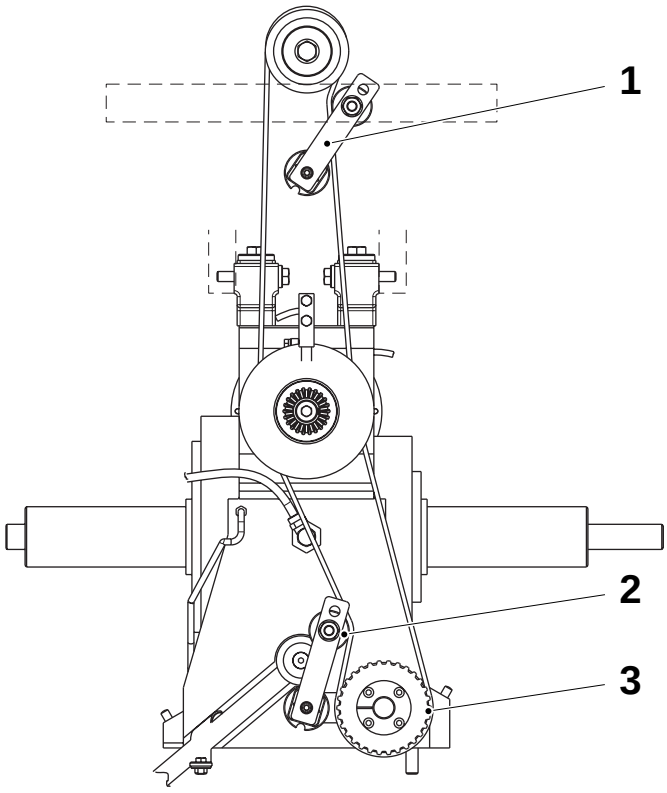

1 Tensioner
2 Tensioner
3 Pulley

(Cont'd)

TechPub_2614345_0105 - 01_2772054_01.fm

(Cont'd)

c) Remove the screws (4) and (5).

d) Remove the disc (6) and the flange (7).

e) Remove the spacers (8), (9), and the shims (10).

f) Remove the toothed pulley (11) using the puller and change the ball bearings (12).

g) Assemble in the reverse order.

Note! During assembling, torque the screws (5) to 10 ±1 Nm and the screws (4) to 16 ±2 Nm

h) Install the magnetic clutch, see 3.1-3 Worm Gear - Change Clutch.

i) Set the belt tensions, see 3.1-7 Worm Gear - Check Belt Tension.

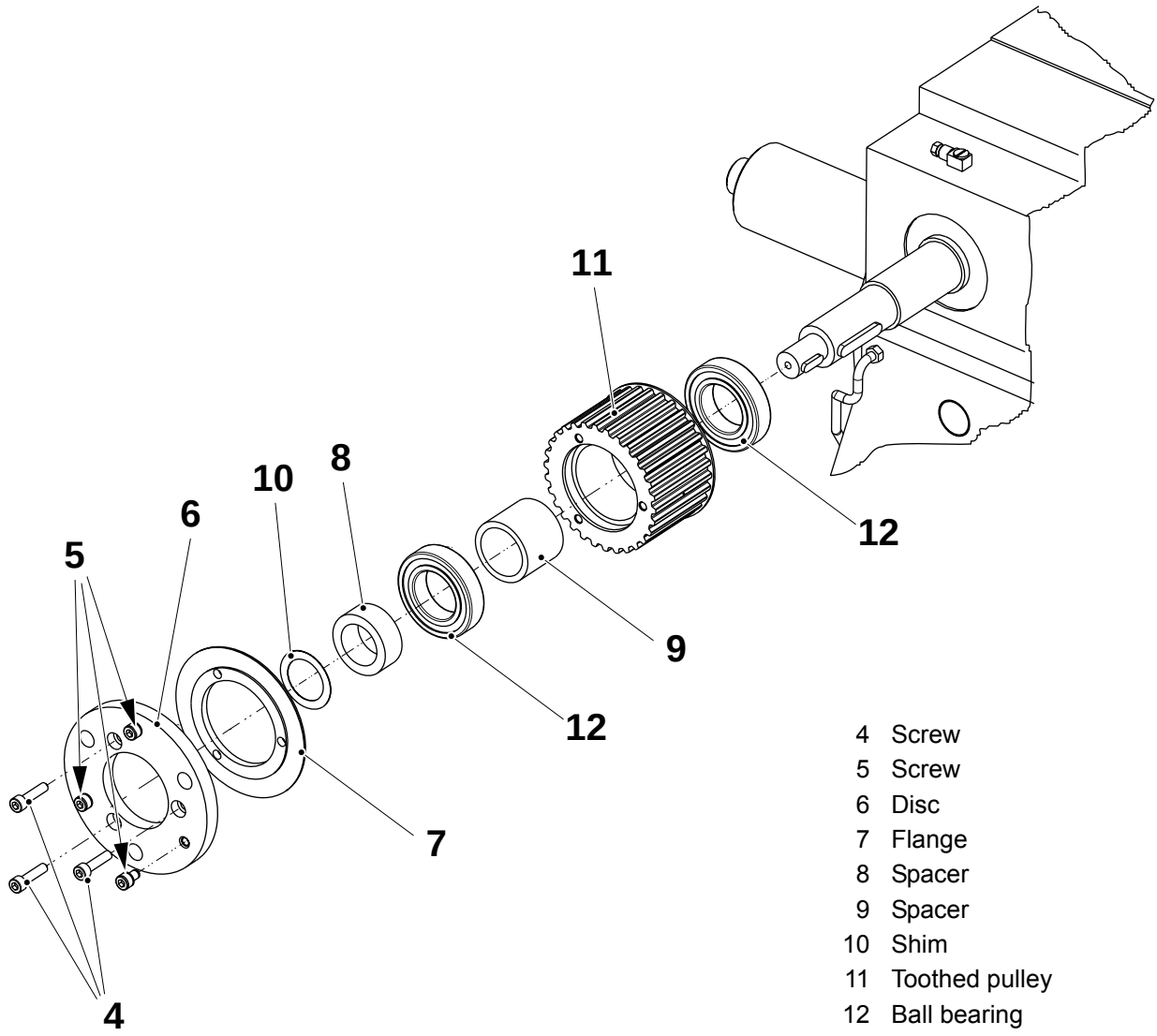

4 Screw
5 Screw
6 Disc
7 Flange
8 Spacer
9 Spacer
10 Shim
11 Toothed pulley
12 Ball bearing

TechPub_2614345_0105 - 01_2772054_01.fm

3.1-6 Worm Gear - Change Timing Belt

Machine Status	Power supply disconnector OFF Air supply OFF Steam supply ON Water supply OFF
SPC Reference	256173-0700

WARNING

Moving parts can crush.

Be careful when working inside the drive unit.

Removal

a) Remove the degree scale (1).

CAUTION

Risk of damage to equipment.

Be careful not to damage the pointer (2) or to change its setting.

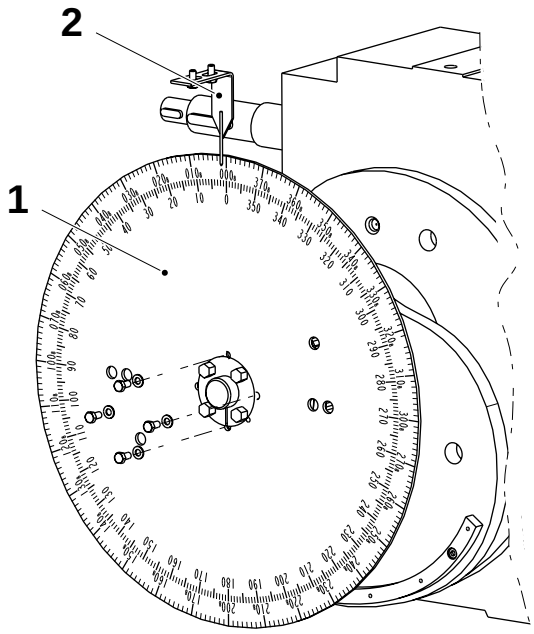

1 Degree scale
2 Pointer

(Cont'd)

TechPub_2614345_0105 - 01_2772054_01.fm

(Cont'd)

b) Release the tension on the crank chain using the chain tensioner and mark the position of the crank mechanism. Move the crank mechanism (3) aside.

c) Release the tension on the belts using the tensioners (4) and (5).

Note! Mark the position of the wires on the terminal block MX007.

d) Disconnect the cable (6).

e) Remove the belts (7) and (8) off the pulleys.

f) Change the belts and assemble in the reverse order.

g) Set the belt tension, see 3.1-7 Worm Gear - Check Belt Tension.

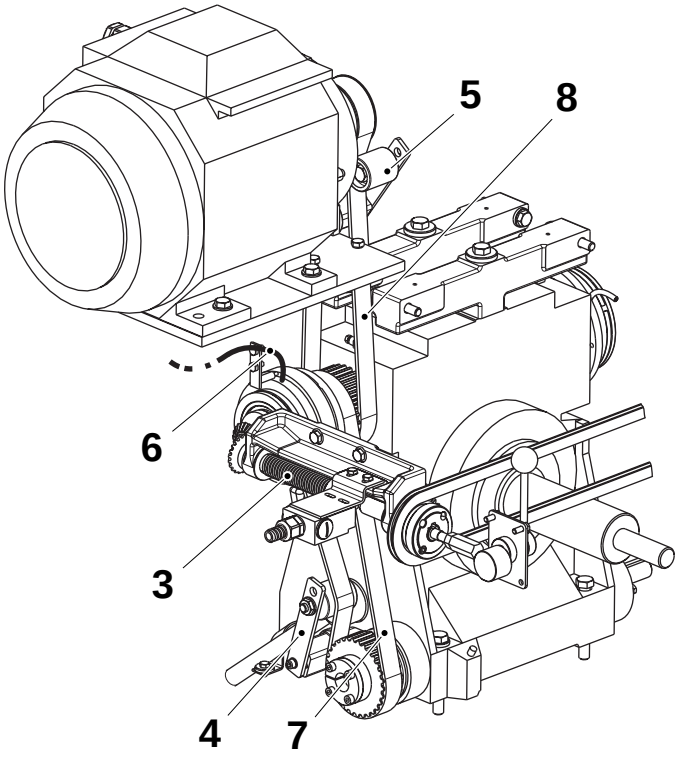

3 Crank mechanism
4 Tensioner
5 Tensioner
6 Cable
7 Belt
8 Belt

TechPub_2614345_0105 - 01_2772054_01.fm

3.1-7 Worm Gear - Check Belt Tension

Machine Status	Power supply disconnector OFF Air supply OFF Steam supply ON Water supply OFF
Special Equipment	Dynamometer
SPC Reference	256173-0700

Using a dynamometer check the tension **A** of the belts (1) and (2).

If the tension is not correct, adjust it by loosening the screw (3) and turning the square piece (4) on the concerned tensioner (5).

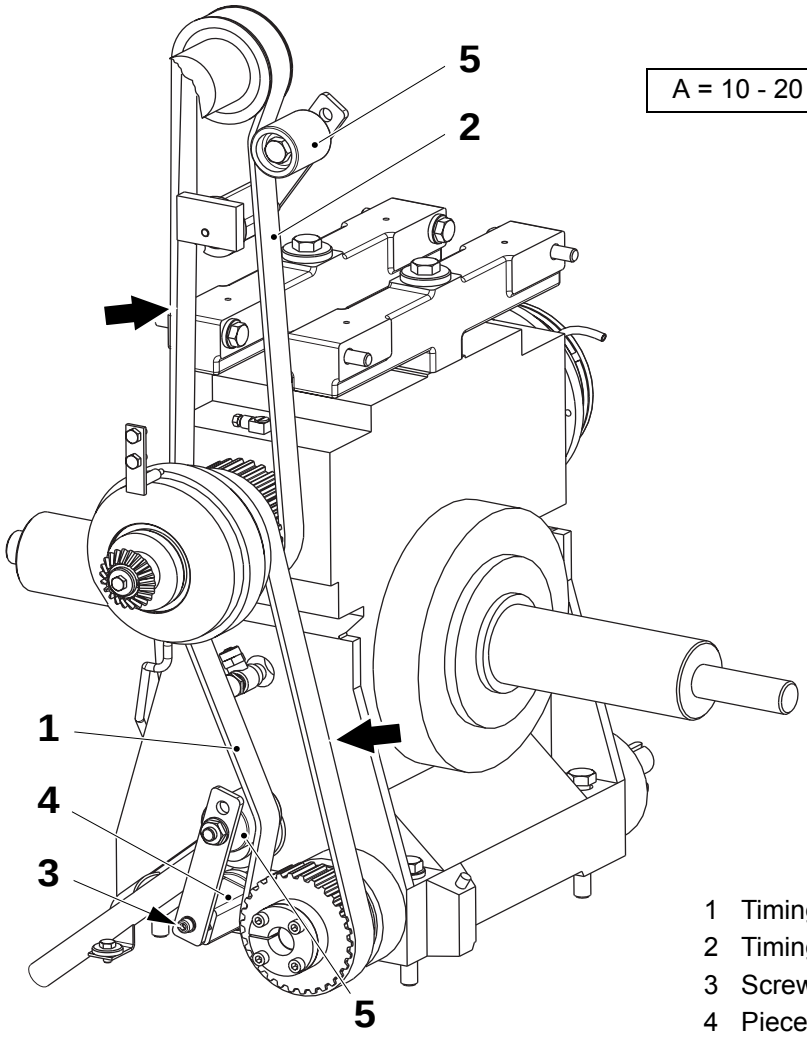

A = 10 - 20 Nm

1 Timing belt
2 Timing belt
3 Screw
4 Piece
5 Tensioner

TechPub_2614345_0105 - 01_2772054_01.fm

3.1-8 Worm Gear - Set

Machine Status	Power supply disconnector OFF Air supply OFF Steam supply ON Water supply OFF
Special Equipment	Template TP No. 75453 Spacer rod TP No. 75454 Template TP No. 978421 Torque wrench min 85 Nm
SPC Reference	256173-0700

Note! The worm gear is pinned. If it needs to be reset, proceed as follows.

a) On the RH and the LH side, install the setting templates (1), and spacer rod (2) at the mounting points (3) of the slewing bracket and the arms.

b) Remove the pins (4).

c) Move the gear towards the templates (1) so that the gear shafts bear against the spacer rods (2).

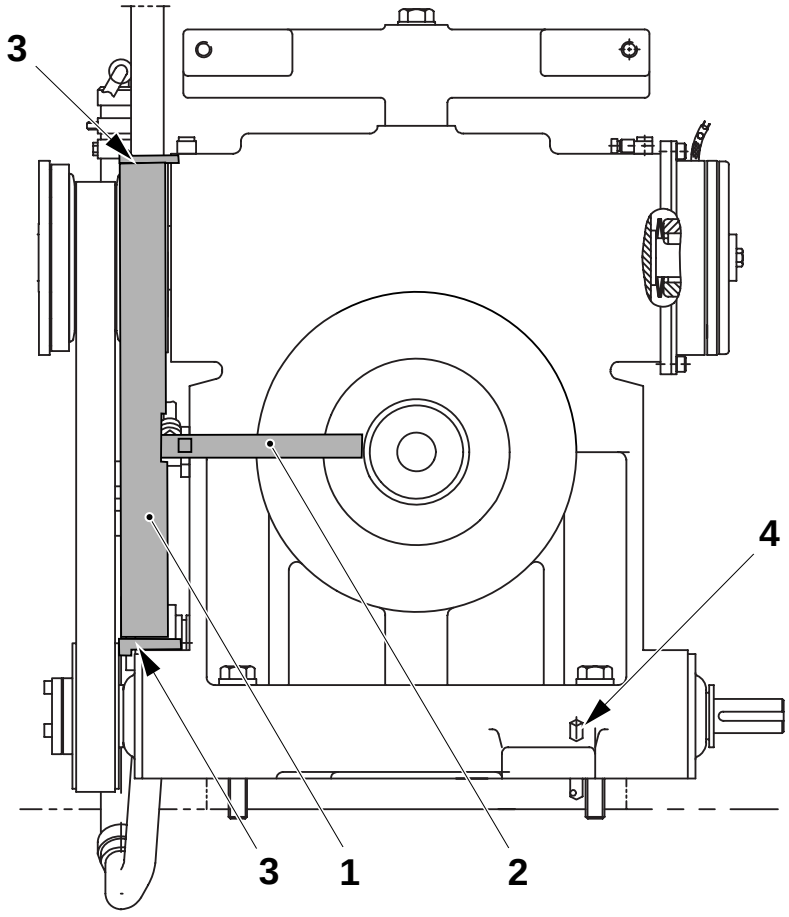

1 Template
2 Spacer rod
3 Mounting point
4 Pin

(Cont'd)

TechPub_2614345_0105 - 01_2772054_01.fm

(Cont'd)

d) Install the template (5) in the holes for the LH side guides.

e) Move the worm gear sideways towards the template so that the brake (6) bears against the templates.
Install the worm gear screws and torque them to 80 ±3 Nm.

f) Make sure that there is the distance **A** between the spacer rod and the shaft (7) on both sides.

g) Drill new holes (Ø 7.8mm) and pin the gear.

A = max. 0.05 mm

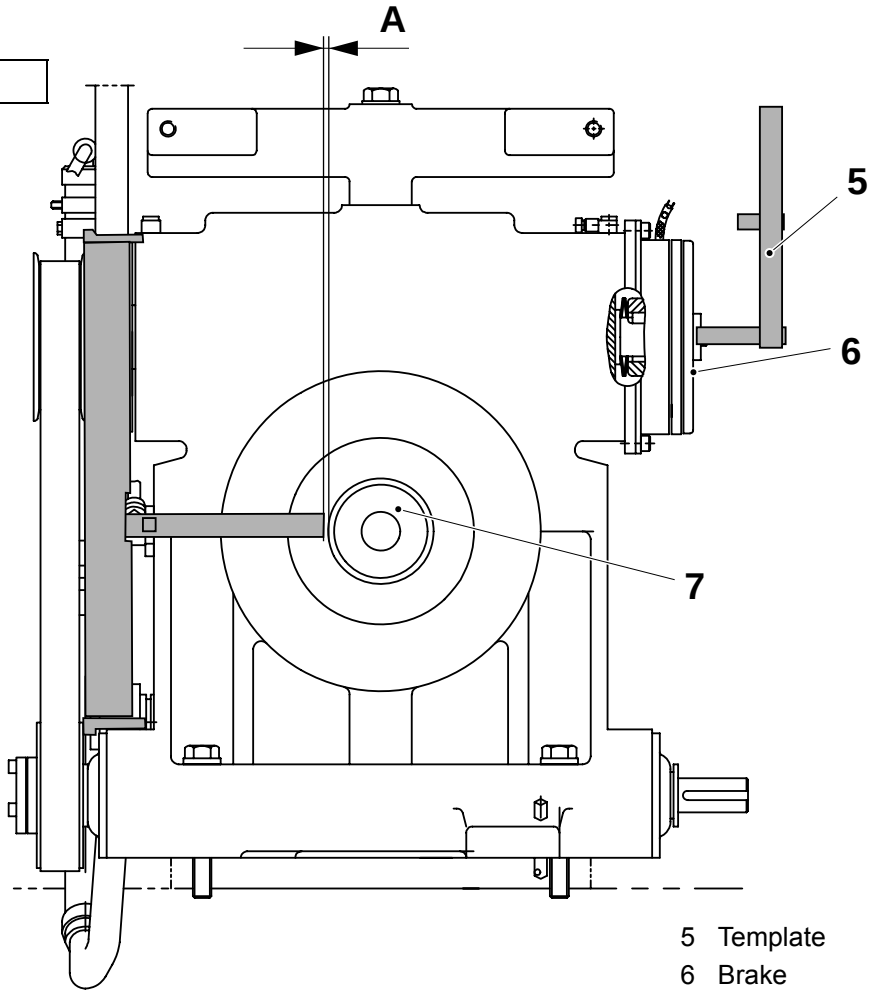

5 Template
6 Brake
7 Shaft

TechPub_2614345_0105 - 01_2772054_01.fm

3.1-9 Worm Gear - Check Oil Level

Machine Status	Power supply disconnector OFF Air supply OFF Steam supply ON Water supply OFF
Consumables	Oil code H
SPC Reference	256173-0700

Note! Always check the oil level when the worm gear is **cold**.

WARNING
Lubricant.
Chemical product. Follow the Safety Precautions.

a) Check the oil level in the worm gear from the glass (1) using the marks (2) and (3).

b) If necessary, remove the plug (4) and top up with oil, code H, see 15.3 Lubricants.

c) Install the plug (4).

TechPub_2614345_0105 - 01_2772054_01.fm

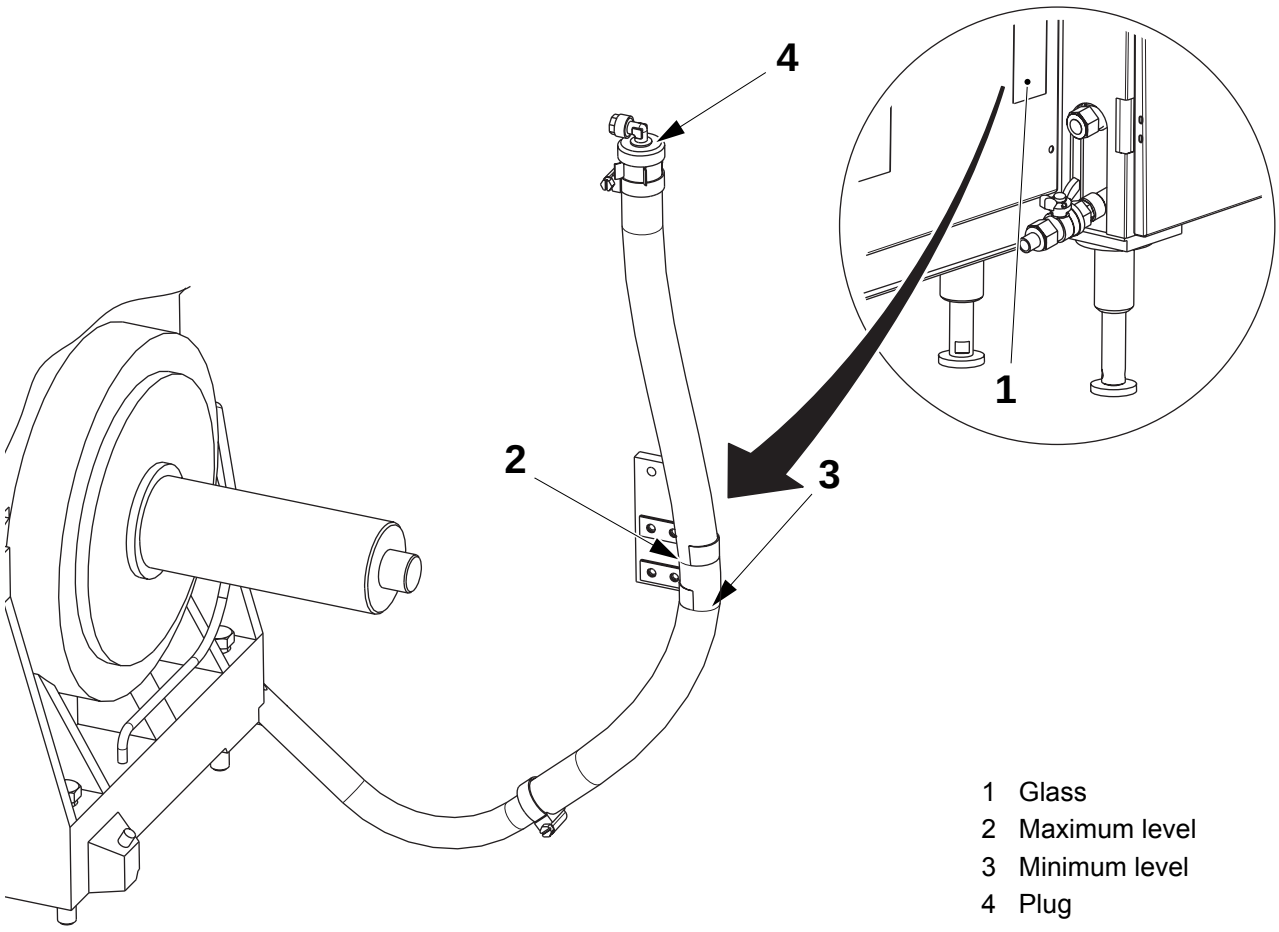

1 Glass
2 Maximum level
3 Minimum level
4 Plug

3.1-10 Worm Gear - Check Clutch and Brake Gap

Machine Status	Power supply disconnector OFF Air supply OFF Steam supply ON Water supply OFF
SPC Reference	256173-0700

a) Measure the distance between the clutch and the disc in the clutch, see 3.1-3 Worm Gear - Change Clutch.

b) If necessary, set the clutch gap. Follow the procedure in 3.1-3 Worm Gear - Change Clutch.

c) Step up to PREHEATING I.

d) Measure the distance **A** (see 3.1-1 Worm Gear - Set Brake Gap) between the brake housing (1) and the disc (2). Make sure that the distance is within the tolerances all the way around.

e) If necessary, set the brake gap, see 3.1-1 Worm Gear - Set Brake Gap.

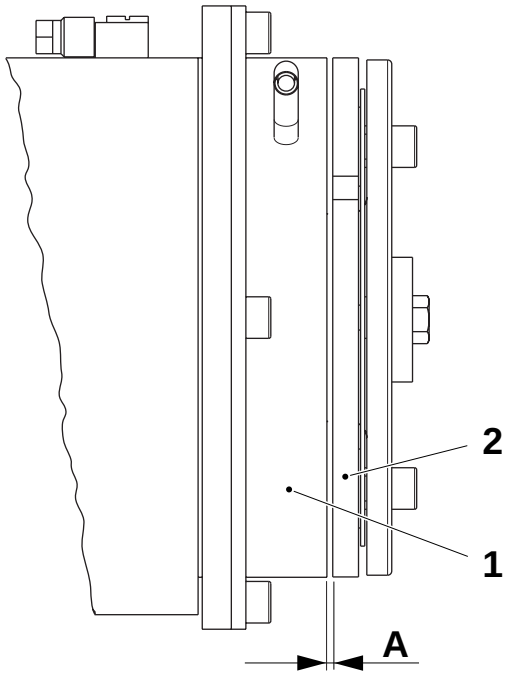

1 Brake housing
2 Disc

TechPub_2614345_0105 - 01_2772054_01.fm

3.1-11 Worm Gear - Change Oil

Machine Status	Power supply disconnector OFF Air supply OFF Steam supply ON Water supply OFF
Consumables	Oil code H
SPC Reference	256173-0700

Note! Always fill oil into the worm gear when it is **cold**.

WARNING
Lubricant.
Chemical product. Follow the Safety Precautions.

a) Disconnect the plug (1).

b) Remove the hose (2) from the clips (3) and drain the oil.

CAUTION
Risk of contamination.
Follow local laws or internal rules for the disposal of exhausted oil.

c) Fill up with oil, code H, see 3.1-9 Worm Gear - Check Oil Level.

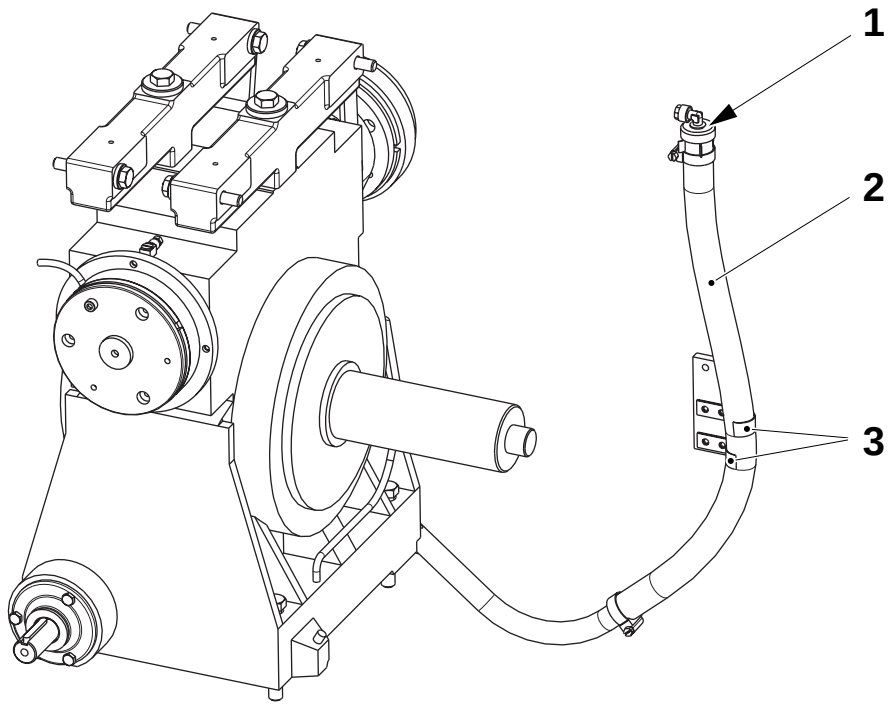

1 Plug
2 Hose
3 Clip

TechPub_2614345_0105 - 01_2772054_01.fm

3.2 Arm

3.2-1 Arm - Check Timing Belt Rollers

Machine Status	Power supply disconnector OFF Air supply OFF Steam supply ON Water supply OFF
SPC Reference	256197-0500 929438-0100

Check that the timing belt rollers (1) and (2) rotate smoothly and that there is no play in the bearings.

Check that the edges (3) of the rollers (1) and (2) are straight and not damaged.

CAUTION
Risk of damage to equipment.
Damaged edges (3) may damage the timing belt when the machine is running.

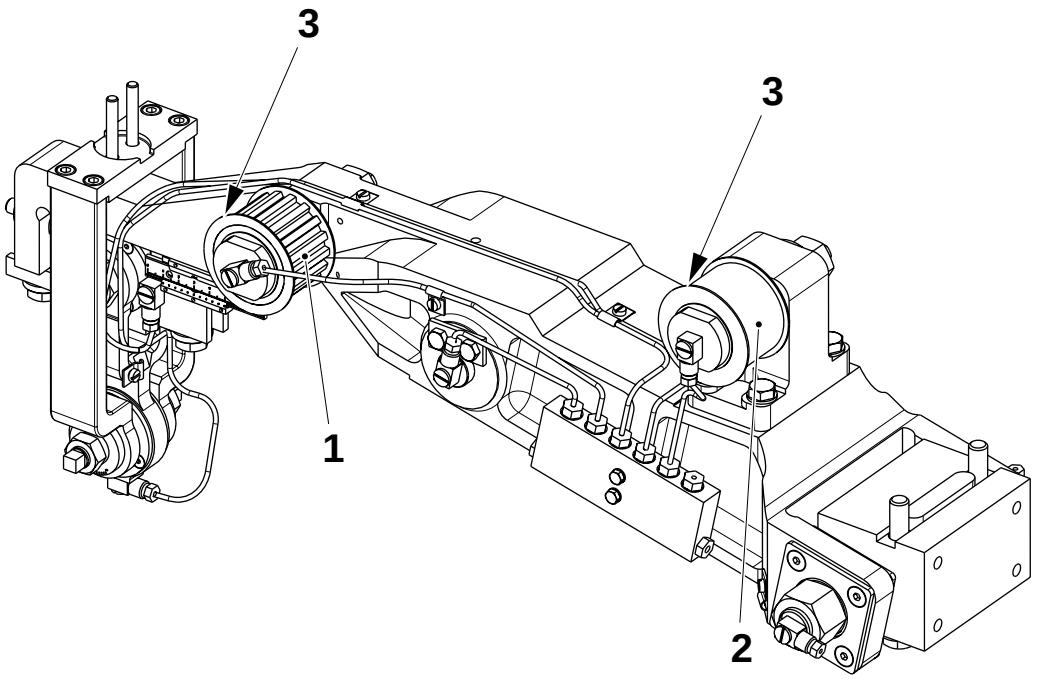

1 Roller
2 Roller
3 Edge

(Cont'd)

TechPub_2614345_0105 - 01_2772055_01.fm

(Cont'd)

If necessary, change the rollers or bearings as follows.

a) Remove the belts, see 3.4-1 Hold-Down Device - Change Timing Belts.

a) Remove the banjo connections (4).

b) Remove the axle pins.

c) Remove the washers (5) and change the bearings (6) or the rollers.

d) Assemble in the reverse order.

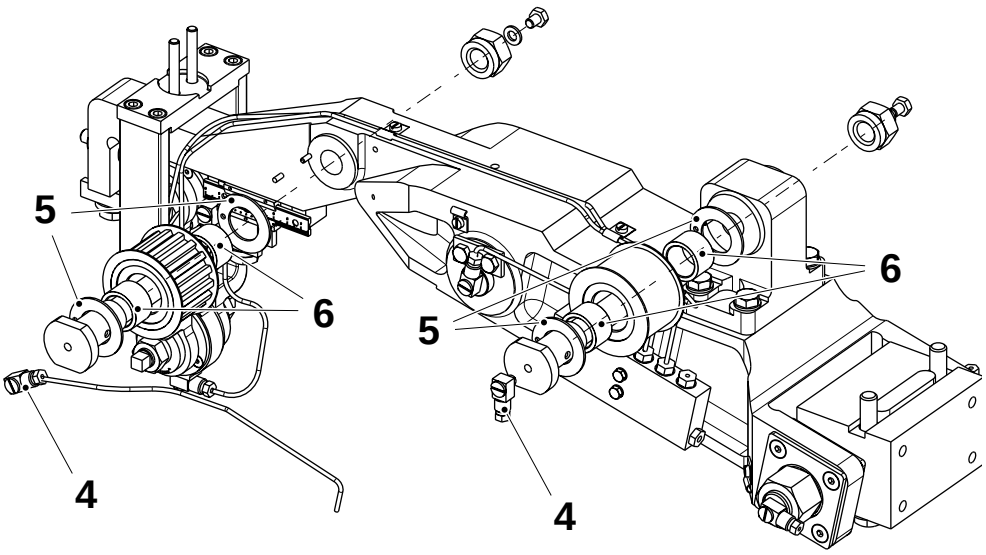

4 Banjo connection
5 Washer
6 Bearing

TechPub_2614345_0105 - 01_2772055_01.fm

3.3 Link System

3.3-1 Link System - Check Cam Roller Condition

Machine Status	Power supply disconnector OFF Air supply OFF Steam supply ON Water supply OFF
SPC Reference	491814-0300 / 491815-0300 1539766-0100 / 1490120-0100 256197-0500 / 929438-0100

WARNING

Moving parts can crush.

Be careful when working inside the drive unit.

a) Release the tension on the hold down device, see 3.4-1 Hold-Down Device - Change Timing Belts.

b) Check that the cam rollers (1) rotate smoothly and that the roller surfaces are not worn or damaged.

c) If necessary, remove the banjo connection (2) and the bracket (3). Pull out the shaft (4) and change the rollers (1).

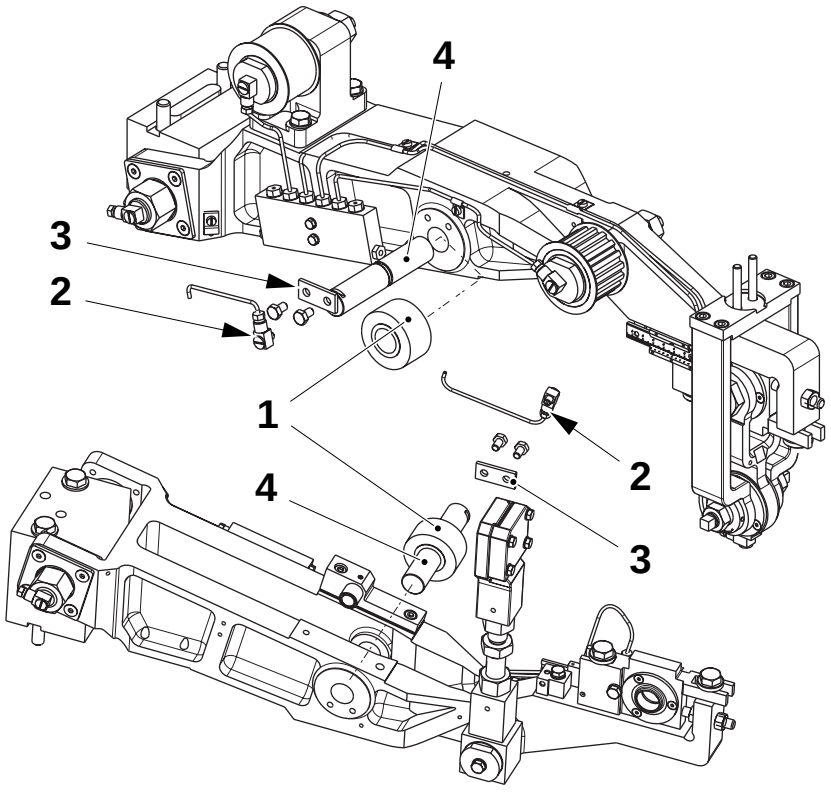

1 Cam roller
2 Banjo connection
3 Bracket
4 Shaft

(Cont'd)

TechPub_2614345_0105 - 01_2772056_01.fm

(Cont'd)

d) Assemble in the reverse order.

e) Check the following settings:
   - the jaw gap setting, refer to 4-2 Jaw System - Set Jaw Gap
   - the jaw over jaw setting, refer to 4-4 Jaw System - Set Jaw Over Jaw.

TechPub_2614345_0105 - 01_2772056_01.fm

3.3-2 Link System - Check Bearings

Machine Status	Power supply disconnector OFF Air supply OFF Steam supply ON Water supply OFF
Special Equipment	Lever
SPC Reference	491814-0300 / 491815-0300 1539766-0100 / 1490120-0100 256197-0500 / 929438-0100

Arm Bearings

a) Crank the LH yoke to its lower turning position.

b) Check for play in the bearings (1) by lifting the yoke with a lever (2).

c) Repeat for the RH yoke. Change the bearings, if necessary, refer to 3.3-3 Link System - Change Arm Bearings.

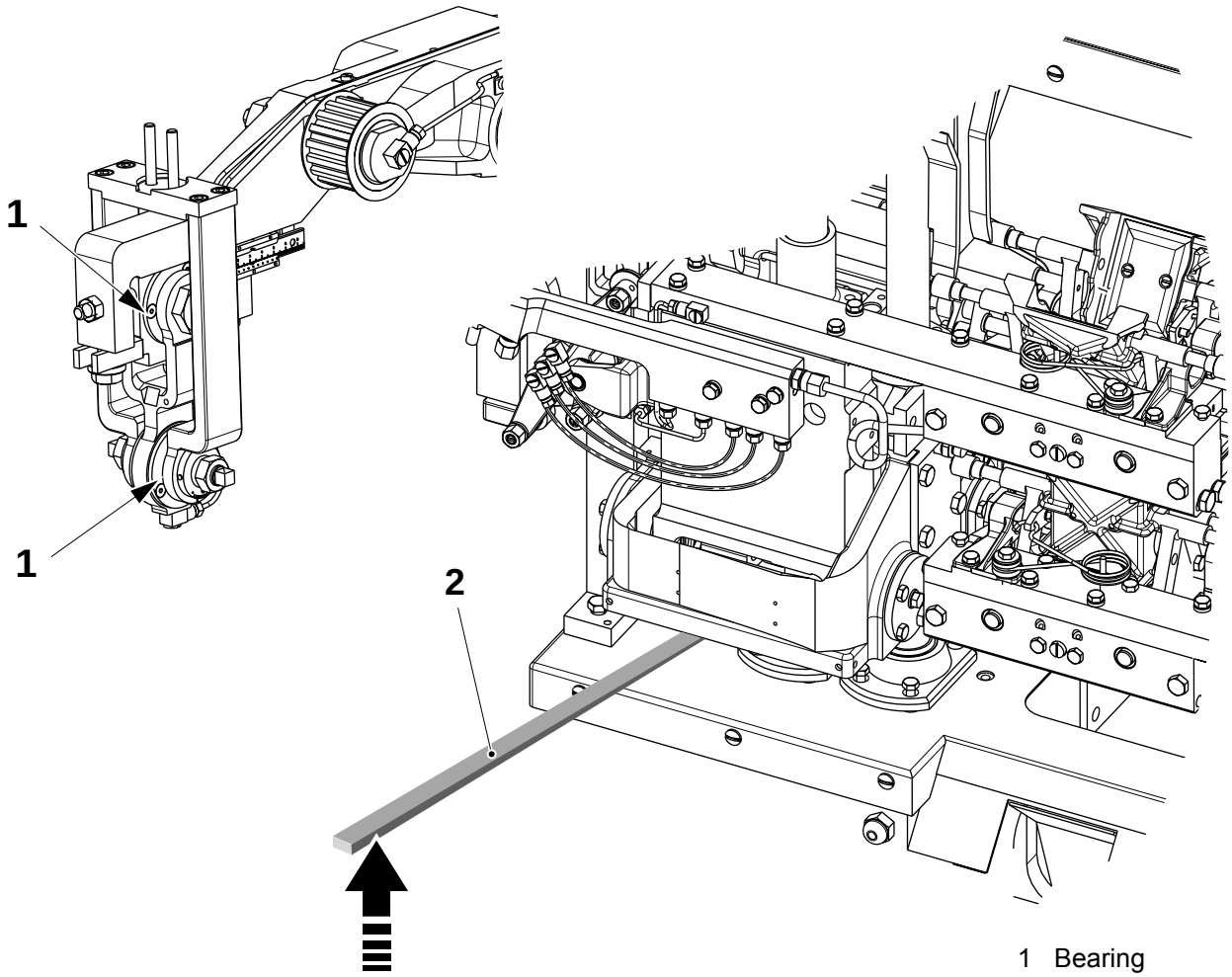

1 Bearing
2 Lever

TechPub_2614345_0105 - 01_2772056_01.fm

(Cont'd)

(Cont'd)

Slewing Bracket

a) Crank until one jaw pair is fully open.

b) Check for play in the bearings (3), (4) by moving the jaws manually, and change them, if necessary, see 3.3-4 Link System - Change Slewing Bracket Bearings.

c) Assemble in the reverse order.

d) Repeat on the other jaw pair.

Perform the following items after the replacement of the bearings:

- Check the jaw gap, see 4-2 Jaw System - Set Jaw Gap
- Check the jaw over jaw setting, see 4-3 Jaw System - Check Jaw Over Jaw.

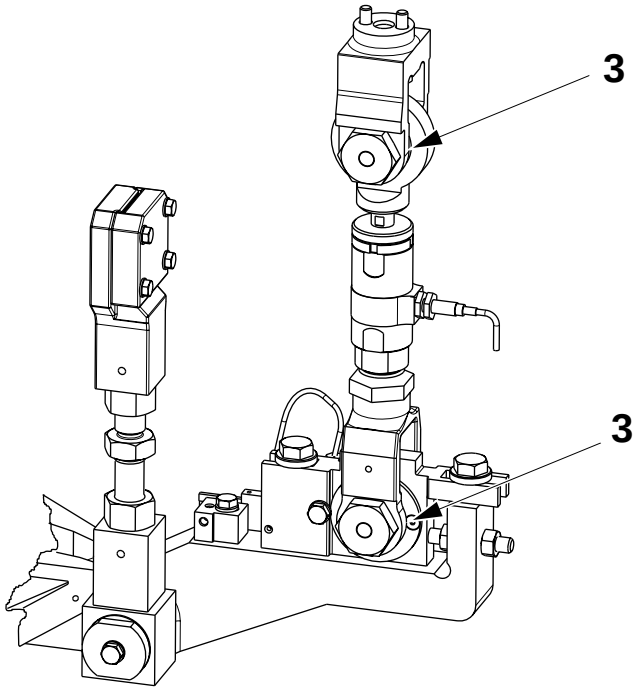

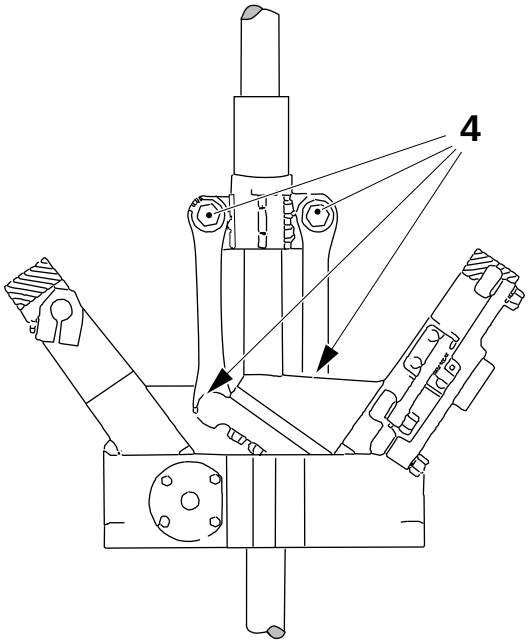

3 Bearing
4 Link bearing

TechPub_2614345_0105 - 01_2772056_01.fm

3.3-3 Link System - Change Arm Bearings

Machine Status	Power supply disconnector OFF Air supply OFF Steam supply ON Water supply OFF
Special Equipment	Extractor TP No. 77165-101 Wooden blocks
Consumables	Locking fluid TP No. 90157-16
SPC Reference	491814-0300 / 491815-0300 1539766-0100 / 1490120-0100 256197-0500 / 929438-0100

WARNING

Moving parts can crush.

Be careful when working inside the drive unit.

a) Remove the cover (1) and the nuts (2).

CAUTION

Risk of damage to equipment.

The nut (3) must not be completely removed from the threaded pin (4).

b) Loosen the nut (3) to release the hold-down device spring.

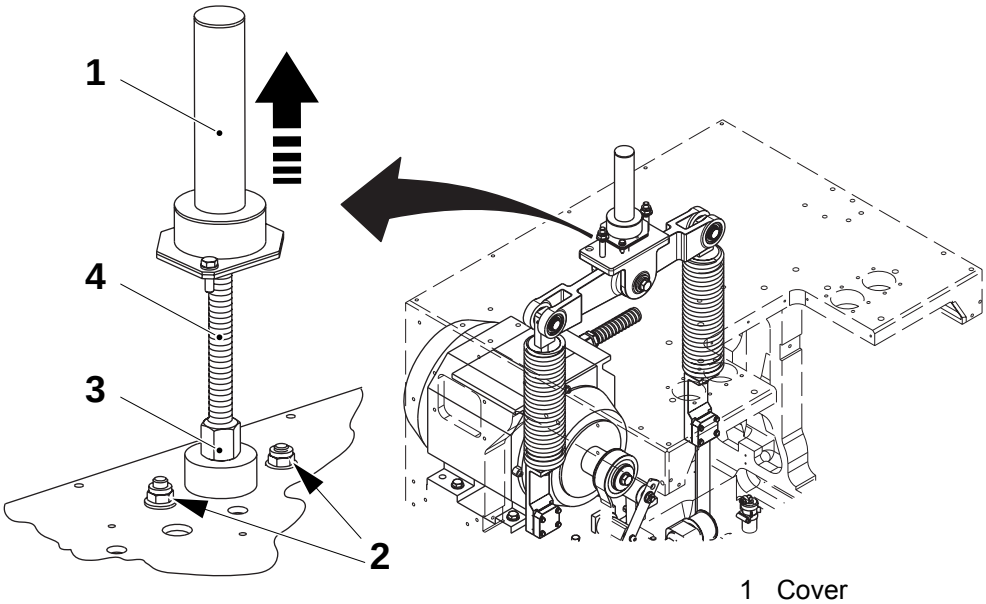

1 Cover
2 Nut
3 Nut
4 Threaded pin

(Cont'd)

TechPub_2614345_0105 - 01_2772056_01.fm

(Cont'd)

CAUTION
Risk of damage to equipment.
Be careful not to damage the pointer (5). **Do not change** the setting.

c) Remove the degree scale (6).

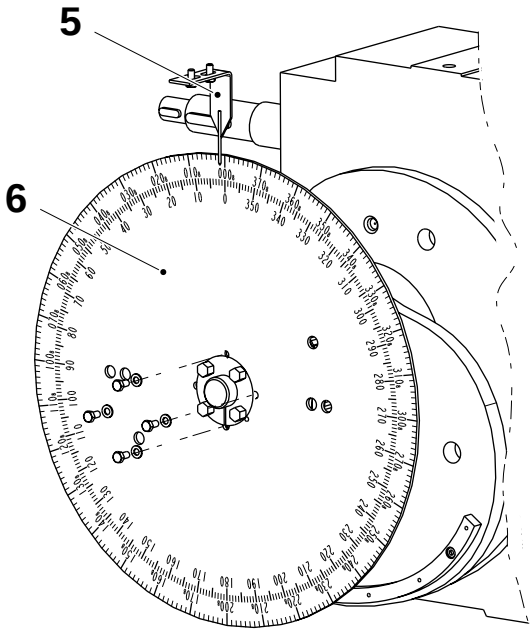

5 Pointer
6 Degree scale

(Cont'd)

TechPub_2614345_0105 - 01_2772056_01.fm

(Cont'd)

WARNING
Risk of crushing.
Lower the arm with care.

d) Remove the screws (7) under the outer guides and lower the slewing bracket down on to the bottom plate.

e) Place wooden blocks (8) underneath to support the yoke.

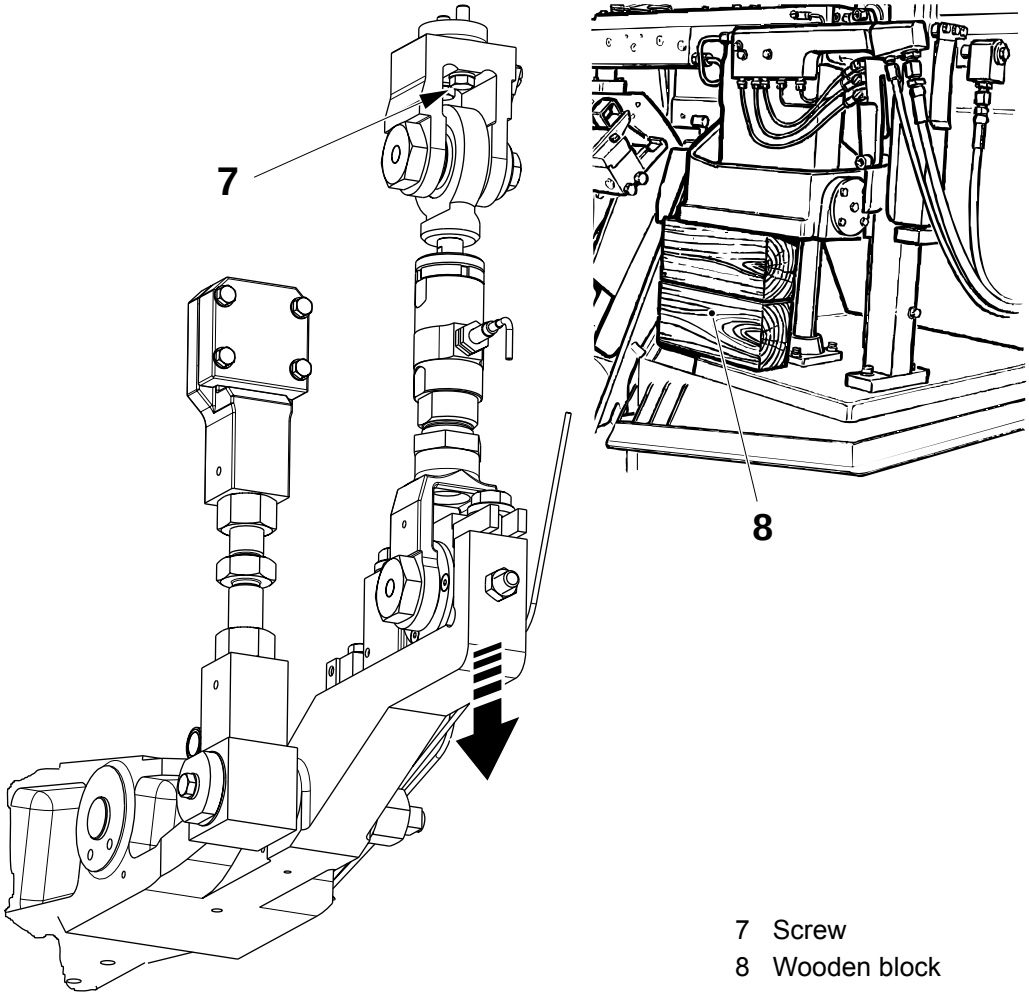

7 Screw
8 Wooden block

(Cont'd)

TechPub_2614345_0105 - 01_2772056_01.fm

(Cont'd)

f) Remove the banjo connection (9), the four screws (10), and the screw (11).

g) Remove the nuts (12) and the flanges (13).

h) Remove the shaft (14) using the extractor. Remove the shaft (15).

i) Remove the screws (16) and the washers (17).

j) Change the bearings (18).

k) Assemble in the reverse order. While assembling put locking fluid on screws (7), see item d).

l) Repeat the procedure on the other arm.

m) Check the jaw gap setting, refer to 4-2 Jaw System - Set Jaw Gap.

n) Check the jaw over jaw setting, refer to 4-13 Jaw System - Set Catch Lifter Cams and Rollers.

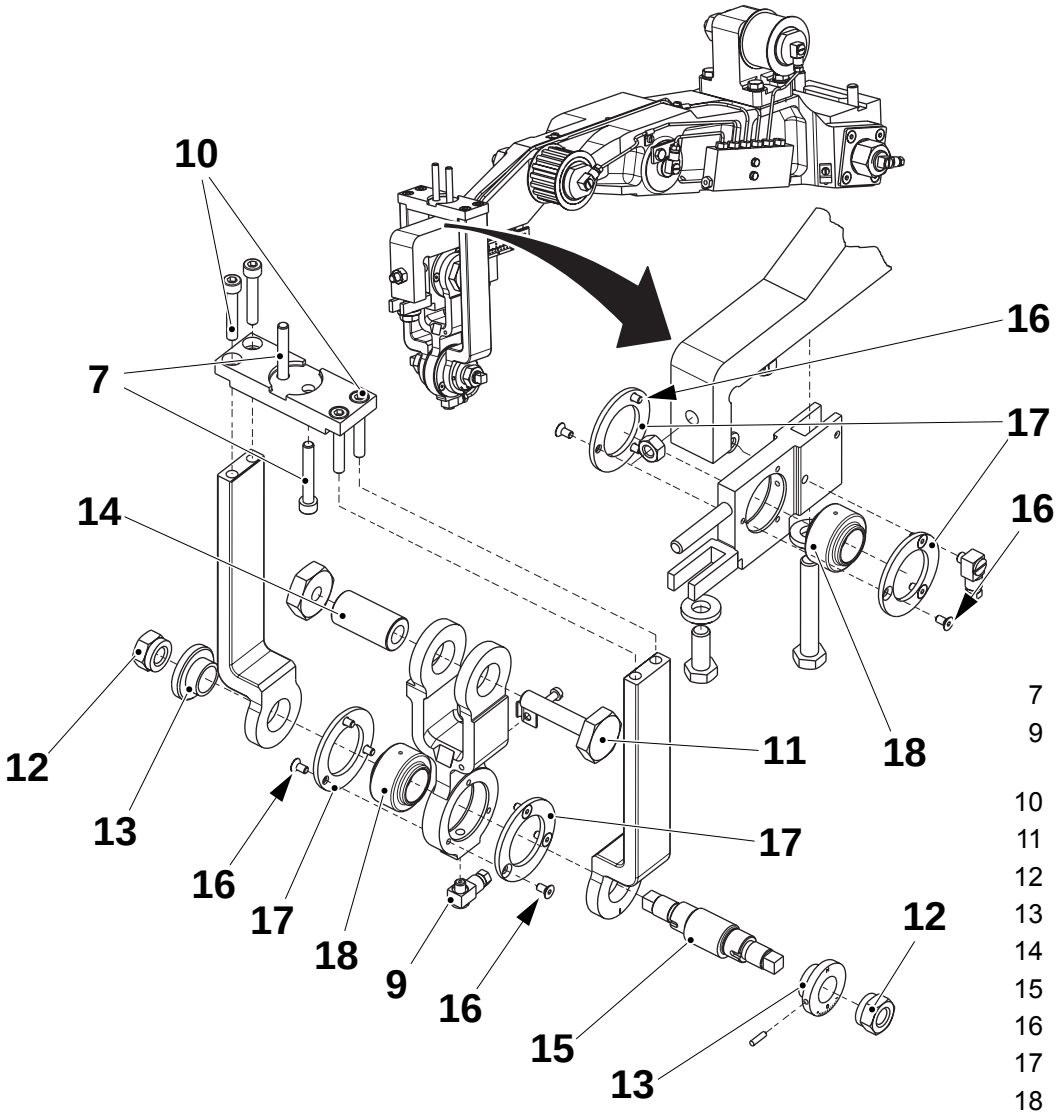

7 Screw
9 Banjo connection
10 Screw
11 Screw
12 Nut
13 Flange
14 Shaft
15 Shaft
16 Screw
17 Washer
18 Bearing

TechPub_2614345_0105 - 01_2772056_01.fm

3.3-4 Link System - Change Slewing Bracket Bearings

Machine Status	Power supply disconnector OFF Air supply OFF Steam supply ON Water supply OFF
Special Equipment	Extractor TP No. 77165-101
SPC Reference	491814-0300 / 491815-0300 1539766-0100 / 1490120-0100 256197-0500 / 929438-0100

WARNING
Moving parts can crush.
Be careful when working inside the drive unit.

a) Remove the cover (1) and the nuts (2).

CAUTION
Risk of damage to equipment.
The nut (3) must not be completely removed from the threaded pin (4).

b) Loosen the nut (3) to release the spring force of the hold-down device.

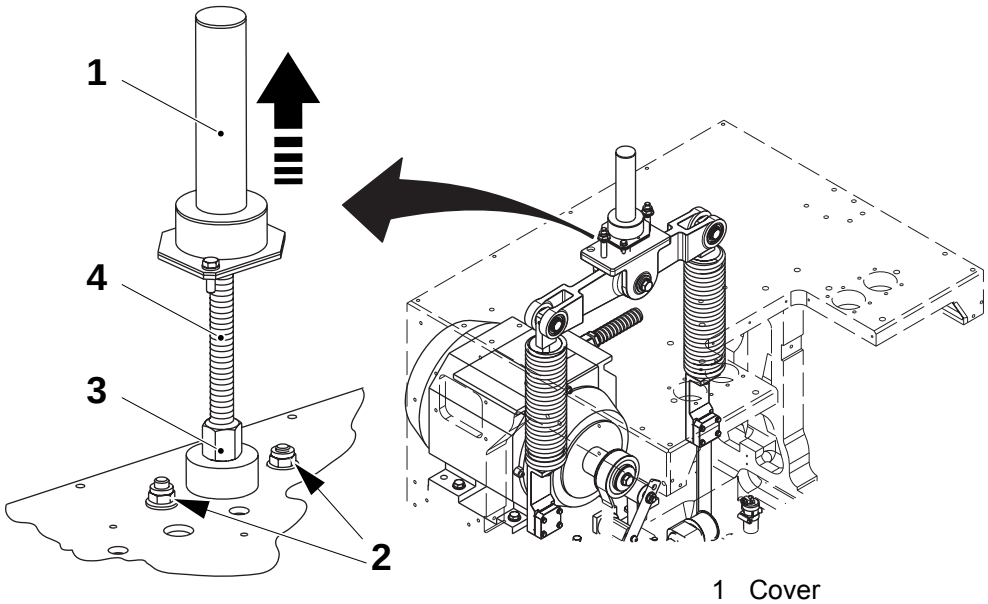

1 Cover
2 Nut
3 Nut
4 Threaded pin

(Cont'd)

TechPub_2614345_0105 - 01_2772056_01.fm

(Cont'd).

c) Remove the screw (5).
d) Remove the shaft (6) using the extractor.
e) Remove the screws (7) and the washers (8).
f) Change the bearing (9).
g) Assemble in the reverse order.
h) Repeat the procedure on the other side.

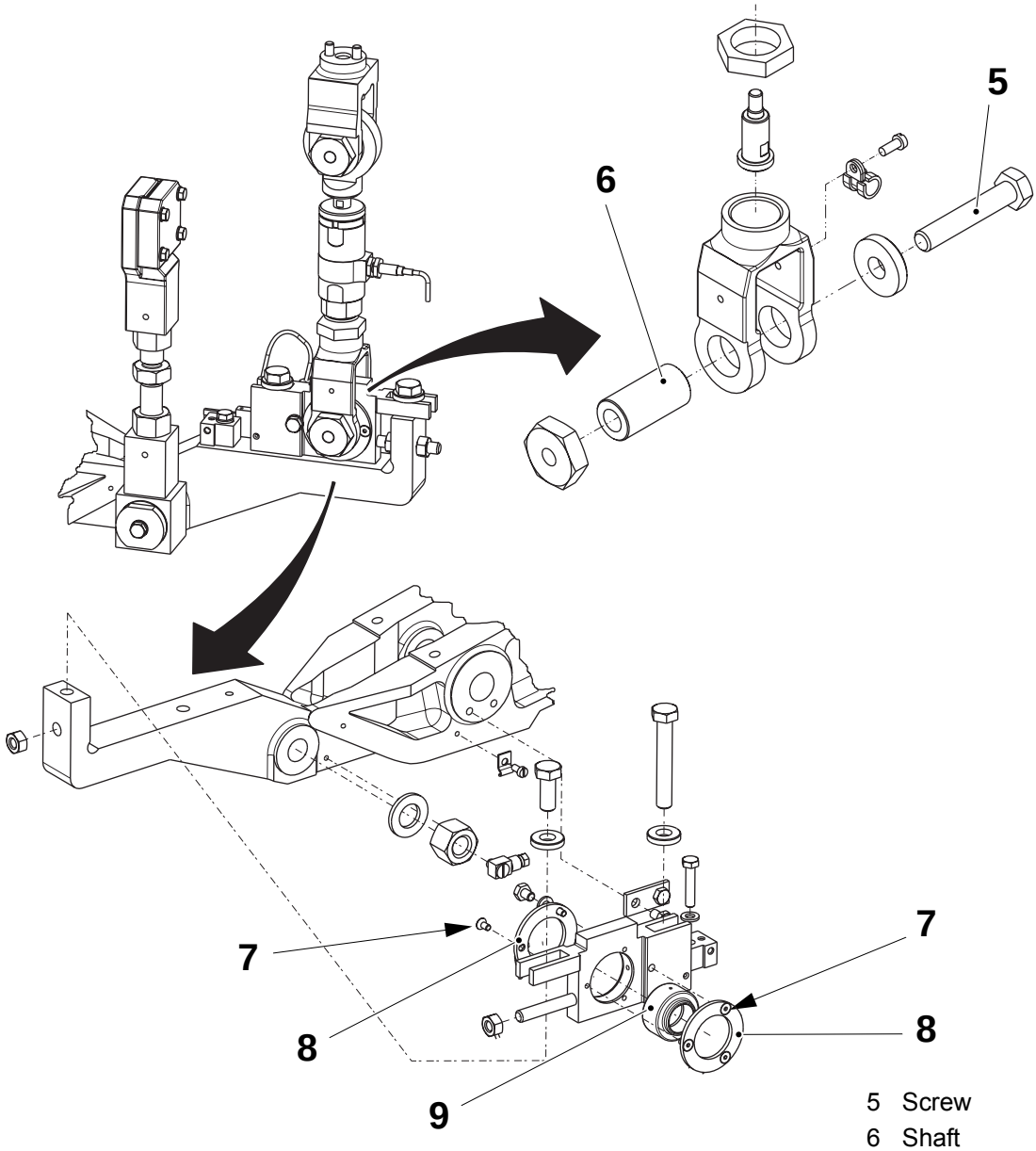

5 Screw
6 Shaft
7 Screw
8 Washer
9 Bearing

(Cont'd)

TechPub_2614345_0105 - 01_2772056_01.fm

(Cont'd)

Setting

Perform the following items after the replacement of the bearings:

- Check the jaw gap, refer to 4-2 Jaw System - Set Jaw Gap.
- Check the jaw over jaw setting, refer to 4-4 Jaw System - Set Jaw Over Jaw.

TechPub_2614345_0105 - 01_2772056_01.fm

3.4 Hold-Down Device

3.4-1 Hold-Down Device - Change Timing Belts

Machine Status	Power supply disconnector OFF Air supply OFF Steam supply ON Water supply OFF
Special Equipment	Torque wrench > 32 Nm
SPC Reference	2506790-0100

a) Loosen the tension in the hold-down device, follow instruction 3.3-3 Link System - Change Arm Bearings. from a) to c).

b) Remove the eight screws (8) and then the two brackets (7).

c) Remove the timing belt (9).

d) Install the brackets (7) on the new belts (9) according to the running volume, see table below and assemble in the reverse order.

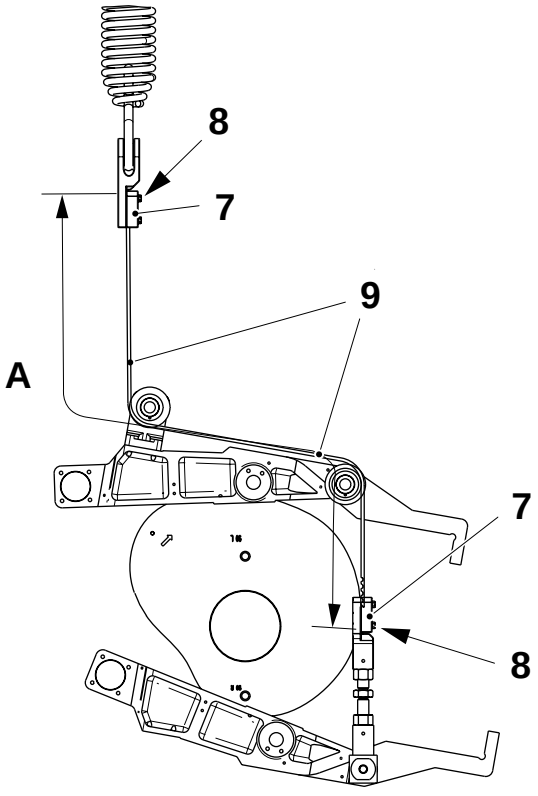

Package	Length A (mm)
TBA 100 B	740
TBA 125 S	740
TBA 160 S	740
TBA 180 B	740
TBA 200 B	740
TBA 200 M	700
TBA 200 S	710
TBA 250 B	710
TBA 250 S	700
TBA 284 B	710
TBA 300 S	710
TBA 330 S	690

7 Bracket
8 Screw
9 Timing belt

(Cont'd)

TechPub_2614345_0105 - 01_2772057_01.fm

(Cont'd)

e) Make sure that the distance **B** is correct on the LH and RH rigging screws, refer to the table below.

f) Tighten the hold-down device nut (3) on the threaded pin.

g) Check that the belt is correctly positioned on the rollers.

h) Install and tighten the nuts (2).

i) Install the cover (1).

j) Reassemble the degree scale.

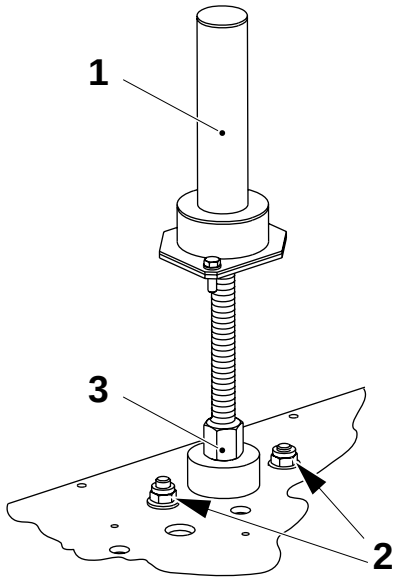

Package	B ±1 (mm)
TBA 100 B	70
TBA 125 S	70
TBA 160 S	45
TBA 180 B	63
TBA 200 B	52
TBA 200 M	45
TBA 200 S	45
TBA 250 B	60
TBA 250 S	40
TBA 284 B	40
TBA 300 S	40
TBA 330 S	45

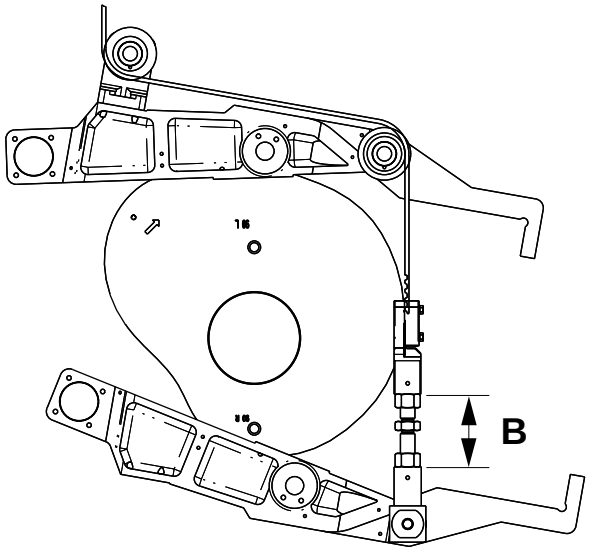

1 Cover
2 Nut
3 Nut

TechPub_2614345_0105 - 01_2772057_01.fm

3.4.1 Rocker Arm

3.4.1-1 Rocker Arm - Change Bearings

Machine Status	Power supply disconnector OFF Air supply OFF Steam supply ON Water supply OFF
SPC Reference	2507014-0100

WARNING
Moving parts can crush.
Be careful when working inside the drive unit.

a) Crank to 145°.

b) Remove the cover (1) and the nuts (2).

CAUTION
Risk of damage to equipment.
The nut (3) must not be completely removed from the threaded pin (4).

c) Loosen the nut (3) to release the tension on the spring of the hold-down device.

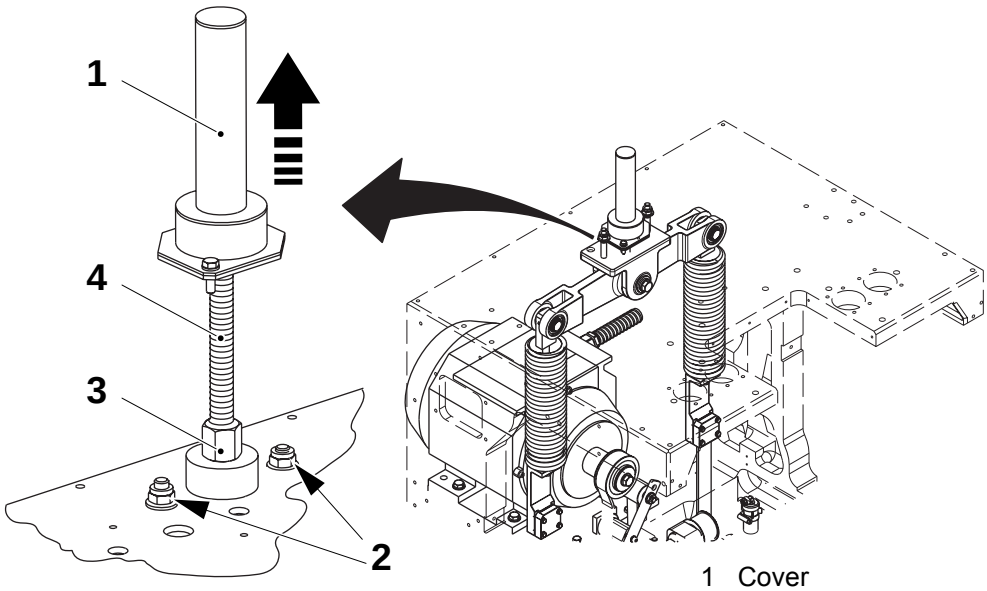

1 Cover
2 Nut
3 Nut
4 Threaded pin

(Cont'd)

TechPub_2614345_0105 - 01_2772057_01.fm

(Cont'd)

d) Remove the springs (5) on both sides.

e) Check for play in the ball bearings (6) and in the bushings (7). If necessary, change as follows.

Note! While removing the nut (3) making sure to hold the rocker arm.

f) Remove the nut (3).

g) Remove the screws (8) and the shaft (9).

h) Change the bushings (7).

i) Remove the circlips (10) and the stop screw (11).

j) Remove the shafts (12) and the bracket (13).

k) Change the ball bearings (6).

l) Assemble in the reverse order.

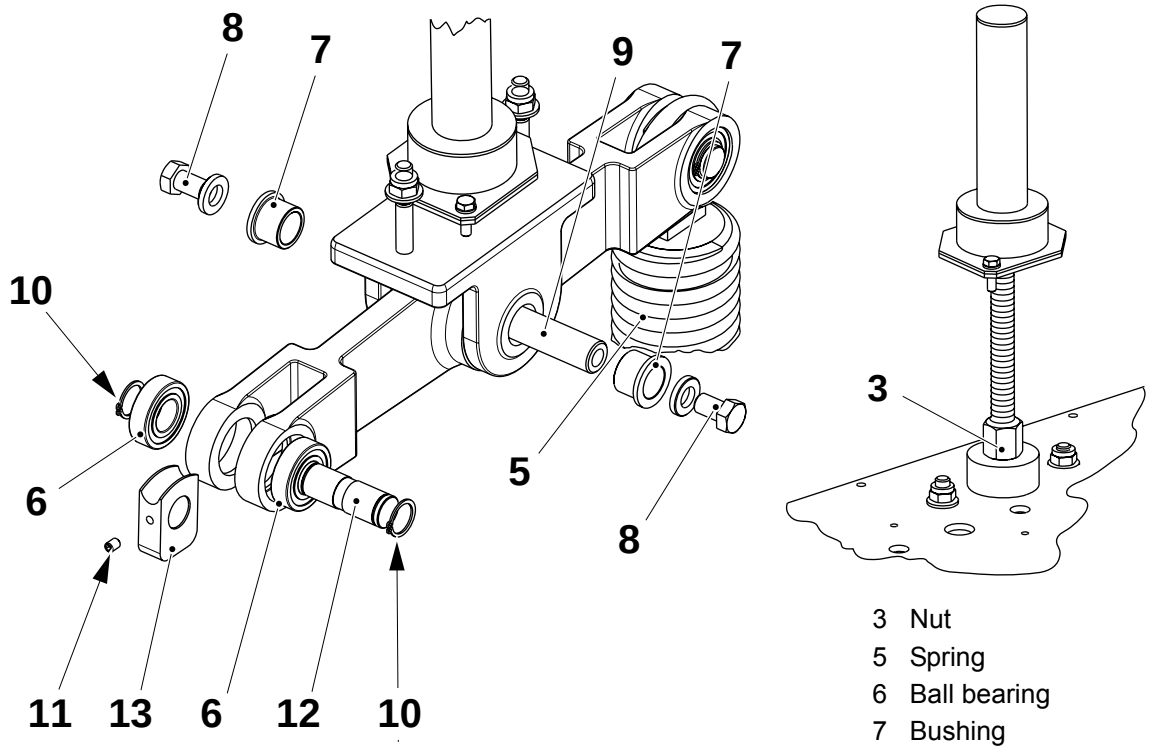

3 Nut
5 Spring
6 Ball bearing
7 Bushing
8 Screw
9 Shaft
10 Circlip
11 Stop screw
12 Shaft
13 Bracket

TechPub_2614345_0105 - 01_2772057_01.fm

3.5 Crank

3.5-1 Crank - Check Mechanism and Switch

Machine Status	Power supply disconnector ON Air supply OFF Steam supply ON Water supply OFF
SPC Reference	1512286-0100

Check the following details for wear or damage:

- the gear wheels (1) and (2)
- the spring (3)
- the shaft (4)

Change the parts, if necessary.

a) Engage the crank using the lock mechanism (5).

b) Crank the machine. Make sure that the gear wheels (1) and (2) do not touch each other until the signal **Safety monitor** (see OM) on the TPOP lights.

c) Set the switch (6), if necessary, see 3.5-2 Crank - Set Switch.

TechPub_2614345_0105 - 01_2772058_01.fm

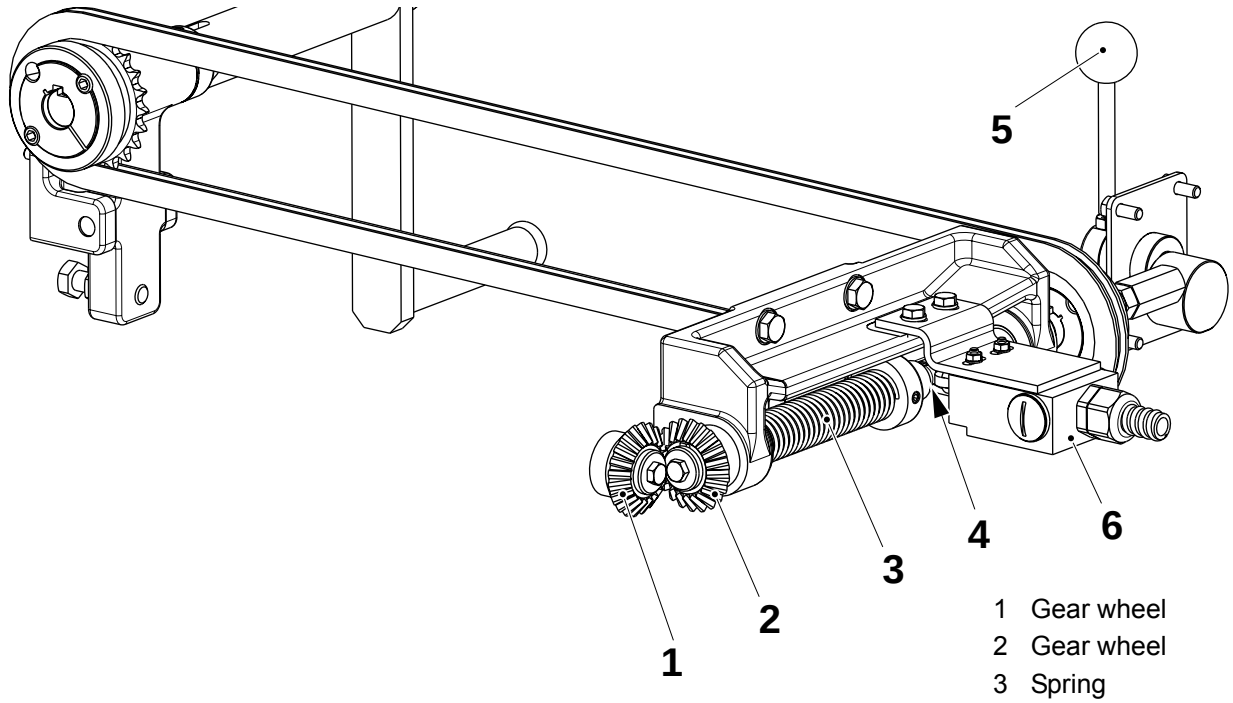

1 Gear wheel
2 Gear wheel
3 Spring
4 Shaft
5 Lock mechanism
6 Switch

3.5-2 Crank - Set Switch

Machine Status	Power supply disconnector ON Air supply OFF Steam supply ON Water supply OFF
SPC Reference	1512286-0100

a) Engage the crank switch (1) using the mechanism (2).

b) The gear wheels (3) and (4) must not touch each other before the **Safety monitor** signal (see **OM**) on the TPOP lights.

c) Adjust sideways the position of the switch (1) using the screws (5).

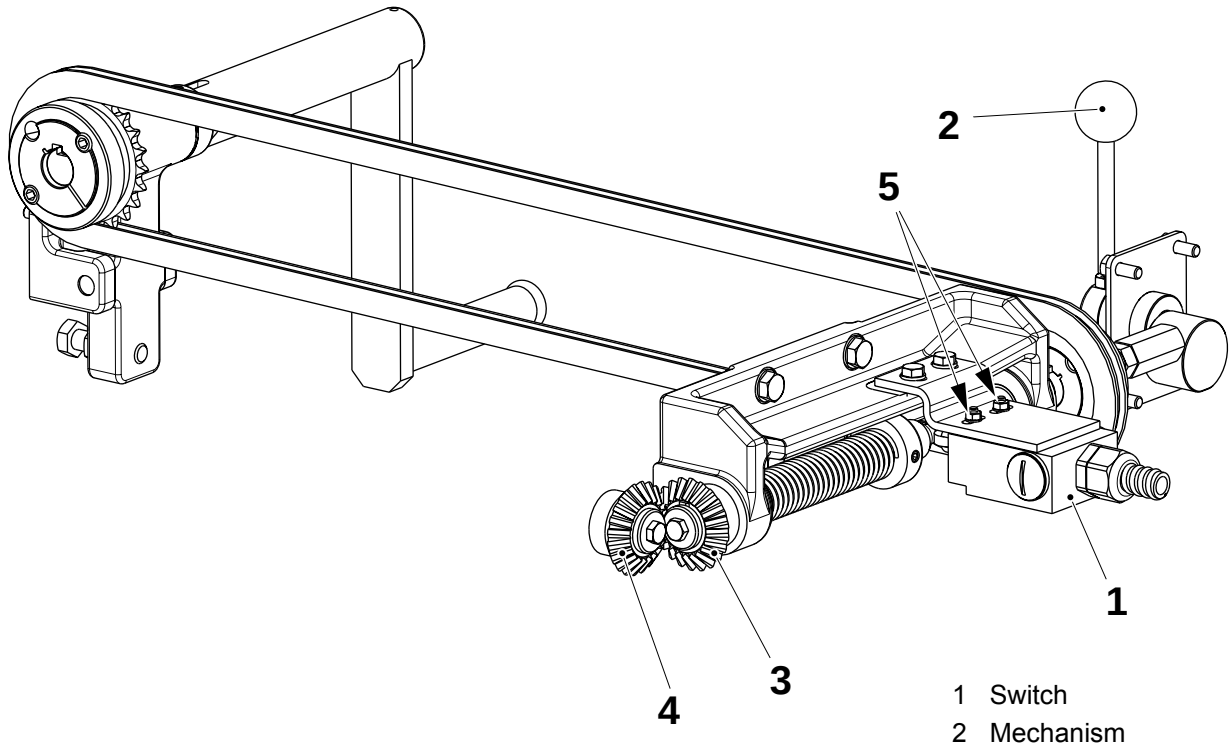

1 Switch
2 Mechanism
3 Gear wheel
4 Gear wheel
5 Screw

TechPub_2614345_0105 - 01_2772058_01.fm

3.6 Disconnection Link

3.6-1 Disconnection Link - Check

Machine Status	Power supply disconnector ON Air supply OFF Steam supply ON Water supply OFF
Special Equipment	Overload protection TP No. 563740-101
SPC Reference	1539766-0100 1490120-0100

Check the microswitch cables (1) for cracks, by twisting and bending at the curves. If the signal **Jaw system overload** lights change the microswitch and the cable.

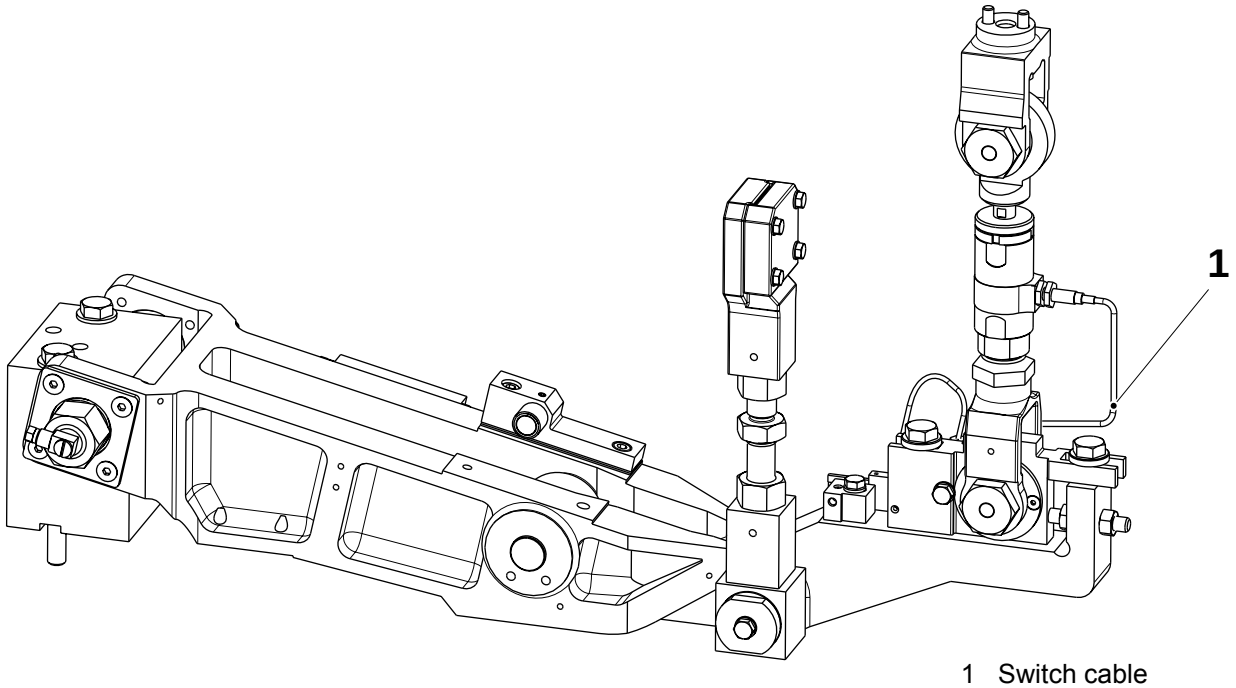

1 Switch cable

(Cont'd)

TechPub_2614345_0105 - 01_2772059_01.fm

(Cont'd)

LH Side

a) Crank to approximately 140° - 150°.

b) Put the tool (2) between the carriers. Make sure that the plate on the back of the tool bears against the inner carrier (3).

c) Close the regulator (4).

d) Connect the tool (2) to the compressed air connection on the valve panel of the machine.

e) Slowly increase the air pressure using the regulator (4) until the overload protection cuts out mechanically.

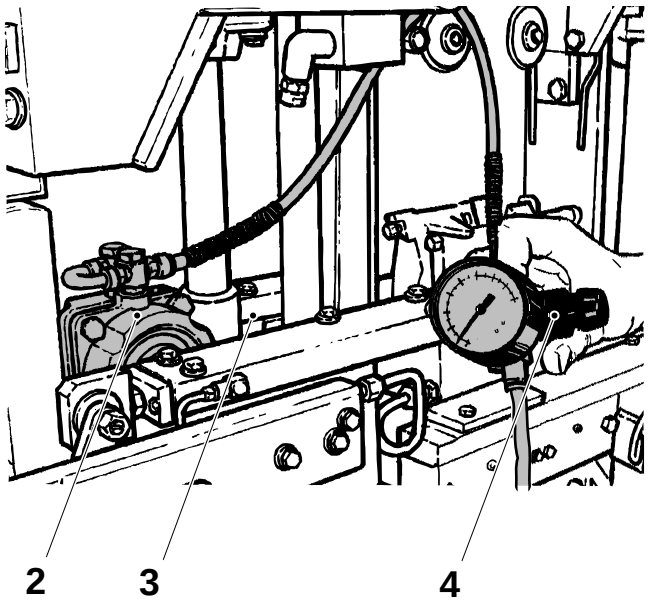

2 Tool
3 Inner carrier
4 Regulator

CAUTION

Risk of personal injury and damage to equipment.
Make sure that the cam roller on the folding flap cam returns to its correct position. Crank the machine if necessary.

f) Slightly move the jaws back to their initial position.

g) Repeat one more time and make sure that the overload protection cuts out when the pressure is 2.5 - 3.0 bar. If necessary, see, 3.6-3 Disconnection Link - Change Force Limiting Device.

RH Side

Crank to approximately 340° - 350° and repeat items b) - g).

TechPub_2614345_0105 - 01_2772059_01.fm

3.6-2 Disconnection Link - Set

Machine Status	Power supply disconnector OFF Air supply OFF Steam supply ON Water supply OFF
SPC Reference	1539766-0100 1490120-0100

Proximity Switch

a) Install the proximity switch (1) and tighten it carefully, by hand, until it stops.

b) Turn the proximity switch (1) a quarter of turn to the left.

c) Tighten the nut (2).

d) After setting, check for the correct functioning.

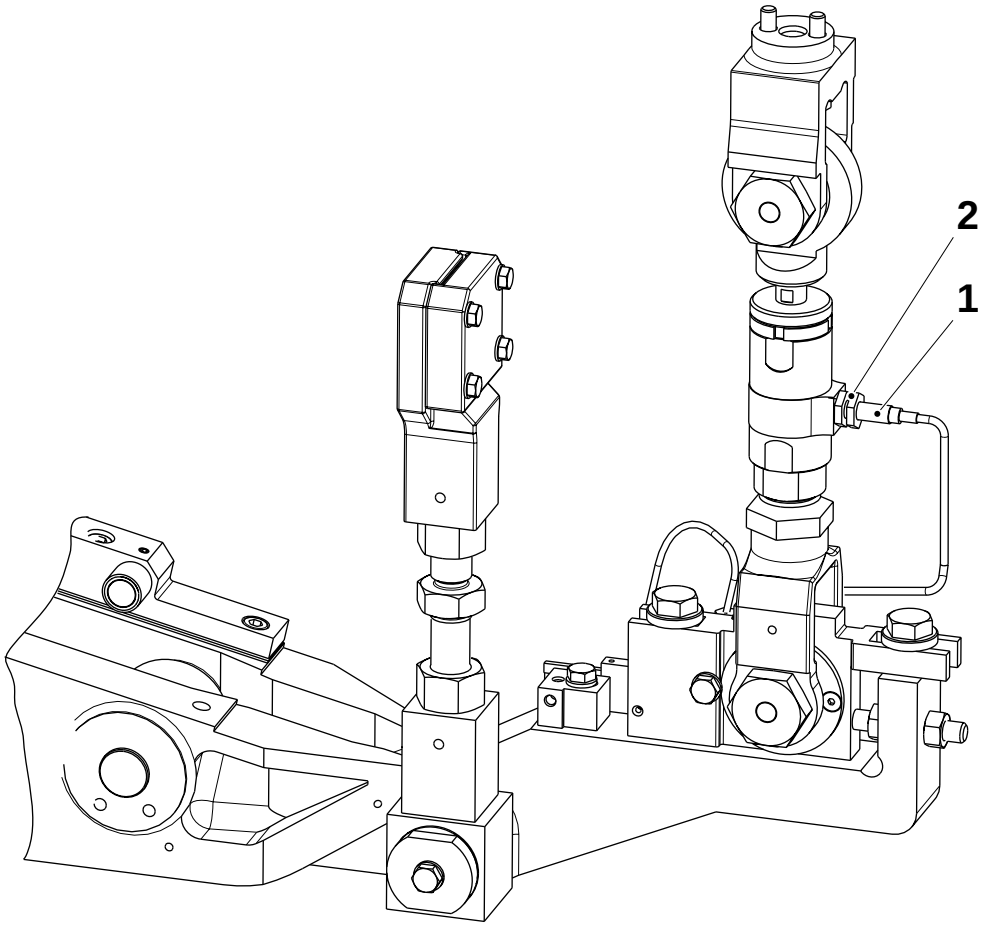

1 Proximity switch
2 Nut

(Cont'd)

TechPub_2614345_0105 - 01_2772059_01.fm

(Cont'd)

Link

a) Remove the nut (1) and the screw on the opposite side.

b) Set the distance **A**, according to the running volume, by loosening the nut (2) and turning the link (3).

c) Check the disconnection link, refer to 3.6-1 Disconnection Link - Check.

d) Assemble in the reverse order.

Package	A ±0.5 mm
TBA 100 B, TBA 125 S, TBA 180 B, TBA 200 B, TBA 250 B, TBA 284 B, TBA 300 S, TBA 330 S	28
TBA 160 S, TBA 200 M, TBA 200 S, TBA 250 S	23

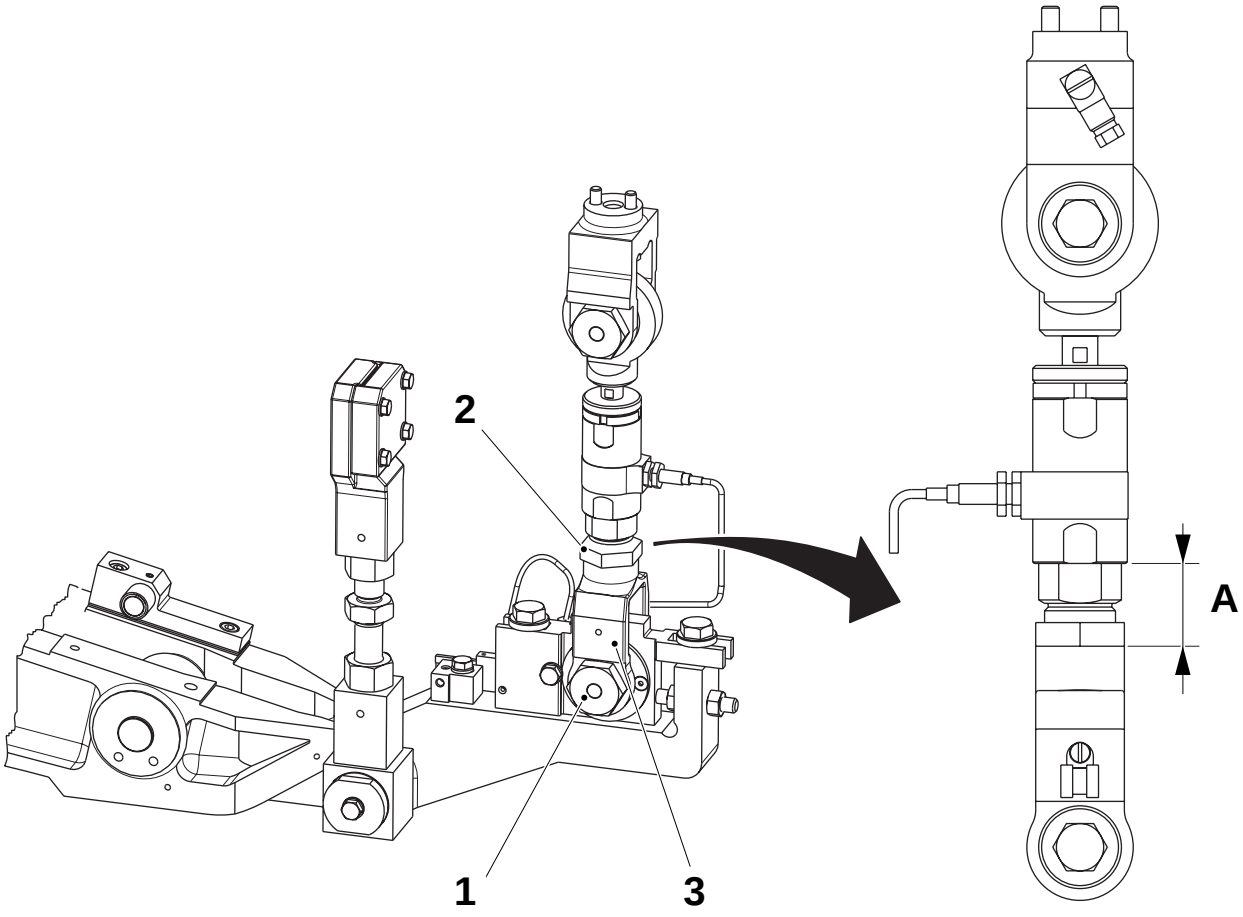

1 Nut
2 Nut
3 Link

TechPub_2614345_0105 - 01_2772059_01.fm

3.6-3 Disconnection Link - Change Force Limiting Device

Machine Status	Power supply disconnector OFF Air supply OFF Steam supply ON Water supply OFF
SPC Reference	1539766-0100 1490120-0100

a) Remove the nut (2) and the screw (3) and then disconnect the link head (1).

b) Remove the nut (5) and then disconnect the proximity switch (4).

c) Change the force limiting device (6) and assemble in the reverse order, see 3.6-2 Disconnection Link - Set.

CAUTION
Risk of damage to equipment.
Attach the cable (7) so that the disconnection link can cut-out without damaging or stretching the cable.

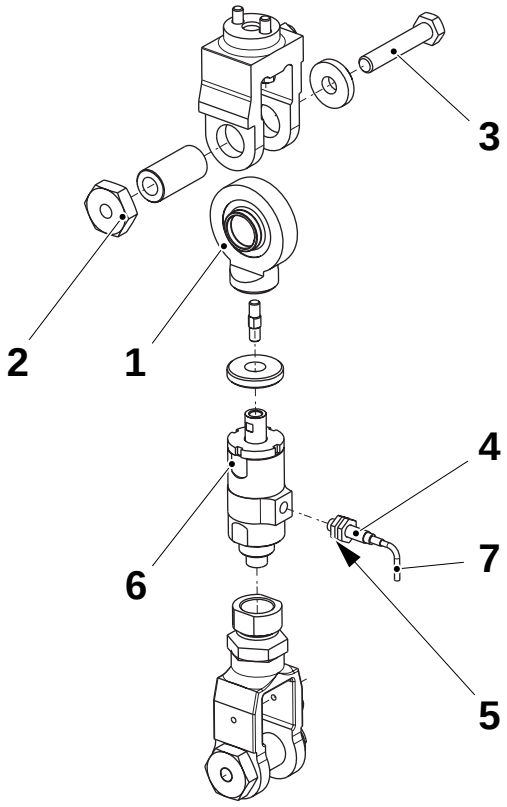

1 Link head
2 Nut
3 Screw
4 Proximity switch
5 Nut
6 Force limiting device
7 Cable

TechPub_2614345_0105 - 01_2772059_01.fm

3.7 Curve Pack

3.7-1 Curve Pack - Change

Machine Status	Power supply disconnector OFF Air supply OFF Steam supply ON Water supply OFF
Special Equipment	Guide pin TP No. 75451 Template TP No. 76338 Torque wrench > 32 Nm Wooden blocks
Consumables	Oil code D
SPC Reference	256202-0700

Removal

a) Remove the cover (1) and the nuts (2).

CAUTION
Risk of damage to equipment.
The nut (3) must not be completely removed from the threaded pin.

b) Loosen the nut (3) to release the tension on the spring of the hold-down device.

CAUTION
Risk of damage to equipment.
Be careful not to damage the pointer (4). Do not change its setting.

c) Remove the degree scale (5) using the four screws (6).

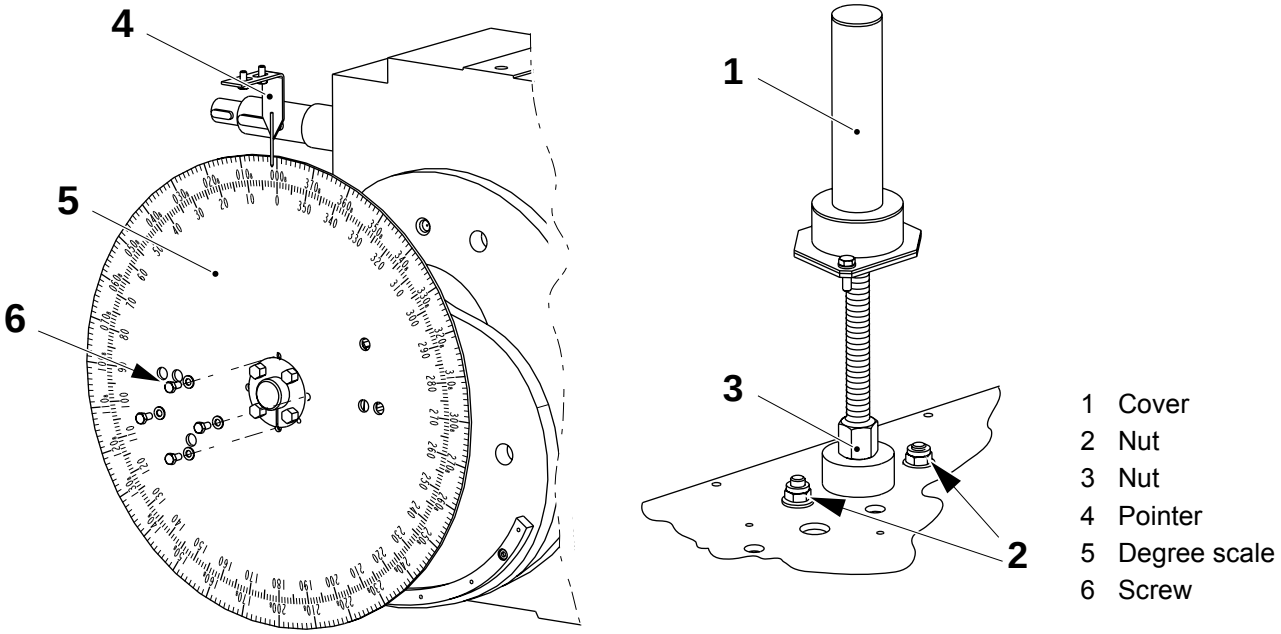

1 Cover
2 Nut
3 Nut
4 Pointer
5 Degree scale
6 Screw

(Cont'd)

TechPub_2614345_0105 - 01_2772060_01.fm

(Cont'd)

d) Loosen the chain tensioner nut (7) to release the tension on the chain (8). Remove the chain lock and disengage the chain (8) from the sprocket (9).

e) Place wooden blocks (10) as support under both yokes.

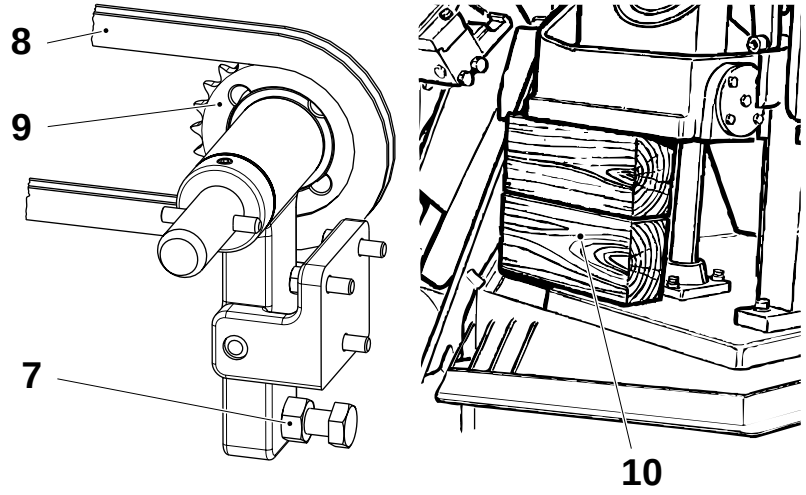

7 Tensioner nut
8 Chain
9 Sprocket
10 Wooden block

(Cont'd)

TechPub_2614345_0105 - 01_2772060_01.fm

(Cont'd)

f) Remove the timing belt, see 3.4-1 Hold-Down Device - Change Timing Belts.

g) Split the disconnection link, see 3.6-3 Disconnection Link - Change Force Limiting Device

h) Remove the angle encoder, see 3.8-1 Angle Encoder - Remove Bracket.

i) Lower the slewing bracket (11) and raise the arm (12), see 3.4-1 Hold-Down Device - Change Timing Belts.

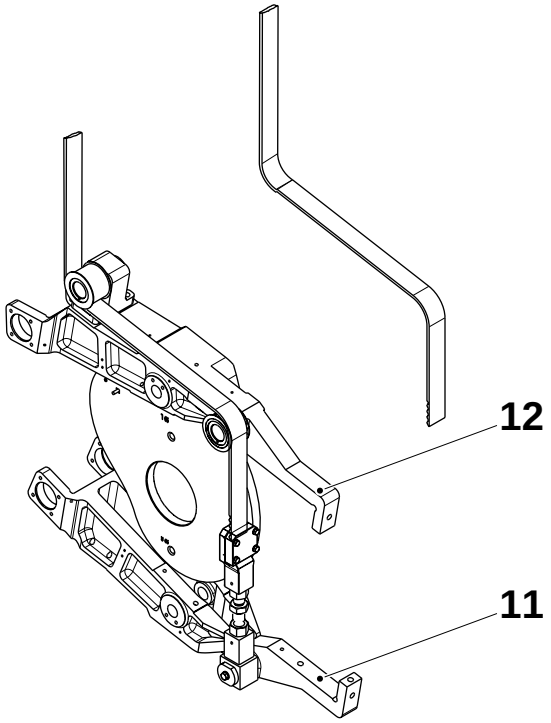

11 Slewing bracket
12 Arm

(Cont'd)

TechPub_2614345_0105 - 01_2772060_01.fm

(Cont'd)

WARNING
Risk of crushing.
Remove the curve pack with care.

CAUTION
Risk of damage to equipment.
The screws (13) and (14) must not be removed.

j) Release the tension on the clamping elements (15) and (16) by loosening the screws (13) and (14).

k) Remove the complete curve packs (17).

Note! If necessary, use two of the screws (14), as pullers by screwing them into two opposite holes (18).

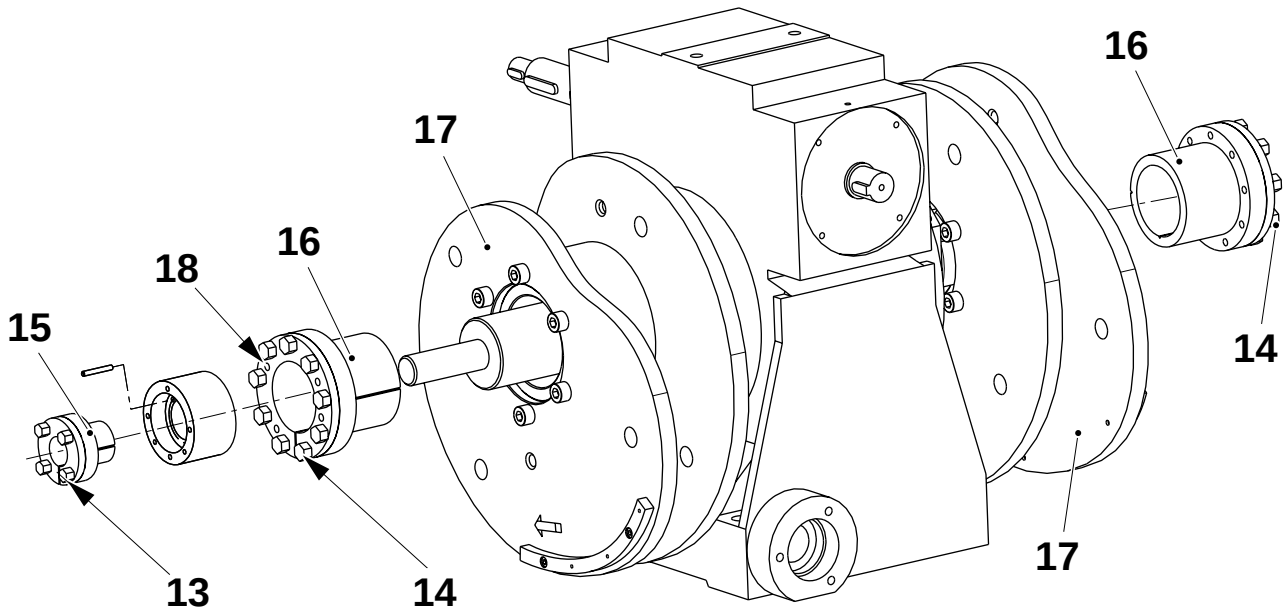

13 Screw
14 Screw
15 Clamping element
16 Clamping element
17 Curve pack
18 Hole

(Cont'd)

TechPub_2614345_0105 - 01_2772060_01.fm

(Cont'd)

Assembly

Note! The curve packs (7) are marked with arrows. On the LH curve pack, the arrow points **to the right**, and on the RH curve pack **to the left**.

a) Clean the shaft (1), the inside of the hubs (2), and the clamping element (3) and (4).

WARNING

Lubricant.

Chemical products. Follow the Safety Precautions.

b) Lubricate the screws (5) and (6) with oil code D, see 15.3 Lubricants.

c) Install the curve packs (7) on the shaft (1). Use as reference the pins (8) on the alignment template (9).

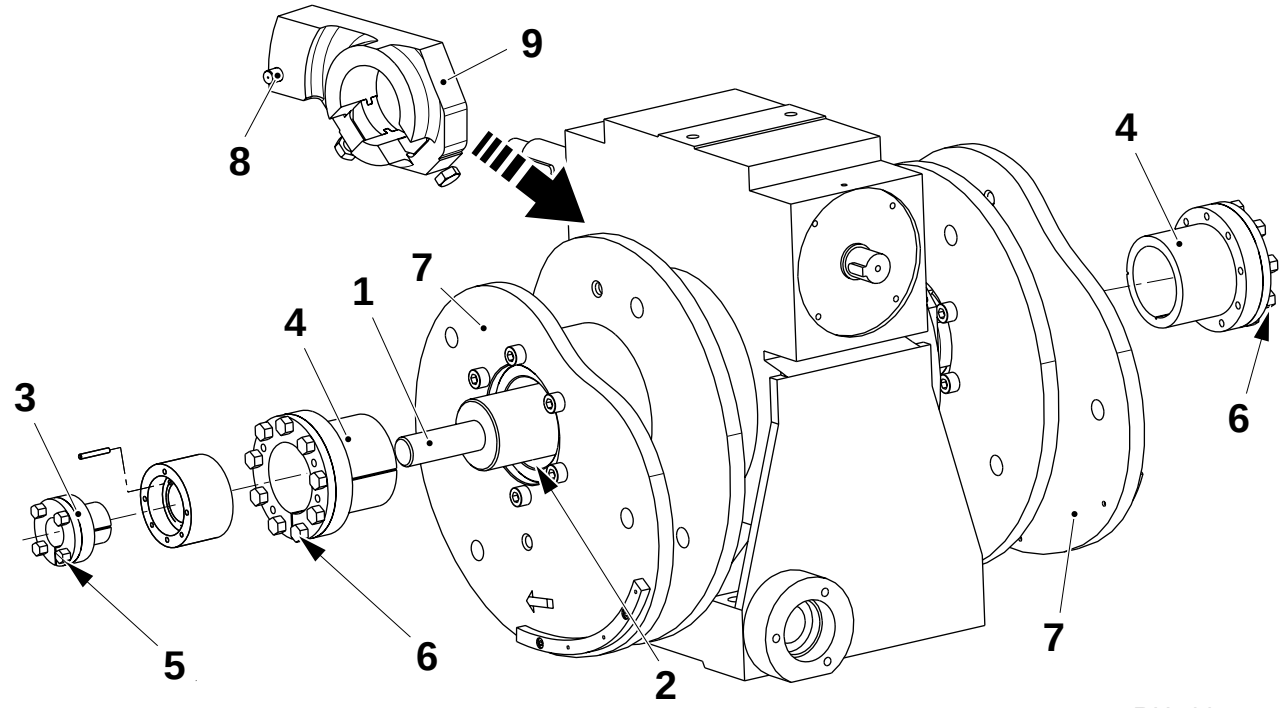

TechPub_2614345_0105 - 01_2772060_01.fm

1	Shaft	6	Screw
2	Hub	7	Curve pack
3	Clamping element	8	Pin
4	Clamping element	9	Template
5	Screw		

(Cont'd)

(Cont'd)

CAUTION
Risk of damage to equipment.
Make sure that distance **A** is maintained when tightening the screws (5) and (6). To prevent the screws (5, 6) from shaking loose, **do not** adjust the tightening torque by over-tightening and then screwing out the screws.

d) Install the clamping element (4) on the shaft (1).Tighten the screws (6) crosswise, first to a torque of **14 ±1 Nm** and then to **28 ±1 Nm**.

e) Install the clamping element (3).Tighten the screws (5) **in sequence** around the flange, half a turn at a time, until a torque of **8.0 ±0.5** Nm is reached.

f) Check the distance **A**, and check that it remains parallel ±0.1 mm around the shaft.

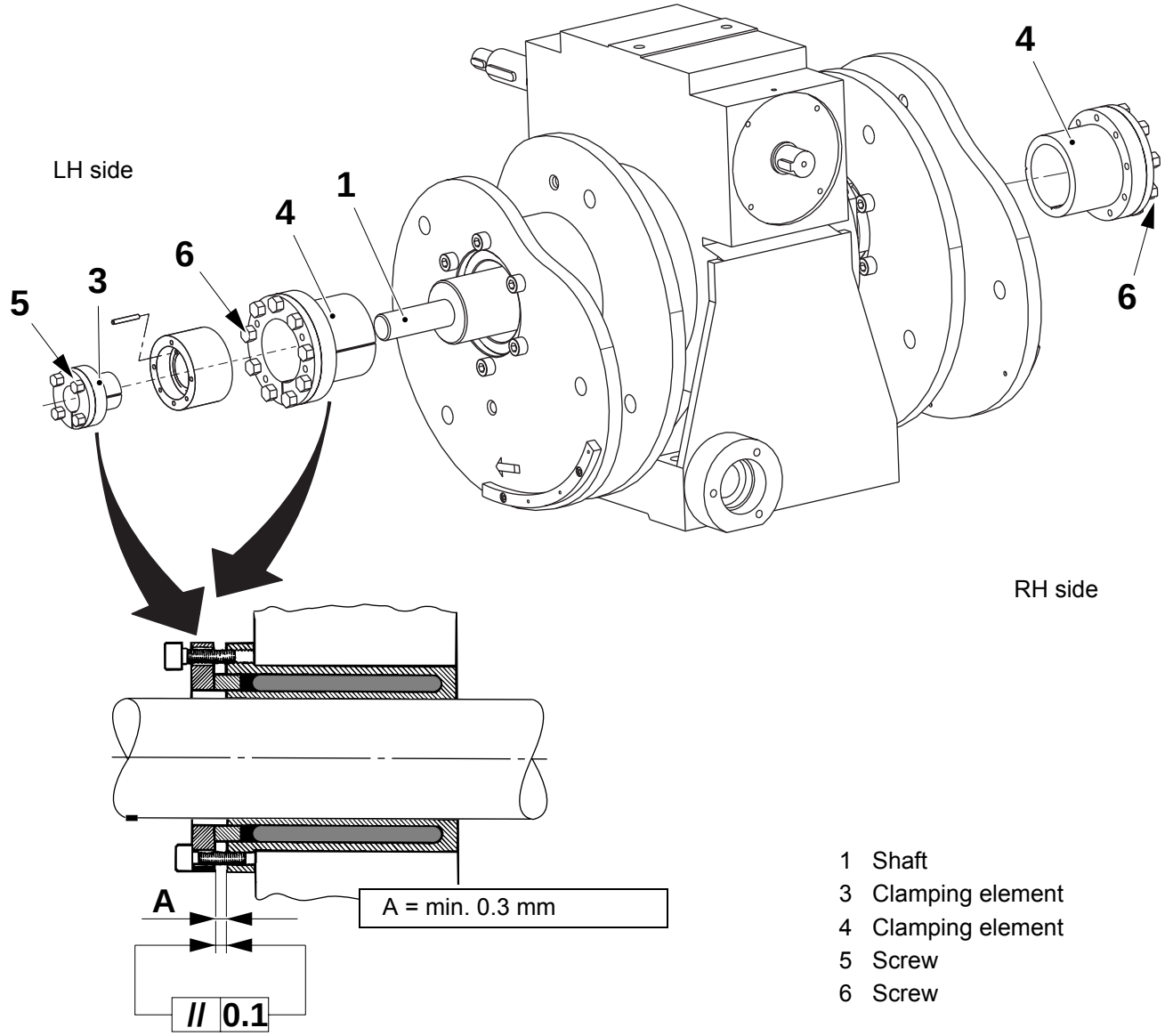

1 Shaft
3 Clamping element
4 Clamping element
5 Screw
6 Screw

(Cont'd)

TechPub_2614345_0105 - 01_2772060_01.fm

(Cont'd)

g) Assemble the timing belt, see 3.4-1 Hold-Down Device - Change Timing Belts.

h) Assemble the angle encoder, see 3.8-1 Angle Encoder - Remove Bracket.

i) Assemble the disconnection link, see 3.6-3 Disconnection Link - Change Force Limiting Device.

j) Assemble the degree scale.

Note! The degree scale and the TPOP display must display the same value. If necessary, set the degree scale, refer to 3.7-3 Curve Pack - Set Degree Scale and the pointer, refer to 3.7-4 Curve Pack - Set Pointer. If necessary, check also the following items:

- 4-5 Jaw System - Check Stroke.
- 4-2 Jaw System - Set Jaw Gap.
- 4-13 Jaw System - Set Catch Lifter Cams and Rollers.
- 3.8-2 Angle Encoder - Set Sensor.
- 3.8-3 Angle Encoder - Synchronise.

TechPub_2614345_0105 - 01_2772060_01.fm

3.7-2 Curve Pack - Set Cam Segment

Machine Status	Power supply disconnector OFF Air supply OFF Steam supply ON Water supply OFF
Special Equipment	Drill Ø 3.5 Ream H7
SPC Reference	256202-0700

a) Install the cam segment (1) on the LH side arm cam using the screws (2).

b) Crank the machine until the roller (3) is positioned at the beginning of the cam segment (1).

c) Set the distance **A** between the roller (3) and the cam segment (1). Check the position of the screws (2) and remove or add shims (4) under the holder (5) to set the position. Shift the cam segment within its holes as an alternative solution.

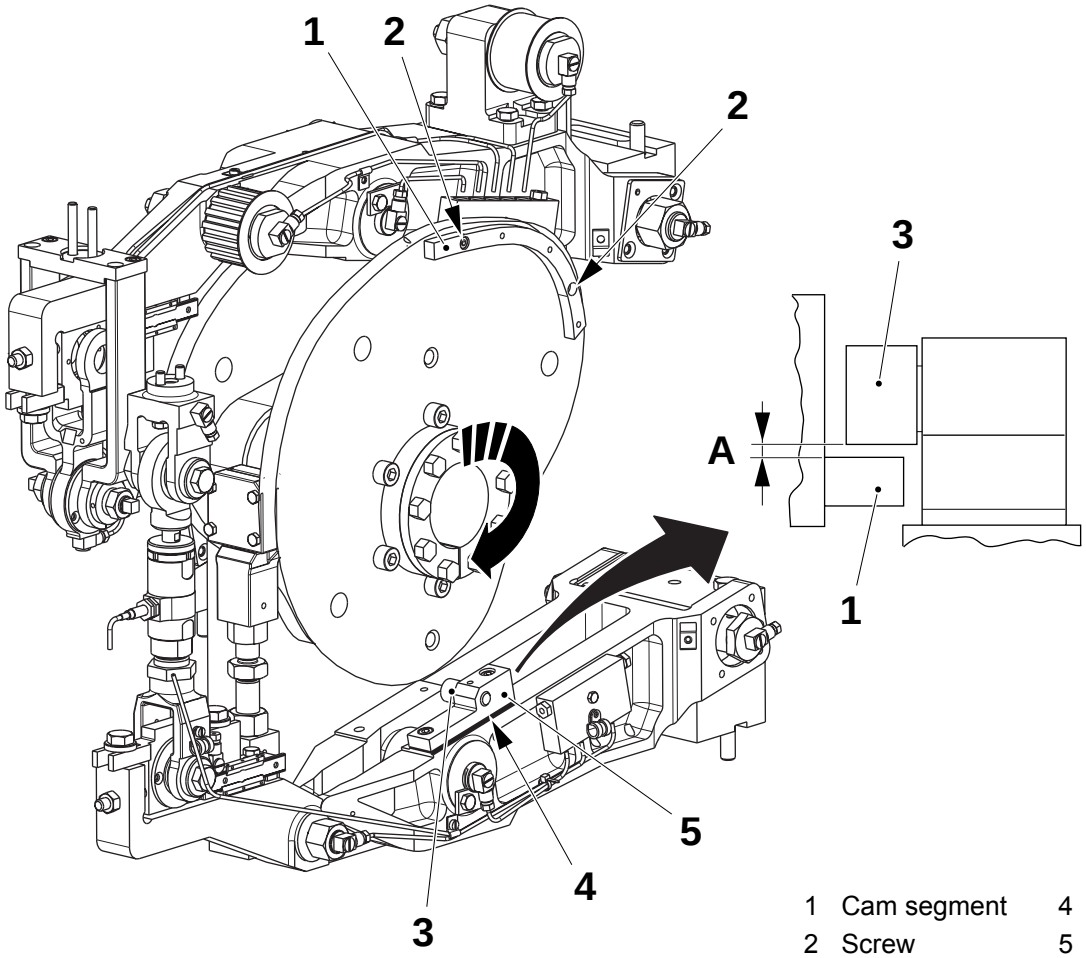

1 Cam segment
2 Screw
3 Roller
4 Shim
5 Holder

A = 0.2 to 0.3 mm

(Cont'd)

TechPub_2614345_0105 - 01_2772060_01.fm

(Cont'd)

WARNING
Risk of cutting.
Handle the curve pack with care.

d) Drill the holes Ø 3.8mm close to the existing ones. Ream them to Ø 4.0^{H7}.

e) Install the pins (6).

f) Repeat the operation on the RH side curve pack.

Note! Check that the rollers do not interfere with the curve pack. Check the distance **A** at least at three different points.

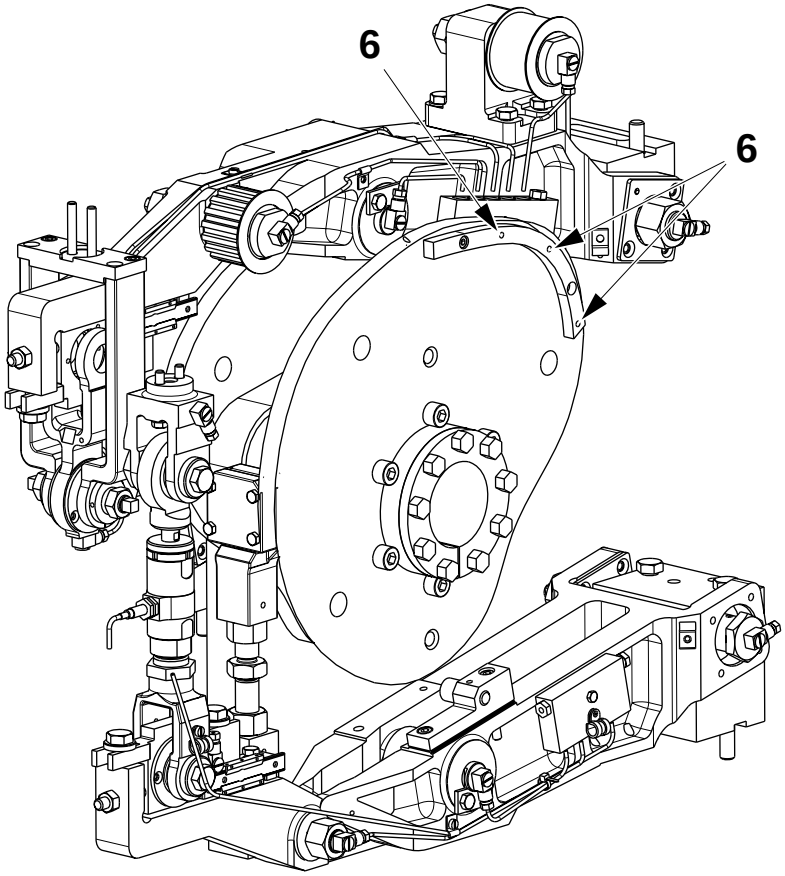

6 Pin

TechPub_2614345_0105 - 01_2772060_01.fm

3.7-3 Curve Pack - Set Degree Scale

Machine Status	Power supply disconnector OFF Air supply OFF Steam supply ON Water supply OFF
Special Equipment	Guide pin TP No. 75451 Torque wrench > 8 Nm
SPC Reference	256202-0700

a) Crank the machine until the RH yoke is in its upper turning position.

Note! Do not remove the screws (2).

b) Loosen the clamping element using the screws (2) **in sequence** around the flange, half a turn at a time. If the clamping element sticks long screws may be used as puller tools.

c) Turn the degree (1) scale so that the 230° - 240° divisions face upwards.

d) Set the degree scale (1) so that the hole (3) at the 270° divisions is in front of the hole marked 90° on the arm cam behind.

e) Insert the guide pins through the holes (3) at the 90° and 270° divisions and through the arm cam and yoke cam.

TechPub_2614345_0105 - 01_2772060_01.fm

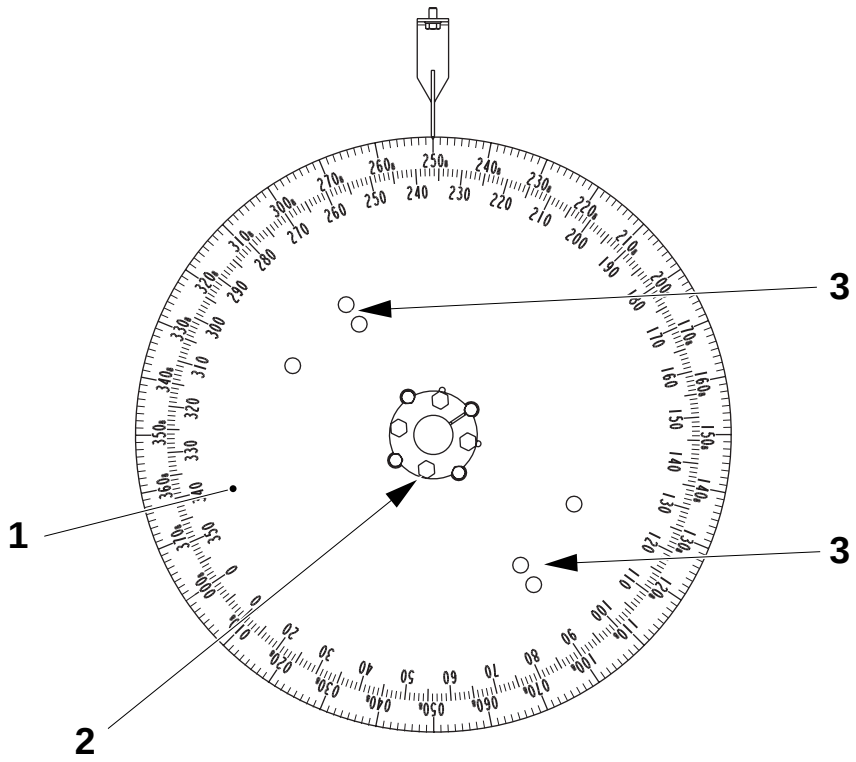

1 Degree scale
2 Screw
3 Hole

(Cont'd)

(Cont'd)

f) Lubricate the screws (2).

CAUTION
Risk of damage to equipment.
Make sure to maintain the distance A when tightening the screws (2).

g) Tighten the screws (2) **in sequence** around the flange, half a turn at a time, until a torque of **8.0 ±0.5** Nm is reached.

CAUTION
Risk of damage to equipment.
Never adjust the tightening torque afterwards by loosening the screws (2). The result may be that the screws (2) shake loose.

h) Set the pointer, see 3.7-4 Curve Pack - Set Pointer.

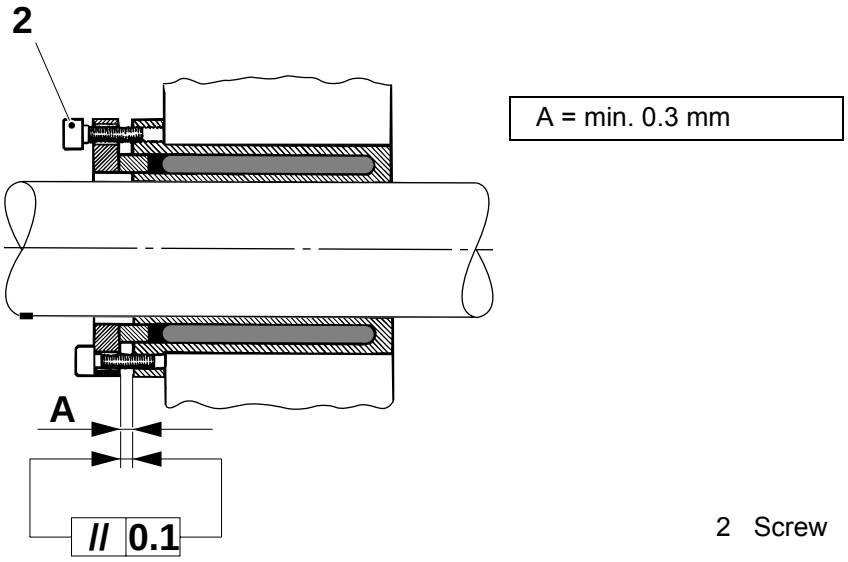

TechPub_2614345_0105 - 01_2772060_01.fm

3.7-4 Curve Pack - Set Pointer

Machine Status	Power supply disconnector OFF Air supply OFF Steam supply ON Water supply OFF
Special Equipment	Spirit level TP No. 90243-163 Guide pin TP No. 75451 Template TP No. 76338
SPC Reference	256202-0700

a) Crank to 0°.

b) Install the guide pins (4), the template (3), and the spirit level (2) on the curve pack.

c) Crank until the spirit level is horizontal.

d) Set the pointer (1) opposite 0° on the degree scale.

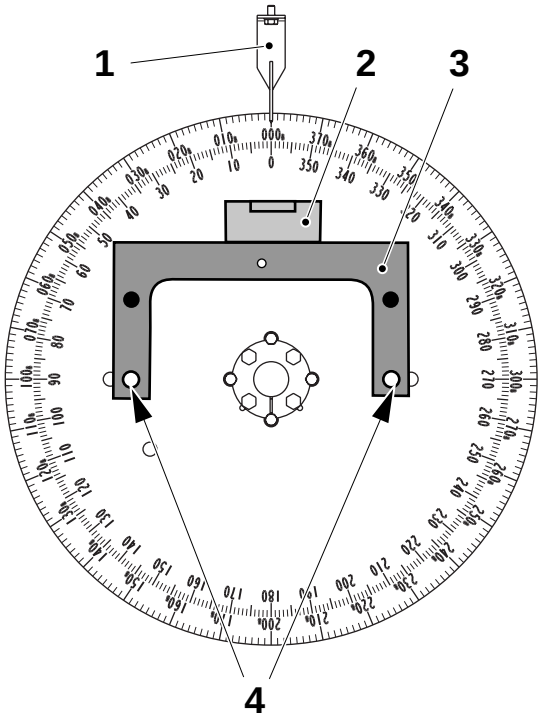

1 Pointer
2 Spirit level
3 Template
4 Guide pin

TechPub_2614345_0105 - 01_2772060_01.fm

3.7-5 Curve Pack - Synchronise

Machine Status	Power supply disconnector OFF Air supply OFF Steam supply ON Water supply OFF
Special Equipment	Template TP No. 76338 Guide pin TP No. 75451
SPC Reference	256202-0700

(Cont'd)

TechPub_2614345_0105 - 01_2772060_01.fm

(Cont'd)

a) Put the arm cam (1) and the yoke cam (5) so that the text by the holes (2) reads right side up.

CAUTION
Risk of damage to equipment.
Make sure that the arrows direction (4) is **to the right** for the LH curve pack and **to the left** for the RH curve pack.

Note! The cams are marked on both sides, since they are used for both RH and LH curve packs.

b) Fit the cams together and tighten the screws (3).

Note! Make sure that the hole (2) marked 90°L on the upper cam is positioned above the hole (2) marked 90°L on the lower cam.

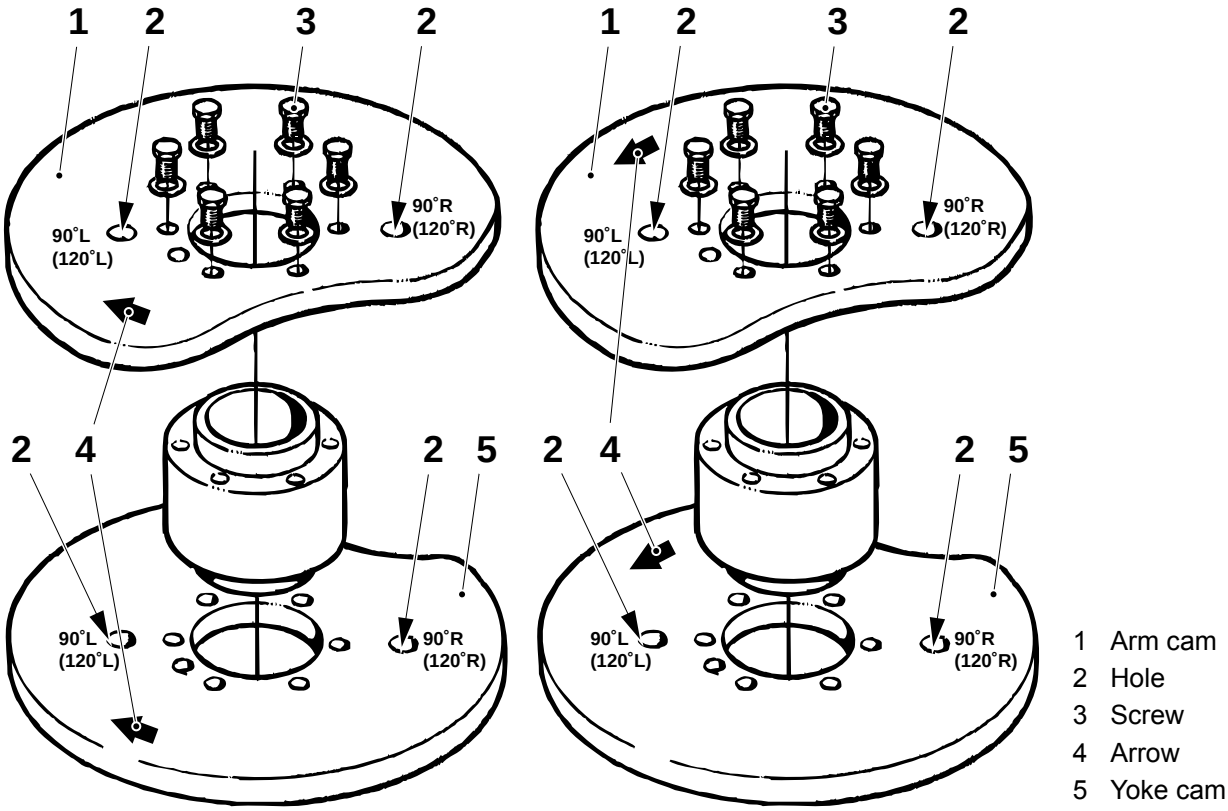

LH side curve pack

RH side curve pack

1 Arm cam
2 Hole
3 Screw
4 Arrow
5 Yoke cam

(Cont'd)

TechPub_2614345_0105 - 01_2772060_01.fm

(Cont'd)

c) Put the template (7) between the cams. Insert the guide pin (6) through the cams and the template (7).

d) Torque the screws (3) to **50 ±2 Nm**. Install the pin (8).

e) Remove the template (7) and the guide pins (6).

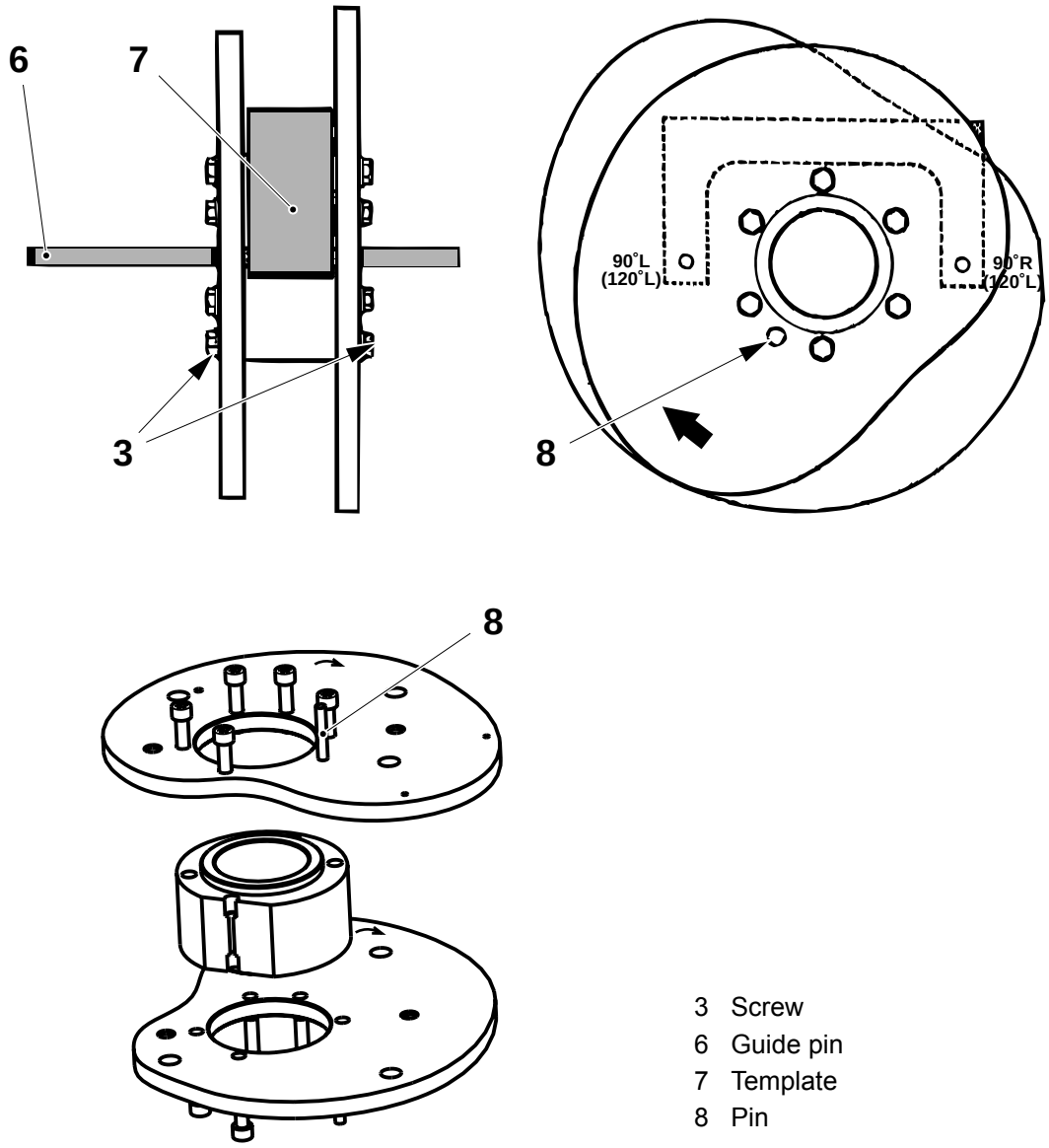

3 Screw
6 Guide pin
7 Template
8 Pin

TechPub_2614345_0105 - 01_2772060_01.fm

3.7-6 Curve Pack - Set Worm Gear Alignment

Machine Status	Power supply disconnector OFF Air supply OFF Steam supply ON Water supply OFF
Special Equipment	Spirit level TP No. 90243-163
SPC Reference	256202-0700

Note! Make sure that the templates (2) on both sides are horizontal.

a) Level the templates (2) relative to one another **within 3 scale divisions** on the spirit level (1).

Note! Before assembly, thoroughly clean the templates (2) and the shafts (3).

b) Put the template (2) on the LH gear shaft (3).

c) Put the spirit level (1) on the template (2) and set the template horizontal.

d) Tighten the screws (4).

e) Put the other template (2) on the RH gear shaft (3).
Put the spirit level (1).

f) Make sure that the template (2) is horizontal, then tighten the screws (4).

TechPub_2614345_0105 - 01_2772060_01.fm

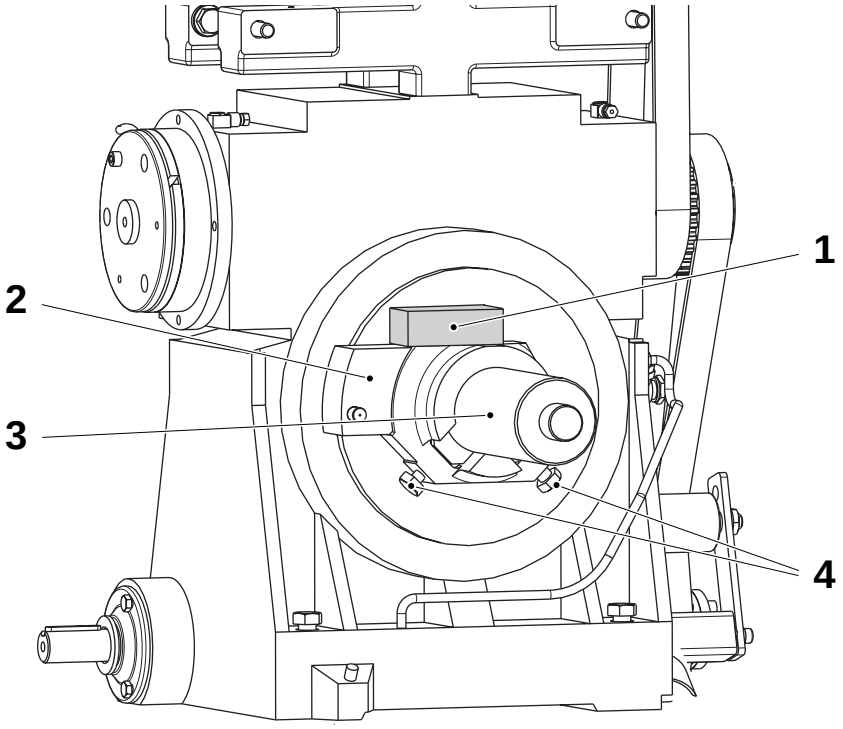

1 Spirit level
2 Alignment template
3 Shaft
4 Screw

3.8 Angle Encoder

3.8-1 Angle Encoder - Remove Bracket

Machine Status	Power supply disconnector OFF Air supply OFF Steam supply ON Water supply OFF
SPC Reference	1512284-0100

Remove Bracket

a) Remove the screws (2) and then remove the complete bracket (1).

Install Bracket

a) Put the bracket (1) back in place, and attach it with the screws (2).

b) Check the sensor and angle encoder settings, see 3.8-2 Angle Encoder - Set Sensor and 3.8-3 Angle Encoder - Synchronise.

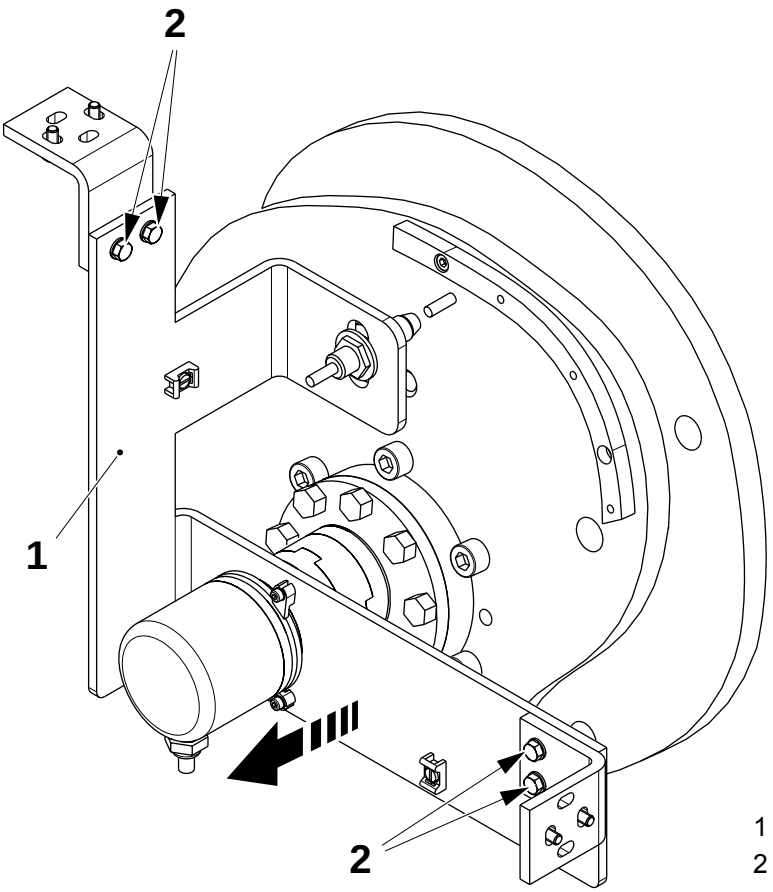

1 Bracket
2 Screw

TechPub_2614345_0105 - 01_2772061_01.fm

3.8-2 Angle Encoder - Set Sensor

Machine Status	Power supply disconnector OFF Air supply OFF Steam supply ON Water supply OFF
SPC Reference	1512284-0100

a) Set the distance **A** between the sensor (1) and the pin (2) on the curve pack by loosening the nuts (3) and turning the sensor (1).

b) Tighten the nuts (3).

A = 2.0 ±0.5 mm

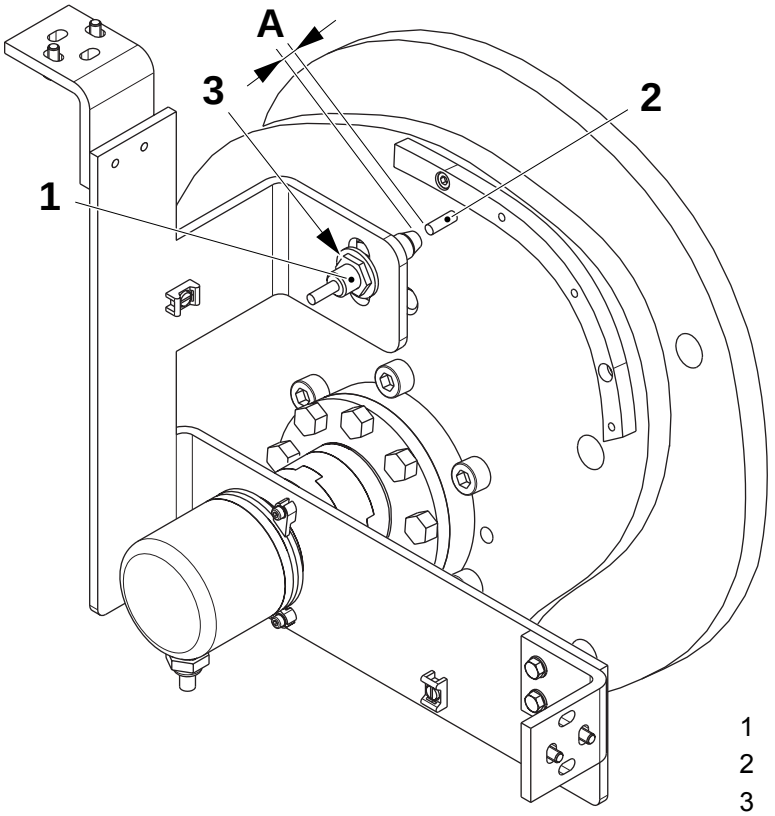

1 Sensor
2 Pin
3 Nut

TechPub_2614345_0105 - 01_2772061_01.fm

3.8-3 Angle Encoder - Synchronise

Machine Status	Power supply disconnector ON Air supply OFF Steam supply ON Water supply OFF
SPC Reference	1512284-0100

a) Manually turn the encoder shaft (1) until the angle shown on the TPOP display is the same as the one on the degree scale (2).

b) Install the angle encoder tighten the screw (3) and check again that the angle displayed on the TPOP is correct.

c) If necessary, adjust by turning the angle encoder.

d) Tighten the three screws (4).

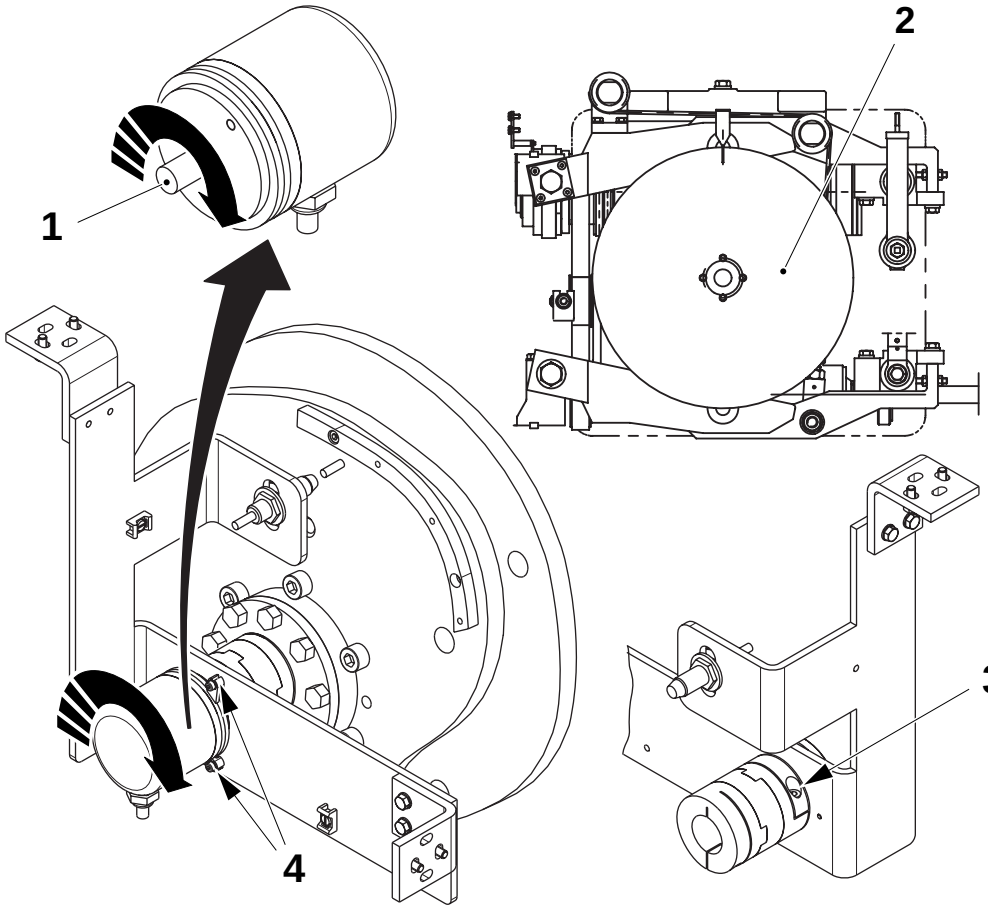

1 Shaft
2 Degree scale
3 Screw
4 Screw

TechPub_2614345_0105 - 01_2772061_01.fm

3.8-4 Angle Encoder - Change

Machine Status	Power supply disconnector OFF Air supply OFF Steam supply ON Water supply OFF
SPC Reference	1512284-0100

Angle Encoder

a) Loosen the blocking screw (1).

b) Loosen the three screws (2) and remove the clamping elements (3).

c) Disconnect the cable from the bracket (7) and remove the angle encoder (4).

d) Disconnect the cable from the electrical cabinet and change the angle encoder (4).

e) Assemble in the reverse order.

f) Synchronise the encoder (4) according to 3.8-3 Angle Encoder - Synchronise.

Sensor

a) Disconnect the cable from the bracket (7) and remove the sensor (5) using the nut (6).

b) Disconnect the cable from the electrical cabinet and change the sensor (5).

c) Assemble in the reverse order.

d) Set the sensor (5) according to 3.8-2 Angle Encoder - Set Sensor.

TechPub_2614345_0105 - 01_2772061_01.fm

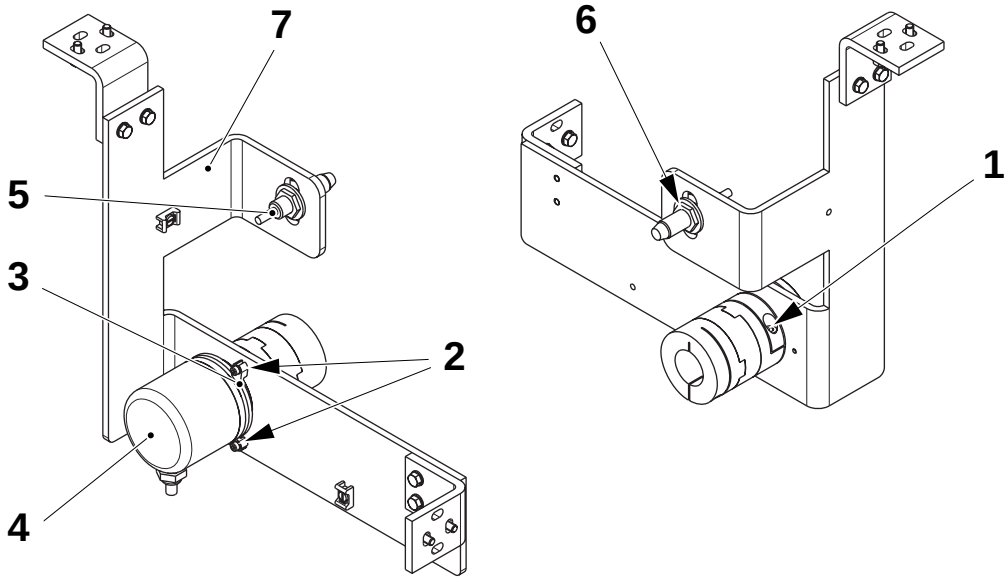

1 Screw
2 Screw
3 Clamping element
4 Angle encoder
5 Sensor
6 Nut
7 Bracket

This page intentionally left blank

TechPub_2614345_0105 - 01_2772061_01.fm

4 Jaw System

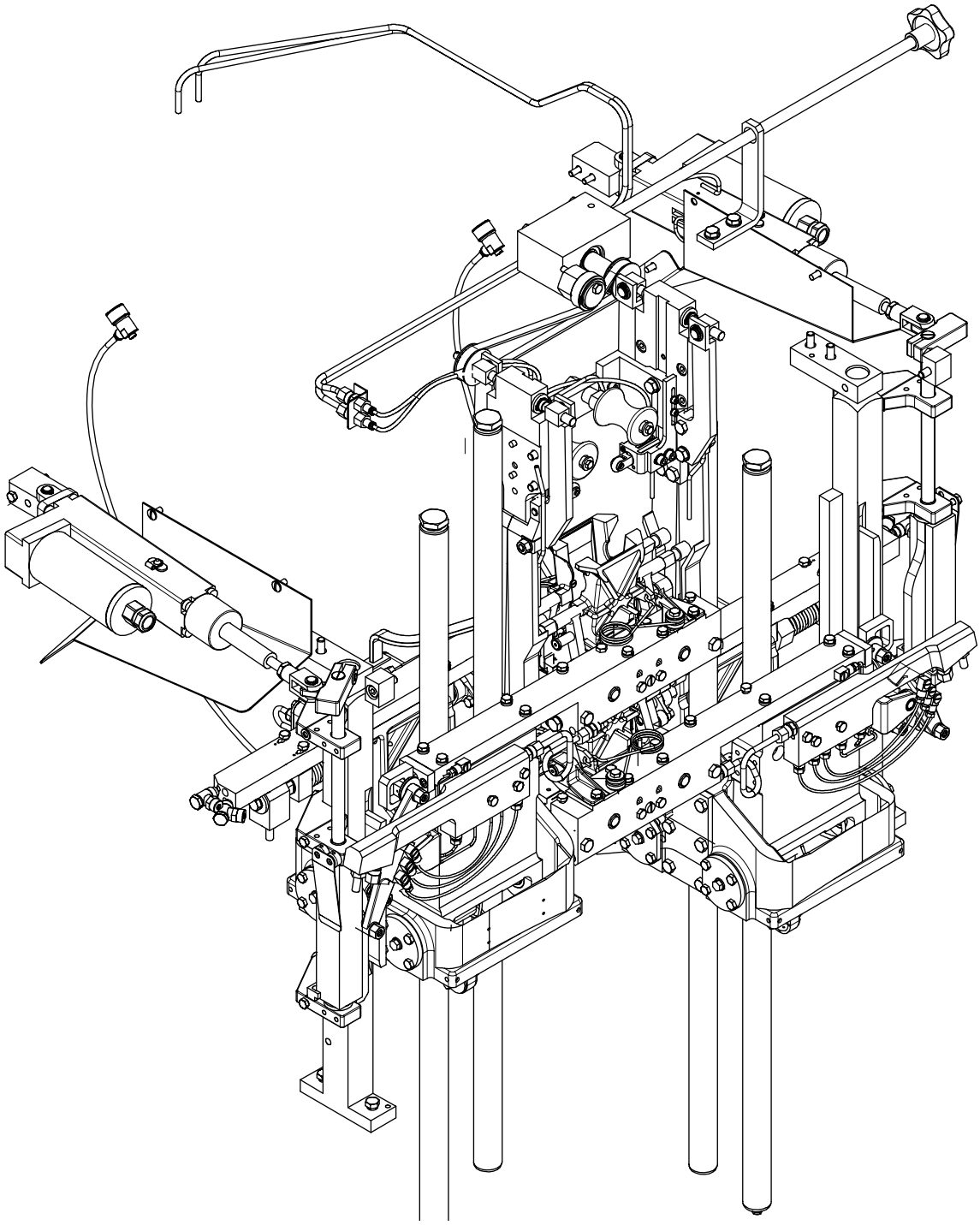

TechPub_2614345_0105 - 01_2772062_01.fm

Jaw System - Description

SPC Reference	648104-1200

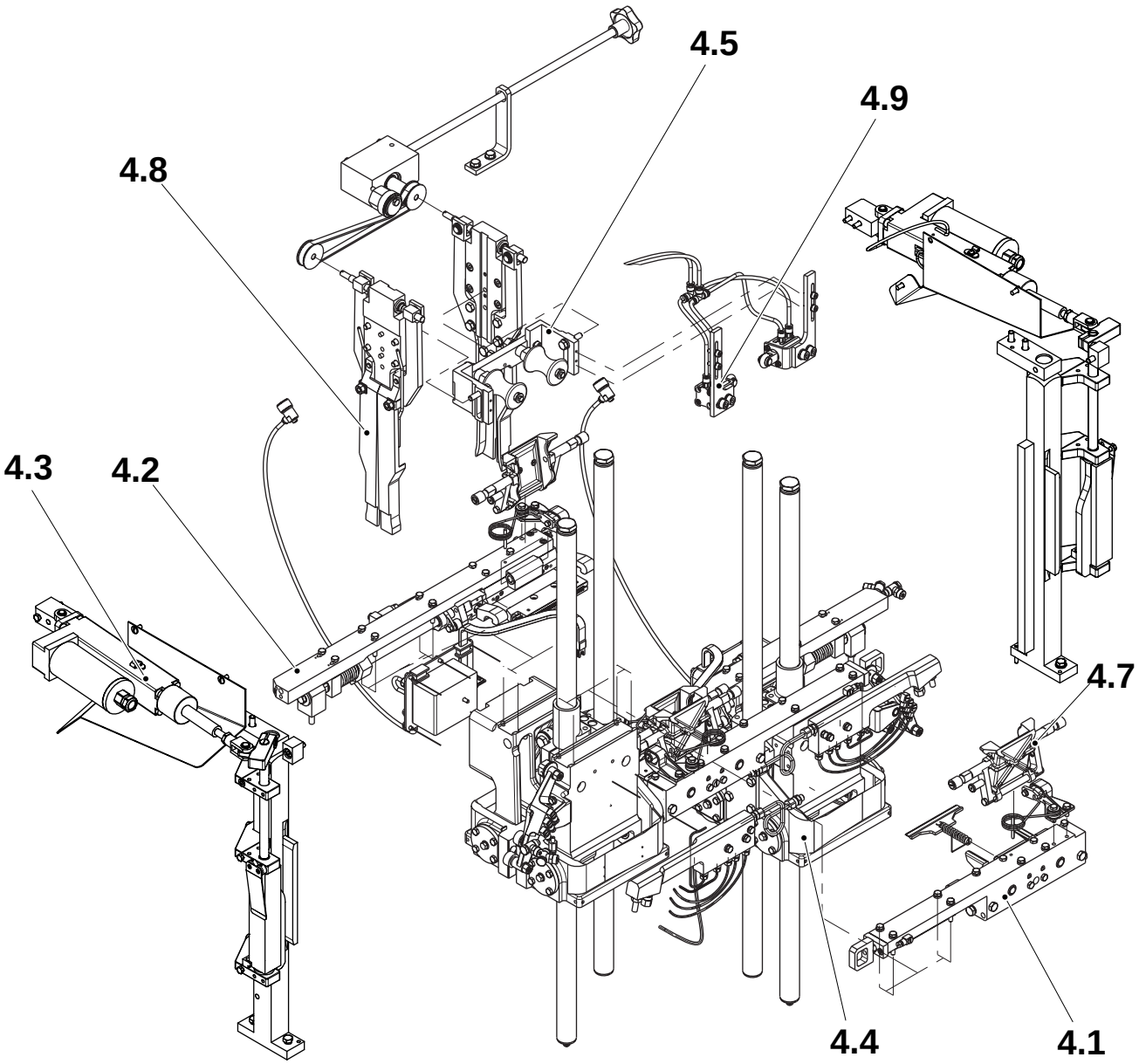

4.1 Cutting Jaw
4.2 Pressure Jaw
4.3 Motorised Design Control System
4.4 Yoke
4.5 Support Roller
4.6 Blank Section
4.7 Volume Flap
4.8 Volume Adjustment
4.9 Tube Folding Device

TechPub_2614345_0105 - 01_2772062_01.fm

4-1 Basic Jaw System Setting . . . . . 4 - 5
4-2 Jaw System - Set Jaw Gap . . . . . 4 - 7
4-3 Jaw System - Check Jaw Over Jaw . . . . . 4 - 8
4-4 Jaw System - Set Jaw Over Jaw . . . . . 4 - 9
4-5 Jaw System - Check Stroke . . . . . 4 - 12
4-6 Jaw System - Set Stroke . . . . . 4 - 14
4-7 Jaw System - Check Stroke During Production . 4 - 16
4-8 Jaw System - Check T-measurement . . . . . 4 - 17
4-9 Jaw System - Set Cutting Jaw and Pressure Jaw Alignment . . . . . 4 - 18
4-10 Jaw System - Check Parallelism in Movement . 4 - 20
4-11 Jaw System - Set Parallelism in Movement . . . . 4 - 21
4-12 Jaw System - Set Cam Support Rollers . . . . . 4 - 22
4-13 Jaw System - Set Catch Lifter Cams and Rollers 4 - 23
4-14 Jaw System - Check Oil Distribution . . . . . 4 - 25

4.1 Cutting Jaw . . . . . 4 - 26

4.1-1 Cutting Jaw - Set Folding Flap Parallelism . . . . 4 - 26
4.1-2 Cutting Jaw - Overhaul . . . . . 4 - 29
4.1-3 Cutting Jaw - Overhaul Knife Holder . . . . . 4 - 35
4.1-4 Cutting Jaw - Change . . . . . 4 - 36
4.1-5 Cutting Jaw - Bleed . . . . . 4 - 39
4.1-6 Cutting Jaw - Check Folding Flap Mechanism . 4 - 40
4.1-7 Cutting Jaw - Overhaul Shock Absorber . . . . . 4 - 42

4.2 Pressure Jaw . . . . . 4 - 43

4.2-1 Pressure Jaw - Overhaul . . . . . 4 - 43
4.2-2 Pressure Jaw - Check Catches and Catch Clearance . . . . . 4 - 50
4.2-3 Pressure Jaw - Change . . . . . 4 - 52
4.2-4 Pressure Jaw - Bleed . . . . . 4 - 54
4.2-5 Pressure Jaw - Overhaul Shock Absorber . . . . . 4 - 55
4.2-6 Pressure Jaw - Lubricate Pivot Spring . . . . . 4 - 56
4.2-7 Pressure Jaw - Set Pivot Spring . . . . . 4 - 57

4.3 Motorised Design Control System . . . . . 4 - 58

4.3-1 MDCS - Change Rod End . . . . . 4 - 59

TechPub_2614345_0105 - 01_2772062_01.fm

4.3-2 MDCS - Change Cylinders . . . . . 4 - 60
4.3-3 MDCS - Set Cylinder . . . . . 4 - 61
4.3-4 MDCS - Check Sensors . . . . . 4 - 64
4.3-5 MDCS - Calibrate Cylinders . . . . . 4 - 65
4.3-6 MDCS - Check Condition . . . . . 4 - 68
4.3-7 MDCS - Change Bushings, Folding Flap Cams and Eccentric . . . . . 4 - 70
4.3-8 MDCS - Check Pressures . . . . . 4 - 71

4.4 Yoke . . . . . 4 - 72

4.4-1 Yoke - Check Sliders . . . . . 4 - 72
4.4-2 Yoke - Check Curve Rollers and Arm . . . . . 4 - 73
4.4-3 Yoke - Change Plungers . . . . . 4 - 74
4.4-4 Yoke - Overhaul . . . . . 4 - 75
4.4-5 Yoke - Set Symmetry . . . . . 4 - 79
4.4-6 Yoke - Set Turning Position . . . . . 4 - 82

4.5 Support Roller . . . . . 4 - 84

4.5-1 Support Roller - Set . . . . . 4 - 84
4.5-2 Support Roller - Check . . . . . 4 - 89

4.6 Blank Section . . . . . 4 - 90

4.7 Volume Flap . . . . . 4 - 91

4.7-1 Volume Flap - Set Package Volume . . . . . 4 - 91
4.7-2 Volume Flap - Alignment . . . . . 4 - 92
4.7-3 Volume Flap - Overhaul . . . . . 4 - 95

4.8 Volume Adjustment . . . . . 4 - 97

4.8-1 Volume Adjustment - Overhaul . . . . . 4 - 97
4.8-2 Volume Adjustment - Change Volume Cams . 4 - 100
4.8-3 Volume Adjustment - Set . . . . . 4 - 101

4.9 Tube Folding Device . . . . . 4 - 104

4.9-1 Tube Folding Device - Check . . . . . 4 - 104
4.9-2 Tube Folding Device - Set . . . . . 4 - 105

TechPub_2614345_0105 - 01_2772062_01.fm

4-1 Basic Jaw System Setting

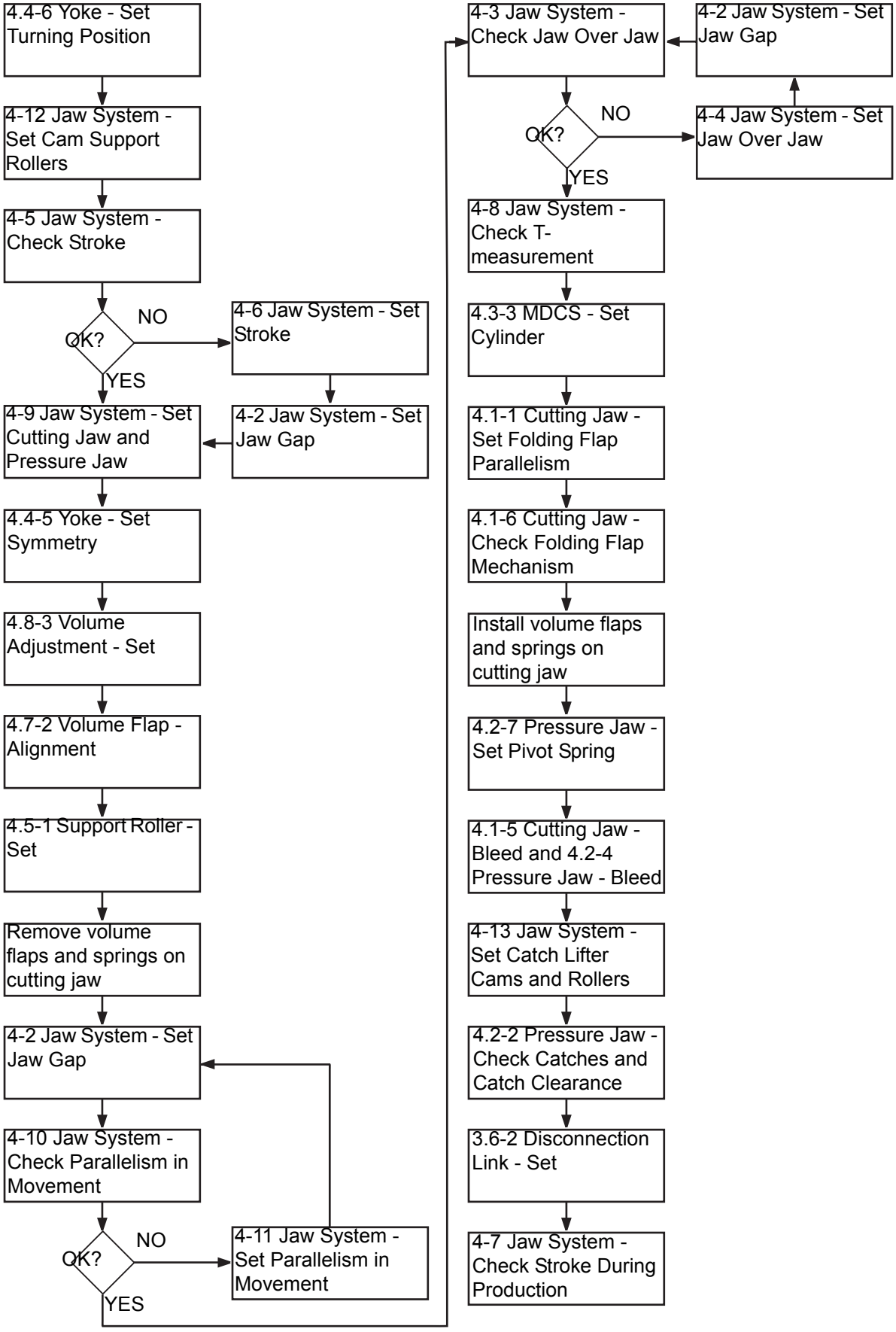

TechPub_2614345_0105 - 01_2772062_01.fm

This page intentionally left blank

TechPub_2614345_0105 - 01_2772062_01.fm

4-2 Jaw System - Set Jaw Gap

Machine Status	Power supply disconnector OFF Air supply OFF Steam supply ON Water supply OFF
Special Equipment	Spring TP No. 76304-101
SPC Reference	648104-1200

Note! Check that the dollies are not worn-out before performing this check.

a) Put the spring (2) between the carriers (1).

b) Crank the LH yoke to 80 °.

c) Measure the jaw gap **A** between the inductor and the dollies. If necessary, set as follows.

d) Check the disconnection link setting, see 3.6-2 Disconnection Link - Set.

If A is Too Narrow:

e) Slightly loosen the screws (3) and adjust by tapping underneath the connection rod (5) (with a plastic hammer) to lift the bracket (4).

f) Tighten the screws (3).

If A is Too Wide:

g) Loosen the screws (3) and remove the spring (2). Close the jaws.

h) Tighten (not completely) the screws (3) and put the spring (2) back in position. Go to item e)e).

i) Crank the RH yoke to 260° and repeat the procedure.

TechPub_2614345_0105 - 01_2772062_01.fm

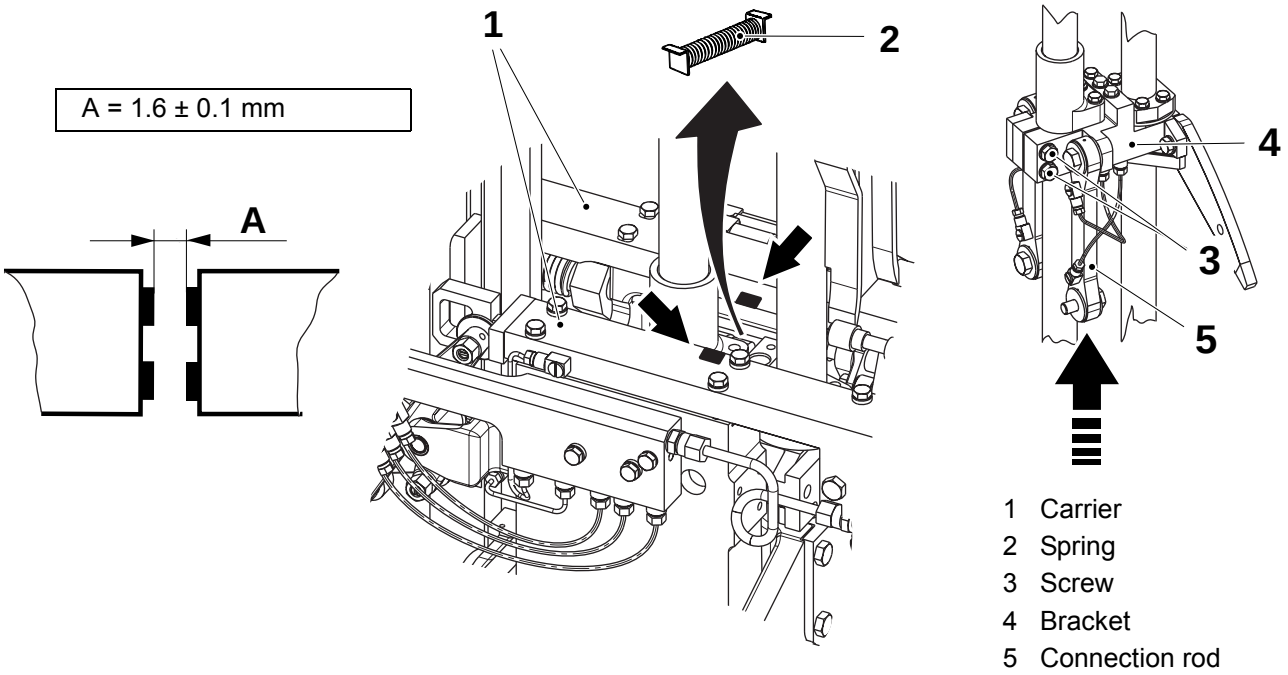

1 Carrier
2 Spring
3 Screw
4 Bracket
5 Connection rod

4-3 Jaw System - Check Jaw Over Jaw

Machine Status	Power supply disconnector OFF Air supply OFF Steam supply ON Water supply OFF
Special Equipment	Internal micrometer
SPC Reference	648104-1200

a) Remove the volume flaps on both of the cutting jaws.

b) Crank to 90°.

Note! Check the distances **A** and **B** in the **middle** of the inductors (1).

c) Check the jaw over jaw measurement between the inductors (1) (distance **A)** using an internal micrometer.

d) Crank to 270° and check the distance **B**.

e) The difference between the two distances must not exceed **0.1** mm. If necessary, set the jaw over jaw, see 4-4 Jaw System - Set Jaw Over Jaw.

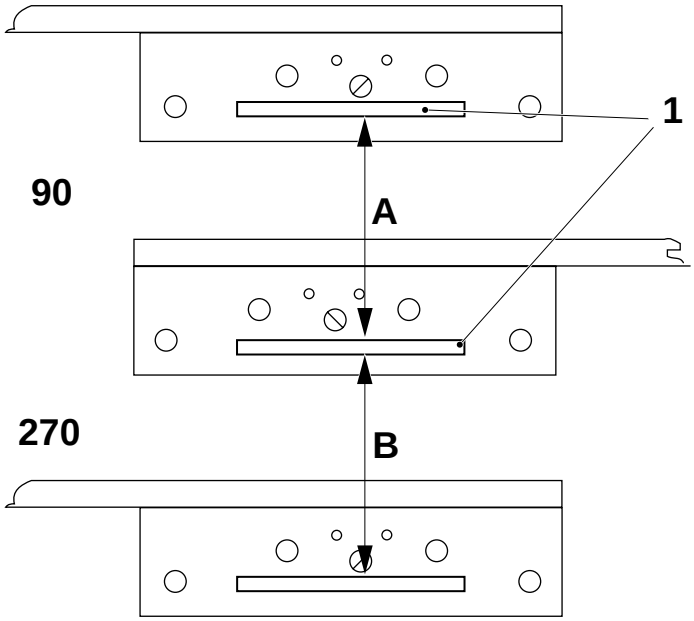

1 Inductor

TechPub_2614345_0105 - 01_2772062_01.fm

4-4 Jaw System - Set Jaw Over Jaw

Machine Status	Power supply disconnector OFF Air supply OFF Steam supply ON Water supply OFF
Special Equipment	Internal micrometer Template see table on page 4-82
SPC Reference	648104-1200

Check the jaw over jaw, see 4-3 Jaw System - Check Jaw Over Jaw. If the difference between the two distances **exceeds** 1.0 mm, follow the procedure Basic setting below.

If the difference is less than 1.0 mm, follow the procedure Final Setting on page 4-11.

Basic setting

Note! Adjust the **RH yoke** by only **half the difference**.

Reduce the distance

a) Put the template (1) and a feeler gauge with a thickness equal to the calculated adjustment, underneath the RH yoke:

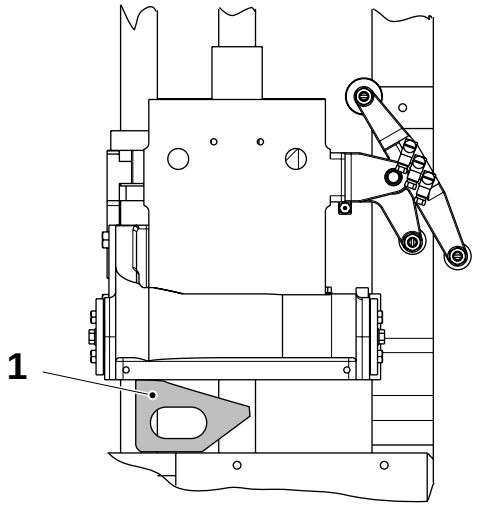

1 Template

(Cont'd)

TechPub_2614345_0105 - 01_2772062_01.fm

(Cont'd)

WARNING

Risk of personal injury.

The jaw system must be **forcibly guided by hand** when the machine is cranked.

b) Crank until the yoke rests against the template and the feeler gauge.

c) Loosen the screws (3) and (2).

d) Remove the feeler gauge and lower the yoke against the template.

e) Tighten the screws (2).

f) Set the jaw gap, refer to 4-2 Jaw System - Set Jaw Gap.

g) Check the jaw over jaw distance, refer to 4-3 Jaw System - Check Jaw Over Jaw.

Increase the distance

a) Put the template underneath the RH yoke.

b) Crank so that the yoke rests against the template.

c) Loosen the screws (3) and (2).

d) Lift the yoke and put a feeler gauge, with thickness equal to the required adjustment, between the template and the yoke.

e) Tighten the screws (2).

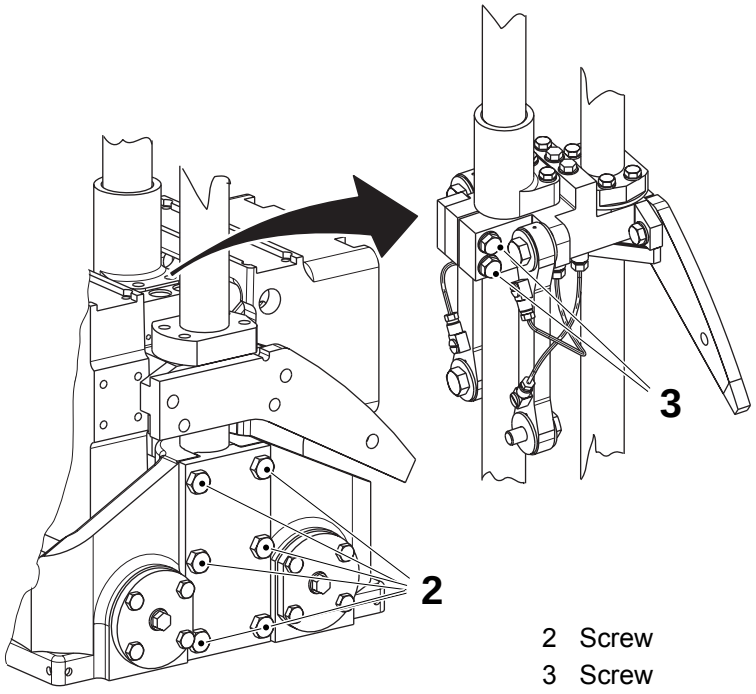

2 Screw
3 Screw

(Cont'd)

TechPub_2614345_0105 - 01_2772062_01.fm

(Cont'd)

WARNING

Risk of personal injury.

The jaw system must be **forcibly guided by hand** when the machine is cranked.

f) Set the jaw gap, refer to 4-2 Jaw System - Set Jaw Gap.

g) Check the jaw over jaw distance, refer to 4-3 Jaw System - Check Jaw Over Jaw.

Final Setting

If the difference between the jaw over jaw distances is **less than** 1.0 mm, adjust as follows:

Note! Adjust the **RH yoke** by only **half the difference**.

a) Loosen the lock nut (5) on the RH yoke lifter arm and shift the eccentric axle pin (4): one scale division = 0.1 mm.

b) Check the jaw gap, refer to 4-2 Jaw System - Set Jaw Gap. If necessary, repeat the setting of the jaw over jaw distance and the jaw gap until both are within the tolerances.

TechPub_2614345_0105 - 01_2772062_01.fm

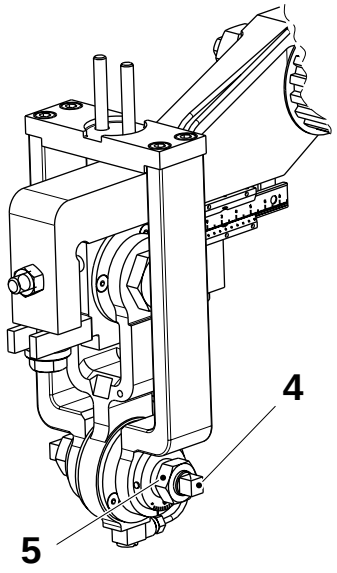

4 Axle pin
5 Lock nut

4-5 Jaw System - Check Stroke

Machine Status	Power supply disconnector OFF Air supply OFF Steam supply ON Water supply OFF
Special Equipment	Measuring clamp TP No. 76416-101 Internal micrometer
SPC Reference	648104-1200

a) Crank to X ° and install the measuring clamp (1), on the LH yoke.

b) Crank until the yoke (2) reaches its lowest turning position.

c) Check the stroke (distance **A**) with an internal micrometer and record the result.

Package	**X°**	**Lower turning position**	
		LH yoke	**RH yoke**
TBA 100 B	25	328°	148°
TBA 125 S	35	322°	142°
TBA 160 S	35	316°	136°
TBA 180 B	35	332°	152°
TBA 200 B	35	322°	142°
TBA 200 M	35	322°	142°
TBA 200 S	30	324°	144°
TBA 250 B	35	322°	142°
TBA 250 S	35	320°	140°
TBA 284 B	35	324°	144°
TBA 300 S	35	324°	144°
TBA 330 S	35	320°	140°

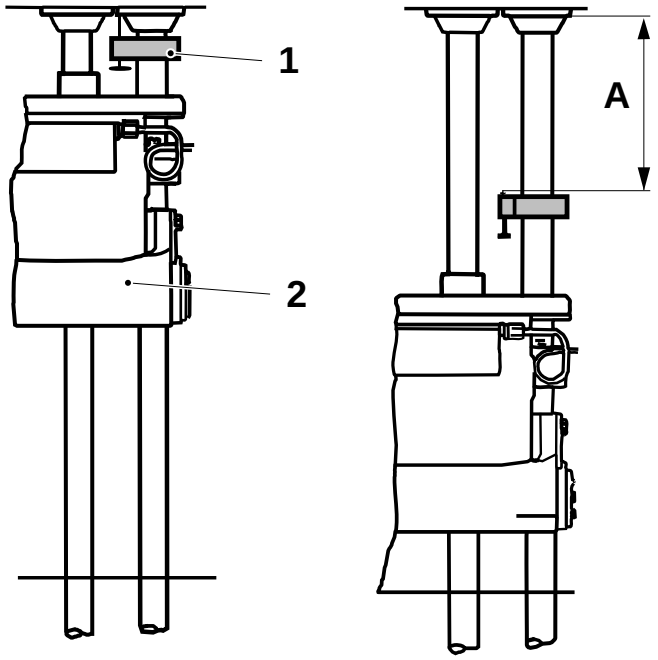

1 Measuring clamp
2 Yoke

TechPub_2614345_0105 - 01_2772062_01.fm

(Cont'd)

(Cont'd)

d) Remove the measuring clamp (1).

e) Crank to Y° and install the measuring clamp (1) onto the RH yoke guide.

f) Repeat items b) - d).

g) If the difference between the measured strokes on the two sides exceeds 0.2 mm, set the stroke, see 4-6 Jaw System - Set Stroke.

Package	Y°
TBA 100 B	205
TBA 125 S	215
TBA 160 S	215
TBA 180 B	215
TBA 200 B	215
TBA 200 M	215
TBA 200 S	210
TBA 250 B	215
TBA 250 S	215
TBA 284 B	215
TBA 300 S	215
TBA 330 S	215

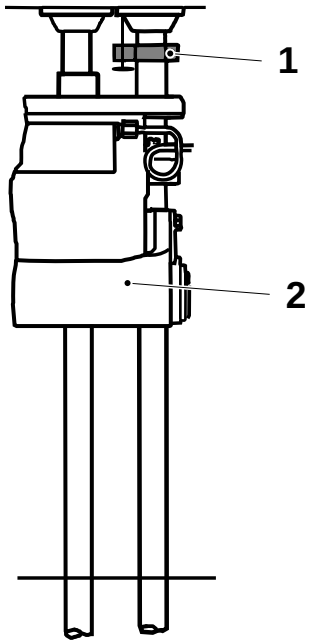

1 Measuring clamp
2 Yoke

TechPub_2614345_0105 - 01_2772062_01.fm

4-6 Jaw System - Set Stroke

Machine Status	Power supply disconnector OFF Air supply OFF Steam supply ON Water supply OFF
SPC Reference	648104-1200

a) Loosen the screws (1).

Note! Make the same adjustment on both the yoke arm and the link arm.

b) Alter the stroke using the nuts (2), and refer to the table below. To increase the stroke, move the bracket (3) towards the final folder. Tighten the screws (1) and the nuts (2).

Basic Setting

Package	Stroke (mm)	Package	Stroke (mm)
TBA 100 B	158.1	TBA 200 S	226.3
TBA 125 S	173.0	TBA 250 B	210.2
TBA 160 S	191.8	TBA 250 S	236.1
TBA 180 B	174.0	TBA 284 B	232.4
TBA 200 B	176.3	TBA 300 S	230.4
TBA 200 M	206.2	TBA 330 S	243.4

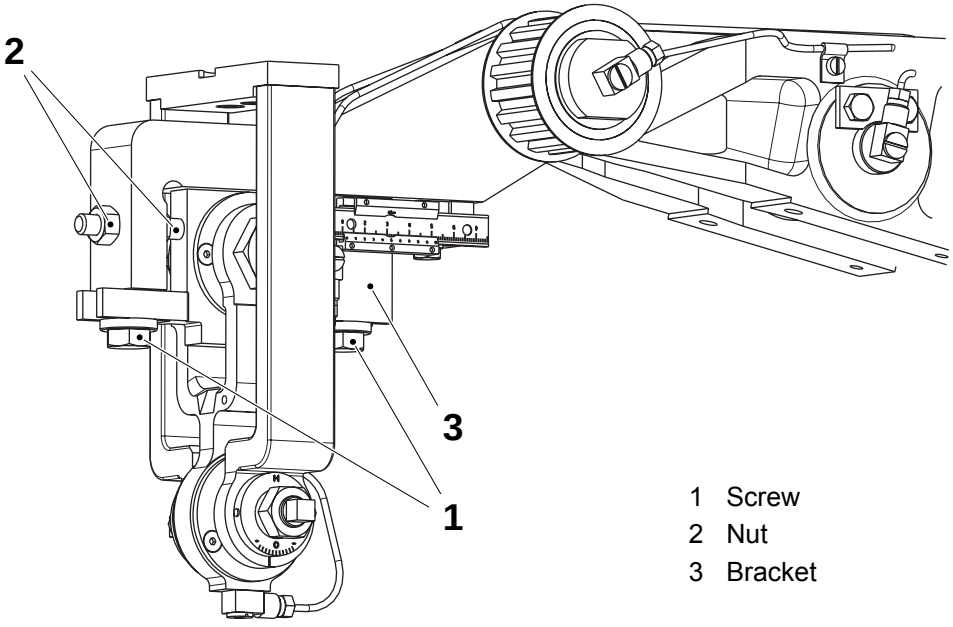

1 Screw
2 Nut
3 Bracket

(Cont'd)

TechPub_2614345_0105 - 01_2772062_01.fm

(Cont'd)

c) Set the jaw gap, see 4-2 Jaw System - Set Jaw Gap.

d) Check the parallelism in movement, see 4-10 Jaw System - Check Parallelism in Movement.

TechPub_2614345_0105 - 01_2772062_01.fm

4-7 Jaw System - Check Stroke During Production

Machine Status	PRODUCTION
Special Equipment	Communication cable AT-compatible PC
SPC Reference	648104-1200

Note! Make sure that all the following settings have been performed successfully (or adjust if necessary).

- 14.6-1 MDCS - Function Description - TMCC2 Output Signals
- 14.6-6 MDCS - Set I/P Transducer - Production settIng I/P Transducer.
- 1.17 Photocell Unit

a) Connect the communication cable (2) between the PC and TMCC2 card **A400** (1) connector.

b) Measure the output value (1-255) for all the different packaging materials used on the machine.

c) Collect all the measurements and calculate the average value.

d) Modify the stroke length so that the average value is, as close as possible, to the centre of the range 1-255, see 14.6-1 MDCS - Function Description - TMCC2 Output Signals.

e) If you are not equipped with a terminal PC the functioning of the machine can be checked by looking at the LEDs on the TMCC2 card, see TMCC2 LED Display at page 14-91.

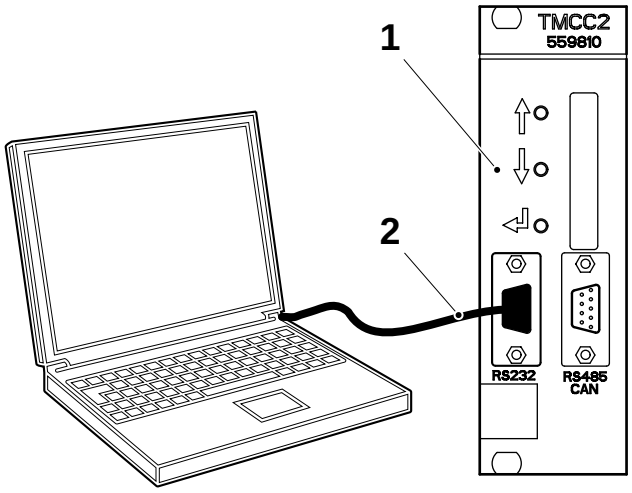

1 TMCC2 card A400
2 Communication cable

TechPub_2614345_0105 - 01_2772062_01.fm

4-8 Jaw System - Check T-measurement

Machine Status	Power supply disconnector OFF Air supply OFF Steam supply ON Water supply OFF
SPC Reference	648104-1200

a) Crank to 90° and check the T-measurement between the volume flap and the cutting jaw.

b) Crank to 270° and check the T-measurement on the other side.

c) If the T-measurement is out of its tolerances, check the following:
   - jaw over jaw, see 4-3 Jaw System - Check Jaw Over Jaw
   - stroke, see 4-5 Jaw System - Check Stroke

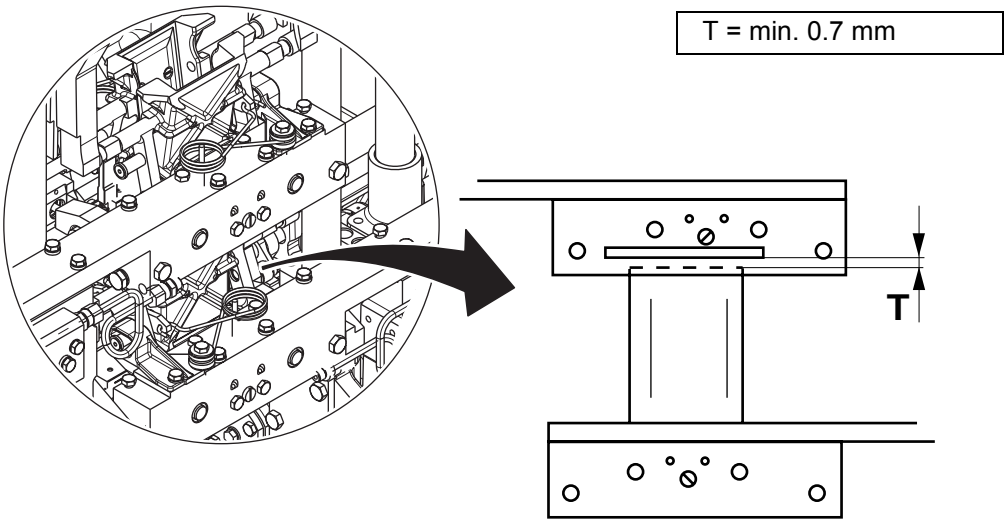

TechPub_2614345_0105 - 01_2772062_01.fm

4-9 Jaw System - Set Cutting Jaw and Pressure Jaw Alignment

Machine Status	Power supply disconnector OFF Air supply OFF Steam supply ON Water supply OFF
Special Equipment	Spring TP No. 76304-101 Template TP No. 76301-101
SPC Reference	648104-1200

LH Yoke

a) Remove the screw (1) and disconnect the busbar.

b) Remove the two bleed screws (2).

c) Remove the banjo connection (5).

d) Crank to 175° (for **TBA 330 S** to 173°).

e) Put the spring (4) between the carriers.

f) Put the template (5) on the pressure jaw carrier (3).

g) Measure the distance **A** and record the result.

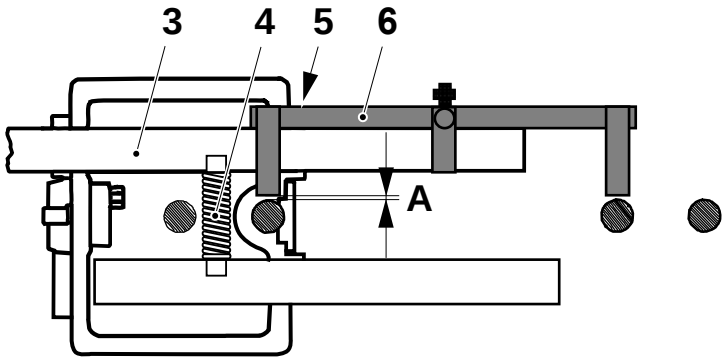

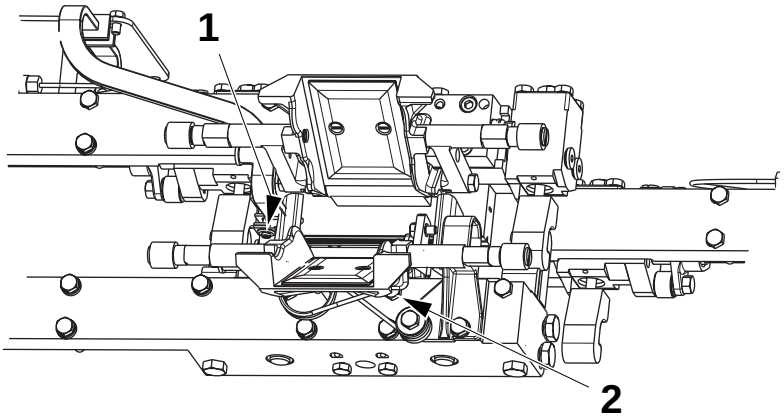

1 Screw
2 Bleed screw
3 Pressure carrier
4 Spring
5 Banjo connection
6 Template

(Cont'd)

TechPub_2614345_0105 - 01_2772062_01.fm

(Cont'd)

h) Put the template (6) on the cutting jaw carrier (7) and measure the distance **B**.

Note! The distances **A** and **B** must differ by no more than 0.1 mm.

Note! Altering the shim thickness by 0.1 mm, changes the distances **A** and **B** by approximately 0.15 mm.

i) If necessary, remove the screws (9) and the bracket (10), and adjust by adding or removing the shims (8) on the cutting side carrier.

j) Remove the template (6) and the spring.

k) Install the busbar, the banjo connections, and the two bleed screws.

RH Yoke

Crank to 355° (for **TBA 330 S** to 353°) and repeat the procedure.

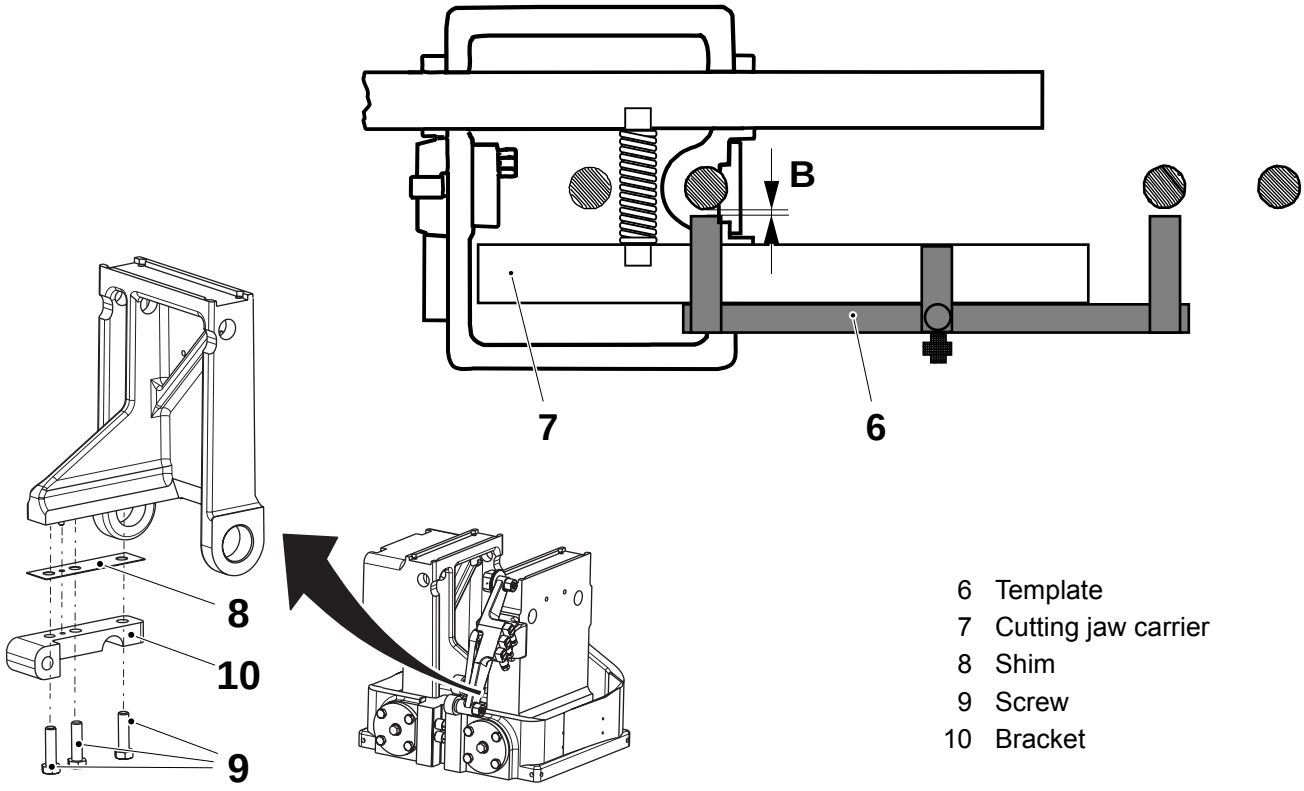

6 Template
7 Cutting jaw carrier
8 Shim
9 Screw
10 Bracket

TechPub_2614345_0105 - 01_2772062_01.fm

4-10 Jaw System - Check Parallelism in Movement

Machine Status	Power supply disconnector OFF Air supply OFF Steam supply ON Water supply OFF
Special Equipment	Spring TP No. 76304-101
SPC Reference	648104-1200

Note! Before checking the parallelism, the jaw gap must be set according to 4-2 Jaw System - Set Jaw Gap.

a) Put the spring (2) between the carriers (1).

LH Side

a) Crank to 190°. Measure the jaw gap **A** from above and record the value.

b) Crank to 280°. Measure the jaw gap **A** from underneath and record the value.

RH Side

a) Crank to 10°. Measure the jaw gap **A** from above and record the value.

b) Crank to 100°. Measure the jaw gap **A** from underneath and record the value.

c) If any of the measurements is larger than 1.8 mm or smaller than 0.4 mm, set the parallelism. See 4-11 Jaw System - Set Parallelism in Movement.

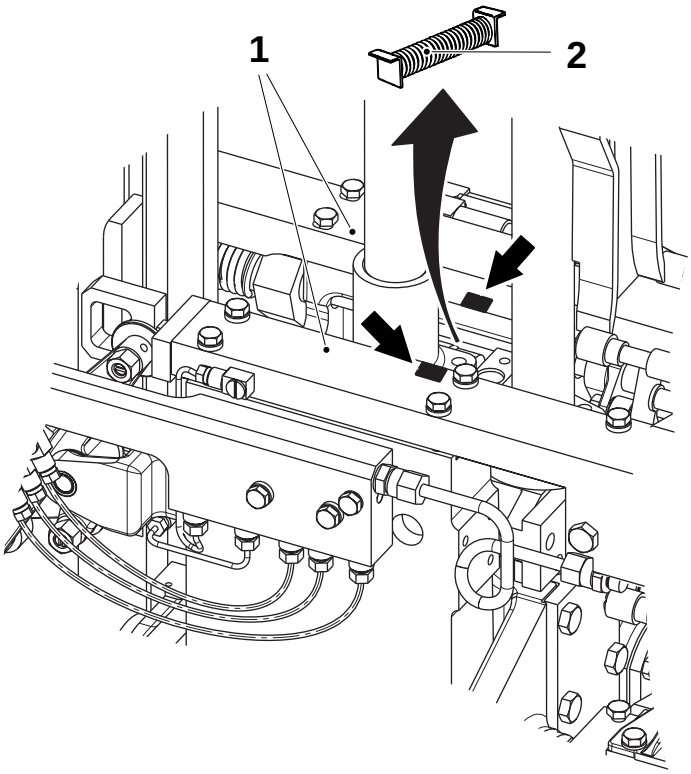

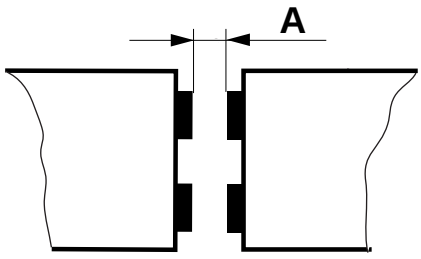

1 Carrier
2 Spring

TechPub_2614345_0105 - 01_2772062_01.fm

4-11 Jaw System - Set Parallelism in Movement

Machine Status	Power supply disconnector OFF Air supply OFF Steam supply ON Water supply OFF
SPC Reference	648104-1200

If any of the jaw gaps are **wider** than 1.8 mm, proceed as follows:

- Loosen the nut (1) and the screws (2).
- Move the adjustment device (4) on the link arm **towards** the final folder using the nut (3). Tighten the nut (1) and the screws (2).

If any of the jaw gaps are **smaller** than 0.4 mm, proceed as follows:

- Loosen the nut (3) and the screws (2).
- Move the adjustment device (4) **away from** the final folder using the nut (1). Tighten the nut (3) and the screws (2).

Set the jaw gap according to 4-2 Jaw System - Set Jaw Gap.

Check the parallelism. See 4-10 Jaw System - Check Parallelism in Movement.

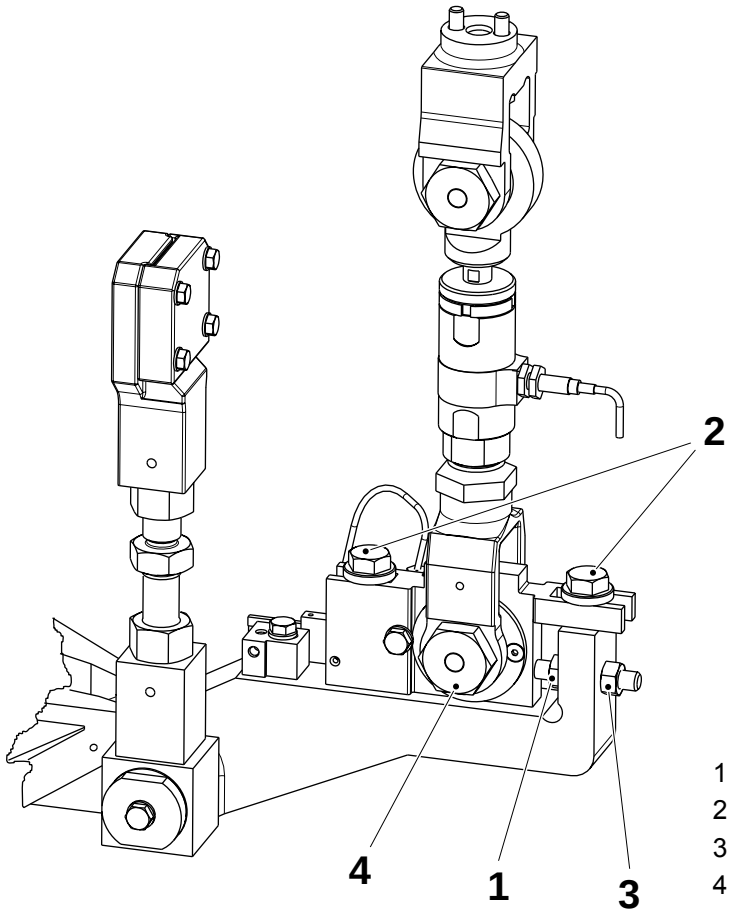

1 Nut
2 Screw
3 Nut
4 Adjustment device

TechPub_2614345_0105 - 01_2772062_01.fm

4-12 Jaw System - Set Cam Support Rollers

Machine Status	Power supply disconnector OFF Air supply OFF Steam supply ON Water supply OFF
SPC Reference	648104-1200

On both sides, set the distance **A** between the support roller (1) and the cam (2) using the eccentric screw (3).

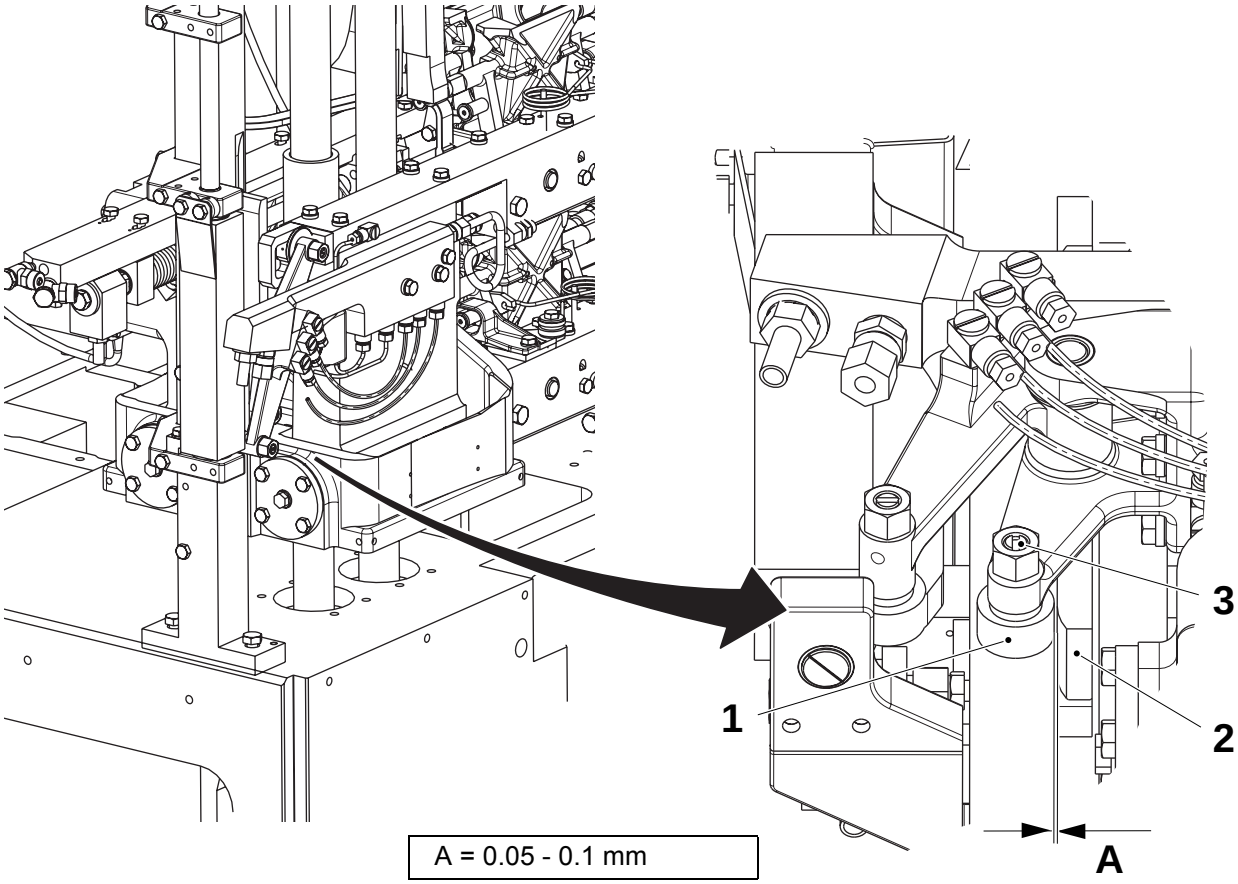

1 Support roller
2 Cam
3 Eccentric screw

TechPub_2614345_0105 - 01_2772062_01.fm

4-13 Jaw System - Set Catch Lifter Cams and Rollers

Machine Status	Power supply disconnector OFF Air supply OFF Steam supply ON Water supply OFF Service switch ON
SPC Reference	648104-1200

a) Put a piece of double packaging material between the inductor and the dollies on the LH side.

b) Crank to 180°.

c) Remove the screws (3) and (7).

d) Check the distance **A** between the cam (1) and the cam roller (2). If necessary, set the distance by adding or removing shims (5) between the bracket (6) and the yoke (4).

Note! Tighten the screws (7) **before** tightening the screws (3).

e) Install the cam (1) and the yoke (4) edge-to-edge to reach the **same** initial position. Tighten the screws (7) and (3).e

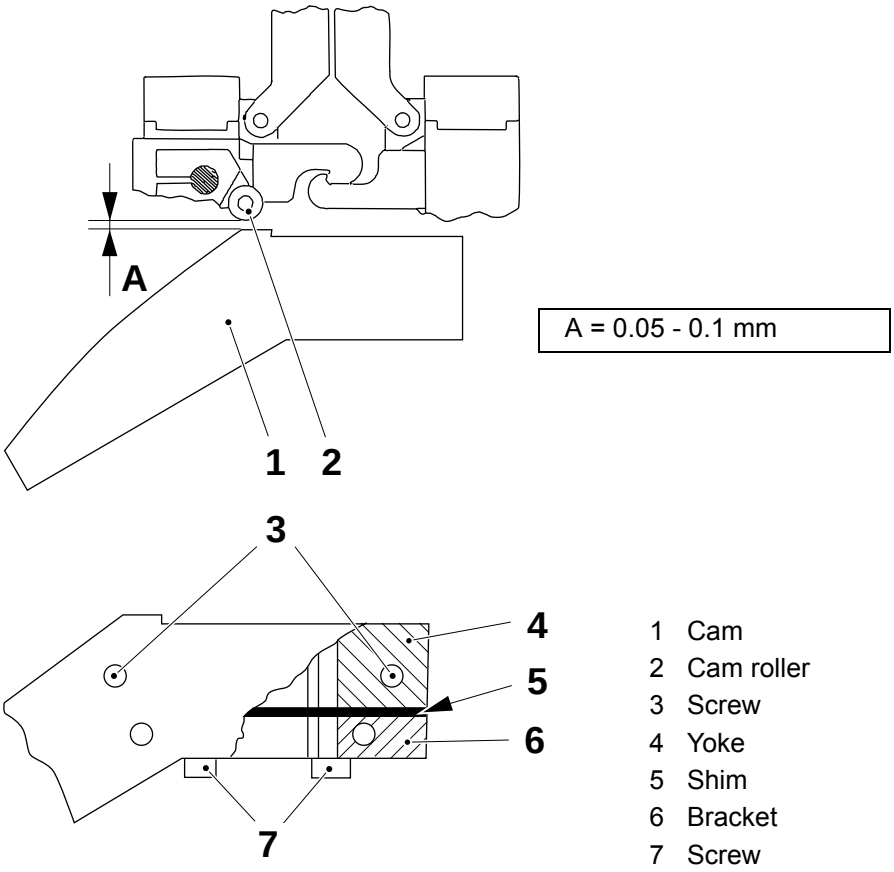

A = 0.05 - 0.1 mm

1 Cam
2 Cam roller
3 Screw
4 Yoke
5 Shim
6 Bracket
7 Screw

(Cont'd)

TechPub_2614345_0105 - 01_2772062_01.fm

(Cont'd)

WARNING
Risk of entanglement.
Moving parts. Follow the Safety Precautions.

f) Crank and lift the catches manually. Check the distance **B** at the highest point of the cam.

g) Put a piece of double packaging material between the inductor and the dollies on the RH side.

h) Crank to 0° and repeat items c) - f) for the RH side.

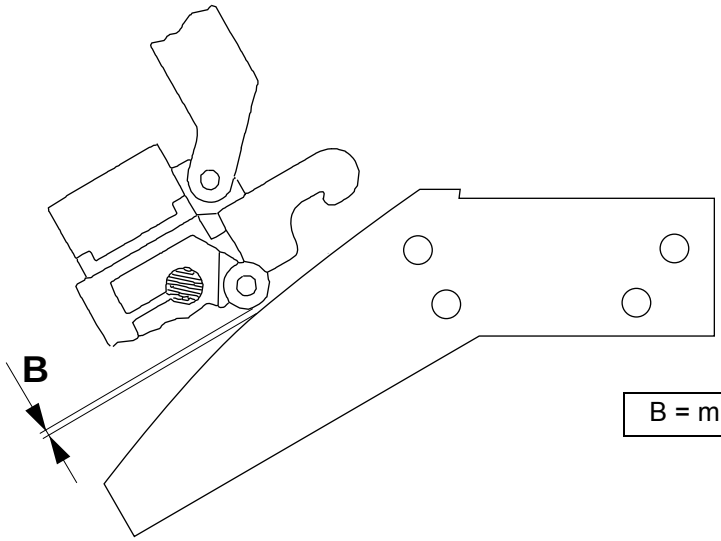

TechPub_2614345_0105 - 01_2772062_01.fm

4-14 Jaw System - Check Oil Distribution

Machine Status	PREHEATING I
SPC Reference	648104-1200

Start the manual lubrication sequence, see OM TPOP display section

Make sure that the oil reaches all the banjo connections (see arrows). Check carefully for any oil leakages.

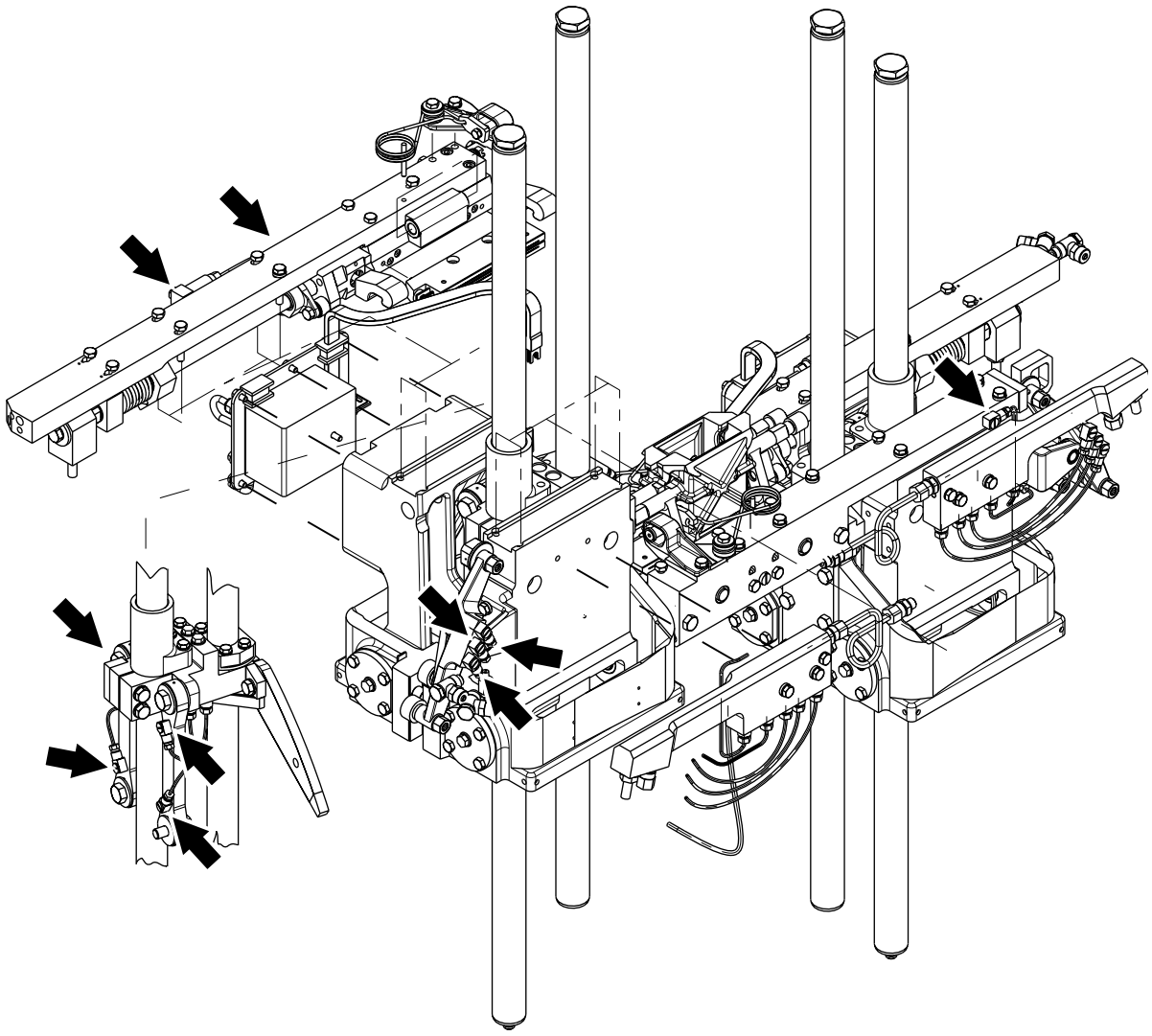

TechPub_2614345_0105 - 01_2772062_01.fm

4.1 Cutting Jaw

4.1-1 Cutting Jaw - Set Folding Flap Parallelism

Machine Status	Power supply disconnector OFF Air supply OFF Steam supply ON Water supply OFF
Consumables	Oil code H Adhesive tape
SPC Reference	256204-0600 256205-0600

a) Remove the bearing housing (1) from the carrier (2) by removing the screws (3), the pipe connection (4), and the spring (5).

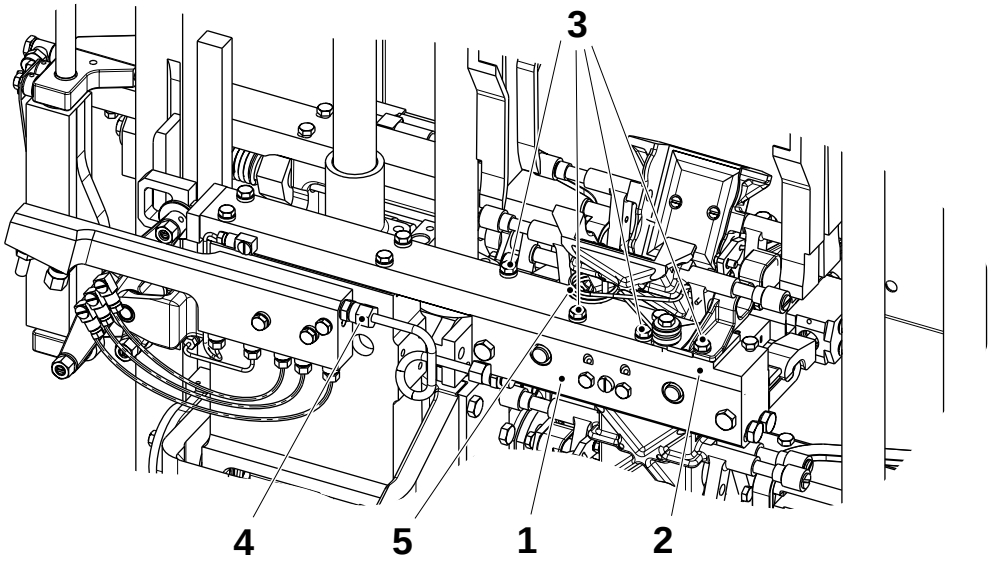

1 Bearing housing
2 Carrier
3 Screw
4 Connection
5 Spring

(Cont'd)

TechPub_2614345_0105 - 01_2772063_01.fm

(Cont'd)

Note! Altering the shim (8) thickness by 0.05 mm changes the distance **A** of 0.07 mm.

b) Remove the screws (6) and adjust the folding flaps (7) parallel to each other by adding or removing shims (8) between the ruler parts (9), (10).

c) Put the screws (6) back, and check the distance **A** by placing a 0.7 mm feeler gauge under one folding flap (7) and moving the carrier ruler into full paper feed position.

d) Make sure that the distance **A** is identical for both flaps. Repeat item b) if necessary.

e) Assemble the bearing housing (1) onto the carrier (2) in the reverse order.

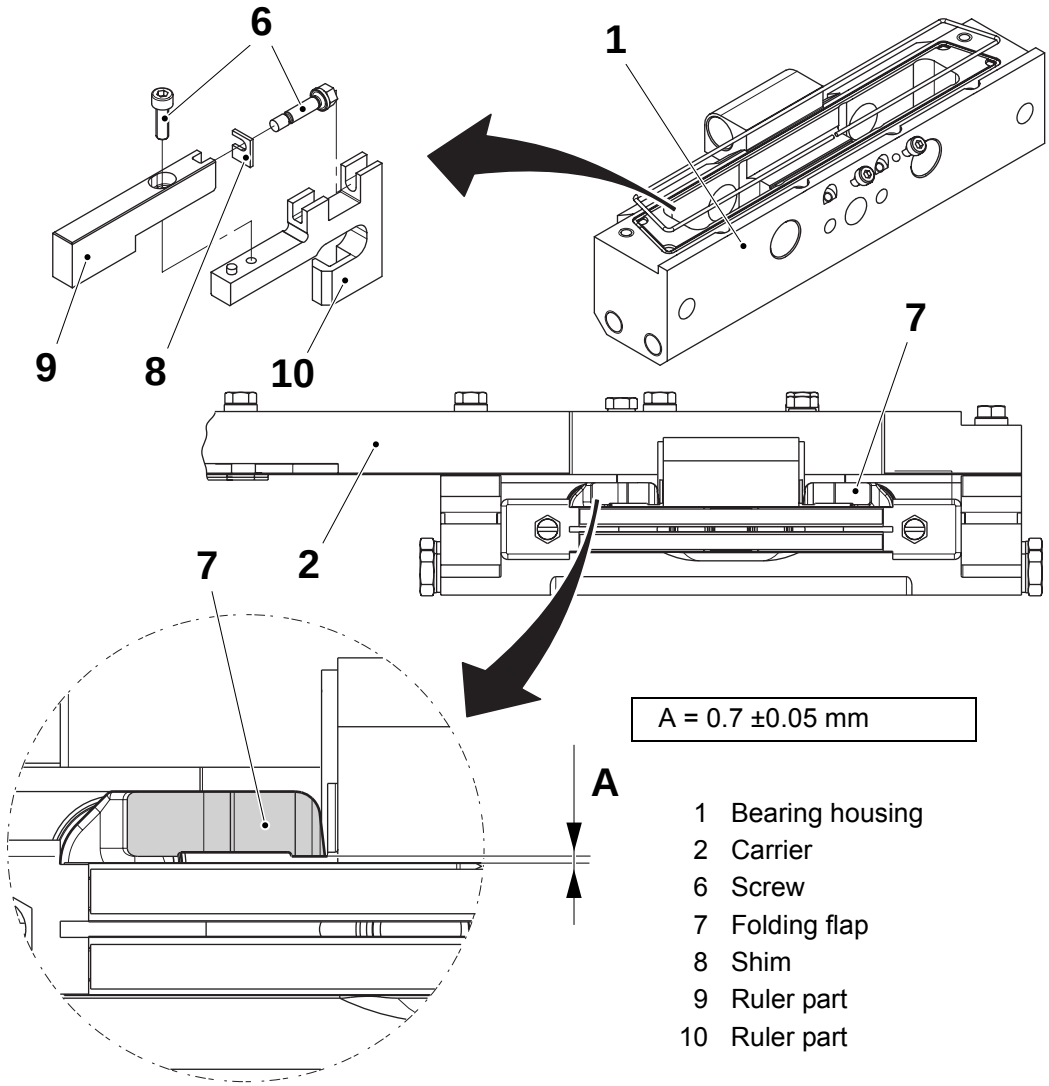

(Cont'd)

TechPub_2614345_0105 - 01_2772063_01.fm

(Cont'd)

WARNING

Lubricants.

Chemical products. Follow the Safety Precautions.

f) Restore the oil level, see 4.1-4 Cutting Jaw - Change.

g) Bleed the cutting pistons, refer to 4.1-5 Cutting Jaw - Bleed.

h) Set the folding flap mechanism, refer to 4.1-6 Cutting Jaw - Check Folding Flap Mechanism.

TechPub_2614345_0105 - 01_2772063_01.fm

4.1-2 Cutting Jaw - Overhaul

Machine Status	Power supply disconnector OFF Air supply OFF Steam supply ON Water supply OFF
Special Equipment	Assembly cone TP No. 76131 Assembly tool TP No. 76132 Calibration tool TP No. 78801
Consumables	Adhesive
SPC Reference	256204-0600 256205-0600

a) Remove the volume flaps and the shock absorber from the cutting jaw, see 4.1-4 Cutting Jaw - Change.

b) Remove the following components:
   - the bearing housing (2), by loosening the screws (1).
   - the knife holder (5), by loosening the screws (4).
   - the screws (3) and the dollies (6).

c) Check the dollies (6). Change them if necessary.

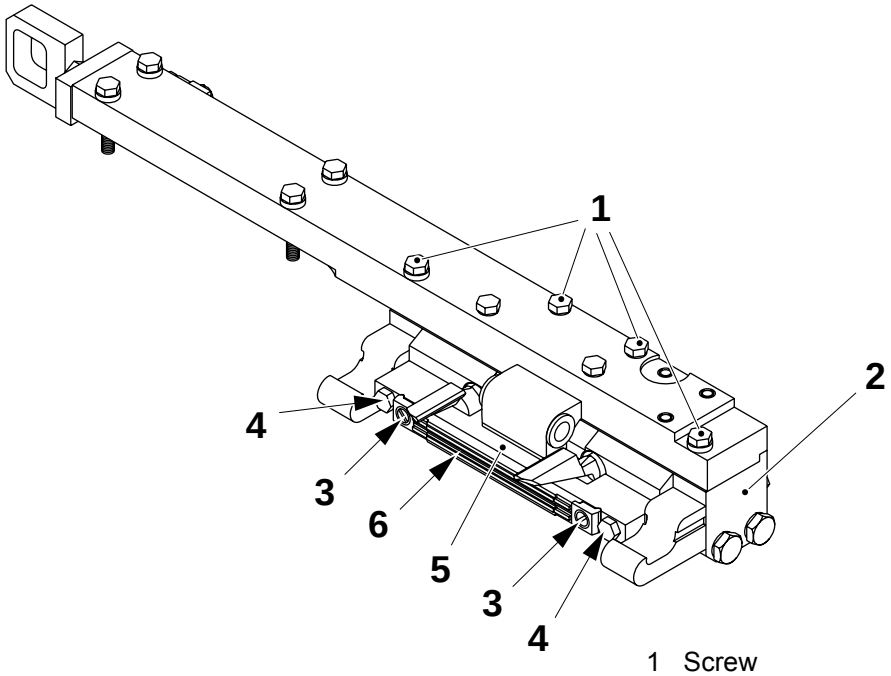

1 Screw
2 Bearing housing
3 Screw
4 Screw
5 Knife holder
6 Dolly

(Cont'd)

TechPub_2614345_0105 - 01_2772063_01.fm

(Cont'd)

Note! To aid plunger removal, apply a light compressed air flow through the hydraulic oil pipe connection.

d) Remove and check the following components for wear and damage:
   – the O-ring (7)
   – the sleeve (9) and the O-ring (8)
   – the plunger (12), the sealing ring (11), and the guide rings (10)

e) Change them if necessary.

f) Install the O-ring (8) and the sleeve (9) onto the bearing housing

WARNING
Adhesive.
Cleaning agent. Follow the Safety Precautions.

g) Fix the O-ring (7) onto the bearing housing using an adhesive layer.

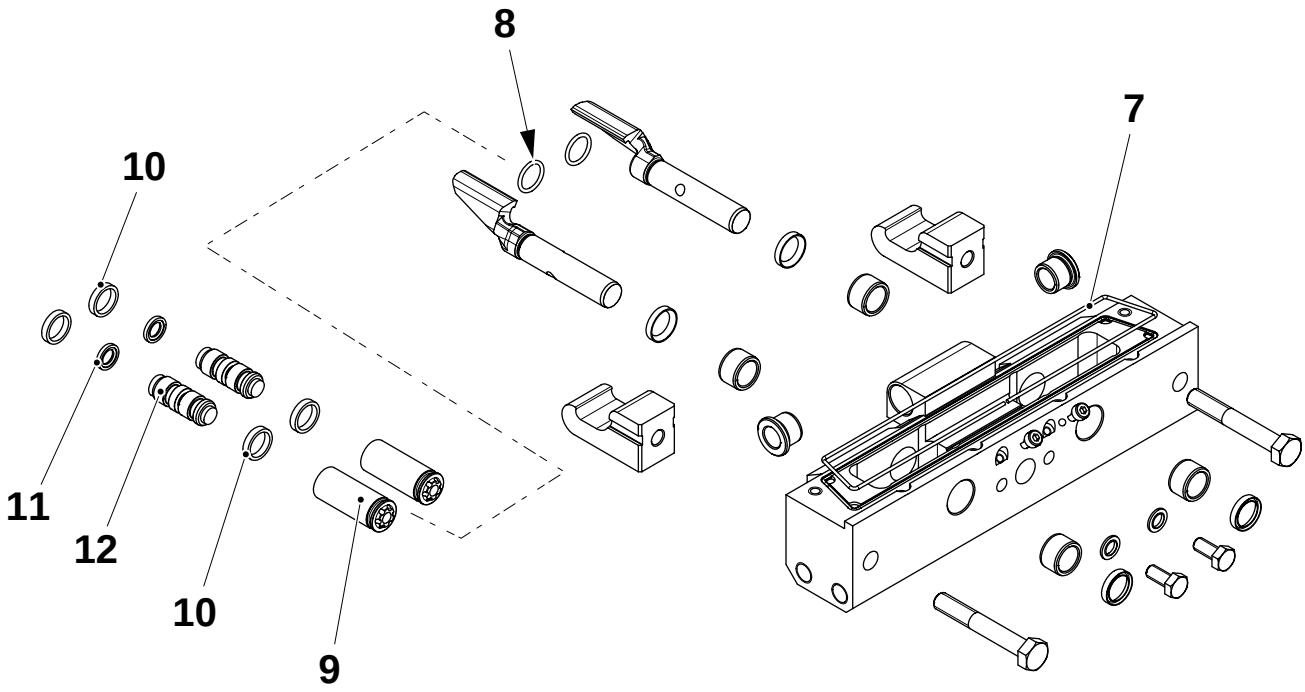

7 O-ring
8 O-ring
9 Sleeve
10 Guide ring
11 Sealing ring
12 Plunger

TechPub_2614345_0105 - 01_2772063_01.fm

(Cont'd)

(Cont'd)

h) Slide the assembly cone (13) on to the plunger (12).

i) Slide the sealing ring (11) over the cone (13). Force the sealing ring (11) into the groove within the plunger (12) using the assembly tool (14).

j) Install the guide rings (10) into their grooves. Calibrate the guide rings (10) by forcing the plunger (12) through the calibration tool (15).

Note! To aid installation, first heat the guide rings (10) by immersion in hot water.

k) Insert the calibration tool (15) into the bearing housing (16). Push the plunger (12) through the calibration tool (15) and into the sleeve within the bearing housing (16).

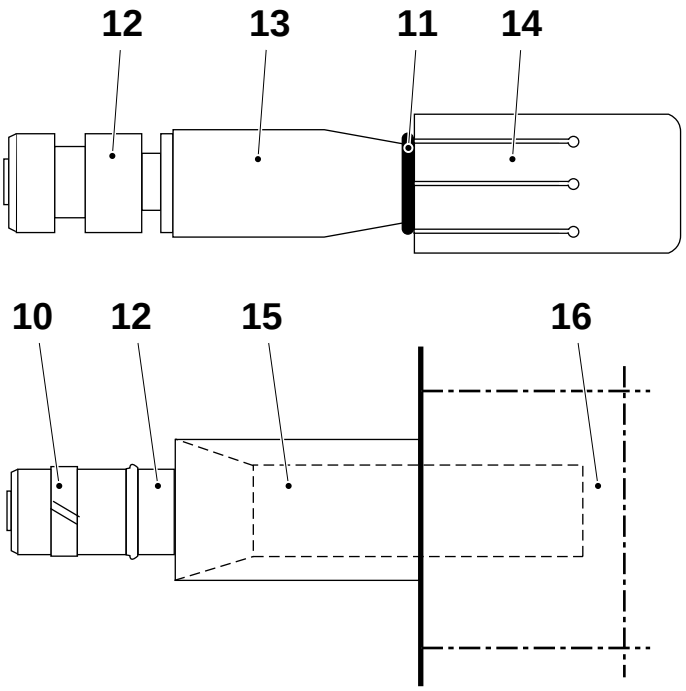

10 Guide ring
11 Sealing ring
12 Plunger
13 Assembly cone
14 Assembly tool
15 Calibration tool
16 Bearing housing

(Cont'd)

TechPub_2614345_0105 - 01_2772063_01.fm

(Cont'd)

l) Remove the ear (19).

WARNING
Spring force.
Can cause serious injury. The spring (23) is compressed. Be careful when removing or assembling components.

m) Loosen the screws (18). Remove the bearing plate (17).

n) Remove and check the following components for wear and damage:
- the O-ring (25)
- the seal ring (24)
- the compression spring (23)
- the retaining ring (22)- first remove the pin (21)
- the operating rod (20)

o) Change components if necessary.

p) Clean the inside of the ear (19) and the rod site in the carrier (26) using compressed air.

q) Assemble in the reverse order.

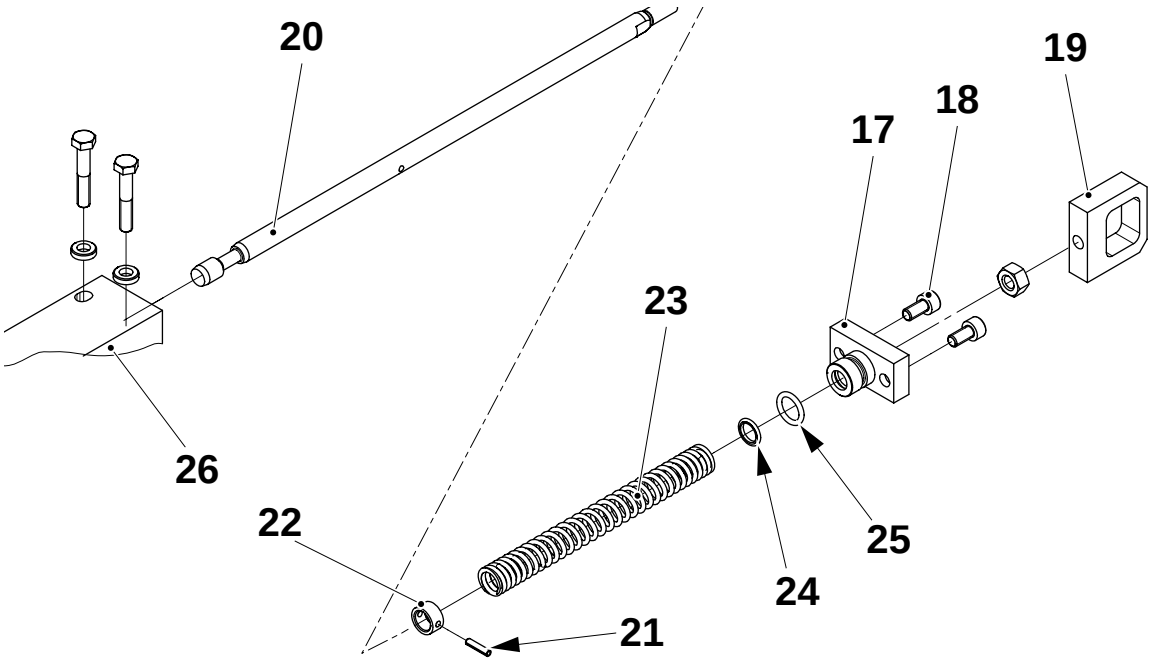

17	Bearing plate	22	Retaining ring
18	Screw	23	Compression spring
19	Ear	24	Seal ring
20	Operating rod	25	O-ring
21	Pin	26	Carrier

(Cont'd)

TechPub_2614345_0105 - 01_2772063_01.fm

(Cont'd)

r) Remove and check the following components for wear and damage:
- the ruler parts (35) and (36) by loosening the screws (34)
- the axle two pins (33)
- the two rollers (32)
- the folding flaps (31) by removing the pins (30)
- the bearings (28)
- the sealing rings (27)
- the flange bushings (29).

s) Change them if necessary.

t) Assemble in the reverse order.

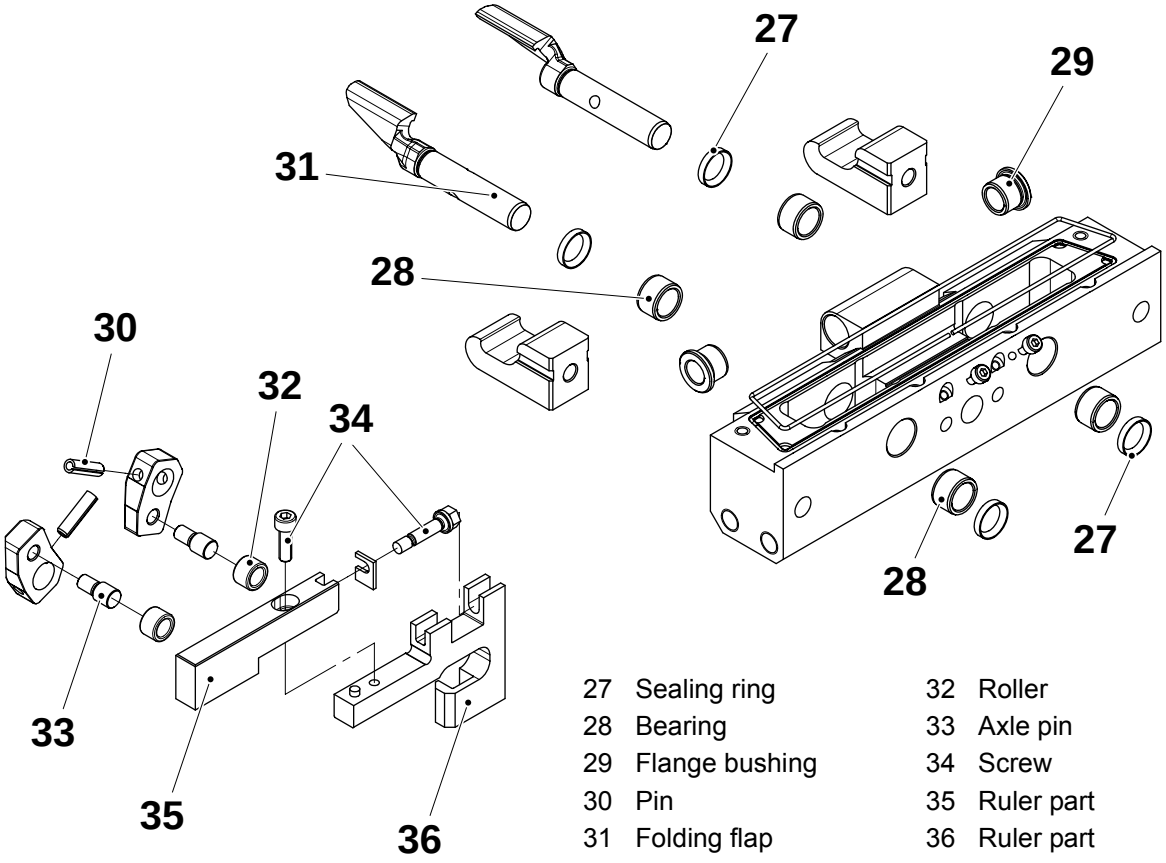

27	Sealing ring	32	Roller
28	Bearing	33	Axle pin
29	Flange bushing	34	Screw
30	Pin	35	Ruler part
31	Folding flap	36	Ruler part

(Cont'd)

TechPub_2614345_0105 - 01_2772063_01.fm

(Cont'd)

u) Remove the bleed screws (37) and check the gaskets (38). Change them, if necessary.

v) Set the folding flap parallelism, see 4.1-1 Cutting Jaw - Set Folding Flap Parallelism.

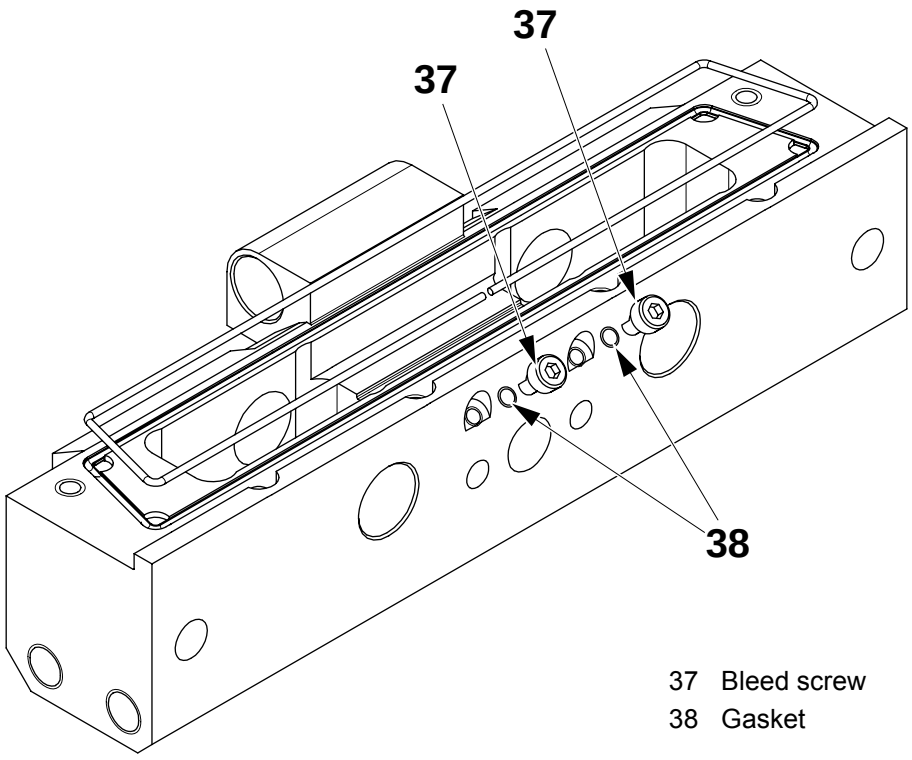

37 Bleed screw
38 Gasket

TechPub_2614345_0105 - 01_2772063_01.fm

4.1-3 Cutting Jaw - Overhaul Knife Holder

Machine Status	Power supply disconnector OFF Air supply OFF Steam supply ON Water supply OFF
Consumables	Oil free acetone
SPC Reference	256204-0600 256205-0600

WARNING
Risk of entanglement.
Moving parts. Follow the Safety Precautions.

a) Remove the nut (1) and remove the following parts from the carrier (2):
   - the spring (3)
   - the steering (4)
   - the link (5)
   - the knife (6).

WARNING
Cleaning agent.
Chemical products. Follow the Safety Precautions.

b) Clean the knife (6) and carrier (2).
c) Check each single part for wear and damage. Change them, if necessary.
d) Lubricate the spring (3) with PTFE grease code N.
e) Assemble in the reverse order.

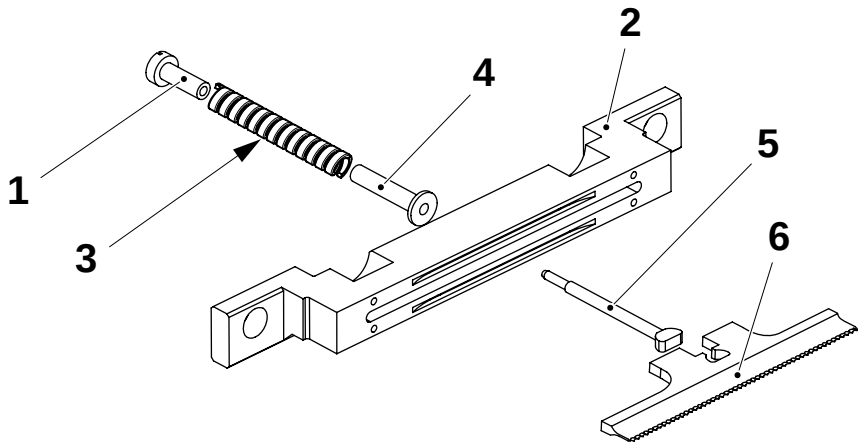

1 Nut
2 Carrier
3 Spring
4 Steering
5 Link
6 Knife

TechPub_2614345_0105 - 01_2772063_01.fm

4.1-4 Cutting Jaw - Change

Machine Status	Power supply disconnector OFF Air supply OFF Steam supply ON Water supply OFF
Consumables	Oil code H Adhesive tape
SPC Reference	256204-0600 256205-0600

a) Crank until one of the jaw pairs is fully open.

b) Remove the banjo connection (1) and the pipe connection (2).

Note! Wile removing the cutting jaw (4), be careful not to lose the shims (5). Note the number of shims (5) under the cutting jaw.

c) Remove the screws (3) and change the cutting jaw (4).

d) Assemble in the reverse order. Check that the lubrication hole in the end piece (6) is pointing outwards.

e) Repeat the procedure on the other cutting jaw.

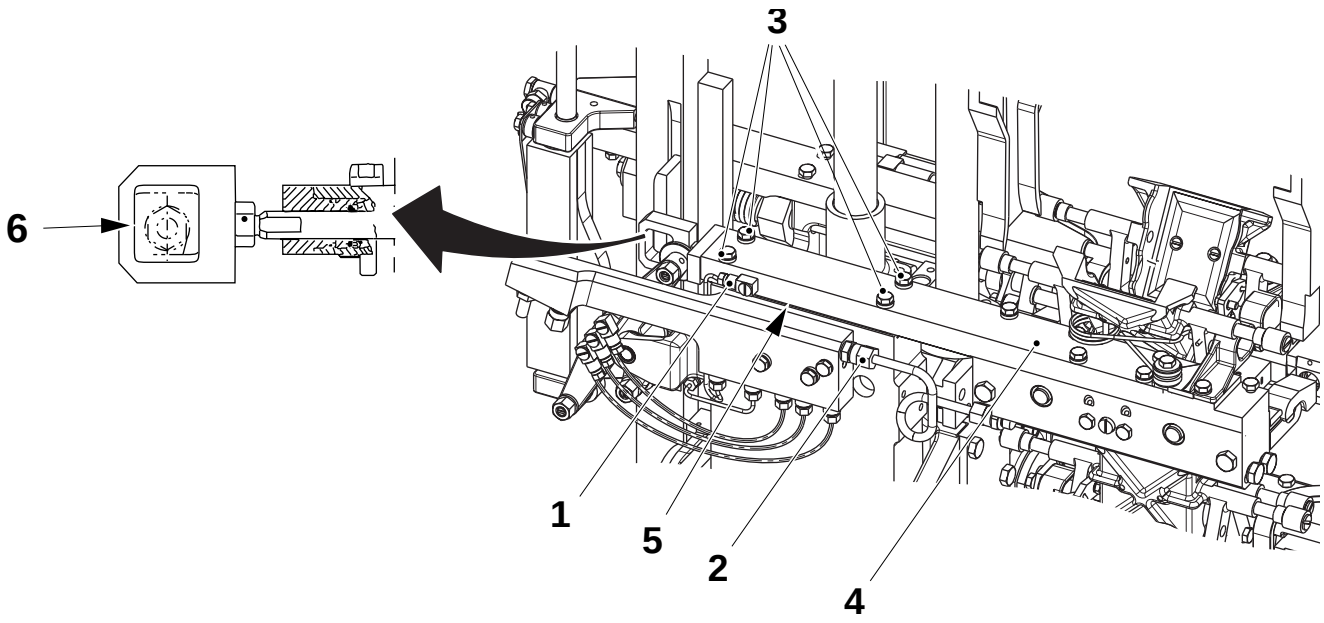

TechPub_2614345_0105 - 01_2772063_01.fm

1 Banjo connection
2 Pipe connection
3 Screw
4 Cutting jaw
5 Shim
6 End piece

(Cont'd)

(Cont'd)

WARNING
Lubricant.
Chemical product. Follow the Safety Precautions.

f) Remove the screw from the bleed hole (7) and from the drain hole (9).

g) Fill with oil (use code H, refer to 15.3 Lubricants) through the drain hole (9) until oil flows out through the bleed hole (7).

h) Put the screws back in the bleed hole (7) and in the drain hole (9).

i) Repeat the same procedure for the bleed hole (8) and the drain hole (10).

j) Repeat the procedure for the other jaw.

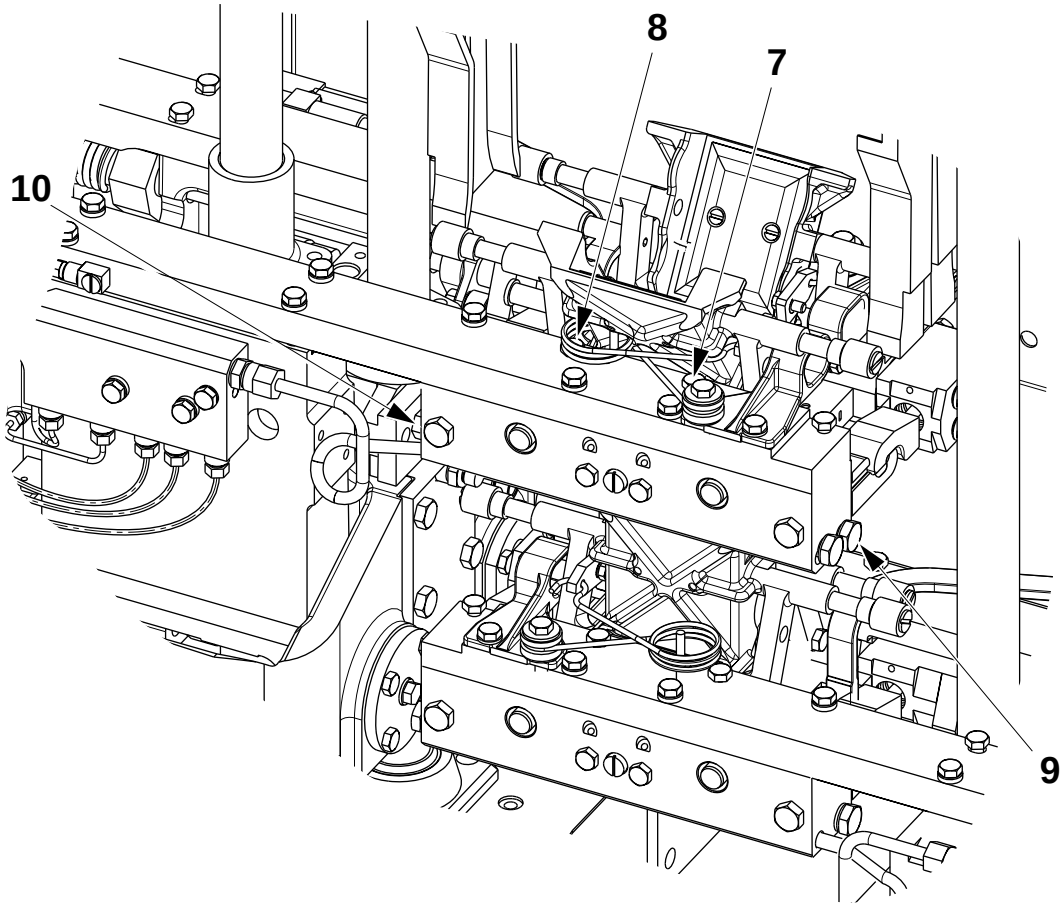

7 Bleed hole
8 Bleed hole
9 Drain hole
10 Drain hole

(Cont'd)

TechPub_2614345_0105 - 01_2772063_01.fm

(Cont'd)

k) Perform the instruction Check Jaw Vertical Position at page 4-42.

l) Bleed the pistons, refer to 4.1-5 Cutting Jaw - Bleed.

m) Check the following:

- 4.7-2 Volume Flap - Alignment
- 4-2 Jaw System - Set Jaw Gap
- 4.1-6 Cutting Jaw - Check Folding Flap Mechanism

n) Check and, if necessary, set the package weight, refer to 4-12 Jaw System - Set Cam Support Rollers.

TechPub_2614345_0105 - 01_2772063_01.fm

4.1-5 Cutting Jaw - Bleed

Machine Status	Power supply disconnector ON Air supply OFF Steam supply ON Water supply ON Service switch ON
SPC Reference	256204-0600 256205-0600

a) Crank to 75°.

WARNING
Risk of splashing.
Can cause serious eye injury. Wear eye protection.

CAUTION
Sharp parts can cut.
Do not remove the screws (1) fully.

b) Carefully loosen the screws (1) and bleed the cutting mechanism on the RH side.

CAUTION
Risk of personal injury.
Do **not** over tighten the screws (1).

c) Tighten the screws (1).

d) Check for oil leakages.

e) Crank to 255° and bleed the cutting mechanism on the LH side by repeating the same procedure.

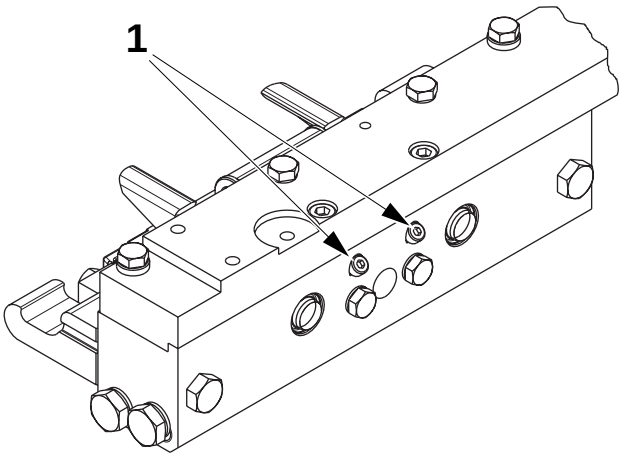

1 Screw

TechPub_2614345_0105 - 01_2772063_01.fm

4.1-6 Cutting Jaw - Check Folding Flap Mechanism

Machine Status	Power supply disconnector OFF Air supply OFF Steam supply ON Water supply OFF
SPC Reference	256204-0600 256205-0600

a) Check folding flaps parallelism, see 4.1-1 Cutting Jaw - Set Folding Flap Parallelism.

b) Check the distance **B**. It should be possible to twist the ears (1) slightly sideways.

c) If necessary, loosen the screws (2) and adjust by shifting the brackets (3).

d) Remove the two volume flaps on the cutting jaw side.

e) Crank to 0°.

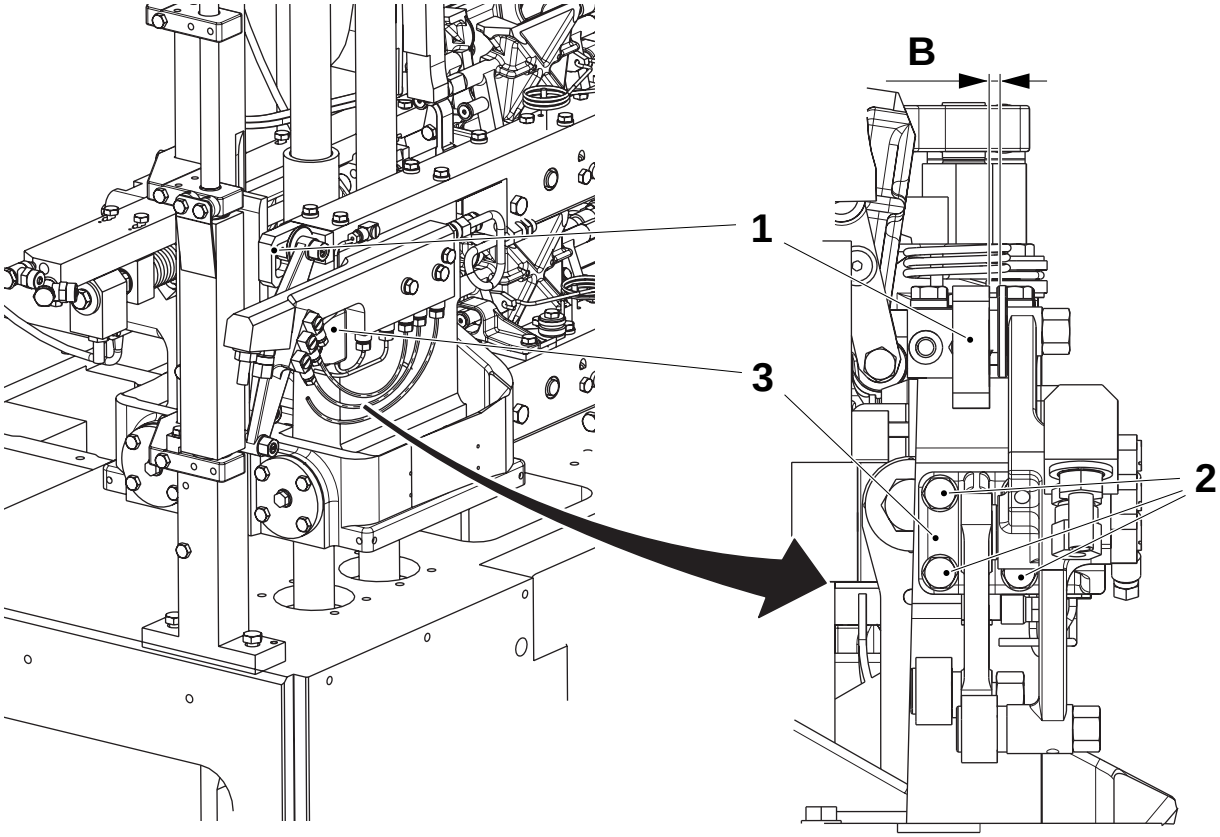

1 Ear
2 Screw
3 Bracket

(Cont'd)

TechPub_2614345_0105 - 01_2772063_01.fm

(Cont'd)

f) Put a feeler gauge with the thickness **0.7** mm, under the folding flaps (4).

g) Move the design correction cylinder to full packaging material feed.

h) Loosen the lock nut (5) and turn the operating rod (6) to reach the distance **A**.

i) Check the distance **A** along the whole folding flap (4) (cutting side and inductor side) and at the top and bottom of the folding flap cam.

j) If the distance **A** differs on the cutting side and the inductor side, adjust by using the shims (7).

k) Check the volume flaps parallelism, see 4.7-2 Volume Flap - Alignment.

l) Check again from items f) *to* k).

m) Crank to 180 ° and repeat items f) - l) on the other side.

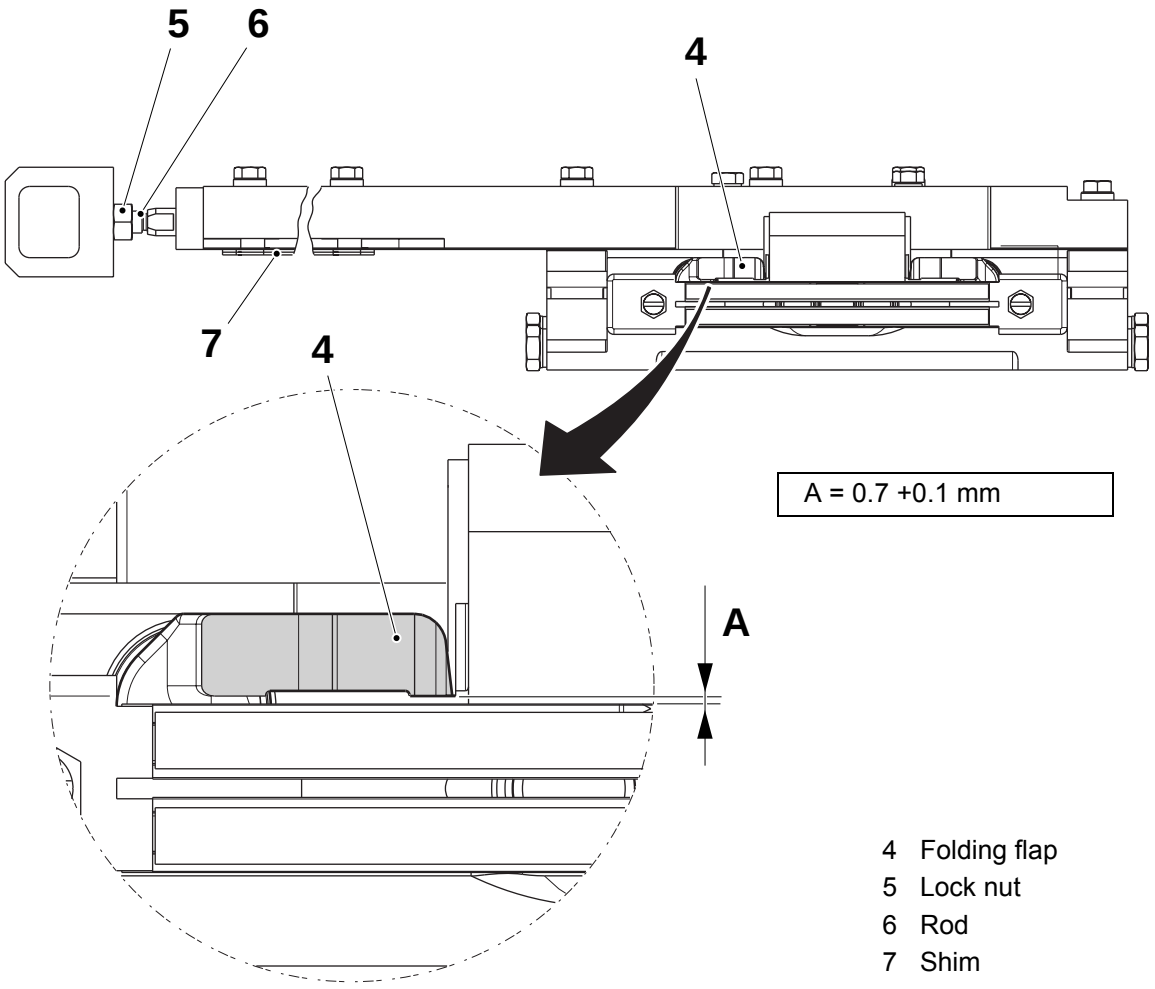

4 Folding flap
5 Lock nut
6 Rod
7 Shim

(Cont'd)

TechPub_2614345_0105 - 01_2772063_01.fm

(Cont'd)

When item j) has been carried out, proceed as follows:

Check Jaw Vertical Position

a) Crank to 30°.

b) Stick two pieces of adhesive tape (8) to the inductor.

c) Turn the service key inside the electrical cabinet to activate the hydraulic unit, and crank by one revolution.

d) Remove the upper RH and lower LH pieces of tape.

e) Check the vertical position. The knife must not hit the edge of the inductor groove. Adjust, if necessary, see items f) - j).

f) Crank to 210° and repeat items from b) *to* e).

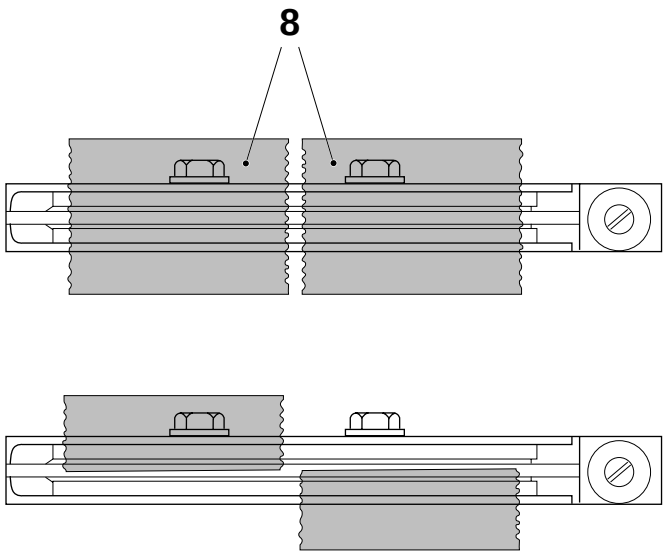

8 Adhesive tape

TechPub_2614345_0105 - 01_2772063_01.fm

4.1-7 Cutting Jaw - Overhaul Shock Absorber

Machine Status	Power supply disconnector OFF Air supply OFF Steam supply ON Water supply OFF
SPC Reference	256204-0600 256205-0600

See 4.2-5 Pressure Jaw - Overhaul Shock Absorber.

4.2 Pressure Jaw

4.2-1 Pressure Jaw - Overhaul

Machine Status	Power supply disconnector OFF Air supply OFF Steam supply ON Water supply OFF
Special Equipment	Torque wrench > 25 Nm
Consumables	Grease code F
SPC Reference	256212-0600 256213-0600

a) Remove the pressure jaw, see 4.2-3 Pressure Jaw - Change.

b) Remove and overhaul the shock absorber on the pressure jaw, see 4.2-5 Pressure Jaw - Overhaul Shock Absorber.

c) Remove the volume flap from the pressure jaw, see 4.7-3 Volume Flap - Overhaul.

(Cont'd)

TechPub_2614345_0105 - 01_2772064_01.fm

(Cont'd)

WARNING

Spring force.

Can cause serious injury. The four springs (7) are compressed. Be careful when removing or assembling components.

d) Remove the following components and check for wear and damage:
   - the screws (1)
   - the catches (2)
   - the four bleed screws (3) and balls (4)
   - the screws (5)
   - the lid (6)
   - the compression springs (7)
   - the piston (8) with the seal ring and the ring.

e) Change them if necessary.

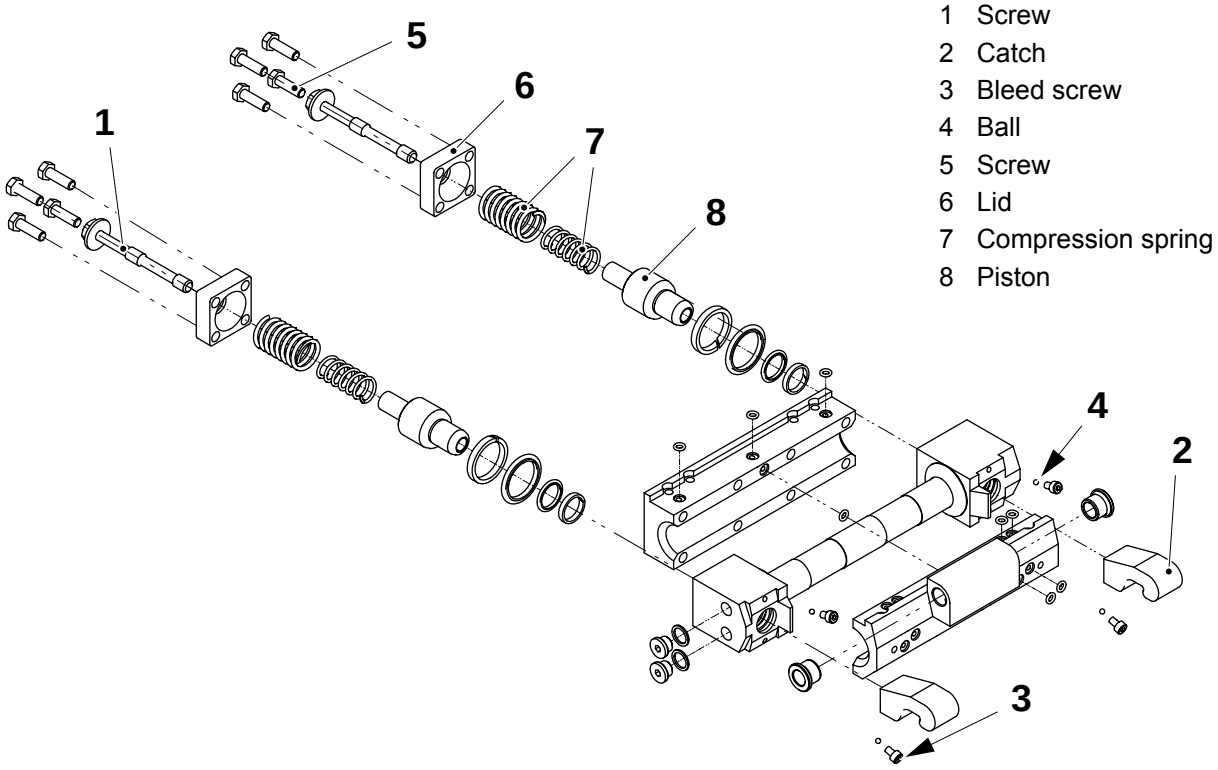

TechPub_2614345_0105 - 01_2772064_01.fm

(Cont'd)

(Cont'd)

f) Remove and check the following details for wear and damage:
   - the banjo connections (9) and (10). Check the valve and the hoses inside the connection.
   - the connections (11) and the O-rings (12)
   - the bushings (13)
   - the bearing housing (14)
   - the cylinder (15)
   - the plug (16). Check the valve and the O-ring inside the plug.

g) Change them if necessary.

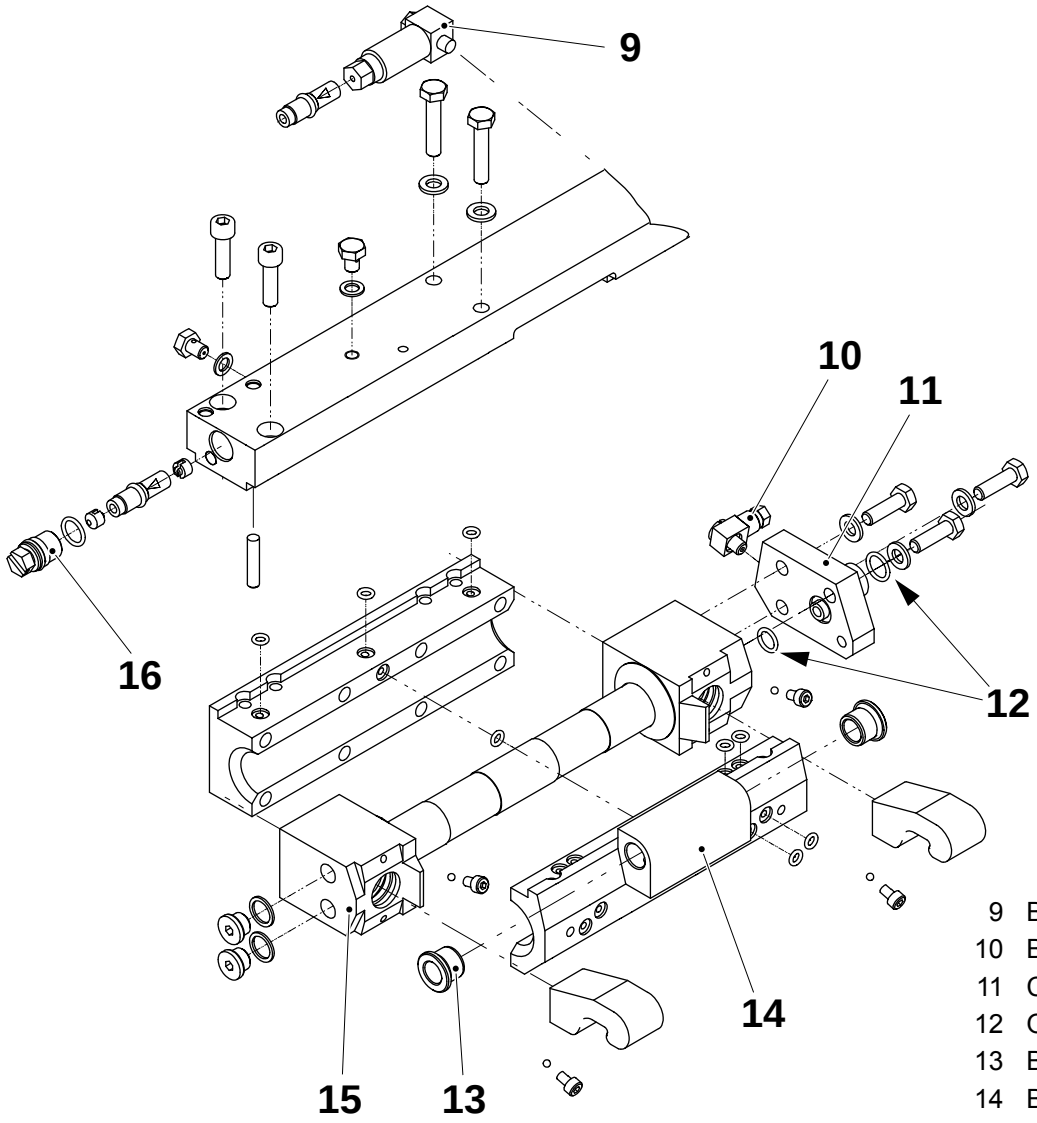

9 Banjo connection
10 Banjo connection
11 Connection
12 O-ring
13 Bushing
14 Bearing housing
15 Cylinder
16 Plug

(Cont'd)

TechPub_2614345_0105 - 01_2772064_01.fm

(Cont'd)

h) Remove and check the following details for wear and damage:
   - the roll (17)
   - the washers (18)
   - the sleeves (19) and (20)
   - the torsion spring (21)
   - the bushing (22)
   - the O-rings (23) and (24)
   - the gaskets (25)

i) Change them if necessary.

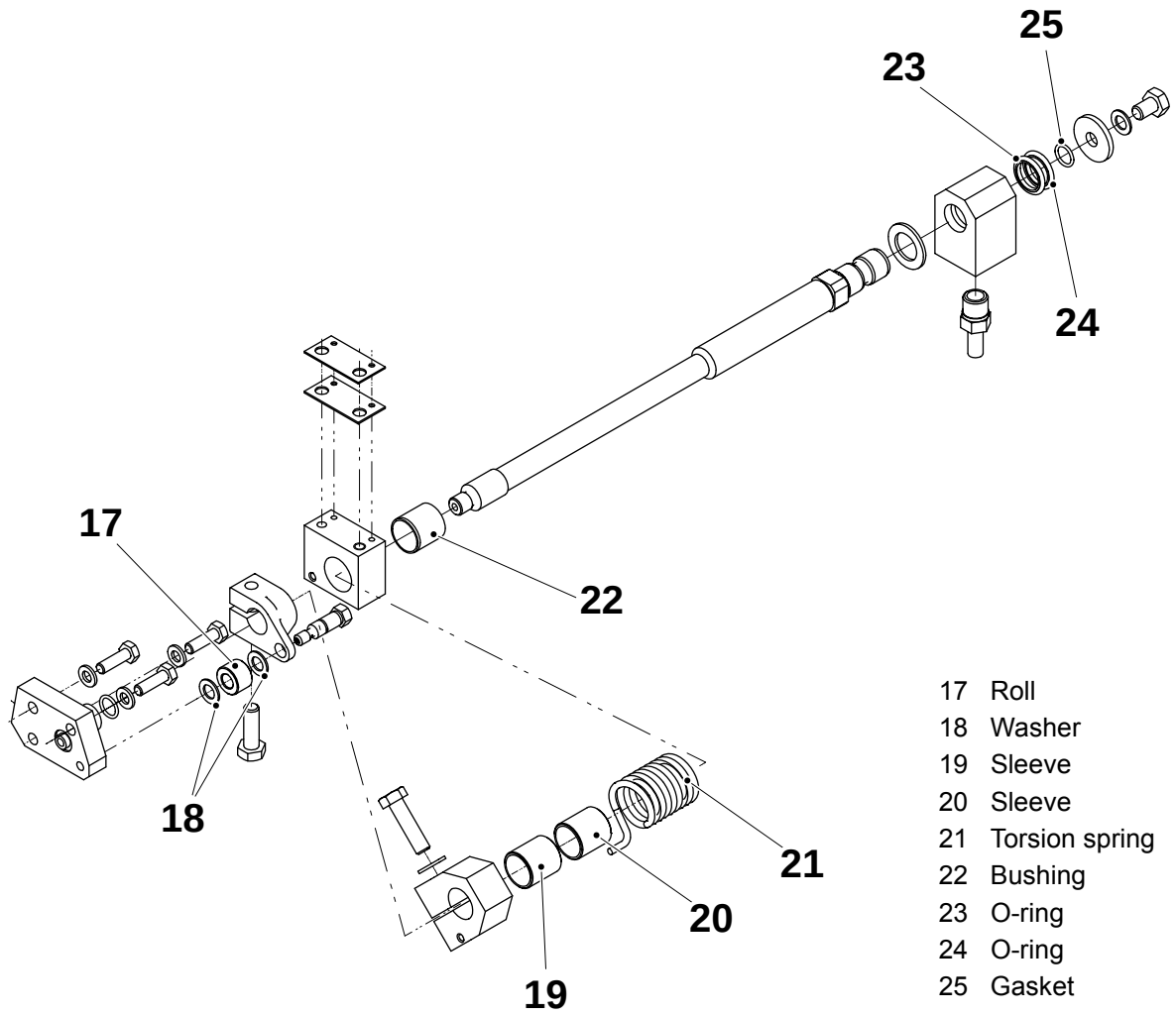

17 Roll
18 Washer
19 Sleeve
20 Sleeve
21 Torsion spring
22 Bushing
23 O-ring
24 O-ring
25 Gasket

TechPub_2614345_0105 - 01_2772064_01.fm

(Cont'd)

(Cont'd)

j) Remove and check the following details for wear and damage:
   - the clamp (26)
   - the screw (27)
   - the shaft (28)
   - the hub (29)
   - the lace (30)
   - the bracket (31)
   - the washers (32) and (33)
   - the hub (34)
   - the pipe connection (35)

k) Change them if necessary.

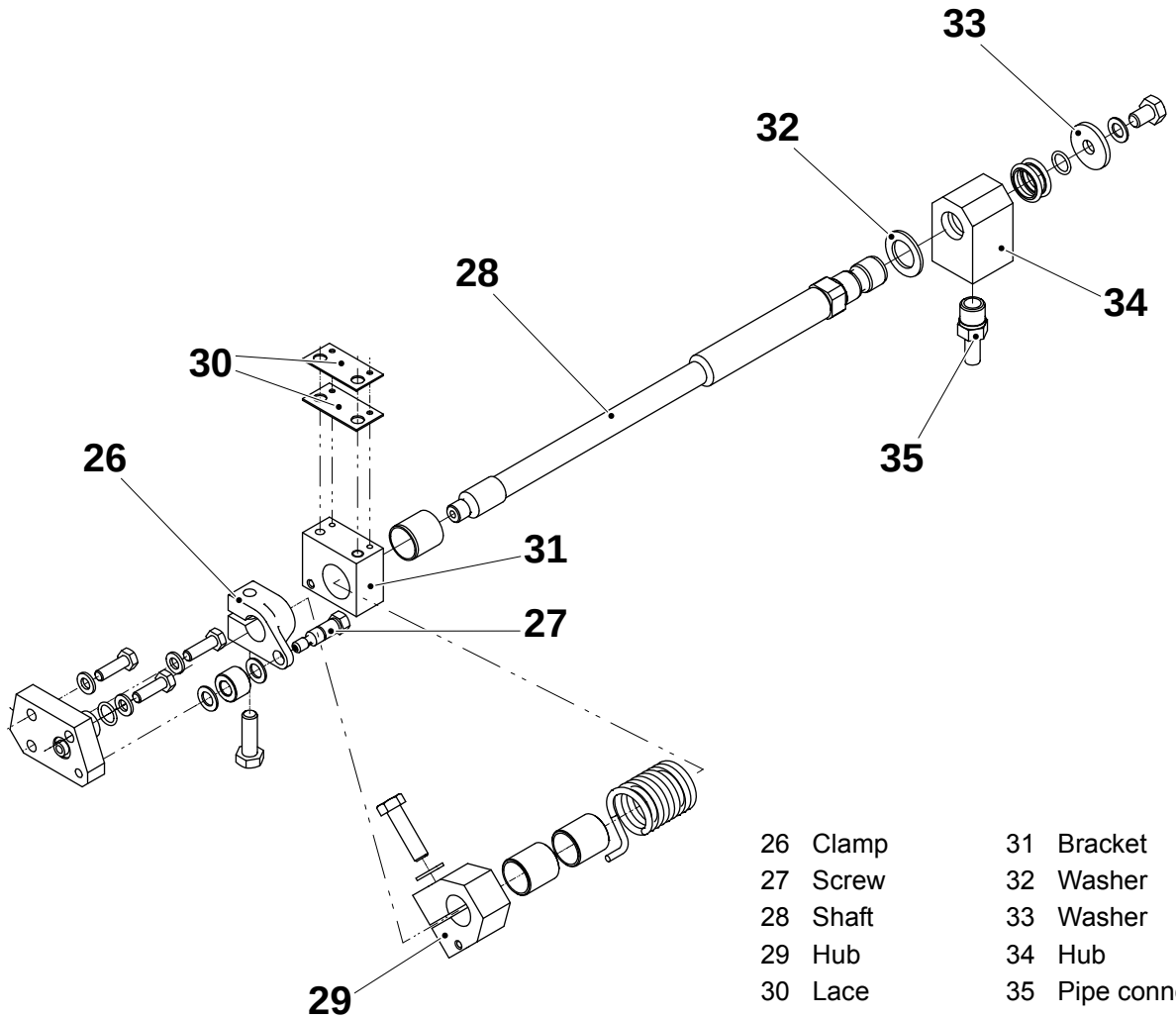

26	Clamp	31	Bracket
27	Screw	32	Washer
28	Shaft	33	Washer
29	Hub	34	Hub
30	Lace	35	Pipe connection

(Cont'd)

TechPub_2614345_0105 - 01_2772064_01.fm

(Cont'd)

WARNING
Lubricants.
Chemical products. Follow the Safety Precautions.

l) Carefully grease the springs (7) in the catch assembly before fitting. Use grease code F, refer to 15.3 Lubricants.

m) Refit the catches (2) and torque the screws (1) to **25 ±2** Nm.

n) Lift the catches (2) by hand and check that the shaft (28) turns smoothly.

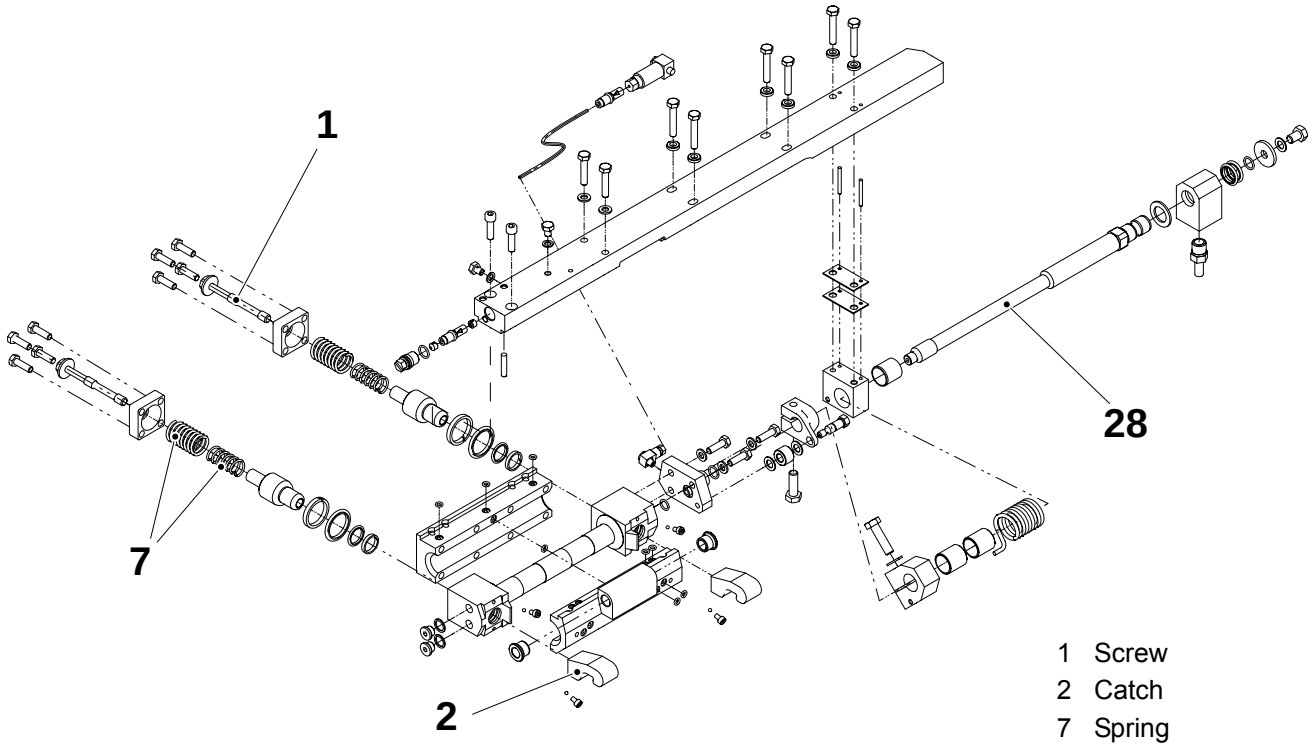

1 Screw
2 Catch
7 Spring
28 Shaft

TechPub_2614345_0105 - 01_2772064_01.fm

(Cont'd)

(Cont'd)

Pressure Rail

SPC Reference	256214-0400

a) Disconnect the busbar by removing the screw (1), the insulation nut (2), and the washers (3) and (4).

b) Remove the rail (5) by loosening the screw (6). Remove the O-ring (7).

c) Loosen the screws (8). Remove the inductor (9) from the rail (5).

d) Check the following details for wear and damage:
   - the nut (2)
   - the washers (3) and (4), the O-rings (7)
   - the gasket (10)
   - the inductor (9)

e) Assemble in the reverse order.

Note! Make sure that the dollies and the O-rings are correctly fit.

f) Bleed the catches, refer to 4.2-4 Pressure Jaw - Bleed. Set the volume flaps alignment, refer to 4.7-2 Volume Flap - Alignment.

TechPub_2614345_0105 - 01_2772064_01.fm

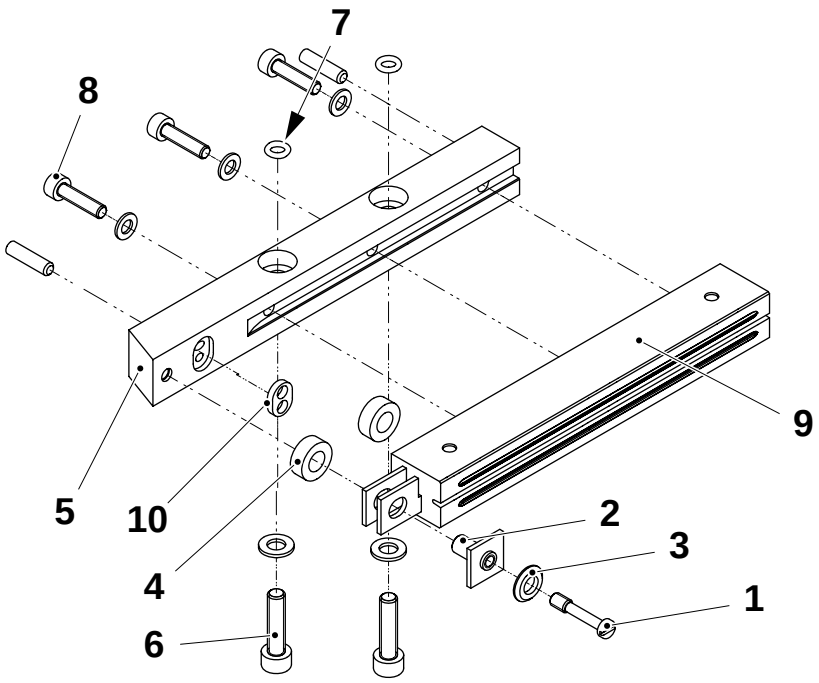

1 Screw
2 Nut
3 Washer
4 Washer
5 Rail
6 Screw
7 O-ring
8 Screw
9 Inductor
10 Gasket

4.2-2 Pressure Jaw - Check Catches and Catch Clearance

Machine Status	Power supply disconnector ON Air supply OFF Steam supply ON Water supply ON Service switch ON
SPC Reference	256212-0600 256213-0600

a) Check that the engagements of the catches are not worn. Change catches if necessary.

b) Put a piece of doubled packaging material with the same width as the TS between the inductor and the dollies. Cut the packaging material so that the folding flaps pass by.

c) Crank to 180°, and measure the distance **A** on the LH side pressure jaw.

d) Crank to 0°, and measure the distance **A** on the RH side pressure jaw.

e) If the distance **A** is less than 0.3 mm, check the pressure jaws, the dollies and the catches. Refer to <u>4.2-1 Pressure Jaw - Overhaul</u>.

A = min. 0.3 mm

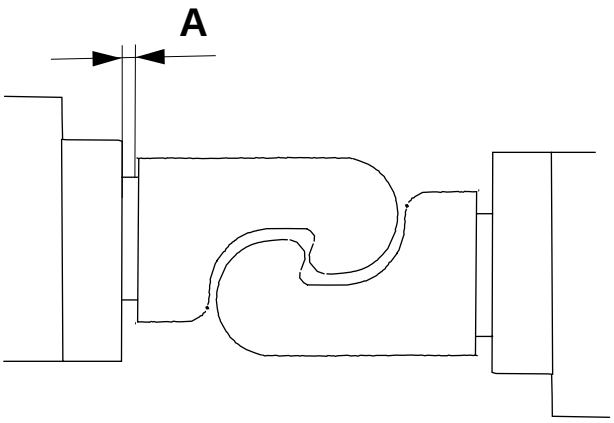

TechPub_2614345_0105 - 01_2772064_01.fm

(Cont'd)

(Cont'd)

f) Crank the machine and check the distance **B** between the disengagement movement catches.

g) If the distance **B** is **too small**, refer to 4-13 Jaw System - Set Catch Lifter Cams and Rollers and 4.2-7 Pressure Jaw - Set Pivot Spring.

h) Crank to D°, refer to the table below, and check the distance **C**.

i) Crank to E° and check the distance **C** for the other jaw pair.

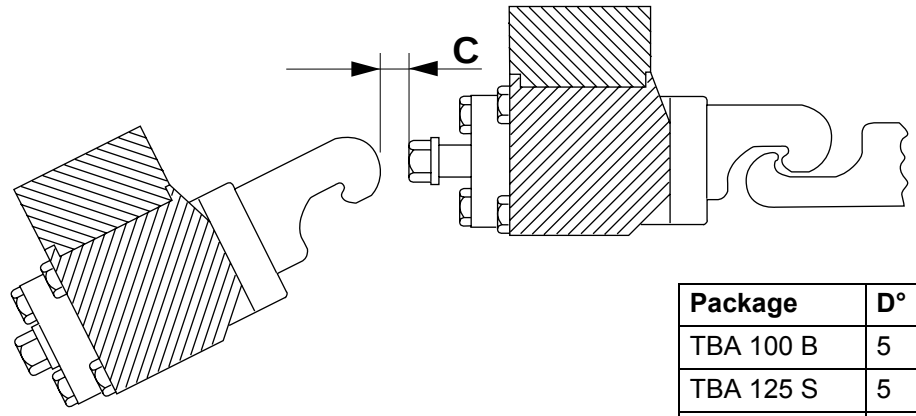

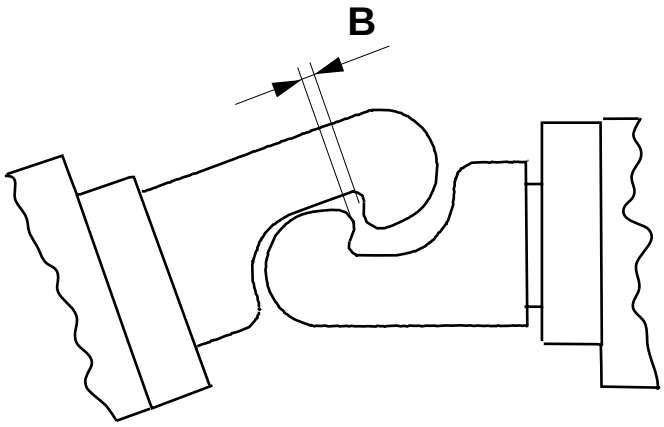

Package	D°	E°
TBA 100 B	5	185
TBA 125 S	5	185
TBA 160 S	352	172
TBA 180 B	5	185
TBA 200 B	355	175
TBA 200 M	355	175
TBA 200 S	5	185
TBA 250 B	5	185
TBA 250 S	355	175
TBA 284 B	5	185
TBA 300 S	5	185
TBA 330 S	355	175

B = min. 0.7 mm
C = min. 4 mm

TechPub_2614345_0105 - 01_2772064_01.fm

4.2-3 Pressure Jaw - Change

Machine Status	Power supply disconnector OFF Air supply OFF Steam supply ON Water supply OFF
Consumables	Oil code H Adhesive tape
SPC Reference	256212-0600 256213-0600

a) Crank the machine until one of the jaw pairs is open.

b) Remove the busbar and the transformer from the pressure jaw.

c) Remove the banjo connections and the oil connections.

d) Remove the hub (4) and loosen the screws (1) and (2).

e) Remove the shaft (3), the sleeves (5), and the spring (6).

Note! Be careful not to lose the shims

f) Remove the screws (7), the pressure jaw and the shims.

g) Change the pressure jaw and assemble in the reverse order.

h) Repeat the procedure on the other pressure jaw.

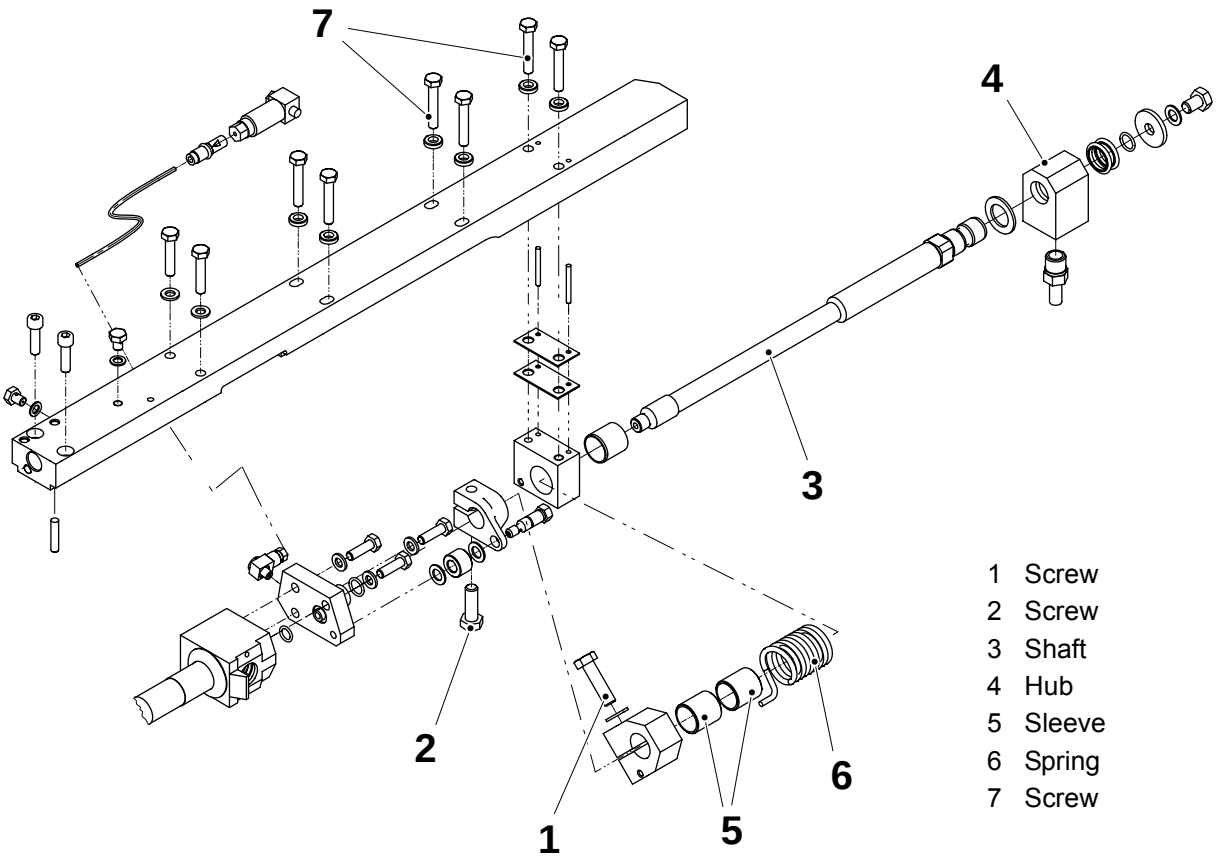

1 Screw
2 Screw
3 Shaft
4 Hub
5 Sleeve
6 Spring
7 Screw

TechPub_2614345_0105 - 01_2772064_01.fm

(Cont'd)

(Cont'd)

i) Perform the instructions Check Jaw Vertical Position on page 4-42.

j) Bleed the pistons, refer to 4.2-4 Pressure Jaw - Bleed.

k) Check the following:

- 4.7-2 Volume Flap - Alignment
- 4-2 Jaw System - Set Jaw Gap
- 4.1-6 Cutting Jaw - Check Folding Flap Mechanism

l) Check and, if necessary, set the package weight, refer to 4-12 Jaw System - Set Cam Support Rollers.

TechPub_2614345_0105 - 01_2772064_01.fm

4.2-4 Pressure Jaw - Bleed

Machine Status	Power supply disconnector ON Air supply OFF Steam supply ON Water supply ON Service switch ON
SPC Reference	256212-0600 256213-0600

a) Crank to 0°.

WARNING
Risk of splashing.
Can cause serious eye injury. Wear eye protection.

CAUTION
Sharp parts can cut.
Do not remove the screws (1) fully.

b) Loosen the screws (1) carefully, and bleed the catches on the RH side.

CAUTION
Risk of personal injury.
Do **not** over tighten the screws (1).

c) Tighten the screws (1).

d) Crank to 180° and bleed the catches of the LH side by repeating the same procedure.

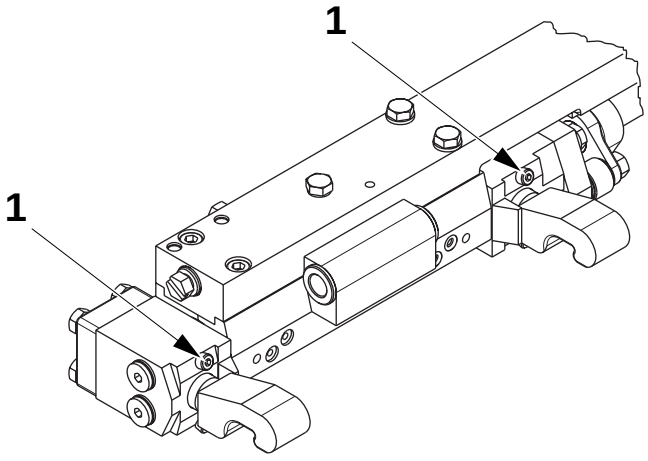

1 Screw

TechPub_2614345_0105 - 01_2772064_01.fm

4.2-5 Pressure Jaw - Overhaul Shock Absorber

Machine Status	Power supply disconnector OFF Air supply OFF Steam supply ON Water supply OFF
SPC Reference	256212-0600 256213-0600

a) Lift the spring (1) away from the pin. Move the spring (1) horizontally away from the flap.

b) Unhook the spring (1) from the link (2) and remove the sleeve (3).

c) Check the following details for wear and damage:
   - the spacer (4)
   - the link (2)
   - the sleeve (3), the spacer and the washer
   - the spring (1)
   - the stop (5)

d) Change the parts, if necessary. Assemble in the reverse order.

TechPub_2614345_0105 - 01_2772064_01.fm

TBA is shown.

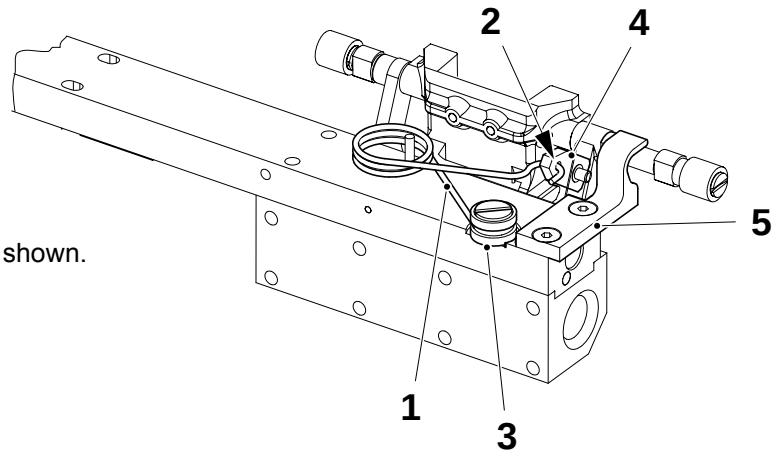

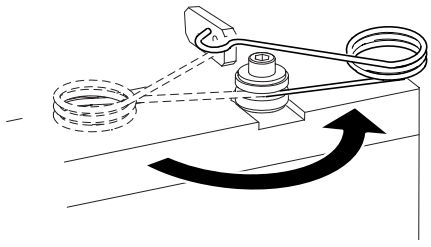

1 Spring
2 Link
3 Sleeve
4 Spacer
5 Stop

4.2-6 Pressure Jaw - Lubricate Pivot Spring

Machine Status	Power supply disconnector OFF Air supply OFF Steam supply ON Water supply OFF
Consumables	Grease code F
SPC Reference	256212-0600 256213-0600

WARNING

Lubricants.

Chemical products. Follow the Safety Precautions.

Lubricate the pivot bushing with grease code F, refer to 15.3 Lubricants.

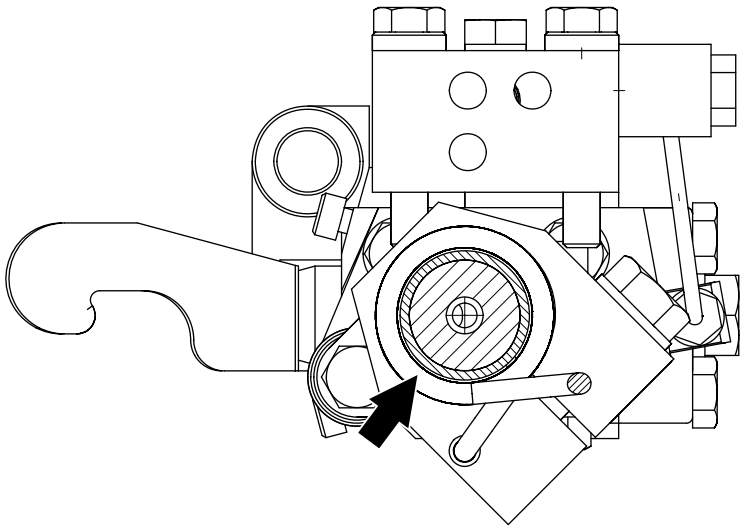

TechPub_2614345_0105 - 01_2772064_01.fm

4.2-7 Pressure Jaw - Set Pivot Spring

Machine Status	Power supply disconnector OFF Air supply OFF Steam supply ON Water supply OFF
Consumables	Grease code F
SPC Reference	256212-0600 256213-0600

WARNING

Lubricants.

Chemical products. Follow the Safety Precautions.

a) Lubricate the bushing (2) with grease code F, refer to 15.3 Lubricants.

b) Crank until the catches are engaged.

c) Set the distance **A**, between the corner of the lug (3) and the top side of the carrier (1), by loosening the screw (4) and turning the lug (3).

d) Make sure that the lug (3) moves sideways smoothly before tightening the screw (4).

TechPub_2614345_0105 - 01_2772064_01.fm

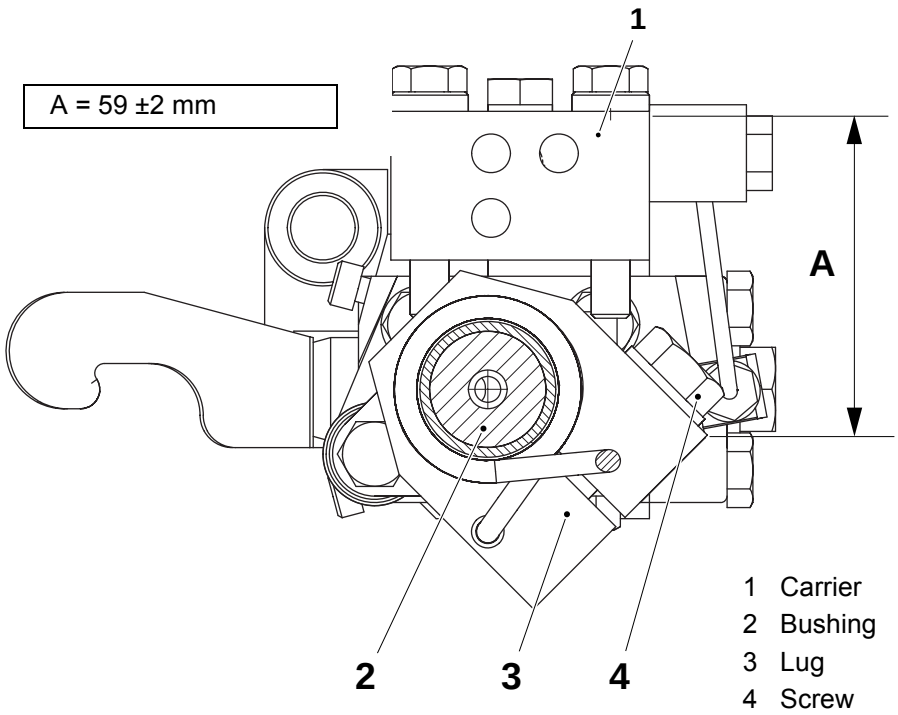

4.3 Motorised Design Control System

Machine Status	Power supply disconnector OFF Air supply OFF Steam supply ON Water supply OFF
SPC Reference	1512305-0100 1512306-0100

Setting Sequence

If a complete setting of the Motorised Design Control System has to be carried out, follow the sequence below.

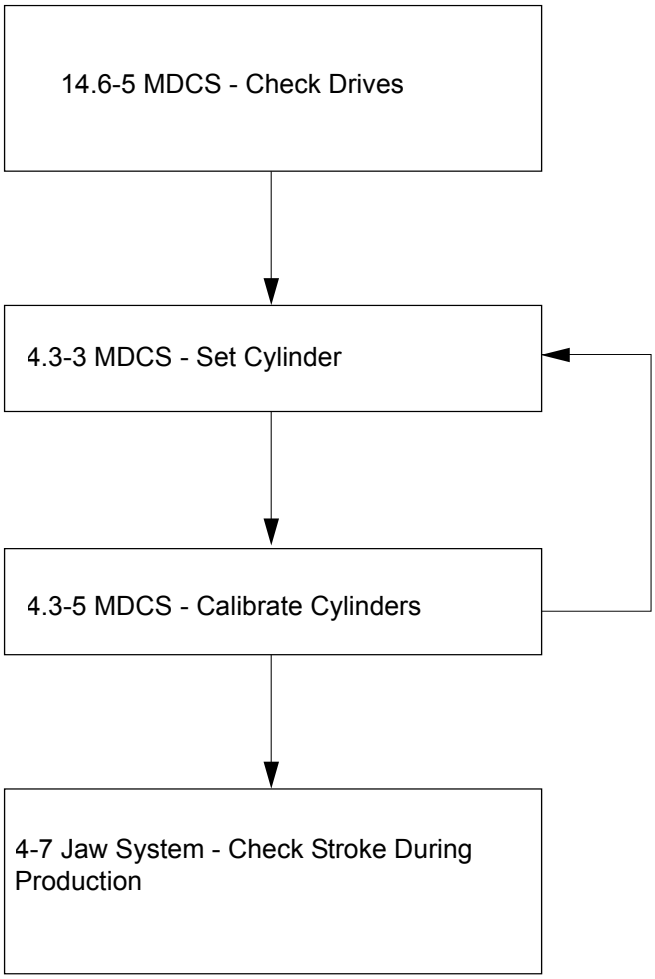

TechPub_2614345_0105 - 01_2772065_01.fm

4.3-1 MDCS - Change Rod End

Machine Status	Power supply disconnector OFF Air supply OFF Steam supply ON Water supply OFF
SPC Reference	1512305-0100 1512306-0100

WARNING

Moving parts can crush.

Be careful when activating the cylinder.

a) Swing sideways and pull out the axle (1).

b) Loosen the screw (2) and remove the bracket (3).

c) Disconnect the rod end (4) from the cylinder.

d) Change the rod end (4), the bushing (5), and its seal ring.

e) Assemble in the reverse order.

f) Set the cylinder, refer to 4.3-3 MDCS - Set Cylinder.

TechPub_2614345_0105 - 01_2772065_01.fm

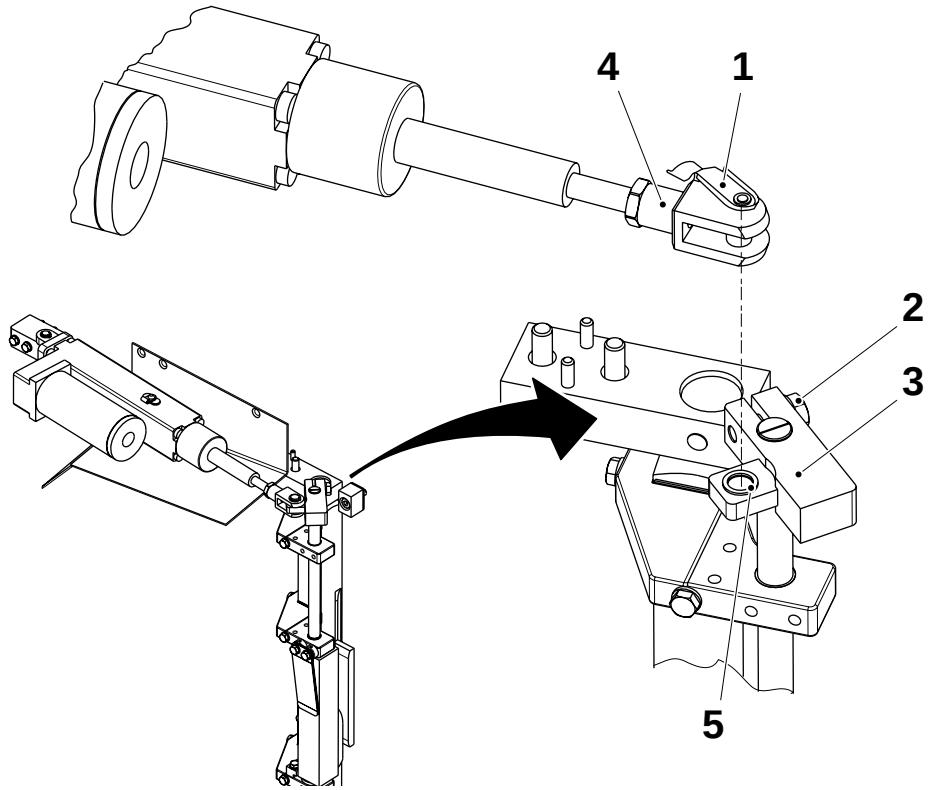

1 Axle
2 Screw
3 Bracket
4 Rod end
5 Bushing

4.3-2 MDCS - Change Cylinders

Machine Status	Power supply disconnector OFF Air supply OFF Steam supply ON Water supply OFF
SPC Reference	1512305-0100 1512306-0100

a) Swing sideways and pull out the axle (6).
b) Swing out the cylinder (5).
c) Remove the sensor (1) using the screw (2).
d) Disconnect the hose (3).
e) Disconnect the cable (4) using the cable clamp (8).
f) Remove the cylinder (5) by using the circlip (7).
g) Disconnect the link head and the rod end.
h) Assemble the new cylinder assembly in the reverse order.
i) Set and calibrate the cylinder, see 4.3-3 MDCS - Set Cylinder and 4.3-5 MDCS - Calibrate Cylinders.

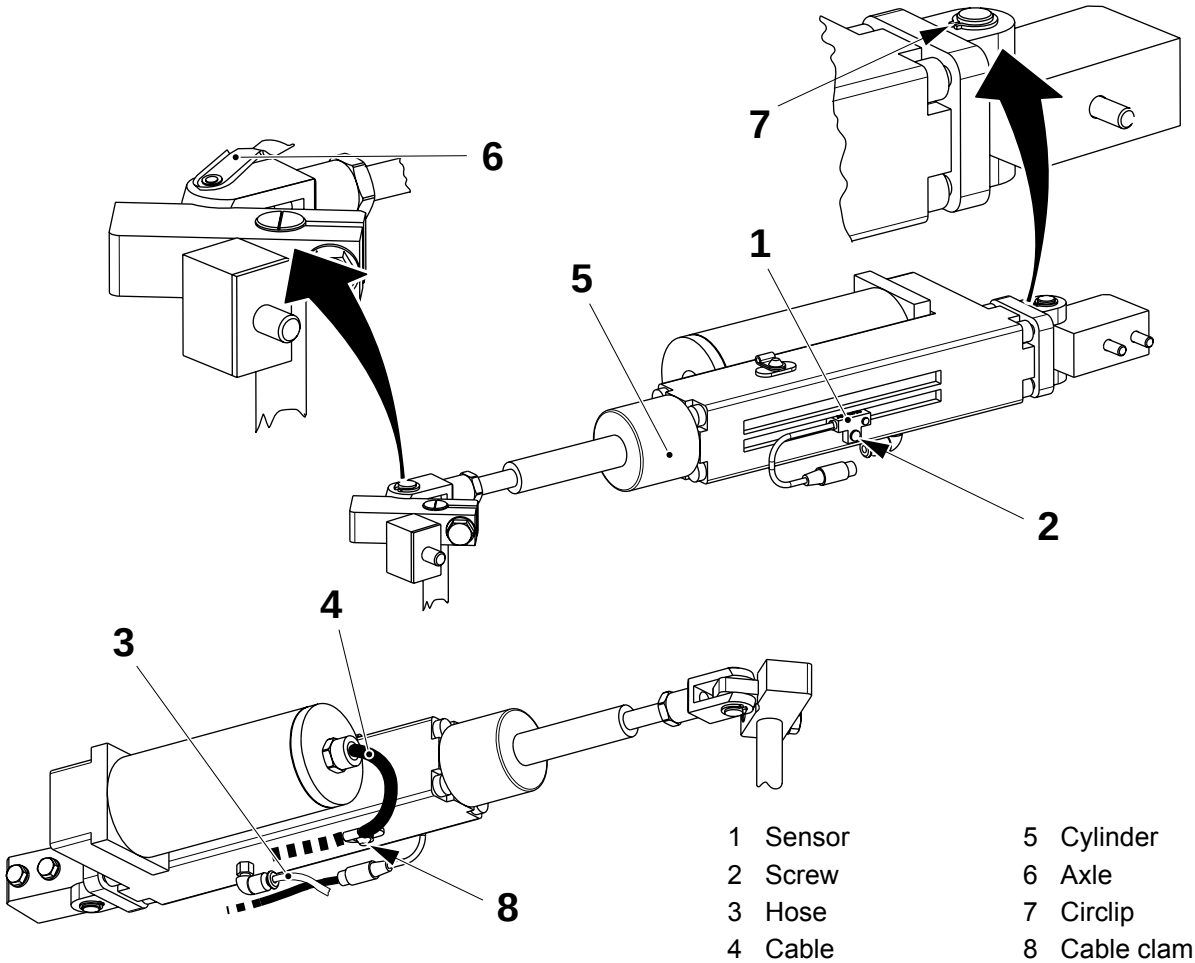

1 Sensor
2 Screw
3 Hose
4 Cable
5 Cylinder
6 Axle
7 Circlip
8 Cable clamp

TechPub_2614345_0105 - 01_2772065_01.fm

4.3-3 MDCS - Set Cylinder

Machine Status	Power supply disconnector ON Air supply OFF Steam supply ON Water supply OFF
Special Equipment	Template TP No. 75945
SPC Reference	1512305-0100 1512306-0100

(Cont'd)

TechPub_2614345_0105 - 01_2772065_01.fm

(Cont'd)

a) Crank to approximately 10° (LH side) or 190° (RH side).

b) Loosen the screws (1) to have a certain distance between the blocking piece (2) and the cam (3).

a) Swing sideways and pull out the axle (5) to disconnect the cylinder (4).

b) Put the template (6) with the chamfered corner (7) facing forward.

c) Loosen the screw (8) and turn the eccentric shaft (9) until the cam (10) bears against the template (6) and the bracket (11) touches the blocking piece (12).

d) Tighten the screw (8).

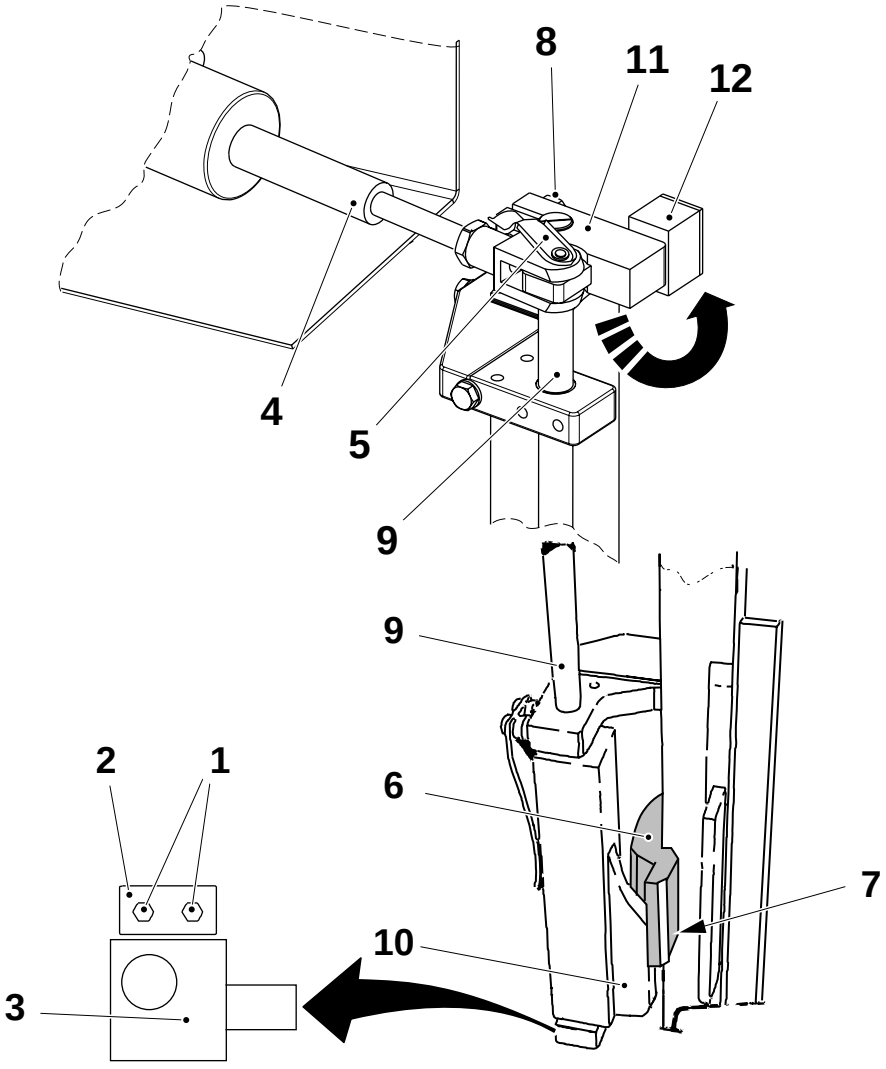

1 Screw
2 Blocking piece
3 Cam
4 Cylinder
5 Axle
6 Template
7 Chamfered corner
8 Screw
9 Shaft
10 Cam
11 Bracket
12 Blocking piece

(Cont'd)

TechPub_2614345_0105 - 01_2772065_01.fm

(Cont'd)

Cylinder Basic Setting

a) Pull out the axle (2).
b) Loosen the screw (1).
c) Push the piston (3) fully in.
d) Move the sensor (4) slowly backward (arrow) until lights **On**.
e) Tighten the screw (1).
f) Put the axle (2) back.
g) Calibrate the cylinder, see 4.3-5 MDCS - Calibrate Cylinders.

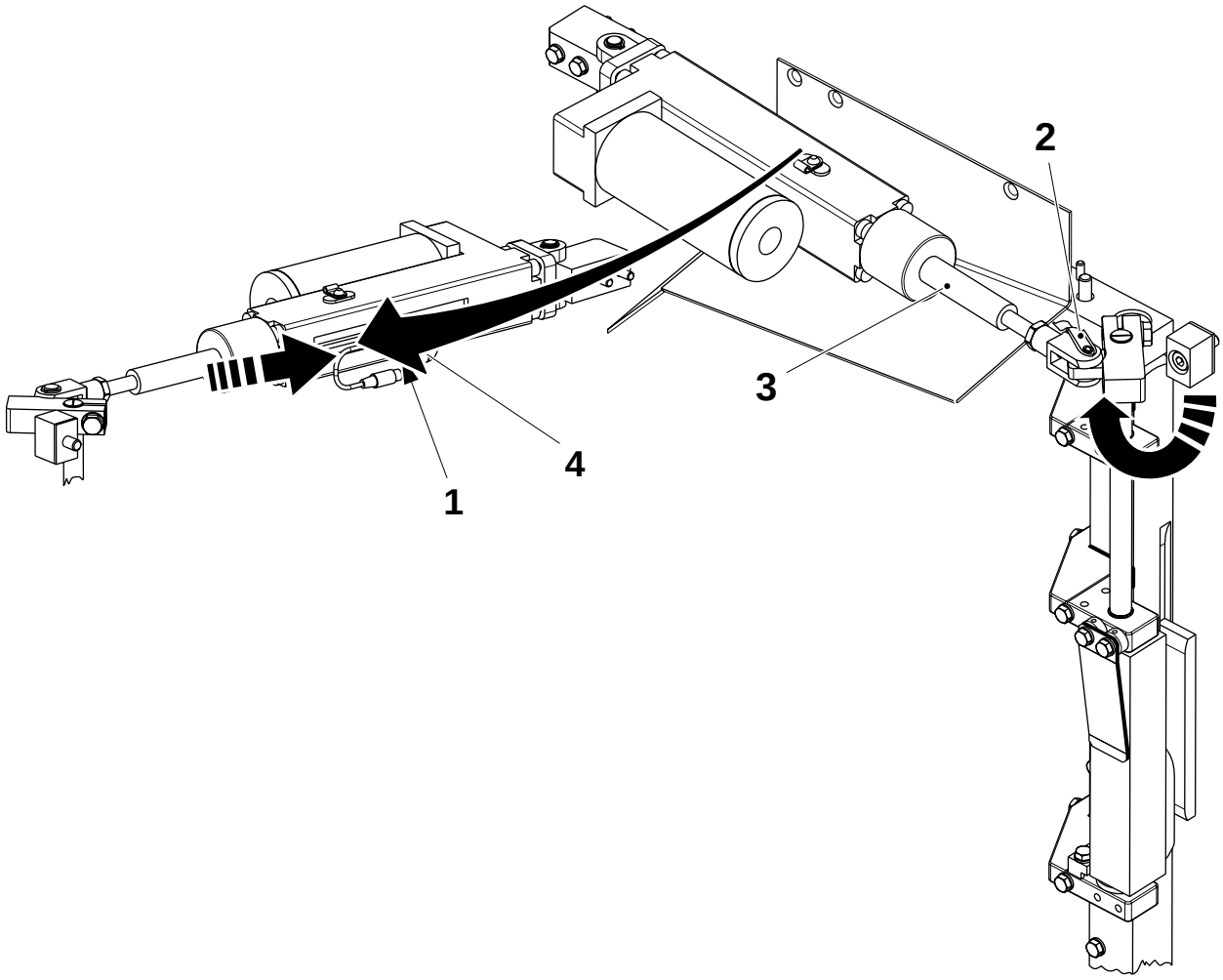

1 Screw
2 Axle
3 Piston
4 Sensor

TechPub_2614345_0105 - 01_2772065_01.fm

4.3-4 MDCS - Check Sensors

Machine Status	Power supply disconnector ON Air supply OFF Steam supply ON Water supply OFF
SPC Reference	1512305-0100 1512306-0100

Note! If a malfunctioning occurs see front panel TMCC2 LED descriptions within chapter 14.6-1 MDCS - Function Description.

Manually move backward and forward the cylinder (1) and verify that the lights of the sensor (2) goes **On** and **Off**.
If necessary, change the sensor and set its position, see 4.3-3 MDCS - Set Cylinder, Cylinder Basic Setting.

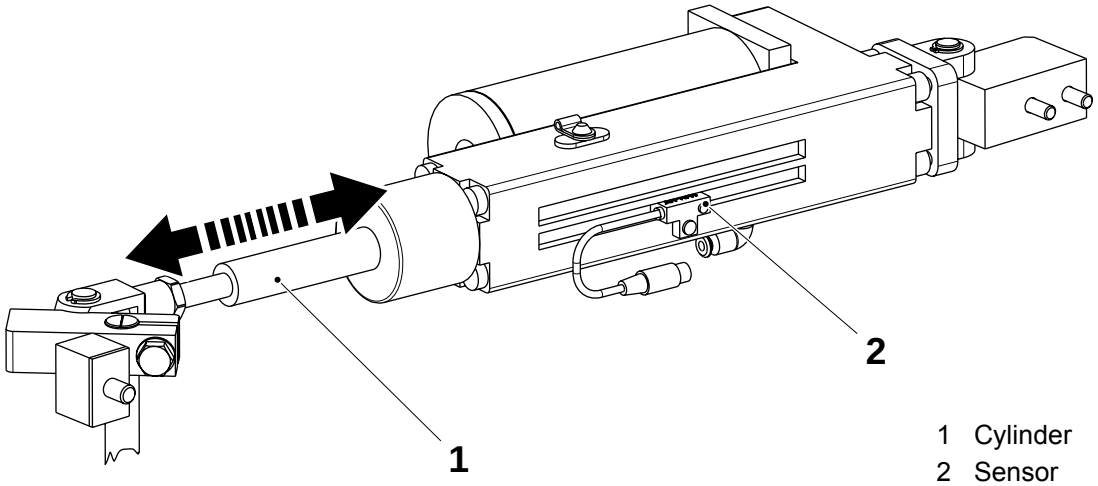

1 Cylinder
2 Sensor

TechPub_2614345_0105 - 01_2772065_01.fm

4.3-5 MDCS - Calibrate Cylinders

Machine Status	PREHEATING I
SPC Reference	1512305-0100 1512306-0100

a) Close the FFU doors and crank the machine to angle within 301° - 40° to calibrate the LH side cylinder, and reset the safety module.

b) Connect the PC and the TMCC2 (2) card (**A400**) using the communication cable (1) and start the communication.

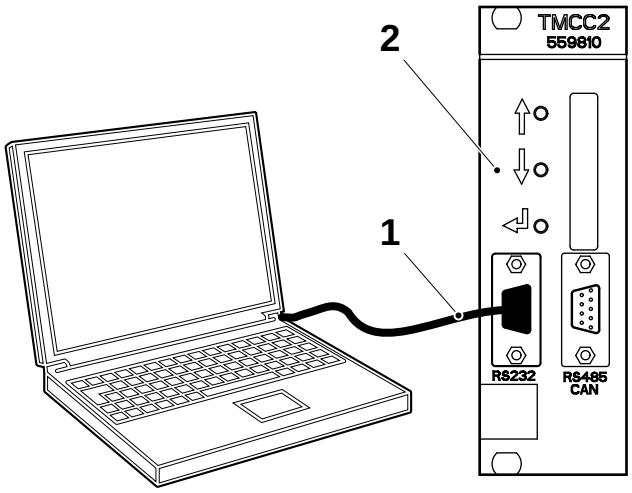

1 Communication cable
2 TMCC2 card

(Cont'd)

TechPub_2614345_0105 - 01_2772065_01.fm

(Cont'd)

WARNING
Moving parts can crush.
Be careful when activating the cylinder.

c) Disconnect the rod end (7) of the cylinder, see 4.3-1 MDCS - Change Rod End.

d) Type the command "CAL" to enter the calibration menu on the TMCC2 card 14.6-3 MDCS - Display Report.

e) Press the key **H** to enter the home position and check the distance **A**. If necessary, adjust the position of the sensor (3) and check again.

f) Press the key **C** to enter the calibration mode. The cylinder moves completely forward.

g) Set the distance **B** between the bracket (4) and the blocking piece (5) and check that the pin (6) can be inserted smoothly.

h) If necessary, loosen the screw (10) and adjust by moving the cylinder (11).

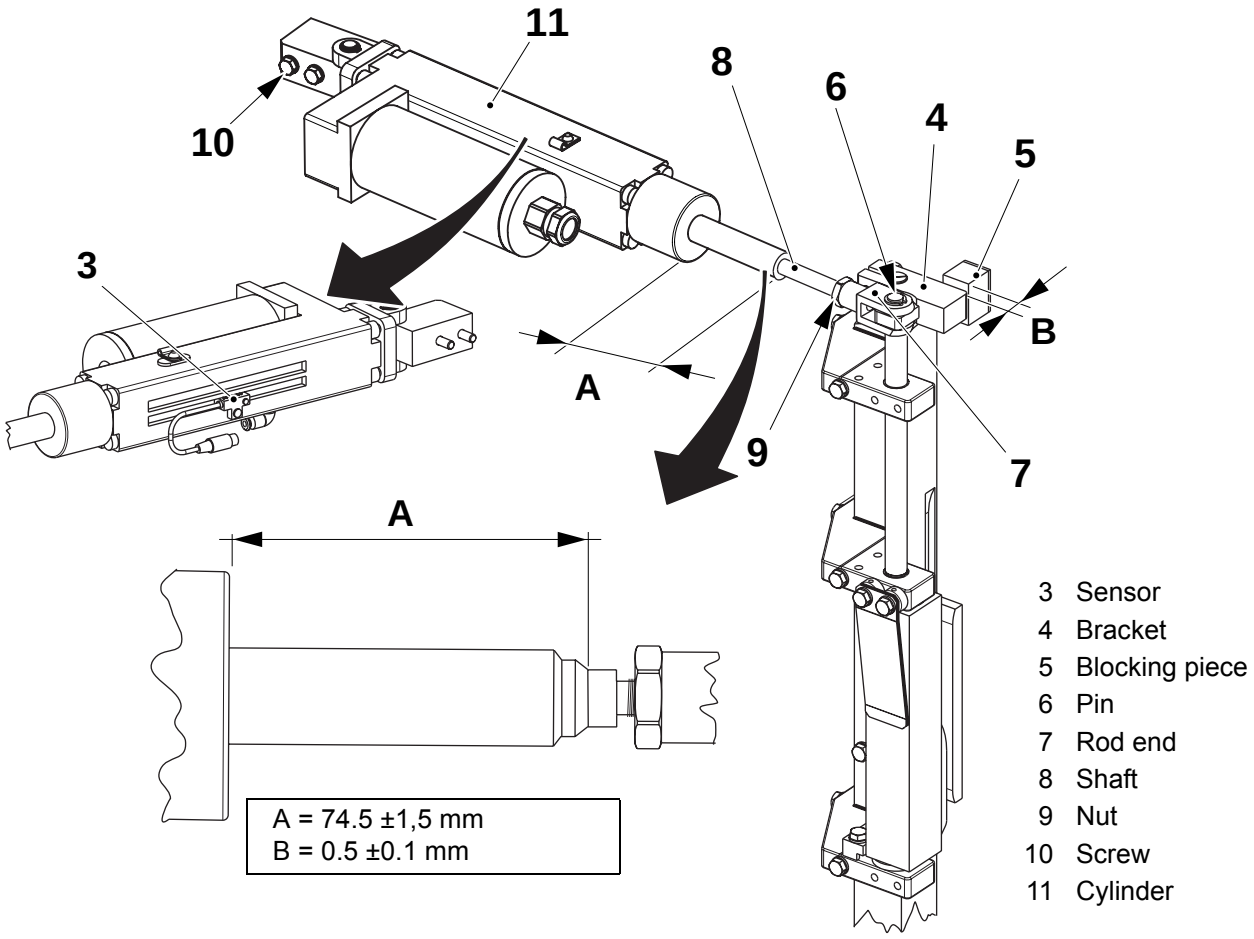

TechPub_2614345_0105 - 01_2772065_01.fm

(Cont'd)

(Cont'd)

i) Check again items e) and g) and adjust if necessary.

j) Tighten the screw to fix the sensor (3) and assemble the rod end (7) to the bracket (4), see 4.3-1 MDCS - Change Rod End.

k) Press the key **H** to enter the home position and press **E** to ESC.

l) Crank to approximately 180° (LH side) or 0° (RH side).

m) Set the distance **C** between the blocking piece (10) and the cam (11) using the screws (12).

n) Set the folding flap, see 4.1-6 Cutting Jaw - Check Folding Flap Mechanism.

o) Crank the machine to an angle within 120° - 220° and repeat the same procedure from item c) to m) for the RH side cylinder.

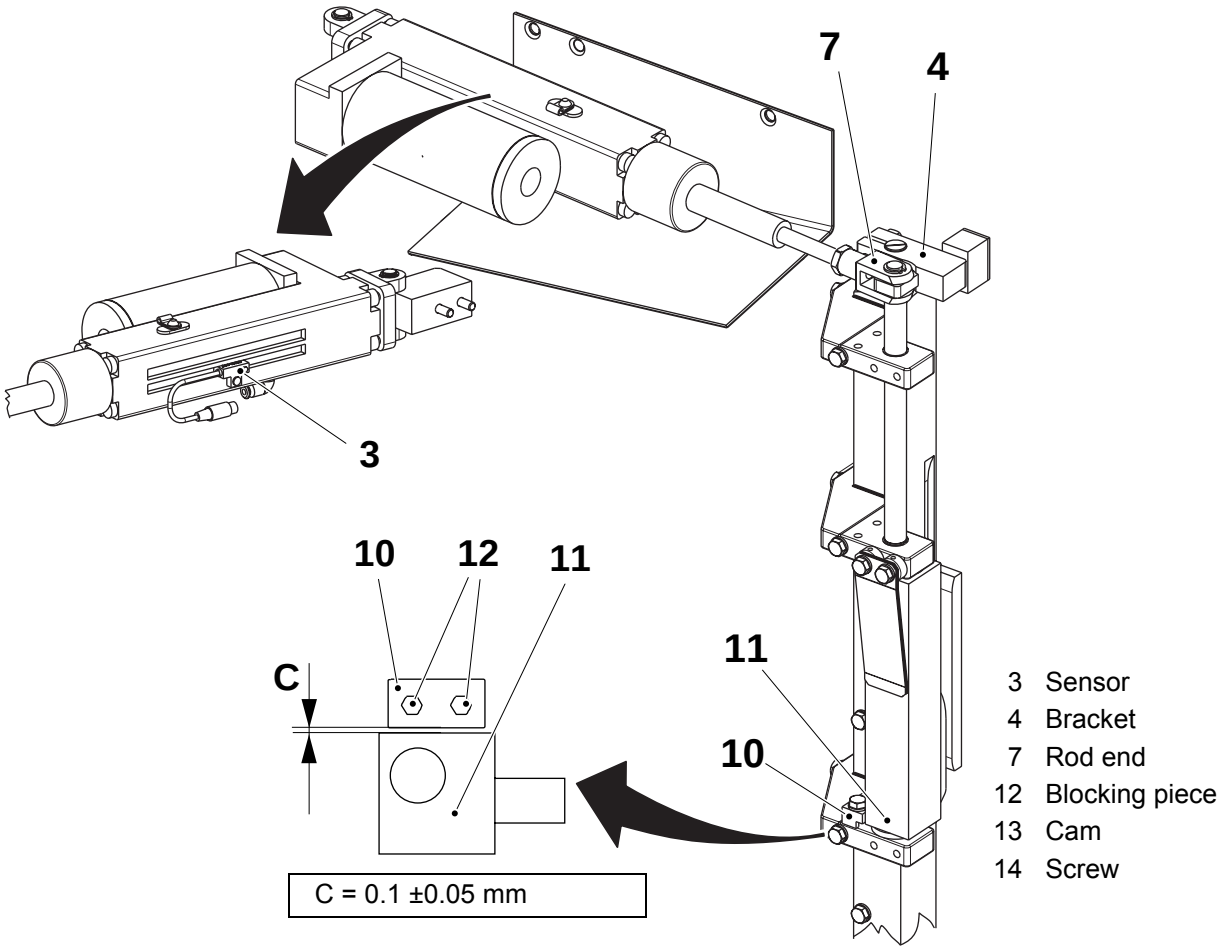

TechPub_2614345_0105 - 01_2772065_01.fm

4.3-6 MDCS - Check Condition

Machine Status	Power supply disconnector OFF Air supply OFF Steam supply ON Water supply OFF
SPC Reference	1512305-0100 1512306-0100

Check Transmission

Check the following details for wear or damage:

- the bushings (1): check that there is no excessive play
- the leaf springs (2): the springs must bear against the back of the cam (3) when the cam is in non-corrective position (full packaging material feed)
- the folding flap cam (3), especially the running surface

Change, if necessary, see 4.3-7 MDCS - Change Bushings, Folding Flap Cams and Eccentric.

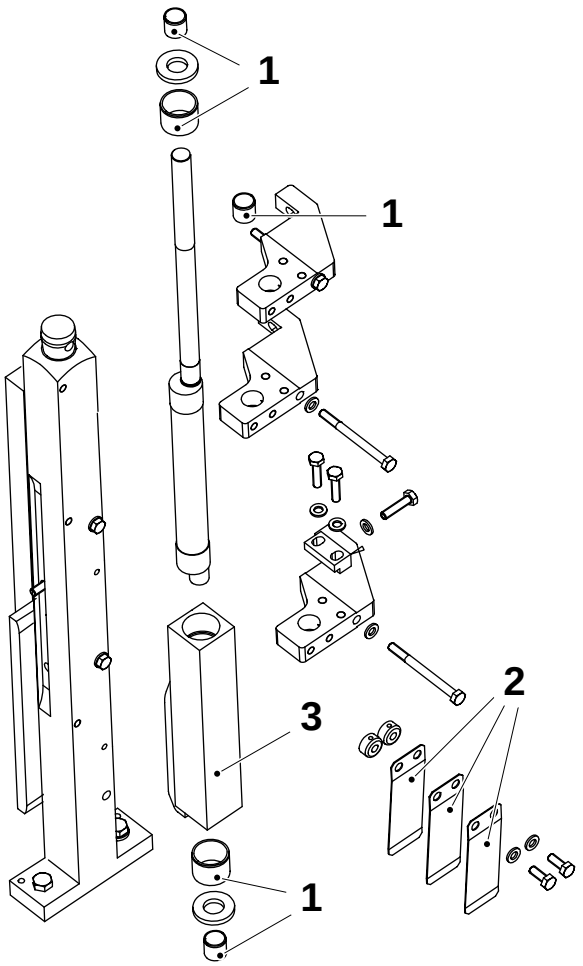

1 Bushing
2 Leaf spring
3 Cam

(Cont'd)

TechPub_2614345_0105 - 01_2772065_01.fm

(Cont'd)

Check Cylinder

Check the following details for wear or damage:

- Check the air connection (1): make sure that there is no air leakage.
- Check the cable connections (2) and (3), and the cable clamp (5).
- Check that the motor works properly, see 4.3-5 MDCS - Calibrate Cylinders. If not change the cylinder assembly see 4.3-2 MDCS - Change Cylinders.
- Check the sensor (4), see 4.3-4 MDCS - Check Sensors.

Change the parts, if necessary.

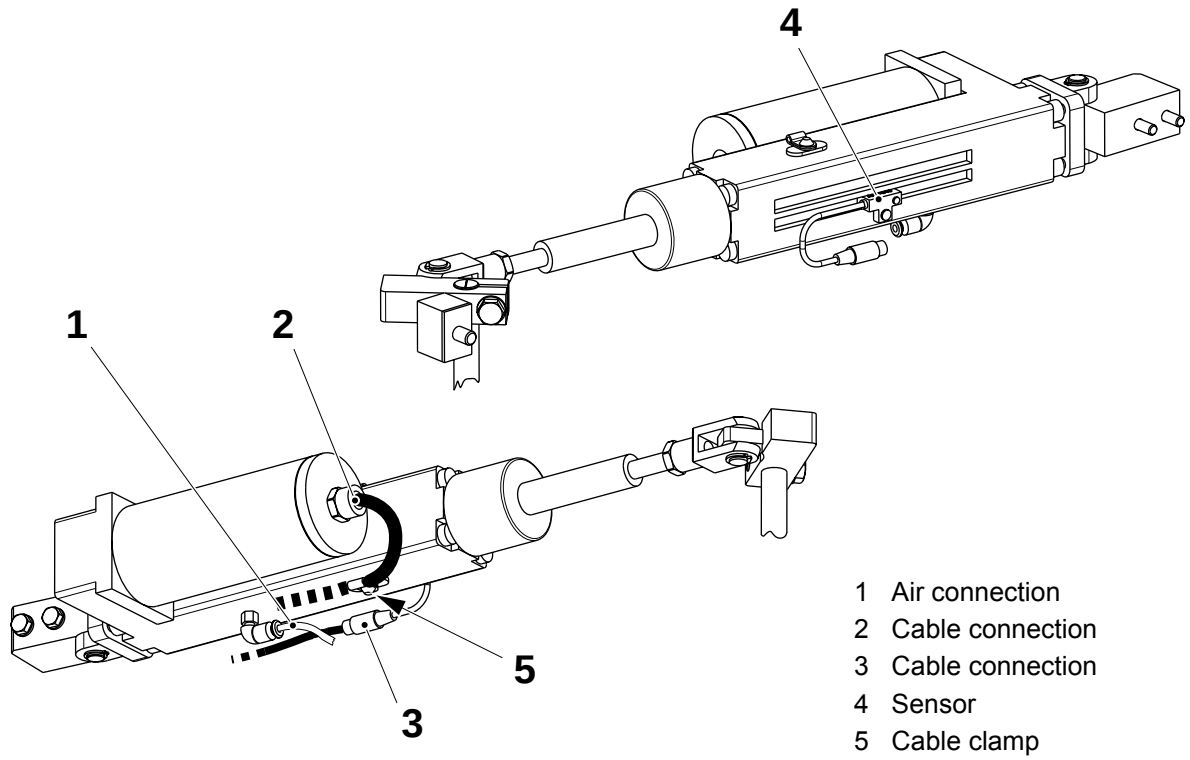

1 Air connection
2 Cable connection
3 Cable connection
4 Sensor
5 Cable clamp

TechPub_2614345_0105 - 01_2772065_01.fm

4.3-7 MDCS - Change Bushings, Folding Flap Cams and Eccentric

Machine Status	Power supply disconnector OFF Air supply OFF Steam supply ON Water supply OFF
SPC Reference	1512305-0100 1512306-0100

a) Disconnect the cylinder and remove the bracket.

b) Remove the brackets (4) and dismantle the folding flap cams (5) and the eccentric shaft (6).

c) Change the bushings (1), (2), and (3).

d) Check and, if necessary, change the eccentric shaft (6) and the folding flap cams (5).

e) Assemble in the reverse order.

f) Set the cylinder, see 4.3-3 MDCS - Set Cylinder

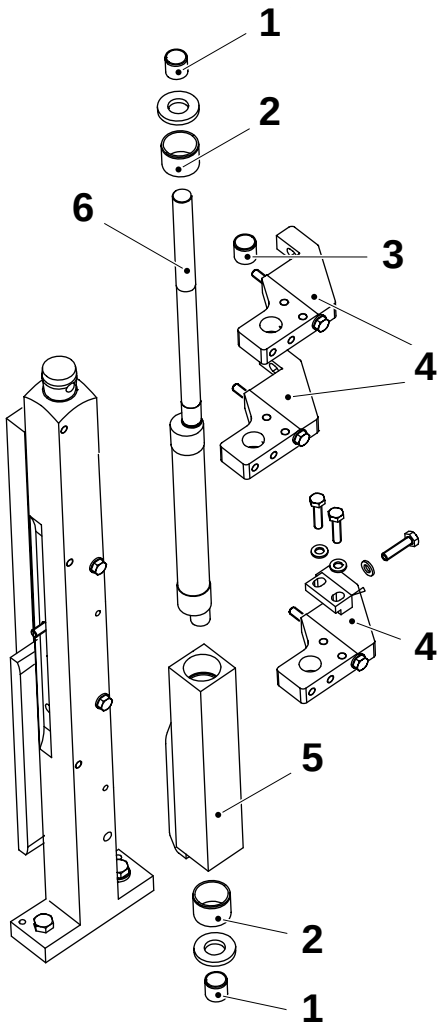

1 Bushing
2 Bushing
3 Bushing
4 Bracket
5 Folding flap cam
6 Eccentric shaft

TechPub_2614345_0105 - 01_2772065_01.fm

4.3-8 MDCS - Check Pressures

Machine Status	Power supply disconnector ON Air supply ON Steam supply ON Water supply OFF
SPC Reference	1512305-0100 1512306-0100

Check the pressure on the pressure gauge (1). Adjust, if necessary, using the correspondent regulators, see 15.1 Technical Data

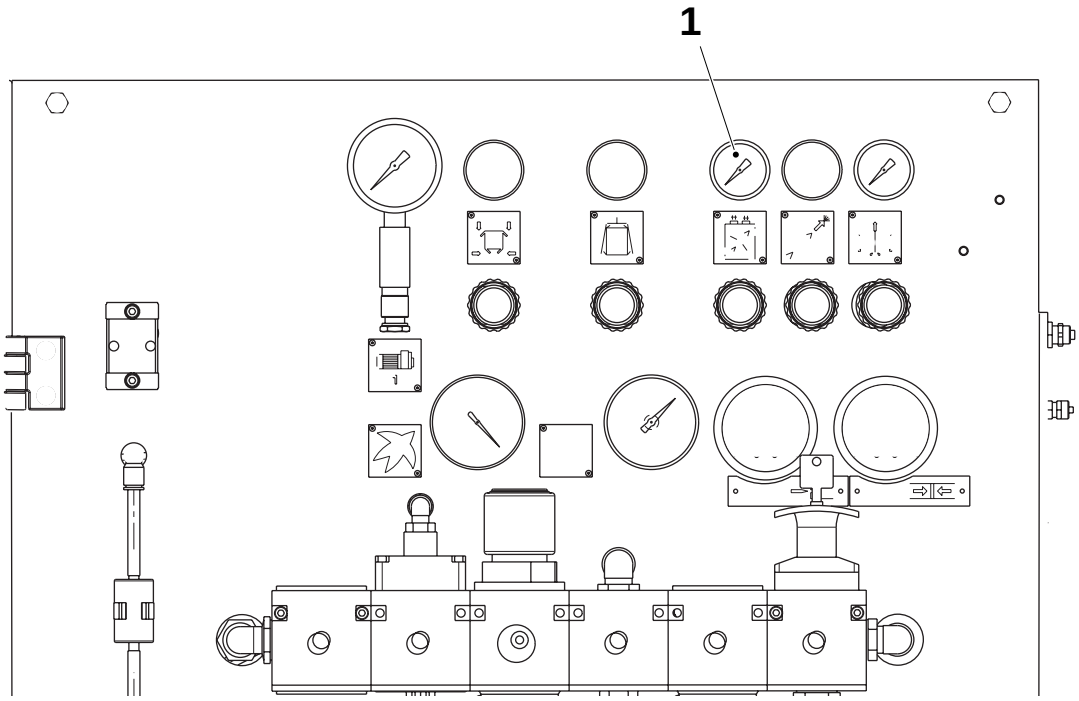

1 Pressure gauge

TechPub_2614345_0105 - 01_2772065_01.fm

4.4 Yoke

4.4-1 Yoke - Check Sliders

Machine Status	Power supply disconnector OFF Air supply OFF Steam supply ON Water supply OFF
SPC Reference	256951-0500 256952-0500

a) Crank the machine until one of the jaw pairs is open.

b) Remove the screws (1) and the bracket (3). Note the shims behind the bracket.

c) Pull out the slider (2).

d) Check the sliders. If the lubrication groove (4) has worn away, change the slider (2).

e) Assemble in the reverse order.

CAUTION
Risk of damage to equipment.
Do not forget to install the shim behind the bracket.

f) Set the yoke symmetry, refer to 4.4-5 Yoke - Set Symmetry.

g) Repeat on the other side.

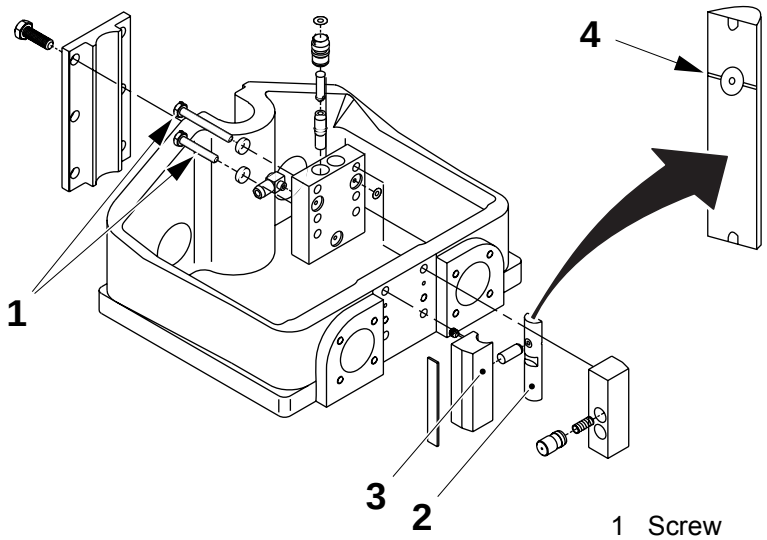

1 Screw
2 Slider
3 Bracket
4 Lubrication groove

TechPub_2614345_0105 - 01_2772066_01.fm

4.4-2 Yoke - Check Curve Rollers and Arm

Machine Status	Power supply disconnector OFF Air supply OFF Steam supply ON Water supply OFF
SPC Reference	256951-0500 256952-0500

Check the following:

- the curve rollers (2) and (4) for wear, change them, if necessary.
- the arm (3) for play. If necessary, change the flange bushings (1).

Check the cam and support rollers setting and adjust, if necessary, see 4-12 Jaw System - Set Cam Support Rollers.

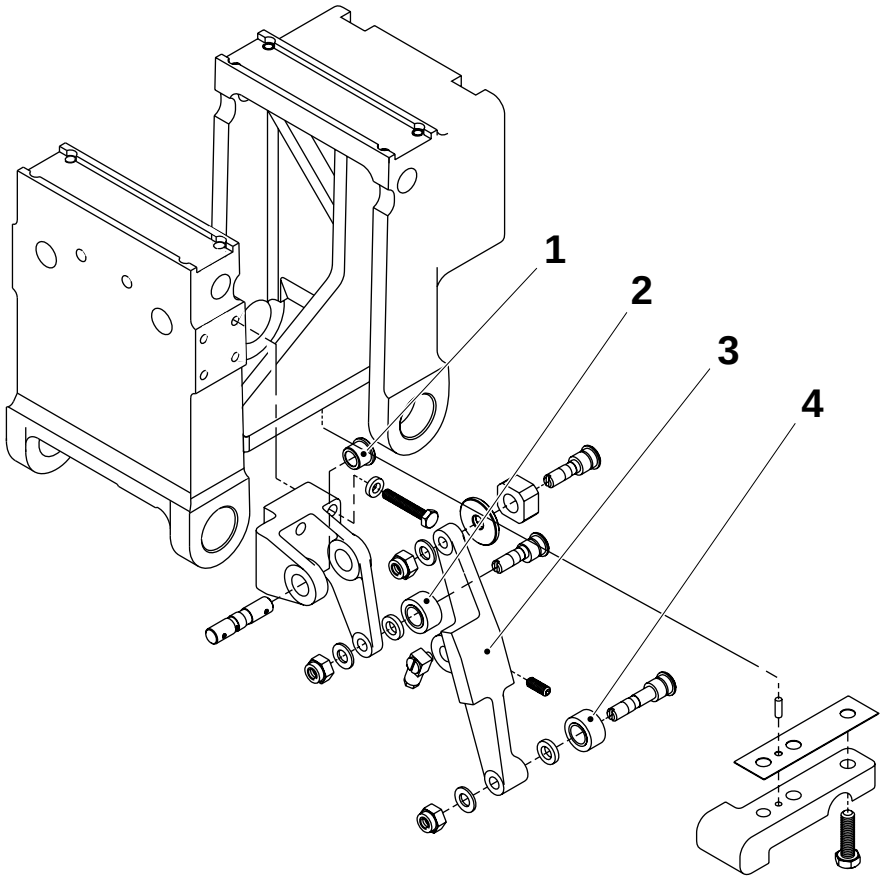

1 Flange bushing
2 Curve roller
3 Arm
4 Curve roller

TechPub_2614345_0105 - 01_2772066_01.fm

4.4-3 Yoke - Change Plungers

Machine Status	Power supply disconnector OFF Air supply OFF Steam supply ON Water supply OFF
SPC Reference	256951-0500 256952-0500

a) Crank until one of the jaw pairs is open.

b) Remove the screws (1) and the bracket (2). Check the O-rings behind the brackets.

c) Remove and change the plungers (3).

d) Assemble in the reverse order.

e) Repeat on the other side.

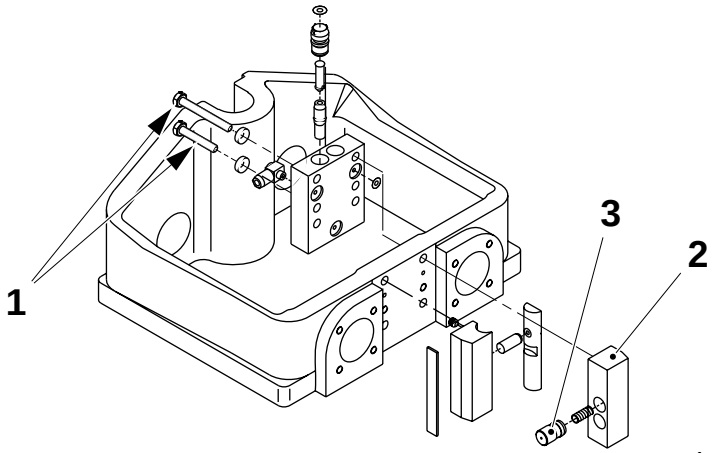

1 Screw
2 Bracket
3 Plunger

TechPub_2614345_0105 - 01_2772066_01.fm

4.4-4 Yoke - Overhaul

Machine Status	Power supply disconnector OFF Air supply OFF Steam supply ON Water supply OFF
Consumables	Lock fluid TP No. 90157-16
SPC Reference	256951-0500 256952-0500

(Cont'd)

TechPub_2614345_0105 - 01_2772066_01.fm

(Cont'd)

a) Remove the cover (1).

b) Remove the nuts (2).

CAUTION
Risk of damage to equipment.
The nut (3) must not be completely removed from the threaded pin.

c) Loosen the nut (3) to release the tension on the hold-down device spring.

CAUTION
Risk of damage to equipment.
Be careful not to damage the pointer (5) or to change its setting.

d) Remove the degree scale (6).

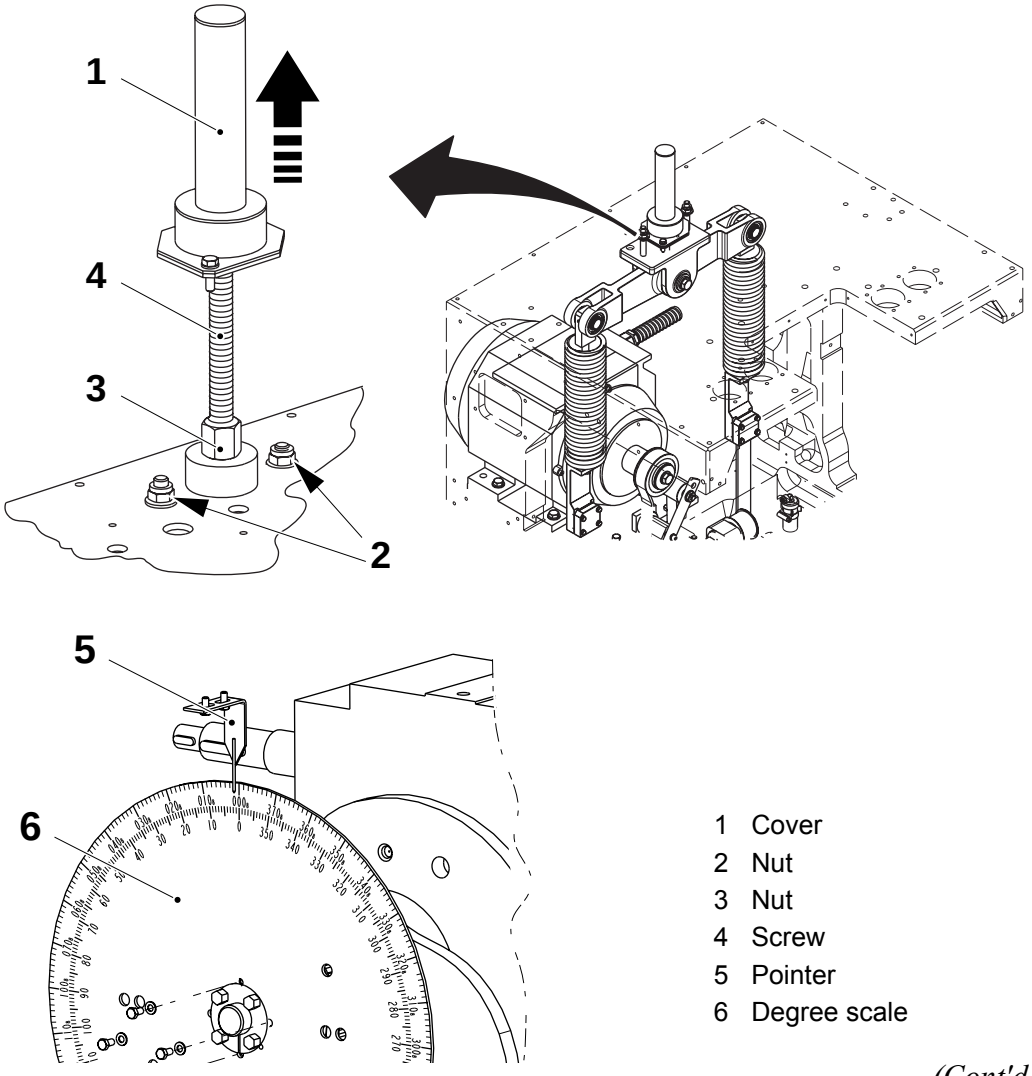

1 Cover
2 Nut
3 Nut
4 Screw
5 Pointer
6 Degree scale

(Cont'd)

TechPub_2614345_0105 - 01_2772066_01.fm

(Cont'd)

e) Remove the cutting jaw, refer to 4.1-1 Cutting jaw - change.

f) Remove the pressure jaw, refer to 4.3-2 Pressure jaw - change.

g) Place wooden blocks underneath the yokes.

WARNING

Risk of crushing.

Watch your finger when lowering the parts.

h) Loosen the screws (9) and (10) and carefully lower the yoke.

i) Loosen the two screws (11) under the link guide (7) and lower the link arm down on to the bottom plate.

j) Remove the four screws (12) on the plate under the yoke guide (8). Remove the two screws (13) under the guides and remove the plate.

k) Push up the yoke guide (8), the link guide (7) and remove the yoke.

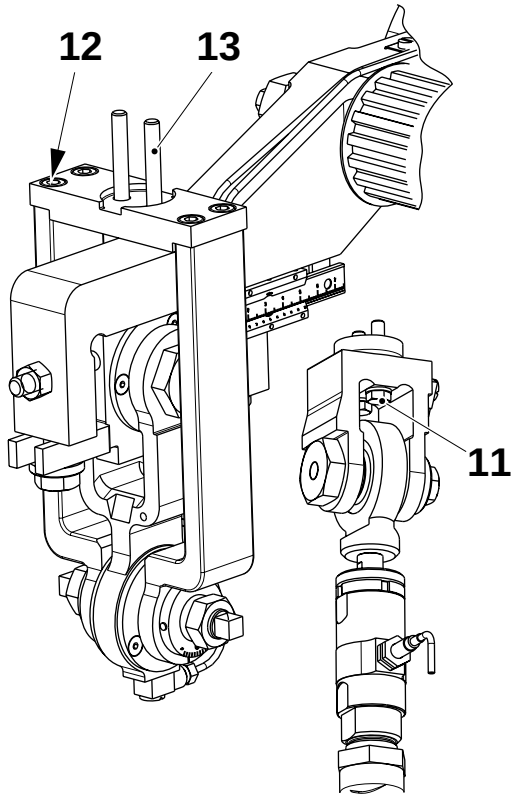

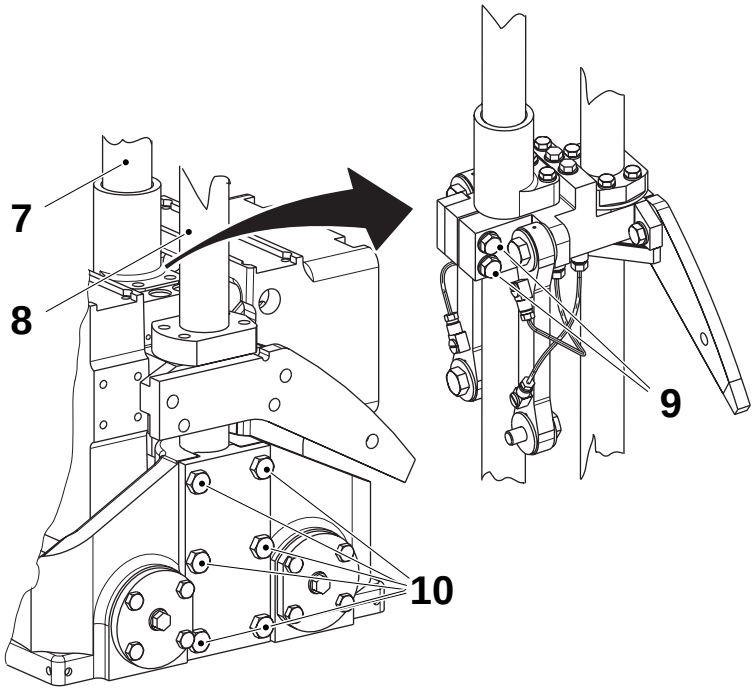

7	Link guide	11	Screw
8	Yoke guide	12	Screw
9	Screw	13	Screw
10	Screw		

(Cont'd)

TechPub_2614345_0105 - 01_2772066_01.fm

(Cont'd)

Note! Do not loosen the shims (14) when removing.

l) Check the following details for wear and damage:
- the shaft (15)
- the flange bushing (16).
- the bushings (17).

m) Change them if necessary.

Note! When assembling make sure that the shaft (15) and the flange bushing (16) are fitted correctly.

n) Assemble in the reverse order.

Check the cam and support rollers settings and adjust, if necessary, see 4-12 Jaw System - Set Cam Support Rollers.

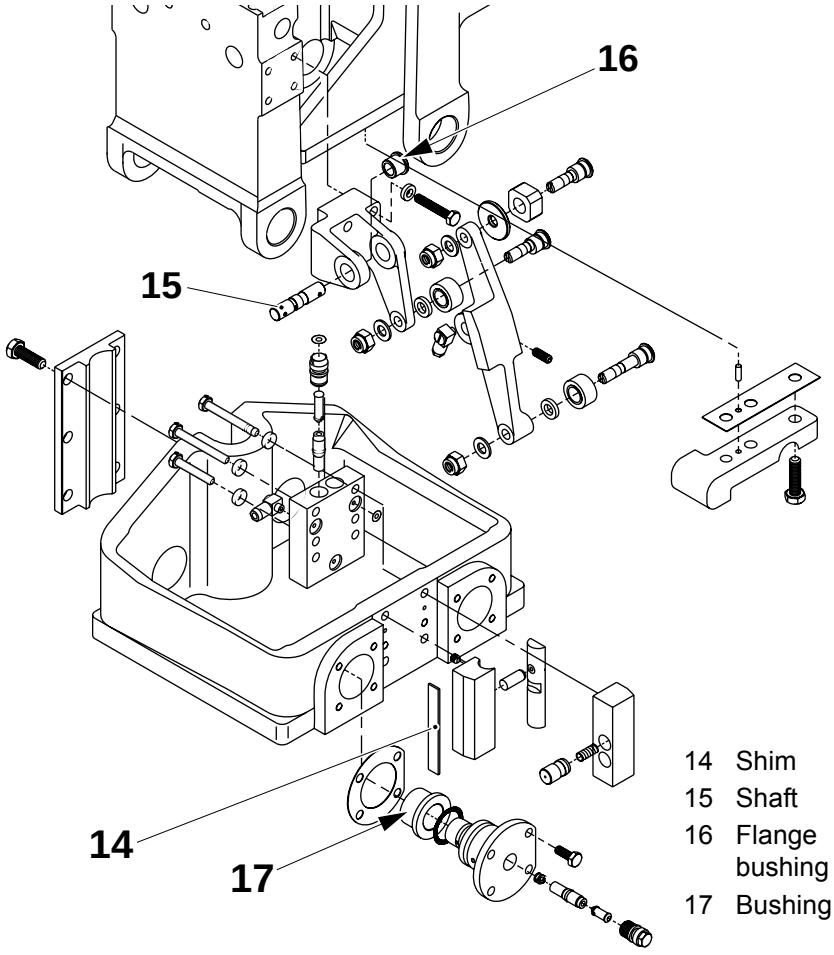

14 Shim
15 Shaft
16 Flange bushing
17 Bushing

TechPub_2614345_0105 - 01_2772066_01.fm

4.4-5 Yoke - Set Symmetry

Machine Status	Power supply disconnector OFF Air supply OFF Steam supply ON Water supply OFF
Special Equipment	Spring TP No.76304-101 Template TP No. 76301-101
SPC Reference	256951-0500 256952-0500

(Cont'd)

TechPub_2614345_0105 - 01_2772066_01.fm

(Cont'd)

LH Yoke

Note! Do not bend the busbar (1) when disconnecting it.

a) Loosen the screws at both ends off the busbar (1) and lift it off.

b) Crank to 175° (for **330 S** to 173°).

c) Remove the banjo connection (6).

d) Put the spring (3) between the carriers.

e) Attach the template (4) on the cutting jaw carrier (2).

f) Measure the distance **A** between the template (4) and the guide. Record the result.

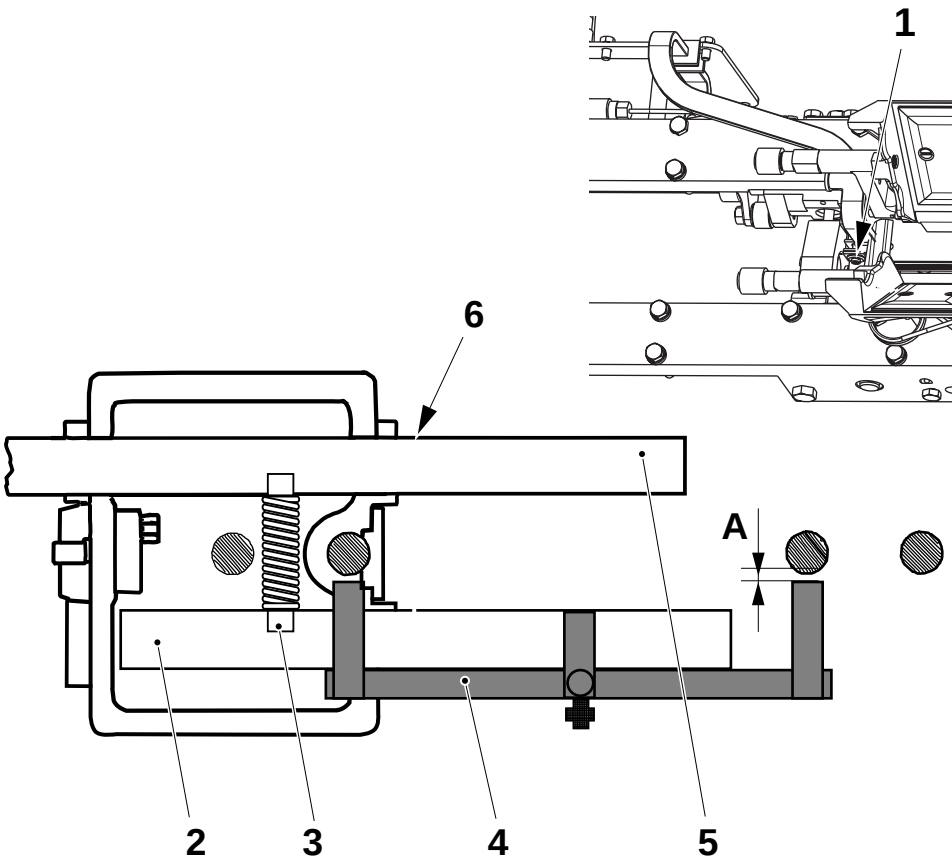

1 Screw
2 Cutting jaw carrier
3 Spring
4 Template
5 Pressure jaw carrier
6 Banjo connection

TechPub_2614345_0105 - 01_2772066_01.fm

(Cont'd)

(Cont'd)

g) Move the template (4) to the pressure carrier (5).

h) Measure the distance **B** and record the result.

Note! Adjust **A** or **B**, if necessary, by loosening the upper and lower screws (8), and adding or removing shims (7). Altering the shimming by 0.1 mm changes the distances **A** and **B** by approximately 0.15 mm.

Note! While tightening the screws (8), press on the yoke to flatten the shims (7).

i) Tighten the screws (8) and re-check the distances **A** and **B**.

j) Install the busbar and the banjo connection.

k) Crank to 355° (for **330 S** to 353°) and repeat the procedure on the **RH Yoke**.

l) Check the cam and support rollers setting, see 4-12 Jaw System - Set Cam Support Rollers.

m) Check the cutting jaw and pressure jaw alignment, see 4-9 Jaw System - Set Cutting Jaw and Pressure Jaw Alignment.

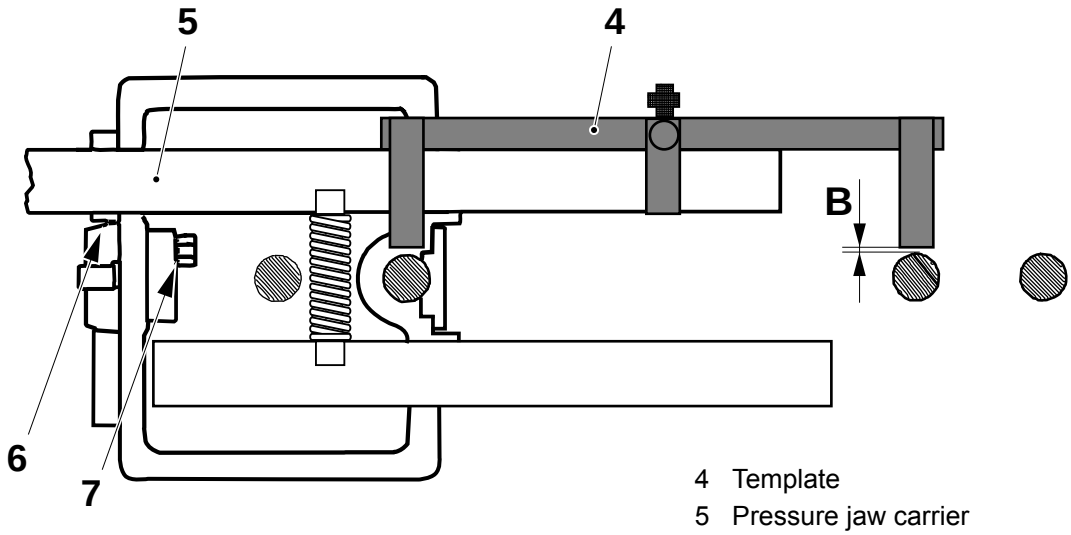

4 Template
5 Pressure jaw carrier
7 Shim
8 Screw

A - B = max. 0.2 mm

TechPub_2614345_0105 - 01_2772066_01.fm

4.4-6 Yoke - Set Turning Position

Machine Status	Power supply disconnector OFF Air supply OFF Steam supply ON Water supply OFF
Special Equipment	Template see table next page
SPC Reference	256951-0500 256952-0500

a) Crank the machine until the LH yoke is in its lower turning position, refer to the table below.

Package	Lower Turning position LH yoke (°)	Template TP No.	A ±0.2 (mm)	Package	Lower Turning position LH yoke (°)	Template TP No.	A ±0.2 (mm)
TBA 100 B	328	75931-9	48.4	TBA 200 S	324	75931-10	40.1
TBA 125 S	322	75931-9	48.4	TBA 250 B	322	75931-5	46.0
TBA 160 S	316	75931-8	47.4	TBA 250 S	320	75931-10	40.1
TBA 180 B	332	75931-8	47.9	TBA 284 B	324	75931-12	41.8
TBA 200 B	322	75931-11	47.9	TBA 300 S	324	75931-12	41.8
TBA 200 M	320	75931-5	46.0	TBA 330 S	320	75931-14	38.1

b) Loosen the screws (1) and (2).

c) Put the template (5) (see table) onto the plate (3). Let the yoke (4) rest against the template (5).

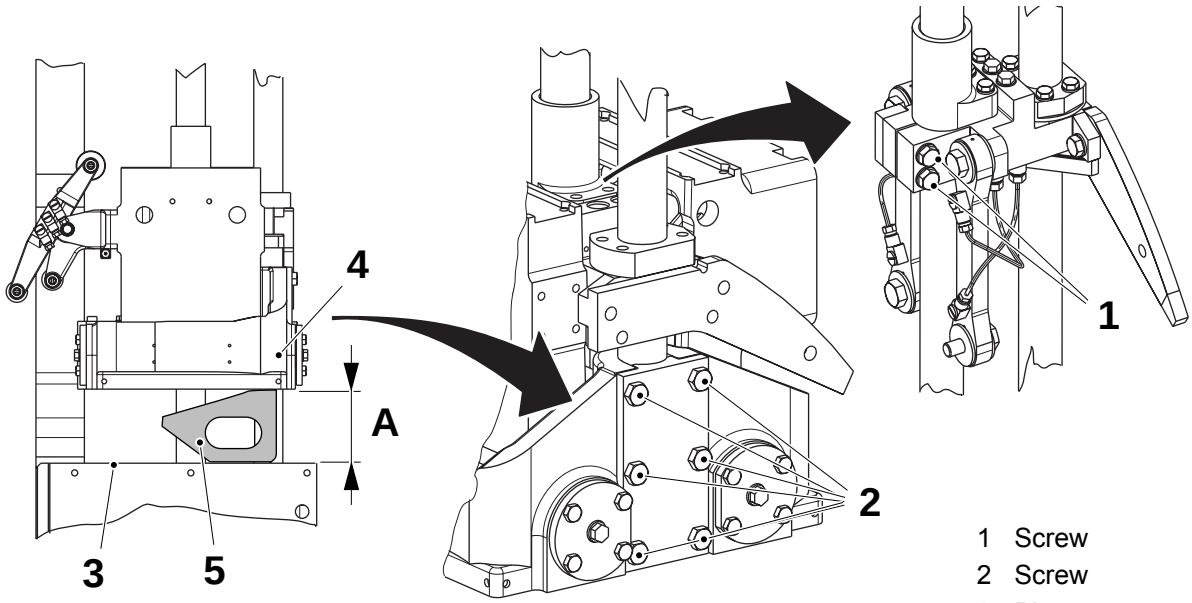

1 Screw
2 Screw
3 Plate
4 Yoke
5 Template

(Cont'd)

TechPub_2614345_0105 - 01_2772066_01.fm

(Cont'd)

d) Make sure that the surface (8) on the bracket (6) is parallel to surface (9) on the yoke lifter arm (7).

Note! When tightening the screws (1) and (2) be careful **not** to twist the bearings.

e) Tighten the screws (2) cross-wise and remove the template.

WARNING
Risk of entanglement.
Moving parts. Follow the Safety Precautions.

f) Crank until the LH yoke is the upper turning position. Guide the carrier to prevent parts from colliding.

g) Set the jaw gap according to 4-2 Jaw System - Set Jaw Gap.

h) Check the T-measurement according to 4-8 Jaw System - Check T-measurement.

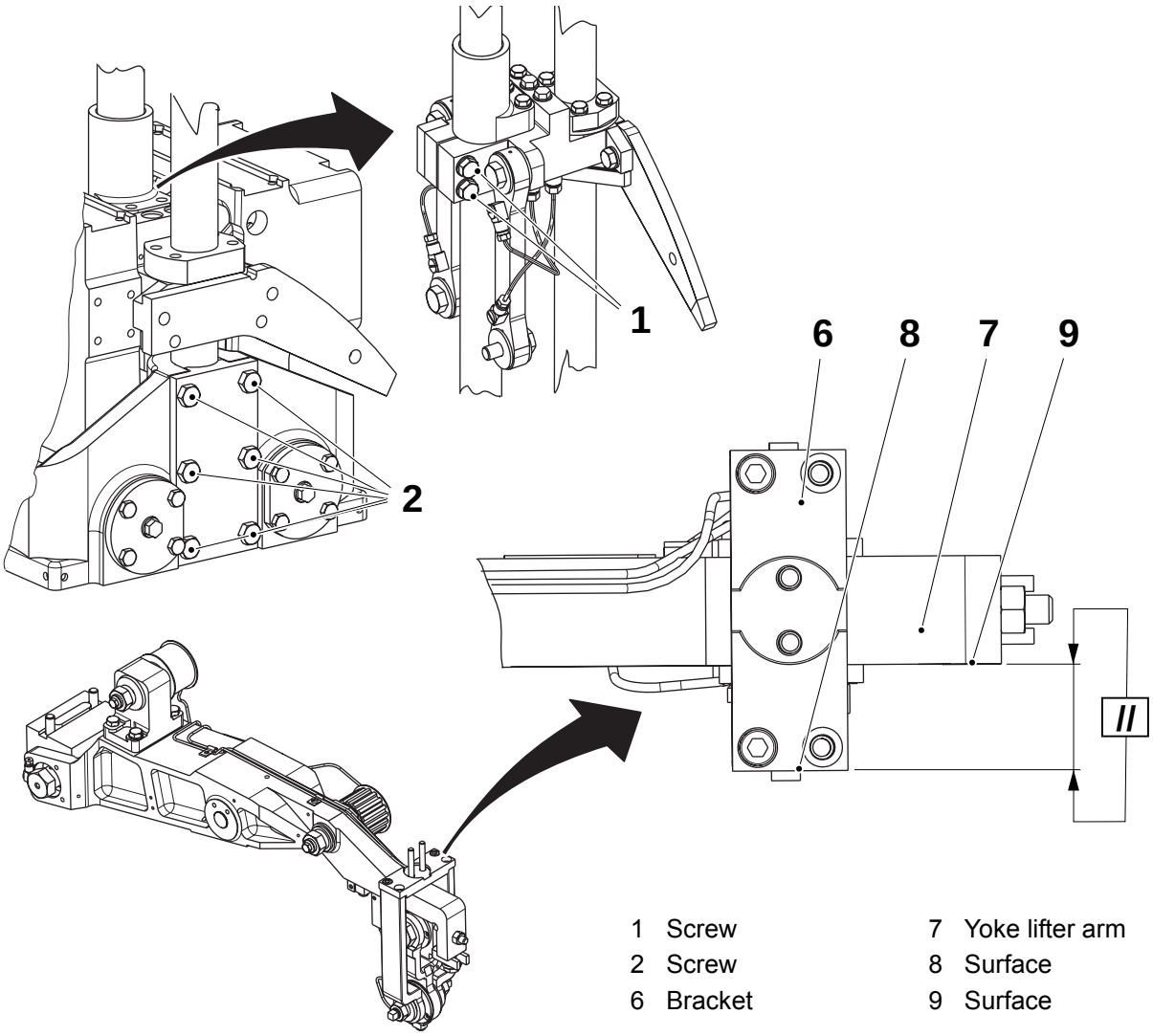

1 Screw
2 Screw
6 Bracket
7 Yoke lifter arm
8 Surface
9 Surface

TechPub_2614345_0105 - 01_2772066_01.fm

4.5 Support Roller

4.5-1 Support Roller - Set

Machine Status	Power supply disconnector OFF Air supply OFF Steam supply ON Water supply OFF
Special Equipment	Template see table Yoke TP No. 76291-101 Ruler TP No. 76298
SPC Reference	1511403-0100

(Cont'd)

TechPub_2614345_0105 - 01_2772067_01.fm

(Cont'd)

Alignment and Vertical Position - Basic Setting

a) Loosen the screws (1) on both sides and set the distance **A** between the bracket (2) and the volume adjuster plate (3) edge.

b) Crank the machine to 5° or 185°.

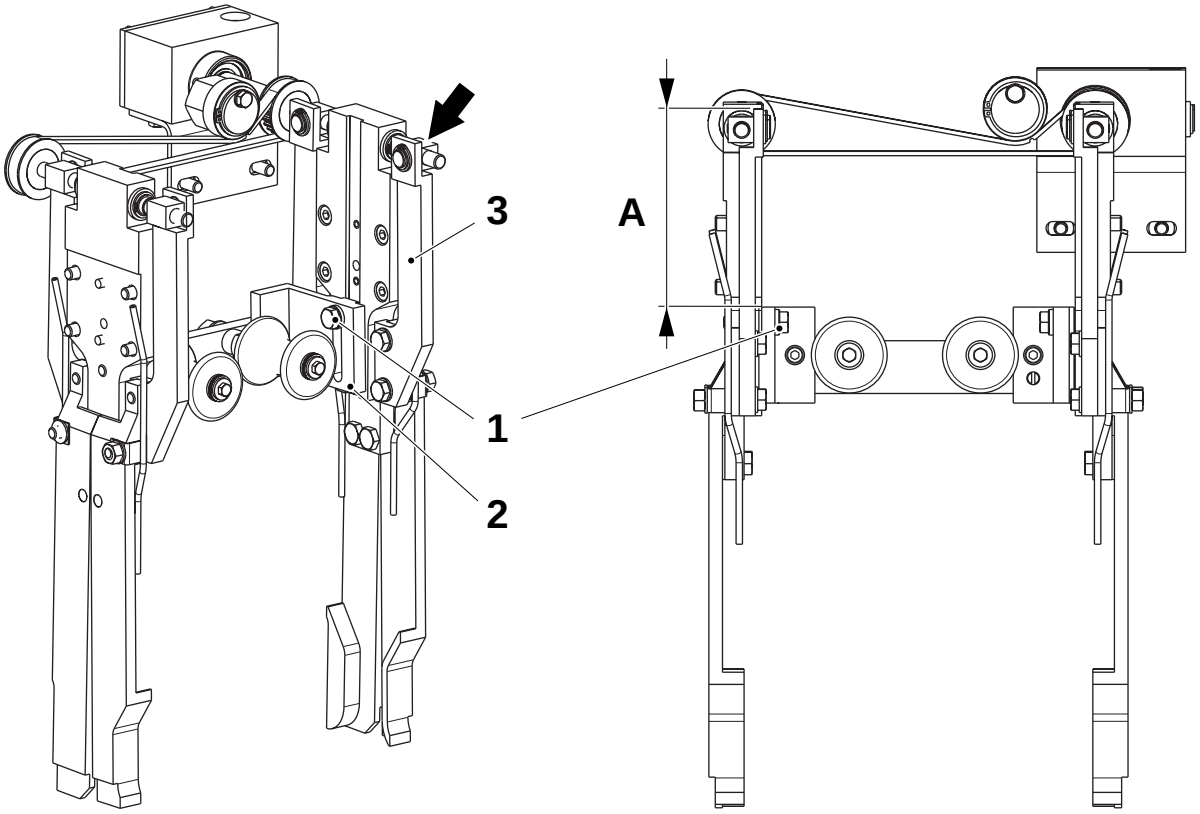

Package	A ±1 (mm)	Package	A ±1 (mm)
TBA 100 B	151.0	TBA 200 S	72.0
TBA 125 S	132.0	TBA 250 B	90.0
TBA 160 S	104.0	TBA 250 S	39.0
TBA 180 B	96.0	TBA 284 B	67.0
TBA 200 B	100.0	TBA 300 S	81.0
TBA 200 M	55.0	TBA 330 S	53.0

1 Screw
2 Bracket
3 Plate

(Cont'd)

TechPub_2614345_0105 - 01_2772067_01.fm

(Cont'd)

c) Install the yoke (4) and the ruler (5) on the guides (6).

d) Put the correct template (7) on the ruler (5) according to the running volume.

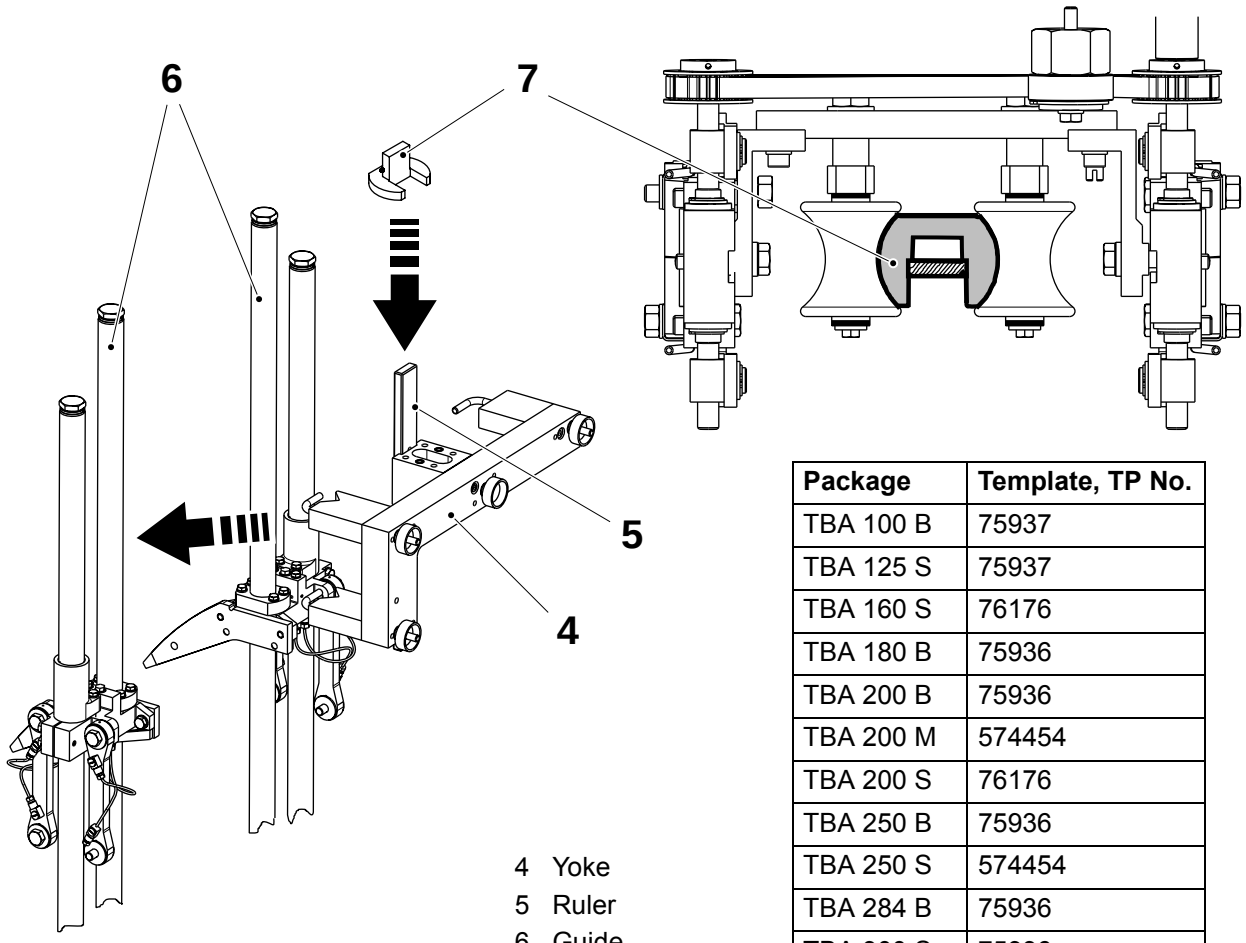

4 Yoke
5 Ruler
6 Guide
7 Template

Package	Template, TP No.
TBA 100 B	75937
TBA 125 S	75937
TBA 160 S	76176
TBA 180 B	75936
TBA 200 B	75936
TBA 200 M	574454
TBA 200 S	76176
TBA 250 B	75936
TBA 250 S	574454
TBA 284 B	75936
TBA 300 S	75936
TBA 330 S	75936

TechPub_2614345_0105 - 01_2772067_01.fm

(Cont'd)

(Cont'd)

e) Loosen the locking screws (8).

f) Turn the adjustment screw (9) until the LH tube support roller (10) touches the template (7), and adjust the LH tube support roller (10) with shims (11) so that it bears evenly against the template (7). After setting, check that the roller (10) rotates smoothly (axial play **0.2** to **0.3** mm**)**.

Note! For **100 B** and **125 S**, there must be a distance of **0.5** mm between the roller (10) and the template (7).

g) Tighten the locking screws (8).

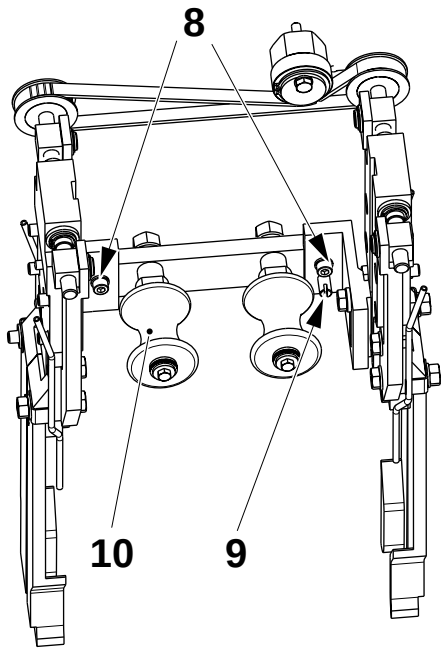

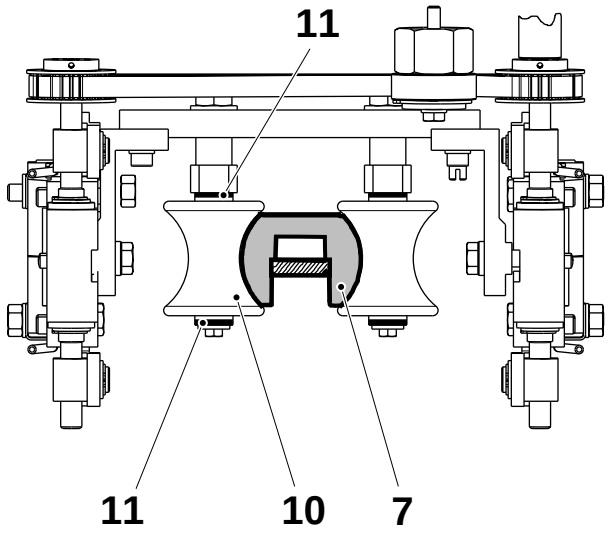

7 Template
8 Locking screw
9 Adjustment screw
10 Tube support roller, LH
11 Shim

(Cont'd)

TechPub_2614345_0105 - 01_2772067_01.fm

(Cont'd)

h) Loosen the nut (12) and slide the RH tube support roller (13) until it touches the template (7), and adjust the RH tube support roller (13) with shims (11) so that it bears evenly against the template. After setting, check that the roller (13) rotates smoothly (axial play **0.2** to **0.3** mm**)**.

Note! For **100 B** and **125 S**, there should be **0.5** mm between the template (7) and the roller (13).

i) Tighten the nut (12).

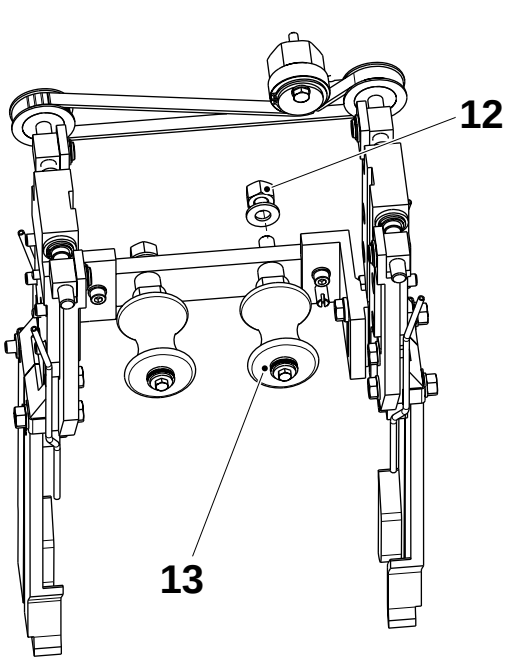

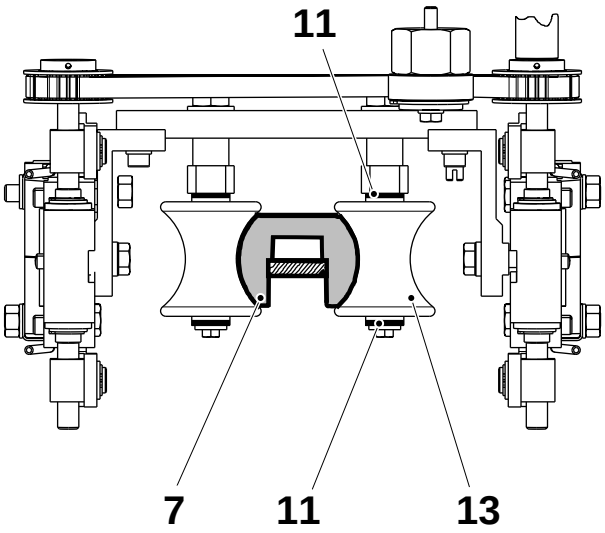

7 Template
11 Shim
12 Nut
13 Tube support roller, RH

TechPub_2614345_0105 - 01_2772067_01.fm

4.5-2 Support Roller - Check

Machine Status	Power supply disconnector OFF Air supply OFF Steam supply ON Water supply OFF
SPC Reference	1511403-0100

a) Check that the two rollers (1) are not worn or damaged. Make sure that they rotate smoothly and that there is no excessive play.

b) Check that the four flange bushings (2) are not worn or damaged.

c) Check that the two shafts (3) are not worn or damaged.

d) Replace the parts if necessary.

e) Check the setting of the rollers (1), see 4.5-1 Support Roller - Set.

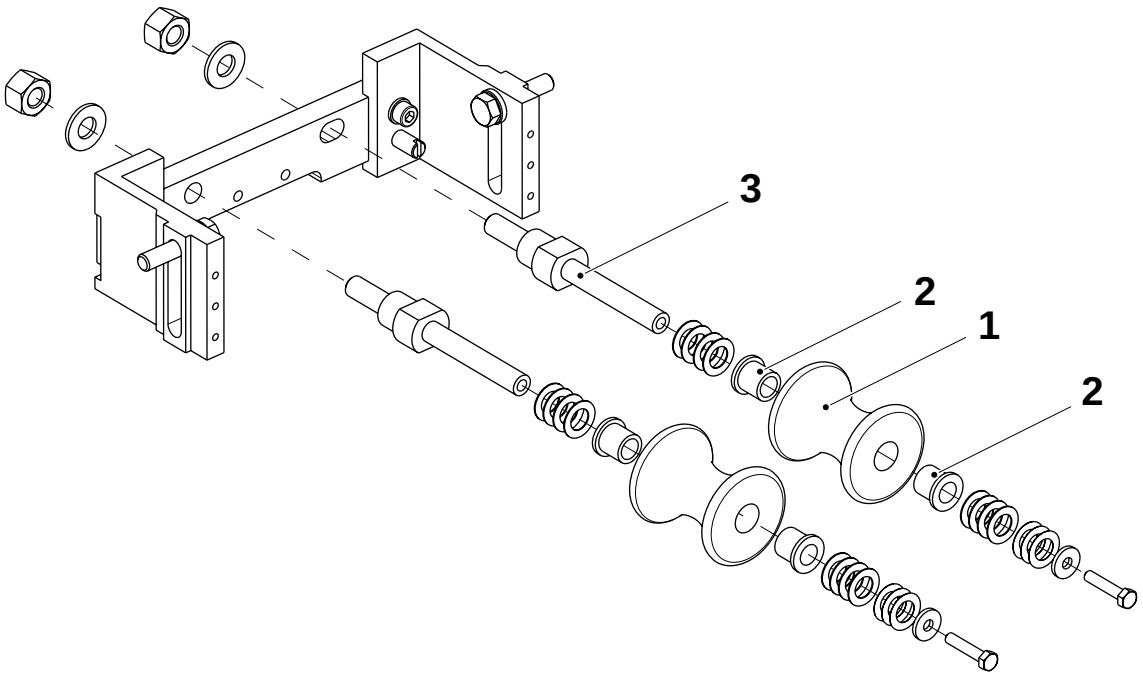

1 Roller
2 Bushing
3 Shaft

TechPub_2614345_0105 - 01_2772067_01.fm

4.6 Blank Section

TechPub_2614345_0105 - 01_2772068_01.fm

4.7 Volume Flap

4.7-1 Volume Flap - Set Package Volume

Machine Status	Power supply disconnector OFF Air supply OFF Steam supply ON Water supply OFF
SPC Reference	1519427-0100 1549581-0100

a) Set the volume adjustment according to the instructions in 4.8-3 Volume Adjustment - Set.

Note! Pick 10 right packages and 10 left packages and add shims on the heavier side to match the weight of the other. The same number of volume shims should be used on the cutting jaw side and the pressure jaw side.

b) Run the machine in PRODUCTION and pick out ten packages from each jaw pair.

c) Stop the machine and set the volume flap for the correct package weight using the volume shims (1).

d) To adjust, remove the screws (2) and remove the volume bulge (3).

e) If necessary, attach the volume shims (1) and reassemble.

f) Perform a final setting of the volume using the handle on the volume curve pieces.

Package	Shim TP No.
TBA 100 B	979754
TBA 125 S	272987
TBA 160 S	577212
TBA 180 B	272986-4
TBA 200 B	272986-3
TBA 200 M	979861
TBA 200 S	272991
TBA 250 B	272986-1
TBA 250 S	574366
TBA 284 B	272986-5
TBA 300 S	272986-3
TBA 330 S	272986-6

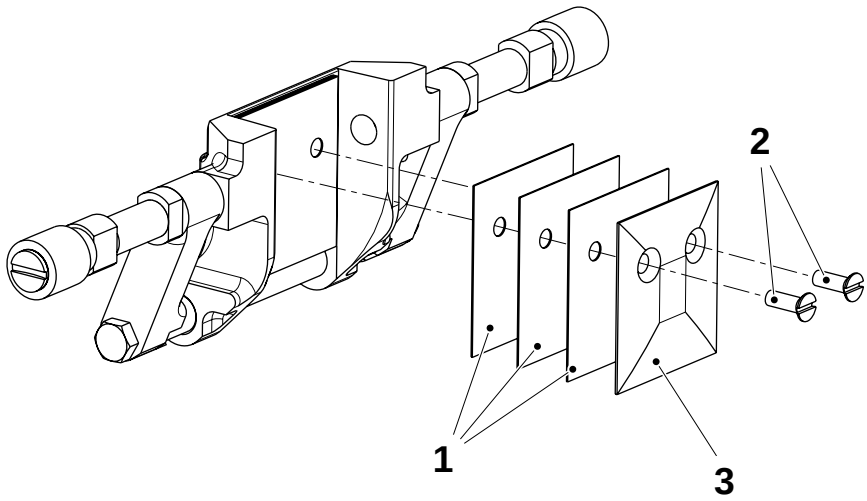

1 Volume shim
2 Screw
3 Volume bulge

TechPub_2614345_0105 - 01_2772069_01.fm

4.7-2 Volume Flap - Alignment

Machine Status	Power supply disconnector OFF Air supply OFF Steam supply ON Water supply OFF
Special Equipment	Template TP No. see table below Yoke TP No. 76291-101 Ruler TP No. 76298
SPC Reference	1519427-0100 1549581-0100

Note! On **100 B** and **125 S** machines, remove the tube support roller bracket.

(Cont'd)

TechPub_2614345_0105 - 01_2772069_01.fm

(Cont'd)

a) Crank to X° the RH volume flap (refer to the table).

b) Install the yoke (2) and the ruler (3) (for **330 S**, install the yoke (2) from the rear). Fit the yoke (2) and the ruler (3).

c) Loosen the screws (4).Install the template (1) on the ruler (3).

Note! If necessary, open the volume curve pieces using the handle.

d) Shift the carrier sideways until the template (1) moves easily within the volume flaps from either side of the ruler (3).

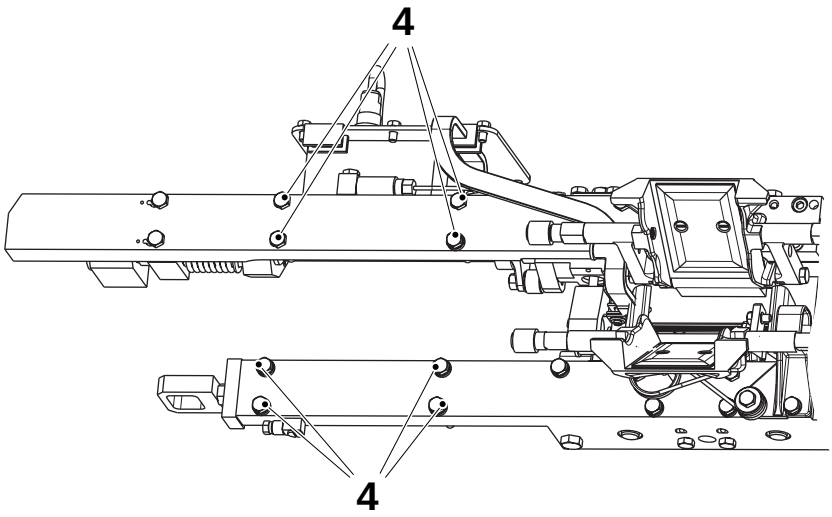

Package	Template TP No.	X°
TBA 100 B	75943	10
TBA 125 S	75943	5
TBA 160 S	75944	5
TBA 180 B	75939	5
TBA 200 B	75939	5
TBA 200 M	574455	350
TBA 200 S	75944	0
TBA 250 B	75939	5
TBA 250 S	574455	15
TBA 284 B	75939	5
TBA 300 S	75939	5
TBA 330 S	75939	8

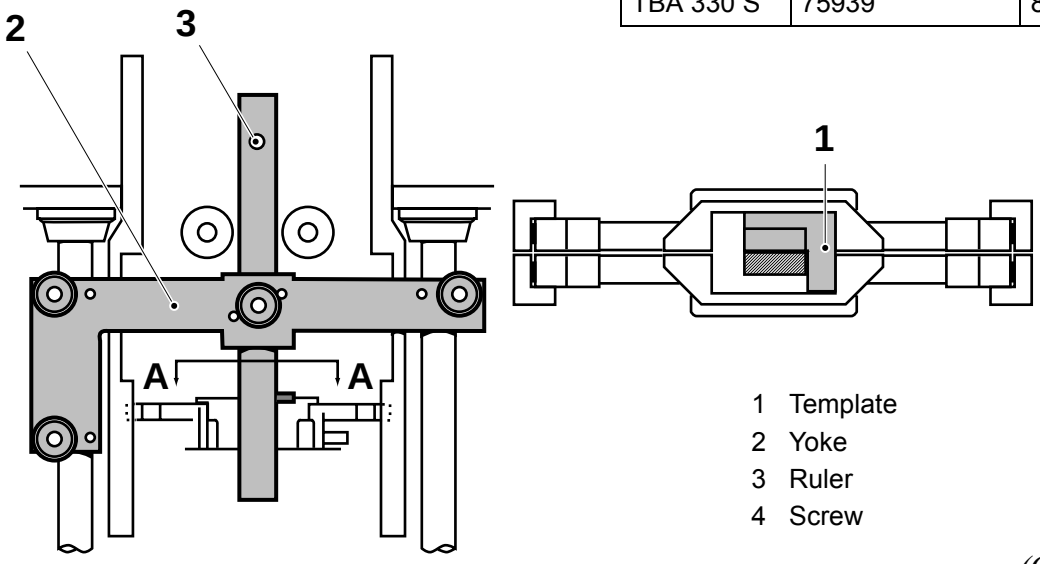

1 Template
2 Yoke
3 Ruler
4 Screw

(Cont'd)

TechPub_2614345_0105 - 01_2772069_01.fm

(Cont'd)

Note! Check that any axial play in the volume flap is symmetrical.

e) Tighten the screws.

f) Remove the ruler, the yoke and the template.

g) Crank the machine to angle Y° (refer to the table below) and repeat the setting procedure with the LH volume flap.

h) Set the folding flaps, refer to 4.1-6 Cutting Jaw - Check Folding Flap Mechanism.

Package	Y°
TBA 100 B	190
TBA 125 S	185
TBA 160 S	185
TBA 180 B	185
TBA 200 B	185
TBA 200 M	170
TBA 200 S	185
TBA 250 B	185
TBA 250 S	195
TBA 284 B	185
TBA 300 S	185
TBA 330 S	195

TechPub_2614345_0105 - 01_2772069_01.fm

4.7-3 Volume Flap - Overhaul

Machine Status	Power supply disconnector OFF Air supply OFF Steam supply ON Water supply OFF
SPC Reference	1519427-0100 1549581-0100

(Cont'd)

TechPub_2614345_0105 - 01_2772069_01.fm

(Cont'd)

a) Remove the volume flap from the arm.

b) Check the following components for wear and damage:
   - the volume flap (1)
   - the volume shim (2)
   - the volume bulge (3)
   - the roller (4) on both sides
   - the shaft (5) on both sides
   - the hose (6)
   - the carrier (7)
   - the shaft (8)

c) Change the parts, if necessary. Assemble in the reverse order.

Note! Always make sure that the volume flaps and stops are fitted in the correct position.

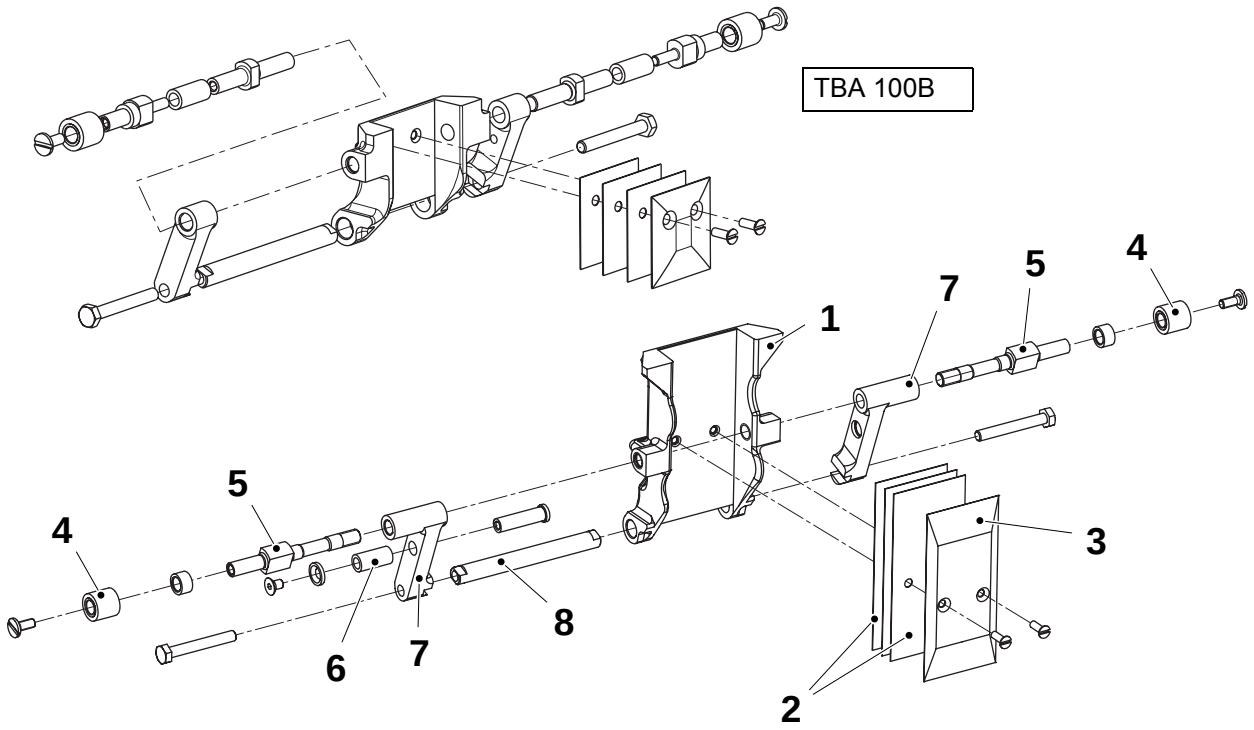

1 Volume flap	4 Roller	7 Carrier
2 Volume shim	5 Shaft	8 Shaft
3 Volume bulge	6 Rubber hose	

TechPub_2614345_0105 - 01_2772069_01.fm

4.8 Volume Adjustment

4.8-1 Volume Adjustment - Overhaul

Machine Status	Power supply disconnector OFF Air supply OFF Steam supply ON Water supply OFF
SPC Reference	1519117-0100

(Cont'd)

TechPub_2614345_0105 - 01_2772070_01.fm

(Cont'd)

a) Release the belts tension and remove the four screws (1).
b) Remove and check the following components for wear and damage:
   – the gear wheels (2)
   – the bushings (3)
   – the ball bearing (4)
   – the shaft (5)
   – the pulleys (6)
   – the spindle (7)
   – the dowels (8)
c) Change them if necessary.

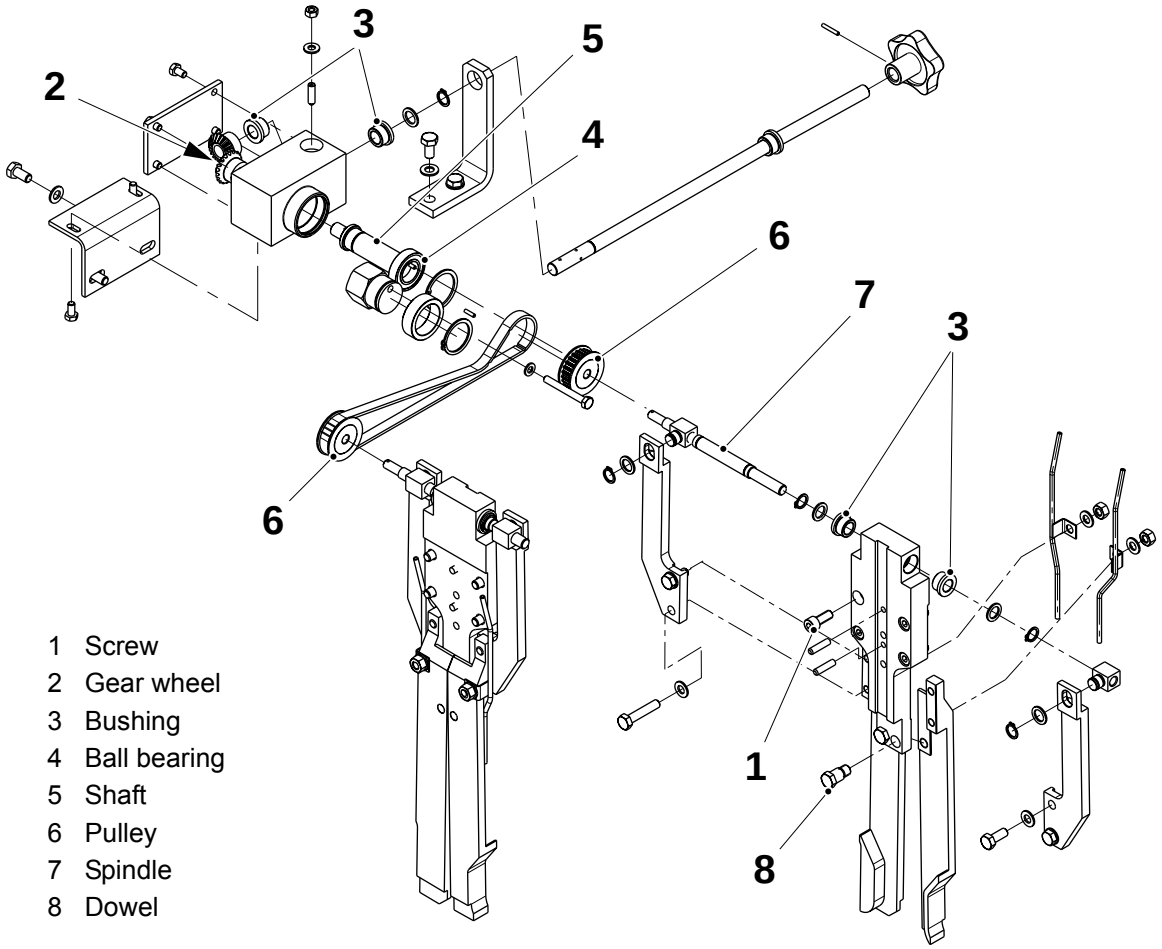

1 Screw
2 Gear wheel
3 Bushing
4 Ball bearing
5 Shaft
6 Pulley
7 Spindle
8 Dowel

(Cont'd)

TechPub_2614345_0105 - 01_2772070_01.fm

(Cont'd)

d) Check the volume cams condition in the area that determines the package volume (9), wear should not exceed the measure **A**. If necessary, change the volume cam, refer to 4.8-2 Volume Adjustment - Change Volume Cams.

e) Set the volume cam piece, refer to 4.8-3 Volume Adjustment - Set

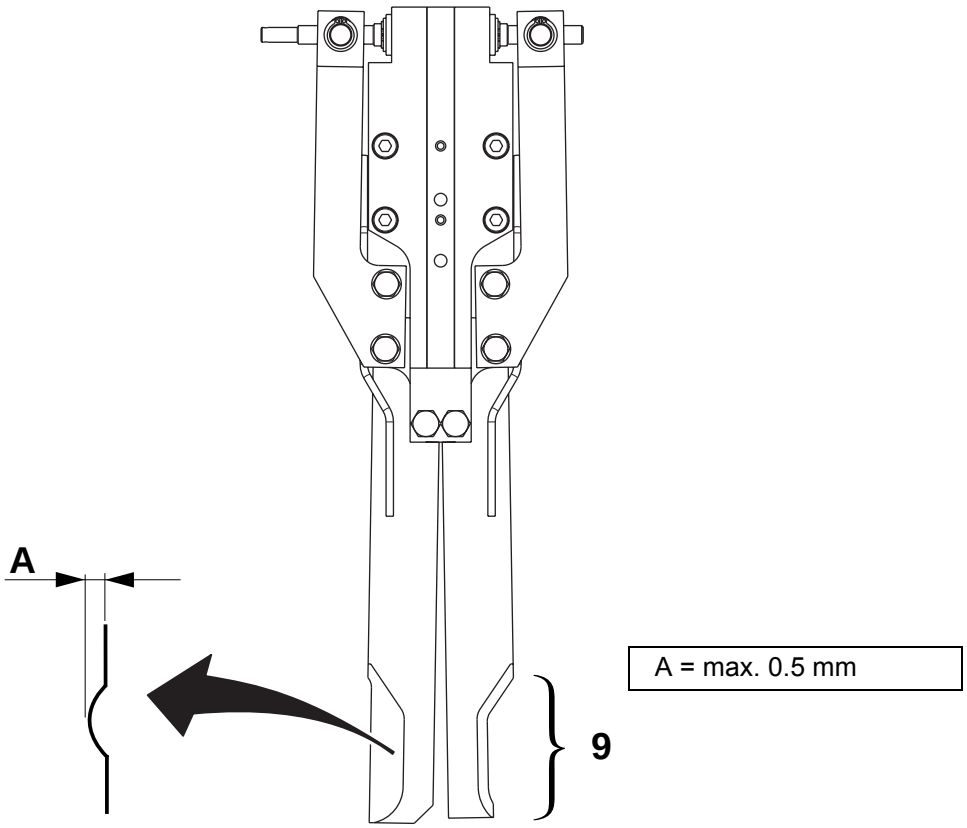

9 Volume determining area

TechPub_2614345_0105 - 01_2772070_01.fm

4.8-2 Volume Adjustment - Change Volume Cams

Machine Status	Power supply disconnector OFF Air supply OFF Steam supply ON Water supply OFF
SPC Reference	1519117-0100

a) Remove the screws (1) and the nuts (2).

Note! Make sure not to bend or choke the pipes (3).

b) Remove the pipes (3) and tilt the arms (4).

c) Remove the dowels (6) and then the volume cams (5).

d) Assemble in the reverse order.

e) Set the volume cams, refer to <u>4.8-3 Volume Adjustment - Set</u>.

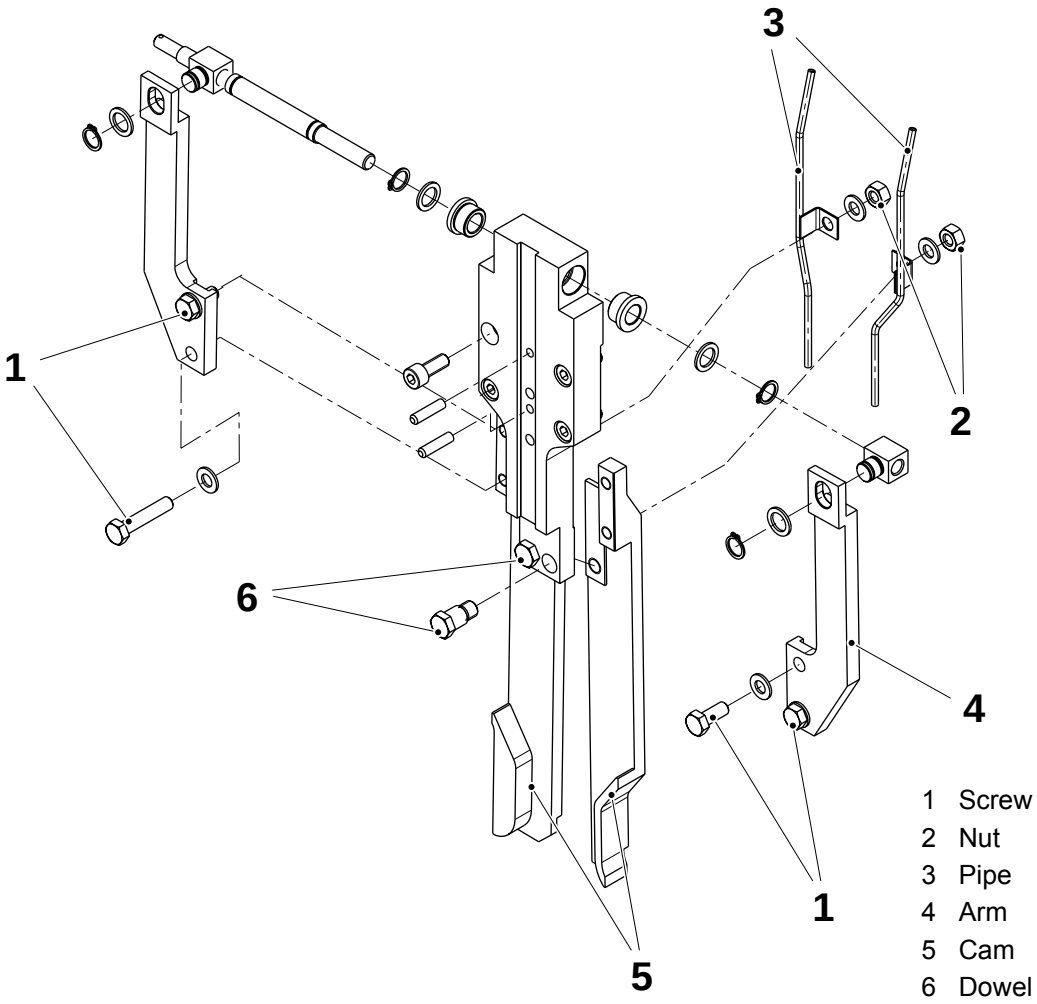

TechPub_2614345_0105 - 01_2772070_01.fm

4.8-3 Volume Adjustment - Set

Machine Status	Power supply disconnector OFF Air supply OFF Steam supply ON Water supply OFF
SPC Reference	1519117-0100

a) Check that the distance **A** between the bracket (1) and the arms (2) is the same on both sides.

b) If necessary, adjust the distance **A** by removing the circlips (3) and the screws (4) and turning the joints (5).

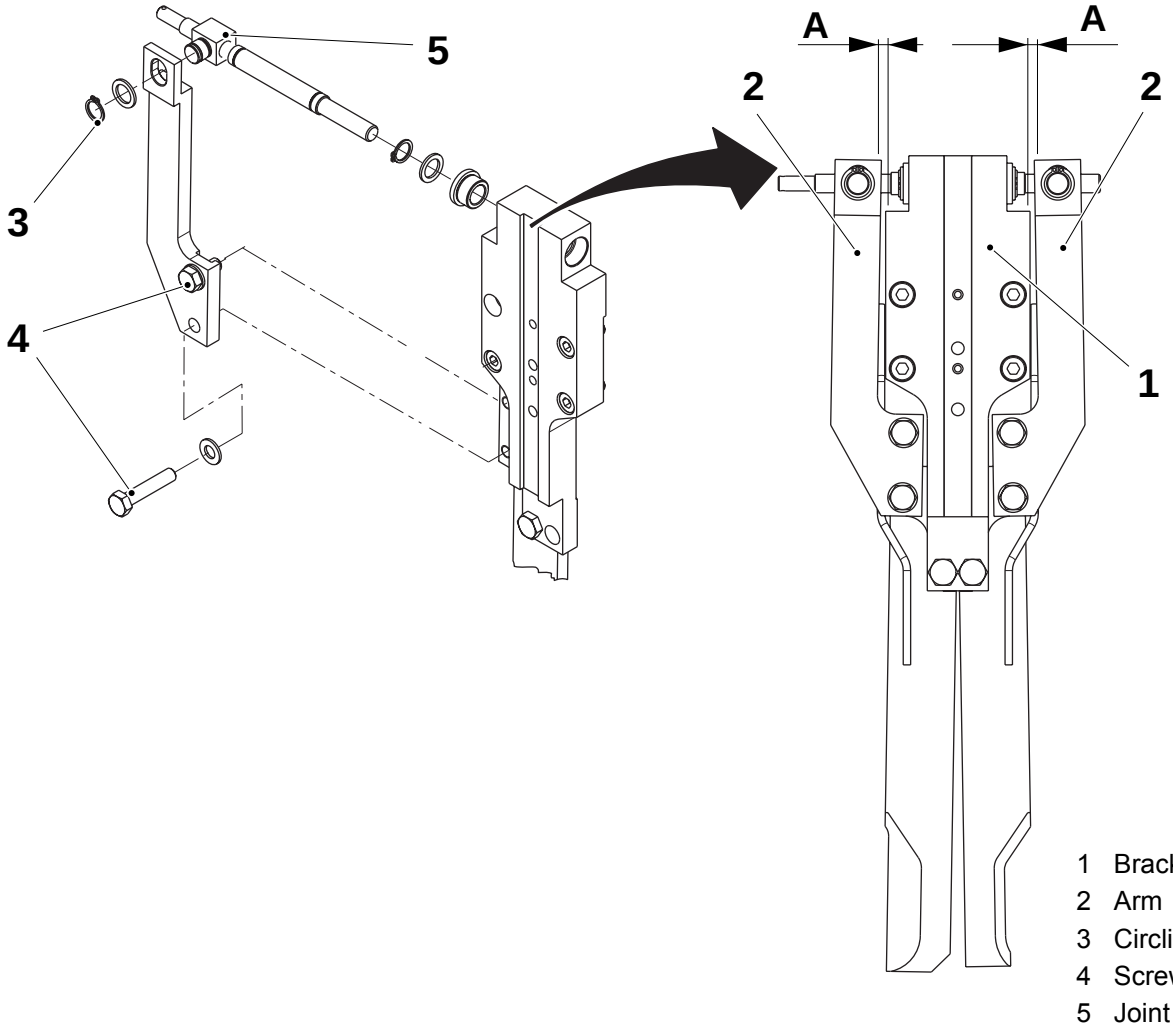

1 Bracket
2 Arm
3 Circlip
4 Screw
5 Joint

(Cont'd)

TechPub_2614345_0105 - 01_2772070_01.fm

(Cont'd)

c) Loosen the belt (6) using the tensioner (7) and set the distance **B** between the volume cams (9) by turning the shafts (8). Make sure that the distance **B** is the same on both sides.

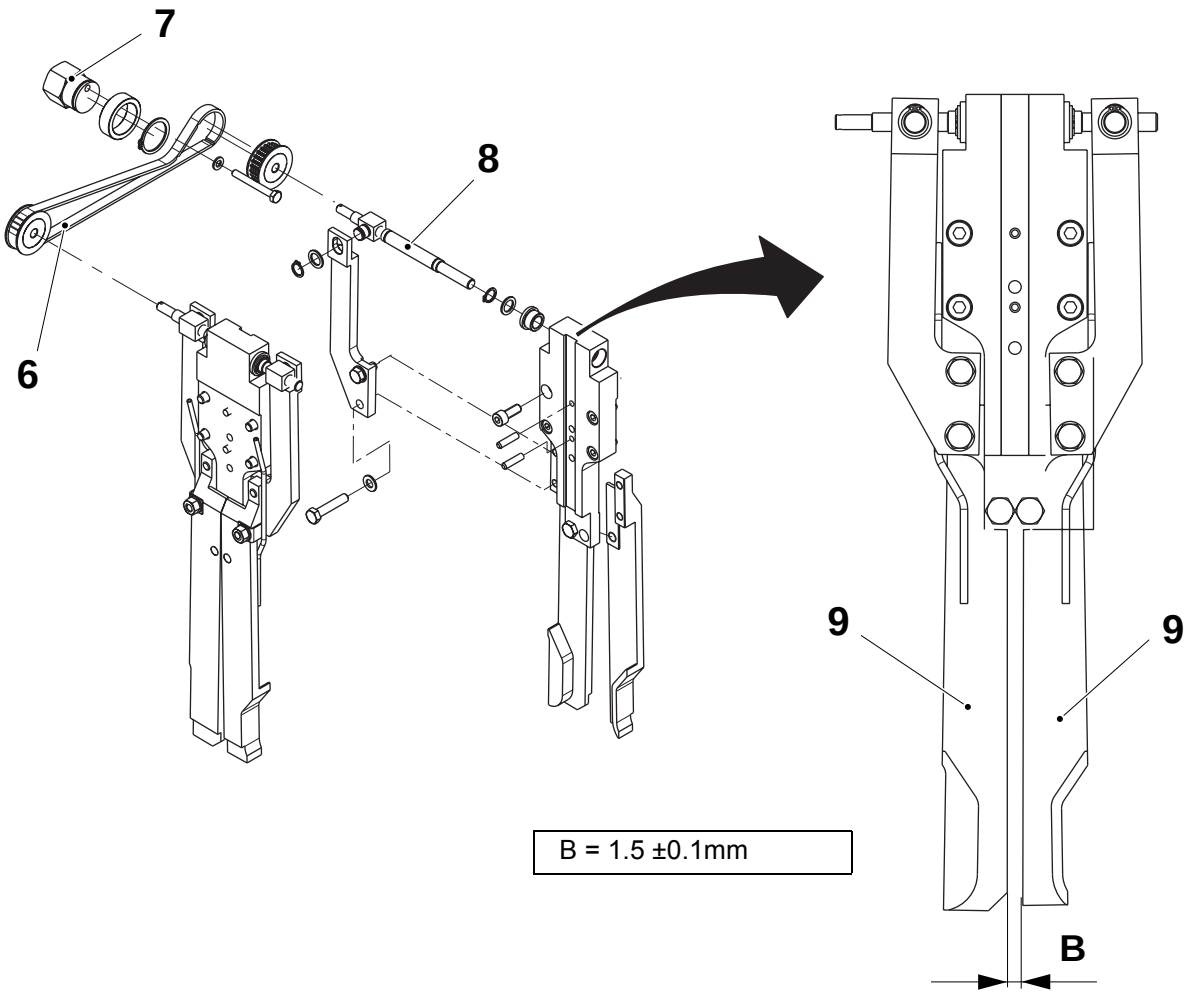

6 Belt
7 Tensioner
8 Shaft
9 Volume cam

(Cont'd)

TechPub_2614345_0105 - 01_2772070_01.fm

(Cont'd)

d) Check the distance **C** between the volume cams (9) and the plate (11). If necessary, set using the screws (10).

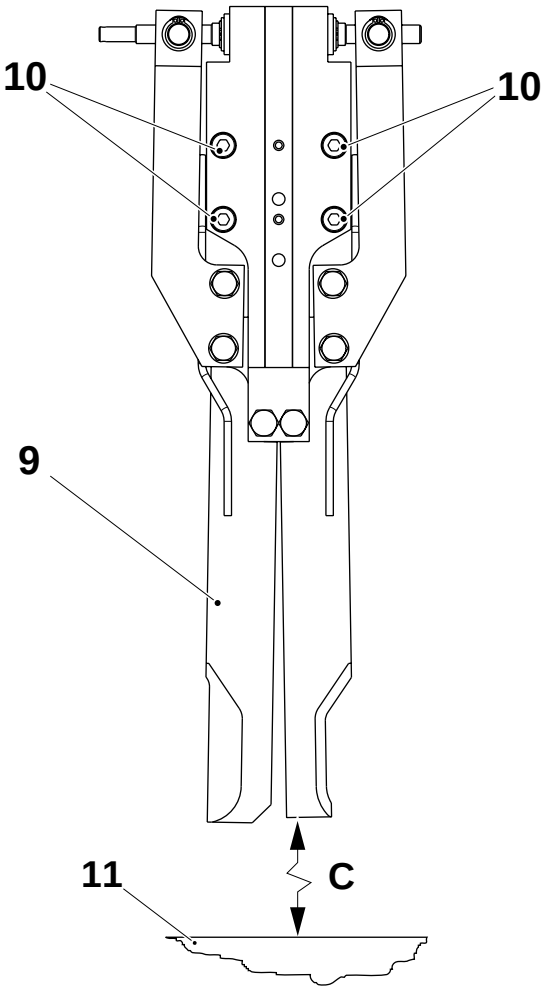

Package	C ±1 (mm)
TBA 100 B	357.0
TBA 125 S	369.0
TBA 160 S	361.0
TBA 180 B	361.5
TBA 200 B	369.0
TBA 200 M	363.0
TBA 200 S	357.5
TBA 250 B	362.5
TBA 250 S	351.5
TBA 284 B	362.5
TBA 300 S	362.5
TBA 330 S	348.5

9 Volume cam
10 Screw
11 Plate

TechPub_2614345_0105 - 01_2772070_01.fm

4.9 Tube Folding Device

4.9-1 Tube Folding Device - Check

Machine Status	Power supply disconnector OFF Air supply OFF Steam supply ON Water supply OFF
SPC Reference	1511069-0100

a) On both cylinders check the rollers (1) and the pin shaft (2). Replace, if necessary, by removing the locking ring (3).

b) Check the position of the roller, see 4.9-2 Tube Folding Device - Set.

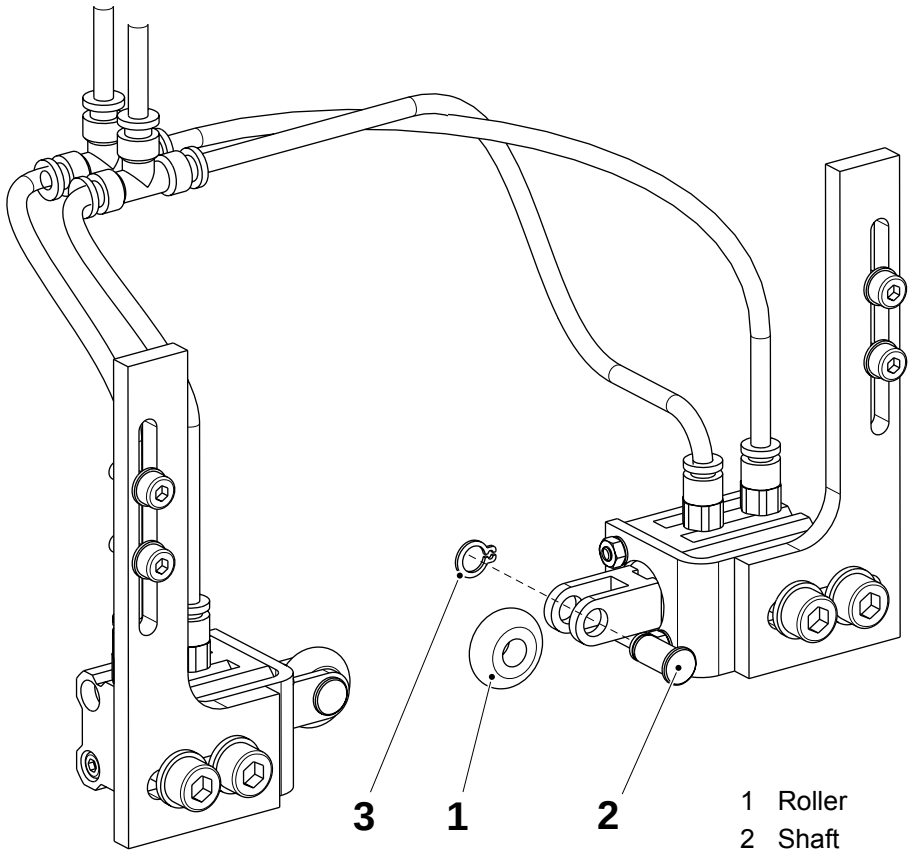

1 Roller
2 Shaft
3 Locking ring

TechPub_2614345_0105 - 01_2772071_01.fm

4.9-2 Tube Folding Device - Set

Machine status	SHORT STOP
SPC Reference	1511069-0100

When the cylinders are not activated set the distance **A**, on both sides, between the packaging material tube and the rollers by loosening the screws (1) and sliding the bracket (2).

Package type	**A mm** ±0.5	Package type	**A mm** ±0.5
TBA 100 B	4	TBA 200 M	6
TBA 125 S	4	TBA 250 B	6
TBA 160 S	5	TBA 250 S	4
TBA 180 B	6	TBA 284 B	6
TBA 200 B	6	TBA 300 S	6
TBA 200 S	5	TBA 330 S	6

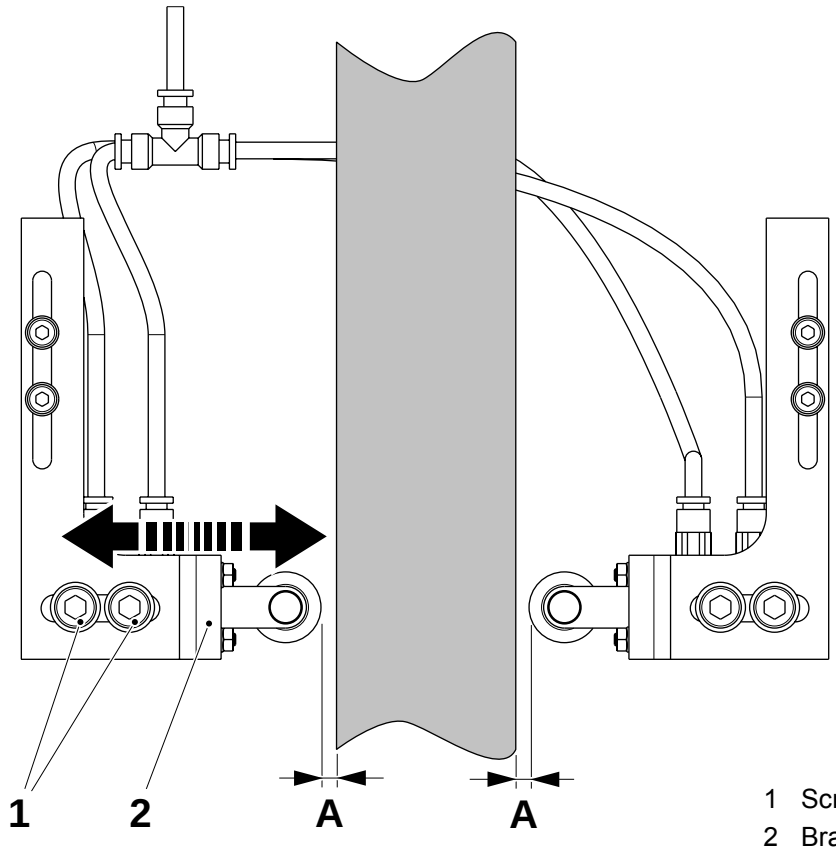

1 Screw
2 Bracket

(Cont'd)

TechPub_2614345_0105 - 01_2772071_01.fm

(Cont'd)

Vertical Setting

a) Crank the jaw system 360° to make sure that there is no interference between the tube folding device and the volume flaps.

Note! The tube folding device as to be as low as possible without interfering with the volume flaps.

b) If necessary, adjust the position of the tube folding device using the screws (1).

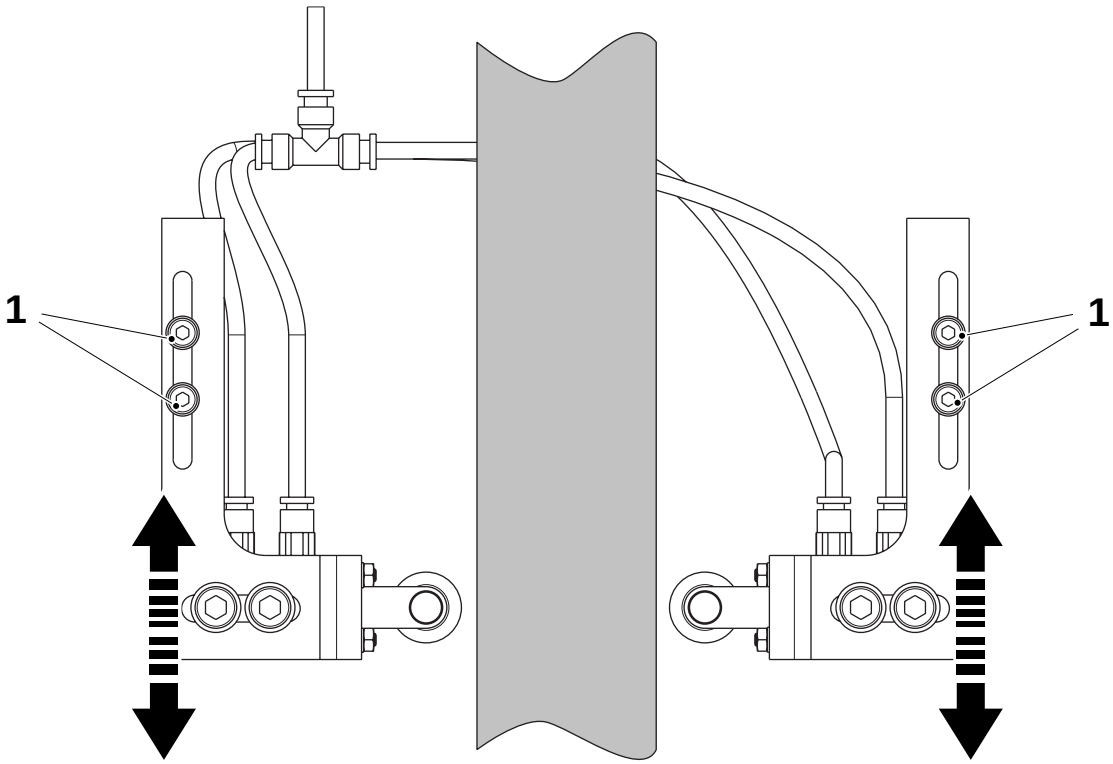

1 Screw

TechPub_2614345_0105 - 01_2772071_01.fm

5 Final Folder

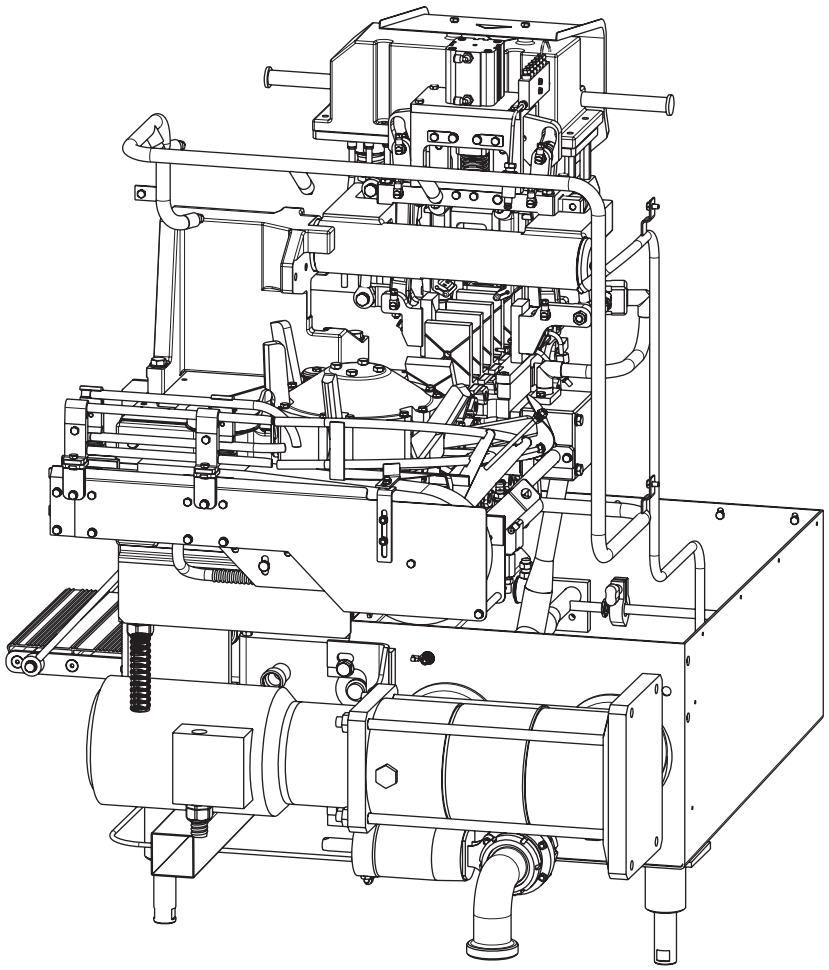

TechPub_2614345_0105 - 01_2772072_01.fm

Final Folder - Description

SPC Reference	648105-1300

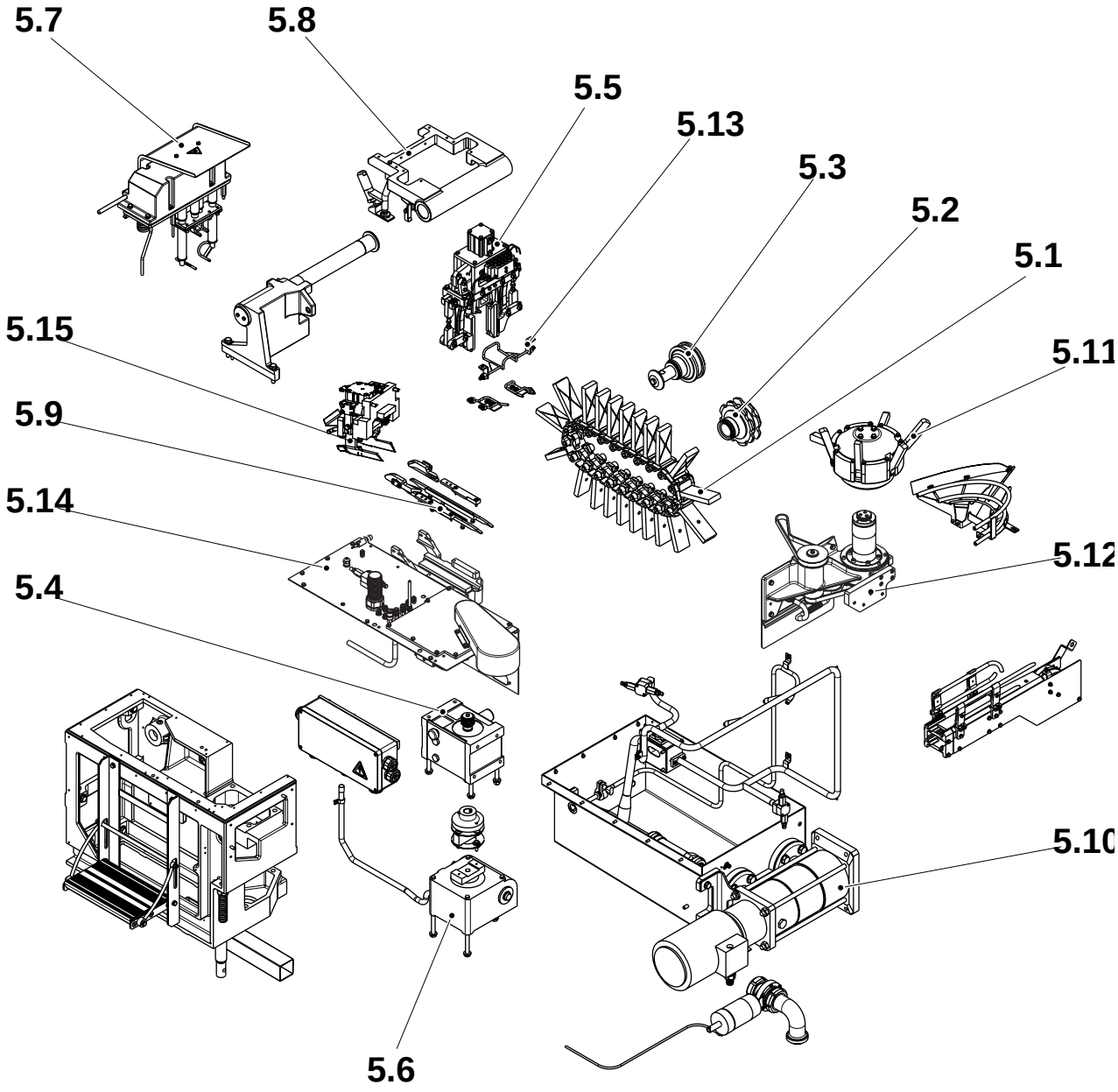

5.1 Station Chain
5.2 Drive Wheel
5.3 Tension Sprocket
5.4 Indexing Unit
5.5 Pressure Device
5.6 Worm Gear
5.7 Flap Heater
5.8 Frame
5.9 Guide
5.10 Cleaning System
5.11 Outfeed Unit
5.12 Transmission Unit
5.13 Folding Bar
5.14 Cantilever
5.15 Pull-Down Device

TechPub_2614345_0105 - 01_2772072_01.fm

5-1 Final Folder - Check Oil Distribution . . . . . 5 - 5

5.1 Station Chain . . . . . 5 - 6

5.1-1 Station Chain - Change . . . . . 5 - 6

5.1-2 Station Chain - Turn Shafts . . . . . 5 - 13

5.1-3 Station Chain - Overhaul . . . . . 5 - 14

5.2 Drive Wheel . . . . . 5 - 15

5.2-1 Drive Wheel - Overhaul . . . . . 5 - 15

5.3 Tension Sprocket. . . . . 5 - 17

5.3-1 Tension Sprocket - Overhaul . . . . . 5 - 17

5.4 Indexing Unit . . . . . 5 - 20

5.4-1 Indexing Unit - Change Oil . . . . . 5 - 20

5.4-2 Indexing Unit - Check Oil Level . . . . . 5 - 21

5.4-3 Indexing Unit - Check Cut Out Torque . . . . . 5 - 22

5.4-4 Indexing Unit - Change . . . . . 5 - 24

5.5 Pressure Device. . . . . 5 - 38

5.5-1 Pressure Device - Check . . . . . 5 - 38

5.5-2 Pressure Device - Change Cylinder . . . . . 5 - 40

5.5-3 Pressure Device - Set . . . . . 5 - 41

5.6 Worm Gear . . . . . 5 - 46

5.6-1 Worm Gear - Check Oil . . . . . 5 - 46

5.6-2 Worm Gear - Change Oil . . . . . 5 - 48

5.6-3 Worm Gear - Change . . . . . 5 - 50

5.7 Flap Heater . . . . . 5 - 53

5.7-1 Flap Heater - Set Air Nozzles . . . . . 5 - 53

5.7-2 Flap Heater - Overhaul . . . . . 5 - 56

5.7-3 Flap Heater - Set Air Flow . . . . . 5 - 58

5.8 Frame . . . . . 5 - 59

5.8-1 Frame - Change Damper . . . . . 5 - 59

5.8-2 Frame - Set . . . . . 5 - 60

TechPub_2614345_0105 - 01_2772072_01.fm

5.9 Guide . . . . . 5 - 64

5.9-1 Guide - Check Rails and Plates . . . . . 5 - 64
5.9-2 Guide - Change Rails and Plates . . . . . 5 - 65
5.9-3 Guide - Set . . . . . 5 - 67

5.10 Cleaning System . . . . . 5 - 69

5.10-1 Cleaning System - Check Rotors and Nozzles . 5 - 69
5.10-2 Cleaning System - Set Nozzles . . . . . 5 - 71
5.10-3 Cleaning System - Check Pump . . . . . 5 - 72
5.10-4 Cleaning System - Change Pump . . . . . 5 - 72

5.11 Outfeed Unit . . . . . 5 - 73

5.11-1 Outfeed Unit- Overhaul Carrier . . . . . 5 - 73
5.11-2 Outfeed Unit - Synchronise . . . . . 5 - 75
5.11-3 Outfeed Unit - Set Transmitter and Receiver PLMS . . . . . 5 - 77

5.12 Transmission Unit . . . . . 5 - 78

5.12-1 Transmission Unit - Overhaul . . . . . 5 - 78
5.12-2 Transmission Unit - Check Belts . . . . . 5 - 84
5.12-3 Transmission Unit - Change Belts . . . . . 5 - 85

5.13 Folding Bar . . . . . 5 - 87

5.13-1 Folding Bar - Set . . . . . 5 - 87

5.14 Cantilever . . . . . 5 - 91

5.14-1 Cantilever - Check Chain Tensioner . . . . . 5 - 91
5.14-2 Cantilever - Overhaul Chain Tensioner . . . . . 5 - 92

5.15 Forming Unit . . . . . 5 - 94

5.15-1 Forming Unit - Set . . . . . 5 - 94

5.15 Pull-Down Device . . . . . 5 - 100

5.15-1 Pull-Down Device - Set . . . . . 5 - 100

5.16 Blank Section . . . . . 5 - 109

5.17 Blank Section . . . . . 5 - 110

TechPub_2614345_0105 - 01_2772072_01.fm

5-1 Final Folder - Check Oil Distribution

Machine Status	PREHEATING I
SPC Reference	648105-1300

a) Start the manual lubrication sequence.

b) Make sure that the oil reaches all the banjo connections (see arrows) in the guide and in the pressure device. Check carefully for any oil leakages.

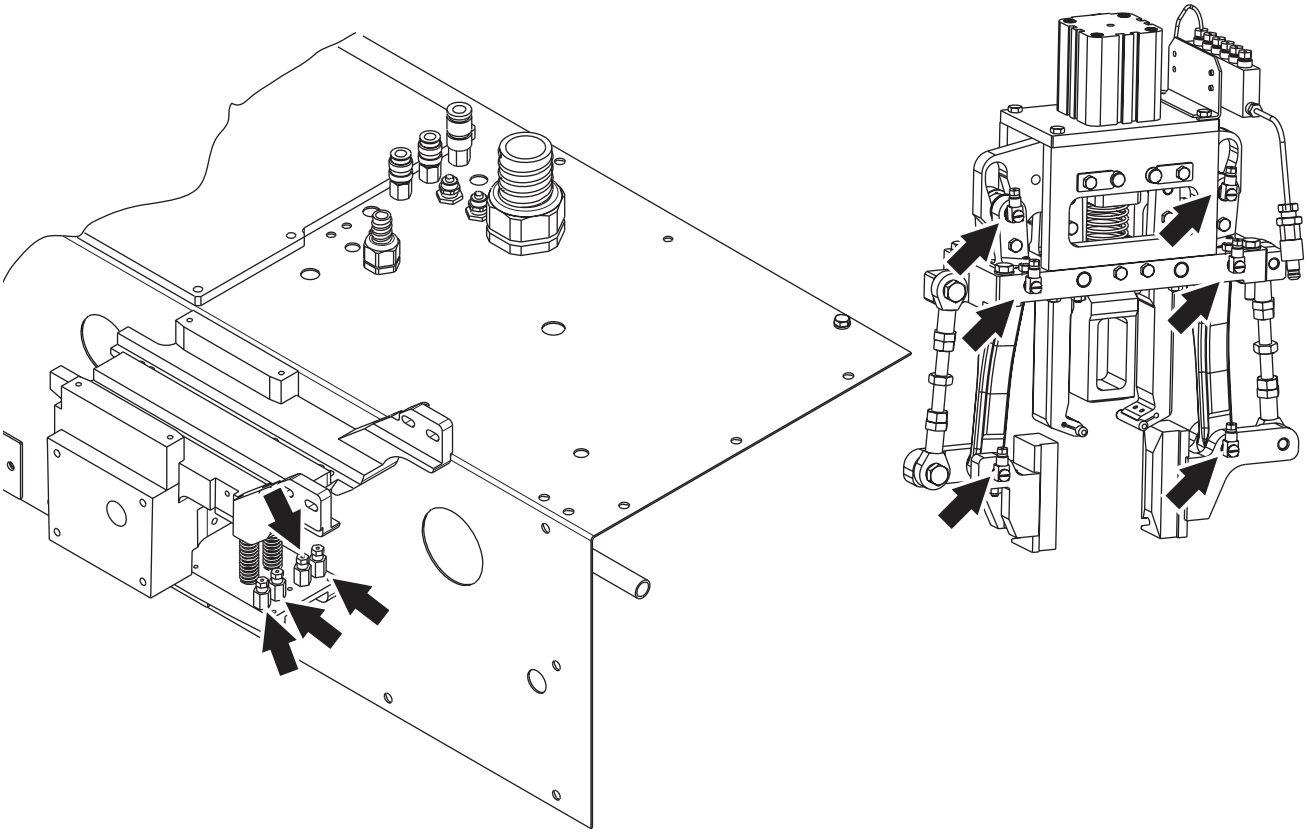

TechPub_2614345_0105 - 01_2772072_01.fm

5.1 Station Chain

5.1-1 Station Chain - Change

Machine Status	Power supply disconnector ON Air supply OFF Steam supply ON Water supply OFF
Special Equipment	Angle gauge or template TP No. 76128 Torque wrench min 10 Nm
SPC Reference	1317526-0200

Removal

WARNING

Moving parts can crush.

Be careful when working inside the machine.

a) Remove the lid of the drive wheel.

b) Remove the screws (1) **in sequence** around the flange, **half a turn at a time**. If necessary, use long screws as pullers to get the clamp bushing loose.

c) Move the chain around until a shaft with a threaded hole in the shaft end is opposite the folding bars (2).

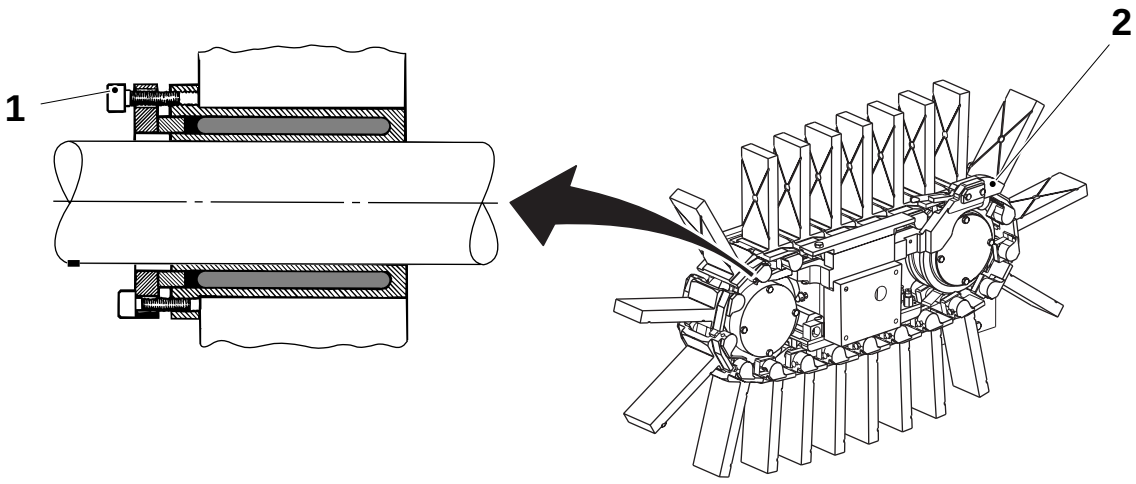

1 Screw
2 Folding bar

TechPub_2614345_0105 - 01_2772073_01.fm

(Cont'd)

(Cont'd)

d) Remove the screws (3), the folding bars (2), and the plates (4).

CAUTION
Risk of damage to equipment.
Do not lose the sliders (7) or the bushings (8) when extracting the shaft (6).

e) Remove the screw (5) and fit a long screw in the shaft (6).
Remove the shaft (6), the sliders (7), and the bushings (8).

Note! To make removal easier, the chain may be split in three equal parts.

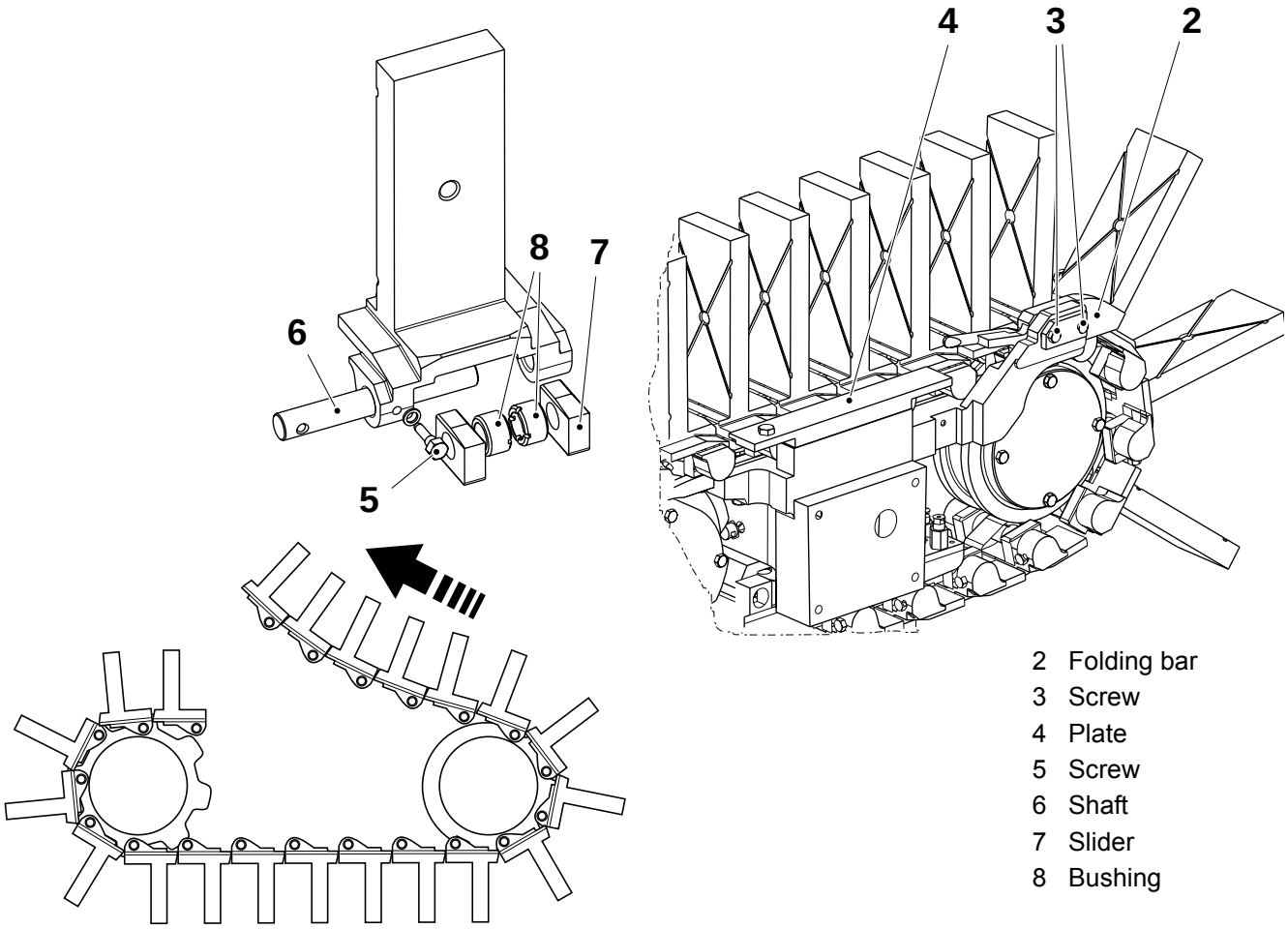

2 Folding bar
3 Screw
4 Plate
5 Screw
6 Shaft
7 Slider
8 Bushing

(Cont'd)

TechPub_2614345_0105 - 01_2772073_01.fm

(Cont'd)

Assembly

a) Crank until the indexing unit shaft end stops indexing.

b) Insert the new station chain (or chain parts) in the direction indicated.

c) Move the chain around until the chain ends meet.

d) Install the bushings (8), the sliders (7), and the shaft (6). Install the washer and the locking screw (5).

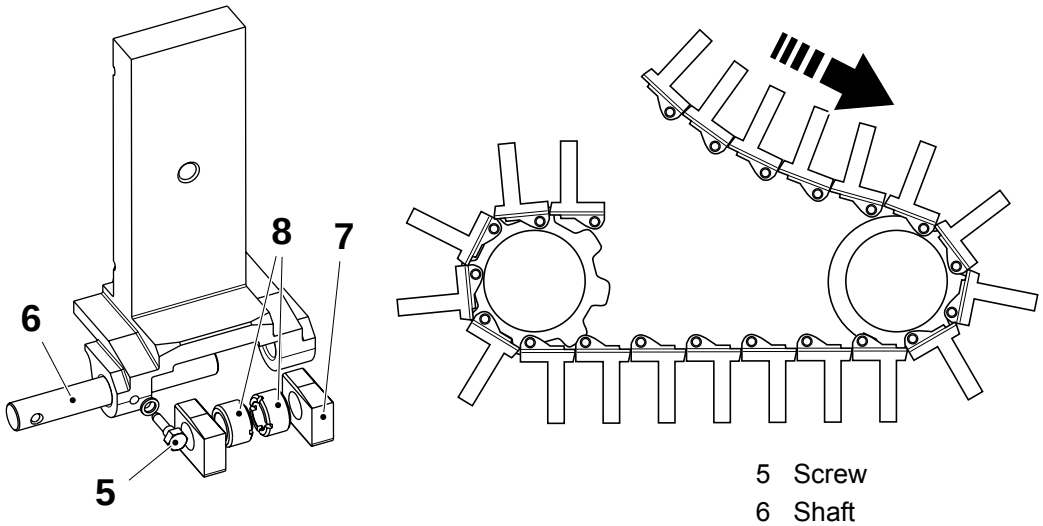

5 Screw
6 Shaft
7 Slider
8 Bushing

(Cont'd)

TechPub_2614345_0105 - 01_2772073_01.fm

(Cont'd)

e) Crank until the indexing unit shaft end stops indexing.

f) To set the angle **A**, put the template (9) in the station chain at the drop chute side. Turn the chain until the chain plate is parallel and touches the template (9).

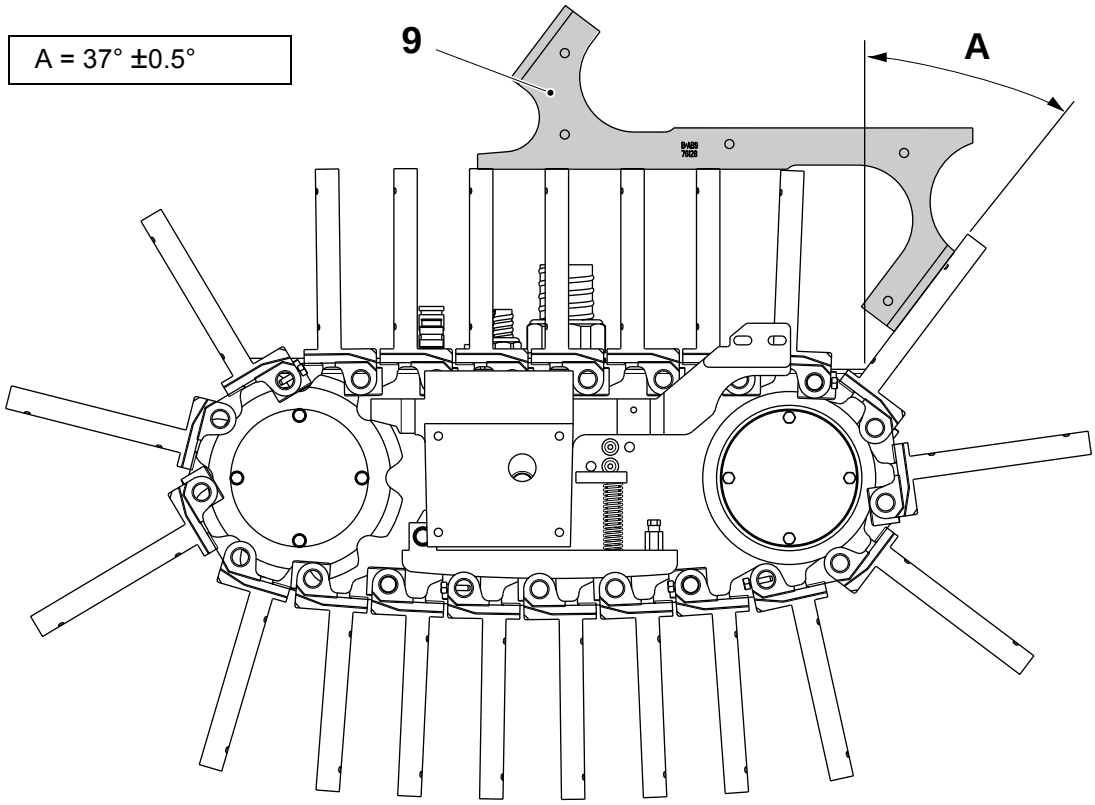

9 Template

(Cont'd)

TechPub_2614345_0105 - 01_2772073_01.fm

(Cont'd)

g) Set the distance **B** between the side of the slide rail (10) and the side of the drive sprocket.

B = 9.1 ± 0.1 mm

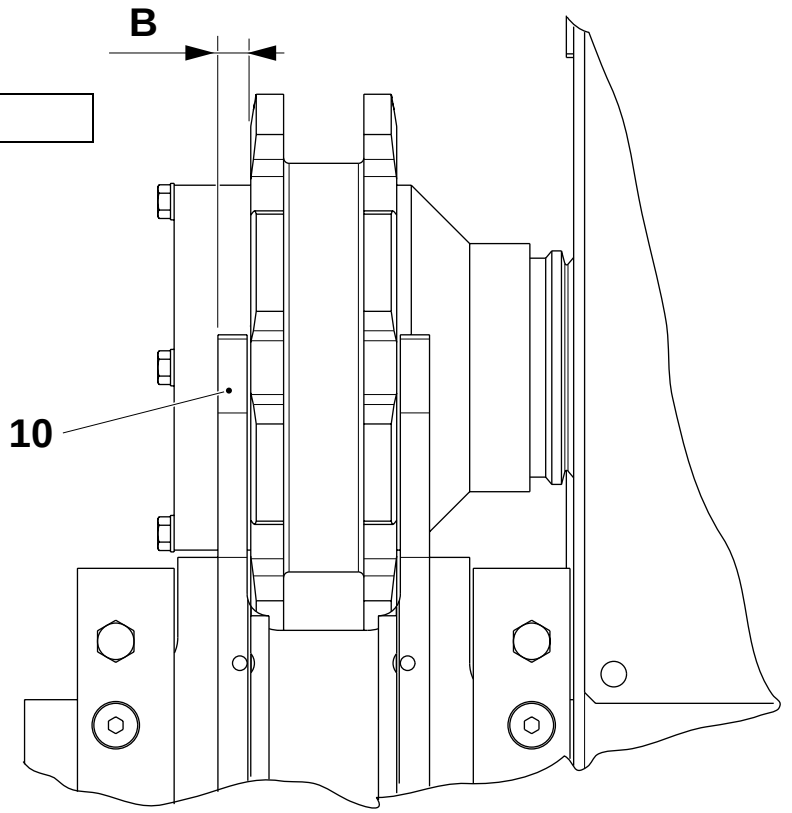

10 Rail

(Cont'd)

TechPub_2614345_0105 - 01_2772073_01.fm

(Cont'd)

WARNING
Risk of serious damage.
Never adjust the tightening torque afterwards by screwing out the screws. The result may be that the screws (1) shake loose.

h) Tighten the screws (1) in sequence around the flange, **half a turn at a time**. Torque the screws to **8.0 ±1.0 Nm**.

CAUTION
Risk of damage to equipment.
Do not tighten the pressure ring (11) and the sleeve (12) against one another. Make sure to keep the distance **C** between the pressure ring (11) and the sleeve (12), and check that the parallelism is within 0.1 mm.

i) Change the plates (4) and set them, see 5.9-2 Guide - Change Rails and Plates.

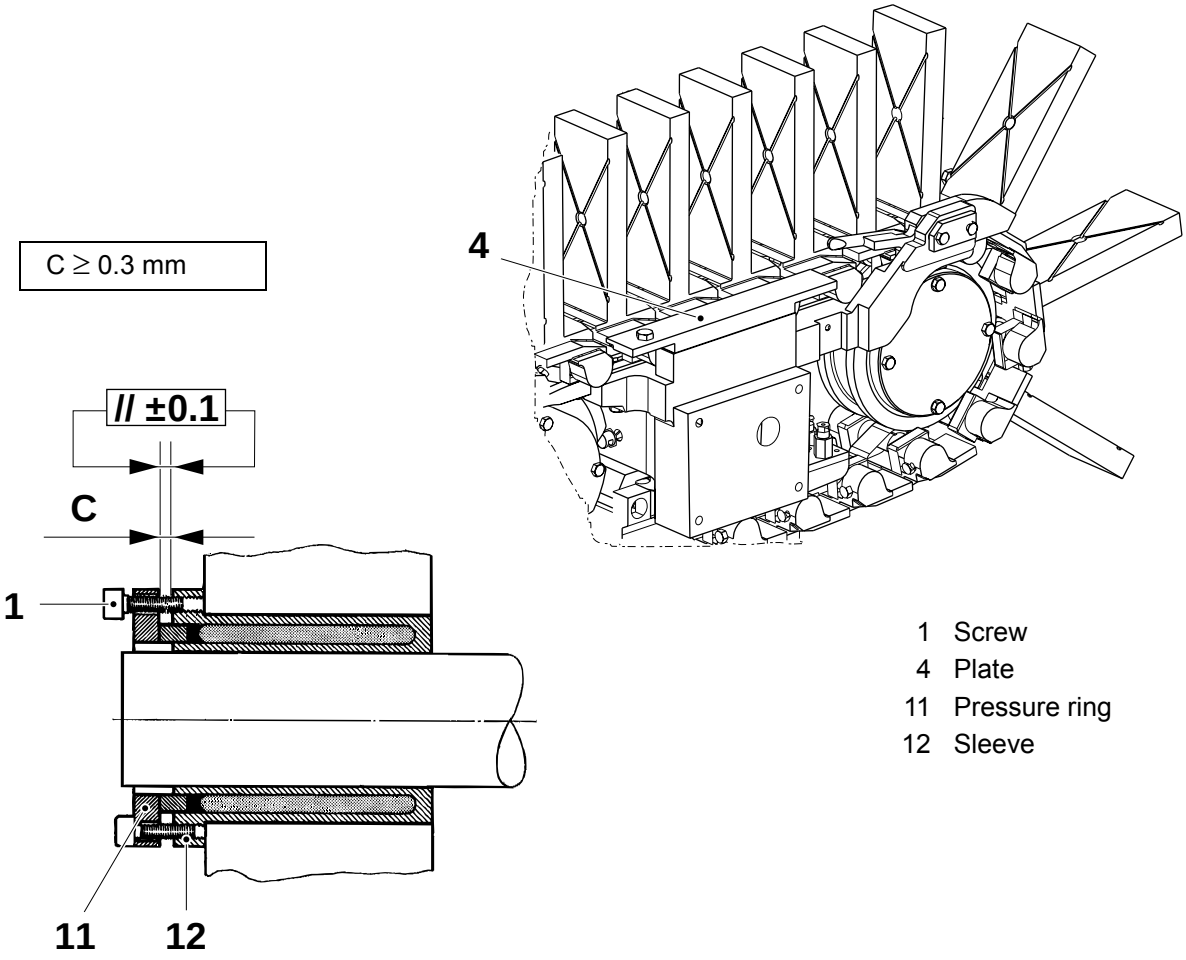

1 Screw
4 Plate
11 Pressure ring
12 Sleeve

(Cont'd)

TechPub_2614345_0105 - 01_2772073_01.fm

(Cont'd)

j) Install the folding bar (2) and the plates (14).

k) Set the folding bar, see <u>5.13-1 Folding Bar - Set</u>

l) Push the chain plate fully towards the sensor (15).

m) Set the distance **F** between the chain plate (13) and the sensor (15).

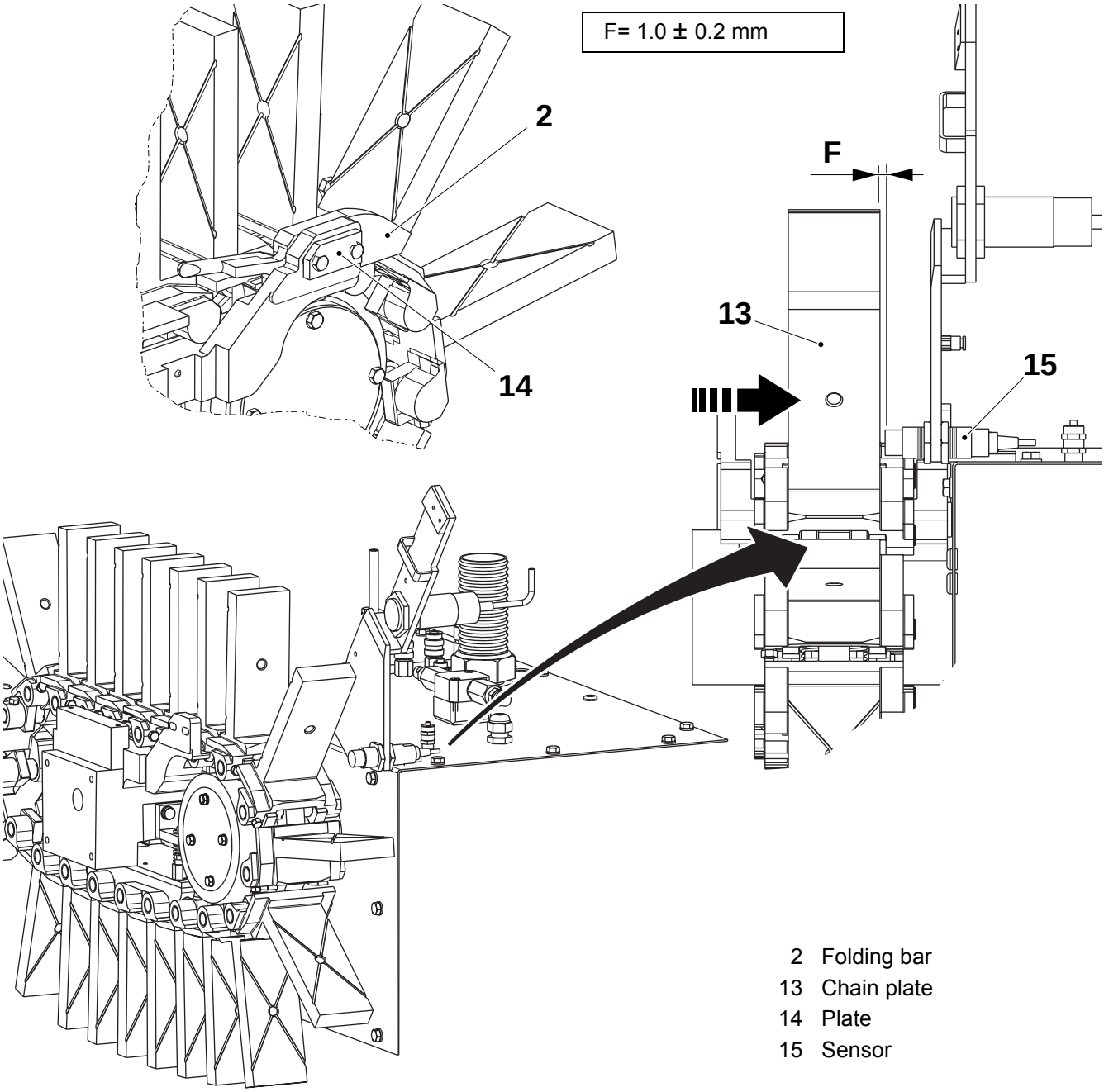

TechPub_2614345_0105 - 01_2772073_01.fm

5.1-2 Station Chain - Turn Shafts

Machine Status	Power supply disconnector OFF Air supply OFF Steam supply ON Water supply OFF
SPC Reference	1317526-0200

a) Remove the screw (1) and slightly push out shaft (2).

b) Turn the shaft (2) 180° and put it back.

c) Tighten the screw (1).

d) Repeat steps from a) to c) for all the station chain plates.

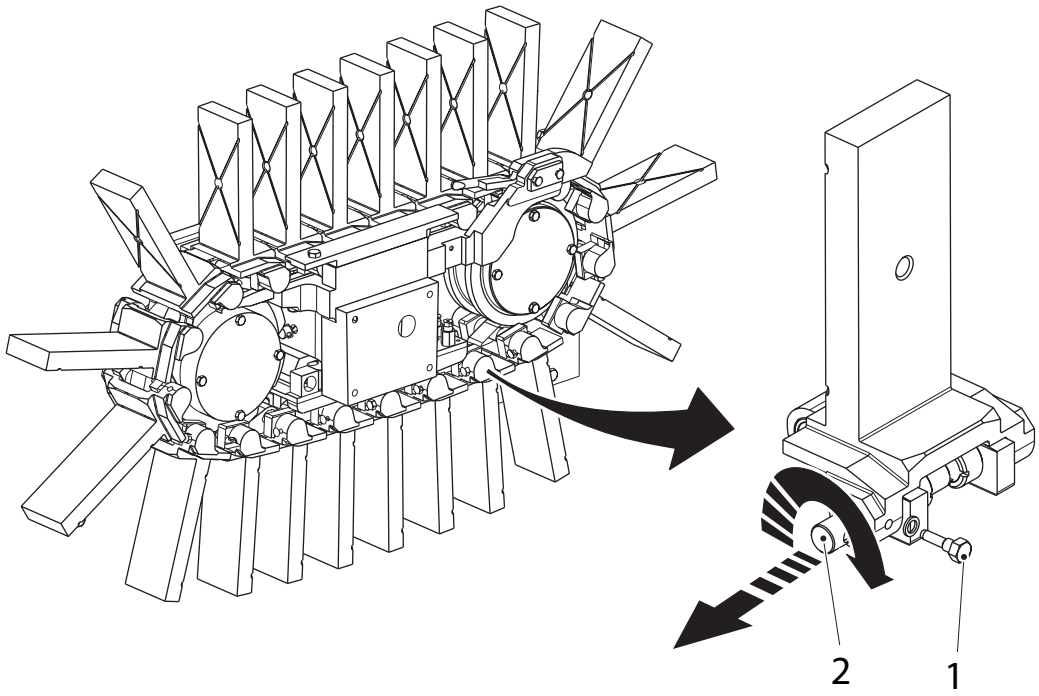

1 Screw
2 Shaft

TechPub_2614345_0105 - 01_2772073_01.fm

5.1-3 Station Chain - Overhaul

TechPub_2614345_0105 - 01_2772073_01.fm

5.2 Drive Wheel

5.2-1 Drive Wheel - Overhaul

Machine Status	Power supply disconnector OFF Air supply OFF Steam supply ON Water supply OFF
Consumables	Solvent Lubricant TP No. 92296-2 Torque wrench min 13 Nm
SPC Reference	491850-0100

a) Remove the station chain, see 5.1-1 Station Chain - Change.

b) Remove the RH slide rail (1), see 5.9-2 Guide - Change Rails and Plates.

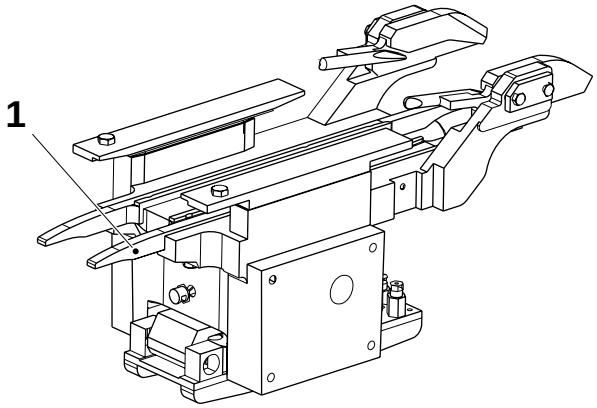

1 Slide rail - RH side

(Cont'd)

TechPub_2614345_0105 - 01_2772074_01.fm

(Cont'd)

c) Loosen the screws (2) and remove the lid (3).

d) Loosen the screws (4) **in sequence**, by half a turn each, to remove the drive wheel (5) from the index unit axle (6).

e) Check the drive wheel (5) for cracks or chipping. If necessary, change it.

f) Remove the bushing (9) from the drive wheel (5).

g) Check and, if necessary, change the following details:
   - the bushing (9)
   - the O-ring (7)
   - the seal ring (8)

Note! Carefully clean the axle (6), the inner side of the drive wheel (5) and the bushing (9). Lubricate before assembling.

h) Assemble in the reverse order, see 5.1-1 Station Chain - Change.

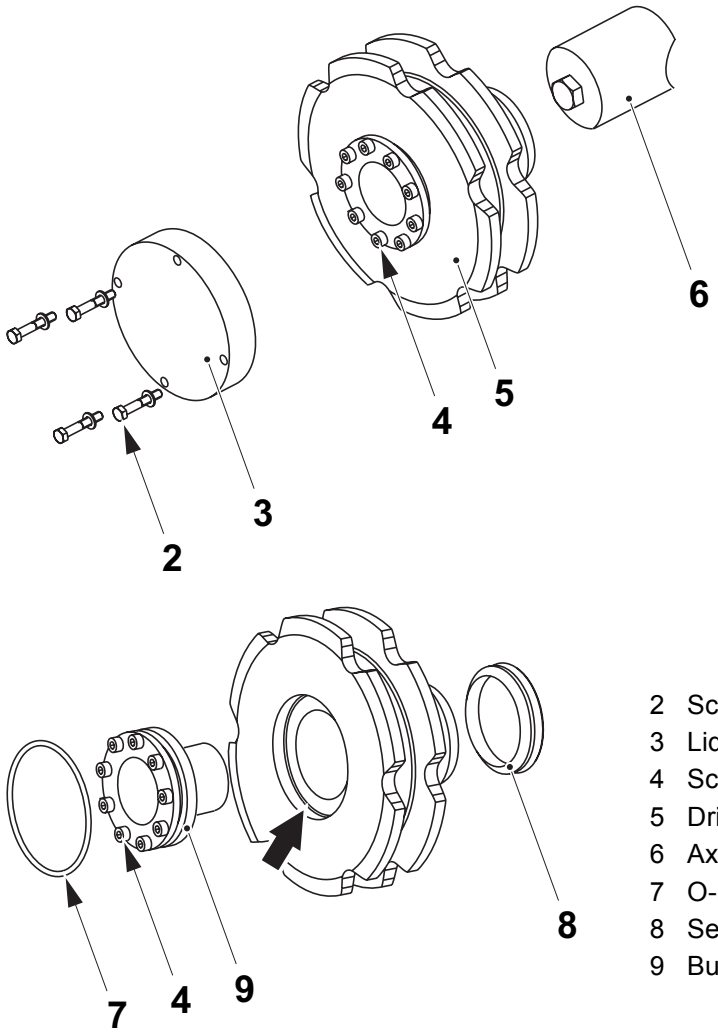

2 Screw
3 Lid
4 Screw
5 Drive wheel
6 Axle - indexing unit
7 O-ring
8 Seal ring
9 Bushing

TechPub_2614345_0105 - 01_2772074_01.fm

5.3 Tension Sprocket

5.3-1 Tension Sprocket - Overhaul

Machine Status	Power supply disconnector OFF Air supply OFF Steam supply ON Water supply OFF
Consumables	Solvent code M Grease 90296-0070
SPC Reference	491846-0200

a) Remove the station chain, see 5.1-1 Station Chain - Change.

b) Remove the RH slide rail (1), see 5.9-2 Guide - Change Rails and Plates.

c) Loosen the screws (2) and remove the lid (3).

d) Hold the shaft (5) and remove the screw (4).

e) Remove the washer (6), the seal ring (7), and the shim (8).

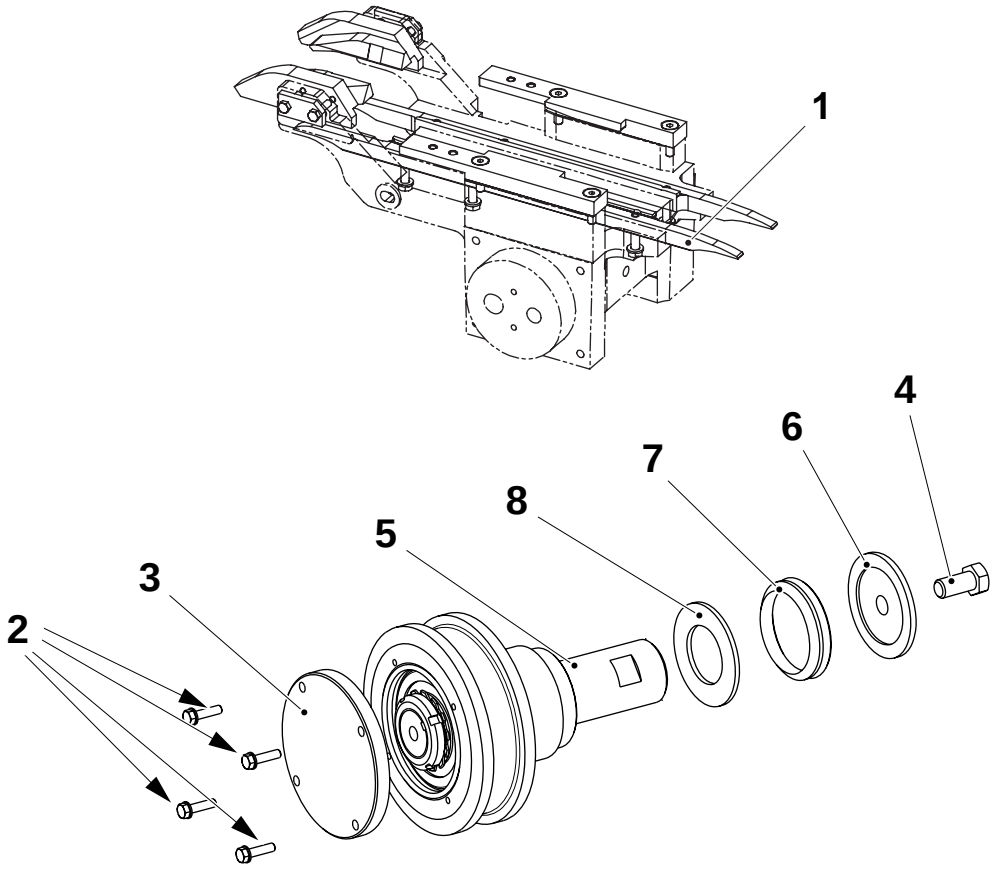

1 Slide rail
2 Screw
3 Lid
4 Screw
5 Shaft
6 Washer
7 Seal ring
8 Shim

(Cont'd)

TechPub_2614345_0105 - 01_2772075_01.fm

(Cont'd)

f) Remove the tension sprocket (9) assembly.

g) Remove the ring nut (10), the lock washer (11), and the sealing ring (12).

h) Check and, if necessary, change the following details:

- the sprocket (9) for cracks or chipping
- the ball bearing (13)
- the seal ring (7), the shim (8), and the sealing ring (12).

i) Remove the shaft (5). Check that the shaft (5) is not damaged. Change it, if necessary.

Note! Carefully clean the shaft (5) and the inner site of the sprocket (9). Lubricate before assembling.

j) Assemble in the reverse order, see 5.1-1 Station Chain - Change.

(Cont'd)

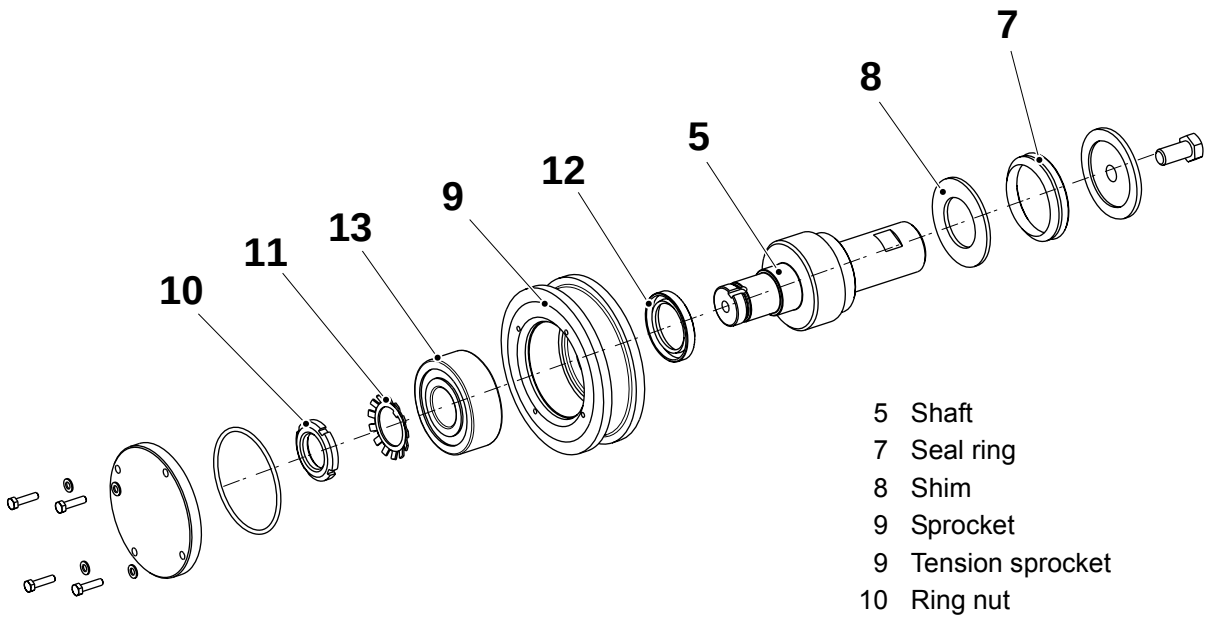

5 Shaft
7 Seal ring
8 Shim
9 Sprocket
9 Tension sprocket
10 Ring nut
11 Lock washer
12 Sealing ring
13 Ball bearing

TechPub_2614345_0105 - 01_2772075_01.fm

(Cont'd)

Set

a) Attach the slide rail (1), see 5.9-2 Guide - Change Rails and Plates.

b) Set the distance **A** between the side of the slide rail and the side of the drive sprockets. Measure from the reference points shown below. Adjust by adding or removing shims (2).

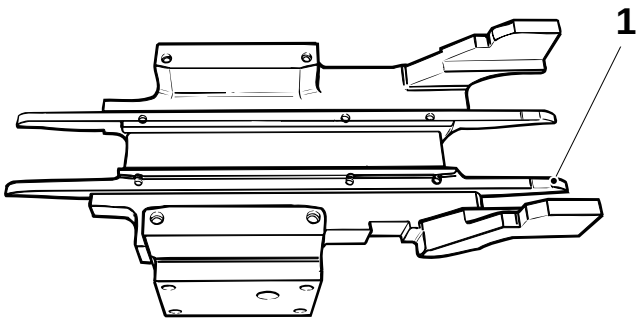

A = 9.1 ± 0.1 mm

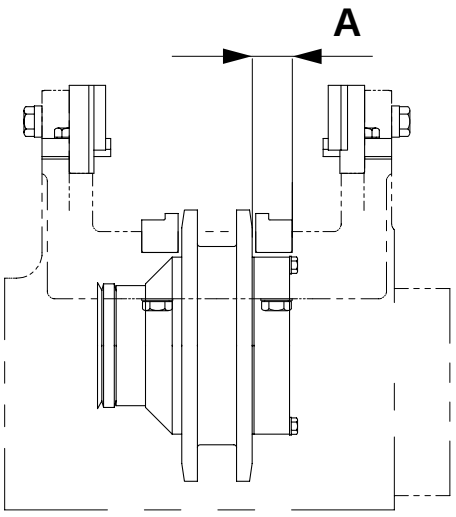

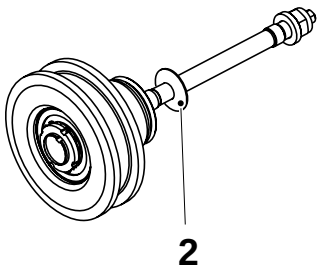

1 Slide rail - RH side
2 Shim

TechPub_2614345_0105 - 01_2772075_01.fm

5.4 Indexing Unit

5.4-1 Indexing Unit - Change Oil

Machine Status	Power supply disconnector OFF Air supply OFF Steam supply ON Water supply OFF
Consumables	Oil code B
SPC Reference	256410-0900

WARNING

Lubricant.

Chemical products. Follow the Safety Precautions.

a) Remove the filling plug (1).

b) Remove the drain plug (3) and drain the oil.

c) When the oil is drained, install the drain plug (3) and top up with oil to the correct level in the level glass (2).

d) Install the filling plug (1).

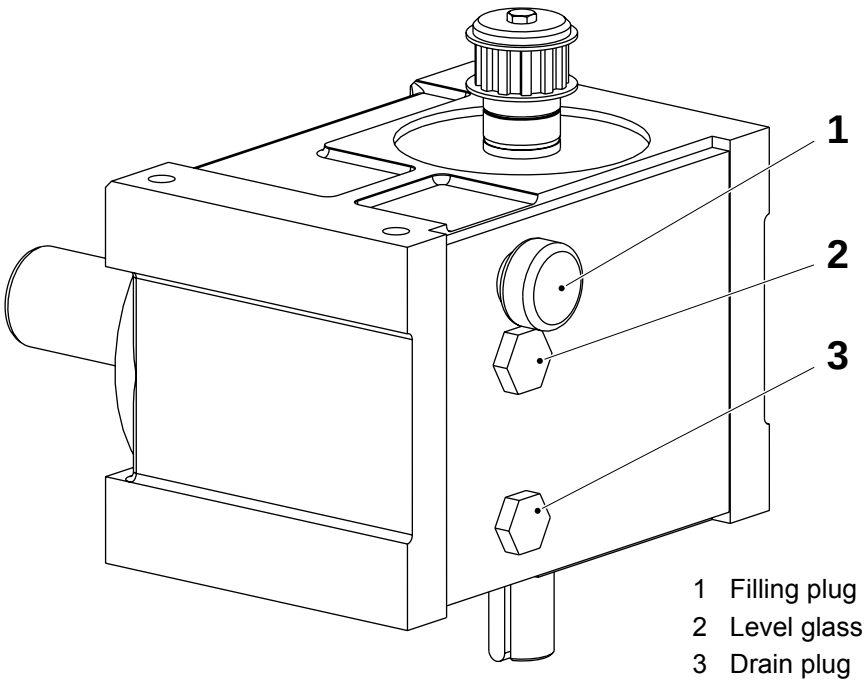

1 Filling plug
2 Level glass
3 Drain plug

TechPub_2614345_0105 - 01_2772076_01.fm

5.4-2 Indexing Unit - Check Oil Level

Machine Status	Power supply disconnector OFF Air supply OFF Steam supply ON Water supply OFF
Consumables	Oil code B
SPC Reference	256410-0900

a) Check the oil level in the level glass (2).

WARNING
Lubricant.
Chemical products. Follow the Safety Precautions.

b) If necessary, remove the filler plug (1) and top up with oil. Use oil code B, see 15.3 Lubricants.

c) Install the filler plug (1).

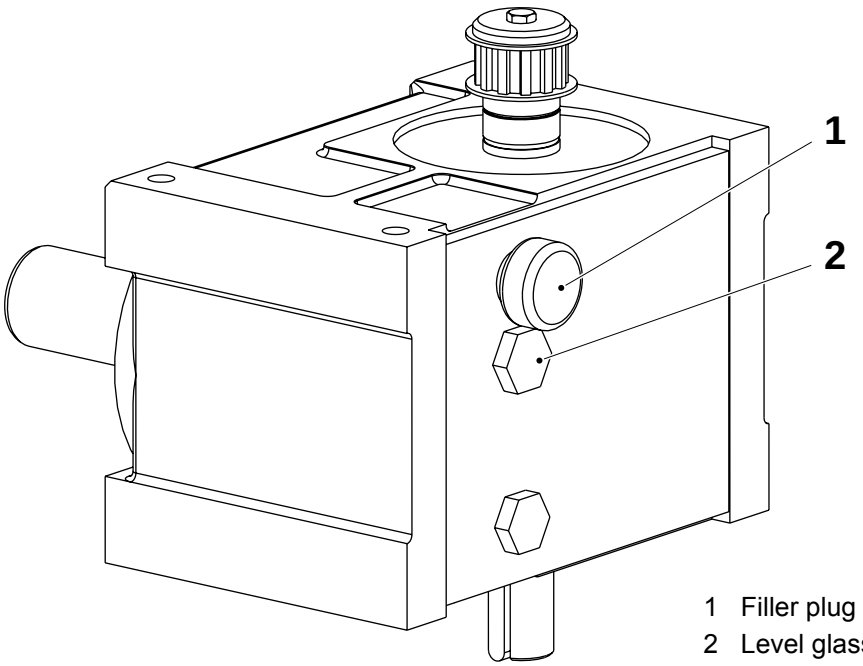

1 Filler plug
2 Level glass

TechPub_2614345_0105 - 01_2772076_01.fm

5.4-3 Indexing Unit - Check Cut Out Torque

Machine Status	Power supply disconnector ON Air supply OFF Steam supply ON Water supply OFF
Special Equipment	Torque wrench min 95 Nm
SPC Reference	256410-0900

a) Crank until the outfeed carrier (1) runs clear of the station chain and remove the lid (2).

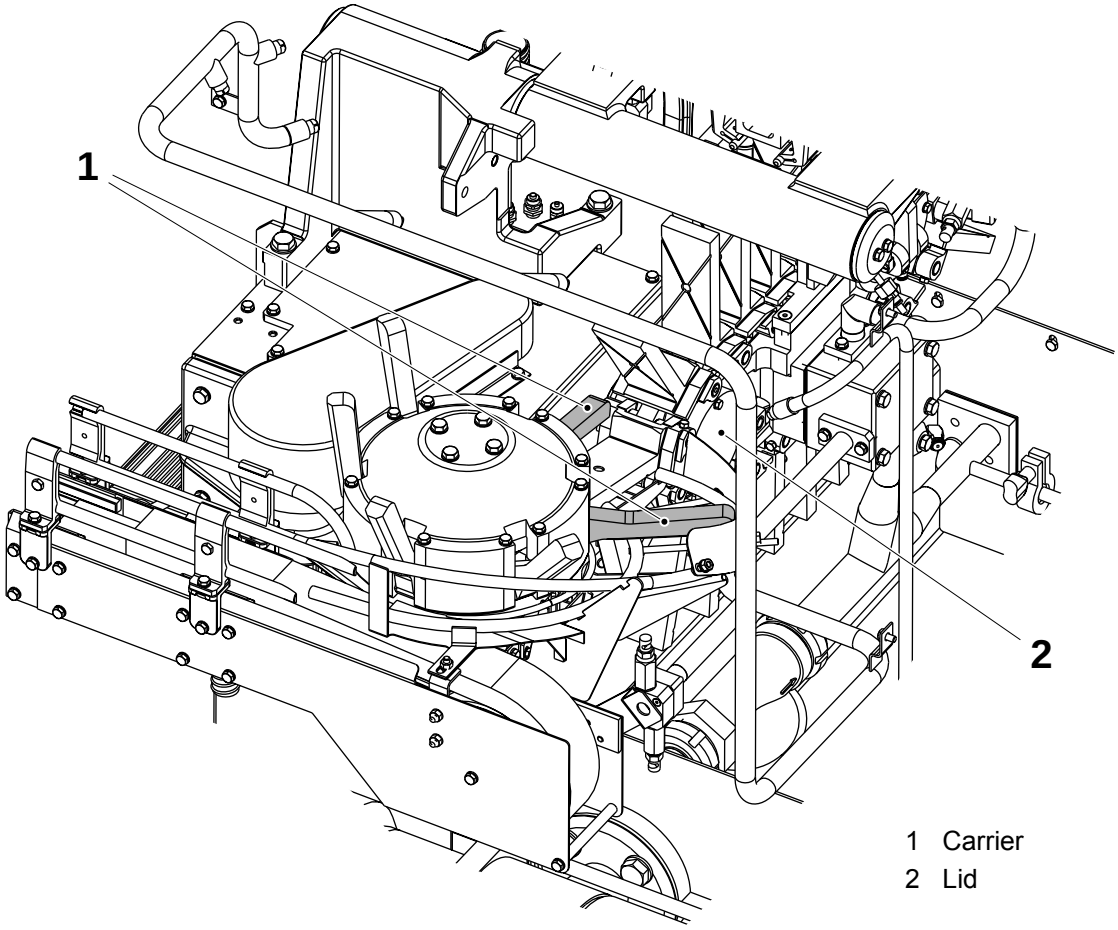

1 Carrier
2 Lid

(Cont'd)

TechPub_2614345_0105 - 01_2772076_01.fm

(Cont'd)

b) Tighten the drive wheel (4) to the right using the torque wrench (3).

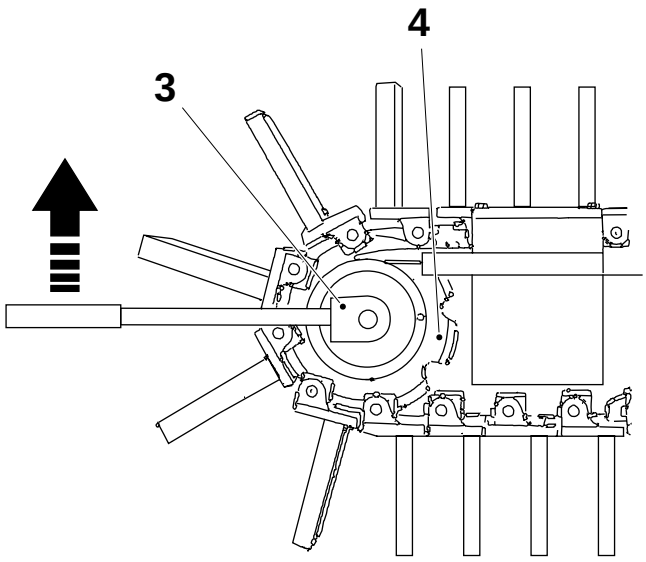

3 Torque wrench
4 Drive wheel

c) Turn the drive wheel (4) to the next indexed position to reset the coupling.

d) Check the cut-out torque at each of the eight indexed positions of the drive wheel (4). The allowed cut-out torque is **80 to 95 Nm**.
If necessary, change the indexing unit, see 5.4-4 Indexing Unit - Change.

TechPub_2614345_0105 - 01_2772076_01.fm

5.4-4 Indexing Unit - Change

Machine Status	Power supply disconnector OFF Air supply OFF Steam supply ON Water supply OFF
SPC Reference	648105-1300

Remove Connections

a) Remove the air connection (1).

b) Remove the elbow pipe joint (2) to the pressure device.

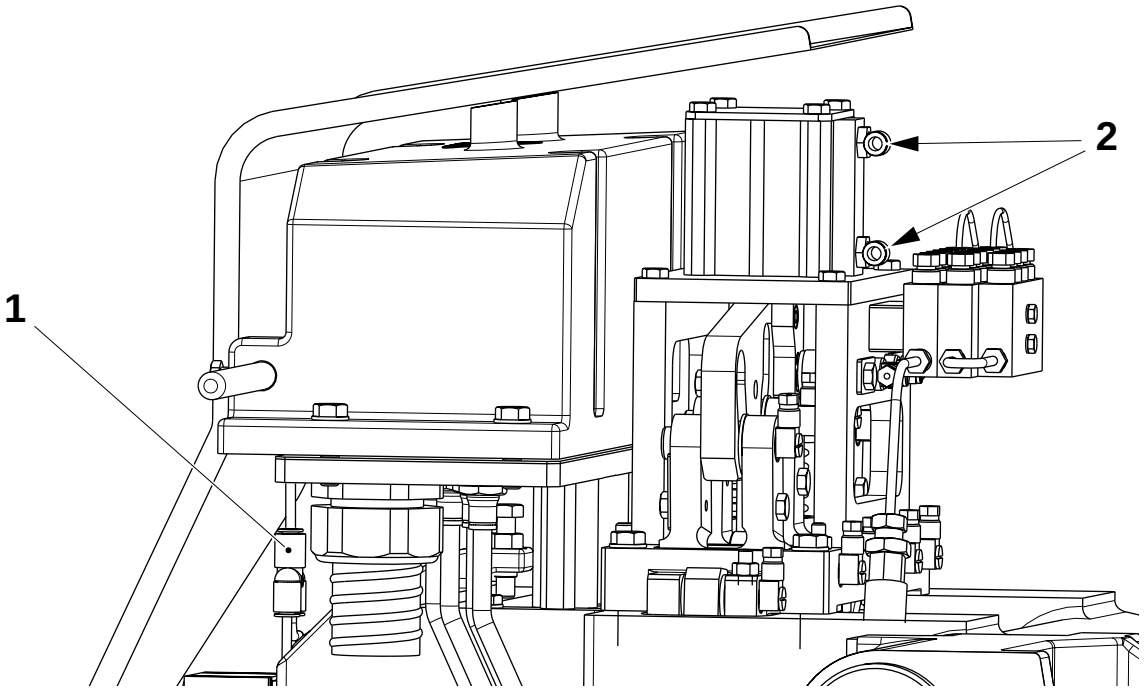

TechPub_2614345_0105 - 01_2772076_01.fm

1 Air connection
2 Elbow pipe joint

(Cont'd)

(Cont'd)

c) Remove the oil connection (3).

d) Remove the water connection (4), (5), and (6).

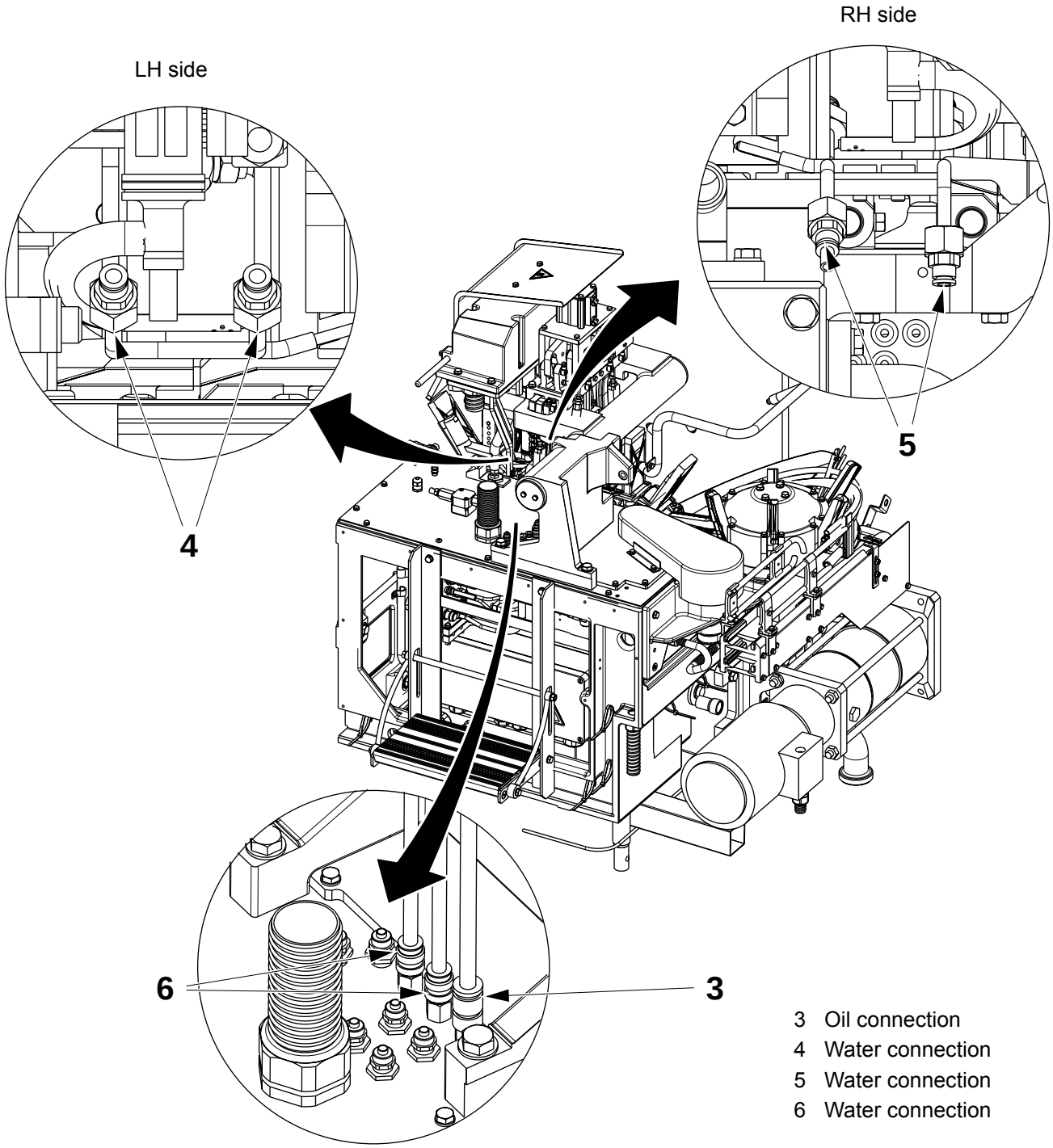

(Cont'd)

TechPub_2614345_0105 - 01_2772076_01.fm

(Cont'd)

e) Remove the air connection (7) to the flap heater.

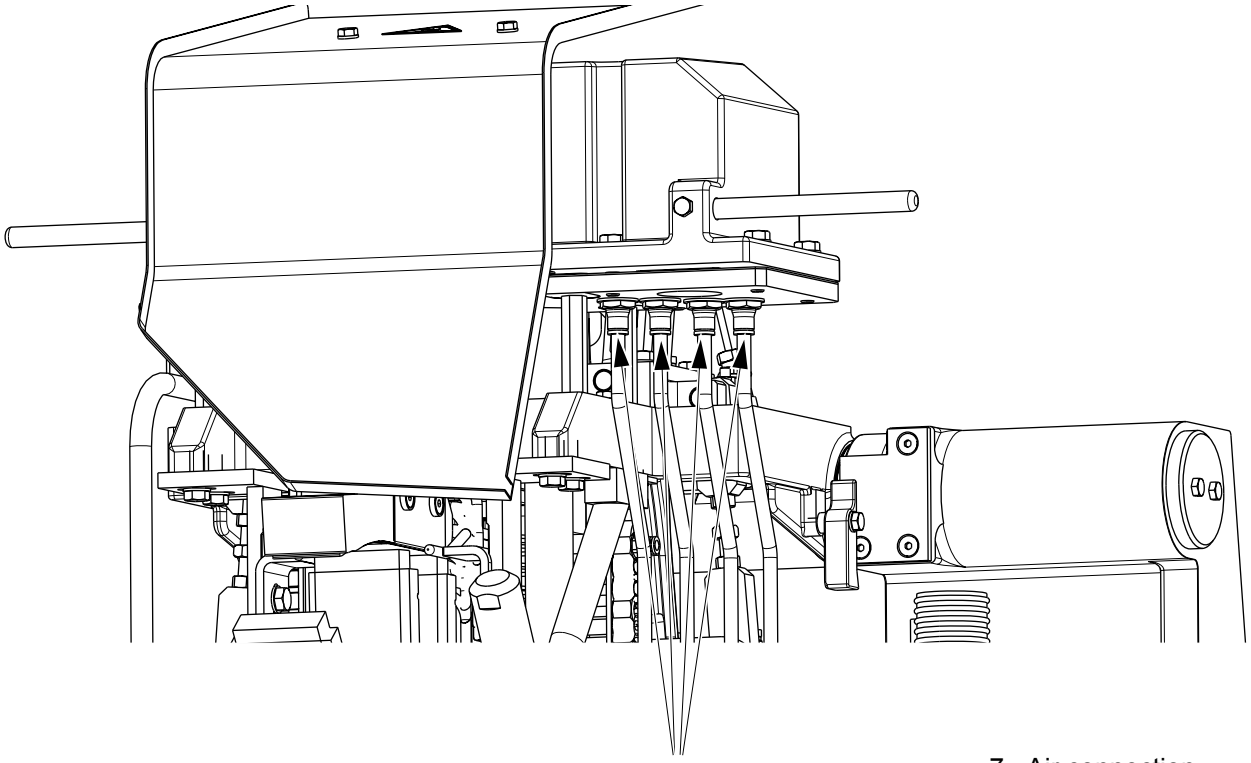

7 Air connection

(Cont'd)

TechPub_2614345_0105 - 01_2772076_01.fm

(Cont'd)

f) Remove the screws (8) and the plate (9).

g) Remove the eight screws (10) and the cover (11).

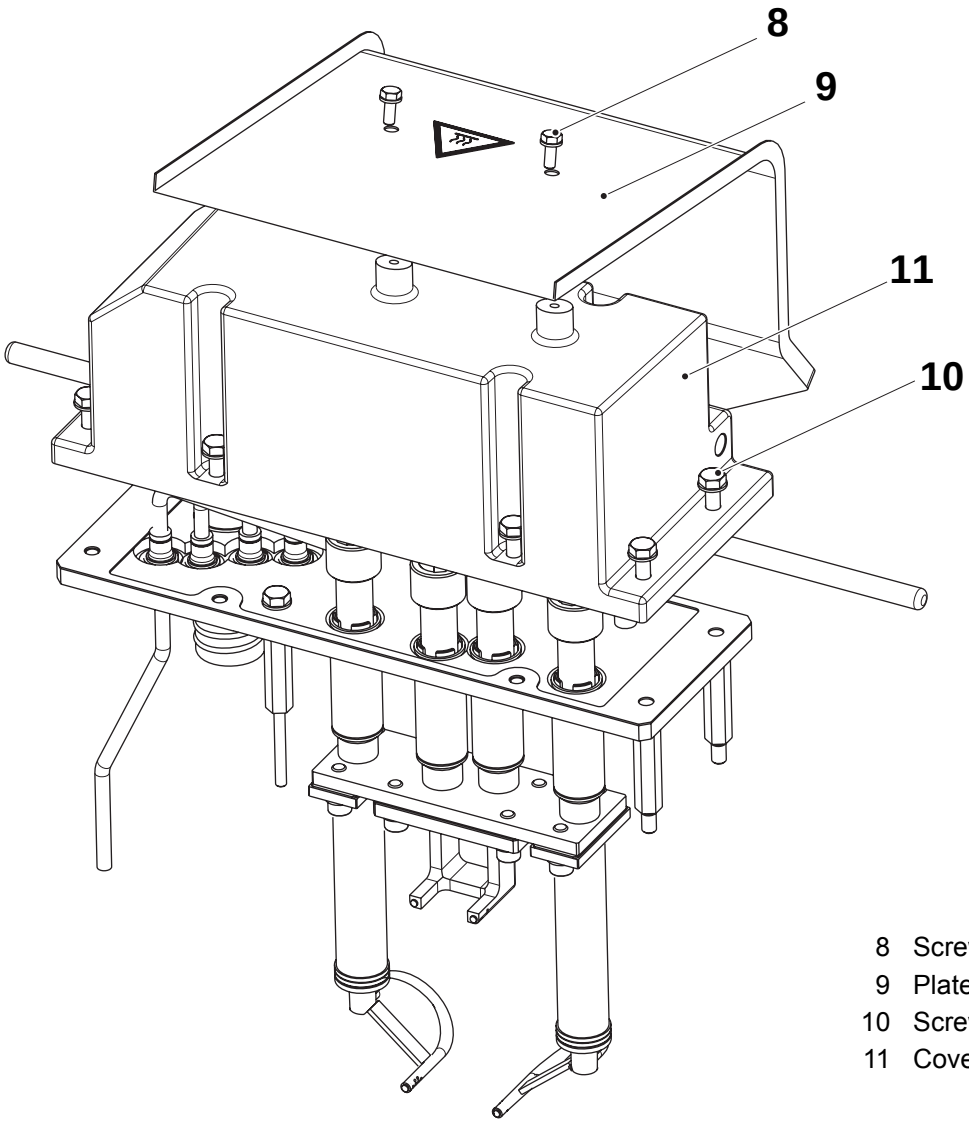

8 Screw
9 Plate
10 Screw
11 Cover

(Cont'd)

TechPub_2614345_0105 - 01_2772076_01.fm

(Cont'd)

h) Remove the gasket (12).

i) Mark all the electrical connections, if they are not already marked, see EM.

j) Remove the nuts (13), the springs (14), and the plates (15).

k) Remove the four contact units (16) and the four heating elements (17).

l) Disconnect the pipes (18) and (19).

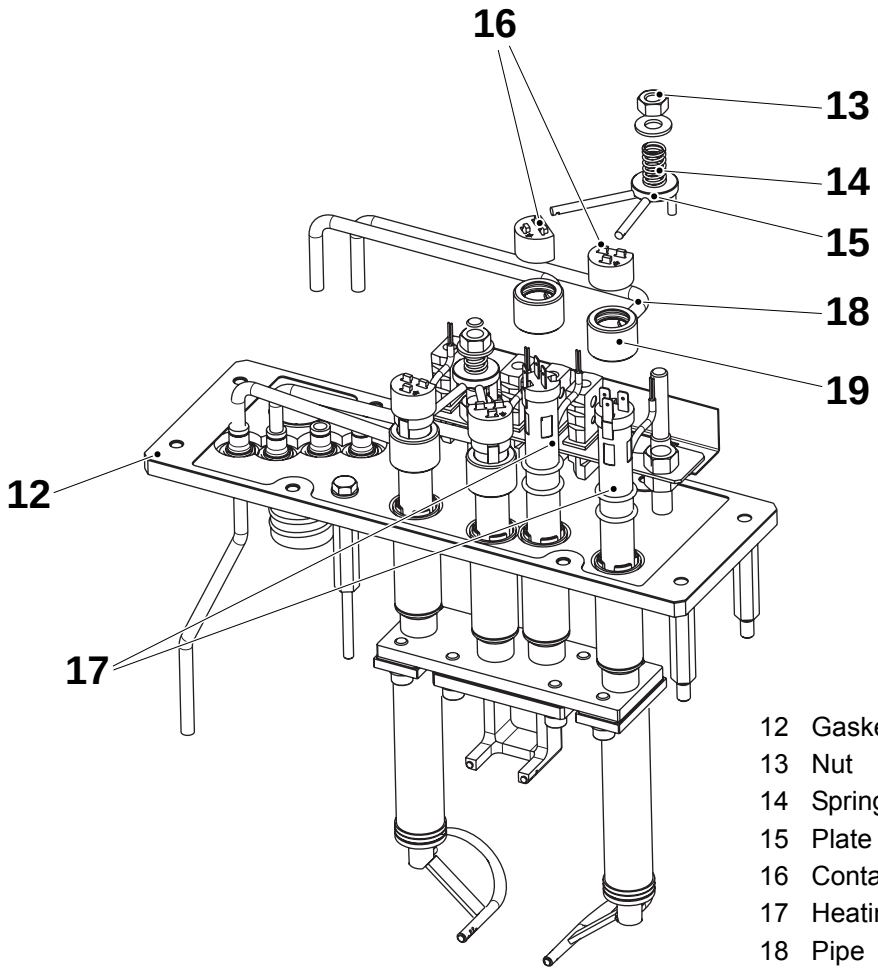

12 Gasket
13 Nut
14 Spring
15 Plate
16 Contact unit
17 Heating element
18 Pipe
19 Pipe

TechPub_2614345_0105 - 01_2772076_01.fm

Remove Indexing Unit

a) Remove the screws (1) and remove the pressure device (2).

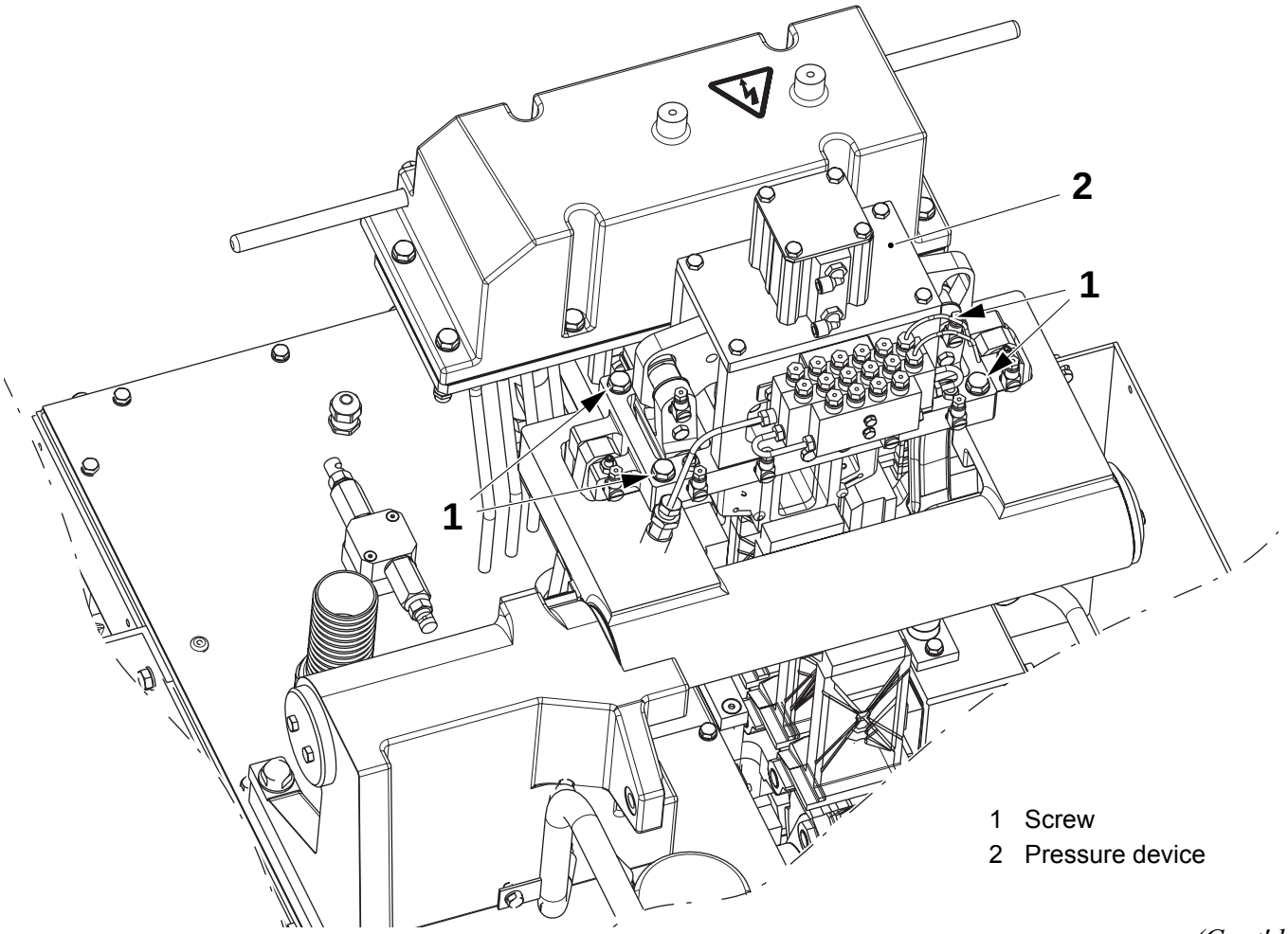

1 Screw
2 Pressure device

(Cont'd)

TechPub_2614345_0105 - 01_2772076_01.fm

(Cont'd)

CAUTION

Heavy parts can crush.

The flap heater (7) and the frame (8) are heavy. Two persons are necessary for this procedure.

b) Rotate the pivot arm (3).

c) Remove the screws (4) and remove the lid (5), the shims (6), the flap heater (7), and the frame (8).

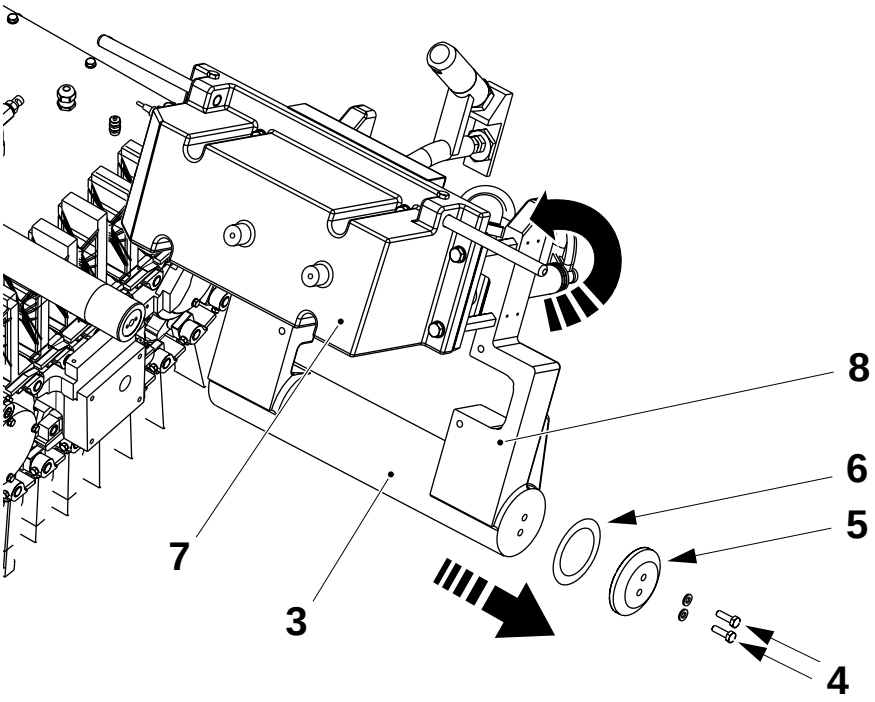

3 Pivot arm
4 Screw
5 Lid
6 Shim
7 Flap heater
8 Frame

(Cont'd)

TechPub_2614345_0105 - 01_2772076_01.fm

(Cont'd)

d) Remove the screws (9) and remove the fixing unit (10).

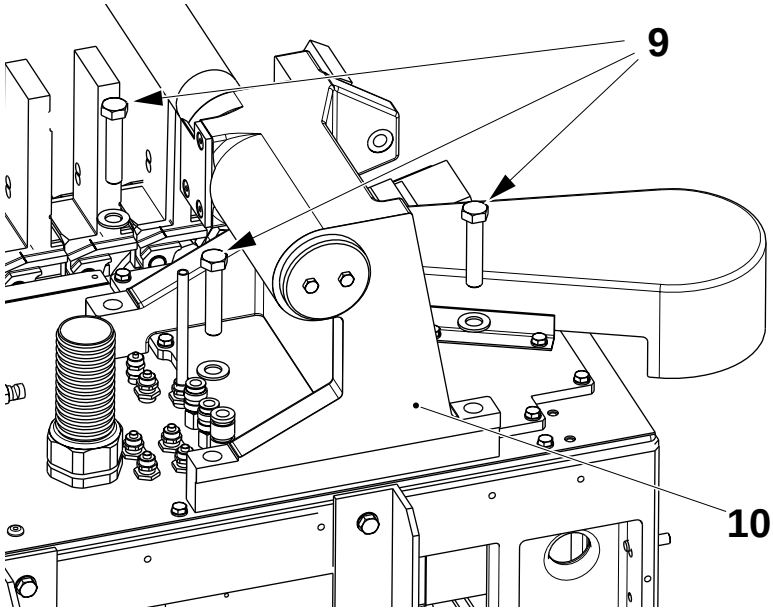

9 Screw
10 Fixing unit

(Cont'd)

TechPub_2614345_0105 - 01_2772076_01.fm

(Cont'd)

e) Remove the station chain, see 5.1-1 Station Chain - Change.

f) Remove the drive wheel, see 5.2-1 Drive Wheel - Overhaul.

g) Remove the screws (11) and the protective cover (12).

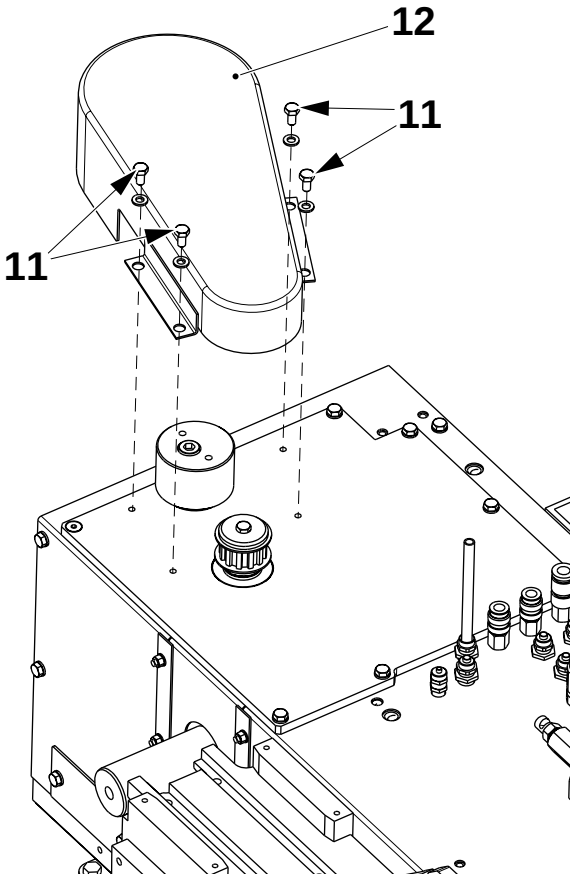

11 Screw
12 Protective cover

(Cont'd)

TechPub_2614345_0105 - 01_2772076_01.fm

(Cont'd)

h) Remove the screw (13) and the tension roller (14)

i) Remove the belt (15).

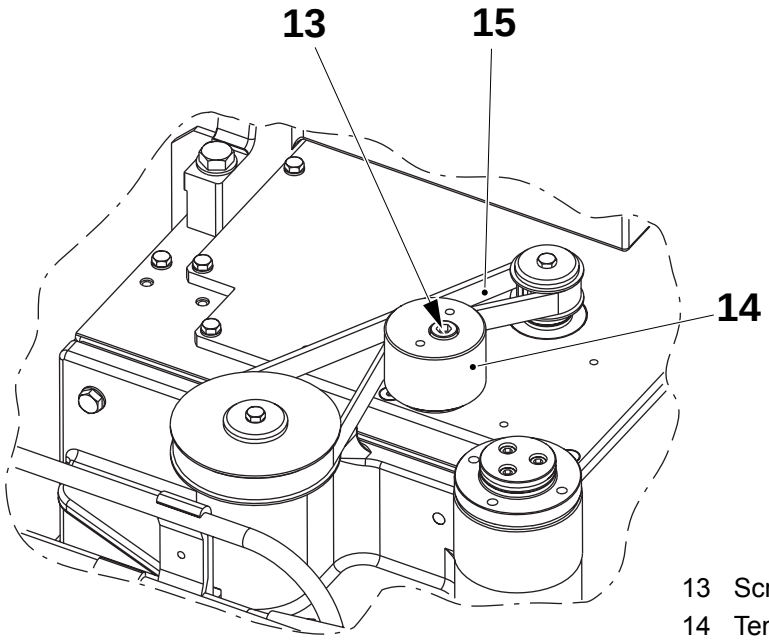

13 Screw
14 Tension roller
15 Belt

(Cont'd)

TechPub_2614345_0105 - 01_2772076_01.fm

(Cont'd)

j) Remove the screw (16) and the toothed pulley (17).

k) Remove the screws (18) and the shield plate (19).

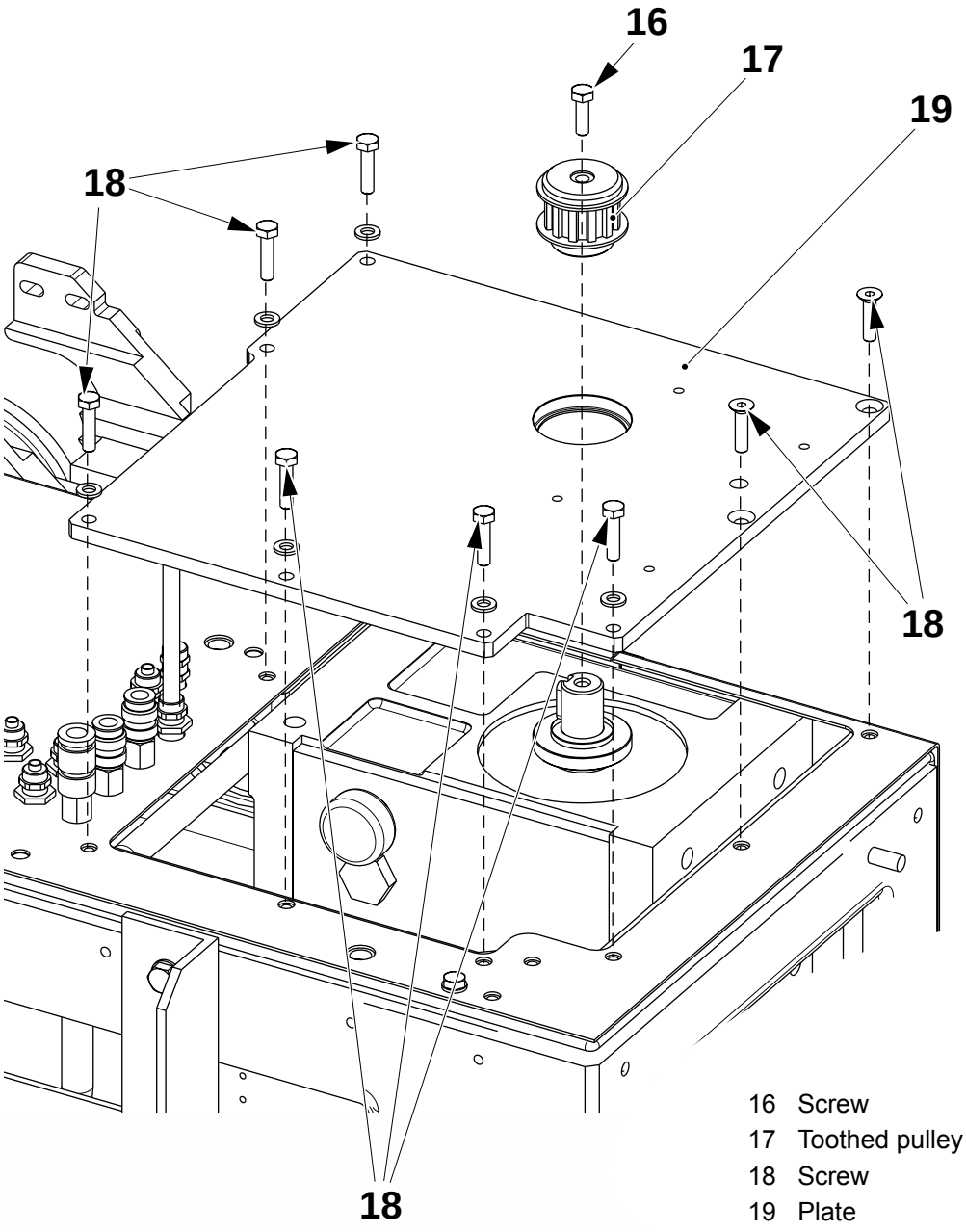

16 Screw
17 Toothed pulley
18 Screw
19 Plate

(Cont'd)

TechPub_2614345_0105 - 01_2772076_01.fm

(Cont'd)

l) Remove the nut (20) and the plate (21).

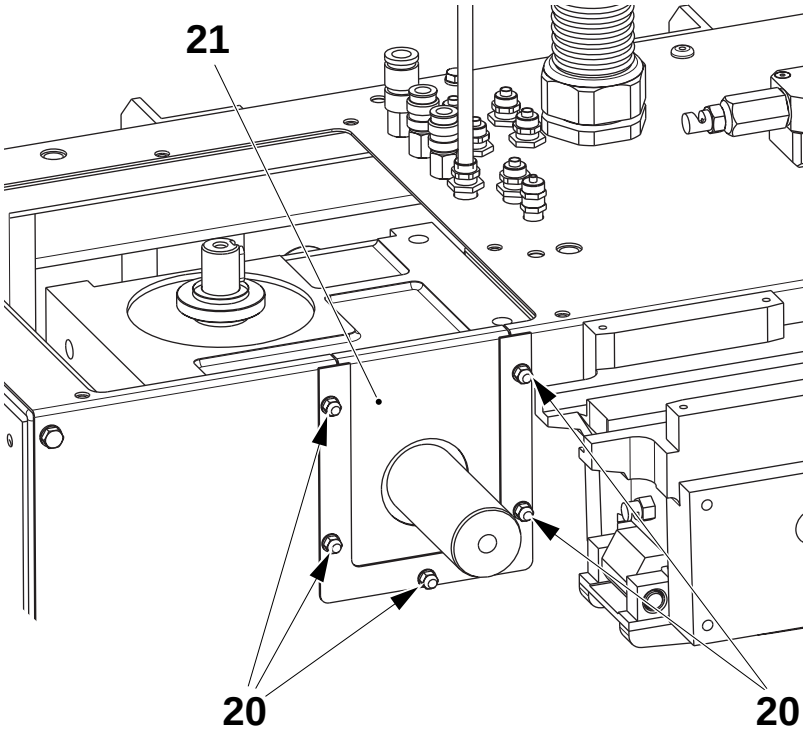

20 Nut
21 Plate

(Cont'd)

TechPub_2614345_0105 - 01_2772076_01.fm

(Cont'd)

m) Remove the screws (22), the nut (23), and the indexing unit (24).

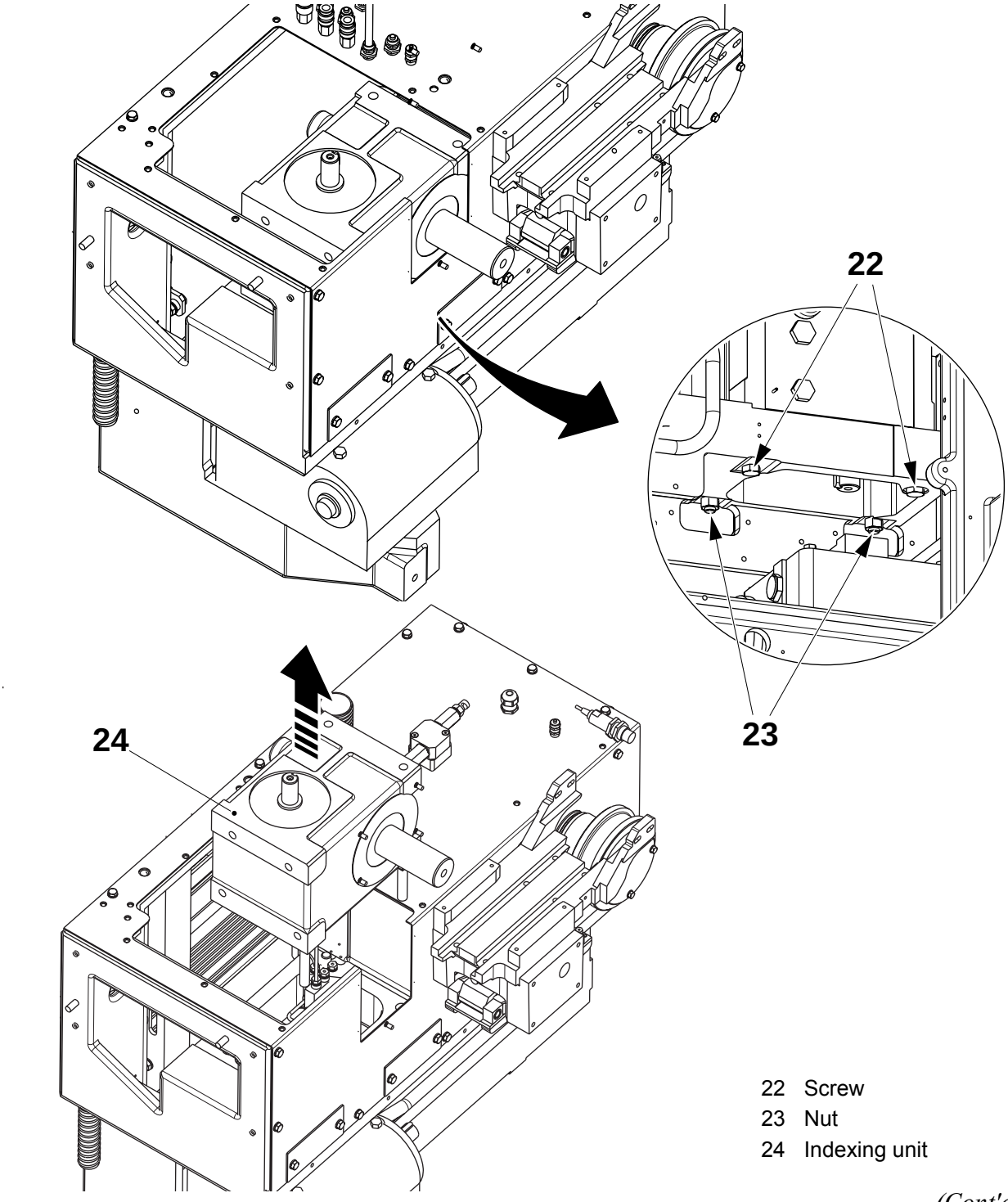

22 Screw
23 Nut
24 Indexing unit

(Cont'd)

TechPub_2614345_0105 - 01_2772076_01.fm

(Cont'd)

n) Assemble in the reverse order.

o) Tension the belt, see 5.12-2 Transmission Unit - Check Belts.

p) Set the pressure device, see 5.5-3 Pressure Device - Set.

q) Set the flap heater, see 5.7-1 Flap Heater - Set Air Nozzles and 5.7-3 Flap Heater - Set Air Flow.

r) Set the frame, see 5.8-2 Frame - Set.

s) Set the forming unit, see 5.15 Forming Unit.

t) Set the station chain, see 5.1-1 Station Chain - Change

u)

TechPub_2614345_0105 - 01_2772076_01.fm

5.5 Pressure Device

5.5-1 Pressure Device - Check

Machine Status	Power supply disconnector OFF Air supply OFF Steam supply ON Water supply OFF
Special Equipment	Template TP No. 2610197-0000 TP No. 2610198-0000
Consumables	Grease 90296-0070
SPC Reference	2523725-0200

Check the following parts for wear or damage:

- the eighteen bushings (1), the ten washers (2) and (7)
- the twelve shafts (3) and axle pins, the four cams surfaces in the plate (4)
- the eight rollers (5), the sides surfaces in the guide (6), the four spheric rod end (9).

Clean or change, if necessary, and assemble in the reverse order.

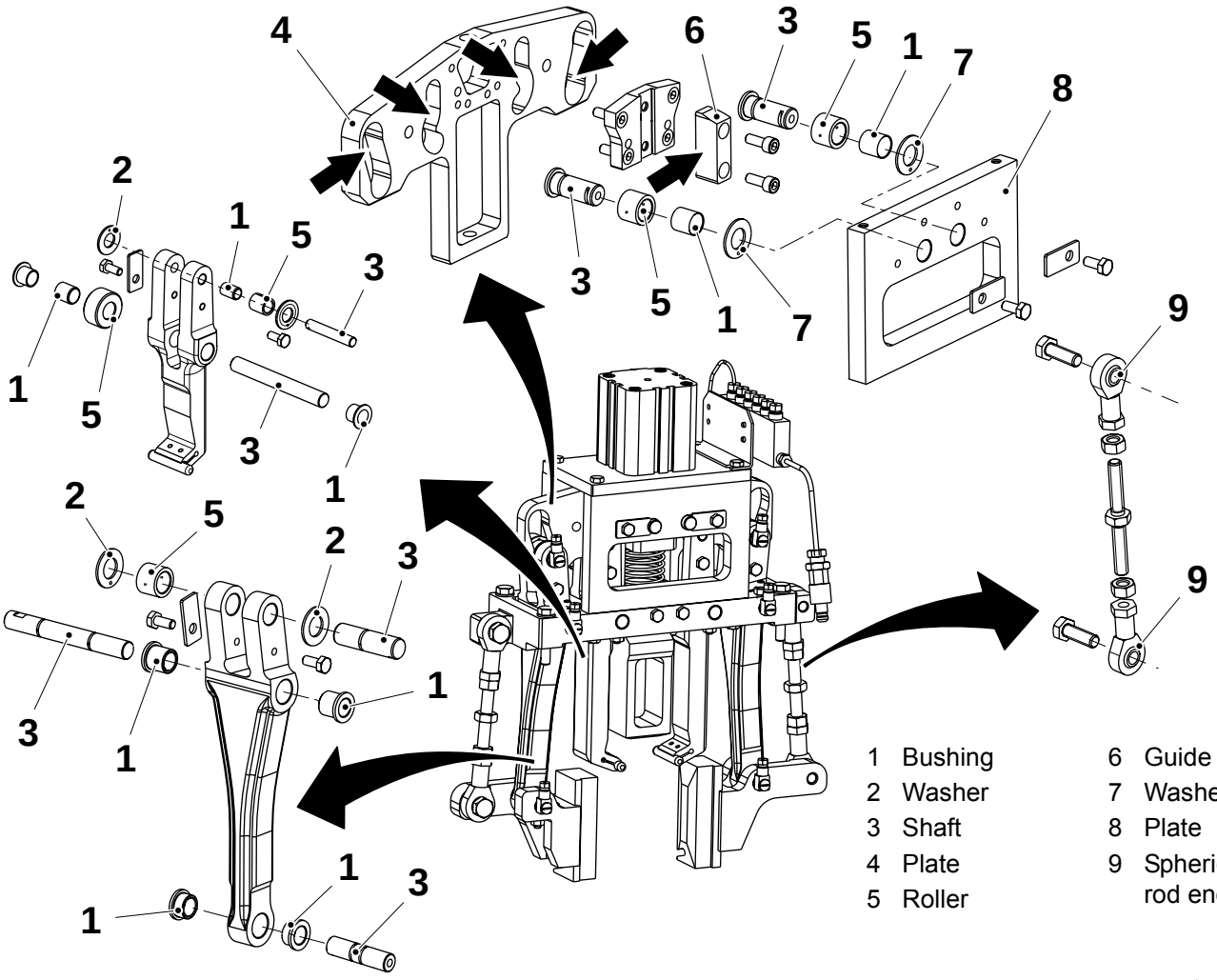

TechPub_2614345_0105 - 01_2772077_01.fm

(Cont'd)

(Cont'd)

Note! While assembling grease the bushings.

a) Assemble the bushings (1) and the rollers (5) at the work-bench using a TP tool and a press:
   - use the template **A** Ø12 (2610197-0000) in indicated positions
   - use the template **B** Ø08 (2610198-0000) in indicated position

b) When fitting back the washers (2) and (7), make sure to install them with the bronze coloured part towards the plates (4) and (8) respectively.

c) Verify the setting of the pressure device, see 5.5-3 Pressure Device - Set.

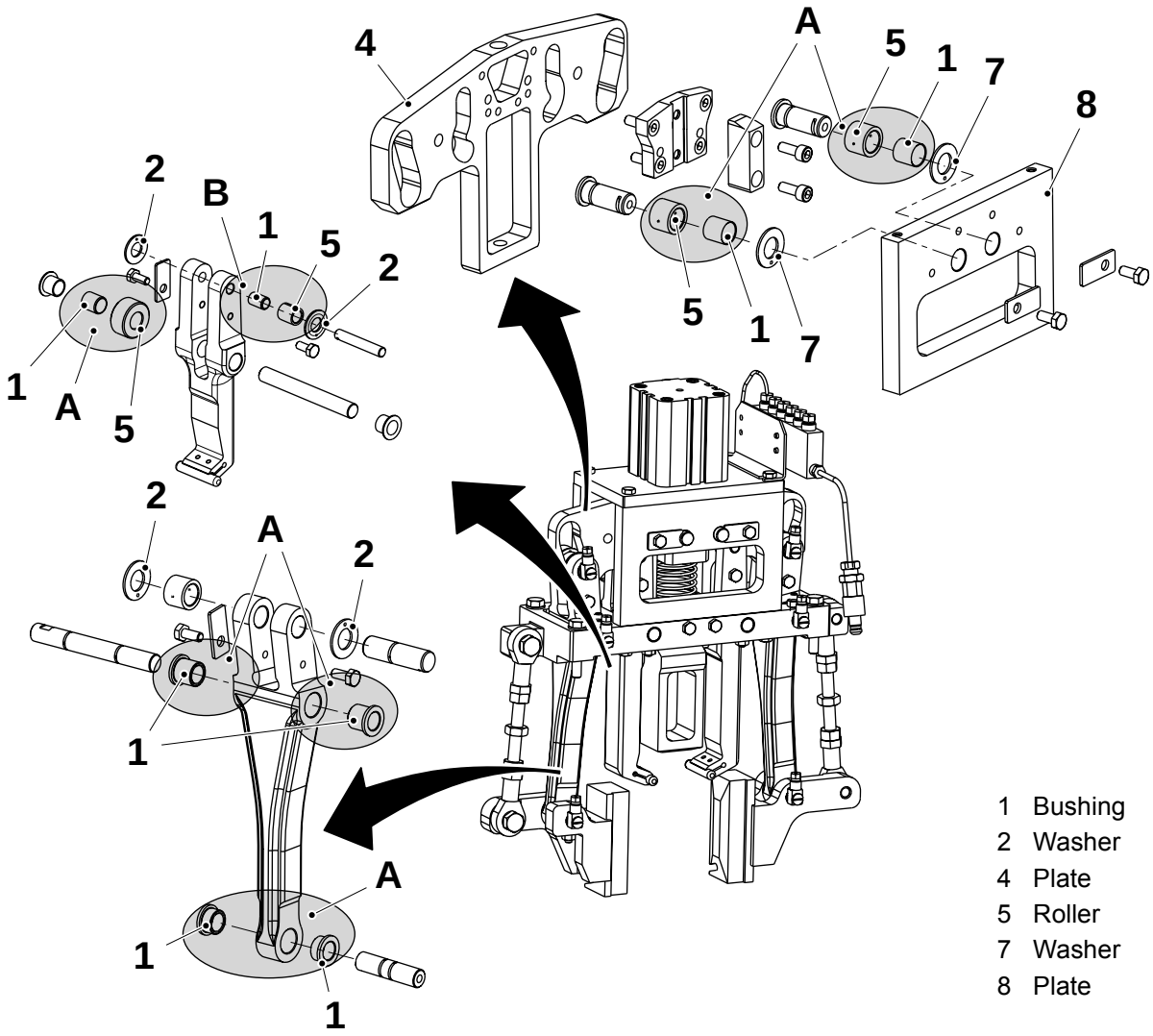

1 Bushing
2 Washer
4 Plate
5 Roller
7 Washer
8 Plate

TechPub_2614345_0105 - 01_2772077_01.fm

5.5-2 Pressure Device - Change Cylinder

Machine Status	Power supply disconnector OFF Air supply OFF Steam supply ON Water supply OFF
SPC Reference	2523725-0200

a) Remove the air connections (1).

b) Remove the four screws (2).

c) Remove the cylinder (3) by removing the screw (4). Change the cylinder (3) and assemble in the reverse order.

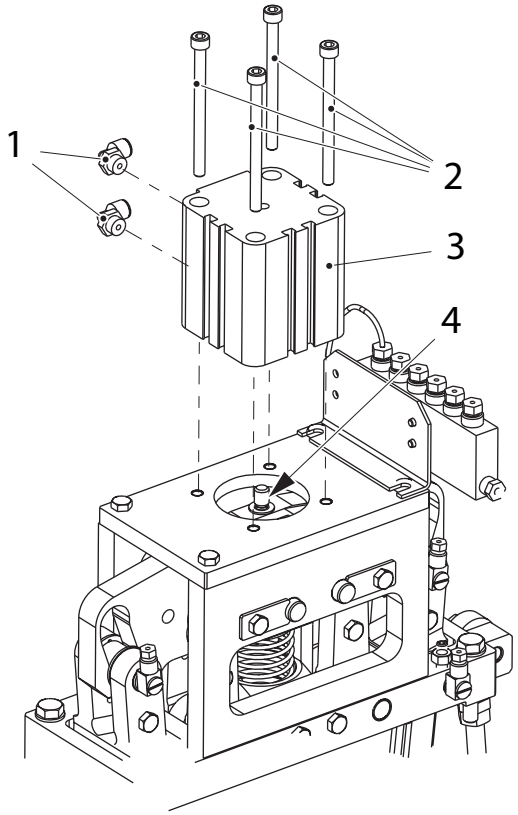

1 Connection
2 Screw
3 Cylinder
4 Screw

TechPub_2614345_0105 - 01_2772077_01.fm

5.5-3 Pressure Device - Set

Machine Status	Power supply disconnector OFF Air supply OFF Steam supply ON Water supply OFF
Special Equipment	Template: - TP No. 2552944-0100 see table 15.4 Tools and Templates
SPC Reference	2523725-0200

Setting without Template

a) Check the station chain synchronization, see 5.1-1 Station Chain - Change step f).

b) Make sure that the thicknesses of the shims (1) are equal on both blocks (2).

c) Check that the blocks (2) are parallel to the station chain. If necessary, set using the nuts (3).

d) Make sure that the blocks (2) are centred in relation to the station chain (see arrows in illustration below), if necessary, set by loosening the four screws (4) and moving the pressure device.

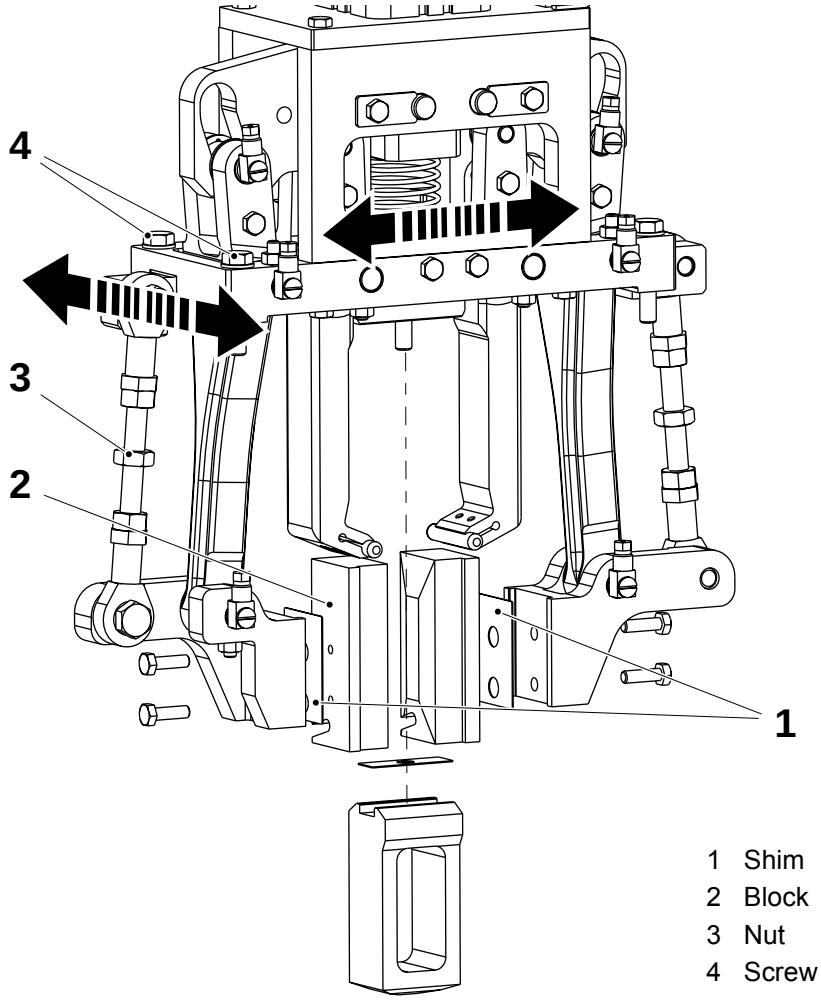

1 Shim
2 Block
3 Nut
4 Screw

(Cont'd)

TechPub_2614345_0105 - 01_2772077_01.fm

(Cont'd)

e) Centre the block (5) relative to the station chain (6) using the screw (7).

f) Step up to PRODUCTION and check that the package forming is correct, and add or remove the shims (1) and (8), if necessary, according to the following procedure:

- Remove the screws (9) and add or remove the shims (1), in equal number on both sides. Assemble in the reverse order.
- Remove the screw (7) add or remove the shims (8), then repeat step e). Tighten the screw (7).

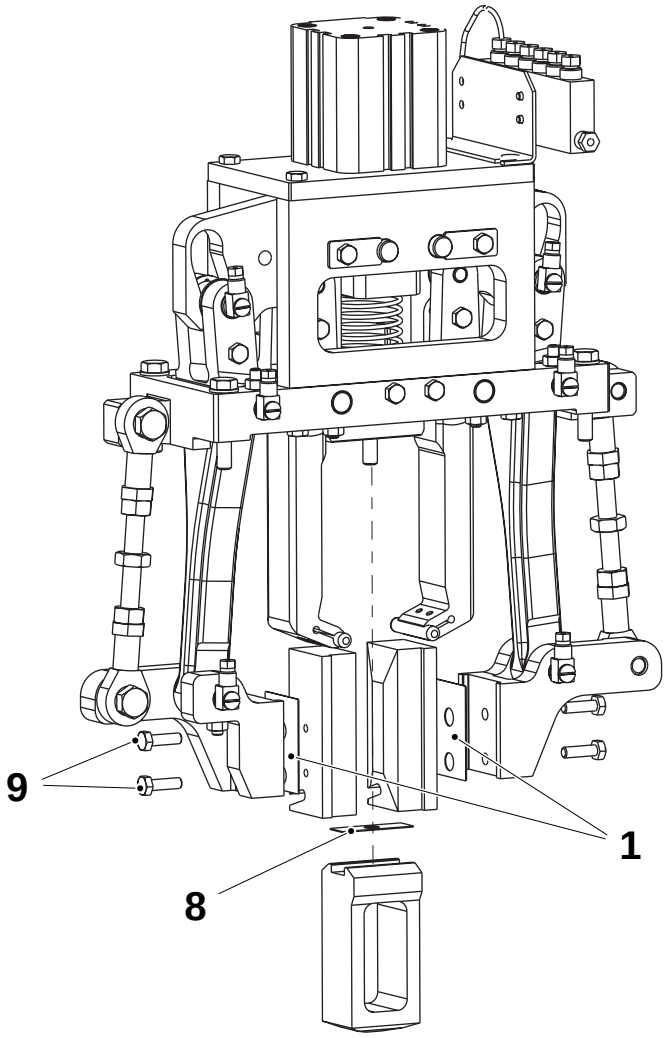

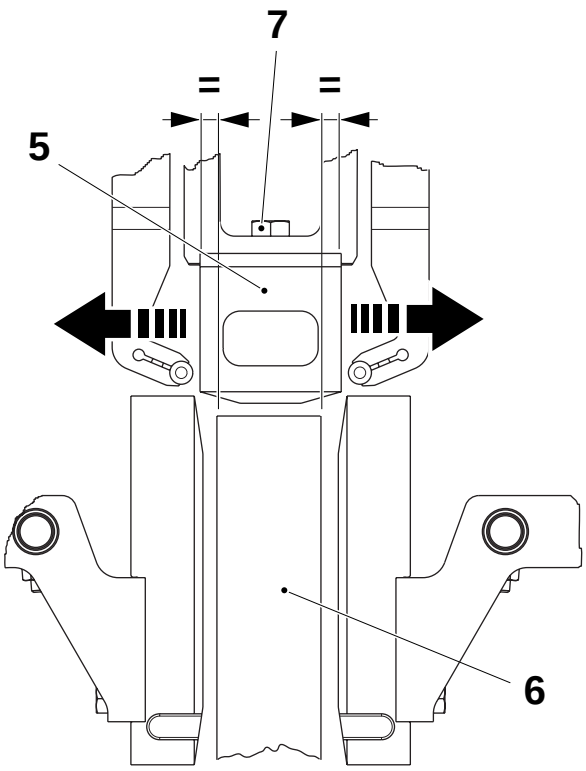

1 Shim
5 Block
6 Station chain
7 Screw
8 Shim
9 Screw

(Cont'd)

TechPub_2614345_0105 - 01_2772077_01.fm

(Cont'd)

Setting With Template

a) Check the station chain synchronization, see 5.1-1 Station Chain - Change step f).

b) Lift the final folder frame then remove the screws (1), the blocks (2), and the shims (3).

Note! Select the template for the package volume shape according to the table 15.4 Tools and Templates.

c) Install the template (4) then lower the final folder frame.

d) Switch **On** power. Turn **On** compressed air. Set the service switch **On**.

Note! Take note of the current air pressure value of the pressure device.

e) Slowly reduce the air pressure value of the pressure device to **0** bar.

f) Manually force the solenoid valve M.Y103 **On**.

g) Slowly increase the air pressure value until the pressure arms close.

(Cont'd)

TechPub_2614345_0105 - 01_2772077_01.fm

(Cont'd)

Note! Make sure that the template (4) is in the correct position, making full contact at the bottom.

h) Make sure that the block (5) touches the template (4), distance **A**. If necessary, remove the screw (6) then add or remove shims (7).

i) Make sure that the distance **B** is the same on both side. If necessary, adjust the distance **B** using the screws (6) and (8).

j) Make sure that the holders (9) are centred relative to the template (4). If necessary, set using the four screws (8) and moving the pressure device.

k) Make sure that the holders (9) are parallel to the template (4). If necessary, set using the nuts (10).

l) Lift the final folder frame and remove the template (4).

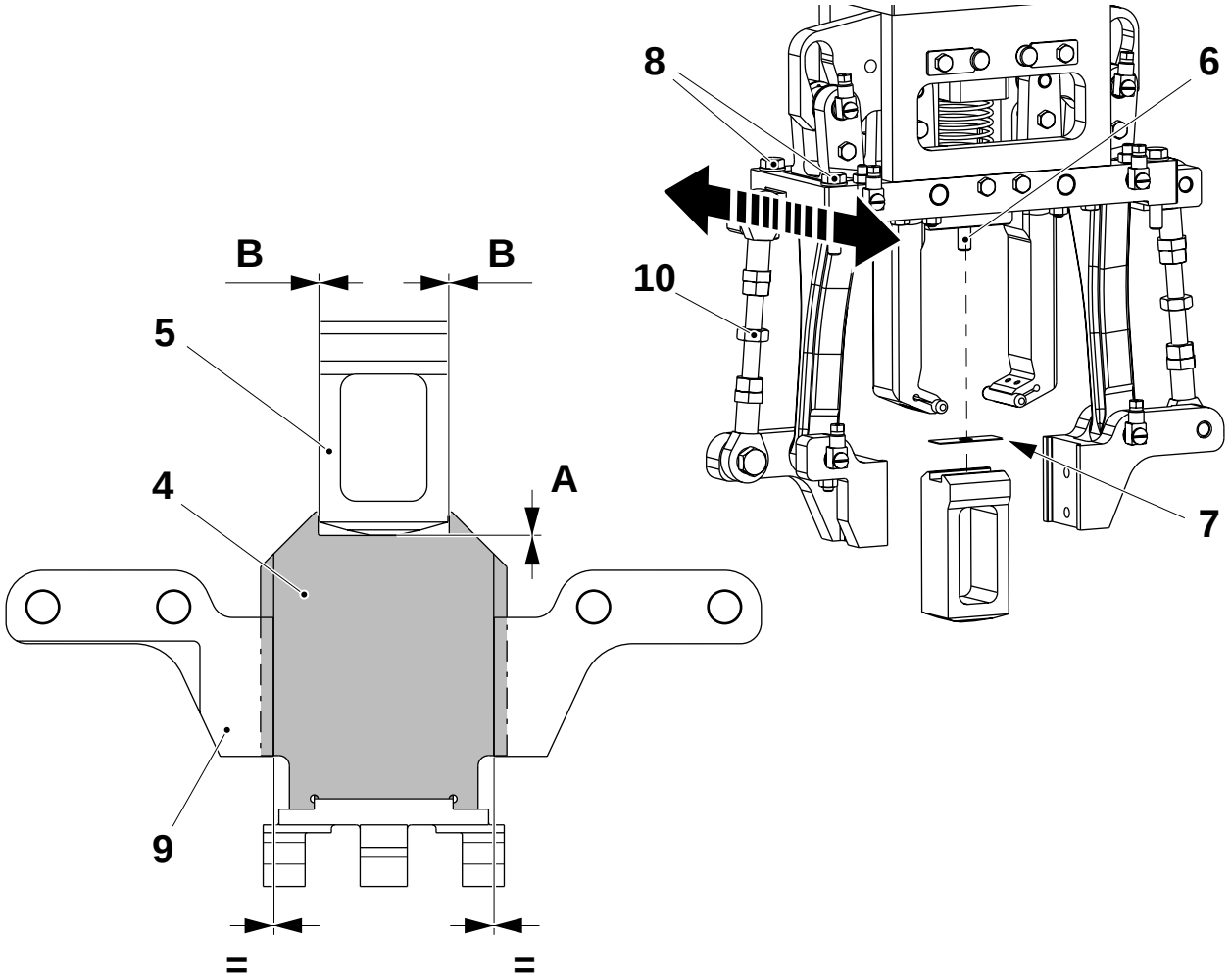

TechPub_2614345_0105 - 01_2772077_01.fm

(Cont'd)

(Cont'd)

m) Install the shims (3) and the blocks (2) with the screws (1).

n) Lower the final folder frame then set the working air pressure of the pressure device as previously recorded.

o) Check that the package forming is correct. If necessary, add or remove the shims (3) in equal number on both sides.

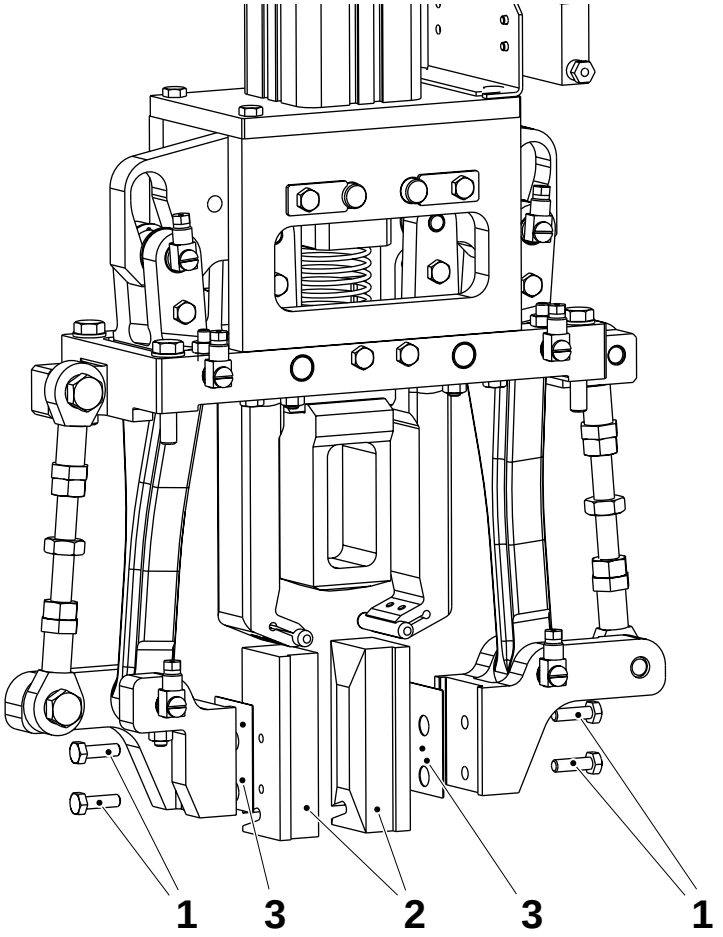

1 Screw
2 Block
3 Shim

TechPub_2614345_0105 - 01_2772077_01.fm

5.6 Worm Gear

5.6-1 Worm Gear - Check Oil

Machine Status	Power supply disconnector OFF Air supply OFF Steam supply ON Water supply OFF
Consumables	Oil code B
SPC Reference	256438-0300

a) Remove the LH side plate and the connection box (1).

(Cont'd)

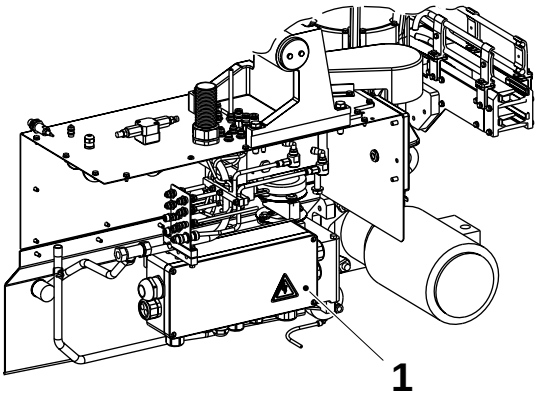

1 Connection box

TechPub_2614345_0105 - 01_2772078_01.fm

(Cont'd)

WARNING
Lubricant.
Chemical products. Follow the Safety Precautions.

b) Check the oil level in the filler hose (2) and the level window (3).

c) If necessary, fill up the oil, see 5.6-2 Worm Gear - Change Oil.

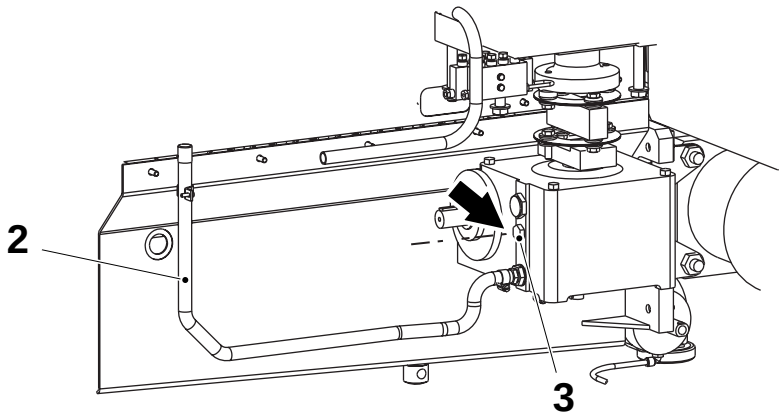

2 Filler hose
3 Window

TechPub_2614345_0105 - 01_2772078_01.fm

5.6-2 Worm Gear - Change Oil

Machine Status	Power supply disconnector OFF Air supply OFF Steam supply ON Water supply OFF
Consumables	Oil code B
SPC Reference	256438-0300

a) Remove the LH side plate and the connection box (1).

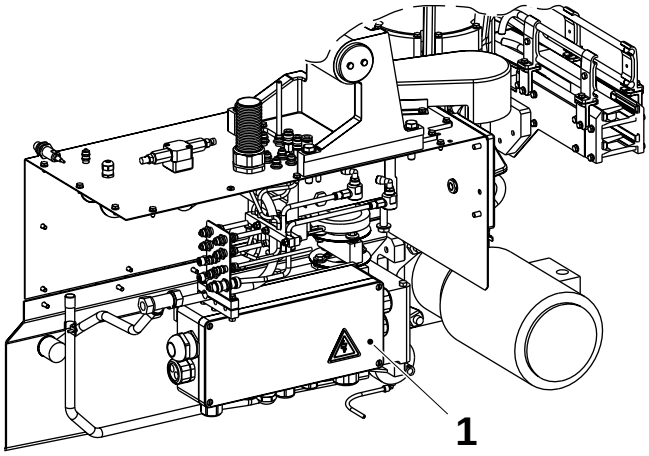

1 Connection box

(Cont'd)

TechPub_2614345_0105 - 01_2772078_01.fm

(Cont'd)

WARNING
Lubricant.
Chemical products. Follow the Safety Precautions.

b) Remove the filter plug (2).

c) Disconnect the hose plug (3) and drain the oil by bending the hose (4).

d) Check that the filter plug (2) is not clogged. Clean with compressed air if necessary.

e) Restore the oil level through the hose (4) by checking in the level glass (5). Oil code B, see 15.3 Lubricants.

f) Install the filter plug (2).

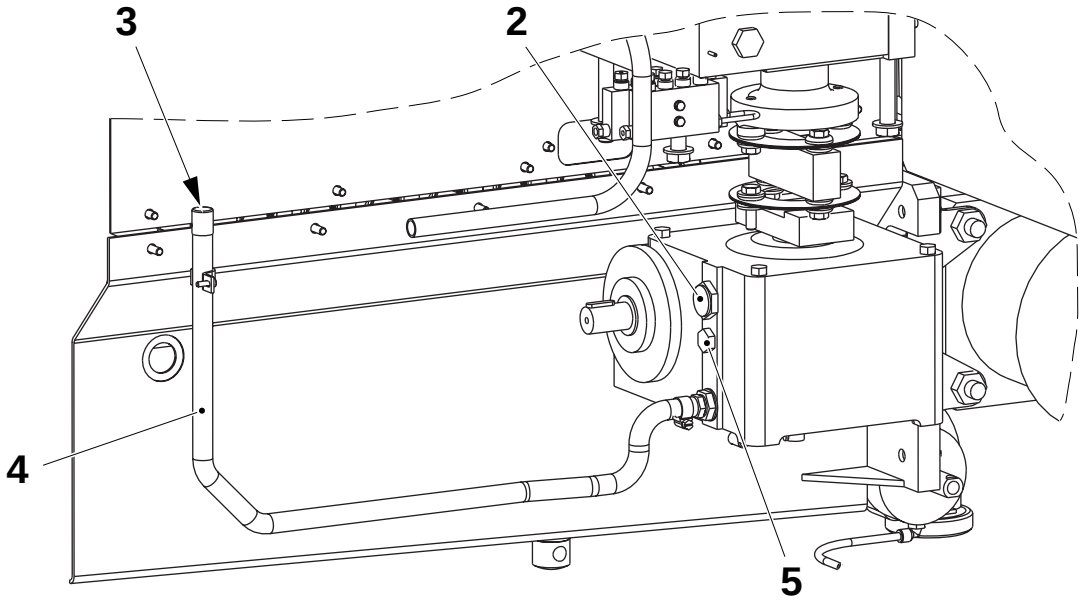

2 Filter plug
3 Hose plug
4 Hose
5 Level glass

TechPub_2614345_0105 - 01_2772078_01.fm

5.6-3 Worm Gear - Change

Machine Status	Power supply disconnector OFF Air supply OFF Steam supply ON Water supply OFF
Consumables	Oil code B
SPC Reference	256438-0300

a) Remove the LH side plate and the connection box (1).

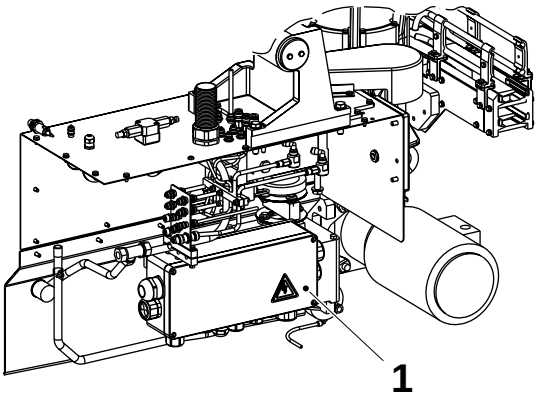

1 Connection box

(Cont'd)

TechPub_2614345_0105 - 01_2772078_01.fm

(Cont'd)

b) Measure the distance **A** between the frame and the shaft (2) of the worm gear. Record the results.

c) Measure the distance **B** between the frame and the shaft (3) of the worm gear. Record the results.

d) Measure the distance **C** between the frame and the shaft (3). Record the results.

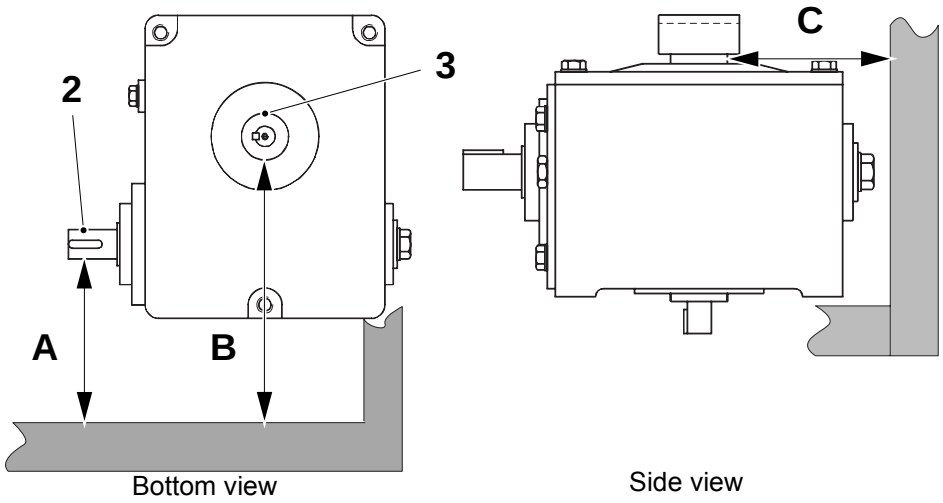

2 Shaft
3 Shaft

(Cont'd)

TechPub_2614345_0105 - 01_2772078_01.fm

(Cont'd)

e) Remove the coupling (4) and the disc coupling (5).

f) Change the worm gear.

g) Set the new worm gear, very accurately, according to the measurements, see items from b) to d).

WARNING
Lubricant.
Chemical product. Follow the Safety Precautions.

h) Restore the oil level.Oil code B, see 15.3 Lubricants.

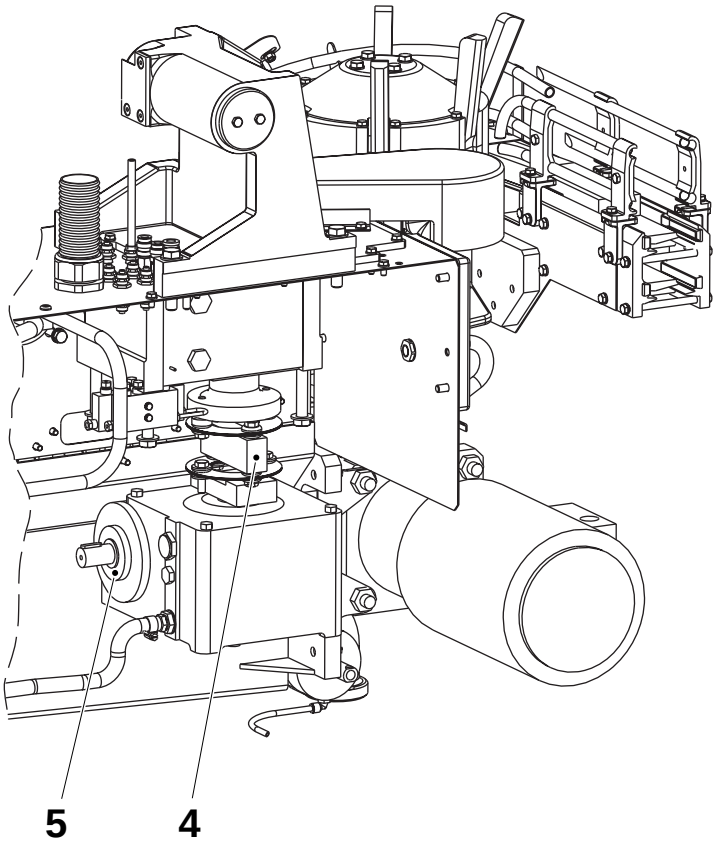

4 Coupling
5 Disc coupling

TechPub_2614345_0105 - 01_2772078_01.fm

5.7 Flap Heater

5.7-1 Flap Heater - Set Air Nozzles

Machine Status	Power supply disconnector ON Air supply OFF Steam supply ON Water supply OFF
Special Equipment	Template 2552946-0100 Template 2552947-0100 see table 15.4 Tools and Templates
SPC Reference	1539968-0100

a) Crank until the station chain stops indexing.

b) Put the templates (1) and (2) onto the stations, perform the Vertical Setting and Horizontal Setting described on the next pages, then remove the templates.

Note! The templates are also used to set the folding bar, see 5.13-1 Folding Bar - Set.

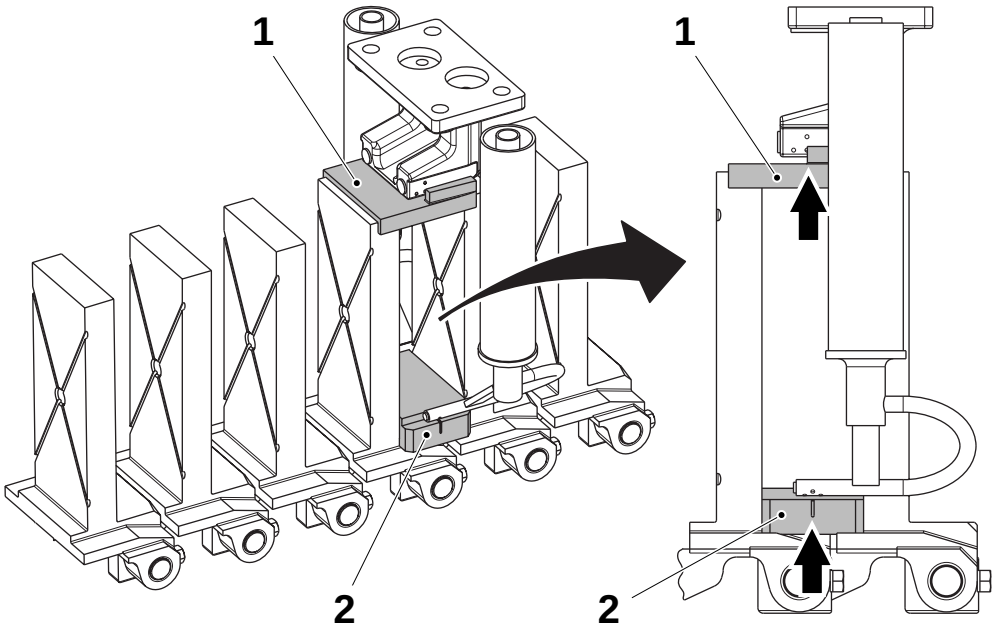

1 Template
2 Template

(Cont'd)

TechPub_2614345_0105 - 01_2772079_01.fm

(Cont'd)

Vertical Setting

The nozzles must slightly touch the templates, see illustration on page 5-53. Perform the setting as follows.

a) Remove the eight screws (1) then add or remove the gaskets (2) and (3) from underneath the elements.

Note! Be careful to install the gasket (3) with the correct orientation.

b) Assemble in the reverse order.

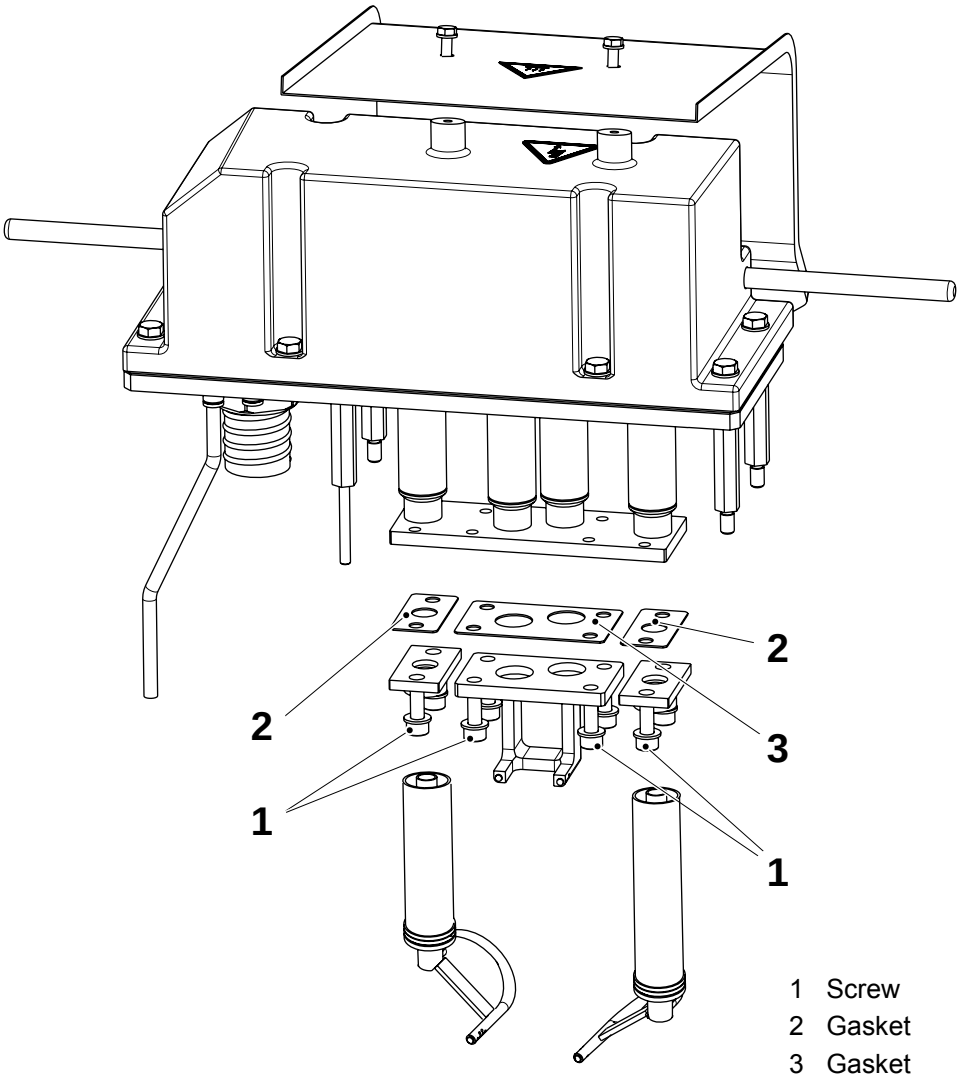

1 Screw
2 Gasket
3 Gasket

(Cont'd)

TechPub_2614345_0105 - 01_2772079_01.fm

(Cont'd)

Horizontal Setting

The nozzles must slightly touch the templates and at the same time the air holes in the nozzles must be aligned with the templates (see arrows in the illustration on page 5-53 for more details). Perform the setting as follows.

a) Remove the screws (1) and the plate (2).

b) Remove the eight screws (3) and the cover (4).

c) Loosen the two screws (5).

d) Set by shifting the nozzles (6) in the direction of the arrows.

e) Assemble in the reverse order.

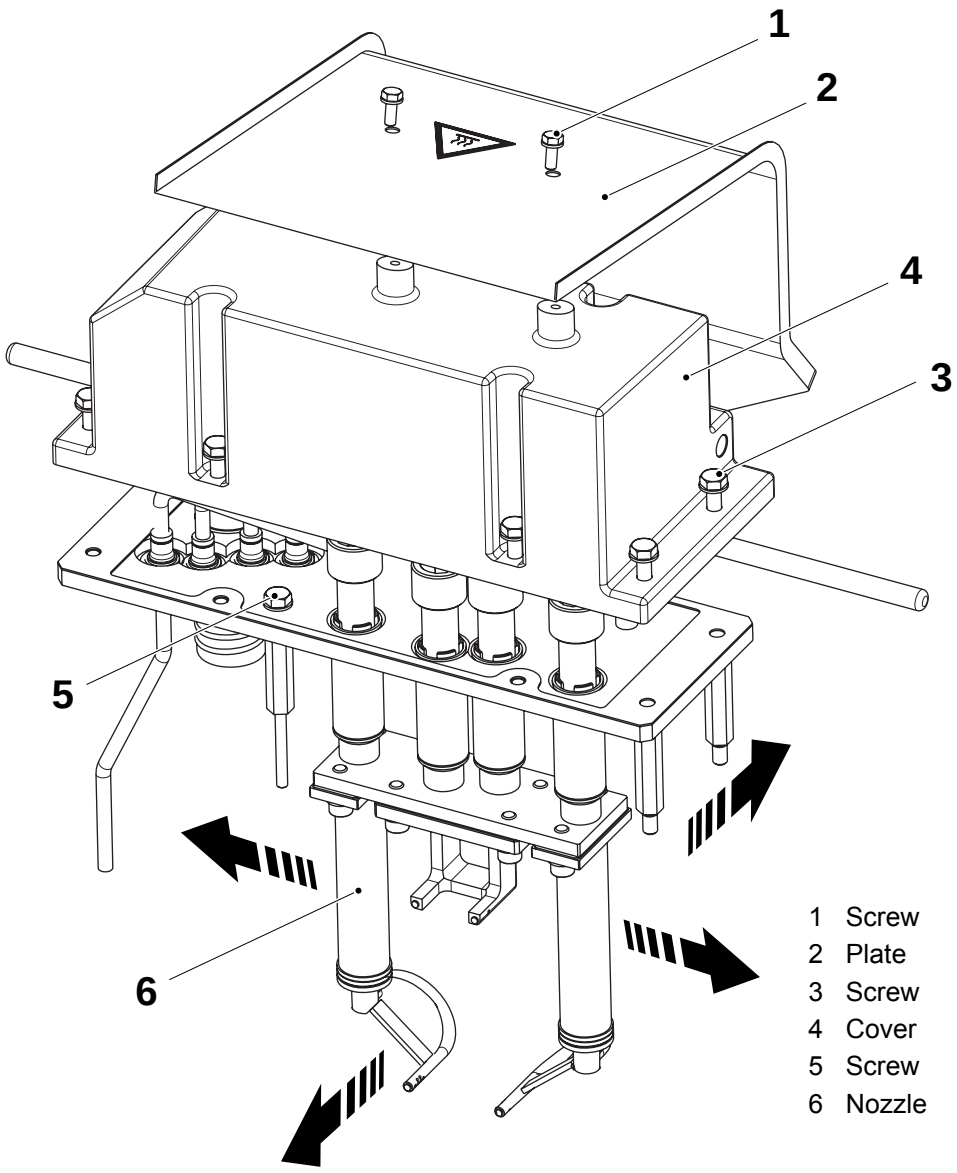

TechPub_2614345_0105 - 01_2772079_01.fm

5.7-2 Flap Heater - Overhaul

Machine Status	Power supply disconnector OFF Air supply OFF Steam supply ON Water supply OFF
SPC Reference	1539968-0100

a) Remove the screws (1) and the plate (2).

b) Remove the eight screws (3) and the cover (4).

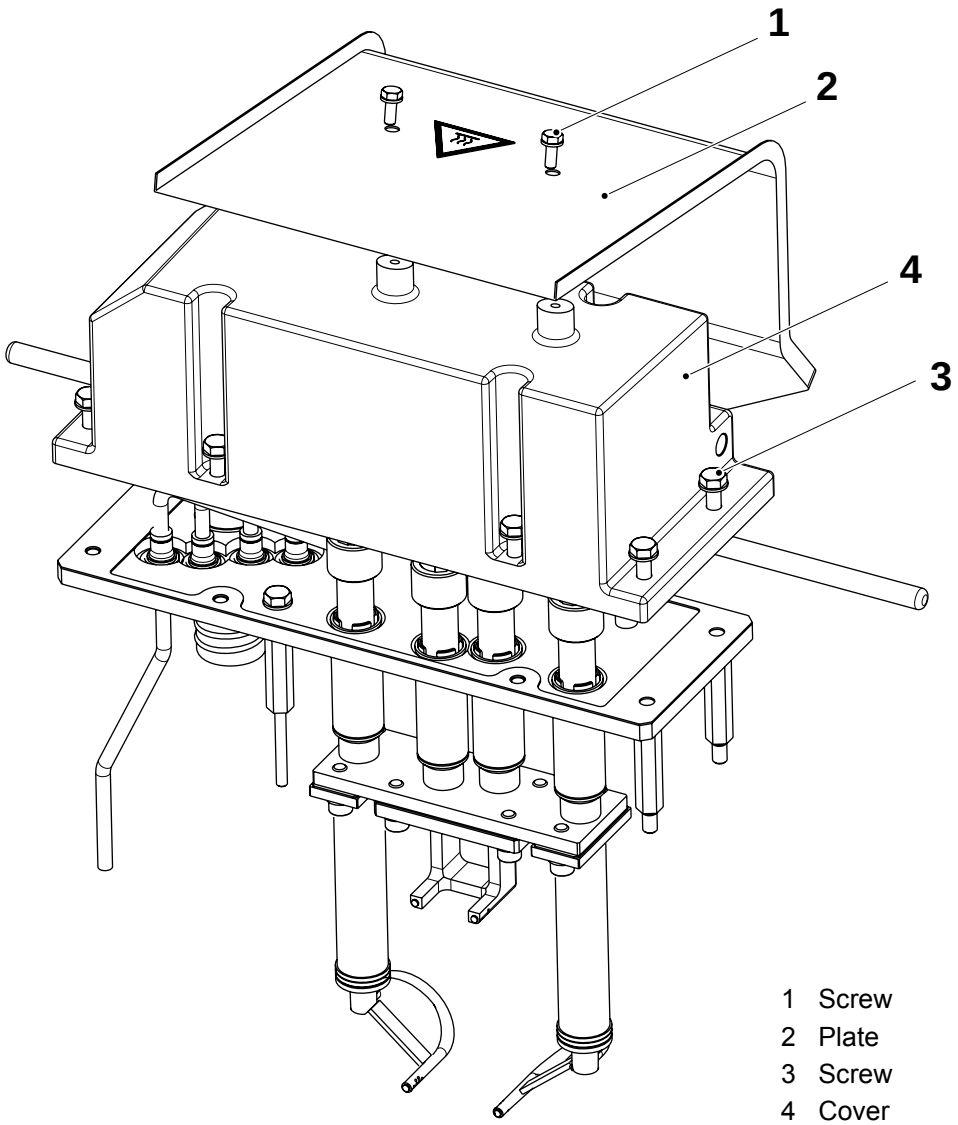

1 Screw
2 Plate
3 Screw
4 Cover

TechPub_2614345_0105 - 01_2772079_01.fm

(Cont'd)

(Cont'd)

c) Remove the gasket (5) and check for wear and damage. Change it, if necessary.

d) Mark all the electrical connections, see EM.

e) Remove the nuts (6), the springs (7), and the plates (8).

f) Remove the four contact units (9) and the four heating elements (10).

g) Disconnect the pipes (11) and (12) and check the O-rings (13). Replace them, if necessary.

h) Change the heating elements (10). Check all the other components and change them, if necessary.

i) Assemble in the reverse order.

CAUTION
Risk of damage to equipment.
During assembly, make sure that the cables into the flap heater **do not touch** the heating elements (10).

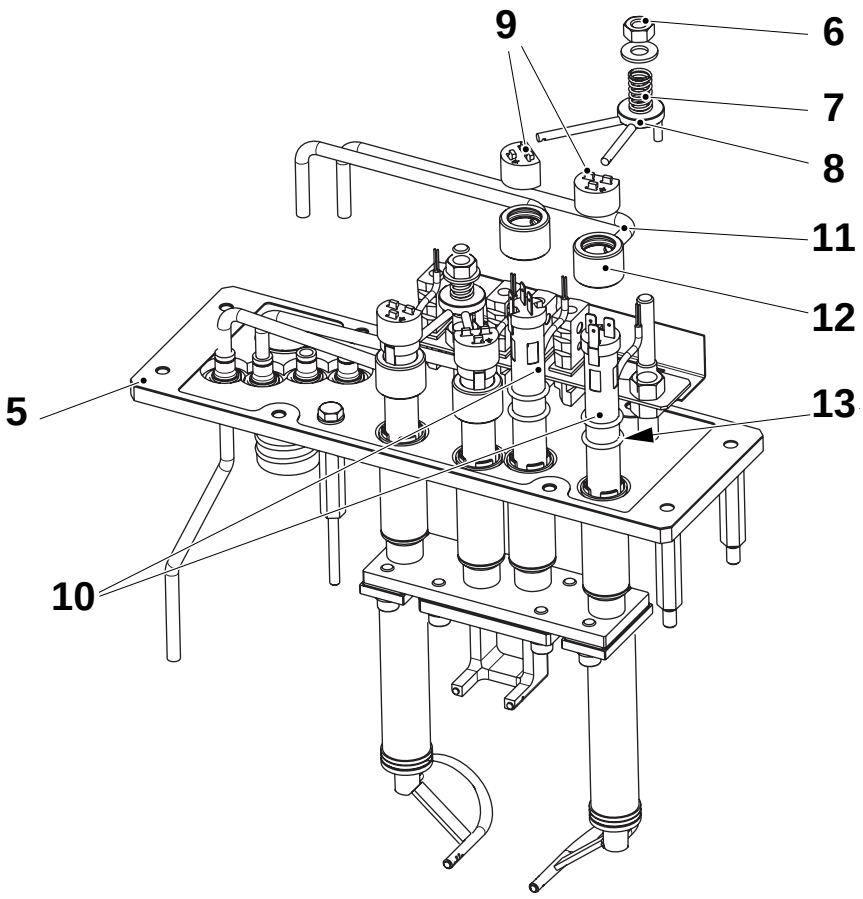

5 Gasket
6 Nut
7 Spring
8 Plate
9 Contact unit
10 Heating element
11 Pipe
12 Pipe
13 O-ring

TechPub_2614345_0105 - 01_2772079_01.fm

5.7-3 Flap Heater - Set Air Flow

Machine Status	PREHEATING I
SPC Reference	1539968-0100

a) Activate valve **Y129**.

b) Make sure that the nozzles are not clogged.

c) Set the main air pressure according to 15.1 Technical Data "**Flap sealing**", using the pressure regulator (1) on the valve panel.

d) Set the air flow for each nozzle according to 15.1 Technical Data "**Air flow top/bottom flap element**", using the screws (2) on the four flow meters (3) located on the valve panel.

e) Deactivate valve **Y129**.

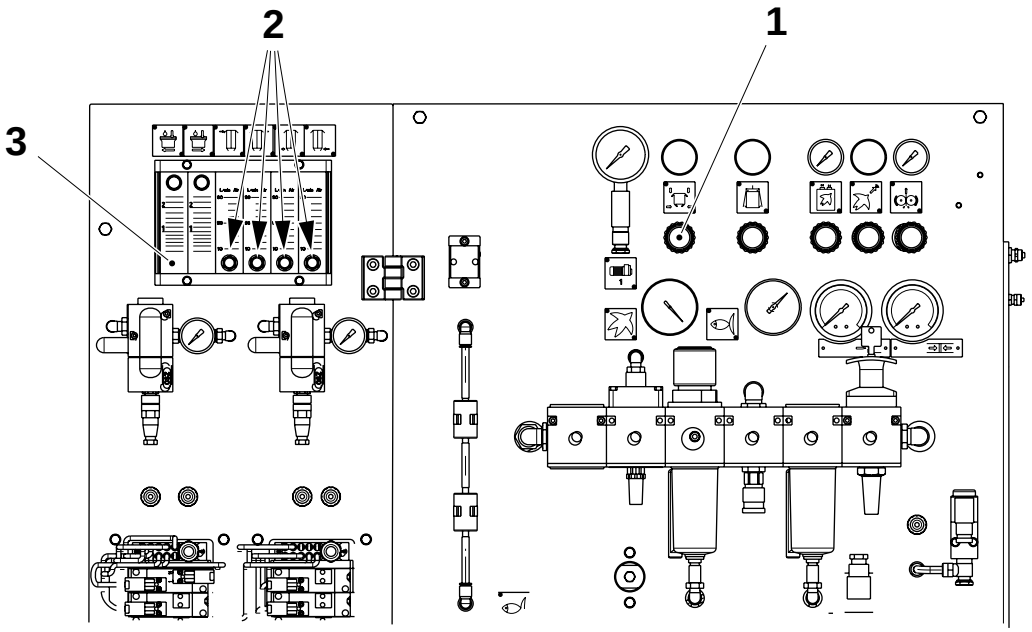

1 Pressure regulator
2 Screw
3 Flow meter

TechPub_2614345_0105 - 01_2772079_01.fm

5.8 Frame

5.8-1 Frame - Change Damper

Machine Status	Power supply disconnector OFF Air supply OFF Steam supply ON Water supply OFF
SPC Reference	1548000-0100

a) Lift the pivot arm.

b) Remove the cover (1) and the nut (2).

c) Remove the damper (3).

d) Install and set a new damper (3), refer to 5.8-2 Frame - Set.

e) Assemble in the reverse order.

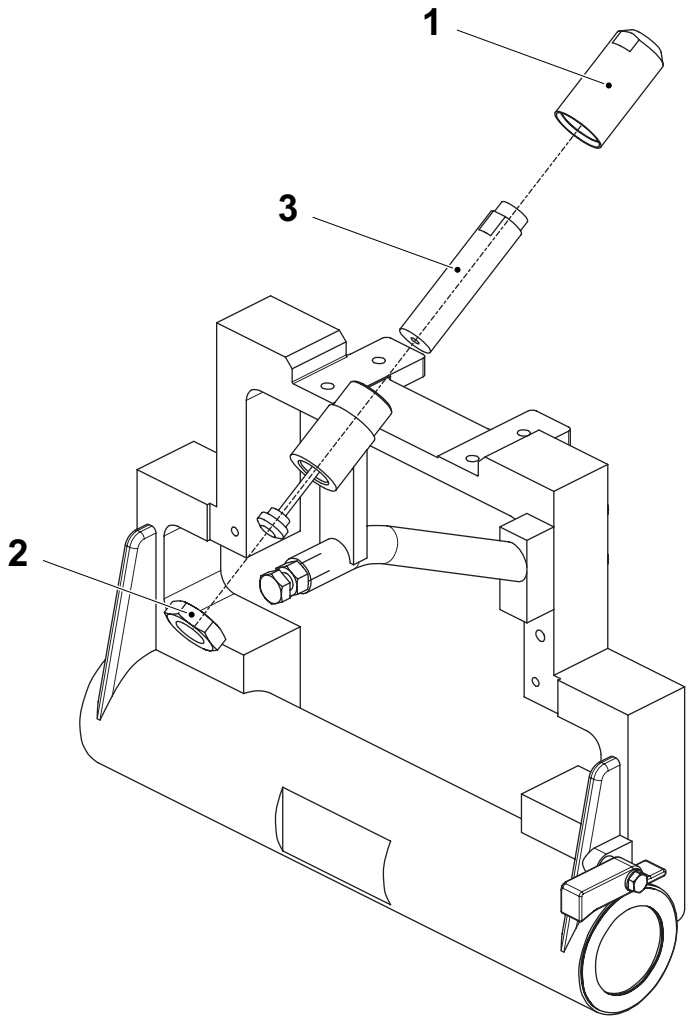

1 Cover
2 Nut
3 Damper

TechPub_2614345_0105 - 01_2772080_01.fm

5.8-2 Frame - Set

Machine Status	Power supply disconnector OFF Air supply OFF Steam supply ON Water supply OFF
Special Equipment	Template 2552943-0100 see table 15.4 Tools and Templates
SPC Reference	1548000-0100

Set Damper

a) Set the distance **A** between the frame and the upper frame surface by loosening the nut (1) and turning the stop screw.

b) Remove the cover (2) and loosen the nut (4).

c) Set the distance **B** between the nut (4) and the upper stop surface by turning the damper (3).

d) Tighten the nut (4) and attach the cover (2).

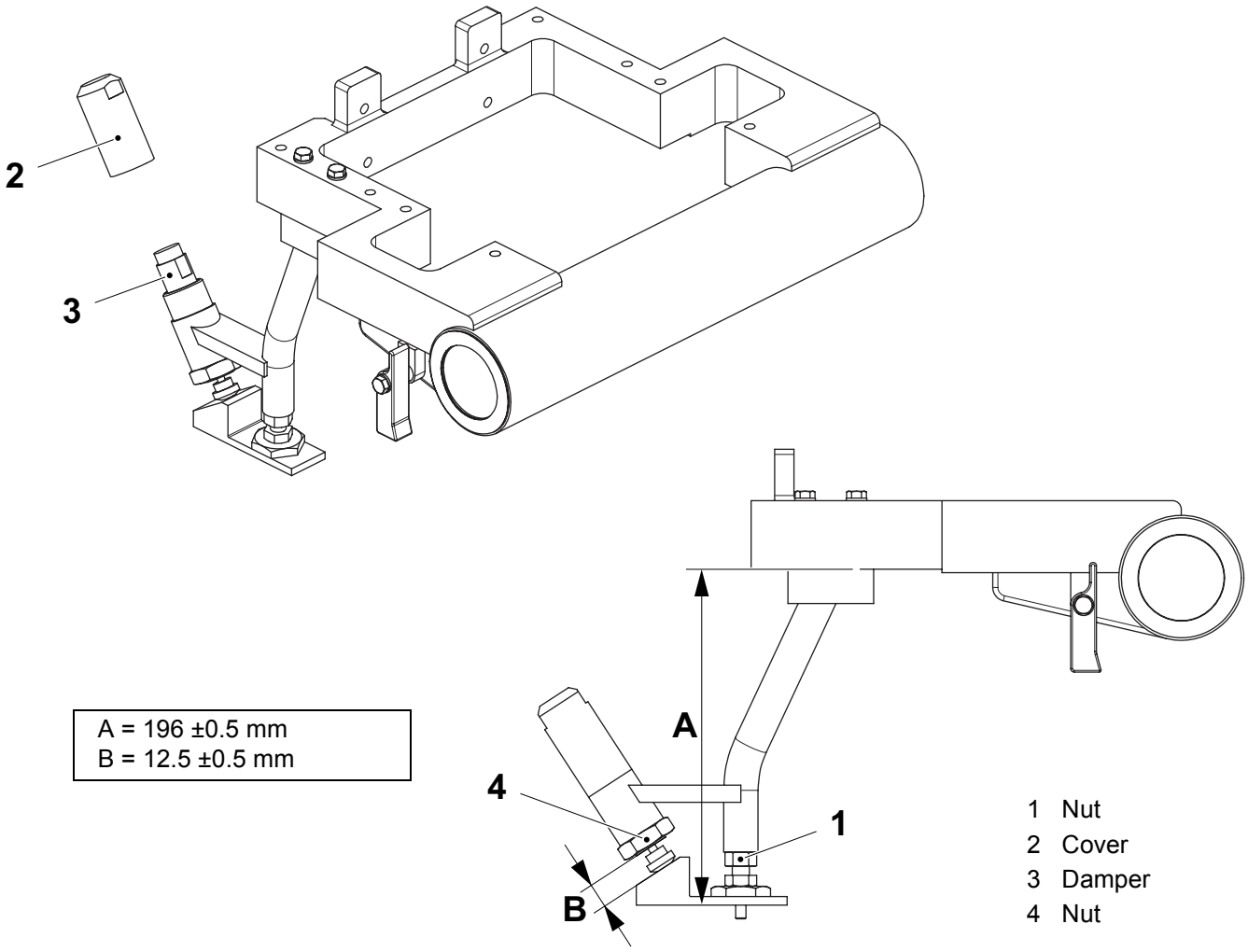

A = 196 ±0.5 mm
B = 12.5 ±0.5 mm

1 Nut
2 Cover
3 Damper
4 Nut

TechPub_2614345_0105 - 01_2772080_01.fm

(Cont'd)

(Cont'd)

Set Frame without Template

Check that the infeed plates (1) are aligned with the station chain (2), if necessary, adjust by shifting the shims from the position (3) to the position (4) or vice versa.

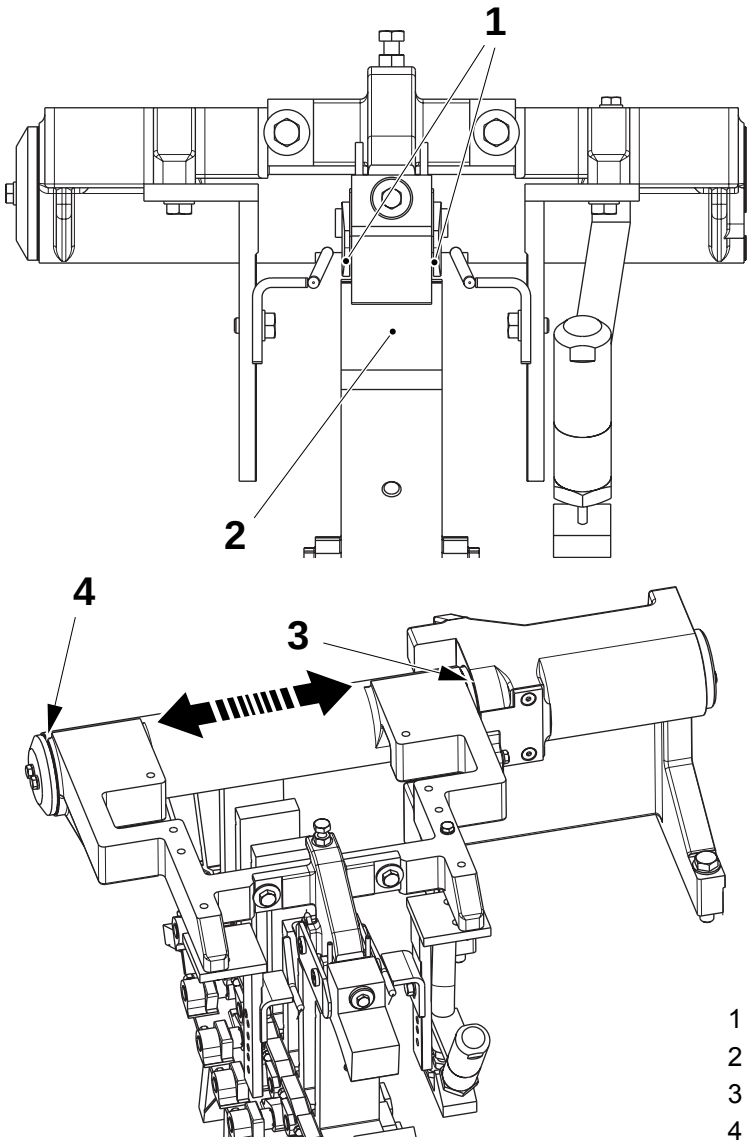

1 Infeed plate
2 Station chain
3 Position
4 Position

(Cont'd)

TechPub_2614345_0105 - 01_2772080_01.fm

(Cont'd)

Set Frame with Template

a) Remove the two screws (1) and the cover (2).

b) Remove the two screws (3) and the forming unit (4).

c) Remove the four screws (5) and the two guides (6).

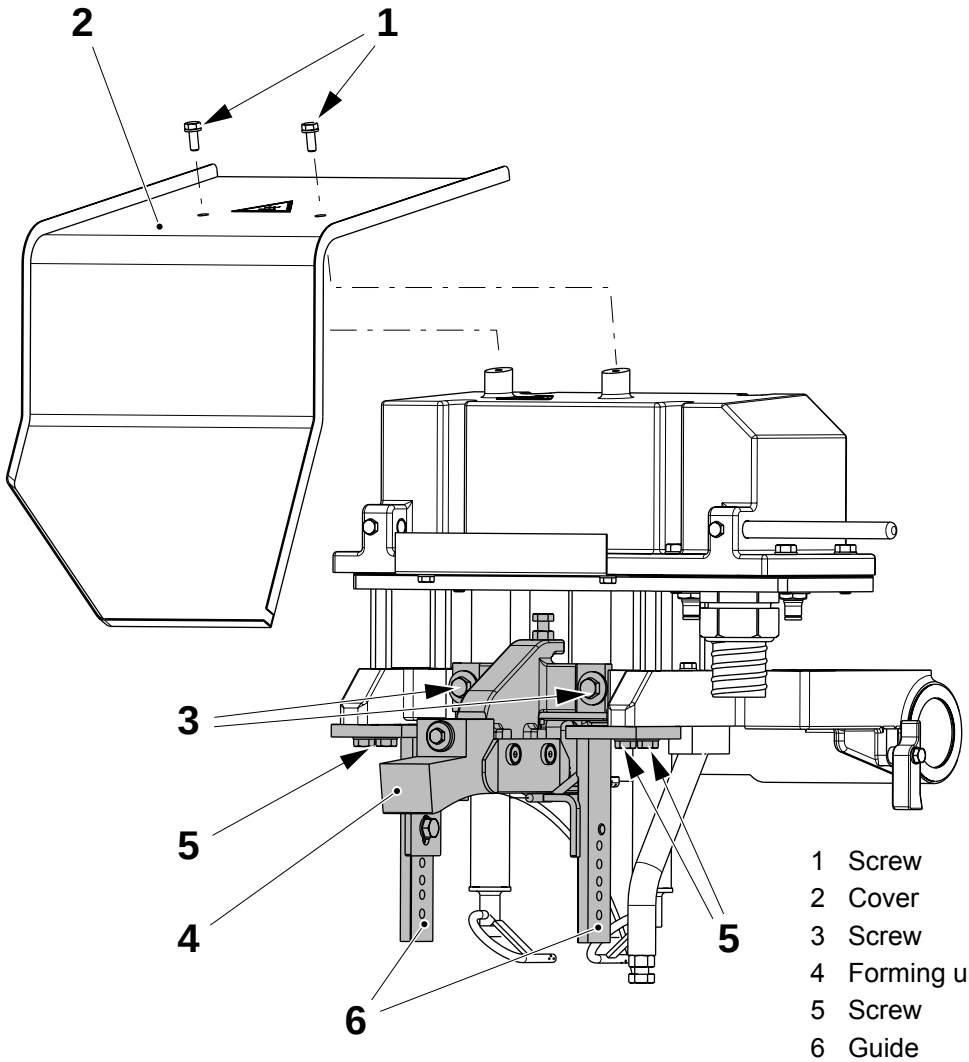

TechPub_2614345_0105 - 01_2772080_01.fm

(Cont'd)

(Cont'd)

Note! Select the template for the package volume shape according to the table 15.4 Tools and Templates.

d) Install the template (7) on the frame (8) with the screws (9).

e) Check that the template (7) is centred relative to the station chain (10). If necessary, adjust by moving shims (11) from one side to the other.

f) Remove the screws (9) and the template (7).

g) Assemble in the reverse order.

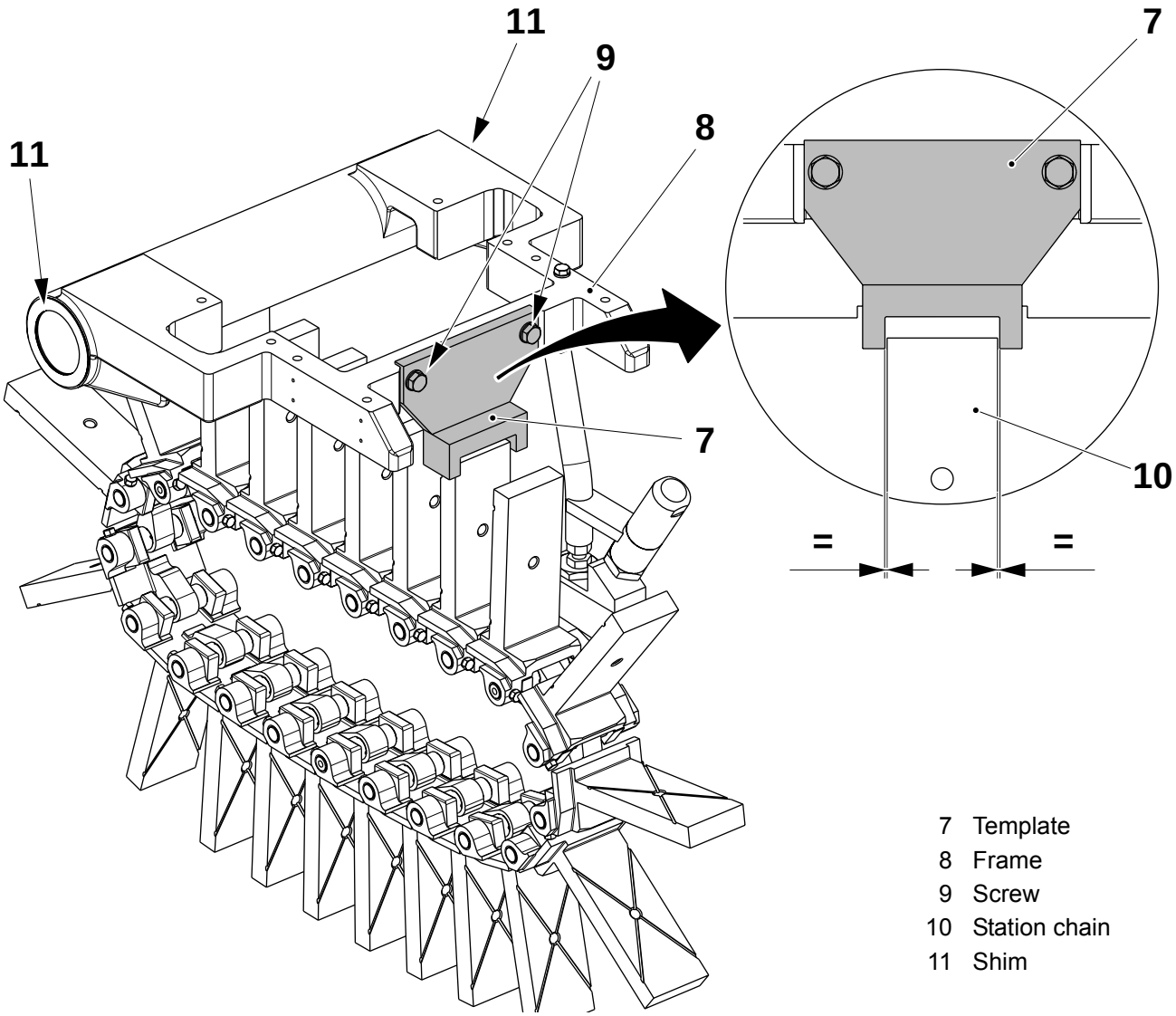

7 Template
8 Frame
9 Screw
10 Station chain
11 Shim

TechPub_2614345_0105 - 01_2772080_01.fm

5.9 Guide

5.9-1 Guide - Check Rails and Plates

Machine Status	Power supply disconnector OFF Air supply OFF Steam supply ON Water supply OFF
SPC Reference	1539969-0200

a) Remove the station chain, see 5.1-1 Station Chain - Change.

b) Check the plates (2) and the rails (1) for wear or damages.

c) Change, if necessary, see 5.9-2 Guide - Change Rails and Plates.

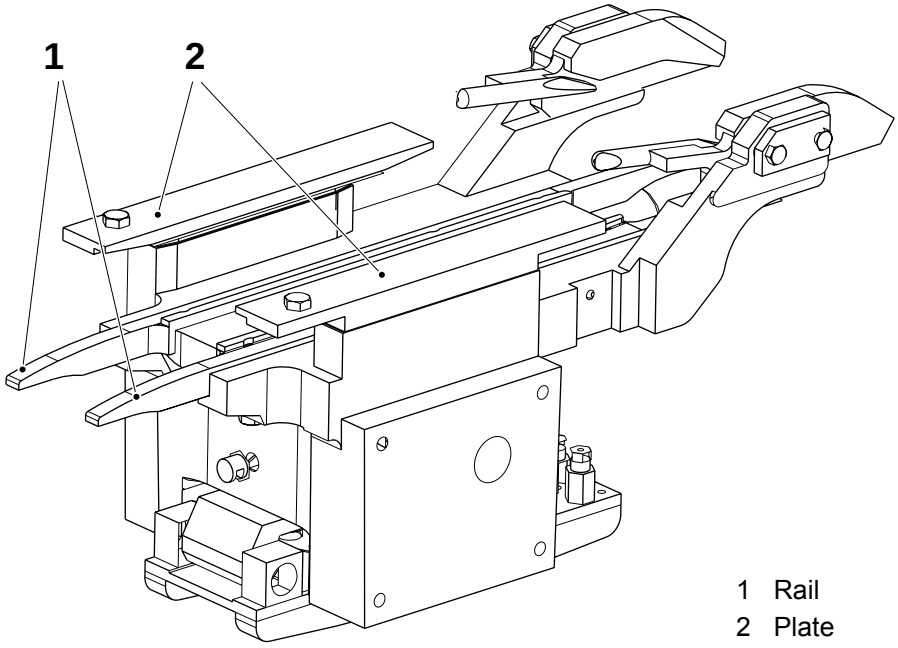

1 Rail
2 Plate

TechPub_2614345_0105 - 01_2772081_01.fm

5.9-2 Guide - Change Rails and Plates

Machine Status	Power supply disconnector OFF Air supply OFF Steam supply ON Water supply OFF
SPC Reference	1539969-0200

a) Remove the station chain, see 5.1-1 Station Chain - Change.

b) Remove screws (2) and then the rails (1).

c) Install the new rails (1).

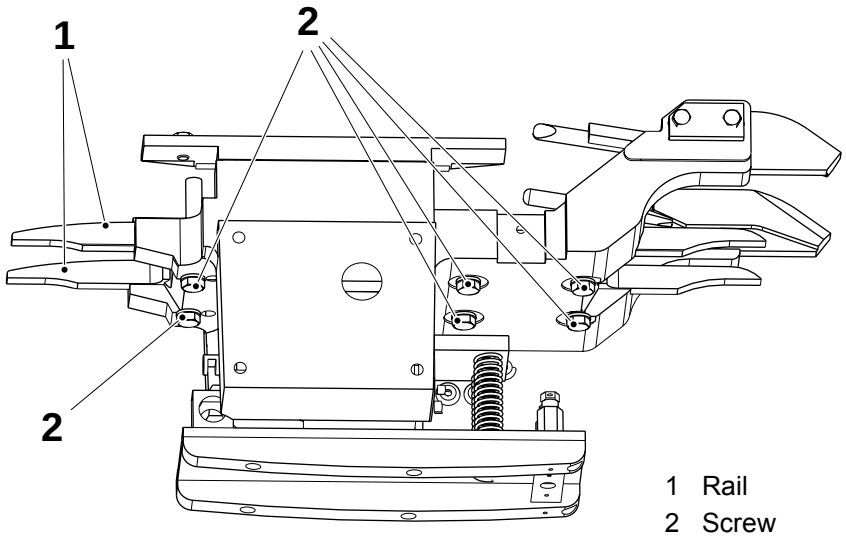

1 Rail
2 Screw

(Cont'd)

TechPub_2614345_0105 - 01_2772081_01.fm

(Cont'd)

d) Remove the screws (4) and then the two plates (3). Install the new plates (3).

e) Set the distance **B** between the plates (3) and the station chain (5) by adding or removing shims (6).

f) Check the distance **C** between the plates (3) and the station chain (5).

g) If necessary, check the position of the drive wheel and the tension sprocket, see 5.1-1 Station Chain - Change and 5.3-1 Tension Sprocket - Overhaul.

TechPub_2614345_0105 - 01_2772081_01.fm

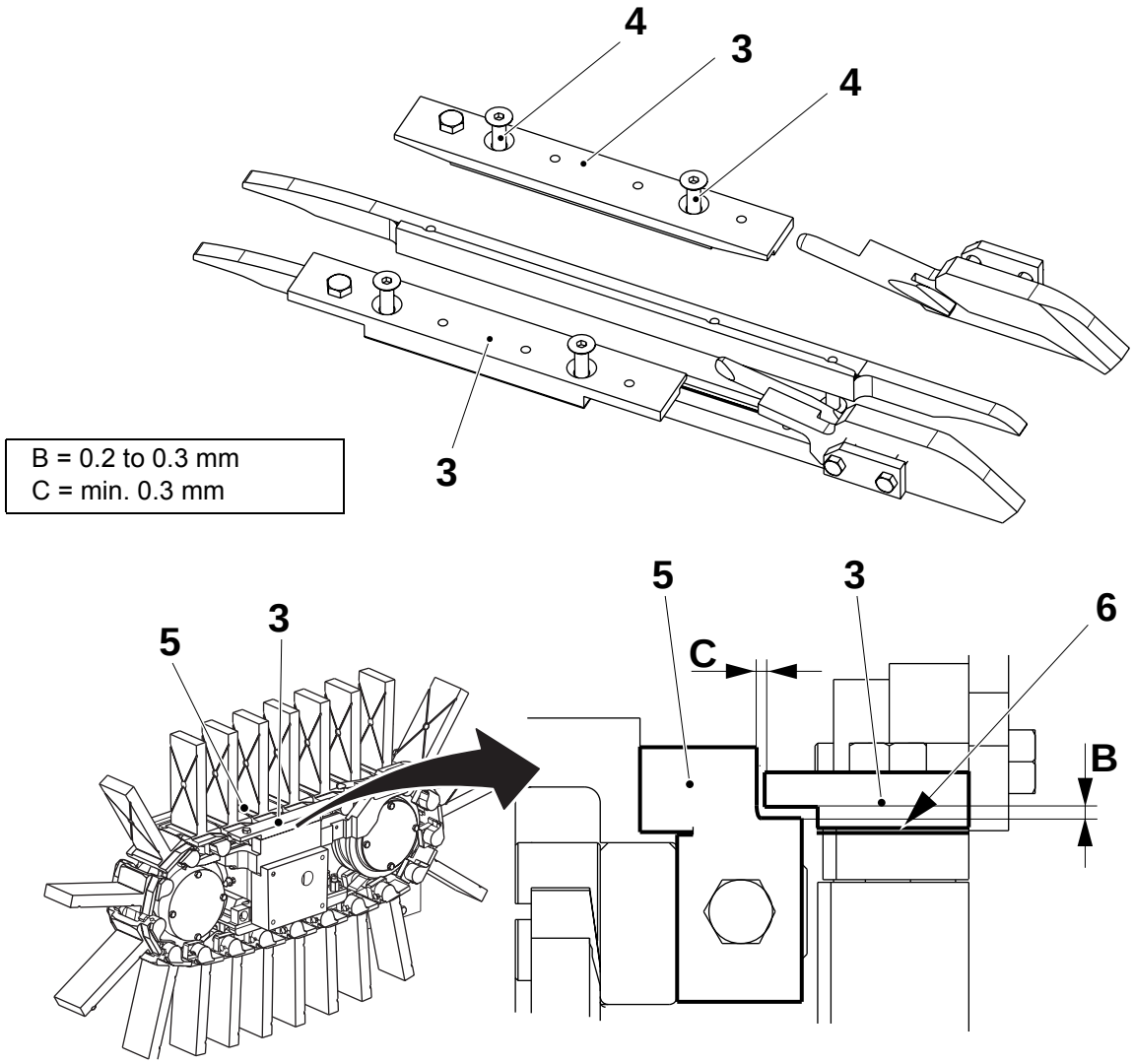

3 Plate
4 Screw
5 Station chain
6 Shim

TechPub_2614345_0105 - 01_2772081_01.fm

5.9-3 Guide - Set

Machine Status	Power supply disconnector OFF Air supply OFF Steam supply ON Water supply OFF
Special Equipment	Template 2552941-0100 see table 15.4 Tools and Templates
SPC Reference	1539969-0200

a) Crank until the station chain stops moving.

Note! Select the clamp for the package volume shape according to the table 15.4 Tools and Templates.

b) Install the template (1) and the clamp (2) on the station chain (3) using the two screws (4).

c) The two guides (5) must touch the template (1). Adjust the position of the guides (5) with the screws (6).

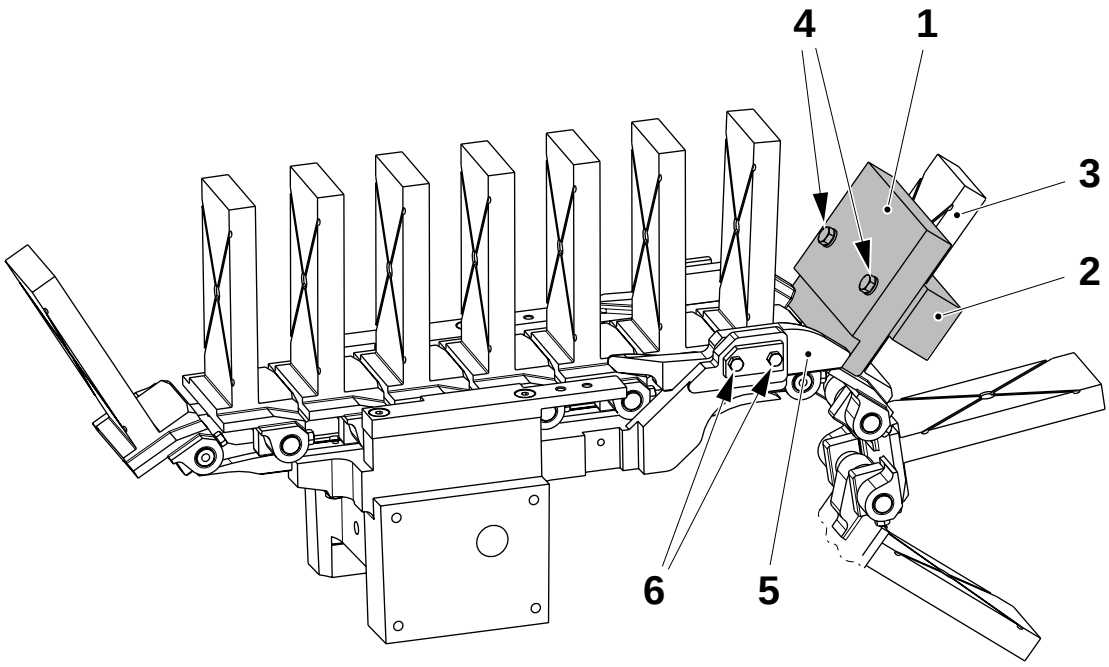

1 Template
2 Clamp
3 Station chain
4 Screw
5 Guide
6 Screw

TechPub_2614345_0105 - 01_2772081_01.fm

5.10 Cleaning System

5.10-1 Cleaning System - Check Rotors and Nozzles

Machine Status	Power supply disconnector OFF Air supply OFF Steam supply ON Water supply OFF
SPC Reference	2544980-0200

Note! If the nozzles have been removed, set them, see 5.10-2 Cleaning System - Set Nozzles.

a) Check that all the nozzles for the external cleaning are clean (see arrows). If necessary, remove the nozzles and clean or delime them.

b) Check that the two cleaning rotors rotate smoothly. If necessary, overhaul the rotors as follows.

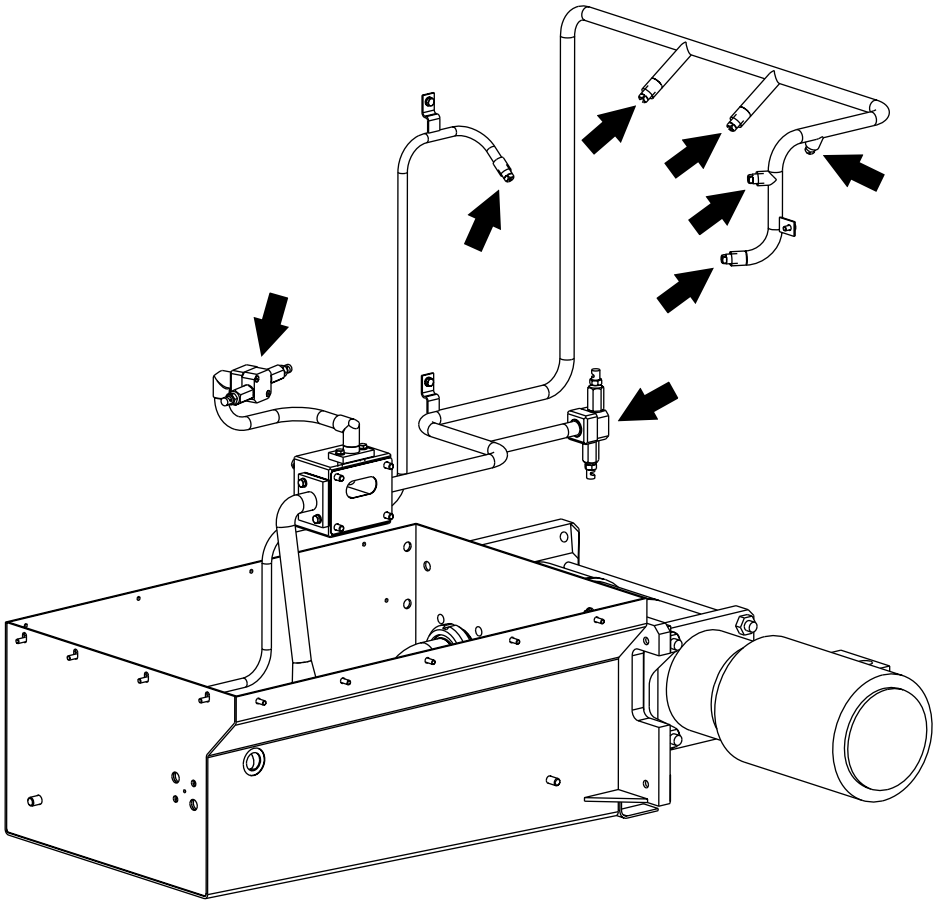

(Cont'd)

TechPub_2614345_0105 - 01_2772082_01.fm

(Cont'd)

c) Loosen the screws (1).

d) Remove and check the following details for wear or damage:
   - the cover (2) and the O-ring (3)
   - the seal (4)
   - the pivot pin (5) using an allen key
   - the washer (6) and the circlip (7)
   - the bearing housing (8) and the ball bearings (9).

e) Change the parts, if necessary.

f) Assemble in the reverse order.

Note! Make sure that the pivot pin (5) flange is levelled with the bottom of the bearing housing (8).

g) Make sure that the cleaning rotors rotate smoothly.

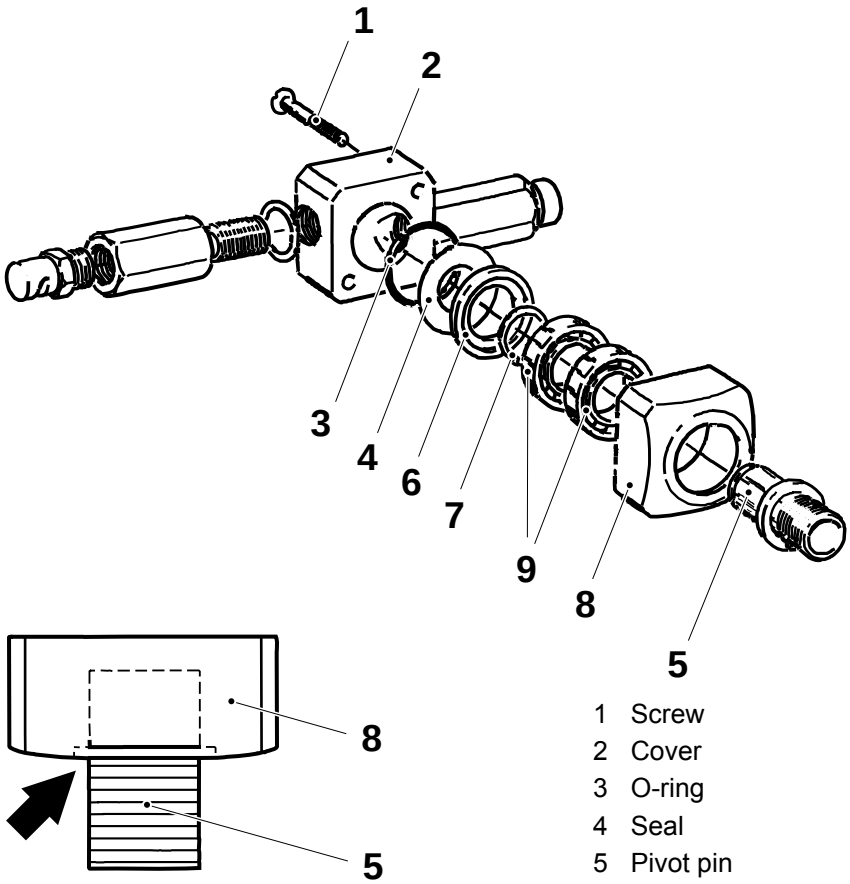

1 Screw
2 Cover
3 O-ring
4 Seal
5 Pivot pin
6 Washer
7 Circlip
8 Bearing housing
9 Ball bearing

TechPub_2614345_0105 - 01_2772082_01.fm

5.10-2 Cleaning System - Set Nozzles

Machine Status	Power supply disconnector OFF Air supply OFF Steam supply ON Water supply OFF
SPC Reference	2544980-0200

Rotor Nozzles

a) Set the jet direction of the nozzle (1) at a right angle **A**, and the nozzle (2) at an angle **B** to the cover of the nozzle.

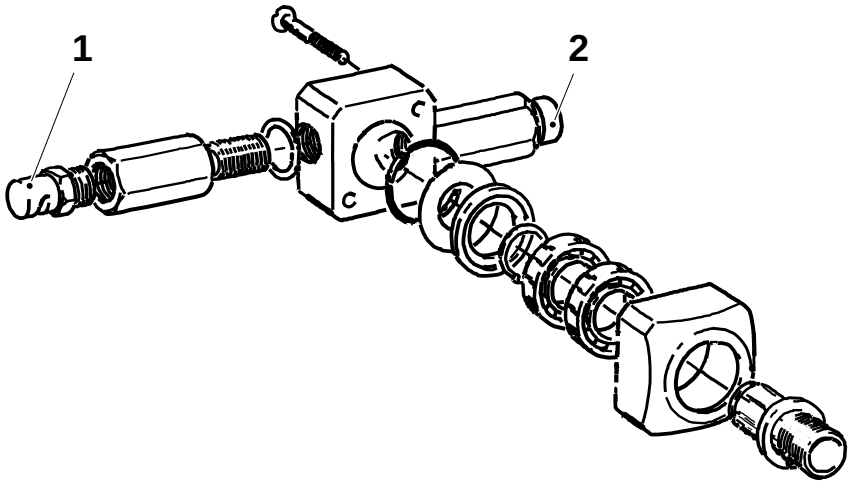

A = 90° ±5°
B = 10° ±5°

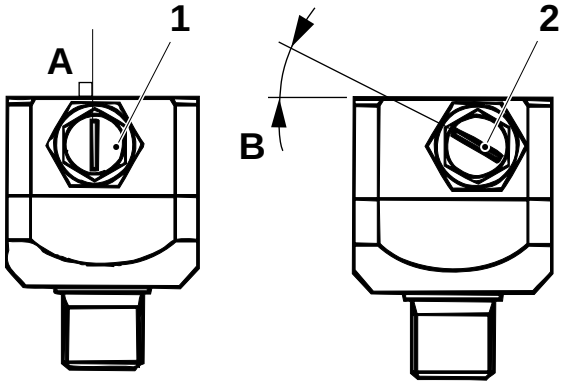

1 Nozzle
2 Nozzle

TechPub_2614345_0105 - 01_2772082_01.fm

5.10-3 Cleaning System - Check Pump

Machine Status	EXTERNAL CLEANING
SPC Reference	2544980-0200

a) Check for abnormal vibrations in the pump.

b) Change the pump, if necessary, see 5.10-4 Cleaning System - Change Pump.

5.10-4 Cleaning System - Change Pump

Machine Status	Power supply disconnector OFF Air supply OFF Steam supply ON Water supply OFF
SPC Reference	2544980-0200

a) Mark and disconnect the cable from the gland fitting (1).

b) Loosen the four nuts (2) and remove the four screws (3) for each flange.

c) Change the pump (4) and assemble in the reverse order.

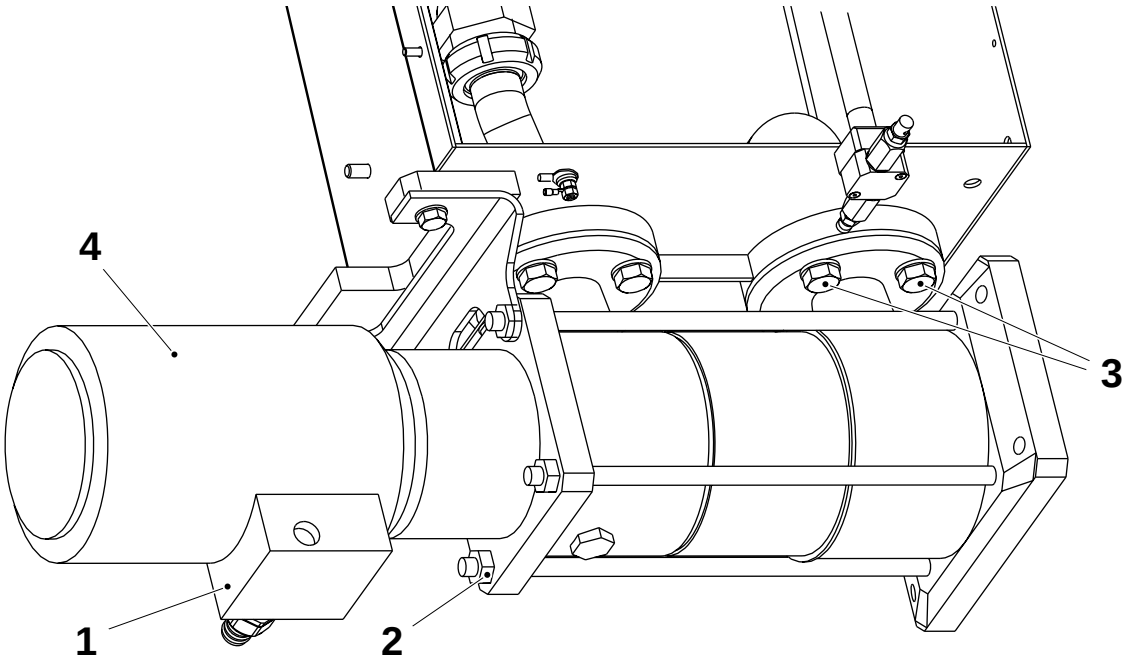

1 Gland fitting
2 Nut
3 Screw
4 Pump

TechPub_2614345_0105 - 01_2772082_01.fm

5.11 Outfeed Unit

5.11-1 Outfeed Unit- Overhaul Carrier

Machine Status	DRYING
SPC Reference	1539265-0100

a) Slow inch the final folder until the chain is in the stop position.

b) Manually turn the wheel (1) until the carrier to be replaced is approximately in position (2).

c) Remove the two screws (3) and push the carrier downwards.

d) Disassemble the carrier by removing the pin (4). Replace the carrier.

e) Check the roller (5) and the bushings (6), change them if necessary.

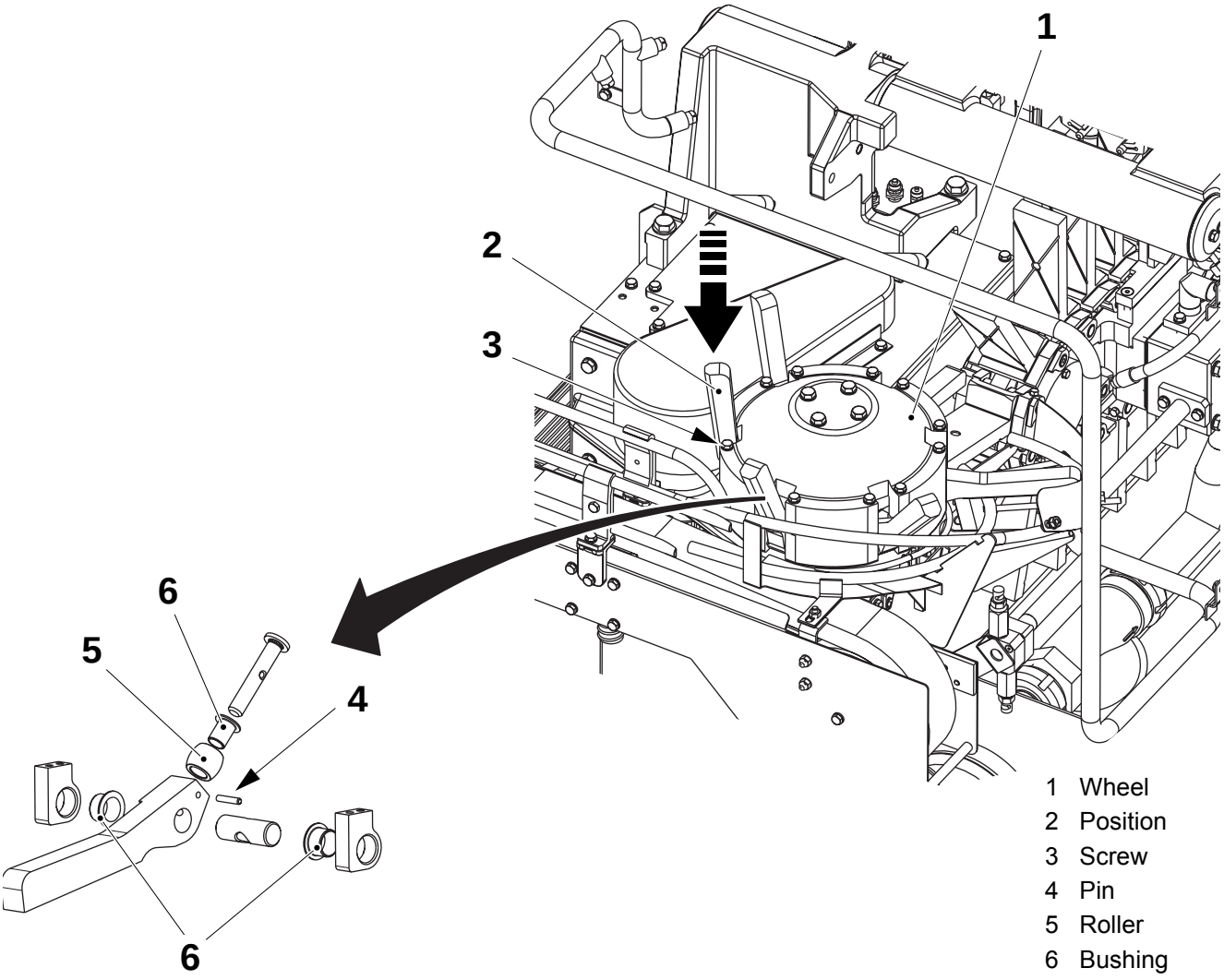

1 Wheel
2 Position
3 Screw
4 Pin
5 Roller
6 Bushing

(Cont'd)

TechPub_2614345_0105 - 01_2772083_01.fm

(Cont'd)

f) Manually turn the wheel (1) until the empty space for the carrier to be reinstalled is approximately in position (7).

g) Assemble in the reverse order.

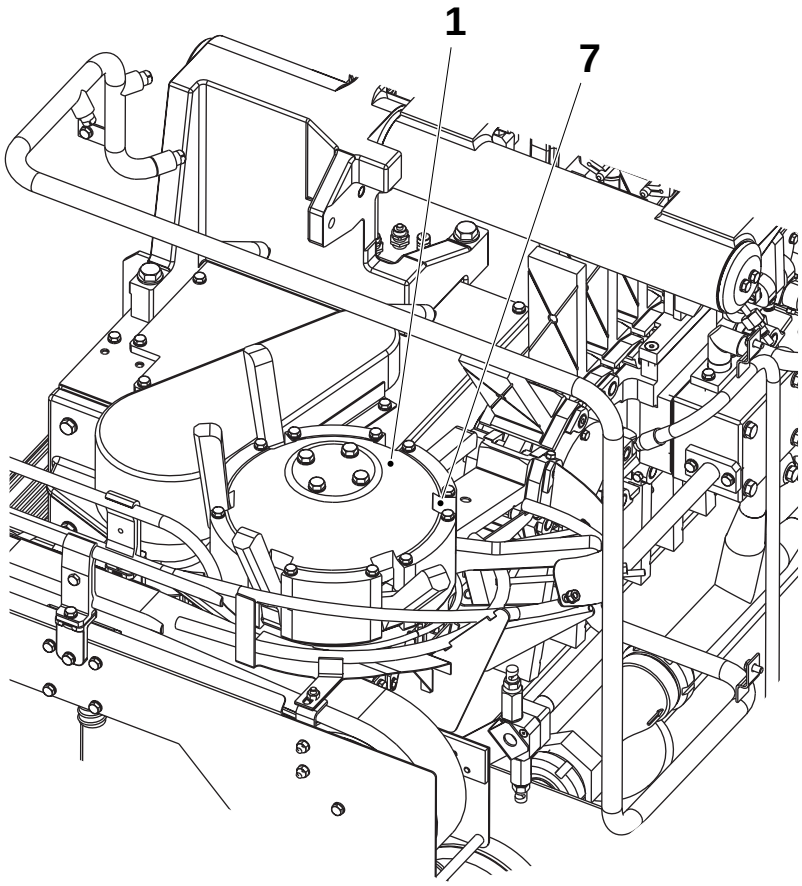

1 Wheel
7 Position

TechPub_2614345_0105 - 01_2772083_01.fm

5.11-2 Outfeed Unit - Synchronise

Machine Status	Power supply disconnector OFF Air supply OFF Steam supply ON Water supply OFF
SPC Reference	1539265-0100

a) Manually crank the machine and check that the carrier (1) has just passed the carton station (2) when the station chain begins indexing. If necessary, set as follows.

b) Remove the screws (4) and then the cover (3).

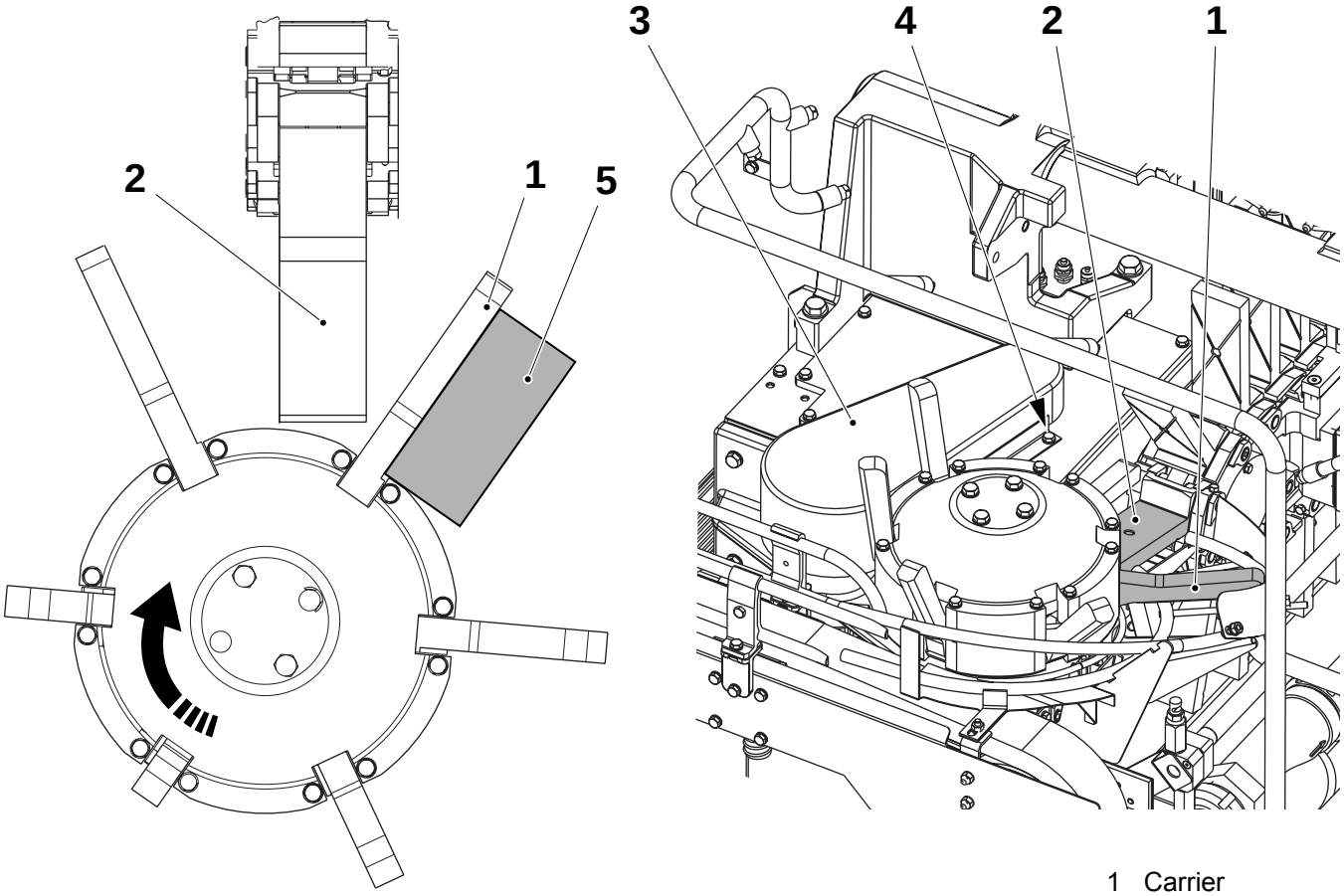

1 Carrier
2 Carton station
3 Cover
4 Screw
5 Package

(Cont'd)

TechPub_2614345_0105 - 01_2772083_01.fm

(Cont'd)

c) Loosen the screw (6) and the tension roller (7).

d) Loosen the belt (8), skip some teeth until the carrier (1) has just passed the carton station (2) when the station chain begins indexing.

e) Tighten the belt (8).

f) Manually crank the machine and make sure that all the other carriers (1) have just passed the carton station (2) when the station chain begins indexing.

g) Set the belt tension, see 5.12-3 Transmission Unit - Change Belts.

h) Assemble in the reverse order.

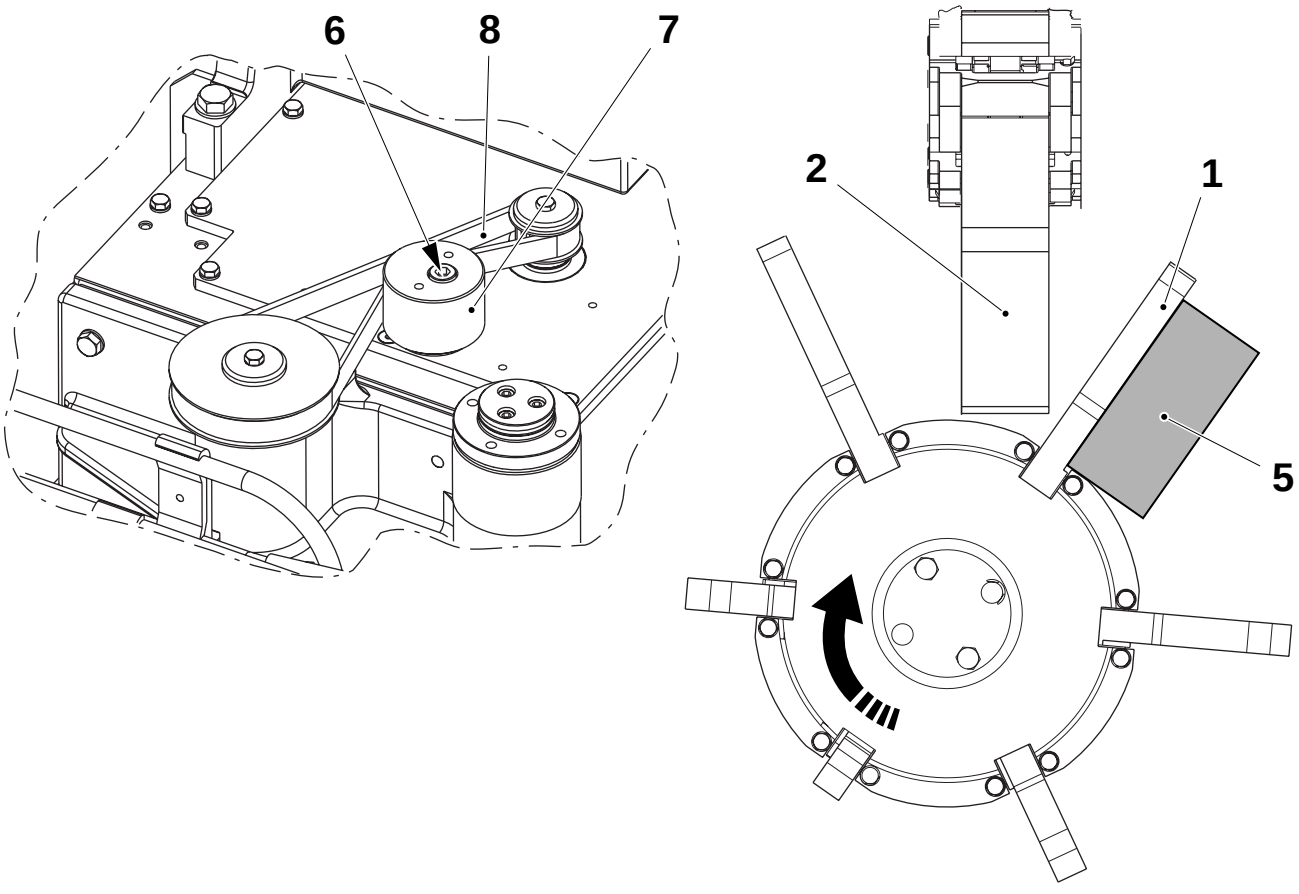

1 Carrier
2 Carton station
5 Package
6 Screw
7 Tension roller
8 Belt

TechPub_2614345_0105 - 01_2772083_01.fm

5.11-3 Outfeed Unit - Set Transmitter and Receiver PLMS

Machine Status	Power supply disconnector ON Air supply OFF Steam supply ON Water supply OFF
SPC Reference	1539265-0100

a) Align the transmitter and the receiver opposite to each other. See illustration below.

b) Loosen the screw (1) and open the cover.

c) Set the polarity switch (5) to the **PNP** position.

d) Set the mode switch (6) to the **D-ON** position.

e) Turn the sensitivity screw (4) fully to the left and then to the right until the red LED (2) lights.

f) Turn the sensitivity screw (4) to the right a little bit more.

g) Put a package between the transmitter and the receiver and check that on the receiver only the green LED (3) is **On**.

Note! When the power is **ON**, the red LED (2) on the transmitter must be **ON**. When the package is between the transmitter and the receiver, the green LED (3) on the receiver must be **ON**. When no package is between the transmitter and the receiver, both LEDs on the receiver must be **ON**.

TechPub_2614345_0105 - 01_2772083_01.fm

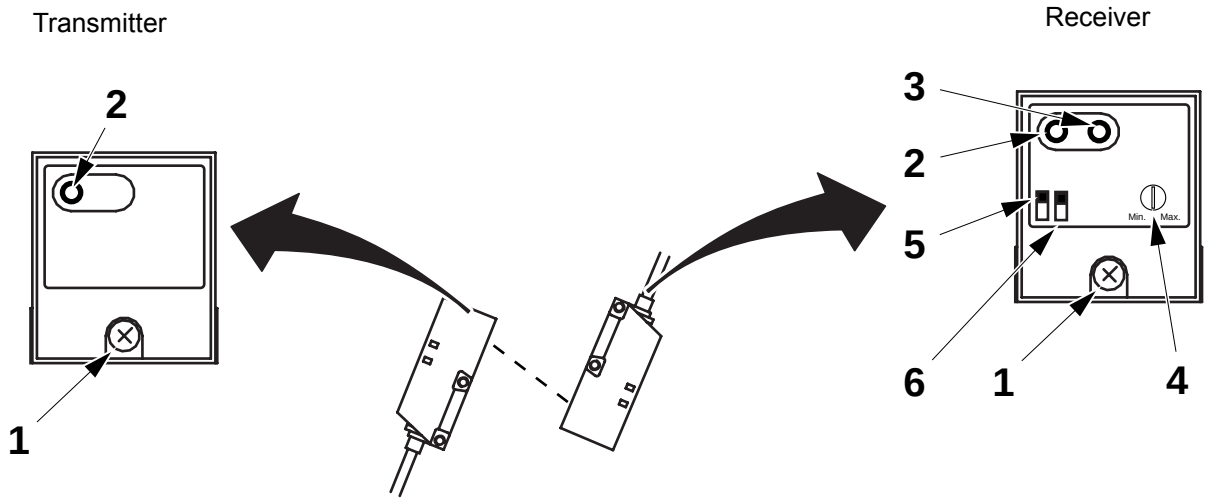

1 Screw
2 Red LED
3 Green LED
4 Sensitivity screw
5 Polarity switch
6 Mode switch

5.12 Transmission Unit

5.12-1 Transmission Unit - Overhaul

Machine Status	Power supply disconnector OFF Air supply OFF Steam supply ON Water supply OFF
Consumables	Grease 90296-0070
SPC Reference	2530400-0100

Remove Conveyor

Note! Mark the position of the conveyor before removal, so that it can be fitted back in the same position.

a) Remove the nut (1).

b) Remove the four screws (2) and the conveyor (3).

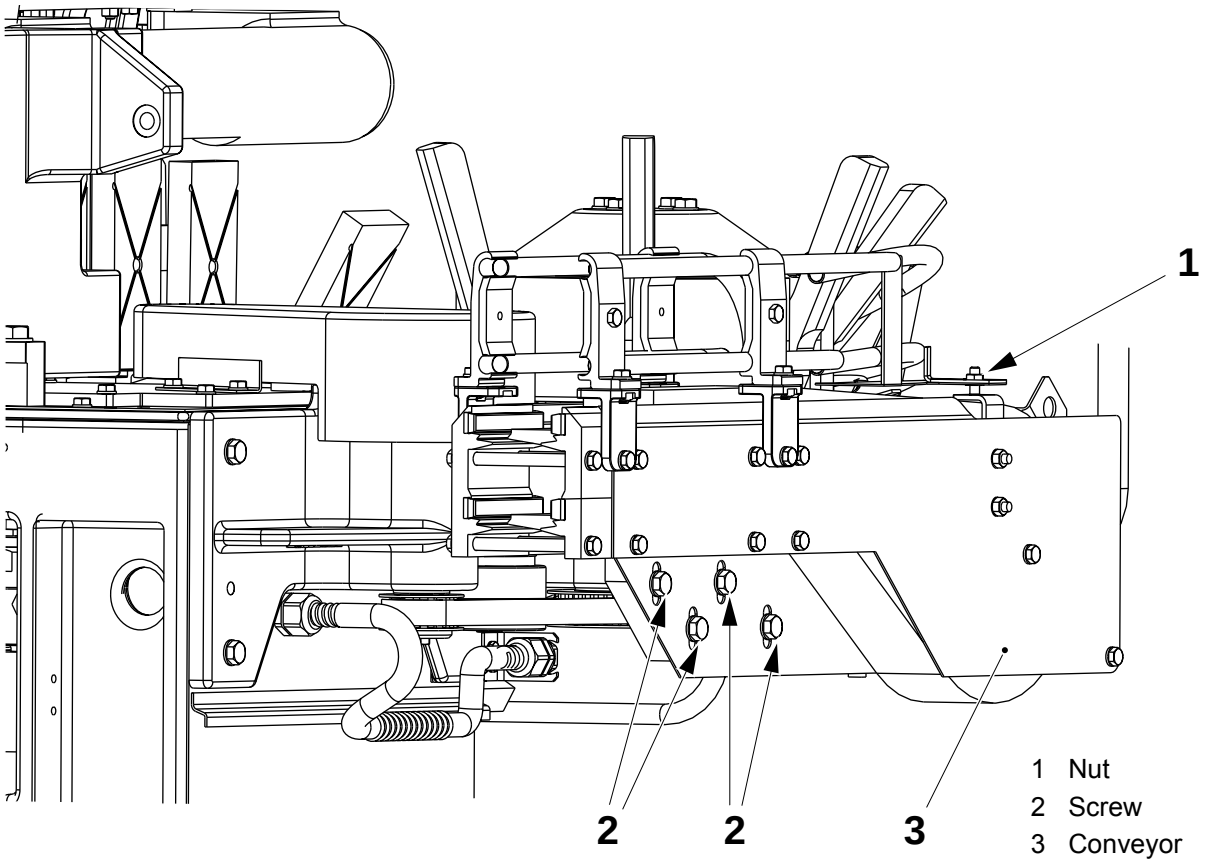

TechPub_2614345_0105 - 01_2772084_01.fm

(Cont'd)

(Cont'd)

Remove Guide

Note! Mark the position of the guide before removal, so that it can be fitted back in the same position.

a) Remove the guide (1) by removing the three screws (2).

b) Remove the two screws (3) to remove the plate (4) with the sensor.

c) Remove the nut (5) and remove the spiral conduit (6) from the bracket (7).

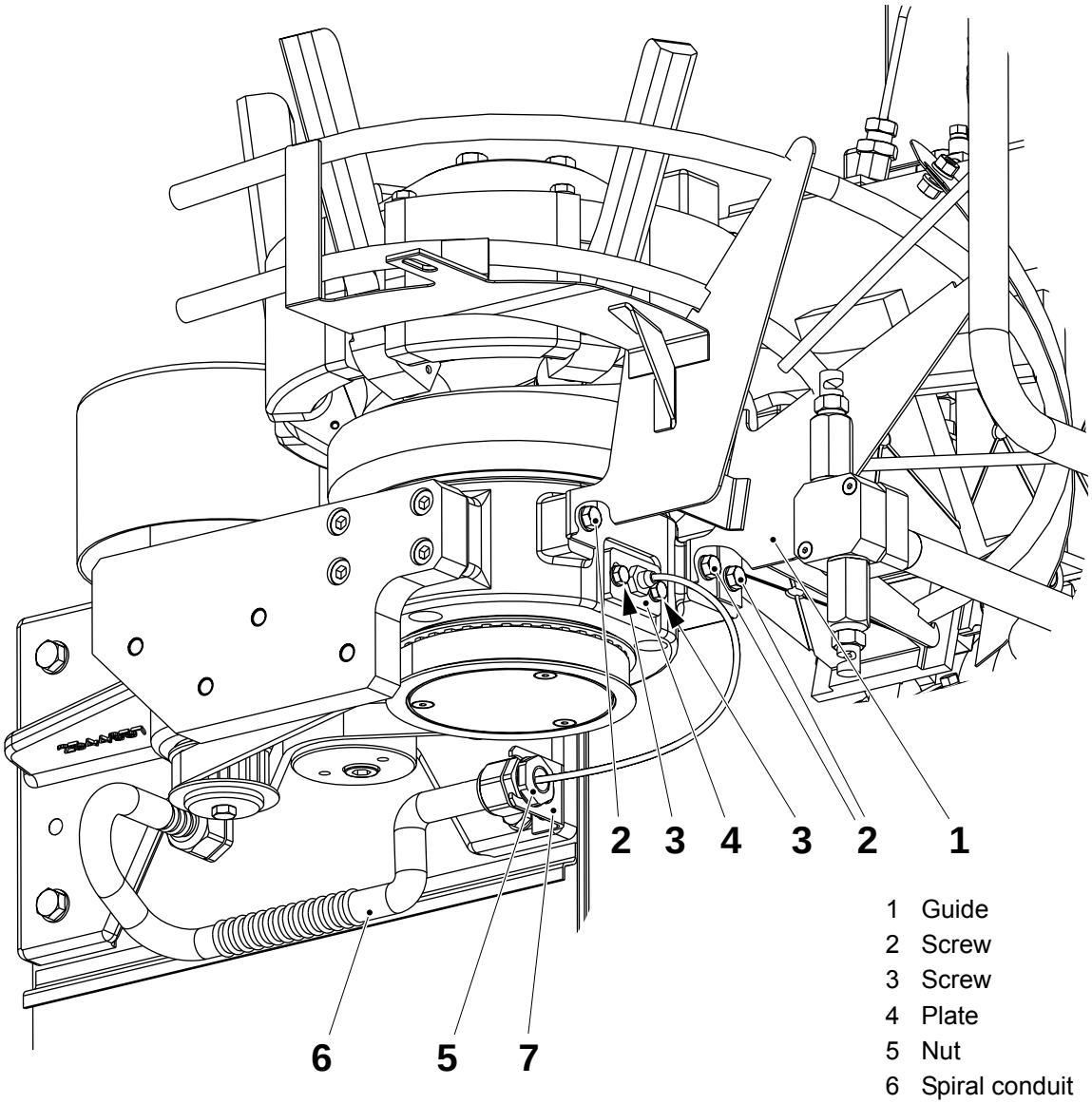

1 Guide
2 Screw
3 Screw
4 Plate
5 Nut
6 Spiral conduit
7 Bracket

(Cont'd)

TechPub_2614345_0105 - 01_2772084_01.fm

(Cont'd)

Remove Outfeed Unit

a) Remove the seven screws (1) and pull out the outfeed unit (2).

b) Perform the instruction Remove Transmission Unit, then replace the parts described in Overhaul Drive Shaft and Overhaul Transmission Shaft.

Note! During reassembly, make sure that the outfeed unit (2) is aligned with the pin (3) and that the sensor (4) is activated by the external edge of the flange (5). The flange (5) moves upwards when activated. Considering this and to make sure that the sensor does not read when the flange moves, the sensor (4) has to be placed to read the **lower edge** of the flange (5).

c) Assemble in the reverse order. While assembling: install the proximity sensor (4) and tighten it carefully, by hand, until it stops. Turn the proximity sensor (4) a quarter of turn to the left.

d) Synchronise the outfeed unit, see 5.11-2 Outfeed Unit - Synchronise.

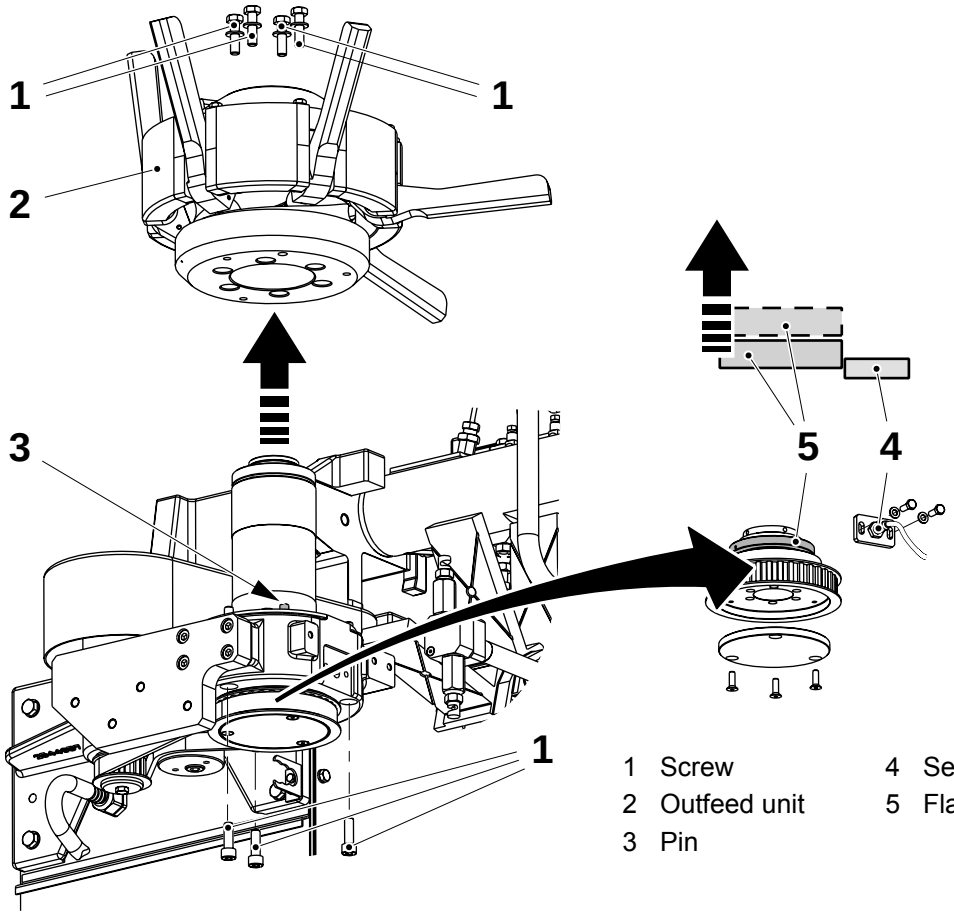

1 Screw
2 Outfeed unit
3 Pin
4 Sensor
5 Flange

(Cont'd)

TechPub_2614345_0105 - 01_2772084_01.fm

(Cont'd)

Remove Transmission Unit

a) Remove the four screws (1) and the cover (2).

b) Remove the screw (3), the tension roller (4), and the belt (5).

WARNING

Risk of crushing.

Be careful when removing the transmission unit (7) due to the weight.

c) Remove the four screws (6) to remove the transmission unit (7).

d) On the workbench remove the screw (8), the tension roller (9), and the belt (10).

e) Replace the parts described in Overhaul Drive Shaft and Overhaul Transmission Shaft.

f) Install the transmission unit (7) in the reverse order and install the belts (5) and (10), then set the belt tension, see 5.12-3 Transmission Unit - Change Belts, continue assembling in the reverse order.

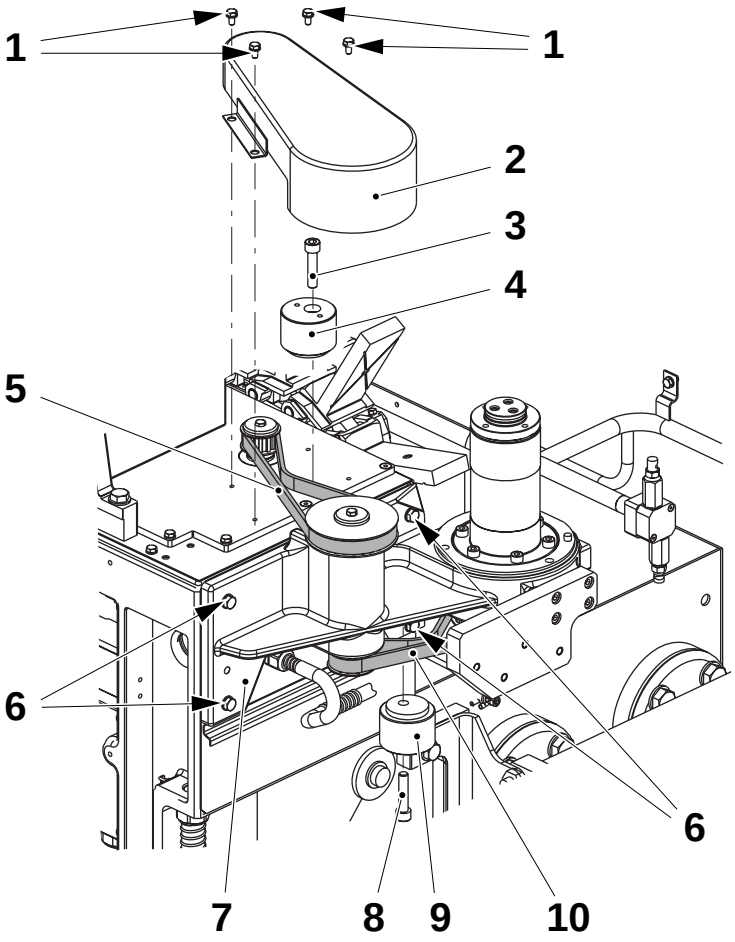

1 Screw
2 Cover
3 Screw
4 Tension roller
5 Belt
6 Screw
7 Transmission unit
8 Screw
9 Tension roller
10 Belt

(Cont'd)

TechPub_2614345_0105 - 01_2772084_01.fm

(Cont'd)

Overhaul Drive Shaft

a) Remove the screws (1) and the toothed pulley (2).

b) Remove the key (3).

c) Remove the screw (4) and the toothed pulley (5).

Note! Make sure to have spare the sealing ring (6) and (10).

d) Remove the sealing ring (6), the retaining ring (7), and the key (8).

e) Remove the shaft (9) group and check the following parts. Clean or change if necessary:
   - the sealing ring (10)
   - the ball bearings (11) and (12).

f) Grease, if necessary, and assemble in the reverse order.

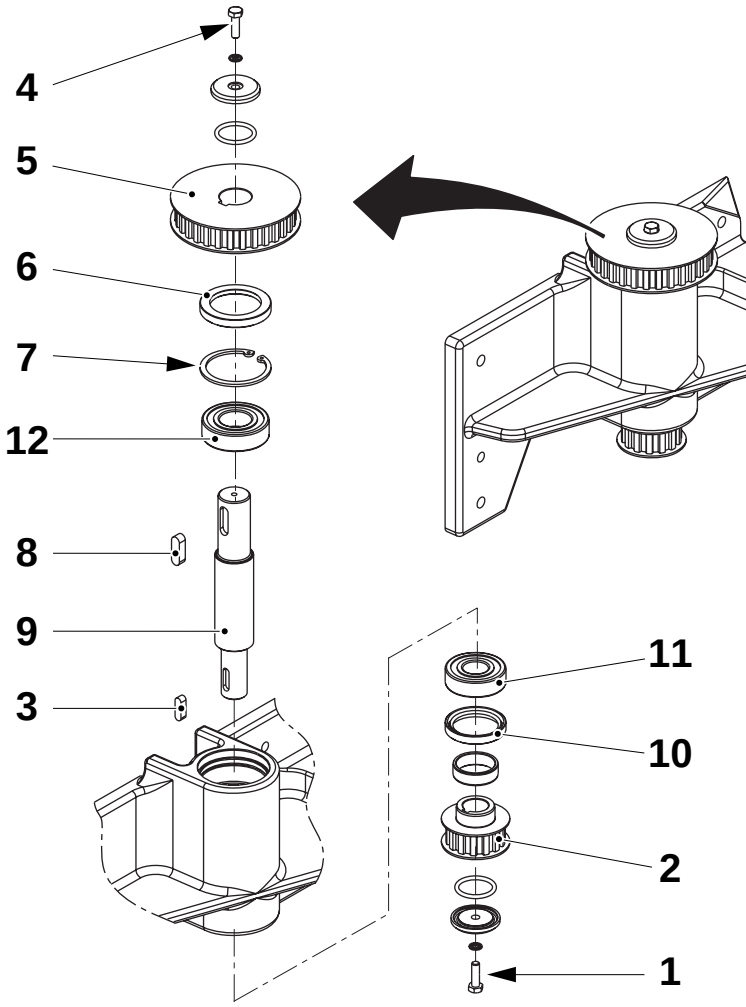

1 Screw
2 Toothed pulley
3 Key
4 Screw
5 Toothed pulley
6 Sealing ring
7 Retaining ring
8 Key
9 Shaft
10 Sealing ring
11 Ball bearing
12 Ball bearing

TechPub_2614345_0105 - 01_2772084_01.fm

(Cont'd)

(Cont'd)

Overhaul Transmission Shaft

a) Remove the three screw (1) and the cup (2).

b) Remove the screw (3), the pulley (4) group, the radial seal (5), and the inner ring (6).

c) Remove the three screws (7) and the flange (8).

d) Remove the six screws (9) and the bearing flange (10) group.

e) Remove the four screws (11), the flange (12), and the key (13).

f) Pull out the shaft (14) group and check the ball bearings (15) and (16). Clean or change the parts, if necessary.

g) Grease, if necessary, and assemble in the reverse order.

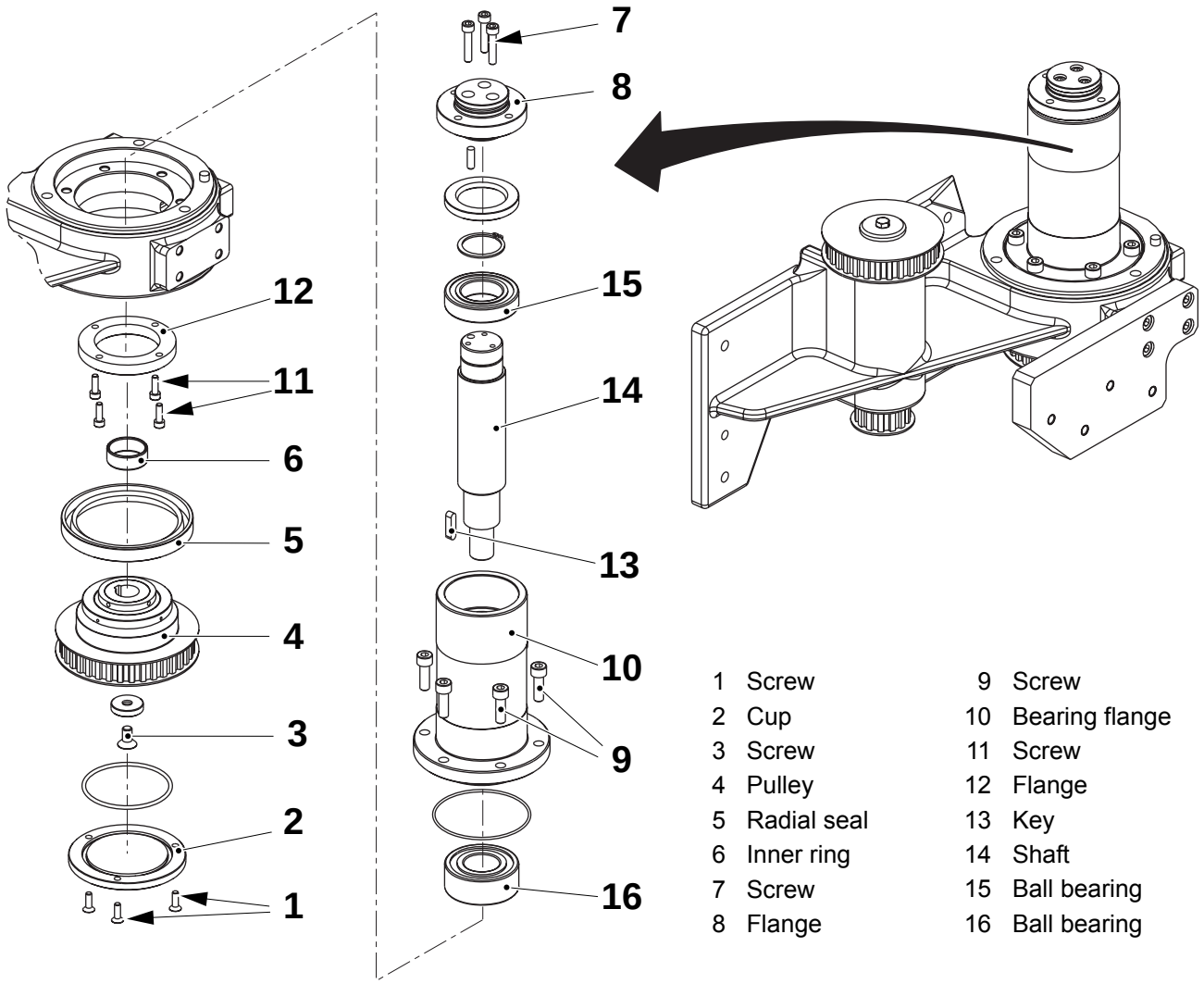

1	Screw	9	Screw
2	Cup	10	Bearing flange
3	Screw	11	Screw
4	Pulley	12	Flange
5	Radial seal	13	Key
6	Inner ring	14	Shaft
7	Screw	15	Ball bearing
8	Flange	16	Ball bearing

TechPub_2614345_0105 - 01_2772084_01.fm

5.12-2 Transmission Unit - Check Belts

Machine Status	Power supply disconnector OFF Air supply OFF Steam supply ON Water supply OFF
SPC Reference	2530400-0100

a) Remove the four screws (1) and the cover (2).

b) Check the belts (3) for cracks, or wear on the teeth. Replace if necessary. See 5.12-3 Transmission Unit - Change Belts.

c) Assemble in the reverse order.

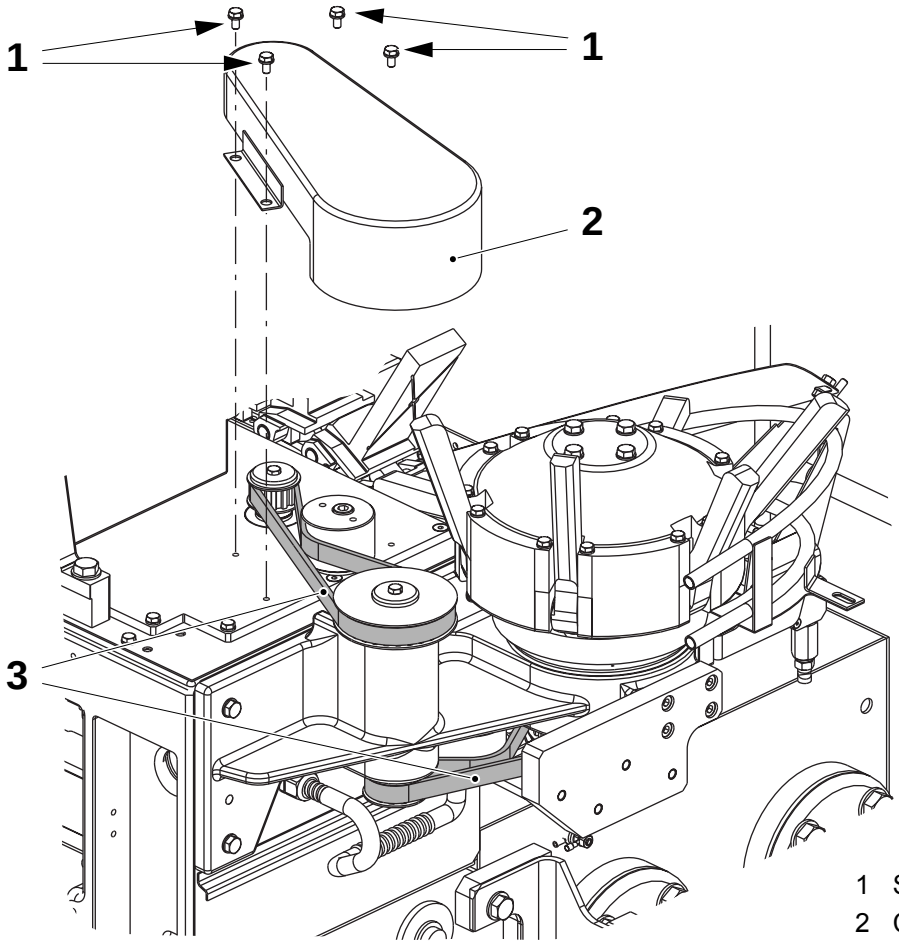

1 Screw
2 Cover
3 Belt

TechPub_2614345_0105 - 01_2772084_01.fm

5.12-3 Transmission Unit - Change Belts

Machine Status	Power supply disconnector OFF Air supply OFF Steam supply ON Water supply OFF
SPC Reference	2530400-0100

Remove Belts

a) Remove the screws (1) and the tension rollers (2).

b) Remove the belts (3).

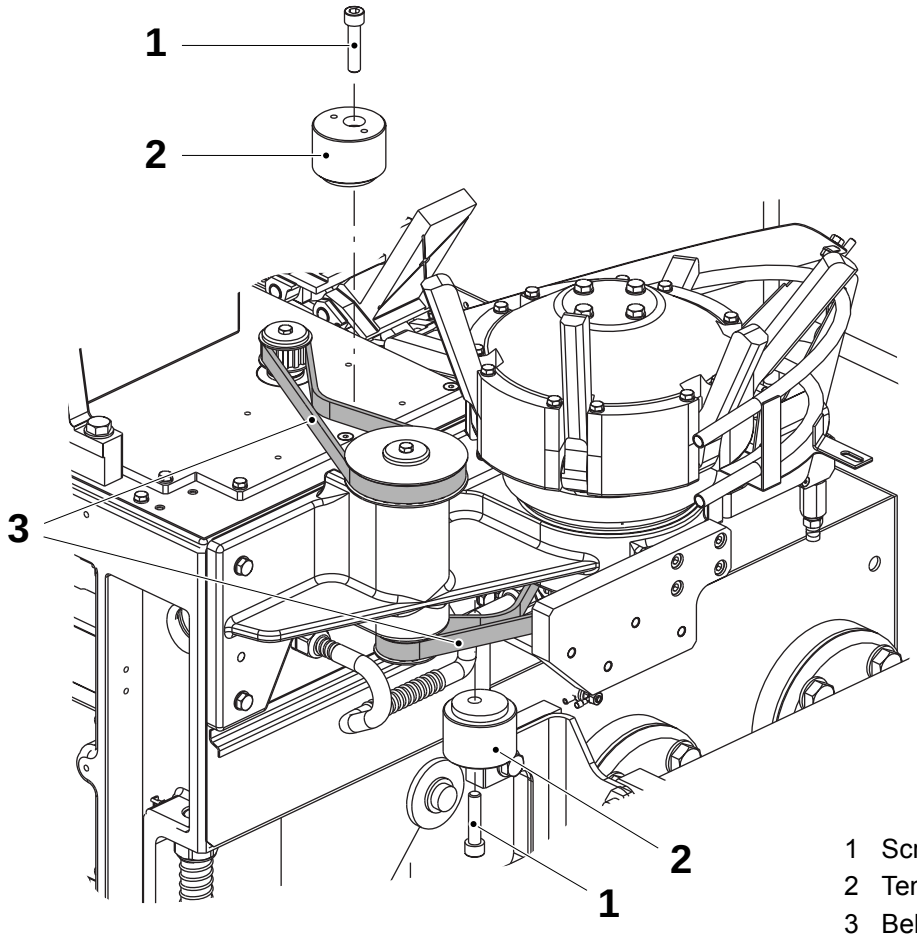

1 Screw
2 Tension roller
3 Belt

(Cont'd)

TechPub_2614345_0105 - 01_2772084_01.fm

(Cont'd)

Install and Tension Belts

a) Install the belts (1).

b) Install the tension rollers (2) using the screws (3) without tightening.

c) Rotate the tension rollers (2) to take up any slack in the belts (1), making force in the holes (4). Tighten the screws (3).

d) Synchronise the outfeed unit, see 5.11-2 Outfeed Unit - Synchronise

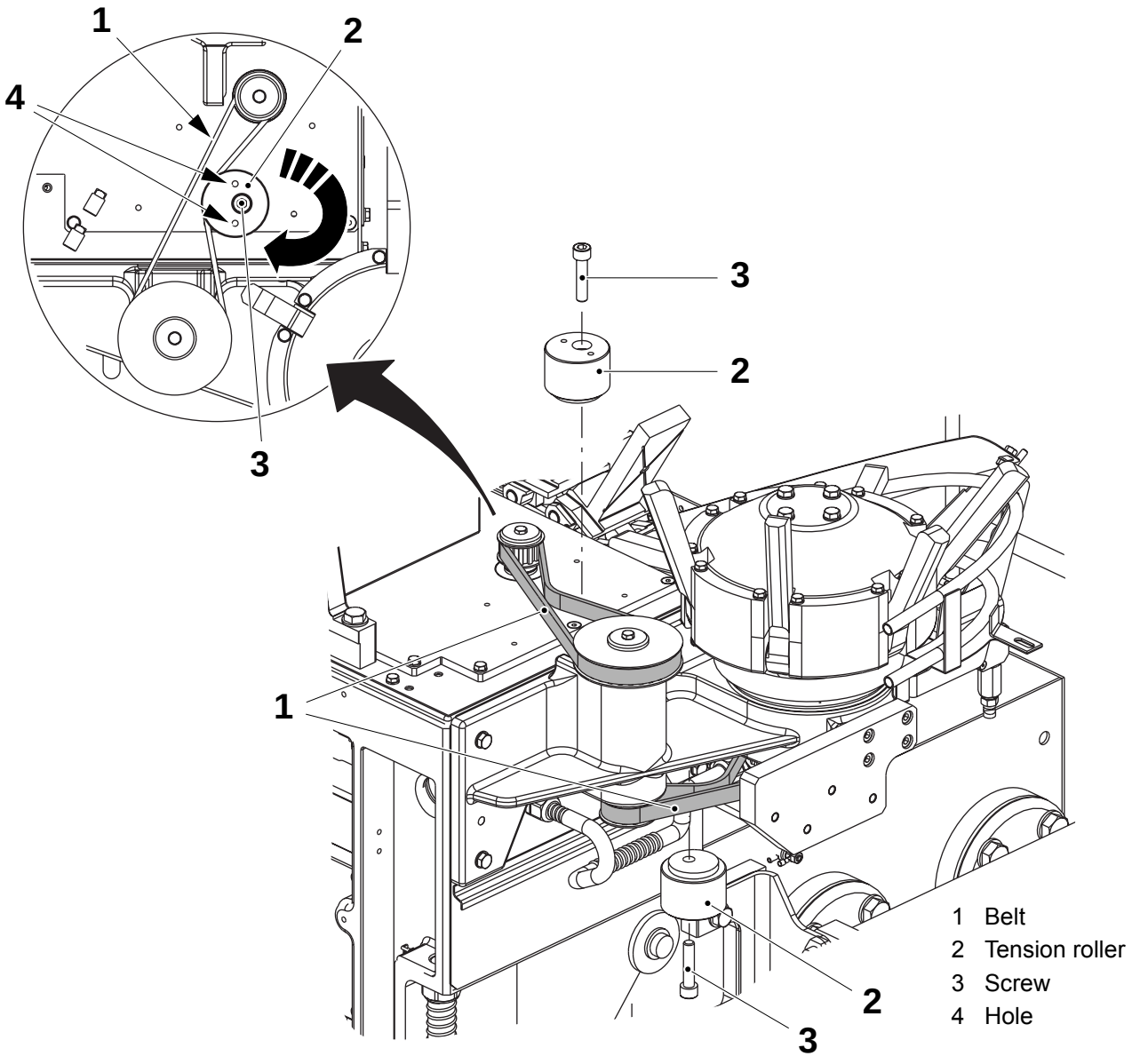

e)

TechPub_2614345_0105 - 01_2772084_01.fm

5.13 Folding Bar

5.13-1 Folding Bar - Set

Machine Status	Power supply disconnector OFF Air supply OFF Steam supply ON Water supply OFF
Special Equipment	Template - see table 15.4 Tools and Templates
SPC Reference	1539970-0200

Setting without Templates

a) Loosen the two screws (1) and center the folding bars (2) in relation to the station chain (3). Make sure that the folding bars are also aligned with the guide pins (4) in the pressure device.

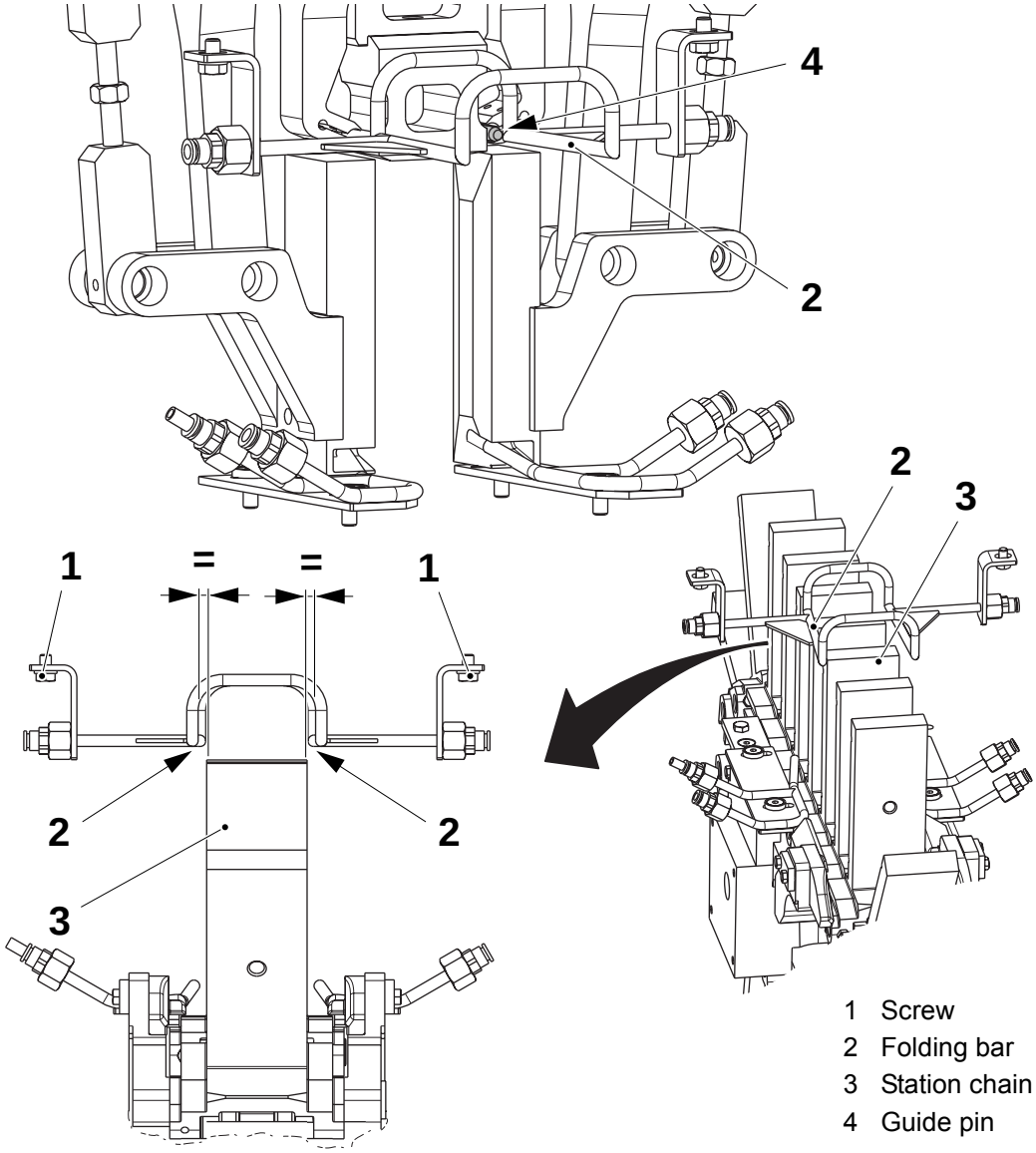

1 Screw
2 Folding bar
3 Station chain
4 Guide pin

(Cont'd)

TechPub_2614345_0105 - 01_2772085_01.fm

(Cont'd)

b) Loosen the four screws (5) and set the distance **A** between the folding bar (6) and the station chain (3) on both sides.

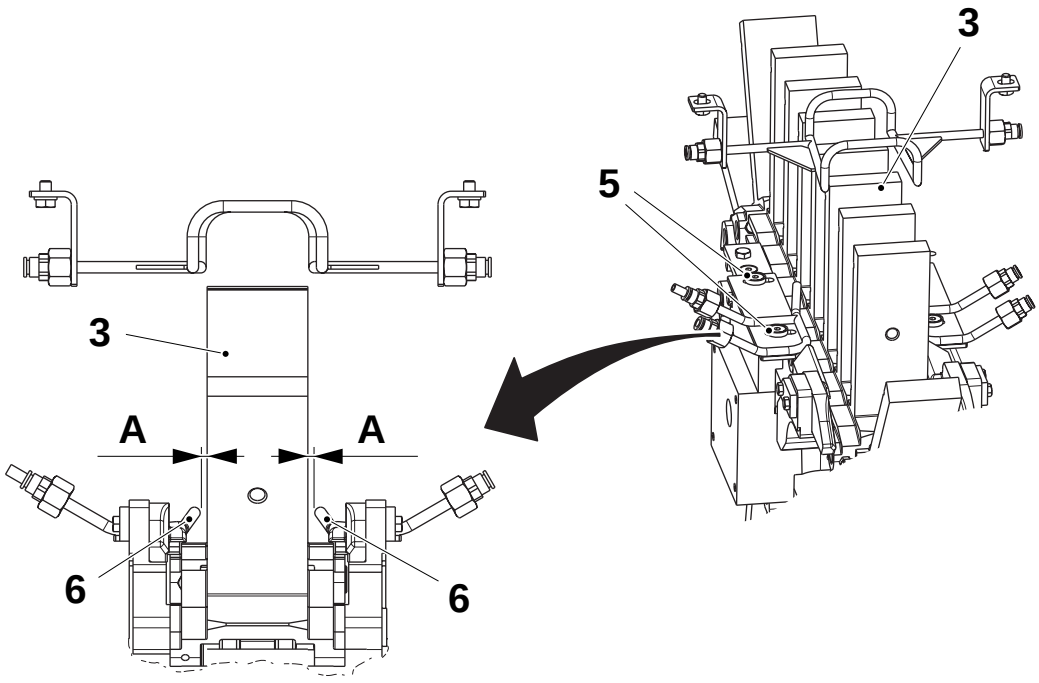

A = 2.5 ±0.5mm

3 Station chain
5 Screw
6 Folding bar

(Cont'd)

TechPub_2614345_0105 - 01_2772085_01.fm

(Cont'd)

Setting with Templates

Note! Select the templates for the package volume shape according to the table 15.4 Tools and Templates.

a) Crank until the station chain stops indexing, then put the templates (1) and (2) onto the stations.

b) The folding bars (3) must slightly touch the template (2). If necessary, adjust the position of the folding bars (3) with the screws (4).

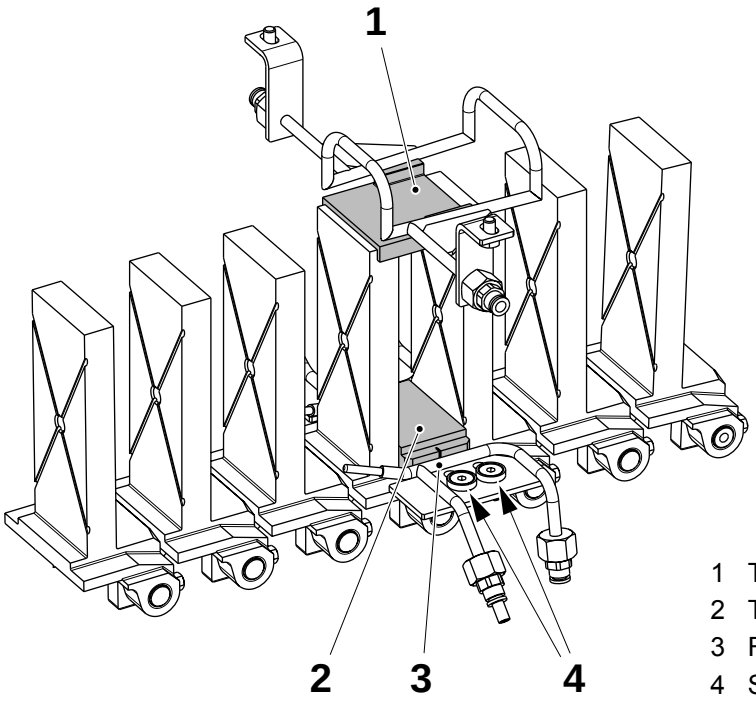

1 Template
2 Template
3 Folding bar
4 Screw

(Cont'd)

TechPub_2614345_0105 - 01_2772085_01.fm

(Cont'd)

c) Check that the folding bars (5) are centred in relation to the template (1). If necessary, adjust the position of the folding bars (5) with the screws (6).

d) Remove the templates (1) and (2).

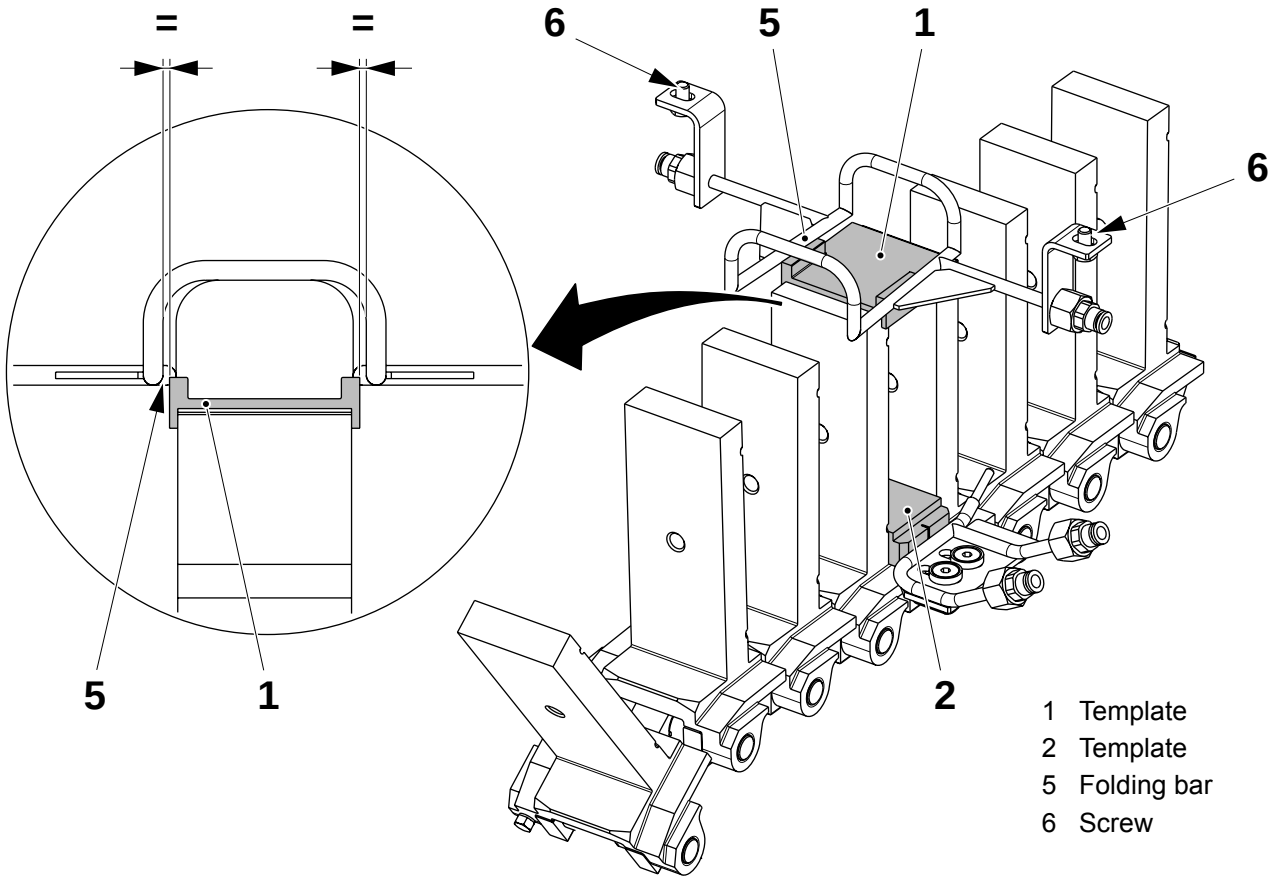

1 Template
2 Template
5 Folding bar
6 Screw

TechPub_2614345_0105 - 01_2772085_01.fm

5.14 Cantilever

5.14-1 Cantilever - Check Chain Tensioner

Machine Status	Power supply disconnector OFF Air supply OFF Steam supply ON Water supply OFF
SPC Reference	1539995-0100

Check the following parts for wear or damage:

- the guides (1)
- the bushings (2)
- the spring (3)
- the shaft (4)

Change, if necessary, see 5.14-2 Cantilever - Overhaul Chain Tensioner.

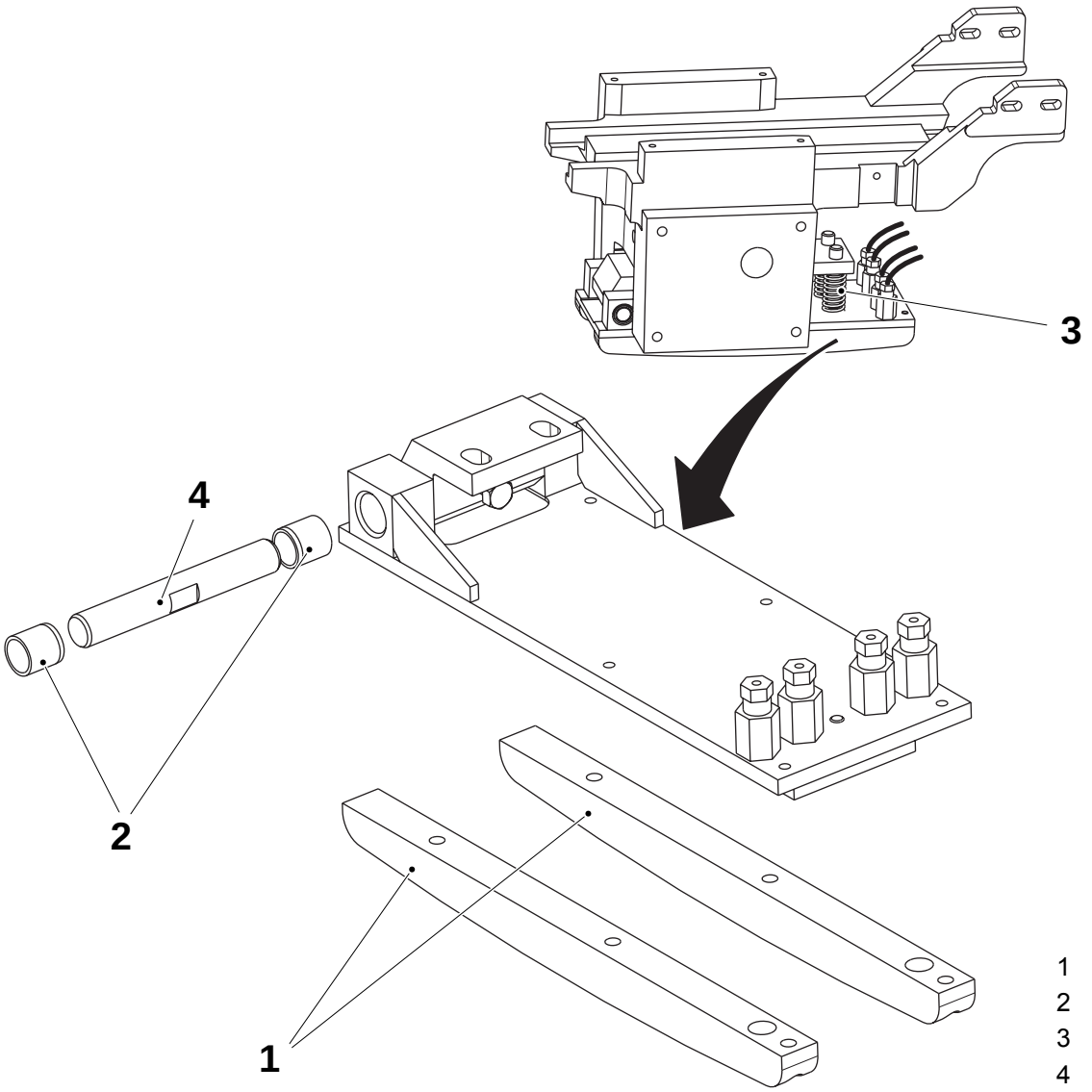

1 Guide
2 Bushing
3 Spring
4 Shaft

TechPub_2614345_0105 - 01_2772086_01.fm

5.14-2 Cantilever - Overhaul Chain Tensioner

Machine Status	Power supply disconnector OFF Air supply OFF Steam supply ON Water supply OFF
SPC Reference	1539995-0100

a) Split the station chain following the procedures described in 5.1-1 Station Chain - Change.

b) Disconnect the four lubrication hoses (1) turn the support (2) and remove the two springs (3).

c) Loosen the screw (4) and remove the screws (5) to remove the guide (6) group.

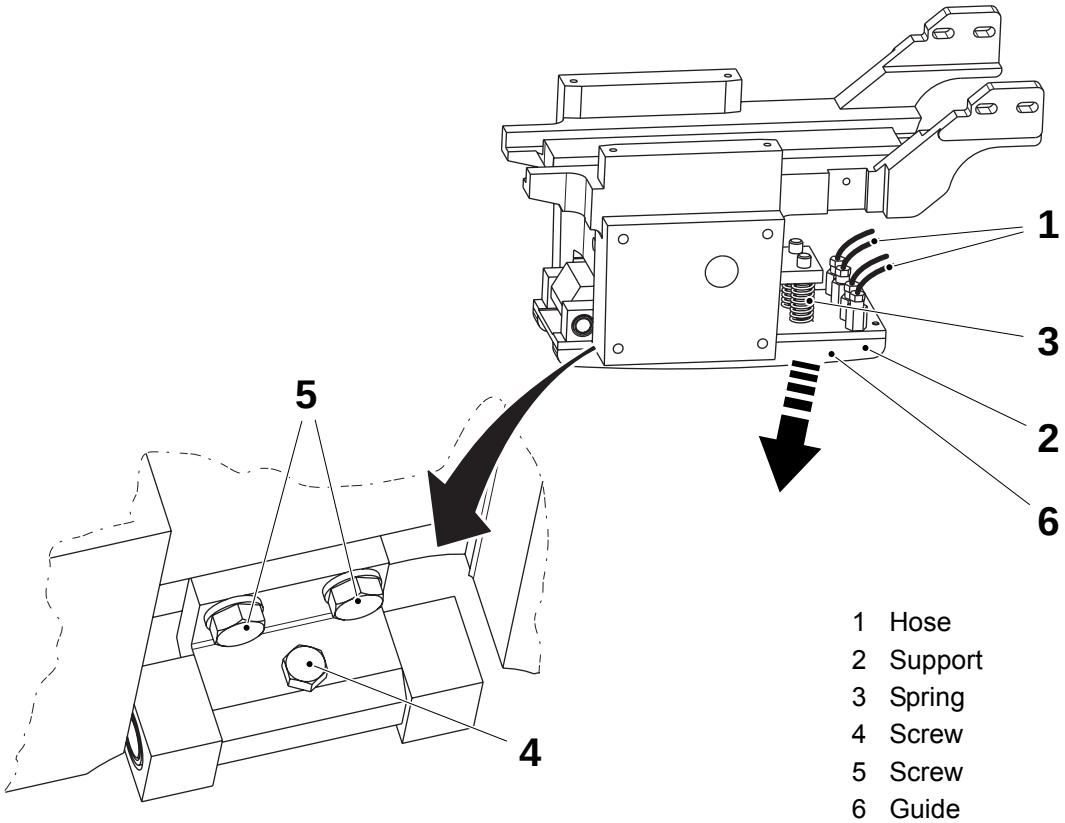

1 Hose
2 Support
3 Spring
4 Screw
5 Screw
6 Guide

TechPub_2614345_0105 - 01_2772086_01.fm

(Cont'd)

(Cont'd)

d) Remove the guides (6) by removing the six screws (7).
e) Tap out the shaft (8) and remove the bushings (9).
f) Assemble in the reverse order.

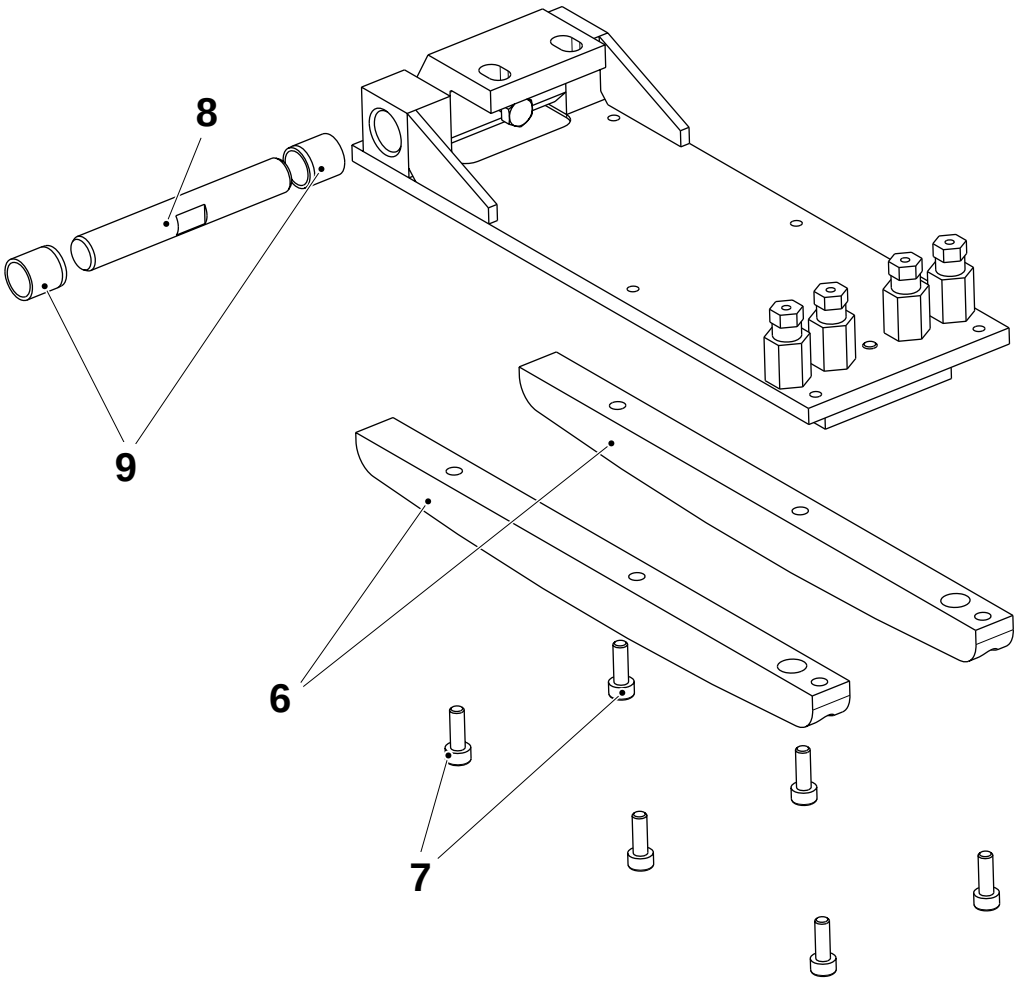

6 Guide
7 Screw
8 Shaft
9 Bushing

TechPub_2614345_0105 - 01_2772086_01.fm

5.15 Forming Unit

5.15-1 Forming Unit - Set

Machine Status	Power supply disconnector OFF Air supply OFF Steam supply ON Water supply OFF
Special Equipment	Ruler Template 2552949-0100 see table 15.4 Tools and Templates
SPC Reference	1539975-0100

Basic Setting

Make sure that the frame is centred, see 5.8-2 Frame - Set.

a) Lift the final folder frame.

b) Slightly loosen the four screws (1).

c) Place a ruler in the position **Y** and make sure the two plates (2) are aligned with the block (3).

d) Place a ruler in the position **Z** and make sure the two plates (2) are aligned with the pressure plate (4).

e) Tighten the four screws (1).

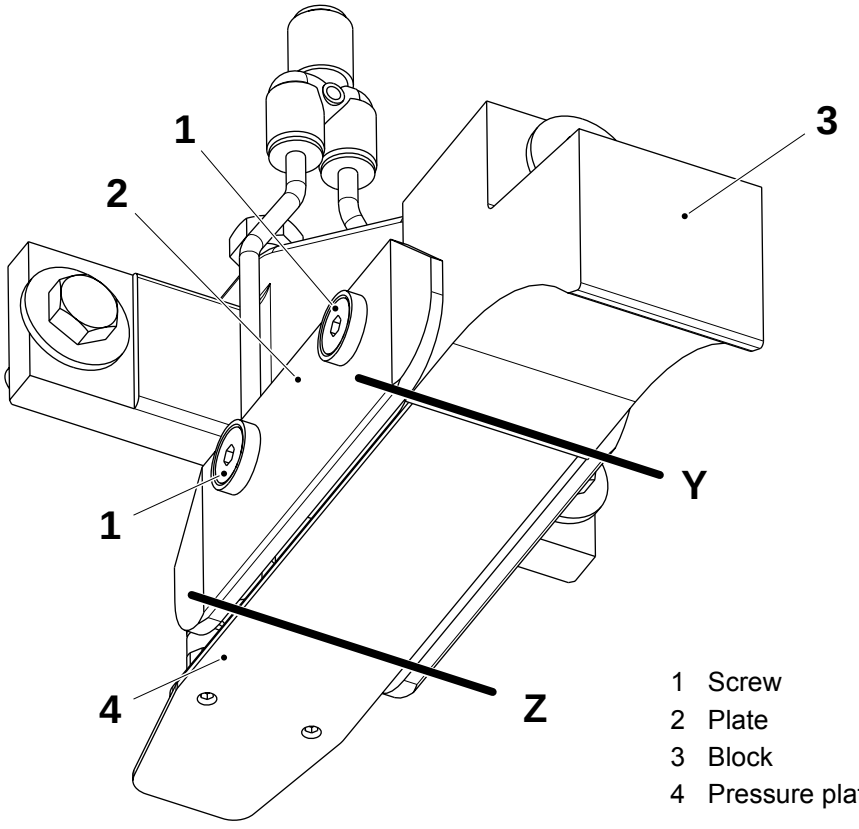

1 Screw
2 Plate
3 Block
4 Pressure plate

(Cont'd)

TechPub_2614345_0105 - 01_2772087_01.fm

(Cont'd)

Vertical Setting without Templates

a) Set the distance **A** on both sides by: loosening the screws (1) and adjust using the screw (2) and the pusher (3).

Note! Make sure that the distance **B** is the same on both sides.

b) Tighten the screws (1).

Package	A ±0.5 mm	Package	A ±0.5 mm
TBA 100 B	-	TBA 200 S	4.0
TBA 125 S	4,0	TBA 250 B	4,5
TBA 160 S	-	TBA 250 S	3.5
TBA 180 B	-	TBA 284 B	-
TBA 200 B	3,5	TBA 300 S	-
TBA 200 M	3,5	TBA 330 S	4,5

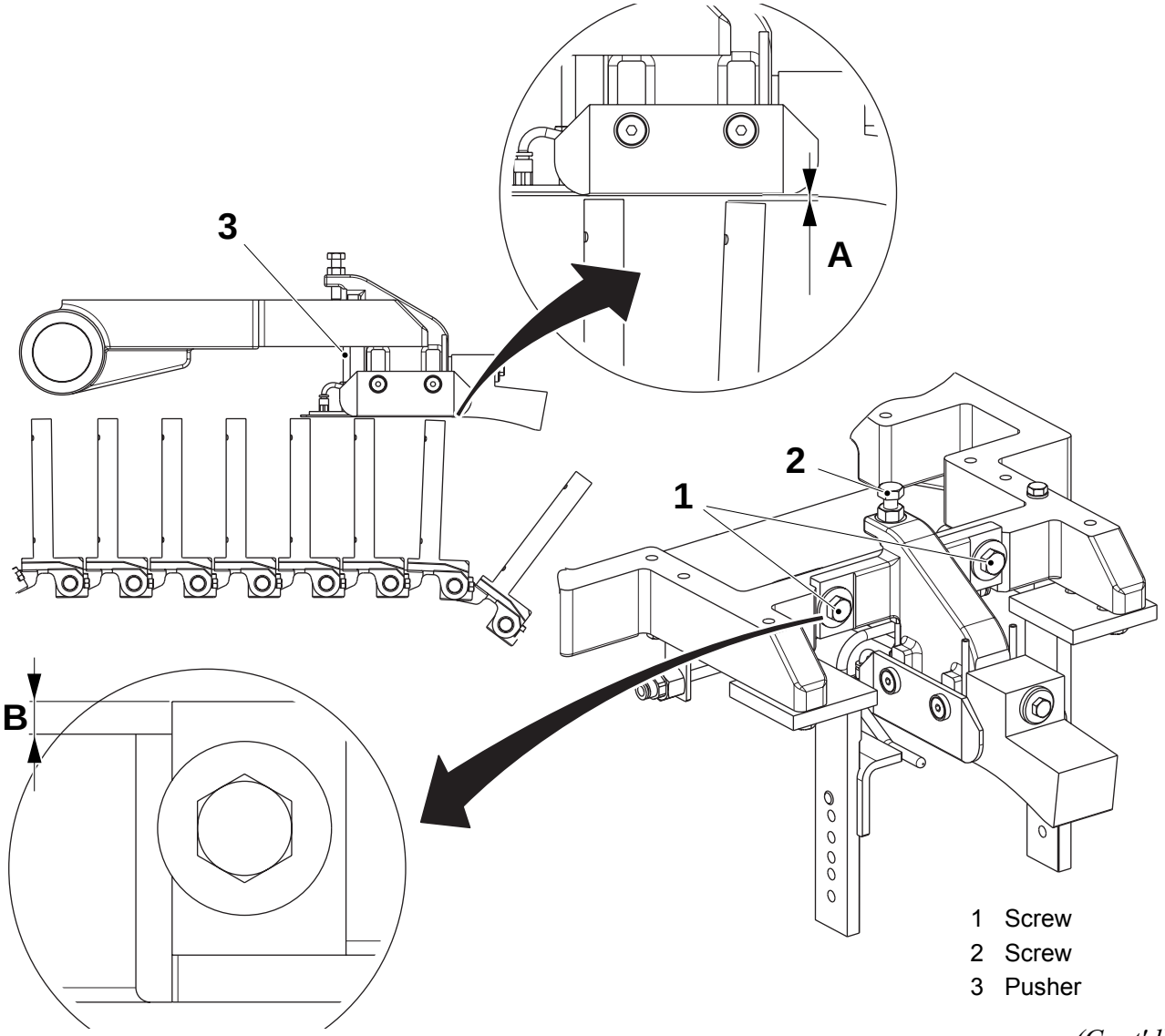

1 Screw
2 Screw
3 Pusher

(Cont'd)

TechPub_2614345_0105 - 01_2772087_01.fm

(Cont'd)

c) Set the distance **C** between the plate (4) and the station chain (5) using the pusher (3) and its locking nut.

d) Step up to PRODUCTION and check the bottom shape of a package.

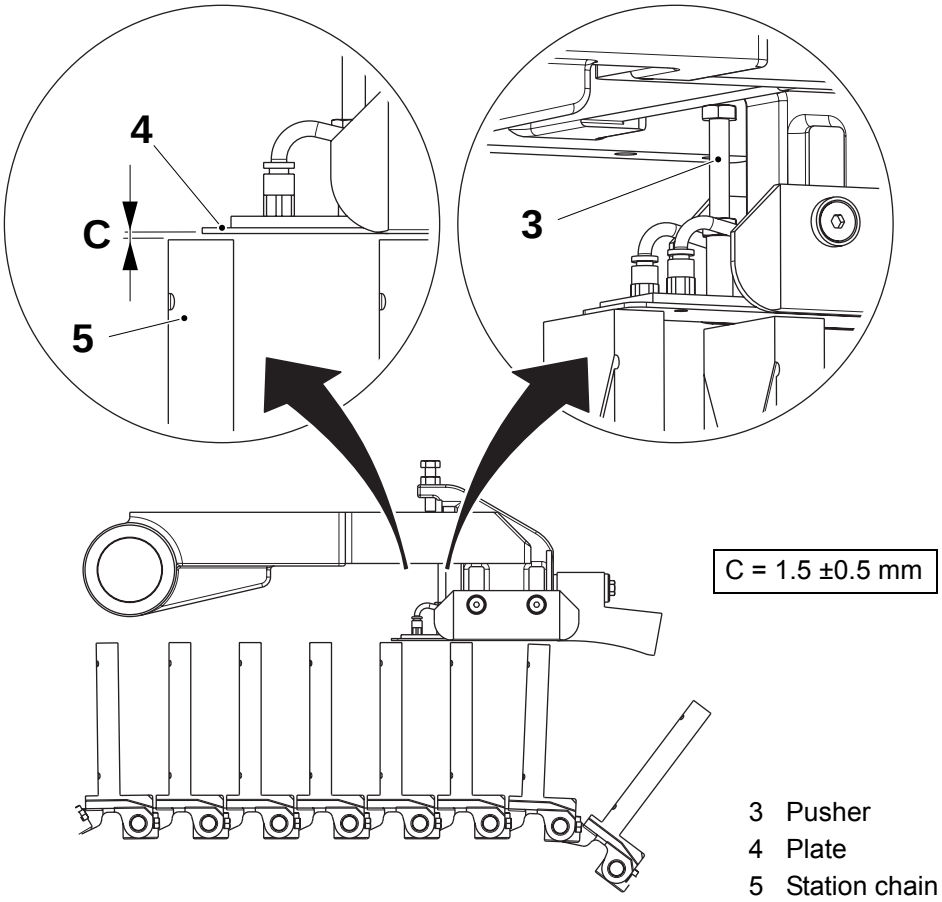

TechPub_2614345_0105 - 01_2772087_01.fm

(Cont'd)

(Cont'd)

Vertical Setting with Templates

Note! Select the templates for the package volume shape according to the table 15.4 Tools and Templates.

a) Assemble the plate (1) and the clamp (2) together onto the station chain (3), using the two screws (4).

b) Install the template (5) on the plate (1) with the two screws (6).

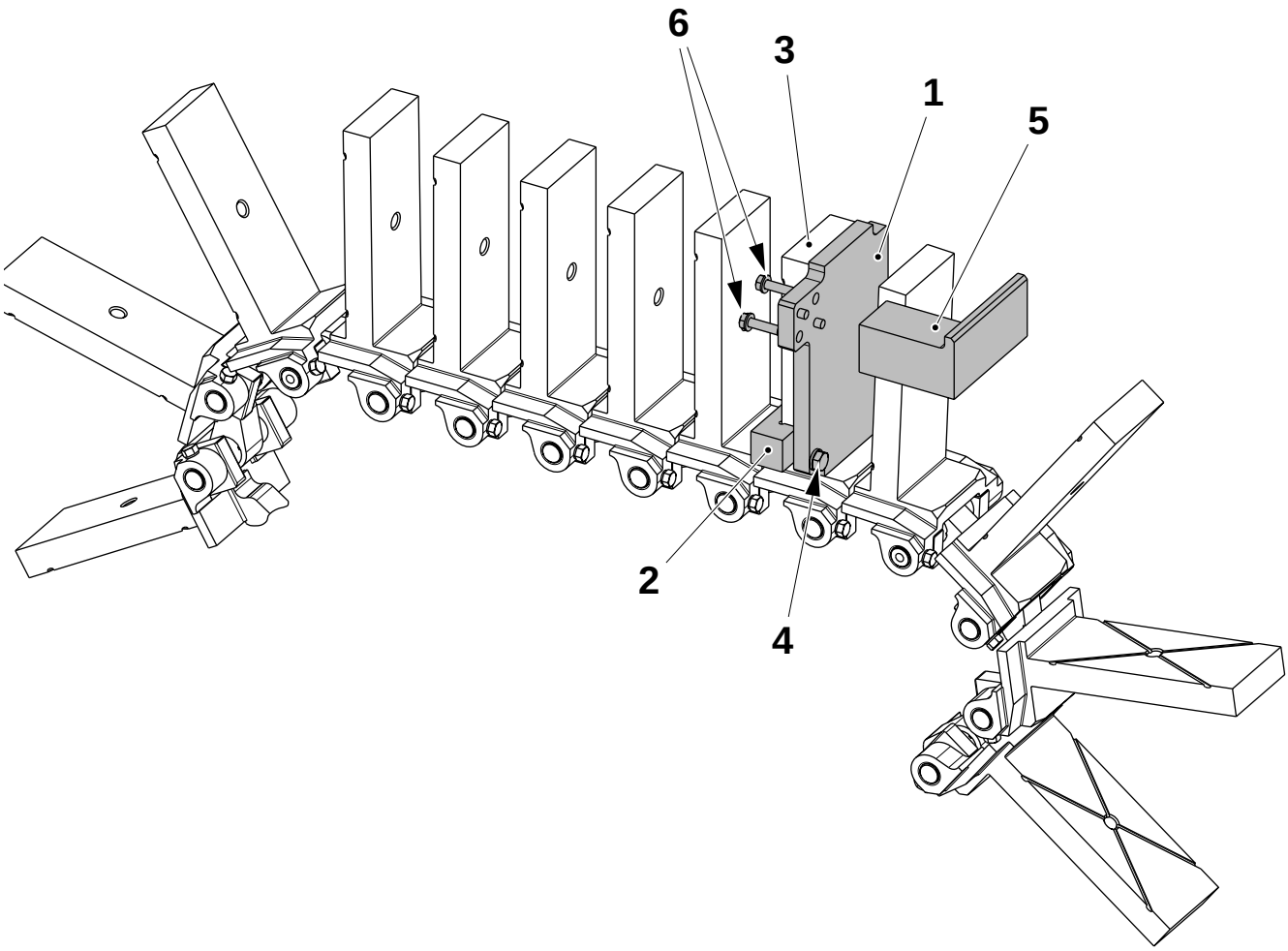

1 Plate
2 Clamp
3 Station chain
4 Screw
5 Template
6 Screw

(Cont'd)

TechPub_2614345_0105 - 01_2772087_01.fm

(Cont'd)

c) With the final folder frame fully low, the forming unit must slightly touch the plate (1) and the template (5) together. If required, loosen the two screws (7) then adjust the forming unit position with the screw (8). At the end tighten the two screws (7).

d) Lift the final folder frame and remove the following parts: the four screws (4) and (6), the clamp (2), the template (5) and the plate (1).

e) Step up to PRODUCTION and check the bottom shape of a package. If required adjust using the screw (8) and the pusher (9).

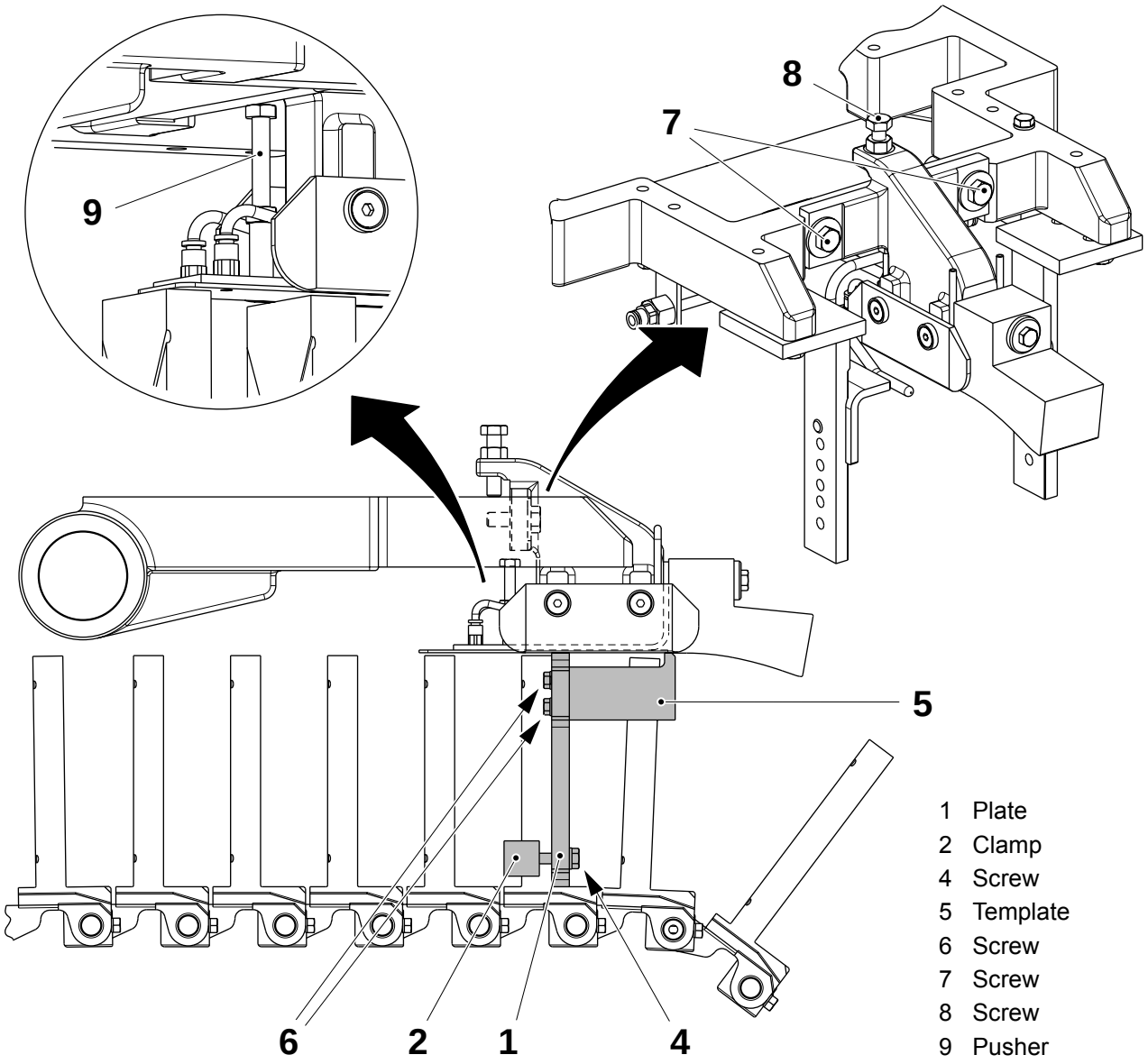

TechPub_2614345_0105 - 01_2772087_01.fm

(Cont'd)

(Cont'd)

Folding Bar Setting

a) Set the distance **A** using the screws (1). Repeat on the other side.

b) Set the distance **B** using the screw (2). Repeat on the other side.

Package	A ±0.25 mm	Package	B ±0.5 mm
All volumes	1.0	All volumes	4.0

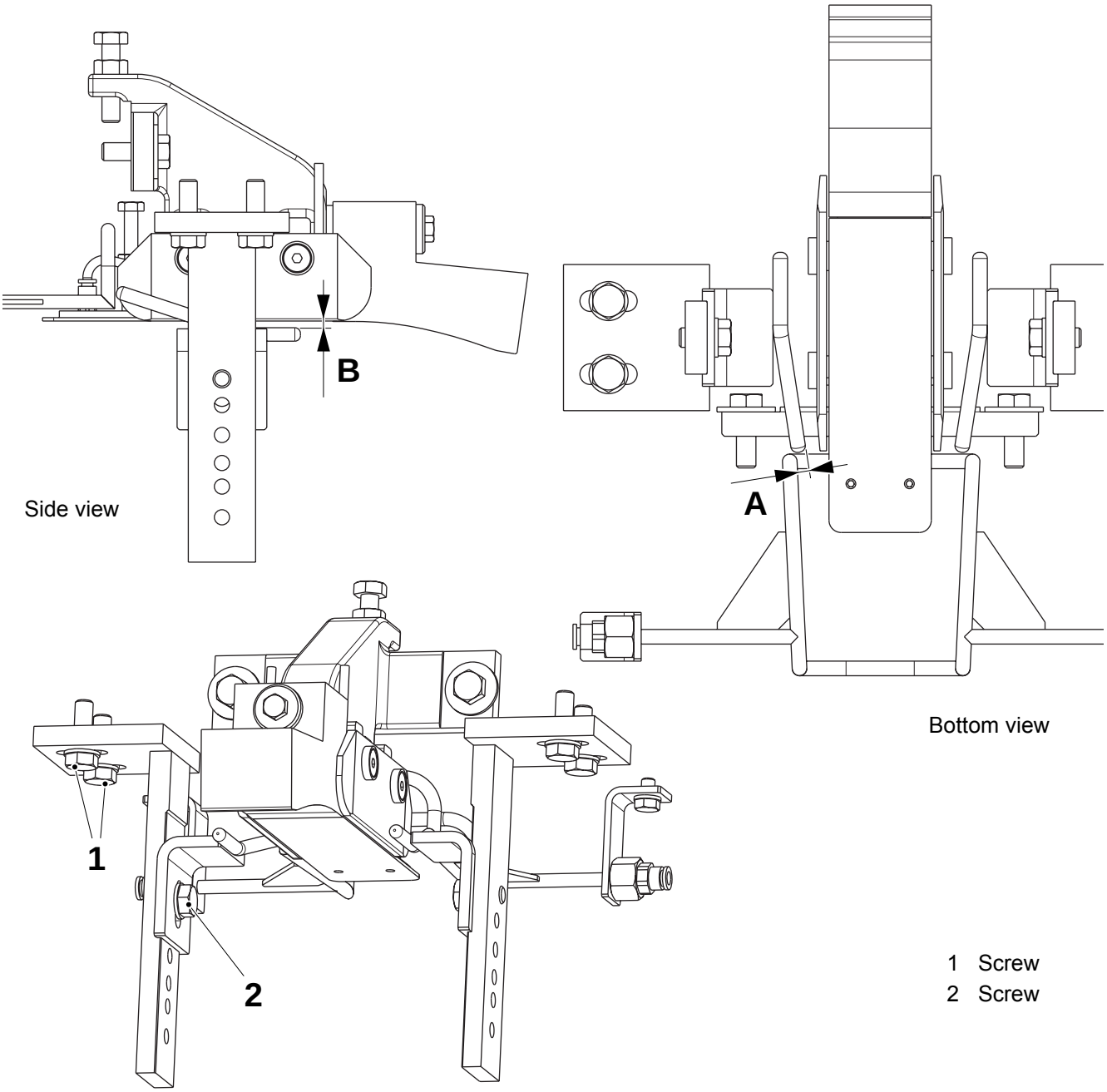

1 Screw
2 Screw

TechPub_2614345_0105 - 01_2772087_01.fm

5.15 Pull-Down Device

5.15-1 Pull-Down Device - Set

Machine Status	Power supply disconnector ON Air supply ON Steam supply ON Water supply ON
Special Equipment	Template - see table 15.4 Tools and Templates Metal piece, - thickness 1.25 mm
SPC Reference	2764344-0100

Rails (TBA Slim, Mid, Base)

a) Raise the pivot frame and loosen the screws (1) on the pull-down arms (2).

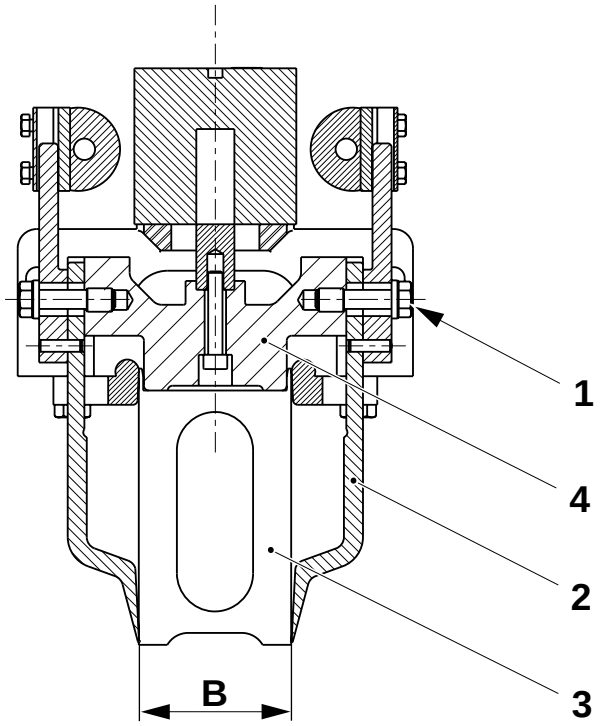

1 Screw
2 Pull-down arm
3 Template
4 Blocking piece

(Cont'd)

TechPub_2614345_0105 - 01_2801997_01.fm

(Cont'd)

b) Position the template (3) against the blocking piece (4), see the table below for the correct width **B.**

Package	Template, TP No.	B ±0.2 mm
TBA 100 B	76307-11	48
TBA 125 S	76307-5	48
TBA 160 S	76307-6	48
TBA 180 B	76307-4	64
TBA 200 B	76307-3	64
TBA 200 M	76307-13	54
TBA 200 S	76307-6	48
TBA 250 B	76307-1	64
TBA 250 S	76307-9	54
TBA 284 B	76307-8	64
TBA 300 S	76307-8	64
TBA 330 S	76307-12	64

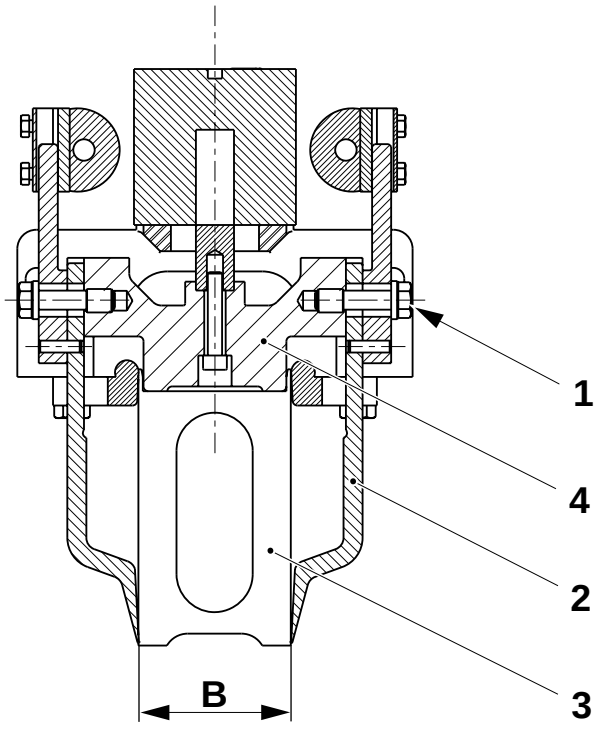

1 Screw
2 Pull-down arm
3 Template
4 Blocking piece

(Cont'd)

TechPub_2614345_0105 - 01_2801997_01.fm

(Cont'd)

c) Set the rails (5) to make light contact with the template (3) by loosening the screws (6).

d) Move the template (3) forward and backward on the blocking piece (4) and make sure that the rails are parallel with the blocking piece. Tighten the screws (6).

e) Remove the template.

f) Tighten the screws (1) on the pull-down arms (2).

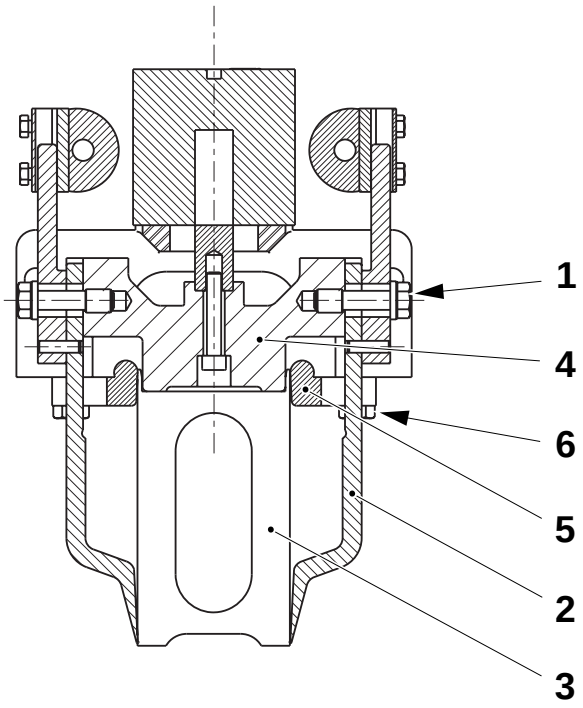

1 Screw
2 Pull-down arm
3 Template
4 Blocking piece
5 Rail
6 Screw

(Cont'd)

TechPub_2614345_0105 - 01_2801997_01.fm

(Cont'd)

Blocking piece (TBA Slim, Mid, Base)

Machine Status	Power supply disconnector ON Air supply ON Steam supply ON Water supply ON
Special Equipment	Template see table below

a) Raise the pivot frame.

b) Crank until the station chain stops indexing.

c) Loosen the screws (1) and move the pull-down arms (2) upwards as far as possible.

d) Activate the pneumatic valves **Y102** and **Y182** on the valve panel.

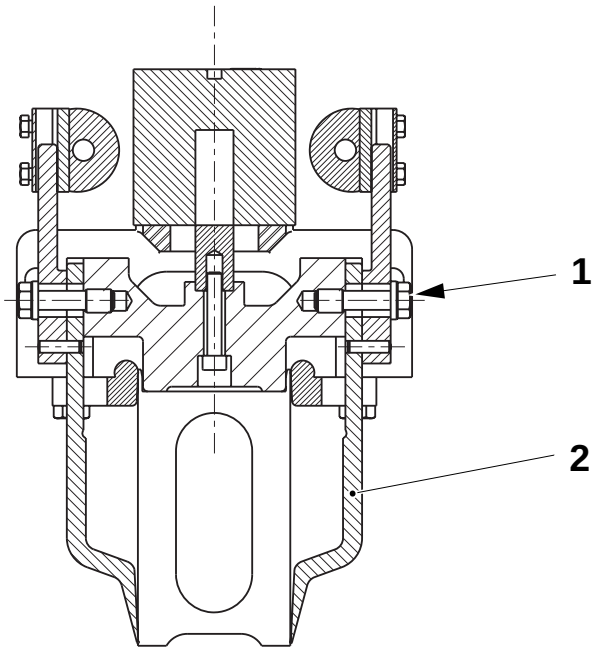

1 Screw
2 Pull-down arm

(Cont'd)

TechPub_2614345_0105 - 01_2801997_01.fm

(Cont'd)

e) See the table below, select the correct template (3) and place it on the station chain centered underneath the blocking piece (4).

Package	Template, TP No.	C ±0.2 mm
TBA 100 B	76307-11	69.8
TBA 125 S	76307-5	86.5
TBA 160 S	76307-6	95.0
TBA 180 B	76307-4	76.0
TBA 200 B	76307-3	83.5
TBA 200 M	76307-13	106.5
TBA 200 S	76307-6	119.8
TBA 250 B	76307-1	106.8
TBA 250 S	76307-9	131.5
TBA 284 B	76307-8	120.2
TBA 300 S	76307-8	120.2
TBA 330 S	76307-12	136.8

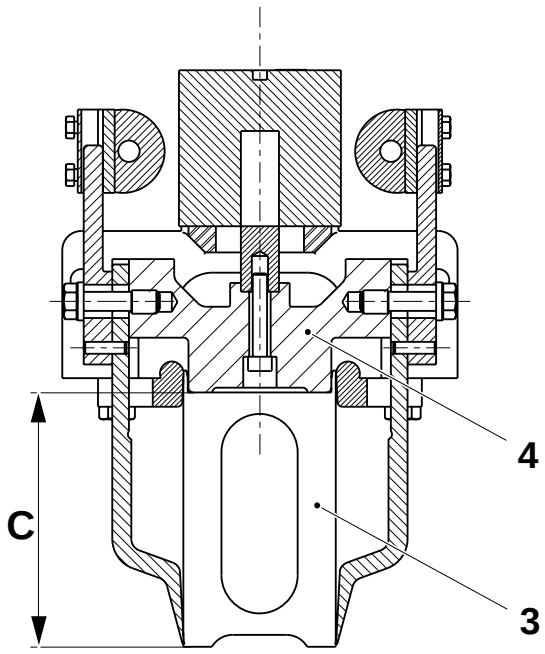

3 Template
4 Blocking piece

(Cont'd)

TechPub_2614345_0105 - 01_2801997_01.fm

(Cont'd)

f) Carefully lower the pivot frame.

g) Loosen the two screws (7) and gently drop the loose part of the pull-down device making it rest on the template.

h) Make sure that the play under the stop lug (D) does not exceed 0.05 mm.

i) Tighten the screws (7) and remove the template.

j) Deactivate the pneumatic valves **Y182** and **Y102**.

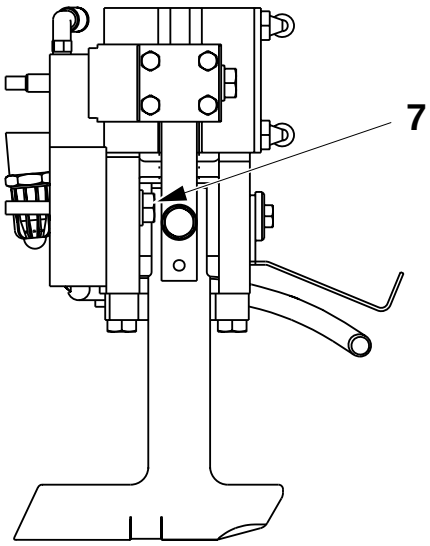

7 Screw

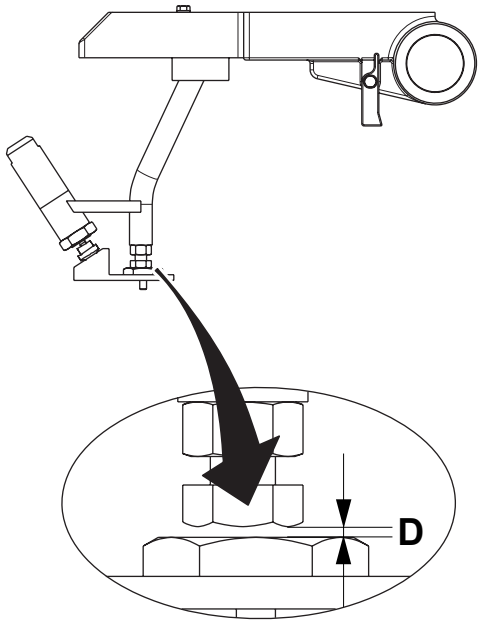

D = max. 0.05 mm

TechPub_2614345_0105 - 01_2801997_01.fm

(Cont'd)

(Cont'd)

Pull-down arms (TBA Slim, Mid, Base)

Machine Status	Power supply disconnector ON Air supply ON Steam supply ON Water supply ON
Special Equipment	Template see table below

a) Crank until the station chain stops indexing.

b) See the table below, and select the correct template. Raise the pivot frame and put the template (3) in the station chain, centered underneath the blocking piece (4)**.**

Package	Template, TP No.	B ±0.2 mm
TBA 100 B	76307-11	48
TBA 125 S	76307-5	48
TBA 160 S	76307-6	48
TBA 180 B	76307-4	64
TBA 200 B	76307-3	64
TBA 200 M	76307-13	54
TBA 200 S	76307-6	48
TBA 250 B	76307-1	64
TBA 250 S	76307-9	54
TBA 284 B	76307-8	64
TBA 300 S	76307-8	64
TBA 330 S	76307-12	64

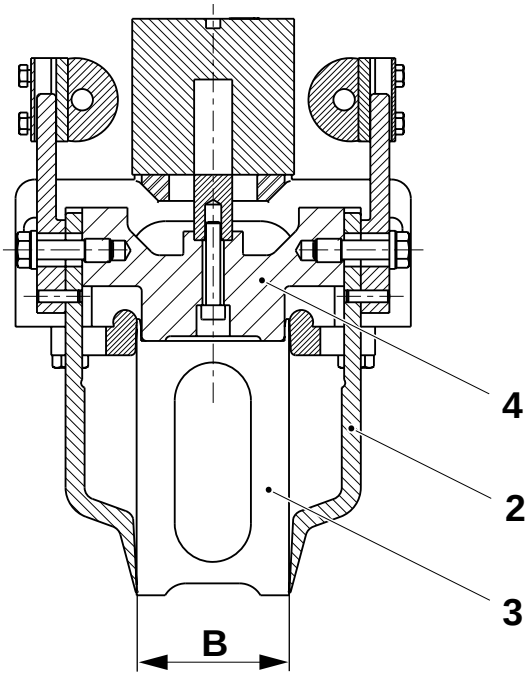

2 Pull-down arms
3 Template
4 Blocking piece

(Cont'd)

TechPub_2614345_0105 - 01_2801997_01.fm

(Cont'd)

c) Carefully lower the pivot frame.

d) Remove and bend the pull-down arms (2) so that they make contact with the template (3).

e) Remove the template.

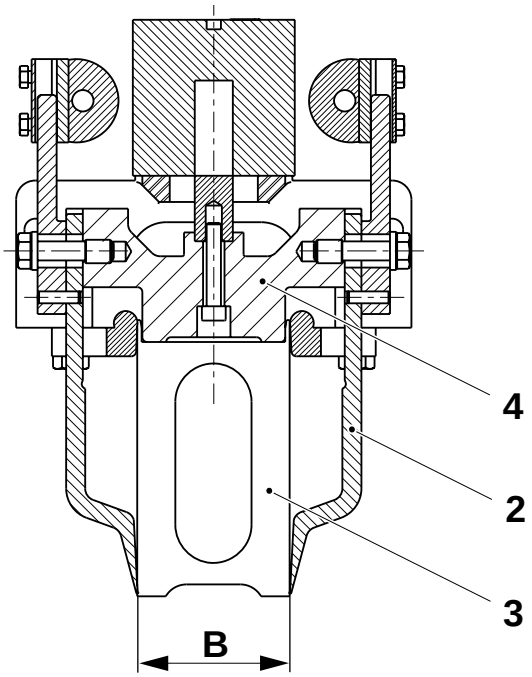

2 Pull-down arms
3 Template
4 Blocking piece

(Cont'd)

TechPub_2614345_0105 - 01_2801997_01.fm

(Cont'd)

Pull-down arms - vertical setting (TBA Slim, Mid, Base)

Machine Status	Power supply disconnector ON Air supply ON Steam supply ON Water supply ON
Special Equipment	Metal piece, 1.25 mm thick

a) Activate the pneumatic valves **Y102** and **Y182**.

b) Put a piece of metal (8), thickness 1.25 mm, in the station at the front edge of the pull-down arms (2).

c) Loosen the screws (1) and shift the pull-down arms (2) to make a light contact with the piece of metal (8).

d) Remove the piece of metal and deactivate the pneumatic valves **Y182** and **Y102**.

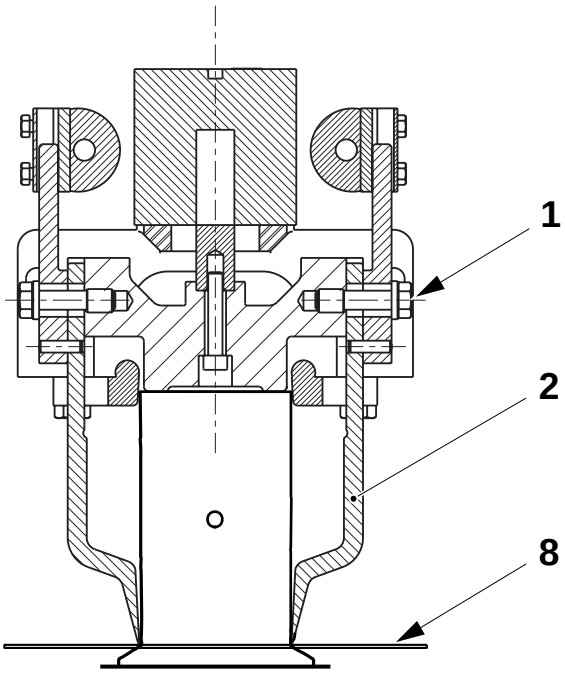

1 Screw
2 Pull-down arm
8 Metal piece

TechPub_2614345_0105 - 01_2801997_01.fm

5.16 Blank Section

TechPub_2614345_0105 - 01_2800550_01.fm

5.17 Blank Section

TechPub_2614345_0105 - 01_2833526_01.fm

6 Service Unit

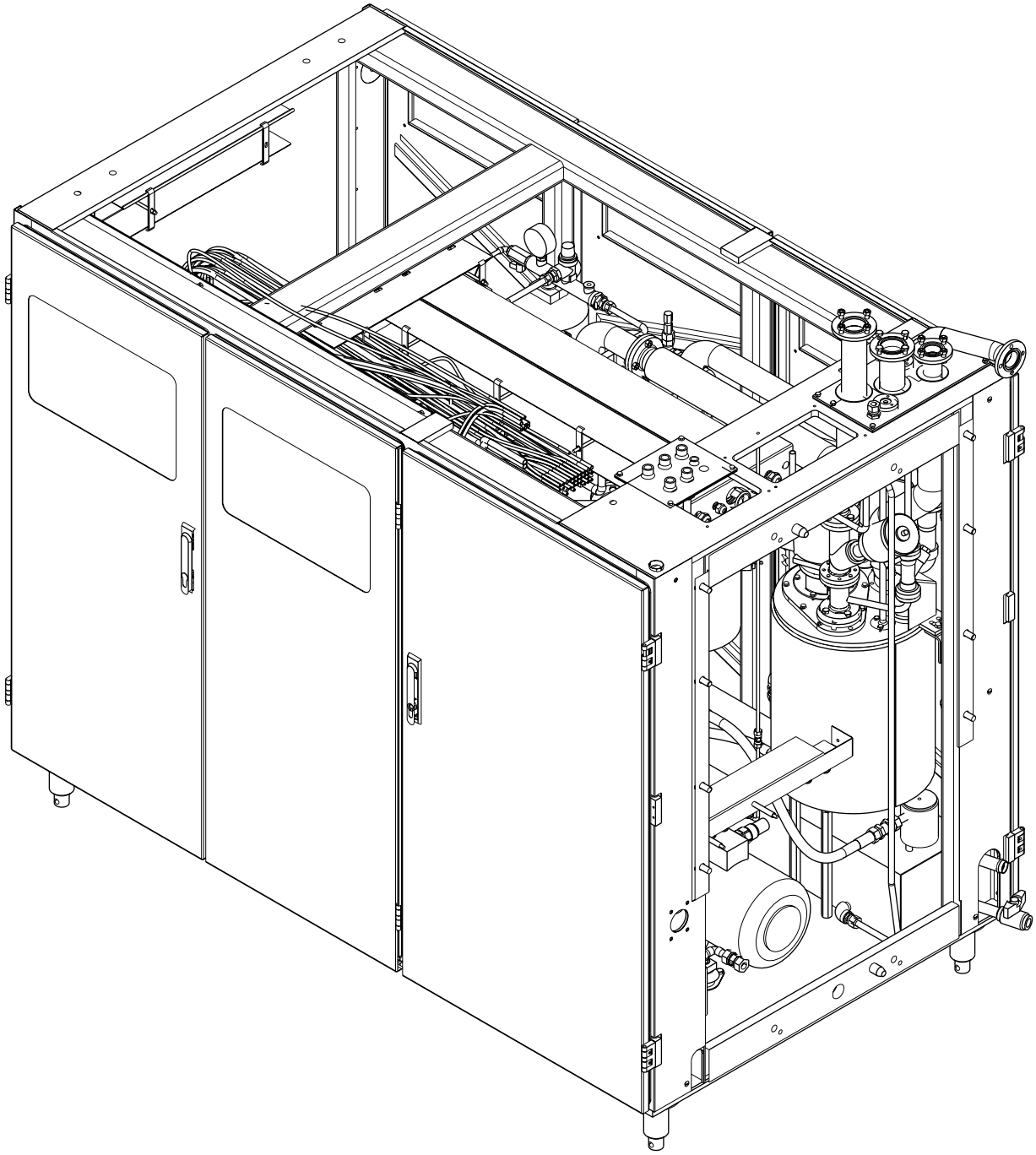

Service Unit - Description

SPC Reference	648106-1300

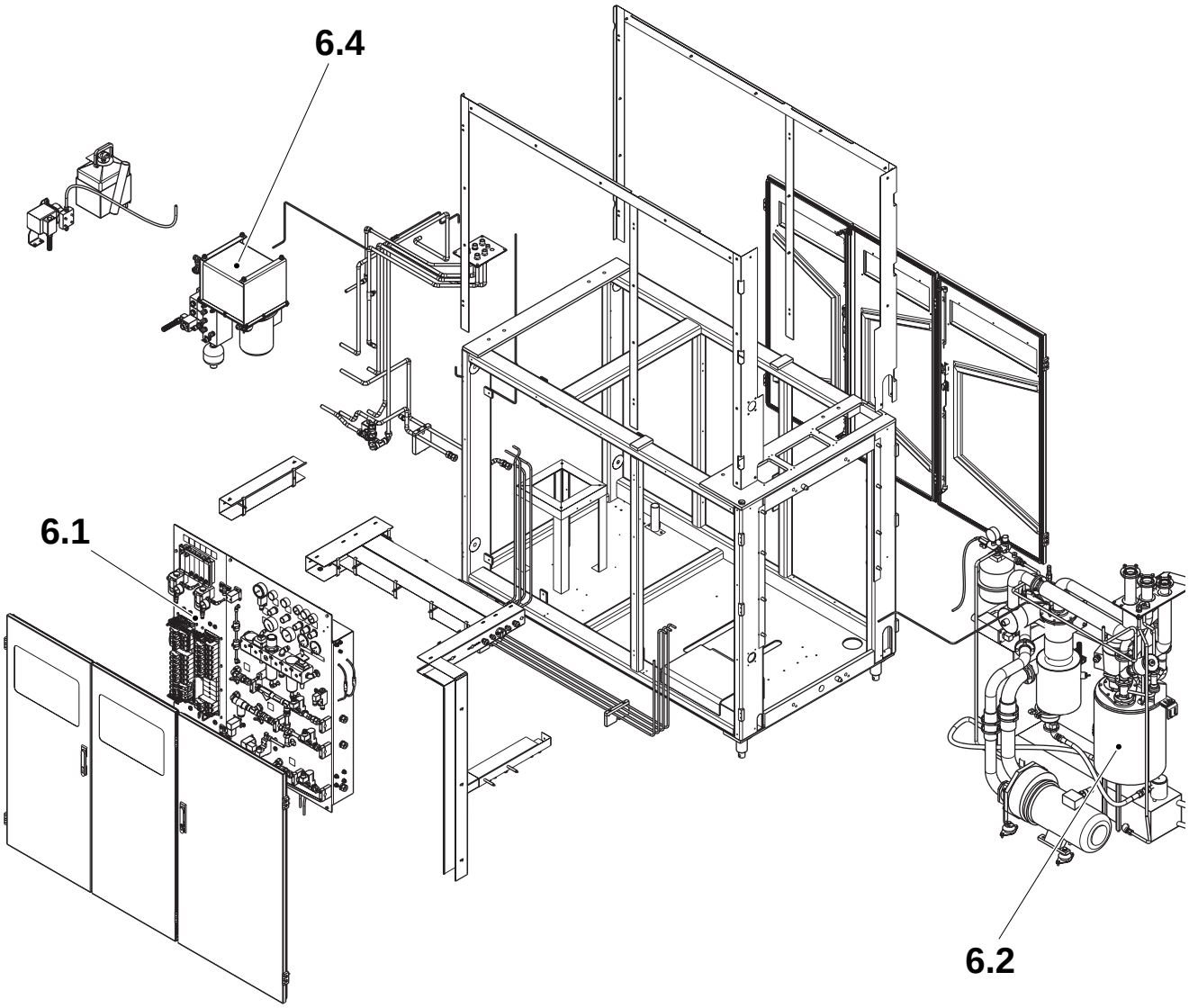

6.1 Valve Panel
6.2 Peroxide and Sterile Systems
6.3 Central Lubrication
6.4 Hydraulic System

6.1 Valve Panel . . . . . 6 - 5

6.1-1 Valve Panel- Check Sterile Air Pressure . . . . . 6 - 5

6.1-2 Valve Panel - Check Photocell Air Filters . . . . . 6 - 6

6.1-3 Valve Panel - Change Spray Filter Cartridge . . . . 6 - 7

6.1-4 Valve Panel - Check Pressures . . . . . 6 - 8

6.1-5 Valve Panel - Change Air Inlet Group Filter Insert . . . . . 6 - 9

6.1-6 Valve Panel - Clean Cool Water Valve Filters . . 6 - 10

6.1-7 Valve Panel - Check Flows . . . . . 6 - 11

6.2 Peroxide and Sterile Systems . . . . . 6 - 12

6.2-1 Peroxide and Sterile Systems - Check for Leaks 6 - 12

6.2-2 Peroxide and Sterile Systems - Check Safety Lids . . . . . 6 - 14

6.2-3 Peroxide and Sterile Systems - Check Gasket and Filter Cartridge . . . . . 6 - 16

6.2.1 Compressor Unit . . . . . 6 - 17

6.2.1-1 Compressor Unit - Check For Leaks and Vibrations . . . . . 6 - 17

6.2.1-2 Compressor Unit - Change Seals . . . . . 6 - 18

6.2.2 Peroxide Tank . . . . . 6 - 21

6.2.2-1 Peroxide Tank - Check Pump . . . . . 6 - 21

6.2.2-2 Peroxide Tank - Overhaul Pump . . . . . 6 - 22

6.2.3 Separator . . . . . 6 - 28

6.2.3-1 Separator - Check Float . . . . . 6 - 28

6.2.3-2 Separator - Clean Filter . . . . . 6 - 29

6.2.4 Scrubber . . . . . 6 - 31

6.2.4-1 Scrubber - Delime Filter . . . . . 6 - 31

6.2.5 Water Circulation . . . . . 6 - 32

6.2.5-1 Water Circulation - Check Pressure . . . . . 6 - 32

6.2.6 Cabinet H_2O_2 . . . . . 6 - 33

6.2.6-1 Cabinet H_2O_2 - Check Transfer Function . . . . . 6 - 33

6.3 Central Lubrication . . . . . 6 - 34

6.3-1 Central Lubrication - Clean Oil Tank . . . . . 6 - 34

6.3-2 Central Lubrication - Check Pressure . . . . . 6 - 35
6.3-3 Central Lubrication - Change Pump . . . . . 6 - 36

6.4 Hydraulic System . . . . . 6 - 37

6.4-1 Hydraulic System - Change Oil and Filter . . . . 6 - 37
6.4-2 Hydraulic System - Check Oil Level and Filter Indicator . . . . . 6 - 38
6.4-3 Hydraulic System - Check Pressures . . . . . 6 - 39
6.4-4 Hydraulic System - Check Accumulator . . . . . 6 - 40

6.1 Valve Panel

6.1-1 Valve Panel- Check Sterile Air Pressure

Machine Status	PRODUCTION
SPC Reference	1349029-0200

Check that the pressure on the pressure gauges (1) is correct, see 15.1 Technical Data.

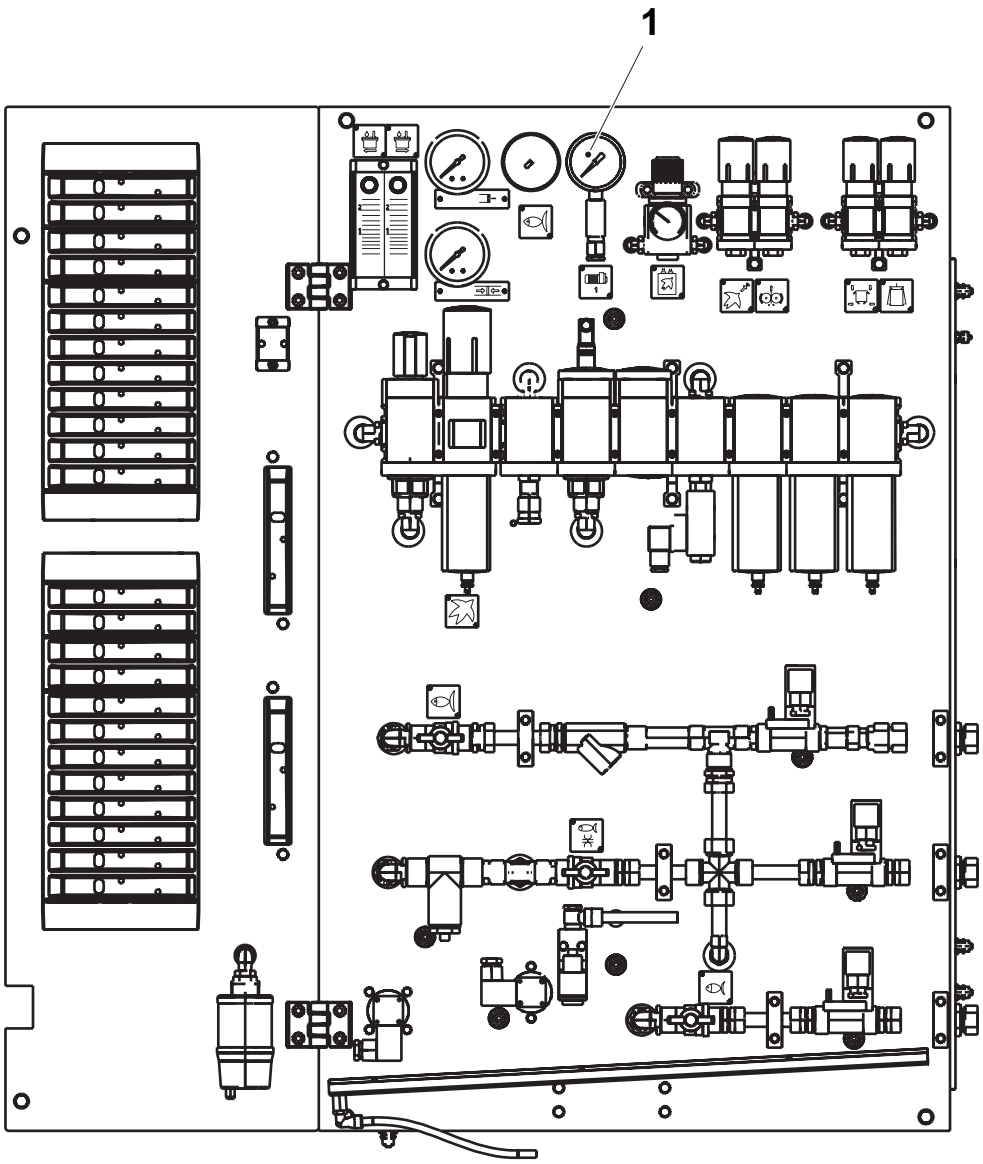

1 Pressure gauge

TechPub_2614345_0105 - 01_2772089_01.fm

6.1-2 Valve Panel - Check Photocell Air Filters

Machine Status	Power supply disconnector OFF Air supply OFF Steam supply ON Water supply OFF
SPC Reference	1349029-0200

Check the colour of the photocell air filters.

- Change the liquid and gas filter (1) **if it is yellowish.**
- Change the moisture-absorbing filter (2) **if it is greenish.**

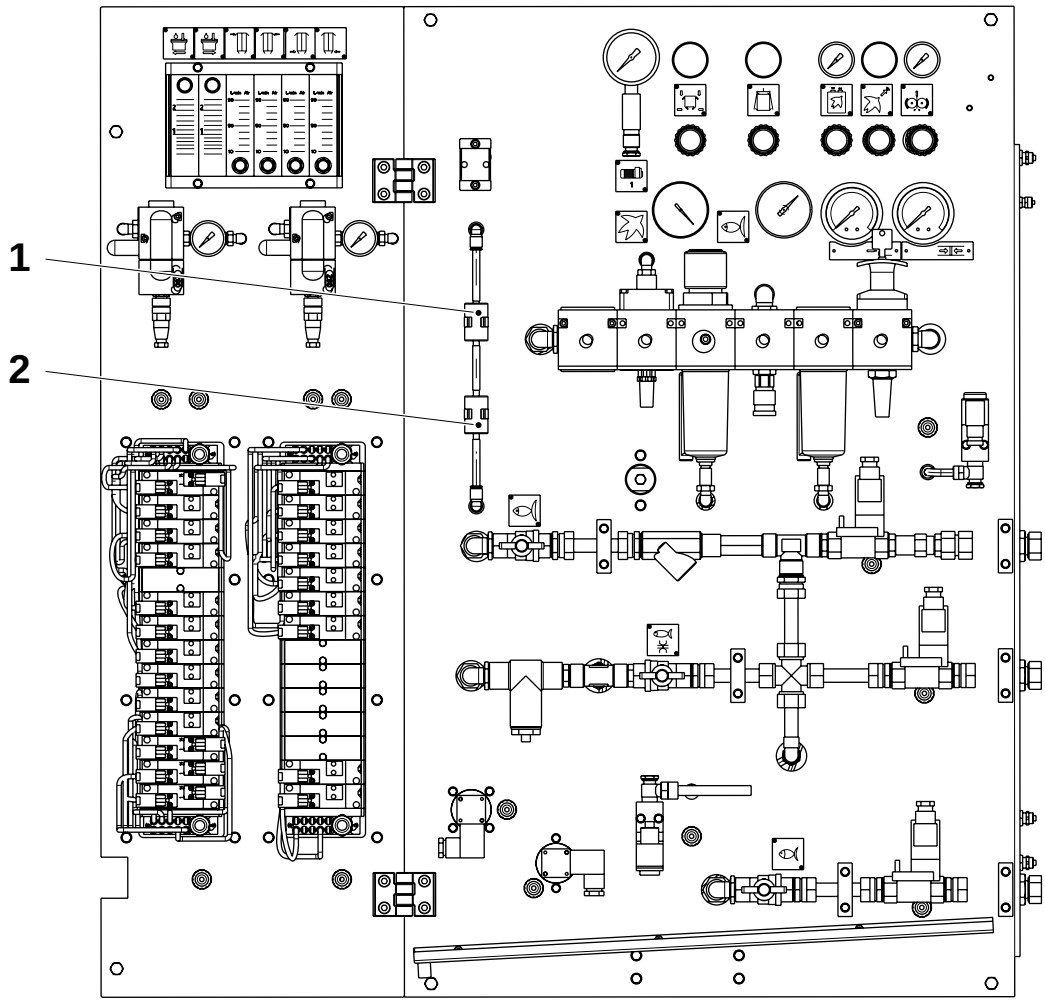

1 Liquid and gas filter
2 Moisture filter

TechPub_2614345_0105 - 01_2772089_01.fm

6.1-3 Valve Panel - Change Spray Filter Cartridge

Machine Status	Power supply disconnector OFF Air supply OFF Steam supply ON Water supply OFF
SPC Reference	1349029-0200

Note! Make sure that the air inlet is properly closed.

Remove the filter cover (1) and change the filter cartridge.

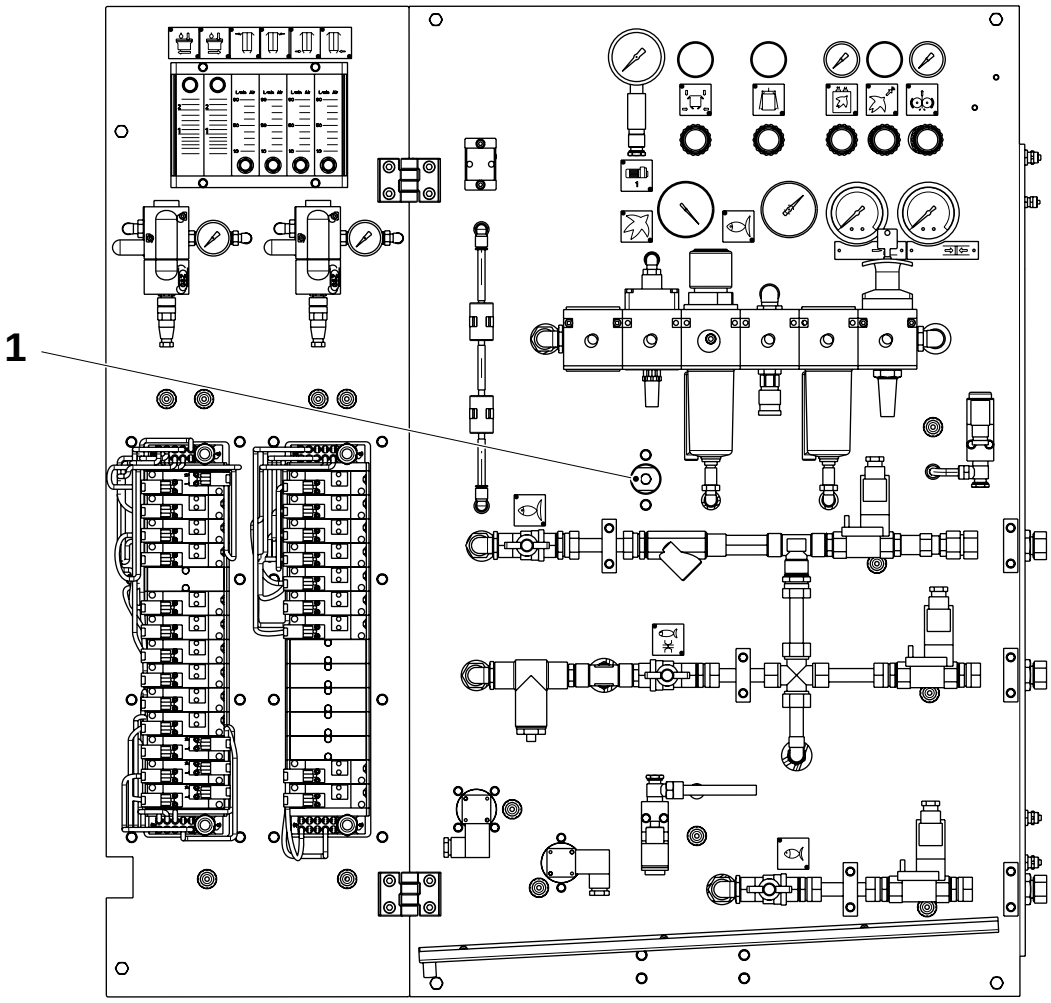

1 Cover

TechPub_2614345_0105 - 01_2772089_01.fm

6.1-4 Valve Panel - Check Pressures

Machine Status	PRODUCTION
SPC Reference	1349029-0200

Check the pressure on the pressure gauges shown. Adjust, if necessary, using the corresponding regulators, see 15.1 Technical Data.

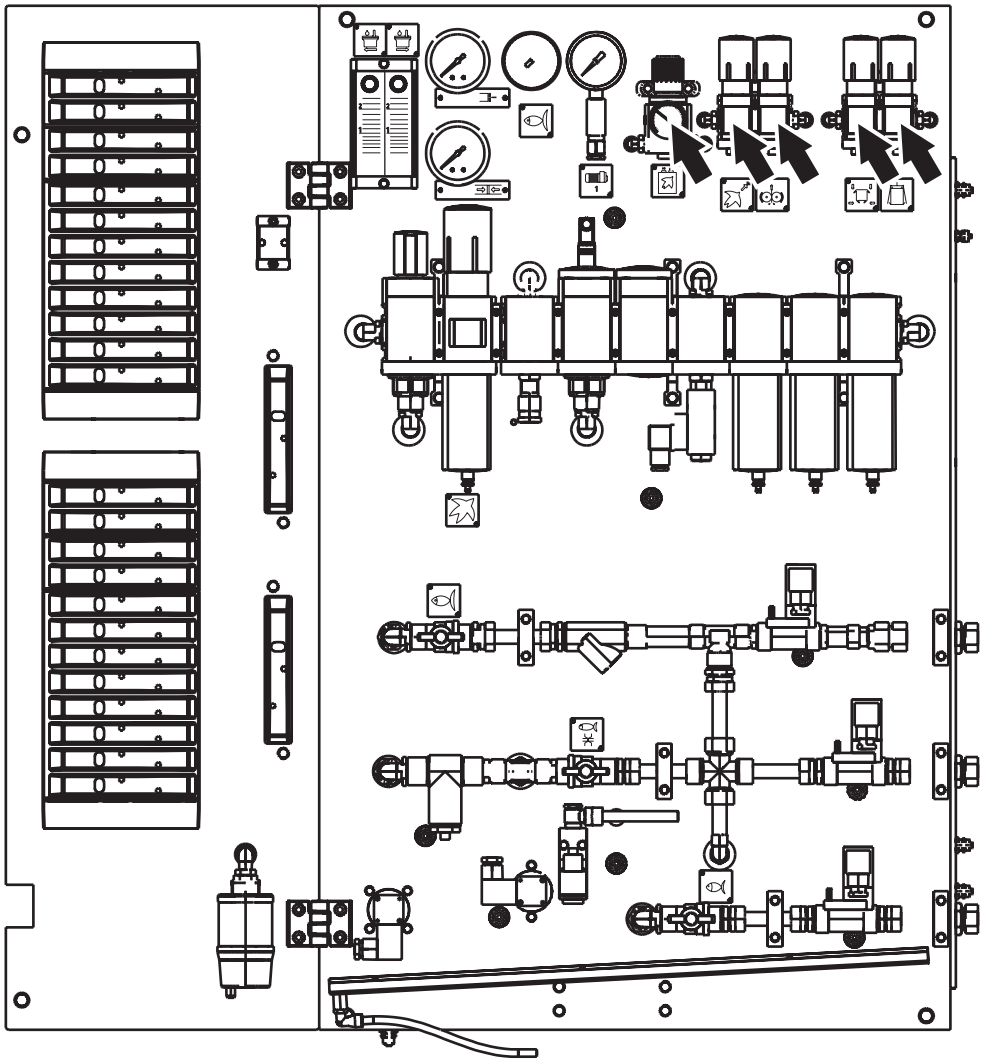

TechPub_2614345_0105 - 01_2772089_01.fm

6.1-5 Valve Panel - Change Air Inlet Group Filter Insert

Machine Status	Power supply disconnector OFF Air supply OFF Steam supply ON Water supply OFF
Consumables	Soap
SPC Reference	2500200-0100

a) Close the air inlet valve.

b) Remove the air connections (1), and then remove the filters (2).

c) Clean the filter (2) with soapy water. Rinse with clean water.

d) Remove and change the filter cartridges in each filter.

e) Install the filters (2), making sure that the O-ring is correctly fitted for each one.

f) Reconnect the air connection (1).

g) Open the air inlet valve and make sure that there are no leakages at the connections.

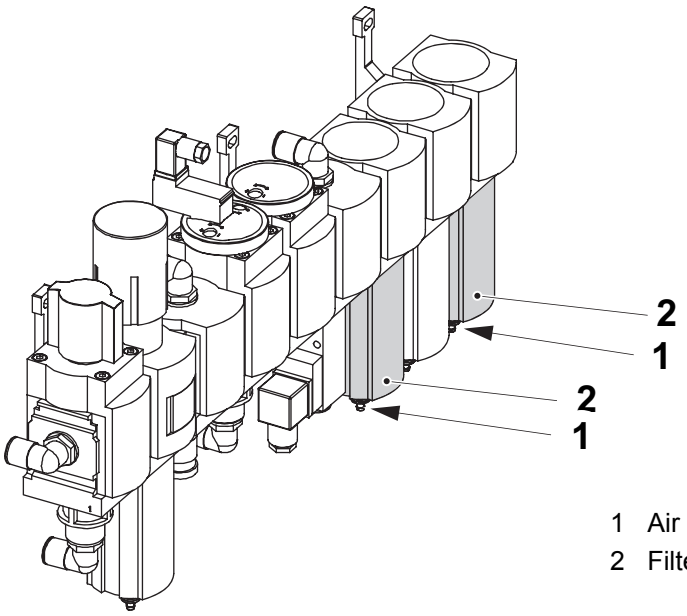

1 Air connection
2 Filter

TechPub_2614345_0105 - 01_2772089_01.fm

6.1-6 Valve Panel - Clean Cool Water Valve Filters

Machine Status	Power supply disconnector OFF Air supply OFF Steam supply ON Water supply OFF
SPC Reference	577824-0200

a) Remove the plug (4) and pull out the filter insert (3). Blow the filter insert (3) clean with compressed air and put it back.

b) Remove the magnetic filter (2) and blow it clean with compressed air. Check the lime filter (1) for deposits, remove and, if necessary, clean it.

c) Assemble in the reverse order.

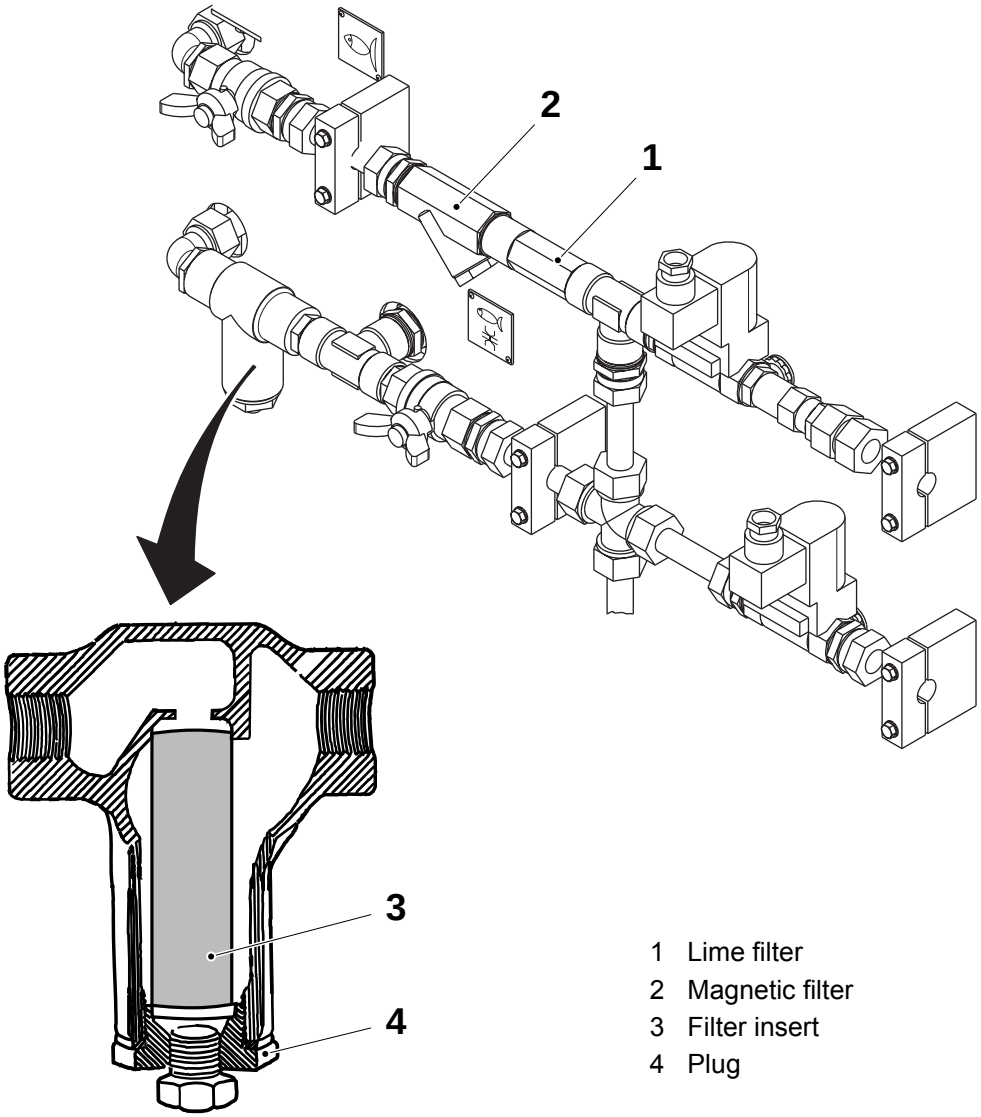

1 Lime filter
2 Magnetic filter
3 Filter insert
4 Plug

TechPub_2614345_0105 - 01_2772089_01.fm

6.1-7 Valve Panel - Check Flows

Machine Status	PRODUCTION
SPC Reference	1349029-0200

a) Check that the correct flows are shown on the flow meters, refer to section 15.1 Technical Data.

b) Record the results.

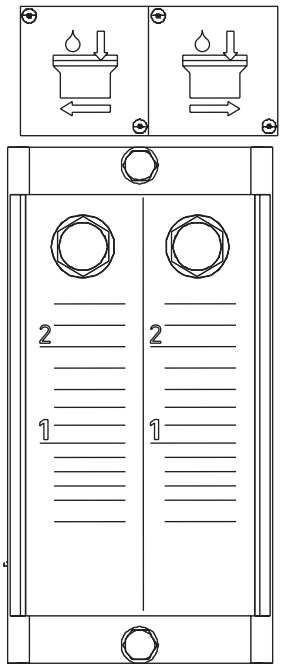

TechPub_2614345_0105 - 01_2772089_01.fm

6.2 Peroxide and Sterile Systems

6.2-1 Peroxide and Sterile Systems - Check for Leaks

Machine Status	PREHEATING II
SPC Reference	978834-0300

WARNING

Dangerous chemicals (hydrogen peroxide).

Hydrogen peroxide can be fatal if inhaled or swallowed. Follow the instructions in chapter ii Safety Precautions.

a) When hydrogen peroxide or acidified water is being pumped through the system, check that components, pipe connections, pipes and hoses do not leak.

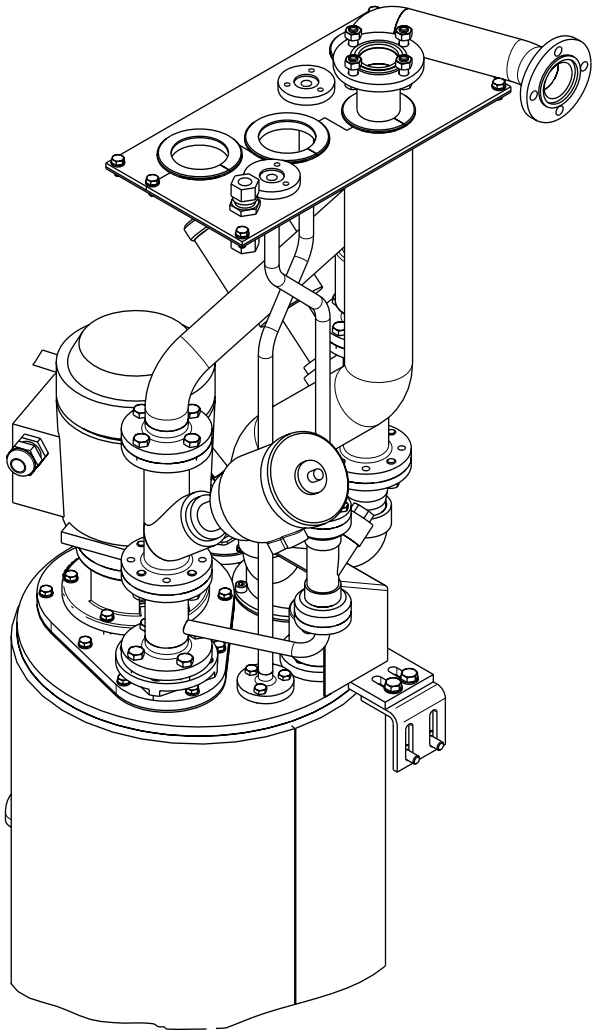

TechPub_2614345_0105 - 01_2772090_01.fm

(Cont'd)

(Cont'd)

b) Check that the pipes are correctly fitted and that the screws are well tightened at the connections.

c) Check the gaskets at the flanges connections. If necessary, change them.

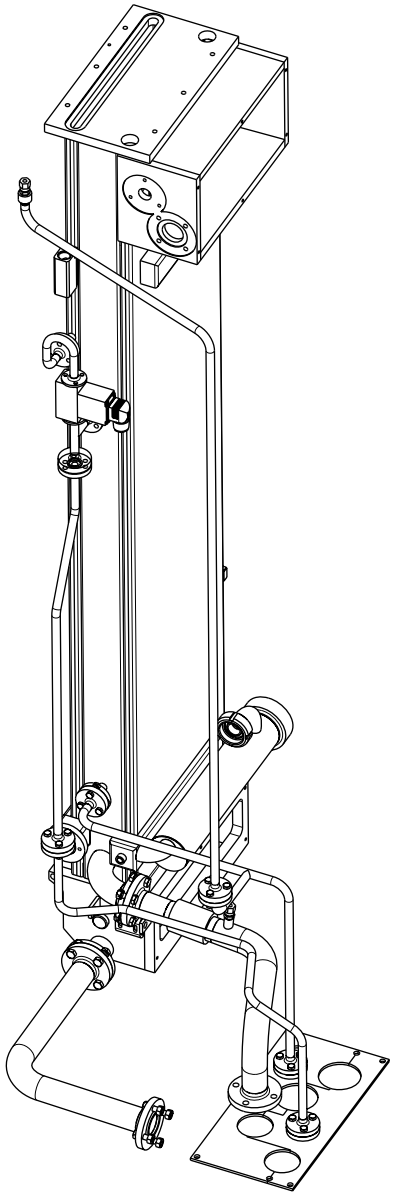

TechPub_2614345_0105 - 01_2772090_01.fm

6.2-2 Peroxide and Sterile Systems - Check Safety Lids

Machine Status	Power supply disconnector OFF Air supply OFF Steam supply ON Water supply OFF
SPC Reference	978834-0300

WARNING

Dangerous chemicals (hydrogen peroxide).

Hydrogen peroxide can be fatal if inhaled or swallowed. Follow the instructions in chapter ii Safety Precautions.

Peroxide Tank

a) Remove the cover (1) and make sure that the safety lid is loose and easy to lift.

b) Check the O-ring (2) under the safety lid. Change if necessary

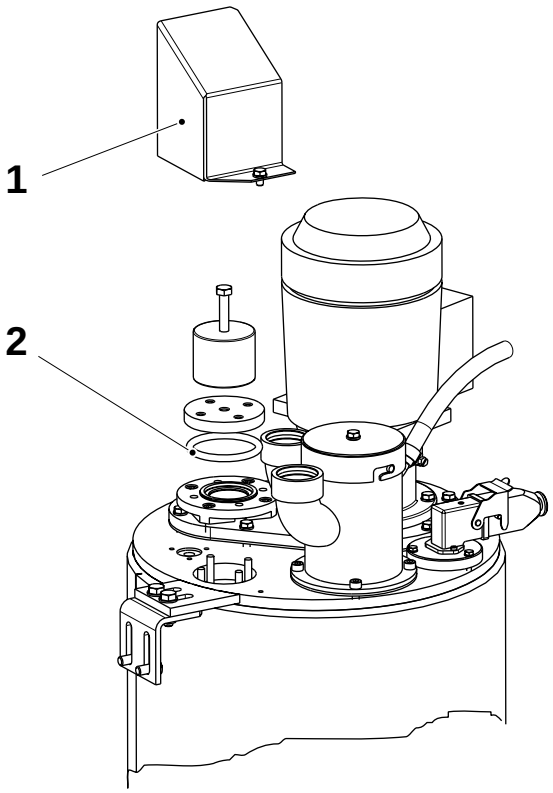

1 Cover
2 O-ring

(Cont'd)

TechPub_2614345_0105 - 01_2772090_01.fm

(Cont'd)

Dilution Tank

a) Check that the safety lid is loose and easy to lift. Check the O-ring under the cover.

b) Change it, if necessary.

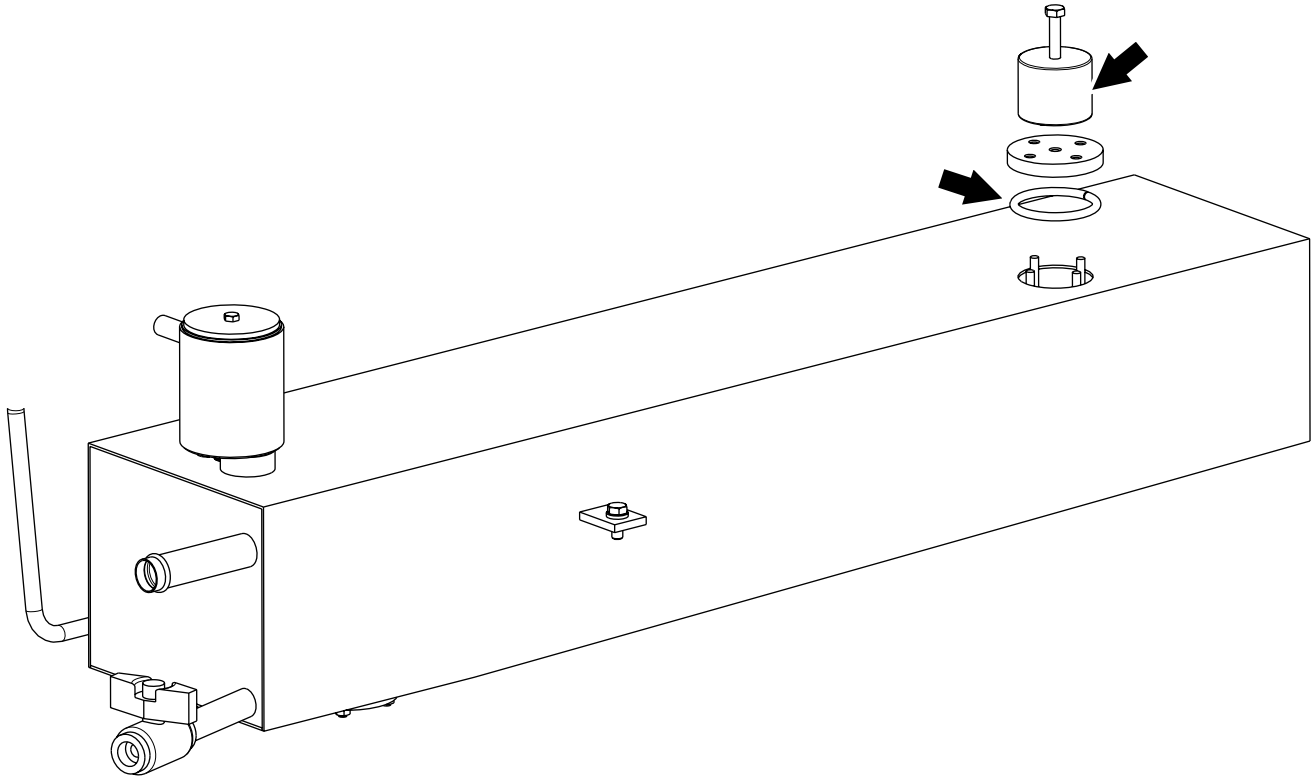

TechPub_2614345_0105 - 01_2772090_01.fm

6.2-3 Peroxide and Sterile Systems - Check Gasket and Filter Cartridge

Machine Status	Power supply disconnector OFF Air supply OFF Steam supply ON Water supply OFF
SPC Reference	978834-0300

WARNING

Dangerous chemicals (hydrogen peroxide).

Hydrogen peroxide can be fatal if inhaled or swallowed. Follow the instructions in chapter ii Safety Precautions.

a) Remove the screw cap (1) and the gasket (2).

b) Check the gasket (2) for wear or damage. Change it, if necessary.

CAUTION

Risk of contamination.

Do not touch the cartridge (3) with hands.

c) Remove the filter cartridge (3).

d) Rinse the cartridge (3) with distilled water and clean it using compressed air. Rinse again the cartridge (3) with distilled water.

e) Check the filter cartridge (3) for damage or corrosion. Change it, if necessary.

f) Assemble in the reverse order.

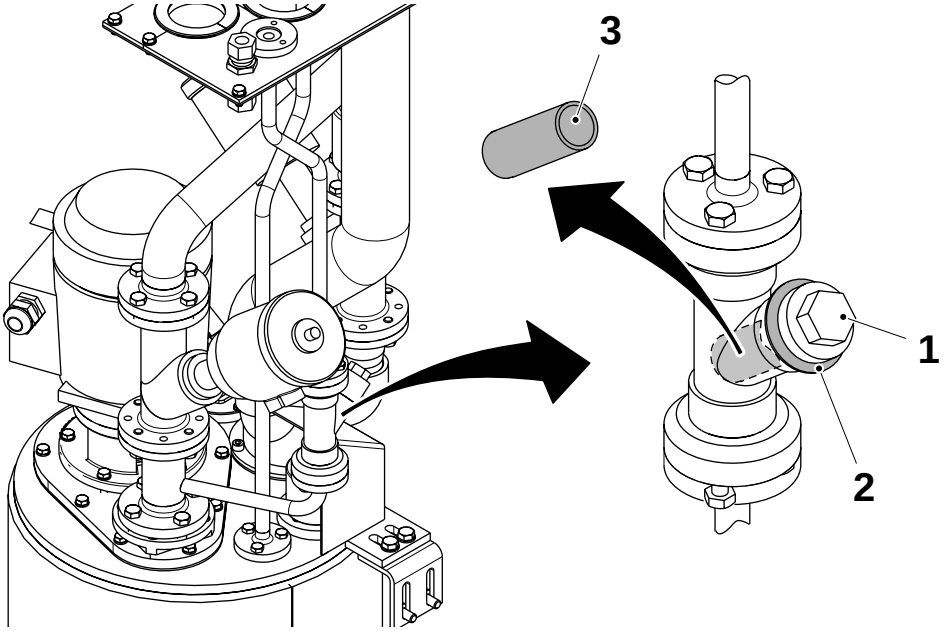

1 Screw cap
2 Gasket
3 Filter cartridge

TechPub_2614345_0105 - 01_2772090_01.fm

6.2.1 Compressor Unit

6.2.1-1 Compressor Unit - Check For Leaks and Vibrations

Machine Status	PREHEATING II
SPC Reference	469452-0500

a) Listen to the compressor during normal running for any abnormal sounds. Abnormal sounds may be caused by dirt. If necessary, remove the drain plug (3) and flush with water to clean the compressor.

b) Check that the axial sealing of the compressor does not leak. Any leakage can be seen on the underside at the joint (2) between the motor and the compressor housing.

c) Check that there is no leakage at point (1). If necessary, overhaul the compressor, refer to 6.2.1-2 Compressor Unit - Change Seals.

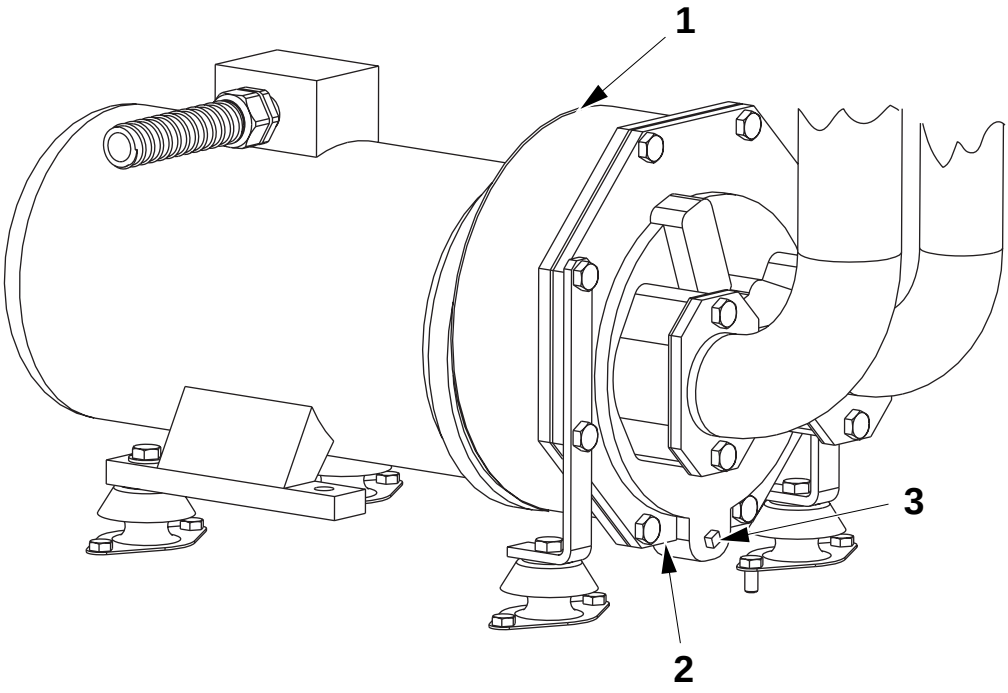

1 Point
2 Joint
3 Drain plug

TechPub_2614345_0105 - 01_2772090_01.fm

6.2.1-2 Compressor Unit - Change Seals

Machine Status	Power supply disconnector OFF Air supply OFF Steam supply ON Water supply OFF
Special Equipment	Extractor TP No. 74305-101
SPC Reference	469452-0500

WARNING

Hot surfaces.
Wear protective gloves.

Removal

a) Remove the compressor cover.

b) Loosen the screws (4) and remove the gasket (3).

c) Using the extractor, remove the locking nut (5), the washer (6), and the rotor (8).

d) Remove the rotor key (7).

Note! Be careful not to damage the surfaces of the shaft seal (10) when removing the pump housing (9).

e) Loosen the nuts (2) and separate the pump housing (9) from the motor (1). The shaft seal (10) will come off with the pump housing. Change the mechanical shaft seal (10).

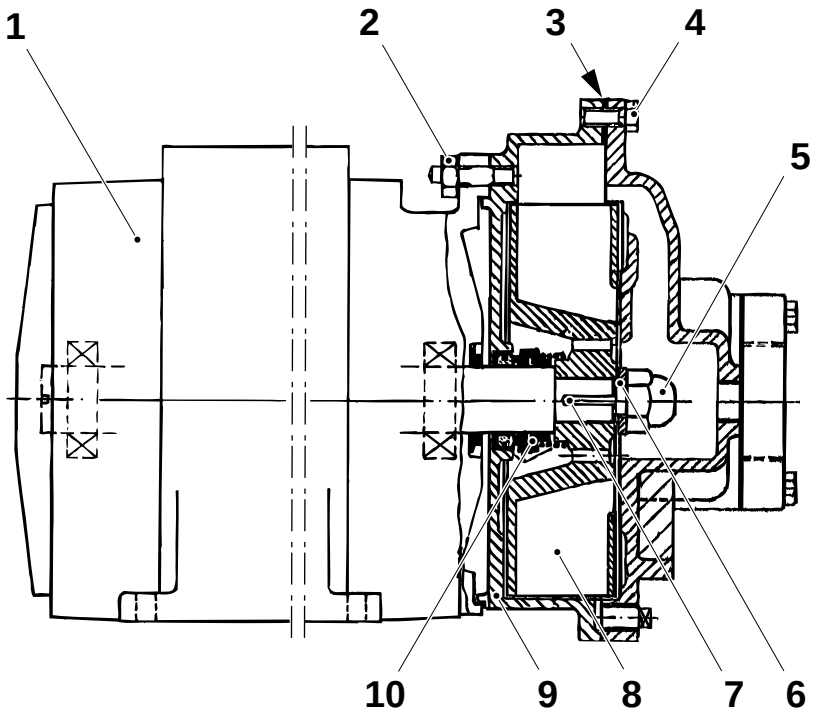

1 Motor
2 Nut
3 Gasket
4 Screw
5 Locking nut
6 Washer
7 Rotor key
8 Rotor
9 Pump housing
10 Shaft seal

(Cont'd)

TechPub_2614345_0105 - 01_2772090_01.fm

(Cont'd)

f) Remove the fixed sealing section (11) from the pump housing (9) by applying an even pressure from the motor side.
Change the fixed sealing section (11).

CAUTION
Risk of damage to equipment.
Do not put grease on the sealing surfaces.

Assembly

a) Install the fixed sealing section (11) and the shaft seal (10) in the pump housing (9) using a thin film of oil on the rubber sleeve.

b) Install the pump housing onto the motor (1) and tighten the nuts (2).

c) Fit the rotor key (7) into the key notch, install the rotor (8), the washer (6), and the locking nut (5). Tighten the locking nut firmly.

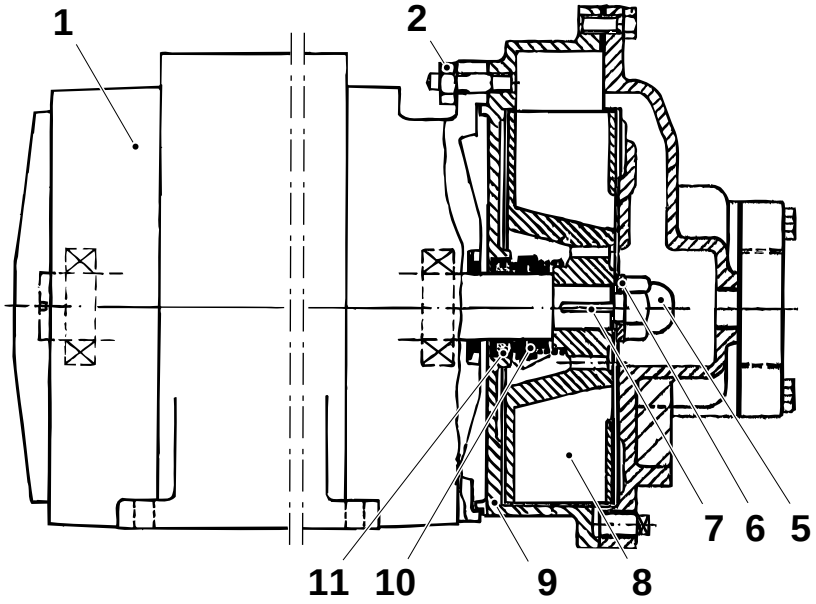

1 Motor
2 Nut
5 Locking nut
6 Washer
7 Rotor key
8 Rotor
9 Pump housing
10 Shaft seal
11 Sealing section

(Cont'd)

TechPub_2614345_0105 - 01_2772090_01.fm

(Cont'd)

Note! Loosen the nuts (2) **before** tightening the screws (4).

d) Install the gasket (3) on the end cover (12), and tighten the screws (4).

e) Install the shims (16) at the four screws between the pump housing (9) and the mounting flange of the motor to reach the distance **A** between the rotor (8) and the end cover (12) (measure through the inlet pipe or the outlet pipe).

f) Tighten the nuts (2).

g) Adjust the distance **A**, if necessary, using the shims (16).

h) Make sure that the rotor (8) rotates smoothly. (Check by rotating the motor fan.)

i) Install the inlet and outlet flanges (14). Install the gasket (15) and tighten the screws (13).

j) Make sure that the rotor still can rotate smoothly. Put the compressor cover back, and check the pressure.

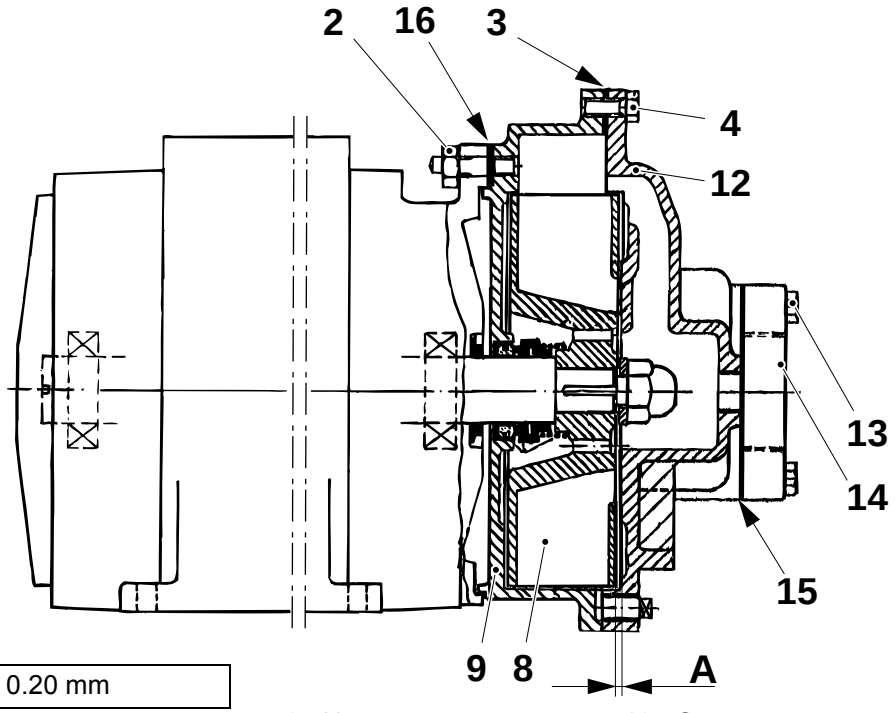

A = 0.15 to 0.20 mm

2	Nut	12	Cover
3	Gasket	13	Screw
4	Screw	14	Flange
8	Rotor	15	Gasket
9	Pump housing	16	Shim

TechPub_2614345_0105 - 01_2772090_01.fm

6.2.2 Peroxide Tank

6.2.2-1 Peroxide Tank - Check Pump

Machine Status	PREHEATING II
SPC Reference	751373-0300

WARNING

Dangerous chemicals (hydrogen peroxide).
Hydrogen peroxide can be fatal if inhaled or swallowed. Follow the instructions in chapter ii Safety Precautions.

a) Check the hydrogen peroxide pump for abnormal noises or vibrations.

b) Change the pump, if necessary, see 6.2.2-2 Peroxide Tank - Overhaul Pump, Pump Removal.

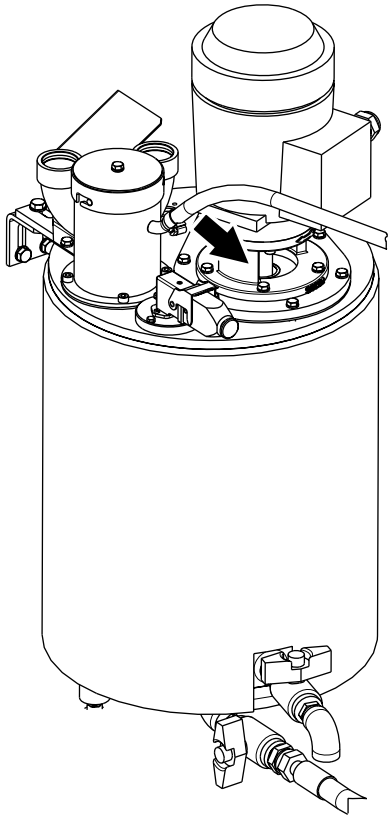

TechPub_2614345_0105 - 01_2772090_01.fm

6.2.2-2 Peroxide Tank - Overhaul Pump

Machine Status	Power supply disconnector OFF Air supply OFF Steam supply ON Water supply OFF
SPC Reference	751373-0300

Pump Removal

WARNING

Dangerous chemicals (hydrogen peroxide).
Hydrogen peroxide can be fatal if inhaled or swallowed. Follow the instructions in chapter ii Safety Precautions.

a) Drain the hydrogen peroxide and rinse the system with distilled water.

Note! Mark the electrical connections of the motor (1) and remove the cables.

b) Remove the screws (4) and (5) and then the pipes (2) and the valve (3).

c) Remove the screws (6) and the pump.

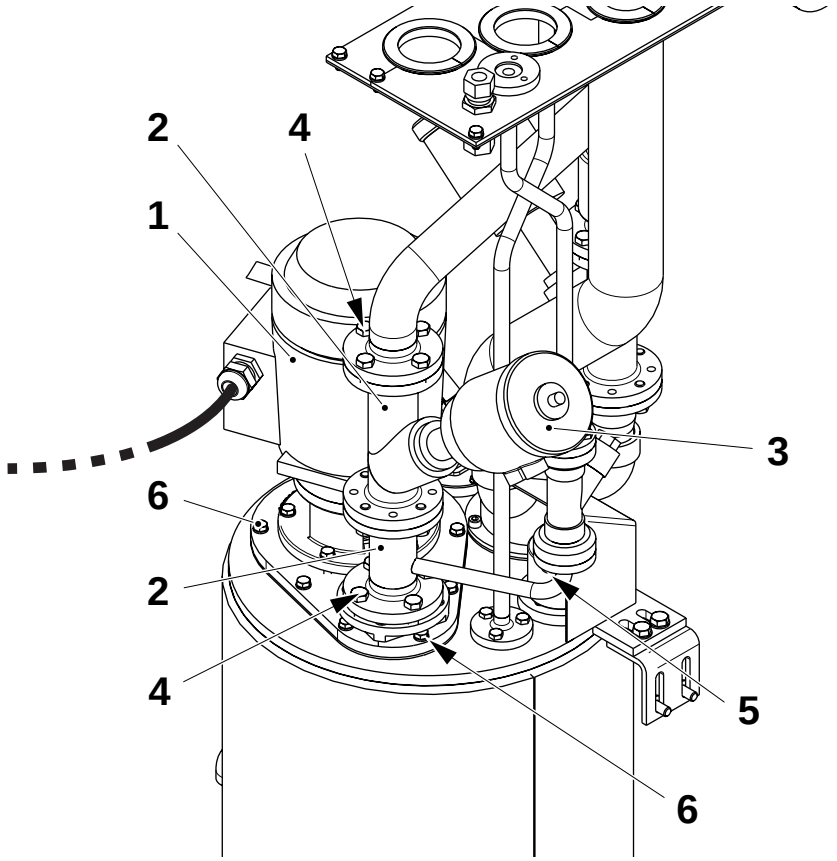

1 Motor
2 Pipe
3 Valve
4 Screw
5 Screw
6 Screw

(Cont'd)

TechPub_2614345_0105 - 01_2772090_01.fm

(Cont'd)

Removal

a) Loosen the screws (1) and remove the flange (2) and the pipe (3). Change the O-rings (4) and (5).

b) Push out the pin (6).

c) Remove the screws (7), and remove the motor from the plate.

d) Change the gasket (8).

e) Mark the position of the extension pipe (9) on the pump housing (10).

f) Remove the screws (11), remove the pump housing (10), and change the gasket (12).

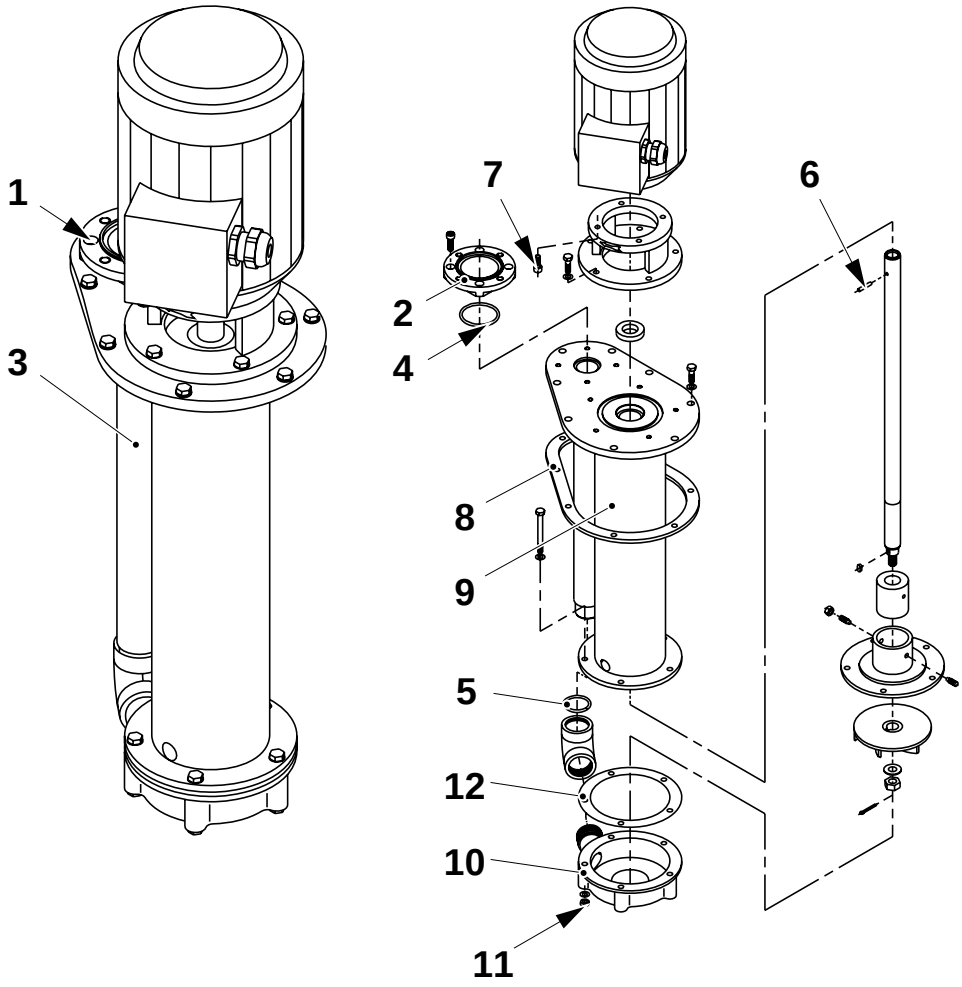

1	Screw	5	O-ring	9	Extension pipe
2	Flange	6	Pin	10	Pump housing
3	Pipe	7	Screw	11	Screw
4	O-ring	8	Gasket	12	Gasket

(Cont'd)

TechPub_2614345_0105 - 01_2772090_01.fm

(Cont'd)

g) Remove and change the split pin (13). Remove the nut (14) and pull off the impeller wheel (15). Use a puller if necessary. Change the impeller wheel (15) if necessary.

h) Remove the bearing cover (17) from the extension pipe.

i) Remove the grub screws (16) and change the bushing (18) and the shaft (19).

j) Remove the screws (20) and change the seal ring (21).

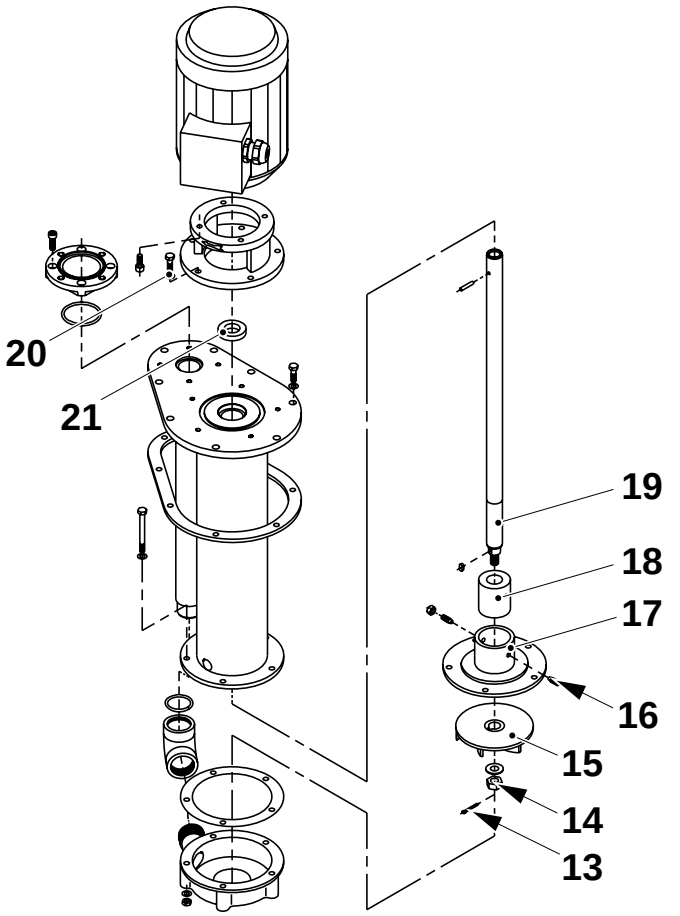

13 Split pin
14 Nut
15 Impeller wheel
16 Grub screw
17 Bearing cover
18 Bushing
19 Shaft
20 Screw
21 Seal ring

(Cont'd)

TechPub_2614345_0105 - 01_2772090_01.fm

(Cont'd)

Assembly

a) Install the seal ring (21) and tighten the screws (20).

b) Install the shaft (19) and the bushing (18), and tighten the grub screws (16).

c) Install the bearing cover (17) onto the extension pipe.

d) Install the impeller wheel (15) and tighten the nut (14). Install the split pin (13).

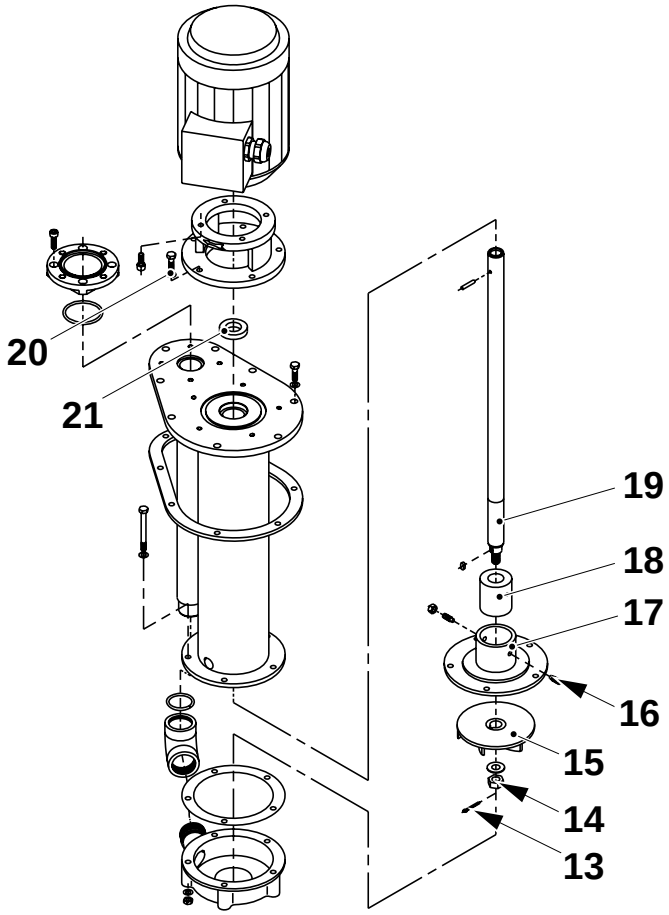

13 Split pin
14 Nut
15 Impeller shaft
16 Grub screw
17 Bearing cover
18 Bushing
19 Shaft
20 Screw
21 Seal ring

(Cont'd)

TechPub_2614345_0105 - 01_2772090_01.fm

(Cont'd)

e) Make sure that there is the distance **A** between the bearing cover (17) and impeller wheel (15). If necessary, remove the pin (6) and adjust.

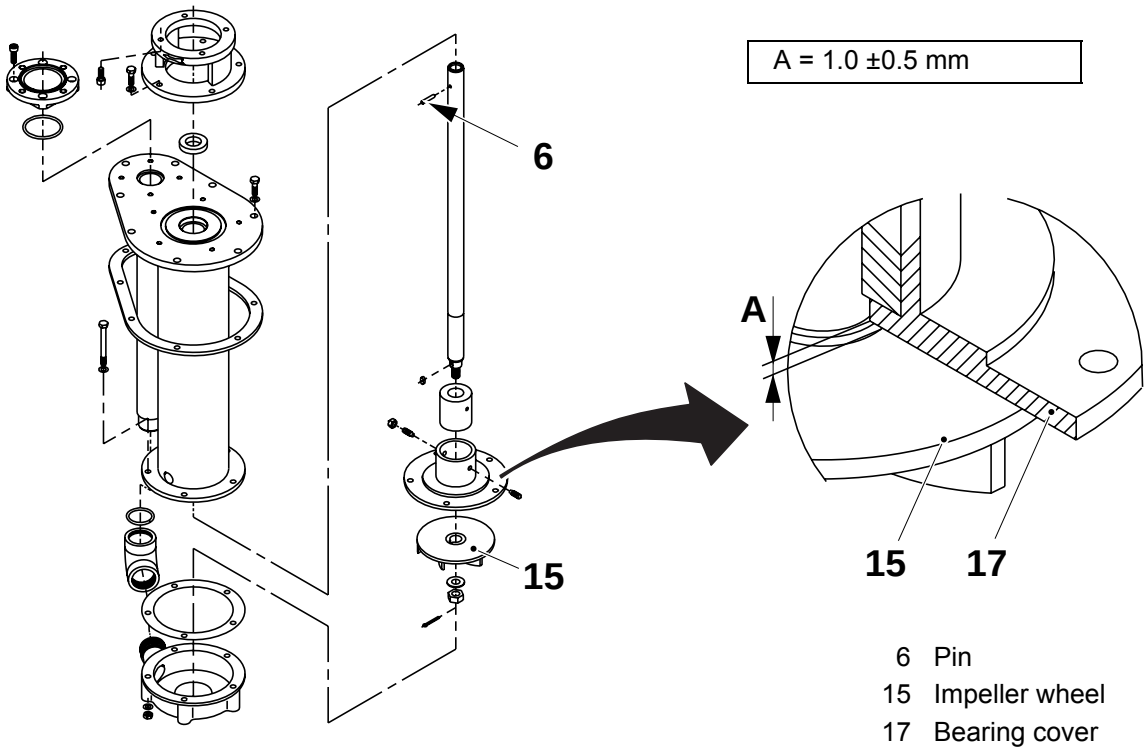

6 Pin
15 Impeller wheel
17 Bearing cover

(Cont'd)

TechPub_2614345_0105 - 01_2772090_01.fm

(Cont'd)

f) When the pin (6) is in position, install the gasket (12) and the O-rings (4) and (5).

g) Install the pump housing (10) according to the mark and tighten the screws (11).

h) Install the gasket (8), the plate and the motor. Tighten the screws (7).

i) Install the pipe (3) and the flange (2), and tighten the screws (1).

j) Install the pump unit to the service unit.

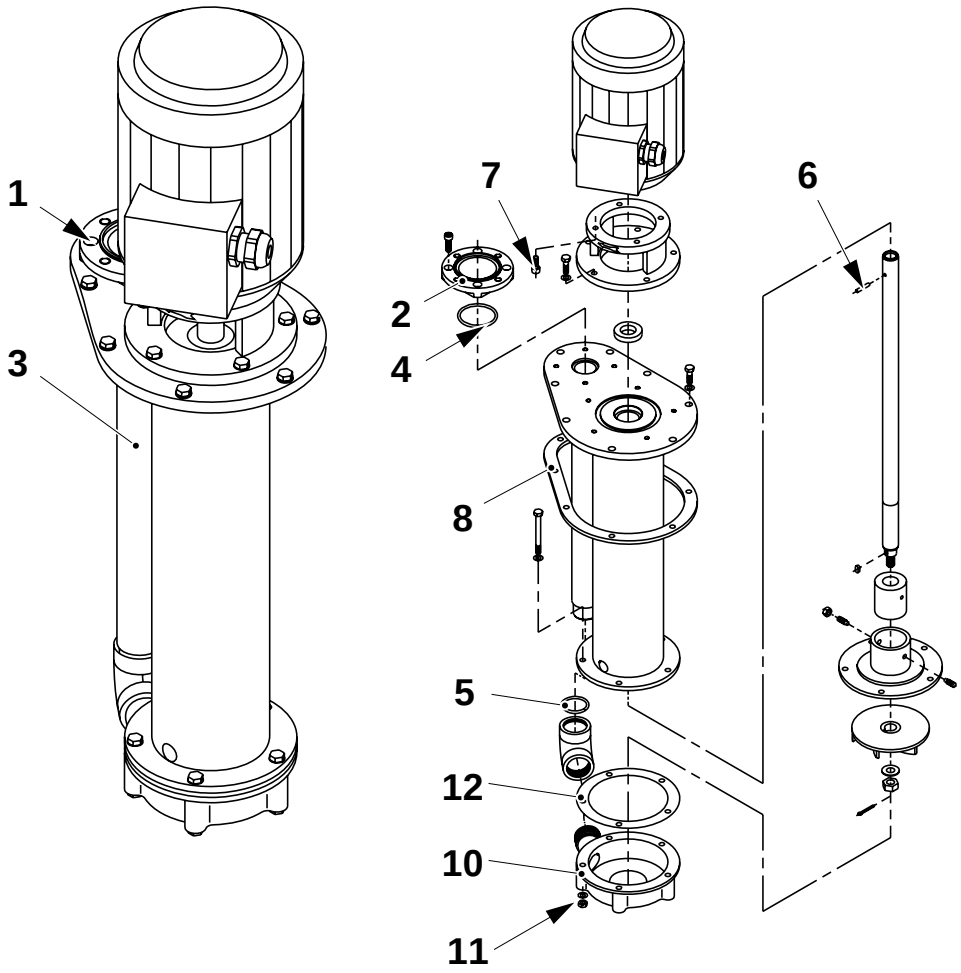

1	Screw	5	O-ring	10	Pump housing
2	Flange	6	Pin	11	Screw
3	Pipe	7	Screw	12	Gasket
4	O-ring	8	Gasket		

TechPub_2614345_0105 - 01_2772090_01.fm

6.2.3 Separator

6.2.3-1 Separator - Check Float

Machine Status	Power supply disconnector OFF Air supply OFF Steam supply ON Water supply OFF
SPC Reference	978988-0300

WARNING

Dangerous chemicals (hydrogen peroxide).

Hydrogen peroxide can be fatal if inhaled or swallowed. Follow the instructions in chapter ii Safety Precautions.

a) Disconnect the pipe (1) under the float unit.

b) Remove the clamp (2) and pull out the float unit.

c) Remove the float (3). Shake it to check that no liquid has leaked inside. Change it, if necessary.

d) Delime according to the procedures described in 6.2.3-2 Separator - Clean Filter.

e) Check that there is a play (distance **A**) between the nut (4) and the valve lever. If necessary, adjust using the nut (4).

f) Assemble in the reverse order.

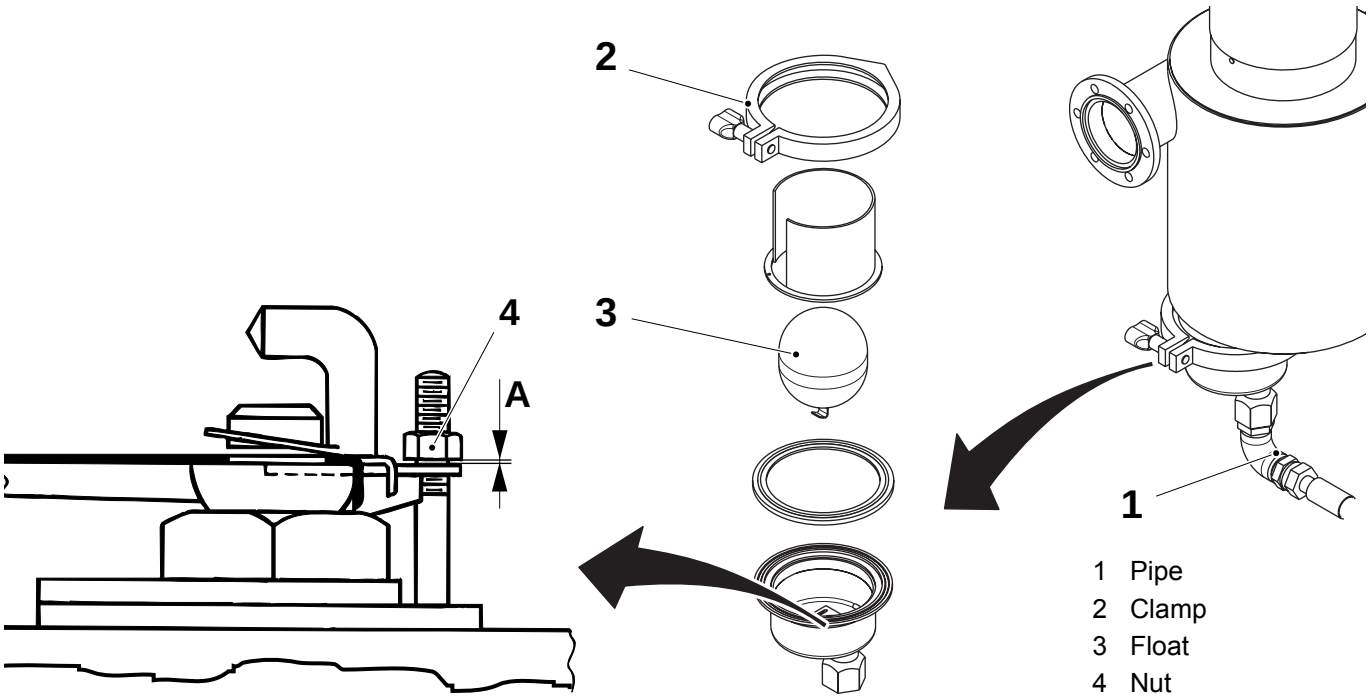

TechPub_2614345_0105 - 01_2772090_01.fm

6.2.3-2 Separator - Clean Filter

Machine Status	Power supply disconnector OFF Air supply OFF Steam supply ON Water supply OFF
Consumables	Deliming acid see list below
SPC Reference	978988-0300

WARNING

Dangerous chemicals (hydrogen peroxide).
Hydrogen peroxide can be fatal if inhaled or swallowed. Follow the instructions in chapter ii Safety Precautions.

a) Remove the nuts (2) and then the pipe (1). Remove the connection (3).

b) Remove the screws (4) to lift the cover (5) and remove the filter (6).

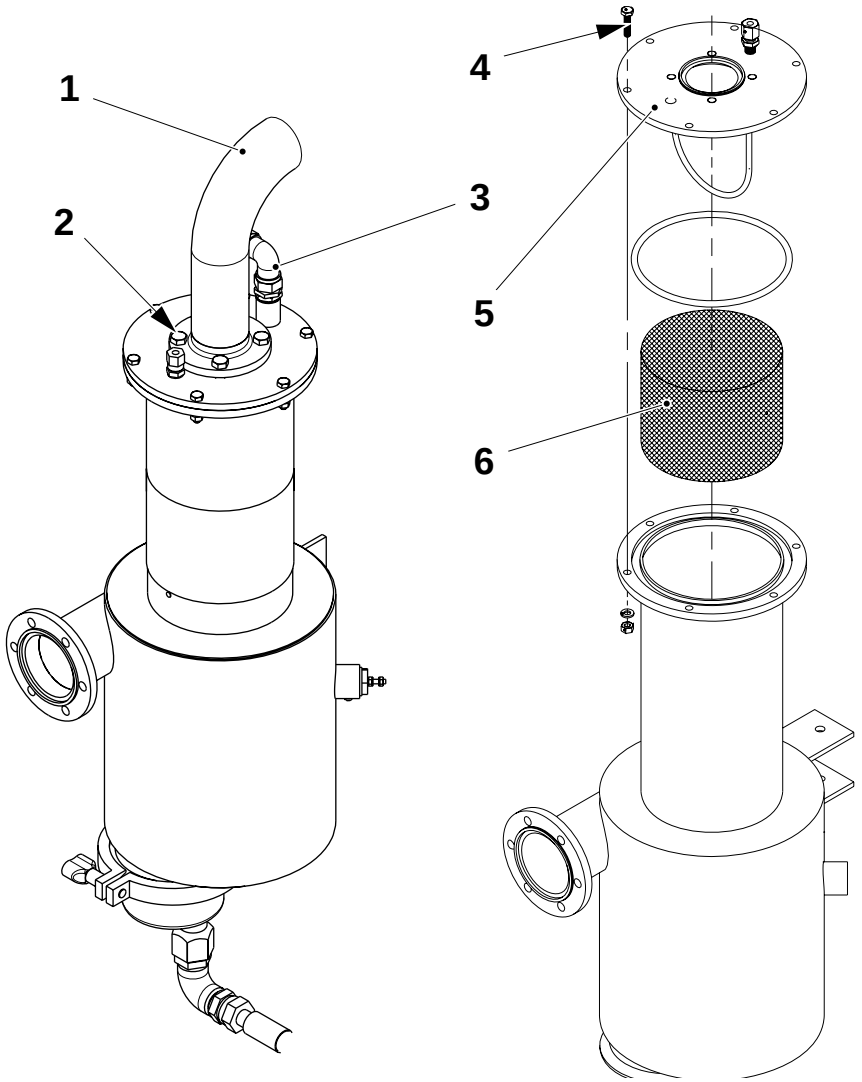

1 Pipe
2 Nut
3 Connection
4 Screw
5 Cover
6 Filter

(Cont'd)

TechPub_2614345_0105 - 01_2772090_01.fm

(Cont'd)

WARNING
Dangerous chemicals (cleaning agent).
Follow the instructions in chapter ii Safety Precautions.

c) Delime the filter using one of the four acid solutions listed below. All solutions must have a temperature of 50° - 60°C during deliming.

CAUTION
Dangerous chemicals (hydrogen peroxide).
Do **not** use hydrochloric acid (HCl).

- acetic acid (CH_3COOH), 20%
- nitric acid (HNO_3), 5 - 10%
- citric acid ($C_6H_8O_7$), 20%
- phosphoric acid (H_3PO_4), 5 - 10%

WARNING
Risk of eye injury.
Wear eye protection.

d) Flush with water and blow dry with compressed air.

e) Assemble in the reverse order.

TechPub_2614345_0105 - 01_2772090_01.fm

6.2.4 Scrubber

6.2.4-1 Scrubber - Delime Filter

Machine Status	Power supply disconnector OFF Air supply OFF Steam supply ON Water supply OFF
Consumables	Deliming acid see list below
SPC Reference	978989-0200

a) Remove the screws (2) and then the cover (1), and pull out the filter (3).

WARNING
Chemical products.
Cleaning agent. Follow the Safety Precautions.

b) Delime the filter (3) according to the procedures described in 6.2.3-2 Separator - Clean Filter.

c) Remove the nozzle (4).

d) Blow through the nozzle (4) from the inside with compressed air. If necessary, very carefully clean the nozzle using a needle.

e) Assemble in the reverse order.

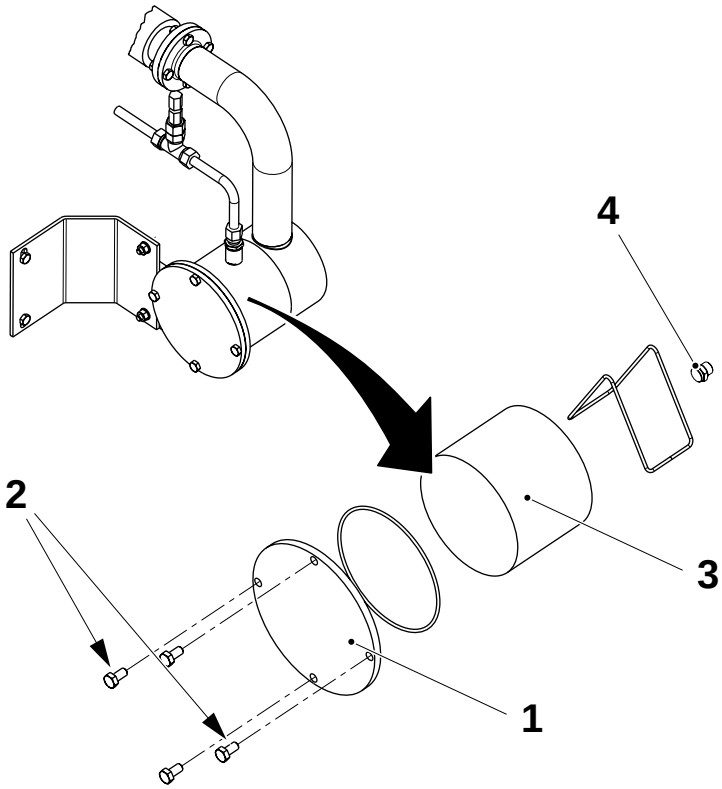

1 Cover
2 Screw
3 Filter
4 Nozzle

TechPub_2614345_0105 - 01_2772090_01.fm

6.2.5 Water Circulation

6.2.5-1 Water Circulation - Check Pressure

Machine Status	Power supply disconnector OFF Air supply OFF Steam supply ON Water supply ON
Special Equipment	Hose
SPC Reference	979026-0200

Check the water pressure on the pressure gauge (1), refer to 15.1 Technical Data.

If the pressure is too low open the valve (2) until the pressure reaches the value indicated in 15.1 Technical Data.

CAUTION
Risk of serious production fault.
The pressure must not, at any time, be below 0.5 bar.

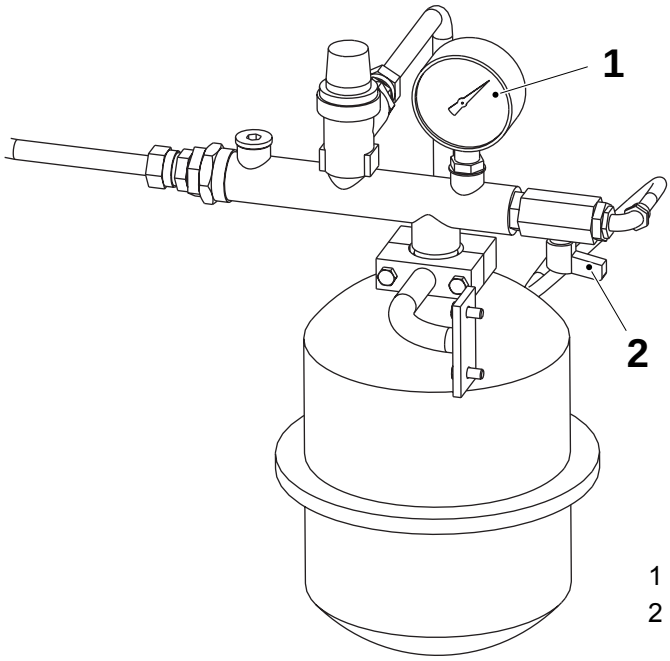

1 Pressure gauge
2 Valve

TechPub_2614345_0105 - 01_2772090_01.fm

6.2.6 Cabinet H_2O_2

6.2.6-1 Cabinet H_2O_2 - Check Transfer Function

Machine Status	PREHEATING I
SPC Reference	979328-0200

WARNING
Dangerous chemicals (hydrogen peroxide).
Hydrogen peroxide can be fatal if inhaled or swallowed. Follow the instructions in chapter ii Safety Precautions.

a) Make sure that the drain tank is empty. Drain if necessary.

CAUTION
Risk of damage to equipment.
If the machine has been in production less than 24 hours, dilute with water when draining.

b) Drain some hydrogen peroxide into the dilution tank. Check that the pump functions correctly. Change it, if necessary.

c) Check, when the hydrogen peroxide is being filled from the container, that there is no hydrogen peroxide leakage from the connections and the hoses (see arrows). Change the parts, if necessary.

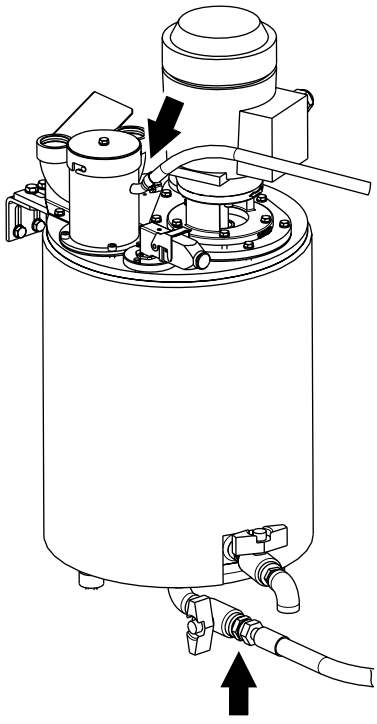

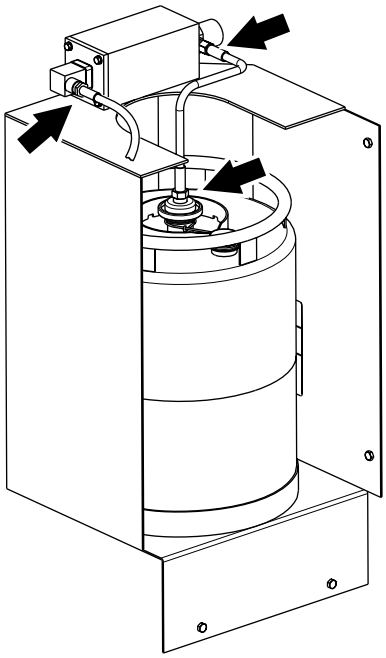

TechPub_2614345_0105 - 01_2772090_01.fm

6.3 Central Lubrication

6.3-1 Central Lubrication - Clean Oil Tank

Machine Status	Power supply disconnector OFF Air supply OFF Steam supply ON Water supply OFF
Consumables	Oil code H
SPC Reference	978823-0300

WARNING

Cleaning agents.

Chemical products. Follow the Safety Precautions.

a) Open the valve (1) and drain the oil.

b) Remove the electrical connection (2).

c) Loosen the four screws (3) and remove the cover.

d) Clean the tank with a lint-free cloth.

e) Assemble in the reverse order.

f) Fill up with oil through the quick-coupling (4). Use oil code H, see 15.3 Lubricants.

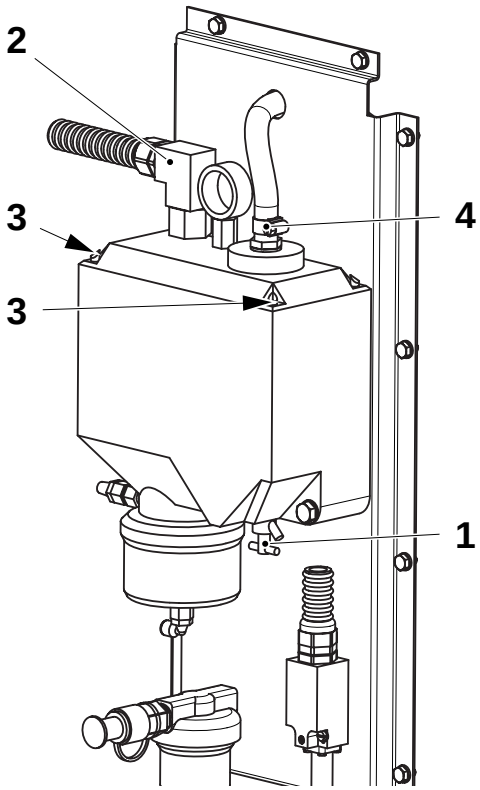

1 Valve
2 Electrical connection
3 Screw
4 Quick-coupling

TechPub_2614345_0105 - 01_2772091_01.fm

6.3-2 Central Lubrication - Check Pressure

Machine Status	PREHEATING I
Special Equipment	Pressure gauge 0 - 7 MPa
SPC Reference	978823-0300

a) Remove the plug (1) on the distribution block of the LH yoke lifter arm.

b) Connect the pressure gauge (2).

c) Start the manual lubrication sequence, see OM TPOP display section.

d) Check that the pressure reaches to 5 - 6 MPa. If not, check for leaks. Change the lubrication pump, if necessary, see 6.3-3 Central Lubrication - Change Pump.

e) Remove the pressure gauge (2) and install the plug (1).

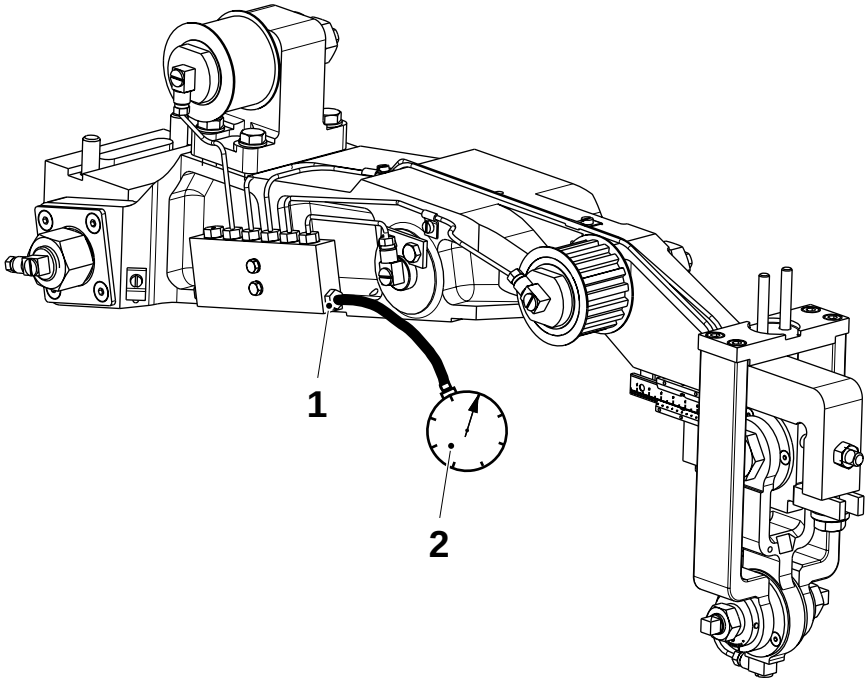

1 Plug
2 Pressure gauge

TechPub_2614345_0105 - 01_2772091_01.fm

6.3-3 Central Lubrication - Change Pump

Machine Status	Power supply disconnector OFF Air supply OFF Steam supply ON Water supply OFF
Consumables	Locking liquid Loctite Oil code H
SPC Reference	978823-0300

WARNING
Chemical products.
Lubricant. Follow the Safety Precautions.

a) Open the valve (1) and drain the oil.
b) Remove the electrical connection (2).
c) Loosen the four screws (3) and remove the cover.
d) Clean the tank with a lint-free cloth.
e) Remove the pipes (4) and the oil pump (5) (turn its lower part).
f) Change the pump (5). Disassemble the new pump and put locking fluid on the threads.
g) Change the seal ring (6) on the quick-coupling.
h) Assemble in the reverse order.
i) Fill up with oil through the quick-coupling. Use oil code H, refer to 15.3 Lubricants.

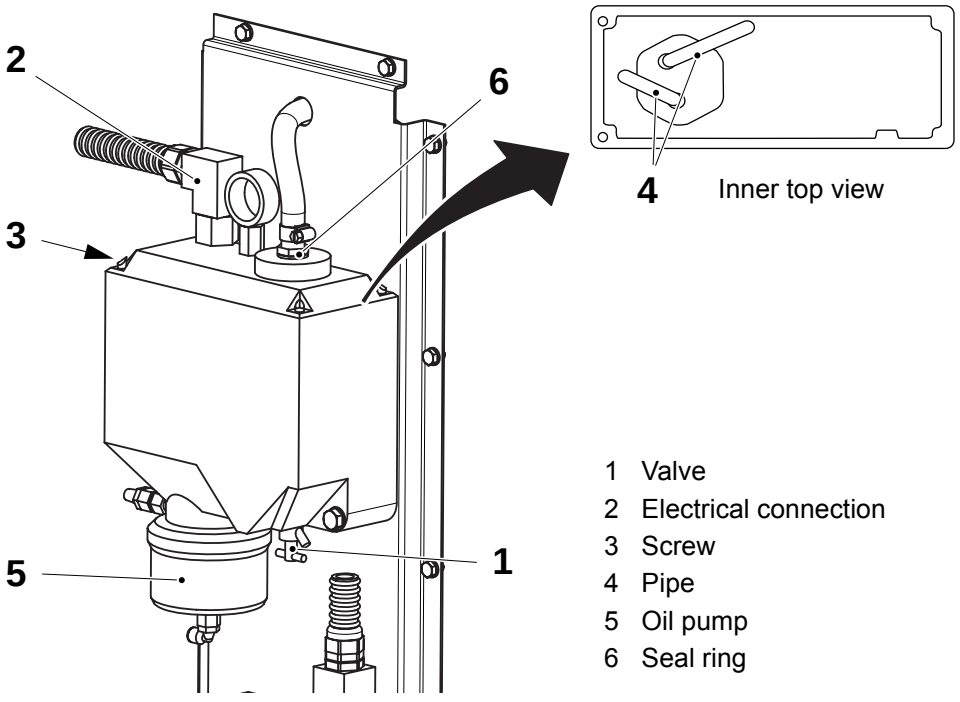

1 Valve
2 Electrical connection
3 Screw
4 Pipe
5 Oil pump
6 Seal ring

TechPub_2614345_0105 - 01_2772091_01.fm

6.4 Hydraulic System

6.4-1 Hydraulic System - Change Oil and Filter

Machine Status	Power supply disconnector OFF Air supply OFF Steam supply ON Water supply OFF
Consumables	Oil code C
SPC Reference	1512304-0200

WARNING
Chemical products.
Lubricant. Follow the Safety Precautions.

CAUTION
Risk of contamination.
Follow local laws or internal rules for the disposal of exhausted oil.

a) Open the valve (1) and drain the oil.
b) Remove the gauge (2) and the filter insert (3).
c) Change the filter insert (3) and put the new filter back.
d) Close the valve (1) and fill up with oil through the quick-coupling (4). See 15.3 Lubricants. Check the oil level on the level glass (5).

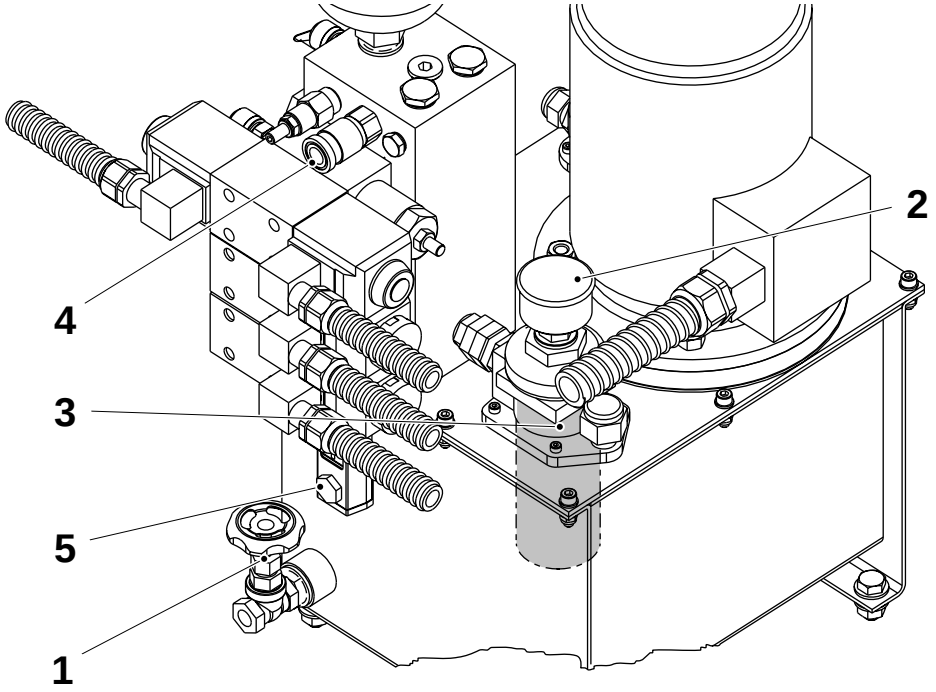

1 Valve
2 Gauge
3 Filter insert
4 Quick-coupling
5 Level glass

TechPub_2614345_0105 - 01_2772092_01.fm

6.4-2 Hydraulic System - Check Oil Level and Filter Indicator

Machine Status	Power supply disconnector OFF Air supply OFF Steam supply ON Water supply OFF
Consumables	Oil code C
SPC Reference	1512304-0200

a) Check the gauge (1), if the arrow is in the red field, change the filter insert (2), see 6.4-1 Hydraulic System - Change Oil and Filter.

b) Check that the oil level in the level glass (3). If necessary, top up with oil through the quick-coupling (4). See 15.3 Lubricants.

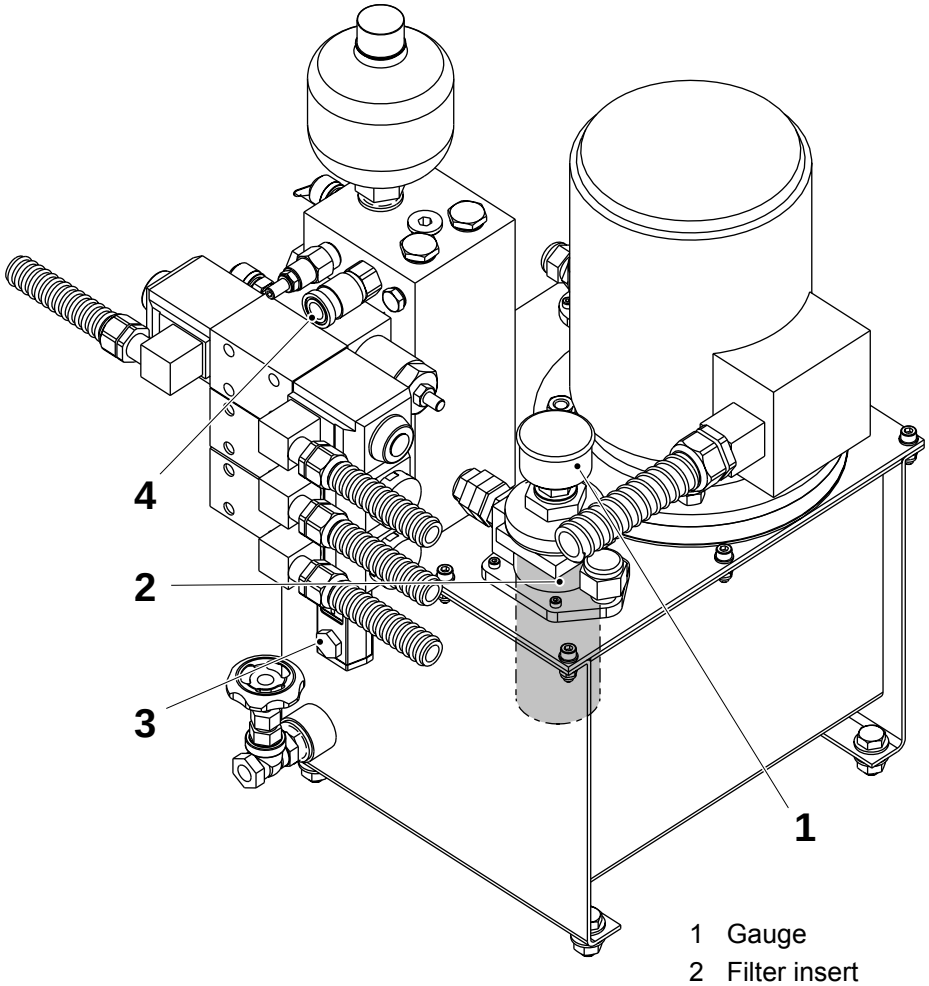

1 Gauge
2 Filter insert
3 Level glass
4 Quick-coupling

TechPub_2614345_0105 - 01_2772092_01.fm

6.4-3 Hydraulic System - Check Pressures

Machine Status	Power supply disconnector ON Air supply OFF Steam supply ON Water supply OFF Service switch ON
Special Equipment	Manometer 90458-0811
SPC Reference	1512304-0200

Check the Cutting pressure and the jaw pressure on the valve panel, see 15.1 Technical Data.

Note! To adjust the **cutting pressure** utilise the regulator (1). To adjust the **jaw pressure** utilise the regulator (2).

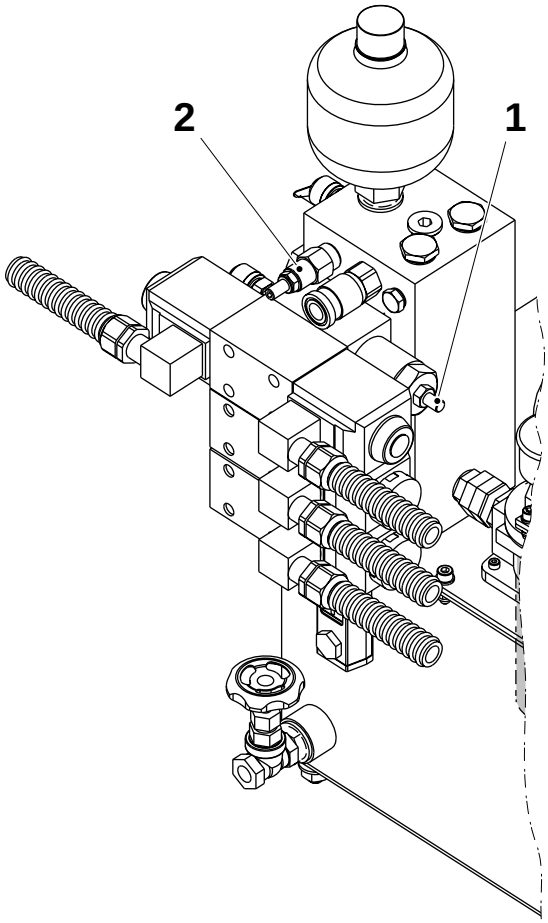

1 Regulator
2 Regulator

TechPub_2614345_0105 - 01_2772092_01.fm

6.4-4 Hydraulic System - Check Accumulator

Machine Status	Power supply disconnector ON Air supply ON Steam supply ON Water supply ON
Special Equipment	Manometer 90458-0811
SPC Reference	1512304-0200

a) Turn **ON** the service key, wait for 30 seconds to let the hydraulic pressure to stabilise. Turn **OFF** the service key.

b) Check the pressure on the valve panel.

c) When the accumulator (1) pressure is being passed, the pointer of the manometer jerks briefly and drop to zero.

d) If the pressure is below **4.0** MPa at that moment, step down the machine to the ZERO POSITION.

e) Change the accumulator (1).

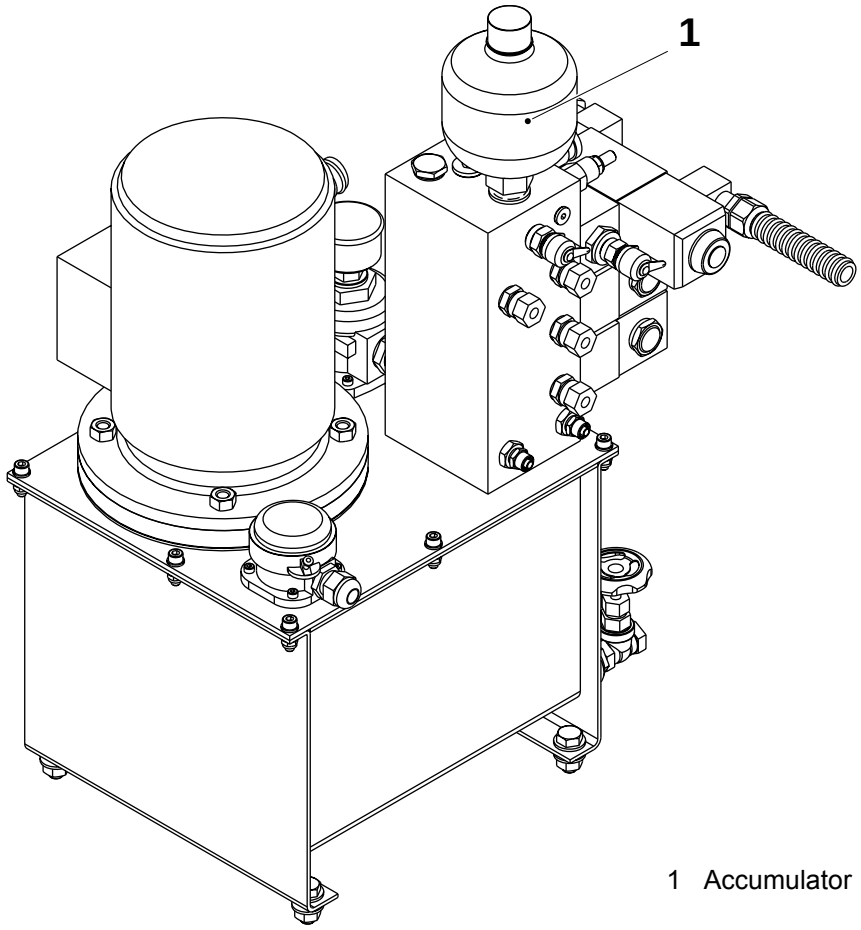

1 Accumulator

TechPub_2614345_0105 - 01_2772092_01.fm

7 Strip Applicator

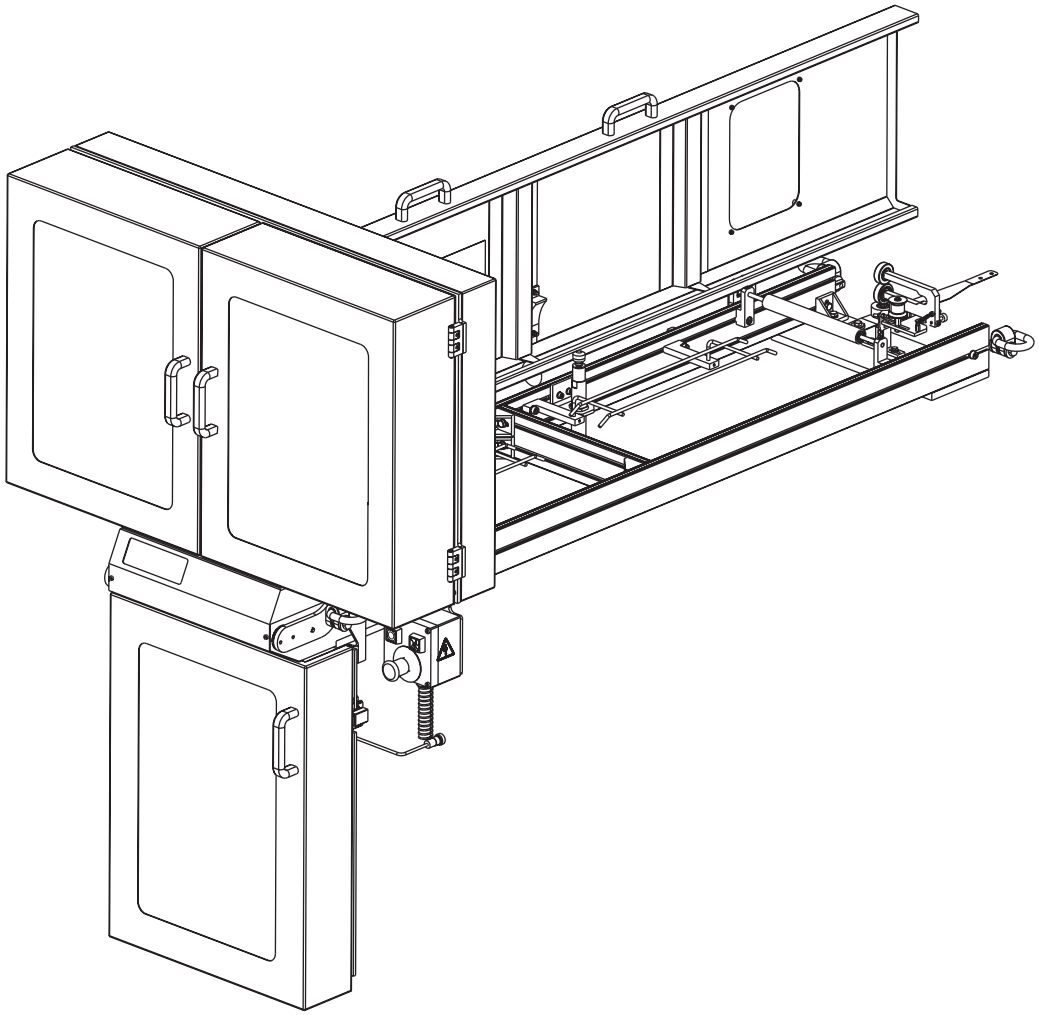

TechPub_2614345_0105 - 01_2772093_01.fm

Strip Applicator - Description

SPC Reference	648107-1300

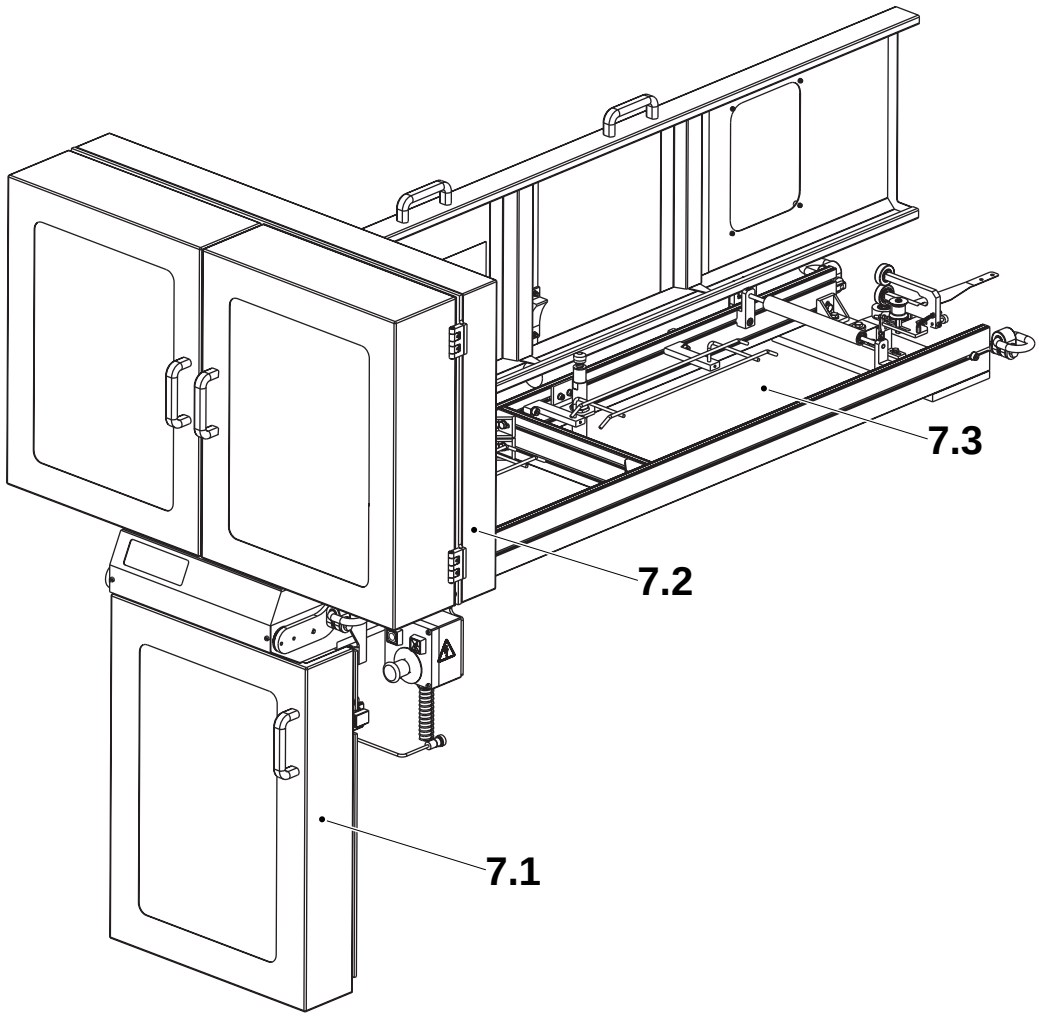

7.1 Strip Applicator
7.2 Strip Magazine
7.3 Web Tunnel

TechPub_2614345_0105 - 01_2772093_01.fm

7.1 Strip Applicator . . . . . 7 - 5

7.1-1 Strip Applicator - Check Rollers . . . . . 7 - 5

7.1.1 Splice Detector . . . . . 7 - 6

7.1.1-1 Splice Detector - Check Function . . . . . 7 - 6

7.1.1-2 Splice Detector - Set . . . . . 7 - 7

7.1.2 Pressure Rollers. . . . . 7 - 8

7.1.2-1 Pressure Rollers - Check Condition and Spring Force . . . . . 7 - 8

7.1.2-2 Pressure Rollers - Change . . . . . 7 - 9

7.1.3 Web Guide . . . . . 7 - 10

7.1.3-1 Web Guide - Check . . . . . 7 - 10

7.1.3-2 Web Guide - Set . . . . . 7 - 11

7.1.4 Inductor. . . . . 7 - 12

7.1.4-1 Inductor - Set Rail . . . . . 7 - 12

7.1.4-2 Inductor - Set . . . . . 7 - 13

7.1.5 Strip Guide . . . . . 7 - 14

7.1.5-1 Strip Guide - Check Guide Wheels and Bushings . . . . . 7 - 14

7.1.5-2 Strip Guide - Change Guide Wheels . . . . . 7 - 15

7.1.5-3 Strip Guide - Change Bushings . . . . . 7 - 17

7.1.5-4 Strip Guide - Set . . . . . 7 - 18

7.2 Strip Magazine . . . . . 7 - 19

7.2.1 Mounting Plate . . . . . 7 - 19

7.2.1-1 Mounting Plate - Check Rollers . . . . . 7 - 19

7.2.1-2 Mounting Plate - Check Proximity Switches . . . 7 - 20

7.2.1-3 Mounting Plate - Set Roller . . . . . 7 - 21

7.2.2 Hub Jumbo . . . . . 7 - 22

7.2.2-1 Hub Jumbo - Check . . . . . 7 - 22

7.2.3 Cutting table . . . . . 7 - 24

7.2.3-1 Cutting Table - Check . . . . . 7 - 24

7.2.4 Heating Device . . . . . 7 - 25

7.2.4-1 Heating Device - Check . . . . . 7 - 25

TechPub_2614345_0105 - 01_2772093_01.fm

7.2.4-2 Heating Device - Set position . . . . . 7 - 26
7.2.4-3 Heating Device - Set Cut Pulse Time . . . . . 7 - 28
7.2.5 Brake Arm . . . . . 7 - 29
7.2.5-1 Brake Arm - Check Function . . . . . 7 - 29
7.2.5-2 Brake Arm - Set . . . . . 7 - 30
7.2.6 Splicing Magazine . . . . . 7 - 32
7.2.6-1 Splicing Magazine - Check . . . . . 7 - 32
7.3 Web Tunnel . . . . . 7 - 34
7.3-1 Web Tunnel- Check Rollers . . . . . 7 - 34
7.3.1 Web Guide . . . . . 7 - 35
7.3.1-1 Web Guide- Check . . . . . 7 - 35
7.3.1-2 Web Guide- Set . . . . . 7 - 36

TechPub_2614345_0105 - 01_2772093_01.fm

7.1 Strip Applicator

7.1-1 Strip Applicator - Check Rollers

Machine Status	Power supply disconnector OFF Air supply OFF Steam supply ON Water supply OFF
SPC Reference	580036-0200

Make sure that the rollers rotate smoothly and that they are not worn or damaged. Change them if necessary.

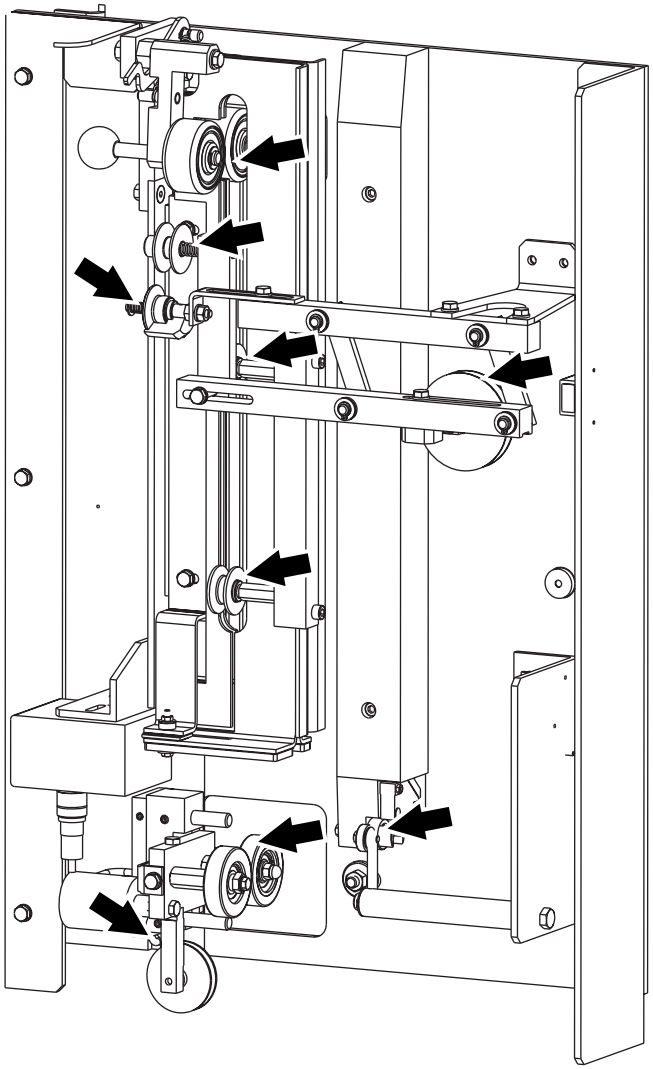

TechPub_2614345_0105 - 01_2772094_01.fm

7.1.1 Splice Detector

7.1.1-1 Splice Detector - Check Function

Machine Status	SHORT STOP
SPC Reference	1279624-0200

a) Step up to PRODUCTION and perform a packaging material splice.

b) Make sure that the splice passes the ball bearing (1).

c) The machine discards three packages. Make sure that the package with the splice is one of these.

d) If not, check that:
   - the ball bearing (1) and the roller (2) underneath rotate easily. Change them, if necessary
   - the spring (3) is intact. Change it, if necessary

e) Make sure that the bracket (4) is easily moved.

f) Clean or change, if necessary, the two bushings (5).

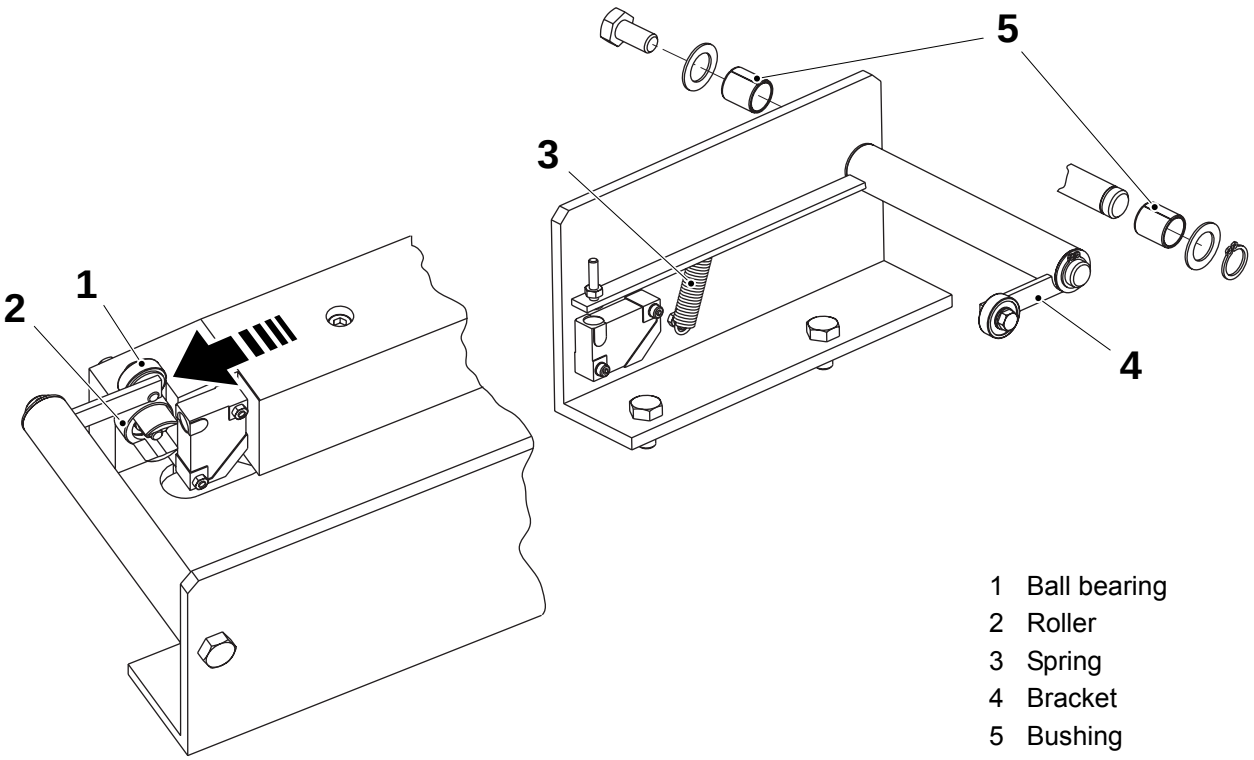

1 Ball bearing
2 Roller
3 Spring
4 Bracket
5 Bushing

TechPub_2614345_0105 - 01_2772094_01.fm

7.1.1-2 Splice Detector - Set

Machine Status	Power supply disconnector ON Air supply OFF Steam supply ON Water supply OFF
SPC Reference	1279624-0200

a) Set the screw (1) so that it **just** touches the inductive switch (2). The LED (3) must light up.

b) Put a spliced packaging material between the ball bearings (4) and the roller (5).

c) Slightly tighten the screw (1) until the LED (3) goes out.

d) Check, with a **single** piece of packaging material, that the LED (3) lights-up.

e) Check with a **spliced** piece of packaging material the LED (3) goes out.

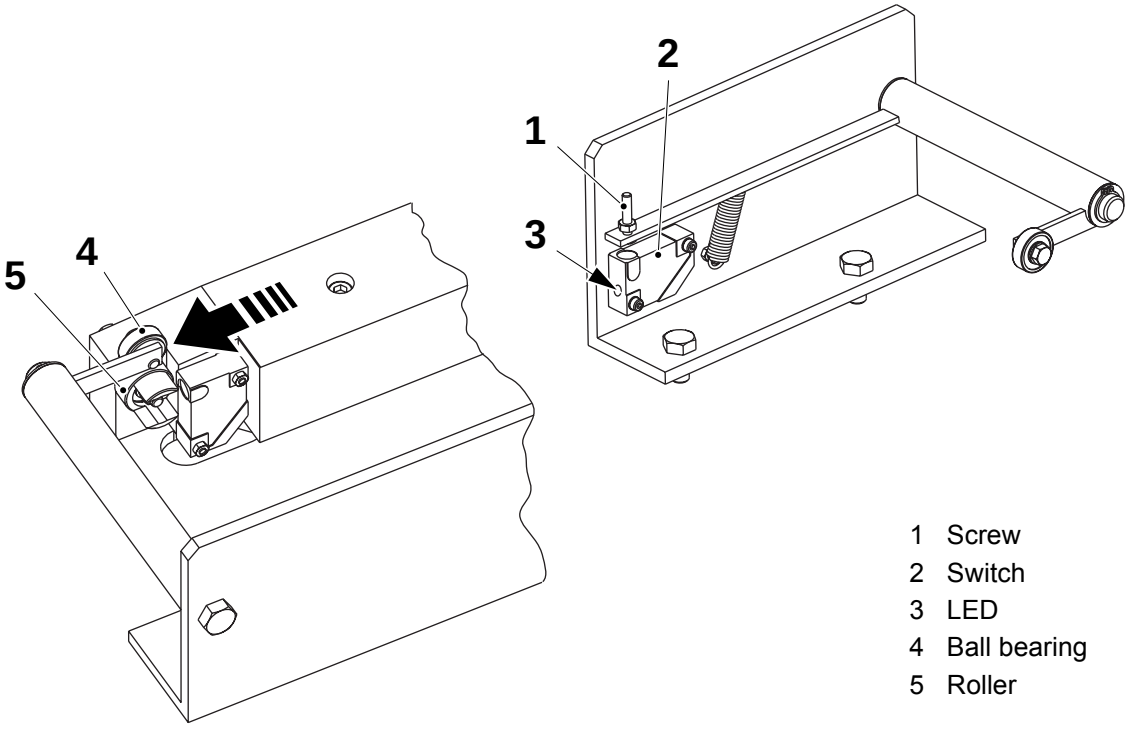

1 Screw
2 Switch
3 LED
4 Ball bearing
5 Roller

TechPub_2614345_0105 - 01_2772094_01.fm

7.1.2 Pressure Rollers

7.1.2-1 Pressure Rollers - Check Condition and Spring Force

Machine Status	Power supply disconnector OFF Air supply OFF Steam supply ON Water supply OFF
Special Equipment	Dynamometer min 17 N
SPC Reference	2506475-0100

a) Make sure that the rollers (1) and (4) rotate smoothly and that they are not damaged. Change the rollers (1) and (4), if necessary, see 7.1.2-2 Pressure Rollers - Change.

b) Attach a dynamometer to the pin (2). Check that the spring force when the roller (1) rises from the counter roller (4) is **25 -1 N**, if it is less change the spring (3).

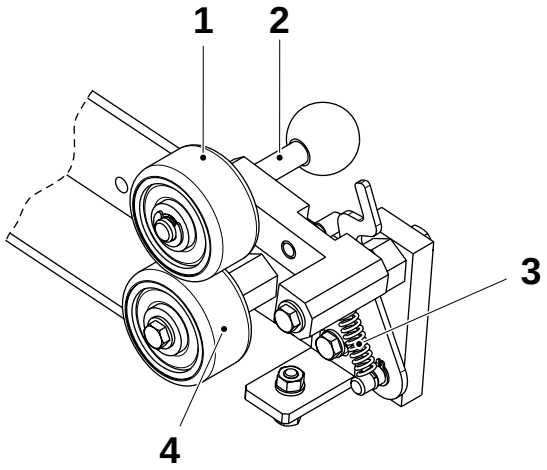

1 Roller
2 Pin
3 Spring
4 Counter roller

TechPub_2614345_0105 - 01_2772094_01.fm

7.1.2-2 Pressure Rollers - Change

Machine Status	Power supply disconnector OFF Air supply OFF Steam supply ON Water supply OFF
SPC Reference	2506475-0100

a) Remove the roller (2) and the locking washer (1).

b) Check the following parts for wear or damage:
   - the roller (2)
   - the contact surface of the pin (3)
   - the counter roller (5)
   - the contact surface of the shaft (4).

c) Change them if necessary.

d) Assemble in the reverse order.

Note! Make sure to install the pressure roller with the groove (6) against the packaging material, as illustrated.

TechPub_2614345_0105 - 01_2772094_01.fm

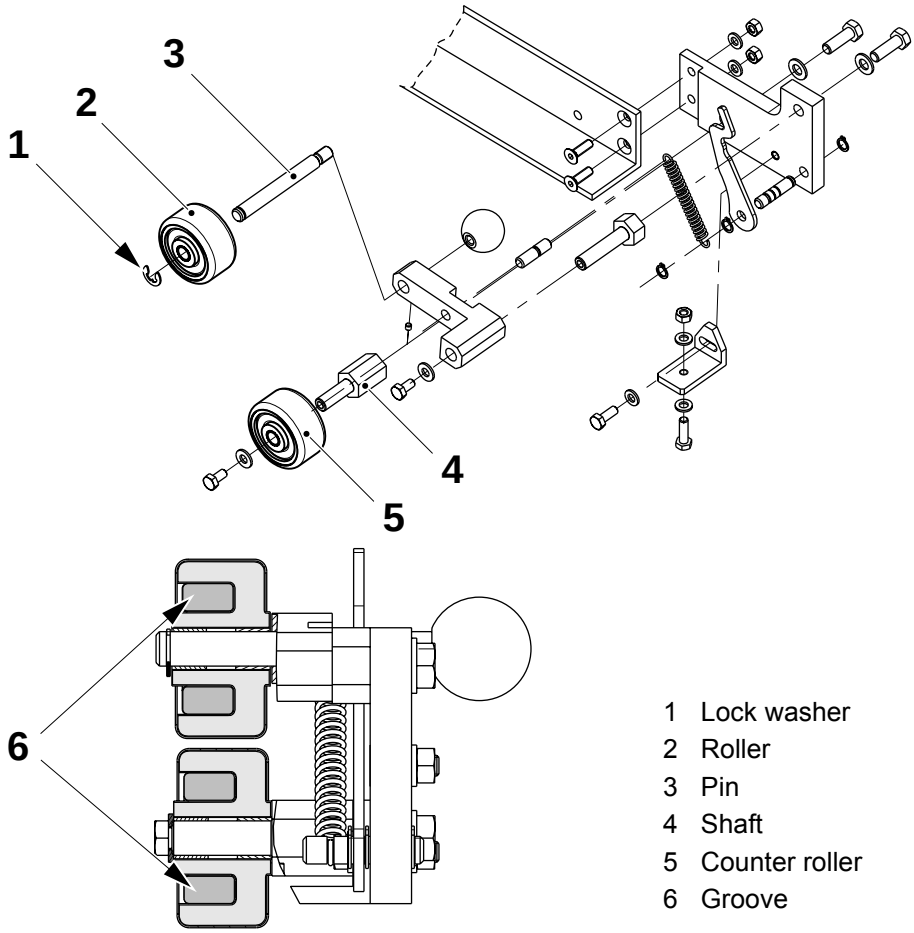

1 Lock washer
2 Roller
3 Pin
4 Shaft
5 Counter roller
6 Groove

7.1.3 Web Guide

7.1.3-1 Web Guide - Check

Machine Status	Power supply disconnector OFF Air supply OFF Steam supply ON Water supply OFF
SPC Reference	2524476-0100

Check that the roller surfaces are not damaged and that the rollers rotate smoothly, if necessary:

a) Remove the nuts (1), the washers and the retaining rings (2).

b) Change the ball bearings (3), the rubber roller (4) or the steel roller (5) as necessary.

c) Check that the edge guide wheel (7) is clean. If not, remove the screw (6) and pull off and clean the guide wheel. If the wheel is worn or damaged, replace it.

Note! Install the rubber roller (4) onto the printed side of the packaging material web.

d) Assemble in the reverse order.

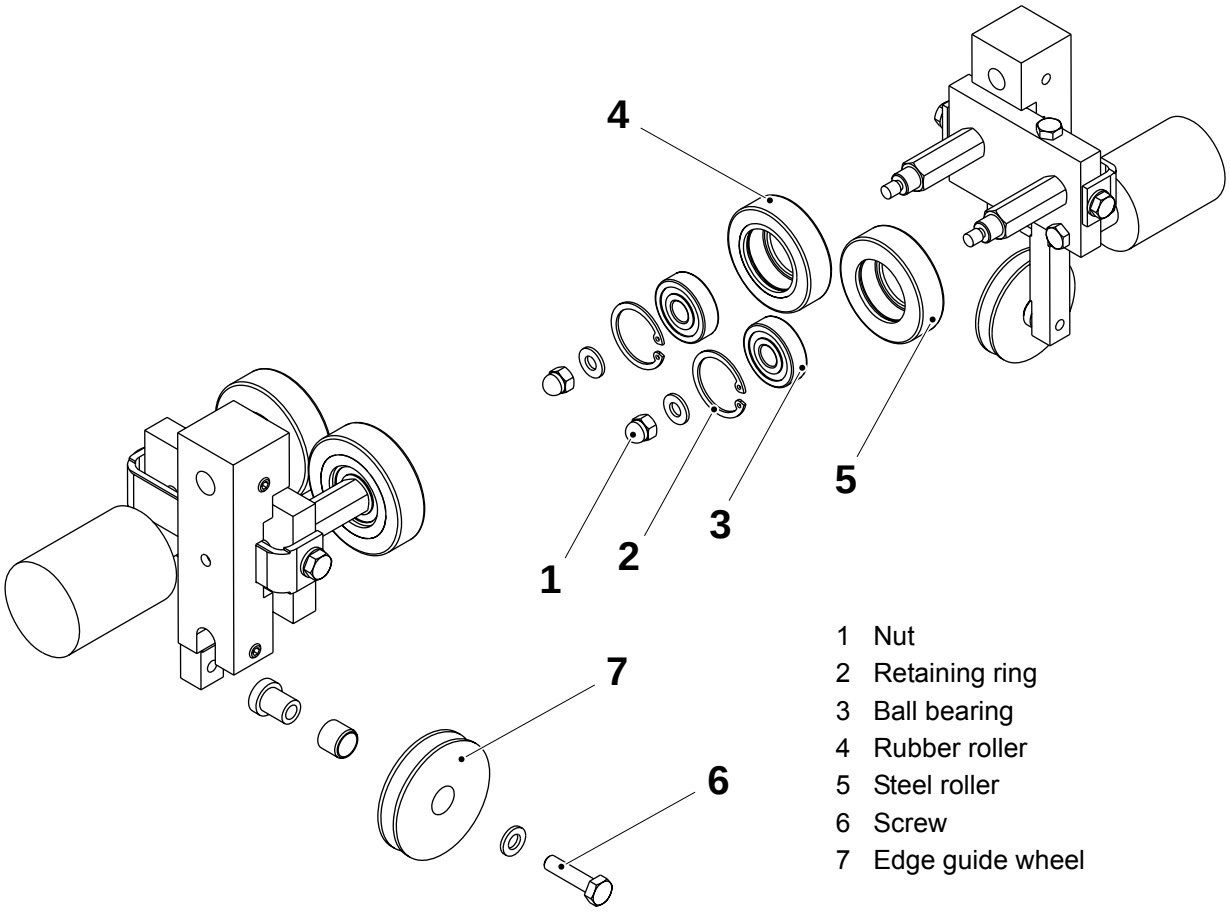

1 Nut
2 Retaining ring
3 Ball bearing
4 Rubber roller
5 Steel roller
6 Screw
7 Edge guide wheel

TechPub_2614345_0105 - 01_2772094_01.fm

7.1.3-2 Web Guide - Set

Machine Status	PREHEATING II
SPC Reference	2524476-0100

a) Inch the machine and make sure that the packaging material is centered with the roller (1).

b) If necessary, adjust the position of the packaging material by loosening the grub screw (3) and moving the web guide (2).

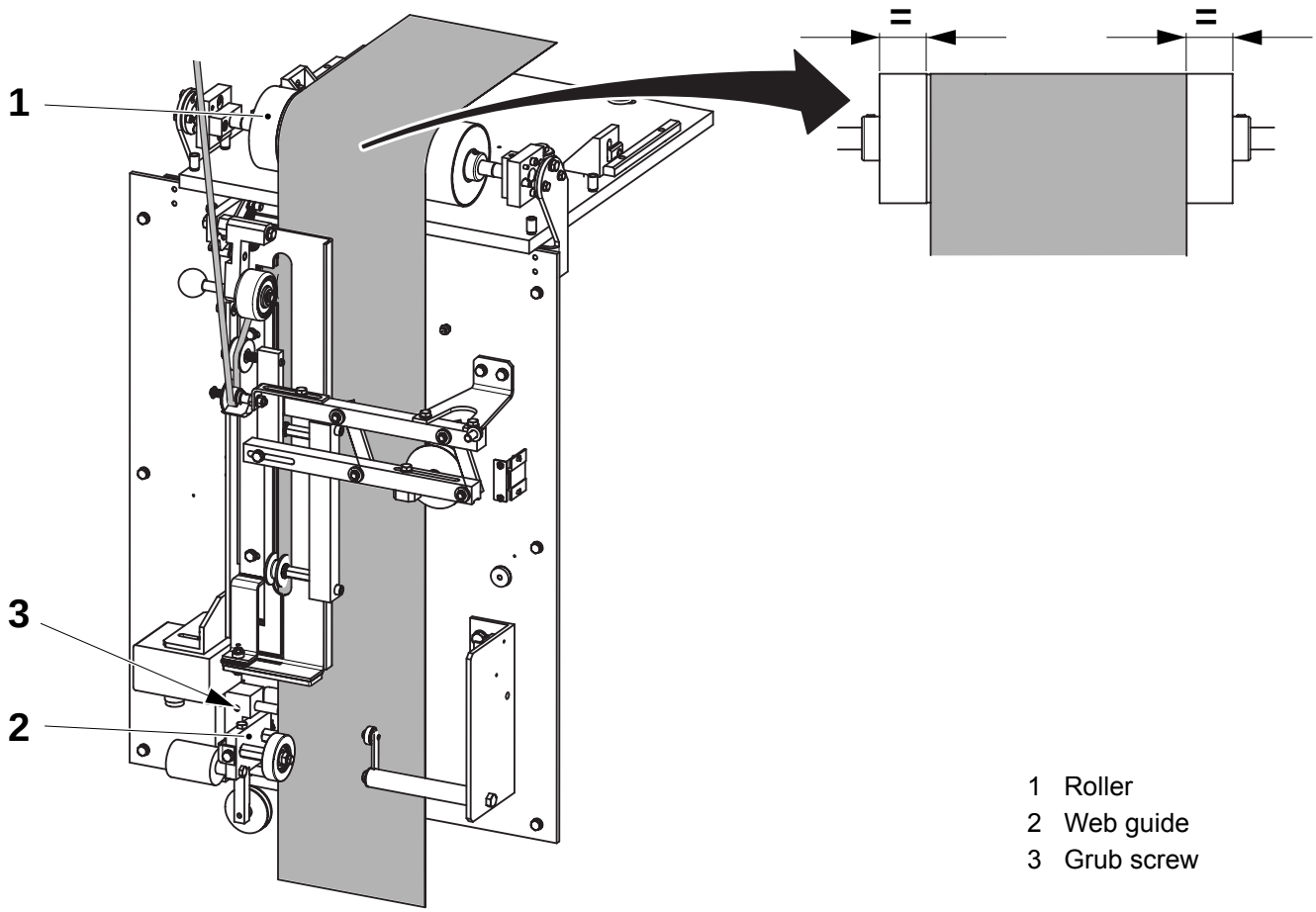

1 Roller
2 Web guide
3 Grub screw

TechPub_2614345_0105 - 01_2772094_01.fm

7.1.4 Inductor

7.1.4-1 Inductor - Set Rail

Machine Status	Power supply disconnector OFF Air supply OFF Steam supply ON Water supply OFF
SPC Reference	580038-0200

a) Loosen the screws (1).

b) Set the distance **A** between the roller (2) and the inductor (3).

c) Tighten the screws (1).

A = 20 ± 5 mm

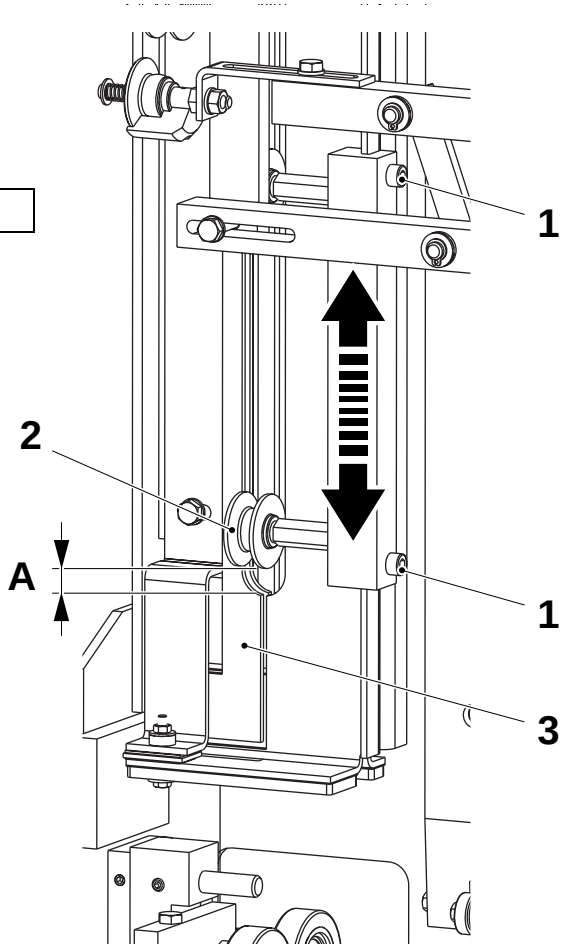

1 Screw
2 Roller
3 Inductor

TechPub_2614345_0105 - 01_2772094_01.fm

7.1.4-2 Inductor - Set

Machine Status	Power supply disconnector OFF Air supply OFF Steam supply ON Water supply OFF
SPC Reference	580038-0200

a) Set the web guide, see 7.1.3-2 Web Guide - Set.

b) Check the distance **A** between the inductor (1) and the bracket (2), if necessary, adjust using the screws (3).

c) Loosen the screws (4) (on the back side of the SA plate) and move the inductor sideways to make sure that the packaging material is aligned with the marks on the inductor (1) see arrows.

d) Tighten the screws (4).

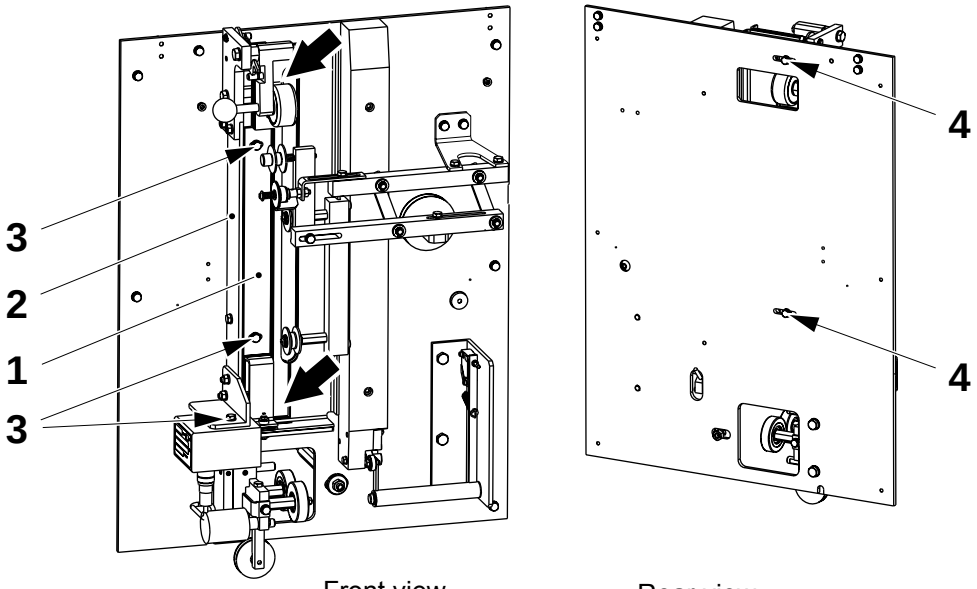

Front view

Rear view

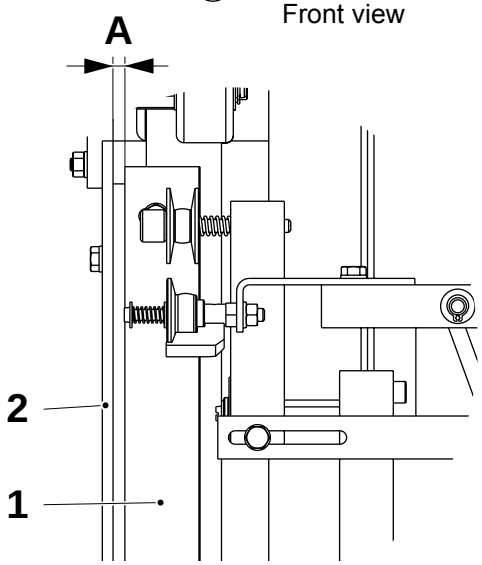

A = 3 ±1mm

1 Inductor
2 Bracket
3 Screw
4 Screw

TechPub_2614345_0105 - 01_2772094_01.fm

7.1.5 Strip Guide

7.1.5-1 Strip Guide - Check Guide Wheels and Bushings

Machine Status	Power supply disconnector OFF Air supply OFF Steam supply ON Water supply OFF
SPC Reference	2576240-0100

a) Check that the web guide wheel (1) and the strip guide wheels (2) and (3) rotate smoothly and that they are intact. Change them, if necessary, see 7.1.5-2 Strip Guide - Change Guide Wheels.

b) Check that there is no excessive play in the bushings (4). Make sure that the strip guide moves smoothly. Change the bushings if necessary, see 7.1.5-3 Strip Guide - Change Bushings

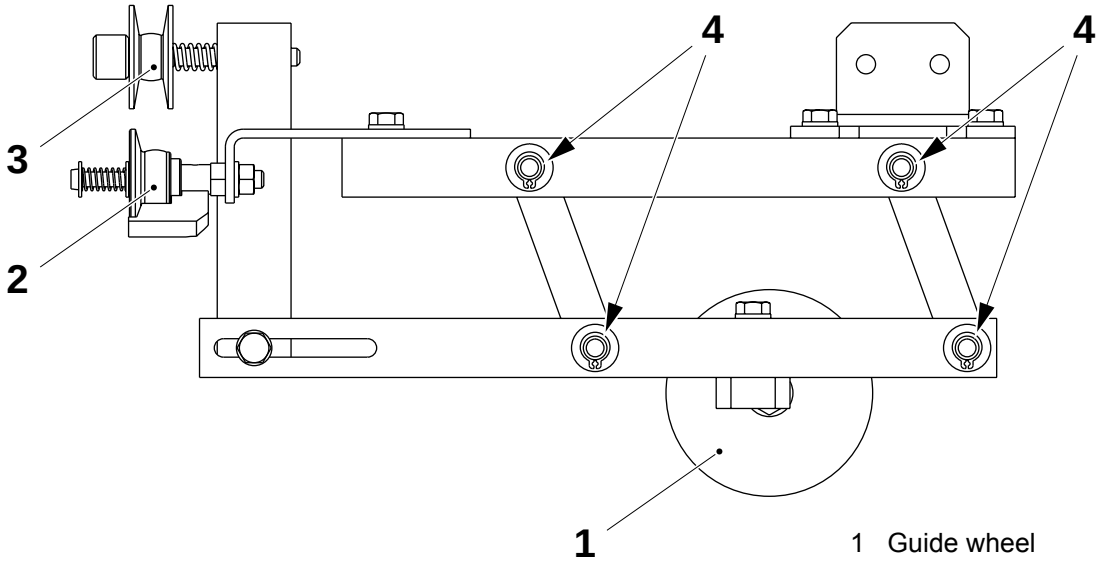

1 Guide wheel
2 Guide wheel
3 Guide wheel
4 Bushing

TechPub_2614345_0105 - 01_2772094_01.fm

7.1.5-2 Strip Guide - Change Guide Wheels

Machine Status	Power supply disconnector OFF Air supply OFF Steam supply ON Water supply OFF
SPC Reference	2576240-0100

Web Guide Wheel

a) Remove the locking washer (1) and the guide wheel (2)

b) Change the guide wheel (2) and assemble in the reverse order.

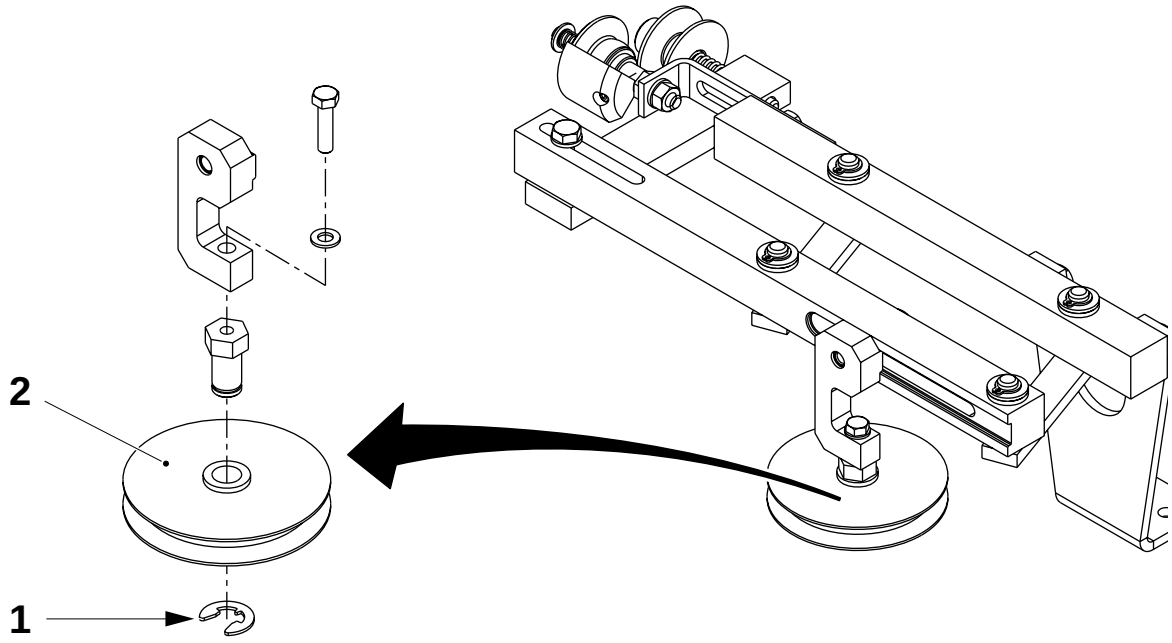

1 Locking washer
2 Guide wheel

(Cont'd)

TechPub_2614345_0105 - 01_2772094_01.fm

(Cont'd)

Strip Guide Wheels

a) Measure distance **A**.

b) Remove the adjusting screw (1), the guide wheel (2), and the spring (3).

c) Change the guide wheel (2) and assemble in the reverse order.

d) Set distance **A** as previously recorded in item a).

e) Remove the screw (4), the washers, the spring (5), and the guide wheel (6).

f) Change the guide wheel (6) and assemble in the reverse order.

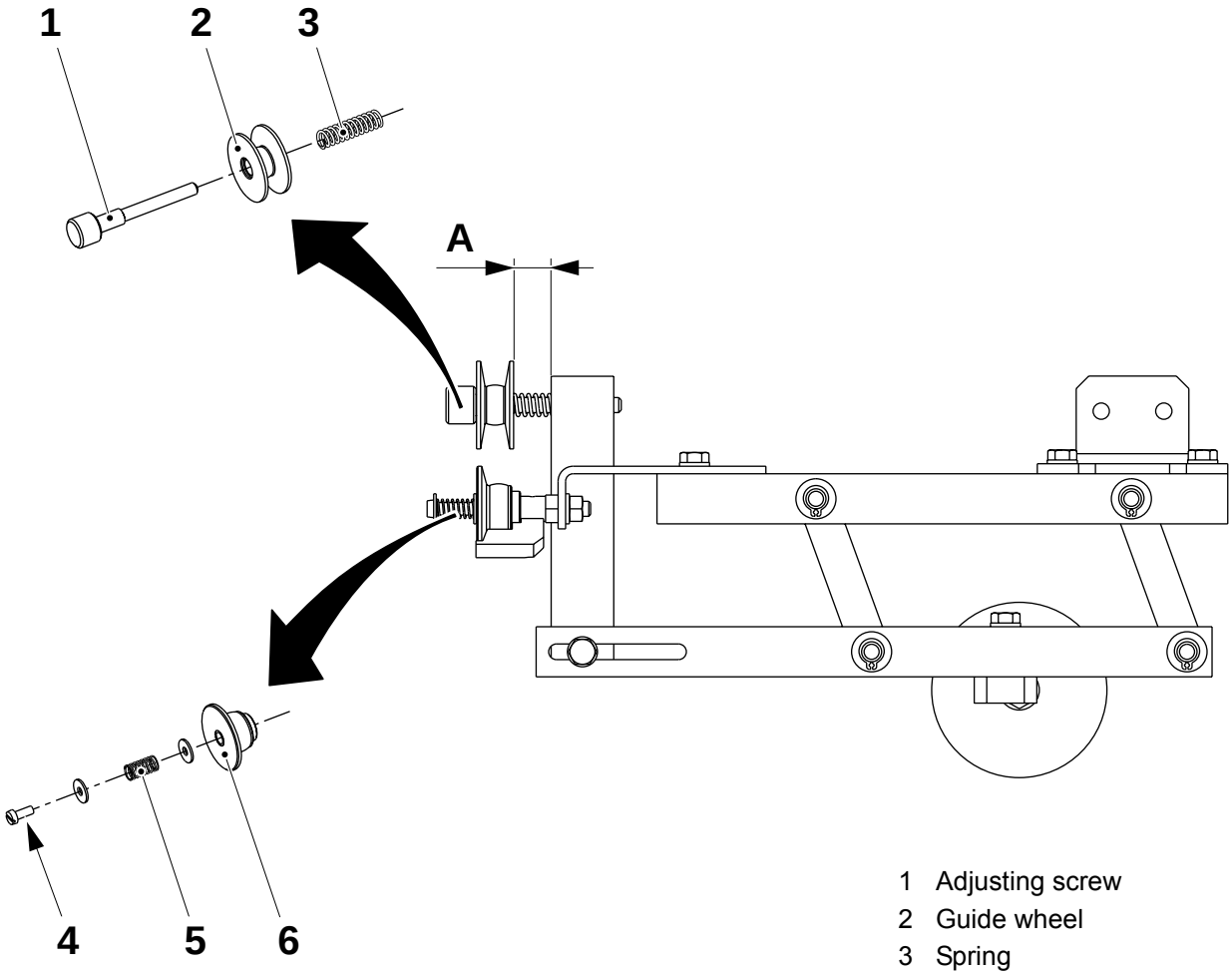

1 Adjusting screw
2 Guide wheel
3 Spring
4 Screw
5 Spring
6 Guide wheel

TechPub_2614345_0105 - 01_2772094_01.fm

7.1.5-3 Strip Guide - Change Bushings

Machine Status	Power supply disconnector OFF Air supply OFF Steam supply ON Water supply OFF
SPC Reference	2576240-0100

a) Remove the retaining rings (1), the washers and the levers (2).

b) Check the contact surfaces on the levers. Change the levers if necessary.

c) Change the bushings (3) and assemble in the reverse order.

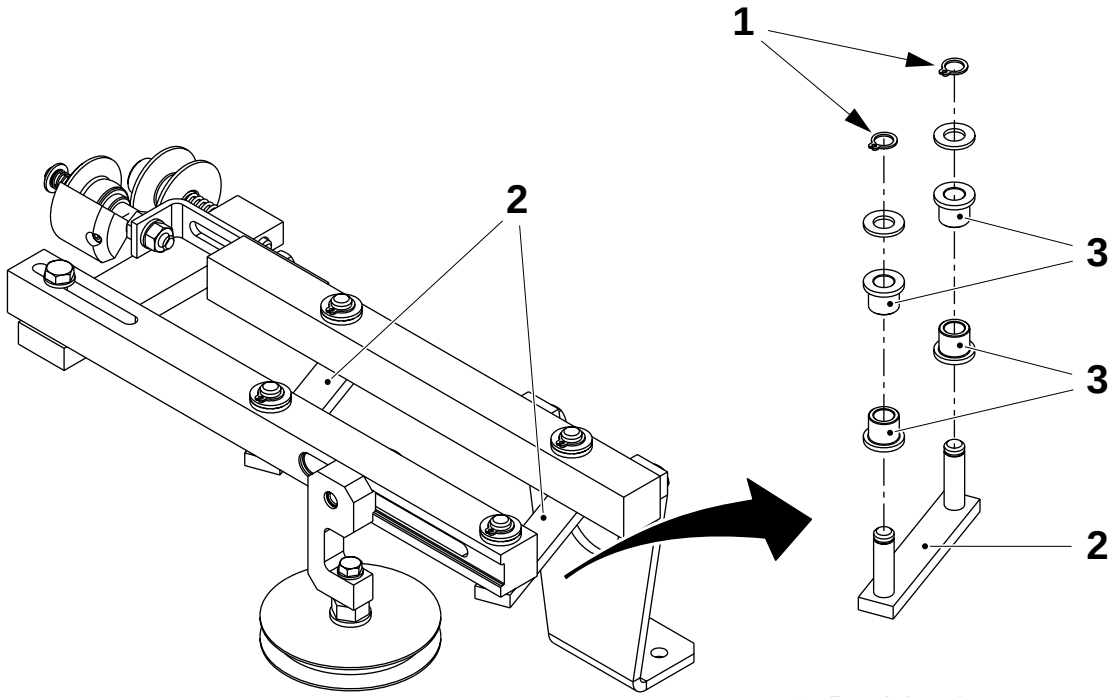

1 Retaining ring
2 Lever
3 Bushing

TechPub_2614345_0105 - 01_2772094_01.fm

7.1.5-4 Strip Guide - Set

Machine Status	SHORT STOP
SPC Reference	2576240-0100

a) Set the web guide, see 7.1.3-2 Web Guide - Set.

b) As a basic setting, set the adjusting screw (1) until the distance **A** is reached. Set the guide wheel (2) using the screw (3) so that the distance **B** is reached.

c) Set the strip guide wheels (4) using the screws (5). The strip guide wheels (4) have to be aligned.

d) Step up to PRODUCTION**.**

e) Set the position of the LS strip using the adjusting screw (1).

A = 2 ±0.5 mm
B = 12 ±2 mm

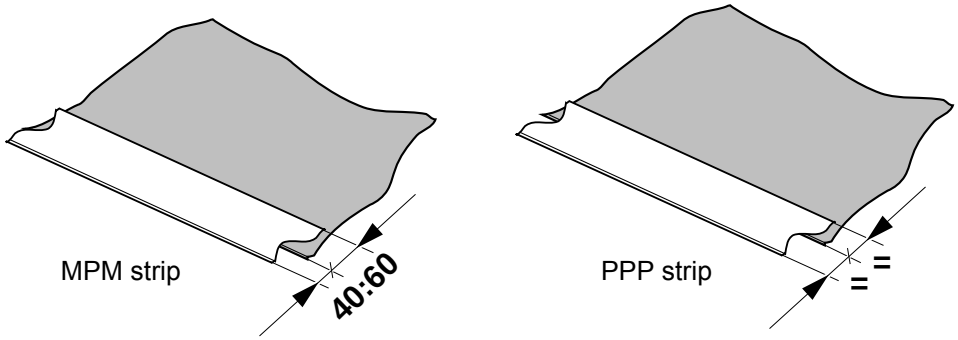

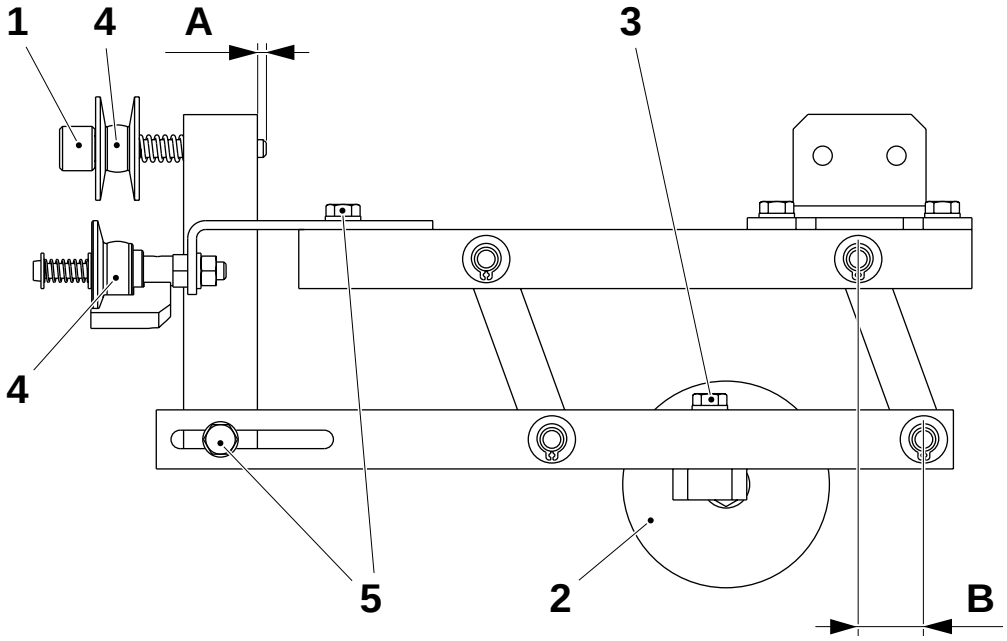

1 Adjusting screw
2 Rod
3 Guide wheel
4 Screw
5 Guide wheel
6 Screw

TechPub_2614345_0105 - 01_2772094_01.fm

7.2 Strip Magazine

7.2.1 Mounting Plate

7.2.1-1 Mounting Plate - Check Rollers

Machine Status	Power supply disconnector OFF Air supply OFF Steam supply ON Water supply OFF
SPC Reference	1499480-0100

Check the following details for wear or damage:

- the rollers (1): make sure that they rotate and slide smoothly
- the brackets (2): make sure that they twist smoothly.

Clean or change the parts, if necessary.

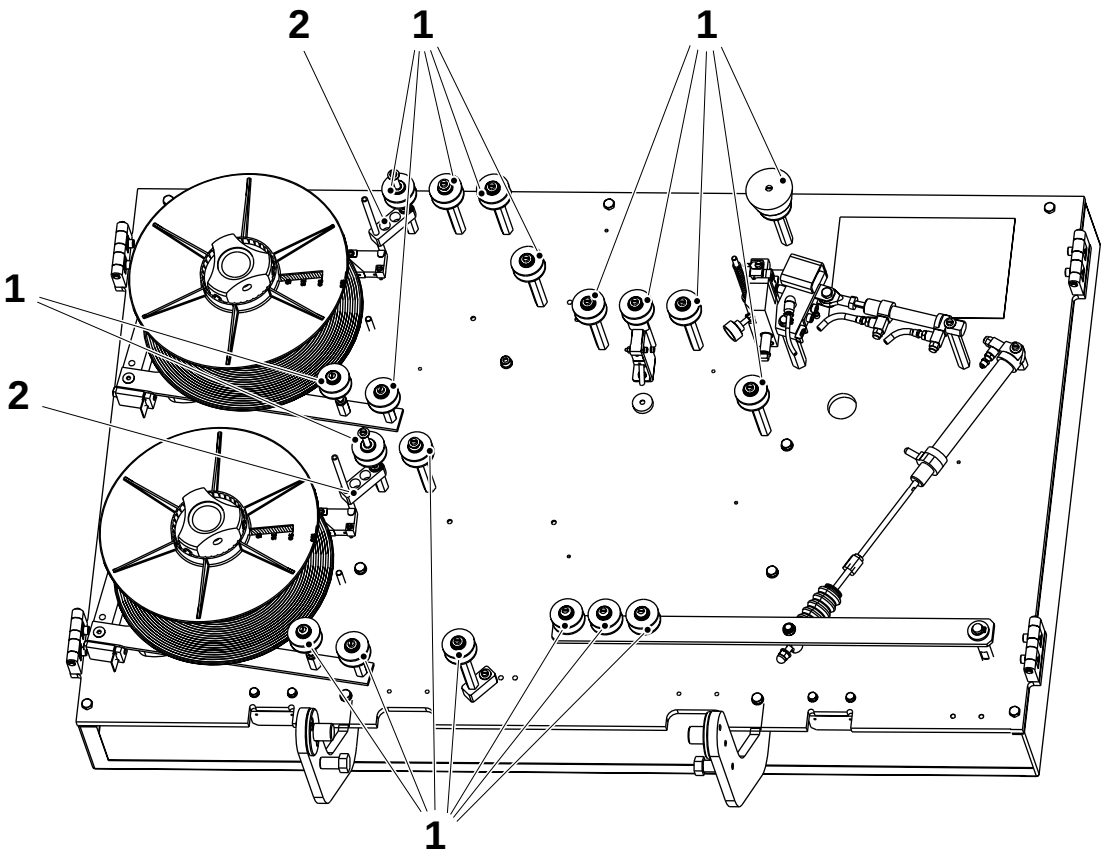

1 Roller
2 Bracket

TechPub_2614345_0105 - 01_2772095_01.fm

7.2.1-2 Mounting Plate - Check Proximity Switches

Machine Status	Power supply disconnector ON Air supply OFF Steam supply ON Water supply OFF
SPC Reference	1499480-0100

a) Check that the proximity switches (1) function correctly: the LED must go **Out** when lifting the finger (2).

b) Set the distance **A**, between the proximity switch (3) and the plate (4) on the roller (5), by shifting the inductive switch (3). If distance **A** is correctly set the LED on proximity switch (3) must be **On**.

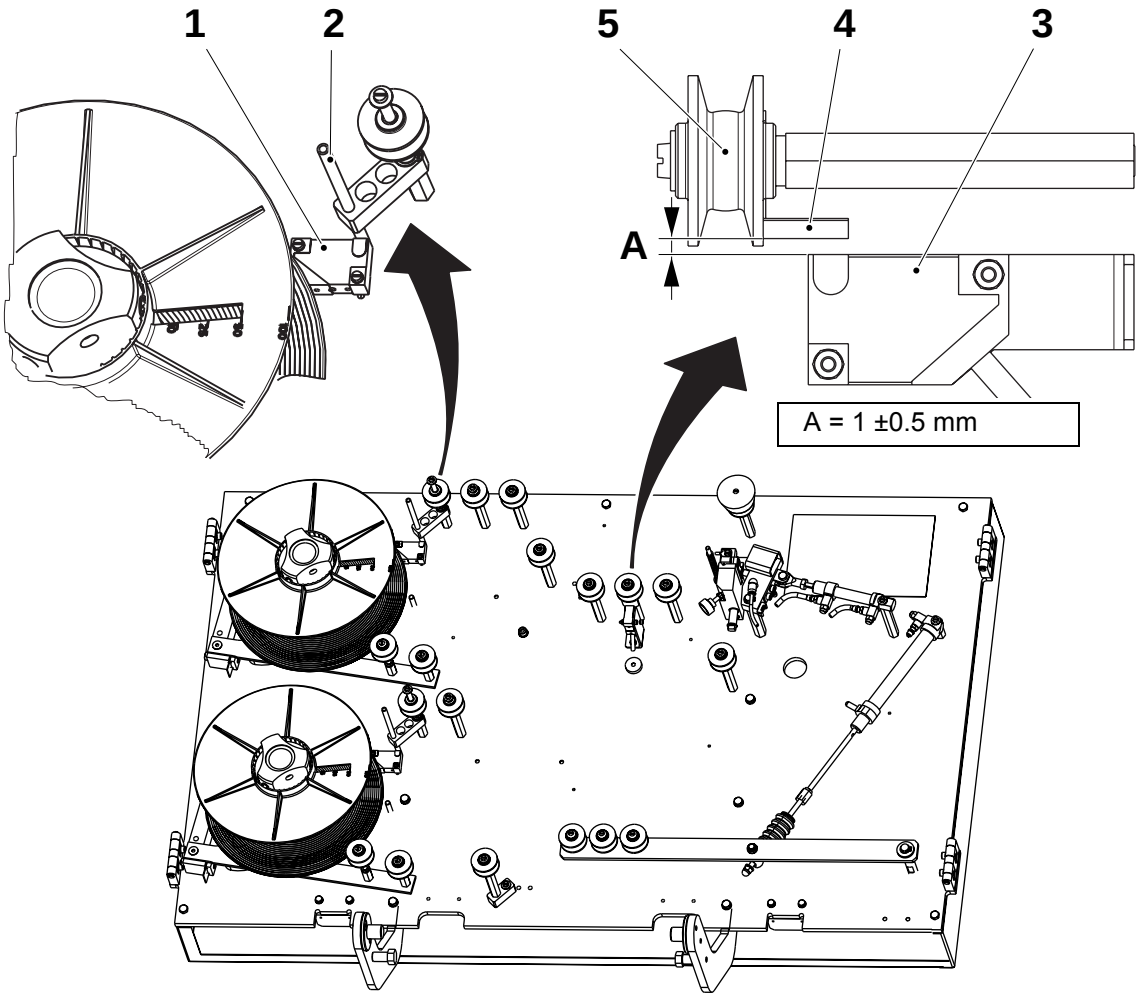

1 Proximity switch
2 Finger
3 Proximity switch
4 Plate
5 Roller

TechPub_2614345_0105 - 01_2772095_01.fm

7.2.1-3 Mounting Plate - Set Roller

Machine Status	Power supply disconnector OFF Air supply OFF Steam supply ON Water supply OFF
SPC Reference	1499480-0100

a) Make sure that the roller (1) is aligned with the packaging material. If necessary, loosen the screw (2) and adjust by turning the block (3).

b) Tighten the screw (2).

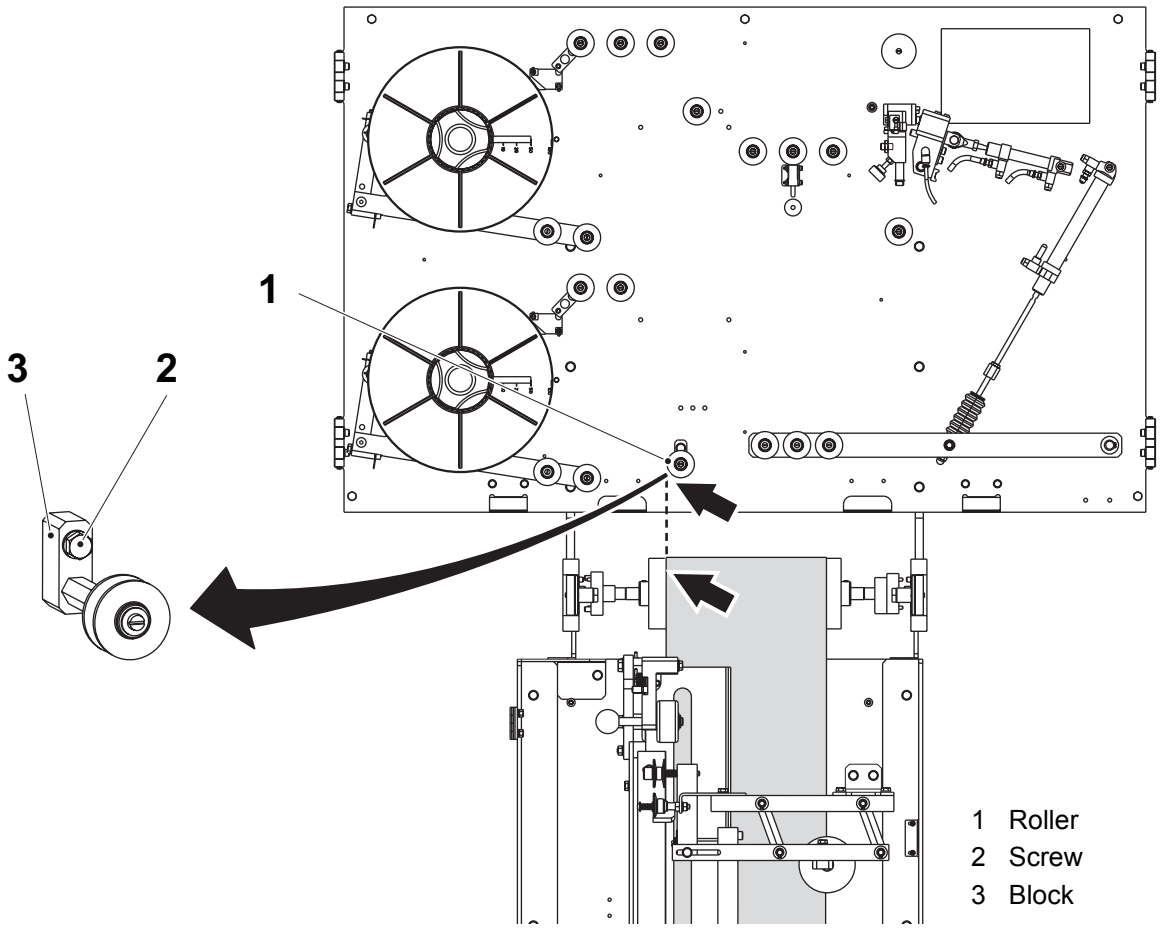

1 Roller
2 Screw
3 Block

TechPub_2614345_0105 - 01_2772095_01.fm

7.2.2 Hub Jumbo

7.2.2-1 Hub Jumbo - Check

Machine Status	Power supply disconnector OFF Air supply OFF Steam supply ON Water supply OFF
Consumables	Locking fluid TP No. 90157-16
SPC Reference	580042-0100

a) Check that the hubs (1) rotate smoothly.

b) If necessary, change the ball bearings (2) as follows:
- Remove the plastic plug (4), the circlip (3), and the hub (1).
- Press out the ball bearings (2) from the hub (1) and change them.
- Assemble in the reverse order.

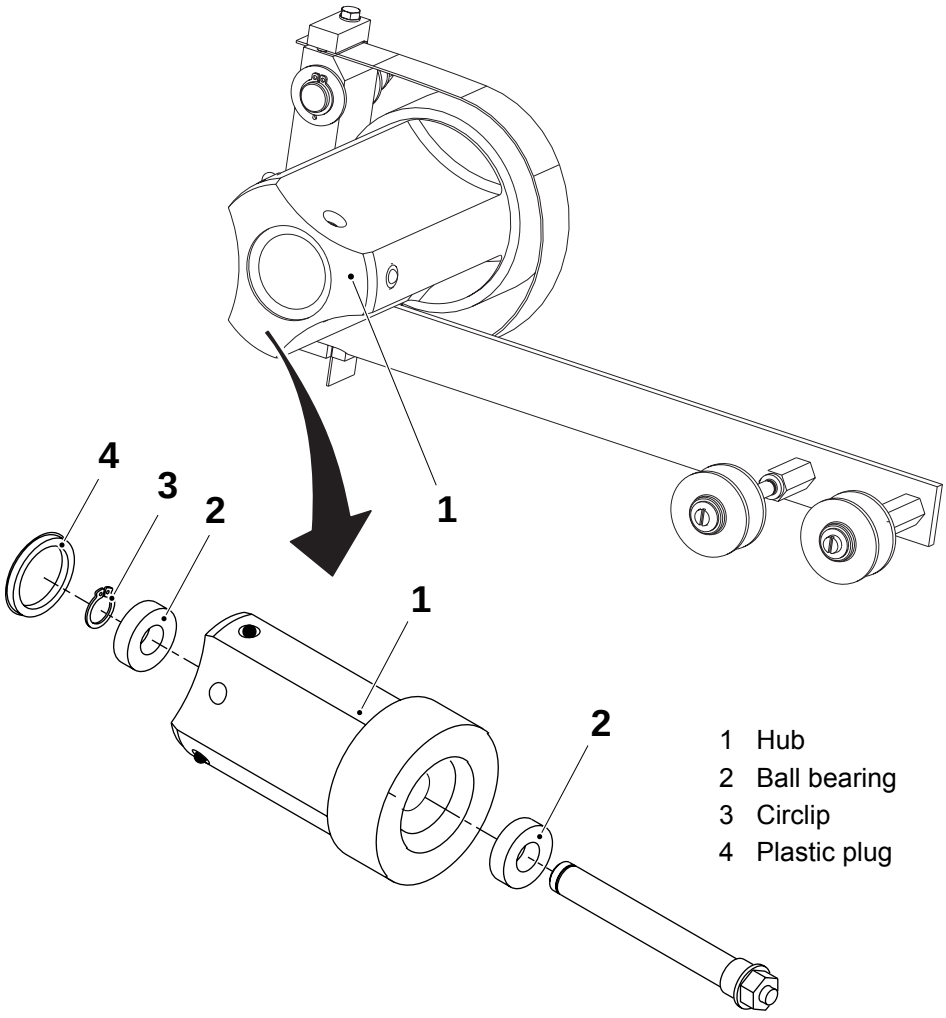

TechPub_2614345_0105 - 01_2772095_01.fm

(Cont'd)

(Cont'd)

c) Install the bobbins (5) on the hubs and check that they are properly locked by the spring loaded screws (6).

d) If necessary, remove the spring loaded screws (6) from the hub holes (7).

e) Change them and install the new ones with locking fluid.

f) Set the spring loaded screws so that the top of the cylinder (8) is in level with the hub.

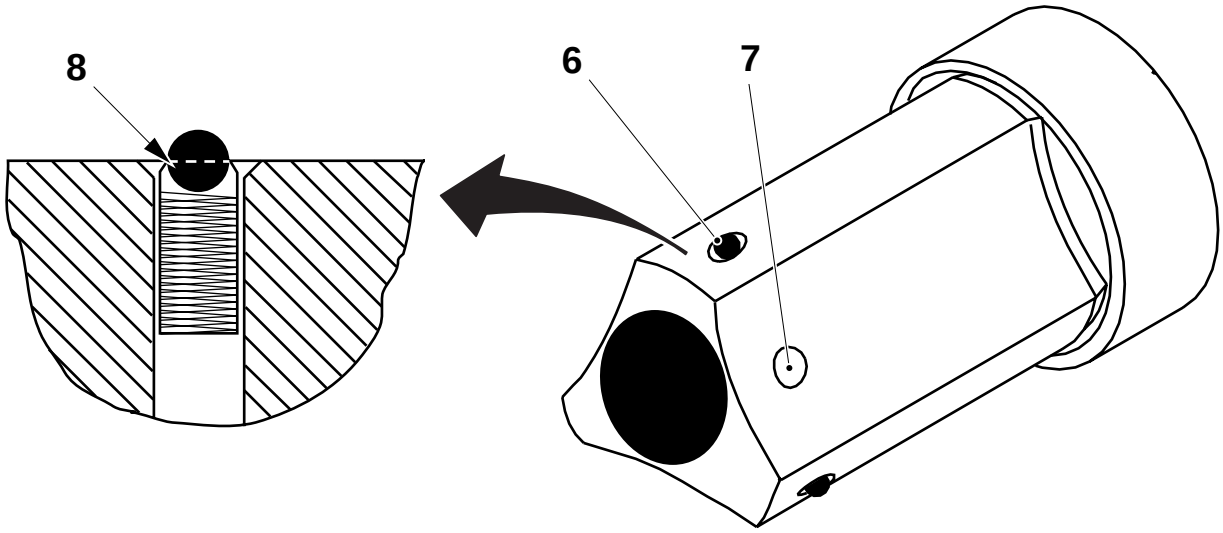

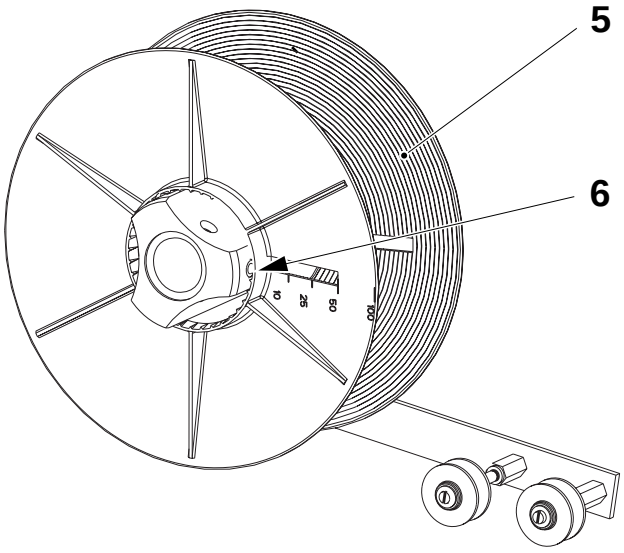

5 Bobbin
6 Spring loaded screw
7 Hub hole
8 Cylinder

TechPub_2614345_0105 - 01_2772095_01.fm

7.2.3 Cutting table

7.2.3-1 Cutting Table - Check

Machine Status	Power supply disconnector OFF Air supply OFF Steam supply ON Water supply OFF
Consumables	Locking fluid TP No. 90157-16
SPC Reference	1524477-0100

WARNING

Hot surfaces.

Risk of burns. Wear protective gloves.

a) Check that the slide (1) moves smoothly on the shafts (2) and (3). Clean the parts, if necessary.

b) Check that the pad (4) is not damaged. If necessary, remove the screws (5) and change the pad.

c) Check that the sealing block (6) is not damaged. If necessary, remove the screws (7) and change the sealing block.

d) Check that when the slide (1) is matching the sealing block (6) the spring loaded screw (8) locks correctly the slide (1). If not, adjust the spring force by turning the screw (8).

e) Lock the screw (8) with locking fluid.

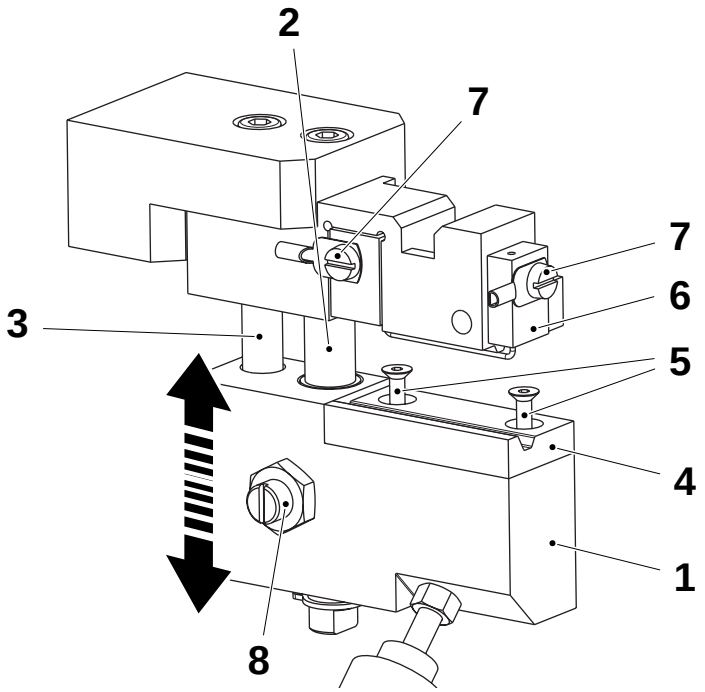

1 Slide
2 Shaft
3 Shaft
4 Pad
5 Screw
6 Sealing block
7 Screw
8 Screw

TechPub_2614345_0105 - 01_2772095_01.fm

7.2.4 Heating Device

7.2.4-1 Heating Device - Check

SPC Reference	1558897-0100

a) Check that the sealing block (1) is intact. Remove the screws (2) and change the sealing block (1) if necessary.

Note! When fitting back the sealing block (1) make sure to fully tighten the four screws (2) to ensure a good electrical connection.

b) Check that the cylinder piston (3) moves smoothly and smoothly.

c) Check that there are no air leaks in the air connections (4).

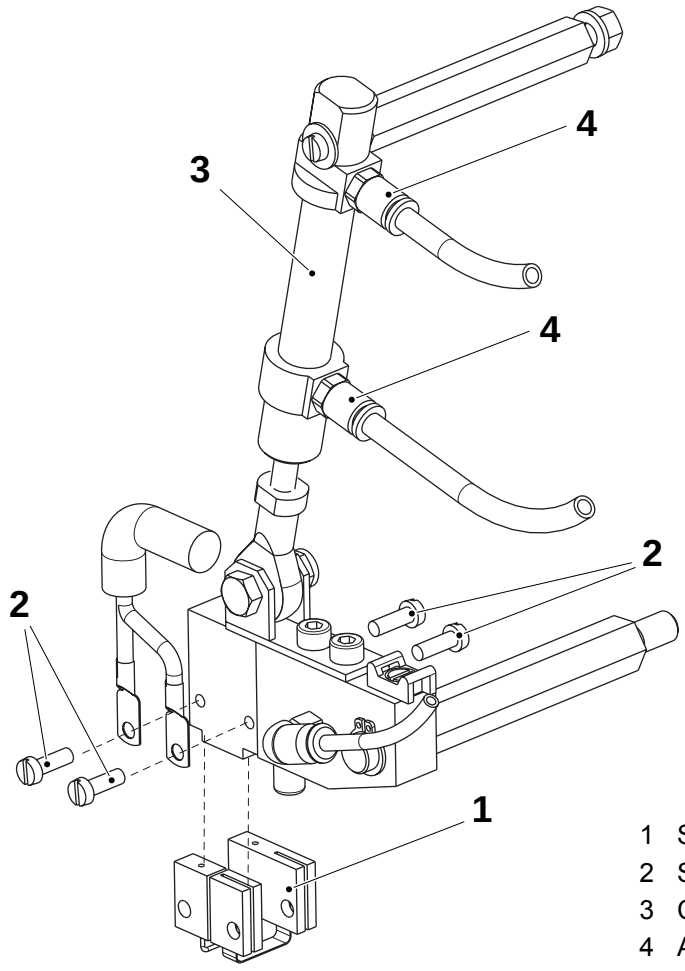

1 Sealing block
2 Screw
3 Cylinder piston
4 Air connection

TechPub_2614345_0105 - 01_2772095_01.fm

7.2.4-2 Heating Device - Set position

Machine Status	Power supply disconnector OFF Air supply OFF Steam supply ON Water supply OFF
SPC Reference	1558897-0100

WARNING

Hot surfaces.

Risk of burns. Wear protective gloves.

a) Set the position of the sealing strip (1) so that it matches the bottom of the splice block (2) using the screws (3), (one on each side).

b) With the cylinder fully extended, set the parallelism between the splice block (2) and the pad (4) using the screws (5) at the rear of the mounting plate.

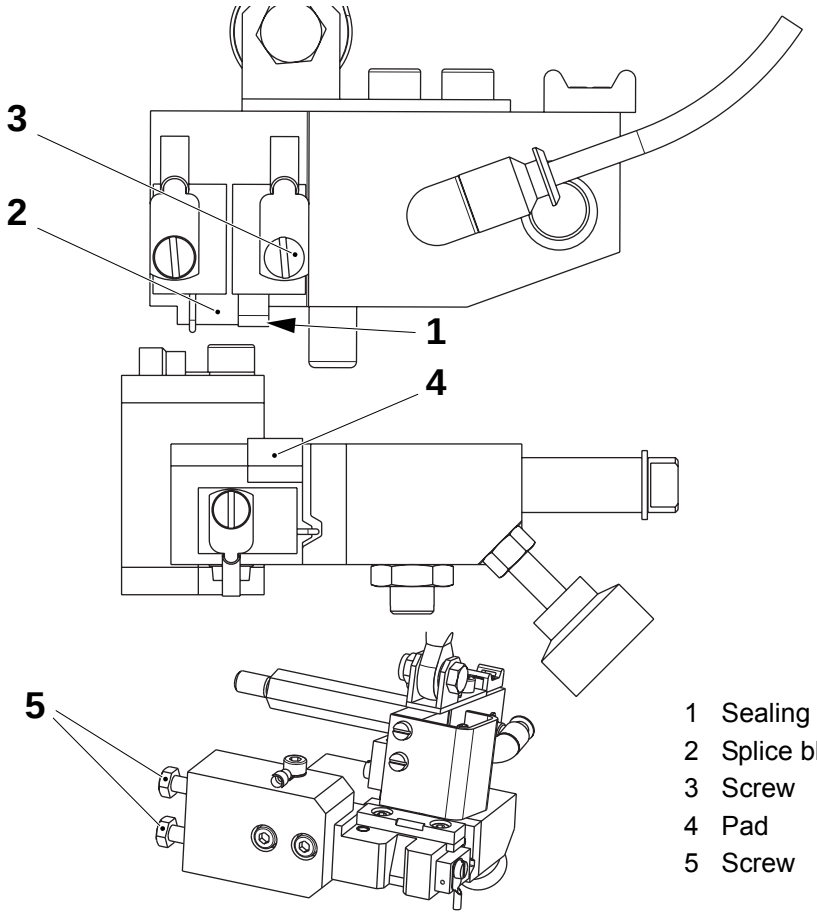

1 Sealing strip
2 Splice block
3 Screw
4 Pad
5 Screw

(Cont'd)

TechPub_2614345_0105 - 01_2772095_01.fm

(Cont'd)

c) Move the piston of the cylinder (6) by hand until it is fully in.

d) Loosen the nut (7).

e) Set the distance **A** between the finger (9) and the slide (10) using the link head (8).

f) Tighten the nut (7).

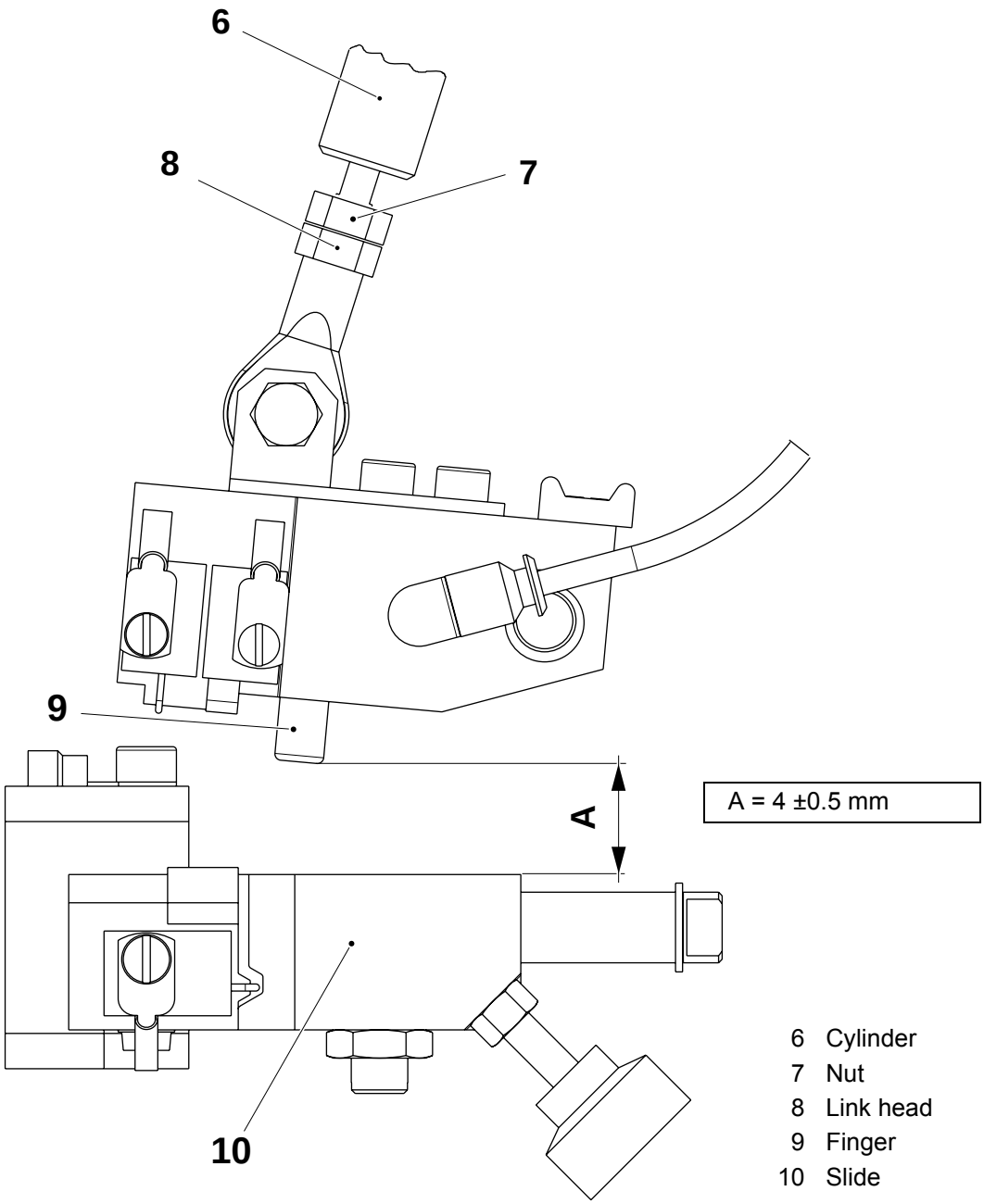

TechPub_2614345_0105 - 01_2772095_01.fm

7.2.4-3 Heating Device - Set Cut Pulse Time

Machine Status	Power supply disconnector OFF Air supply OFF Steam supply ON Water supply OFF
SPC Reference	1558897-0100

On the TPOP press the STRIP APPLICATOR button (1) to set the strip cut pulse time. For further details see OM TPOP display section.

The default value is **1200** ms but adjustment may be needed due to ambient temperature and strip variations.

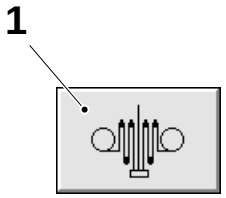

1 STRIP APPLICATOR button

TechPub_2614345_0105 - 01_2772095_01.fm

7.2.5 Brake Arm

7.2.5-1 Brake Arm - Check Function

Machine Status	PRODUCTION
SPC Reference	580060-0200

a) On both brake arms, check that the belt (1) is intact and that it brakes the hub (3) when the arm is lowered. Change it, if necessary.

b) Make sure that the arm follows the strip tension.

c) check the following parts:

– Make sure that the rollers (4) and (5) are intact and that rotate and slide smoothly.

Change or clean the rollers (4, 5) if necessary.

d) Make sure that the brake arm is easy to turn. If not, remove the circlip (2) and the washer. Remove the arm and press out the bushing from the arm. Change the bushing and assemble in the reverse order.

e) If necessary, set the brake arm, see 7.2.5-2 Brake Arm - Set.

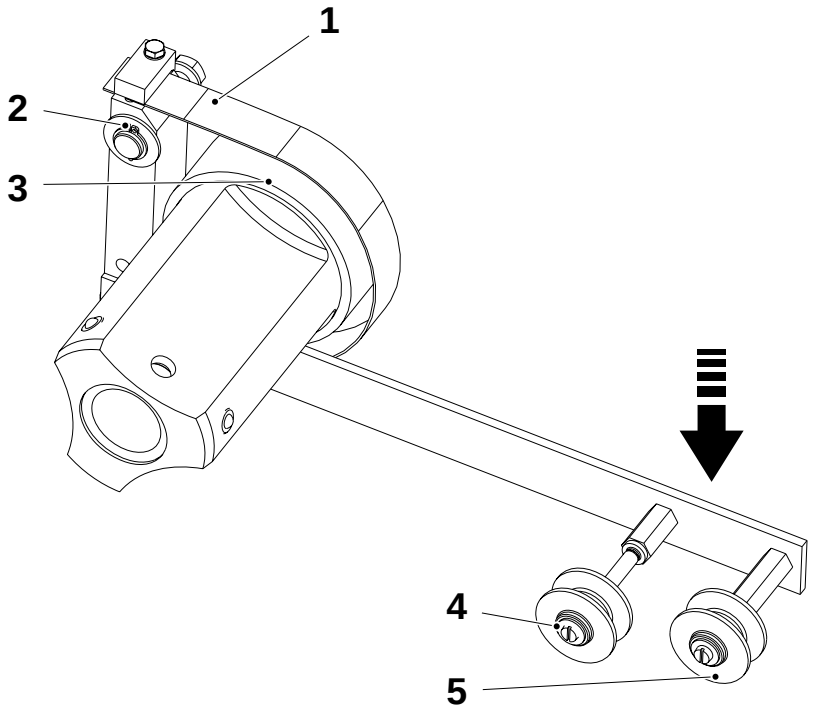

1 Belt
2 Circlip
3 hub
4 Roller
5 Roller

TechPub_2614345_0105 - 01_2772095_01.fm

7.2.5-2 Brake Arm - Set

Machine Status	Power supply disconnector OFF Air supply OFF Steam supply ON Water supply OFF
SPC Reference	580060-0200

a) On both brake arms set the distance **A** between the brake arm and the stop finger (1).

b) Loosen the screw (2) and set, if necessary, by tensing the belt (3).

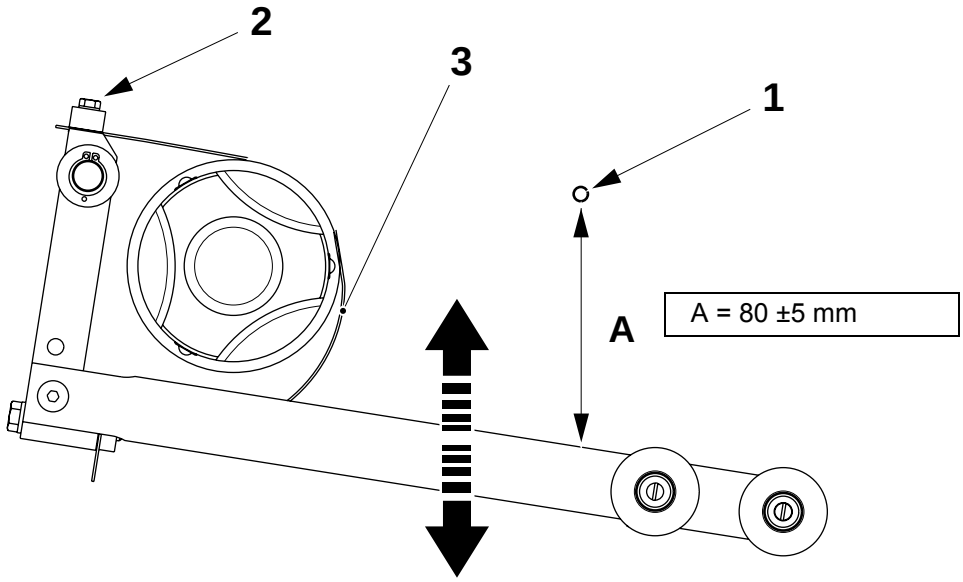

1 Stop finger
2 Screw
3 Belt

TechPub_2614345_0105 - 01_2772095_01.fm

(Cont'd)

(Cont'd)

c) Push the brake arm upwards to touch the stop finger (1) and make sure that the belt (3) doesn't touch at any point around the hub (4).

d) If necessary, manually bend the spring (5).

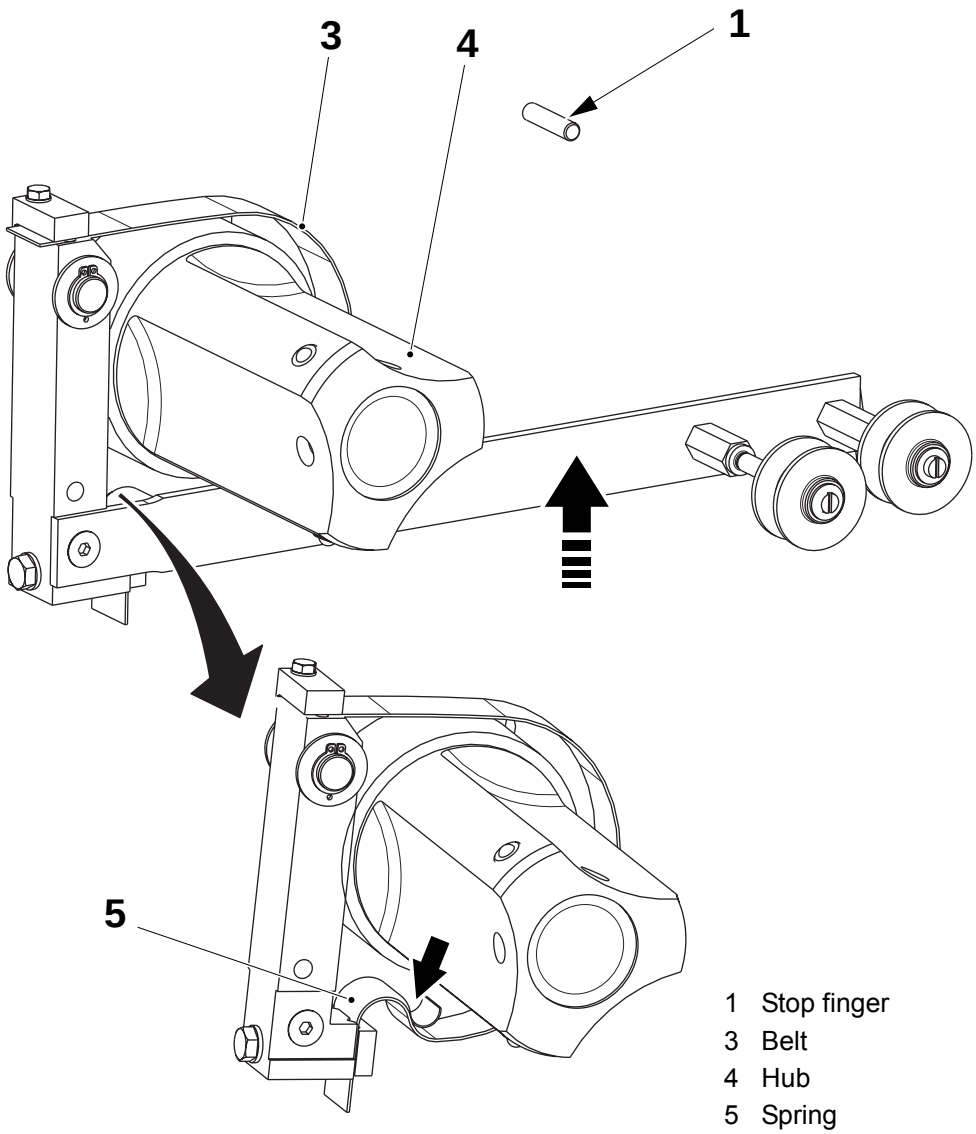

1 Stop finger
3 Belt
4 Hub
5 Spring

TechPub_2614345_0105 - 01_2772095_01.fm

7.2.6 Splicing Magazine

7.2.6-1 Splicing Magazine - Check

Machine Status	PREHEATING I
SPC Reference	580044-0200

a) Check that the rollers (1) are clean and rotate smoothly. Clean or change the parts, if necessary.

b) Check that the bushings are clean and intact. Clean the bushings or change them as follows:

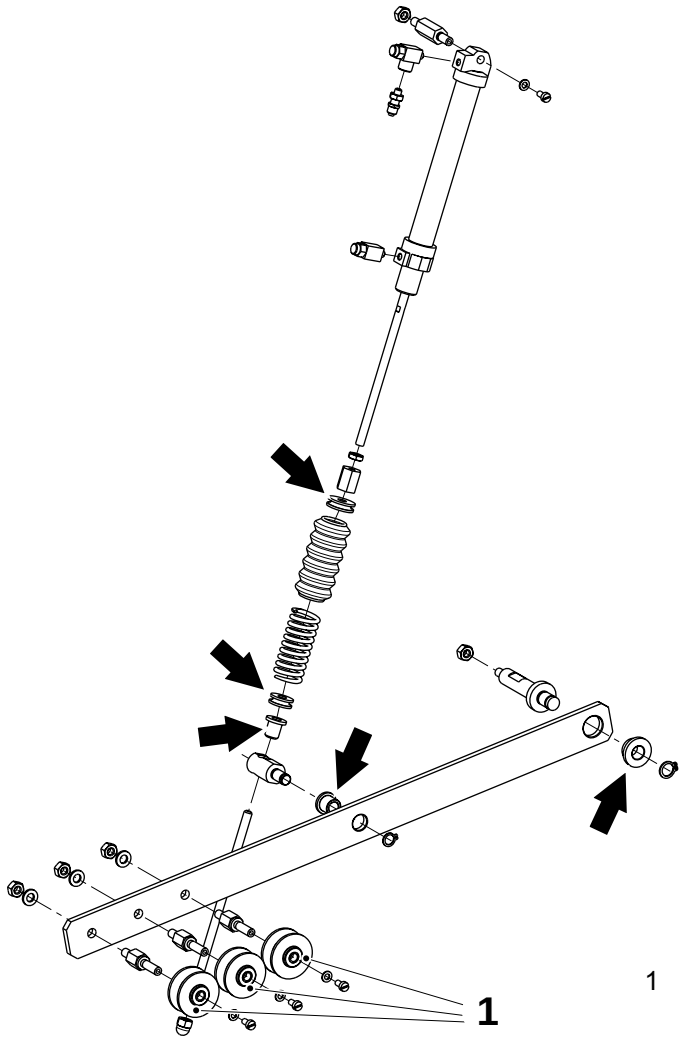

1 Roller

(Cont'd)

TechPub_2614345_0105 - 01_2772095_01.fm

(Cont'd)

c) Loosen the nut (2) and remove the washer.

d) Remove the bellow (3) and the spring (4). Change the bushings (5) and (6) and the spring (4) if necessary.

e) Remove the circlips (7) and (8).

f) Remove the guide axle (9) and change the bushings (10) and (11).

g) Assemble in the reverse order.

h) Check that the cylinder piston (12) moves smoothly. If necessary, loosen the
nut (13), disconnect the air connections, remove the screw (14) and change the cylinder.

i) Assemble in the reverse order.

Note! Make a manual splice and check that the cylinder piston (12) retracts after one or two seconds and that the piston goes from fully retracted to fully extended in 10 to 15 seconds.

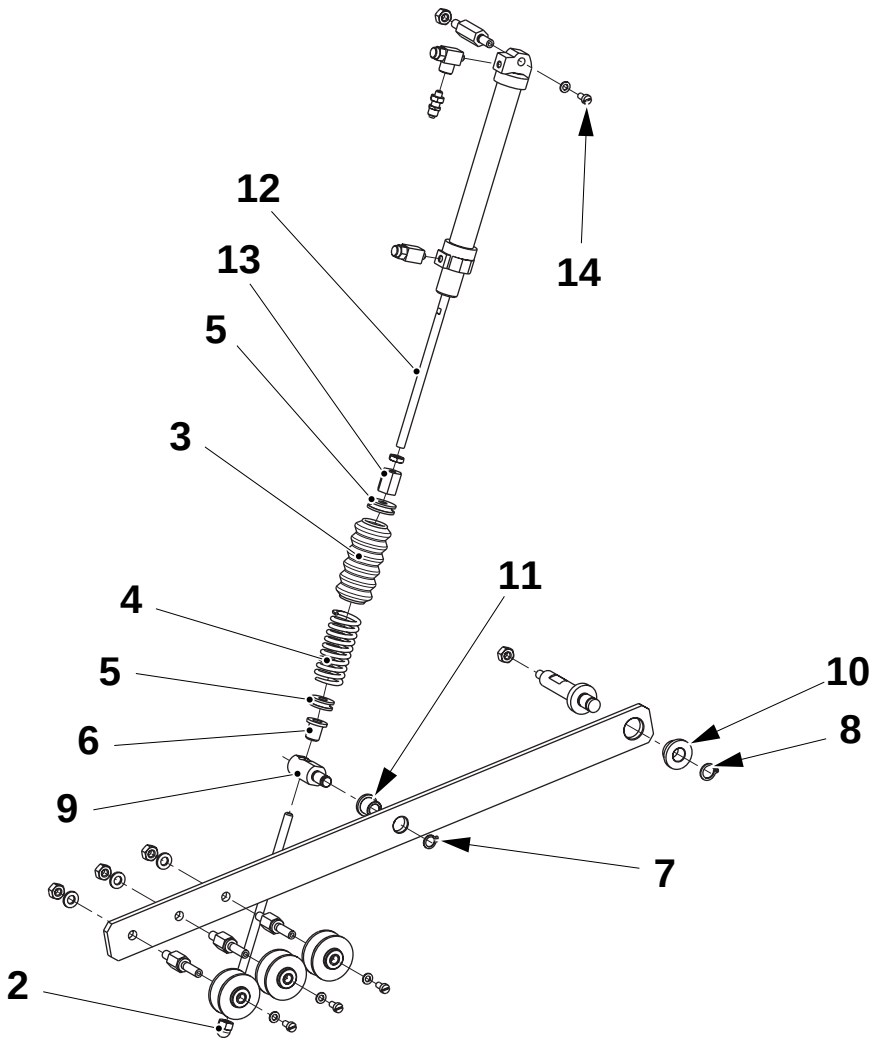

2 Nut
3 Bellow
4 Spring
5 Bushing
6 Bushing
7 Circlip
8 Circlip
9 Axle
10 Bushing
11 Bushing
12 Piston
13 Nut
14 Screw

TechPub_2614345_0105 - 01_2772095_01.fm

7.3 Web Tunnel

7.3-1 Web Tunnel- Check Rollers

Machine Status	Power supply disconnector OFF Air supply OFF Steam supply ON Water supply OFF
SPC Reference	1499477-0100

a) Check the rollers (1) and (2) for damage or wear and that they rotate smoothly.

b) If necessary, change the bearings (3) and (4) on both sides of the rollers by releasing the screws (5), (6), and (9) and the retaining rings (7) and (8).

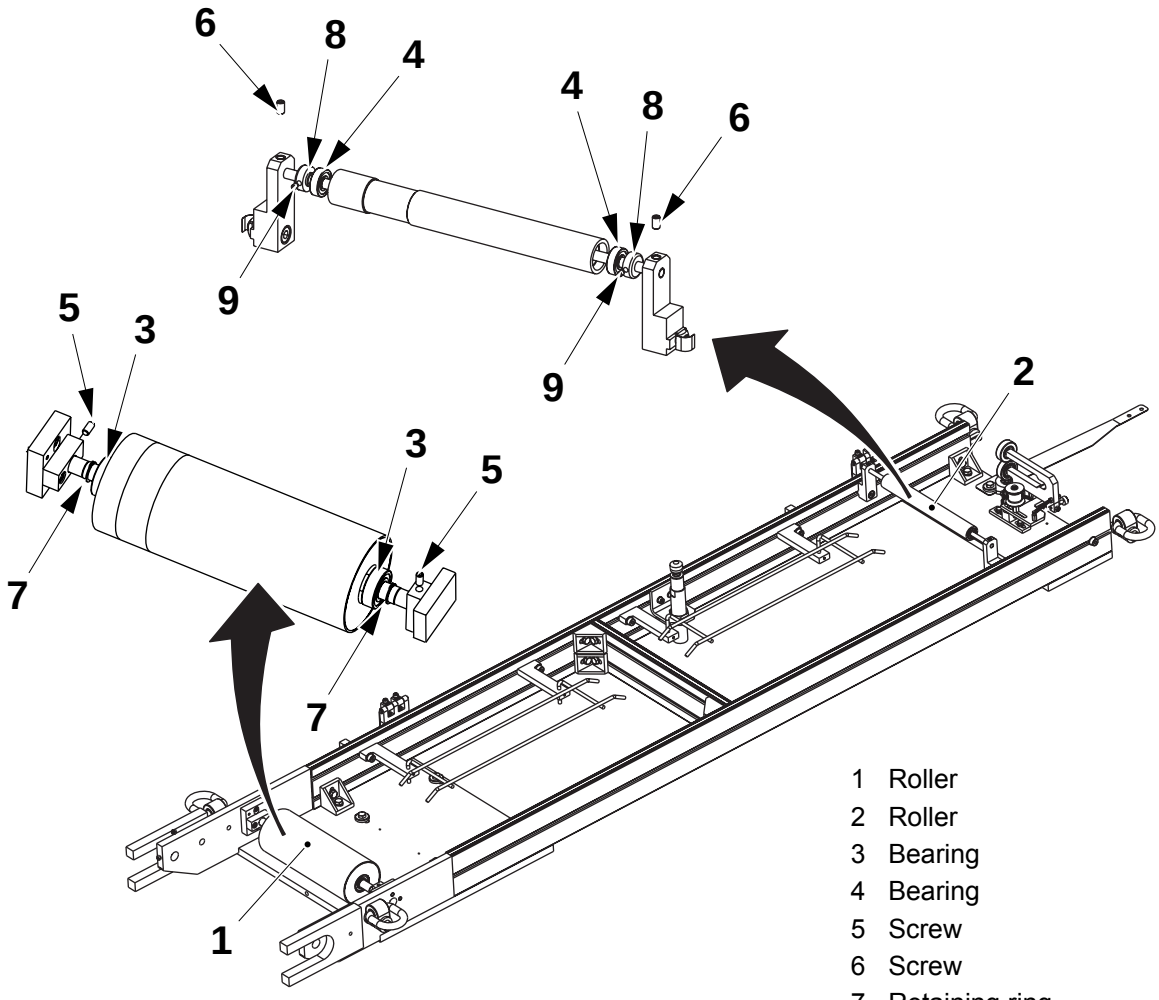

1 Roller
2 Roller
3 Bearing
4 Bearing
5 Screw
6 Screw
7 Retaining ring
8 Retaining ring
9 Screw

TechPub_2614345_0105 - 01_2772096_01.fm

7.3.1 Web Guide

7.3.1-1 Web Guide- Check

Machine Status	Power supply disconnector OFF Air supply OFF Steam supply ON Water supply OFF
SPC Reference	1517065-0100

Check the roller surfaces are not damaged and that the rollers rotate smoothly, if necessary:

a) Remove the nuts (1), the washers and the retaining rings (2).

b) Change the ball bearings (3), the rubber roller (5) or the steel roller (4) if necessary.

c) Check that the edge guide wheel (6) is clean. If not, remove the circlip (7) and pull off and clean the guide wheel (6). If the wheel is worn or damaged, replace it.

d) Remove the screw (8), and the washer and change the ball bearings (9) if necessary.

e) Assemble in the reverse order.

Note! Use the eccentric screw (10) to make sure that the roller (4) touches the packaging material. Install the rubber roller (5) on the printed side of the packaging material web.

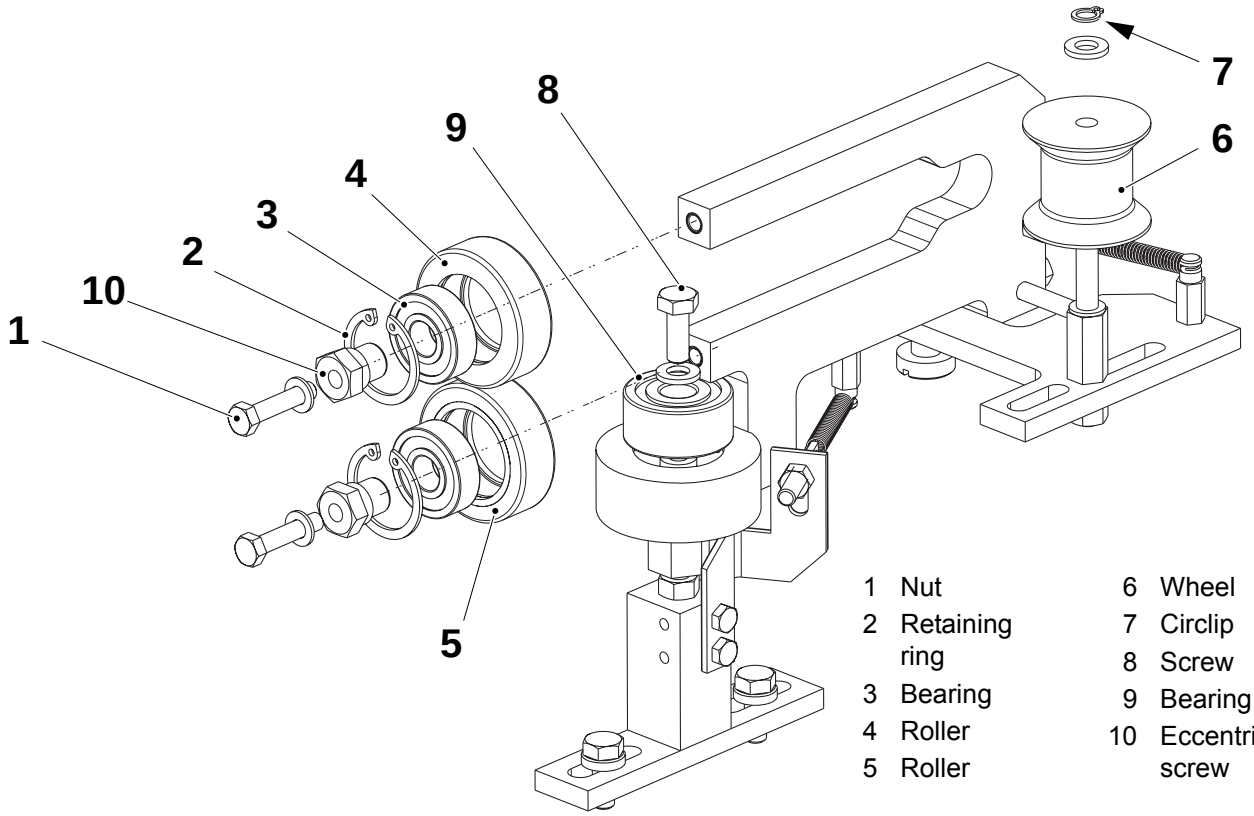

TechPub_2614345_0105 - 01_2772096_01.fm

7.3.1-2 Web Guide- Set

Machine Status	Power supply disconnector OFF Air supply OFF Steam supply ON Water supply OFF
SPC Reference	1517065-0100

a) Make sure that the clamp plate (1) is fitted approximately in the middle of the slots (2).

b) Thread the packaging material.

c) Make sure that the roller (3) touches the packaging material by loosening the nut (4) and shifting the roller (3) sideways.

d) Step up the machine to PRODUCTION.

e) Perform a final setting by turning the knob (5).

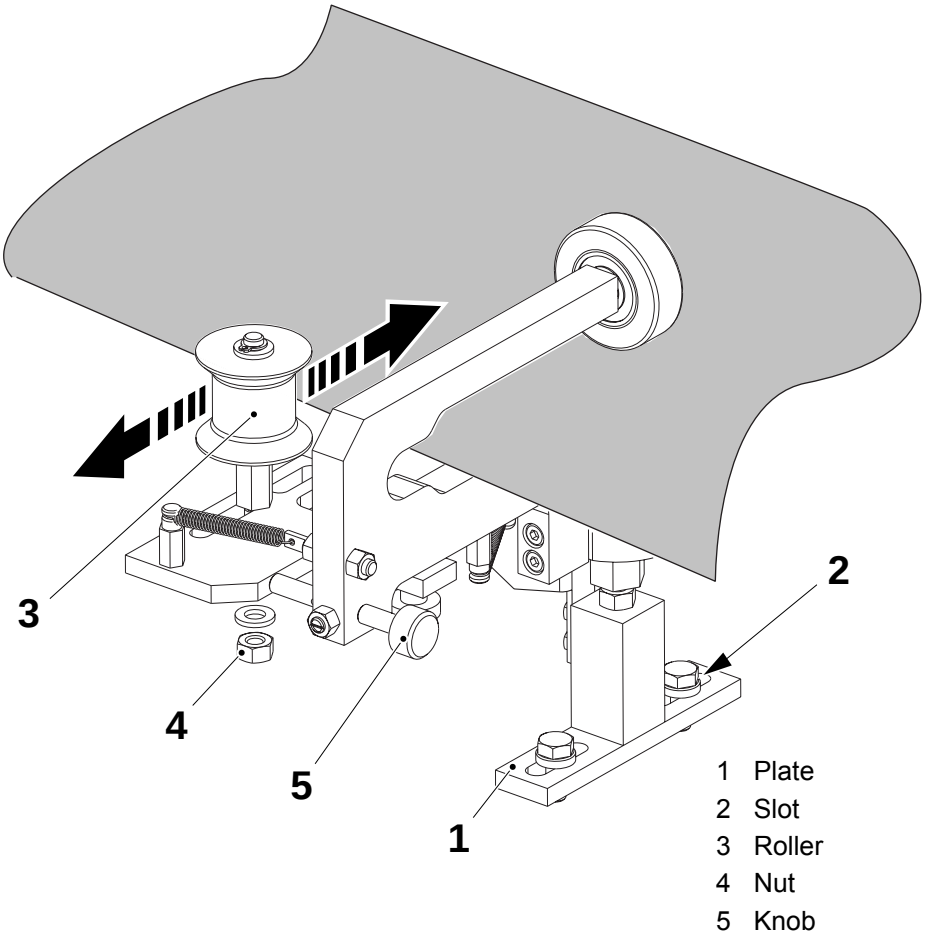

TechPub_2614345_0105 - 01_2772096_01.fm

9 Packaging Material Infeed

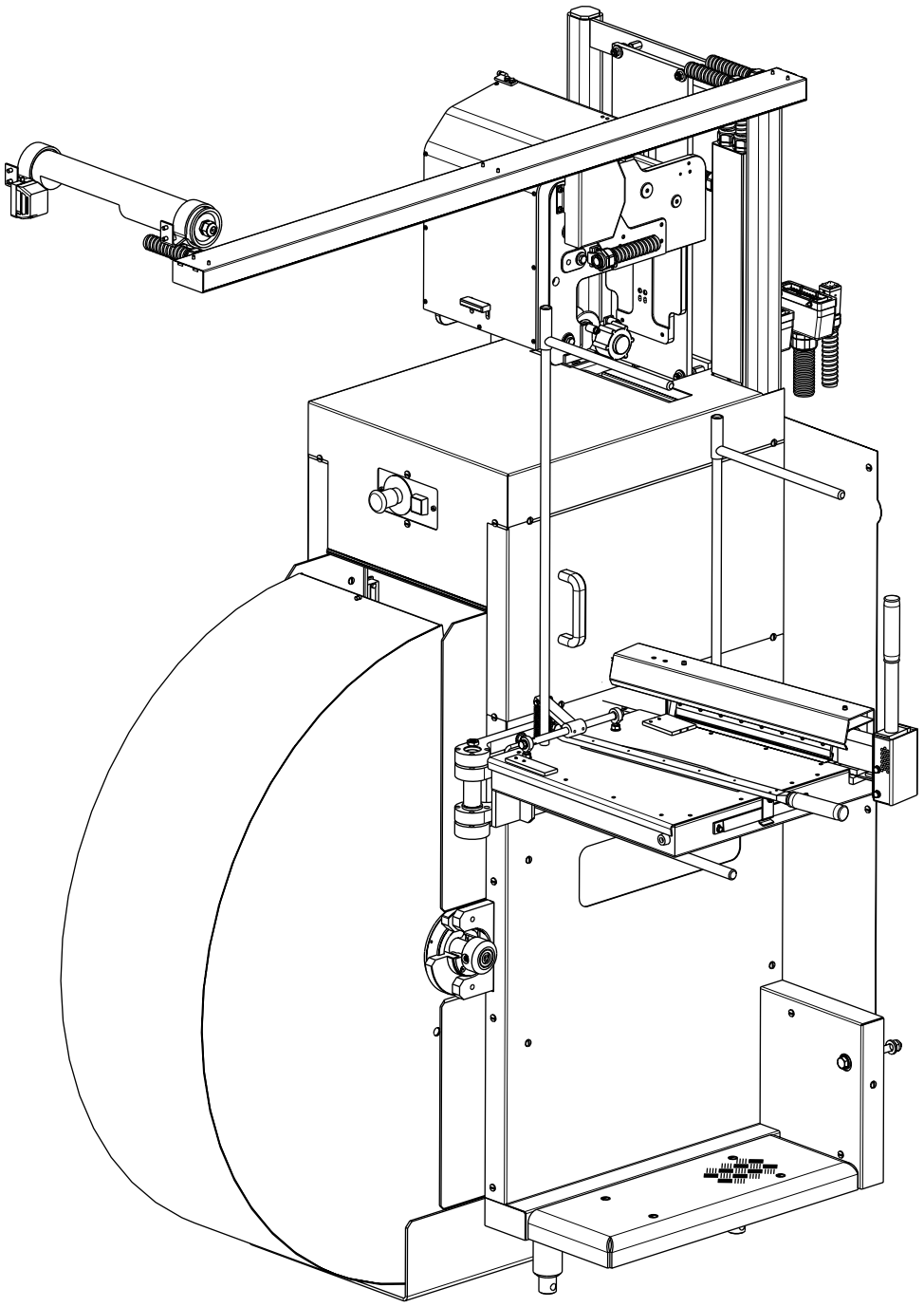

TechPub_2614345_0105 - 01_2772097_01.fm

Packaging Material Infeed - Description

SPC Reference	648156-0200

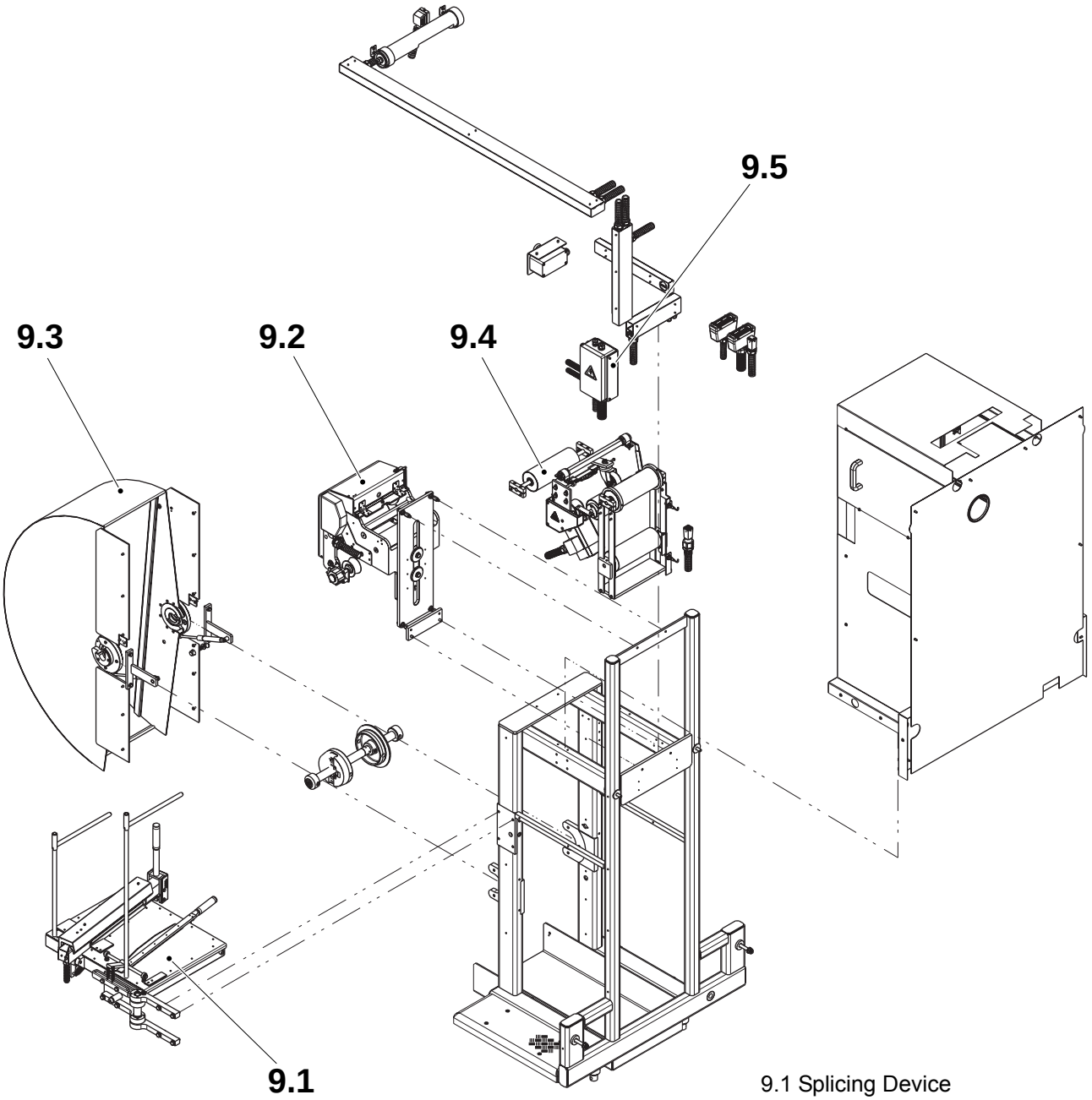

9.1 Splicing Device
9.2 Dating Unit
9.3 Turnable Cover
9.4 Paper Magazine
9.5 Electrical Equipment

TechPub_2614345_0105 - 01_2772097_01.fm

9.1 Splicing Device . . . . . 9 - 5

9.1-1 Splicing Device - Set . . . . . 9 - 5

9.1.1 Heating Block and Counter Rail . . . . . 9 - 8

9.1.1-1 Heating Block and Counter Rail - Check Teflon Tape and Cloth . . . . . 9 - 8

9.2 Dating Unit . . . . . 9 - 11

9.2.1 Ink Unit . . . . . 9 - 11

9.2.1-1 Ink Unit - Overhaul . . . . . 9 - 11

9.2.1-2 Ink Unit - Set . . . . . 9 - 14

9.2.2 Dating unit . . . . . 9 - 16

9.2.2-1 Dating Unit - Set . . . . . 9 - 16

9.3 Turnable Cover . . . . . 9 - 24

9.3-1 Turnable Cover- Check . . . . . 9 - 24

9.4 Paper Magazine . . . . . 9 - 25

9.4-1 Paper Magazine - Check Bending Rollers . . . . . 9 - 25

9.4-2 Paper Magazine - Check Belt Tension . . . . . 9 - 30

9.4-3 Paper Magazine - Change Belt . . . . . 9 - 31

9.4-4 Paper Magazine - Check Un-reeling Function . . 9 - 32

9.4-5 Paper Magazine - Check Brake . . . . . 9 - 33

9.4-6 Paper Magazine - Set Paper Guide . . . . . 9 - 34

9.5 Electrical Equipment . . . . . 9 - 35

9.5-1 Electrical Equipment - Set Photocells . . . . . 9 - 35

9.6 Packaging Material Reel Trolley . . . . . 9 - 37

9.6-1 Packaging Material Reel Trolley - Check Function . . . . . 9 - 37

9.6-2 Packaging Material Reel Trolley - Change Pump Cylinder . . . . . 9 - 38

9.6-3 Packaging Material Reel Trolley - Change Sink Valve . . . . . 9 - 40

9.6-4 Packaging Material Reel Trolley - Overhaul Lifting Cylinder . . . . . 9 - 41

TechPub_2614345_0105 - 01_2772097_01.fm

9.6-5 Packaging Material Reel Trolley - Remove Fork Reel . . . . . 9 - 44

9.6-6 Packaging Material Reel Trolley - Remove Guide Wheel . . . . . 9 - 45

TechPub_2614345_0105 - 01_2772097_01.fm

9.1 Splicing Device

9.1-1 Splicing Device - Set

Machine Status	Power supply disconnector OFF Air supply OFF Steam supply ON Water supply OFF
Special Equipment	Thermometer
SPC Reference	2501836-0100

WARNING
Risk of cutting.
Follow the Safety Precautions.

f) Align the paper web with the blocks (1).

g) Set the distance **A** between the mark (2) and the holder (3) by loosening the grub screws (4) and moving the bracket (5).

h) Check that the overlap in the sealing zone is **10-15** mm.

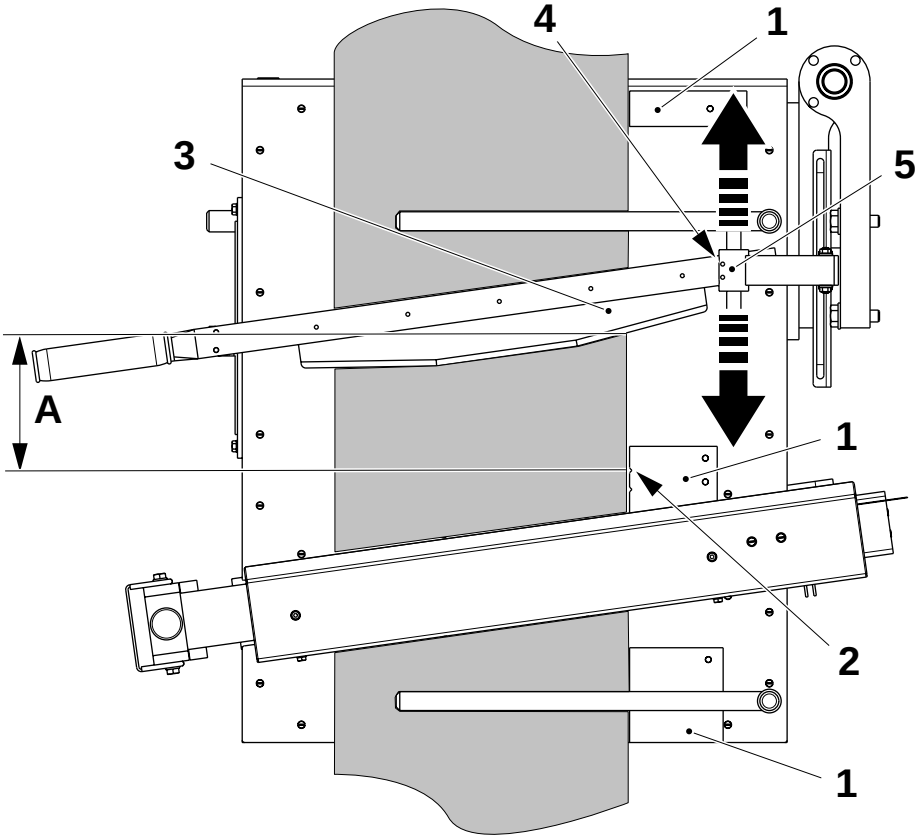

1 Block
2 Mark
3 Holder
4 Grub screw
5 Bracket

(Cont'd)

TechPub_2614345_0105 - 01_2772097_01.fm

(Cont'd)

Set Knife

By loosening the screws (1) set the knife (2) so that the edge is levelled with the bottom of the sealing arm.

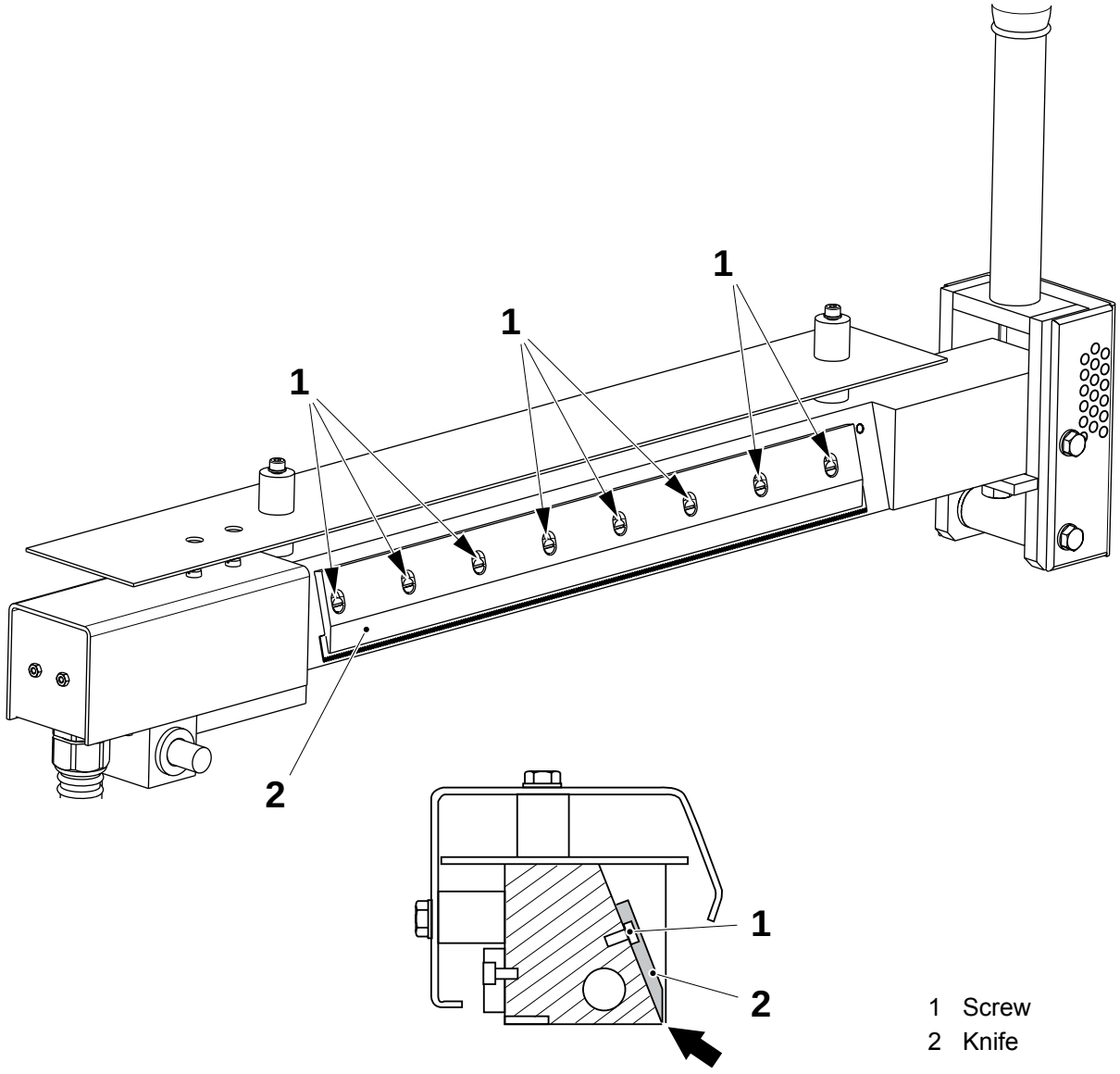

1 Screw
2 Knife

(Cont'd)

TechPub_2614345_0105 - 01_2772097_01.fm

(Cont'd)

Set Temperature

a) Step up the machine to PREHEATING I and wait for approximately 10 minutes.

Note! Measure the temperature on the side surface (1) of the heating element, close to the clamp bar (2).

WARNING

Hot surfaces.
Risk of burns. Wear protective gloves.

b) Remove the cover (3) and set the outer sealing arm temperature using the potentiometer (4) to approximately 200°C. Turn **to the left** to **increase** the temperature.

c) Assemble in the reverse order.

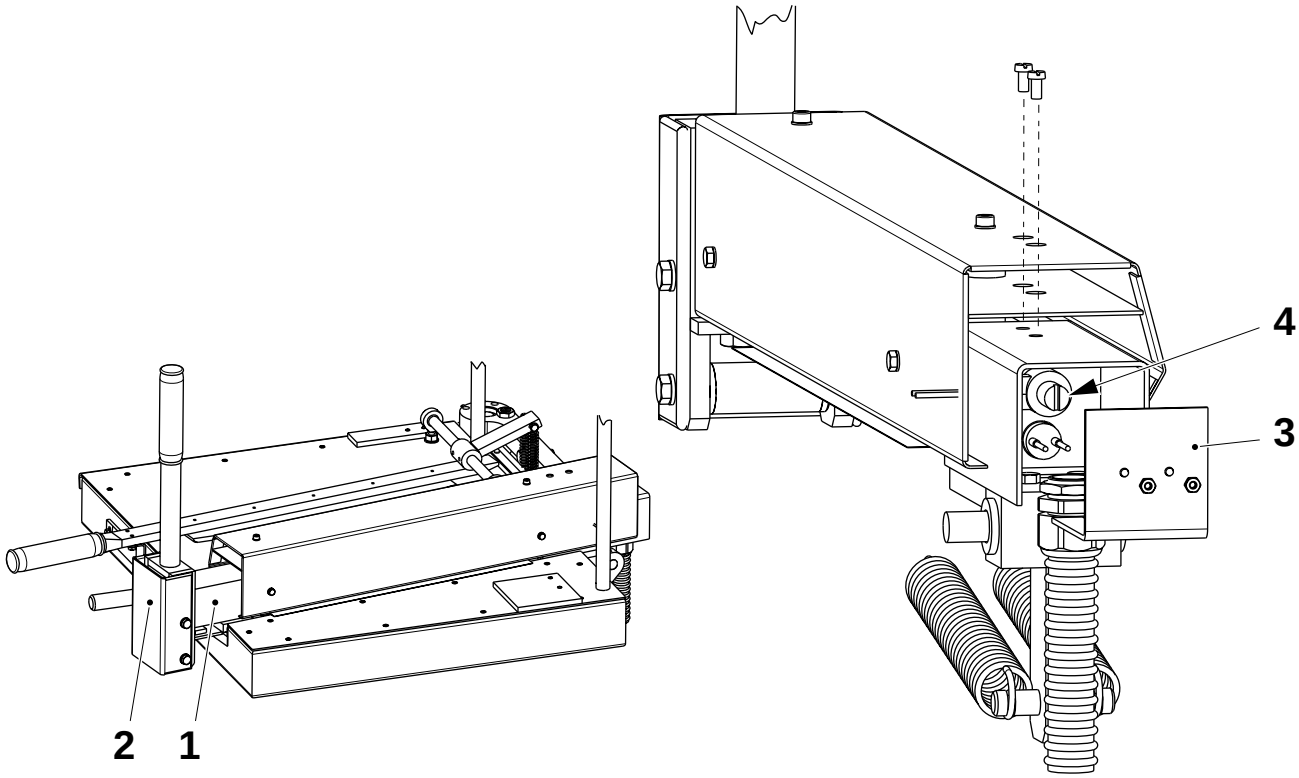

1 Surface
2 Clamp bar
3 Cover
4 Potentiometer

TechPub_2614345_0105 - 01_2772097_01.fm

9.1.1 Heating Block and Counter Rail

9.1.1-1 Heating Block and Counter Rail - Check Teflon Tape and Cloth

Machine Status	Power supply disconnector OFF Air supply OFF Steam supply ON Water supply OFF
Special Equipment	Hot-air gun
Consumables	Degreasing agent
SPC Reference	37877-0400 37894-0100

Check that the teflon tape (1) and teflon cloth (2) are not worn and or damaged.

If necessary, change as follows.

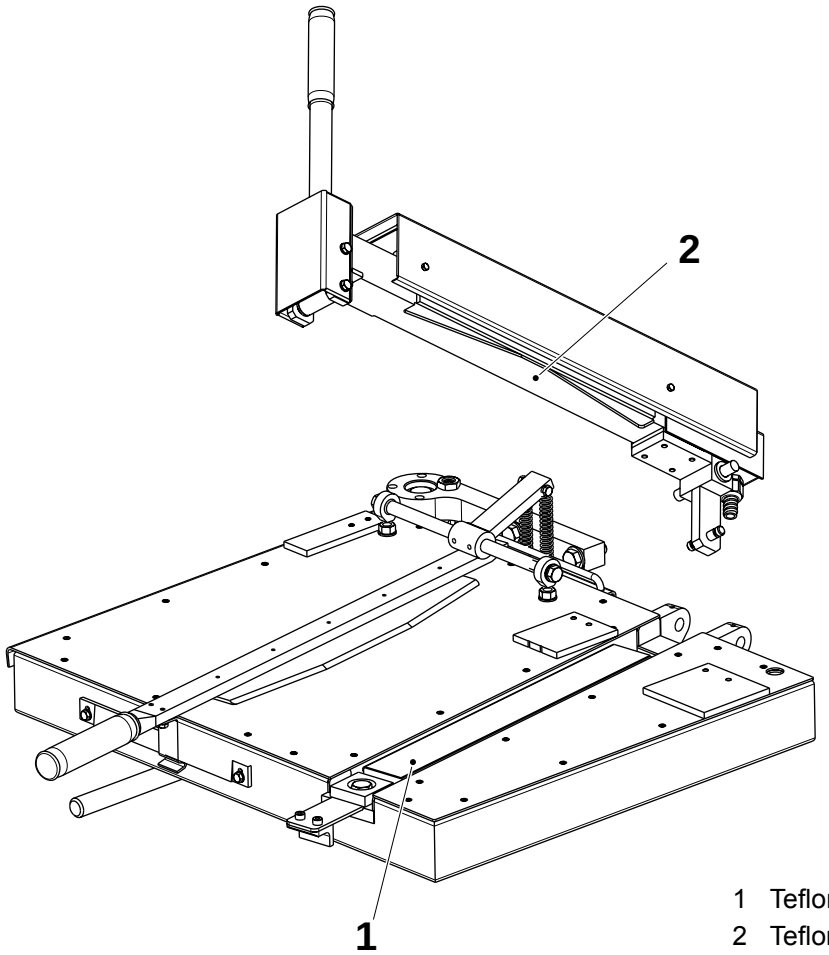

1 Teflon tape
2 Teflon cloth

(Cont'd)

TechPub_2614345_0105 - 01_2772097_01.fm

(Cont'd)

WARNING

Hot surfaces.
Risk of burns. Wear protective gloves.

Change Teflon Tape

a) Remove the old teflon tape (1) from the counter rail.

b) Warm up the surface of the counter rail to approximately 80°C.

c) Put the new teflon tape (1) in the position shown below.

Note! Make sure that there are no air bubbles between the tape and the rail.

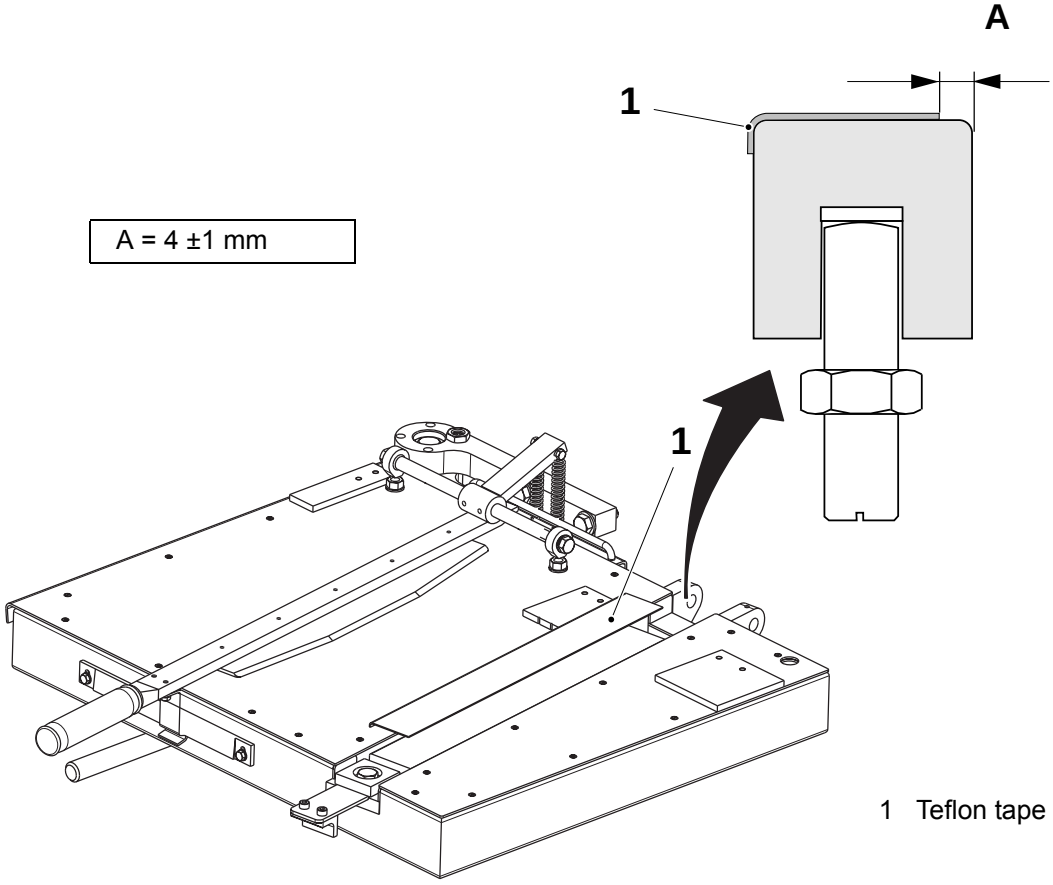

1 Teflon tape

(Cont'd)

TechPub_2614345_0105 - 01_2772097_01.fm

(Cont'd)

Change Teflon Cloth

a) Remove the heat protection (1), the lock bars (2) and (3), and old teflon cloth from the heating block.

b) Install the new teflon cloth (4) as shown below.

Note! Make sure that the new teflon cloth is straight.

c) Put the lock bars and the heat protection back.

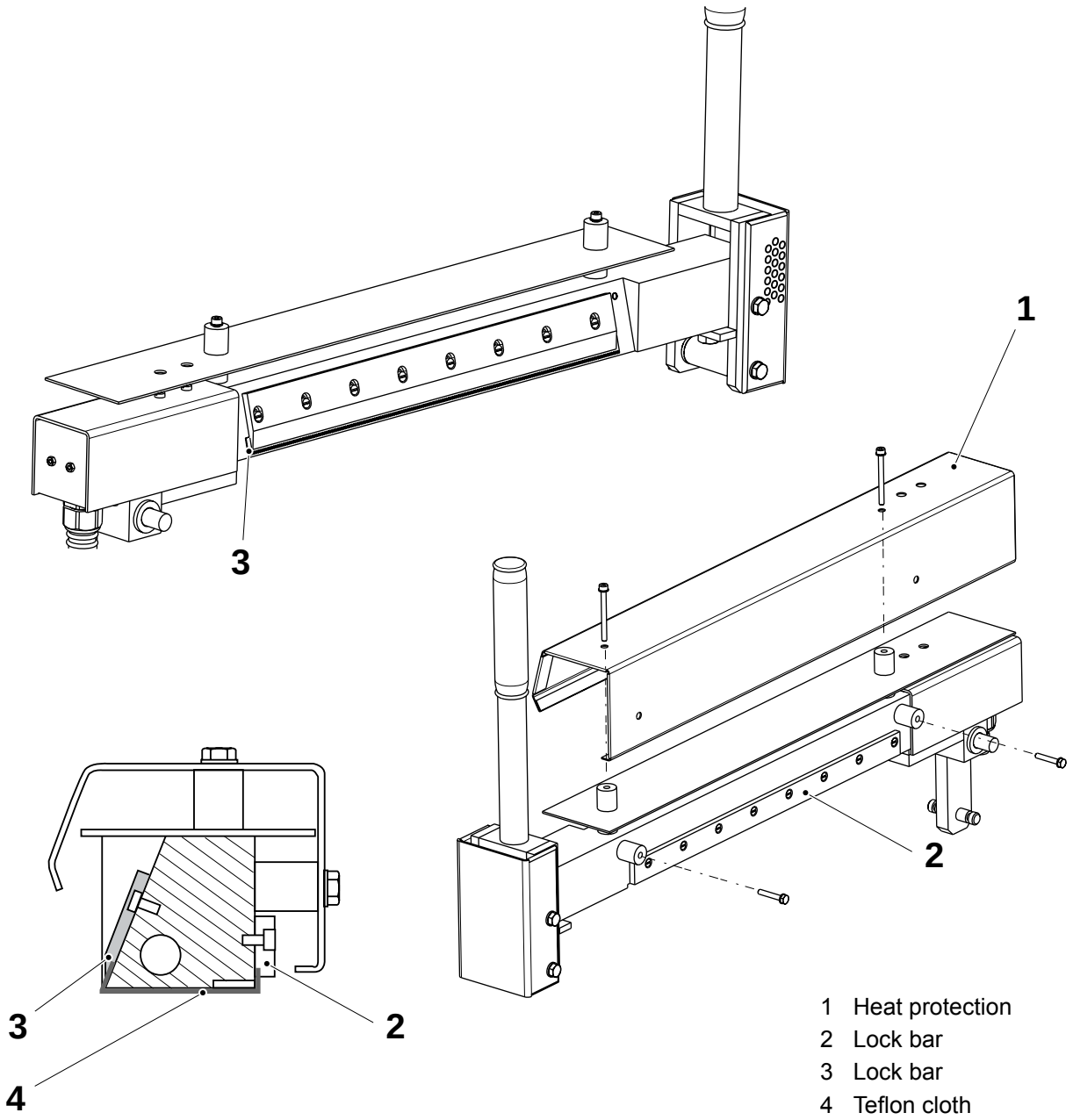

1 Heat protection
2 Lock bar
3 Lock bar
4 Teflon cloth

TechPub_2614345_0105 - 01_2772097_01.fm

9.2 Dating Unit

9.2.1 Ink Unit

9.2.1-1 Ink Unit - Overhaul

Machine Status	Power supply disconnector OFF Air supply OFF Steam supply ON Water supply OFF
Consumables	Solvent - Propylene glycol methyl ether (Dowanol PM)
SPC Reference	458192-0300

WARNING
Chemical products.
Solvent and ink. Follow the Safety Precautions.

a) Remove the ink bottle and the spillage bottle (1).

b) Loosen the knob (2) and remove the ink unit.

c) Loosen the clamp (3) and remove the cover (4). Loosen the hose at the bottle connection.

d) Loosen the screws (5), the screw (6), and the spacer screw (7). Remove the trough (8).

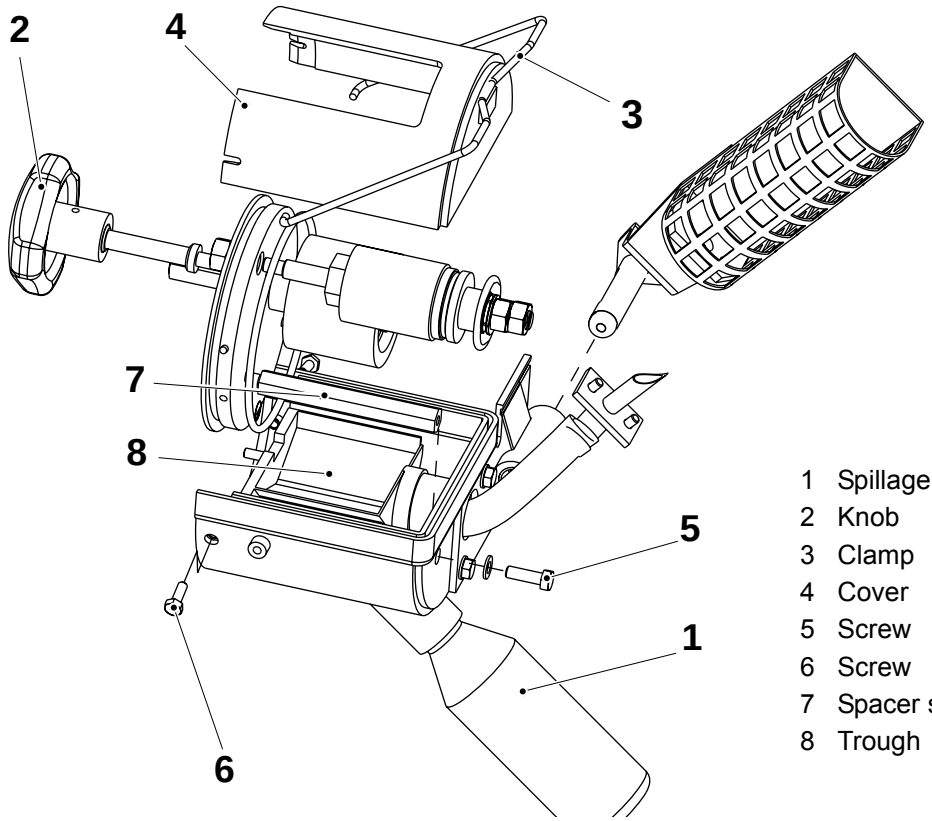

1 Spillage bottle
2 Knob
3 Clamp
4 Cover
5 Screw
6 Screw
7 Spacer screw
8 Trough

(Cont'd)

TechPub_2614345_0105 - 01_2772098_01.fm

(Cont'd)

CAUTION
Risk of damage to equipment.
Do not wash the ink unit with water.

e) Put the trough, the rollers on the gable, the lower cover and the ink bottle in solvent, rinse them, and let them air-dry.

f) Check the following details for wear or damage:
   – the ink roller (9): check for play and replace the bushings, if necessary, make sure that the roller rotates smoothly
   – the spring (10): make sure that the ink bottle stays in its upper position when it has been raised

g) Change the parts, if necessary.

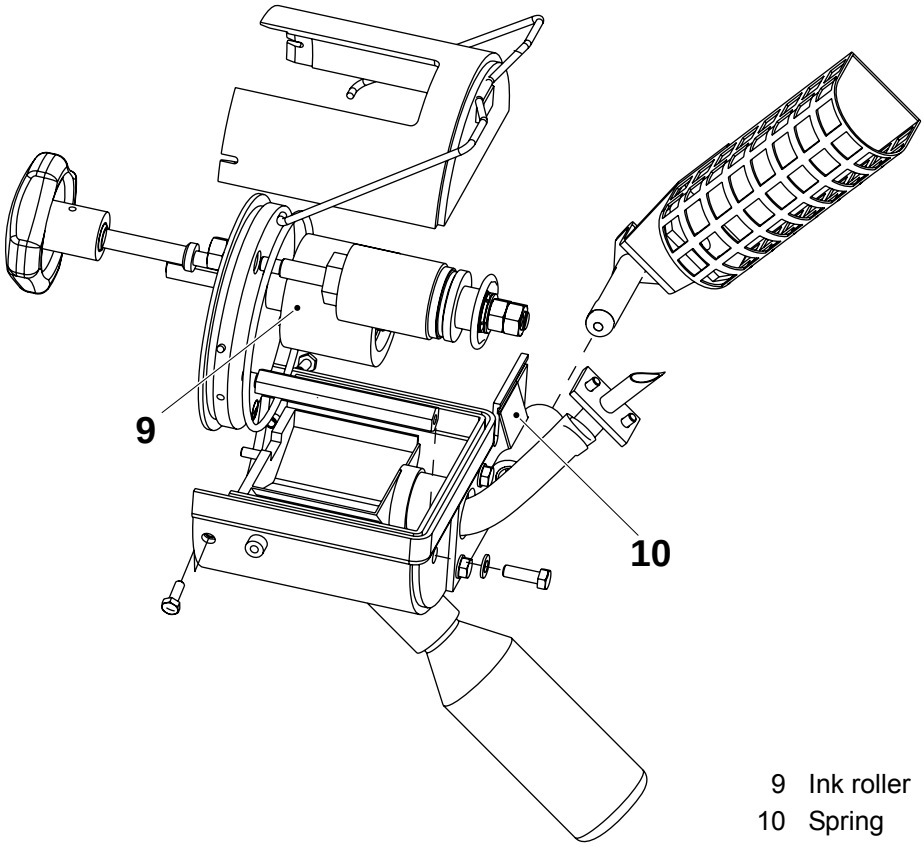

9 Ink roller
10 Spring

TechPub_2614345_0105 - 01_2772098_01.fm

(Cont'd)

(Cont'd)

h) Change the following details:
- the strip (11)
- the transfer roller, for play or damages (12)
- the O-rings (13) and (14)
- the hose (15). Also make sure that the hose is not folded when the ink bottle is raised/lowered
- the rubber gasket (16). Also make sure that there is no ink in the spillage bottle

i) Assemble the ink unit in the reverse order.

j) Set the ink unit, refer to 9.2.1-2 Ink Unit - Set.

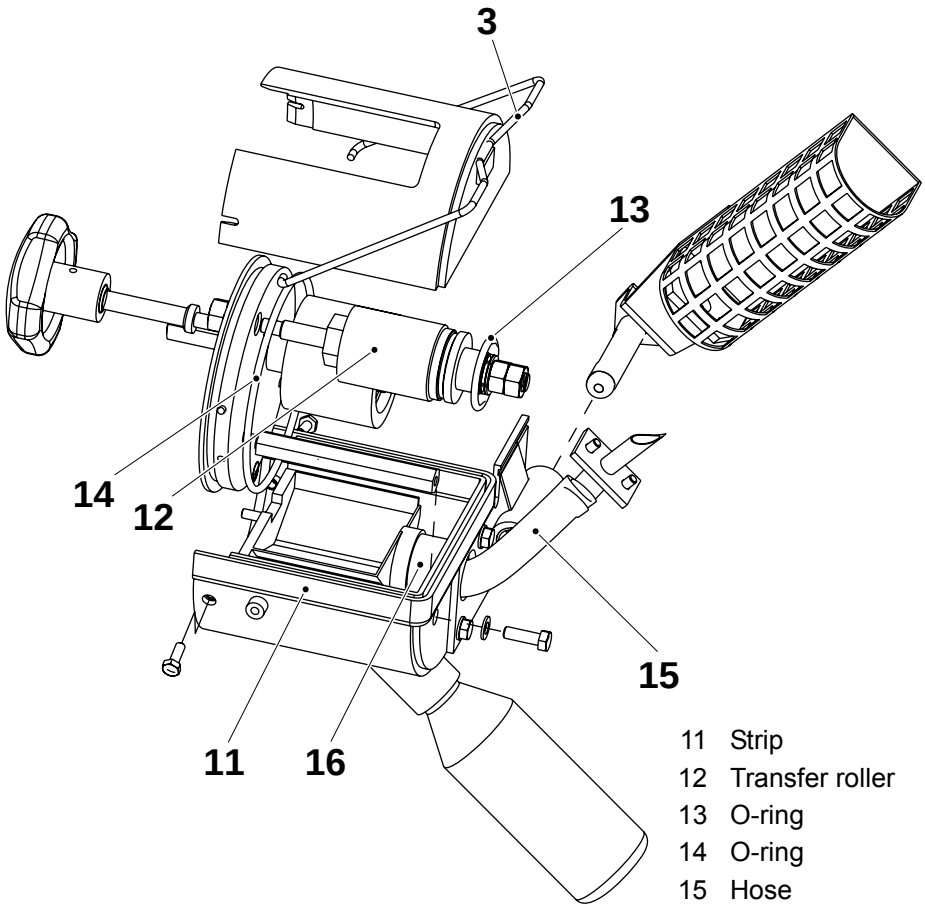

11 Strip
12 Transfer roller
13 O-ring
14 O-ring
15 Hose
16 Rubber gasket

TechPub_2614345_0105 - 01_2772098_01.fm

9.2.1-2 Ink Unit - Set

Machine Status	Power supply disconnector OFF Air supply OFF Steam supply ON Water supply OFF
Special Equipment	Template TP No. 76602 Spirit level TP No. 90243-165
SPC Reference	458192-0300 440286-0300

(Cont'd)

TechPub_2614345_0105 - 01_2772098_01.fm

(Cont'd)

a) Install a printing wheel and set the transfer roller (2) so that the O-ring (1) is exactly in the middle between the two O-rings of the printing wheel.
Adjust by putting shims under the flange of the transfer roller shaft.

b) Set the ink roller (3) exactly opposite the transfer roller (2). Adjust by putting shims under the flange of the eccentric shaft (4) of the ink roller.

c) Set the ink roller so that there is no slip between the transfer roller and the ink roller. Adjust by turning the eccentric shaft (4) (turning the shaft to the right closes up the roller).

d) Put the template (7) between the printing wheel shaft (5) and the transfer roller (2) and set the distance **A**. Adjust using the screw (6).

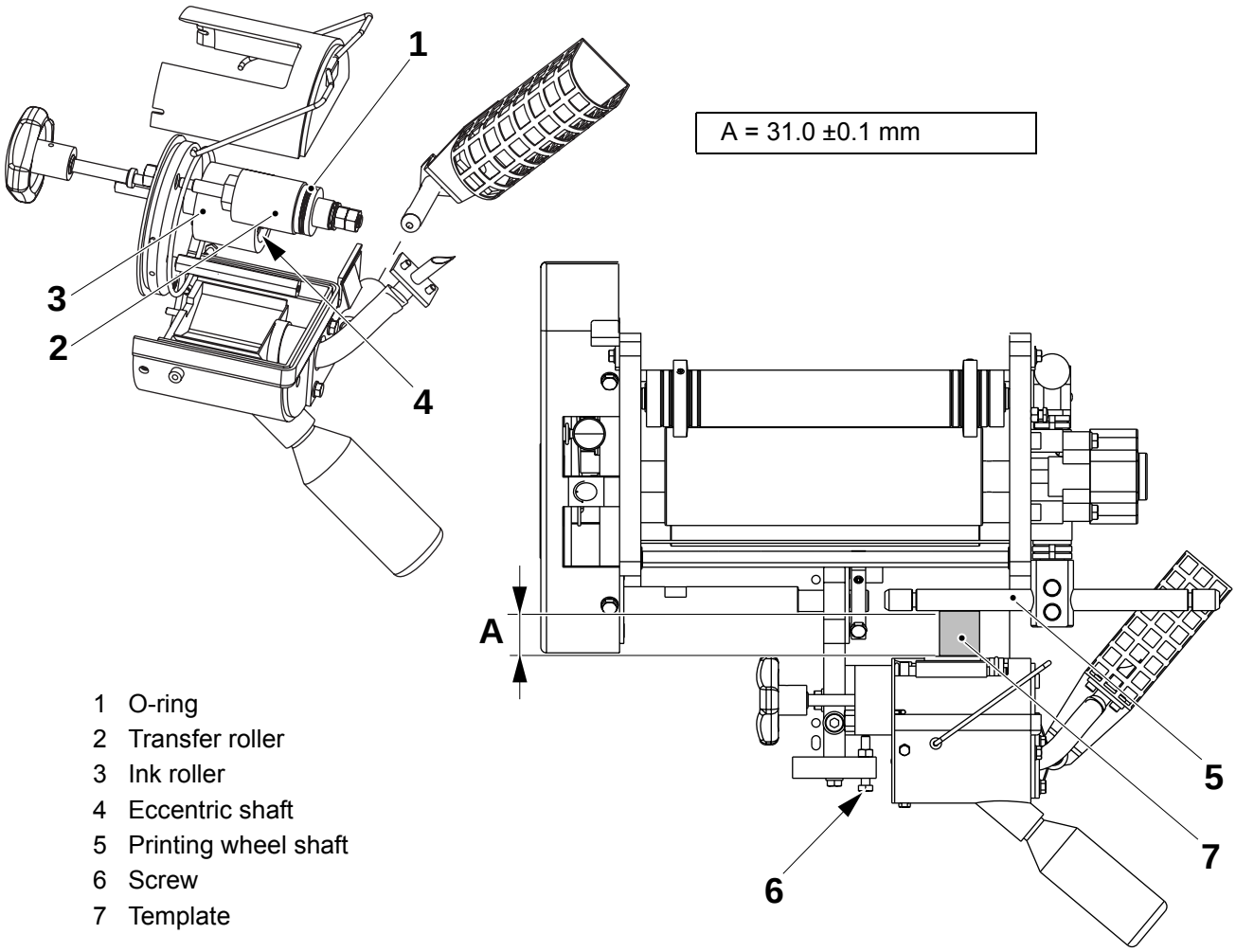

1 O-ring
2 Transfer roller
3 Ink roller
4 Eccentric shaft
5 Printing wheel shaft
6 Screw
7 Template

TechPub_2614345_0105 - 01_2772098_01.fm

9.2.2 Dating unit

9.2.2-1 Dating Unit - Set

Machine Status	Power supply disconnector OFF Air supply OFF Steam supply ON Water supply OFF
Special Equipment	Template TP No. 76602 Spirit level TP No. 90243-165
SPC Reference	579241-0200

Alignment

a) Put the template (3) in position and set the printing wheel axle (2) in line with the carrier axle (1). Adjust using the stop screws (4).

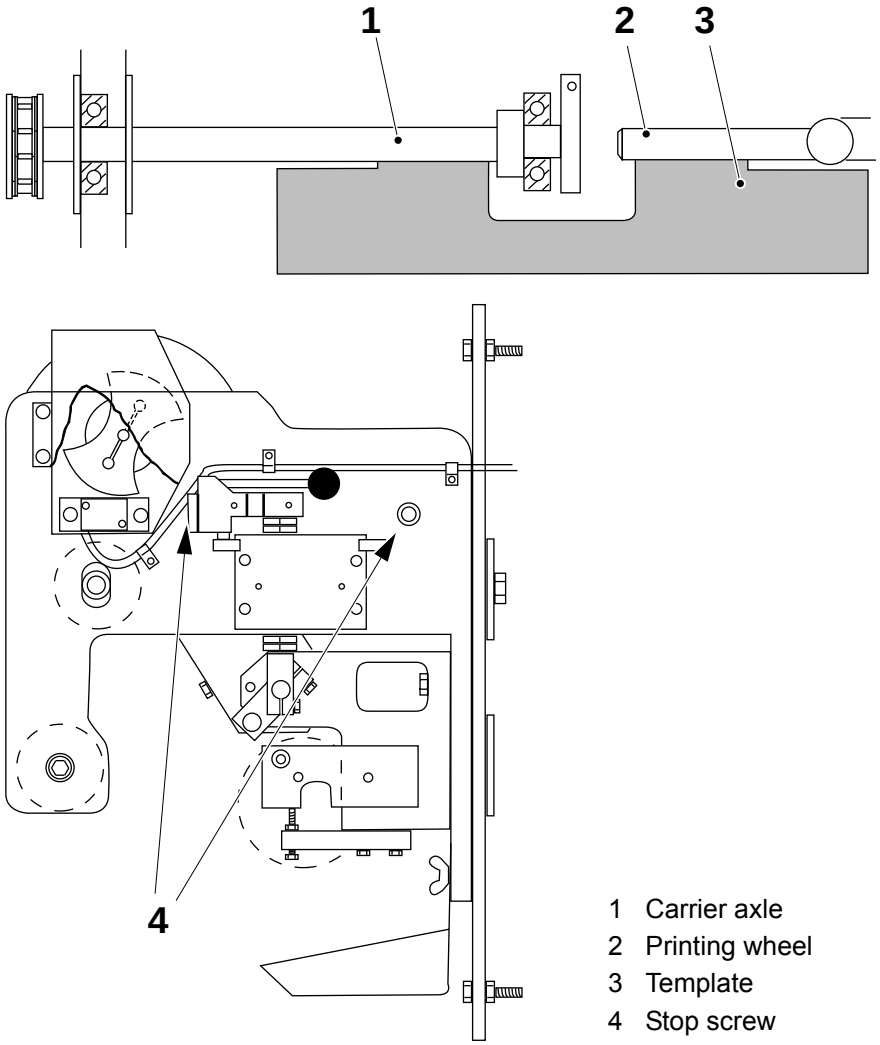

1 Carrier axle
2 Printing wheel
3 Template
4 Stop screw

(Cont'd)

TechPub_2614345_0105 - 01_2772098_01.fm

(Cont'd)

b) Install the template (3) between the printing wheel axle (2) and the bending roller (5). Set the distance **A** using the ring nuts (7).

c) Loosen the clamp fitting (6) and adjust the distance **B**.

d) Set the distance **C** between the proximity switch and the cam (9).

e) Set the ink unit, see 9.2.1-2 Ink Unit - Set.

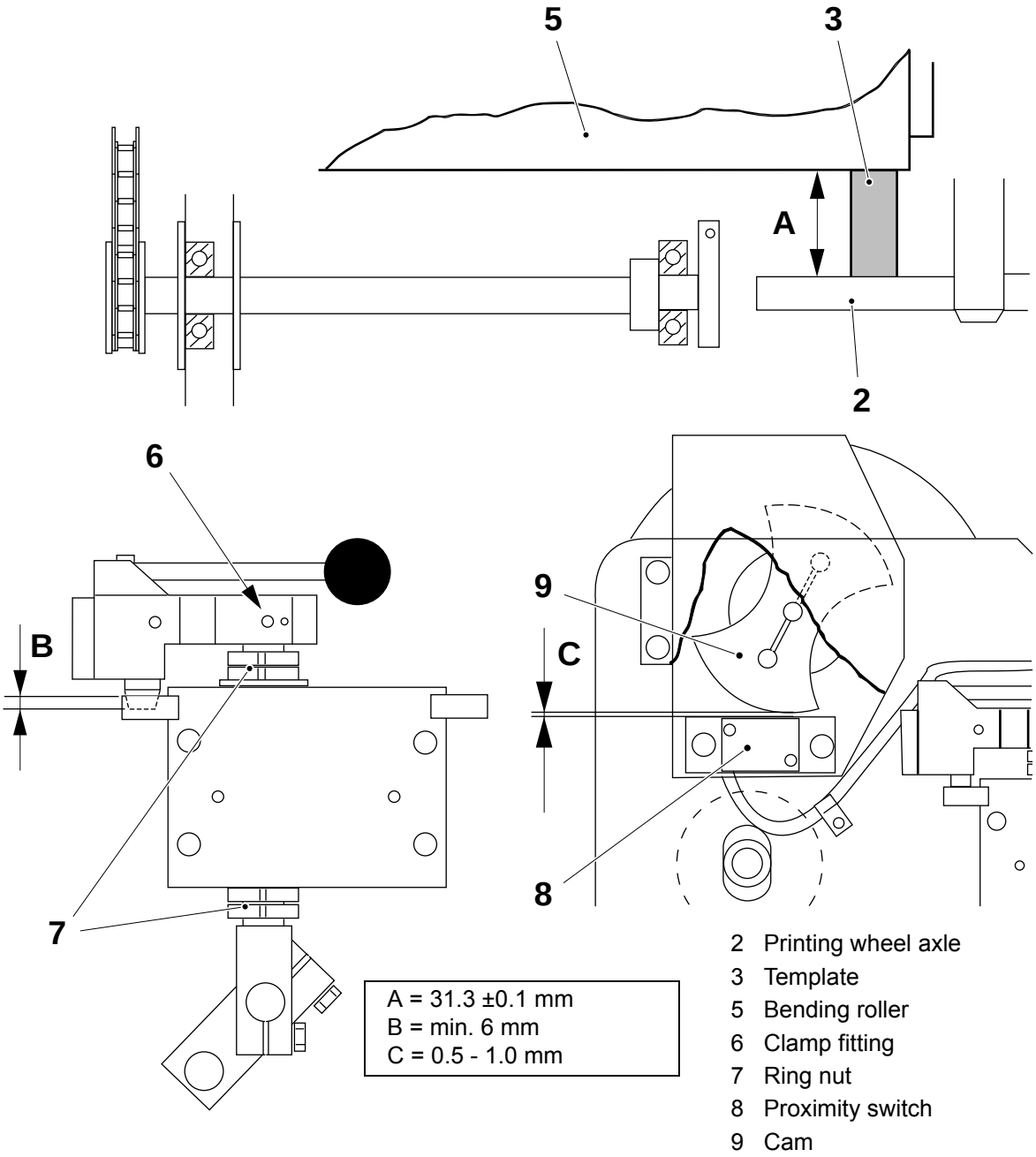

2 Printing wheel axle
3 Template
5 Bending roller
6 Clamp fitting
7 Ring nut
8 Proximity switch
9 Cam

(Cont'd)

TechPub_2614345_0105 - 01_2772098_01.fm

(Cont'd)

Crease Wheel

Note! The distance **D** may vary depending on the packaging material quality. Final adjustment may have to be carried out. Perform the adjustments on a plane surface.

a) Set the distance **D**, see table. Adjust by putting shims (10) under the crease bars (11). Make sure that the crease bars are parallel within 0.2 mm.

Package	D ±0.2 (mm)
TBA 100 B	69.3
TBA 125 S	86.0
TBA 160 S	93.5
TBA 180 B	75.5
TBA 200 B	83.0
TBA 200 M	105.1
TBA 200 S	118.6
TBA 250 B	106.0
TBA 250 S	130.2
TBA 284 B	118.9
TBA 300 S	118.9
TBA 330 S	136.3

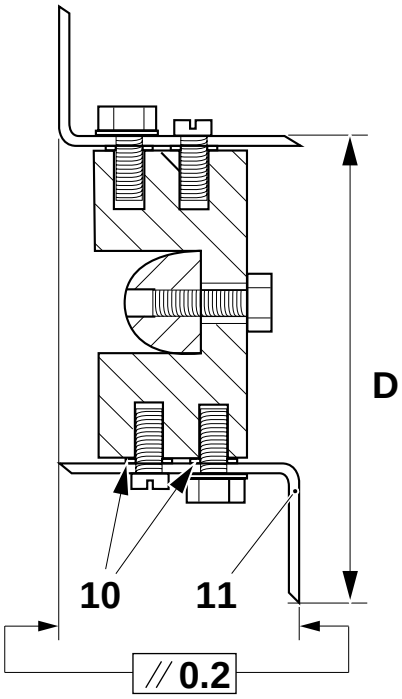

10 Shim
11 Crease bar

(Cont'd)

TechPub_2614345_0105 - 01_2772098_01.fm

(Cont'd)

Note! Make sure that the dating crease wheel is correctly positioned in the creases throughout the setting procedure and that the material web is well tensioned through the machine.

b) Mark the position of the clamp union (15) on the axle.

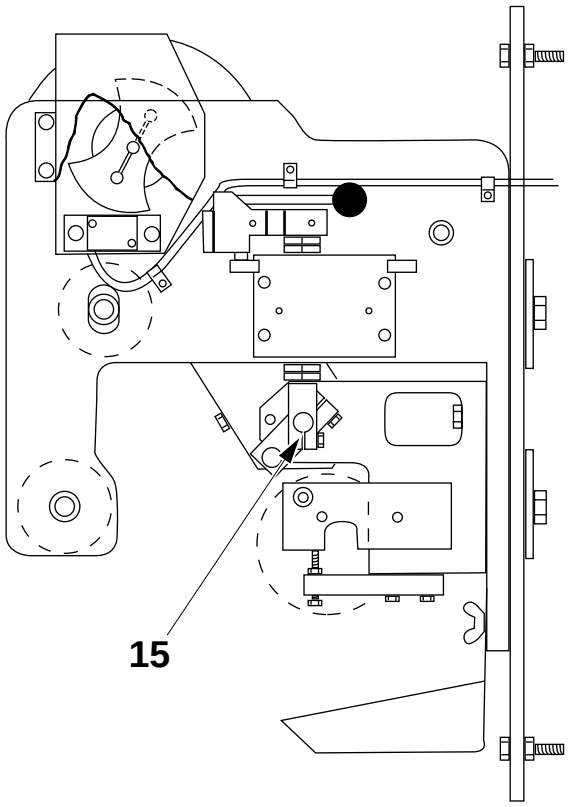

15 Clamp union

c) Step up the machine to PRODUCTION.

d) Pick out packages and check the crease position.

e) Make a SHORT STOP, loosen the clamp union (15) and synchronise the date printing with the printing design on the packaging material web by turning the clamp union.

f) Step up the machine to PRODUCTION and re-check.

g) Repeat *f) - i)* until the creases are correctly positioned on the packages.

(Cont'd)

TechPub_2614345_0105 - 01_2772098_01.fm

(Cont'd)

Final Adjustment

a) Final adjustment can be made with the knob (16).

CAUTION

Risk of damage to equipment.

The chain (17) must not be so tight that the part running over the sprocket (18) touches the inner side of the chain.

b) Move the sprocket (18) inwards as much as possible using the knob (16).

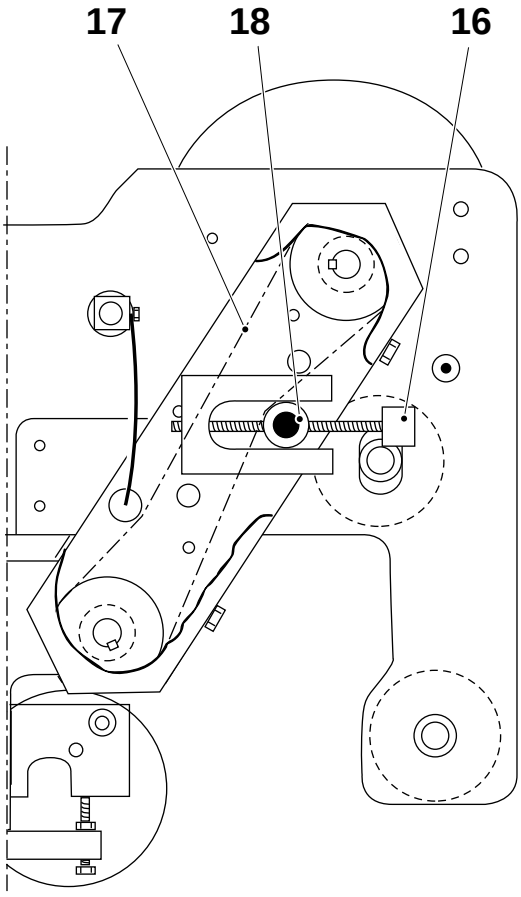

16 Knob
17 Chain
18 Sprocket

(Cont'd)

TechPub_2614345_0105 - 01_2772098_01.fm

(Cont'd)

c) Set the stop (22) against the sprocket and lock it with the locking screw (21).

d) Move the sprocket out as far as possible (but not so far out that the chain loses contact with the sprocket). Mark the end position (24).

e) Move the sprocket in to 2/3 of the adjustable distance. Mark the basic setting position (23).

f) Step up the machine to step PRODUCTION.

g) The spring loaded screw (20) must prevent the shaft (19) from rotating during production. Adjust if necessary.

Note! The shaft must not stick.

h) Check the printing position.

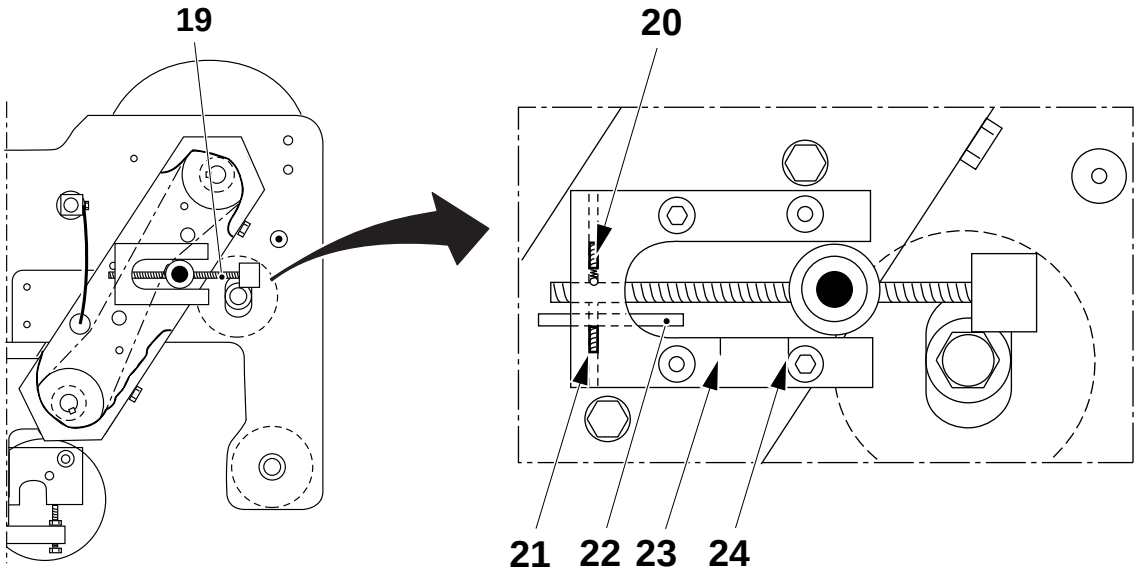

19 Shaft
20 Spring loaded screw
21 Locking screw
22 Stop
23 Basic setting position
24 End position

(Cont'd)

TechPub_2614345_0105 - 01_2772098_01.fm

(Cont'd)

Stamping Position

a) Install the printing wheels so that the print is made within the printing area (one of the areas marked).

b) Check that the print is clear within this area.

Package	A (mm)	B (mm)	C (mm)	D (mm)	E (mm)	F (mm)	G (mm)	H (mm)
TBA 100 B	4	21.5	8	12	-	-	-	-
TBA 125 S	4	21.5	8	12	-	-	-	-
TBA 160 S	4	21.5	10.5	12.5	-	-	-	-
TBA 180 B	-	-	-	-	8	26.5	9.5	17.5
TBA 200 B	-	-	-	-	8	26.5	9.5	17.5
TBA 200 M	4	21.5	10.5	12.2	-	-	-	-
TBA 200 S	4	21.5	10.5	12.5	-	-	-	-
TBA 250 B	-	-	-	-	8	26.5	9.5	17.5
TBA 250 S	4	21.5	10.5	12.2	-	-	-	-
TBA 284 B	-	-	-	-	7.5	26.5	9.5	17.5
TBA 300 S	-	-	-	-	7.5	26.5	9.5	17.5
TBA 330 S	4	29.5	9.5	17.5	-	-	-	-

Package seen from above

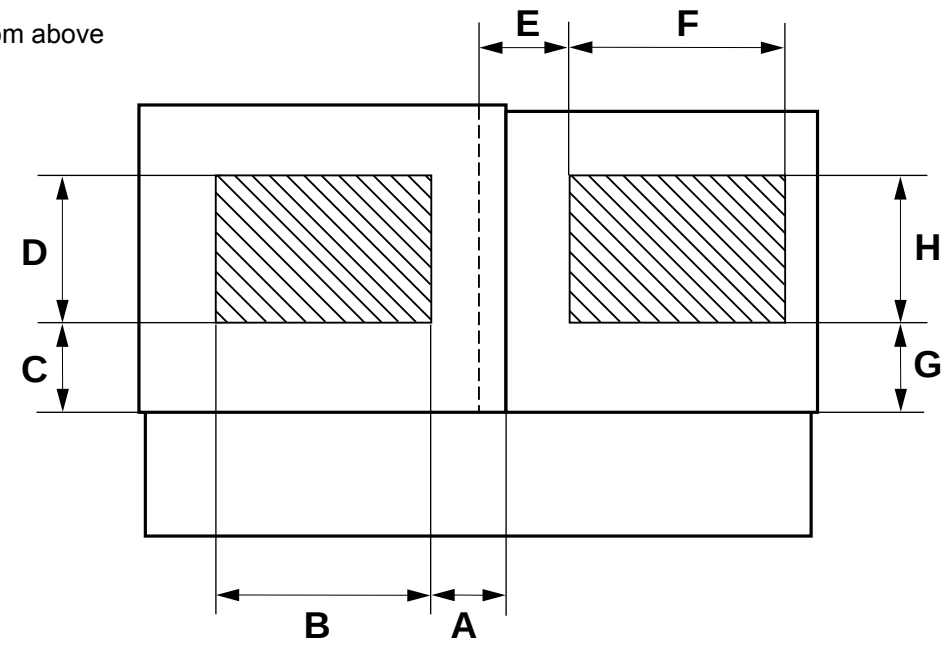

(Cont'd)

TechPub_2614345_0105 - 01_2772098_01.fm

(Cont'd)

Paper Brake

a) Loosen the screw (2).

b) Push the bracket (3) towards the paper roller until the contact point of the roller (1) is compressed by the distance **A**. Tighten the screw (2).

c) Release the adjustable clutch lock screw (5) and set the value on the dial (4), according to the packaging material type. Refer to the table below. Tighten the lock screw (5).

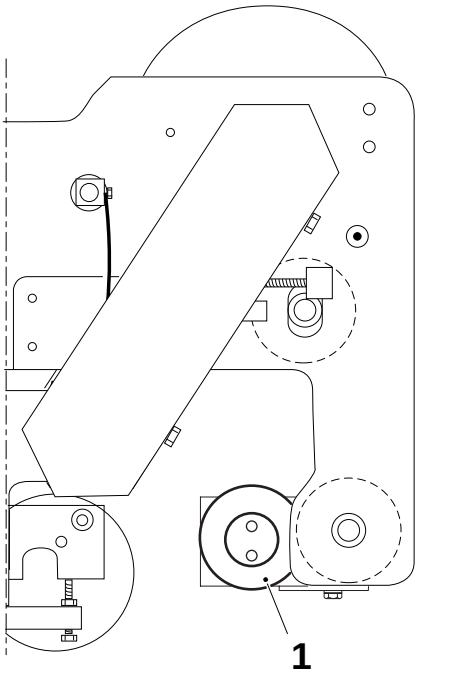

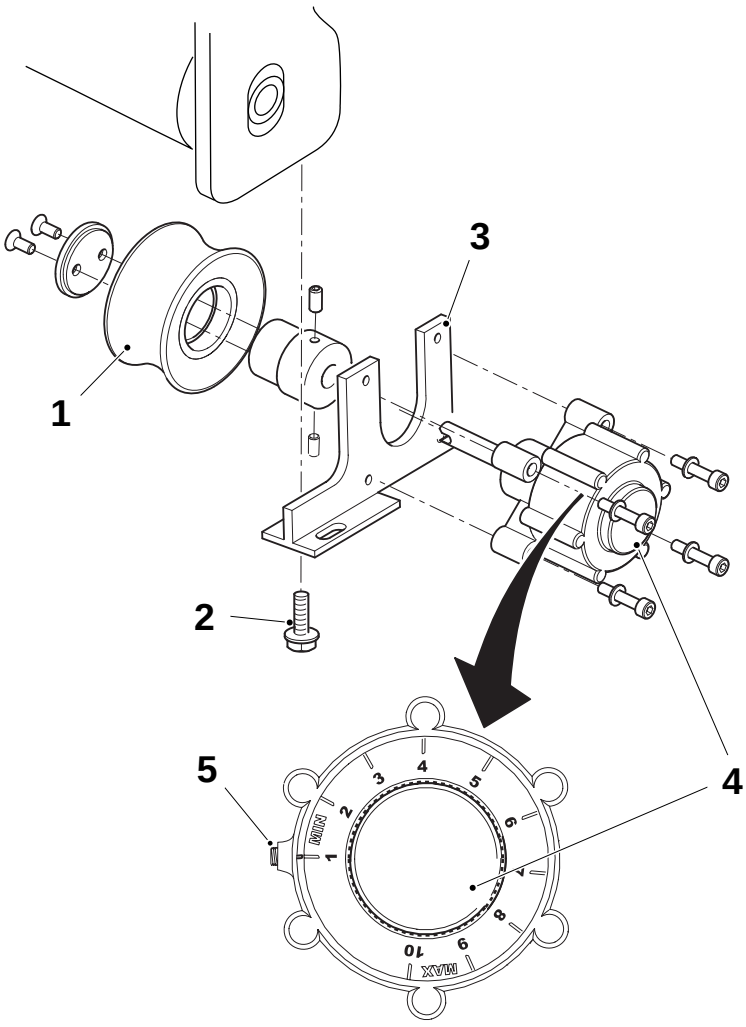

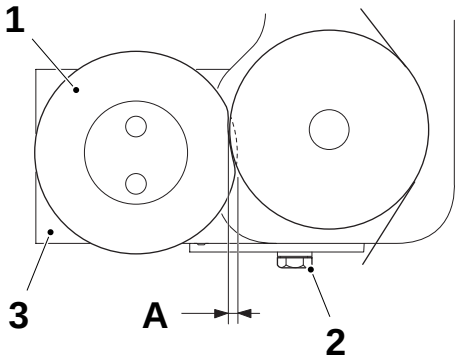

A = 1 to 2 mm

Paper type	Basic dial setting
Metallised	4
Non-metallised	1

1 Roller
2 Screw
3 Bracket
4 Dial
5 Screw

TechPub_2614345_0105 - 01_2772098_01.fm

9.3 Turnable Cover

9.3-1 Turnable Cover- Check

Machine Status	Power supply disconnector OFF Air supply OFF Steam supply ON Water supply OFF
SPC Reference	1549305-0100

a) On both sides check for wear or damage the real holder (1) group.

b) If necessary, disassemble the group by removing the screws (2), (3), and (4), and the pins (5).

c) Replace if necessary:
   – the sleeve (6)
   – the reel holder (7)
   – the reel holder rubber (8)
   – the reel holder brass (9)

d) Assemble in the reverse order.

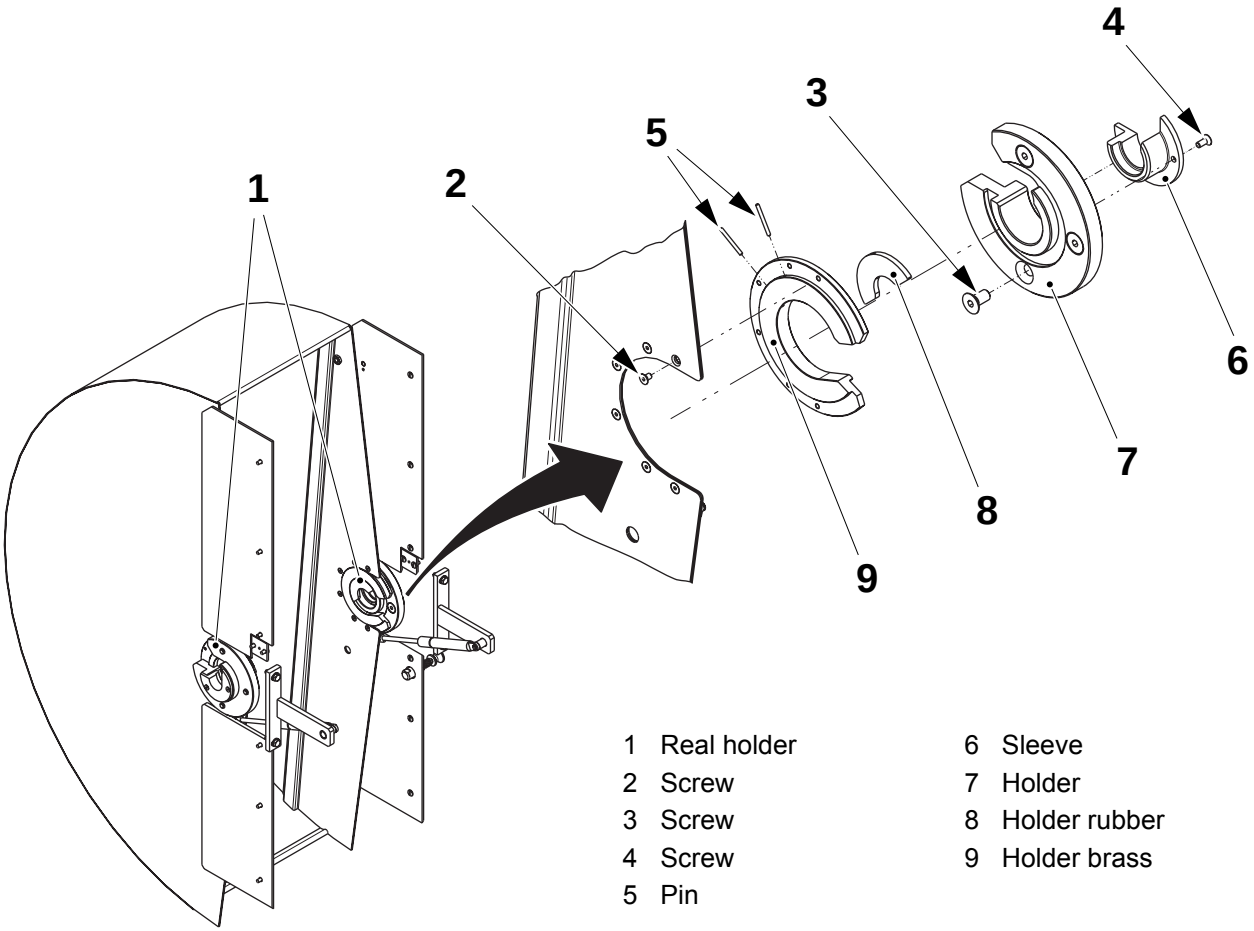

1 Real holder
2 Screw
3 Screw
4 Screw
5 Pin
6 Sleeve
7 Holder
8 Holder rubber
9 Holder brass

TechPub_2614345_0105 - 01_2772099_01.fm

9.4 Paper Magazine

9.4-1 Paper Magazine - Check Bending Rollers

Machine Status	Power supply disconnector OFF Air supply OFF Steam supply ON Water supply OFF
SPC Reference	1549300-0100

a) Check the surfaces of the bending rollers (1), (2), (3), and (4). Make sure that the rollers rotate smoothly.

b) If necessary, change the rollers or the bearings, see below.

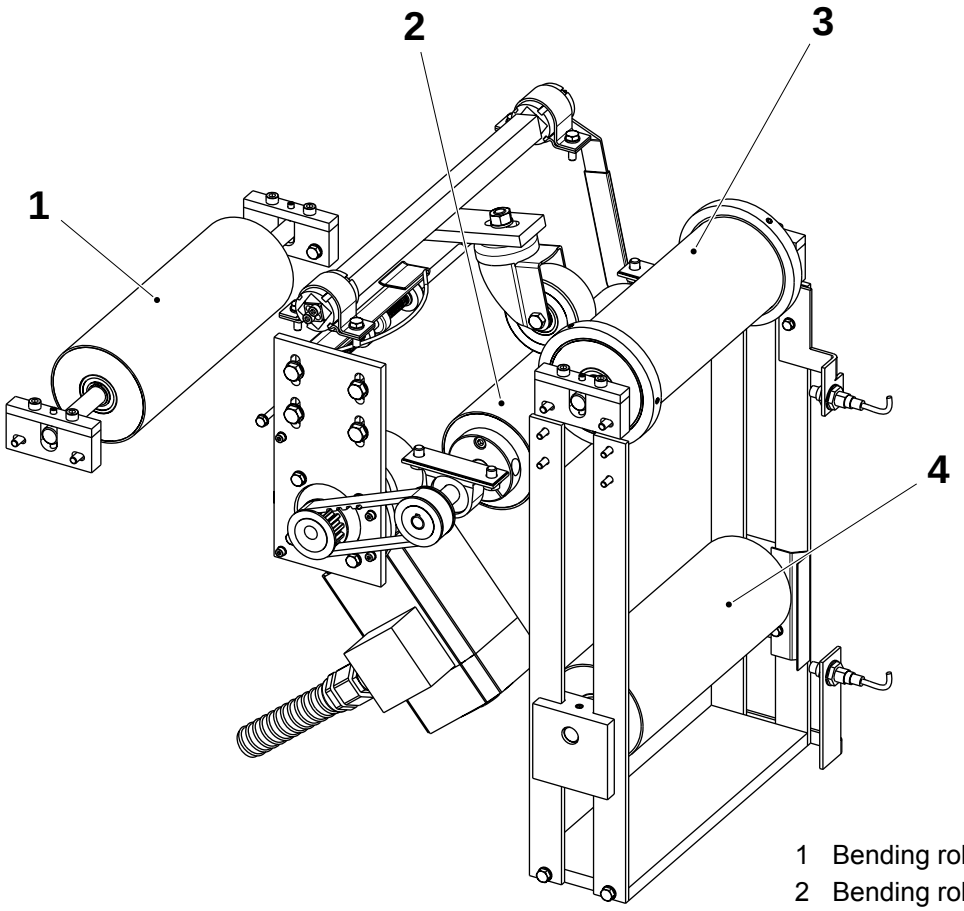

1 Bending roller
2 Bending roller
3 Bending roller
4 Bending roller

(Cont'd)

TechPub_2614345_0105 - 01_2772100_01.fm

(Cont'd)

Bending Roller (1)

a) Loosen the screws (2), remove the screws (3), the upper brackets (4), and the bending roller (1).

b) Remove the circlips and change the roller or the bearings.

c) Assemble in the reverse order.

d) Align the bending roller (1) with the screws (2).

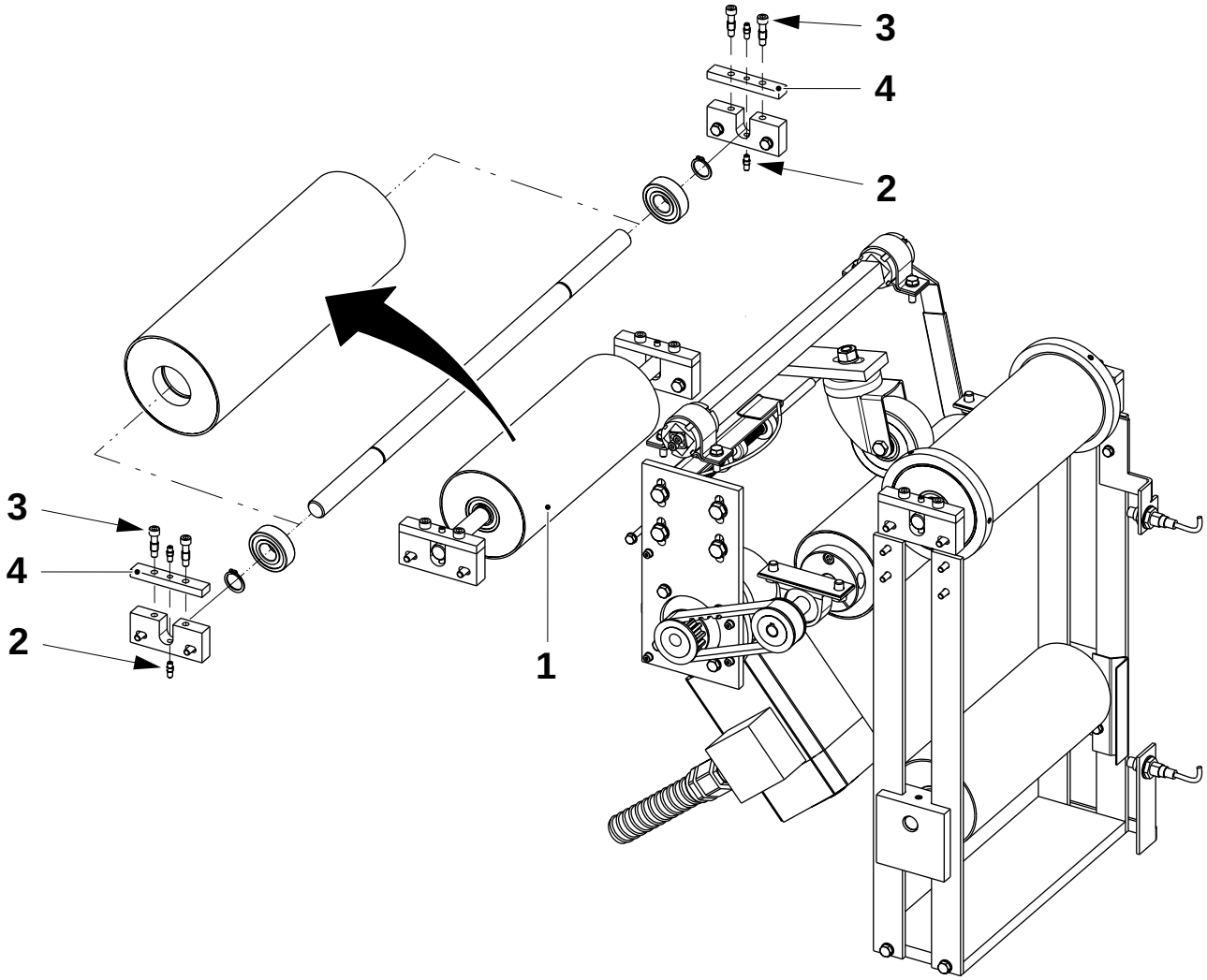

1 Bending roller
2 Screw
3 Screw
4 Bracket

(Cont'd)

TechPub_2614345_0105 - 01_2772100_01.fm

(Cont'd)

Bending Roller (2)

a) Release the tension on the belt (3) by loosening the four screws (1).

Note! Before removing the bending roller, mark its position on the shaft.

b) Remove the screws (7) and remove the bending roller (2) group.

c) Loosen the grub screw (4) and the screws (5) and (6).

d) Remove the circlips and change the roller or the bearing brackets.

e) Check the toothed pulleys (8) and change the parts, if necessary.

f) Assemble in the reverse order.

g) Set the belt (3) tension, see 9.4-2 Paper Magazine - Check Belt Tension.

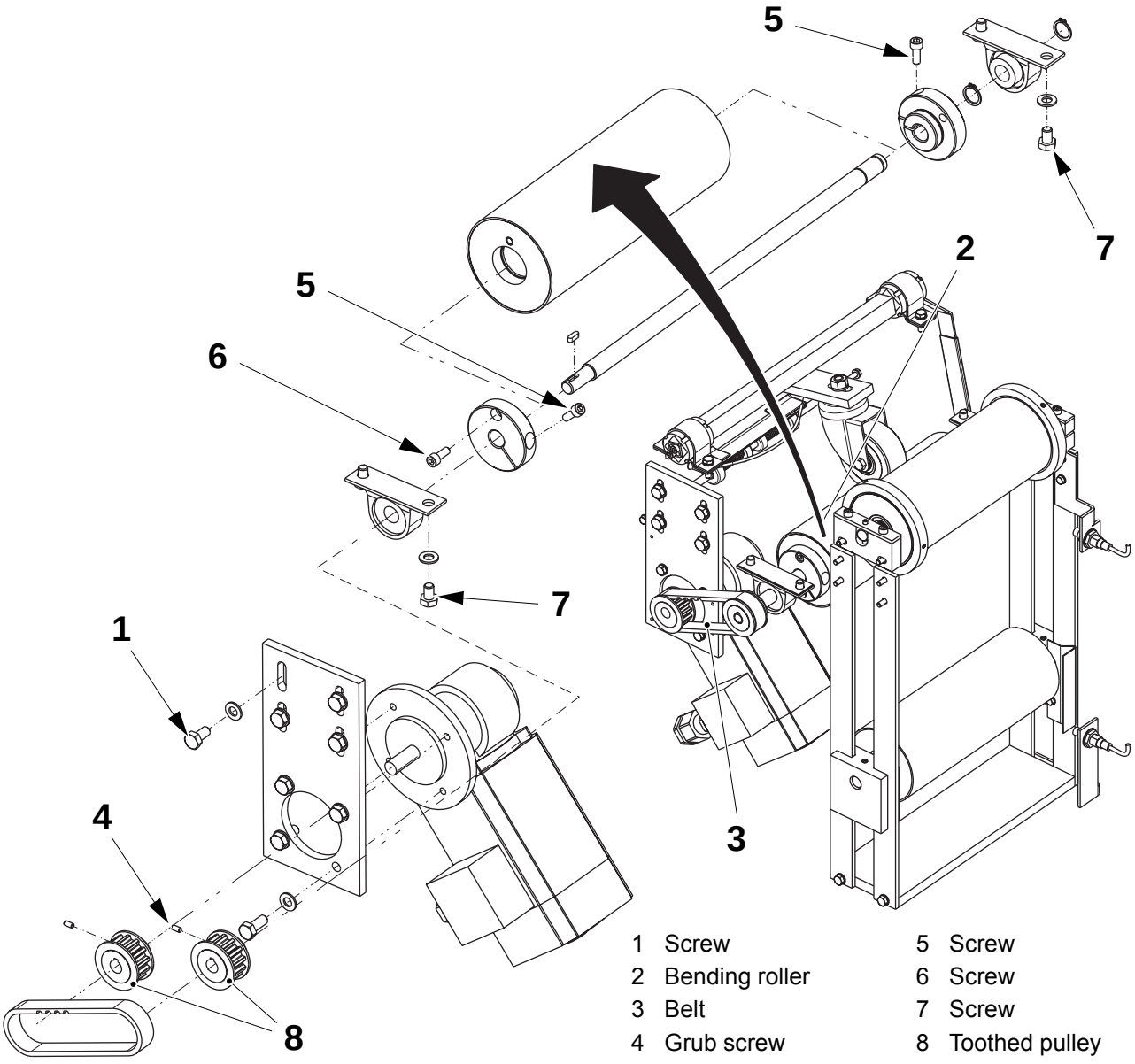

1	Screw	5	Screw
2	Bending roller	6	Screw
3	Belt	7	Screw
4	Grub screw	8	Toothed pulley

(Cont'd)

TechPub_2614345_0105 - 01_2772100_01.fm

(Cont'd)

Bending Roller (3)

a) Loosen the screws (1), remove the screws (2), the upper brackets (4), and the bending roller (3).

b) Remove the grub screws (5) and the flanges (6).

c) Remove the circlips and change the roller or the bearings.

d) Assemble in the reverse order

e) Align the bending roller (3) with the screws (2).

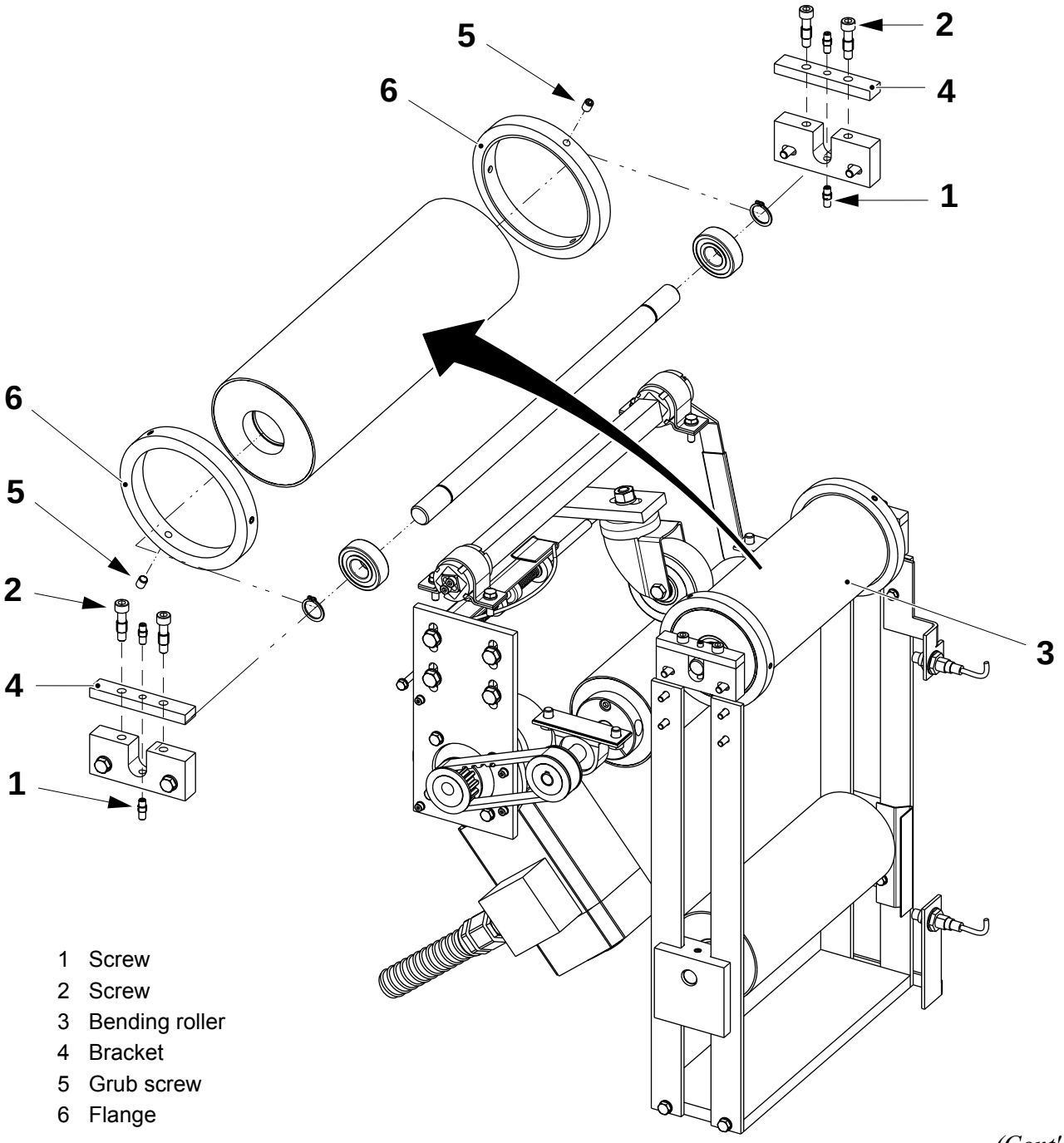

1 Screw
2 Screw
3 Bending roller
4 Bracket
5 Grub screw
6 Flange

(Cont'd)

TechPub_2614345_0105 - 01_2772100_01.fm

(Cont'd)

Bending Roller (4)

a) Loosen the four screws (1), remove the plate (2), and pull out the roller (4) group.

Note! Before removing the bending roller, mark its position on the shaft.

b) Loosen the stop screws (3) and remove the pieces (5).

c) Remove the circlips, change the roller (4) or the bearings.

d) Assemble in the reverse order.

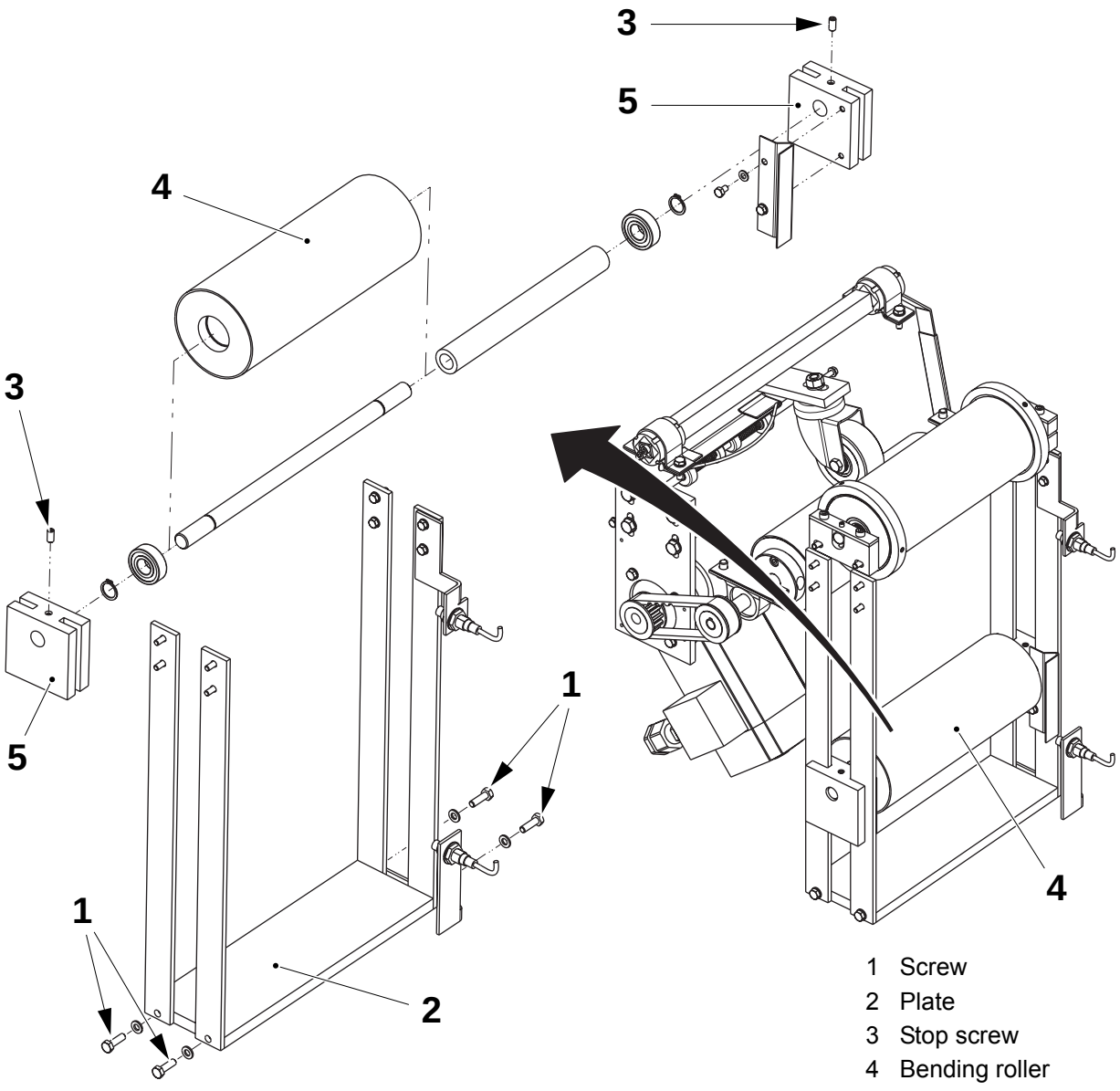

1 Screw
2 Plate
3 Stop screw
4 Bending roller
5 Piece

TechPub_2614345_0105 - 01_2772100_01.fm

9.4-2 Paper Magazine - Check Belt Tension

Machine Status	Power supply disconnector OFF Air supply OFF Steam supply ON Water supply OFF
Special Equipment	Torque wrench min 30 Nm
SPC Reference	1549300-0100

a) Check the belt (1) tension according to the table below.

b) If necessary, adjust using the screws (2).

Load force (N)	Deflection (mm)
25-30	10

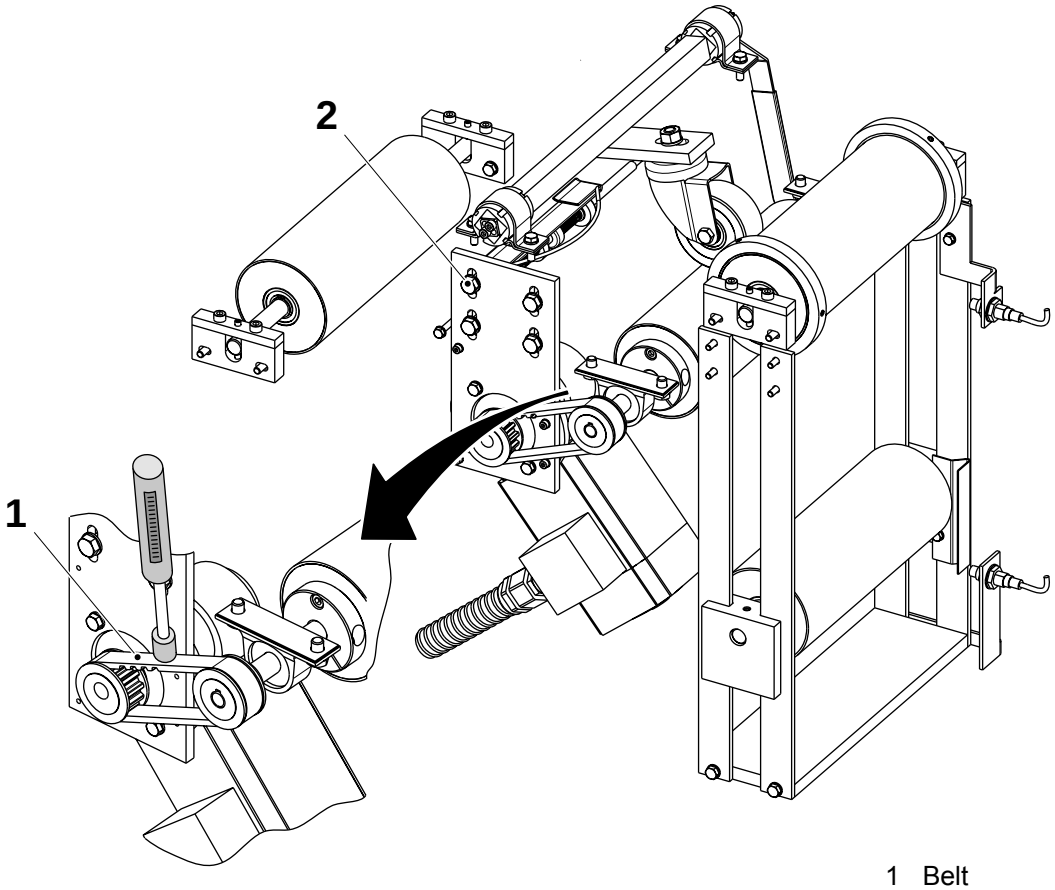

1 Belt
2 Screw

TechPub_2614345_0105 - 01_2772100_01.fm

9.4-3 Paper Magazine - Change Belt

Machine Status	Power supply disconnector OFF Air supply OFF Steam supply ON Water supply OFF
SPC Reference	1549300-0100

a) Release the tension on the belt (1) by loosening the screws (2).

b) Replace the belt (1), if necessary, and set the belt tension, see 9.4-2 Paper Magazine - Check Belt Tension.

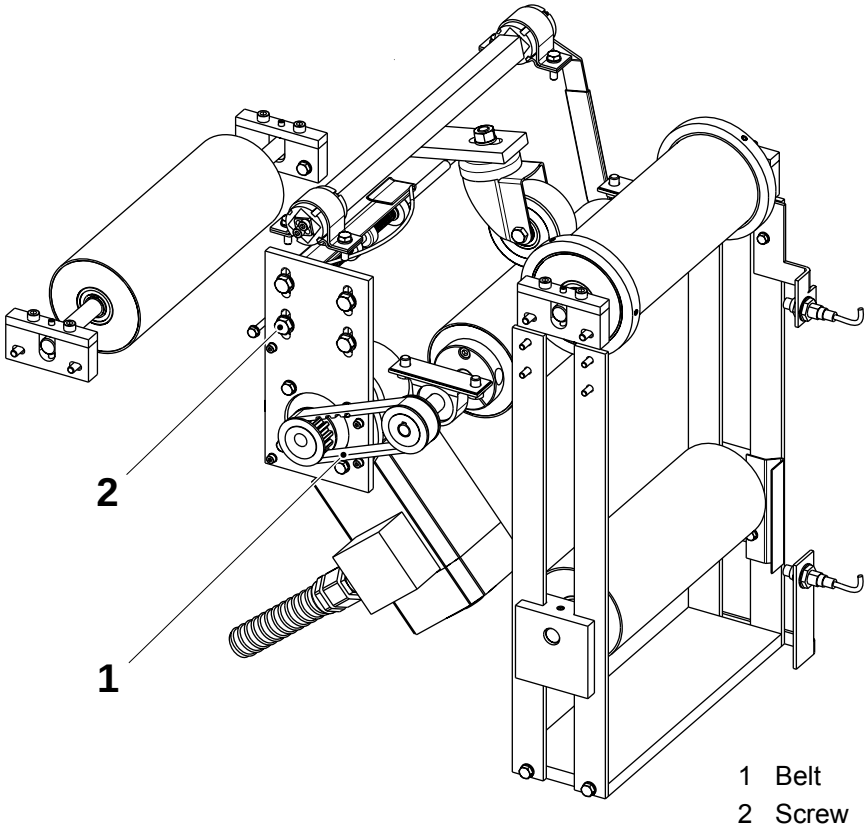

1 Belt
2 Screw

TechPub_2614345_0105 - 01_2772100_01.fm

9.4-4 Paper Magazine - Check Un-reeling Function

Machine Status	Power supply disconnector OFF Air supply OFF Steam supply ON Water supply OFF
SPC Reference	1549300-0100

a) Lift the bending roller (1) and check that it moves smoothly.

b) Thread the packaging material web through the paper magazine.

c) Check that the flanges (4) slightly touch the packaging material web. If necessary, set using the grub screws (5).

d) Push the ALARM RESET button.

e) Pull the packaging material web until the bending roller (1) is raised above the proximity switch (2).

f) Check that the driven roller (3) begins and works correctly.

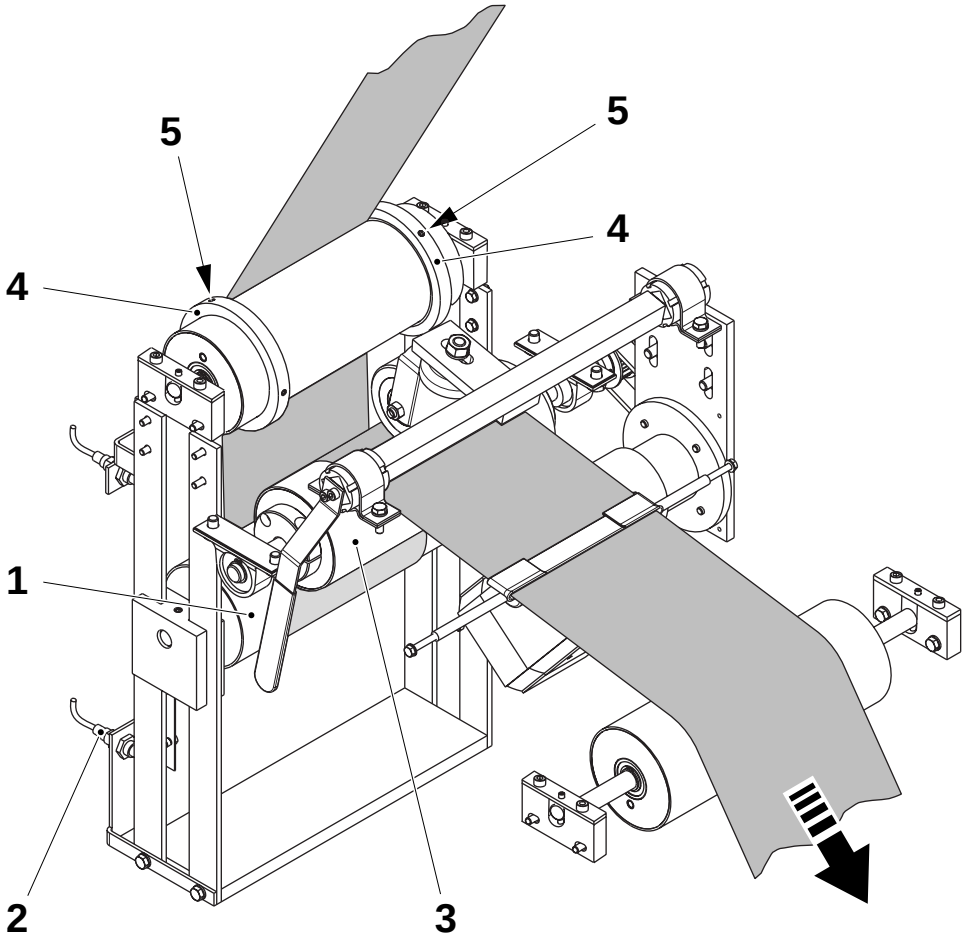

1 Bending roller
2 Proximity switch
3 Driven roller
4 Flange
5 Grub screw

TechPub_2614345_0105 - 01_2772100_01.fm

9.4-5 Paper Magazine - Check Brake

Machine Status	Power supply disconnector OFF Air supply OFF Steam supply ON Water supply OFF
SPC Reference	1549300-0100

a) Check that the roller (1) is clean, undamaged and that rotates smoothly. If necessary, remove the roller (1) group by removing the screws (2) and (3).

b) Change, if necessary, the roller (1), the bearings (4), and the bushings (5).

c) Check the position of the arm (6), angle **A**.

d) If necessary, adjust by loosening the four screws (7).

e) Assemble in the reverse order.

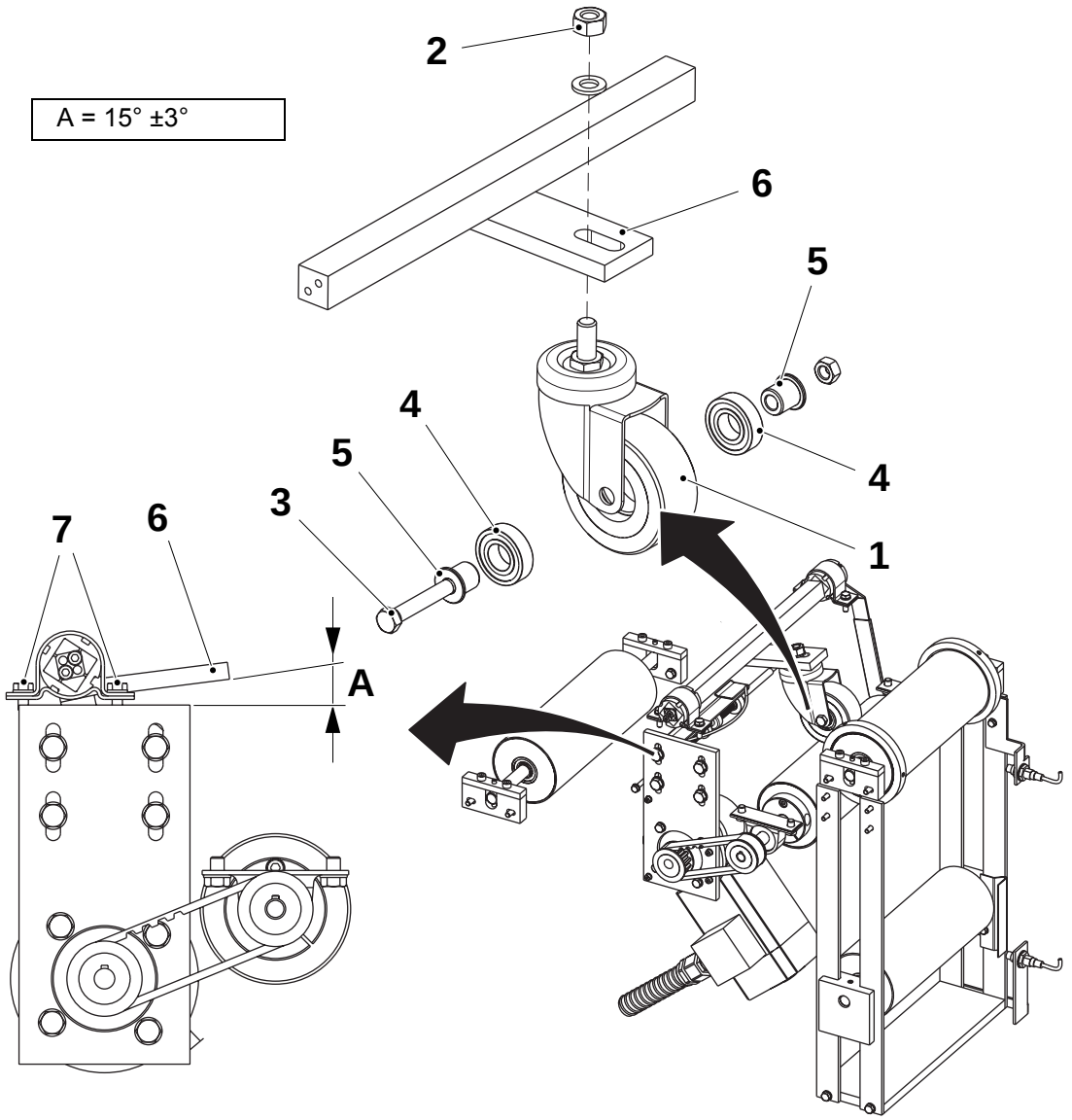

TechPub_2614345_0105 - 01_2772100_01.fm

9.4-6 Paper Magazine - Set Paper Guide

Machine Status	Power supply disconnector OFF Air supply OFF Steam supply ON Water supply OFF
SPC Reference	1549300-0100

a) Check the distance **A** between the frame (1) and the support (2).

b) Set the distance **A**, if necessary, by shifting the support (2).

c) On both sides check the distance **B** between the support (2) and the flanges (3).

d) Loosen the grub screws (4) and set the distance **B** if necessary.

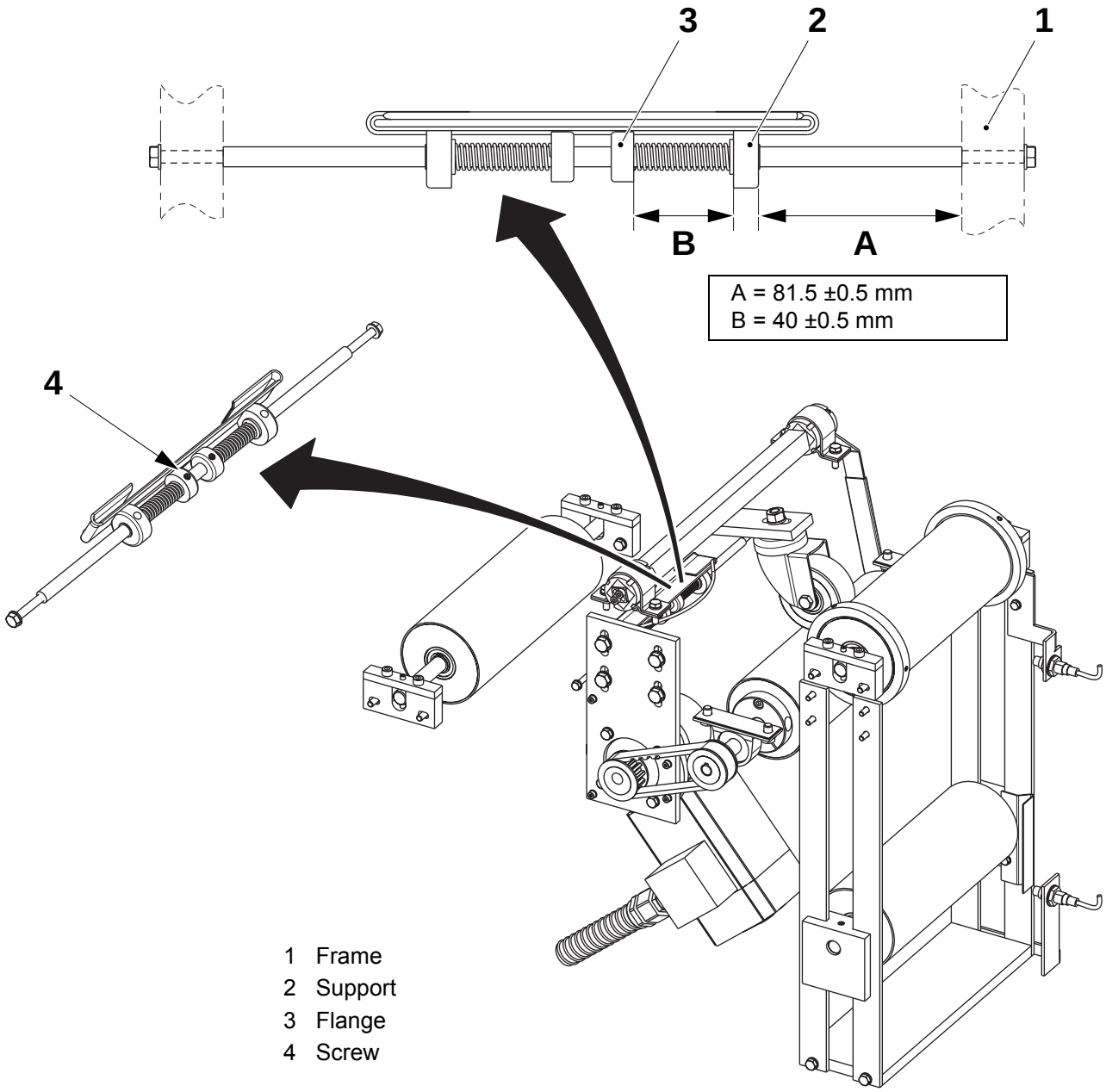

TechPub_2614345_0105 - 01_2772100_01.fm

9.5 Electrical Equipment

9.5-1 Electrical Equipment - Set Photocells

Machine Status	Power supply disconnector ON Air supply OFF Steam supply ON Water supply OFF
SPC Reference	1549480-0100

a) Remove the cover from the connection box and the packaging material detector (1).

b) Remove the plastic cover from the packaging material detector (1).

c) Make sure that the off delay switch (4) is in the position **OFF**.

d) Make sure that the Light/Dark switch (5) is in the position **D. ON**.

e) Set the mode switch (6) to the position **SET**.

f) Cut a length of packaging material and hold it in the normal web path in front of the fibre-optic sensor. Push the teach-in button (7) for more than 2 seconds. The **orange LED** (2) must light.

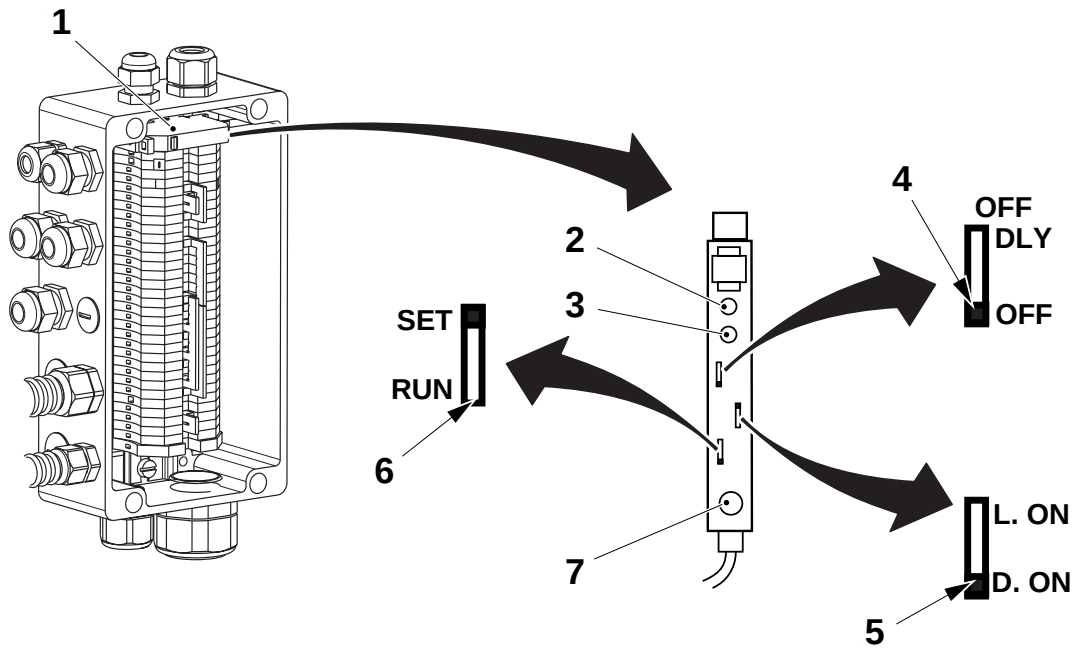

1 Detector
2 Orange LED
3 Green LED
4 Selector switch - Off delay
5 Selector switch - Light/Dark
6 Selector switch - Operating mode selector
7 Teach-in push button

(Cont'd)

TechPub_2614345_0105 - 01_2772101_01.fm

(Cont'd)

g) Remove the packaging material. Push the teach-in button (7) for more than 2 seconds.
Both orange LED (2) and green LED (3) must light-up **ON**.

Note! During item *e)* the LEDs (2) and (3) must stay illuminated.
If flashing, the reading signal difference is too low.
Clean the photoelectric switches and repeat the setting procedure.

h) Set the mode switch (6) to the position **RUN**.

i) Assemble in the reverse order.

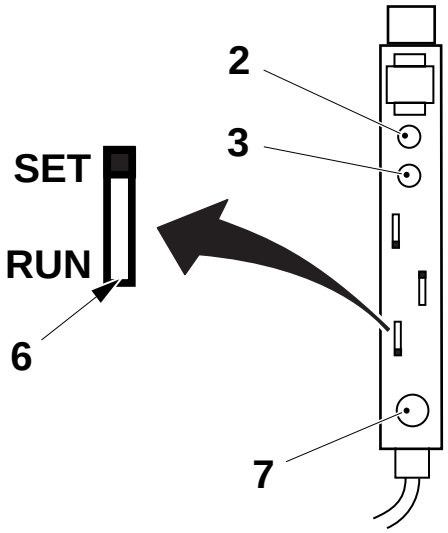

2 Orange LED
3 Green LED
6 Selector switch - Operating mode selector
7 Teach-in push button

TechPub_2614345_0105 - 01_2772101_01.fm

9.6 Packaging Material Reel Trolley

9.6-1 Packaging Material Reel Trolley - Check Function

SPC Reference	90459-0308

a) Press the handle (1) and make sure that the brake releases.

b) Check all hydraulic connections are oil free.

c) Put a packaging material reel on the trolley and pump until the reel lifts from the floor. Wait for 10 minutes. Make sure that the reel does not sink. If required, change the pump cylinder (2), step 9.6-2 Packaging Material Reel Trolley - Change Pump Cylinder.

d) Pump up again until the reel lifts from the floor and let it down. If it sinks too quickly, change the sink valve (3), step 9.6-3 Packaging Material Reel Trolley - Change Sink Valve.

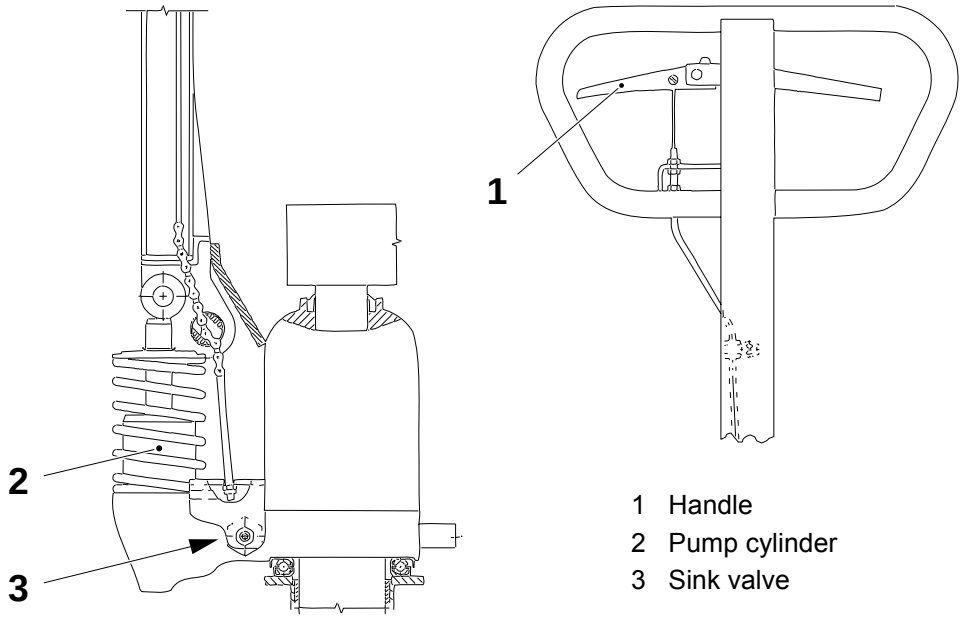

1 Handle
2 Pump cylinder
3 Sink valve

TechPub_2614345_0105 - 01_2833528_01.fm

9.6-2 Packaging Material Reel Trolley - Change Pump Cylinder

Consumables	Oil code C
SPC Reference	90459-0308

a) Disengage the chain (1) from the valve arm (2).
b) Remove the screw (3).
c) Turn the axle pin (4) a little bit clockwise and pull out the chain (1).
d) Pull out the axle pin and remove the tie rod (5).
e) Remove the circlip (6), the washer (7), and the spring (8).

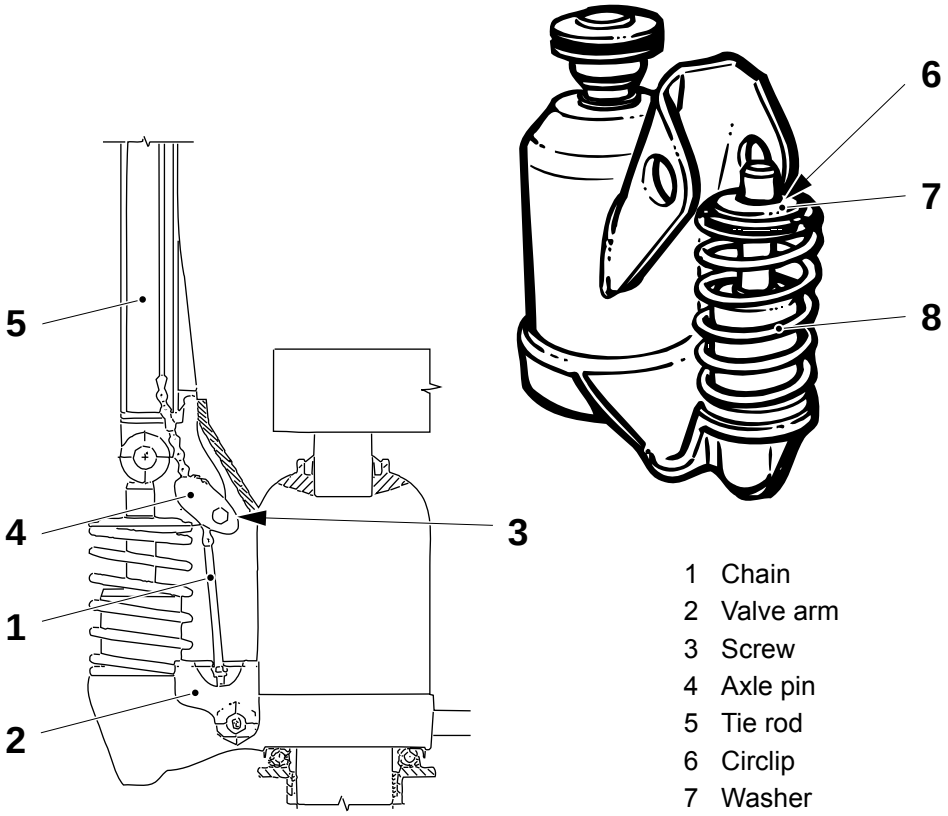

1 Chain
2 Valve arm
3 Screw
4 Axle pin
5 Tie rod
6 Circlip
7 Washer
8 Spring

(Cont'd)

TechPub_2614345_0105 - 01_2833528_01.fm

(Cont'd)

f) Remove the cylinder (9) and pull out the axle (10) in the direction indicated by the arrow.

g) Remove the oil seal (11), the circlip (12), the spacer (13), and the seal (14).

h) Change the oil seal (11) and the seal (14).

i) Assemble in the reverse order.

Note! Put the lifting arms in lowered position.

CAUTION
Lubricant.
Chemical products**.** Follow the ii Safety Precautions.

j) Remove the plug (15) and fill up with oil code C, see 15.3 Lubricants. Fill up until oil starts to flow out of the overfilling hole.

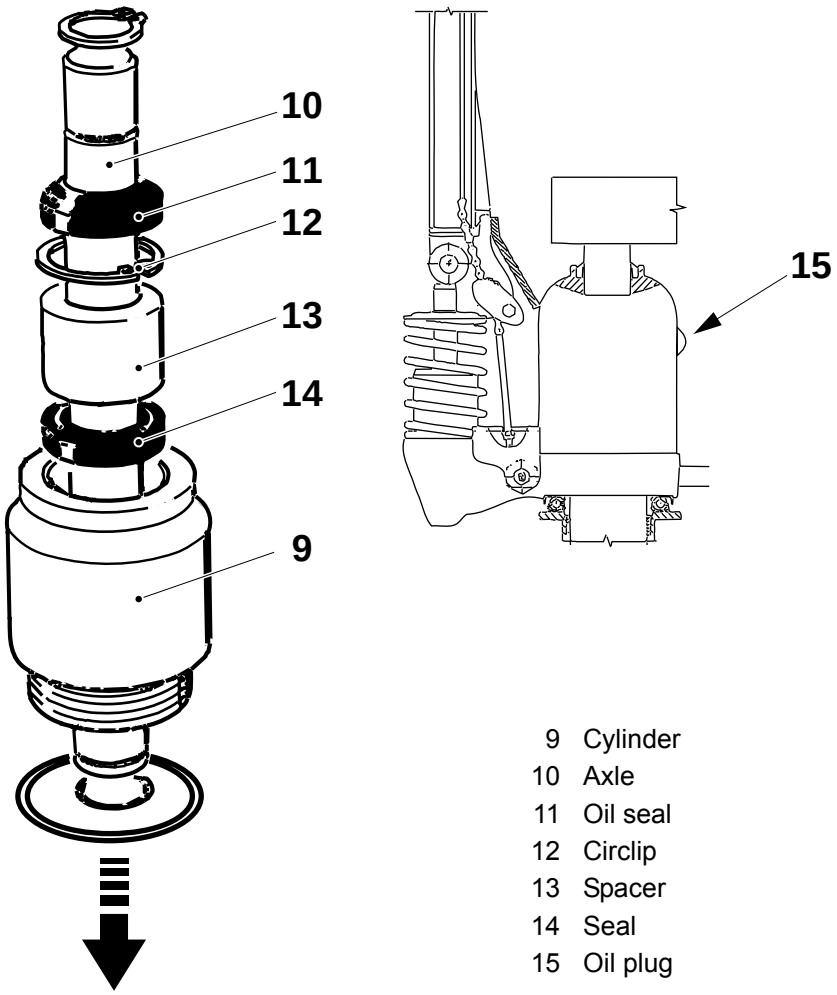

9 Cylinder
10 Axle
11 Oil seal
12 Circlip
13 Spacer
14 Seal
15 Oil plug

TechPub_2614345_0105 - 01_2833528_01.fm

9.6-3 Packaging Material Reel Trolley - Change Sink Valve

Consumables	Oil code C
SPC Reference	90459-0308

a) Disengage the chain (1).

b) Drive out the slotted pin (2) and remove the valve arm (3).

c) Remove the sink valve (4).

d) Change the O-rings (5), the copper washer (6), and the teflon washer (7).

e) Assemble in the reverse order.

f) Pump up the lifter arms to their highest position.

g) Loosen the setting screw (8) in the valve arm.

h) Press in the handle and at the same time screw in the screw (8) until the lifting arms start to sink. Secure the screw with the lock nut.

Note! Put the lifting arms in lowered position.

CAUTION

Lubricant!

Chemical products. Follow the ii Safety Precautions.

i) Remove the oil plug (9) and fill up with oil, code C, see 15.3 Lubricants. Fill up until oil starts to flow out of the overfilling hole.

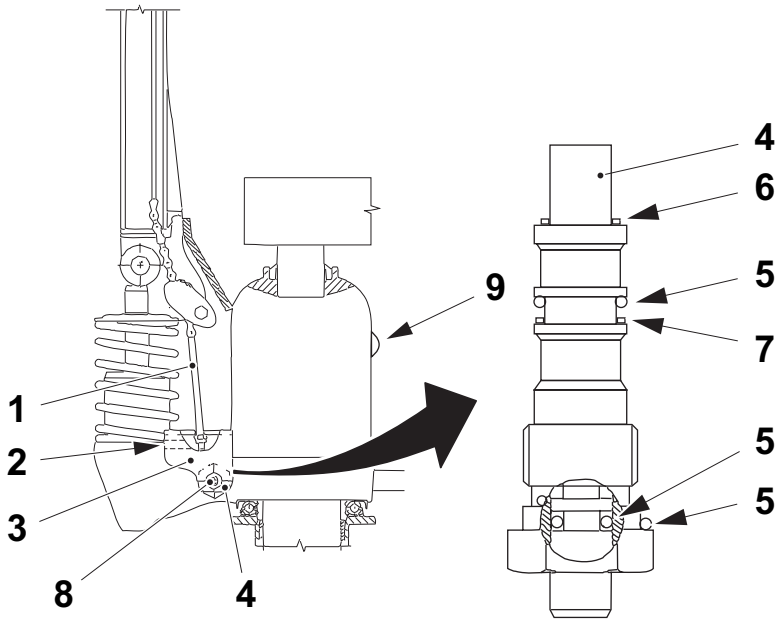

1 Chain
2 Slotted turf
3 Valve arm
4 Sink valve
5 O-ring
6 Copper washer
7 Teflon washer
8 Setting screw
9 Oil plug

TechPub_2614345_0105 - 01_2833528_01.fm

9.6-4 Packaging Material Reel Trolley - Overhaul Lifting Cylinder

Consumables	Oil code C
SPC Reference	90459-0308

a) Disengage the chain (1) from the valve arm (2).
b) Remove the screw (3).
c) Turn the axle pin (4) a bit clockwise and pull out the chain (1).
d) Pull out the axle pin and remove the tie rod (5).
e) Turn the trolley upside down and remove the circlip (6).

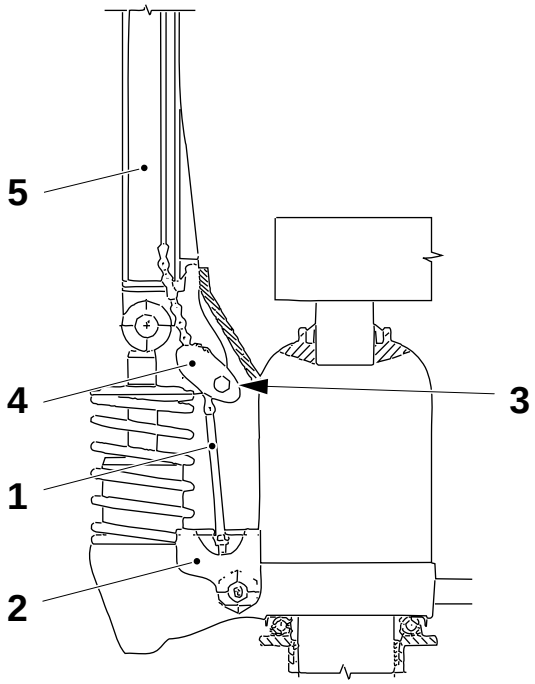

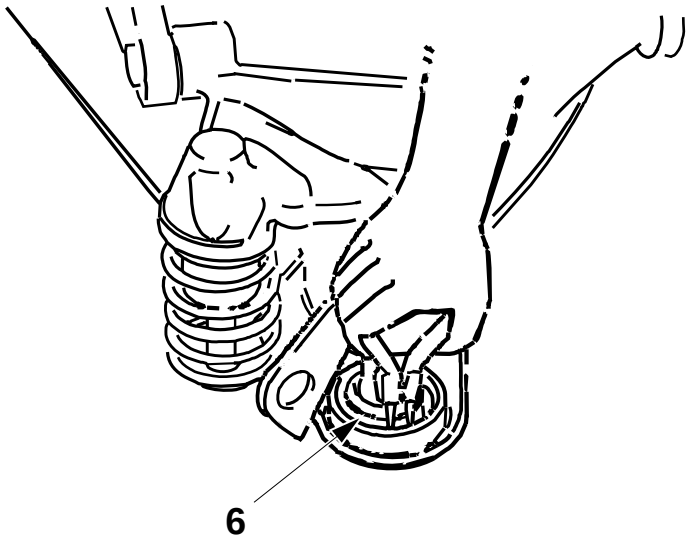

1 Chain
2 Valve arm
3 Screw
4 Axle pin
5 Tie rod
6 Circlip

(Cont'd)

TechPub_2614345_0105 - 01_2833528_01.fm

(Cont'd)

f) Put the trolley back on its wheel and put some support (7) under the lifting arms.

g) Pull out the axle (8).

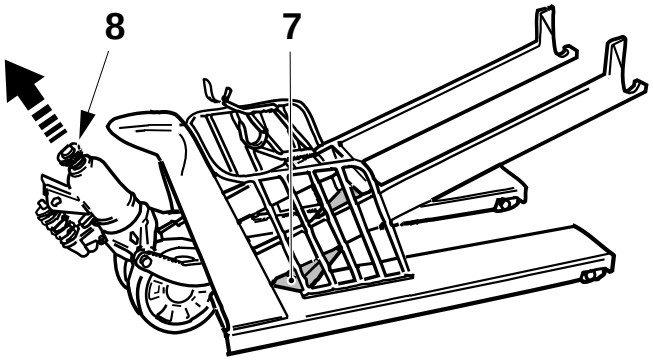

7 Support
8 Axle

(Cont'd)

TechPub_2614345_0105 - 01_2833528_01.fm

(Cont'd)

CAUTION
Risk of damage to the equipment.
When removing the seals be careful not to damage the surface where the seals are placed.

h) With a screwdriver, remove the seals (9) and (10). Change the seals, shape them as a "V" and then attach them in correct position in the tracks.

Note! Heat the seals (9) and (10) by dipping them into hot water to make the installation easier.

i) Put some oil on the axle (11) before assembly and assemble in the reverse order.

Note! Put the lifting arms in lowered position.

CAUTION
Lubricant.
Chemical products. Follow the ii Safety Precautions.

j) Remove the oil plug (12) and fill up with oil, code C, see 15.3 Lubricants. Fill up until oil starts to flow out of the overfilling hole.

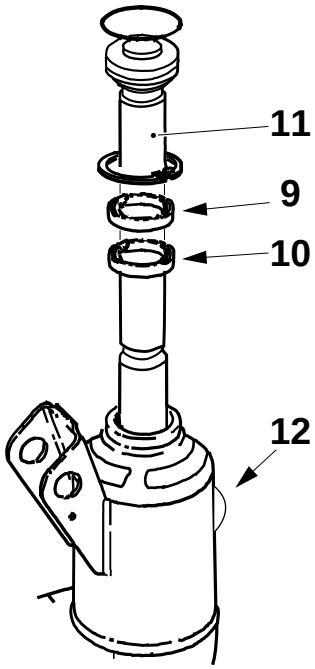

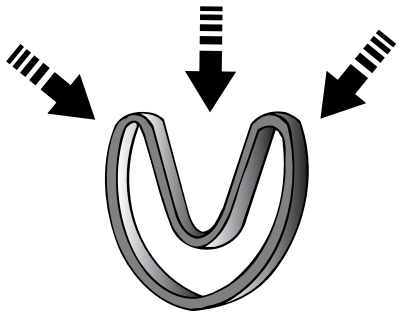

9 Seal
10 Seal
11 Axle
12 Oil plug

TechPub_2614345_0105 - 01_2833528_01.fm

9.6-5 Packaging Material Reel Trolley - Remove Fork Reel

SPC Reference	90459-0308

Put the trolley on its side.

a) Drive the pins (1) in to the axle (2) and pull out the axle.

b) Remove the wheel (3) and the sleeves (4).

c) Assemble in the reverse order.

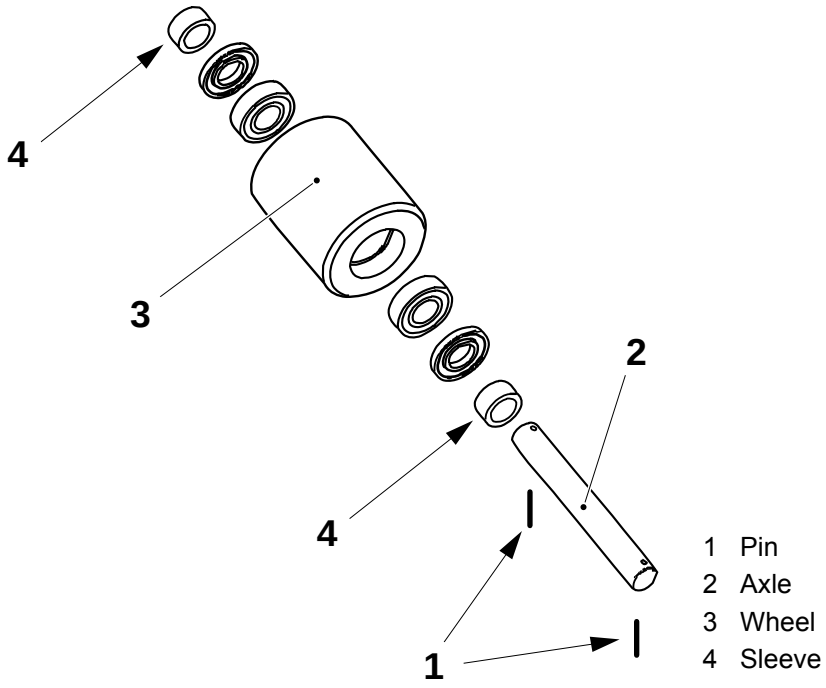

TechPub_2614345_0105 - 01_2833528_01.fm

9.6-6 Packaging Material Reel Trolley - Remove Guide Wheel

SPC Reference	90459-0308

Put the trolley on its side.

a) Remove the plastic plug (1), the circlip (2), and the wheel (3).

b) Disengage the torsion spring (4).

c) Remove the springs (5) holding the two break linings (6) together and remove the guide wheel.

d) Assemble in the reverse order.

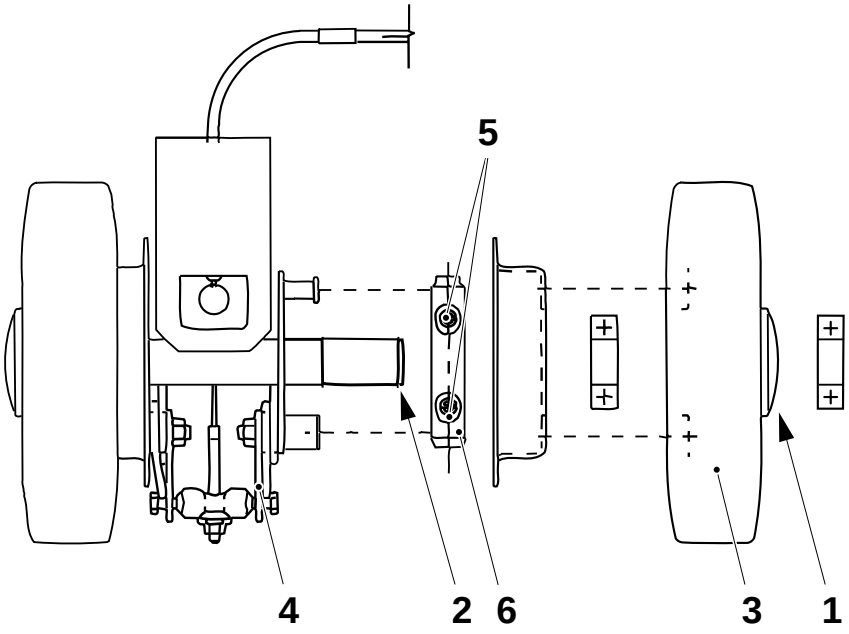

1 Plastic plug
2 Circlip
3 Wheel
4 Torsion spring
5 Spring
6 Brake lining

TechPub_2614345_0105 - 01_2833528_01.fm

This page intentionally left blank

TechPub_2614345_0105 - 01_2833528_01.fm

14 Electrical Equipment

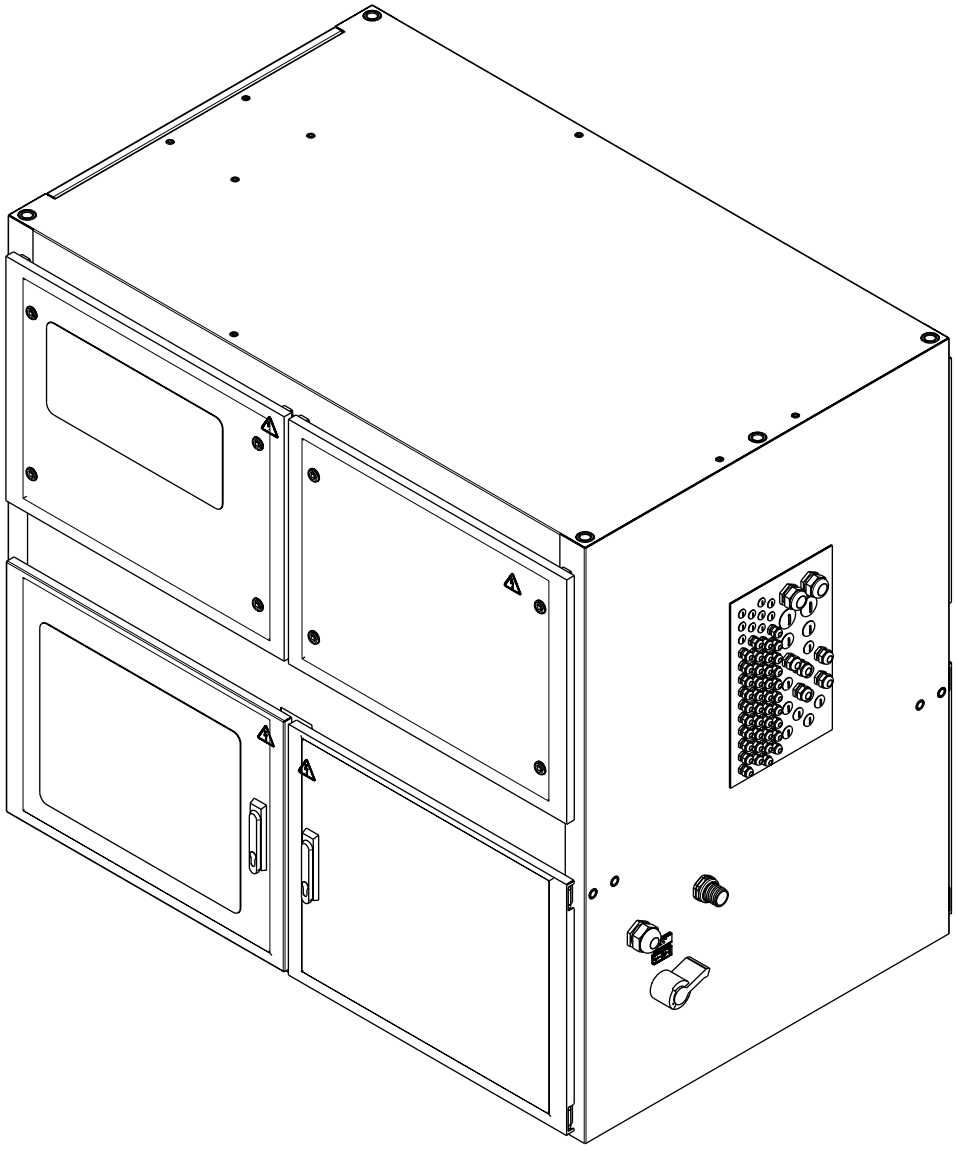

TechPub_2614345_0105 - 01_2772102_01.fm

Electrical Equipment - Description

SPC Reference	648114-0200

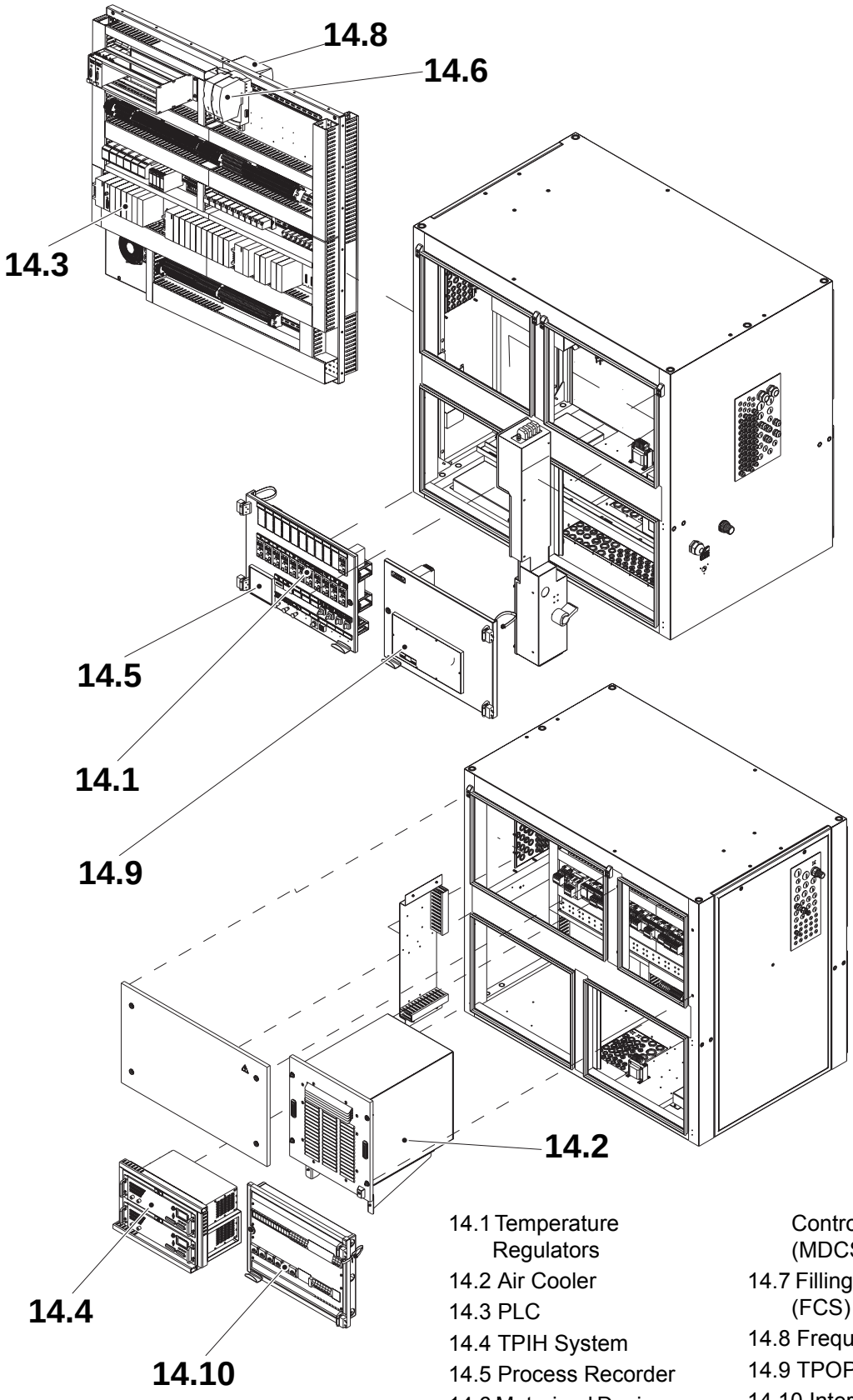

14.1 Temperature Regulators
14.2 Air Cooler
14.3 PLC
14.4 TPIH System
14.5 Process Recorder
14.6 Motorised Design Control System (MDCS)
14.7 Filling Control System (FCS)
14.8 Frequency Converter
14.9 TPOP
14.10 Internal Door Fuses

TechPub_2614345_0105 - 01_2772102_01.fm

14.1 Temperature Regulators . . . . . 14 - 7

14.1-1 Temperature Regulators - Check Values . . . . . 14 - 7

14.1-2 Temperature Regulators - Set . . . . . 14 - 8

14.1-3 Temperature Regulator - Change . . . . . 14 - 13

14.1-4 Temperature Regulators - Calibrate . . . . . 14 - 14

14.1.1 Calibrator . . . . . 14 - 17

14.1.1-1 Calibrator - Set Micromite II . . . . . 14 - 17

14.1.1-2 Calibrator - Set Fluke 714 . . . . . 14 - 19

14.1.2 Thermocouple . . . . . 14 - 20

14.1.2-1 Thermocouple - Check . . . . . 14 - 20

14.2 Air Cooler . . . . . 14 - 22

14.2-1 Air Cooler - Check . . . . . 14 - 22

14.3 PLC . . . . . 14 - 23

14.3-1 PLC - Load Program . . . . . 14 - 23

14.3-2 PLC - Set Queue Guard Photocell Delay . . . . . 14 - 30

14.3-3 PLC - Set Initialization Parameters . . . . . 14 - 33

14.3-4 PLC - Backup Program . . . . . 14 - 34

14.3-5 PLC - Establish Communication . . . . . 14 - 36

14.3-6 PLC - Force an Output . . . . . 14 - 41

14.3.1 PLC Power Supply Unit . . . . . 14 - 46

14.3.1-1 PLC Power Supply Unit - Change Battery . . . 14 - 46

14.3.1-2 PLC Power Supply Unit - Change . . . . . 14 - 48

14.4 TPIH System. . . . . 14 - 50

14.4-1 TPIH System - Description . . . . . 14 - 50

14.4-2 TPIH System - LCD Display . . . . . 14 - 53

14.4-3 TPIH System - Error Handling . . . . . 14 - 58

14.4-4 TPIH System - Check Function . . . . . 14 - 62

14.4-5 TPIH System - Check Cables . . . . . 14 - 64

14.4-6 TPIH System - Check Impedance Transformer 14 - 65

14.4-7 TPIH Power - Record Settings . . . . . 14 - 66

14.4-8 TPIH System - Set TS Power . . . . . 14 - 66

14.4-9 TPIH System - Set SA Power . . . . . 14 - 67

TechPub_2614345_0105 - 01_2772102_01.fm

14.4-10 TPIH System - Download Software . . . . . 14 - 68

14.4.1 TPIH Test Instrument. . . . . 14 - 73

14.4.1-1 TPIH Test Instrument - Description . . . . . 14 - 73

14.5 Process Recorder . . . . . 14 - 75

14.5-1 Process Recorder - Description . . . . . 14 - 75

14.5-2 Process Recorder - Set Recorder . . . . . 14 - 80

14.5-3 Process Recorder - Clean Chart Carriage . . . . 14 - 83

14.5-4 Process Recorder - Calibrate . . . . . 14 - 84

14.6 Motorised Design Control System (MDCS) . . 14 - 89

14.6-1 MDCS - Function Description . . . . . 14 - 89

14.6-2 MDCS - Set Communication . . . . . 14 - 95

14.6-3 MDCS - Display Report . . . . . 14 - 96

14.6-4 MDCS - Load Program . . . . . 14 - 100

14.6-5 MDCS - Check Drives . . . . . 14 - 101

14.6-6 MDCS - Set I/P Transducer . . . . . 14 - 104

14.7 Filling Control System (FCS) . . . . . 14 - 107

14.7-1 Filling System - Function Description . . . . . 14 - 107

14.7-2 Filling System - Setting Sequence . . . . . 14 - 114

14.7-3 Filling System - Set Communication . . . . . 14 - 115

14.7-4 Filling System - Display Report . . . . . 14 - 115

14.7-5 Filling System - Load Program . . . . . 14 - 119

14.7-6 Filling System - Check First Package . . . . . 14 - 120

14.7-7 Filling System - Check Parameters . . . . . 14 - 120

14.7-8 Filling System - Floater Calibration . . . . . 14 - 121

14.7-9 Filling System - Set I/P Transducer . . . . . 14 - 122

14.7-10 Filling System - Set Filling Window . . . . . 14 - 123

14.7-11 Filling System - Filling Mode Selection . . . . 14 - 123

14.7-12 Filling System - Level Regulator Relay . . . . 14 - 127

14.8 Frequency Converter. . . . . 14 - 129

14.8-1 Frequency Converter - Check . . . . . 14 - 129

14.8-2 Frequency Converter - Set . . . . . 14 - 130

TechPub_2614345_0105 - 01_2772102_01.fm

14.9 TPOP . . . . . 14 - 135

14.9-1 TPOP - PLMS Functional Description . . . . . 14 - 135
14.9-2 TPOP - Change Display Unit . . . . . 14 - 138
14.9-3 TPOP - Adjust Display . . . . . 14 - 140
14.9-4 TPOP - Copy Data PLMS . . . . . 14 - 141
14.9-5 TPOP - Set PLMS Date and Time . . . . . 14 - 154
14.9-6 TPOP - Change Display . . . . . 14 - 156
14.9-7 TPOP - Calibrate Touch Screen . . . . . 14 - 158
14.9-8 TPOP - Change Flexbox Fuse . . . . . 14 - 161
14.9-9 TPOP - Change Flexbox Hard Disc . . . . . 14 - 162
14.9-10 TPOP - Install Software . . . . . 14 - 168
14.9-11 TPOP - Set Machine ID . . . . . 14 - 178
14.9-12 TPOP - Set Up Distribution Equipment . . . . . 14 - 179
14.9-13 TPOP - Serial Communication Checks PLMS 14 - 183
14.9-14 TPOP - Line Supervision Checks . . . . . 14 - 184
14.9-15 TPOP - Check Flexbox Processor Fan . . . . . 14 - 189
14.9-16 TPOP - Change Flexbox Processor Fan . . . . . 14 - 191
14.9-17 TPOP - Import and Export PLMS Live Setup 14 - 198
14.9-18 TPOP - Log On Procedure . . . . . 14 - 202

14.10 Internal Door Fuses . . . . . 14 - 204

14.10-1 Internal Door Fuses - Check Earth Fault Breaker . . . . . 14 - 204

TechPub_2614345_0105 - 01_2772102_01.fm

This page intentionally left blank

TechPub_2614345_0105 - 01_2772102_01.fm

14.1 Temperature Regulators

14.1-1 Temperature Regulators - Check Values

Machine Status	Power supply disconnector ON Air supply OFF Steam supply ON Water supply OFF
SPC Reference	90410-44 90410-51

Check the temperatures on the temperature regulators according to the basic settings, see 14.1-2 Temperature Regulators - Set.

Set, if necessary, see 14.1-2 Temperature Regulators - Set.

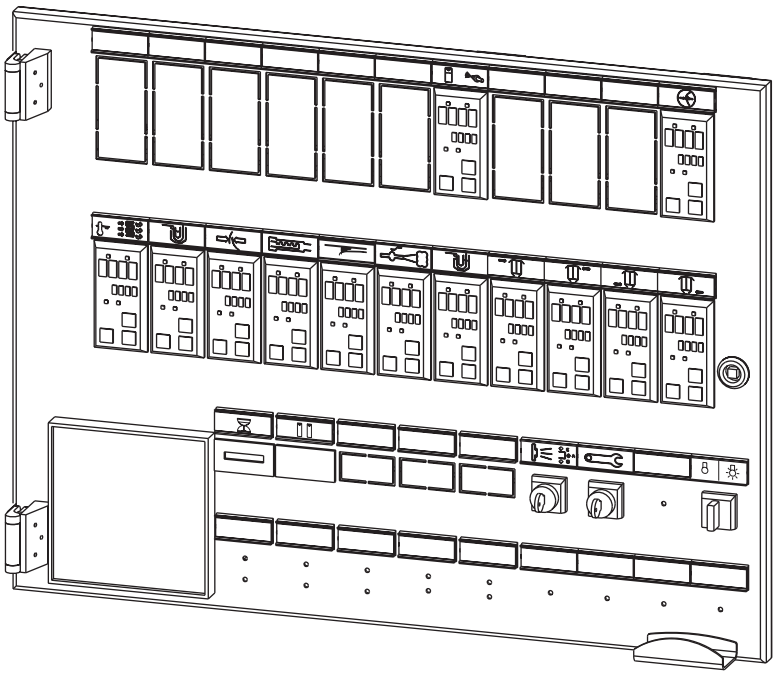

TechPub_2614345_0105 - 01_2772102_01.fm

14.1-2 Temperature Regulators - Set

Machine Status	Power supply disconnector ON Air supply OFF Steam supply ON Water supply OFF
Special Equipment	Adhesive label TP No. 90194-131
SPC Reference	90410-44 90410-51

The actual value or parameter is shown on the display (3).

To change values, press the buttons (10) or (9).

a) Set the correct temperature **W** (5), refer to the table.

b) Remove the regulator from the housing and set the **Lock** bridge in the **open** position (refer to the following page).
Fit back the regulator.

c) Press the menu button (8) for three seconds to step to the parameter level.

d) Press the menu button (8) several times until parameter **Loc** is displayed.

e) Set the **Loc** value to **0**.

f) Press the menu button (8) for three seconds to step to the parameter level. Set the correct values for the following parameters: **SP2**, **LCL1**, **LCH1**, **LCL2**, **LCH2**, **HCA**, **SPL**,**SPH**, **Pb1**, **ti**, **td**, **t1**. See table below.

g) Press the menu button (8) once to step to the operating level.

h) Press the menu button (8) for five seconds to step to the configuration level. Set the correct values for the following parameters: **Con1** and **Con2.** See table below.

i) Press the menu button (8) once to step to the operating level.

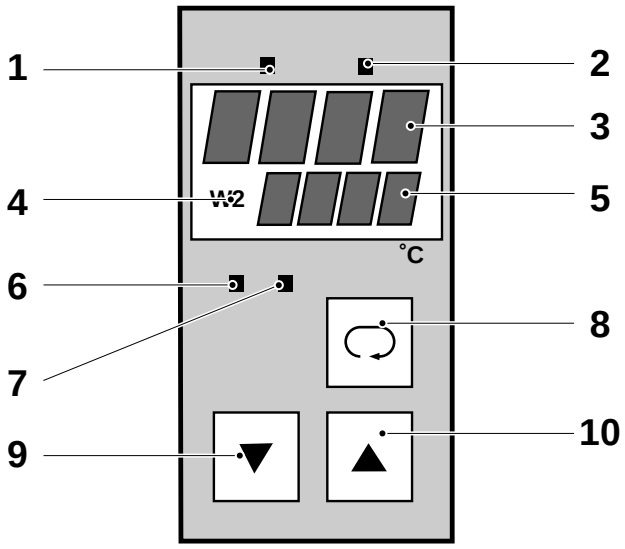

1 Heating LED
2 Cooling LED
3 Actual value/temp. display
4 W2 value LED*
5 Set temperature (W)
6 Temperature within limits LED
7 Heating current alarm LED
8 Menu button
9 Decrease value button
10 Increase value button

*) When SP2 works, the LED (4) is lit.

(Cont'd)

TechPub_2614345_0105 - 01_2772102_01.fm

(Cont'd)

j) For **90410-44**, step to parameter **Loc** and set the value to **1**.

k) For **90410-51, s**tep to parameter **Loc** and set the value to **4**.

l) Pull out the regulator and set the **Lock** bridge in the **closed** position (arrow).

m) Dismount the complete regulator from the panel by removing the screws at the top and the bottom of the regulator.

n) Put the adhesive label (12) over the edge of the regulator and it's housing (11).

o) Fit back the complete regulator.

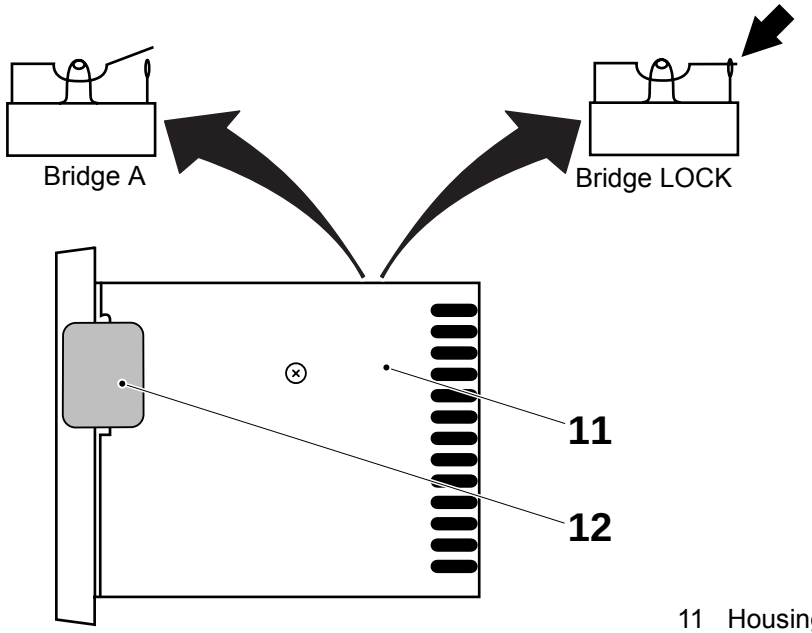

11 Housing
12 Adhesive label

(Cont'd)

TechPub_2614345_0105 - 01_2772102_01.fm

(Cont'd)

	Regulator (position)	**W** temperature, °C	**SP2** setpoint, °C	**PT2** segment time, min.	**LCL1** lower OK limit, °C	**LCH1** upper OK limit, °C	**LCL2** lower OK limit, °C	**LCH2** upper OK limit, °C	**HCA** current limit, A	**Loc** blocking at operation	**SPL** lower setpoint limit, °C	**SPH** upper setpoint limit, °C	**Pb1**	**ti**	**td**	**t1**	**con1**	**con2**
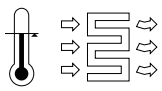	**A200** Pre-sterilization valve	270	0	0	1	100	-	-	-	4	270	271	-	-	-	-	0230	0000
	**A201** Water bath	74	80	0	10	12	1	95	-	4	72	85	0.1	1	1	0.4	0230	0001
	**A202** LS	380*	280	0	10	20	1	50	-	4	200	460	1.9	20	20	3.8	0230	0000
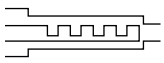	**A203** Air superheater	360	400	0	10	10	50	50	-	4	360	400	2.0	9	9	1.8	0230	0000
	**A204** Air knife	125	0	0	10	10	-	-	-	4	125	126	-	-	-	-	0230	0000
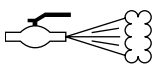	**A205** Steam	130	0	0	5	20	-	-	-	4	130	131	-	-	-	-	0230	0000
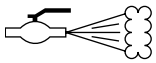	**A205** HVA	50	125	0	5	65	5	15	-	4/1	50	125	0.2	0.0	0.0	0.4	0230	0000
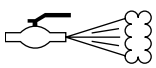	**A205** TCSB	110	130	0	5	25	5	10	-	4/1	110	135	-	-	-	-	0230	0000
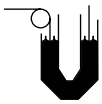	**A206** Peroxide	70	0	0	1	10	1	90	-	4	70	71	-	-	-	-	0230	0001
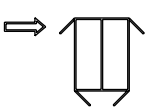	**A212** Flap heating, top LH	420*	0	0	10	10	-	-	-	4	0	600	6.1	1	1	0.4	0230	0000
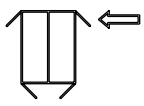	**A213** Flap heating, top RH	420*	0	0	10	10	-	-	-	4	0	600	6.1	1	1	0.4	0230	0000

(Cont'd)

TechPub_2614345_0105 - 01_2772102_01.fm

(Cont'd)

	Regulator (position)	**W** temperature, °C	**SP2** setpoint, °C	**PT2** segment time, min.	**LCL1** lower OK limit, °C	**LCH1** upper OK limit, °C	**LCL2** lower OK limit, °C	**LCH2** upper OK limit, °C	**HCA** current limit, A	**Loc** blocking at operation	**SPL** lower setpoint limit, °C	**SPH** upper setpoint limit, °C	**Pb1**	**ti**	**td**	**t1**	**con1**	**con2**
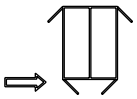	**A214** Flap heating, bottom LH	400*	0	0	10	10	-	-	-	4	0	600	6.6	1	1	0.4	0230	0000
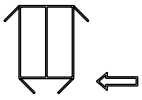	**A215** Flap heating, bottom RH	400*	0	0	10	10	-	-	-	4	0	600	6.6	1	1	0.4	0230	0000
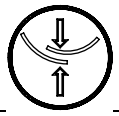	**A217** Short stop	165*	0	0	5	20	1	50	-	-	0	470	1.5	10	10	2.0	-	-

CAUTION

Risk of product damage.

* These setting values are basic values, which may vary according to the type of packaging material used and environmental conditions.

(Cont'd)

TechPub_2614345_0105 - 01_2772102_01.fm

(Cont'd)

Error Signal

In the case of an error, an error code is displayed on the display (3). The error code is displayed until the error is acknowledged, or until its cause has been eliminated.

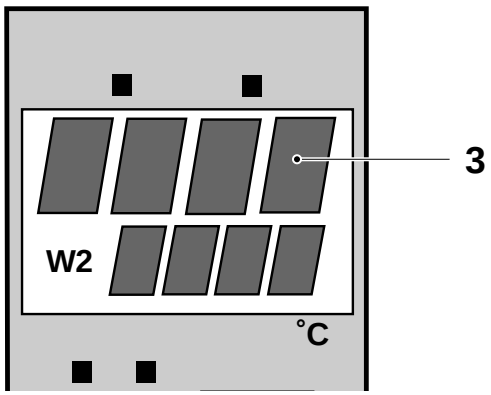

3 Display

The following error signals can be displayed:

Code	Cause
FbF	Sensor break
POL	Wrong sensor polarity
AdF	Selftuning error

In the case of problems with a temperature regulator, check all connections. Change the temperature regulator, if necessary, refer to 14.1-3 Temperature Regulator - Change.

TechPub_2614345_0105 - 01_2772102_01.fm

14.1-3 Temperature Regulator - Change

Machine Status	Power supply disconnector OFF Air supply OFF Steam supply ON Water supply OFF
SPC Reference	90410-44 90410-51

a) Get a grip of the front panel (1) and pull out the regulator from its case (2).

b) Change the regulator and calibrate it, refer to 14.1-4 Temperature Regulators - Calibrate.

c) Set the thermoregulator, refer to 14.1-2 Temperature Regulators - Set.

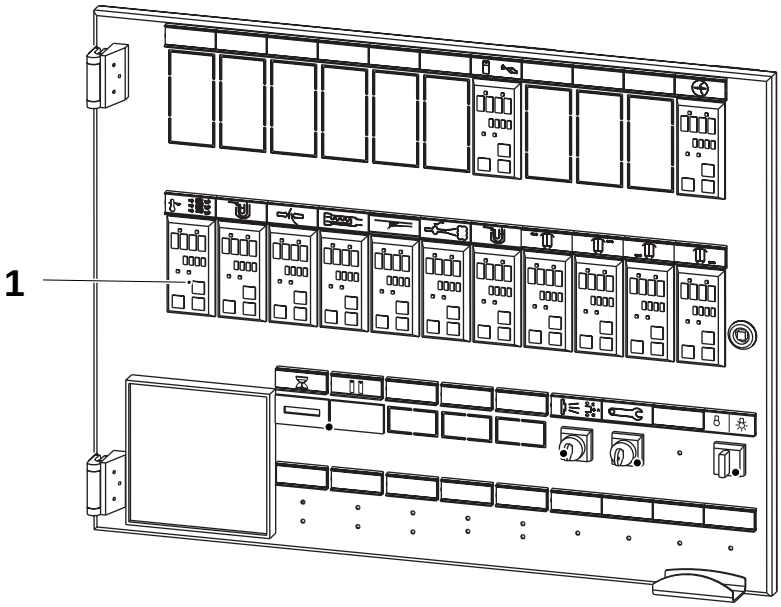

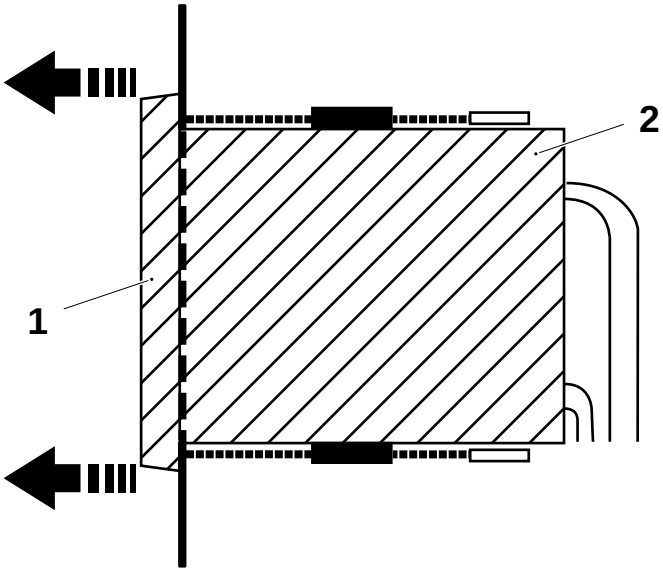

1 Front panel
2 Case

TechPub_2614345_0105 - 01_2772102_01.fm

14.1-4 Temperature Regulators - Calibrate

Machine Status	Power supply disconnector OFF Air supply OFF Steam supply ON Water supply OFF
Special Equipment	Calibrator TP No. 90410-338 Extension wire TP No. 90410-308 Adhesive label TP No. 90194-131
SPC Reference	90410-44 90410-51

Note! Before calibration, be sure the calibrator has already been set (according to the Pentronic calibration certificate), see page 14.1.1-1 Calibrator - Set Micromite II or 14.1.1-2 Calibrator - Set Fluke 714.

Calibration must be performed when a temperature regulator is changed or at least once a year.

a) Get a grip on the front panel of the temperature regulator and pull it out from the housing (14.1-3 Temperature Regulator - Change).

b) Close the calibration bridge **A** (arrow) and open the **lock** bridge.

c) Fit back the temperature regulator.

d) Connect the micromite instrument as a replacement of the temperature sensor using the extension wire.

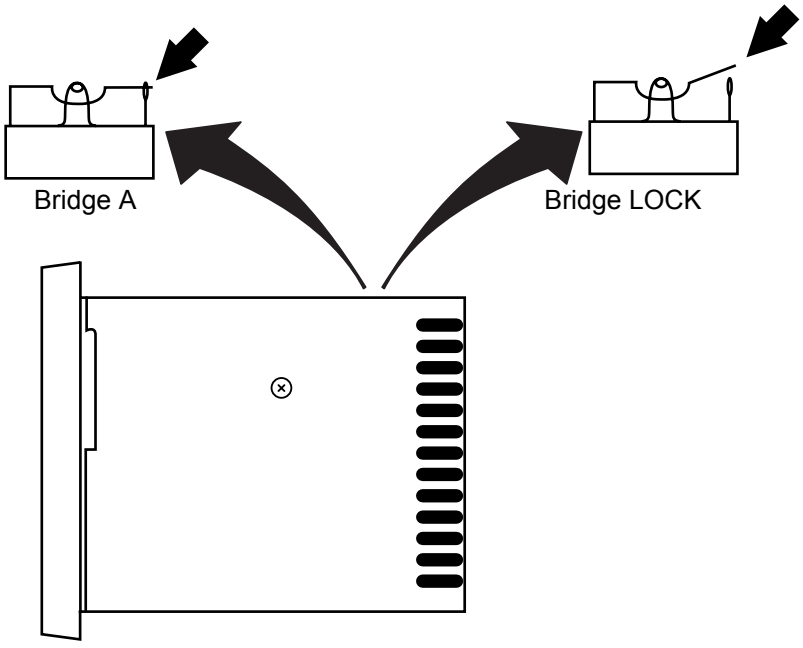

(Cont'd)

TechPub_2614345_0105 - 01_2772102_01.fm

(Cont'd)

e) The display (1) shows **CAL**.

f) Let the temperature stabilise, select **Output 1** and set the value for **SP1**.

g) Find in the Calibration certificate the deviation value for Micromite corresponding to **Output 1**.

h) Check that the difference between the displayed value and the deviation value from Calibration certificate is within ± 1.4° C. If not correct using the buttons (3) and (4). Press the key **Menu** button (2) to store.

i) Remove the regulator from the housing.

j) Open the calibration bridge **A**.

k) Fit back the regulator.

l) Check all setting values according to the table, refer to 14.1-2 Temperature Regulators - Set.

m) For **90410-44**, step to parameter **Loc** and set the value to **1**.
For **90410-51**, step to parameter **Loc** and set the value to **4**.

n) Pull out the regulator and set the **Lock** bridge in the **closed** position and fit back the regulator.

o) Dismount the complete regulator from the panel by removing the screws at the top and the bottom of the regulator.

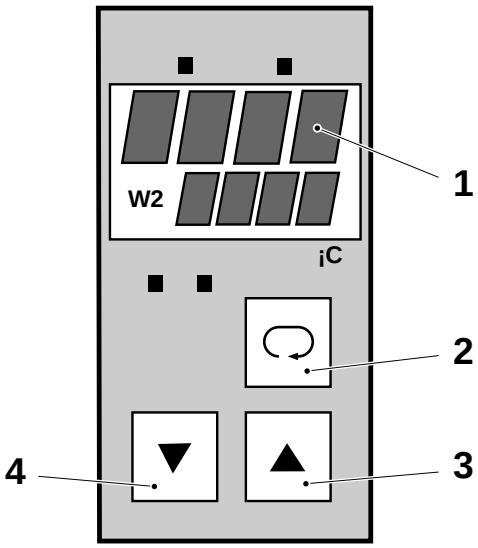

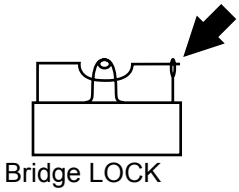

1 Display
2 Menu button
3 Increase value
4 Decrease value

(Cont'd)

TechPub_2614345_0105 - 01_2772102_01.fm

(Cont'd)

p) Put the adhesive label (6) over the edge of the regulator and it's housing (5).

q) Fit back the complete regulator.

Note! To cancel the calibration, repeat items from a) to e).
Press the **Menu** button (2) and the **Increase value** button (3) simultaneously to set the correction value to **0**. Continue with items from f) to h).

r) Repeat on the other temperature regulators.

s) Check the thermocouples, refer to 14.1.2-1 Thermocouple - Check.

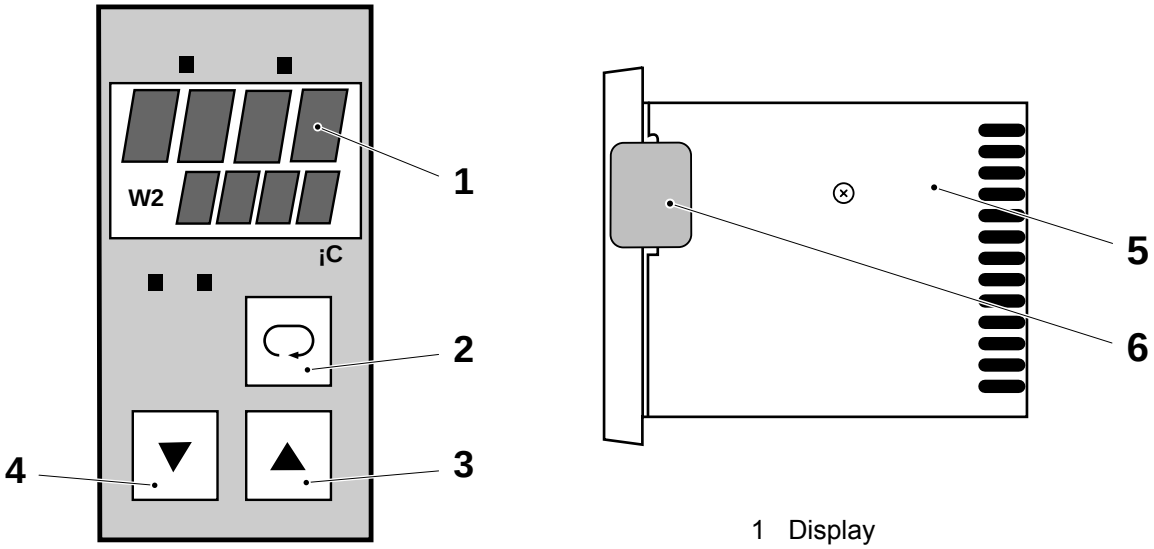

1 Display
2 Menu button
3 Increase value
4 Decrease value
5 Housing
6 Adhesive label

TechPub_2614345_0105 - 01_2772102_01.fm

14.1.1 Calibrator

14.1.1-1 Calibrator - Set Micromite II

Machine Status	Power supply disconnector OFF Air supply OFF Steam supply ON Water supply OFF
Special Equipment	Calibrator (Micromite II) TP No. 90410-338

Thermocouple Type and Measuring Unit

a) Turn **On** mains power (at least 15 minute before setting).

b) Connect the type K thermocouple to the + input (1) (yellow lead) and the - input (2) (red lead).

c) Push the **On/Off** key (6) to switch on the instrument.

CAUTION

Risk of damage to equipment.

Make sure that the instrument is switched off in case the AC-adapter is to be disconnected or the batteries removed. Failure to do so will cause the instrument to lose the set-up information.

d) Push the **F/C** key (4) to select “centigrade”.

e) Push the **Select** key (5) and the **Sensor** key (3).

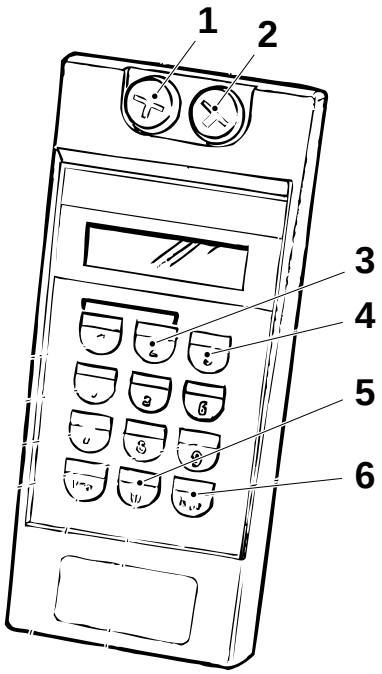

1 Input (+)
2 Input (-)
3 Sensor key
4 F/C key
5 Select key
6 On/Off key

(Cont'd)

TechPub_2614345_0105 - 01_2772102_01.fm

(Cont'd)

f) Select the thermocouple type. Move the flashing cursor to the right or to the left by pushing the **Up** (9) or **Down** (7) keys.

g) Push the **Enter** key (8) when the cursor is indicating **type K**.

Temperature Output Value

Push the **Select** key (5) and the **Output 1** key (10) to set the output temperature. Use the numeric keys to type in the temperature value and push the **Enter** key (8).

To clear an output value, simultaneously push the **Input** key (11) and the **Sensor** key (3).

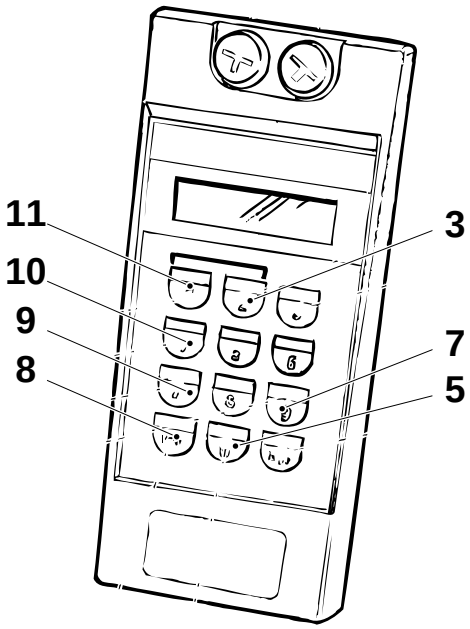

3 Sensor key
5 Select key
7 Down key
8 Enter key
9 Up key
10 Output 1 key
11 Input key

TechPub_2614345_0105 - 01_2772102_01.fm

14.1.1-2 Calibrator - Set Fluke 714

Machine Status	Power supply disconnector ON Air supply OFF Steam supply ON Water supply OFF
Special Equipment	Calibrator FLUKE 714 TP No 90458-0914

Turn ON mains power at least 15 minutes before setting.

WARNING

Hazardous voltage.

Will cause death or serious injury. Be careful when working with the calibrator. Follow the safety information in the Instruction Sheet delivered with the calibrator.

Set the calibrator as follows:

a) Press the ON/OFF button (6) to switch on the calibrator.

b) Press the button (7) to toggle °C or °F on the display (3).

c) Press the TC TYPE button (5) to show the thermocouple **TYPE K** (4).

d) Connect the type **K** thermocouple to the calibrator connection (11).

Thermocouple value

Press the INPUT-OUTPUT button (8) to show **INPUT** (1) on the display. Actual temperature (2) is shown.

Temperature output value

Press the INPUT-OUTPUT button (8) to show **OUTPUT** (1) on the display. Set the temperature (2) with the buttons (9), and (10).

For further information on the calibrator, see the Instruction Sheet delivered with the calibrator.

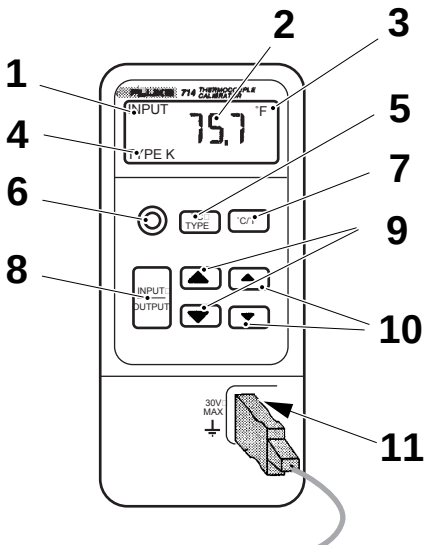

1 INPUT or OUTPUT indicator
2 Temperature indicator
3 °F or °C indicator
4 Thermocouple type
5 TC TYPE button
6 ON/OFF button
7 °F or °C button
8 INPUT or OUTPUT button
9 Step up/down buttons 50° steps
10 Step up/down buttons 0.1° steps
11 Calibrator connection

TechPub_2614345_0105 - 01_2772102_01.fm

14.1.2 Thermocouple

14.1.2-1 Thermocouple - Check

Machine Status	Power supply disconnector OFF Air supply OFF Steam supply ON Water supply OFF
Special Equipment	Calibration oven TP No. 90410-337 Extension wire TP No. 90410-309
SPC Reference	90410-44 90410-51

Note! The check must be performed when a temperature regulator is changed or at least once a year.

a) Turn on the oven by connecting the mains plug.

b) Push the FUNC key (2) to select Set-up mode (indicated by a flashing "SP" on the calibrator display(1)).

c) Use the UP (3) or DOWN (4) keys to set the temperature value at **100**°C.

Note! Pushing the key once changes the value by 0.1°C.
Pushing the key for at least two seconds to make the temperature value change more quickly.

d) Push the FUNC key again to select **Run mode**.
The oven is now ready for measuring operations.

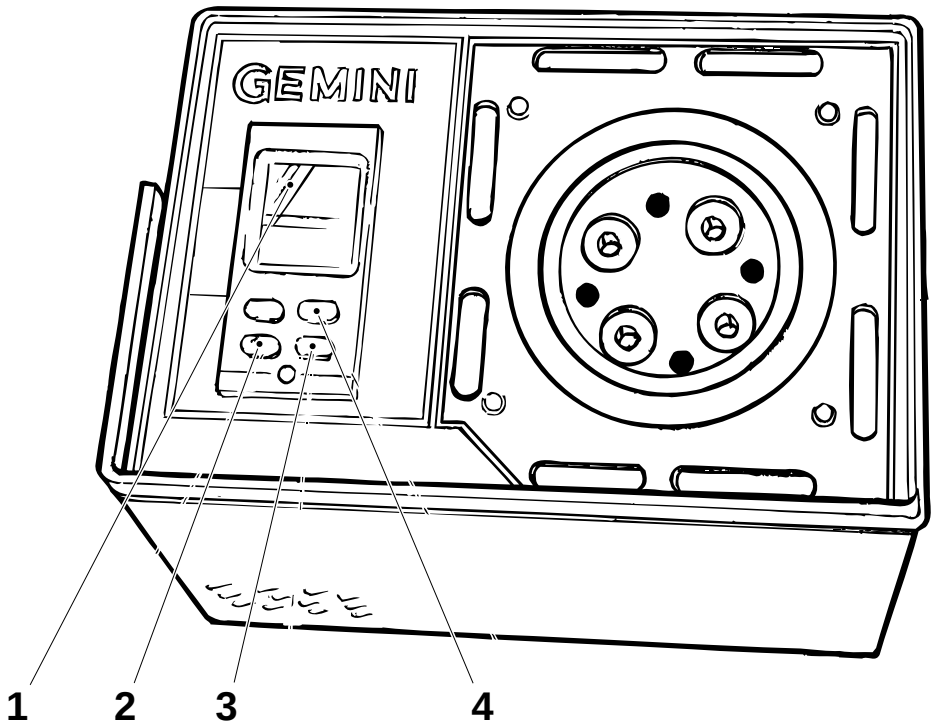

1 Display
2 FUNC key
3 UP key
4 DOWN key

(Cont'd)

TechPub_2614345_0105 - 01_2772102_01.fm

(Cont'd)

e) Detach the machine thermocouple and place it in one of the cavities (5) in the oven.

f) Put the calibrated thermocouple (to be found in the calibration kit) in an adjacent cavity in the oven (6).

Note! Make sure that the two thermocouples are inserted equally deep.

g) Use the extension wire to connect the calibrator Micromite II (7) to the thermocouple from the machine. Note the temperature reading on the display (8) on the Micromite II (7).

h) Connect the Micromite II (7) to the calibrated thermocouple. Note the temperature reading on the display (8).

i) Find in the Pentronic Calibration Certificate the real correction value for the calibrated thermocouple (thermocouple fault plus Micromite II fault).

j) If the value of the machine thermocouple deviates by more than **± 1.1°C** from the value of the calibrated thermocouple, change the machine thermocouple.

k) When the measurement is complete, let the oven stay switched on and cool it by setting the temperature value to 0.
This cools down the oven more effectively.

TechPub_2614345_0105 - 01_2772102_01.fm

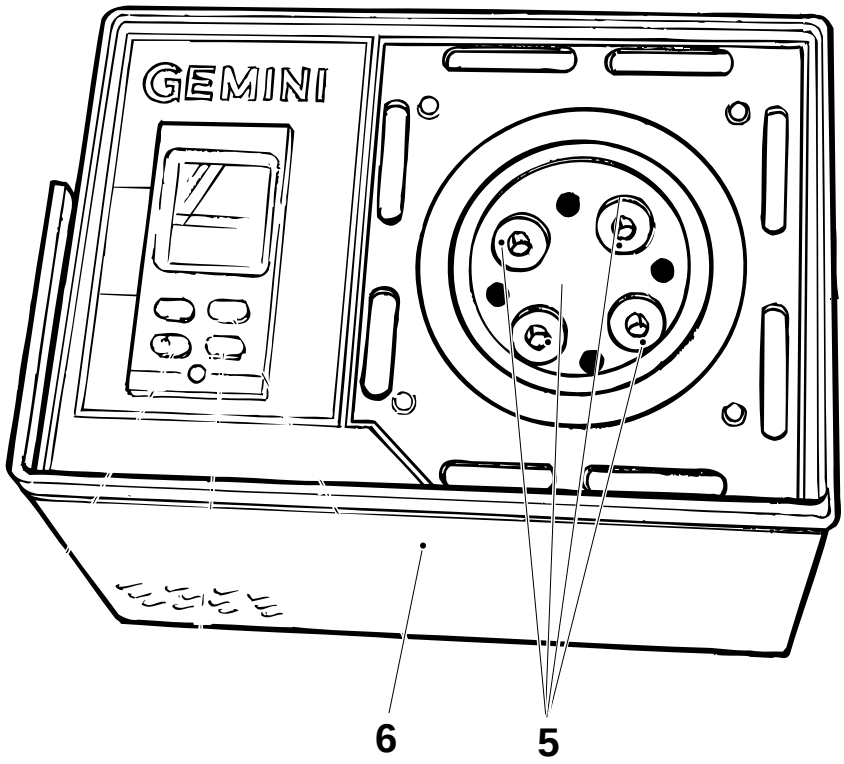

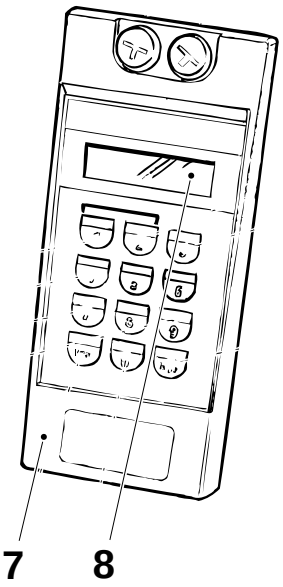

5 Cavity
6 Oven
7 Micromite II
8 Display

14.2 Air Cooler

14.2-1 Air Cooler - Check

Machine Status	Power supply disconnector ON Air supply OFF Steam supply ON Water supply OFF
SPC Reference	1517677-0100

Use a thermometer to check that the temperature inside the electrical cabinet does not exceed **35°**. If not call the authorised service for refrigerating units.

CAUTION

Risk of personal injury and damage to the equipment.

While the doors of the electrical cabinet are open the cooler does not work. Make sure to close the doors of the electrical cabinet after having finished working inside.

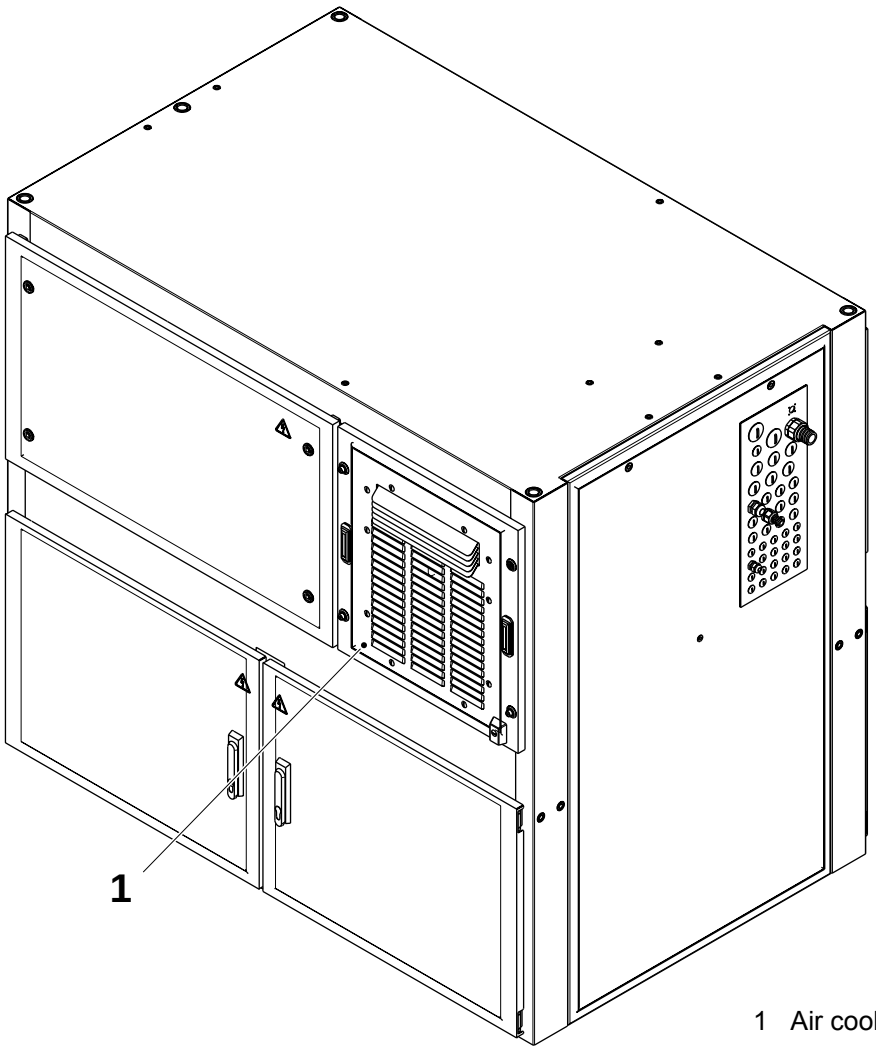

1 Air cooler

TechPub_2614345_0105 - 01_2772103_01.fm

14.3 PLC

14.3-1 PLC - Load Program

Machine Status	Power supply disconnector ON Air supply OFF Steam supply ON Water supply OFF
Special Equipment	Communication cable TP No. 90031-300 AT-compatible PC with CD-ROM drive
EM Reference	EM-2771720-XXXX

a) Establish a connection link, see 14.3-5 PLC - Establish Communication on page 14-36.

b) Select the Manager tab in the Navigator window.

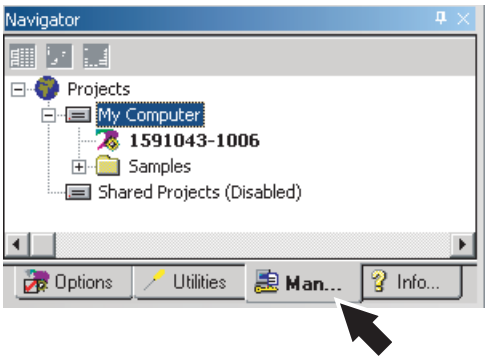

c) Insert the program CD-ROM disc in the PC CD-ROM drive.

d) From the File menu, select Restore Project.

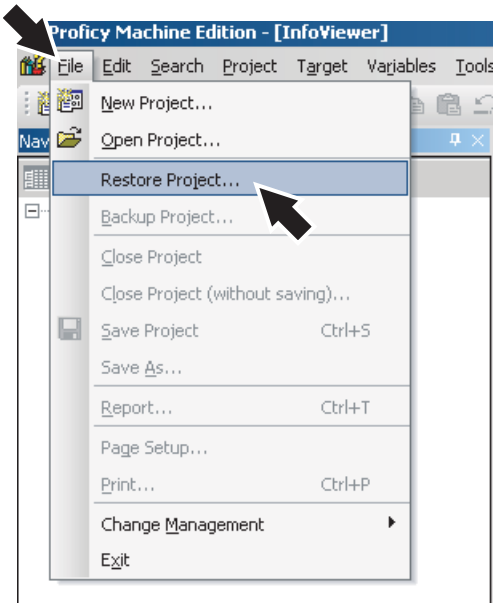

(Cont'd)

TechPub_2614345_0105 - 01_2772104_01.fm

(Cont'd)

e) Select the CD-ROM drive, select the program file, and click Open.

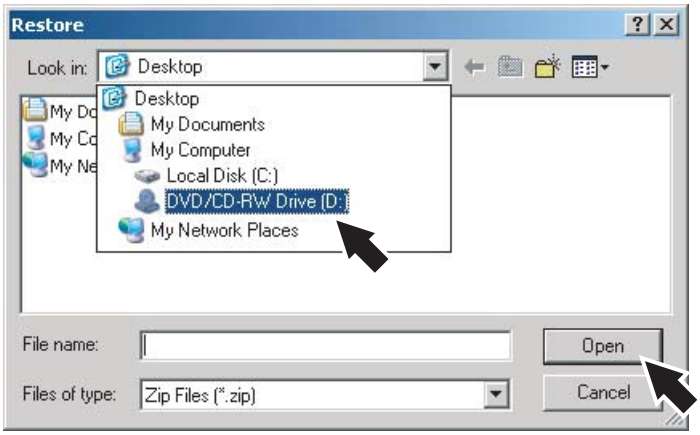

f) Select the Manager tab in the Navigator window.

g) Right-click the program in the tree-structure and select Open.

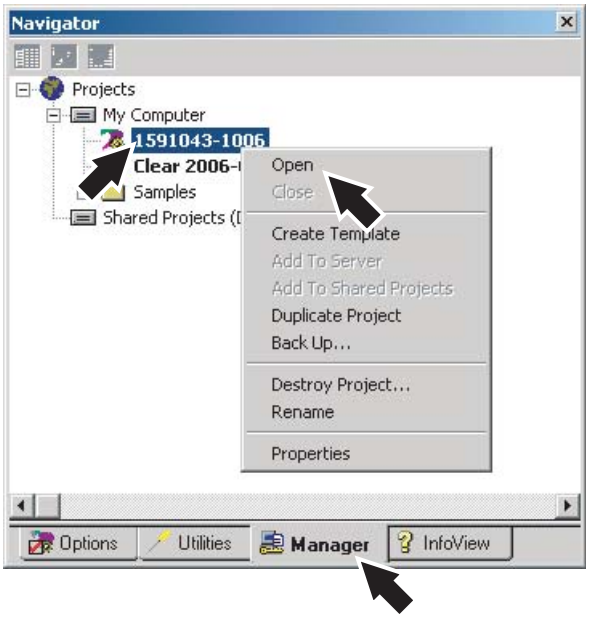

(Cont'd)

TechPub_2614345_0105 - 01_2772104_01.fm

(Cont'd)

h) Toggle to online mode by clicking the Toggle Online Mode button.

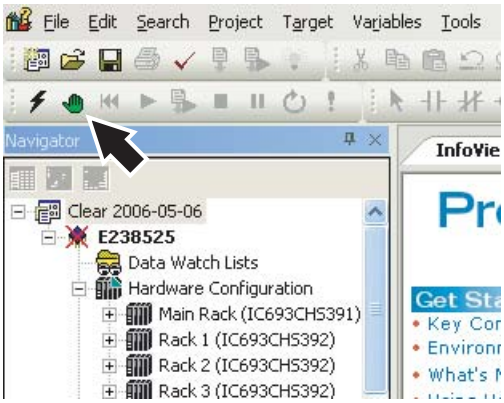

i) Stop the PLC by clicking the Stop button.

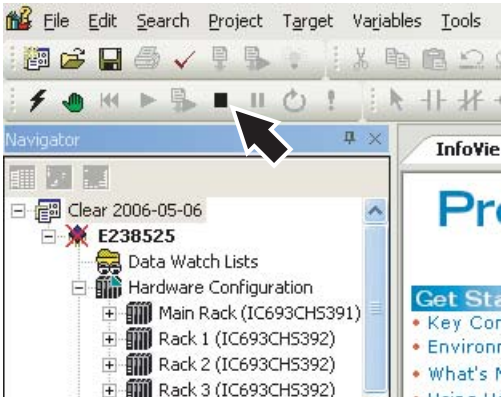

j) Make sure Outputs Disabled is checked in the Stop PLC window and click OK.

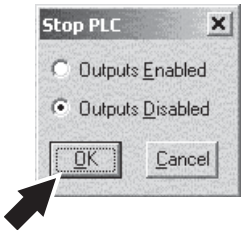

(Cont'd)

TechPub_2614345_0105 - 01_2772104_01.fm

(Cont'd)

k) When the PLC has been stopped, a message confirming this will be displayed in the Feedback Zone window.

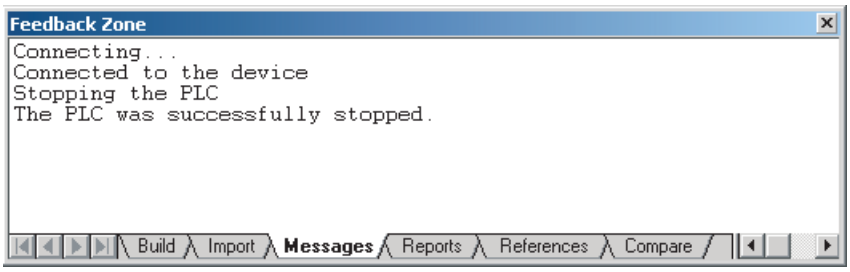

l) Click the Reset button.



m) In the Clear Memory window, make sure All memory is selected and click OK.

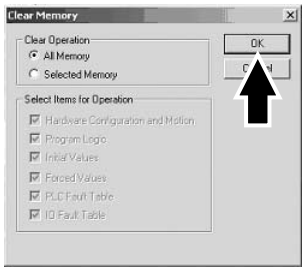

n) A confirmation window will appear. Click Yes.

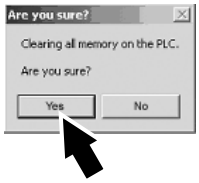

(Cont'd)

TechPub_2614345_0105 - 01_2772104_01.fm

(Cont'd)

o) If the memory has been sucessfully cleared, a message confirming this will be displayed in the Feedback Zone window.

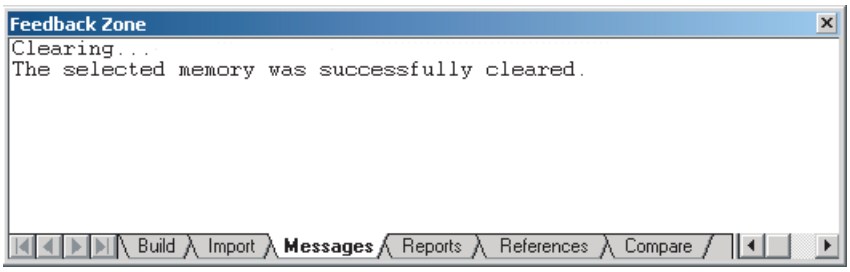

p) Press the Download and Start Active Target button.

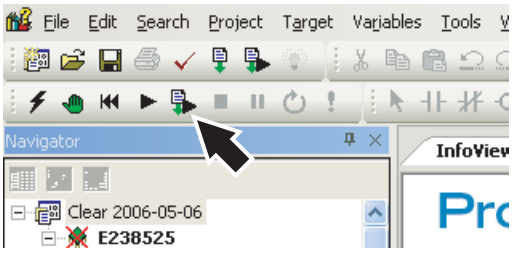

q) In the Download to PLC Window, make sure that all boxes are checked except the Initial/Forced box and the Write all box, then click OK.

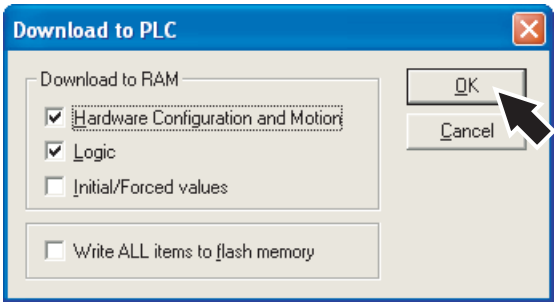

r) If the Program Name window appears, press Yes.

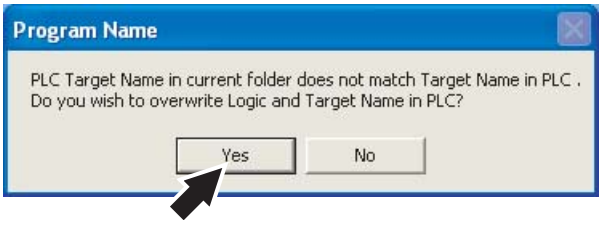

(Cont'd)

TechPub_2614345_0105 - 01_2772104_01.fm

(Cont'd)

s) Make sure Outputs Enabled is checked in the Start PLC window and click OK.

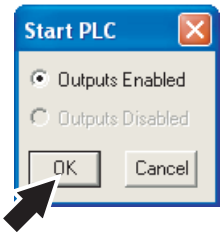

t) When the download is complete, the PLC will start automatically and a message confirming this will be displayed in the Feedback Zone window.

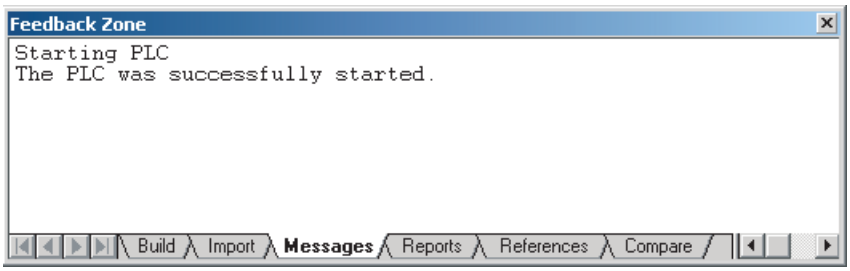

u) Click the Online/Offline button to go offline.

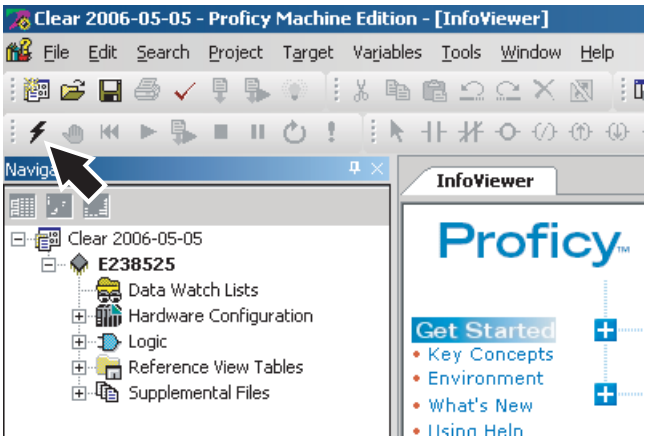

(Cont'd)

TechPub_2614345_0105 - 01_2772104_01.fm

(Cont'd)

v) From the File menu, select Close Project.

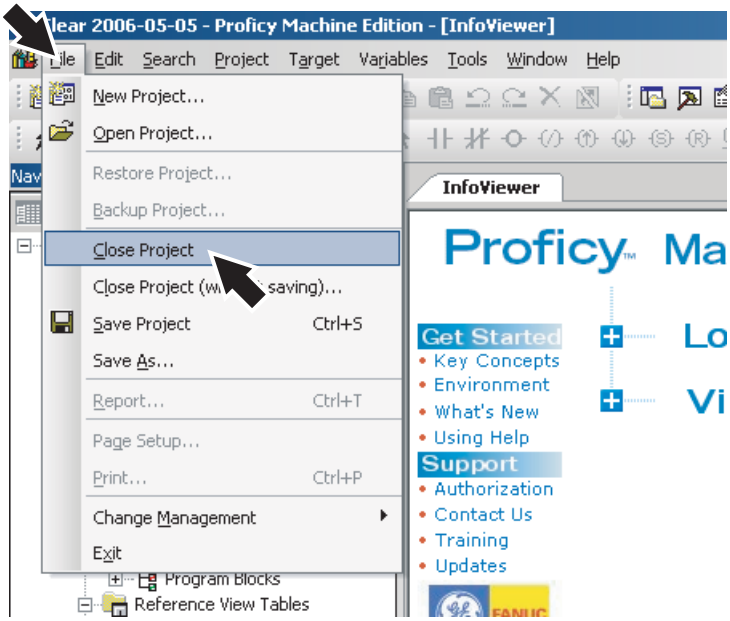

w) Exit Proficy Machine Edition.

x) Disconnect the communication cable between the PLC and the PC.

TechPub_2614345_0105 - 01_2772104_01.fm

14.3-2 PLC - Set Queue Guard Photocell Delay

Machine Status	Power supply disconnector ON Air supply OFF Steam supply ON Water supply OFF
Special Equipment	Communication cable RS 232 C AT-compatible PC with CD-ROM drive

When there is a congestion, the Queue Guard Photocell (1) gives the signal to stop the Filling Machine before the package queue arrives to the Package Counter (2). If necessary, decrease the delay time of the Queue Guard Photocell (1) R731 in the machine program. Follow the instructions below.

a) Establish a connection link, see 14.3-5 PLC - Establish Communication on page 14-36.

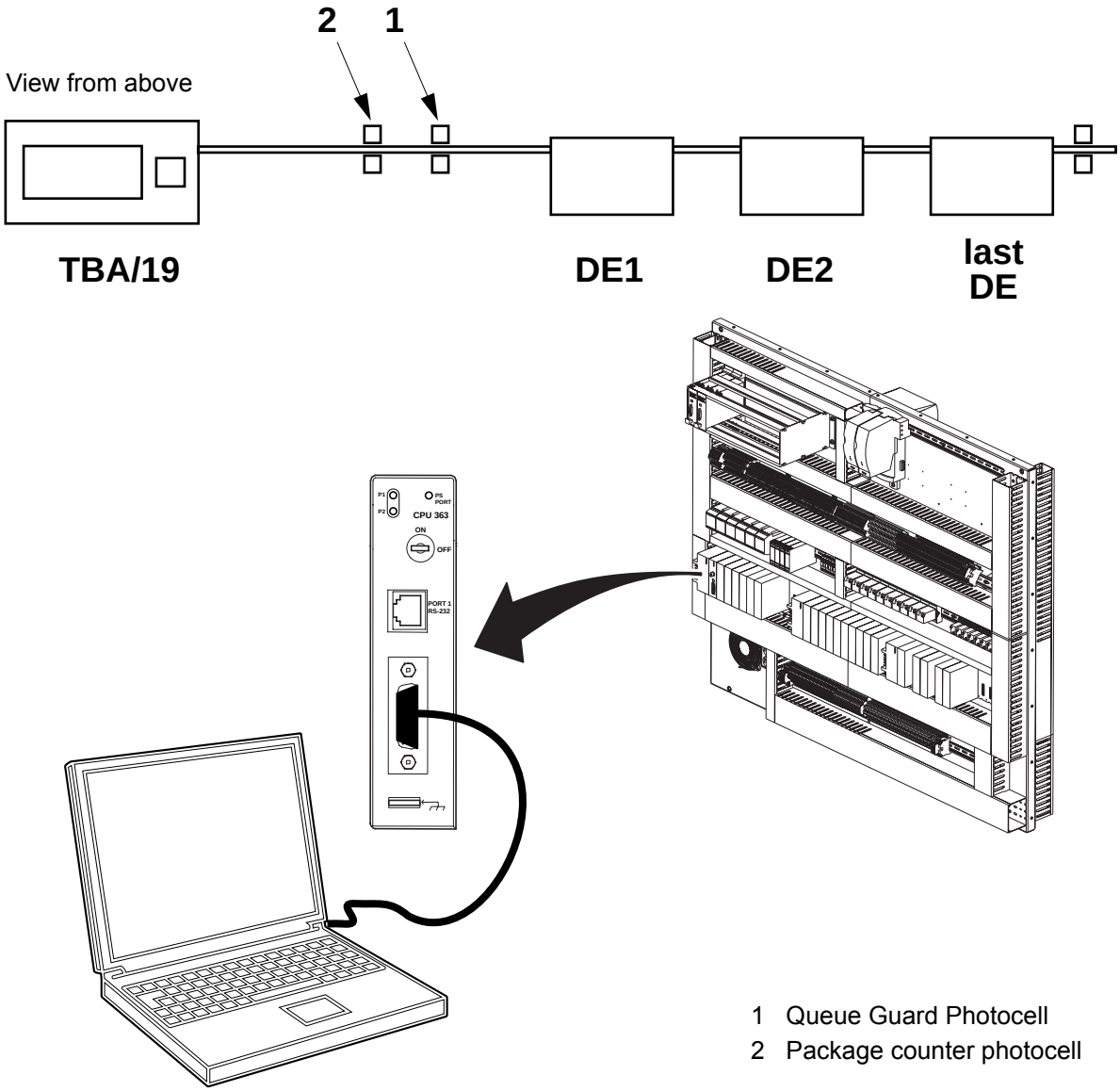

1 Queue Guard Photocell
2 Package counter photocell

(Cont'd)

TechPub_2614345_0105 - 01_2772104_01.fm

(Cont'd)

b) Click the Find in Active Target button.

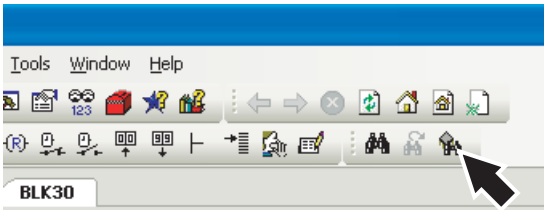

c) In the Text to Find field, type “%R731” and click the Find button.

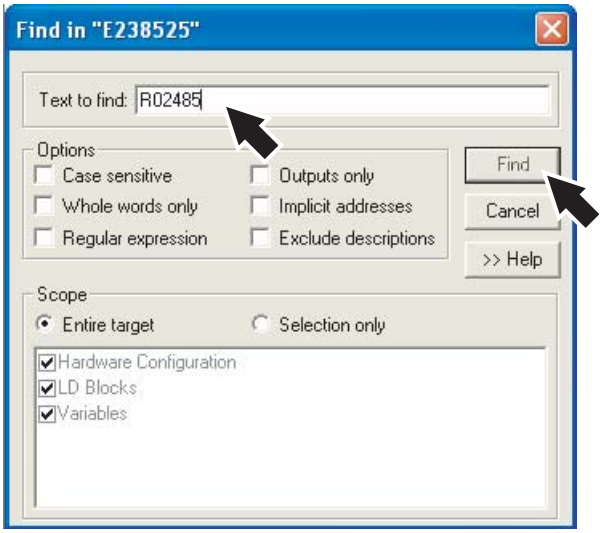

d) Double-click the result row in the Feedback Zone window.

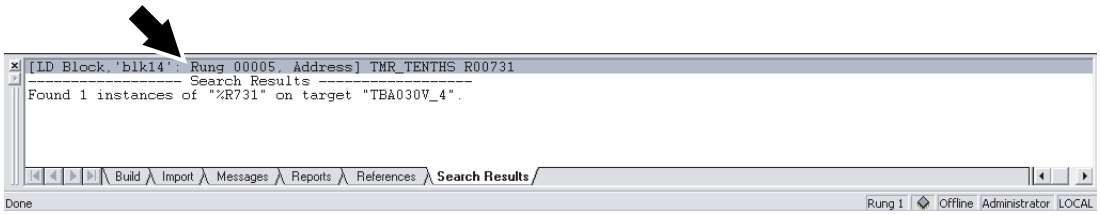

(Cont'd)

TechPub_2614345_0105 - 01_2772104_01.fm

(Cont'd)

e) Double-click and change the delay time constant as required.

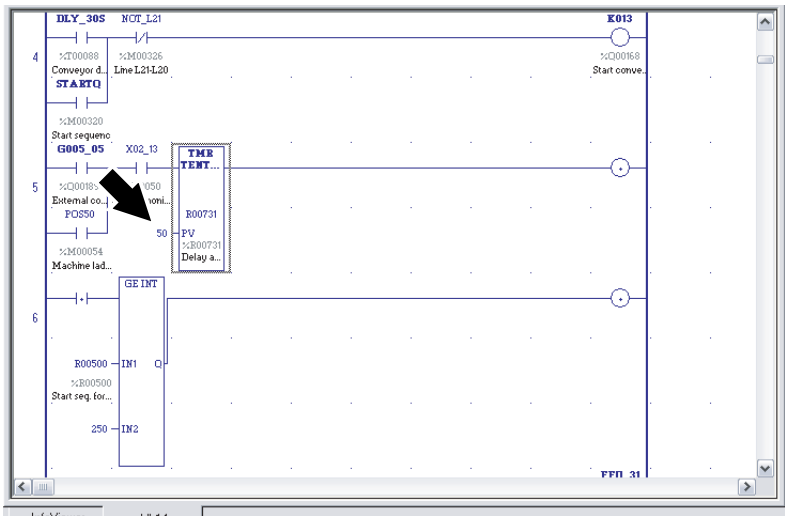

f) Follow the instructions in items h) to x) in procedure 14.3-1 PLC - Load Program, starting on page 14-25.

TechPub_2614345_0105 - 01_2772104_01.fm

14.3-3 PLC - Set Initialization Parameters

Machine Status	Power supply disconnector ON Air supply OFF Steam supply ON Water supply OFF
Special Equipment	Communication cable AT-compatible PC with floppy disc drive

Set the basic machine parameters for package volume and shape, machine speed, and optional equipment as follows:

a) Step the machine to STEP 0, attach a keyboard, and press F12.

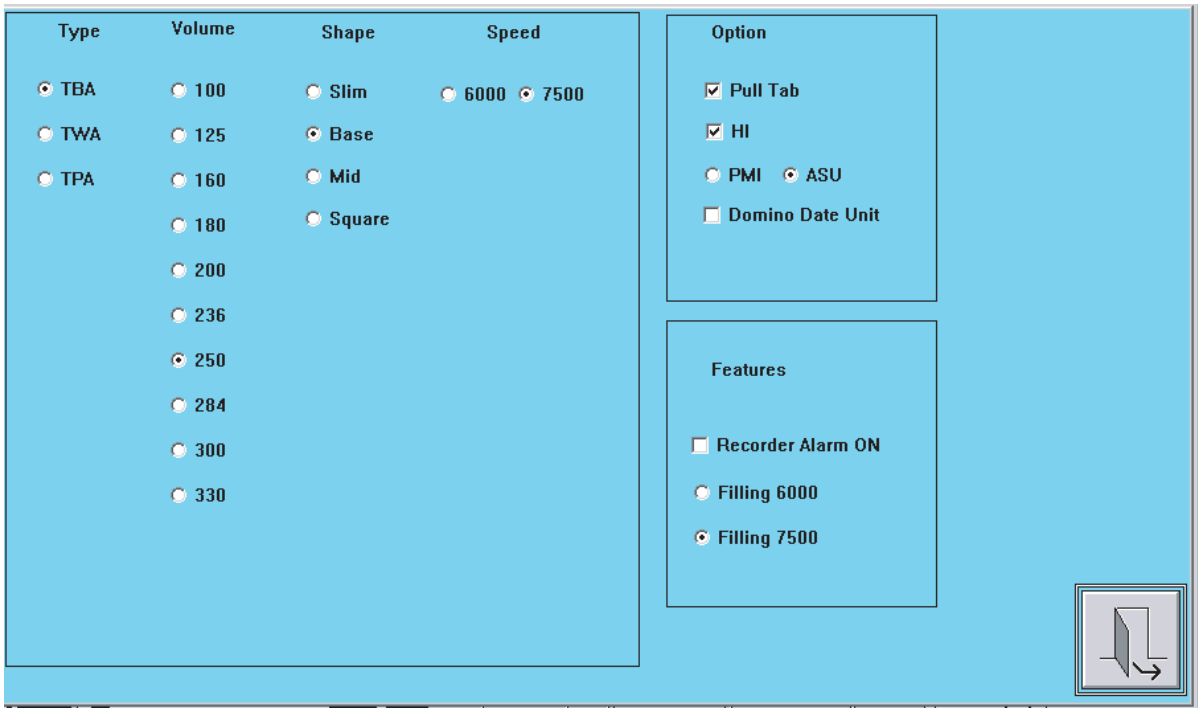

b) Choose the correct volume, speed, and installed optional kit, and then press EXIT (the door symbol) to save and activate the settings.

c) Whenever you change the volume or optional kits on the machine, make sure to reset the FCS parameters using the reset parameters button (1) on the TPOP.

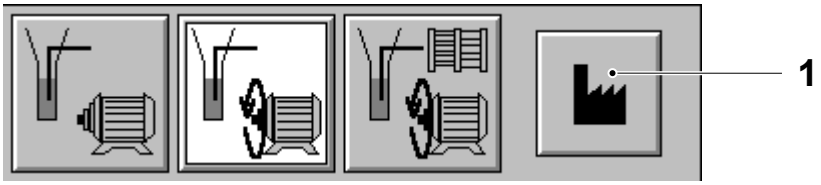

1 Reset parameters button

TechPub_2614345_0105 - 01_2772104_01.fm

14.3-4 PLC - Backup Program

Machine Status	Power supply disconnector ON Air supply OFF Steam supply ON Water supply OFF
Special Equipment	Communication cable TP No. 90031-300 AT-compatible PC
EM Reference	EM-2771720-XXXX

Note! This instruction describes one way to create a backup of the PLC program and store it in a desired location.

a) Start the Proficy Machine Edition program.

b) Select the Manager tab in the Navigator window.

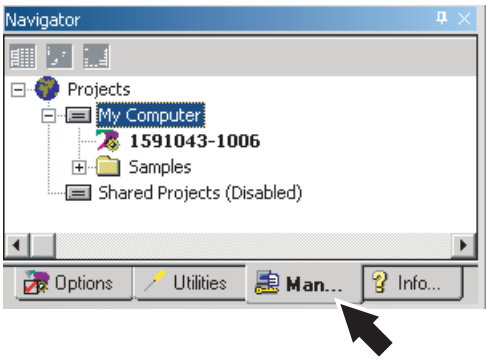

c) Make sure that the project is closed, select Close Project in the File menu.

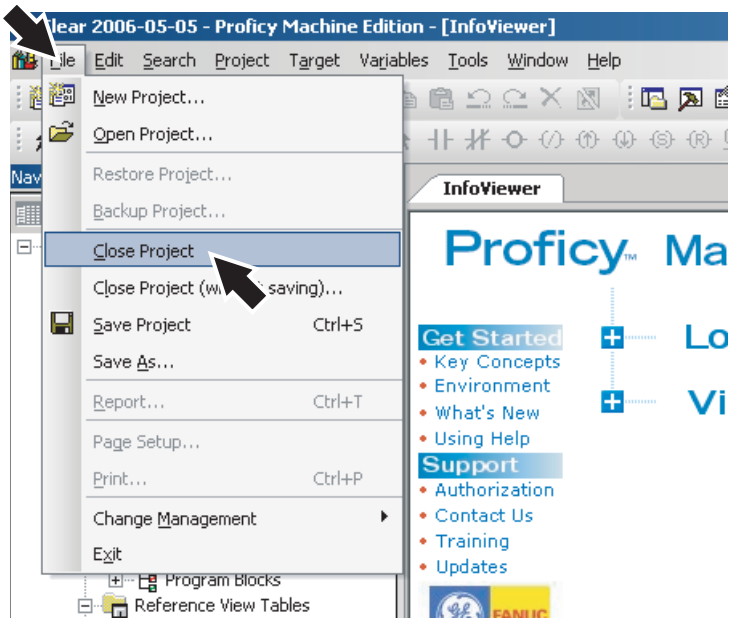

(Cont'd)

TechPub_2614345_0105 - 01_2772104_01.fm

(Cont'd)

d) Select the project to be backed up in the tree-structure.

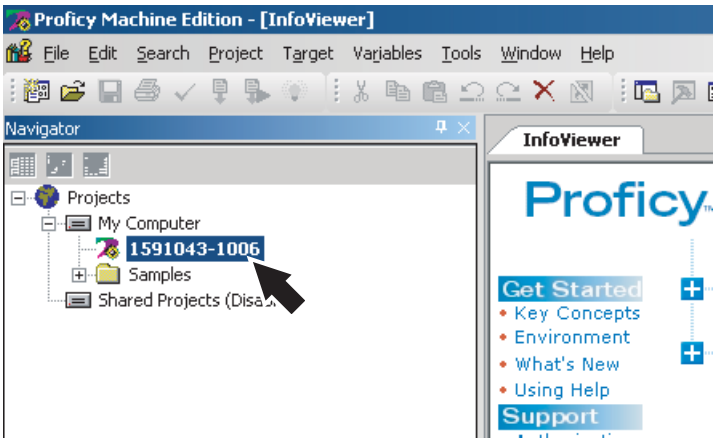

e) From the File menu, select Backup Project.

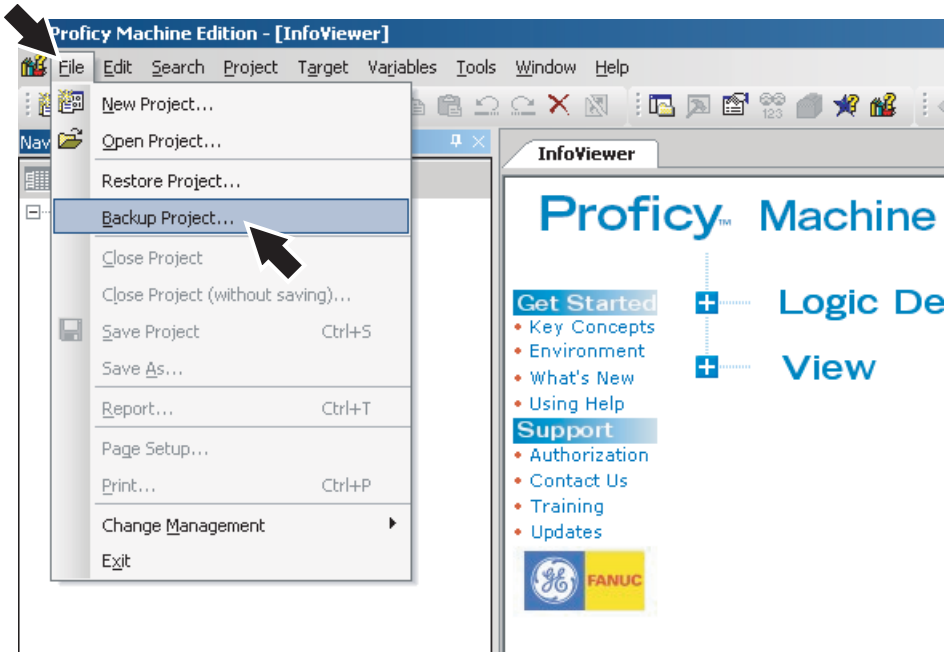

f) Select the desired location in which to store the backup file and click the Save button.

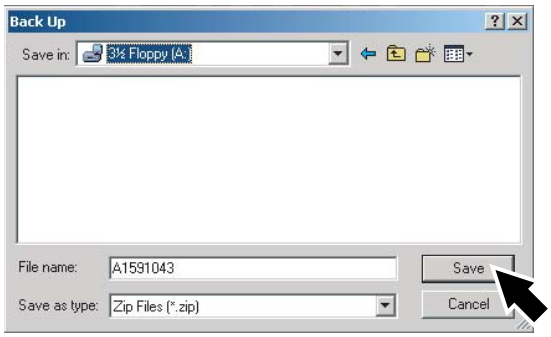

TechPub_2614345_0105 - 01_2772104_01.fm

14.3-5 PLC - Establish Communication

Machine Status	Power supply disconnector ON Air supply OFF Steam supply ON Water supply OFF
Special Equipment	Communication cable TP No. 90031-300 AT-compatible PC with CD-ROM drive
EM Reference	EM-2771720-XXXX

DANGER

Hazardous voltage.

Will shock, burn or cause death.

Follow lockout procedure before maintenance. See Chapter ii Safety Precautions.

a) Connect the communication cable between the comm1 port on the PLC and the PC.

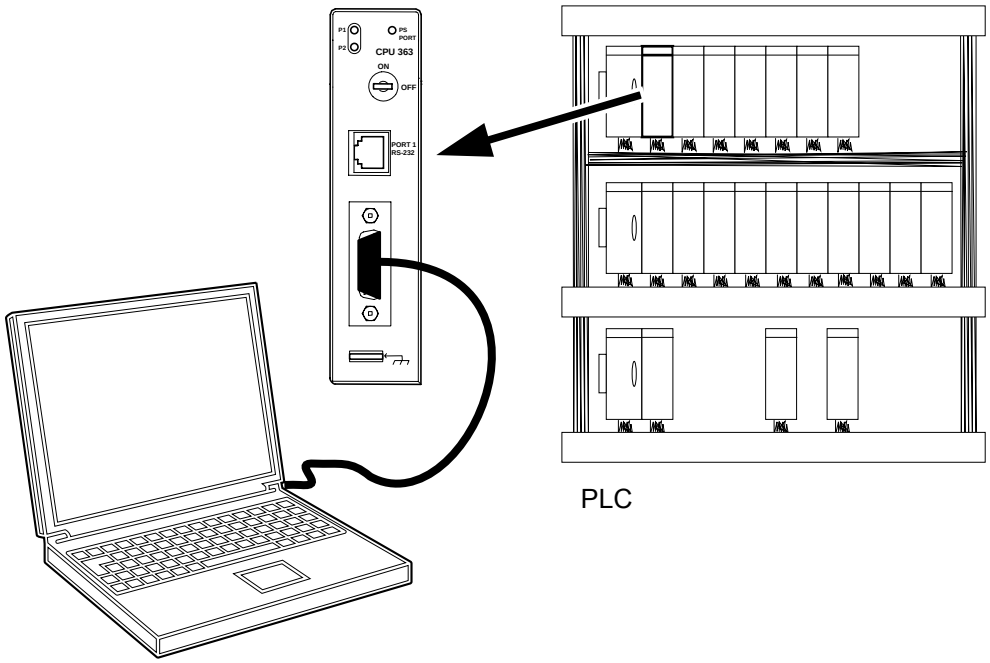

PLC

TechPub_2614345_0105 - 01_2772104_01.fm

(Cont'd)

(Cont'd)

b) Start the Proficy Machine Edition program on the PC.

c) Click Cancel in the New/Open Dialog window.

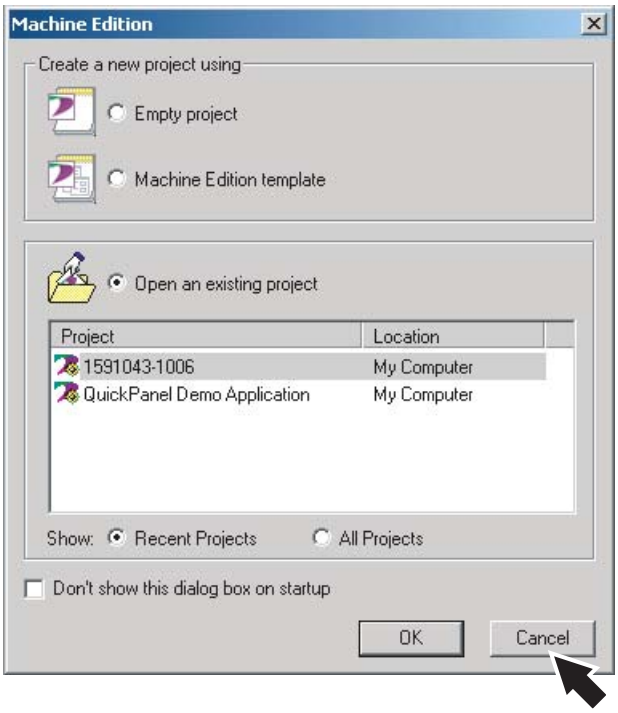

(Cont'd)

TechPub_2614345_0105 - 01_2772104_01.fm

(Cont'd)

d) Select the Options tab in the Navigator window.

e) Double-click the file General in the PLC folder.

f) In the Duplicate Addresses field in the Inspector window, select Ignore.

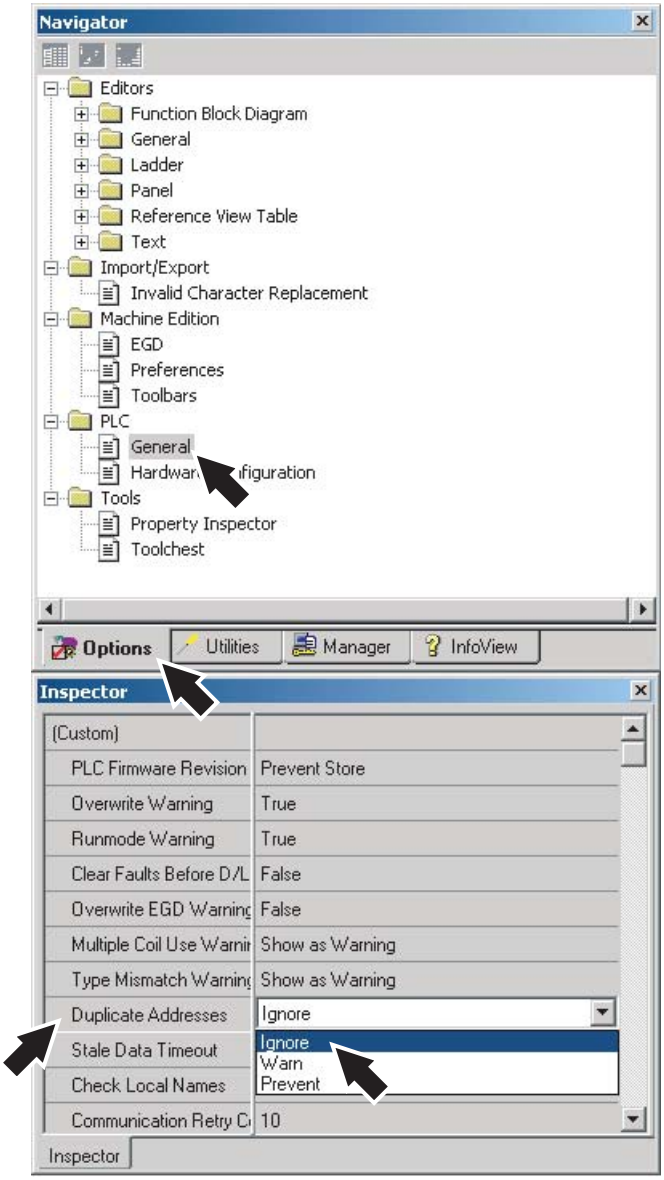

(Cont'd)

TechPub_2614345_0105 - 01_2772104_01.fm

(Cont'd)

g) In the tools menu, select Feedback Zone to display the Feedback Zone window.

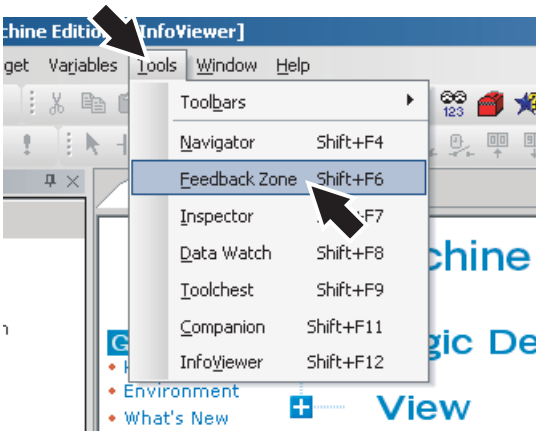

h) Select the Manager tab in the Navigator window.

i) Right-click the program in the tree-structure and select Open.

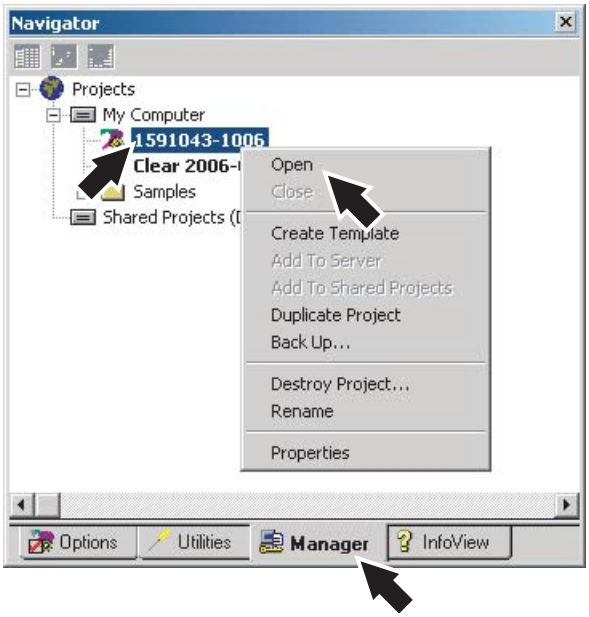

(Cont'd)

TechPub_2614345_0105 - 01_2772104_01.fm

(Cont'd)

j) Go online by clicking the Online/Offline button. If you get an error message, check the communication connection between the PLC and the PC.

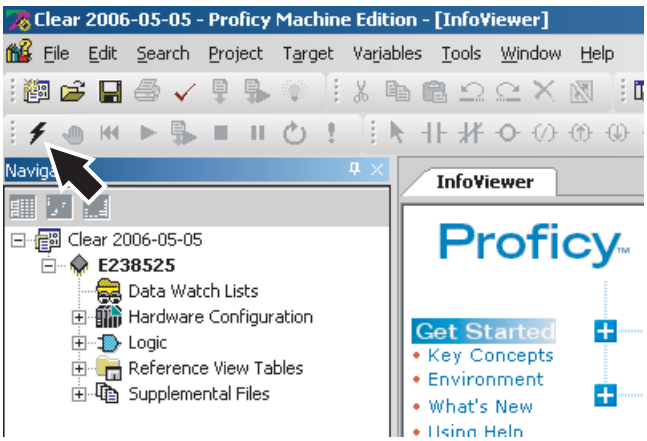

k) If communication has been established, a message confirming this will be displayed in the Feedback Zone window.

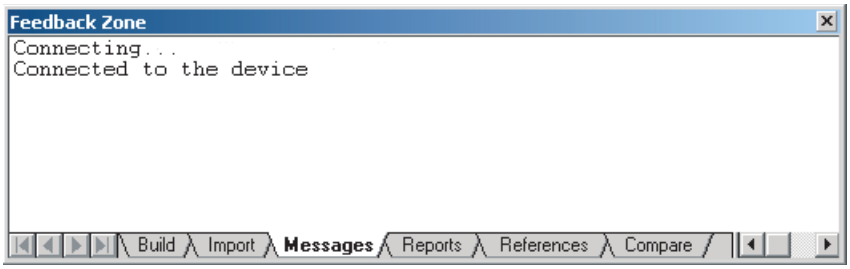

TechPub_2614345_0105 - 01_2772104_01.fm

14.3-6 PLC - Force an Output

Machine Status	Power supply disconnector ON Air supply OFF Steam supply ON Water supply OFF
Special Equipment	Communication cable TP No. 90031-300 AT-compatible PC with CD-ROM drive
EM Reference	EM-2771720-XXXX

Note! This instruction describes one way to force an output in the PLC program.

a) Establish a connection link, see 14.3-5 PLC - Establish Communication on page 14-36.

b) Toggle to online mode by clicking the Toggle Online Mode button.

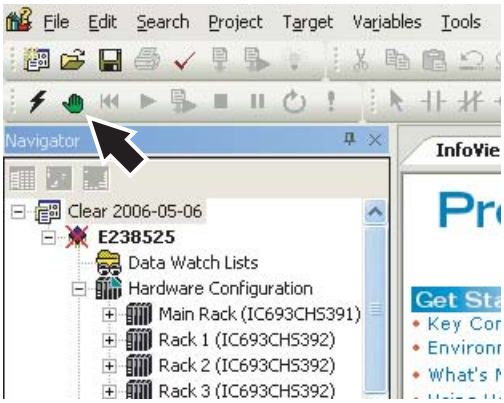

c) Click the Find in Active Target button.

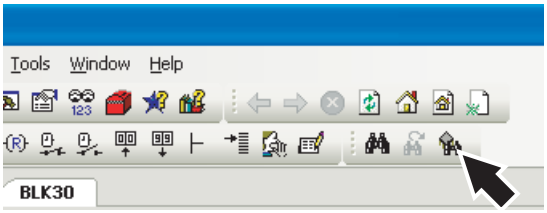

(Cont'd)

TechPub_2614345_0105 - 01_2772104_01.fm

(Cont'd)

d) In the Text to Find field, enter the name of the output that is going to be forced. For instance %Q29. Press Find to perform the search.

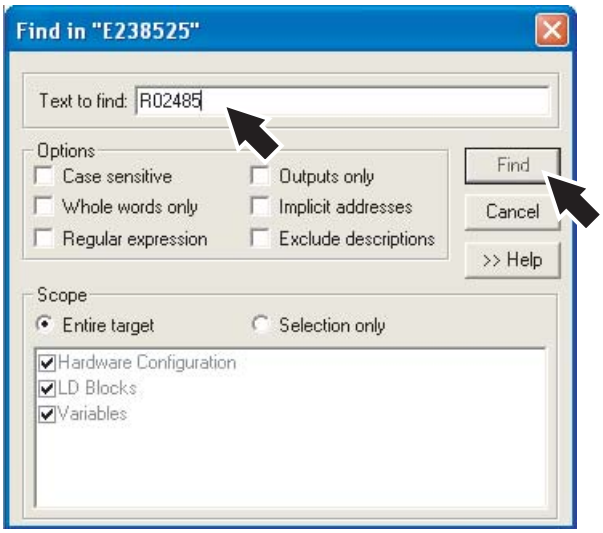

e) The search results are displayed in the Search Results tab in the Feedback Zone window. Double-click a result row to display the found string in the InfoViewer window.

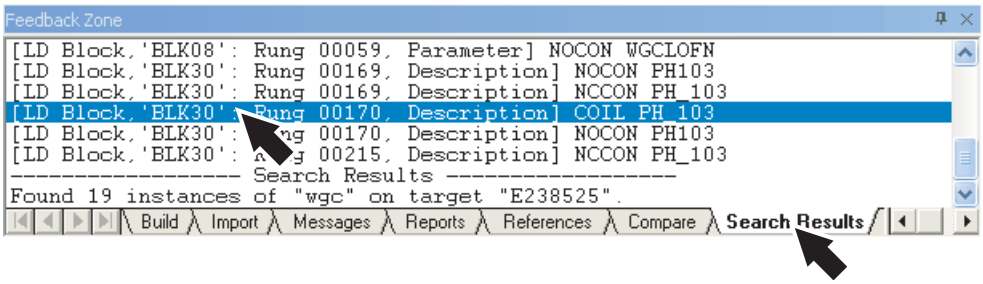

(Cont'd)

TechPub_2614345_0105 - 01_2772104_01.fm

(Cont'd)

f) In the InfoViewer window, select the desired output by clicking it once.

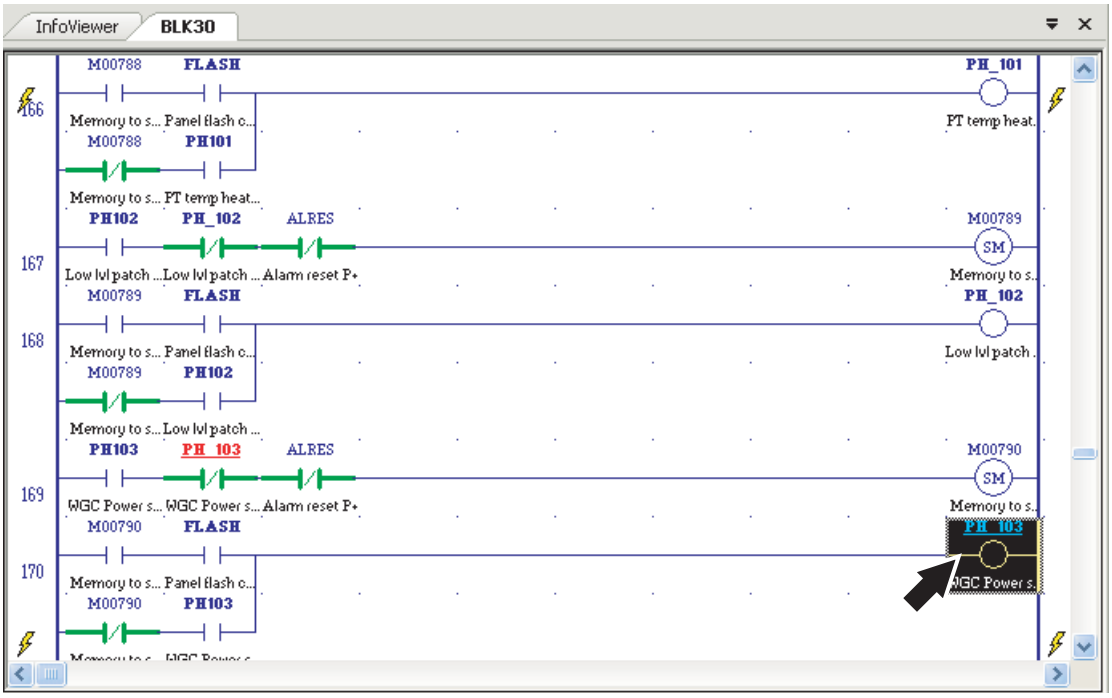

g) Press F12 on the PC keyboard to toggle IO.

h) Press F11 on the PC keyboard to toggle force.

i) When you are done, remove all forces and press F12 to toggle back the IO.

(Cont'd)

TechPub_2614345_0105 - 01_2772104_01.fm

(Cont'd)

j) Select Online Force Report in Online Commands in the Target menu.

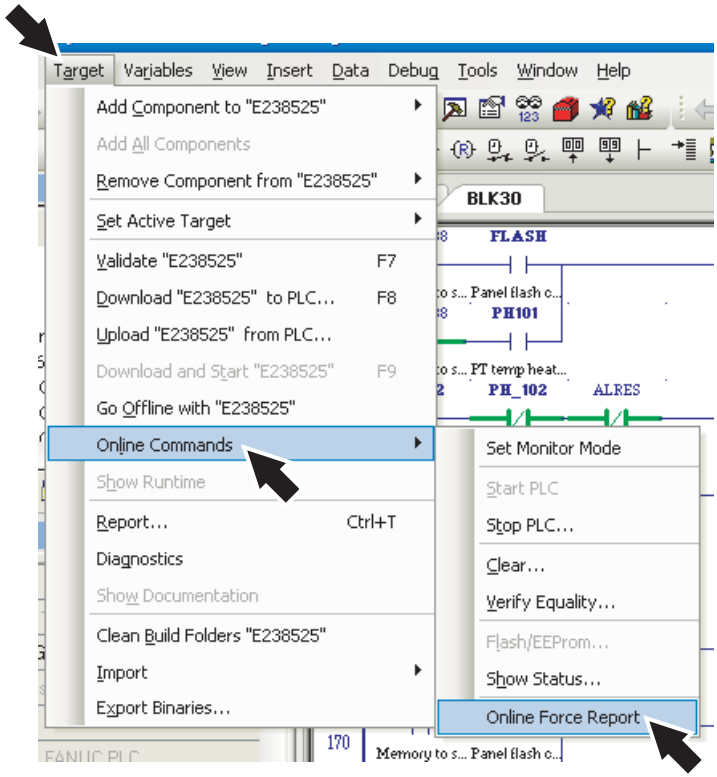

k) Check that the report is empty. If not, remove the forces in the report. In the example below there is a force reported on the address %M01012.

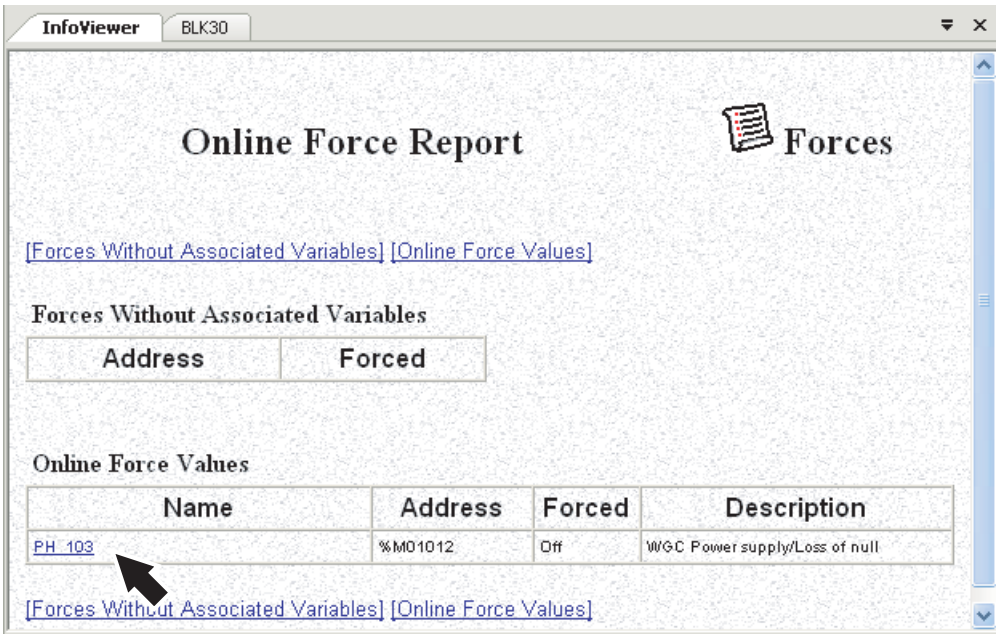

(Cont'd)

TechPub_2614345_0105 - 01_2772104_01.fm

(Cont'd)

l) Click the Online/Offline button to go “offline”.

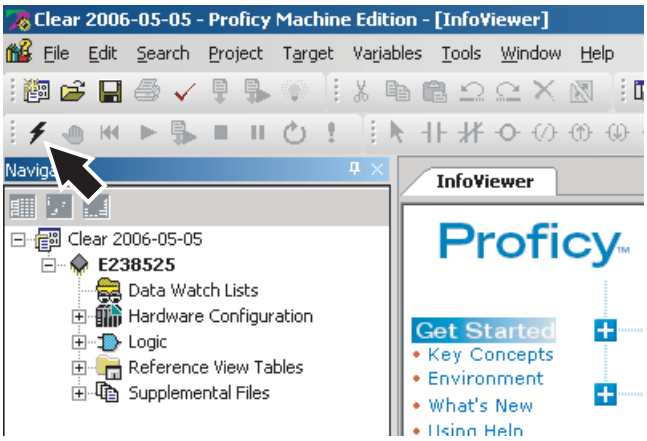

m) Exit Proficy Machine Edition.

n) Disconnect the communication cable between the PLC and the PC.

TechPub_2614345_0105 - 01_2772104_01.fm

14.3.1 PLC Power Supply Unit

14.3.1-1 PLC Power Supply Unit - Change Battery

Machine Status	Power supply disconnector ON Air supply OFF Steam supply ON Water supply OFF
Consumables	Battery TP No. 90031-301
EM Reference	EM-2771720-XXXX
SPC Reference	90031-0068

DANGER

Hazardous voltage.
Will shock, burn or cause death.
Follow lockout procedure before maintenance. See Chapter ii Safety Precautions.

When the battery signal lamp (1) lights, the battery (2) must be changed. Change the battery as follows.

a) Remove the battery cover (3).

Note! The battery replacement must be completed within 20 minutes or else the RAM memory might be erased.

b) **First** fit the cable of the new battery on the cable connector (4) left free.

c) **Then** remove the old battery cable and remove the battery from its mounting clip (5).

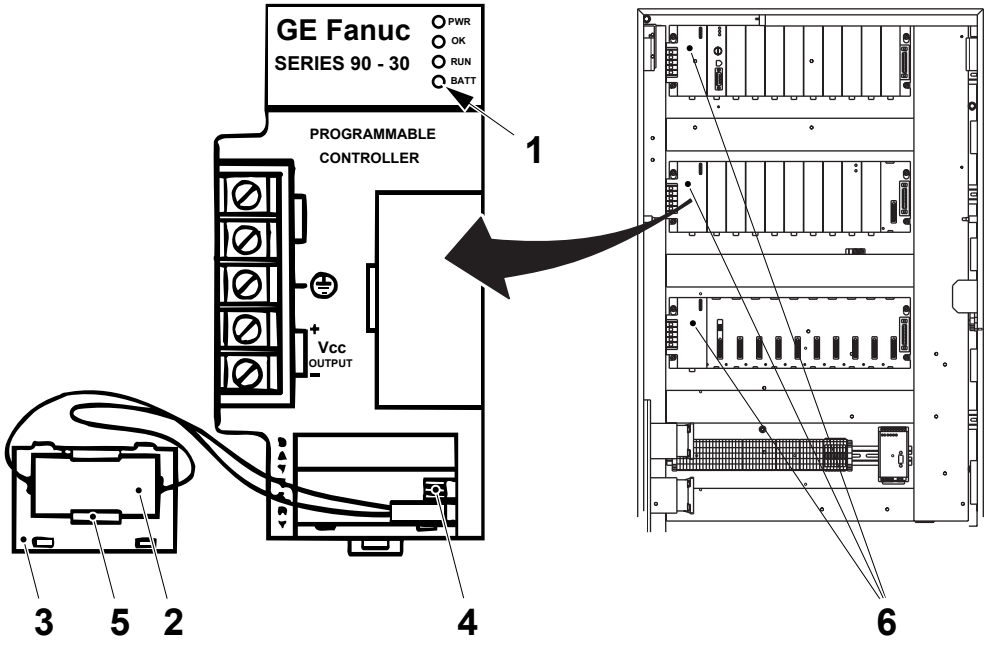

1 Lamp
2 Battery
3 Battery cover
4 Cable connector
5 Mounting clip
6 PLC power supply units

(Cont'd)

TechPub_2614345_0105 - 01_2772104_01.fm

(Cont'd)

d) Firmly insert the new battery into the mounting clip.

e) Fit the battery cover.

Note! The batteries in the second and third PLC rack are not necessary to change.

CAUTION

Handle the old battery safely.

The battery contains harmful substances and must not be thrown away in nature. Hand it in to the nearest recycle centre.

Do not burn lithium batteries. Do not try to recharge lithium batteries.

TechPub_2614345_0105 - 01_2772104_01.fm

14.3.1-2 PLC Power Supply Unit - Change

Machine Status	Power supply disconnector ON Air supply OFF Steam supply ON Water supply OFF
EM Reference	EM-2771720-XXXX
SPC Reference	90031-0068

DANGER

Hazardous voltage.
Will shock, burn or cause death.
Follow lockout procedure before maintenance. See Chapter ii Safety Precautions.

a) Identify the PLC power supply unit (1) to be changed (G100, G101, G102, or G103).

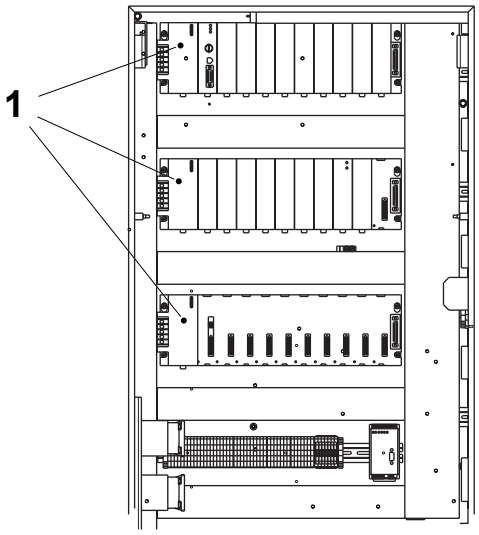

1 PLC unit

(Cont'd)

TechPub_2614345_0105 - 01_2772104_01.fm

(Cont'd)

b) Open the plastic cover and disconnect the electrical connectors:

Note! Note the positions of the electrical connectors.

- earth connection (2)
- two blue input connections (3)
- two black input connections (4).

c) Press the release catch (5) underneath the PLC power supply unit and remove the PLC power supply unit from the back plane (7).

d) Make sure that the connector on the back plane is not damaged.

Note! Lift up the PLC power supply unit to disengage the hook (6).

e) Assemble in the reverse order.

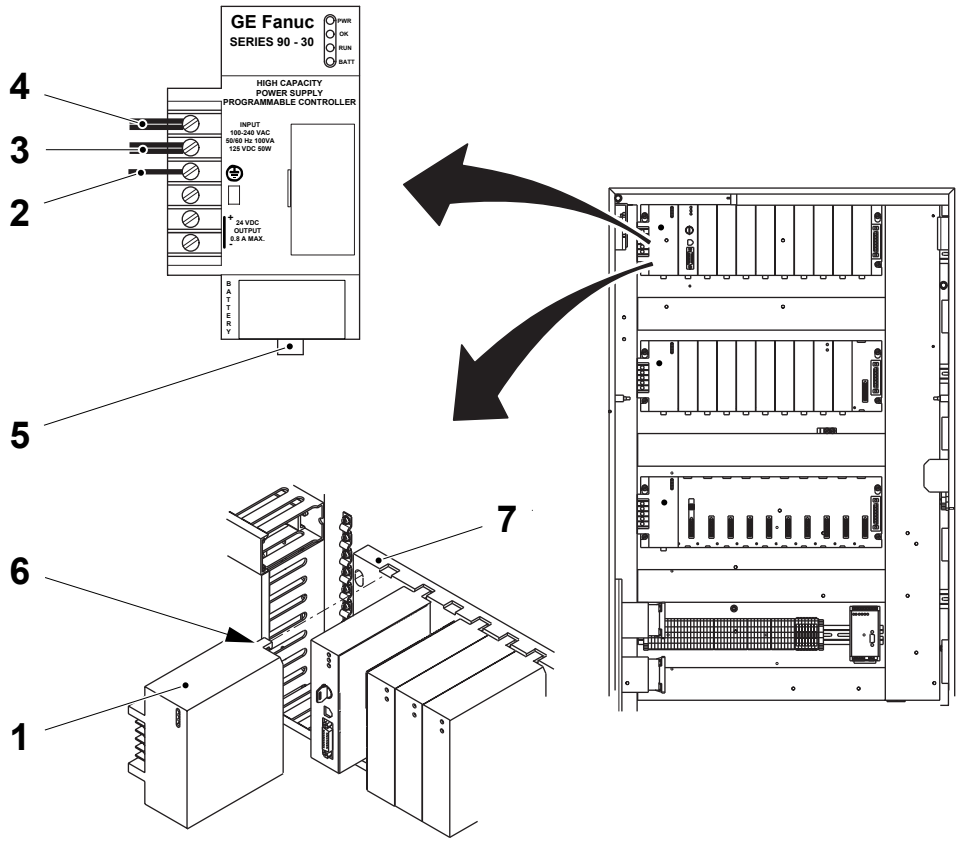

1 PLC unit
2 Earth connection
3 Input connection (blue)
4 Input connection (black)
5 Release catch
6 Hook
7 Back plane

TechPub_2614345_0105 - 01_2772104_01.fm

14.4 TPIH System

WARNING

Risk of electrocution.

The TPIH generator **must not** be opened. This could cause shock, burns or even death. If there is an accident, immediately call for medical attention immediately.

14.4-1 TPIH System - Description

Machine Status	Power supply disconnector OFF Air supply OFF Steam supply ON Water supply OFF
SPC Reference	1499642-0201

Each TPIH-2500 system is mainly composed of the following:

- Parameter setting at TPOP (1)
- TPIH 2500 generator (2)
- coaxial cable (3)
- impedance transformer (4)

The pulse duration is controlled by the PLC program.

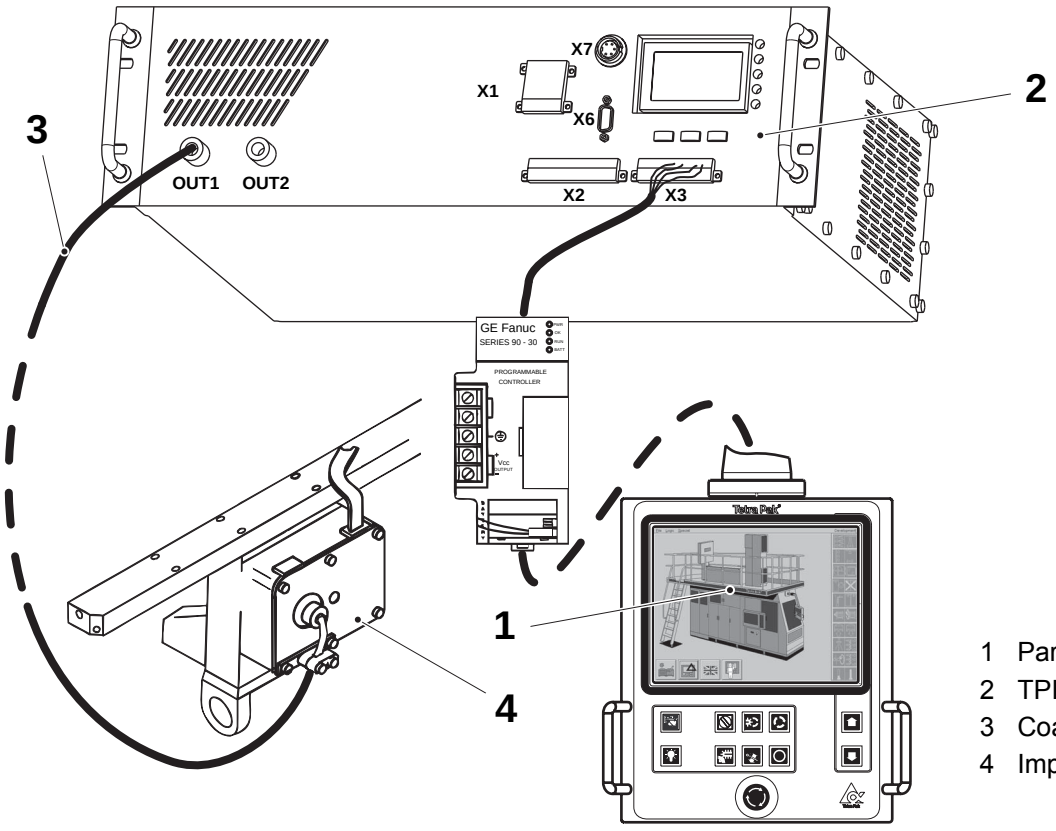

1 Parameter setting
2 TPIH 2500 generator
3 Coaxial cable
4 Impedance transformer

(Cont'd)

TechPub_2614345_0105 - 01_2772105_01.fm

(Cont'd)

The TPIH 2500 generator is mainly composed of the following:

- output 1 (5)
- output 2 (6)
- serial connection X6 (7)
- 24V connection X3 (8)
- 400V connection X1 (9)
- Multi-functional buttons (10)
- Status LEDs (11)
- LCD display (12)

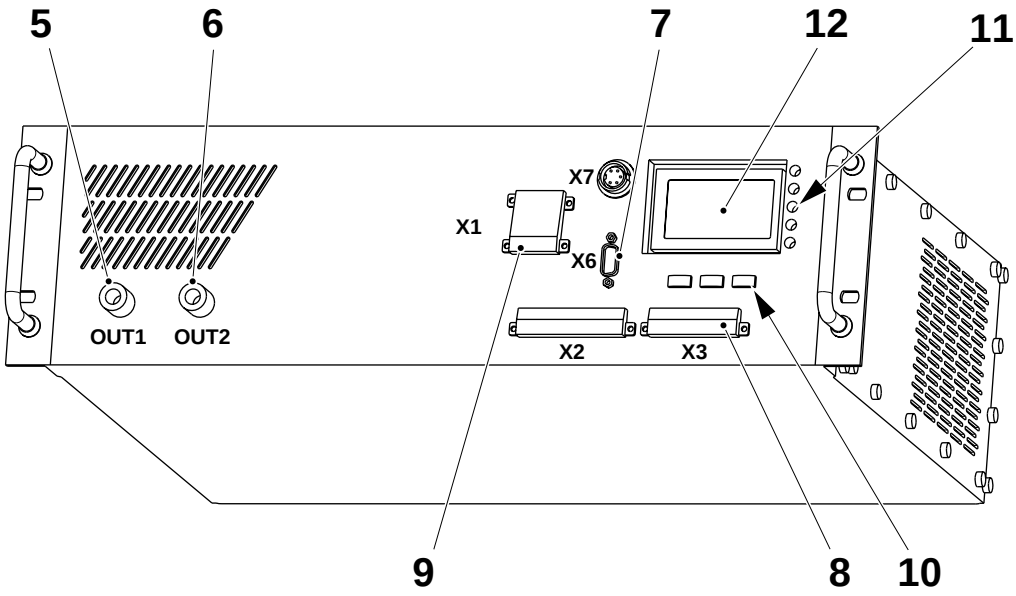

5 Output 1
6 Output 2
7 Serial connection
8 24V connection
9 400V connection
10 Multi functional button
11 LED
12 LCD display

(Cont'd)

TechPub_2614345_0105 - 01_2772105_01.fm

(Cont'd)

LED Description

CAUTION

Hazardous voltage.

Will cause death or serious injury. When the 400 VAC green LED is OFF, there can still be one or two phases present on the connector X1.

Colour	Label	Meaning
Green	+24 VDC	It is ON when the 24 V is present. It is OFF when there is no 24 V.
Green	400 VAC	It is ON when ALL of the 3-phases are present. It is OFF when AT LEAST one of the 3-phases are missed.
Red	Error	It is ON when one or more errors occurred. In this case on the LCD the operator can read which errors occurred. It is OFF when there are no error conditions.
Green	Out 1	It is ON when the generator is sending power through output 1 It is OFF when output 1 is inactive.
Green	Out 2	It is ON when the generator is sending power through output 2 It is OFF when output 2 is inactive.

TechPub_2614345_0105 - 01_2772105_01.fm

14.4-2 TPIH System - LCD Display

Machine Status	Power supply disconnector ON Air supply OFF Steam supply ON Water supply OFF
SPC Reference	1499642-0201

User's Menu

The TPIH 2500 provides the user with an easy way of accessing information and settings using a menu that is shown on the display.

A generic page is usually made of three parts:

- the row at the top shows the page title,

- the six following rows show either commands or information,

- the row at the bottom shows the actions performed by the buttons. The symbol or word above each button explains which action will be performed if that button is pressed.

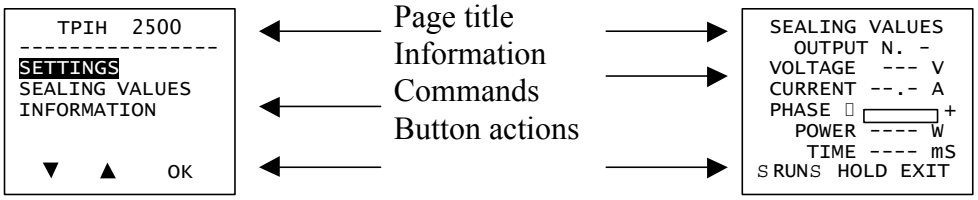

The page on the left has a list of possible commands. The currently selected command is displayed in reverse mode (white on black).

On the bottom line you can see that, by pressing the left button, the user can select the command below (in this case SEALING VALUES), whereas by pressing the centre button the selection will move up one row.

When the user presses the right button, the command selected at that moment is executed.

(Cont'd)

TechPub_2614345_0105 - 01_2772105_01.fm

(Cont'd)

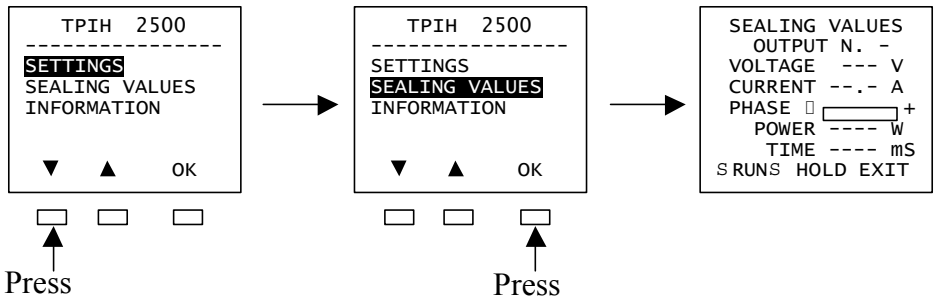

To access the page with the sealing values:

- on the main page, by pressing the left button, the user selects the command SEALING VALUES,
- then presses the right button that executes the command,
- as a result the requested page is now shown on the screen.

The page SEALING VALUES is an example of a page that shows information instead of commands.

It is always possible to see what the buttons will do when pressed by reading the bottom line.

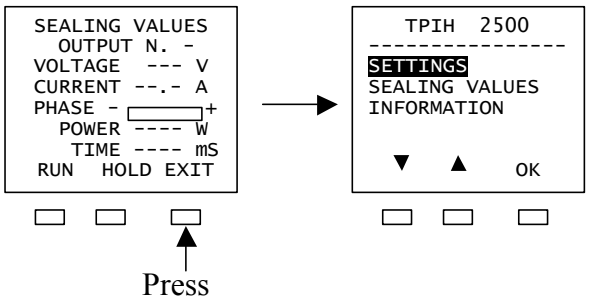

Every time a button is pressed the LCD back light lights and, if no other button is pressed, goes off after about 10 seconds.

(Cont'd)

TechPub_2614345_0105 - 01_2772105_01.fm

(Cont'd)

Menu Structure

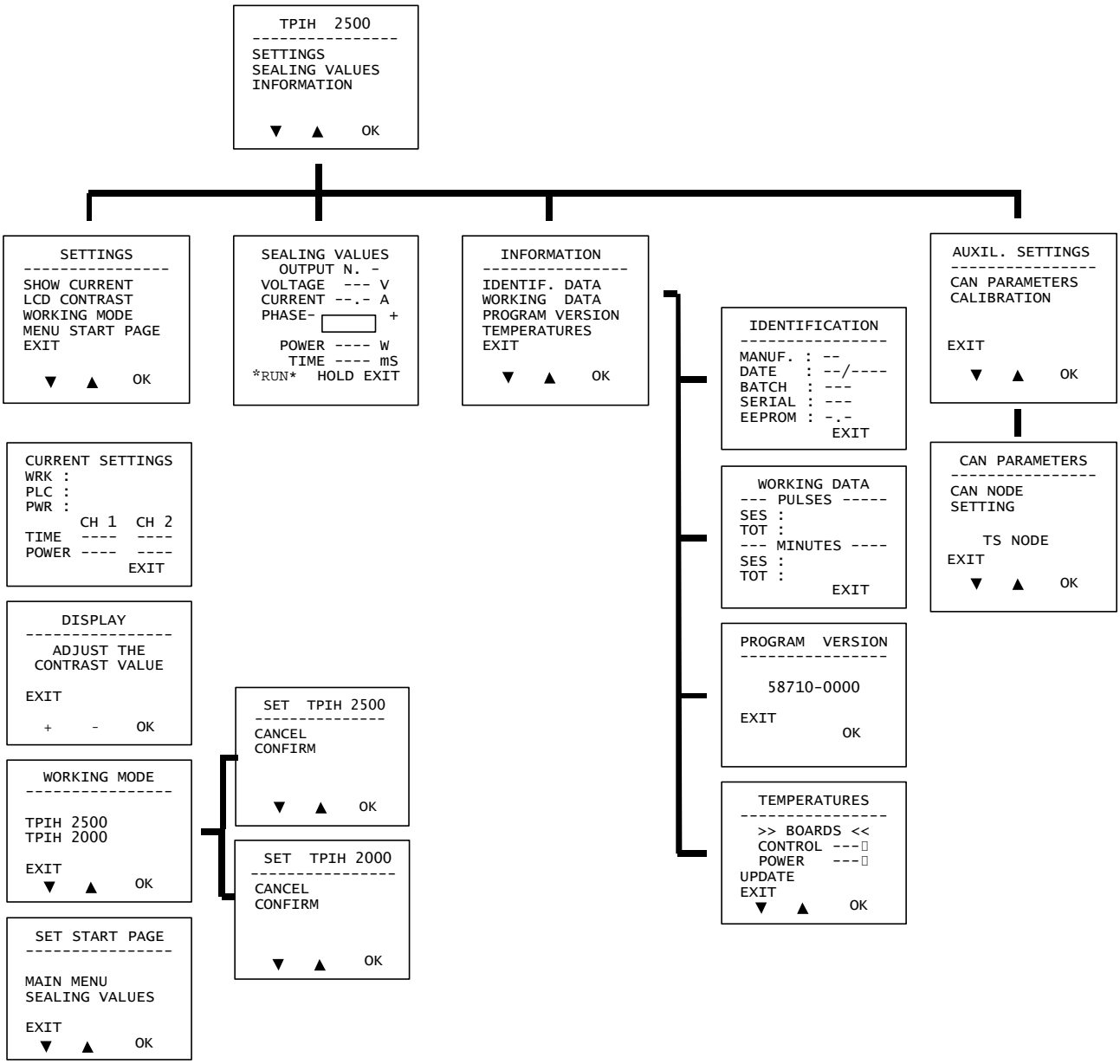

TechPub_2614345_0105 - 01_2772105_01.fm

(Cont'd)

(Cont'd)

Basic Setting

From the main menu select: **SETTINGS** then press **OK**

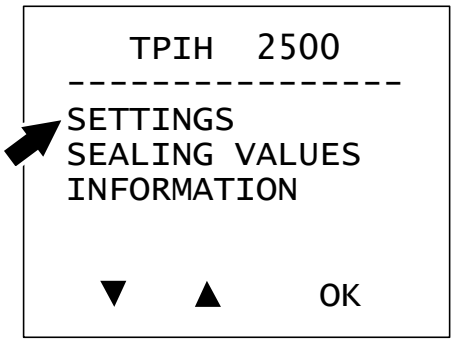

Select: **WORKING MODE** then press **OK**

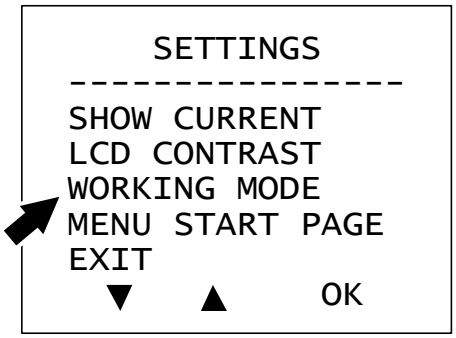

Select: **SET TPIH 2500** then press **OK**

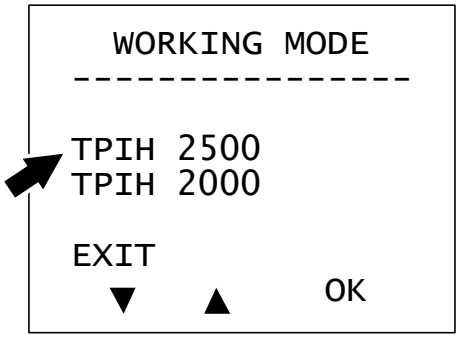

(Cont'd)

TechPub_2614345_0105 - 01_2772105_01.fm

(Cont'd)

Select: **CONFIRM** then press **OK**

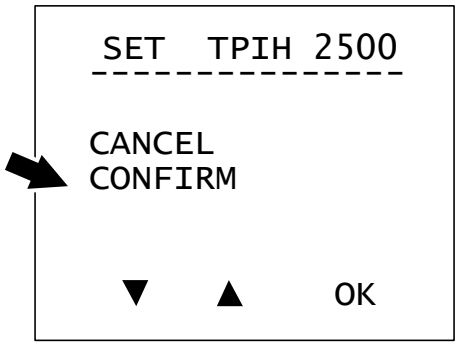

Go back to the menu **SETTINGS**, select **SHOW CURRENT** and check if **TPIH 2500 STD** is activated.

TechPub_2614345_0105 - 01_2772105_01.fm

14.4-3 TPIH System - Error Handling

Machine Status	PRODUCTION
Special Equipment	Test instrument TP No. 68462-101
SPC Reference	1499642-0201

WARNING

Risk of electrocution.

The TPIH generator **must not** be opened. It may cause shock, burns or even death. In case of an accident, immediately call for medical attention.

When the generator is producing power, it keeps many parameters under control and, when some errors occur, it stops the pulse and shows on the display the error cause.

A specific message explaining the cause is shown on the LCD and the red LED on the front panel is turned ON.

Reset the error by pressing one of the multi-functional buttons

Power Setting Too Low

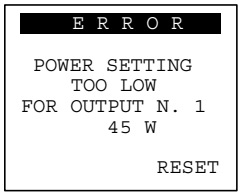

This error occurs when the generator is required to produce less power than the minimum level.

On the display the user can read in which channel the problem was encountered (in this case n. 1) and what was the power level read by the generator (in this case 45W which is below the minimum level, 100W).

Usually, when this error occurs, the problem is related to the power setting of the channel shown in the error message.

It might be that the voltage from the analogical output card (A108) does not reach the pin 1 or 2 (depending on the channel) of connector X3.

- the generator is faulty and must be replaced, or
- the analogical output card (A108) is faulty, or
- the power setting on TPOP is below the minimum value of 100W, or
- the communication between TPOP and PLC is faulty.

(Cont'd)

TechPub_2614345_0105 - 01_2772105_01.fm

(Cont'd)

One or more Phases are Missing

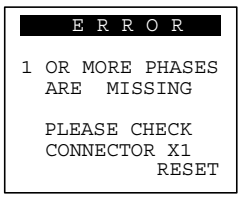

CAUTION

Hazardous voltage.

Will cause death or serious injury. When this error occurs, there can still be at least one ACTIVE phase present on the connector X1

This error occurs when one or more phases are either not present at all or are absent for at least 100 milliseconds (power supply hole).

In this case it is recommended:

- checking that the connector X1 is correctly plugged into the generator,
- to check the fuses for the 400VAC of that generator.

Temperature Too High

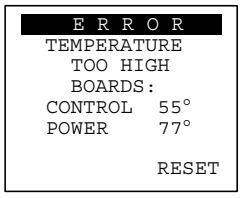

This error occurs when the temperature inside the generator becomes too high.

The limits are:

- 60° for the control board,

- 70° for the power board.

On the display the user can read the temperatures of both the boards.

- the cooling fan inside the generator is not working
- the ambient temperature is above 50°C

Change the generator if the fan does not operate.

(Cont'd)

TechPub_2614345_0105 - 01_2772105_01.fm

(Cont'd)

The Load Impedance is Too High

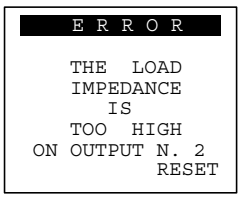

This error occurs when the generator is not able to deliver the required power because the load impedance is too high (tends to be an open circuit).

In this case it is recommended to checking all of the connections from the generator down to the inductor looking for bad contacts, loosened connector or a broken cable.

If a single output is used make sure that the load is connected to the correct one.

If both outputs are used make sure that they have not been swapped by mistake. Check for:

- An open circuit in the coaxial cable, busbar, inductor or impedance transformer
- No pressure applied to the inductor
- The wrong type of impedance transformer i has been installed
- The wrong type of inductor has been installed

See 14.4-4 TPIH System - Check Function.

The load impedance is too low

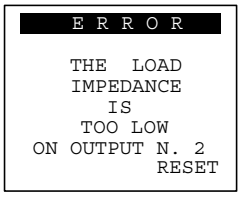

This error occurs when the generator is not able to deliver the required power because the load impedance is too low (tends to be a short circuit).

In this case it is recommended to checking all of the connections from the generator down to the inductor looking for some short circuit in the connectors or in the cables. Check for:

- A short circuit in the coaxial cable, busbar, inductor or impedance transformer
- No pressure applied to the inductor
- The wrong type of impedance transformer has been installed
- The wrong type of inductor has been installed

See, 14.4-4 TPIH System - Check Function.

(Cont'd)

TechPub_2614345_0105 - 01_2772105_01.fm

(Cont'd)

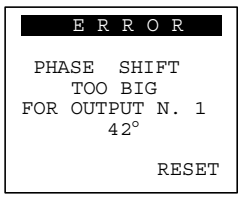

Phase Shift Too Big

This error occurs when the load has a phase shift >+40° or <-40°.

On the display the user can read which channel the problem was encountered (in this case n. 1) and what was the phase shift read by the generator (in this case 42°).

Some of the causes may be a damaged inductor or transformer or a bad position of the inductor relative to the packaging material.

See, 14.4-4 TPIH System - Check Function.

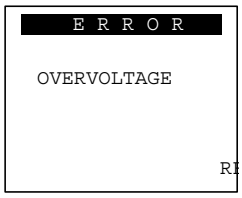

Over Voltage

This error occurs when the voltage between the two main power stages of the generator becomes too high.

A possible cause is the failure of the generator.

If the error persists change the TPIH generator.



Not Initialized EPROM

This error occurs when the generator is turned ON or reset when there is a failure in the test of EEPROM. In this case all the default values and parameters are set:

- Working mode: TPIH 2500 STD
- PLC mode: Driving
- Power set: External

The generator will work in these conditions. If other settings are needed they must entered from the display or from the PC though serial communications.

If the error persists change the TPIH generator.



Watchdog Reset

This error occurs when the generator is reset accidentally due to some problem in electronic components. In this case the generator, after the reset, keeps the previous parameter settings and can continue to work if the problem is not present any more.

If the error persists change the TPIH generator.

TechPub_2614345_0105 - 01_2772105_01.fm

14.4-4 TPIH System - Check Function

Machine Status	PRODUCTION
Special Equipment	Test instrument TP No. 68462-101
SPC Reference	1499642-0201

The origin of an error may be located using the test instrument.

With a load problem only short pulses are delivered by the generator. During the entire pulse the sample LED (2) lights, while the pulse LED (1) is off.

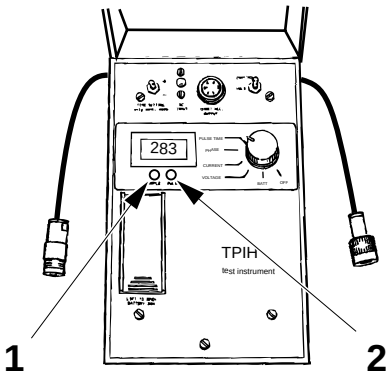

1 Pulse LED
2 Sample LED

Proceed as follows:

a) Make a SHORT STOP.

b) Connect the test instrument (3) between the TPIH generator (4) and the impedance transformer (5).

c) Step up to step PRODUCTION.

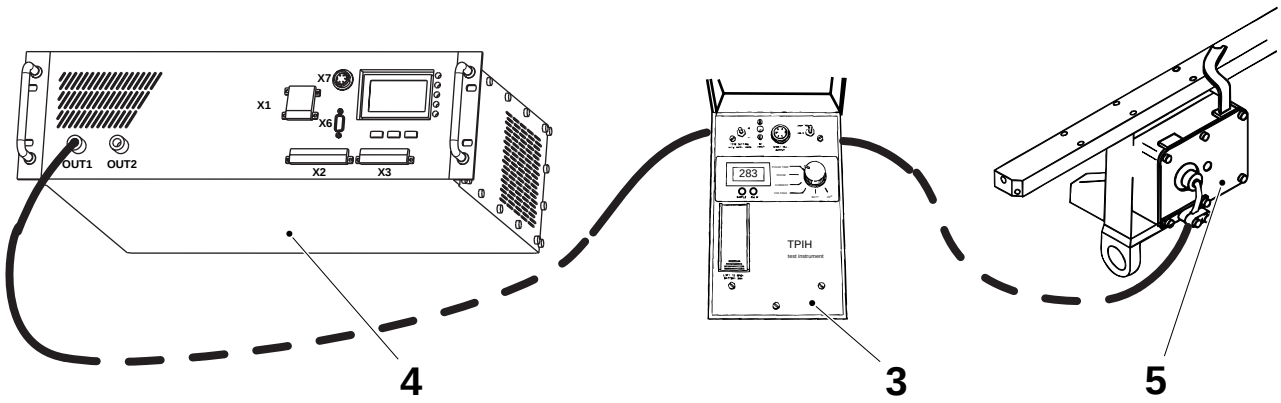

3 Test instrument
4 TPIH generator
5 Transformer

(Cont'd)

TechPub_2614345_0105 - 01_2772105_01.fm

(Cont'd)

d) Measure the values of the voltage, current, phase angle, pulse time and compare with the values in the table below.

Load examples	Phase angle	Voltage/Current
Optimal load	0°	50 Ohm
Normal load	±15°	40 - 65 Ohm
Short circuit in coaxial cable, contacts or primary of the IH transformer	pos (3)	1 - 10 Ohm (1)
Open circuit in coaxial cable, contacts or primary of the IH transformer	neg (3)	200 - 2000 Ohm (2)
Short circuit in inductor, current rail or secondary of the IH transformer	pos	10 - 20 Ohm
Open circuit in inductor, current rail or secondary of the IH transformer	neg	2 - 5 Ohm
No packaging material on the inductor	neg	5 - 15 Ohm

Note! 1) Greater value = greater distance between problem and instrument.

2) Smaller value = shorter distance between problem and instrument.

3) Greater phase difference = greater distance between problem and instrument.

e) Repeat the procedure for the other inductors.

TechPub_2614345_0105 - 01_2772105_01.fm

14.4-5 TPIH System - Check Cables

Machine Status	Power supply disconnector OFF Air supply OFF Steam supply ON Water supply OFF
SPC Reference	1499642-0201

Check the following details for wear or damage:

- the coaxial connectors (2): make sure that there is no moisture between the male connector and the female connector
- the rubber gasket (4) in the male connectors: make sure that it seals properly (it should not be possible to turn the male connector easily)
- the coaxial cables (3): make sure that the cables are flexible and that there are no cracks where they bend
- the busbar (1): make sure that there are no signs of damage

Clean or change the parts, if necessary.

Note! The coaxial cable should hang free, not attached to any other hose. It should move smoothly.

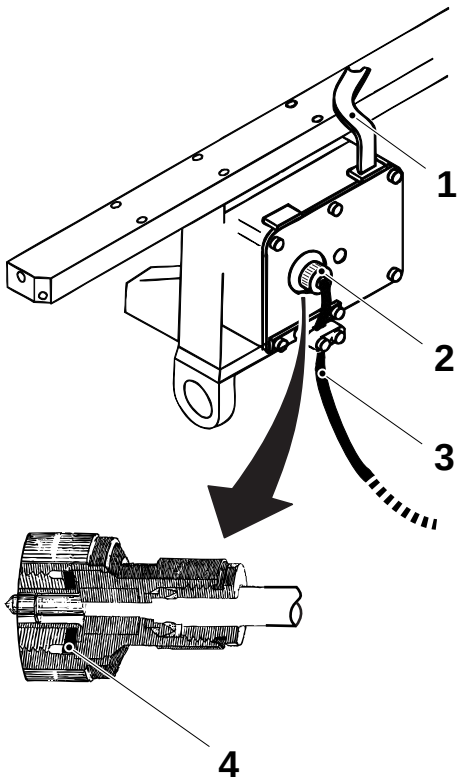

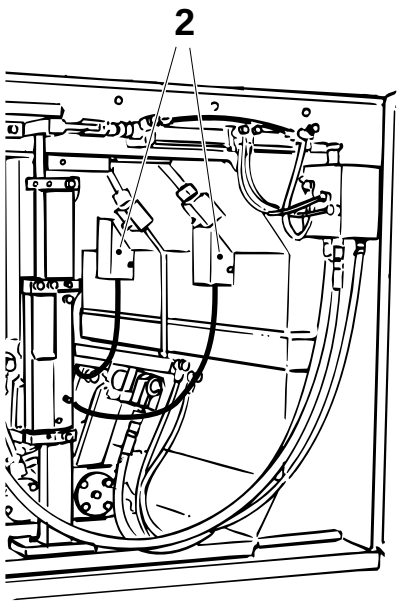

1 Busbar
2 Coaxial connector
3 Coaxial cable
4 Rubber gasket

TechPub_2614345_0105 - 01_2772105_01.fm

14.4-6 TPIH System - Check Impedance Transformer

Machine Status	Power supply disconnector OFF Air supply OFF Steam supply ON Water supply OFF
SPC Reference	1499642-0201

a) Remove the clamp (1).

b) Remove the coaxial cable from the impedance transformer.

c) Remove the screws and the plate (2).

d) Remove the busbar (3).

e) Check that the impedance transformer is intact and clean. Pay particular attention to the coil (4) and the coaxial connector (5). Clean or change the impedance transformer if necessary.

f) Remove the screw (6) and the impedance transformer.

g) Assemble in the reverse order.

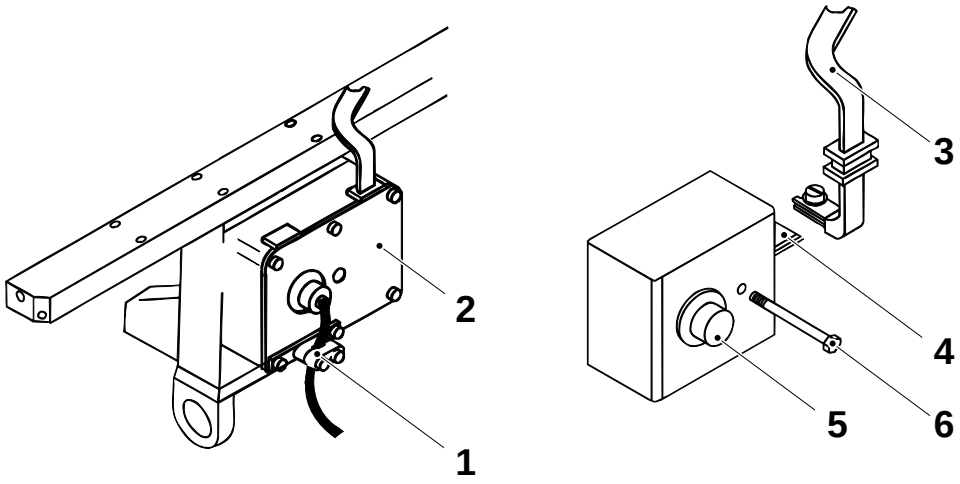

1 Clamp
2 Plate
3 Busbar
4 Coil
5 Coaxial connector
6 Screw

TechPub_2614345_0105 - 01_2772105_01.fm

14.4-7 TPIH Power - Record Settings

Machine Status	Power supply disconnector ON Air supply OFF Steam supply ON Water supply OFF
SPC Reference	1499642-0201

Via the TPOP interface record the values of the following potentiometers:

- LH TS power
- RH TS power
- SA power

See OM section TPOP display for further details.

14.4-8 TPIH System - Set TS Power

Machine Status	Power supply disconnector ON Air supply OFF Steam supply ON Water supply OFF
SPC Reference	1499642-0201

Basic Setting

a) On the TPOP press the DRIVE UNIT button (1) to set the LH jaw power and the RH jaw power according to the table below.
For further details see OM section TPOP display.

Package	Set value (basic setting)	Package	Set value (basic setting)
TBA 100 B	400	TBA 180 B	540
TBA 125 S	400	TBA 200 B	540
TBA 160 S	460	TBA 250 B	540
TBA 200 S	460	TBA 284 B	540
TBA 200 M	460	TBA 300 S	540
TBA 250 S	460	TBA 330 S	540

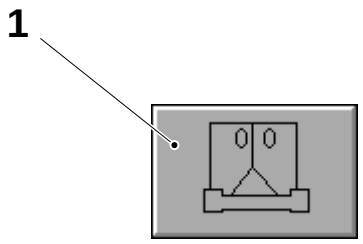

1 DRIVE UNIT button

Final setting

In step PRODUCTION, evaluate the TS sealing, see **OM section Package checks**. If necessary, perform a final setting.

TechPub_2614345_0105 - 01_2772105_01.fm

14.4-9 TPIH System - Set SA Power

Machine Status	Power supply disconnector ON Air supply OFF Steam supply ON Water supply OFF
SPC Reference	1499642-0201

Basic Setting

On the TPOP press the STRIP APPLICATOR button (1) to set the SA power according to the table below. For further details see OM TPOP display section.

Note! Basic setting is for 7500 p/h, for slower speed of the machine the TS power should be consequently adapted.

Package	Set value (basic setting)	Package	Set value (basic setting)
TBA 100 B	600	TBA 200 S	680
TBA 125 S	620	TBA 250 B	660
TBA 160 S	650	TBA 250 S	800
TBA 180 B	620	TBA 284 B	720
TBA 200 B	640	TBA 300 S	720
TBA 200 M	660	TBA 330 S	880

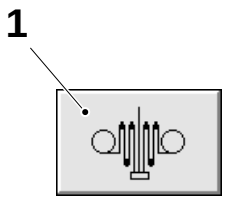

1 STRIP APPLICATOR button

Final setting

In step PRODUCTION, evaluate the SA sealing, see **OM section Package checks**. If necessary, perform a final setting.

TechPub_2614345_0105 - 01_2772105_01.fm

14.4-10 TPIH System - Download Software

Machine Status	Power supply disconnector ON Air supply OFF Steam supply ON Water supply OFF
Special Equipment	Communication cable TP No. 90031-300 AT-compatible PC TMCC2Trm.exe software
SPC Reference	1499642-0201

Checking the Version of the Installed TPIH Software

Check the software version on the TPIH display by following the menus: MAIN MENU >> INFORMATION >> PROGRAM VERSION.

TechPub_2614345_0105 - 01_2772105_01.fm

Downloading TPIH Software

CAUTION
Internal memory damage.
Disconnecting the 24V auxiliary voltage during download can damage the internal memory.

CAUTION
Possible CAN BUS error.
Remember to set the CAN BUS node of each TPIH 2500 after the application has been downloaded.

a) Disconnect the 400 V supply connector, X1 (1) from the TPIH system.
b) Connect the PC to the TPIH serial port, X6 (2) with the serial cable.
c) Check that the LED (3) is lit. This means that the 24 V supply is connected.
d) Press the three buttons (4) underneath the display (5) simultaneously.

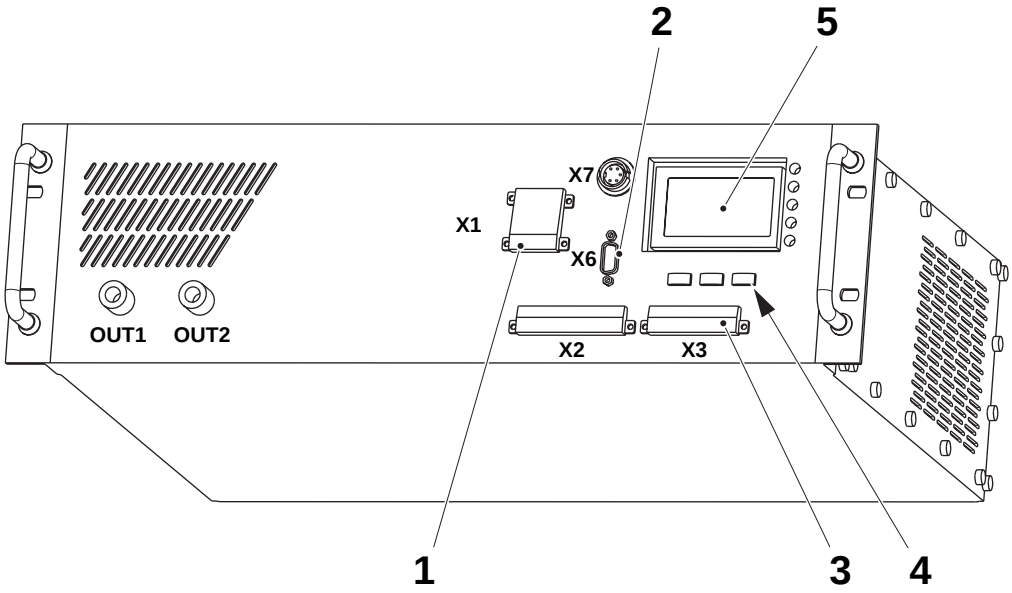

1 400V connection
2 Serial connection
3 LED
4 Multi functional button
5 LCD display

(Cont'd)

TechPub_2614345_0105 - 01_2772105_01.fm

(Cont'd)

e) Start or install TMCC2.exe on the PC.

f) Press SET COMM and check the serial configuration.

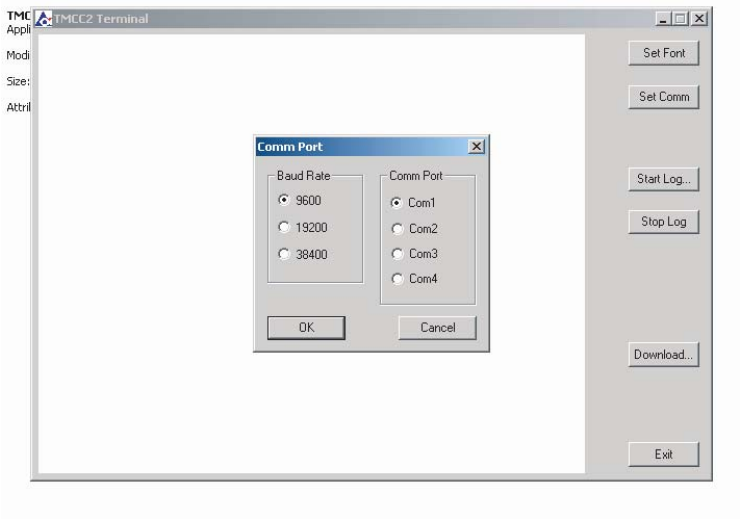

g) Press ENTER and verify that generator is on firmware mode.

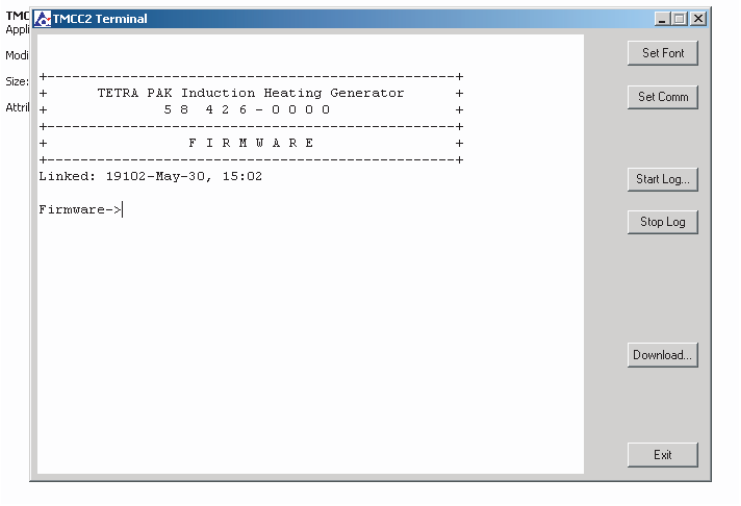

(Cont'd)

TechPub_2614345_0105 - 01_2772105_01.fm

(Cont'd)

h) Press DOWNLOAD and, in the download window, press BROWSE. Choose “All Files (*.*)“ in the Files of Type drop-down list. Select the new software file and click OPEN.

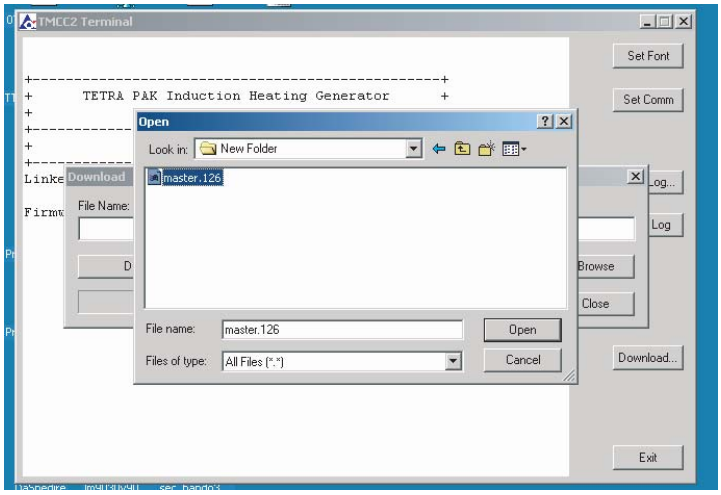

i) Press DOWNLOAD to erase the TPIH memory and download the new software to the TPIH system.

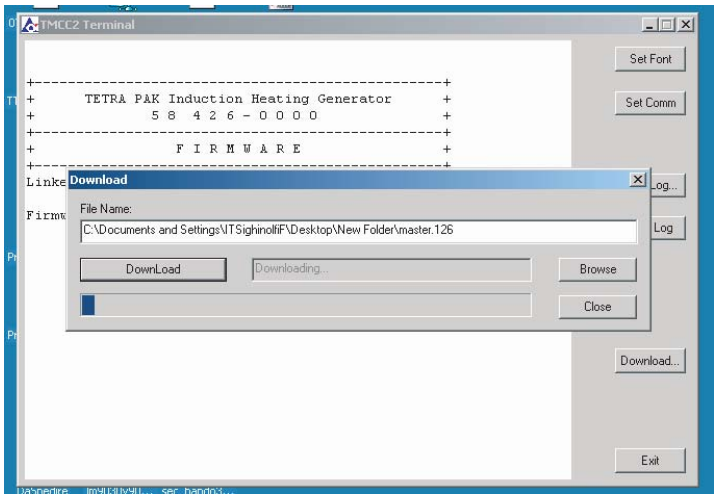

j) Wait until the download is completed, and then press CLOSE.

k) Type “**G**” and ENTER to restart the TPIH generator.

l) Disconnect the PC from the TPIH system.

m) Reconnect the 400 V supply connector, X1 to the TPIH system.

TechPub_2614345_0105 - 01_2772105_01.fm

LCD Contrast Display

Downloading new TPIH software can affect the contrast of the LCD display on front panel. No other TPIH generator functionality is affected.

Adjust the TPIH LCD Display panel contrast as follows:

a) Connect the PC to the TPIH serial port, X6, with the serial cable.

b) Press ENTER on the PC to open the Help menu.

c) Type "**DC xxx**" and ENTER, where xxx is a number from 1 to 100, to set the LCD display contrast.
   - Higher values correspond to a "darker" display. Increase the value if the display appears completely blank, or decrease the value if it appears completely dark.
   - The recommended starting value is 27.

TechPub_2614345_0105 - 01_2772105_01.fm

14.4.1 TPIH Test Instrument

14.4.1-1 TPIH Test Instrument - Description

Machine Status	Power supply disconnector OFF Air supply OFF Steam supply ON Water supply OFF
Special Equipment	Test instrument TP No. 68462-101

The TPIH test instrument is used to check the available output power from the TPIH generator as well as the condition of the coaxial cable, the impedance transformer, the busbar and the inductor.

Note! The instrument can be damaged if it is connected to trouble shoot in an open circuit. The output voltage from TPIH 2500 can be too high.

Connect it in series with the coaxial cable from the generator.

It simplifies the work, when trying to locate the origin of a problem.

The test instrument can be used for direct measurement of the following parameters:

- HF voltage
- HF current
- phase shift voltage/current
- pulse duration

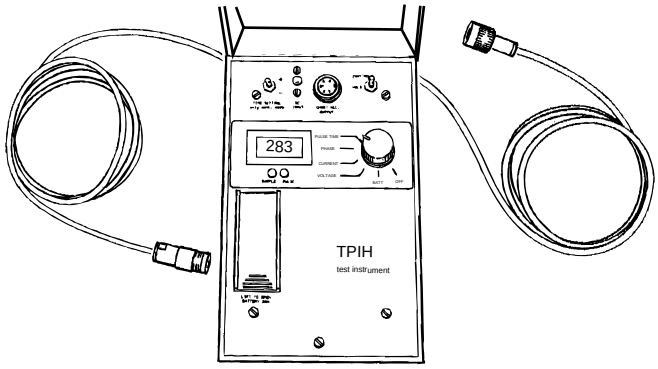

(Cont'd)

TechPub_2614345_0105 - 01_2772105_01.fm

(Cont'd)

The results of these measurements can be used to calculate the available HF power.

One 9 V battery is used for the instrument and an automatic power-off function is used to minimise the battery consumption.

A test outlet permits the connection of a printer, such as a Brush recorder. Print-out of the HF voltage, HF current and the phase shift as a function of time are possible.

The instrument kit contains complete operating instructions as well as a printer cable and a battery eliminator.

TechPub_2614345_0105 - 01_2772105_01.fm

14.5 Process Recorder

14.5-1 Process Recorder - Description

Machine Status	Power supply disconnector OFF Air valve OFF Steam valve OFF Water valve OFF
SPC Reference	90459-0080

Parameters

The process recorder registers the following parameters:

Channel No.	**Type**	**Colour**	**Description**
AN1	Analog	Blue	**Hydrogen peroxide temperature** If the temperature of the sterile bath drops below its the machine stops. The temperature range for this channel is 0 to 100 corresponding to the full paper range.
AN2	Analog	Brown	**Top aseptic chamber temperature** If the temperature of the top aseptic chamber drop 95 °C during Production, the machine stops. The temperature range for this channel is 0 to 200 corresponding to the full paper range.
AN3	Analog	Black	**Sterile air temperature** If the temperature of the air super heater drops bel the machine shuts down. The temperature range for this channel is 0 to 400 corresponding to the full paper range.
AN4	Analog	Not defined	Not used
AN5	Analog	Not defined	Not used
AN6	Analog	Not defined	Not used

(Cont'd)

TechPub_2614345_0105 - 01_2772106_01.fm

(Cont'd)

Channel No.	**Type**	**Colour**	**Description**
DI1	Digital	Purple	**Sterile parameter** Sterile parameter caused a machine shutdown (see Supervision,....). Re-sterilisation is required. The process recorder records line 22 (100 unit paper) as as the machine is sterile. The normal position of this signal is line 20 (100 unit pape
DI2	Digital	Red	**Operation parameter** An operation parameter has caused the machine to stop Supervision,...). The process recorder records line 25 (100 unit paper) for five minutes after the stop. This channel also records internal cleaning (Ready for CI Signal from CIP valve on). The normal position of this signal is line 23 (100 unit pape
DI3	Digital	Green	**Drive motor operating** When the main motor is ON, the process recorder record line 28 (100 unit paper). When the main motor is OFF, it records line 26 (100 unit paper).
DI4	Digital	Black	**Filling machine in production** When the filling machine is producing filled packages, the process recorder records line 31 (100 unit paper). When the machine is not in production, it records line 29 unit paper).

(Cont'd)

TechPub_2614345_0105 - 01_2772194_Dim

(Cont'd)

The figure below shows a sample process recorder printout.

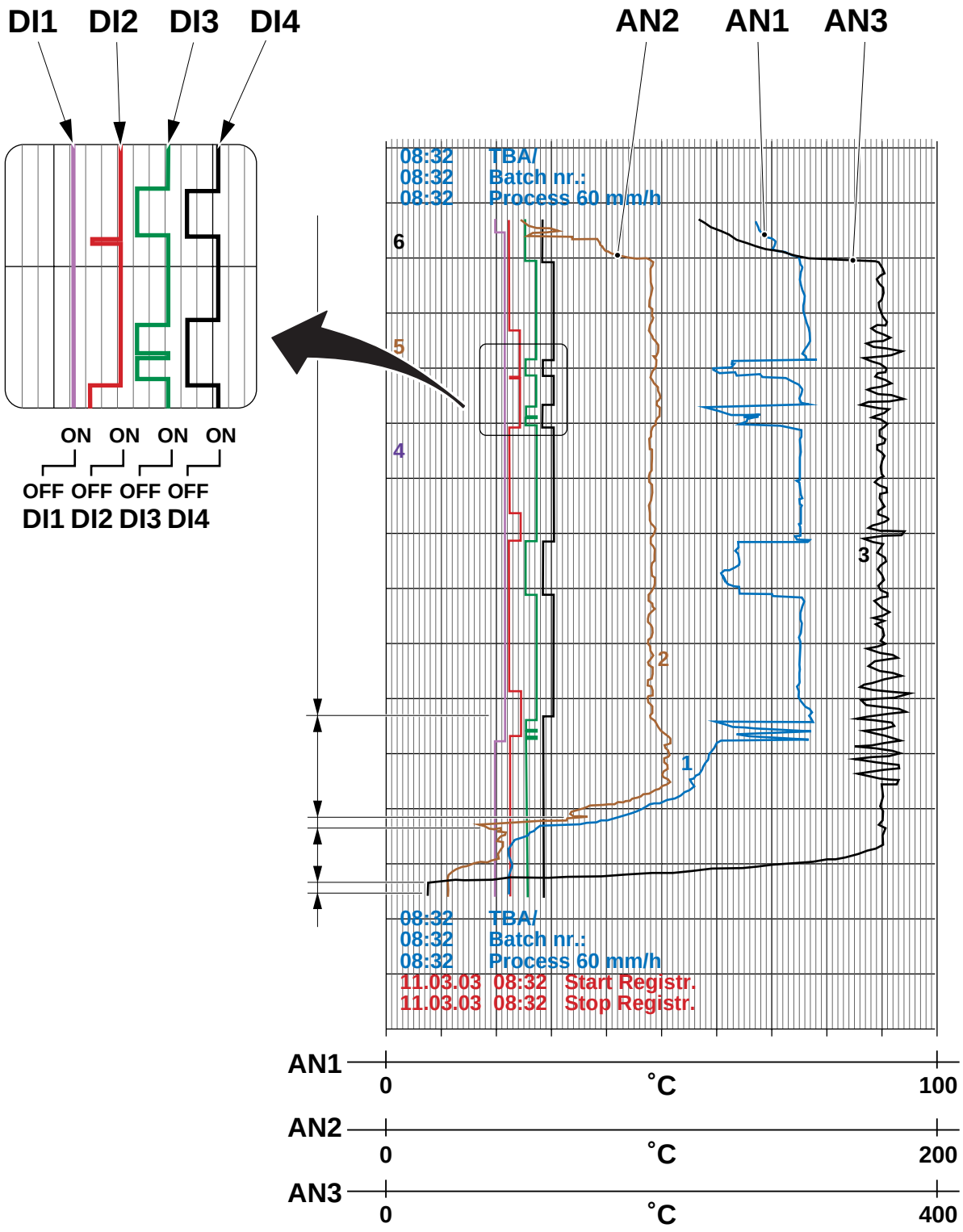

(Cont'd)

TechPub_2614345_0105 - 01_2772106_01.fm

(Cont'd)

The figure below shows a sample from a printout of the CIP.

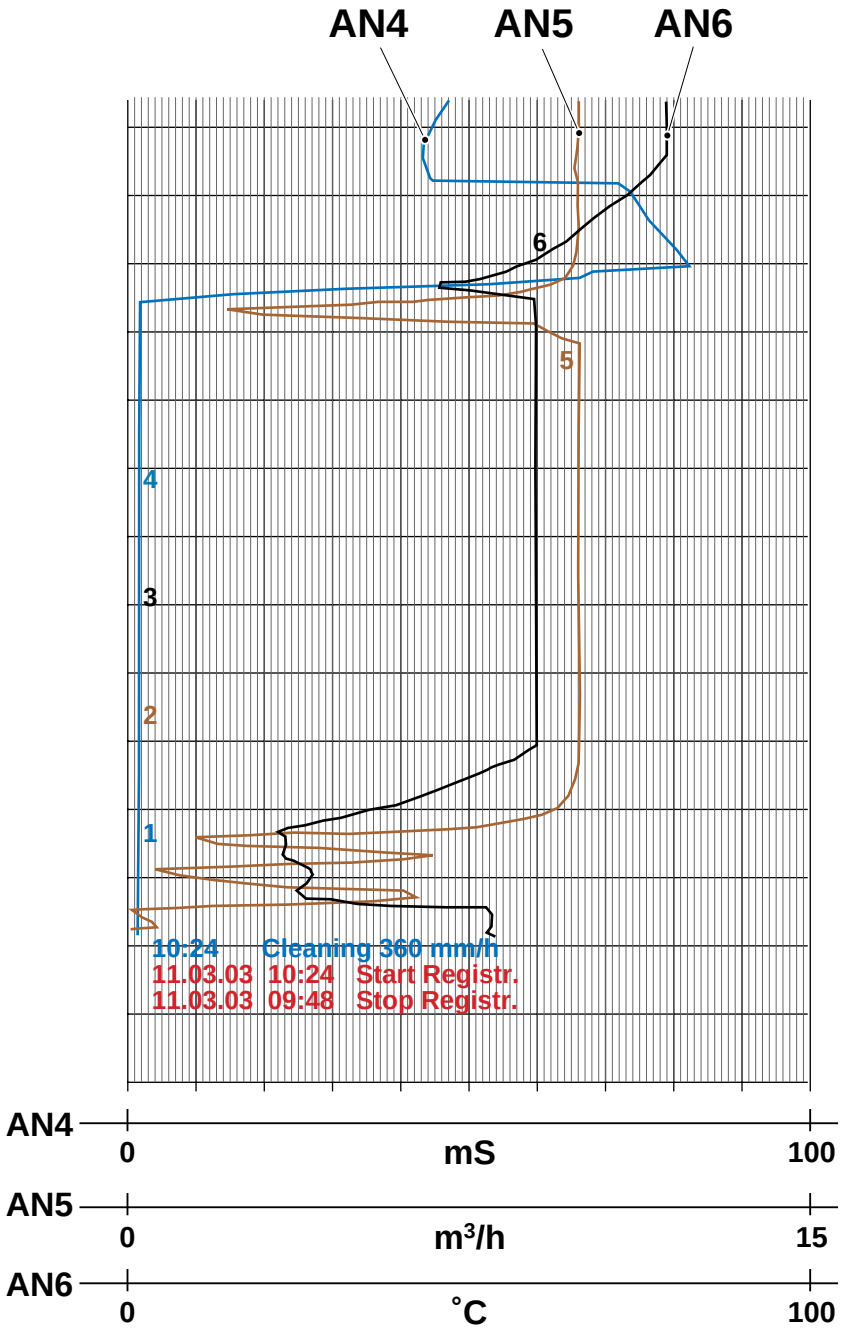

(Cont'd)

TechPub_2614345_0105 - 01_2772106_01.fm

(Cont'd)

Whenever the machine goes to step ZERO, the power supply to the recorder remains **ON** for only 20 minutes. Then the power supply goes OFF.

The paper cassette lifetime is about **10** days (paper length **16 m**).

The print head lifetime is about **5 months** at optimum conditions (with the recorder running 24 hours a day).

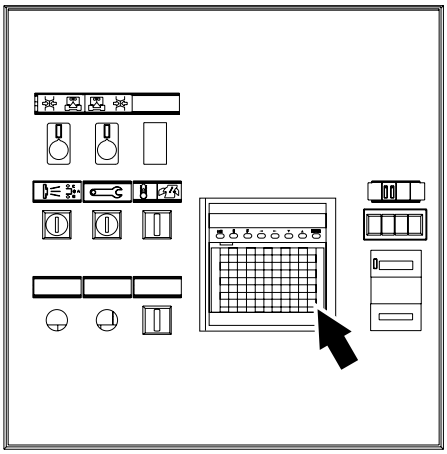

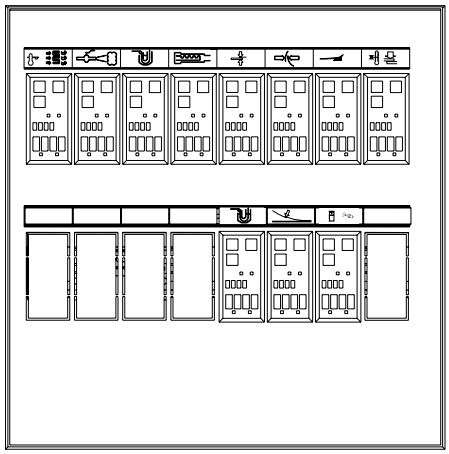

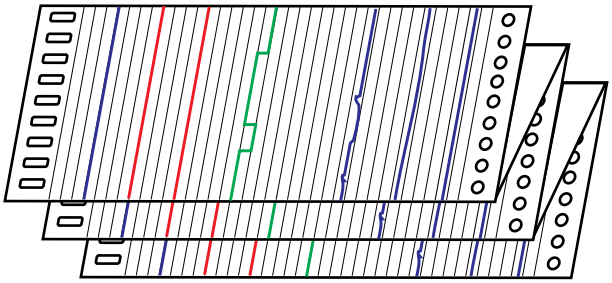

Passwords

The process recorder has two passwords, for different access privileges:

- Password #1 gives full access to the configuration of parameters
- Password #2 is not used.

TechPub_2614345_0105 - 01_2772106_01.fm

14.5-2 Process Recorder - Set Recorder

Machine Status	Power supply disconnector ON Air valve OFF Steam valve OFF Water valve OFF
SPC Reference	90459-0080

Note! For further information. See the *Jumo Operation Manual*.

CAUTION
Production fault hazard.
All changes in the process recorder program must be carried out by skilled or instructed personnel only. Changes should be carried out at a Tetra Pak service station.

Set Language

a) Open the front door (1) of the recorder.

b) Press both the ARROW DOWN button (2) and the ARROW UP button (3), at the same time, **twice**.

c) Enter the code password #1, four digits, using the ARROW buttons (2), (3), (4), and (5).

d) Press the ENTER button (6). The message **P-LEVEL** appears on the display.

e) Press the ARROW UP button (3).

f) Press the ENTER button (6). Set the language, using the ARROW buttons (2) and (3).

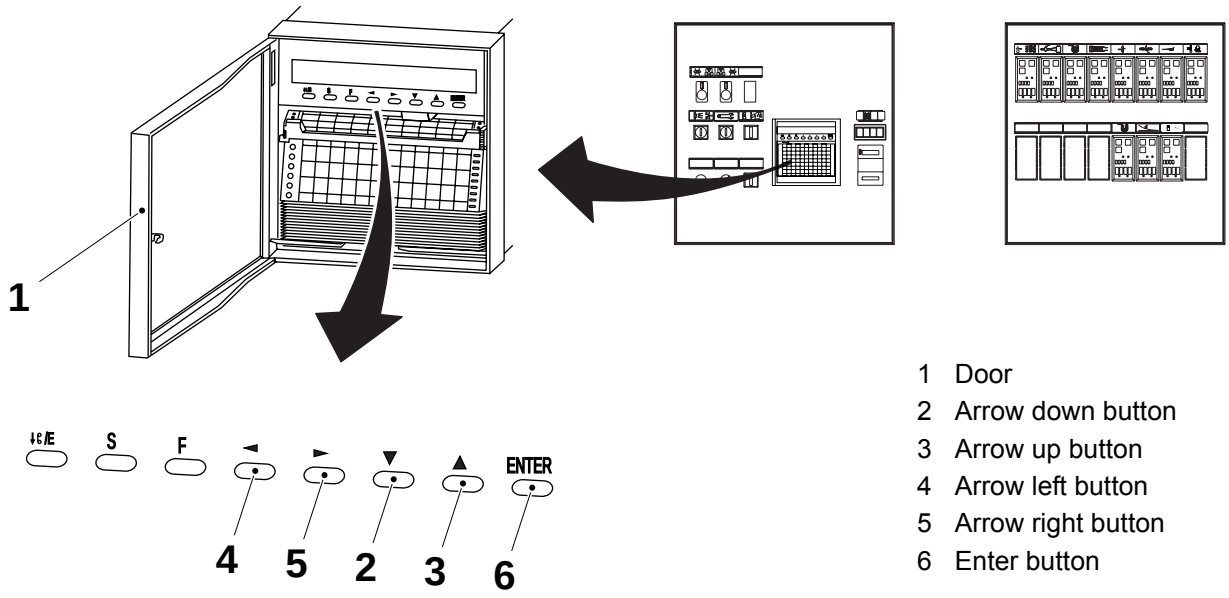

1 Door
2 Arrow down button
3 Arrow up button
4 Arrow left button
5 Arrow right button
6 Enter button

(Cont'd)

TechPub_2614345_0105 - 01_2772106_01.fm

(Cont'd)

g) Press the ENTER button (6) and then the EXIT button (7).

Note! In the parameter level the FAST FEED button works as the EXIT button (7).

h) Close the front door (1) and wait until the recorder is ready.

Note! As long as the display is flashing the recorder is initialized with the new data.

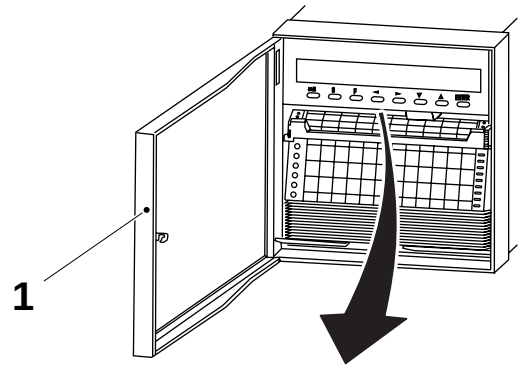

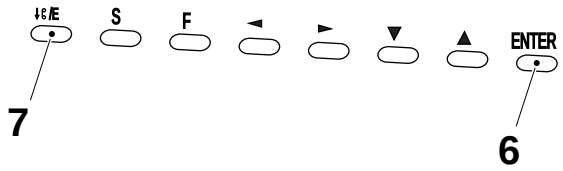

1 Door
6 Enter button
7 Arrow down button

(Cont'd)

TechPub_2614345_0105 - 01_2772106_01.fm

(Cont'd)

Set Date and Time

a) Open the front door (1) of the recorder.

b) Press both the ARROW DOWN button (2) and the ARROW UP button (3), at the same time, **twice**.

c) Enter the code password #1, four digits, using the ARROW buttons (2), (3), (4), and (5).

d) Press the ENTER button (6). The message **P-LEVEL** appears on the display.

e) Press the ARROW UP button (3) twice.

f) Press the ENTER button (6). Set the date, using the ARROW buttons (2), (3), (4), and (5) (day - month - year).

g) Press the ENTER button (6). Set the weekday, using the ARROW buttons (2) and (3).

h) Press the ENTER button (6). Set the time, using the ARROW buttons (2), (3), (4), and (5) (hours - minutes).

i) Press the ENTER button (6) and then the EXIT button (7).

Note! In the parameter level the FAST FEED button works as the EXIT button (7).

j) Close the front door (1) and wait until the recorder is ready.

Note! As long as the display is flashing the recorder is initialized with the new data.

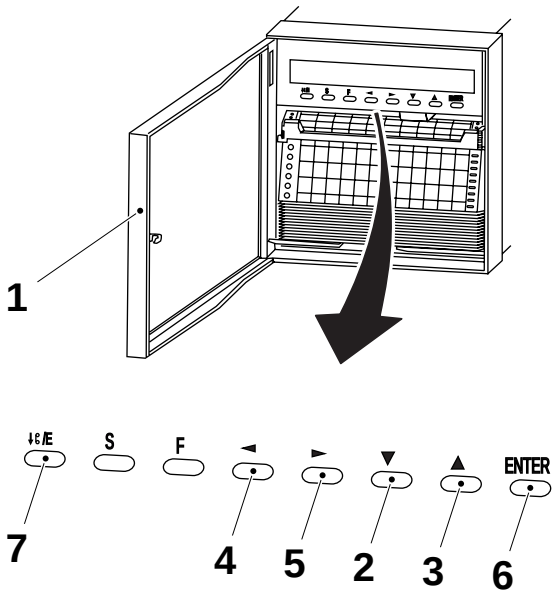

1 Door
2 Arrow down button
3 Arrow up button
4 Arrow left button
5 Arrow right button
6 Enter button
7 Exit button

TechPub_2614345_0105 - 01_2772106_01.fm

14.5-3 Process Recorder - Clean Chart Carriage

Machine Status	Power supply disconnector ON Air valve OFF Steam valve OFF Water valve OFF
SPC Reference	90459-0080

a) Open the front door (1) of the recorder and press the button (2) downwards.

b) Pull out the chart cassette (3) and open the paper guides (4) and (5).

c) Remove the chart paper (6).

d) Clean the guide rods of the cassette (3) with a dry cotton cloth.

e) Clean the cassette (3) with a damp cloth.

Note! Do **not** lubricate.

f) Fit the chart paper (6) with the round holes (7) on the LH side.

g) Close the paper guides (4) and (5).

h) Fit the cassette (3) and close the front door (1).

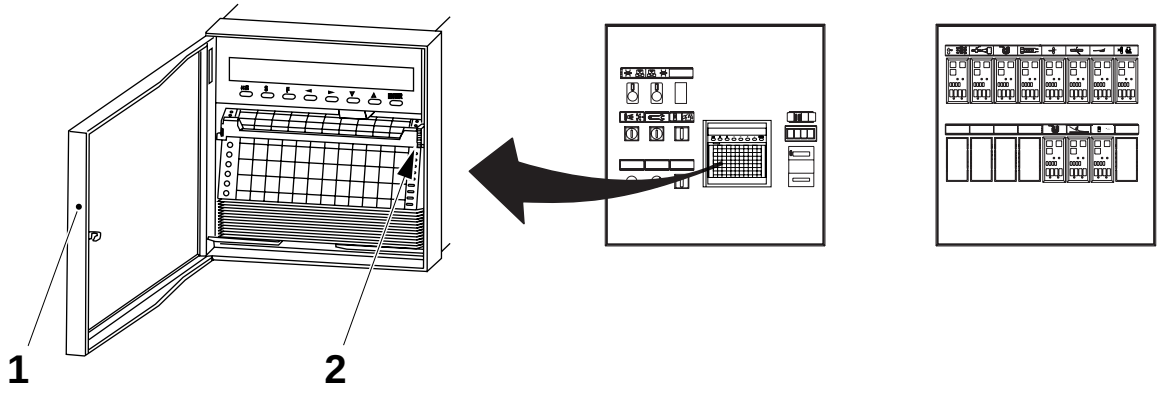

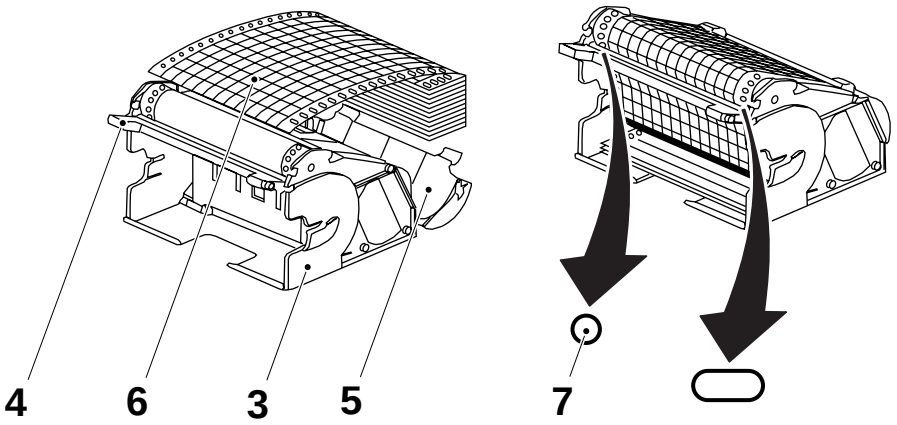

1 Door
2 Button
3 Cassette
4 Guide
5 Guide
6 Paper
7 Hole

TechPub_2614345_0105 - 01_2772106_01.fm

14.5-4 Process Recorder - Calibrate

Machine Status	Power supply disconnector OFF Air valve OFF Steam valve OFF Water valve OFF
SPC Reference	90459-0080

Note! It is only possible to calibrate the process recorder channels.

a) Before calibration, be sure that the calibrator has already been set. See instructions in procedure 14.1.1-1 Calibrator - Set Micromite II or 14.1.1-2 Calibrator - Set Fluke 714 depending on the calibrator model you use.

b) Follow the instructions for the Micromite calibrator (2) or the Fluke calibrator (3), see the procedures above, and connect the thermocouple cable.

c) Type in the **Temperature output value** on the calibrator to
   - **100** °C for channel **1**
   - **200** °C for channel **2**
   - **400** °C for channel **3**

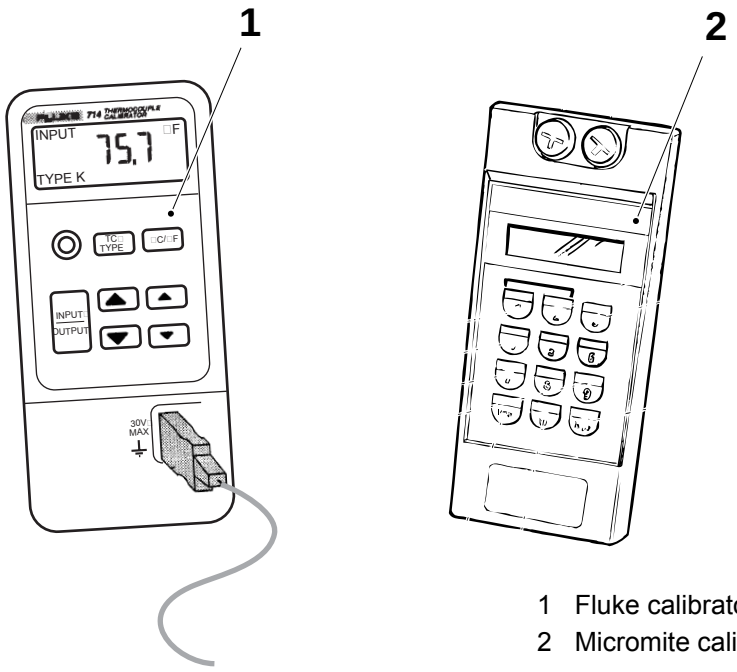

1 Fluke calibrator
2 Micromite calibrator

(Cont'd)

TechPub_2614345_0105 - 01_2772106_01.fm

(Cont'd)

DANGER

Hazardous voltage.
Will shock, burn or cause death.
Follow lockout procedure before maintenance. See Chapter ii Safety Precautions.

d) Connect the calibrator instrument as a replacement of a temperature sensor with the thermocouple cable to channel **1**.
   - remove the yellow cable from the channel connector (3) and fit the (+) input (yellow lead) from the thermocouple cable
   - remove the red cable from the channel connector (3) and fit the (-) input (red lead) from the thermocouple cable.

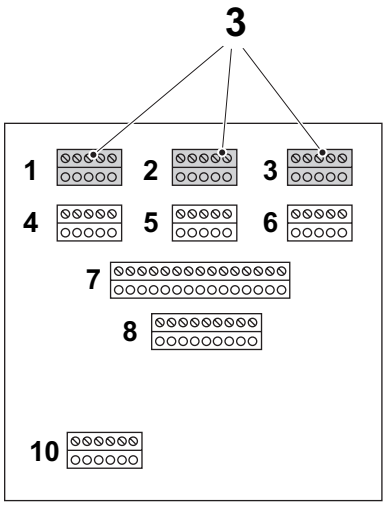

Process recorder back side

3 Channel connector

(Cont'd)

TechPub_2614345_0105 - 01_2772106_01.fm

(Cont'd)

Note! Measure the channel **1** (100 °C), the channel **2 (2**00 °C), and the channel **3** (400 °C) one at the time.

e) Check that the value on the recorder display is correct for that channel. If the value is not correct then note the value for that channel.

f) Check also the channels **2** and **3** according to item d) and e).

g) Disconnect the calibrator instrument and fit back all the yellow and red cables to the recorder. Check that all connections to the recorder are correct according to the *EM*.

h) If necessary, calibrate the channels **1**, **2** and **3**. See Procedure Calibrate channels on page 14-87.

(Cont'd)

TechPub_2614345_0105 - 01_2772106_01.fm

(Cont'd)

Calibrate channels

a) Open the front door (1) of the recorder.

b) Press both the ARROW DOWN button (2) and the ARROW UP button (3), at the same time, **twice**.

c) Enter the code password #1, four digits, using the ARROW buttons (2), (3), (4), and (5).

d) Press the ENTER button (6). The message **P-LEVEL** appears on the display.

e) Press both the ARROW DOWN button (2) and the ARROW UP button (3) at the same time, **three times**. The message **C3** appears on the display.

f) Press the ARROW DOWN button (2) until the message **P** appears on the display. Press the ENTER button (6).

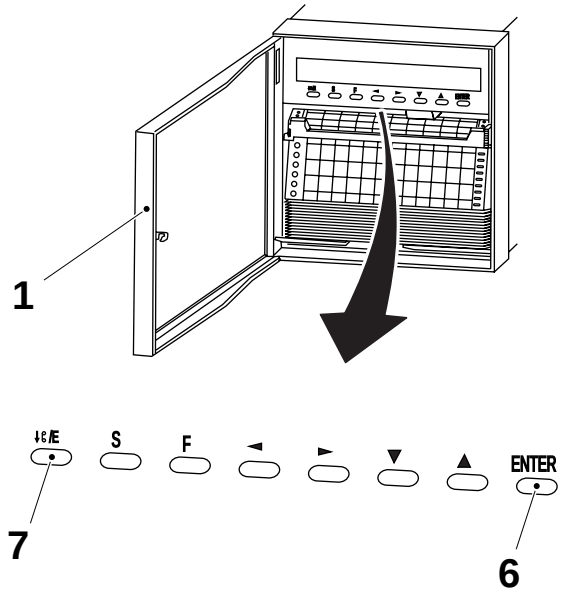

1 Door
2 Arrow down button
3 Arrow up button
4 Arrow left button
5 Arrow right button
6 Enter button

(Cont'd)

TechPub_2614345_0105 - 01_2772106_01.fm

(Cont'd)

g) Select the analog channel **01 P**, **02 P,** or **03 P**, using the ARROW buttons (4) and (5).

h) Press the ENTER button (6) and calibrate the channel, using the ARROW buttons (2) and (3).

i) **+2.000** if the recorder showed **98 °C** (the calibration value is **100 °C**)

j) **-2.000** if the recorder showed **102 °C** (the calibration value is **100 °C**).

k) Press the ENTER button (6).

l) Repeat items g) to h) until the analog channels are calibrated

m) Press the ENTER button (6) and then the EXIT button (7) several times.

Note! The FAST FEED button works as the EXIT button (7) when not in the basic status.

n) Close the front door (1) and wait until the recorder is ready.

Note! As long as the display is flashing the recorder is initialized with the new data.

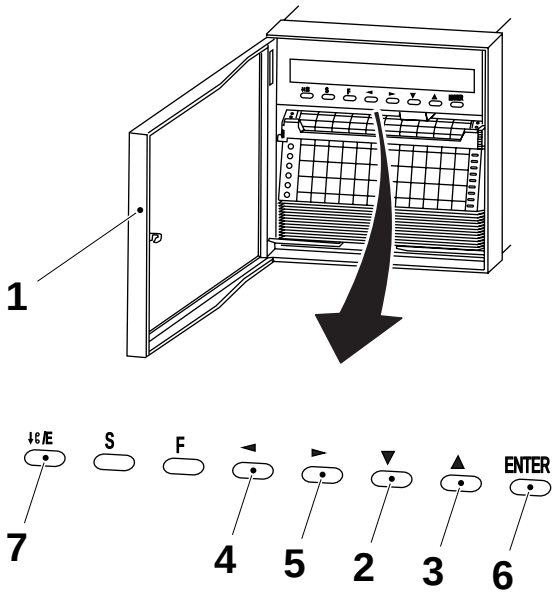

1 Door
2 Arrow down button
3 Arrow up button
4 Arrow left button
5 Arrow right button
6 Enter button
7 Exit button

TechPub_2614345_0105 - 01_2772106_01.fm

14.6 Motorised Design Control System (MDCS)

14.6-1 MDCS - Function Description

Machine Status	Power supply disconnector OFF Air supply OFF Steam supply ON Water supply OFF
SPC Reference	559810-0101

MDCS19 is a program that runs on the TMCC2 **A400** hardware.

The program reads the register code photocells on the packaging material and the machine angle encoder. From these parameters the output is calculated via a PID-algorithm.

The output values set the I/P transducer pressure and the motorised cylinders (folding flap) position. Package specific parameters are sent from the PLC.

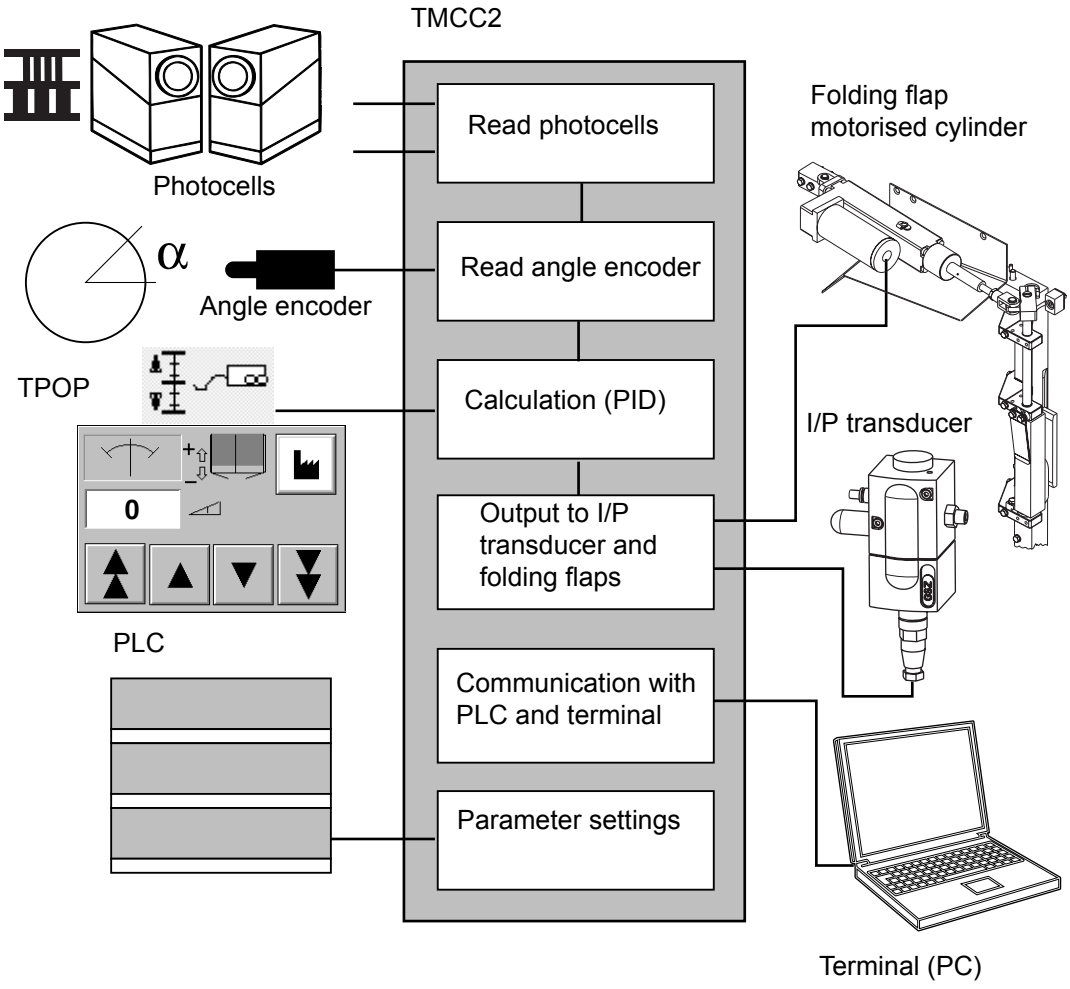

(Cont'd)

TechPub_2614345_0105 - 01_2772107_01.fm

(Cont'd)

TMCC2 Panel Display

The buttons UP (1), DOWN (2), Enter (3) and the display/LED (4) are located on the front panel of the TMCC2, and are used to select one of several program functions.

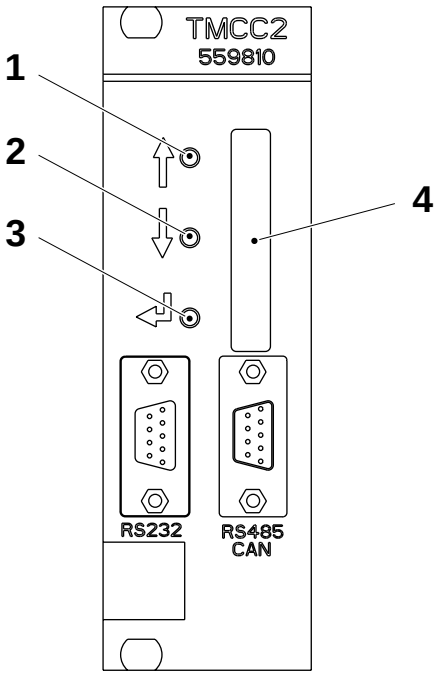

1 UP button
2 DOWN button
3 ENTER button
4 Display/LED

The display (4) is used for the following purposes:

- When the TMCC2 is idle the display (4) shows program information.
- When the TMCC2 is working the display (4) is used as LEDs to display the operation of the TMCC2.
- When you push any of the buttons (1), (2), (3) the display (4) is used to navigate through a menu structure that allows you to set up the TMCC2.

If the communication with the photocells fails an error message is displayed as follows:

3 bar Ph.if the communication to the 3 bar photocell fails.

4 bar Ph.if the communication to the 4 bar photocell fails.

Ph. FAILif both photocells are in error status.

(Cont'd)

TechPub_2614345_0105 - 01_2772107_01.fm

(Cont'd)

TMCC2 LED Display

The display, used as LEDs, provide the following information when the machine is **ON**.

LED	Function
S1	Register code detection
S2	Design correct (production)
S3	RH/LH stepper motor step pulse
S4	RH/LH motor direc. ON =CW / OFF=CCW
S5	Cylinder position 19-25
S6	Cylinder position 12-18
S7	Cylinder position 6-11
S8	Cylinder position 0-5
Note: If LEDs S5 and S6 are ON it means that the sensor is broken in status ON. If LEDs S7 and S8 are ON it means that the sensor is broken in status OFF.	

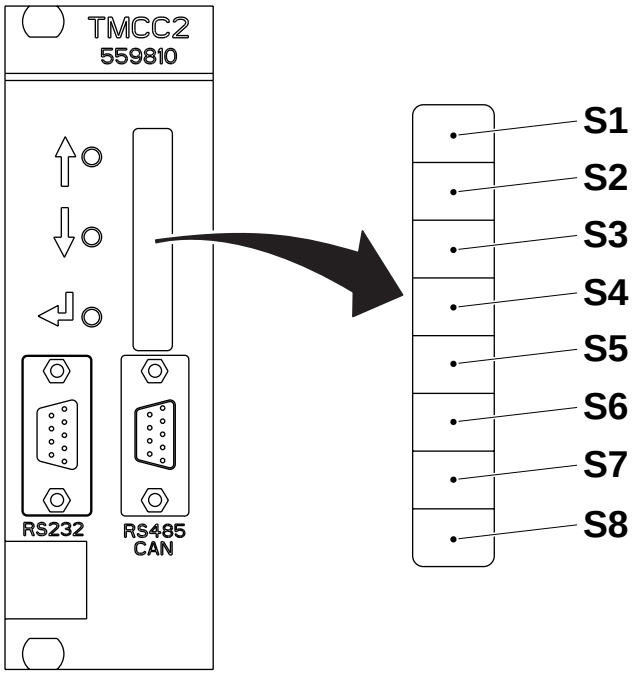

(Cont'd)

TechPub_2614345_0105 - 01_2772107_01.fm

(Cont'd)

TMCC2 Menu System

By pushing any button on the TMCC2 you enter the first level of the menu. Then you use the arrow buttons to select an item and the enter button to access the sub-menus to that item.

Menu Level				Description
1	2	3	4	
MONITOR				Select what data to view on the display
	DES ERR			Displays the Design Error
	MEAN DER			Displays the Mean Design Error
	OUTPUT			Displays the Output to the I/P (0-255)
	BACK			Back to Level 1
DIAG OUT **(**)**				Select what data to send to the analog output on Pin 6 of the TMCC2
	DES ERR			Outputs the Design Error of every pack.
	MEAN2 DE			Outputs the Mean Design Error of the last 2 pack.
	MEAN DER			Outputs a filter of the Mean Design Error
	OUTPUT			Outputs the output value to I/P
	MEAN OUT			Outputs the mean output value to I/P
	DES ADJ			Outputs the Design Adjustment Value
	BACK			Back to Level 1
PHOT.				Photocells menu
	CONF? Y			Photocells configuration menu
		GREEN		Sets the photocells spot colour to green
		BLUE		Sets the photocells spot colour to blue
		RED		Sets the photocells spot colour to red
		CALIB.		Manual calibration menu
			USE CAL.	Use previous manual calibration
			RUN CAL.	Start manual calibration
			BACK	Exit from manual calibration menu
		BACK		Exit from photocell configuration menu
	CONF? N			Exit from photocells configuration menu
MAX D OK				Max allowed design error menu
	DOK=±X.X			Set the max allowed design error **(*)**
PRESSURE				Set the pressure I/P transducer WTC
	MIN PRES			Minimum pressure menu
		MIN= X.X		Set the minimum pressure (0-10 V)
	MAX PRES			Maximum pressure menu
		MAX= X.X		Set the maximum pressure (0-10 V)
	BACK			Back to Level 1
BACK				Exit from menu structure

* For detailed information, see 14.6-3 MDCS - Display Report. ** For detailed information, see TMCC2 Diagnostic Output on next page.

Note! Make sure to manually exit the menu, up to level 1, using the “back” command. Commands and parameters entered in the MDCS19 program and data can be read from the TMCC2 by using a PC, see 14.6-3 MDCS - Display Report. The values XX=XX in the table can be changed by using the UP and DOWN push buttons and the storage is performed after pressing the ENTER push button.

(Cont'd)

TechPub_2614345_0105 - 01_2772107_01.fm

(Cont'd)

TMCC2 Diagnostic Output

Diagnostic output is enabled during **production** only.

	Function	Output format
DIAG. OUT		
	DES ERR	0 to 10 V => -5 to + 5 mm design error
	MEAN2 DE	0 to 10 V => -5 to + 5 mm design error
	MEAN DER	0 to 10 V => -5 to + 5 mm design error
	MEAN OUT	0 to 10 V => 0 to 255 range of output signal
	MEAN OUT	0 to 10 V => 0 to 255 range of output signal
	DES ADJ	0 to 10 V=> -5 to +5 mm adjustment range

(Cont'd)

TechPub_2614345_0105 - 01_2772107_01.fm

(Cont'd)

TMCC2 Output Signals

The PID algorithm calculates a new output value for every package. The calculated output value ranges from 0 to 255.

This value is converted into an analogue signal for the I/P Transducer and a twenty-six digital signals to the driver controlling the folding flap motorised cylinders.

The I/P Transducer signal overlaps the motorised cylinder positions (hysteresis) as shown below:

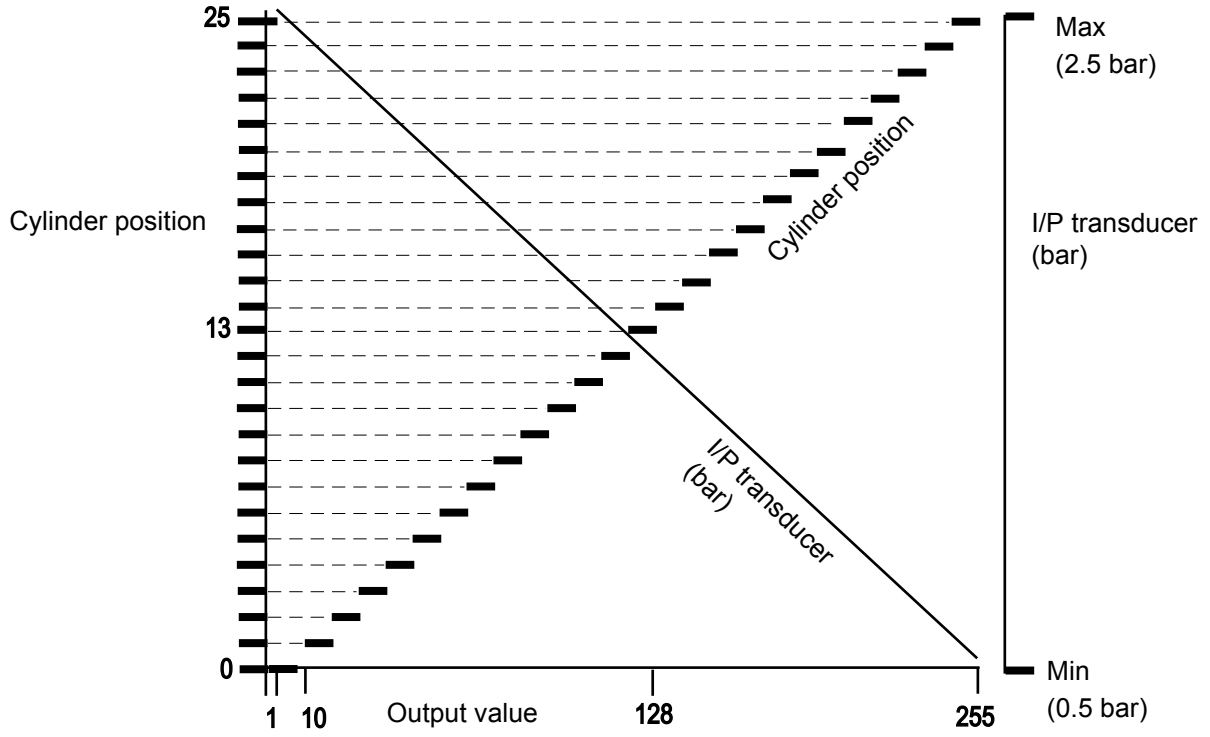

Output value = 0 sets the pre-correction position of the motorised cylinders and sets the maximum pressure on the I/P Transducer.

Note! Cylinder position 0 corresponds to the minimum paper feed. Position 25 corresponds to the maximum paper feed.

TechPub_2614345_0105 - 01_2772107_01.fm

14.6-2 MDCS - Set Communication

Machine Status	PRODUCTION
Special Equipment	Communication cable RS 232-C AT-compatible PC with floppy disc drive
SPC Reference	559810-0101

Note! The following procedure should be used to communicate with a TMCC2 card.

a) Connect the TMCC2 to a PC with the connection cable (1).

b) The connections required are:

PC 9-pin female	TMCC2 9-pin male
2	3
3	2
5	5

Note! Do **not** connect any other pin.

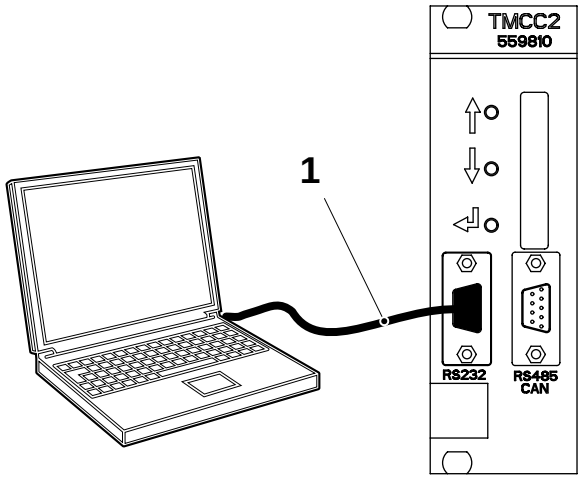

1 Communication cable

c) Set-up the program to use, e.g. Hyperterminal, as follows:

Baud rate	9600
Parity	None
Bits	8
Stop bits	1
Flow control	None

TechPub_2614345_0105 - 01_2772107_01.fm

14.6-3 MDCS - Display Report

Machine Status	PRODUCTION
Special Equipment	AT-compatible PC TMCC2 connection cable
SPC Reference	559810-0101

Configure a PC to be used as Windows terminal and connect it to the TMCC2, see 14.6-2 MDCS - Set Communication.

Enter the commands and parameters into the MDCS19 program via the keyboard and execute them by pressing the **<RETURN>** key.
(The commands and parameters are not replicated on the terminal).
The functions described below are available:

(Cont'd)

TechPub_2614345_0105 - 01_2772107_01.fm

(Cont'd)

Code	Description
Annn	Angle nnn The Production Angle (=machine angle) nnn is the **new** angle value, ranging from 0 to 255 decimal degrees. Normally the Production Angle is set from the PLC, but this command overrides the PLC setting. It may be used in test purpose to find the correct nominal Production Angler, which will later be set from the PLC. **Note!** The Design Adjustment setting is added to this value. Example: A72 sets the Production Angle to 72 degrees (110 octal).
E	Current encoder value, first hexadecimal Gray code, then converted to octal.
CAL	Execute the calibration sequence of the motorised cylinder.
Fooo	Force ooo Force outputs for I/P transducer pressure and air cylinder position, to a certain value which is (ooo-1). F0 resets the forcing: **F0** - Reset (disable) output force **F1** - Force to Precorrection output **F2** - Force to output = 1 **...** **F255** - Force to output = 254 (Output = 255 is not possible but since it is a small step in the upper region of the output range this has no practical meaning.) **Note!** This function is only available when the machine is running.
H	Help Menu: displays the commands available.
L	Show the LED function.
STOP	Stop the MDCS program and enter in the firmware.
Mnn	Change the design OK window storing the value into the EEPROM, to keep them even after a shut down or a reset. The value is expressed in 1/10 of mm. (i.e. 20 means ±2.0 mm) **Note!** The maximum possible value is 3 mm.
PTH= xx	Set photocells dynamic threshold, 00-F2 (hex value), see 1.17-2 Photocell Unit - Set Sensitivity
Rn	Reporting **On/Off** Enables and disables automatic reporting of a design error and an output value for every package. **R0** - Disable reporting. **R1** - Enable reporting. (N.B. Disabled with **R0** end of reporting)

(Cont'd)

TechPub_2614345_0105 - 01_2772107_01.fm

(Cont'd)

<table>
<tr><th>Code</th><th>Description</th></tr>
<tr><td>S</td><td>Status, displays a list of parameters for test and service purposes:
<table>
<tr><td>Output status</td><td>indicates if the output is “Forced” or ready for “Production”</td></tr>
<tr><td>Design error mean (mm)</td><td>filtered* value</td></tr>
<tr><td>Output mean (0 - 255)</td><td>filtered* value</td></tr>
<tr><td>Machine speed (p/h)</td><td>packages per hour</td></tr>
<tr><td>Repeat length</td><td>the repeat length of the packaging material transferred from the PLC</td></tr>
<tr><td>Production angle const (dec.degr.)</td><td>production angle set from PLC</td></tr>
<tr><td>Production angle +pot (dec.degr.)</td><td>production angle + design adjustment pot offset</td></tr>
<tr><td>WTC constant pressure (bar x 0.1)</td><td>Sets the pressure from the PLC</td></tr>
<tr><td>Max design OK (mm)</td><td>max allowed design error</td></tr>
<tr><td>Max pressure, Min pressure (bar x 0.1)</td><td>the maximum and minimum I/P pressure set by the TMCC2 front panel buttons.</td></tr>
<tr><td>Design Adjustment (V)</td><td>A value 0 -10 Volt depending on the Design Adjustment position.</td></tr>
<tr><td>Filling sector calculation</td><td>ON</td></tr>
<tr><td>Pc=,Ic= and Dc=</td><td>the constants for the PID controller algorithm</td></tr>
<tr><td>Photocell Status</td><td>displays if there is a failure with the photocells</td></tr>
</table>
* = filter algorithm: 90%(old values) + 10%(new values)</td></tr>
</table>

(Cont'd)

TechPub_2614345_0105 - 01_2772107_01.fm

(Cont'd)

<table>
<tr><th>Code</th><th>Description</th></tr>
<tr><td>Y</td><td>Displays a detailed status of photocells for test and service purposes:
<table>
<tr><td>Commands OK</td><td>total number of commands executed by the photocells</td></tr>
<tr><td>Commands failed</td><td>Total number of commands failed by the photocells</td></tr>
<tr><td>Register Code decoded</td><td>Total number of register codes decoded by the TMCC2</td></tr>
<tr><td>Register Code errors</td><td>Total number of register codes missed by the TMCC2</td></tr>
<tr><td>Dynamic threshold</td><td>photocell threshold</td></tr>
<tr><td>Light spot</td><td>colour of the spotlight used by the photocells</td></tr>
<tr><td>Output</td><td>Logic of the photocells output (light/dark switching)</td></tr>
<tr><td>3 bar Phot. Working Hours</td><td>Number of hours that every LED of the photocell has been working</td></tr>
<tr><td>4 bar Phot. Working Hours</td><td>Number of hours that every LED of the photocell has been working</td></tr>
<tr><td>3 bar Phot.l Software ver./S.N.:</td><td>Software version of the photocell firmware and serial number</td></tr>
<tr><td>4 bar Phot.l Software ver./S.N.:</td><td>Software version of the photocell firmware and serial number</td></tr>
</table></td></tr>
</table>

TechPub_2614345_0105 - 01_2772107_01.fm

14.6-4 MDCS - Load Program

Machine Status	PRODUCTION
Special Equipment	Communication cable RS 232-C AT-compatible PC with floppy disc drive
SPC Reference	559810-0101

a) Configure a PC to be used as a Hyperterminal and connect it to the TMCC2, see 14.6-2 MDCS - Set Communication.

b) Connect the communication cable between the PC and the TMCC2 front panel connector (1).

c) Type **Stop** and press the enter key or keep pressed the **DOWN** button (2) and the **ENTER** button (3) for few seconds.

d) For the card **A400**, insert the program disc marked **"2589438-xxxx"** into the PC floppy disc drive.

Note! The **x** corresponds to the current program revision.

e) Type **E flash** and press the enter key.

f) When the TMCC2 prompt appears ("TMCC2->"), type **D** and press the enter key.

g) Select menu **Transfers** and menu item **Send text file**.

h) Locate the file **"2589438.1xxx"** to be downloaded.

i) The downloading progress is displayed with dots on the screen.

j) At the TMCC2 prompt type **Run** and press the enter key, or press two times the ENTER button (3).

k) Press the **S** key to verify the downloaded programs status.

l) Set I/P transducer, see 14.6-6 MDCS - Set I/P Transducer.

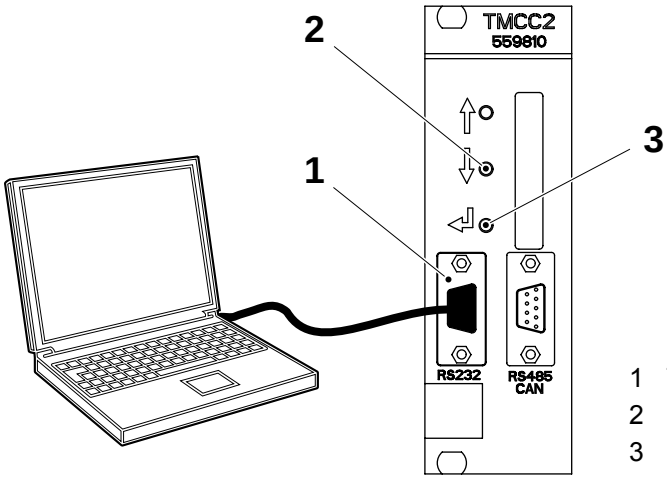

1 TMCC2 connector
2 DOWN button
3 ENTER button

TechPub_2614345_0105 - 01_2772107_01.fm

14.6-5 MDCS - Check Drives

Machine Status	Power supply disconnector OFF Air supply OFF Steam supply ON Water supply OFF
SPC Reference	1512305-0100 1512306-0100 90458-0746

a) Swing out the Drive (1) by loosening the screw (2) and pulling the flap (3).

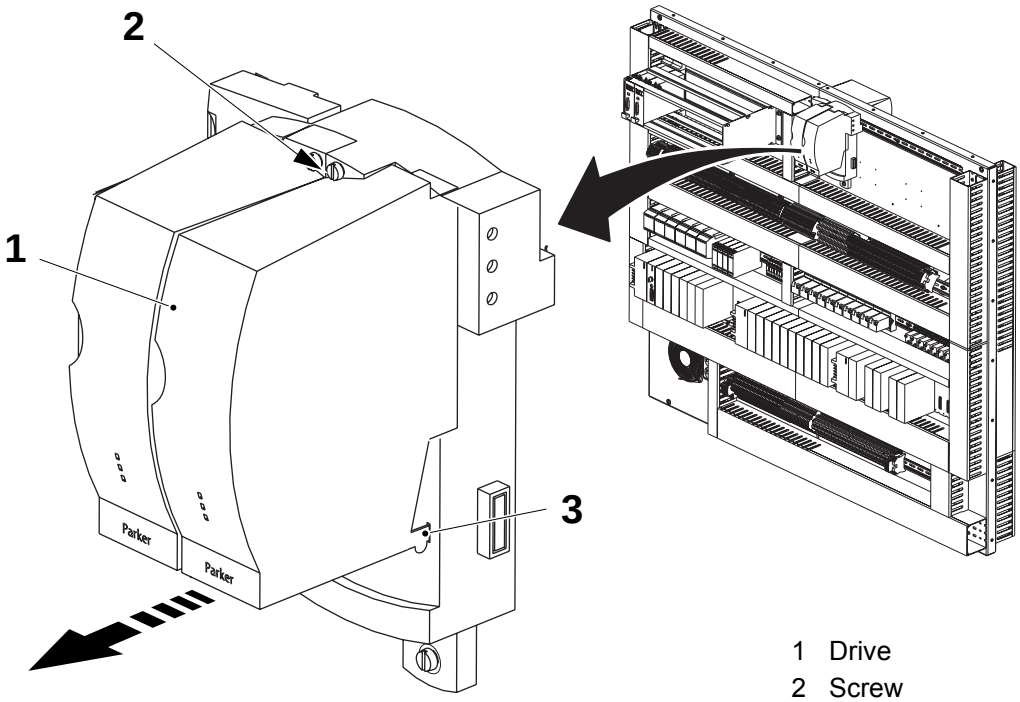

1 Drive
2 Screw
3 Flap

(Cont'd)

TechPub_2614345_0105 - 01_2772107_01.fm

(Cont'd)

b) Make sure that the switches from 1 to 8 on the switch panel (4) in the drives (1) are set in the correct position according to the following table.

c) Put the drive (1) back.

Switch number	**Function**	Description	**Switch position**
1	Boost enable (ON) Boost disable (OFF)	Activates timed boost	ON
2	Step/dir. (OFF) Step+/Step- (ON)	Allows conventional or two step line control	OFF
3	Standby 50% (OFF) 70% (ON)	Standby select	OFF
4	Resolution bit 1	Set motor resolution	ON
5	Resolution bit 2	Set motor resolution	ON
6	Current select bit 1	Set motor current	ON
7	Current select bit 2	Set motor current	OFF
8	Current select bit 3	Set motor current	ON

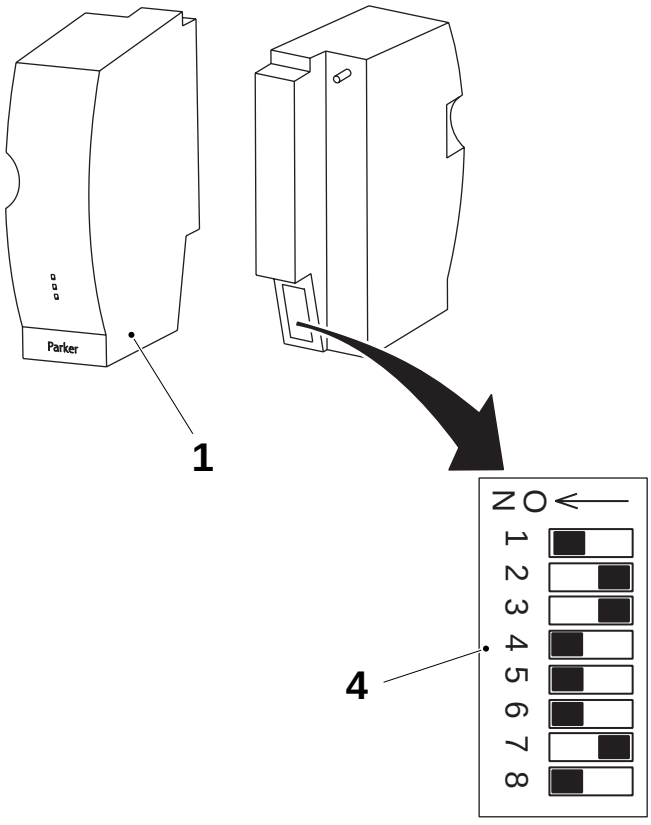

1 Drive
4 Switch panel

(Cont'd)

TechPub_2614345_0105 - 01_2772107_01.fm

(Cont'd)

Troubleshooting

The LEDs at the front of the drivers (1) have the following meanings:

LED (5)

- Orange: hardware OK & Zero Phase
- Green: Power ON

LED (6)

Red: Drive Fault. Check the following items.

- Check the power supply voltage
- The drive may not be fully inserted into the docking station. Check that the wiring is not preventing the drive from being fully home.
- There is a short circuit across two of the motor connections or between one of the motor connections and ground. Disconnect the power, remove the drive from the docking station and check the motor connections with a meter. This condition may also rise if a very low inductance motor is used. The preferred range is from 0.8 mH to 10 mH.
- The drive has shut down due to excess of temperature. Check that the refrigerator in the electrical cabinet is working. Allow the drive to cool down and check again. If the motor has ample torque for the application, try to move the cylinder by hand.

- Green: Drive ready/energised

LED **(7)**: Not used.

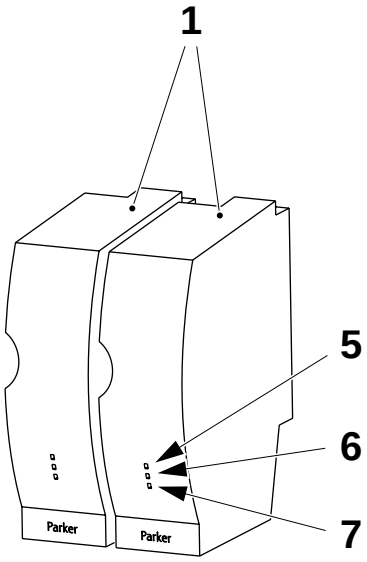

1 Drive
5 LED
6 LED
7 LED

TechPub_2614345_0105 - 01_2772107_01.fm

14.6-6 MDCS - Set I/P Transducer

Machine Status	PREHEATING I
SPC Reference	559810-0101

Basic Setting TMCC2 Card (A400)

a) Remove the electrical connection (1) from the I/P transducer.

b) Connect a voltmeter between Pin number **2** and **6** at the back plane of the TMCC2 card.

a) Press any of the buttons on the TMCC2 card.

b) Use the UP/DOWN (2-3) to select **PRESSURE** and press the ENTER button (4).

c) Select **MIN PRES**, press the enter button MIN=0, check on the Display (5) that the reading is **0 Volt**. If it is not, then adjust it using the buttons UP (2) and DOWN (3).

d) Press the ENTER button (4).

e) Select **MAX PRES**, press the enter button MAX=10, check on the Display (5) that the reading is **10 Volt**. If it is not, then adjust it using the buttons UP (2) and DOWN (3).

f) Press the ENTER button (4).

g) Reconnect the electrical connection (1).

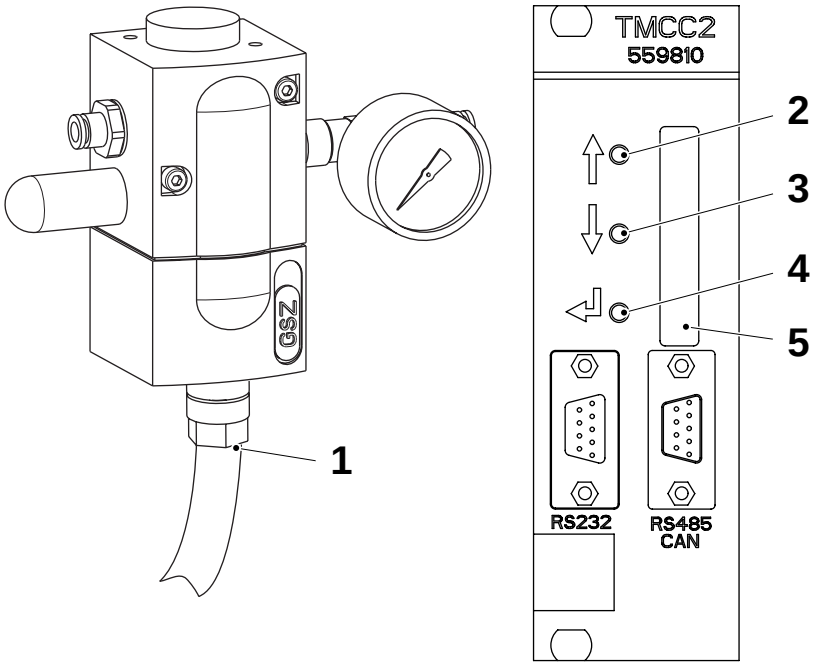

1 Connection
2 UP button
3 DOWN button
4 ENTER button
5 Display

(Cont'd)

TechPub_2614345_0105 - 01_2772107_01.fm

(Cont'd)

Basic Setting I/P Transducer

a) Remove the rubber cover (1) to display the three trimmers Z, S and G.

b) Turn the gain trimmer G (2) fully to the left.

c) On the TMCC2 card select **MIN PRES** and press Enter (3). Turn the Zero trimmer Z (4) and set the output pressure of the I/P transducer to **0.1/0.2** bar by checking on the manometer (5).

d) On the TMCC2 card select **MAX PRES** and press Enter (3). Turn the Span trimmer S (6) and set the output pressure of the I/P transducer to **3.0** bar by checking on the manometer (5).

e) Repeat items c) to d) until a satisfactory setting is reached.

f) Install the rubber cover (1).

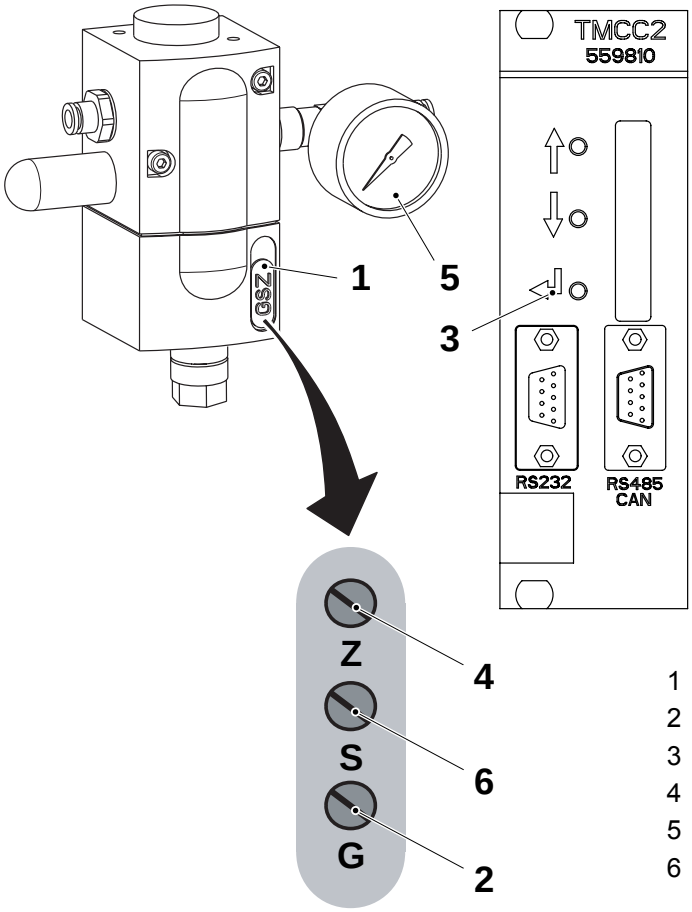

1 Rubber cover
2 Gain trimmer **G**
3 ENTER
4 Zero trimmer **Z**
5 Manometer
6 Span trimmer **S**

(Cont'd)

TechPub_2614345_0105 - 01_2772107_01.fm

(Cont'd)

Final Setting of the I/P Transducer

Note! See volume depending settings according to table below Production settIng I/P Transducer.

a) Set and check the minimum pressure (**0.5** bar) on the manometer, see item c) on page 14-104.

b) Set and check the maximum pressure (2**.5** bar) on the manometer, see item e) on page 14-104.

c) Repeat items c) and e) until the pressure is correct.

d) Exit the menu on the TMCC2 card, see TMCC2 Menu System.

e) Perform the WTC production setting, see Production settIng I/P Transducer.

Production settIng I/P Transducer

Machine Status	PRODUCTION

Check the package forming and the design error, and set the pressure range according to the procedure described in Final Setting of the I/P Transducer. See table below.

Pressure range	Volume
0.50 - 1.50	TBA 200S - TBA 125S - TBA 100 B
0.50 - 2.50	All other volumes

TechPub_2614345_0105 - 01_2772107_01.fm

14.7 Filling Control System (FCS)

14.7-1 Filling System - Function Description

Machine Status	Power supply disconnector OFF Air supply OFF Steam supply ON Water supply OFF
SPC Reference	559810-0101

(Cont'd)

TechPub_2614345_0105 - 01_2772108_01.fm

(Cont'd)

Principle

The design of the regulating valve (a constant flow valve) ensures that the product pressure and the product flow from the valve is kept constant (for a specific product). Inside the packaging material tube there is a floater that registers the product level. The position of the floater is detected by the level probe, that gives a corresponding signal to the level regulator TMCC2 card (**A310**). On the TMCC2 card, the LEDs (S8-S4) display the height of the floater. Depending on the incoming level signal and the setting of the card, it will send an electrical signal to the I/P transducer.

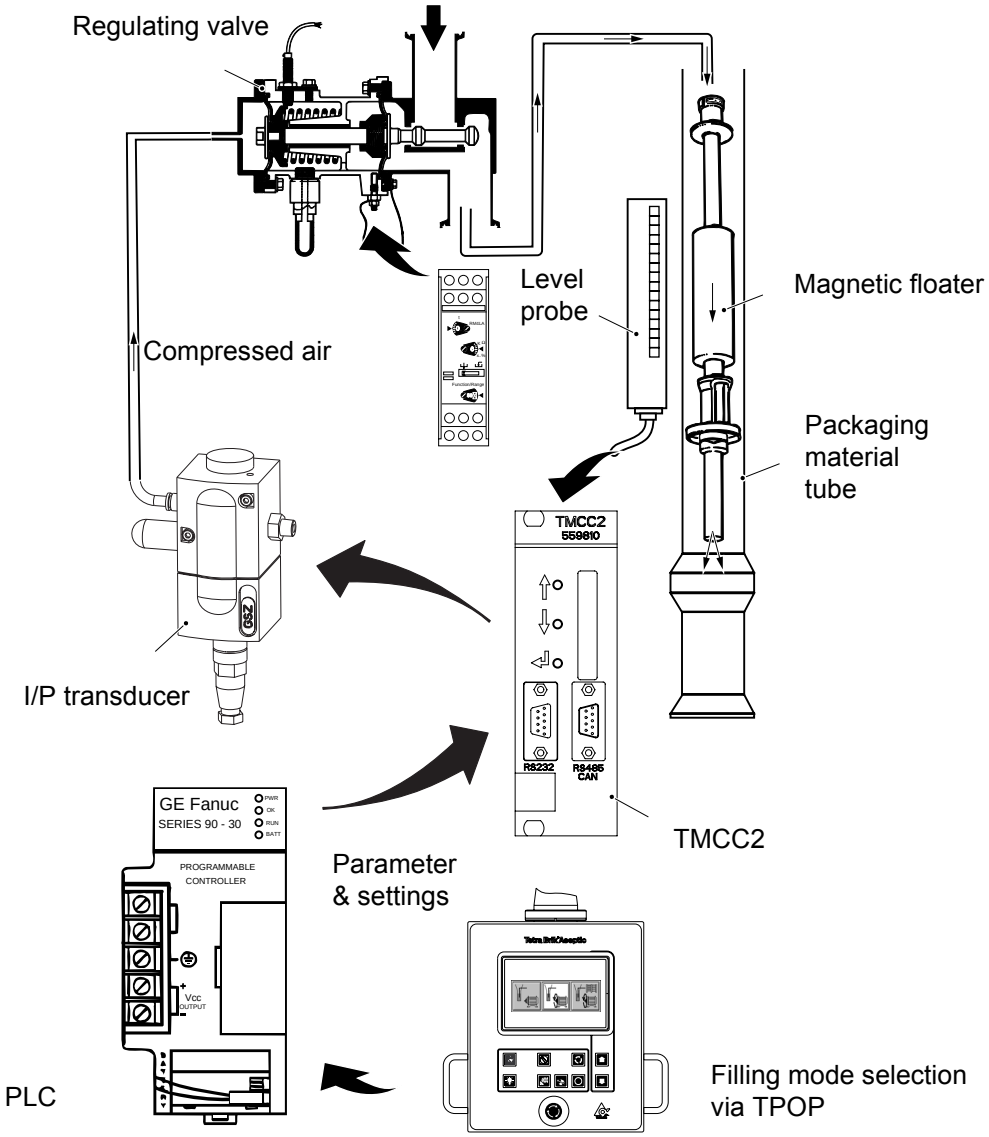

(Cont'd)

TechPub_2614345_0105 - 01_2772108_01.fm

(Cont'd)

The I/P transducer gives an air pressure, corresponding to the received signal, to open the regulating valve which controls the flow. Process-specific parameters are sent from the PLC to the TMCC2. By using the TPOP it's possible to select between three types of starts:

- **pre-filling**: filling of the paper tube while the machine is standing still.
- **normal filling**: filling of the paper tube while the machine is running synchronous with the design.
- **asynchronous filling**: filling of the paper tube while the machine is running.

Some process parameters like Start flow, Production flow and Pre-filling threshold are automatically tuned to adapt the controller to the different products and environments.

(Cont'd)

TechPub_2614345_0105 - 01_2772108_01.fm

(Cont'd)

How to Chose the Filling Mode

The basic parameters to be considered when choosing the proper filling mode are:

- Filled packages or empty packages wasted during machine start
- Product line pressure constant or variable
- Low product flow

The graphic below shows how the different possible combinations of waste (filled packages or empty packages) and line pressure are combined to enable to chose the proper filling mode according to the different needs and conditions.

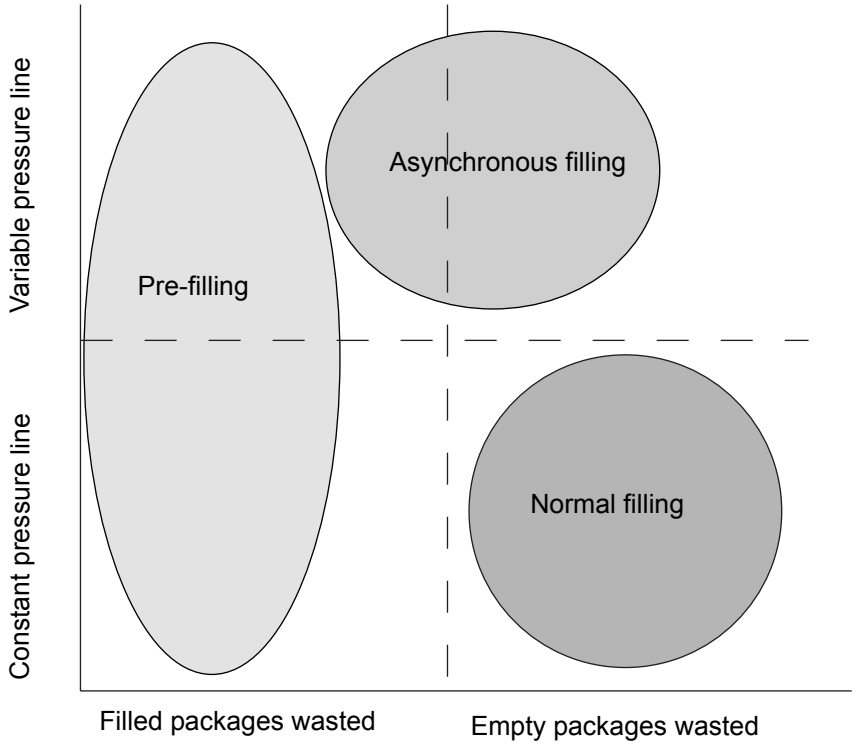

TechPub_2614345_0105 - 01_2772108_01.fm

Note! In case of **low product flow** (the flow is just sufficient to fill the packages) **Pre-filling** mode has to be chosen

(Cont'd)

(Cont'd)

Leakage Detector

A leakage detector detects faults in the membrane of the regulating valve. The membrane is made of two different layers. The first layer is in contact with the product, the second is conductive.

If the first layer breaks, the leakage detector is activated. The alarm signal will thereby occur **before** a leakage occurs. Immediately change membranes in the regulating valve, see 1.2.2-1 RegulatIng Valve - Overhaul.

TMCC2 Panel Display

The buttons UP (1), DOWN (2), ENTER (3) and the display/LED (4) are located on the front panel of the TMCC2, and are used to select one of several program functions.

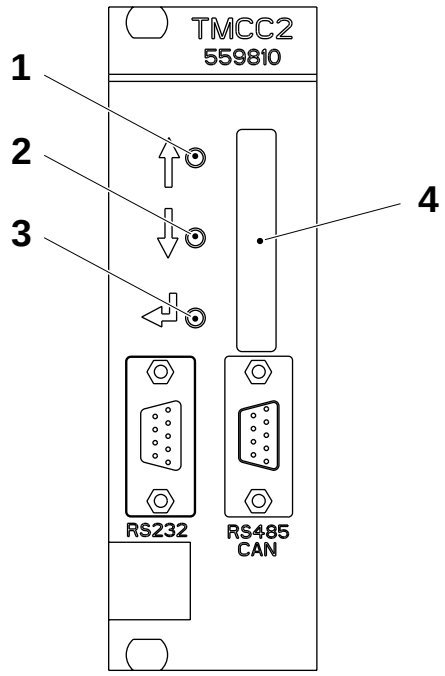

1 UP button
2 DOWN button
3 ENTER button
4 Display/LED

The display (4) is used for the following purposes:

- When the TMCC2 is idle the display (4) shows program information.
- When the TMCC2 is working the display (4) is used as LEDs to display the operation of the TMCC2.
- When you push any of the buttons (1), (2), (3) the display (4) is used to navigate through a menu structure that allows you to set up the TMCC2.

(Cont'd)

TechPub_2614345_0105 - 01_2772108_01.fm

(Cont'd)

TMCC2 LED Display

The display, used as LEDs, provide the following information when the machine is **ON**.

Note! In floater calibration, section 14.7-8 Filling System - Floater Calibration indicates the floater position.

During the parameter transmission all the LEDs from S1 to S8 are ON and turn OFF when the transmission is completed without any errors by touching the **RESET BUTTON** in the filling mode selection window, see OM section TPOP display section for details.

Note! If during production the LED S8 or S4 flash (because of wrong product level) the product flow is stopped.

LED	Function	Description
S1	Production	Flashes during normal or pre-filling starts. Always **ON** during PRODUCTION.
S2	Cleaning	Always **ON** during CLEANING.
S3	Sterilization	Always **ON** during STERILIZATION.
S4	Level	Flashes if a high level alarm occurs. Lights if the level is bigger than 83%.
S5	Level	Lights if the level is bigger than 66%.
S6	Level	Lights if the level is bigger than 50%.
S7	Level	Lights if the level is bigger than 33%.
S8	Level	Flashes if a low level alarm occurred. Lights if the level is bigger than 16%.

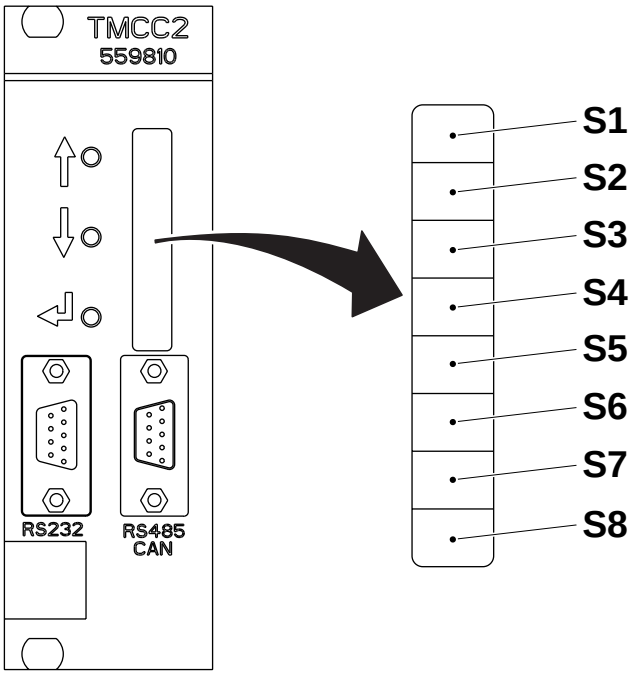

(Cont'd)

TechPub_2614345_0105 - 01_2772108_01.fm

(Cont'd)

TMCC2 Menu System

By pushing any button on the TMCC2 you enter the first level of the menu. Then you use the arrow buttons to select an item and the ENTER button to access the sub-menus to that item.

Menu Level				
1	**2**	**3**	**4**	**Description**
FILL WND				Filling OK window menu
	Wnd=±XX%			Set the filling window
STR TIME				Filling start time set point parameter
	TIME=XXX			Set the value (*0,1 sec.)
SETUP HI				Floater calibration: from half to top stroke
SETUP LO				Floater calibration: from bottom to half stroke
BACK				Exit from the menu

Note! This value XX=XX in the table can be changed by using the UP and DOWN push buttons and the storage is performed after pressing the ENTER push button.

For further details on floater calibration, see 14.7-8 Filling System - Floater Calibration.

For further details on Filling OK, see 14.7-10 Filling System - Set Filling Window.

TechPub_2614345_0105 - 01_2772108_01.fm

14.7-2 Filling System - Setting Sequence

Machine Status	Power supply disconnector OFF Air supply OFF Steam supply ON Water supply OFF
SPC Reference	559810-0101

If a complete setting of the filling system has to be carried out, follow the sequence below.

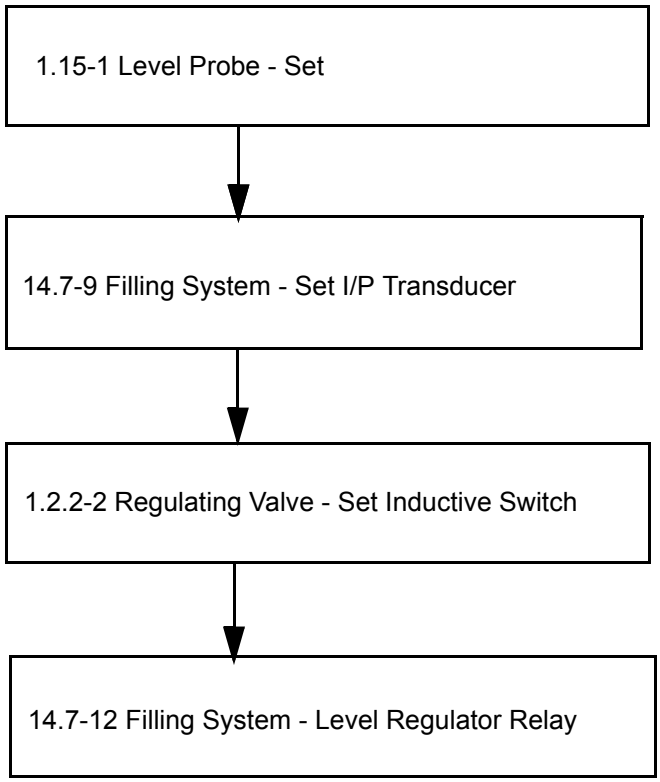

TechPub_2614345_0105 - 01_2772108_01.fm

14.7-3 Filling System - Set Communication

Machine Status	Power supply disconnector OFF Air supply OFF Steam supply ON Water supply OFF
SPC Reference	559810-0101

See chapter 14.6-2 MDCS - Set Communication.

14.7-4 Filling System - Display Report

Machine Status	PRODUCTION
Special Equipment	AT-compatible PC TMCC2 connection cable
SPC Reference	559810-0101

Configure a PC to be used as Windows terminal and connect it to the TMCC2, see 14.7-3 Filling System - Set Communication.

Enter the commands and parameters into the FCS program via the keyboard and execute them by pressing the <RETURN> key. (The commands and parameters are not replicated on the terminal). The functions described below are available:

(Cont'd)

TechPub_2614345_0105 - 01_2772108_01.fm

(Cont'd)

Pnnn	This command changes the proportional factor of the PID algorithm only during the production phase. The proportional factor is automatically changed after 30 seconds from the production start to reach the steady proportional factor. If the level exits from the filling OK window, during the change, (set by the menu system), the default values, downloaded from the PLC, are automatically restored.
Innn	This command is equivalent to the Pnnn command but for the integral factor.
Dnnn	This command is equivalent to the Pnnn command but for the derivative factor.
Qnnn	This command changes the **Start** flow parameter. It is stored in the internal EEPROM and is used by the future start sequences.
Gnnn	This command changes the Production flow parameter. It is stored in the internal EEPROM and is used by the future production sequences.
Cnnn	This command changes the Cleaning flow parameter. It is restored to the value downloaded from the PLC at power on or reset.
Bnnn	This command changes the Sterilisation flow parameter. It is restored to the value downloaded from the PLC at power on or reset.
Lnnn	This command changes the Set point level parameter. The value introduced is in the range 0-1000 that corresponds to 0-100%. It is restored to the value downloaded from the PLC at power on or reset.
Mnnn	This command changes the Minimum output parameter. The value introduced is in the range 0-255. It is restored to the of 52 (corresponding at 4 mA) or 0 at power on or reset.
Unnn	This command changes the Pre-filling threshold level parameter. The value introduced is in the range 0-1000 that corresponds to 0-100%. It is stored in the internal EEPROM and is used by the future start sequences.
Fnnn	This command forces the analog output to a certain value which is nnn. F0 resets the forcing: F0Reset (disable) output force. F1Force to output = 1. F2Force to output = 2. F255Force to output = 255.

(Cont'd)

TechPub_2614345_0105 - 01_2772108_01.fm

(Cont'd)

Rn	Reporting **ON/OFF**. This command enables and disables the automatic reporting of the level, filtered level and output. The reporting is activated only when the production signal or the prefilling signal are **ON**. **R0** Disable reporting. **R1** Enable reporting is in the form of three columns on the screen of the terminal. **R2** Enable reporting in the form of a chart on the screen of the terminal. (N.B. Disabled with **R0** end of reporting) The output value column is changed according to the conditions below: 1) Start Flow + Minimum Output(start filling from empty tube) 2) 90% Prod. Flow + Minimum Output (start prefilling) 3) 110% Prod. Flow + Minimum Output (start with already filled tube) 4) Prod. Flow + PID + Minimum Output (production) Note: Minimum Output = 52 (type of output 4-20 mA) Minimum Output = 0(type of output 0-20 mA or 0-10 V)

SThis command sends the status of the cards and the value of the current parameters to the terminal screen:

```
**** Filling controller status ****

Output status                  = Normal
P constant                     = 24.00
I constant                     = 40.00
D constant                     = 100.00
Start flow                     = 50
Production Flow                = 47
Cleaning flow                  = 255
Sterilisation flow             = 126
Minimum output                 = 0
Mean Production Flow           = 47
Set point  (0-1000)            = 400
PreFilling (0-1000)            = 200
Prefil. Start Flow             = 40
Starting Level                 = 71
Current Level*                 = 71
Max Level                      = 720
Start time [* 0.1 s]           = 45
Prefilling time [* 0.1 s]      = 32

* The current level value must be > 32, if not the
LED S8 in TMCC2 flashes
```

(Cont'd)

TechPub_2614345_0105 - 01_2772108_01.fm

(Cont'd)

XThis command sends the current configuration of the cards on the screen.

```
******* Filling controller configuration *******

Type of output                    = 0-10V or 4-20mA
PreFillingMode                    = OFF
Autotuning on Prefilling level    = OFF
Autotuning on Production Flow     = ON
Autotuning on Start Flow          = ON
FCMM                              = ON
PID Trigger on                    = Level
PID Trigger level                 = 150
Filling OK window                 = 100
Steady P constant                 = 6
Steady I constant                 = 20
Steady D constant                 = 1
Stabilisation Time (*10ms)        = 150
FCS Start time set point[* 0.1 s] = 70
Stabilisation flow ratio (%)      = 110
Low speed flow ratio (%)          = 75
```

HThis command sends help provided by the available commands on the terminal screen.

```
******************** Help menu ********************

p<value> changes the proportional factor
i<value> changes the integral factor
d<value> changes the derivative factor
q<value> changes the start flow
g<value> changes the production flow
c<value> changes the cleaning flow
b<value> changes the sterilisation flow
m<value> changes the minimum output value
l<value> changes the set point expressed (1/1000)
u<value> changes the prefilling level (1/1000)
f<value> force the analog output (0=No forcing)
r<value> 0=report Off  1=report On  2=chart On
s        send the status of the card
x        send the configuration of the card
h        show the available commands
```

TechPub_2614345_0105 - 01_2772108_01.fm

14.7-5 Filling System - Load Program

Machine Status	PRODUCTION
Special Equipment	Communication cable RS 232-C AT-compatible PC with floppy disc drive
SPC Reference	559810-0101

a) Configure a PC to be used as a Hyperterminal and connect it to the TMCC2, see 14.7-3 Filling System - Set Communication.

b) Connect the communication cable between the PC and the TMCC2 front panel connector (1).

c) Type **Stop** and press the ENTER key.

d) For the card **A310**, insert the program disc marked **"2589442-xxxx"** into the PC floppy disc drive.

Note! The **x** corresponds to the current program revision.

e) Type **E flash** and press the ENTER key.

f) When the TMCC2 prompt appears ("TMCC2->"), type **D** and press the ENTER key.

g) Select menu **Transfers** and menu item **Send text file**.

h) Locate the file **"2589442.1xxx"** to be downloaded.

i) The downloading progress is displayed with dots on the screen.

j) At the TMCC2 prompt type **Run** and press the ENTER key.

k) Press the **S** key to verify the downloaded programs status.

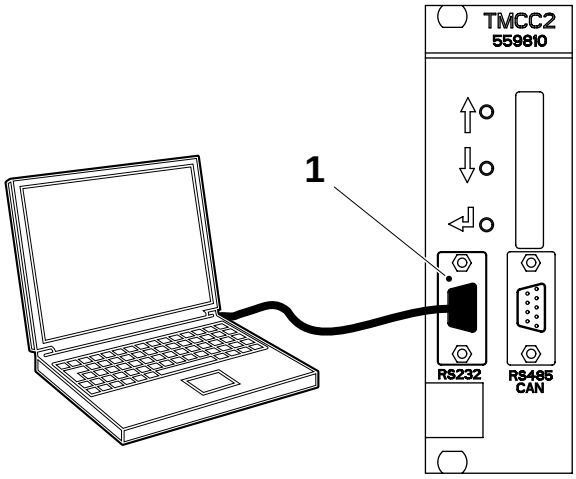

1 TMCC2 front panel connector

TechPub_2614345_0105 - 01_2772108_01.fm

14.7-6 Filling System - Check First Package

Machine Status	PRODUCTION
SPC Reference	559810-0101

- Pick out the first package inched out of the final folder.
- Check the weight of the package to make sure that it is filled

14.7-7 Filling System - Check Parameters

Machine Status	Power supply disconnector OFF Air supply OFF Steam supply ON Water supply OFF
SPC Reference	559810-0101

Check the following items in the filling system and verify their functions:

- the magnetic floater, see 1.15-1 Level Probe - Set
- the level probe, see 1.15-1 Level Probe - Set
- the regulating valve, see 1.2.2-2 Regulating Valve - Set Inductive Switch
- the I/P transducer, see 14.7-9 Filling System - Set I/P Transducer.

TechPub_2614345_0105 - 01_2772108_01.fm

14.7-8 Filling System - Floater Calibration

Machine Status	Power supply disconnector ON Air supply ON Steam supply ON Water supply OFF
SPC Reference	559810-0101

The FCS19 program has implemented the function of the floater calibration. This function is enabled by TMCC2 (**A310**) buttons, see TMCC2 Panel Display at page 14-111 for description. It is also required to connect a voltmeter to the terminal connections 3 on 2 (analog inputs) on the back plane of the level regulator TMCC2 card. The calibration can be done in the following steps:

Note! This procedure is not applicable during PRODUCTION.

a) Set up the machine to PREHEATING I.

b) Use the UP and DOWN buttons on the TMCC2 card to select **SETUP LO** and press the ENTER button.

c) Ensure that if the floater is not installed, all the front panel LEDs are off and the voltage is 0V.

d) Install the floater and move it slowly from the bottom to a half stroke. Check to see if the LEDs are turned ON sequentially from S8 to S1 according to the floater position. Check to see if the voltage increases linearly from 0V-5V. If the checking fails, adjust the floater position according to 1.15-1 Level Probe - Set

e) Press ENTER on the TMCC2 card.

f) Use the UP and DOWN buttons on the TMCC2 card to select **SETUP HI** and press the ENTER button.

g) Slowly move the floater from a half stroke to the top. Check to see if the LEDs turn on sequentially from S8 to S1 according to the floater position. Check to see if the voltage increases linearly from 5V-10V. If the checking fails, adjust the floater position according to 1.15-1 Level Probe - Set.

h) When the calibration procedure is finished exit the TMCC2 program by pressing ENTER, selecting **BACK** and pressing the ENTER button.

TechPub_2614345_0105 - 01_2772108_01.fm

14.7-9 Filling System - Set I/P Transducer

Machine Status	PREHEATING I
SPC Reference	90458-1092

a) Remove the rubber cover (1) to display the three trimmers **Z**, **S** and **G**.

CAUTION
Risk of damage to equipment.
Be careful not to damage the trimmers with the screw driver.

b) Turn the gain trimmer **G** (2) fully to the left.

c) Set the pressure for the regulating valve on the pressure gauge (3) to **0.1** bar using the trimmer **Z** (4).

d) Step up the machine to PREHEATING II.

Note! See TMCC2 LED Display at page 14-112 for LED description.

e) LED **S3** on TMCC2 card (5) **A310** is ON (Output sterilisation). On the back plane of the TMCC2 card **A310** connect a voltmeter between pin 5 and pin 2 (analogue output). Make sure that the voltage is **5V**.

f) Make sure that the pressure on the pressure gauge (3) is **2** bar. If necessary, adjust by using the trimmer **S** (6).

g) Repeat items from c) *to* f) if necessary.

h) Turn the service switch to ON and step up the machine to step DRYING.

i) LED **S2** TMCC2 card (5) **A310** is ON (Output cleaning). Check that the pressure on the pressure gauge (3) is at least **4.0** bar.

j) Put the rubber cover (1) back.

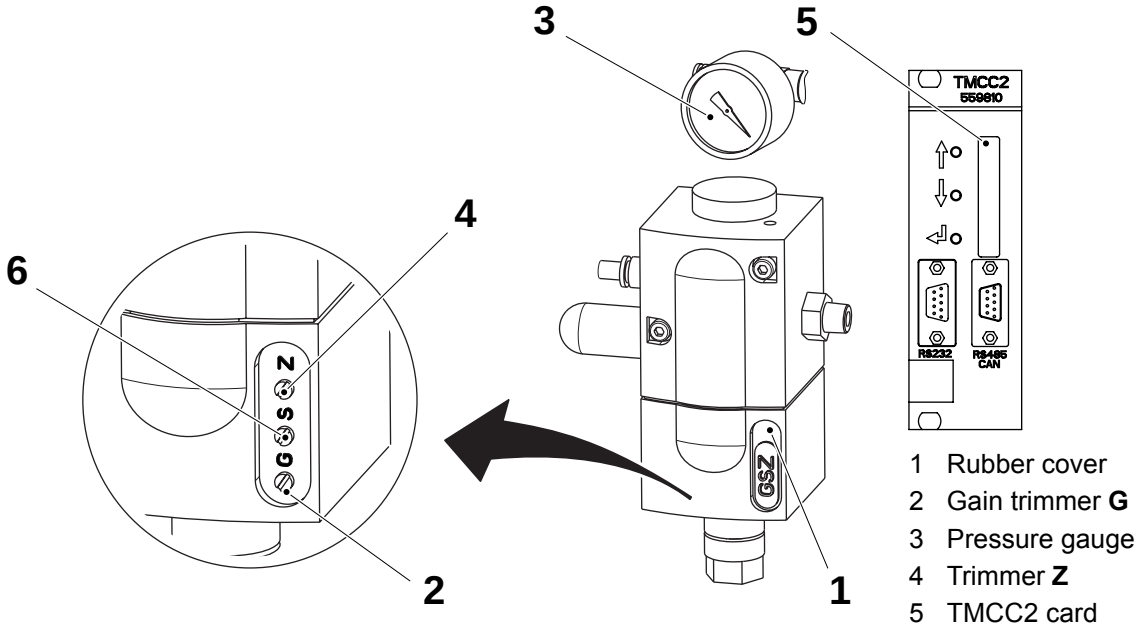

1 Rubber cover
2 Gain trimmer **G**
3 Pressure gauge
4 Trimmer **Z**
5 TMCC2 card
6 Trimmer **S**

TechPub_2614345_0105 - 01_2772108_01.fm

14.7-10 Filling System - Set Filling Window

Machine Status	Power supply disconnector ON Air supply OFF Steam supply ON Water supply OFF
SPC Reference	559810-0101

The pre-set value that sets the amplitude of the **FILLING OK WINDOW** can be changed as described below. In this way it is possible to change the value in steps of 1% around the set point valve.

Note! The pre-set value is 10%.

Note! See TMCC2 Panel Display at page 14-111 for TMCC2 description.

a) Use the UP and DOWN buttons to select **FILL WIND**, press ENTER.

b) Adjust as required using the UP and DOWN button. Exit the TMCC2 program, see TMCC2 Menu System at page 14-113.

14.7-11 Filling System - Filling Mode Selection

Machine Status	DRYING
SPC Reference	559810-0101

The default filling parameters for the TMCC2 card are set for water.

Remember that every time a **lower** viscosity product is going to be used, the parameters of the TMCC2 card must be reset. This can be done by touching the RESET button **(1)** in the filling mode selection window, see OM section TPOP display section for details.

When the data transfer is completed, all the LEDs on the TMCC2 card turn off (approximately within 10 seconds).

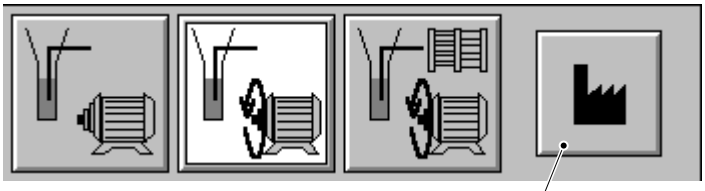

1 RESET button

(Cont'd)

TechPub_2614345_0105 - 01_2772108_01.fm

(Cont'd)

Normal Filling Mode

Machine Status	READY FOR PRODUCTION

Note! If the previous filling sequence was performed in five to seven seconds, the machine begins normal filling. On the contrary, the machine begins asynchronous filling.

Note! See TMCC2 LED Display at page 14-112 for LED description.

a) The STEP UP button flashing at high frequency and shows that the machine is about to start in the NORMAL FILLING mode.

b) When the machine is in the FILLING step, the S1 LED flashes. After the level has reached the set-point, the S1 LED remains ON to indicate the production status.

c) When the correct setting is reached, the level indicator displays a level of 30 - 50% and the S6 and S7 LEDs flash.

Note! If lower filling pipe alarm flashes after NORMAL START and the machine discharges 50 packages, verify the product line pressure.

When the machine is in the NORMAL FILLING mode, the sequence is as follows:

a) it runs the defined waste packages

b) the register code is in a certain angular position

c) it begins to fill the paper tube

In this way the filling is synchronised with the sharing of the decor position. This is the quickest way to start the machine and is recommended when the product line pressure is stable.

(Cont'd)

TechPub_2614345_0105 - 01_2772108_01.fm

(Cont'd)

Asynchronous Filling Mode

Machine Status	READY FOR PRODUCTION

All listed items from (a-c) are valid also for the ASYNCHRONOUS FILLING mode.

In the ASYNCHRONOUS FILLING mode, the machine begins to fill the paper tube immediately after the last waste package. The decor position is enabled only after the filling has been completed. This ASYNCHRONOUS mode is recommended when the product line pressure is more unstable (usually when several filling machines are connected to the same product line).

Pre-Filling Mode

Machine Status	READY FOR PRODUCTION

Note! See TMCC2 LED Display at page 14-112 for LED description.

The pre-filling function consists of the filling of the paper tube when the machine is at a stand still.

a) The STEP UP button flashing at a low frequency shows that the machine is about to start in the PRE-FILLING mode.

b) When the machine is pre-filling the paper tube (Step-up push button depressed), the S1 LED flashes and the filling symbol on the control panel is ON. After the level has reached the set-point, the S1 LED remains ON to indicate the production status and the main motor starts.

c) If the level does not rise at the first attempt after a product change, inch the machine (see the following page) and restart it again. The TMCC2 card automatically tunes the filling parameters according to the product.

d) When the correct setting is reached, the level indicator displays a level of 30 - 50% and the S6 and S7 LEDs flash.

(Cont'd)

TechPub_2614345_0105 - 01_2772108_01.fm

(Cont'd)

Note! You **cannot** start the machine in the PRE-FILLING mode under the following circumstances:

- when the machine has been stopped for more than 5 minutes in NORMAL STOP and SHORT STOP
- when the C valve is closed (first production start and at the end of production)

PRE-FILLING can be started if the Inching Process has been done previously, to renew packaging material. When the STEP UP button is flashing, it indicates that the correct number of packages has been discharged during inching.

If the PRE-FILLING start sequence is completed after 10 seconds without reaching the pre-filling level threshold, an ASYNCHRONOUS FILLING Mode start sequence is performed to start the machine. This condition is indicated by the lower filling pipe alarm flashing in the control panel.

TechPub_2614345_0105 - 01_2772108_01.fm

14.7-12 Filling System - Level Regulator Relay

Machine Status	Power supply disconnector OFF Air supply OFF Steam supply ON Water supply OFF
SPC Reference	90458-2580

Description

The level regulator relay (RM4-LA) monitors the product level by measuring the change in the resistance of immersed and non immersed electrodes. The relay sensitivity must be set according to the conductivity of the product.

The level regulator parameters are set using the potentiometer and selectors shown in the illustration below:

a) The selector (1) sets the filling/empty functions.

b) The potentiometer (2) fine adjusts the sensitivity as % of the sensitivity range (3).

c) The potentiometer (4) sets the delay.

d) The selector (3) sets ON the level status of the relay and the sensitivity range.

e) The yellow LED (5) lights when the relay is **closed**.

f) The green LED (6) lights when the power is ON.

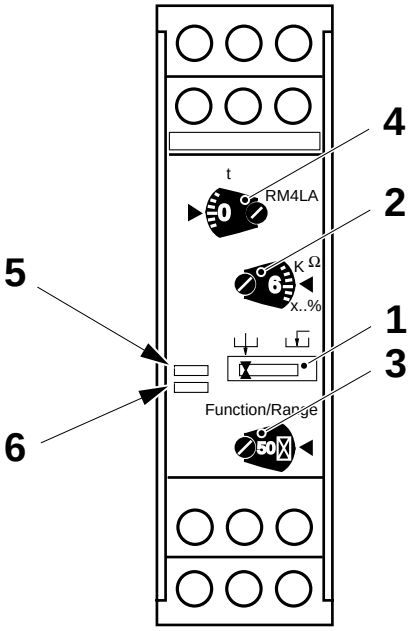

1 Functionality selector
2 Fine adjustment potentiometer
3 Function mode selector and sensitivity
4 Potentiometer
5 Yellow LED
6 Green LED

TechPub_2614345_0105 - 01_2772108_01.fm

Setting

Machine Status	Power supply disconnector ON Air supply OFF Steam supply ON Water supply OFF

Set the display functions using a screwdriver, refer to the table below:

Description		**Function/Range (3)**	**Time value** (4)	**R-value** (2)
Cleaning tray level	A300	50 ☒	0	14
Spray tank level (max.-min.)	A301	50 ☒	0	14
Peroxide bath level	A302	50 ☒	0	14
Water separator level	A303	50 ☒	0	14
Bath water level	A305	50 ☒	0	14
Membrane leakages	A307	500 ☒	0	50
Spray tank HI level	A510	50 ☒	0	14

If necessary, make fine adjustments using the potentiometer (2).

Make sure that the yellow LED lights when the correct level is reached.

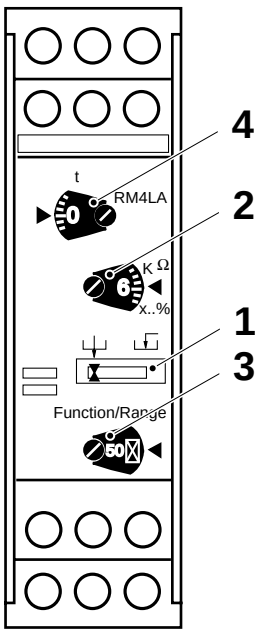

1 Functionality selector
2 Fine adjustment potentiometer
3 Function mode selector and sensitivity
4 Adjustment of timing

TechPub_2614345_0105 - 01_2772108_01.fm

14.8 Frequency Converter

14.8-1 Frequency Converter - Check

Machine Status	Power supply disconnector ON Air supply OFF Steam supply ON Water supply OFF
SPC Reference	90459-3450

Check and, if necessary, set the parameters of the frequency converters described below according to 14.8-2 Frequency Converter - Set on page 14-130:

- Frequency controlled main motor (4) FCMM19
- Frequency converter paper magazine (1)
- Frequency converter ASU free loop (2) (Option, see the separate MM)
- Frequency converter bending roller Web Tension Control (3)
- Frequency converter conveyor (5)
- Frequency converter PT19 infeed free loop (6) (Option, see separate MM)

TechPub_2614345_0105 - 01_2772109_01.fm

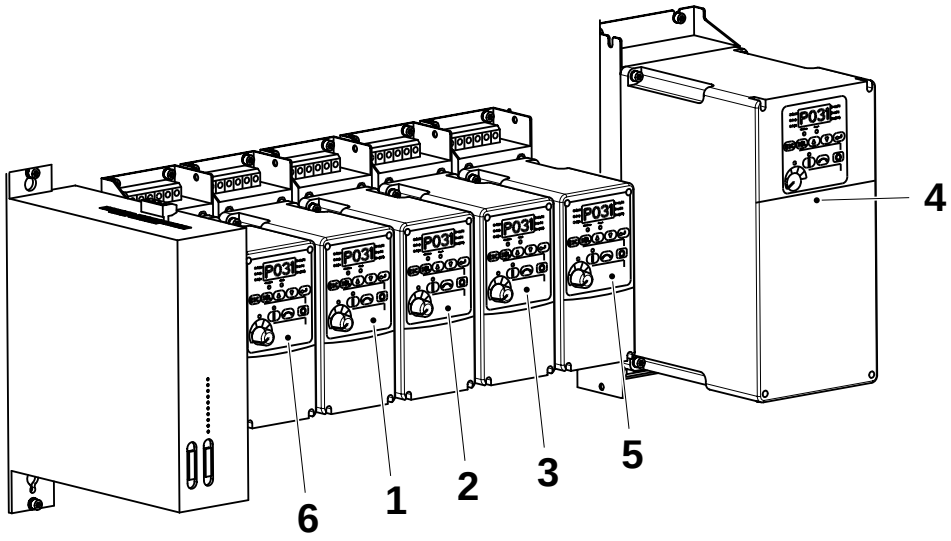

1 Frequency converter paper magazine, PMI
2 Frequency converter ASU free loop (Option)
3 Frequency converter bending roller WTC
4 Frequency controlled main motor FCMM 19
5 Frequency converter conveyor
6 Frequency converter PT19 infeed free loop (Option)

14.8-2 Frequency Converter - Set

Machine Status	PREHEATING I
SPC Reference	90459-3450

a) When the power is switche on, press the ESC button (6) to enter the menu.

b) Press the SELECT button (1). The display (4) shows d002 (letter d is flashing). There are 3 groups of menu: d, P and A, see table below. To enter one of them, proceed as follow.

c) Press UP (2) or DOWN button (3) to change the group. Press ENTER button (5) to enter the group.

d) Select the parameter to set (see table below for all the inverters) using the UP button (2) or the DOWN button (3).

e) Press the ENTER button (5) to view the value of the parameter currently selected.

f) Press the UP button (2) or the DOWN button (3) to change the value of the parameter.

g) Press the ENTER button (5) to confirm the values.

h) Press the ESC button (6) to go back to the other paramenters.

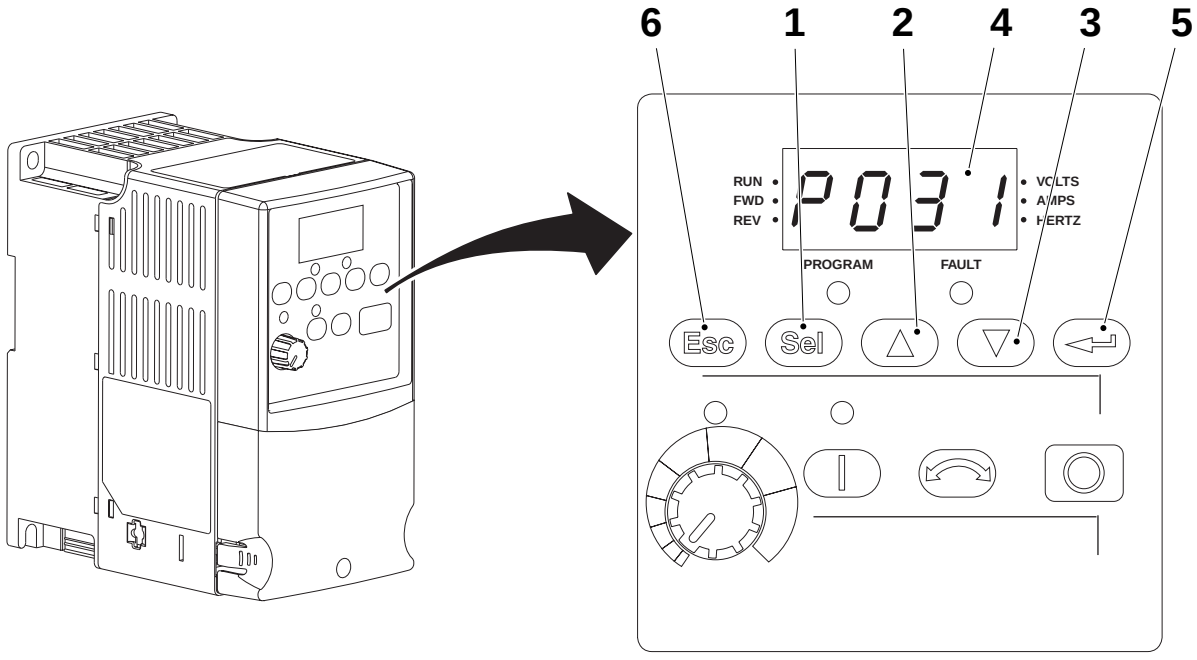

1 SELECT button
2 UP button
3 DOWN button
4 Display
5 ENTER button
6 ESCAPE button

(Cont'd)

TechPub_2614345_0105 - 01_2772109_01.fm

(Cont'd)

i) Set the inverter values for all the parameters, see the table below.

j) When the setting is finished, press the ESCAPE button (6).

Note! Make sure that the inverters are always in the FWD mode, see LED (7). If not press the REVERSE button (8).

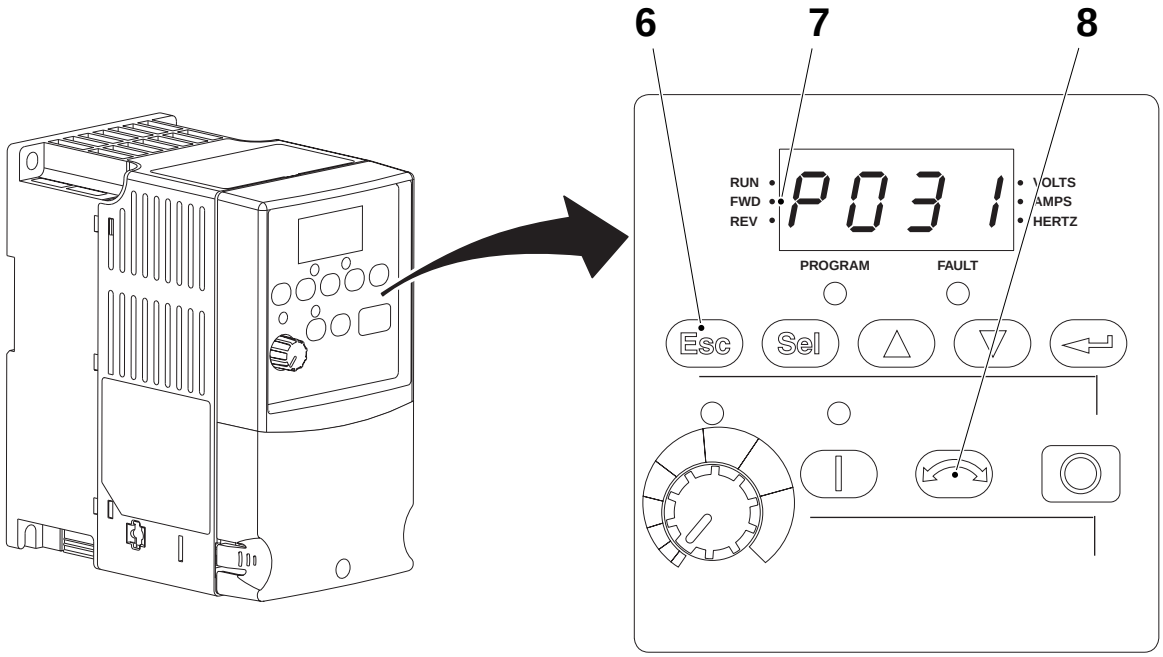

6 ESCAPE button
7 LED
8 REVERSE button

(Cont'd)

TechPub_2614345_0105 - 01_2772109_01.fm

(Cont'd)

Table for Customised Inverters Values

Note! For parameters not included in the table, choose the default value. See the enclosed “Rockwell” manual for details.
For the frequency converters specific for optional equipment, see the separate MMs.

Display group

Parameter	Function
d001	Output Freq
d002	Commanded Freq
d003	Output Current
d004	Output Voltage
d005	DC Bus Voltage
d006	Drive Status
d007	Fault 1 Code
d009	Fault 2 Code
d010	Fault 2 Code
d011	Process Display
d012	Control Source
d013	Contrl in Status
d014	Dig in Status
d015	Comm in Status
d016	Control SW Ver
d017	Drive Type
d018	Elapsed Run Time
d019	Testpoint Data
d020	0-10V Analog Input
d021	4-20mA Analog Input

(Cont'd)

TechPub_2614345_0105 - 01_2772109_01.fm

(Cont'd)

Basic program group

Parameter	Function	Default	Main Motor (4)	WTC (2)	PMI (6)	Conveyor (3)
P031	Motor NP Volts	*	400	230	230	230
P032	Motor NP Hertz	60	50	50	50	50
P033	Motor OL Current	*	10,9	1,2	1,2	1,1
P034	Minimum Freq	0				
P035	Maximum Freq	60	51	50	50	50
P036	Start Source	0	2	2	2	2
P037	Stop Mode	0		1	1	1
P038	Speed Reference	0	4	3	3	4
P039	Accel Time 1	10	1	0,1	0,2	1
P040	Decel Time 1	10	0,9	0,5	0,2	1
P041	Reset To Defaults	0				

Advanced Program group

Parameter	Function	Default	Main Motor (4)	WTC (2)	PMI (6)	Conveyor (3)
A051	Digital In1 Sel	4	1	0	0	
A052	Digital In2 Sel	4		0	0	
A053	Digital In3 Sel	4		**	**	**
A055	Relay Out Sel	0				
A056	Relay Out Level	0,0				
A067	Accel Time 2	20	0,9			
A068	Decel Time 2	20	5			
A069	Internal Freq	60				
A070	Preset Freq 0	0				50,0
A071	Preset Freq 1	5	13,5			
A072	Preset Freq 2	10	49,5			
A073	Preset Freq 3	20	40,1			
A078	Jog Frequency	10				
A079	Jog Accel/Decel	10				
A080	DC Brake Time	0,0				

(Cont'd)

TechPub_2614345_0105 - 01_2772109_01.fm

(Cont'd)

Parameter	Function	Default	Main Motor (4)	WTC (2)	PMI (6)	Conveyor (3)
A081	DC Brake Level	*				
A082	DB Resistor Sel	0				
A083	S Curve %			25		
A084	Start Boost	8				
A088	Maximum Voltage	*				
A089	Current Limit	*				
A090	Motor OL Select	0				
A091	PWM Frequency	4,0				
A092	Auto Rstrt Tries	0				1
A093	Auto Rstrt Delay	1				0
A094	Start At Power Up	0				1
A095	Reverse Disable	0	1	1	1	1
A096	Flying Start En	0				0
A097	Compensation	1				
A098	SW Current Tip	0,0				
A099	Process Factor	30,0				
A100	Fault Clear	0				
A101	Program Lock	0				
A102	Testpoint Sel	400				
A103	Comm Data Rate	3				
A104	Comm Node Addr	100				
A105	Comm Loss Action	0				
A106	Comm Loss Time	5,0				
A107	Comm Format	0				
A110	0-10V Analog Input Low	0,0				
A111	0-10V Analog Input High	100				
A112	4-20mA Analog Input Low	0,0				
A113	4-20mA Analog Input High	100				
A114	Slip Compensation	2,0				

* Different depending on Drive Amps.
** Not possible to set.

TechPub_2614345_0105 - 01_2772109_01.fm

14.9 TPOP

14.9-1 TPOP - PLMS Functional Description

Machine Status	Power supply disconnector OFF Air supply OFF Steam supply ON Water supply OFF
SPC Reference	2518145-0101 2518146-0100

PLMS

PLMS (Packaging Line Monitoring System) is a system for collecting data from filling machines and production lines for analysis.

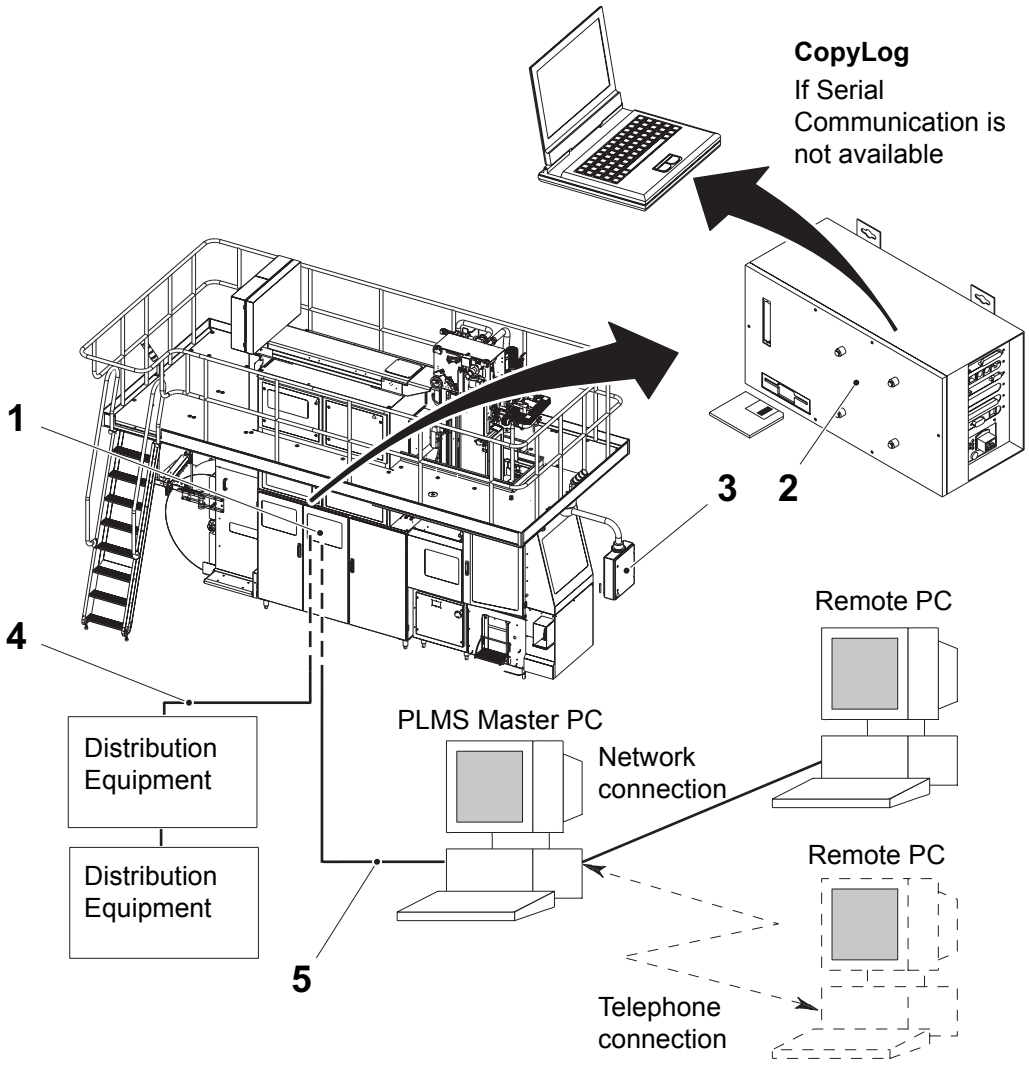

1 PLC
2 Flexbox
3 Touch screen
4 Line supervision
5 Serial communication

(Cont'd)

TechPub_2614345_0105 - 01_2772110_01.fm

(Cont'd)

Flexbox

The flexbox is the heart of the TPOP system. It contains a computer with the TPOP and PLMS software and all the connections needed for communicating with the rest of the system.

- Parallel port (1): used for the licence key
- Mouse (2): connects a mouse to the flexbox
- Int. network (3): used for communication with the PLC (connected to the ethernet switch)
- Keyboard (4): connects a keyboard to the flexbox
- COM4 (5): line supervision
- Ext. network (6): external network (not used)
- CD connector (8): connects a CD reader to the flexbox. The CD reader can be attached to the component door using the knobs (7)

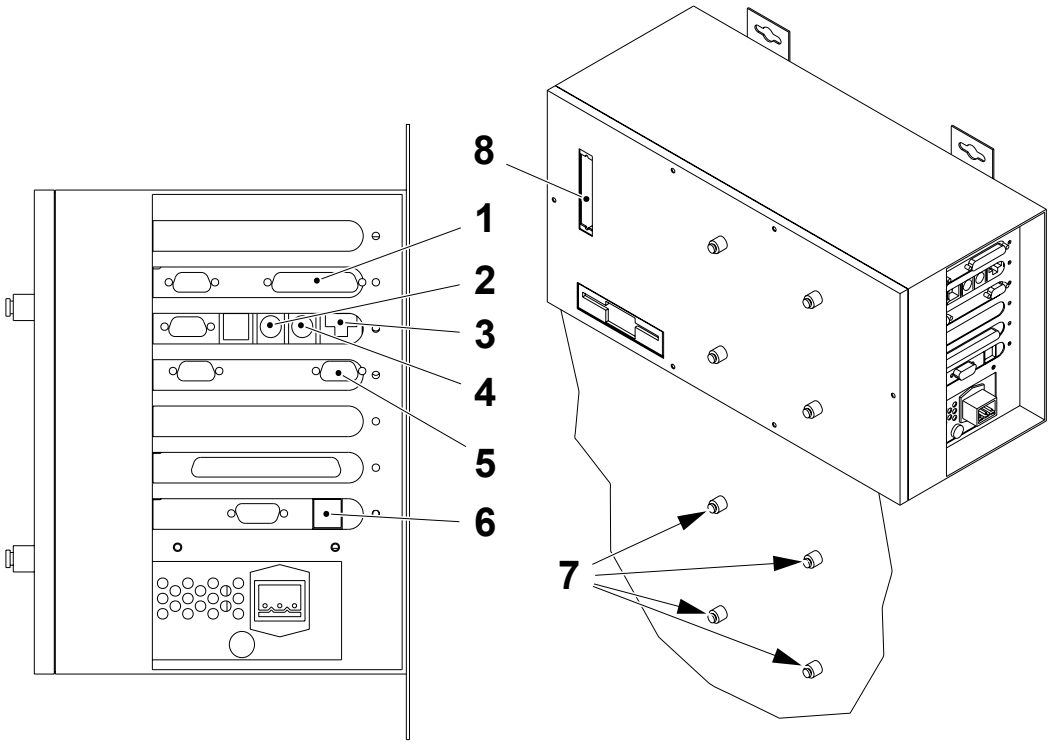

TechPub_2614345_0105 - 01_2772110_01.fm

1	Parallel port	5	COM4
2	Mouse	6	Network
3	Network	7	Knob
4	Keyboard	8	CD connector

(Cont'd)

(Cont'd)

- LVDS port (9): connects the TPOP to the flexbox
- USB (10): not used
- Monitor (11): connects an external monitor to the flexbox
- COM1 (12): serial communication
- Advantec (13): this connector replicates COM5-COM8
  - P1=COM5
  - P2=COM6
  - P3=COM7
  - P4=COM8
- COM3 (14): PAM communication.

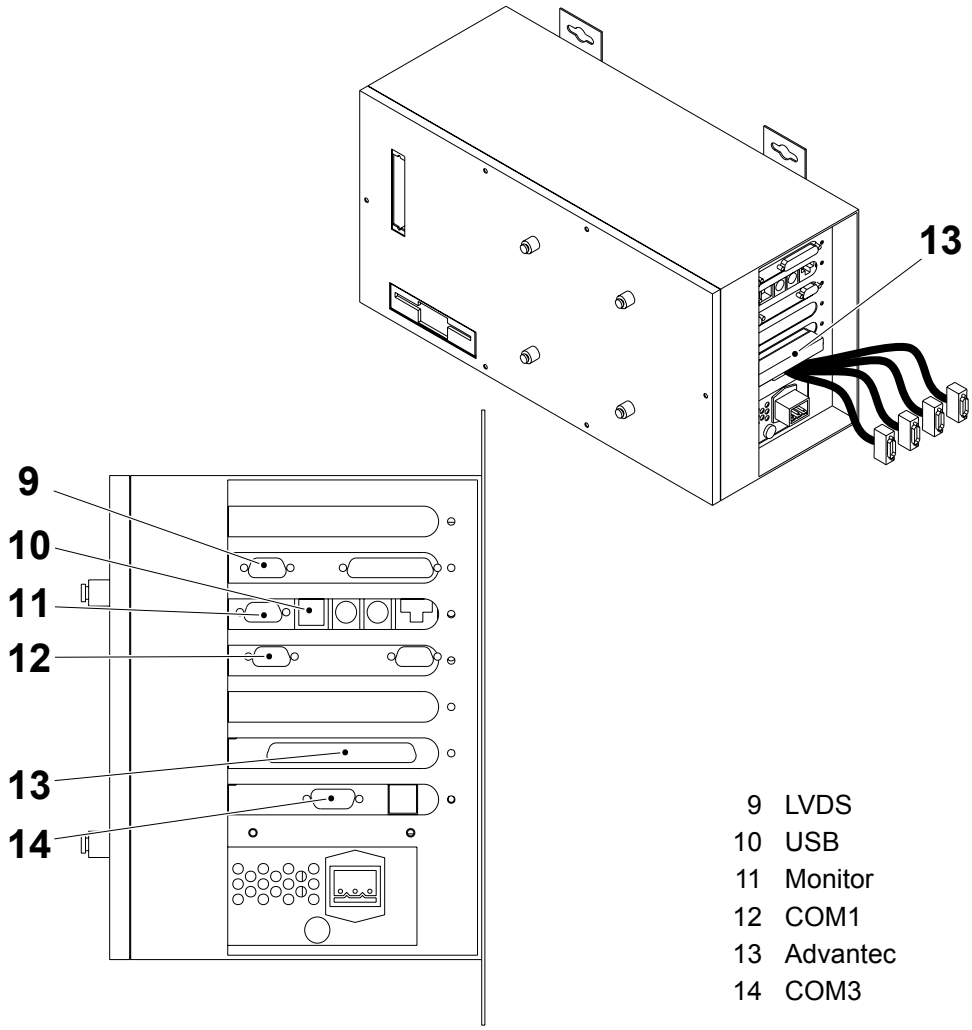

9 LVDS
10 USB
11 Monitor
12 COM1
13 Advantec
14 COM3

TechPub_2614345_0105 - 01_2772110_01.fm

14.9-2 TPOP - Change Display Unit

Machine Status	Mains Power OFF Air OFF Steam ON Water OFF
SPC Reference	2518146-0100

a) Open the door at the rear of the control panel (1) using a key in the two keyholes (2).

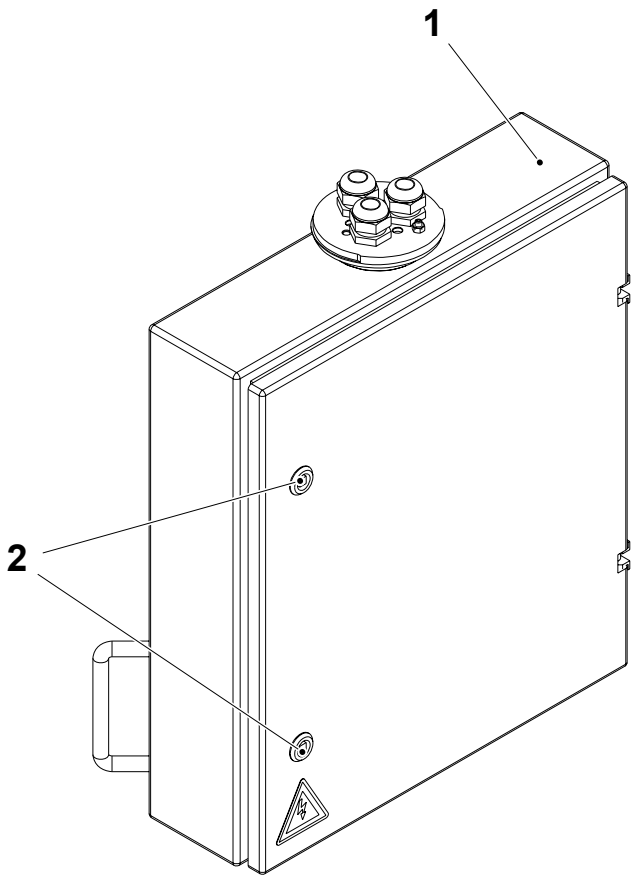

1 Control panel
2 Keyhole

(Cont'd)

TechPub_2614345_0105 - 01_2772110_01.fm

(Cont'd)

b) Remove the screws (3) and the cover (4).
c) Release the clamps (5) and remove the connection wires (6).
d) Remove the six nuts (7) and remove the display unit (8).
e) Install the new display unit and assemble in the reverse order,
f) Adjust the display, if necessary, see 14.9-3 TPOP - Adjust Display.

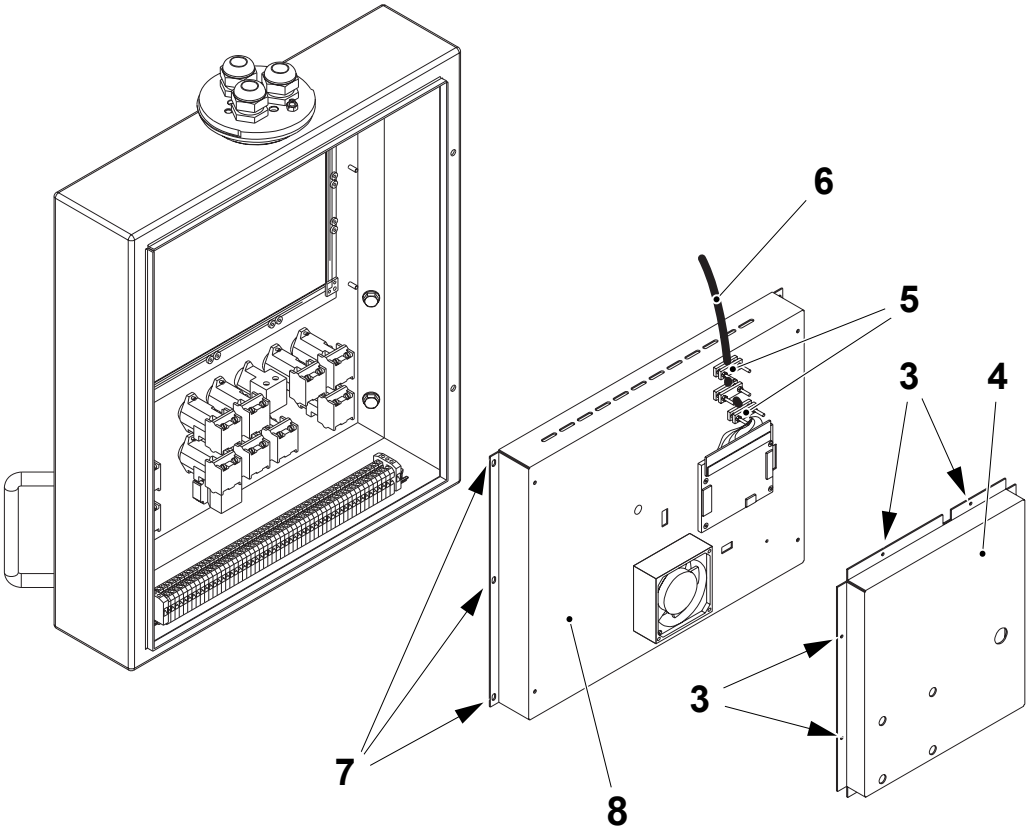

3 Screw
4 Cover
5 Clamp
6 Connection wire
7 Nut
8 Display unit

TechPub_2614345_0105 - 01_2772110_01.fm

14.9-3 TPOP - Adjust Display

Machine Status	Mains Power ON Air OFF Steam ON Water OFF
SPC Reference	2518146-0100

a) Open the door at the rear of the control panel (1) using a key in the two keyholes (2).

b) Remove the cover (3).

c) Use the potentiometer (4) to adjust the display on the TPOP.

d) Assemble in the reverse order.

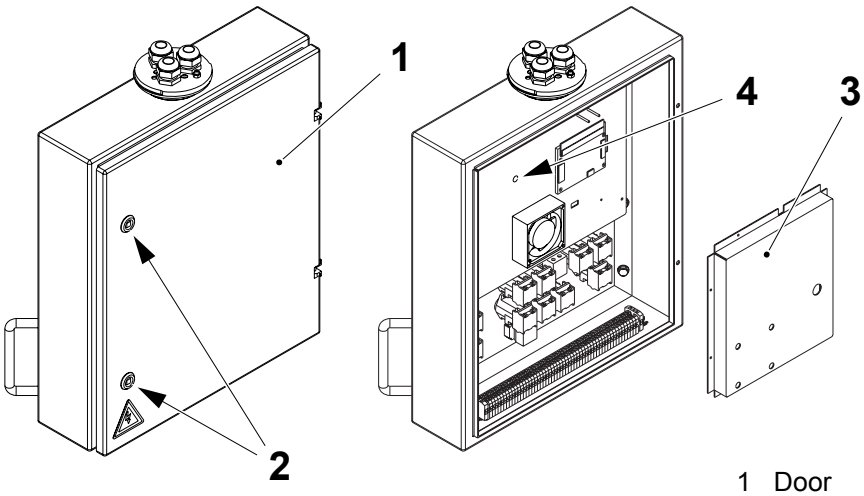

1 Door
2 Keyhole
3 Cover
4 Potentiometer

TechPub_2614345_0105 - 01_2772110_01.fm

14.9-4 TPOP - Copy Data PLMS

Machine Status	Power supply disconnector ON Air supply OFF Steam supply ON Water supply OFF
SPC Reference	2518145-0101

Description

To analyse the data collected by the system, the data must be copied to an office PC. There are two possible methods:

- direct communication between the filling machine and an office PC using the Serial Communication kit (if installed). See the PLMS Send and Receive User Manual for the copying procedures
- manual copying using a floppy disc.

This section only describes how to manually copy the data.

The copied data can be analysed in the office PC utilising the PLMS Off-Line Analysis program. For more informations, see PLMS Off-Line Analysis User Manual.

It is possible to copy different kinds of data for different purposes:

- data files in DBF format. Collected events to be analysed with the PLMS Off-Line Analysis program or any program with the possibility to read database files in DB4 format
- data files in BIN format. Collected events to be analysed with the PLMS Off-Line Analysis program
- PLMS language files with the configuration of the filling machine for all available languages
- TPOP software language files.

Note! The files are compressed into **"xxxxxxx.TGZ"** and can be extracted with the program WinZip.

(Cont'd)

TechPub_2614345_0105 - 01_2772110_01.fm

(Cont'd)

Copy DBF Files

a) Open the LH electrical cabinet door and insert a 1.44 Mb formatted floppy disc into the floppy disc drive.

Note! Make sure that the disc is empty and not write protected.

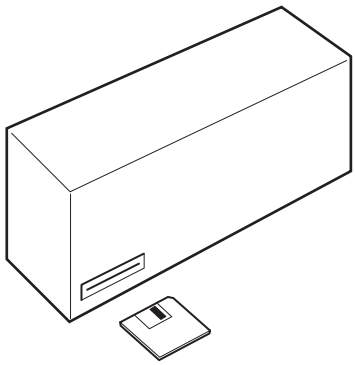

b) Press the COLLECT SYSTEM button (1).

c) Press the COPYLOG button (2).

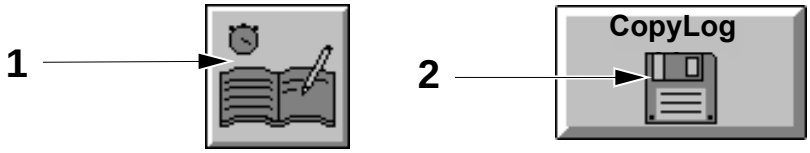

1 COLLECT SYSTEM button
2 COPYLOG button

(Cont'd)

TechPub_2614345_0105 - 01_2772110_01.fm

(Cont'd)

Note! The COPYLOG STARTING DATE button (3) is set by default to the date of the previous download.
The COPYLOG ENDING DATE button (4) is set by default to yesterday's date.

d) Press the OK button (5) to download the following files:
   - evntcode.dbf
   - plmsdata.dbf
   - TBA19_030V.p00 - PLMS config in English
   - TBA19_030V.p** - PLMS config file of the selected language if other than English.

Note! Do not press the TPOP RESET (6) button on the control panel during the copying procedure if it is flashing.

Note! The **Copylog starting date** is automatically updated every time the data log is copied.

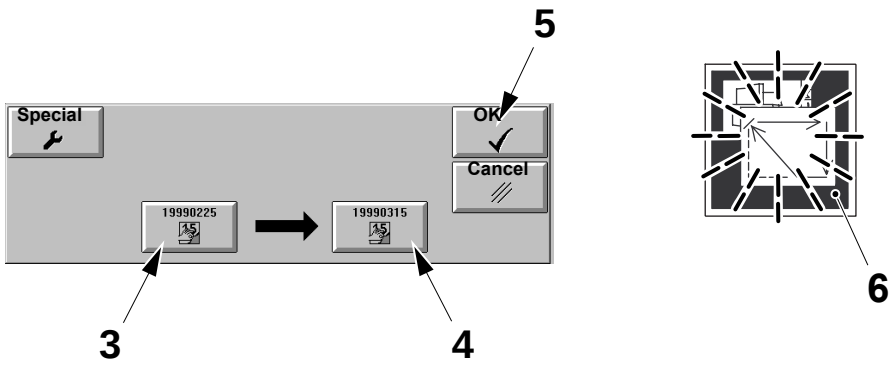

3 COPYLOG STARTING DATE button
4 COPYLOG ENDING DATE button
5 OK button
6 TPOP RESET button

(Cont'd)

TechPub_2614345_0105 - 01_2772110_01.fm

(Cont'd)

Change the Copylog Start/End Date

To download the data files from a different period of time follow the instructions below.

a) Touch the COLLECT SYSTEM button (1).

b) Touch the COPY LOG button (2).



1 Collect system button
2 Copy log button

c) Press the SPECIAL button (6).

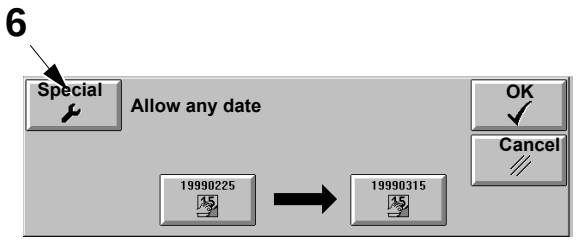

3 SPECIAL button

d) Press the COPYLOG STARTING DATE button (3).

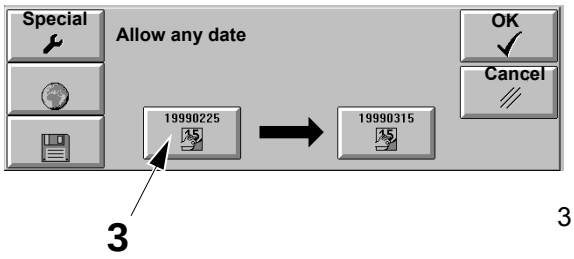

3 COPYLOG STARTING DATE button

e) Enter the Copylog starting date using the ARROW buttons.

f) Press the OK button (7) to confirm the date and return to the previous window.

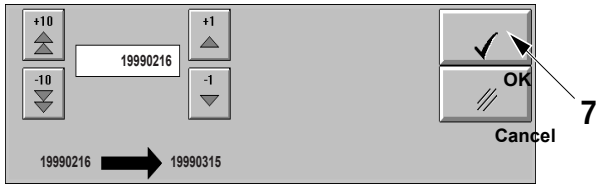

7 OK button

(Cont'd)

TechPub_2614345_0105 - 01_2772110_01.fm

(Cont'd)

g) Press the COPYLOG ENDING DATE button (4).

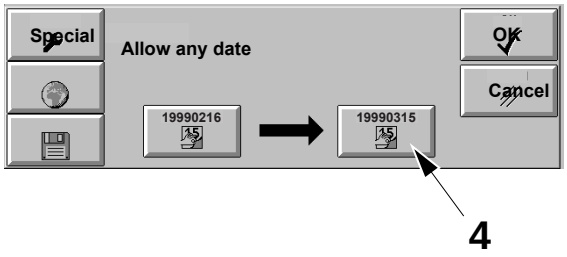

4 COPYLOG ENDING DATE button

h) Enter the Copylog ending date using the ARROW buttons.

i) Press the OK button (7) to confirm the date and return to the previous window.

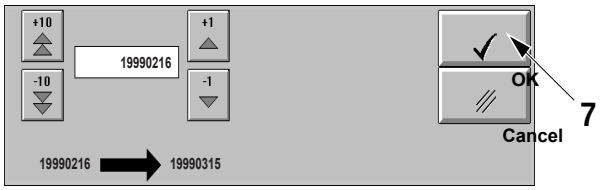

7 OK button

j) Press the OK button (5) to start copying.

Note! Do not press the TPOP RESET button (7) on the control panel during the copying procedure if it is flashing.

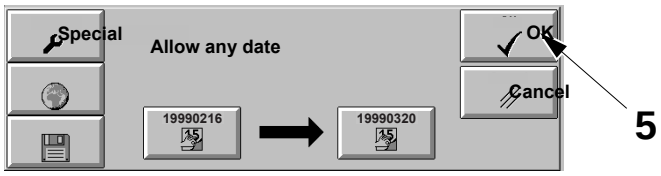

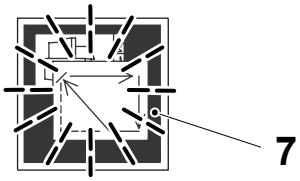

5 OK button
7 TPOP RESET button

(Cont'd)

TechPub_2614345_0105 - 01_2772110_01.fm

(Cont'd)

During data copying, the icons shown below will be displayed on the screen. Follow the instructions in the Action column.

Icon	Meaning	Action
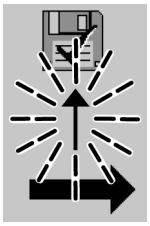	The flashing arrow indicates that the copying procedure is in progress.	Wait
	Successful copy procedure	Press the CLOSE button and remove the floppy disc
	Failed copy procedure Check that the floppy disc is: -inside the floppy disc drive -correctly formatted -not write protected -not full.	Press the CLOSE button and repeat the procedure

k) Press the CLOSE button (8) and repeat the procedure if necessary.

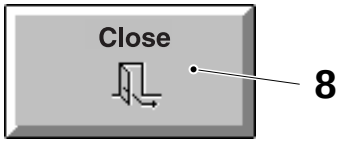

8 CLOSE button

(Cont'd)

TechPub_2614345_0105 - 01_2772110_01.fm

(Cont'd)

Copy BIN Files

a) Touch the COLLECT SYSTEM button (1).

b) Touch the COPY LOG button (2).



1 Collect system button
2 Copy log button

c) Press the SPECIAL button (1).

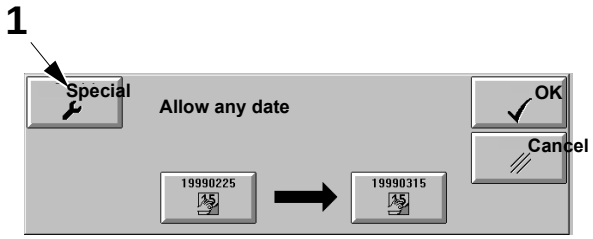

1 SPECIAL button

(Cont'd)

TechPub_2614345_0105 - 01_2772110_01.fm

(Cont'd)

Note! The COPYLOG STARTING DATE button (2) is set by default to the previous down loading date.
The COPYLOG ENDING DATE button (3) is set by default to yesterday's date.

Note! The starting date is automatically updated every time the data log is copied.

d) Press the BIN FILES button (4) to download the following files:
   - TBA19_030V.p00
   - the .bin files for the selected period of time.

Note! The files are compressed into **"BINDUMP.TGZ"** and can be extracted with the program WinZip.

Note! Do not press the TPOP RESET button (7) on the control panel during the copying procedure, if flashing.

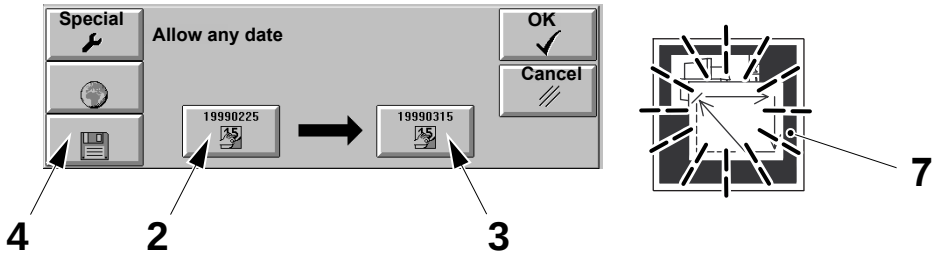

2 COPYLOG STARTING DATE button
3 COPYLOG ENDING DATE button
4 BIN FILES button
7 TPOP RESET button

(Cont'd)

TechPub_2614345_0105 - 01_2772110_01.fm

(Cont'd)

While the data copying is in progress, the icons shown below will be displayed on the screen. Follow the instructions in the Action column.

Icon	Meaning	Action
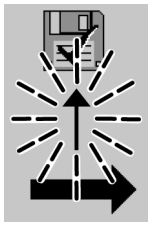	The flashing arrow indicates that the copying procedure is in progress.	Wait
	Successful copy procedure	Press the CLOSE button and remove the floppy disc
	Failed copy procedure Check that the floppy disc is: -inside the floppy disc drive -correctly formatted -not write protected -not full.	Press the CLOSE button and repeat the procedure

e) Press the CLOSE button (6) and repeat the procedure if necessary.

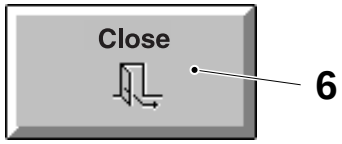

6 CLOSE button

(Cont'd)

TechPub_2614345_0105 - 01_2772110_01.fm

(Cont'd)

Copy PLMS Language Files

a) Touch the COLLECT SYSTEM button (1).

b) Touch the COPY LOG button (2).

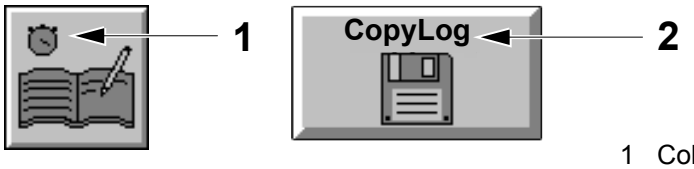

1 Collect system button
2 Copy log button

c) Press the SPECIAL button (1).

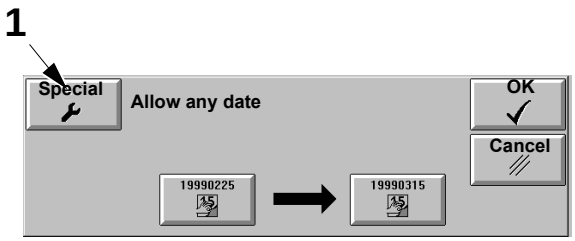

1 SPECIAL button

d) Press the WORLD button (2) to copy all the PLMS config files TBA19_030V.p** for all available languages.

Note! The files are compressed into **"LANGDUMP.TGZ"** and can be extracted with the program WinZip.

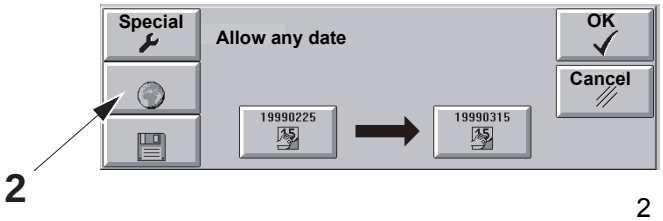

2 WORLD button

(Cont'd)

TechPub_2614345_0105 - 01_2772110_01.fm

(Cont'd)

While the data copying is in progress, the icons shown below will be displayed on the screen. Follow the instruction in the Action column.

Icon	Meaning	Action
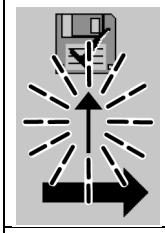	The flashing arrow indicates that the copying procedure is in progress.	Wait
	Successful copy procedure	Press the CLOSE button (3) and remove the floppy disc
	Failed copy procedure Check that the floppy disc is: -inside the floppy disc drive -correctly formatted -not write protected -not full.	Press the CLOSE button (3) and repeat the procedure

e) Press the CLOSE button (3). If necessary, repeat the copy procedure.

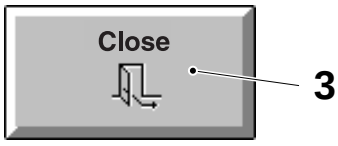

3 CLOSE button

(Cont'd)

TechPub_2614345_0105 - 01_2772110_01.fm

(Cont'd)

Copy TPOP Software Configuration Files

a) Touch the COLLECT SYSTEM button (1).

b) Touch the COPY LOG button (2).



1 Collect system button
2 Copy log button

c) Press the SPECIAL button (1).

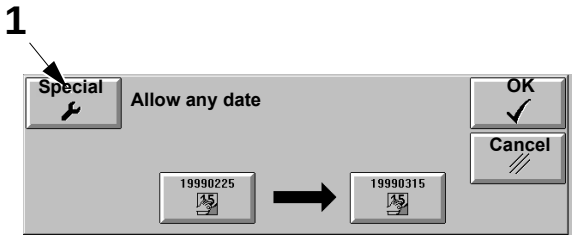

1 SPECIAL button

d) Press the SAVE ALL CONFIG FILES button (4) to copy the TPOP software configuration files.

Note! The files are compressed into **"CONTFILE.TGZ"** and can be extracted with the program WinZip.

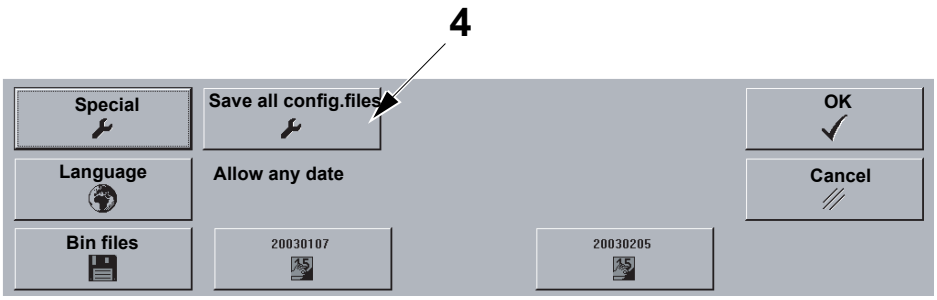

4 Save all config.files button

(Cont'd)

TechPub_2614345_0105 - 01_2772110_01.fm

(Cont'd)

While the data copying is in progress, the icons shown below will be displayed on the screen. Follow the instruction in the Action column.

Icon	Meaning	Action
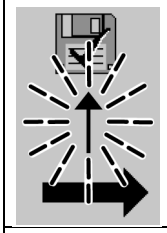	The flashing arrow indicates that the copying procedure is in progress.	Wait
	Successful copy procedure	Press the CLOSE button (3) and remove the floppy disc
	Failed copy procedure Check that the floppy disc is: -inside the floppy disc drive -correctly formatted -not write protected -not full.	Press the CLOSE button (3) and repeat the procedure

e) Press the CLOSE button (3). If necessary, repeat the copy procedure.

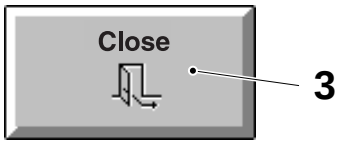

3 CLOSE button

TechPub_2614345_0105 - 01_2772110_01.fm

14.9-5 TPOP - Set PLMS Date and Time

Machine Status	Power supply disconnector ON Air supply OFF Steam supply ON Water supply OFF
SPC Reference	2518145-0101

a) Log on as an installer, see 14.9-18 TPOP - Log On Procedure on page 14-202.

b) From the START menu choose CONFIGURE PLMS.

c) Touch the TIME AND DATE button (1) in the PLMS LIVE window.

d) Use the ARROW buttons (2) to set the date and the ARROW buttons (3) to set the time.

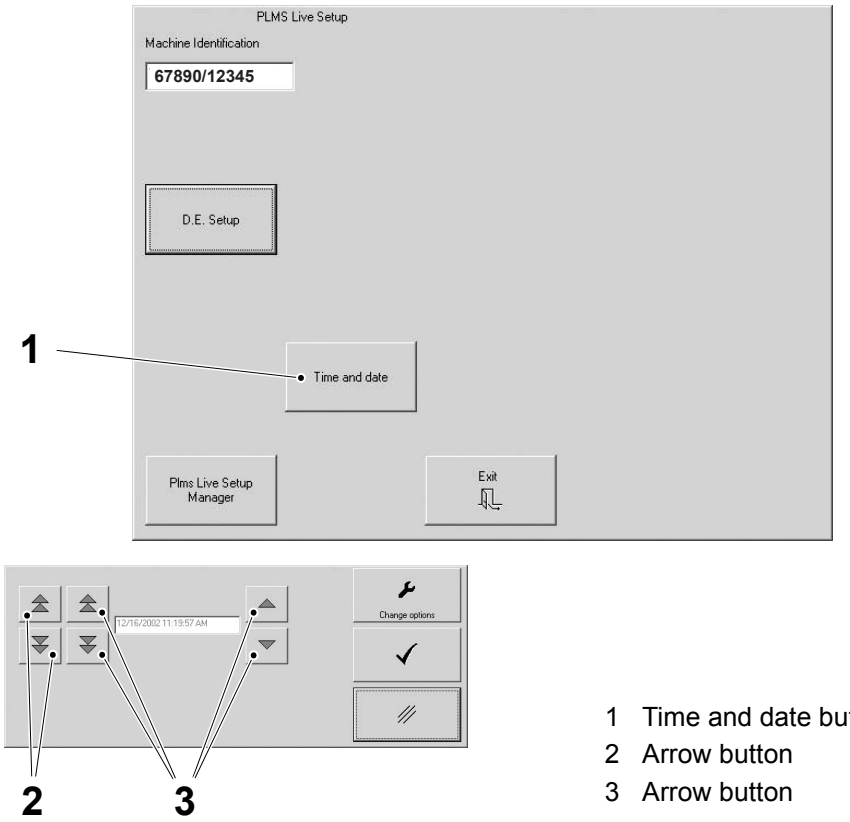

1 Time and date button
2 Arrow button
3 Arrow button

(Cont'd)

TechPub_2614345_0105 - 01_2772110_01.fm

(Cont'd)

e) Touch the CHANGE OPTIONS button (4) to select time zone and daylight savings time option. The CHANGE OPTIONS window (5) appears.

f) Select country from the list (6) and check the check box (7) if the daylight savings time should be adjusted automatically.

g) Touch the OK button (8) to save and exit from the CHANGE OPTIONS window (5) or the EXIT button (9) to exit without saving.

h) Touch the OK button (10) to save and exit or the EXIT button (11) to exit without saving.

i) If all work with the PLMS is completed, restart Windows 2000 to log on as an operator, see 14.9-18 TPOP - Log On Procedure on page 14-202.

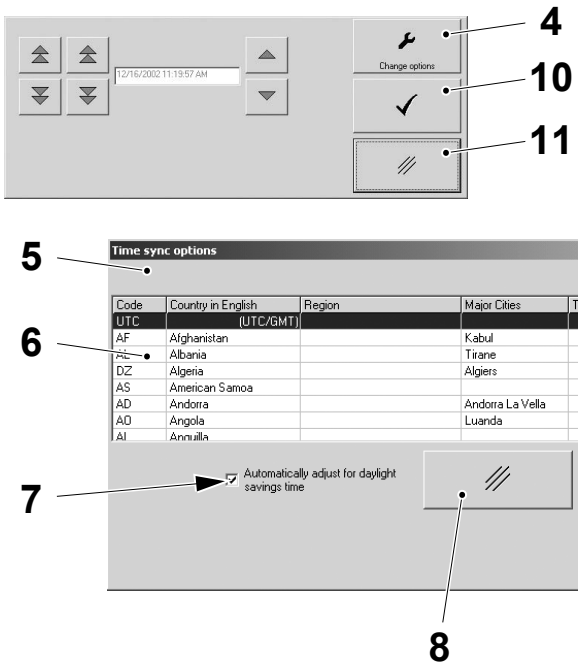

4 Change options button
5 Change options window
6 Country list
7 Checkbox
8 OK button
9 Exit button
10 OK button
11 Exit button

TechPub_2614345_0105 - 01_2772110_01.fm

14.9-6 TPOP - Change Display

Machine Status	Power supply disconnector OFF Air supply OFF Steam supply ON Water supply OFF
SPC Reference	2518145-0101 2518146-0100

a) Open the door at the rear of the touch screen (1) by using a key in the keyholes (2).

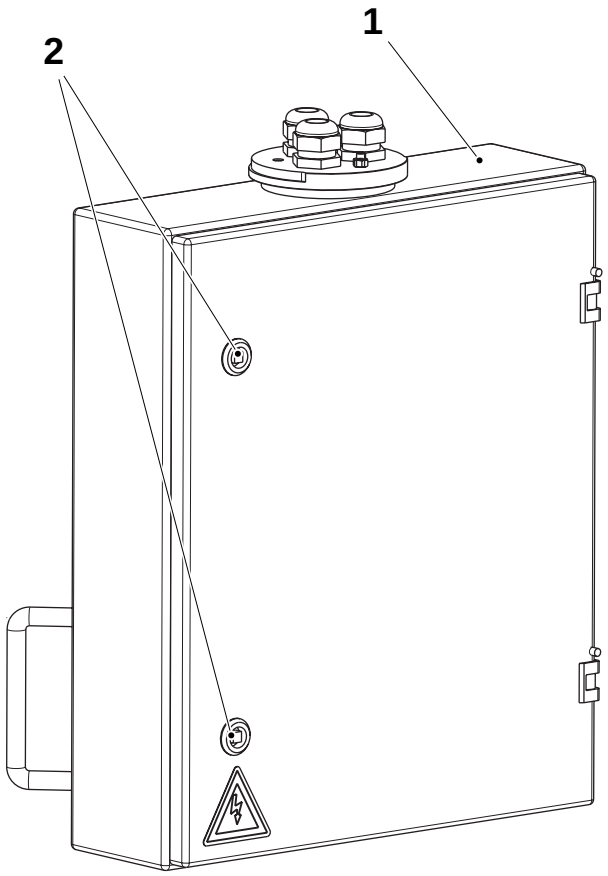

1 Touch screen
2 Keyhole

(Cont'd)

TechPub_2614345_0105 - 01_2772110_01.fm

(Cont'd)

b) Remove the screws (4) and the cover (3).

c) Remove the clamps (6) and the connection wires (5).

d) Remove the nuts (8) and the display unit (7).

e) Install the new display unit and assemble in the reverse order.

f) Calibrate the touch screen, if necessary, see 14.9-7 TPOP - Calibrate Touch Screen.

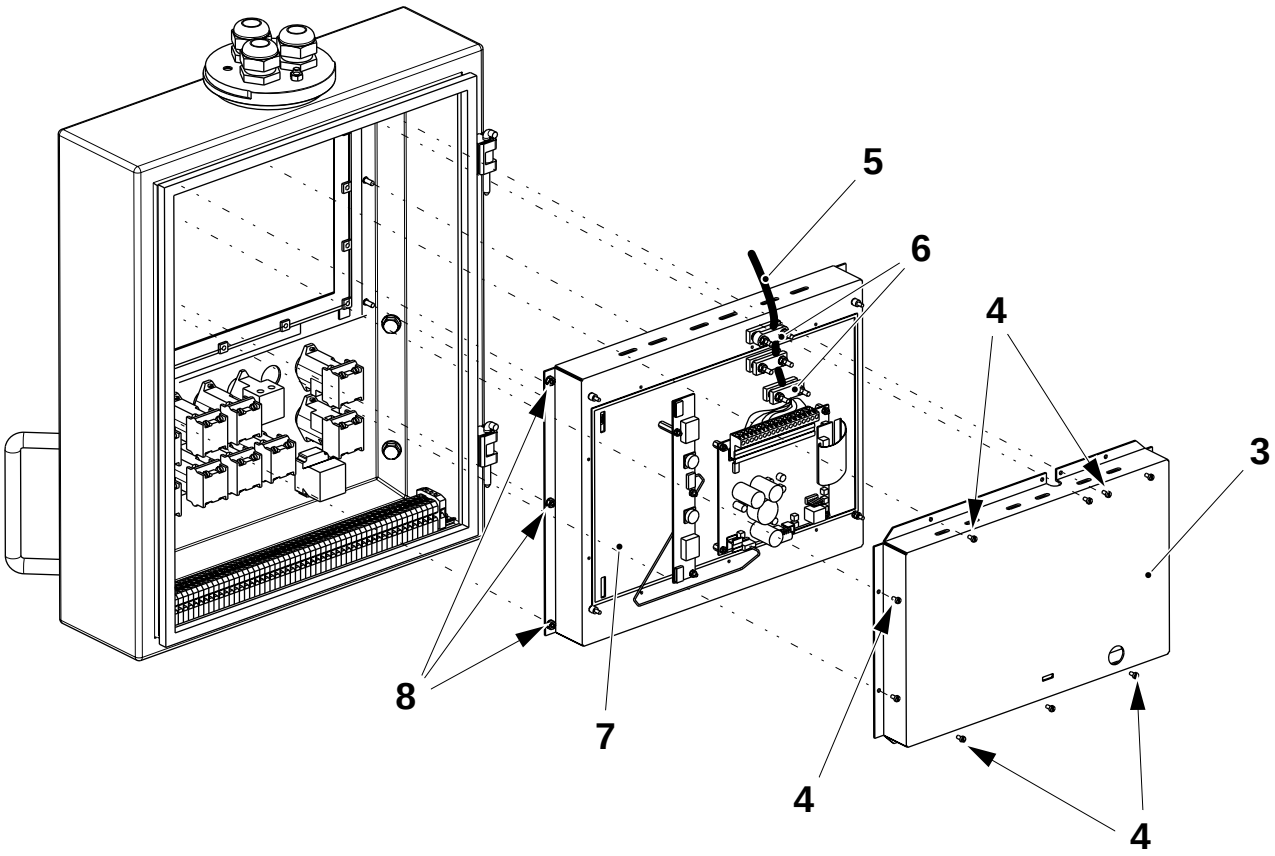

3 Cover
4 Screw
5 Connection wire
6 Clamp
7 Display unit
8 Nut

TechPub_2614345_0105 - 01_2772110_01.fm

14.9-7 TPOP - Calibrate Touch Screen

Machine Status	Power supply disconnector ON Air supply OFF Steam supply ON Water supply OFF
Special Equipment	Keyboard with PS/2 connector
SPC Reference	2518145-0101 2518146-0100

a) Open the door at the rear of the touch screen (1) by using a key in the keyholes (2).

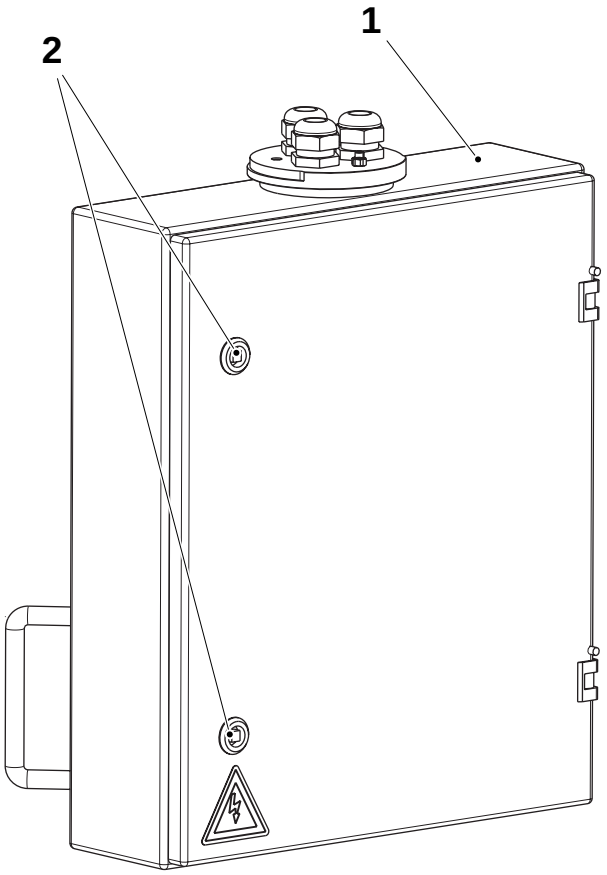

1 Touch screen
2 Keyhole

(Cont'd)

TechPub_2614345_0105 - 01_2772110_01.fm

(Cont'd)

b) Connect a keyboard to the port (3) at the rear of the touch screen

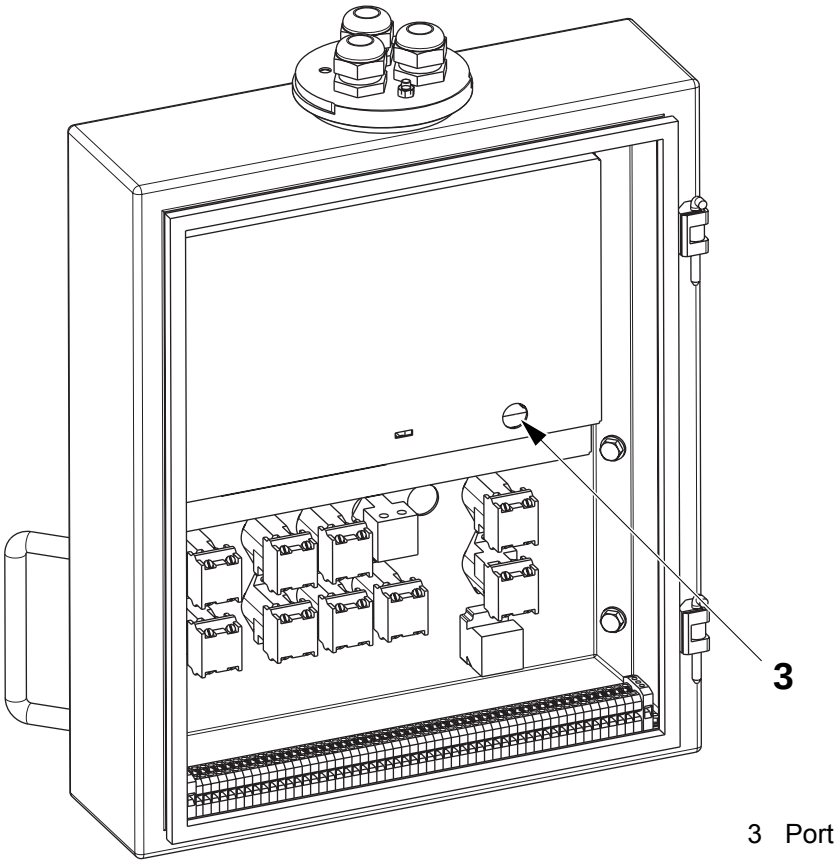

3 Port

(Cont'd)

TechPub_2614345_0105 - 01_2772110_01.fm

(Cont'd)

c) Log on as an installer, see 14.9-18 TPOP - Log On Procedure on page 14-202.

d) Select Touch Screen Calibration (1) from the Start menu.

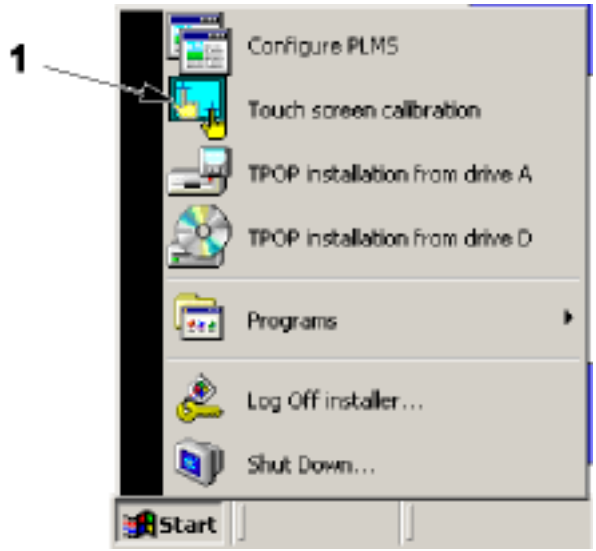

e) Follow the instructions on the TPOP screen.

f) If all work on the PLMS is completed, restart Windows 2000 to log on as an operator, see 14.9-18 TPOP - Log On Procedure on page 14-202.

TechPub_2614345_0105 - 01_2772110_01.fm

14.9-8 TPOP - Change Flexbox Fuse

Machine Status	Power supply disconnector OFF Air supply OFF Steam supply ON Water supply OFF
RK Reference	1511790-0200

If the flexbox does not turn on, check that the fuse (1) is intact. Change it, if necessary.

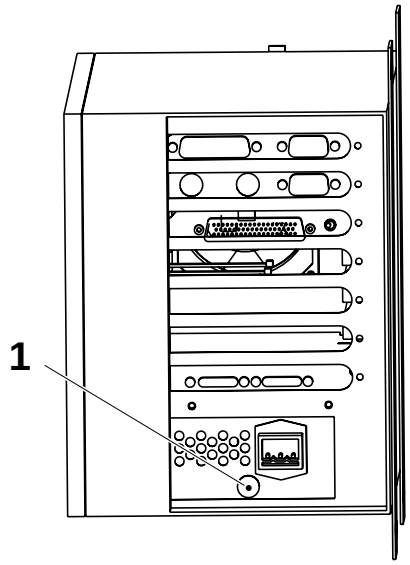

1 Fuse

TechPub_2614345_0105 - 01_2772110_01.fm

14.9-9 TPOP - Change Flexbox Hard Disc

Machine Status	Power supply disconnector ON Air supply OFF Steam supply ON Water supply OFF
Special Equipment	Hard Disc Copy Tool TP No. 90459-6473
SPC Reference	2518145-0101 2518146-0100

a) Open the door of the electrical cabinet and disconnect the 24 V DC power connector to the flexbox.

b) Remove the six screws (1) and the cover (2).

c) Pull out the hard disc (3) from the flexbox (4).

- If the hard disc is broken, continue with items l) to n) to install the new hard disc and then follow the instructions in 14.9-10 TPOP - Install Software.
- If the hard disc is being changed as part of the machine's TPMS schedule, continue with item d).

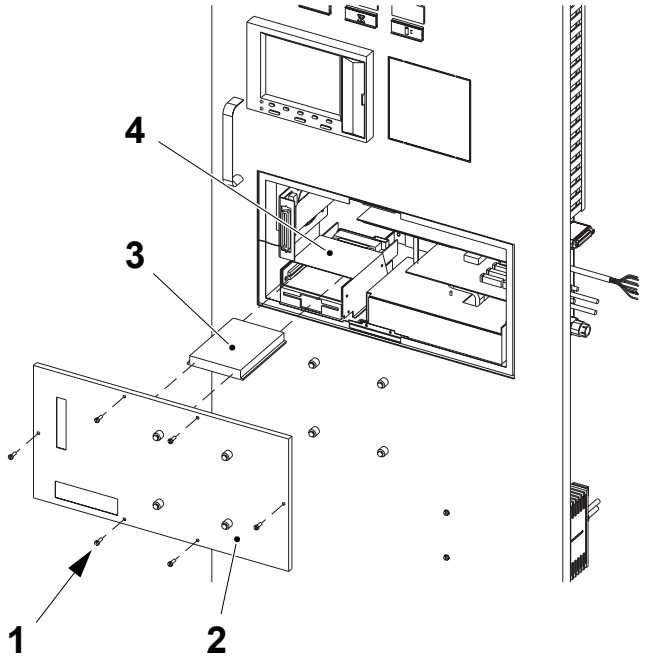

1 Screw
2 Cover
3 Hard disc
4 Flexbox

(Cont'd)

TechPub_2614345_0105 - 01_2772110_01.fm

(Cont'd)

Note! The new hard disc must be of equal or greater capacity than the existing hard disc.

d) Connect the hard disc (3) to the bay in the hard disc copy tool (5) marked OLD.

e) If not already connected, connect the new hard disc (6) to the bay in the hard disc copy tool (5) marked NEW.

f) Connect the hard disc copy tool power cable (7) to a suitable power supply outlet.

g) Press the BLUE button (8) firmly to apply power to the two hard discs.

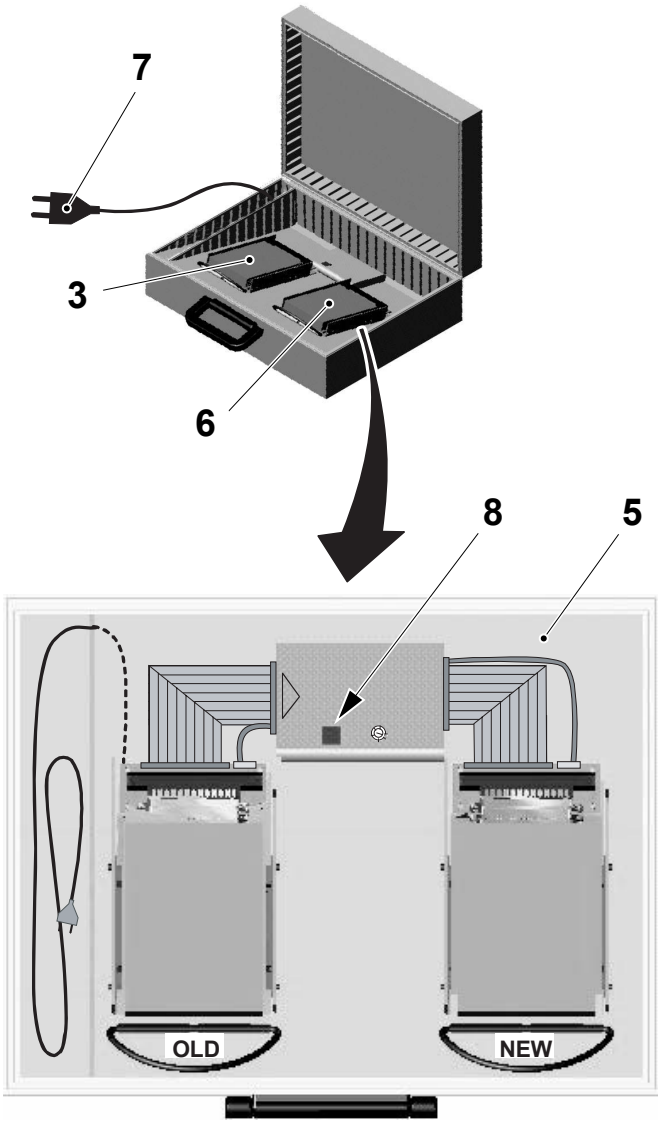

5 Hard disc copy tool
6 New hard disc
7 Power cable
8 Blue button

(Cont'd)

TechPub_2614345_0105 - 01_2772110_01.fm

(Cont'd)

Note! If the POWER LED (9) turns from green to red when the BLUE button is pressed, this indicates a hard disc error and the hard disc copy tool cannot be used, see Hard Disc Copy Tool - Error Handling for more information. Install the new hard disc in the flexbox and follow the instructions in 14.9-10 TPOP - Install Software to continue the installation.

h) After approximately 15 seconds, the POWER LED (9) turns green. Press the BLUE button (8) once again to start the disc-to-disc copy. The approximate copy time is stated in the table below:

ISIC S/N Printed on the TPOP Hard Disc	Hard Disc Capacity	Copy Time
HD0300…	5 GB	6 minutes
HD0400...	10,5 GB	11 minutes
HD0500...	20 GB	12 minutes
HD0600...	30 GB	15 minutes

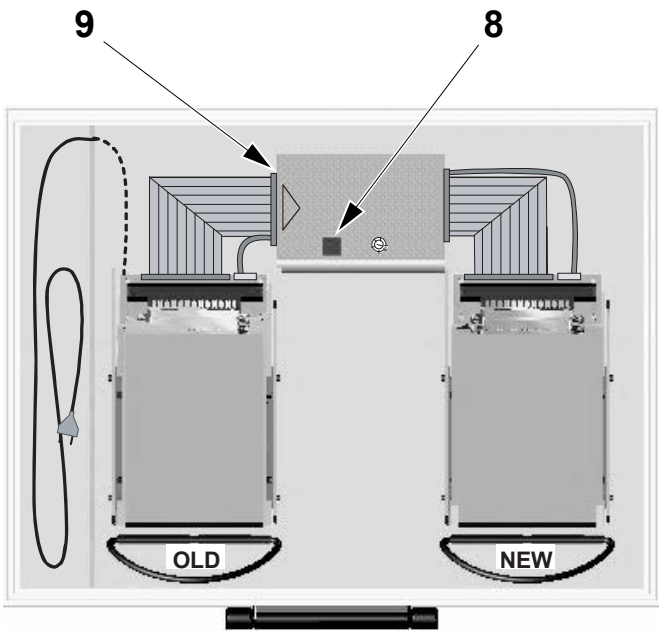

8 Blue button
9 Power LED

(Cont'd)

TechPub_2614345_0105 - 01_2772110_01.fm

(Cont'd)

Note! If the POWER LED (9) turns from green to red during the copy process, this indicates a hard disc error and the hard disc copy tool cannot be used, see Hard Disc Copy Tool - Error Handling for more information. Install the new hard disc in the flexbox and follow the instructions in 14.9-10 TPOP - Install Software to continue the installation.

i) During the copying process the POWER LED (9) flashes green and the two hard disc connection LEDs (10) and (11) have a fixed red light.

j) An audible signal indicates when the copy process is completed and the POWER LED (9) changes to a fixed green light. Approximately three seconds after the copy process has been completed, the power to the two hard discs is automatically switched off and the POWER LED (9) fixed green light goes out.

k) Disconnect the power cable (7) and remove the new hard disc (6).

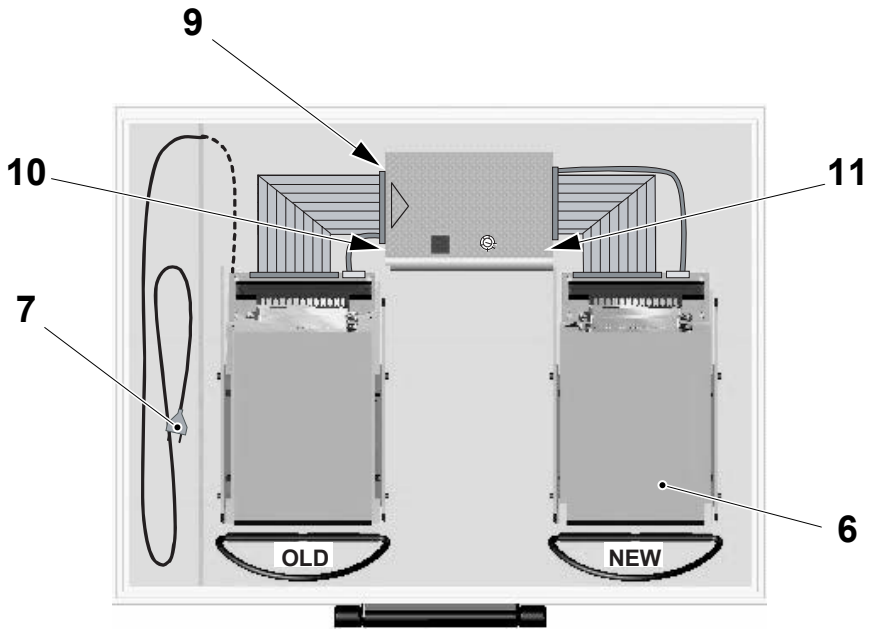

6 New hard disc
7 Power cable
9 Power LED
10 Hard disc LED
11 Hard disc LED

(Cont'd)

TechPub_2614345_0105 - 01_2772110_01.fm

(Cont'd)

l) Install the new hard disc (6) in the flexbox (4).

m) Install the six screws (1) and the cover (2).

n) Open the door of the electrical cabinet and connect the 24 V DC power connector to the flexbox.

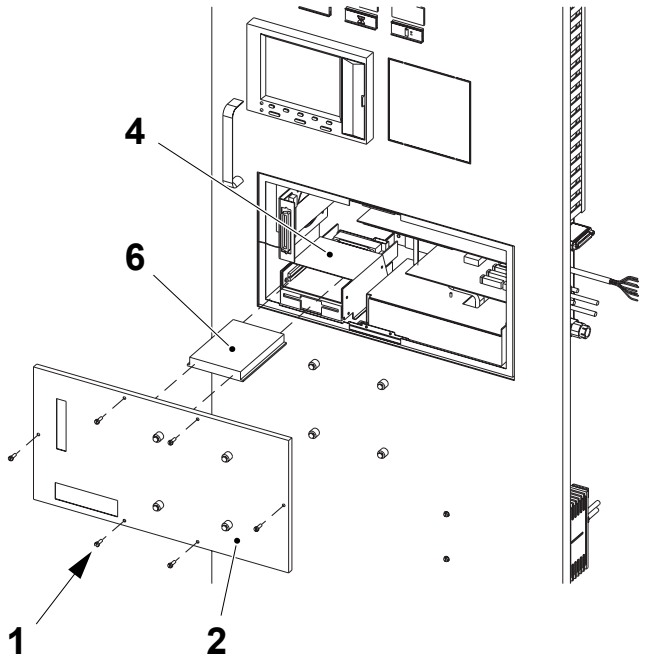

1 Screw
2 Cover
4 Flexbox
6 Hard disc

(Cont'd)

TechPub_2614345_0105 - 01_2772110_01.fm

(Cont'd)

Hard Disc Copy Tool - Error Handling

Note! To power off the hard discs at any time, press the blue button for approximately 10 seconds.

The hard disc copy tool is used to copy the complete contents, including configuration data, from an existing TPOP hard disc to a new hard disc. The hard disc copy tool does not manage bad sectors when copying. If a problem reading a sector of the existing hard disc occurs, the copy process is aborted and an error is reported by both a visual (LED) and audible (beep) error signal.

The hard disc copy tool makes the following audible error signals:

- A series of long beeps indicates that there is a problem with the old hard disc, for example, a bad connector or disc error.
- A series of short beeps indicates that there is a problem with the new hard disc, for example, a bad connector or disc error.
- A combination of two short beeps and one long beep indicates that there is a problem with both of the hard discs, for example, a bad connector or disc error, or that the new hard disc capacity is smaller than the capacity of the old hard disc.

TechPub_2614345_0105 - 01_2772110_01.fm

14.9-10 TPOP - Install Software

Machine Status	Power supply disconnector ON Air supply OFF Steam supply ON Water supply OFF
Special Equipment	Keyboard with PS/2 connector
SPC Reference	2518145-0101 2518146-0100

Material at Hand

- Windows 2000 Professional CD
- TPOP Basic: CD and Floppy disc(s)
- PLMS PERFORMANCE RUNTIME: Floppy disc(s)
- TPOP HMI: Floppy disc(s)
- PLMS PERFORMANCE CONFIGURATION: Floppy disc(s)
- PLMS Send: Floppy disc(s).

Installation Order

You must always follow the order below when installing all software on a blank hard drive. If you are only updating one or more programs, then jump directly to the specific software sections.

- Windows 2000 Professional, TPOP Basic and InTouch on page 14-170
- PLMS Performance Runtime on page 14-174
- TPOP HMI on page 14-175
- PLMS Performance Configuration on page 14-176
- PLMS Send on page 14-177

(Cont'd)

TechPub_2614345_0105 - 01_2772110_01.fm

(Cont'd)

Connect the Keyboard

a) Open the door at the rear of the control panel (1) using a key in the two keyholes (2).

b) Connect a keyboard to the port (3) at the rear of the touch screen.

Connect the CD Reader

c) Switch the mains power OFF.

d) Mount the CD reader (4) on to the component door (5) and connect the cable (6) to the connector (7).

e) Switch the mains power ON.

Note! Remove the CD reader at the end of the installation process.

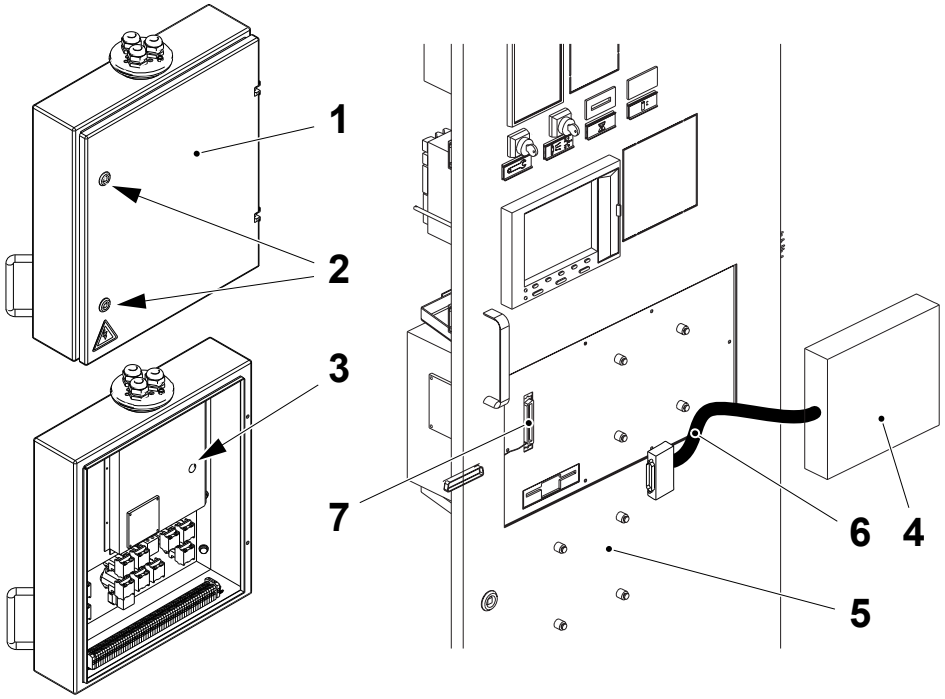

1 Control panel
2 Keyhole
3 Port
4 CD reader
5 Component door
6 Cable
7 Connector

(Cont'd)

TechPub_2614345_0105 - 01_2772110_01.fm

(Cont'd)

CAUTION
Possible software download error.
To install the software correctly on an empty hard disc, follow the instructions in the order given below.

Windows 2000 Professional, TPOP Basic and InTouch

a) Insert the TPOP Basic floppy disc in the disc drive, and the Windows 2000 CD in the CD-drive.

b) If installing on a blank hard disc:
   - reboot the system
   - when prompted, press "C" to continue the installation.

c) If installing on a non-blank hard disc:
   - press CTRL + ESC and choose "SHUT DOWN..." from the START menu
   - choose RESTART and press the OK button
   - press any key when the text PRESS ANY KEY TO BOOT FROM CD is displayed.

Note! This text will only be displayed for a few seconds when the computer restarts, and then the computer continues with a normal boot. If it does this, wait until it is finished, and repeat item c) until you successfully boot from the CD.

d) Windows 2000 is now being installed. The installation will take approximately 30 minutes.

e) When prompted, remove the TPOP Basic floppy disc, remove the Windows 2000 CD and insert the TPOP Basic CD.

f) Windows 2000 is now being configured for the TPOP and the TPOP Basic software is installed and configured. This will take approximately 30 minutes.

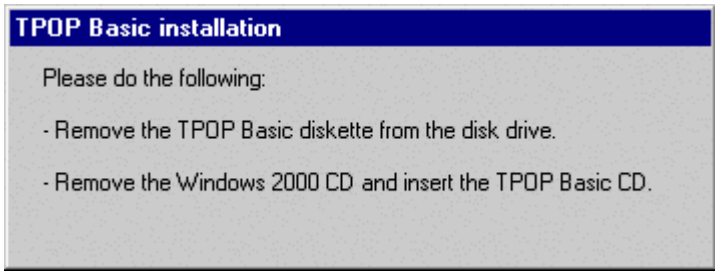

(Cont'd)

TechPub_2614345_0105 - 01_2772110_01.fm

(Cont'd)

g) If the touch screen is not automatically detected, select TPOP 15” IR touch, from the list.

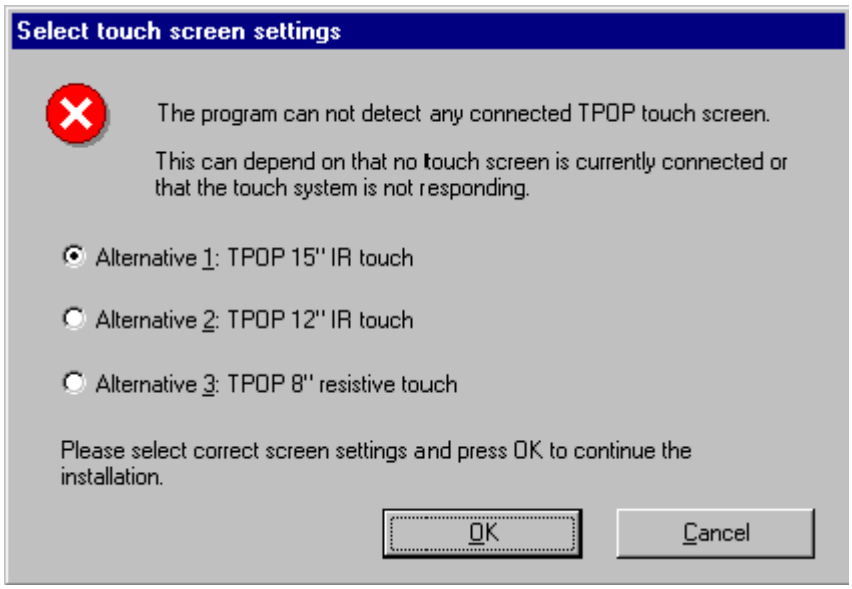

Note! If the touch screen is not automatically detected, there will be an error message at the end of the installation. If you manually select the correct touch screen, this error message can be ignored.

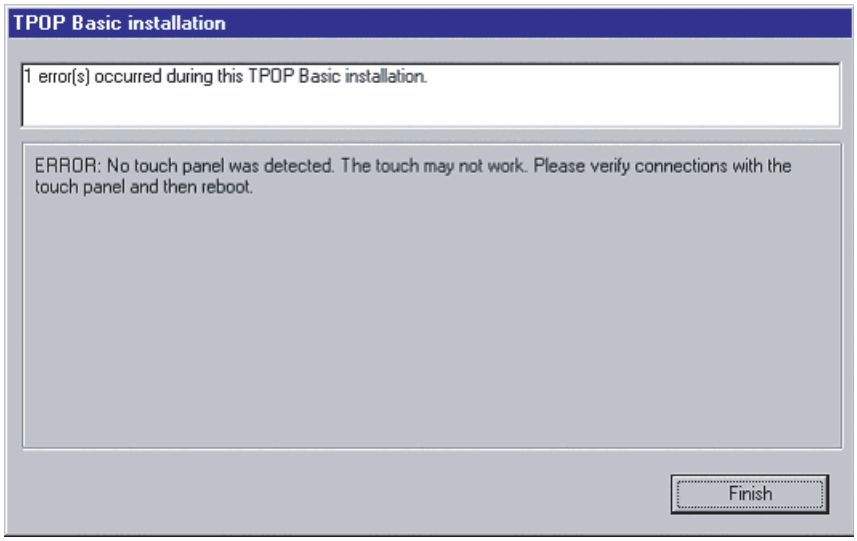

(Cont'd)

TechPub_2614345_0105 - 01_2772110_01.fm

(Cont'd)

h) Enter the current date and time.

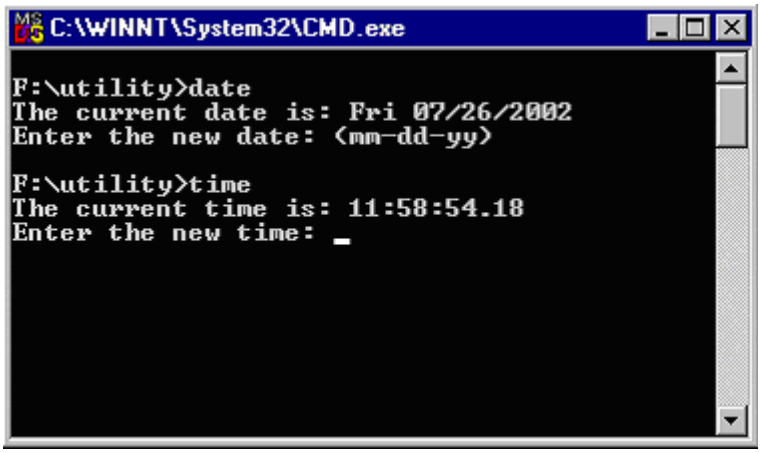

i) Remove the TPOP Basic CD and click Finish.

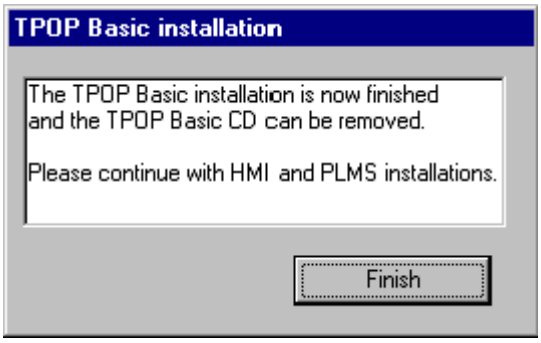

(Cont'd)

TechPub_2614345_0105 - 01_2772110_01.fm

(Cont'd)

j) If there were any errors detected during installation there will be a message displayed at the end of the installation. Take the appropriate actions.

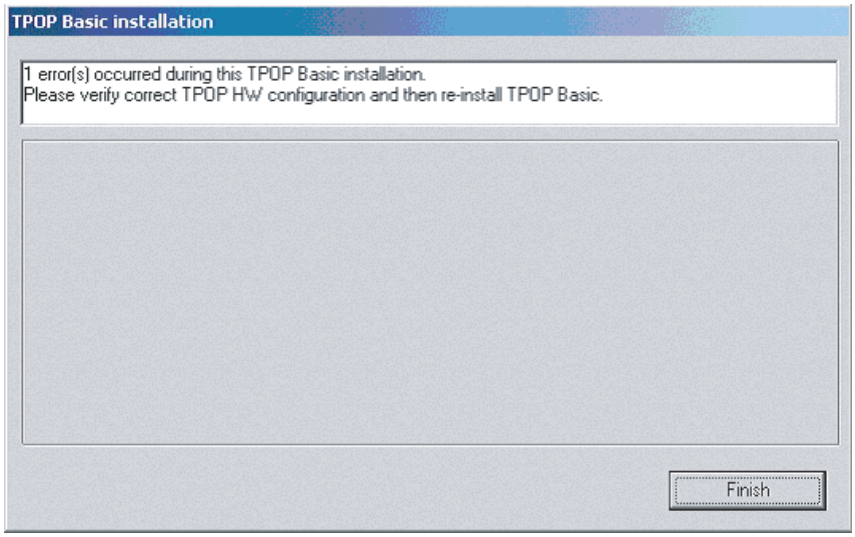

Note! The first time the TPOP is started up after a TPOP Basic installation, with no keyboard connected, the operating system will tell you that a new device is installed and prompt for a reboot. This message can be ignored.

If it is necessary to install more software, continue with the appropriate headline on the following pages.

(Cont'd)

TechPub_2614345_0105 - 01_2772110_01.fm

(Cont'd)

Note! The following software (PLMS Performance Runtime, TPOP HMI, PLMS Performance Configuration, PLMS Send) can also be installed separately.

PLMS Performance Runtime

a) If you are already logged on as an installer it is possible to continue installing the software. Continue with item b), see below. Otherwise, to log on as an installer, see 14.9-18 TPOP - Log On Procedure on page 14-202.

b) Insert the disc marked PLMSPERF RUN disc 1, into the drive A.

c) From the START menu choose TPOP INSTALLATION FROM DRIVE A.

d) Follow the instructions on the screen, and then press ENTER to accept the default values.

e) Remove the installation disc from the drive when the installation is finished.

If it is necessary to install more software, continue with the appropriate headline on the following pages. Otherwise, restart Windows 2000 to log on as an operator, see 14.9-18 TPOP - Log On Procedure on page 14-202.

(Cont'd)

TechPub_2614345_0105 - 01_2772110_01.fm

(Cont'd)

TPOP HMI

a) If you are already logged on as an installer it is possible to continue installing the software. Continue with item b), see below. Otherwise, see 14.9-18 TPOP - Log On Procedure on page 14-202.

b) Insert the disc marked **TPOP HMI System Disk 1** into drive A.

c) From the START menu choose TPOP INSTALLATION FROM DRIVE A.

d) Follow the instructions on the screen, and then press ENTER to accept the default values.

e) Remove the installation disc from the drive when the installation is finished.

If it is necessary to install more software, continue with the appropriate headline on the following pages. Otherwise, restart Windows 2000 to log on as an operator, see 14.9-18 TPOP - Log On Procedure on page 14-202.

(Cont'd)

TechPub_2614345_0105 - 01_2772110_01.fm

(Cont'd)

PLMS Performance Configuration

Note! The PLMS Performance Runtime must be installed before installing the PLMS Performance Configuration.

a) If you are already logged on as an installer it is possible to continue installing the software. Continue with item b), see below. Otherwise, see 14.9-18 TPOP - Log On Procedure on page 14-202.

b) Insert the disc marked **PLMS Perf Config System Disk 1** into drive A.

c) From the START menu choose TPOP INSTALLATION FROM DRIVE A.

d) Follow the instructions on the screen, and then press ENTER to accept the default values.

e) At the end of the installation the PLMS Live window will be displayed. In this window you can:

- set the machine ID, see 14.9-11 TPOP - Set Machine ID
- change the distribution equipment setup, see 14.9-12 TPOP - Set Up Distribution Equipment
- set the time and date, see 14.9-5 TPOP - Set PLMS Date and Time.

f) Remove the installation disc from the drive when the installation is finished.

If it is necessary to install more software, continue with the appropriate headline on the following pages. Otherwise, restart Windows 2000 to log on as an operator, see 14.9-18 TPOP - Log On Procedure on page 14-202.

(Cont'd)

TechPub_2614345_0105 - 01_2772110_01.fm

(Cont'd)

PLMS Send

a) If you are already logged on as an installer it is possible to continue installing the software. Continue with item b), see below. Otherwise, see 14.9-18 TPOP - Log On Procedure on page 14-202.

b) Insert the disc marked PLMSS in the into the drive A.

c) From the START menu choose TPOP INSTALLATION FROM DRIVE A.

d) Follow the instructions on the screen. Press the ENTER key to accept the default values.

e) It the Readme file is displayed, press ALT + F4 to close the window and then press the ENTER key.

f) Remove the installation disc from the drive.

g) When all work on the PLMS is complete, restart Windows 2000 to log on as an operator, see 14.9-18 TPOP - Log On Procedure on page 14-202.

TechPub_2614345_0105 - 01_2772110_01.fm

14.9-11 TPOP - Set Machine ID

Machine Status	Power supply disconnector ON Air supply OFF Steam supply ON Water supply OFF
SPC Reference	2518145-0101 2518146-0100

a) Log on as an installer, see 14.9-18 TPOP - Log On Procedure on page 14-202.

b) From the START menu choose CONFIGURE PLMS.

c) In the PLMS Live window you set the machine serial number. Touch the MACHINE IDENTIFICATION field (1) to activate it, then use the keyboard to type the last five digits of the machine number followed by the first five digits.

If the machine identity is set in a previous installation, this serial number will be suggested.

Note! The machine serial number is found on the LH side of the machine below the Control Panel on the identification sign.

d) Restart and log on as an operator, see 14.9-18 TPOP - Log On Procedure on page 14-202.

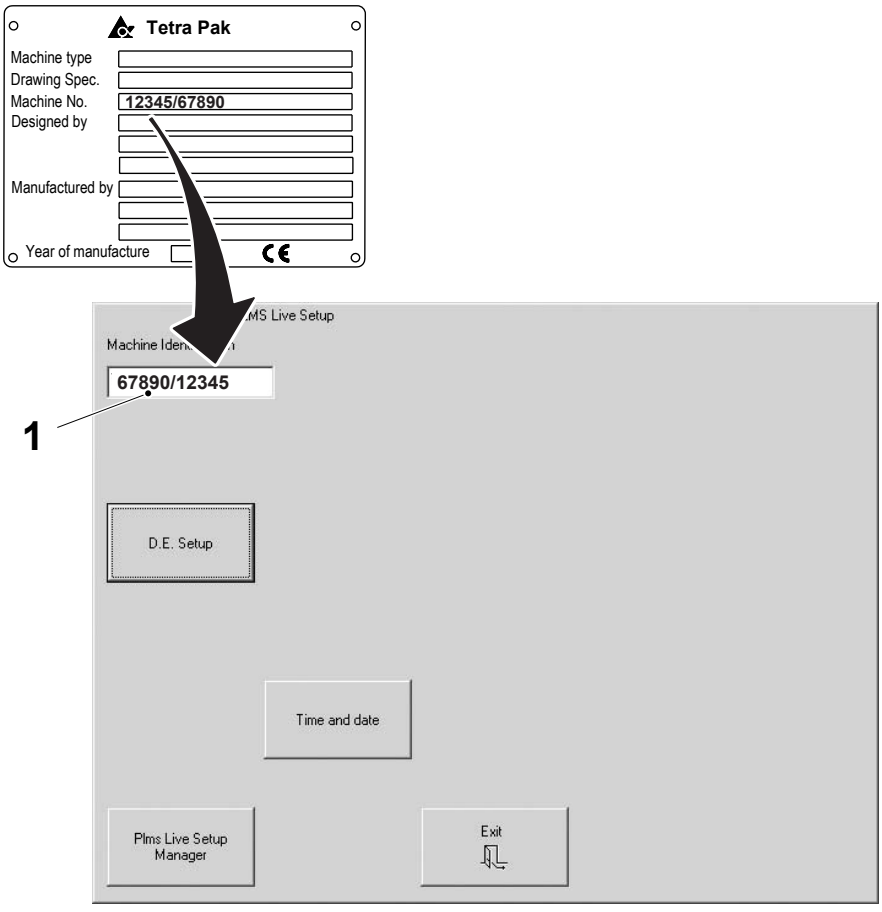

1 Machine identification field

TechPub_2614345_0105 - 01_2772110_01.fm

14.9-12 TPOP - Set Up Distribution Equipment

Machine Status	Power supply disconnector ON Air supply OFF Steam supply ON Water supply OFF
SPC Reference	2518145-0101 2518146-0100

a) Log on as an installer, see 14.9-18 TPOP - Log On Procedure on page 14-202.

b) From the START menu choose CONFIGURE PLMS.

Note! If new Distribution Equipment (DE) has been added in the line, see the Installation Manual Line Supervision in the Final Assembly section for the cable connections.

c) Touch the D.E. SETUP button (1).

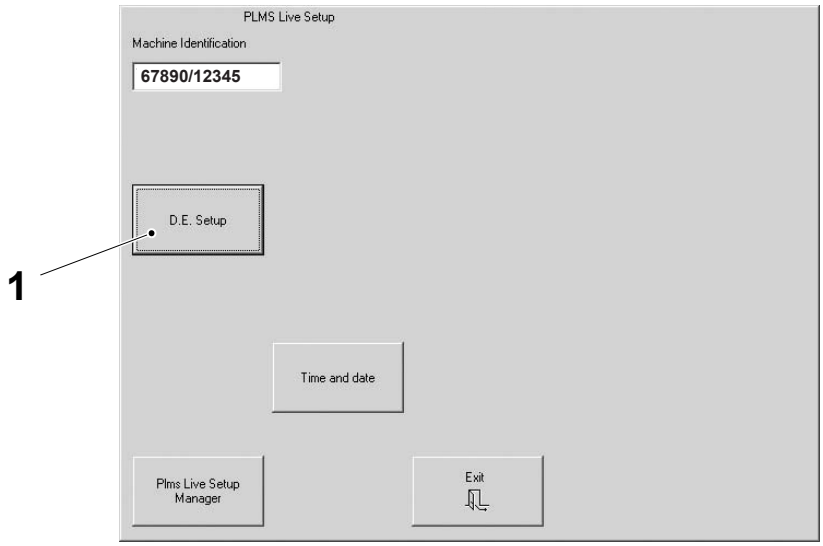

1 D.E. Setup button

(Cont'd)

TechPub_2614345_0105 - 01_2772110_01.fm

(Cont'd)

Note! Make sure that the configuration in the PRESENT SETUP (2) includes only the equipment used in the line. Delete any equipment from the PRESENT SETUP (2) that is not to be used in the line.

d) In the PLMS LIVE window you can also configure the PLMS operator list, the PRESENT SETUP (2) list, to include only the DE equipment present in the packaging line.

The configuration shown in the PRESENT SETUP (2) list must fulfil the following demands:

- each TP DE you have in the packaging line must be present in the PRESENT SETUP (2) list through several text rows:
  - one text (preceded by 4xxxx code) stating the DE name (3)
  - one or more text rows (preceded by 74xxx codes) stating the DE acronym followed by an event description (4)
- each NON TP DE you have in the packaging line must be present in the PRESENT SETUP (2) list through one text row that will look as follows:
  - "NON TP DE N" (5) (preceded by 50xxx code) where N is a progressive number from 1 to 3
- the 4xxxx and 50xxx must be sorted in the same order as the DE's are placed in the line (you do not need to sort 74xxx codes).

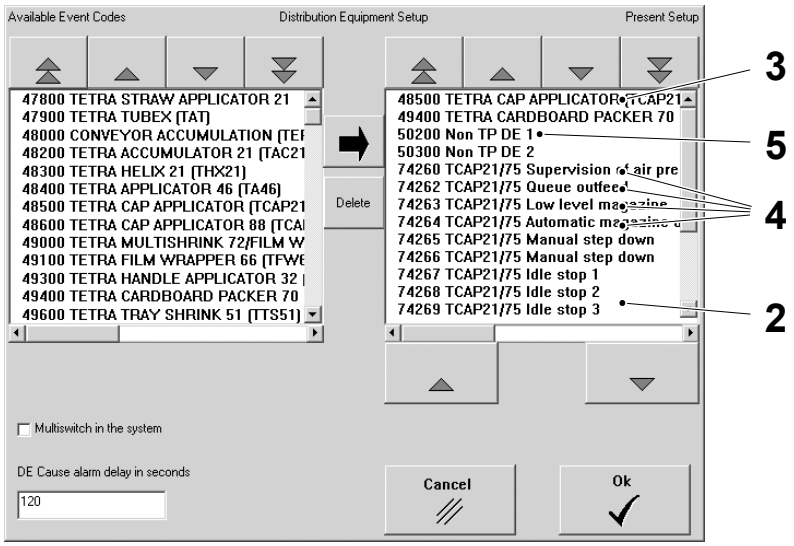

2 Present Setup
3 DE name
4 DE acronym followed by an event description
5 Non TP DE

(Cont'd)

TechPub_2614345_0105 - 01_2772110_01.fm

(Cont'd)

If necessary, arrange the PRESENT SETUP (2) list:

- use the SCROLL buttons (6) to scroll the list and to select the desired item. Touch the SORTING buttons (7) below the PRESENT SETUP (2) list to sort the selected item. Touch the DELETE button (8) to delete the selected item
- if an item is missing in the PRESENT SETUP (2) list you can pick it from the AVAILABLE EVENT CODES list (9). Use the SCROLL buttons (10) to scroll the list and to select the desired item. Touch the MOVE button (11) to move it to the PRESENT SETUP (2) list. The AVAILABLE EVENT CODES list (9) includes all possible DE names (3) and their related event descriptions (4).

Note! If you pick 4xxxx code from the AVAILABLE EVENT CODES list (9) you must also pick all related 74xxx codes. If you delete a 4xxxx code from the PRESENT SETUP (2) list you must delete individually all related 74xxx.

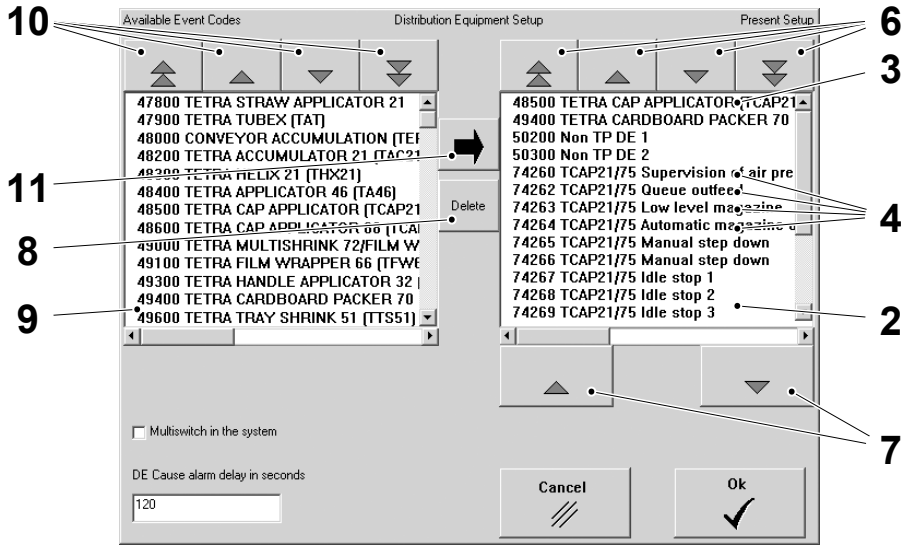

2	Present Setup	7	Sorting button
3	DE name	8	Delete button
4	DE acronym followed by an event description	9	Available event codes list
6	Scroll button	10	Scroll button
		11	Move button

(Cont'd)

TechPub_2614345_0105 - 01_2772110_01.fm

(Cont'd)

e) If the filling machine is connected to more than one packaging line chosen according to the need, check the MULTISWITCH IN SYSTEM box (12).

Note! When a multi switch is used, DE stop reasons can't be automatically assigned to the filling machine conveyor congestion stop. Checking the MULTISWITCH IN SYSTEM box (12) disables automatic “DE stops catch” functionality.

The DE CAUSE ALARM DELAY IN SECONDS (13) determines how long after an alarm in the distribution equipment is cleared, it will be held responsible for a stop in the filling machine when a conveyor congestion occurs. This item has no meaning if the MULTISWITCH IN SYSTEM check box (12) is checked.

f) Touch the OK button (14) when finished.

g) Restart, and log on as an installer, see 14.9-18 TPOP - Log On Procedure on page 14-202.

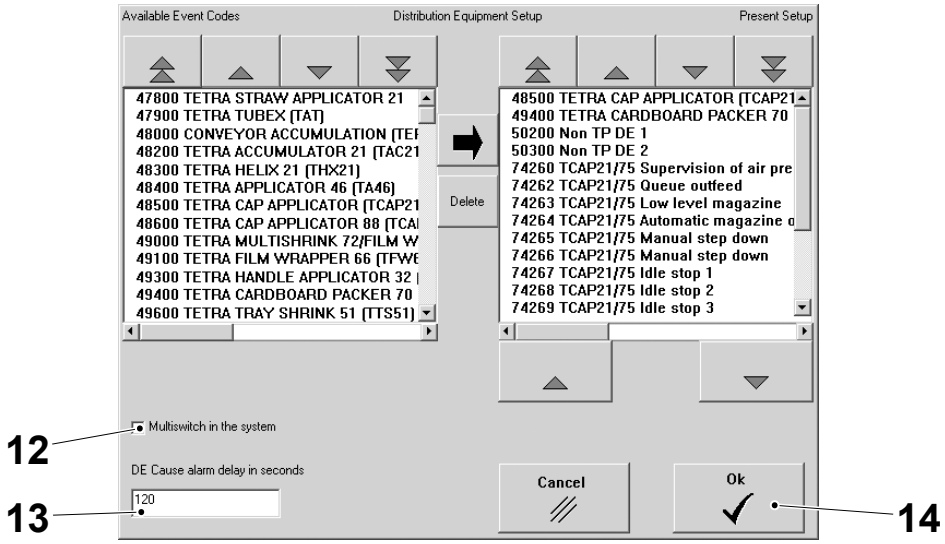

12 Multiswitch in system box
13 DE Cause alarm delay in seconds
14 OK button

TechPub_2614345_0105 - 01_2772110_01.fm

14.9-13 TPOP - Serial Communication Checks PLMS

Machine Status	Power supply disconnector ON Air supply OFF Steam supply ON Water supply OFF
SPC Reference	2518145-0101

Run the Communication Test Program. See the PLMS Send/Receive User's Manual.

Download the data from the office PC and check that there is communication between the PC and the equipment.

TechPub_2614345_0105 - 01_2772110_01.fm

14.9-14 TPOP - Line Supervision Checks

Machine Status	Power supply disconnector ON Air supply OFF Steam supply ON Water supply OFF
SPC Reference	2518145-0101

Test the Distribution Equipment connections as follows:

a) Once the PLC program has been modified, keep the machine in STEP ZERO, PREHEATING I.

b) Connect a keyboard to the flexbox.

c) Temporarily disconnect the PLC cable from port com3 on the flexbox.

d) Touch the HMI screen to activate it, then press the **F5** key. The Debug window appears.

e) Press the OPTIONS.13 button (1) to activate the Line Supervision option. The message **On** must appear on the right of the button.

f) Press the COMMUNICATION button (2) to start detecting the DE present on the packaging line. The message **On** must appear on the right of the button.

g) Wait two minutes, then press the ENABLE button (3) to enable Event collection from the DE present on the packaging line (only if the packaging line is working, see page 14-186 for details).

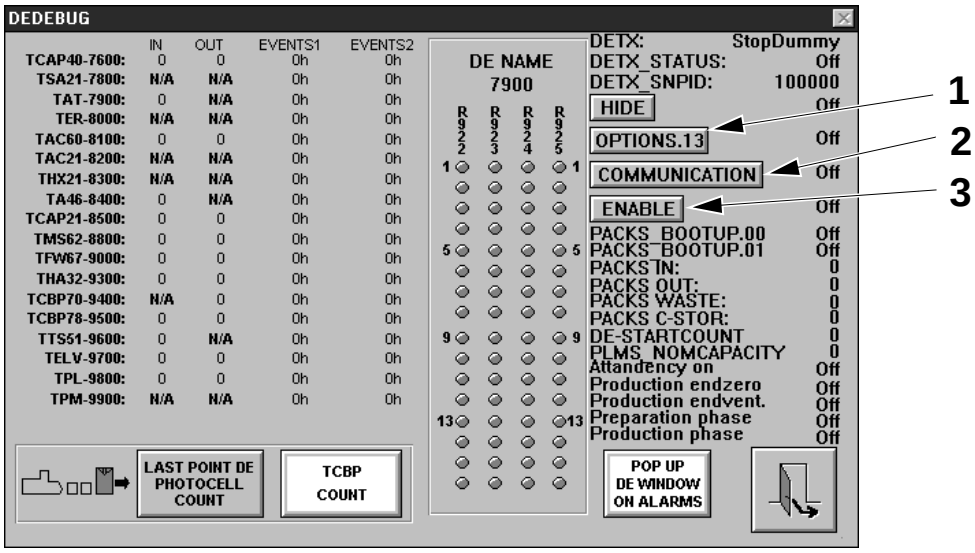

1 OPTION.13 button
2 COMMUNICATION button
3 ENABLE button

(Cont'd)

TechPub_2614345_0105 - 01_2772110_01.fm

(Cont'd)

h) The debugging starts and the analysis of the DE begins.
The Debug window activates as follows:

- The first column on the left (4) displays the **Identification Numbers** of the DE available for TBA/19 in bold. The numbers turn green when the corresponding DE is detected by the system.
- **DETX** field = displays Identification Number of the DE which is being analysed

Note! The DE are analysed in numeric order (e.g. 7900, 8000, 8100, etc.)

- **DETX_STATUS** field = displays ON as soon as the system identifies a DE, then turns to OFF again until another DE is found
- **DETX_SNPID** field = displays 100000 as default. It displays the correct DE Identification Number as soon as the DE is identified, then immediately turns to 100000 again until another DE is found
- **DETX** field = displays message **Stop Dummy** when the search is completed.

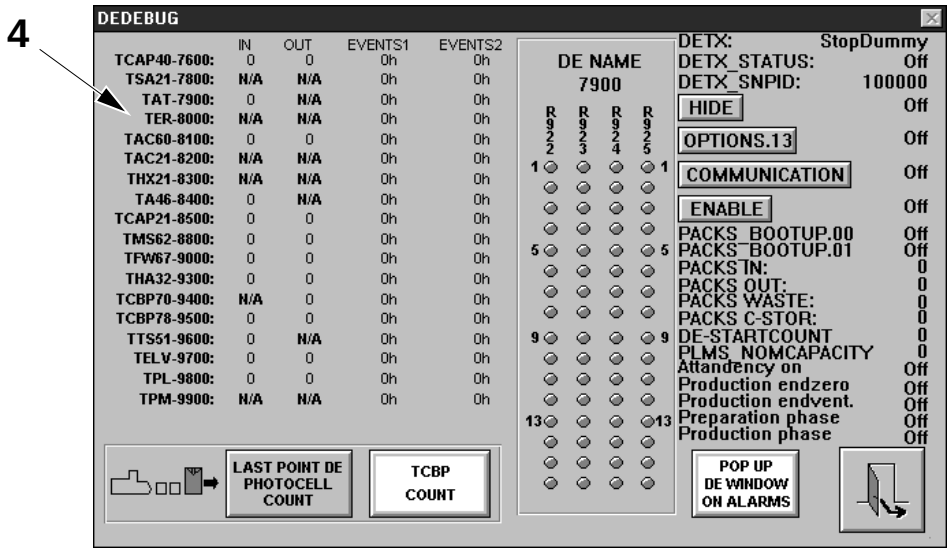

4 DE Identification Numbers

(Cont'd)

TechPub_2614345_0105 - 01_2772110_01.fm

(Cont'd)

If the packaging line is working, the Debug window displays the following supplementary data:

- Column **IN** = Number of packages going into each DE
- Column **OUT** = Number of packages coming out of each DE
- Column **EVENTS1** = Register for word1 in each DE for event collection
- Column **EVENTS2** = Register for word2 in each DE for event collection
- Columns **R922, R923, R924, R925** = Event binary code relative to the DE displayed in box (5). It is activated by selecting a DE identification number in column (4).

Note! Events collection is enabled by touching the **ENABLE** button, see page 14-184 for details.

- **PACKS IN** field = Number of packages going into the filling machine
- **PACKS OUT** field = Number of packages coming out from the filling machine
- **PACKS WASTE** field = Number of packages wasted

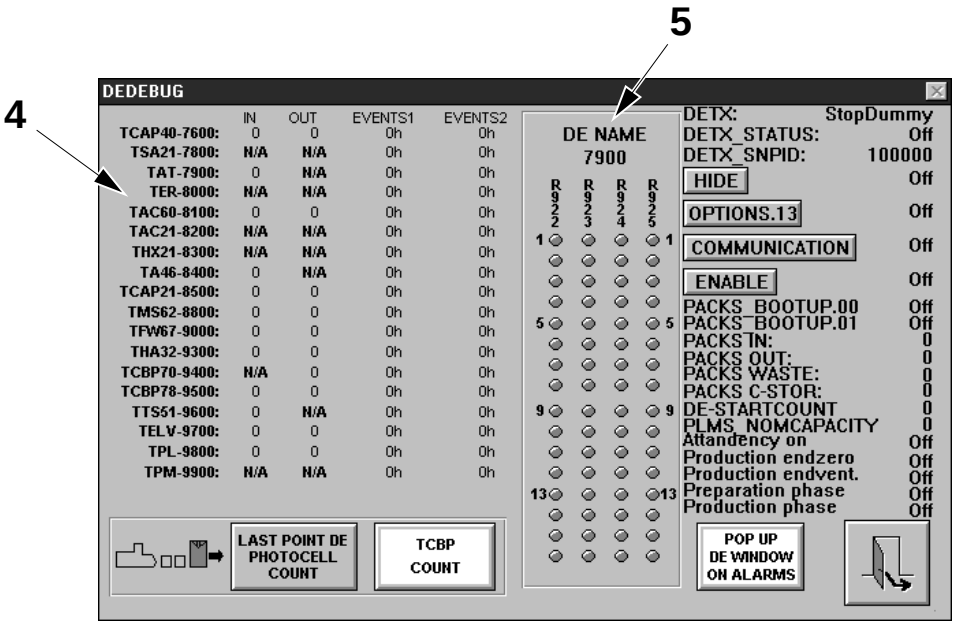

4 DE Identification Numbers
5 Binary code

(Cont'd)

TechPub_2614345_0105 - 01_2772110_01.fm

(Cont'd)

i) If the program has not found some Distribution Equipment, carry out the following checks:
   - Check Line Supervision connections to port com4, refer to the Electrical Manual.
   - Check Line Supervision connectors, see drawing 52710-80:XX for TBA/19 TBA with SA, 52722-80:XX for TBA/19 TBA with PT, 52774-80:XX for TBA/19 TPA, 52855-80:XX for TBA/19 TWA in the Electrical Manual.
   - Check that the DE Identification Numbers have been properly programmed and the DE hardware and software support Line Supervision.
   - Repeat the Communication test.

j) Number of packages coming out from the packaging line.

(Cont'd)

TechPub_2614345_0105 - 01_2772110_01.fm

(Cont'd)

Note! Buttons **LAST POINT DE PHOTOCELL COUNT (7)** and **TCBP COUNT** (8) are enabled until the communication between the filling machine and the distribution equipment starts.

k) Press and hold the **LAST POINT DE PHOTOCELL COUNT (7)** button until it lights to enable the counting photocell at the end of the line.

l) Press and hold the **TCBP COUNT** (8) button until it lights to enable the package count in the cardboard packer.

Note! The first time the machine is started, the **TCBP COUNT** button is automatically selected if a cardboard packer is detected. If no cardboard packer is detected, **LAST POINT DE PHOTOCELL COUNT** is automatically selected. If the automatic selection is changed manually, the new setting is recorded and will be displayed on any subsequent machine start.

m) When debugging is completed, press the **EXIT (6)** button to Exit and return to the main MMI window

n) Press and hold the **POP UP DE WINDOW ON ALARMS (9)** button until it lights to enable the automatic pop up window that shows the distribution equipment status, see filling machine OM.

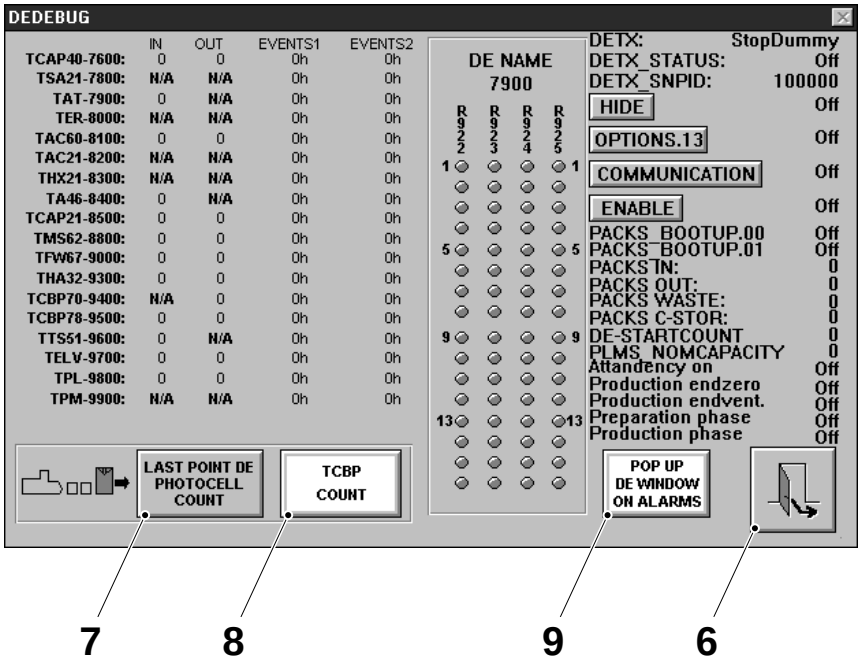

6 EXIT button
7 LAST POINT DE PHOTOCELL COUNT
8 TCBP COUNT
9 POP UP DE WINDOW ON ALARMS

TechPub_2614345_0105 - 01_2772110_01.fm

14.9-15 TPOP - Check Flexbox Processor Fan

Machine Status	Power supply disconnector ON Air supply OFF Steam supply ON Water supply OFF
SPC Reference	2518145-0101

a) Open the door of the electrical cabinet and disconnect the 24 V DC power connector from the flexbox.

b) Remove the six screws (1) and the cover (2).

c) Remove the four screws (3) and the card holder (4).

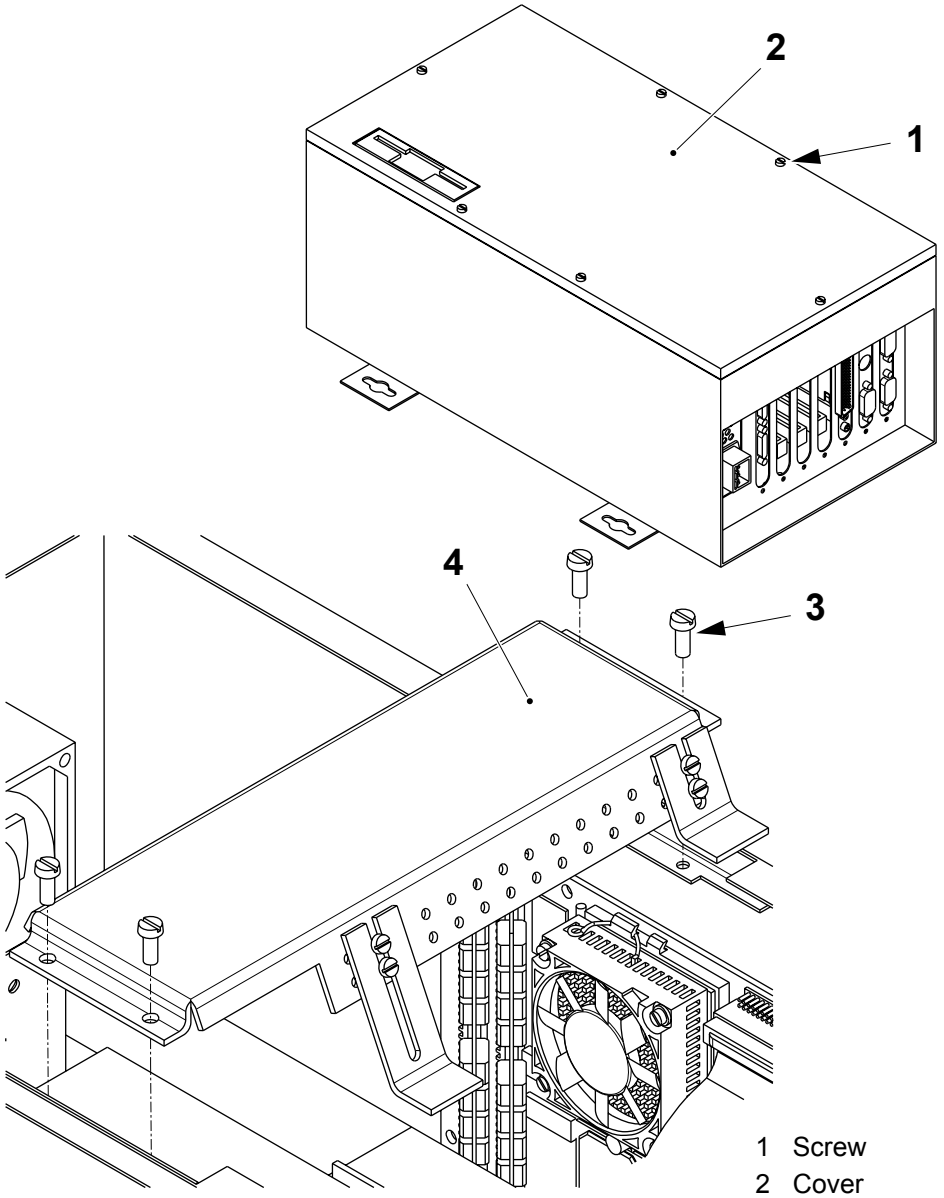

1 Screw
2 Cover
3 Screw
4 Card holder

(Cont'd)

TechPub_2614345_0105 - 01_2772110_01.fm

(Cont'd)

d) Locate the fan (5) on the upper part of the processor board (6).

e) Connect the 24 V DC power connector to the flexbox and check that the fan rotates and is not abnormally noisy.

f) Change the fan, if necessary, see 14.9-16 TPOP - Change Flexbox Processor Fan.

g) Disconnect the 24 V DC power connector from the flexbox, and assemble in the reverse order.

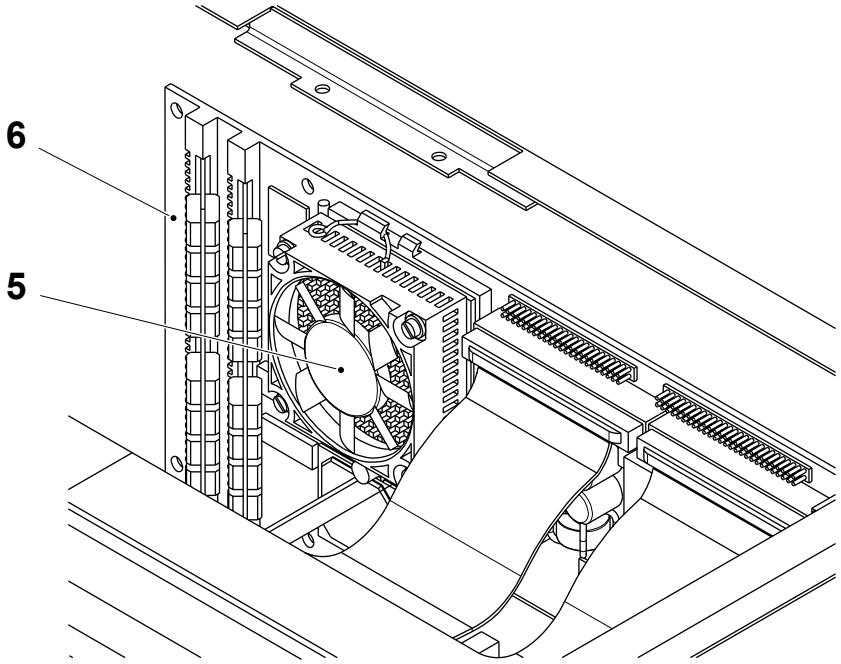

5 Fan
6 Processor board

TechPub_2614345_0105 - 01_2772110_01.fm

14.9-16 TPOP - Change Flexbox Processor Fan

Machine Status	Power supply disconnector ON Air supply OFF Steam supply ON Water supply OFF
SPC Reference	2518145-0101

a) Open the door of the electrical cabinet and disconnect the 24 V DC power connector from the flexbox.

b) Remove the six screws (1) and the cover (2).

c) Remove the four screws (3) and the card holder (4).

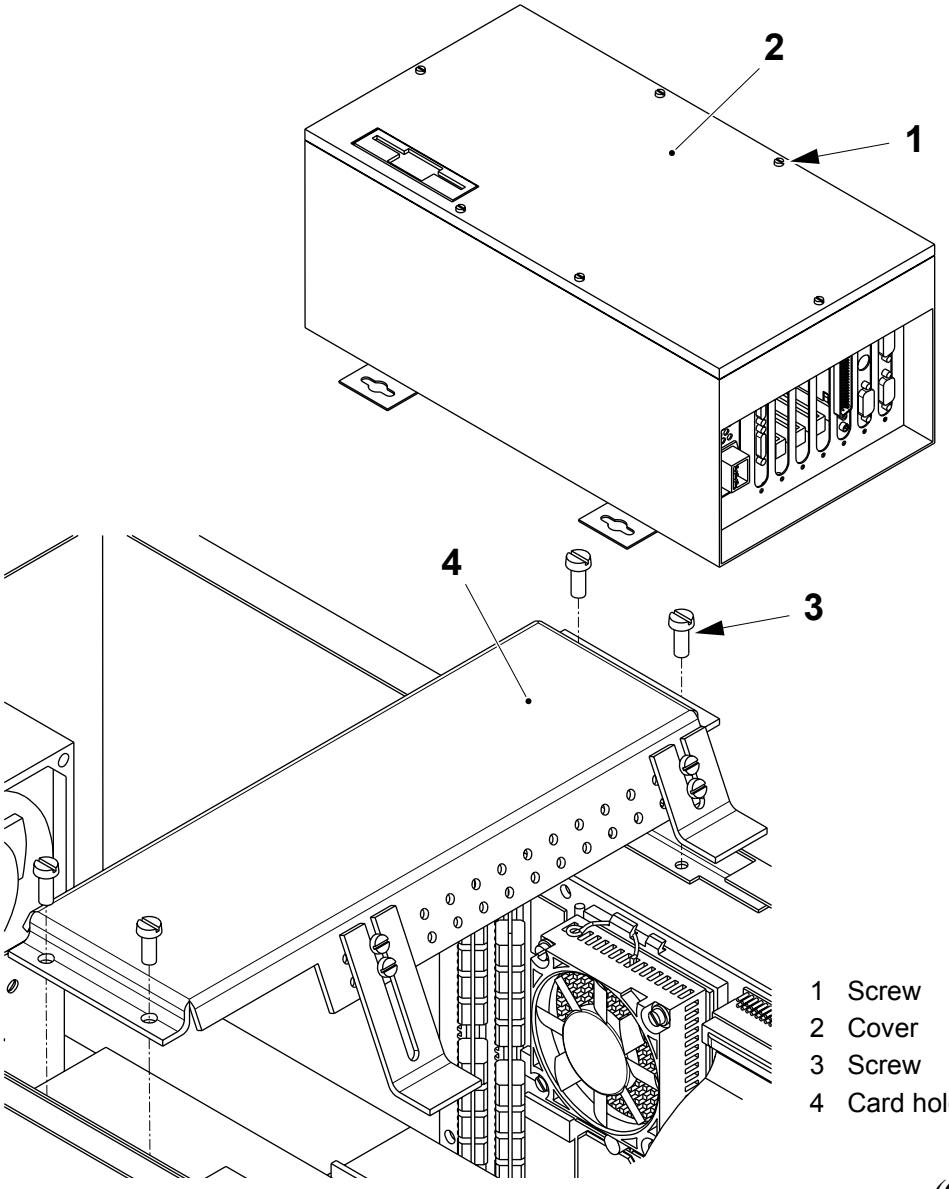

1 Screw
2 Cover
3 Screw
4 Card holder

(Cont'd)

TechPub_2614345_0105 - 01_2772110_01.fm

(Cont'd)

d) Remove the hard disc cable (5) to allow better access to the fan (6).

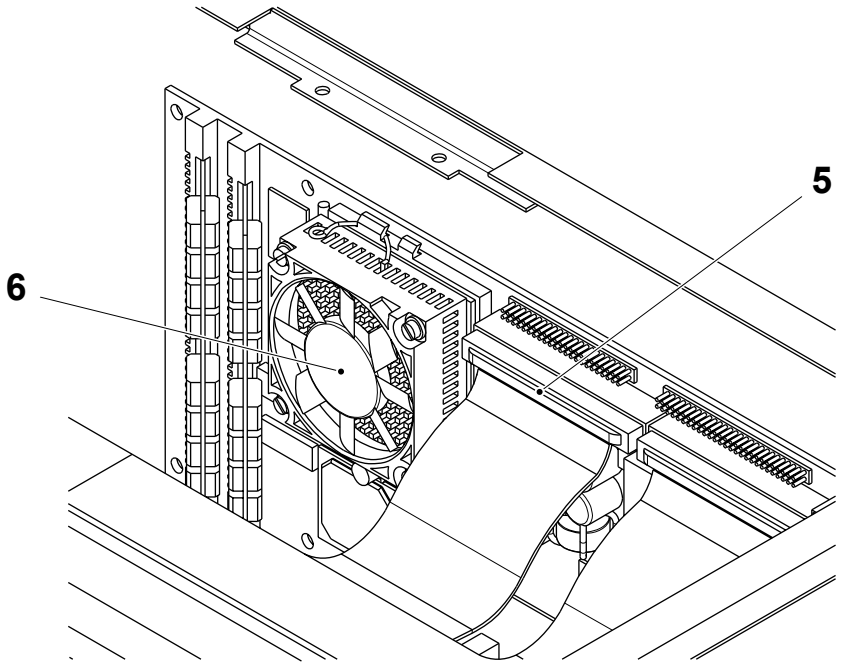

5 Hard disc cable
6 Fan

(Cont'd)

TechPub_2614345_0105 - 01_2772110_01.fm

(Cont'd)

e) Remove the fan power supply connector (7).

f) Release the two clips (8) securing the fan (6) to the processor (9) and remove the fan (6).

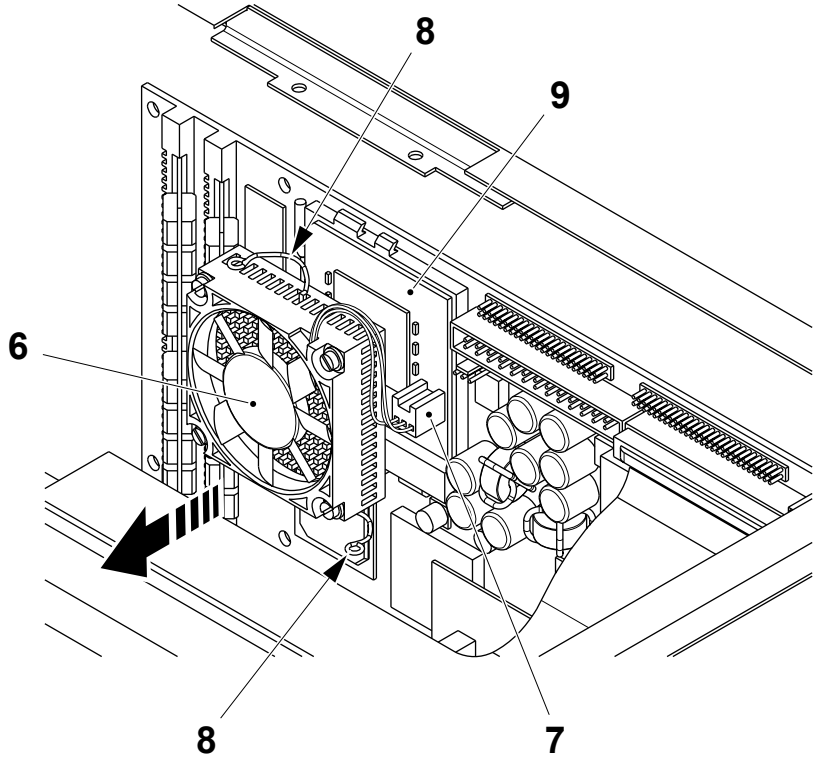

6 Fan
7 Power supply connector
8 Clip
9 Processor

(Cont'd)

TechPub_2614345_0105 - 01_2772110_01.fm

(Cont'd)

Note! It is only necessary to clean and apply heat compound to the surface (10) (shaded in the illustration) which is in direct contact with the fan.

g) Remove the layer of white heat compound from the shaded surface (10) in the centre of the processor (9).

h) Put a small amount of new heat compound on the shaded surface (10) and spread the compound carefully over the surface (10).

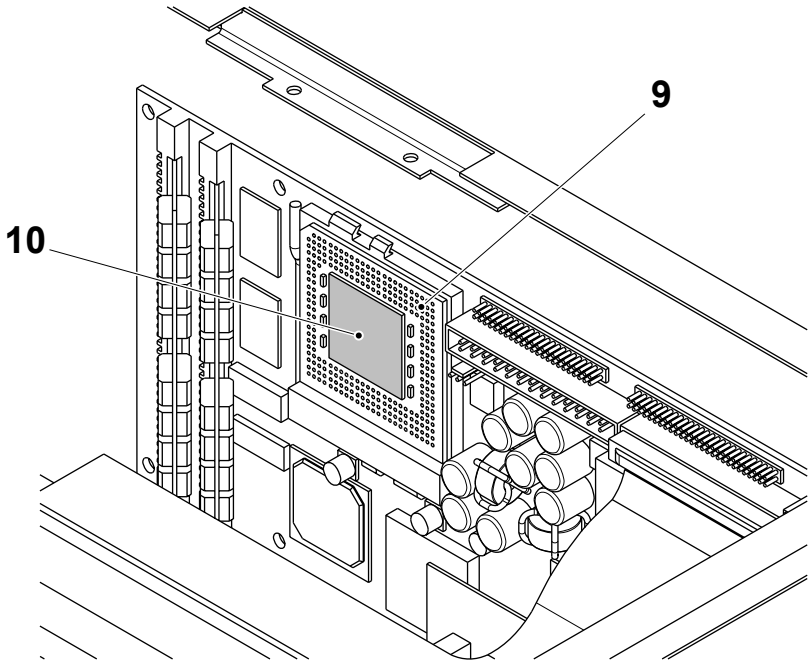

9 Processor
10 Surface

(Cont'd)

TechPub_2614345_0105 - 01_2772110_01.fm

(Cont'd)

i) Attach the new fan (6) to the processor (9) and secure it using the two clips (8).

j) Install the fan power supply connector (7).

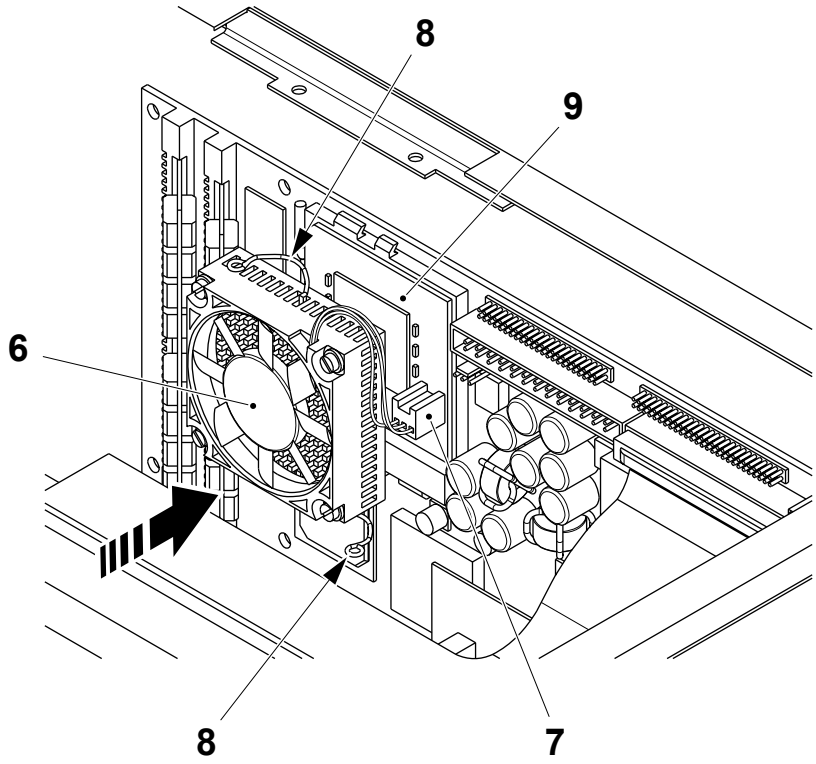

6 Fan
7 Power supply connector
8 Clip
9 Processor

(Cont'd)

TechPub_2614345_0105 - 01_2772110_01.fm

(Cont'd)

k) Install the hard disc cable (5).

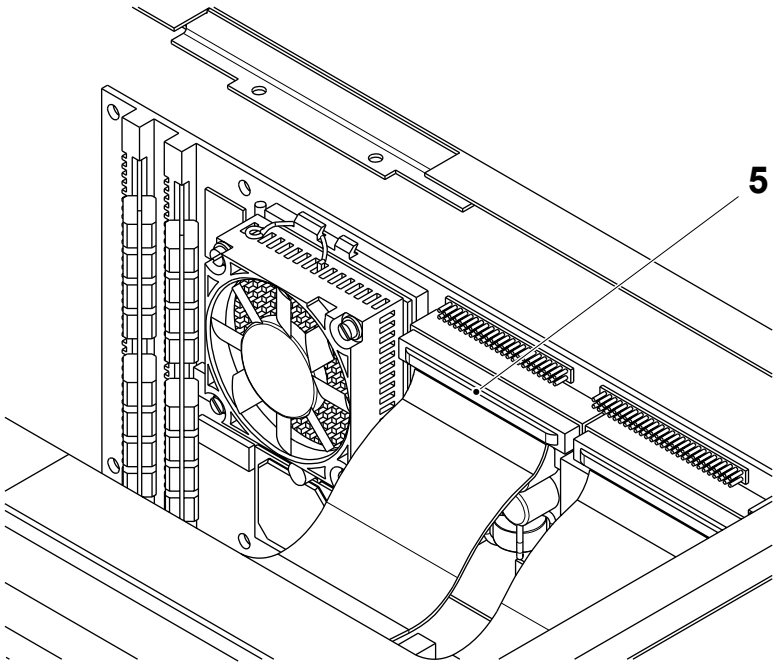

5 Hard disc cable

(Cont'd)

TechPub_2614345_0105 - 01_2772110_01.fm

(Cont'd)

l) Connect the 24 V DC power connector to the flexbox and check that the fan works and that the hard disc spins up.

m) Install the card holder (4) and the four screws (3).

n) Attach the cover (2) and the screws (1).

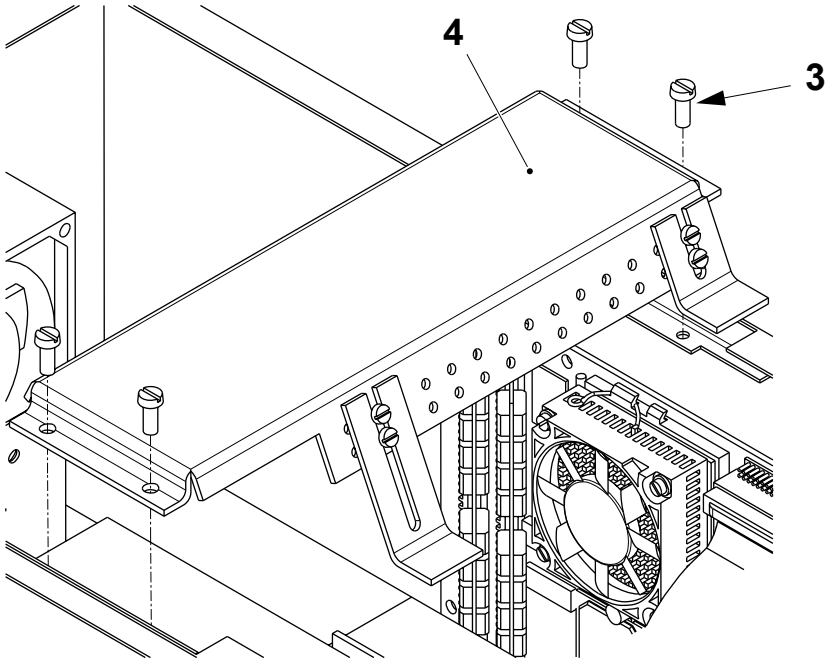

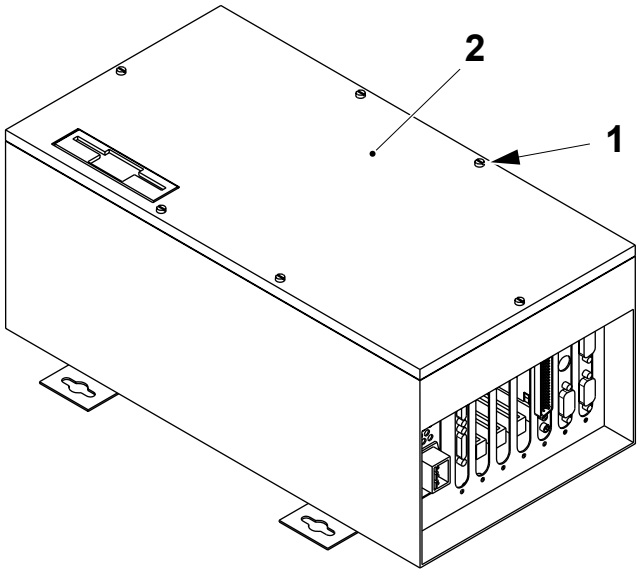

1 Screw
2 Cover
3 Screw
4 Card holder

TechPub_2614345_0105 - 01_2772110_01.fm

14.9-17 TPOP - Import and Export PLMS Live Setup

Machine Status	Power supply disconnector ON Air supply OFF Steam supply ON Water supply OFF
Special Equipment	Keyboard with PS/2 connector
SPC Reference	2518146-0100

This section describes how to import and export the PLMS Live Setup so that it can be used on several machines without having to set them up individually.

a) Log on as an installer, see 14.9-18 TPOP - Log On Procedure on page 14-202.

b) From the START menu choose CONFIGURE PLMS.

c) In the PLMS LIVE window, touch the PLMS LIVE SETUP MANAGER button (1).

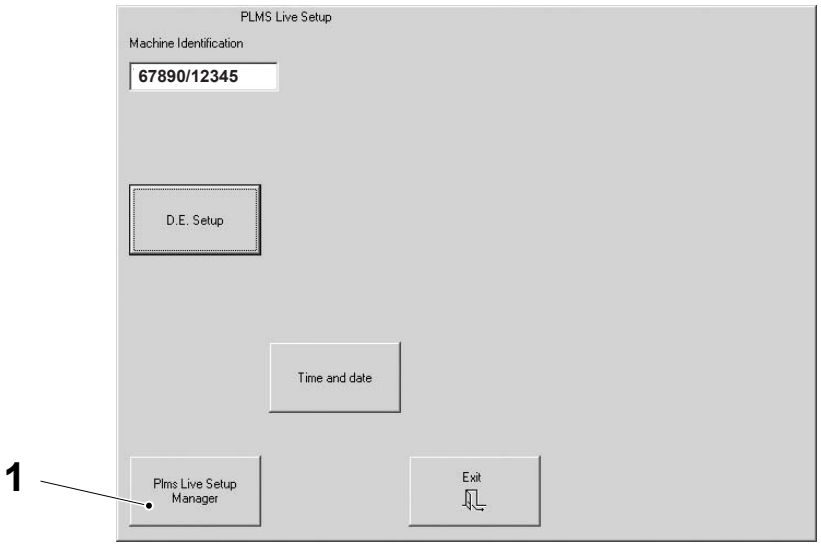

1 PLMS Live Setup Manager button

(Cont'd)

TechPub_2614345_0105 - 01_2772110_01.fm

(Cont'd)

Importing from a Floppy Disk:

a) Insert the floppy disk to import from into drive A.

b) Check the items to be imported:
   - D.E. Setup (2) for distribution Equipment Setup, see 14.9-12 TPOP - Set Up Distribution Equipment
   - time and date (3) for time and date setting, see 14.9-5 TPOP - Set PLMS Date and Time.

c) Touch the IMPORT FLOPPY->PLMS button (4).

d) A dialogue box appears. Touch the YES button (5) to continue or the NO button (6) to stop the import action.

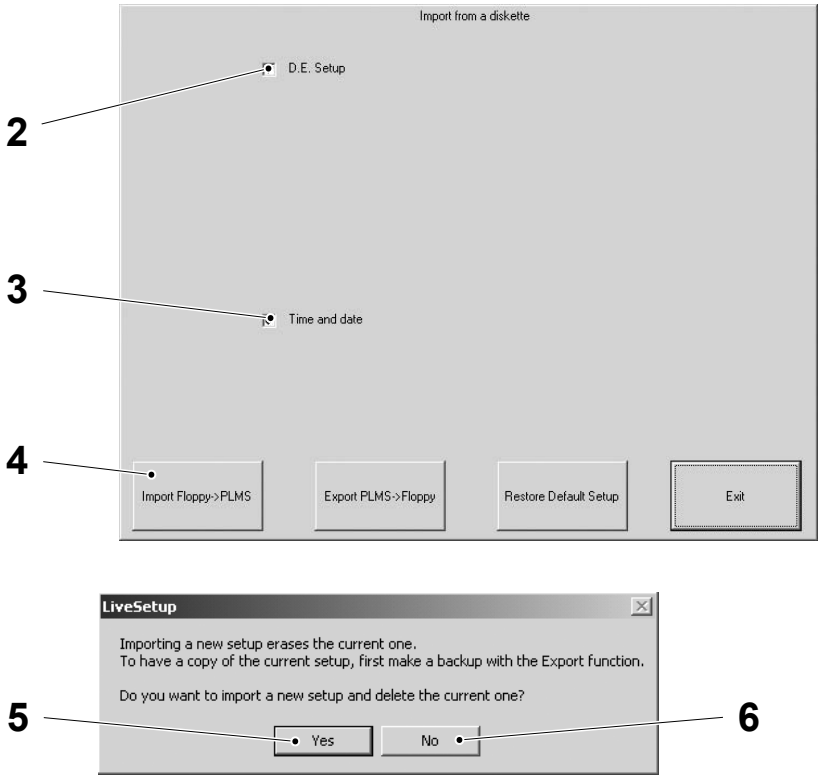

2 D.E. Setup
3 Time and date
4 Import Floppy->PLMS button
5 Yes button
6 No button

(Cont'd)

TechPub_2614345_0105 - 01_2772110_01.fm

(Cont'd)

Exporting to a Floppy Disk:

a) Check the items to be exported:
   - D.E. Setup (7) for distribution Equipment Setup, see 14.9-12 TPOP - Set Up Distribution Equipment
   - time and date (8) for time and date setting, see 14.9-5 TPOP - Set PLMS Date and Time.

b) Touch the EXPORT PLMS->FLOPPY button (9).

c) A dialogue box appears. Insert a floppy disk into drive A and touch the YES button (10) to continue or the NO button (11) to stop the restore action.

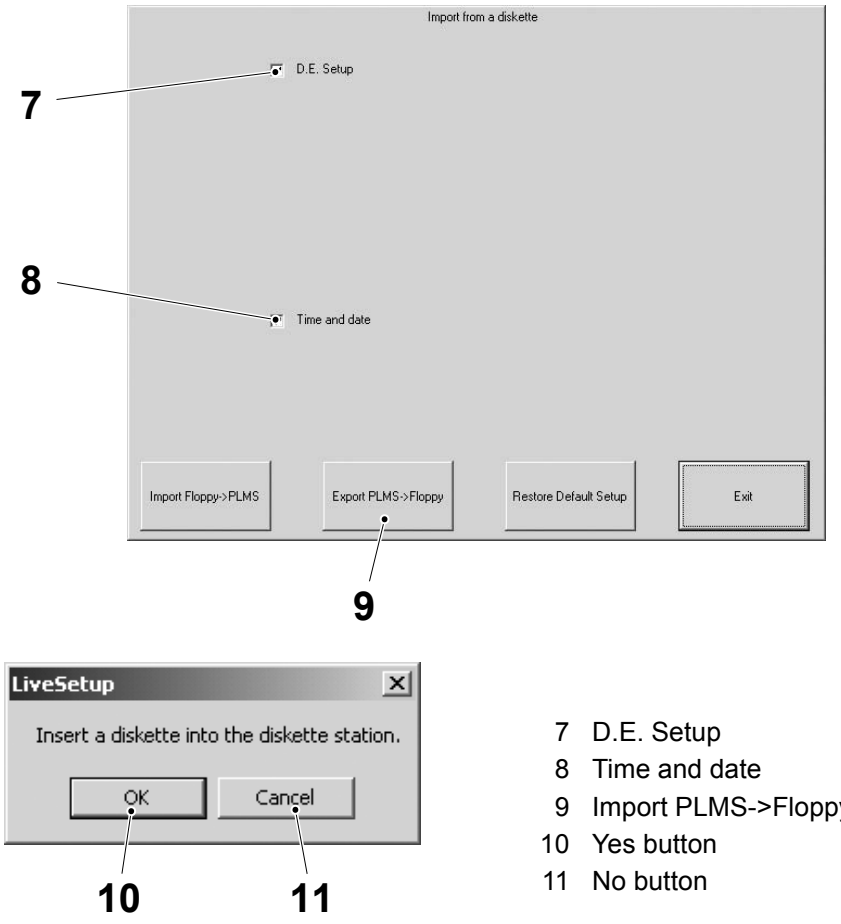

7 D.E. Setup
8 Time and date
9 Import PLMS->Floppy button
10 Yes button
11 No button

(Cont'd)

TechPub_2614345_0105 - 01_2772110_01.fm

(Cont'd)

Restoring the Default Set Up:

a) Touch the RESTORE DEFAULT SETUP button (12).

b) A dialogue box appears. Touch the YES button (13) to continue or the NO button (14) to stop the restore action.

c) If all work in the PLMS is completed, restart and log on as an operator, see 14.9-18 TPOP - Log On Procedure on page 14-202.

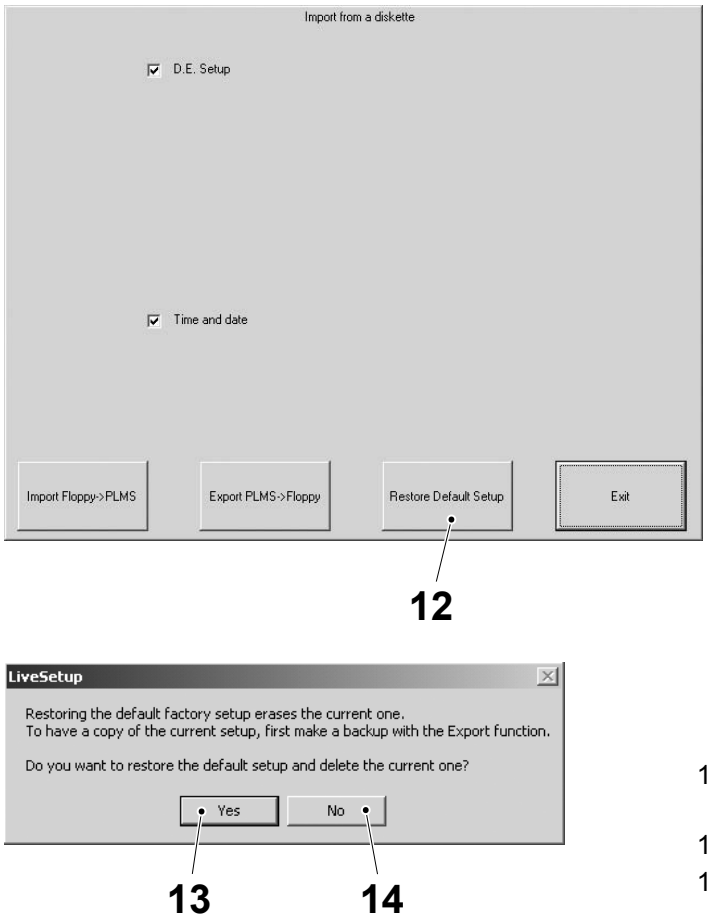

12 Restore Default Setup button
13 Yes button
14 No button

TechPub_2614345_0105 - 01_2772110_01.fm

14.9-18 TPOP - Log On Procedure

Machine Status	Power supply disconnector ON Air supply OFF Steam supply ON Water supply OFF
Special Equipment	Keyboard with PS/2 connector
SPC Reference	2518146-0100

When the machine is switched on, the system automatically logs on as an **operator**. This allows normal operation of the machine. For some purposes, it is necessary to log off as an operator and log on as an **installer**.

The installer has additional privileges and is allowed to:

- install software
- change the configuration
- change the date and time

Log On as an Installer

a) Open the door at the rear of the control panel (1) using a key in the two keyholes (2).

b) Connect a keyboard to the port (3) at the rear of the touch screen.

c) Press CTRL + ESC and choose LOG OFF OPERATOR from the START menu (4).

d) Press the YES button or the ENTER key.

e) Log on with the following identity:
   - User name: **installer**
   - Password: **installer**

After logging on as installer, use the START menu (4) to perform the necessary tasks.

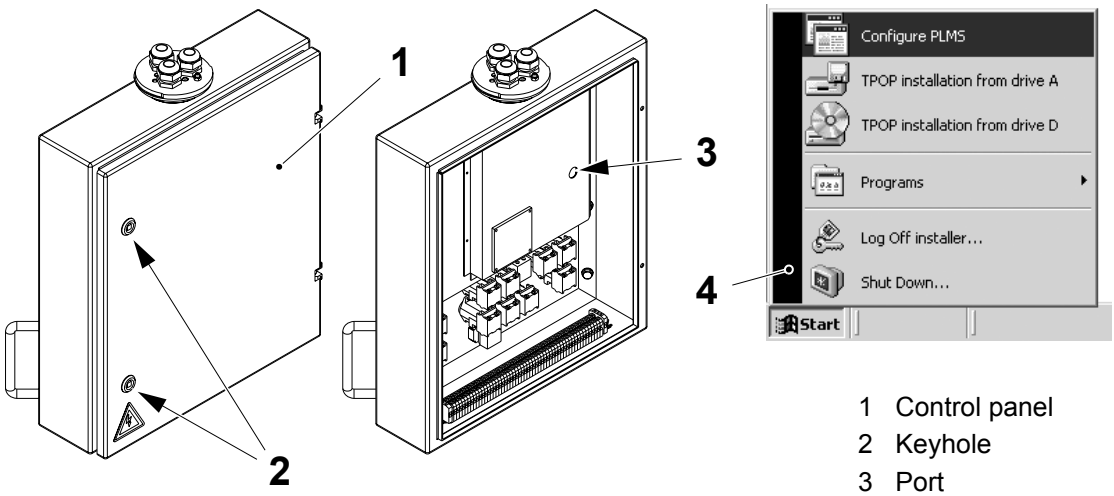

1 Control panel
2 Keyhole
3 Port
4 Start-menu

(Cont'd)

TechPub_2614345_0105 - 01_2772110_01.fm

(Cont'd)

Restart and Log On as an Operator

a) Press CTRL + ESC and choose SHUT DOWN from the START menu.

Note! Always restart Windows 2000 to log on as an operator.

b) Select RESTART from the list and select the OK button or the press ENTER key.

c) Remove the keyboard and close the control panel.

d) The system restarts in normal operating mode and automatically logs on as an operator.

TechPub_2614345_0105 - 01_2772110_01.fm

14.10 Internal Door Fuses

14.10-1 Internal Door Fuses - Check Earth Fault Breaker

Machine Status	Power supply disconnector ON Air supply OFF Steam supply ON Water supply OFF
SPC Reference	1511810-0100

Note! F024 is the earth fault breaker.

a) Make sure that the switch is in the **ON**, position (1).

b) Press the test button (2).

c) The circuit breaker must trip immediately: the switch jumps to the **OFF**, position (3).

CAUTION

Hazardous voltage.

Will cause death or serious injury. If the earth fault breaker does not trip immediately, change it.

d) Put the switch back to the position (1).

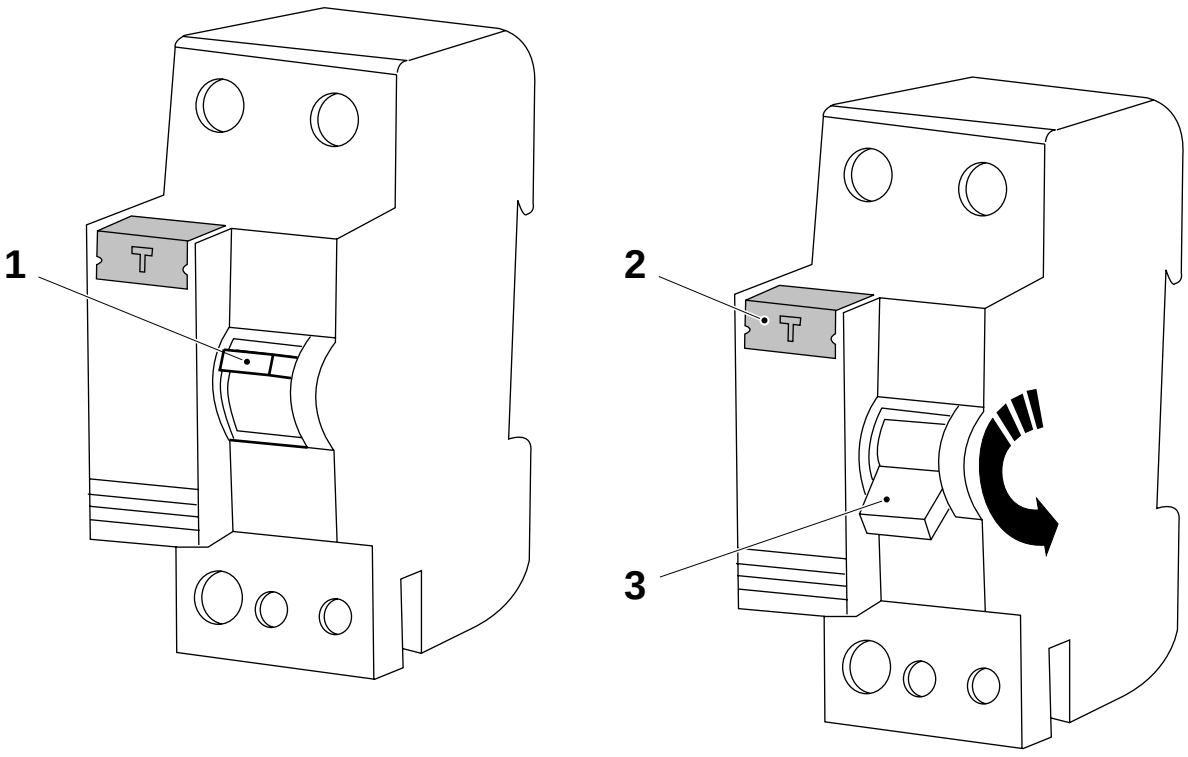

1 Switch (On)
2 Test button
3 Switch (Off)

TechPub_2614345_0105 - 01_2772111_01.fm

15 General

TechPub_2614345_0105 - 01_2772112_01.fm

2006-07-05

General - Description

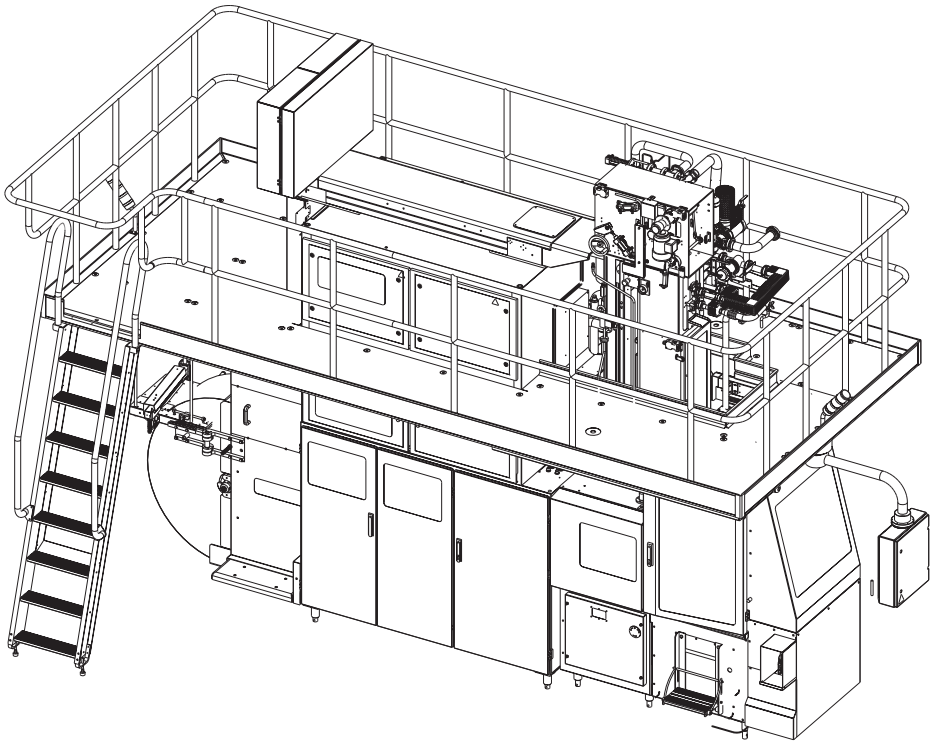

15.1 Technical Data
15.2 Safety Functions
15.3 Lubricants
15.4 Tools and Templates
15.5 Conversion Table, Degrees
15.6 Diagrams

2006-07-05

TechPub_2614345_0105 - 01_2772112_01.fm

15.1 Technical Data . . . . . 15 - 5

15.2 Safety Functions . . . . . 15 - 8

15.2-1 Safety Function - Check . . . . . 15 - 8

15.3 Lubricants . . . . . 15 - 10

15.4 Tools and Templates . . . . . 15 - 12

15.5 Conversion Table, Degrees. . . . . 15 - 20

15.6 Diagrams . . . . . 15 - 21

15.6.1 Water Diagram . . . . . 15 - 21

15.6.2 Lubrication Diagram . . . . . 15 - 22

15.6.3 Hydraulic System. . . . . 15 - 23

15.6.4 Pneumatic Diagram . . . . . 15 - 24

15.6.5 Aseptic Diagram. . . . . 15 - 25

TechPub_2614345_0105 - 01_2772112_01.fm

This page intentionally left blank

2006-07-05

TechPub_2614345_0105 - 01_2772112_01.fm

15.1 Technical Data

Pressures	**Unit**	**Value**
Sterile air	bar (kPa)	0.30 to 0.35 (30 to 35)
Calender rollers		
- TBA 100 B, 125 S	bar (kPa)	2.3 (230)
- TBA 160 S, 200 S	bar (kPa)	2.4 (240)
- TBA 200 M, 250 S	bar (kPa)	2.6 (260)
- TBA 180 B, 284 B, 300 S, 330 S	bar (kPa)	3.0 (300)
LS	bar (kPa)	0.027 (2.7)
LS short stop	bar (kPa)	0.025* (2.5*)
Air to photocell unit and discharger	bar (kPa)	0.1 (10)
Jaw pressure		
- TBA 100 B, 125 S	bar (MPa)	90 to 95 (9.0 to 9.5)
- TBA 160 S, 200 S	bar (MPa)	90 to 96 (9.0 to 9.6)
- TBA 200 M, 250 S	bar (MPa)	92 to 102 (9.2 to 10.2)
- TBA 180 B, 284 B, 300 S, 330 S	bar (MPa)	100 to 110 (10.0 to 11.0)
Cutting pressure	bar (MPa)	80 to 90 (8.0 to 9.0)
Air to spray container	bar (kPa)	3.0 (300)
Flap sealing	bar (kPa)	1.5 to 2.0 (150 to 200)
Pressure device	bar (kPa)	4.0 to 6.0 (400 to 600)
Pressure accumulator, water (cold machine, during start-up)	bar (kPa)	0.5 (50)
Peroxide bath water	bar (kPa)	1.3 (130)
Regulating valve, I/P transducer)		
- during preheating	bar (kPa)	0.1 (10)
- during sterilisation	bar (kPa)	2.0 (200)
- during cleaning	bar (kPa)	4.0 (400)
WTC (pendulum) I/P transducer		
- basic setting	bar (kPa)	0 to 3.0 (0 to 300)
- working range	bar (kPa)	0.5 to 2.5 (50 to 250) TBA 200S 0.5 to 1.5 (50 to 150) TBA 125S 0.3 to 0.8 (30 to 80)

*To be checked after thirty minutes of production.

(Cont'd)

TechPub_2614345_0105 - 01_2772112_01.fm

2006-07-05

(Cont'd)

Pressure switches	Unit	Value
Sterile air	bar (kPa)	0.15 (15)
Input air	bar (MPa)	4.0 (0.4)

Temperatures	Unit	Value
Sterilisation bath, water **PREHEATING**	°C	78*
Sterilisation bath, water	°C	74
Sterilisation bath, peroxide	°C	70
Air superheater	°C	360
Air superheater, **PREHEATING**	°C	400
LS sealed tube, (basic setting)	°C	260
LS sealing, (basic setting)	°C	380
Air knife	°C	125
Pre-sterilisation	°C	270
Flap heater (Top)	°C	360
Flap heater (Bottom)	°C	400
Steam	°C	130
Hot air element (LS SS)	°C	165**

* Basic setting. In case of a cold environment increase if necessary (Maximum 85).

** Basic setting.

Induction heating	Value
Induction heating, transversal sealing (left / right), depending on packaging material type	See section 14.4-8 TPIH System - Set TS Power
Induction heating, strip applicator	See section 14.4-9 TPIH System - Set SA Power

(Cont'd)

2006-07-05

TechPub_2614345_0105 - 01_2772112_01.fm

(Cont'd)

Miscellaneous	Unit	Value
Cooling water, RH jaw pair	l/min	min 0.8
Cooling water, LH jaw pair	l/min	min 0.8
Hydrogen peroxide	% w/w	35

TechPub_2614345_0105 - 01_2772112_01.fm

15.2 Safety Functions

15.2-1 Safety Function - Check

Machine Status	PREHEATING II

Make sure that is **not** possible to inch the machine when any of the doors and covers are open or any of the emergency stops are pushed.

Make sure that when any of the Emergency stops are pushed the machine resets to the ZERO POSITION.

Refer to the doors, covers and emergency stops shown in chapter ii Safety Precautions, sections Safeguards and Emergency Stop.

Check the safety signs shown in section Locations of Safety Signs in chapter ii Safety Precautions.

See also the Optional Equipment MMs.

(Cont'd)

2006-07-05

TechPub_2614345_0105 - 01_2772112_01.fm

(Cont'd)

LS Strip Magazine
Step up to step PRODUCTION.

a) Open the doors (1), push twice the Manual strip splice button (2) and check that the splice function is blocked (the splice is not performed). Close doors (1).

b) Open the doors (1) and repeat the check.

c) In case of malfunction, check and change the safety switches if necessary.

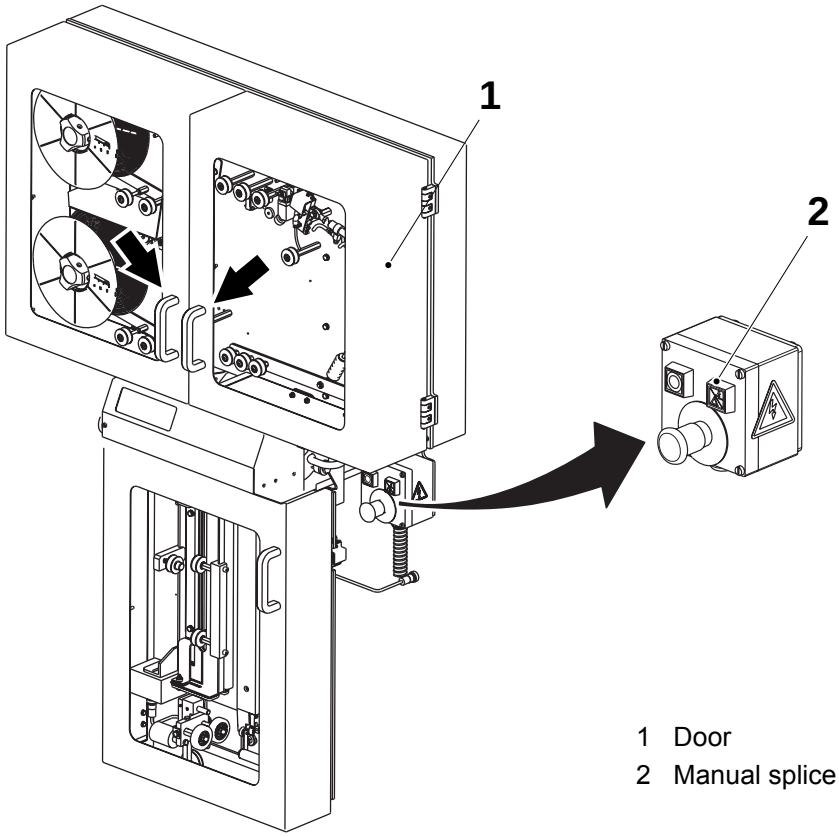

1 Door
2 Manual splice button

TechPub_2614345_0105 - 01_2772112_01.fm

2006-07-05

15.3 Lubricants

The table below lists only a selection of lubricants with their respective designations.

Comparable lubricants from other suppliers may be selected with the aid of the lubricant specifications (Part No. in the table).

Lubricant specifications may be ordered from:
Tetra Pak Global Technical Support AB
Ruben Rausings gata
SE-221 86 LUND
Sweden

Lubricant Code	Part No. (used when ordering from Tetra Pak)	Example	
		Supplier	Product Designation
A Motor oil	90 296-28	Shell	Shell Rimula Oil X 10W-30
B High-pressure oil	90 296-73	Shell	Shell Omala Oil 220
	90 296-72 For use in production plants with start temperatures below 5°C.	Shell	Shell Omala Oil 150
C Hydraulic oil	90 296-53	Shell	Shell Tellus Oil T 32
D Mist lubrication oil	90 296-80	Shell	Shell Dontax Oil TA
E Compounded cylinder oil	90 296-2	Shell	Shell Valvata J460
F Lithium grease, EP type	90 296-68	Shell	Shell Alvania Grease EP 2
H High-pressure oil	90 296-75	Shell	Shell Omala Oil 320
	90 296-73 For use in production plants with start temperatures below 5°C.	Shell	Shell Omala Oil 220
K Circulation oil	90 296-15	Shell	Shell Tellus Oil 100
L Silicone grease	90 296-9	Dow Kluber	Dow Corning 7 Compound Unisilikon L 250L
M Lithium grease, EP type	90 296-70	Shell	Shell Alvania Grease EP 1
N PTFE grease	90 296-91	Sikema	Fluolub 210

2006-07-05

TechPub_2614345_0105 - 01_2772112_01.fm

Lubricant Code	Part No. (used when ordering from Tetra Pak)	Example	
		Supplier	Product Designation
P Synthetic compressor oil	90 296-54	Shell	Shell Corena Oil P68
R Synthetic grease	90 459-246	Kluber	Klubersynth UH1 14-1600
T Synthetic lubricating grease	90 459-0340	Shell	Shell Cassida Grease HDS 2
U Hydraulic fluid	90 459-1310	Shell	Shell Cassida Fluid HF 322

TechPub_2614345_0105 - 01_2772112_01.fm

2006-07-05

15.4 Tools and Templates

Fig.	Description
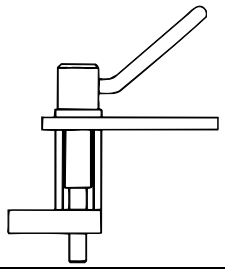	Tool TP No. 449969-101 1 Superstructure
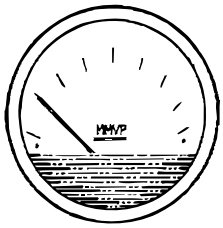	Pressure gauge TP No. 90243-137 1 Superstructure
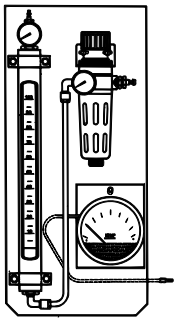	Test equipment TP No. 533014-101 1 Superstructure
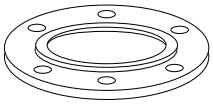	**Flange** TP No. 979952 1 Superstructure
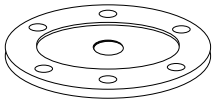	**Flange** TP No. 979951 1 Superstructure
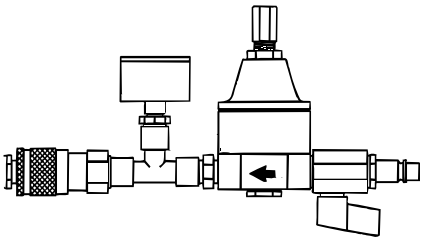	**Hydrostatic test instrument** TP No. 565536 1 Superstructure
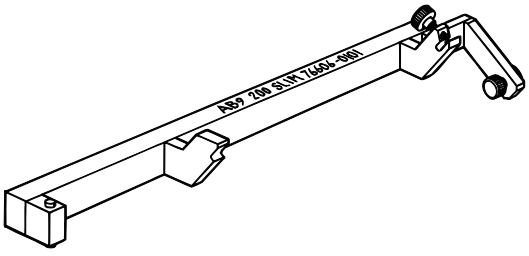	**Tool** TP No. 76133-101 (TBA 100 B, TBA 125 S) TP No. 76606-101 (TBA 160 S, TBA 200 S) TP No. 76595-101 (TBA 180 B - TBA 284 B, TBA 300 S, TBA 330 S) TP No. 590222-201 (TBA 200 M, TBA 250 S) 1 Superstructure

2006-07-05

TechPub_2614345_0105 - 01_2772112_01.fm

Fig.	Description
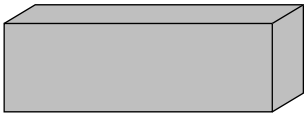	**Spirit level** TP No. 90243-165 1 Superstructure 9 Packaging Material Infeed
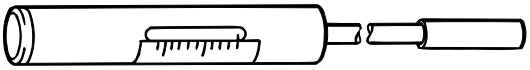	**Dynamometer/Spring balance** TP No. 74767-102 1 Superstructure 3 Drive Unit
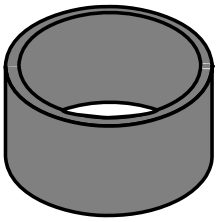	**Template** TP No. 590268 (TBA 200 M, TBA 250 S) TP No. 590269 (TBA 160 S, TBA 200 S) TP No. 590270 (TBA 100 B, TBA 125 S) TP No. 590271 (TBA 180 B, TBA 200 B, TBA 250 B, TBA 284 B, TBA 300 S, 330 S) 1 Superstructure
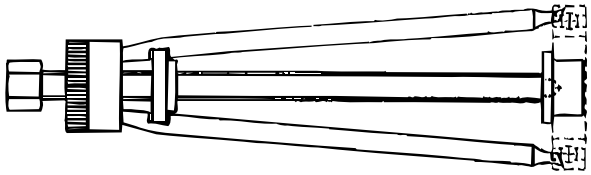	Puller TP No. 76175-101 3 Drive Unit
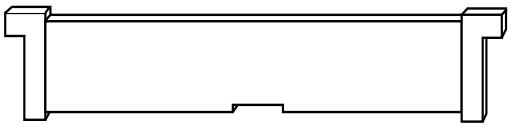	**Template** TP No. 75453 3 Drive Unit
	**Spacer rod** TP No. 75454 3 Drive Unit
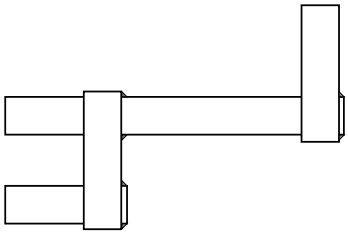	**Template** TP No. 978421 3 Drive Unit

TechPub_2614345_0105 - 01_2772112_01.fm

Fig.	Description
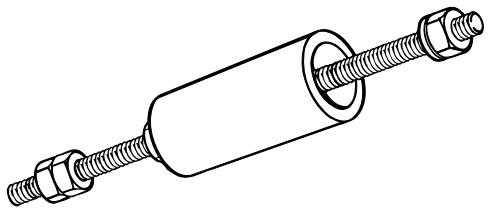	**Extractor** TP No. 77165 3 Drive Unit
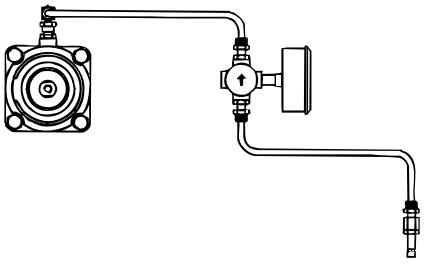	**Overload protection** TP No. 563740-101 3 Drive Unit
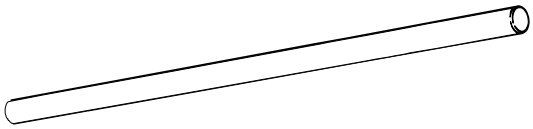	**Guide pins** TP No. 75451 3 Drive Unit
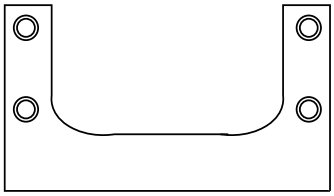	**Template** TP No. 76338 3 Drive Unit
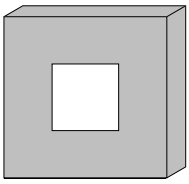	**Spirit level** TP No. 90243-163 3 Drive Unit
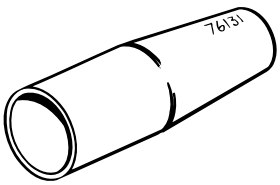	**Assembly cone** TP No. 76131 4 Jaw System
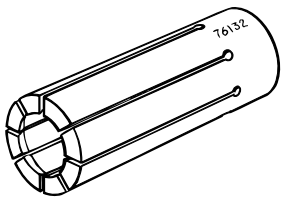	**Assembly tool** TP No. 76132 4 Jaw System
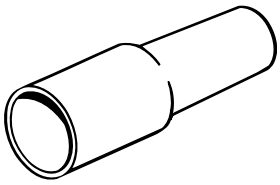	**Calibration tool** TP No. 78801 4 Jaw System

2006-07-05

TechPub_2614345_0105 - 01_2772112_01.fm

Fig.	Description
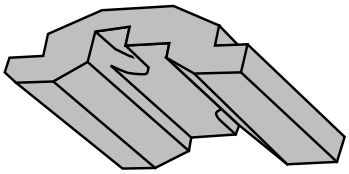	**Template** TP No. 75945 4 Jaw System
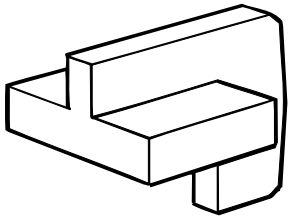	**Template** 4 Jaw System
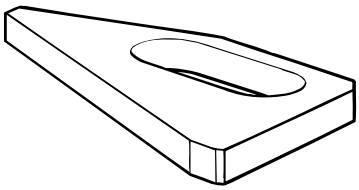	**Template** TP No. 75931-9 (TBA 100 B, TBA 125 S) TP No. 75931-8 (TBA 160 S) TP No. 75931-10 (TBA 200 S, TBA 250 S) TP No. 75931-11 (TBA 200 B) TP No. 75931-5 (TBA 200 M, TBA 250 B) TP No. 75931-12 (TBA 284 B, TBA 300 S) TP No. 75931-14 (TBA 330 S) 4 Jaw System
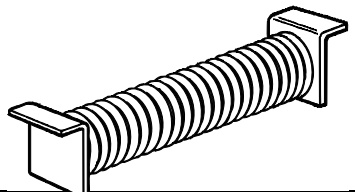	**Spring** TP No. 76304-101 4 Jaw System
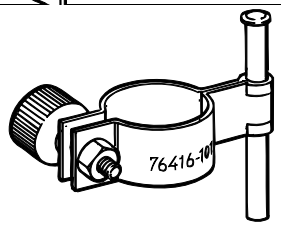	**Measuring clamp** TP No. 76416-101 4 Jaw System
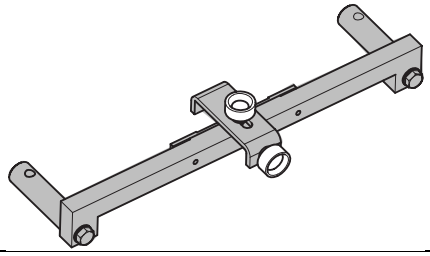	**Template** TP No. 76301-101 4 Jaw System
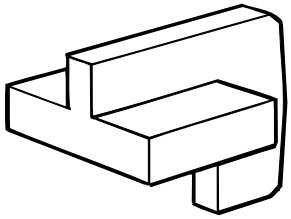	**Template** TP No. 75943 (TBA 100 B, TBA 125 S) TP No. 75944 (TBA 160 S, TBA 200 S) TP No. 75939 (TBA 180 B - TBA 284 B, TBA 300 S, TBA 330 S) TP No. 574455 (TBA 200 M, TBA 250 S) 4 Jaw System

TechPub_2614345_0105 - 01_2772112_01.fm

Fig.	Description
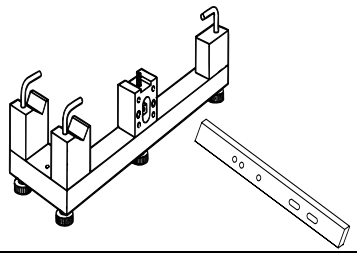	**Yoke** TP No. 76291-101 **Ruler** TP No. 76298 4 Jaw System
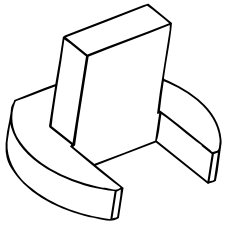	**Template** TP No. 75937 (TBA 100 B, TBA 125 S) TP No. 75176 (TBA 160 S, TBA 200 S) TP No. 75936 (TBA 180 B - TBA 200 B, TBA 250 B, TBA 284 B, TBA 300 S, TBA 330 S) TP No. 574454 (TBA 200 M, TBA 250 S) 4 Jaw System
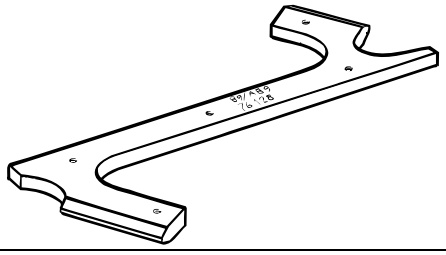	SPC reference 2641477-0100 **Template** TP No. 76128 5 Final Folder
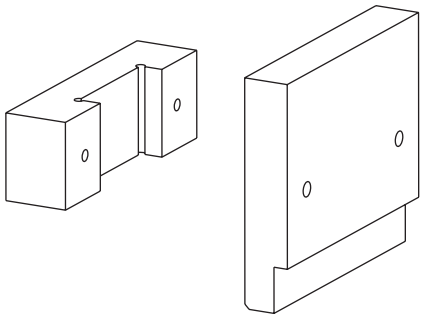	SPC reference 2552941-0100 **Template** TP No. 1517517 **Clamp** TP No. 1517518-1 (TBA 100 B, TBA 125 S, TBA 160 S, TBA 200 S) TP No. 1517518-2 (TBA 180 B, TBA 200 B, TBA 250 B, TBA 284 B, TBA 300 S, TBA 330 S) TP No. 1517518-3 (TBA 200 M, TBA 250 S) 5 Final Folder
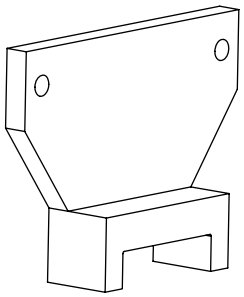	SPC reference 2552943-0100 **Template** TP No. 1512453-1 (TBA 250 S) TP No. 1512453-2 (TBA 100 B) TP No. 1512453-3 (TBA 125 S) TP No. 1512453-4 (TBA 160 S) TP No. 1512453-5 (TBA 180 B) TP No. 1512453-6 (TBA 200 B) TP No. 1512453-7 (TBA 200 M) TP No. 1512453-8 (TBA 200 S) TP No. 1512453-9 (TBA 250 B) TP No. 1512453-10 (TBA 330 S) TP No. 1512453-11 (TBA 300 S, TBA 284 B) 5 Final Folder

2006-07-05

TechPub_2614345_0105 - 01_2772112_01.fm

Fig.	Description
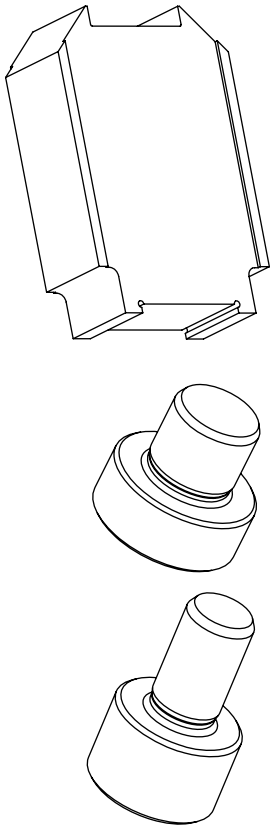	SPC reference 2552944-0100 **Template** TP No. 2552945-1 (TBA 250 S) TP No. 2552945-2 (TBA 100 B) TP No. 2552945-3 (TBA 125 S) TP No. 2552945-4 (TBA 160 S) TP No. 2552945-5 (TBA 180 B) TP No. 2552945-6 (TBA 200 B) TP No. 2552945-7 (TBA 200 M) TP No. 2552945-8 (TBA 200 S) TP No. 2552945-9 (TBA 250 B) TP No. 2552945-10 (TBA 330 S) TP No. 2552945-11 (TBA 300 S, TBA 284 B) **Common template** TP No. 2610197 TP No. 2610198 5 Final Folder
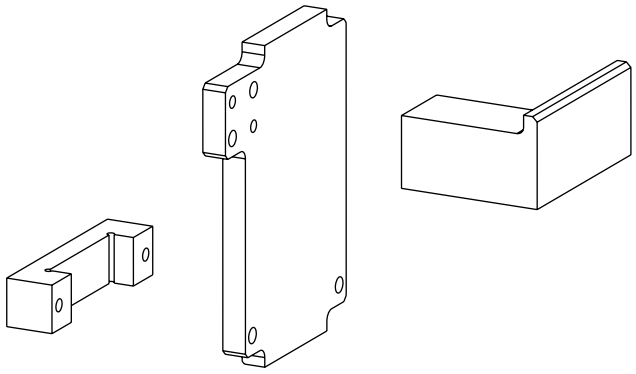	SPC reference 2552949-0100 **Template** TP No. 2552950-1 (TBA 250 S, TBA 160 S, TBA 200 B, TBA 200 M, TBA 200 S) TP No. 2552950-2 (TBA 100 B, TBA 125 S) TP No. 2552950-3 (TBA 180 B, TBA 250 B, TBA 284 B, TBA 300 S, TBA 330 S) **Clamp** TP No. 2552951-1 (TBA 200 M, TBA 250 S) TP No. 2552951-2 (TBA 180 B, TBA 200 B, TBA 250 B,TBA 284 B, TBA 300 S, TBA 330 S) TP No. 2552951-3 (TBA 100 B, TBA 125 S, TBA 160 S, TBA 200 S) **Plate** TP No. 2552952-1 (TBA 250 S) TP No. 2552952-2 (TBA 100 B) TP No. 2552952-3 (TBA 125 S) TP No. 2552952-4 (TBA 160 S) TP No. 2552952-5 (TBA 180 B) TP No. 2552952-6 (TBA 200 B) TP No. 2552952-7 (TBA 200 M) TP No. 2552952-8 (TBA 200 S) TP No. 2552952-9 (TBA 250 B) TP No. 2552952-10 (TBA 330 S) TP No. 2552952-11 (TBA 284 B, TBA 300 S) 5 Final Folder

TechPub_2614345_0105 - 01_2772112_01.fm

Fig.	Description
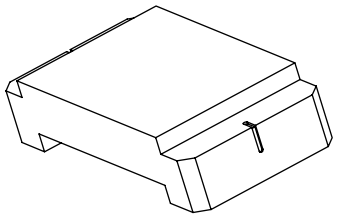	SPC reference 2552946-0100 Template TP No. 1512450-1 (TBA 200 M, TBA 250 S) TP No. 1512450-2 (TBA 100 B, TBA 125 S) TP No. 1512450-3 (TBA 180 B, TBA 200 B, TBA 250 B, TBA 284 B, TBA 300 S, TBA 330 S) TP No. 1512450-4 (TBA 160 S, TBA 200 S) 5 Final Folder
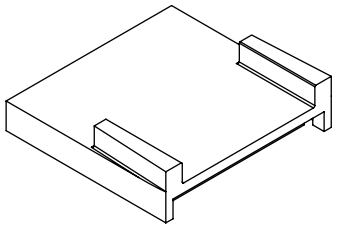	SPC reference 2552947-0100 Template TP No. 2552948-1 (TBA 200 M, TBA 250 S) TP No. 2552948-2 (TBA 100 B, TBA 125 S) TP No. 2552948-3 (TBA 180 B, TBA 200 B, TBA 250 B, TBA 284 B, TBA 300 S, TBA 330 S) TP No. 2552948-4 (TBA 160 S, TBA 200 S) 5 Final Folder
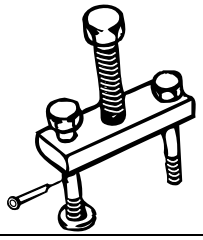	**Extractor** TP No. 74305-101 6 Service Unit
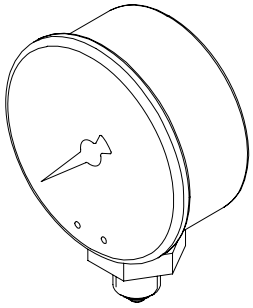	Manometer TP No 90458-0811 6 Service Unit
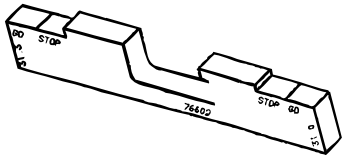	**Template** TP No. 76602 9 Packaging Material Infeed
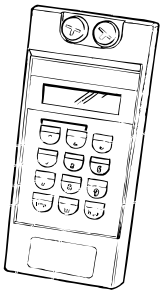	**Calibrator Micromite II** TP No. 90410-338 14 Electrical Equipment

2006-07-05

TechPub_2614345_0105 - 01_2772112_01.fm

Fig.	Description
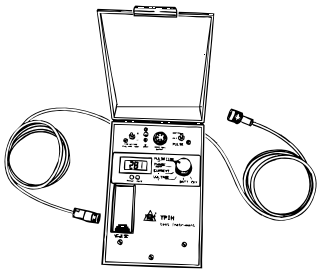	**Test instrument** TP No. 68462-101 14 Electrical Equipment
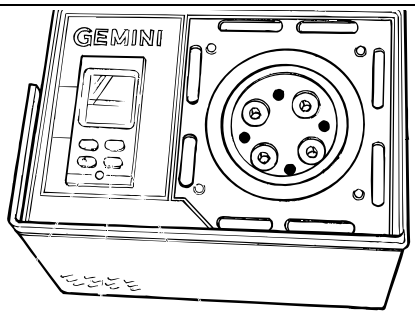	**Gemini oven** TP No 90410-337 14 Electrical Equipment
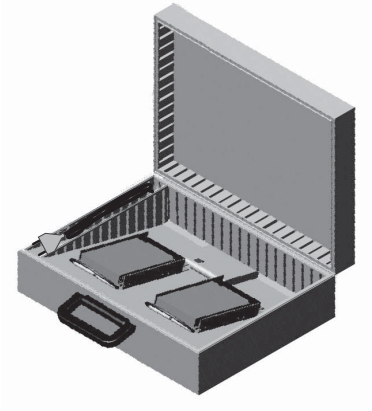	**HD Copy Tool** TP No. 90459-6473 14 Electrical Equipment

TechPub_2614345_0105 - 01_2772112_01.fm

15.5 Conversion Table, Degrees

Oct	Dec	Mech	Oct	Dec	Mech	Oct	Dec	Mech	Oct	Dec	Mech
0	0	0.0	100	64	90.0	200	128	180.0	300	192	270.0
1	1	1.4	101	65	91.4	201	129	181.4	301	193	271.4
2	2	2.8	102	66	92.8	202	130	182.8	302	194	272.8
3	3	4.2	103	67	94.2	203	131	184.2	303	195	274.2
4	4	5.6	104	68	95.6	204	132	185.6	304	196	275.6
5	5	7.0	105	69	97.0	205	133	187.0	305	197	277.0
6	6	8.4	106	70	98.4	206	134	188.4	306	198	278.4
7	7	9.8	107	71	99.8	207	135	189.8	307	199	279.8
10	8	11.3	110	72	101.3	210	136	191.3	310	200	281.3
11	9	12.7	111	73	102.7	211	137	192.7	311	201	282.7
12	10	14.1	112	74	104.1	212	138	194.1	312	202	284.1
13	11	15.5	113	75	105.5	213	139	195.5	313	203	285.5
14	12	16.9	114	76	106.9	214	140	196.9	314	204	286.9
15	13	18.3	115	77	108.3	215	141	198.3	315	205	288.3
16	14	19.7	116	78	109.7	216	142	199.7	316	206	289.7
17	15	21.1	117	79	111.1	217	143	201.1	317	207	291.1
20	16	22.5	120	80	112.5	220	144	202.5	320	208	292.5
21	17	23.9	121	81	113.9	221	145	203.9	321	209	293.9
22	18	25.3	122	82	115.3	222	146	205.3	322	210	295.3
23	19	26.7	123	83	116.7	223	147	206.7	323	211	296.7
24	20	28.1	124	84	118.1	224	148	208.1	324	212	298.1
25	21	29.5	125	85	119.5	225	149	209.5	325	213	299.5
26	22	30.9	126	86	120.9	226	150	210.9	326	214	300.9
27	23	32.3	127	87	122.3	227	151	212.3	327	215	302.3
30	24	33.8	130	88	123.8	230	152	213.8	330	216	303.8
31	25	35.2	131	89	125.2	231	153	215.2	331	217	305.2
32	26	36.6	132	90	126.6	232	154	216.6	332	218	306.6
33	27	38.0	133	91	128.0	233	155	218.0	333	219	308.0
34	28	39.4	134	92	129.4	234	156	219.4	334	220	309.4
35	29	40.8	135	93	130.8	235	157	220.8	335	221	310.8
36	30	42.2	136	94	132.2	236	158	222.2	336	222	312.2
37	31	43.6	137	95	133.6	237	159	223.6	337	223	313.6
40	32	45.0	140	96	135.0	240	160	225.0	340	224	315.0
41	33	46.4	141	97	136.4	241	161	226.4	341	225	316.4
42	34	47.8	142	98	137.8	242	162	227.8	342	226	317.8
43	35	49.2	143	99	139.2	243	163	229.2	343	227	319.2
44	36	50.6	144	100	140.6	244	164	230.6	344	228	320.6
45	37	52.0	145	101	142.0	245	165	232.0	345	229	322.0
46	38	53.4	146	102	143.4	246	166	233.4	346	230	323.4
47	39	54.8	147	103	144.8	247	167	234.8	347	231	324.8
50	40	56.3	150	104	146.3	250	168	236.3	350	232	326.3
51	41	57.7	151	105	147.7	251	169	237.7	351	233	327.7
52	42	59.1	152	106	149.1	252	170	239.1	352	234	329.1
53	43	60.5	153	107	150.5	253	171	240.5	353	235	330.5
54	44	61.9	154	108	151.9	254	172	241.9	354	236	331.9
55	45	63.3	155	109	153.3	255	173	243.3	355	237	333.3
56	46	64.7	156	110	154.7	256	174	244.7	356	238	334.7
57	47	66.1	157	111	156.1	257	175	246.1	357	239	336.1
60	48	67.5	160	112	157.5	260	176	247.5	360	240	337.5
61	49	68.9	161	113	158.9	261	177	248.9	361	241	338.9
62	50	70.3	162	114	160.3	262	178	250.3	362	242	340.3
63	51	71.7	163	115	161.7	263	179	251.7	363	243	341.7
64	52	73.1	164	116	163.1	264	180	253.1	364	244	343.1
65	53	74.5	165	117	164.5	265	181	254.5	365	245	344.5
66	54	75.9	166	118	165.9	266	182	255.9	366	246	345.9
67	55	77.3	167	119	167.3	267	183	257.3	367	247	347.3
70	56	78.8	170	120	168.8	270	184	258.8	370	248	348.8
71	57	80.2	171	121	170.2	271	185	260.2	371	249	350.2
72	58	81.6	172	122	171.6	272	186	261.6	372	250	351.6
73	59	83.0	173	123	173.0	273	187	263.0	373	251	353.0
74	60	84.4	174	124	174.4	274	188	264.4	374	252	354.4
75	61	85.8	175	125	175.8	275	189	265.8	375	253	355.8
76	62	87.2	176	126	177.2	276	190	267.2	376	254	357.2
77	63	88.6	177	127	178.6	277	191	268.6	377	255	358.6

2006-07-05

TechPub_2614345_0105 - 01_2772112_01.fm

15.6 Diagrams

15.6.1 Water Diagram

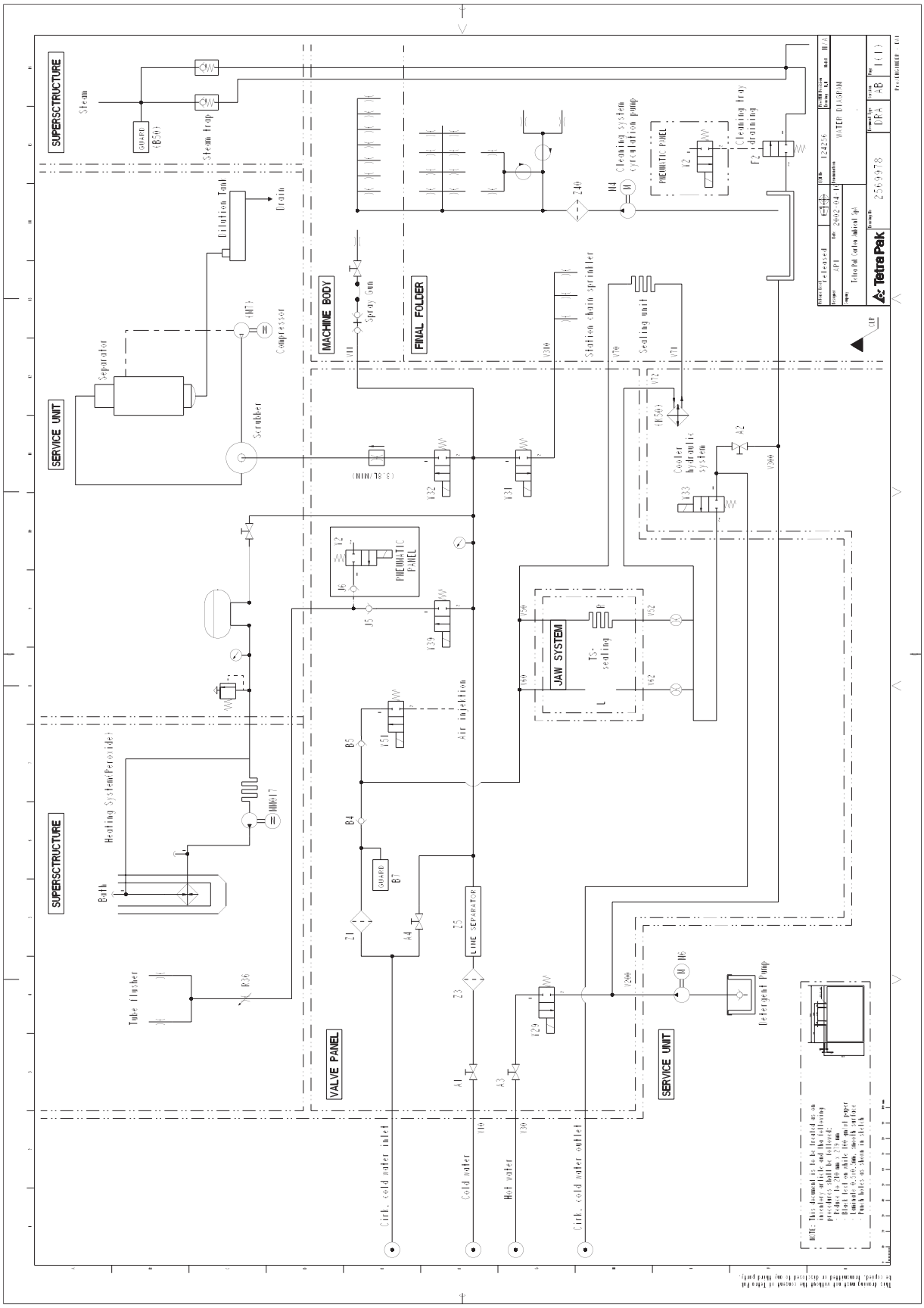

TechPub_2614345_0105 - 01_2772112_01.fm

2006-07-05

15.6.2 Lubrication Diagram

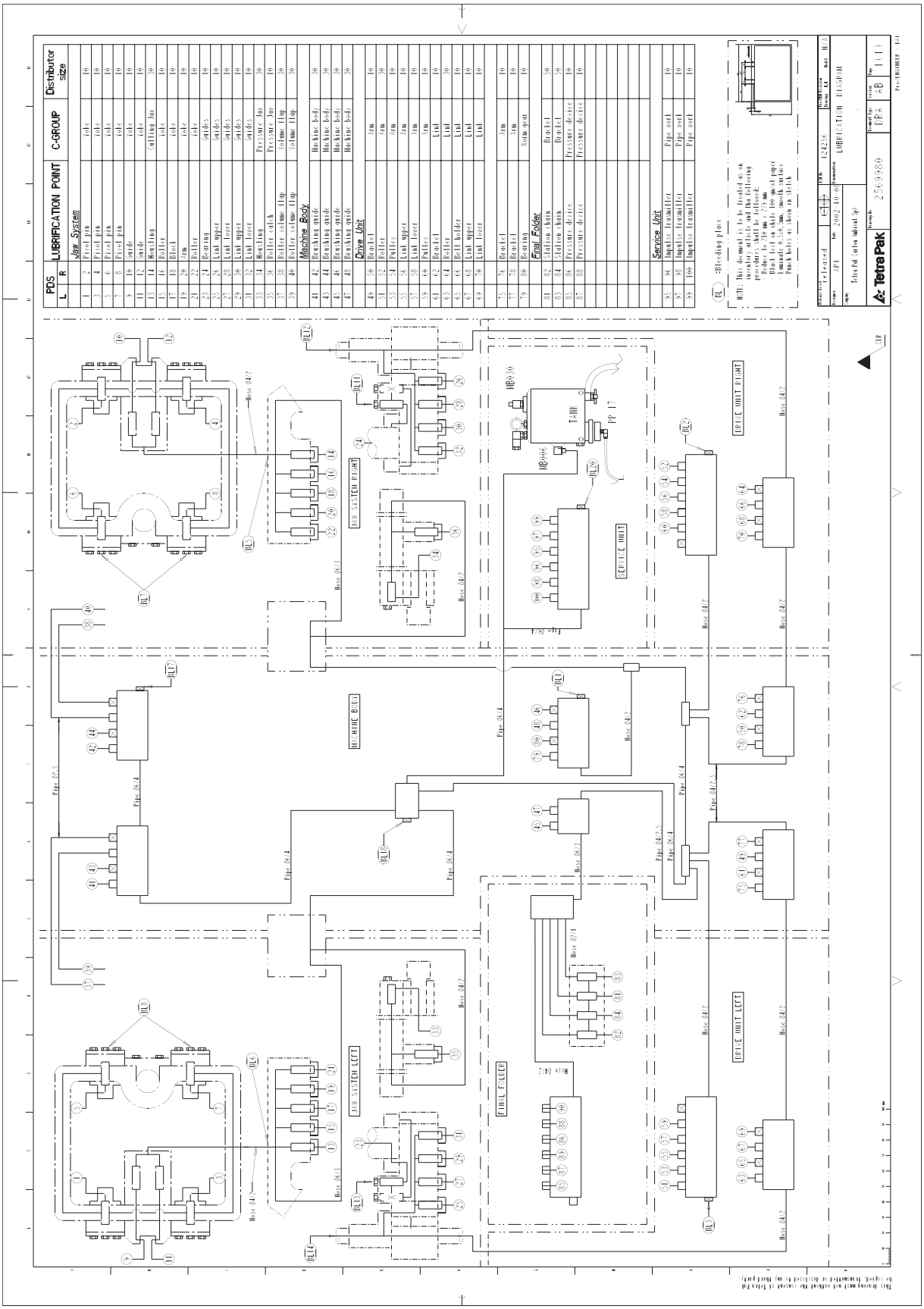

TechPub_2614345_0105 - 01_2772112_01.fm

15.6.3 Hydraulic System

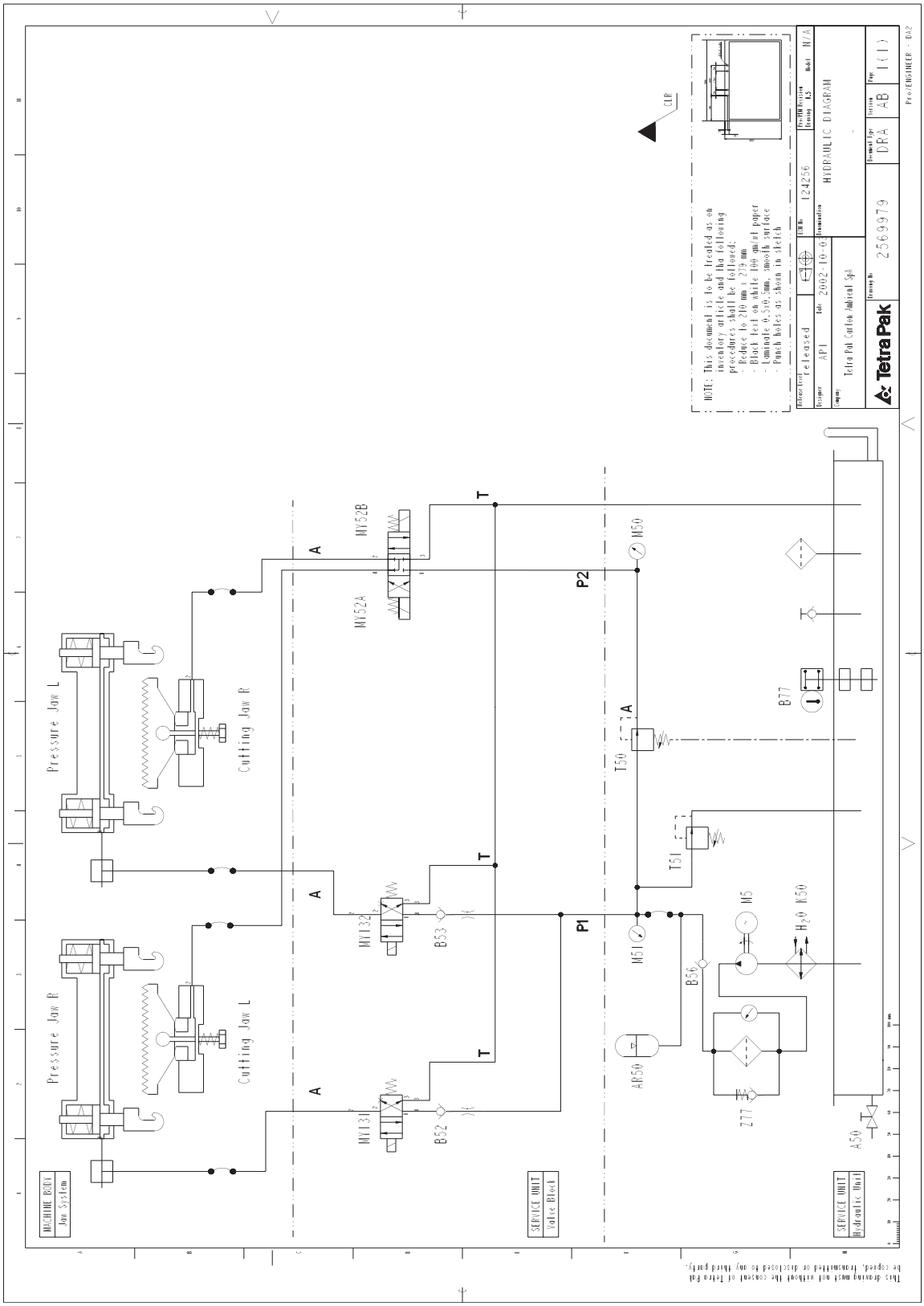

This drawing must not without the consent of Tetra Pak be copied, transmitted or disclosed to any third party.

TechPub_2614345_0105 - 01_2772112_01.fm

15.6.4 Pneumatic Diagram

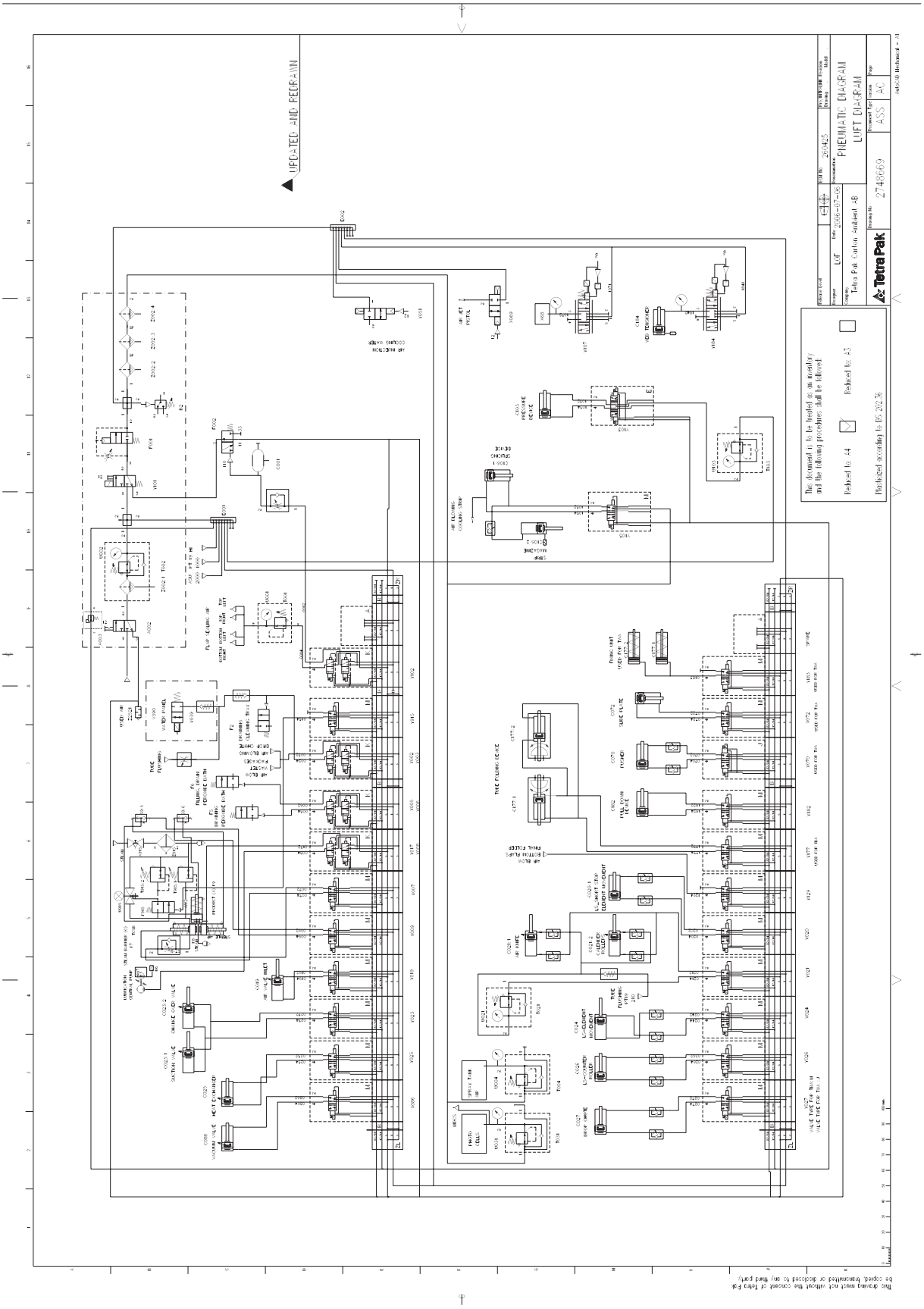

2006-07-05

TechPub_2614345_0105 - 01_2772112_01.fm

15.6.5 Aseptic Diagram

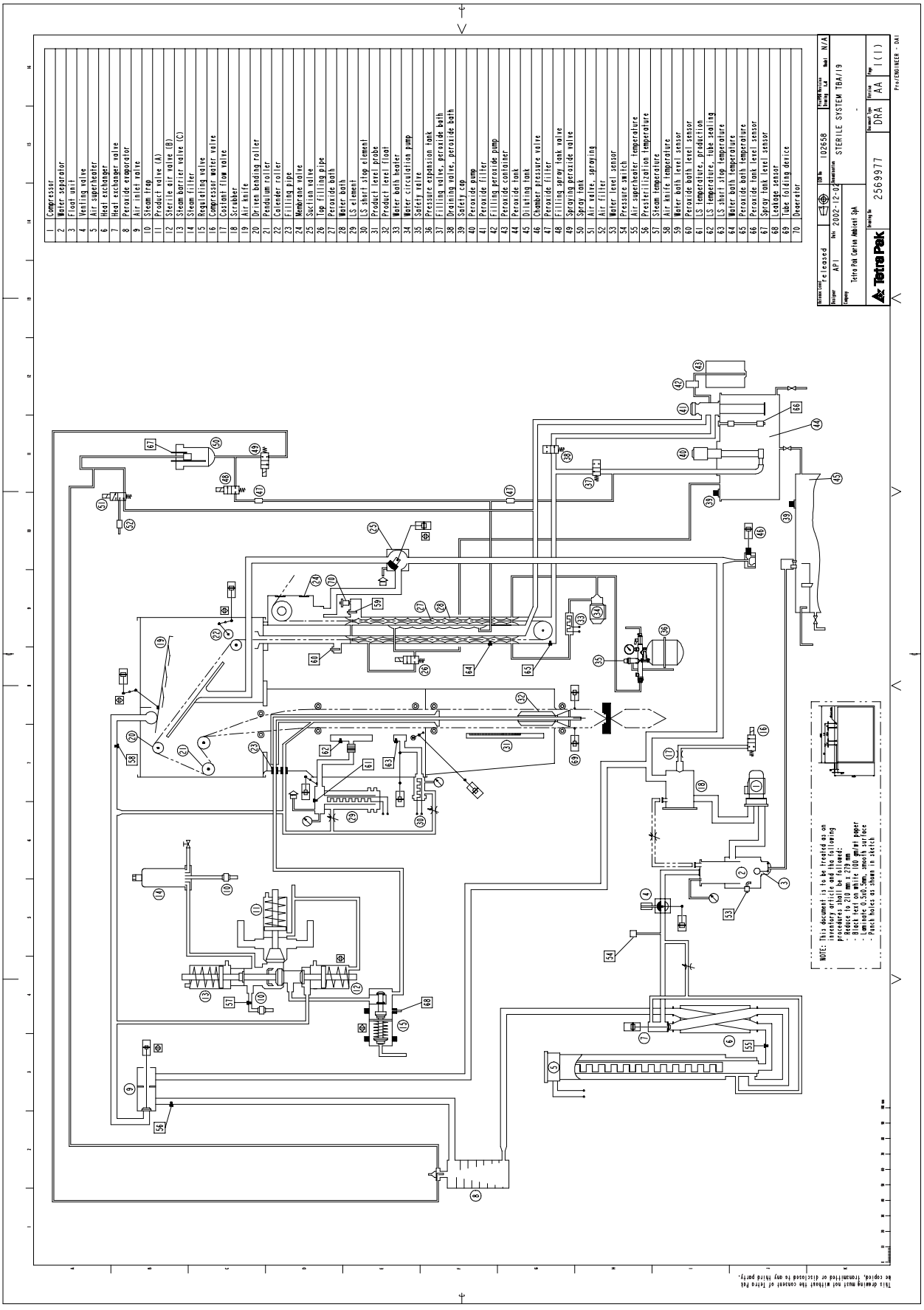

2006-07-05

TechPub_2614345_0105 - 01_2772112_01.fm

This page intentionally left blank

2006-07-05

TechPub_2614345_0105 - 01_2772112_01.fm

A

Air Cooler - Check . . . . . 14 - 22
Air Knife - Check . . . . . 1 - 92
Air Knife - Set Temperature . . . . . 1 - 95
Air Nozzle (LS) - Check Pressures . . . . . 1 - 129
Air Nozzle (LS) - Set . . . . . 1 - 120
Angle Encoder - Change . . . . . 3 - 65
Angle Encoder - Remove Bracket . . . . . 3 - 62
Angle Encoder - Set Sensor . . . . . 3 - 63
Angle Encoder - Synchronise . . . . . 3 - 64
AP Valve - Change A and B Cylinder Seals . 1 - 47
AP Valve - Change C Cylinder Seals . . . . . 1 - 50
AP Valve - Change Seals and Diaphragm . . . 1 - 43
AP Valve - Remove Cylinders . . . . . 1 - 41
Arm - Check Timing Belt Rollers . . . . . 3 - 22
Aseptic Chamber - Change Sealing Lip . . . . . 1 - 84
Aseptic Chamber - Check Cleaning Cup Sensor . . . . . 1 - 88
Aseptic Chamber - Check Support Roller . . . 1 - 85
Aseptic Chamber - Measure Leakages . . . . . 1 - 15
Aseptic Chamber - Set Cleaning Cup Sensor 1 - 86

B

Basic Jaw System Setting . . . . . 4 - 5
Bath - Change Chain Seals . . . . . 1 - 24
Bath - Change Lower Bending Roller Bushing and Shaft . . . . . 1 - 26
Bath - Change Upper Bending Roller Bushings . . . . . 1 - 27
Bath - Check Air Vent Valves . . . . . 1 - 31
Bath - Check Lower Bending Roller . . . . . 1 - 25
Bath - Check Microswitches . . . . . 1 - 22
Bath - Check Suction Box Seal . . . . . 1 - 20
Bath - Check Upper Level Filling Valve for Leakage . . . . . 1 - 29
Bath - Set Microswitches . . . . . 1 - 23
Bending Roller - Overhaul . . . . . 1 - 89
Bending Roller - Set . . . . . 1 - 91
Bending Roller (Driven) - Overhaul . . . . . 1 - 153
Brake Arm - Check Function . . . . . 7 - 29
Brake Arm - Set . . . . . 7 - 30

C

Cabinet H2O2 - Check Transfer Function . . . . 6 - 33
Calender Rollers - Change Bearings . . . . . 1 - 64
Calender Rollers - Check During Operation . . 1 - 64
Calender Rollers - Check Rubber Surfaces . . 1 - 63
Calender Rollers - Set . . . . . 1 - 68
Calibrator - Set Fluke 714 . . . . . 14 - 19
Calibrator - Set Micromite II . . . . . 14 - 17
Cantilever - Check Chain Tensioner . . . . . 5 - 91
Cantilever - Overhaul Chain Tensioner . . . . . 5 - 92
Central Lubrication - Change Pump . . . . . 6 - 36
Central Lubrication - Check Pressure . . . . . 6 - 35
Central Lubrication - Clean Oil Tank . . . . . 6 - 34
Change Over Valve (Suction) - Overhaul . . . 1 - 111
Cleaning System - Change Pump . . . . . 5 - 72
Cleaning System - Check Pump . . . . . 5 - 72
Cleaning System - Check Rotors and Nozzles 5 - 69
Cleaning System - Set Nozzles . . . . . 5 - 71
Compressor Unit - Change Seals . . . . . 6 - 18
Compressor Unit - Check For Leaks and Vibrations . . . . . 6 - 17
Connection Box - Check Sterile Air Pressure Switch . . . . . 2 - 5
Crank - Check Mechanism and Switch . . . . . 3 - 39
Crank - Set Switch . . . . . 3 - 40
Curve Pack - Change . . . . . 3 - 46
Curve Pack - Set Cam Segment . . . . . 3 - 53
Curve Pack - Set Degree Scale . . . . . 3 - 55
Curve Pack - Set Pointer . . . . . 3 - 57
Curve Pack - Set Worm Gear Alignment . . . . 3 - 61
Curve Pack - Synchronise . . . . . 3 - 58
Cutting Jaw - Bleed . . . . . 4 - 39
Cutting Jaw - Change . . . . . 4 - 36
Cutting Jaw - Check Folding Flap Mechanism 4 - 40
Cutting Jaw - Overhaul . . . . . 4 - 29
Cutting Jaw - Overhaul Knife Holder . . . . . 4 - 35
Cutting Jaw - Overhaul Shock Absorber . . . . . 4 - 42
Cutting Jaw - Set Folding Flap Parallelism . . . 4 - 26
Cutting Table - Check . . . . . 7 - 24

TechPub_2614345_0105 - MM_19_030V_0102IOM.fm

D

Dating Unit - Set . . . . . 9 - 16
Disconnection Link - Change Force Limiting Device . . . . . 3 - 45
Disconnection Link - Check . . . . . 3 - 41
Disconnection Link - Set . . . . . 3 - 43
Divided Forming Ring - Overhaul . . . . . 1 - 79
Drive - Check Oil Distribution . . . . . 3 - 5
Drive Wheel - Overhaul . . . . . 5 - 15
Drop Chute - Remove . . . . . 2 - 6
Drop Chute - Set . . . . . 2 - 8

E

Electrical Equipment - Set Photocells . . . . . 9 - 35

F

Filler Pipe - Check Pressure Roller Spring Force . . . . . 1 - 140
Filling Pipe - Check . . . . . 1 - 134
Filling Pipe - Set . . . . . 1 - 135
Filling System - Check First Package . . . . 14 - 120
Filling System - Check Parameters . . . . . 14 - 120
Filling System - Display Report . . . . . 14 - 115
Filling System - Filling Mode Selection . . . 14 - 123
Filling System - Floater Calibration . . . . . 14 - 121
Filling System - Function Description . . . . . 14 - 107
Filling System - Level Regulator Relay . . . 14 - 127
Filling System - Load Program . . . . . 14 - 119
Filling System - Set Communication . . . . . 14 - 115
Filling System - Set Filling Window . . . . . 14 - 123
Filling System - Set I/P Transducer . . . . . 14 - 122
Filling System - Setting Sequence . . . . . 14 - 114
Final Folder - Check Oil Distribution . . . . . 5 - 5
Flap Heater - Overhaul . . . . . 5 - 56
Flap Heater - Set Air Flow . . . . . 5 - 58
Flap Heater - Set Air Nozzles . . . . . 5 - 53
Folding Bar - Set . . . . . 5 - 87
Forming Unit - Set . . . . . 5 - 94
Frame - Change Damper . . . . . 5 - 59
Frame - Set . . . . . 5 - 60
Frequency Converter - Check . . . . . 14 - 129
Frequency Converter - Set . . . . . 14 - 130

G

Guide - Change Rails and Plates . . . . . 5 - 65
Guide - Check Rails and Plates . . . . . 5 - 64
Guide - Set . . . . . 5 - 67

H

Heat Exchanger - Check Tightness . . . . . 1 - 96
Heating Block and Counter Rail - Check Teflon Tape and Cloth . . . . . 9 - 8
Heating Device - Check . . . . . 7 - 25
Heating Device - Set Cut Pulse Time . . . . . 7 - 28
Heating Device - Set position . . . . . 7 - 26
Hold-Down Device - Change Timing Belts . . . 3 - 35
Hot Air Element (LS SS) - Check Packages . 1 - 114
Hot Air Element (LS SS) - Set Nozzle . . . . . 1 - 115
Hub Jumbo - Check . . . . . 7 - 22
Hydraulic System - Change Oil and Filter . . . . 6 - 37
Hydraulic System - Check Accumulator . . . . . 6 - 40
Hydraulic System - Check Oil Level and Filter Indicator . . . . . 6 - 38
Hydraulic System - Check Pressures . . . . . 6 - 39

I

Indexing Unit - Change . . . . . 5 - 24
Indexing Unit - Change Oil . . . . . 5 - 20
Indexing Unit - Check Cut Out Torque . . . . . 5 - 22
Indexing Unit - Check Oil Level . . . . . 5 - 21
Inductor - Set . . . . . 7 - 13
Inductor - Set Rail . . . . . 7 - 12
Ink Unit - Overhaul . . . . . 9 - 11
Ink Unit - Set . . . . . 9 - 14
Internal Door Fuses - Check Earth Fault Breaker . . . . . 14 - 204

TechPub_2614345_0105 - MM_19_030V_0102IOM.fm

J

Jaw System - Check Jaw Over Jaw . . . . . 4 - 8
Jaw System - Check Oil Distribution . . . . . 4 - 25
Jaw System - Check Parallelism in Movement 4 - 20
Jaw System - Check Stroke . . . . . 4 - 12
Jaw System - Check Stroke During Production . . . . . 4 - 16
Jaw System - Check T-measurement . . . . . 4 - 17
Jaw System - Set Cam Support Rollers . . . . . 4 - 22
Jaw System - Set Catch Lifter Cams and Rollers . . . . . 4 - 23
Jaw System - Set Cutting Jaw and Pressure Jaw Alignment . . . . . 4 - 18
Jaw System - Set Jaw Gap . . . . . 4 - 7
Jaw System - Set Jaw Over Jaw . . . . . 4 - 9
Jaw System - Set Parallelism in Movement . . 4 - 21
Jaw System - Set Stroke . . . . . 4 - 14

L

Level Probe - Check Lower Filling Pipe . . . . 1 - 133
Level Probe - Set . . . . . 1 - 130
Link System - Change Arm Bearings . . . . . 3 - 28
Link System - Change Slewing Bracket Bearings . . . . . 3 - 32
Link System - Check Bearings . . . . . 3 - 26
Link System - Check Cam Roller Condition . . 3 - 24
Lower Forming Ring - Overhaul . . . . . 1 - 81
Lower Forming Ring - Set Counter Roller . . . 1 - 83
LS Overlap - Set . . . . . 1 - 75

M

MDCS - Calibrate Cylinders . . . . . 4 - 65
MDCS - Change Bushings, Folding Flap Cams and Eccentric . . . . . 4 - 70
MDCS - Change Cylinders . . . . . 4 - 60
MDCS - Change Rod End . . . . . 4 - 59
MDCS - Check Condition . . . . . 4 - 68
MDCS - Check Drives . . . . . 14 - 101
MDCS - Check Pressures . . . . . 4 - 71
MDCS - Check Sensors . . . . . 4 - 64
MDCS - Display Report . . . . . 14 - 96
MDCS - Function Description . . . . . 14 - 89
MDCS - Load Program . . . . . 14 - 100
MDCS - Set Communication . . . . . 14 - 95
MDCS - Set Cylinder . . . . . 4 - 61
MDCS - Set I/P Transducer . . . . . 14 - 104
Mounting Plate - Check Proximity Switches . . 7 - 20
Mounting Plate - Check Rollers . . . . . 7 - 19
Mounting Plate - Set Roller . . . . . 7 - 21
Movable Forming Ring - Overhaul . . . . . 1 - 78

O

Outfeed Unit - Set Transmitter and Receiver PLMS . . . . . 5 - 77
Outfeed Unit - Synchronise . . . . . 5 - 75
Outfeed Unit- Overhaul Carrier . . . . . 5 - 73

P

Packaging Material Reel Trolley - Change Pump Cylinder . . . . . 9 - 38
Packaging Material Reel Trolley - Change Sink Valve . . . . . 9 - 40
Packaging Material Reel Trolley - Check Function . . . . . 9 - 37
Packaging Material Reel Trolley - Overhaul Lifting Cylinder . . . . . 9 - 41
Packaging Material Reel Trolley - Remove Fork Reel . . . . . 9 - 44
Packaging Material Reel Trolley - Remove Guide Wheel . . . . . 9 - 45
Paper Magazine - Change Belt . . . . . 9 - 31
Paper Magazine - Check Belt Tension . . . . . 9 - 30
Paper Magazine - Check Bending Rollers . . . 9 - 25
Paper Magazine - Check Brake . . . . . 9 - 33
Paper Magazine - Check Un-reeling Function 9 - 32
Paper Magazine - Set Paper Guide . . . . . 9 - 34
Peroxide and Sterile Systems - Check for Leaks . . . . . 6 - 12
Peroxide and Sterile Systems - Check Gasket and Filter Cartridge . . . . . 6 - 16
Peroxide and Sterile Systems - Check Safety Lids . . . . . 6 - 14

TechPub_2614345_0105 - MM_19_030V_0102IOM.fm

Peroxide Tank - Check Pump . . . . . 6 - 21
Peroxide Tank - Overhaul Pump . . . . . 6 - 22
Photocell Unit - Set . . . . . 1 - 141
Photocell Unit - Set Sensitivity . . . . . 1 - 146
PLC - Backup Program . . . . . 14 - 34
PLC - Establish Communication . . . . . 14 - 36
PLC - Force an Output . . . . . 14 - 41
PLC - Load Program . . . . . 14 - 23
PLC - Set Initialization Parameters . . . . . 14 - 33
PLC - Set Queue Guard Photocell Delay . . . 14 - 30
PLC Power Supply Unit - Change . . . . . 14 - 48
PLC Power Supply Unit - Change Battery . . 14 - 46
Pressure Device - Change Cylinder . . . . . 5 - 40
Pressure Device - Check . . . . . 5 - 38
Pressure Device - Set . . . . . 5 - 41
Pressure Jaw - Bleed . . . . . 4 - 54
Pressure Jaw - Change . . . . . 4 - 52
Pressure Jaw - Check Catches and Catch Clearance . . . . . 4 - 50
Pressure Jaw - Lubricate Pivot Spring . . . . . 4 - 56
Pressure Jaw - Overhaul . . . . . 4 - 43
Pressure Jaw - Overhaul Shock Absorber . . . 4 - 55
Pressure Jaw - Set Pivot Spring . . . . . 4 - 57
Pressure Regulator - Overhaul . . . . . 1 - 58
Pressure Regulator - Set . . . . . 1 - 62
Pressure Rollers - Change . . . . . 7 - 9
Pressure Rollers - Check Condition and Spring Force . . . . . 7 - 8
Process Recorder - Calibrate . . . . . 14 - 84
Process Recorder - Clean Chart Carriage . . 14 - 83
Process Recorder - Description . . . . . 14 - 75
Process Recorder - Set Recorder . . . . . 14 - 80
Product Valve - Change Filter Cartridge . . . . 1 - 39
Product Valve - Check Steam Filter Cartridge 1 - 35
Product Valve - Clean Steam Traps . . . . . 1 - 33
Pull-Down Device - Set . . . . . 5 - 100

R

RegulatIng Valve - Overhaul . . . . . 1 - 52
Regulating Valve - Set Inductive Switch . . . . 1 - 57
Rocker Arm - Change Bearings . . . . . 3 - 37

S

Safety Function - Check . . . . . 15 - 8
Scrubber - Delime Filter . . . . . 6 - 31
Separator - Check Float . . . . . 6 - 28
Separator - Clean Filter . . . . . 6 - 29
Splice Detector - Check Function . . . . . 7 - 6
Splice Detector - Set . . . . . 7 - 7
Splicing Device - Set . . . . . 9 - 5
Splicing Magazine - Check . . . . . 7 - 32
Spray System - Check for Leaks . . . . . 1 - 119
Spray System - Clean Filter . . . . . 1 - 118
Station Chain - Change . . . . . 5 - 6
Station Chain - Overhaul . . . . . 5 - 14
Station Chain - Turn Shafts . . . . . 5 - 13
Strip Applicator - Check Rollers . . . . . 7 - 5
Strip Guide - Change Bushings . . . . . 7 - 17
Strip Guide - Change Guide Wheels . . . . . 7 - 15
Strip Guide - Check Guide Wheels and Bushings . . . . . 7 - 14
Strip Guide - Set . . . . . 7 - 18
Superstructure - Check Air Nozzle (LS) and Hot Air Element (LS SS) . . . . . 1 - 8
Superstructure - Check Bending Rollers . . . . . 1 - 7
Superstructure - Check DIN Fittings . . . . . 1 - 19
Superstructure - Check Pressures . . . . . 1 - 10
Support Roller - Check . . . . . 4 - 89
Support Roller - Set . . . . . 4 - 84

T

Temperature Regulator - Change . . . . . 14 - 13
Temperature Regulators - Calibrate . . . . . 14 - 14
Temperature Regulators - Check Values . . . . 14 - 7
Temperature Regulators - Set . . . . . 14 - 8
Tension Sprocket - Overhaul . . . . . 5 - 17
Thermocouple - Check . . . . . 14 - 20
TPIH Power - Record Settings . . . . . 14 - 66
TPIH System - Check Cables . . . . . 14 - 64
TPIH System - Check Function . . . . . 14 - 62
TPIH System - Check Impedance Transformer . . . . . 14 - 65
TPIH System - Description . . . . . 14 - 50

TechPub_2614345_0105 - MM_19_030V_0102IOM.fm

TPIH System - Download Software . . . . . 14 - 68
TPIH System - Error Handling . . . . . 14 - 58
TPIH System - LCD Display . . . . . 14 - 53
TPIH System - Set SA Power . . . . . 14 - 67
TPIH System - Set TS Power . . . . . 14 - 66
TPIH Test Instrument - Description . . . . . 14 - 73
TPOP - Adjust Display . . . . . 14 - 140
TPOP - Calibrate Touch Screen . . . . . 14 - 158
TPOP - Change Display . . . . . 14 - 156
TPOP - Change Display Unit . . . . . 14 - 138
TPOP - Change Flexbox Fuse . . . . . 14 - 161
TPOP - Change Flexbox Hard Disc . . . . . 14 - 162
TPOP - Change Flexbox Processor Fan . . 14 - 191
TPOP - Check Flexbox Processor Fan . . . 14 - 189
TPOP - Copy Data PLMS . . . . . 14 - 141
TPOP - Import and Export PLMS Live Setup . . . . . 14 - 198
TPOP - Install Software . . . . . 14 - 168
TPOP - Line Supervision Checks . . . . . 14 - 184
TPOP - Log On Procedure . . . . . 14 - 202
TPOP - PLMS Functional Description . . . . 14 - 135
TPOP - Serial Communication Checks PLMS . . . . . 14 - 183
TPOP - Set Machine ID . . . . . 14 - 178
TPOP - Set PLMS Date and Time . . . . . 14 - 154
TPOP - Set Up Distribution Equipment . . . 14 - 179
Transmission Unit - Change Belts . . . . . 5 - 85
Transmission Unit - Check Belts . . . . . 5 - 84
Transmission Unit - Overhaul . . . . . 5 - 78
Tube Flushing Device - Check . . . . . 1 - 148
Tube Folding Device - Check . . . . . 4 - 104
Tube Folding Device - Set . . . . . 4 - 105
Tube Supports and Forming Rings - Check . . 1 - 70
Tube Supports and Forming Rings - Set . . . . 1 - 72
Turnable Cover- Check . . . . . 9 - 24

U

Upper Tube Support - Overhaul . . . . . 1 - 77

V

Valve (Air Inlet) - Overhaul . . . . . 1 - 107
Valve (Air Inlet) - Set . . . . . 1 - 110
Valve (Heat Exchanger) - Overhaul . . . . . 1 - 103
Valve (Heat Exchanger) - Set . . . . . 1 - 105
Valve Panel - Change Air Inlet Group Filter Insert . . . . . 6 - 9
Valve Panel - Change Spray Filter Cartridge . . 6 - 7
Valve Panel - Check Flows . . . . . 6 - 11
Valve Panel - Check Photocell Air Filters . . . . . 6 - 6
Valve Panel - Check Pressures . . . . . 6 - 8
Valve Panel - Clean Cool Water Valve Filters . 6 - 10
Valve Panel- Check Sterile Air Pressure . . . . . 6 - 5
Volume Adjustment - Change Volume Cams 4 - 100
Volume Adjustment - Overhaul . . . . . 4 - 97
Volume Adjustment - Set . . . . . 4 - 101
Volume Flap - Alignment . . . . . 4 - 92
Volume Flap - Overhaul . . . . . 4 - 95
Volume Flap - Set Package Volume . . . . . 4 - 91

W

Water Circulation - Check Pressure . . . . . 6 - 32
WEAC Valve - Overhaul . . . . . 1 - 99
Web Guide - Check . . . . . 7 - 10
Web Guide - Set . . . . . 7 - 11
Web Guide- Check . . . . . 7 - 35
Web Guide- Set . . . . . 7 - 36
Web Tunnel- Check Rollers . . . . . 7 - 34
Worm Gear - Change . . . . . 5 - 50
Worm Gear - Change Bearings . . . . . 3 - 12
Worm Gear - Change Brake . . . . . 3 - 7
Worm Gear - Change Clutch . . . . . 3 - 8
Worm Gear - Change Clutch Bearing . . . . . 3 - 11
Worm Gear - Change Oil . . . . . 3 - 21, 5 - 48
Worm Gear - Change Timing Belt . . . . . 3 - 14
Worm Gear - Check Belt Tension . . . . . 3 - 16
Worm Gear - Check Clutch and Brake Gap . . 3 - 20
Worm Gear - Check Oil . . . . . 5 - 46
Worm Gear - Check Oil Level . . . . . 3 - 19
Worm Gear - Set . . . . . 3 - 17

TechPub_2614345_0105 - MM_19_030V_0102IOM.fm

Worm Gear - Set Brake Gap . . . . . 3 - 6
WTC (Pendulum) - Overhaul . . . . . 1 - 149
WTC (Pendulum) - Set . . . . . 1 - 151
WTC (Pendulum) - Set Proximity Switch . . . 1 - 152

Y

Yoke - Change Plungers . . . . . 4 - 74
Yoke - Check Curve Rollers and Arm . . . . . 4 - 73
Yoke - Check Sliders . . . . . 4 - 72
Yoke - Overhaul . . . . . 4 - 75
Yoke - Set Symmetry . . . . . 4 - 79
Yoke - Set Turning Position . . . . . 4 - 82

TechPub_2614345_0105 - MM_19_030V_0102IOM.fm

Tetra Pak

Note! *This page is generated* ***automatically****.*
using the ***variable definitions*** *made in the* ***front page*** *file!*

TBA/19 Tetra Brik Aseptic 030V
648160-0300
Issue 2006-07 Doc. No. MM-2771721-0102

TBA/19 Tetra Brik Aseptic 030V 1(2)
648160-0300
Issue 2006-07 Doc. No. MM-2771721-0102

TBA/19 Tetra Brik Aseptic 030V
648160-0300
Issue 2006-07 Doc. No. MM-2771721-0102

TBA/19 Tetra Brik Aseptic 030V 1(2)
648160-0300
Issue 2006-07 Doc. No. MM-2771721-0102

TBA/19 Tetra Brik Aseptic 030V
648160-0300
Issue 2006-07 Doc. No. MM-2771721-0102

TBA/19 Tetra Brik Aseptic 030V 1(2)
648160-0300
Issue 2006-07 Doc. No. MM-2771721-0102

TBA/19 Tetra Brik Aseptic 030V
648160-0300
Issue 2006-07 Doc. No. MM-2771721-0102

TBA/19 Tetra Brik Aseptic 030V 1(2)
648160-0300
Issue 2006-07 Doc. No. MM-2771721-0102

TBA/19 Tetra Brik Aseptic 030V
648160-0300
Issue 2006-07 Doc. No. MM-2771721-0102

TBA/19 Tetra Brik Aseptic 030V 2(2)
648160-0300
Issue 2006-07 Doc. No. MM-2771721-0102

TBA/19 Tetra Brik Aseptic 030V
648160-0300
Issue 2006-07 Doc. No. MM-2771721-0102

TBA/19 Tetra Brik Aseptic 030V 2(2)
648160-0300
Issue 2006-07 Doc. No. MM-2771721-0102

TBA/19 Tetra Brik Aseptic 030V
648160-0300
Issue 2006-07 Doc. No. MM-2771721-0102

TBA/19 Tetra Brik Aseptic 030V 2(2)
648160-0300
Issue 2006-07 Doc. No. MM-2771721-0102

TBA/19 Tetra Brik Aseptic 030V
648160-0300

Issue 2006-07 Doc. No. MM-2771721-0102

TBA/19 Tetra Brik Aseptic 030V 1(2)
648160-0300

Issue 2006-07 Doc. No. MM-2771721-0102

TBA/19 Tetra Brik Aseptic 030V
648160-0300

Issue 2006-07 Doc. No. MM-2771721-0102

TBA/19 Tetra Brik Aseptic 030V 1(2)
648160-0300

Issue 2006-07 Doc. No. MM-2771721-0102

TBA/19 Tetra Brik Aseptic 030V
648160-0300

Issue 2006-07 Doc. No. MM-2771721-0102

TBA/19 Tetra Brik Aseptic 030V 1(2)
648160-0300

Issue 2006-07 Doc. No. MM-2771721-0102

TBA/19 Tetra Brik Aseptic 030V
648160-0300

Issue 2006-07 Doc. No. MM-2771721-0102

TBA/19 Tetra Brik Aseptic 030V 2(2)
648160-0300

Issue 2006-07 Doc. No. MM-2771721-0102

TBA/19 Tetra Brik Aseptic 030V
648160-0300

Issue 2006-07 Doc. No. MM-2771721-0102

TBA/19 Tetra Brik Aseptic 030V 2(2)
648160-0300

Issue 2006-07 Doc. No. MM-2771721-0102

TBA/19 Tetra Brik Aseptic 030V
648160-0300

Issue 2006-07 Doc. No. MM-2771721-0102

TBA/19 Tetra Brik Aseptic 030V 2(2)
648160-0300

Issue 2006-07 Doc. No. MM-2771721-0102