SPC

Spare Parts Catalogue

TBA/19 030V TBA

648160-0300

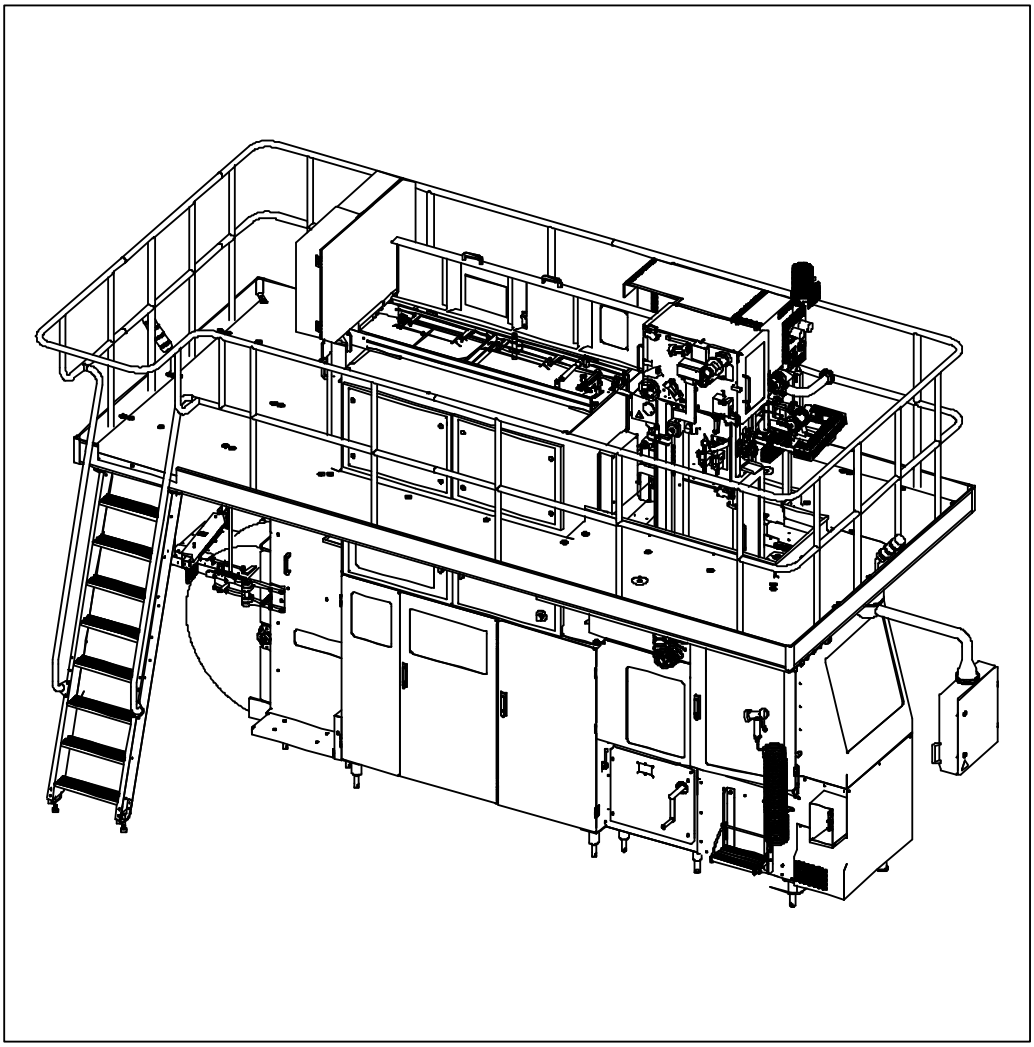

Tetra Pak

Doc. No: SPC-2771717-0103

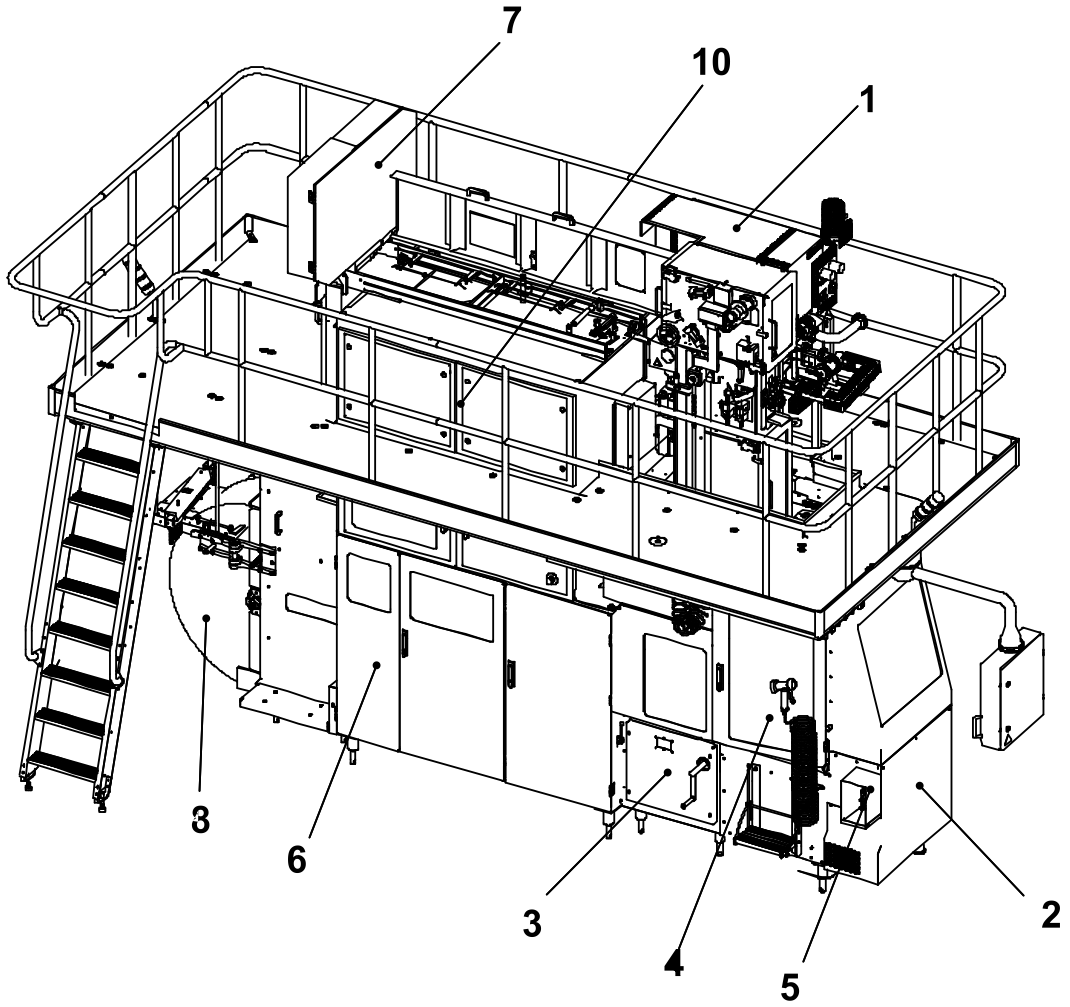

The position numbers in the illustration correspond with the chapter numbers listed on the next page.

Copyright © 2007 Tetra Pak Group

All rights reserved. No part of this document may be reproduced or copied in any form or by any means without written permission from Tetra Pak Packaging Solutions AB.

Tetra Pak and all Tetra Pak products are trademarks belonging to the Tetra Pak Group.

The content of this manual is in accordance with the design and construction of the machine or equipment at the time of publishing. Tetra Pak reserves the right to introduce design modifications without prior notice.

This document was produced by:

Tetra Pak Packaging Solutions AB
Ruben Rausings gata
221 86 Lund
SWEDEN

Additional copies can be ordered from Tetra Pak. When ordering additional copies, always provide the document number.

Doc. No. SPC-2771717-0103

Issue 2007-02

This document is valid from:

21210/00090

Series No/Machine No Sign.

SPC

Spare Parts Catalogue

TBA/19 030V TBA
648160-0300

Machine or equipment configurations that this catalogue is valid for are described on the next page.

Doc. No: SPC-2771717-0103

Issue 2007-02

BINDER 1

i Introduction

1 Superstructure TBA/19 .

2 Machine Body

3 Drive Unit

4 Jaw System

5 Final Folder

6 Service Unit

7 Strip Applicator

8 Packaging Material Infe.

9 Regular Accessories

BINDER 2

10 Electrical Cabinet

11 Electric Equipment

12 Optional Accessories

13 Optional Equipment

ii Part Number Index

iii Alphabetical Index

iv Ref. Des. Parts Index

Tetra Pak

Tetra Pak Packaging Solutions

Valid for:

Name	Drawing Specification and Development Step	Additional Information
TBA/19 030V TBA	648160-0300	Volume and package shapes - Valid for all TBA volumes Included equipment - Headspace by Injection, 2619758-0200 Optional Equipment - Ink Jet Printer A300 HS, 90457-0048

Update Log for Doc. No. SPC-2771717-0103

This table shows all changes made to this catalogue, including installed rebuilding kits, added or removed pages.

Date	Installed Kit	Added Pages (Doc. No.)	Removed Pages	Signature

Date	Installed Kit	Added Pages (Doc. No.)	Removed Pages	Signature

i Introduction

en About the Introduction Chapter
This chapter contains basic information about this catalogue and related Tetra Pak equipment.

bg За уводната глава
Тази глава съдържа основна информация за този каталог и приложимото Tetra Pak оборудване.

cs O kapitole Úvod
Tato kapitola obsahuje základní informace o této příručce a souvisejícím zařízení Tetra Pak.

da Om indledningen
Kapitlet indeholder grundlæggende oplysninger om dette katalog og tilhørende Tetra Pak-udstyr.

de Über das Einleitungskapitel
Diese Kapitel enthält grundlegende Informationen über diesen Katalog und die zugehörige Tetra Pak-Ausrüstung

el Σχετικά με το Κεφάλαιο 'Εισαγωγή'
Αυτό το κεφάλαιο περιέχει βασικές πληροφορίες για τον παρόντα κατάλογο και τον σχετικό εξοπλισμό της Tetra Pak.

es Acerca del capítulo Introducción
Este capítulo contiene información básica sobre este catálogo y el equipo Tetra Pak relacionado.

et Sissejuhatava peatüki kohta
See peatükk sisaldab teavet käesoleva kataloogi ja sellega seonduva Tetra Paki seadme kohta.

fi Tietoja Johdanto-luvusta
Tässä luvussa on perustietoja tästä luettelosta ja Tetra Pak -laitteesta.

fr À propos du chapitre Introduction
Ce chapitre contient les informations de base à propos de ce catalogue et de l'équipement Tetra Pak concerné.

hu A Bevezetés fejezetről
Ez a fejezet alapvető információkat tartalmaz a katalógusról és a hozzá tartozó Tetra Pak berendezésről.

is Um inngangskaflann
Þessi kafli inniheldur grundvallarupplýsingar um þennan vörulista og tengdan Tetra Pak búnað.

it Informazioni sul capitolo Introduzione
Questo capitolo contiene informazioni generali sul presente catalogo e sulla relativa macchina Tetra Pak.

lt Apie įvadinį skyrių
Šiame skyriuje pateikta pagrindinė informacija apie šį katalogą ir su juo susijusią "Tetra Pak" įrangą.

lv Par Ievada nodaļu
Šī nodaļa ietver galveno informāciju par šo katalogu un saistītajām Tetra Pak iekārtām.

nl Over de inleiding
Dit hoofdstuk bevat basisinformatie omtrent deze catalogus en aanverwante Tetra Pak-installatie.

no Om kapitlet Introduksjon
Dette kapitlet inneholder grunnleggende informasjon om denne katalogen og relatert Tetra Pak-utstyr.

pl Informacje na temat rozdziału wprowadzającego
Rozdział wprowadzający zawiera podstawowe informacje dotyczące niniejszego katalogu i związanej z nim maszyny Tetra Pak.

pt Acerca do Capítulo de Introdução
Este capítulo contém informações básicas sobre este catálogo e os equipamentos relacionados da Tetra Pak.

ro Despre capitolul introductiv
Acest capitol conține informații de bază despre acest catalog și despre echipamentul Tetra Pak corelat.

sk O kapitole Úvod
Táto kapitola obsahuje základné informácie o tomto návode a informácie súvisiace so zariadením Tetra Pak.

sl O uvodnem poglavju
To poglavje vsebuje osnovne informacije o tem katalogu in opremi Tetra Pak.

sv Om inledningskapitlet
Det här kapitlet innehåller grundläggande information om katalogen och Tetra Pak-utrustningen.

Introduction

Illustrations . . . . . i - 5
English Text . . . . . i - 7

Увод

Илюстрации . . . . . i - 5
Текст на български език . . . . . i -11

Úvod

Obrázky . . . . . i -5
Český text . . . . . i - 15

Indledning

Illustrationer . . . . . i - 5
Dansk tekst . . . . . i - 19

Einleitung

Abbildungen . . . . . i - 5
Deutscher Text . . . . . i - 23

Εισαγωγή

Εικόνες . . . . . i - 5
Ελληνικό Κείμενο . . . . . i - 27

Introducción

Ilustraciones . . . . . i - 5
Texto en español . . . . . i - 31

Sissejuhatus

Joonised . . . . . i - 5
Eestikeelne tekst . . . . . i - 35

Johdanto

Kuvat . . . . . i - 5
Suomenkielinen teksti . . . . . i - 39

Introduction

Illustrations . . . . . i - 5
Texte français . . . . . i - 43

Bevezetés

Ábrák . . . . . i - 5
Magyar szöveg . . . . . i - 47

Inngangur

Skýringarmyndir . . . . . i - 5
Íslenskur texti . . . . . i - 51

Introduzione

Figure . . . . . i - 5
Testo in italiano . . . . . i - 55

Įvadas

Paveikslėliai . . . . . i - 5
Lietuviškas tekstas . . . . . i - 59

Ievads

Ilustrācijas . . . . . i - 5
Teksts latviešu valodā . . . . . i - 63

Inleiding

Afbeeldingen . . . . . i - 5
Nederlands tekst . . . . . i - 67

Introduksjon

Illustrasjoner . . . . . i - 5
Norsk tekst . . . . . i - 71

Wprowadzenie

Rysunki . . . . . i - 5
Tekst polski . . . . . i - 75

Introdução

Ilustrações . . . . . i - 5
Texto em português . . . . . i - 79

Introducere

Ilustrații . . . . . i - 5
Text în limba română . . . . . i - 83

Úvod

Ilustrácie . . . . . i – 5
Slovenský text . . . . . i - 87

Uvod

Slike . . . . . i - 5
Slovensko besedilo . . . . . i - 91

Inledning

Bilder . . . . . i - 5
Svensk text . . . . . i - 95

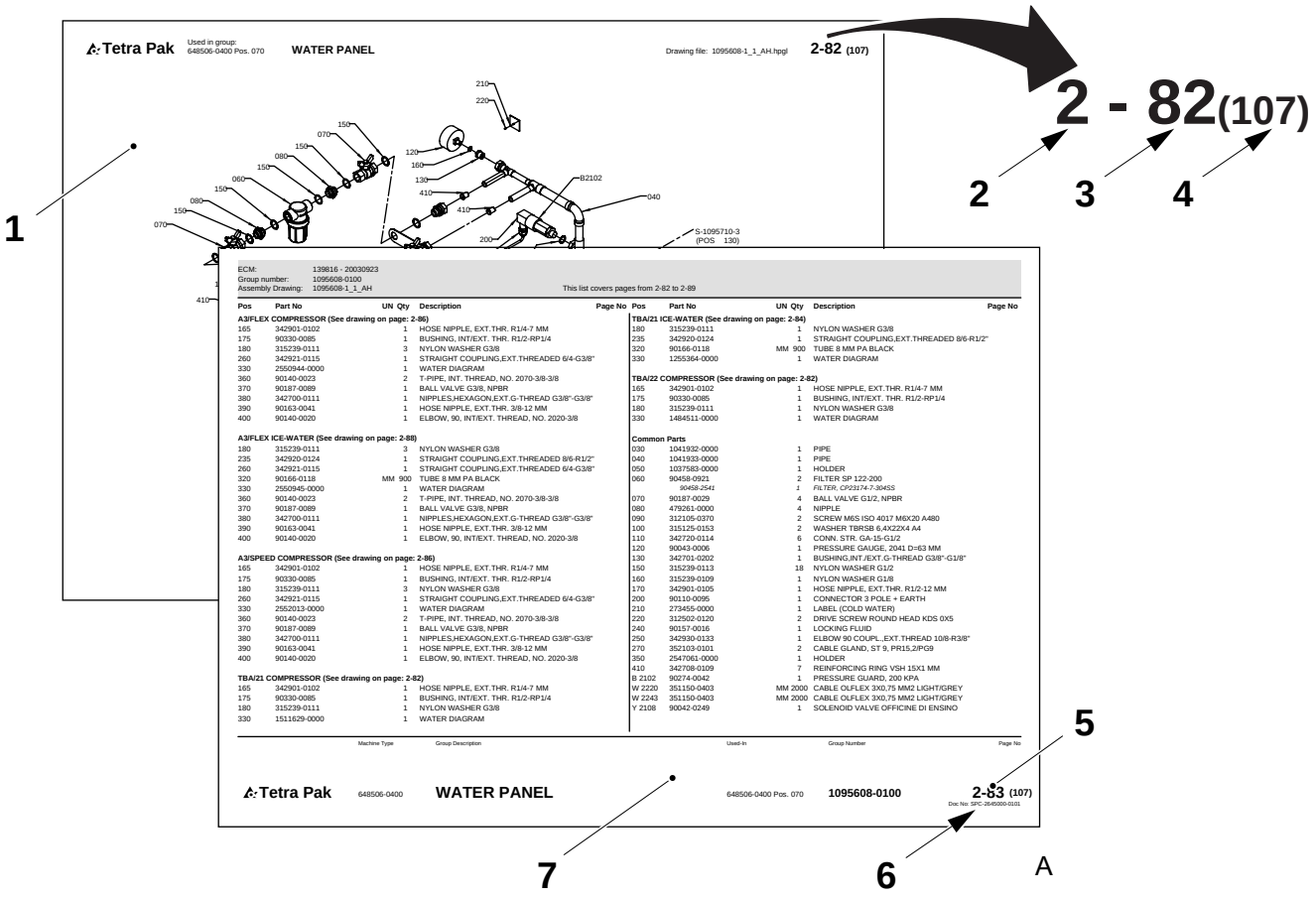
Tetra Pak
Used in group: 648506-0400 Pos. 070
WATER PANEL
Drawing file: 1095608-1_1_AH.hpgl
2-82 (107)
2 - 82(107)
1
2
3
4
5
6
7
A
ECM: 139816 - 20030923
Group number: 1095608-0100
Assembly Drawing: 1095608-1_1_AH
This list covers pages from 2-82 to 2-89
Tetra Pak
648506-0400
WATER PANEL
648506-0400 Pos. 070
1095608-0100
2-83 (107)

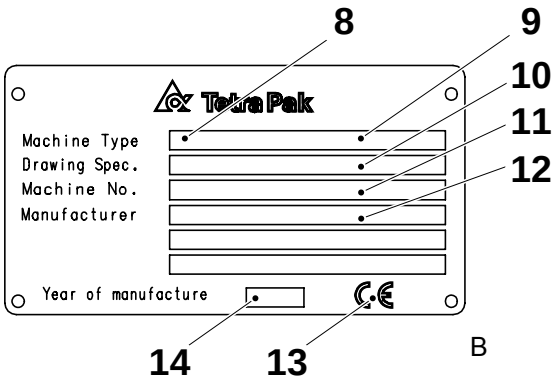
8
9
10
11
12
Tetra Pak
Machine Type
Drawing Spec.
Machine No.
Manufacturer
Year of manufacture
14
13
B

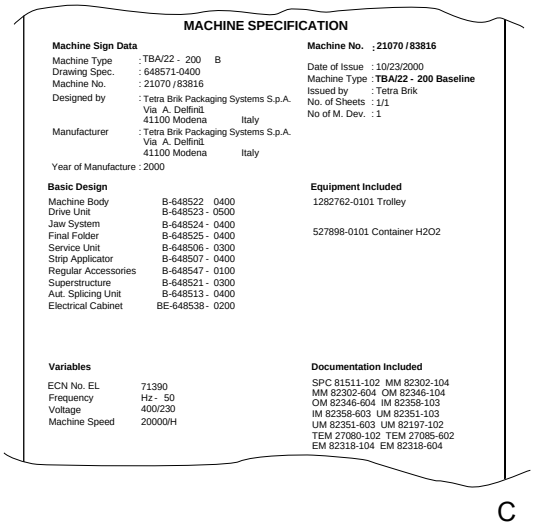
MACHINE SPECIFICATION
Machine Sign Data
Machine Type : TBA/22 - 200 B
Drawing Spec. : 648571-0400
Machine No. : 21070 / 83816
Designed by : Tetra Brik Packaging Systems S.p.A. Via A. Delfini1 41100 Modena Italy
Manufacturer : Tetra Brik Packaging Systems S.p.A. Via A. Delfini1 41100 Modena Italy
Year of Manufacture : 2000
Machine No. ; 21070 / 83816
Date of Issue : 10/23/2000
Machine Type : TBA/22 - 200 Baseline
Issued by : Tetra Brik
No. of Sheets : 1/1
No of M. Dev. : 1
Basic Design
Machine Body B-648522 0400
Drive Unit B-648523 - 0500
Jaw System B-648524 - 0400
Final Folder B-648525 - 0400
Service Unit B-648506 - 0300
Strip Applicator B-648507 - 0400
Regular Accessories B-648547 - 0100
Superstructure B-648521 - 0300
Aut. Splicing Unit B-648513 - 0400
Electrical Cabinet BE-648538 - 0200
Equipment Included
1282762-0101 Trolley
527898-0101 Container H2O2
Variables
ECN No. EL 71390
Frequency Hz - 50
Voltage 400/230
Machine Speed 20000/H
Documentation Included
SPC 81511-102 MM 82302-104
MM 82302-604 OM 82346-104
OM 82346-604 IM 82358-103
IM 82358-603 UM 82351-103
UM 82351-603 UM 82197-102
TEM 27080-102 TEM 27085-602
EM 82318-104 EM 82318-604
C

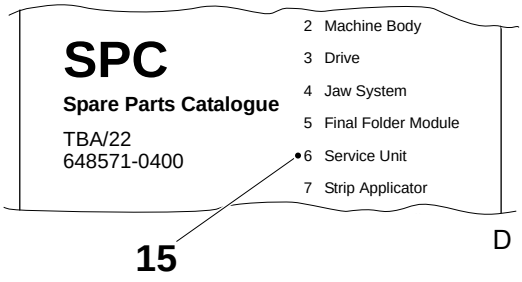
SPC
Spare Parts Catalogue
TBA/22
648571-0400
2 Machine Body
3 Drive
4 Jaw System
5 Final Folder Module
6 Service Unit
7 Strip Applicator
15
D

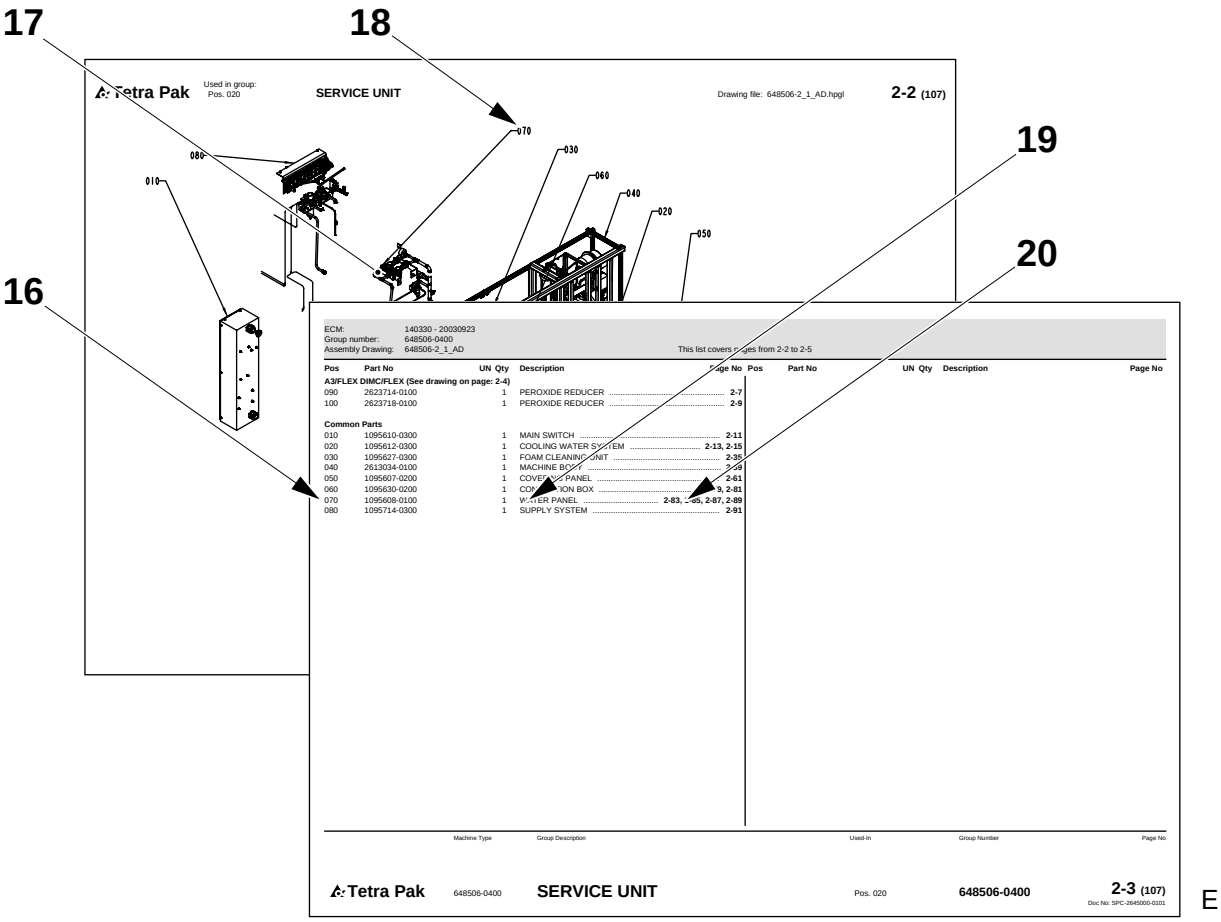
17
18
19
20
16
Tetra Pak
Used in group:
Pos. 020
SERVICE UNIT
Drawing file: 648506-2_1_AD.hpgl
2-2 (107)
070
030
080
060
010
040
020
050
ECM: 140330 - 20030923
Group number: 648506-0400
Assembly Drawing: 648506-2_1_AD
This list covers pages from 2-2 to 2-5
Pos Part No UN Qty Description Page No
A3/FLEX DIMC/FLEX (See drawing on page: 2-4)
090 2623714-0100 1 PEROXIDE REDUCER 2-7
100 2623718-0100 1 PEROXIDE REDUCER 2-9
Common Parts
010 1095610-0300 1 MAIN SWITCH 2-11
020 1095612-0300 1 COOLING WATER SYSTEM 2-13, 2-15
030 1095627-0300 1 FOAM CLEANING UNIT 2-35
040 2613034-0100 1 MACHINE BODY 2-39
050 1095607-0200 1 COVERING PANEL 2-61
060 1095630-0200 1 CONNECTION BOX 2-79, 2-81
070 1095608-0100 1 WATER PANEL 2-83, 2-85, 2-87, 2-89
080 1095714-0300 1 SUPPLY SYSTEM 2-91
Pos Part No UN Qty Description Page No
Machine Type Group Description Used-In Group Number Page No
Tetra Pak 648506-0400 SERVICE UNIT Pos. 020 648506-0400 2-3 (107)
Doc No: SPC-2645000-0101
E

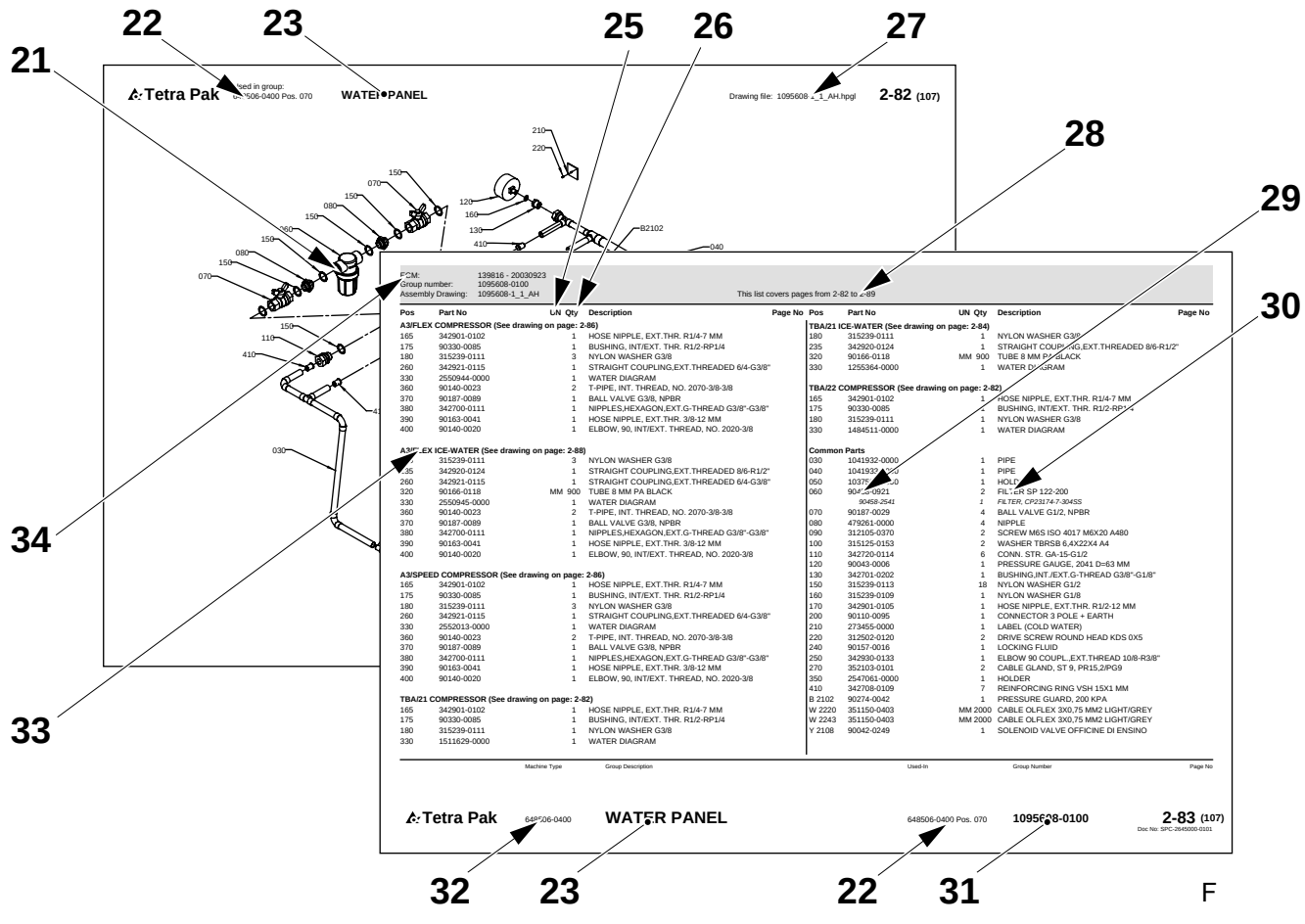
22
23
25
26
27
21
28
29
30
34
33
Tetra Pak
Used in group:
Pos. 070
WATER PANEL
Drawing file: 1095608-1_1_AH.hpgl
2-82 (107)
210
220
150
070
080
150
150
080
150
070
120
160
130
410
B2102
040
030
110
410
ECM: 139816 - 20030923
Group number: 1095608-0100
Assembly Drawing: 1095608-1_1_AH
This list covers pages from 2-82 to 2-89
Pos Part No UN Qty Description Page No
A3/FLEX COMPRESSOR (See drawing on page: 2-86)
165 342901-0102 1 HOSE NIPPLE, EXT.THR. R1/4-7 MM
175 90330-0085 1 BUSHING, INT/EXT. THR. R1/2-RP1/4
180 315239-0111 3 NYLON WASHER G3/8
260 342921-0115 1 STRAIGHT COUPLING,EXT.THREADED 6/4-G3/8"
330 2550944-0000 1 WATER DIAGRAM
360 90140-0023 2 T-PIPE, INT. THREAD, NO. 2070-3/8-3/8
370 90187-0089 1 BALL VALVE G3/8, NPBR
380 342700-0111 1 NIPPLES,HEXAGON,EXT.G-THREAD G3/8"-G3/8"
390 90163-0041 1 HOSE NIPPLE, EXT.THR. 3/8-12 MM
400 90140-0020 1 ELBOW, 90, INT/EXT. THREAD, NO. 2020-3/8
A3/FLEX ICE-WATER (See drawing on page: 2-88)
235 315239-0111 3 NYLON WASHER G3/8
235 342920-0124 1 STRAIGHT COUPLING,EXT.THREADED 8/6-R1/2"
260 342921-0115 1 STRAIGHT COUPLING,EXT.THREADED 6/4-G3/8"
320 90166-0118 MM 900 TUBE 8 MM PA BLACK
330 2550945-0000 1 WATER DIAGRAM
360 90140-0023 2 T-PIPE, INT. THREAD, NO. 2070-3/8-3/8
370 90187-0089 1 BALL VALVE G3/8, NPBR
380 342700-0111 1 NIPPLES,HEXAGON,EXT.G-THREAD G3/8"-G3/8"
390 90163-0041 1 HOSE NIPPLE, EXT.THR. 3/8-12 MM
400 90140-0020 1 ELBOW, 90, INT/EXT. THREAD, NO. 2020-3/8
A3/SPEED COMPRESSOR (See drawing on page: 2-86)
165 342901-0102 1 HOSE NIPPLE, EXT.THR. R1/4-7 MM
175 90330-0085 1 BUSHING, INT/EXT. THR. R1/2-RP1/4
180 315239-0111 3 NYLON WASHER G3/8
260 342921-0115 1 STRAIGHT COUPLING,EXT.THREADED 6/4-G3/8"
330 2552013-0000 1 WATER DIAGRAM
360 90140-0023 2 T-PIPE, INT. THREAD, NO. 2070-3/8-3/8
370 90187-0089 1 BALL VALVE G3/8, NPBR
380 342700-0111 1 NIPPLES,HEXAGON,EXT.G-THREAD G3/8"-G3/8"
390 90163-0041 1 HOSE NIPPLE, EXT.THR. 3/8-12 MM
400 90140-0020 1 ELBOW, 90, INT/EXT. THREAD, NO. 2020-3/8
TBA/21 COMPRESSOR (See drawing on page: 2-82)
165 342901-0102 1 HOSE NIPPLE, EXT.THR. R1/4-7 MM
175 90330-0085 1 BUSHING, INT/EXT. THR. R1/2-RP1/4
180 315239-0111 1 NYLON WASHER G3/8
330 1511629-0000 1 WATER DIAGRAM
TBA/21 ICE-WATER (See drawing on page: 2-84)
180 315239-0111 1 NYLON WASHER G3/8
235 342920-0124 1 STRAIGHT COUPLING,EXT.THREADED 8/6-R1/2"
320 90166-0118 MM 900 TUBE 8 MM PA BLACK
330 1255364-0000 1 WATER DIAGRAM
TBA/22 COMPRESSOR (See drawing on page: 2-82)
165 342901-0102 1 HOSE NIPPLE, EXT.THR. R1/4-7 MM
175 90330-0085 1 BUSHING, INT/EXT. THR. R1/2-RP1/4
180 315239-0111 1 NYLON WASHER G3/8
330 1484511-0000 1 WATER DIAGRAM
Common Parts
030 1041932-0000 1 PIPE
040 1041933-0000 1 PIPE
050 1037[illegible]-0000 1 HOLDER
060 90458-0921 2 FILTER SP 122-200
90458-2541 FILTER, CP23174-7-304SS
070 90187-0029 4 BALL VALVE G1/2, NPBR
080 479261-0000 4 NIPPLE
090 312105-0370 2 SCREW M6S ISO 4017 M6X20 A480
100 315125-0153 2 WASHER TBRSB 6,4X22X4 A4
110 342720-0114 6 CONN. STR. GA-15-G1/2
120 90043-0006 1 PRESSURE GAUGE, 2041 D=63 MM
130 342701-0202 1 BUSHING,INT./EXT.G-THREAD G3/8"-G1/8"
150 315239-0113 18 NYLON WASHER G1/2
160 315239-0109 1 NYLON WASHER G1/8
170 342901-0105 1 HOSE NIPPLE, EXT.THR. R1/2-12 MM
200 90110-0095 1 CONNECTOR 3 POLE + EARTH
210 273455-0000 1 LABEL (COLD WATER)
220 312502-0120 2 DRIVE SCREW ROUND HEAD KDS 0X5
240 90157-0016 1 LOCKING FLUID
250 342930-0133 1 ELBOW 90 COUPL.,EXT.THREAD 10/8-R3/8"
270 352103-0101 2 CABLE GLAND, ST 9, PR15,2/PG9
350 2547061-0000 1 HOLDER
410 342708-0109 7 REINFORCING RING VSH 15X1 MM
B 2102 90274-0042 1 PRESSURE GUARD, 200 KPA
W 2220 351150-0403 MM 2000 CABLE OLFLEX 3X0,75 MM2 LIGHT/GREY
W 2243 351150-0403 MM 2000 CABLE OLFLEX 3X0,75 MM2 LIGHT/GREY
Y 2108 90042-0249 1 SOLENOID VALVE OFFICINE DI ENSINO
Pos Part No UN Qty Description Page No
Machine Type Group Description Used-In Group Number Page No
Tetra Pak 648506-0400 WATER PANEL 648506-0400 Pos. 070 1095608-0100 2-83 (107)
Doc No: SPC-2645000-0101
32 23 22 31
F

Introduction

Manual Information

Tetra Pak recommends reading all delivered manuals carefully. Make sure that the delivered manuals are available to personnel who operate or maintain the equipment.

It is important to keep this catalogue for the lifetime of the equipment and to pass the catalogue on to any subsequent holder or user.

Tetra Pak will not be held responsible for any damage to the equipment caused by not following the instructions given in the manuals that accompany this equipment.

Delivered Manuals

Manuals delivered with this equipment may include

- CM
  The Conversion Manual provides technicians with information on converting the equipment between different production modes.
- EM
  The Electrical Manual provides technicians with information about the equipment's electrical system.
- IM
  The Installation Manual provides technicians with information required to safely install the equipment.
- MM
  The Maintenance Manual provides technicians with information on maintaining the equipment.
- OM
  The Operation Manual manual provides the operator with information on handling and operating the equipment before, during, and after production.
- SPC
  The Spare Parts Catalogue provides the information necessary to order spare parts from Tetra Pak
- TeM
  The Technical Manual
  - provides technicians with information required to safely install the equipment
  - provides technicians with information on maintaining the equipment
  - provides technicians with information about the machine's/ equipment's electrical system
  - provides the information necessary to order spare parts from Tetra Pak.

Page Layout

Refer to the illustration (A) on page i-5: The main pages in a Spare Parts Catalogue consist of an illustration page (1) and a corresponding list page (7). The page number (5) is shown in the header of an illustration page and in the footer of a list page. The document number (6) is shown in the footer of a list page.

Page Numbering

Refer to the illustration (A) on page i-5: A page number (5) has three parts:

- chapter number (2)
- consecutive page number within the chapter (3)
- total number of pages in the chapter (4)

Machine Introduction

Manufacturer

For the manufacturer's name and address, see the second page of this catalogue.

Service

To order spare parts for this machine, or to report problems associated with operating this machine, contact the nearest Tetra Pak office.

Contact the Liaison with other inquiries, comments, or suggestions for improvement regarding the equipment and its documentation.

Identification

CE Classification

This equipment complies with the basic health and safety regulations of the European Economic Area (EEA).

Machine Plate

The illustration (B) on page i-5 shows an example of a machine plate. An illustration of the valid machine plate and its location on the equipment is shown in the Introduction chapter of the manuals delivered with this equipment. The machine plate contains the data listed below, needed when contacting Tetra Pak concerning this specific equipment.

- Machine type (8)
- Volume (9)
- Drawing specifications (10)
- Machine serial number (11)
- Manufacturer (12)
- CE mark (13)
- Year of manufacture (14)

The illustration (C) on page i-5 shows an example of a machine specification. Make sure that the equipment data listed in the front pages of this manual corresponds to the machine plate data and the machine specification.

How to Use This Spare Parts Catalogue

Locate a Spare Part Number

a) Refer to the illustration (D) on page i-5: Go to the chapter number (15) indicated beside the main group that contains the part you want to locate.

Items b) and c) refer to the illustration (E) on page i-6.

b) On the main group illustration, look for the machine subgroup (17) that contains the part or subgroup you are looking for. Note the position number (18) and go to the list page that follows the illustration.

c) Look for the position number/reference designation (16) or the subgroup name (19). Go to the corresponding page number (20) listed in the right-hand column. Tetra Pak has chosen to always use the function oriented structure for reference designation. The prefix indicating function oriented structure (=) is not shown in the reference designation.

Items d) and e) refer to the illustration (F) on page i-6.

d) Locate the part (21) that you are looking for on the subgroup illustration and note the part's position number.

e) The part number (29) and part description (30) are listed beside the position number on the list page.

Information Listed in a Spare Parts Catalogue

The list below refers to the illustration (F) on page i-6. A Spare Parts Catalogue contains the following information about groups, subgroups, and spare parts for the equipment:

- Group structure reference (22). Indicates the next higher group in the equipment list structure.
- Group name (23)
- Unit of measure (25)
- Quantity (26)
- Assembly drawing number (27)
- List page range (28). Included if there are multiple pages in the group illustration or list.
- Part or subgroup number (29)
- Subgroup name or part description (30)
- Group number (31)
- Equipment number (32)
- Group information heading (33). Indicates if the section below the heading is for a specific machine variant or if it is a list of common parts. If a list has more than one variant and each variant has its own assembly drawing, a page reference to the variant's assembly drawing is shown.
- Internal information (34)

Увод

Информация за ръководството

Tetra Pak Ви препоръчва да прочетете внимателно всички доставени ръководства. Проверете дали доставените ръководства са достъпни за служителите, които поддържат или работят с оборудването.

Важно е да запазите този каталог през целия живот на оборудването и да го предадете на трети лица, които ще използват или съхраняват оборудването.

Tetra Pak не може да бъде държана под отговорност за щети върху оборудването, причинени от неспазване на даденте инструкции в ръководствата, които съпровождат оборудването.

Доставени ръководства

Ръководствата, доставени с това оборудване, могат да включват

- CM
  Ръководството за приспособяване осигурява на техническите лица информация за приспособяването на оборудване към различни производствени режими.
- EM
  Електрическото ръководство осигурява на техническите лица информация за електрическата система на оборудването.
- IM
  Ръководството за инсталиране предоставя на техническите лица информацията, която е необходима за безопасно инсталиране на оборудването.
- MM
  Ръководството за поддръжка предоставя на техническите лица информация относно поддържането на оборудването.
- OM
  Ръководството за операции предоставя на операторите информация за това, как да боравят и функционират с оборудването преди, по време на и след производство.
- SPC
  Каталогът с резервни части предоставя необходимата информация за поръчка на резервни части от Tetra Pak
- TeM
  Техническото ръководство
  - предоставя на техническите лица необходимата информация за безопасно инсталиране на оборудването
  - предоставя на техническите лица информация за поддръжка на оборудването
  - предоставя на техническите лица информация за електрическата система на машината/оборудването
  - предоставя необходимата информация за поръчка на резервни части от Tetra Pak.

Формат на страниците

Разгледайте илюстрация (A) на страница i-5: Главните страници в Каталога с резервни части се състоят от страница с илюстрация (1) и прилежаща страница със списък (7). Номерът на страницата (5) е посочен в горната част на страницата с илюстрация и в долната част на страницата със списъка. Номерът на документа (6) е показан в долната част на страницата със списъка.

Номериране на страници

Разгледайте илюстрация (A) на страница i-5: Един номер на страница (5) има три части:

- номер на глава (2)
- последователен номер на страница в една глава (3)
- общ брой страници в главата (4)

Машини Увод

Производител

Вижте втората страница на този каталог, за да проверите името и адреса на производителя.

Обслужване

За да поръчате резервни части за тази машина или да докладвате за проблеми, свързани с работата с тази машина, се свържете с най-близкия офис на Tetra Pak.

Свържете се с отдела за контакти с клиенти за други запитвания, коментари и предложения за подобрение по отношение на оборудването и прилежащата му документация.

Идентификация

Класификация на ЦЕ

Това оборудване отговаря на основните наредби, свързани с опазване на здравето и безопасността на Европейската Икономическа Общност (ЕИО).

Табелка на машина

Илюстрация (B) на страница i-5 показва пример с табелка на машина. В уводната глава на ръководствата, доставени с това оборудване, е показана илюстрация с валидната табелка на машината и нейното положение върху оборудването. Табелката на машината съдържа посочените по-долу данни, които Ви трябват, когато се свързвате с Tetra Pak относно това специфично оборудване.

- Тип машина (8)
- Обем (9)
- Спесификации за чертане (10)
- Сериен номер на машината (11)
- Производител (12)
- CE печат (13)
- Година на производство (14)

Илюстрация (C) на страница i-5 показва пример със спесификация за машина. Проверете дали данните за оборудването, изброени на предните страници в това ръководство отговарят на данните от табелката на машината и на спесификацията на машината.

Как да използвате този Каталог за резервни части

Намерете Номер на резервна част

a) Разгледайте илюстрация (D) на страница i-5: Отидете в глава номер (15) посочена до главната група, която съдържа частта, която искате да намерите.

Артикули b) и c) се отнасят до илюстрация (E) на страница i-6.

b) На главната обща илюстрация вижте подгрупата на машината (17), която съдържа частта или подгрупата, която търсите. Намерете номера на позицията (18) и отворете на страницата със списъка, която е след илюстрацията.

c) Намерете номера на позицията/референцията (16) или името на подгрупата (19). Отворете съответстващия номер на страница (20) в дясната колона. Tetra Pak е избрала да използва винаги функционално-ориентирана структура при обозначаване на референциите. Префиксът, който показва функционално-ориентирана структура (=) не е посочен в обозначаването на референциите.

Артикули d) и e) се отнасят до илюстрация (F) на страница i-6.

d) Намерете частта (21), която търсите в илюстрацията на подгрупата и запомнете номера на частта.

e) Номерът на частта (29) и описанието на частта (30) са изброени до номера на позицията на страницата със списъка.

Изброена информация в Каталога с резервни части

По-долу посоченият списък се отнася до илюстрация (F) на страница i-6. Каталогът с резервни части съдържа следната информация за групи, подгрупи и резервни части за оборудването:

- Референция за структурата (22). Показва следващата по-голяма група в структурата със списъка на оборудването.
- Име на група (23)
- Единица мярка (25)
- Количество (26)
- Номер за монтажен чертеж (27)
- Обхват на страницата със списък (28). Включен, ако има няколко страници в илюстрацията на групата или списъка.
- Номер на част или подгрупа (29)
- Име на подгрупа или описание на част (30)
- Номер на група (31)
- Номер на оборудване (32)
- Референция за информацията за групата (33). Показва дали частта под заглавието е за специфична версия на машината или е списък с общи части. Ако един списък има повече от един вариант и всеки вариант има собствен монтажен чертеж, се показва референцията на страницата към монтажния чертеж на варианта.
- Вътрешна информация (34)

Úvod

Informace o manuálu

Tetra Pak doporučuje, abyste si pozorně přečetli všechny dodané příručky. Přesvědčte se, že dodané manuály jsou k dispozici personálu, který obsluhuje nebo provádí údržbu zařízení.

Je důležité ponechat si tuto příručku po celou dobu životnosti zařízení a předat ho jakémukoliv následujícímu vlastníkovi nebo uživateli.

Tetra Pak nebude odpovídat za žádné škody zařízení, způsobené nedodržováním pokynů uvedených v této příručce.

Dodané příručky

Příručky dodané s tímto zařízením mohou obsahovat

- CM
  Konverzní manuál (CM) poskytuje technikům informace o konverzi zařízení mezi různými výrobními režimy.
- EM
  Elektrický manuál (EM) poskytuje technikům informace o elektrickém systému tohoto zařízení.
- IM
  Instalační manuál (IM) poskytuje technikům informace potřebné k bezpečné instalaci zařízení.
- MM
  Údržbový manuál (MM) poskytuje technikům informace o údržbě tohoto zařízení.
- OM
  Provozní manuál (OM) poskytuje operátorovi informace o manipulaci s tímto zařízením a provozu před, během a po výrobě.
- SPC
  Katalog náhradních dílů (SPC) poskytuje informace potřebné pro objednávání náhradních dílů od společnosti Tetra Pak
- TeM
  Technický manuál
  - poskytuje technikům informace potřebné k bezpečné instalaci tohoto zařízení
  - poskytuje technikům informace o údržbě tohoto zařízení
  - poskytuje technikům informace o elektrickém systému tohoto zařízení
  - poskytuje informace potřebné pro objednávání náhradních dílů od společnosti Tetra Pak

Rozvržení stránky

Viz obrázek (A) na straně i-5: Hlavní strany Katalogu náhradních dílů obsahují stranu s obrázky (1) a odpovídající stranu seznamu (7). Číslo strany (5) je uvedeno v záhlaví strany s obrázky a v zápatí strany seznamu. Číslo dokumentu (6) je uvedeno v zápatí strany seznamu.

Číslování stran

Viz obrázek (A) na straně i-5: Číslo strany (5) sestává ze tří částí:

- číslo kapitoly (2)
- pořadové číslo strany (3) v kapitole
- celkový počet stránek (4) v kapitole

Úvod ke stroji

Výrobce

Název a adresa výrobce je uvedena na druhé straně tohoto katalogu.

Servis

Chcete-li objednat náhradní díly nebo ohlásit problémy související s provozem tohoto stroje, kontaktujte nejbližší kancelář Tetra Pak.

S dalšími dotazy, připomínkami nebo náměty na vylepšení ohledně zařízení a této dokumentace se obracejte na kontaktní osobu.

Identifikace

Klasifikace CE

Toto zařízení splňuje základní zdravotní a bezpečnostní předpisy Evropského hospodářského prostoru (EEA).

Štítek na stroji

Obrázek (B) na straně i-5 znázorňuje příklad štítku na stroji. Obrázek platného štítku na stroji a jeho umístění na zařízení je uveden v příručkách dodaných s tímto strojem v kapitole Úvod. Na štítku jsou uvedeny údaje potřebné při kontaktování společnosti Tetra Pak, týkající se tohoto specifického zařízení.

- Typ stroje (8)
- Objem (9)
- Výkresové specifikace (10)
- Výrobní číslo stroje (11)
- Výrobce (12)
- Označení CE (13)
- Rok výroby (14)

Obrázek (C) na straně i-5 zobrazuje příklad specifikace stroje. Přesvědčte se, že údaje o zařízení uvedená v seznamu na předních stranách tohoto manuálu odpovídají údajům štítku na stroji a specifikaci stroje.

Jak používat tento Katalog náhradních dílů

Vyhledejte číslo náhradního dílu

a) Viz obrázek (D) na straně i-5: Přejděte na číslo kapitoly (15) uvedené vedle hlavní skupiny, která obsahuje hledaný díl.

Položky b) a c) odkazují na obrázek (E) na straně i-6.

b) Na vyobrazení hlavní skupiny vyhledejte strojní podskupinu (17), která obsahuje hledaný díl nebo podskupinu. Poznamenejte si číslo pozice (18) a přejděte na stranu seznamu vyplývající z obrázku.

c) Vyhledejte číslo pozice/označení odkazu (16) nebo název podskupiny (19). Přejděte na odpovídající číslo strany (20) v seznamu v pravém sloupci. Tetra Pak zvolil pro označování odkazu používat vždy uspořádání orientované na funkci. Prefix indikující uspořádání orientované na funkci (=) není uveden v označení odkazu.

Položky d) a e) odkazují na obrázek (F) na straně i-6.

d) Vyhledejte díl (21), který hledáte na vyobrazení podskupiny a poznamenejte si číslo pozice dílu.

e) Číslo dílu (29) a popis dílu (30) jsou uvedeny v seznamu vedle čísla pozice na straně seznamu.

Informace uvedené v seznamu v Katalogu náhradních dílů

Níže uvedený seznam odkazuje na obrázek (F) na straně i-6. Katalog náhradních dílů obsahuje následující informace o skupinách, podskupinách a náhradních dílech pro toto zařízení:

- Odkaz na uspořádání skupiny (22). Indikuje další vyšší skupinu v uspořádání seznamu zařízení.
- Název skupiny (23)
- Měrná jednotka (25)
- Množství (26)
- Číslo montážního výkresu (27)
- Rozsah stran seznamu (28). Včetně toho, zda existuje více stran v obrázku skupiny nebo seznamu.
- Díl nebo číslo podskupiny (29)
- Název podskupiny nebo popis dílu (30)
- Číslo skupiny (31)
- Číslo zařízení (32)
- Záhlaví informace o skupině (33). Indikuje, že oddíl pod záhlavím je pro specifickou variantu stroje nebo jde-li o seznam běžných dílů. Jestliže seznam obsahuje více než jednu variantu a každá varianta má svůj vlastní montážní výkres, pak je uveden odkaz na stranu montážního výkresu této varianty.
- Interní informace (34)

Indledning

Oplysninger om manualen

Tetra Pak anbefaler, at alle leverede manualer læses omhyggeligt. Sørg for, at de udleverede manualer er til rådighed for personale, som arbejder med eller vedligeholder udstyret.

Det er vigtigt at opbevare dette katalog hele udstyrets levetid og give kataloget videre til eventuelt kommende ejere eller brugere.

Tetra Pak kan ikke holdes ansvarlig for eventuel beskadigelse af udstyr, der opstår, fordi instruktionerne i manualerne til dette udstyr ikke følges.

Udleverede manualer

De manualer, der leveres sammen med dette udstyr, kan omfatte

- CM
  Denne konverteringsmanual forsyner teknikere med oplysninger om konvertering af udstyret mellem forskellige produktionstilstande.
- EM
  Denne elektriske manual forsyner teknikere med informationer om udstyrets elektriske system.
- IM
  Denne installationsmanual forsyner teknikere med nødvendig information i forbindelse med sikker installation af udstyret.
- MM
  Denne vedligeholdelsesmanual forsyner teknikere med information om vedligeholdelse af udstyret.
- OM
  Denne betjeningsmanual giver operatøren oplysninger om betjening af udstyret før, under og efter produktion.
- SPC
  Denne reservedelskatalog indeholder oplysninger, der er nødvendig for at bestille reservedele fra Tetra Pak
- TeM
  Den tekniske manual
  – forsyner teknikere med information, der er nødvendig for en sikker installation af udstyret.
  – forsyner teknikere med information om vedligeholdelse af udstyret.
  – forsyner teknikere med information om maskinens/udstyrets elektriske system.
  – indeholder de informationer, der er nødvendige for at kunne bestille reservedele fra Tetra Pak.

Sidelayout

Se illustration (A) på side i-5: Hovedsiderne i et reservedelskatalog består af en illustrationsside (1) og en tilsvarende listeside (7). Sidenummeret (5) vises i sidehovedet på en illlustrationsside og i sidefoden på en listeside. Dokumentnummeret (6) vises i sidefoden på en listeside.

Sidenummerering

Se illustrationen (A) på side i-5: Et sidenummer (5) har tre dele:

- kapitelnummer (2)
- fortløbende sidenummer i kapitlet (3)
- samlet sideantal i kapitlet (4)

Præsentation af maskinen

Producent

Producentens navn og adresse findes på side to i dette katalog.

Service

Kontakt nærmeste Tetra Pak-kontor for at bestille reservedele eller rapportere problemer i forbindelse med betjening af denne maskine.

Henvendelse til vores kontaktperson med andre forespørgsler, kommentarer eller forslag til forbedring angående udstyr og dokumentation.

Identificering

CE-klassificering

Dette udstyr lever op til de grundlæggende regulativer for sundhed og sikkerhed indenfor den Europæiske Økonomiske Samarbejdsområde (EØS).

Maskinskilt

Illustrationen (B) på side i-5 viser et eksempel på et maskinskilt.
En illustration af et gyldigt maskinskilt og dets placering på udstyret er vist i indledningskapitlet i de manualer, der leveres med dette udstyr. Maskinskiltet indeholder nedennævnte data. Disse er nødvendige ved kontakt med Tetra Pak vedrørende dette specifikke udstyr.

- Maskintype (8)
- Volumen (9)
- Tegningsspecifikationer (10)
- Maskinens serienummer (11)
- Producent (12)
- CE-mærke (13)
- Produktionsår (14)

Illustrationen (C) på side i-5 viser et eksempel på en maskinspecifikation. Kontroller, at de udstyrsdata, der er anført på de første sider i denne manual, svarer til maskinskiltsdataene og maskinspecifikationen.

Sådan bruges dette reservedelskatalog.

Find et reservedelsnummer

a) Se illustrationen (D) på side i-5: Gå til kapitelnummeret (15), der er angivet ved siden af hovedgruppen, der indeholder den del, der ønskes fundet.

Punkterne b) og c) refererer til illustrationen (E) på side i-6.

b) I hovedgruppeillustrationen skal man se efter maskinundergruppen (17), som indeholder den del eller undergruppe, der søges. Bemærk placeringsnummeret (18), og gå til listesiden, som følger illustrationen.

c) Se efter placeringsnummeret/henvisningsbetegnelse (16) eller undergruppens navn (19). Gå til det tilsvarende sidenummer (20) angivet i den højre kolonne. Tetra Pak har valgt altid at anvende den funktionsorienterede struktur til henvisningsbetegnelse. Præfikset angiver funktionsorienteret struktur (=) ikke vist i henvisningsbetegnelsen.

Punkterne d) og e) refererer til illustrationen (F) på side i-6.

d) Find den del (21), du søger i undergruppeillustrationen, og notér delens placeringsnummer.

e) Reservedelsnummeret (29) og -beskrivelsen (30) er angivet ved siden af placeringsnummeret på listesiden.

Informationer der er angivet i et reservedelskatalog

Listen nedenfor refererer til illustrationen (F) på side i-6. Et reservedelskatalog indeholder følgende informationer om grupper, undergrupper og reservedele til udstyret:

- Gruppestrukturreference (22). Angiver næste overordnede gruppe i udstyrslistestrukturen.
- Gruppenavn (23)
- Måleenhed (25)
- Antal (26)
- Samletegningsnummer (27)
- Listens sideområde (28). Er angivet, hvis gruppeillustrationen eller -listen inkluderer mange sider.
- Del- eller undergruppenummer (29)
- Undergruppens navn eller delsbeskrivelse (30)
- Gruppenummer (31)
- Udstyrsnummer (32)
- Overskrift for gruppeinformation (33). Angiver, om afsnittet under overskriften er for en specifik maskinvariant, eller om det er en liste over fælles dele. Hvis en liste har mere end én variant, og hver variant har sin egen samletegning, vises en sidereference til variantens samletegning.
- Intern information (34)

Einleitung

Informationen über das Handbuch

Tetra Pak empfiehlt, alle mitgelieferten Handbücher sorgfältig durchzulesen. Stellen Sie sicher, dass die Handbücher dem Personal, das die Ausrüstung betreibt oder wartet, zur Verfügung steht.

Es ist wichtig, dass Sie diesen Katalog für die gesamte Lebensdauer der Ausrüstung vorliegen haben und einem etwaigen Nachbesitzer oder -betreiber übergeben.

Tetra Pak haftet nicht für Schäden an der Ausrüstung, die aufgrund von Nichtbeachtung der Anweisungen aus den Handbüchern, die mit diesem Gerät geliefert werden, entstehen.

Gelieferte Handbücher

Die Handbücher, die mit dieser Ausrüstung geliefert wird, können Folgendes beinhalten

- CM
  Das Umbauhandbuch gibt den Technikern Informationen über den Umbau der Ausrüstung zwischen verschiedenen Produktionsweisen.
- EM
  Das Elektrohandbuch gibt den Technikern Informationen zum Elektrosystem der Ausrüstung.
- IM
  Das Installationshandbuch gibt den Technikern Informationen für die sichere Installation der Ausrüstung.
- MM
  Das Wartungshandbuch gibt den Technikern Informationen für die Wartung der Ausrüstung.
- OM
  Das Betriebshandbuch gibt dem Bediener Informationen über die Bedienung und den Betrieb der Ausrüstung vor, während und nach der Produktion.
- SPC
  Der Ersatzteilkatalog liefert die Informationen, die für die Bestellung von Ersatzteilen bei Tetra Pak erforderlich sind.
- TeM
  Das technische Handbuch
  - gibt den Technikern Informationen für die sichere Installation der Ausrüstung
  - gibt den Technikern Informationen für die Wartung der Ausrüstung
  - gibt den Techniker Informationen zum Elektrosystem der Ausrüstung/der Maschine
  - liefert die Informationen, die für die Bestellung von Ersatzteilen bei Tetra Pak erforderlich sind.

Seitenlayout

Bezugnahme auf Abbildung (A) auf Seite i-5: Die Hauptseiten in einem Ersatzteilkatalog bestehen aus einer Abbildungsseite (1) und einer entsprechenden Listenseite (7). Die Seitennummer (5) wird in der Kopfzeile einer Abbildungsseite und in der Fußzeile einer Listenseite aufgeführt. Die Dokumentennummer (6) wird in der Fußzeile einer Listenseite aufgeführt.

Seitennummerierung

Bezugnahme auf Abbildung (A) auf Seite i-5: Eine Seitennummer (5) besteht aus drei Teilen:

- Kapitelnummer (2)
- Fortlaufende Seitennummer innerhalb des Kapitels (3)
- Gesamtzahl der Seiten im Kapitel (4)

Einführung zur Maschine

Hersteller

Bitte entnehmen Sie den Namen und die Adresse des Herstellers der zweiten Seite dieses Katalogs.

Service

Zur Bestellung von Ersatzteilen für diese Maschine oder um Probleme im Zusammenhang mit dem Betrieb dieser Maschine zu melden, wenden Sie sich bitte an das nächstgelegene Büro von Tetra Pak.

Wenden Sie sich bei anderen Anfragen, Kommentaren oder Verbesserungsvorschlägen mit Bezug auf die Ausrüstung und seine Dokumentation an die Verbindungsstelle.

Identifizierung

CE-Klassifizierung

Diese Ausrüstung erfüllt die wesentlichen Anforderungen des Europäischen Wirtschaftsraum (EWR) für Gesundheitsschutz und die Sicherheit.

Maschinenschild

Die Abbildung (B) auf Seite i-5 zeigt ein Beispiel eines Maschinenschilds. Die Abbildung eines gültigen Maschinenschildes und seine Position auf der Ausrüstung wird im Einleitungskapitel der mit dieser Ausrüstung gelieferten Handbücher gezeigt. Das Maschinenschild enthält die Daten, die erforderlich sind, wenn Sie sich bezüglich dieser speziallen Ausrüstung an Tetra Pak wenden.

- Maschinentyp (8)
- Volumen (9)
- Zeichnungsspezifikationen (10)
- Seriennummer der Maschine (11)
- Hersteller (12)
- CE-Zeichen (13)
- Baujahr (14)

Die Abbildung (C) auf Seite i-5 zeigt ein Beispiel einer Maschinenspezifikation. Stellen Sie sicher, dass die Ausrüstungsdaten, die in den vorderen Seiten dieses Handbuchs aufgelistet sind, mit den Maschinenschilddaten und der Maschinenspezifikation übereinstimmen.

Benutzung dieses Ersatzteilkatalogs

Finden einer Ersatzteilnummer

a) Bezugnahme auf Abbildung (D) auf Seite i-5: Weiter zur Kapitel nummer (15), die neben der Hauptgruppe angegeben ist, die das entsprechende Teil enthält.

Die Positionen b) und c) beziehen sich auf die Abbildung (E) auf Seite i-6.

b) Suchen Sie auf der Hauptgruppenillustration nach der Maschinen-Untergruppe (17), die das gesuchte Teil oder die Untergruppe enthält. Notieren Sie die Positionsnummer (18) und gehen Sie dann zur Listenseite, die der Abbildung folgt.

c) Suchen Sie nach der Positionsnummer/Referenzbezeichnung (16) oder dem Namen der Untergruppe (19). Gehen Sie zur entsprechenden Seitennummer (20), die in der rechten Spalte aufgelistet ist. Tetra Pak hat sich dazu entschieden, stets eine funktionsorientierte Struktur für die Referenzbezeichnung zu verwenden. Die vorangestellte Kennzeichnung, welche die funktionsorientierte Struktur angibt (=), wird in der Referenzbezeichnung nicht angezeigt.

Die Positionen d) und e) beziehen sich auf die Abbildung (F) auf Seite i-6.

d) Finden Sie das gesuchte Teil (21) auf der Abbildung der Untergruppe und notieren Sie die Positionsnummer des Teils.

e) Die Teilenummer (29) und die Teilebeschreibung (30) werden neben der Positionsnummer auf der Listenseite aufgelistet.

In einem Ersatzteilkatalog aufgelistete Informationen

Die folgende Liste bezieht sich auf die Abbildung (F) auf Seite i-6. Ein Ersatzteilkatalog enthält folgende Informationen über Gruppen, Untergruppen und Ersatzteile für die Ausrüstung:

- Gruppenstrukturreferenz (22). Sie gibt die nächst höhere Gruppe in der Ausrüstungslistenstruktur an.
- Gruppenname (23)
- Maßeinheit (25)
- Menge (26)
- Nummer der Zusammenbauzeichnung (27)
- Listenseitenbereich (28). Enthalten, wenn es mehrere Seiten in der Gruppenabbildung oder Liste gibt.
- Teile- oder Untergruppennummer (29)
- Untergruppenname oder Teilebeschreibung (30)
- Gruppennummer (31)
- Ausrüstungsnummer (32)
- Gruppeninformationsüberschrift (33). Gibt an, ob sich der Abschnitt unter der Überschrift auf eine spezifische Maschinenvariante bezieht oder ob es sich um eine Liste der allgemeinen Teile handelt. Wenn eine Liste mehr als eine Variante hat und jede Variante über eine eigene Zusammenbauzeichnung verfügt, wird eine Seitenreferenz zur Zusammenbauzeichnung angezeigt.
- Interne Informationen (34)

Εισαγωγή

Πληροφορίες για το Εγχειρίδιο

Η Tetra Pak σάς συνιστά να διαβάζετε προσεκτικά όλα τα παρεχόμενα εγχειρίδια. Εξασφαλίζετε ότι όλα τα παρεχόμενα εγχειρίδια διατίθενται στο προσωπικό που χειρίζεται ή συντηρεί τον εξοπλισμό.

Είναι σημαντικό να διατηρείτε αυτό τον κατάλογο καθ' όλη τη διάρκεια ζωής του εξοπλισμού καθώς και να παραδίδετε τον κατάλογο στον τυχόν επόμενο ιδιοκτήτη ή χρήστη του εξοπλισμού.

Η Tetra Pak δεν πρόκειται να αναλάβει καμία ευθύνη για οποιαδήποτε ζημιά που μπορεί να προκληθεί στον εξοπλισμό εξαιτίας της μη τήρησης των οδηγιών οι οποίες παρέχονται στα εγχειρίδια που συνοδεύουν αυτό τον εξοπλισμό.

Παρεχόμενα Εγχειρίδια

Στα εγχειρίδια που παρέχονται μαζί μ' αυτό τον εξοπλισμό, μπορεί να περιλαμβάνονται τα εξής:

- CM
  Αυτό το Εγχειρίδιο Μετατροπής παρέχει στους τεχνικούς πληροφορίες για τη μετατροπή του εξοπλισμού μεταξύ των διάφορων λειτουργιών παραγωγής.
- EM
  Αυτό το Ηλεκτρικό Εγχειρίδιο παρέχει στους τεχνικούς πληροφορίες για το ηλεκτρικό σύστημα του εξοπλισμού.
- IM
  Αυτό το Εγχειρίδιο Εγκατάστασης παρέχει στους τεχνικούς τις απαιτούμενες πληροφορίες για την ασφαλή εγκατάσταση του εξοπλισμού.
- MM
  Αυτό το Εγχειρίδιο Συντήρησης παρέχει στους τεχνικούς πληροφορίες για τη συντήρηση του εξοπλισμού.
- OM
  Αυτό το Εγχειρίδιο Χειρισμού παρέχει στο χειριστή πληροφορίες για το χειρισμό και τη λειτουργία του εξοπλισμού πριν, κατά τη διάρκεια και μετά την παραγωγή.
- SPC
  Αυτός ο Κατάλογος Ανταλλακτικών παρέχει τις απαραίτητες πληροφορίες για την παραγγελία ανταλλακτικών από την Tetra Pak.
- TeM
  Το Τεχνικό Εγχειρίδιο
  - παρέχει στους τεχνικούς τις απαιτούμενες πληροφορίες για την ασφαλή εγκατάσταση του εξοπλισμού
  - παρέχει στους τεχνικούς πληροφορίες για τη συντήρηση του εξοπλισμού
  - παρέχει στους τεχνικούς πληροφορίες για το ηλεκτρικό σύστημα του εξοπλισμού/μηχανής
  - παρέχει τις απαραίτητες πληροφορίες για την παραγγελία ανταλλακτικών από την Tetra Pak.

Διάταξη Σελίδων

Ανατρέξτε στην εικόν (A) της σελίδας i-5: Οι κύριες σελίδες ενός Καταλόγου Ανταλλακτικών αποτελούνται από μία εικονογραφημένη σελίδα (1) και από μία αντίστοιχη σελίδα λίστας (7). Ο αριθμός σελίδας (5) εμφανίζεται στην κεφαλίδα μιας εικονογραφημένης σελίδας και στο υποσέλιδο μιας σελίδας λίστας. Ο αριθμός εγγράφου (6) εμφανίζεται στο υποσέλιδο μιας σελίδας λίστας.

Αρίθμηση Σελίδων

Ανατρέξτε στην εικόνα (A) της σελίδας i-5: Ένας αριθμός σελίδας (5) αποτελείται από τα εξής τρία μέρη:

- αριθμός κεφαλαίου (2)
- αύξων αριθμός σελίδας του κεφαλαίου (3)
- συνολικός αριθμός σελίδων του κεφαλαίου (4)

Παρουσίαση Μηχανής

Κατασκευαστής

Για το όνομα και τη διεύθυνση του κατασκευαστή, ανατρέξτε στη δεύτερη σελίδα αυτού του καταλόγου.

Τεχνική Εξυπηρέτηση

Για να παραγγείλετε ανταλλακτικά για τη συγκεκριμένη μηχανή ή για να αναφέρετε προβλήματα που σχετίζονται με τη λειτουργία αυτής της μηχανής, επικοινωνήστε με το πλησιέστερο γραφείο της Tetra Pak.

Εάν έχετε άλλου είδους ερωτήσεις, σχόλια ή προτάσεις βελτίωσης σχετικά με τον εξοπλισμό και την έγγραφη τεκμηρίωσή του, επικοινωνήστε με το Τμήμα Σχέσεων.

Στοιχεία Ταυτότητας

Σήμανση CE

Αυτός ο εξοπλισμός συμμορφώνεται με τους βασικούς κανονισμούς υγείας και ασφάλειας του Ευρωπαϊκού Οικονομικού Χώρου (ΕΟΧ).

Πινακίδα Αναγνώρισης Μηχανής

Η εικόνα (B) της σελίδας i-5 δείχνει ένα παράδειγμα μιας πινακίδας αναγνώρισης μηχανής.
Μια εικόνα που δείχνει την ενδεδειγμένη μορφή και θέση της πινακίδας αναγνώρισης μηχανής στον εξοπλισμό, παρουσιάζεται στο κεφάλαιο 'Εισαγωγή' των εγχειριδίων που παρέχονται μ' αυτόν τον εξοπλισμό.
Η πινακίδα αναγνώρισης μηχανής αναγράφει τα δεδομένα που παρατίθενται στη συνέχεια, τα οποία είναι απαραίτητα όταν επικοινωνείτε με την Tetra Pak για θέματα που αφορούν αυτό το συγκεκριμένο εξοπλισμό.

- Τύπος μηχανής (8)
- Χωρητικότητα (9)
- Στοιχεία σχεδίου (10)
- Αριθμός σειράς μηχανής (11)
- Κατασκευαστής (12)
- Σήμανση CE (13)
- Έτος κατασκευής (14)

Η εικόνα (Γ) της σελίδας i-5 δείχνει ένα παράδειγμα τεχνικών χαρακτηριστικών μηχανής. Βεβαιωθείτε ότι τα δεδομένα εξοπλισμού που παρατίθενται στις πρώτες σελίδες αυτού του εγχειριδίου συμφωνούν με τα δεδομένα της πινακίδας αναγνώρισης μηχανής και των τεχνικών χαρακτηριστικών μηχανής.

Πώς Χρησιμοποιείται Αυτός ο Κατάλογος Ανταλλακτικών

Εύρεση ενός Αριθμού Ανταλλακτικού

a) Ανατρέξτε στην εικόνα (Δ) της σελίδας i-5: Πηγαίνετε στον αριθμό κεφαλαίου (15) που υποδεικνύεται δίπλα από την κύρια ομάδα της μηχανής η οποία περιλαμβάνει το εξάρτημα που θέλετε να βρείτε.

Τα βήματα b) και c) αναφέρονται στην εικόνα (Ε) της σελίδας i-6.

b) Στην εικόνα της κύριας ομάδας μηχανής, αναζητήστε την υποομάδα μηχανής (17) η οποία περιλαμβάνει το εξάρτημα ή την υποομάδα που αναζητάτε. Σημειώστε τον αριθμό θέσης (18) και πηγαίνετε στη σελίδα λίστας που ακολουθεί την εικόνα.

c) Αναζητήστε τον αριθμό θέσης/ονομασία αναφοράς (16) ή το όνομα υποομάδας (19). Πηγαίνετε στον αντίστοιχο αριθμό σελίδας (20) που αναγράφεται στη δεξιά στήλη. Η Tetra Pak έχει επιλέξει να χρησιμοποιεί πάντα δομή ονομασίας αναφοράς με βάση τη λειτουργία. Το πρόθεμα που υποδεικνύει τη δομή με βάση τη λειτουργία (=) δε φαίνεται στο διάγραμμα αναφοράς.

Τα βήματα d) και e) αναφέρονται στην εικόνα (ΣΤ) της σελίδας i-6.

d) Βρείτε το εξάρτημα (21) που αναζητάτε στην εικόνα υποομάδας μηχανής και σημειώστε τον αριθμό θέσης του εξαρτήματος.

e) Ο αριθμός του εξαρτήματος (29) και η περιγραφή του εξαρτήματος (30) παρατίθενται δίπλα στον αριθμό θέσης στη σελίδα λίστας.

Πληροφορίες που Περιέχονται σε έναν Κατάλογο Ανταλλακτικών

Η λίστα που ακολουθεί αναφέρεται στην εικόνα (F) της σελίδας i-6. Ένας Κατάλογος Ανταλλακτικών περιέχει τις παρακάτω πληροφορίες σχετικά με τις ομάδες, τις υποομάδες και τα ανταλλακτικά του εξοπλισμού:

- Αναφορά δομής ομάδας (22). Υποδηλώνει την επόμενη μεγαλύτερη ομάδα στη δομή λίστας του εξοπλισμού.
- Όνομα ομάδας (23)
- Μονάδα μέτρησης (25)
- Ποσότητα (26)
- Αριθμός σχεδίου συγκροτήματος (27)
- Περιοχή σελίδων λίστας (28). Περιλαμβάνεται εφόσον η εικόνα ή η λίστα μιας ομάδας εκτίθεται σε περισσότερες από μία σελίδες.
- Αριθμός εξαρτήματος ή υποομάδας (29)
- Αριθμός υποομάδας ή περιγραφή εξαρτήματος (30)
- Αριθμός ομάδας (31)
- Αριθμός εξοπλισμού (32)
- Επικεφαλίδα πληροφοριών ομάδας (33). Υποδεικνύει εάν η ενότητα κάτω από την επικεφαλίδα αφορά μια συγκεκριμένη παραλλαγή μηχανής ή αποτελεί μια λίστα κοινών εξαρτημάτων. Σε περίπτωση που μια λίστα περιέχει περισσότερες από μία παραλλαγές και κάθε παραλλαγή έχει ξεχωριστό σχέδιο συγκροτήματος, εμφανίζεται μια παραπομπή προς τη σελίδα όπου βρίσκεται το σχέδιο συγκροτήματος της παραλλαγής.
- Εσωτερικές πληροφορίες (34)

Introducción

Información sobre el manual

Tetra Pak recomienda leer atentamente todos los manuales suministrados. Asegúrese de que los manuales están disponibles para el personal que opera o mantiene el equipo.

Es importante conservar este catálogo durante la vida útil del equipo, así como facilitárselo a cualquier propietario o usuario posterior.

Tetra Pak no se responsabilizará de daños en el equipo por no seguir las instrucciones proporcionadas en los manuales que acompañan este equipo.

Manuales entregados

Los manuales entregados con este equipo pueden incluir:

- CM
  El Manual de conversión proporciona a los técnicos información sobre cómo convertir el equipo a diferentes modos de producción.
- EM
  El Manual eléctrico proporciona a los técnicos información sobre el sistema eléctrico del equipo.
- IM
  El Manual de instalación proporciona a los técnicos la información necesaria para instalar el equipo de manera segura.
- MM
  El Manual de mantenimiento proporciona a los técnicos información sobre el mantenimiento del equipo.
- OM
  El Manual de funcionamiento proporciona al operador información sobre el manejo y el funcionamiento del equipo antes, durante y después de la producción.
- SPC
  El Catálogo de recambios proporciona la información necesaria para pedir las piezas de recambio a Tetra Pak.
- TeM
  El Manual técnico
  - proporciona a los técnicos la información necesaria para instalar de manera segura el equipo
  - proporciona a los técnicos información sobre el mantenimiento del equipo
  - proporciona a los técnicos información sobre el sistema eléctrico de la máquina/equipo
  - proporciona la información necesaria para pedir las piezas de recambio a Tetra Pak.

Organización de las páginas

Consultar la ilustración (A) en la página i-5: Las páginas principales en un Catálogo de recambios se componen de una página de ilustración (1) y una página de lista correspondiente (7). El número de la página (5) se muestra en el encabezado de una página de ilustración y en el pie de página de una página de lista. El número del documento (6) se muestra en el pie de página de una página de lista.

Numeración de las páginas

Consulte la ilustración (A) en la página i-5: Un número de página (5) consta de tres partes:

- número de capítulo (2)
- número de página consecutivo dentro del capítulo (3)
- número total de páginas del capítulo (4)

Introducción a la máquina

Fabricante

Para obtener el nombre y la dirección del fabricante, véase la segunda página de este catálogo.

Servicio

Para pedir recambios para esta máquina o informar de problemas asociados con el funcionamiento de la misma, póngase en contacto con la oficina de Tetra Pak más cercana.

Póngase en contacto con el representante para otras consultas, comentarios o consejos sobre mejoras referidos al equipo y su documentación.

Identificación

Clasificación de la CE

Este equipo cumple con la normativa básica sobre salud y seguridad del Espacio Económico Europeo (EEE).

Placa de máquina

La ilustración (B) en la página i-5 muestra un ejemplo de una placa de máquina.
En el capítulo Introducción de los manuales entregados con este equipo, se muestra una ilustración de la placa de máquina válida y su ubicación en el equipo. La placa de máquina contiene los datos que se enumeran a continuación, requeridos al ponerse en contacto con Tetra Pak en relación con este equipo específico.

- Tipo de máquina (8)
- Volumen (9)
- Especificaciones de plano (10)
- Número de serie de la máquina (11)
- Fabricante (12)
- Marca de la CE (13)
- Año de fabricación (14)

La ilustración (C) en la página i-5 muestra un ejemplo de especificación de la máquina. Asegúrese de que los datos de equipo que se enumeran en las páginas de la cubierta de este manual corresponden a los datos de la placa y las especificaciones de la máquina.

Cómo utilizar este Catálogo de recambios

Localizar un número de recambio

a) Consulte la ilustración (D) en la página i-5: Vaya al número de capítulo (15) indicado junto al grupo principal que contiene la pieza que desea localizar.

Los puntos b) y c) hacen referencia a la ilustración (E) en la página i-6.

b) En la ilustración del grupo principal, busque el subgrupo de la máquina (17) que contiene la pieza o el subgrupo que busca. Anote el número de posición (18) y vaya a la página de lista que sigue a la ilustración.

c) Busque el número de posición/denominación de referencia (16) o el nombre del subgrupo (19). Vaya al número de página correspondiente (20) que aparece en la columna de la derecha. Tetra Pak ha elegido utilizar siempre la estructura orientada a la función para la denominación de referencia. El prefijo que indica la estructura orientada a la función (=) no aparece en la denominación de referencia.

Los puntos d) y e) hacen referencia a la ilustración (F) en la página i-6.

d) Localice la pieza (21) que busca en la ilustración del subgrupo y anote el número de posición de la pieza.

e) El número de pieza (29) y la descripción de la misma (30) aparecen junto al número de posición en la página de lista.

Información que contiene un Catálogo de recambios

La lista que aparece a continuación hace referencia a la ilustración (F) en la página i-6. Un Catálogo de recambios contiene la siguiente información sobre grupos, subgrupos y recambios para el equipo:

- Referencia de estructura de grupo (22). Indica el siguiente grupo más alto en la estructura de lista del equipo.
- Nombre del grupo (23)
- Unidad de medida (25)
- Cantidad (26)
- Número de dibujo del conjunto (27)
- Intervalo de página de lista (28). Incluido si hay varias páginas en la ilustración o lista de grupo.
- Número de pieza o subgrupo (29)
- Nombre de subgrupo o descripción de pieza (30)
- Número de grupo (31)
- Número de equipo (32)
- Encabezado de información de grupo (33). Indica si la sección que aparece debajo del encabezado corresponde a una variante específica de la máquina o si es una lista de piezas comunes. Si la lista tiene más de una variante y cada variante tiene su propio dibujo de conjunto, se muestra una referencia de página al dibujo de conjunto de la variante.
- Información interna (34)

Sissejuhatus

Juhendi teave

Tetra Pak soovitab kõik juhendid hoolikalt läbi lugeda. Kontrollige, et juhendid oleksid seadmetega töötavatele ja neid hooldavatele isikutele kättesaadavad.

Kataloog tuleb seadme kasutusaja vältel alles hoida ning järgmisele omanikule või kasutajale edasi anda.

Tetra Pak ei vastuta seadme vigastuste eest, mis on tekkinud seadmega kaasnevate juhendite mittejärgimise tõttu.

Kaasaolevad juhendid

Seadmega kaasasolevad juhendid võivad sisaldada järgmist:

- CM
  Ümberseadistusjuhend annab tehnikutele teavet seadme ümber seadistamise kohta eri tootmisrežiimide korral.
- EM
  Elektrijuhend annab tehnikutele informatsiooni seadme elektrisüsteemi kohta.
- IM
  Paigaldusjuhend annab tehnikutele vajalikku teavet seadme ohutu paigaldamise kohta.
- MM
  Hooldusjuhend annab tehnikutele teavet seadme hoolduse kohta.
- OM
  Kasutusjuhend annab operaatorile teavet seadme käsitsemise ja kasutamise kohta enne tootmist, selle ajal ja pärast seda.
- SPC
  Varuosade kataloog annab vajalikku teavet Tetra Pakilt varuosade tellimiseks
- TeM
  Tehniline juhend
  - annab tehnikutele vajalikku teavet seadme ohutuks paigaldamiseks
  - annab tehnikutele teavet seadme hooldamise kohta
  - annab tehnikutele teavet masina/seadme elektrisüsteemi kohta
  - annab vajalikku teavet Tetra Pakilt varuosade tellimiseks.

Lehekülje kujundus

Vt joonist (A) lk i-5: Varuosade kataloogi põhilehtedeks on jooniste lehekülg (1) ja vastav loeteluleht (7). Lehekülje number (5) on toodud joonistelehe päises ja loetelulehe jaluses. Dokumendi number (6) on toodud loetelulehe jaluses.

Lehekülje nummerdus

Vt joonist (A) lk i-5: Lehekülje number (5) koosneb kolmest osast:

- peatüki number (2)
- järgneva lehekülje number (3) peatükis
- lehekülgede koguarv peatükis (4)

Sissejuhatus masina kohta

Tootja

Tootja nimi ja aadress on toodud kataloogi teisel lehel.

Teenindus

Masina varuosade tellimiseks või masina kasutamisega seonduvate probleemide teatamiseks võtke ühendust lähima Tetra Pak kontoriga.

Seadme ja dokumendiga seonduvate küsimuste, kommentaaride ja parandusettepanekute puhul võtke ühendust ettevõtte esindajaga.

Identifikatsioon

CE klassifikatsioon

Seade on kooskõlas Euroopa Majanduspiirkonna (EEA) tervishoiu- ja ohutusnõuetega.

Masina andmeplaat

Joonisel (B) leheküljel i-5 on kujutatud masina andmeplaati. Masina andmeplaadi joonis ja selle asukoht seadmel on toodud seadmega kaasasoleva juhendi sissejuhatavas peatükis. Masina andmeplaadil on toodud allpool loetletud andmed, mida vajate antud konkreetse seadmega seoses Tetra Paki poole pöördudes.

- Masina tüüp (8)
- Maht (9)
- Joonisspetsifikatsioonid (10)
- Masina seerianumber (11)
- Tootja (12)
- CE tähis (13)
- Tootmisaasta (14)

Joonisel (C) leheküljel i-5 on kujutatud näide masina spetsifikatsioonist. Veenduge, et juhendi esimestel lehekülgedel toodud andmed seadme kohta vastavad masina andmesildil olevatele andmetele ja masina spetsifikatsioonile.

Kuidas varuosade kataloogi kasutada

Leidke varuosa number

a) Vt joonist (D) lk i-5: Leidke peatükk, mille number (15) on toodud selle põhirühma juures, mis sisaldab otsitavat varuosa.

Punktid b) ja c) viitavad joonisele (E) lk i-6.

b) Põhirühma joonisel leidke masina alamrühm (17), mis sisaldab otsitavat osa või alamrühma. Leidke positsiooninumber (18) ja avage joonisele järgnev loeteluleht.

c) Leidke positsiooninumber/viite tähis (16) või alamgrupi nimetus (19). Avage parempoolses veerus loetletud vastav lehekülje number (20). Tetra Pak on valinud viite tähise puhul alatiseks kasutamiseks funktsioonile suunatud struktuuri. Funktsioonile suunatud struktuuri prefiks (=) pole viite tähises näidatud.

Punktid d) ja e) viitavad jooniselerefer (F) lk i-6.

d) Leidke otsitav osa (21) alamrühma joonisel ja seejärel osa positsioonnumber.

e) Osa number (29) ja osa kirjeldus (30) on toodud loetelulehel positsioonnumbri kõrval.

Varuosade kataloogis toodud teave

Allpool toodud loetelui viitab joonisele (F) lk i-6. Varuosade kataloog sisaldab järgmist teavet seadme rühmade, alamrühmade ja varuosade kohta:

- Rühmastruktuuri viide (22). Märgib seadme loetelu struktuuris järgmist kõrgemat rühma.
- Rühma nimetus (23)
- Mõõtühik (25)
- Kogus (26)
- Koostejoonise number (27)
- Loetelu lehekülgede vahemik (28). Kaasatud kui rühma joonised või loetelu on toodud mitmel lehel.
- Osa või alamrühma number (29)
- Alamrühma nimetus või osa kirjeldus (30)
- Rühma number (31)
- Seadme number (32)
- Rühma teabe pealkiri (33). Näitab, kas pealkirja all toodud jaotis on konkreetse masinavariandi kohta või on tegemist tavaliste varuosade loeteluga. Kui loetelus on toodud rohkem kui üks variant ja iga variandi jaoks on oma koostejoonis, esitatakse viide selle variandi koostejoonise leheküljele.
- Siseteave (34)

Johdanto

Tietoja käsikirjasta

Tetra Pak suosittelee kaikkien toimitettavien oppaiden lukemista huolellisesti. Varmista, että toimitetut oppaat ovat laitetta käyttävän tai huoltavan henkilökunnan saatavilla.

Tämä luettelo on säilytettävä laitteen käyttöiän ajan ja toimitettava edelleen mahdolliselle seuraavalle omistajalle tai käyttäjälle.

Tetra Pak ei vastaa laitevaurioista, jotka aiheutuvat laitteen mukana tulevissa oppaissa annettujen ohjeiden noudattamatta jättämisestä.

Toimitettavat ohjeet

Tämän laitteen mukana toimitettaviin ohjeisiin kuuluvat:

- CM
  Muunnoskirjassa on teknikoille tarkoitettuja ohjeita laitteiston muuttamisesta eri tuotantotiloihin.
- EM
  Sähkökirjassa on teknikoille tarkoitettuja tietoja laitteen sähköjärjestelmästä.
- IM
  Asennuskäsikirjassa on teknikoille tarkoitettuja tietoja, jotka tarvitaan laitteen turvallista asentamista varten.
- MM
  Huoltokäsikirjassa on teknikoille tarkoitettuja tietoja tämän laitteen huoltamisesta.
- OM
  Käyttäjän käsikirjassa on käyttäjälle tarkoitettuja tietoja laitteen käsittelystä ja käyttämisestä ennen tuotantoa, tuotannon aikana ja sen jälkeen.
- SPC
  Varaosaluettelossa on tietoja, joita tarvitaan varaosien tilaamiseen Tetra Pakilta.
- TeM
  Tekninen käsikirja
  - sisältää teknikoille tarkoitettuja tietoja, joita tarvitaan laitteen turvallista asentamista varten
  - sisältää teknikoille tarkoitettuja tietoja laitteen huoltamisesta
  - sisältää teknikoille tarkoitettuja tietoja koneen/laitteen sähköjärjestelmästä
  - sisältää tietoja, joita tarvitaan varaosien tilaamiseen Tetra Pakilta.

Sivujen asettelu

Katso kuva (A) sivulla i-5: Varaosaluettelon pääsivut koostuvat kuvasivusta (1) ja sitä vastaavasta luettelosivusta (7). Sivunumero (5) näytetään kuvasivun ylätunnisteessa ja luettelosivun alatunnisteessa. Asiakirjan numero (6) näytetään luettelosivun alatunnisteessa.

Sivunumerointi

Katso kuva (A) sivulla i-5: Sivunumerossa (5) on kolme osaa:

- luvun numero (2)
- perättäinen sivunumero (3) luvun sisällä
- luvun kokonaissivumäärä (4).

Koneen esittely

Valmistaja

Valmistajan nimi ja osoite on ilmoitettu tämän luettelon toisella sivulla.

Huolto

Jos haluat tilata tähän koneeseen varaosia tai jos tämän koneen käytössä ilmenee ongelmia, jotka haluat raportoida, ota yhteyttä lähimpään Tetra Pakin toimistoon.

Jos sinulla on muuta kysyttävää, huomautettavaa tai ehdotuksia ja sen asiakirjoja koskevista parannuksista, ota yhteys yhteyshenkilöön.

Tunnistetiedot

CE-luokitus

Tämä laite vastaa Euroopan talousalueen (ETA) terveyttä ja turvallisuutta koskevia perusvaatimuksia.

Koneen tyyppikilpi

Kuvassa (B) sivulla i-5 on esimerkki koneen tyyppikilvestä. Voimassa olevan tyyppikilven kuva ja sen sijainti koneessa käy ilmi laitteiston mukana tulleiden ohjeiden Johdanto-luvusta. Tyyppikilvessä on tarvitsemasi Tetra Pakin voimassa olevat yhteystiedot, kun on kyseessä tämä nimenomainen laite.

- Konetyyppi (8)
- Tilavuus (9)
- Piirustuserittely (10)
- Koneen sarjanumero (11)
- Valmistaja (12)
- CE-merkki (13)
- Valmistusvuosi (14)

Kuvassa (C) sivulla i-5 on esimerkki koneen erittelystä. Varmista, että tämän ohjeen etusivuilla ilmoitetut laitetiedot vastaavat tyyppikilven ja kone-erittelyn tietoja.

Tämän varaosaluettelon käyttäminen

Etsi varaosan numero

a) Katso kuva (D) sivulla i-5: Siirry lukuun (15), joka on ilmoitettu etsittävän osan pääryhmän vieressä.

Kohdat b) ja c) viittaavat kuvaan (E) sivulla i-6.

b) Etsi pääryhmän kuvasta koneen alaryhmä (17), joka sisältää etsimäsi osan tai alaryhmän. Merkitse muistiin paikkanumero (18) ja siirry luettelosivulle, joka seuraa kuvaa.

c) Etsi paikkanumero (16) tai alaryhmän nimi (19). Siirry vastaavalle sivunumerolle (20), joka on ilmoitettu oikeassa sarakkeessa. Tetra Pak on päättänyt aina noudattaa toimintoperusteista rakennetta viitemerkinnöissä. Viitemerkinnässä ei esitetä toimintoperusteisen rakenteen osoittavaa etuliitettä (=).

Kohdat d) ja e) viittaavat kuvaan (F) sivulla i-6.

d) Hae etsittävä osa (21) alaryhmän kuvasta ja merkitse osan paikkanumero muistiin.

e) Osanumero (29) ja osan kuvaus (30) on annettu paikkanumeron vieressä luettelosivulla.

Varaosaluettelossa olevat tiedot

Alla oleva luettelo viittaa kuvaan (F) sivulla i-6. Varaosaluettelo sisältää seuraavat tiedot ryhmistä, alaryhmistä ja laitteen varaosista:

- Ryhmärakenneviite (22). Osoittaa seuraavaksi ylemmän ryhmän laiteluettelorakenteessa.
- Ryhmän nimi (23)
- Mittayksikkö (25)
- Määrä (26)
- Kokoonpanopiirustuksen numero (27)
- Luettelon sivualue (28). Tämä on mukana, jos ryhmäkuvassa tai luettelossa on useita sivuja.
- Osan tai alaryhmän numero (29)
- Alaryhmän nimi tai osan kuvaus (30)
- Ryhmän numero (31)
- Laitteen numero (32)
- Ryhmätietojen otsikko (33). Osoittaa, koskeeko alla oleva osio tiettyä koneversiota vai onko kyseessä yhteisten osien luettelo. Jos luettelolla on useampi kuin yksi versio ja kullakin versiolla on oma kokoonpanopiirustuksensa, näytetään version kokoonpanopiirustuksen sivuviittaus.
- Sisäiset tiedot (34)

Introduction

Informations sur ce manuel

Tetra Pak recommande de lire attentivement tous les manuels remis. S'assurer que ceux-ci sont accessibles au personnel d'exploitation et de maintenance de l'équipement.

Il est important de conserver ce catalogue pendant la durée de vie de l'équipement et de le transmettre à tout détenteur ou à tout utilisateur ultérieur de l'équipement.

Tetra Pak ne pourra être tenu responsable d'aucun dommage causé à l'équipement suite au non respect des instructions fournies dans les manuels remis avec cet équipement.

Manuels remis

Les manuels remis avec cet équipement peuvent comprendre

- CM
  Le Manuel de Conversion contient les informations destinées aux techniciens pour la conversion de l'équipement en vue des différents modes de production.
- EM
  Le Manuel Electrique fournit aux techniciens des informations sur le système électrique de l'équipement.
- IM
  Le Manuel d'Installation fournit les informations nécessaires aux techniciens pour installer l'équipement en toute sécurité.
- MM
  Le Manuel d'Entretien contient les informations nécessaires aux techniciens pour la maintenance de l'équipement.
- OM
  Le Manuel d'Utilisation fournit à l'opérateur les informations nécessaires à la manutention et à l'exploitation de l'équipement, avant, pendant et après la production.
- SPC
  Le Catalogue des Pièces de Rechange contient les informations permettant de commander des pièces de rechange auprès de Tetra Pak
- TeM
  Le Manuel Technique
  - contient les informations nécessaires aux techniciens pour installer l'équipement en toute sécurité.
  - contient les informations nécessaires aux techniciens pour la maintenance de l'équipement.
  - fournit aux techniciens des informations sur le système électrique de la machine/de l'équipement.
  - fournit les informations permettant de commander des pièces de rechange auprès de Tetra Pak.

Mise en page

Reportez-vous au schéma (A) page i-5 : Dans un catalogue de Pièces de Rechange, les pages principales sont les pages de schémas (1) et les pages de listes correspondantes (7). Le numéro de page (5) est indiqué en en-tête sur une page de schéma et en bas de page sur une page de liste. Le numéro de document (6) est indiqué au bas d'une page de liste.

Numérotation des pages

Reportez-vous au schéma (A) page i-5 : Un numéro de page (5) se compose de trois éléments :

- numéro du chapitre (2)
- numéro de page séquentiel à l'intérieur du chapitre (3)
- nombre total de pages du chapitre (4)

Présentation de la machine

Fabricant

Les nom et adresse du fabricant sont donnés en deuxième page de ce catalogue.

Assistance technique

Pour commander des pièces de rechange pour cette machine ou signaler un problème lié à son fonctionnement, contactez l'agence Tetra Pak la plus proche.

Contactez le responsable de liaison pour tout autre renseignement, commentaire ou suggestion d'amélioration relatifs à l'équipement et à sa documentation.

Identification

Certification CE

Cet équipement est conforme aux réglementations essentielles en matière d'hygiène et de sécurité de l'Espace économique européen (EEE).

Plaque signalétique de la machine

Le schéma (B) de la page i-5 reproduit un exemple de plaque signalétique de la machine.
Le chapitre Introduction des manuels remis avec cet équipement comprend une reproduction de la plaque signalétique valide de la machine et indique son emplacement sur l'équipement. La plaque comporte les caractéristiques indiquées ci-dessous, nécessaires pour prendre contact avec Tetra Pak à propos de cet équipement spécifique.

- Type de la machine (8)
- Volume (9)
- Caractéristiques schéma (10)
- Numéro de série de la machine (11)
- Fabricant (12)
- Marquage CE (13)
- Année de fabrication (14)

Le schéma (C) de la page i-5 reproduit un exemple de plaque signalétique de la machine. Assurez-vous que les données relatives à l'équipement qui se trouvent au début de ce manuel correspondent bien aux données figurant sur la plaque signalétique de la machine et à ses spécifications.

Comment utiliser ce Catalogue des Pièces de Rechange

Trouver un numéro de pièce de rechange

a) Reportez-vous au schéma (D) page i-5 : Allez au numéro de chapitre (15) indiqué à côté du groupe principal contenant la pièce que vous recherchez.

Les éléments b) et c) se rapportent au schéma (E) de la page i-6.

b) Sur le schéma du groupe principal, recherchez le sous-groupe de la machine (17) contenant la pièce ou le sous-groupe que vous recherchez. Notez le numéro de position (18) et reportez-vous à la page de liste suivant le schéma.

c) Recherchez le numéro de position/la désignation de référence (16) ou le nom du sous-groupe (19). Allez au numéro de page correspondant (20) figurant dans la liste de la colonne de droite. Tetra Pak a pris le parti de toujours utiliser la structure de la fonction pour la désignation de la référence. Le préfixe indiquant la structure de la fonction (=) ne figure pas dans la désignation de la référence.

Les éléments d) et e) se rapportent au schéma (F) de la page i-6.

d) Repérez la pièce (21) que vous recherchez dans le schéma du sous-groupe et notez le numéro de position de la pièce.

e) Le numéro de la pièce (29) et sa description (30) figurent à côté du numéro de position sur la page de liste.

Informations données dans un Catalogue de Pièces de Rechange

La liste ci-dessous se rapporte au schéma (F) de la page i-6. Un Catalogue de Pièces de Rechange contient les informations suivantes concernant les groupes, sous-groupes et pièces de rechange de l'équipement :

- Référence de structure de groupe (22). Indique le groupe immédiatement supérieur dans la structure de liste de l'équipement.
- Nom du groupe (23)
- Unité de mesure (25)
- Quantité (26)
- Numéro de plan de montage (27)
- Groupe de pages de liste (28). Indiqué si la liste ou l'illustration du groupe comporte plusieurs pages.
- Numéro de pièce ou de sous-groupe (29)
- Nom du sous-groupe ou description de la pièce (30)
- Numéro de groupe (31)
- Numéro de l'équipement (32)
- Titre information du groupe (33) Indique si la section en-dessous du titre est destinée à une variante spécifique de la machine ou s'il s'agit d'une liste de pièces communes. Si une liste comprend plus d'une variante et que chaque variante a son propre plan de montage, une référence de page est donnée pour le plan de montage de la variante.
- Information interne (34)

Bevezetés

Kézikönyvre vonatkozó információk

A Tetra Pak javasolja, hogy az összes kapott kézikönyvet gondosan olvassa el. Gondoskodjon róla, hogy a kézikönyvek a berendezést üzemeltető és karbantartó személyzet számára elérhetők legyenek.

Fontos, hogy megőrizzék ezt a katalógust a berendezés élettartama alatt, és átadják a következő tulajdonosoknak és felhasználóknak.

A Tetra Pak nem vállal felelősséget a berendezés semmilyen megrongálódása esetén, ha nem követték a berendezéshez tartozó kézikönyvekben leírt utasításokat.

Szállított kézikönyvek

A berendezéssel szállított kézikönyvek az alábbiak lehetnek

- CM
  Az Átállási kézikönyv a műszaki szakemberek számára a berendezés különböző gyártási módjai közötti átállásra vonatkozó információkat tartalmaz.
- EM
  A Villamossági kézikönyv a berendezés elektronikai rendszerére vonatkozó információkat szolgáltat a műszaki szakemberek részére.
- IM
  Az Üzembe helyezési kézikönyv a berendezés biztonságos üzembe helyezésére vonatkozó információkat biztosít a technikai szakemberek részére.
- MM
  A Karbantartási kézikönyv a berendezés karbantartására vonatkozó információkat biztosít a technikai szakemberek részére.
- OM
  Az Üzemeltetési kézikönyv az üzemeltető személyzetnek szolgáltat a berendezés kezelésére és üzemeltetésére, a feldolgozás előtti, közbeni és utáni teendőkre vonatkozó információkat.
- SPC
  A Tartalékalkatrész-katalógus információt biztosít a pótalkatrészek Tetra Pak-tól történő megrendeléséhez.
- TeM
  A Technikai kézikönyv
  – a berendezés biztonságos üzembe helyezésére vonatkozó információkat biztosít a technikai szakemberek részére.
  – a berendezés karbantartására vonatkozó információkat biztosít a technikai szakemberek részére.
  – a gép/berendezés elektromos rendszerére vonatkotó információkat szolgáltat a technikai szakemberek számára.
  – információkat biztosít a pótalkatrészek Tetra Pak-tól történő megrendeléséhez.

Oldalelrendezés

Tekintse meg az i-5 oldalon lévő (A) ábrát: A Tartalékalkatrész-katalógus főoldalai egy rajzoldalból (1) és egy hozzá tartozó listaoldalból (7) állnak. Az oldalszám (5) a rajzoldal fejlécében és a listaoldal láblécében látható. A dokumentum száma (6) a listaoldal láblécében jelenik meg.

Oldalszámozás

Tekintse meg az i-5 oldalon lévő (A) ábrát: Az oldalszám (5) három részből áll:

- fejezetszám (2)
- folyamatos oldalszám (3) a fejezeten belül
- összes oldalszám (4) a fejezeten belül.

Bevezetés

Gyártó

A gyártó neve és címe a katalógus második oldalán található.

Szerviz

A gép valamely pótalkatrészének megrendelése vagy a berendezés működésével kapcsolatos zavarok bejelentése végett forduljon a legközelebbi Tetra Pak képviselethez.

Bármilyen más, a berendezésre illetve a dokumentációra vonatkozó kérdéseivel, megjegyzéseivel vagy javaslataival forduljon területi képviselőjéhez.

Azonosítás

CE besorolás

Ez a berendezés megfelel az Európai Gazdasági Régió (EEA) alapvető egészségügyi és biztonsági előírásainak.

Gépcímke

A(z) i-5 oldalon található (B) ábra a gépcímke egy példáját mutatja be. Egy érvényes gépcímkét és megfelelő elhelyezését ábrázoló rajz látható a berendezéssel szállított kézikönyv Bevezetés fejezetében. A gépcímke azokat az alább felsorolt adatokat tartalmazza, amelyek a Tetra Pak-kal történő, a berendezésre vonatkozó kommunikációhoz szükségesek.

- Géptípus (8)
- Térfogat (9)
- Tervrajzok (10)
- A gép sorozatszáma (11)
- Gyártó (12)
- CE jelzés (13)
- Gyártási év (14)

A(z) i-5 oldalon található (C) ábra a gép műszaki specifikációjának egy példáját mutatja be. Győződjön meg róla, hogy a kézikönyv első lapjain közölt berendezésadatok megegyeznek a gép adattábláján és a gép műszaki leírásában megjelenő információkkal.

A Tartalékalkatrész-katalógus használata

A tartalékalkatrész számának kikeresése

a) Tekintse meg a(z) i-5 oldalon lévő (D) ábrát: Lapozzon a keresett alkatrészt tartalmazó főcsoport mellett feltüntetett (15) számú fejezetre.

A b) és c) elemek az i-6 oldalon található ábrára vonatkoznak.

b) A főcsoport-ábrán keresse meg azt az alcsoportot (17), amelyik a keresett alkatrészt vagy alcsoportot tartalmazza. Jegyezze meg a pozíciószámot (18), majd lapozzon az ábrát követő listaoldalra.

c) Keresse meg a lejegyzett pozíciószámot/hivatkozási megjelölést (16) vagy a keresett alcsoport nevét (19). Lapozzon a jobb oldali oszlopban feltüntetett számú (20) oldalra. A Tetra Pak a hivatkozási jelöléseket mindig funkció-orientált struktúra alapján végzi el. Az előtaggal jelölt funkció-orientált struktúra (=) nem jelenik meg a hivatkozási jelölésben.

A d) és e) elemek az i-6 oldalon található (F) ábrára vonatkoznak.

d) Az alcsoport ábrán keresse meg a kívánt alkatrészt (21), és jegyezze meg az alkatrész pozíciószámát.

e) Az alkatrész száma (29) és leírása (30) a listaoldalon, a pozíciószám mellett látható.

A Tartalékalkatrész-katalógusban megtalálható információk

Az alábbi lista az i-6 oldalon található (F) ábrára vonatkozik.
A Tartalékalkatrész-katalógus a következő, csoportokra, alcsoportokra és pótalkatrészekre vonatkozó adatokat tartalmazza:

- Csoportstruktúra-hivatkozás (22). A berendezés listás struktúrájában közvetlenül az aktuális csoport fölött álló csoportot jelöli.
- Csoportnév (23)
- Mértékegység (25)
- Mennyiség (26)
- Összeszerelési rajzszám (27)
- Lista oldaltartománya (28). Abban az esetben jelenik meg, ha a csoport ábrája vagy listája többoldalas.
- Alkatrész vagy alcsoport száma (29)
- Alcsoport neve vagy alkatrész leírása (30)
- Csoportszám (31)
- Berendezésszám (32)
- Csoportinformáció fejléce (33). Azt mutatja, hogy a fejléc után következő rész egy speciális gépváltozatra vonatkozik vagy az általános pótalkatrészek listája. Ha a listának több változata van, és mindegyikhez saját összeszerelési rajz tartozik, az illető összeszerelési rajz oldalhivatkozása is megjelenik.
- Belső információ (34)

Inngangur

Upplýsingar um handbók

Tetra Pak mælir með því að allar handbækur sem afhentar eru séu lesnar vandlega. Gætið þess að afhentar handbækur séu tiltækar fyrir starfsfólk sem vinnur við eða viðheldur tækjabúnaðinum.

Það er mikilvægt að halda upp á þennan vörulista allan líftíma tækjabúnaðarins og að láta síðari eiganda eða notanda hafa vörulistann.

Ekki er hægt að gera Tetra Pak ábyrgt fyrir neinum skemmdum sem verða á tækjabúnaðinum vegna þess að ekki er farið eftir leiðbeiningunum í þeim handbókum sem fylgja tækjabúnaðinum.

Afhentar handbækur

Handbækur sem afhentar eru með þessum tækjabúnaði geta verið

- CM
  Breytingahandbók, sem veitir tæknimönnum upplýsingar um breytingar á tækjabúnaðinum milli mismunandi framleiðsluhama.
- EM
  Rafmagnshandbók, sem veitir tæknimönnum upplýsingar um rafkerfi tækjabúnaðarins.
- IM
  Uppsetningarhandbók, sem veitir tæknimönnum nauðsynlegar upplýsingar til að setja tækjabúnaðinn upp á öruggan hátt.
- MM
  Viðhaldshandbók, sem eitir tæknimönnum upplýsingar um viðhald tækjabúnaðarins.
- OM
  Notkunarhandbók, sem veitir stjórnandanum upplýsingar um meðhöndlun og notkun tækjabúnaðarins, fyrir, eftir og meðan á framleiðslu stendur.
- SPC
  Varahlutavörulisti, sem veitir nauðsynlegar upplýsingar til pöntunar varahluta frá Tetra Pak.
- TeM
  Tæknihandbók
  - sem veitir tæknimönnum nauðsynlegar upplýsingar til að setja tækjabúnaðinn upp á öruggan hátt
  - sem veitir tæknimönnum upplýsingar um viðhald tækjabúnaðarins
  - sem veitir tæknimönnum upplýsingar um rafkerfi vélarinnar/ tækjabúnaðarins
  - sem veitir nauðsynlegar upplýsingar til pöntunar varahluta frá Tetra Pak.

Umbrot

Sjá skýringarmynd (A) á síðu i-5: Aðalsíðurnar í Varahlutavörulistanum samanstanda af skýringarsíðu (1) og samsvarandi listasíðu (7). Síðunúmerið (5) er sýnt í haus síðunnar með skýringarmyndinni og í fæti listasíðunnar. Skjalnúmerið (6) er sýnt í fæti listasíðunnar.

Númerun síðu

Sjá skýringarmynd (A) á síðu i-5: Síðunúmer (5) er í þremur hlutum:

- kaflanúmer (2)
- samfellt síðunúmer innan kaflans (3)
- heildarfjölda blaðsíðna í kaflanum (4)

Kynning á vél

Framleiðandi

Fyrir nafn og heimilisfang framleiðanda, sjá síðu tvö í þessum vörulista.

Þjónusta

Til að panta varahluti fyrir þessa vél, eða til að tilkynna vandamál sem tengjast notkun þessarar vélar, skal hafa samband við næstu Tetra Pak skrifstofu.

Hafðu samband við Samskiptatengsl með aðrar fyrirspurnir, athugasemdir eða uppástungur varðandi tækjabúnaðinn og fylgiskjöl hans.

Kennsl

CE flokkun

Þessi tækjabúnaður er í samræmi við grundvallar heilbrigðis- og öryggisreglugerðir á Evrópska efnahags svæðinu (EES).

Nafnplata

Skýringarmynd (B) á síðu i-5 sýnir dæmi um nafnplötu.
Skýringarmynd af gildri nafnplötu og staðsetningu hennar á tækjabúnaðinum er sýnd í Inngangskafla handbókanna sem afhentar eru með þessum tækjabúnaði. Á nafnplötunni eru upplýsingarnar sem taldar eru upp hér að neðan, sem þörf er á þegar haft er samband við Tetra Pak varðandi þennan tiltekna tækjabúnað.

- Vélartegund (8)
- Fjöldi (9)
- Teikniupplýsingar (10)
- Raðnúmer vélar (11)
- Framleiðandi (12)
- CE merki (13)
- Framleiðsluár (14)

Skýringarmynd (C) á síðu i-5 sýnir dæmi um tæknilýsingu vélar. Gættu þess að upplýsingar um tækjabúnað sem talinn er upp á fremstu síðum þessarar handbóka samsvari upplýsingum á nafnplötu og tæknilýsingu vélar.

Hvernig nota á þennan Varahlutavörulista

Finndu varahlutarnúmer

a) Sjá skýringarmynd (D) á síðu i-5: Farðu í kaflanúmerið (15) sem gefið er til kynna við hlið aðalflokksins sem inniheldur hlutinn sem þú vilt finna.

Atriði b) og c) vísa til skýringarmyndar (E) á síðu i-6:

b) Á skýringarmynd aðalflokksins skaltu leita að undirflokki (17) vélarinnar, sem inniheldur hlutinn eða undirflokkinn sem þú ert að leita að. Taktu eftir stöðunúmerinu (18) og farðu á listasíðuna sem fylgir skýringarmyndinni.

c) Leitaðu að stöðunúmeri/tilvísunartitli (16) eða heiti undirflokksins (19). Farðu á samsvarandi síðunúmer (20) sem sýnt er í hægri dálkinum. Tetra Pak hefur kosið að nota alltaf sérhæfða skipan fyrir tilvísunartitla. Forskeytið sem gefur til kynna sérhæfða skipan (=) er ekki sýnt í tilvísunartitlinum.

Atriði d) og e) vísa til skýringarmyndar (F) á síðu i-6:

d) Finndu hlutinn (21) sem þú ert að leita að á undirflokksskýringarmyndinni og taktu eftir stöðunúmeri hlutarins.

e) Hlutarnúmerið (29) og lýsing hlutar (30) eru skráð hjá stöðunúmerinu á listasíðunni.

Upplýsingar skráðar í Varahlutavörulista

Listinn að neðan vísar til skýringarmyndar (F) á síðu i-6: Varahlutavörulisti inniheldur eftirfarandi upplýsingar um flokka, undirflokka og varahluti fyrir tækjabúnaðinn:

- Tilvísun flokkaskipunar (22). Gefur til kynna næsta flokk fyrir ofan í listaskipan tækjabúnaðarins.
- Heiti flokks (23)
- Mælieining (25)
- Magn (26)
- Númer samsetningarteikningar (27)
- Röð listasíðu (28). Fylgir með ef það eru margar blaðsíður í skýringarmynd eða lista flokksins.
- Númer hlutar eða undirflokks (29)
- Heiti undirflokks eða lýsing hlutar (30)
- Númer flokks (31)
- Númer tækjabúnaðar (32)
- Fyrirsögn flokkaskipunar (33). Gefur til kynna ef kaflinn fyrir neðan fyrirsögnina er fyrir sérstakt afbrigði vélar eða ef hann er listi yfir algenga hluti. Ef listi er með meira en eitt afbrigði og hvert afbrigði á sína eigin samsetningarteikningu, er sýnd blaðsíðutilvísun til samsetningarteikningar afbrigðisins.
- Innri upplýsingar (34)

Introduzione

Informazioni sul manuale

Tetra Pak consiglia di leggere con attenzione tutti i manuali forniti in dotazione. Assicurarsi che tutti i manuali in dotazione siano disponibili per il personale addetto al funzionamento o alla manutenzione della macchina.

È importante conservare il presente catalogo per tutta la durata della macchina e consegnarlo al successivo proprietario o utilizzatore.

Tetra Pak non sarà da ritenersi responsabile per eventuali danni alla macchina causati dal mancato rispetto delle istruzioni fornite nei manuali che accompagnano questa macchina.

Manuali in dotazione

I manuali consegnati con la presente macchina possono comprendere:

- CM (Manuale di conversione)
  Questo manuale fornisce ai tecnici le informazioni necessarie per la conversione della macchina da una modalità di produzione a un'altra.
- EM (Manuale elettrico)
  Questo manuale fornisce ai tecnici informazioni sull'impianto elettrico della macchina.
- IM (Manuale d'installazione)
  Questo manuale fornisce ai tecnici le informazioni necessarie per installare in sicurezza la macchina.
- MM (Manuale di manutenzione)
  Questo manuale fornisce ai tecnici le informazioni sulla manutenzione della macchina.
- OM (Manuale operativo)
  Questo manuale fornisce all'operatore le informazioni sull'utilizzo e il funzionamento della macchina prima, durante e dopo la produzione.
- SPC (Catalogo dei pezzi di ricambio)
  Questo catalogo fornisce le informazioni necessarie per ordinare i pezzi di ricambio a Tetra Pak.
- TeM (Manuale tecnico)
  Questo manuale:
  - fornisce ai tecnici le informazioni necessarie per installare in sicurezza la macchina
  - fornisce ai tecnici le informazioni sulla manutenzione della macchina
  - fornisce ai tecnici informazioni sull'impianto elettrico della macchina
  - fornisce le informazioni necessarie per ordinare i pezzi di ricambio a Tetra Pak.

Schema delle pagine

Consultare la figura (A) a pagina i-5: Le pagine principali di un Catalogo dei pezzi di ricambio sono costituite da una pagina con la figura (1) e una pagina elenco corrispondente (7). Il numero di pagina (5) è indicato nell'intestazione delle pagine con le figure e nel piè di pagina delle pagine elenco. Il codice del documento (6) è indicato nel piè di pagina delle pagine elenco.

Numerazione delle pagine

Consultare la figura (A) a pagina i-5: Il numero di pagina (5) è suddiviso in tre parti:

- numero del capitolo (2)
- numero progressivo di pagina all'interno del capitolo (3)
- numero totale di pagine nel capitolo (4)

Introduzione alla macchina

Fabbricante

Il nome e l'indirizzo del fabbricante sono riportati sulla seconda pagina del presente catalogo.

Assistenza

Per ordinare i pezzi di ricambio per questa macchina oppure per riferire problemi associati al funzionamento della macchina, contattare l'ufficio Tetra Pak più vicino.

Per tutte le altre richieste, commenti o suggerimenti per eventuali miglioramenti da apportare alla macchina e alla relativa documentazione, contattare il responsabile di collegamento.

Identificazione

Classificazione CE

Questa macchina è conforme alle principali norme sanitarie e di sicurezza dell'Area Economica Europea (EEA).

Targhetta della macchina

La figura (B) a pagina i-5 mostra un esempio di targhetta della macchina. Il capitolo Introduzione di tutti i manuali consegnati con la presente macchina contiene invece la figura della targhetta della macchina valida e la sua posizione sulla macchina. La targhetta riporta i dati elencati qui sotto, che sono necessari per contattare Tetra Pak in relazione a questa macchina specifica.

- Tipo di macchina (8)
- Volume (9)
- Specifiche disegno (10)
- Numero di matricola della macchina (11)
- Fabbricante (12)
- Marchio CE (13)
- Anno di fabbricazione (14)

La figura (C) a pagina i-5 mostra un esempio delle specifiche di una macchina. Verificare che i dati relativi alla macchina elencati nelle pagine iniziali del presente manuale corrispondano ai dati riportati sulla targhetta della macchina e nelle specifiche della macchina.

Come usare questo Catalogo dei pezzi di ricambio

Individuare il numero del pezzo di ricambio

a) Consultare la figura (D) a pagina i-5: andare al numero del capitolo (15) indicato accanto al gruppo principale che contiene il pezzo che si desidera individuare.

I punti b) e c) fanno riferimento alla figura (E) a pagina i-6.

b) Nella figura del gruppo principale, identificare il sottogruppo della macchina (17) che contiene il pezzo o il sottogruppo cercato. Annotare il numero di posizione (18) e andare alla pagina elenco che segue la figura.

c) Identificare il numero di posizione/l'indicazione di riferimento (16) o il nome del sottogruppo (19). Andare al numero di pagina corrispondente (20) indicato nella colonna di destra. Per le indicazioni di riferimento, Tetra Pak ha scelto di usare sempre la struttura "function-oriented". Il prefisso che indica la struttura "function-oriented" (=) non è mostrato nell'indicazione di riferimento.

I punti d) e e) fanno riferimento alla figura (F) a pagina i-6.

d) Individuare il pezzo (21) cercato sulla figura del sottogruppo e annotare il numero di posizione del pezzo.

e) Il numero del pezzo (29) e la descrizione del pezzo (30) sono indicati accanto al numero di posizione sulla pagina elenco.

Informazioni contenute nel Catalogo dei pezzi di ricambio

L'elenco seguente fa riferimento alla figura (F) a pagina i-6. Il Catalogo dei pezzi di ricambio contiene le seguenti informazioni sui gruppi, i sottogruppi e i pezzi di ricambio della macchina:

- Riferimento struttura gruppo (22). Indica il gruppo superiore successivo nella struttura elenco della macchina.
- Nome gruppo (23)
- Unità di misura (25)
- Quantità (26)
- Numero disegno di assemblaggio (27)
- Intervallo delle pagine elenco (28). Questa informazione è presente se la figura o l'elenco relativi al gruppo occupano più di una pagina del manuale.
- Numero pezzo o sottogruppo (29)
- Nome sottogruppo o descrizione pezzo (30)
- Numero gruppo (31)
- Numero macchina (32)
- Intestazione informazioni gruppo (33). Indica se la sezione che segue l'intestazione si riferisce a una variante di macchina specifica oppure se si tratta di un elenco di parti comuni. Se un elenco contiene più di una variante ed esiste un disegno di assemblaggio specifico per ogni variante, viene fornito il riferimento alla pagina in cui è mostrato il disegno di assemblaggio relativo alla variante.
- Informazioni interne (34)

Įvadas

Informacija apie instrukciją

"Tetra Pak" rekomenduoja atidžiai perskaityti visas pateiktas instrukcijas. Pasirūpinkite, kad instrukcijos būtų prieinamos darbuotojams, kurie eksploatuoja arba prižiūri įrangą.

Svarbu šį katalogą išsaugoti visą įrangos tarnavimo laiką ir perduoti jį kitam įrangos savininkui arba naudotojui.

"Tetra Pak" neprisiima atsakomybės už įrangos sugadinimą, jei nesilaikoma nurodymų, pateiktų prie šios įrangos pridedamuose kataloguose.

Pateikiamos instrukcijos

Su šia įranga pateikiamose instrukcijose gali būti

- CM
  Transformacijos instrukcija, suteikianti technikams informaciją apie įrangos transformavimą skirtingiems gamybos režimams.
- EM
  Elektrinės dalies instrukcija, suteikianti technikams informaciją apie įrangos elektros sistemą.
- IM
  Įrengimo instrukcija, suteikianti technikams informaciją, reikalingą norint saugiai sumontuoti įrangą.
- MM
  Techninės priežiūros instrukcija, suteikianti technikams informaciją apie įrangos priežiūrą.
- OM
  Eksploatavimo instrukcijos paskirtis yra suteikti informaciją operatoriui, kaip naudoti ir valdyti įrangą prieš gamybos procesą, jo metu ir po jo.
- SPC
  Atsarginių dalių katalogas, kuriame yra informacija, reikalinga atsarginėms dalims iš "Tetra Pak" užsakyti
- TeM
  Techninė instrukcija
  – suteikia technikams informaciją, reikalingą saugiai sumontuoti įrangą
  – suteikia technikams informaciją apie įrangos priežiūrą
  – suteikia technikams informaciją apie įrangos elektros sistemą
  – suteikia informaciją, reikalingą užsakyti iš "Tetra Pak" atsargines dalis

Puslapių išdėstymas

Žr. paveikslėlį (A) puslapyje i-5. Pagrindiniai atsarginių dalių katalogo puslapiai sudaryti iš paveikslėlio puslapio (1) ir atitinkamo sąrašo puslapio (7). Puslapio numeris (5) nurodomas paveikslėlio puslapio viršuje ir sąrašo puslapio apačioje. Dokumento numeris (6) nurodomas sąrašo puslapio apačioje.

Puslapių numeravimas

Žr. iliustraciją (A) puslapyje i-5. Puslapio numerį (5) sudaro trys dalys:

- skyriaus numeris (2)
- puslapio eilės numeris (3) skyriuje
- bendras puslapių skaičius (4) skyriuje

Įrenginio pristatymas

Gamintojas

Gamintojo pavadinimas ir adresas pateikti antrajame šio katalogo puslapyje.

Aptarnavimas

Jei reikia šiai įrangai užsakyti atsarginių dalių arba pranešti apie jos eksploatavimo nesklandumus, kreipkitės į artimiausią "Tetra Pak" biurą.

Su kitais klausimais, pastabomis ar įrangos ir jos dokumentacijos tobulinimo pasiūlymais kreipkitės į savo kontaktinį asmenį.

Identifikavimas

CE klasifikacija

Šis įrenginys atitinka esminius Europos ekonominės erdvės (EEE) sveikatos ir saugumo reikalavimus.

Vardinė plokštelė

Puslapyje i-5 pateiktame paveikslėlyje (B) parodytas įrangos vardinės plokštelės pavyzdys.
Atitinkamos įrangos vardinė plokštelė ir jos vieta ant įrangos parodoma su šia įranga pateikiamų instrukcijų įvade. Įrangos vardinėje plokštelėje pateikiami žemiau nurodyti duomenys, kurie reikalingi kreipiantis į "Tetra Pak" dėl konkretaus įrenginio.

- Mašinos tipas (8)
- Tomas (9)
- Brėžinių specifikacijos (10)
- Įrangos serijos numeris (11)
- Gamintojas (12)
- CE ženklas (13)
- Pagaminimo metai (14)

Paveikslėlyje (C) puslapyje i-5 parodytas įrangos specifikacijos pavyzdys. Patikrinkite, ar šios instrukcijos pirmuosiuose puslapiuose nurodyti duomenys atitinka duomenis vardinėje plokštelėje ir įrangos specifikaciją.

Kaip naudotis atsarginių dalių katalogu

Atsarginės dalies numerio suradimas

a) Žr. iliustraciją (D) puslapyje i-5. Atsiverskite skyrių (15), nurodytą šalia pagrindinio mazgo, kuriame yra jūsų ieškoma dalis.

Punktai b) ir c) atitinka paveikslėlį (E) puslapyje i-6.

b) Pagrindinio mazgo paveikslėlyje suraskite smulkesnį įrangos mazgą (17), kuriame yra jūsų ieškoma dalis arba mazgas. Pasižiūrėkite pozicijos numerį (18) ir suraskite jį toliau pateiktame sąraše.

c) Suraskite pozicijos numerį/pavadinimą (16) arba smulkesnio mazgo pavadinimą (19). Atsiverskite dešiniajame stulpelyje nurodytą puslapį (20). "Tetra Pak" nusprendė pavadinimuose visada naudoti paskirtį atitinkančią struktūrą. Pavadinimuose nepateikiamas paskirtį atitinkančios struktūros prefiksas (=).

Punktai d) ir e) atitinka paveikslėlį (F) puslapyje i-6.

d) Suraskite ieškomą dalį (21) smulkesnio mazgo paveikslėlyje ir pasižiūrėkite dalies pozicijos numerį.

e) Dalies numeris (29) ir dalies aprašymas (30) sąrašo puslapyje nurodyti šalia pozicijos numerio.

Atsarginių dalių kataloge pateikiama informacija

Žemiau pateiktas sąrašas atitinka paveikslėlį (F) puslapyje i-6. Atsarginių dalių kataloge apie įrangos mazgus, smulkesnius mazgus ir atsargines dalis pateikiama tokia informacija:

- Struktūrinė mazgo nuoroda (22). Nurodo stambesnį mazgą įrangos sąrašo struktūroje.
- Mazgo pavadinimas (23)
- Matavimo vienetai (25)
- Kiekis (26)
- Surinkimo brėžinio numeris (27)
- Sąrašo puslapių intervalas (28) Pateikiamas, jei mazgo paveikslėlis arba sąrašas užima kelis puslapius.
- Dalies arba smulkesnio mazgo numeris (29)
- Smulkesnio mazgo arba dalies aprašymas (30)
- Mazgo numeris (31)
- Įrangos numeris (32)
- Informacijos apie mazgą puslapio antraštė (33). Nurodo, ar po antrašte pateikta informacija yra specifinio įrangos varianto, ar tai paprastų dalių sąrašas. Jei yra daugiau kaip vienas sąrašo variantas ir kiekvienam variantui yra atskiras surinkimo brėžinys, nurodomas puslapis, kuriame pateiktas konkretaus varianto surinkimo brėžinys.
- Vidinė informacija (34)

Ievads

Informācija par rokasgrāmatu

Tetra Pak iesaka rūpīgi izlasīt visas piegādātās rokasgrāmatas. Jānodrošina, lai piegādātas rokasgrāmatas būtu pieejamas personālam, kas apkalpo iekārtas vai veic to apkopi.

Šo katalogu ir nepieciešams saglabāt visu laiku, kamēr iekārtas tiek izmantotas, un nodot katalogu nākamajam īpašniekam vai lietotājam.

Tetra Pak neatbild par jebkuriem iekārtas bojājumiem, kuri rodas līdz ar iekārtu piegādāto instrukciju neievērošanas rezultātā.

Piegādātas rokasgrāmatas

Līdz ar iekārtu var tikt piegādātas šādas rokasgrāmatas

- CM
  Pārslēgšanas rokasgrāmata sniedz tehniķiem informāciju par iekārtas pārslēgšanu dažādos atšķirīgos ražošanas režīmos.
- EM
  Elektriskās instalācijas rokasgrāmata sniedz tehniķiem informāciju par iekārtas elektriskās instalācijas sistēmu.
- IM
  Uzstādīšanas rokasgrāmata sniedz tehniķiem informāciju, kas nepieciešama drošai iekārtas uzstādīšanai.
- MM
  Apkopes rokasgrāmata sniedz tehniķiem informāciju par iekārtas apkopi.
- OM
  Ekspluatācijas rokasgrāmata sniedz apkalpojošajam personālam informāciju par iekārtas apkalpošanu un ekspluatēšanu pirms darba sākuma, darba laikā un pēc darba beigām.
- SPC
  Rezerves daļu katalogs sniedz informāciju, kas nepieciešama, lai pasūtītu rezerves daļas no Tetra Pak
- TeM
  Tehniskā rokasgrāmata
  - sniedz tehniķiem informāciju, kas nepieciešama drošai iekārtas uzstādīšanai
  - sniedz tehniķiem informāciju par iekārtas apkopi
  - sniedz tehniķiem informāciju par mašīnas/iekārtas elektrisko instalāciju
  - sniedz informāciju, kas nepieciešama, lai pasūtītu rezerves daļas no Tetra Pak.

Lappuses izkārtojums

Skatīt ilustrāciju (A) i-5 lappusē: Galvenās lappuses Rezerves daļu katalogā sastāv no ilustrāciju lapas (1) un atbilstīgās saraksta lapas (7). Lappuses numurs (5) ir norādīts ilustrāciju lapas galvenē un saraksta lapas kājenē. Dokumenta numurs (6) ir norādīts saraksta lapas kājenē.

Lappušu numerācija

Skatīt ilustrāciju (A) lappusē i-5: Lappuses numurs (5) sastāv no trim daļām:

- nodaļas numura (2)
- secīga lappuses numura nodaļas ietvaros (3)
- kopējā lappušu skaita nodaļā (3)

Iepazīstināšana ar iekārtu

Ražotājs

Ražotāja nosaukumu un adresi skatīt šī kataloga otrajā lappusē.

Serviss

Lai pasūtītu rezerves daļas šai mašīnai vai lai ziņotu par problēmām saistībā ar šīs mašīnas ekspluatāciju, sazinieties ar tuvāko Tetra Pak pārstāvniecību.

Ja Jums ir citi jautājumi, piezīmes vai ieteikumi par iekārtas un tās dokumentācijas uzlabošanu, tad lūdzam sazināties ar Sakaru biroju.

Identifikācija

EK klasifikācija

Šī iekārta atbilst galvenajām Eiropas Ekonomiskās Zonas (EEA) regulām, kuras attiecas uz veselību un drošību.

Mašīnas tipa plāksnīte

Ilustrācijā (B) i-5 lappusē ir redzams mašīnas tipa plāksnītes paraugs. Aktuālās mašīnas tipa plāksnīte un tās atrašanās vieta uz iekārtas ir parādīta līdz ar šo iekārtu piegādāto rokasgrāmatu Ievada nodaļā. Mašīnas tipa plāksnīte ietver turpmāk uzskaitīto informāciju, kura ir nepieciešama, sazinoties ar Tetra Pak par šo konkrēto iekārtu.

- Mašīnas tips (8)
- Daudzums (9)
- Rasējuma specifikācijas (10)
- Mašīnas sērijas numurs (11)
- Ražotājs (12)
- CE apzīmējums (13)
- Izgatavošanas gads (14)

Ilustrācijā (C) lappusē i-5 ir parādīts mašīnas specifikācijas paraugs. Pārliecinieties, ka šīs rokasgrāmatas titullapās minētā informācija par iekārtu atbilst tai, kas norādīta uz mašīnas tipa plāksnītes un mašīnas specifikācijā.

Rezerves daļu kataloga lietošana

Vajadzīgās rezerves daļas numura atrašana

a) Skatiet ilustrāciju (D) lappusē i-5: Atrodiet nodaļas numuru (15), kas norādīts līdzās galvenajai grupai, kurā ietilpst Jūsu meklētā rezerves daļa.

Pozīcijas b) un c) skatiet ilustrāciju (E) lappusē i-6.

b) Galvenās grupas ilustrācijā atrodiet mašīnas apakšgrupu (17), kurā ietilpst Jūsu meklētā detaļa vai apakšgrupa. Atzīmējiet pozīcijas numuru (18) un pievērsieties saraksta lappusei, kura seko šai ilustrācijai.

c) Sameklējiet atbilstīgo pozīcijas numuru (16) vai apakšgrupas nosaukumu (19). Pievērsieties atbilstīgajam lappuses numuram (20), kas norādīts ailē pa labi. Tetra Pak norādes apzīmēšanai ir izvēlējies vienmēr izmantot uz funkciju orientētu struktūru. Priedēklis, kas norāda uz funkciju orientētu struktūru (=), norādes apzīmējumā nav parādīts.

Pozīcijas d) un e) skatiet ilustrāciju (F) lappusē i-6.

d) Atrodiet vajadzīgo rezerves daļu (21) apakšgrupas ilustrācijā un atzīmējiet šīs detaļas pozīcijas numuru.

e) Šīs detaļas numurs (29) un apraksts (30) atrodas saraksta lapā līdzās pozīcijas numuram.

Rezerves daļu katalogā sniegtā informācija

Šis saraksts attiecas uz ilustrāciju (F) lappusē i-6. Rezerves daļu katalogs satur šādu informāciju par grupām, apakšgrupām un iekārtas rezerves daļām:

- Grupas struktūras norāde (22). Norāda nākamo augstāko grupu iekārtas saraksta struktūrā.
- Grupas nosaukums (23)
- Mērvienība (25)
- Skaits (26)
- Montāžas rasējuma numurs (27)
- Saraksta lappuses zona (28). Tiek izmantota tad, ja grupas ilustrācija vai saraksts ir uz vairākām lappusēm.
- Daļas vai apakšgrupas numurs (29)
- Apakšgrupas nosaukums vai daļas apraksts (30)
- Grupas numurs (31)
- Iekārtas numurs (32)
- Grupas informācijas iedaļas apzīmējums (33). Norāda, vai iedaļa zem šī apzīmējuma attiecas uz noteiktu mašīnas variantu, vai arī tas ir kopējo rezerves daļu saraksts. Ja sarakstam ir vairāk nekā viens variants un katram variantam ir savs montāžas rasējums, tad tiek dota atsauce uz lappusi, kur atrodams katra varianta montāžas rasējums.
- Iekšējā informācija (34)

Inleiding

Informatiehandboek

Tetra Pak adviseert alle meegeleverde handboeken zorgvuldig te lezen. Controleer of het bedienende of onderhoudspersoneel van de machine de beschikking heeft over de meegeleverde handboeken

Het is belangrijk deze catalogus tijdens de levensduur van de machine te bewaren en de catalogus door te geven aan iedere volgende eigenaar of gebruiker.

Tetra Pak stelt zich niet aansprakelijk voor eventuele schade aan de installatie als gevolg van het niet naleven van de instructies die in de meegeleverde handboeken worden gegeven.

Meegeleverde handboeken

De bij deze installatie meegeleverde handboeken omvatten

- CM
  Het conversiehandboek geeft technici informatie met betrekking tot de ombouw van de installatie tussen verschillende productiemodi.
- EM
  Het elektriciteitshandboek informeerttechnici omtrent het elektrischesysteem van de installatie.
- IM
  Het installatiehandboek informeert technici hoe men de installatie op veilige wijze installeert.
- MM
  Het onderhoudshandboek geeft technici informatie over het onderhoud van de installatie.
- OM
  Het bedieningshandboek informeert de operator betreffende het omgaan met en het bedienen van de installatie voor, tijdens en na de productie.
- SPC
  De reserveonderdelencatalogus geeft de nodige informatie omtrent het bestellen van reserveonderdelen bij Tetra Pak
- TeM
  Het technische handboek
  - informeert technici hoe men de installatie op veilige wijze installeert
  - informeert technici omtrent het onderhoud van de installatie
  - informeert technici omtrent het elektrische systeem van de machine/ installatie
  - informeert over welke informatie men nodig heeft om reserveonderdelen bij Tetra Pak te bestellen.

Pagina layout

Zie afbeelding (A) op pagina i-5: De belangrijkste bladzijden van een reserveonderdelencatalogus bestaan uit een bladzijde met afbeeldingen (1) en een bladzijde met een corresponderende lijst (7). Het bladzijde-nummer (5) is te vinden in de kop van een bladzijde met een afbeelding en in de voetnoot van een lijstbladzijde. Het documentennummer (6) is te vinden in de voetnoot van een lijstbladzijde.

Bladzijdenummering

Zie afbeelding (A) op pagina: i-5: Een bladzijdenummer (5) bestaat uit drie delen:

- hoofdstuknummer (2)
- opeenvolgend bladzijdenummer in het hoofdstuk (3)
- totaal aantal bladzijden in het hoofdstuk (4)

Introductie van de machine

Fabrikant

Zie de tweede bladzijde van deze catalogus voor naam en adres van de fabrikant.

Service

Neem voor het bestellen van reserveonderdelen voor deze machine, of om bedieningsproblemen met betrekking tot deze machine te melden, contact op met de dichtstbijzijnde Tetra Pak vestiging.

Neem contact op met de contactpersoon voor verdere informatie, opmerkingen of suggesties ter verbetering van de installatie en de bijbehorende documentatie.

Identificatie

CE-classificatie

Deze installatie voldoet aan de basisvoorschriften voor gezondheid en veiligheid voor het Europese Economische Gebied (EEG).

Machineplaatje

Afbeelding (B) op bladzijde i-5 toont een voorbeeld van een machineplaatje. Een afbeelding van het geldige machineplaatje en de plaatsing ervan worden getoond in de Inleiding van de handboeken, die bij deze installatie worden meegeleverd. Het machineplaatje bevat onderstaande gegevens, die men nodig heeft wanneer men omtrent de desbetreffende installatie contact opneemt met Tetra Pak.

- Machinetype (8)
- Volume (9)
- Specificatietekeningen (10)
- Serienummer van de machine (11)
- Fabrikant (12)
- CE-markering (13)
- Jaar van fabrikage (14)

Afbeelding (C) op pagina i-5 toont een voorbeeld van een machinespecificatie. Controleer of de gegevens betreffende de installatie op de eerste bladzijden van dit handboek overeenkomen met de gegevens op het machineplaatje en de machinespecificatie.

Gebruik van de reserveonderdelencatalogus

Vinden van het bestelnummer van een reserveonderdeel

a) Zie afbeelding (D) op pagina i-5: Ga naar het hoofdstuknummer (15) dat wordt aangeven naast de hoofdgroep waarin zich het door u gezochte onderdeel bevindt.

Items b) en c) verwijzen naar afbeelding (E) op pagina i-6.

b) Op de afbeelding van de hoofdgroep zoekt u de machinesubgroep (17), die het gezochte onderdeel of de gezochte subgroep bevat. Noteer het positienummer (18) en ga naar de lijstbladzijde die op de afbeelding volgt.

c) Zoek naar het positienummer/de referentie (16) of de subgroep-naam (19). Ga naar de corresponderende bladzijde (20) die in de rechterkolom staat vermeld. Tetra Pak heeft voor de benoeming van de referenties gekozen voor de functiegeoriënteerde structuur. De prefixaanduidende functiegeoriënteerde structuur (=) wordt niet in de referentie getoond.

Items d) en e) verwijzen naar afbeelding (F) op pagina i-6.

d) Zoek het gewenste deel (21) op de subgroepafbeelding en noteer het positienummer van het onderdeel.

e) Het bestelnummer (29) en de omschrijving (30) van het onderdeel staan naast het positienummer op de lijstbladzijde.

Informatie die in een reserveonderdelencatalogus wordt gegeven

De onderstaande lijst verwijst naar afbeelding (F) op bladzijde i-6. Een reserveonderdelencatalogus bevat de volgende informatie over groepen, subgroepen en reserveronderdelen voor de installatie:

- Referentie groepstructuur (22). Geeft de volgende hogere groep in de lijststructuur van de installatie aan.
- Groepsnaam (23)
- Meeteenheid (25)
- Hoeveelheid (26)
- Nummer montagetekening (27)
- Lijst bladzijdenreeks (28). Wordt vermeld wanneer er meerdere bladzijden in de groepsafbeelding of -lijst voorkomen.
- Deel- of subgroepnummer (29)
- Subgroepnaam of onderdeelbeschrijving (30)
- Groepsnummer (31)
- Machinenummer (32)
- Titel groepsinformatie (33). Geeft aan of het gedeelte onder de titel voor een specifieke machinesoort is of dat het een lijst met gebruikelijke onderdelen is. Indien een lijst meer dan één type bevat en ieder type zijn eigen montagetekening heeft, wordt een bladzijdereferentie getoond voor de montagetekening van het type.
- Interne informatie (34)

Introduksjon

Informasjon om manualen

Tetra Pak anbefaler at du leser nøye gjennom alle leverte manualer. Sørg for at manualene er tilgjengelige for alle som betjener eller vedlikeholder utstyret.

Det er viktig at du tar vare på denne katalogen under hele levetiden til utstyret og at du gir den videre til eventuelle nye eiere eller brukere.

Tetra Pak vil ikke være ansvarlig for skader på utstyret som oppstår fordi brukeren ikke følger instruksjonene i manualene som følger med utstyret.

Leverte manualer

Manualene som leveres med dette utstyret, kan inkludere

- CM
  Konverteringsmanualen gir teknikere informasjon om hvordan de konverterer utstyret mellom ulike produksjonsmodi.
- EM
  Den elektriske manualen gir teknikere informasjon om utstyrets elektriske system.
- IM
  Installasjonsmanualen gir teknikere informasjon som kreves for å kunne installere utstyret på en sikker måte.
- MM
  Vedlikeholdsmanualen gir teknikere informasjon om vedlikehold av utstyret.
- OM
  Driftsmanualen gir operatøren informasjon om hvordan han håndterer og bruker utstyret før, under og etter produksjon.
- SPC
  Reservedelskatalogen inneholder informasjon som du trenger for å bestille reservedeler fra Tetra Pak
- TeM
  Den tekniske manualen
  – gir teknikere informasjon om sikker installasjon av utstyret
  – gir teknikere informasjon om vedlikehold av utstyret
  – gir teknikere informasjon om maskinens/utstyrets elektriske system
  – inneholder informasjon som du trenger for å bestille reservedeler fra Tetra Pak.

Sideoppsett

Se illustrasjonen (A) på side i-5: Hovedsidene i reservedelskatalogen består av en illustrasjonsside (1) og en korresponderende listeside (7). Sidenummeret (5) vises i topteksten på illustrasjonssiden og i bunnteksten på listesiden. Dokumentnummeret (6) vises i bunnteksten på listesiden.

Sidenummerering

Se illustrasjonen (A) på side i-5: Et sidenummer (5) består av tre deler:

- kapittelnummer (2)
- etterfølgende sidenummer i kapitlet (3)
- det totale antall sider i kapitlet (4)

Introduksjon av maskinen

Produsent

Hvis du ønsker produsentens navn og adresse, kan du se side to i denne katalogen.

Service

Når du skal bestille reservedeler til denne maskinen eller rapportere problemer forbundet med driften av denne maskinen, må du kontakte ditt nærmeste Tetra Pak-kontor.

Når det gjelder andre forespørsler, kommentarer eller forslag til forbedringer av utstyret og dets dokumentasjon, kan du ta kontakt med din kontaktperson.

Identifisering

CE-klassifisering

Dette utstyret er i overensstemmelse med de grunnleggende helse- og sikkerhetsforskriftene i Det europeiske økonomiske samarbeidsområdet (EØS).

Maskinplate

Illustrasjonen (B) på side i-5 viser et eksempel på en maskinplate.
En illustrasjon av en gyldig maskinplate og hvor denne er plassert på utstyret, er vist i introduksjonskapitlet i manualene som følger med dette utstyret. Maskinplaten inneholder nedenstående data, som du trenger når du skal kontakte Tetra Pak angående dette bestemte utstyret.

- Maskintype (8)
- Volum (9)
- Tegningsspesifikasjoner (10)
- Maskin-serienummer (11)
- Produsent (12)
- CE-merke (13)
- Produksjonsår (14)

Illustrasjonen (C) på side i-5 viser et eksempel på en maskinspesifikasjon. Sørg for at utstyrsdataene som står oppført foran i denne manualen, samsvarer med dataene på maskinplaten og maskinspesifikasjonen.

Hvordan bruke denne reservedelskatalogen

Finn et reservedelsnummer

a) Se illustrasjonen (D) på side i-5: Gå til kapittelnummeret (15) som er angitt ved siden av hovedgruppen som inneholder delen du vil finne.

Punkt b) og c) viser til illustrasjonen (E) på side i-6.

b) På hovedgruppeillustrasjonen ser du etter maskinundergruppen (17) som inneholder delen eller undergruppen du ser etter. Merk deg posisjonsnummeret (18), og gå til listesiden som kommer etter illustrasjonen.

c) Se etter posisjonsnummeret/referansebetegnelsen (16) eller undergruppenavnet (19). Gå til det korresponderende sidenummeret (20) som står oppført i høyre kolonne. Tetra Pak har valgt å alltid bruke den funksjonsorienterte inndelingen for referansebetegnelse. Prefiksen som angir funksjonsorientert inndeling (=), er ikke vist i referansebetegnelsen.

Punkt d) og e) viser til illustrasjonen (F) på side i-6.

d) Finn delen (21) du ser etter på undergruppeillustrasjonen, og merk deg delens posisjonsnummer.

e) Delenummeret (29) og delebeskrivelsen (30) finner du ved siden av posisjonsnummeret på listesiden.

Informasjon i en reservedelskatalog

Listen nedenfor viser til illustrasjonen (F) på side i-6. En reservedelskatalog inneholder følgende informasjon om grupper, undergrupper og reservedeler for utstyret:

- Gruppeinndelingsreferanse (22). Angir den neste gruppen opp i inndelingen av utstyrslisten.
- Gruppenavn (23)
- Målenhet (25)
- Antall (26)
- Tegningsnummer (27)
- Listesideområde (28). Inkludert hvis det er flere sider i gruppe-illustrasjonen eller listen.
- Dele- eller undergruppenummer (29)
- Undergruppenavn eller delebeskrivelse (30)
- Gruppenummer (31)
- Utstyrsnummer (32)
- Gruppeinformasjonsoverskrift (33). Angir om avsnittet under overskriften er for en bestemt maskinvariant eller om det er en liste over vanlige deler. Hvis en liste har flere varianter og hver variant har sin egen sammenstillingstegning, vises det en sidereferanse til variantens sammenstillingstegning.
- Intern informasjon (34)

Wprowadzenie

Informacje na temat instrukcji

Firma Tetra Pak zaleca dokładne przeczytanie wszystkich dostarczonych instrukcji. Należy upewnić się, że dostarczone instrukcje są dostępne dla personelu, który obsługuje lub konserwuje maszynę.

Należy przechowywać ten katalog przez cały okres użytkowania maszyny i przekazać go kolejnemu właścicielowi lub użytkownikowi.

Firma Tetra Pak nie będzie ponosić odpowiedzialności za jakiekolwiek uszkodzenia maszyny spowodowane niestosowaniem się do zaleceń zawartych w instrukcjach dostarczonych z maszyną.

Dostarczone instrukcje

W skład dokumentacji dostarczonej z maszyną wchodzą:

- Instrukcja konwersji (CM)
  W tej instrukcji zawarte są informacje dotyczące dostosowania maszyny do różnych trybów produkcji.
- Instrukcja dotycząca wyposażenia elektrycznego (EM)
  W tej instrukcji zawarte są informacje dotyczące układu elektrycznego maszyny.
- Instrukcja instalacji (IM)
  W tej instrukcji zawarte są informacje niezbędne do bezpiecznego zainstalowania maszyny.
- Instrukcja konserwacji (MM)
  W tej instrukcji zawarte są informacje dotyczące konserwacji maszyny.
- Instrukcja obsługi (OM)
  W tej instrukcji zawarte są informacje dotyczące obsługi maszyny przed rozpoczęciem produkcji, w jej trakcie oraz po jej zakończeniu.
- Katalog części zamiennych (SPC)
  W katalogu zawarte są informacje dotyczące zamawiania części zamiennych w firmie Tetra Pak.
- Instrukcja techniczna (TeM)
  Instrukcja techniczna zawiera informacje:
  - dotyczące bezpiecznego instalowania maszyny,
  - dotyczące konserwacji maszyny,
  - dotyczące układu elektrycznego maszyny,
  - dotyczące zamawiania części zamiennych w firmie Tetra Pak.

Układ strony

Patrz rysunek (A) na stronie i-5: Główne strony w Katalogu części zamiennych składają się ze strony zawierającej rysunek (1) i odpowiadającej jej strony zawierającej listę (7). Numer strony (5) znajduje się w nagłówku strony zawierającej rysunek i w stopce strony zawierającej listę. Numer dokumentu (6) znajduje się w stopce strony zawierającej listę.

Numeracja stron

Patrz rysunek (A) na stronie i-5: Numer strony (5) składa się z trzech części:

- numeru rozdziału (2),
- kolejnego numeru strony w rozdziale (3),
- całkowitej liczby stron w rozdziale (4).

Ogólne informacje o maszynie

Producent

Nazwę i adres producenta można znaleźć na drugiej stronie niniejszego katalogu.

Serwis

Aby zamówić części zapasowe do tej maszyny lub zgłosić problemy związane z jej pracą, należy skontaktować się z najbliższym biurem Tetra Pak.

Można kontaktować się także w przypadku innych zapytań, uwag lub sugestii dotyczących udoskonalenia urządzenia i dokumentacji.

Identyfikacja

Klasyfikacja CE

Maszyna spełnia podstawowe wymogi z zakresu bezpieczeństwa i ochrony zdrowia obowiązujące w Europejskiej Strefie Ekonomicznej (EEA).

Tabliczka znamionowa

Na rysunku (B), znajdującym się na stronie i-5, pokazano przykładową tabliczkę znamionową.
Rysunek prawidłowej tabliczki znamionowej oraz jej umiejscowienie na maszynie pokazano w rozdziale Wprowadzenie zawartym w instrukcjach dostarczonych z maszyną. Tabliczka znamionowa zawiera następujące dane potrzebne w przypadku kontaktowania się z firmą Tetra Pak w sprawie dotyczącej danej maszyny:

- typ maszyny (8),
- objętość (9),
- specyfikacje rysunkowe (10),
- numer seryjny maszyny (11),
- nazwę producenta (12),
- oznaczenie CE (13),
- rok produkcji (14).

Na rysunku (C) zamieszczonym na stronie i-5 pokazano przykład specyfikacji maszyny. Należy sprawdzić, czy dane dotyczące maszyny przedstawione na pierwszej stronie tej instrukcji odpowiadają danym zawartym na tabliczce znamionowej maszyny oraz specyfikacji maszyny.

Jak korzystać z niniejszego Katalogu części zamiennych

Należy odnaleźć numer części zamiennej

a) Zapoznaj się z rysunkiem (D) na stronie i-5: przejdź do numeru rozdziału (15) pokazanego obok głównej grupy zawierającej część, którą chcesz odszukać.

Punkty b) i c) odnoszą się do rysunku (E) na stronie i-6.

b) Na rysunku grupy głównej odszukaj podgrupę maszyny (17), która zawiera odpowiednią część lub podgrupę, której szukasz. Zanotuj numer pozycji (18) i przejdź do strony z listą odpowiadającą rysunkowi.

c) Odszukaj numer pozycji/oznaczenie odnośnika (16) lub nazwę podgrupy (19). Przejdź do odpowiedniego numeru strony (20) podanego w kolumnie umieszczonej po prawej stronie. Firma Tetra Pak w przypadku oznaczenia odnośnika korzysta ze struktury ukierunkowanej na funkcję. Przedrostek wskazujący strukturę ukierunkowaną na funkcję (=) nie jest pokazany w oznaczeniu odnośnika.

Punkty d) i e) odnoszą się do rysunku (F) na stronie i-6.

d) Na rysunku podgrupyodszukaj odpowiednią część (21) i zanotuj numer pozycji części.

e) Numer części (29) oraz jej opis (30) podano na stronie zawierającej listę obok numeru pozycji.

Informacje zawarte w Katalogu części zamiennych

Poniższa lista odnosi się do rysunku (F), znajdującego się na stronie i-6. Katalog części zamiennych zawiera następujące informacje o grupach, podgrupach oraz częściach zamiennych maszyny:

- Odnośnik struktury grup (22). Wskazuje następną wyższą grupę zawartą w strukturze listy maszyny.
- Nazwa grupy (23).
- Jednostka miary (25).
- Liczba (26).
- Numer rysunku złożeniowego (27).
- Zakres stron zawierających listę (28). Podany w przypadku występowania wielu stron zawierających rysunek grupy lub listę.
- Numer części lub podgrupy (29).
- Nazwa podgrupy lub opis części (30).
- Numer grupy (31).
- Numer maszyny (32).
- Nagłówek informacyjny grupy (33). Wskazuje, czy sekcja umieszczona pod nagłówkiem dotyczy określonego wariantu maszyny, czy też jest to lista wspólna dla wszystkich wariantów. Jeśli lista występuje w wielu wariantach i dla każdego z nich dostępny jest osobny rysunek złożeniowy, podany jest odnośnik strony do rysunku złożeniowego dla danego wariantu.
- Informacje wewnętrzne (34).

Introdução

Informações sobre o Manual

A Tetra Pak recomenda que leia atentamente todos os manuais incluídos. Certifique-se de que os manuais incluídos estão disponíveis para o pessoal que utiliza ou faz a manutenção do equipamento.

É importante que mantenha este catálogo durante toda a vida útil do equipamento, devendo ainda ser fornecido a quaisquer proprietários e operadores subsequentes do mesmo.

A Tetra Pak não será responsável por quaisquer danos no equipamento provocados pelo não seguimento das instruções fornecidas nos manuais que acompanham este equipamento.

Manuais Fornecidos

Os manuais fornecidos com este equipamento podem incluir

- CM
  O Manual de Conversão (Conversion Manual) fornece aos técnicos informações sobre a conversão do equipamento entre modos de produção diferentes.
- EM
  O Manual Eléctrico (Electrical Manual) fornece aos técnicos informações sobre o sistema eléctrico do equipamento.
- IM
  O Manual de Instalação (Installation Manual) fornece aos técnicos as informações necessárias à instalação do equipamento em segurança.
- MM
  O Manual de Manutenção (Maintenance Manual) fornece aos técnicos informações sobre como realizar a manutenção do equipamento.
- OM
  O Manual de Funcionamento (Operation Manual) fornece ao operador informações sobre o manuseamento e funcionamento do equipamento antes, durante e após a produção.
- SPC
  O Spare Parts Catalogue (Catálogo das Peças Sobressalentes) fornece as informações necessárias para encomendar peças sobressalentes à Tetra Pak
- TeM
  O Manual Técnico (Technical Manual)
  - fornece aos técnicos as informações necessárias à instalação do equipamento em segurança
  - fornece aos técnicos informações sobre a manutenção do equipamento
  - fornece aos técnicos informações sobre o sistema eléctrico da máquina/equipamento
  - fornece as informações necessárias para encomendar peças sobressalentes à Tetra Pak.

Desenho da Página

Consulte a ilustração (A) na página i-5: As páginas principais num Catálogo de Peças Sobressalentes são constituídas por uma página de ilustração (1) e uma página de lista correspondente (7). O número de página (5) é apresentado no cabeçalho de uma página de ilustração e no rodapé de uma página de lista. O número do documento (6) é apresentado no rodapé de uma página de lista.

Numeração das Páginas

Consulte a ilustração (A) na página i-5: Um número de página (5) tem três partes:

- número do capítulo (2)
- número das páginas consecutivas dentro do capítulo (3)
- número de páginas total no capítulo (4)

Introdução da Máquina

Fabricante

Quanto ao nome e endereço do fabricante, consulte a segunda página deste catálogo.

Manutenção

Para encomendar peças sobressalentes para esta máquina ou para apresentar relatórios de problemas associados com o funcionamento desta máquina, contacte os escritórios mais próximos da Tetra Pak.

Contacte a Ligação com outras questões, comentários ou sugestões para melhoria referentes ao equipamento e à sua documentação.

Identificação

Classificação da CE

Este equipamento está em conformidade com as regulamentações básicas da saúde e segurança da Área Económica Europeia (AEE).

Chapa de Identificação da Máquina

A ilustração (B) na página i-5 mostra um exemplo de uma chapa de identificação da máquina.
No capítulo Introdução dos manuais entregues com este equipamento é apresentada uma ilustração da chapa de identificação válida da máquina e a sua localização no equipamento. A chapa de identificação da máquina contém os dados listados em baixo, necessários quando contactar a Tetra Pak em relação a este equipamento específico.

- Tipo de máquina (8)
- Volume (9)
- Especificações do desenho (10)
- Número de série da máquina (11)
- Fabricante (12)
- Marca da CE (13)
- Ano de fabricação (14)

A ilustração (C) na página i-5 mostra um exemplo de uma especificação da máquina. Certifique-se de que os dados do equipamento listados nas primeiras páginas deste manual correspondem aos dados indicados na chapa de identificação da máquina e às especificações da máquina.

Como utilizar este Catálogo de Peças Sobressalentes

Localize o Número da Peça Sobressalente

a) Consulte a ilustração (D) na página i-5: Vá para o número do capítulo (15) indicado no grupo principal que contém a peça que pretende localizar.

Os itens b) e c) referem-se à ilustração (E) na página i-6:

b) Na ilustração do grupo principal, procure o subgrupo da máquina (17) que contém a peça ou o subgrupo que procura. Tome nota do número de posição (18) e vá para a página de lista a seguir à ilustração.

c) Procure o número de posição/designação de referência (16) ou o nome do subgrupo (19). Vá para o número de página correspondente (20) indicado na coluna do lado direito. A Tetra Pak preferiu utilizar sempre a estrutura orientada para a função como designação de referência. O prefixo que inicia a estrutura orientada para a função (=) não está indicada na designação de referência.

Os itens d) e e) referem-se à ilustração (F) na página i-6:

d) Localize a peça (21) que procura na ilustração do subgrupo e tome nota do número de posição da peça.

e) O número de peça (29) e a descrição da peça (30) são apresentados ao lado do número da posição na página de lista.

Informações listadas num Catálogo de Peças Sobressalentes

A lista em baixo refere-se à ilustração (F) na página i-6: Um Catálogo de Peças Sobressalentes contém as seguintes informações sobre grupos, subgrupos e peças sobressalentes para o equipamento:

- Referência da estrutura do grupo (22). Indica o grupo mais elevado seguinte na estrutura da lista do equipamento.
- Nome do grupo (23)
- Unidade de medida (25)
- Quantidade (26)
- Número de série do conjunto (27)
- Intervalo de páginas da lista (28). Incluído se existirem várias páginas na ilustração ou na lista do grupo.
- Número de peça ou subgrupo (29)
- Nome do subgrupo ou descrição da peça (30)
- Número do grupo (31)
- Número do equipamento (32)
- Cabeçalho das informações do grupo (33). Indica se a secção em baixo do cabeçalho é de uma variante específica da máquina ou se é uma lista de peças comuns. Se uma lista tiver mais de uma variante e cada variante tiver o seu próprio desenho de conjunto, é apresentada uma referência de página ao desenho do conjunto da variante.
- Informações internas (34)

Introducere

Informații despre manual

Tetra Pak recomandă citirea cu atenție a tuturor manualelor livrate. Asigurați-vă că manualele livrate sunt puse la îndemâna personalului care exploatează sau întreține echipamentul.

Este important să păstrați acest catalog pe întreaga durată de viață a echipamentului și să transmiteți catalogul deținătorilor sau utilizatorilor ulteriori.

Tetra Pak nu va fi răspunzător pentru niciun defect al echipamentului cauzat prin nerespectarea instrucțiunilor date în manualele care însoțesc acest echipament.

Manuale livrate

Manualele livrate cu acest echipament pot include

- CM
  Manualul de conversie furnizează tehnicienilor informații despre conversia echipamentului între diferite moduri de producție.
- EM
  Manualul electric furnizează tehnicienilor informații despre sistemul electric al echipamentului.
- IM
  Manualul de instalare furnizează tehnicienilor informații necesare pentru instalarea în siguranță a echipamentului.
- MM
  Manualul de întreținere furnizează tehnicienilor informații cu privire la întreținerea echipamentului.
- OM
  Manualul de exploatare pune la dispoziție operatorilor informații despre manevrarea și exploatarea echipamentului înainte, în timpul și după producție.
- SPC
  Catalogul pieselor de schimb furnizează informații necesare pentru comandarea pieselor de schimb de la Tetra Pak.
- TeM
  Manualul tehnic
  – furnizează tehnicienilor informații necesare pentru instalarea în siguranță a echipamentului
  – furnizează tehnicienilor informații necesare cu privire la întreținerea echipamentului
  – furnizează tehnicienilor informații despre sistemul electric al mașinii/echipamentului
  – furnizează informații necesare pentru comandarea pieselor de schimb de la Tetra Pak.

Configurația paginilor

Examinați ilustrația (A) de pe pagina i-5: Paginile principale dintr-un catalog de piese de schimb constau dintr-o pagină de ilustrare (1) și o pagină de liste corespunzătoare (7). Numărul paginii (5) apare în antetul unei pagini de ilustrare și în subsolul unei pagini de liste. Numărul documentului (6) apare în subsolul unei pagini de liste.

Numerotarea paginilor

Examinați ilustrația (A) de la pagina i-5: Un număr de pagină (5) are trei părți:

- numărul capitolului (2)
- numărul paginii consecutive din cadrul capitolului (3)
- număr total de pagini din capitol (4)

Prezentare introductivă a mașinii

Producător

Pentru numele și adresa producătorului, consultați pagina a doua a acestui catalog.

Service

Pentru comandarea pieselor de schimb pentru această mașină sau pentru a raporta problemele asociate cu exploatarea acestei mașini, contactați cel mai apropiat birou Tetra Pak.

Contactați Liaison cu privire la alte întrebări, comentarii sau sugestii legate de îmbunătățirea echipamentului și a documentației acestuia.

Identificare

Clasificare CE

Acest echipament este fabricat în conformitate cu reglementările de bază cu privire la sănătate și siguranță din Zona economică europeană (EEA).

Plăcuța mașinii

Ilustrația (B) de la pagina i-5 arată un exemplu al unei plăcuțe de mașină. O ilustrație a plăcuței valide a mașinii și a poziției acesteia pe echipament este arătată în capitolul introductiv al manualelor livrate împreună cu acest echipament. Plăcuța mașinii conține datele listate mai jos, necesare în cazul în care contactați Tetra Pak în legătură cu acest echipament specific.

- Tip mașină (8)
- Volum (9)
- Specificații de desen (10)
- Număr de serie al mașinii (11)
- Producător (12)
- Marcaj CE (13)
- Anul fabricației (14)

Ilustrația (C) de la pagina i-5 arată un exemplu al unei specificații de mașină. Asigurați-vă că datele specifice echipamentului, listate în paginile din față ale acestui manual, corespund cu datele de pe plăcuța mașinii și cu specificațiile mașinii.

Cum se utilizează acest catalog de piese de schimb

Localizarea unui număr de piesă de schimb

a) Examinați ilustrația (D) de la pagina i-5: Treceți la numărul de capitol (15) indicat lângă grupa principală care conține piesa pe care doriți să o localizați.

Articolele b) și c) se referă la ilustrația (E) de la pagina i-6.

b) Pe ilustrația grupei principale, căutați subgrupa aferentă mașinii (17) care conține piesa sau subgrupa pe care o căutați. Notați numărul poziției (18) și treceți la pagina de liste care urmează după ilustrație.

c) Căutați numărul poziției/marcarea de referință (16) sau numele subgrupei (19). Treceți la numărul de pagină corespunzător (20) listat în coloana din partea dreaptă. Tetra Pak a optat ca întotdeauna să utilizeze structura orientată pe funcție pentru marcarea de referință. Prefixul care indică structura orientată pe funcție (=) nu este arătat în marcarea de referință.

Articolele d) și e) se referă la ilustrația (F) de la pagina i-6.

d) Localizați piesa (21) pe care o căutați pe ilustrația subgrupei și notați numărul de poziție al piesei.

e) Numărul piesei (29) și descrierea piesei (30) sunt listate lângă numărul de poziție de pe pagina de liste.

Informațiile listate într-un catalog de piese de schimb

Lista de mai jos se referă la ilustrația (F) de la pagina i-6. Un catalog de piese de schimb conține următoarele informații despre grupe, subgrupe și piese de schimb pentru echipament:

- Referința despre structura grupelor (22). Indică următoarea grupă superioară din structura de liste a echipamentului.
- Numele grupei (23)
- Unitatea de măsură (25)
- Cantitatea (26)
- Numărul de desen de ansamblu (27)
- Intervalul de pagini de liste (28). Inclus dacă există mai multe pagini în ilustrația sau lista grupei.
- Numărul piesei sau al subgrupei (29)
- Numele subgrupei sau descrierea piesei (30)
- Numărul grupei (31)
- Numărul echipamentului (32)
- Antet cu informații despre grupă (33). Indică dacă secțiunea de sub antet se referă la o anumită variantă de mașină sau este o listă de piese comune. Dacă o listă are mai multe variante și fiecare variantă are propriul său desen de ansamblu, este arătată o referință de pagină pentru desenul de ansamblu al variantei.
- Informații interne (34)

Úvod

Informácie o návode

Spoločnosť Tetra Pak odporúča, starostlivo si prečítať všetky dodané návody. Dbajte, aby pracovníci, obsluhujúci zariadenie alebo zabezpečujúci jeho údržbu, mali vždy dodané návody k dispozícii.

Je dôležité, aby bol tento katalóg k dispozícii počas celého času životnosti zariadenia, a aby sa katalóg dostal aj k jeho prípadnému ďalšiemu držiteľovi alebo používateľovi.

Spoločnosť Tetra Pak nepreberá zodpovednosť za akékoľvek poškodenie zariadenia spôsobené nedodržaním pokynov uvedených v návodoch dodávaných s týmto zariadením.

Dodané návody

S týmto zariadením vám mohli byť dodané nasledujúce návody:

- CM
  Návod na prestavovanie poskytuje technikom informácie o prestavovaní zariadenia do rôznych výrobných režimov.
- EM
  Elektrotechnický návod poskytujetechnikom informácie o elektrickom systéme zariadenia.
- IM
  Návod na inštaláciu poskytuje technikom informácie potrebné na bezpečnú inštaláciu zariadenia.
- MM
  Návod na údržbu poskytujetechnikom informácie o údržbe zariadenia.
- OM
  Návod na obsluhu poskytuje obsluhe informácie o zaobchádzaní a obsluhe zariadenia pred, počas a po prevádzke.
- SPC
  Katalóg náhradných dielcov poskytuje informácie potrebné na objednávanie náhradných dielcov od spoločnosti Tetra Pak
- TeM
  Technický návod
  - poskytuje technikom informácie potrebné na bezpečnú inštaláciu zariadenia
  - poskytuje technikom informácie o údržbe zariadenia
  - poskytuje technikom informácie o elektrickom systéme stroja/ zariadenia
  - poskytuje informácie potrebné na objednávanie náhradných dielcov od spoločnosti Tetra Pak.

Rozloženie strany

Pozri ilustráciu (A) na strane i-5: Hlavné strany Katalógu náhradných dielcov obsahujú stránku s ilustráciami (1) a príslušnú stranu so zoznamom (7). Číslo strany (5) sa uvádza v záhlaví na strane s ilustráciami a v päte strany so zoznamom. Číslo dokumentu (6) sa uvádza v päte strany so zoznamom.

Číslovanie strán

Pozri ilustráciu (A) na strane i-5: Číslo strany (5) má tri časti:

- číslo kapitoly (2)
- poradové číslo strany v rámci kapitoly (3)
- celkový počet strán v kapitole (4)

Základné informácie o stroji

Výrobca

Meno a adresa výrobcu sa uvádza na druhej strane tohto katalógu.

Servis

Pri objednávaní náhradných dielcov pre tento stroj alebo na nahlasovanie problémov súvisiacich s prevádzkou tohto stroja sa obráťte na najbližšie zastúpenie spoločnosti Tetra Pak.

S ostatnými otázkami, pripomienkami a podnetmi na vylepšenie stroja alebo zariadenia a jeho dokumentácie sa obracajte na kontaktnú osobu.

Identifikácia

Klasifikácia CE

Toto zariadenie spĺňa základné predpisy o ochrane zdravia a bezpečnosti Európskeho hospodárskeho priestoru (EEA).

Typový štítok stroja

Na ilustrácii (B) na strane i-5 uvádzame príklad typového štítku. Ilustrácia platného typového štítku stroja a jeho umiestnenia na zariadení sa uvádza v kapitole Úvod v návodoch, dodaných s týmto zariadením. Typový štítok obsahuje dolu údaje uvedené, potrebné pri kontaktoch so spoločnosťou Tetra Pak ohľadom tohto špecifického zariadenia.

- Typ stroja (8)
- Objem (9)
- Údaje o výkrese (10)
- Výrobné číslo stroja (11)
- Výrobca (12)
- Značka CE (13)
- Rok výroby (14)

Ilustrácia (C) na strane i-5 zobrazuje príklad špecifikácie stroja. Presvedčite sa, že údaje zariadenia uvedené na predných stranách tohto návodu zodpovedajú údajom na typovom štítku a v špecifikácii stroja.

Ako sa tento Katalóg náhradných dielcov používa

Vyhľadanie čísla náhradného dielca

a) Pozri ilustráciu (D) na strane i-5: Prejdite na číslo kapitoly (15) uvedené vedľa hlavnej skupiny obsahujúcej dielec, ktorý chcete vyhľadať.

Položky b) a c) odkazujú na ilustráciu (E) na strane i-6.

b) Na ilustrácii hlavnej skupiny hľadajte podskupinu stroja (17), ktorý obsahuje dielec alebo podskupinu, ktorú hľadáte. Poznamenajte si číslo položky (18) a prejdite stranu so zoznamom nasledujúcu po ilustrácii.

c) Vyhľadajte číslo položky/referenčné označenie (16) alebo názov podskupiny (19). Prejdite na príslušné číslo strany (20) uvedené v zozname v pravom stĺpci. Spoločnosť Tetra Pak sa rozhodla vždy používať funkčne zameranú štruktúru na referenčné označovanie. Predčíslie udávajúce funkčne orientovanú štruktúra (=) sa v referenčnom označení nezobrazuje.

Položky d) a e) odkazujú na ilustráciu (F) na strane i-6.

d) Nájdite dielec (21), ktorý hľadáte, na ilustrácii podskupiny a poznamenajte si číslo položky daného dielca.

e) Číslo dielca (29) a popis dielca (30) sa uvádza vedľa čísla položky na stránke so zoznamom.

Informácie uvádzané v Katalógu náhradných dielcov

Dolu uvedený zoznam odkazuje na ilustráciu (F) na strane i-6. Katalóg náhradných dielcov obsahuje nasledujúce informácia o skupinách, podskupinách a náhradných dielcov zariadenia:

- Referenčná štruktúrna skupina (22). Označuje najbližšiu vyššiu skupinu v štruktúre zoznamu zariadenia.
- Názobv skupiny (23)
- Jednotka merania (25)
- Množstvo (26)
- Číslo výkresu celkovej zostavy (27)
- Rozsah strán zoznamu (28). Uvádza sa, ak má ilustrácia alebo zoznam skupiny viac strán.
- Číslo dielca alebo podskupiny (29)
- Názov podskupiny alebo popis dielca (30)
- Číslo skupiny (31)
- Číslo zariadenia (32)
- Záhlavie informácií o skupine (33). Uvádza, či je časť nasledujúca pod záhlavím určená pre špecifický variant stroja, alebo či ide o zoznam spoločných dielcov. Ak má zoznam viac ako jeden variant a každý z variantov má vlastný výkres celkovej zostavy, uvádza sa odkaz na stranu s výkresom zostavy daného variantu.
- Interné informácie (34)

Uvod

Informacije o priročnikih

Tetra Pak priporoča, da natančno preberete vse priložene priročnike. Osebje, ki upravlja in vzdržuje opremo mora imeti dostop do priloženih priročnikov.

Katalog hranite v celotnem času uporabe opreme. V primeru, ko opremo pridobi drug imetnik ali uporabnik, mu obenem izročite tudi katalog.

Podjetje Tetra Pak ne prevzema odgovornosti za poškodbe na opremi, ki nastanejo zaradi neupoštevanja navodil iz priročnikov, ki so priloženi opremi.

Priloženi priročniki

Priročniki, ki so priloženi tej opremi, lahko vključujejo

- Priročnik za zamenjavo (CM)
  V tem priročniku so podatki, ki tehnikom omogočajo izvesti zamenjavo opreme med različnimi načini proizvodnje.
- Elektrotehnični priročnik (EM)
  Priročnik vsebuje podatke za tehnike o električnem sistemu opreme.
- Priročnik za montažo (IM)
  Priročnik vsebuje podatke, ki jih tehniki potrebujejo za varno montažo opreme.
- Priročnik za vzdrževanje (MM)
  Priročnik vsebuje podatke za tehnike o vzdrževanju opreme.
- Priročnik za obratovanje (OM)
  Priročnik je namenjen informiranju za pravilno rokovanje in upravljanje s strojem pred, med in po proizvodnem postopku.
- Katalog nadomestnih delov (SPC)
  Katalog vsebuje potrebne podatke za naročilo nadomestnih delov pri podjetju Tetra Pak.
- Tehnični priročnik (TeM)
  Priročnik
  - vsebuje podatke, ki jih tehniki potrebujejo za varno montažo opreme;
  - vsebuje podatke za tehnike o vzdrževanju opreme;
  - vsebuje podatke za tehnike o električnem sistemu stroja/opreme;
  - vsebuje potrebne podatke za naročilo nadomestnih delov pri podjetju Tetra Pak.

Postavitev strani

Poglejte sliko (A) na strani i-5: Glavne strani v Katalogu nadomestnih delov sestavljata stran s sliko (1) in ustrezna stran s seznamom (7). Številka strani (5) je prikazana na vrhu strani s sliko in na dnu strani s seznamom. Številka dokumenta (6) je prikazana na dnu strani s seznamom.

Številčenje strani

Oglejte si sliko (A) na strani i-5: Številka strani (5) ima tri dele:

- številko poglavja (2);
- zaporedno številko strani v poglavju (3);
- število vseh strani v poglavju (4).

Predstavitev stroja

Proizvajalec

Ime in naslov proizvajalca najdete na drugi strani kataloga.

Servisiranje

Za naročanje nadomestnih delov za stroj ter za sporočanje motenj pri delovanju stroja se obrnite na najbližjo servisno službo podjetja Tetra Pak.

V primeru drugih zahtev, komentarjev, predlogov za izboljšavo opreme ali dokumentacije se obrnite na odgovorno osebo.

Identifikacijska oznaka

CE-klasifikacija

Oprema je izdelana v skladu z osnovnimi zdravstvenimi in varnostnimi predpisi Evropskega gospodarskega prostora (EGS).

Napisna ploščica

Slika (B) na strani i-5 prikazuje primer napisne ploščice.
Sliko veljavne napisne ploščice in njeno mesto na opremi najdete v uvodnem poglavju priloženih priročnikov. Ploščica vsebuje spodaj navedene podatke, ki jih potrebujete, ko se v zvezi z določeno opremo obrnete na podjetje Tetra Pak:

- tip stroja (8);
- prostornino (9);
- specifikacije risbe (10);
- serijsko številko stroja (11);
- proizvajalca (12);
- oznako CE (13);
- leto izdelave (14).

Slika (C) na strani i-5 prikazuje primer specifikacije stroja. Podatki o opremi, navedeni na prvih straneh tega priročnika, se morajo ujemati s podatki o stroju, navedenimi na napisni ploščici in v specifikacijah.

Uporaba Kataloga nadomestnih delov

Iskanje številke nadomestnega dela

a) Oglejte si sliko (D) na strani i-5: Poiščite številko poglavja (15), navedeno poleg glavne skupine, ki vsebuje iskani del.

Točki b) in c) se nanašata na sliko (E) na strani i-6.

b) Na sliki glavne skupine poiščite podskupino stroja (17), ki vsebuje iskani del ali podskupino. Zapomnite si pozicijsko številko (18) in poiščite stran s seznamom, ki pripada sliki.

c) Poiščite pozicijsko številko/referenčno oznako (16) ali ime podskupine (19). Pojdite na stran (20), navedeno v desnem stolpcu. Tetra Pak za referenčno označevanje vedno uporablja funkcijsko strukturo. Predpona, ki označuje funkcijsko strukturo (=), ni prikazana v referenčni oznaki.

Točki d) in e) se nanašata na sliko (F) na strani i-6.

d) Na sliki podskupine poiščite del (21), ki ga iščete, in si zapomnite njegovo pozicijsko številko.

e) Številka (29) in opis dela (30) sta navedena poleg pozicijske številke na strani s seznamom.

Informacije v Katalogu nadomestnih delov

Spodnji seznam se nanaša na sliko (F) na strani i-6. Katalog nadomestnih delov vsebuje naslednje informacije o skupinah, podskupinah in nadomestnih delih za opremo:

- referenco strukture skupine (22); Označuje naslednjo višjo skupino v strukturi seznamov opreme.
- ime skupine (23);
- mersko enoto (25);
- količino (26);
- številko sestavne risbe (27);
- število strani seznama (28); Če je slika ali seznam skupine sestavljen iz več strani.
- številko dela ali podskupine (29);
- ime podskupine ali opis dela (30);
- številko skupine (31);
- številko opreme (32);
- naslov z informacijami o skupini (33). Označuje, ali je razdelek pod naslovom namenjen specifični izvedbi stroja ali gre za seznam skupnih delov. Če ima seznam več izvedb in če ima vsaka od njih svojo sestavno risbo, je ob vsaki izvedbi navedena referenčna stran s sestavno risbo.
- interne informacije (34).

Inledning

Information om manualen

Tetra Pak rekommenderar att alla manualer läses noggrant. Se till att manualerna är tillgängliga för personalen som använder eller underhåller utrustningen.

Det är viktigt att denna katalog behålls under utrustningens livslängd, och att den överlämnas till varje efterföljande innehavare eller användare av utrustningen.

Tetra Pak tar inte ansvar för någon skada på utrustningen som orsakats av att instruktionerna i medföljande manualer inte har följts.

Medföljande manualer

Följande manualer kan levereras tillsammans med utrustningen:

- CM
  Konverteringsmanualen (CM) innehåller information för tekniker om hur man konverterar utrustningen mellan olika produktionslägen.
- EM
  Den elektriska manualen (EM) innehåller information för tekniker om utrustningens elektriska system.
- IM
  Installationsmanualen (IM) innehåller information för tekniker om hur utrustningen installeras på ett säkert sätt.
- MM
  Underhållsmanualen (MM) innehåller information för tekniker om hur utrustningen underhålls.
- OM
  Driftsmanualen (OM) innehåller information för operatören om hur utrustningen ska hanteras före, under och efter produktion.
- SPC
  Reservdelskatalogen (SPC) innehåller den information som behövs för att beställa reservdelar från Tetra Pak.
- TeM
  Den tekniska manualen (TeM)
  - innehåller information för tekniker om hur utrustningen installeras på ett säkert sätt.
  - innehåller information för tekniker om hur utrustningen underhålls.
  - innehåller information för tekniker om maskinens/utrustningens elektriska system.
  - innehåller den information som behövs för att beställa reservdelar från Tetra Pak.

Sidlayout

Se bild (A) på sidan i-5: Huvudsidorna i reservdelskatalogen består av en bildsida (1) och en motsvarande listsida (7). Sidnumret (5) visas i sidhuvudet på bildsidan och i sidfoten på listsidan. Dokumentnumret (6) visas i sidfoten på listsidan.

Sidnumrering

Se bild (A) på sidan i-5: Ett sidnummer (5) består av tre delar:

- kapitlets nummer (2)
- löpande sidnummer inom kapitlet (3)
- totalt sidantal i kapitlet (4)

Introduktion till maskinen

Tillverkare

Tillverkarens namn och adress finns på sidan 2 i katalogen.

Service

För att beställa reservdelar till denna maskin eller för att rapportera problem som uppstått i samband med driften kontaktar du närmaste Tetra Pak-kontor.

Om du har andra frågor, kommentarer eller förslag till förbättringar av utrustningen och dokumentationen vänder du dig till din kontaktperson på Tetra Pak.

Identifiering

CE-märkning

Denna utrustning överensstämmer med den grundläggande hälso- och säkerhetslagstiftningen inom Europeiska ekonomiska samarbetsområdet (EES).

Maskinskylt

Bild (B) på sidan i-5 visar ett exempel på en maskinskylt.
En bild på giltig maskinskylt och dess placering på utrustningen visas i inledningskapitlet som medföljer utrustningen. Skylten innehåller de uppgifter som listas nedan och som behövs vid kontakt med Tetra Pak angående utrustningen.

- Maskintyp (8)
- Volym (9)
- Ritningsspecifikationer (10)
- Maskinnummer (11)
- Tillverkare (12)
- CE-märkning (13)
- Tillverkningsår (14)

Bild (C) på sidan i-5 visar ett exempel på en maskinspecifikation. Kontrollera att informationen om utrustningen som listas på de första sidorna i manualen motsvarar informationen på maskinskylten och i maskinspecifikationen.

Använda reservdelskatalogen

Hitta ett reservdelsnummer

a) Se bild (D) på sidan i-5: Gå till kapitelnumret (15) som står vid sidan om huvudgruppen som innehåller den del du vill hitta.

Punkt b) och c) hänvisar till bild (E) på sidan i-6.

b) På huvudgruppsbilden letar du efter den maskinundergrupp (17) som innehåller delen eller undergruppen du letar efter. Notera positionsnumret (18) och gå till listsidan som anges efter bilden.

c) Leta efter positionsnumret/referensbeteckningen (16) eller undergruppsnamnet (19). Gå till motsvarande sidnummer (20) som listas i den högra kolumnen. Tetra Pak har valt allt alltid använda en funktionsorienterad struktur för referensbeteckningarna. Prefixet för funktionsorienterad struktur (=) visas inte i referensbeteckningen.

Punkt d) och e) hänvisar till bild (F) på sidan i-6.

d) Leta reda på delen (21) i undergruppsbilden och notera delens positionsnummer.

e) Reservdelsnumret (29) och reservdelsbeskrivningen (30) står bredvid positionsnumret på listsidan.

Information i reservdelskatalogen

Listan nedan hänvisar till bild (F) på sidan i-6. Reservdelskatalogen innehåller följande information om grupper, undergrupper och reservdelar för utrustningen:

- Gruppstrukturreferens (22). Anger nästa högre grupp i utrustningslistans struktur.
- Gruppnamn (23)
- Måttenhet (25)
- Kvantitet (26)
- Monteringsritningsnummer (27)
- Listsideintervall (28). Anges om det finns flera sidor i gruppbilden eller grupplistan.
- Reservdels- eller undergruppsnummer (29)
- Undergruppsnamn eller reservdelsbeskrivning (30)
- Gruppnummer (31)
- Utrustningsnummer (32)
- Gruppinformationsrubrik (33). Anger om avsnittet under rubriken gäller en viss maskinvariant eller om det är en lista över allmänna delar. Om en lista har fler än en variant och varje variant har sin egen monteringsritning visas en sidhänvisning till variantens monteringsritning.
- Intern information (34)

SPC
Spare Parts Catalogue

SUPERSTRUCTURE TBA/19 030V

Drawing file: 648111-15_1_AA.hpgl

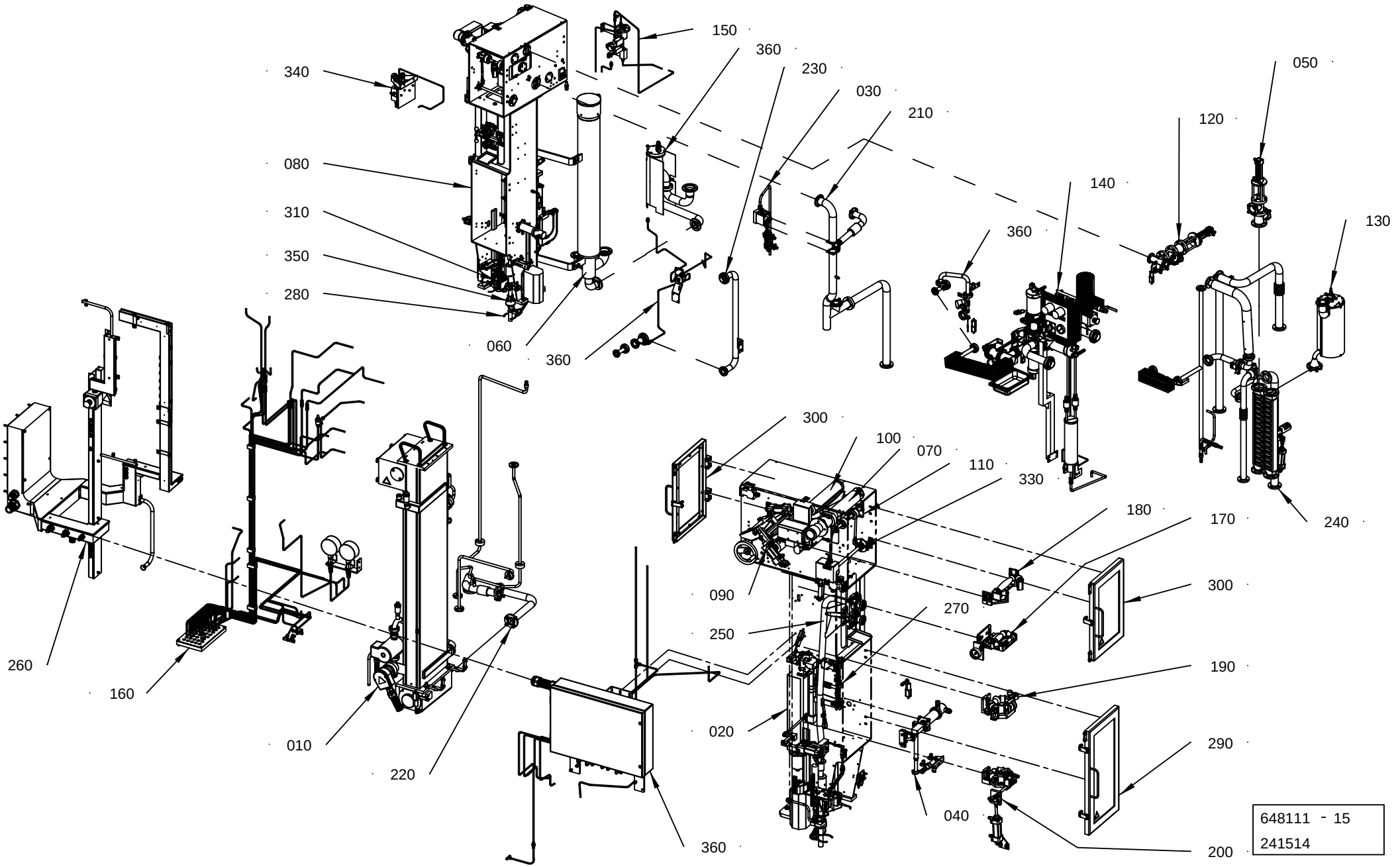

ECM: 266823 - 20070126
Group number: 648111-1300
Assembly Drawing: 648111-15_1_AA

This list covers pages from 1-2 to 1-5

Pos	Part No	UN	Qty	Description	Page No
HI (See drawing on page: 1-2)					
360	2619758-0200		1	HEAD SPACE BY INJECTION	**1-7**
Common Parts					
010	256014-0900		1	BATH	**1-21, 1-23, 1-25, 1-27, 1-29, 1-31**
020	256055-0700		1	HOT AIR ELEMENT	**1-35**
030	256084-0700		1	CHANGE-OVER VALVE	**1-37**
040	256095-0700		1	HOT AIR ELEMENT	**1-39**
050	271169-0500		1	VALVE	**1-41**
060	271181-0600		1	AIR SUPER-HEATER	**1-43, 1-45**
070	272004-0500		1	BENDING ROLLER	**1-47**
080	272021-0900		1	ASEPTIC CHAMBER	**1-49, 1-51, 1-53**
090	272024-0500		1	CALENDER ROLLER	**1-57**
100	272025-0600		1	AIR KNIFE	**1-59**
110	272028-0800		1	BENDING ROLLER	**1-61**
120	272337-0600		1	VALVE	**1-63**
130	272407-0400		1	GENERATOR	**1-65**
140	272560-0900		1	PRODUCT VALVE	**1-67, 1-69, 1-71, 1-73**
150	272623-0800		1	SPRAY SYSTEM	**1-91, 1-93**
160	295045-0900		1	PIPE WORK-PNEUMATIC	**1-95, 1-97, 1-99, 1-101**
170	441304-0400		1	MOVABLE FORMING RING	**1-103, 1-105, 1-107, 1-109**
180	441307-0300		1	UPPER TUBE SUPPORT	**1-111, 1-113, 1-115**
190	441486-0400		1	DIVIDED FORMING RING	**1-119, 1-121, 1-123**
200	456309-0600		1	LOWER FORMING RING	**1-125, 1-127**
210	456555-0600		1	SUCTION PIPE	**1-129**
220	456556-0400		1	PEROXIDE PIPE	**1-131**
230	456836-0700		1	CLEANING SYSTEM	**1-133**
240	456976-0700		1	HEAT EXCHANGER	**1-137**
250	469091-0500		1	FILLER TUBE	**1-141**
260	469374-0700		1	CABLE TRENCH .	**1-143, 1-145, 1-147, 1-149, 1-151, 1-153**
270	469501-0400		1	AIR NOZZLE	**1-159**
280	469781-0400		1	TUBE FLUSHING DEVICE	**1-161, 1-163**
290	491570-0300		1	DOOR	**1-167**
300	491579-0300		2	DOOR	**1-169**
310	491976-0400		1	PHOTOCELL UNIT	**1-171, 1-173**
320	579625-0300		1	PROTECTIVE GRATING	**1-175**
330	1539920-0200		1	PENDULUM	**1-177**
340	2774503-0100		1	CONVERTER	**1-181**
350	925991-0200		1	LEVEL PROBE	**1-183**

Pos	Part No	UN	Qty	Description	Page No

SUPERSTRUCTURE TBA/19 030V

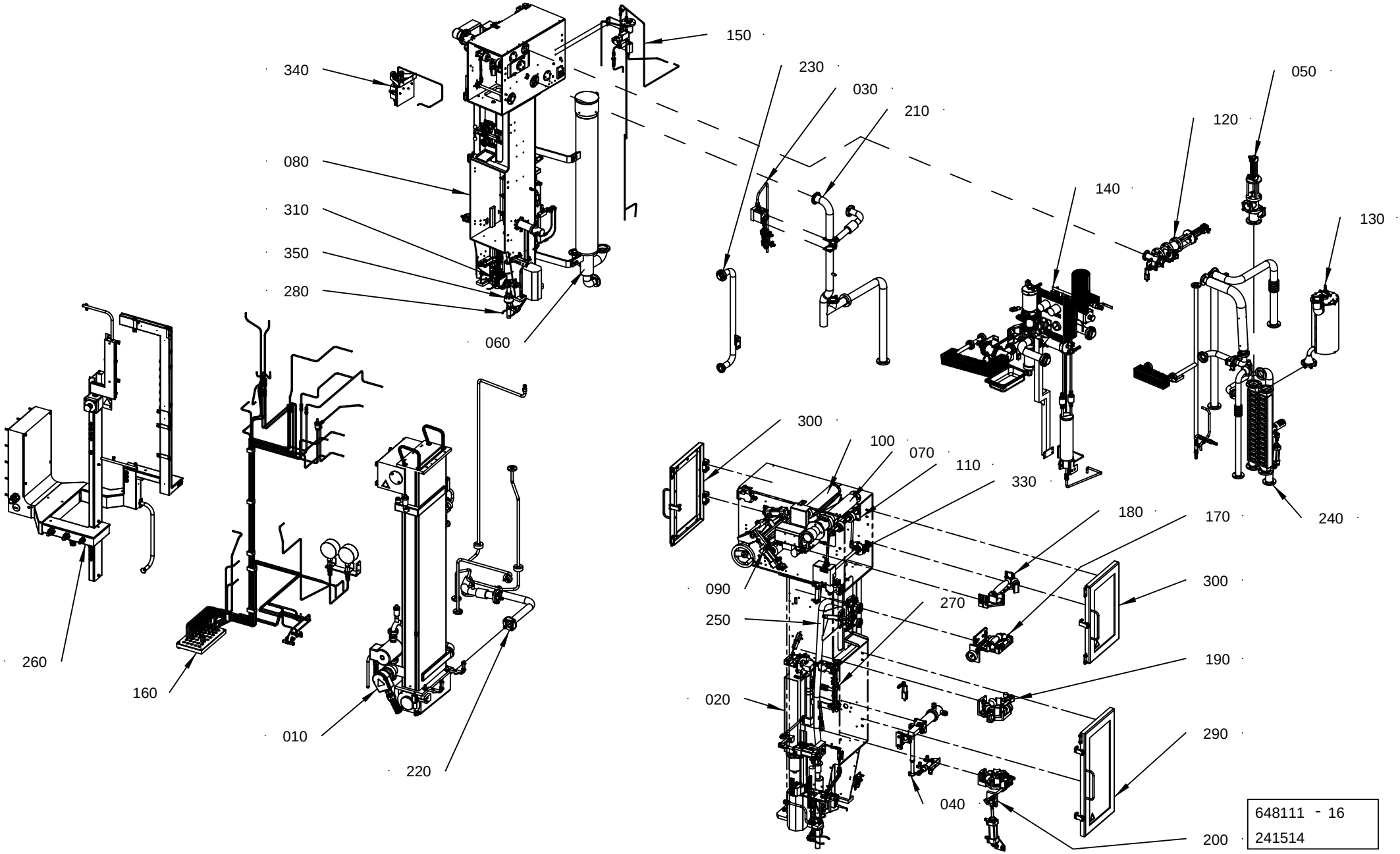

ECM: 266823 - 20070126
Group number: 648111-1300
Assembly Drawing: 648111-16_1_AA

This list covers pages from 1-2 to 1-5

Pos	Part No	UN	Qty	Description	Page No
HI (See drawing on page: 1-2)					
360	2619758-0200		1	HEAD SPACE BY INJECTION	**1-7**
Common Parts					
010	256014-0900		1	BATH	**1-21, 1-23, 1-25, 1-27, 1-29, 1-31**
020	256055-0700		1	HOT AIR ELEMENT	**1-35**
030	256084-0700		1	CHANGE-OVER VALVE	**1-37**
040	256095-0700		1	HOT AIR ELEMENT	**1-39**
050	271169-0500		1	VALVE	**1-41**
060	271181-0600		1	AIR SUPER-HEATER	**1-43, 1-45**
070	272004-0500		1	BENDING ROLLER	**1-47**
080	272021-0900		1	ASEPTIC CHAMBER	**1-49, 1-51, 1-53**
090	272024-0500		1	CALENDER ROLLER	**1-57**
100	272025-0600		1	AIR KNIFE	**1-59**
110	272028-0800		1	BENDING ROLLER	**1-61**
120	272337-0600		1	VALVE	**1-63**
130	272407-0400		1	GENERATOR	**1-65**
140	272560-0900		1	PRODUCT VALVE	**1-67, 1-69, 1-71, 1-73**
150	272623-0800		1	SPRAY SYSTEM	**1-91, 1-93**
160	295045-0900		1	PIPE WORK-PNEUMATIC	**1-95, 1-97, 1-99, 1-101**
170	441304-0400		1	MOVABLE FORMING RING	**1-103, 1-105, 1-107, 1-109**
180	441307-0300		1	UPPER TUBE SUPPORT	**1-111, 1-113, 1-115**
190	441486-0400		1	DIVIDED FORMING RING	**1-119, 1-121, 1-123**
200	456309-0600		1	LOWER FORMING RING	**1-125, 1-127**
210	456555-0600		1	SUCTION PIPE	**1-129**
220	456556-0400		1	PEROXIDE PIPE	**1-131**
230	456836-0700		1	CLEANING SYSTEM	**1-133**
240	456976-0700		1	HEAT EXCHANGER	**1-137**
250	469091-0500		1	FILLER TUBE	**1-141**
260	469374-0700		1	CABLE TRENCH .	**1-143, 1-145, 1-147, 1-149, 1-151, 1-153**
270	469501-0400		1	AIR NOZZLE	**1-159**
280	469781-0400		1	TUBE FLUSHING DEVICE	**1-161, 1-163**
290	491570-0300		1	DOOR	**1-167**
300	491579-0300		2	DOOR	**1-169**
310	491976-0400		1	PHOTOCELL UNIT	**1-171, 1-173**
320	579625-0300		1	PROTECTIVE GRATING	**1-175**
330	1539920-0200		1	PENDULUM	**1-177**
340	2774503-0100		1	CONVERTER	**1-181**
350	925991-0200		1	LEVEL PROBE	**1-183**

Pos	Part No	UN	Qty	Description	Page No

HEAD SPACE BY INJECTION

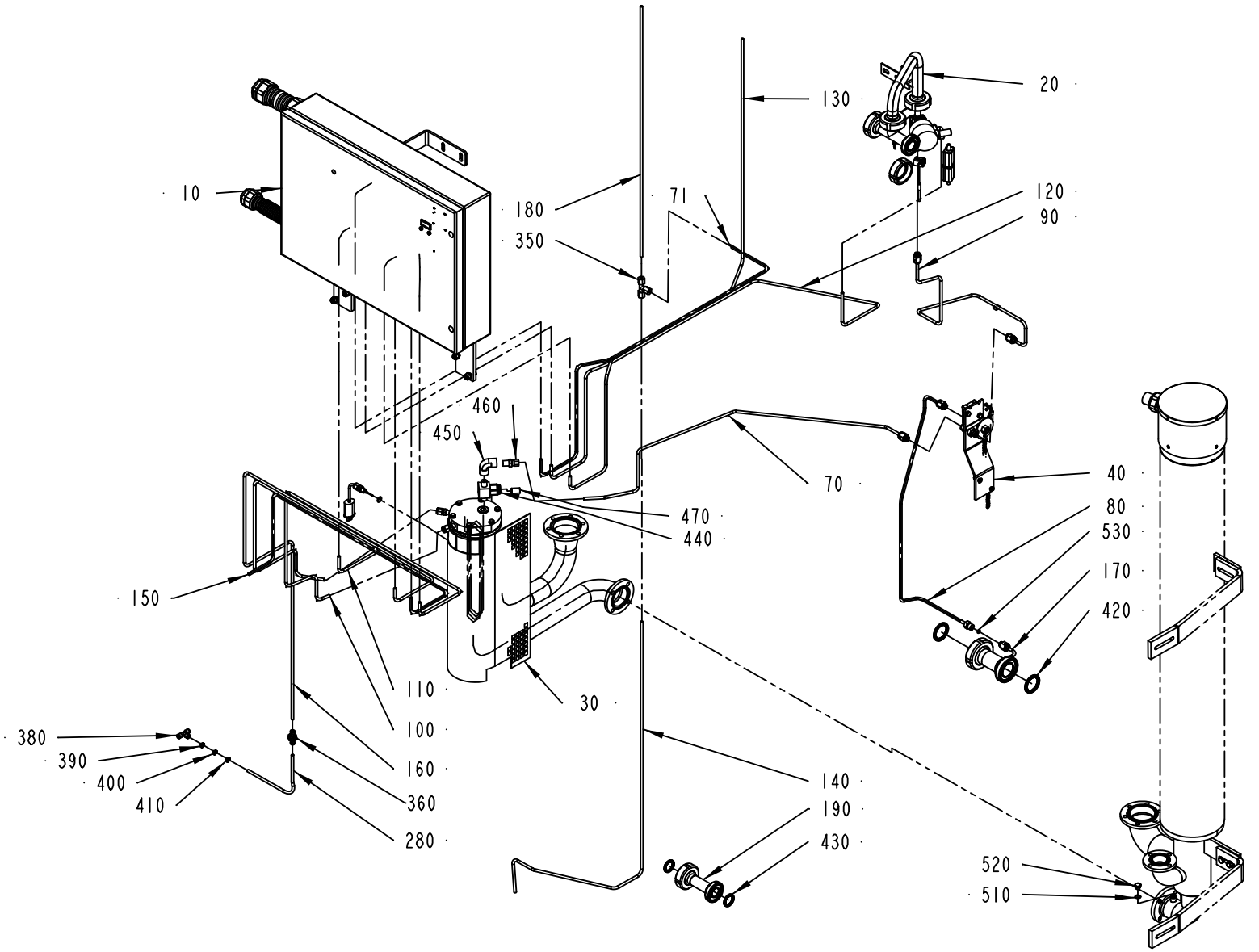

2619758-2
ECM 266817

ECM: 275057 - 20070126
Group number: 2619758-0200
Assembly Drawing: 2619758-2_1_AA

Pos	Part No	UN	Qty	Description	Page No
-					
	2568779-0000		1	DIAGRAM	
10	2545083-0200		1	CONTROL CABINET	**1-9, 1-11**
20	2545080-0200		1	INJECTION SYSTEM	**1-15**
30	1539599-0100		1	HEAT EXCHANGER	**1-17**
40	1539602-0100		1	CONNECTION SYSTEM	**1-19**
070	1539604-0000		1	PIPE	
071	2546472-0000		1	PIPE	
080	2545432-0000		1	CLEANING PIPE	
090	1539605-0000		1	COOLING PIPE	
100	2546444-0000		1	PIPE	
110	2546447-0000		1	SPRAY PIPE	
120	2546471-0000		1	AIR PIPE	
130	2546473-0000		1	FILLING PIPE	
140	2547007-0000		1	RETURN PIPE	
150	2546446-0000		1	PIPE	
160	2546445-0000		1	AIR PIPE	
170	2545062-0000		1	CLEANING PIPE	
180	2547006-0000		1	RETURN PIPE	
190	1539601-0000		1	CLEANING PIPE	
260	90144-0073		1	TREBOFLON-TAPE W=13MM	
280	90166-0132	MM	2500	TUBE 6 MM PA,TRANSP.	
340	342706-0130		1	ACCESSORIES, INSERT SLEEVE 6 MM	
350	90030-0076		1	CONN. T-PIPE T-6	
360	90457-0086		2	BULKHEAD CONNECTOR 6MM	
380	342748-0102		1	T-CONNECTION 6MM	
390	359000-0400		1	WIRE MARKING, YELLOW, PA2/4"0"	
400	359000-0401		1	WIRE MARKING, YELLOW, PA2/4"1"	
410	359000-0405		1	WIRE MARKING, YELLOW, PA2/4"5"	
420	90217-0348		2	GASKET 35,4X46,8X4 MM	
430	90217-0347		2	GASKET 32X22,6X3,6 MM	
440	90277-0062		1	FILTER HOUSING SS-4TF2-60	
	90277-0347		*1*	*FILTER*	
450	90330-0169		1	ELBOW, 90 INT. THREAD, 4-4FE. SS	
460	90030-0062		1	CONN. STR. GE 6-1/4-18 NPTF	
470	90277-0407		1	FILTER ELEMENT 60Âµ, SS-4F-K4-60	
510	315234-0109		1	WASHER,PL.RND.CU.10,3/13,5 H=1,0	
520	90136-0001		1	PLUG, EXT. THREAD, NO. 100727	
530	315205-0505		1	O-RING 6,07X1,78 MM	

Pos	Part No	UN	Qty	Description	Page No

Machine Type | Group Description | Used-In | Group Number | Page No

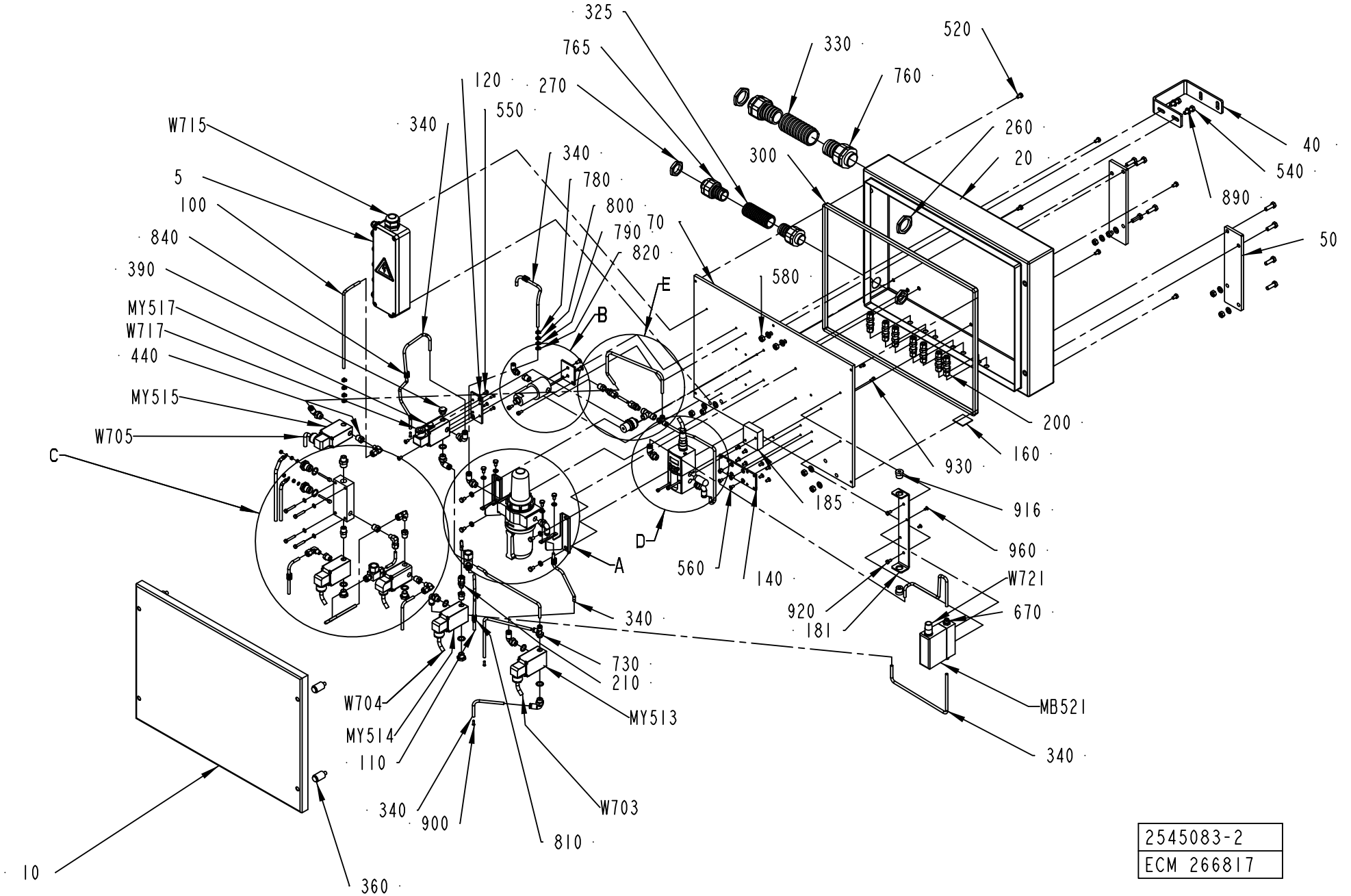
325
765
330
520
120
270
760
550
W715
340
260
340
300
20
40
5
780
540
100
800
890
840
790
70
50
820
390
580
E
MY517
B
W717
440
MY515
200
W705
160
C
930
185
916
960
D
560
140
W721
A
920
670
181
340
730
210
W704
MB521
MY513
MY514
340
110
900
W703
810
10
360
2545083-2
ECM 266817

ECM: 275058 - 20070126
Group number: 2545083-0200
Assembly Drawing: 2545083-2_1_AB

This list covers pages from 1-8 to 1-11

Pos	Part No	UN	Qty	Description	Page No
-					
005	2623674-0100		1	CONNECTION BOX	**1-13**
010	2800353-0000		1	COVER	
020	2800352-0000		1	CABINET	
030	2565736-0000		1	RESERVOIR	
040	2546448-0000		1	SUPPORT	
050	2547315-0000		2	SUPPORT	
070	2545426-0000		1	MOUNTING PLATE	
080	2545425-0000		1	SPRAY PIPE	
090	2545427-0000		1	FILLING PIPE	
100	2545428-0000		1	RETURN PIPE	
110	2545429-0000		1	PIPE	
120	978235-0000		1	VALVE PLATE	
140	2574348-0000		1	VALVE BRACKET	
150	979474-0000		1	BRACKET	
160	520072-0000		1	SIGN BOARD	
170	560931-0000		2	BRACKET	
181	2572676-0000		1	SUPPORT	
182	2570391-0000		1	PIPE	
185	2511330-0000		1	SPACER	
190	2558744-0000		1	PIPE	
195	2558745-0000		2	PIPE	
200	90030-0230		7	CONN. BULKHEAD SV 6-	
210	90030-0233		1	CONN. STR., 6-G1/8, EXT. THREAD	
220	90030-0234		1	CONN. ELBOW, 6-R1/8 , EXT.THREAD	
260	90099-0120		2	NUT, PR 37 (PG29)	
270	90099-0119		2	NUT, PR 28,3 (PG21)	
290	90140-0015		1	T-PIPE, INT. THREAD, 2003-1/8	
300	90143-0059	M	2	SEAL STRIP 4610069	
310	90144-0073		1	TREBOFLON-TAPE W=13MM	
325	90152-0070	MM	1200	METAL HOSE, 32,5X26, UL 2621	
330	90152-0060	MM	1200	SPIRAL CONDUIT, 42X35, UL3529	
335	90153-0043		1	ADHESIVE, LOCTITE 495 20G	
340	90166-0132	M	10	TUBE 6 MM PA,TRANSP.	
350	90458-2957		10	ELBOW PIPE JOINT, EXT.THREAD, D=6MM-G1/4	
360	90226-0452		4	MOUNTING SCREW	
370	90236-0041		1	BRACKET	
380	350002-0006		1	PUSH-IN L-FITTING QSL-F-G1/8-6	
390	90257-0001		1	FILTER PLUG ART.NO.8145-00-140 TYPE F14	
410	90277-0104		1	FILTER F64B-2GN-ARO	
	90113-0457		*1*	*FILTER ELEMENTS*	
	90113-0458		*1*	*FILTER ELEMENTS, 5350-99*	
420	90277-0323		1	FILTER HOUSING / ART.NO 95S6-1/4 S 5430	
430	90277-0324		1	FILTER CARTRIDGE 050-11-A	
440	90330-0025		8	BUSHING, INT/EXT. THR. R1/4-RP1/8	
450	90330-0026		3	PLUG, EXT. G-THREAD, G1/4	
470	90330-0043		1	NIPPLES, EXT. THREAD. R-207R1/4	
480	90030-0234		5	CONN. ELBOW, 6-R1/8 , EXT.THREAD	
490	90330-0083		1	NIPPLES, EXT. THREAD. R3/8-R1/4	
510	312105-0335		4	SCREW M6S ISO 4014 M5X30 A480	
520	312105-0364		14	SCREW M6S ISO 4017 M6X10 A480	
530	312115-0325		2	SCREW ISO4762 M5X10 A4 80	
540	312105-0453		10	SCREW M6S ISO 4017 M8X25 A480	
550	312145-0291		12	SCREW ISO 2009 MFS M4X12 A4	
560	312145-0325		14	SCREW ISO 2009 MFS M5X10 A4	
570	312145-0366		2	SCREW ISO 2009 MFS M6X12 A4	
580	312605-0318		10	HEXAGON NUT, M6M M8 A280	
585	312605-0312		4	HEXAGON NUT, M6M M4 A280	
590	312605-0314		8	HEXAGON NUT, M6M M5 A280	
595	315105-0136		4	WASHER BRB 4,3X8 RFR	
600	315105-0153		12	WASHER BRB 6,4X12 RFR	
610	315105-0146		12	WASHER BRB 5,3X10 RFR	
630	315237-0110		6	WASHER,PL.RND.AL.13,5/18,H=1,5	
660	342713-0210		1	PLUG,EXT THREAD HEX SOCKET(PAK OF 10 PCS	
670	342722-0203		2	STRAIGHT COUPLING	
730	342772-0114		1	ELBOW FITTING, 6 - G1/4	
735	342772-0113		1	ELBOW FITTING, 6 - G1/8	
760	353243-0008		2	HOSE GLAND W/O INSERT PG29 EXTENDED	
765	353243-0007		2	HOSE GLAND W/O INSERT PG21 EXTENDED	
780	359000-0400		6	WIRE MARKING, YELLOW, PA2/4"0"	
790	359000-0401		8	WIRE MARKING, YELLOW, PA2/4"1"	
800	359000-0403		3	WIRE MARKING, YELLOW, PA2/4"3"	
810	359000-0404		8	WIRE MARKING, YELLOW, PA2/4"4"	
820	359000-0405		8	WIRE MARKING, YELLOW, PA2/4"5"	
830	359000-0406		1	WIRE MARKING, YELLOW, PA2/4"6"	
840	359000-0407		1	WIRE MARKING, YELLOW, PA2/4"7"	
850	315204-0213		2	O-RING 15,2X2,4 MM	
860	90230-0064		2	CHECK VALVE, 6 MM HIGH TEMP.	
890	315105-0165		12	WASHER BRB 8,4X16 RFR	
900	342706-0130		3	ACCESSORIES, INSERT SLEEVE 6 MM	
916	353249-0017		2	INSERT, SINGEL HOLE, HI.TEMP, EK152I7	
920	312105-0325		2	SCREW M6S ISO 4017 M5X10 A480	
930	312115-0289		2	SCREW ISO4762 M4X10 A4 80	
940	312115-0305		2	SCREW ISO4762 M4X50 A4 80	

Machine Type | Group Description | Used-In | Group Number | Page No

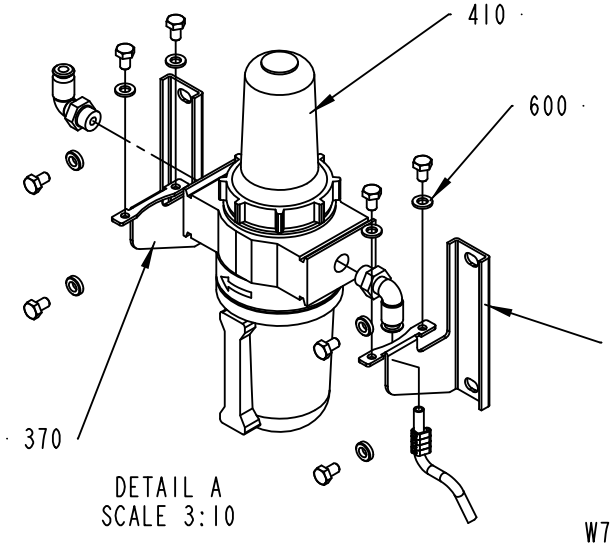

DETAIL A
SCALE 3:10

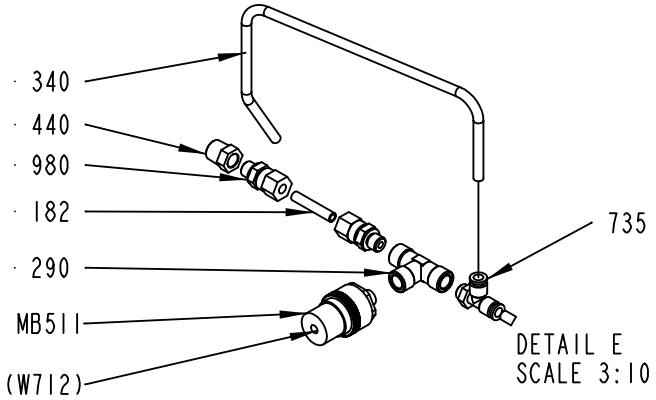

DETAIL E
SCALE 3:10

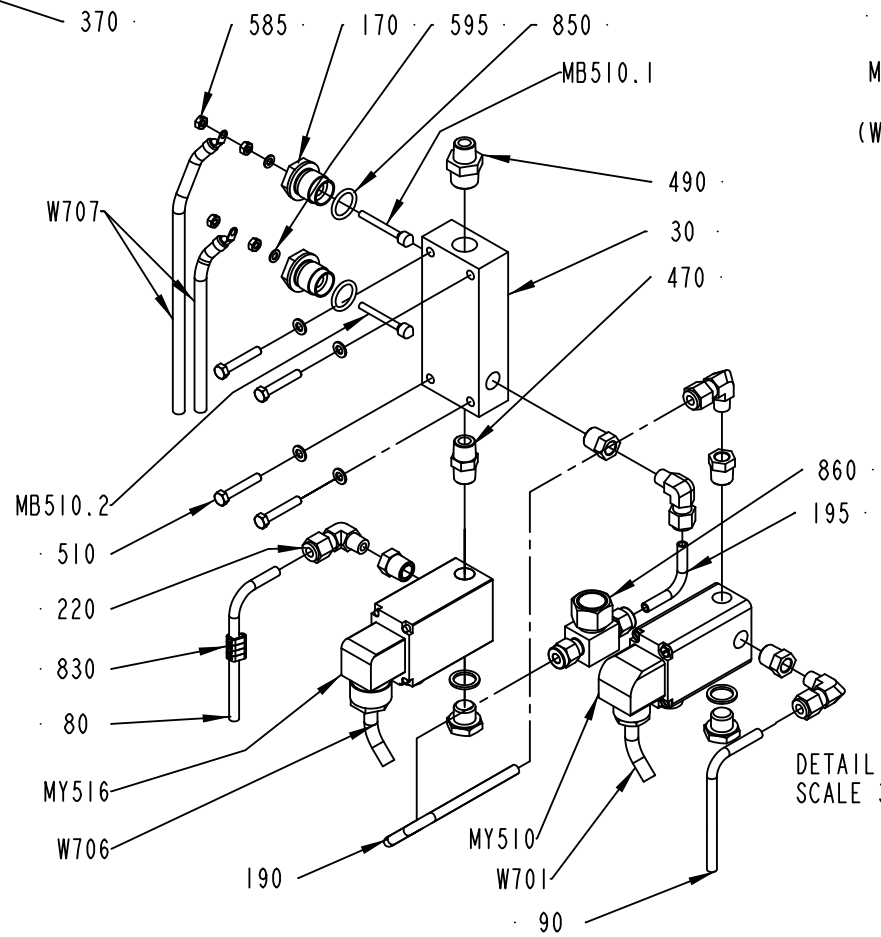

DETAIL C
SCALE 3:10

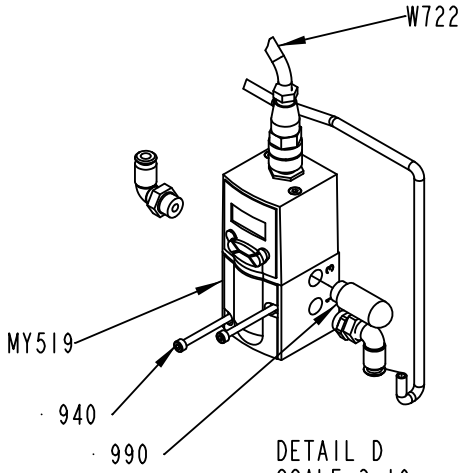

DETAIL D
SCALE 3:10

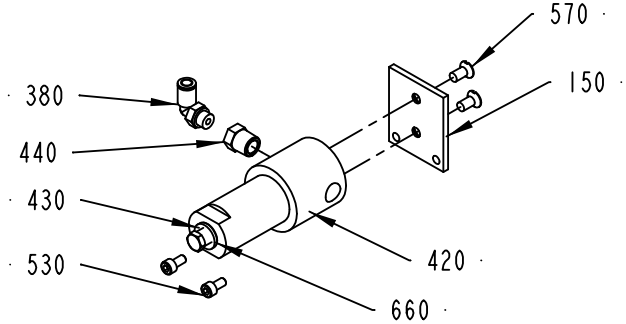

DETAIL B
SCALE 3:10

2545083-2
ECM 266817

Pos	Part No	UN	Qty	Description	Page No
- (Cont'd)					
960	312155-0287		2	SCREW DIN 7991 MF6S M4X8 A4 70	
980	90030-0184		2	CONN. STR. GA-6-G1/8	
990	90328-0026		1	SILENCER G1/4"	
MB511	90274-0066		1	PRESSURE SWITCH, 5,516 - 689,5 KPA	
MB521	90458-2619		1	FLOW METER, D-6230-HGB-BB-AV-99-0-N2	
MY510	979956-0000		1	SOLENOID VALVE	
MY513	90042-0171		1	SOLENOID VALVE BURKERT	
	90042-0466		*1*	*DIAPHRAGM 330.95.2 VITON*	
MY514	90042-0171		1	SOLENOID VALVE BURKERT	
	90042-0466		*1*	*DIAPHRAGM 330.95.2 VITON*	
MY515	90042-0171		1	SOLENOID VALVE BURKERT	
	90042-0466		*1*	*DIAPHRAGM 330.95.2 VITON*	
MY516	90042-0171		1	SOLENOID VALVE BURKERT	
	90042-0466		*1*	*DIAPHRAGM 330.95.2 VITON*	
MY517	90042-0171		1	SOLENOID VALVE BURKERT	
	90042-0466		*1*	*DIAPHRAGM 330.95.2 VITON*	
MY519	90459-1420		1	PROPORTIONAL VALVE 0 - 10V/0-6 BAR	
	90458-1262		*1*	*CONNECTOR 131028001 FOR PROP. VALVE*	
MB510.1	567070-0014		2	ELECTRODE	
MB510.2	567070-0014		1	ELECTRODE	
W701	351150-0403	MM	720	CABLE OLFLEX 3X0,75 MM2 LIGHT/GREY	
W703	351150-0403	MM	980	CABLE OLFLEX 3X0,75 MM2 LIGHT/GREY	
W704	351150-0403	MM	780	CABLE OLFLEX 3X0,75 MM2 LIGHT/GREY	
W705	351150-0403	MM	780	CABLE OLFLEX 3X0,75 MM2 LIGHT/GREY	
W706	351150-0403	MM	580	CABLE OLFLEX 3X0,75 MM2 LIGHT/GREY	
W707	351150-0404	MM	630	CABLE OLFLEX 4X0,75 MM2 LIGHT/GREY	
W715	351150-0425	M	4	CABLE OLFLEX 25X0,75 MM2 LIGHT/GREY	
W717	351150-0403	MM	860	CABLE OLFLEX 3X0,75 MM2 LIGHT/GREY	
W721	90220-0072	M	7	SCR. CABLE 4X0,34MM2	
W721.1	353300-0006	MM	150	SHRINKABLE HOSE	
W722	90220-0072	M	7	SCR. CABLE 4X0,34MM2	
W722.1	353300-0006	MM	150	SHRINKABLE HOSE	

Pos	Part No	UN	Qty	Description	Page No

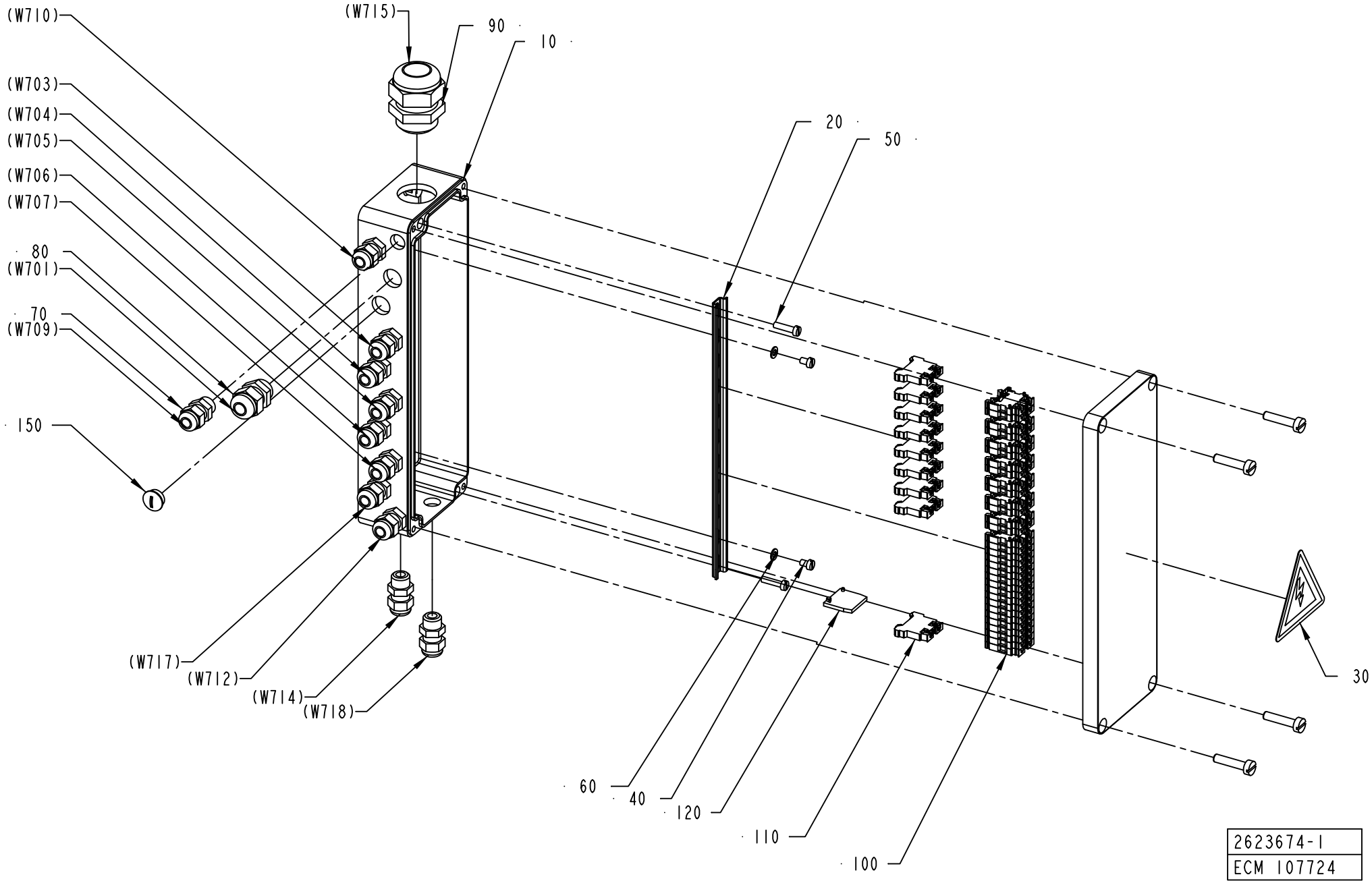
(W710)
(W715)
90
10
(W703)
(W704)
(W705)
(W706)
(W707)
20
50
80
(W701)
70
(W709)
150
(W717)
(W712)
(W714)
(W718)
30
60
40
120
110
100
2623674-1
ECM 107724

ECM: 227627 - 20051011
Group number: 2623674-0100
Assembly Drawing: 2623674-1_1_AA

Pos	Part No	UN	Qty	Description	Page No
-					
010	979475-0000		1	CONNECTION BOX	
020	979476-0000		1	RAIL	
030	90194-0016		1	WARNING SIGN, RISK OF ELECTRIC SHOCK	
040	312125-0285		2	SCREW ISO 1207 M4X6 A4	
050	312125-0293		2	SCREW ISO 1207 M4X16 A4	
060	315105-0136		2	WASHER BRB 4,3X8 RFR	
070	352103-0096		5	CABLE GLAND, ST 7, PR 12,5/PG7	
080	352103-0101		7	CABLE GLAND, ST 9, PR15,2/PG9	
090	352103-0116		1	CABLE GLAND, ST 21, PR28,3/PG21	
100	90077-0123		32	FEED THROUGH TERMINAL, 017596	
110	90135-0042		9	EARTH TERMINAL, 130336	
120	90077-0122		1	END PLATE AP/AKZ 2,5	
130	359011-0807		2	MARKING PLATES 5-FW 1-50	
140	359011-0819		1	MARKING PLATES 5-GW (EARTH)	
150	90002-0018		1	BLANK-OFF PLUG, PR 12,5 SKINDICHT-BLK7	
160	351160-0102	MM	1200	CABLE (1UNIT = 100M)	

Pos	Part No	UN	Qty	Description	Page No

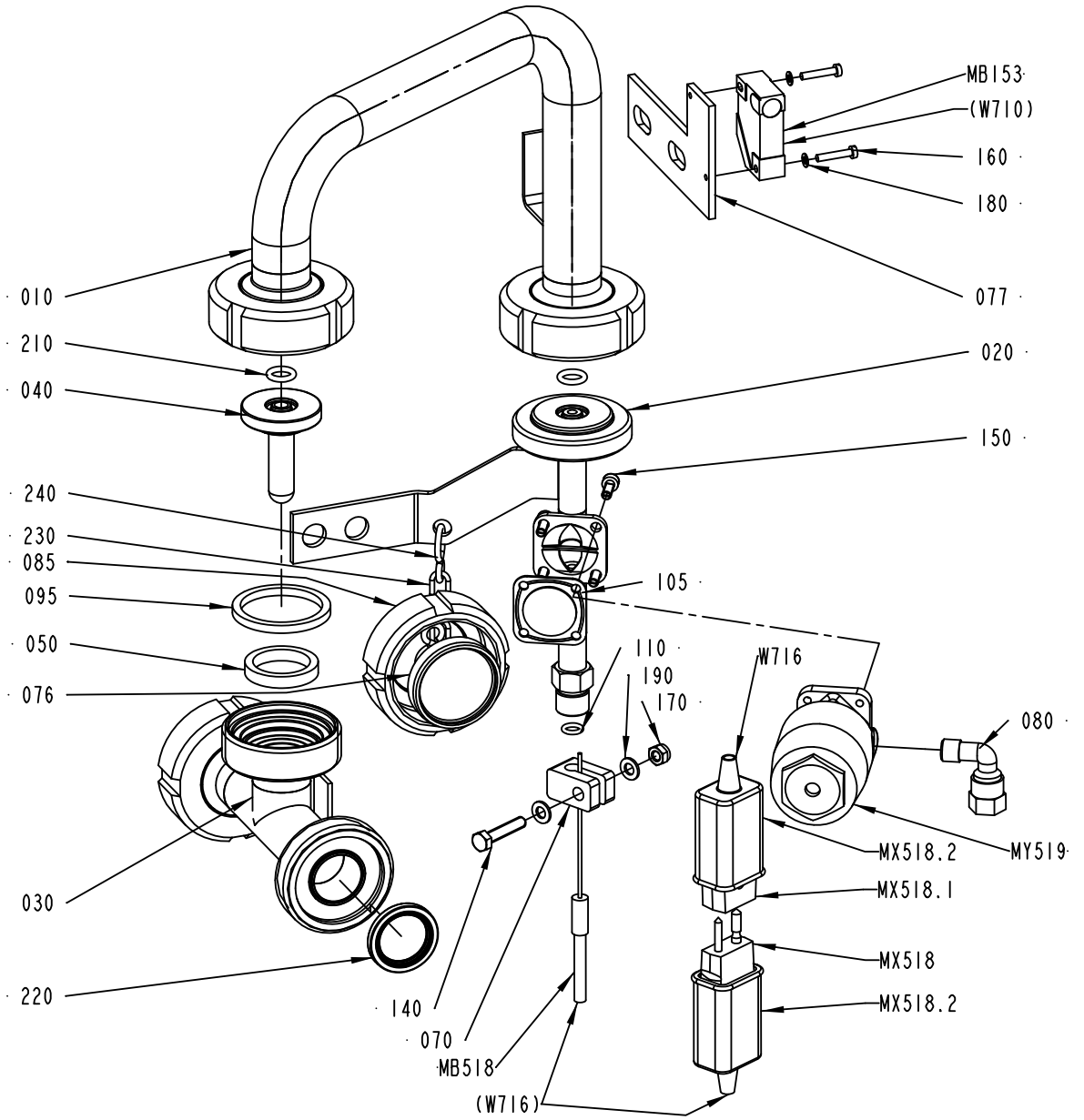
MB153
(W710)
160
180
077
010
210
040
020
150
240
230
085
095
105
050
076
110
190
170
W716
080
030
220
140
070
MB518
(W716)
MX518.2
MY519
MX518.1
MX518
MX518.2
2545080-2
ECM 254456

ECM: 291010 - 20061205
Group number: 2545080-0200
Assembly Drawing: 2545080-2_1_AA

Pos	Part No	UN	Qty	Description	Page No
-					
010	2545132-0000		1	TRANSITION PIPE	
020	2814877-0000		1	VALVE BODY	
030	1539597-0000		1	T-PIECE	
040	2545134-0000		1	SPRAY NOZZLE	
040	1539606-0005		1	SPRAY NOZZLE	
040	1539606-0004		1	SPRAY NOZZLE	
040	1539606-0003		1	SPRAY NOZZLE	
040	1539606-0002		1	SPRAY NOZZLE	
050	12242-0001		1	GASKET 32X25X5,5	
070	978440-0000		1	CRAMP	
076	2545155-0000		1	PLUG	
077	979814-0000		1	BRACKET	
080	90030-0137		1	CONN. ELBOW WA 6-R1/8	
085	90217-0203		1	UNION NUT, 1 APV, 07-01-276/17	
095	315229-0104		1	GASKETS, 35,8X42,8X3,7 MM 1"1/2 FD	
105	90600-0493		1	DIAPHRAGM 3A, 600-008-M5A	
110	315205-0505		1	O-RING 6,07X1,78 MM	
140	312105-0333		1	SCREW M6S ISO 4017 M5X25 A480	
150	312115-0291		4	SCREW ISO4762 M4X12 A4 80	
160	312125-0228		2	SCREW ISO 1207 M3X16 A4	
170	312812-0314		1	HEXAGON NUT, NY-LOCK M5 A480	
180	315105-0124		2	WASHER BRB 3,2X6 RFR	
190	315105-0146		2	WASHER BRB 5,3X10 RFR	
210	315204-0207		2	O-RING 8,3X2,4 MM	
220	90217-0347		1	GASKET 32X22,6X3,6 MM	
230	90155-0008	MM	200	HANGER CHAIN, 18	
240	209183-0000		2	RING	
MY519	90600-0491		1	ACTUATOR, 9650-0089-Z-I-OTI	
MX518	90326-0022		1	PLUG, MALE YELLOW CR-AL	
MB518	90326-0060		1	THERMOCOUPLE, CR-AL	
MB153	90044-0194		1	PROX.SW. IN5329/IN3002-BPKG(EX90044-104)	
MX518.1	90326-0020		1	PLUG, FEMALE YELLOW CR-AL	
MX518.2	90326-0012		2	PROTECTIVE COVER, T31A4618	
W716	90220-0059	MM	4500	THERMOCOUPLE CABLE K/PVC/20AWG 2X0,5MM2	

Pos	Part No	UN	Qty	Description	Page No

Machine Type	Group Description	Used-In	Group Number	Page No

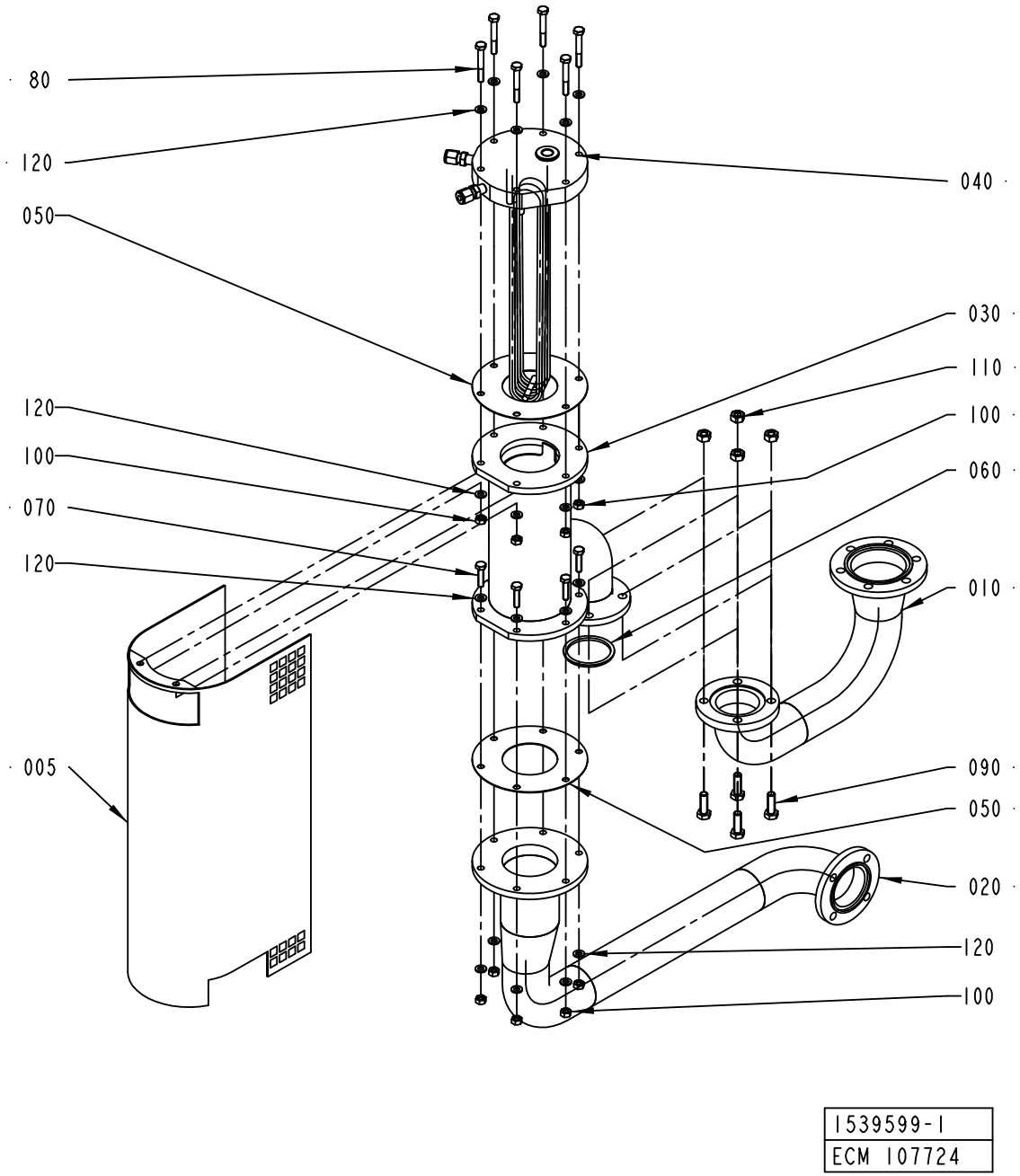
80
120
050
120
100
070
120
005
040
030
110
100
060
010
090
050
020
120
100
1539599-1
ECM 107724

ECM: 227634 - 20051011
Group number: 1539599-0100
Assembly Drawing: 1539599-1_1_AA

Pos	Part No	UN	Qty	Description	Page No
-					
005	581341-0000		1	TOUCH GUARD	
010	1539603-0000		1	PIPE	
020	1539596-0000		1	PIPE	
030	979247-0000		1	HOUSE	
040	2555310-0000		1	COIL	
050	751016-0000		2	GASKET	
060	315229-0205		1	GASKET 47,5X55,5X3,7 MM 2 INCH	
070	312105-0372		6	SCREW M6S ISO 4017 M6X25 A480	
080	312105-0378		6	SCREW M6S ISO 4014 M6X40 A480	
090	312105-0453		4	SCREW M6S ISO 4017 M8X25 A480	
100	312605-0316		12	HEXAGON NUT, M6M M6 A280	
110	312605-0318		4	HEXAGON NUT, M6M M8 A280	
120	315105-0153		24	WASHER BRB 6,4X12 RFR	

Pos	Part No	UN	Qty	Description	Page No

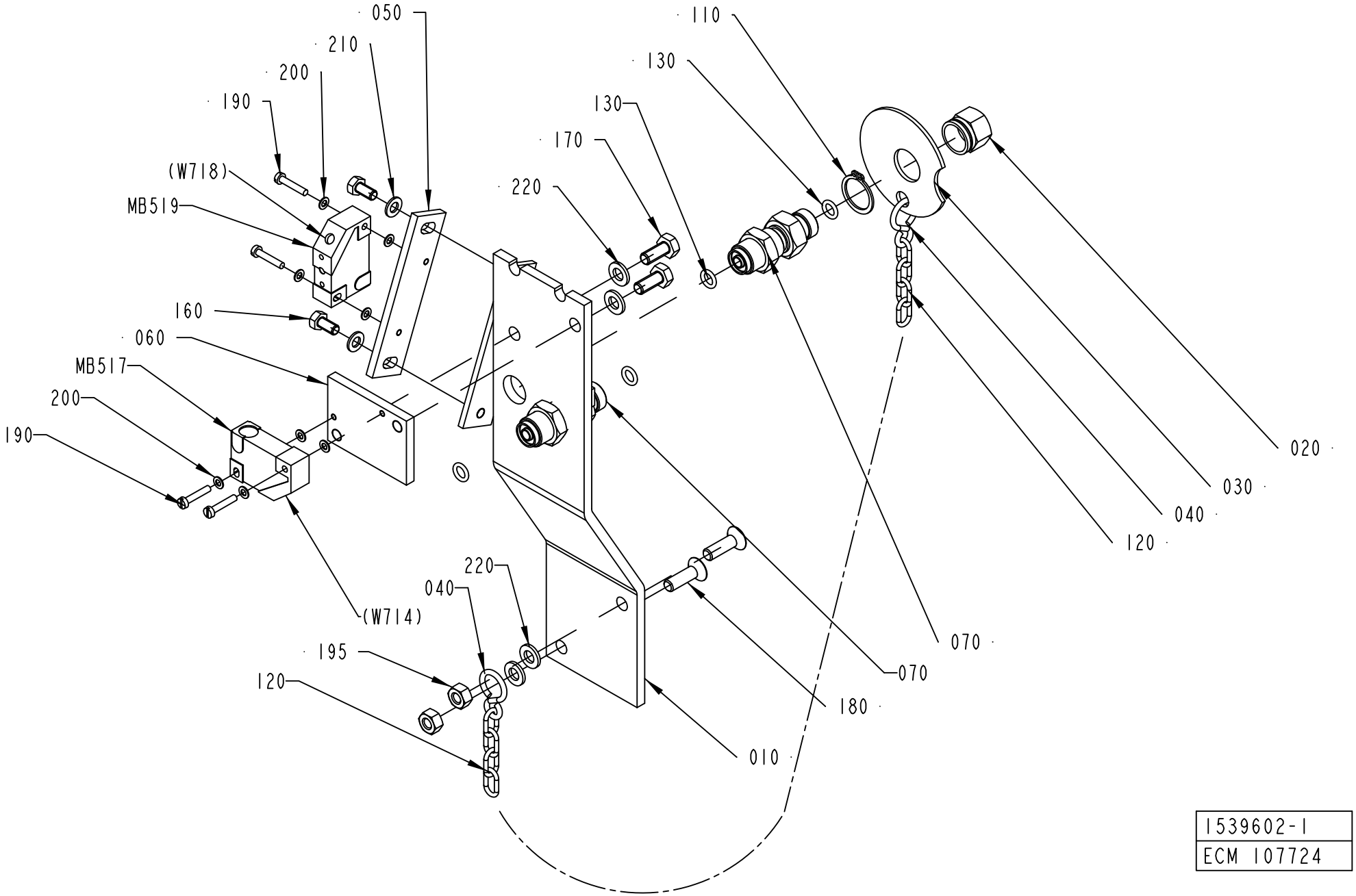

1539602-1
ECM 107724

ECM: 189532 - 20051011
Group number: 1539602-0100
Assembly Drawing: 1539602-1_1_AA

Pos	Part No	UN	Qty	Description	Page No
-					
010	1539600-0000		1	SUPPORT	
020	978380-0000		1	BLIND PLUG	
030	978381-0000		1	WASHER 56X2MM	
040	209183-0000		2	RING	
050	927081-0000		1	SUPPORT	
060	979254-0000		1	SUPPORT	
070	90030-0549		2	CONN. STRAIGHT, BULKHEAD, SS-4-VCO-61	
110	90141-0017		1	RETAINING RING FOR SHAFT DIN 471 17 A2	
120	90155-0008	MM	200	HANGER CHAIN, 18	
130	315205-0505		4	O-RING 6,07X1,78 MM	
160	312105-0325		2	SCREW M6S ISO 4017 M5X10 A480	
170	312105-0367		2	SCREW M6S ISO 4017 M6X14 A480	
180	312155-0370		2	SCREW DIN 7991 MF6S M6X20 A4 70	
190	312125-0228		4	SCREW ISO 1207 M3X16 A4	
195	312605-0316		2	HEXAGON NUT, M6M M6 A280	
200	315105-0124		4	WASHER BRB 3,2X6 RFR	
210	315105-0146		2	WASHER BRB 5,3X10 RFR	
220	315105-0153		4	WASHER BRB 6,4X12 RFR	
MB519	90044-0104		1	PROX.SWITCH IFM IN 3002(RP 90044-194)	
MB517	90044-0104		1	PROX.SWITCH IFM IN 3002(RP 90044-194)	

Pos	Part No	UN	Qty	Description	Page No

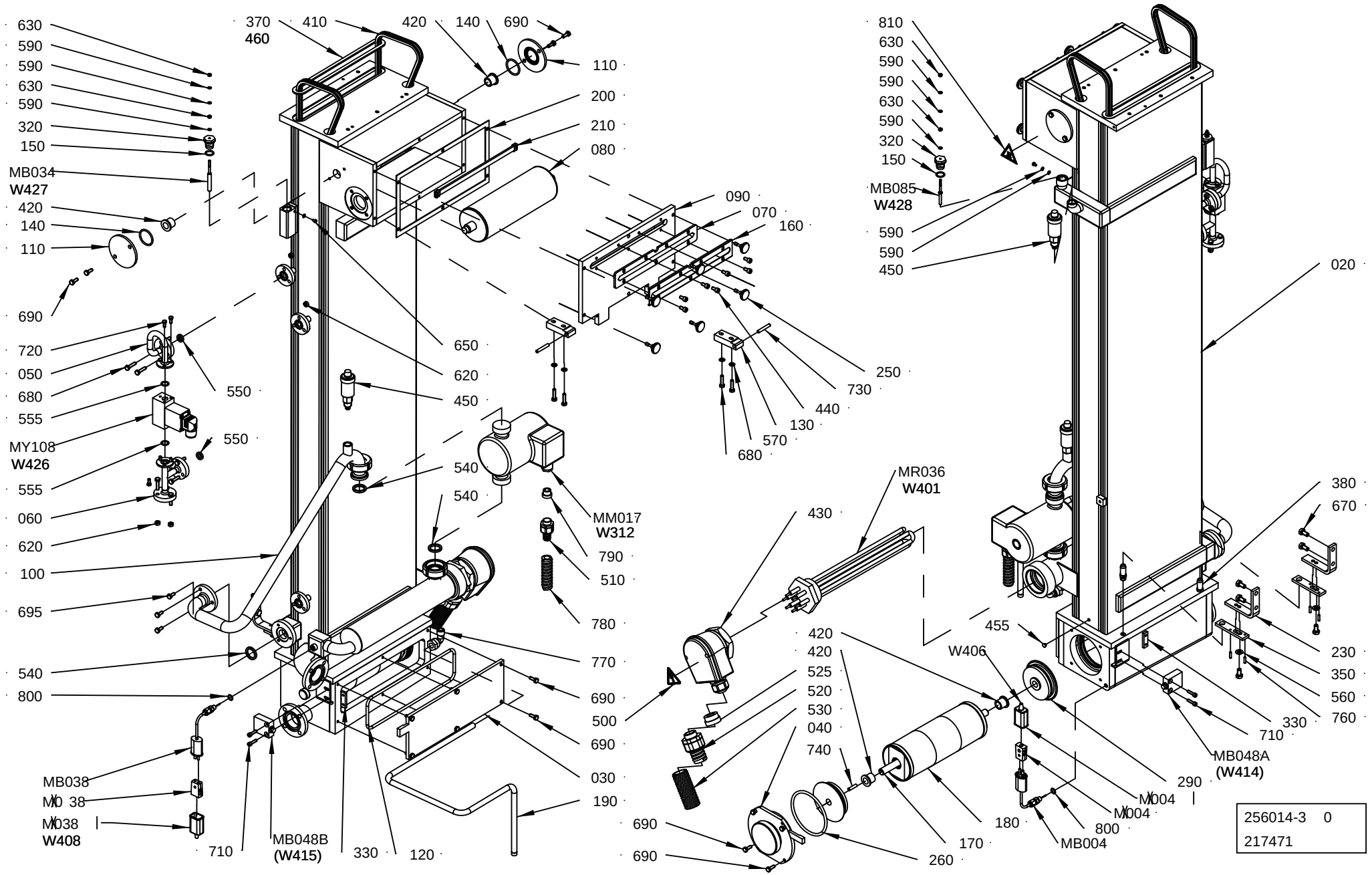

256014-3 0
217471

ECM: 276145 - 20070126
Group number: 256014-0900
Assembly Drawing: 256014-30_1_AA

This list covers pages from 1-20 to 1-31

Pos	Part No	UN	Qty	Description	Page No
NOPT TBA 0200B, NOPT TBA 0180B, NOPT TBA 0200S, NOPT TBA 0200M, NOPT TBA 0160S, NOPT TBA 0125S, NOPT TBA 0100B, NOPT TBA 0330S, NOPT TBA 0236B, NOPT TBA 0250B (See drawing on pages: 1-20, 1-22, 1-24)					
MB034	567070-0019		1	ELECTRODE	
NOPT TBA 0300S, NOPT TBA 0284B, NOPT TBA 0250S (See drawing on pages: 1-20, 1-22, 1-24)					
MB034	567070-0011		1	ELECTRODE	
PT19 TBA 0125S, PT19 TBA 0100B, PT19 TBA 0330S, PT19 TBA 0200M, PT19 TBA 0200B, PT19 TBA 0180B, PT19 TBA 0160S, PT19 TBA 0250B, PT19 TBA 0236B, PT19 TBA 0200S (See drawing on pages: 1-26, 1-28, 1-30)					
010	530600-0100		1	GUIDING PULLTAB	**1-33**
MB034	567070-0019		1	ELECTRODE	
PT19 TBA 0300S, PT19 TBA 0284B, PT19 TBA 0250S (See drawing on pages: 1-26, 1-28, 1-30)					
010	530600-0100		1	GUIDING PULLTAB	**1-33**
MB034	567070-0011		1	ELECTRODE	
Common Parts					
020	1296855-0000		1	BATH	
030	578492-0000		1	LID	
040	578491-0000		1	LID	
050	1490840-0000		1	PIPE	
060	1490839-0000		1	PIPE	
070	2795368-0000		1	SEAL	
080	1282581-0000		1	BENDING ROLLER	
090	2685680-0000		1	LID	
100	2528094-0000		1	PIPE	
110	578490-0000		2	LID	
120	578494-0000		1	O-RING 226X5,7 FPM	
130	979559-0000		2	HINGE	
140	927422-0014		2	O-RING 34.2X3 SILICONE	
150	927421-0004		2	O-RING 15.3X2.4 SILICONE	
160	2685681-0000		1	LID	
170	578493-0000		1	SHAFT	
180	566191-0000		1	BENDING ROLLER	
190	2532923-0000		1	PIPE	
200	751331-0000		1	GASKET	
210	456995-0000		1	CARRIER	
230	456472-0000		2	ANGLE	
250	751680-0000		6	SCREW	
260	578495-0000		1	O-RING	
290	578486-0000		2	WHEEL	
320	560931-0000		2	BRACKET	
330	490890-0000		2	NUT PLATE	
350	456474-0000		2	ADJUSTMENT PLATE	
370	256005-0000		1	GASKET	
380	247248-0000		2	PIN	
410	90288-0066		2	ROLLER CHAIN, SINGLE 3/8 -365	
420	90240-0146		4	FLANGE BUSHING, 15X21X20 MM	
430	90206-0326		1	JUNCTION BOX FOR 90206-56	
440	312115-0366		7	SCREW ISO4762 M6X12 A4 80	
450	90187-0105		2	PURGING VALVE, G3/8 FOR WATER	
455	90261-0071		1	PLUG, BLIND, PLASTIC, NO. GPN500B58	
460	90153-0016		1	ADHESIVE,TUBE 100G RHODORSIL CAF 3	
470	90153-0023		1	ADHESIVE, SILICON 251470 TUB 90CC	
500	359705-0015		1	WARNING SIGN ISO, RISK OF ELECTRIC SHOCK	
510	353243-0003		1	HOSE GLAND W/O INSERT PG11 EXTENDED	
520	353243-0007		1	HOSE GLAND W/O INSERT PG21 EXTENDED	
525	353249-0016		1	INSERT, SINGEL HOLE, EK 155/18	
530	90152-0070	MM	800	METAL HOSE, 32,5X26, UL 2621	
540	315229-0103		3	GASKETS, 23,1X30,1X3,7 MM 1" FDA	
550	315229-0101		2	GASKETS, 10,4X17,4X3,7 MM 1/2" FDA	
555	927421-0003		2	O-RING 13.3X2.4 SILICONE	
560	315105-0165		2	WASHER BRB 8,4X16 RFR	
570	315105-0153		4	WASHER BRB 6,4X12 RFR	
590	315105-0136		9	WASHER BRB 4,3X8 RFR	
620	312605-0316		9	HEXAGON NUT, M6M M6 A280	
630	312605-0312		4	HEXAGON NUT, M6M M4 A280	
650	312125-0285		2	SCREW ISO 1207 M4X6 A4	
670	312105-0449		6	SCREW M6S ISO 4017 M8X16 A480	
680	312105-0372		13	SCREW M6S ISO 4017 M6X25 A480	
690	312105-0368		14	SCREW M6S ISO 4017 M6X16 A480	
695	312105-0367		3	SCREW M6S ISO 4017 M6X14 A480	
710	312115-0331		4	SCREW ISO4762 M5X20 A4 80	
720	312105-0327		6	SCREW M6S ISO 4017 M5X12 A480	
730	311103-0361		2	PARALLEL PIN ISO 2338 6M6X40 A1	
740	311103-0355		1	PARALLEL PIN ISO 2338 6M6X25 A1	
760	311103-0270		4	PARALLEL PIN ISO 2338 4M6X16 A1	
770	90030-0115		1	CONN. ELBOW WA 12-R3/8	
780	90152-0050	M	0.5	SPIRAL CONDUIT, 20X13, UL 1313	
790	353249-0011		1	INSERT, SINGEL HOLE, EK 153/11	
800	315234-0109		2	WASHER,PL.RND.CU.10,3/13,5 H=1,0	
810	359710-0001		1	WARNING SIGN ISO, HOT SURFACE	
MY108	544906-0000		1	SOLENOID VALVE	
	90042-0465		*1*	*O-RING VITON 17,17X1,78*	
	90042-0464		*1*	*DIAPHRAGM VITON 1211321*	
MX038	90326-0020		1	PLUG, FEMALE YELLOW CR-AL	

Machine Type | Group Description | Used-In | Group Number | Page No

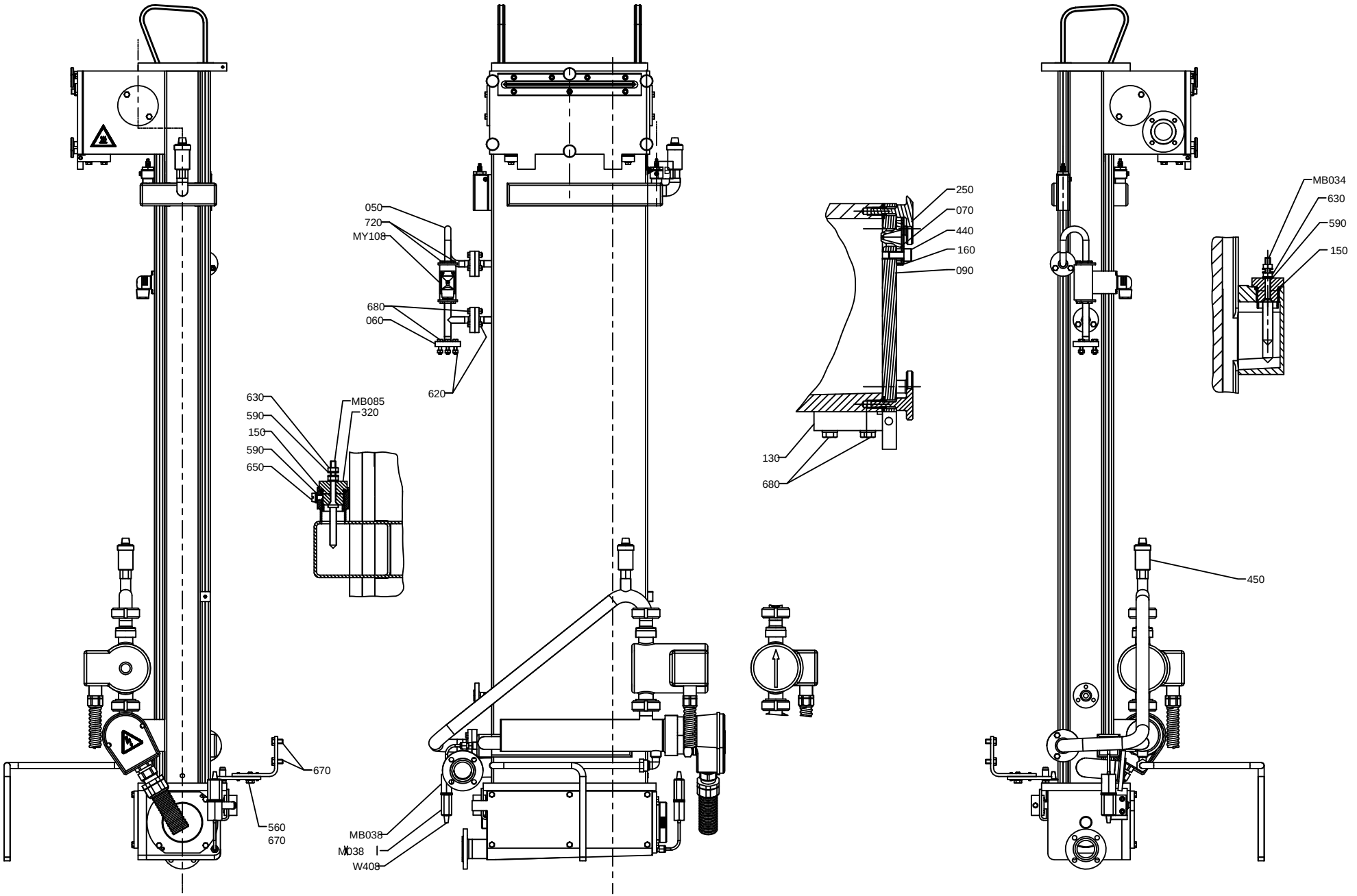
050
720
MY108
680
060
620
630
590
150
590
650
MB085
320
670
560
670
MB038
MB038
W408
250
070
440
160
090
130
680
MB034
630
590
150
450

Pos	Part No	UN	Qty	Description	Page No
Common Parts (Cont'd)					
MR036	90206-0070		1	HEATING ELEMENT 6000W 380/220V	
	90269-0308		*1*	*GASKET 59X68X3 MM*	
	90206-0326		*1*	*JUNCTION BOX FOR 90206-56*	
MM017	2526863-0000		1	PUMP	
MB085	979500-0001		1	ELECTRODE	
MB048B	90044-0084		1	LIMIT SW. 14 CE1-4	
MB048A	90044-0084		1	LIMIT SW. 14 CE1-4	
MB038	90326-0052		1	THERMO ELEMENT	
MB004	90326-0052		1	THERMO ELEMENT	
MX038.1	90326-0012		1	PROTECTIVE COVER, T31A4618	
MX004.1	90326-0012		1	PROTECTIVE COVER, T31A4618	
W312	351150-0412	M	5	CABLE OLFLEX 3X1,5 MM2 LIGHT/GREY	
W401	351120-0267	M	3.9	CABLE SILFLEX SIHF 4X6 00460333	
W406	90220-0059	M	3.3	THERMOCOUPLE CABLE K/PVC/20AWG 2X0,5MM2	
W408	90220-0059	M	3.2	THERMOCOUPLE CABLE K/PVC/20AWG 2X0,5MM2	
W426	351150-0403	M	3	CABLE OLFLEX 3X0,75 MM2 LIGHT/GREY	
W427	351150-0431	M	3.3	CABLE OLFLEX 2X0,75 MM2 LIGHT/GREY	
W428	351150-0431	M	3.4	CABLE OLFLEX 2X0,75 MM2 LIGHT/GREY	

Pos	Part No	UN	Qty	Description	Page No

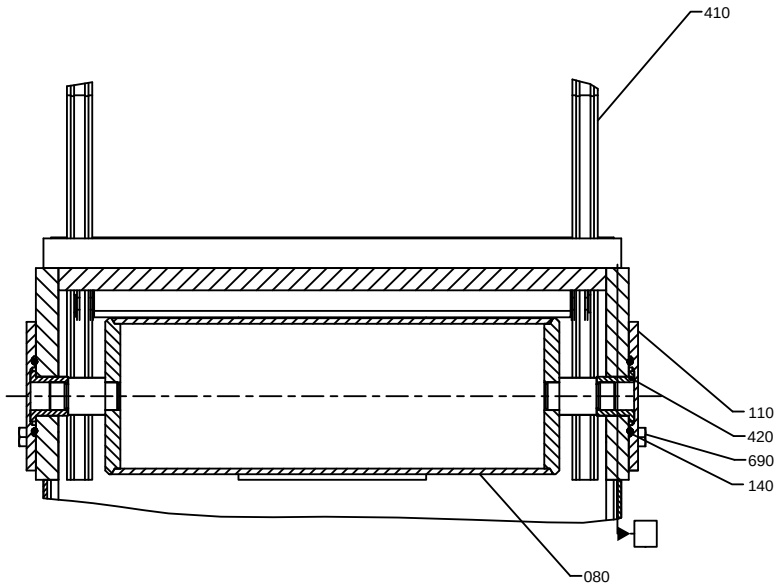
410
110
420
690
140
080

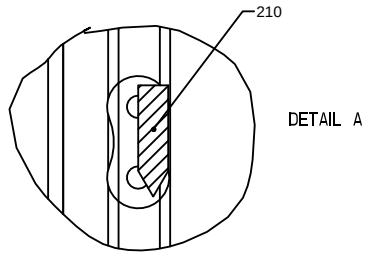
210
DETAIL A

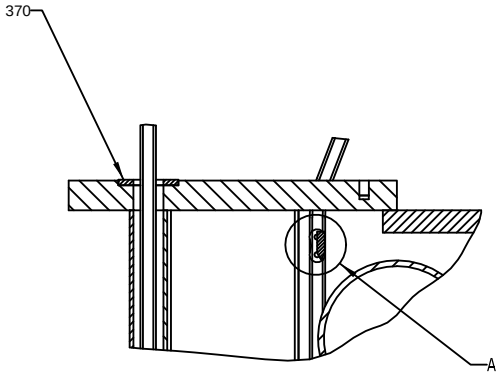
370
A

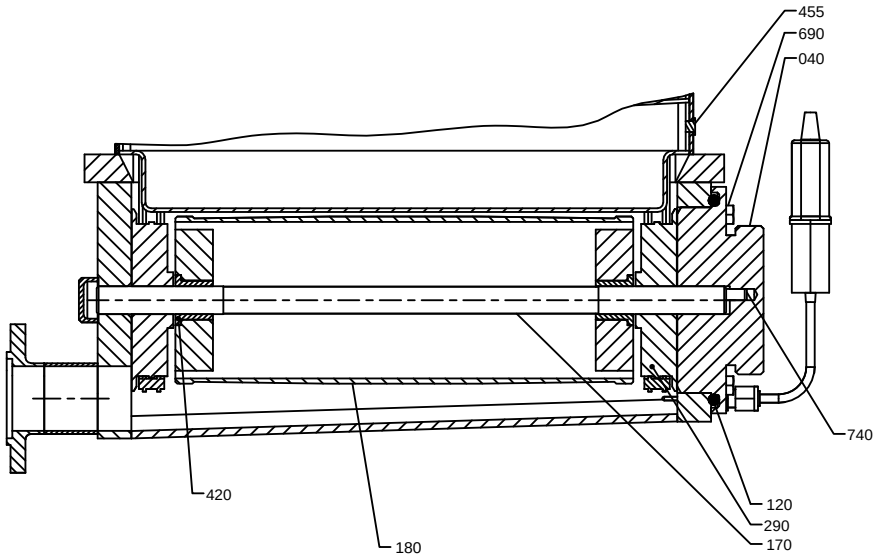
455
690
040
740
420
180
120
290
170

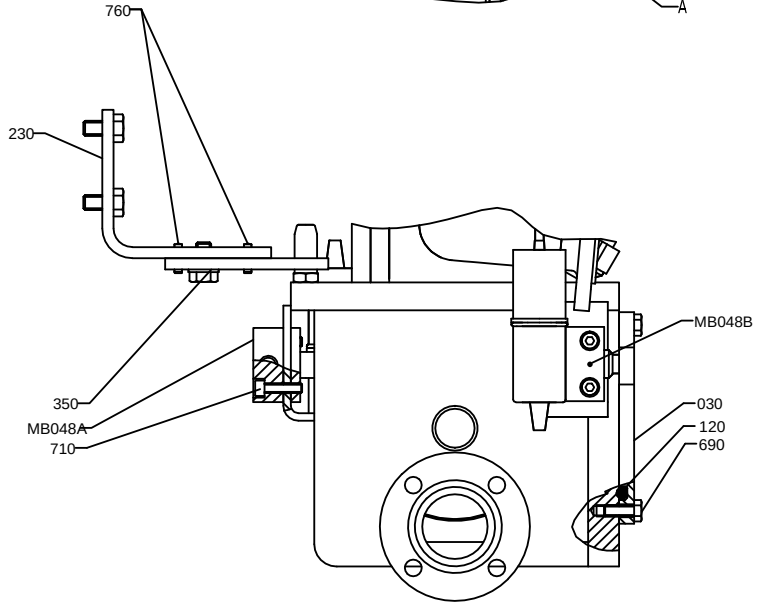
760
230
MB048B
350
MB048A
710
030
120
690

ECM: 276145 - 20070126
Group number: 256014-0900
Assembly Drawing: 256014-30_3_AA

This list covers pages from 1-20 to 1-31

Pos	Part No	UN	Qty	Description	Page No	Pos	Part No	UN	Qty	Description	Page No

SEE PREVIOUS LISTS PAGES: 1-21, 1-23.

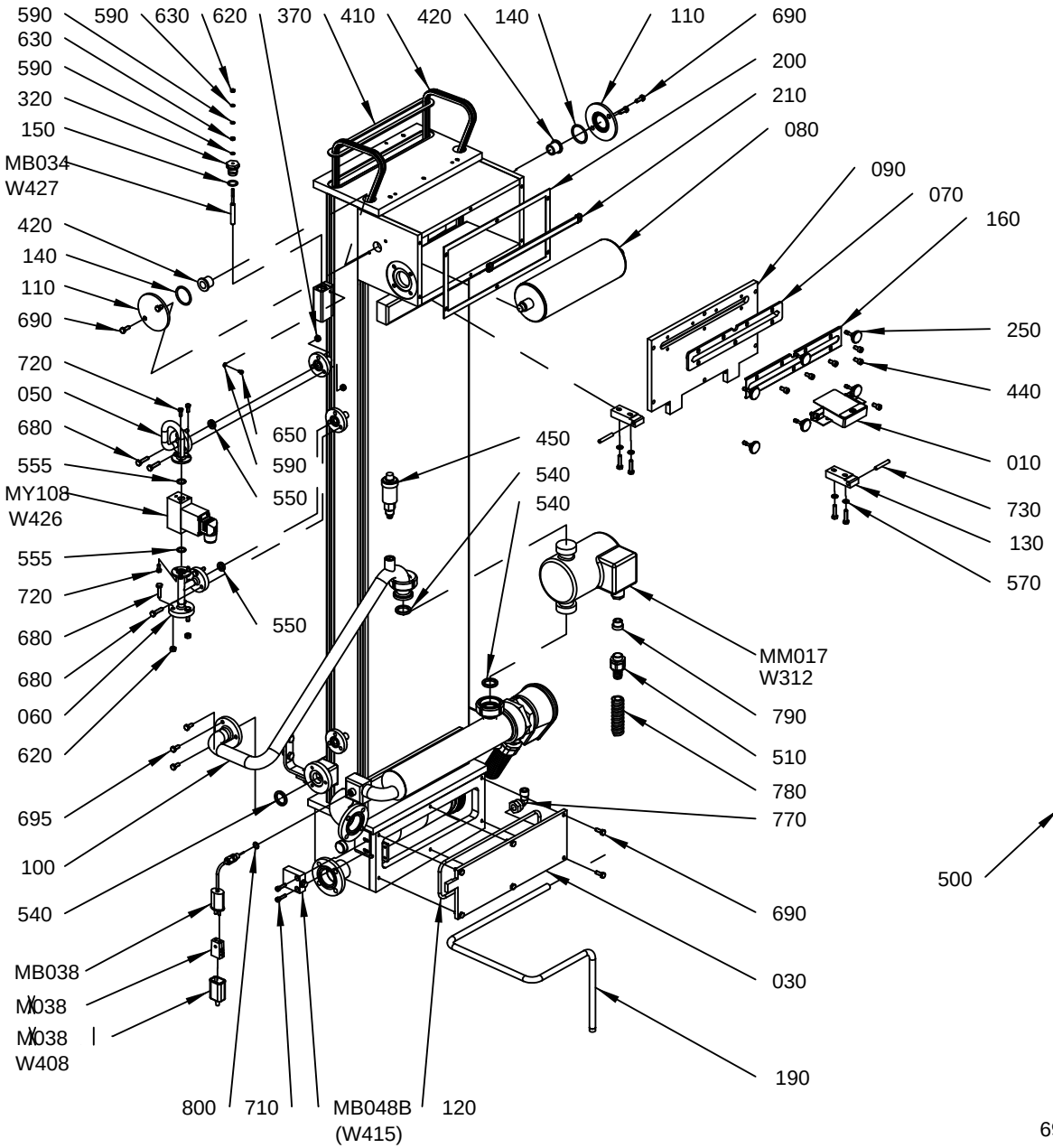

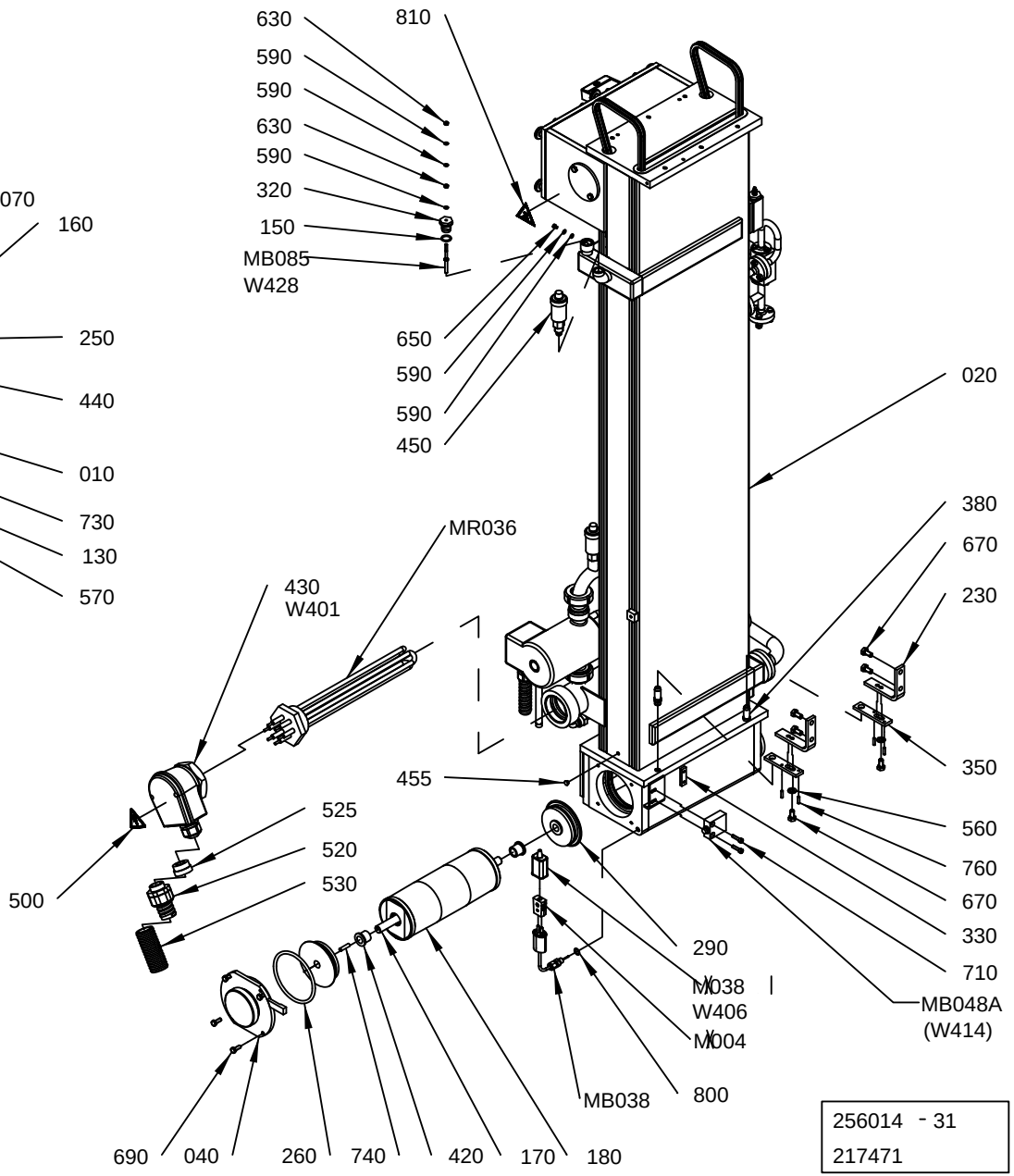

256014 - 31
217471

Pos	Part No	UN	Qty	Description	Page No	Pos	Part No	UN	Qty	Description	Page No

SEE PREVIOUS LISTS PAGES: 1-21, 1-23.

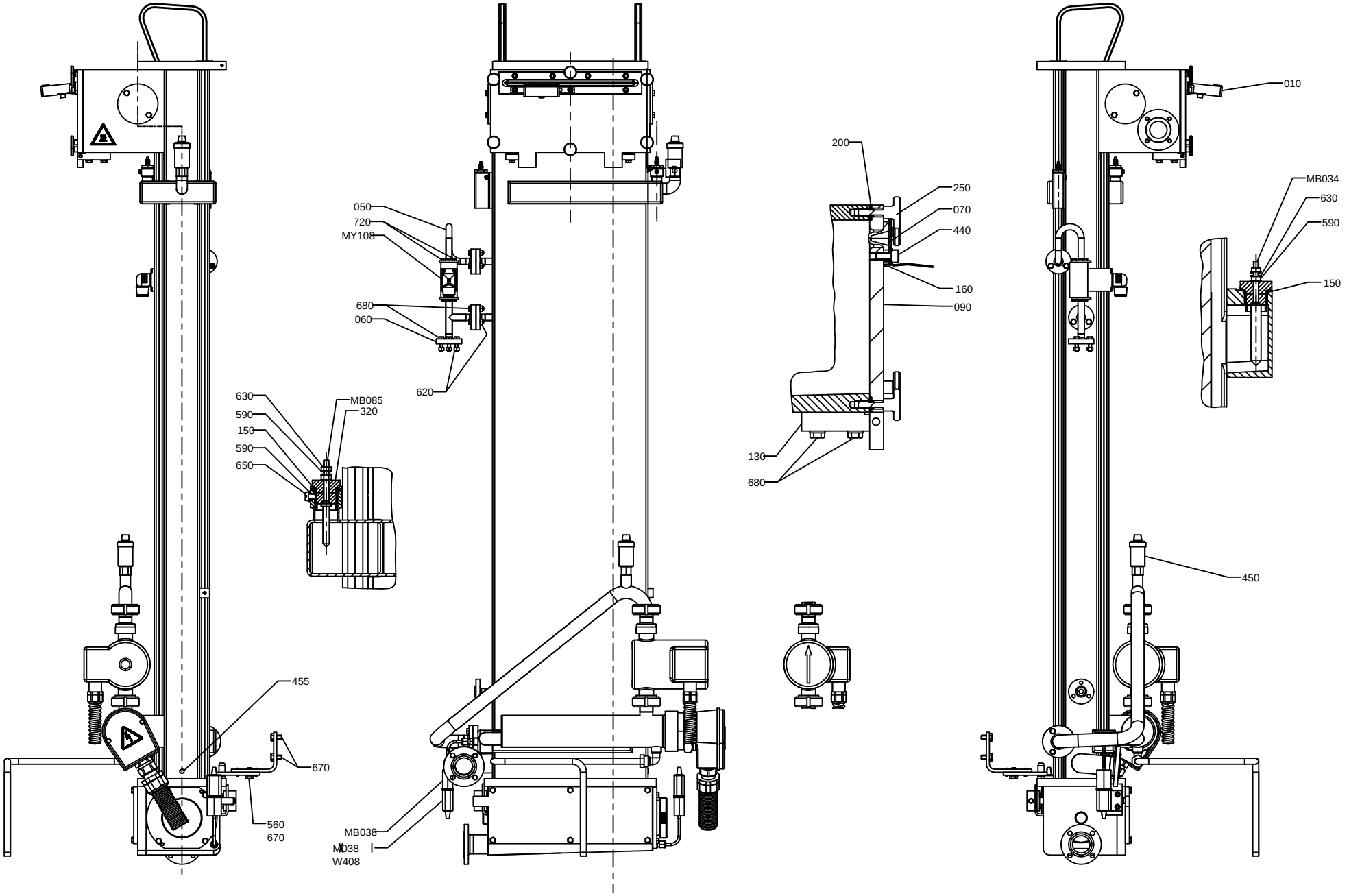
050
720
MY108
680
060
620
630
590
150
590
650
MB085
320
455
670
560
670
MB038
M038
W408
200
250
070
440
160
090
130
680
010
MB034
630
590
150
450

Pos	Part No	UN	Qty	Description	Page No	Pos	Part No	UN	Qty	Description	Page No

SEE PREVIOUS LISTS PAGES: 1-21, 1-23.

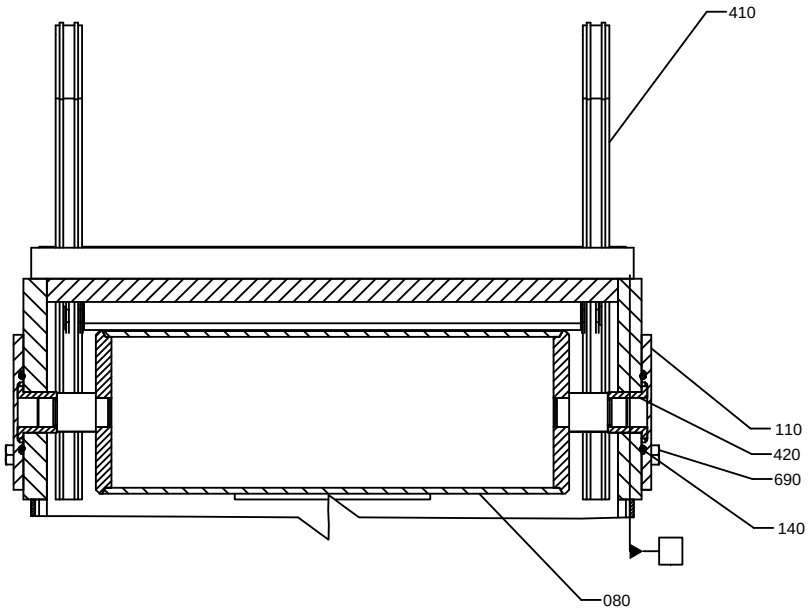
410
110
420
690
140
080

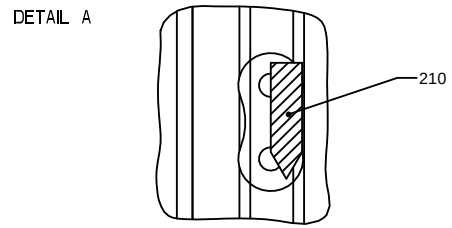
DETAIL A
210

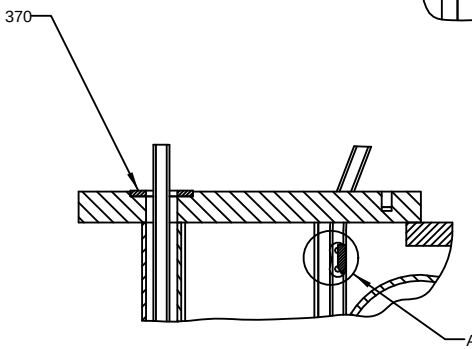
370
A

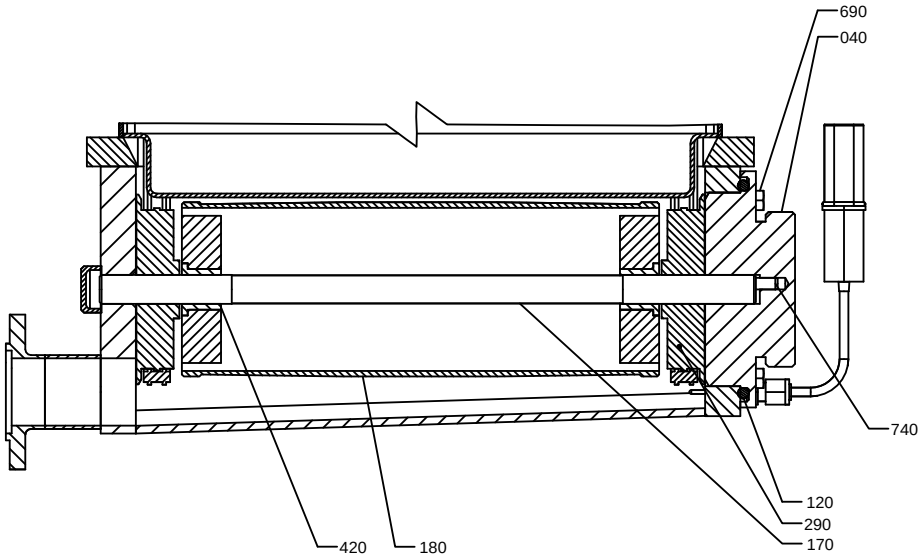
690
040
740
120
290
170
420
180

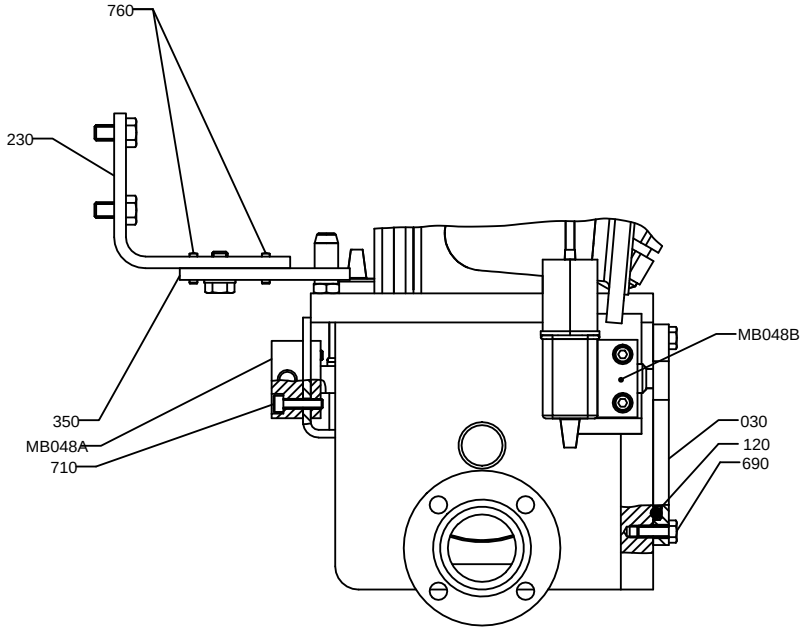
760
230
MB048B
350
MB048A
710
030
120
690

ECM: 276145 - 20070126
Group number: 256014-0900
Assembly Drawing: 256014-31_3_AA

This list covers pages from 1-20 to 1-31

Pos	Part No	UN	Qty	Description	Page No	Pos	Part No	UN	Qty	Description	Page No

SEE PREVIOUS LISTS PAGES: 1-21, 1-23.

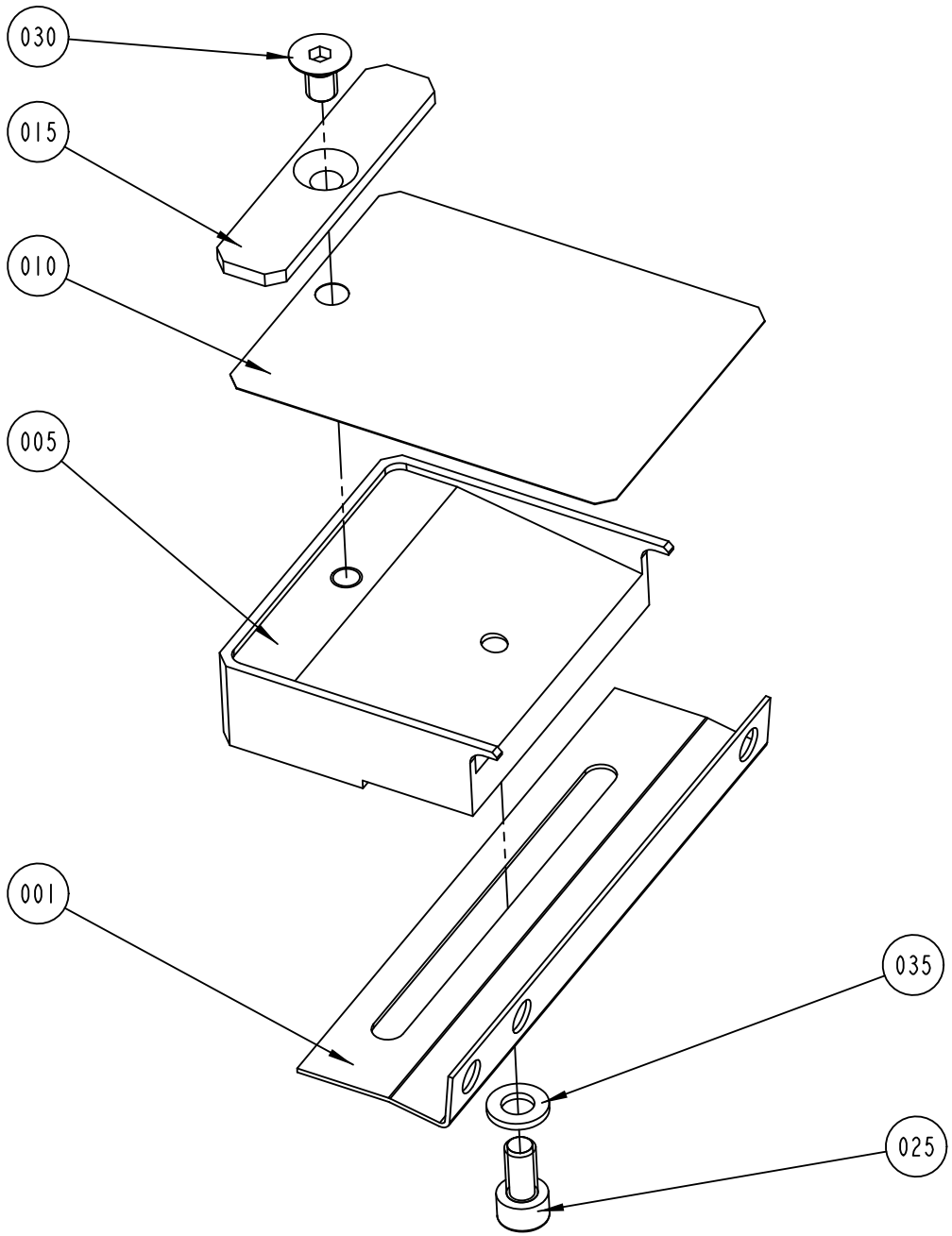

S-530600-I
ECN 72398

ECM: 72398 - 19990428
Group number: 530600-0100
Assembly Drawing: 530600-1_1_AB

Pos	Part No	UN	Qty	Description	Page No
-					
001	529146-0000		1	ANGLE BRACKET	
005	529147-0000		1	SPRING BRACKET	
010	529148-0000		1	STEERING	
015	529149-0000		1	DOLLY WASHER	
025	312115-0366		1	SCREW ISO4762 M6X12 A4 80	
030	312155-0364		1	SCREW DIN 7991 MF6S M6X10 A4 70	
035	315105-0153		1	WASHER BRB 6,4X12 RFR	

Pos	Part No	UN	Qty	Description	Page No

HOT AIR ELEMENT

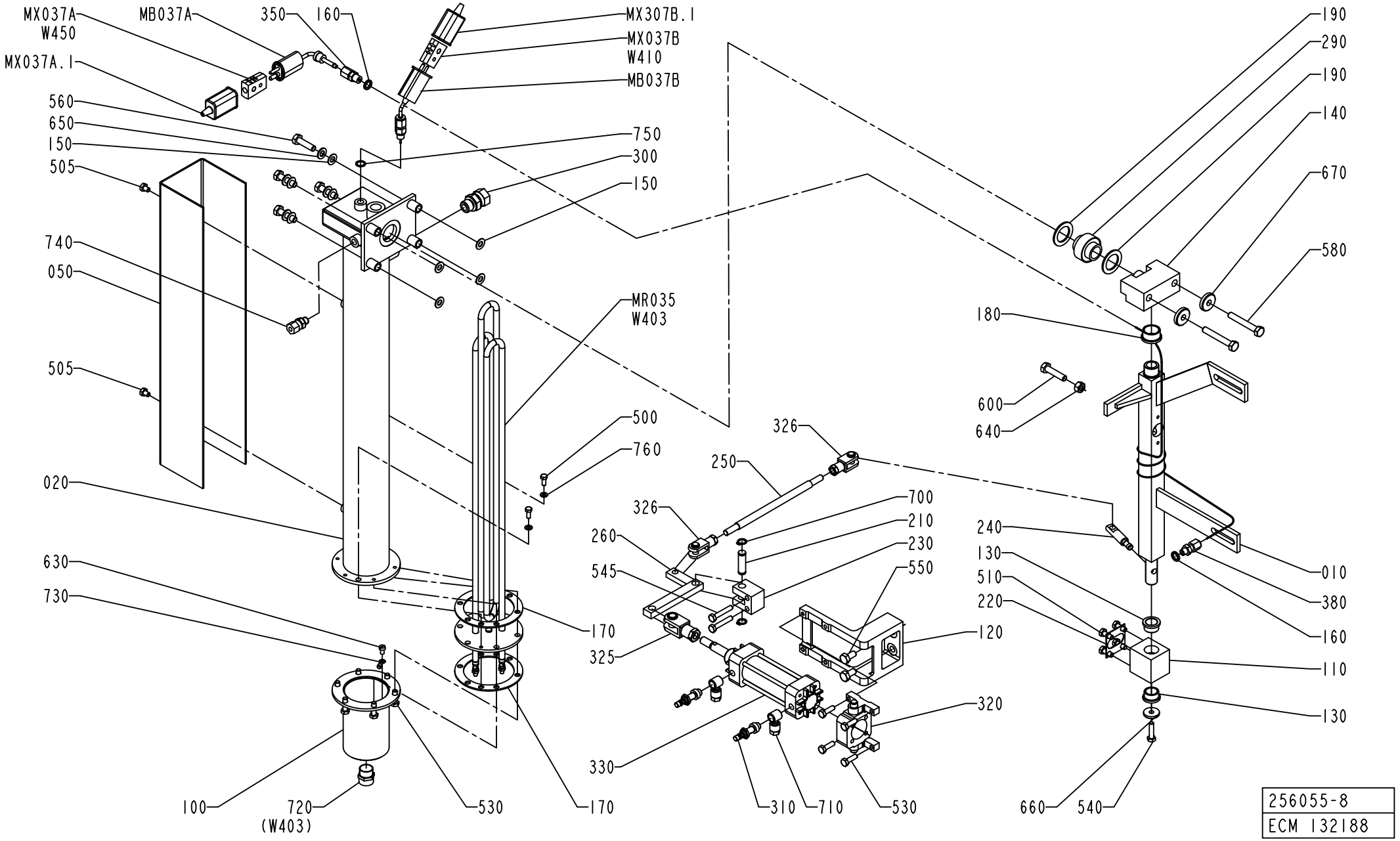

ECM: 227626 - 20051011
Group number: 256055-0700
Assembly Drawing: 256055-8_1_AB

Pos	Part No	UN	Qty	Description	Page No
-					
010	491169-0000		1	PIVOT ARM	
020	752174-0000		1	HEATING PIPE	
050	1260743-0000		1	HEAT GUARD	
100	491170-0000		1	COVER	
110	491171-0000		1	BEARING BLOCK	
120	978736-0000		1	BRACKET	
130	271269-0000		2	BUSHING	
140	272286-0000		1	AXLE SUPPORT	
150	751019-0000		8	WASHER	
160	273429-0000		2	WASHER	
170	751020-0000		2	GASKET	
180	295909-0000		1	BUSHING	
190	751023-0000		2	GASKET	
210	491931-0000		1	SHAFT	
220	491172-0000		1	GASKET	
230	491173-0000		1	BRACKET	
240	491174-0000		1	ARM	
250	491175-0000		1	LINK	
260	491177-0000		1	ARM	
290	491487-0000		1	BUSHING	
300	90030-0187		1	CONN. STR. GA-12-G3/8	
310	90235-0280		2	THROTTLE CHECK VALVE,M5	
320	90239-0460		1	BRACKET	
325	90239-0516		1	ROD END, CLEVIS WITH AXLE M10X1,25	
326	90239-0532		2	ROD END, CLEVIS WITH AXLE M8X1,25	
330	90239-0779		1	CYLINDER	
	90239-0442		*1*	*SEAL KIT*	
350	90326-0306		1	GLAND FITTING 9041-45-KS-KR.1/8" D=4,5MM	
380	90326-0304		1	LEAD IN, 9041-15-KS-UB60	
500	312105-0327		2	SCREW M6S ISO 4017 M5X12 A480	
505	312105-0362		2	SCREW M6S ISO 4017 M6X8 A480	
510	312105-0368		4	SCREW M6S ISO 4017 M6X16 A480	
530	312105-0370		10	SCREW M6S ISO 4017 M6X20 A480	
540	312105-0372		1	SCREW M6S ISO 4017 M6X25 A480	
545	312105-0376		2	SCREW M6S ISO 4014 M6X35 A480	
550	312105-0449		2	SCREW M6S ISO 4017 M8X16 A480	
560	312105-0455		4	SCREW M6S ISO 4017 M8X30 A480	
580	312105-0462		2	SCREW M6S ISO 4014 M8X55 A480	
600	312109-0457		1	SCREW M6S ISO 4017 M8X35 A480	
630	312125-0323		1	SCREW ISO 1207 M5X8 A4	
640	312605-0318		1	HEXAGON NUT, M6M M8 A280	
650	315105-0165		4	WASHER BRB 8,4X16 RFR	
660	315125-0153		1	WASHER TBRSB 6,4X22X4 A4	
670	315125-0165		2	WASHER TBRSB 8,4X26X5 A4	
700	90141-0016		2	RETAINING RING FOR SHAFT DIN 471 10 A2	
710	342797-0121		2	CONN. BANJO, RINGPIECE 6-1/8	
720	352100-0106		1	CABLE GLAND NO.18,6-10,5	
730	353101-0132		1	CABLE SHOE 1,5-2,5MM2 M5 BLUE	
740	90030-0184		1	CONN. STR. GA-6-G1/8	
750	315234-0109		1	WASHER,PL.RND.CU.10,3/13,5 H=1,0	
760	315105-0146		2	WASHER BRB 5,3X10 RFR	
MB037A	90326-0048		1	THERMOCOUPLE, 12826-31	
	90326-0304		*1*	*LEAD IN, 9041-15-KS-UB60*	
MB037B	90326-0057		1	THERMOCOUPLE, CR-AL	
MR035	90459-1094		1	HEATING ELEMENT 3000W 240V AC	
MX037A	90326-0020		1	PLUG, FEMALE YELLOW CR-AL	
MX037B	90326-0020		1	PLUG, FEMALE YELLOW CR-AL	
MX037A.1	90326-0012		1	PROTECTIVE COVER, T31A4618	
MX037B.1	90326-0012		1	PROTECTIVE COVER, T31A4618	
W403	351120-0145	M	6	CABLE SILFLEX SIHF 3X2,5 0046020	
W410	90220-0059	MM	3500	THERMOCOUPLE CABLE K/PVC/20AWG 2X0,5MM2	
W450	90220-0059	MM	3500	THERMOCOUPLE CABLE K/PVC/20AWG 2X0,5MM2	

Machine Type | Group Description | Used-In | Group Number | Page No

CHANGE-OVER VALVE

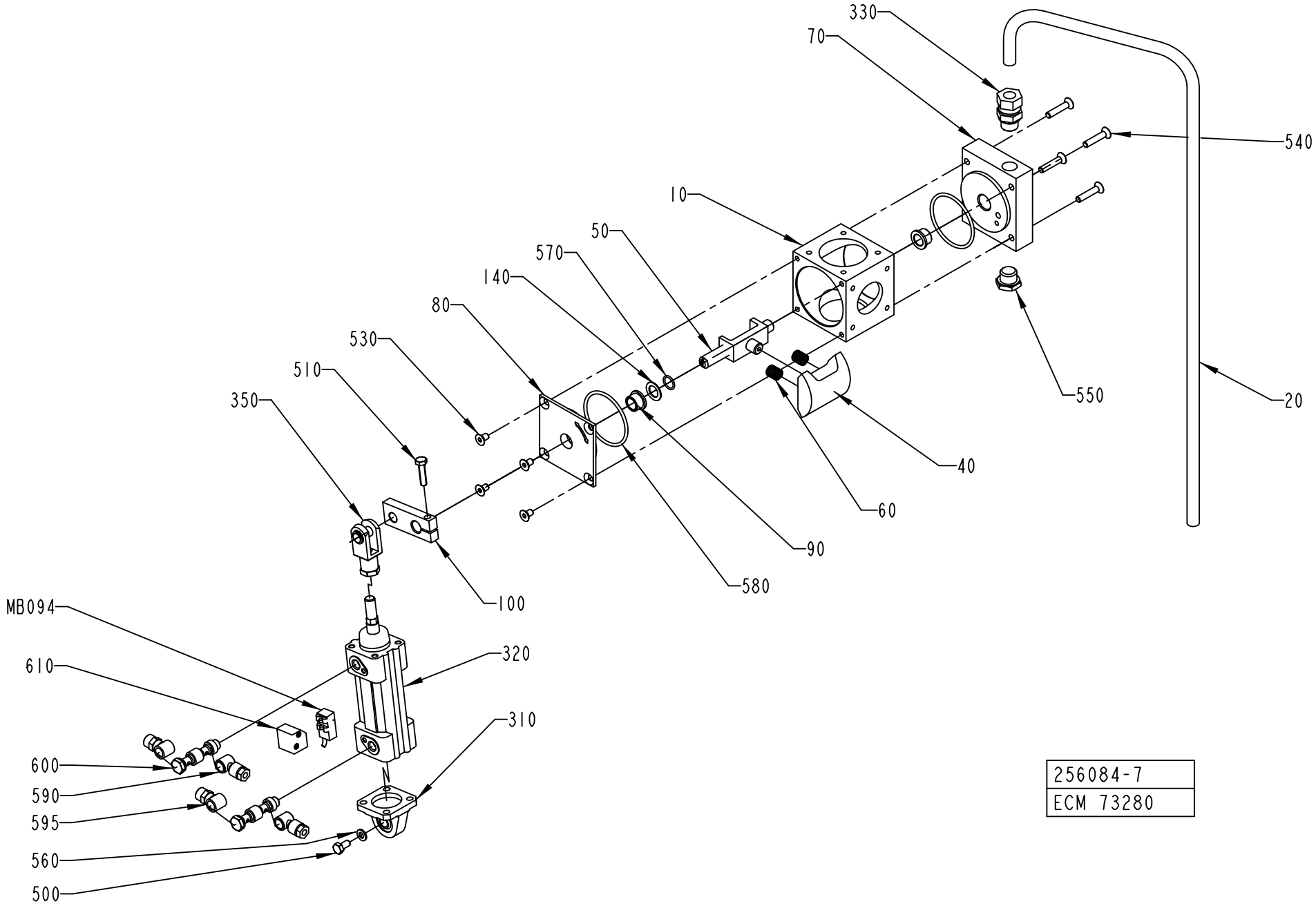

256084-7
ECM 73280

ECM: 178063 - 20040910
Group number: 256084-0700
Assembly Drawing: 256084-7_1_AA

Pos	Part No	UN	Qty	Description	Page No
-					
010	255870-0000		1	VALVE HOUSING	
020	1519934-0000		1	PIPE	
040	979722-0000		1	BLOCK	
050	751732-0000		1	BRACKET	
060	21521-0000		2	COMPRESSION SPRING	
070	751731-0000		1	BEARING COVER	
080	441957-0000		1	BEARING COVER	
090	255875-0000		2	BUSHING	
100	2527337-0000		1	CYLINDER BRACKET	
140	266737-0000		1	WASHER	
310	90450-0756		1	BRACKET, REAR EYE 32	
320	90450-0328		1	DOUBLE ACTING,PROFILE CYL32-25	
330	90030-0187		1	CONN. STR. GA-12-G3/8	
350	90239-0516		1	ROD END, CLEVIS WITH AXLE M10X1,25	
500	312105-0366		1	SCREW M6S ISO 4017 M6X12 A480	
510	312105-0372		1	SCREW M6S ISO 4017 M6X25 A480	
530	312155-0364		4	SCREW DIN 7991 MF6S M6X10 A4 70	
540	312155-0374		4	SCREW DIN 7991 MF6S M6X30 A4 70	
550	90330-0029		1	PLUG, EXT. G-THREAD, R-236R3/8	
560	315105-0153		1	WASHER BRB 6,4X12 RFR	
570	315204-0110		1	O-RING 12,1X1,6 MM	
580	315204-0302		2	O-RING 54,5X3 MM	
590	342797-0121		2	CONN. BANJO, RINGPIECE 6-1/8	
595	342980-0113		2	BANJO-CONNECTION,RING 6/4-G1/8 INCH	
600	342980-0313		2	BANJO-HOLLOW BOLT COUPL,EXT.THR.02-G1/8	
610	90450-0669		1	SENSOR, BRACKET SERIES 168	
MB094	90044-0116		1	CYLINDER, SENSOR	

Pos	Part No	UN	Qty	Description	Page No

HOT AIR ELEMENT

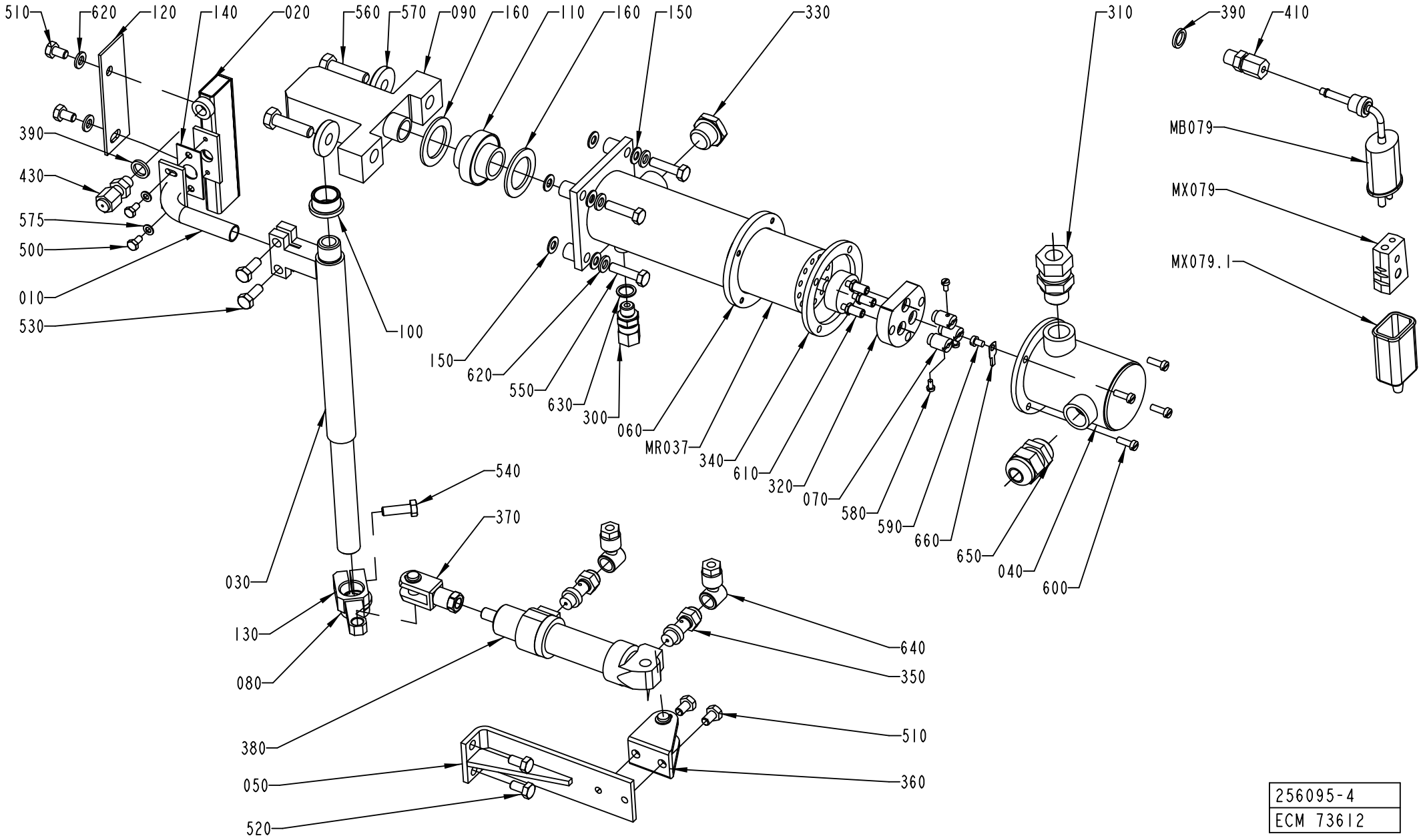

256095-4
ECM 73612

ECM: 276146 - 20070126
Group number: 256095-0700
Assembly Drawing: 256095-4_1_AA

Pos	Part No	UN	Qty	Description	Page No
TBA 0100B, TBA 0125S					
010	571533-0000		1	BRACKET	
TBA 0160S, TBA 0200M, TBA 0200S, TBA 0250S					
010	571532-0000		1	BRACKET	
TBA 0180B, TBA 0200B, TBA 0236B, TBA 0284B, TBA 0250B, TBA 0300S, TBA 0330S					
010	256112-0000		1	BRACKET	
Common Parts					
020	1524662-0000		1	AIR NOZZLE	
030	272948-0003		1	SHAFT	
040	491223-0000		1	COVER	
050	491224-0000		1	BRACKET	
060	751733-0000		1	HEATING PIPE	
070	266739-0000		3	CABLE GLAND	
080	271269-0000		1	BUSHING	
090	272287-0000		1	AXLE SUPPORT	
100	295910-0000		1	BUSHING	
110	295936-0000		1	BUSHING	
120	491097-0000		1	HEAT GUARD	
130	491545-0000		1	BRACKET	
140	751015-0000		1	GASKET	
150	751018-0000		8	WASHER	
160	751023-0000		2	GASKET	
300	90030-0184		1	CONN. STR. GA-6-G1/8	
310	90030-0187		1	CONN. STR. GA-12-G3/8	
320	90125-0020		1	PLATE COMPLETE	
	270926-0000		*6*	*NUT*	
	270927-0000		*3*	*SCREW*	
	294464-0000		*1*	*BASE PLATE*	
330	90330-0029		1	PLUG, EXT. G-THREAD, R-236R3/8	
340	90206-0322		1	GASKET	
350	90235-0274		2	THROTTLE CHECK VALVE, G1/8", SCU-604-1/8	
360	90239-0487		1	REAR,CLEVIS,MINI-ISO 20-25	
370	90239-0532		1	ROD END, CLEVIS WITH AXLE M8X1,25	
380	90239-0847		1	DOUBLE ACTING, MINI-ISO, CYL.20-50	
390	273429-0000		2	WASHER	
410	90326-0306		1	GLAND FITTING 9041-45-KS-KR.1/8" D=4,5MM	
430	90326-0304		1	LEAD IN, 9041-15-KS-UB60	
500	312105-0287		2	SCREW M6S ISO 4017 M4X8 A470	
510	312105-0364		4	SCREW M6S ISO 4017 M6X10 A480	
520	312105-0366		2	SCREW M6S ISO 4017 M6X12 A480	
530	312105-0368		2	SCREW M6S ISO 4017 M6X16 A480	
540	312105-0370		1	SCREW M6S ISO 4017 M6X20 A480	
550	312105-0372		4	SCREW M6S ISO 4017 M6X25 A480	
560	312105-0455		2	SCREW M6S ISO 4017 M8X30 A480	
570	315125-0165		2	WASHER TBRSB 8,4X26X5 A4	
575	315105-0136		2	WASHER BRB 4,3X8 RFR	
580	312125-0220		3	SCREW ISO 1207 M3X6 A4	
590	312125-0285		1	SCREW ISO 1207 M4X6 A4	
600	312125-0291		4	SCREW ISO 1207 M4X12 A4	
610	312145-0228		3	SCREW ISO 2009 MFS M3X16 A4	
620	315105-0153		6	WASHER BRB 6,4X12 RFR	
630	315234-0109		1	WASHER,PL.RND.CU.10,3/13,5 H=1,0	
640	342797-0121		2	CONN. BANJO, RINGPIECE 6-1/8	
650	352103-0106		1	CABLE GLAND, ST 11, PR18,6/PG11	
660	353104-0130		1	CABLE SHOE, RING UNINS., YAV 025 M 4	
MBO79	90326-0048		1	THERMOCOUPLE, 12826-31	
	90326-0304		*1*	*LEAD IN, 9041-15-KS-UB60*	
MR037	90206-0031		1	HEATING ELEMENT 700+1200W, 220V	
MXO79	90326-0020		1	PLUG, FEMALE YELLOW CR-AL	
MX079.1	90326-0012		1	PROTECTIVE COVER, T31A4618	
W402	351120-0144	M	6	CABLE SILFLEX SIHF 3X1,5 0046014	
W433	90220-0059	M	6	THERMOCOUPLE CABLE K/PVC/20AWG 2X0,5MM2	

Machine Type | Group Description | Used-In | Group Number | Page No

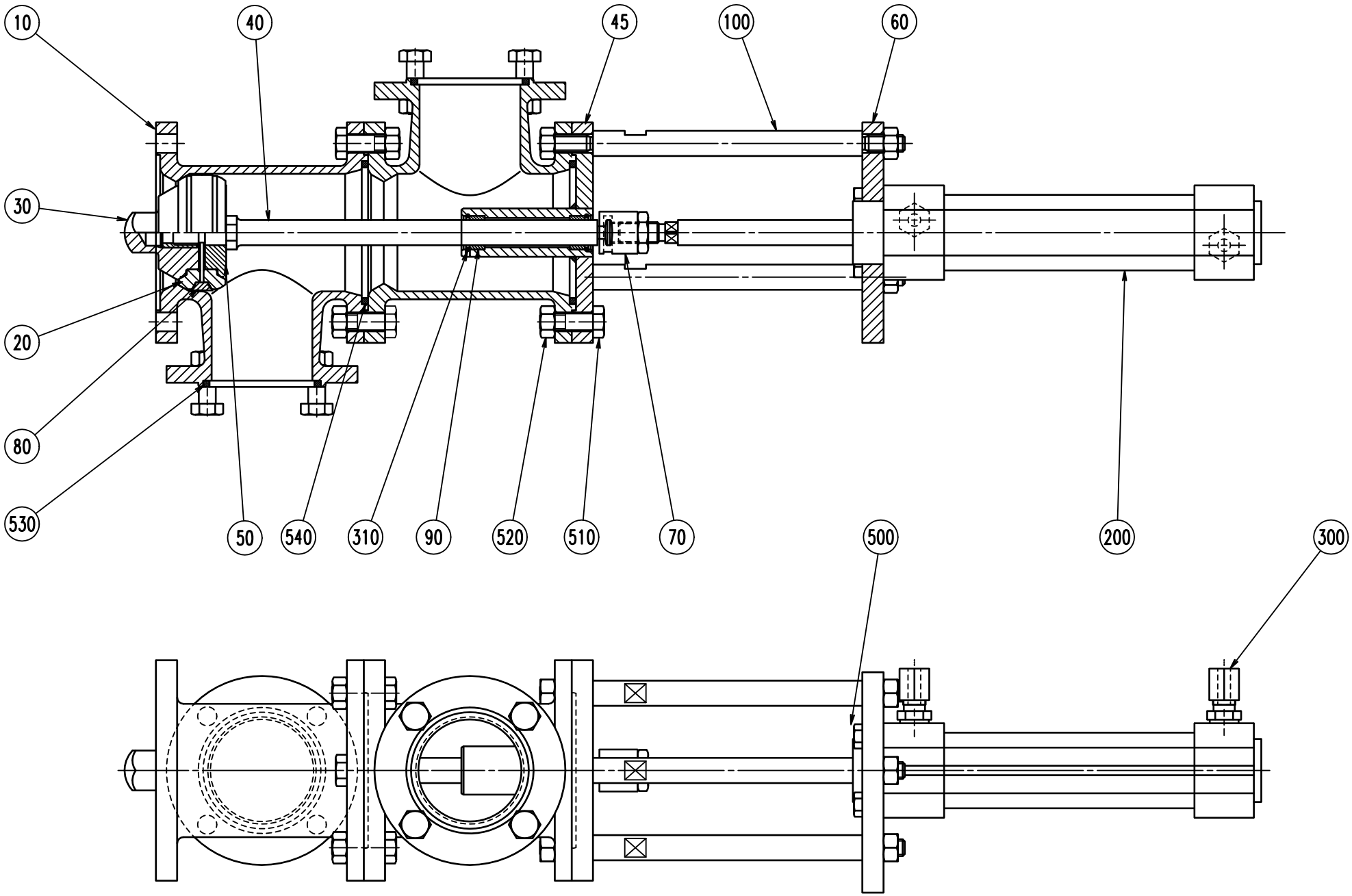
10
40
45
100
60
30
20
80
530
50
540
310
90
520
510
70
200
500
300

ECM: 178604 - 20040910
Group number: 271169-0500
Assembly Drawing: 271169-5_1_AA

Pos	Part No	UN	Qty	Description	Page No
-					
010	1036194-0000		2	T-PIPE	
020	530589-0000		2	SEAL RING	
030	530590-0000		1	VALVE CONE	
040	1036188-0000		1	SHAFT	
045	1036189-0000		1	SPINDEL GUIDE	
050	1036191-0000		1	SEAL HOLDER	
060	1036193-0000		1	CYLINDER BRACKET	
070	441871-0000		1	PENDULUM SUSPENSION	
080	530599-0000		1	RING	
090	532349-0000		2	PLAIN BEARING	
100	1036192-0000		3	SPACER ROD	
200	90450-0281		1	DOUBLE ACTING,PROF.CYL 32-80	
300	90030-0184		2	CONN. STR. GA-6-G1/8	
310	90141-0022		2	SNAP RING B 16	
500	312105-0370		4	SCREW M6S ISO 4017 M6X20 A480	
510	312105-0453		17	SCREW M6S ISO 4017 M8X25 A480	
520	312605-0318		23	HEXAGON NUT, M6M M8 A280	
530	315229-0205		2	GASKET 47,5X55,5X3,7 MM 2 INCH	
540	315229-0206		2	GASKET 60,2X68,2X3,7 MM 2"1/2	

Pos	Part No	UN	Qty	Description	Page No

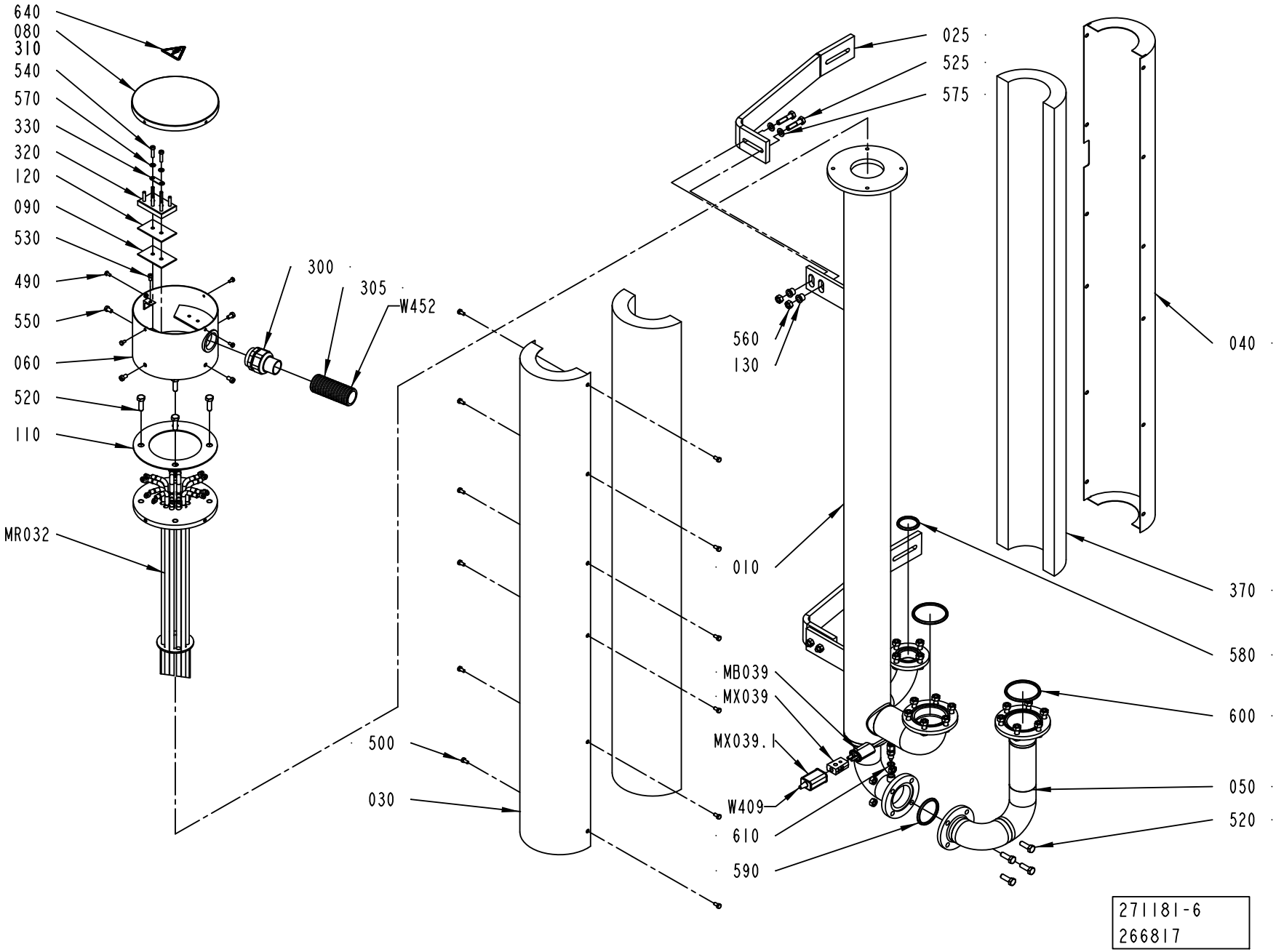
640
080
310
540
570
330
320
120
090
530
490
550
060
520
110
MR032
300
305
W452
500
030
025
525
575
560
130
010
040
370
580
MB039
MX039
MX039.1
W409
610
590
600
050
520
271181-6
266817

ECM: 292311 - 20070126
Group number: 271181-0600
Assembly Drawing: 271181-6_1_AC

This list covers pages from 1-42 to 1-45

Pos	Part No	UN	Qty	Description	Page No
HI (See drawing on page: 1-44)					
600	315229-0206		1	GASKET 60,2X68,2X3,7 MM 2"1/2	
620	315234-0109		1	WASHER,PL.RND.CU.10,3/13,5 H=1,0	
630	90136-0001		1	PLUG, EXT. THREAD, NO. 100727	
NOHI (See drawing on page: 1-42)					
050	1519482-0000		1	PIPE	
600	315229-0206		2	GASKET 60,2X68,2X3,7 MM 2"1/2	
Common Parts					
010	1519483-0000		1	HEATING PIPE	
025	1519484-0000		2	SUPPORT	
030	1296849-0000		1	DISCHARGE TRAY	
040	1296850-0000		1	DISCHARGE TRAY	
060	451430-0000		1	CONNECTION HOUS.(MINOR)	
080	29876-0000		1	COVER	
090	30298-0000		1	INSULATION	
100	491305-0000		1	CONN.DIAGRAM AIR SUPERH.	
110	531731-0000		1	GASKET	
120	751009-0000		1	INSULATION	
130	1519601-0000		2	BUSHING	
300	90012-0126		1	HOSE GLAND W/O INSERT PG29 NORMAL	
305	90152-0070	MM	1700	METAL HOSE, 32,5X26, UL 2621	
310	90153-0020	ML	1	ADHESIVE, BOSTIK 1782 125ML	
320	90195-0028		1	TERM.BLOCK 6-POLE STEATIT	
330	90195-0029		3	CONN. LINK NO324 FOR -28	
370	90411-0005	MM	1100	INSULATOR	
490	312105-0287		4	SCREW M6S ISO 4017 M4X8 A470	
500	312105-0325		12	SCREW M6S ISO 4017 M5X10 A480	
520	312105-0453		26	SCREW M6S ISO 4017 M8X25 A480	
525	312105-0457		4	SCREW M6S ISO 4014 M8X35 A480	
530	312125-0323		1	SCREW ISO 1207 M5X8 A4	
540	312125-0331		2	SCREW ISO 1207 M5X20 A4	
550	312125-0364		4	SCREW ISO 1207 M6X10 A4	
560	312605-0318		30	HEXAGON NUT, M6M M8 A280	
570	315105-0146		2	WASHER BRB 5,3X10 RFR	
575	315105-0165		4	WASHER BRB 8,4X16 RFR	
580	315229-0204		1	GASKET 34,8X42,8X3,7 MM 1"1/2	
590	315229-0205		1	GASKET 47,5X55,5X3,7 MM 2 INCH	
610	315234-0109		1	WASHER,PL.RND.CU.10,3/13,5 H=1,0	
640	90600-1738		1	WARNING SIGN ISO, ELECTRIC SHOCK	
MX039	90326-0020		1	PLUG, FEMALE YELLOW CR-AL	
MR032	90600-2007		1	HEATING ELEM.15KW 3X230/400V,T90600-2007	
MB039	90326-0051		1	THERMOCOUPLE, 12826-33	
MX039.1	90326-0012		1	PROTECTIVE COVER, T31A4618	
W409	90220-0059	M	4	THERMOCOUPLE CABLE K/PVC/20AWG 2X0,5MM2	
W452	351120-0168	M	6	CABLE SIHF 4X10MM2 GREEN/YELLOW	

Machine Type | Group Description | Used-In | Group Number | Page No

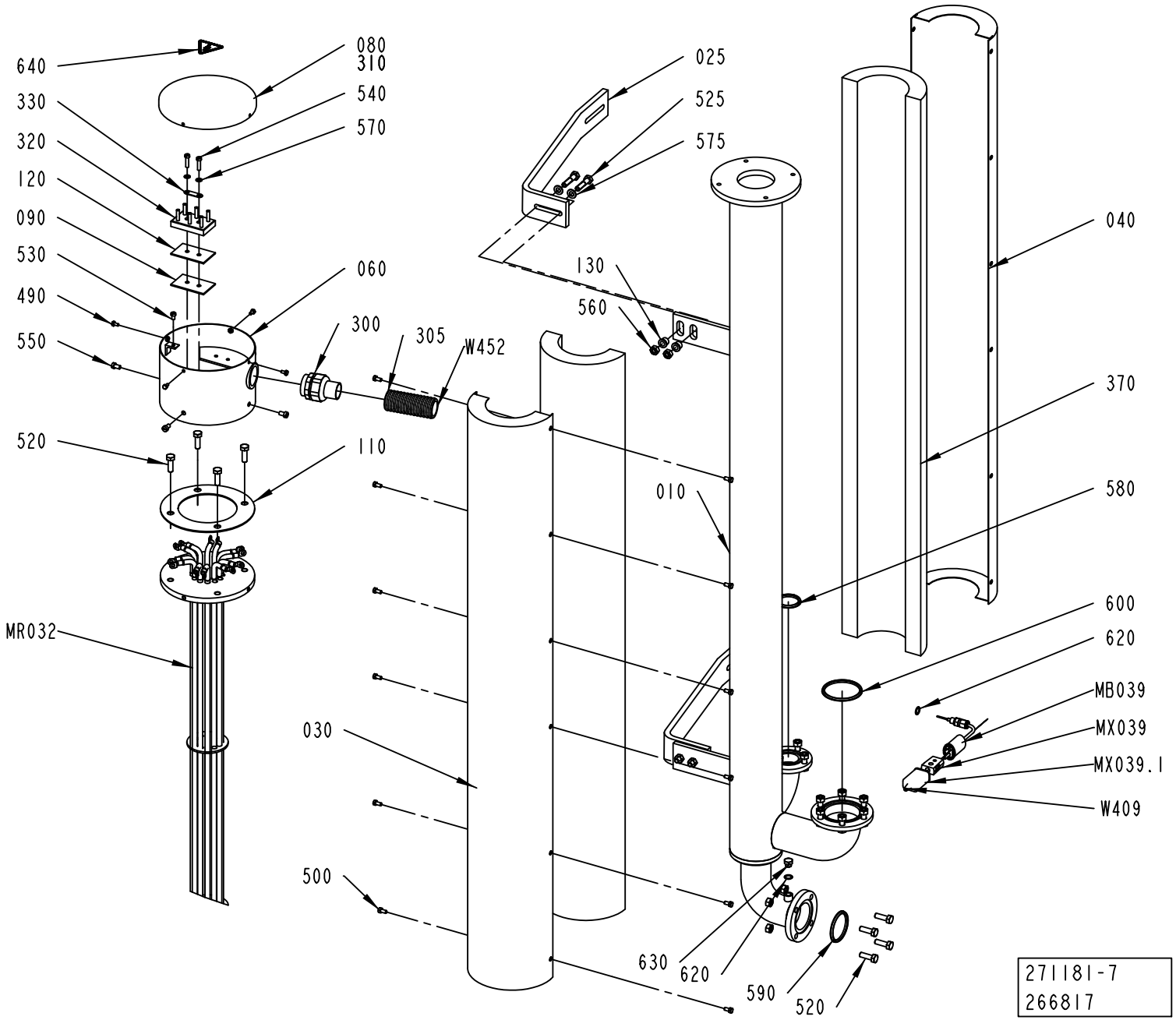
640
080
310
330
540
320
570
120
090
530
490
550
520
MR032
060
300
305
W452
110
025
525
575
130
560
040
370
580
010
600
620
MB039
MX039
MX039.1
W409
030
500
630
620
590
520
271181-7
266817

ECM: 292311 - 20070126
Group number: 271181-0600
Assembly Drawing: 271181-7_1_AB

This list covers pages from 1-42 to 1-45

Pos	Part No	UN	Qty	Description	Page No
HI (See drawing on page: 1-44)					
600	315229-0206		1	GASKET 60,2X68,2X3,7 MM 2"1/2	
620	315234-0109		1	WASHER,PL.RND.CU.10,3/13,5 H=1,0	
630	90136-0001		1	PLUG, EXT. THREAD, NO. 100727	
NOHI (See drawing on page: 1-42)					
050	1519482-0000		1	PIPE	
600	315229-0206		2	GASKET 60,2X68,2X3,7 MM 2"1/2	
Common Parts					
010	1519483-0000		1	HEATING PIPE	
025	1519484-0000		2	SUPPORT	
030	1296849-0000		1	DISCHARGE TRAY	
040	1296850-0000		1	DISCHARGE TRAY	
060	451430-0000		1	CONNECTION HOUS.(MINOR)	
080	29876-0000		1	COVER	
090	30298-0000		1	INSULATION	
100	491305-0000		1	CONN.DIAGRAM AIR SUPERH.	
110	531731-0000		1	GASKET	
120	751009-0000		1	INSULATION	
130	1519601-0000		2	BUSHING	
300	90012-0126		1	HOSE GLAND W/O INSERT PG29 NORMAL	
305	90152-0070	MM	1700	METAL HOSE, 32,5X26, UL 2621	
310	90153-0020	ML	1	ADHESIVE, BOSTIK 1782 125ML	
320	90195-0028		1	TERM.BLOCK 6-POLE STEATIT	
330	90195-0029		3	CONN. LINK NO324 FOR -28	
370	90411-0005	MM	1100	INSULATOR	
490	312105-0287		4	SCREW M6S ISO 4017 M4X8 A470	
500	312105-0325		12	SCREW M6S ISO 4017 M5X10 A480	
520	312105-0453		26	SCREW M6S ISO 4017 M8X25 A480	
525	312105-0457		4	SCREW M6S ISO 4014 M8X35 A480	
530	312125-0323		1	SCREW ISO 1207 M5X8 A4	
540	312125-0331		2	SCREW ISO 1207 M5X20 A4	
550	312125-0364		4	SCREW ISO 1207 M6X10 A4	
560	312605-0318		30	HEXAGON NUT, M6M M8 A280	
570	315105-0146		2	WASHER BRB 5,3X10 RFR	
575	315105-0165		4	WASHER BRB 8,4X16 RFR	
580	315229-0204		1	GASKET 34,8X42,8X3,7 MM 1"1/2	
590	315229-0205		1	GASKET 47,5X55,5X3,7 MM 2 INCH	
610	315234-0109		1	WASHER,PL.RND.CU.10,3/13,5 H=1,0	
640	90600-1738		1	WARNING SIGN ISO, ELECTRIC SHOCK	
MX039	90326-0020		1	PLUG, FEMALE YELLOW CR-AL	
MR032	90600-2007		1	HEATING ELEM.15KW 3X230/400V,T90600-2007	
MB039	90326-0051		1	THERMOCOUPLE, 12826-33	
MX039.1	90326-0012		1	PROTECTIVE COVER, T31A4618	
W409	90220-0059	M	4	THERMOCOUPLE CABLE K/PVC/20AWG 2X0,5MM2	
W452	351120-0168	M	6	CABLE SIHF 4X10MM2 GREEN/YELLOW	

Machine Type	Group Description	Used-In	Group Number	Page No

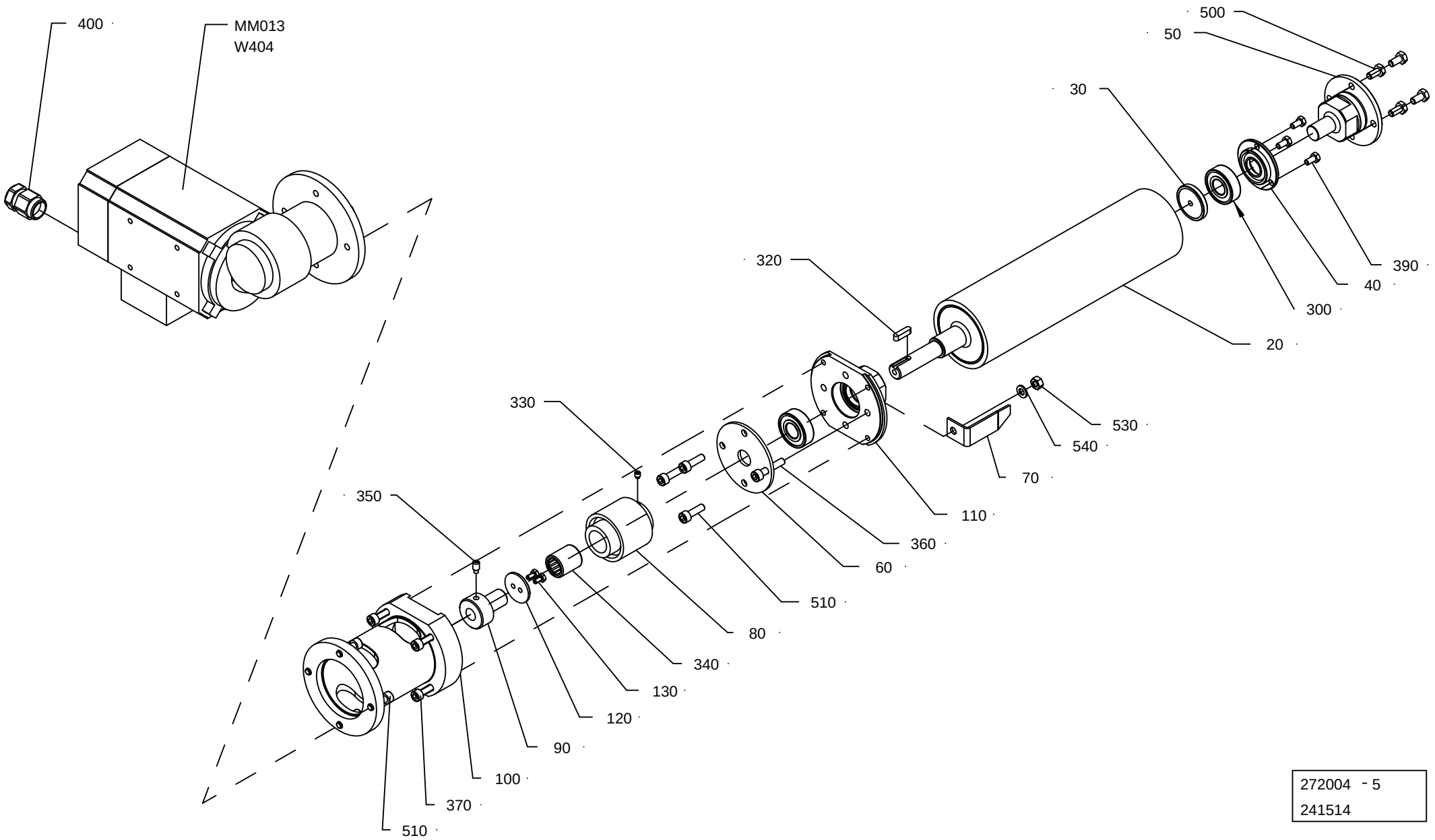

272004 - 5
241514

Pos	Part No	UN	Qty	Description	Page No
TBA 0100B, TBA 0125S					
070	752859-0000		1	POINTER	
TBA 0160S, TBA 0200S					
070	752858-0000		1	POINTER	
TBA 0180B, TBA 0200B, TBA 0236B, TBA 0200SQ, TBA 0284B, TBA 0250B, TBA 0300S, TBA 0330S					
070	752857-0000		1	POINTER	
TBA 0200M, TBA 0250S					
070	574415-0000		1	INDICATOR 250S	
Common Parts					
020	1548284-0000		1	ROLLER	
030	1490407-0000		1	WASHER	
040	1548275-0000		1	SEAL COVER	
050	1548056-0000		1	AXLE SUPPORT	
060	250590-0000		1	BEARING COVER	
080	90458-2841		1	SHAFT COUPLING 22,225H9/15	
090	1334234-0000		1	HUB	
100	1523228-0000		1	FLANGE	
110	2501542-0000		1	AXLE SUPPORT	
120	250592-0000		1	WASHER	
130	312105-0287		2	SCREW M6S ISO 4017 M4X8 A470	
300	90458-1704		2	BALL BEARING, 15X35X11 MM	
320	315705-0201		1	PARALLEL KEY W. ROUND ENDS 5X5X20 MM	
330	312311-0321		1	SCREW ISO4028 M5X6 FZB	
340	90348-0007		1	FREE-WHEEL COUPLING, 15,875X22,225 MM	
350	312311-0366		1	SCREW ISO4028 M6X12 FZB	
360	312115-0374		1	SCREW ISO4762 M6X30 A4 80	
370	312115-0372		4	SCREW ISO4762 M6X25 A4 80	
390	312105-0325		3	SCREW M6S ISO 4017 M5X10 A480	
400	90458-0438		1	GLAND, EXTENDED WITH INSERT, M20X1,5	
500	312105-0366		4	SCREW M6S ISO 4017 M6X12 A480	
510	312115-0370		7	SCREW ISO4762 M6X20 A4 80	
530	312605-0316		1	HEXAGON NUT, M6M M6 A280	
540	315105-0153		1	WASHER BRB 6,4X12 RFR	
M.M013	90459-2327		1	GEARS, WORM MOTOR IGL 80-60 + VE 31-G-R-	
W404	90220-0104	M	4.4	SCR. CABLE 4X1,5MM2	

Pos	Part No	UN	Qty	Description	Page No

ASEPTIC CHAMBER

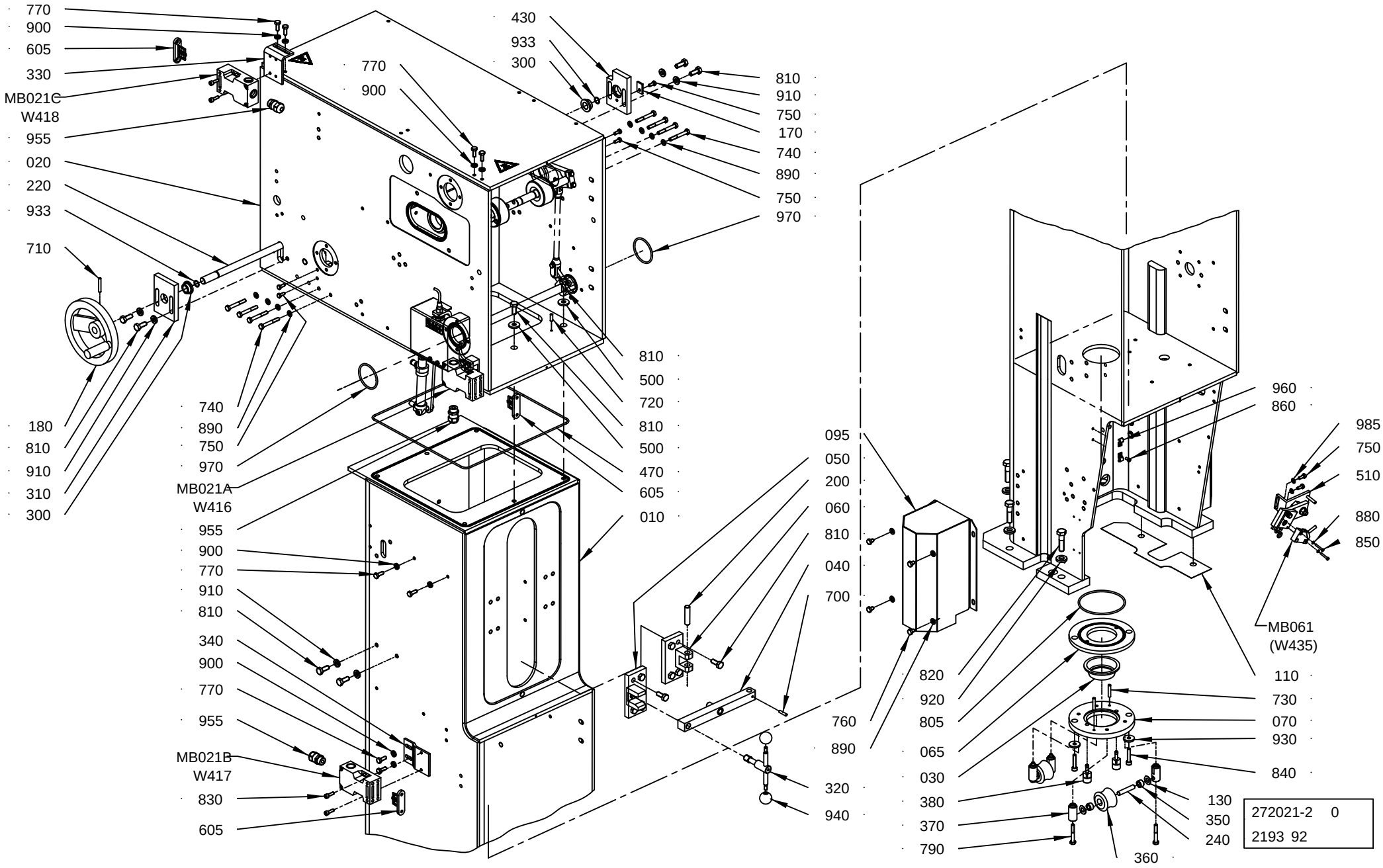

ECM: 276148 - 20070126
Group number: 272021-0900
Assembly Drawing: 272021-20_1_AA

This list covers pages from 1-48 to 1-53

Pos	Part No	UN	Qty	Description	Page No
TBA 0100B, TBA 0125S					
030	490900-0000		1	SEALING RING	
065	571537-0000		1	RING	
070	571538-0000		1	RING	
240	490903-0000		2	SHAFT	
350	751230-0000		4	PLAIN BEARING	
360	441876-0000		2	ROLL	
370	490902-0000		4	AXLE SUPPORT	
380	571540-0000		2	PIN	
730	311103-0313		2	PARALLEL PIN ISO 2338 5M6X28 A1	
805	315204-0309		1	O-RING 89,5X3 MM	
840	312115-0374		2	SCREW ISO4762 M6X30 A4 80	
TBA 0160S, TBA 0200S					
030	490901-0000		1	SEAL	
065	571537-0000		1	RING	
070	571539-0000		1	RING	
240	490903-0000		2	SHAFT	
350	751230-0000		4	PLAIN BEARING	
360	456996-0000		2	ROLLER	
370	490902-0000		4	AXLE SUPPORT	
380	571540-0000		2	PIN	
730	311103-0313		2	PARALLEL PIN ISO 2338 5M6X28 A1	
805	315204-0309		1	O-RING 89,5X3 MM	
840	312115-0374		2	SCREW ISO4762 M6X30 A4 80	
TBA 0180B, TBA 0200B, TBA 0236B, TBA 0284B, TBA 0250B, TBA 0300S, TBA 0330S					
030	273953-0000		1	SEAL	
070	456794-0000		1	RING	
240	263655-0006		2	SHAFT	
360	456796-0000		2	ROLLER	
370	456797-0000		4	AXLE SUPPORT	
380	752519-0002		2	PIN	
730	311103-0310		2	PARALLEL PIN ISO 2338 5M6X20 A1	
840	312115-0370		2	SCREW ISO4762 M6X20 A4 80	
TBA 0200M, TBA 0250S					
030	574336-0000		1	SEAL	
065	574334-0000		1	RING	
070	574335-0000		1	RING	
240	490903-0000		2	SHAFT	
350	751230-0000		4	PLAIN BEARING	
360	574333-0000		2	ROLL	
370	490902-0000		4	AXLE SUPPORT	
380	571540-0000		2	PIN	
730	311103-0313		2	PARALLEL PIN ISO 2338 5M6X28 A1	
805	315204-0309		1	O-RING 89,5X3 MM	
840	312115-0374		2	SCREW ISO4762 M6X30 A4 80	
730	311103-0313		2	PARALLEL PIN ISO 2338 5M6X28 A1	
805	315204-0309		1	O-RING 89,5X3 MM	
840	312115-0374		2	SCREW ISO4762 M6X30 A4 80	
Common Parts					
010	1523494-0000		1	PILLAR	
015	12242-0005		1	GASKET 61X51X5,5	
020	978865-0000		1	HOUSE	
040	295426-0000		1	CAP	
050	295427-0000		1	LOCK	
060	295428-0000		1	HINGE	
095	490964-0000		2	COVER	
110	1523158-0003		1	SHIM	
110	1523158-0002		1	SHIM	
110	1523158-0001		1	SHIM	
130	2033-0007		8	WASHER	
140	247349-0000		2	STEERING	
150	491602-0000		2	GASKET HOLDER	
170	978872-0000		1	LOCK WASHER	
180	247358-0000		1	SHIFTER HANDLE	
190	255986-0000		2	WHEEL	
200	256163-0000		1	SHAFT	
210	247357-0000		2	SPROCKET	
220	751131-0000		1	SHAFT	
230	256170-0000		2	DRIP PLATE	
250	267033-0000		2	WASHER	
260	271863-0000		2	SHAFT	
270	271864-0000		2	WASHER	
280	272002-0000		1	PROTECTIVE COVER LEFT	
290	272003-0000		1	PROTECTIVE COVER RIGHT	
300	279008-0000		2	BUSHING	
310	978870-0000		1	BEARING PLATE	
320	295429-0000		1	HANDLE	
330	978532-0000		1	BRACKET	
340	978531-0000		1	BRACKET	
430	978871-0000		1	BEARING PLATE	
460	491128-0000		2	GASKET	
470	491418-0002		1	O-RING 352X3 FPM	
500	28036-0000		6	WASHER	
510	2790832-0100		1	SUPPORT	**1-55**
605	90044-0310		3	KEY FOR SAFETY SWITCH AZ 15/16 B1	
700	311112-0256		1	SPRING PIN, ISO 8752 4X20-C	
710	311112-0262		1	SPRING PIN, ISO 8752 4X32-C	

Machine Type | Group Description | Used-In | Group Number | Page No

ASEPTIC CHAMBER

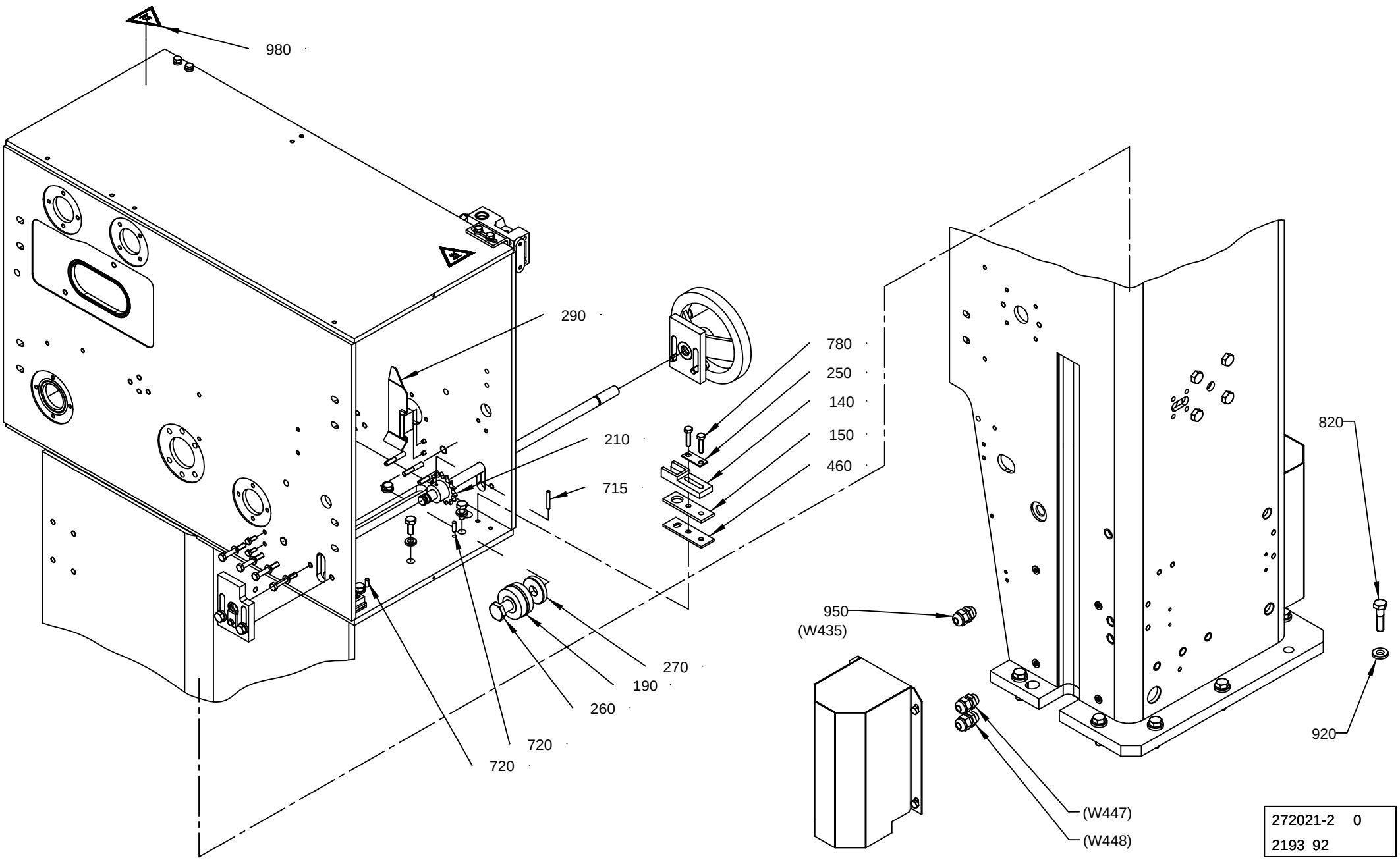

272021-2 0
2193 92

Pos	Part No	UN	Qty	Description	Page No
Common Parts (Cont'd)					
715	311103-0276		2	PARALLEL PIN ISO 2338 4M6X30 A1	
720	311103-0308		4	PARALLEL PIN ISO 2338 5M6X16 A1	
740	312105-0379		8	SCREW M6S ISO 4014 M6X45 A480	
750	312105-0327		7	SCREW M6S ISO 4017 M5X12 A480	
760	312105-0362		8	SCREW M6S ISO 4017 M6X8 A480	
770	312105-0368		8	SCREW M6S ISO 4017 M6X16 A480	
780	312105-0372		4	SCREW M6S ISO 4017 M6X25 A480	
790	312105-0378		4	SCREW M6S ISO 4014 M6X40 A480	
810	312105-0451		26	SCREW M6S ISO 4017 M8X20 A480	
820	312105-0499		7	SCREW M6S ISO 4014 M10X40 A480	
830	312115-0329		6	SCREW ISO4762 M5X16 A4 80	
850	312125-0230		2	SCREW ISO 1207 M3X20 A4	
860	312125-0287		4	SCREW ISO 1207 M4X8 A4	
870	312605-0316		8	HEXAGON NUT, M6M M6 A280	
880	315105-0124		2	WASHER BRB 3,2X6 RFR	
890	315105-0153		16	WASHER BRB 6,4X12 RFR	
900	315115-0153		8	WASHER PLAIN, TBRB 6,4/12 H=3	
910	315115-0165		12	WASHER PLAIN, TBRB 8,4/16 H=3	
920	315115-0173		7	WASHER PLAIN, TBRB 10,5/22 H=4	
930	315125-0153		2	WASHER TBRSB 6,4X22X4 A4	
933	315204-0109		2	O-RING 11,1X1,6 MM	
940	318800-0103		2	HANDLES,SPHERICAL KNOB,INT.THRE.,D.25-M6	
950	352103-0101		3	CABLE GLAND, ST 9, PR15,2/PG9	
955	90458-0306		3	CABLE GLAND, M16X1,5, NO.5311 1010	
960	352110-0100		4	CABLE CLIPS, D=5-7 MM	
970	315204-0301		2	O-RING 49,5X3 MM	
980	359710-0001		2	WARNING SIGN ISO, HOT SURFACE	
985	312105-0327		2	SCREW M6S ISO 4017 M5X12 A480	
990	315105-0146		2	WASHER BRB 5,3X10 RFR	
MB061	90044-0194		1	PROX.SW. IN5329/IN3002-BPKG(EX90044-104)	
MB021C	90459-1194		1	KEY SAF.SW. AZ16-03 ZVRK-M16	
MB021B	90459-1194		1	KEY SAF.SW. AZ16-03 ZVRK-M16	
MB021A	90459-1194		1	KEY SAF.SW. AZ16-03 ZVRK-M16	
W416	351150-0405	M	6	CABLE OLFLEX 5X0,75 MM2 LIGHT/GREY	
W417	351150-0405	M	6	CABLE OLFLEX 5X0,75 MM2 LIGHT/GREY	
W418	351150-0405	M	6	CABLE OLFLEX 5X0,75 MM2 LIGHT/GREY	

Pos	Part No	UN	Qty	Description	Page No

ASEPTIC CHAMBER

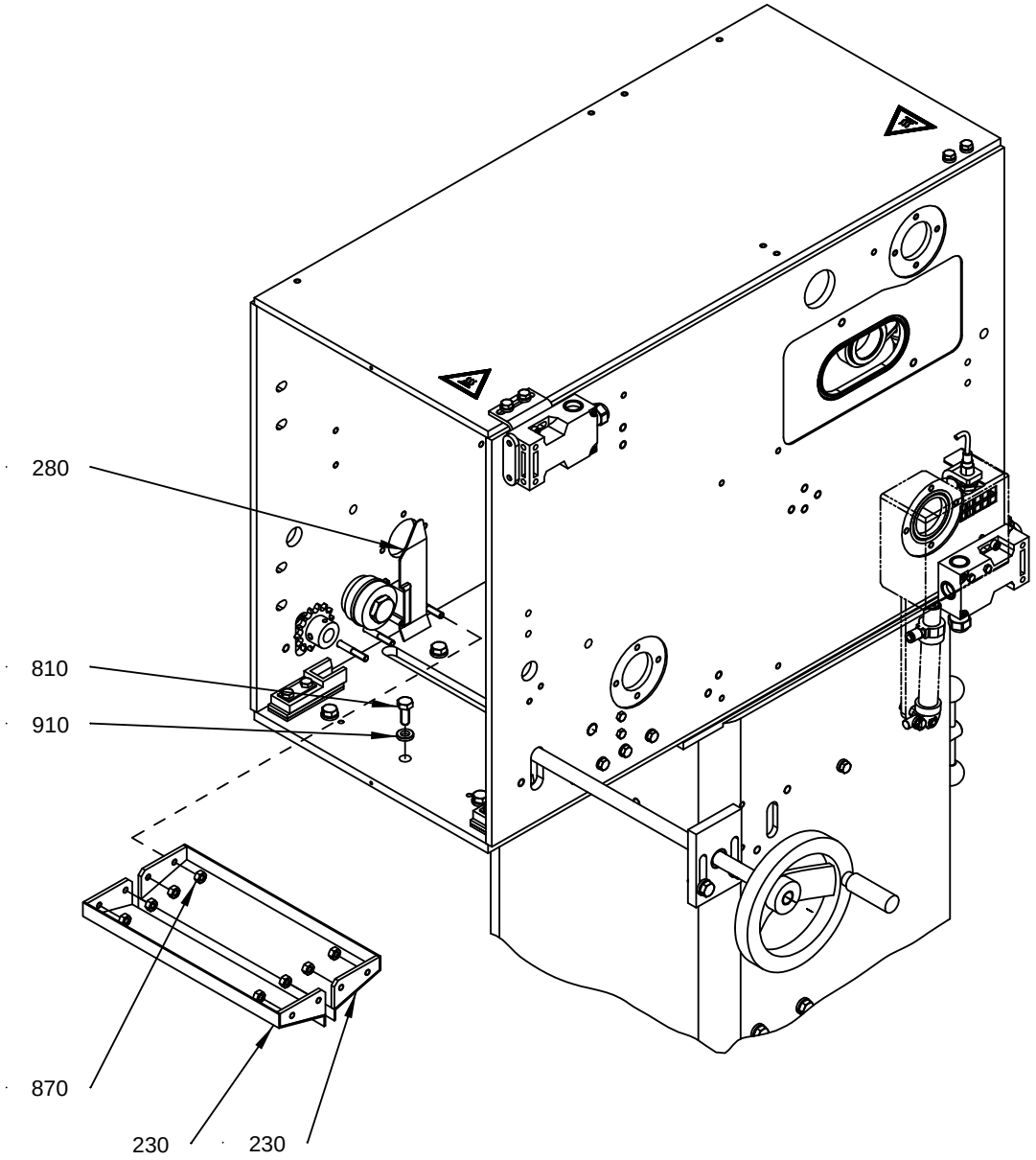

272021-2 0
2193 92

Pos	Part No	UN	Qty	Description	Page No	Pos	Part No	UN	Qty	Description	Page No

SEE PREVIOUS LISTS PAGES: 1-49, 1-51.

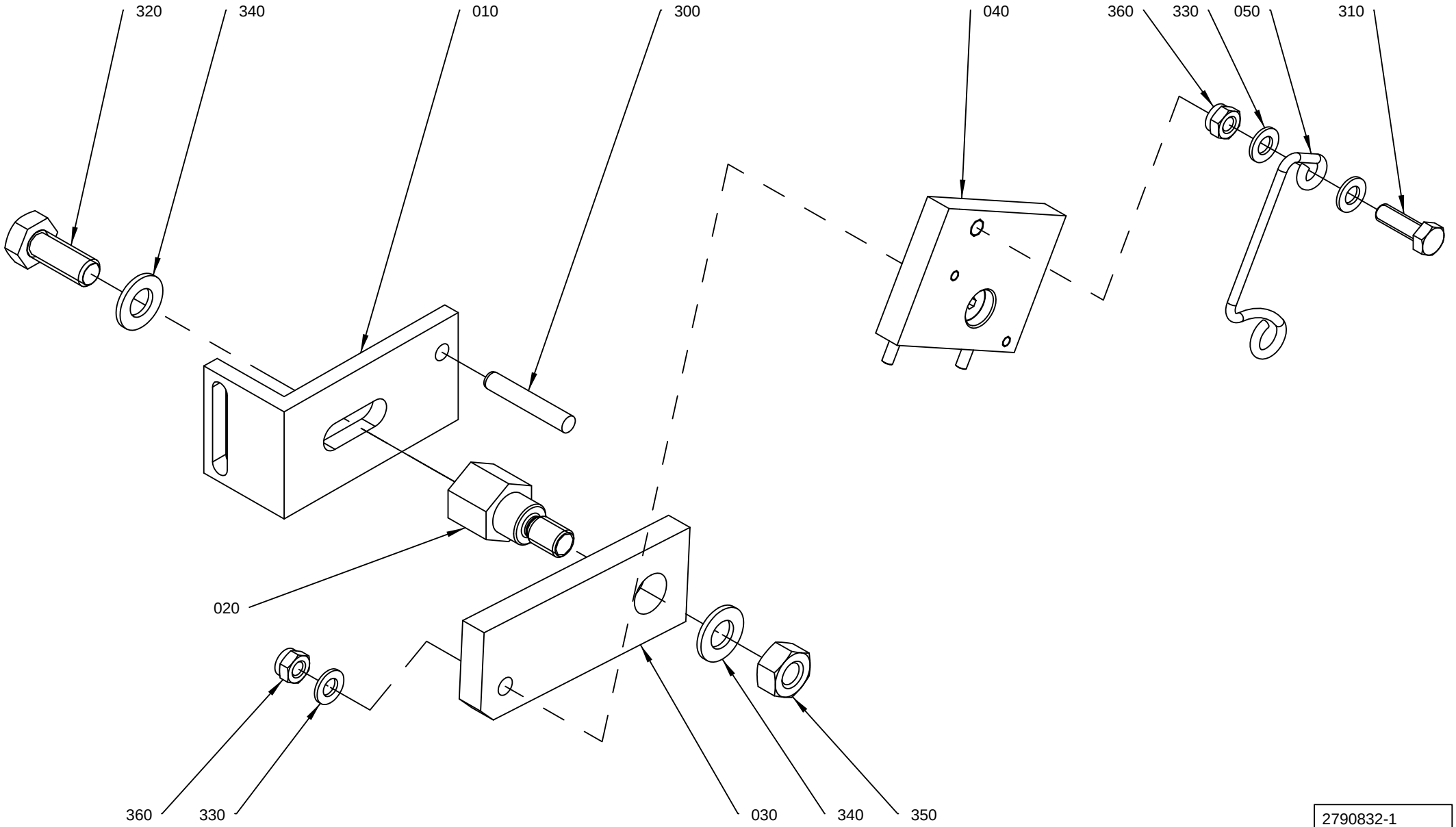

2790832-1
2193 92

ECM: 236147 - 20051104
Group number: 2790832-0100
Assembly Drawing: 2790832-1_1_AA

Pos	Part No	UN	Qty	Description	Page No
-					
010	2646248-0000		1	MOUNTING BRACKET	
020	2640262-0000		1	AXLE PIN	
030	2790830-0000		1	SUPPORT BAR	
040	2790831-0000		1	SUPPORT PLATE	
050	2640265-0000		1	LOCK SPRING	
300	311103-0314		1	PARALLEL PIN ISO 2338 5M6X30 A1	
310	312105-0329		1	SCREW M6S ISO 4017 M5X16 A480	
320	312105-0451		1	SCREW M6S ISO 4017 M8X20 A480	
330	315105-0146		3	WASHER BRB 5,3X10 RFR	
340	315105-0165		2	WASHER BRB 8,4X16 RFR	
350	312605-0318		1	HEXAGON NUT, M6M M8 A280	
360	312812-0314		2	HEXAGON NUT, NY-LOCK M5 A480	

Pos	Part No	UN	Qty	Description	Page No

CALENDER ROLLER

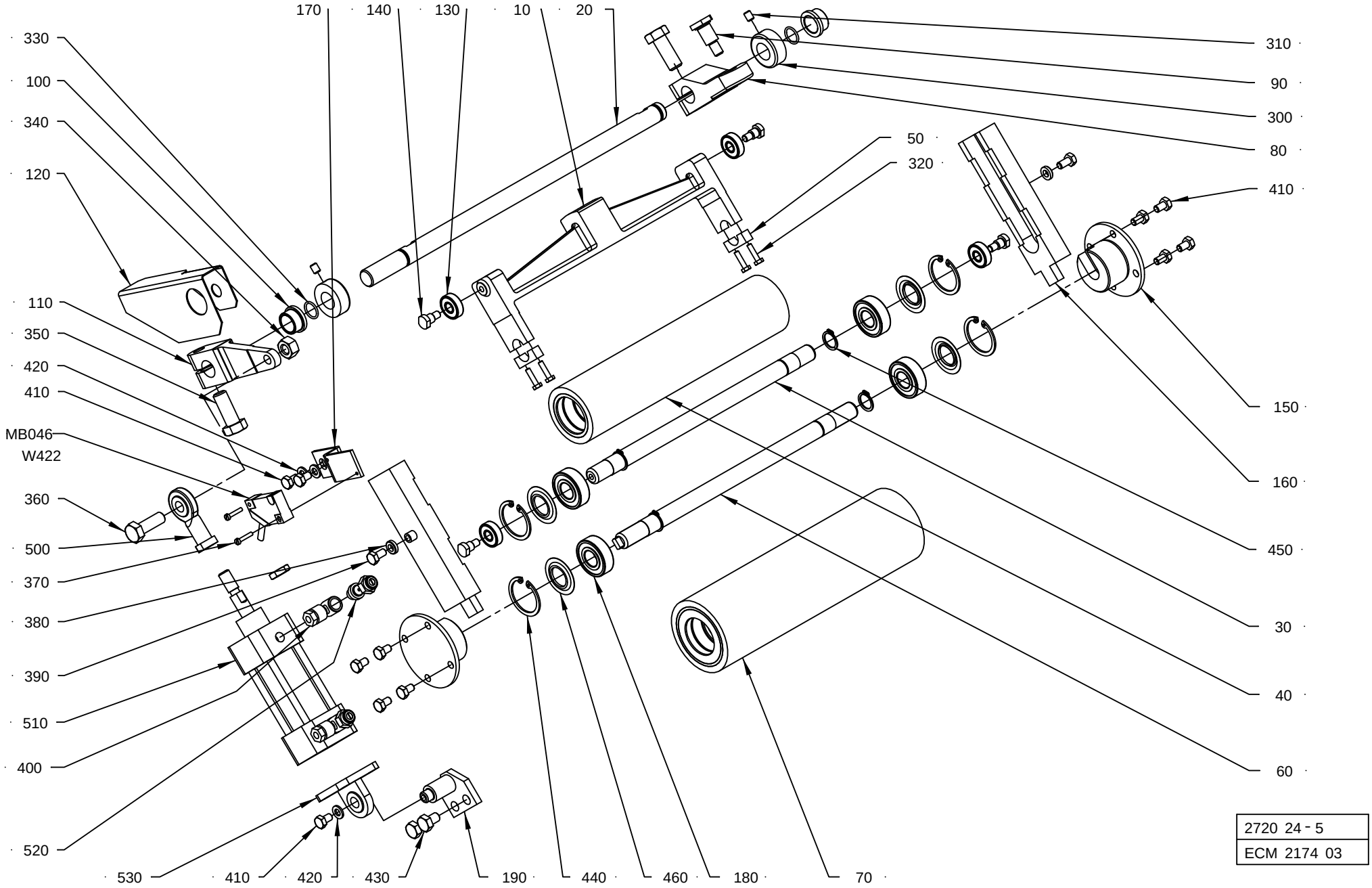

2720 24 - 5
ECM 2174 03

ECM: 252131 - 20060127
Group number: 272024-0500
Assembly Drawing: 272024-5_1_AC

Pos	Part No	UN	Qty	Description	Page No
-					
010	1538103-0000		1	FORK	
020	751132-0000		1	SHAFT	
030	2555634-0000		1	SHAFT	
040	1538097-0000		1	CALENDER ROLLER	
050	1538098-0000		2	CLAMP	
060	2555633-0000		1	SHAFT	
070	1538096-0000		1	CALENDER ROLLER	
080	272927-0000		1	PRESSURE ARM	
090	271898-0000		1	SCREW	
100	271269-0000		2	BUSHING	
110	441904-0000		1	ARM	
120	978462-0000		1	PROTECTION PLATE	
130	90459-6335		4	BALL BEARING, 8X22X7 MM	
140	271899-0000		4	SCREW	
150	566697-0000		2	AXLE SUPPORT	
160	566696-0000		2	GUIDE CONSOLE	
170	272033-0000		1	BRACKET	
180	90458-1704		4	BALL BEARING, 15X35X11 MM	
190	441578-0002		1	CYLINDER BRACKET	
300	315742-0112		2	RETAINING RING 16 SMS 199 RFR	
310	312318-0362		2	SCREW ISO4029 M6X8 A4	
320	312105-0293		4	SCREW M6S ISO 4017 M4X16 A470	
330	315204-0111		2	O-RING 13,1X1,6 MM	
340	312605-0320		1	HEXAGON NUT, M6M M10 A280	
350	312105-0536		2	SCREW M6S ISO 4017 M12X30 A480	
360	312105-0495		1	SCREW M6S ISO 4017 M10X30 A480	
370	312125-0228		2	SCREW ISO 1207 M3X16 A4	
380	315115-0153		2	WASHER PLAIN, TBRB 6,4/12 H=3	
390	312105-0366		2	SCREW M6S ISO 4017 M6X12 A480	
400	342797-0121		2	CONN. BANJO, RINGPIECE 6-1/8	
410	312105-0364		11	SCREW M6S ISO 4017 M6X10 A480	
420	315105-0153		3	WASHER BRB 6,4X12 RFR	
430	312105-0447		2	SCREW M6S ISO 4017 M8X12 A480	
440	315753-0124		4	RETAINING RING FOR BORE DIN 472 35 A2	
450	315751-0112		4	RETAINING RING FOR SHAFT DIN 471 15 A2	
460	90214-0303		4	SEALING RING, 18,6X35X2 MM	
500	90239-0405		1	ROD END,BALL JOINT EYE M10X1,25	
510	90239-0773		1	CYLINDER	
	90239-0442		*1*	*SEAL KIT*	
520	90235-0274		2	THROTTLE CHECK VALVE, G1/8", SCU-604-1/8	
530	90239-0453		1	BRACKET	
MB046	90044-0194		1	PROX.SW. IN5329/IN3002-BPKG(EX90044-104)	

Machine Type	Group Description	Used-In	Group Number	Page No

AIR KNIFE

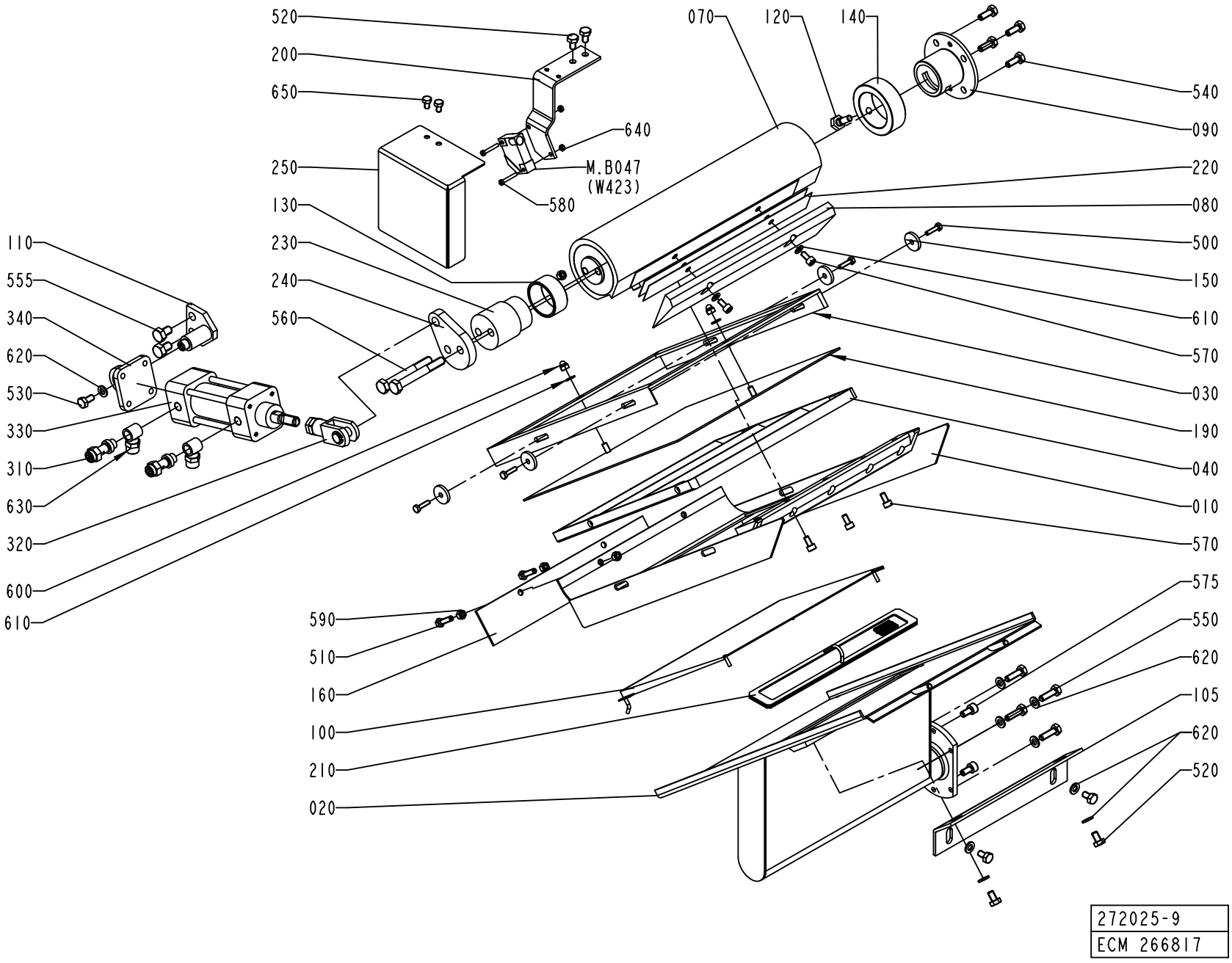
520
200
650
640
250
M.B047
(W423)
580
130
230
240
560
110
555
340
620
530
330
310
630
320
600
610
070
120
140
540
090
220
080
500
150
610
570
030
190
040
010
570
575
550
620
105
620
520
590
510
160
100
210
020
272025-9
ECM 266817

ECM: 275422 - 20070126
Group number: 272025-0600
Assembly Drawing: 272025-9_1_AA

Pos	Part No	UN	Qty	Description	Page No
TBA 0100B, TBA 0125S (See drawing on page: 1-58)					
010	271824-0000		1	AIR KNIFE, MOVABLE	
020	271825-0000		1	FIXED AIR KNIFE	
030	2815750-0001		1	FRAME	
040	271942-0001		1	AIR GUIDE	
070	272026-0001		1	AIR DISTRIBUTOR	
080	271820-0001		1	STEERING RAIL	
100	272140-0001		1	HEAD PLATE	
160	271827-0001		1	HEAD PLATE	
190	2815751-0001		1	COVER PLATE	
210	272141-0001		1	FILTER	
220	272329-0001		2	LACE	
510	312105-0331		2	SCREW M6S ISO 4017 M5X20 A480	
570	312115-0325		5	SCREW ISO4762 M5X10 A4 80	
590	312605-0314		4	HEXAGON NUT, M6M M5 A280	
610	315105-0146		4	WASHER BRB 5,3X10 RFR	
TBA 0180B, TBA 0160S, TBA 0200M, TBA 0200B, TBA 0236B, TBA 0200S, TBA 0250S, TBA 0284B, TBA 0250B, TBA 0300S, TBA 0330S (See drawing on page: 1-58)					
010	272022-0000		1	AIR KNIFE, MOVABLE	
020	272023-0000		1	FIXED AIR KNIFE	
030	2815750-0002		1	FRAME	
040	271942-0002		1	AIR GUIDE	
070	272026-0002		1	AIR DISTRIBUTOR	
080	271820-0002		1	STEERING RAIL	
100	272140-0002		1	HEAD PLATE	
160	271827-0002		1	HEAD PLATE	
190	2815751-0002		1	COVER PLATE	
210	272141-0002		1	FILTER	
220	272329-0002		3	LACE	
510	312105-0331		2	SCREW M6S ISO 4017 M5X20 A480	
570	312115-0325		7	SCREW ISO4762 M5X10 A4 80	
590	312605-0314		4	HEXAGON NUT, M6M M5 A280	
610	315105-0146		4	WASHER BRB 5,3X10 RFR	
Common Parts					
090	271858-0000		1	FLANGE	
105	272464-0000		1	ANGLE BRACKET	
110	441578-0001		1	CYLINDER BRACKET	
120	255995-0000		1	SCREW	
130	751165-0000		1	BUSHING	
140	256022-0000		1	BUSHING	
150	263311-0000		4	WASHER	
200	1524653-0000		1	BRACKET	
230	441576-0000		1	SPACER	
240	1524654-0000		1	ARM	
250	1524655-0000		1	PROTECTION PLATE	
310	90235-0274		2	THROTTLE CHECK VALVE, G1/8", SCU-604-1/8	
320	90239-0516		1	ROD END, CLEVIS WITH AXLE M10X1,25	
330	90239-0773		1	CYLINDER	
	90239-0442		*1*	*SEAL KIT*	
340	90239-0453		1	BRACKET	
500	312105-0293		4	SCREW M6S ISO 4017 M4X16 A470	
520	312105-0364		6	SCREW M6S ISO 4017 M6X10 A480	
530	312105-0366		1	SCREW M6S ISO 4017 M6X12 A480	
540	312105-0368		4	SCREW M6S ISO 4017 M6X16 A480	
550	312105-0370		4	SCREW M6S ISO 4017 M6X20 A480	
555	312105-0447		2	SCREW M6S ISO 4017 M8X12 A480	
560	312105-0464		2	SCREW M6S ISO 4014 M8X65 A480	
575	312115-0366		2	SCREW ISO4762 M6X12 A4 80	
580	312125-0230		2	SCREW ISO 1207 M3X20 A4	
600	90459-3318		2	DOMED LOCKING NUT, M5 SS 304	
620	315105-0153		9	WASHER BRB 6,4X12 RFR	
630	342980-0113		2	BANJO-CONNECTION,RING 6/4-G1/8 INCH	
640	312605-0310		2	HEXAGON NUT, M6M M3 A280	
650	312105-0323		2	SCREW M6S ISO 4017 M5X8 A480	
MB047	90044-0104		1	PROX.SWITCH IFM IN 3002(RP 90044-194)	

Machine Type	Group Description	Used-In	Group Number	Page No

BENDING ROLLER

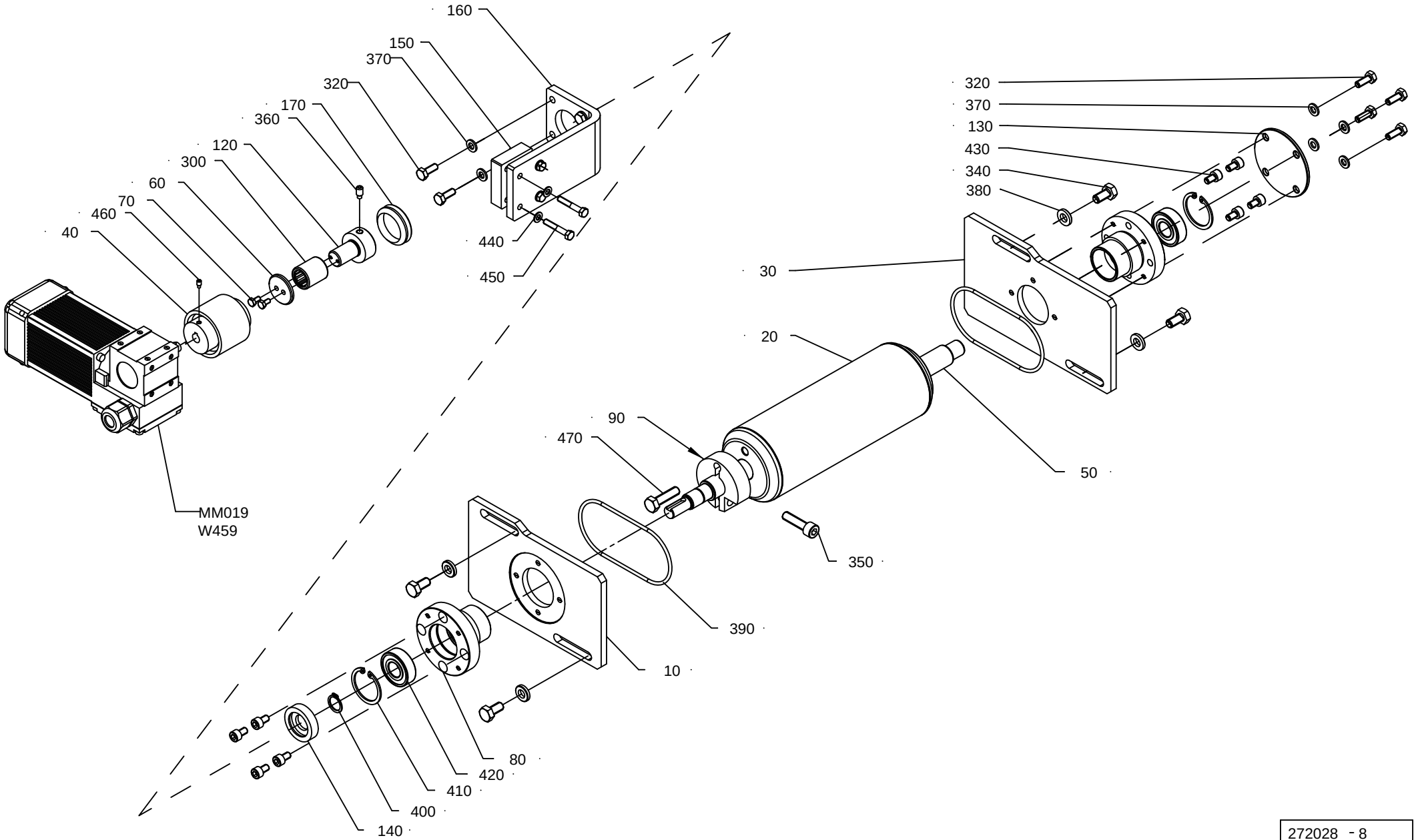

272028 - 8
ECM 241514

ECM: 276162 - 20070126
Group number: 272028-0800
Assembly Drawing: 272028-8_1_AC

Pos	Part No	UN	Qty	Description	Page No
TBA 0100B, TBA 0125S					
010	1524780-0000		1	PLATE	
020	2559069-0000		1	BENDING ROLLER	
030	572157-0000		1	BEARING PANEL	
TBA 0160S, TBA 0200S					
010	1524780-0000		1	PLATE	
020	2559071-0000		1	BENDING ROLLER	
030	572157-0000		1	BEARING PANEL	
TBA 0180B, TBA 0200B, TBA 0236B, TBA 0200SQ, TBA 0284B, TBA 0250B, TBA 0300S, TBA 0330S					
010	1524805-0000		1	PLATE	
020	2559068-0000		1	BENDING ROLLER	
030	572158-0000		1	BEARING PANEL	
TBA 0200M, TBA 0250S					
010	1524780-0000		1	PLATE	
020	2559070-0000		1	BENDING ROLLER	
030	572157-0000		1	BEARING PANEL	
Common Parts					
040	90458-2840		1	SHAFT COUPLING 22,225H9/9	
050	2522249-0000		1	SHAFT	
060	250592-0000		1	WASHER	
070	312105-0287		2	SCREW M6S ISO 4017 M4X8 A470	
080	1539997-0000		2	AXLE SUPPORT	
090	2559087-0000		1	CLAMP	
120	1334234-0000		1	HUB	
130	1548143-0000		1	END PLATE	
140	1558403-0000		1	DISC	
150	2527718-0000		1	SPACER	
160	2522248-0000		1	BRACKET	
170	315220-0167		1	V-RINGS 27X35X10,5 MM V-30S	
300	90348-0007		1	FREE-WHEEL COUPLING, 15,875X22,225 MM	
320	312105-0368		8	SCREW M6S ISO 4017 M6X16 A480	
340	312105-0449		4	SCREW M6S ISO 4017 M8X16 A480	
350	312115-0455		2	SCREW ISO4762 M8X30 A4 80	
360	312311-0366		1	SCREW ISO4028 M6X12 FZB	
370	315105-0153		8	WASHER BRB 6,4X12 RFR	
380	315115-0165		4	WASHER PLAIN, TBRB 8,4/16 H=3	
390	315204-0309		2	O-RING 89,5X3 MM	
400	315751-0112		1	RETAINING RING FOR SHAFT DIN 471 15 A2	
410	315753-0124		2	RETAINING RING FOR BORE DIN 472 35 A2	
420	90458-1704		2	BALL BEARING, 15X35X11 MM	
430	312115-0364		8	SCREW ISO4762 M6X10 A4 80	
440	315105-0146		4	WASHER BRB 5,3X10 RFR	
450	312105-0335		4	SCREW M6S ISO 4014 M5X30 A480	
460	312311-0287		1	SCREW ISO4028 M4X8 FZB	
470	312105-0455		1	SCREW M6S ISO 4017 M8X30 A480	
MM019	90458-1879		1	GEARS, WORM MOTOR 528V--L06-B01	
W459	351150-0413	M	5	CABLE OLFLEX 4X1,5 MM2 LIGHT/GREY	

Machine Type | Group Description | Used-In | Group Number | Page No

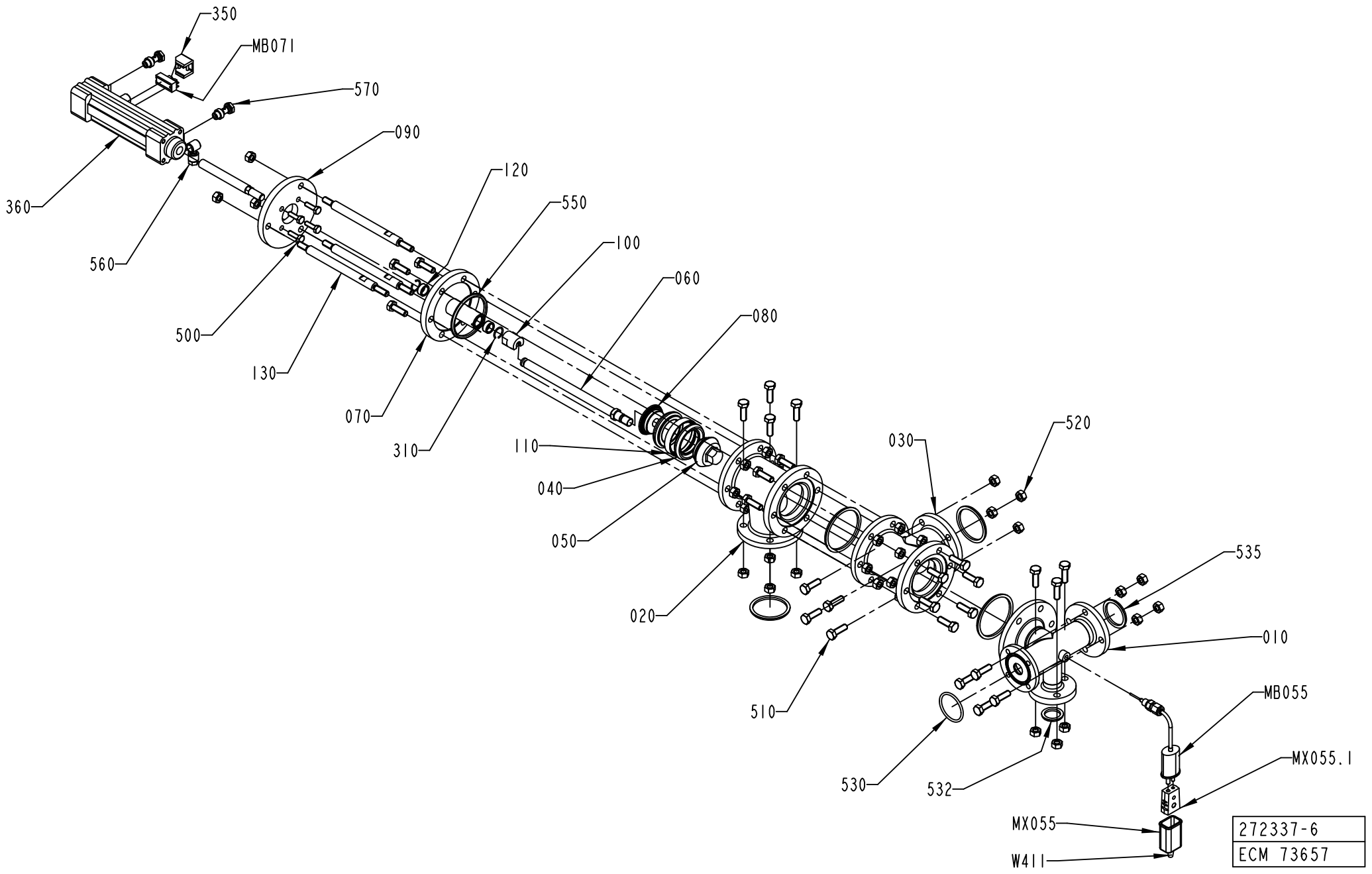
350
MB071
570
090
120
550
100
060
080
360
560
500
130
070
310
110
040
050
020
030
520
535
010
MB055
MX055.1
510
530
532
MX055
W411
272337-6
ECM 73657

ECM: 178605 - 20040910
Group number: 272337-0600
Assembly Drawing: 272337-6_1_AA

Pos	Part No	UN	Qty	Description	Page No
-					
010	978996-0000		1	BRANCH PIPE	
020	1036187-0000		1	T-PIPE	
030	1036194-0000		1	T-PIPE	
040	530589-0000		2	SEAL RING	
050	530590-0000		1	VALVE CONE	
060	1036188-0000		1	SHAFT	
070	1036189-0000		1	SPINDEL GUIDE	
080	1036191-0000		1	SEAL HOLDER	
090	1036193-0000		1	CYLINDER BRACKET	
100	441871-0000		1	PENDULUM SUSPENSION	
110	530599-0000		1	RING	
120	532349-0000		2	PLAIN BEARING	
130	1036192-0000		3	SPACER ROD	
310	90141-0022		2	SNAP RING B 16	
350	90450-0669		1	SENSOR, BRACKET SERIES 168	
360	90450-0281		1	DOUBLE ACTING,PROF.CYL 32-80	
500	312105-0370		4	SCREW M6S ISO 4017 M6X20 A480	
510	312105-0453		30	SCREW M6S ISO 4017 M8X25 A480	
520	312605-0318		36	HEXAGON NUT, M6M M8 A280	
530	315204-0223		1	O-RING 39,2X3 MM	
532	315229-0203		1	GASKET 22,1X31,1X3,7 MM 1"	
535	315229-0204		1	GASKET 34,8X42,8X3,7 MM 1"1/2	
540	315229-0205		2	GASKET 47,5X55,5X3,7 MM 2 INCH	
550	315229-0206		3	GASKET 60,2X68,2X3,7 MM 2"1/2	
560	342797-0121		2	CONN. BANJO, RINGPIECE 6-1/8	
570	342980-0303		2	BANJO-HOLLOW BOLT COUPL,EXT.THR.01-G1/8	
MX055	90326-0020		1	PLUG, FEMALE YELLOW CR-AL	
MB071	90457-0047		1	SENSOR 2750-1-5111-1 W.ADAPTER PNP	
MB055	90326-0051		1	THERMOCOUPLE, 12826-33	
MX055.1	90326-0012		1	PROTECTIVE COVER, T31A4618	
W411	90220-0059	M	5	THERMOCOUPLE CABLE K/PVC/20AWG 2X0,5MM2	

Pos	Part No	UN	Qty	Description	Page No

Machine Type | Group Description | Used-In | Group Number | Page No

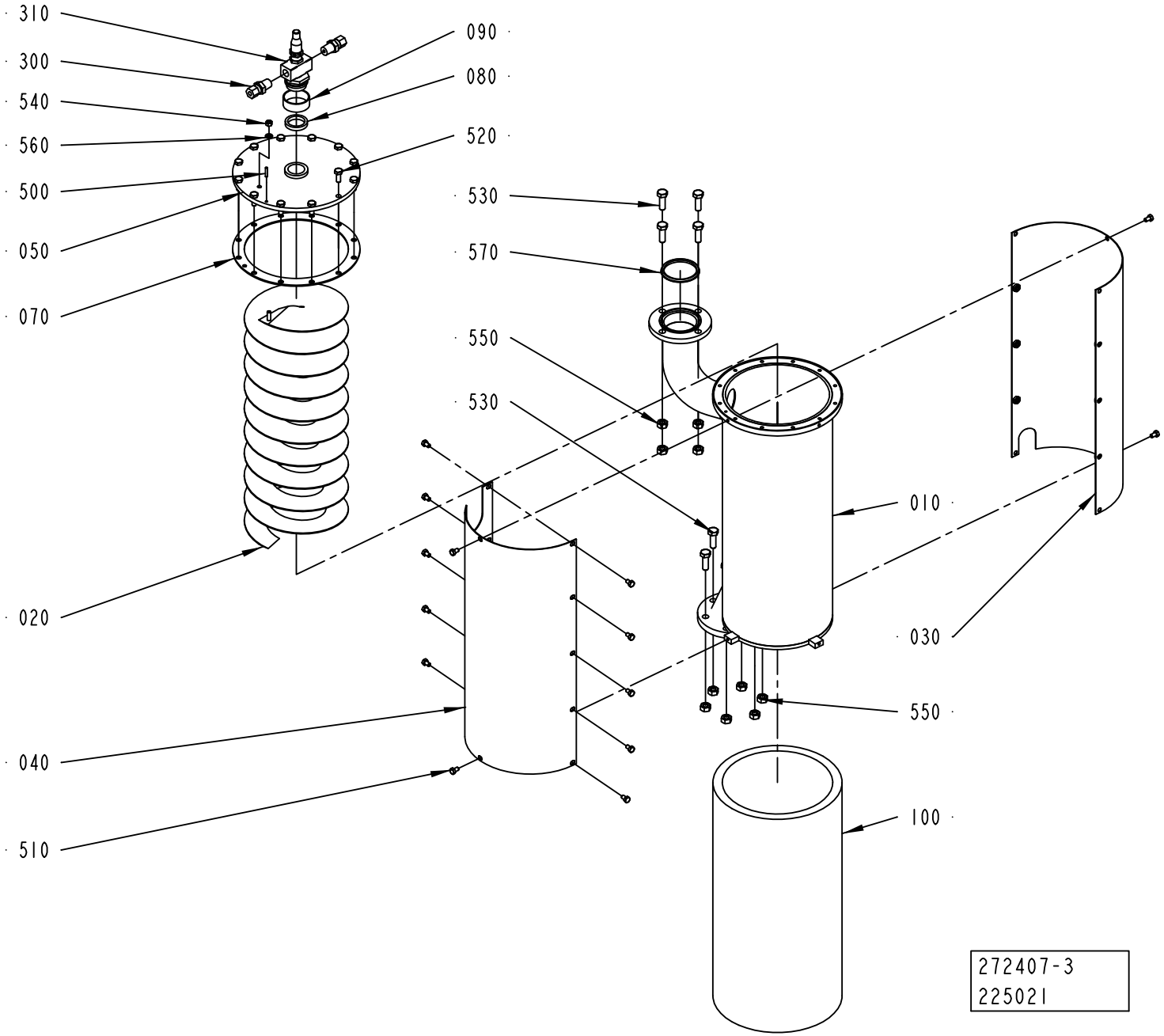
310
300
540
560
500
050
070
090
080
520
530
570
550
530
010
030
550
100
020
040
510
272407-3
225021

ECM: 225021 - 20050804
Group number: 272407-0400
Assembly Drawing: 272407-3_1_AD

Pos	Part No	UN	Qty	Description	Page No
-					
010	978879-0000		1	CONTAINER	
020	272325-0000		1	SPIRAL	
030	978971-0000		1	DISCHARGE TRAY	
040	978972-0000		1	DISCHARGE TRAY	
050	272275-0000		1	LID	
070	272277-0000		1	GASKET	
080	12242-0001		1	GASKET 32X25X5,5	
090	295993-0000		1	GASKET HOLDER	
100	441501-0000		1	INSULATION	
300	90030-0062		2	CONN. STR. GE 6-1/4-18 NPTF	
310	90424-0017		1	SPRAY NOZZLE	
	90424-0301		*1*	*SLEEVE*	
	90424-0302		*1*	*FLUID CAP GASKET, CP3612-AL*	
	90424-0303		*1*	*BACK SEAL GASKET, CP10439*	
	90424-0304		*1*	*GASKET*	
500	311103-0236		1	PARALLEL PIN ISO 2338 3M6X16 A1	
510	312105-0323		14	SCREW M6S ISO 4017 M5X8 A480	
520	312105-0368		12	SCREW M6S ISO 4017 M6X16 A480	
530	312105-0453		10	SCREW M6S ISO 4017 M8X25 A480	
540	312605-0314		1	HEXAGON NUT, M6M M5 A280	
550	312605-0318		10	HEXAGON NUT, M6M M8 A280	
560	315105-0146		1	WASHER BRB 5,3X10 RFR	
570	315229-0205		1	GASKET 47,5X55,5X3,7 MM 2 INCH	

Pos	Part No	UN	Qty	Description	Page No

PRODUCT VALVE

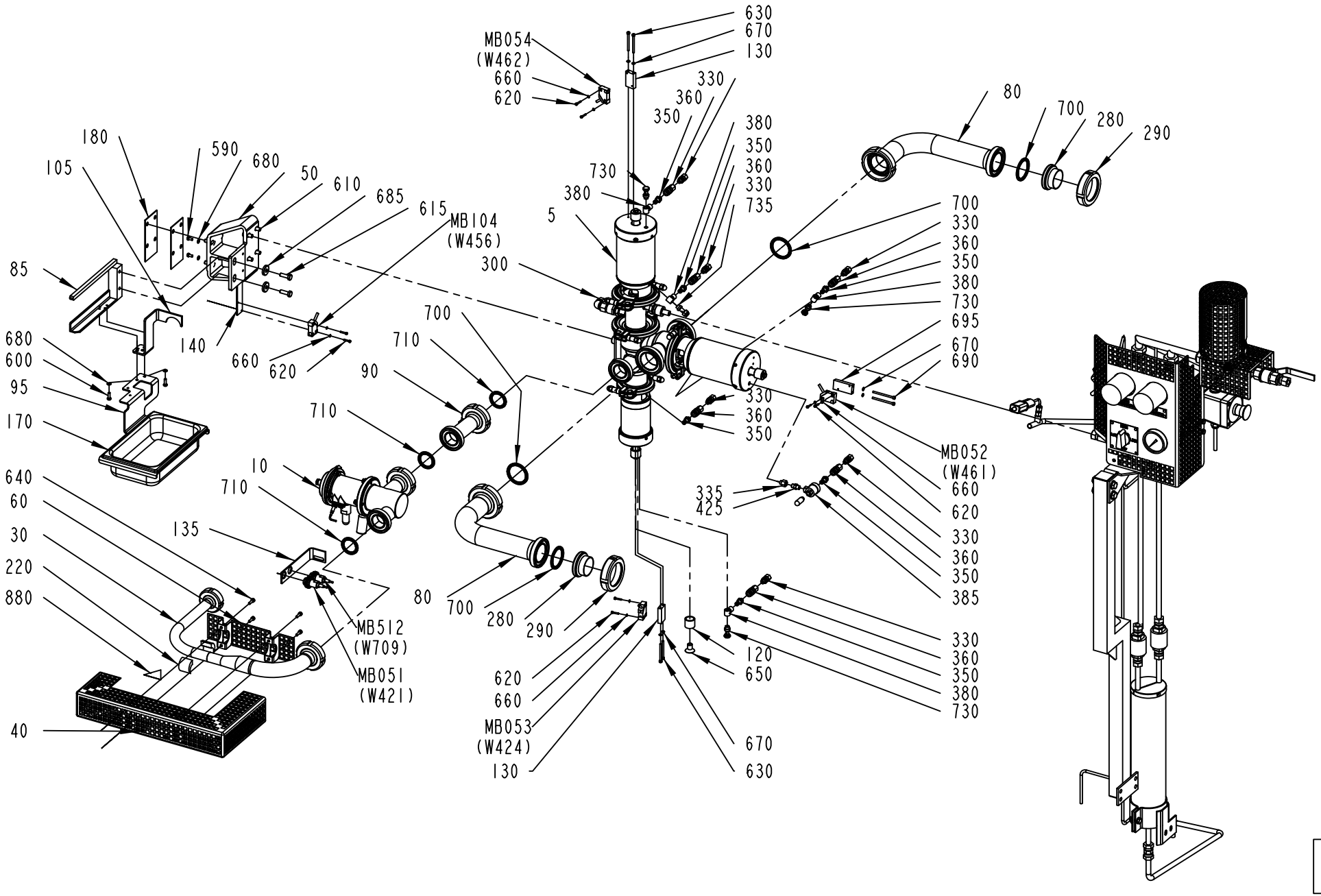

272560-17
266817

ECM: 275059 - 20070126
Group number: 272560-0900
Assembly Drawing: 272560-17_1_AC

This list covers pages from 1-66 to 1-73

Pos	Part No	UN	Qty	Description	Page No
HI (See drawing on pages: 1-66, 1-68)					
MB512	90458-0676		1	PROXIMITY SWITCH,E2EG-X5B1-6M	
Common Parts					
005	576434-0200		1	AP-VALVE 51-38	**1-75**
010	927205-0200		1	REGULATING VALVE	**1-87**
015	2618264-0000		1	PIPE	
020	1512411-0000		2	PIPE	
025	2618263-0000		1	CONTAINER	
030	2721238-0000		1	PIPE	
035	1317756-0000		1	PIPE	
040	1348476-0000		1	TOUCH GUARD	
050	577360-0000		1	CANTILEVER	
060	1348636-0000		1	TOUCH GUARD	
070	2761759-0000		1	PIPE	
075	2761760-0000		1	PIPE	
080	1519936-0000		2	PIPE	
085	2721241-0000		1	SUPPORT	
090	1317663-0000		1	PIPE	
095	2603631-0000		1	BRACKET	
100	2618266-0000		1	PIPE	
105	2721240-0000		1	BRACKET	
120	440647-0000		1	SLEEVE	
130	440731-0000		2	PLATE	
135	1317905-0000		1	BRACKET	
140	578480-0000		1	BRACKET	
150	1317262-0000		1	COVER	
160	1512377-0000		1	COVER	
170	90459-2435		1	CONTAINER 1,8L , GN 1406	
180	490985-0000		2	SPACER SHEET	
190	1334841-0300		1	T.C.S.B UNIT	**1-89**
200	2635109-0000		1	CLAMP	
210	1539238-0000		1	PIPE	
220	2721239-0000		2	SPACER	
280	90217-0207		2	ASEPT. MALE FITTING ISO, 03-32-456/42	
290	90217-0209		2	UNION NUT, 2 APV, 07-01-426/17	
300	90030-0096		1	CONN. ELBOW W-12	
305	90030-0106		1	CONN. PIPE G-12	
315	90030-0187		4	CONN. STR. GA-12-G3/8	
330	90030-0184		6	CONN. STR. GA-6-G1/8	
335	90030-0212		1	NIPPLES, REDUSING, INT. THR. NO. 2521	
350	90163-0057		6	QUICK COUPLING, (M) 5150-1/8	
355	90157-0037	L	1	THREAD SEALANT LOCTITE 542	
360	90163-0062		6	QUICK COUPLING, (F) 5053-1/8	
380	90224-0308		4	CONN. BANJO, ART. NO. 2023-1/8-1/8	
385	90235-0259		1	VALVE	
410	90328-0047		1	SILENCER G1/8"	
425	90330-0032		1	NIPPLES, EXT. THREAD. ISO 7/1 R1/8-R1/8	
460	90360-0020		2	STEAM TRAP / MK36/51 3/8 INCH	
	90360-0310		*1*	*CAPSULE, FOR STEAM TRAP 90360-20*	
	90360-0309		*1*	*STRAINER, FOR STEAM TRAP 90360-20*	
520	90066-0021		1	PUSH BUTTON BOX XAP-M1501	
530	312125-0333		2	SCREW ISO 1207 M5X25 A4	
540	90089-0002		1	REDUCING SLEEVE, PR22,5/PR15,2	
550	352103-0101		1	CABLE GLAND, ST 9, PR15,2/PG9	
580	315105-0165		1	WASHER BRB 8,4X16 RFR	
590	312105-0325		6	SCREW M6S ISO 4017 M5X10 A480	
610	312105-0451		8	SCREW M6S ISO 4017 M8X20 A480	
615	312105-0453		3	SCREW M6S ISO 4017 M8X25 A480	
620	312115-0228		8	SCREW ISO4762 M3X16 A4 80	
630	312115-0305		4	SCREW ISO4762 M4X50 A4 80	
640	312115-0329		4	SCREW ISO4762 M5X16 A4 80	
645	312115-0340		1	SCREW ISO4762 M5X45 A4 80	
650	312155-0532		1	SCREW DIN 7991 MF6S M12X20 A4 70	
660	315105-0124		8	WASHER BRB 3,2X6 RFR	
670	315105-0136		6	WASHER BRB 4,3X8 RFR	
680	315105-0146		6	WASHER BRB 5,3X10 RFR	
685	315125-0165		2	WASHER TBRSB 8,4X26X5 A4	
690	90287-0314		2	SCREW MC6S M4X60 A280	
695	2832787-0000		1	PLATE	
700	90217-0349		4	GASKET 48,4X59,8X4 MM	
710	90217-0348		3	GASKET 35,4X46,8X4 MM	
720	90217-0347		2	GASKET 32X22,6X3,6 MM	
730	342980-0303		3	BANJO-HOLLOW BOLT COUPL,EXT.THR.01-G1/8	
735	90235-0274		1	THROTTLE CHECK VALVE, G1/8", SCU-604-1/8	
860	342737-0204		1	CONN. ELBOW W-6 LRFR	
870	315234-0109		1	WASHER,PL.RND.CU.10,3/13,5 H=1,0	
880	359710-0001		1	WARNING SIGN ISO, HOT SURFACE	
MX050	90326-0020		1	PLUG, FEMALE YELLOW CR-AL	
MS012	90458-1651		1	EMERGENCY STOP, ZB4-BS-844 ZB4-BZ-104	
MB104	90044-0194		1	PROX.SW. IN5329/IN3002-BPKG(EX90044-104)	
MB054	90044-0194		1	PROX.SW. IN5329/IN3002-BPKG(EX90044-104)	
MB053	90044-0194		1	PROX.SW. IN5329/IN3002-BPKG(EX90044-104)	
MB052	90044-0194		1	PROX.SW. IN5329/IN3002-BPKG(EX90044-104)	
MB051	90458-0676		1	PROXIMITY SWITCH,E2EG-X5B1-6M	

Machine Type | Group Description | Used-In | Group Number | Page No

PRODUCT VALVE

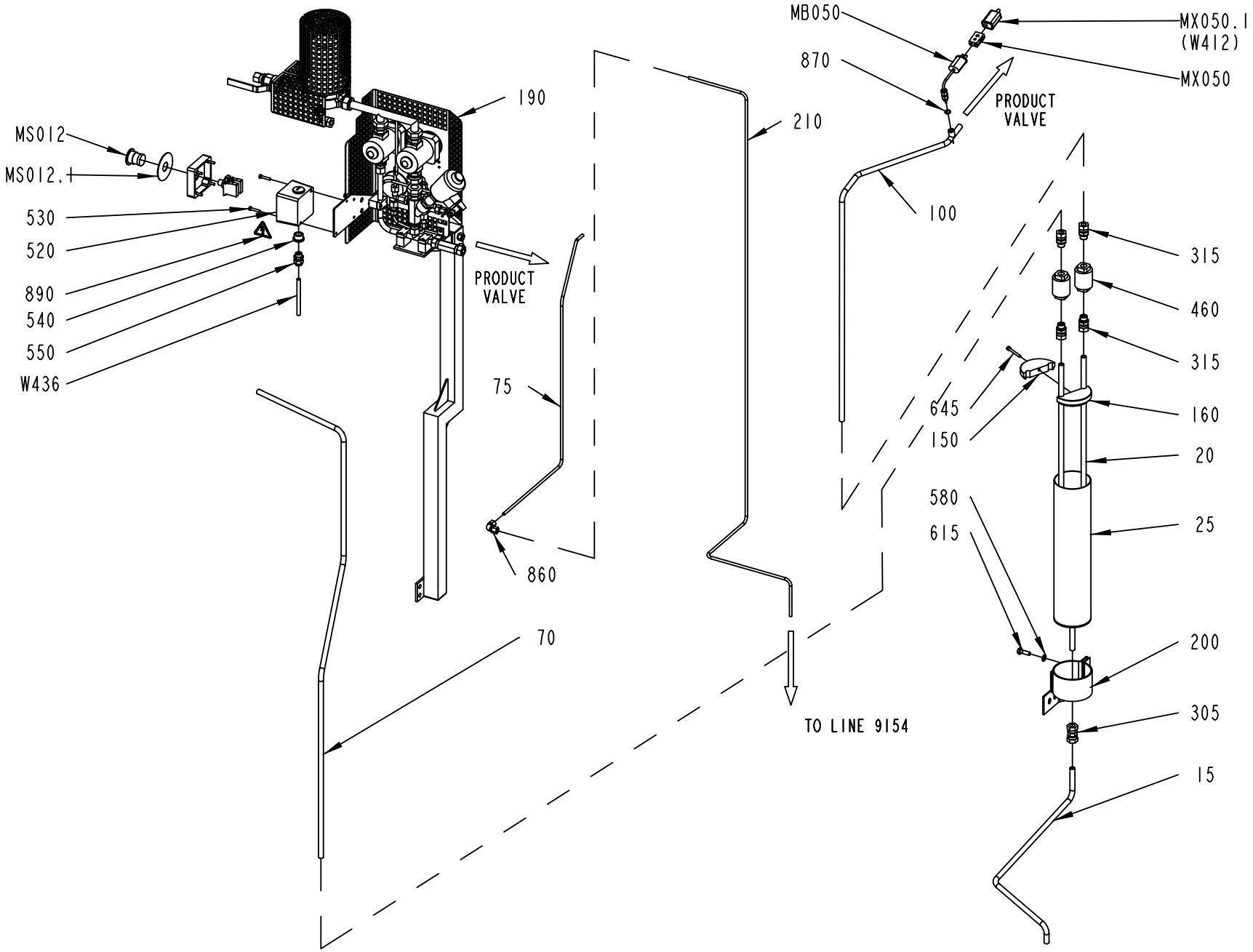

272560-17
266817

Pos	Part No	UN	Qty	Description	Page No
Common Parts (Cont'd)					
MB050	90326-0089		1	THERMOCOUPLE, 5110-089-000	
MX050.1	90326-0012		1	PROTECTIVE COVER, T31A4618	
MS012.1	486826-0001		1	SIGN "EMERGENCY STOP"	
W412	90220-0059	M	5	THERMOCOUPLE CABLE K/PVC/20AWG 2X0,5MM2	
W436	351150-0405	M	5	CABLE OLFLEX 5X0,75 MM2 LIGHT/GREY	

Pos	Part No	UN	Qty	Description	Page No

PRODUCT VALVE

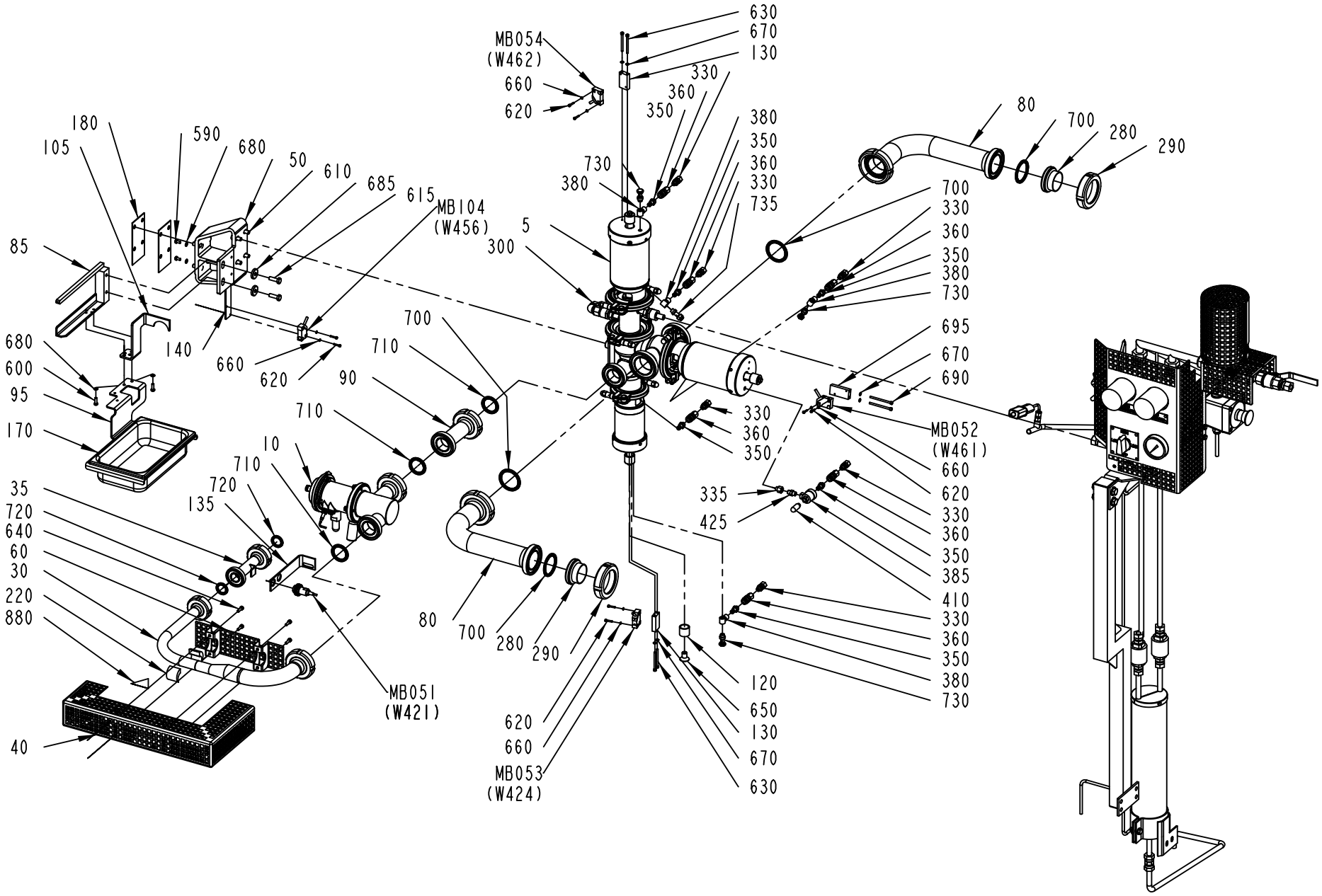

272560-18
266817

Pos	Part No	UN	Qty	Description	Page No	Pos	Part No	UN	Qty	Description	Page No

SEE PREVIOUS LISTS PAGES: 1-67, 1-69.

PRODUCT VALVE

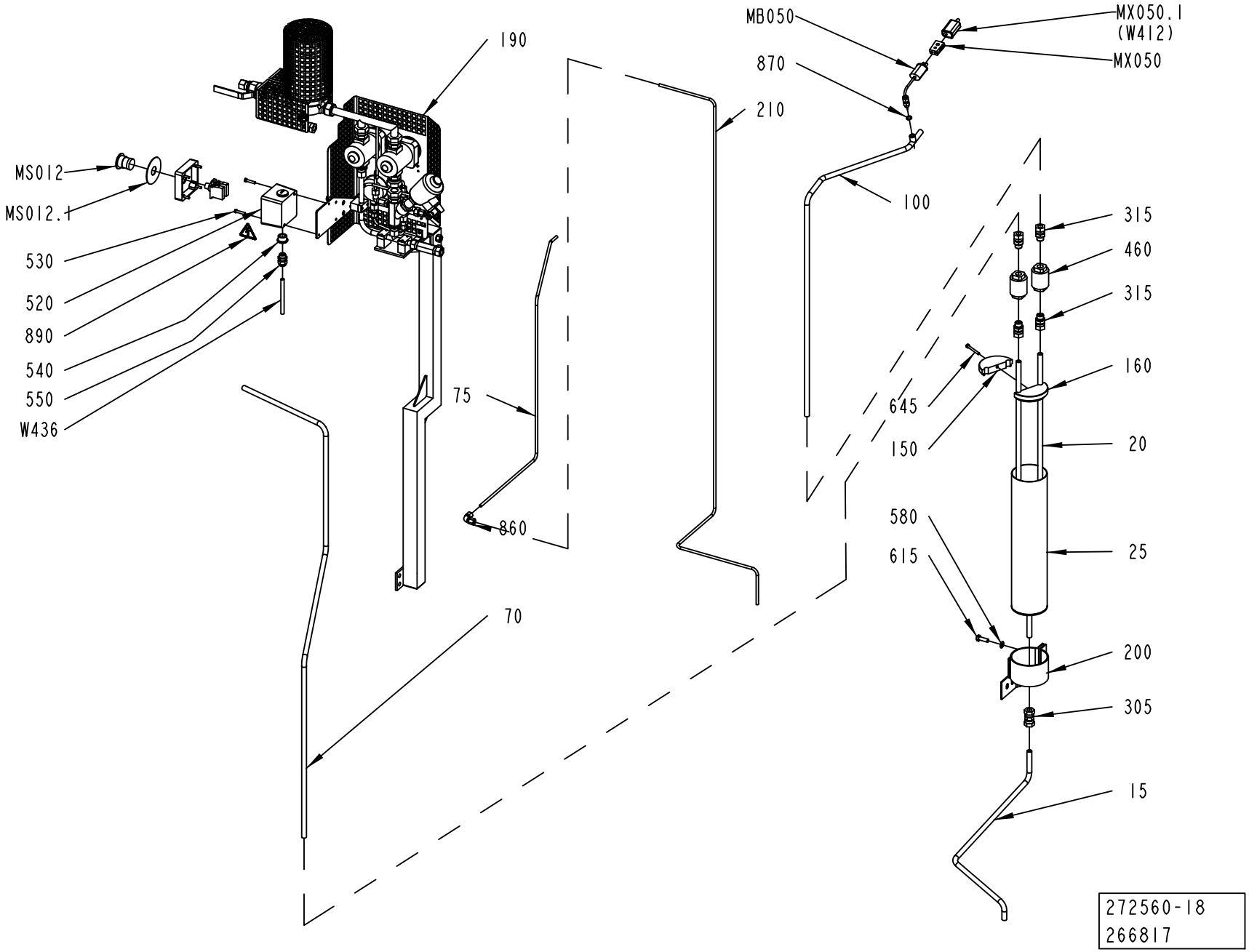

Pos	Part No	UN	Qty	Description	Page No	Pos	Part No	UN	Qty	Description	Page No

SEE PREVIOUS LISTS PAGES: 1-67, 1-69.

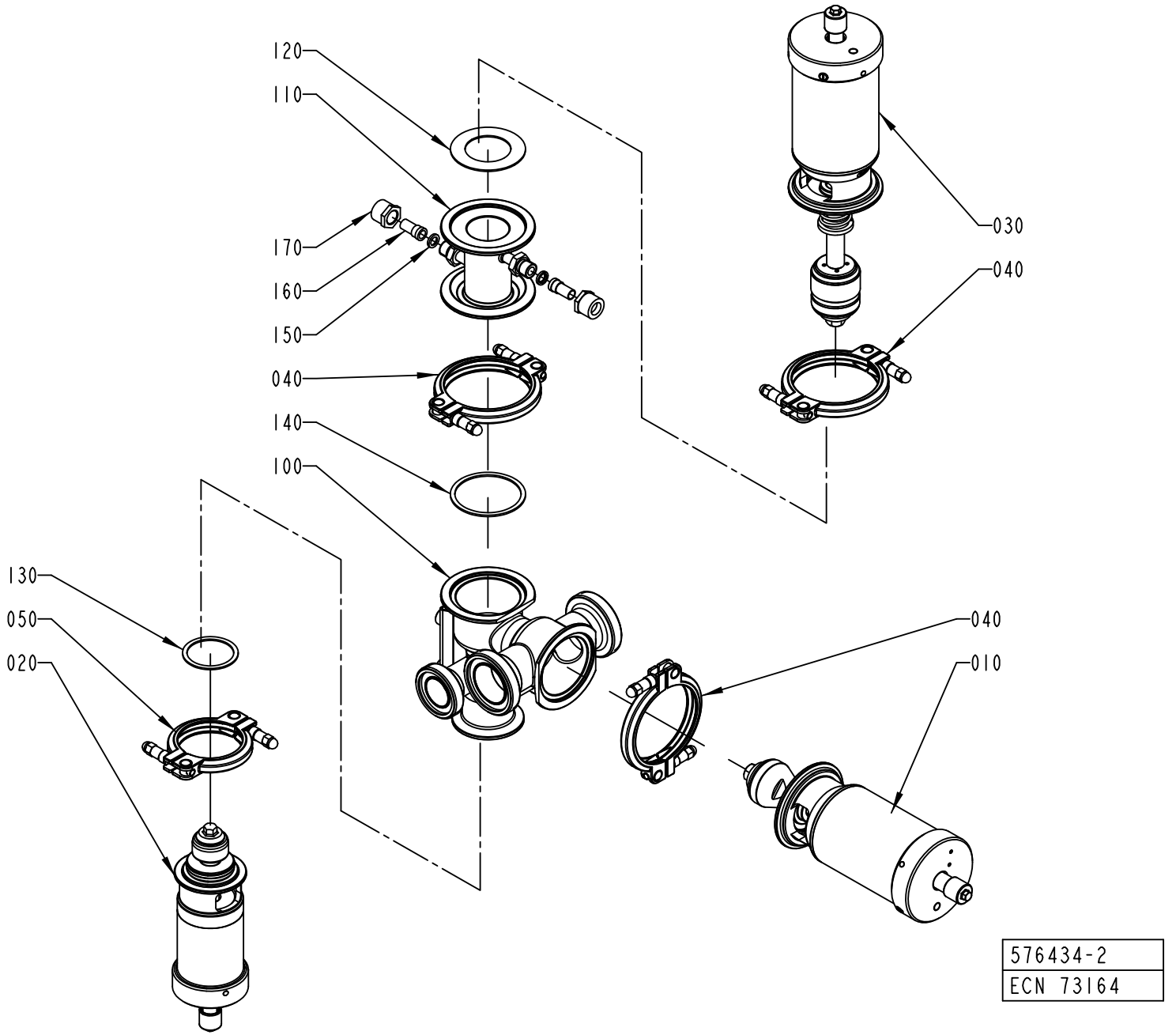
120
110
170
160
150
040
140
100
130
050
020
030
040
040
010
576434-2
ECN 73164

ECM: 177592 - 20040910
Group number: 576434-0200
Assembly Drawing: 576434-2_1_AA

Pos	Part No	UN	Qty	Description	Page No
-					
010	576436-0100		1	A-CYLINDER	**1-77**
020	576438-0100		1	B-CYLINDER	**1-79**
030	576437-0100		1	C-CYLINDER	**1-81**
040	541163-0200		3	CLAMP RING	**1-83**
050	541164-0200		1	CLAMP RING	**1-85**
100	1523057-0000		1	AP-VALVE-BODY (51-38)	
110	567018-0000		1	STEAM HOUSE	
120	539212-0000		1	GASKET	
130	90207-0365		1	GASKET	
140	90207-0363		1	GASKET	
150	90091-0266		2	SEAL RING 10,4X16,3X2,5 MM	
160	90030-0336		2	CONN. STRAIGHT, 316L-12M-BVCO-3	
170	90030-0338		2	NUT, PIPE & CONNECTORS, SS-8-BVCO-4	

Pos	Part No	UN	Qty	Description	Page No

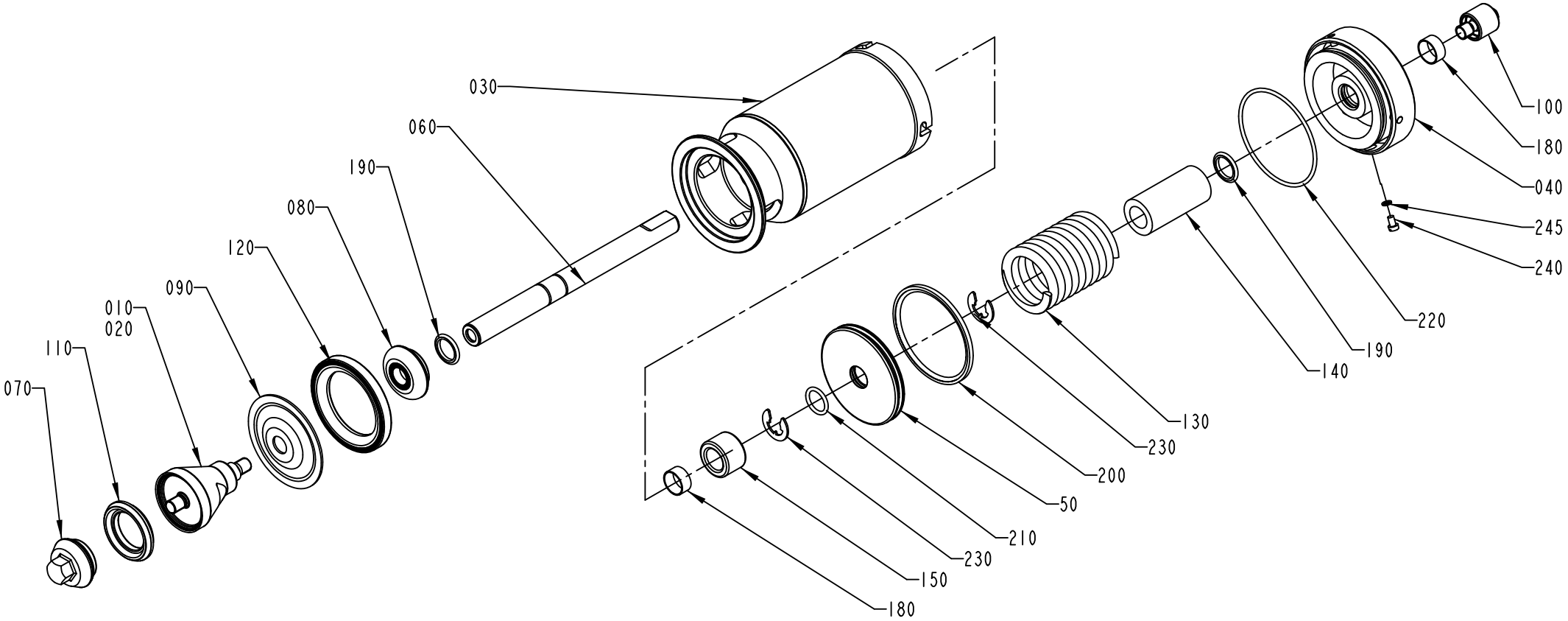

576436-1
ECN 261676

ECM: 274696 - 20070101
Group number: 576436-0100
Assembly Drawing: 576436-1_1_AC

Pos	Part No	UN	Qty	Description	Page No
2"					
010	2833037-0000		1	SEAL RING	
3"					
010	530595-0000		1	SEAL RING HOLDER	
Common Parts					
030	576439-0000		1	CYLINDER HOUSING	
040	576440-0000		1	END SECTION	
050	576441-0000		1	PISTON	
060	576446-0000		1	PISTON ROD	
070	2826442-0000		1	VALVE CONE	
080	541166-0000		1	WASHER	
090	533169-0000		1	DIAPHRAGM	
100	553607-0000		1	SLEEVE	
110	2826441-0000		1	SEAL RING	
120	440655-0000		1	RING	
130	440663-0000		1	COMPRESSION SPRING	
140	576448-0000		1	SPACER	
150	576449-0000		1	SPACER	
180	90091-0238		2	WEAR RING 20X22X10 MM	
190	90091-0237		2	ROD SEAL, GLIDORING 20X27,5X3 MM	
200	90091-0336		1	PISTON SEAL GLIDE RING 79X90X4 MM	
210	315204-0215		1	O-RING 19,2X3 MM	
220	315202-0308		1	O-RING 84,5X3 MM	
230	315754-0113		2	LOCKING WAE 15	
240	312125-0323		1	SCREW ISO 1207 M5X8 A4	
245	315233-0101		1	WASHER CAPTIVE SEALING M5(NEW315239-101)	

Pos	Part No	UN	Qty	Description	Page No

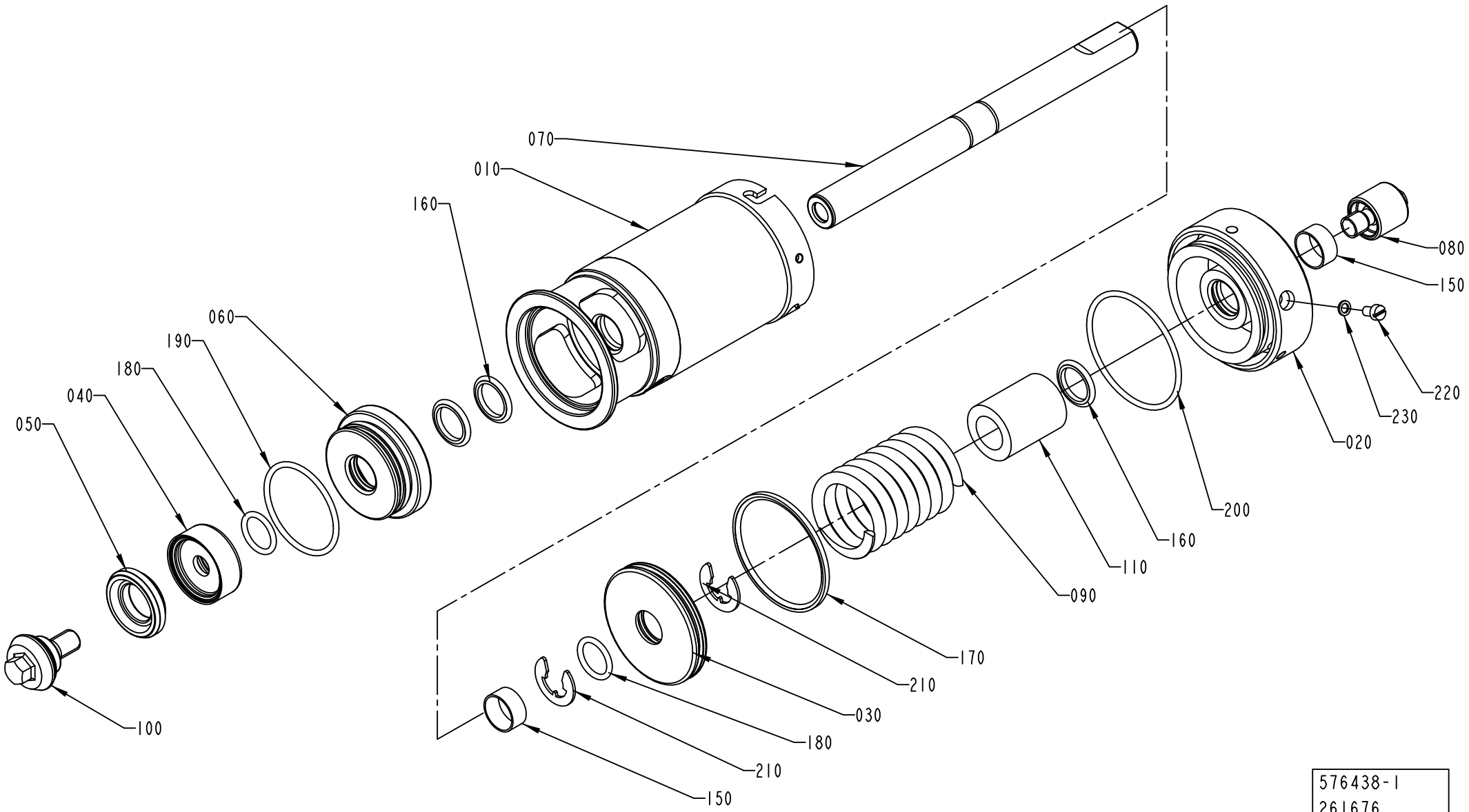

576438-1
261676

ECM: 274697 - 20070101
Group number: 576438-0100
Assembly Drawing: 576438-1_1_AC

Pos	Part No	UN	Qty	Description	Page No
-					
010	576443-0000		1	CYLINDER HOUSING	
020	576444-0000		1	END SECTION	
030	576445-0000		1	PISTON	
040	530587-0000		1	WASHER	
050	2826440-0000		1	SEAL RING	
060	556133-0000		1	SEALING WASHER	
070	576447-0000		1	PISTON ROD	
080	553607-0000		1	SLEEVE	
090	440662-0000		1	COMPRESSION SPRING	
100	2826439-0000		1	VALVE CONE	
110	576451-0000		1	SPACER	
150	90091-0238		2	WEAR RING 20X22X10 MM	
160	90091-0237		3	ROD SEAL, GLIDORING 20X27,5X3 MM	
170	90091-0335		1	PISTON SEAL GLIDE RING 62,5X70X3 MM	
180	315204-0215		2	O-RING 19,2X3 MM	
190	315204-0301		1	O-RING 49,5X3 MM	
200	315202-0304		1	O-RING 64,5X3 MM	
210	315754-0113		2	LOCKING WAE 15	
220	312125-0323		1	SCREW ISO 1207 M5X8 A4	
230	315233-0101		1	WASHER CAPTIVE SEALING M5(NEW315239-101)	

Pos	Part No	UN	Qty	Description	Page No

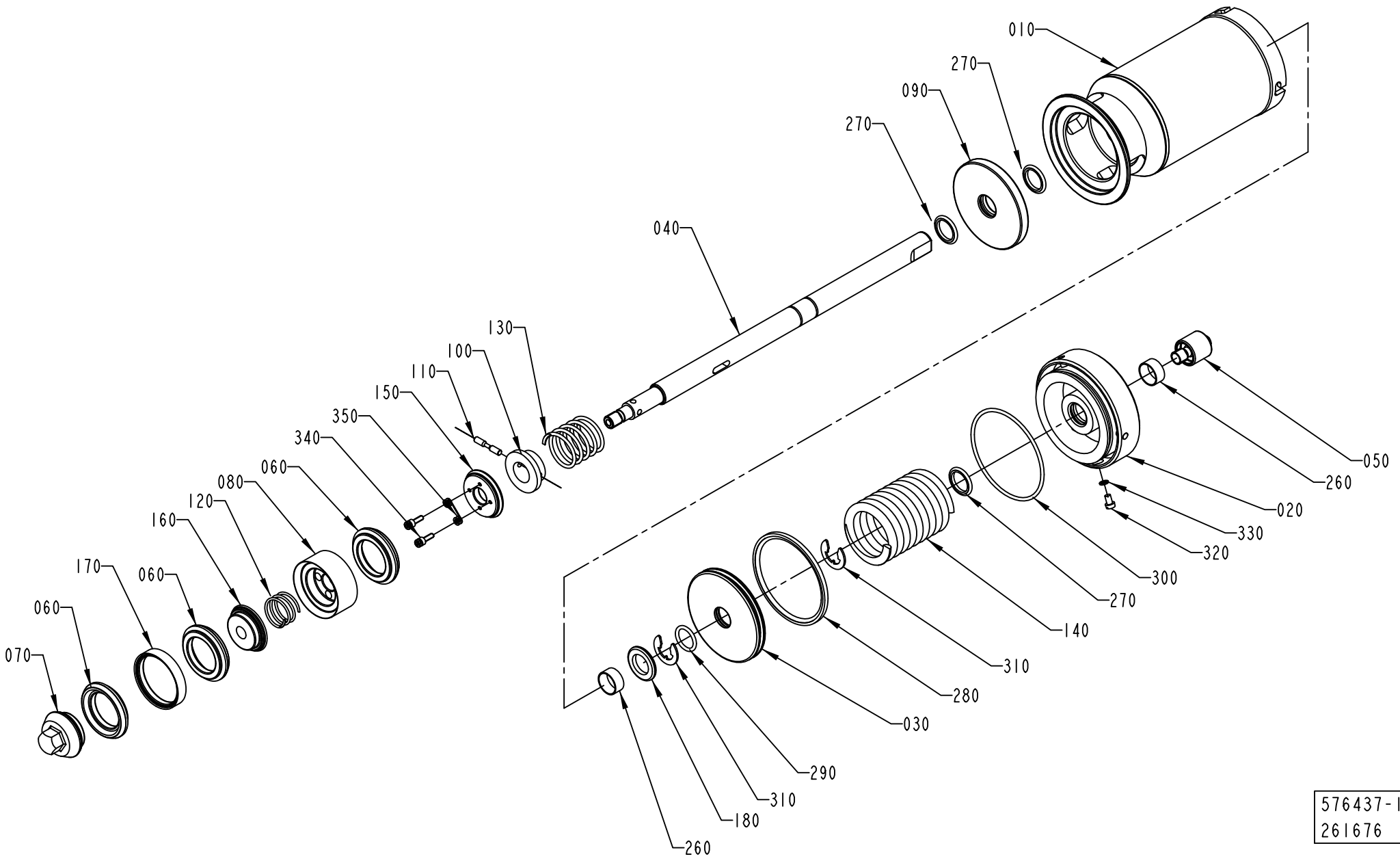

576437-1
261676

ECM: 274695 - 20070101
Group number: 576437-0100
Assembly Drawing: 576437-1_1_AC

Pos	Part No	UN	Qty	Description	Page No
-					
010	576439-0000		1	CYLINDER HOUSING	
020	576440-0000		1	END SECTION	
030	576441-0000		1	PISTON	
040	576442-0000		1	PISTON ROD	
050	553607-0000		1	SLEEVE	
060	2826441-0000		3	SEAL RING	
070	2826442-0000		1	VALVE CONE	
080	530591-0000		1	HOLDER	
090	555458-0000		1	SEALING WASHER	
100	440650-0000		1	WASHER	
110	440659-0000		1	CYLINDRICAL PIN	
120	440660-0000		1	COMPRESSION SPRING	
130	440661-0000		1	COMPRESSION SPRING	
140	440663-0000		1	COMPRESSION SPRING	
150	530597-0000		1	WASHER	
160	530598-0000		1	WASHER	
170	530599-0000		2	RING	
180	576450-0000		1	SPACER	
260	90091-0238		2	WEAR RING 20X22X10 MM	
270	90091-0237		3	ROD SEAL, GLIDORING 20X27,5X3 MM	
280	90091-0336		1	PISTON SEAL GLIDE RING 79X90X4 MM	
290	315204-0215		1	O-RING 19,2X3 MM	
300	315202-0308		1	O-RING 84,5X3 MM	
310	315754-0113		2	LOCKING WAE 15	
320	312125-0323		1	SCREW ISO 1207 M5X8 A4	
330	315233-0101		1	WASHER CAPTIVE SEALING M5(NEW315239-101)	
340	312115-0291		4	SCREW ISO4762 M4X12 A4 80	
350	315402-0136		4	LOCK WASHER FBB 4,1	

Pos	Part No	UN	Qty	Description	Page No

CLAMP RING

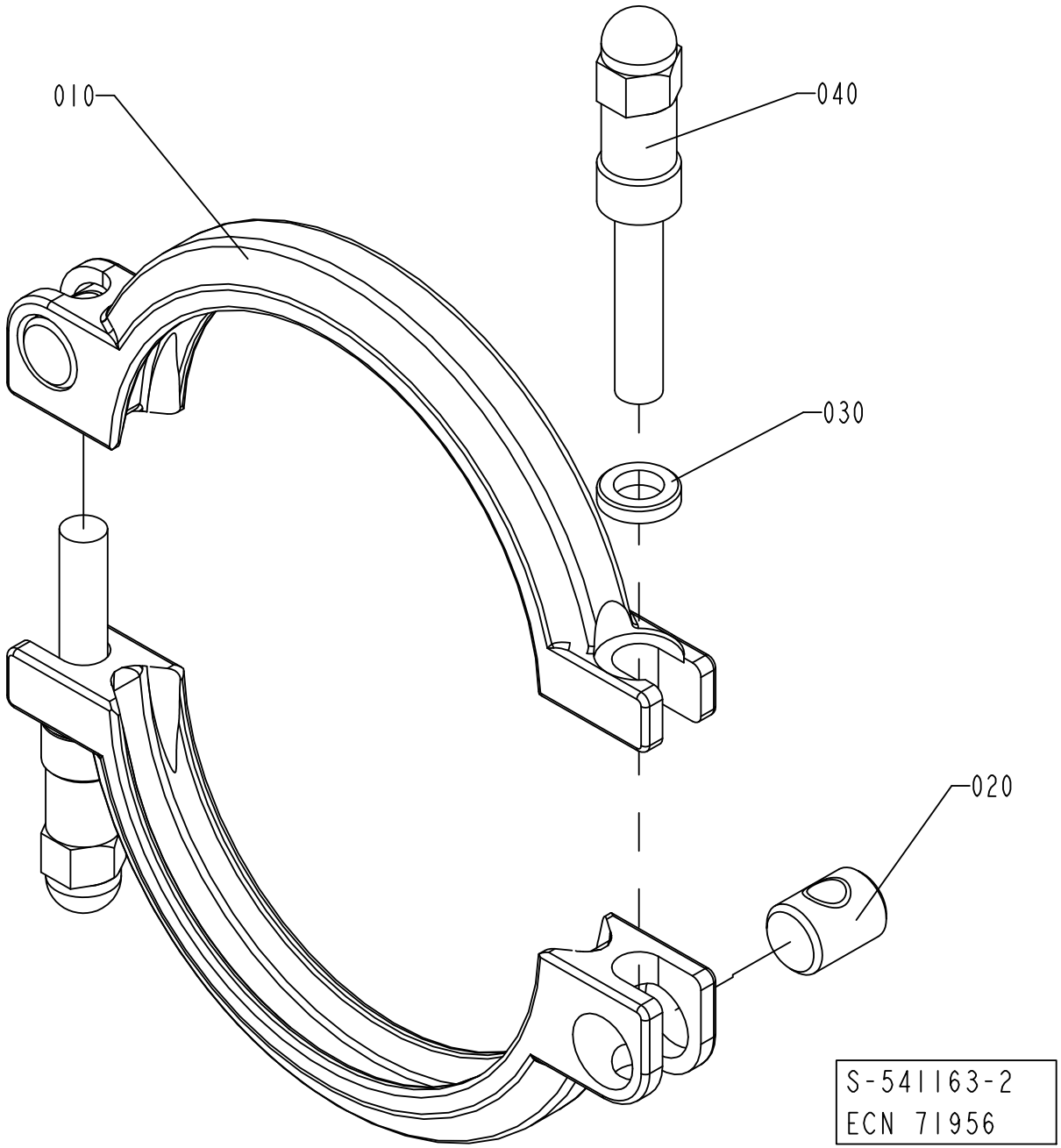

ECM: 178064 - 20040910
Group number: 541163-0200
Assembly Drawing: 541163-2_1_AB

Pos	Part No	UN	Qty	Description	Page No
-					
010	532117-0000		2	CLAMP RING	
020	497748-0000		2	PIN	
030	541165-0000		2	WASHER	
040	554162-0000		2	SCREW	

Pos	Part No	UN	Qty	Description	Page No

CLAMP RING

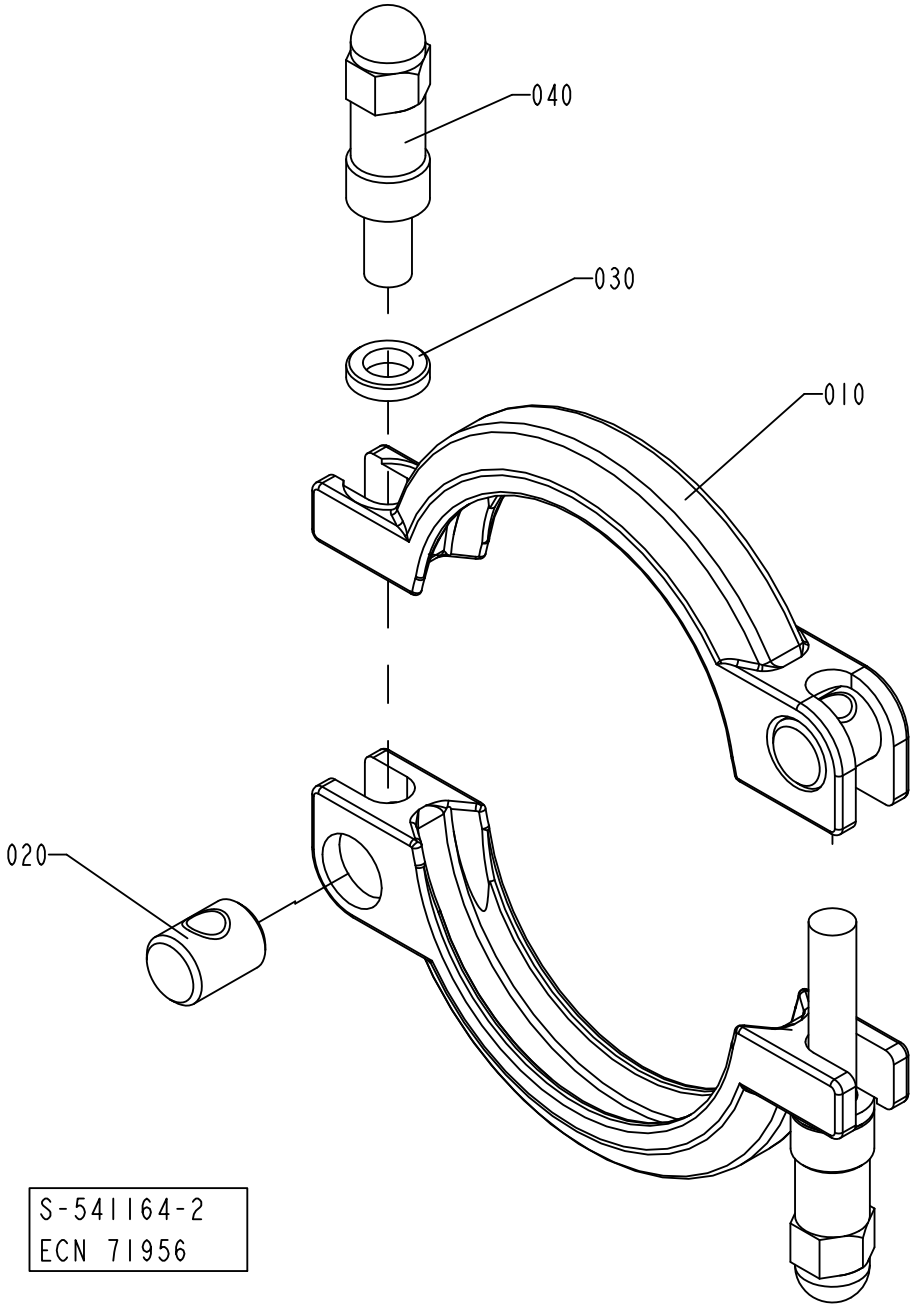

ECM: 178065 - 20040910
Group number: 541164-0200
Assembly Drawing: 541164-2_1_AB

Pos	Part No	UN	Qty	Description	Page No
-					
010	532118-0000		2	CLAMP RING	
020	497748-0000		2	PIN	
030	541165-0000		2	WASHER	
040	554162-0000		2	SCREW	

Pos	Part No	UN	Qty	Description	Page No

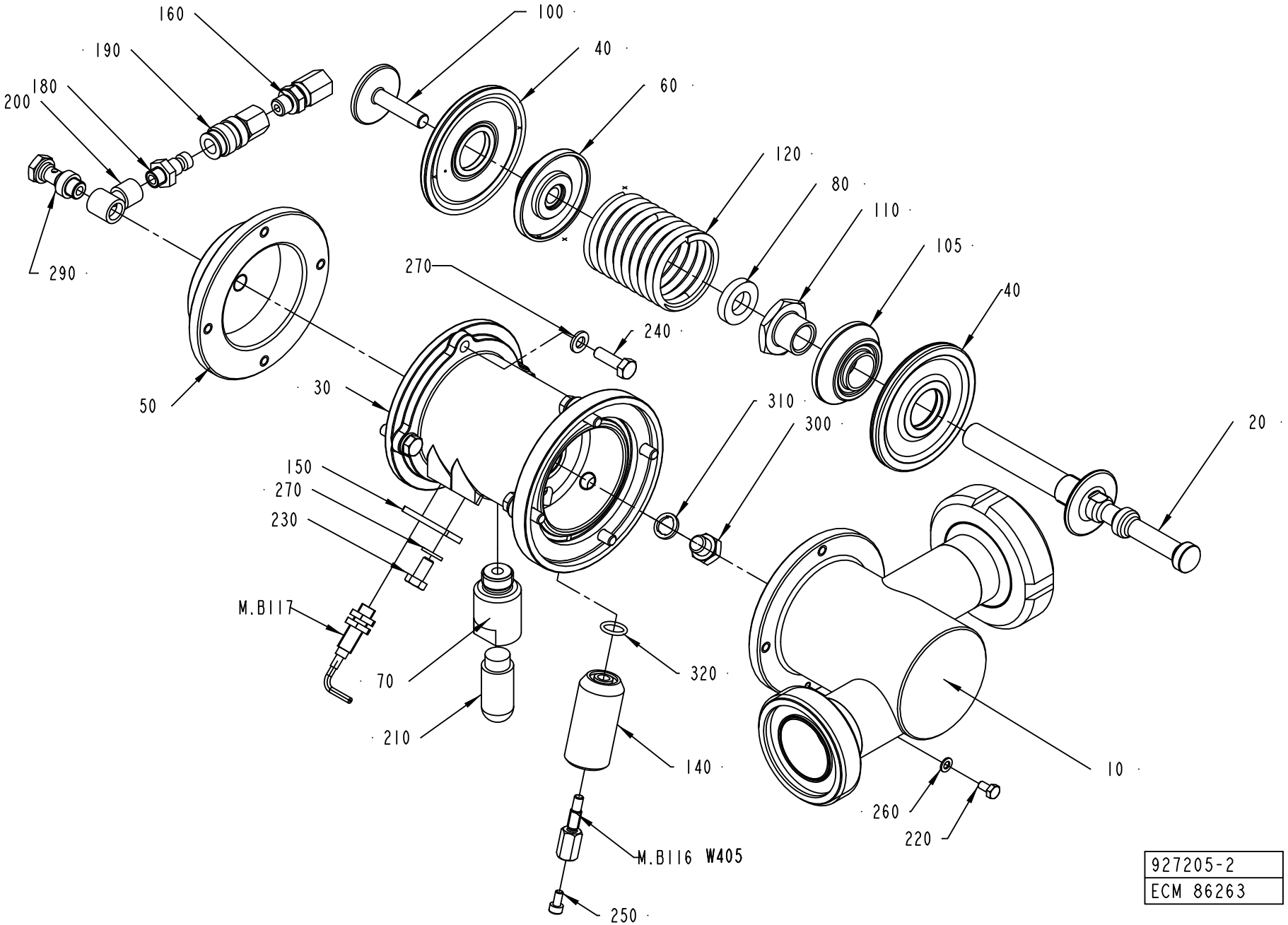
160
190
200
180
290
100
40
60
120
80
110
105
40
270
240
50
30
310
300
20
150
270
230
M.B117
70
210
320
140
M.B116 W405
250
260
220
10
927205-2
ECM 86263

ECM: 179735 - 20041217
Group number: 927205-0200
Assembly Drawing: 927205-2_1_AB

Pos	Part No	UN	Qty	Description	Page No
-					
010	1519937-0000		1	1REGULATOR BODY	
020	927007-0000		1	SHUTTER	
030	927194-0000		1	BODY	
040	925998-0000		2	DIAPHRAGM	
050	927203-0000		1	COVER	
060	926906-0000		1	SPACER	
070	927044-0000		1	SPACER	
080	736514-0000		1	SHOCK ABSORBER	
100	926907-0000		1	SCREW	
105	1511600-0000		1	SPACER	
110	979434-0000		1	FERRULE	
120	926909-0000		1	COMPRESSION SPRING	
140	2576398-0000		1	SPACER	
150	926934-0000		1	SUPPORT	
160	90030-0089		1	STRAIGHT CONNECTION	
180	90163-0057		1	QUICK COUPLING, (M) 5150-1/8	
190	90163-0062		1	QUICK COUPLING, (F) 5053-1/8	
200	90224-0308		1	CONN. BANJO, ART. NO. 2023-1/8-1/8	
210	90328-0026		1	SILENCER G1/4"	
220	312105-0287		1	SCREW M6S ISO 4017 M4X8 A470	
230	312105-0366		1	SCREW M6S ISO 4017 M6X12 A480	
240	312105-0370		8	SCREW M6S ISO 4017 M6X20 A480	
250	312115-0287		1	SCREW ISO4762 M4X8 A4 80	
260	315105-0136		1	WASHER BRB 4,3X8 RFR	
270	315105-0153		9	WASHER BRB 6,4X12 RFR	
290	342980-0303		1	BANJO-HOLLOW BOLT COUPL,EXT.THR.01-G1/8	
300	90330-0066		1	PLUG, EXT. G-THREAD, G1/8	
310	315239-0109		1	NYLON WASHER G1/8	
320	315206-0701		1	O-RING 10,82X1,78 MM	
M.B117	90458-0138		1	PROX. SWITCH, E2EG-X1R5B1-5M	
M.B116	1478814-0000		1	SENSOR	
W405	351150-0431	M	5	CABLE OLFLEX 2X0,75 MM2 LIGHT/GREY	

Pos	Part No	UN	Qty	Description	Page No

Machine Type | Group Description | Used-In | Group Number | Page No

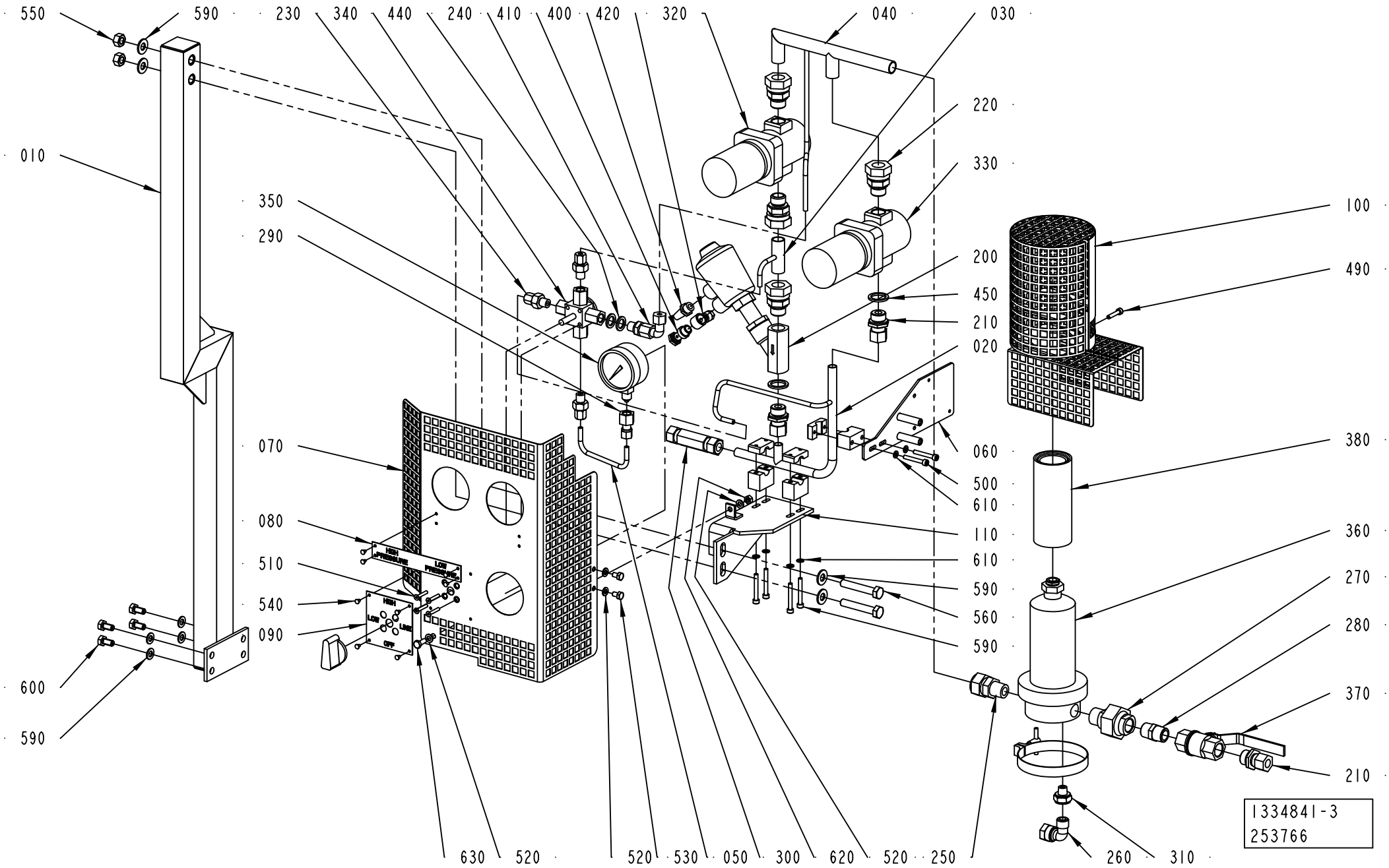
550
590
230
340
440
240
410
400
420
320
040
030
010
220
330
350
290
100
200
490
450
210
020
070
060
380
500
610
080
110
360
510
610
270
540
590
280
090
560
590
600
370
590
210
630
520
520
530
050
300
620
520
250
260
310
1334841-3
253766

ECM: 267104 - 20060707
Group number: 1334841-0300
Assembly Drawing: 1334841-3_1_AB

Pos	Part No	UN	Qty	Description	Page No
-					
010	2761755-0000		1	BRACKET	
020	2674161-0000		1	STEAM PIPE	
030	2687095-0000		1	STEAM PIPE	
040	2674158-0000		1	STEAM PIPE	
050	2691065-0000		1	PIPE	
060	2761757-0000		1	PIPE HOLDER	
070	2761758-0000		1	TOUCH GUARD	
080	1279456-0000		1	LABEL	
090	1255924-0000		1	LABEL	
100	1260311-0000		1	COVER	
110	2761756-0000		1	PIPE HOLDER	
200	90459-0336		1	ANGLE SEAT VALVE G1/2, N.C. DN13	
210	90030-0109		3	STRAIGHT PIPE CONN. GE12LR1/271	
220	90030-0191		4	CONN. STR. GA-18-G1/2	
230	90030-0202		3	CONN. STR., 6-G1/4, EXT. THREAD	
240	90030-0612		1	ADJUSTABLE ELBOW CONNECTION,EXT 6-G1/4	
250	90030-0416		1	CONN. STR. 18-R1/2, EXT. TAPPERED	
260	90030-0115		1	CONN. ELBOW WA 12-R3/8	
270	90330-0106		1	PIPE COUPLING	
280	90330-0021		1	NIPPLES, EXT. THREAD. R-207R1/2	
290	342790-0102		1	CONN. PRESS. GAUGE MAV6-LRFZB	
300	90230-0025		1	NON-RETURN VALVE, 12MM, L=85	
310	90030-0170		1	REDUCER 2521-1/4"X3/8"	
320	2558134-0000		1	PRESSURE REGULATOR	
330	2558133-0000		1	PRESSURE REGULATOR	
340	90187-0112		1	COCK VALVE, G1/4, 4-WAY, VITON	
350	90043-0082		1	PRESSURE GAUGE, 2740, D=63 MM	
360	90277-0055		1	FILTER HOUSING / MDS 4463 G 08 H	
	90277-0339		*1*	*O-RING, ACS0272 EU FOR PALL FILTER*	
370	90187-0082		1	BALL VALVE G1/2	
380	90337-0315		1	FILTER INSERT / MCS 4463	
	90458-2549		*1*	*O-RING 72,69X2,62 MM*	
400	90328-0002		1	SILENCER, 338/12D	
410	342980-0304		1	BANJO-HOLLOW BOLT COUPL,EXT.THR.01-G1/4	
420	342797-0122		1	CONN. BANJO, RINGPIECE 6-1/4	
440	90459-1948		2	BONDED SEAL SS/VITON G1/4	
450	315217-0111		2	BONDED SEAL SS/VITON G1/2	
490	312115-0333		1	SCREW ISO4762 M5X25 A4 80	
500	312115-0337		2	SCREW ISO4762 M5X35 A4 80	
510	312156-0297		4	SCREW EN 10642 MF6S M4X25 A470	
520	315105-0153		4	WASHER BRB 6,4X12 RFR	
530	312105-0364		2	SCREW M6S ISO 4017 M6X10 A480	
540	311521-0142		8	BLANK RIVET 3,2X6	
550	312607-0320		2	HEXAGON NUT, EN 24032 M6M M10 A480	
560	312105-0503		2	SCREW M6S ISO 4014 M10X60 A480	
570	312115-0327		1	SCREW ISO4762 M5X12 A4 80	
580	312115-0339		4	SCREW ISO4762 M5X40 A4 80	
590	315105-0173		4	WASHER BRB 10,5X22 RFR	
600	312105-0449		4	SCREW M6S ISO 4017 M8X16 A480	
610	315105-0146		7	WASHER BRB 5,3X10 RFR	
620	312607-0316		1	HEXAGON NUT, EN 24032 M6M M6 A480	
630	312105-0368		1	SCREW M6S ISO 4017 M6X16 A480	

Machine Type | Group Description | Used-In | Group Number | Page No

SPRAY SYSTEM

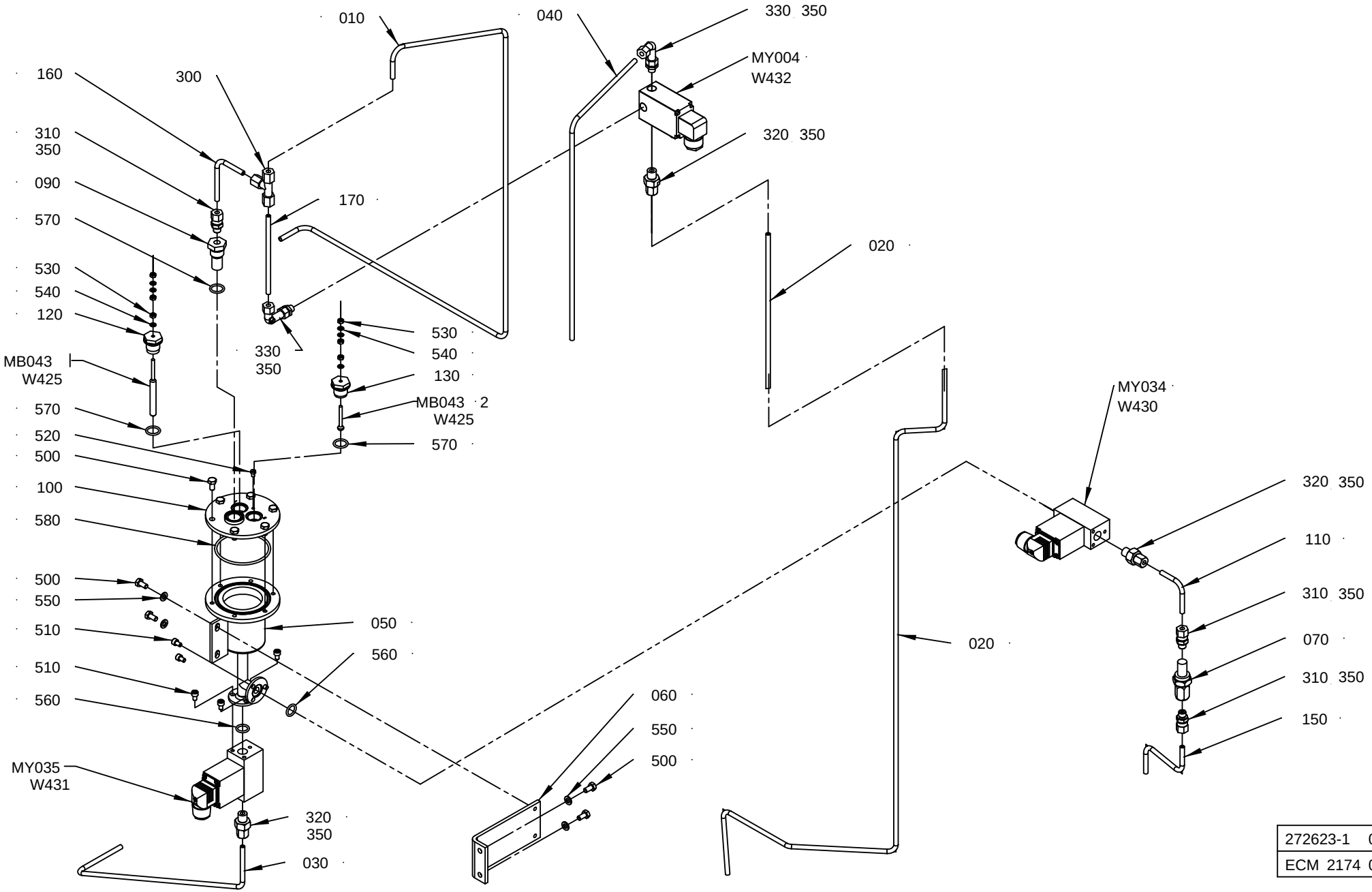

ECM: 238061 - 20051103
Group number: 272623-0800
Assembly Drawing: 272623-10_1_AA

This list covers pages from 1-90 to 1-93

Pos	Part No	UN	Qty	Description	Page No
HI (See drawing on page: 1-92)					
310	90030-0184		2	CONN. STR. GA-6-G1/8	
320	90030-0202		2	CONN. STR., 6-G1/4, EXT. THREAD	
590	90330-0013		1	NIPPLES, EXT. THREAD. ISO 7/1 R1/4-R1/8	
600	90330-0095		1	T-PIPE, INT. THREAD, R-221-R1/8	
610	90030-0234		1	CONN. ELBOW, 6-R1/8 , EXT.THREAD	
620	90330-0032		1	NIPPLES, EXT. THREAD. ISO 7/1 R1/8-R1/8	
NOHI (See drawing on page: 1-90)					
020	1517493-0000		1	PIPE	
110	456900-0000		1	PIPE	
310	90030-0184		3	CONN. STR. GA-6-G1/8	
320	90030-0202		3	CONN. STR., 6-G1/4, EXT. THREAD	
Common Parts					
010	2743328-0000		1	PIPE	
030	1517495-0000		1	PIPE	
040	578019-0000		1	TUBE40	
050	752576-0000		1	CONTAINER	
060	272844-0000		1	BRACKET	
070	484196-0000		1	FILTER	
090	450833-0000		1	FILTER	
100	2743327-0000		1	LID	
120	560931-0000		1	BRACKET	
130	2638206-0000		1	BRACKET	
150	578026-0000		1	PIPE	
160	2743329-0000		1	PIPE	
170	2743331-0000		1	PIPE	
300	90030-0076		1	CONN. T-PIPE T-6	
330	90030-0203		2	ADJUSTABLE ELBOW CONNECTION,EXT 6-G1/4	
350	90144-0073		1	TREBOFLON-TAPE W=13MM	
500	312105-0366		10	SCREW M6S ISO 4017 M6X12 A480	
510	312115-0323		6	SCREW ISO4762 M5X8 A4 80	
520	312125-0285		1	SCREW ISO 1207 M4X6 A4	
530	312605-0312		6	HEXAGON NUT, M6M M4 A280	
540	315105-0136		6	WASHER BRB 4,3X8 RFR	
550	315105-0153		4	WASHER BRB 6,4X12 RFR	
560	927421-0003		2	O-RING 13.3X2.4 SILICONE	
570	927421-0004		3	O-RING 15.3X2.4 SILICONE	
580	927422-0011		1	O-RING 69.5X3 SILICONE	
MY035	544906-0000		1	SOLENOID VALVE	
	90042-0465		*1*	*O-RING VITON 17,17X1,78*	
	90042-0464		*1*	*DIAPHRAGM VITON 1211321*	
MY034	544906-0000		1	SOLENOID VALVE	
	90042-0465		*1*	*O-RING VITON 17,17X1,78*	
	90042-0464		*1*	*DIAPHRAGM VITON 1211321*	
MY004	90042-0171		1	SOLENOID VALVE BURKERT	
	90042-0466		*1*	*DIAPHRAGM 330.95.2 VITON*	
MB043.1	567070-0010		1	ELECTRODE	
MB043.2	567070-0015		1	ELECTRODE	
W425	351150-0404	M	5	CABLE OLFLEX 4X0,75 MM2 LIGHT/GREY	
W430	351150-0403	M	4	CABLE OLFLEX 3X0,75 MM2 LIGHT/GREY	
W431	351150-0403	M	4	CABLE OLFLEX 3X0,75 MM2 LIGHT/GREY	
W432	351150-0403	M	4	CABLE OLFLEX 3X0,75 MM2 LIGHT/GREY	

Machine Type | Group Description | Used-In | Group Number | Page No

SPRAY SYSTEM

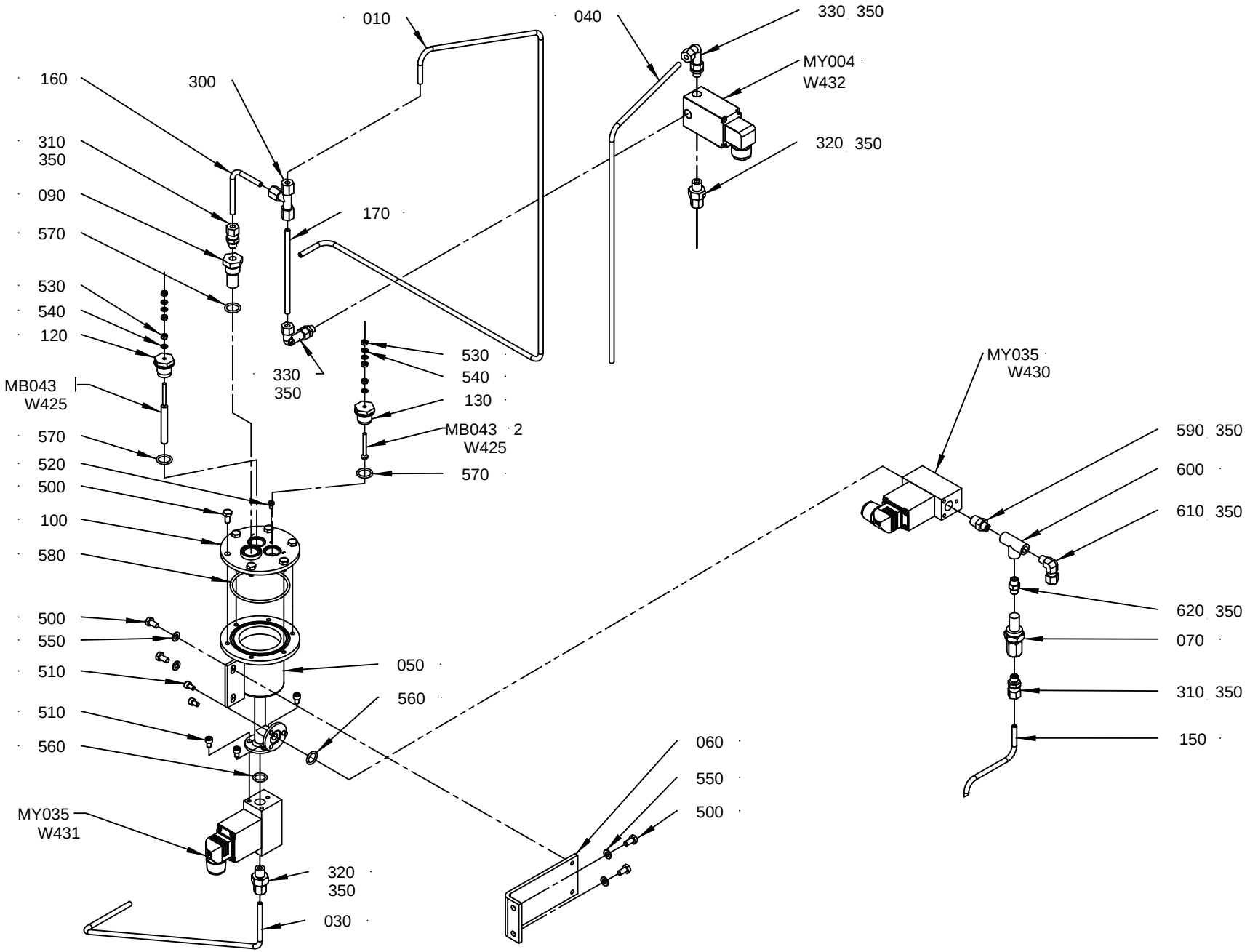

272623-1
ECM 2174 03

ECM: 238061 - 20051103
Group number: 272623-0800
Assembly Drawing: 272623-11_1_AA

This list covers pages from 1-90 to 1-93

Pos	Part No	UN	Qty	Description	Page No
HI (See drawing on page: 1-92)					
310	90030-0184		2	CONN. STR. GA-6-G1/8	
320	90030-0202		2	CONN. STR., 6-G1/4, EXT. THREAD	
590	90330-0013		1	NIPPLES, EXT. THREAD. ISO 7/1 R1/4-R1/8	
600	90330-0095		1	T-PIPE, INT. THREAD, R-221-R1/8	
610	90030-0234		1	CONN. ELBOW, 6-R1/8 , EXT.THREAD	
620	90330-0032		1	NIPPLES, EXT. THREAD. ISO 7/1 R1/8-R1/8	
NOHI (See drawing on page: 1-90)					
020	1517493-0000		1	PIPE	
110	456900-0000		1	PIPE	
310	90030-0184		3	CONN. STR. GA-6-G1/8	
320	90030-0202		3	CONN. STR., 6-G1/4, EXT. THREAD	
Common Parts					
010	2743328-0000		1	PIPE	
030	1517495-0000		1	PIPE	
040	578019-0000		1	TUBE40	
050	752576-0000		1	CONTAINER	
060	272844-0000		1	BRACKET	
070	484196-0000		1	FILTER	
090	450833-0000		1	FILTER	
100	2743327-0000		1	LID	
120	560931-0000		1	BRACKET	
130	2638206-0000		1	BRACKET	
150	578026-0000		1	PIPE	
160	2743329-0000		1	PIPE	
170	2743331-0000		1	PIPE	
300	90030-0076		1	CONN. T-PIPE T-6	
330	90030-0203		2	ADJUSTABLE ELBOW CONNECTION,EXT 6-G1/4	
350	90144-0073		1	TREBOFLON-TAPE W=13MM	
500	312105-0366		10	SCREW M6S ISO 4017 M6X12 A480	
510	312115-0323		6	SCREW ISO4762 M5X8 A4 80	
520	312125-0285		1	SCREW ISO 1207 M4X6 A4	
530	312605-0312		6	HEXAGON NUT, M6M M4 A280	
540	315105-0136		6	WASHER BRB 4,3X8 RFR	
550	315105-0153		4	WASHER BRB 6,4X12 RFR	
560	927421-0003		2	O-RING 13.3X2.4 SILICONE	
570	927421-0004		3	O-RING 15.3X2.4 SILICONE	
580	927422-0011		1	O-RING 69.5X3 SILICONE	
MY035	544906-0000		1	SOLENOID VALVE	
	90042-0465		*1*	*O-RING VITON 17,17X1,78*	
	90042-0464		*1*	*DIAPHRAGM VITON 1211321*	
MY034	544906-0000		1	SOLENOID VALVE	
	90042-0465		*1*	*O-RING VITON 17,17X1,78*	
	90042-0464		*1*	*DIAPHRAGM VITON 1211321*	
MY004	90042-0171		1	SOLENOID VALVE BURKERT	
	90042-0466		*1*	*DIAPHRAGM 330.95.2 VITON*	
MB043.1	567070-0010		1	ELECTRODE	
MB043.2	567070-0015		1	ELECTRODE	
W425	351150-0404	M	5	CABLE OLFLEX 4X0,75 MM2 LIGHT/GREY	
W430	351150-0403	M	4	CABLE OLFLEX 3X0,75 MM2 LIGHT/GREY	
W431	351150-0403	M	4	CABLE OLFLEX 3X0,75 MM2 LIGHT/GREY	
W432	351150-0403	M	4	CABLE OLFLEX 3X0,75 MM2 LIGHT/GREY	

PIPE WORK-PNEUMATIC

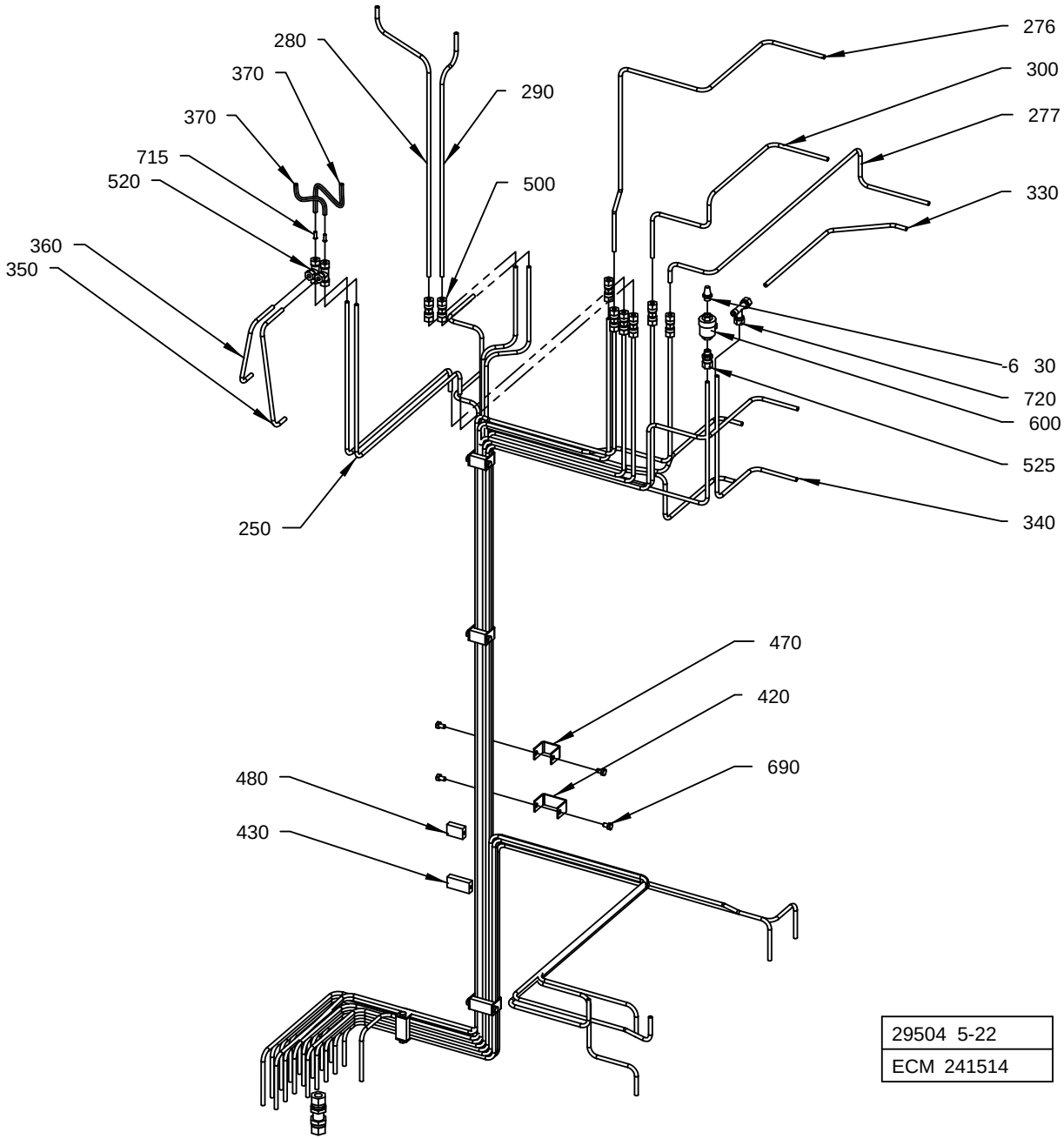

29504 5-22
ECM 241514

ECM: 276152 - 20070126
Group number: 295045-0900
Assembly Drawing: 295045-22_1_AD

This list covers pages from 1-94 to 1-101

Pos	Part No	UN	Qty	Description	Page No
TBA NOPT (See drawing on pages: 1-94, 1-96)					
650	90330-0066		1	PLUG, EXT. G-THREAD, G1/8	
730	342797-0121		2	CONN. BANJO, RINGPIECE 6-1/8	
760	342980-0113		2	BANJO-CONNECTION,RING 6/4-G1/8 INCH	
770	342980-0303		4	BANJO-HOLLOW BOLT COUPL,EXT.THR.01-G1/8	
TBA PT19 (See drawing on pages: 1-98, 1-100)					
010	2502199-0000		1	PIPE	
730	342797-0121		3	CONN. BANJO, RINGPIECE 6-1/8	
760	342980-0113		3	BANJO-CONNECTION,RING 6/4-G1/8 INCH	
770	342980-0303		6	BANJO-HOLLOW BOLT COUPL,EXT.THR.01-G1/8	
Common Parts					
020	2502197-0000		1	PIPE	
030	2502198-0000		1	PIPE	
050	577782-0000		1	TUBE 200	
060	577783-0000		1	TUBE 201	
070	577784-0000		1	TUBE260	
080	577785-0000		1	TUBE 261	
090	577786-0000		1	TUBE 240	
100	577787-0000		1	TUBE 241	
110	577788-0000		1	TUBE 80	
120	577789-0000		1	TUBE 90	
130	577790-0000		1	TUBE 70	
140	577791-0000		1	TUBE 40	
150	2544863-0000		1	PIPE	
160	2544864-0000		1	PIPE	
170	578004-0000		1	TUBE 211	
180	578005-0000		1	TUBE 213	
190	1524666-0000		1	TUBE 230	
200	1524667-0000		1	TUBE 231	
210	2544855-0000		1	PIPE	
220	2544856-0000		1	PIPE	
230	1524665-0000		1	TUBE 860	
240	1524664-0000		1	TUBE 861	
250	578013-0000		2	TUBE 213 AND 211	
270	1524669-0000		1	PIPE	
275	580363-0000		1	PIPE 71	
276	580364-0000		1	PIPE 71	
277	581015-0000		1	PIPE 91	
278	581016-0000		1	PIPE 91	
279	1524663-0000		1	TUBE 55	
280	2544868-0000		1	PIPE	
290	2544869-0000		1	PIPE	
300	578020-0000		1	TUBE 70	
320	1512356-0000		1	CONNECTION DEVICE	
330	577541-0000		1	TUBE 90	
340	577542-0000		1	TUBE 90	
350	578022-0000		1	TUBE 211	
360	578023-0000		1	TUBE 213	
370	90166-0132	MM	350	TUBE 6 MM PA,TRANSP.	
390	578030-0000		2	GASKET	
400	1524670-0000		1	PIPE	
410	1524673-0000		1	BRACKET	
420	295604-0000		3	CRAMP	
430	295605-0000		3	BRACKET	
440	464173-0000		2	LABEL HOLDER	
450	464174-0000		1	SIGN, LONGITUDINAL SEALING	
460	464175-0000		1	SIGN, LONGITUDINAL SEALING SHORT STOP	
470	578027-0000		3	CRAMP	
480	578028-0000		3	BRACKET	
490	1524674-0000		2	REDUCTION SLEEVE	
495	1539250-0000		1	SPACER	
500	90030-0075		8	UNION FITTING 6MM, G06L71	
510	90030-0092		2	STRAIGHT CONN., 6-R1/4,EXT. TAPPERED	
520	90030-0164		2	CONN. T-PIPE T6-LL	
525	90030-0184		1	CONN. STR. GA-6-G1/8	
550	90043-0034		2	PRESSURE GAUGE	
560	90043-0302		2	SCREW	
580	90166-0119	MM	2100	HOSE PUR 4/6 BLACK	
590	90166-0132	MM	1500	TUBE 6 MM PA,TRANSP.	
600	90235-0259		1	VALVE	
630	90328-0003		1	SILENCER, 338/110	
660	90330-0025		3	BUSHING, INT/EXT. THR. R1/4-RP1/8	
690	312105-0364		12	SCREW M6S ISO 4017 M6X10 A480	
700	312105-0368		2	SCREW M6S ISO 4017 M6X16 A480	
710	312502-0120		4	DRIVE SCREW ROUND HEAD KDS 0X5	
715	342706-0130		2	ACCESSORIES, INSERT SLEEVE 6 MM	
720	342751-0204		1	CONN. L-PIPE, EXT. LE-6-R1/8	
740	90030-0030		1	CONN. BULKHEAD SV 12-L/SY	
750	90457-0086		38	BULKHEAD CONNECTOR 6MM	
780	359000-0400		16	WIRE MARKING, YELLOW, PA2/4"0"	
780	359000-0401		36	WIRE MARKING, YELLOW, PA2/4"1"	
780	359000-0402		72	WIRE MARKING, YELLOW, PA2/4"2"	
780	359000-0403		8	WIRE MARKING, YELLOW, PA2/4"3"	
780	359000-0404		40	WIRE MARKING, YELLOW, PA2/4"4"	

Machine Type | Group Description | Used-In | Group Number | Page No

VIEW A

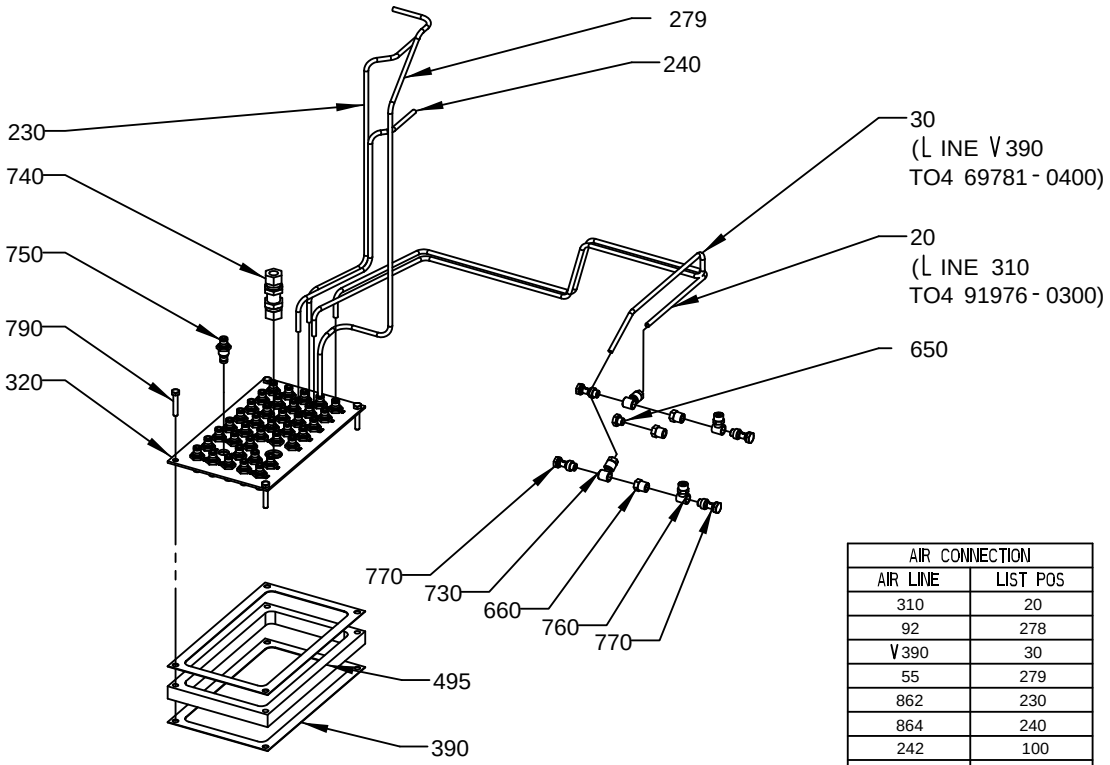

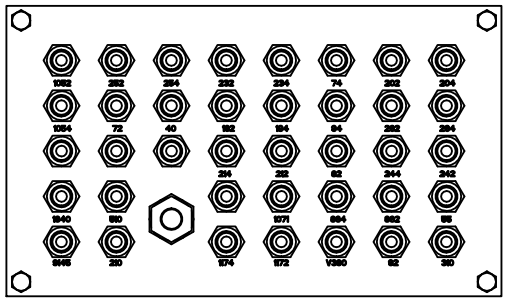

AIR CONNECTION	
AIR LINE	LIST POS
310	20
92	278
V390	30
55	279
862	230
864	240
242	100
244	90
82	110
212	170
214	180
264	80
262	70
94	120
194	150
192	160
40	140
72	275
204	50
202	60
74	130
234	190
232	200
254	210
252	220

VIEW B

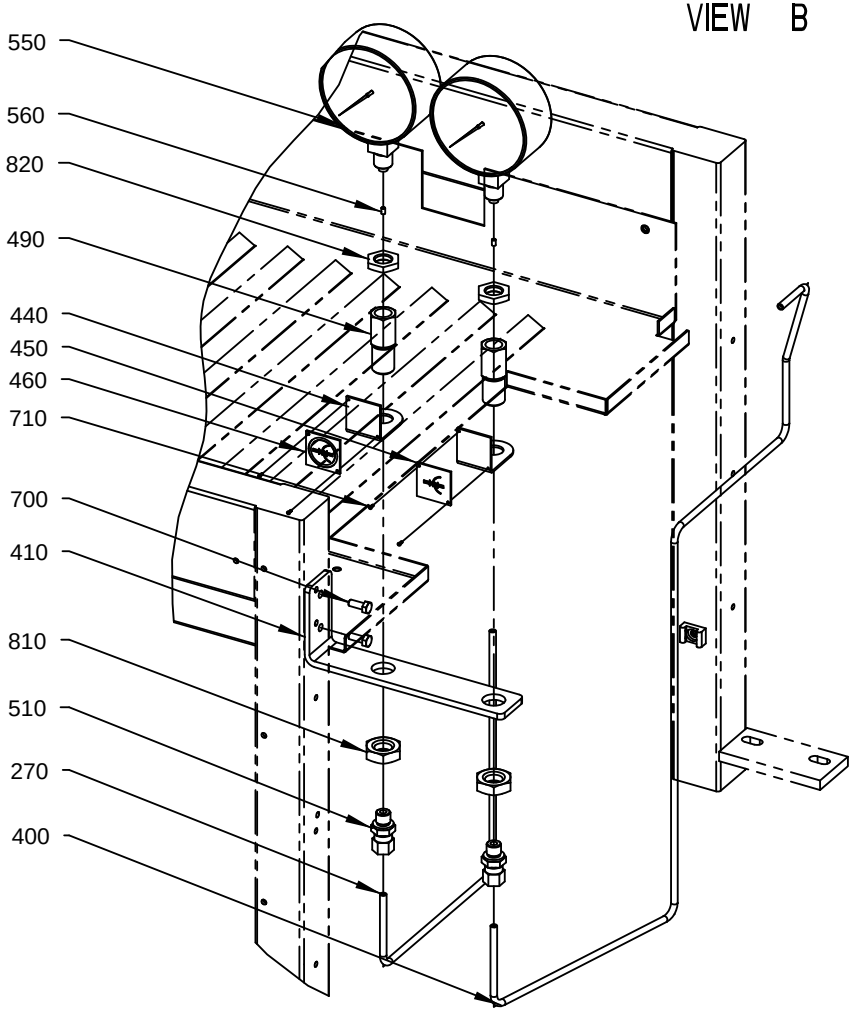

29504 5-22
ECM 241514

Pos	Part No	UN	Qty	Description	Page No
Common Parts (Cont'd)					
780	359000-0405		8	WIRE MARKING, YELLOW, PA2/4"5"	
780	359000-0406		8	WIRE MARKING, YELLOW, PA2/4"6"	
780	359000-0407		12	WIRE MARKING, YELLOW, PA2/4"7"	
780	359000-0408		6	WIRE MARKING, YELLOW, PA2/4"8"	
780	359000-0409		20	WIRE MARKING, YELLOW, PA2/4"9"	
780	359000-0771		2	WIRE MARKING, YELLOW, PA2/4"V"	
790	312109-0376		4	SCREW M6S ISO 4017 M6X35 A480	
810	312625-0326		2	HEXAGON THIN NUT, EN 24035 ML6M M20 A4	
820	90330-0105		2	NUT, HEXAGON, R3/8	

Pos	Part No	UN	Qty	Description	Page No

PIPE WORK-PNEUMATIC

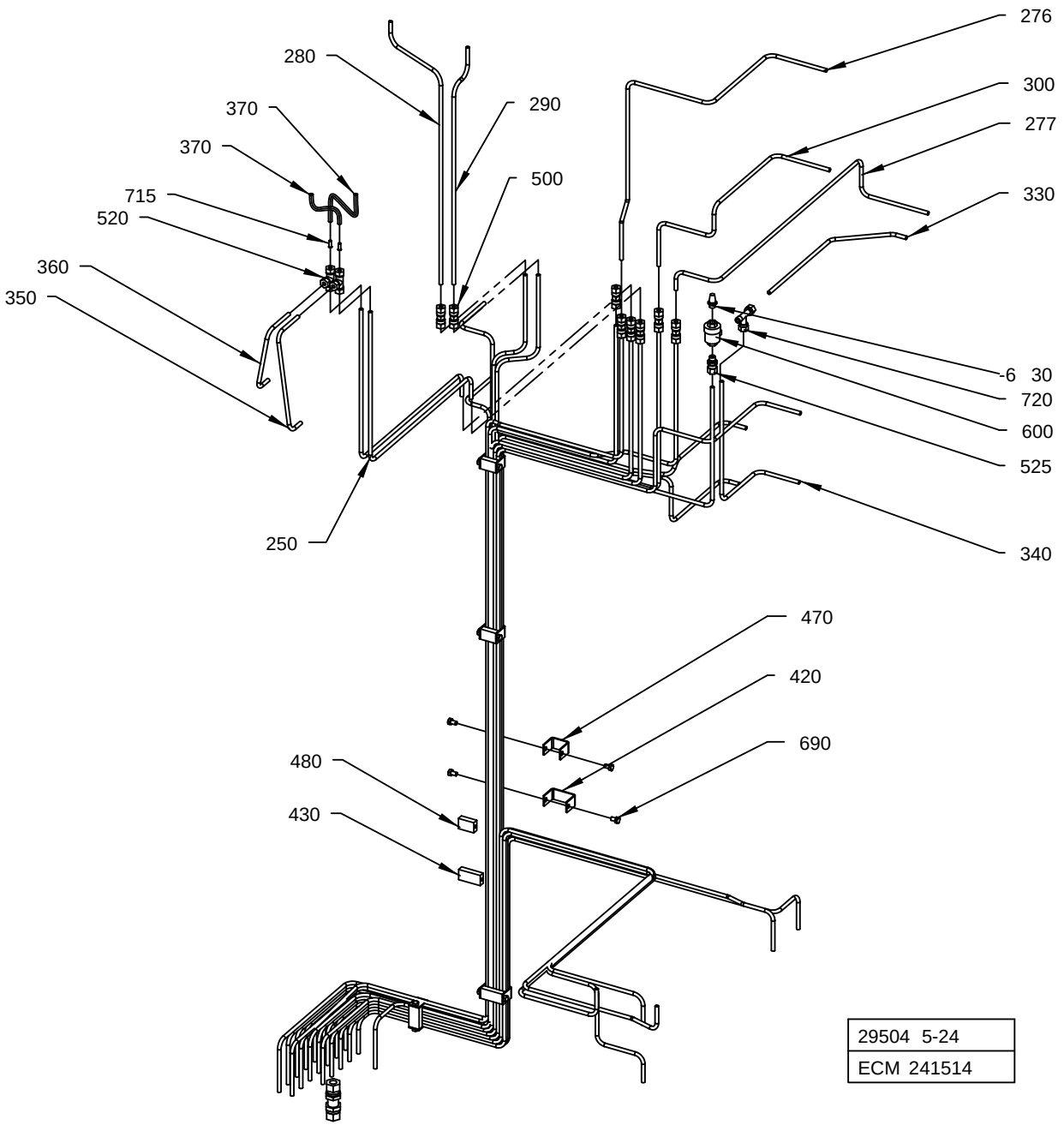

Pos	Part No	UN	Qty	Description	Page No	Pos	Part No	UN	Qty	Description	Page No

SEE PREVIOUS LISTS PAGES: 1-95, 1-97.

VIEW A

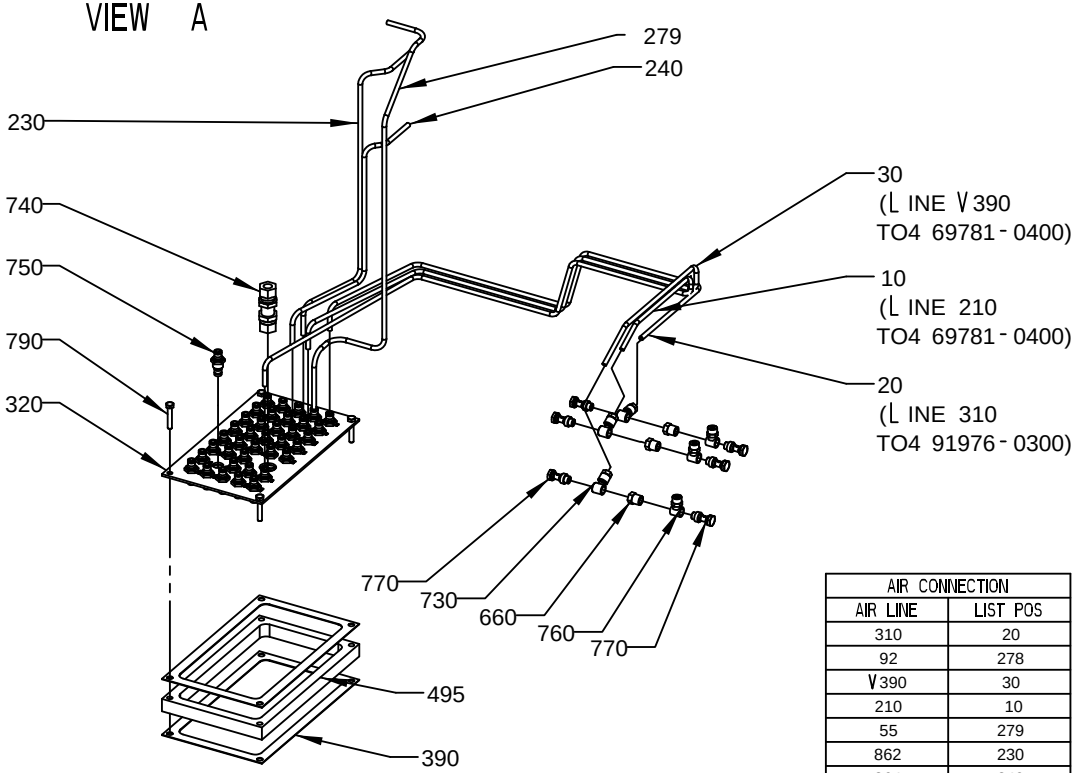

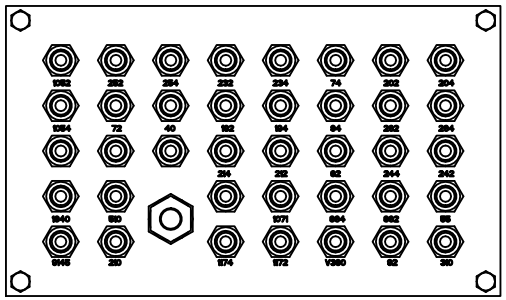

AIR CONNECTION	
AIR LINE	LIST POS
310	20
92	278
V390	30
210	10
55	279
862	230
864	240
242	100
244	90
82	110
212	170
214	180
264	80
262	70
94	120
194	150
192	160
40	140
72	275
204	50
202	60
74	130
234	190
232	200
254	210
252	220

VIEW B

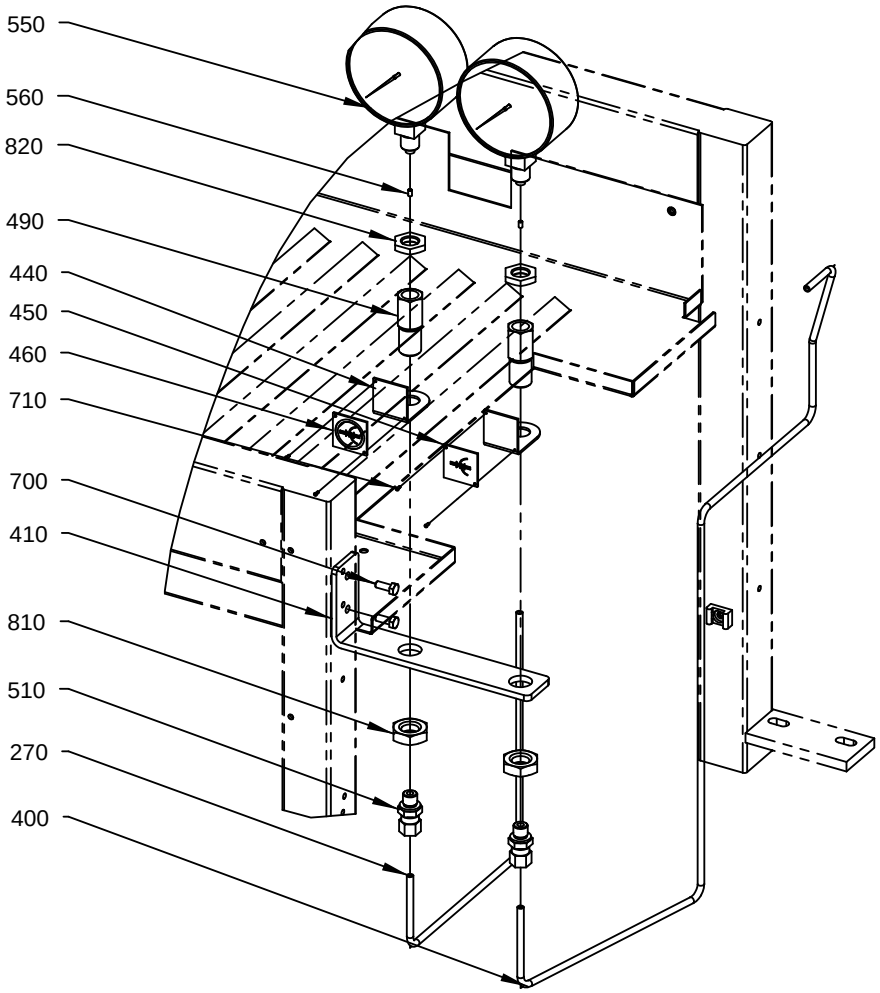

29504 5-24
ECM 241514

ECM: 276152 - 20070126
Group number: 295045-0900
Assembly Drawing: 295045-24_2_AC

This list covers pages from 1-94 to 1-101

Pos	Part No	UN	Qty	Description	Page No	Pos	Part No	UN	Qty	Description	Page No

SEE PREVIOUS LISTS PAGES: 1-95, 1-97.

MOVABLE FORMING RING

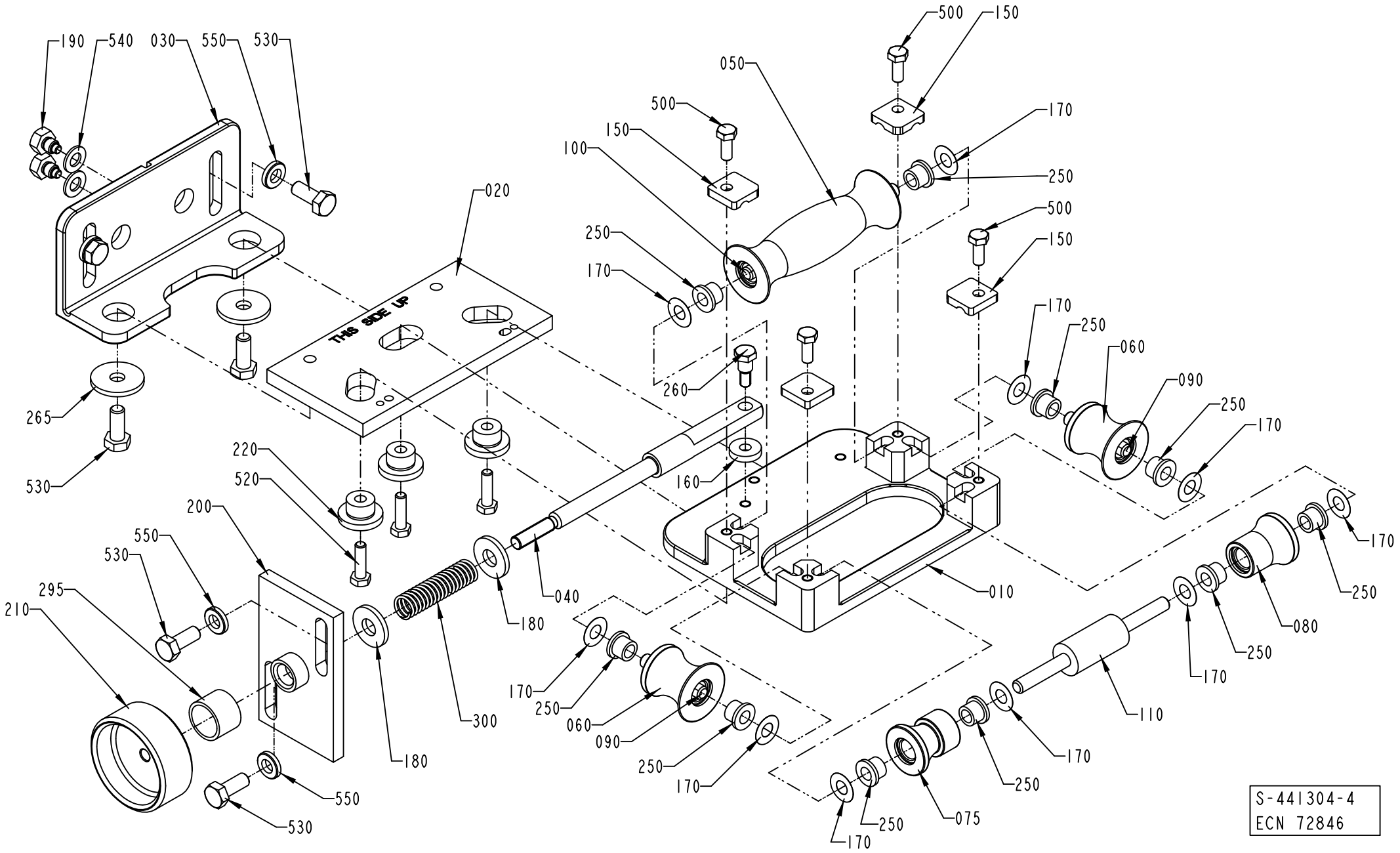

ECM: 171187 - 20050713
Group number: 441304-0400
Assembly Drawing: 441304-4_1_AD

This list covers pages from 1-102 to 1-109

Pos	Part No	UN	Qty	Description	Page No
TBA 0100B, TBA 0125S (See drawing on page: 1-108)					
010	456905-0000		1	FASTENING PLATE	
030	571536-0000		1	CANTILEVER	
050	752141-0000		1	FORMING ROLLER	
060	752142-0000		2	FORMING ROLLER	
075	1296912-0000		1	ROLL	
080	752143-0000		1	FORMING ROLLER	
090	752186-0002		2	SHAFT	
100	752186-0008		1	SHAFT	
110	752186-0006		2	SHAFT	
140	456907-0000		2	LOCK PLATE	
150	1279091-0000		4	LOCKING PLATE	
250	90240-0172		6	FLANGE BUSHING, 8X12X10 MM	
255	752156-0000		4	FLANGE BUSHING	
500	312105-0332		6	SCREW M6S ISO 4017 M5X22 A470	
TBA 0160S, TBA 0200S (See drawing on page: 1-104)					
010	456905-0000		1	FASTENING PLATE	
030	571535-0000		1	CANTILEVER	
050	752126-0000		1	FORMING ROLLER	
060	752127-0000		2	FORMING ROLLER	
075	1296914-0000		1	ROLL	
080	752128-0000		1	FORMING ROLLER	
090	752186-0002		2	SHAFT	
100	752186-0008		1	SHAFT	
110	752186-0006		2	SHAFT	
140	456907-0000		2	LOCK PLATE	
150	1279091-0000		4	LOCKING PLATE	
250	90240-0172		6	FLANGE BUSHING, 8X12X10 MM	
255	752156-0000		4	FLANGE BUSHING	
500	312105-0332		6	SCREW M6S ISO 4017 M5X22 A470	
TBA 0180B, TBA 0200B, TBA 0236B, TBA 0200SQ, TBA 0284B, TBA 0250B, TBA 0300S, TBA 0330S (See drawing on page: 1-102)					
010	978792-0000		1	PLATE	
030	571535-0000		1	CANTILEVER	
050	751491-0000		1	ROLL	
060	751492-0000		2	ROLL	
075	1296913-0000		1	ROLL	
080	751494-0000		1	ROLL	
090	752186-0005		2	SHAFT	
100	752186-0009		1	SHAFT	
110	752187-0000		1	SHAFT	
150	1279091-0000		4	LOCKING PLATE	
250	90240-0172		10	FLANGE BUSHING, 8X12X10 MM	
500	312105-0368		4	SCREW M6S ISO 4017 M6X16 A480	
TBA 0200M, TBA 0250S (See drawing on page: 1-106)					
010	574404-0000		1	BRACKET	
030	571535-0000		1	CANTILEVER	
050	574479-0000		1	ROLL	
060	574480-0000		2	ROLL	
075	1296915-0000		1	ROLL	
080	574481-0000		1	ROLL	
090	752186-0002		2	SHAFT	
100	752186-0008		1	SHAFT	
110	752186-0006		2	SHAFT	
140	1279087-0000		2	LOCKING PLATE	
150	1279091-0000		4	LOCKING PLATE	
250	90240-0172		6	FLANGE BUSHING, 8X12X10 MM	
255	752156-0000		4	FLANGE BUSHING	
500	312105-0332		6	SCREW M6S ISO 4017 M5X22 A470	
Common Parts					
020	751333-0000		1	SETTING PLATE	
040	256309-0000		1	SHAFT	
160	256312-0000		1	WASHER	
170	2033-0011		10	WASHER	
180	26490-0000		2	WASHER	
190	256280-0000		2	DOWEL	
200	571534-0000		1	PLATE	
210	257090-0000		1	SHIFTER HANDLE	
220	751334-0000		3	SPACER	
260	456042-0000		1	SCREW	
265	28037-0000		2	WASHER	
295	491153-0000		1	COMPRESSION GLAND	
300	90335-0008		1	COMP. SPRING 22490, 1,6X14,1X115	
520	312105-0371		3	SCREW M6S ISO 4017 M6X22 A480	
530	312105-0451		6	SCREW M6S ISO 4017 M8X20 A480	
540	315105-0165		2	WASHER BRB 8,4X16 RFR	
550	315115-0165		4	WASHER PLAIN, TBRB 8,4/16 H=3	

Machine Type	Group Description	Used-In	Group Number	Page No

MOVABLE FORMING RING

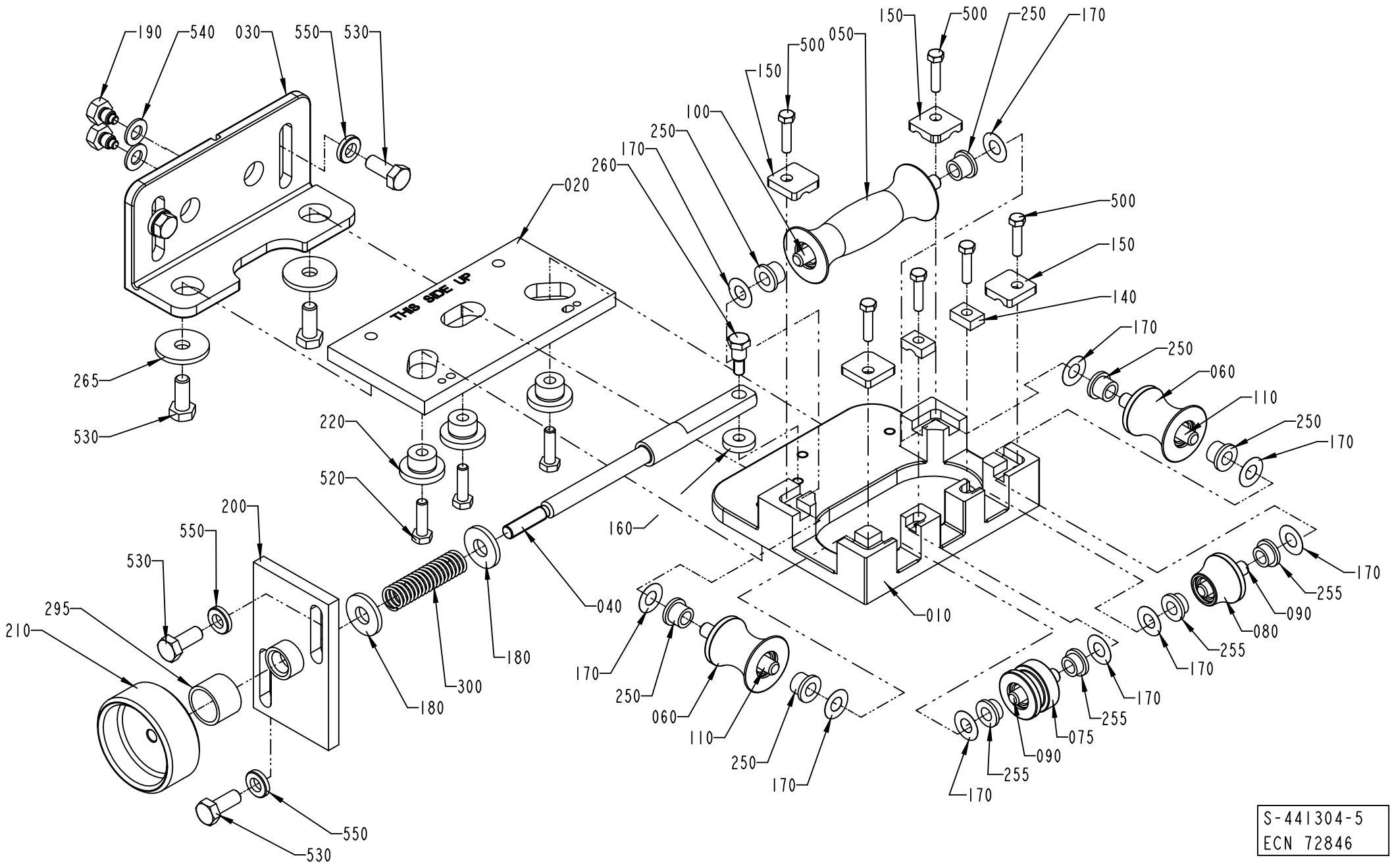

S-441304-5
ECN 72846

ECM: 171187 - 20050713
Group number: 441304-0400
Assembly Drawing: 441304-5_1_AD

This list covers pages from 1-102 to 1-109

Pos	Part No	UN	Qty	Description	Page No
TBA 0100B, TBA 0125S (See drawing on page: 1-108)					
010	456905-0000		1	FASTENING PLATE	
030	571536-0000		1	CANTILEVER	
050	752141-0000		1	FORMING ROLLER	
060	752142-0000		2	FORMING ROLLER	
075	1296912-0000		1	ROLL	
080	752143-0000		1	FORMING ROLLER	
090	752186-0002		2	SHAFT	
100	752186-0008		1	SHAFT	
110	752186-0006		2	SHAFT	
140	456907-0000		2	LOCK PLATE	
150	1279091-0000		4	LOCKING PLATE	
250	90240-0172		6	FLANGE BUSHING, 8X12X10 MM	
255	752156-0000		4	FLANGE BUSHING	
500	312105-0332		6	SCREW M6S ISO 4017 M5X22 A470	
TBA 0160S, TBA 0200S (See drawing on page: 1-104)					
010	456905-0000		1	FASTENING PLATE	
030	571535-0000		1	CANTILEVER	
050	752126-0000		1	FORMING ROLLER	
060	752127-0000		2	FORMING ROLLER	
075	1296914-0000		1	ROLL	
080	752128-0000		1	FORMING ROLLER	
090	752186-0002		2	SHAFT	
100	752186-0008		1	SHAFT	
110	752186-0006		2	SHAFT	
140	456907-0000		2	LOCK PLATE	
150	1279091-0000		4	LOCKING PLATE	
250	90240-0172		6	FLANGE BUSHING, 8X12X10 MM	
255	752156-0000		4	FLANGE BUSHING	
500	312105-0332		6	SCREW M6S ISO 4017 M5X22 A470	
TBA 0180B, TBA 0200B, TBA 0236B, TBA 0200SQ, TBA 0284B, TBA 0250B, TBA 0300S, TBA 0330S (See drawing on page: 1-102)					
010	978792-0000		1	PLATE	
030	571535-0000		1	CANTILEVER	
050	751491-0000		1	ROLL	
060	751492-0000		2	ROLL	
075	1296913-0000		1	ROLL	
080	751494-0000		1	ROLL	
090	752186-0005		2	SHAFT	
100	752186-0009		1	SHAFT	
110	752187-0000		1	SHAFT	
150	1279091-0000		4	LOCKING PLATE	
250	90240-0172		10	FLANGE BUSHING, 8X12X10 MM	
500	312105-0368		4	SCREW M6S ISO 4017 M6X16 A480	
TBA 0200M, TBA 0250S (See drawing on page: 1-106)					
010	574404-0000		1	BRACKET	
030	571535-0000		1	CANTILEVER	
050	574479-0000		1	ROLL	
060	574480-0000		2	ROLL	
075	1296915-0000		1	ROLL	
080	574481-0000		1	ROLL	
090	752186-0002		2	SHAFT	
100	752186-0008		1	SHAFT	
110	752186-0006		2	SHAFT	
140	1279087-0000		2	LOCKING PLATE	
150	1279091-0000		4	LOCKING PLATE	
250	90240-0172		6	FLANGE BUSHING, 8X12X10 MM	
255	752156-0000		4	FLANGE BUSHING	
500	312105-0332		6	SCREW M6S ISO 4017 M5X22 A470	
Common Parts					
020	751333-0000		1	SETTING PLATE	
040	256309-0000		1	SHAFT	
160	256312-0000		1	WASHER	
170	2033-0011		10	WASHER	
180	26490-0000		2	WASHER	
190	256280-0000		2	DOWEL	
200	571534-0000		1	PLATE	
210	257090-0000		1	SHIFTER HANDLE	
220	751334-0000		3	SPACER	
260	456042-0000		1	SCREW	
265	28037-0000		2	WASHER	
295	491153-0000		1	COMPRESSION GLAND	
300	90335-0008		1	COMP. SPRING 22490, 1,6X14,1X115	
520	312105-0371		3	SCREW M6S ISO 4017 M6X22 A480	
530	312105-0451		6	SCREW M6S ISO 4017 M8X20 A480	
540	315105-0165		2	WASHER BRB 8,4X16 RFR	
550	315115-0165		4	WASHER PLAIN, TBRB 8,4/16 H=3	

Machine Type	Group Description	Used-In	Group Number	Page No

MOVABLE FORMING RING

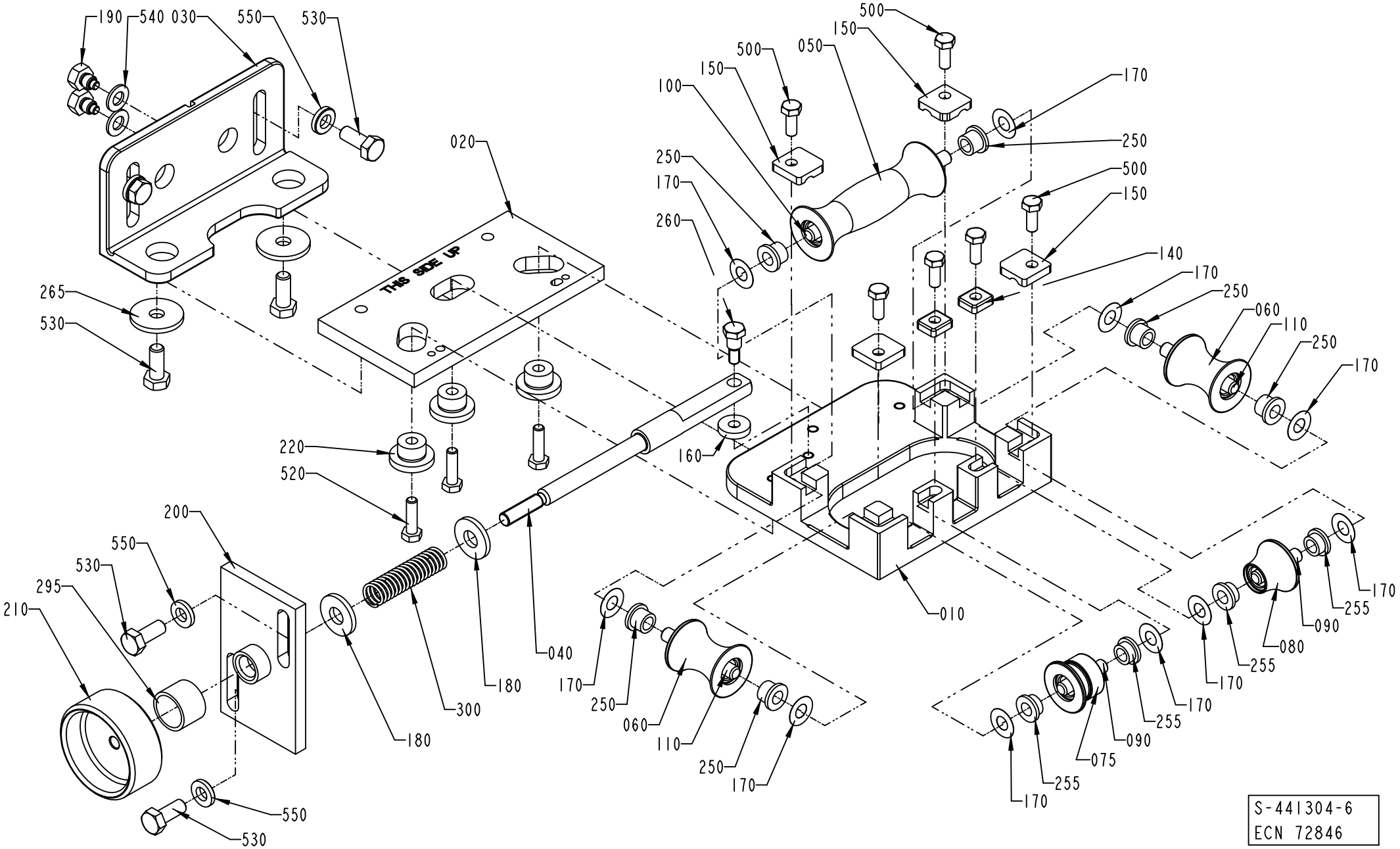

ECM: 171187 - 20050713
Group number: 441304-0400
Assembly Drawing: 441304-6_1_AD

This list covers pages from 1-102 to 1-109

Pos	Part No	UN	Qty	Description	Page No
TBA 0100B, TBA 0125S (See drawing on page: 1-108)					
010	456905-0000		1	FASTENING PLATE	
030	571536-0000		1	CANTILEVER	
050	752141-0000		1	FORMING ROLLER	
060	752142-0000		2	FORMING ROLLER	
075	1296912-0000		1	ROLL	
080	752143-0000		1	FORMING ROLLER	
090	752186-0002		2	SHAFT	
100	752186-0008		1	SHAFT	
110	752186-0006		2	SHAFT	
140	456907-0000		2	LOCK PLATE	
150	1279091-0000		4	LOCKING PLATE	
250	90240-0172		6	FLANGE BUSHING, 8X12X10 MM	
255	752156-0000		4	FLANGE BUSHING	
500	312105-0332		6	SCREW M6S ISO 4017 M5X22 A470	
TBA 0160S, TBA 0200S (See drawing on page: 1-104)					
010	456905-0000		1	FASTENING PLATE	
030	571535-0000		1	CANTILEVER	
050	752126-0000		1	FORMING ROLLER	
060	752127-0000		2	FORMING ROLLER	
075	1296914-0000		1	ROLL	
080	752128-0000		1	FORMING ROLLER	
090	752186-0002		2	SHAFT	
100	752186-0008		1	SHAFT	
110	752186-0006		2	SHAFT	
140	456907-0000		2	LOCK PLATE	
150	1279091-0000		4	LOCKING PLATE	
250	90240-0172		6	FLANGE BUSHING, 8X12X10 MM	
255	752156-0000		4	FLANGE BUSHING	
500	312105-0332		6	SCREW M6S ISO 4017 M5X22 A470	
TBA 0180B, TBA 0200B, TBA 0236B, TBA 0200SQ, TBA 0284B, TBA 0250B, TBA 0300S, TBA 0330S (See drawing on page: 1-102)					
010	978792-0000		1	PLATE	
030	571535-0000		1	CANTILEVER	
050	751491-0000		1	ROLL	
060	751492-0000		2	ROLL	
075	1296913-0000		1	ROLL	
080	751494-0000		1	ROLL	
090	752186-0005		2	SHAFT	
100	752186-0009		1	SHAFT	
110	752187-0000		1	SHAFT	
150	1279091-0000		4	LOCKING PLATE	
250	90240-0172		10	FLANGE BUSHING, 8X12X10 MM	
500	312105-0368		4	SCREW M6S ISO 4017 M6X16 A480	
TBA 0200M, TBA 0250S (See drawing on page: 1-106)					
010	574404-0000		1	BRACKET	
030	571535-0000		1	CANTILEVER	
050	574479-0000		1	ROLL	
060	574480-0000		2	ROLL	
075	1296915-0000		1	ROLL	
080	574481-0000		1	ROLL	
090	752186-0002		2	SHAFT	
100	752186-0008		1	SHAFT	
110	752186-0006		2	SHAFT	
140	1279087-0000		2	LOCKING PLATE	
150	1279091-0000		4	LOCKING PLATE	
250	90240-0172		6	FLANGE BUSHING, 8X12X10 MM	
255	752156-0000		4	FLANGE BUSHING	
500	312105-0332		6	SCREW M6S ISO 4017 M5X22 A470	
Common Parts					
020	751333-0000		1	SETTING PLATE	
040	256309-0000		1	SHAFT	
160	256312-0000		1	WASHER	
170	2033-0011		10	WASHER	
180	26490-0000		2	WASHER	
190	256280-0000		2	DOWEL	
200	571534-0000		1	PLATE	
210	257090-0000		1	SHIFTER HANDLE	
220	751334-0000		3	SPACER	
260	456042-0000		1	SCREW	
265	28037-0000		2	WASHER	
295	491153-0000		1	COMPRESSION GLAND	
300	90335-0008		1	COMP. SPRING 22490, 1,6X14,1X115	
520	312105-0371		3	SCREW M6S ISO 4017 M6X22 A480	
530	312105-0451		6	SCREW M6S ISO 4017 M8X20 A480	
540	315105-0165		2	WASHER BRB 8,4X16 RFR	
550	315115-0165		4	WASHER PLAIN, TBRB 8,4/16 H=3	

Machine Type | Group Description | Used-In | Group Number | Page No

MOVABLE FORMING RING

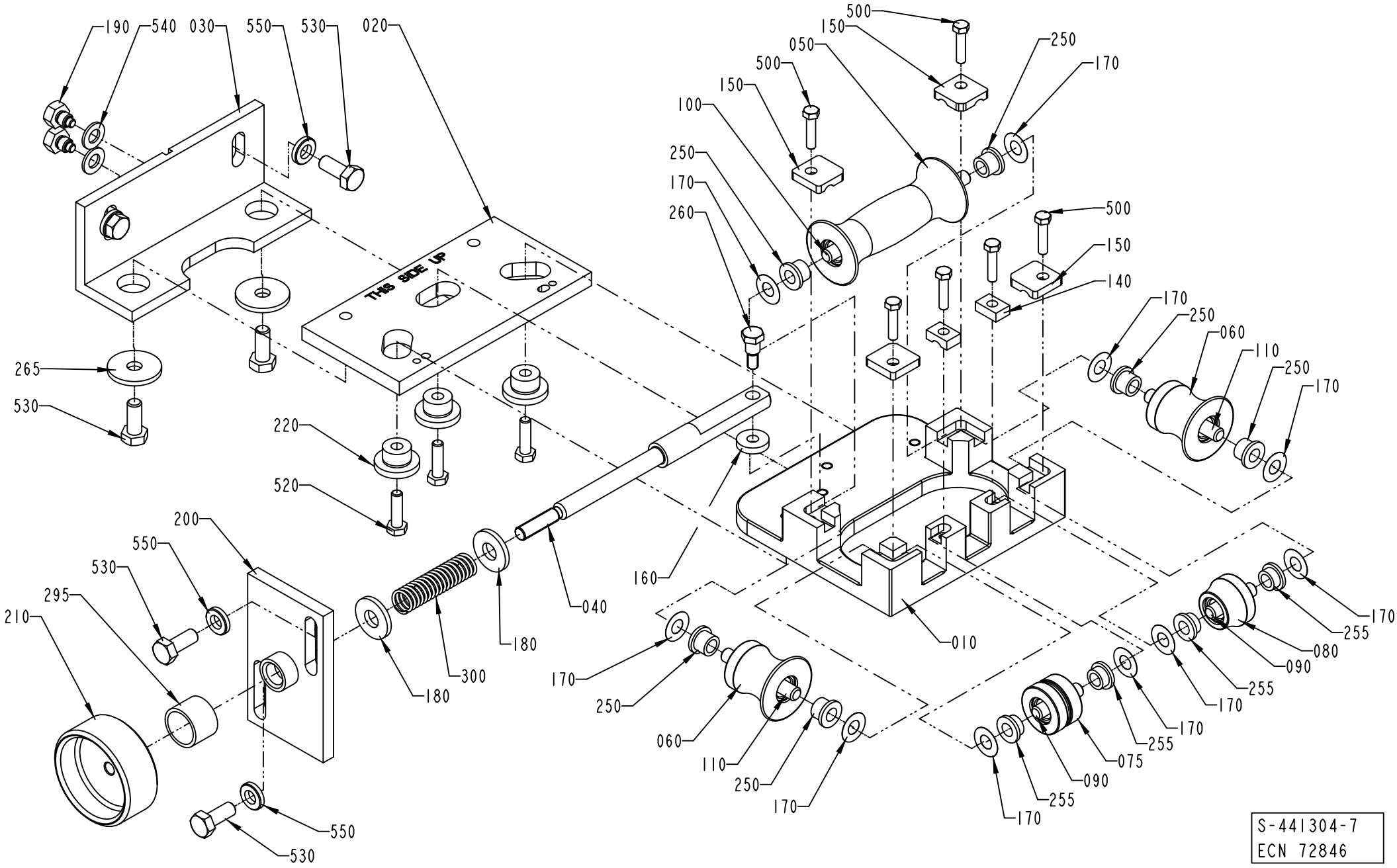

ECM: 171187 - 20050713
Group number: 441304-0400
Assembly Drawing: 441304-7_1_AB

This list covers pages from 1-102 to 1-109

Pos	Part No	UN	Qty	Description	Page No
TBA 0100B, TBA 0125S (See drawing on page: 1-108)					
010	456905-0000		1	FASTENING PLATE	
030	571536-0000		1	CANTILEVER	
050	752141-0000		1	FORMING ROLLER	
060	752142-0000		2	FORMING ROLLER	
075	1296912-0000		1	ROLL	
080	752143-0000		1	FORMING ROLLER	
090	752186-0002		2	SHAFT	
100	752186-0008		1	SHAFT	
110	752186-0006		2	SHAFT	
140	456907-0000		2	LOCK PLATE	
150	1279091-0000		4	LOCKING PLATE	
250	90240-0172		6	FLANGE BUSHING, 8X12X10 MM	
255	752156-0000		4	FLANGE BUSHING	
500	312105-0332		6	SCREW M6S ISO 4017 M5X22 A470	
TBA 0160S, TBA 0200S (See drawing on page: 1-104)					
010	456905-0000		1	FASTENING PLATE	
030	571535-0000		1	CANTILEVER	
050	752126-0000		1	FORMING ROLLER	
060	752127-0000		2	FORMING ROLLER	
075	1296914-0000		1	ROLL	
080	752128-0000		1	FORMING ROLLER	
090	752186-0002		2	SHAFT	
100	752186-0008		1	SHAFT	
110	752186-0006		2	SHAFT	
140	456907-0000		2	LOCK PLATE	
150	1279091-0000		4	LOCKING PLATE	
250	90240-0172		6	FLANGE BUSHING, 8X12X10 MM	
255	752156-0000		4	FLANGE BUSHING	
500	312105-0332		6	SCREW M6S ISO 4017 M5X22 A470	
TBA 0180B, TBA 0200B, TBA 0236B, TBA 0200SQ, TBA 0284B, TBA 0250B, TBA 0300S, TBA 0330S (See drawing on page: 1-102)					
010	978792-0000		1	PLATE	
030	571535-0000		1	CANTILEVER	
050	751491-0000		1	ROLL	
060	751492-0000		2	ROLL	
075	1296913-0000		1	ROLL	
080	751494-0000		1	ROLL	
090	752186-0005		2	SHAFT	
100	752186-0009		1	SHAFT	
110	752187-0000		1	SHAFT	
150	1279091-0000		4	LOCKING PLATE	
250	90240-0172		10	FLANGE BUSHING, 8X12X10 MM	
500	312105-0368		4	SCREW M6S ISO 4017 M6X16 A480	
TBA 0200M, TBA 0250S (See drawing on page: 1-106)					
010	574404-0000		1	BRACKET	
030	571535-0000		1	CANTILEVER	
050	574479-0000		1	ROLL	
060	574480-0000		2	ROLL	
075	1296915-0000		1	ROLL	
080	574481-0000		1	ROLL	
090	752186-0002		2	SHAFT	
100	752186-0008		1	SHAFT	
110	752186-0006		2	SHAFT	
140	1279087-0000		2	LOCKING PLATE	
150	1279091-0000		4	LOCKING PLATE	
250	90240-0172		6	FLANGE BUSHING, 8X12X10 MM	
255	752156-0000		4	FLANGE BUSHING	
500	312105-0332		6	SCREW M6S ISO 4017 M5X22 A470	
Common Parts					
020	751333-0000		1	SETTING PLATE	
040	256309-0000		1	SHAFT	
160	256312-0000		1	WASHER	
170	2033-0011		10	WASHER	
180	26490-0000		2	WASHER	
190	256280-0000		2	DOWEL	
200	571534-0000		1	PLATE	
210	257090-0000		1	SHIFTER HANDLE	
220	751334-0000		3	SPACER	
260	456042-0000		1	SCREW	
265	28037-0000		2	WASHER	
295	491153-0000		1	COMPRESSION GLAND	
300	90335-0008		1	COMP. SPRING 22490, 1,6X14,1X115	
520	312105-0371		3	SCREW M6S ISO 4017 M6X22 A480	
530	312105-0451		6	SCREW M6S ISO 4017 M8X20 A480	
540	315105-0165		2	WASHER BRB 8,4X16 RFR	
550	315115-0165		4	WASHER PLAIN, TBRB 8,4/16 H=3	

Machine Type | Group Description | Used-In | Group Number | Page No

UPPER TUBE SUPPORT

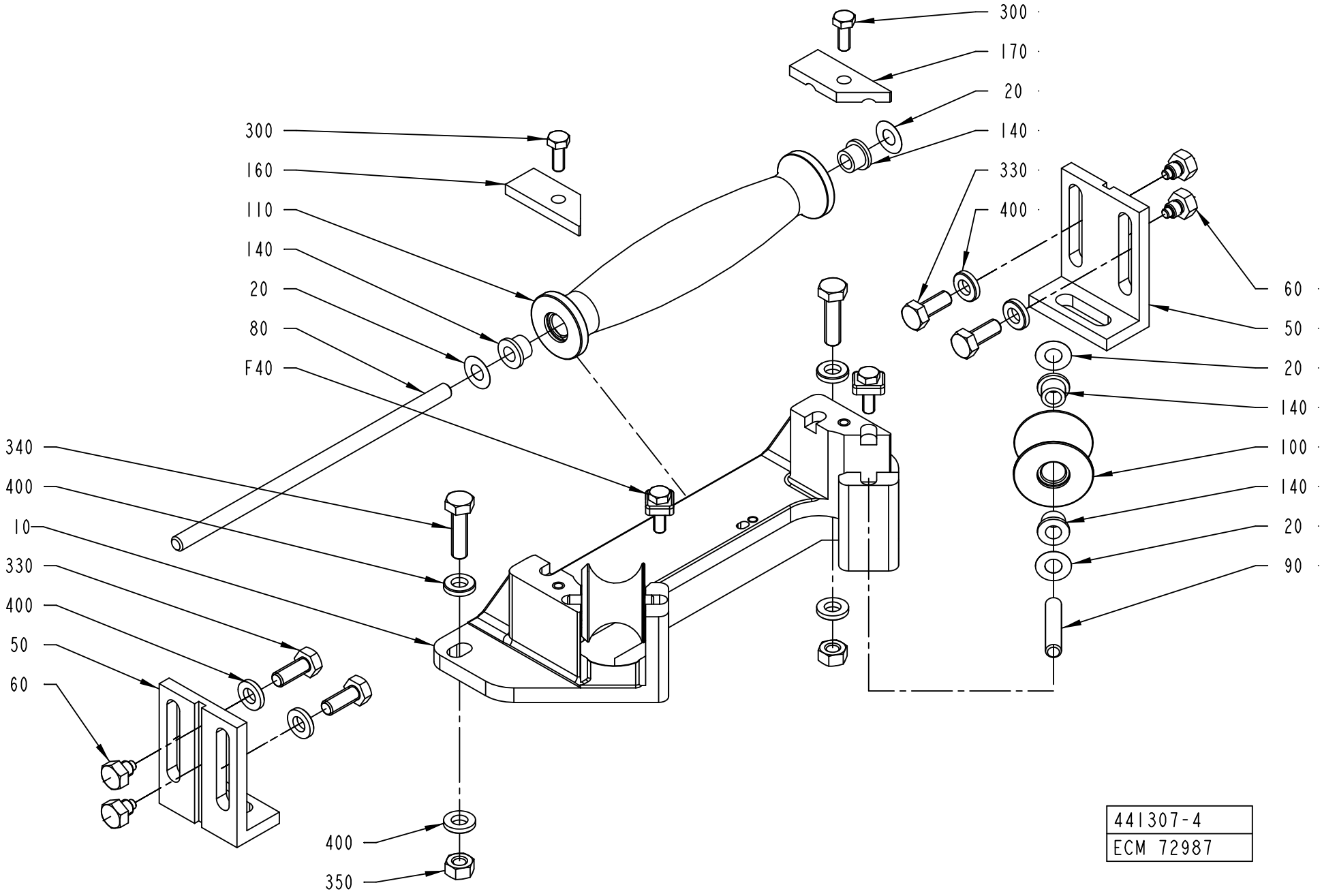

ECM: 178603 - 20040910
Group number: 441307-0300
Assembly Drawing: 441307-4_1_AC

This list covers pages from 1-110 to 1-115

Pos	Part No	UN	Qty	Description	Page No
TBA 0100B, TBA 0125S (See drawing on page: 1-112)					
010	469078-0000		1	HOLDER	
050	256279-0000		2	ANGLE	
080	752186-0010		1	SHAFT	
090	752186-0001		2	SHAFT	
100	752145-0000		2	FORMING ROLLER	
110	752144-0000		1	FORMING ROLLER	
160	1279089-0000		1	LOCKING PLATE	
170	1279088-0000		1	LOCKING PLATE	
290	312105-0368		2	SCREW M6S ISO 4017 M6X16 A480	
345	312105-0457		2	SCREW M6S ISO 4014 M8X35 A480	
TBA 0160S, TBA 0200S (See drawing on page: 1-114)					
010	469041-0000		1	HOLDER	
050	469047-0000		2	ANGLE	
080	752186-0010		1	SHAFT	
090	752186-0004		2	SHAFT	
100	752130-0000		2	FORMING ROLLER	
110	752129-0000		1	FORMING ROLLER	
160	1279089-0000		1	LOCKING PLATE	
170	1279088-0000		1	LOCKING PLATE	
300	312105-0368		2	SCREW M6S ISO 4017 M6X16 A480	
340	312105-0455		2	SCREW M6S ISO 4017 M8X30 A480	
TBA 0180B (See drawing on page: 1-110)					
010	978791-0000		1	HOLDER	
050	751267-0000		2	CANTILEVER	
080	752186-0011		1	SHAFT	
090	752186-0004		2	SHAFT	
160	751287-0000		1	PLATE	
170	751288-0000		1	PLATE	
300	312105-0368		2	SCREW M6S ISO 4017 M6X16 A480	
340	312105-0455		2	SCREW M6S ISO 4017 M8X30 A480	
TBA 0200B, TBA 0236B, TBA 0200SQ, TBA 0284B, TBA 0250B, TBA 0300S, TBA 0330S (See drawing on page: 1-110)					
010	978791-0000		1	HOLDER	
050	751267-0000		2	CANTILEVER	
080	752186-0011		1	SHAFT	
090	752186-0004		2	SHAFT	
100	751284-0000		2	ROLL	
110	751283-0000		1	ROLL	
160	751287-0000		1	PLATE	
170	751288-0000		1	PLATE	
300	312105-0368		2	SCREW M6S ISO 4017 M6X16 A480	
340	312105-0455		2	SCREW M6S ISO 4017 M8X30 A480	
TBA 0200M, TBA 0250S (See drawing on page: 1-114)					
010	574416-0000		1	BRACKET	
050	469047-0000		2	ANGLE	
080	752186-0010		1	SHAFT	
090	752186-0012		2	SHAFT	
100	574418-0000		2	ROLL	
110	574417-0000		1	ROLL	
160	1279089-0000		1	LOCKING PLATE	
170	1279088-0000		1	LOCKING PLATE	
300	312105-0368		2	SCREW M6S ISO 4017 M6X16 A480	
340	312105-0455		2	SCREW M6S ISO 4017 M8X30 A480	
Common Parts					
020	2033-0011		6	WASHER	
040	565462-0100		1	LOCK PLATE	**1-117**
060	256280-0000		4	DOWEL	
100	751284-0000		2	ROLL	
140	90240-0172		6	FLANGE BUSHING, 8X12X10 MM	
330	312105-0451		4	SCREW M6S ISO 4017 M8X20 A480	
350	312605-0318		2	HEXAGON NUT, M6M M8 A280	
400	315115-0165		8	WASHER PLAIN, TBRB 8,4/16 H=3	

Machine Type | Group Description | Used-In | Group Number | Page No

UPPER TUBE SUPPORT

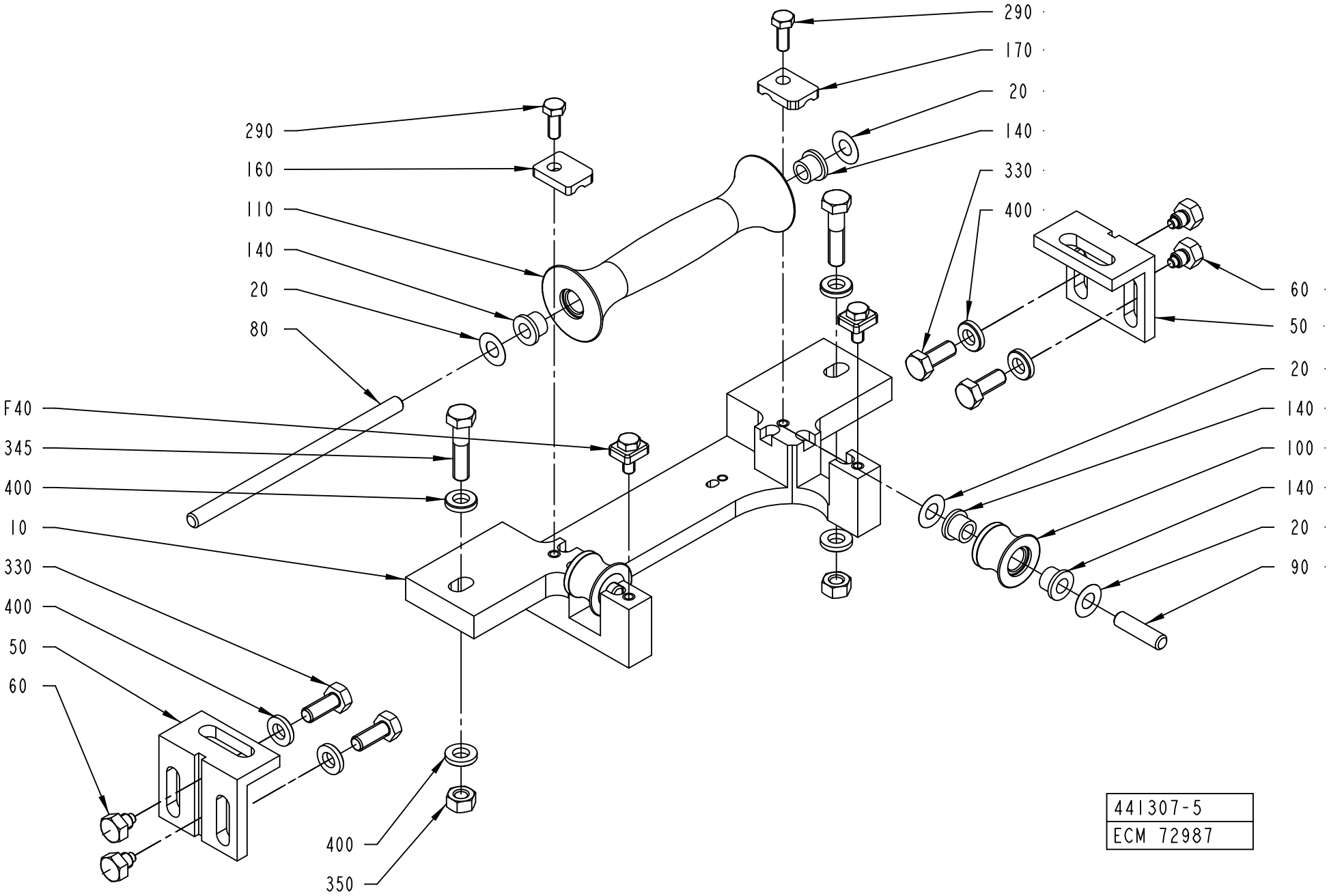

ECM: 178603 - 20040910
Group number: 441307-0300
Assembly Drawing: 441307-5_1_AC

This list covers pages from 1-110 to 1-115

Pos	Part No	UN	Qty	Description	Page No
TBA 0100B, TBA 0125S (See drawing on page: 1-112)					
010	469078-0000		1	HOLDER	
050	256279-0000		2	ANGLE	
080	752186-0010		1	SHAFT	
090	752186-0001		2	SHAFT	
100	752145-0000		2	FORMING ROLLER	
110	752144-0000		1	FORMING ROLLER	
160	1279089-0000		1	LOCKING PLATE	
170	1279088-0000		1	LOCKING PLATE	
290	312105-0368		2	SCREW M6S ISO 4017 M6X16 A480	
345	312105-0457		2	SCREW M6S ISO 4014 M8X35 A480	
TBA 0160S, TBA 0200S (See drawing on page: 1-114)					
010	469041-0000		1	HOLDER	
050	469047-0000		2	ANGLE	
080	752186-0010		1	SHAFT	
090	752186-0004		2	SHAFT	
100	752130-0000		2	FORMING ROLLER	
110	752129-0000		1	FORMING ROLLER	
160	1279089-0000		1	LOCKING PLATE	
170	1279088-0000		1	LOCKING PLATE	
300	312105-0368		2	SCREW M6S ISO 4017 M6X16 A480	
340	312105-0455		2	SCREW M6S ISO 4017 M8X30 A480	
TBA 0180B (See drawing on page: 1-110)					
010	978791-0000		1	HOLDER	
050	751267-0000		2	CANTILEVER	
080	752186-0011		1	SHAFT	
090	752186-0004		2	SHAFT	
160	751287-0000		1	PLATE	
170	751288-0000		1	PLATE	
300	312105-0368		2	SCREW M6S ISO 4017 M6X16 A480	
340	312105-0455		2	SCREW M6S ISO 4017 M8X30 A480	
TBA 0200B, TBA 0236B, TBA 0200SQ, TBA 0284B, TBA 0250B, TBA 0300S, TBA 0330S (See drawing on page: 1-110)					
010	978791-0000		1	HOLDER	
050	751267-0000		2	CANTILEVER	
080	752186-0011		1	SHAFT	
090	752186-0004		2	SHAFT	
100	751284-0000		2	ROLL	
110	751283-0000		1	ROLL	
160	751287-0000		1	PLATE	
170	751288-0000		1	PLATE	
300	312105-0368		2	SCREW M6S ISO 4017 M6X16 A480	
340	312105-0455		2	SCREW M6S ISO 4017 M8X30 A480	
TBA 0200M, TBA 0250S (See drawing on page: 1-114)					
010	574416-0000		1	BRACKET	
050	469047-0000		2	ANGLE	
080	752186-0010		1	SHAFT	
090	752186-0012		2	SHAFT	
100	574418-0000		2	ROLL	
110	574417-0000		1	ROLL	
160	1279089-0000		1	LOCKING PLATE	
170	1279088-0000		1	LOCKING PLATE	
300	312105-0368		2	SCREW M6S ISO 4017 M6X16 A480	
340	312105-0455		2	SCREW M6S ISO 4017 M8X30 A480	
Common Parts					
020	2033-0011		6	WASHER	
040	565462-0100		1	LOCK PLATE	**1-117**
060	256280-0000		4	DOWEL	
100	751284-0000		2	ROLL	
140	90240-0172		6	FLANGE BUSHING, 8X12X10 MM	
330	312105-0451		4	SCREW M6S ISO 4017 M8X20 A480	
350	312605-0318		2	HEXAGON NUT, M6M M8 A280	
400	315115-0165		8	WASHER PLAIN, TBRB 8,4/16 H=3	

Machine Type | Group Description | Used-In | Group Number | Page No

UPPER TUBE SUPPORT

Drawing file: 441307-6_1_AC.hpgl

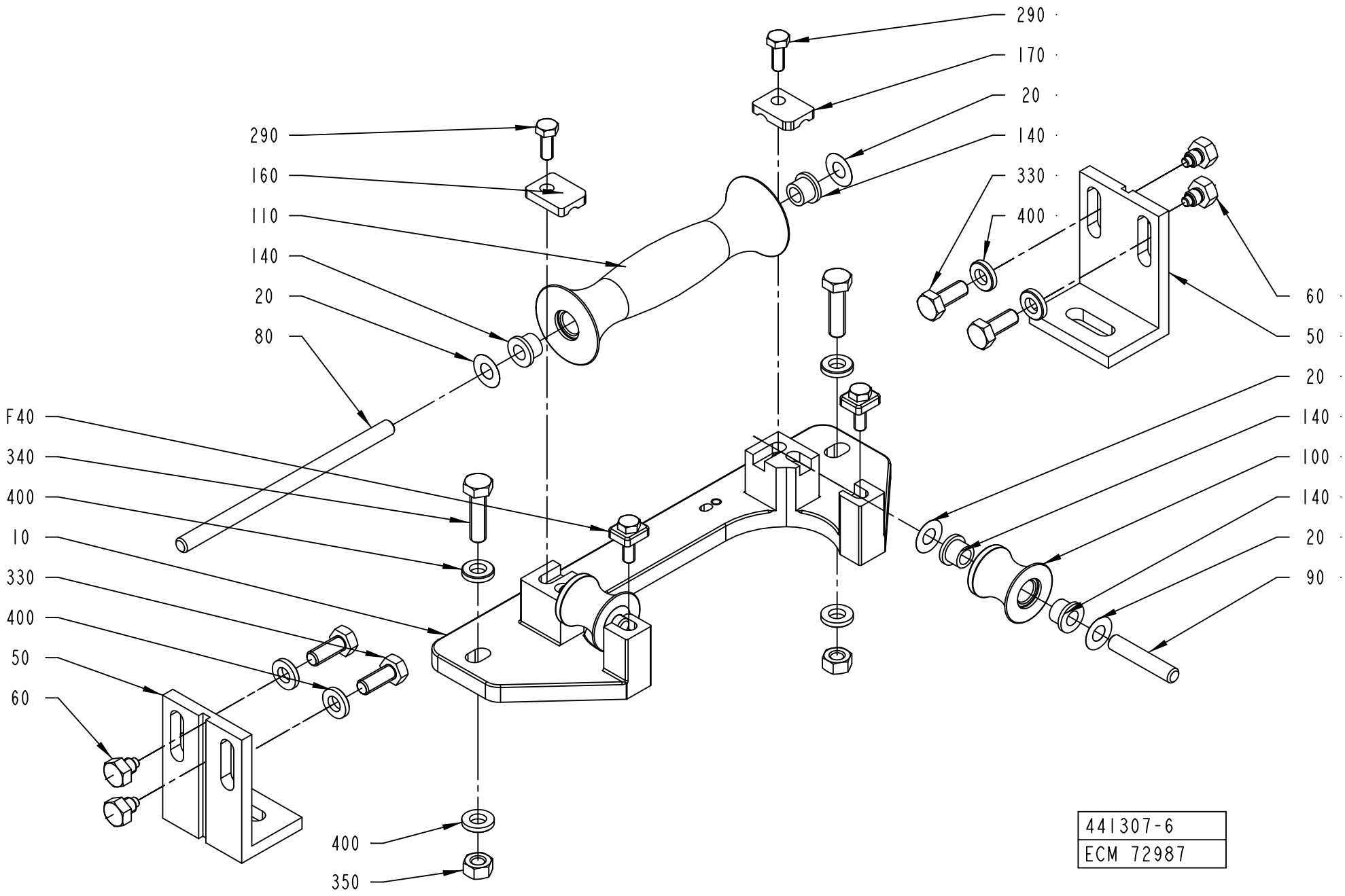

ECM: 178603 - 20040910
Group number: 441307-0300
Assembly Drawing: 441307-6_1_AC

This list covers pages from 1-110 to 1-115

Pos	Part No	UN	Qty	Description	Page No
TBA 0100B, TBA 0125S (See drawing on page: 1-112)					
010	469078-0000		1	HOLDER	
050	256279-0000		2	ANGLE	
080	752186-0010		1	SHAFT	
090	752186-0001		2	SHAFT	
100	752145-0000		2	FORMING ROLLER	
110	752144-0000		1	FORMING ROLLER	
160	1279089-0000		1	LOCKING PLATE	
170	1279088-0000		1	LOCKING PLATE	
290	312105-0368		2	SCREW M6S ISO 4017 M6X16 A480	
345	312105-0457		2	SCREW M6S ISO 4014 M8X35 A480	
TBA 0160S, TBA 0200S (See drawing on page: 1-114)					
010	469041-0000		1	HOLDER	
050	469047-0000		2	ANGLE	
080	752186-0010		1	SHAFT	
090	752186-0004		2	SHAFT	
100	752130-0000		2	FORMING ROLLER	
110	752129-0000		1	FORMING ROLLER	
160	1279089-0000		1	LOCKING PLATE	
170	1279088-0000		1	LOCKING PLATE	
300	312105-0368		2	SCREW M6S ISO 4017 M6X16 A480	
340	312105-0455		2	SCREW M6S ISO 4017 M8X30 A480	
TBA 0180B (See drawing on page: 1-110)					
010	978791-0000		1	HOLDER	
050	751267-0000		2	CANTILEVER	
080	752186-0011		1	SHAFT	
090	752186-0004		2	SHAFT	
160	751287-0000		1	PLATE	
170	751288-0000		1	PLATE	
300	312105-0368		2	SCREW M6S ISO 4017 M6X16 A480	
340	312105-0455		2	SCREW M6S ISO 4017 M8X30 A480	
TBA 0200B, TBA 0236B, TBA 0200SQ, TBA 0284B, TBA 0250B, TBA 0300S, TBA 0330S (See drawing on page: 1-110)					
010	978791-0000		1	HOLDER	
050	751267-0000		2	CANTILEVER	
080	752186-0011		1	SHAFT	
090	752186-0004		2	SHAFT	
100	751284-0000		2	ROLL	
110	751283-0000		1	ROLL	
160	751287-0000		1	PLATE	
170	751288-0000		1	PLATE	
300	312105-0368		2	SCREW M6S ISO 4017 M6X16 A480	
340	312105-0455		2	SCREW M6S ISO 4017 M8X30 A480	
TBA 0200M, TBA 0250S (See drawing on page: 1-114)					
010	574416-0000		1	BRACKET	
050	469047-0000		2	ANGLE	
080	752186-0010		1	SHAFT	
090	752186-0012		2	SHAFT	
100	574418-0000		2	ROLL	
110	574417-0000		1	ROLL	
160	1279089-0000		1	LOCKING PLATE	
170	1279088-0000		1	LOCKING PLATE	
300	312105-0368		2	SCREW M6S ISO 4017 M6X16 A480	
340	312105-0455		2	SCREW M6S ISO 4017 M8X30 A480	
Common Parts					
020	2033-0011		6	WASHER	
040	565462-0100		1	LOCK PLATE	**1-117**
060	256280-0000		4	DOWEL	
100	751284-0000		2	ROLL	
140	90240-0172		6	FLANGE BUSHING, 8X12X10 MM	
330	312105-0451		4	SCREW M6S ISO 4017 M8X20 A480	
350	312605-0318		2	HEXAGON NUT, M6M M8 A280	
400	315115-0165		8	WASHER PLAIN, TBRB 8,4/16 H=3	

Machine Type | Group Description | Used-In | Group Number | Page No

This page is intentionally left blank.

ECM: 178239 - 20040910
Group number: 565462-0100
Assembly Drawing:

Pos	Part No	UN	Qty	Description	Page No
TBA 0100B, TBA 0125S					
020	312105-0368		2	SCREW M6S ISO 4017 M6X16 A480	
TBA 0180B, TBA 0160S, TBA 0200M, TBA 0200B, TBA 0236B, TBA 0200SQ, TBA 0200S, TBA 0250S, TBA 0284B, TBA 0250B, TBA 0300S, TBA 0330S					
020	312105-0370		2	SCREW M6S ISO 4017 M6X20 A480	
Common Parts					
010	1279087-0000		2	LOCKING PLATE	

Pos	Part No	UN	Qty	Description	Page No

DIVIDED FORMING RING

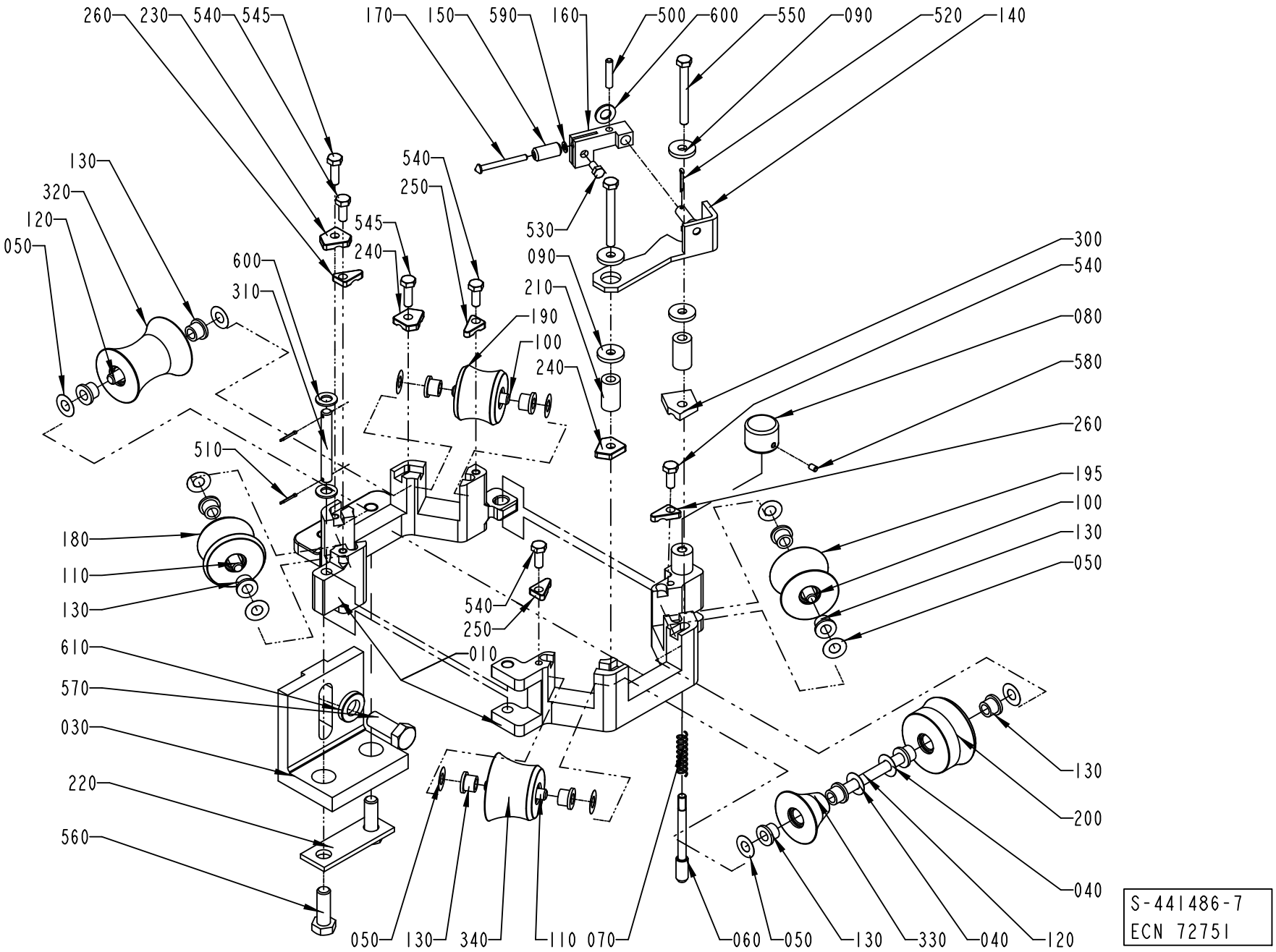

ECM: 227631 - 20051011
Group number: 441486-0400
Assembly Drawing: 441486-7_1_AC

This list covers pages from 1-118 to 1-123

Pos	Part No	UN	Qty	Description	Page No
TBA 0100B, TBA 0125S (See drawing on page: 1-120)					
010	469745-0000		1	BRACKET	
050	2033-0011		14	WASHER	
100	752186-0003		4	SHAFT	
120	752186-0006		1	SHAFT	
125	752185-0000		1	SHAFT	
130	90240-0172		12	FLANGE BUSHING, 8X12X10 MM	
180	752147-0000		1	FORMING ROLLER	
190	752148-0000		1	FORMING ROLLER	
195	752150-0000		1	FORMING ROLLER	
200	752151-0000		1	FORMING ROLLER	
300	456872-0000		1	LOCK PLATE	
320	752146-0000		1	FORMING ROLLER	
330	752152-0000		1	FORMING ROLLER	
340	752149-0000		1	FORMING ROLLER	
350	752156-0000		2	FLANGE BUSHING	
535	312105-0329		4	SCREW M6S ISO 4017 M5X16 A480	
536	312105-0332		4	SCREW M6S ISO 4017 M5X22 A470	
600	315105-0165		2	WASHER BRB 8,4X16 RFR	
TBA 0160S, TBA 0200S (See drawing on page: 1-120)					
010	469745-0000		1	BRACKET	
050	2033-0011		14	WASHER	
100	752186-0003		4	SHAFT	
120	752186-0006		1	SHAFT	
125	752185-0000		1	SHAFT	
130	90240-0172		12	FLANGE BUSHING, 8X12X10 MM	
180	752132-0000		1	FORMING ROLLER	
190	752133-0000		1	FORMING ROLLER	
195	752135-0000		1	FORMING ROLLER	
200	752136-0000		1	FORMING ROLLER	
300	456872-0000		1	LOCK PLATE	
320	752131-0000		1	FORMING ROLLER	
330	752137-0000		1	FORMING ROLLER	
340	752134-0000		1	FORMING ROLLER	
350	752156-0000		2	FLANGE BUSHING	
535	312105-0329		4	SCREW M6S ISO 4017 M5X16 A480	
536	312105-0332		4	SCREW M6S ISO 4017 M5X22 A470	
600	315105-0165		2	WASHER BRB 8,4X16 RFR	
TBA 0180B, TBA 0200B, TBA 0236B, TBA 0200SQ, TBA 0284B, TBA 0250B, TBA 0300S, TBA 0330S (See drawing on page: 1-118)					
010	978790-0000		1	BRACKET	
040	2033-0008		2	WASHER	
050	2033-0011		12	WASHER	
090	257175-0000		4	WASHER	
100	752186-0004		2	SHAFT	
110	752186-0005		2	SHAFT	
120	752186-0007		2	SHAFT	
130	90240-0172		14	FLANGE BUSHING, 8X12X10 MM	
140	441918-0000		1	BRACKET	
150	451117-0000		1	ROLL	
160	451148-0000		1	BRACKET	
170	451149-0000		1	SHAFT	
180	751499-0000		1	ROLL	
190	751497-0000		1	ROLL	
195	751496-0000		1	ROLL	
200	751495-0000		1	ROLL	
210	456181-0000		2	SPACER	
300	456199-0000		1	LOCK PLATE	
320	751498-0000		1	ROLL	
330	751501-0000		1	ROLL	
340	751500-0000		1	ROLL	
500	311103-0312		1	PARALLEL PIN ISO 2338 5M6X25 A1	
520	311411-0165		1	SPLIT PIN SP2,5X16RFR	
530	312105-0325		1	SCREW M6S ISO 4017 M5X10 A480	
540	312105-0368		4	SCREW M6S ISO 4017 M6X16 A480	
545	312105-0370		2	SCREW M6S ISO 4017 M6X20 A480	
550	312105-0381		2	SCREW M6S ISO 4014 M6X55 A480	
590	315105-0136		1	WASHER BRB 4,3X8 RFR	
600	315105-0165		3	WASHER BRB 8,4X16 RFR	
TBA 0200M, TBA 0250S (See drawing on page: 1-122)					
010	574396-0000		1	BRACKET	
050	2033-0011		14	WASHER	
090	257175-0000		4	WASHER	
100	752186-0004		4	SHAFT	
120	752186-0006		1	SHAFT	
125	574395-0000		1	SHAFT	
130	90240-0172		12	FLANGE BUSHING, 8X12X10 MM	
140	574456-0000		1	BRACKET	
150	451117-0000		1	ROLL	
160	451148-0000		1	BRACKET	
170	451149-0000		1	SHAFT	
180	574397-0000		1	ROLL	
190	574399-0000		1	ROLL	
195	574400-0000		1	ROLL	

Machine Type | Group Description | Used-In | Group Number | Page No

DIVIDED FORMING RING

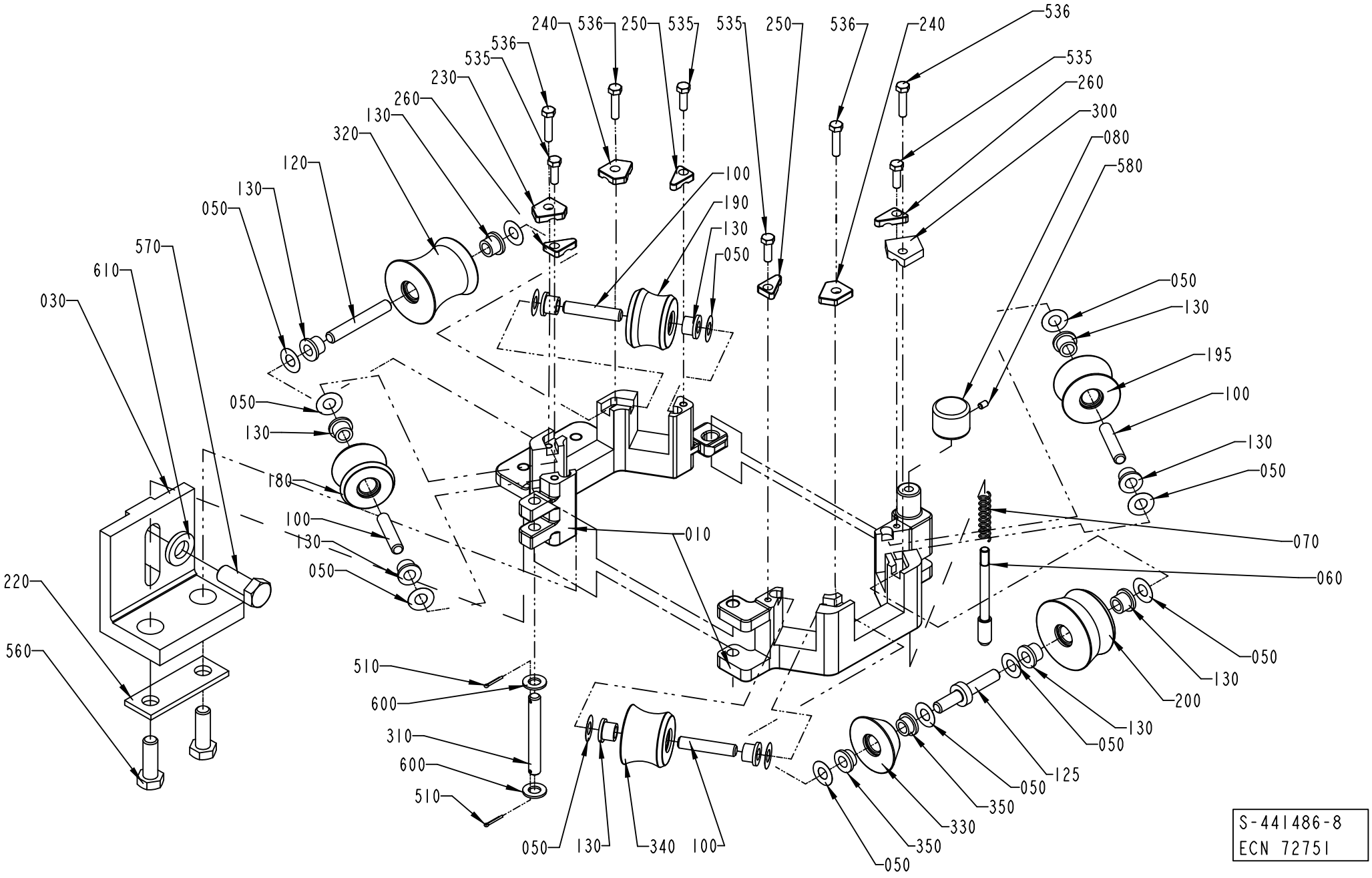

Pos	Part No	UN	Qty	Description	Page No
TBA 0200M, TBA 0250S (Cont'd) (See drawing on page: 1-122)					
210	456181-0000		2	SPACER	
300	574393-0000		1	LOCK PLATE	
320	574398-0000		1	ROLL	
330	574402-0000		1	ROLL	
340	574403-0000		1	ROLL	
350	752156-0000		2	FLANGE BUSHING	
500	311103-0312		1	PARALLEL PIN ISO 2338 5M6X25 A1	
520	311411-0165		1	SPLIT PIN SP2,5X16RFR	
530	312105-0325		1	SCREW M6S ISO 4017 M5X10 A480	
535	312105-0329		4	SCREW M6S ISO 4017 M5X16 A480	
536	312105-0332		2	SCREW M6S ISO 4017 M5X22 A470	
550	312105-0381		2	SCREW M6S ISO 4014 M6X55 A480	
590	315105-0136		1	WASHER BRB 4,3X8 RFR	
600	315105-0165		3	WASHER BRB 8,4X16 RFR	
Common Parts					
030	456230-0000		1	ANGLE BRACKET	
060	35918-0000		1	SHAFT	
070	35919-0000		1	COMPRESSION SPRING	
080	36325-0000		1	KNOB	
220	456182-0000		1	PLATE	
230	1279086-0000		1	LOCKING PLATE	
240	1279090-0000		2	LOCKING PLATE	
250	1279093-0000		2	LOCKING PLATE	
260	1279094-0000		2	LOCKING PLATE	
310	751318-0000		1	SHAFT	
510	311411-0150		2	SPLIT PIN SP2X12RFR	
560	312105-0495		2	SCREW M6S ISO 4017 M10X30 A480	
570	312105-0536		1	SCREW M6S ISO 4017 M12X30 A480	
580	312318-0285		1	SCREW ISO4029 M4X6 A4	
610	315115-0178		1	WASHER PLAIN, TBRB 13/24 H=4	

Pos	Part No	UN	Qty	Description	Page No

DIVIDED FORMING RING

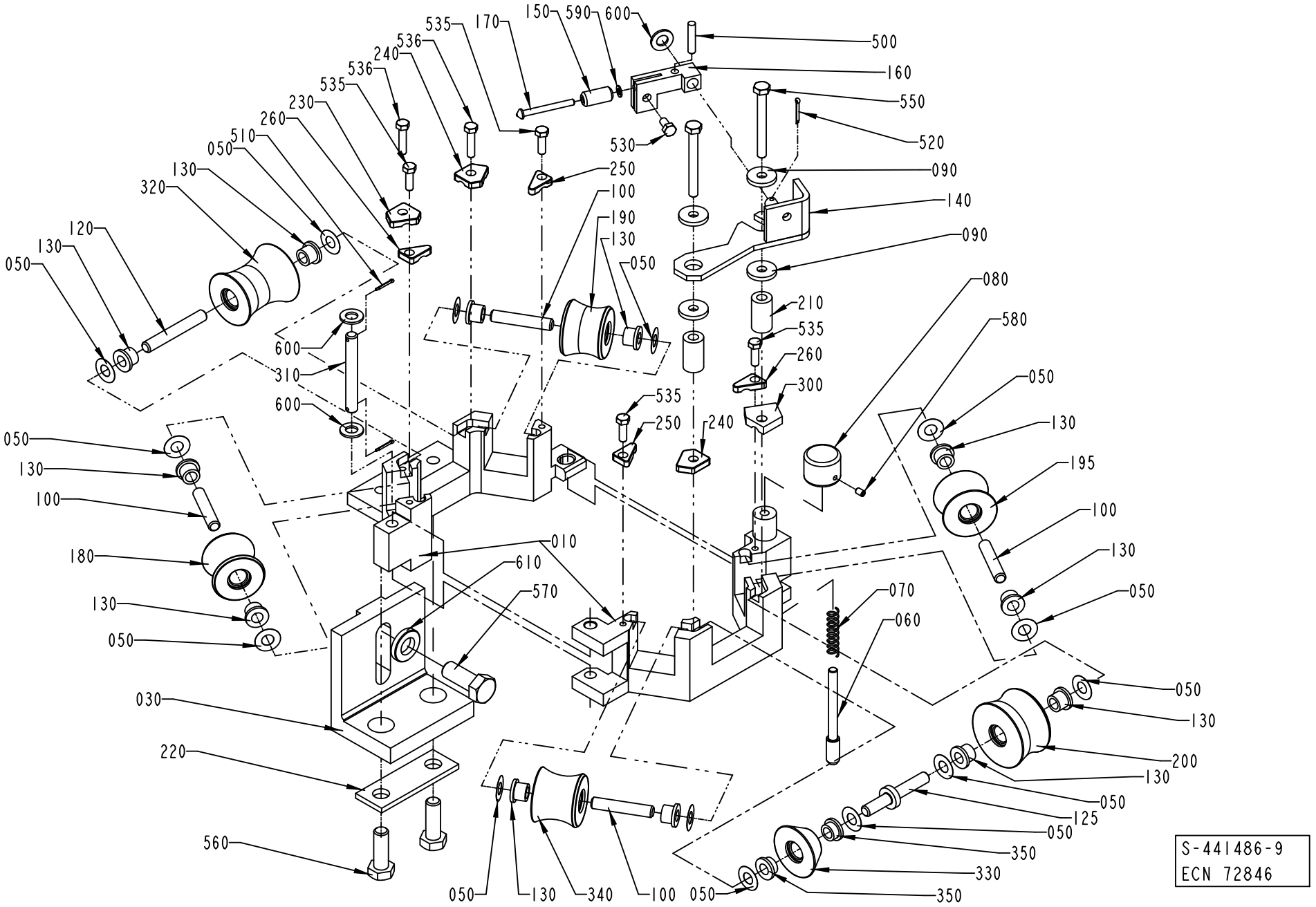

S-441486-9
ECN 72846

Pos	Part No	UN	Qty	Description	Page No	Pos	Part No	UN	Qty	Description	Page No

SEE PREVIOUS LISTS PAGES: 1-119, 1-121.

LOWER FORMING RING

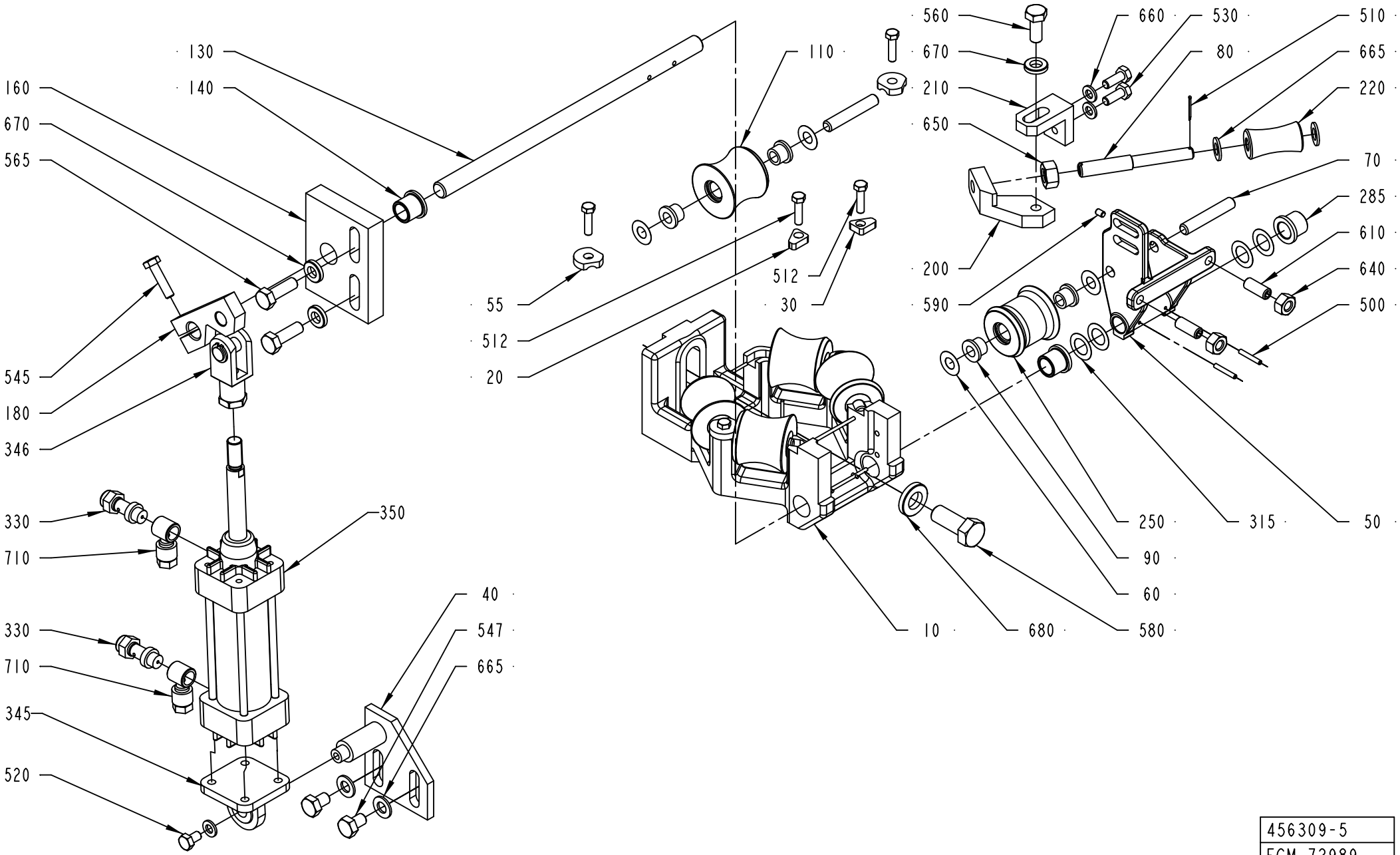

456309-5
ECM 72989

ECM: 292527 - 20070126
Group number: 456309-0600
Assembly Drawing: 456309-5_1_AC

This list covers pages from 1-124 to 1-127

Pos	Part No	UN	Qty	Description	Page No
TBA 0100B, TBA 0125S (See drawing on page: 1-126)					
010	456837-0000		1	HOLDER	
050	257041-0000		1	FORK	
070	752186-0003		4	SHAFT	
075	752186-0012		2	SHAFT	
110	752153-0000		5	FORMING ROLLER	
140	255970-0000		3	BUSHING	
160	571544-0000		1	BEARING PLATE	
220	257044-0000		1	ROLL	
250	752155-0000		1	COUNTER ROLLER	
510	311411-0140		1	SPLIT PIN SP1,6X16RFR	
512	312105-0331		2	SCREW M6S ISO 4017 M5X20 A480	
540	312105-0370		4	SCREW M6S ISO 4017 M6X20 A480	
600	312318-0368		2	SCREW ISO4029 M6X16 A4	
630	312605-0316		2	HEXAGON NUT, M6M M6 A280	
650	312605-0320		1	HEXAGON NUT, M6M M10 A280	
665	315105-0165		4	WASHER BRB 8,4X16 RFR	
TBA 0160S, TBA 0200S (See drawing on page: 1-126)					
010	456837-0000		1	HOLDER	
050	257041-0000		1	FORK	
070	752186-0003		4	SHAFT	
075	752186-0012		2	SHAFT	
110	752138-0000		5	FORMING ROLLER	
140	255970-0000		3	BUSHING	
160	571544-0000		1	BEARING PLATE	
220	257044-0000		1	ROLL	
250	752140-0000		1	COUNTER ROLLER	
510	311411-0140		1	SPLIT PIN SP1,6X16RFR	
512	312105-0331		2	SCREW M6S ISO 4017 M5X20 A480	
540	312105-0370		4	SCREW M6S ISO 4017 M6X20 A480	
600	312318-0368		2	SCREW ISO4029 M6X16 A4	
630	312605-0316		2	HEXAGON NUT, M6M M6 A280	
650	312605-0320		1	HEXAGON NUT, M6M M10 A280	
665	315105-0165		4	WASHER BRB 8,4X16 RFR	
TBA 0180B, TBA 0200B, TBA 0236B, TBA 0284B, TBA 0250B, TBA 0300S, TBA 0330S (See drawing on page: 1-124)					
010	490518-0000		1	HOLDER	
050	257040-0000		1	FORK	
070	752186-0005		6	SHAFT	
110	751502-0000		5	ROLLER	
140	255970-0000		1	BUSHING	
160	571543-0000		1	BEARING PLATE	
220	257044-0000		1	ROLL	
250	751503-0000		1	COUNTER ROLLER	
	90166-0179	*M*	*1*	*SHRINKABLE HOSE (1 1/2")*	
285	752047-0000		2	BUSHING	
510	311411-0140		1	SPLIT PIN SP1,6X16RFR	
512	312105-0331		6	SCREW M6S ISO 4017 M5X20 A480	
610	312318-0451		2	SCREW ISO4029 M8X20 A4	
640	312605-0318		2	HEXAGON NUT, M6M M8 A280	
650	312605-0320		1	HEXAGON NUT, M6M M10 A280	
665	315105-0165		4	WASHER BRB 8,4X16 RFR	
TBA 0200M, TBA 0250S (See drawing on page: 1-126)					
010	574337-0000		1	BRACKET	
050	574341-0000		1	FORK	
070	752186-0003		1	SHAFT	
075	752186-0004		5	SHAFT	
110	574346-0000		5	ROLL	
140	255970-0000		3	BUSHING	
160	571544-0000		1	BEARING PLATE	
220	257044-0000		1	ROLL	
250	574347-0000		1	COUNTER ROLLER	
510	311411-0140		1	SPLIT PIN SP1,6X16RFR	
512	312105-0331		2	SCREW M6S ISO 4017 M5X20 A480	
540	312105-0370		4	SCREW M6S ISO 4017 M6X20 A480	
600	312318-0368		2	SCREW ISO4029 M6X16 A4	
630	312605-0316		2	HEXAGON NUT, M6M M6 A280	
650	312605-0320		1	HEXAGON NUT, M6M M10 A280	
665	315105-0165		4	WASHER BRB 8,4X16 RFR	
TBA 0200SQ (See drawing on page: 1-124)					
010	490518-0000		1	HOLDER	
050	257040-0000		1	FORK	
070	752186-0005		6	SHAFT	
110	1538150-0000		5	ROLLER	
140	255970-0000		1	BUSHING	
160	571543-0000		1	BEARING PLATE	
220	257044-0000		1	ROLL	
250	1538151-0000		1	COUNTER ROLLER	
285	752047-0000		2	BUSHING	
510	311411-0140		1	SPLIT PIN SP1,6X16RFR	
512	312105-0331		6	SCREW M6S ISO 4017 M5X20 A480	
610	312318-0451		2	SCREW ISO4029 M8X20 A4	
640	312605-0318		2	HEXAGON NUT, M6M M8 A280	
650	312605-0320		1	HEXAGON NUT, M6M M10 A280	

LOWER FORMING RING

Drawing file: 456309-6_1_AD.hpgl

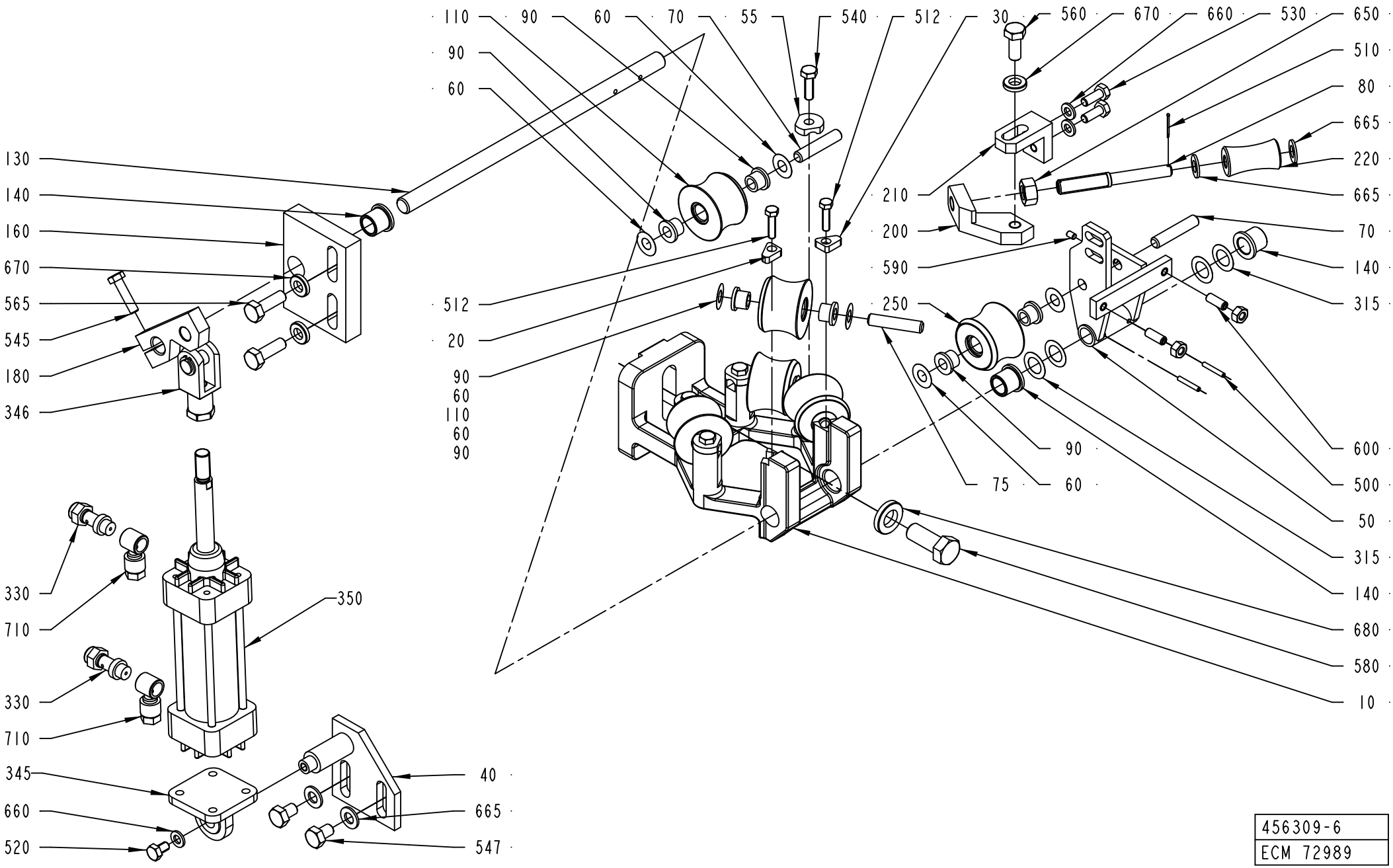

456309-6
ECM 72989

ECM: 292527 - 20070126
Group number: 456309-0600
Assembly Drawing: 456309-6_1_AD

This list covers pages from 1-124 to 1-127

Pos	Part No	UN	Qty	Description	Page No
Common Parts (Cont'd)					
020	1279095-0000		1	LOCKING PLATE	
030	1279096-0000		1	LOCKING PLATE	
040	491022-0000		1	CYLINDER BRACKET	
055	1279092-0000		4	LOCKING PLATE	
060	2033-0011		12	WASHER	
080	239440-0000		1	SHAFT	
090	90240-0172		12	FLANGE BUSHING, 8X12X10 MM	
130	255969-0000		1	SHAFT	
180	441483-0000		1	CYLINDER BRACKET	
200	257042-0000		1	BRACKET	
210	257043-0000		1	ANGLE BRACKET	
315	752038-0000		4	SHIM	
330	90235-0274		2	THROTTLE CHECK VALVE, G1/8", SCU-604-1/8	
345	90239-0453		1	BRACKET	
346	90239-0516		1	ROD END, CLEVIS WITH AXLE M10X1,25	
350	90239-0779		1	CYLINDER	
	90239-0442		*1*	*SEAL KIT*	
500	311103-0238		2	PARALLEL PIN ISO 2338 3M6X20 A1	
520	312105-0364		1	SCREW M6S ISO 4017 M6X10 A480	
530	312105-0368		2	SCREW M6S ISO 4017 M6X16 A480	
545	312105-0372		1	SCREW M6S ISO 4017 M6X25 A480	
547	312105-0447		2	SCREW M6S ISO 4017 M8X12 A480	
560	312105-0451		1	SCREW M6S ISO 4017 M8X20 A480	
565	312105-0453		2	SCREW M6S ISO 4017 M8X25 A480	
580	312105-0536		1	SCREW M6S ISO 4017 M12X30 A480	
590	312318-0285		1	SCREW ISO4029 M4X6 A4	
660	315105-0153		3	WASHER BRB 6,4X12 RFR	
670	315115-0165		3	WASHER PLAIN, TBRB 8,4/16 H=3	
680	315115-0178		1	WASHER PLAIN, TBRB 13/24 H=4	
710	342797-0121		2	CONN. BANJO, RINGPIECE 6-1/8	

Pos	Part No	UN	Qty	Description	Page No

SUCTION PIPE

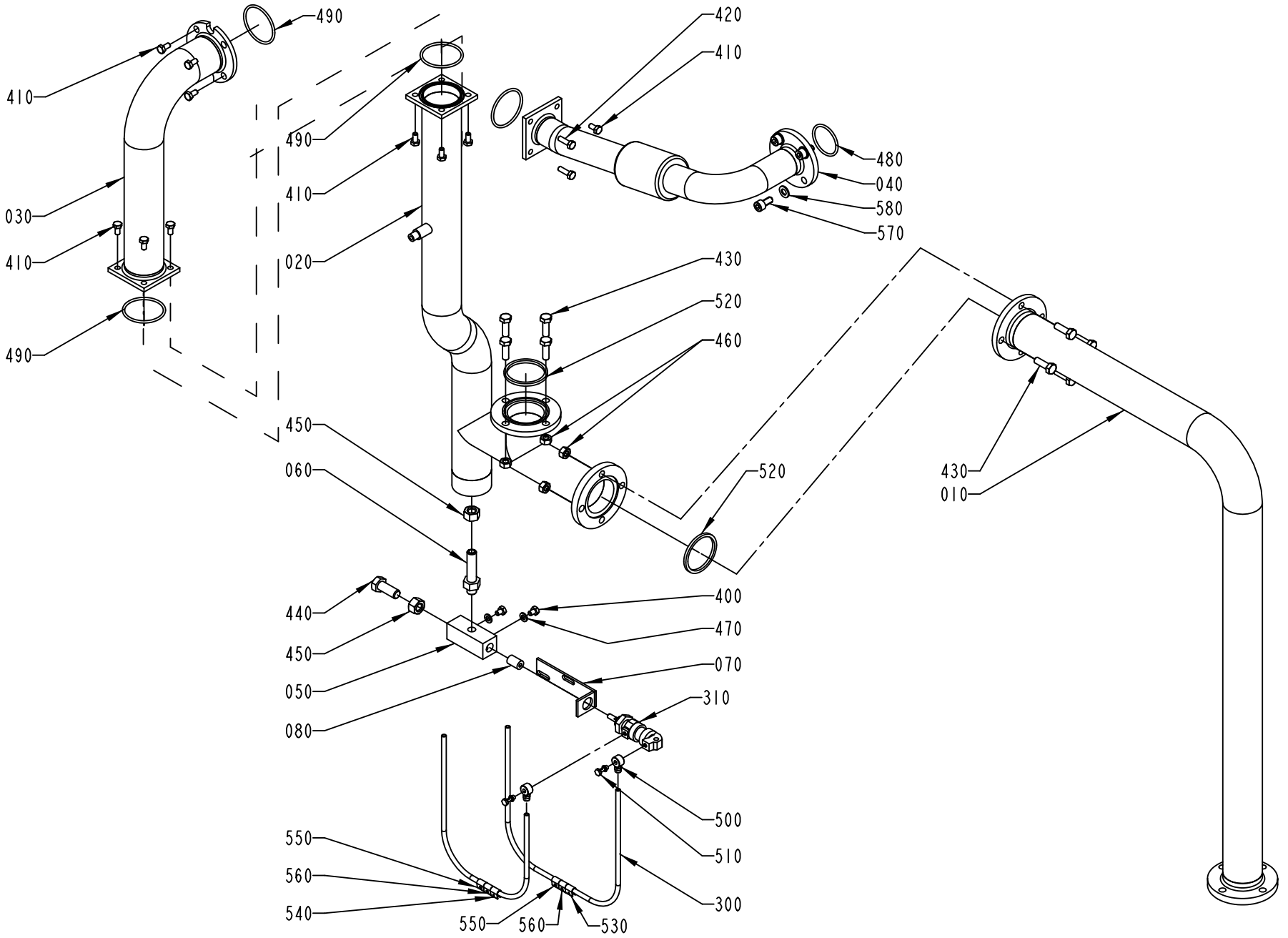

456555-7
ECM 73280

ECM: 178599 - 20040910
Group number: 456555-0600
Assembly Drawing: 456555-7_1_AA

Pos	Part No	UN	Qty	Description	Page No
-					
010	1519401-0000		1	SUCTION PIPE	
020	1519402-0000		1	SUCTION PIPE	
030	1519403-0000		1	SUCTION PIPE	
040	2528095-0000		1	PIPE	
050	572487-0000		1	THROTTLING	
060	566669-0000		1	NIPPLE	
070	572485-0000		1	BRACKET	
080	572486-0000		1	PISTON	
300	90166-0124	MM	2000	TUBE 6 MM PA,TRANSP.	
310	90239-0840		1	DOUBLE ACTING, MINI-ISO, CYL.16-12	
400	312105-0362		2	SCREW M6S ISO 4017 M6X8 A480	
410	312105-0366		16	SCREW M6S ISO 4017 M6X12 A480	
420	312105-0370		2	SCREW M6S ISO 4017 M6X20 A480	
430	312105-0453		8	SCREW M6S ISO 4017 M8X25 A480	
440	312105-0536		1	SCREW M6S ISO 4017 M12X30 A480	
450	312605-0322		2	HEXAGON NUT, M6M M12 A280	
460	312605-0318		8	HEXAGON NUT, M6M M8 A280	
470	315105-0153		2	WASHER BRB 6,4X12 RFR	
480	927422-0015		1	O-RING 39.2X3 SILICONE	
490	927422-0008		4	O-RING 49.5X3 SILICONE	
500	342980-0111		2	BANJO-CONNECTION,RING 6/4-M5	
510	342980-0301		2	BANJO-HOLLOW BOLT COUPL.,EXT.THREA.01-M5	
	315233-0101		*1*	*WASHER CAPTIVE SEALING M5(NEW315239-101)*	
520	315229-0105		2	GASKETS, 48,5X55,5X3,7 MM 2" FDA	
530	359000-0400		1	WIRE MARKING, YELLOW, PA2/4"0"	
540	359000-0401		1	WIRE MARKING, YELLOW, PA2/4"1"	
550	359000-0402		2	WIRE MARKING, YELLOW, PA2/4"2"	
560	359000-0403		2	WIRE MARKING, YELLOW, PA2/4"3"	
570	312115-0449		4	SCREW ISO4762 M8X16 A4 80	
580	315105-0165		4	WASHER BRB 8,4X16 RFR	

Pos	Part No	UN	Qty	Description	Page No

PEROXIDE PIPE

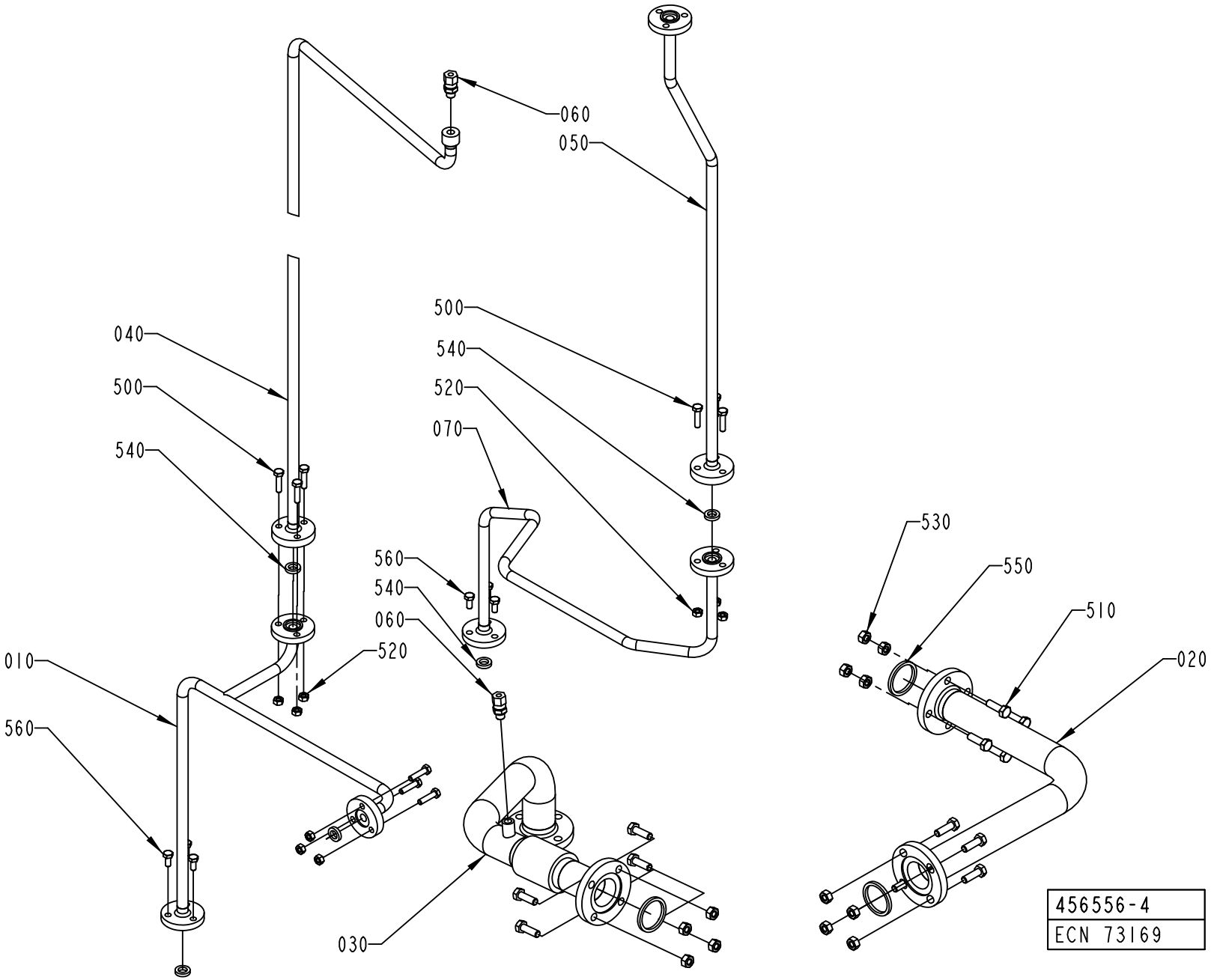

ECM: 178348 - 20040910
Group number: 456556-0400
Assembly Drawing: 456556-4_1_AA

Pos	Part No	UN	Qty	Description	Page No
-					
010	1523049-0000		1	PIPE	
020	1523050-0000		1	PIPE	
030	1523051-0000		1	PIPE	
040	1523052-0000		1	PIPE	
050	1523053-0000		1	PIPE	
060	90030-0184		2	CONN. STR. GA-6-G1/8	
070	1548315-0000		1	PIPE	
500	312105-0372		9	SCREW M6S ISO 4017 M6X25 A480	
510	312105-0453		8	SCREW M6S ISO 4017 M8X25 A480	
520	312605-0316		9	HEXAGON NUT, M6M M6 A280	
530	312605-0318		12	HEXAGON NUT, M6M M8 A280	
540	315229-0101		5	GASKETS, 10,4X17,4X3,7 MM 1/2" FDA	
550	315229-0104		3	GASKETS, 35,8X42,8X3,7 MM 1"1/2 FD	
560	312105-0367		6	SCREW M6S ISO 4017 M6X14 A480	

Pos	Part No	UN	Qty	Description	Page No

CLEANING SYSTEM

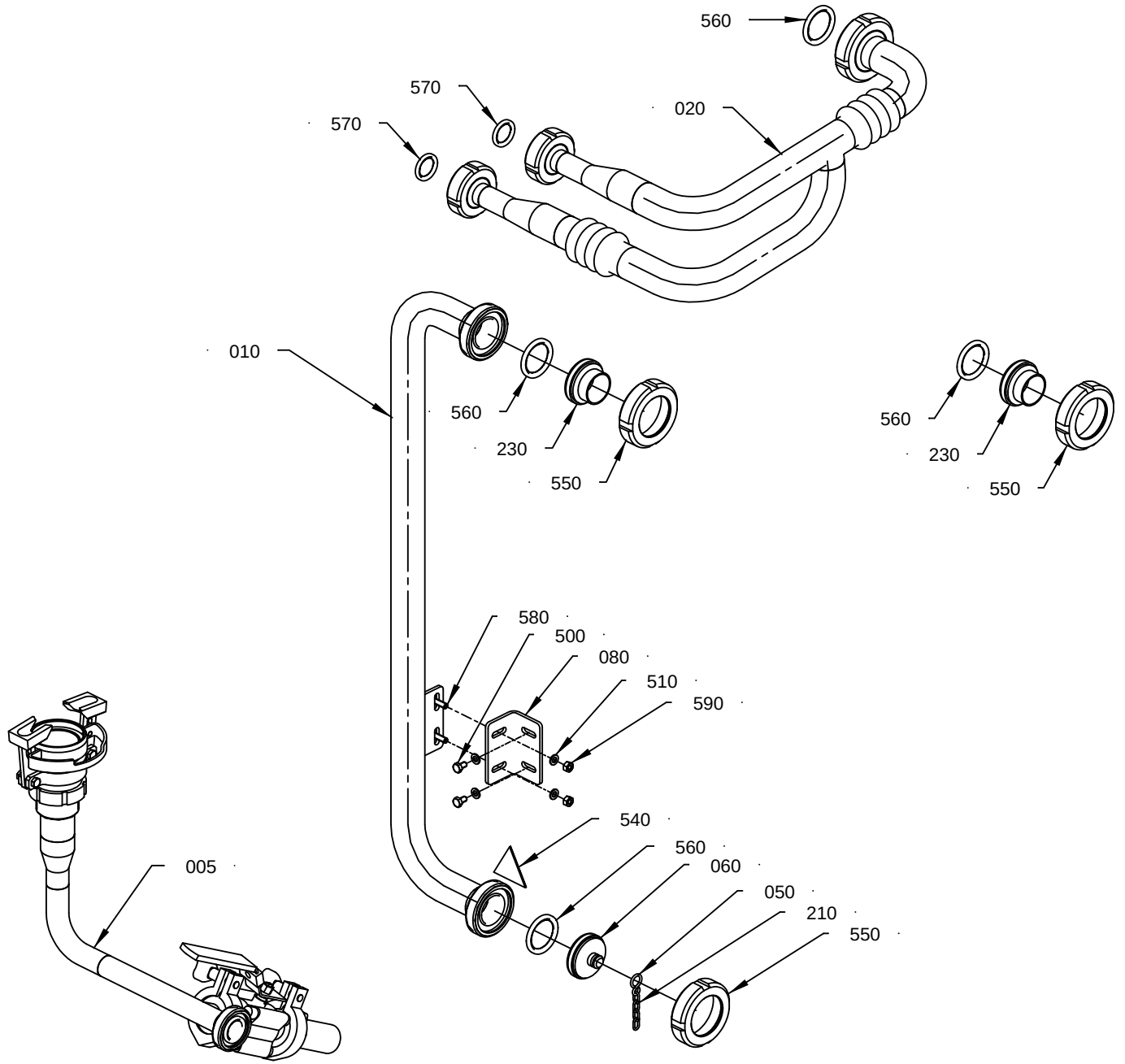

456836 - 8
ECM 217471

ECM: 236149 - 20051104
Group number: 456836-0700
Assembly Drawing: 456836-8_1_AA

Pos	Part No	UN	Qty	Description	Page No
-					
005	752495-0400		1	ATTACHMENT	**1-135**
010	1523365-0000		1	PIPE	
020	1523366-0000		1	PIPE	
050	209183-0000		1	RING	
060	1523364-0000		1	LID	
080	1548833-0000		1	BRACKET	
210	90155-0016	MM	300	CHAIN LONG LINK, LLB-3-R	
230	90217-0204		2	ASEPT. MALE FITTING ISO, 03-32-406/42	
500	312105-0364		2	SCREW M6S ISO 4017 M6X10 A480	
510	315105-0153		6	WASHER BRB 6,4X12 RFR	
540	359705-0003		1	WARNING SIGN ISO, DANGEROUS CHEMICALS	
550	90217-0206		3	UNION NUT, 1 1/2 APV, 07-01-376/17	
560	90217-0348		4	GASKET 35,4X46,8X4 MM	
570	90217-0347		2	GASKET 32X22,6X3,6 MM	
580	312105-0370		2	SCREW M6S ISO 4017 M6X20 A480	
590	312605-0316		2	HEXAGON NUT, M6M M6 A280	

Pos	Part No	UN	Qty	Description	Page No

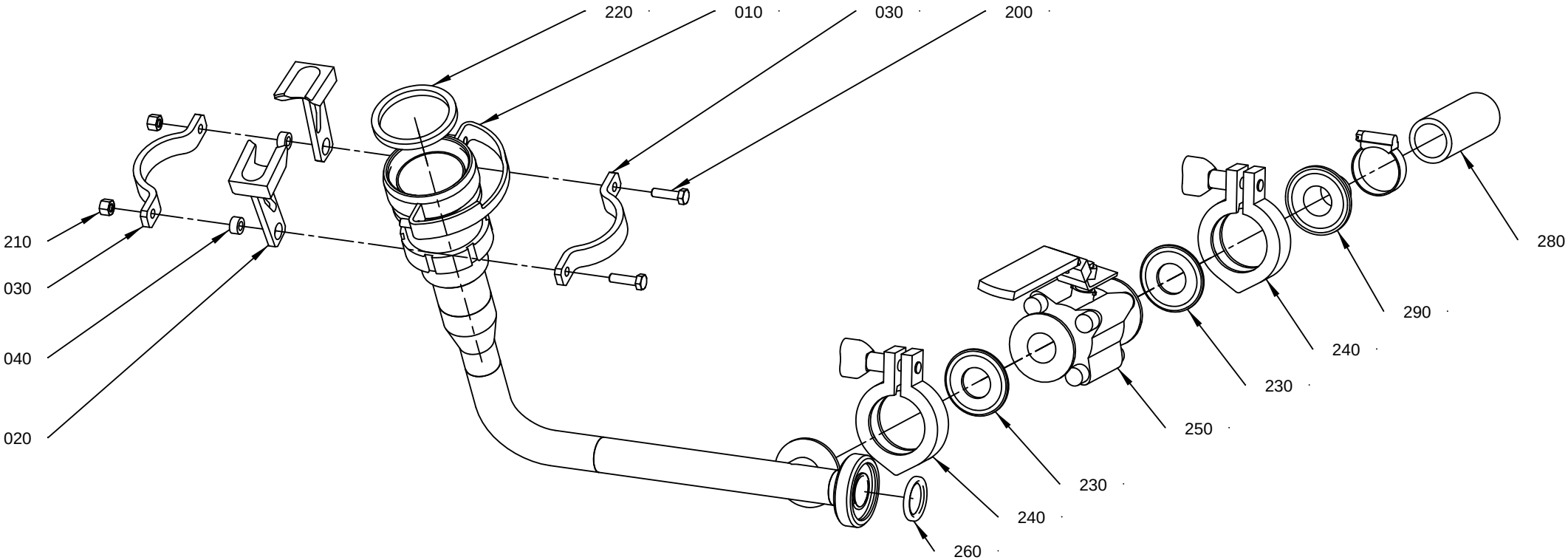

7524 95-4
2193 92

ECM: 290293 - 20070126
Group number: 752495-0400
Assembly Drawing: 752495-4_1_AA

Pos	Part No	UN	Qty	Description	Page No
TBA 0100B, TBA 0125S, TBA 0160S, TBA 0200S					
010	2781223-0000		1	CLEANING PIPE	
020	979728-0000		2	CATCH	
220	315229-0104		1	GASKETS, 35,8X42,8X3,7 MM 1"1/2 FD	
TBA 0180B, TBA 0200B, TBA 0236B, TBA 0284B, TBA 0250B, TBA 0300S, TBA 0330S					
010	2781221-0000		1	CLEANING PIPE	
020	579637-0000		2	CATCH	
220	12242-0005		1	GASKET 61X51X5,5	
TBA 0200M, TBA 0250S					
010	2781222-0000		1	CLEANING PIPE	
020	579771-0000		2	CATCH	
220	12242-0003		1	GASKET 48X38X5,5	
Common Parts					
030	752499-0000		2	RING	
040	553586-0000		2	SPACER	
200	312105-0371		2	SCREW M6S ISO 4017 M6X22 A480	
210	312811-0316		2	NUT HEX.LOCK HELI COIL MID GRIP M6 SS	
230	342850-0203		2	GASKET 22,7X49,1X5,2 MM 1" FDA 3-A	
240	342840-0103		2	CLAMPING PIECE	
250	90458-2601		1	BALL VALVE 3A DAIRY CLAMP LOCKABLE	
260	90217-0347		1	GASKET 32X22,6X3,6 MM	
270	342991-0106		1	HOSE CLIP,WORM DRIVE TYPE (30)-36	
280	90166-0049	MM	1500	HOSE PVC 25/33-34	
290	342841-0103		1	FERRULE, 3-A, GC-CLAMP 25,4 MM (1")	

Pos	Part No	UN	Qty	Description	Page No

HEAT EXCHANGER

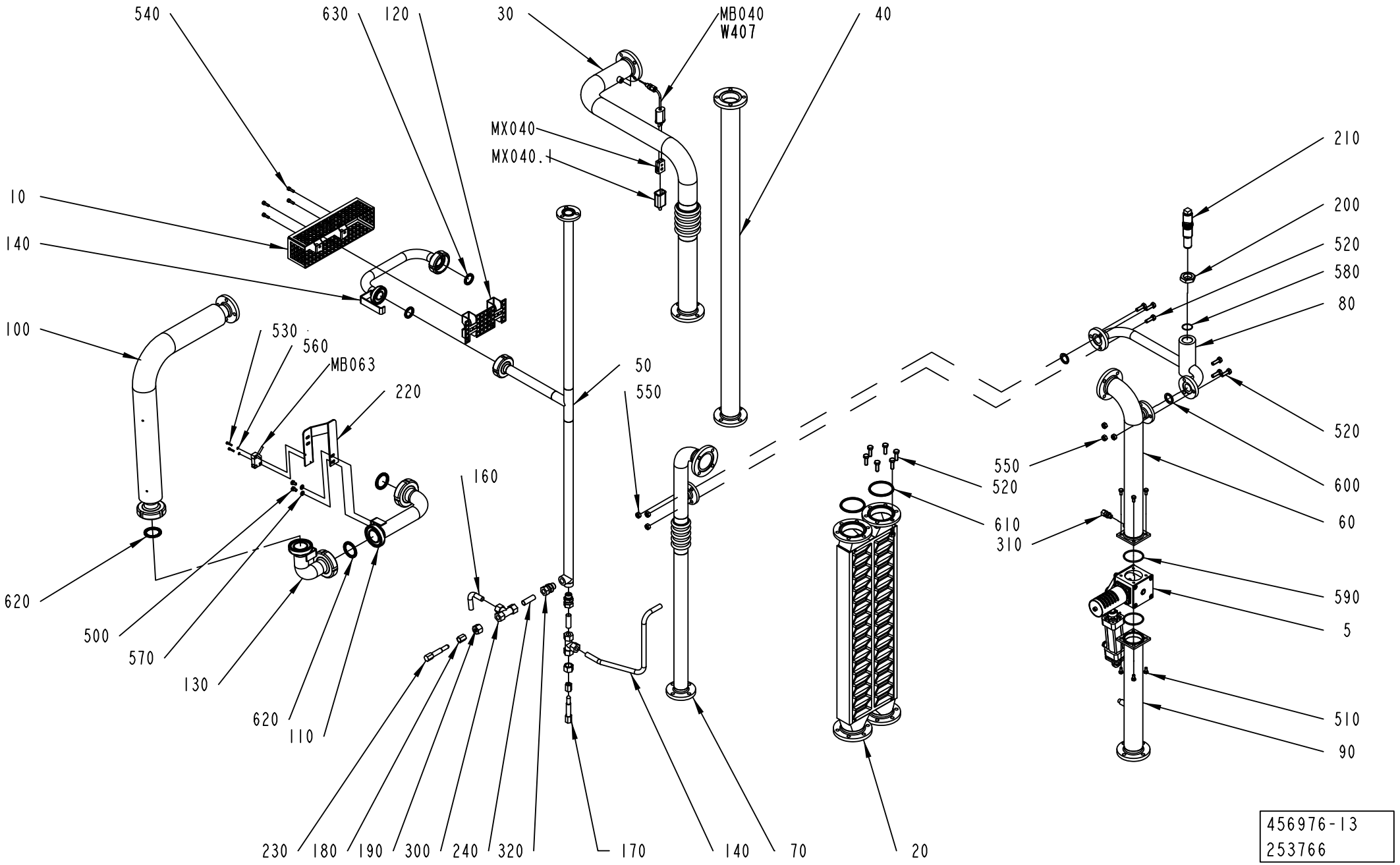

ECM: 262213 - 20060707
Group number: 456976-0700
Assembly Drawing: 456976-13_1_AC

Pos	Part No	UN	Qty	Description	Page No
-					
005	476859-0300		1	WEAC-VALVE	**1-139**
010	1348477-0000		1	TOUCH GUARD	
020	978838-0000		1	HEAT EXCHANGER	
030	1519380-0000		1	PIPE	
040	1519381-0000		1	PIPE	
050	1519382-0000		1	PIPE	
060	1519383-0000		1	PIPE	
070	979028-0000		1	PIPE	
080	979031-0000		1	PIPE	
090	1519384-0000		1	PIPE	
100	1519385-0000		1	PIPE	
110	1519386-0000		1	PIPE	
120	1348637-0000		1	TOUCH GUARD	
130	1519387-0000		1	PIPE	
140	1260481-0000		1	PIPE	
150	1519388-0000		1	PIPE	
160	1260480-0000		1	PIPE	
170	209145-0000		1	THROTTLE SCREW	
180	209146-0000		2	BARRIER NUT	
190	279589-0000		2	NUT	
200	442237-0000		1	PORCA	
210	490998-0000		1	THROTTLE SCREW	
220	2640472-0000		1	HOLDER	
230	2832785-0000		1	THROTTLE SCREW	
240	1260489-0000		2	PIPE	
300	90030-0058		2	CONN. T-PIPE T-12	
310	90030-0184		1	CONN. STR. GA-6-G1/8	
320	90030-0187		2	CONN. STR. GA-12-G3/8	
500	312105-0364		2	SCREW M6S ISO 4017 M6X10 A480	
510	312105-0366		8	SCREW M6S ISO 4017 M6X12 A480	
520	312105-0453		12	SCREW M6S ISO 4017 M8X25 A480	
530	312115-0228		2	SCREW ISO4762 M3X16 A4 80	
540	312115-0329		4	SCREW ISO4762 M5X16 A4 80	
550	312605-0318		12	HEXAGON NUT, M6M M8 A280	
560	315105-0124		2	WASHER BRB 3,2X6 RFR	
570	315105-0153		2	WASHER BRB 6,4X12 RFR	
580	315204-0119		1	O-RING 25,1X1,6 MM	
590	315204-0301		2	O-RING 49,5X3 MM	
600	315229-0203		2	GASKET 22,1X31,1X3,7 MM 1"	
610	315229-0206		2	GASKET 60,2X68,2X3,7 MM 2"1/2	
620	90217-0348		3	GASKET 35,4X46,8X4 MM	
630	90217-0347		2	GASKET 32X22,6X3,6 MM	
MX040	90326-0020		1	PLUG, FEMALE YELLOW CR-AL	
MB063	90044-0194		1	PROX.SW. IN5329/IN3002-BPKG(EX90044-104)	
MB040	90326-0051		1	THERMOCOUPLE, 12826-33	
MX040.1	90326-0012		1	PROTECTIVE COVER, T31A4618	
W407	90220-0059	M	5	THERMOCOUPLE CABLE K/PVC/20AWG 2X0,5MM2	

Machine Type | Group Description | Used-In | Group Number | Page No

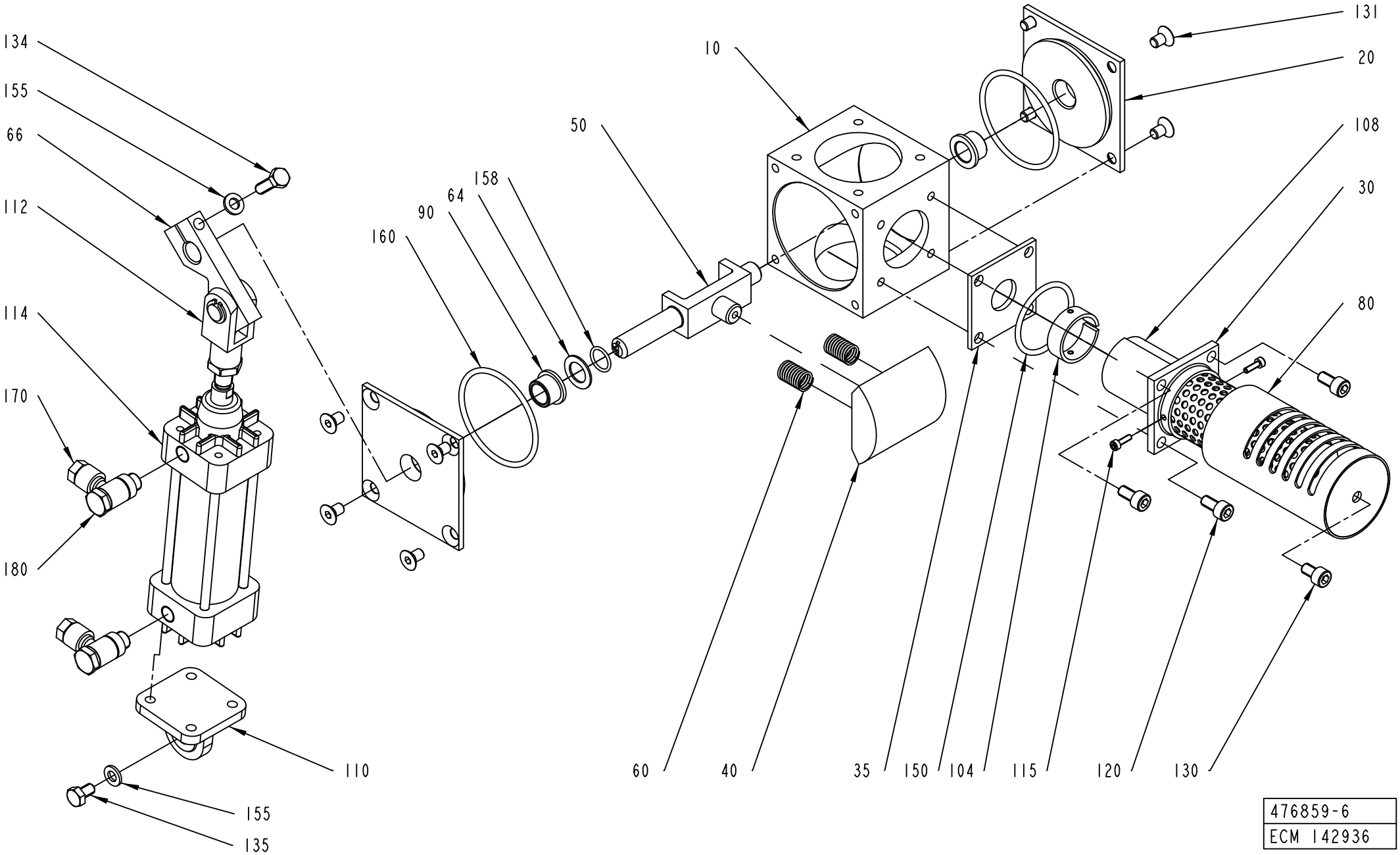

476859-6
ECM 142936

ECM: 178606 - 20040910
Group number: 476859-0300
Assembly Drawing: 476859-6_1_AD

Pos	Part No	UN	Qty	Description	Page No
-					
010	578031-0000		1	VALVE HOUSING	
020	255874-0000		2	BEARING COVER	
030	466477-0000		1	INNER PIPE	
035	979953-0000		1	WASHER	
040	466479-0000		1	PIECE	
050	555541-0000		1	BRACKET	
060	21521-0000		2	COMPRESSION SPRING	
064	266737-0000		1	WASHER	
066	441483-0000		1	CYLINDER BRACKET	
080	466478-0000		1	OUTER PIPE	
090	255875-0000		2	BUSHING	
104	466483-0000		1	CLAMPING PIECE	
108	466484-0000		1	NET	
110	90239-0453		1	BRACKET	
112	90239-0516		1	ROD END, CLEVIS WITH AXLE M10X1,25	
114	90239-0779		1	CYLINDER	
	90239-0442		*1*	*SEAL KIT*	
115	312115-0224		2	SCREW ISO4762 M3X10 A4 80	
120	312115-0366		4	SCREW ISO4762 M6X12 A4 80	
130	312115-0364		1	SCREW ISO4762 M6X10 A4 80	
131	312155-0364		8	SCREW DIN 7991 MF6S M6X10 A4 70	
134	312105-0370		1	SCREW M6S ISO 4017 M6X20 A480	
135	312105-0364		1	SCREW M6S ISO 4017 M6X10 A480	
150	315204-0222		1	O-RING 36,2X3 MM	
155	315105-0153		2	WASHER BRB 6,4X12 RFR	
158	315204-0110		1	O-RING 12,1X1,6 MM	
160	315204-0302		2	O-RING 54,5X3 MM	
170	342797-0121		2	CONN. BANJO, RINGPIECE 6-1/8	
180	342980-0303		2	BANJO-HOLLOW BOLT COUPL,EXT.THR.01-G1/8	

Pos	Part No	UN	Qty	Description	Page No

FILLER TUBE

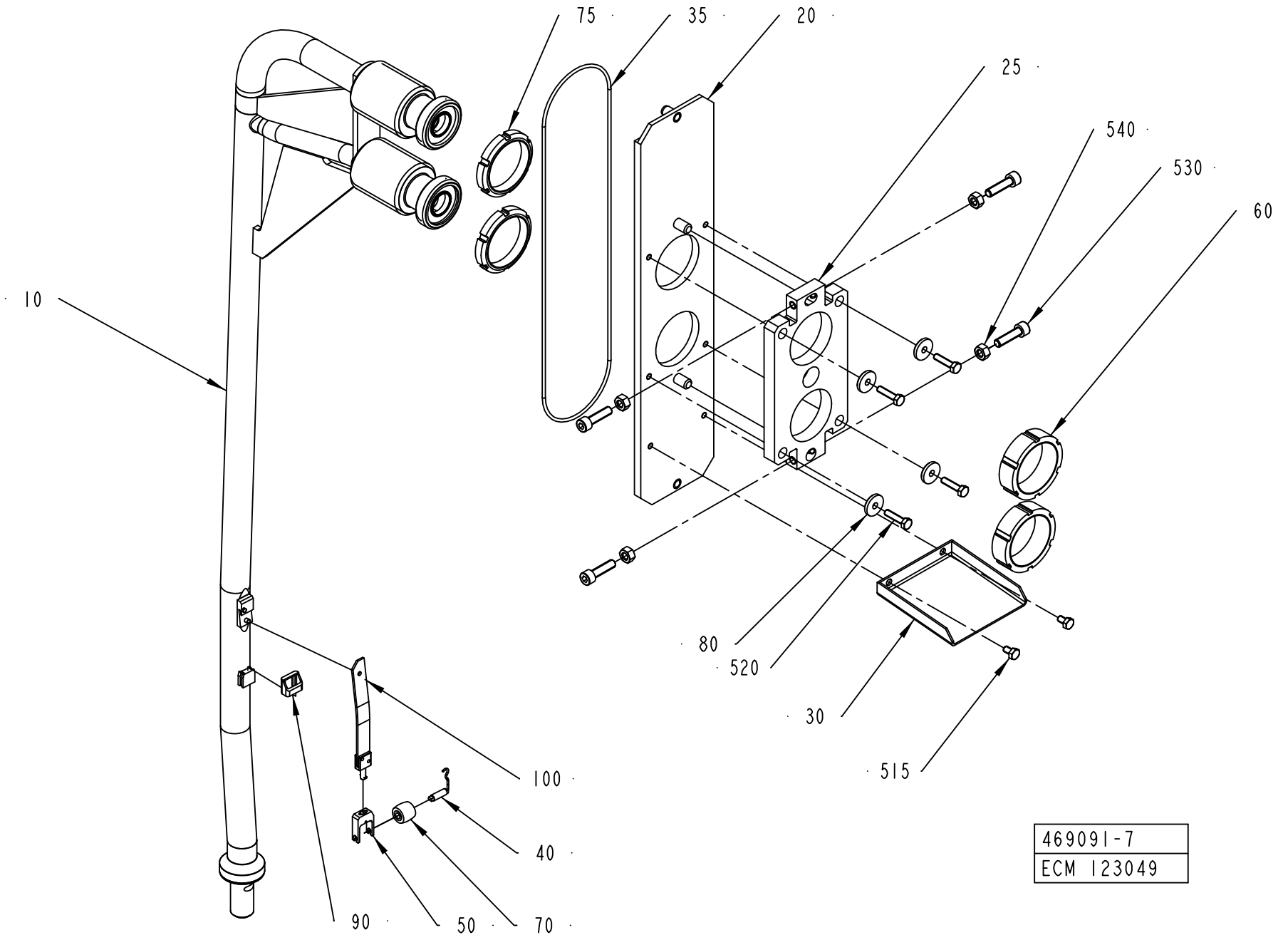
75
35
20
25
540
530
60
10
80
520
30
515
100
40
90
50
70
469091-7
ECM 123049

ECM: 292528 - 20070126
Group number: 469091-0500
Assembly Drawing: 469091-7_1_AB

Pos	Part No	UN	Qty	Description	Page No
TBA 0100B, TBA 0125S					
010	1317914-0000		1	UPPER FILLING TUBE	
040	255977-0000		1	SHAFT	
050	255978-0000		1	FORK	
070	272479-0000		1	PRESSURE ROLLER (10PCS)	
090	491441-0000		1	HOOD	
100	1285580-0000		1	SPRING	
TBA 0160S, TBA 0200S					
010	1317914-0000		1	UPPER FILLING TUBE	
040	255977-0000		1	SHAFT	
050	255978-0000		1	FORK	
070	272479-0000		1	PRESSURE ROLLER (10PCS)	
090	295377-0001		1	HOOD	
100	1285580-0000		1	SPRING	
TBA 0180B, TBA 0200B, TBA 0236B, TBA 0200SQ, TBA 0284B, TBA 0250B, TBA 0300S, TBA 0330S					
010	1317989-0000		1	UPPER FILLING TUBE	
040	295376-0000		1	SHAFT	
050	568583-0000		1	FORK	
070	257330-0000		1	PRESSURE ROLLER	
090	295377-0002		1	HOOD	
100	1317991-0000		1	SPRING	
TBA 0200M, TBA 0250S					
010	1558442-0000		1	UPPER FILLING TUBE	
040	255977-0000		1	SHAFT	
050	255978-0000		1	FORK	
070	272479-0000		1	PRESSURE ROLLER (10PCS)	
090	295377-0001		1	HOOD	
100	1285580-0000		1	SPRING	
Common Parts					
020	1523222-0000		1	PLATE	
025	1523225-0000		1	FASTENING PLATE	
030	295984-0000		1	DRIP GUARD	
035	491418-0001		1	O-RING 284X3 FPM	
060	1523223-0000		2	NUT	
075	1523224-0000		2	NUT	
080	315125-0153		4	WASHER TBRSB 6,4X22X4 A4	
515	312105-0364		2	SCREW M6S ISO 4017 M6X10 A480	
520	312105-0372		4	SCREW M6S ISO 4017 M6X25 A480	
530	312115-0455		4	SCREW ISO4762 M8X30 A4 80	
540	312605-0318		4	HEXAGON NUT, M6M M8 A280	

Pos	Part No	UN	Qty	Description	Page No

CABLE TRENCH

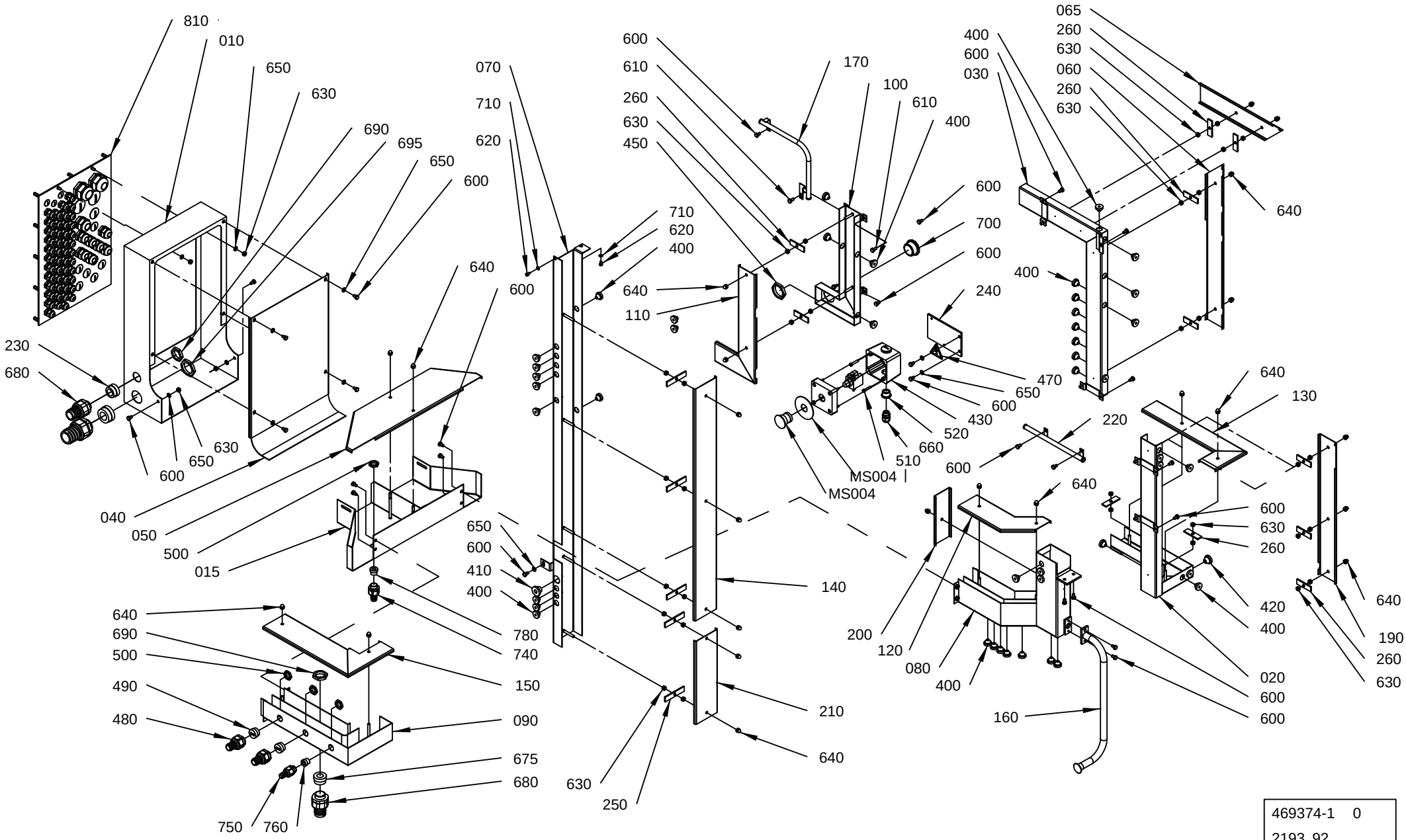

469374-1 0
2193 92

ECM: 219397 - 20051104
Group number: 469374-0700
Assembly Drawing: 469374-10_1_AA

This list covers pages from 1-142 to 1-153

Pos	Part No	UN	Qty	Description	Page No
NOHI (See drawing on pages: 1-142, 1-144, 1-146, 1-148, 1-150, 1-152)					
720	90002-0010		1	BLANK-OFF PLUG, PR 37 SKINDICHT-BLK29	
Common Parts					
010	1517268-0000		1	CABLE TRENCH	
015	1517269-0000		1	CABLE TRENCH	
020	577462-0000		1	CABLE TRENCH	
030	2773918-0000		1	CABLE TRENCH	
040	1517270-0000		1	LID	
050	1517271-0000		1	LID	
060	2773919-0000		1	LID	
065	1334769-0000		1	LID	
070	2781220-0000		1	CABLE TRENCH	
080	2526847-0000		1	CABLE TRENCH	
090	2526848-0000		1	CABLE TRENCH	
100	2526843-0000		1	CABLE TRENCH	
110	2526844-0000		1	LID	
120	577467-0000		1	LID	
130	577468-0000		1	LID	
140	578035-0000		1	LID	
150	2526846-0000		1	LID	
160	578500-0000		1	PIPE	
170	978540-0000		1	CABLE CONDUIT	
190	577469-0000		1	LID	
200	577470-0000		1	LID	
210	578496-0000		1	LID	
220	978539-0000		1	CABLE CONDUIT	
230	353249-0061		1	INSERT, SINGEL HOLE, EK 155/20	
240	2781216-0000		1	PLATE	
250	272945-0000		5	LOCK	
260	295466-0000		11	LOCK	
400	90015-0020		44	LEAD-IN, TET5-7, E-1458016	
410	90015-0021		1	LEAD-IN, TET10-14, E-1458023	
420	90015-0023		1	LEAD-IN, TET7-10, E-1458019	
430	90066-0021		1	PUSH BUTTON BOX XAP-M1501	
450	90099-0011		1	NUT PR 37 BRASS	
470	359705-0015		1	WARNING SIGN ISO, RISK OF ELECTRIC SHOCK	
480	90457-0146		2	HOSE GLAND W/O INSERT M16 EXTENDED	
490	90457-0147		2	GLAND, INSERT, MULTI HOLE, 2X7	
500	90099-0117		4	NUT, PR 18,6 (PG11)	
510	312125-0333		2	SCREW ISO 1207 M5X25 A4	
520	90089-0002		1	REDUCING SLEEVE, PR22,5/PR15,2	
600	312105-0364		32	SCREW M6S ISO 4017 M6X10 A480	
610	312105-0366		2	SCREW M6S ISO 4017 M6X12 A480	
620	312125-0323		2	SCREW ISO 1207 M5X8 A4	
630	312605-0316		36	HEXAGON NUT, M6M M6 A280	
640	312705-0316		23	NUT HEX. DOMED CAP MHM-6 M6 A280	
650	315105-0153		11	WASHER BRB 6,4X12 RFR	
660	352103-0101		1	CABLE GLAND, ST 9, PR15,2/PG9	
675	353249-0016		1	INSERT, SINGEL HOLE, EK 155/18	
680	353243-0007		2	HOSE GLAND W/O INSERT PG21 EXTENDED	
690	90099-0119		2	NUT, PR 28,3 (PG21)	
695	90099-0120		1	NUT, PR 37 (PG29)	
700	352101-0107		1	LEAD-IN, PR37/PG29, E-1457537	
710	315105-0146		2	WASHER BRB 5,3X10 RFR	
740	353243-0003		1	HOSE GLAND W/O INSERT PG11 EXTENDED	
750	353243-0002		1	HOSE GLAND W/O INSERT PG11 EXTENDED	
760	353249-0010		1	INSERT, SINGEL HOLE, EK 152/11	
780	353249-0011		1	INSERT, SINGEL HOLE, EK 153/11	
810	1511786-0100		1	TOWER CABLE INLETS	**1-155, 1-157**
MS004	90458-1651		1	EMERGENCY STOP, ZB4-BS-844 ZB4-BZ-104	
MS004.1	486826-0001		1	SIGN "EMERGENCY STOP"	
W434	351150-0405	M	4	CABLE OLFLEX 5X0,75 MM2 LIGHT/GREY	

Machine Type	Group Description	Used-In	Group Number	Page No

CABLE TRENCH

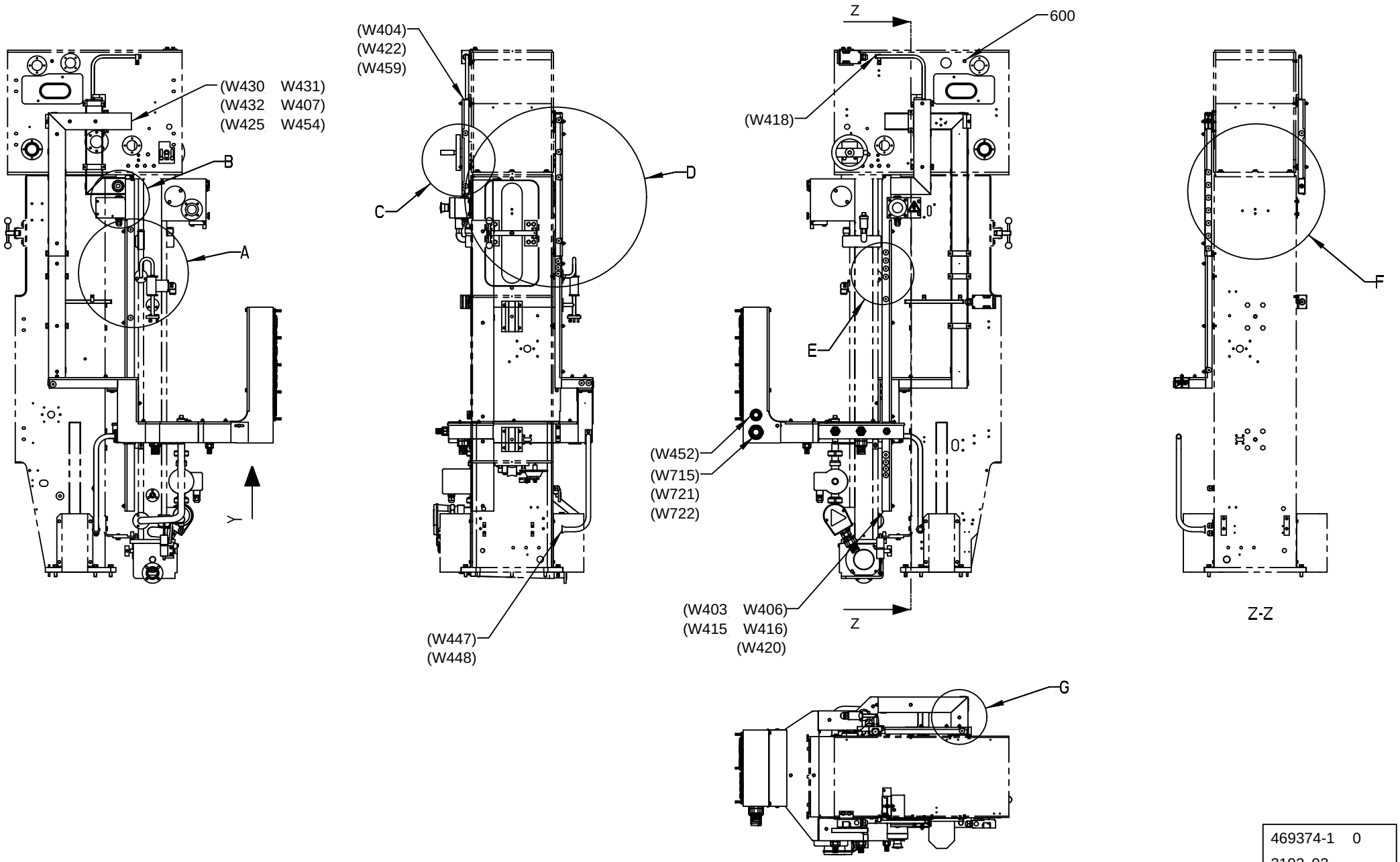

469374-1	0
2193	92

ECM: 219397 - 20051104
Group number: 469374-0700
Assembly Drawing: 469374-10_2_AA

This list covers pages from 1-142 to 1-153

Pos	Part No	UN	Qty	Description	Page No
NOHI (See drawing on pages: 1-142, 1-144, 1-146, 1-148, 1-150, 1-152)					
720	90002-0010		1	BLANK-OFF PLUG, PR 37 SKINDICHT-BLK29	
Common Parts					
010	1517268-0000		1	CABLE TRENCH	
015	1517269-0000		1	CABLE TRENCH	
020	577462-0000		1	CABLE TRENCH	
030	2773918-0000		1	CABLE TRENCH	
040	1517270-0000		1	LID	
050	1517271-0000		1	LID	
060	2773919-0000		1	LID	
065	1334769-0000		1	LID	
070	2781220-0000		1	CABLE TRENCH	
080	2526847-0000		1	CABLE TRENCH	
090	2526848-0000		1	CABLE TRENCH	
100	2526843-0000		1	CABLE TRENCH	
110	2526844-0000		1	LID	
120	577467-0000		1	LID	
130	577468-0000		1	LID	
140	578035-0000		1	LID	
150	2526846-0000		1	LID	
160	578500-0000		1	PIPE	
170	978540-0000		1	CABLE CONDUIT	
190	577469-0000		1	LID	
200	577470-0000		1	LID	
210	578496-0000		1	LID	
220	978539-0000		1	CABLE CONDUIT	
230	353249-0061		1	INSERT, SINGEL HOLE, EK 155/20	
240	2781216-0000		1	PLATE	
250	272945-0000		5	LOCK	
260	295466-0000		11	LOCK	
400	90015-0020		44	LEAD-IN, TET5-7, E-1458016	
410	90015-0021		1	LEAD-IN, TET10-14, E-1458023	
420	90015-0023		1	LEAD-IN, TET7-10, E-1458019	
430	90066-0021		1	PUSH BUTTON BOX XAP-M1501	
450	90099-0011		1	NUT PR 37 BRASS	
470	359705-0015		1	WARNING SIGN ISO, RISK OF ELECTRIC SHOCK	
480	90457-0146		2	HOSE GLAND W/O INSERT M16 EXTENDED	
490	90457-0147		2	GLAND, INSERT, MULTI HOLE, 2X7	
500	90099-0117		4	NUT, PR 18,6 (PG11)	
510	312125-0333		2	SCREW ISO 1207 M5X25 A4	
520	90089-0002		1	REDUCING SLEEVE, PR22,5/PR15,2	
600	312105-0364		32	SCREW M6S ISO 4017 M6X10 A480	
610	312105-0366		2	SCREW M6S ISO 4017 M6X12 A480	
620	312125-0323		2	SCREW ISO 1207 M5X8 A4	
630	312605-0316		36	HEXAGON NUT, M6M M6 A280	
640	312705-0316		23	NUT HEX. DOMED CAP MHM-6 M6 A280	
650	315105-0153		11	WASHER BRB 6,4X12 RFR	
660	352103-0101		1	CABLE GLAND, ST 9, PR15,2/PG9	
675	353249-0016		1	INSERT, SINGEL HOLE, EK 155/18	
680	353243-0007		2	HOSE GLAND W/O INSERT PG21 EXTENDED	
690	90099-0119		2	NUT, PR 28,3 (PG21)	
695	90099-0120		1	NUT, PR 37 (PG29)	
700	352101-0107		1	LEAD-IN, PR37/PG29, E-1457537	
710	315105-0146		2	WASHER BRB 5,3X10 RFR	
740	353243-0003		1	HOSE GLAND W/O INSERT PG11 EXTENDED	
750	353243-0002		1	HOSE GLAND W/O INSERT PG11 EXTENDED	
760	353249-0010		1	INSERT, SINGEL HOLE, EK 152/11	
780	353249-0011		1	INSERT, SINGEL HOLE, EK 153/11	
810	1511786-0100		1	TOWER CABLE INLETS	**1-155, 1-157**
MS004	90458-1651		1	EMERGENCY STOP, ZB4-BS-844 ZB4-BZ-104	
MS004.1	486826-0001		1	SIGN "EMERGENCY STOP"	
W434	351150-0405	M	4	CABLE OLFLEX 5X0,75 MM2 LIGHT/GREY	

Machine Type | Group Description | Used-In | Group Number | Page No

CABLE TRENCH

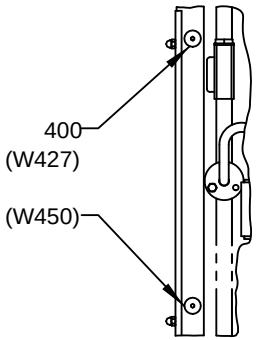

A
7:50

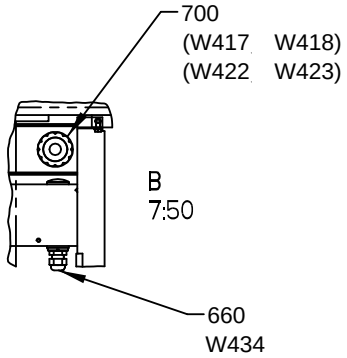

B
7:50

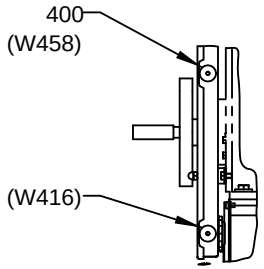

C
7:50

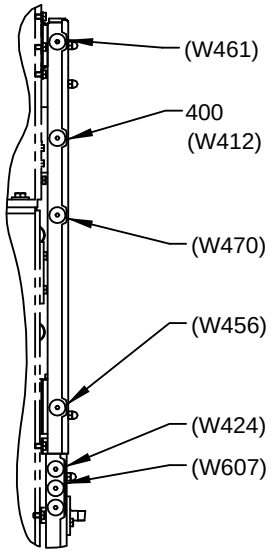

D
7:50

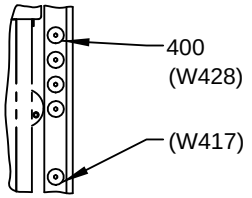

E
7:50

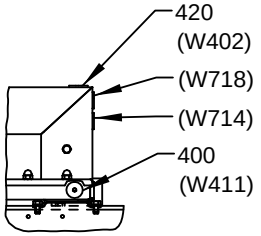

G
7:50

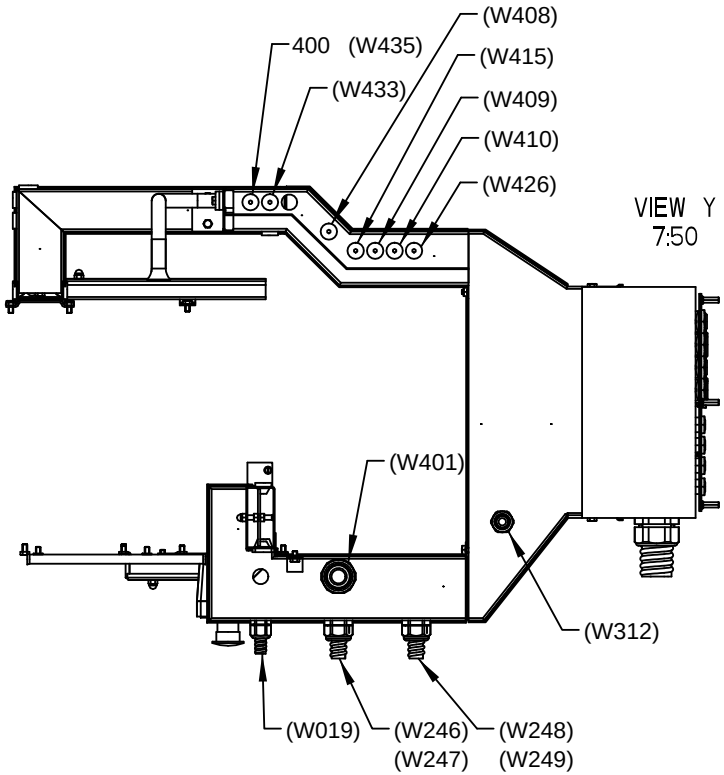

VIEW Y
7:50

F
7:50

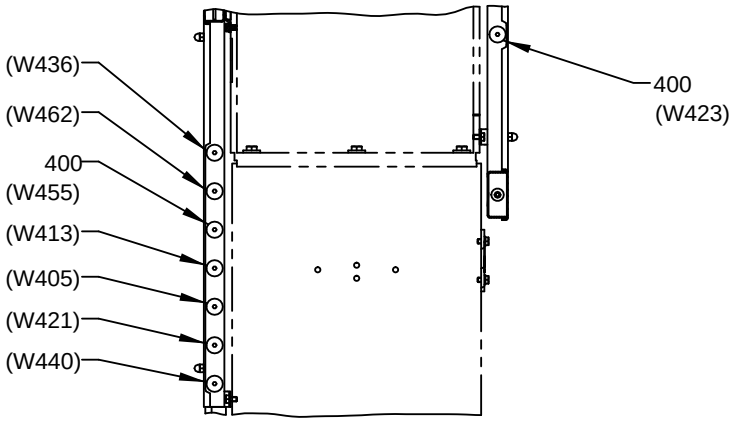

469374-1 0
2193 92

ECM: 219397 - 20051104
Group number: 469374-0700
Assembly Drawing: 469374-10_3_AA

This list covers pages from 1-142 to 1-153

Pos	Part No	UN	Qty	Description	Page No
NOHI (See drawing on pages: 1-142, 1-144, 1-146, 1-148, 1-150, 1-152)					
720	90002-0010		1	BLANK-OFF PLUG, PR 37 SKINDICHT-BLK29	
Common Parts					
010	1517268-0000		1	CABLE TRENCH	
015	1517269-0000		1	CABLE TRENCH	
020	577462-0000		1	CABLE TRENCH	
030	2773918-0000		1	CABLE TRENCH	
040	1517270-0000		1	LID	
050	1517271-0000		1	LID	
060	2773919-0000		1	LID	
065	1334769-0000		1	LID	
070	2781220-0000		1	CABLE TRENCH	
080	2526847-0000		1	CABLE TRENCH	
090	2526848-0000		1	CABLE TRENCH	
100	2526843-0000		1	CABLE TRENCH	
110	2526844-0000		1	LID	
120	577467-0000		1	LID	
130	577468-0000		1	LID	
140	578035-0000		1	LID	
150	2526846-0000		1	LID	
160	578500-0000		1	PIPE	
170	978540-0000		1	CABLE CONDUIT	
190	577469-0000		1	LID	
200	577470-0000		1	LID	
210	578496-0000		1	LID	
220	978539-0000		1	CABLE CONDUIT	
230	353249-0061		1	INSERT, SINGEL HOLE, EK 155/20	
240	2781216-0000		1	PLATE	
250	272945-0000		5	LOCK	
260	295466-0000		11	LOCK	
400	90015-0020		44	LEAD-IN, TET5-7, E-1458016	
410	90015-0021		1	LEAD-IN, TET10-14, E-1458023	
420	90015-0023		1	LEAD-IN, TET7-10, E-1458019	
430	90066-0021		1	PUSH BUTTON BOX XAP-M1501	
450	90099-0011		1	NUT PR 37 BRASS	
470	359705-0015		1	WARNING SIGN ISO, RISK OF ELECTRIC SHOCK	
480	90457-0146		2	HOSE GLAND W/O INSERT M16 EXTENDED	
490	90457-0147		2	GLAND, INSERT, MULTI HOLE, 2X7	
500	90099-0117		4	NUT, PR 18,6 (PG11)	
510	312125-0333		2	SCREW ISO 1207 M5X25 A4	
520	90089-0002		1	REDUCING SLEEVE, PR22,5/PR15,2	
600	312105-0364		32	SCREW M6S ISO 4017 M6X10 A480	
610	312105-0366		2	SCREW M6S ISO 4017 M6X12 A480	
620	312125-0323		2	SCREW ISO 1207 M5X8 A4	
630	312605-0316		36	HEXAGON NUT, M6M M6 A280	
640	312705-0316		23	NUT HEX. DOMED CAP MHM-6 M6 A280	
650	315105-0153		11	WASHER BRB 6,4X12 RFR	
660	352103-0101		1	CABLE GLAND, ST 9, PR15,2/PG9	
675	353249-0016		1	INSERT, SINGEL HOLE, EK 155/18	
680	353243-0007		2	HOSE GLAND W/O INSERT PG21 EXTENDED	
690	90099-0119		2	NUT, PR 28,3 (PG21)	
695	90099-0120		1	NUT, PR 37 (PG29)	
700	352101-0107		1	LEAD-IN, PR37/PG29, E-1457537	
710	315105-0146		2	WASHER BRB 5,3X10 RFR	
740	353243-0003		1	HOSE GLAND W/O INSERT PG11 EXTENDED	
750	353243-0002		1	HOSE GLAND W/O INSERT PG11 EXTENDED	
760	353249-0010		1	INSERT, SINGEL HOLE, EK 152/11	
780	353249-0011		1	INSERT, SINGEL HOLE, EK 153/11	
810	1511786-0100		1	TOWER CABLE INLETS	**1-155, 1-157**
MS004	90458-1651		1	EMERGENCY STOP, ZB4-BS-844 ZB4-BZ-104	
MS004.1	486826-0001		1	SIGN "EMERGENCY STOP"	
W434	351150-0405	M	4	CABLE OLFLEX 5X0,75 MM2 LIGHT/GREY	

Machine Type | Group Description | Used-In | Group Number | Page No

CABLE TRENCH

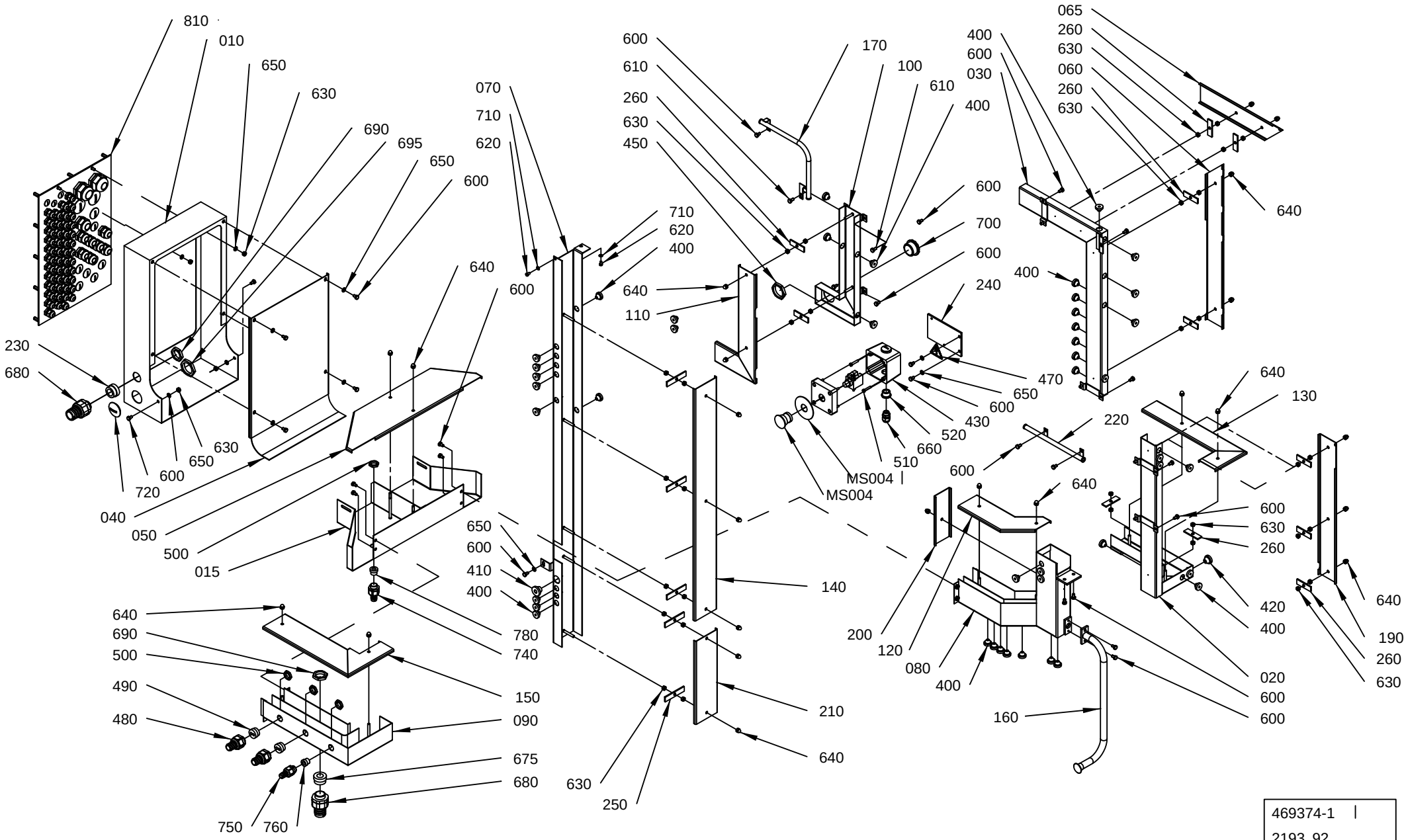

469374-1
2193 92

ECM: 219397 - 20051104
Group number: 469374-0700
Assembly Drawing: 469374-11_1_AA

This list covers pages from 1-142 to 1-153

Pos	Part No	UN	Qty	Description	Page No
NOHI (See drawing on pages: 1-142, 1-144, 1-146, 1-148, 1-150, 1-152)					
720	90002-0010		1	BLANK-OFF PLUG, PR 37 SKINDICHT-BLK29	
Common Parts					
010	1517268-0000		1	CABLE TRENCH	
015	1517269-0000		1	CABLE TRENCH	
020	577462-0000		1	CABLE TRENCH	
030	2773918-0000		1	CABLE TRENCH	
040	1517270-0000		1	LID	
050	1517271-0000		1	LID	
060	2773919-0000		1	LID	
065	1334769-0000		1	LID	
070	2781220-0000		1	CABLE TRENCH	
080	2526847-0000		1	CABLE TRENCH	
090	2526848-0000		1	CABLE TRENCH	
100	2526843-0000		1	CABLE TRENCH	
110	2526844-0000		1	LID	
120	577467-0000		1	LID	
130	577468-0000		1	LID	
140	578035-0000		1	LID	
150	2526846-0000		1	LID	
160	578500-0000		1	PIPE	
170	978540-0000		1	CABLE CONDUIT	
190	577469-0000		1	LID	
200	577470-0000		1	LID	
210	578496-0000		1	LID	
220	978539-0000		1	CABLE CONDUIT	
230	353249-0061		1	INSERT, SINGEL HOLE, EK 155/20	
240	2781216-0000		1	PLATE	
250	272945-0000		5	LOCK	
260	295466-0000		11	LOCK	
400	90015-0020		44	LEAD-IN, TET5-7, E-1458016	
410	90015-0021		1	LEAD-IN, TET10-14, E-1458023	
420	90015-0023		1	LEAD-IN, TET7-10, E-1458019	
430	90066-0021		1	PUSH BUTTON BOX XAP-M1501	
450	90099-0011		1	NUT PR 37 BRASS	
470	359705-0015		1	WARNING SIGN ISO, RISK OF ELECTRIC SHOCK	
480	90457-0146		2	HOSE GLAND W/O INSERT M16 EXTENDED	
490	90457-0147		2	GLAND, INSERT, MULTI HOLE, 2X7	
500	90099-0117		4	NUT, PR 18,6 (PG11)	
510	312125-0333		2	SCREW ISO 1207 M5X25 A4	
520	90089-0002		1	REDUCING SLEEVE, PR22,5/PR15,2	
600	312105-0364		32	SCREW M6S ISO 4017 M6X10 A480	
610	312105-0366		2	SCREW M6S ISO 4017 M6X12 A480	
620	312125-0323		2	SCREW ISO 1207 M5X8 A4	
630	312605-0316		36	HEXAGON NUT, M6M M6 A280	
640	312705-0316		23	NUT HEX. DOMED CAP MHM-6 M6 A280	
650	315105-0153		11	WASHER BRB 6,4X12 RFR	
660	352103-0101		1	CABLE GLAND, ST 9, PR15,2/PG9	
675	353249-0016		1	INSERT, SINGEL HOLE, EK 155/18	
680	353243-0007		2	HOSE GLAND W/O INSERT PG21 EXTENDED	
690	90099-0119		2	NUT, PR 28,3 (PG21)	
695	90099-0120		1	NUT, PR 37 (PG29)	
700	352101-0107		1	LEAD-IN, PR37/PG29, E-1457537	
710	315105-0146		2	WASHER BRB 5,3X10 RFR	
740	353243-0003		1	HOSE GLAND W/O INSERT PG11 EXTENDED	
750	353243-0002		1	HOSE GLAND W/O INSERT PG11 EXTENDED	
760	353249-0010		1	INSERT, SINGEL HOLE, EK 152/11	
780	353249-0011		1	INSERT, SINGEL HOLE, EK 153/11	
810	1511786-0100		1	TOWER CABLE INLETS	**1-155, 1-157**
MS004	90458-1651		1	EMERGENCY STOP, ZB4-BS-844 ZB4-BZ-104	
MS004.1	486826-0001		1	SIGN "EMERGENCY STOP"	
W434	351150-0405	M	4	CABLE OLFLEX 5X0,75 MM2 LIGHT/GREY	

Machine Type | Group Description | Used-In | Group Number | Page No

CABLE TRENCH

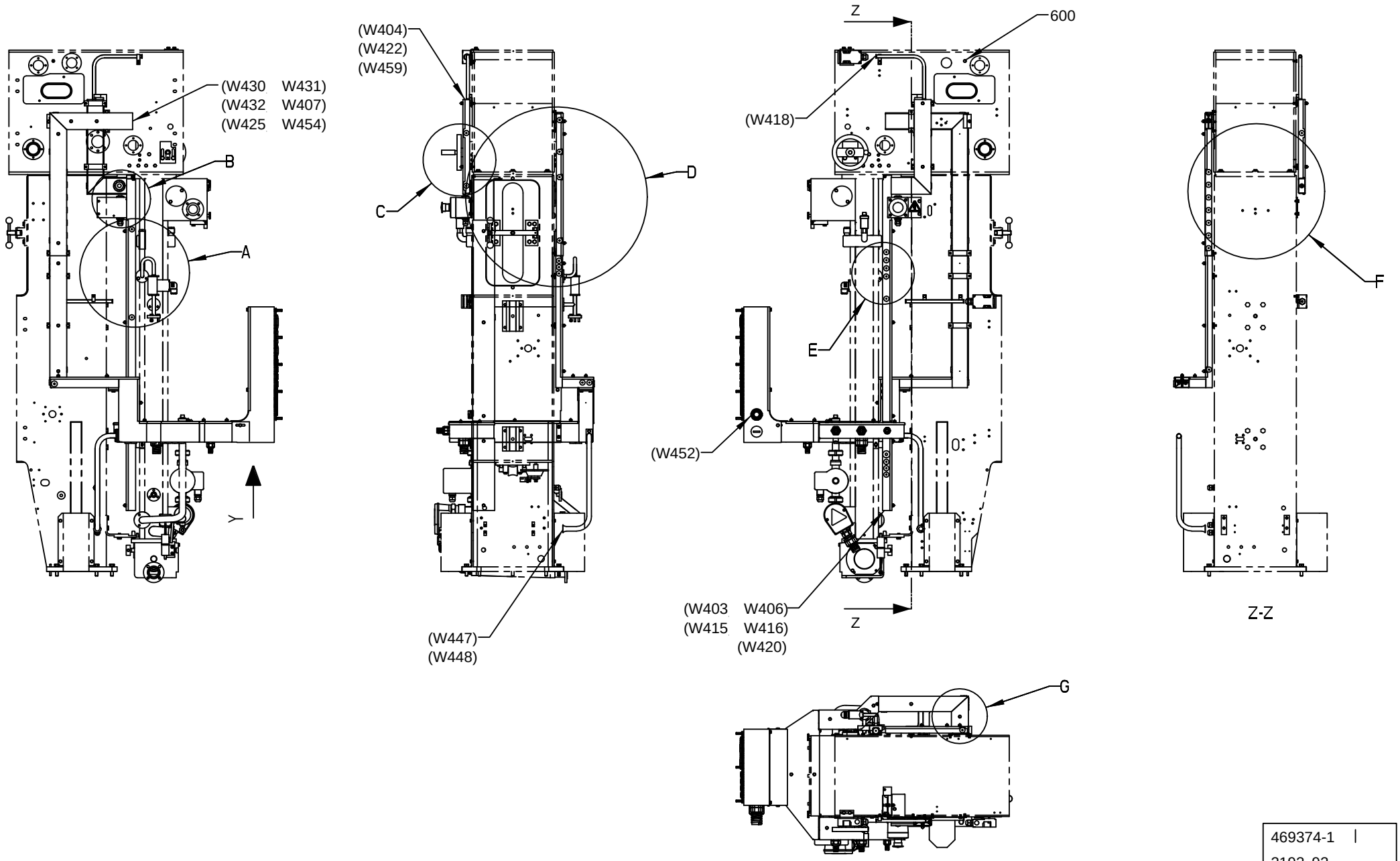

469374-1
2193 92

ECM: 219397 - 20051104
Group number: 469374-0700
Assembly Drawing: 469374-11_2_AA

This list covers pages from 1-142 to 1-153

Pos	Part No	UN	Qty	Description	Page No
NOHI (See drawing on pages: 1-142, 1-144, 1-146, 1-148, 1-150, 1-152)					
720	90002-0010		1	BLANK-OFF PLUG, PR 37 SKINDICHT-BLK29	
Common Parts					
010	1517268-0000		1	CABLE TRENCH	
015	1517269-0000		1	CABLE TRENCH	
020	577462-0000		1	CABLE TRENCH	
030	2773918-0000		1	CABLE TRENCH	
040	1517270-0000		1	LID	
050	1517271-0000		1	LID	
060	2773919-0000		1	LID	
065	1334769-0000		1	LID	
070	2781220-0000		1	CABLE TRENCH	
080	2526847-0000		1	CABLE TRENCH	
090	2526848-0000		1	CABLE TRENCH	
100	2526843-0000		1	CABLE TRENCH	
110	2526844-0000		1	LID	
120	577467-0000		1	LID	
130	577468-0000		1	LID	
140	578035-0000		1	LID	
150	2526846-0000		1	LID	
160	578500-0000		1	PIPE	
170	978540-0000		1	CABLE CONDUIT	
190	577469-0000		1	LID	
200	577470-0000		1	LID	
210	578496-0000		1	LID	
220	978539-0000		1	CABLE CONDUIT	
230	353249-0061		1	INSERT, SINGEL HOLE, EK 155/20	
240	2781216-0000		1	PLATE	
250	272945-0000		5	LOCK	
260	295466-0000		11	LOCK	
400	90015-0020		44	LEAD-IN, TET5-7, E-1458016	
410	90015-0021		1	LEAD-IN, TET10-14, E-1458023	
420	90015-0023		1	LEAD-IN, TET7-10, E-1458019	
430	90066-0021		1	PUSH BUTTON BOX XAP-M1501	
450	90099-0011		1	NUT PR 37 BRASS	
470	359705-0015		1	WARNING SIGN ISO, RISK OF ELECTRIC SHOCK	
480	90457-0146		2	HOSE GLAND W/O INSERT M16 EXTENDED	
490	90457-0147		2	GLAND, INSERT, MULTI HOLE, 2X7	
500	90099-0117		4	NUT, PR 18,6 (PG11)	
510	312125-0333		2	SCREW ISO 1207 M5X25 A4	
520	90089-0002		1	REDUCING SLEEVE, PR22,5/PR15,2	
600	312105-0364		32	SCREW M6S ISO 4017 M6X10 A480	
610	312105-0366		2	SCREW M6S ISO 4017 M6X12 A480	
620	312125-0323		2	SCREW ISO 1207 M5X8 A4	
630	312605-0316		36	HEXAGON NUT, M6M M6 A280	
640	312705-0316		23	NUT HEX. DOMED CAP MHM-6 M6 A280	
650	315105-0153		11	WASHER BRB 6,4X12 RFR	
660	352103-0101		1	CABLE GLAND, ST 9, PR15,2/PG9	
675	353249-0016		1	INSERT, SINGEL HOLE, EK 155/18	
680	353243-0007		2	HOSE GLAND W/O INSERT PG21 EXTENDED	
690	90099-0119		2	NUT, PR 28,3 (PG21)	
695	90099-0120		1	NUT, PR 37 (PG29)	
700	352101-0107		1	LEAD-IN, PR37/PG29, E-1457537	
710	315105-0146		2	WASHER BRB 5,3X10 RFR	
740	353243-0003		1	HOSE GLAND W/O INSERT PG11 EXTENDED	
750	353243-0002		1	HOSE GLAND W/O INSERT PG11 EXTENDED	
760	353249-0010		1	INSERT, SINGEL HOLE, EK 152/11	
780	353249-0011		1	INSERT, SINGEL HOLE, EK 153/11	
810	1511786-0100		1	TOWER CABLE INLETS	**1-155, 1-157**
MS004	90458-1651		1	EMERGENCY STOP, ZB4-BS-844 ZB4-BZ-104	
MS004.1	486826-0001		1	SIGN "EMERGENCY STOP"	
W434	351150-0405	M	4	CABLE OLFLEX 5X0,75 MM2 LIGHT/GREY	

Machine Type | Group Description | Used-In | Group Number | Page No

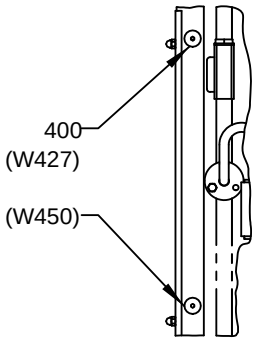

A
7:50

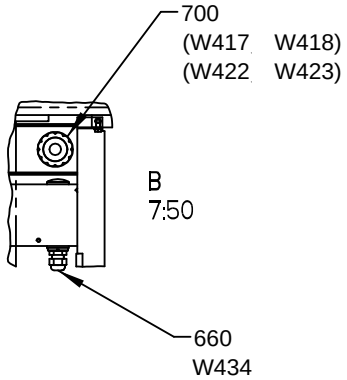

B
7:50

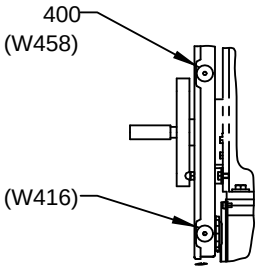

C
7:50

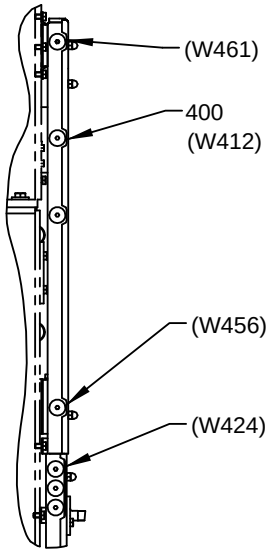

D
7:50

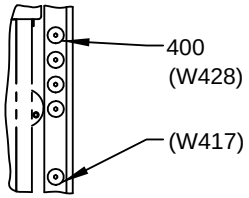

E
7:50

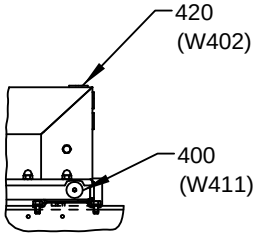

G
7:50

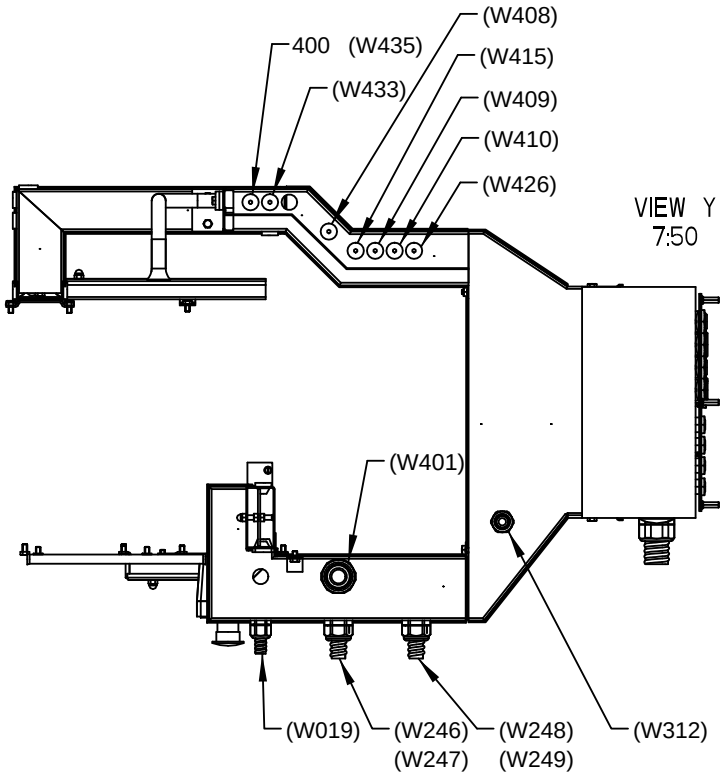

VIEW Y
7:50

F
7:50

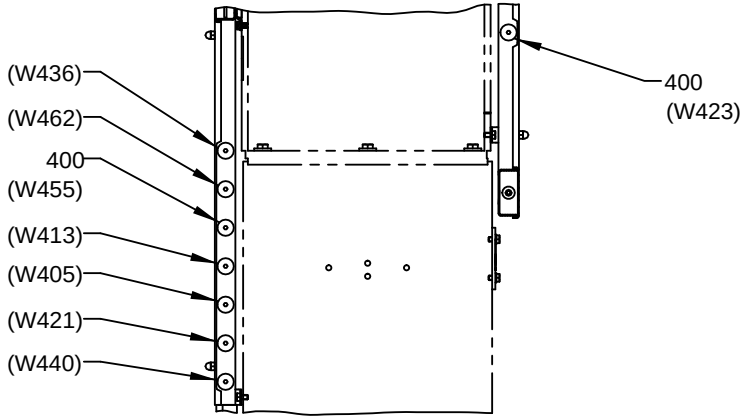

469374-1
2193 92

ECM: 219397 - 20051104
Group number: 469374-0700
Assembly Drawing: 469374-11_3_AA

This list covers pages from 1-142 to 1-153

Pos	Part No	UN	Qty	Description	Page No
NOHI (See drawing on pages: 1-142, 1-144, 1-146, 1-148, 1-150, 1-152)					
720	90002-0010		1	BLANK-OFF PLUG, PR 37 SKINDICHT-BLK29	
Common Parts					
010	1517268-0000		1	CABLE TRENCH	
015	1517269-0000		1	CABLE TRENCH	
020	577462-0000		1	CABLE TRENCH	
030	2773918-0000		1	CABLE TRENCH	
040	1517270-0000		1	LID	
050	1517271-0000		1	LID	
060	2773919-0000		1	LID	
065	1334769-0000		1	LID	
070	2781220-0000		1	CABLE TRENCH	
080	2526847-0000		1	CABLE TRENCH	
090	2526848-0000		1	CABLE TRENCH	
100	2526843-0000		1	CABLE TRENCH	
110	2526844-0000		1	LID	
120	577467-0000		1	LID	
130	577468-0000		1	LID	
140	578035-0000		1	LID	
150	2526846-0000		1	LID	
160	578500-0000		1	PIPE	
170	978540-0000		1	CABLE CONDUIT	
190	577469-0000		1	LID	
200	577470-0000		1	LID	
210	578496-0000		1	LID	
220	978539-0000		1	CABLE CONDUIT	
230	353249-0061		1	INSERT, SINGEL HOLE, EK 155/20	
240	2781216-0000		1	PLATE	
250	272945-0000		5	LOCK	
260	295466-0000		11	LOCK	
400	90015-0020		44	LEAD-IN, TET5-7, E-1458016	
410	90015-0021		1	LEAD-IN, TET10-14, E-1458023	
420	90015-0023		1	LEAD-IN, TET7-10, E-1458019	
430	90066-0021		1	PUSH BUTTON BOX XAP-M1501	
450	90099-0011		1	NUT PR 37 BRASS	
470	359705-0015		1	WARNING SIGN ISO, RISK OF ELECTRIC SHOCK	
480	90457-0146		2	HOSE GLAND W/O INSERT M16 EXTENDED	
490	90457-0147		2	GLAND, INSERT, MULTI HOLE, 2X7	
500	90099-0117		4	NUT, PR 18,6 (PG11)	
510	312125-0333		2	SCREW ISO 1207 M5X25 A4	
520	90089-0002		1	REDUCING SLEEVE, PR22,5/PR15,2	
600	312105-0364		32	SCREW M6S ISO 4017 M6X10 A480	
610	312105-0366		2	SCREW M6S ISO 4017 M6X12 A480	
620	312125-0323		2	SCREW ISO 1207 M5X8 A4	
630	312605-0316		36	HEXAGON NUT, M6M M6 A280	
640	312705-0316		23	NUT HEX. DOMED CAP MHM-6 M6 A280	
650	315105-0153		11	WASHER BRB 6,4X12 RFR	
660	352103-0101		1	CABLE GLAND, ST 9, PR15,2/PG9	
675	353249-0016		1	INSERT, SINGEL HOLE, EK 155/18	
680	353243-0007		2	HOSE GLAND W/O INSERT PG21 EXTENDED	
690	90099-0119		2	NUT, PR 28,3 (PG21)	
695	90099-0120		1	NUT, PR 37 (PG29)	
700	352101-0107		1	LEAD-IN, PR37/PG29, E-1457537	
710	315105-0146		2	WASHER BRB 5,3X10 RFR	
740	353243-0003		1	HOSE GLAND W/O INSERT PG11 EXTENDED	
750	353243-0002		1	HOSE GLAND W/O INSERT PG11 EXTENDED	
760	353249-0010		1	INSERT, SINGEL HOLE, EK 152/11	
780	353249-0011		1	INSERT, SINGEL HOLE, EK 153/11	
810	1511786-0100		1	TOWER CABLE INLETS	**1-155, 1-157**
MS004	90458-1651		1	EMERGENCY STOP, ZB4-BS-844 ZB4-BZ-104	
MS004.1	486826-0001		1	SIGN "EMERGENCY STOP"	
W434	351150-0405	M	4	CABLE OLFLEX 5X0,75 MM2 LIGHT/GREY	

Machine Type	Group Description	Used-In	Group Number	Page No

TOWER CABLE INLETS

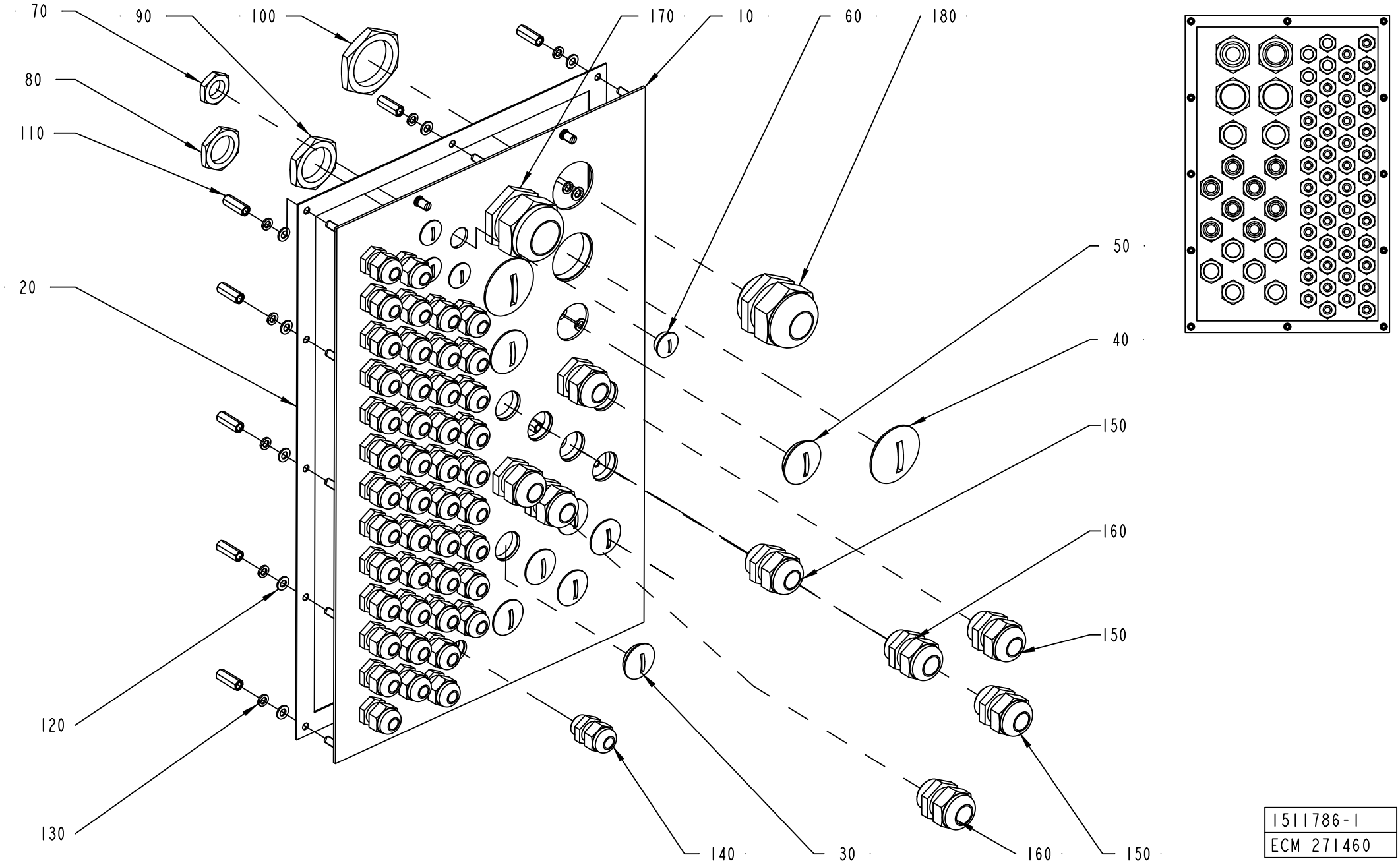

1511786-1
ECM 271460

ECM: 271468 - 20060707
Group number: 1511786-0100
Assembly Drawing: 1511786-1_1_AD

This list covers pages from 1-154 to 1-157

Pos	Part No	UN	Qty	Description	Page No
HI (See drawing on page: 1-156)					
050	90002-0012		1	BLANK-OFF PLUG, PR 28,3 SKINDICHT-BLK21	
060	90002-0013		1	BLANK-OFF PLUG, PR 15,2 SKINDICHT-BLK9	
140	352103-0101		49	CABLE GLAND, ST 9, PR15,2/PG9	
190	352103-0116		1	CABLE GLAND, ST 21, PR28,3/PG21	
NOHI (See drawing on page: 1-154)					
050	90002-0012		2	BLANK-OFF PLUG, PR 28,3 SKINDICHT-BLK21	
060	90002-0013		4	BLANK-OFF PLUG, PR 15,2 SKINDICHT-BLK9	
140	352103-0101		46	CABLE GLAND, ST 9, PR15,2/PG9	
Common Parts					
010	1511835-0000		1	PLATE	
020	1511836-0000		1	GASKET	
030	90002-0004		6	BLANK-OFF PLUG, PR 22,5 SKINDICHT-BLK16	
040	90002-0010		2	BLANK-OFF PLUG, PR 37 SKINDICHT-BLK29	
070	90099-0104		50	NUT, PR 15,2 (PG9)	
080	90099-0110		14	NUT, PR 22,5 (PG16)	
090	90099-0119		2	NUT, PR 28,3 (PG21)	
100	90099-0120		4	NUT, PR 37 (PG29)	
110	1517676-0000		12	SPACER	
120	315105-0146		12	WASHER BRB 5,3X10 RFR	
130	315402-0146		12	LOCK WASHER FBB 5,1	
150	352103-0110		6	CABLE GLAND, STR 16, PR22,5/PG16	
160	352103-0111		2	CABLE GLAND, ST 16, PR22,5/PG16	
170	352103-0121		1	CABLE GLAND, ST 29, PR37,0/PG29	
180	352103-0120		1	CABLE GLAND, STR 29, PR37,0/PG29	

Pos	Part No	UN	Qty	Description	Page No

TOWER CABLE INLETS

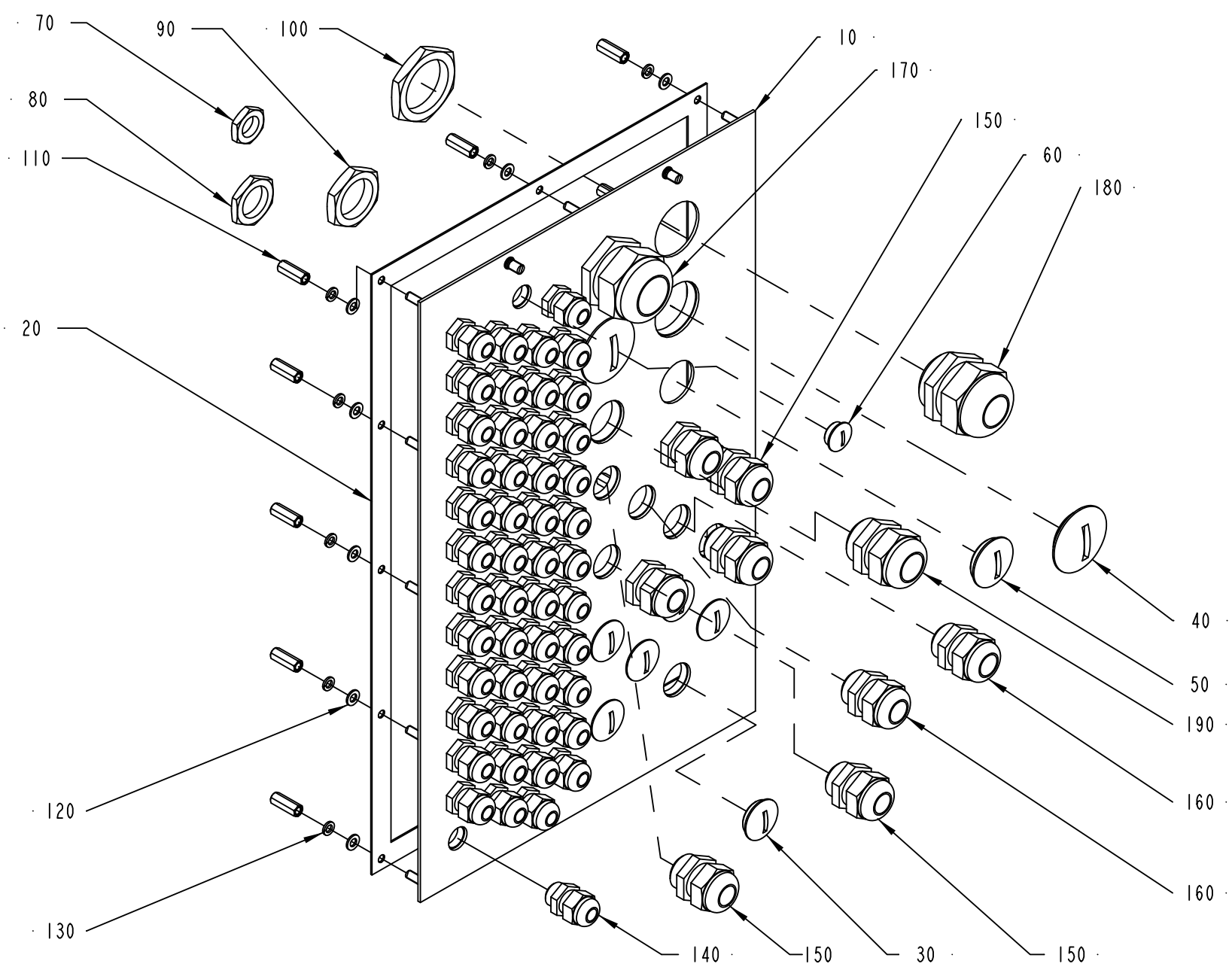

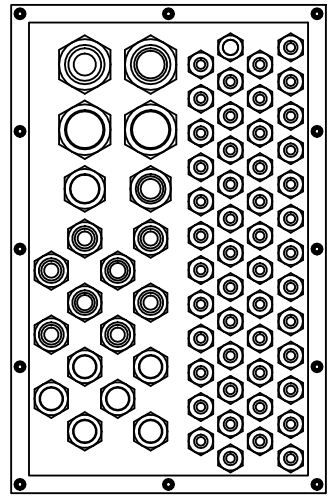

1511786-2
ECM 271460

ECM: 271468 - 20060707
Group number: 1511786-0100
Assembly Drawing: 1511786-2_1_AB

This list covers pages from 1-154 to 1-157

Pos	Part No	UN	Qty	Description	Page No
HI (See drawing on page: 1-156)					
050	90002-0012		1	BLANK-OFF PLUG, PR 28,3 SKINDICHT-BLK21	
060	90002-0013		1	BLANK-OFF PLUG, PR 15,2 SKINDICHT-BLK9	
140	352103-0101		49	CABLE GLAND, ST 9, PR15,2/PG9	
190	352103-0116		1	CABLE GLAND, ST 21, PR28,3/PG21	
NOHI (See drawing on page: 1-154)					
050	90002-0012		2	BLANK-OFF PLUG, PR 28,3 SKINDICHT-BLK21	
060	90002-0013		4	BLANK-OFF PLUG, PR 15,2 SKINDICHT-BLK9	
140	352103-0101		46	CABLE GLAND, ST 9, PR15,2/PG9	
Common Parts					
010	1511835-0000		1	PLATE	
020	1511836-0000		1	GASKET	
030	90002-0004		6	BLANK-OFF PLUG, PR 22,5 SKINDICHT-BLK16	
040	90002-0010		2	BLANK-OFF PLUG, PR 37 SKINDICHT-BLK29	
070	90099-0104		50	NUT, PR 15,2 (PG9)	
080	90099-0110		14	NUT, PR 22,5 (PG16)	
090	90099-0119		2	NUT, PR 28,3 (PG21)	
100	90099-0120		4	NUT, PR 37 (PG29)	
110	1517676-0000		12	SPACER	
120	315105-0146		12	WASHER BRB 5,3X10 RFR	
130	315402-0146		12	LOCK WASHER FBB 5,1	
150	352103-0110		6	CABLE GLAND, STR 16, PR22,5/PG16	
160	352103-0111		2	CABLE GLAND, ST 16, PR22,5/PG16	
170	352103-0121		1	CABLE GLAND, ST 29, PR37,0/PG29	
180	352103-0120		1	CABLE GLAND, STR 29, PR37,0/PG29	

Pos	Part No	UN	Qty	Description	Page No

AIR NOZZLE

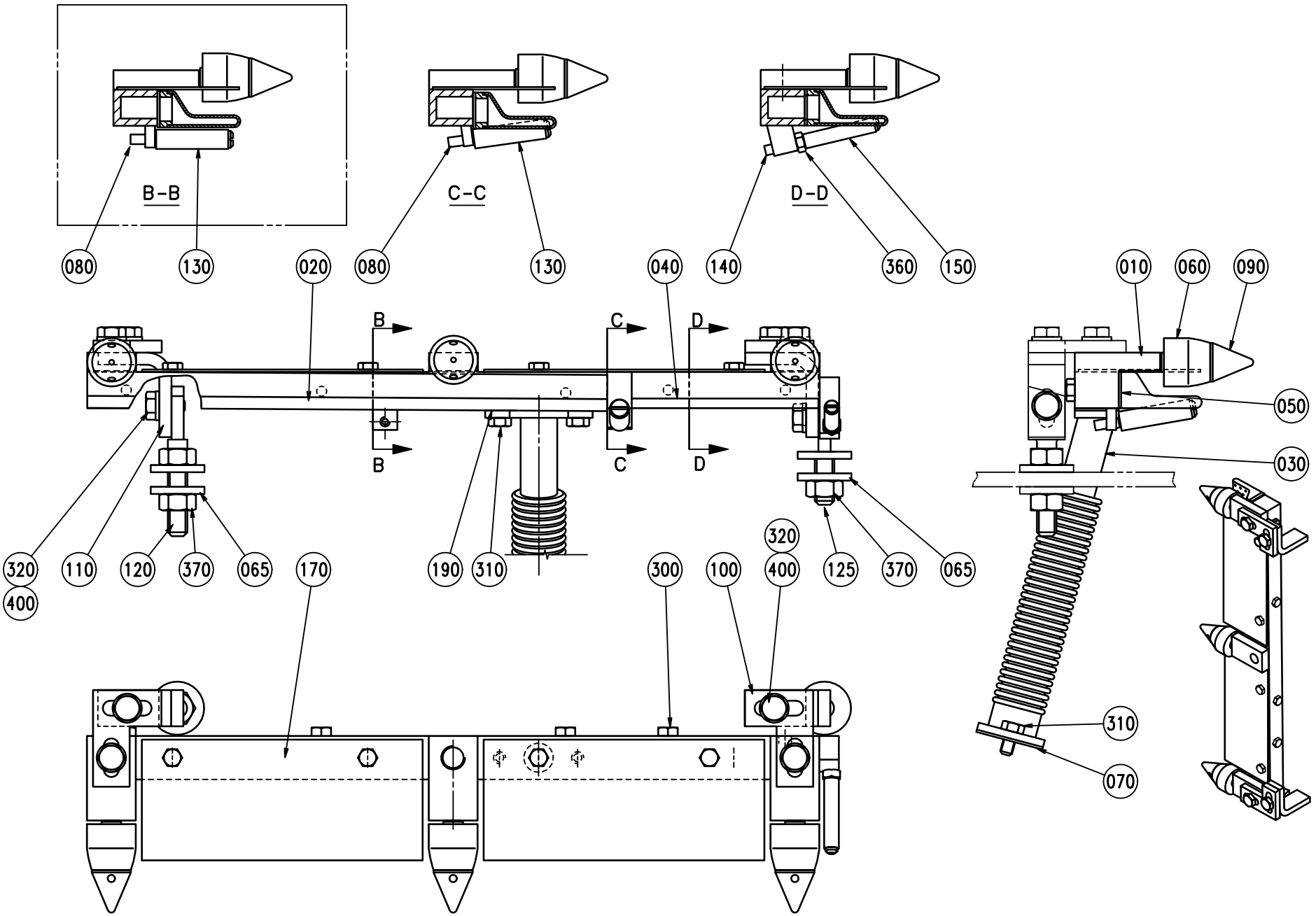
B-B
C-C
D-D
080
130
020
080
130
040
140
360
150
010
060
090
050
030
B
B
C
C
D
D
320
400
110
120
370
065
170
190
310
300
100
320
400
125
370
065
310
070

ECM: 240681 - 20051209
Group number: 469501-0400
Assembly Drawing: 469501-4_1_AA

Pos	Part No	UN	Qty	Description	Page No
TBA 0100B, TBA 0125S, TBA 0160S, TBA 0200M, TBA 0200S, TBA 0250S (See drawing on page: 1-158)					
020	568577-0000		1	AIR NOZZLE	
040	568578-0000		1	AIR NOZZLE	
080	256899-0000		2	SHAFT	
090	272095-0000		3	SHAFT	
130	469461-0000		2	ROLL	
TBA 0180B, TBA 0200B, TBA 0236B, TBA 0200SQ, TBA 0284B, TBA 0250B, TBA 0300S, TBA 0330S (See drawing on page: 1-158)					
020	568577-0000		1	AIR NOZZLE	
040	568578-0000		1	AIR NOZZLE	
080	256899-0000		1	SHAFT	
090	272095-0000		3	SHAFT	
130	469461-0000		1	ROLL	
Common Parts					
010	752218-0000		1	ATTACHMENT	
030	751722-0000		1	PIPE-LINE	
050	568581-0000		1	DISTRIBUTOR WING	
060	6161-0000		3	ROLL	
065	28036-0000		4	WASHER	
070	751010-0000		1	GASKET	
100	469458-0000		2	BRACKET	
110	469459-0000		2	BRACKET	
120	469460-0000		1	BRACKET	
125	491143-0000		1	BRACKET	
140	469463-0000		1	SHAFT	
150	469464-0000		1	ROLL	
170	469466-0000		2	PLATE	
190	751024-0000		1	GASKET	
300	312105-0287		4	SCREW M6S ISO 4017 M4X8 A470	
310	312105-0325		4	SCREW M6S ISO 4017 M5X10 A480	
315	312105-0333		5	SCREW M6S ISO 4017 M5X25 A480	
320	312105-0366		6	SCREW M6S ISO 4017 M6X12 A480	
360	312605-0312		1	HEXAGON NUT, M6M M4 A280	
370	312605-0318		3	HEXAGON NUT, M6M M8 A280	
400	315105-0153		6	WASHER BRB 6,4X12 RFR	

Pos	Part No	UN	Qty	Description	Page No

TUBE FLUSHING DEVICE

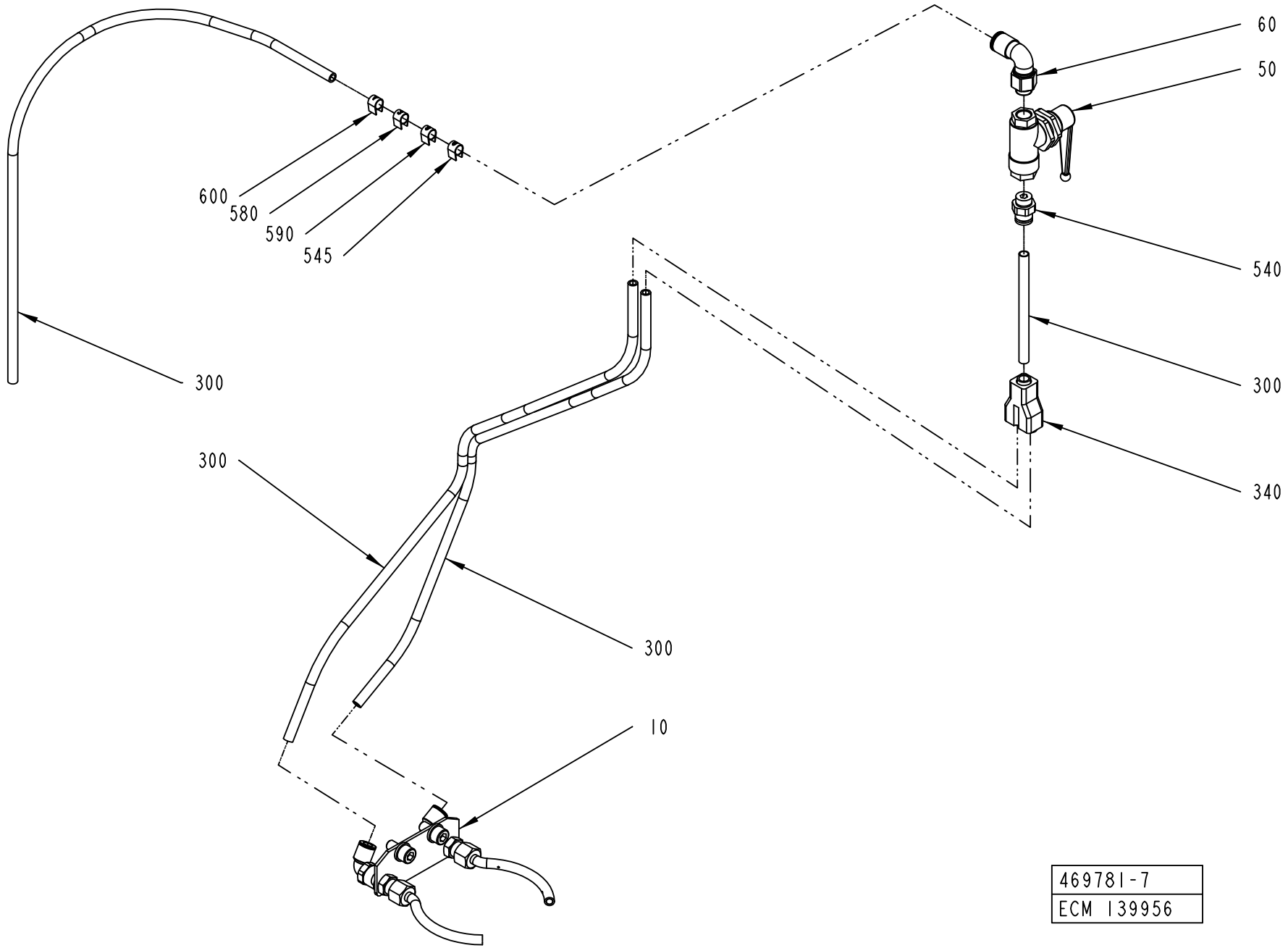

469781-7
ECM 139956

Pos	Part No	UN	Qty	Description	Page No
PT19 TBA 0125S, PT19 TBA 0100B, PT19 TBA 0330S, PT19 TBA 0300S, PT19 TBA 0284B, PT19 TBA 0250S, PT19 TBA 0200M, PT19 TBA 0200B, PT19 TBA 0180B, PT19 TBA 0160S, PT19 TBA 0250B, PT19 TBA 0236B, PT19 TBA 0200S (See drawing on page: 1-162)					
030	589449-0000		1	NOZZLE	
040	342946-0112		1	T-COUPLING,UNION 6/4	
300	90166-0119	MM	1650	HOSE PUR 4/6 BLACK	
310	90166-0132	MM	250	TUBE 6 MM PA,TRANSP.	
330	90235-0280		1	THROTTLE CHECK VALVE,M5	
545	359000-0400		2	WIRE MARKING, YELLOW, PA2/4"0"	
550	342980-0113		2	BANJO-CONNECTION,RING 6/4-G1/8 INCH	
555	342980-0303		1	BANJO-HOLLOW BOLT COUPL,EXT.THR.01-G1/8	
560	359000-0401		1	WIRE MARKING, YELLOW, PA2/4"1"	
570	359000-0402		1	WIRE MARKING, YELLOW, PA2/4"2"	
610	2640155-0000		1	BRACKET	
620	312105-0328		4	SCREW M6S ISO 4017 M5X14 A480	
630	315105-0146		4	WASHER BRB 5,3X10 RFR	
NOPT TBA 0200B, NOPT TBA 0180B, NOPT TBA 0200S, NOPT TBA 0200M, NOPT TBA 0160S, NOPT TBA 0125S, NOPT TBA 0100B, NOPT TBA 0330S, NOPT TBA 0300S, NOPT TBA 0236B, NOPT TBA 0250B, NOPT TBA 0284B, NOPT TBA 0250S (See drawing on page: 1-160)					
300	90166-0119	MM	1400	HOSE PUR 4/6 BLACK	
545	359000-0400		1	WIRE MARKING, YELLOW, PA2/4"0"	
Common Parts					
010	1558128-0100		1	NOZZLE	**1-165**
050	90459-0486		1	BALL VALVE PANEL MOUNTED G1/8	
060	90459-0487		1	ELBOW PIPE JOINT, EXT.THREAD, D=6MM G1/8	
340	90055-0100		1	Y-CONNECTION, 6-6	
540	342722-0202		1	PIPE COUPLING 1/8" D=6MM	
580	359000-0403		1	WIRE MARKING, YELLOW, PA2/4"3"	
590	359000-0409		1	WIRE MARKING, YELLOW, PA2/4"9"	
600	359000-0771		1	WIRE MARKING, YELLOW, PA2/4"V"	

Pos	Part No	UN	Qty	Description	Page No

TUBE FLUSHING DEVICE

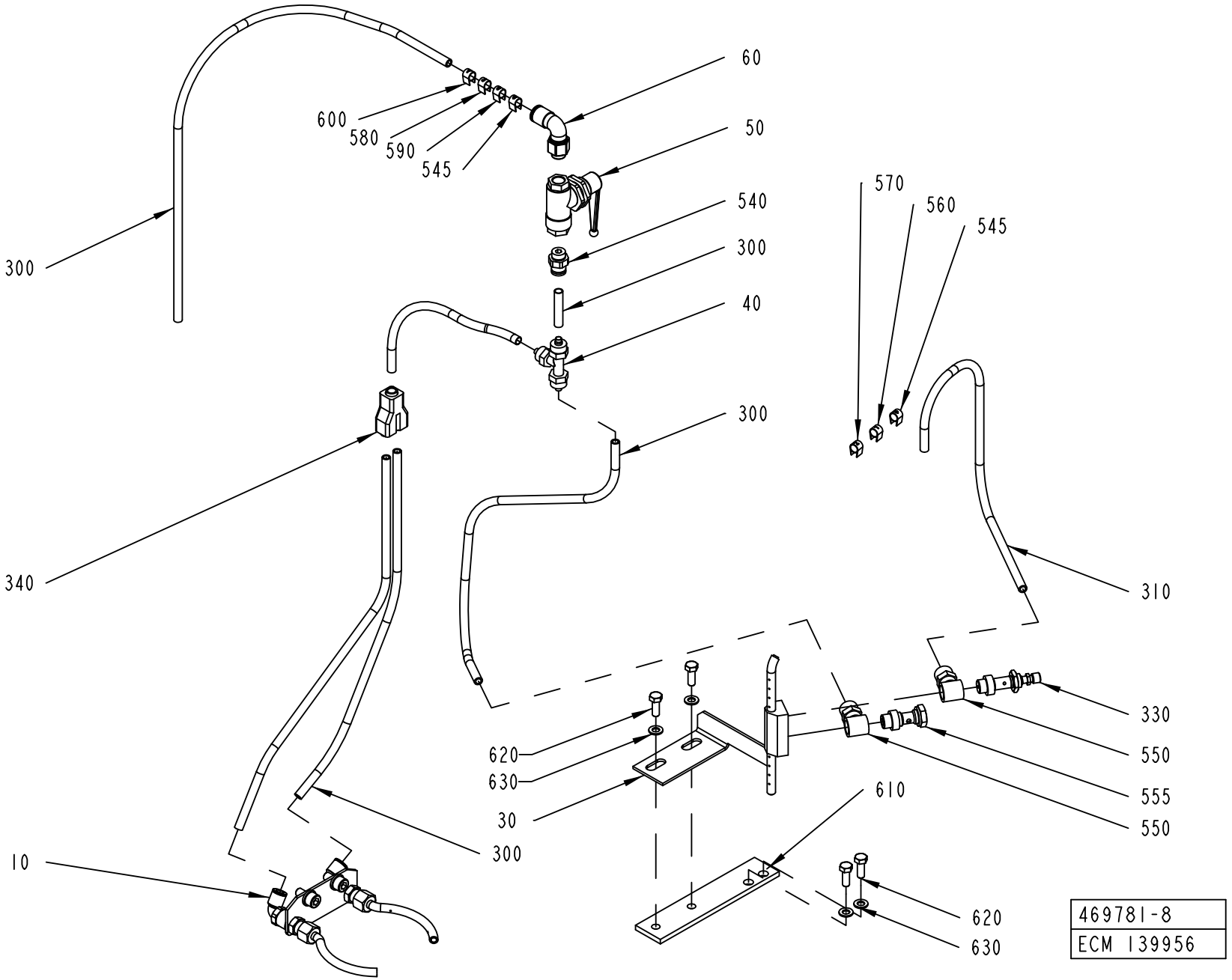

Pos	Part No	UN	Qty	Description	Page No
PT19 TBA 0125S, PT19 TBA 0100B, PT19 TBA 0330S, PT19 TBA 0300S, PT19 TBA 0284B, PT19 TBA 0250S, PT19 TBA 0200M, PT19 TBA 0200B, PT19 TBA 0180B, PT19 TBA 0160S, PT19 TBA 0250B, PT19 TBA 0236B, PT19 TBA 0200S (See drawing on page: 1-162)					
030	589449-0000		1	NOZZLE	
040	342946-0112		1	T-COUPLING,UNION 6/4	
300	90166-0119	MM	1650	HOSE PUR 4/6 BLACK	
310	90166-0132	MM	250	TUBE 6 MM PA,TRANSP.	
330	90235-0280		1	THROTTLE CHECK VALVE,M5	
545	359000-0400		2	WIRE MARKING, YELLOW, PA2/4"0"	
550	342980-0113		2	BANJO-CONNECTION,RING 6/4-G1/8 INCH	
555	342980-0303		1	BANJO-HOLLOW BOLT COUPL,EXT.THR.01-G1/8	
560	359000-0401		1	WIRE MARKING, YELLOW, PA2/4"1"	
570	359000-0402		1	WIRE MARKING, YELLOW, PA2/4"2"	
610	2640155-0000		1	BRACKET	
620	312105-0328		4	SCREW M6S ISO 4017 M5X14 A480	
630	315105-0146		4	WASHER BRB 5,3X10 RFR	
NOPT TBA 0200B, NOPT TBA 0180B, NOPT TBA 0200S, NOPT TBA 0200M, NOPT TBA 0160S, NOPT TBA 0125S, NOPT TBA 0100B, NOPT TBA 0330S, NOPT TBA 0300S, NOPT TBA 0236B, NOPT TBA 0250B, NOPT TBA 0284B, NOPT TBA 0250S (See drawing on page: 1-160)					
300	90166-0119	MM	1400	HOSE PUR 4/6 BLACK	
545	359000-0400		1	WIRE MARKING, YELLOW, PA2/4"0"	
Common Parts					
010	1558128-0100		1	NOZZLE	**1-165**
050	90459-0486		1	BALL VALVE PANEL MOUNTED G1/8	
060	90459-0487		1	ELBOW PIPE JOINT, EXT.THREAD, D=6MM G1/8	
340	90055-0100		1	Y-CONNECTION, 6-6	
540	342722-0202		1	PIPE COUPLING 1/8" D=6MM	
580	359000-0403		1	WIRE MARKING, YELLOW, PA2/4"3"	
590	359000-0409		1	WIRE MARKING, YELLOW, PA2/4"9"	
600	359000-0771		1	WIRE MARKING, YELLOW, PA2/4"V"	

Pos	Part No	UN	Qty	Description	Page No

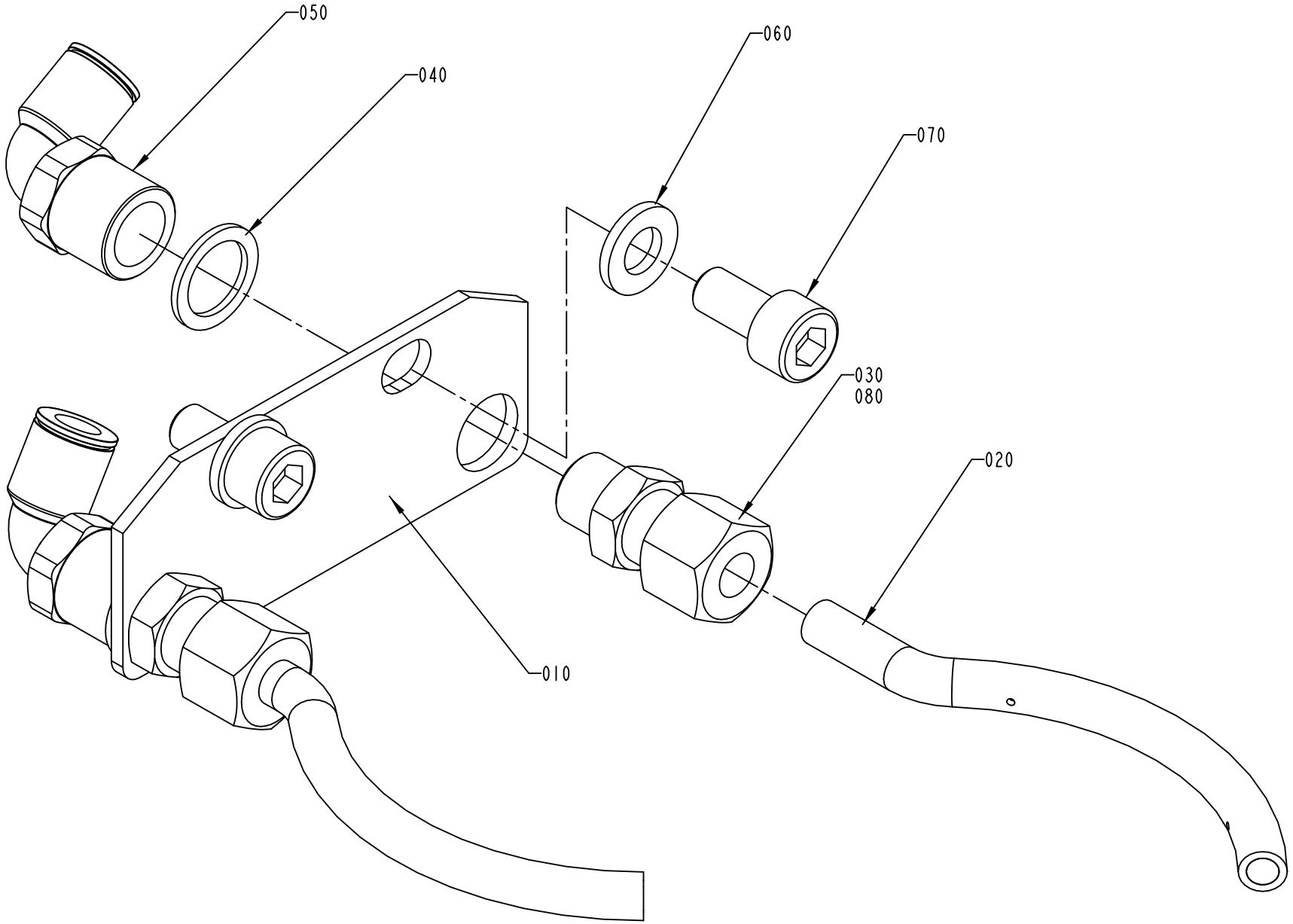
050
040
060
070
030
080
020
010
1558128-1
ECM 139956

ECM: 178345 - 20040910
Group number: 1558128-0100
Assembly Drawing: 1558128-1_1_AB

Pos	Part No	UN	Qty	Description	Page No
-					
010	2500293-0000		1	PLATE	
020	2500294-0000		2	PIPE	
030	90458-2039		2	CONN. STR., 6-R1/8, EXT. THREAD	
040	315233-0109		2	WASHER CAPTIVE SEALING G1/8	
050	90458-2040		2	ELBOW PIPE JOINT, INT.THREAD, G1/8"D=6MM	
060	315105-0153		2	WASHER BRB 6,4X12 RFR	
070	312115-0366		2	SCREW ISO4762 M6X12 A4 80	
080	90157-0016	ML	1	LOCKING FLUID LOCTITE 242 50 ML	

Pos	Part No	UN	Qty	Description	Page No

DOOR

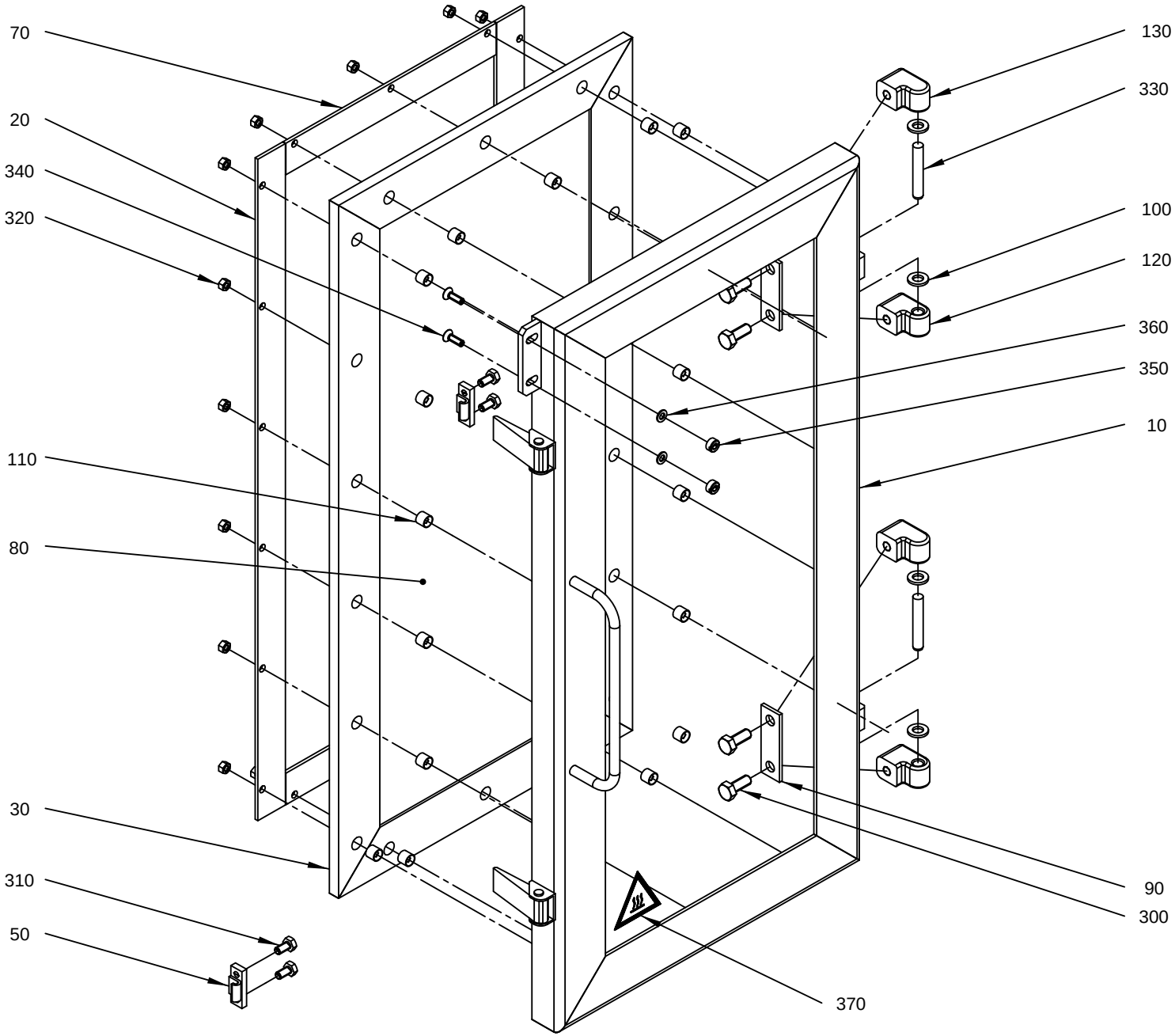

491570-3
ECM 2193 92

ECM: 234402 - 20051104
Group number: 491570-0300
Assembly Drawing: 491570-3_1_AA

Pos	Part No	UN	Qty	Description	Page No
-					
010	978542-0000		1	FRAME	
020	272780-0000		2	COVER SLIP	
030	272785-0000		1	RUBBER STRIP	
050	271860-0000		2	CLAMP BLOCK	
070	272782-0000		2	COVER SLIP	
080	272783-0003		1	GLASS PANE	
090	441737-0000		2	WASHER	
100	441739-0000		4	WASHER	
110	441718-0000		18	SPACER	
120	441740-0000		2	HINGE FLANGE	
130	441741-0000		2	HINGE FLANGE	
300	312105-0451		4	SCREW M6S ISO 4017 M8X20 A480	
310	312105-0366		4	SCREW M6S ISO 4017 M6X12 A480	
320	312605-0314		18	HEXAGON NUT, M6M M5 A280	
330	311103-0413		2	PARALLEL PIN ISO 2338 8M6X50 A1	
340	312155-0329		2	SCREW DIN 7991 MF6S M5X16 A4 70	
350	575034-0000		2	ROUND NUT	
360	315105-0146		2	WASHER BRB 5,3X10 RFR	
370	359710-0001		1	WARNING SIGN ISO, HOT SURFACE	

Pos	Part No	UN	Qty	Description	Page No

DOOR

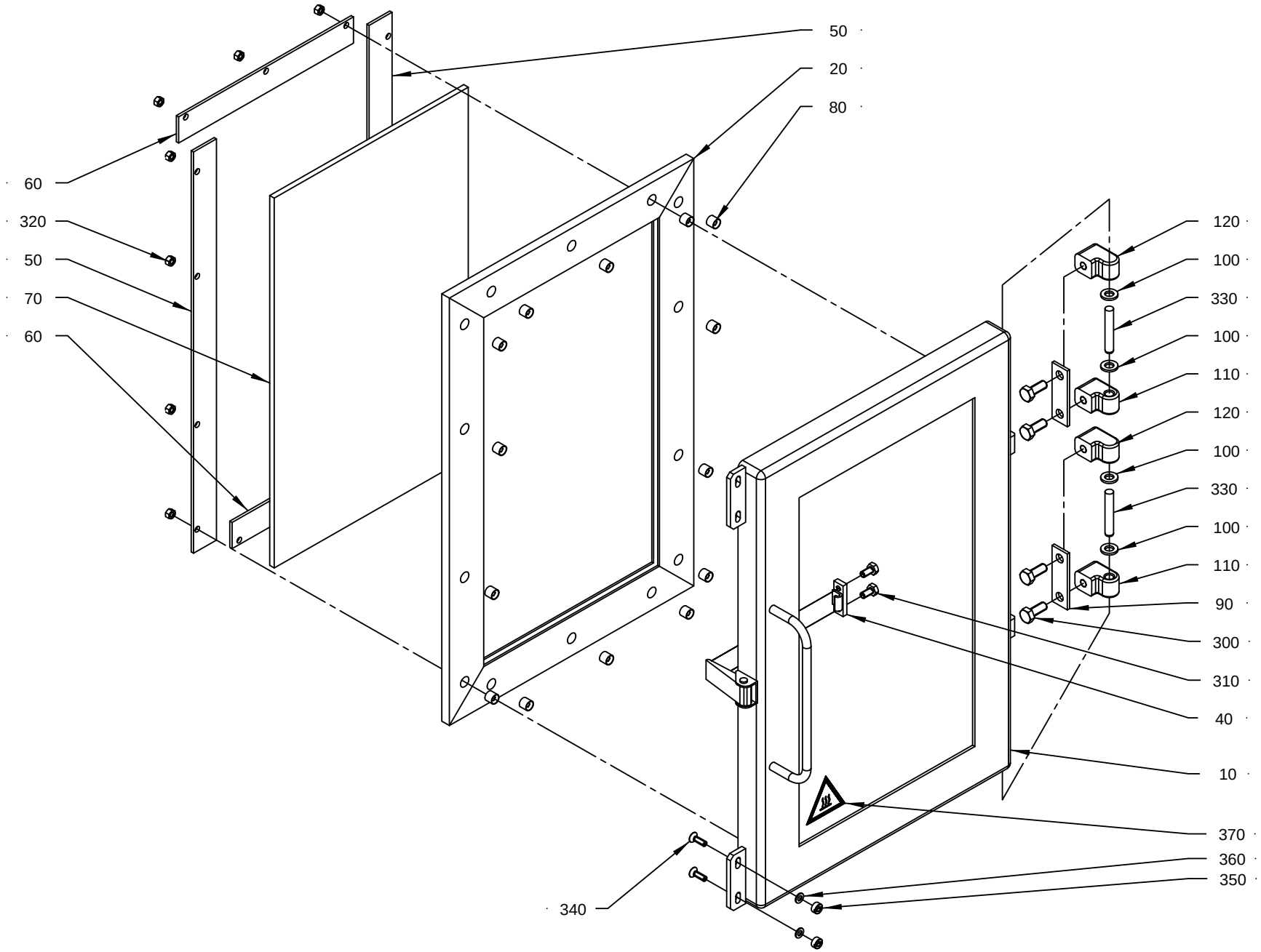

491579-3
ECM 2193 92

ECM: 234403 - 20051104
Group number: 491579-0300
Assembly Drawing: 491579-3_1_AA

Pos	Part No	UN	Qty	Description	Page No
-					
010	978543-0000		1	FRAME	
020	272784-0002		1	RUBBER STRIP	
040	271860-0000		1	CLAMP BLOCK	
050	272781-0002		2	COVER SLIP	
060	272782-0000		2	COVER SLIP	
070	272783-0002		1	GLASS PANE	
080	441718-0000		14	SPACER	
090	441737-0000		2	WASHER	
100	441739-0000		4	WASHER	
110	441740-0000		2	HINGE FLANGE	
120	441741-0000		2	HINGE FLANGE	
300	312105-0451		4	SCREW M6S ISO 4017 M8X20 A480	
310	312105-0366		2	SCREW M6S ISO 4017 M6X12 A480	
320	312605-0314		14	HEXAGON NUT, M6M M5 A280	
330	311103-0413		2	PARALLEL PIN ISO 2338 8M6X50 A1	
340	312155-0329		2	SCREW DIN 7991 MF6S M5X16 A4 70	
350	575034-0000		2	ROUND NUT	
360	315105-0146		2	WASHER BRB 5,3X10 RFR	
370	359710-0001		1	WARNING SIGN ISO, HOT SURFACE	

Pos	Part No	UN	Qty	Description	Page No

PHOTOCELL UNIT

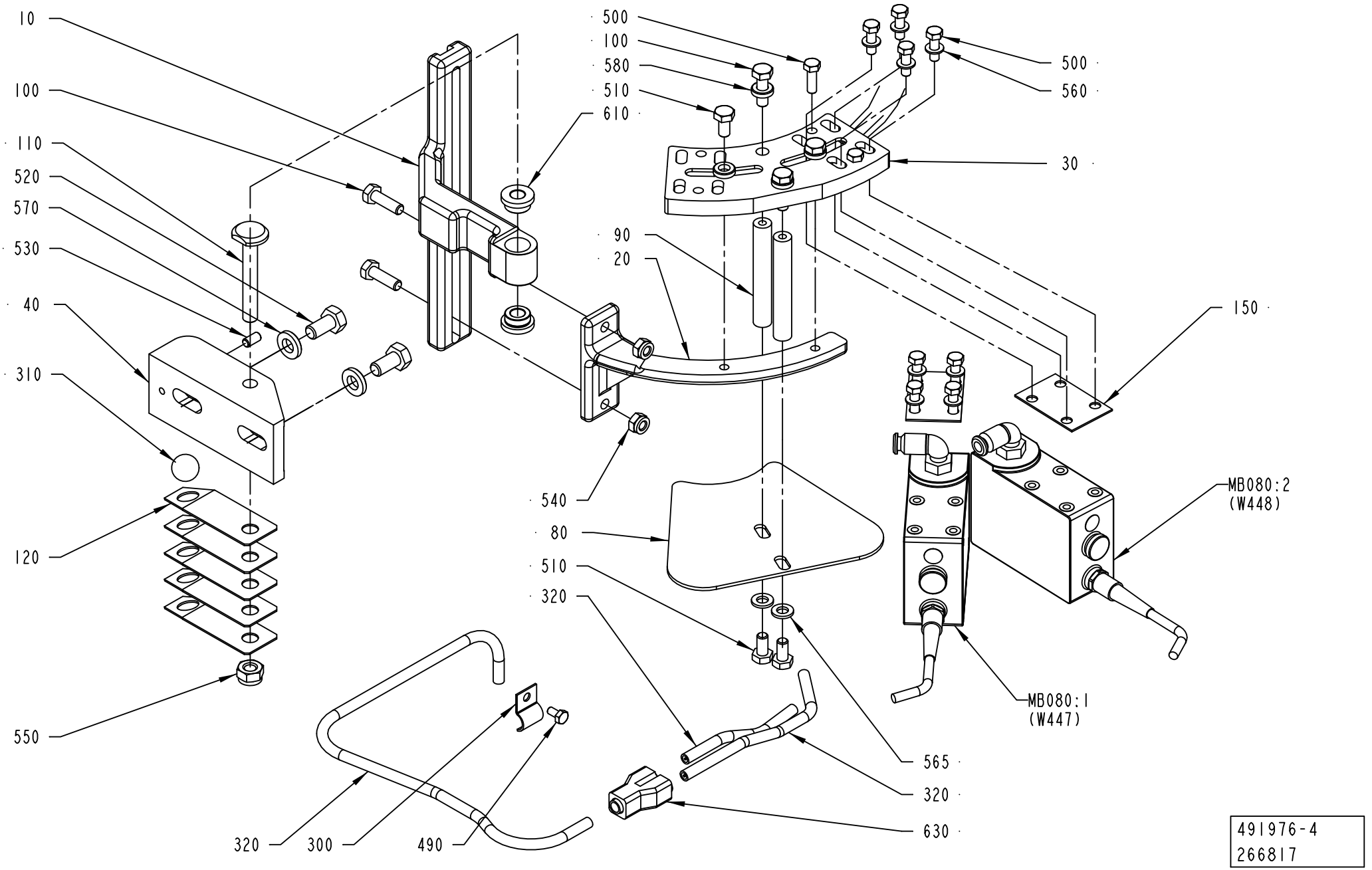

491976-4
266817

ECM: 276059 - 20070126
Group number: 491976-0400
Assembly Drawing: 491976-4_1_AD

This list covers pages from 1-170 to 1-173

Pos	Part No	UN	Qty	Description	Page No
TBA 0100B, TBA 0125S, TBA 0160S, TBA 0200M, TBA 0200S, TBA 0250S (See drawing on page: 1-172)					
010	2815756-0000		1	HOLDER	
020	751476-0000		1	CANTILEVER	
030	491880-0000		1	FASTENING PLATE	
060	752554-0000		4	SPACER	
080	1260487-0000		1	PLATE	
090	1260491-0000		2	NUT	
100	312105-0370		4	SCREW M6S ISO 4017 M6X20 A480	
170	312109-0335		8	SCREW M6S ISO 4017 M5X30 A480	
500	312105-0329		2	SCREW M6S ISO 4017 M5X16 A480	
510	312105-0366		4	SCREW M6S ISO 4017 M6X12 A480	
580	315115-0153		4	WASHER PLAIN, TBRB 6,4/12 H=3	
TBA 0180B, TBA 0200B, TBA 0200SQ, TBA 0284B, TBA 0250B, TBA 0300S, TBA 0330S (See drawing on page: 1-170)					
010	2815756-0000		1	HOLDER	
020	751457-0000		1	CANTILEVER	
030	978735-0000		1	FASTENING PLATE	
080	1260486-0000		1	PLATE	
090	1260490-0000		2	NUT	
100	312105-0370		4	SCREW M6S ISO 4017 M6X20 A480	
150	536374-0000		2	WASHER	
500	312105-0329		10	SCREW M6S ISO 4017 M5X16 A480	
510	312105-0366		4	SCREW M6S ISO 4017 M6X12 A480	
580	315115-0153		4	WASHER PLAIN, TBRB 6,4/12 H=3	
Common Parts					
040	490876-0000		1	BRACKET	
110	457367-0000		1	SHAFT	
120	457368-0000		5	SPRING	
300	90074-0001		1	CABLE CLIPS, D=10 MM	
310	90090-0016		1	BALL, D=15 MM	
320	90166-0132	MM	750	TUBE 6 MM PA,TRANSP.	
490	312105-0287		1	SCREW M6S ISO 4017 M4X8 A470	
520	312105-0449		2	SCREW M6S ISO 4017 M8X16 A480	
530	312318-0325		1	SCREW ISO4029 M5X10 A4	
540	312812-0316		2	HEXAGON NUT, NY-LOCK M6 A480	
550	312812-0318		1	HEXAGON NUT, NY-LOCK M8 A480	
560	315105-0146		8	WASHER BRB 5,3X10 RFR	
565	315105-0153		2	WASHER BRB 6,4X12 RFR	
570	315115-0165		2	WASHER PLAIN, TBRB 8,4/16 H=3	
610	321101-0143		2	FLANGE BUSHING, 8X14X8 MM	
630	90055-0100		1	Y-CONNECTION, 6-6	
MB080:2	90458-0601		1	CONTRAST SCANNER, KT15W-P2110S01	
	342732-0102		*1*	*ELBOW PIPE JOINT, EXT.THREAD, D=6MM-G1/8*	
MB080:1	90458-0601		1	CONTRAST SCANNER, KT15W-P2110S01	
	342732-0102		*1*	*ELBOW PIPE JOINT, EXT.THREAD, D=6MM-G1/8*	

Machine Type | Group Description | Used-In | Group Number | Page No

PHOTOCELL UNIT

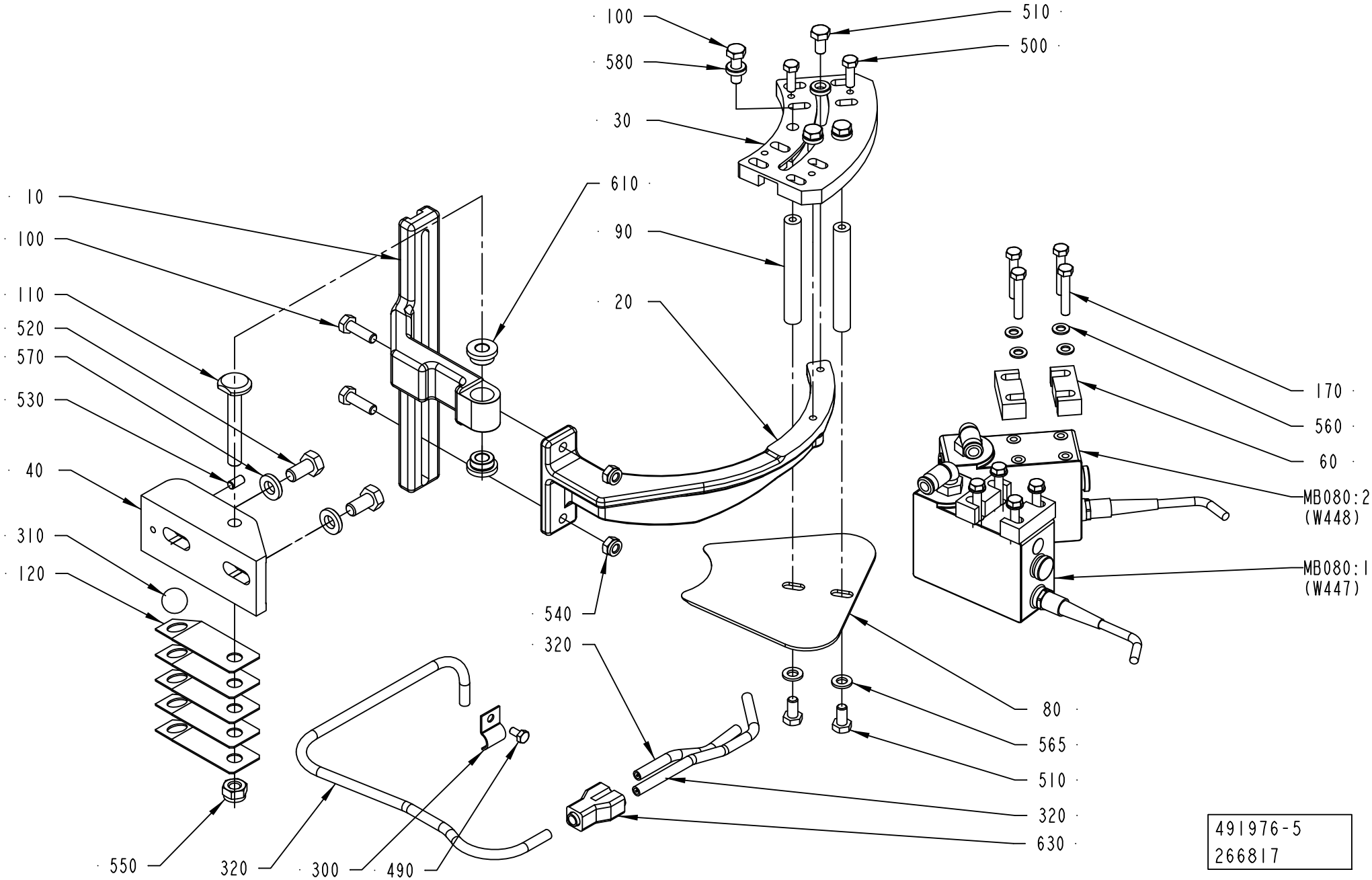

ECM: 276059 - 20070126
Group number: 491976-0400
Assembly Drawing: 491976-5_1_AD

This list covers pages from 1-170 to 1-173

Pos	Part No	UN	Qty	Description	Page No
TBA 0100B, TBA 0125S, TBA 0160S, TBA 0200M, TBA 0200S, TBA 0250S (See drawing on page: 1-172)					
010	2815756-0000		1	HOLDER	
020	751476-0000		1	CANTILEVER	
030	491880-0000		1	FASTENING PLATE	
060	752554-0000		4	SPACER	
080	1260487-0000		1	PLATE	
090	1260491-0000		2	NUT	
100	312105-0370		4	SCREW M6S ISO 4017 M6X20 A480	
170	312109-0335		8	SCREW M6S ISO 4017 M5X30 A480	
500	312105-0329		2	SCREW M6S ISO 4017 M5X16 A480	
510	312105-0366		4	SCREW M6S ISO 4017 M6X12 A480	
580	315115-0153		4	WASHER PLAIN, TBRB 6,4/12 H=3	
TBA 0180B, TBA 0200B, TBA 0200SQ, TBA 0284B, TBA 0250B, TBA 0300S, TBA 0330S (See drawing on page: 1-170)					
010	2815756-0000		1	HOLDER	
020	751457-0000		1	CANTILEVER	
030	978735-0000		1	FASTENING PLATE	
080	1260486-0000		1	PLATE	
090	1260490-0000		2	NUT	
100	312105-0370		4	SCREW M6S ISO 4017 M6X20 A480	
150	536374-0000		2	WASHER	
500	312105-0329		10	SCREW M6S ISO 4017 M5X16 A480	
510	312105-0366		4	SCREW M6S ISO 4017 M6X12 A480	
580	315115-0153		4	WASHER PLAIN, TBRB 6,4/12 H=3	
Common Parts					
040	490876-0000		1	BRACKET	
110	457367-0000		1	SHAFT	
120	457368-0000		5	SPRING	
300	90074-0001		1	CABLE CLIPS, D=10 MM	
310	90090-0016		1	BALL, D=15 MM	
320	90166-0132	MM	750	TUBE 6 MM PA,TRANSP.	
490	312105-0287		1	SCREW M6S ISO 4017 M4X8 A470	
520	312105-0449		2	SCREW M6S ISO 4017 M8X16 A480	
530	312318-0325		1	SCREW ISO4029 M5X10 A4	
540	312812-0316		2	HEXAGON NUT, NY-LOCK M6 A480	
550	312812-0318		1	HEXAGON NUT, NY-LOCK M8 A480	
560	315105-0146		8	WASHER BRB 5,3X10 RFR	
565	315105-0153		2	WASHER BRB 6,4X12 RFR	
570	315115-0165		2	WASHER PLAIN, TBRB 8,4/16 H=3	
610	321101-0143		2	FLANGE BUSHING, 8X14X8 MM	
630	90055-0100		1	Y-CONNECTION, 6-6	
MB080:2	90458-0601		1	CONTRAST SCANNER, KT15W-P2110S01	
	342732-0102		*1*	*ELBOW PIPE JOINT, EXT.THREAD, D=6MM-G1/8*	
MB080:1	90458-0601		1	CONTRAST SCANNER, KT15W-P2110S01	
	342732-0102		*1*	*ELBOW PIPE JOINT, EXT.THREAD, D=6MM-G1/8*	

Machine Type | Group Description | Used-In | Group Number | Page No

PROTECTIVE GRATING

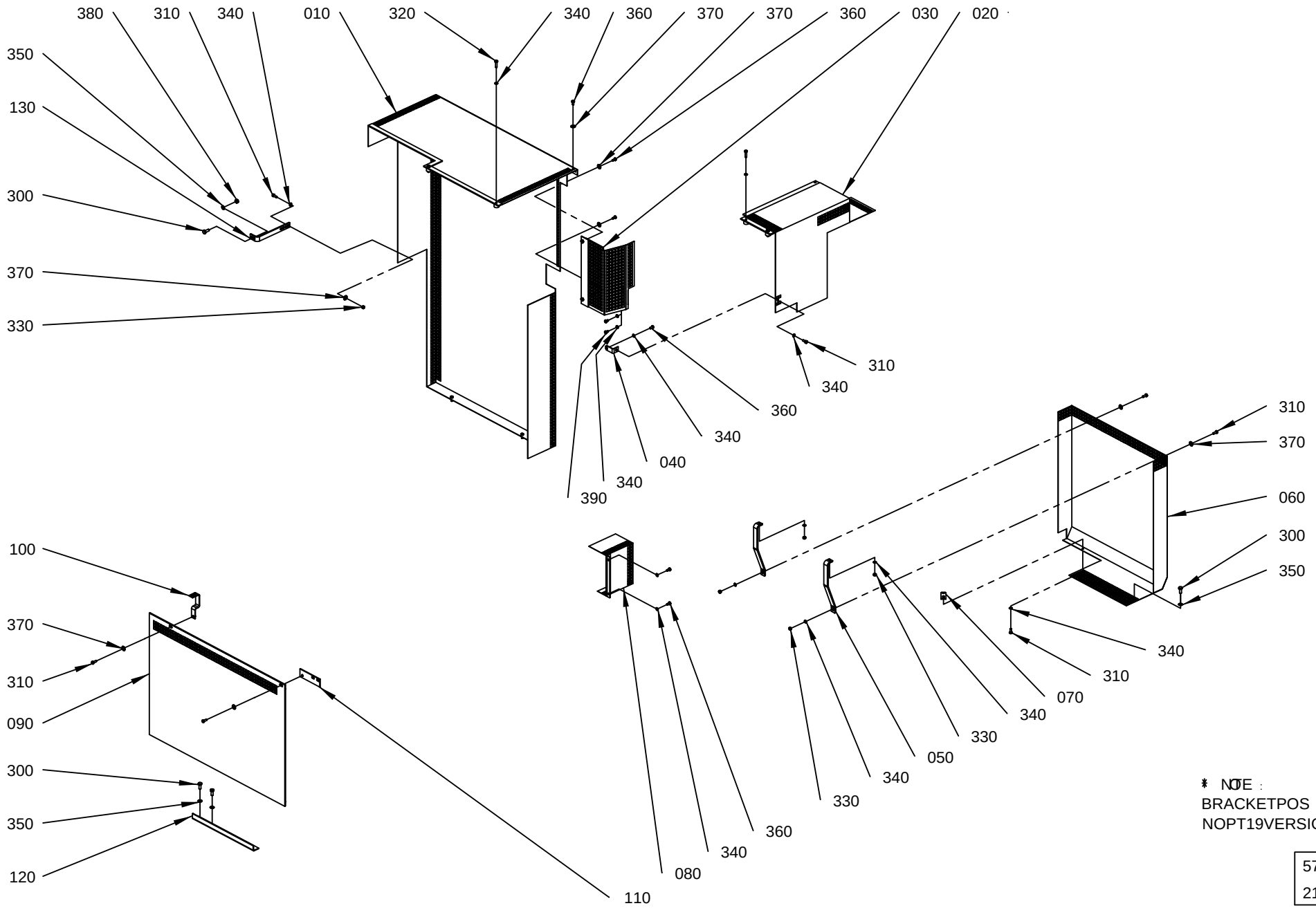

* NOTE:
BRACKETPOS 130 VALID FOR NOPT19VERSIONONLY

579625-4
2193 92

ECM: 230574 - 20051104
Group number: 579625-0300
Assembly Drawing: 579625-4_1_AA

Pos	Part No	UN	Qty	Description	Page No
-					
010	2565515-0000		1	TOUCH GUARD	
020	2781214-0000		1	TOUCH GUARD	
030	2781215-0000		1	TOUCH GUARD	
040	579633-0000		1	BRACKET	
050	2582602-0000		2	BRACKET	
060	2565516-0000		1	TOUCH GUARD	
070	2611008-0000		1	BRACKET	
080	579629-0000		1	TOUCH GUARD	
090	2565517-0000		1	TOUCH GUARD	
100	2582639-0000		1	BRACKET	
110	2634940-0000		1	BRACKET	
120	2582603-0000		1	BRACKET	
130	579630-0000		1	BRACKET	
300	312105-0451		4	SCREW M6S ISO 4017 M8X20 A480	
310	312105-0368		7	SCREW M6S ISO 4017 M6X16 A480	
320	312105-0372		4	SCREW M6S ISO 4017 M6X25 A480	
330	312605-0316		5	HEXAGON NUT, M6M M6 A280	
340	315105-0153		16	WASHER BRB 6,4X12 RFR	
350	315105-0165		4	WASHER BRB 8,4X16 RFR	
360	312105-0366		6	SCREW M6S ISO 4017 M6X12 A480	
370	90005-0060		8	WASHER PLAIN, RBS 6,4/M6)/18,H=1,5	
380	312605-0318		1	HEXAGON NUT, M6M M8 A280	
390	312105-0364		2	SCREW M6S ISO 4017 M6X10 A480	

Pos	Part No	UN	Qty	Description	Page No

PENDULUM

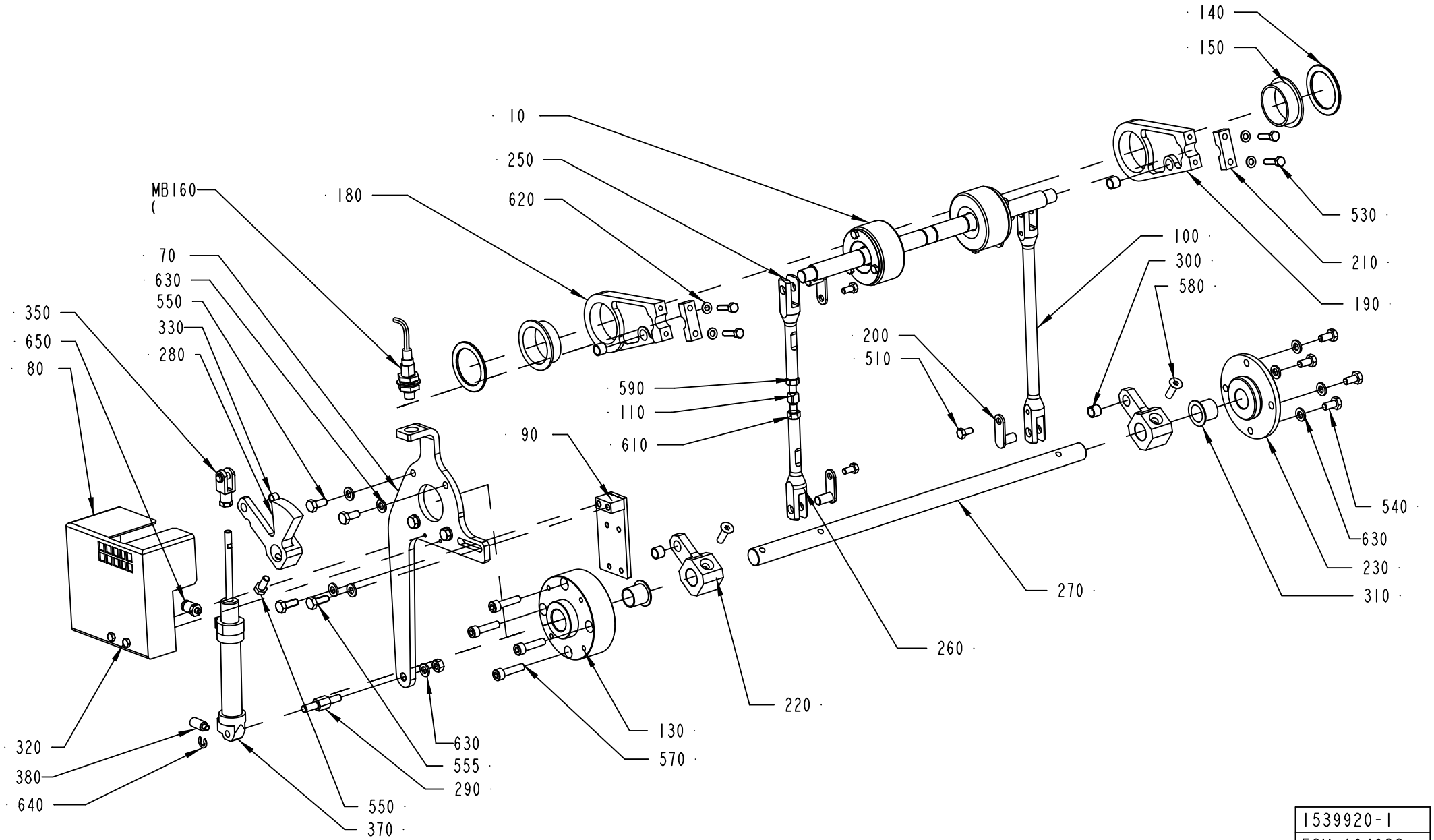

1539920-1
ECM 104628

ECM: 178346 - 20040910
Group number: 1539920-0200
Assembly Drawing: 1539920-1_1_AB

Pos	Part No	UN	Qty	Description	Page No
-					
010	1548010-0200		1	PENDULUM ROLLER	**1-179**
070	1524829-0000		1	PLATE	
080	2510532-0000		1	PROTECTION	
090	1524814-0000		1	BRACKET	
100	1548003-0000		1	LINK	
110	1548006-0000		1	ADJUSTING SCREW	
130	1548059-0000		1	AXLE SUPPORT	
140	1548141-0000		2	WASHER	
150	1548142-0000		2	BUSHING	
180	1548147-0000		1	PLATE	
190	1548148-0000		1	PLATE	
200	1548152-0000		4	PIN	
210	1548225-0000		2	CLAMP	
220	1548276-0000		2	LEVER	
230	1548277-0000		1	FLANGE	
250	1548004-0001		1	LINK	
260	1548004-0002		1	LINK	
270	1548005-0000		1	SHAFT	
280	1548532-0000		1	LEVER	
290	1524830-0000		1	SHAFT	
300	90458-0824		4	BUSHING, 8X10X8 MM	
310	90458-0825		2	FLANGE BUSHING, 16X18X17 MM	
320	312105-0301		2	SCREW M6S ISO 4017 M4X35 A470	
330	90458-1790		1	BUSHING, 6X8X6 MM	
350	90239-0489		1	ROD END, CLEVIS WITH AXLE M6X1,25	
360	90296-0091		1	LUBRICATION GREASE	
370	90239-0817		1	DOUBLE ACTING, MINI-ISO, CYL.16-50	
380	90328-0020		1	SILENCER U-M5,	
510	312105-0325		4	SCREW M6S ISO 4017 M5X10 A480	
530	312105-0331		4	SCREW M6S ISO 4017 M5X20 A480	
540	312105-0366		4	SCREW M6S ISO 4017 M6X12 A480	
550	312105-0367		5	SCREW M6S ISO 4017 M6X14 A480	
555	312105-0368		4	SCREW M6S ISO 4017 M6X16 A480	
570	312115-0372		4	SCREW ISO4762 M6X25 A4 80	
580	312155-0370		2	SCREW DIN 7991 MF6S M6X20 A4 70	
590	312605-0316		2	HEXAGON NUT, M6M M6 A280	
610	312902-0316		1	NUT HEX. LEFT THREAD, M6 A280	
620	315105-0146		4	WASHER BRB 5,3X10 RFR	
630	315105-0153		11	WASHER BRB 6,4X12 RFR	
640	315755-0107		1	RETAINING RING SHAFT DIN 6799 5 A2	
650	342722-0197		2	STRAIGHT COUPLING	
MB160	90458-0675		1	PROXIMITY SENSOR, E2EG-X5MB1-5M	

Machine Type	Group Description	Used-In	Group Number	Page No

PENDULUM ROLLER

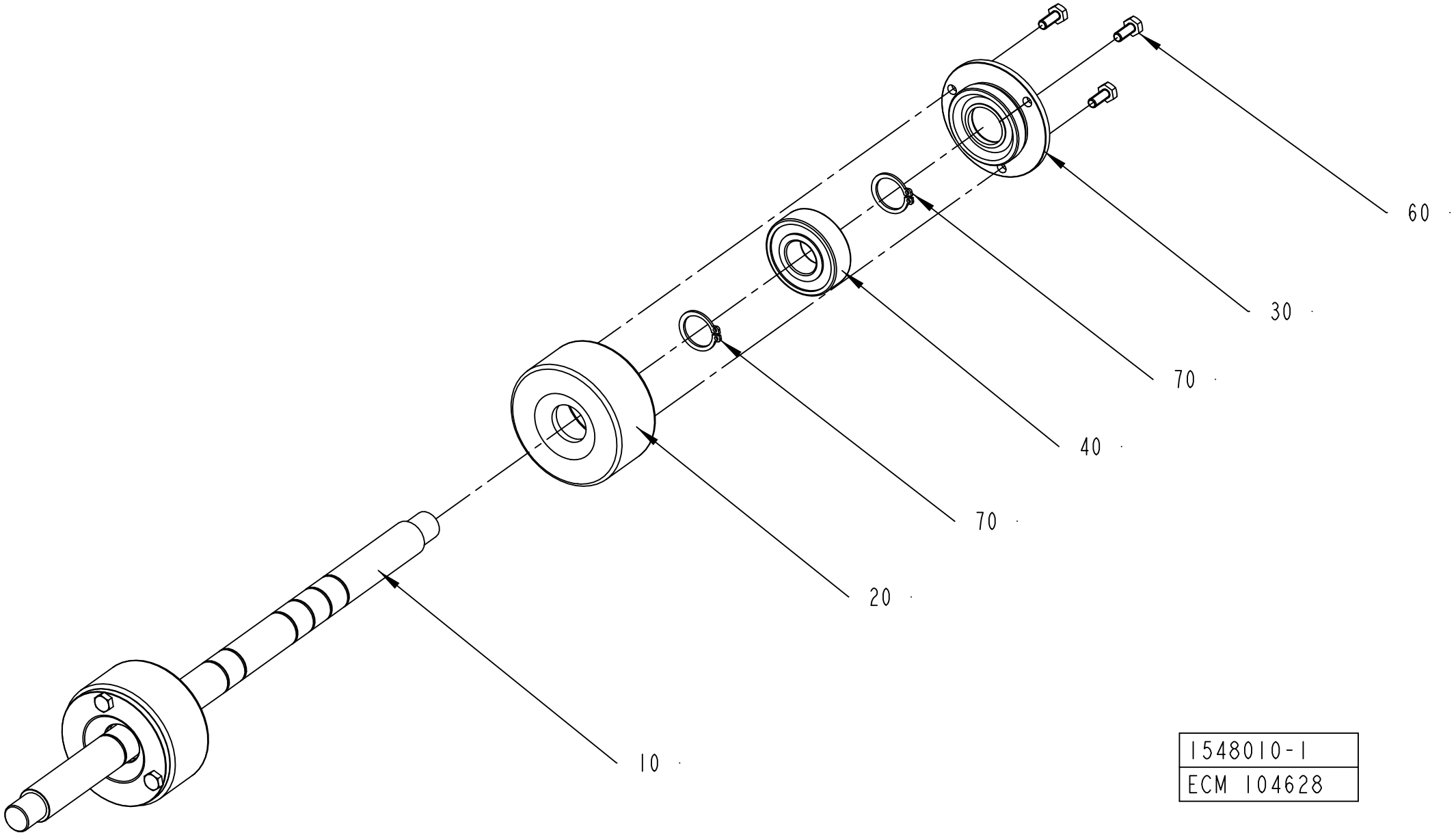

1548010-1
ECM 104628

ECM: 178347 - 20040910
Group number: 1548010-0200
Assembly Drawing: 1548010-1_1_AB

Pos	Part No	UN	Qty	Description	Page No
-					
010	1539996-0000		1	SHAFT	
020	1548052-0000		2	ROLLER	
030	1548053-0000		2	COVER	
040	90458-1704		2	BALL BEARING, 15X35X11 MM	
050	90296-0091		1	LUBRICATION GREASE	
060	312105-0289		6	SCREW M6S ISO 4017 M4X10 A470	
070	315751-0112		4	RETAINING RING FOR SHAFT DIN 471 15 A2	

Pos	Part No	UN	Qty	Description	Page No

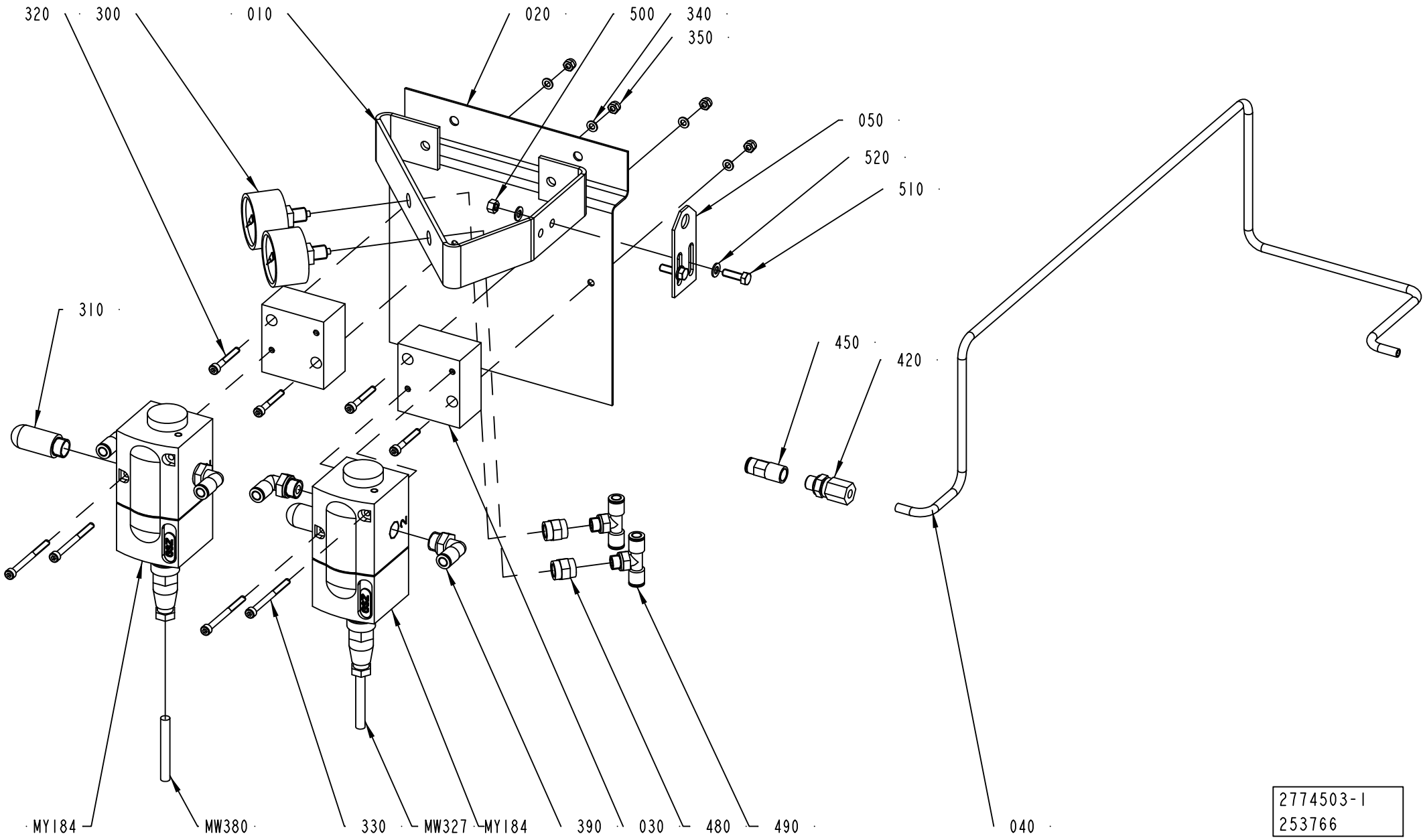
320
300
010
020
500
340
350
050
520
510
310
450
420
MY184
MW380
330
MW327
MY184
390
030
480
490
040
2774503-1
253766

ECM: 268530 - 20060707
Group number: 2774503-0100
Assembly Drawing: 2774503-1_1_AC

Pos	Part No	UN	Qty	Description	Page No
-					
010	2500207-0000		1	BRACKET	
020	2774504-0000		1	BRACKET	
030	1538758-0000		2	SPACER	
040	2788118-0000		1	PIPE	
050	2832789-0000		1	PLATE	
300	90043-0069		2	PRESSURE GAUGE 0-4BAR WIEGAND 2040	
310	90328-0026		2	SILENCER G1/4"	
320	312115-0299		4	SCREW ISO4762 M4X30 A4 80	
330	312115-0305		4	SCREW ISO4762 M4X50 A4 80	
340	315105-0136		4	WASHER BRB 4,3X8 RFR	
350	312812-0312		4	HEXAGON NUT, NY-LOCK M4 A480	
390	350002-0008		4	PUSH-IN L-FITTING QSL-F-G1/4-6	
420	90030-0089		1	STRAIGHT CONNECTION	
450	350008-0003		1	PUSH-IN FITTING QSF-F-G1/8-6	
470	315105-0146		2	WASHER BRB 5,3X10 RFR	
480	342707-0109		2	SLEEVE, INT. THREAD, NO. 2543-1/8	
490	350007-0006		2	PUSH-IN T-FITTING QST-F-G1/8-6	
500	312607-0314		2	HEXAGON NUT, EN 24032 M6M M5 A480	
510	312105-0329		2	SCREW M6S ISO 4017 M5X16 A480	
520	315105-0146		2	WASHER BRB 5,3X10 RFR	
MY184	90458-1092		1	PROPORTIONAL VALVE 0 - 10V/0-6 BAR	
	90458-1262		*1*	*CONNECTOR 131028001 FOR PROP. VALVE*	
MY107	90458-1092		1	PROPORTIONAL VALVE 0 - 10V/0-6 BAR	
	90458-1262		*1*	*CONNECTOR 131028001 FOR PROP. VALVE*	
MW380	90220-0091	MM	5500	PAIR TWISTED CABLE 2X2X0,25MM2	
MW327	90220-0091	MM	5500	PAIR TWISTED CABLE 2X2X0,25MM2	

Pos	Part No	UN	Qty	Description	Page No

LEVEL PROBE

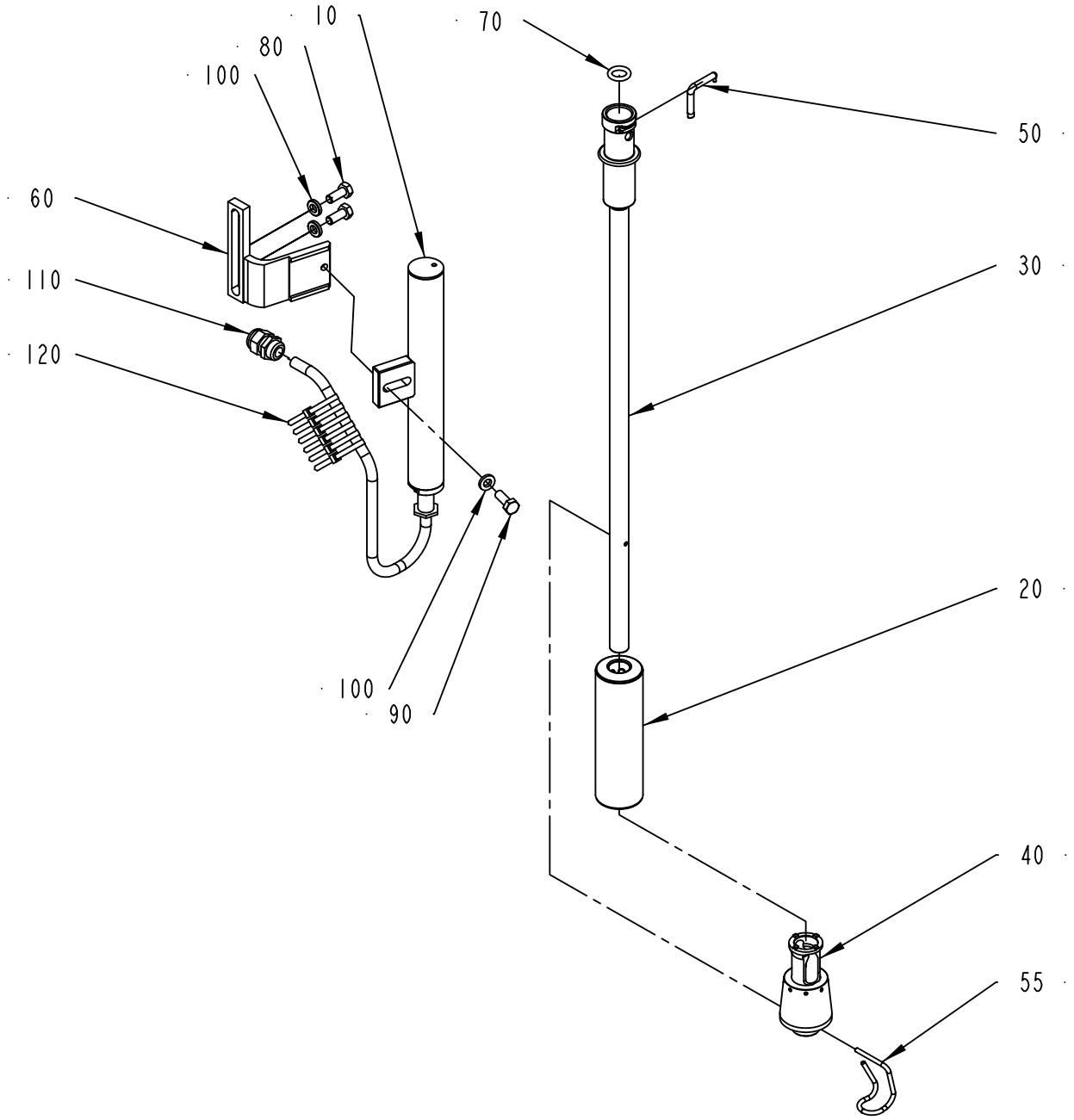

925991-1
ECM 123049

ECM: 249968 - 20070126
Group number: 925991-0200
Assembly Drawing: 925991-1_1_AF

Pos	Part No	UN	Qty	Description	Page No
TBA 0100B, TBA 0125S					
020	979330-0000		1	FLOATER	
030	2527717-0000		1	FILLING PIPE	
040	2510541-0000		1	PRESSURE FLANGE	
055	2506432-0000		1	LOCKING FINGER	
TBA 0160S, TBA 0200S					
020	979330-0000		1	FLOATER	
030	2527707-0000		1	FILLING PIPE	
040	2527708-0000		1	PRESSURE FLANGE	
055	2506432-0000		1	LOCKING FINGER	
TBA 0180B, TBA 0200B					
020	979326-0000		1	FLOAT	
030	2524342-0000		1	FILLING PIPE	
040	1548332-0000		1	PRESSURE FLANGE	
055	2506433-0000		1	LOCKING FINGER	
TBA 0200M					
020	979330-0000		1	FLOATER	
030	2524341-0000		1	FILLING PIPE	
040	1558444-0000		1	PRESSURE FLANGE	
055	2506432-0000		1	LOCKING FINGER	
TBA 0200SQ					
020	979326-0000		1	FLOAT	
030	2527714-0000		1	FILLING PIPE	
040	2527715-0000		1	PRESSURE FLANGE	
055	2506433-0000		1	LOCKING FINGER	
TBA 0236B, TBA 0284B, TBA 0300S					
020	979326-0000		1	FLOAT	
030	2527706-0000		1	FILLING PIPE	
040	2514301-0000		1	PRESSURE FLANGE	
055	2506433-0000		1	LOCKING FINGER	
TBA 0250B					
020	979326-0000		1	FLOAT	
030	2524343-0000		1	FILLING PIPE	
040	1558446-0000		1	PRESSURE FLANGE	
055	2506433-0000		1	LOCKING FINGER	
TBA 0250S					
020	979330-0000		1	FLOATER	
030	1558443-0000		1	FILLING PIPE	
040	1558444-0000		1	PRESSURE FLANGE	
055	2506432-0000		1	LOCKING FINGER	
TBA 0330S					
020	979326-0000		1	FLOAT	
030	2527710-0000		1	FILLING PIPE	
040	2514301-0000		1	PRESSURE FLANGE	
055	2506433-0000		1	LOCKING FINGER	
Common Parts					
010	42062-0200		1	LEVEL PROBE	**1-185**
050	2506530-0000		1	LOCKING FINGER	
060	979368-0000		1	HOLDER	
070	90459-2045		1	O-RING 14X4 MM	
080	312105-0451		2	SCREW M6S ISO 4017 M8X20 A480	
090	312105-0452		1	SCREW M6S ISO 4017 M8X22 A4 80	
100	315115-0165		3	WASHER PLAIN, TBRB 8,4/16 H=3	
110	352103-0106		1	CABLE GLAND, ST 11, PR18,6/PG11	
120	352113-0102		6	CABLE TIE, BLACK 188X4,8 MM	

Machine Type | Group Description | Used-In | Group Number | Page No

LEVEL PROBE

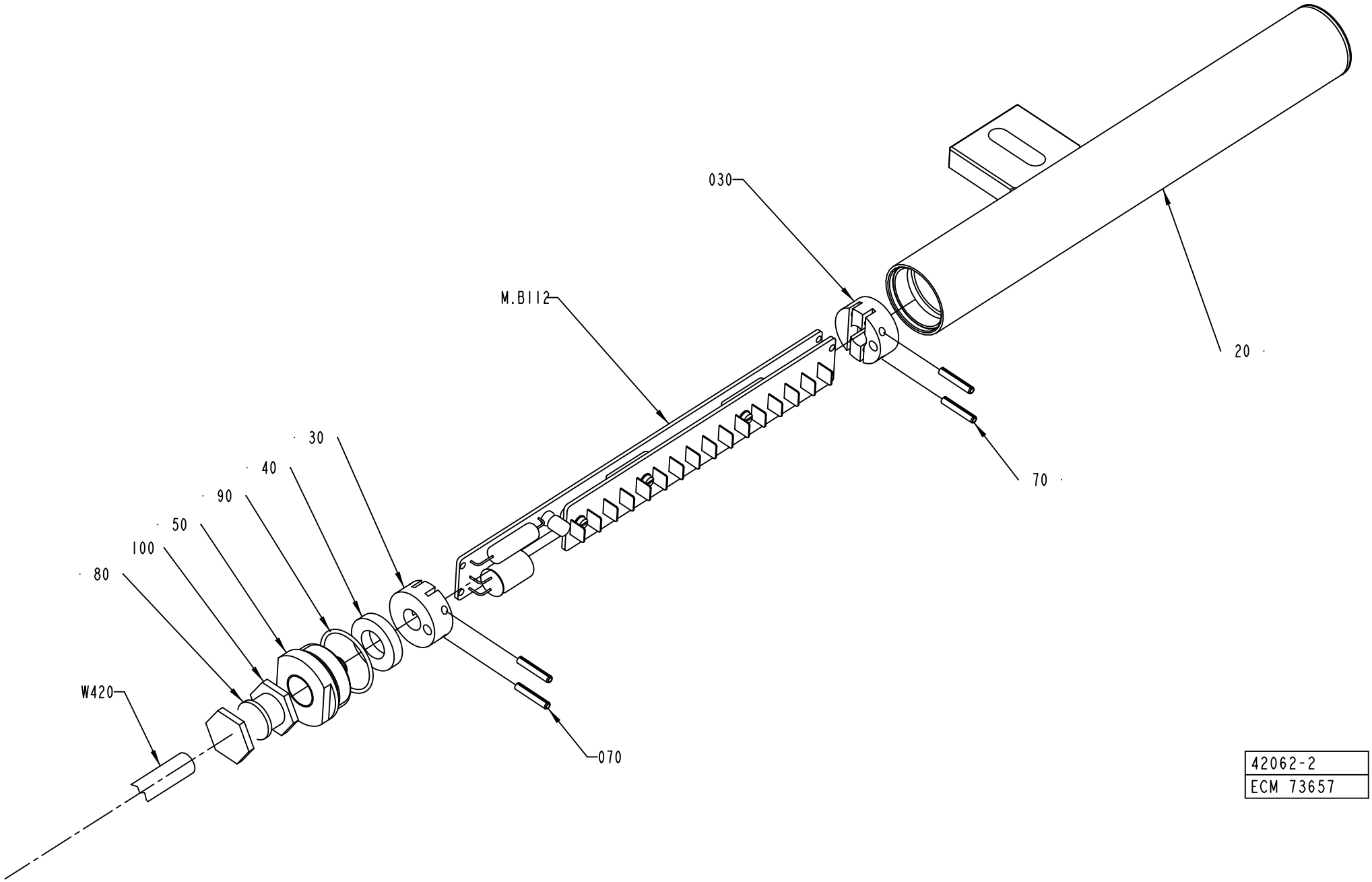

42062-2
ECM 73657

ECM: 178238 - 20040910
Group number: 42062-0200
Assembly Drawing: 42062-2_1_AA

Pos	Part No	UN	Qty	Description	Page No
TBA/19					
020	925999-0000		1	PROTECTION PIPE	
Common Parts					
030	925877-0000		2	SUPPORT	
040	736514-0000		1	SHOCK ABSORBER	
050	926820-0000		1	PLUG	
070	311111-0209		4	SPRING PIN ISO 8752 3X18-ST	
080	315105-0171		1	WASHER BRB 10X18 RFR	
090	315202-0120		1	O-RING 27,1X1,6 MM	
100	90012-0119		1	GLAND, EXTENDED WITH INSERT, PG9	
MB112	42063-0100		1	LEVEL DETECTOR	**1-187**
W420	90220-0085	M	6	CABLE, MULTI-CONDUCTOR SCREENED	

Pos	Part No	UN	Qty	Description	Page No

LEVEL DETECTOR

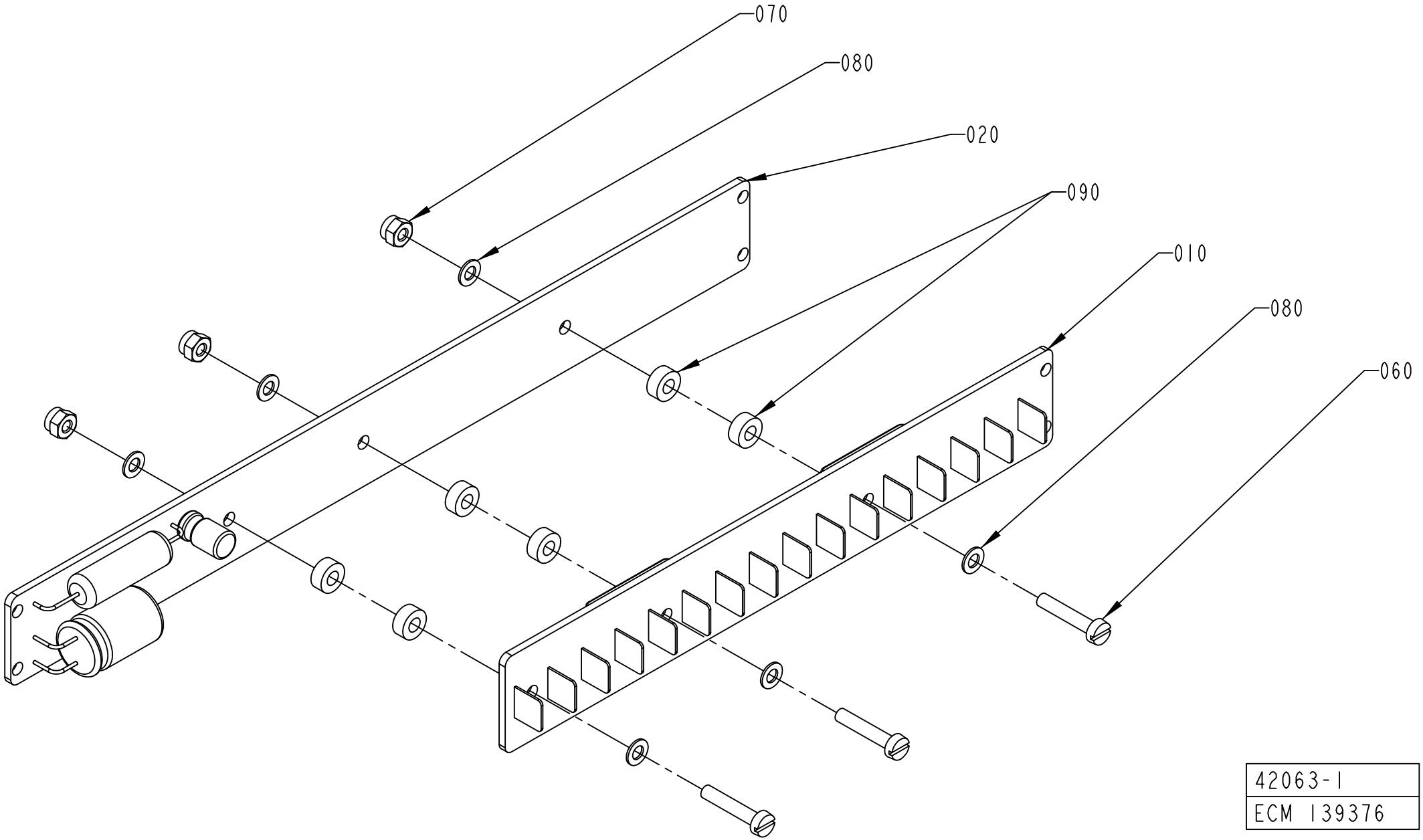

42063-1
ECM 139376

ECM: 190580 - 20041104
Group number: 42063-0100
Assembly Drawing: 42063-1_1_AB

Pos	Part No	UN	Qty	Description	Page No
-					
010	42067-0100		1	SENSOR BOARD	
020	42068-0100		1	CONVERTER BOARD	
060	312125-0228		3	SCREW ISO 1207 M3X16 A4	
070	312812-0310		3	HEXAGON NUT, NY-LOCK M3 A480	
080	315105-0124		6	WASHER BRB 3,2X6 RFR	
090	90005-0143		6	SPACER 3,3/7, H=3	

Pos	Part No	UN	Qty	Description	Page No

Tetra Pak

SPC
Spare Parts Catalogue

MACHINE BODY

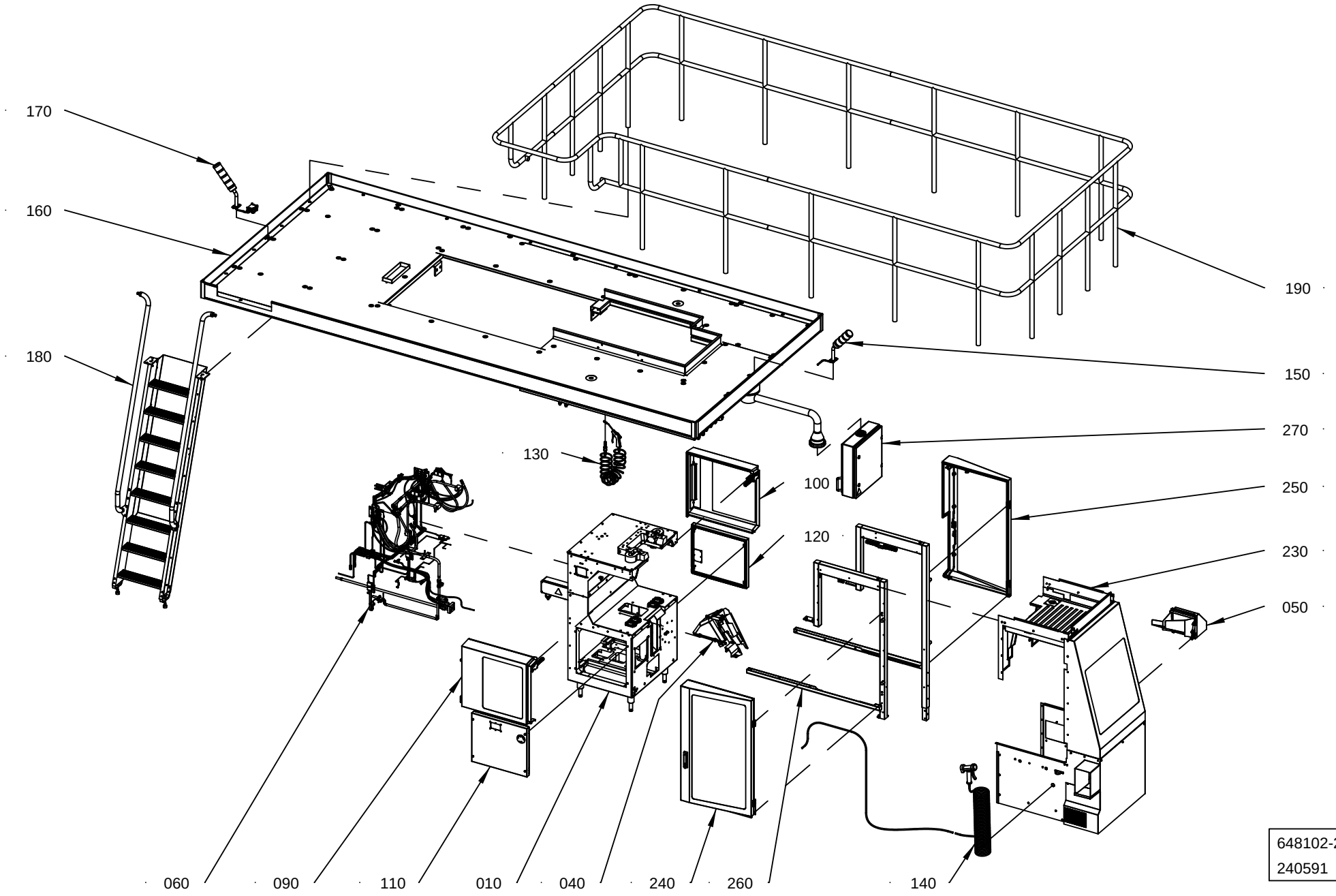

648102-2	2
240591	

ECM: 276155 - 20070126
Group number: 648102-1300
Assembly Drawing: 648102-22_1_AA

Pos	Part No	UN	Qty	Description	Page No
TBA					
040	2526338-0100		1	DROP CHUTE	**2-5, 2-7**
230	2552700-0100		1	COVER PLATES	**2-9**
Common Parts					
010	1532584-0200		1	MACHINE BODY	**2-13**
050	2552699-0100		1	DISCHARGE CHUTE	**2-21**
060	1548576-0100		1	PIPE WORK	**2-23, 2-25, 2-27**
090	2552694-0200		1	DOOR	**2-35**
100	2552695-0200		1	DOOR	**2-37**
110	256665-0200		1	HATCH	**2-39**
120	1296815-0100		1	HATCH	**2-41**
130	271414-0300		1	AIR JET GUN	**2-43**
140	271387-0400		1	SPRAY GUN	**2-45**
150	1519086-0100		1	LAMP	**2-47**
160	1512660-0200		1	PLATFORM	**2-49, 2-51**
170	1549603-0100		1	LAMP	**2-59**
180	598762-0300		1	LADDER	**2-61**
190	1519602-0200		1	RAILING	**2-63**
240	2552680-0200		1	DOOR	**2-65**
250	2552681-0200		1	DOOR	**2-67**
260	2553830-0100		1	FRAME	**2-69**
270	2518146-0100		1	TPOP PANEL 15"	**2-71**

Pos	Part No	UN	Qty	Description	Page No

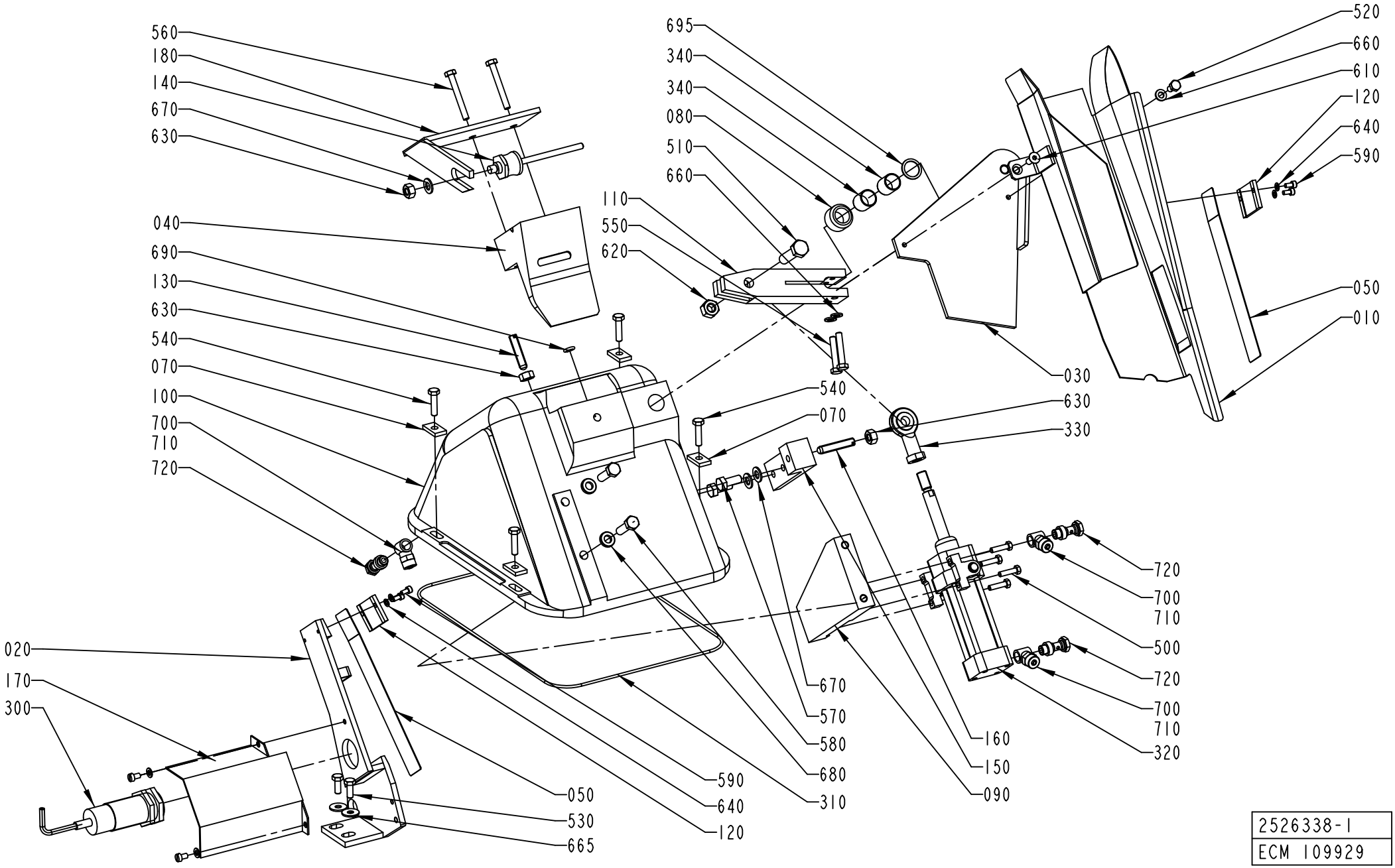

2526338-1
ECM 109929

ECM: 227593 - 20051011
Group number: 2526338-0100
Assembly Drawing: 2526338-1_1_AB

This list covers pages from 2-4 to 2-7

Pos	Part No	UN	Qty	Description	Page No
TBA 0100B					
010	2526310-0000		1	DROP CHUTE	
020	2522107-0000		1	HEAD PLATE	
040	255942-0000		1	SLIDER	
050	2526327-0000		2	LEAF SPRING	
170	295075-0000		1	PROTECTION	
560	312105-0380		2	SCREW M6S ISO 4014 M6X50 A480	
TBA 0125S					
010	2526300-0000		1	DROP CHUTE	
020	2506323-0000		1	HEAD PLATE	
040	255942-0000		1	SLIDER	
050	2526323-0000		2	LEAF SPRING	
170	295075-0000		1	PROTECTION	
560	312105-0380		2	SCREW M6S ISO 4014 M6X50 A480	
TBA 0160S					
010	2526303-0000		1	DROP CHUTE	
020	2522109-0000		1	HEAD PLATE	
040	469502-0000		1	SLIDER	
050	2526325-0000		2	LEAF SPRING	
170	295075-0000		1	PROTECTION	
560	312105-0380		2	SCREW M6S ISO 4014 M6X50 A480	
TBA 0180B					
010	2526305-0000		1	DROP CHUTE	
020	2506322-0000		1	HEAD PLATE	
040	295097-0000		1	SLIDER	
050	2526324-0000		2	LEAF SPRING	
170	295075-0000		1	PROTECTION	
560	312105-0380		2	SCREW M6S ISO 4014 M6X50 A480	
TBA 0200B					
010	2526306-0000		1	DROP CHUTE	
020	2506321-0000		1	HEAD PLATE	
040	295097-0000		1	SLIDER	
050	2526324-0000		2	LEAF SPRING	
170	295075-0000		1	PROTECTION	
560	312105-0380		2	SCREW M6S ISO 4014 M6X50 A480	
TBA 0200M					
010	2526311-0000		1	DROP CHUTE	
020	2522105-0000		1	HEAD PLATE	
040	574449-0000		1	SLIDER	
050	2526328-0000		2	LEAF SPRING	
170	574452-0000		1	PROTECTION	
560	312105-0380		2	SCREW M6S ISO 4014 M6X50 A480	
TBA 0200S					
010	2526301-0000		1	DROP CHUTE	
020	2504445-0000		1	PLATE	
040	469502-0000		1	SLIDER	
050	2526323-0000		2	LEAF SPRING	
170	295075-0000		1	PROTECTION	
560	312105-0380		2	SCREW M6S ISO 4014 M6X50 A480	
TBA 0236B					
010	2526307-0000		1	DROP CHUTE	
020	2506320-0000		1	HEAD PLATE	
040	295097-0000		1	SLIDER	
050	2526324-0000		2	LEAF SPRING	
170	295075-0000		1	PROTECTION	
560	312105-0380		2	SCREW M6S ISO 4014 M6X50 A480	
TBA 0250B					
010	2526308-0000		1	DROP CHUTE	
020	2506319-0000		1	HEAD PLATE	
040	295097-0000		1	SLIDER	
050	2526324-0000		2	LEAF SPRING	
170	295075-0000		1	PROTECTION	
560	312105-0380		2	SCREW M6S ISO 4014 M6X50 A480	
TBA 0250S					
010	2526302-0000		1	DROP CHUTE	
020	2522106-0000		1	HEAD PLATE	
040	574449-0000		1	SLIDER	
050	2526325-0000		2	LEAF SPRING	
170	574452-0000		1	PROTECTION	
560	312105-0380		2	SCREW M6S ISO 4014 M6X50 A480	
TBA 0284B, TBA 0300S					
010	2526309-0000		1	DROP CHUTE	
020	2506324-0000		1	HEAD PLATE	
040	295097-0000		1	SLIDER	
050	2526326-0000		2	LEAF SPRING	
170	295075-0000		1	PROTECTION	
560	312105-0380		2	SCREW M6S ISO 4014 M6X50 A480	
TBA 0330S					
010	2526304-0000		1	DROP CHUTE	
020	2522108-0000		1	HEAD PLATE	
040	979938-0000		1	SLIDER	
050	2526329-0000		2	LEAF SPRING	
170	574452-0000		1	PROTECTION	
560	312109-0378		2	SCREW M6S ISO 4017 M6X40 A480	

Machine Type | Group Description | Used-In | Group Number | Page No

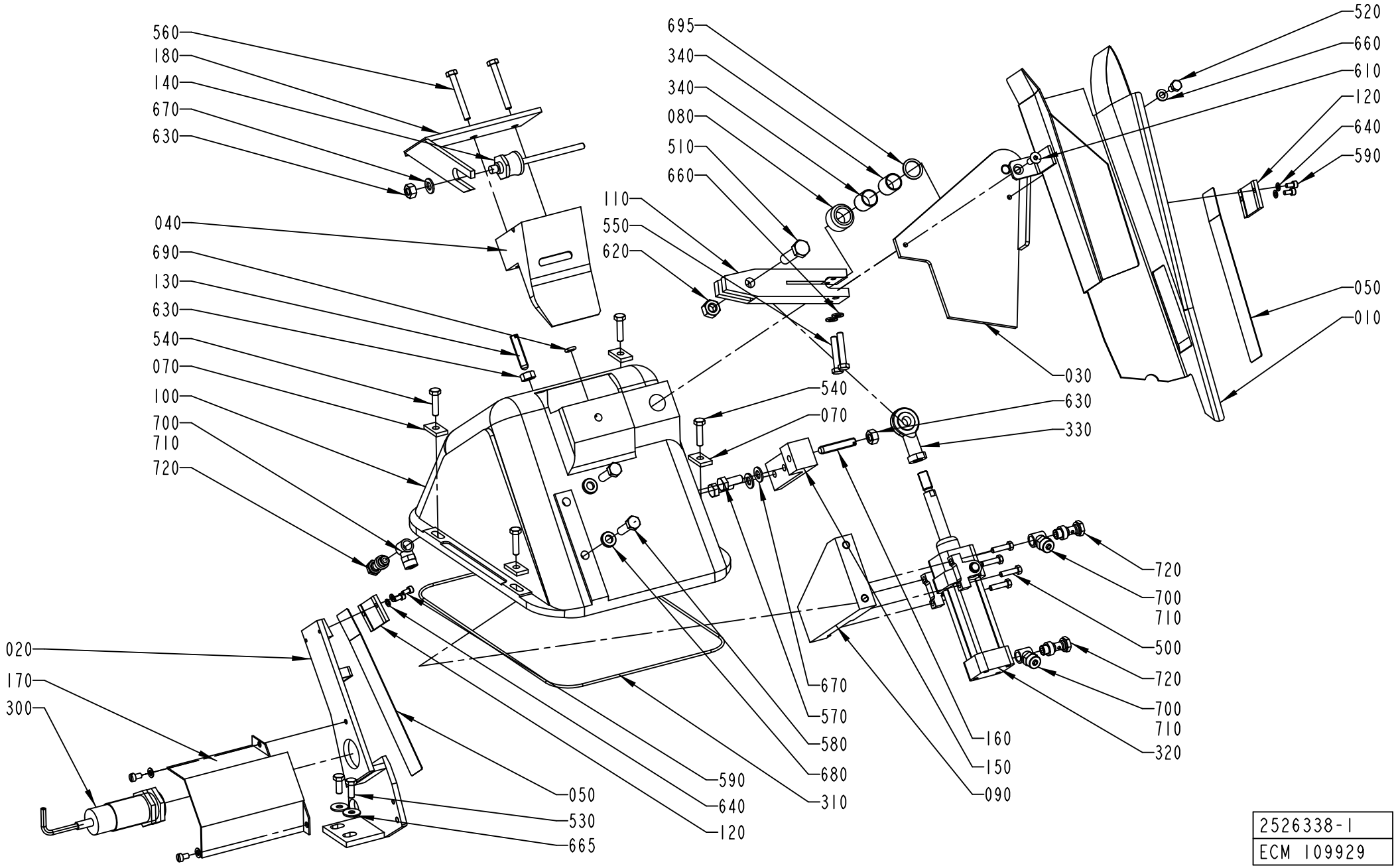

2526338-1
ECM 109929

ECM: 227593 - 20051011
Group number: 2526338-0100
Assembly Drawing: 2526338-1_1_AB

This list covers pages from 2-4 to 2-7

Pos	Part No	UN	Qty	Description	Page No
Common Parts (Cont'd)					
030	2547232-0000		1	PIVOT ARM	
070	255939-0000		4	WASHER	
080	255940-0000		1	SPACER	
090	255943-0000		1	HOLDER	
100	271163-0000		1	CANTILEVER	
110	272600-0000		1	ARM	
120	2522110-0000		2	PLATE	
130	272602-0000		1	SCREW	
140	272742-0000		1	FINGER	
150	272852-0000		1	HOLDER	
160	272853-0000		1	SCREW	
180	295399-0000		1	HOLDER	
300	90458-0256		1	PROXIMITY SWITCH IIA 3010-BPKG/6M	
310	90161-0001	MM	1500	O-RING MATERIAL 3 MM	
320	90450-0033		1	CYLINDER	
330	90239-0405		1	ROD END,BALL JOINT EYE M10X1,25	
340	90240-0073		2	BEARING BUSHING W/O FL, 16X18X20 MM	
500	312101-0331		4	SCREW M6S M5X20 FZB	
510	312101-0499		1	SCREW M6S M10X40 FZB	
520	312105-0366		1	SCREW M6S ISO 4017 M6X12 A480	
530	312105-0368		2	SCREW M6S ISO 4017 M6X16 A480	
540	312105-0372		4	SCREW M6S ISO 4017 M6X25 A480	
550	312105-0376		2	SCREW M6S ISO 4014 M6X35 A480	
570	312105-0451		2	SCREW M6S ISO 4017 M8X20 A480	
580	312105-0455		2	SCREW M6S ISO 4017 M8X30 A480	
590	312115-0287		4	SCREW ISO4762 M4X8 A4 80	
600	312125-0323		2	SCREW ISO 1207 M5X8 A4	
610	312155-0368		1	SCREW DIN 7991 MF6S M6X16 A4 70	
620	312601-0320		1	HEXAGON NUT, M10 8 FZB, ISO 4032	
630	312605-0318		4	HEXAGON NUT, M6M M8 A280	
640	315105-0136		4	WASHER BRB 4,3X8 RFR	
650	315105-0146		2	WASHER BRB 5,3X10 RFR	
660	315105-0153		3	WASHER BRB 6,4X12 RFR	
665	90005-0060		2	WASHER PLAIN, RBS 6,4/M6)/18,H=1,5	
670	315105-0165		3	WASHER BRB 8,4X16 RFR	
680	315115-0165		2	WASHER PLAIN, TBRB 8,4/16 H=3	
690	315202-0206		1	O-RING 7,3X2,4 MM	
695	315233-0111		1	WASHER CAPTIVE SEALING G3/8	
700	342903-0121		3	NUT WITH SPRING, 1723 8/6-M12X1	
710	342980-0121		3	BANJO-CONNECTION,RING 8/6-G1/8	
720	342980-0303		3	BANJO-HOLLOW BOLT COUPL,EXT.THR.01-G1/8	

Pos	Part No	UN	Qty	Description	Page No

Machine Type | Group Description | Used-In | Group Number | Page No

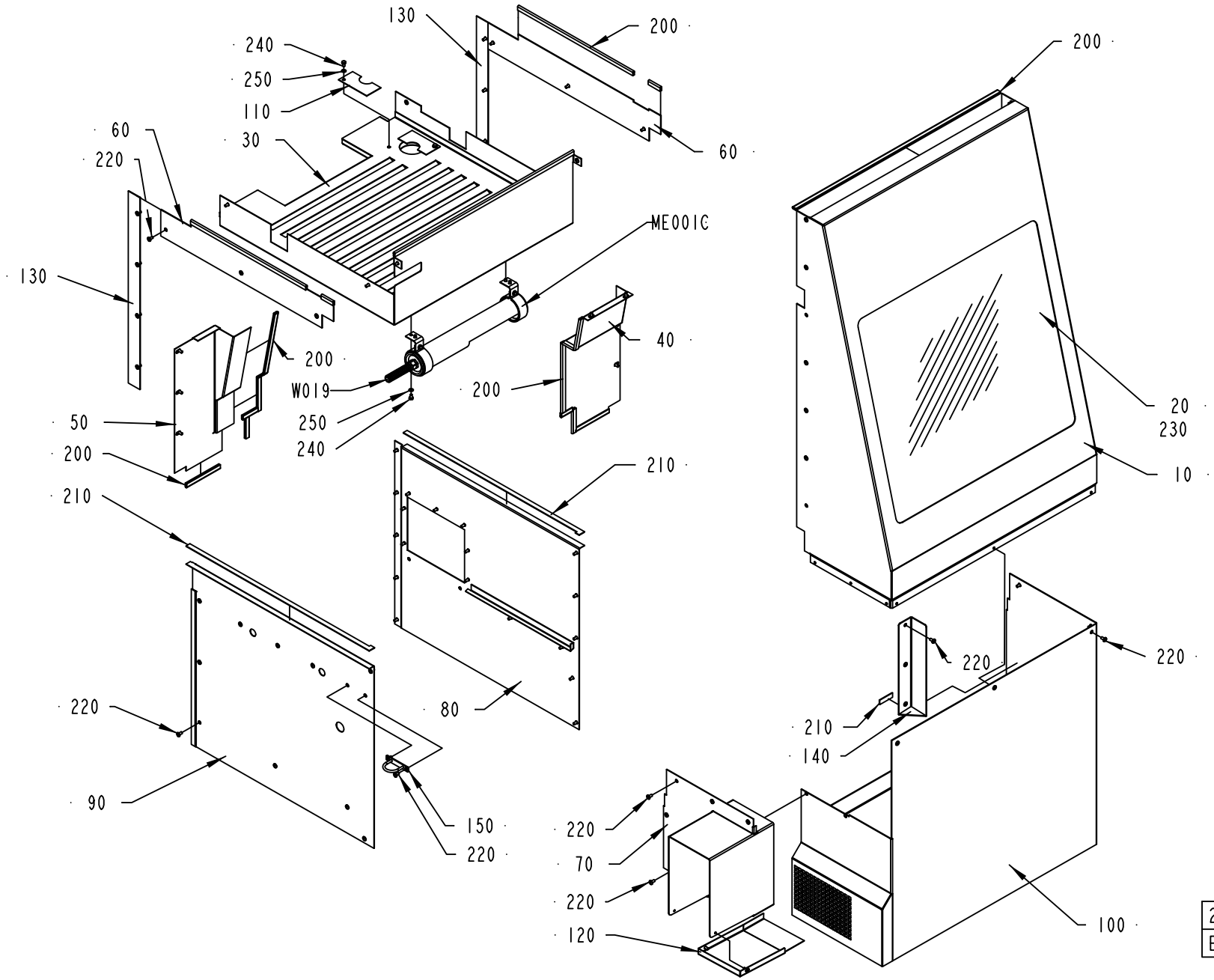

2552700-1
ECM 111225

ECM: 277412 - 20060928
Group number: 2552700-0100
Assembly Drawing: 2552700-1_1_AB

Pos	Part No	UN	Qty	Description	Page No
TBA					
070	2552710-0000		1	COVER	
080	2552708-0000		1	COVERING PLATE	
090	2552709-0000		1	COVERING PLATE	
100	2552706-0000		1	COVER	
140	2594128-0000		1	COVER	
200	90143-0059	MM	4500	SEAL STRIP 4610069	
220	90287-0075		78	SCREW SLOT. PAN HEAD LKCS M6X12	
240	312105-0364		6	SCREW M6S ISO 4017 M6X10 A480	
250	315105-0153		6	WASHER BRB 6,4X12 RFR	
Common Parts					
010	2552705-0000		1	FRONT COVER	
020	1549608-0000		1	GLASS PANE	
030	2552701-0000		1	TOP SECTION	
040	2552702-0000		1	COVER	
050	2552703-0000		1	COVER	
060	2552704-0000		2	COVER PLATE	
110	2552707-0000		2	COVER PLATE	
120	2552711-0000		1	COVER	
130	2553895-0000		2	COVER	
150	2594221-0000		1	BOW CLAMP	
210	90458-0145	MM	1400	SEALING, 3X15 MM CLOSED CELL SPONGE	
230	90157-0041		1	SEALING COMPOUND, RHODORSEAL 5651	
ME001C	595430-0200		1	LIGHT FIXTURE	**2-11**
W019	351150-0412	M	6	CABLE OLFLEX 3X1,5 MM2 LIGHT/GREY	

Pos	Part No	UN	Qty	Description	Page No

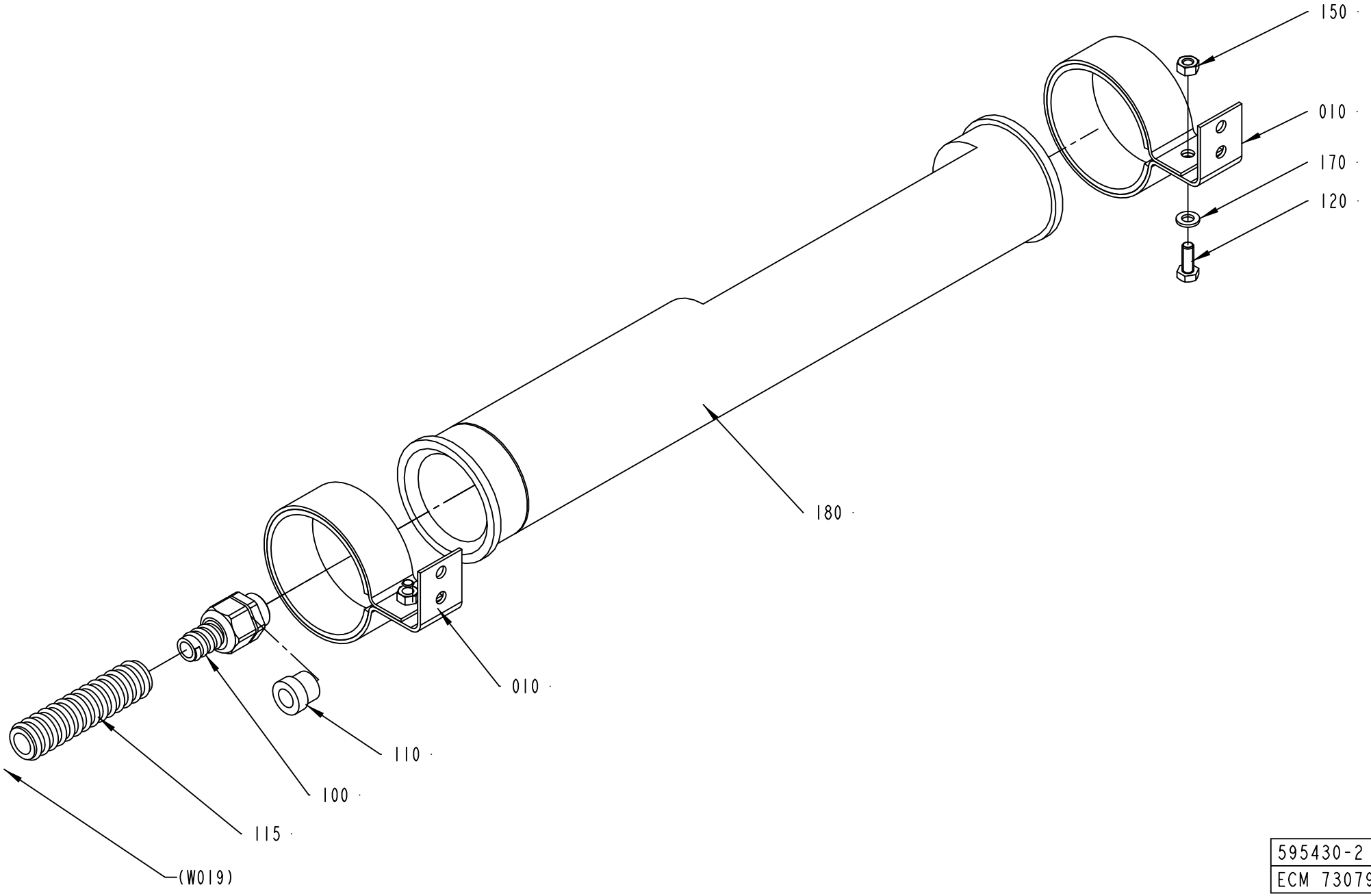

595430-2
ECM 73079

ECM: 178699 - 20040910
Group number: 595430-0200
Assembly Drawing: 595430-2_1_AA

Pos	Part No	UN	Qty	Description	Page No
-					
10	1140129-0000		2	HOLDER	
100	353243-0002		1	HOSE GLAND W/O INSERT PG11 EXTENDED	
110	353249-0010		1	INSERT, SINGEL HOLE, EK 152/11	
115	90152-0059	MM	2150	SPIRAL CONDUIT, 18X12, UL 1211	
120	312105-0368		2	SCREW M6S ISO 4017 M6X16 A480	
150	312605-0316		2	HEXAGON NUT, M6M M6 A280	
170	315105-0153		2	WASHER BRB 6,4X12 RFR	
180	90164-0015		1	LIGHT FIXTURE, RL70CV-111 / 230V 50HZ	
	90297-0007		*1*	*FLUORESCENT TUBE, PLS 11*	
	92297-0301		*1*	*STARTER 4-65W S10, E 8219023*	

Pos	Part No	UN	Qty	Description	Page No

MACHINE BODY

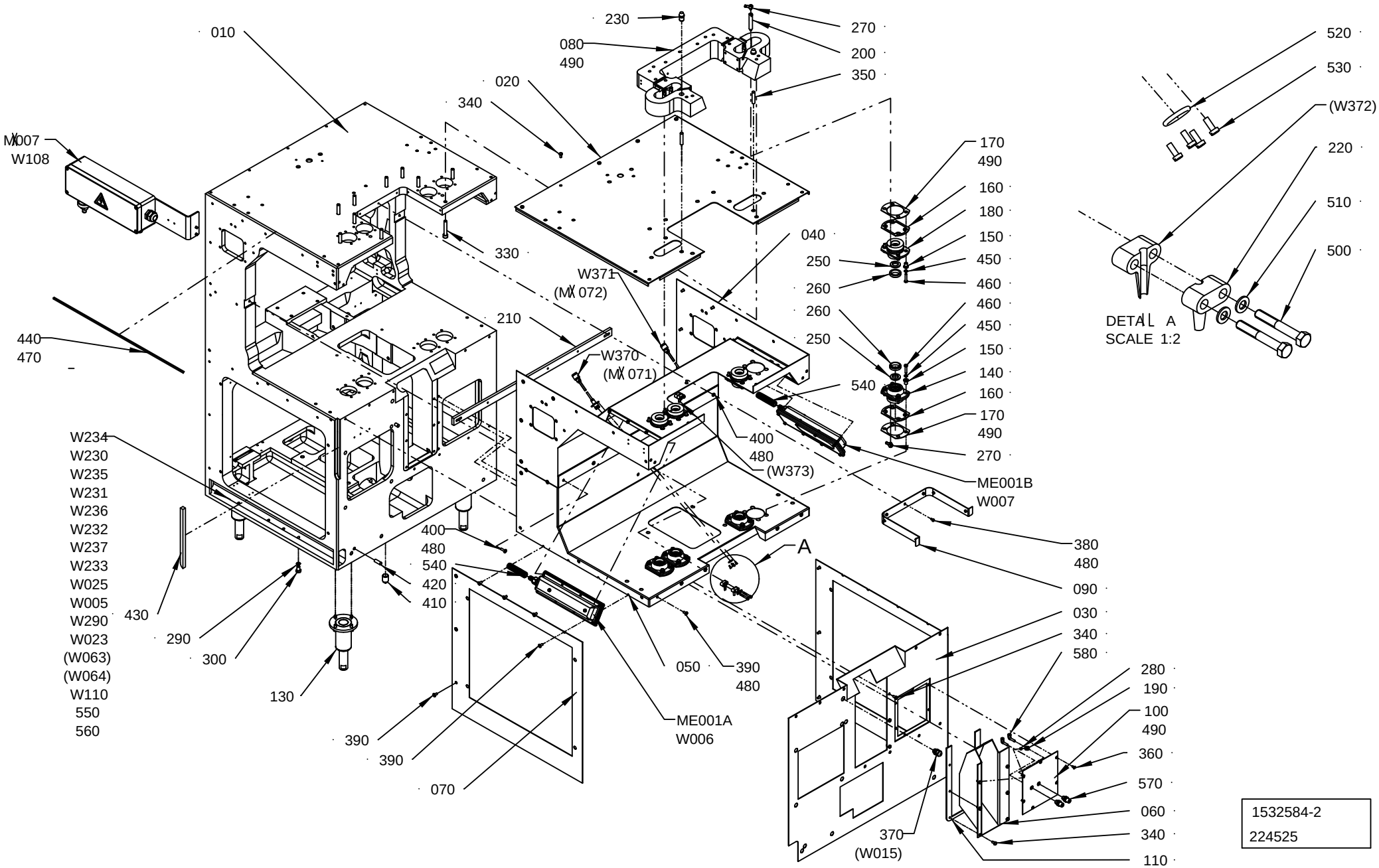

1532584-2
224525

ECM: 276157 - 20070126
Group number: 1532584-0200
Assembly Drawing: 1532584-2_1_AA

Pos	Part No	UN	Qty	Description	Page No
TBA					
060	1523759-0000		1	COVER	
110	1195428-0000		1	GASKET	
Common Parts					
010	1523754-0000		1	MACHINE BODY	
020	1523755-0000		1	COVERING PLATE	
030	1523756-0000		1	COVER	
040	1523757-0000		1	PLATE	
050	1523758-0000		1	PLATE	
070	1523760-0000		1	FRONT PLATE	
080	2781218-0000		1	COLLAR	
090	441677-0000		1	FRONT PLATE	
100	2556246-0000		1	HATCH	
130	2773926-0100		4	LEG	**2-15, 6-55, 8-9**
140	441217-0000		4	BUSHING LOWER	
150	751085-0000		32	BUSHING	
160	441593-0000		8	GASKET	
170	441221-0000		8	WASHER	
180	441218-0000		4	BUSHING UPPER	
190	441077-0000		1	NOZZLE BRACKET	
200	469937-0000		4	PIPE	
210	441212-0000		1	HOLDER	
220	1282426-0000		4	CLIP	
230	1037761-0000		2	PIN	
250	315259-0102		8	FELT SEAL 22-47 MM	
260	90091-0106		8	SCRAPER 30X40X10 MM	
270	90137-0010		8	BANJO CONN. M6, D=2,5 MM	
280	90424-0027		1	SPRAY NOZZLE TIP, 8613-8V-TC	
290	315239-0109		8	NYLON WASHER G1/8	
300	312105-0489		8	SCREW M6S ISO 4017 M10X16 A480	
330	312115-0503		10	SCREW ISO4762 M10X60 A4 80	
340	312105-0366		14	SCREW M6S ISO 4017 M6X12 A480	
350	311103-0466		2	PARALLEL PIN ISO 2338 10M6X50 A1	
360	312155-0325		6	SCREW DIN 7991 MF6S M5X10 A4 70	
370	352103-0100		1	CABLE GLAND, STR 9, PR15,2/PG9	
380	312125-0323		7	SCREW ISO 1207 M5X8 A4	
390	90287-0075		38	SCREW SLOT. PAN HEAD LKCS M6X12	
400	90287-0076		2	SCREW SLOT. PAN HEAD LKCS M6X20	
410	90087-0002		3	PIPE PLUG	
420	311103-0458		2	PARALLEL PIN ISO 2338 10M6X30 A1	
430	90143-0010	MM	260	STRIP	
440	90143-0012	MM	1900	STRIP	
450	315105-0153		32	WASHER BRB 6,4X12 RFR	
460	312105-0374		32	SCREW M6S ISO 4014 M6X30 A480	
470	90153-0017	KG	1	ADHESIVE, 2963 TUBE 160G	
480	90157-0016	L	1	LOCKING FLUID LOCTITE 242 50 ML	
490	90157-0022	ML	1	SEALING COMPOUND, SILICONE	
500	312105-0337		4	SCREW M6S ISO 4014 M5X35 A480	
510	315105-0146		4	WASHER BRB 5,3X10 RFR	
520	315202-0211		2	O-RING 13,3X2,4 MM	
530	312125-0222		8	SCREW ISO 1207 M3X8 A4	
540	90152-0059	M	6	SPIRAL CONDUIT, 18X12, UL 1211	
550	90152-0051	M	8.5	SPIRAL CONDUIT, 25X18, UL 1816	
560	90152-0070	M	2.7	METAL HOSE, 32,5X26, UL 2621	
570	342768-0102		2	BULKHEAD CONNECTOR, 6 MM	
580	90055-0217		2	ELBOW PIPE JOINT	
ME001B	441534-0200		1	LIGHT FIXTURE	**2-17**
MX007	456827-0400		1	CONNECTION BOX	**2-19**
ME001A	441534-0200		1	LIGHT FIXTURE	**2-17**
W005	351150-0418	M	7	CABLE OLFLEX 4X2,5 MM2 LIGHT/GREY	
W006	351150-0412	M	4	CABLE OLFLEX 3X1,5 MM2 LIGHT/GREY	
W007	351150-0412	M	3.5	CABLE OLFLEX 3X1,5 MM2 LIGHT/GREY	
W023	90220-0104	M	8.5	SCR. CABLE 4X1,5MM2	
W025	351150-0428	M	6	CABLE OLFLEX 41X0,75 MM2 LIGHT/GREY	
W108	351150-0425	M	4	CABLE OLFLEX 25X0,75 MM2 LIGHT/GREY	
W110	351150-0413	M	6	CABLE OLFLEX 4X1,5 MM2 LIGHT/GREY	
W230	351150-0412	M	6.5	CABLE OLFLEX 3X1,5 MM2 LIGHT/GREY	
W231	351150-0412	M	6.5	CABLE OLFLEX 3X1,5 MM2 LIGHT/GREY	
W232	351150-0412	M	6.5	CABLE OLFLEX 3X1,5 MM2 LIGHT/GREY	
W233	351150-0412	M	6.5	CABLE OLFLEX 3X1,5 MM2 LIGHT/GREY	
W234	90220-0034	M	6	THERMOCABLE TEX/SITW-20F-KX 2X0,5MM2	
W235	90220-0034	M	6	THERMOCABLE TEX/SITW-20F-KX 2X0,5MM2	
W236	90220-0034	M	6	THERMOCABLE TEX/SITW-20F-KX 2X0,5MM2	
W237	90220-0034	M	6	THERMOCABLE TEX/SITW-20F-KX 2X0,5MM2	
W290	351162-0106	M	8	CABLE AWM 1X4 MM2 YELLOW-GREEN	
W370	551969-0006		1	COAXIAL CABLES	
W371	551969-0006		1	COAXIAL CABLES	

Machine Type | Group Description | Used-In | Group Number | Page No

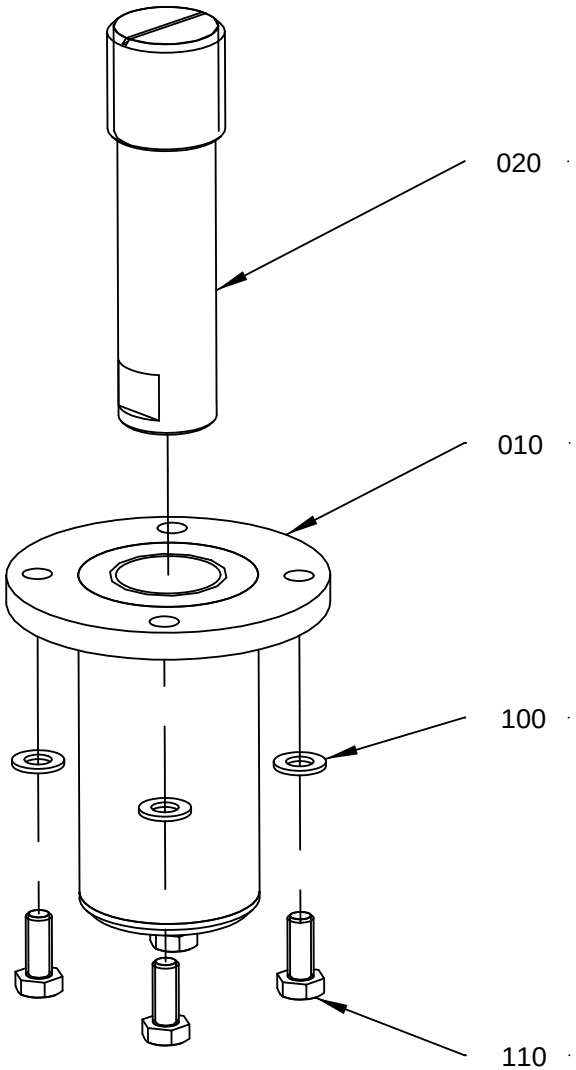

2773 926-1
224525

ECM: 224529 - 20051114
Group number: 2773926-0100
Assembly Drawing: 2773926-1_1_AA

Pos	Part No	UN	Qty	Description	Page No
-					
010	2773925-0000		1	LEG	
020	598148-0000		1	LEG	
100	315105-0165		4	WASHER BRB 8,4X16 RFR	
110	312105-0451		4	SCREW M6S ISO 4017 M8X20 A480	

Pos	Part No	UN	Qty	Description	Page No

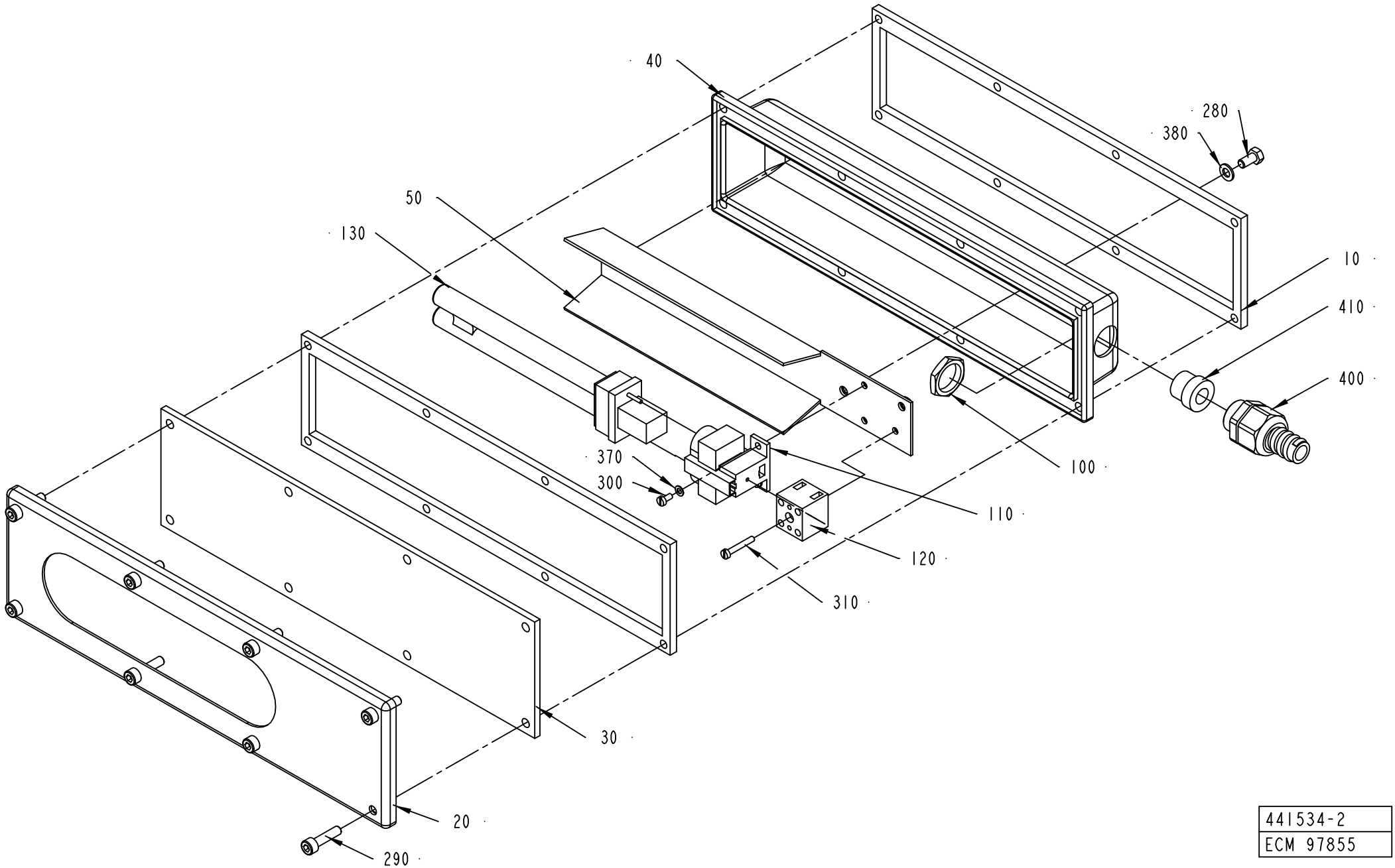

441534-2
ECM 97855

ECM: 178704 - 20040910
Group number: 441534-0200
Assembly Drawing: 441534-2_1_AA

Pos	Part No	UN	Qty	Description	Page No
-					
010	441536-0000		2	GASKET	
020	456263-0000		1	SHEET	
030	456264-0000		1	GLASS	
040	469336-0000		1	COVER	
050	469337-0000		1	REFLECTOR	
100	90099-0002		1	NUT PR 18,6 BRASS	
110	90164-0301		1	HOLDING FIXTURE	
120	90195-0020		1	TERMINAL BLOCK, BK 2CRN; 0624720000	
130	90297-0006		1	FLUORESCENT TUBE, PL9	
280	312105-0325		2	SCREW M6S ISO 4017 M5X10 A480	
290	312115-0331		8	SCREW ISO4762 M5X20 A4 80	
300	312125-0220		2	SCREW ISO 1207 M3X6 A4	
310	312125-0230		1	SCREW ISO 1207 M3X20 A4	
370	315105-0124		2	WASHER BRB 3,2X6 RFR	
380	315105-0146		2	WASHER BRB 5,3X10 RFR	
400	353243-0002		1	HOSE GLAND W/O INSERT PG11 EXTENDED	
410	353249-0009		1	INSERT, SINGEL HOLE, EK 152/9	

Pos	Part No	UN	Qty	Description	Page No

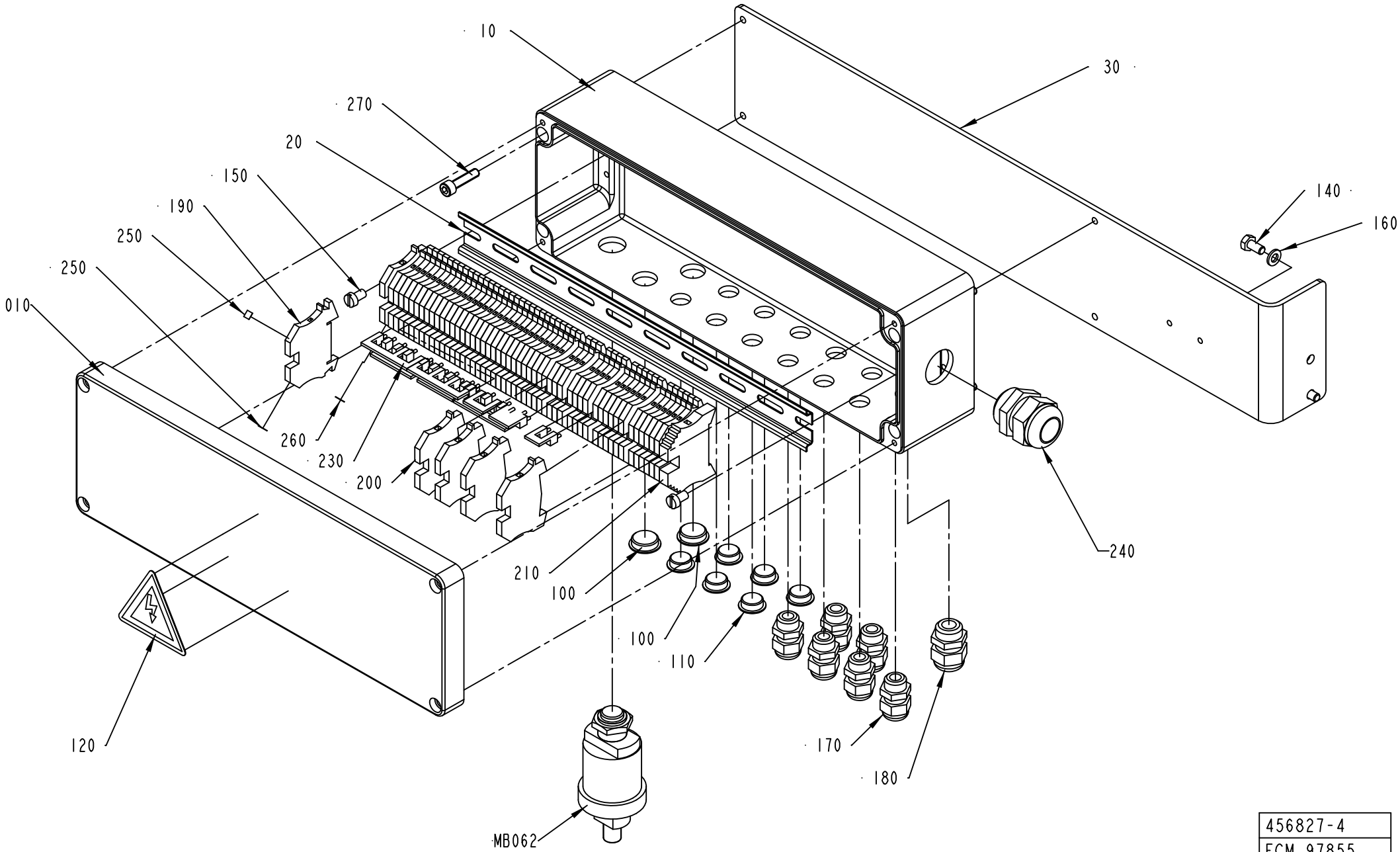

456827-4
ECM 97855

ECM: 178696 - 20040910
Group number: 456827-0400
Assembly Drawing: 456827-4_1_AA

Pos	Part No	UN	Qty	Description	Page No
-					
010	1512667-0000		1	CONNECTION BOX	
020	578676-0000		1	RAIL	
030	1512840-0000		1	BRACKET	
100	90002-0009		2	BLANK-OFF PLUG, PR 18.6 SKINDICHT-BLK11	
110	90002-0013		6	BLANK-OFF PLUG, PR 15,2 SKINDICHT-BLK9	
120	90194-0016		1	WARNING SIGN, RISK OF ELECTRIC SHOCK	
140	312105-0366		2	SCREW M6S ISO 4017 M6X12 A480	
150	312125-0364		2	SCREW ISO 1207 M6X10 A4	
160	315105-0153		2	WASHER BRB 6,4X12 RFR	
170	352103-0101		6	CABLE GLAND, ST 9, PR15,2/PG9	
180	352103-0106		1	CABLE GLAND, ST 11, PR18,6/PG11	
190	353021-0212		50	FEED THROUGH TERMINAL, 10200.0	
200	353024-0204		5	EARTH TERMINAL WPE 2,5	
210	353031-0203		1	END SUPPORT, WEW 35/2	
230	353034-0030		6	BRIDGE CONNECTOR WQV 2,5/10, 10544.6	
240	352103-0116		1	CABLE GLAND, ST 21, PR28,3/PG21	
250	359011-0807		2	MARKING PLATES 5-FW 1-50	
260	359011-0819		1	MARKING PLATES 5-GW (EARTH)	
270	312115-0372		4	SCREW ISO4762 M6X25 A4 80	
MB062	90274-0045		1	PRESSURE GUARD, 14 KPA	

Pos	Part No	UN	Qty	Description	Page No

DISCHARGE CHUTE

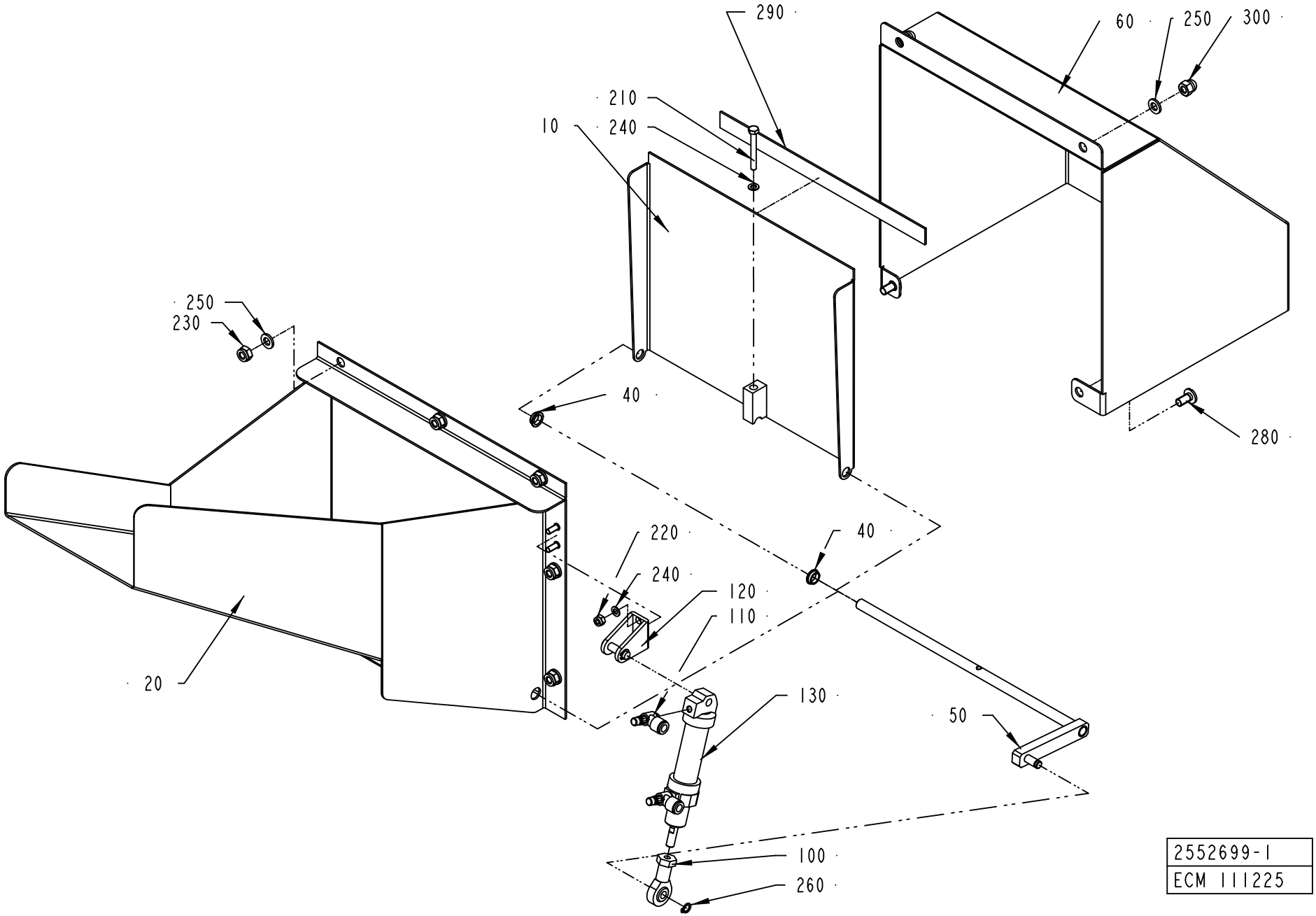

ECM: 276158 - 20070126
Group number: 2552699-0100
Assembly Drawing: 2552699-1_1_AB

Pos	Part No	UN	Qty	Description	Page No
TBA					
010	2552697-0000		1	LID	
020	2552698-0000		1	DISCHARGE CHUTE	
050	2552714-0000		1	BRACKET	
060	2554975-0000		1	COVER	
290	90458-0145	MM	220	SEALING, 3X15 MM CLOSED CELL SPONGE	
Common Parts					
040	2552713-0000		2	BUSHING	
100	90115-0173		1	ROD END, ID=6 MM, M6X1	
110	90235-0844		2	THROTTLE CHECK VALVE, M5, MANUAL, 6MM	
120	90239-0486		1	REAR,CLEVIS,MINI-ISO 16	
130	90239-0842		1	DOUBLE ACTING, MINI-ISO, CYL.16-50	
210	312105-0301		1	SCREW M6S ISO 4017 M4X35 A470	
220	312812-0312		2	HEXAGON NUT, NY-LOCK M4 A480	
230	312812-0316		7	HEXAGON NUT, NY-LOCK M6 A480	
240	315105-0136		3	WASHER BRB 4,3X8 RFR	
250	315105-0153		9	WASHER BRB 6,4X12 RFR	
260	315751-0103		1	RETAINING RING FOR SHAFT DIN 471 6 A2	
280	90287-0075		2	SCREW SLOT. PAN HEAD LKCS M6X12	
300	312705-0316		2	NUT HEX. DOMED CAP MHM-6 M6 A280	

Pos	Part No	UN	Qty	Description	Page No

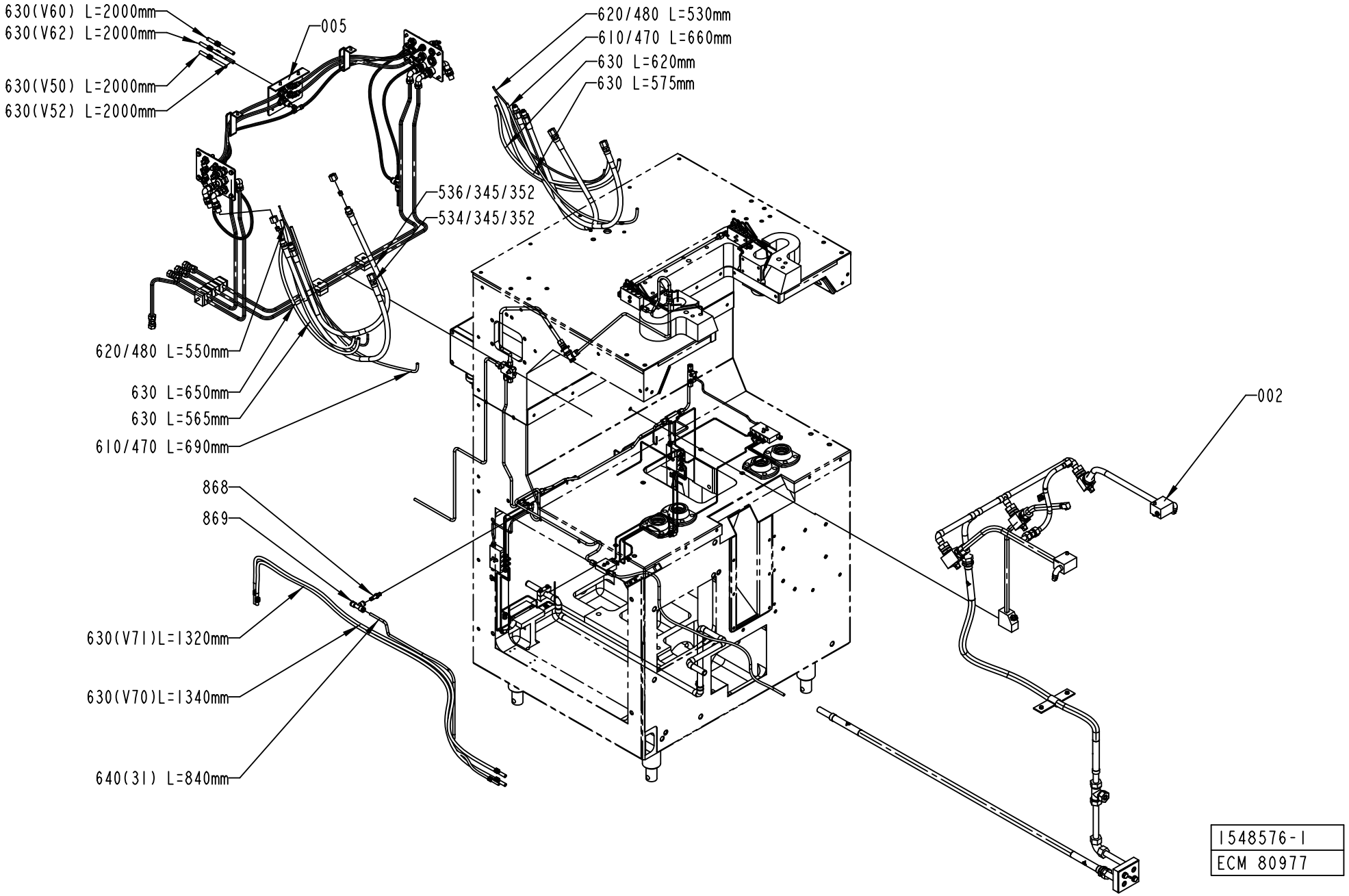
630(V60) L=2000mm
630(V62) L=2000mm
630(V50) L=2000mm
630(V52) L=2000mm
005
620/480 L=530mm
610/470 L=660mm
630 L=620mm
630 L=575mm
536/345/352
534/345/352
620/480 L=550mm
630 L=650mm
630 L=565mm
610/470 L=690mm
002
868
869
630(V71)L=1320mm
630(V70)L=1340mm
640(31) L=840mm
1548576-1
ECM 80977

ECM: 178879 - 20040910
Group number: 1548576-0100
Assembly Drawing: 1548576-1_1_AA

This list covers pages from 2-22 to 2-27

Pos	Part No	UN	Qty	Description	Page No
-					
002	271261-0700		1	CLEANING SYSTEM	**2-29**
005	1523829-0100		1	DISTRIBUTOR BLOCK	**2-31**
010	491854-0000		1	PIPE WATER	
020	979486-0000		1	LUBRICATING PIPE	
060	469133-0000		1	PIPE	
070	469132-0000		1	PIPE	
075	469131-0000		2	LACE	
090	271622-0000		1	LACE	
100	271623-0000		1	LACE	
120	295986-0000		1	HOLDER	
130	456407-0000		1	LACE	
140	491390-0000		1	PIPE CENTRAL LUBRICATION	
150	491859-0000		1	HOLDER	
160	491860-0000		1	HOLDER	
310	90028-0001		5	CONE 5/32"	
320	90028-0020		22	CONE TUBE 2,5MM	
330	90028-0021		5	CONE TUBE 4 MM	
340	90030-0051		1	CONN. STR., 6-R1/8, EXT. THREAD	
345	90030-0098		8	ACCESSORIES, FERRULE 8	
347	90136-0002		2	PLUG 5/16"24	
350	90030-0162		3	CONN. STR. 6-M10X1, EXT. THREAD	
352	342703-0208		8	NUT, PIPES & CONNECTORS,NUT M-8 SS	
355	90030-0200		2	CONN. ELBOW, 6-M10X1, EXT.THREAD	
360	90032-0014		1	DISTR. BLOCK & DIST.5/16-24UNF X6	
370	90032-0026		1	DISTR. BLOCK, 5/16-24UNF X2	
390	90032-0030		1	DISTR. BLOCK, 5/16-24UNF X3	
391	90032-0031		1	DISTR. BLOCK, 5/16-24UNF X5	
400	90032-0038		1	BLOCK 2 WAYS	
410	90032-0039		5	BLOCK 4 WAYS	
420	90090-0008		2	STEEL BALL 7,1MM, RB-7.144/III	
430	90092-0052		10	METERING VALVE 10 MM3	
440	90092-0053		12	METERING VALVE 30 MM3	
450	90134-0003		5	BUSHING	
470	90134-0030		2	SLEEVE FOR PLASTIC TUBE	
480	90134-0031		6	SLEEVE FOR PLASTIC TUBE	
490	90134-0034		11	NIPPLE	
	90030-0101		*1*	*TAPER*	
500	90134-0038		7	BUSHING/NUT INLET/OUTLET 4 MM	
510	90134-0039		22	BUSHING VALVE CONNECTION 2,5 MM	
534	90148-0037		2	HYDRAULIC HOSE	
536	90148-0038		2	HYDRAULIC HOSE	
540	90151-0001	MM	2200	BRASS PIPE DI=2,6 MM	
550	90266-0019	MM	7000	PIPE	
560	90165-0002		2	PIPE CLIP FOR TUBE D=4 MM	
590	90165-0022		2	PIPE CLIP, FOR TUBE D=2,5 MM, B-3570	
600	90165-0023		2	CLIP	
605	90165-0039		1	PIPE CLAMP D=15 MM, GSK15/12	
610	90166-0108	MM	2100	TUBE 6 MM PA,TRANSP.	
620	90166-0109	MM	1080	TUBE 4 MM PA,TRANSP.	
630	90166-0118	M	13	TUBE 8 MM PA BLACK	
640	90166-0081	MM	840	TUBE 6 MM PA BLUE	
650	90266-0006	MM	3400	TUBE	
660	312101-0337		2	SCREW M6S M5X35 FZB	
790	312115-0289		2	SCREW ISO4762 M4X10 A4 80	
800	312105-0295		8	SCREW M6S ISO 4017 M4X20 A470	
805	312121-0289		1	SCREW ISO 1207 M4X10 4.8 - 5.8 Z.PL.	
810	312105-0297		10	SCREW M6S ISO 4017 M4X25 A470	
820	312105-0372		2	SCREW M6S ISO 4017 M6X25 A480	
840	312125-0287		6	SCREW ISO 1207 M4X8 A4	
845	312125-0323		1	SCREW ISO 1207 M5X8 A4	
854	315101-0146		2	WASHER PLAIN, BRB, 5,3/10 H=1	
860	315234-0109		1	WASHER,PL.RND.CU.10,3/13,5 H=1,0	
865	342727-0102		1	CONN. PIPE G-6-LFZB	
867	90165-0065		1	PIPE CLAMP D=8 MM, GSK08/12	
868	342716-0203		1	REDUCER 6-8	
869	342748-0103		1	T-CONNECTION 8MM	
870	342767-0100		1	CONN. BULKHEAD G1/8	
880	342797-0121		1	CONN. BANJO, RINGPIECE 6-1/8	
890	342980-0303		1	BANJO-HOLLOW BOLT COUPL,EXT.THR.01-G1/8	
900	352113-0101		10	CABLE TIE, BLACK 92X2,5 MM	
910	359000-0400		5	WIRE MARKING, YELLOW, PA2/4"0"	
920	359000-0401		3	WIRE MARKING, YELLOW, PA2/4"1"	
930	359000-0402		2	WIRE MARKING, YELLOW, PA2/4"2"	
940	359000-0403		1	WIRE MARKING, YELLOW, PA2/4"3"	
951	359000-0405		2	WIRE MARKING, YELLOW, PA2/4"5"	
952	359000-0406		2	WIRE MARKING, YELLOW, PA2/4"6"	
965	359000-0407		4	WIRE MARKING, YELLOW, PA2/4"7"	
990	359000-0771		8	WIRE MARKING, YELLOW, PA2/4"V"	

Machine Type | Group Description | Used-In | Group Number | Page No

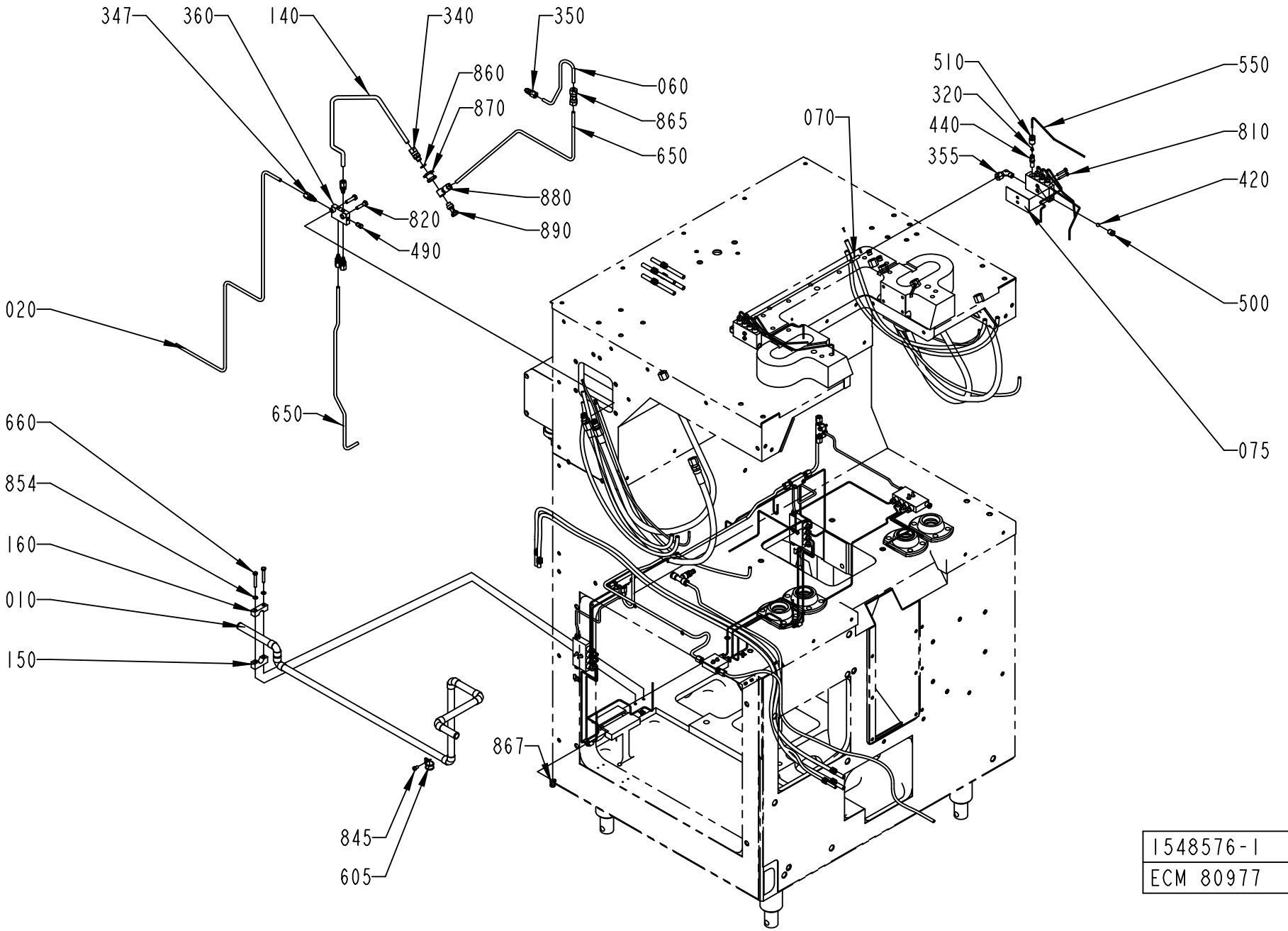

1548576-1
ECM 80977

ECM: 178879 - 20040910
Group number: 1548576-0100
Assembly Drawing: 1548576-1_2_AA

This list covers pages from 2-22 to 2-27

Pos	Part No	UN	Qty	Description	Page No
-					
002	271261-0700		1	CLEANING SYSTEM	**2-29**
005	1523829-0100		1	DISTRIBUTOR BLOCK	**2-31**
010	491854-0000		1	PIPE WATER	
020	979486-0000		1	LUBRICATING PIPE	
060	469133-0000		1	PIPE	
070	469132-0000		1	PIPE	
075	469131-0000		2	LACE	
090	271622-0000		1	LACE	
100	271623-0000		1	LACE	
120	295986-0000		1	HOLDER	
130	456407-0000		1	LACE	
140	491390-0000		1	PIPE CENTRAL LUBRICATION	
150	491859-0000		1	HOLDER	
160	491860-0000		1	HOLDER	
310	90028-0001		5	CONE 5/32"	
320	90028-0020		22	CONE TUBE 2,5MM	
330	90028-0021		5	CONE TUBE 4 MM	
340	90030-0051		1	CONN. STR., 6-R1/8, EXT. THREAD	
345	90030-0098		8	ACCESSORIES, FERRULE 8	
347	90136-0002		2	PLUG 5/16"24	
350	90030-0162		3	CONN. STR. 6-M10X1, EXT. THREAD	
352	342703-0208		8	NUT, PIPES & CONNECTORS,NUT M-8 SS	
355	90030-0200		2	CONN. ELBOW, 6-M10X1, EXT.THREAD	
360	90032-0014		1	DISTR. BLOCK & DIST.5/16-24UNF X6	
370	90032-0026		1	DISTR. BLOCK, 5/16-24UNF X2	
390	90032-0030		1	DISTR. BLOCK, 5/16-24UNF X3	
391	90032-0031		1	DISTR. BLOCK, 5/16-24UNF X5	
400	90032-0038		1	BLOCK 2 WAYS	
410	90032-0039		5	BLOCK 4 WAYS	
420	90090-0008		2	STEEL BALL 7,1MM, RB-7.144/III	
430	90092-0052		10	METERING VALVE 10 MM3	
440	90092-0053		12	METERING VALVE 30 MM3	
450	90134-0003		5	BUSHING	
470	90134-0030		2	SLEEVE FOR PLASTIC TUBE	
480	90134-0031		6	SLEEVE FOR PLASTIC TUBE	
490	90134-0034		11	NIPPLE	
	90030-0101		*1*	*TAPER*	
500	90134-0038		7	BUSHING/NUT INLET/OUTLET 4 MM	
510	90134-0039		22	BUSHING VALVE CONNECTION 2,5 MM	
534	90148-0037		2	HYDRAULIC HOSE	
536	90148-0038		2	HYDRAULIC HOSE	
540	90151-0001	MM	2200	BRASS PIPE DI=2,6 MM	
550	90266-0019	MM	7000	PIPE	
560	90165-0002		2	PIPE CLIP FOR TUBE D=4 MM	
590	90165-0022		2	PIPE CLIP, FOR TUBE D=2,5 MM, B-3570	
600	90165-0023		2	CLIP	
605	90165-0039		1	PIPE CLAMP D=15 MM, GSK15/12	
610	90166-0108	MM	2100	TUBE 6 MM PA,TRANSP.	
620	90166-0109	MM	1080	TUBE 4 MM PA,TRANSP.	
630	90166-0118	M	13	TUBE 8 MM PA BLACK	
640	90166-0081	MM	840	TUBE 6 MM PA BLUE	
650	90266-0006	MM	3400	TUBE	
660	312101-0337		2	SCREW M6S M5X35 FZB	
790	312115-0289		2	SCREW ISO4762 M4X10 A4 80	
800	312105-0295		8	SCREW M6S ISO 4017 M4X20 A470	
805	312121-0289		1	SCREW ISO 1207 M4X10 4.8 - 5.8 Z.PL.	
810	312105-0297		10	SCREW M6S ISO 4017 M4X25 A470	
820	312105-0372		2	SCREW M6S ISO 4017 M6X25 A480	
840	312125-0287		6	SCREW ISO 1207 M4X8 A4	
845	312125-0323		1	SCREW ISO 1207 M5X8 A4	
854	315101-0146		2	WASHER PLAIN, BRB, 5,3/10 H=1	
860	315234-0109		1	WASHER,PL.RND.CU.10,3/13,5 H=1,0	
865	342727-0102		1	CONN. PIPE G-6-LFZB	
867	90165-0065		1	PIPE CLAMP D=8 MM, GSK08/12	
868	342716-0203		1	REDUCER 6-8	
869	342748-0103		1	T-CONNECTION 8MM	
870	342767-0100		1	CONN. BULKHEAD G1/8	
880	342797-0121		1	CONN. BANJO, RINGPIECE 6-1/8	
890	342980-0303		1	BANJO-HOLLOW BOLT COUPL,EXT.THR.01-G1/8	
900	352113-0101		10	CABLE TIE, BLACK 92X2,5 MM	
910	359000-0400		5	WIRE MARKING, YELLOW, PA2/4"0"	
920	359000-0401		3	WIRE MARKING, YELLOW, PA2/4"1"	
930	359000-0402		2	WIRE MARKING, YELLOW, PA2/4"2"	
940	359000-0403		1	WIRE MARKING, YELLOW, PA2/4"3"	
951	359000-0405		2	WIRE MARKING, YELLOW, PA2/4"5"	
952	359000-0406		2	WIRE MARKING, YELLOW, PA2/4"6"	
965	359000-0407		4	WIRE MARKING, YELLOW, PA2/4"7"	
990	359000-0771		8	WIRE MARKING, YELLOW, PA2/4"V"	

Machine Type | Group Description | Used-In | Group Number | Page No

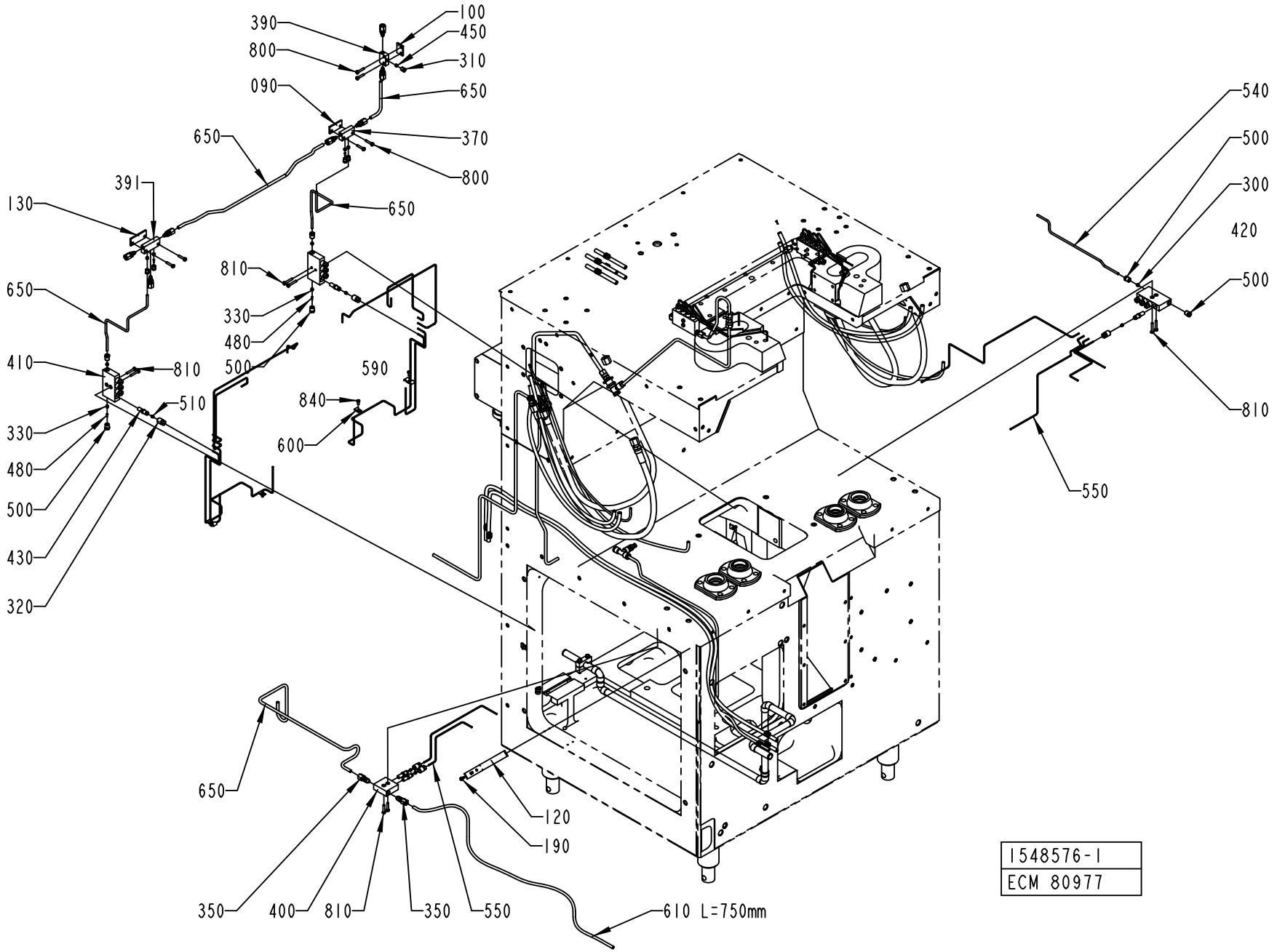
100
390
450
800
310
090
650
650
370
800
391
650
130
810
650
330
480
500
590
410
810
840
510
600
330
480
500
430
320
540
500
300
420
500
810
550
650
120
190
350
400
810
350
550
610 L=750mm
1548576-1
ECM 80977

ECM: 178879 - 20040910
Group number: 1548576-0100
Assembly Drawing: 1548576-1_3_AA

This list covers pages from 2-22 to 2-27

Pos	Part No	UN	Qty	Description	Page No
-					
002	271261-0700		1	CLEANING SYSTEM	**2-29**
005	1523829-0100		1	DISTRIBUTOR BLOCK	**2-31**
010	491854-0000		1	PIPE WATER	
020	979486-0000		1	LUBRICATING PIPE	
060	469133-0000		1	PIPE	
070	469132-0000		1	PIPE	
075	469131-0000		2	LACE	
090	271622-0000		1	LACE	
100	271623-0000		1	LACE	
120	295986-0000		1	HOLDER	
130	456407-0000		1	LACE	
140	491390-0000		1	PIPE CENTRAL LUBRICATION	
150	491859-0000		1	HOLDER	
160	491860-0000		1	HOLDER	
310	90028-0001		5	CONE 5/32"	
320	90028-0020		22	CONE TUBE 2,5MM	
330	90028-0021		5	CONE TUBE 4 MM	
340	90030-0051		1	CONN. STR., 6-R1/8, EXT. THREAD	
345	90030-0098		8	ACCESSORIES, FERRULE 8	
347	90136-0002		2	PLUG 5/16"24	
350	90030-0162		3	CONN. STR. 6-M10X1, EXT. THREAD	
352	342703-0208		8	NUT, PIPES & CONNECTORS,NUT M-8 SS	
355	90030-0200		2	CONN. ELBOW, 6-M10X1, EXT.THREAD	
360	90032-0014		1	DISTR. BLOCK & DIST.5/16-24UNF X6	
370	90032-0026		1	DISTR. BLOCK, 5/16-24UNF X2	
390	90032-0030		1	DISTR. BLOCK, 5/16-24UNF X3	
391	90032-0031		1	DISTR. BLOCK, 5/16-24UNF X5	
400	90032-0038		1	BLOCK 2 WAYS	
410	90032-0039		5	BLOCK 4 WAYS	
420	90090-0008		2	STEEL BALL 7,1MM, RB-7.144/III	
430	90092-0052		10	METERING VALVE 10 MM3	
440	90092-0053		12	METERING VALVE 30 MM3	
450	90134-0003		5	BUSHING	
470	90134-0030		2	SLEEVE FOR PLASTIC TUBE	
480	90134-0031		6	SLEEVE FOR PLASTIC TUBE	
490	90134-0034		11	NIPPLE	
	90030-0101		*1*	*TAPER*	
500	90134-0038		7	BUSHING/NUT INLET/OUTLET 4 MM	
510	90134-0039		22	BUSHING VALVE CONNECTION 2,5 MM	
534	90148-0037		2	HYDRAULIC HOSE	
536	90148-0038		2	HYDRAULIC HOSE	
540	90151-0001	MM	2200	BRASS PIPE DI=2,6 MM	
550	90266-0019	MM	7000	PIPE	
560	90165-0002		2	PIPE CLIP FOR TUBE D=4 MM	
590	90165-0022		2	PIPE CLIP, FOR TUBE D=2,5 MM, B-3570	
600	90165-0023		2	CLIP	
605	90165-0039		1	PIPE CLAMP D=15 MM, GSK15/12	
610	90166-0108	MM	2100	TUBE 6 MM PA,TRANSP.	
620	90166-0109	MM	1080	TUBE 4 MM PA,TRANSP.	
630	90166-0118	M	13	TUBE 8 MM PA BLACK	
640	90166-0081	MM	840	TUBE 6 MM PA BLUE	
650	90266-0006	MM	3400	TUBE	
660	312101-0337		2	SCREW M6S M5X35 FZB	
790	312115-0289		2	SCREW ISO4762 M4X10 A4 80	
800	312105-0295		8	SCREW M6S ISO 4017 M4X20 A470	
805	312121-0289		1	SCREW ISO 1207 M4X10 4.8 - 5.8 Z.PL.	
810	312105-0297		10	SCREW M6S ISO 4017 M4X25 A470	
820	312105-0372		2	SCREW M6S ISO 4017 M6X25 A480	
840	312125-0287		6	SCREW ISO 1207 M4X8 A4	
845	312125-0323		1	SCREW ISO 1207 M5X8 A4	
854	315101-0146		2	WASHER PLAIN, BRB, 5,3/10 H=1	
860	315234-0109		1	WASHER,PL.RND.CU.10,3/13,5 H=1,0	
865	342727-0102		1	CONN. PIPE G-6-LFZB	
867	90165-0065		1	PIPE CLAMP D=8 MM, GSK08/12	
868	342716-0203		1	REDUCER 6-8	
869	342748-0103		1	T-CONNECTION 8MM	
870	342767-0100		1	CONN. BULKHEAD G1/8	
880	342797-0121		1	CONN. BANJO, RINGPIECE 6-1/8	
890	342980-0303		1	BANJO-HOLLOW BOLT COUPL,EXT.THR.01-G1/8	
900	352113-0101		10	CABLE TIE, BLACK 92X2,5 MM	
910	359000-0400		5	WIRE MARKING, YELLOW, PA2/4"0"	
920	359000-0401		3	WIRE MARKING, YELLOW, PA2/4"1"	
930	359000-0402		2	WIRE MARKING, YELLOW, PA2/4"2"	
940	359000-0403		1	WIRE MARKING, YELLOW, PA2/4"3"	
951	359000-0405		2	WIRE MARKING, YELLOW, PA2/4"5"	
952	359000-0406		2	WIRE MARKING, YELLOW, PA2/4"6"	
965	359000-0407		4	WIRE MARKING, YELLOW, PA2/4"7"	
990	359000-0771		8	WIRE MARKING, YELLOW, PA2/4"V"	

Machine Type | Group Description | Used-In | Group Number | Page No

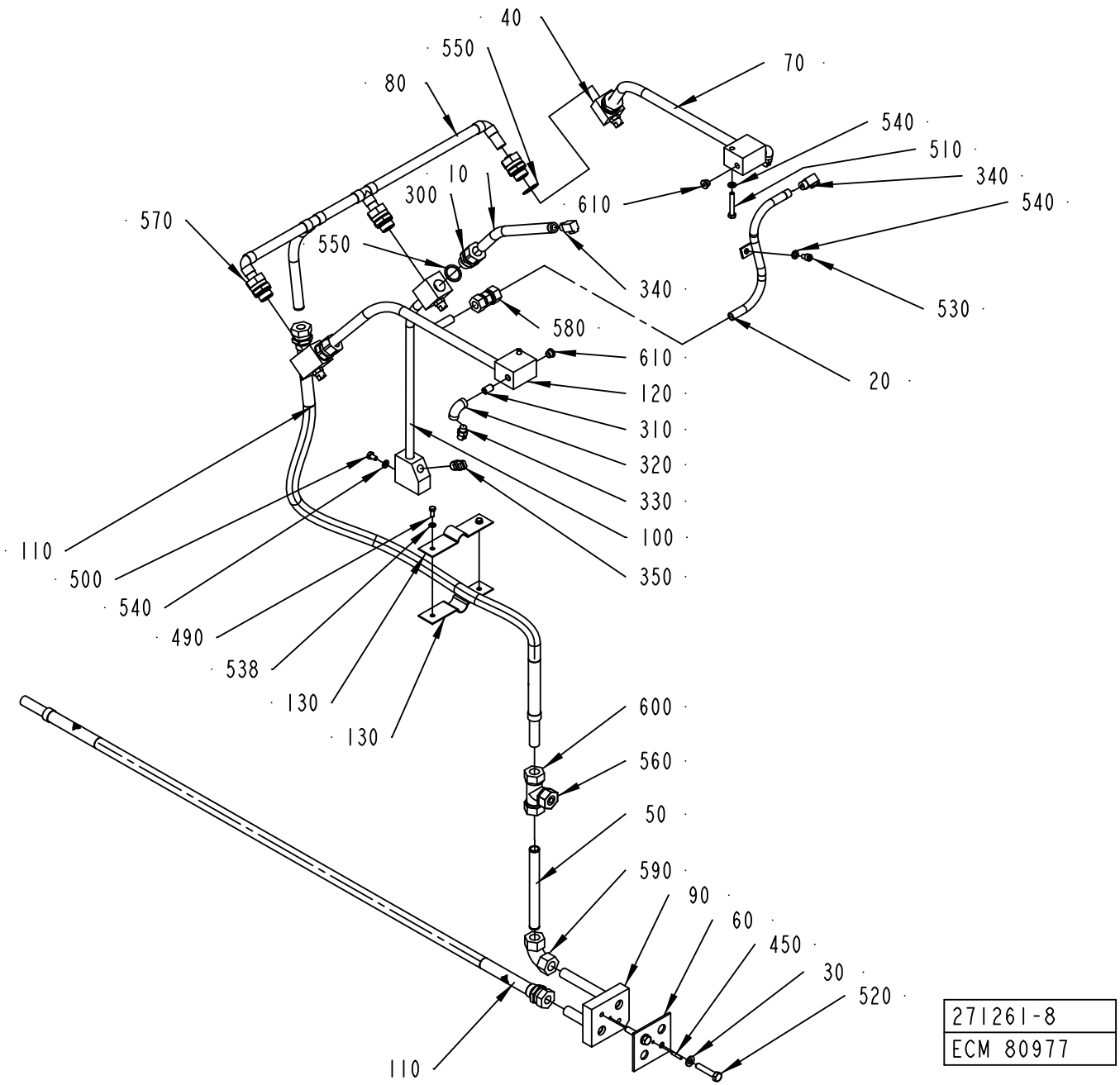
40
550
80
70
540
510
340
540
10
300
610
570
550
340
530
580
610
20
120
310
320
330
100
350
110
500
540
490
538
130
130
600
560
50
590
90
60
450
30
520
110
271261-8
ECM 80977

ECM: 276156 - 20070126
Group number: 271261-0700
Assembly Drawing: 271261-8_1_AA

Pos	Part No	UN	Qty	Description	Page No
TBA 0100B, TBA 0125S					
010	271121-0000		1	FORCE SPRING	
020	456129-0001		1	FORCE SPRING	
560	342710-0115		1	REDUCTION RBM 16/8	
600	342746-0114		1	CONN. T-PIPE T-15	
TBA 0180B, TBA 0160S, TBA 0200M, TBA 0200B, TBA 0200SQ, TBA 0200S, TBA 0250S, TBA 0284B, TBA 0250B, TBA 0300S, TBA 0330S					
010	295985-0000		1	FORCE SPRING	
020	456129-0002		1	FORCE SPRING	
560	342710-0115		1	REDUCTION RBM 16/8	
600	342746-0114		1	CONN. T-PIPE T-15	
Common Parts					
030	18542-0000		2	WASHER	
040	257190-0000		2	SEPARATION BLOCK	
050	272679-0000		1	PIPE	
060	295417-0000		1	GASKET	
070	295785-0000		1	FORCE SPRING	
080	295978-0000		1	PIPE	
090	578091-0000		1	BRANCH PIPE	
100	441665-0000		1	FORCE SPRING	
110	469146-0000		2	HOSE	
120	456128-0000		1	FORCE SPRING	
130	2516972-0000		2	HOSE HOLDER	
300	90030-0151		3	CONN. STR.,15-R1/2, EXT. THREAD	
310	90330-0097		2	NIPPLES, EXT. THREAD, G1/8	
320	90330-0099		2	ELBOW, 90 INT. THREAD, R-222R1/8	
330	90424-0032		2	SPRAY NOZZLE 95 DEG	
340	90424-0033		2	SPRAY NOZZLE 76 DEG	
350	90424-0035		4	SPRAY NOZZLE 95 DEG	
450	311103-0272		1	PARALLEL PIN ISO 2338 4M6X20 A1	
490	312105-0327		2	SCREW M6S ISO 4017 M5X12 A480	
500	312105-0364		1	SCREW M6S ISO 4017 M6X10 A480	
510	312105-0378		2	SCREW M6S ISO 4014 M6X40 A480	
520	312105-0459		2	SCREW M6S ISO 4014 M8X40 A480	
530	312115-0364		1	SCREW ISO4762 M6X10 A4 80	
538	315105-0146		2	WASHER BRB 5,3X10 RFR	
540	315105-0153		4	WASHER BRB 6,4X12 RFR	
550	315233-0113		6	WASHER CAPTIVE SEALING G1/2	
570	342720-0114		3	CONN. STR. GA-15-G1/2	
580	342726-0109		1	CONN. PIPE G-12	
590	342736-0114		1	CONN. ELBOW W-15	
610	342713-0209		2	PLUG (QUANT.MINIMA= 10PC).	

Pos	Part No	UN	Qty	Description	Page No

Machine Type | Group Description | Used-In | Group Number | Page No

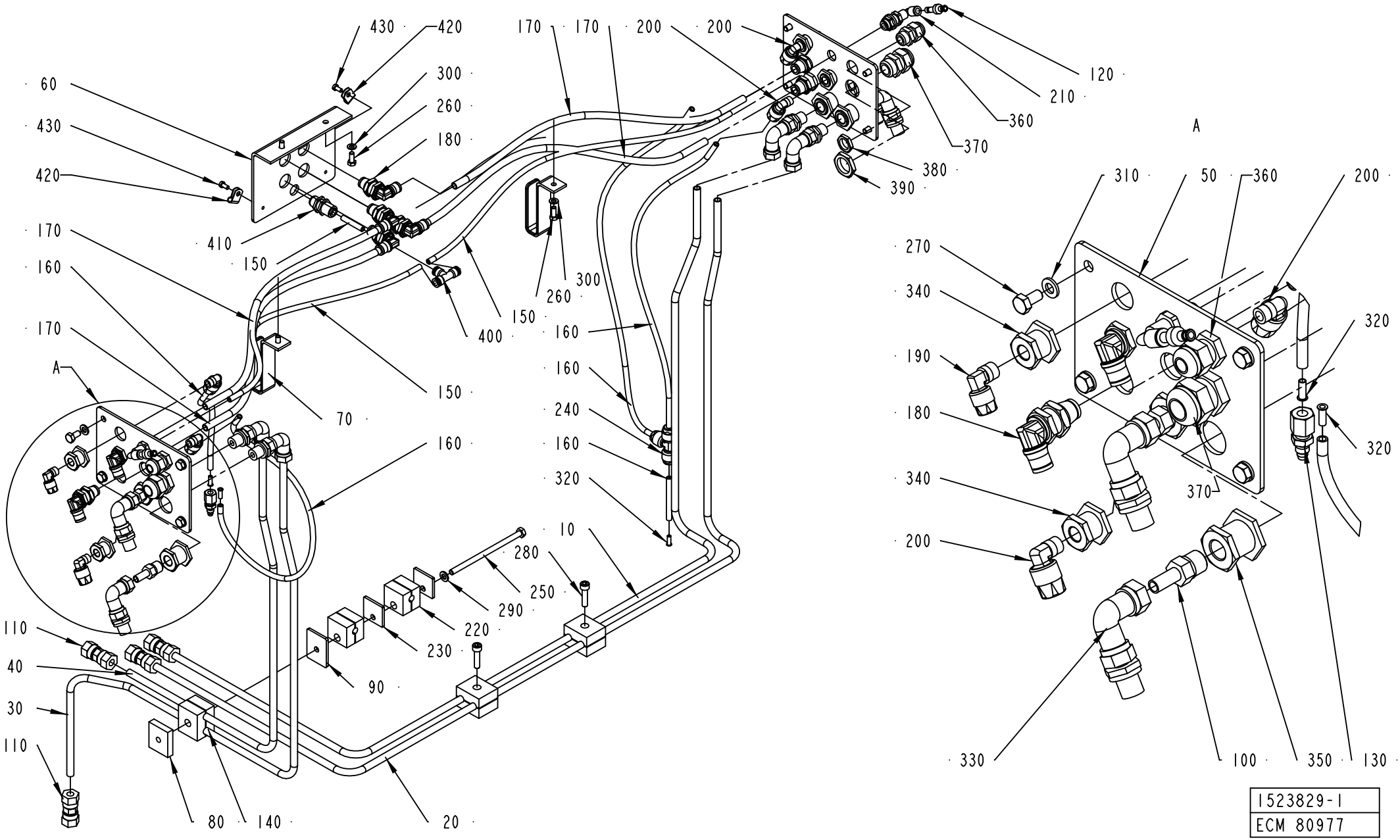
430
420
300
260
180
60
430
420
410
150
170
160
170
A
70
150
160
150
400
170
170
200
200
120
210
360
370
380
390
A
310
50
360
200
270
340
190
180
340
200
320
320
370
330
100
350
130
300
260
150
160
160
240
160
320
10
280
250
290
220
230
90
110
40
30
110
80
140
20
1523829-1
ECM 80977

ECM: 178877 - 20040910
Group number: 1523829-0100
Assembly Drawing: 1523829-1_1_AA

Pos	Part No	UN	Qty	Description	Page No
-					
010	1523433-0000		1	PIPE	
020	1523434-0000		1	PIPE	
030	1523431-0000		1	PIPE	
040	1523432-0000		1	PIPE	
050	1523383-0000		2	CONNECTION PLATE	
060	1523384-0000		1	CONNECTION PLATE	
070	1523832-0000		2	HOSE HOLDER	
080	1523886-0000		1	SPACER PLATE	
090	1523887-0000		1	SPACER PLATE	
100	90030-0065		4	PIPE CONNECTION	
110	90030-0091		4	CONN. PIPE G-8	
120	342716-0202		2	REDUCER 4-6	
130	90134-0034		1	NIPPLE	
	90030-0101		*1*	*TAPER*	
140	90165-0099		3	PIPE CLAMP, DOUBLE, RBP-108, D=8 MM	
150	90166-0081	M	3	TUBE 6 MM PA BLUE	
160	90166-0108	M	2	TUBE 6 MM PA,TRANSP.	
170	90166-0118	M	2	TUBE 8 MM PA BLACK	
180	90457-0178		8	EQUAL BULKHEAD ELBOW CONNECTOR 36390800	
190	90457-0179		2	ELBOW COUPLING 6179 04 10	
200	90457-0180		6	ELBOW COUPLING 6179 06 10	
210	90457-0181		2	EQUAL BULKHEAD ELBOW CONNECTOR 31390600	
220	90457-0182		2	PIPE CLAMP, D=8 MM, RAPOD8X	**2-33**
230	90457-0183		2	COVER PLATE, DPA0X, FOR 90457-0182	
240	90457-0184		1	T-CONNECTION 6 MM 6104 06 00	
250	312101-0392		1	SCREW M6S M6X110 FZB	
260	312105-0327		4	SCREW M6S ISO 4017 M5X12 A480	
270	312105-0366		8	SCREW M6S ISO 4017 M6X12 A480	
280	312115-0372		2	SCREW ISO4762 M6X25 A4 80	
290	315101-0153		1	WASHER PLAIN, BRB, 6,4/12 H=1,5	
300	315105-0146		4	WASHER BRB 5,3X10 RFR	
310	315105-0153		8	WASHER BRB 6,4X12 RFR	
320	342706-0130		3	ACCESSORIES, INSERT SLEEVE 6 MM	
330	342738-0208		8	ADJUSTABLE ELBOW CONNECTION,EXT 8-G1/4	
340	342767-0100		4	CONN. BULKHEAD G1/8	
350	342767-0104		4	CONN. BULKHEAD G1/4	
360	352103-0101		2	CABLE GLAND, ST 9, PR15,2/PG9	
370	352103-0108		2	CABLE GLAND, ST 13,5 , PR20,4/PG13,5	
380	90099-0001		2	NUT PG 9/PR 15,2	
390	90099-0087		2	NUT PR=20,4	
400	342748-0102		1	T-CONNECTION 6MM	
410	342768-0102		1	BULKHEAD CONNECTOR, 6 MM	
420	90458-1489		2	CABLE CLIPS, D=4,75 MM	
430	312125-0287		2	SCREW ISO 1207 M4X8 A4	

Machine Type | Group Description | Used-In | Group Number | Page No

This page is intentionally left blank.

ECM: 81442 - 20000714
Group number: 90457-0182
Assembly Drawing:

Pos	Part No	UN	Qty	Description	Page No
-					
	90457-0183		1	COVER PLATE, DPA0X, FOR 90457-0182	

Pos	Part No	UN	Qty	Description	Page No

Machine Type	Group Description	Used-In	Group Number	Page No

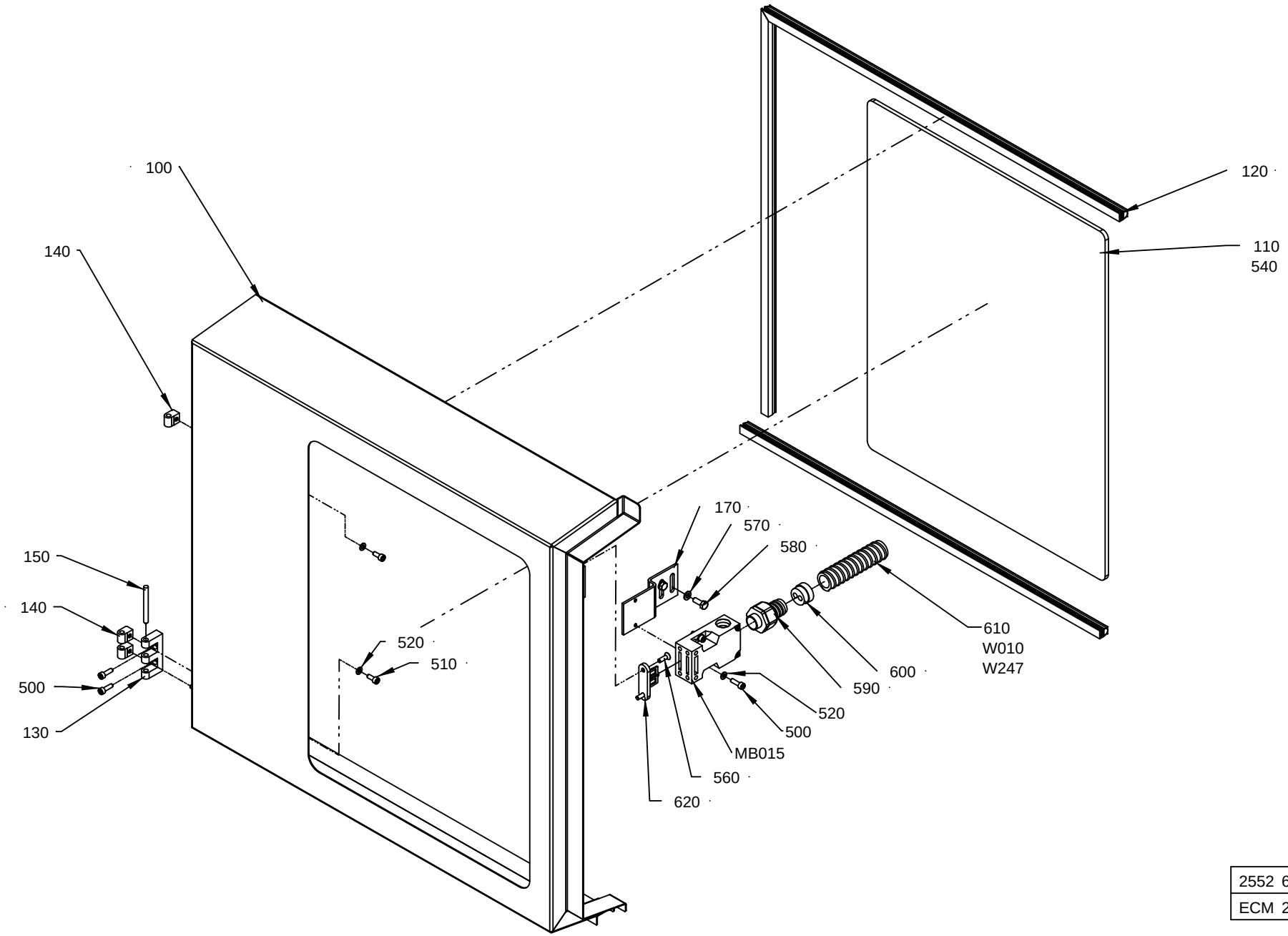

2552 694-2
ECM 224525

ECM: 234759 - 20051114
Group number: 2552694-0200
Assembly Drawing: 2552694-2_1_AA

Pos	Part No	UN	Qty	Description	Page No
-					
100	2748677-0000		1	DOOR	
110	2748679-0000		1	GLASS	
120	90143-0068	M	2	RUBBER STRIP EMKA 1011-06	
130	1035792-0000		1	E-HINGE	
140	1035794-0000		3	BLOCKING PIECE	
150	988685-0000		1	PIN	
170	1511437-0000		1	BRACKET	
500	312115-0329		4	SCREW ISO4762 M5X16 A4 80	
510	312115-0327		3	SCREW ISO4762 M5X12 A4 80	
520	315105-0146		5	WASHER BRB 5,3X10 RFR	
540	90157-0041		1	SEALING COMPOUND, RHODORSEAL 5651	
560	312155-0329		2	SCREW DIN 7991 MF6S M5X16 A4 70	
570	315105-0153		2	WASHER BRB 6,4X12 RFR	
580	312105-0368		2	SCREW M6S ISO 4017 M6X16 A480	
590	90458-0430		1	HOSE GLAND W/O INSERT M20 EXTENDED	
600	90457-0147		1	GLAND, INSERT, MULTI HOLE, 2X7	
610	90152-0051	M	1	SPIRAL CONDUIT, 25X18, UL 1816	
620	90044-0310		1	KEY FOR SAFETY SWITCH AZ 15/16 B1	
MB015	90459-0472		1	KEY SAF.SW. AZ 16 02ZVRK-M20-2152-2254	
W010	351150-0431	M	1	CABLE OLFLEX 2X0,75 MM2 LIGHT/GREY	
W247	351150-0431	M	6	CABLE OLFLEX 2X0,75 MM2 LIGHT/GREY	

Pos	Part No	UN	Qty	Description	Page No

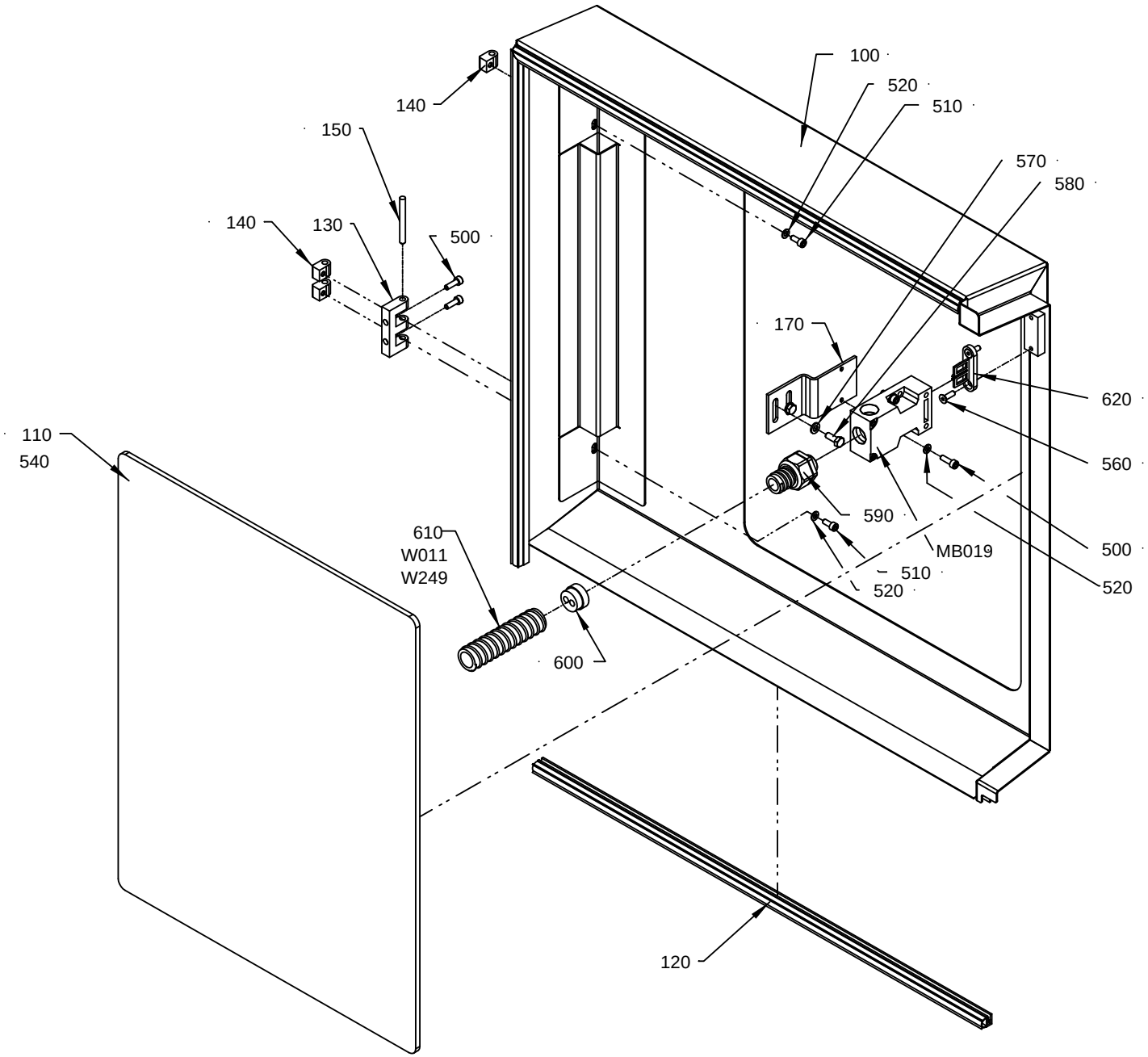

2552 695-2
ECM 224525

ECM: 234760 - 20051114
Group number: 2552695-0200
Assembly Drawing: 2552695-2_1_AA

Pos	Part No	UN	Qty	Description	Page No
-					
100	2748678-0000		1	DOOR	
110	2748679-0000		1	GLASS	
120	90143-0068	M	2	RUBBER STRIP EMKA 1011-06	
130	1035792-0000		1	E-HINGE	
140	1035794-0000		3	BLOCKING PIECE	
150	988685-0000		1	PIN	
170	1511437-0000		1	BRACKET	
500	312115-0329		4	SCREW ISO4762 M5X16 A4 80	
510	312115-0327		3	SCREW ISO4762 M5X12 A4 80	
520	315105-0146		5	WASHER BRB 5,3X10 RFR	
540	90157-0041		1	SEALING COMPOUND, RHODORSEAL 5651	
560	312155-0329		2	SCREW DIN 7991 MF6S M5X16 A4 70	
570	315105-0153		2	WASHER BRB 6,4X12 RFR	
580	312105-0368		2	SCREW M6S ISO 4017 M6X16 A480	
590	90458-0430		1	HOSE GLAND W/O INSERT M20 EXTENDED	
600	90457-0147		1	GLAND, INSERT, MULTI HOLE, 2X7	
610	90152-0051	M	1	SPIRAL CONDUIT, 25X18, UL 1816	
620	90044-0310		1	KEY FOR SAFETY SWITCH AZ 15/16 B1	
MB019	90459-0472		1	KEY SAF.SW. AZ 16 02ZVRK-M20-2152-2254	
W011	351150-0431	M	1	CABLE OLFLEX 2X0,75 MM2 LIGHT/GREY	
W249	351150-0431	M	7	CABLE OLFLEX 2X0,75 MM2 LIGHT/GREY	

Pos	Part No	UN	Qty	Description	Page No

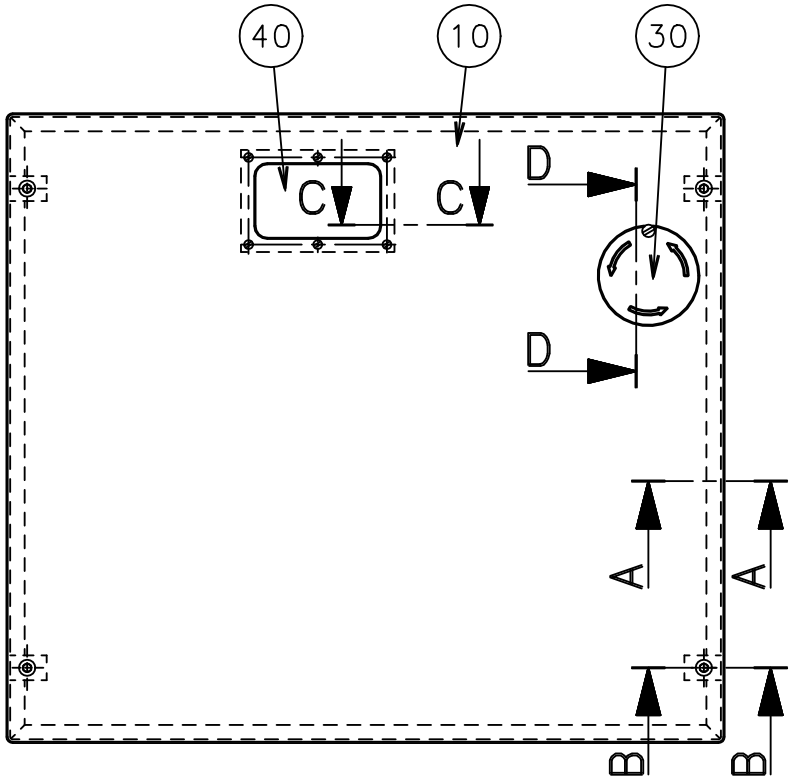

A–A

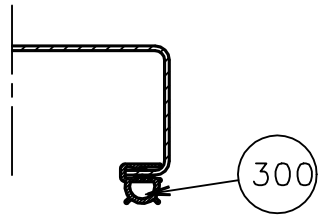

B–B

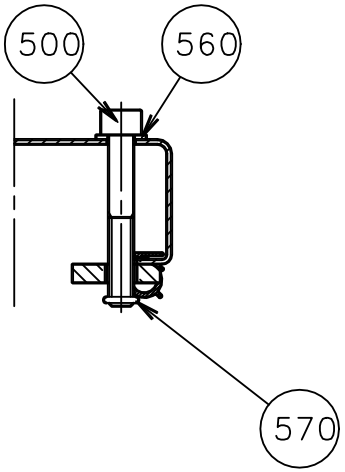

C–C

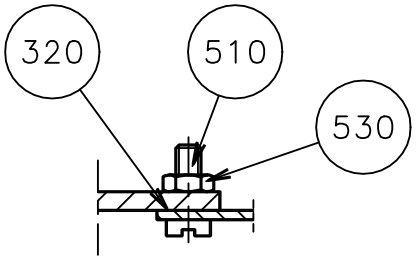

D–D

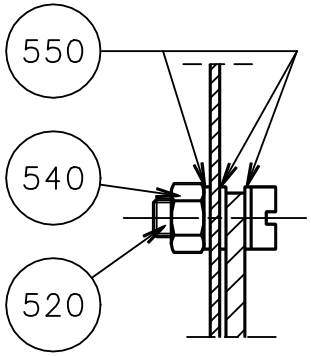

ECM: 178700 - 20040910
Group number: 256665-0200
Assembly Drawing: 256665-4_1_AC

Pos	Part No	UN	Qty	Description	Page No
-					
010	1279044-0000		1	HATCH	
030	469964-0000		1	LID	
040	257231-0000		1	WINDOW	
300	90143-0068	MM	2200	RUBBER STRIP EMKA 1011-06	
320	90157-0022	L		SEALING COMPOUND, SILICONE	
500	312115-0463		4	SCREW ISO4762 M8X60 A4 80	
510	312125-0291		6	SCREW ISO 1207 M4X12 A4	
520	312125-0329		1	SCREW ISO 1207 M5X16 A4	
530	312605-0312		6	HEXAGON NUT, M6M M4 A280	
540	312810-0314		1	HEXAGON NUT, NY-LOCK M5 FZB	
550	315105-0146		3	WASHER BRB 5,3X10 RFR	
560	315105-0165		4	WASHER BRB 8,4X16 RFR	
570	315202-0105		4	O-RING 7,1X1,6 MM	

Pos	Part No	UN	Qty	Description	Page No

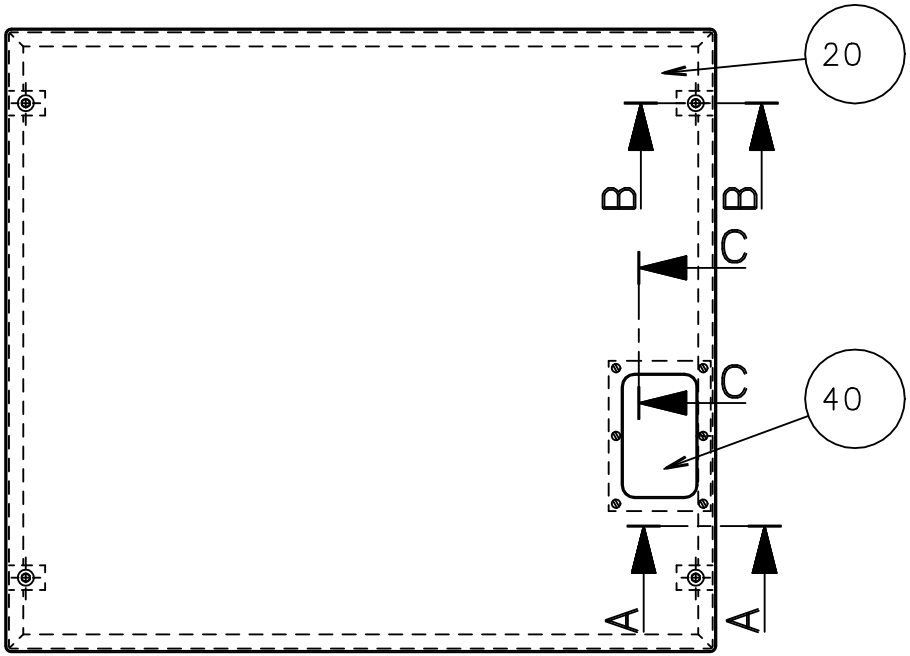

B–B

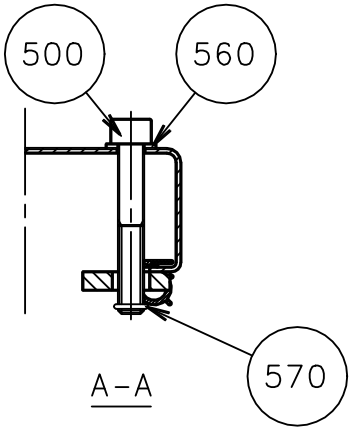

A–A

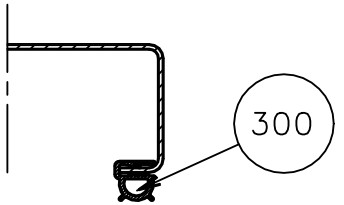

C–C

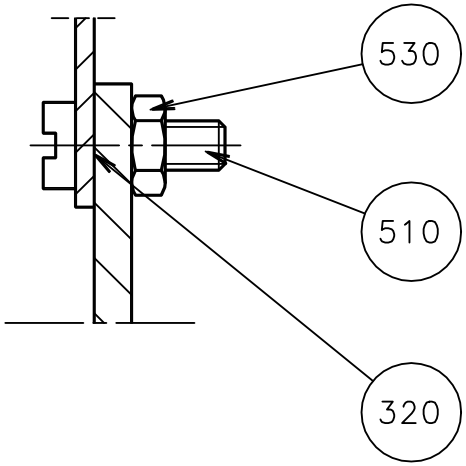

ECM: 178698 - 20040910
Group number: 1296815-0100
Assembly Drawing: 1296815-1_1_AB

Pos	Part No	UN	Qty	Description	Page No
-					
020	1279045-0000		1	HATCH	
040	257231-0000		1	WINDOW	
300	90143-0068	MM	2200	RUBBER STRIP EMKA 1011-06	
320	90157-0022	L		SEALING COMPOUND, SILICONE	
500	312115-0463		4	SCREW ISO4762 M8X60 A4 80	
510	312125-0291		6	SCREW ISO 1207 M4X12 A4	
530	312605-0312		6	HEXAGON NUT, M6M M4 A280	
560	315105-0165		4	WASHER BRB 8,4X16 RFR	
570	315202-0105		4	O-RING 7,1X1,6 MM	

Pos	Part No	UN	Qty	Description	Page No

AIR JET GUN

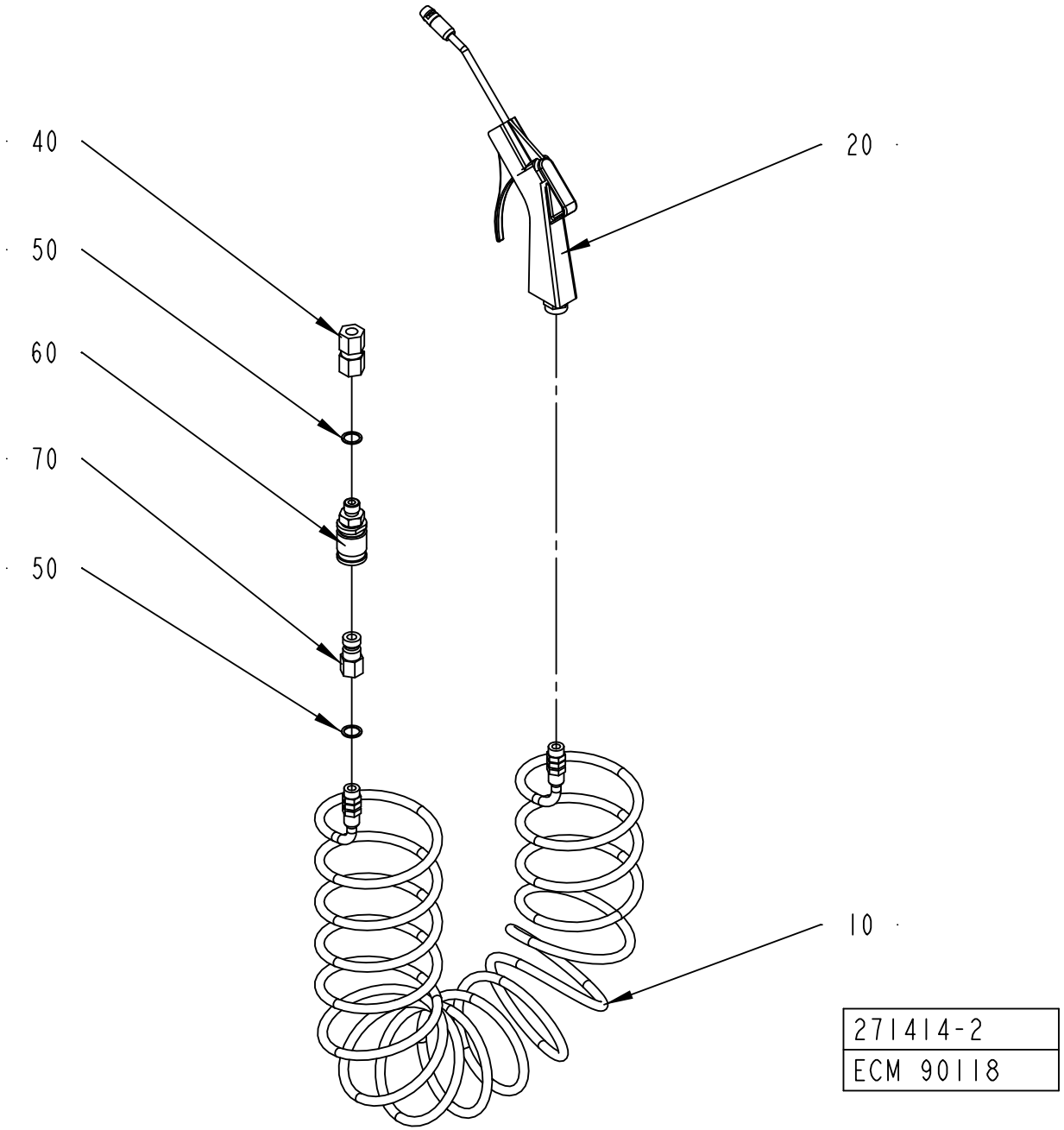

ECM: 178703 - 20040910
Group number: 271414-0300
Assembly Drawing: 271414-2_1_AA

Pos	Part No	UN	Qty	Description	Page No
-					
010	90152-0016		1	HOSE (SPIRAL)	
020	90243-0061		1	AIR GUN, CEJN SERIE 204 ED: 90459-0173	
040	342725-0108		1	CONN. STR. PIPE GI-10-G1/4	
050	315233-0110		2	WASHER CAPTIVE SEALING G1/4	
060	90163-0013		1	QUICK COUPLING, (F) LP 006-0-WR013-01-2	
	90163-0301		*1*	*GASKET VITON REPL.BY 90163-312*	
070	90163-0015		1	QUICK COUPLING, (M) LP-006-1-WR513	

Pos	Part No	UN	Qty	Description	Page No

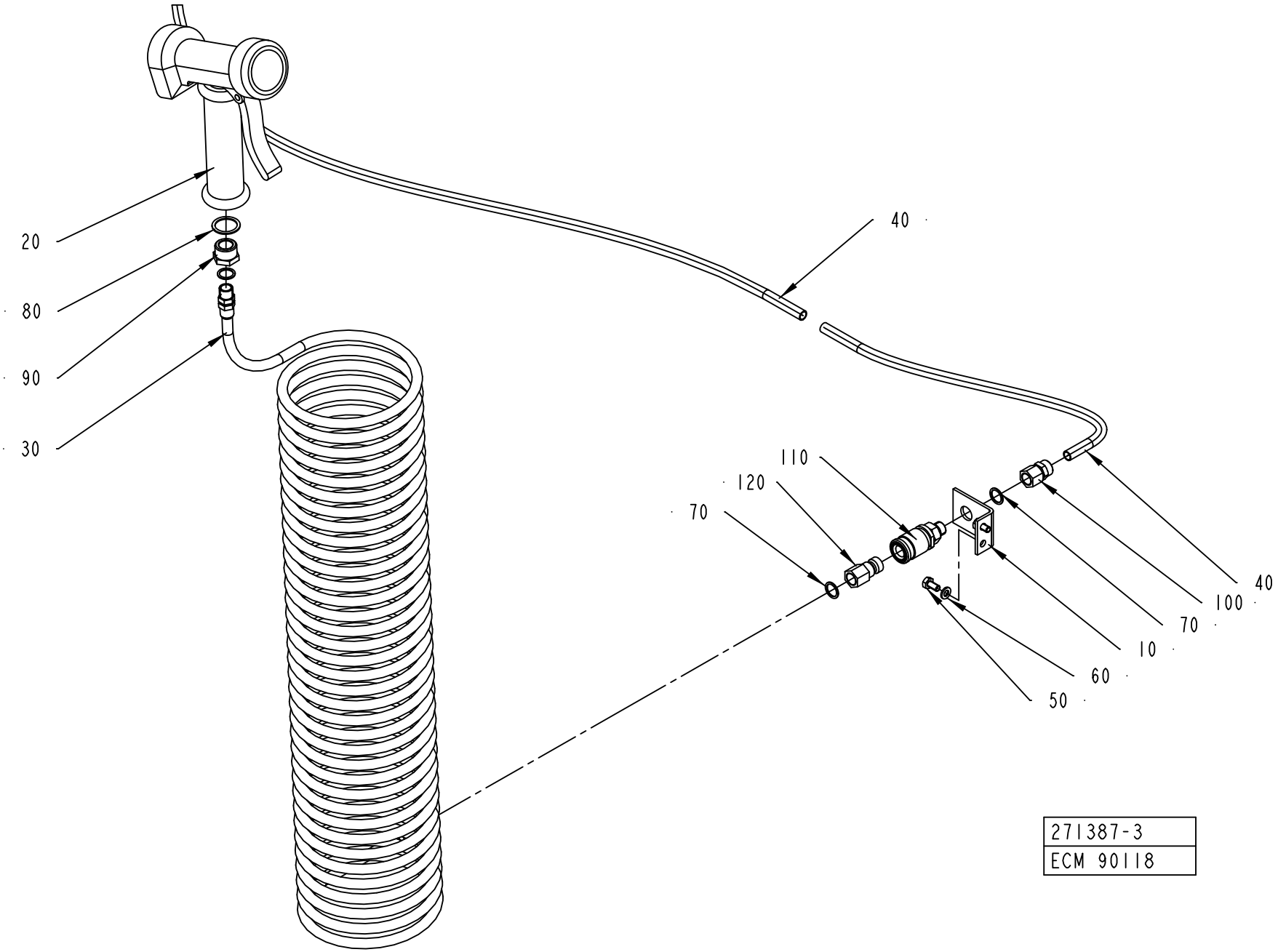
20
80
90
30
40
110
120
70
40
100
70
10
60
50
271387-3
ECM 90118

ECM: 178702 - 20040910
Group number: 271387-0400
Assembly Drawing: 271387-3_1_AA

Pos	Part No	UN	Qty	Description	Page No
-					
010	2524394-0000		1	BRACKET	
020	90426-0003		1	HAND SHOWER	
030	90152-0017		1	HOSE (SPIRAL)	
040	90166-0135	M	2.8	TUBE 10 MM PA BLACK	
050	312105-0366		2	SCREW M6S ISO 4017 M6X12 A480	
060	315105-0153		2	WASHER BRB 6,4X12 RFR	
070	315233-0110		3	WASHER CAPTIVE SEALING G1/4	
080	315233-0113		1	WASHER CAPTIVE SEALING G1/2	
090	342701-0205		1	BUSHING,INT./EXT.G-THREAD G1/2"-G1/4"	
100	342923-0132		1	STRAIGHT COUPL.,INT.THREADED 10/8-G1/4"	
110	90163-0013		1	QUICK COUPLING, (F) LP 006-0-WR013-01-2	
	90163-0301		*1*	*GASKET VITON REPL.BY 90163-312*	
120	90163-0015		1	QUICK COUPLING, (M) LP-006-1-WR513	

Pos	Part No	UN	Qty	Description	Page No

Machine Type | Group Description | Used-In | Group Number | Page No

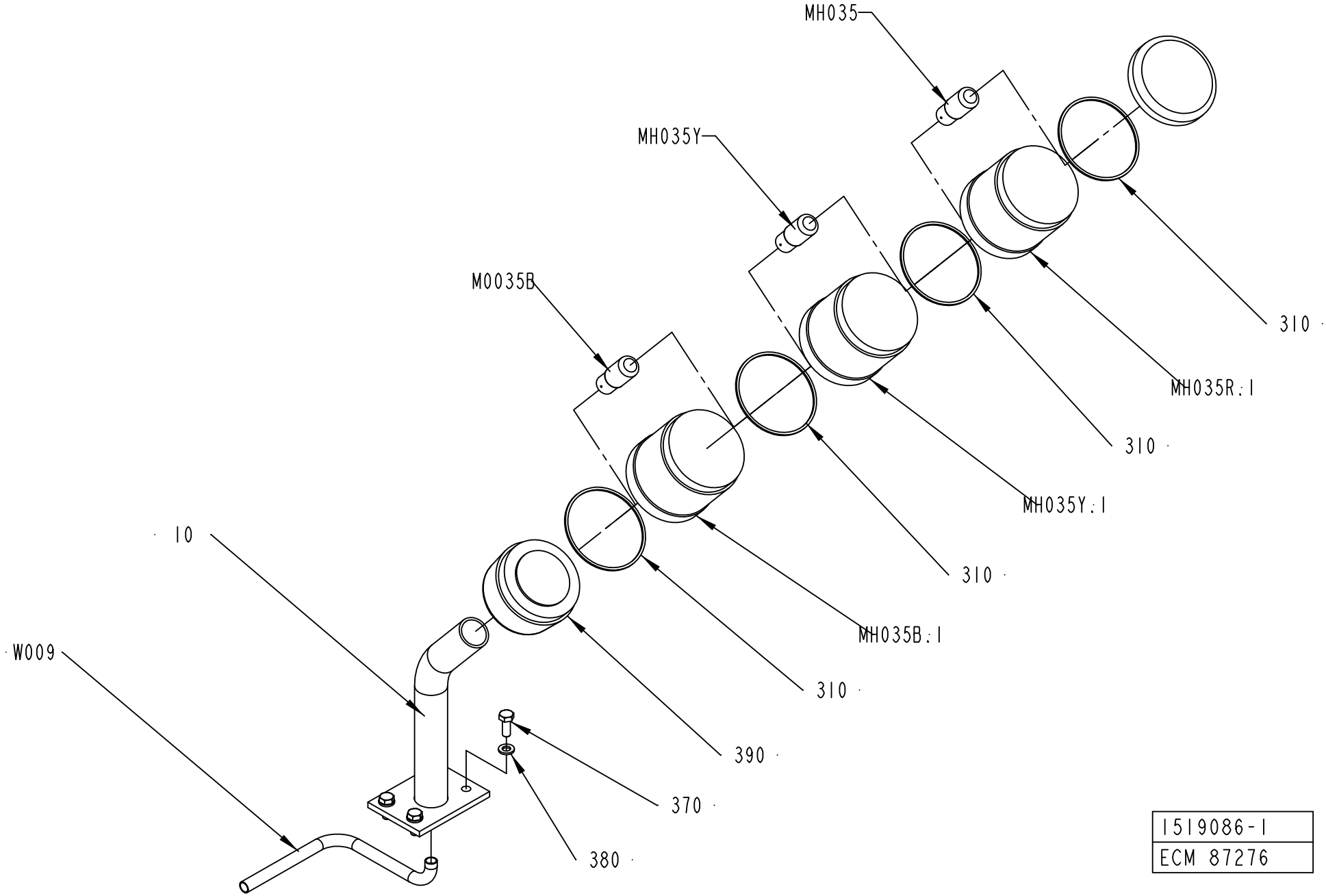

1519086-1
ECM 87276

ECM: 227590 - 20051011
Group number: 1519086-0100
Assembly Drawing: 1519086-1_1_AA

Pos	Part No	UN	Qty	Description	Page No
-					
010	1517248-0000		1	BRACKET	
310	90419-0307		4	GASKET	
370	312105-0368		4	SCREW M6S ISO 4017 M6X16 A480	
380	315105-0153		4	WASHER BRB 6,4X12 RFR	
390	90458-0292		1	BASE, KT70-1001	
MH035Y	90036-0068		1	BULB 6.5W 24V	
MH035R	90036-0068		1	BULB 6.5W 24V	
MH035B	90036-0068		1	BULB 6.5W 24V	
MH035Y.1	90458-0294		1	LIGHT ELEMENT, YELLOW, KL70-401Y	
MH035R.1	90458-0293		1	LIGHT ELEMENT, RED, KL70-401R	
MH035B.1	90458-0295		1	LIGHT ELEMENT, BLUE, KL70-401L	
W009	351150-0406	M	5	CABLE OLFLEX 7X0,75 MM2 LIGHT/GREY	

Pos	Part No	UN	Qty	Description	Page No

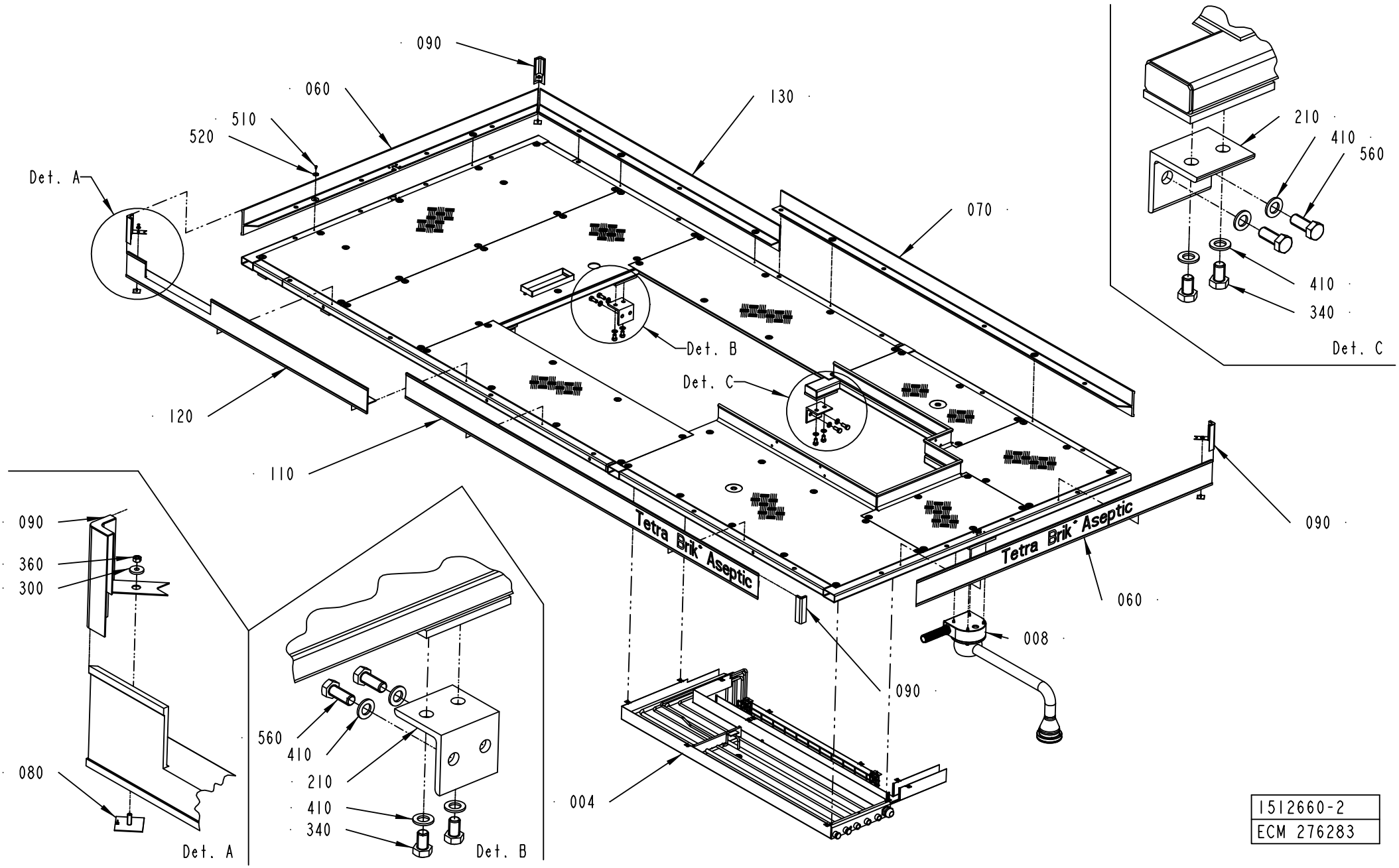
090
060
510
520
130
Det. A
070
210
410
560
410
340
Det. C
Det. B
Det. C
120
110
Tetra Brik Aseptic
Tetra Brik Aseptic
090
060
008
090
004
090
360
300
080
Det. A
560
410
210
410
340
Det. B
1512660-2
ECM 276283

ECM: 276283 - 20070126
Group number: 1512660-0200
Assembly Drawing: 1512660-2_1_AB

This list covers pages from 2-48 to 2-51

Pos	Part No	UN	Qty	Description	Page No
LEFTLADDER					
120	1512643-0000		1	TOE PLATE	
130	1512666-0000		1	TOE PLATE	
NOPT					
050	1512633-0000		1	CHECKER PLATE	
PT19					
050	2632603-0000		1	CHECKER PLATE	
RIGHTLADDER					
120	2514018-0000		1	TOP TIE PLATE	
130	2512805-0000		1	TOE PLATE	
Common Parts					
004	2500214-0100		1	PIPE WORK	**2-53, 2-55**
008	2500332-0100		1	PIVOT ARM	**2-57**
010	1512350-0000		1	PLATFORM	
020	1512351-0000		1	PLATFORM	
030	1512631-0000		2	CHECKER PLATE	
040	1512632-0000		1	CHECKER PLATE	
060	1512640-0000		2	TOE PLATE	
070	1512641-0000		1	TOE PLATE	
080	1254028-0000		4	FASTENING PLATE	
090	1254027-0000		4	CORNER STRIP	
110	1512642-0000		1	TOE PLATE	
140	1512845-0000		1	CHECKER PLATE	
150	1512846-0000		1	CHECKER PLATE	
160	1512847-0000		1	BRACKET	
180	2506608-0000		4	PLATE	
190	2506609-0000		4	PLATE	
200	1512851-0000		1	COVER	
210	1517249-0000		4	BRACKET	
220	2505282-0000		1	CHECKER PLATE	
230	2505236-0000		1	PLATFORM	
300	38087-0000		4	WASHER	
310	312105-0371		2	SCREW M6S ISO 4017 M6X22 A480	
320	312105-0648		4	SCREW M6S M16X150 A280	
340	312105-0622		8	SCREW M6S ISO 4017 M16X25 A480	
360	312605-0316		6	HEXAGON NUT, M6M M6 A280	
370	312812-0324		4	HEXAGON NUT, NY-LOCK M16 A480	
380	312105-0534		16	SCREW M6S ISO 4017 M12X25 A480	
390	315105-0153		4	WASHER BRB 6,4X12 RFR	
410	315105-0186		24	WASHER BRB 17X30 RFR	
420	315105-0178		16	WASHER BRB 13X24 RFR	
510	90458-0072		78	SCREW ISO 7380 S M6X12 A2	
520	90458-0073		78	WASHER 6,4/30, H=1,5	
560	312105-0628		8	SCREW M6S ISO 4017 M16X40 A480	
570	90143-0076	MM	7300	PROFILE	

Machine Type | Group Description | Used-In | Group Number | Page No

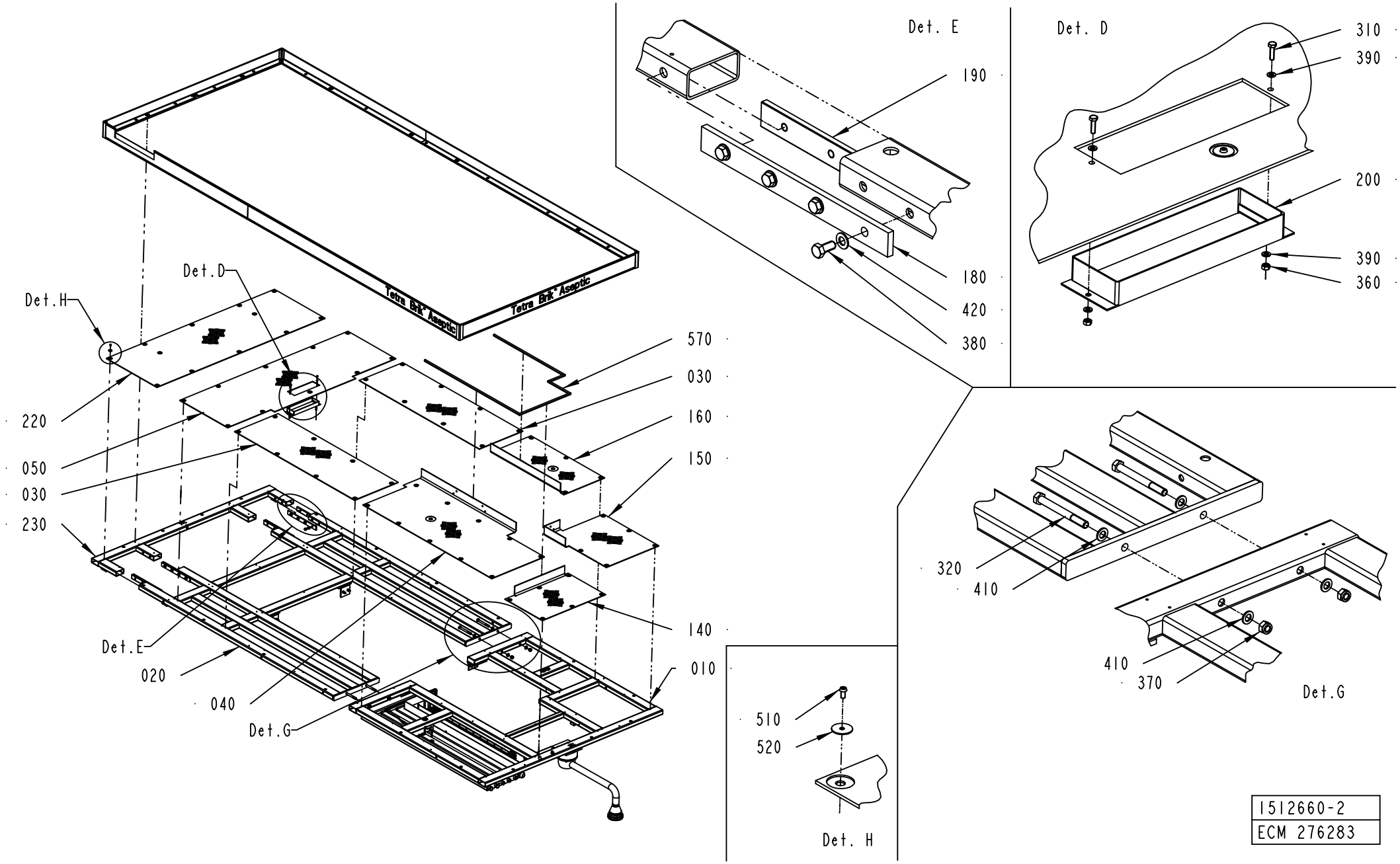
Det. E
190
180
420
380
Det. D
310
390
200
390
360
Det.H
Det.D
570
030
160
150
220
050
030
230
140
010
Det.E
020
040
Det.G
320
410
410
370
Det.G
510
520
Det. H
1512660-2
ECM 276283

ECM: 276283 - 20070126
Group number: 1512660-0200
Assembly Drawing: 1512660-2_2_AB

This list covers pages from 2-48 to 2-51

Pos	Part No	UN	Qty	Description	Page No
LEFTLADDER					
120	1512643-0000		1	TOE PLATE	
130	1512666-0000		1	TOE PLATE	
NOPT					
050	1512633-0000		1	CHECKER PLATE	
PT19					
050	2632603-0000		1	CHECKER PLATE	
RIGHTLADDER					
120	2514018-0000		1	TOP TIE PLATE	
130	2512805-0000		1	TOE PLATE	
Common Parts					
004	2500214-0100		1	PIPE WORK	**2-53, 2-55**
008	2500332-0100		1	PIVOT ARM	**2-57**
010	1512350-0000		1	PLATFORM	
020	1512351-0000		1	PLATFORM	
030	1512631-0000		2	CHECKER PLATE	
040	1512632-0000		1	CHECKER PLATE	
060	1512640-0000		2	TOE PLATE	
070	1512641-0000		1	TOE PLATE	
080	1254028-0000		4	FASTENING PLATE	
090	1254027-0000		4	CORNER STRIP	
110	1512642-0000		1	TOE PLATE	
140	1512845-0000		1	CHECKER PLATE	
150	1512846-0000		1	CHECKER PLATE	
160	1512847-0000		1	BRACKET	
180	2506608-0000		4	PLATE	
190	2506609-0000		4	PLATE	
200	1512851-0000		1	COVER	
210	1517249-0000		4	BRACKET	
220	2505282-0000		1	CHECKER PLATE	
230	2505236-0000		1	PLATFORM	
300	38087-0000		4	WASHER	
310	312105-0371		2	SCREW M6S ISO 4017 M6X22 A480	
320	312105-0648		4	SCREW M6S M16X150 A280	
340	312105-0622		8	SCREW M6S ISO 4017 M16X25 A480	
360	312605-0316		6	HEXAGON NUT, M6M M6 A280	
370	312812-0324		4	HEXAGON NUT, NY-LOCK M16 A480	
380	312105-0534		16	SCREW M6S ISO 4017 M12X25 A480	
390	315105-0153		4	WASHER BRB 6,4X12 RFR	
410	315105-0186		24	WASHER BRB 17X30 RFR	
420	315105-0178		16	WASHER BRB 13X24 RFR	
510	90458-0072		78	SCREW ISO 7380 S M6X12 A2	
520	90458-0073		78	WASHER 6,4/30, H=1,5	
560	312105-0628		8	SCREW M6S ISO 4017 M16X40 A480	
570	90143-0076	MM	7300	PROFILE	

Machine Type | Group Description | Used-In | Group Number | Page No

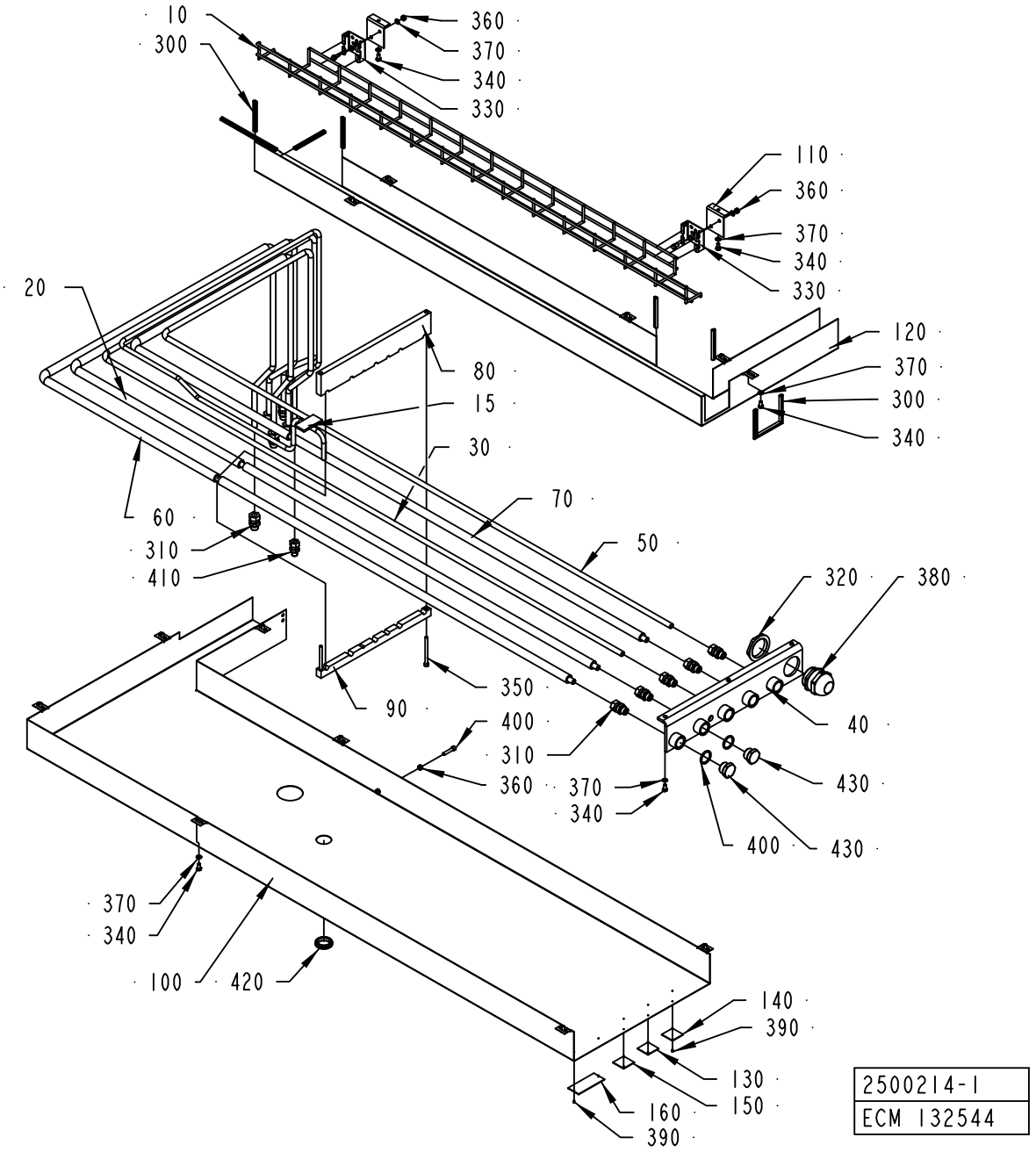
10
300
360
370
340
330
110
360
370
340
330
120
370
300
340
20
80
15
30
70
50
60
310
410
320
380
90
350
400
310
360
370
340
40
430
400
430
370
340
100
420
140
390
130
150
160
390
2500214-1
ECM 132544

Pos	Part No	UN	Qty	Description	Page No
HI (See drawing on page: 2-54)					
170	2613035-0000		1	SUPPORT	
180	978010-0000		1	SIGN BOARD	
450	90030-0230		1	CONN. BULKHEAD SV 6-	
460	90166-0132	CM	250	TUBE 6 MM PA,TRANSP.	
470	90457-0086		1	BULKHEAD CONNECTOR 6MM	
480	312115-0325		2	SCREW ISO4762 M5X10 A4 80	
490	312605-0314		2	HEXAGON NUT, M6M M5 A280	
500	315105-0146		2	WASHER BRB 5,3X10 RFR	
Common Parts					
010	2500218-0000		1	CABLE TRENCH	
015	2523703-0000		1	PIPE	
020	1286000-0000		1	PIPE	
030	1296854-0000		1	PIPE	
040	1334694-0000		1	CONNECTION PLATE	
050	1350307-0000		1	PIPE	
060	1350308-0000		1	PIPE	
070	1350309-0000		1	PIPE	
080	1350472-0000		1	HOLDER	
090	1350473-0000		1	HOLDER	
100	2500215-0000		1	CABLE DUCT	
110	2500217-0000		2	BRACKET	
120	2500216-0000		1	CABLE DUCT	
130	273455-0000		1	SIGN, COLD WATER	
140	273456-0000		1	SIGN, HOT WATER	
150	273458-0000		1	SIGN, AIR	
160	2555070-0000		1	SIGN	
300	90143-0060	M	1.5	EDGE STRIP 9,5X6,3MM BLACK PVC	
310	90030-0187		10	CONN. STR. GA-12-G3/8	
320	90458-0327		1	NUT, M50X1,5	
330	90181-0190		2	CABLE DUCT, WALL BRACKET, B4 MINI	
340	312105-0366		21	SCREW M6S ISO 4017 M6X12 A480	
350	312115-0385		2	SCREW ISO4762 M6X75 A4 80	
360	312605-0316		5	HEXAGON NUT, M6M M6 A280	
370	315105-0153		21	WASHER BRB 6,4X12 RFR	
380	90458-0311		1	CABLE GLAND, M50X1,5, NO.5311 1060	
390	312502-0120		8	DRIVE SCREW ROUND HEAD KDS 0X5	
400	312115-0374		1	SCREW ISO4762 M6X30 A4 80	
410	90030-0186		1	CONN. STR. GA-10-G1/4	
420	90459-1066		1	LEAD-IN, BUSHING, DA 300/350/10	
430	90330-0046		2	PLUG, EXT. G-THREAD, R-236G3/4	
440	315239-0115		2	NYLON WASHER G3/4	

Pos	Part No	UN	Qty	Description	Page No

Machine Type | Group Description | Used-In | Group Number | Page No

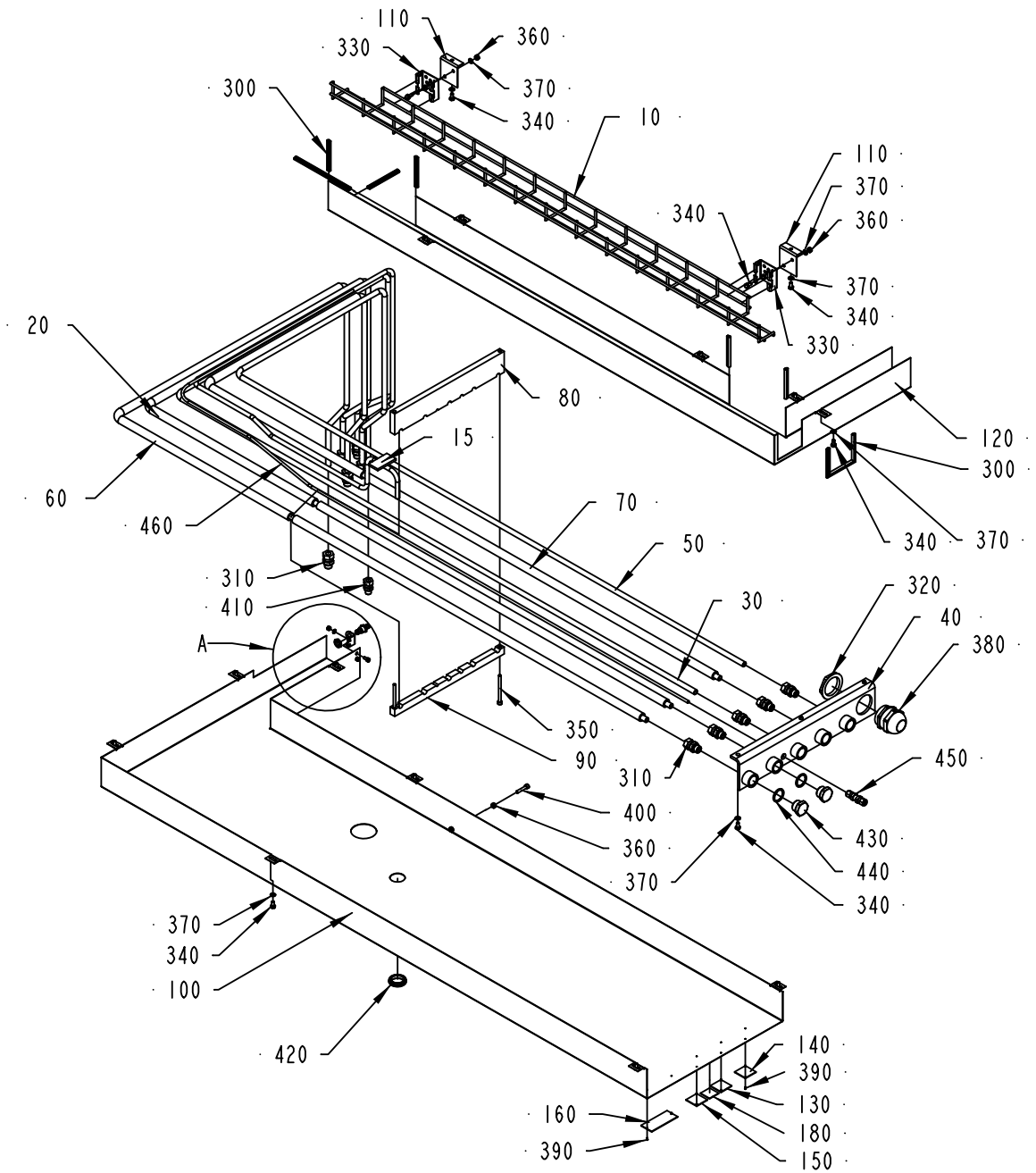

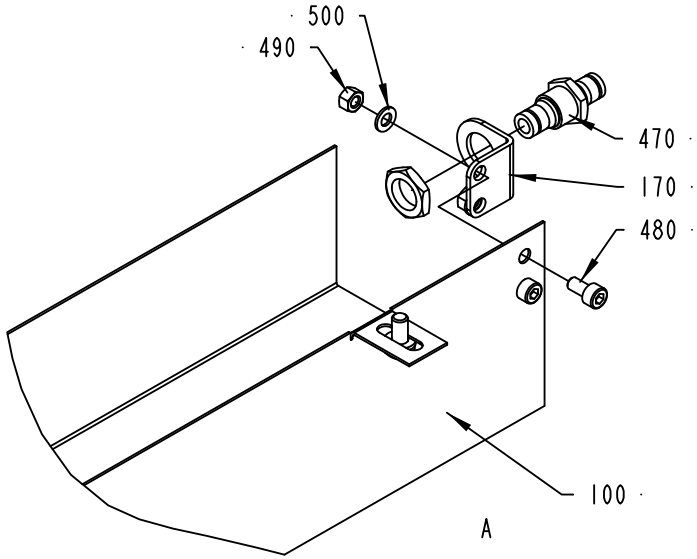

2500214-2
ECM 132544

Pos	Part No	UN	Qty	Description	Page No
HI (See drawing on page: 2-54)					
170	2613035-0000		1	SUPPORT	
180	978010-0000		1	SIGN BOARD	
450	90030-0230		1	CONN. BULKHEAD SV 6-	
460	90166-0132	CM	250	TUBE 6 MM PA,TRANSP.	
470	90457-0086		1	BULKHEAD CONNECTOR 6MM	
480	312115-0325		2	SCREW ISO4762 M5X10 A4 80	
490	312605-0314		2	HEXAGON NUT, M6M M5 A280	
500	315105-0146		2	WASHER BRB 5,3X10 RFR	
Common Parts					
010	2500218-0000		1	CABLE TRENCH	
015	2523703-0000		1	PIPE	
020	1286000-0000		1	PIPE	
030	1296854-0000		1	PIPE	
040	1334694-0000		1	CONNECTION PLATE	
050	1350307-0000		1	PIPE	
060	1350308-0000		1	PIPE	
070	1350309-0000		1	PIPE	
080	1350472-0000		1	HOLDER	
090	1350473-0000		1	HOLDER	
100	2500215-0000		1	CABLE DUCT	
110	2500217-0000		2	BRACKET	
120	2500216-0000		1	CABLE DUCT	
130	273455-0000		1	SIGN, COLD WATER	
140	273456-0000		1	SIGN, HOT WATER	
150	273458-0000		1	SIGN, AIR	
160	2555070-0000		1	SIGN	
300	90143-0060	M	1.5	EDGE STRIP 9,5X6,3MM BLACK PVC	
310	90030-0187		10	CONN. STR. GA-12-G3/8	
320	90458-0327		1	NUT, M50X1,5	
330	90181-0190		2	CABLE DUCT, WALL BRACKET, B4 MINI	
340	312105-0366		21	SCREW M6S ISO 4017 M6X12 A480	
350	312115-0385		2	SCREW ISO4762 M6X75 A4 80	
360	312605-0316		5	HEXAGON NUT, M6M M6 A280	
370	315105-0153		21	WASHER BRB 6,4X12 RFR	
380	90458-0311		1	CABLE GLAND, M50X1,5, NO.5311 1060	
390	312502-0120		8	DRIVE SCREW ROUND HEAD KDS 0X5	
400	312115-0374		1	SCREW ISO4762 M6X30 A4 80	
410	90030-0186		1	CONN. STR. GA-10-G1/4	
420	90459-1066		1	LEAD-IN, BUSHING, DA 300/350/10	
430	90330-0046		2	PLUG, EXT. G-THREAD, R-236G3/4	
440	315239-0115		2	NYLON WASHER G3/4	

Pos	Part No	UN	Qty	Description	Page No

Machine Type | Group Description | Used-In | Group Number | Page No

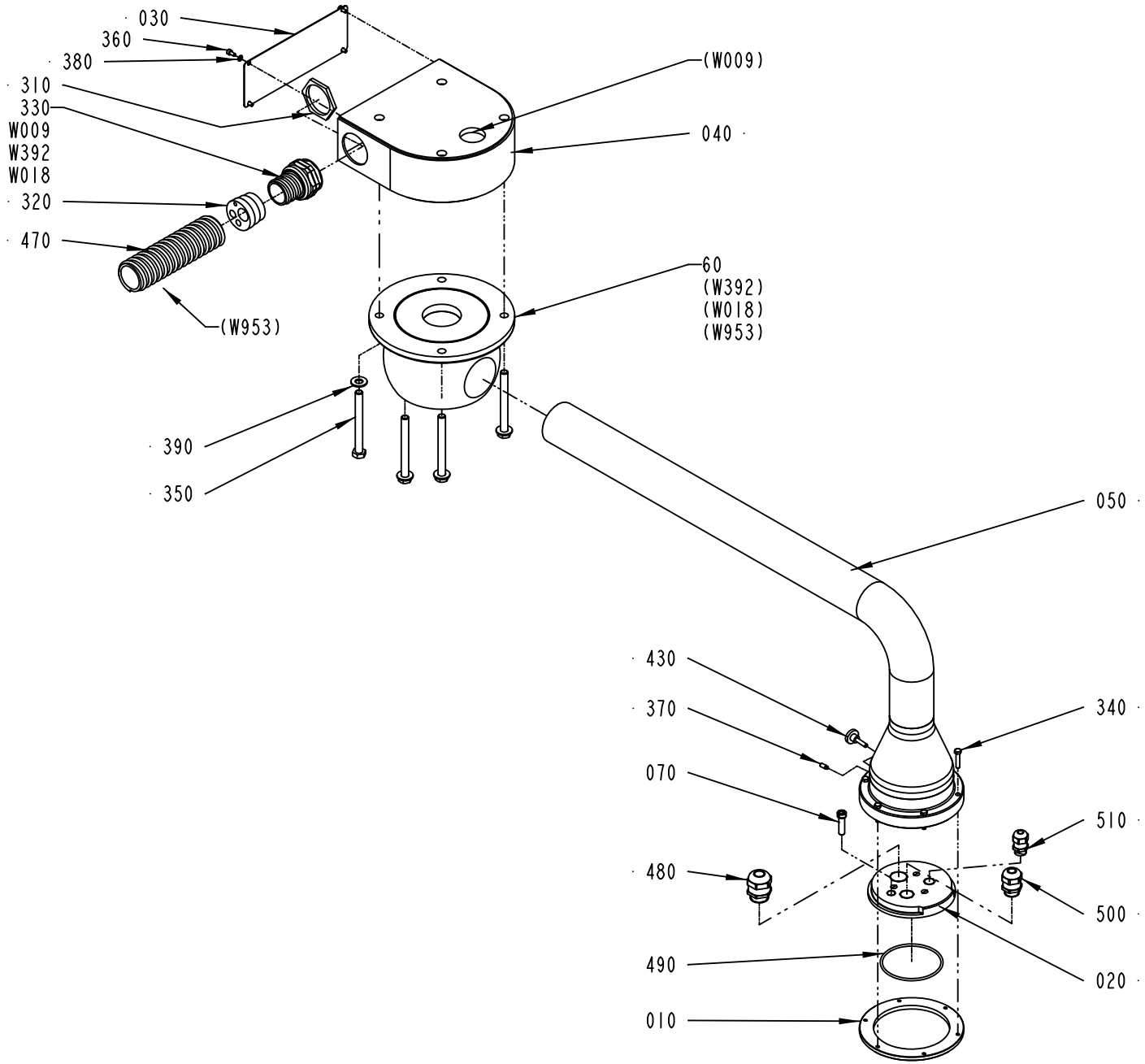

2500332-1
276283

ECM: 276283 - 20070126
Group number: 2500332-0100
Assembly Drawing: 2500332-1_1_AD

Pos	Part No	UN	Qty	Description	Page No
-					
010	1558949-0000		1	PLATE	
020	2500261-0000		1	FIXING RING	
030	1539113-0000		1	COVER	
040	2500259-0000		1	BRACKET	
050	2500260-0000		1	ARM	
060	90458-1958		1	ARTICULATION, 300DEG WITH STOP	
070	2850447-0000		1	TUBE	
310	90099-0085		1	NUT	
320	90457-0029		1	INSERT, MULTI HOLE, E156M5,9,11,19	
330	90457-0031		1	HOSE GLAND W/O INSERT PG36 NORMAL	
340	312105-0333		6	SCREW M6S ISO 4017 M5X25 A480	
350	312105-0511		4	SCREW M6S ISO 4014 M10X100 A480	
360	312115-0287		4	SCREW ISO4762 M4X8 A4 80	
370	312311-0327		1	SCREW ISO4028 M5X12 FZB	
380	315105-0136		4	WASHER BRB 4,3X8 RFR	
390	315105-0173		4	WASHER BRB 10,5X22 RFR	
430	318860-0106		1	KNOB, ADJUST.HI.EXT.THREAD, NO 8324-3674	
470	90152-0060	M	4	SPIRAL CONDUIT, 42X35, UL3529	
480	90458-0308		1	CABLE GLAND, M25X1,5, NO.5311 1030	
490	315202-0307		1	O-RING 79,5X3 MM	
500	90458-0307		1	CABLE GLAND, M20X1,5, NO.5311 1020	
510	90458-0314		1	CABLE GLAND, M16X1,5, NO.5311 1110	
W009	351150-0406	M	6.5	CABLE OLFLEX 7X0,75 MM2 LIGHT/GREY	
W018	90458-2557	M	7	CABLE OLFLEX 25X1 MM2	
W392	351162-0106	M	7.5	CABLE AWM 1X4 MM2 YELLOW-GREEN	

Pos	Part No	UN	Qty	Description	Page No

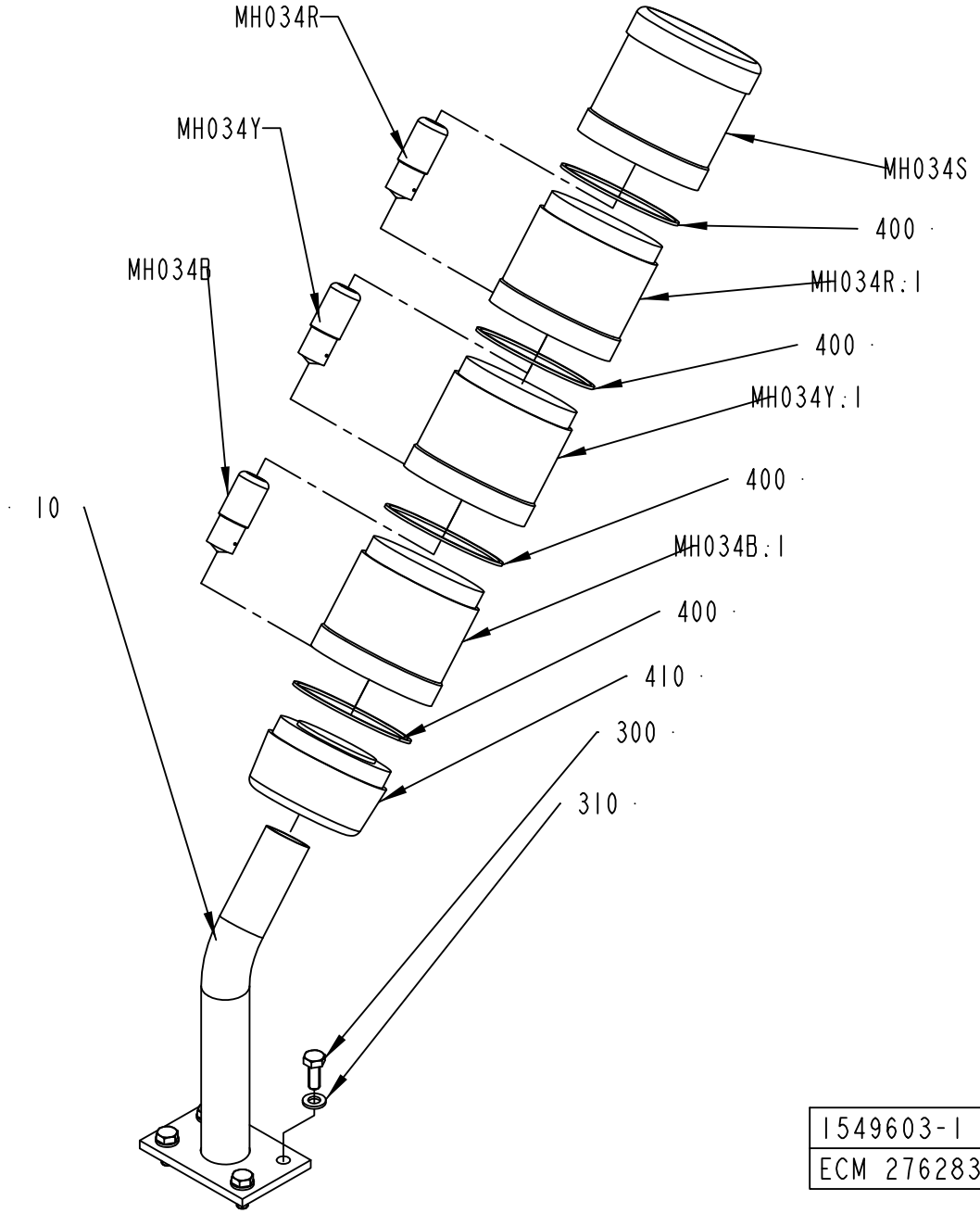

1549603-1
ECM 276283

ECM: 276283 - 20070126
Group number: 1549603-0100
Assembly Drawing: 1549603-1_1_AB

Pos	Part No	UN	Qty	Description	Page No
-					
10	1517248-0000		1	BRACKET	
300	312105-0368		4	SCREW M6S ISO 4017 M6X16 A480	
310	315105-0153		4	WASHER BRB 6,4X12 RFR	
320	312125-0325		4	SCREW ISO 1207 M5X10 A4	
400	90419-0307		4	GASKET	
410	90458-0292		1	BASE, KT70-1001	
MH034Y	90036-0068		1	BULB 6.5W 24V	
MH034S	90458-0302		1	SIREN WITH ADJUSTABLE VOLUME KS 70-3004	
MH034R	90036-0068		1	BULB 6.5W 24V	
MH034B	90036-0068		1	BULB 6.5W 24V	
MH034Y.1	90458-0294		1	LIGHT ELEMENT, YELLOW, KL70-401Y	
MH034R.1	90458-0293		1	LIGHT ELEMENT, RED, KL70-401R	
MH034B.1	90458-0295		1	LIGHT ELEMENT, BLUE, KL70-401L	

Pos	Part No	UN	Qty	Description	Page No

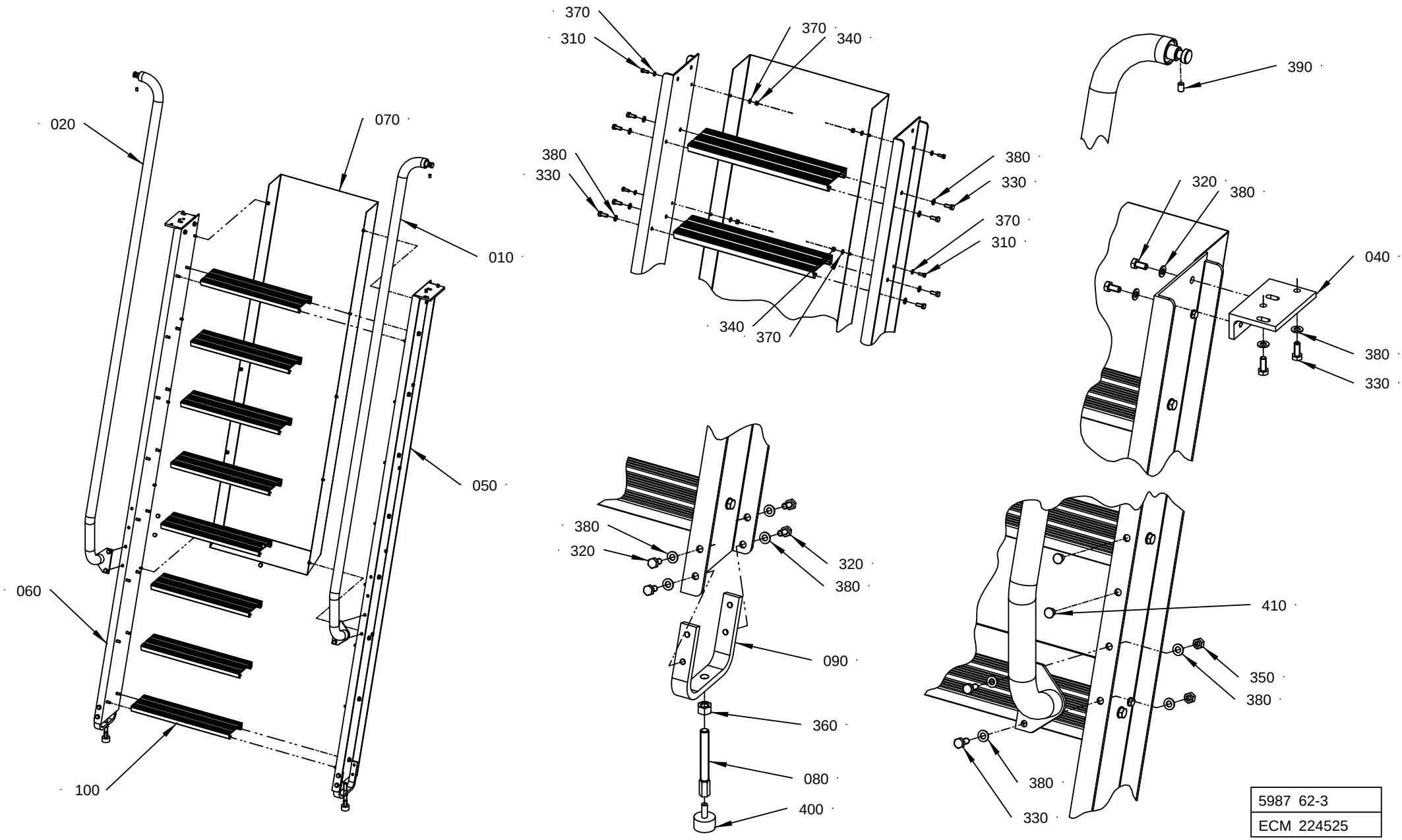

5987 62-3
ECM 224525

ECM: 240924 - 20051114
Group number: 598762-0300
Assembly Drawing: 598762-3_1_AA

Pos	Part No	UN	Qty	Description	Page No
-					
010	2769984-0000		1	RAIL	
020	2769985-0000		1	RAIL	
040	2769988-0000		1	BRACKET	
050	2527513-0000		1	SIDE PIECE	
060	2527514-0000		1	SIDE PIECE	
070	2514112-0000		1	COVER	
080	441905-0000		2	RETARD PIN	
090	979966-0000		2	BRACKET	
100	441679-0000		8	STAIR	
310	312105-0368		10	SCREW M6S ISO 4017 M6X16 A480	
320	312105-0449		12	SCREW M6S ISO 4017 M8X16 A480	
330	312105-0451		40	SCREW M6S ISO 4017 M8X20 A480	
340	312605-0316		10	HEXAGON NUT, M6M M6 A280	
350	312605-0318		4	HEXAGON NUT, M6M M8 A280	
360	312605-0322		2	HEXAGON NUT, M6M M12 A280	
370	315105-0153		20	WASHER BRB 6,4X12 RFR	
380	315105-0165		56	WASHER BRB 8,4X16 RFR	
390	312318-0447		2	SCREW ISO4029 M8X12 A4	
400	90347-0004		2	VIBRATION DAMPER D=30 TH=M8 H=17 H2=21MM	
410	90459-5924		4	PLUG LD-PE, Ã¸10.7 NATUR	

Pos	Part No	UN	Qty	Description	Page No

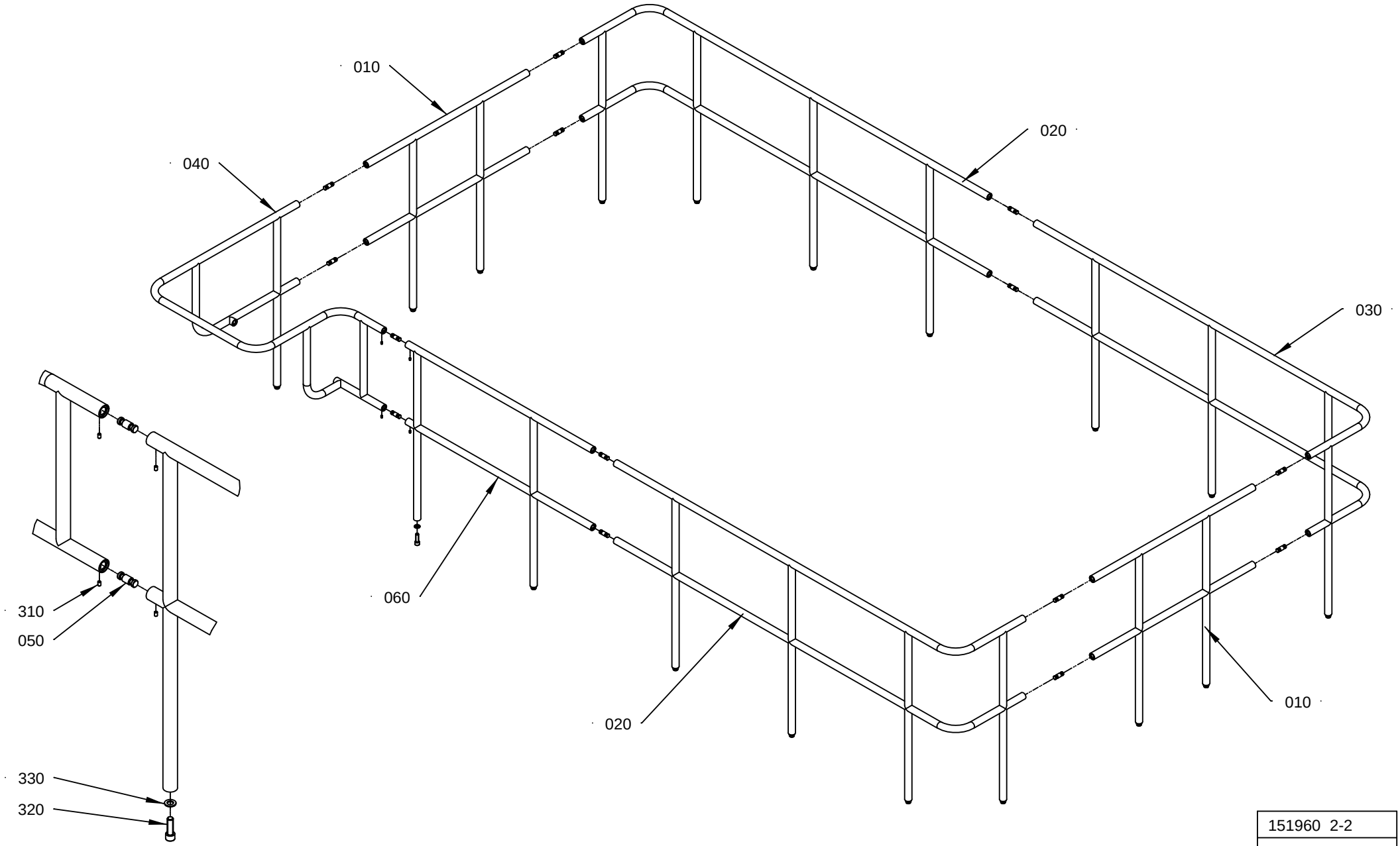

151960 2-2
ECM 224525

ECM: 268007 - 20060516
Group number: 1519602-0200
Assembly Drawing: 1519602-2_1_AA

Pos	Part No	UN	Qty	Description	Page No
LEFTLADDER					
020	1512636-0000		2	RAILING	
030	1512637-0000		1	RAILING	
040	2769991-0000		1	RAILING	
RIGHTLADDER					
020	1512636-0000		1	RAILING	
030	1512637-0000		2	RAILING	
040	2769992-0000		1	RAILING	
Common Parts					
010	1512635-0000		2	RAILING	
050	2555063-0000		14	PIN	
060	1538924-0000		1	RAILING	
310	312318-0447		28	SCREW ISO4029 M8X12 A4	
320	312115-0630		19	SCREW ISO4762 M16X50 A4 80	
330	315105-0186		19	WASHER BRB 17X30 RFR	

Pos	Part No	UN	Qty	Description	Page No

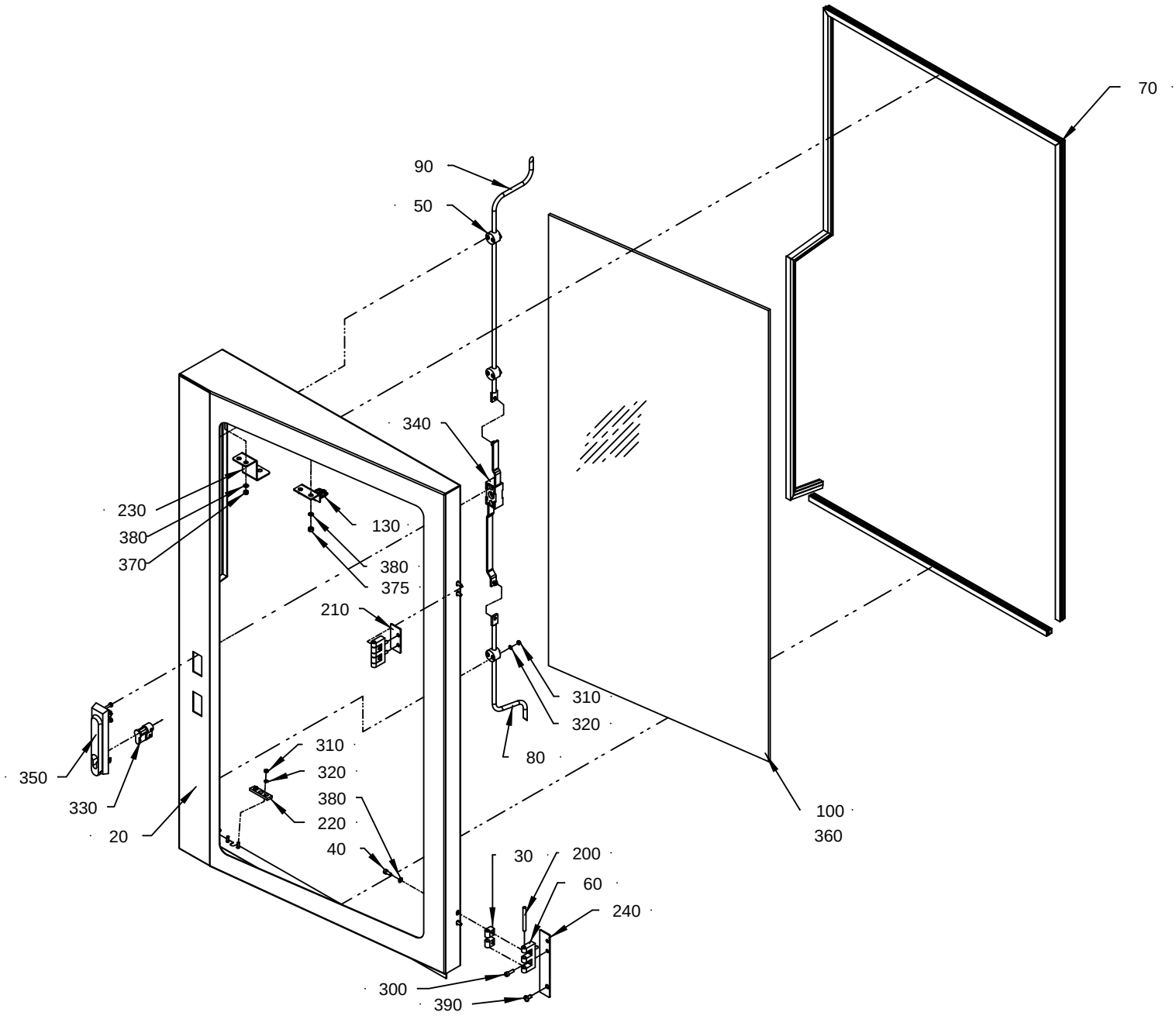

2552 680-2
ECM 224525

ECM: 234757 - 20051114
Group number: 2552680-0200
Assembly Drawing: 2552680-2_1_AA

Pos	Part No	UN	Qty	Description	Page No
-					
020	2552691-0000		1	DOOR	
030	1035794-0000		4	BLOCKING PIECE	
040	312115-0327		4	SCREW ISO4762 M5X12 A4 80	
050	1129274-0000		3	GUIDE LUG	
060	1035792-0000		2	E-HINGE	
070	90143-0068	M	3.5	RUBBER STRIP EMKA 1011-06	
080	2552683-0000		1	LOCKING ARM	
090	2552682-0000		1	LOCKING ARM	
100	2552679-0000		1	GLASS PANE	
130	2552686-0000		1	KEY	
200	988685-0000		2	PIN	
210	2552687-0000		1	SPACER	
220	2552688-0000		1	GUIDE BRACKET	
230	2554959-0000		1	GUIDE	
240	2556243-0000		1	SPACER	
300	312115-0329		4	SCREW ISO4762 M5X16 A4 80	
310	312605-0312		8	HEXAGON NUT, M6M M4 A280	
320	315105-0136		8	WASHER BRB 4,3X8 RFR	
330	90237-0128		1	LOCK CYLINDER, 1109-U3	
340	90237-0153		1	LOCK HOUSING, 1121-U26-0B	
350	90237-0176		1	TURNING HANDLE, 1125-U190-A	
360	90157-0041		1	SEALING COMPOUND, RHODORSEAL 5651	
370	312812-0314		2	HEXAGON NUT, NY-LOCK M5 A480	
375	575034-0000		2	ROUND NUT	
380	315105-0146		8	WASHER BRB 5,3X10 RFR	
390	90287-0075		1	SCREW SLOT. PAN HEAD LKCS M6X12	

Pos	Part No	UN	Qty	Description	Page No

Machine Type	Group Description	Used-In	Group Number	Page No

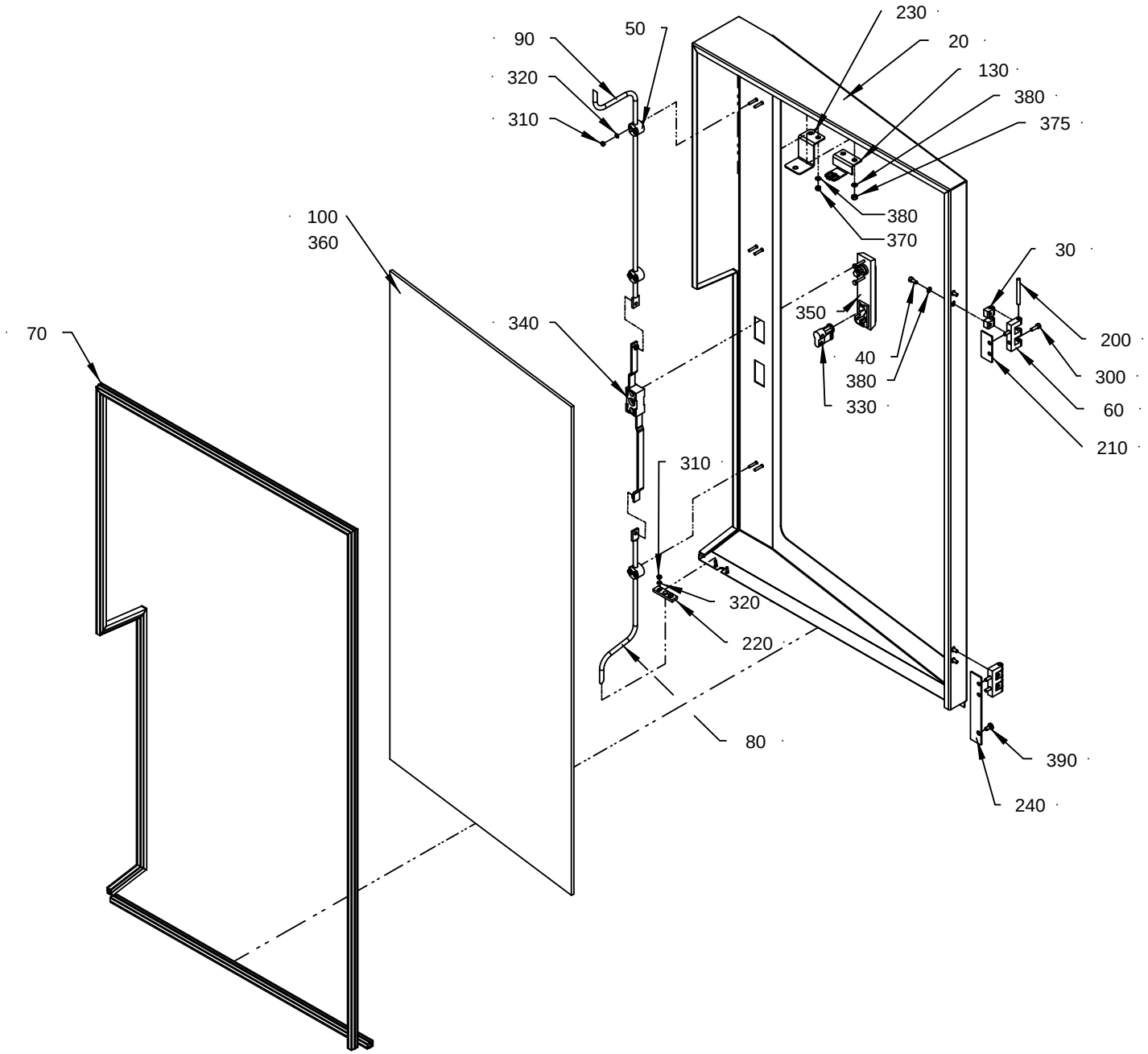

2552 681-2
ECM 224525

ECM: 234758 - 20051114
Group number: 2552681-0200
Assembly Drawing: 2552681-2_1_AA

Pos	Part No	UN	Qty	Description	Page No
-					
020	2552692-0000		1	DOOR	
030	1035794-0000		4	BLOCKING PIECE	
040	312115-0327		4	SCREW ISO4762 M5X12 A4 80	
050	1129274-0000		3	GUIDE LUG	
060	1035792-0000		2	E-HINGE	
070	90143-0068	M	3.5	RUBBER STRIP EMKA 1011-06	
080	2552683-0000		1	LOCKING ARM	
090	2552682-0000		1	LOCKING ARM	
100	2552679-0000		1	GLASS PANE	
130	2552686-0000		1	KEY	
200	988685-0000		2	PIN	
210	2552687-0000		1	SPACER	
220	2552688-0000		1	GUIDE BRACKET	
230	2554959-0000		1	GUIDE	
240	2556243-0000		1	SPACER	
300	312115-0329		4	SCREW ISO4762 M5X16 A4 80	
310	312605-0312		8	HEXAGON NUT, M6M M4 A280	
320	315105-0136		8	WASHER BRB 4,3X8 RFR	
330	90237-0128		1	LOCK CYLINDER, 1109-U3	
340	90237-0153		1	LOCK HOUSING, 1121-U26-0B	
350	90237-0176		1	TURNING HANDLE, 1125-U190-A	
360	90157-0041		1	SEALING COMPOUND, RHODORSEAL 5651	
370	312812-0314		2	HEXAGON NUT, NY-LOCK M5 A480	
375	575034-0000		2	ROUND NUT	
380	315105-0146		8	WASHER BRB 5,3X10 RFR	
390	90287-0075		1	SCREW SLOT. PAN HEAD LKCS M6X12	

Pos	Part No	UN	Qty	Description	Page No

Machine Type	Group Description	Used-In	Group Number	Page No

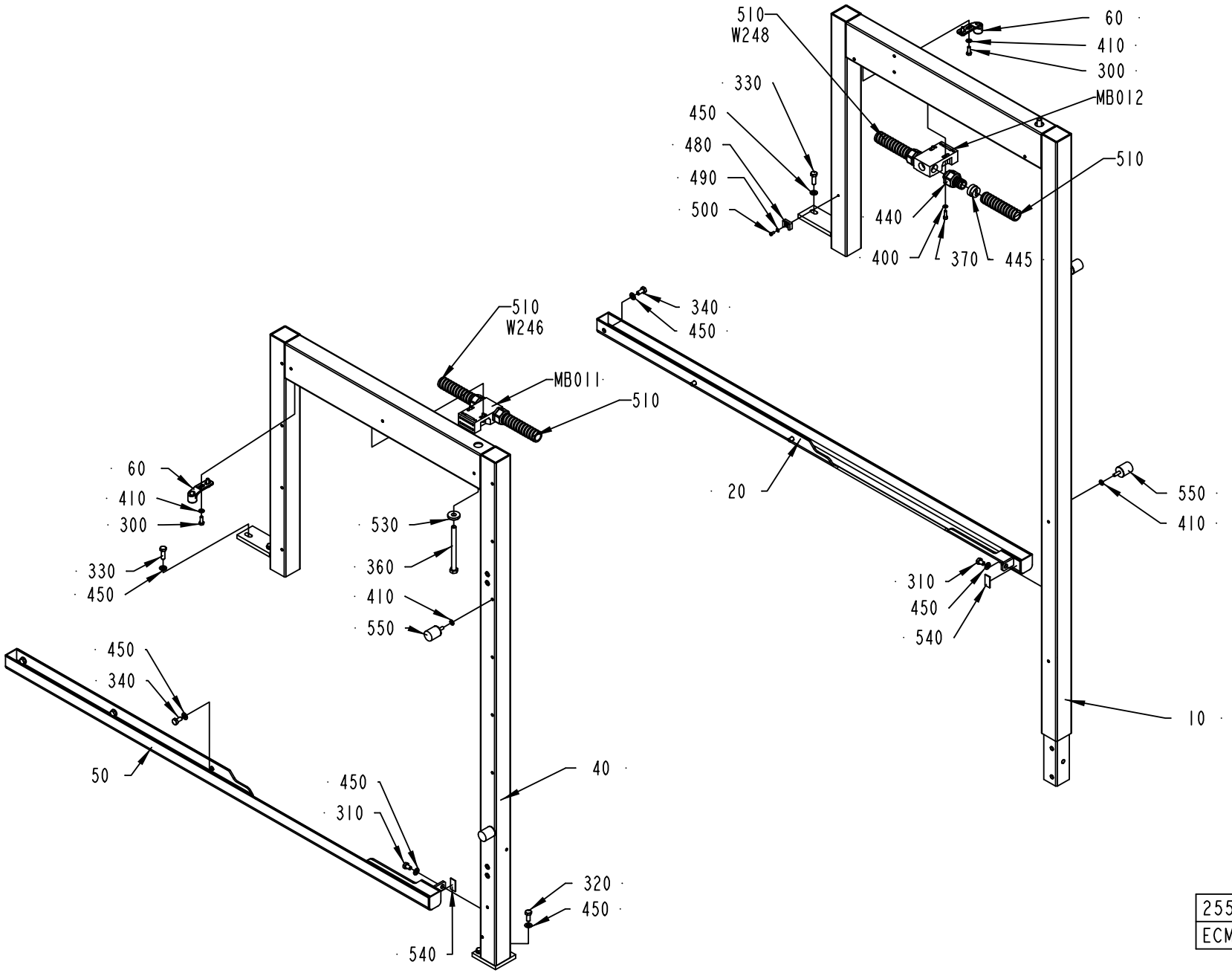
510
W248
60
410
300
330
MB012
450
480
490
500
510
440
400
370
445
340
450
510
W246
MB011
510
60
410
300
530
360
410
550
330
450
20
550
410
310
450
540
450
340
50
10
450
310
40
320
450
540
2553830-1
ECM 110911

ECM: 276159 - 20070126
Group number: 2553830-0100
Assembly Drawing: 2553830-1_1_AA

Pos	Part No	UN	Qty	Description	Page No
TBA					
010	2553831-0000		1	FRAME	
040	2553832-0000		1	FRAME	
Common Parts					
020	2552685-0000		1	CHUTE	
050	2552684-0000		1	CHUTE	
060	1538868-0000		2	BRACKET	
300	312105-0368		4	SCREW M6S ISO 4017 M6X16 A480	
310	312105-0447		2	SCREW M6S ISO 4017 M8X12 A480	
320	312105-0451		2	SCREW M6S ISO 4017 M8X20 A480	
330	312105-0453		4	SCREW M6S ISO 4017 M8X25 A480	
340	312105-0449		6	SCREW M6S ISO 4017 M8X16 A480	
360	312105-0515		2	SCREW M6S ISO 4014 M10X120 A480	
370	312115-0329		4	SCREW ISO4762 M5X16 A4 80	
400	315105-0146		4	WASHER BRB 5,3X10 RFR	
410	315105-0153		8	WASHER BRB 6,4X12 RFR	
440	90458-0430		4	HOSE GLAND W/O INSERT M20 EXTENDED	
445	90457-0147		4	GLAND, INSERT, MULTI HOLE, 2X7	
450	315105-0165		14	WASHER BRB 8,4X16 RFR	
480	352113-0204		2	ANCHOR PLATES FOR STRIPS, TYPE TM3S25-M	
490	315105-0136		2	WASHER BRB 4,3X8 RFR	
500	312125-0287		2	SCREW ISO 1207 M4X8 A4	
510	90152-0051	M	6	SPIRAL CONDUIT, 25X18, UL 1816	
530	315125-0173		2	WASHER TBRSB 10,5X28X6 A4	
540	90458-0145		1	SEALING, 3X15 MM CLOSED CELL SPONGE	
550	90459-1060		4	VIBRATION DAMPER, T15688	
MB012	90459-0472		1	KEY SAF.SW. AZ 16 02ZVRK-M20-2152-2254	
MB011	90459-0472		1	KEY SAF.SW. AZ 16 02ZVRK-M20-2152-2254	
W246	351150-0431	M	5	CABLE OLFLEX 2X0,75 MM2 LIGHT/GREY	
W248	351150-0431	M	6	CABLE OLFLEX 2X0,75 MM2 LIGHT/GREY	

Pos	Part No	UN	Qty	Description	Page No

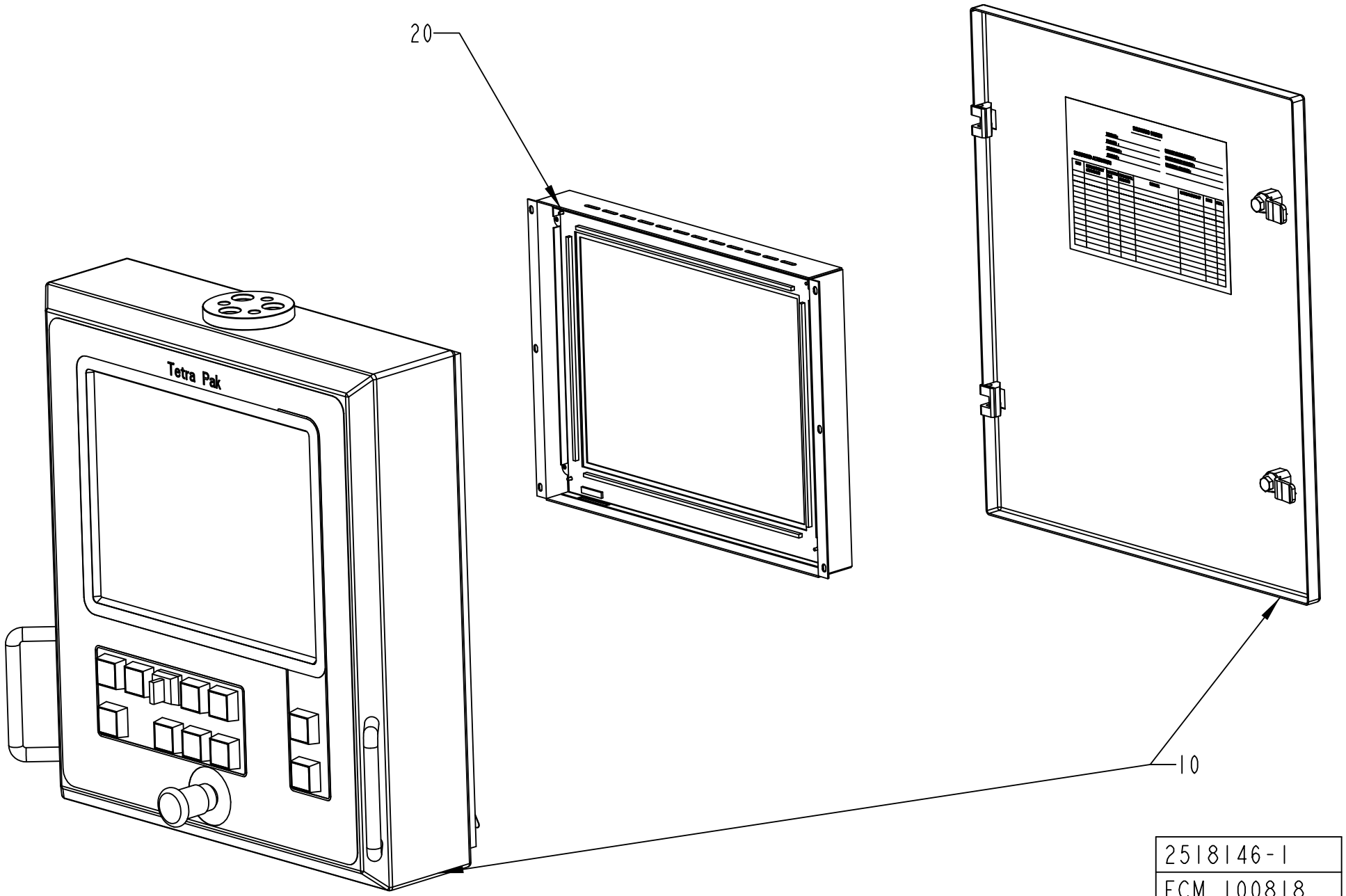
20
Tetra Pak
10
2518146-1
ECM 100818

ECM: 245343 - 20060124
Group number: 2518146-0100
Assembly Drawing: 2518146-1_1_AA

Pos	Part No	UN	Qty	Description	Page No
TBA/19-0300					
0010	2518147-0109		1	PANEL UNIT 15"	**2-73**
Common Parts					
0020	90459-0287		1	DISPLAY UNIT 15", 02567-000	

Pos	Part No	UN	Qty	Description	Page No

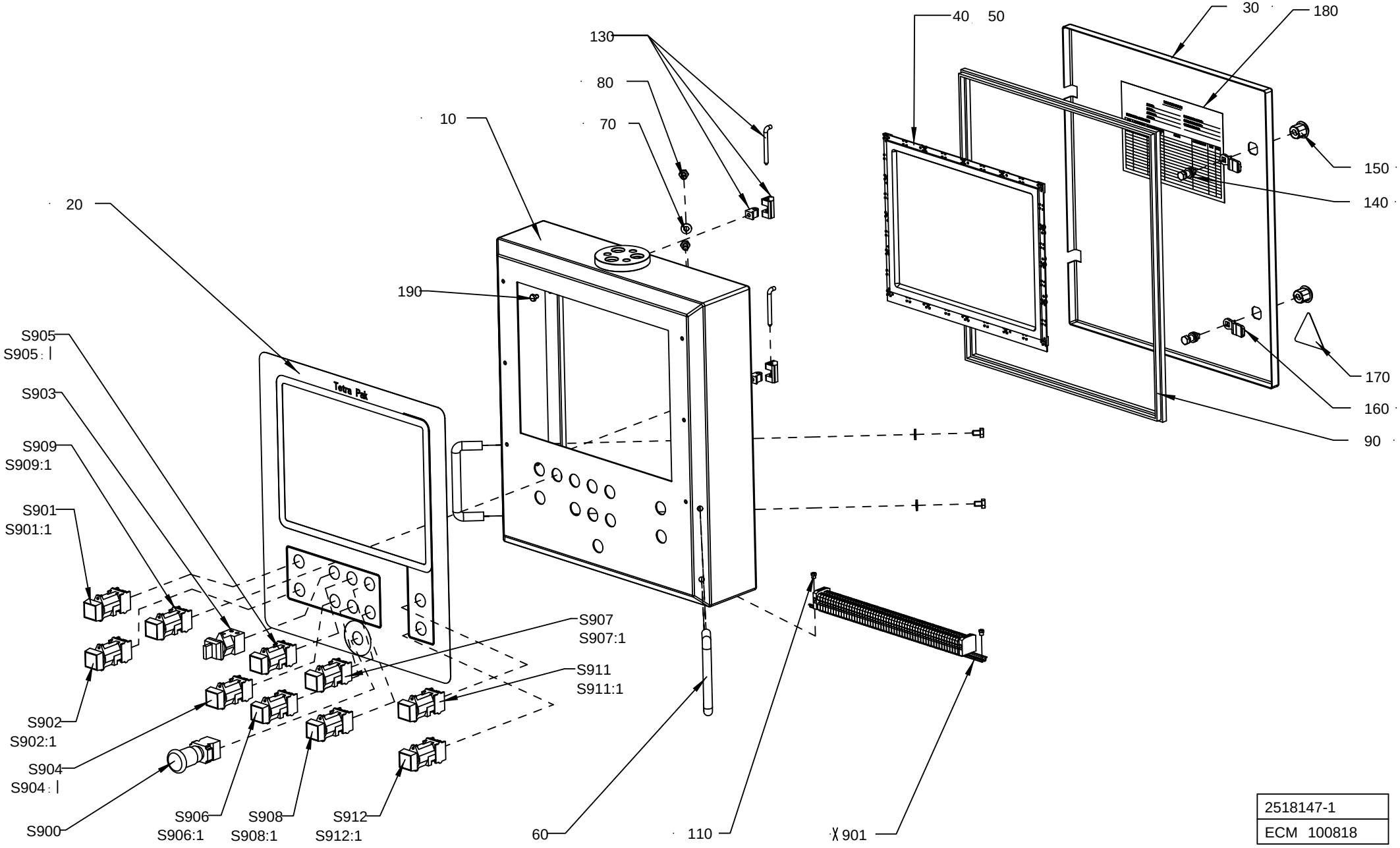

2518147-1
ECM 100818

ECM: 100818 -
Group number: 2518147-0109
Assembly Drawing: 2518147-1_1_AA

Pos	Part No	UN	Qty	Description	Page No
TBA/19-0300					
S903	90111-0120		1	SWITCH, 2 POS.704.510 .0A+704.901.5/A	
S904:1	359301-0170		1	BUTTON SIGN, SPOOLING OF FINAL FOLDER	
S904	90064-0082		1	PUSH BUTTON, WHITE	
	90036-0057		*1*	*LIGHT BULB, BA9S 28V*	
S905:1	359301-0091		1	BUTTON SIGN, INCHING FINAL FOLDER	
S905	90064-0098		1	PUSH BUTTON, CLEAR	
Common Parts					
010	2518148-0000		1	PANEL	
020	2518149-0000		1	FOIL	
030	2518157-0000		1	DOOR	
040	90459-0288		1	SLIM LINE TOUCH BEZEL 15", 1511	
050	90153-0060		1	ADHESIVE, 3M DP-190 B/A	
060	90017-0016		2	HANDLE, NO. 14.4012.02.120	
070	90005-0077		4	WASHER PL.RND.NYL.8,4/7, H=2	
080	312105-0447		4	SCREW M6S ISO 4017 M8X12 A480	
090	90143-0057	MM	1800	STRIP EMKA 1011-05 21X11MM	
110	1041609-0000		2	NUT	
120	312605-0316		1	HEXAGON NUT, M6M M6 A280	
130	90248-0047		2	HINGE, 1150-U50	
140	90237-0320		2	LOCK HOUSING, 1000-U136	
150	90237-0319		2	LOCK HOUSING, 1000-U134	
160	90237-0157		2	LOCK BOLT, 1000-230	
170	359705-0015		1	WARNING SIGN ISO, RISK OF ELECTRIC SHOCK	
190	90194-0133		1	SIGN "DELIVERED DESIGN"	
220	312105-0362		2	SCREW M6S ISO 4017 M6X8 A480	
S900	90458-1651		1	EMERGENCY STOP, ZB4-BS-844 ZB4-BZ-104	
S901:1	359301-0519		1	SIGN "TPOP RESET"	
S901	90064-0082		1	PUSH BUTTON, WHITE	
	90036-0057		*1*	*LIGHT BULB, BA9S 28V*	
S902:1	359301-0130		1	BUTTON SIGN, LAMP TEST	
S902	90064-0082		1	PUSH BUTTON, WHITE	
	90036-0057		*1*	*LIGHT BULB, BA9S 28V*	
S906:1	359301-0050		1	BUTTON SIGN, DROP CHUTE BRIK	
S906	90064-0082		1	PUSH BUTTON, WHITE	
	90036-0057		*1*	*LIGHT BULB, BA9S 28V*	
S907:1	359301-0090		1	BUTTON SIGN, INCHING	
S907	90064-0098		1	PUSH BUTTON, CLEAR	
S908:1	359301-0110		1	BUTTON SIGN, SHORT STOP	
S908	90064-0084		1	PUSH BUTTON, YELLOW	
S909:1	359301-0160		1	BUTTON SIGN, DRAINAGE OF PRODUCT TUBE	
S909	90064-0086		1	PUSH BUTTON, WHITE	
	90036-0057		*1*	*LIGHT BULB, BA9S 28V*	
S911:1	359301-0001		1	BUTTON SIGN, UP	
S911	90064-0093		1	PUSH BUTTON, GREEN	
	90036-0057		*1*	*LIGHT BULB, BA9S 28V*	
S912:1	359301-0005		1	BUTTON SIGN, DOWN	
S912	90064-0082		1	PUSH BUTTON, WHITE	
	90036-0057		*1*	*LIGHT BULB, BA9S 28V*	
X901	1095597-0100		1	TERMINAL	**2-75**

Machine Type | Group Description | Used-In | Group Number | Page No

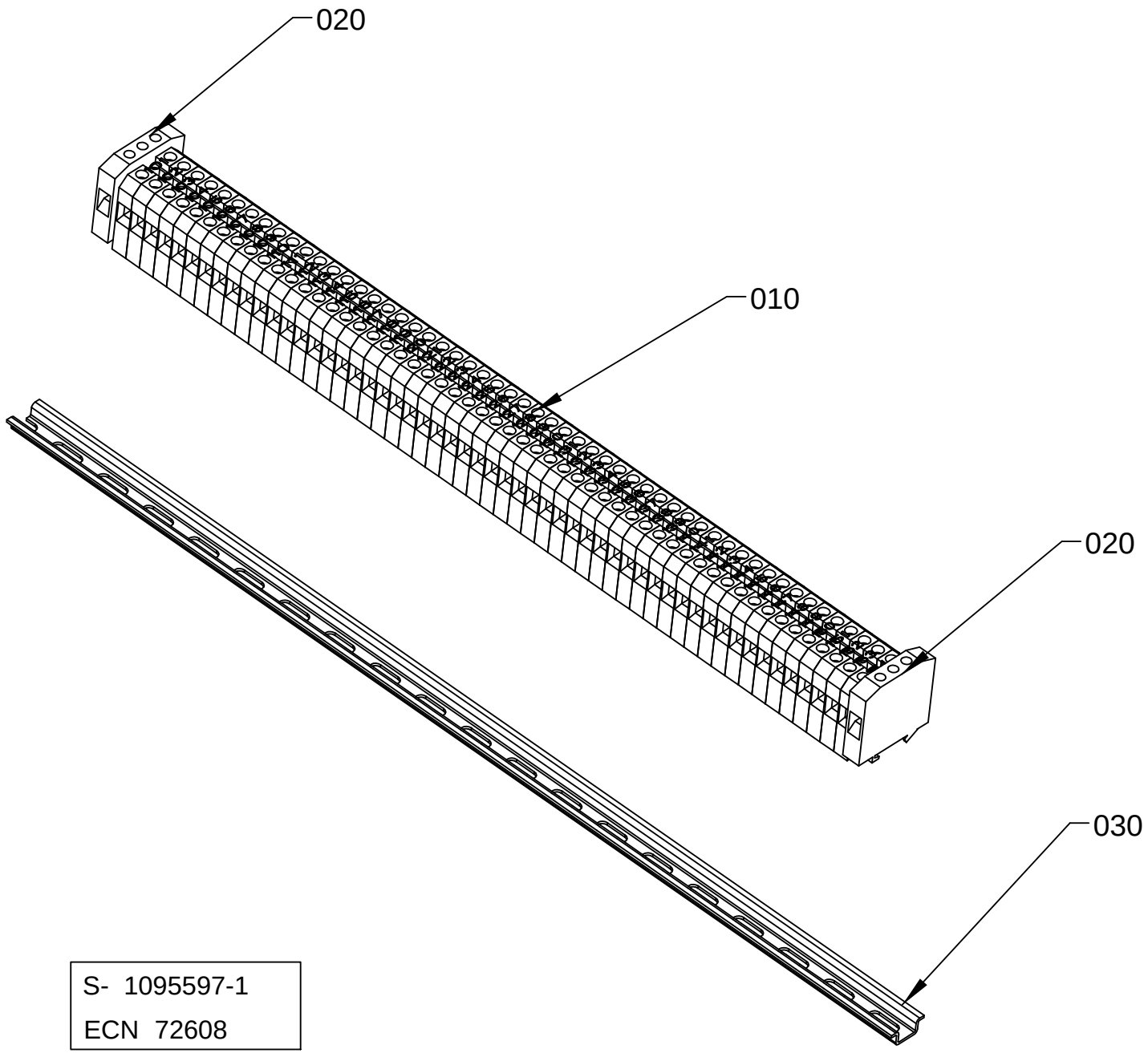

S- 1095597-1
ECN 72608

ECM: 189931 - 20041104
Group number: 1095597-0100
Assembly Drawing: 1095597-1_1_AB

Pos	Part No	UN	Qty	Description	Page No
-					
010	90077-0079		56	FEED THROUGH TERMINAL, 02943.6	
020	90135-0026		2	EARTH TERMINAL, 3802.6	
030	90077-0328	MM	390	RAIL TS15/5	
040	359011-0821		2	SET OF SIGNS 6-FW 1-50	
050	359011-0819		1	MARKING PLATES 5-GW (EARTH)	

Pos	Part No	UN	Qty	Description	Page No

Tetra Pak

SPC
Spare Parts Catalogue

DRIVE UNIT

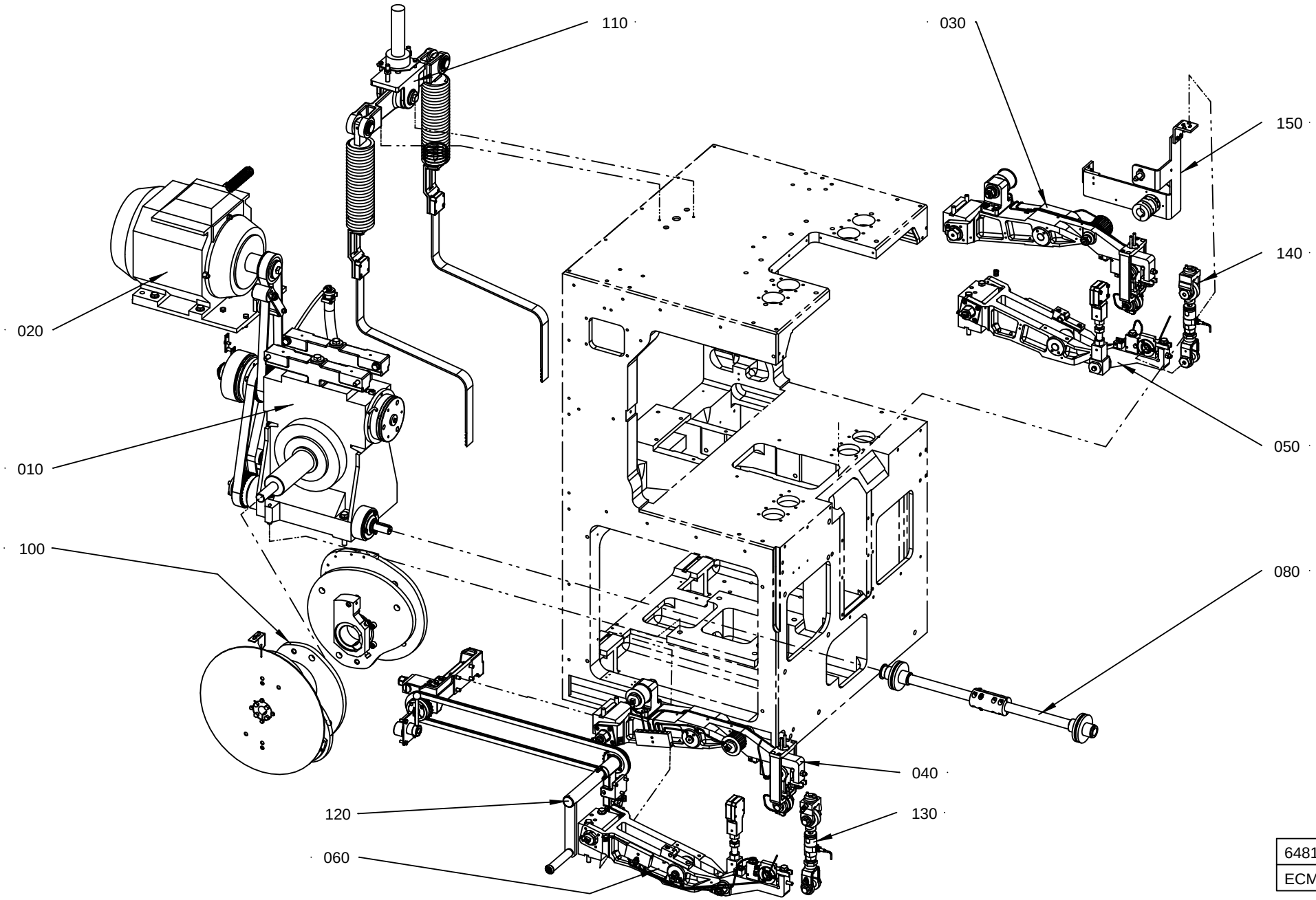

648103 - 8
ECM 252610

ECM: 252617 - 20060131
Group number: 648103-1200
Assembly Drawing: 648103-8_1_AA

Pos	Part No	UN	Qty	Description	Page No
-					
010	256173-0700		1	WORM GEAR	**3-5**
020	1523210-0100		1	MOTOR	**3-7**
030	256197-0500		1	ARM	**3-9**
040	929438-0100		1	ARM	**3-11**
050	491814-0300		1	SLEWING BRACKET RIGHT	**3-13**
060	491815-0300		1	SLEWING BRACKET LEFT	**3-15**
080	256200-0300		1	INTERMEDIARY SHAFT	**3-17**
100	256202-0700		1	CURVE PACK	**3-19, 3-21**
110	2506790-0100		1	HOLD-DOWN DEVICE	**3-23**
120	1512286-0100		1	CRANK	**3-27**
130	1490120-0100		1	DISCONNECTION LINK LEFT	**3-29**
140	1539766-0100		1	DISCONNECTION LINK RIGHT	**3-31**
150	1512284-0100		1	ANGLE ENCODER	**3-33**

Pos	Part No	UN	Qty	Description	Page No

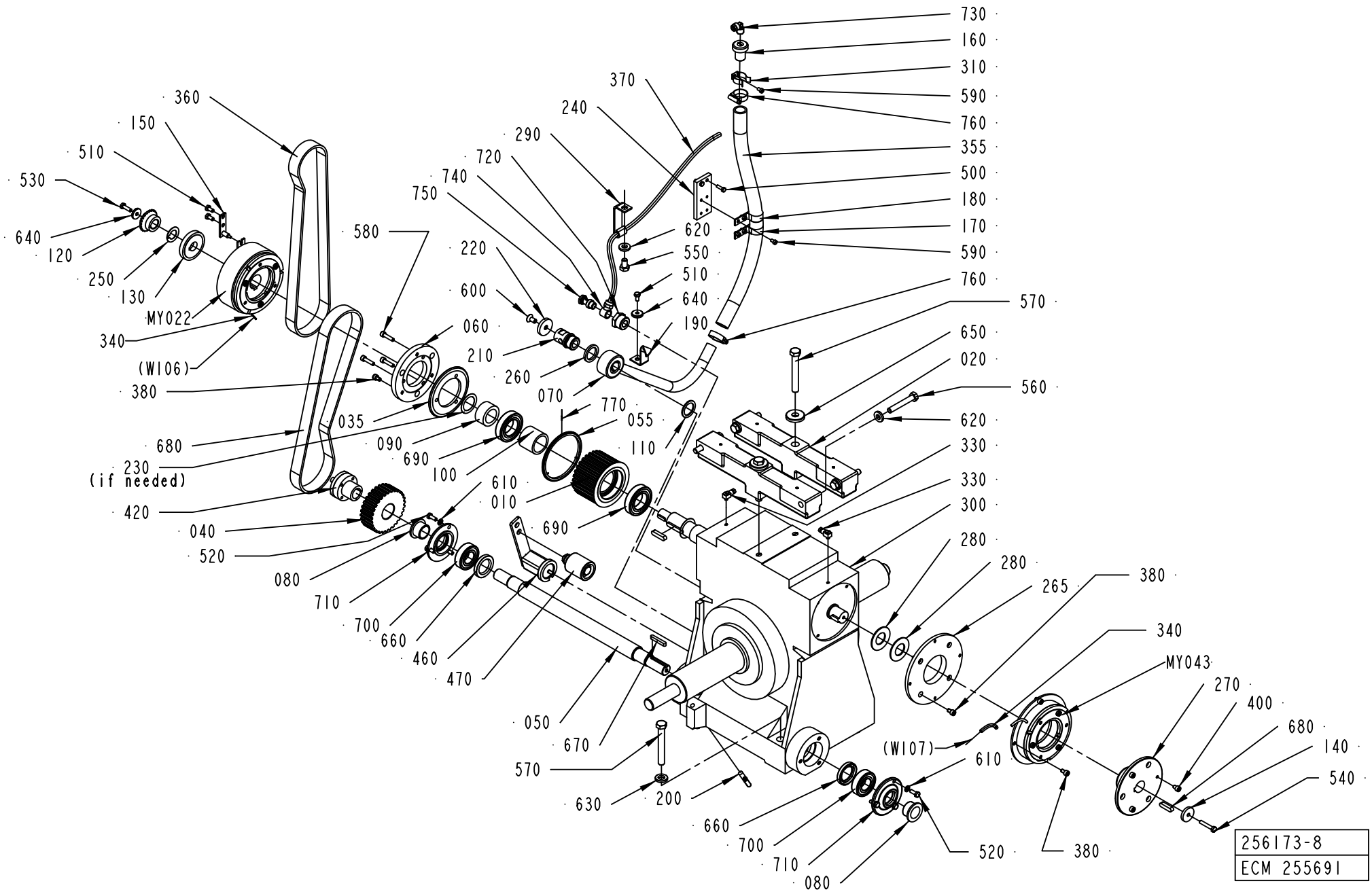

256173-8
ECM 255691

ECM: 256477 - 20060303
Group number: 256173-0700
Assembly Drawing: 256173-8_1_AB

Pos	Part No	UN	Qty	Description	Page No
-					
010	2751443-0000		1	TIMING BELT PULLEY	
020	441356-0000		2	BRACKET	
035	751245-0000		1	FLANGE	
040	256176-0000		1	GEAR WHEEL	
050	256177-0000		1	SHAFT	
055	2518410-0000		1	FLANGE	
060	256178-0000		1	FIXING RING	
070	272372-0000		1	HOUSE	
080	256179-0000		2	SPACER SLEEVE	
090	2527651-0000		1	SPACER	
100	256181-0000		1	SPACER PIPE	
110	257174-0000		1	SEALING WASHER	
120	257179-0000		1	GEAR WHEEL	
130	491409-0000		1	WASHER	
140	271689-0000		1	WASHER	
150	2527652-0000		1	ARM	
160	272376-0000		1	SHUTTER	
170	272377-0001		1	CRAMP	
180	272377-0002		1	CRAMP	
190	272388-0000		1	CRAMP	
200	295140-0000		2	PIN	
210	295766-0000		1	SCREW	
220	295767-0000		1	SEALING WASHER	
230	441024-0000		1	LACE	
240	441360-0000		1	PLATE	
250	491410-0000		1	LACE	
260	456934-0000		1	SEALING WASHER	
265	469999-0000		1	FLANGE	
270	491274-0000		1	HUB	
280	90016-0010		2	DISC SPRINGS,50X25,4X2	
290	469867-0000		1	HOSE HOLDER	
300	90457-0151		1	WORM GEAR UCZ 151 SIZE 125 39:1	
310	90074-0026		1	PIPE CLIP FOR TUBE D=24-35 MM	
330	90134-0058		2	CONNECTION	
340	90142-0005	MM	1500	HOSE	
350	90144-0073	MM	1	TREBOFLON-TAPE W=13MM	
355	90166-0060	MM	530	HOSE 19/26-27 REINF.PVC	
360	90600-0275		1	TIMING BELT T10X1000X25 RUBBER	
370	90166-0133	MM	500	TUBE 8 MM PA,TRANSP.	
380	90287-0081		11	SCREW MC6S M6X10 129	
400	312115-0362		6	SCREW ISO4762 M6X8 A4 80	
410	90157-0016	ML	1	LOCKING FLUID LOCTITE 242 50 ML	
420	90208-0120		1	CONE CLAMP. ELEMENT 22/32, L=25	
430	90296-0068	G	1	SHELL ALVANIA GREASE EP 2	
440	90296-0075	L	4	SHELL OMALA OIL 320, DRUM 208 LITRES	
460	90457-0127		1	TENSIONER, TYPE SE-F-15	
470	90457-0128		1	CLAMPING ROLL	
500	312101-0329		2	SCREW M6S M5X16 FZB	
510	312101-0366		3	SCREW M6S M6X12 FZB	
520	312101-0368		6	SCREW M6S M6X16 FZB	
530	312101-0370		1	SCREW M6S M6X20 FZB	
540	312101-0376		1	SCREW M6S M6X35 FZB	
550	312101-0489		1	SCREW M6S M10X16 FZB	
560	312101-0504		4	SCREW M6S M10X65 FZB	
570	312101-0550		6	SCREW M6S M12X90 FZB	
580	312115-0372		3	SCREW ISO4762 M6X25 A4 80	
590	312121-0323		5	SCREW ISO 1207 M5X8 4.8 - 5.8 Z.PL.	
600	312155-0449		1	SCREW DIN 7991 MF6S M8X16 A4 70	
610	315101-0153		6	WASHER PLAIN, BRB, 6,4/12 H=1,5	
620	315111-0173		5	WASHER PLAIN, TBRB 10,5/22 H=4	
630	315111-0178		4	WASHER PLAIN, TBRB 13/24 H=4	
640	315121-0153		2	WASHER PLAIN, TBRSB 6,4/22 H=4	
650	315121-0178		2	WASHER PLAIN, TBRSB 13/36 H=6	
660	315221-0169		2	RADIAL SEAL 30X47X7 MM	
670	315701-0239		1	PARALLEL KEY W. ROUND ENDS 6X6X40 MM	
680	90600-0274		1	TIMING BELT T10X920X25 RUBBER	
680	315701-0268		1	PARALLEL KEY W. ROUND ENDS 8X7X32 MM	
690	90600-0352		2	BALL BEARING, 35X62X14 MM	
700	321313-0105		2	BALL BEARING, 25X52X15MM	
710	321600-0114		2	SEAL COVER LL3052	
720	342701-0208		1	BUSHING, INT/EXT. G-THREAD NO. 3/4-1/4	
730	342930-0122		1	ELBOW 90 COUPL.,EXT.THREAD 8/6-R1/4"	
740	342980-0122		1	BANJO-CONNECTION,RING 8/6-G1/4 INCH	
750	342980-0304		1	BANJO-HOLLOW BOLT COUPL,EXT.THR.01-G1/4	
760	342991-0104		2	HOSE CLIP,WORM DRIVE TYPE (23)-27	
770	311102-0153		3	PARALLEL PIN ISO 2338 1,5M6X10 ST	
780	315705-0269		1	PARALLEL KEY W. ROUND ENDS 8X7X35 MM	
MY043	90432-0023		1	BRAKE ORTLINGHAUS	
MY022	90458-2200		1	ELECTROMAGNETIC CLUTCH, 30 MM/24 VDC	
	90600-0381		*2*	*BALL BEARING, SP. PART FOR 90458-2200*	

Machine Type	Group Description	Used-In	Group Number	Page No

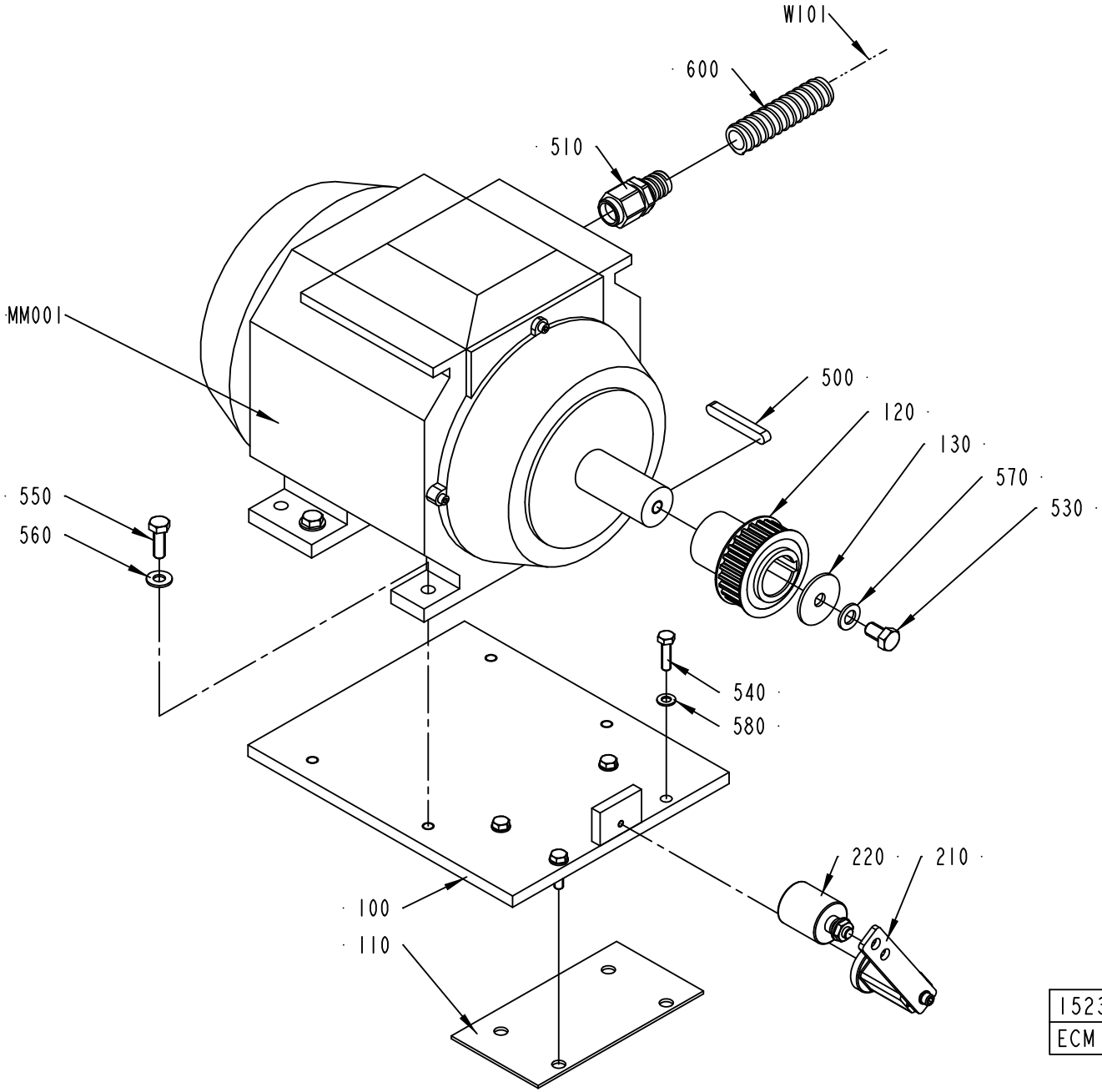

1523210-1
ECM 73461

ECM: 179096 - 20040910
Group number: 1523210-0100
Assembly Drawing: 1523210-1_1_AA

Pos	Part No	UN	Qty	Description	Page No
-					
100	1517230-0000		1	BRACKET	
110	1517231-0000		1	RUBBER SHIM	
120	1523215-0000		1	TIMING PULLEY	
130	1523211-0000		1	WASHER	
210	90457-0127		1	TENSIONER, TYPE SE-F-15	
220	90457-0128		1	CLAMPING ROLL	
500	315705-0307		1	PARALLEL KEY W. ROUND ENDS 10X8X70 MM	
510	90458-0450		1	HOSE GLAND EMC M25 EXTENDED	
530	312105-0532		1	SCREW M6S ISO 4017 M12X20 A480	
540	312105-0455		4	SCREW M6S ISO 4017 M8X30 A480	
550	312105-0495		4	SCREW M6S ISO 4017 M10X30 A480	
560	315105-0173		4	WASHER BRB 10,5X22 RFR	
570	315105-0178		1	WASHER BRB 13X24 RFR	
580	315105-0165		4	WASHER BRB 8,4X16 RFR	
600	90152-0051	MM	2200	SPIRAL CONDUIT, 25X18, UL 1816	
MM001	90457-0172		1	MOTOR 3GAA 131001-ASA	
W101	90220-0105	M	6	SCR. CABLE 4X2,5MM2	

Pos	Part No	UN	Qty	Description	Page No

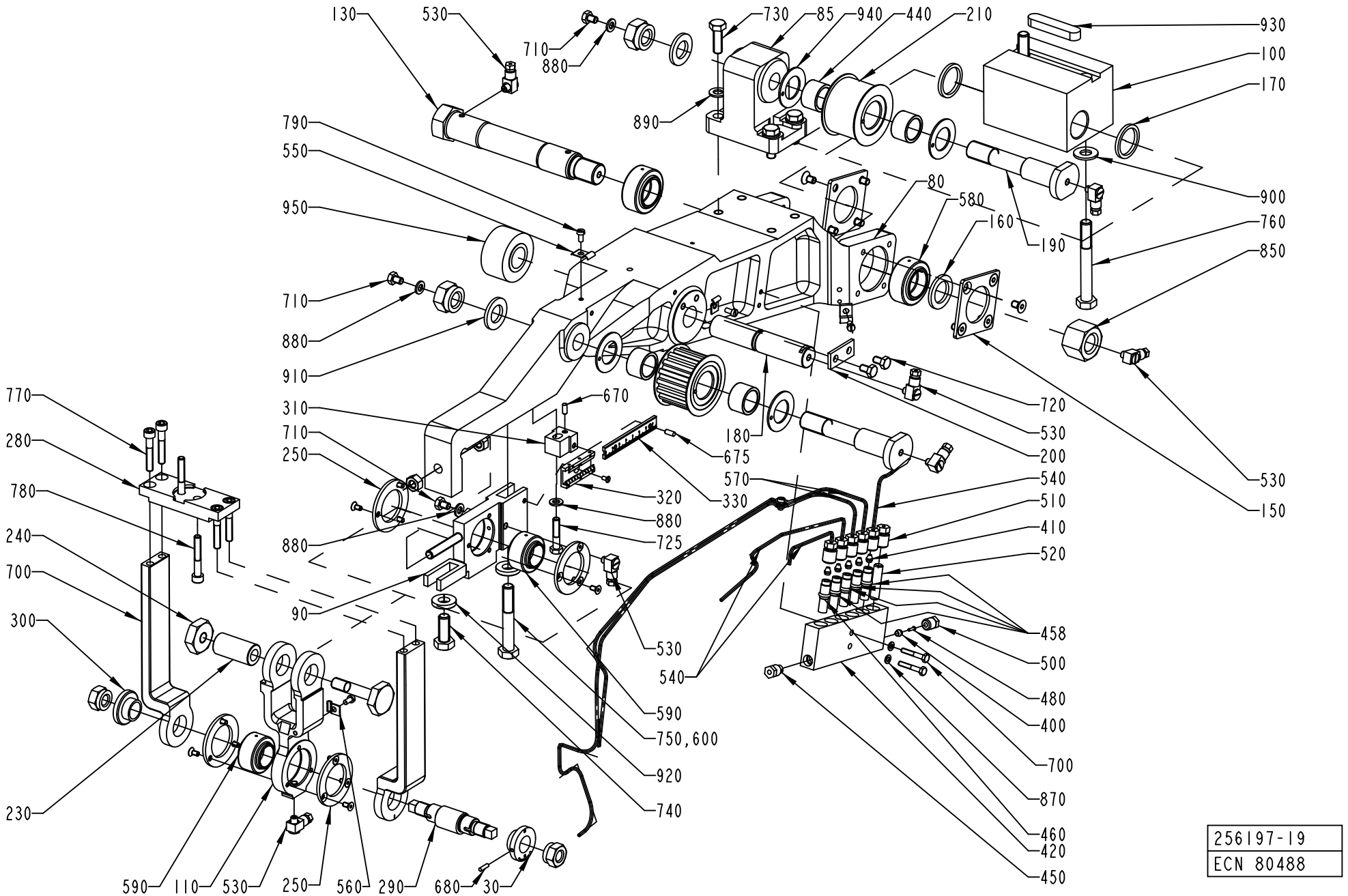

256197-19
ECN 80488

ECM: 178936 - 20040910
Group number: 256197-0500
Assembly Drawing: 256197-19_1_AA

Pos	Part No	UN	Qty	Description	Page No
-					
030	272459-0000		1	WASHER	
080	751212-0000		1	ARM	
085	272442-0000		1	CANTILEVER	
090	978275-0000		1	BEARING HOLDER	
100	272455-0000		1	BEARING BRACKET	
110	272456-0000		1	LINK	
120	272457-0000		2	BOW CLAMP	
130	295770-0000		1	AXLE BOLT	
140	256421-0000		1	PULLEY	
150	256422-0000		2	WASHER	
160	256426-0001		1	WASHER	
170	256426-0002		2	WASHER	
180	256427-0000		1	SHAFT	
190	490916-0000		2	AXLE PIN	
200	256472-0000		1	WASHER	
210	257306-0000		1	ROLL	
220	257308-0000		1	SCREW	
230	257309-0000		1	SHAFT	
240	257310-0000		1	NUT	
250	257311-0000		4	CAP	
280	272116-0000		1	CAP	
290	272458-0000		1	ECCENTRIC SHAFT	
300	272461-0000		1	WASHER	
310	978272-0000		1	BRACKET	
320	1484792-0000		1	SCALE	
330	1484791-0000		1	SCALE	
400	90028-0021		1	CONE TUBE 4 MM	
410	90028-0020		5	CONE TUBE 2,5MM	
420	90032-0040		1	BLOCK 6 WAYS	
440	321531-0248		4	NEEDLE SLEEVE W/O CONE, 20X26X16 MM	
450	90087-0019		1	PLUG M10X1 STAINLESS	
458	90092-0052		4	METERING VALVE 10 MM3	
460	90092-0053		1	METERING VALVE 30 MM3	
480	90134-0031		1	SLEEVE FOR PLASTIC TUBE	
500	90134-0038		1	BUSHING/NUT INLET/OUTLET 4 MM	
510	90134-0039		6	BUSHING VALVE CONNECTION 2,5 MM	
520	90134-0052		1	PLUG DOSING BLOCK	
530	90134-0058		7	CONNECTION	
540	90266-0019	MM	550	PIPE	
550	90165-0002		3	PIPE CLIP FOR TUBE D=4 MM	
560	90165-0022		2	PIPE CLIP, FOR TUBE D=2,5 MM, B-3570	
570	90166-0143	MM	1100	TUBE 2,5 MM PA,TRANSP.	
580	90240-0048		2	PLAIN BEAR,SELF ADJ.SPHER. 25X42X20 MM	
590	90240-0050		2	PLAIN BEAR,SELF ADJ. 20X35X24	
600	90157-0016		1	LOCKING FLUID LOCTITE 242 50 ML	
670	311101-0267		1	PARALLEL PIN ISO 2338 4H6X10 ST	
675	311103-0267		1	PARALLEL PIN ISO 2338 4M6X10 A1	
680	311303-0234		1	SLOTTED PIRPB3X12FZB	
700	312101-0297		2	SCREW M6S M4X25 FZB	
710	312101-0362		3	SCREW M6S M6X8 FZB	
720	312101-0364		2	SCREW M6S M6X10 FZB	
725	312105-0374		1	SCREW M6S ISO 4014 M6X30 A480	
730	312101-0453		4	SCREW M6S M8X25 FZB	
740	312101-0493		1	SCREW M6S M10X25 FZB	
750	312101-0504		1	SCREW M6S M10X65 FZB	
760	312101-0507		2	SCREW M6S M10X80 FZB	
770	312111-0376		4	SCREW HEX.SOCK.HD.MC6S-TT 6X35 88 FZB	
780	312111-0378		2	SCREW HEX.SOCK.HD.MC6S-TT 6X40 88 FZB	
790	312121-0287		5	SCREW ISO 1207 M4X8 4.8 - 5.8 Z.PL.	
795	312145-0220		1	SCREW ISO 2009 MFS M3X6 A4	
800	312151-0287		12	SCREW EN 10642 MF6S M4X8 10.9 EL.PL	
810	312151-0364		8	SCREW EN 10642 MF6S M6X10 10.9 EL.PL	
820	312601-0318		2	HEXAGON NUT, DIN 934 M8 8 FZB	
830	312811-0322		2	NUT HEX.LOCK HELI COIL MID GRIP M12 SS	
840	312811-0324		2	NUT HEX.LOCK HELI COIL MID GRIP M16 SS	
850	312811-0326		1	NUT HEX.LOCK HELI COIL MID GRIP M20 SS	
870	315101-0136		2	WASHER BRB, 4,3/8 H=0,8	
880	315101-0153		4	WASHER PLAIN, BRB, 6,4/12 H=1,5	
890	315101-0165		4	WASHER PLAIN, BRB, 8,4/16 H=1,5	
900	315101-0173		2	WASHER PLAIN, BRB, 10,5/22 H=2	
910	315101-0186		2	WASHER PLAIN, BRB, 17/30 H=3	
920	315111-0173		2	WASHER PLAIN, TBRB 10,5/22 H=4	
930	315701-0335		1	PARALLEL KEY W. ROUND ENDS 12X8X56 MM	
940	321129-0137		4	THRUST WASHER, 22X38X1,5 MM	
950	321576-0260		1	ROLLER BEARING, 20X47X25 MM	

Machine Type	Group Description	Used-In	Group Number	Page No

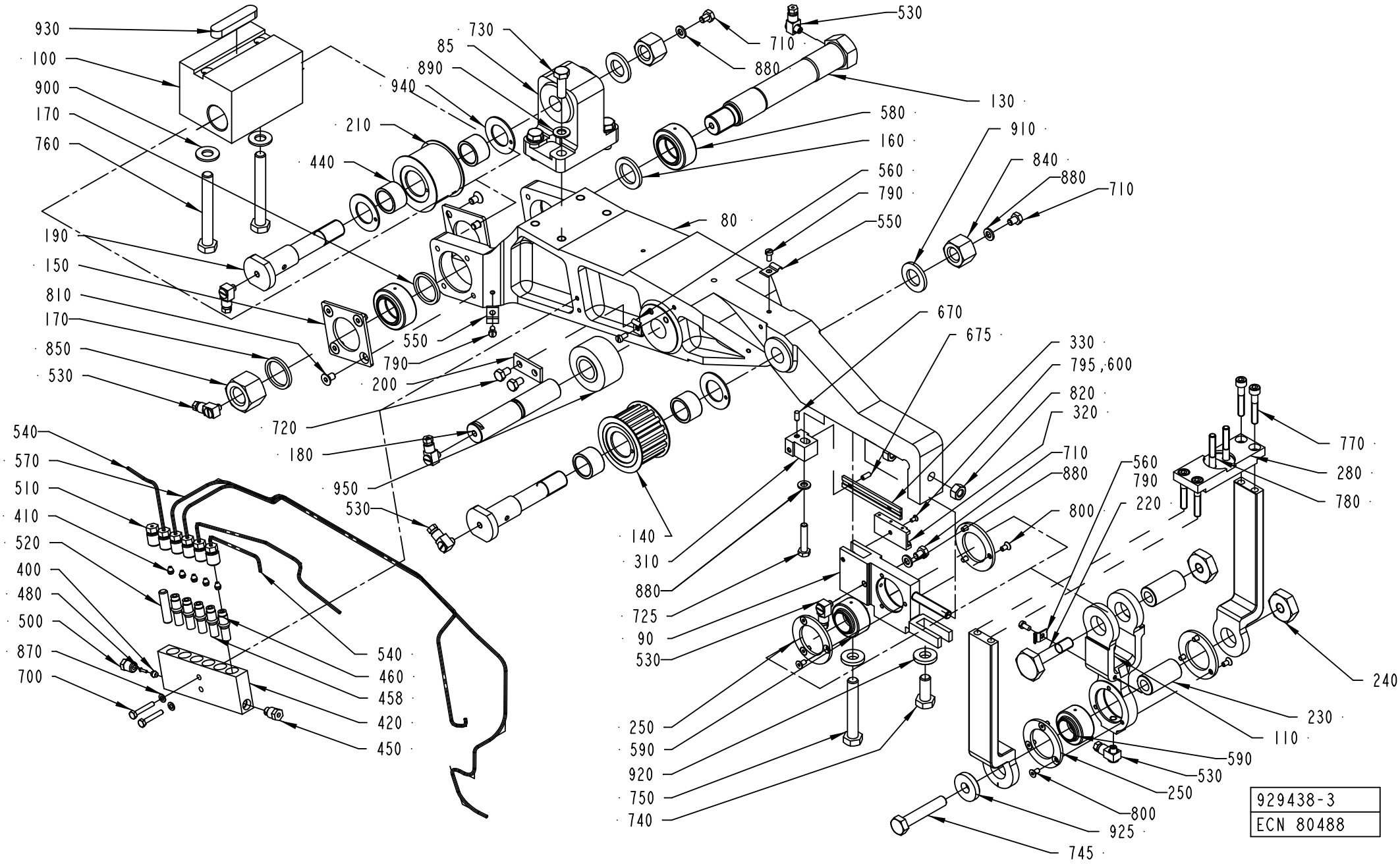

929438-3
ECN 80488

ECM: 179092 - 20040910
Group number: 929438-0100
Assembly Drawing: 929438-3_1_AA

Pos	Part No	UN	Qty	Description	Page No
-					
080	751212-0000		1	ARM	
085	272442-0000		1	CANTILEVER	
090	978275-0000		1	BEARING HOLDER	
100	272455-0000		1	BEARING BRACKET	
110	272456-0000		1	LINK	
120	272457-0000		2	BOW CLAMP	
130	295770-0000		1	AXLE BOLT	
140	256421-0000		1	PULLEY	
150	256422-0000		2	WASHER	
160	256426-0001		1	WASHER	
170	256426-0002		2	WASHER	
180	256427-0000		1	SHAFT	
190	490916-0000		2	AXLE PIN	
200	256472-0000		1	WASHER	
210	257306-0000		1	ROLL	
220	257308-0000		1	SCREW	
230	257309-0000		2	SHAFT	
240	257310-0000		2	NUT	
250	257311-0000		4	CAP	
280	272116-0000		1	CAP	
310	978272-0000		1	BRACKET	
320	1484792-0000		1	SCALE	
330	1484791-0000		1	SCALE	
400	90028-0021		1	CONE TUBE 4 MM	
410	90028-0020		5	CONE TUBE 2,5MM	
420	90032-0040		1	BLOCK 6 WAYS	
440	321531-0248		4	NEEDLE SLEEVE W/O CONE, 20X26X16 MM	
450	90087-0019		1	PLUG M10X1 STAINLESS	
458	90092-0052		4	METERING VALVE 10 MM3	
460	90092-0053		1	METERING VALVE 30 MM3	
480	90134-0031		1	SLEEVE FOR PLASTIC TUBE	
500	90134-0038		1	BUSHING/NUT INLET/OUTLET 4 MM	
510	90134-0039		6	BUSHING VALVE CONNECTION 2,5 MM	
520	90134-0052		1	PLUG DOSING BLOCK	
530	90134-0058		7	CONNECTION	
540	90266-0019	MM	550	PIPE	
550	90165-0002		3	PIPE CLIP FOR TUBE D=4 MM	
560	90165-0022		2	PIPE CLIP, FOR TUBE D=2,5 MM, B-3570	
570	90166-0143	MM	1100	TUBE 2,5 MM PA,TRANSP.	
580	90240-0048		2	PLAIN BEAR,SELF ADJ.SPHER. 25X42X20 MM	
590	90240-0050		2	PLAIN BEAR,SELF ADJ. 20X35X24	
600	90157-0016		1	LOCKING FLUID LOCTITE 242 50 ML	
670	311101-0267		1	PARALLEL PIN ISO 2338 4H6X10 ST	
675	311103-0267		1	PARALLEL PIN ISO 2338 4M6X10 A1	
700	312101-0297		2	SCREW M6S M4X25 FZB	
710	312101-0362		3	SCREW M6S M6X8 FZB	
720	312101-0364		2	SCREW M6S M6X10 FZB	
725	312105-0374		1	SCREW M6S ISO 4014 M6X30 A480	
730	312101-0453		4	SCREW M6S M8X25 FZB	
740	312101-0493		1	SCREW M6S M10X25 FZB	
745	312101-0502		1	SCREW M6S M10X55 FZB	
750	312101-0504		1	SCREW M6S M10X65 FZB	
760	312101-0507		2	SCREW M6S M10X80 FZB	
770	312111-0376		4	SCREW HEX.SOCK.HD.MC6S-TT 6X35 88 FZB	
780	312111-0378		2	SCREW HEX.SOCK.HD.MC6S-TT 6X40 88 FZB	
790	312121-0287		5	SCREW ISO 1207 M4X8 4.8 - 5.8 Z.PL.	
795	312145-0220		1	SCREW ISO 2009 MFS M3X6 A4	
800	312151-0287		12	SCREW EN 10642 MF6S M4X8 10.9 EL.PL	
810	312151-0364		8	SCREW EN 10642 MF6S M6X10 10.9 EL.PL	
820	312601-0318		2	HEXAGON NUT, DIN 934 M8 8 FZB	
840	312811-0324		2	NUT HEX.LOCK HELI COIL MID GRIP M16 SS	
850	312811-0326		1	NUT HEX.LOCK HELI COIL MID GRIP M20 SS	
870	315101-0136		2	WASHER BRB, 4,3/8 H=0,8	
880	315101-0153		4	WASHER PLAIN, BRB, 6,4/12 H=1,5	
890	315101-0165		4	WASHER PLAIN, BRB, 8,4/16 H=1,5	
900	315101-0173		2	WASHER PLAIN, BRB, 10,5/22 H=2	
910	315101-0186		2	WASHER PLAIN, BRB, 17/30 H=3	
920	315111-0173		2	WASHER PLAIN, TBRB 10,5/22 H=4	
925	315121-0173		1	WASHER PLAIN, TBRSB 10,5/28 H=6	
930	315701-0335		1	PARALLEL KEY W. ROUND ENDS 12X8X56 MM	
940	321129-0137		4	THRUST WASHER, 22X38X1,5 MM	
950	321576-0260		1	ROLLER BEARING, 20X47X25 MM	

Machine Type	Group Description	Used-In	Group Number	Page No

SLEWING BRACKET RIGHT

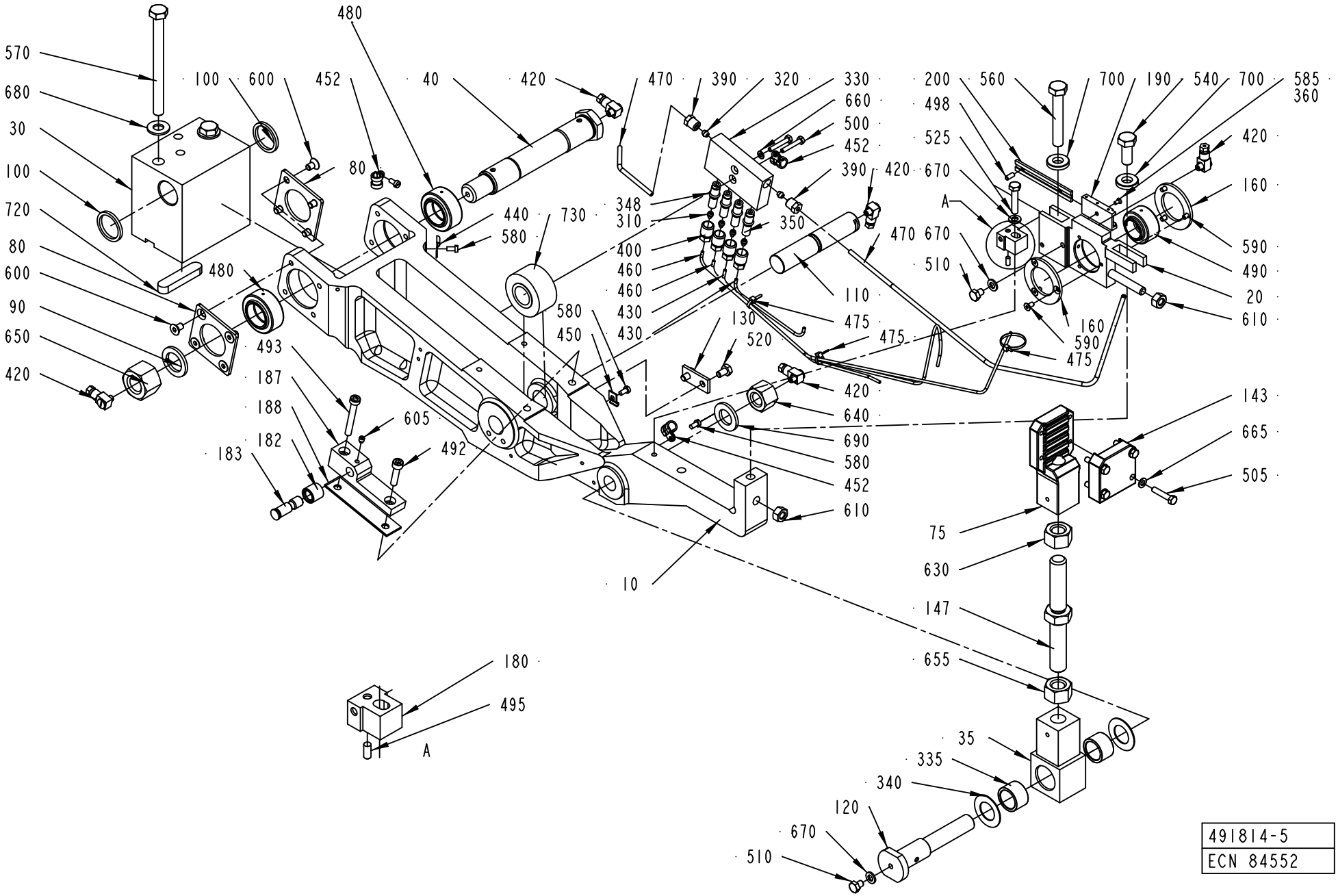

491814-5
ECN 84552

ECM: 179089 - 20040910
Group number: 491814-0300
Assembly Drawing: 491814-5_1_AA

Pos	Part No	UN	Qty	Description	Page No
-					
0010	751212-0000		1	ARM	
0020	978275-0000		1	BEARING HOLDER	
0030	256418-0000		1	BEARING BRACKET	
0035	256515-0000		1	END PIECE	
0040	272462-0000		1	AXLE BOLT	
0075	272607-0000		1	BELT HOLDER	
0080	256422-0000		2	WASHER	
0090	256426-0001		1	WASHER	
0100	256426-0002		2	WASHER	
0110	256427-0000		1	SHAFT	
0120	490916-0000		1	AXLE PIN	
0130	256472-0000		1	WASHER	
0143	256516-0000		1	CAP	
0147	256517-0000		1	SCREW	
0160	257311-0000		2	CAP	
0180	978272-0000		1	BRACKET	
0182	491165-0000		1	ROLL	
0183	491166-0000		1	SHAFT	
0187	751078-0000		1	BRACKET RIGHT	
0188	491319-0000		2	LACE	
0190	1484792-0000		1	SCALE	
0200	1484791-0000		1	SCALE	
0310	90028-0020		4	CONE TUBE 2,5MM	
0320	90028-0021		2	CONE TUBE 4 MM	
0330	90032-0039		1	BLOCK 4 WAYS	
0335	321531-0248		2	NEEDLE SLEEVE W/O CONE, 20X26X16 MM	
0340	90083-0016		2	PLATE FOR AXK 2035	
0348	90092-0052		3	METERING VALVE 10 MM3	
0350	90092-0053		1	METERING VALVE 30 MM3	
0360	90157-0016	L	1	LOCKING FLUID LOCTITE 242 50 ML	
0390	90134-0038		2	BUSHING/NUT INLET/OUTLET 4 MM	
0400	90134-0039		4	BUSHING VALVE CONNECTION 2,5 MM	
0420	90134-0058		5	CONNECTION	
0430	90266-0019	MM	350	PIPE	
0440	90165-0002		1	PIPE CLIP FOR TUBE D=4 MM	
0450	90165-0022		1	PIPE CLIP, FOR TUBE D=2,5 MM, B-3570	
0452	90165-0065		3	PIPE CLAMP D=8 MM, GSK08/12	
0460	90166-0143	MM	1100	TUBE 2,5 MM PA,TRANSP.	
0470	90166-0109	MM	700	TUBE 4 MM PA,TRANSP.	
0475	352113-0101		3	CABLE TIE, BLACK 92X2,5 MM	
0480	90240-0048		2	PLAIN BEAR,SELF ADJ.SPHER. 25X42X20 MM	
0490	90240-0050		1	PLAIN BEAR,SELF ADJ. 20X35X24	
0492	90287-0143		1	SCREW ISO4762 M6X25 12.9	
0493	90287-0144		1	SCREW ISO4762 M6X35 12.9	
0495	311101-0267		1	PARALLEL PIN ISO 2338 4H6X10 ST	
0498	311103-0267		1	PARALLEL PIN ISO 2338 4M6X10 A1	
0500	312101-0297		2	SCREW M6S M4X25 FZB	
0505	312101-0333		4	SCREW M6S M5X25 FZB	
0510	312101-0362		2	SCREW M6S M6X8 FZB	
0520	312101-0364		2	SCREW M6S M6X10 FZB	
0525	312105-0374		1	SCREW M6S ISO 4014 M6X30 A480	
0540	312101-0493		1	SCREW M6S M10X25 FZB	
0560	312101-0504		1	SCREW M6S M10X65 FZB	
0570	312101-0515		2	SCREW M6S M10X120 FZB	
0580	312121-0287		4	SCREW ISO 1207 M4X8 4.8 - 5.8 Z.PL.	
0585	312145-0220		1	SCREW ISO 2009 MFS M3X6 A4	
0590	312151-0287		6	SCREW EN 10642 MF6S M4X8 10.9 EL.PL	
0600	312151-0364		8	SCREW EN 10642 MF6S M6X10 10.9 EL.PL	
0605	312311-0321		1	SCREW ISO4028 M5X6 FZB	
0610	312601-0318		2	HEXAGON NUT, DIN 934 M8 8 FZB	
0630	312601-0324		1	HEXAGON NUT, DIN 934 M16 8 FZB	
0640	312811-0324		1	NUT HEX.LOCK HELI COIL MID GRIP M16 SS	
0650	312811-0326		1	NUT HEX.LOCK HELI COIL MID GRIP M20 SS	
0655	312901-0324		1	NUT M6M16VFZB	
0660	315101-0136		1	WASHER BRB, 4,3/8 H=0,8	
0665	315101-0146		4	WASHER PLAIN, BRB, 5,3/10 H=1	
0670	315101-0153		3	WASHER PLAIN, BRB, 6,4/12 H=1,5	
0680	315101-0173		2	WASHER PLAIN, BRB, 10,5/22 H=2	
0690	315101-0186		1	WASHER PLAIN, BRB, 17/30 H=3	
0700	315111-0173		2	WASHER PLAIN, TBRB 10,5/22 H=4	
0720	315701-0335		1	PARALLEL KEY W. ROUND ENDS 12X8X56 MM	
0730	321576-0260		1	ROLLER BEARING, 20X47X25 MM	

Machine Type | Group Description | Used-In | Group Number | Page No

SLEWING BRACKET LEFT

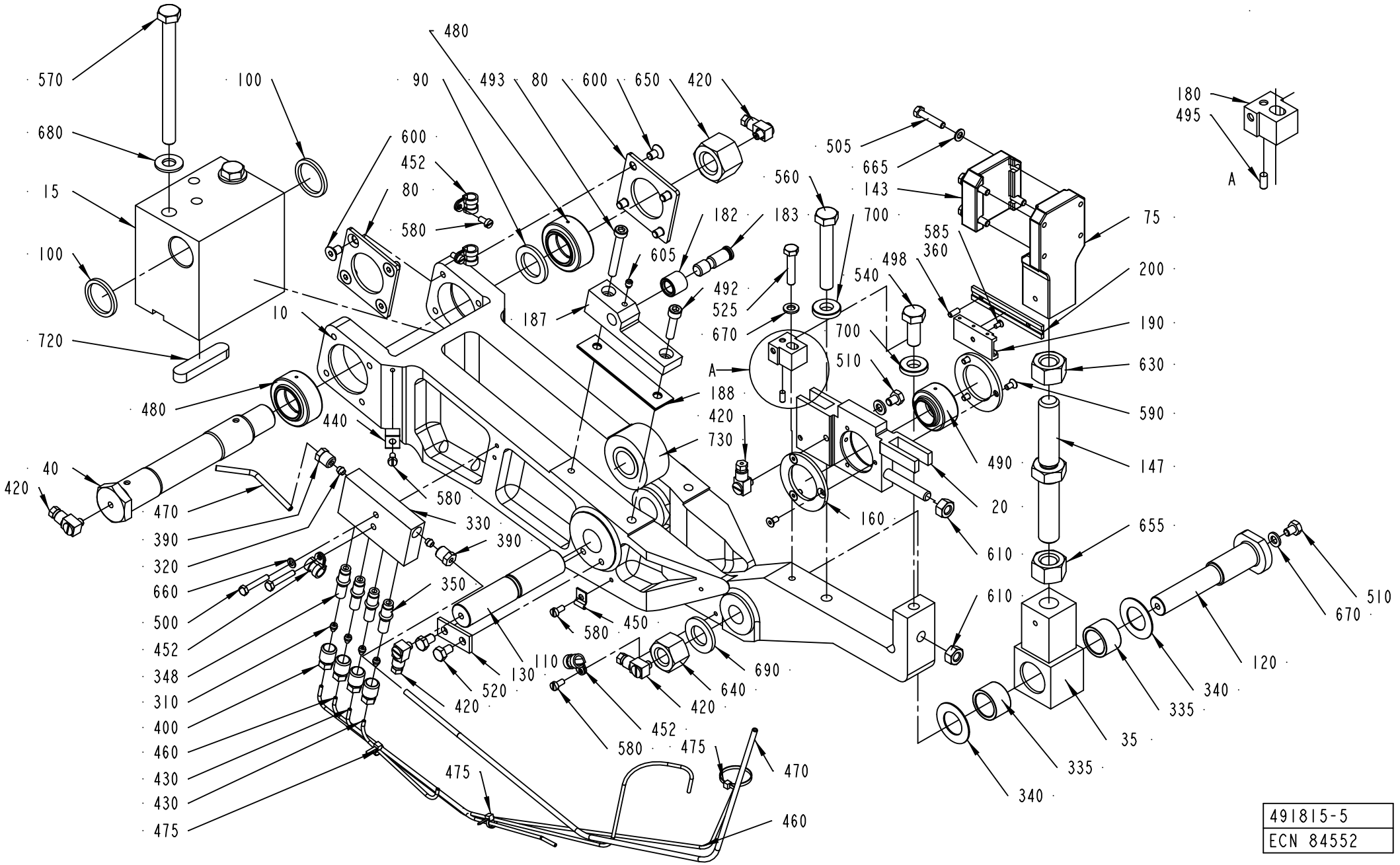

491815-5
ECN 84552

ECM: 216922 - 20050622
Group number: 491815-0300
Assembly Drawing: 491815-5_1_AA

Pos	Part No	UN	Qty	Description	Page No
-					
0010	751212-0000		1	ARM	
0015	256418-0000		1	BEARING BRACKET	
0020	978275-0000		1	BEARING HOLDER	
0035	256515-0000		1	END PIECE	
0040	272462-0000		1	AXLE BOLT	
0075	272607-0000		1	BELT HOLDER	
0080	256422-0000		2	WASHER	
0090	256426-0001		1	WASHER	
0100	256426-0002		2	WASHER	
0110	256427-0000		1	SHAFT	
0120	490916-0000		1	AXLE PIN	
0130	256472-0000		1	WASHER	
0143	256516-0000		1	CAP	
0147	256517-0000		1	SCREW	
0160	257311-0000		2	CAP	
0180	978272-0000		1	BRACKET	
0182	491165-0000		1	ROLL	
0183	491166-0000		1	SHAFT	
0187	751079-0000		1	BRACKET LEFT	
0188	491319-0000		2	LACE	
0190	1484792-0000		1	SCALE	
0200	1484791-0000		1	SCALE	
0310	90028-0020		4	CONE TUBE 2,5MM	
0320	90028-0021		2	CONE TUBE 4 MM	
0330	90032-0039		1	BLOCK 4 WAYS	
0335	321531-0248		2	NEEDLE SLEEVE W/O CONE, 20X26X16 MM	
0340	90083-0016		2	PLATE FOR AXK 2035	
0348	90092-0052		3	METERING VALVE 10 MM3	
0350	90092-0053		1	METERING VALVE 30 MM3	
0360	90157-0016		1	LOCKING FLUID LOCTITE 242 50 ML	
0390	90134-0038		2	BUSHING/NUT INLET/OUTLET 4 MM	
0400	90134-0039		4	BUSHING VALVE CONNECTION 2,5 MM	
0420	90134-0058		5	CONNECTION	
0430	90266-0019	MM	350	PIPE	
0440	90165-0002		1	PIPE CLIP FOR TUBE D=4 MM	
0450	90165-0022		1	PIPE CLIP, FOR TUBE D=2,5 MM, B-3570	
0452	90165-0065		4	PIPE CLAMP D=8 MM, GSK08/12	
0460	90166-0143	MM	1100	TUBE 2,5 MM PA,TRANSP.	
0470	90166-0109	MM	700	TUBE 4 MM PA,TRANSP.	
0475	352113-0101		3	CABLE TIE, BLACK 92X2,5 MM	
0480	90240-0048		2	PLAIN BEAR,SELF ADJ.SPHER. 25X42X20 MM	
0490	90240-0050		1	PLAIN BEAR,SELF ADJ. 20X35X24	
0492	90287-0143		1	SCREW ISO4762 M6X25 12.9	
0493	90287-0144		1	SCREW ISO4762 M6X35 12.9	
0495	311101-0267		1	PARALLEL PIN ISO 2338 4H6X10 ST	
0498	311103-0267		1	PARALLEL PIN ISO 2338 4M6X10 A1	
0500	312101-0297		2	SCREW M6S M4X25 FZB	
0505	312101-0333		4	SCREW M6S M5X25 FZB	
0510	312101-0362		2	SCREW M6S M6X8 FZB	
0520	312101-0364		2	SCREW M6S M6X10 FZB	
0525	312105-0374		1	SCREW M6S ISO 4014 M6X30 A480	
0540	312101-0493		1	SCREW M6S M10X25 FZB	
0560	312101-0504		1	SCREW M6S M10X65 FZB	
0570	312101-0515		2	SCREW M6S M10X120 FZB	
0580	312121-0287		5	SCREW ISO 1207 M4X8 4.8 - 5.8 Z.PL.	
0585	312145-0220		1	SCREW ISO 2009 MFS M3X6 A4	
0590	312151-0287		6	SCREW EN 10642 MF6S M4X8 10.9 EL.PL	
0600	312151-0364		8	SCREW EN 10642 MF6S M6X10 10.9 EL.PL	
0605	312311-0321		1	SCREW ISO4028 M5X6 FZB	
0610	312601-0318		2	HEXAGON NUT, DIN 934 M8 8 FZB	
0630	312601-0324		1	HEXAGON NUT, DIN 934 M16 8 FZB	
0640	312811-0324		1	NUT HEX.LOCK HELI COIL MID GRIP M16 SS	
0650	312811-0326		1	NUT HEX.LOCK HELI COIL MID GRIP M20 SS	
0655	312901-0324		1	NUT M6M16VFZB	
0660	315101-0136		1	WASHER BRB, 4,3/8 H=0,8	
0665	315101-0146		4	WASHER PLAIN, BRB, 5,3/10 H=1	
0670	315101-0153		3	WASHER PLAIN, BRB, 6,4/12 H=1,5	
0680	315101-0173		2	WASHER PLAIN, BRB, 10,5/22 H=2	
0690	315101-0186		1	WASHER PLAIN, BRB, 17/30 H=3	
0700	315111-0173		2	WASHER PLAIN, TBRB 10,5/22 H=4	
0720	315701-0335		1	PARALLEL KEY W. ROUND ENDS 12X8X56 MM	
0730	321576-0260		1	ROLLER BEARING, 20X47X25 MM	

Machine Type | Group Description | Used-In | Group Number | Page No

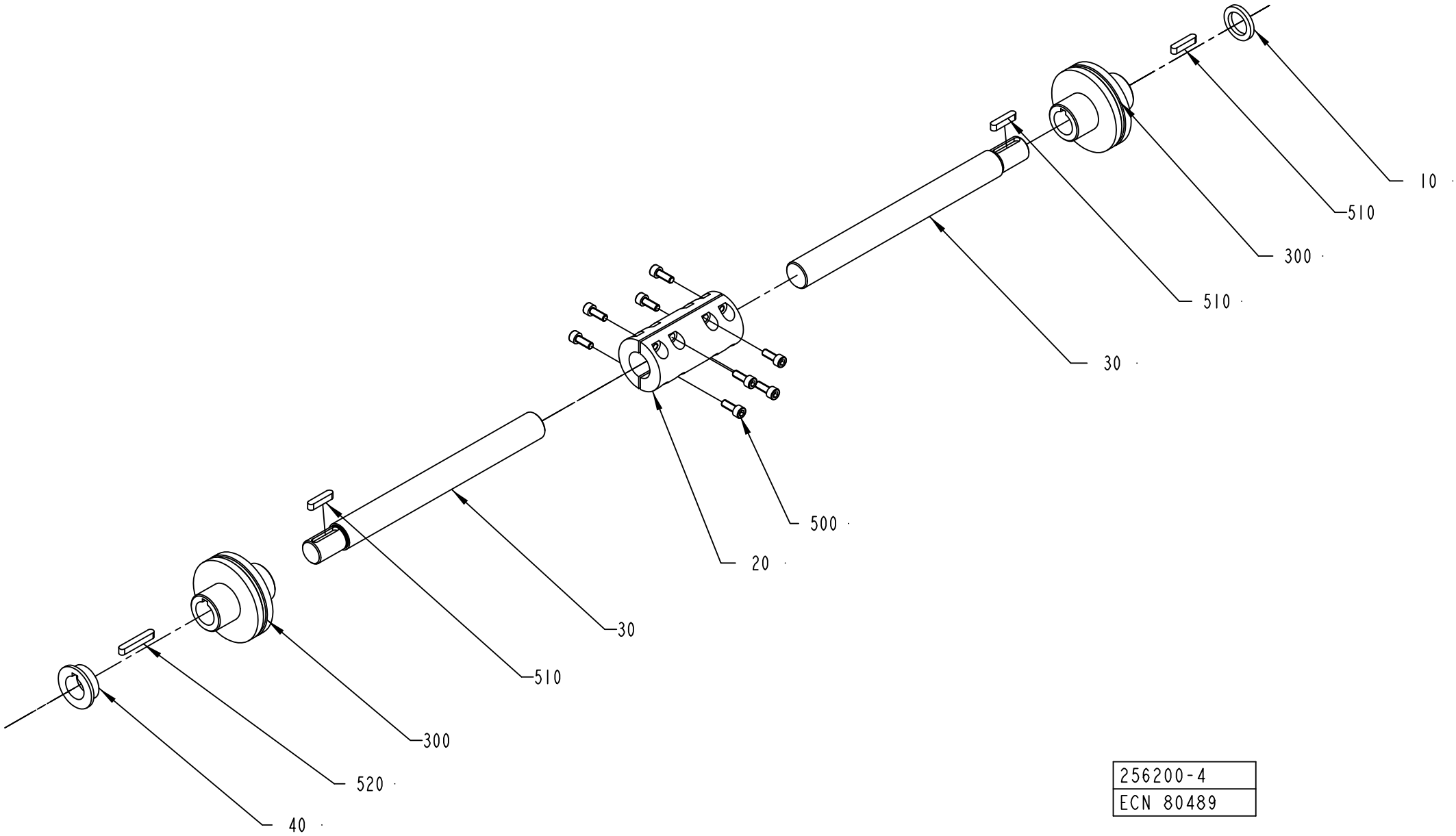

256200-4
ECN 80489

ECM: 178937 - 20040910
Group number: 256200-0300
Assembly Drawing: 256200-4_1_AB

Pos	Part No	UN	Qty	Description	Page No
TBA					
030	441339-0000		2	SHAFT	
Common Parts					
010	272857-0000		1	RING	
020	295983-0000		1	CONNECTION	
040	441720-0000		1	SPACER	
300	90355-0048		2	TORQUE RIGID COUPLING, 22X22 MM	
500	312111-0368		8	SCREW HEX.SOCK.HD.MC6S-TT 6X16 88 FZB	
510	315701-0235		3	PARALLEL KEY W. ROUND ENDS 6X6X28 MM	
520	315701-0239		1	PARALLEL KEY W. ROUND ENDS 6X6X40 MM	

Pos	Part No	UN	Qty	Description	Page No

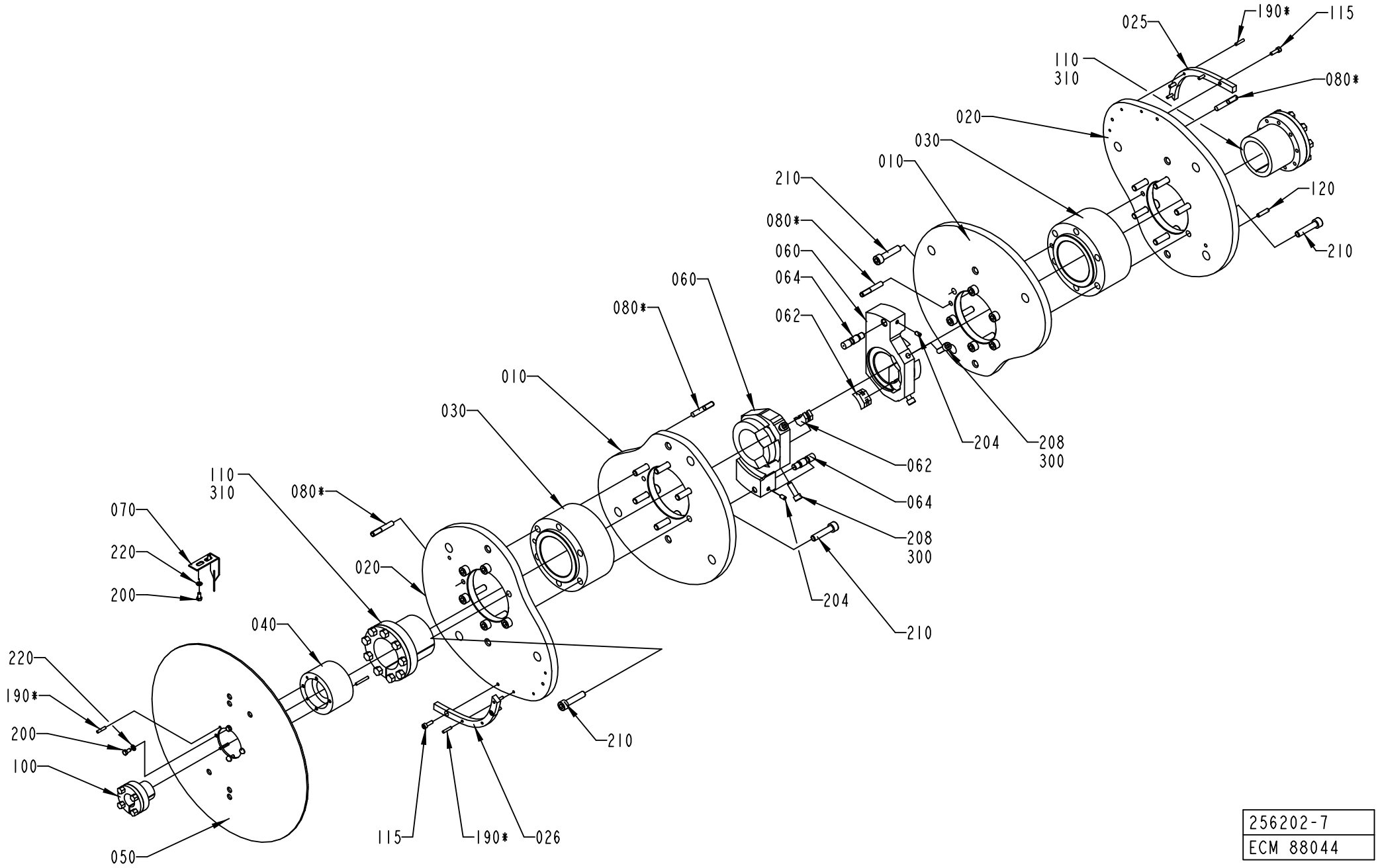

256202-7
ECM 88044

ECM: 290769 - 20070126
Group number: 256202-0700
Assembly Drawing: 256202-7_1_AA

This list covers pages from 3-18 to 3-21

Pos	Part No	UN	Qty	Description	Page No
TBA 0100B					
010	979778-0000		2	YOKE CAM 100	
020	979779-0000		2	ARM CAM 100	
025	979780-0000		1	CAM SEGMENT R 100	
026	979781-0000		1	CAM SEGMENT L 100	
030	456744-0000		2	HUB	
210	312115-0500		24	SCREW ISO4762 M10X45 A4 80	
230	315101-0173		24	WASHER PLAIN, BRB, 10,5/22 H=2	
TBA 0125S					
010	978793-0000		2	YOKECURVE 125ML	
020	978794-0000		2	ARMCURVE 125ML	
025	978795-0000		1	CAMSEGMENT R	
026	978796-0000		1	CAMSEGMENT L	
030	456744-0000		2	HUB	
192	311103-0276		1	PARALLEL PIN ISO 2338 4M6X30 A1	
210	312115-0500		24	SCREW ISO4762 M10X45 A4 80	
230	315101-0173		24	WASHER PLAIN, BRB, 10,5/22 H=2	
300	90157-0016		1	LOCKING FLUID LOCTITE 242 50 ML	
TBA 0160S					
010	577217-0000		2	YOKECAM 160ML	
020	577218-0000		2	ARMCAM 160ML	
025	577219-0000		1	CAMSEGMENT R	
026	577220-0000		1	CAMSEGMENT L	
030	456744-0000		2	HUB	
210	312115-0500		24	SCREW ISO4762 M10X45 A4 80	
230	315101-0173		24	WASHER PLAIN, BRB, 10,5/22 H=2	
TBA 0180B					
010	469369-0000		2	YOKECAM 180ML	
020	469370-0000		2	ARMCAM 180ML	
025	491918-0000		1	CAMSEGMENT R	
026	491919-0000		1	CAMSEGMENT L	
030	456744-0000		2	HUB	
210	312115-0500		24	SCREW ISO4762 M10X45 A4 80	
230	315101-0173		24	WASHER PLAIN, BRB, 10,5/22 H=2	
TBA 0200B					
010	978768-0000		2	YOKECURVE200ML	
020	978769-0000		2	ARMCURVE 200ML	
025	978770-0000		1	CAMSEGMENTL	
026	978771-0000		1	CAMSEGMENTL	
030	456744-0000		2	HUB	
192	311103-0276		1	PARALLEL PIN ISO 2338 4M6X30 A1	
210	312115-0500		24	SCREW ISO4762 M10X45 A4 80	
230	315101-0173		24	WASHER PLAIN, BRB, 10,5/22 H=2	
300	90157-0016		1	LOCKING FLUID LOCTITE 242 50 ML	
TBA 0200M					
010	1282310-0000		2	YOKE CAM 200ML MID	
020	1282309-0000		2	ARM CAM 200 ML MID	
025	1282312-0000		1	CAM SEGMENT R	
026	1282311-0000		1	CAM SEGMENT L	
030	456744-0000		2	HUB	
210	312115-0500		22	SCREW ISO4762 M10X45 A4 80	
230	315101-0173		22	WASHER PLAIN, BRB, 10,5/22 H=2	
TBA 0200S					
010	978772-0000		2	YOKECURVE 200SL	
020	978773-0000		2	ARMCURVE 200SL	
025	978774-0000		1	CAMSEGMENT R	
026	978775-0000		1	CAMSEGMENT L	
030	456744-0000		2	HUB	
192	311103-0276		1	PARALLEL PIN ISO 2338 4M6X30 A1	
210	312115-0500		22	SCREW ISO4762 M10X45 A4 80	
230	315101-0173		22	WASHER PLAIN, BRB, 10,5/22 H=2	
300	90157-0016		1	LOCKING FLUID LOCTITE 242 50 ML	
TBA 0200SQ					
030	456744-0000		2	HUB	
TBA 0236B					
010	272118-0000		2	YOKECAM 236ML	
020	272119-0000		2	ARMCAM 236ML	
025	491916-0000		1	CAMSEGMENT R	
026	491917-0000		1	CAMSEGMENT L	
030	456744-0000		2	HUB	
210	312115-0500		24	SCREW ISO4762 M10X45 A4 80	
230	315101-0173		24	WASHER PLAIN, BRB, 10,5/22 H=2	
TBA 0250B					
010	978776-0000		2	YOKECURVE 250ML	
020	978777-0000		2	ARMCURVE 250ML	
025	978778-0000		1	CAMSEGMENT R	
026	978779-0000		1	CAMSEGMENT L	
030	456744-0000		2	HUB	
192	311103-0276		1	PARALLEL PIN ISO 2338 4M6X30 A1	
210	312115-0500		24	SCREW ISO4762 M10X45 A4 80	
230	315101-0173		24	WASHER PLAIN, BRB, 10,5/22 H=2	
300	90157-0016		1	LOCKING FLUID LOCTITE 242 50 ML	
TBA 0250S					
010	580356-0000		2	YOKECAM 250ML SLIM	

Machine Type | Group Description | Used-In | Group Number | Page No

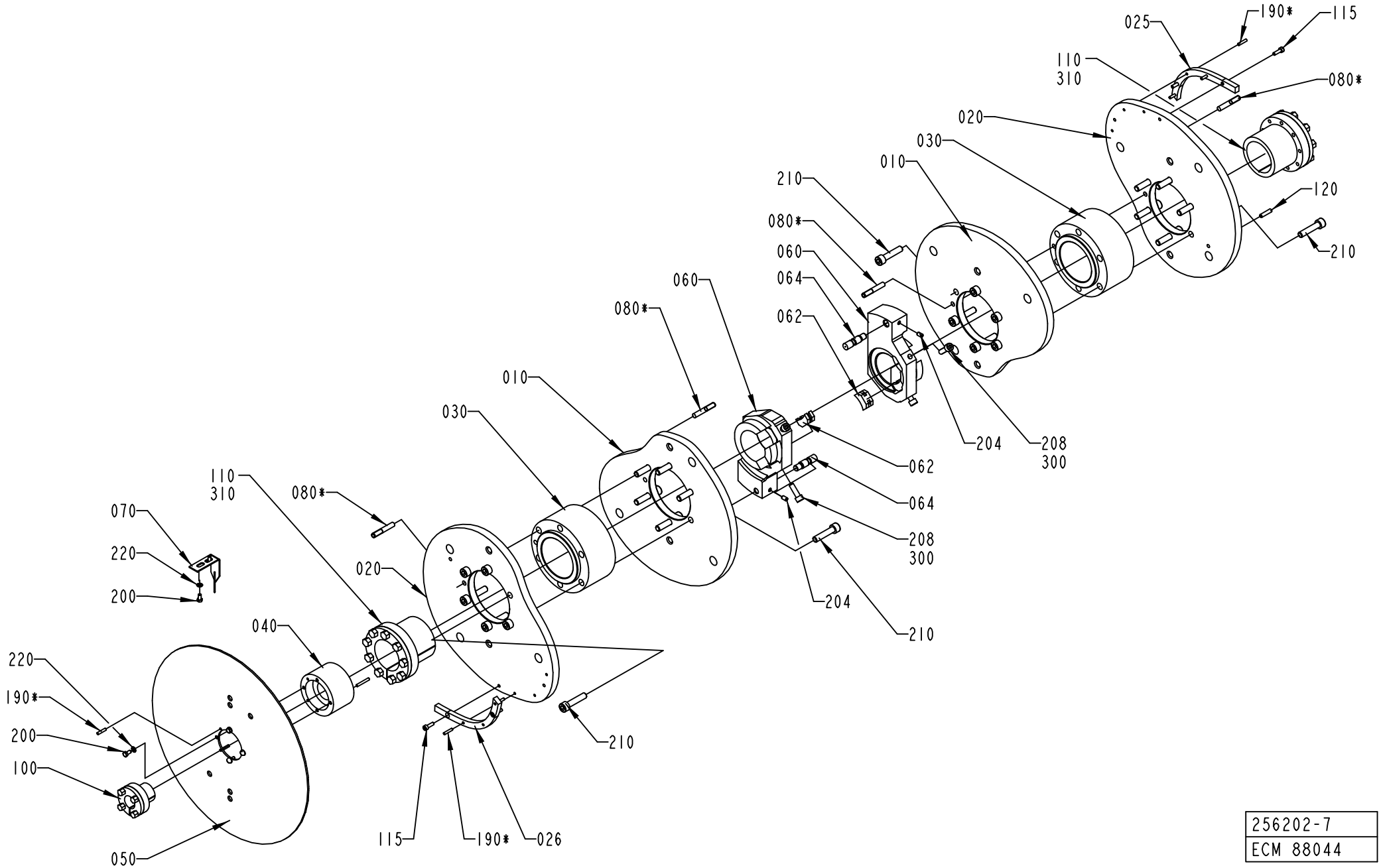

256202-7
ECM 88044

Pos	Part No	UN	Qty	Description	Page No
TBA 0250S (Cont'd)					
020	580357-0000		2	ARMCAM 250ML SLIM	
025	580359-0000		1	CAM SEGMENT R	
026	580358-0000		1	CAM SEGMENT L	
030	456744-0000		2	HUB	
210	312115-0500		22	SCREW ISO4762 M10X45 A4 80	
230	315101-0173		22	WASHER PLAIN, BRB, 10,5/22 H=2	
TBA 0284B, TBA 0300S					
010	581533-0000		2	YOKE CAM 284ML	
020	581534-0000		2	ARM CAM 284ML	
025	581535-0000		1	CAMSEGMENT R 284ML	
026	581536-0000		1	CAMSEGMENT L 284ML	
030	456744-0000		2	HUB	
192	311103-0276		1	PARALLEL PIN ISO 2338 4M6X30 A1	
210	312115-0500		22	SCREW ISO4762 M10X45 A4 80	
230	315101-0173		22	WASHER PLAIN, BRB, 10,5/22 H=2	
300	90157-0016		1	LOCKING FLUID LOCTITE 242 50 ML	
TBA 0330S					
010	582197-0000		2	YOKE CAM 330S	
020	582195-0000		2	ARM CAM 330S	
025	582199-0000		1	CAM SEGMENT RIGHT	
026	582200-0000		1	CAM SEGMENT LEFT	
030	456744-0000		2	HUB	
210	312115-0500		24	SCREW ISO4762 M10X45 A4 80	
230	315101-0173		24	WASHER PLAIN, BRB, 10,5/22 H=2	
Common Parts					
040	1523828-0000		1	SPACER	
050	2504952-0000		1	PROTRACTOR	
060	978609-0000		2	ALIGNMENT TEMPLATE	
062	752774-0000		4	PLUNGER	
064	978262-0000		2	GUIDE PIN	
070	271007-0000		1	POINTER	
080	295140-0000		4	PIN	
090	978340-0000		1	SPACER	
100	90208-0080		1	CLAMPING ELEMENT WITH SLEEVE, 25X34 MM	
110	90208-0091		2	CLAMPING ELEMENT WITH SLEEVE, 60X77 MM	
115	90287-0145		4	SCREW ISO4762 M5X16 12.9	
120	929444-0000		1	PIN	
190	311103-0272		6	PARALLEL PIN ISO 2338 4M6X20 A1	
200	312101-0325		6	SCREW M6S M5X10 FZB	
204	312318-0364		2	SCREW ISO4029 M6X10 A4	
208	312115-0453		4	SCREW ISO4762 M8X25 A4 80	
220	315101-0146		6	WASHER PLAIN, BRB, 5,3/10 H=1	

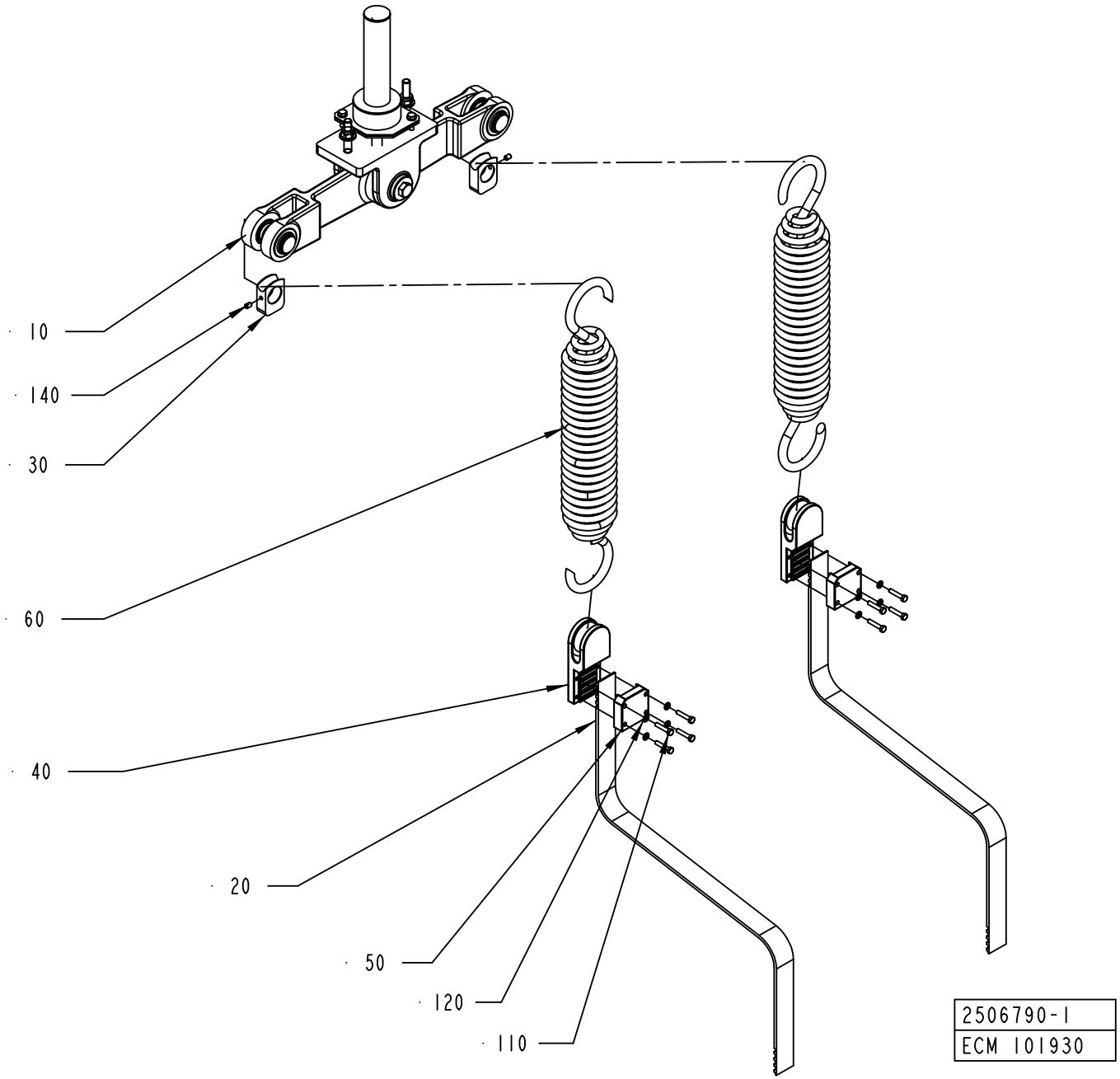
10
140
30
60
40
20
50
120
110
2506790-1
ECM 101930

ECM: 196422 - 20050309
Group number: 2506790-0100
Assembly Drawing: 2506790-1_1_AC

Pos	Part No	UN	Qty	Description	Page No
TBA 0100B, TBA 0180B, TBA 0125S, TBA 0160S, TBA 0200B, TBA 0236B, TBA 0200SQ					
020	566404-0001		2	TIMING BELT	
TBA 0200M, TBA 0250S					
020	566404-0003		2	TIMING BELT	
TBA 0200S, TBA 0284B, TBA 0250B, TBA 0300S					
020	566404-0002		2	TIMING BELT	
TBA 0330S					
020	566404-0005		2	TIMING BELT	
Common Parts					
010	2507014-0100		1	ROCKER ARM	**3-25**
030	2519460-0000		2	SPRING BRACKET	
040	272608-0000		2	BELT HOLDER	
050	256516-0000		2	CAP	
060	441353-0000		2	TENSION SPRING	
110	312101-0333		8	SCREW M6S M5X25 FZB	
120	315101-0146		8	WASHER PLAIN, BRB, 5,3/10 H=1	
140	312318-0362		2	SCREW ISO4029 M6X8 A4	

Pos	Part No	UN	Qty	Description	Page No

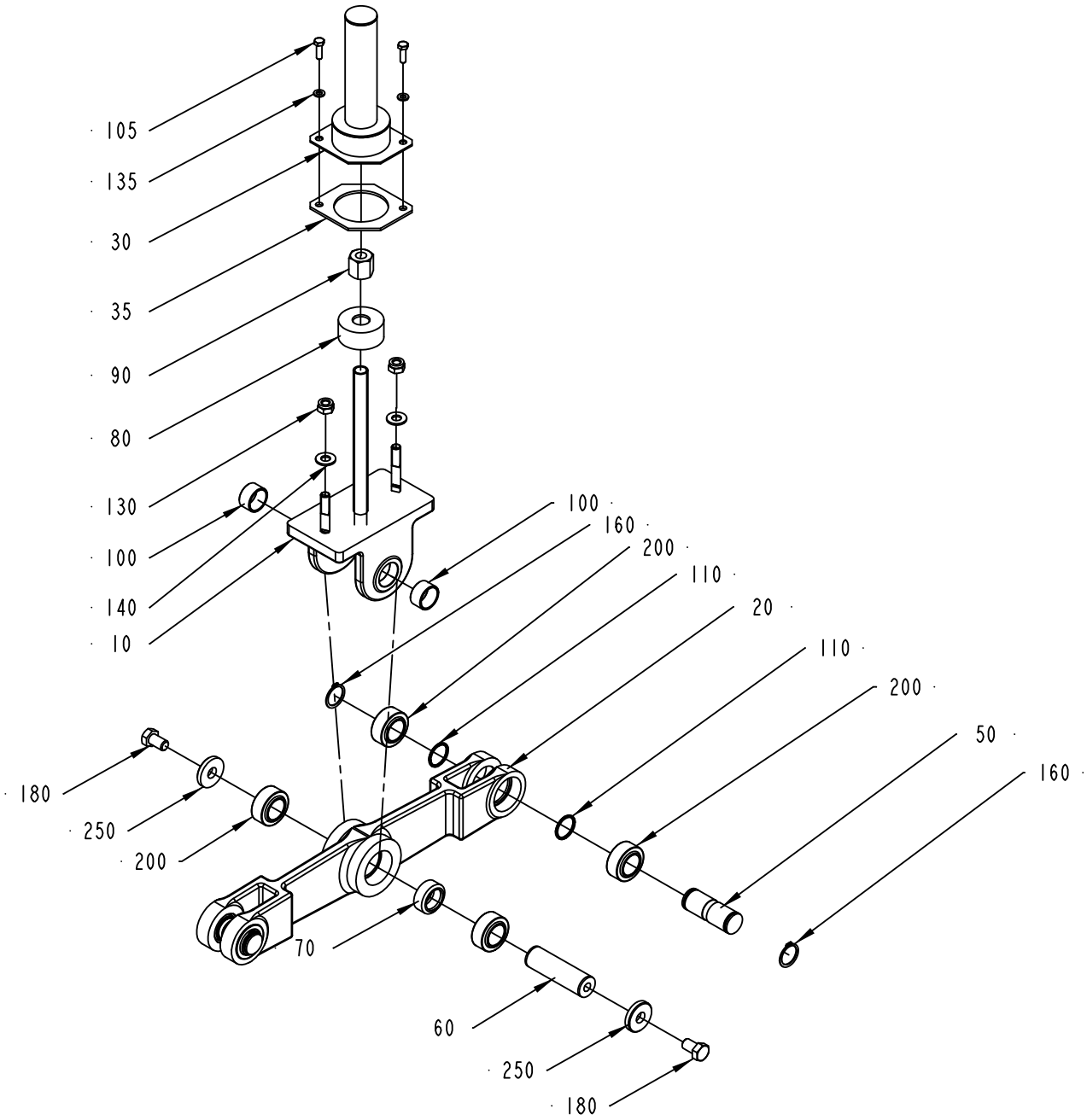

2507014-1
ECN 262864

ECM: 267223 - 20060707
Group number: 2507014-0100
Assembly Drawing: 2507014-1_1_AB

Pos	Part No	UN	Qty	Description	Page No
-					
010	1484457-0000		1	BRACKET	
020	1484454-0000		1	ROCKER ARM	
030	579623-0000		1	PROTECTIVE CASING	
035	579624-0000		1	GASKET	
050	1484456-0000		2	SHAFT	
060	1484452-0000		1	SHAFT	
070	1484453-0000		1	SPACER	
080	978207-0000		1	SPACER PIPE	
090	978209-0000		1	NUT	
100	1484455-0000		2	SPACER	
105	312105-0370		2	SCREW M6S ISO 4017 M6X20 A480	
110	1484461-0000		4	SPACER	
130	312812-0320		2	HEXAGON NUT, NY-LOCK M10 A480	
135	315105-0153		2	WASHER BRB 6,4X12 RFR	
140	315105-0173		2	WASHER BRB 10,5X22 RFR	
160	315751-0119		4	RETAINING RING FOR SHAFT DIN 471 25 A2	
180	312105-0532		2	SCREW M6S ISO 4017 M12X20 A480	
200	90459-6727		6	SPHERICAL BEARING, 25X42X20 MM	
250	315121-0178		2	WASHER PLAIN, TBRSB 13/36 H=6	

Pos	Part No	UN	Qty	Description	Page No

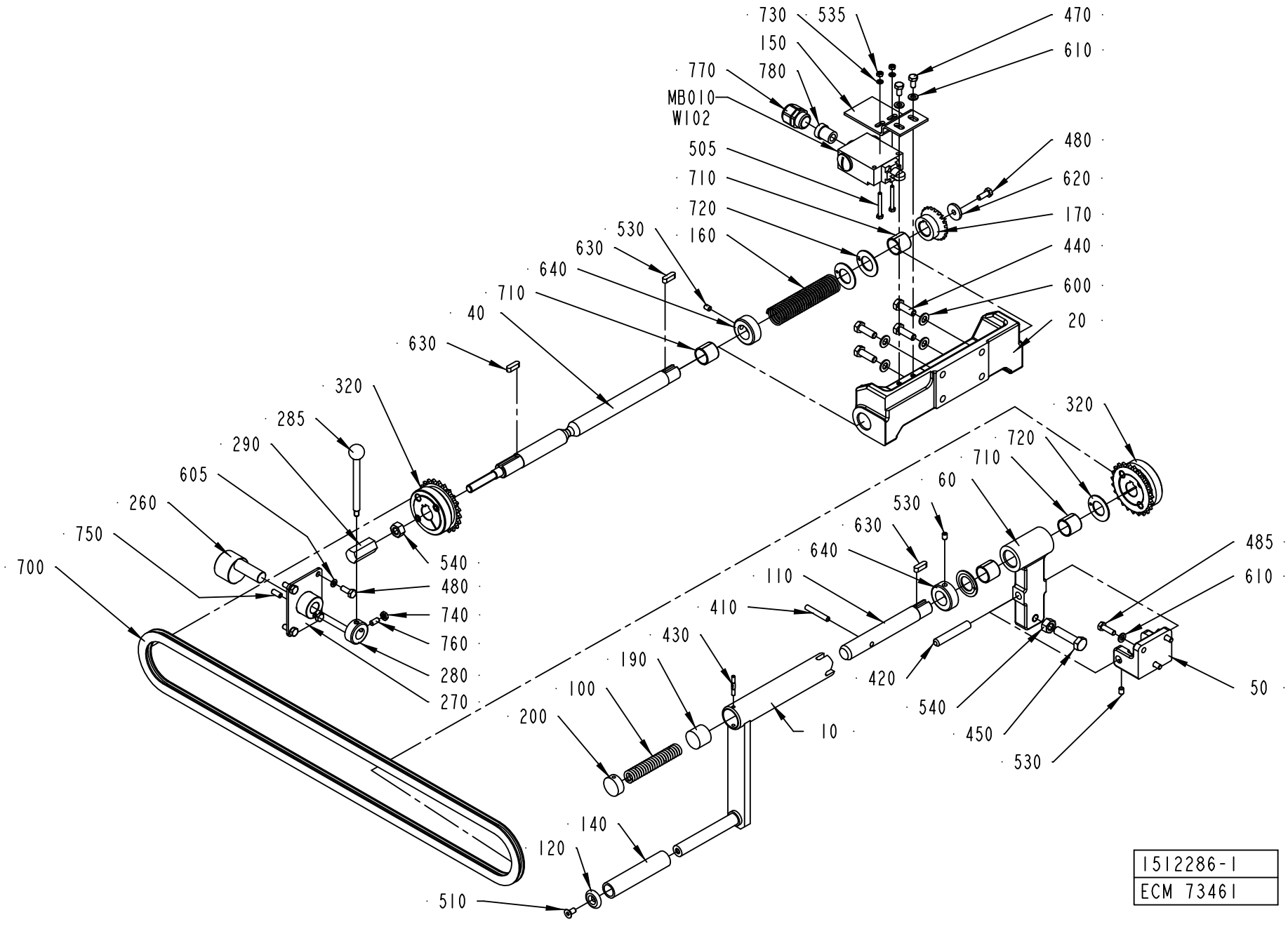
730
535
470
150
610
770
780
MB010
W102
505
480
710
620
720
170
530
160
630
440
640
600
710
40
20
630
320
285
320
290
720
710
605
60
260
530
630
750
640
485
700
110
610
540
480
410
740
760
280
270
430
190
420
100
540
50
200
450
10
530
140
120
510
1512286-1
ECM 73461

ECM: 179095 - 20040910
Group number: 1512286-0100
Assembly Drawing: 1512286-1_1_AA

Pos	Part No	UN	Qty	Description	Page No
-					
010	257326-0000		1	CRANK	
020	272664-0000		1	CANTILEVER	
040	1517984-0000		1	SHAFT	
050	272736-0000		1	CANTILEVER	
060	272737-0000		1	BRACKET	
100	12228-0000		1	COMPRESSION SPRING	
110	256812-0000		1	SHAFT	
120	256814-0000		1	WASHER	
140	256816-0000		1	PIPE	
150	1517983-0000		1	BRACKET	
160	256828-0000		1	SPRING	
170	257179-0000		1	GEAR WHEEL	
190	257327-0000		1	SLIDER	
200	257328-0000		1	END PIECE	
260	1512355-0000		1	ECCENTRIC SHAFT	
270	1512354-0000		1	BRACKET	
280	1517985-0000		1	SETTING RING	
285	90458-1590		1	KNOB WITH SHAFT, M6	
290	1517986-0000		1	SCREW BUSHING	
320	90344-0022		2	SPROCKET	
410	311103-0361		1	PARALLEL PIN ISO 2338 6M6X40 A1	
420	311103-0470		1	PARALLEL PIN ISO 2338 10M6X60 A1	
430	311307-0275		1	SLOTTED PIRPD4X28FZB	
440	312105-0453		4	SCREW M6S ISO 4017 M8X25 A480	
450	312104-0499		1	SCREW M6S M10X40H FZB	
470	312105-0366		2	SCREW M6S ISO 4017 M6X12 A480	
480	312105-0368		5	SCREW M6S ISO 4017 M6X16 A480	
485	312105-0370		3	SCREW M6S ISO 4017 M6X20 A480	
505	312105-0301		2	SCREW M6S ISO 4017 M4X35 A470	
510	312155-0366		1	SCREW DIN 7991 MF6S M6X12 A4 70	
530	312318-0362		3	SCREW ISO4029 M6X8 A4	
535	312605-0312		2	HEXAGON NUT, M6M M4 A280	
540	312605-0320		2	HEXAGON NUT, M6M M10 A280	
600	315101-0165		4	WASHER PLAIN, BRB, 8,4/16 H=1,5	
605	315105-0146		4	WASHER BRB 5,3X10 RFR	
610	315105-0153		5	WASHER BRB 6,4X12 RFR	
620	315125-0153		1	WASHER TBRSB 6,4X22X4 A4	
630	315705-0232		3	PARALLEL KEY W. ROUND ENDS 6X6X20 MM	
640	315742-0116		2	RETAINING RING 20 SMS 199 RFR	
700	318201-0150		1	ROLLER CHAIN, SINGLE 3/8 -150	
710	321141-0260		4	BEARING BUSH W/O FLANGE, 20X23X20 MM	
720	321130-0260		4	THRUST WASHER, 20X36X1,5 MM	
730	315105-0136		2	WASHER BRB 4,3X8 RFR	
740	312625-0316		1	HEXAGON THIN NUT, EN 24035 ML6M M6 A4	
750	90287-0163		1	SCREW SPRINGLOAD. SLOTTED HEAD M6X14	
760	312318-0366		1	SCREW ISO4029 M6X12 A4	
770	353240-0003		1	GLAND W/O INSERT PG13,5 NORMAL	
780	353249-0065		1	INSERT, SINGEL HOLE, E152/09	
MB010	90044-0151		1	LIMIT SW. GLEB24C	
W102	351150-0405	MM	1500	CABLE OLFLEX 5X0,75 MM2 LIGHT/GREY	

Machine Type	Group Description	Used-In	Group Number	Page No

DISCONNECTION LINK LEFT

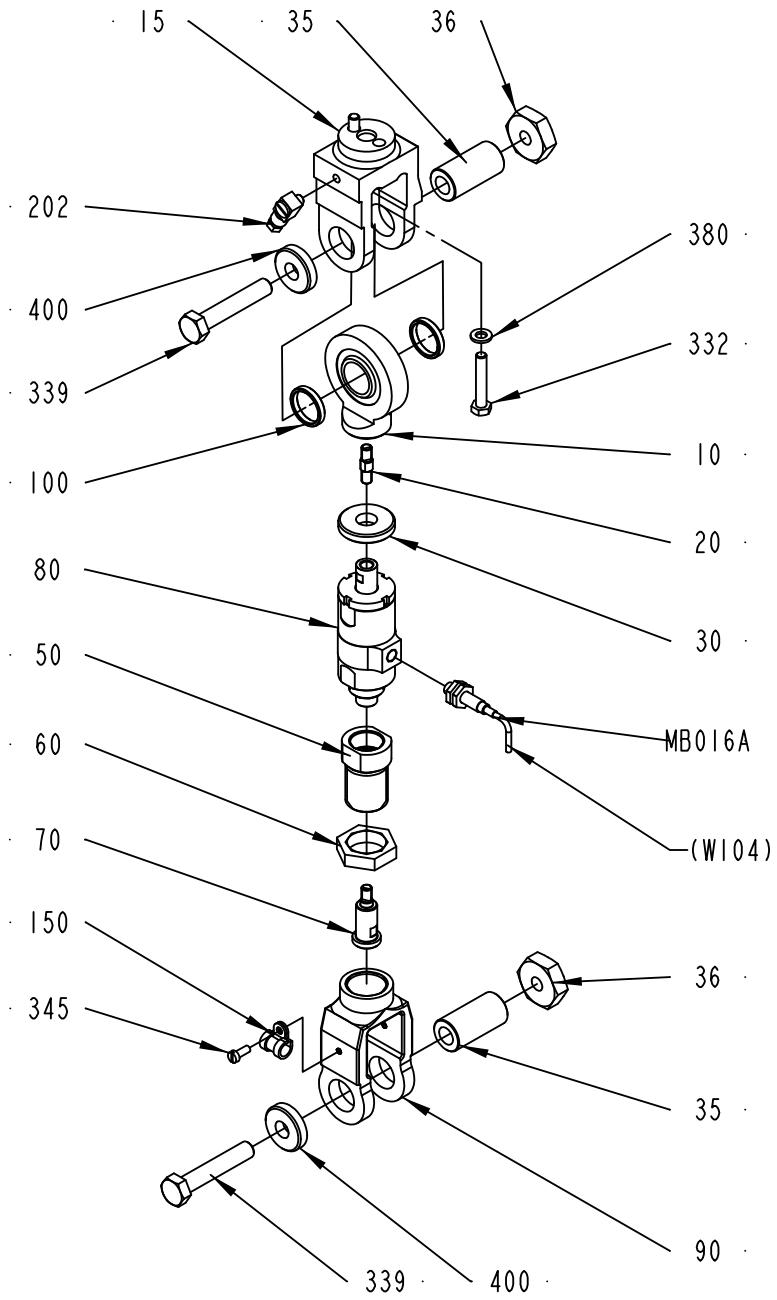

1490120-1
276014

ECM: 290770 - 20070126
Group number: 1490120-0100
Assembly Drawing: 1490120-1_1_AC

Pos	Part No	UN	Qty	Description	Page No
TBA 0100B, TBA 0180B, TBA 0125S, TBA 0200B, TBA 0236B, TBA 0284B, TBA 0250B, TBA 0300S, TBA 0330S (See drawing on page: 3-28)					
010	1490113-0000		1	LINK HEAD	
050	1490116-0000		1	SPACER	
060	1490117-0000		1	NUT	
070	1490119-0000		1	SHAFT	
080	1548313-0000		1	FORCE LIMITING DEVICE	
090	1490118-0000		1	LINK	
TBA 0160S, TBA 0200M, TBA 0200S, TBA 0250S (See drawing on page: 3-28)					
010	1490113-0000		1	LINK HEAD	
050	1490116-0000		1	SPACER	
060	1490117-0000		1	NUT	
070	1490119-0000		1	SHAFT	
080	1548313-0000		1	FORCE LIMITING DEVICE	
090	1490118-0000		1	LINK	
Common Parts					
015	272472-0000		1	END PIECE	
020	1490114-0000		1	PIN	
030	1498194-0000		1	SPACER	
035	257309-0000		2	SHAFT	
036	257310-0000		2	NUT	
100	1490133-0000		2	SPACER	
150	90165-0065		1	PIPE CLAMP D=8 MM, GSK08/12	
202	90134-0068		1	CONNECTION	
332	312101-0376		2	SCREW M6S M6X35 FZB	
339	312101-0502		2	SCREW M6S M10X55 FZB	
345	312101-0289		1	SCREW M6S M4X10 FZB	
380	315101-0153		2	WASHER PLAIN, BRB, 6,4/12 H=1,5	
400	315121-0173		2	WASHER PLAIN, TBRSB 10,5/28 H=6	
MB016A	90458-0138		1	PROX. SWITCH, E2EG-X1R5B1-5M	

Pos	Part No	UN	Qty	Description	Page No

DISCONNECTION LINK RIGHT

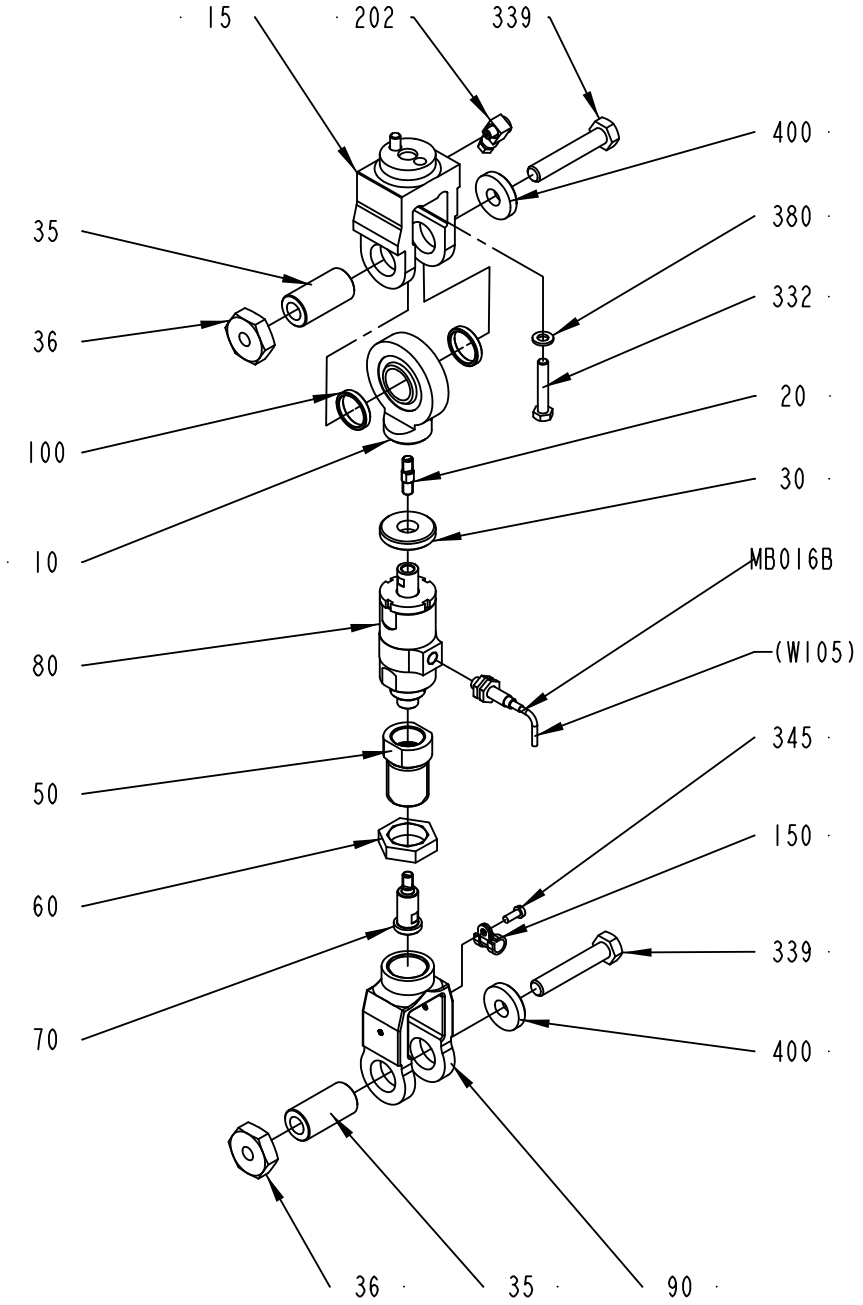

1539766-1
276014

ECM: 290771 - 20070126
Group number: 1539766-0100
Assembly Drawing: 1539766-1_1_AC

Pos	Part No	UN	Qty	Description	Page No
TBA 0100B, TBA 0180B, TBA 0125S, TBA 0200B, TBA 0236B, TBA 0284B, TBA 0250B, TBA 0300S, TBA 0330S (See drawing on page: 3-30)					
010	1490113-0000		1	LINK HEAD	
050	1490116-0000		1	SPACER	
060	1490117-0000		1	NUT	
070	1490119-0000		1	SHAFT	
080	1548313-0000		1	FORCE LIMITING DEVICE	
090	1490118-0000		1	LINK	
TBA 0160S, TBA 0200M, TBA 0200S, TBA 0250S (See drawing on page: 3-30)					
010	1490113-0000		1	LINK HEAD	
050	1490116-0000		1	SPACER	
060	1490117-0000		1	NUT	
070	1490119-0000		1	SHAFT	
080	1548313-0000		1	FORCE LIMITING DEVICE	
090	1490118-0000		1	LINK	
Common Parts					
015	272472-0000		1	END PIECE	
020	1490114-0000		1	PIN	
030	1498194-0000		1	SPACER	
035	257309-0000		2	SHAFT	
036	257310-0000		2	NUT	
100	1490133-0000		2	SPACER	
150	90165-0065		1	PIPE CLAMP D=8 MM, GSK08/12	
202	90134-0068		1	CONNECTION	
332	312101-0376		2	SCREW M6S M6X35 FZB	
339	312101-0502		2	SCREW M6S M10X55 FZB	
345	312101-0289		1	SCREW M6S M4X10 FZB	
380	315101-0153		2	WASHER PLAIN, BRB, 6,4/12 H=1,5	
400	315121-0173		2	WASHER PLAIN, TBRSB 10,5/28 H=6	
MB016B	90458-0138		1	PROX. SWITCH, E2EG-X1R5B1-5M	

Pos	Part No	UN	Qty	Description	Page No

ANGLE ENCODER

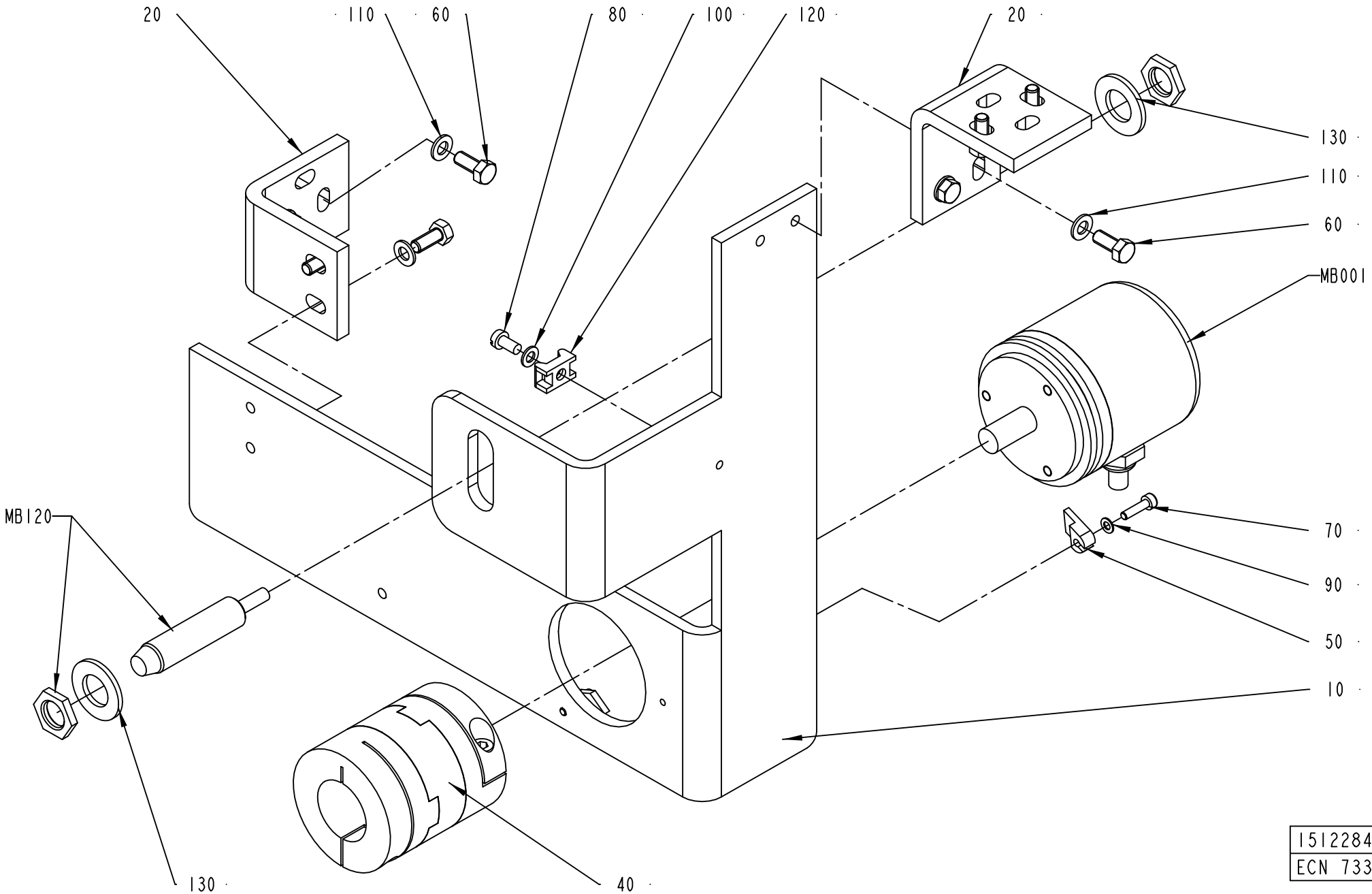

1512284-1
ECN 73395

ECM: 179094 - 20040910
Group number: 1512284-0100
Assembly Drawing: 1512284-1_1_AA

Pos	Part No	UN	Qty	Description	Page No
-					
010	1523151-0000		1	BRACKET	
020	1523152-0000		2	ANGLE ENCODER	
040	90457-0150		1	FLEXIBLE COUPLING, 10X25 MM	
050	90457-0162		1	CLAMPING ELEMENT, 00203005	
060	312105-0327		8	SCREW M6S ISO 4017 M5X12 A480	
070	312115-0226		3	SCREW ISO4762 M3X12 A4 80	
080	312125-0287		2	SCREW ISO 1207 M4X8 A4	
090	315105-0124		3	WASHER BRB 3,2X6 RFR	
100	315105-0136		2	WASHER BRB 4,3X8 RFR	
110	315105-0146		8	WASHER BRB 5,3X10 RFR	
120	352113-0205		2	ANCHOR PLATES FOR STRIPS, TYPE TM2S8-C10	
130	315105-0178		2	WASHER BRB 13X24 RFR	
MB120	90044-0124		1	PROX.SW. 922AB2XM-A9P-050-LZ-876	
MB001	90061-0027		1	ANGLE ENCODER 670900035	

Pos	Part No	UN	Qty	Description	Page No

Tetra Pak

SPC
Spare Parts Catalogue

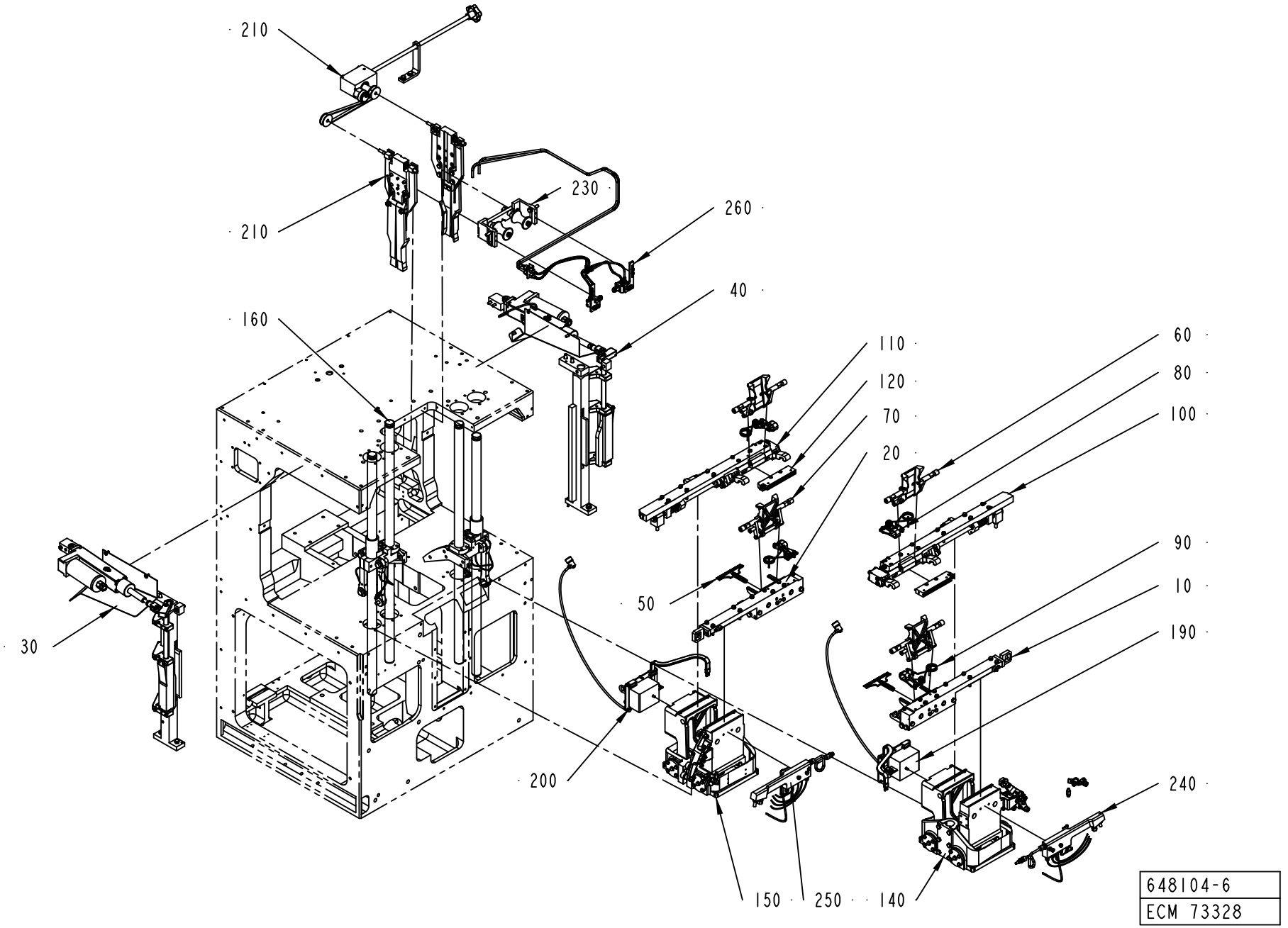
210
210
230
260
40
160
110
120
70
20
60
80
100
50
90
10
190
30
200
240
150
250
140
648104-6
ECM 73328

ECM: 292909 - 20070126
Group number: 648104-1200
Assembly Drawing: 648104-6_1_AA

Pos	Part No	UN	Qty	Description	Page No
TBA					
010	256204-0600		1	CUTTING JAW	**4-5, 4-7, 4-9**
020	256205-0600		1	CUTTING JAW	**4-11, 4-13, 4-15**
060	1519427-0100		2	VOLUME FLAP	**4-17, 4-19**
070	1549581-0100		2	VOLUME FLAP	**4-21, 4-23**
100	256212-0600		1	PRESSURE JAW	**4-25**
110	256213-0600		1	PRESSURE JAW	**4-27**
260	1511069-0100		1	TUBE FOLDING DEVICE	**4-29**
Common Parts					
030	1512305-0100		1	MOTORIZED DESIGN CONTROL SYSTEM, LEFT	**4-31**
040	1512306-0100		1	MOTORIZED DESIGN CONTROL SYSTEM, RIGHT	**4-33**
050	256208-0400		2	KNIFE HOLDER	**4-35**
080	752671-0100		2	SHOCK ABSORBER	**4-37, 4-39**
090	752672-0100		2	SHOCK ABSORBER	**4-41, 4-43**
120	256214-0400		2	PRESSURE RAIL	**4-45, 4-47**
140	256951-0500		1	YOKE RIGHT	**4-49**
150	256952-0500		1	YOKE LEFT	**4-51**
160	256217-0500		1	GUIDE	**4-53**
190	572642-0200		1	TRANSFER	**4-55**
200	572643-0200		1	TRANSFER	**4-57**
210	1519117-0100		1	VOLUME ADJUSTER	**4-59**
230	1511403-0100		1	SUPPORT ROLLER	**4-65**
240	257381-0300		1	MANIFOLD RIGHT	**4-67**
250	257382-0300		1	MANIFOLD LEFT	**4-69**
300	295523-0400		1	START-UP KIT	**4-71**

Pos	Part No	UN	Qty	Description	Page No

CUTTING JAW

Drawing file: 256204-20_1_AI.hpgl

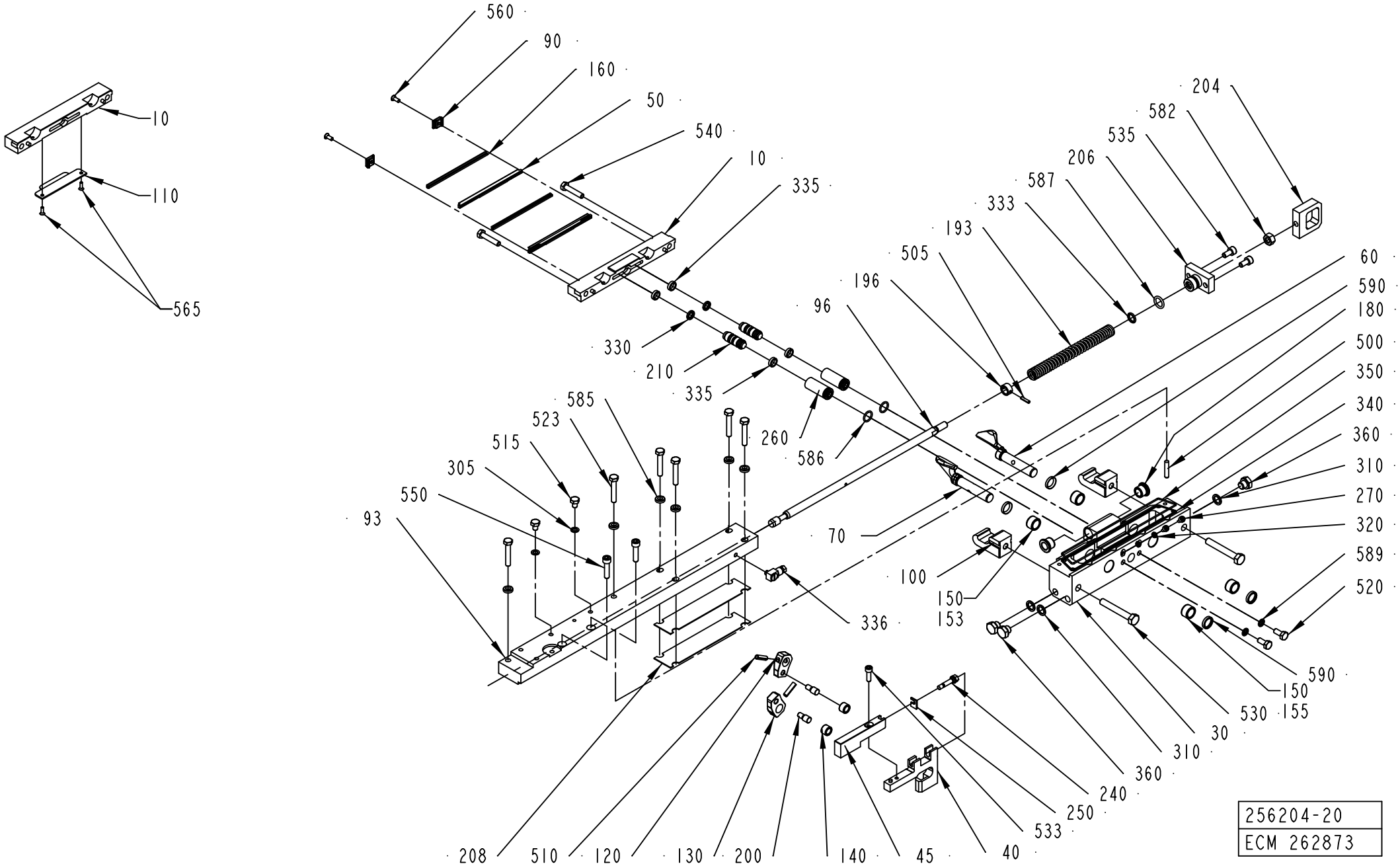

256204-20
ECM 262873

ECM: 273605 - 20060707
Group number: 256204-0600
Assembly Drawing: 256204-20_1_AI

This list covers pages from 4-4 to 4-9

Pos	Part No	UN	Qty	Description	Page No
TBA 0100B					
010	256487-0000		1	CUTTING JAW	
030	1478222-0000		1	BEARING HOUSING	
040	752014-0000		1	RULERPART R	
045	752015-0000		1	RULERPART R	
050	1110829-0000		2	CUTTING RAIL	
060	272420-0000		1	FOLDING FLAP	
070	272421-0000		1	FOLDING FLAP	
090	272427-0000		2	BRACKET	
093	979762-0000		1	CARRIER RIGHT 100	
100	978745-0000		2	CATCH	
120	2527724-0000		1	CARRIER	
130	2665718-0000		1	CARRIER	
150	33408-0000		4	BEARING	
160	1520577-0001		2	DOLLY	
180	2532544-0000		2	BUSHING	
540	312105-0374		2	SCREW M6S ISO 4014 M6X30 A480	
550	312115-0372		2	SCREW ISO4762 M6X25 A4 80	
560	312145-0289		2	SCREW ISO 2009 MFS M4X10 A4	
585	315115-0153		6	WASHER PLAIN, TBRB 6,4/12 H=3	
TBA 0125S					
010	256487-0000		1	CUTTING JAW	
030	1478222-0000		1	BEARING HOUSING	
040	752014-0000		1	RULERPART R	
045	752015-0000		1	RULERPART R	
050	1110829-0000		2	CUTTING RAIL	
060	2597663-0000		1	FOLDING FLAP	
070	2532539-0000		1	FOLDING FLAP	
090	272427-0000		2	BRACKET	
093	979762-0000		1	CARRIER RIGHT 100	
100	978745-0000		2	CATCH	
120	2527724-0000		1	CARRIER	
130	2665718-0000		1	CARRIER	
150	33408-0000		4	BEARING	
160	1520577-0001		2	DOLLY	
180	2532544-0000		2	BUSHING	
540	312105-0374		2	SCREW M6S ISO 4014 M6X30 A480	
550	312115-0372		2	SCREW ISO4762 M6X25 A4 80	
560	312145-0289		2	SCREW ISO 2009 MFS M4X10 A4	
585	315115-0153		6	WASHER PLAIN, TBRB 6,4/12 H=3	
TBA 0160S, TBA 0200S					
010	441727-0000		1	CUTTING JAW	
030	1478224-0000		1	BEARING HOUSING	
040	752009-0000		1	RULERPART R	
045	752010-0000		1	RULERPART R	
050	1110820-0000		2	CUTTING RAIL	
060	2532542-0000		1	FOLDING FLAP	
070	2532543-0000		1	FOLDING FLAP	
090	1348053-0000		2	BRACKET	
093	978715-0000		1	CARRIER RIGHT	
100	978745-0000		2	CATCH	
120	272419-0000		1	CARRIER	
130	272419-0000		1	CARRIER	
150	33408-0000		4	BEARING	
160	1110391-0000		2	DOLLY	
180	2532544-0000		2	BUSHING	
540	312115-0370		2	SCREW ISO4762 M6X20 A4 80	
550	312105-0376		2	SCREW M6S ISO 4014 M6X35 A480	
560	312145-0291		2	SCREW ISO 2009 MFS M4X12 A4	
585	315115-0153		8	WASHER PLAIN, TBRB 6,4/12 H=3	
TBA 0180B, TBA 0300S, TBA 0330S					
010	256769-0000		1	CUTTING JAW	
030	1478223-0000		1	BEARING HOUSING	
040	751575-0000		1	RULERPART R	
045	751577-0000		1	RULERPART R	
050	1110820-0000		2	CUTTING RAIL	
060	272422-0000		1	FOLDING FLAP	
070	272423-0000		1	FOLDING FLAP	
090	1348053-0000		2	BRACKET	
093	978715-0000		1	CARRIER RIGHT	
100	978745-0000		2	CATCH	
120	272419-0000		1	CARRIER	
130	272419-0000		1	CARRIER	
150	33408-0000		4	BEARING	
160	1110391-0000		2	DOLLY	
180	2532544-0000		2	BUSHING	
540	312115-0370		2	SCREW ISO4762 M6X20 A4 80	
550	312105-0376		2	SCREW M6S ISO 4014 M6X35 A480	
560	312145-0291		2	SCREW ISO 2009 MFS M4X12 A4	
585	315115-0153		8	WASHER PLAIN, TBRB 6,4/12 H=3	
TBA 0200B, TBA 0250B					
010	256769-0000		1	CUTTING JAW	
030	1478223-0000		1	BEARING HOUSING	
040	751575-0000		1	RULERPART R	

CUTTING JAW

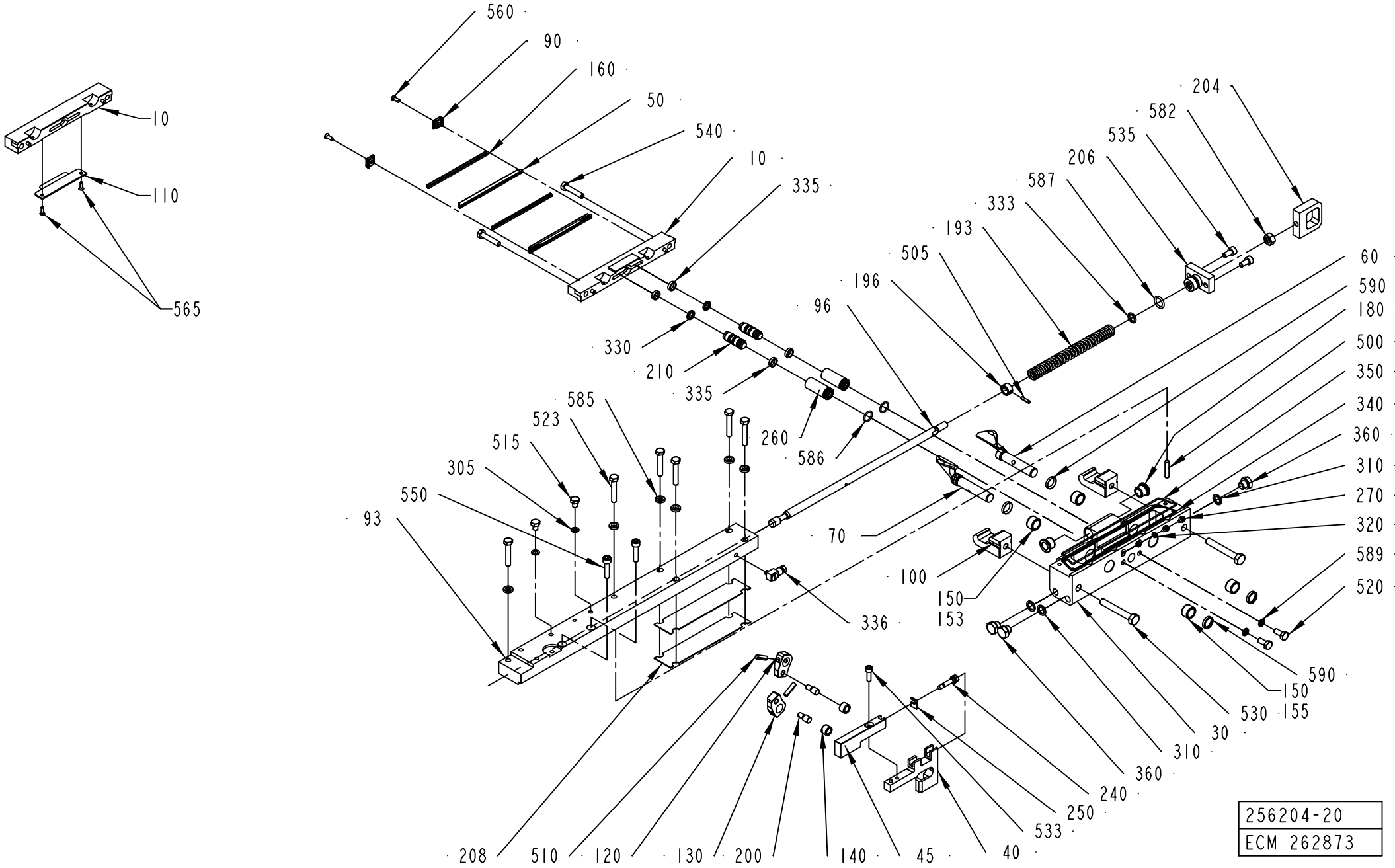

256204-20
ECM 262873

ECM: 273605 - 20060707
Group number: 256204-0600
Assembly Drawing: 256204-20_1_AI

This list covers pages from 4-4 to 4-9

Pos	Part No	UN	Qty	Description	Page No
TBA 0200B, TBA 0250B (Cont'd)					
045	751577-0000		1	RULERPART R	
050	1110820-0000		2	CUTTING RAIL	
060	2532540-0000		1	FOLDING FLAP	
070	2532541-0000		1	FOLDING FLAP	
090	1348053-0000		2	BRACKET	
093	978715-0000		1	CARRIER RIGHT	
100	978745-0000		2	CATCH	
120	272419-0000		1	CARRIER	
130	272419-0000		1	CARRIER	
150	33408-0000		4	BEARING	
160	1110391-0000		2	DOLLY	
180	2532544-0000		2	BUSHING	
540	312115-0370		2	SCREW ISO4762 M6X20 A4 80	
550	312105-0376		2	SCREW M6S ISO 4014 M6X35 A480	
560	312145-0291		2	SCREW ISO 2009 MFS M4X12 A4	
585	315115-0153		8	WASHER PLAIN, TBRB 6,4/12 H=3	
TBA 0200M, TBA 0250S					
010	574386-0000		1	CUTTING JAW	
030	1478225-0000		1	BEARING HOUSING	
040	574369-0000		1	CARRIER RULER RIGHT	
045	574370-0000		1	CARRIER RULER RIGHT	
050	1110820-0000		2	CUTTING RAIL	
060	2532542-0000		1	FOLDING FLAP	
070	2532543-0000		1	FOLDING FLAP	
090	1348053-0000		2	BRACKET	
093	978715-0000		1	CARRIER RIGHT	
100	978745-0000		2	CATCH	
120	272419-0000		1	CARRIER	
130	272419-0000		1	CARRIER	
150	33408-0000		4	BEARING	
160	1110391-0000		2	DOLLY	
180	2532544-0000		2	BUSHING	
540	312115-0370		2	SCREW ISO4762 M6X20 A4 80	
550	312105-0376		2	SCREW M6S ISO 4014 M6X35 A480	
560	312145-0291		2	SCREW ISO 2009 MFS M4X12 A4	
585	315115-0153		8	WASHER PLAIN, TBRB 6,4/12 H=3	
TBA 0200SQ					
010	1548942-0000		1	CUTTING JAW	
030	1519215-0000		1	BEARING HOUSING	
040	1519216-0000		1	CARRIER RULER	
045	751577-0000		1	RULERPART R	
050	1110820-0000		2	CUTTING RAIL	
060	1532440-0000		1	FOLDING FLAP	
070	1532441-0000		1	FOLDING FLAP	
090	1348053-0000		2	BRACKET	
093	1519219-0000		1	CARRIER	
100	1523924-0000		2	CATCH	
110	1538756-0000		1	VOLUME BULGE	
120	272419-0000		1	CARRIER	
130	272419-0000		1	CARRIER	
153	929316-0002		2	BEARING	
155	929316-0001		2	BEARING	
160	1110391-0000		2	DOLLY	
180	1255541-0000		2	BUSHING	
540	312115-0370		2	SCREW ISO4762 M6X20 A4 80	
550	312105-0376		2	SCREW M6S ISO 4014 M6X35 A480	
560	312145-0291		2	SCREW ISO 2009 MFS M4X12 A4	
565	90287-0295		2	SCREW HEX.SOCK.COUNT.MF6S M3X8 A280	
585	315115-0153		8	WASHER PLAIN, TBRB 6,4/12 H=3	
TBA 0284B					
010	256769-0000		1	CUTTING JAW	
030	1478223-0000		1	BEARING HOUSING	
040	751575-0000		1	RULERPART R	
045	751577-0000		1	RULERPART R	
050	1110820-0000		2	CUTTING RAIL	
060	2532540-0000		1	FOLDING FLAP	
070	2532541-0000		1	FOLDING FLAP	
090	1348053-0000		2	BRACKET	
093	978715-0000		1	CARRIER RIGHT	
100	978745-0000		2	CATCH	
120	272419-0000		1	CARRIER	
130	272419-0000		1	CARRIER	
150	33408-0000		4	BEARING	
160	1110391-0000		2	DOLLY	
180	2532544-0000		2	BUSHING	
540	312115-0370		2	SCREW ISO4762 M6X20 A4 80	
550	312105-0376		2	SCREW M6S ISO 4014 M6X35 A480	
560	312145-0291		2	SCREW ISO 2009 MFS M4X12 A4	
585	315115-0153		8	WASHER PLAIN, TBRB 6,4/12 H=3	
Common Parts					
096	256659-0000		1	OPERATING ROD	
140	22463-0000		2	ROLL	
193	255742-0000		1	COMPRESSION SPRING	

Machine Type | Group Description | Used-In | Group Number | Page No

CUTTING JAW

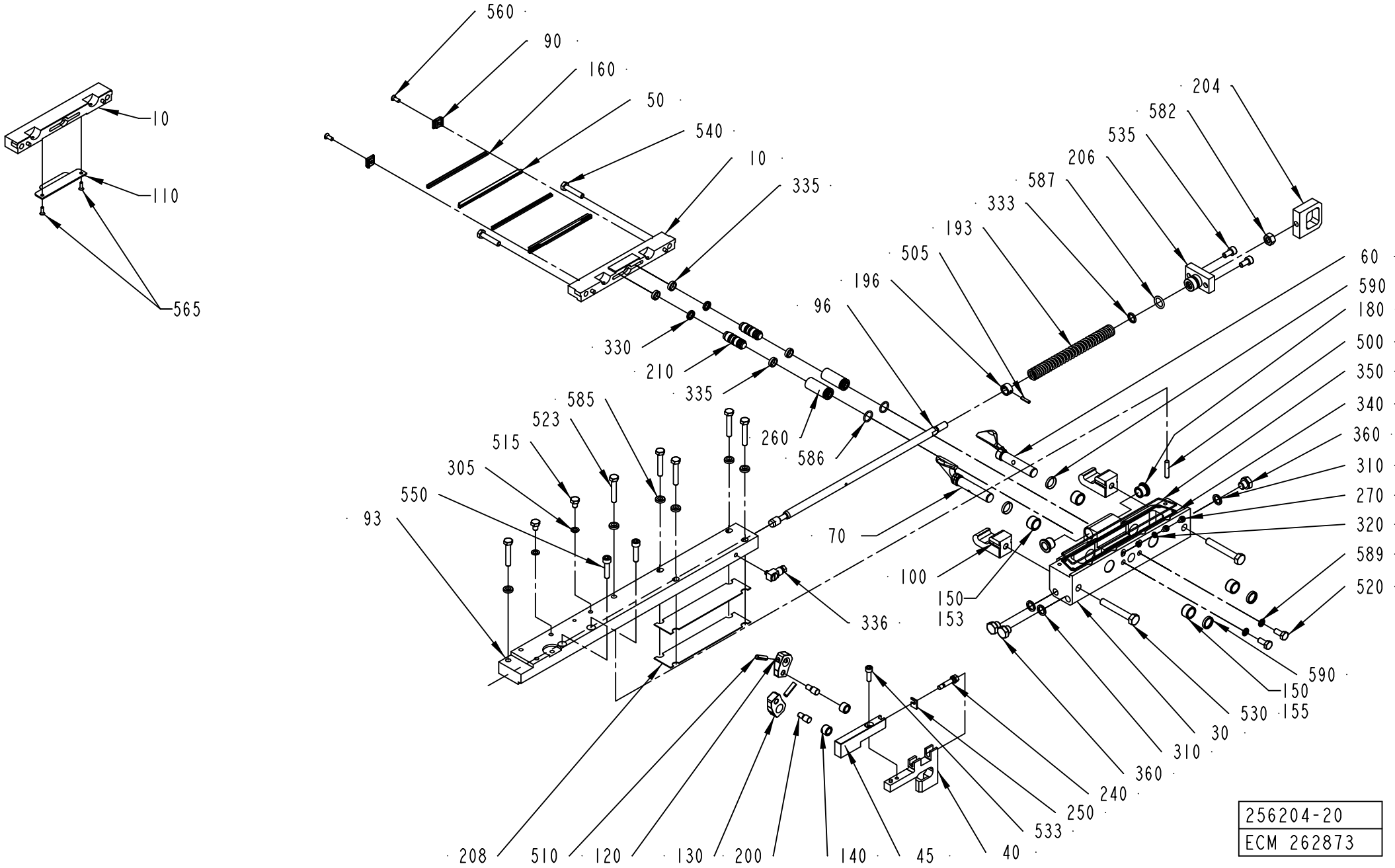

256204-20
ECM 262873

Pos	Part No	UN	Qty	Description	Page No
Common Parts (Cont'd)					
196	255801-0000		1	RETAINING RING	
200	256607-0000		2	AXLE PIN	
204	256626-0000		1	EAR	
206	256706-0000		1	BEARING PLATE	
208	257362-0000		2	LACE	
210	752115-0000		2	PLUNGER	
240	751579-0000		1	ADJUSTING SCREW	
250	751580-0000		1	SHIM	
260	752288-0000		2	SLEEVE	
270	752476-0000		2	SCREW	
305	315237-0106		2	WASHER,PL.RND.AL.6/10,H=1	
310	315237-0109		3	WASHER,PL.RND.AL.10/14,H=1,5	
320	315211-0101		2	BONDED SEAL SS/NBR90 M4	
330	90091-0216		2	PISTON SEAL GLIDE RING 7,1X12X2,2 MM	
333	90091-0091		1	ROD SEAL, GLIDORING 10X14X1,7 MM	
335	90091-0169		4	WEAR RING 12X15X3,2 MM	
336	90134-0058		1	CONNECTION	
340	90153-0015	KG	1	ADHESIVE,LOCTITE IS 496/CYANOLOT 303	
350	90242-0093	MM	450	O-RING MATERIAL 1,5 MM	
360	90330-0066		3	PLUG, EXT. G-THREAD, G1/8	
500	311103-0312		1	PARALLEL PIN ISO 2338 5M6X25 A1	
505	311111-0207		1	SPRING PIN ISO 8752 3X14-ST	
510	311111-0308		2	SPRING PIN ISO 8752 5X20-ST	
515	312105-0362		2	SCREW M6S ISO 4017 M6X8 A480	
520	312105-0367		2	SCREW M6S ISO 4017 M6X14 A480	
523	312105-0376		6	SCREW M6S ISO 4014 M6X35 A480	
530	312105-0462		2	SCREW M6S ISO 4014 M8X55 A480	
533	312115-0329		1	SCREW ISO4762 M5X16 A4 80	
535	312115-0366		2	SCREW ISO4762 M6X12 A4 80	
582	312605-0318		1	HEXAGON NUT, M6M M8 A280	
586	315202-0110		2	O-RING 12,1X1,6 MM	
587	315202-0265		1	O-RING 12,3X2,4 MM	
589	315211-0103		2	BONDED SEAL SS/NBR90 M6	
590	315230-0157		4	BEARING SEAL 12X16X3 MM	

Pos	Part No	UN	Qty	Description	Page No

CUTTING JAW

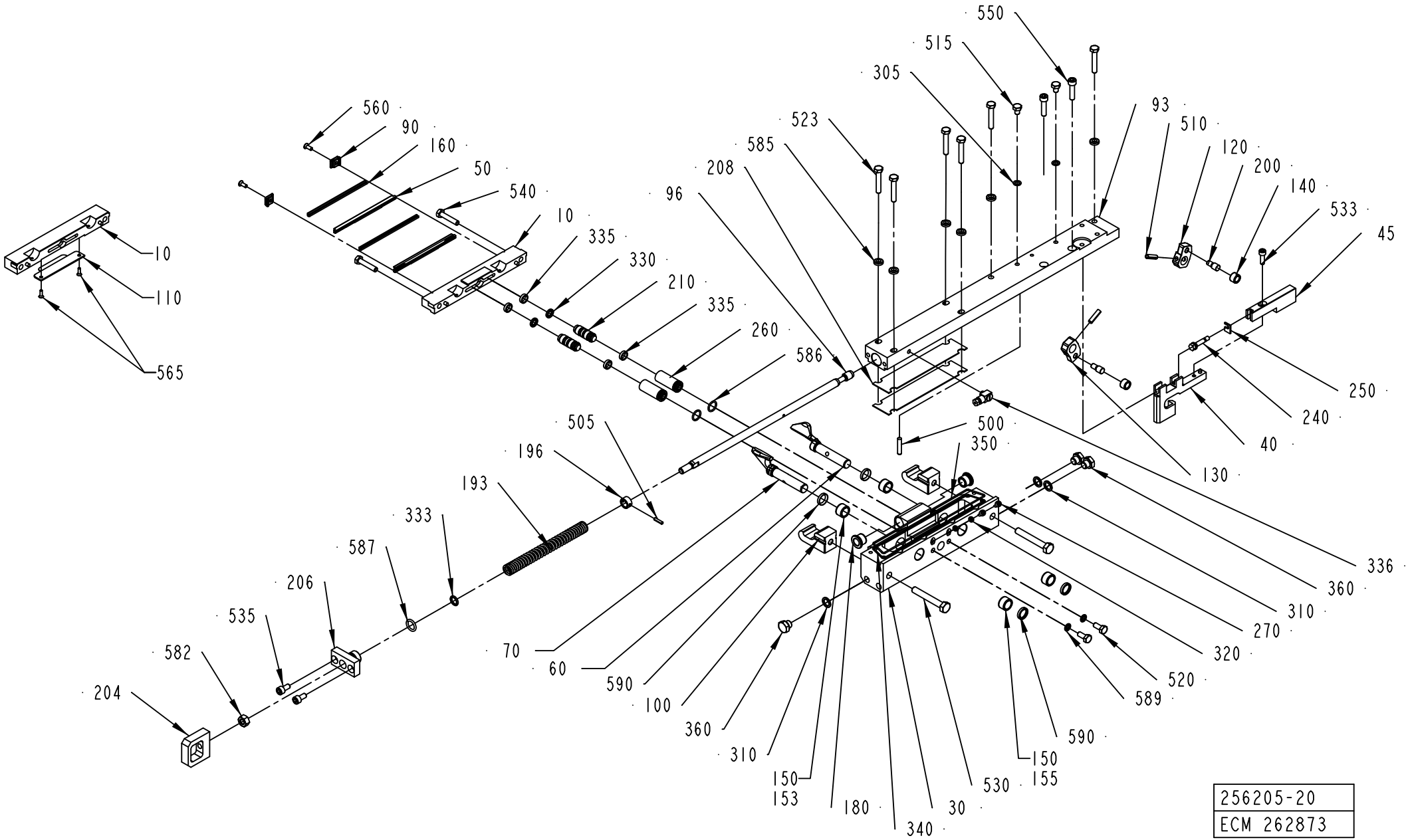
10
110
565
560
90
160
50
540
10
335
330
210
335
260
586
550
515
305
523
585
208
96
93
510
120
200
140
533
45
250
240
40
130
500
350
505
196
193
333
587
206
535
582
204
70
60
590
100
360
310
150
153
180
340
30
530
150
155
590
589
520
320
270
310
360
336
256205-20
ECM 262873

ECM: 265203 - 20060707
Group number: 256205-0600
Assembly Drawing: 256205-20_1_AI

This list covers pages from 4-10 to 4-15

Pos	Part No	UN	Qty	Description	Page No
TBA 0100B					
010	256487-0000		1	CUTTING JAW	
030	1478222-0000		1	BEARING HOUSING	
040	752016-0000		1	RULERPART L	
045	752017-0000		1	RULERPART L	
050	1110829-0000		2	CUTTING RAIL	
060	272420-0000		1	FOLDING FLAP	
070	272421-0000		1	FOLDING FLAP	
090	272427-0000		2	BRACKET	
093	979763-0000		1	CARRIER LEFT 100	
100	978745-0000		2	CATCH	
120	2527724-0000		1	CARRIER	
130	2665718-0000		1	CARRIER	
150	33408-0000		4	BEARING	
160	1520577-0001		2	DOLLY	
180	2532544-0000		2	BUSHING	
540	312105-0374		2	SCREW M6S ISO 4014 M6X30 A480	
550	312115-0372		2	SCREW ISO4762 M6X25 A4 80	
560	312145-0289		2	SCREW ISO 2009 MFS M4X10 A4	
585	315115-0153		6	WASHER PLAIN, TBRB 6,4/12 H=3	
TBA 0125S					
010	256487-0000		1	CUTTING JAW	
030	1478222-0000		1	BEARING HOUSING	
040	752016-0000		1	RULERPART L	
045	752017-0000		1	RULERPART L	
050	1110829-0000		2	CUTTING RAIL	
060	2597663-0000		1	FOLDING FLAP	
070	2532539-0000		1	FOLDING FLAP	
090	272427-0000		2	BRACKET	
093	979763-0000		1	CARRIER LEFT 100	
100	978745-0000		2	CATCH	
120	2527724-0000		1	CARRIER	
130	2665718-0000		1	CARRIER	
150	33408-0000		4	BEARING	
160	1520577-0001		2	DOLLY	
180	2532544-0000		2	BUSHING	
540	312105-0374		2	SCREW M6S ISO 4014 M6X30 A480	
550	312115-0372		2	SCREW ISO4762 M6X25 A4 80	
560	312145-0289		2	SCREW ISO 2009 MFS M4X10 A4	
585	315115-0153		6	WASHER PLAIN, TBRB 6,4/12 H=3	
TBA 0160S, TBA 0200S					
010	441727-0000		1	CUTTING JAW	
030	1478224-0000		1	BEARING HOUSING	
040	752011-0000		1	RULERPART L	
045	752012-0000		1	RULERPART L	
050	1110820-0000		2	CUTTING RAIL	
060	2532542-0000		1	FOLDING FLAP	
070	2532543-0000		1	FOLDING FLAP	
090	1348053-0000		2	BRACKET	
093	978714-0000		1	CARRIER LEFT	
100	978745-0000		2	CATCH	
120	272419-0000		1	CARRIER	
130	272419-0000		1	CARRIER	
150	33408-0000		4	BEARING	
160	1110391-0000		2	DOLLY	
180	2532544-0000		2	BUSHING	
540	312115-0370		2	SCREW ISO4762 M6X20 A4 80	
550	312105-0376		2	SCREW M6S ISO 4014 M6X35 A480	
560	312145-0291		2	SCREW ISO 2009 MFS M4X12 A4	
585	315115-0153		8	WASHER PLAIN, TBRB 6,4/12 H=3	
TBA 0180B, TBA 0300S, TBA 0330S					
010	256769-0000		1	CUTTING JAW	
030	1478223-0000		1	BEARING HOUSING	
040	751576-0000		1	RULERPART L	
045	751578-0000		1	RULERPART L	
050	1110820-0000		2	CUTTING RAIL	
060	272422-0000		1	FOLDING FLAP	
070	272423-0000		1	FOLDING FLAP	
090	1348053-0000		2	BRACKET	
093	978714-0000		1	CARRIER LEFT	
100	978745-0000		2	CATCH	
120	272419-0000		1	CARRIER	
130	272419-0000		1	CARRIER	
150	33408-0000		4	BEARING	
160	1110391-0000		2	DOLLY	
180	2532544-0000		2	BUSHING	
540	312115-0370		2	SCREW ISO4762 M6X20 A4 80	
550	312105-0376		2	SCREW M6S ISO 4014 M6X35 A480	
560	312145-0291		2	SCREW ISO 2009 MFS M4X12 A4	
585	315115-0153		8	WASHER PLAIN, TBRB 6,4/12 H=3	
TBA 0200B, TBA 0250B					
010	256769-0000		1	CUTTING JAW	
030	1478223-0000		1	BEARING HOUSING	
040	751576-0000		1	RULERPART L	

Machine Type | Group Description | Used-In | Group Number | Page No

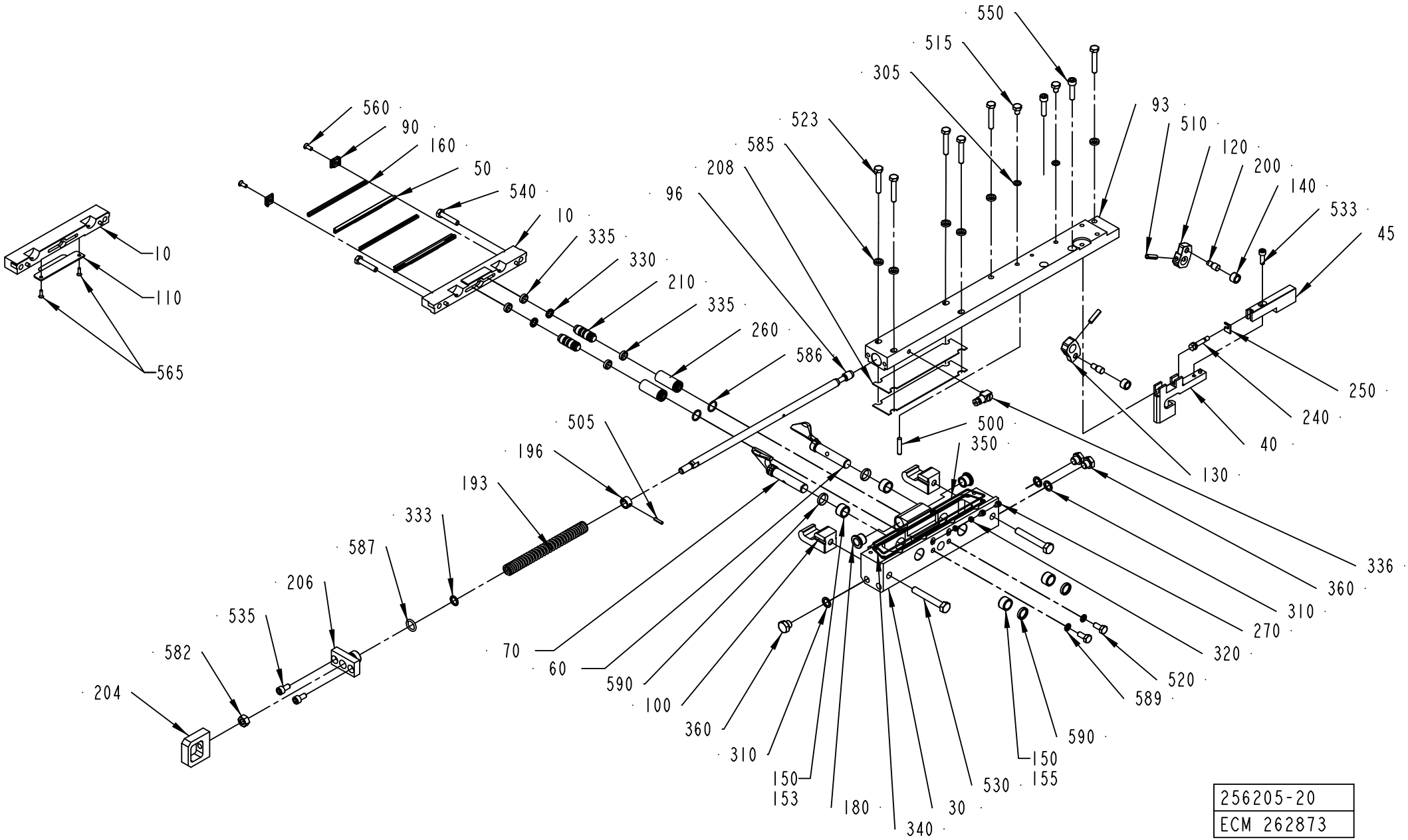

256205-20
ECM 262873

Pos	Part No	UN	Qty	Description	Page No
TBA 0200B, TBA 0250B (Cont'd)					
045	751578-0000		1	RULERPART L	
050	1110820-0000		2	CUTTING RAIL	
060	2532540-0000		1	FOLDING FLAP	
070	2532541-0000		1	FOLDING FLAP	
090	1348053-0000		2	BRACKET	
093	978714-0000		1	CARRIER LEFT	
100	978745-0000		2	CATCH	
120	272419-0000		1	CARRIER	
130	272419-0000		1	CARRIER	
150	33408-0000		4	BEARING	
160	1110391-0000		2	DOLLY	
180	2532544-0000		2	BUSHING	
540	312115-0370		2	SCREW ISO4762 M6X20 A4 80	
550	312105-0376		2	SCREW M6S ISO 4014 M6X35 A480	
560	312145-0291		2	SCREW ISO 2009 MFS M4X12 A4	
585	315115-0153		8	WASHER PLAIN, TBRB 6,4/12 H=3	
TBA 0200M, TBA 0250S					
010	574386-0000		1	CUTTING JAW	
030	1478225-0000		1	BEARING HOUSING	
040	574371-0000		1	CARRIER RULER LEFT	
045	574372-0000		1	CARRIER RULER LEFT	
050	1110820-0000		2	CUTTING RAIL	
060	2532542-0000		1	FOLDING FLAP	
070	2532543-0000		1	FOLDING FLAP	
090	1348053-0000		2	BRACKET	
093	978714-0000		1	CARRIER LEFT	
100	978745-0000		2	CATCH	
120	272419-0000		1	CARRIER	
130	272419-0000		1	CARRIER	
150	33408-0000		4	BEARING	
160	1110391-0000		2	DOLLY	
180	2532544-0000		2	BUSHING	
540	312115-0370		2	SCREW ISO4762 M6X20 A4 80	
550	312105-0376		2	SCREW M6S ISO 4014 M6X35 A480	
560	312145-0291		2	SCREW ISO 2009 MFS M4X12 A4	
585	315115-0153		8	WASHER PLAIN, TBRB 6,4/12 H=3	
TBA 0200SQ					
010	1548942-0000		1	CUTTING JAW	
030	1519215-0000		1	BEARING HOUSING	
040	1519231-0000		1	CARRIER RULER	
045	751578-0000		1	RULERPART L	
050	1110820-0000		2	CUTTING RAIL	
060	1532440-0000		1	FOLDING FLAP	
070	1532441-0000		1	FOLDING FLAP	
090	1348053-0000		2	BRACKET	
093	1519536-0000		1	CARRIER	
100	1523924-0000		2	CATCH	
110	1538756-0000		1	VOLUME BULGE	
120	272419-0000		1	CARRIER	
130	272419-0000		1	CARRIER	
153	929316-0002		2	BEARING	
155	929316-0001		2	BEARING	
160	1110391-0000		2	DOLLY	
180	1255541-0000		2	BUSHING	
540	312115-0370		2	SCREW ISO4762 M6X20 A4 80	
550	312105-0376		2	SCREW M6S ISO 4014 M6X35 A480	
560	312145-0291		2	SCREW ISO 2009 MFS M4X12 A4	
565	90287-0295		2	SCREW HEX.SOCK.COUNT.MF6S M3X8 A280	
585	315115-0153		8	WASHER PLAIN, TBRB 6,4/12 H=3	
TBA 0284B					
010	256769-0000		1	CUTTING JAW	
030	1478223-0000		1	BEARING HOUSING	
040	751576-0000		1	RULERPART L	
045	751578-0000		1	RULERPART L	
050	1110820-0000		2	CUTTING RAIL	
060	2532540-0000		1	FOLDING FLAP	
070	2532541-0000		1	FOLDING FLAP	
090	1348053-0000		2	BRACKET	
093	978714-0000		1	CARRIER LEFT	
100	978745-0000		2	CATCH	
120	272419-0000		1	CARRIER	
130	272419-0000		1	CARRIER	
150	33408-0000		4	BEARING	
160	1110391-0000		2	DOLLY	
180	2532544-0000		2	BUSHING	
540	312115-0370		2	SCREW ISO4762 M6X20 A4 80	
550	312105-0376		2	SCREW M6S ISO 4014 M6X35 A480	
560	312145-0291		2	SCREW ISO 2009 MFS M4X12 A4	
585	315115-0153		8	WASHER PLAIN, TBRB 6,4/12 H=3	
Common Parts					
096	256659-0000		1	OPERATING ROD	
140	22463-0000		2	ROLL	
193	255742-0000		1	COMPRESSION SPRING	

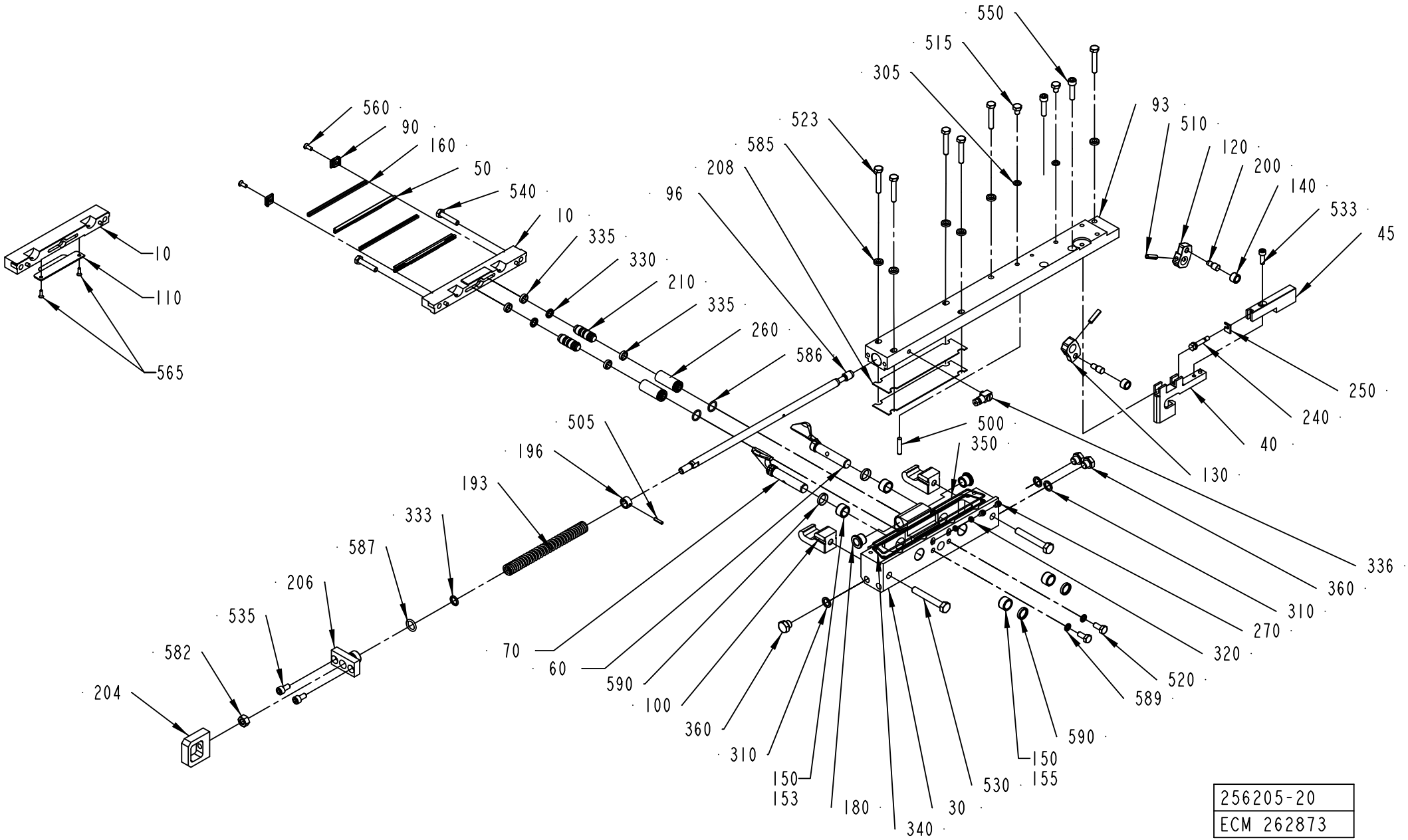

256205-20
ECM 262873

Pos	Part No	UN	Qty	Description	Page No
Common Parts (Cont'd)					
196	255801-0000		1	RETAINING RING	
200	256607-0000		2	AXLE PIN	
204	256626-0000		1	EAR	
206	256706-0000		1	BEARING PLATE	
208	257362-0000		2	LACE	
210	752115-0000		2	PLUNGER	
240	751579-0000		1	ADJUSTING SCREW	
250	751580-0000		1	SHIM	
260	752288-0000		2	SLEEVE	
270	752476-0000		2	SCREW	
305	315237-0106		2	WASHER,PL.RND.AL.6/10,H=1	
310	315237-0109		3	WASHER,PL.RND.AL.10/14,H=1,5	
320	315211-0101		2	BONDED SEAL SS/NBR90 M4	
330	90091-0216		2	PISTON SEAL GLIDE RING 7,1X12X2,2 MM	
333	90091-0091		1	ROD SEAL, GLIDORING 10X14X1,7 MM	
335	90091-0169		4	WEAR RING 12X15X3,2 MM	
336	90134-0058		1	CONNECTION	
340	90153-0015	KG	1	ADHESIVE,LOCTITE IS 496/CYANOLOT 303	
350	90242-0093	MM	450	O-RING MATERIAL 1,5 MM	
360	90330-0066		3	PLUG, EXT. G-THREAD, G1/8	
500	311103-0312		1	PARALLEL PIN ISO 2338 5M6X25 A1	
505	311111-0207		1	SPRING PIN ISO 8752 3X14-ST	
510	311111-0308		2	SPRING PIN ISO 8752 5X20-ST	
515	312105-0362		2	SCREW M6S ISO 4017 M6X8 A480	
520	312105-0367		2	SCREW M6S ISO 4017 M6X14 A480	
523	312105-0376		6	SCREW M6S ISO 4014 M6X35 A480	
530	312105-0462		2	SCREW M6S ISO 4014 M8X55 A480	
533	312115-0329		1	SCREW ISO4762 M5X16 A4 80	
535	312115-0366		2	SCREW ISO4762 M6X12 A4 80	
582	312605-0318		1	HEXAGON NUT, M6M M8 A280	
586	315202-0110		2	O-RING 12,1X1,6 MM	
587	315202-0265		1	O-RING 12,3X2,4 MM	
589	315211-0103		2	BONDED SEAL SS/NBR90 M6	
590	315230-0157		4	BEARING SEAL 12X16X3 MM	

Pos	Part No	UN	Qty	Description	Page No

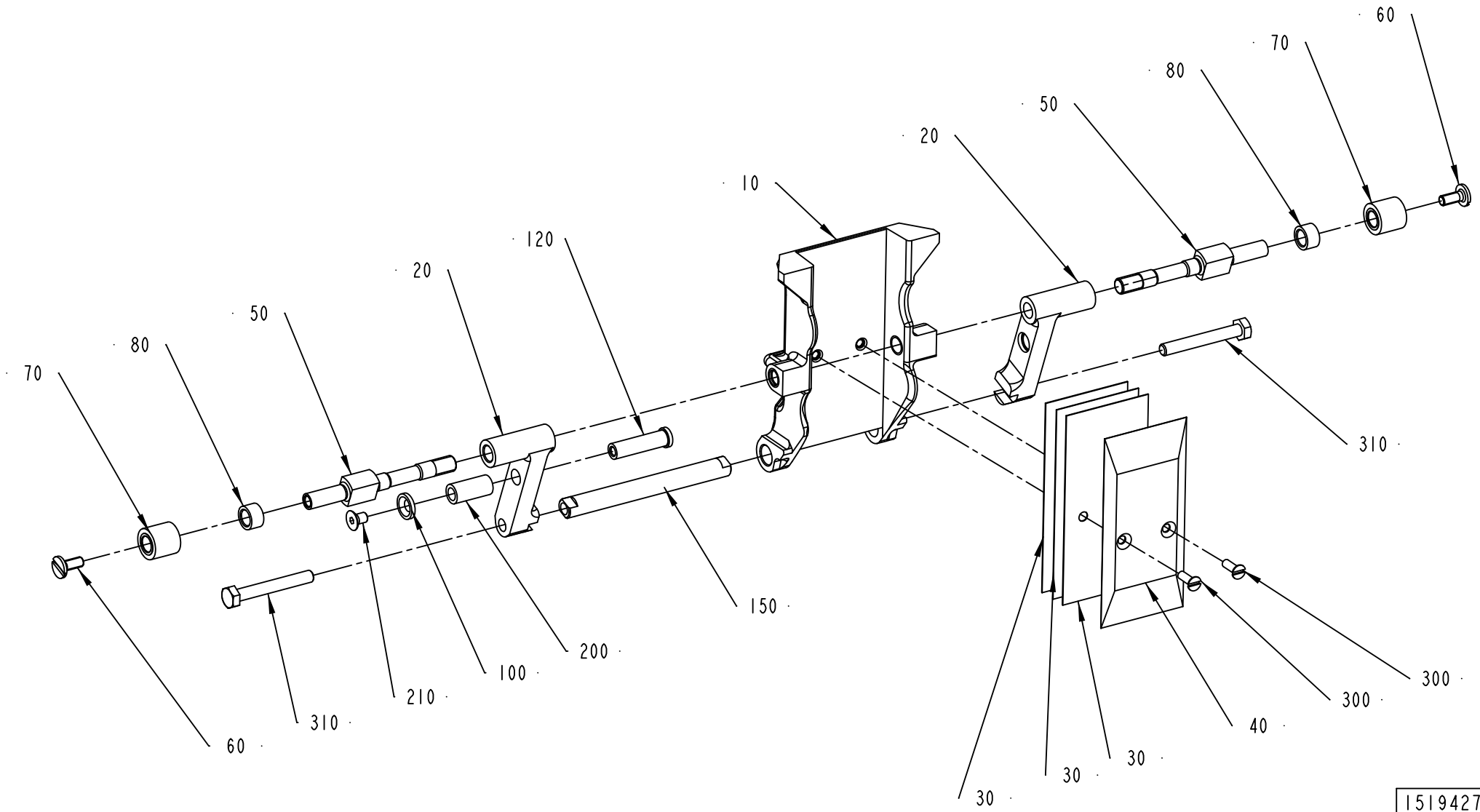

1519427-1
ECN 83326

ECM: 265719 - 20060616
Group number: 1519427-0100
Assembly Drawing: 1519427-1_1_AA

This list covers pages from 4-16 to 4-19

Pos	Part No	UN	Qty	Description	Page No
TBA 0100B (See drawing on page: 4-18)					
010	979751-0000		1	VOLUME FLAP 100	
020	1538942-0000		2	CARRIER	
030	979754-0000		3	VOLUME SHIM 100	
040	979755-0000		1	VOLUME BULGE 100	
050	979756-0000		2	SHAFT	
080	979757-0000		2	SPACER	
150	1519375-0001		1	SHAFT	
TBA 0125S (See drawing on page: 4-16)					
010	256849-0000		1	VOLUMEFLAP 125 ML	
020	1519374-0001		2	CARRIER	
030	272987-0000		3	VOLUME SHIM	
040	491868-0000		1	VOLUME BULGE	
050	752598-0000		2	SHAFT	
080	752615-0000		2	SPACER	
100	1519377-0000		1	WASHER	
120	1519376-0000		1	AXLE PIN	
150	1519375-0001		1	SHAFT	
210	312155-0323		1	SCREW DIN 7991 MF6S M5X8 A4 70	
TBA 0160S (See drawing on page: 4-16)					
010	577211-0000		1	VOLUMEFLAP 160 ML	
020	1519374-0001		2	CARRIER	
030	577212-0000		3	VOLUME SHIM	
040	577213-0000		1	VOLUME BULGE 160 ML	
050	752598-0000		2	SHAFT	
080	752615-0000		2	SPACER	
100	1519377-0000		1	WASHER	
120	1519376-0000		1	AXLE PIN	
150	1519375-0001		1	SHAFT	
210	312155-0323		1	SCREW DIN 7991 MF6S M5X8 A4 70	
TBA 0180B (See drawing on page: 4-16)					
010	752292-0000		1	VOLUMEFLAP 180 ML	
020	1519374-0002		2	CARRIER	
030	272986-0004		3	VOLUME SHIM	
040	272988-0004		1	VOLUME BULGE	
050	752598-0000		2	SHAFT	
080	752615-0000		2	SPACER	
100	1519377-0000		1	WASHER	
120	1519376-0000		1	AXLE PIN	
150	1519375-0001		1	SHAFT	
210	312155-0323		1	SCREW DIN 7991 MF6S M5X8 A4 70	
TBA 0200B (See drawing on page: 4-16)					
010	752212-0000		1	VOLUME FLAP 200 ML	
020	1519374-0001		2	CARRIER	
030	272986-0003		3	VOLUME SHIM	
040	456005-0003		1	VOLUME BULGE	
050	752598-0000		2	SHAFT	
080	752615-0000		2	SPACER	
100	1519377-0000		1	WASHER	
120	1519376-0000		1	AXLE PIN	
150	1519375-0001		1	SHAFT	
210	312155-0323		1	SCREW DIN 7991 MF6S M5X8 A4 70	
TBA 0200M (See drawing on page: 4-16)					
020	1519374-0001		2	CARRIER	
030	979861-0000		3	VOLUME SHIM	
040	979860-0000		1	VOLUME BULGE	
050	752598-0000		2	SHAFT	
080	752615-0000		2	SPACER	
100	1519377-0000		1	WASHER	
120	1519376-0000		1	AXLE PIN	
150	1519375-0001		1	SHAFT	
210	312155-0323		1	SCREW DIN 7991 MF6S M5X8 A4 70	
TBA 0200S (See drawing on page: 4-16)					
010	752999-0000		1	VOLUME FLAP 200S	
020	1519374-0001		2	CARRIER	
030	272991-0000		3	VOLUME SHIM	
040	272990-0000		1	VOLUME BULGE	
050	752598-0000		2	SHAFT	
080	752615-0000		2	SPACER	
100	1519377-0000		1	WASHER	
120	1519376-0000		1	AXLE PIN	
150	1519375-0001		1	SHAFT	
210	312155-0323		1	SCREW DIN 7991 MF6S M5X8 A4 70	
TBA 0250B (See drawing on page: 4-16)					
010	978366-0000		1	VOLUME FLAP 250 ML	
020	1519374-0001		2	CARRIER	
030	272986-0001		3	VOLUME SHIM	
040	456005-0001		1	VOLUME BULGE	
050	752598-0000		2	SHAFT	
080	752615-0000		2	SPACER	
100	1519377-0000		1	WASHER	
120	1519376-0000		1	AXLE PIN	
150	1519375-0001		1	SHAFT	
210	312155-0323		1	SCREW DIN 7991 MF6S M5X8 A4 70	

Machine Type | Group Description | Used-In | Group Number | Page No

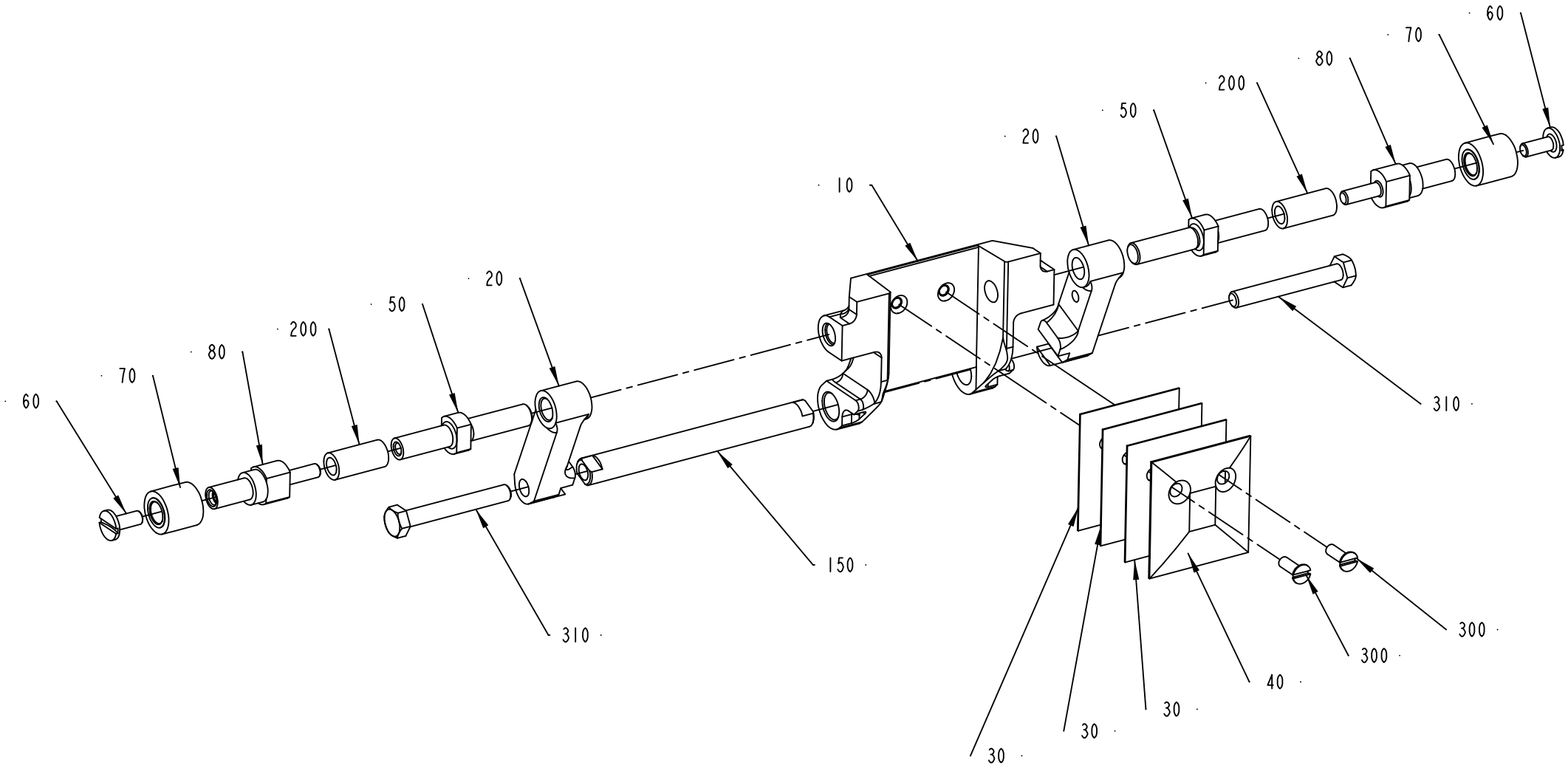

1519427-3
ECN 83326

Pos	Part No	UN	Qty	Description	Page No
TBA 0250S (Cont'd) (See drawing on page: 4-16)					
010	574365-0000		1	VOLUMEFLAP 250S	
020	1519374-0001		2	CARRIER	
030	574366-0000		3	VOLUME SHIM	
040	574367-0000		1	VOLUME BULGE	
050	752598-0000		2	SHAFT	
080	752615-0000		2	SPACER	
100	1519377-0000		1	WASHER	
120	1519376-0000		1	AXLE PIN	
150	1519375-0001		1	SHAFT	
210	312155-0323		1	SCREW DIN 7991 MF6S M5X8 A4 70	
TBA 0284B (See drawing on page: 4-16)					
010	978031-0000		1	VOLUMEFLAP 284 ML	
020	1519374-0001		2	CARRIER	
030	272986-0005		3	VOLUME SHIM	
040	752739-0000		1	VOLUME BULGE	
050	752598-0000		2	SHAFT	
080	752615-0000		2	SPACER	
100	1519377-0000		1	WASHER	
120	1519376-0000		1	AXLE PIN	
150	1519375-0001		1	SHAFT	
210	312155-0323		1	SCREW DIN 7991 MF6S M5X8 A4 70	
TBA 0300S (See drawing on page: 4-16)					
010	978031-0000		1	VOLUMEFLAP 284 ML	
020	1519374-0001		2	CARRIER	
030	272986-0003		3	VOLUME SHIM	
040	979792-0000		1	VOLUME BULGE	
050	752598-0000		2	SHAFT	
080	752615-0000		2	SPACER	
100	1519377-0000		1	WASHER	
120	1519376-0000		1	AXLE PIN	
150	1519375-0001		1	SHAFT	
210	312155-0323		1	SCREW DIN 7991 MF6S M5X8 A4 70	
TBA 0330S (See drawing on page: 4-16)					
010	582163-0000		1	VOLUME FLAP 330S	
020	1519374-0001		2	CARRIER	
030	272986-0006		3	VOLUME SHIM 330S	
040	979931-0000		1	VOLUME BULGE	
050	752598-0000		2	SHAFT	
080	752615-0000		2	SPACER	
100	1519377-0000		1	WASHER	
120	1519376-0000		1	AXLE PIN	
150	1519375-0001		1	SHAFT	
210	312155-0323		1	SCREW DIN 7991 MF6S M5X8 A4 70	
Common Parts					
060	256859-0000		2	SCREW	
070	256860-0000		2	ROLL	
200	90166-0159	MM	25	RUBBER HOSE	
300	312145-0291		2	SCREW ISO 2009 MFS M4X12 A4	
310	312105-0379		2	SCREW M6S ISO 4014 M6X45 A480	

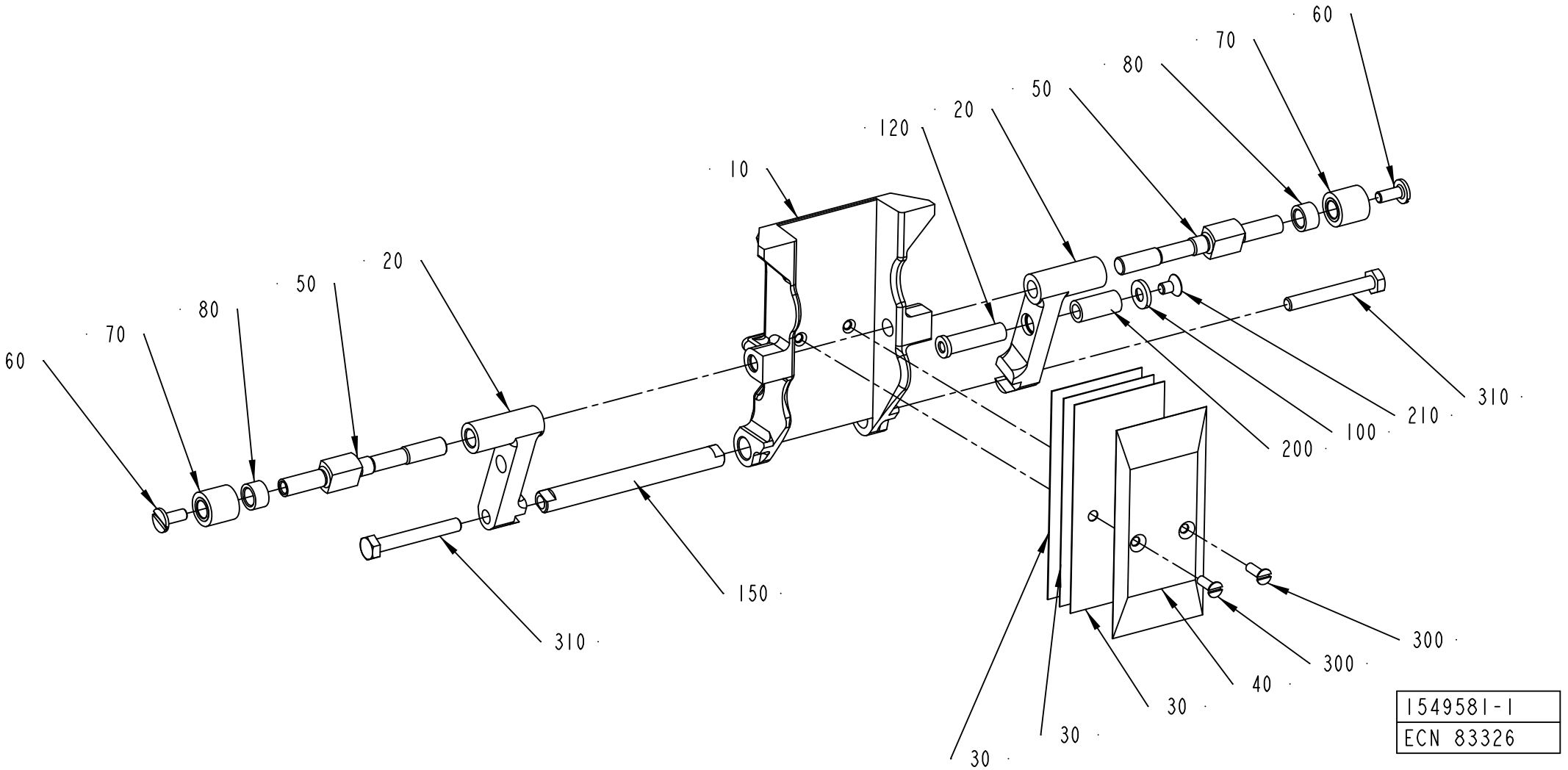
60
70
80
50
20
10
120
20
50
80
70
60
310
150
310
200
100
210
310
300
300
40
30
30
30
1549581-1
ECN 83326

ECM: 265720 - 20060616
Group number: 1549581-0100
Assembly Drawing: 1549581-1_1_AA

This list covers pages from 4-20 to 4-23

Pos	Part No	UN	Qty	Description	Page No
TBA 0100B (See drawing on page: 4-22)					
010	979751-0000		1	VOLUME FLAP 100	
020	1538942-0000		2	CARRIER	
030	979754-0000		3	VOLUME SHIM 100	
040	979755-0000		1	VOLUME BULGE 100	
050	979756-0000		2	SHAFT	
080	979757-0000		2	SPACER	
150	1519375-0001		1	SHAFT	
TBA 0125S (See drawing on page: 4-20)					
010	256849-0000		1	VOLUMEFLAP 125 ML	
020	1519374-0001		2	CARRIER	
030	272987-0000		3	VOLUME SHIM	
040	491868-0000		1	VOLUME BULGE	
050	752598-0000		2	SHAFT	
080	752615-0000		2	SPACER	
100	1519377-0000		1	WASHER	
120	1519376-0000		1	AXLE PIN	
150	1519375-0001		1	SHAFT	
210	312155-0323		1	SCREW DIN 7991 MF6S M5X8 A4 70	
TBA 0160S (See drawing on page: 4-20)					
010	577211-0000		1	VOLUMEFLAP 160 ML	
020	1519374-0001		2	CARRIER	
030	577212-0000		3	VOLUME SHIM	
040	577213-0000		1	VOLUME BULGE 160 ML	
050	752598-0000		2	SHAFT	
080	752615-0000		2	SPACER	
100	1519377-0000		1	WASHER	
120	1519376-0000		1	AXLE PIN	
150	1519375-0001		1	SHAFT	
210	312155-0323		1	SCREW DIN 7991 MF6S M5X8 A4 70	
TBA 0180B (See drawing on page: 4-20)					
010	752292-0000		1	VOLUMEFLAP 180 ML	
020	1519374-0002		2	CARRIER	
030	272986-0004		3	VOLUME SHIM	
040	272988-0004		1	VOLUME BULGE	
050	752598-0000		2	SHAFT	
080	752615-0000		2	SPACER	
100	1519377-0000		1	WASHER	
120	1519376-0000		1	AXLE PIN	
150	1519375-0001		1	SHAFT	
210	312155-0323		1	SCREW DIN 7991 MF6S M5X8 A4 70	
TBA 0200B (See drawing on page: 4-20)					
010	752212-0000		1	VOLUME FLAP 200 ML	
020	1519374-0001		2	CARRIER	
030	272986-0003		3	VOLUME SHIM	
040	456005-0003		1	VOLUME BULGE	
050	752598-0000		2	SHAFT	
080	752615-0000		2	SPACER	
100	1519377-0000		1	WASHER	
120	1519376-0000		1	AXLE PIN	
150	1519375-0001		1	SHAFT	
210	312155-0323		1	SCREW DIN 7991 MF6S M5X8 A4 70	
TBA 0200M (See drawing on page: 4-20)					
020	1519374-0001		2	CARRIER	
030	979861-0000		3	VOLUME SHIM	
040	979860-0000		1	VOLUME BULGE	
050	752598-0000		2	SHAFT	
080	752615-0000		2	SPACER	
100	1519377-0000		1	WASHER	
120	1519376-0000		1	AXLE PIN	
150	1519375-0001		1	SHAFT	
210	312155-0323		1	SCREW DIN 7991 MF6S M5X8 A4 70	
TBA 0200S (See drawing on page: 4-20)					
010	752999-0000		1	VOLUME FLAP 200S	
020	1519374-0001		2	CARRIER	
030	272991-0000		3	VOLUME SHIM	
040	272990-0000		1	VOLUME BULGE	
050	752598-0000		2	SHAFT	
080	752615-0000		2	SPACER	
100	1519377-0000		1	WASHER	
120	1519376-0000		1	AXLE PIN	
150	1519375-0001		1	SHAFT	
210	312155-0323		1	SCREW DIN 7991 MF6S M5X8 A4 70	
TBA 0250B (See drawing on page: 4-20)					
010	978366-0000		1	VOLUME FLAP 250 ML	
020	1519374-0001		2	CARRIER	
030	272986-0001		3	VOLUME SHIM	
040	456005-0001		1	VOLUME BULGE	
050	752598-0000		2	SHAFT	
080	752615-0000		2	SPACER	
100	1519377-0000		1	WASHER	
120	1519376-0000		1	AXLE PIN	
150	1519375-0001		1	SHAFT	
210	312155-0323		1	SCREW DIN 7991 MF6S M5X8 A4 70	

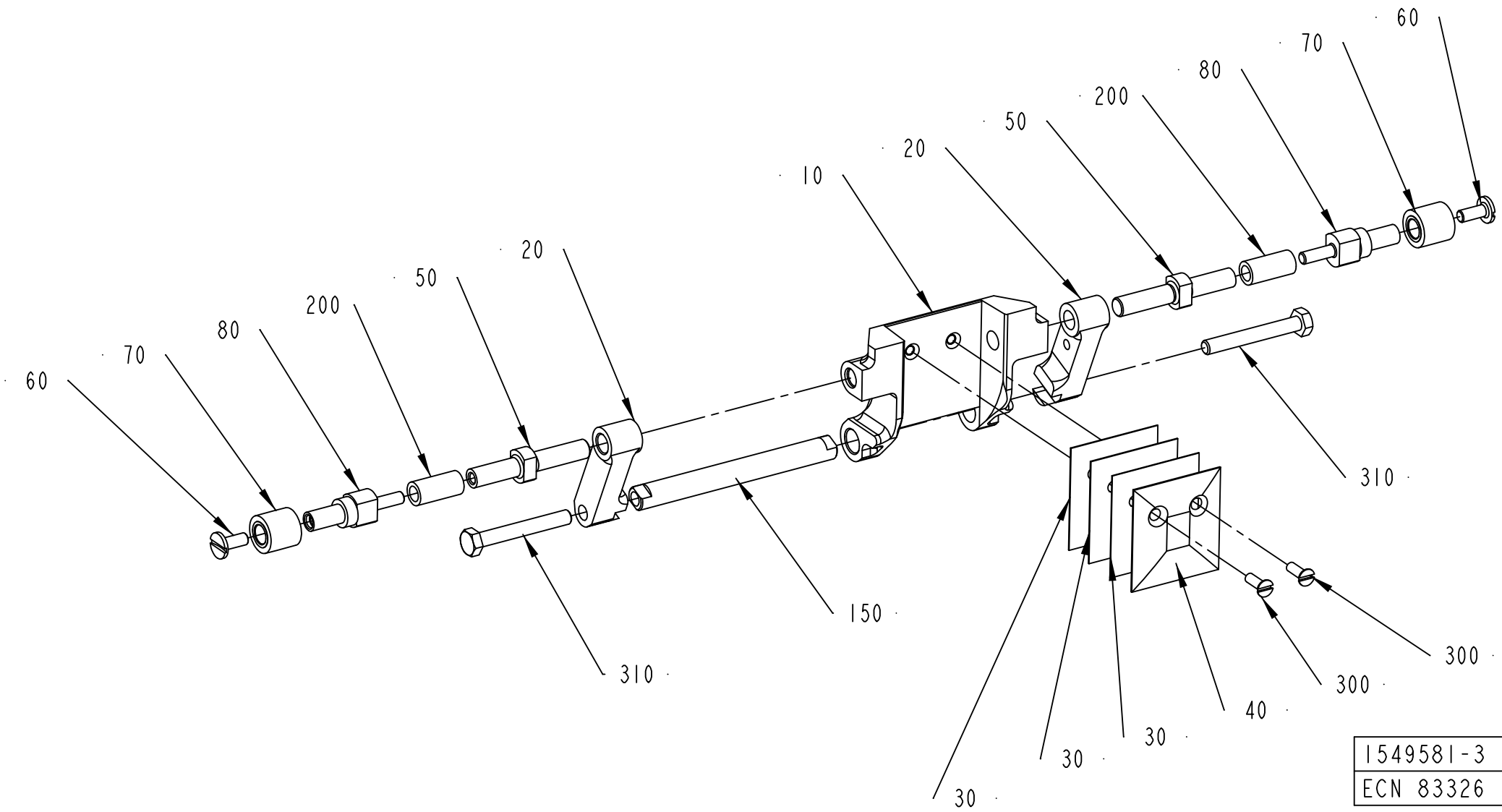
60
70
80
200
50
20
10
20
50
200
80
70
60
310
150
310
300
300
40
30
30
30
1549581-3
ECN 83326

Pos	Part No	UN	Qty	Description	Page No
TBA 0250S (Cont'd) (See drawing on page: 4-20)					
010	574365-0000		1	VOLUMEFLAP 250S	
020	1519374-0001		2	CARRIER	
030	574366-0000		3	VOLUME SHIM	
040	574367-0000		1	VOLUME BULGE	
050	752598-0000		2	SHAFT	
080	752615-0000		2	SPACER	
100	1519377-0000		1	WASHER	
120	1519376-0000		1	AXLE PIN	
150	1519375-0001		1	SHAFT	
210	312155-0323		1	SCREW DIN 7991 MF6S M5X8 A4 70	
TBA 0284B (See drawing on page: 4-20)					
010	978031-0000		1	VOLUMEFLAP 284 ML	
020	1519374-0001		2	CARRIER	
030	272986-0005		3	VOLUME SHIM	
040	752739-0000		1	VOLUME BULGE	
050	752598-0000		2	SHAFT	
080	752615-0000		2	SPACER	
100	1519377-0000		1	WASHER	
120	1519376-0000		1	AXLE PIN	
150	1519375-0001		1	SHAFT	
210	312155-0323		1	SCREW DIN 7991 MF6S M5X8 A4 70	
TBA 0300S (See drawing on page: 4-20)					
010	978031-0000		1	VOLUMEFLAP 284 ML	
020	1519374-0001		2	CARRIER	
030	272986-0003		3	VOLUME SHIM	
040	979792-0000		1	VOLUME BULGE	
050	752598-0000		2	SHAFT	
080	752615-0000		2	SPACER	
100	1519377-0000		1	WASHER	
120	1519376-0000		1	AXLE PIN	
150	1519375-0001		1	SHAFT	
210	312155-0323		1	SCREW DIN 7991 MF6S M5X8 A4 70	
TBA 0330S (See drawing on page: 4-20)					
010	582163-0000		1	VOLUME FLAP 330S	
020	1519374-0001		2	CARRIER	
030	272986-0006		3	VOLUME SHIM 330S	
040	979931-0000		1	VOLUME BULGE	
050	752598-0000		2	SHAFT	
080	752615-0000		2	SPACER	
100	1519377-0000		1	WASHER	
120	1519376-0000		1	AXLE PIN	
150	1519375-0001		1	SHAFT	
210	312155-0323		1	SCREW DIN 7991 MF6S M5X8 A4 70	
Common Parts					
060	256859-0000		2	SCREW	
070	256860-0000		2	ROLL	
200	90166-0159	MM	25	RUBBER HOSE	
300	312145-0291		2	SCREW ISO 2009 MFS M4X12 A4	
310	312105-0379		2	SCREW M6S ISO 4014 M6X45 A480	

PRESSURE JAW

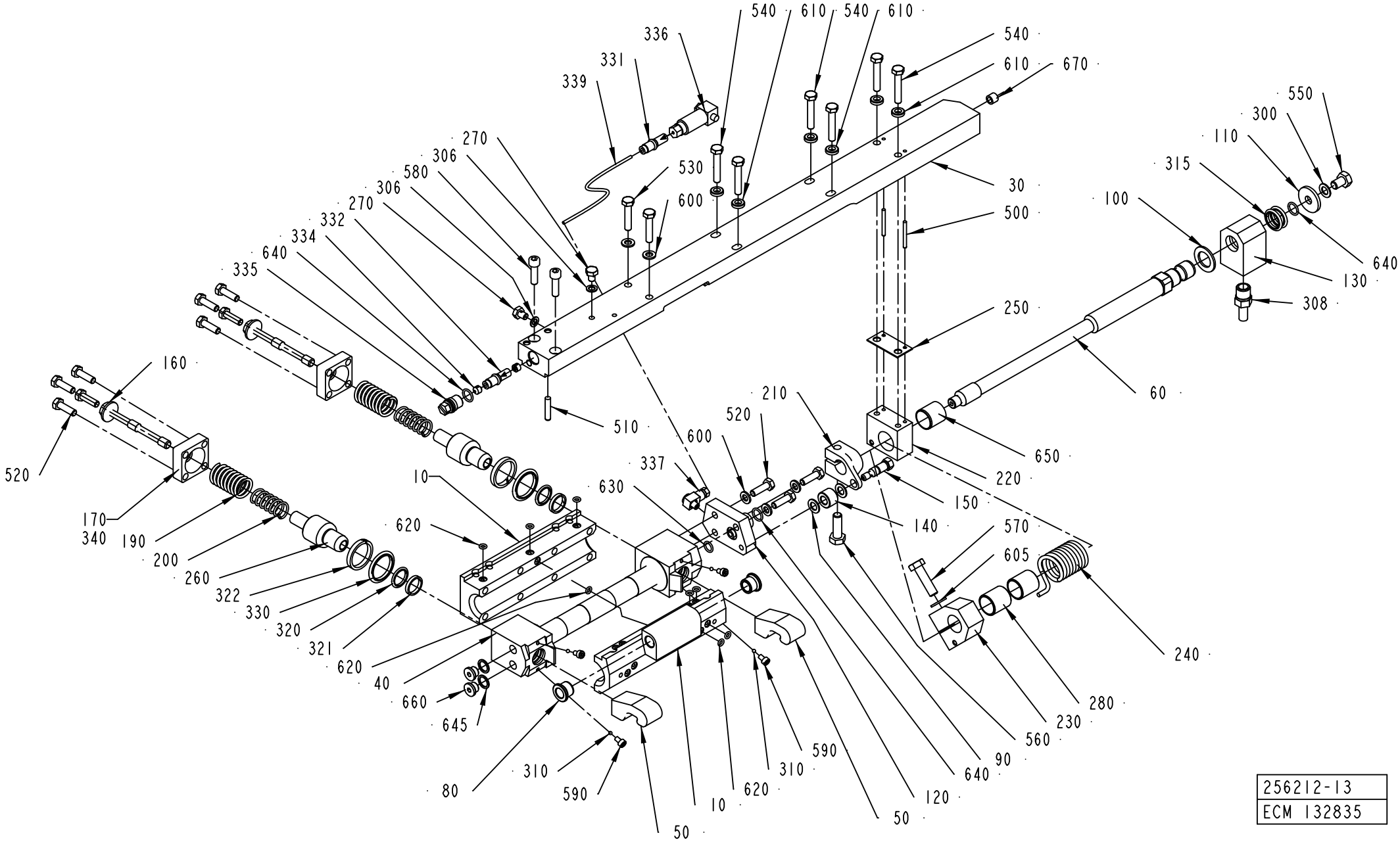

256212-13
ECM 132835

ECM: 215358 - 20050622
Group number: 256212-0600
Assembly Drawing: 256212-13_1_AE

Pos	Part No	UN	Qty	Description	Page No
TBA 0100B					
010	2552528-0000		1	BEARING HOUSING	
030	979764-0000		1	CARRIER RIGHT 100	
080	2532544-0000		2	BUSHING	
TBA 0125S					
010	2552528-0000		1	BEARING HOUSING	
030	979793-0000		1	CARRIER	
080	2532544-0000		2	BUSHING	
TBA 0160S, TBA 0200S					
010	2552530-0000		1	BEARING HOUSING	
030	979793-0000		1	CARRIER	
080	2532544-0000		2	BUSHING	
TBA 0180B, TBA 0200B, TBA 0236B, TBA 0284B, TBA 0250B, TBA 0300S, TBA 0330S					
010	2552529-0000		1	BEARING HOUSING	
030	979793-0000		1	CARRIER	
080	2532544-0000		2	BUSHING	
TBA 0200M, TBA 0250S					
010	2552527-0000		1	BEARING HOUSING	
030	979793-0000		1	CARRIER	
080	2532544-0000		2	BUSHING	
TBA 0200SQ					
010	2552531-0000		1	BEARING HOUSING	
030	1519214-0000		1	CARRIER	
080	1255541-0000		2	BUSHING	
Common Parts					
040	490940-0000		1	CYLINDER	
050	978746-0000		2	CATCH	
060	752284-0000		1	SHAFT	
090	256557-0001		2	WASHER	
100	256557-0002		1	WASHER	
110	256557-0003		1	WASHER	
120	752282-0000		1	CONNECTION RIGHT	
130	441385-0000		1	HUB	
140	256576-0000		1	ROLL	
150	441764-0000		1	SHAFT	
160	257249-0000		2	SCREW	
170	257250-0000		2	LID	
190	490942-0000		2	COMPRESSION SPRING	
200	490943-0000		2	COMPRESSION SPRING	
210	752289-0000		1	CLAMP RIGHT	
220	272501-0000		1	BRACKET RIGHT	
230	272503-0000		1	CLAMPING PIECE	
240	456311-0000		1	TORSION SPRING RIGHT	
250	272506-0000		1	LACE	
260	751743-0000		2	PISTON	
270	441355-0000		2	BLEEDING SCREW	
280	751769-0000		2	SLEEVE	
300	315237-0107		1	WASHER,PL.RND.AL.8/14,H=1	
306	315237-0106		2	WASHER,PL.RND.AL.6/10,H=1	
308	90030-0065		1	PIPE CONNECTION	
310	90090-0005		4	STEEL BALL 3MM, RB-3/IIIB	
315	90091-0089		2	ROD SEAL, GLIDORING 16X22X2,5 MM	
320	90091-0214		2	ROD SEAL, GLIDORING 16X20,9X2,2 MM	
321	90091-0162		2	WEAR RING 16X19X3,2 MM	
322	90091-0170		2	WEAR RING 25X30X4,2 MM	
330	90091-0215		2	ROD SEAL, GLIDORING 25X32,5X3,2 MM	
331	90092-0052		1	METERING VALVE 10 MM3	
332	90092-0053		1	METERING VALVE 30 MM3	
334	90134-0042		2	SPACER DOSING VALVE	
335	90134-0045		1	PLUG M12X1	
336	90134-0047		1	CONNECTION FOR DOSING VALVE	
337	90134-0058		1	CONNECTION	
339	90166-0143	MM	160	TUBE 2,5 MM PA,TRANSP.	
340	90296-0068	G	25	SHELL ALVANIA GREASE EP 2	
500	311103-0242		2	PARALLEL PIN ISO 2338 3M6X30 A1	
510	311103-0312		1	PARALLEL PIN ISO 2338 5M6X25 A1	
520	312105-0370		11	SCREW M6S ISO 4017 M6X20 A480	
530	312105-0374		2	SCREW M6S ISO 4014 M6X30 A480	
540	312105-0376		6	SCREW M6S ISO 4014 M6X35 A480	
550	312105-0447		1	SCREW M6S ISO 4017 M8X12 A480	
560	312105-0453		1	SCREW M6S ISO 4017 M8X25 A480	
570	312105-0455		1	SCREW M6S ISO 4017 M8X30 A480	
580	312115-0371		2	SCREW ISO4762 M6X22 A4	
590	752476-0000		4	SCREW	
600	315105-0153		5	WASHER BRB 6,4X12 RFR	
605	315105-0165		1	WASHER BRB 8,4X16 RFR	
610	315115-0153		6	WASHER PLAIN, TBRB 6,4/12 H=3	
620	315202-0102		8	O-RING 4,1X1,6 MM	
630	315202-0106		1	O-RING 8,1X1,6 MM	
640	315202-0108		3	O-RING 10,1X1,6 MM	
645	315234-0109		2	WASHER,PL.RND.CU.10,3/13,5 H=1,0	
650	321120-0132		1	BEARING BUSH W/O FLANGE, 18X20X20 MM	
660	342713-0209		2	PLUG (QUANT.MINIMA= 10PC).	
670	2545249-0000		1	TEFLON HOSE	

Machine Type | Group Description | Used-In | Group Number | Page No

PRESSURE JAW

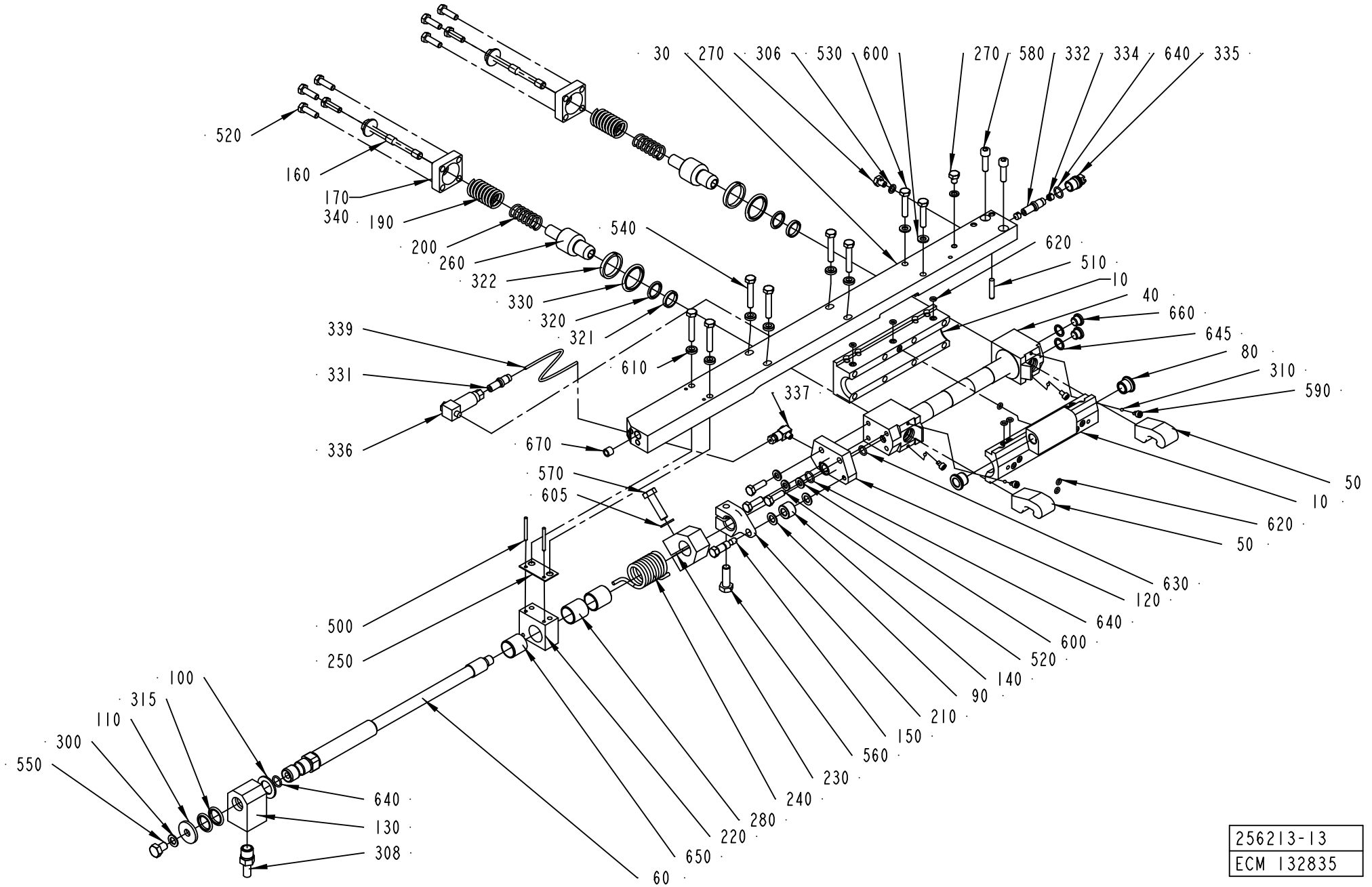

256213-13
ECM 132835

ECM: 216906 - 20050622
Group number: 256213-0600
Assembly Drawing: 256213-13_1_AE

Pos	Part No	UN	Qty	Description	Page No
TBA 0100B					
010	2552528-0000		1	BEARING HOUSING	
030	979765-0000		1	CARRIER LEFT 100	
080	2532544-0000		2	BUSHING	
TBA 0125S					
010	2552528-0000		1	BEARING HOUSING	
030	979794-0000		1	CARRIER	
080	2532544-0000		2	BUSHING	
TBA 0160S, TBA 0200S					
010	2552530-0000		1	BEARING HOUSING	
030	979794-0000		1	CARRIER	
080	2532544-0000		2	BUSHING	
TBA 0180B, TBA 0200B, TBA 0236B, TBA 0284B, TBA 0250B, TBA 0300S, TBA 0330S					
010	2552529-0000		1	BEARING HOUSING	
030	979794-0000		1	CARRIER	
080	2532544-0000		2	BUSHING	
TBA 0200M, TBA 0250S					
010	2552527-0000		1	BEARING HOUSING	
030	979794-0000		1	CARRIER	
080	2532544-0000		2	BUSHING	
TBA 0200SQ					
010	2552531-0000		1	BEARING HOUSING	
030	1519230-0000		1	CARRIER	
080	1255541-0000		2	BUSHING	
Common Parts					
040	490940-0000		1	CYLINDER	
050	978746-0000		2	CATCH	
060	752284-0000		1	SHAFT	
090	256557-0001		2	WASHER	
100	256557-0002		1	WASHER	
110	256557-0003		1	WASHER	
120	752283-0000		1	CONNECTION LEFT	
130	441385-0000		1	HUB	
140	256576-0000		1	ROLL	
150	441764-0000		1	SHAFT	
160	257249-0000		2	SCREW	
170	257250-0000		2	LID	
190	490942-0000		2	COMPRESSION SPRING	
200	490943-0000		2	COMPRESSION SPRING	
210	752290-0000		1	CLAMP LEFT	
220	272502-0000		1	BRACKET LEFT	
230	272503-0000		1	CLAMPING PIECE	
240	456312-0000		1	TORSION SPRING LEFT	
250	272506-0000		1	LACE	
260	751743-0000		2	PISTON	
270	441355-0000		2	BLEEDING SCREW	
280	751769-0000		2	SLEEVE	
300	315237-0107		1	WASHER,PL.RND.AL.8/14,H=1	
306	315237-0106		2	WASHER,PL.RND.AL.6/10,H=1	
308	90030-0065		1	PIPE CONNECTION	
310	90090-0005		4	STEEL BALL 3MM, RB-3/IIIB	
315	90091-0089		2	ROD SEAL, GLIDORING 16X22X2,5 MM	
320	90091-0214		2	ROD SEAL, GLIDORING 16X20,9X2,2 MM	
321	90091-0162		2	WEAR RING 16X19X3,2 MM	
322	90091-0170		2	WEAR RING 25X30X4,2 MM	
330	90091-0215		2	ROD SEAL, GLIDORING 25X32,5X3,2 MM	
331	90092-0052		1	METERING VALVE 10 MM3	
332	90092-0053		1	METERING VALVE 30 MM3	
334	90134-0042		2	SPACER DOSING VALVE	
335	90134-0045		1	PLUG M12X1	
336	90134-0047		1	CONNECTION FOR DOSING VALVE	
337	90134-0058		1	CONNECTION	
339	90166-0143	MM	160	TUBE 2,5 MM PA,TRANSP.	
340	90296-0068	G	25	SHELL ALVANIA GREASE EP 2	
500	311103-0242		2	PARALLEL PIN ISO 2338 3M6X30 A1	
510	311103-0312		1	PARALLEL PIN ISO 2338 5M6X25 A1	
520	312105-0370		11	SCREW M6S ISO 4017 M6X20 A480	
530	312105-0374		2	SCREW M6S ISO 4014 M6X30 A480	
540	312105-0376		6	SCREW M6S ISO 4014 M6X35 A480	
550	312105-0447		1	SCREW M6S ISO 4017 M8X12 A480	
560	312105-0453		1	SCREW M6S ISO 4017 M8X25 A480	
570	312105-0455		1	SCREW M6S ISO 4017 M8X30 A480	
580	312115-0371		2	SCREW ISO4762 M6X22 A4	
590	752476-0000		4	SCREW	
600	315105-0153		5	WASHER BRB 6,4X12 RFR	
605	315105-0165		1	WASHER BRB 8,4X16 RFR	
610	315115-0153		6	WASHER PLAIN, TBRB 6,4/12 H=3	
620	315202-0102		8	O-RING 4,1X1,6 MM	
630	315202-0106		1	O-RING 8,1X1,6 MM	
640	315202-0108		3	O-RING 10,1X1,6 MM	
645	315234-0109		2	WASHER,PL.RND.CU.10,3/13,5 H=1,0	
650	321120-0132		1	BEARING BUSH W/O FLANGE, 18X20X20 MM	
660	342713-0209		2	PLUG (QUANT.MINIMA= 10PC).	
670	2545249-0000		1	TEFLON HOSE	

Machine Type | Group Description | Used-In | Group Number | Page No

TUBE FOLDING DEVICE

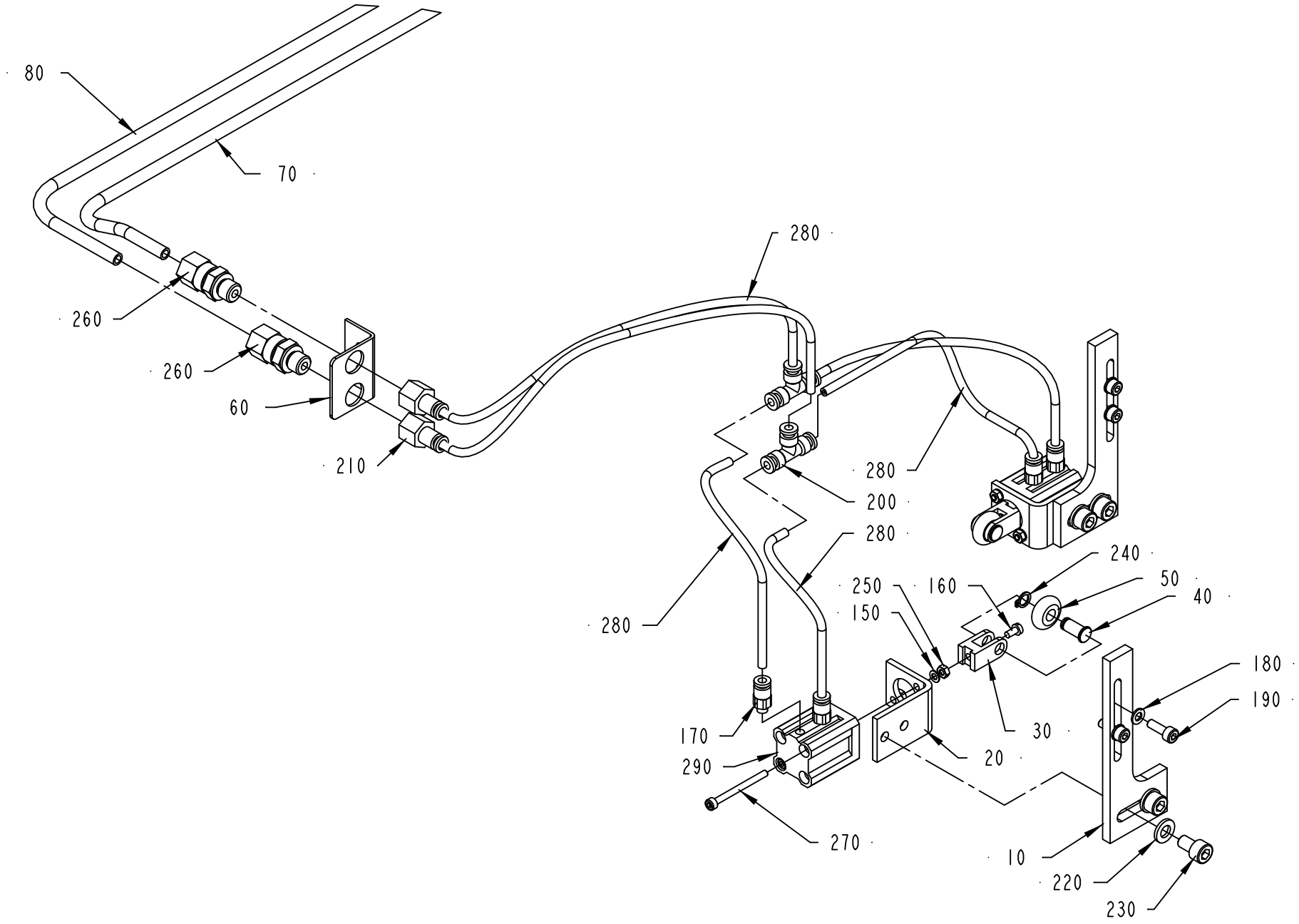

1511069-1
ECM 73438

ECM: 179452 - 20040910
Group number: 1511069-0100
Assembly Drawing: 1511069-1_1_AA

Pos	Part No	UN	Qty	Description	Page No
-					
010	1549540-0000		2	BRACKET	
020	1558130-0000		2	BRACKET	
030	1558124-0000		2	FORK HEAD	
040	1490932-0000		2	SHAFT	
050	1490931-0000		2	WHEEL	
060	1558129-0000		1	BRACKET	
070	1558127-0000		1	PIPE	
080	1558126-0000		1	PIPE	
150	315105-0124		4	WASHER BRB 3,2X6 RFR	
160	312125-0220		2	SCREW ISO 1207 M3X6 A4	
170	90458-2954		4	ELBOW PIPE JOINT, EXT.THREAD, D=4MM M5	
180	315105-0136		4	WASHER BRB 4,3X8 RFR	
190	312115-0291		4	SCREW ISO4762 M4X12 A4 80	
200	342748-0100		2	T-CONNECTION 4MM	
210	342770-0101		2	STRAIGHT COUPLING INT, D=4 MM - G1/8	
220	315105-0153		4	WASHER BRB 6,4X12 RFR	
230	312115-0364		4	SCREW ISO4762 M6X10 A4 80	
240	315751-0103		2	RETAINING RING FOR SHAFT DIN 471 6 A2	
250	312605-0310		4	HEXAGON NUT, M6M M3 A280	
260	90030-0184		2	CONN. STR. GA-6-G1/8	
270	90457-0937		4	SCREW MC6S M3X40 A480	
280	90166-0095	M	1.5	TUBE 4 MM PA BLUE (50M)	
290	90459-0251		2	DOUBLE ACTING, COMPACT, CYL 12-15	

Pos	Part No	UN	Qty	Description	Page No

MOTORIZED DESIGN CONTROL SYSTEM, LEFT

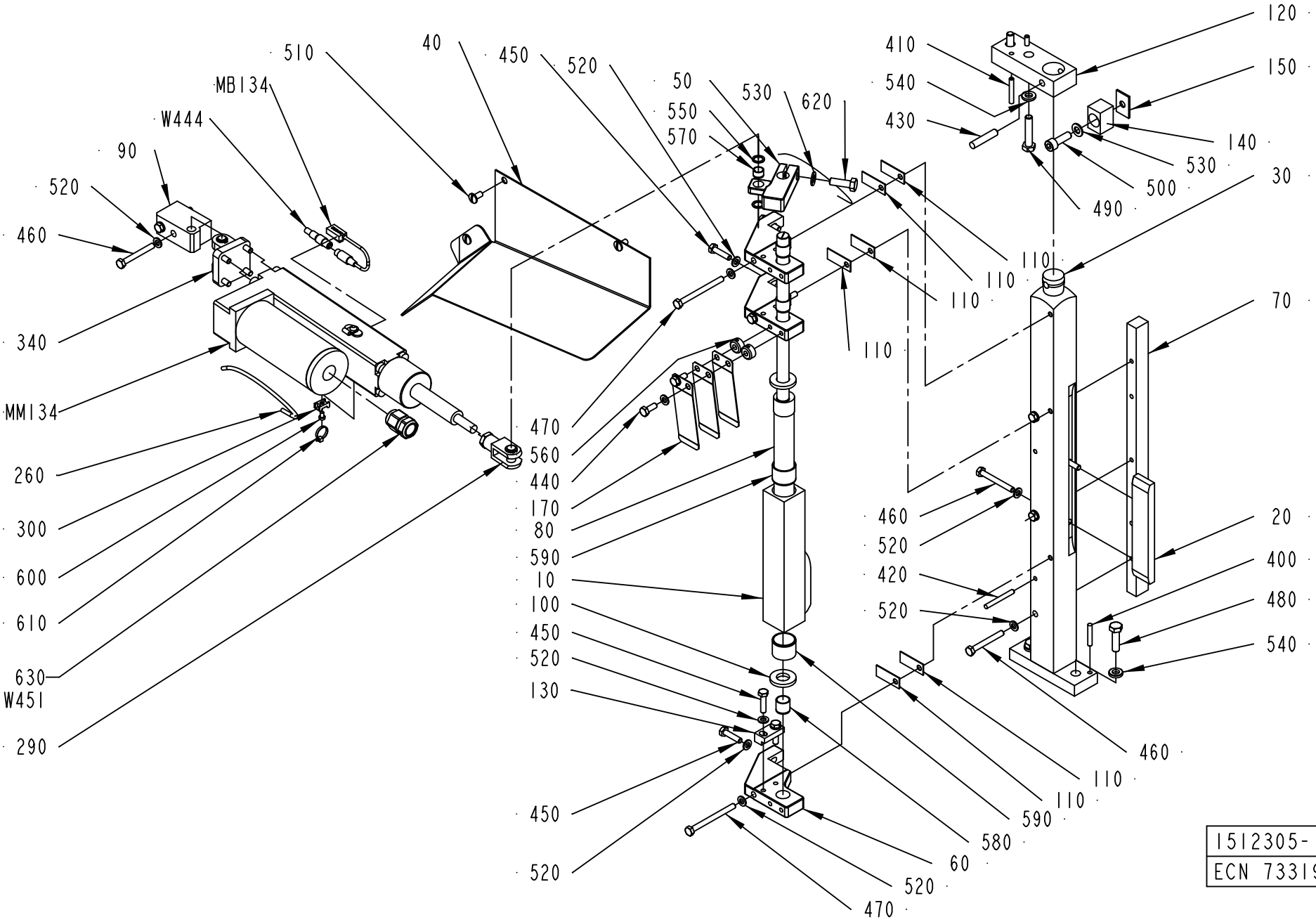

1512305-1
ECN 73319

ECM: 292914 - 20070126
Group number: 1512305-0100
Assembly Drawing: 1512305-1_1_AA

Pos	Part No	UN	Qty	Description	Page No
TBA 0100B					
010	979770-0000		1	FOLDING FLAP CAM 100	
020	979771-0000		1	COUNTER CAM 100	
TBA 0125S, TBA 0200B					
010	456760-0010		1	FOLDING FLAP CAM 200B & 125S	
020	272640-0005		1	COUNTER CAM	
TBA 0160S					
010	577225-0000		1	FOLDING FLAP CAM	
020	272640-0006		1	COUNTER CAM	
TBA 0180B					
010	456760-0010		1	FOLDING FLAP CAM 200B & 125S	
020	272640-0007		1	COUNTER CAM	
TBA 0200M					
010	456760-0011		1	FOLDING FLAP CAM 250B	
020	272640-0009		1	COUNTER CAM	
TBA 0200S					
010	456760-0003		1	FOLDING FLAP CAM 200S	
020	272640-0009		1	COUNTER CAM	
TBA 0236B					
010	456760-0011		1	FOLDING FLAP CAM 250B	
020	272640-0003		1	COUNTER CAM	
TBA 0250B					
010	456760-0011		1	FOLDING FLAP CAM 250B	
020	272640-0002		1	COUNTER CAM	
TBA 0250S					
010	574494-0000		1	FOLDING FLAP CAM	
020	272640-0009		1	COUNTER CAM	
TBA 0284B, TBA 0300S					
010	456760-0012		1	FOLDING FLAP CAM	
020	272640-0002		1	COUNTER CAM	
TBA 0330S					
010	582162-0000		1	FOLDING FLAP CAM	
020	272640-0001		1	COUNTER CAM	
Common Parts					
030	272642-0000		1	PILLAR	
040	2514041-0000		1	PROTECTION	
050	929402-0000		1	ARM	
060	272491-0000		3	BRACKET	
070	272645-0000		1	RAIL	
080	272654-0000		1	ECCENTRIC SHAFT	
090	2512787-0000		1	HOLDER	
100	256621-0000		2	WASHER	
110	256705-0000		6	LACE	
120	256707-0000		1	BRACKET	
130	271284-0000		1	BLOCKING PIECE	
140	978184-0000		1	STOPPER	
150	978185-0000		1	SHIM	
170	257334-0000		3	LEAF SPRING	
260	90166-0095	MM	250	TUBE 4 MM PA BLUE (50M)	
290	90239-0357		1	ROD END, CLEVIS WITH AXLE M10X1,25	
300	352113-0205		1	ANCHOR PLATES FOR STRIPS, TYPE TM2S8-C10	
340	90450-0654		1	BRACKET,REAR,EYE WITH AXLE 32	
400	311103-0314		2	PARALLEL PIN ISO 2338 5M6X30 A1	
410	311103-0316		2	PARALLEL PIN ISO 2338 5M6X35 A1	
420	311103-0320		2	PARALLEL PIN ISO 2338 5M6X45 A1	
430	311103-0409		1	PARALLEL PIN ISO 2338 8M6X40 A1	
440	312105-0368		2	SCREW M6S ISO 4017 M6X16 A480	
450	312105-0372		5	SCREW M6S ISO 4017 M6X25 A480	
460	312105-0380		7	SCREW M6S ISO 4014 M6X50 A480	
470	312105-0384		3	SCREW M6S ISO 4014 M6X70 A480	
480	312105-0455		2	SCREW M6S ISO 4017 M8X30 A480	
490	312105-0459		2	SCREW M6S ISO 4014 M8X40 A480	
500	312115-0453		1	SCREW ISO4762 M8X25 A4 80	
510	90287-0075		3	SCREW SLOT. PAN HEAD LKCS M6X12	
520	315105-0153		17	WASHER BRB 6,4X12 RFR	
530	315105-0165		2	WASHER BRB 8,4X16 RFR	
540	315115-0165		4	WASHER PLAIN, TBRB 8,4/16 H=3	
550	315233-0109		2	WASHER CAPTIVE SEALING G1/8	
560	315742-0102		2	RETAINING RING 6 SMS 199 RFR	
570	321120-0098		1	BEARING BUSH W/O FLANGE, 10X12X8 MM	
580	321120-0118		3	BEARING BUSH W/O FLANGE, 14X16X15 MM	
590	321120-0153		2	BEARING BUSH W/O FLANGE, 24X27X20 MM	
600	312125-0285		1	SCREW ISO 1207 M4X6 A4	
610	352113-0101		1	CABLE TIE, BLACK 92X2,5 MM	
620	312105-0453		1	SCREW M6S ISO 4017 M8X25 A480	
630	90458-0438		1	GLAND, EXTENDED WITH INSERT, M20X1,5	
MB134	90458-0747		1	SENSOR FOR CYLINDER, SMH-1PC	
MM134	90458-1301		1	CYLINDER ETS32-M10NA2X-FM50-AEUM1D	
W444	90458-1298		1	CONNECTOR AND CABLE 403000E 18M 080	
W451	90220-0107	M	3.5	SCR. CABLE 5X0,75MM2	

Machine Type	Group Description	Used-In	Group Number	Page No

MOTORIZED DESIGN CONTROL SYSTEM, RIGHT

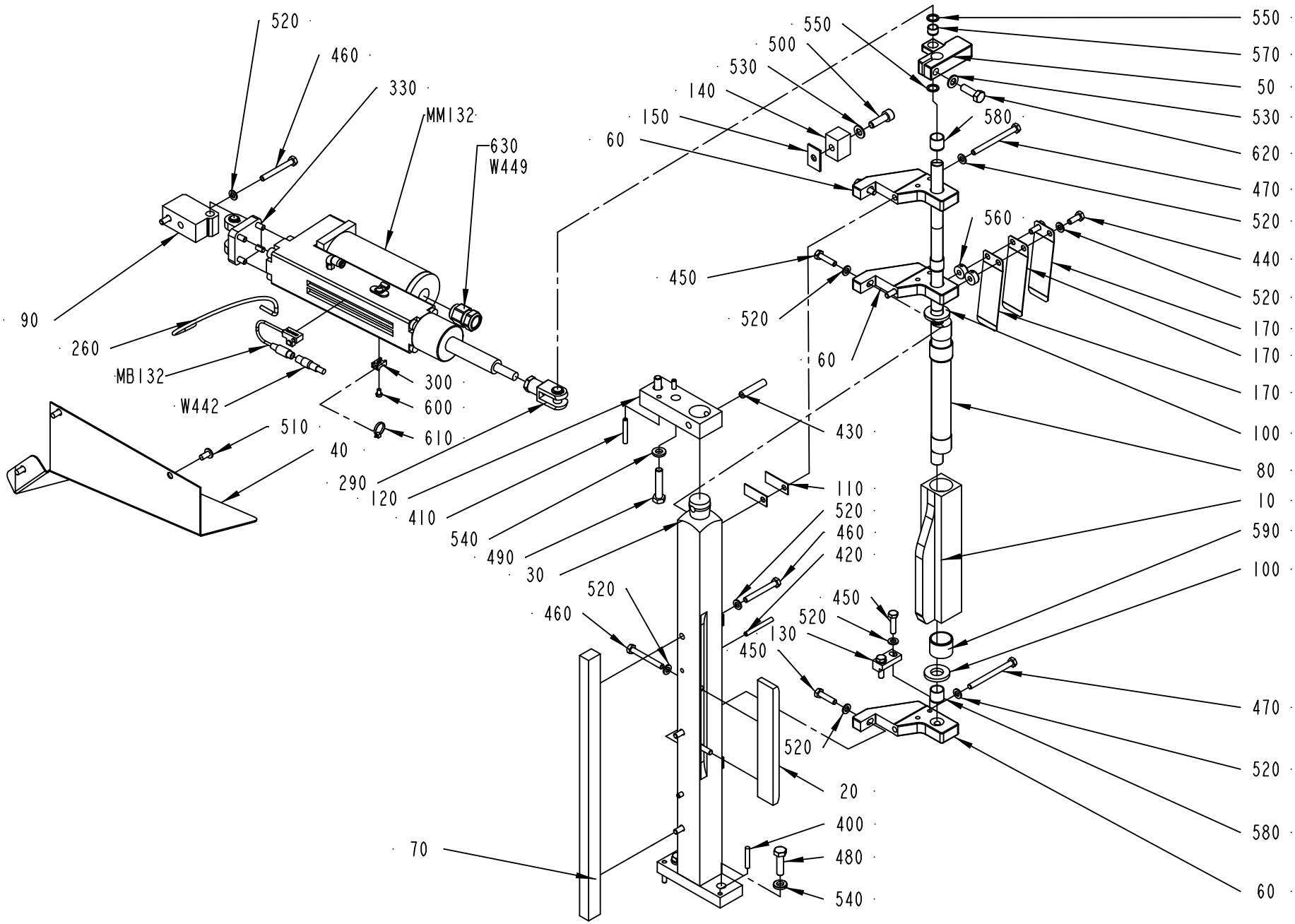

1512306-1
ECN 73319

ECM: 292915 - 20070126
Group number: 1512306-0100
Assembly Drawing: 1512306-1_1_AA

Pos	Part No	UN	Qty	Description	Page No
TBA 0100B					
010	979770-0000		1	FOLDING FLAP CAM 100	
020	979771-0000		1	COUNTER CAM 100	
TBA 0125S, TBA 0200B					
010	456760-0010		1	FOLDING FLAP CAM 200B & 125S	
020	272640-0005		1	COUNTER CAM	
TBA 0160S					
010	577225-0000		1	FOLDING FLAP CAM	
020	272640-0006		1	COUNTER CAM	
TBA 0180B					
010	456760-0010		1	FOLDING FLAP CAM 200B & 125S	
020	272640-0007		1	COUNTER CAM	
TBA 0200M					
010	456760-0011		1	FOLDING FLAP CAM 250B	
020	272640-0009		1	COUNTER CAM	
TBA 0200S					
010	456760-0003		1	FOLDING FLAP CAM 200S	
020	272640-0009		1	COUNTER CAM	
TBA 0236B					
010	456760-0011		1	FOLDING FLAP CAM 250B	
020	272640-0003		1	COUNTER CAM	
TBA 0250B					
010	456760-0011		1	FOLDING FLAP CAM 250B	
020	272640-0002		1	COUNTER CAM	
TBA 0250S					
010	574494-0000		1	FOLDING FLAP CAM	
020	272640-0009		1	COUNTER CAM	
TBA 0284B, TBA 0300S					
010	456760-0012		1	FOLDING FLAP CAM	
020	272640-0002		1	COUNTER CAM	
TBA 0330S					
010	582162-0000		1	FOLDING FLAP CAM	
020	272640-0001		1	COUNTER CAM	
Common Parts					
030	272641-0000		1	PILLAR	
040	2514042-0000		1	PROTECTION	
050	929402-0000		1	ARM	
060	272491-0000		3	BRACKET	
070	272645-0000		1	RAIL	
080	272654-0000		1	ECCENTRIC SHAFT	
090	2512787-0000		1	HOLDER	
100	256621-0000		2	WASHER	
110	256705-0000		6	LACE	
120	256707-0000		1	BRACKET	
130	271284-0000		1	BLOCKING PIECE	
140	978184-0000		1	STOPPER	
150	978185-0000		1	SHIM	
170	257334-0000		3	LEAF SPRING	
260	90166-0095	MM	250	TUBE 4 MM PA BLUE (50M)	
290	90239-0357		1	ROD END, CLEVIS WITH AXLE M10X1,25	
300	352113-0205		1	ANCHOR PLATES FOR STRIPS, TYPE TM2S8-C10	
340	90450-0654		1	BRACKET,REAR,EYE WITH AXLE 32	
400	311103-0314		2	PARALLEL PIN ISO 2338 5M6X30 A1	
410	311103-0316		2	PARALLEL PIN ISO 2338 5M6X35 A1	
420	311103-0320		2	PARALLEL PIN ISO 2338 5M6X45 A1	
430	311103-0409		1	PARALLEL PIN ISO 2338 8M6X40 A1	
440	312105-0368		2	SCREW M6S ISO 4017 M6X16 A480	
450	312105-0372		5	SCREW M6S ISO 4017 M6X25 A480	
460	312105-0380		7	SCREW M6S ISO 4014 M6X50 A480	
470	312105-0384		3	SCREW M6S ISO 4014 M6X70 A480	
480	312105-0455		2	SCREW M6S ISO 4017 M8X30 A480	
490	312105-0459		2	SCREW M6S ISO 4014 M8X40 A480	
500	312115-0453		1	SCREW ISO4762 M8X25 A4 80	
510	90287-0075		3	SCREW SLOT. PAN HEAD LKCS M6X12	
520	315105-0153		17	WASHER BRB 6,4X12 RFR	
530	315105-0165		2	WASHER BRB 8,4X16 RFR	
540	315115-0165		4	WASHER PLAIN, TBRB 8,4/16 H=3	
550	315233-0109		2	WASHER CAPTIVE SEALING G1/8	
560	315742-0102		2	RETAINING RING 6 SMS 199 RFR	
570	321120-0098		1	BEARING BUSH W/O FLANGE, 10X12X8 MM	
580	321120-0118		3	BEARING BUSH W/O FLANGE, 14X16X15 MM	
590	321120-0153		2	BEARING BUSH W/O FLANGE, 24X27X20 MM	
600	312125-0285		1	SCREW ISO 1207 M4X6 A4	
610	352113-0101		1	CABLE TIE, BLACK 92X2,5 MM	
620	312105-0453		1	SCREW M6S ISO 4017 M8X25 A480	
630	90458-0438		1	GLAND, EXTENDED WITH INSERT, M20X1,5	
MB132	90458-0747		1	SENSOR FOR CYLINDER, SMH-1PC	
MM132	90458-1301		1	CYLINDER ETS32-M10NA2X-FM50-AEUM1D	
W442	90458-1298		1	CONNECTOR AND CABLE 403000E 18M 080	
W449	90220-0107	M	4.5	SCR. CABLE 5X0,75MM2	

Machine Type	Group Description	Used-In	Group Number	Page No

KNIFE HOLDER

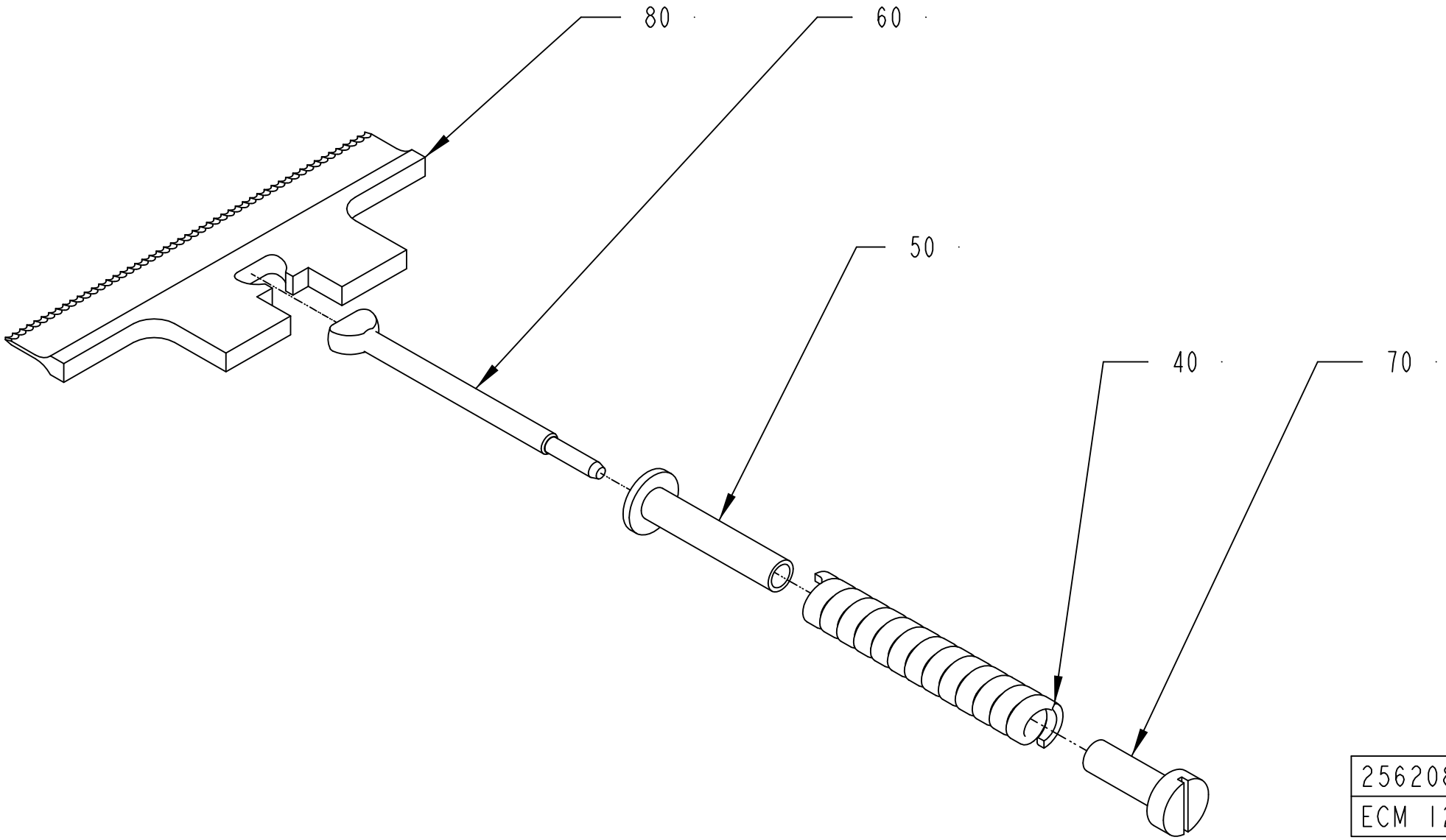

256208-14
ECM 126095

ECM: 219047 - 20050707
Group number: 256208-0400
Assembly Drawing: 256208-14_1_AE

Pos	Part No	UN	Qty	Description	Page No
TBA 0100B IH, TBA 0125S IH					
040	1538109-0000		1	COMPRESSION SPRING	
080	1282645-0000		1	KNIFE	
TBA 0160S IH, TBA 0200M IH, TBA 0200S IH, TBA 0250S IH					
040	1538109-0000		1	COMPRESSION SPRING	
080	1282647-0000		1	KNIFE	
TBA 0200B IH, TBA 0180B IH, TBA 0200SQ IH, TBA 0236B IH, TBA 0250B IH, TBA 0300S IH, TBA 0284B IH, TBA 0330S IH					
040	1538109-0000		1	COMPRESSION SPRING	
080	1282646-0000		1	KNIFE	
Common Parts					
050	272753-0000		1	STEERING	
060	456009-0000		1	LINK	
070	272755-0000		1	NUT	

Pos	Part No	UN	Qty	Description	Page No

SHOCK ABSORBER

Drawing file: 752671-1_1_AC.hpgl

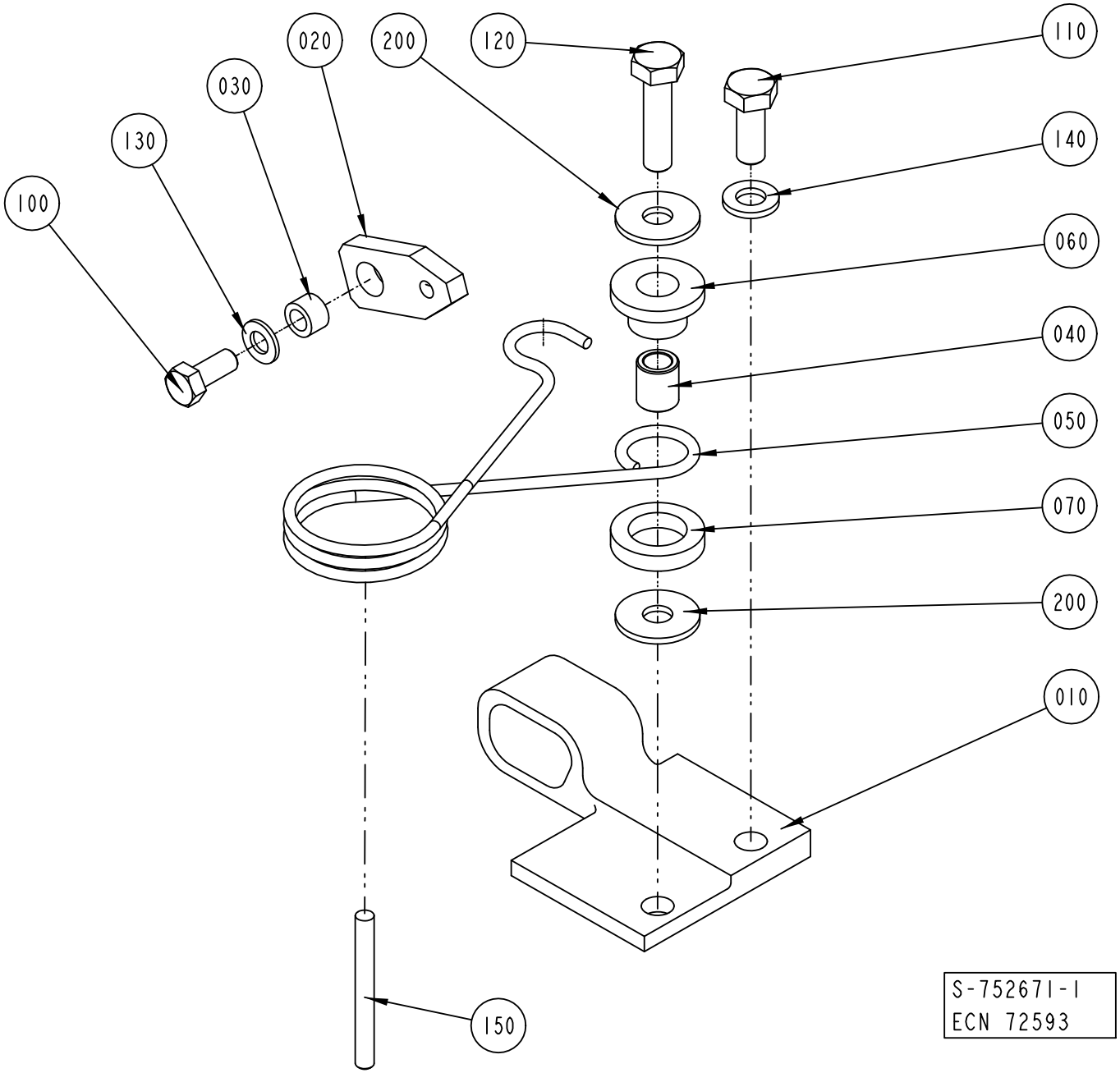

Pos	Part No	UN	Qty	Description	Page No
TBA 0100B (See drawing on page: 4-38)					
010	979758-0000		1	STOP PERF 1	
020	752425-0000		1	LINK	
030	752556-0000		1	SPACER	
040	979760-0000		1	SPACER	
050	752678-0000		1	SPRING PERF 1	
060	979761-0000		1	SLEEVE	
070	752681-0000		1	WASHER	
100	312105-0327		1	SCREW M6S ISO 4017 M5X12 A480	
110	312155-0368		2	SCREW DIN 7991 MF6S M6X16 A4 70	
130	315105-0146		1	WASHER BRB 5,3X10 RFR	
150	311103-0278		1	PARALLEL PIN ISO 2338 4M6X35 A1	
TBA 0125S (See drawing on page: 4-36)					
010	752563-0000		1	STOP PERF 1	
020	752425-0000		1	LINK	
030	752556-0000		1	SPACER	
040	752673-0000		1	SPACER	
050	752678-0000		1	SPRING PERF 1	
060	752680-0000		1	SLEEVE	
070	752681-0000		1	WASHER	
100	312105-0327		1	SCREW M6S ISO 4017 M5X12 A480	
110	312105-0368		1	SCREW M6S ISO 4017 M6X16 A480	
120	312105-0372		1	SCREW M6S ISO 4017 M6X25 A480	
130	315105-0146		1	WASHER BRB 5,3X10 RFR	
140	315105-0153		1	WASHER BRB 6,4X12 RFR	
150	311103-0280		1	PARALLEL PIN ISO 2338 4M6X40 A1	
200	90005-0060		2	WASHER PLAIN, RBS 6,4/M6)/18,H=1,5	
TBA 0160S, TBA 0200M, TBA 0200B, TBA 0236B, TBA 0200S, TBA 0250S, TBA 0284B, TBA 0250B, TBA 0300S, TBA 0330S (See drawing on page: 4-36)					
010	752559-0000		1	STOP PERF 1	
020	752425-0000		1	LINK	
030	752556-0000		1	SPACER	
040	752673-0000		1	SPACER	
050	752678-0000		1	SPRING PERF 1	
060	752680-0000		1	SLEEVE	
070	752681-0000		1	WASHER	
100	312105-0327		1	SCREW M6S ISO 4017 M5X12 A480	
110	312105-0368		1	SCREW M6S ISO 4017 M6X16 A480	
120	312105-0372		1	SCREW M6S ISO 4017 M6X25 A480	
130	315105-0146		1	WASHER BRB 5,3X10 RFR	
140	315115-0153		1	WASHER PLAIN, TBRB 6,4/12 H=3	
150	311103-0280		1	PARALLEL PIN ISO 2338 4M6X40 A1	
200	90005-0060		2	WASHER PLAIN, RBS 6,4/M6)/18,H=1,5	
TBA 0180B (See drawing on page: 4-36)					
010	752561-0000		1	STOP PERF 1	
020	752425-0000		1	LINK	
030	752556-0000		1	SPACER	
040	752673-0000		1	SPACER	
050	752678-0000		1	SPRING PERF 1	
060	752680-0000		1	SLEEVE	
070	752681-0000		1	WASHER	
100	312105-0327		1	SCREW M6S ISO 4017 M5X12 A480	
110	312105-0368		1	SCREW M6S ISO 4017 M6X16 A480	
120	312105-0372		1	SCREW M6S ISO 4017 M6X25 A480	
130	315105-0146		1	WASHER BRB 5,3X10 RFR	
140	315105-0153		1	WASHER BRB 6,4X12 RFR	
150	311103-0280		1	PARALLEL PIN ISO 2338 4M6X40 A1	
200	90005-0060		2	WASHER PLAIN, RBS 6,4/M6)/18,H=1,5	
TBA 0200SQ (See drawing on page: 4-36)					
010	1519227-0000		1	STOP	
020	752425-0000		1	LINK	
030	752556-0000		1	SPACER	
040	752673-0000		1	SPACER	
050	752678-0000		1	SPRING PERF 1	
060	752680-0000		1	SLEEVE	
070	752681-0000		1	WASHER	
100	312105-0327		1	SCREW M6S ISO 4017 M5X12 A480	
110	312105-0368		1	SCREW M6S ISO 4017 M6X16 A480	
120	312105-0372		1	SCREW M6S ISO 4017 M6X25 A480	
130	315105-0146		1	WASHER BRB 5,3X10 RFR	
140	315115-0153		1	WASHER PLAIN, TBRB 6,4/12 H=3	
150	311103-0280		1	PARALLEL PIN ISO 2338 4M6X40 A1	
200	90005-0060		2	WASHER PLAIN, RBS 6,4/M6)/18,H=1,5	

SHOCK ABSORBER

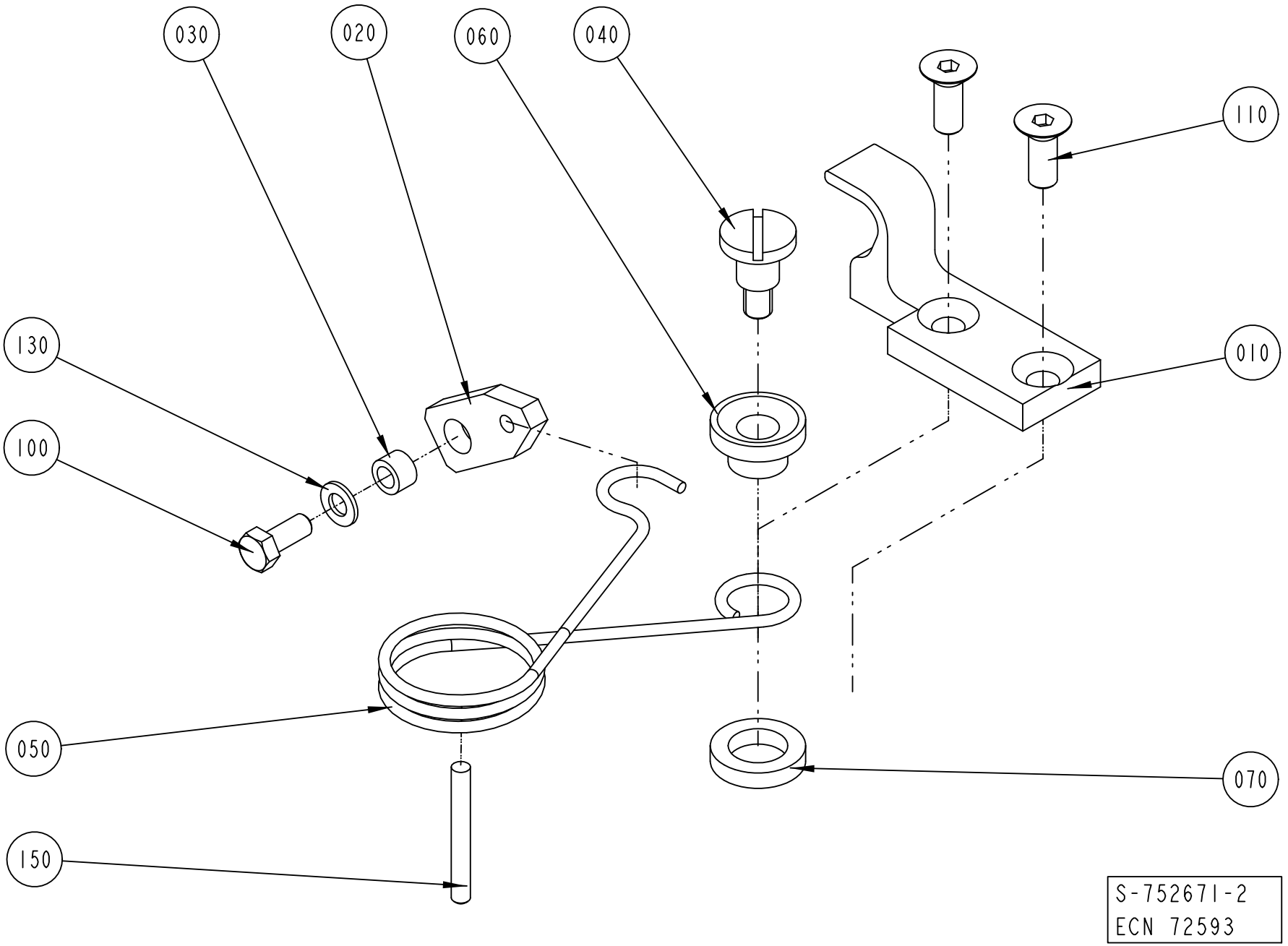

Pos	Part No	UN	Qty	Description	Page No
TBA 0100B (See drawing on page: 4-38)					
010	979758-0000		1	STOP PERF 1	
020	752425-0000		1	LINK	
030	752556-0000		1	SPACER	
040	979760-0000		1	SPACER	
050	752678-0000		1	SPRING PERF 1	
060	979761-0000		1	SLEEVE	
070	752681-0000		1	WASHER	
100	312105-0327		1	SCREW M6S ISO 4017 M5X12 A480	
110	312155-0368		2	SCREW DIN 7991 MF6S M6X16 A4 70	
130	315105-0146		1	WASHER BRB 5,3X10 RFR	
150	311103-0278		1	PARALLEL PIN ISO 2338 4M6X35 A1	
TBA 0125S (See drawing on page: 4-36)					
010	752563-0000		1	STOP PERF 1	
020	752425-0000		1	LINK	
030	752556-0000		1	SPACER	
040	752673-0000		1	SPACER	
050	752678-0000		1	SPRING PERF 1	
060	752680-0000		1	SLEEVE	
070	752681-0000		1	WASHER	
100	312105-0327		1	SCREW M6S ISO 4017 M5X12 A480	
110	312105-0368		1	SCREW M6S ISO 4017 M6X16 A480	
120	312105-0372		1	SCREW M6S ISO 4017 M6X25 A480	
130	315105-0146		1	WASHER BRB 5,3X10 RFR	
140	315105-0153		1	WASHER BRB 6,4X12 RFR	
150	311103-0280		1	PARALLEL PIN ISO 2338 4M6X40 A1	
200	90005-0060		2	WASHER PLAIN, RBS 6,4/M6)/18,H=1,5	
TBA 0160S, TBA 0200M, TBA 0200B, TBA 0236B, TBA 0200S, TBA 0250S, TBA 0284B, TBA 0250B, TBA 0300S, TBA 0330S (See drawing on page: 4-36)					
010	752559-0000		1	STOP PERF 1	
020	752425-0000		1	LINK	
030	752556-0000		1	SPACER	
040	752673-0000		1	SPACER	
050	752678-0000		1	SPRING PERF 1	
060	752680-0000		1	SLEEVE	
070	752681-0000		1	WASHER	
100	312105-0327		1	SCREW M6S ISO 4017 M5X12 A480	
110	312105-0368		1	SCREW M6S ISO 4017 M6X16 A480	
120	312105-0372		1	SCREW M6S ISO 4017 M6X25 A480	
130	315105-0146		1	WASHER BRB 5,3X10 RFR	
140	315115-0153		1	WASHER PLAIN, TBRB 6,4/12 H=3	
150	311103-0280		1	PARALLEL PIN ISO 2338 4M6X40 A1	
200	90005-0060		2	WASHER PLAIN, RBS 6,4/M6)/18,H=1,5	
TBA 0180B (See drawing on page: 4-36)					
010	752561-0000		1	STOP PERF 1	
020	752425-0000		1	LINK	
030	752556-0000		1	SPACER	
040	752673-0000		1	SPACER	
050	752678-0000		1	SPRING PERF 1	
060	752680-0000		1	SLEEVE	
070	752681-0000		1	WASHER	
100	312105-0327		1	SCREW M6S ISO 4017 M5X12 A480	
110	312105-0368		1	SCREW M6S ISO 4017 M6X16 A480	
120	312105-0372		1	SCREW M6S ISO 4017 M6X25 A480	
130	315105-0146		1	WASHER BRB 5,3X10 RFR	
140	315105-0153		1	WASHER BRB 6,4X12 RFR	
150	311103-0280		1	PARALLEL PIN ISO 2338 4M6X40 A1	
200	90005-0060		2	WASHER PLAIN, RBS 6,4/M6)/18,H=1,5	
TBA 0200SQ (See drawing on page: 4-36)					
010	1519227-0000		1	STOP	
020	752425-0000		1	LINK	
030	752556-0000		1	SPACER	
040	752673-0000		1	SPACER	
050	752678-0000		1	SPRING PERF 1	
060	752680-0000		1	SLEEVE	
070	752681-0000		1	WASHER	
100	312105-0327		1	SCREW M6S ISO 4017 M5X12 A480	
110	312105-0368		1	SCREW M6S ISO 4017 M6X16 A480	
120	312105-0372		1	SCREW M6S ISO 4017 M6X25 A480	
130	315105-0146		1	WASHER BRB 5,3X10 RFR	
140	315115-0153		1	WASHER PLAIN, TBRB 6,4/12 H=3	
150	311103-0280		1	PARALLEL PIN ISO 2338 4M6X40 A1	
200	90005-0060		2	WASHER PLAIN, RBS 6,4/M6)/18,H=1,5	

SHOCK ABSORBER

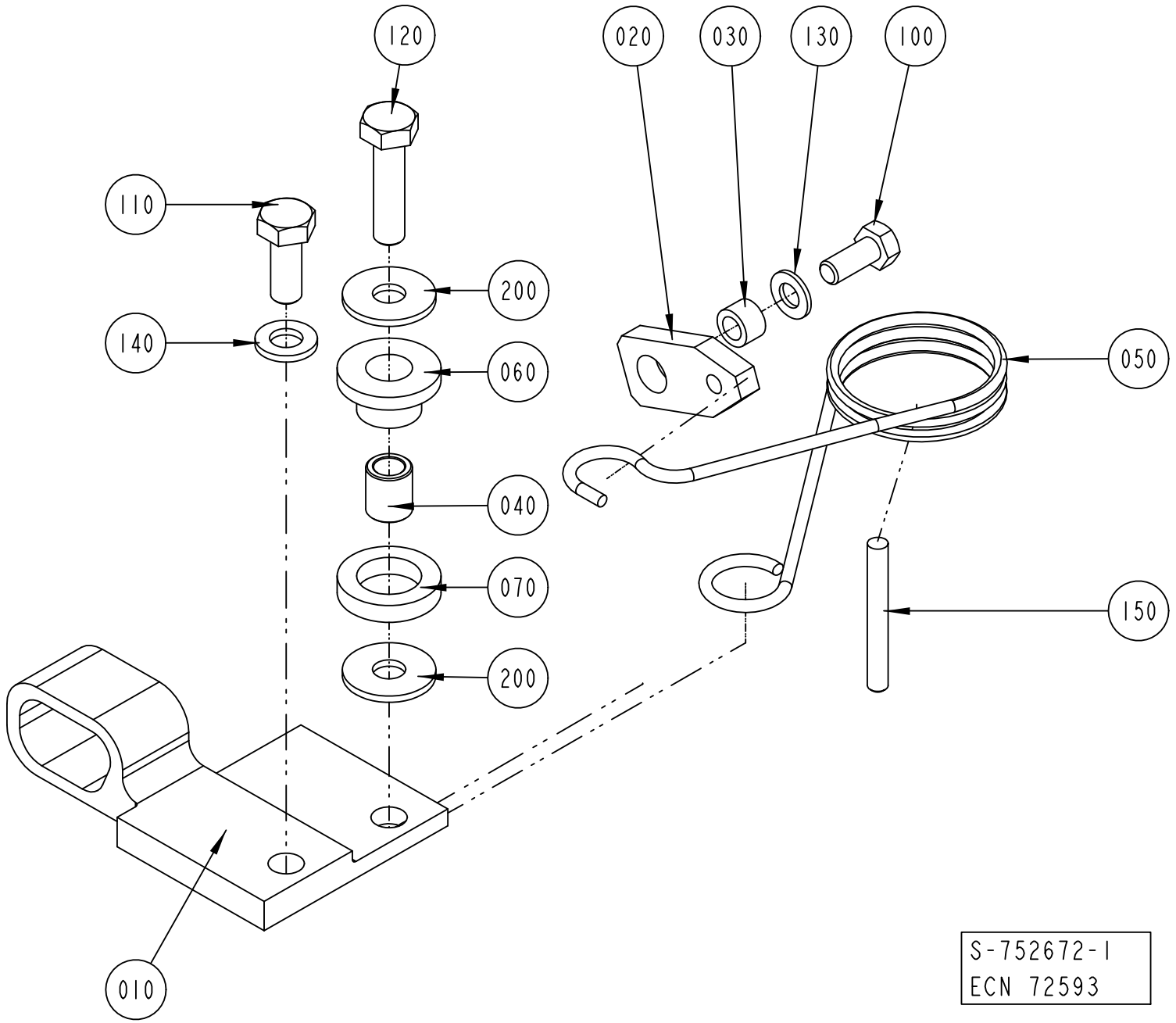

ECM: 292922 - 20070126
Group number: 752672-0100
Assembly Drawing: 752672-1_1_AC

This list covers pages from 4-40 to 4-43

Pos	Part No	UN	Qty	Description	Page No
TBA 0100B (See drawing on page: 4-42)					
010	979759-0000		1	STOP PERF 2	
020	752425-0000		1	LINK	
030	752556-0000		1	SPACER	
040	979760-0000		1	SPACER	
050	752679-0000		1	SPRING PERF 2	
060	979761-0000		1	SLEEVE	
070	752681-0000		1	WASHER	
100	312105-0327		1	SCREW M6S ISO 4017 M5X12 A480	
110	312155-0368		2	SCREW DIN 7991 MF6S M6X16 A4 70	
130	315105-0146		1	WASHER BRB 5,3X10 RFR	
150	311103-0278		1	PARALLEL PIN ISO 2338 4M6X35 A1	
TBA 0125S (See drawing on page: 4-40)					
010	752564-0000		1	STOP PERF 2	
020	752425-0000		1	LINK	
030	752556-0000		1	SPACER	
040	752673-0000		1	SPACER	
050	752679-0000		1	SPRING PERF 2	
060	752680-0000		1	SLEEVE	
070	752681-0000		1	WASHER	
100	312105-0327		1	SCREW M6S ISO 4017 M5X12 A480	
110	312105-0368		1	SCREW M6S ISO 4017 M6X16 A480	
120	312105-0372		1	SCREW M6S ISO 4017 M6X25 A480	
130	315105-0146		1	WASHER BRB 5,3X10 RFR	
140	315105-0153		1	WASHER BRB 6,4X12 RFR	
150	311103-0280		1	PARALLEL PIN ISO 2338 4M6X40 A1	
200	90005-0060		2	WASHER PLAIN, RBS 6,4/M6)/18,H=1,5	
TBA 0160S, TBA 0200M, TBA 0200B, TBA 0236B, TBA 0200S, TBA 0250S, TBA 0284B, TBA 0250B, TBA 0300S, TBA 0330S (See drawing on page: 4-40)					
010	752560-0000		1	STOP PERF 2	
020	752425-0000		1	LINK	
030	752556-0000		1	SPACER	
040	752673-0000		1	SPACER	
050	752679-0000		1	SPRING PERF 2	
060	752680-0000		1	SLEEVE	
070	752681-0000		1	WASHER	
100	312105-0327		1	SCREW M6S ISO 4017 M5X12 A480	
110	312105-0368		1	SCREW M6S ISO 4017 M6X16 A480	
120	312105-0372		1	SCREW M6S ISO 4017 M6X25 A480	
130	315105-0146		1	WASHER BRB 5,3X10 RFR	
140	315115-0153		1	WASHER PLAIN, TBRB 6,4/12 H=3	
150	311103-0280		1	PARALLEL PIN ISO 2338 4M6X40 A1	
200	90005-0060		2	WASHER PLAIN, RBS 6,4/M6)/18,H=1,5	
TBA 0180B (See drawing on page: 4-40)					
010	752562-0000		1	STOP PERF 2	
020	752425-0000		1	LINK	
030	752556-0000		1	SPACER	
040	752673-0000		1	SPACER	
050	752679-0000		1	SPRING PERF 2	
060	752680-0000		1	SLEEVE	
070	752681-0000		1	WASHER	
100	312105-0327		1	SCREW M6S ISO 4017 M5X12 A480	
110	312105-0368		1	SCREW M6S ISO 4017 M6X16 A480	
120	312105-0372		1	SCREW M6S ISO 4017 M6X25 A480	
130	315105-0146		1	WASHER BRB 5,3X10 RFR	
140	315105-0153		1	WASHER BRB 6,4X12 RFR	
150	311103-0280		1	PARALLEL PIN ISO 2338 4M6X40 A1	
200	90005-0060		2	WASHER PLAIN, RBS 6,4/M6)/18,H=1,5	
TBA 0200SQ (See drawing on page: 4-40)					
010	1519228-0000		1	STOP	
020	752425-0000		1	LINK	
030	752556-0000		1	SPACER	
040	752673-0000		1	SPACER	
050	752679-0000		1	SPRING PERF 2	
060	752680-0000		1	SLEEVE	
070	752681-0000		1	WASHER	
100	312105-0327		1	SCREW M6S ISO 4017 M5X12 A480	
110	312105-0368		1	SCREW M6S ISO 4017 M6X16 A480	
120	312105-0372		1	SCREW M6S ISO 4017 M6X25 A480	
130	315105-0146		1	WASHER BRB 5,3X10 RFR	
140	315115-0153		1	WASHER PLAIN, TBRB 6,4/12 H=3	
150	311103-0280		1	PARALLEL PIN ISO 2338 4M6X40 A1	
200	90005-0060		2	WASHER PLAIN, RBS 6,4/M6)/18,H=1,5	

SHOCK ABSORBER

Drawing file: 752672-2_1_AB.hpgl

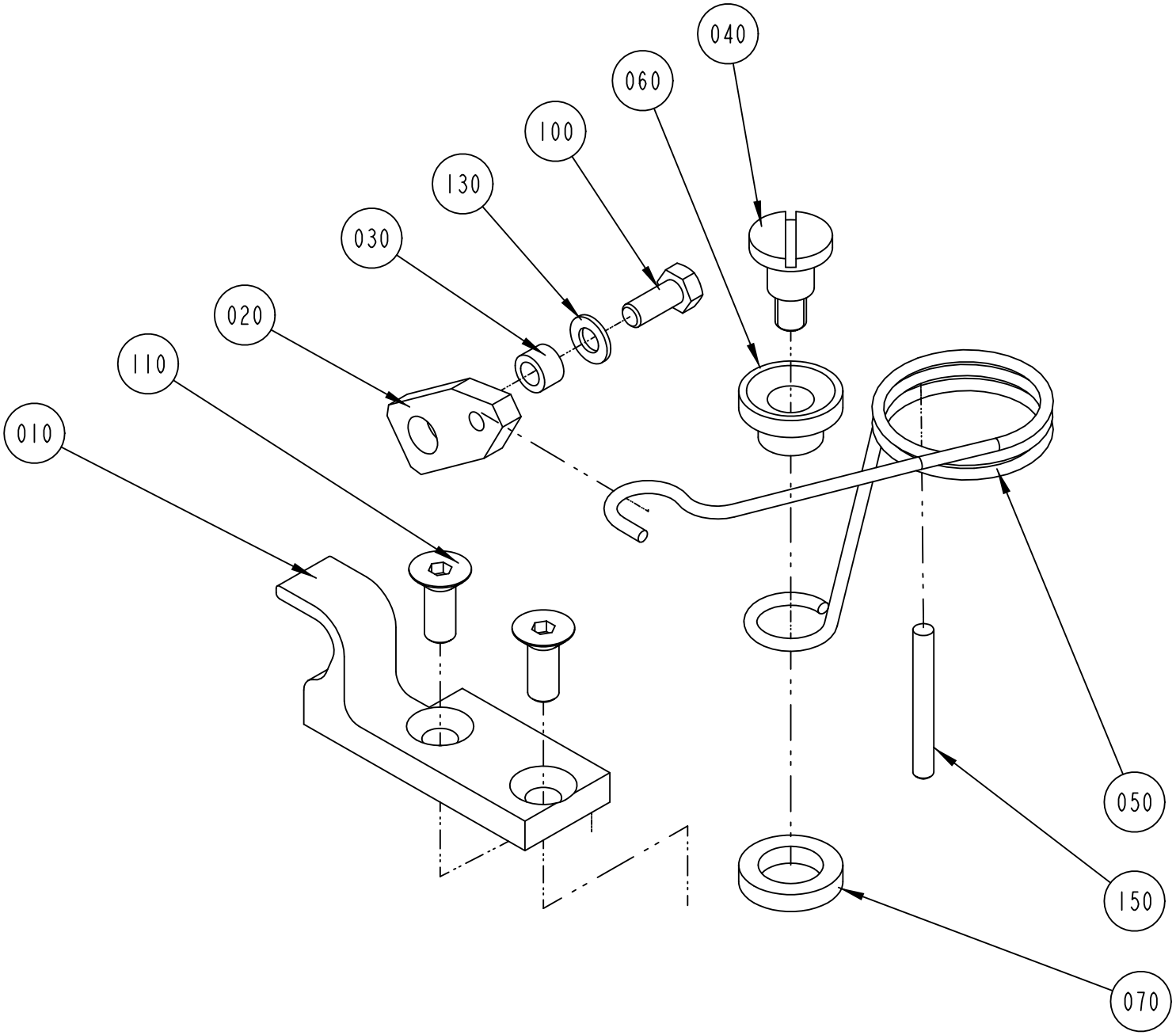

S-752672-2
ECN 72593

Pos	Part No	UN	Qty	Description	Page No
TBA 0100B (See drawing on page: 4-42)					
010	979759-0000		1	STOP PERF 2	
020	752425-0000		1	LINK	
030	752556-0000		1	SPACER	
040	979760-0000		1	SPACER	
050	752679-0000		1	SPRING PERF 2	
060	979761-0000		1	SLEEVE	
070	752681-0000		1	WASHER	
100	312105-0327		1	SCREW M6S ISO 4017 M5X12 A480	
110	312155-0368		2	SCREW DIN 7991 MF6S M6X16 A4 70	
130	315105-0146		1	WASHER BRB 5,3X10 RFR	
150	311103-0278		1	PARALLEL PIN ISO 2338 4M6X35 A1	
TBA 0125S (See drawing on page: 4-40)					
010	752564-0000		1	STOP PERF 2	
020	752425-0000		1	LINK	
030	752556-0000		1	SPACER	
040	752673-0000		1	SPACER	
050	752679-0000		1	SPRING PERF 2	
060	752680-0000		1	SLEEVE	
070	752681-0000		1	WASHER	
100	312105-0327		1	SCREW M6S ISO 4017 M5X12 A480	
110	312105-0368		1	SCREW M6S ISO 4017 M6X16 A480	
120	312105-0372		1	SCREW M6S ISO 4017 M6X25 A480	
130	315105-0146		1	WASHER BRB 5,3X10 RFR	
140	315105-0153		1	WASHER BRB 6,4X12 RFR	
150	311103-0280		1	PARALLEL PIN ISO 2338 4M6X40 A1	
200	90005-0060		2	WASHER PLAIN, RBS 6,4/M6)/18,H=1,5	
TBA 0160S, TBA 0200M, TBA 0200B, TBA 0236B, TBA 0200S, TBA 0250S, TBA 0284B, TBA 0250B, TBA 0300S, TBA 0330S (See drawing on page: 4-40)					
010	752560-0000		1	STOP PERF 2	
020	752425-0000		1	LINK	
030	752556-0000		1	SPACER	
040	752673-0000		1	SPACER	
050	752679-0000		1	SPRING PERF 2	
060	752680-0000		1	SLEEVE	
070	752681-0000		1	WASHER	
100	312105-0327		1	SCREW M6S ISO 4017 M5X12 A480	
110	312105-0368		1	SCREW M6S ISO 4017 M6X16 A480	
120	312105-0372		1	SCREW M6S ISO 4017 M6X25 A480	
130	315105-0146		1	WASHER BRB 5,3X10 RFR	
140	315115-0153		1	WASHER PLAIN, TBRB 6,4/12 H=3	
150	311103-0280		1	PARALLEL PIN ISO 2338 4M6X40 A1	
200	90005-0060		2	WASHER PLAIN, RBS 6,4/M6)/18,H=1,5	
TBA 0180B (See drawing on page: 4-40)					
010	752562-0000		1	STOP PERF 2	
020	752425-0000		1	LINK	
030	752556-0000		1	SPACER	
040	752673-0000		1	SPACER	
050	752679-0000		1	SPRING PERF 2	
060	752680-0000		1	SLEEVE	
070	752681-0000		1	WASHER	
100	312105-0327		1	SCREW M6S ISO 4017 M5X12 A480	
110	312105-0368		1	SCREW M6S ISO 4017 M6X16 A480	
120	312105-0372		1	SCREW M6S ISO 4017 M6X25 A480	
130	315105-0146		1	WASHER BRB 5,3X10 RFR	
140	315105-0153		1	WASHER BRB 6,4X12 RFR	
150	311103-0280		1	PARALLEL PIN ISO 2338 4M6X40 A1	
200	90005-0060		2	WASHER PLAIN, RBS 6,4/M6)/18,H=1,5	
TBA 0200SQ (See drawing on page: 4-40)					
010	1519228-0000		1	STOP	
020	752425-0000		1	LINK	
030	752556-0000		1	SPACER	
040	752673-0000		1	SPACER	
050	752679-0000		1	SPRING PERF 2	
060	752680-0000		1	SLEEVE	
070	752681-0000		1	WASHER	
100	312105-0327		1	SCREW M6S ISO 4017 M5X12 A480	
110	312105-0368		1	SCREW M6S ISO 4017 M6X16 A480	
120	312105-0372		1	SCREW M6S ISO 4017 M6X25 A480	
130	315105-0146		1	WASHER BRB 5,3X10 RFR	
140	315115-0153		1	WASHER PLAIN, TBRB 6,4/12 H=3	
150	311103-0280		1	PARALLEL PIN ISO 2338 4M6X40 A1	
200	90005-0060		2	WASHER PLAIN, RBS 6,4/M6)/18,H=1,5	

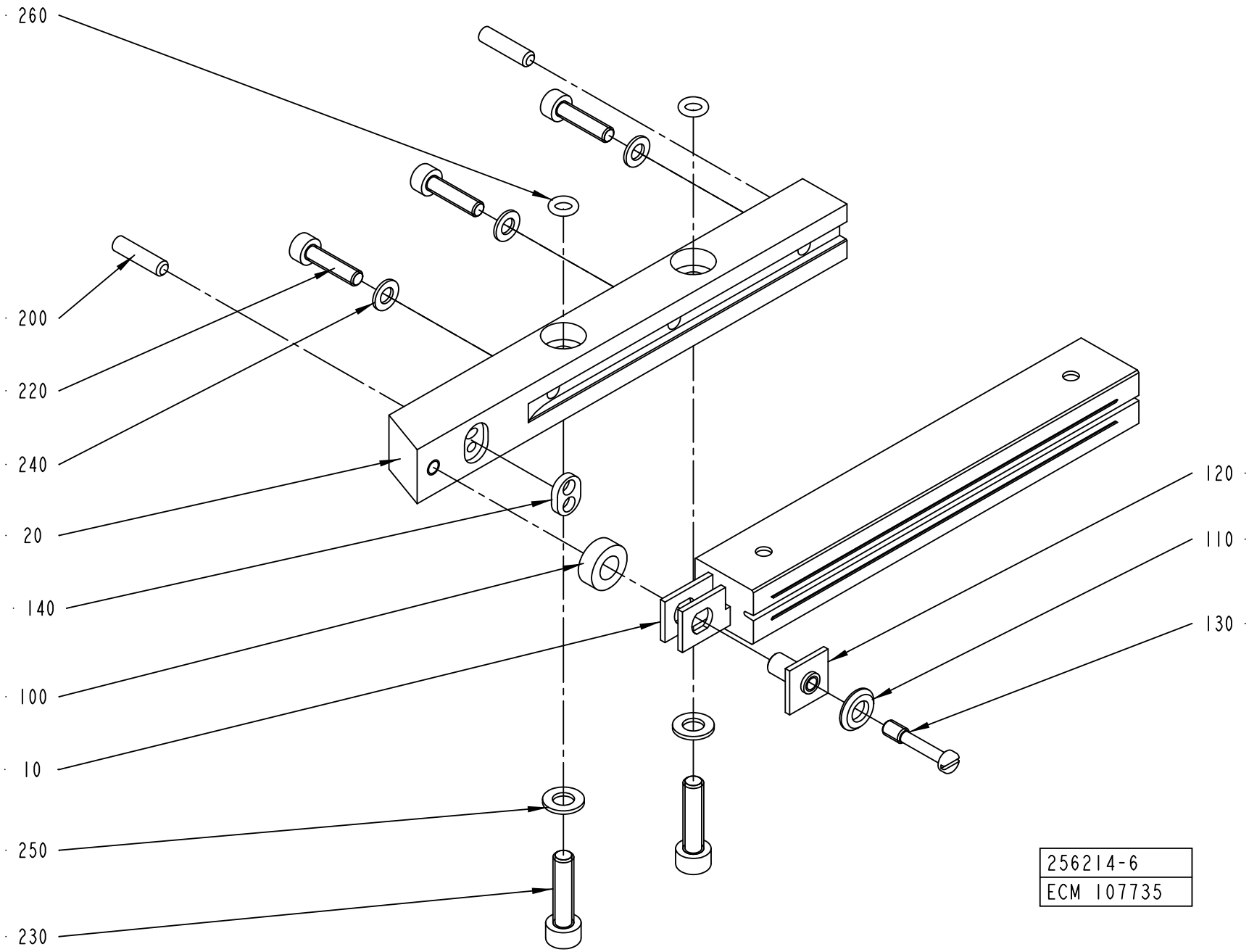
260
200
220
240
20
140
100
10
250
230
120
110
130
256214-6
ECM 107735

ECM: 292923 - 20070126
Group number: 256214-0400
Assembly Drawing: 256214-6_1_AD

This list covers pages from 4-44 to 4-47

Pos	Part No	UN	Qty	Description	Page No
TBA 0100B, TBA 0125S (See drawing on page: 4-44)					
010	1110530-0000		1	INDUCTOR	
020	2527135-0000		1	RAIL (TITANIUM)	
200	311103-0270		2	PARALLEL PIN ISO 2338 4M6X16 A1	
220	312115-0293		3	SCREW ISO4762 M4X16 A4 80	
230	312105-0329		2	SCREW M6S ISO 4017 M5X16 A480	
240	315105-0136		3	WASHER BRB 4,3X8 RFR	
250	315105-0146		2	WASHER BRB 5,3X10 RFR	
TBA 0160S, TBA 0200S (See drawing on page: 4-44)					
010	1110532-0000		1	INDUCTOR	
020	2527137-0000		1	RAIL (TITANIUM)	
200	311103-0270		2	PARALLEL PIN ISO 2338 4M6X16 A1	
220	312115-0293		2	SCREW ISO4762 M4X16 A4 80	
230	312115-0331		2	SCREW ISO4762 M5X20 A4 80	
240	315105-0136		2	WASHER BRB 4,3X8 RFR	
250	315105-0146		2	WASHER BRB 5,3X10 RFR	
260	315202-0102		2	O-RING 4,1X1,6 MM	
TBA 0180B, TBA 0200B, TBA 0236B, TBA 0284B, TBA 0250B, TBA 0300S, TBA 0330S (See drawing on page: 4-44)					
010	1110534-0000		1	INDUCTOR	
020	2527136-0000		1	RAIL	
200	311103-0270		2	PARALLEL PIN ISO 2338 4M6X16 A1	
220	312115-0293		3	SCREW ISO4762 M4X16 A4 80	
230	312115-0331		2	SCREW ISO4762 M5X20 A4 80	
240	315105-0136		3	WASHER BRB 4,3X8 RFR	
250	315105-0146		2	WASHER BRB 5,3X10 RFR	
260	315202-0102		2	O-RING 4,1X1,6 MM	
TBA 0200M, TBA 0250S (See drawing on page: 4-44)					
010	1110535-0000		1	INDUCTOR	
020	2527137-0000		1	RAIL (TITANIUM)	
200	311103-0270		2	PARALLEL PIN ISO 2338 4M6X16 A1	
220	312115-0293		2	SCREW ISO4762 M4X16 A4 80	
230	312115-0331		2	SCREW ISO4762 M5X20 A4 80	
240	315105-0136		2	WASHER BRB 4,3X8 RFR	
250	315105-0146		2	WASHER BRB 5,3X10 RFR	
260	315202-0102		2	O-RING 4,1X1,6 MM	
TBA 0200SQ (See drawing on page: 4-46)					
010	1520078-0000		1	INDUCTOR	
020	2529075-0000		1	RAIL	
030	1539120-0000		1	VOLUME BULGE	
040	1539593-0000		1	COVER	
200	311103-0270		2	PARALLEL PIN ISO 2338 4M6X16 A1	
220	312115-0293		3	SCREW ISO4762 M4X16 A4 80	
230	312115-0331		2	SCREW ISO4762 M5X20 A4 80	
240	315105-0136		3	WASHER BRB 4,3X8 RFR	
270	312155-0285		2	SCREW DIN 7991 MF6S M4X6 A4 70	
280	312155-0287		2	SCREW DIN 7991 MF6S M4X8 A4 70	
Common Parts					
100	32644-0000		1	WASHER	
110	256882-0000		1	WASHER	
120	271846-0000		1	INSULATION NUT	
130	271848-0000		1	SCREW	
140	491681-0000		1	GASKET	

Machine Type | Group Description | Used-In | Group Number | Page No

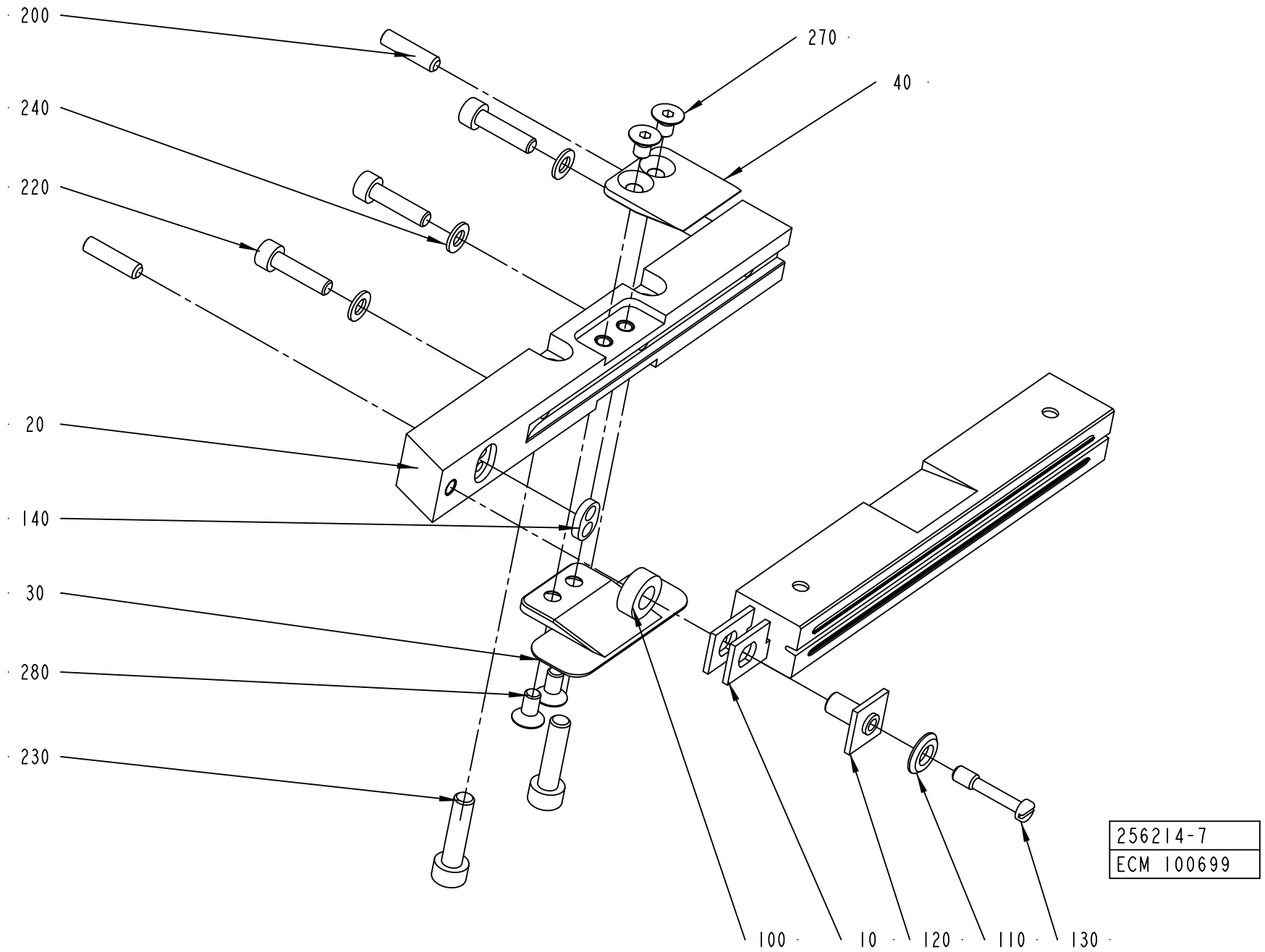
200
240
220
20
140
30
280
230
270
40
100
10
120
110
130
256214-7
ECM 100699

Pos	Part No	UN	Qty	Description	Page No
TBA 0100B, TBA 0125S (See drawing on page: 4-44)					
010	1110530-0000		1	INDUCTOR	
020	2527135-0000		1	RAIL (TITANIUM)	
200	311103-0270		2	PARALLEL PIN ISO 2338 4M6X16 A1	
220	312115-0293		3	SCREW ISO4762 M4X16 A4 80	
230	312105-0329		2	SCREW M6S ISO 4017 M5X16 A480	
240	315105-0136		3	WASHER BRB 4,3X8 RFR	
250	315105-0146		2	WASHER BRB 5,3X10 RFR	
TBA 0160S, TBA 0200S (See drawing on page: 4-44)					
010	1110532-0000		1	INDUCTOR	
020	2527137-0000		1	RAIL (TITANIUM)	
200	311103-0270		2	PARALLEL PIN ISO 2338 4M6X16 A1	
220	312115-0293		2	SCREW ISO4762 M4X16 A4 80	
230	312115-0331		2	SCREW ISO4762 M5X20 A4 80	
240	315105-0136		2	WASHER BRB 4,3X8 RFR	
250	315105-0146		2	WASHER BRB 5,3X10 RFR	
260	315202-0102		2	O-RING 4,1X1,6 MM	
TBA 0180B, TBA 0200B, TBA 0236B, TBA 0284B, TBA 0250B, TBA 0300S, TBA 0330S (See drawing on page: 4-44)					
010	1110534-0000		1	INDUCTOR	
020	2527136-0000		1	RAIL	
200	311103-0270		2	PARALLEL PIN ISO 2338 4M6X16 A1	
220	312115-0293		3	SCREW ISO4762 M4X16 A4 80	
230	312115-0331		2	SCREW ISO4762 M5X20 A4 80	
240	315105-0136		3	WASHER BRB 4,3X8 RFR	
250	315105-0146		2	WASHER BRB 5,3X10 RFR	
260	315202-0102		2	O-RING 4,1X1,6 MM	
TBA 0200M, TBA 0250S (See drawing on page: 4-44)					
010	1110535-0000		1	INDUCTOR	
020	2527137-0000		1	RAIL (TITANIUM)	
200	311103-0270		2	PARALLEL PIN ISO 2338 4M6X16 A1	
220	312115-0293		2	SCREW ISO4762 M4X16 A4 80	
230	312115-0331		2	SCREW ISO4762 M5X20 A4 80	
240	315105-0136		2	WASHER BRB 4,3X8 RFR	
250	315105-0146		2	WASHER BRB 5,3X10 RFR	
260	315202-0102		2	O-RING 4,1X1,6 MM	
TBA 0200SQ (See drawing on page: 4-46)					
010	1520078-0000		1	INDUCTOR	
020	2529075-0000		1	RAIL	
030	1539120-0000		1	VOLUME BULGE	
040	1539593-0000		1	COVER	
200	311103-0270		2	PARALLEL PIN ISO 2338 4M6X16 A1	
220	312115-0293		3	SCREW ISO4762 M4X16 A4 80	
230	312115-0331		2	SCREW ISO4762 M5X20 A4 80	
240	315105-0136		3	WASHER BRB 4,3X8 RFR	
270	312155-0285		2	SCREW DIN 7991 MF6S M4X6 A4 70	
280	312155-0287		2	SCREW DIN 7991 MF6S M4X8 A4 70	
Common Parts					
100	32644-0000		1	WASHER	
110	256882-0000		1	WASHER	
120	271846-0000		1	INSULATION NUT	
130	271848-0000		1	SCREW	
140	491681-0000		1	GASKET	

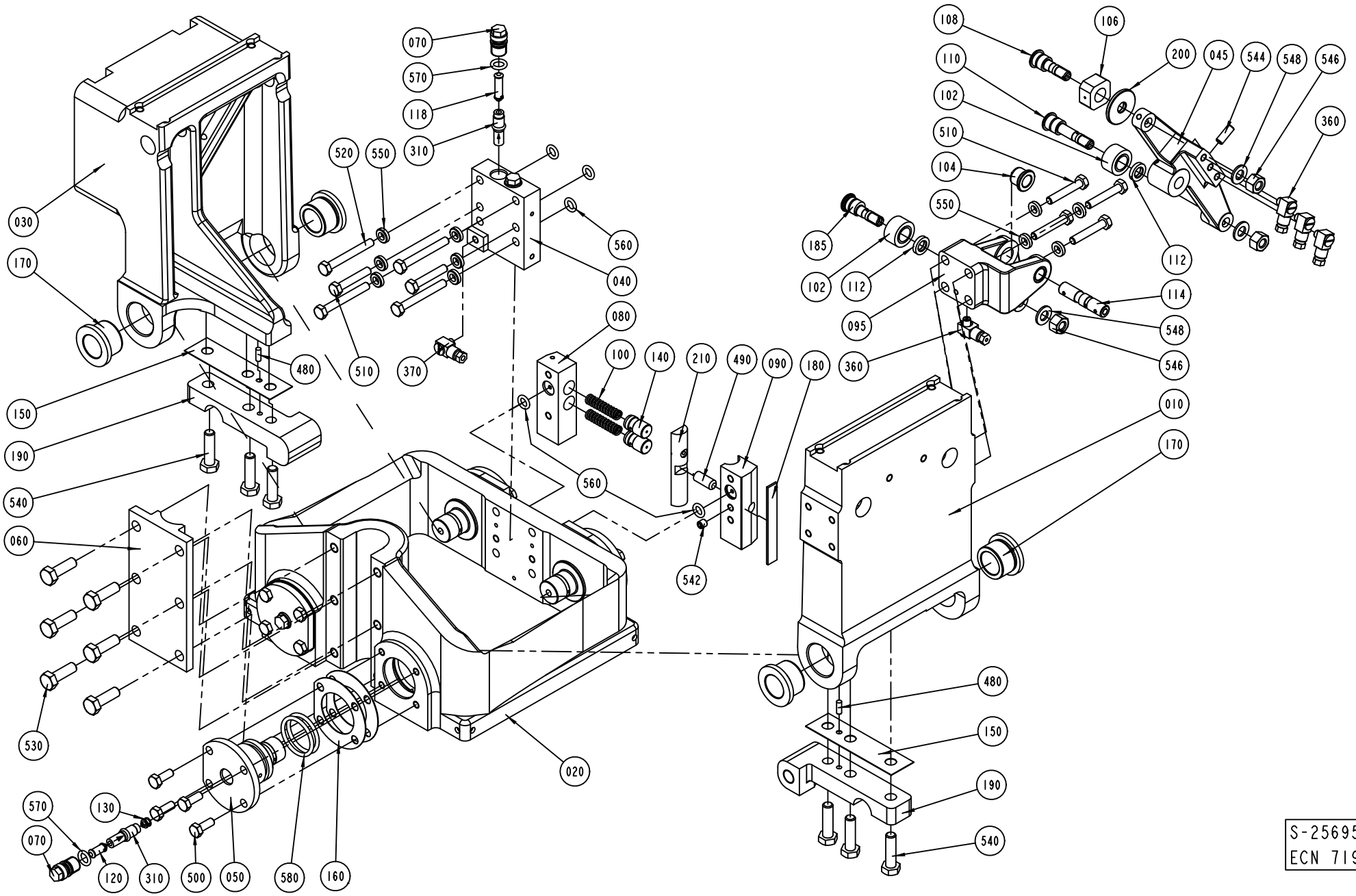
070
570
118
310
520
550
560
040
030
170
480
510
370
080
100
140
210
490
090
180
150
190
540
060
560
542
530
020
570
130
070
120
310
500
050
580
160
108
106
200
045
544
548
546
110
102
510
104
550
360
185
102
112
095
360
112
114
548
546
010
170
480
150
190
540
S-256951-5
ECN 71944

ECM: 216908 - 20050622
Group number: 256951-0500
Assembly Drawing: 256951-5_1_AC

Pos	Part No	UN	Qty	Description	Page No
TBA IH					
030	562120-0000		1	ARM PRESSURE JAW	
Common Parts					
010	255609-0000		1	ARM CUTTING JAW	
020	256834-0000		1	YOKE	
040	256953-0000		1	BLOCK RIGHT	
045	272492-0000		1	ARM RIGHT	
050	272454-0000		4	PIVOT PIN	
060	256082-0000		1	CAP	
070	256829-0000		6	SCREW	
080	256870-0000		1	BRACKET	
090	491349-0000		1	BEARING SEAT	
095	272496-0000		1	BRACKET RIGHT	
100	20239-0000		2	25MPRESSION SPRING	
102	22475-0000		2	CURVE ROLLER	
104	255653-0000		2	FLANGE BUSHING	
106	256628-0000		1	PIECE	
108	256629-0001		1	AXLE PIN	
110	256629-0003		1	AXLE PIN	
112	256704-0000		2	WASHER	
114	256710-0000		1	SHAFT	
118	256831-0001		2	SPACER	
120	256831-0002		4	SPACER	
130	256831-0003		4	SPACER	
140	256889-0000		2	PLUNGER	
150	256890-0000		2	LACE	
160	256891-0000		6	LACE	
170	257213-0000		4	BUSHING	
180	257317-0000		1	LACE	
185	271100-0000		1	DOWEL	
190	272415-0000		2	ARM	
200	441706-0000		1	WASHER	
210	491350-0000		1	SLIDER	
310	90092-0052		6	METERING VALVE 10 MM3	
360	90134-0058		4	CONNECTION	
370	90134-0068		1	CONNECTION	
480	311103-0268		2	PARALLEL PIN ISO 2338 4M6X12 A1	
490	311103-0401		1	PARALLEL PIN ISO 2338 8M6X20 A1	
500	312105-0368		16	SCREW M6S ISO 4017 M6X16 A480	
510	312105-0376		6	SCREW M6S ISO 4014 M6X35 A480	
520	312105-0380		4	SCREW M6S ISO 4014 M6X50 A480	
530	312105-0453		6	SCREW M6S ISO 4017 M8X25 A480	
540	312105-0455		6	SCREW M6S ISO 4017 M8X30 A480	
542	312318-0360		1	SCREW ISO4029 M6X6 A4	
544	312318-0368		1	SCREW ISO4029 M6X16 A4	
546	312811-0318		3	NUT HEX.LOCK HELI COIL M8 SS	
548	315105-0165		3	WASHER BRB 8,4X16 RFR	
550	315115-0153		10	WASHER PLAIN, TBRB 6,4/12 H=3	
560	315202-0206		5	O-RING 7,3X2,4 MM	
570	315202-0207		6	O-RING 8,3X2,4 MM	
580	315202-0219		8	O-RING 29,2X3 MM	

Machine Type	Group Description	Used-In	Group Number	Page No

YOKE LEFT

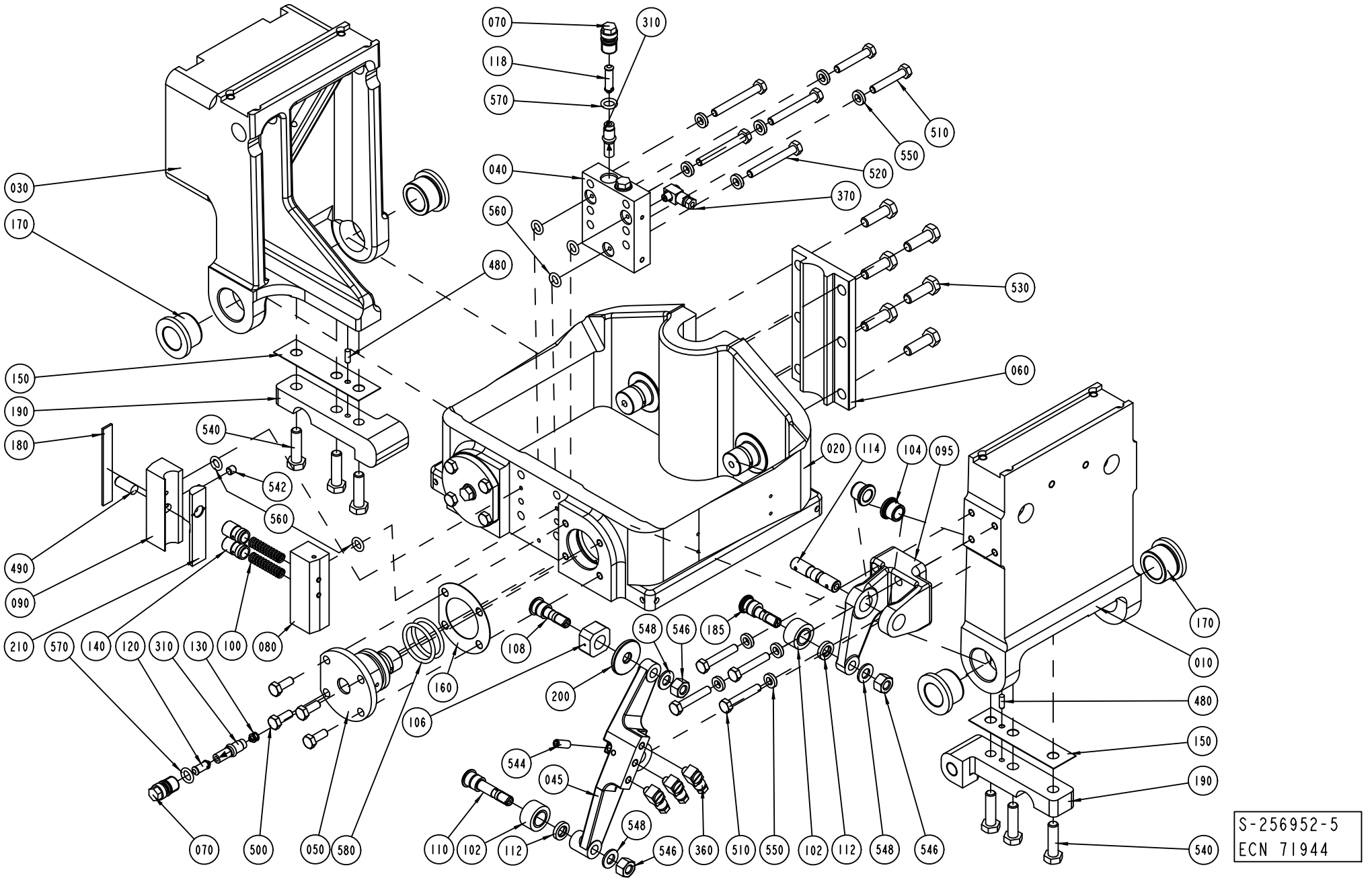
070
310
118
570
510
550
520
040
370
560
480
530
030
170
060
150
190
180
540
542
560
020
114
104
095
490
090
210
570
140
120
310
130
100
080
108
548
546
185
170
010
160
200
106
480
150
190
544
045
548
070
500
050
580
110
102
112
546
360
510
550
102
112
548
546
540
S-256952-5
ECN 71944

ECM: 216909 - 20050622
Group number: 256952-0500
Assembly Drawing: 256952-5_1_AC

Pos	Part No	UN	Qty	Description	Page No
TBA IH					
030	562120-0000		1	ARM PRESSURE JAW	
Common Parts					
010	255609-0000		1	ARM CUTTING JAW	
020	256834-0000		1	YOKE	
040	256954-0000		1	BLOCK LEFT	
045	272493-0000		1	ARM LEFT	
050	272454-0000		4	PIVOT PIN	
060	256082-0000		1	CAP	
070	256829-0000		6	SCREW	
080	256870-0000		1	BRACKET	
090	491349-0000		1	BEARING SEAT	
095	272497-0000		1	BRACKET LEFT	
100	20239-0000		2	25MPRESSION SPRING	
102	22475-0000		2	CURVE ROLLER	
104	255653-0000		2	FLANGE BUSHING	
106	256628-0000		1	PIECE	
108	256629-0001		1	AXLE PIN	
110	256629-0003		1	AXLE PIN	
112	256704-0000		2	WASHER	
114	256710-0000		1	SHAFT	
118	256831-0001		2	SPACER	
120	256831-0002		4	SPACER	
130	256831-0003		4	SPACER	
140	256889-0000		2	PLUNGER	
150	256890-0000		2	LACE	
160	256891-0000		6	LACE	
170	257213-0000		4	BUSHING	
180	257317-0000		1	LACE	
185	271100-0000		1	DOWEL	
190	272415-0000		2	ARM	
200	441706-0000		1	WASHER	
210	491350-0000		1	SLIDER	
310	90092-0052		6	METERING VALVE 10 MM3	
360	90134-0058		4	CONNECTION	
370	90134-0068		1	CONNECTION	
480	311103-0268		2	PARALLEL PIN ISO 2338 4M6X12 A1	
490	311103-0401		1	PARALLEL PIN ISO 2338 8M6X20 A1	
500	312105-0368		16	SCREW M6S ISO 4017 M6X16 A480	
510	312105-0376		6	SCREW M6S ISO 4014 M6X35 A480	
520	312105-0380		4	SCREW M6S ISO 4014 M6X50 A480	
530	312105-0453		6	SCREW M6S ISO 4017 M8X25 A480	
540	312105-0455		6	SCREW M6S ISO 4017 M8X30 A480	
542	312318-0360		1	SCREW ISO4029 M6X6 A4	
544	312318-0368		1	SCREW ISO4029 M6X16 A4	
546	312811-0318		3	NUT HEX.LOCK HELI COIL M8 SS	
548	315105-0165		3	WASHER BRB 8,4X16 RFR	
550	315115-0153		10	WASHER PLAIN, TBRB 6,4/12 H=3	
560	315202-0206		5	O-RING 7,3X2,4 MM	
570	315202-0207		6	O-RING 8,3X2,4 MM	
580	315202-0219		8	O-RING 29,2X3 MM	

Machine Type | Group Description | Used-In | Group Number | Page No

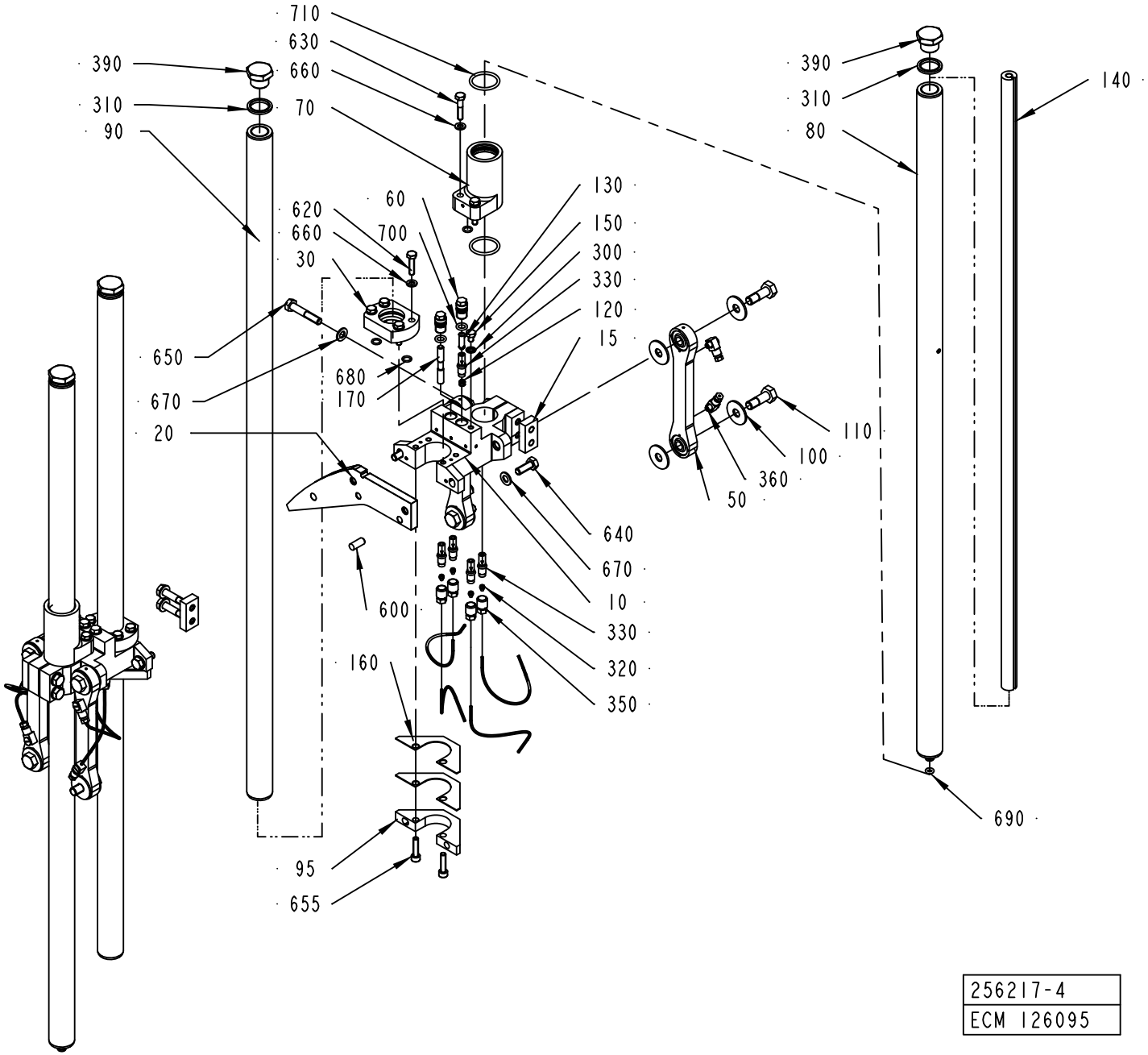

256217-4
ECM 126095

ECM: 216907 - 20050622
Group number: 256217-0500
Assembly Drawing: 256217-4_1_AG

Pos	Part No	UN	Qty	Description	Page No
TBA 0100B, TBA 0180B, TBA 0125S, TBA 0160S, TBA 0200M, TBA 0200B, TBA 0200SQ, TBA 0200S, TBA 0250S, TBA 0250B, TBA 0300S (See drawing on page: 4-52)					
020	1538039-0000		2	CURVE	
095	441750-0000		2	YOKE	
160	441751-0000		4	LACE	
600	311103-0401		4	PARALLEL PIN ISO 2338 8M6X20 A1	
640	312105-0452		4	SCREW M6S ISO 4017 M8X22 A4 80	
655	312115-0372		4	SCREW ISO4762 M6X25 A4 80	
670	315105-0165		8	WASHER BRB 8,4X16 RFR	
TBA 0284B, TBA 0330S (See drawing on page: 4-52)					
020	1538039-0000		2	CURVE	
095	441750-0000		2	YOKE	
160	441751-0000		4	LACE	
600	311103-0401		4	PARALLEL PIN ISO 2338 8M6X20 A1	
640	312105-0452		4	SCREW M6S ISO 4017 M8X22 A4 80	
655	312115-0372		4	SCREW ISO4762 M6X25 A4 80	
670	315105-0165		8	WASHER BRB 8,4X16 RFR	
Common Parts					
010	2514091-0000		2	BRACKET	
015	2514090-0000		2	FORCE PLATE	
030	456002-0000		2	BEARING	
050	441031-0000		4	LINK BEARING	
060	256829-0000		4	SCREW	
070	272490-0000		2	SLEEVE	
080	441269-0000		2	GUIDE	
090	441268-0000		2	GUIDE	
100	256738-0000		16	WASHER	
110	256739-0000		8	SCREW	
120	256831-0003		2	SPACER	
130	256831-0004		2	SPACER	
140	272840-0000		2	ROD	
150	441355-0000		2	BLEEDING SCREW	
170	456004-0000		2	SPACER	
300	90005-0003		2	BONDED SEAL SS/NBR M6	
310	90005-0014		4	BONDED SEAL SS/NBR G1/2"	
320	90028-0020		8	CONE TUBE 2,5MM	
330	90092-0052		10	METERING VALVE 10 MM3	
350	90134-0039		8	BUSHING VALVE CONNECTION 2,5 MM	
360	90134-0058		8	CONNECTION	
370	90166-0143	MM	1160	TUBE 2,5 MM PA,TRANSP.	
390	90330-0037		4	PLUG, EXT. G-THREAD, G1/2	
620	312105-0372		8	SCREW M6S ISO 4017 M6X25 A480	
630	312105-0374		4	SCREW M6S ISO 4014 M6X30 A480	
650	312105-0460		4	SCREW M6S ISO 4014 M8X45 A480	
660	315105-0153		12	WASHER BRB 6,4X12 RFR	
680	315202-0106		6	O-RING 8,1X1,6 MM	
690	315202-0204		2	O-RING 5,3X2,4 MM	
700	315202-0207		4	O-RING 8,3X2,4 MM	
710	315202-0219		4	O-RING 29,2X3 MM	

Machine Type | Group Description | Used-In | Group Number | Page No

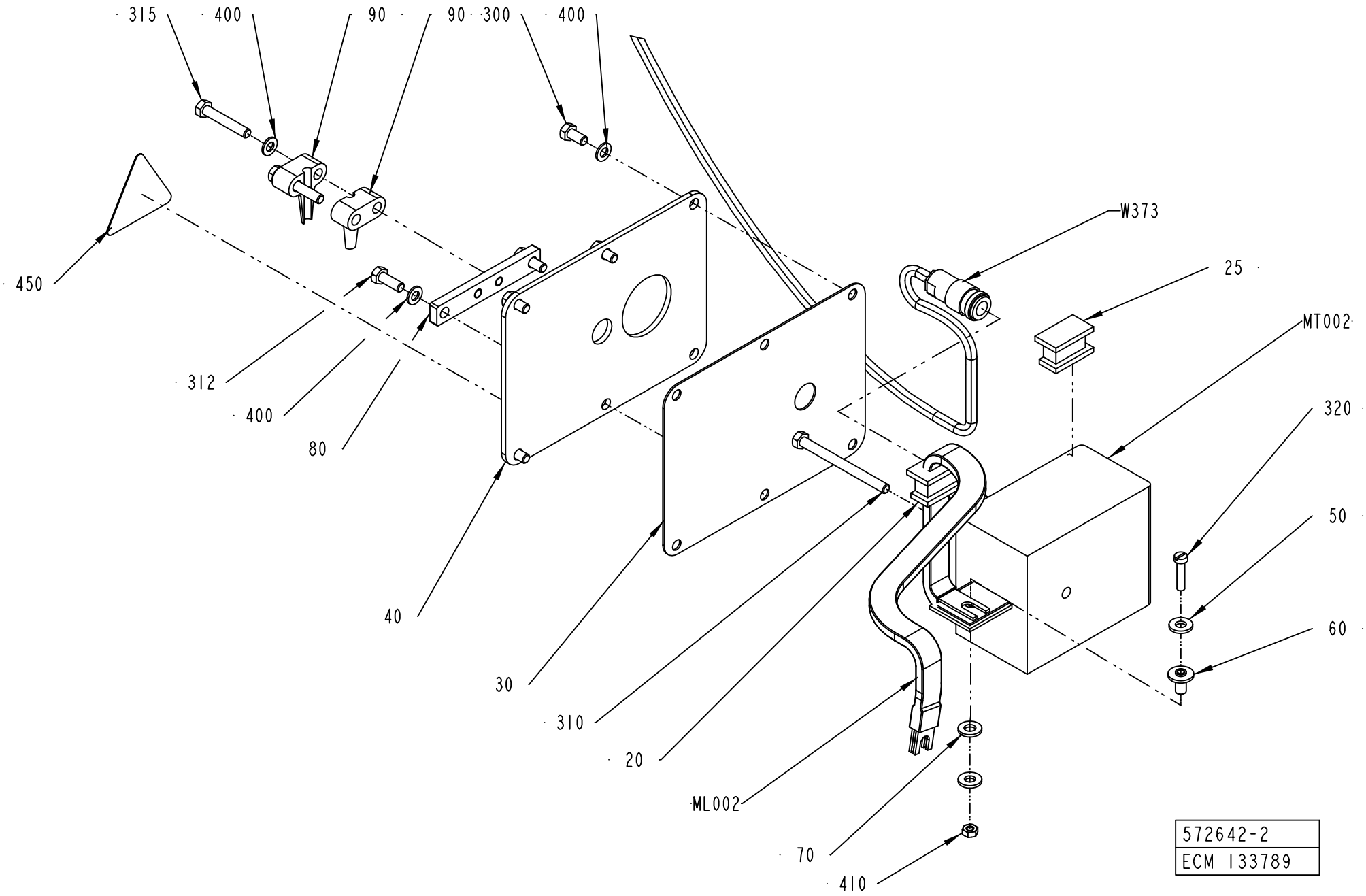
315
400
90
90
300
400
W373
25
MT002
320
50
60
450
312
400
80
40
30
310
20
ML002
70
410
572642-2
ECM 133789

ECM: 292916 - 20070126
Group number: 572642-0200
Assembly Drawing: 572642-2_1_AC

Pos	Part No	UN	Qty	Description	Page No
TBA 0100B, TBA 0125S					
MT002	67379-0262		1	TRANSFORMER	
ML002	2554961-0000		1	BUSBAR RIGHT	
TBA 0160S, TBA 0200S					
MT002	67379-0264		1	TRANSFORMER	
ML002	571871-0000		1	BUSBAR,RIGHT	
TBA 0180B, TBA 0200B, TBA 0236B, TBA 0284B, TBA 0250B, TBA 0300S, TBA 0330S					
MT002	67379-0264		1	TRANSFORMER	
ML002	571871-0000		1	BUSBAR,RIGHT	
TBA 0200M, TBA 0250S					
MT002	67379-0265		1	TRANSFORMER	
ML002	571871-0000		1	BUSBAR,RIGHT	
Common Parts					
020	571873-0000		1	SEAL	
025	571874-0000		1	SEALING PLUG	
030	562119-0000		1	GASKET	
040	562118-0000		1	LID	
050	28509-0000		2	WASHER	
060	32544-0000		1	INSULATION NUT	
070	32079-0000		1	WASHER	
080	578104-0000		1	SHEET	
090	1282426-0000		2	CLIP	
300	312105-0325		4	SCREW M6S ISO 4017 M5X10 A480	
310	312101-0343		1	SCREW M6S M5X60 FZB	
312	312105-0328		2	SCREW M6S ISO 4017 M5X14 A480	
315	312105-0335		2	SCREW M6S ISO 4014 M5X30 A480	
320	312122-0294		1	SCREW ISO 1207 M4X18 NI PL BRASS	
400	315105-0146		8	WASHER BRB 5,3X10 RFR	
410	312602-0312		1	HEXAGON NUT, EN 24032 M6M M4 NIPLBR	
450	359705-0015		1	WARNING SIGN ISO, RISK OF ELECTRIC SHOCK	
W373	1548155-0000		1	COAXIAL CABLE	

Pos	Part No	UN	Qty	Description	Page No

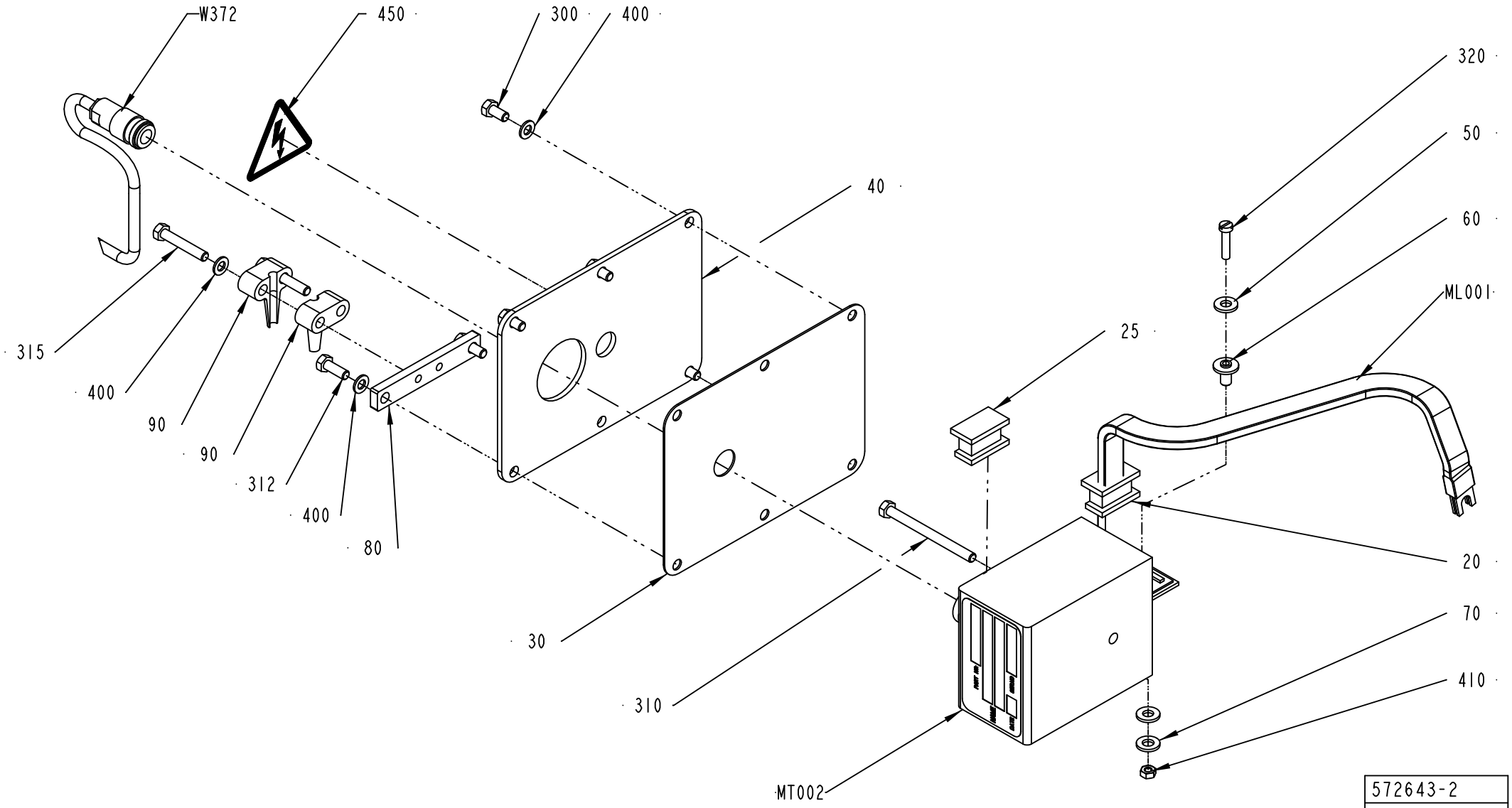
W372
450
300
400
320
50
60
ML001
40
315
400
90
90
312
400
80
25
20
70
410
30
310
MT002
572643-2
ECM 133789

ECM: 292917 - 20070126
Group number: 572643-0200
Assembly Drawing: 572643-2_1_AC

Pos	Part No	UN	Qty	Description	Page No
TBA 0100B, TBA 0125S					
MT001	67379-0262		1	TRANSFORMER	
ML001	2554960-0000		1	BUSBAR LEFT	
TBA 0160S, TBA 0200S					
MT001	67379-0264		1	TRANSFORMER	
ML001	571872-0000		1	BUSBAR,LEFT	
TBA 0180B, TBA 0200B, TBA 0236B, TBA 0284B, TBA 0250B, TBA 0300S, TBA 0330S					
MT001	67379-0264		1	TRANSFORMER	
ML001	571872-0000		1	BUSBAR,LEFT	
TBA 0200M, TBA 0250S					
MT001	67379-0265		1	TRANSFORMER	
ML001	571872-0000		1	BUSBAR,LEFT	
Common Parts					
020	571873-0000		1	SEAL	
025	571874-0000		1	SEALING PLUG	
030	562119-0000		1	GASKET	
040	562118-0000		1	LID	
050	28509-0000		2	WASHER	
060	32544-0000		1	INSULATION NUT	
070	32079-0000		1	WASHER	
080	578104-0000		1	SHEET	
090	1282426-0000		2	CLIP	
300	312105-0325		4	SCREW M6S ISO 4017 M5X10 A480	
310	312101-0343		1	SCREW M6S M5X60 FZB	
312	312105-0328		2	SCREW M6S ISO 4017 M5X14 A480	
315	312105-0335		2	SCREW M6S ISO 4014 M5X30 A480	
320	312122-0294		1	SCREW ISO 1207 M4X18 NI PL BRASS	
400	315105-0146		8	WASHER BRB 5,3X10 RFR	
410	312602-0312		1	HEXAGON NUT, EN 24032 M6M M4 NIPLBR	
450	359705-0015		1	WARNING SIGN ISO, RISK OF ELECTRIC SHOCK	
W372	1548155-0000		1	COAXIAL CABLE	

Pos	Part No	UN	Qty	Description	Page No

VOLUME ADJUSTER

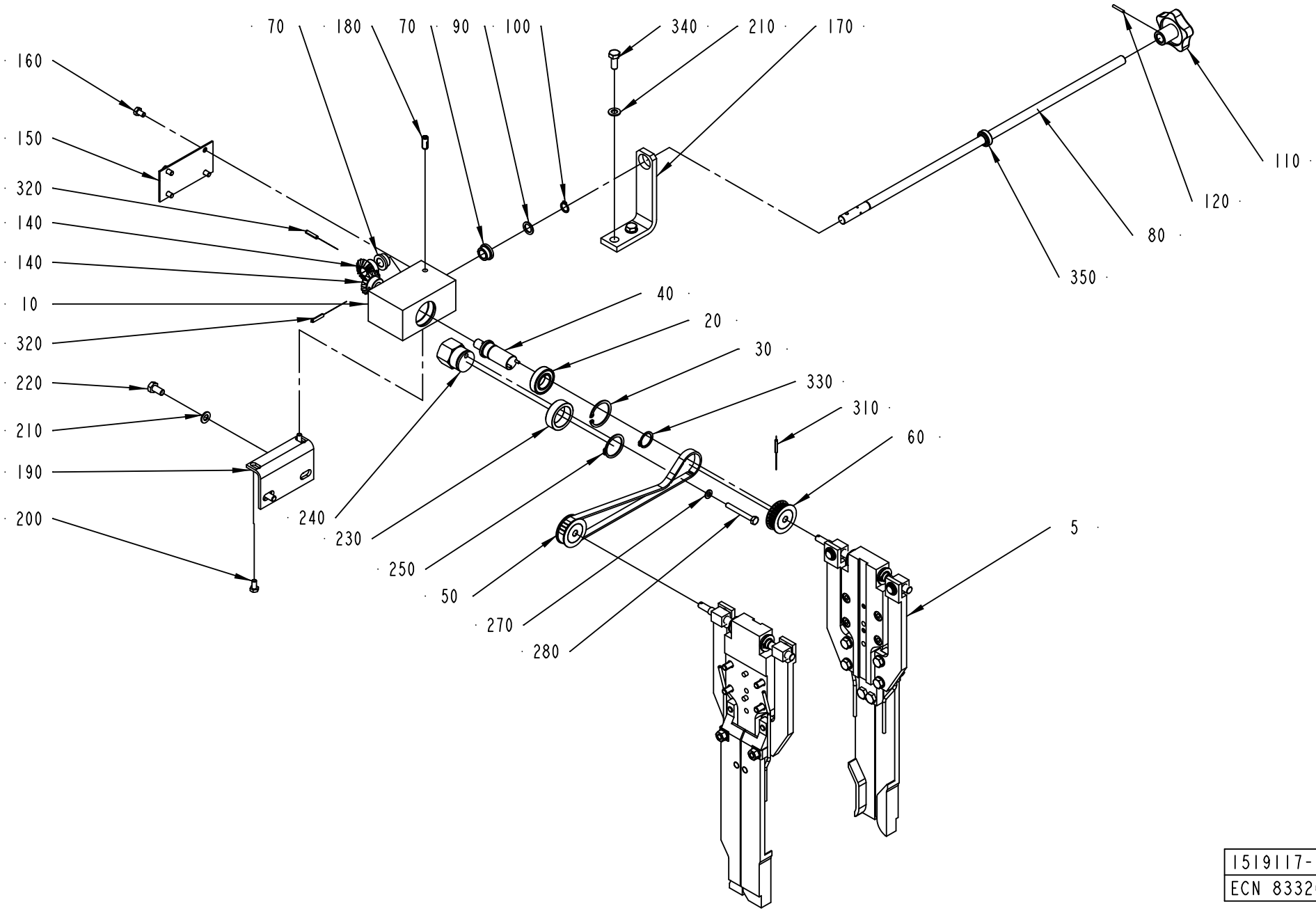

1519117-1
ECN 83326

ECM: 292918 - 20070126
Group number: 1519117-0100
Assembly Drawing: 1519117-1_1_AA

Pos	Part No	UN	Qty	Description	Page No
-					
005	1519118-0100		1	VOLUM CURVE PIECE	**4-61, 4-63**
010	1539105-0000		1	BOX	
020	90214-0166		1	BALL BEARING, 20X37X12 MM	
030	315752-0125		1	RETAINING RING FOR BORE DIN 472 37 ST	
040	1539106-0000		1	SHAFT	
050	1539107-0000		1	TIMING BELT	
060	1539108-0000		2	TIMING BELT PULLEY	
070	321101-0172		2	FLANGE BUSHING, 12X18X10 MM	
080	1539109-0000		1	SHAFT	
090	90005-0047		1	WASHER,PL.RND.CU.12,2/ H=1,5	
100	315751-0109		1	RETAINING RING FOR SHAFT DIN 471 12 A2	
110	240797-0000		1	HANDLE	
120	311103-0238		1	PARALLEL PIN ISO 2338 3M6X20 A1	
140	293610-0000		2	GEAR WHEEL	
150	1539110-0000		1	LID	
160	312105-0364		4	SCREW M6S ISO 4017 M6X10 A480	
170	1539111-0000		1	SUPPORT	
180	90458-1517		1	SCREW SPRINGLOAD. SOCK. HEX HEAD M8X18	
190	1539112-0000		1	SUPPORT	
200	312105-0366		2	SCREW M6S ISO 4017 M6X12 A480	
210	315105-0165		4	WASHER BRB 8,4X16 RFR	
220	312105-0449		2	SCREW M6S ISO 4017 M8X16 A480	
230	1538948-0000		1	ROLLER	
240	1538949-0000		1	ECCENTRIC	
250	315751-0122		1	RETAINING RING FOR SHAFT DIN 471 30 A2	
270	315105-0153		1	WASHER BRB 6,4X12 RFR	
280	312105-0380		1	SCREW M6S ISO 4014 M6X50 A480	
310	90258-0031		1	PIN, STRAIGHT SLOTTED SPRING FRP 3X20	
320	311112-0256		2	SPRING PIN, ISO 8752 4X20-C	
330	315751-0116		1	RETAINING RING FOR SHAFT DIN 471 20 A2	
340	312105-0451		2	SCREW M6S ISO 4017 M8X20 A480	
350	90240-0152		1	PLAIN BEAR,SELF ADJ.SPHER.12X22X10 MM	

Pos	Part No	UN	Qty	Description	Page No

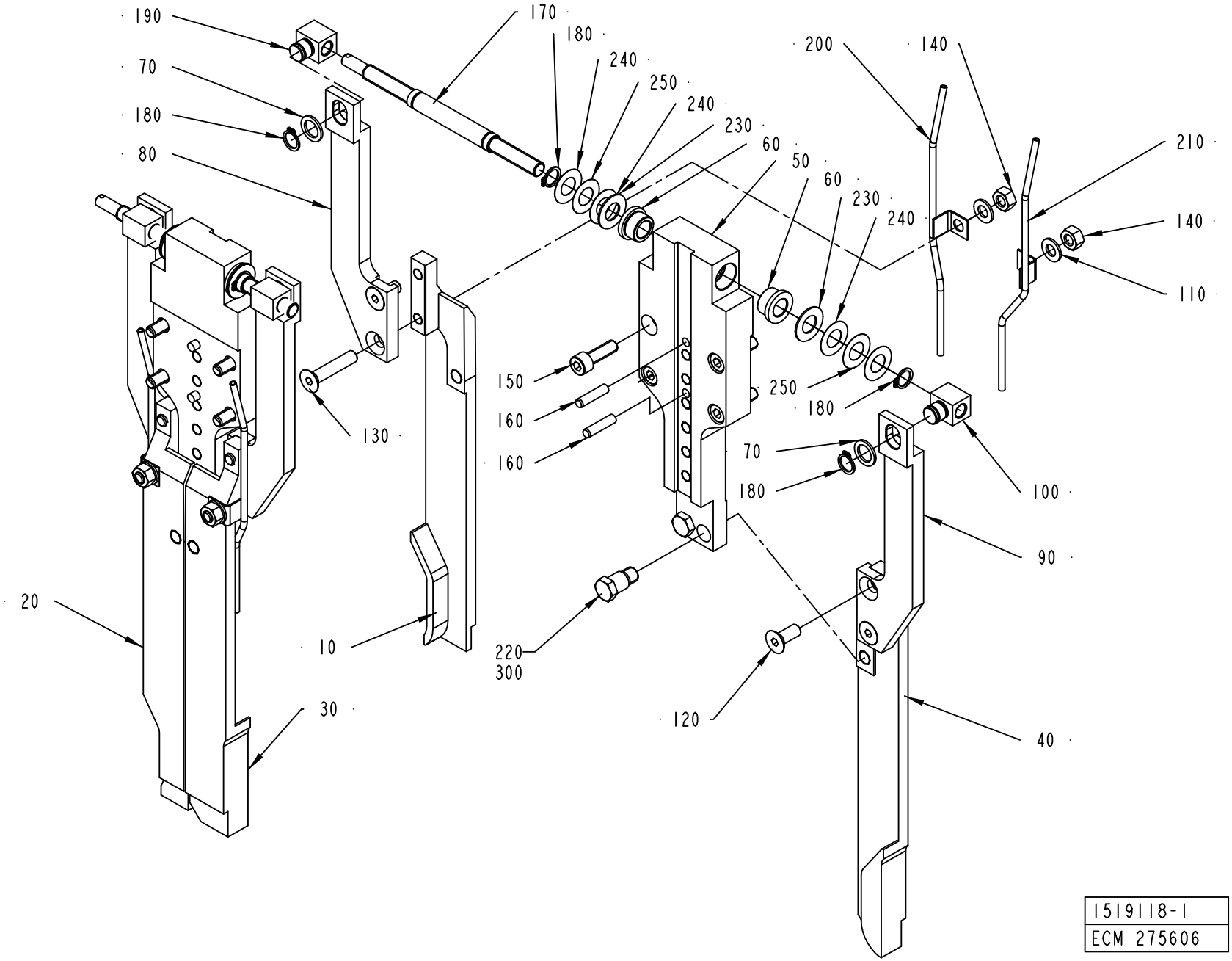
190
70
180
80
170
180
240
250
240
230
60
50
60
230
240
200
140
210
140
110
150
160
160
130
250
180
70
180
100
90
20
10
220
300
120
30
40
1519118-1
ECM 275606

Pos	Part No	UN	Qty	Description	Page No
TBA 0100B					
010	979772-0000		1	VOLUME CAM L 100	
020	979774-0000		1	VOLUME CAM R 100	
030	979773-0000		1	VOLUME CAM L WIDE 100	
040	979775-0000		1	VOLUME CAM R WIDE 100	
050	1539101-0000		2	BRACKET	
200	441759-0000		2	PIPE LEFT	
210	441758-0000		2	PIPE RIGHT	
TBA 0125S					
010	1490235-0000		1	VOLUME CAM	
020	1490236-0000		1	VOLUME CAM	
030	1490237-0000		1	VOLUME CAM, WIDE	
040	1490238-0000		1	VOLUME CAM, WIDE	
050	1539101-0000		2	BRACKET	
200	441759-0000		2	PIPE LEFT	
210	441758-0000		2	PIPE RIGHT	
TBA 0160S					
010	2506638-0000		1	VOLUME CAM	
020	2506639-0000		1	VOLUME CAM	
030	2506640-0000		1	VOLUME CAM	
040	2506641-0000		1	VOLUME CAM	
050	1539101-0000		2	BRACKET	
200	441759-0000		2	PIPE LEFT	
210	441758-0000		2	PIPE RIGHT	
TBA 0180B					
010	272956-0000		1	VOLUME CAM LEFT	
020	272964-0000		1	VOLUME CAM RIGHT	
030	272965-0000		1	VOLUME CAM LEFT, WIDE	
040	272967-0000		1	VOLUME CAM RIGHT, WIDE	
050	1539101-0000		2	BRACKET	
200	441759-0000		2	PIPE LEFT	
210	441758-0000		2	PIPE RIGHT	
TBA 0200B					
010	1490239-0000		1	VOLUME CAM	
020	1490240-0000		1	VOLUME CAM	
030	1490239-0000		1	VOLUME CAM	
040	1490240-0000		1	VOLUME CAM	
050	1539101-0000		2	BRACKET	
200	441759-0000		2	PIPE LEFT	
210	441758-0000		2	PIPE RIGHT	
TBA 0200M, TBA 0250B					
010	1282315-0000		1	VOLUME CAM LEFT	
020	1282316-0000		1	VOLUME CAM RIGHT	
030	1282315-0000		1	VOLUME CAM LEFT	
040	1282316-0000		1	VOLUME CAM RIGHT	
050	1539101-0000		2	BRACKET	
200	441759-0000		2	PIPE LEFT	
210	441758-0000		2	PIPE RIGHT	
TBA 0200S					
010	2506645-0000		1	VOLUME CAM	
020	2506643-0000		1	VOLUME CAM	
030	2506642-0000		1	VOLUME CAM	
040	2506644-0000		1	VOLUME CAM	
050	1539101-0000		2	BRACKET	
200	441759-0000		2	PIPE LEFT	
210	441758-0000		2	PIPE RIGHT	
TBA 0236B					
010	272954-0000		1	VOLUME CAM LEFT	
020	272962-0000		1	VOLUME CAM RIGHT	
030	272954-0000		1	VOLUME CAM LEFT	
040	272962-0000		1	VOLUME CAM RIGHT	
050	1539101-0000		2	BRACKET	
200	441759-0000		2	PIPE LEFT	
210	441758-0000		2	PIPE RIGHT	
TBA 0250S					
010	2553111-0000		1	CAM	
020	2553110-0000		1	CAM	
030	2553111-0000		1	CAM	
040	2553110-0000		1	CAM	
050	1539101-0000		2	BRACKET	
200	441759-0000		2	PIPE LEFT	
210	441758-0000		2	PIPE RIGHT	
TBA 0284B					
010	2506645-0000		1	VOLUME CAM	
020	2506643-0000		1	VOLUME CAM	
030	2506645-0000		1	VOLUME CAM	
040	2506643-0000		1	VOLUME CAM	
050	1539101-0000		2	BRACKET	
200	441759-0000		2	PIPE LEFT	
210	441758-0000		2	PIPE RIGHT	
TBA 0300S					
010	272949-0000		1	VOLUME CAM LEFT	
020	272957-0000		1	VOLUME CAM RIGHT	
030	272949-0000		1	VOLUME CAM LEFT	

Machine Type | Group Description | Used-In | Group Number | Page No

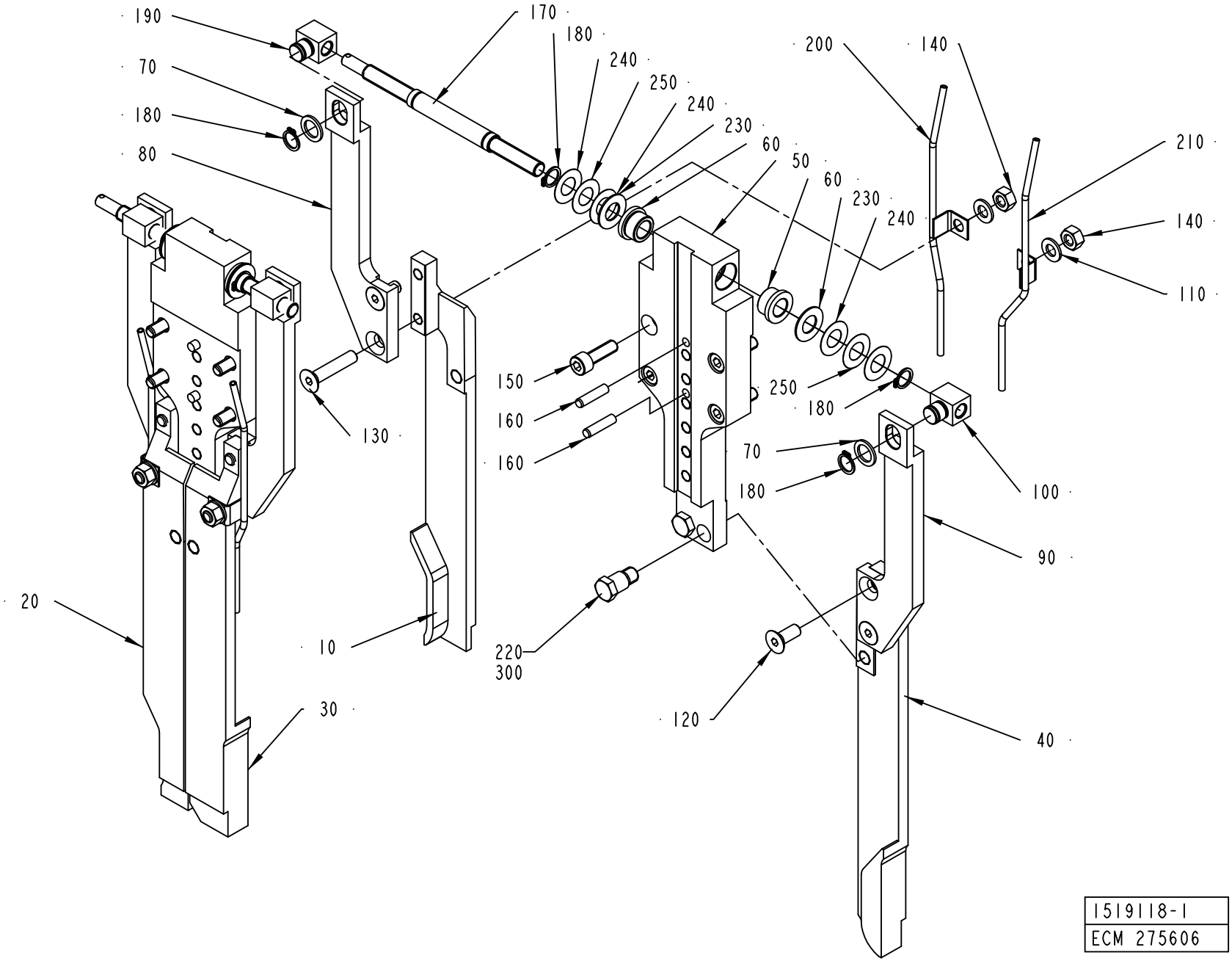
190
70
180
80
170
180
240
250
240
230
60
50
60
230
240
200
140
210
140
110
150
160
160
130
250
180
70
180
100
90
20
10
220
300
120
30
40
1519118-1
ECM 275606

ECM: 292919 - 20070126
Group number: 1519118-0100
Assembly Drawing: 1519118-1_1_AC

This list covers pages from 4-60 to 4-63

Pos	Part No	UN	Qty	Description	Page No
TBA 0300S (Cont'd)					
040	272957-0000		1	VOLUME CAM RIGHT	
050	1539101-0000		2	BRACKET	
200	441759-0000		2	PIPE LEFT	
210	441758-0000		2	PIPE RIGHT	
TBA 0330S					
010	582166-0000		1	VOLUME CAM L 330S	
020	582164-0000		1	VOLUME CAM R 330S	
030	582167-0000		1	VOLUME CAM L WIDE 330S	
040	582165-0000		1	VOLUME CAM R WIDE 330S	
050	1539101-0000		2	BRACKET	
200	441759-0000		2	PIPE LEFT	
210	441758-0000		2	PIPE RIGHT	
Common Parts					
060	321101-0173		4	FLANGE BUSHING, 12X18X12 MM	
070	90005-0047		4	WASHER,PL.RND.CU.12,2/ H=1,5	
080	1539102-0000		2	ARM	
090	1539103-0000		2	ARM	
100	1519134-0000		2	JOINT	
110	315105-0165		12	WASHER BRB 8,4X16 RFR	
120	312155-0451		4	SCREW DIN 7991 MF6S M8X20 A4 70	
130	312155-0459		4	SCREW DIN 7991 MF6S M8X40 A4 70	
140	312605-0318		4	HEXAGON NUT, M6M M8 A280	
150	312115-0453		8	SCREW ISO4762 M8X25 A4 80	
160	311103-0355		4	PARALLEL PIN ISO 2338 6M6X25 A1	
170	1539104-0000		2	SPINDLE	
180	315751-0109		8	RETAINING RING FOR SHAFT DIN 471 12 A2	
190	1519133-0000		2	JOINT	
220	272973-0000		4	DOWEL	
230	1755-0001		4	WASHER	
240	1755-0002		8	WASHER	
250	1755-0003		4	WASHER	
300	90157-0021	KG	0.02	LOCKING FLUID LOCTITE 270	

Pos	Part No	UN	Qty	Description	Page No

Machine Type | Group Description | Used-In | Group Number | Page No

SUPPORT ROLLER

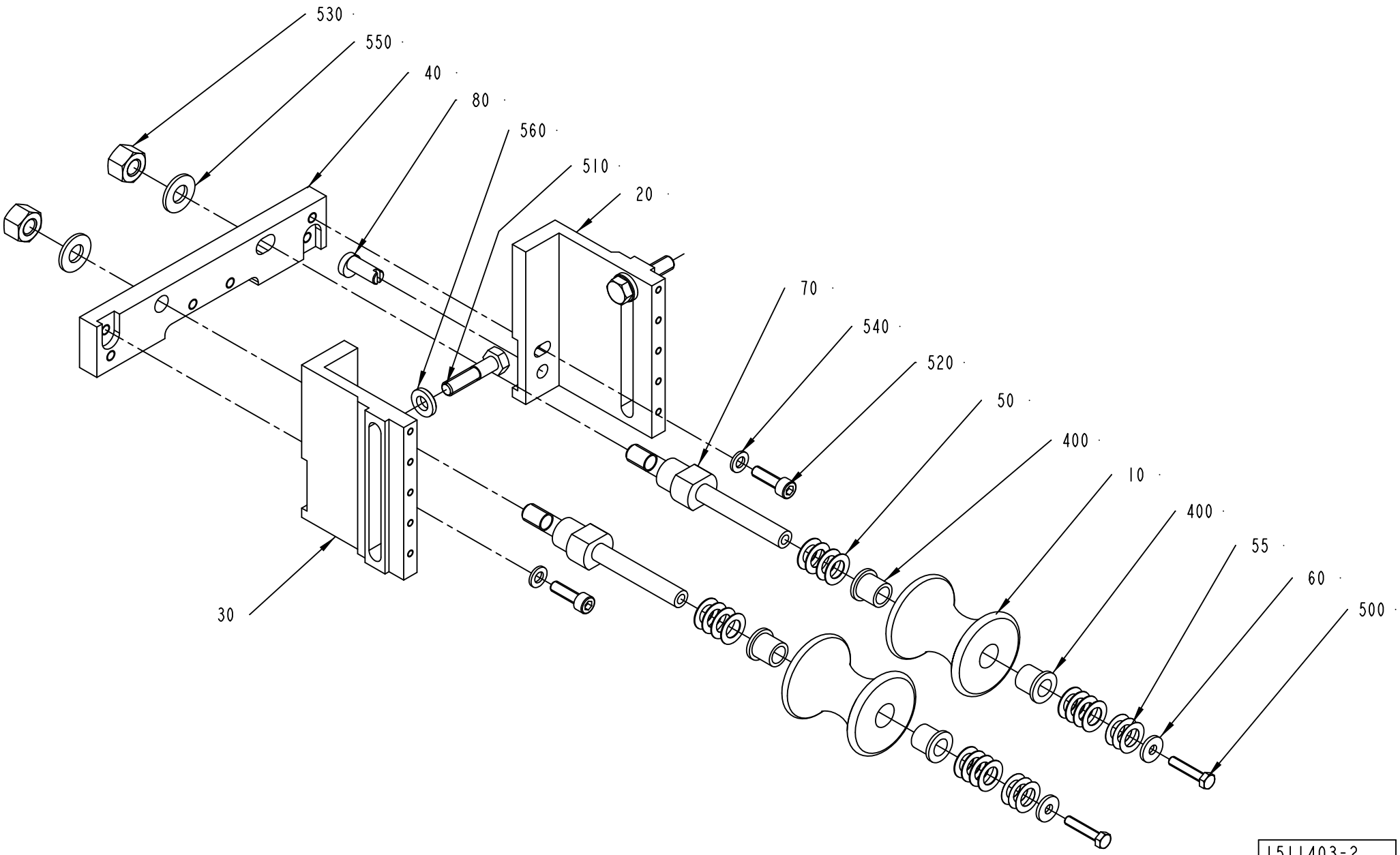

ECM: 292920 - 20070126
Group number: 1511403-0100
Assembly Drawing: 1511403-2_1_AA

Pos	Part No	UN	Qty	Description	Page No
TBA 0100B, TBA 0125S					
010	978758-0000		2	ROLLER 125ML	
040	1511405-0003		1	BRACKET	
TBA 0160S, TBA 0200S					
010	978760-0000		2	ROLLER TBA200SL	
040	1511405-0004		1	BRACKET	
TBA 0180B, TBA 0200B, TBA 0236B, TBA 0284B, TBA 0250B, TBA 0300S, TBA 0330S					
010	978757-0000		2	ROLLER 180-284ML	
040	1511405-0002		1	BRACKET	
TBA 0200M, TBA 0250S					
010	574385-0000		2	ROLLER TBA250SL	
040	1511405-0001		1	BRACKET	
TBA 0200SQ					
010	1532526-0000		2	ROLLER	
040	1511405-0002		1	BRACKET	
Common Parts					
020	1511406-0000		1	BRACKET	
030	1511407-0000		1	BRACKET	
050	2033-0009		16	WASHER	
055	2033-0014		6	WASHER	
060	27815-0000		2	WASHER	
070	978756-0000		2	PIN	
080	1511404-0000		1	ECCENTRIC SHAFT	
400	90240-0180		4	FLANGE BUSHING 10X14X15MM	
500	312105-0333		2	SCREW M6S ISO 4017 M5X25 A480	
510	312105-0457		2	SCREW M6S ISO 4014 M8X35 A480	
520	312115-0370		2	SCREW ISO4762 M6X20 A4 80	
530	312811-0320		2	NUT HEX.LOCK HELI COIL MID GRIP M10 SS	
540	315105-0153		2	WASHER BRB 6,4X12 RFR	
550	315105-0173		2	WASHER BRB 10,5X22 RFR	
560	315115-0165		2	WASHER PLAIN, TBRB 8,4/16 H=3	

Pos	Part No	UN	Qty	Description	Page No

MANIFOLD RIGHT

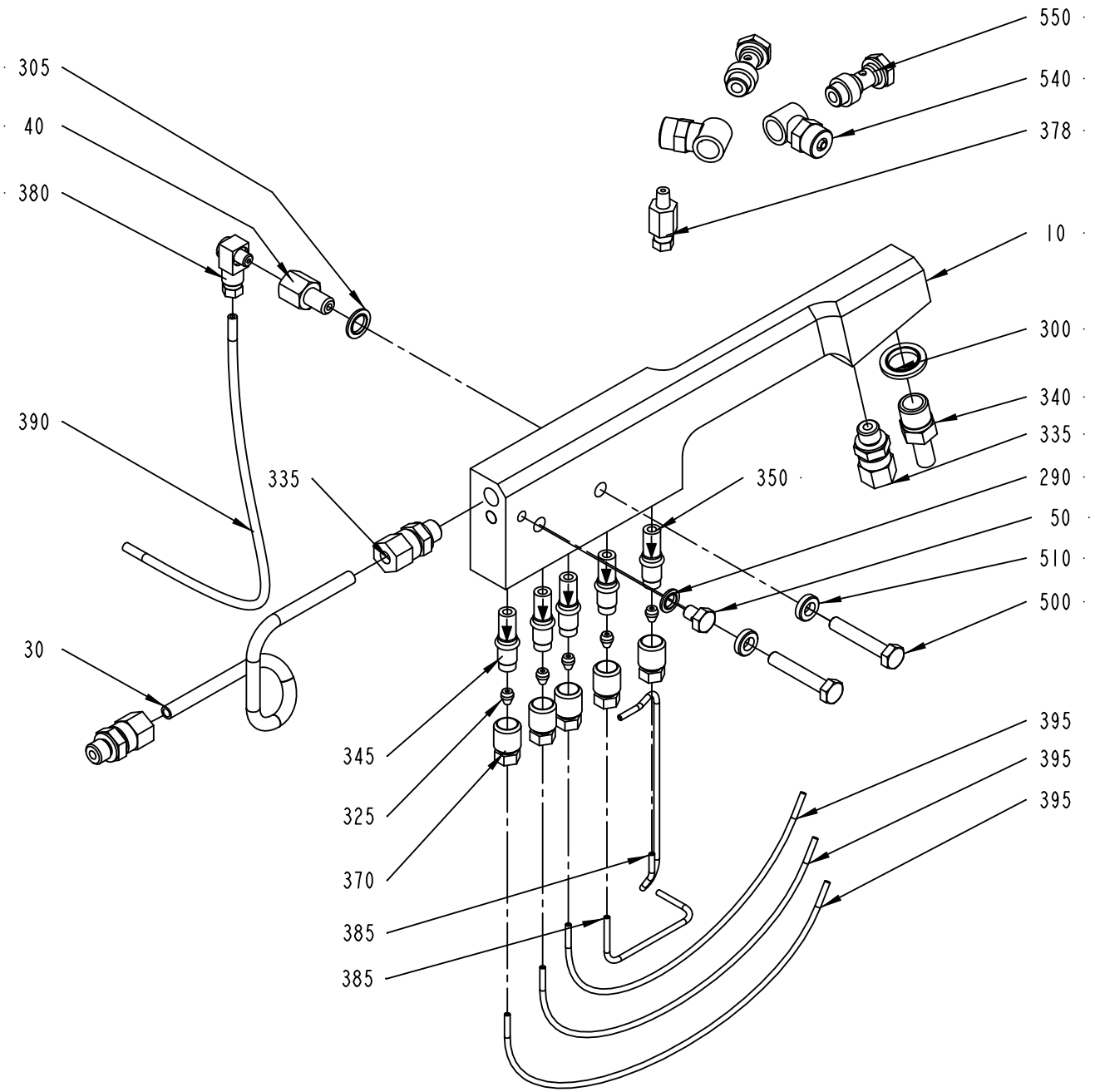

257381-3
ECN 95208

ECM: 183746 - 20050713
Group number: 257381-0300
Assembly Drawing: 257381-3_1_AC

Pos	Part No	UN	Qty	Description	Page No
NOCLEAR					
325	90028-0020		5	CONE TUBE 2,5MM	
345	90092-0052		4	METERING VALVE 10 MM3	
370	90134-0039		5	BUSHING VALVE CONNECTION 2,5 MM	
500	312105-0376		2	SCREW M6S ISO 4014 M6X35 A480	
Common Parts					
010	456017-0000		1	HOSE HOLDER RIGHT	
030	257379-0000		1	HYDRAULIC PIPE RIGHT	
040	257000-0000		1	NIPPLE	
050	441355-0000		1	BLEEDING SCREW	
290	90005-0003		1	BONDED SEAL SS/NBR M6	
300	90005-0005		1	BONDED SEAL SS/NBR G1/4	
305	90005-0007		1	BONDED SEAL SS/NBR M8	
335	90030-0184		3	CONN. STR. GA-6-G1/8	
340	90030-0065		1	PIPE CONNECTION	
350	90092-0053		1	METERING VALVE 30 MM3	
378	90134-0066		1	CONNECTION M6 TUBE 4 MM	
380	90134-0068		1	CONNECTION	
385	90266-0019	MM	270	PIPE	
390	90166-0109	MM	240	TUBE 4 MM PA,TRANSP.	
395	90166-0143	MM	580	TUBE 2,5 MM PA,TRANSP.	
510	315115-0153		2	WASHER PLAIN, TBRB 6,4/12 H=3	
540	342980-0121		2	BANJO-CONNECTION,RING 8/6-G1/8	
550	342980-0303		2	BANJO-HOLLOW BOLT COUPL,EXT.THR.01-G1/8	

Pos	Part No	UN	Qty	Description	Page No

MANIFOLD LEFT

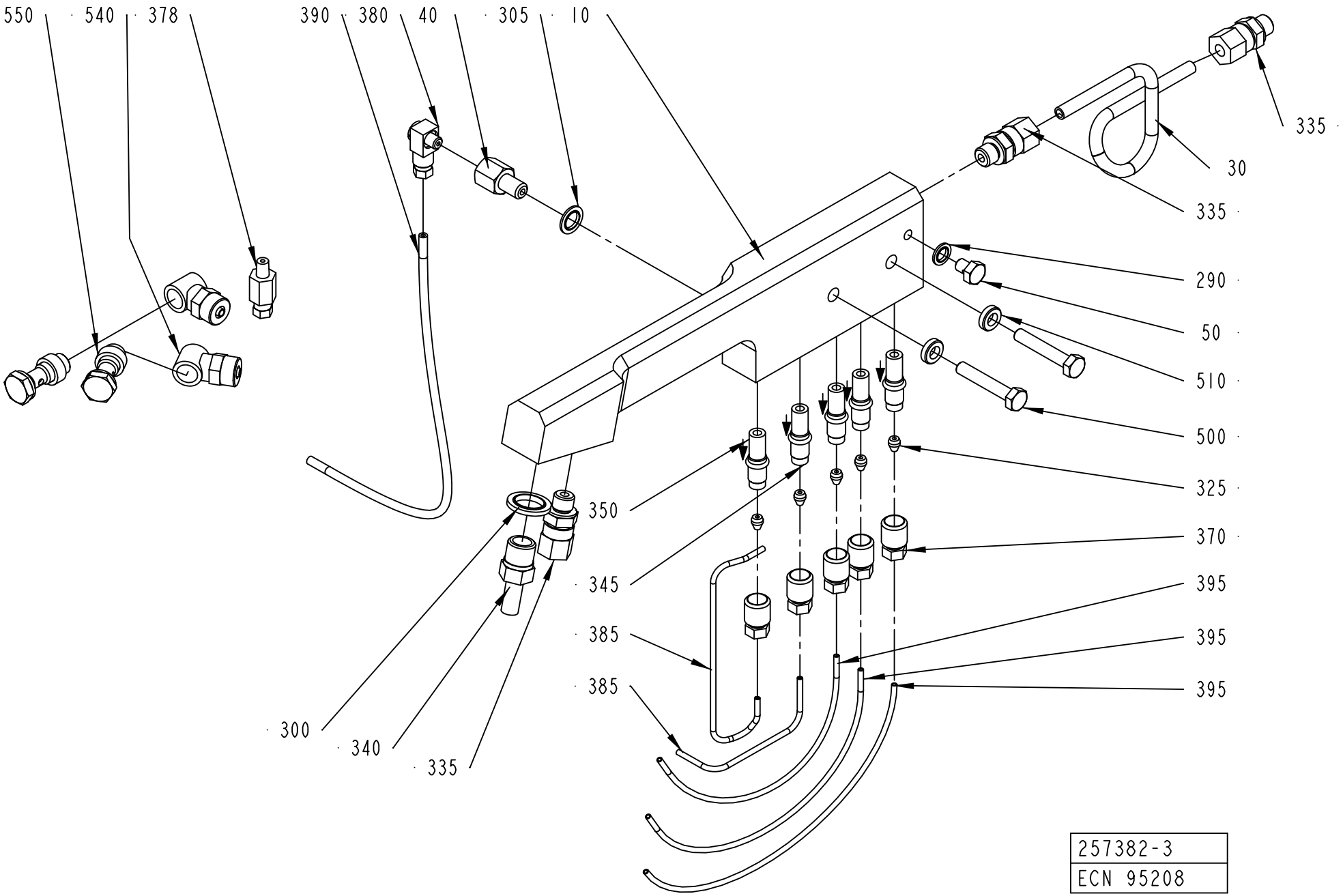

ECM: 183747 - 20050713
Group number: 257382-0300
Assembly Drawing: 257382-3_1_AC

Pos	Part No	UN	Qty	Description	Page No
NOCLEAR					
325	90028-0020		5	CONE TUBE 2,5MM	
345	90092-0052		4	METERING VALVE 10 MM3	
370	90134-0039		5	BUSHING VALVE CONNECTION 2,5 MM	
Common Parts					
010	456018-0000		1	HOSE HOLDER LEFT	
030	257380-0000		1	HYDRAULIC PIPE LEFT	
040	257000-0000		1	NIPPLE	
050	441355-0000		1	BLEEDING SCREW	
290	90005-0003		1	BONDED SEAL SS/NBR M6	
300	90005-0005		1	BONDED SEAL SS/NBR G1/4	
305	90005-0007		1	BONDED SEAL SS/NBR M8	
335	90030-0184		3	CONN. STR. GA-6-G1/8	
340	90030-0065		1	PIPE CONNECTION	
350	90092-0053		1	METERING VALVE 30 MM3	
378	90134-0066		1	CONNECTION M6 TUBE 4 MM	
380	90134-0068		1	CONNECTION	
385	90266-0019	MM	270	PIPE	
390	90166-0109	MM	240	TUBE 4 MM PA,TRANSP.	
395	90166-0143	MM	580	TUBE 2,5 MM PA,TRANSP.	
500	312105-0376		2	SCREW M6S ISO 4014 M6X35 A480	
510	315115-0153		2	WASHER PLAIN, TBRB 6,4/12 H=3	
540	342980-0121		2	BANJO-CONNECTION,RING 8/6-G1/8	
550	342980-0303		2	BANJO-HOLLOW BOLT COUPL,EXT.THR.01-G1/8	

Pos	Part No	UN	Qty	Description	Page No

This page is intentionally left blank.

ECM: 92423 - 20011113
Group number: 295523-0400
Assembly Drawing:

Pos	Part No	UN	Qty	Description	Page No
TBA 0100B, TBA 0125S					
020	1110530-0000		2	INDUCTOR	
040	1520577-0001		4	DOLLY	
TBA 0160S, TBA 0200S					
025	1110532-0000		2	INDUCTOR	
055	1110391-0000		4	DOLLY	
TBA 0180B, TBA 0200B, TBA 0236B, TBA 0284B, TBA 0250B, TBA 0300S, TBA 0330S					
010	1110534-0000		2	INDUCTOR	
055	1110391-0000		4	DOLLY	
TBA 0200M, TBA 0250S					
028	1110535-0000		2	INDUCTOR	
055	1110391-0000		4	DOLLY	
TBA 0200SQ					
010	1520078-0000		2	INDUCTOR	
055	1110391-0000		4	DOLLY	

Pos	Part No	UN	Qty	Description	Page No

Machine Type | Group Description | Used-In | Group Number | Page No

Tetra Pak

SPC
Spare Parts Catalogue

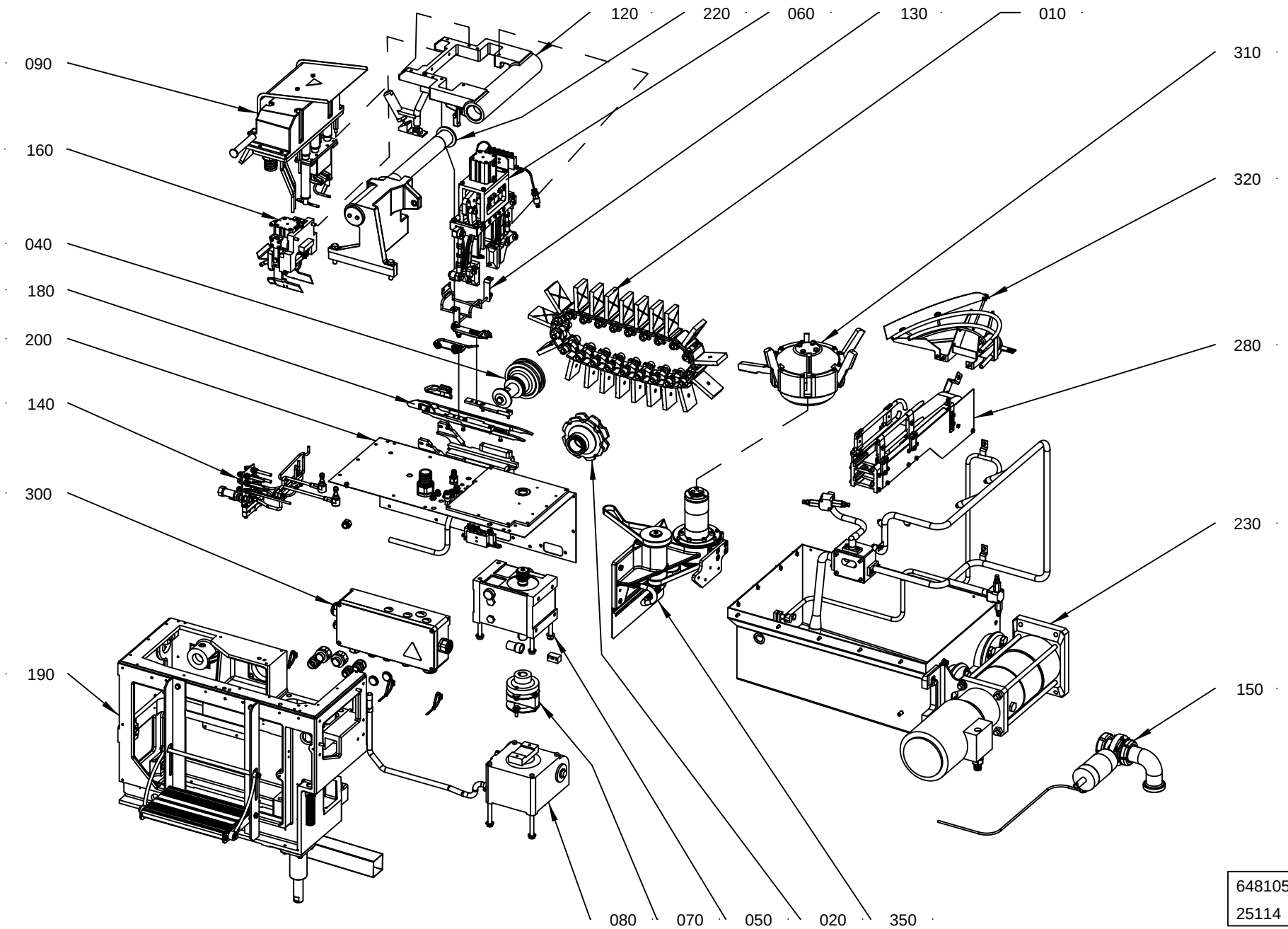

648105 - 8
25114 5

ECM: 288952 - 20070126
Group number: 648105-1300
Assembly Drawing: 648105-8_1_AA

Pos	Part No	UN	Qty	Description	Page No
TBA 0100B, TBA 0180B, TBA 0125S, TBA 0160S, TBA 0200M, TBA 0200B, TBA 0200S, TBA 0250S, TBA 0284B, TBA 0250B, TBA 0300S, TBA 0330S					
010	1317526-0200		1	STATION CHAIN	**5-5**
060	2523725-0200		1	PRESSURE DEVICE	**5-7, 5-9**
090	1539968-0200		1	FLAP HEATER	**5-13, 5-15, 5-17, 5-19, 5-21**
120	1548000-0200		1	FRAME	**5-23**
130	1539970-0200		1	FOLDING BAR	**5-25, 5-27**
160	2764344-0100		1	PULL-DOWN DEVICE	**5-29, 5-31, 5-33**
180	1539969-0200		1	GUIDE	**5-35**
200	1539995-0200		1	CANTILEVER	**5-37**
220	1539949-0100		1	FIXING UNIT	**5-43**
280	2500233-0100		1	CONVEYOR	**5-45**
300	441850-0700		1	CABLE	**5-47**
310	1539265-0100		1	OUTFEED UNIT	**5-53**
320	2544961-0100		1	RAIL	**5-55**
350	2530400-0100		1	TRANSMISSION UNIT	**5-57**
Common Parts					
020	491850-0100		1	DRIVE WHEEL	**5-59, 5-61**
040	491846-0300		1	TENSION SPROCKET	**5-63**
050	256410-0900		1	INDEXING UNIT	**5-65**
070	256437-0200		1	DISC COUPLING	**5-67**
080	256438-0300		1	WORM GEAR	**5-69**
140	456455-0700		1	PIPE WORK	**5-71**
150	256674-0500		1	BOTTOM VALVE	**5-73**
190	441695-0600		1	MACHINE BODY	**5-75**
230	2544980-0200		1	CLEANING SYSTEM	**5-81**

Pos	Part No	UN	Qty	Description	Page No

STATION CHAIN

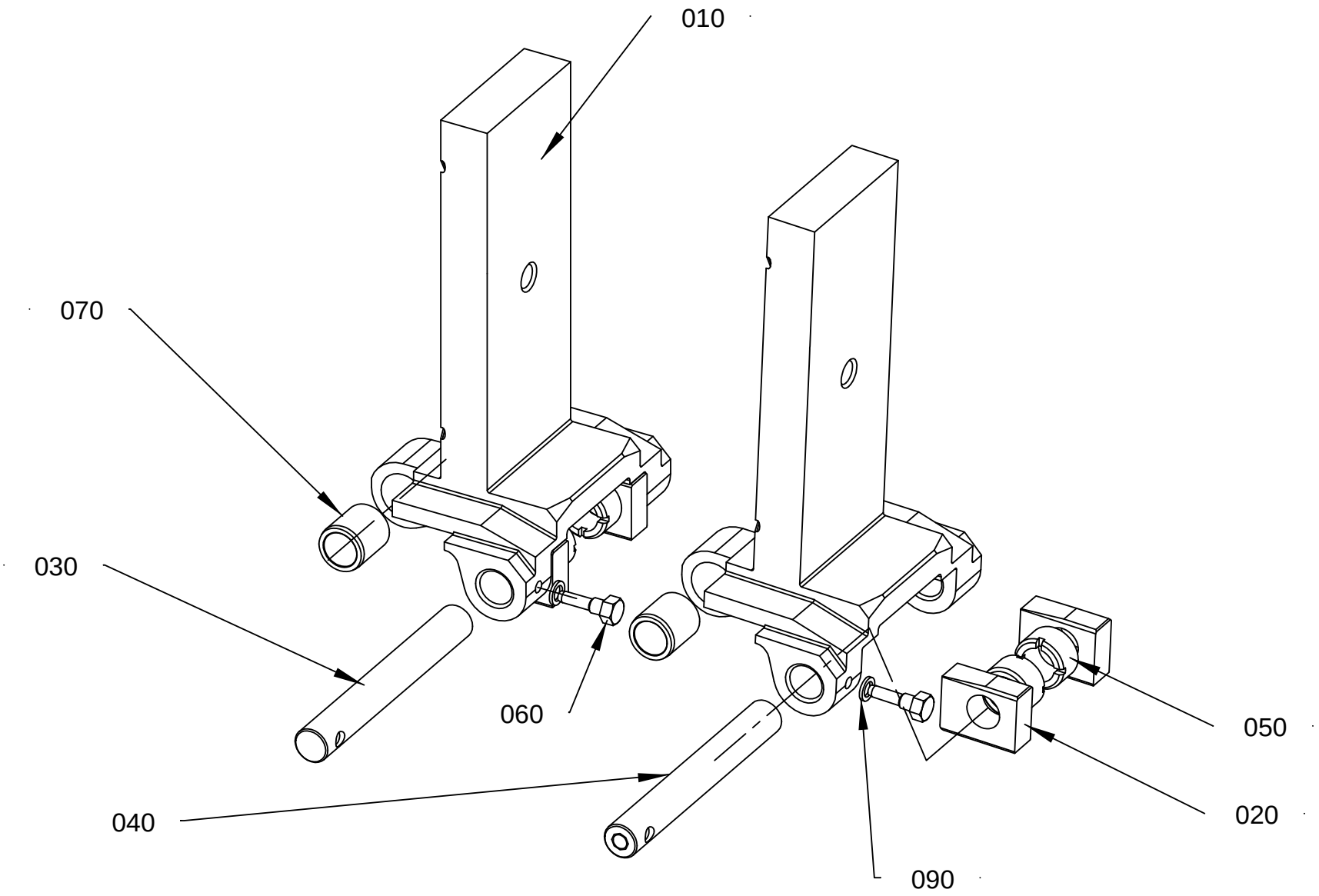

131752	6-2
246719	

ECM: 246727 - 20060131
Group number: 1317526-0200
Assembly Drawing: 1317526-2_1_AA

Pos	Part No	UN	Qty	Description	Page No
TBA 0100B					
010	2800336-0004		21	CARTON STATION	
TBA 0125S					
010	2800336-0003		21	CARTON STATION	
TBA 0160S					
010	2800336-0002		21	CARTON STATION	
TBA 0180B					
010	2800334-0006		21	CARTON STATION	
TBA 0200B					
010	2800334-0004		21	CARTON STATION	
TBA 0200M					
010	2800335-0002		21	CARTON STATION	
TBA 0200S					
010	2800336-0001		21	CARTON STATION	
TBA 0236B					
010	2800334-0003		21	CARTON STATION	
TBA 0250B					
010	2800334-0002		21	CARTON STATION	
TBA 0250S					
010	2800335-0001		21	CARTON STATION	
TBA 0284B, TBA 0300S					
010	2800334-0001		21	CARTON STATION	
TBA 0330S					
010	2800334-0007		21	CARTON STATION	
Common Parts					
020	491227-0000		42	SLIDER	
030	491228-0001		18	SHAFT	
040	491228-0002		3	SHAFT	
050	491229-0000		42	BUSHING	
060	491230-0000		21	GRUB SCREW	
070	491231-0000		21	BUSHING	
090	315239-0101		21	NYLON WASHER M5(RP315233-101)	

Pos	Part No	UN	Qty	Description	Page No

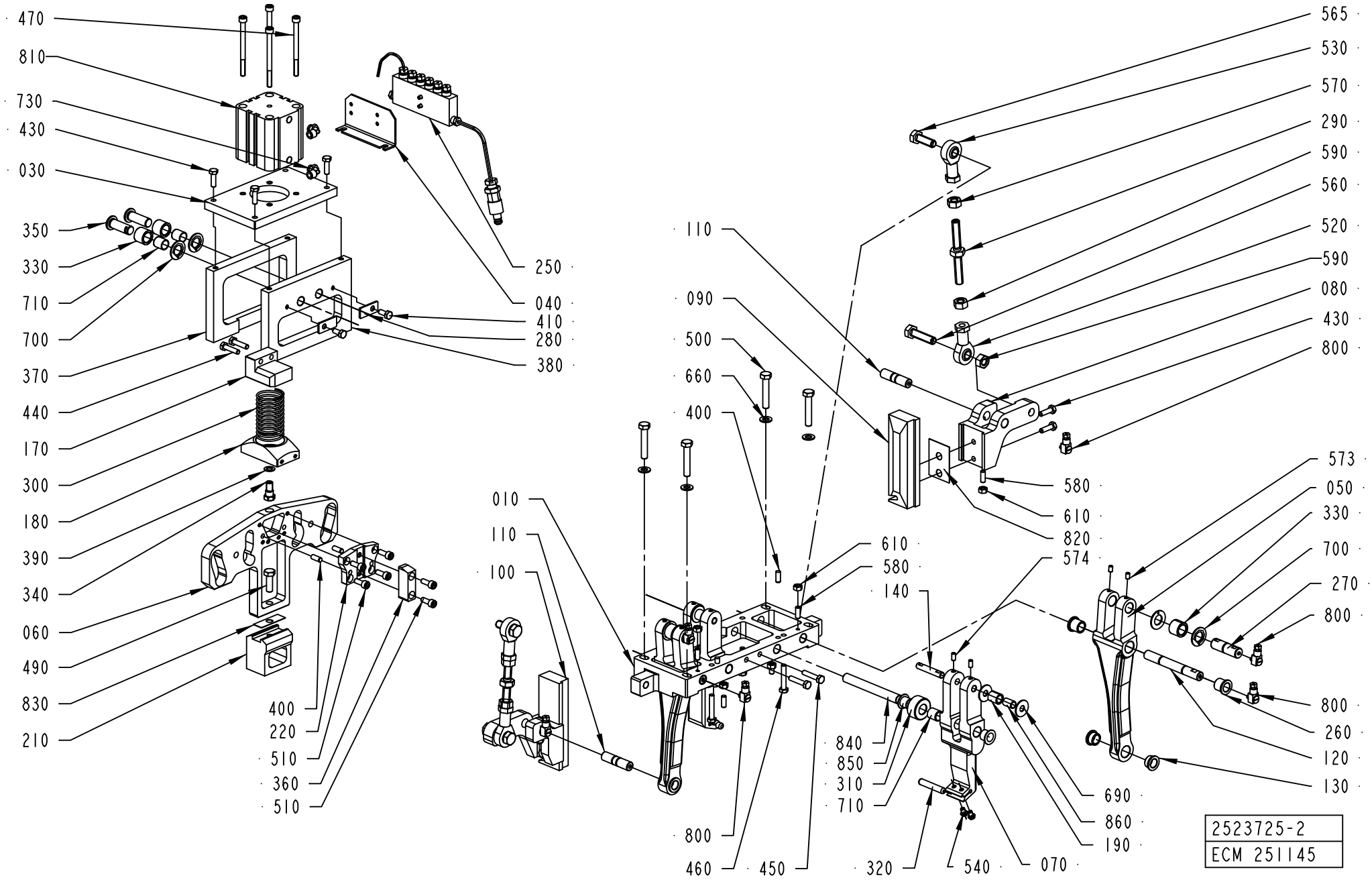
470
810
730
430
030
350
330
710
700
370
440
170
300
180
390
340
060
490
830
210
400
220
510
360
510
250
040
410
280
380
110
090
500
660
400
010
110
100
610
580
140
574
840
850
310
710
800
460
450
320
540
070
690
860
190
565
530
570
290
590
560
520
590
080
430
800
580
610
820
573
050
330
700
270
800
800
260
120
130
2523725-2
ECM 251145

ECM: 290171 - 20070126
Group number: 2523725-0200
Assembly Drawing: 2523725-2_1_AC

This list covers pages from 5-6 to 5-9

Pos	Part No	UN	Qty	Description	Page No
TBA 0100B					
070	2685677-0001		2	LEVER	
080	2606880-0000		2	HOLDER	
090	2575624-0001		1	BLOCK	
100	2575625-0001		1	BLOCK	
210	2552734-0001		1	BLOCK	
430	312105-0370		8	SCREW M6S ISO 4017 M6X20 A480	
820	2527454-0000		6	SHIM	
TBA 0125S					
070	2685677-0002		2	LEVER	
080	2606880-0000		2	HOLDER	
090	2575624-0002		1	BLOCK	
100	2575625-0002		1	BLOCK	
210	2552734-0002		1	BLOCK	
430	312105-0370		8	SCREW M6S ISO 4017 M6X20 A480	
820	2527454-0000		6	SHIM	
TBA 0160S					
070	2685677-0003		2	LEVER	
080	2606880-0000		2	HOLDER	
090	2575624-0003		1	BLOCK	
100	2575625-0003		1	BLOCK	
210	2554977-0001		1	BLOCK	
430	312105-0370		8	SCREW M6S ISO 4017 M6X20 A480	
820	2527454-0000		6	SHIM	
TBA 0180B					
070	2685677-0004		2	LEVER	
080	2606880-0000		2	HOLDER	
090	2575624-0004		1	BLOCK	
100	2575625-0004		1	BLOCK	
210	2524579-0004		1	BLOCK	
430	312105-0370		8	SCREW M6S ISO 4017 M6X20 A480	
820	2527454-0000		6	SHIM	
TBA 0200B					
070	2685677-0005		2	LEVER	
080	2606880-0000		2	HOLDER	
090	2575624-0005		1	BLOCK	
100	2575625-0005		1	BLOCK	
210	2524579-0005		1	BLOCK	
430	312105-0370		8	SCREW M6S ISO 4017 M6X20 A480	
820	2527454-0000		6	SHIM	
TBA 0200M					
070	2685677-0006		2	LEVER	
080	2606880-0000		2	HOLDER	
090	2575624-0006		1	BLOCK	
100	2575625-0006		1	BLOCK	
210	2554977-0002		1	BLOCK	
430	312105-0370		8	SCREW M6S ISO 4017 M6X20 A480	
820	2527454-0000		6	SHIM	
TBA 0200S					
070	2685677-0007		2	LEVER	
080	2606880-0000		2	HOLDER	
090	2575624-0007		1	BLOCK	
100	2575625-0007		1	BLOCK	
210	2554977-0003		1	BLOCK	
430	312105-0370		8	SCREW M6S ISO 4017 M6X20 A480	
820	2527454-0000		6	SHIM	
TBA 0250B					
070	2685677-0008		2	LEVER	
080	2606880-0000		2	HOLDER	
090	2575624-0008		1	BLOCK	
100	2575625-0008		1	BLOCK	
210	2524579-0008		1	BLOCK	
430	312105-0370		8	SCREW M6S ISO 4017 M6X20 A480	
820	2527454-0000		6	SHIM	
TBA 0250S					
070	2685677-0009		2	LEVER	
080	2606880-0000		2	HOLDER	
090	2575624-0009		1	BLOCK	
100	2575625-0009		1	BLOCK	
210	2554977-0004		1	BLOCK	
430	312105-0370		8	SCREW M6S ISO 4017 M6X20 A480	
820	2527454-0000		6	SHIM	
TBA 0284B, TBA 0300S					
070	2685677-0010		2	LEVER	
080	2606880-0000		2	HOLDER	
090	2575624-0010		1	BLOCK	
100	2575625-0010		1	BLOCK	
210	2524579-0010		1	BLOCK	
430	312105-0370		8	SCREW M6S ISO 4017 M6X20 A480	
820	2527454-0000		6	SHIM	
TBA 0330S					
070	2685677-0011		2	LEVER	
080	2606880-0000		2	HOLDER	
090	2575624-0011		1	BLOCK	

Machine Type | Group Description | Used-In | Group Number | Page No

PRESSURE DEVICE

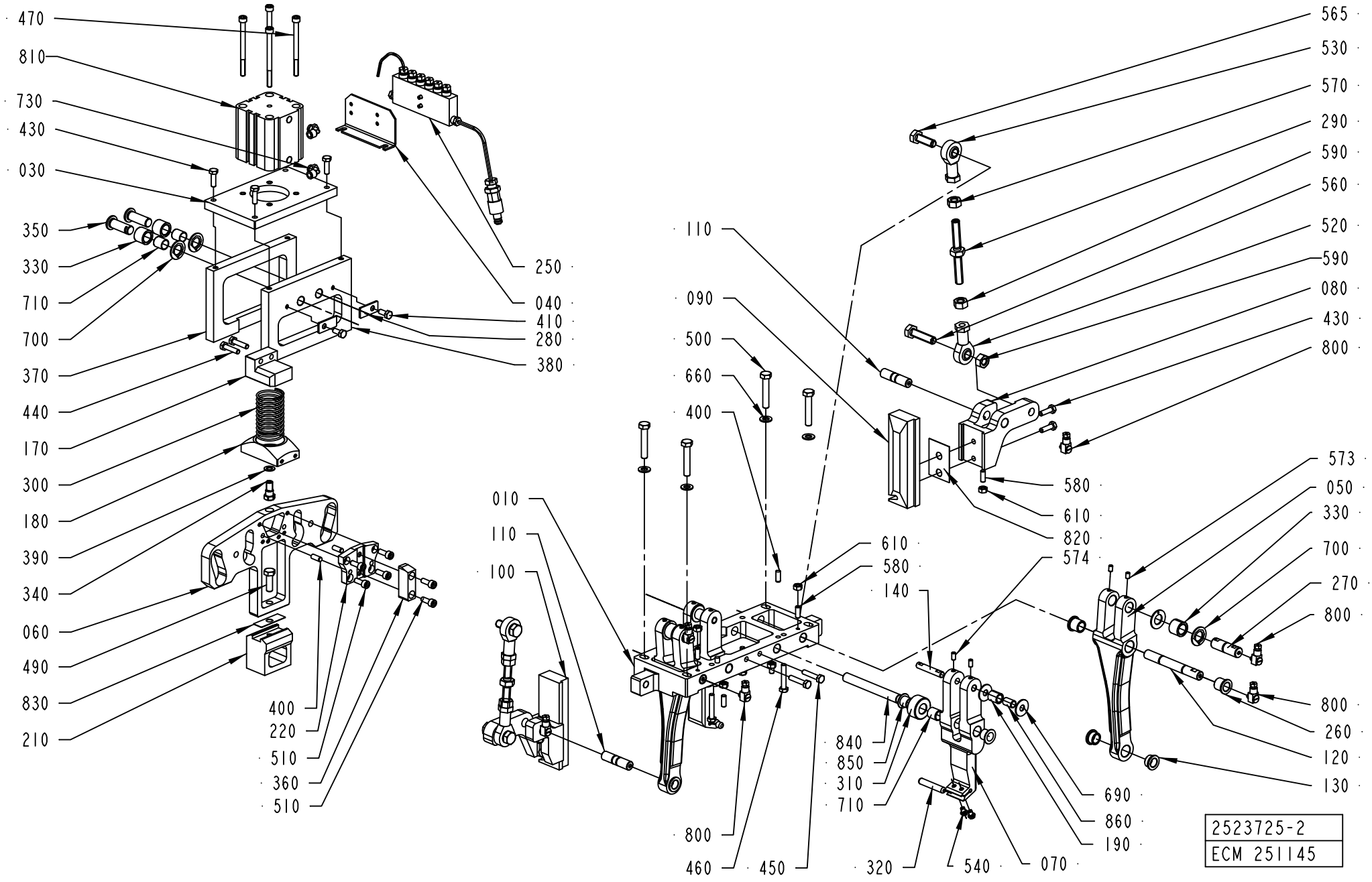

ECM: 290171 - 20070126
Group number: 2523725-0200
Assembly Drawing: 2523725-2_1_AC

This list covers pages from 5-6 to 5-9

Pos	Part No	UN	Qty	Description	Page No
TBA 0330S (Cont'd)					
100	2575625-0011		1	BLOCK	
210	2524579-0011		1	BLOCK	
430	312105-0370		8	SCREW M6S ISO 4017 M6X20 A480	
820	2527454-0000		6	SHIM	
Common Parts					
010	2606879-0000		1	PLATE	
030	2652212-0000		1	PLATE	
040	2576353-0000		1	SUPPORT	
050	2594658-0000		2	LEVER	
060	2552721-0000		1	CAM	
110	2523736-0000		2	SHAFT	
120	2523737-0000		2	SHAFT	
130	2523738-0000		4	BUSHING	
140	2594657-0000		2	AXLE PIN	
170	2552723-0000		1	SPRING BRACKET	
180	2552732-0000		1	SPRING BRACKET	
190	2576349-0000		2	ROLLER	
220	2552724-0000		1	SUPPORT	
250	2502424-0200		1	LUBRICATION	**5-11**
260	1144507-0000		4	BUSHING	
270	2594659-0000		2	AXLE PIN	
280	1144521-0000		2	CLAMP	
290	2606881-0000		2	ADJUSTING SCREW	
300	1195044-0000		1	SPRING	
310	2576346-0000		2	ROLLER	
320	1511021-0000		2	SHAFT	
330	2576350-0000		4	ROLLER	
340	2552722-0000		1	AXLE PIN	
350	2576351-0000		2	AXLE PIN	
360	2552726-0000		1	GUIDE	
370	2552727-0000		1	PLATE	
380	2576352-0000		1	PLATE	
390	2552731-0000		1	WASHER	
400	311103-0351		4	PARALLEL PIN ISO 2338 6M6X16 A1	
410	312105-0367		2	SCREW M6S ISO 4017 M6X14 A480	
440	312105-0372		2	SCREW M6S ISO 4017 M6X25 A480	
450	312105-0374		2	SCREW M6S ISO 4014 M6X30 A480	
460	312105-0376		4	SCREW M6S ISO 4014 M6X35 A480	
470	312115-0386		4	SCREW ISO4762 M6X80 A4 80	
490	312105-0453		1	SCREW M6S ISO 4017 M8X25 A480	
500	312105-0460		4	SCREW M6S ISO 4014 M8X45 A480	
510	312115-0368		6	SCREW ISO4762 M6X16 A4 80	
520	90115-0181		2	ROD END, ID=10 MM M10X1,5	
530	90115-0182		2	ROD END, ID=10 MM M10X1,5LH	
540	90459-6738		4	SCREW ISO 7380 88-MKT M5X10 A4	
560	312109-0499		2	SCREW M6S ISO 4017 M10X40 A480	
565	312105-0495		2	SCREW M6S ISO 4017 M10X30 A480	
570	312902-0320		2	NUT HEX. LEFT THREAD, M10 A280	
573	312318-0323		4	SCREW ISO4029 M5X8 A4	
574	312318-0325		4	SCREW ISO4029 M5X10 A4	
580	312318-0368		6	SCREW ISO4029 M6X16 A4	
590	312605-0320		4	HEXAGON NUT, M6M M10 A280	
610	312605-0316		6	HEXAGON NUT, M6M M6 A280	
660	315105-0165		4	WASHER BRB 8,4X16 RFR	
690	2652213-0000		4	THRUST WASHER	
700	321130-0200		6	THRUST WASHER, 14X26X1,5 MM	
710	321135-0183		4	BUSHING, 12X14X15 MM	
730	90458-2956		2	ELBOW PIPE JOINT, EXT.THREAD, D=6MM-G1/8	
800	90134-0058		6	CONNECTION	
810	90459-1845		1	DOUBLE ACTING, COMPACT, 50-30	
830	2530401-0000		3	SHIM	
840	2576347-0000		2	SHAFT	
850	90240-0262		4	FLANGE BUSHING, 12X14X12 MM	
860	90459-5626		2	BUSHING, 8X10X15 MM	

Machine Type | Group Description | Used-In | Group Number | Page No

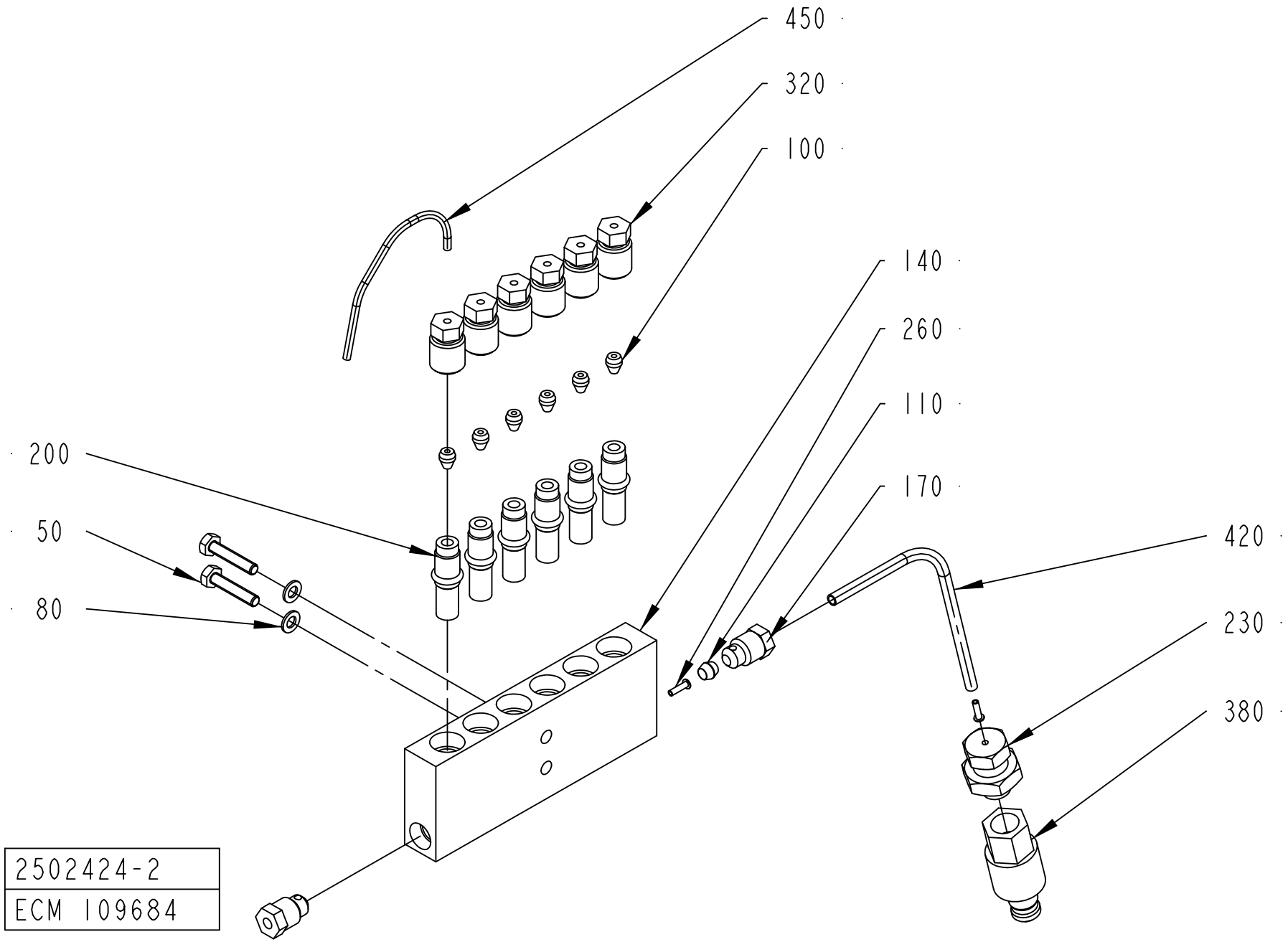
450
320
100
140
260
110
170
200
50
80
420
230
380
2502424-2
ECM 109684

ECM: 211573 - 20050621
Group number: 2502424-0200
Assembly Drawing: 2502424-2_1_AA

Pos	Part No	UN	Qty	Description	Page No
-					
050	312101-0295		2	SCREW M6S M4X20 FZB	
080	315105-0136		2	WASHER BRB 4,3X8 RFR	
100	90028-0020		6	CONE TUBE 2,5MM	
110	90028-0021		1	CONE TUBE 4 MM	
140	90032-0040		1	BLOCK 6 WAYS	
170	90087-0019		2	PLUG M10X1 STAINLESS	
200	90092-0052		6	METERING VALVE 10 MM3	
230	90134-0004		1	PIPE CONNECTION R1/8	
260	90134-0031		2	SLEEVE FOR PLASTIC TUBE	
320	90134-0039		6	BUSHING VALVE CONNECTION 2,5 MM	
380	90163-0048		1	NIPPLE LP-004-2-WR 510-23-1	
420	90166-0109	M	1	TUBE 4 MM PA,TRANSP.	
450	90166-0143	M	2	TUBE 2,5 MM PA,TRANSP.	

Pos	Part No	UN	Qty	Description	Page No

FLAP HEATER

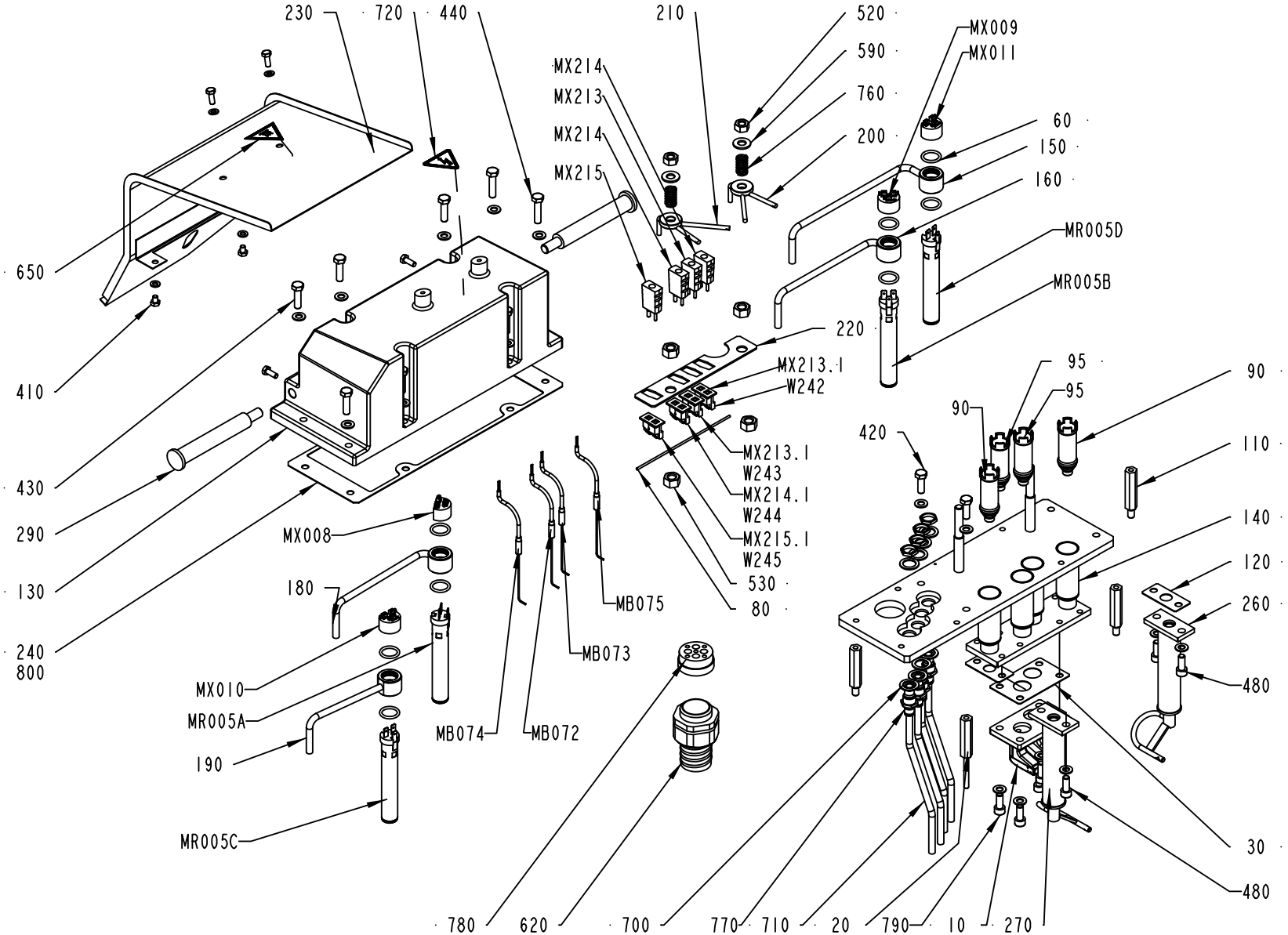

1539968-3
ECM 257878

ECM: 998197 - 20060928
Group number: 1539968-0200
Assembly Drawing: 1539968-3_1_AB

This list covers pages from 5-12 to 5-21

Pos	Part No	UN	Qty	Description	Page No
TBA 0100B (See drawing on pages: 5-12, 5-14, 5-16, 5-18, 5-20)					
010	2611151-0004		1	AIR NOZZLE	
015	2611190-0018		1	SPACER	
030	1539967-0000		4	GASKET	
060	927422-0001		8	O-RING 19.2X3 SILICONE	
090	1144122-0000		2	REDUCTION	
120	1296415-0000		2	GASKET	
140	1498217-0000		1	HEATING CHAMBER	
150	1498218-0000		1	PIPE	
190	1498221-0000		1	PIPE	
260	1519307-0000		1	AIR NOZZLE	
270	1519308-0000		1	AIR NOZZLE	
290	2528199-0000		2	HANDLE	
480	312115-0451		4	SCREW ISO4762 M8X20 A4 80	
770	90457-0141		4	BULKHEAD CONNECTOR, 8MM	
790	90287-0335		4	SCREW MC6S M8X90 A280	
MB074	90326-0080		1	THERMOCOUPLE, 5110080-000	
MB075	90326-0080		1	THERMOCOUPLE, 5110080-000	
MR005C	90459-1382		1	HEATING ELEMENT 1100W 220V	
MR005D	90459-1382		1	HEATING ELEMENT 1100W 220V	
MX010	1036443-0000		1	CONTACT UNIT	
MX011	1036443-0000		1	CONTACT UNIT	
MX212	90326-0022		1	PLUG, MALE YELLOW CR-AL	
MX212,1	90326-0077		1	CONTACT	
MX215	90326-0022		1	PLUG, MALE YELLOW CR-AL	
MX215,1	90326-0077		1	CONTACT	
W242	351120-0144	MM	2500	CABLE SILFLEX SIHF 3X1,5 0046014	
W245	351120-0144	MM	2500	CABLE SILFLEX SIHF 3X1,5 0046014	
TBA 0125S (See drawing on pages: 5-12, 5-14, 5-16, 5-18, 5-20)					
010	2611151-0004		1	AIR NOZZLE	
015	2611190-0019		1	SPACER	
030	1539967-0000		4	GASKET	
060	927422-0001		8	O-RING 19.2X3 SILICONE	
090	1144122-0000		2	REDUCTION	
120	1296415-0000		2	GASKET	
140	1498217-0000		1	HEATING CHAMBER	
150	1498218-0000		1	PIPE	
190	1498221-0000		1	PIPE	
260	1519307-0000		1	AIR NOZZLE	
270	1519308-0000		1	AIR NOZZLE	
290	2528199-0000		2	HANDLE	
480	312115-0451		4	SCREW ISO4762 M8X20 A4 80	
770	90457-0141		4	BULKHEAD CONNECTOR, 8MM	
790	312115-0465		4	SCREW ISO4762 M8X70 A4 80	
MB074	90326-0080		1	THERMOCOUPLE, 5110080-000	
MB075	90326-0080		1	THERMOCOUPLE, 5110080-000	
MR005C	90459-1382		1	HEATING ELEMENT 1100W 220V	
MR005D	90459-1382		1	HEATING ELEMENT 1100W 220V	
MX010	1036443-0000		1	CONTACT UNIT	
MX011	1036443-0000		1	CONTACT UNIT	
MX212	90326-0022		1	PLUG, MALE YELLOW CR-AL	
MX212,1	90326-0077		1	CONTACT	
MX215	90326-0022		1	PLUG, MALE YELLOW CR-AL	
MX215,1	90326-0077		1	CONTACT	
W242	351120-0144	MM	2500	CABLE SILFLEX SIHF 3X1,5 0046014	
W245	351120-0144	MM	2500	CABLE SILFLEX SIHF 3X1,5 0046014	
TBA 0160S (See drawing on pages: 5-12, 5-14, 5-16, 5-18, 5-20)					
010	2611151-0003		1	AIR NOZZLE	
015	2611190-0013		1	SPACER	
030	1539967-0000		4	GASKET	
060	927422-0001		8	O-RING 19.2X3 SILICONE	
090	1144122-0000		2	REDUCTION	
120	1296415-0000		2	GASKET	
140	1498217-0000		1	HEATING CHAMBER	
150	1498218-0000		1	PIPE	
190	1498221-0000		1	PIPE	
260	1519318-0000		1	AIR NOZZLE	
270	1519319-0000		1	AIR NOZZLE	
290	2528199-0000		2	HANDLE	
480	312115-0451		4	SCREW ISO4762 M8X20 A4 80	
770	90457-0141		4	BULKHEAD CONNECTOR, 8MM	
790	312115-0463		4	SCREW ISO4762 M8X60 A4 80	
MB074	90326-0080		1	THERMOCOUPLE, 5110080-000	
MB075	90326-0080		1	THERMOCOUPLE, 5110080-000	
MR005C	90459-1382		1	HEATING ELEMENT 1100W 220V	
MR005D	90459-1382		1	HEATING ELEMENT 1100W 220V	
MX010	1036443-0000		1	CONTACT UNIT	
MX011	1036443-0000		1	CONTACT UNIT	
MX212	90326-0022		1	PLUG, MALE YELLOW CR-AL	
MX212,1	90326-0077		1	CONTACT	
MX215	90326-0022		1	PLUG, MALE YELLOW CR-AL	
MX215,1	90326-0077		1	CONTACT	
W242	351120-0144	MM	2500	CABLE SILFLEX SIHF 3X1,5 0046014	
W245	351120-0144	MM	2500	CABLE SILFLEX SIHF 3X1,5 0046014	

Machine Type | Group Description | Used-In | Group Number | Page No

FLAP HEATER

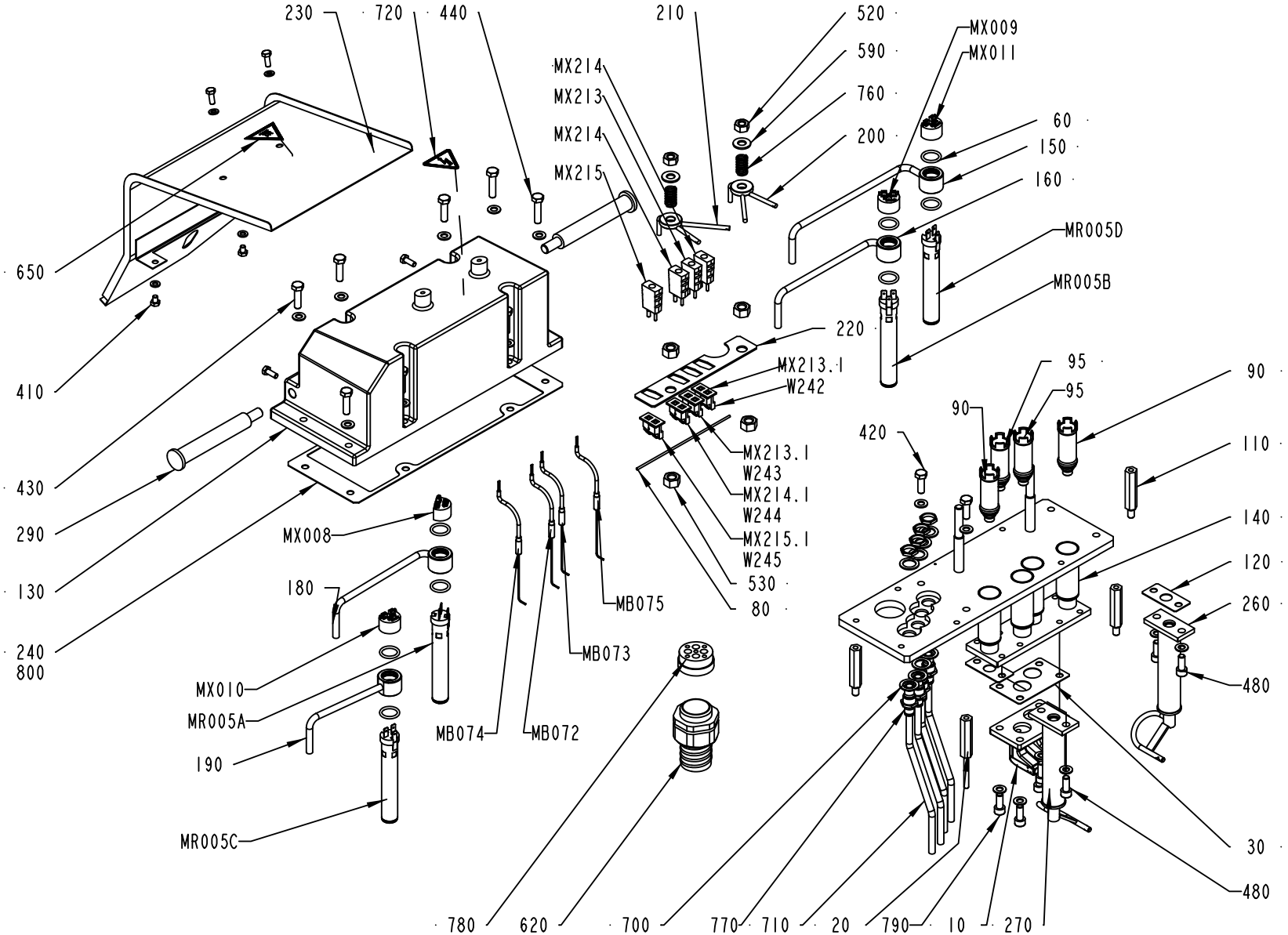

1539968-3
ECM 257878

Pos	Part No	UN	Qty	Description	Page No
TBA 0180B (Cont'd) (See drawing on pages: 5-12, 5-14, 5-16, 5-18, 5-20)					
010	2701083-0000		1	AIR NOZZLE	
015	2611190-0016		1	SPACER	
030	1539967-0000		4	GASKET	
060	927422-0001		8	O-RING 19.2X3 SILICONE	
090	1144122-0000		2	REDUCTION	
120	1296415-0000		2	GASKET	
140	1498217-0000		1	HEATING CHAMBER	
150	1498218-0000		1	PIPE	
190	1498221-0000		1	PIPE	
260	1519313-0000		1	AIR NOZZLE	
270	1519314-0000		1	AIR NOZZLE	
290	2528199-0000		2	HANDLE	
480	312115-0451		4	SCREW ISO4762 M8X20 A4 80	
770	90457-0141		4	BULKHEAD CONNECTOR, 8MM	
790	312115-0467		4	SCREW ISO4762 M8X80 A4 80	
MB074	90326-0080		1	THERMOCOUPLE, 5110080-000	
MB075	90326-0080		1	THERMOCOUPLE, 5110080-000	
MR005C	90459-1382		1	HEATING ELEMENT 1100W 220V	
MR005D	90459-1382		1	HEATING ELEMENT 1100W 220V	
MX010	1036443-0000		1	CONTACT UNIT	
MX011	1036443-0000		1	CONTACT UNIT	
MX212	90326-0022		1	PLUG, MALE YELLOW CR-AL	
MX212,1	90326-0077		1	CONTACT	
MX215	90326-0022		1	PLUG, MALE YELLOW CR-AL	
MX215,1	90326-0077		1	CONTACT	
W242	351120-0144	MM	2500	CABLE SILFLEX SIHF 3X1,5 0046014	
W245	351120-0144	MM	2500	CABLE SILFLEX SIHF 3X1,5 0046014	
TBA 0200B (See drawing on pages: 5-12, 5-14, 5-16, 5-18, 5-20)					
010	2701083-0000		1	AIR NOZZLE	
015	2611190-0015		1	SPACER	
030	1539967-0000		4	GASKET	
060	927422-0001		8	O-RING 19.2X3 SILICONE	
090	1144122-0000		2	REDUCTION	
120	1296415-0000		2	GASKET	
140	1498217-0000		1	HEATING CHAMBER	
150	1498218-0000		1	PIPE	
190	1498221-0000		1	PIPE	
260	1519313-0000		1	AIR NOZZLE	
270	1519314-0000		1	AIR NOZZLE	
290	2528199-0000		2	HANDLE	
480	312115-0451		4	SCREW ISO4762 M8X20 A4 80	
770	90457-0141		4	BULKHEAD CONNECTOR, 8MM	
790	312115-0467		4	SCREW ISO4762 M8X80 A4 80	
MB074	90326-0080		1	THERMOCOUPLE, 5110080-000	
MB075	90326-0080		1	THERMOCOUPLE, 5110080-000	
MR005C	90459-1382		1	HEATING ELEMENT 1100W 220V	
MR005D	90459-1382		1	HEATING ELEMENT 1100W 220V	
MX010	1036443-0000		1	CONTACT UNIT	
MX011	1036443-0000		1	CONTACT UNIT	
MX212	90326-0022		1	PLUG, MALE YELLOW CR-AL	
MX212,1	90326-0077		1	CONTACT	
MX215	90326-0022		1	PLUG, MALE YELLOW CR-AL	
MX215,1	90326-0077		1	CONTACT	
W242	351120-0144	MM	2500	CABLE SILFLEX SIHF 3X1,5 0046014	
W245	351120-0144	MM	2500	CABLE SILFLEX SIHF 3X1,5 0046014	
TBA 0200M (See drawing on pages: 5-12, 5-14, 5-16, 5-18, 5-20)					
010	2701082-0000		1	AIR NOZZLE	
015	2611190-0012		1	SPACER	
030	1539967-0000		4	GASKET	
060	927422-0001		8	O-RING 19.2X3 SILICONE	
090	1144122-0000		2	REDUCTION	
120	1296415-0000		2	GASKET	
140	1498217-0000		1	HEATING CHAMBER	
150	1498218-0000		1	PIPE	
190	1498221-0000		1	PIPE	
260	1517504-0000		1	AIR NOZZLE	
270	1517505-0000		1	AIR NOZZLE	
290	2528199-0000		2	HANDLE	
480	312115-0451		4	SCREW ISO4762 M8X20 A4 80	
770	90457-0141		4	BULKHEAD CONNECTOR, 8MM	
790	312115-0460		4	SCREW ISO4762 M8X45 A4 80	
MB074	90326-0080		1	THERMOCOUPLE, 5110080-000	
MB075	90326-0080		1	THERMOCOUPLE, 5110080-000	
MR005C	90459-1382		1	HEATING ELEMENT 1100W 220V	
MR005D	90459-1382		1	HEATING ELEMENT 1100W 220V	
MX010	1036443-0000		1	CONTACT UNIT	
MX011	1036443-0000		1	CONTACT UNIT	
MX212	90326-0022		1	PLUG, MALE YELLOW CR-AL	
MX212,1	90326-0077		1	CONTACT	
MX215	90326-0022		1	PLUG, MALE YELLOW CR-AL	
MX215,1	90326-0077		1	CONTACT	
W242	351120-0144	MM	2500	CABLE SILFLEX SIHF 3X1,5 0046014	
W245	351120-0144	MM	2500	CABLE SILFLEX SIHF 3X1,5 0046014	

FLAP HEATER

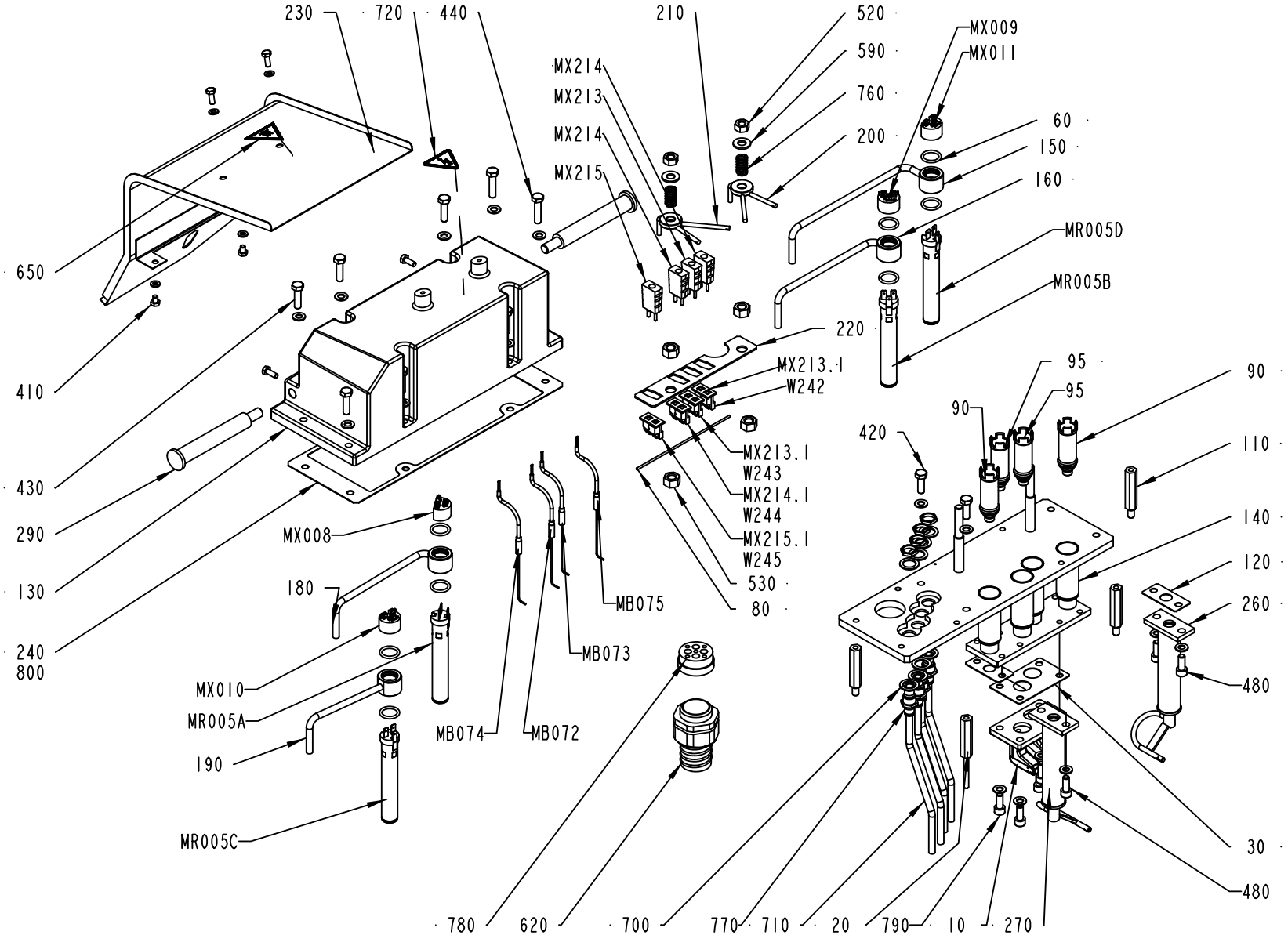

1539968-3
ECM 257878

ECM: 998197 - 20060928
Group number: 1539968-0200
Assembly Drawing: 1539968-3_1_AB

This list covers pages from 5-12 to 5-21

Pos	Part No	UN	Qty	Description	Page No
TBA 0200S (Cont'd) (See drawing on pages: 5-12, 5-14, 5-16, 5-18, 5-20)					
010	2611151-0003		1	AIR NOZZLE	
015	2611190-0017		1	SPACER	
030	1539967-0000		4	GASKET	
060	927422-0001		8	O-RING 19.2X3 SILICONE	
090	1144122-0000		2	REDUCTION	
120	1296415-0000		2	GASKET	
140	1498217-0000		1	HEATING CHAMBER	
150	1498218-0000		1	PIPE	
190	1498221-0000		1	PIPE	
260	1519318-0000		1	AIR NOZZLE	
270	1519319-0000		1	AIR NOZZLE	
290	2528199-0000		2	HANDLE	
480	312115-0451		4	SCREW ISO4762 M8X20 A4 80	
770	90457-0141		4	BULKHEAD CONNECTOR, 8MM	
790	312115-0457		4	SCREW ISO4762 M8X35 A4 80	
MB074	90326-0080		1	THERMOCOUPLE, 5110080-000	
MB075	90326-0080		1	THERMOCOUPLE, 5110080-000	
MR005C	90459-1382		1	HEATING ELEMENT 1100W 220V	
MR005D	90459-1382		1	HEATING ELEMENT 1100W 220V	
MX010	1036443-0000		1	CONTACT UNIT	
MX011	1036443-0000		1	CONTACT UNIT	
MX212	90326-0022		1	PLUG, MALE YELLOW CR-AL	
MX212,1	90326-0077		1	CONTACT	
MX215	90326-0022		1	PLUG, MALE YELLOW CR-AL	
MX215,1	90326-0077		1	CONTACT	
W242	351120-0144	MM	2500	CABLE SILFLEX SIHF 3X1,5 0046014	
W245	351120-0144	MM	2500	CABLE SILFLEX SIHF 3X1,5 0046014	
TBA 0250B (See drawing on pages: 5-12, 5-14, 5-16, 5-18, 5-20)					
010	2701083-0000		1	AIR NOZZLE	
015	2611190-0014		1	SPACER	
030	1539967-0000		4	GASKET	
060	927422-0001		8	O-RING 19.2X3 SILICONE	
090	1144122-0000		2	REDUCTION	
120	1296415-0000		2	GASKET	
140	1498217-0000		1	HEATING CHAMBER	
150	1498218-0000		1	PIPE	
190	1498221-0000		1	PIPE	
260	1519313-0000		1	AIR NOZZLE	
270	1519314-0000		1	AIR NOZZLE	
290	2528199-0000		2	HANDLE	
480	312115-0451		4	SCREW ISO4762 M8X20 A4 80	
770	90457-0141		4	BULKHEAD CONNECTOR, 8MM	
790	312115-0461		4	SCREW ISO4762 M8X50 A4 80	
MB074	90326-0080		1	THERMOCOUPLE, 5110080-000	
MB075	90326-0080		1	THERMOCOUPLE, 5110080-000	
MR005C	90459-1382		1	HEATING ELEMENT 1100W 220V	
MR005D	90459-1382		1	HEATING ELEMENT 1100W 220V	
MX010	1036443-0000		1	CONTACT UNIT	
MX011	1036443-0000		1	CONTACT UNIT	
MX212	90326-0022		1	PLUG, MALE YELLOW CR-AL	
MX212,1	90326-0077		1	CONTACT	
MX215	90326-0022		1	PLUG, MALE YELLOW CR-AL	
MX215,1	90326-0077		1	CONTACT	
W242	351120-0144	MM	2500	CABLE SILFLEX SIHF 3X1,5 0046014	
W245	351120-0144	MM	2500	CABLE SILFLEX SIHF 3X1,5 0046014	
TBA 0250S (See drawing on pages: 5-12, 5-14, 5-16, 5-18, 5-20)					
010	2701082-0000		1	AIR NOZZLE	
030	1539967-0000		3	GASKET	
060	927422-0001		8	O-RING 19.2X3 SILICONE	
090	1144122-0000		2	REDUCTION	
120	1296415-0000		2	GASKET	
140	1498217-0000		1	HEATING CHAMBER	
150	1498218-0000		1	PIPE	
190	1498221-0000		1	PIPE	
260	1517504-0000		1	AIR NOZZLE	
270	1517505-0000		1	AIR NOZZLE	
290	2528199-0000		2	HANDLE	
480	312115-0451		4	SCREW ISO4762 M8X20 A4 80	
770	90457-0141		4	BULKHEAD CONNECTOR, 8MM	
790	312115-0451		4	SCREW ISO4762 M8X20 A4 80	
MB074	90326-0080		1	THERMOCOUPLE, 5110080-000	
MB075	90326-0080		1	THERMOCOUPLE, 5110080-000	
MR005C	90459-1382		1	HEATING ELEMENT 1100W 220V	
MR005D	90459-1382		1	HEATING ELEMENT 1100W 220V	
MX010	1036443-0000		1	CONTACT UNIT	
MX011	1036443-0000		1	CONTACT UNIT	
MX212	90326-0022		1	PLUG, MALE YELLOW CR-AL	
MX212,1	90326-0077		1	CONTACT	
MX215	90326-0022		1	PLUG, MALE YELLOW CR-AL	
MX215,1	90326-0077		1	CONTACT	
W242	351120-0144	MM	2500	CABLE SILFLEX SIHF 3X1,5 0046014	
W245	351120-0144	MM	2500	CABLE SILFLEX SIHF 3X1,5 0046014	
TBA 0284B, TBA 0300S (See drawing on pages: 5-12, 5-14, 5-16, 5-18, 5-20)					

Machine Type | Group Description | Used-In | Group Number | Page No

FLAP HEATER

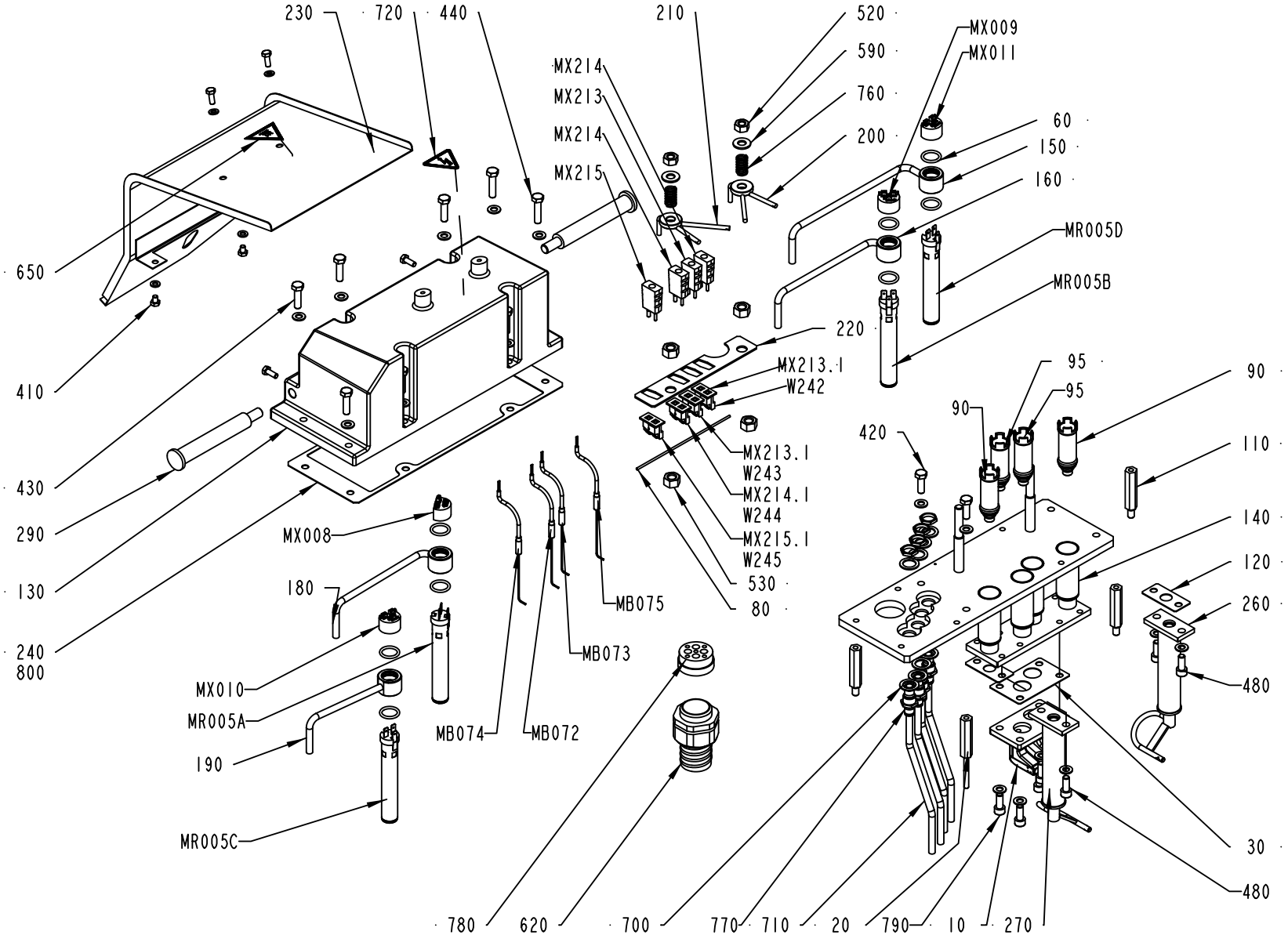

1539968-3
ECM 257878

ECM: 998197 - 20060928
Group number: 1539968-0200
Assembly Drawing: 1539968-3_1_AB

This list covers pages from 5-12 to 5-21

Pos	Part No	UN	Qty	Description	Page No
TBA 0284B, TBA 0300S (Cont'd) (See drawing on pages: 5-12, 5-14, 5-16, 5-18, 5-20)					
010	2701083-0000		1	AIR NOZZLE	
015	2611190-0011		1	SPACER	
030	1539967-0000		4	GASKET	
060	927422-0001		8	O-RING 19.2X3 SILICONE	
090	1144122-0000		2	REDUCTION	
120	1296415-0000		2	GASKET	
140	1498217-0000		1	HEATING CHAMBER	
150	1498218-0000		1	PIPE	
190	1498221-0000		1	PIPE	
260	1519313-0000		1	AIR NOZZLE	
270	1519314-0000		1	AIR NOZZLE	
290	2528199-0000		2	HANDLE	
480	312115-0451		4	SCREW ISO4762 M8X20 A4 80	
770	90457-0141		4	BULKHEAD CONNECTOR, 8MM	
790	312115-0459		4	SCREW ISO4762 M8X40 A4 80	
MB074	90326-0080		1	THERMOCOUPLE, 5110080-000	
MB075	90326-0080		1	THERMOCOUPLE, 5110080-000	
MR005C	90459-1382		1	HEATING ELEMENT 1100W 220V	
MR005D	90459-1382		1	HEATING ELEMENT 1100W 220V	
MX010	1036443-0000		1	CONTACT UNIT	
MX011	1036443-0000		1	CONTACT UNIT	
MX212	90326-0022		1	PLUG, MALE YELLOW CR-AL	
MX212,1	90326-0077		1	CONTACT	
MX215	90326-0022		1	PLUG, MALE YELLOW CR-AL	
MX215,1	90326-0077		1	CONTACT	
W242	351120-0144	MM	2500	CABLE SILFLEX SIHF 3X1,5 0046014	
W245	351120-0144	MM	2500	CABLE SILFLEX SIHF 3X1,5 0046014	
TBA 0330S (See drawing on pages: 5-12, 5-14, 5-16, 5-18, 5-20)					
010	2701083-0000		1	AIR NOZZLE	
030	1539967-0000		3	GASKET	
060	927422-0001		8	O-RING 19.2X3 SILICONE	
090	1144122-0000		2	REDUCTION	
120	1296415-0000		2	GASKET	
140	1498217-0000		1	HEATING CHAMBER	
150	1498218-0000		1	PIPE	
190	1498221-0000		1	PIPE	
260	1519313-0000		1	AIR NOZZLE	
270	1519314-0000		1	AIR NOZZLE	
290	2528199-0000		2	HANDLE	
480	312115-0451		4	SCREW ISO4762 M8X20 A4 80	
770	90457-0141		4	BULKHEAD CONNECTOR, 8MM	
790	312115-0451		4	SCREW ISO4762 M8X20 A4 80	
MB074	90326-0080		1	THERMOCOUPLE, 5110080-000	
MB075	90326-0080		1	THERMOCOUPLE, 5110080-000	
MR005C	90459-1382		1	HEATING ELEMENT 1100W 220V	
MR005D	90459-1382		1	HEATING ELEMENT 1100W 220V	
MX010	1036443-0000		1	CONTACT UNIT	
MX011	1036443-0000		1	CONTACT UNIT	
MX212	90326-0022		1	PLUG, MALE YELLOW CR-AL	
MX212,1	90326-0077		1	CONTACT	
MX215	90326-0022		1	PLUG, MALE YELLOW CR-AL	
MX215,1	90326-0077		1	CONTACT	
W242	351120-0144	MM	2500	CABLE SILFLEX SIHF 3X1,5 0046014	
W245	351120-0144	MM	2500	CABLE SILFLEX SIHF 3X1,5 0046014	
Common Parts					
020	1539966-0000		1	BRACKET	
080	1144059-0000		1	WIRE	
095	2552081-0000		2	REDUCTION	
110	1279702-0000		3	BRACKET	
130	1498216-0000		1	LID	
160	1498219-0000		1	PIPE	
180	1498220-0000		1	PIPE	
200	1498222-0000		1	PLATE	
210	1498223-0000		1	PLATE	
220	1498224-0000		1	PLATE	
230	2814873-0000		1	PLATE	
240	1498233-0000		1	GASKET	
400	312105-0368		2	SCREW M6S ISO 4017 M6X16 A480	
410	312105-0362		2	SCREW M6S ISO 4017 M6X8 A480	
420	312105-0453		2	SCREW M6S ISO 4017 M8X25 A480	
430	312105-0455		6	SCREW M6S ISO 4017 M8X30 A480	
440	312109-0457		2	SCREW M6S ISO 4017 M8X35 A480	
520	312605-0320		2	HEXAGON NUT, M6M M10 A280	
530	312605-0322		4	HEXAGON NUT, M6M M12 A280	
570	315105-0153		4	WASHER BRB 6,4X12 RFR	
580	315105-0165		17	WASHER BRB 8,4X16 RFR	
590	315105-0173		2	WASHER BRB 10,5X22 RFR	
620	90458-0459		1	HOSE GLAND W/O INSERT M40 EXTENDED	
650	359705-0007		1	WARNING SIGN ISO, HOT SURFACE	
700	2552073-0000		8	SEAL	
710	315400-0004	M	2	TUBE PUN-H-8X1,25-BL	
720	359705-0015		1	WARNING SIGN ISO, RISK OF ELECTRIC SHOCK	
760	90335-0036		2	COMP. SPRING 22450, 1,6X14,1X24	

FLAP HEATER

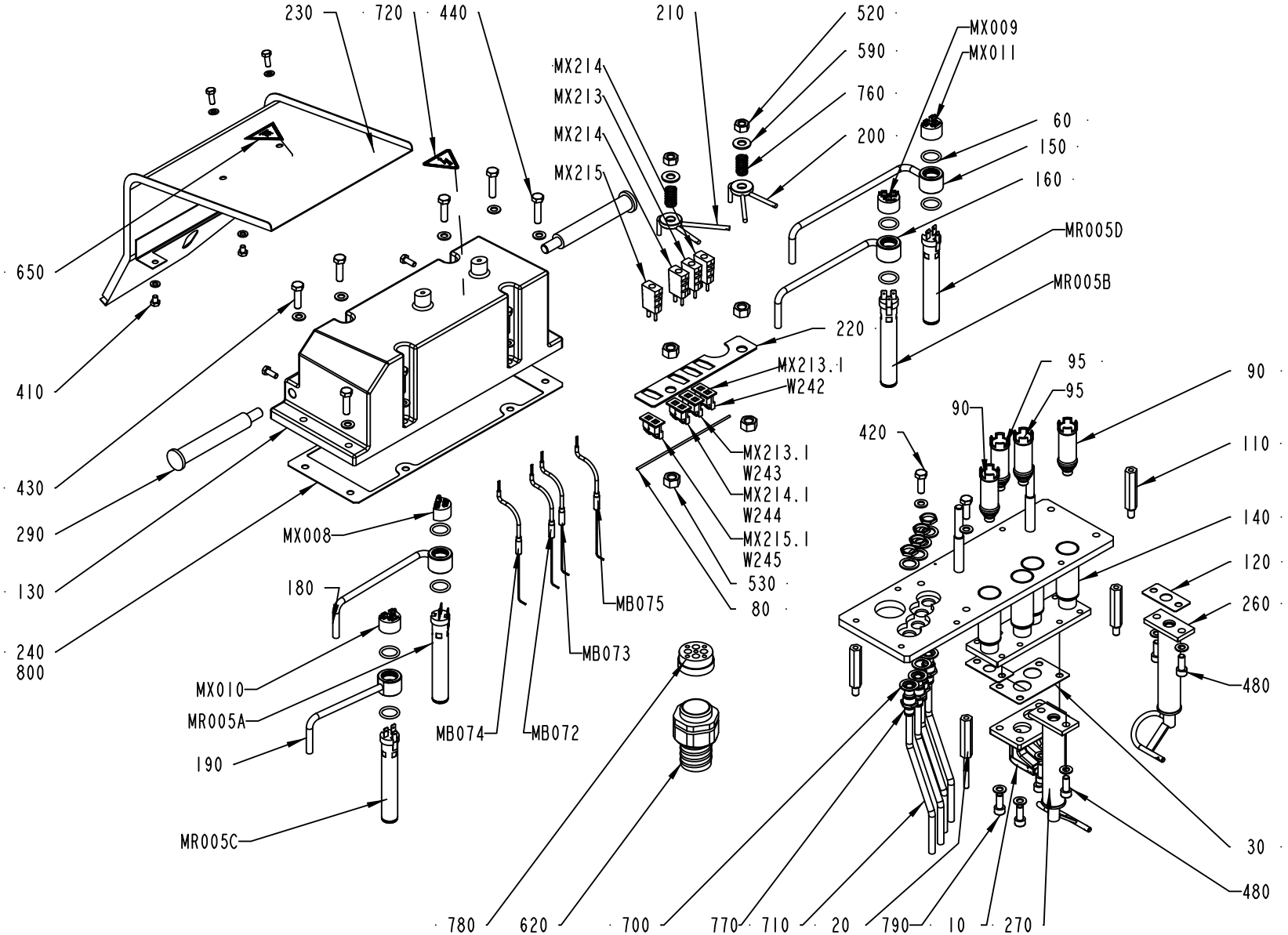

1539968-3
ECM 257878

Pos	Part No	UN	Qty	Description	Page No
Common Parts (Cont'd)					
780	90457-0199		1	INSERT EK 156M 5X5/4X9	
800	90153-0023		1	ADHESIVE, SILICON 251470 TUB 90CC	
MB072	90326-0080		1	THERMOCOUPLE, 5110080-000	
MB073	90326-0080		1	THERMOCOUPLE, 5110080-000	
MR005A	90459-1382		1	HEATING ELEMENT 1100W 220V	
MR005B	90459-1382		1	HEATING ELEMENT 1100W 220V	
MX008	1036443-0000		1	CONTACT UNIT	
MX009	1036443-0000		1	CONTACT UNIT	
MX213	90326-0022		1	PLUG, MALE YELLOW CR-AL	
MX213,1	90326-0077		1	CONTACT	
MX214	90326-0022		1	PLUG, MALE YELLOW CR-AL	
MX214,1	90326-0077		1	CONTACT	
W238	90220-0034	MM	2500	THERMOCABLE TEX/SITW-20F-KX 2X0,5MM2	
W239	90220-0034	MM	2500	THERMOCABLE TEX/SITW-20F-KX 2X0,5MM2	
W240	90220-0034	MM	2500	THERMOCABLE TEX/SITW-20F-KX 2X0,5MM2	
W241	90220-0034	MM	2500	THERMOCABLE TEX/SITW-20F-KX 2X0,5MM2	
W243	351120-0144	MM	2500	CABLE SILFLEX SIHF 3X1,5 0046014	
W244	351120-0144	MM	2500	CABLE SILFLEX SIHF 3X1,5 0046014	

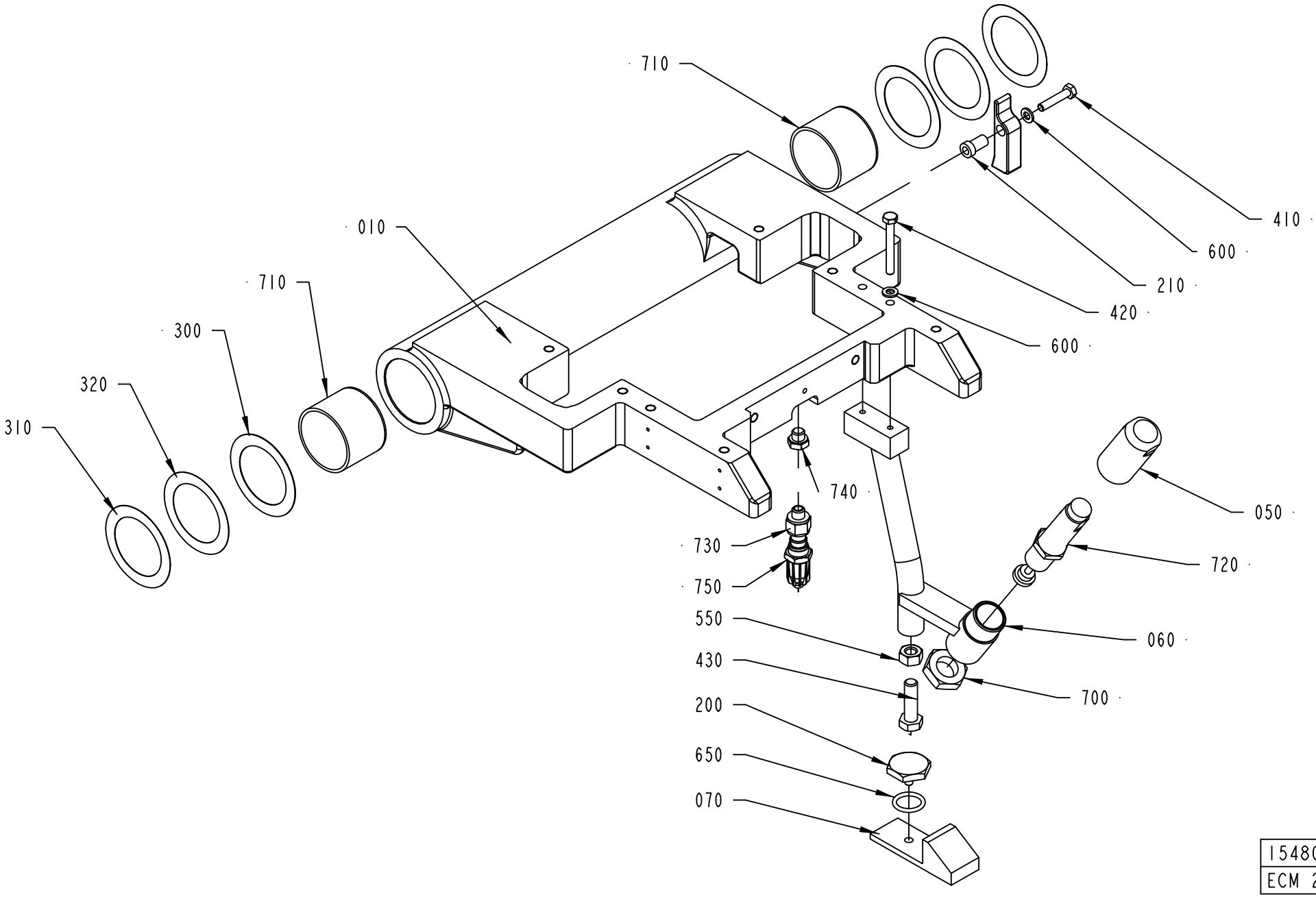

1548000-3
ECM 254643

ECM: 256754 - 20060303
Group number: 1548000-0200
Assembly Drawing: 1548000-3_1_AA

Pos	Part No	UN	Qty	Description	Page No
TBA 0100B, TBA 0180B, TBA 0125S, TBA 0160S, TBA 0200M, TBA 0200B, TBA 0200S, TBA 0284B, TBA 0250B					
010	2814875-0000		1	PIVOT ARM	
740	90330-0066		1	PLUG, EXT. G-THREAD, G1/8	
TBA 0250S, TBA 0300S, TBA 0330S					
010	2814875-0000		1	PIVOT ARM	
730	90030-0116		1	NIPPLES, REDUCING, EXT. THR. NO. 2520	
750	90424-0068		1	AIR NOZZLE, G1/4, MOD. 216 BSP	
Common Parts					
050	1512128-0000		1	PLUG	
060	1512129-0000		1	BRACKET	
070	1512133-0000		1	STOP	
200	272997-0000		1	STOPPER	
210	295205-0000		1	SPACER SLEEVE	
220	295206-0000		1	FLAP	
300	295204-0001		2	SHIM	
310	295204-0002		2	SHIM	
320	295204-0003		2	SHIM	
410	312105-0374		1	SCREW M6S ISO 4014 M6X30 A480	
420	312105-0380		1	SCREW M6S ISO 4014 M6X50 A480	
430	312105-0497		1	SCREW M6S ISO 4017 M10X35 A480	
550	312605-0320		1	HEXAGON NUT, M6M M10 A280	
600	315105-0153		2	WASHER BRB 6,4X12 RFR	
650	315202-0215		1	O-RING 19,2X3 MM	
700	90099-0057		1	NUT HEX. M20X1,5	
710	90240-0094		2	BEARING BUSHING W/O FL, 50X55X40 MM	
720	90347-0189		1	SHOCK ABSORBER, 370-050-400	

Pos	Part No	UN	Qty	Description	Page No

FOLDING BAR

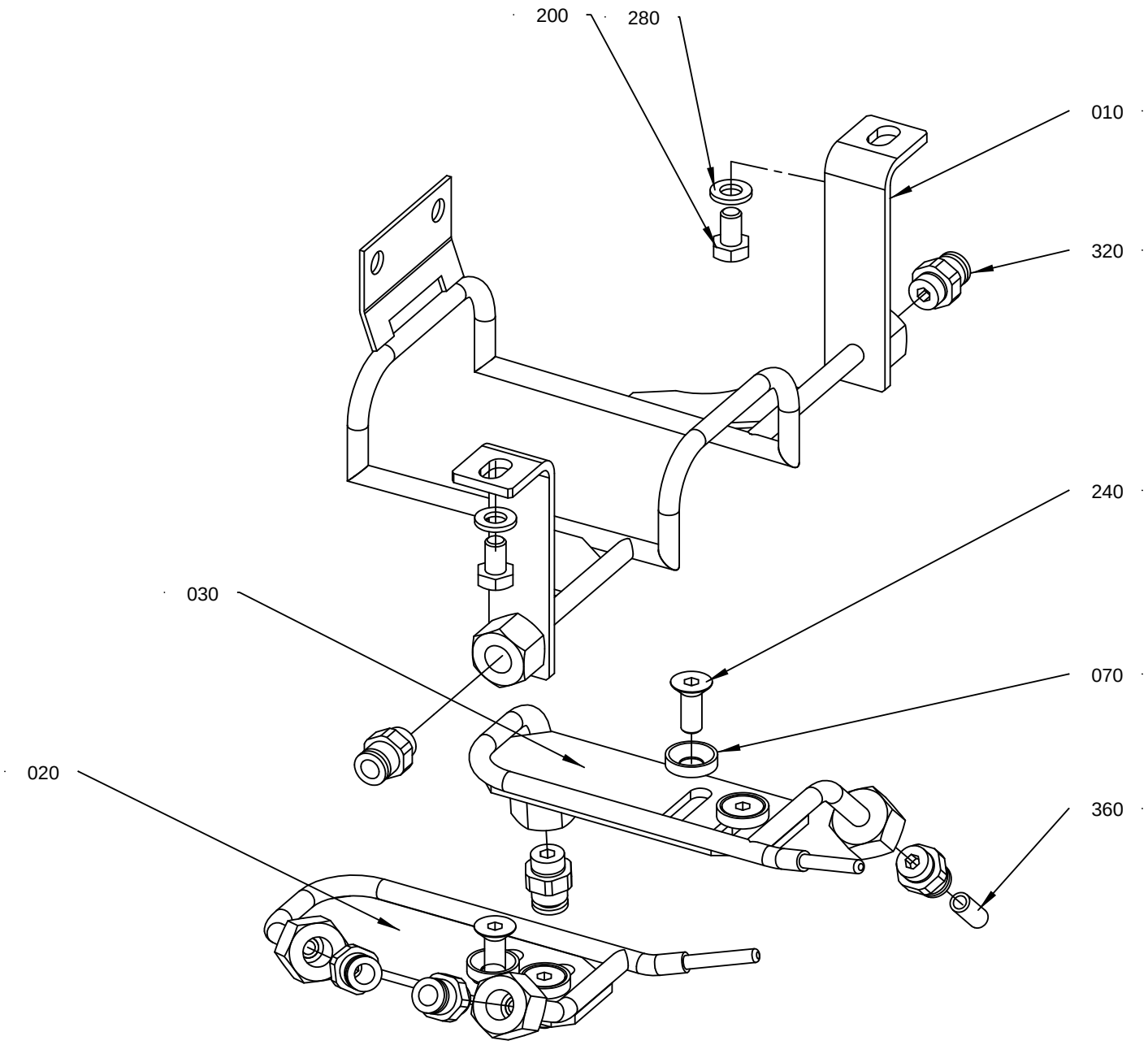

1539970-3
25114 5

ECM: 259607 - 20060413
Group number: 1539970-0200
Assembly Drawing: 1539970-3_1_AA

This list covers pages from 5-24 to 5-27

Pos	Part No	UN	Qty	Description	Page No
TBA 0100B					
010	2814883-0000		1	PIPE	
020	2776744-0000		1	SIDE PIPE	
030	2776743-0000		1	SIDE PIPE	
070	1317228-0000		4	WASHER	
240	312155-0368		4	SCREW DIN 7991 MF6S M6X16 A4 70	
320	342722-0202		6	PIPE COUPLING 1/8" D=6MM	
360	90166-0108	MM	3500	TUBE 6 MM PA,TRANSP.	
TBA 0125S					
010	2764346-0000		1	PIPE	
020	2776744-0000		1	SIDE PIPE	
030	2776743-0000		1	SIDE PIPE	
070	1317228-0000		4	WASHER	
240	312155-0368		4	SCREW DIN 7991 MF6S M6X16 A4 70	
320	342722-0202		6	PIPE COUPLING 1/8" D=6MM	
360	90166-0108	MM	3500	TUBE 6 MM PA,TRANSP.	
TBA 0160S					
010	2830507-0000		1	PIPE	
020	2776744-0000		1	SIDE PIPE	
030	2776743-0000		1	SIDE PIPE	
070	1317228-0000		4	WASHER	
240	312155-0368		4	SCREW DIN 7991 MF6S M6X16 A4 70	
320	342722-0202		6	PIPE COUPLING 1/8" D=6MM	
360	90166-0108	MM	3500	TUBE 6 MM PA,TRANSP.	
TBA 0180B					
010	2830503-0000		1	PIPE	
020	2776744-0000		1	SIDE PIPE	
030	2776743-0000		1	SIDE PIPE	
070	1317228-0000		4	WASHER	
240	312155-0368		4	SCREW DIN 7991 MF6S M6X16 A4 70	
320	342722-0202		6	PIPE COUPLING 1/8" D=6MM	
360	90166-0108	MM	3500	TUBE 6 MM PA,TRANSP.	
TBA 0200B					
010	2776732-0000		1	PIPE	
020	2776744-0000		1	SIDE PIPE	
030	2776743-0000		1	SIDE PIPE	
070	1317228-0000		4	WASHER	
240	312155-0368		4	SCREW DIN 7991 MF6S M6X16 A4 70	
320	342722-0202		6	PIPE COUPLING 1/8" D=6MM	
360	90166-0108	MM	3500	TUBE 6 MM PA,TRANSP.	
TBA 0200M					
010	2830499-0000		1	PIPE	
020	2776744-0000		1	SIDE PIPE	
030	2776743-0000		1	SIDE PIPE	
070	1317228-0000		4	WASHER	
240	312155-0368		4	SCREW DIN 7991 MF6S M6X16 A4 70	
320	342722-0202		6	PIPE COUPLING 1/8" D=6MM	
360	90166-0108	MM	3500	TUBE 6 MM PA,TRANSP.	
TBA 0200S					
010	2776738-0000		1	PIPE	
020	2776744-0000		1	SIDE PIPE	
030	2776743-0000		1	SIDE PIPE	
070	1317228-0000		4	WASHER	
240	312155-0368		4	SCREW DIN 7991 MF6S M6X16 A4 70	
320	342722-0202		6	PIPE COUPLING 1/8" D=6MM	
360	90166-0108	MM	3500	TUBE 6 MM PA,TRANSP.	
TBA 0250B					
010	2751445-0000		1	PIPE	
020	2776744-0000		1	SIDE PIPE	
030	2776743-0000		1	SIDE PIPE	
070	1317228-0000		4	WASHER	
240	312155-0368		4	SCREW DIN 7991 MF6S M6X16 A4 70	
320	342722-0202		6	PIPE COUPLING 1/8" D=6MM	
360	90166-0108	MM	3500	TUBE 6 MM PA,TRANSP.	
TBA 0250S					
010	2800348-0000		1	PIPE	
020	2776744-0000		1	SIDE PIPE	
030	2776743-0000		1	SIDE PIPE	
070	1317228-0000		4	WASHER	
240	312155-0368		4	SCREW DIN 7991 MF6S M6X16 A4 70	
320	342722-0202		6	PIPE COUPLING 1/8" D=6MM	
360	90166-0108	MM	3500	TUBE 6 MM PA,TRANSP.	
TBA 0284B, TBA 0300S					
010	2814879-0000		1	PIPE	
020	2776744-0000		1	SIDE PIPE	
030	2776743-0000		1	SIDE PIPE	
070	1317228-0000		4	WASHER	
240	312155-0368		4	SCREW DIN 7991 MF6S M6X16 A4 70	
320	342722-0202		6	PIPE COUPLING 1/8" D=6MM	
360	90166-0108	MM	3500	TUBE 6 MM PA,TRANSP.	
TBA 0330S					
010	2814890-0000		1	PIPE	
020	2776744-0000		1	SIDE PIPE	
030	2776743-0000		1	SIDE PIPE	

Machine Type | Group Description | Used-In | Group Number | Page No

FOLDING BAR

Drawing file: 1539970-3_1_AA.hpgl

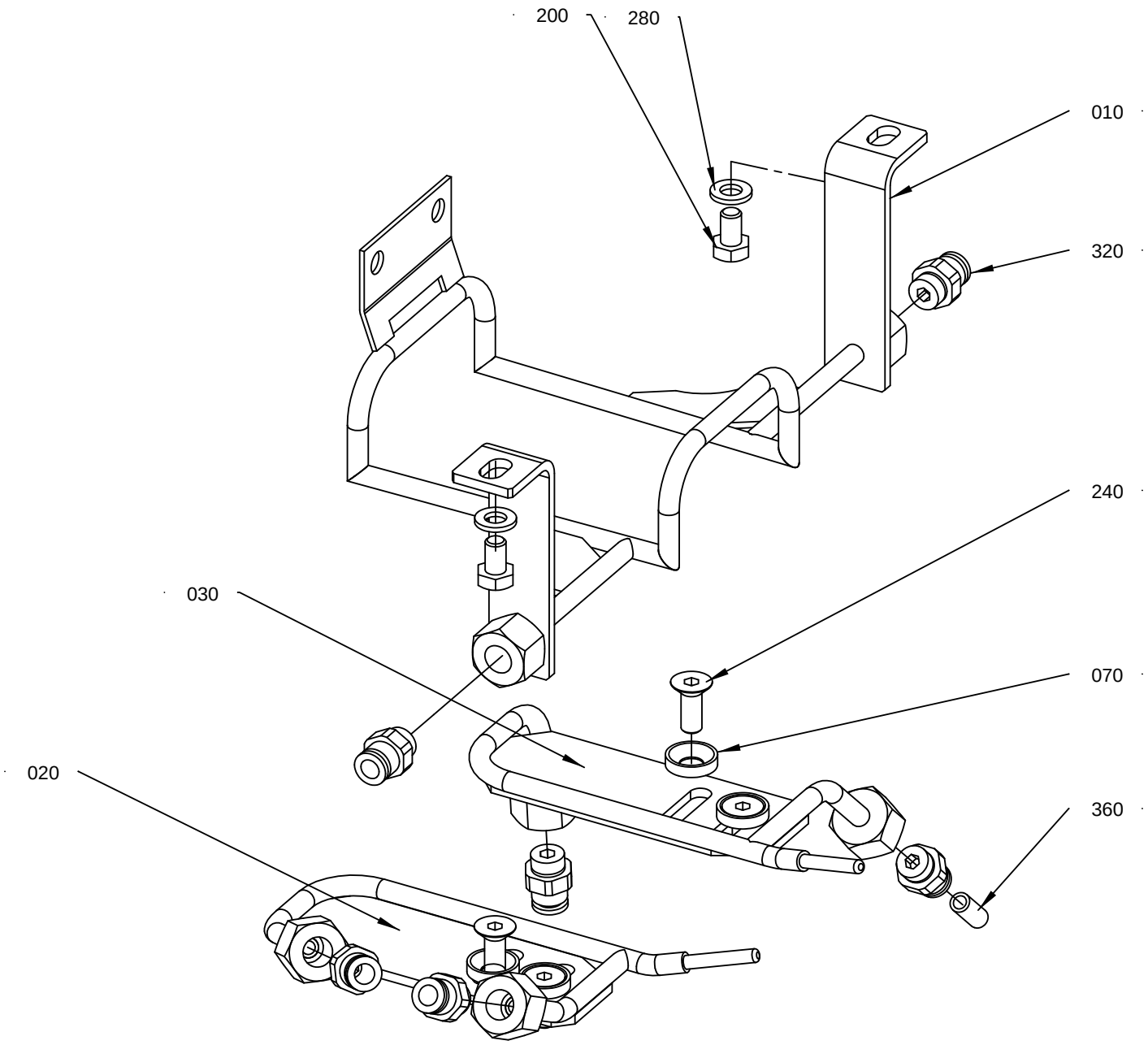

1539970-3
25114 5

ECM: 259607 - 20060413
Group number: 1539970-0200
Assembly Drawing: 1539970-3_1_AA

This list covers pages from 5-24 to 5-27

Pos	Part No	UN	Qty	Description	Page No
TBA 0330S (Cont'd)					
070	1317228-0000		4	WASHER	
240	312155-0368		4	SCREW DIN 7991 MF6S M6X16 A4 70	
320	342722-0202		6	PIPE COUPLING 1/8" D=6MM	
360	90166-0108	MM	3500	TUBE 6 MM PA,TRANSP.	
Common Parts					
200	312105-0364		2	SCREW M6S ISO 4017 M6X10 A480	
280	315105-0153		2	WASHER BRB 6,4X12 RFR	
320	342722-0202		2	PIPE COUPLING 1/8" D=6MM	

Pos	Part No	UN	Qty	Description	Page No

PULL-DOWN DEVICE

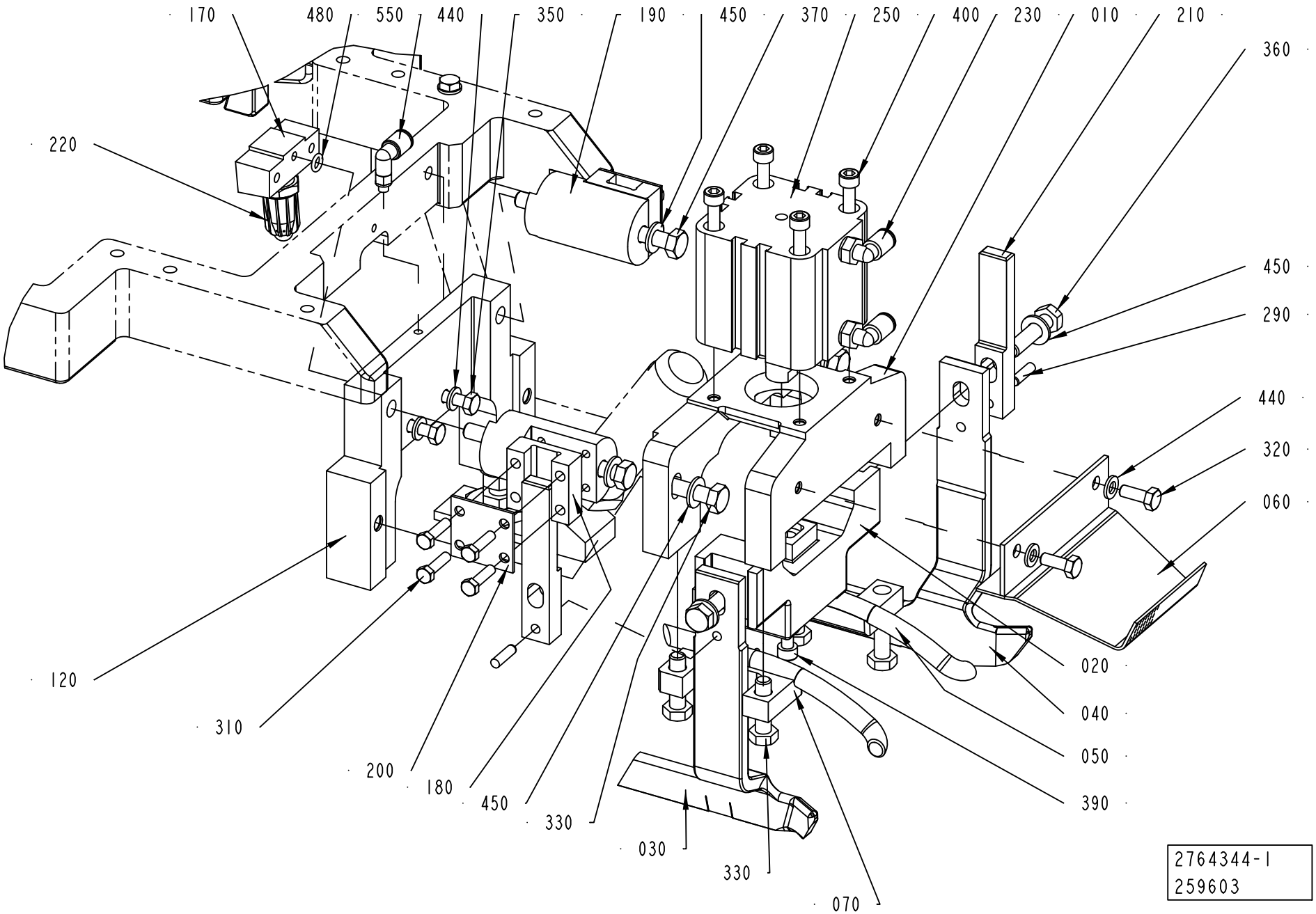

ECM: 259606 - 20060413
Group number: 2764344-0100
Assembly Drawing: 2764344-1_1_AB

This list covers pages from 5-28 to 5-33

Pos	Part No	UN	Qty	Description	Page No
0100B (See drawing on page: 5-30)					
020	2764345-0000		1	BLOCKING PIECE	
030	2814881-0000		1	ARM	
040	2814882-0000		1	ARM	
050	979737-0000		1	RAIL LEFT	
060	271939-0003		1	SLIDE SHEET	
070	979738-0000		1	RAIL RIGHT	
120	2814880-0000		1	FASTENING PLATE	
170	2764343-0000		1	AIR CONNECTION	
205	2776727-0000		2	SPACER	
220	90424-0068		1	AIR NOZZLE, G1/4, MOD. 216 BSP	
290	311103-0313		2	PARALLEL PIN ISO 2338 5M6X28 A1	
350	312105-0370		2	SCREW M6S ISO 4017 M6X20 A480	
360	312105-0459		2	SCREW M6S ISO 4014 M8X40 A480	
370	312105-0464		2	SCREW M6S ISO 4014 M8X65 A480	
410	312115-0453		2	SCREW ISO4762 M8X25 A4 80	
0125S (See drawing on page: 5-30)					
020	2764345-0000		1	BLOCKING PIECE	
030	2764347-0000		1	ARM	
040	2764348-0000		1	ARM	
050	295059-0000		1	RAIL LEFT	
060	271939-0001		1	SLIDE SHEET	
070	295060-0000		1	RAIL	
120	2764349-0000		1	FASTENING PLATE	
170	2764343-0000		1	AIR CONNECTION	
205	2776727-0000		2	SPACER	
220	90424-0068		1	AIR NOZZLE, G1/4, MOD. 216 BSP	
290	311103-0313		2	PARALLEL PIN ISO 2338 5M6X28 A1	
350	312105-0370		2	SCREW M6S ISO 4017 M6X20 A480	
360	312105-0459		2	SCREW M6S ISO 4014 M8X40 A480	
370	312105-0464		2	SCREW M6S ISO 4014 M8X65 A480	
410	312115-0453		2	SCREW ISO4762 M8X25 A4 80	
0160S (See drawing on page: 5-30)					
020	2776733-0000		1	BLOCKING PIECE	
030	2830506-0000		1	ARM	
040	2830505-0000		1	ARM	
050	295059-0000		1	RAIL LEFT	
060	271939-0001		1	SLIDE SHEET	
070	295060-0000		1	RAIL	
120	2830504-0000		1	FASTENING PLATE	
170	2764343-0000		1	AIR CONNECTION	
205	2776727-0000		2	SPACER	
220	90424-0068		1	AIR NOZZLE, G1/4, MOD. 216 BSP	
290	311103-0313		2	PARALLEL PIN ISO 2338 5M6X28 A1	
350	312105-0370		2	SCREW M6S ISO 4017 M6X20 A480	
360	312105-0459		2	SCREW M6S ISO 4014 M8X40 A480	
370	312105-0464		2	SCREW M6S ISO 4014 M8X65 A480	
410	312115-0453		2	SCREW ISO4762 M8X25 A4 80	
0180B (See drawing on page: 5-30)					
020	2751448-0000		1	BLOCKING PIECE	
030	2830502-0000		1	ARM	
040	2830501-0000		1	ARM	
050	295057-0003		1	RAIL	
060	272045-0004		1	SLIDE SHEET	
070	295058-0003		1	RAIL	
120	2830500-0000		1	FASTENING PLATE	
170	2764343-0000		1	AIR CONNECTION	
220	90424-0068		1	AIR NOZZLE, G1/4, MOD. 216 BSP	
290	311103-0309		2	PARALLEL PIN ISO 2338 5M6X18 A1	
350	312105-0370		2	SCREW M6S ISO 4017 M6X20 A480	
360	312105-0457		2	SCREW M6S ISO 4014 M8X35 A480	
370	312105-0464		2	SCREW M6S ISO 4014 M8X65 A480	
410	312115-0453		2	SCREW ISO4762 M8X25 A4 80	
0200B (See drawing on page: 5-30)					
020	2751448-0000		1	BLOCKING PIECE	
030	2776729-0000		1	ARM	
040	2776730-0000		1	ARM	
050	295057-0002		1	RAIL	
060	272045-0003		1	SLIDE SHEET	
070	295058-0002		1	RAIL	
120	2776731-0000		1	FASTENING PLATE	
170	2764343-0000		1	AIR CONNECTION	
220	90424-0068		1	AIR NOZZLE, G1/4, MOD. 216 BSP	
290	311103-0309		2	PARALLEL PIN ISO 2338 5M6X18 A1	
350	312105-0370		2	SCREW M6S ISO 4017 M6X20 A480	
360	312105-0457		2	SCREW M6S ISO 4014 M8X35 A480	
370	312105-0464		2	SCREW M6S ISO 4014 M8X65 A480	
410	312115-0453		2	SCREW ISO4762 M8X25 A4 80	
0200M (See drawing on page: 5-28)					
020	2800344-0000		1	BLOCKING PIECE	
030	2814892-0000		1	ARM	
040	2814891-0000		1	ARM	
050	979864-0000		1	RAIL LEFT	
060	2776734-0000		1	SLIDE SHEET	

Machine Type | Group Description | Used-In | Group Number | Page No

PULL-DOWN DEVICE

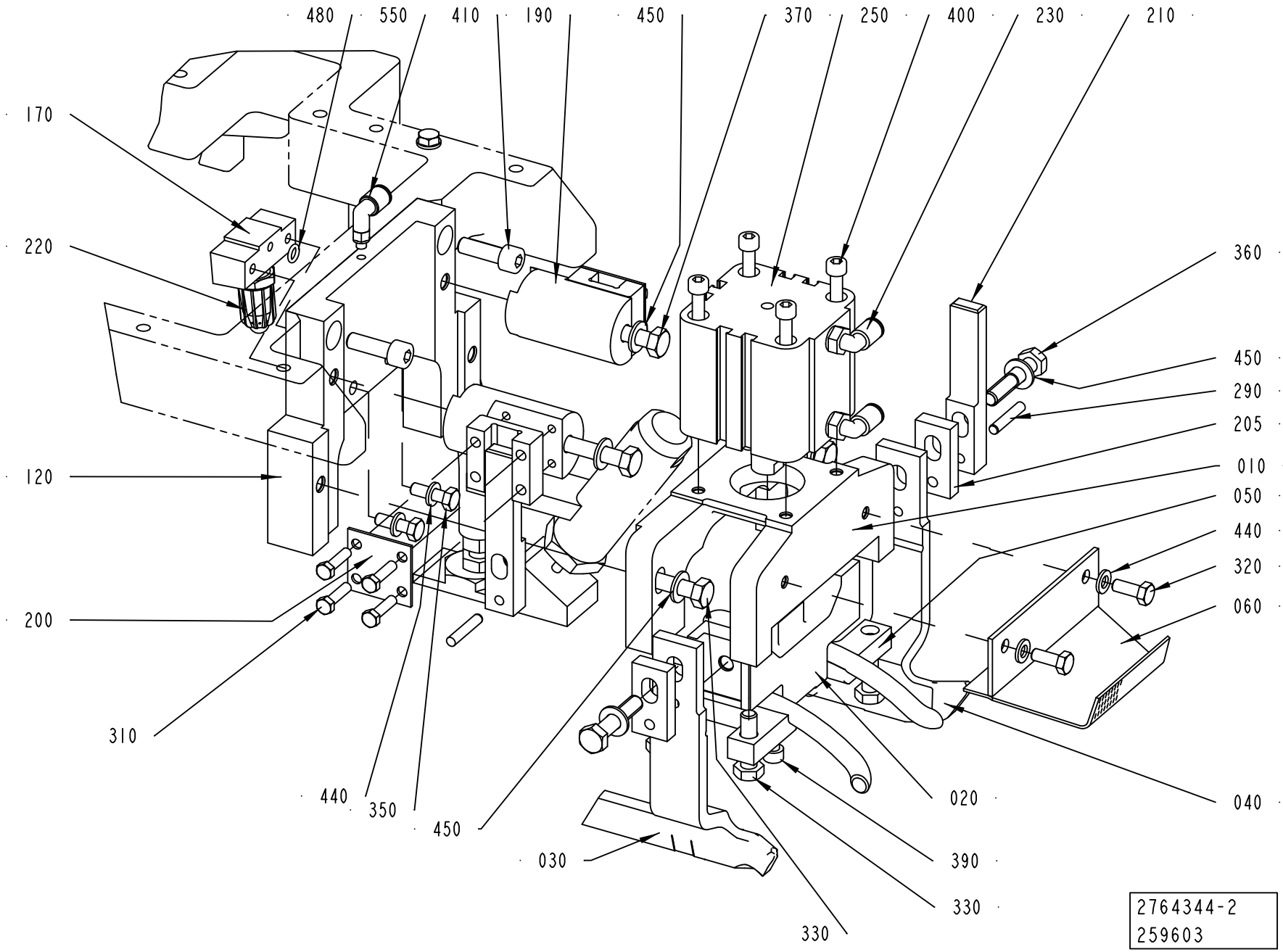

Pos	Part No	UN	Qty	Description	Page No
0200M (Cont'd) (See drawing on page: 5-28)					
070	979865-0000		1	RAIL RIGHT	
120	2751450-0000		1	FASTENING PLATE	
170	2764343-0000		1	AIR CONNECTION	
205	2800347-0000		2	SPACER	
220	90424-0068		1	AIR NOZZLE, G1/4, MOD. 216 BSP	
290	311103-0313		2	PARALLEL PIN ISO 2338 5M6X28 A1	
350	312105-0370		2	SCREW M6S ISO 4017 M6X20 A480	
360	312105-0457		2	SCREW M6S ISO 4014 M8X35 A480	
370	312105-0469		2	SCREW M6S ISO 4014 M8X90 A480	
0200S (See drawing on page: 5-30)					
020	2776733-0000		1	BLOCKING PIECE	
030	2776736-0000		1	ARM	
040	2776737-0000		1	ARM	
050	295061-0000		1	RAIL	
060	2776734-0000		1	SLIDE SHEET	
070	295062-0000		1	RAIL	
120	2776735-0000		1	FASTENING PLATE	
170	2764343-0000		1	AIR CONNECTION	
205	2776727-0000		2	SPACER	
220	90424-0068		1	AIR NOZZLE, G1/4, MOD. 216 BSP	
290	311103-0313		2	PARALLEL PIN ISO 2338 5M6X28 A1	
350	312105-0370		2	SCREW M6S ISO 4017 M6X20 A480	
360	312105-0459		2	SCREW M6S ISO 4014 M8X40 A480	
370	312105-0464		2	SCREW M6S ISO 4014 M8X65 A480	
410	312115-0453		2	SCREW ISO4762 M8X25 A4 80	
0250B (See drawing on page: 5-28)					
020	2751448-0000		1	BLOCKING PIECE	
030	2751451-0000		1	ARM	
040	2751446-0000		1	ARM	
050	295057-0001		1	RAIL	
060	272045-0002		1	SLIDE SHEET	
070	295058-0001		1	RAIL	
120	2751450-0000		1	FASTENING PLATE	
170	2764343-0000		1	AIR CONNECTION	
220	90424-0068		1	AIR NOZZLE, G1/4, MOD. 216 BSP	
290	311103-0309		2	PARALLEL PIN ISO 2338 5M6X18 A1	
350	312105-0370		2	SCREW M6S ISO 4017 M6X20 A480	
360	312105-0457		2	SCREW M6S ISO 4014 M8X35 A480	
370	312105-0469		2	SCREW M6S ISO 4014 M8X90 A480	
0250S (See drawing on page: 5-30)					
020	2800344-0000		1	BLOCKING PIECE	
030	2800342-0000		1	ARM	
040	2800343-0000		1	ARM	
050	574348-0000		1	RAIL LEFT	
060	2776734-0000		1	SLIDE SHEET	
070	574349-0000		1	RAIL RIGHT	
120	2800346-0000		1	FASTENING PLATE	
205	2800347-0000		2	SPACER	
290	311103-0313		2	PARALLEL PIN ISO 2338 5M6X28 A1	
350	312105-0362		2	SCREW M6S ISO 4017 M6X8 A480	
360	312105-0457		2	SCREW M6S ISO 4014 M8X35 A480	
370	312105-0464		2	SCREW M6S ISO 4014 M8X65 A480	
410	312115-0453		2	SCREW ISO4762 M8X25 A4 80	
0284B, 0300S (See drawing on page: 5-30)					
020	2751448-0000		1	BLOCKING PIECE	
030	2776736-0000		1	ARM	
040	2776737-0000		1	ARM	
050	295057-0001		1	RAIL	
060	272045-0001		1	SLIDE SHEET	
070	295058-0001		1	RAIL	
120	2776735-0000		1	FASTENING PLATE	
170	2764343-0000		1	AIR CONNECTION	
220	90424-0068		1	AIR NOZZLE, G1/4, MOD. 216 BSP	
290	311103-0309		2	PARALLEL PIN ISO 2338 5M6X18 A1	
350	312105-0370		2	SCREW M6S ISO 4017 M6X20 A480	
360	312105-0457		2	SCREW M6S ISO 4014 M8X35 A480	
370	312105-0464		2	SCREW M6S ISO 4014 M8X65 A480	
410	312115-0453		2	SCREW ISO4762 M8X25 A4 80	
0330S (See drawing on page: 5-30)					
020	2751448-0000		1	BLOCKING PIECE	
030	2814885-0000		1	ARM	
040	2814886-0000		1	ARM	
050	295057-0004		1	RAIL	
060	272045-0001		1	SLIDE SHEET	
070	295058-0004		1	RAIL	
120	2814887-0000		1	FASTENING PLATE	
290	311103-0309		2	PARALLEL PIN ISO 2338 5M6X18 A1	
350	312105-0362		2	SCREW M6S ISO 4017 M6X8 A480	
370	312105-0464		2	SCREW M6S ISO 4014 M8X65 A480	
410	312115-0453		2	SCREW ISO4762 M8X25 A4 80	
Common Parts					
010	2751447-0000		1	BRACKET	
180	2776725-0000		2	GUIDE	

See previous drawings pages: 5-28, 5-30.

Pos	Part No	UN	Qty	Description	Page No
Common Parts (Cont'd)					
190	2776726-0000		2	GUIDE BRACKET	
200	2685679-0000		2	LID	
210	752655-0000		2	GUIDE PIN	
230	350002-0006		2	PUSH-IN L-FITTING QSL-F-G1/8-6	
250	90459-4968		1	DOUBLE ACTING, COMPACT, 50-20	
310	312105-0331		8	SCREW M6S ISO 4017 M5X20 A480	
320	312105-0368		2	SCREW M6S ISO 4017 M6X16 A480	
330	312105-0455		6	SCREW M6S ISO 4017 M8X30 A480	
390	312115-0376		1	SCREW ISO4762 M6X35 A4 80	
400	312115-0384		4	SCREW ISO4762 M6X70 A4 80	
440	315105-0153		4	WASHER BRB 6,4X12 RFR	
450	315105-0165		6	WASHER BRB 8,4X16 RFR	
480	315202-0505		1	O-RING 6,07X1,78 MM	
550	350002-0002		1	PUSH-IN L-FITTING QSL-F-M5-6	

Pos	Part No	UN	Qty	Description	Page No

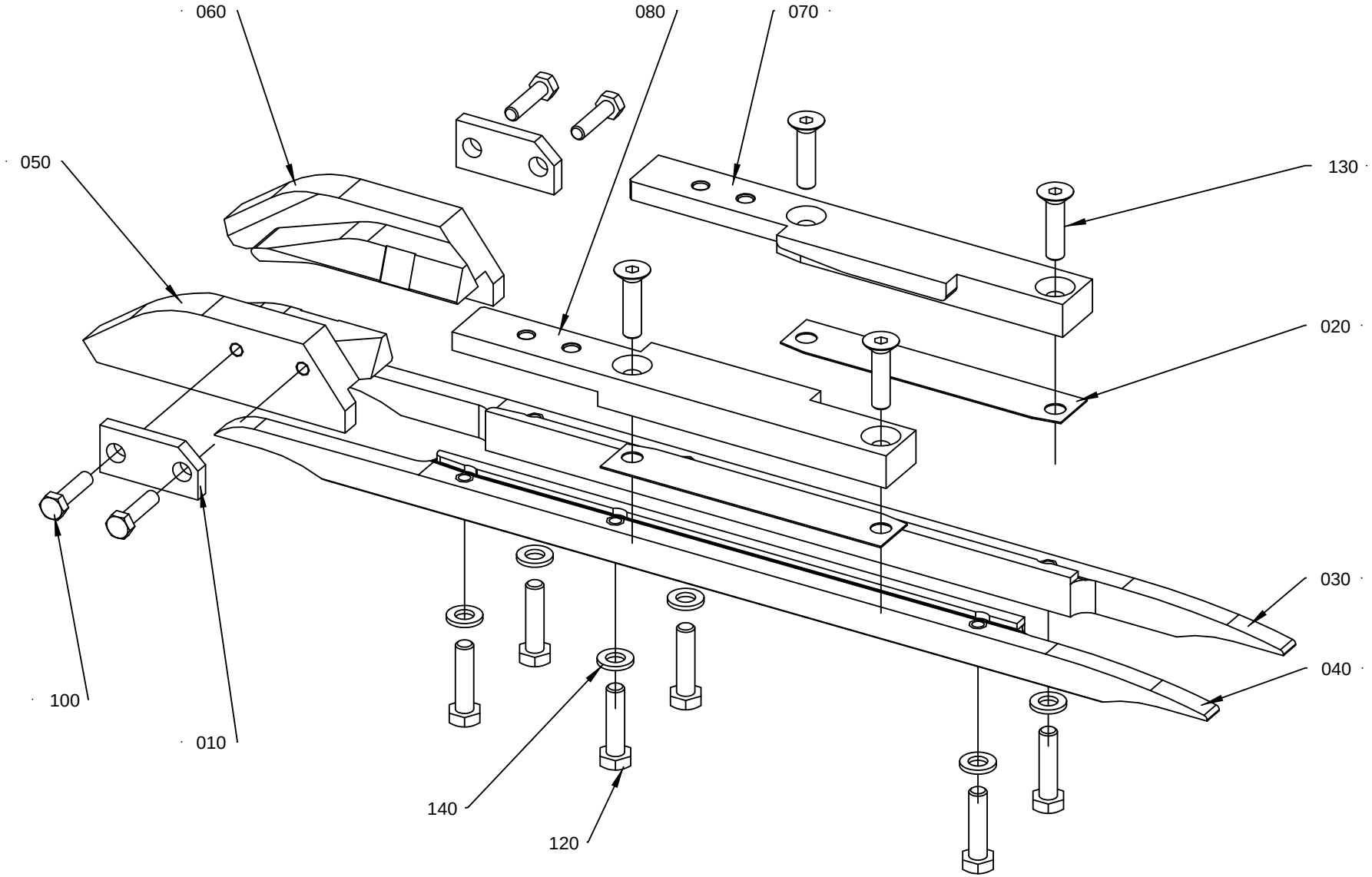

1539969-3
ECM 25114 5

ECM: 264418 - 20060616
Group number: 1539969-0200
Assembly Drawing: 1539969-3_1_AA

Pos	Part No	UN	Qty	Description	Page No
TBA 0100B, TBA 0125S (See drawing on page: 5-34)					
050	2776742-0000		1	FOLDING BAR LEFT	
060	2776741-0000		1	FOLDING BAR RIGHT	
070	2526343-0000		1	PLATE	
080	2526344-0000		1	PLATE	
TBA 0160S, TBA 0200S (See drawing on page: 5-34)					
050	2800340-0000		1	FOLDING BAR	
060	2800341-0000		1	FOLDING BAR	
070	2526343-0000		1	PLATE	
080	2526344-0000		1	PLATE	
TBA 0180B, TBA 0200B, TBA 0284B, TBA 0250B, TBA 0300S (See drawing on page: 5-34)					
050	2800339-0000		1	FOLDING BAR	
060	2800338-0000		1	FOLDING BAR	
070	2526343-0000		1	PLATE	
080	2526344-0000		1	PLATE	
TBA 0200M, TBA 0250S (See drawing on page: 5-34)					
050	2800350-0000		1	FOLDING BAR	
060	2800351-0000		1	FOLDING BAR	
070	2526343-0000		1	PLATE	
080	2526344-0000		1	PLATE	
TBA 0330S (See drawing on page: 5-34)					
050	2814889-0000		1	FOLDING BAR	
050	2800339-0000		1	FOLDING BAR	
060	2814888-0000		1	FOLDING BAR	
060	2800338-0000		1	FOLDING BAR	
070	2526343-0000		1	PLATE	
080	2526344-0000		1	PLATE	
Common Parts					
010	295729-0000		2	WASHER	
020	491266-0000		4	SHIM	
030	751109-0000		1	RAIL RIGHT	
040	751110-0000		1	RAIL LEFT	
100	312105-0331		4	SCREW M6S ISO 4017 M5X20 A480	
120	312105-0372		6	SCREW M6S ISO 4017 M6X25 A480	
130	312155-0372		4	SCREW DIN 7991 MF6S M6X25A4 70	
140	315105-0153		6	WASHER BRB 6,4X12 RFR	

Pos	Part No	UN	Qty	Description	Page No

Machine Type | Group Description | Used-In | Group Number | Page No

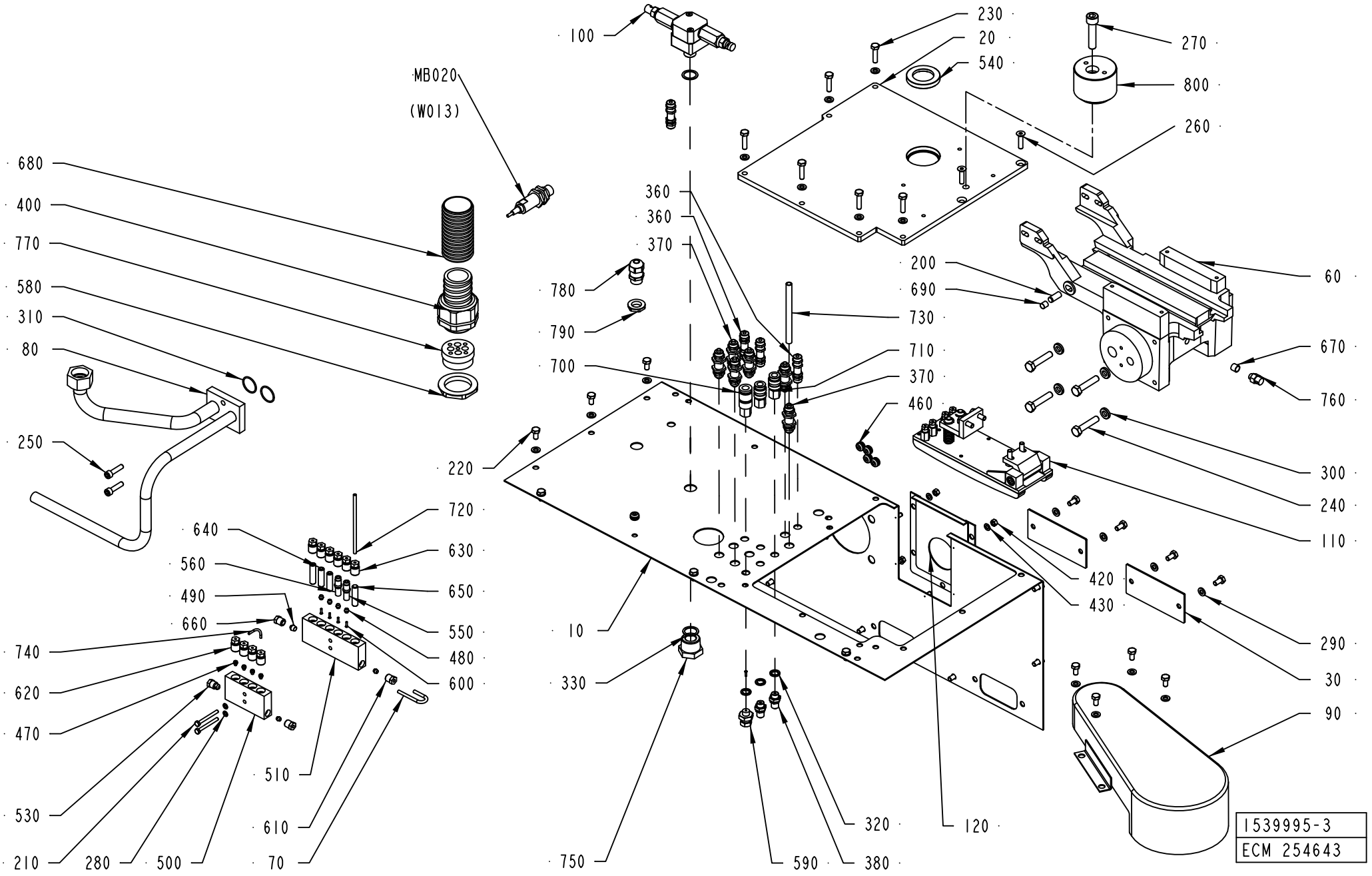
100
MB020
(W013)
680
400
770
580
310
80
250
220
780
790
700
360
360
370
230
20
540
270
800
260
200
690
730
710
370
460
60
670
760
300
240
110
420
430
290
30
90
640
560
490
660
740
620
470
530
210
280
500
720
630
650
550
480
600
510
610
70
10
330
750
590
320
380
120
1539995-3
ECM 254643

ECM: 256931 - 20060303
Group number: 1539995-0200
Assembly Drawing: 1539995-3_1_AA

Pos	Part No	UN	Qty	Description	Page No
TBA 0100B, TBA 0180B, TBA 0125S, TBA 0160S, TBA 0200M, TBA 0200B, TBA 0200S, TBA 0250S, TBA 0284B, TBA 0250B, TBA 0300S, TBA 0330S					
010	2814876-0000		1	SHIELD PLATE	
020	2544966-0000		1	PLATE	
Common Parts					
030	1539957-0000		2	PLATE	
060	1498245-0000		1	SUPPORTING ARM	
070	1512442-0000		1	CONNECTING PIPE	
080	1512448-0000		1	PIPE CONNECTION	
090	1539953-0000		1	PROTECTIVE COVER	
100	441811-0100		1	ROTOR	**5-39**
110	1255876-0200		1	CHAIN TENSIONER	**5-41**
120	2633435-0000		1	PLATE	
200	311103-0401		1	PARALLEL PIN ISO 2338 8M6X20 A1	
210	312105-0303		2	SCREW M6S ISO 4017 M4X40 A470	
220	312105-0366		24	SCREW M6S ISO 4017 M6X12 A480	
230	312105-0372		6	SCREW M6S ISO 4017 M6X25 A480	
240	312105-0459		4	SCREW M6S ISO 4014 M8X40 A480	
250	312115-0372		4	SCREW ISO4762 M6X25 A4 80	
260	312155-0372		2	SCREW DIN 7991 MF6S M6X25A4 70	
270	312115-0500		1	SCREW ISO4762 M10X45 A4 80	
280	315105-0136		2	WASHER BRB 4,3X8 RFR	
290	315105-0153		32	WASHER BRB 6,4X12 RFR	
300	315111-0165		4	WASHER PLAIN, TBRB 8,4/16 H=3	
310	315202-0118		2	O-RING 22,1X1,6 MM	
320	315239-0109		3	NYLON WASHER G1/8	
330	315239-0111		2	NYLON WASHER G3/8	
360	342960-0112		4	BULKHEAD COUPLING 6/4	
370	342960-0122		6	BULKHEAD COUPLING 8/6	
380	342921-0113		2	STRAIGHT COUPLING,EXT.THREADED 6/4-G1/8"	
400	90458-0459		1	HOSE GLAND W/O INSERT M40 EXTENDED	
420	312605-0314		5	HEXAGON NUT, M6M M5 A280	
430	315105-0146		5	WASHER BRB 5,3X10 RFR	
460	90015-0028		5	LEAD-IN BUSHING	
470	90028-0020		4	CONE TUBE 2,5MM	
480	90028-0021		6	CONE TUBE 4 MM	
490	90028-0025		1	CONE TUBE 6 MM	
500	90032-0039		1	BLOCK 4 WAYS	
510	90032-0040		1	BLOCK 6 WAYS	
530	90087-0019		1	PLUG M10X1 STAINLESS	
540	90091-0306		1	RADIAL SEAL 30X47X7 MM DUST LIP	
550	90092-0053		1	METERING VALVE 30 MM3	
560	90092-0054		1	METERING VALVE 50 MM3	
580	90458-0326		1	NUT, M40X1,5	
590	90134-0004		1	PIPE CONNECTION R1/8	
600	90134-0031		5	SLEEVE FOR PLASTIC TUBE	
610	90134-0038		2	BUSHING/NUT INLET/OUTLET 4 MM	
620	90134-0039		4	BUSHING VALVE CONNECTION 2,5 MM	
630	90134-0040		6	BUSHING VALVE CONNECTION 4 MM	
640	90134-0051		2	SPACING COLLAR DOSING BLOCK	
650	90134-0052		2	PLUG DOSING BLOCK	
660	90134-0055		1	BUSHING/NUT INLET/OUTLET 6 MM	
670	90144-0073	MM	1	TREBOFLON-TAPE W=13MM	
680	90152-0070	M	1	METAL HOSE, 32,5X26, UL 2621	
690	90157-0022		1	SEALING COMPOUND, SILICONE	
700	90163-0046		1	SLEEVE LP-004-0-WR 0510-21-1 BRASS	
710	90163-0062		2	QUICK COUPLING, (F) 5053-1/8	
720	90166-0109	M	2	TUBE 4 MM PA,TRANSP.	
730	90166-0013	M	2	TUBE 8 MM PA BLUE	
740	90166-0143	M	2	TUBE 2,5 MM PA,TRANSP.	
750	90330-0078		1	BUSHING, INT/EXT. THR. R3/4-RP3/8	
760	90424-0010		1	SPRAY NOZZLE 142 DEG BSPT 1/4 K5	
770	90457-0199		1	INSERT EK 156M 5X5/4X9	
780	90458-0314		1	CABLE GLAND, M16X1,5, NO.5311 1110	
790	90458-0322		1	NUT, M16X1,5	
800	90458-0220		1	TENSION ROLLER, M40/60-0-M EXCENTRIC	
810	90099-0117		1	NUT, PR 18,6 (PG11)	
820	90002-0009		1	BLANK-OFF PLUG, PR 18.6 SKINDICHT-BLK11	
MB020	90458-0894		1	PROXIMITY SENSOR E2E2-X10MB1-5M	

Machine Type | Group Description | Used-In | Group Number | Page No

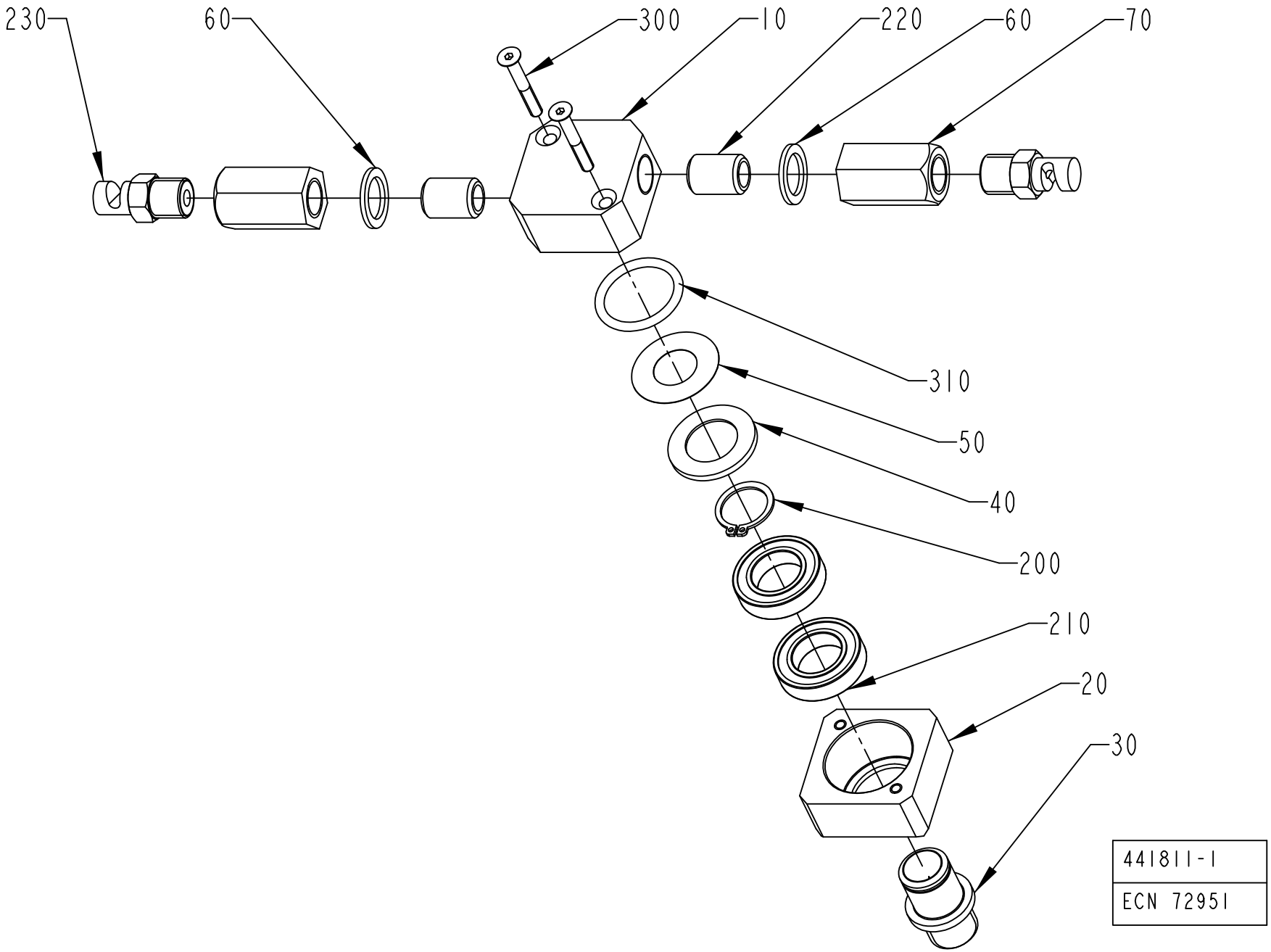
230
60
300
10
220
60
70
310
50
40
200
210
20
30
441811-1
ECN 72951

ECM: 205730 - 20050621
Group number: 441811-0100
Assembly Drawing: 441811-1_1_AB

Pos	Part No	UN	Qty	Description	Page No
-					
010	441792-0000		1	HEAD	
020	441793-0000		1	BEARING HOUSING	
030	441794-0000		1	PIVOT PIN	
040	441795-0000		1	WASHER	
050	441796-0000		1	SEAL	
060	441797-0000		2	SHIM	
070	441800-0000		2	STRAIGHT FITTING	
200	90141-0017		1	RETAINING RING FOR SHAFT DIN 471 17 A2	
210	90214-0092		2	BALL BEARING, 17X30X7 MM	
220	90330-0101		2	NIPPLES, EXT. THREAD, G1/4	
230	90424-0025		2	SPRAY NOZZLE 145 DEG	
300	312155-0299		2	SCREW DIN 7991 MF6S M4X30 A4 70	
310	315202-0217		1	O-RING 24,2X3 MM	

Pos	Part No	UN	Qty	Description	Page No

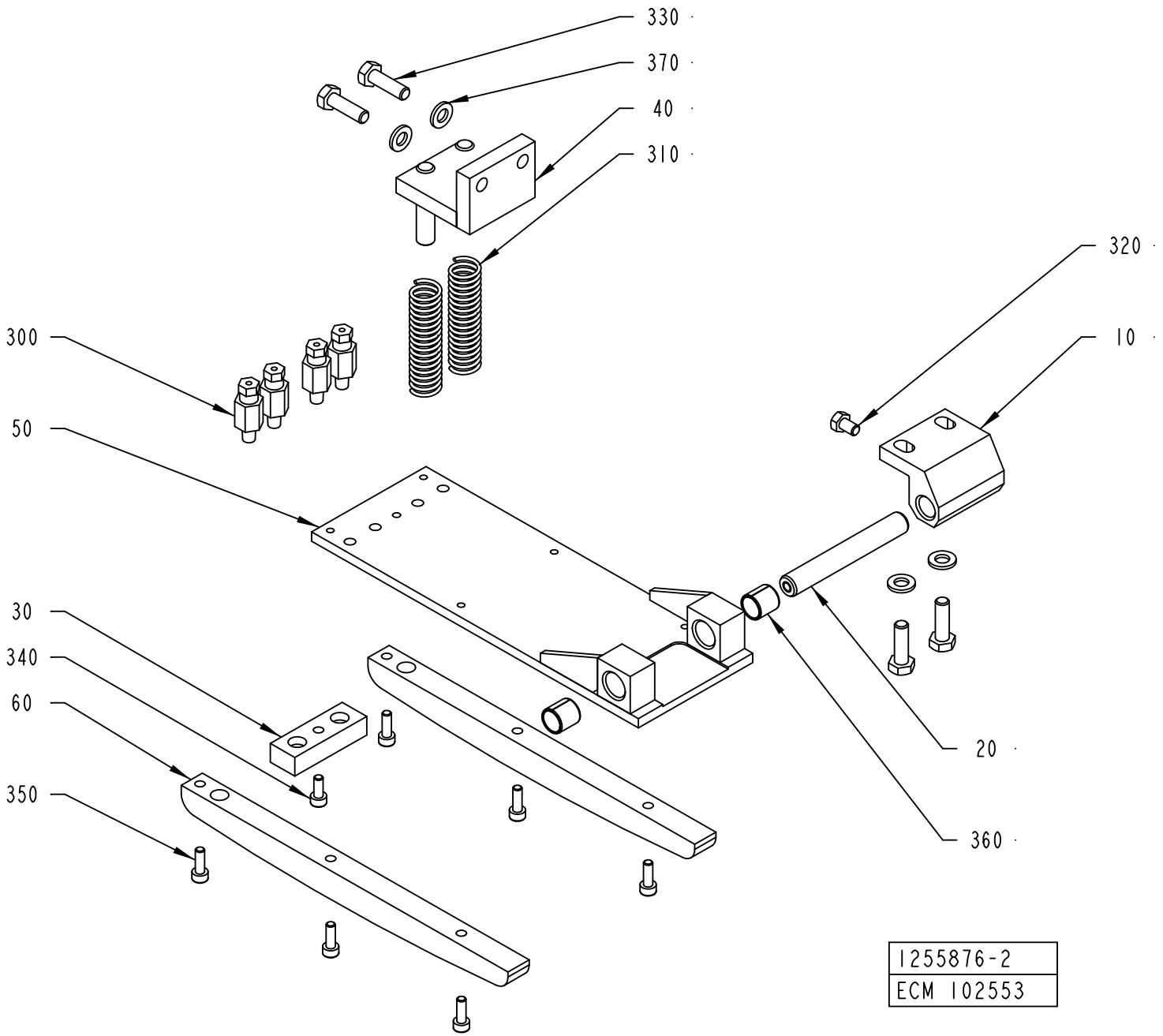
330
370
40
310
320
10
300
50
30
340
60
350
20
360
1255876-2
ECM 102553

ECM: 290172 - 20070126
Group number: 1255876-0200
Assembly Drawing: 1255876-2_1_AA

Pos	Part No	UN	Qty	Description	Page No
TBA					
060	1512444-0000		2	GUIDE RAIL	
Common Parts					
010	1195454-0000		1	BRACKET	
020	1195456-0000		1	SHAFT	
030	1334721-0000		1	BLOCK	
040	1346933-0000		1	BRACKET	
050	1512443-0000		1	PLATE CHOKE	
300	90134-0065		4	CONNECTION M6 TUBE 2,5 MM	
310	90335-0152		2	COMP. SPRING 22300, 1,25X17,25X40,5	
320	312105-0323		1	SCREW M6S ISO 4017 M5X8 A480	
330	312105-0370		4	SCREW M6S ISO 4017 M6X20 A480	
340	312115-0289		1	SCREW ISO4762 M4X10 A4 80	
350	312115-0291		6	SCREW ISO4762 M4X12 A4 80	
360	321141-0142		2	BEARING BUSH W/O FLANGE, 10X12X12 MM	
370	315105-0153		4	WASHER BRB 6,4X12 RFR	

Pos	Part No	UN	Qty	Description	Page No

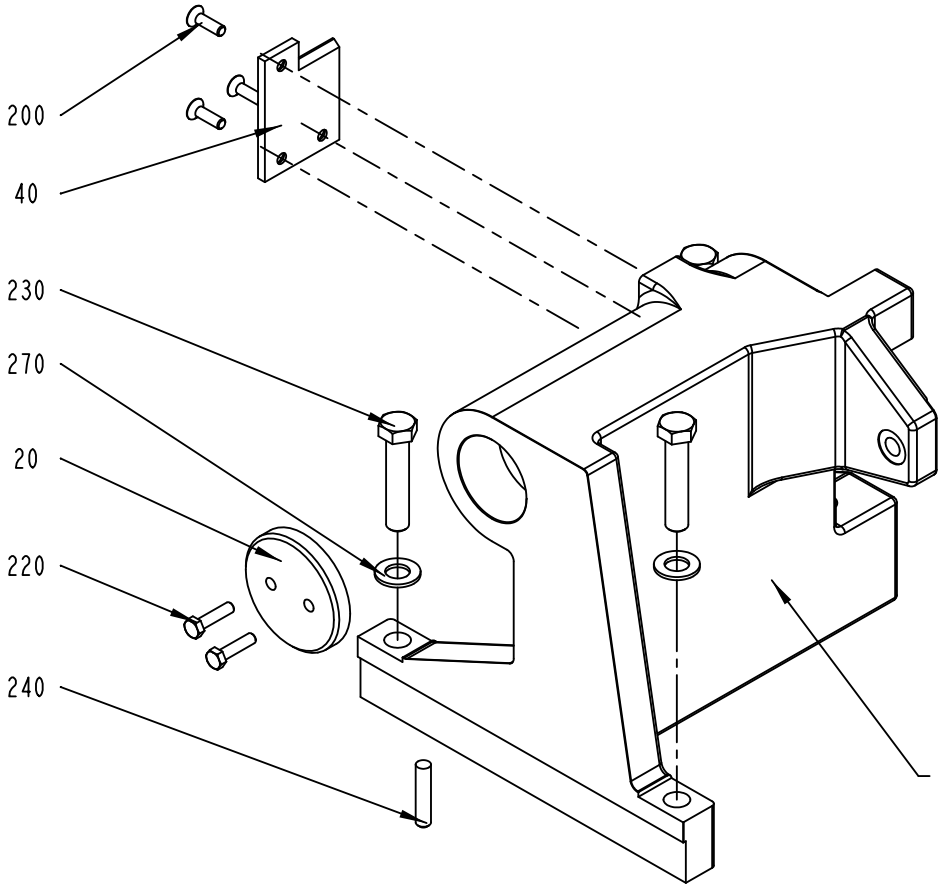

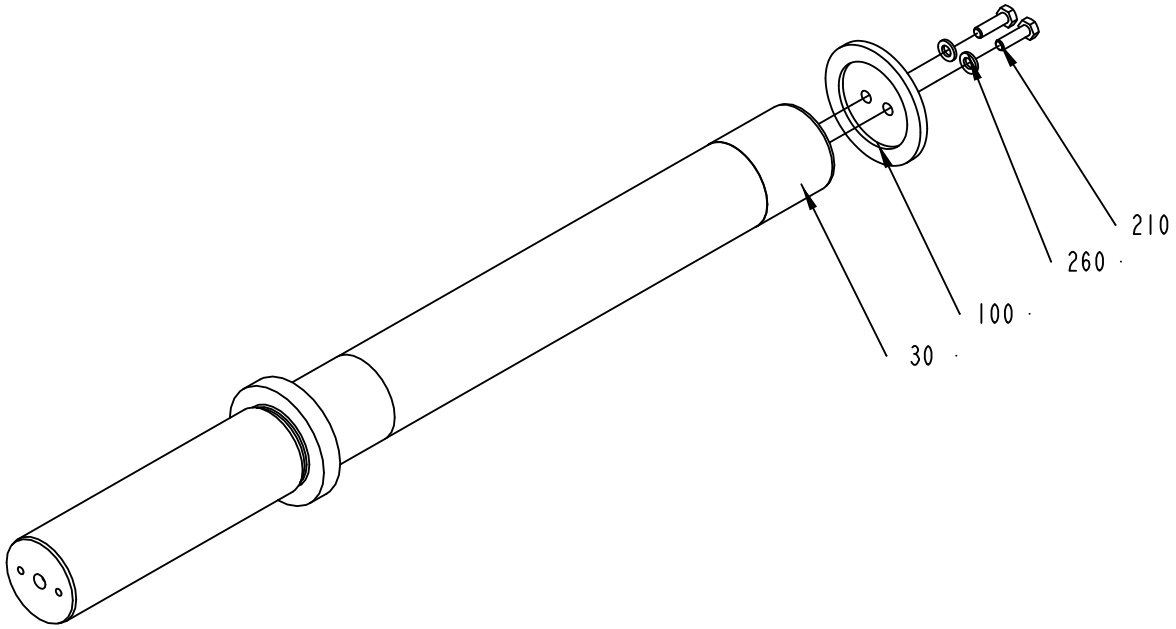

1539949-1
ECM 103407

ECM: 205736 - 20050621
Group number: 1539949-0100
Assembly Drawing: 1539949-1_1_AB

Pos	Part No	UN	Qty	Description	Page No
-					
010	1539951-0000		1	HOUSE	
020	1539950-0000		1	WASHER	
030	1539948-0000		1	SHAFT	
040	1539965-0000		1	PLATE	
100	295203-0000		1	LID	
200	312155-0370		3	SCREW DIN 7991 MF6S M6X20 A4 70	
210	312105-0370		2	SCREW M6S ISO 4017 M6X20 A480	
220	312105-0372		2	SCREW M6S ISO 4017 M6X25 A480	
230	312105-0544		3	SCREW M6S ISO 4014 M12X60 A480	
240	311103-0409		2	PARALLEL PIN ISO 2338 8M6X40 A1	
260	315105-0153		2	WASHER BRB 6,4X12 RFR	
270	315105-0178		3	WASHER BRB 13X24 RFR	

Pos	Part No	UN	Qty	Description	Page No

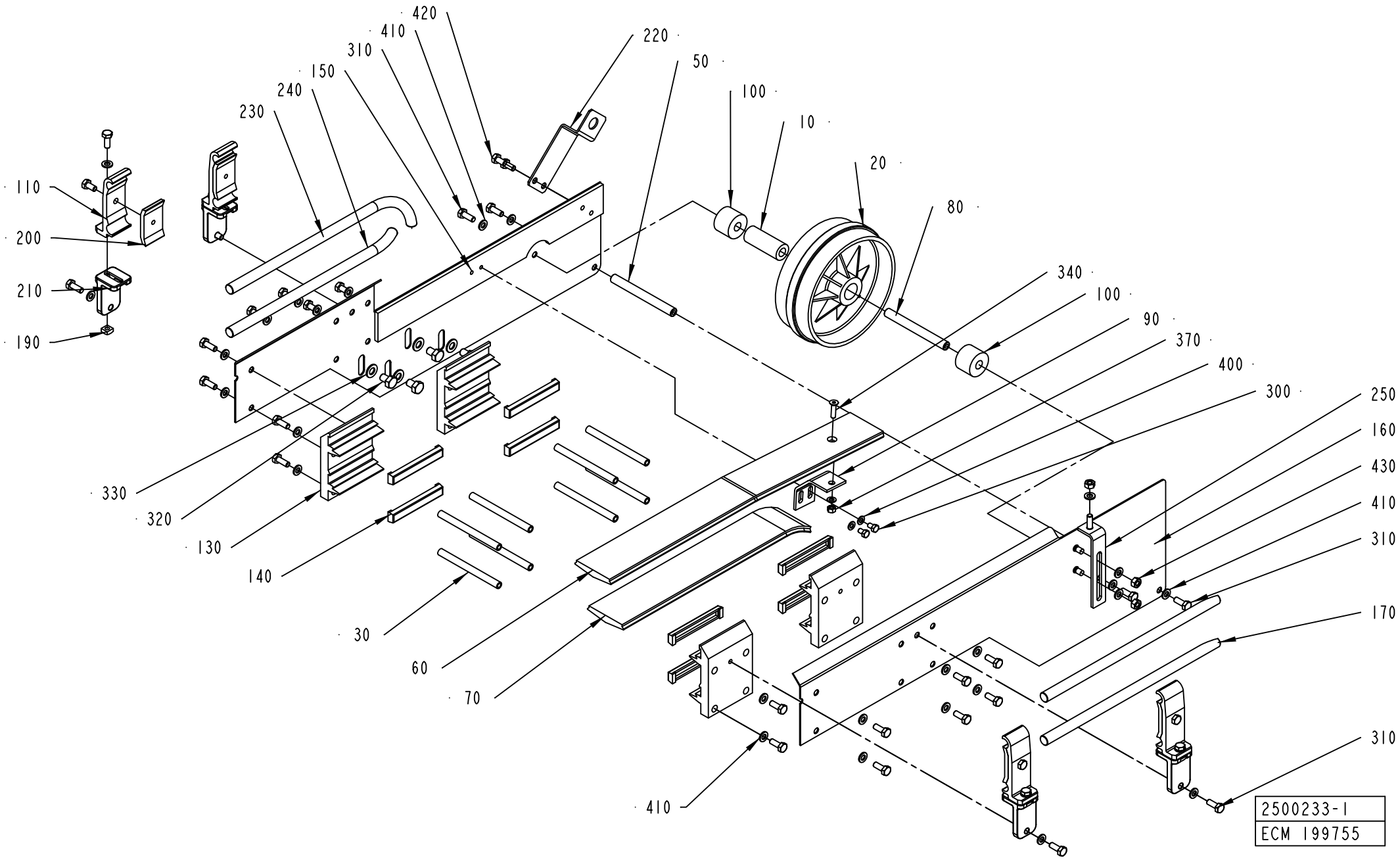
420
410
310
150
240
230
220
50
100
10
20
80
110
200
210
190
340
100
90
370
400
300
250
160
430
410
310
330
320
130
140
30
60
70
170
410
310
2500233-1
ECM 199755

ECM: 261565 - 20060707
Group number: 2500233-0100
Assembly Drawing: 2500233-1_1_AC

Pos	Part No	UN	Qty	Description	Page No
-					
010	229207-0000		1	BEARING SLEEVE	
020	245039-0000		1	GUIDE WHEEL	
030	476220-0000		8	SPACER	
050	1091683-0000		1	SPACER	
060	1091684-0000		1	RAIL	
070	1091685-0000		1	RAIL	
080	1091686-0000		1	SPACER	
090	1091719-0000		1	BRACKET	
100	1144943-0000		2	SPACER	
110	1366726-0000		4	HOLDER	
130	457696-0001		4	JOINT PIECE	
140	466074-0002		8	SLIDER	
150	2500234-0000		1	PLATE	
160	2500235-0000		1	PLATE	
170	2500236-0000		2	RAIL	
190	1359565-0000		4	NUT	
200	1366727-0000		4	CLAMP	
210	2559121-0000		4	BRACKET	
220	2511668-0000		1	SUPPORT	
230	2518102-0000		1	RAIL	
240	2518103-0000		1	RAIL	
250	2546226-0000		1	SUPPORT	
300	312105-0323		2	SCREW M6S ISO 4017 M5X8 A480	
310	312105-0368		26	SCREW M6S ISO 4017 M6X16 A480	
320	312105-0447		4	SCREW M6S ISO 4017 M8X12 A480	
330	315105-0165		4	WASHER BRB 8,4X16 RFR	
340	312155-0331		1	SCREW DIN 7991 MF6S M5X20 A4 70	
370	312605-0314		1	HEXAGON NUT, M6M M5 A280	
400	315105-0146		3	WASHER BRB 5,3X10 RFR	
410	315105-0153		33	WASHER BRB 6,4X12 RFR	
420	312105-0366		8	SCREW M6S ISO 4017 M6X12 A480	
430	312605-0316		3	HEXAGON NUT, M6M M6 A280	

Pos	Part No	UN	Qty	Description	Page No

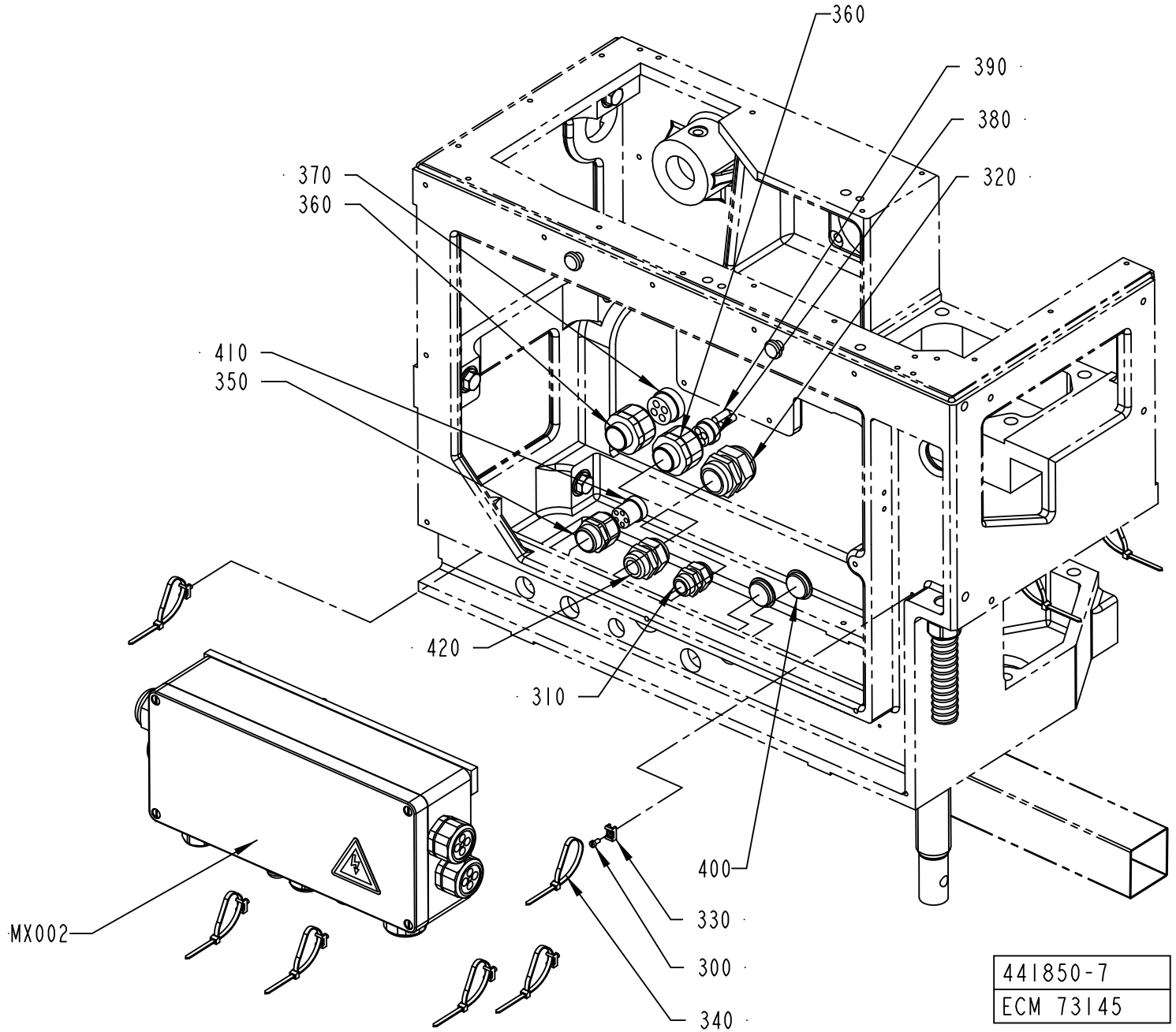
360
390
380
320
370
360
410
350
420
310
400
330
300
340
MX002
441850-7
ECM 73145

ECM: 119545 - 20050621
Group number: 441850-0700
Assembly Drawing: 441850-7_1_AA

Pos	Part No	UN	Qty	Description	Page No
-					
300	312125-0287		8	SCREW ISO 1207 M4X8 A4	
310	90458-0316		2	CABLE GLAND, M25X1,5, NO.5311 1130	
320	90458-0310		1	CABLE GLAND, M40X1,5, NO.5311 1050	
330	352113-0205		8	ANCHOR PLATES FOR STRIPS, TYPE TM2S8-C10	
340	352113-0102		8	CABLE TIE, BLACK 188X4,8 MM	
350	90458-0408		1	GLAND W/O INSERT M32 NORMAL	
360	90458-0423		2	GLAND W/O INSERT M32 EXTENDED	
370	353249-0037		1	INSERT, MULTI HOLE, EK155M4X8	
380	353249-0084		1	INSERT, MULTI HOLE, EK 154M4X7,5	
390	353249-0307		2	SEALING PIN, 7,5X20	
400	90458-1310		2	BLIND PLUG CIRCULAR, M32X1,5 514GFK/232	
410	90457-0028		1	INSERT, MULTI HOLE, E154M5X5	
MX002	2506331-0200		1	CONNECTION BOX	**5-49, 5-51**

Pos	Part No	UN	Qty	Description	Page No

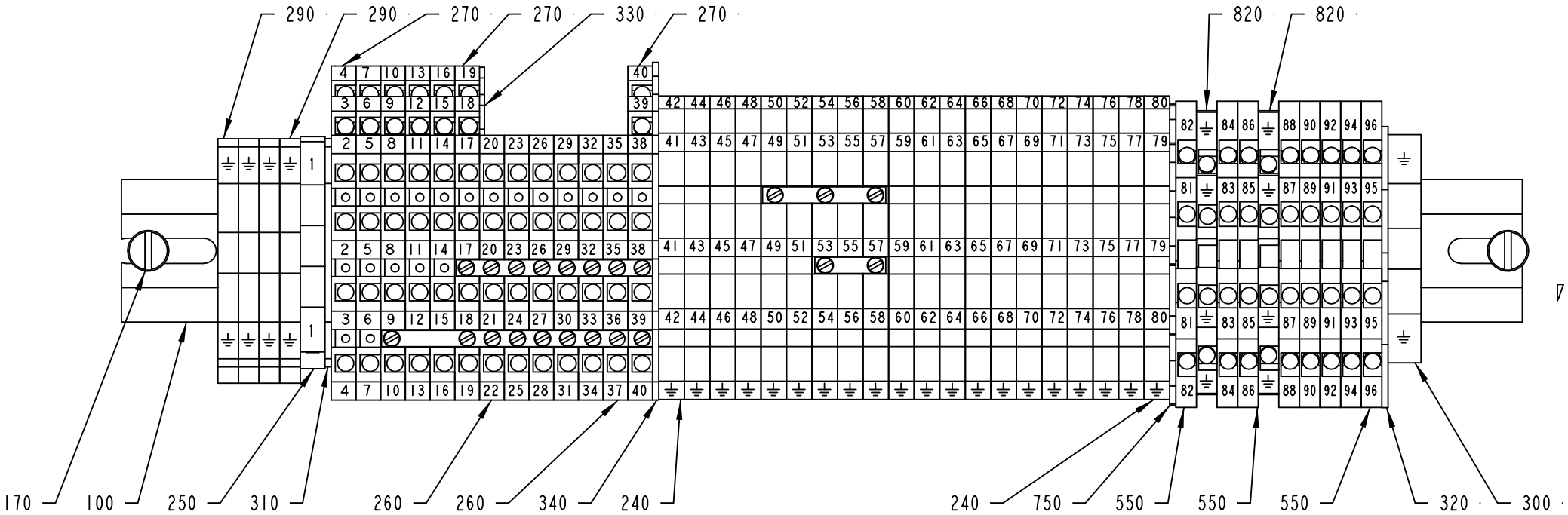

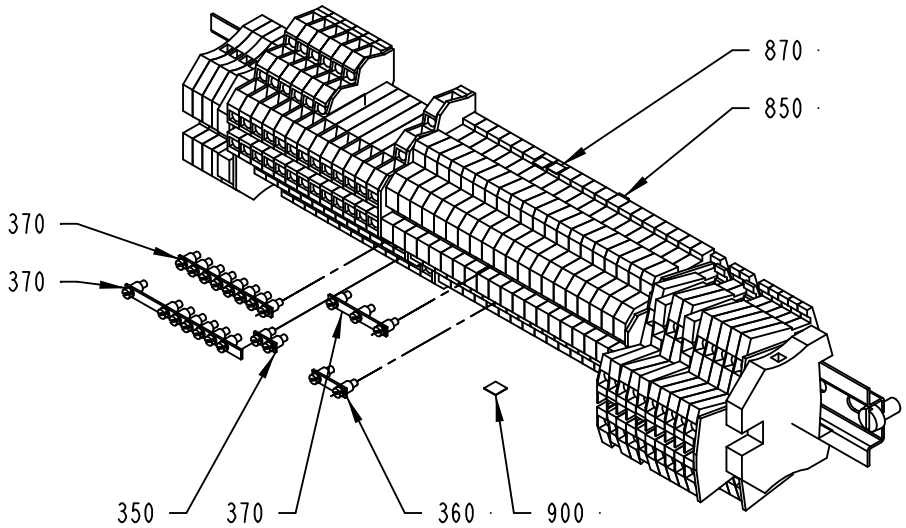

MX002

2506331-1
ECN 93276

ECM: 179320 - 20040910
Group number: 2506331-0200
Assembly Drawing: 2506331-1_1_AA

This list covers pages from 5-48 to 5-51

Pos	Part No	UN	Qty	Description	Page No
-					
0010	1255874-0000		1	SPACER	
0030	2506332-0000		1	BOX	
0100	353042-0005	MM	340	RAIL TS 35/7.5	
0130	312115-0366		2	SCREW ISO4762 M6X12 A4 80	
0140	312115-0372		2	SCREW ISO4762 M6X25 A4 80	
0170	312125-0364		2	SCREW ISO 1207 M6X10 A4	
0200	352103-0106		1	CABLE GLAND, ST 11, PR18,6/PG11	
0210	352103-0121		1	CABLE GLAND, ST 29, PR37,0/PG29	
0240	353021-0132		20	TERMINALS,TRIPLE-LEVEL, DLD 2,5/PE	
0250	353021-0213		1	FEED THROUGH TERMINAL, 10201.0	
0260	353021-0301		6	TERMINALS,TRIPLE-LEVEL, DLI 2,5/35 PA	
0270	353021-0302		7	TERMINALS,TRIPLE-LEVEL, DLD 2,5/35 PA	
0290	353024-0204		4	EARTH TERMINAL WPE 2,5	
0300	353024-0206		1	EARTH TERMINAL, 1010.2	
0310	353032-0004		1	END PLATE WAP 2,5-10 BEIGE	
0320	353032-0009		1	END PLATE, WAP FOR WDK	
0330	353032-0013		1	END PLATE, 13818.6	
0340	353032-0302		1	END PLATE WAP, 13176.6	
0350	353034-0401		1	BRIDGE CONNECTOR Q2, 13125.0	
0360	353034-0402		1	BRIDGE CONNECTOR Q3, 13126.0	
0370	353034-0404		3	BRIDGE CONNECTOR Q10, 13131.0	
0385	353240-0004		2	GLAND W/O INSERT PG16 NORMAL	
0390	353240-0005		3	GLAND W/O INSERT PG21 NORMAL	
0400	353240-0006		4	GLAND W/O INSERT PG29 NORMAL	
0420	353241-0005		1	GLAND W/O INSERT PG13,5 EXTENDED	
0430	353241-0007		1	GLAND W/O INSERT PG16 EXTENDED	
0460	90458-0147		1	GLAND, INSERT, MULTI HOLE, 2X6,5	
0470	353249-0051		1	INSERT, MULTI HOLE, E154M4X6	
0480	353249-0059		1	GLAND, INSERT, MULTI HOLE, 4X8	
0490	353249-0060		1	INSERT, MULTI HOLE, E155M2X13	
0500	353249-0084		1	INSERT, MULTI HOLE, EK 154M4X7,5	
0550	90077-0113		8	FEED THROUGH TERMINAL, 10-00102150-1	
0600	90194-0016		1	WARNING SIGN, RISK OF ELECTRIC SHOCK	
0650	90457-0027		2	INSERT, MULTI HOLE, E155M1X5/4X9	
0700	90457-0030		1	INSERT, MULTI HOLE, EK155M4X9	
0750	90457-0051		1	END PLATE	
0820	90458-1136		2	TERMINAL BLOCK, 103630	
0830	90458-1906		2	GLAND, INSERT, MULTI HOLE, 4X5	
0850	359011-0807		2	MARKING PLATES 5-FW 1-50	
0870	359011-0808		2	MARKING PLATES 5-FW 51-100	
0900	359011-0818		1	SYMBOL 5-GW (-) 50PC	
1000	353249-0304		3	SEALING PIN, 6X25	
1010	353249-0308		2	SEALING PIN, 8X20	
1020	353249-0309		1	SEALING PIN, 9,3X20	
1070	90002-0004		1	BLANK-OFF PLUG, PR 22,5 SKINDICHT-BLK16	
1080	90002-0009		1	BLANK-OFF PLUG, PR 18.6 SKINDICHT-BLK11	
1090	90002-0010		1	BLANK-OFF PLUG, PR 37 SKINDICHT-BLK29	

Machine Type | Group Description | Used-In | Group Number | Page No

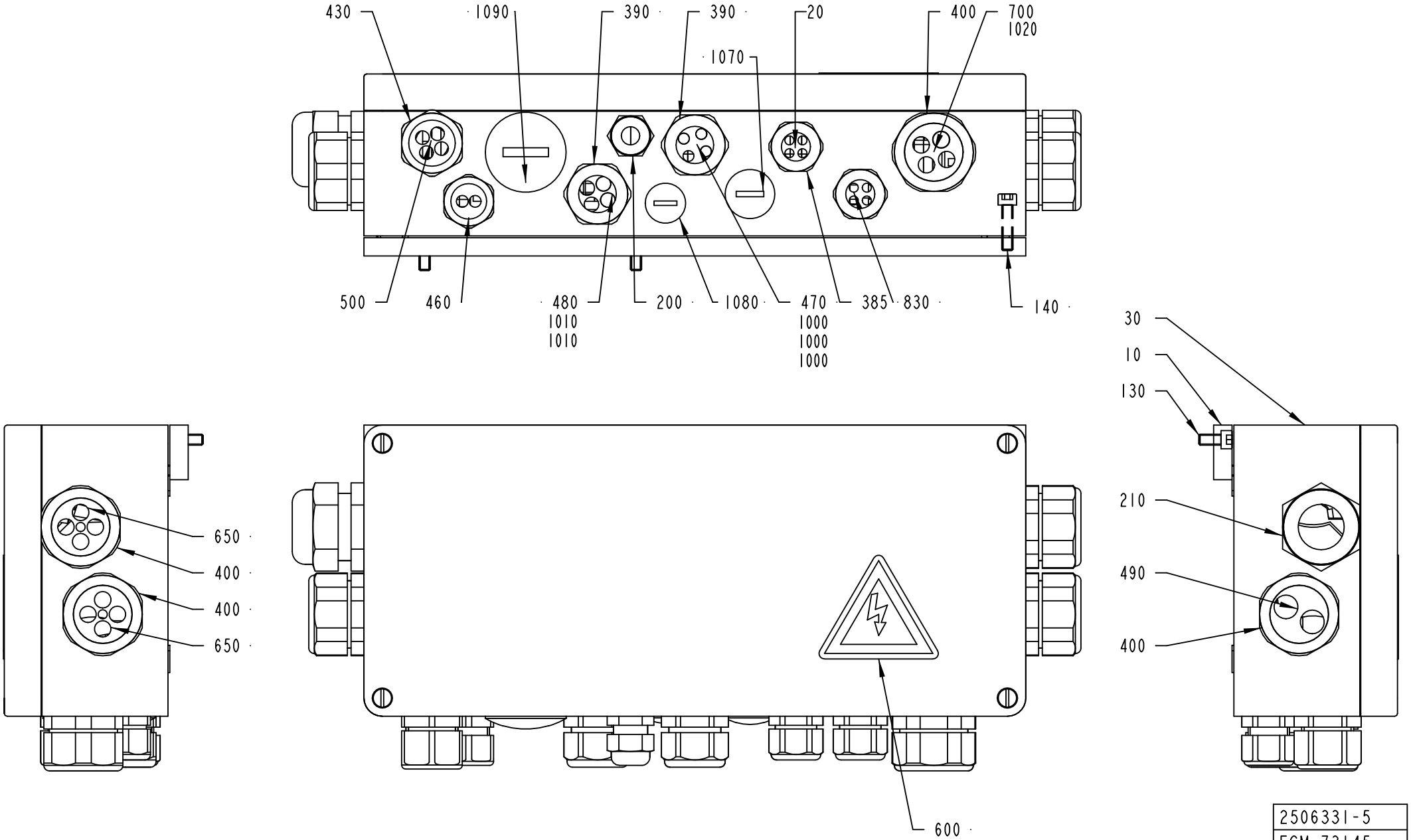

2506331-5
ECM 73145

ECM: 179320 - 20040910
Group number: 2506331-0200
Assembly Drawing: 2506331-5_1_AA

This list covers pages from 5-48 to 5-51

Pos	Part No	UN	Qty	Description	Page No
-					
0010	1255874-0000		1	SPACER	
0030	2506332-0000		1	BOX	
0100	353042-0005	MM	340	RAIL TS 35/7.5	
0130	312115-0366		2	SCREW ISO4762 M6X12 A4 80	
0140	312115-0372		2	SCREW ISO4762 M6X25 A4 80	
0170	312125-0364		2	SCREW ISO 1207 M6X10 A4	
0200	352103-0106		1	CABLE GLAND, ST 11, PR18,6/PG11	
0210	352103-0121		1	CABLE GLAND, ST 29, PR37,0/PG29	
0240	353021-0132		20	TERMINALS,TRIPLE-LEVEL, DLD 2,5/PE	
0250	353021-0213		1	FEED THROUGH TERMINAL, 10201.0	
0260	353021-0301		6	TERMINALS,TRIPLE-LEVEL, DLI 2,5/35 PA	
0270	353021-0302		7	TERMINALS,TRIPLE-LEVEL, DLD 2,5/35 PA	
0290	353024-0204		4	EARTH TERMINAL WPE 2,5	
0300	353024-0206		1	EARTH TERMINAL, 1010.2	
0310	353032-0004		1	END PLATE WAP 2,5-10 BEIGE	
0320	353032-0009		1	END PLATE, WAP FOR WDK	
0330	353032-0013		1	END PLATE, 13818.6	
0340	353032-0302		1	END PLATE WAP, 13176.6	
0350	353034-0401		1	BRIDGE CONNECTOR Q2, 13125.0	
0360	353034-0402		1	BRIDGE CONNECTOR Q3, 13126.0	
0370	353034-0404		3	BRIDGE CONNECTOR Q10, 13131.0	
0385	353240-0004		2	GLAND W/O INSERT PG16 NORMAL	
0390	353240-0005		3	GLAND W/O INSERT PG21 NORMAL	
0400	353240-0006		4	GLAND W/O INSERT PG29 NORMAL	
0420	353241-0005		1	GLAND W/O INSERT PG13,5 EXTENDED	
0430	353241-0007		1	GLAND W/O INSERT PG16 EXTENDED	
0460	90458-0147		1	GLAND, INSERT, MULTI HOLE, 2X6,5	
0470	353249-0051		1	INSERT, MULTI HOLE, E154M4X6	
0480	353249-0059		1	GLAND, INSERT, MULTI HOLE, 4X8	
0490	353249-0060		1	INSERT, MULTI HOLE, E155M2X13	
0500	353249-0084		1	INSERT, MULTI HOLE, EK 154M4X7,5	
0550	90077-0113		8	FEED THROUGH TERMINAL, 10-00102150-1	
0600	90194-0016		1	WARNING SIGN, RISK OF ELECTRIC SHOCK	
0650	90457-0027		2	INSERT, MULTI HOLE, E155M1X5/4X9	
0700	90457-0030		1	INSERT, MULTI HOLE, EK155M4X9	
0750	90457-0051		1	END PLATE	
0820	90458-1136		2	TERMINAL BLOCK, 103630	
0830	90458-1906		2	GLAND, INSERT, MULTI HOLE, 4X5	
0850	359011-0807		2	MARKING PLATES 5-FW 1-50	
0870	359011-0808		2	MARKING PLATES 5-FW 51-100	
0900	359011-0818		1	SYMBOL 5-GW (-) 50PC	
1000	353249-0304		3	SEALING PIN, 6X25	
1010	353249-0308		2	SEALING PIN, 8X20	
1020	353249-0309		1	SEALING PIN, 9,3X20	
1070	90002-0004		1	BLANK-OFF PLUG, PR 22,5 SKINDICHT-BLK16	
1080	90002-0009		1	BLANK-OFF PLUG, PR 18.6 SKINDICHT-BLK11	
1090	90002-0010		1	BLANK-OFF PLUG, PR 37 SKINDICHT-BLK29	

Machine Type | Group Description | Used-In | Group Number | Page No

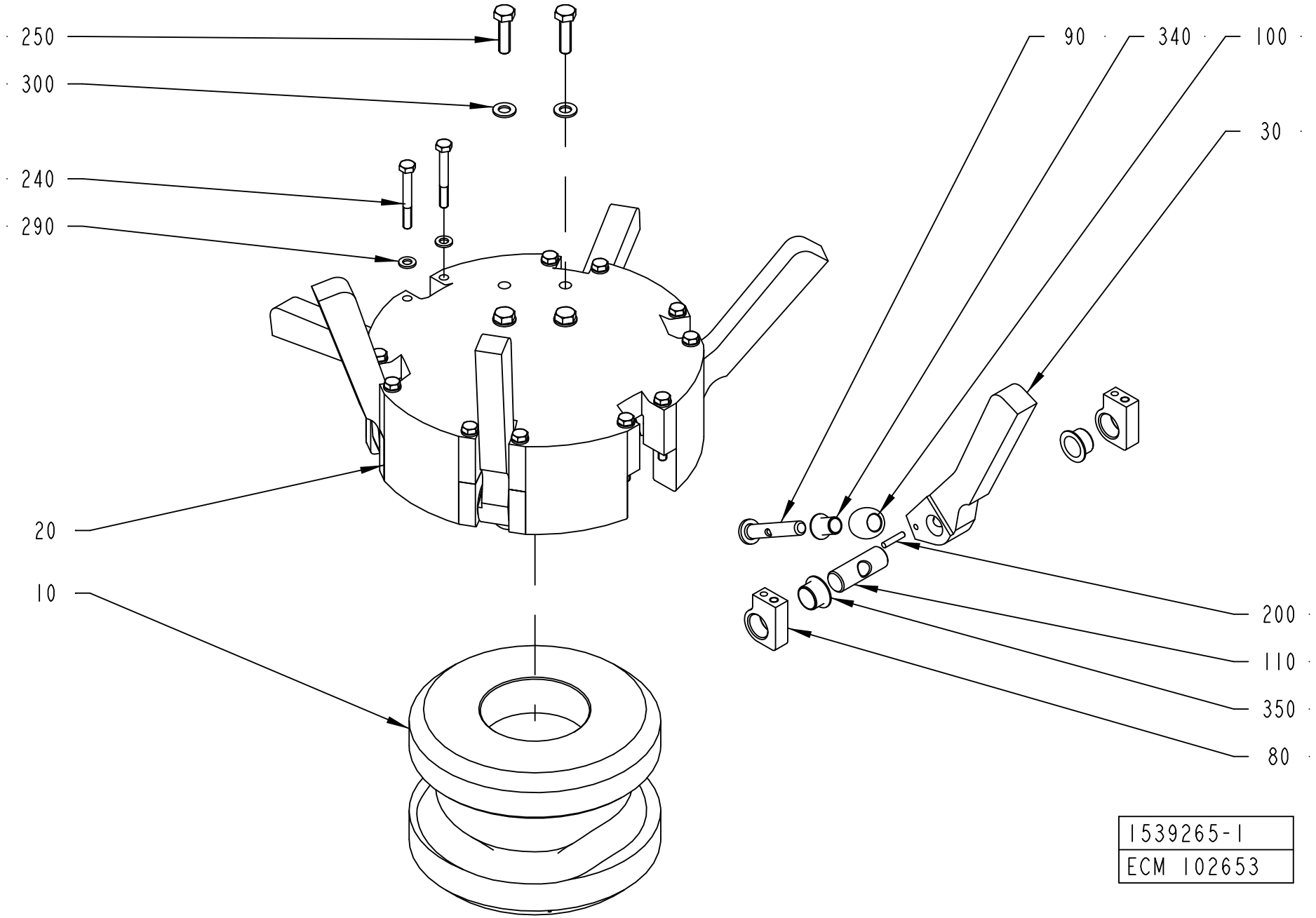
250
300
240
290
20
10
90
340
100
30
200
110
350
80
1539265-1
ECM 102653

ECM: 205735 - 20050621
Group number: 1539265-0100
Assembly Drawing: 1539265-1_1_AA

Pos	Part No	UN	Qty	Description	Page No
TBA 0100B					
030	1549186-0000		6	CARRIER	
TBA 0125S					
030	1549184-0000		6	CARRIER	
TBA 0160S					
030	2502192-0000		6	CARRIER	
TBA 0180B					
030	1549193-0000		6	CARRIER	
TBA 0200B					
030	1549183-0000		6	CARRIER	
TBA 0200M					
030	1549190-0000		6	CARRIER	
TBA 0200S					
030	1549182-0000		6	CARRIER	
TBA 0250B					
030	1549187-0000		6	CARRIER	
TBA 0250S					
030	1539268-0000		6	CARRIER	
TBA 0284B, TBA 0300S					
030	2502194-0000		6	CARRIER	
TBA 0330S					
030	1549191-0000		6	CARRIER	
Common Parts					
010	1539266-0000		1	CAM	
020	1539267-0000		1	DRUM	
080	1260065-0000		12	BRACKET	
090	1260068-0000		6	SHAFT	
100	1260069-0000		6	ROLLER	
110	1260070-0000		6	SHAFT	
200	311103-0272		6	PARALLEL PIN ISO 2338 4M6X20 A1	
240	312105-0380		12	SCREW M6S ISO 4014 M6X50 A480	
250	312105-0455		4	SCREW M6S ISO 4017 M8X30 A480	
290	315105-0153		12	WASHER BRB 6,4X12 RFR	
300	315105-0165		4	WASHER BRB 8,4X16 RFR	
340	90240-0331		6	FLANGE BUSHING, 10X12X17 MM	
350	90240-0332		12	FLANGE BUSHING, 16X18X12 MM	

Pos	Part No	UN	Qty	Description	Page No

Machine Type | Group Description | Used-In | Group Number | Page No

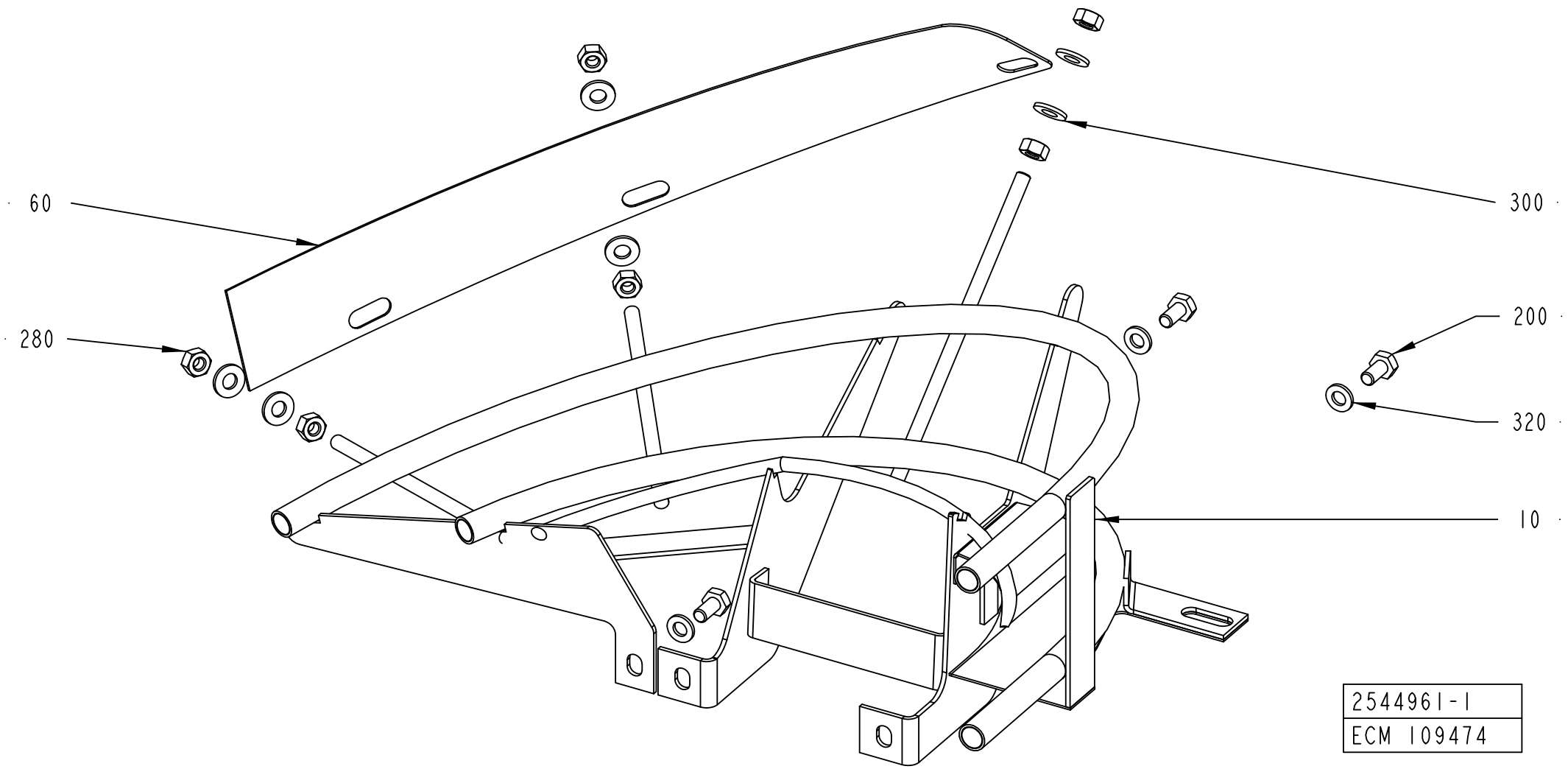
60
280
300
200
320
10
2544961-1
ECM 109474

ECM: 211574 - 20050621
Group number: 2544961-0100
Assembly Drawing: 2544961-1_1_AA

Pos	Part No	UN	Qty	Description	Page No
TBA 0100B					
010	2555564-0000		1	GUIDE	
TBA 0125S					
010	2555563-0000		1	GUIDE	
TBA 0160S					
010	2555568-0000		1	GUIDE	
TBA 0180B					
010	2555567-0000		1	GUIDE	
TBA 0200B					
010	2555562-0000		1	GUIDE	
TBA 0200M					
010	2555571-0000		1	GUIDE	
TBA 0200S					
010	2545667-0000		1	GUIDE	
TBA 0250B					
010	2555565-0000		1	GUIDE	
TBA 0250S, TBA 0330S					
010	2555566-0000		1	GUIDE	
TBA 0284B, TBA 0300S					
010	2555569-0000		1	GUIDE	
Common Parts					
060	1539956-0000		1	PLATE	
200	312105-0366		3	SCREW M6S ISO 4017 M6X12 A480	
280	312605-0316		6	HEXAGON NUT, M6M M6 A280	
300	315105-0156		6	WASHER BRB 6,7X14 RFR	
320	315105-0153		3	WASHER BRB 6,4X12 RFR	

Pos	Part No	UN	Qty	Description	Page No

TRANSMISSION UNIT

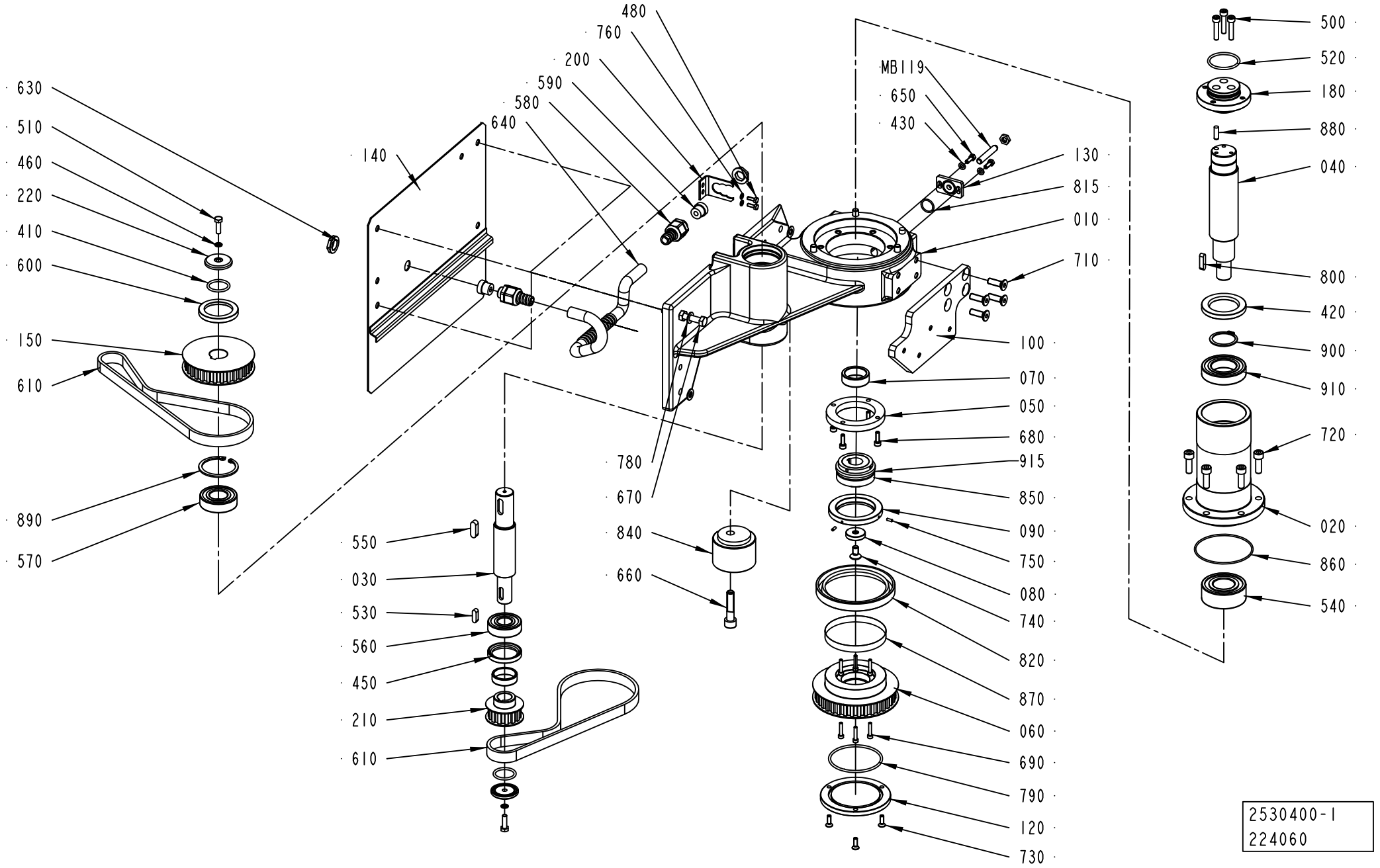

ECM: 238740 - 20051114
Group number: 2530400-0100
Assembly Drawing: 2530400-1_1_AC

Pos	Part No	UN	Qty	Description	Page No
-					
010	2544957-0000		1	AXLE SUPPORT	
020	2544958-0000		1	BEARING FLANGE	
030	2544962-0000		1	SHAFT	
040	2544963-0000		1	SHAFT	
050	2544964-0000		1	FLANGE	
060	2544965-0000		1	TOOTHED PULLEY	
070	2544968-0000		1	INNER RING	
080	2544969-0000		1	SPACER	
090	2544970-0000		1	FLANGE	
100	2544971-0000		1	BRACKET	
120	2544973-0000		1	CUP	
130	2544974-0000		1	BLANK PLUG	
140	2544975-0000		1	SHEET	
150	1539260-0000		1	TOOTHED PULLEY	
180	2559122-0000		1	FLANGE	
200	977527-0000		1	BRACKET	
210	1539256-0000		1	TOOTHED PULLEY	
220	1539261-0000		3	WASHER	
410	315202-0218		3	O-RING 26,2X3 MM	
420	315221-0185		1	RADIAL SEAL 40X62X7 MM	
430	315105-0146		2	WASHER BRB 5,3X10 RFR	
450	315221-0175		1	RADIAL SEAL 35X47X7 MM	
460	315211-0103		2	BONDED SEAL SS/NBR90 M6	
480	312105-0291		2	SCREW M6S ISO 4017 M4X12 A470	
500	312115-0374		1	SCREW ISO4762 M6X30 A4 80	
510	312105-0370		2	SCREW M6S ISO 4017 M6X20 A480	
520	315202-0223		1	O-RING 39,2X3 MM	
530	315705-0232		1	PARALLEL KEY W. ROUND ENDS 6X6X20 MM	
540	321330-0106		1	ANG. BALL BEAR, 30X62X23,8 MM	
550	315705-0265		1	PARALLEL KEY W. ROUND ENDS 8X7X25 MM	
560	321309-0104		1	BALL BEARING, 20X47X14 MM	
570	321309-0105		1	BALL BEARING, 25X52X15 MM	
580	90458-0427		2	HOSE GLAND W/O INSERT M16 EXTENDED	
590	353249-0008		2	INSERT, SINGEL HOLE, EK 152/7	
600	90091-0305		1	RADIAL SEAL 40X55X7 MM DUST LIP	
610	90459-6812		2	TIMING BELT T10X690X16 POLYURETHANE	
630	90458-0322		2	NUT, M16X1,5	
640	90152-0058	M	1	SPIRAL CONDUIT, 15X9, UL 0909	
650	312105-0328		2	SCREW M6S ISO 4017 M5X14 A480	
660	312115-0500		1	SCREW ISO4762 M10X45 A4 80	
670	312105-0455		4	SCREW M6S ISO 4017 M8X30 A480	
680	312115-0329		4	SCREW ISO4762 M5X16 A4 80	
690	312115-0295		6	SCREW ISO4762 M4X20 A4 80	
700	312115-0374		2	SCREW ISO4762 M6X30 A4 80	
710	312156-0453		4	SCREW EN 10642 MF6S M8X25 A470	
720	312115-0453		9	SCREW ISO4762 M8X25 A4 80	
730	312156-0329		3	SCREW EN 10642 MF6S M5X16 A470	
740	312156-0449		1	SCREW EN 10642 MF6S M8X16 A470	
750	312318-0222		2	SCREW ISO4029 M3X8 A4	
760	315101-0136		2	WASHER BRB, 4,3/8 H=0,8	
780	315105-0165		4	WASHER BRB 8,4X16 RFR	
790	315202-0305		1	O-RING 69,5X3 MM	
800	315701-0234		1	PARALLEL KEY W. ROUND ENDS 6X6X25 MM	
815	315205-0705		1	O-RING 17,17X1,78 MM	
820	90091-0233		1	RADIAL SEAL 85X110X12 MM DUST LIP	
840	90458-0220		1	TENSION ROLLER, M40/60-0-M EXCENTRIC	
850	90459-0737		1	SAFETY CLUTCH, SK1 15/D/20/5-20	
860	90459-0765		1	O-RING 78X2 MM	
870	90459-0766		1	SLEEVE, CR 99334	
880	311103-0353		1	PARALLEL PIN ISO 2338 6M6X20 A1	
890	315753-0132		1	RETAINING RING FOR BORE DIN 472 52 A2	
900	315751-0124		1	RETAINING RING FOR SHAFT DIN 471 35 A2	
910	321306-0107		1	BALL BEARING, 35X62X14 MM	
915	90296-0070	KG	0.1	SHELL ALVANIA GREASE EP 1	
MB119	90044-0117		1	PROX.SW. IX 0208	

Machine Type	Group Description	Used-In	Group Number	Page No

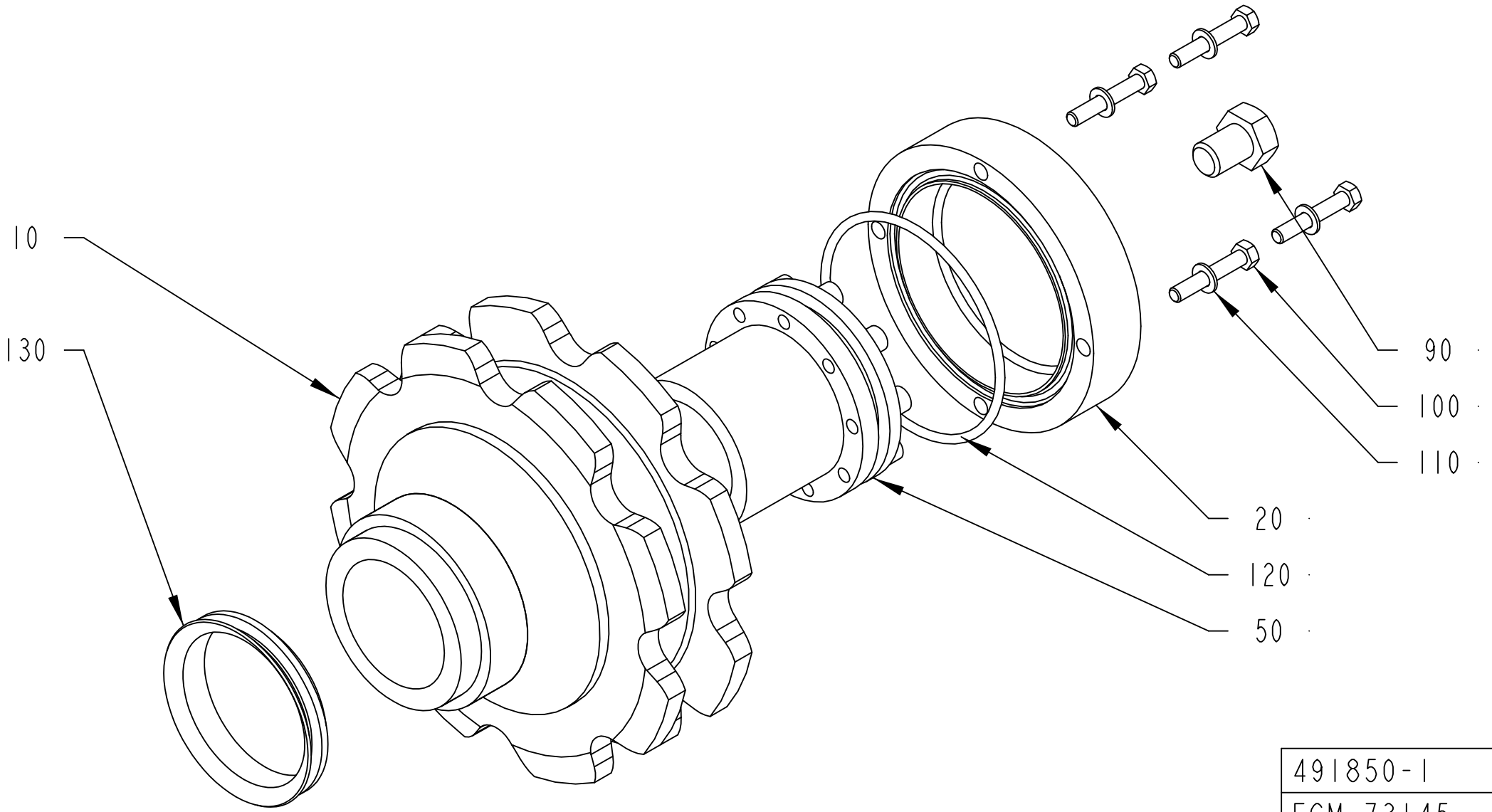

491850-1
ECM 73145

ECM: 190643 - 20050713
Group number: 491850-0100
Assembly Drawing: 491850-1_1_AC

This list covers pages from 5-58 to 5-61

Pos	Part No	UN	Qty	Description	Page No
TBA 0100B, TBA 0180B, TBA 0125S, TBA 0160S, TBA 0200M, TBA 0200B, TBA 0200S, TBA 0250S, TBA 0284B, TBA 0250B, TBA 0300S, TBA 0330S (See drawing on page: 5-58)					
010	491258-0000		1	DRIVE WHEEL	
TBA 0200SQ (See drawing on page: 5-60)					
010	1143975-0000		1	DRIVE WHEEL	
Common Parts					
020	491851-0000		1	LID	
050	90208-0031		1	BUSHING	
090	312101-0530		1	SCREW M6S M12X16 FZB	
100	312105-0335		4	SCREW M6S ISO 4014 M5X30 A480	
110	315105-0146		4	WASHER BRB 5,3X10 RFR	
120	315202-0306		1	O-RING 74,5X3 MM	
130	315220-0210		1	V-RINGS 54X64X13 MM V-60S	

Pos	Part No	UN	Qty	Description	Page No

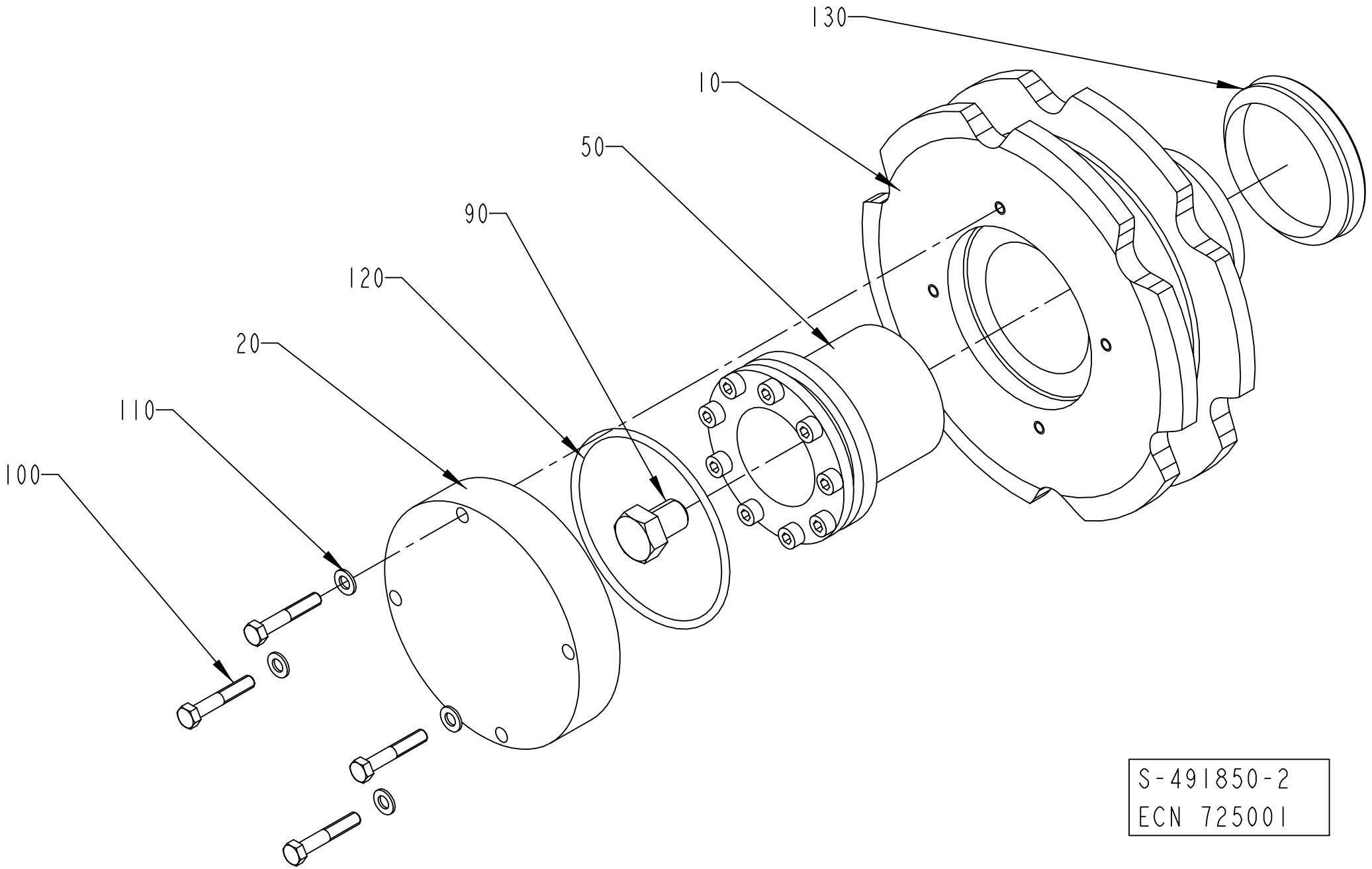
130
10
50
90
120
20
110
100
S-491850-2
ECN 725001

ECM: 190643 - 20050713
Group number: 491850-0100
Assembly Drawing: 491850-2_1_AC

This list covers pages from 5-58 to 5-61

Pos	Part No	UN	Qty	Description	Page No
TBA 0100B, TBA 0180B, TBA 0125S, TBA 0160S, TBA 0200M, TBA 0200B, TBA 0200S, TBA 0250S, TBA 0284B, TBA 0250B, TBA 0300S, TBA 0330S (See drawing on page: 5-58)					
010	491258-0000		1	DRIVE WHEEL	
TBA 0200SQ (See drawing on page: 5-60)					
010	1143975-0000		1	DRIVE WHEEL	
Common Parts					
020	491851-0000		1	LID	
050	90208-0031		1	BUSHING	
090	312101-0530		1	SCREW M6S M12X16 FZB	
100	312105-0335		4	SCREW M6S ISO 4014 M5X30 A480	
110	315105-0146		4	WASHER BRB 5,3X10 RFR	
120	315202-0306		1	O-RING 74,5X3 MM	
130	315220-0210		1	V-RINGS 54X64X13 MM V-60S	

Pos	Part No	UN	Qty	Description	Page No

TENSION SPROCKET

Drawing file: 491846-3_1_AA.hpgl

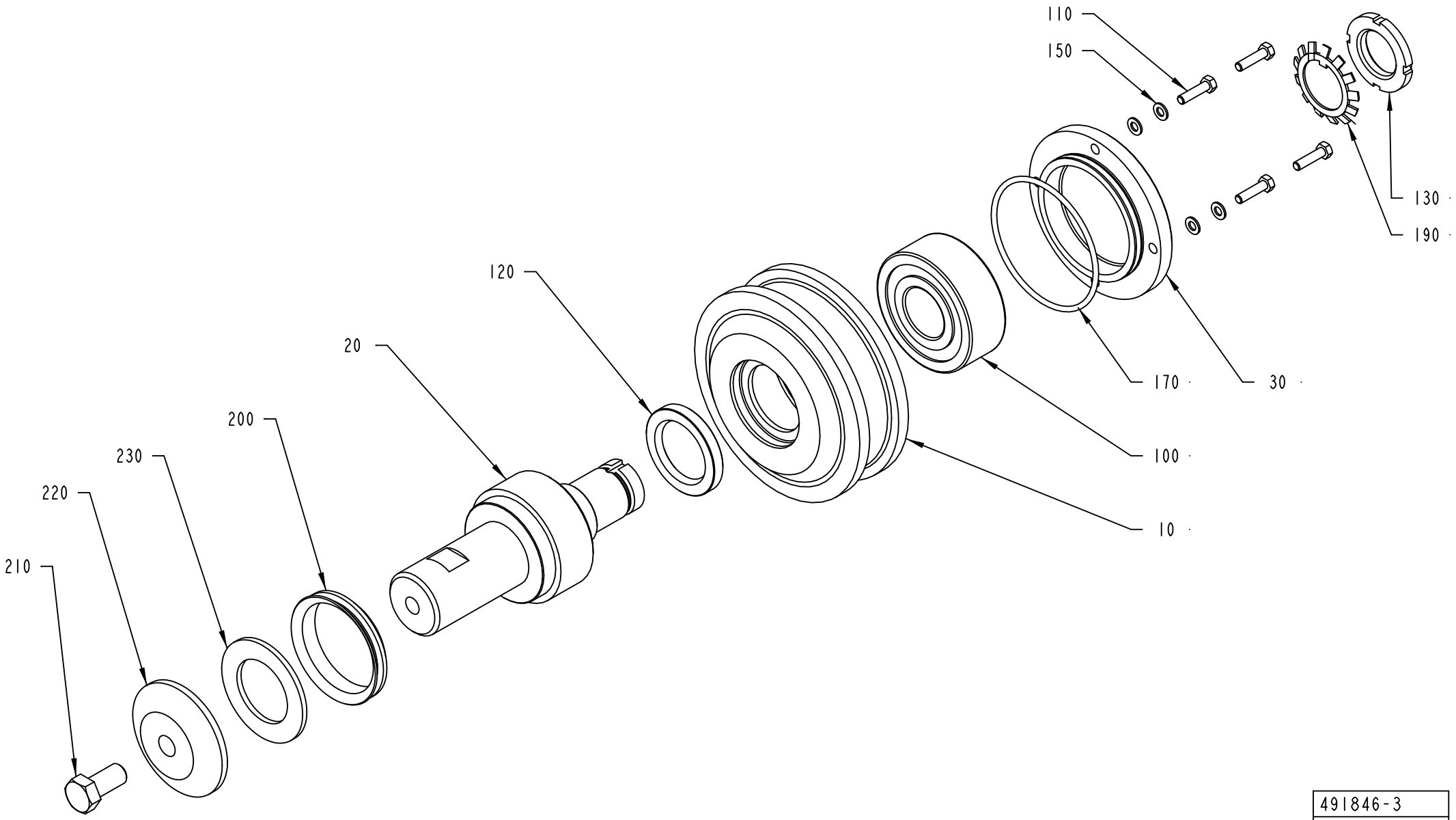

491846-3
ECM 73145

ECM: 293452 - 20070126
Group number: 491846-0300
Assembly Drawing: 491846-3_1_AA

Pos	Part No	UN	Qty	Description	Page No
TBA					
010	2569884-0000		1	TENSION SPROCKET	
020	1490928-0000		1	SHAFT	
210	312105-0534		1	SCREW M6S ISO 4017 M12X25 A480	
220	1279701-0000		1	WASHER	
230	1517506-0000		1	SHIM	
Common Parts					
030	491291-0000		1	LID	
100	90214-0122		1	BALL BEARING, 30X72X27 MM	
105	90296-0070		1	SHELL ALVANIA GREASE EP 1	
110	312105-0331		4	SCREW M6S ISO 4017 M5X20 A480	
120	315221-0177		1	RADIAL SEAL 35X52X7 MM	
130	312805-0106		1	NUT ROUND WITH SLOTS M30X1,5 FE	
150	315105-0146		4	WASHER BRB 5,3X10 RFR	
170	315202-0306		1	O-RING 74,5X3 MM	
190	315410-0106		1	LOCK WASHER MB 6 D=30 H=1,25	
200	315220-0210		1	V-RINGS 54X64X13 MM V-60S	

Pos	Part No	UN	Qty	Description	Page No

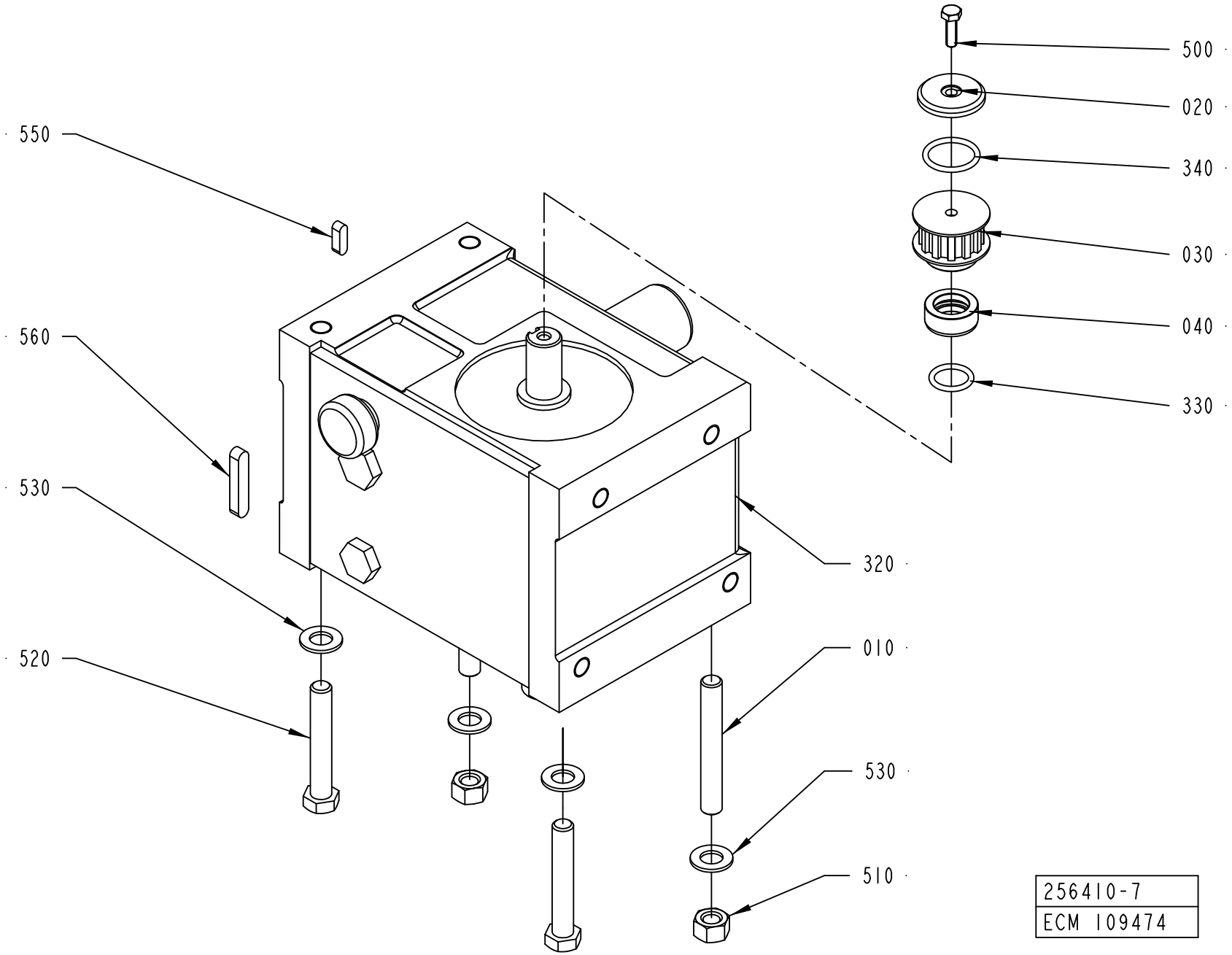
500
020
340
030
040
330
550
560
530
520
320
010
530
510
256410-7
ECM 109474

ECM: 293453 - 20070126
Group number: 256410-0900
Assembly Drawing: 256410-7_1_AB

Pos	Part No	UN	Qty	Description	Page No
TBA					
020	1539261-0000		1	WASHER	
030	1539301-0000		1	TOOTHED PULLEY	
040	1539302-0000		1	SPACER	
320	90458-1721		1	INDEXING GEAR, 10.707.207	
010	*90459-2632*		*1*	*GASKET, 15.609.003*	
030	*90416-0373*		*8*	*CAM ROLLER*	
040	*321361-0104*		*1*	*TAPER ROLLER BEARING, 20X47X15,25 MM*	
050	*321361-0109*		*1*	*TAPER ROLLER BEARING, 45X85X20,75 MM*	
060	*90214-0083*		*1*	*TAPER ROLLER BEARING, 30X55X17 MM*	
070	*90416-0362*		*2*	*RING*	
080	*90416-0359*		*1*	*RING*	
090	*90416-0363*		*2*	*RING*	
100	*90416-0374*		*1*	*PROTECTIVE RING FOR90416-21*	
110	*90214-0314*		*1*	*SEALING RING, 30X54,5X4,5 MM*	
120	*312805-0104*		*1*	*NUT ROUND WITH SLOTS M20X1 FE*	
130	*312805-0107*		*1*	*NUT ROUND WITH SLOTS M35X1,5 FE*	
140	*312805-0108*		*1*	*NUT ROUND WITH SLOTS M40X1,5 FE*	
150	*315410-0104*		*1*	*LOCK WASHER MB 4 D=20 H=1*	
160	*315410-0107*		*1*	*LOCK WASHER MB 7 D=35 H=1,25*	
170	*315410-0108*		*1*	*LOCK WASHER MB 8 D=40 H=1,25*	
200	*90459-3205*		*1*	*SHIM SET, 10.707.116*	
330	315202-0215		1	O-RING 19,2X3 MM	
340	315202-0218		1	O-RING 26,2X3 MM	
500	312105-0370		1	SCREW M6S ISO 4017 M6X20 A480	
550	315705-0232		1	PARALLEL KEY W. ROUND ENDS 6X6X20 MM	
Common Parts					
010	1511487-0000		2	STUD SCREW	
310	90296-0073	L	2	SHELL OMALA OIL 220	
510	312605-0322		2	HEXAGON NUT, M6M M12 A280	
520	312105-0547		2	SCREW M6S ISO 4014 M12X75 A480	
530	315105-0178		4	WASHER BRB 13X24 RFR	
560	315705-0271		1	PARALLEL KEY W. ROUND ENDS 8X7X45 MM	

Pos	Part No	UN	Qty	Description	Page No

Machine Type | Group Description | Used-In | Group Number | Page No

DISC COUPLING

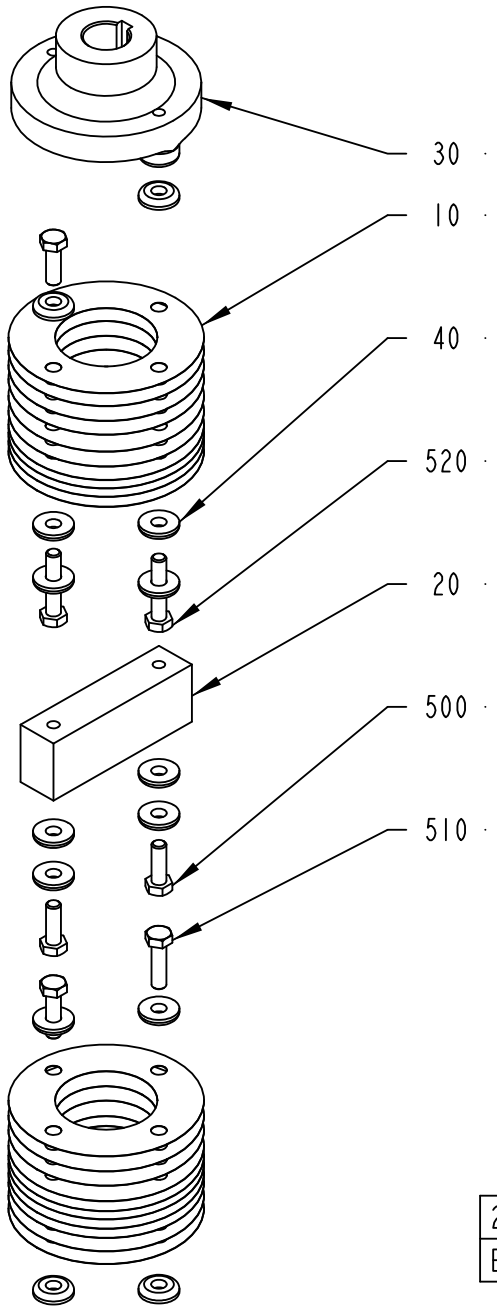

256437-2
ECM 73145

ECM: 205727 - 20050621
Group number: 256437-0200
Assembly Drawing: 256437-2_1_AC

Pos	Part No	UN	Qty	Description	Page No
-					
010	31559-0000		20	SPRING PLATE	
020	272746-0000		1	ROD	
030	272747-0000		1	CONNECTION	
040	31553-0001		14	WASHER	
500	312101-0453		4	SCREW M6S M8X25 FZB	
510	312101-0455		2	SCREW M6S M8X30 FZB	
520	312101-0459		2	SCREW M6S M8X40 FZB	

Pos	Part No	UN	Qty	Description	Page No

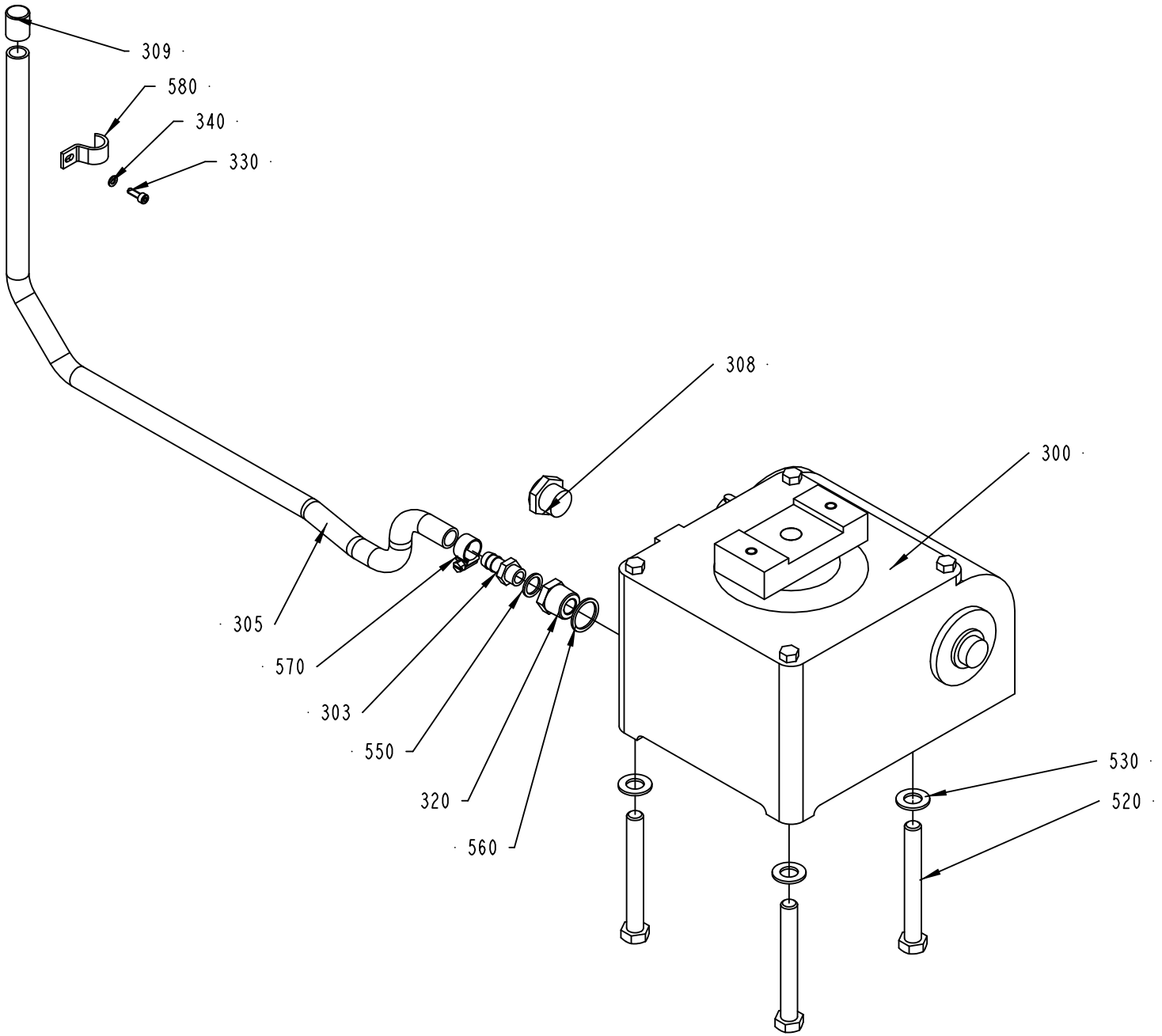

256438-6
ECM 103837

ECM: 203547 - 20051207
Group number: 256438-0300
Assembly Drawing: 256438-6_1_AD

Pos	Part No	UN	Qty	Description	Page No
TBA/19					
303	90163-0052		1	HOSE NIPPLE, EXT.THR. 1/4-12 MM	
305	90166-0113	MM	800	HOSE	
308	90257-0002		1	FILTER PLUG, NO. 8145-00-120 TYPE F12	
309	90261-0073		1	PLUG, BLIND, PLASTIC, NO. GPN250/15	
330	312115-0291		1	SCREW ISO4762 M4X12 A4 80	
340	315105-0136		1	WASHER BRB 4,3X8 RFR	
550	315234-0110		1	WASHER,PL.RND.CU.13,5/18 H=1,5	
560	315234-0113		1	WASHER PL.RND.CU.21,3//26 H=1,5	
570	342991-0101		1	HOSE CLIP,WORM DRIVE TYPE (13)-16	
580	352110-0103		1	CABLE CLIPS, D=14-20 MM	
Common Parts					
300	90056-0071		1	WORM GEAR	
310	90296-0073	L	2	SHELL OMALA OIL 220	
320	90330-0085		1	BUSHING, INT/EXT. THR. R1/2-RP1/4	
520	312101-0552		3	SCREW M6S M12X100 FZB	
530	315101-0178		3	WASHER PLAIN, BRB, 13/24 H=2	

Pos	Part No	UN	Qty	Description	Page No

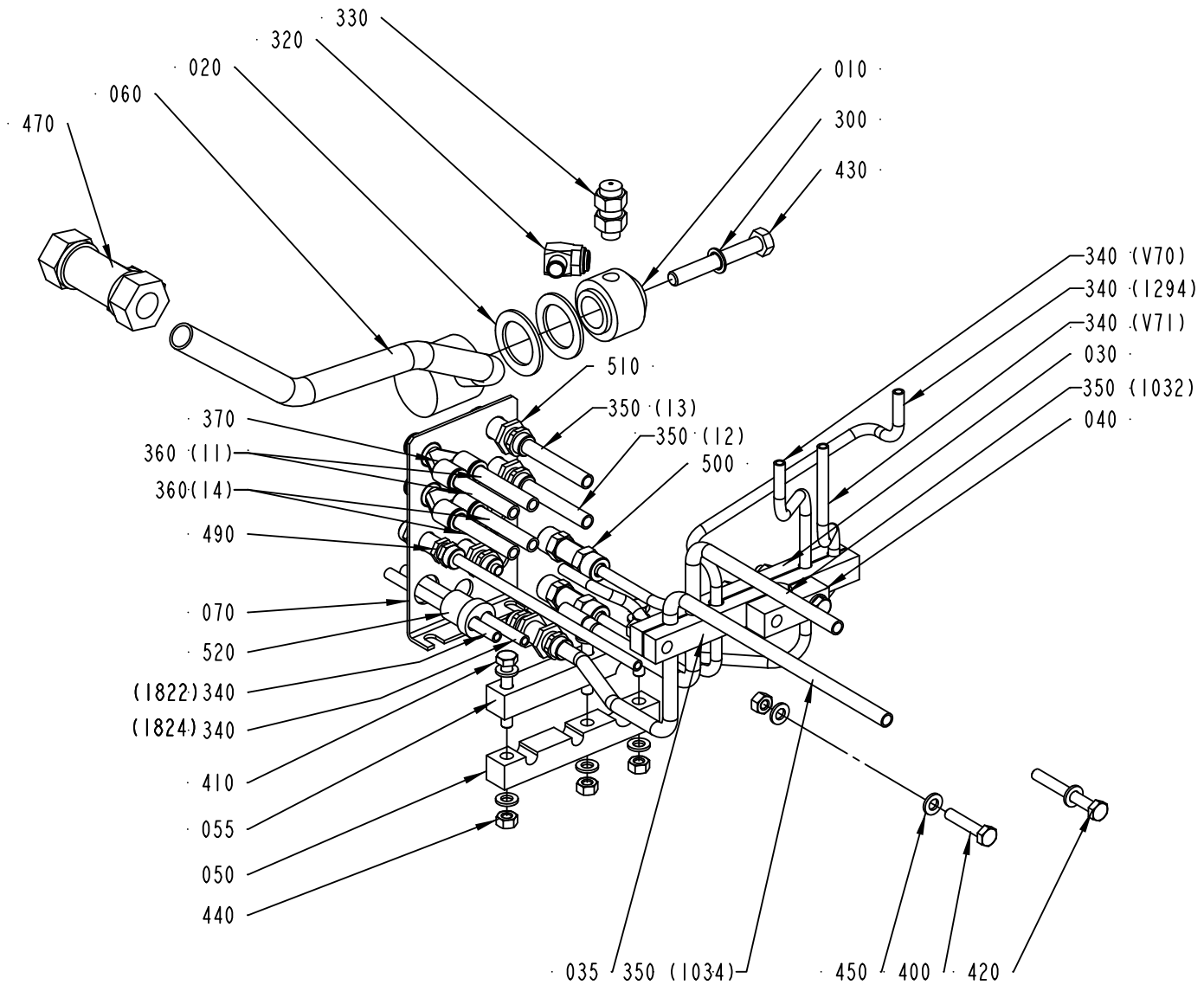

456455-8
257878

ECM: 293446 - 20070126
Group number: 456455-0700
Assembly Drawing: 456455-8_1_AB

Pos	Part No	UN	Qty	Description	Page No
TBA					
360	315400-0004	M	2	TUBE PUN-H-8X1,25-BL	
370	350015-0003		2	Y-FITTING QSY-F-8	
440	312605-0316		7	HEXAGON NUT, M6M M6 A280	
450	315105-0153		13	WASHER BRB 6,4X12 RFR	
490	342960-0112		2	BULKHEAD COUPLING 6/4	
500	342960-0121		2	BULKHEAD COUPLING 8/6-6/4	
510	342960-0122		4	BULKHEAD COUPLING 8/6	
Common Parts					
010	272191-0000		1	DISTRIBUTOR	
020	256907-0000		2	WASHER	
030	456853-0001		1	PIPE CLAMP	
035	456853-0002		1	PIPE CLAMP	
040	456853-0003		1	PIPE CLAMP	
050	456854-0001		1	CRAMP	
055	456854-0002		1	CRAMP	
060	1511887-0000		1	DISTRIBUTOR	
070	1517519-0000		1	PLATE	
300	315211-0104		1	BONDED SEAL SS/NBR90 M8	
320	90424-0009		1	SPRAY NOZZLE 103 DEG	
330	90424-0016		1	SPRAY NOZZLE 103 DEG R 1/8 GG8W	
340	90166-0089	M	12	HOSE 4/6.2 PE BLUE	
350	90166-0090	M	2	HOSE 6/8.4 PE BLUE	
400	312105-0374		1	SCREW M6S ISO 4014 M6X30 A480	
410	312105-0378		3	SCREW M6S ISO 4014 M6X40 A480	
420	312105-0380		2	SCREW M6S ISO 4014 M6X50 A480	
430	312105-0463		1	SCREW M6S ISO 4014 M8X60 A480	
470	342746-0114		1	CONN. T-PIPE T-15	
520	353249-0028		1	INSERT, MULTI HOLE, E153M2X8	
900	359000-0400		3	WIRE MARKING, YELLOW, PA2/4"0"	
910	359000-0401		9	WIRE MARKING, YELLOW, PA2/4"1"	
920	359000-0402		5	WIRE MARKING, YELLOW, PA2/4"2"	
930	359000-0403		3	WIRE MARKING, YELLOW, PA2/4"3"	
940	359000-0404		3	WIRE MARKING, YELLOW, PA2/4"4"	
950	359000-0407		2	WIRE MARKING, YELLOW, PA2/4"7"	
960	359000-0409		1	WIRE MARKING, YELLOW, PA2/4"9"	
970	359000-0771		2	WIRE MARKING, YELLOW, PA2/4"V"	

Pos	Part No	UN	Qty	Description	Page No

Machine Type | Group Description | Used-In | Group Number | Page No

BOTTOM VALVE

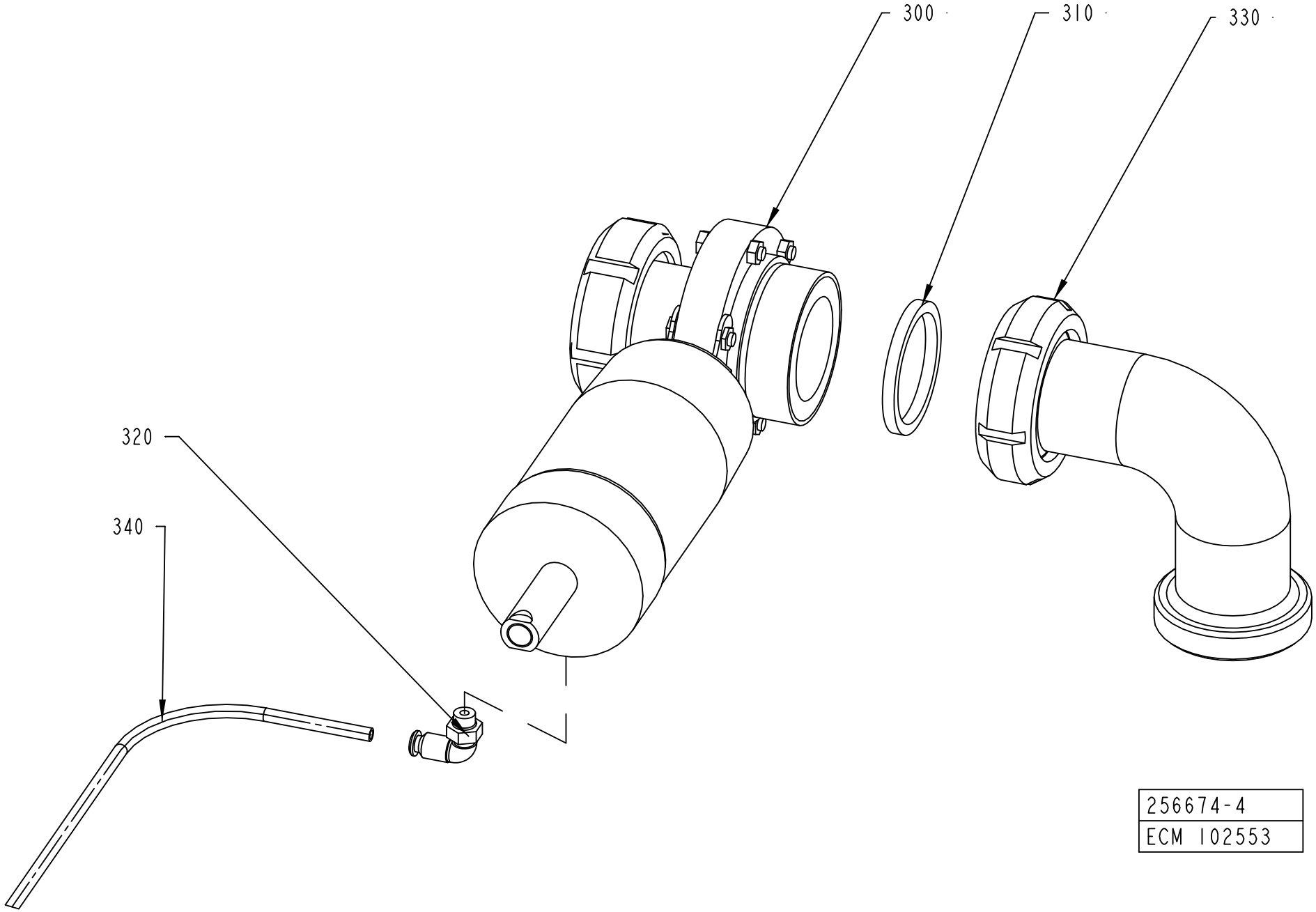

ECM: 205729 - 20050621
Group number: 256674-0500
Assembly Drawing: 256674-4_1_AA

Pos	Part No	UN	Qty	Description	Page No
-					
300	90457-0132		1	VALVE, BUTTERFLY, N.O. ZVF1200BSAAO	
310	315250-0104		1	GASKET 61X51X5,5 MM	
320	90458-2956		1	ELBOW PIPE JOINT, EXT.THREAD, D=6MM-G1/8	
330	342807-0104		1	PIPE ELBOW 90 DEGR. SMS1220, D=51 MM	
340	90166-0089	M	1	HOSE 4/6.2 PE BLUE	

Pos	Part No	UN	Qty	Description	Page No

MACHINE BODY

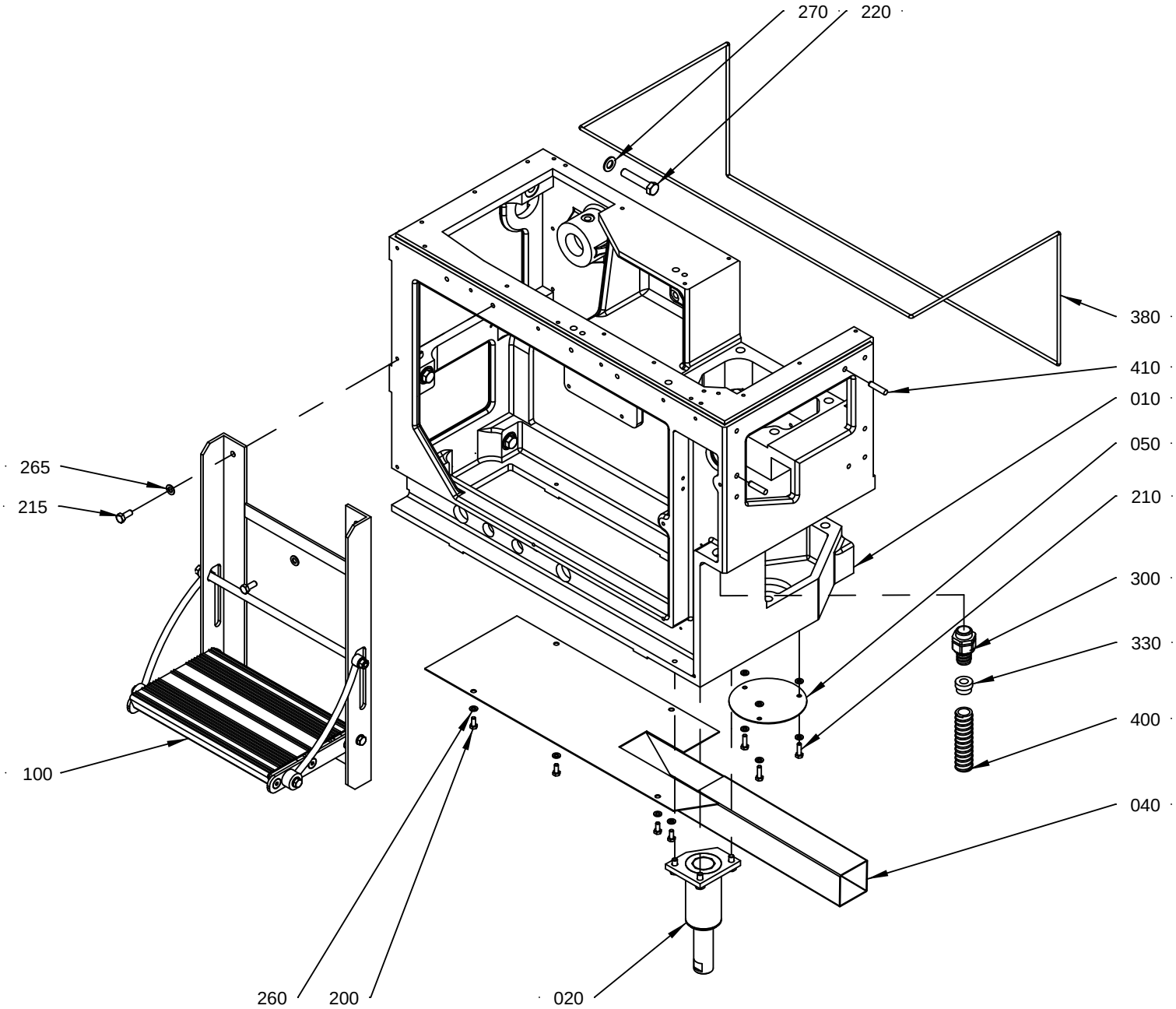

4416 95 - 7
224060

ECM: 293447 - 20070126
Group number: 441695-0600
Assembly Drawing: 441695-7_1_AA

Pos	Part No	UN	Qty	Description	Page No
TBA 0100B, TBA 0180B, TBA 0125S, TBA 0160S, TBA 0200M, TBA 0200B, TBA 0200S, TBA 0250S, TBA 0284B, TBA 0250B, TBA 0300S, TBA 0330S					
010	1539960-0000		1	MACHINE BODY	
220	312105-0544		6	SCREW M6S ISO 4014 M12X60 A480	
265	315105-0165		2	WASHER BRB 8,4X16 RFR	
300	90458-0431		1	HOSE GLAND W/O INSERT M25 EXTENDED	
330	353249-0013		1	INSERT, SINGEL HOLE, EK 154/13	
400	90152-0051	M	1	SPIRAL CONDUIT, 25X18, UL 1816	
410	311103-0407		2	PARALLEL PIN ISO 2338 8M6X35 A1	
Common Parts					
020	2773924-0100		1	LEG	**5-77**
040	2773922-0000		1	BOTTOM PLATE	
050	272743-0000		1	LID	
100	1519426-0100		1	STAIR	**5-79**
200	312105-0366		4	SCREW M6S ISO 4017 M6X12 A480	
210	312105-0370		3	SCREW M6S ISO 4017 M6X20 A480	
215	312105-0451		2	SCREW M6S ISO 4017 M8X20 A480	
260	315105-0153		7	WASHER BRB 6,4X12 RFR	
270	315105-0178		6	WASHER BRB 13X24 RFR	
380	90143-0028	M	2.6	STRIP	
420	311103-0458		2	PARALLEL PIN ISO 2338 10M6X30 A1	

Pos	Part No	UN	Qty	Description	Page No

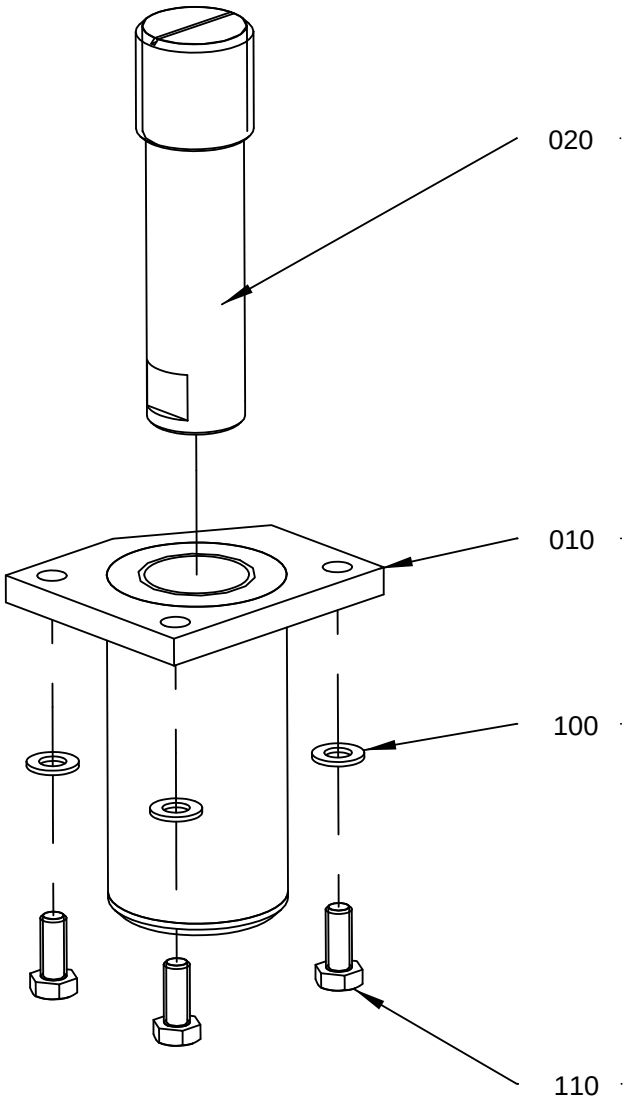

2773 924-1
224060

ECM: 224537 - 20051114
Group number: 2773924-0100
Assembly Drawing: 2773924-1_1_AA

Pos	Part No	UN	Qty	Description	Page No
-					
010	2773923-0000		1	LEG	
020	598148-0000		1	LEG	
100	315105-0165		3	WASHER BRB 8,4X16 RFR	
110	312105-0451		3	SCREW M6S ISO 4017 M8X20 A480	

Pos	Part No	UN	Qty	Description	Page No

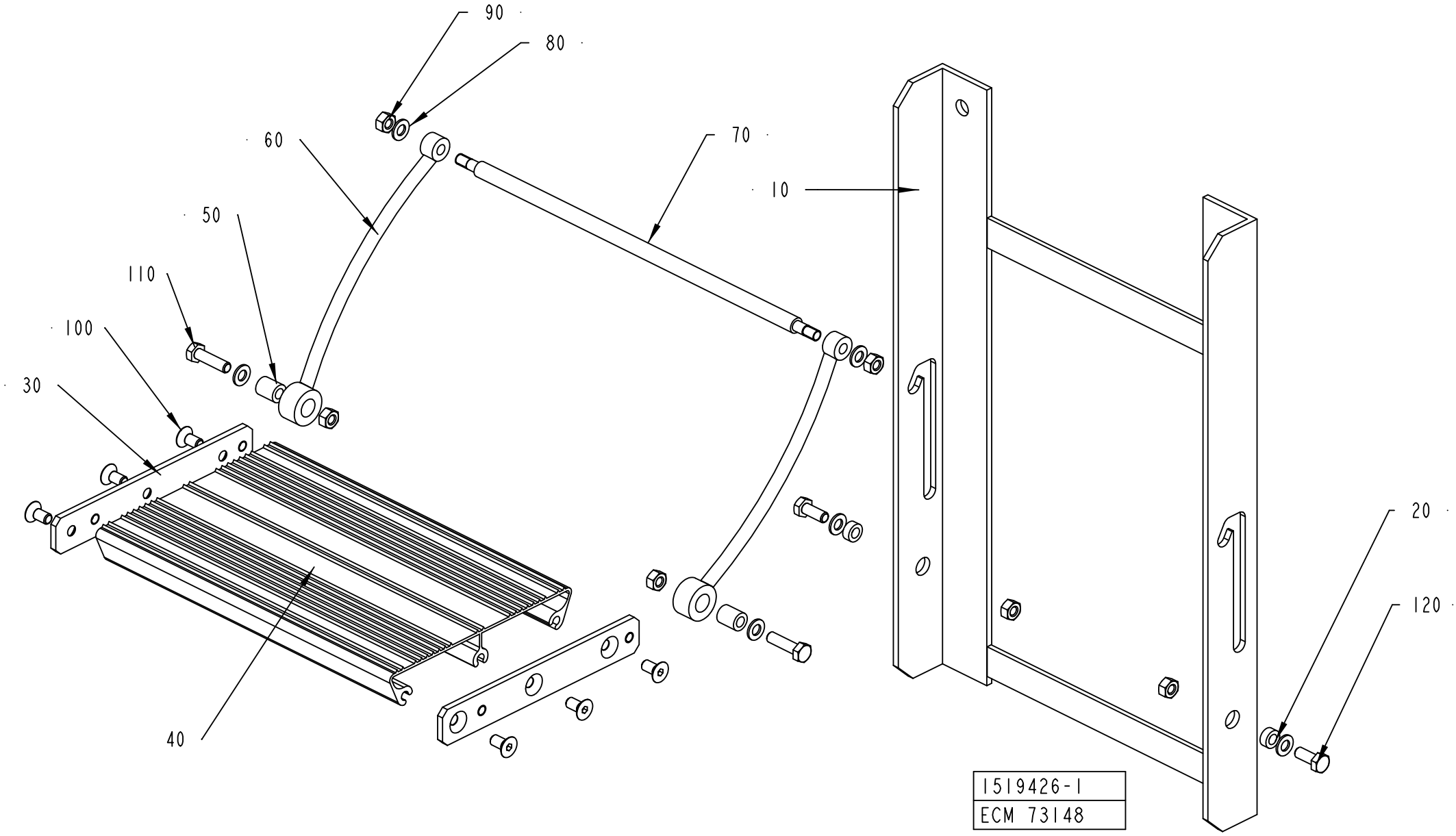
90
80
60
70
10
50
110
100
30
20
120
40
1519426-1
ECM 73148

ECM: 205734 - 20050621
Group number: 1519426-0100
Assembly Drawing: 1519426-1_1_AA

Pos	Part No	UN	Qty	Description	Page No
-					
010	1519423-0000		1	SUPPORT	
020	1519421-0000		2	BUSHING	
030	1519418-0000		2	PLATE	
040	1519417-0000		1	STAIR	
050	1519422-0000		2	BUSHING	
060	1519424-0000		2	SUPPORT	
070	1519425-0000		1	SPACER	
080	315105-0165		6	WASHER BRB 8,4X16 RFR	
090	312605-0318		6	HEXAGON NUT, M6M M8 A280	
100	312155-0449		6	SCREW DIN 7991 MF6S M8X16 A4 70	
110	312105-0455		2	SCREW M6S ISO 4017 M8X30 A480	
120	312105-0451		2	SCREW M6S ISO 4017 M8X20 A480	

Pos	Part No	UN	Qty	Description	Page No

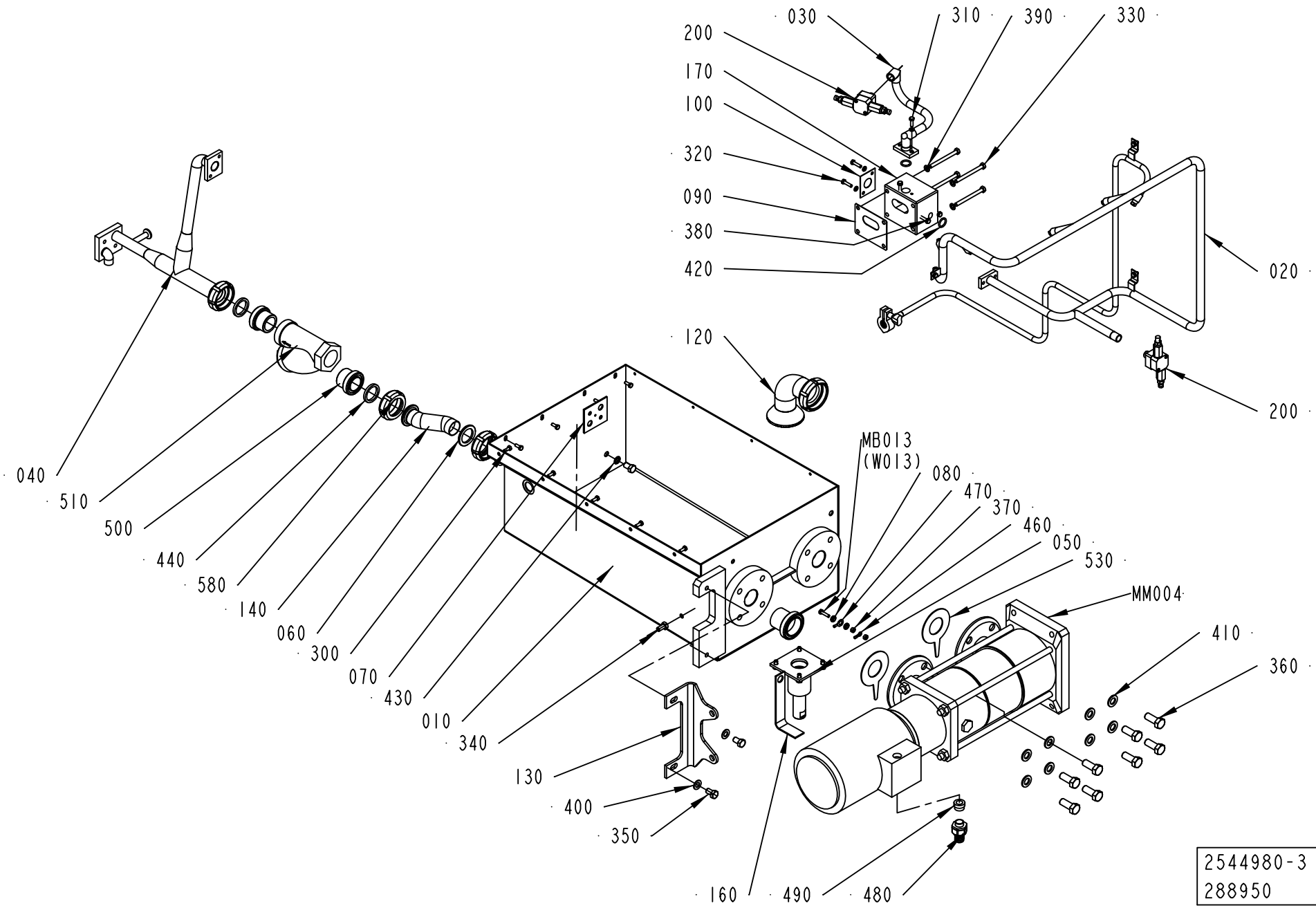
030
310
390
330
200
170
100
320
090
380
420
020
120
200
040
510
500
440
580
140
060
300
070
430
010
340
MB013
(W013)
080
470
370
460
050
530
MM004
410
360
130
400
350
160
490
480
2544980-3
288950

ECM: 289854 - 20070126
Group number: 2544980-0200
Assembly Drawing: 2544980-3_1_AB

Pos	Part No	UN	Qty	Description	Page No
50HZ					
310	312105-0370		2	SCREW M6S ISO 4017 M6X20 A480	
320	312105-0372		4	SCREW M6S ISO 4017 M6X25 A480	
330	312105-0469		4	SCREW M6S ISO 4014 M8X90 A480	
380	315105-0153		6	WASHER BRB 6,4X12 RFR	
420	315202-0215		2	O-RING 19,2X3 MM	
MM004	90457-0131		1	PUMP SV805 R22T 50HZ	
60HZ					
310	312105-0370		2	SCREW M6S ISO 4017 M6X20 A480	
320	312105-0372		4	SCREW M6S ISO 4017 M6X25 A480	
330	312105-0469		4	SCREW M6S ISO 4014 M8X90 A480	
380	315105-0153		6	WASHER BRB 6,4X12 RFR	
420	315202-0215		2	O-RING 19,2X3 MM	
MM004	90458-2762		1	PUMP SV805 R406T 60HZ	
TBA					
010	2773920-0000		1	CLEANING TANK	
020	2544981-0100		1	CLEANING CIRCUIT	**5-83**
030	1539947-0000		1	PIPE	
040	2544959-0000		1	PIPE	
120	1511291-0000		1	CURVE	
130	1511293-0000		1	BRACKET	
140	1511294-0000		1	CLEANING PIPE	
170	1517523-0000		1	BLOCK	
200	441811-0100		2	ROTOR	**5-39**
310	312105-0370		2	SCREW M6S ISO 4017 M6X20 A480	
320	312105-0372		4	SCREW M6S ISO 4017 M6X25 A480	
330	312105-0469		4	SCREW M6S ISO 4014 M8X90 A480	
380	315105-0153		6	WASHER BRB 6,4X12 RFR	
420	315202-0215		2	O-RING 19,2X3 MM	
Common Parts					
050	2854818-0100		1	LEG	**5-85**
060	271435-0000		1	WASHER	
070	295417-0000		1	GASKET	
080	295434-0000		2	BUSHING	
090	456395-0000		1	GASKET	
100	456396-0000		1	GASKET	
160	1512440-0000		1	BRACKET	
300	312105-0368		9	SCREW M6S ISO 4017 M6X16 A480	
340	312105-0491		1	SCREW M6S ISO 4017 M10X20 A480	
350	312105-0532		3	SCREW M6S ISO 4017 M12X20 A480	
360	312105-0628		8	SCREW M6S ISO 4017 M16X40 A480	
370	312605-0316		2	HEXAGON NUT, M6M M6 A280	
390	315105-0165		4	WASHER BRB 8,4X16 RFR	
400	315105-0178		2	WASHER BRB 13X24 RFR	
410	315105-0186		8	WASHER BRB 17X30 RFR	
430	315211-0107		1	BONDED SEAL SS/NBR90 M12	
440	315250-0103		3	GASKET 48X38X5,5 MM	
460	353101-0123		1	CABLE SHOE 0,5-1,5MM2 M6 RED	
470	353101-0126		1	CABLE SHOE	
480	90458-0430		1	HOSE GLAND W/O INSERT M20 EXTENDED	
490	353249-0014		1	INSERT, SINGEL HOLE, EK 154/16	
500	90217-0041		2	NIPPLE LKBN, RD 60-6 - R1 1/2 M	
510	90415-0022		1	FILTER / R1 1/2" TYP. 1012	
	90415-0320		*1*	*FILTER FOR ECON R1 1/2"*	
530	90458-2199		2	GASKET, LOWARA 168061340	
580	342803-0103		2	UNION NUT, RD 60-6 (SMS 38)	
MB013	312105-0372		1	SCREW M6S ISO 4017 M6X25 A480	
W013	351150-0431	M	1.5	CABLE OLFLEX 2X0,75 MM2 LIGHT/GREY	

Machine Type | Group Description | Used-In | Group Number | Page No

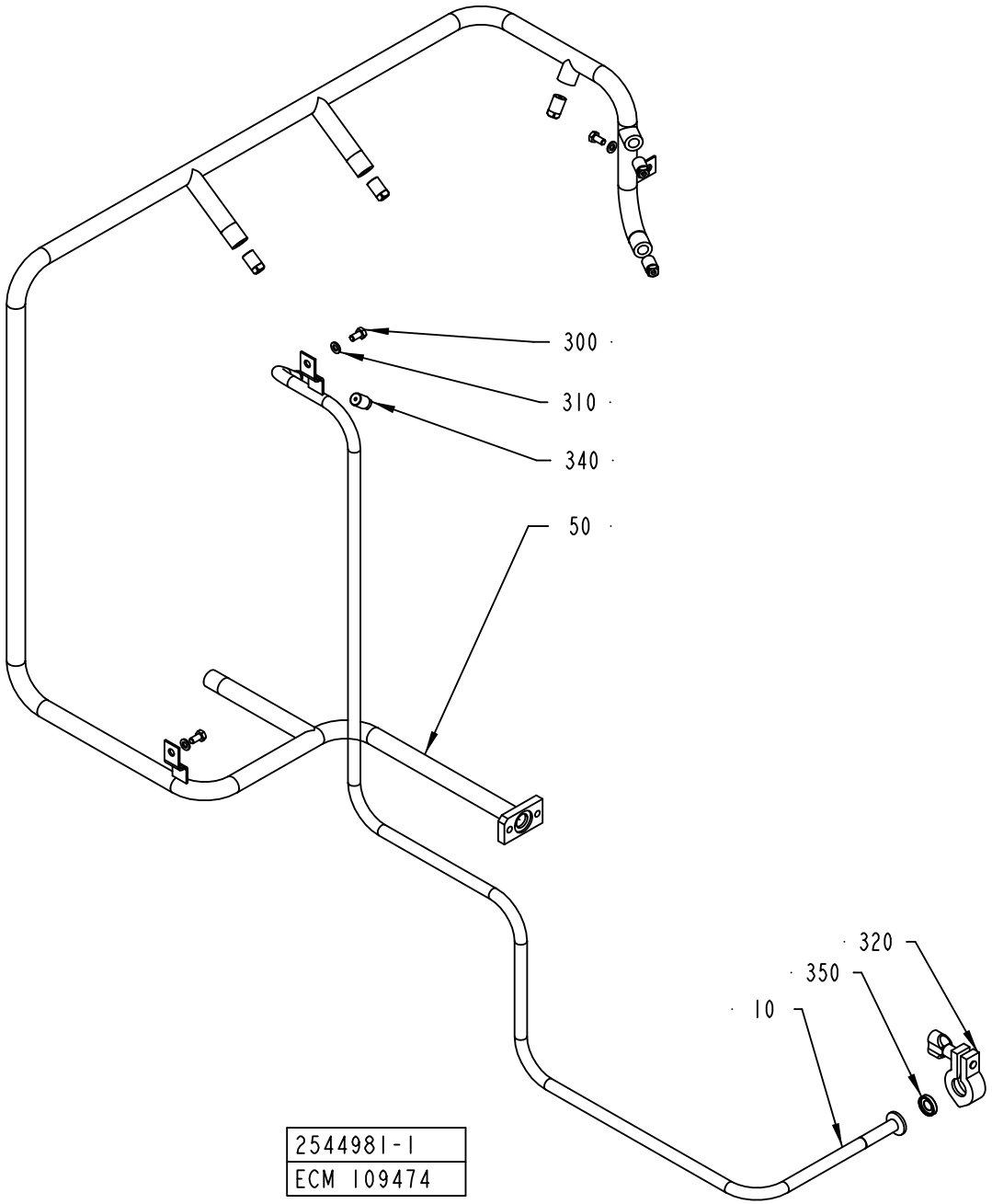
300
310
340
50
320
350
10
2544981-1
ECM 109474

ECM: 179445 - 20040910
Group number: 2544981-0100
Assembly Drawing: 2544981-1_1_AA

Pos	Part No	UN	Qty	Description	Page No
-					
010	1517510-0000		1	PIPE	
050	2544979-0000		1	PIPE	
300	312105-0366		3	SCREW M6S ISO 4017 M6X12 A480	
310	315105-0153		3	WASHER BRB 6,4X12 RFR	
320	342840-0101		1	CLAMP, 12,7 AND 19,1 MM 3-A PCS+PMCS	
340	90424-0070		6	SPRAY NOZZLE 61 DEG	
350	342850-0101		1	GASKET, FDA, 3-A, 1/2	

Pos	Part No	UN	Qty	Description	Page No

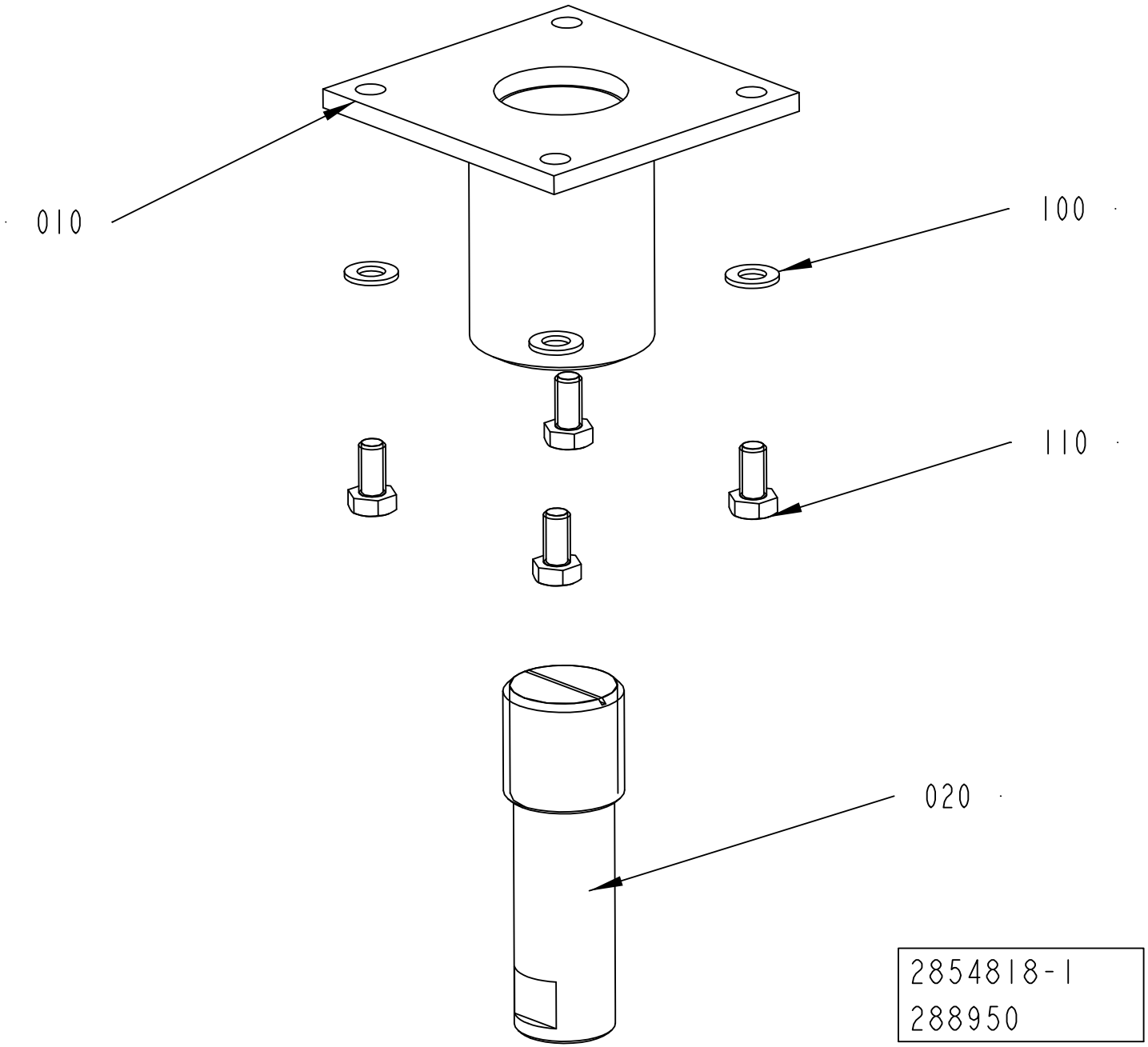
010
100
110
020
2854818-1
288950

ECM: 289853 - 20070126
Group number: 2854818-0100
Assembly Drawing: 2854818-1_1_AA

Pos	Part No	UN	Qty	Description	Page No
-					
010	2854819-0000		1	LEG	
020	2781021-0000		1	LEG	
100	315105-0165		4	WASHER BRB 8,4X16 RFR	
110	312105-0449		4	SCREW M6S ISO 4017 M8X16 A480	

Pos	Part No	UN	Qty	Description	Page No

Tetra Pak

SPC
Spare Parts Catalogue

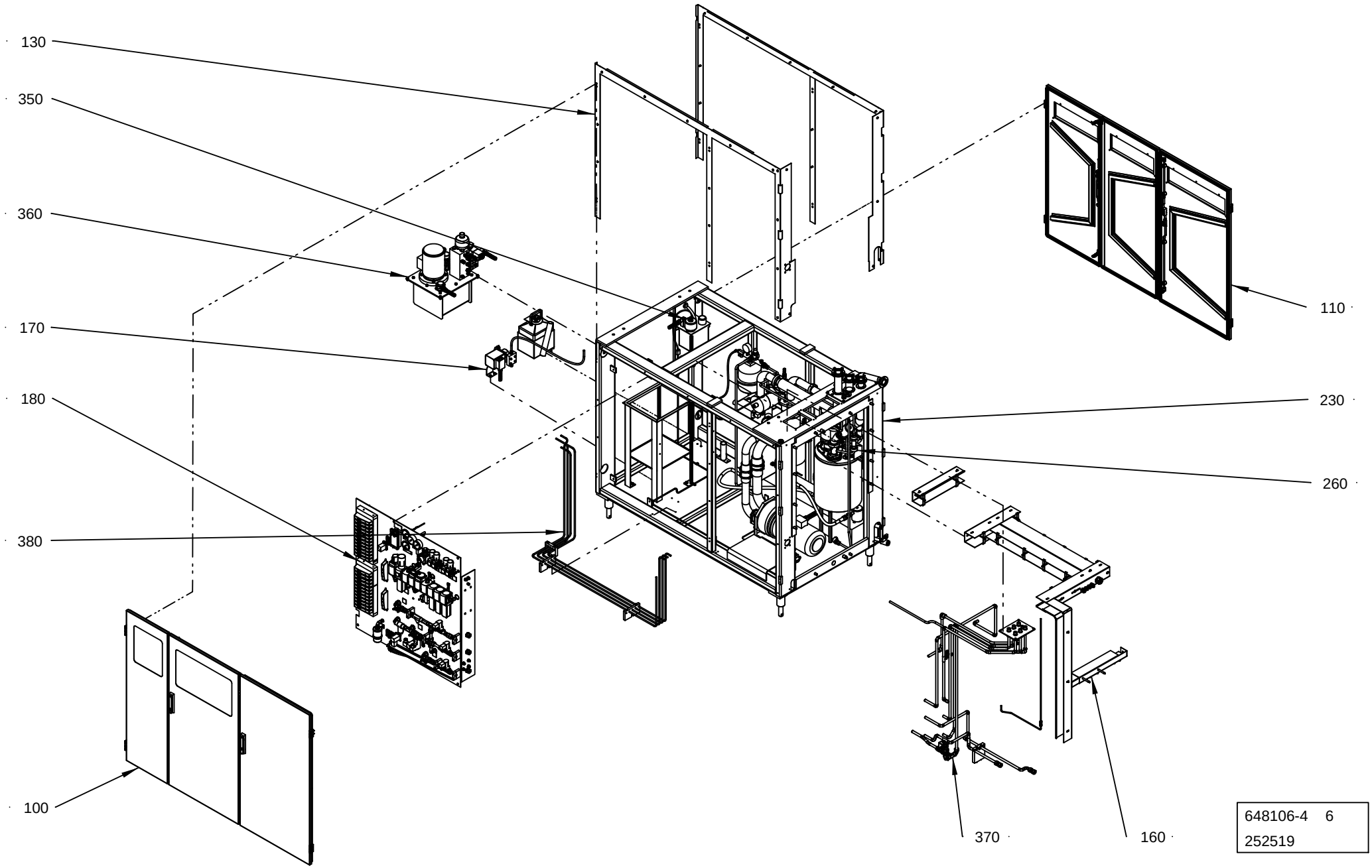

648106-4	6
252519	

ECM: 252521 - 20060131
Group number: 648106-1300
Assembly Drawing: 648106-46_1_AA

Pos	Part No	UN	Qty	Description	Page No
-					
100	1350529-0200		1	DOORS LEFT SIDE	**6-5**
110	1350531-0100		1	DOORS RIGHT SIDE	**6-7**
130	979215-0200		1	COVER PLATE	**6-9**
160	1524319-0100		1	CABLE DUCT	**6-11**
170	490761-0200		1	DETERGENT PUMP	**6-13**
180	1349029-0200		1	VALVE PANEL	**6-15, 6-17, 6-19**
230	979216-0300		1	MACHINE BODY	**6-53**
260	978834-0300		1	PEROXID AND STERILSYSTEM	**6-57**
350	978823-0300		1	CENTRAL LUBRICATION	**6-87**
360	1512304-0200		1	HYDRAULIC SYSTEM	**6-89, 6-91**
370	1350184-0200		1	PIPE WORK, AIR WATER	**6-93, 6-95**
380	1519663-0200		1	PIPE WORK-HYDRAULIC	**6-97**
600	469384-0100		1	START-UP KIT	**6-99**

Pos	Part No	UN	Qty	Description	Page No

DOORS LEFT SIDE

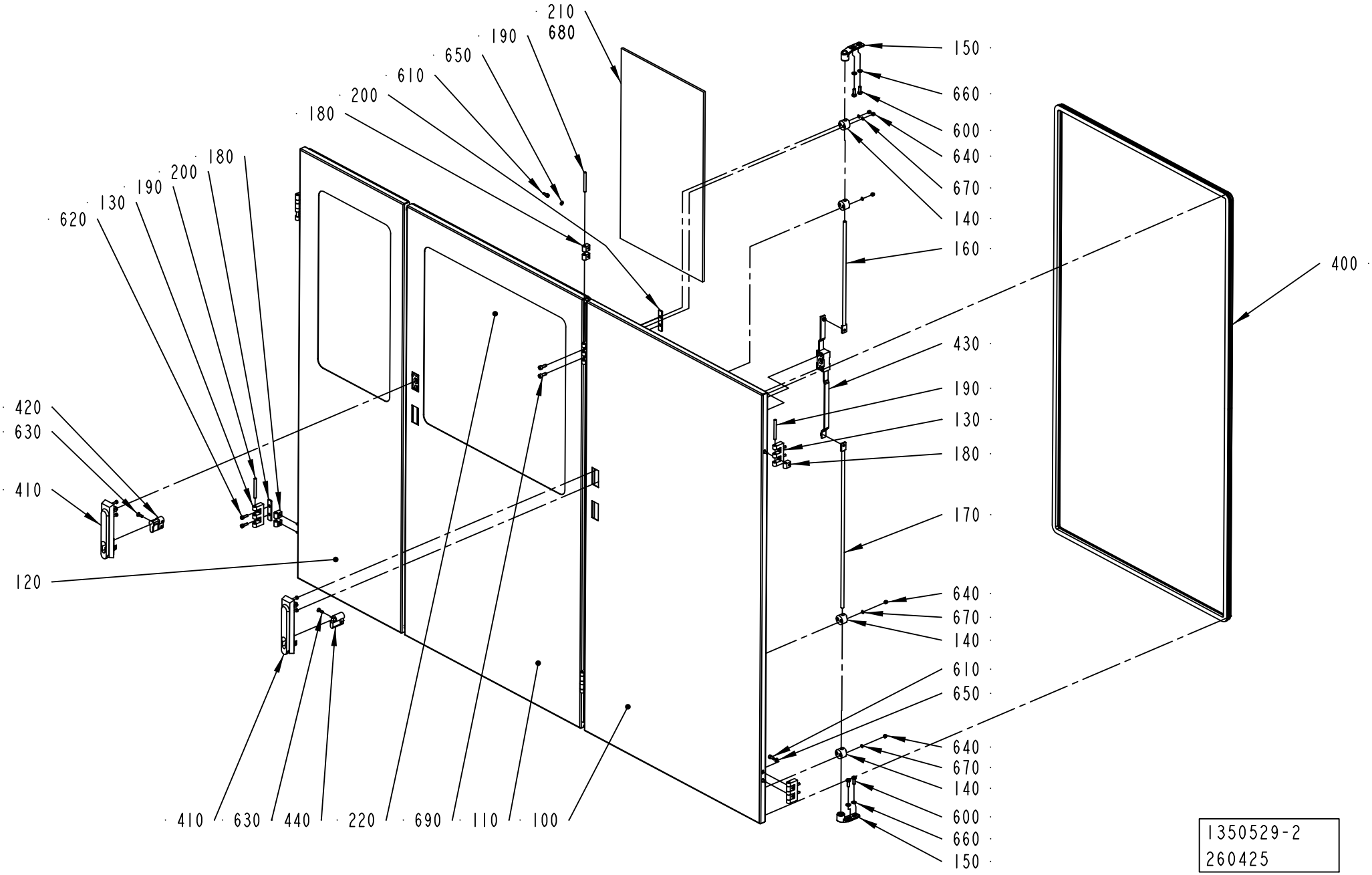

ECM: 272950 - 20060707
Group number: 1350529-0200
Assembly Drawing: 1350529-2_1_AB

Pos	Part No	UN	Qty	Description	Page No
-					
100	1512826-0000		1	DOOR	
110	2788122-0000		1	DOOR	
120	2788123-0000		1	DOOR	
130	1035792-0000		6	E-HINGE	
140	1129274-0000		8	GUIDE LUG	
150	1538868-0000		4	BRACKET	
160	1511613-0000		2	LOCKING ARM	
170	1511614-0000		2	LOCKING ARM	
180	1035794-0000		11	BLOCKING PIECE	
190	988685-0000		6	PIN	
200	1517182-0000		4	SPACER	
210	2788117-0000		1	GLASS PANE	
220	2788121-0000		1	GLASS PANE	
400	90143-0068	M	9.8	RUBBER STRIP EMKA 1011-06	
410	90237-0175		2	TURNING HANDLE, 1125-U185-0A	
420	90237-0128		1	LOCK CYLINDER, 1109-U3	
430	90237-0153		2	LOCK HOUSING, 1121-U26-0B	
440	90237-0129		1	LOCK CYLINDER, 1109-U6	
600	312105-0368		8	SCREW M6S ISO 4017 M6X16 A480	
610	312115-0327		11	SCREW ISO4762 M5X12 A4 80	
620	312115-0329		8	SCREW ISO4762 M5X16 A4 80	
630	312155-0329		2	SCREW DIN 7991 MF6S M5X16 A4 70	
640	312705-0312		16	NUT HEX. DOMED CAP MHM-6 M4 A280	
650	315105-0146		11	WASHER BRB 5,3X10 RFR	
660	315105-0153		8	WASHER BRB 6,4X12 RFR	
670	315105-0136		16	WASHER BRB 4,3X8 RFR	
680	90157-0041	ML	50	SEALING COMPOUND, RHODORSEAL 5651	
690	312115-0368		4	SCREW ISO4762 M6X16 A4 80	

Pos	Part No	UN	Qty	Description	Page No

DOORS RIGHT SIDE

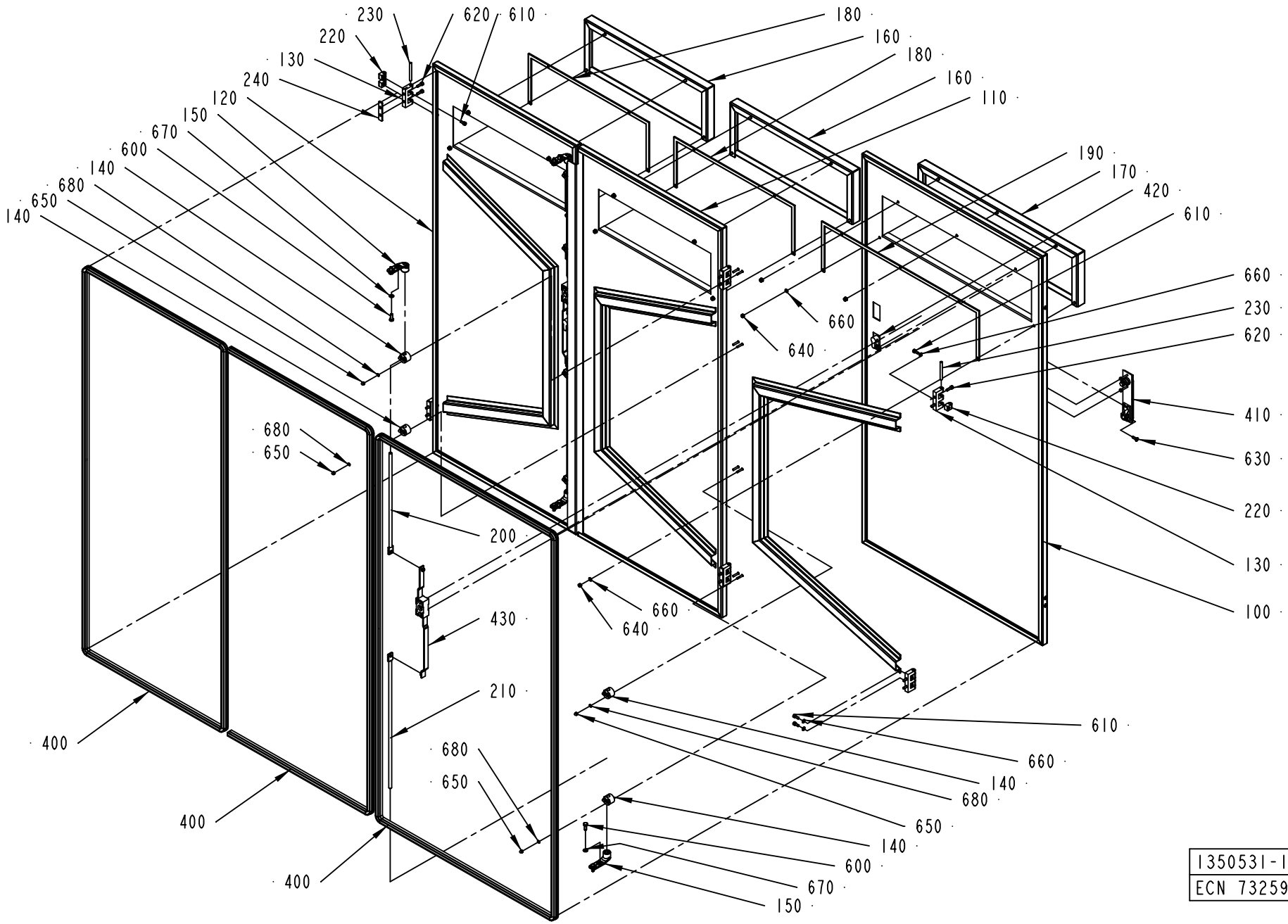

1350531-1
ECN 73259

ECM: 179707 - 20040910
Group number: 1350531-0100
Assembly Drawing: 1350531-1_1_AA

Pos	Part No	UN	Qty	Description	Page No
-					
100	1512829-0000		1	DOOR	
110	1512830-0000		1	DOOR	
120	1512831-0000		1	DOOR	
130	1035792-0000		6	E-HINGE	
140	1129274-0000		8	GUIDE LUG	
150	1538868-0000		4	BRACKET	
160	1511609-0000		2	COVER	
170	1511610-0000		1	COVER	
180	1511611-0000		2	GASKET	
190	1511612-0000		1	GASKET	
200	1511613-0000		2	LOCKING ARM	
210	1511681-0000		2	LOCKING ARM	
220	1035794-0000		11	BLOCKING PIECE	
230	988685-0000		6	PIN	
240	1517182-0000		4	SPACER	
400	90143-0068	M	9.8	RUBBER STRIP EMKA 1011-06	
410	90237-0175		2	TURNING HANDLE, 1125-U185-0A	
420	90237-0128		2	LOCK CYLINDER, 1109-U3	
430	90237-0153		2	LOCK HOUSING, 1121-U26-0B	
600	312105-0368		8	SCREW M6S ISO 4017 M6X16 A480	
610	312115-0327		11	SCREW ISO4762 M5X12 A4 80	
620	312115-0329		12	SCREW ISO4762 M5X16 A4 80	
630	312155-0329		2	SCREW DIN 7991 MF6S M5X16 A4 70	
640	312605-0314		13	HEXAGON NUT, M6M M5 A280	
650	312705-0312		16	NUT HEX. DOMED CAP MHM-6 M4 A280	
660	315105-0146		24	WASHER BRB 5,3X10 RFR	
670	315105-0153		8	WASHER BRB 6,4X12 RFR	
680	315105-0136		16	WASHER BRB 4,3X8 RFR	

Pos	Part No	UN	Qty	Description	Page No

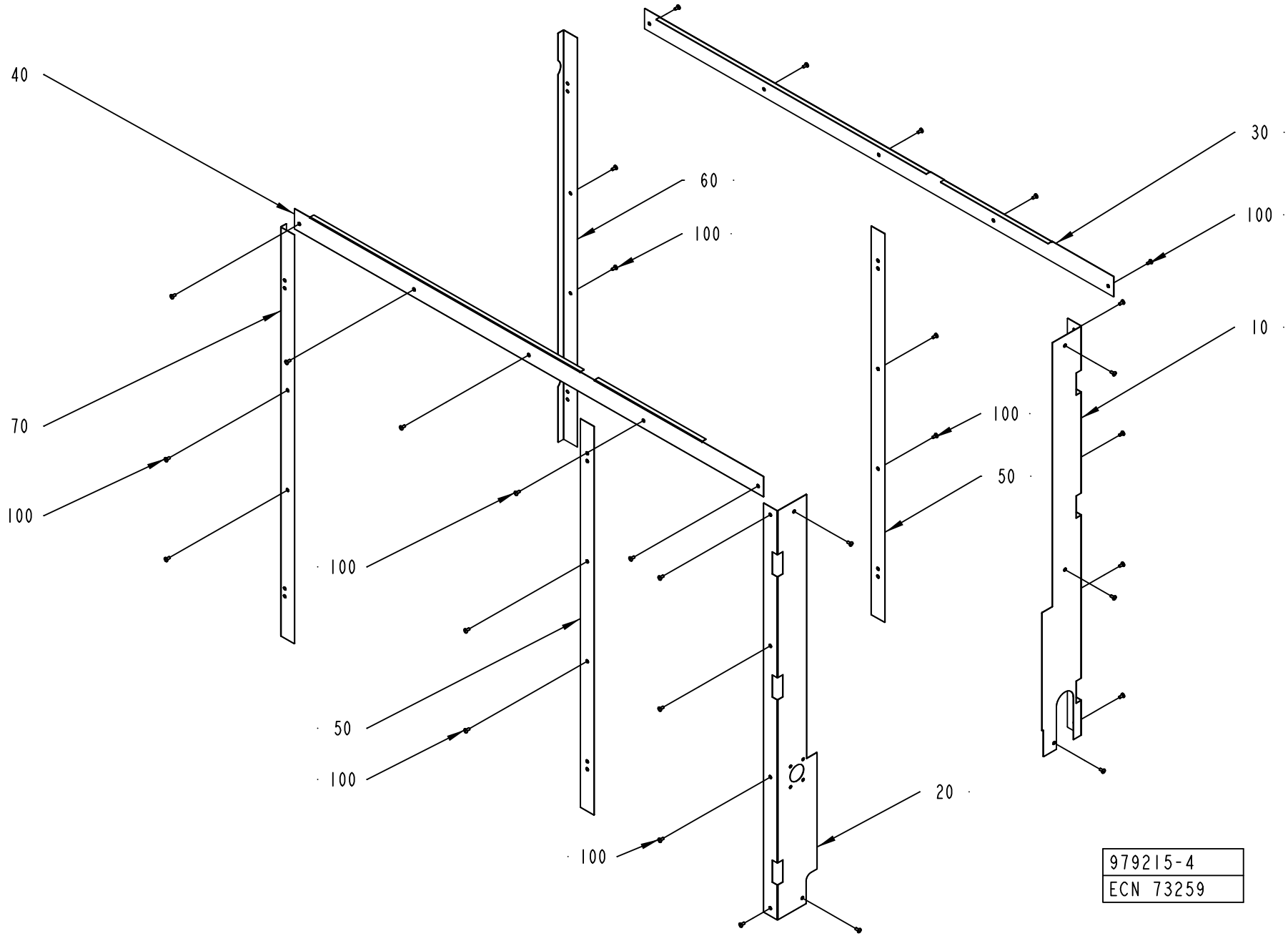
40
60
100
30
100
10
70
100
100
50
100
50
100
100
20
979215-4
ECN 73259

ECM: 179714 - 20040910
Group number: 979215-0200
Assembly Drawing: 979215-4_1_AA

Pos	Part No	UN	Qty	Description	Page No
-					
10	1538089-0000		1	PLATE	
20	1517072-0000		1	PLATE	
30	1517073-0000		1	PLATE	
40	1517074-0000		1	PLATE	
50	1517075-0000		2	PLATE	
60	1517076-0000		1	PLATE	
70	1517077-0000		1	PLATE	
100	90287-0075		31	SCREW SLOT. PAN HEAD LKCS M6X12	

Pos	Part No	UN	Qty	Description	Page No

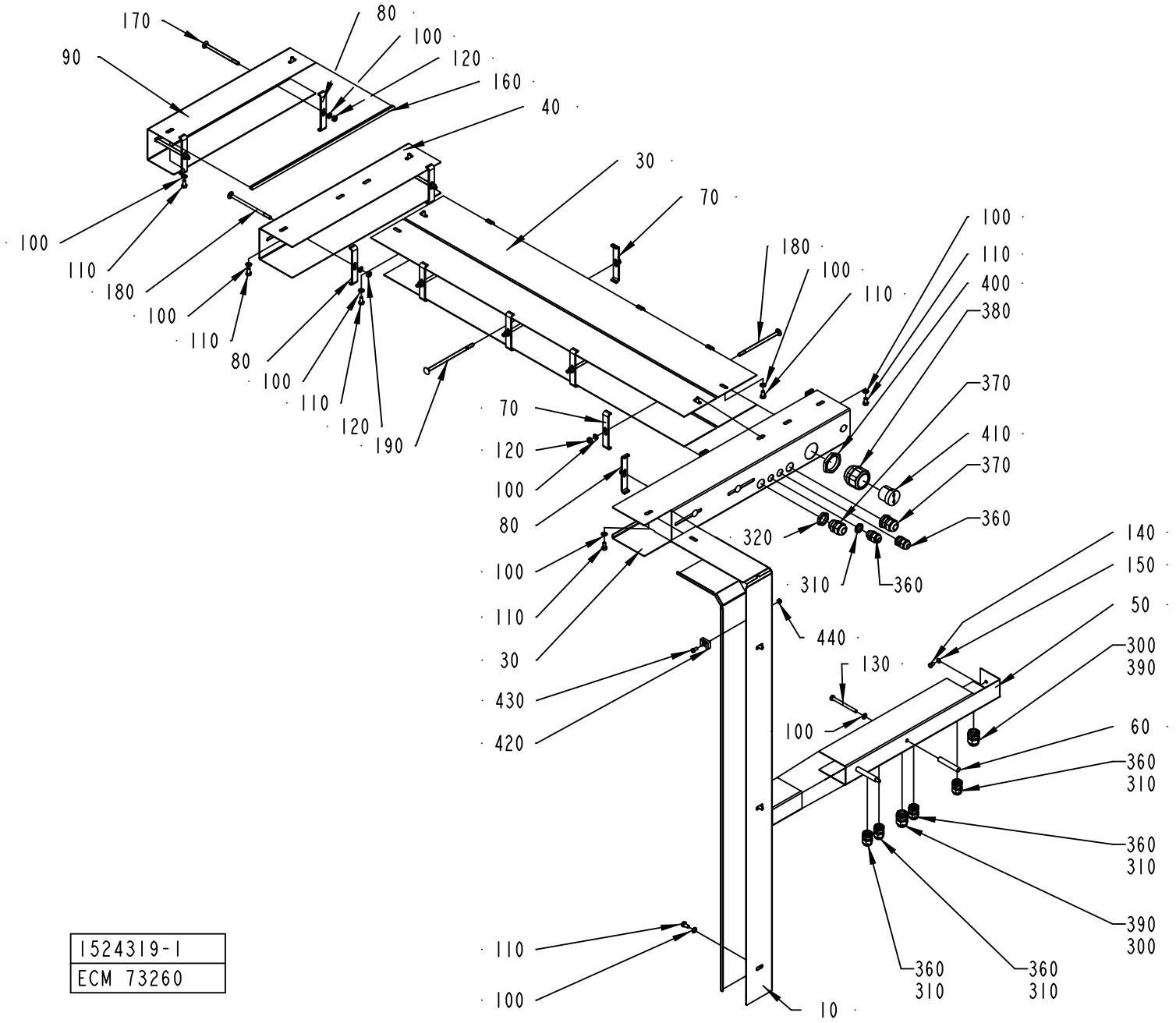
170
80
100
120
160
40
90
30
70
100
110
180
100
110
180
100
110
80
100
110
120
190
70
120
100
80
100
110
30
430
420
110
100
100
110
400
380
370
410
370
360
320
310
360
140
150
50
300
390
440
130
100
60
360
310
360
310
390
300
360
310
360
310
10
1524319-1
ECM 73260

ECM: 179711 - 20040910
Group number: 1524319-0100
Assembly Drawing: 1524319-1_1_AA

Pos	Part No	UN	Qty	Description	Page No
-					
010	1519758-0000		1	CABLE DUCT	
020	1519760-0000		1	CABLE DUCT	
030	1519761-0000		1	CABLE DUCT	
040	1519762-0000		1	CABLE DUCT	
050	1519759-0000		1	CABLE DUCT	
060	1519764-0000		2	SPACER	
070	1519765-0001		8	SUPPORT	
080	1519765-0002		7	SUPPORT	
090	1519763-0000		1	CABLE DUCT	
100	315105-0153		30	WASHER BRB 6,4X12 RFR	
110	312105-0366		13	SCREW M6S ISO 4017 M6X12 A480	
120	312605-0316		15	HEXAGON NUT, M6M M6 A280	
130	312105-0384		2	SCREW M6S ISO 4014 M6X70 A480	
140	312105-0323		2	SCREW M6S ISO 4017 M5X8 A480	
150	315105-0146		2	WASHER BRB 5,3X10 RFR	
160	90143-0060	M	12	EDGE STRIP 9,5X6,3MM BLACK PVC	
170	90457-0148		2	SCREW CAP HEAD SQ. NECK M6X100 SS	
180	90458-1612		9	SCREW CAP HEAD SQ. NECK M6X120 SS	
190	90458-1613		4	SCREW CAP HEAD SQ. NECK M6X140 SS	
300	90099-0002		2	NUT PR 18,6 BRASS	
310	90099-0001		6	NUT PG 9/PR 15,2	
320	90099-0087		2	NUT PR=20,4	
360	352103-0101		6	CABLE GLAND, ST 9, PR15,2/PG9	
370	352103-0108		2	CABLE GLAND, ST 13,5 , PR20,4/PG13,5	
380	353240-0006		1	GLAND W/O INSERT PG29 NORMAL	
390	352103-0106		2	CABLE GLAND, ST 11, PR18,6/PG11	
400	90099-0011		1	NUT PR 37 BRASS	
410	2504449-0000		1	INSERT	
420	352113-0204		5	ANCHOR PLATES FOR STRIPS, TYPE TM3S25-M	
430	312125-0325		5	SCREW ISO 1207 M5X10 A4	
440	312605-0314		5	HEXAGON NUT, M6M M5 A280	

Pos	Part No	UN	Qty	Description	Page No

DETERGENT PUMP

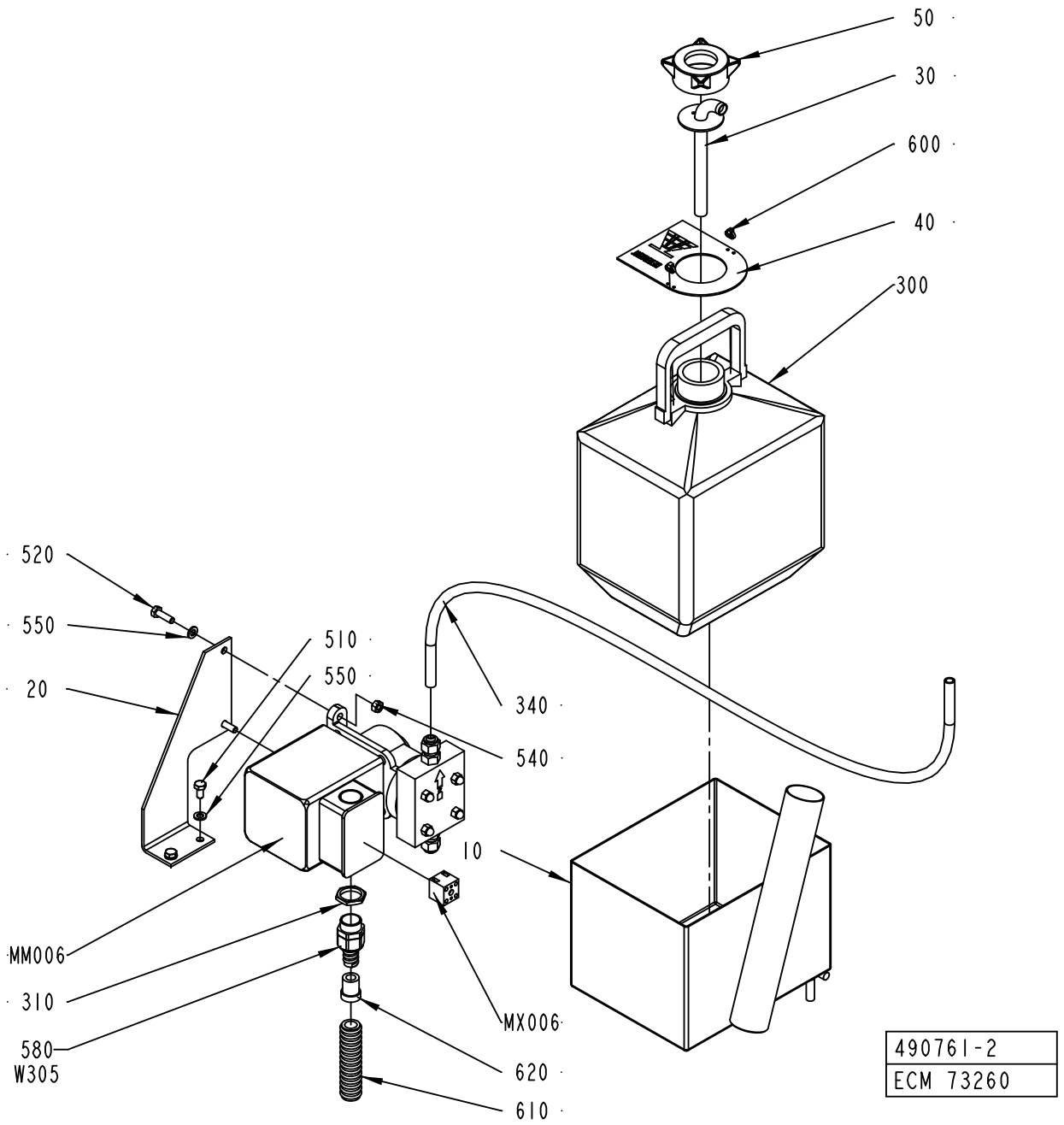

ECM: 211351 - 20050621
Group number: 490761-0200
Assembly Drawing: 490761-2_1_AA

Pos	Part No	UN	Qty	Description	Page No
-					
010	490768-0000		1	BOX	
020	490769-0000		1	BRACKET	
030	979217-0000		1	PIPE	
040	295387-0000		1	SIGN BOARD	
050	35962-0000		1	LID	
300	90050-0011		1	BOTTLE	
310	90099-0003		1	NUT PR 22,5	
340	90166-0008	CM	200	HOSE 7/10 PVC TRANSP.	
510	312105-0366		2	SCREW M6S ISO 4017 M6X12 A480	
520	312105-0370		2	SCREW M6S ISO 4017 M6X20 A480	
540	312605-0316		2	HEXAGON NUT, M6M M6 A280	
550	315105-0153		4	WASHER BRB 6,4X12 RFR	
580	353242-0001		1	HOSE GLAND W/O INSERT PG13,5 NORMAL	
	353249-0065		*1*	*INSERT, SINGEL HOLE, E152/09*	
600	352113-0101		2	CABLE TIE, BLACK 92X2,5 MM	
610	90152-0059	MM	2500	SPIRAL CONDUIT, 18X12, UL 1211	
620	353249-0065		1	INSERT, SINGEL HOLE, E152/09	
MX006	90195-0020		1	TERMINAL BLOCK, BK 2CRN; 0624720000	
MM006	90321-0037		1	PUMP C-6125P EP 220V, 50HZ	
	90321-0396		*1*	*FILTER, C-340-6*	
	90321-0380		*1*	*DIAPHRAGM*	
	90166-0157	*MM*	*1500*	*HOSE*	
W305	351150-0412	M	4	CABLE OLFLEX 3X1,5 MM2 LIGHT/GREY	

Pos	Part No	UN	Qty	Description	Page No

VALVE PANEL

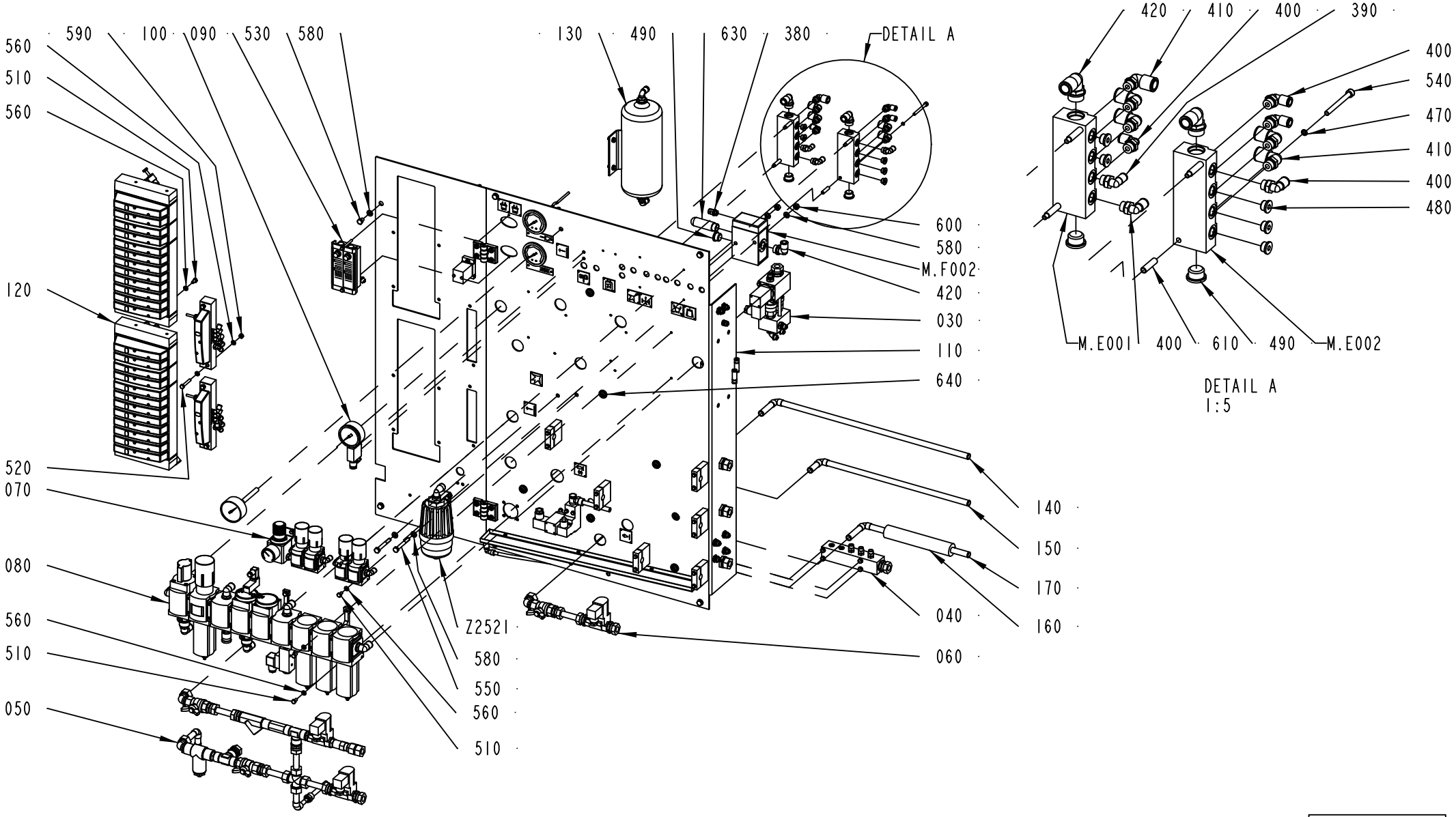

1349029-2
260425

ECM: 272949 - 20060707
Group number: 1349029-0200
Assembly Drawing: 1349029-2_1_AC

This list covers pages from 6-14 to 6-19

Pos	Part No	UN	Qty	Description	Page No
-					
005	2846063-0100		1	AIR DISTRIBUTOR	6-21
010	580993-0000		1	WATER DIAGRAM	
020	2748669-0000		1	PNEUMATIC DIAGRAM	
030	456757-0300		1	AIR INJECTOR	6-23
040	469121-0400		1	JUNCTION BLOCK	6-27
050	577824-0200		1	COOL WATER VALVE	6-29
060	577825-0200		1	HOT WATER VALVE	6-31
070	577822-0300		1	PRESSURE REGULATOR GROUP	6-33
080	2500200-0100		1	AIR INLET GROUP	6-35
090	1349090-0200		1	FLOW METER	6-37
100	1349091-0100		1	GAUGE GROUP	6-39
110	1349094-0200		1	VALVE PLATE	6-41, 6-43
120	1478717-0200		1	VALVE GROUP	6-45, 6-47
130	929415-0100		1	BALANCE TANK	6-49
140	2517051-0000		1	PIPE	
150	577832-0000		1	PIPE	
160	456137-0000		1	HOSE	
170	576293-0000		1	PIPE	
300	90153-0035		1	ADHESIVE, CLIMAFLEX 1632864	
310	90459-0290		2	NON-RETURN VALVE, PUSH-IN 6 MM	
320	342946-0112		2	T-COUPLING,UNION 6/4	
330	342946-0122		1	T-COUPLING,UNION 8/6	
350	350015-0003		1	Y-FITTING QSY-F-8	
360	90055-0147		1	Y-FITTING QSY-12	
370	350001-0008		1	PUSH-IN FITTING QS-F-G1/4-6	
380	350001-0009		2	PUSH-IN FITTING QS-F-G1/4-8	
390	350002-0008		1	PUSH-IN L-FITTING QSL-F-G1/4-6	
400	350002-0009		5	PUSH-IN L-FITTING QSL-F-G1/4-8	
410	350002-0011		5	PUSH-IN L-FITTING QSL-F-G1/4-12	
420	350002-0016		3	PUSH-IN L-FITTING QSL-F-G1/2-12	
430	350004-0005		1	PUSH-IN L-FITTING QSL-F-12	
440	350005-0002		2	PUSH-IN T-FITTING QST-F-6	
450	350006-0003		1	PUSH-IN FITTING QS-F-8H-6	
460	350006-0008		2	PUSH-IN FITTING QS-F-12H-8	
465	350006-0003		2	PUSH-IN FITTING QS-F-8H-6	
470	315239-0101		4	NYLON WASHER M5(RP315233-101)	
480	342713-0210		5	PLUG,EXT THREAD HEX SOCKET(PAK OF 10 PCS	
490	342713-0213		3	PLUG, EXT THREAD HEX SOCKET 8638-00-120	
500	312105-0325		2	SCREW M6S ISO 4017 M5X10 A480	
510	312105-0366		18	SCREW M6S ISO 4017 M6X12 A480	
520	312105-0378		4	SCREW M6S ISO 4014 M6X40 A480	
530	312105-0447		6	SCREW M6S ISO 4017 M8X12 A480	
540	312115-0382		4	SCREW ISO4762 M6X60 A4 80	
550	312105-0464		2	SCREW M6S ISO 4014 M8X65 A480	
560	315105-0153		26	WASHER BRB 6,4X12 RFR	
580	315105-0165		10	WASHER BRB 8,4X16 RFR	
590	312605-0316		4	HEXAGON NUT, M6M M6 A280	
600	312605-0318		2	HEXAGON NUT, M6M M8 A280	
610	341001-0148	MM	120	COPPER TUBE	
620	90459-2425		1	PRESSURE REGULATOR IN-LINE, BSP-1/4	
630	90328-0025		1	SILENCER G1/2"	
640	352101-0103		2	LEAD-IN, PR18,6/PG11, E-1457518	
650	352113-0104		15	CABLE TIE, BLACK 300X4,8 MM	
700	359000-0400		78	WIRE MARKING, YELLOW, PA2/4"0"	
710	359000-0401		61	WIRE MARKING, YELLOW, PA2/4"1"	
720	359000-0402		44	WIRE MARKING, YELLOW, PA2/4"2"	
730	359000-0403		13	WIRE MARKING, YELLOW, PA2/4"3"	
740	359000-0404		20	WIRE MARKING, YELLOW, PA2/4"4"	
750	359000-0405		24	WIRE MARKING, YELLOW, PA2/4"5"	
760	359000-0406		20	WIRE MARKING, YELLOW, PA2/4"6"	
770	359000-0407		16	WIRE MARKING, YELLOW, PA2/4"7"	
780	359000-0408		6	WIRE MARKING, YELLOW, PA2/4"8"	
790	359000-0409		13	WIRE MARKING, YELLOW, PA2/4"9"	
800	359000-0771		27	WIRE MARKING, YELLOW, PA2/4"V"	
810	90166-0013	M	38	TUBE 8 MM PA BLUE	
820	90166-0068	M	10	TUBE 12 MM PA BLUE	
830	90166-0081	M	157	TUBE 6 MM PA BLUE	
840	90166-0118	M	9	TUBE 8 MM PA BLACK	
850	90166-0119	M	3	HOSE PUR 4/6 BLACK	
M.F002	90235-0297		1	VALVE 3/2, OPEN/CLOSED	
M.E002	90458-1921		1	DISTRIBUTOR BLOCK, FR-8-1/4	
M.E001	90458-1921		1	DISTRIBUTOR BLOCK, FR-8-1/4	
M.Z2521	2814874-0100		1	SILENCER	6-51

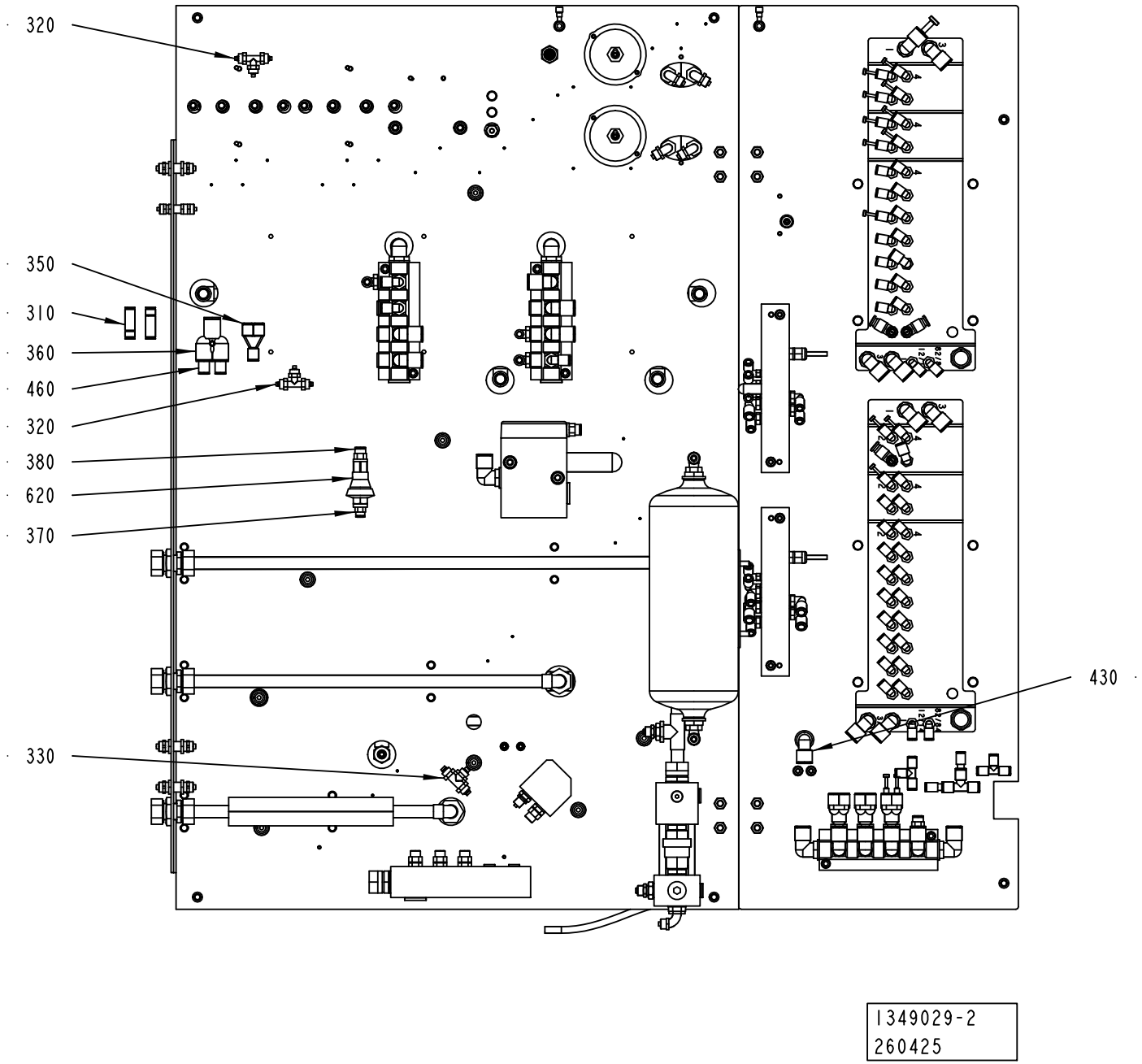
320
350
310
360
460
320
380
620
370
330
430
1349029-2
260425

ECM: 272949 - 20060707
Group number: 1349029-0200
Assembly Drawing: 1349029-2_2_AC

This list covers pages from 6-14 to 6-19

Pos	Part No	UN	Qty	Description	Page No
-					
005	2846063-0100		1	AIR DISTRIBUTOR	6-21
010	580993-0000		1	WATER DIAGRAM	
020	2748669-0000		1	PNEUMATIC DIAGRAM	
030	456757-0300		1	AIR INJECTOR	6-23
040	469121-0400		1	JUNCTION BLOCK	6-27
050	577824-0200		1	COOL WATER VALVE	6-29
060	577825-0200		1	HOT WATER VALVE	6-31
070	577822-0300		1	PRESSURE REGULATOR GROUP	6-33
080	2500200-0100		1	AIR INLET GROUP	6-35
090	1349090-0200		1	FLOW METER	6-37
100	1349091-0100		1	GAUGE GROUP	6-39
110	1349094-0200		1	VALVE PLATE	6-41, 6-43
120	1478717-0200		1	VALVE GROUP	6-45, 6-47
130	929415-0100		1	BALANCE TANK	6-49
140	2517051-0000		1	PIPE	
150	577832-0000		1	PIPE	
160	456137-0000		1	HOSE	
170	576293-0000		1	PIPE	
300	90153-0035		1	ADHESIVE, CLIMAFLEX 1632864	
310	90459-0290		2	NON-RETURN VALVE, PUSH-IN 6 MM	
320	342946-0112		2	T-COUPLING,UNION 6/4	
330	342946-0122		1	T-COUPLING,UNION 8/6	
350	350015-0003		1	Y-FITTING QSY-F-8	
360	90055-0147		1	Y-FITTING QSY-12	
370	350001-0008		1	PUSH-IN FITTING QS-F-G1/4-6	
380	350001-0009		2	PUSH-IN FITTING QS-F-G1/4-8	
390	350002-0008		1	PUSH-IN L-FITTING QSL-F-G1/4-6	
400	350002-0009		5	PUSH-IN L-FITTING QSL-F-G1/4-8	
410	350002-0011		5	PUSH-IN L-FITTING QSL-F-G1/4-12	
420	350002-0016		3	PUSH-IN L-FITTING QSL-F-G1/2-12	
430	350004-0005		1	PUSH-IN L-FITTING QSL-F-12	
440	350005-0002		2	PUSH-IN T-FITTING QST-F-6	
450	350006-0003		1	PUSH-IN FITTING QS-F-8H-6	
460	350006-0008		2	PUSH-IN FITTING QS-F-12H-8	
465	350006-0003		2	PUSH-IN FITTING QS-F-8H-6	
470	315239-0101		4	NYLON WASHER M5(RP315233-101)	
480	342713-0210		5	PLUG,EXT THREAD HEX SOCKET(PAK OF 10 PCS	
490	342713-0213		3	PLUG, EXT THREAD HEX SOCKET 8638-00-120	
500	312105-0325		2	SCREW M6S ISO 4017 M5X10 A480	
510	312105-0366		18	SCREW M6S ISO 4017 M6X12 A480	
520	312105-0378		4	SCREW M6S ISO 4014 M6X40 A480	
530	312105-0447		6	SCREW M6S ISO 4017 M8X12 A480	
540	312115-0382		4	SCREW ISO4762 M6X60 A4 80	
550	312105-0464		2	SCREW M6S ISO 4014 M8X65 A480	
560	315105-0153		26	WASHER BRB 6,4X12 RFR	
580	315105-0165		10	WASHER BRB 8,4X16 RFR	
590	312605-0316		4	HEXAGON NUT, M6M M6 A280	
600	312605-0318		2	HEXAGON NUT, M6M M8 A280	
610	341001-0148	MM	120	COPPER TUBE	
620	90459-2425		1	PRESSURE REGULATOR IN-LINE, BSP-1/4	
630	90328-0025		1	SILENCER G1/2"	
640	352101-0103		2	LEAD-IN, PR18,6/PG11, E-1457518	
650	352113-0104		15	CABLE TIE, BLACK 300X4,8 MM	
700	359000-0400		78	WIRE MARKING, YELLOW, PA2/4"0"	
710	359000-0401		61	WIRE MARKING, YELLOW, PA2/4"1"	
720	359000-0402		44	WIRE MARKING, YELLOW, PA2/4"2"	
730	359000-0403		13	WIRE MARKING, YELLOW, PA2/4"3"	
740	359000-0404		20	WIRE MARKING, YELLOW, PA2/4"4"	
750	359000-0405		24	WIRE MARKING, YELLOW, PA2/4"5"	
760	359000-0406		20	WIRE MARKING, YELLOW, PA2/4"6"	
770	359000-0407		16	WIRE MARKING, YELLOW, PA2/4"7"	
780	359000-0408		6	WIRE MARKING, YELLOW, PA2/4"8"	
790	359000-0409		13	WIRE MARKING, YELLOW, PA2/4"9"	
800	359000-0771		27	WIRE MARKING, YELLOW, PA2/4"V"	
810	90166-0013	M	38	TUBE 8 MM PA BLUE	
820	90166-0068	M	10	TUBE 12 MM PA BLUE	
830	90166-0081	M	157	TUBE 6 MM PA BLUE	
840	90166-0118	M	9	TUBE 8 MM PA BLACK	
850	90166-0119	M	3	HOSE PUR 4/6 BLACK	
M.F002	90235-0297		1	VALVE 3/2, OPEN/CLOSED	
M.E002	90458-1921		1	DISTRIBUTOR BLOCK, FR-8-1/4	
M.E001	90458-1921		1	DISTRIBUTOR BLOCK, FR-8-1/4	
M.Z2521	2814874-0100		1	SILENCER	6-51

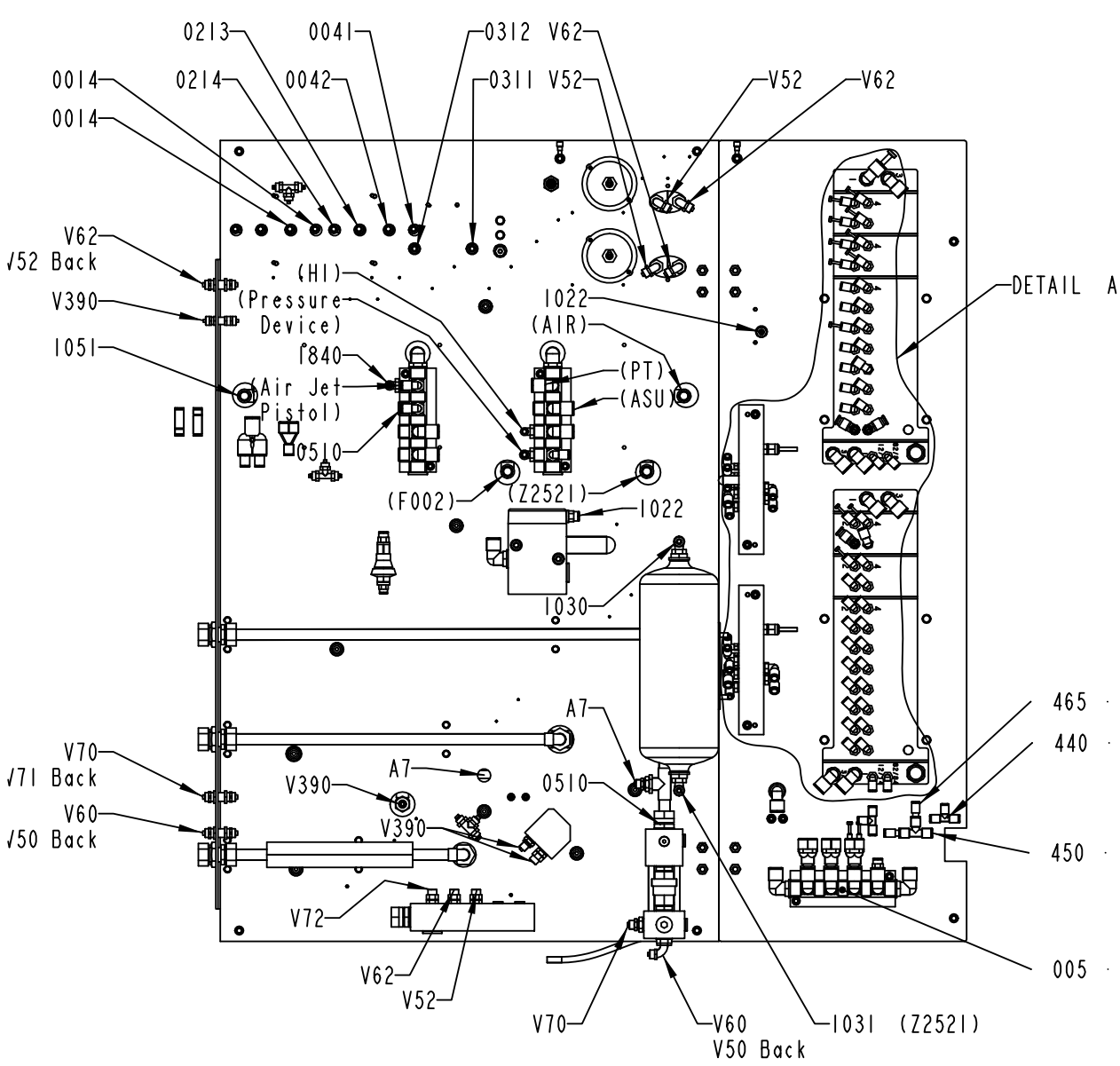
0213
0041
0312 V62
0014
0214
0042
0311 V52
V52
V62
0014
V62
V52 Back
V390
1051
(HI)
(Pressure Device)
1840
(Air Jet Pistol)
0510
1022
(AIR)
(PT)
(ASU)
(F002)
(Z2521)
1022
1030
DETAIL A
A7
465
440
450
005
V70
V71 Back
V60
V50 Back
A7
V390
V390
0510
V72
V62
V52
V70
V60
V50 Back
1031 (Z2521)

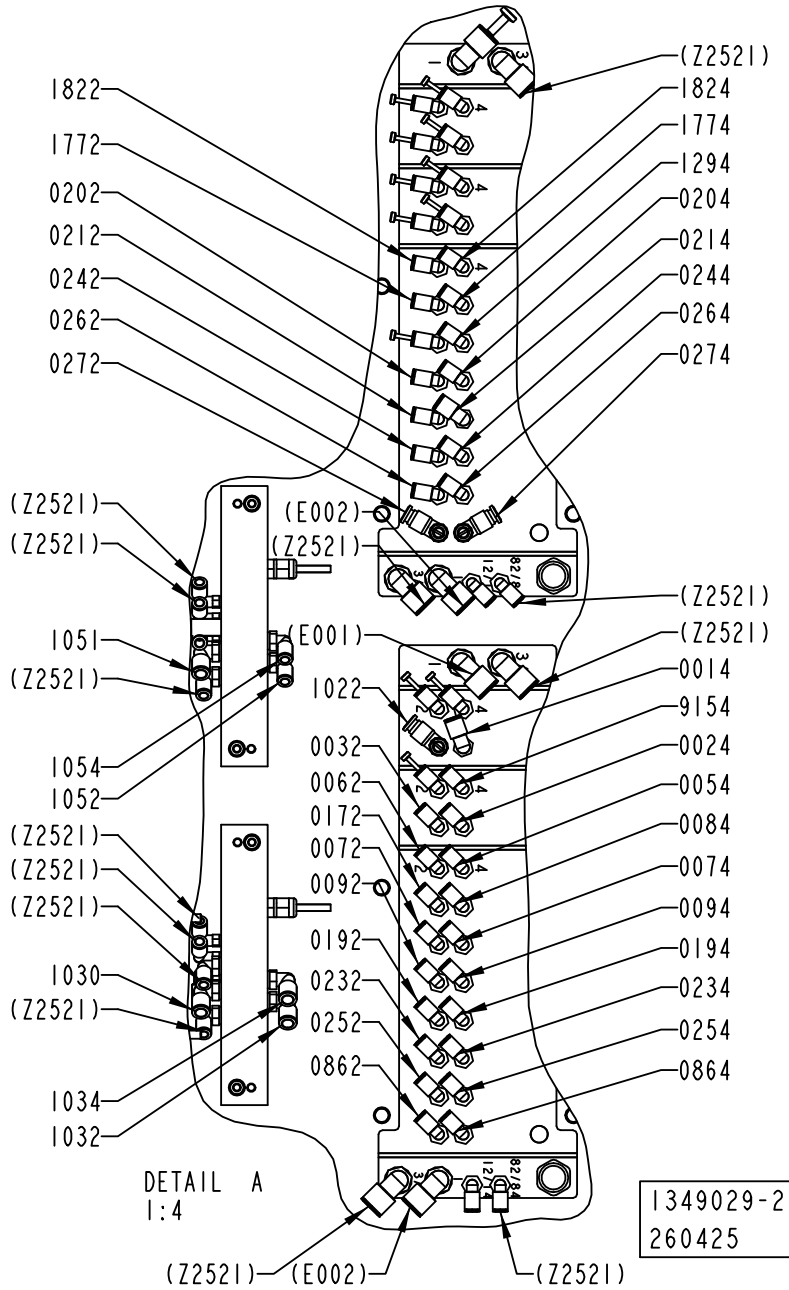
(Z2521)
1822
1824
1772
1774
0202
1294
0212
0204
0242
0214
0262
0244
0272
0264
0274
(Z2521)
(E002)
(Z2521)
(Z2521)
(Z2521)
(Z2521)
(E001)
1051
(Z2521)
0014
1022
9154
1054
0032
0024
1052
0062
0054
(Z2521)
0172
0084
(Z2521)
0072
0074
(Z2521)
0092
0094
0192
1030
0194
(Z2521)
0232
0234
0252
1034
0254
0862
1032
0864
DETAIL A
1:4
(Z2521)
(E002)
(Z2521)
1349029-2
260425

ECM: 272949 - 20060707
Group number: 1349029-0200
Assembly Drawing: 1349029-2_3_AC

This list covers pages from 6-14 to 6-19

Pos	Part No	UN	Qty	Description	Page No
-					
005	2846063-0100		1	AIR DISTRIBUTOR	6-21
010	580993-0000		1	WATER DIAGRAM	
020	2748669-0000		1	PNEUMATIC DIAGRAM	
030	456757-0300		1	AIR INJECTOR	6-23
040	469121-0400		1	JUNCTION BLOCK	6-27
050	577824-0200		1	COOL WATER VALVE	6-29
060	577825-0200		1	HOT WATER VALVE	6-31
070	577822-0300		1	PRESSURE REGULATOR GROUP	6-33
080	2500200-0100		1	AIR INLET GROUP	6-35
090	1349090-0200		1	FLOW METER	6-37
100	1349091-0100		1	GAUGE GROUP	6-39
110	1349094-0200		1	VALVE PLATE	6-41, 6-43
120	1478717-0200		1	VALVE GROUP	6-45, 6-47
130	929415-0100		1	BALANCE TANK	6-49
140	2517051-0000		1	PIPE	
150	577832-0000		1	PIPE	
160	456137-0000		1	HOSE	
170	576293-0000		1	PIPE	
300	90153-0035		1	ADHESIVE, CLIMAFLEX 1632864	
310	90459-0290		2	NON-RETURN VALVE, PUSH-IN 6 MM	
320	342946-0112		2	T-COUPLING,UNION 6/4	
330	342946-0122		1	T-COUPLING,UNION 8/6	
350	350015-0003		1	Y-FITTING QSY-F-8	
360	90055-0147		1	Y-FITTING QSY-12	
370	350001-0008		1	PUSH-IN FITTING QS-F-G1/4-6	
380	350001-0009		2	PUSH-IN FITTING QS-F-G1/4-8	
390	350002-0008		1	PUSH-IN L-FITTING QSL-F-G1/4-6	
400	350002-0009		5	PUSH-IN L-FITTING QSL-F-G1/4-8	
410	350002-0011		5	PUSH-IN L-FITTING QSL-F-G1/4-12	
420	350002-0016		3	PUSH-IN L-FITTING QSL-F-G1/2-12	
430	350004-0005		1	PUSH-IN L-FITTING QSL-F-12	
440	350005-0002		2	PUSH-IN T-FITTING QST-F-6	
450	350006-0003		1	PUSH-IN FITTING QS-F-8H-6	
460	350006-0008		2	PUSH-IN FITTING QS-F-12H-8	
465	350006-0003		2	PUSH-IN FITTING QS-F-8H-6	
470	315239-0101		4	NYLON WASHER M5(RP315233-101)	
480	342713-0210		5	PLUG,EXT THREAD HEX SOCKET(PAK OF 10 PCS	
490	342713-0213		3	PLUG, EXT THREAD HEX SOCKET 8638-00-120	
500	312105-0325		2	SCREW M6S ISO 4017 M5X10 A480	
510	312105-0366		18	SCREW M6S ISO 4017 M6X12 A480	
520	312105-0378		4	SCREW M6S ISO 4014 M6X40 A480	
530	312105-0447		6	SCREW M6S ISO 4017 M8X12 A480	
540	312115-0382		4	SCREW ISO4762 M6X60 A4 80	
550	312105-0464		2	SCREW M6S ISO 4014 M8X65 A480	
560	315105-0153		26	WASHER BRB 6,4X12 RFR	
580	315105-0165		10	WASHER BRB 8,4X16 RFR	
590	312605-0316		4	HEXAGON NUT, M6M M6 A280	
600	312605-0318		2	HEXAGON NUT, M6M M8 A280	
610	341001-0148	MM	120	COPPER TUBE	
620	90459-2425		1	PRESSURE REGULATOR IN-LINE, BSP-1/4	
630	90328-0025		1	SILENCER G1/2"	
640	352101-0103		2	LEAD-IN, PR18,6/PG11, E-1457518	
650	352113-0104		15	CABLE TIE, BLACK 300X4,8 MM	
700	359000-0400		78	WIRE MARKING, YELLOW, PA2/4"0"	
710	359000-0401		61	WIRE MARKING, YELLOW, PA2/4"1"	
720	359000-0402		44	WIRE MARKING, YELLOW, PA2/4"2"	
730	359000-0403		13	WIRE MARKING, YELLOW, PA2/4"3"	
740	359000-0404		20	WIRE MARKING, YELLOW, PA2/4"4"	
750	359000-0405		24	WIRE MARKING, YELLOW, PA2/4"5"	
760	359000-0406		20	WIRE MARKING, YELLOW, PA2/4"6"	
770	359000-0407		16	WIRE MARKING, YELLOW, PA2/4"7"	
780	359000-0408		6	WIRE MARKING, YELLOW, PA2/4"8"	
790	359000-0409		13	WIRE MARKING, YELLOW, PA2/4"9"	
800	359000-0771		27	WIRE MARKING, YELLOW, PA2/4"V"	
810	90166-0013	M	38	TUBE 8 MM PA BLUE	
820	90166-0068	M	10	TUBE 12 MM PA BLUE	
830	90166-0081	M	157	TUBE 6 MM PA BLUE	
840	90166-0118	M	9	TUBE 8 MM PA BLACK	
850	90166-0119	M	3	HOSE PUR 4/6 BLACK	
M.F002	90235-0297		1	VALVE 3/2, OPEN/CLOSED	
M.E002	90458-1921		1	DISTRIBUTOR BLOCK, FR-8-1/4	
M.E001	90458-1921		1	DISTRIBUTOR BLOCK, FR-8-1/4	
M.Z2521	2814874-0100		1	SILENCER	6-51

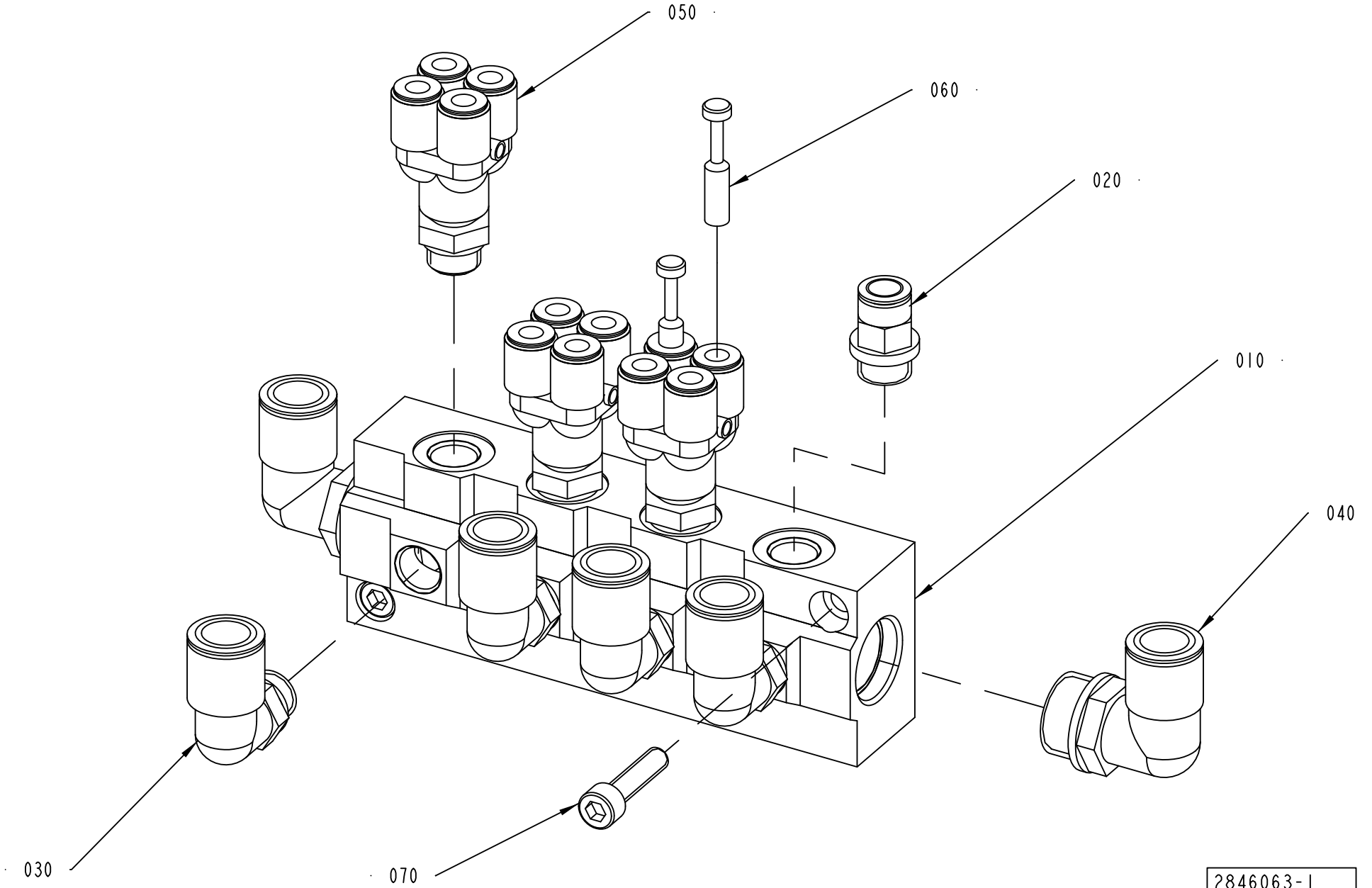
050
060
020
010
040
030
070
2846063-1
260425

ECM: 272948 - 20060707
Group number: 2846063-0100
Assembly Drawing: 2846063-1_1_AA

Pos	Part No	UN	Qty	Description	Page No
-					
010	90458-1921		1	DISTRIBUTOR BLOCK, FR-8-1/4	
020	350001-0009		1	PUSH-IN FITTING QS-F-G1/4-8	
030	350002-0011		4	PUSH-IN L-FITTING QSL-F-G1/4-12	
040	350002-0016		2	PUSH-IN L-FITTING QSL-F-G1/2-12	
050	90600-0913		3	PUSH-IN FITTING QSQ-G1/4-6	
060	350013-0002		2	PLUG QSC-6H	
070	312115-0372		2	SCREW ISO4762 M6X25 A4 80	

Pos	Part No	UN	Qty	Description	Page No

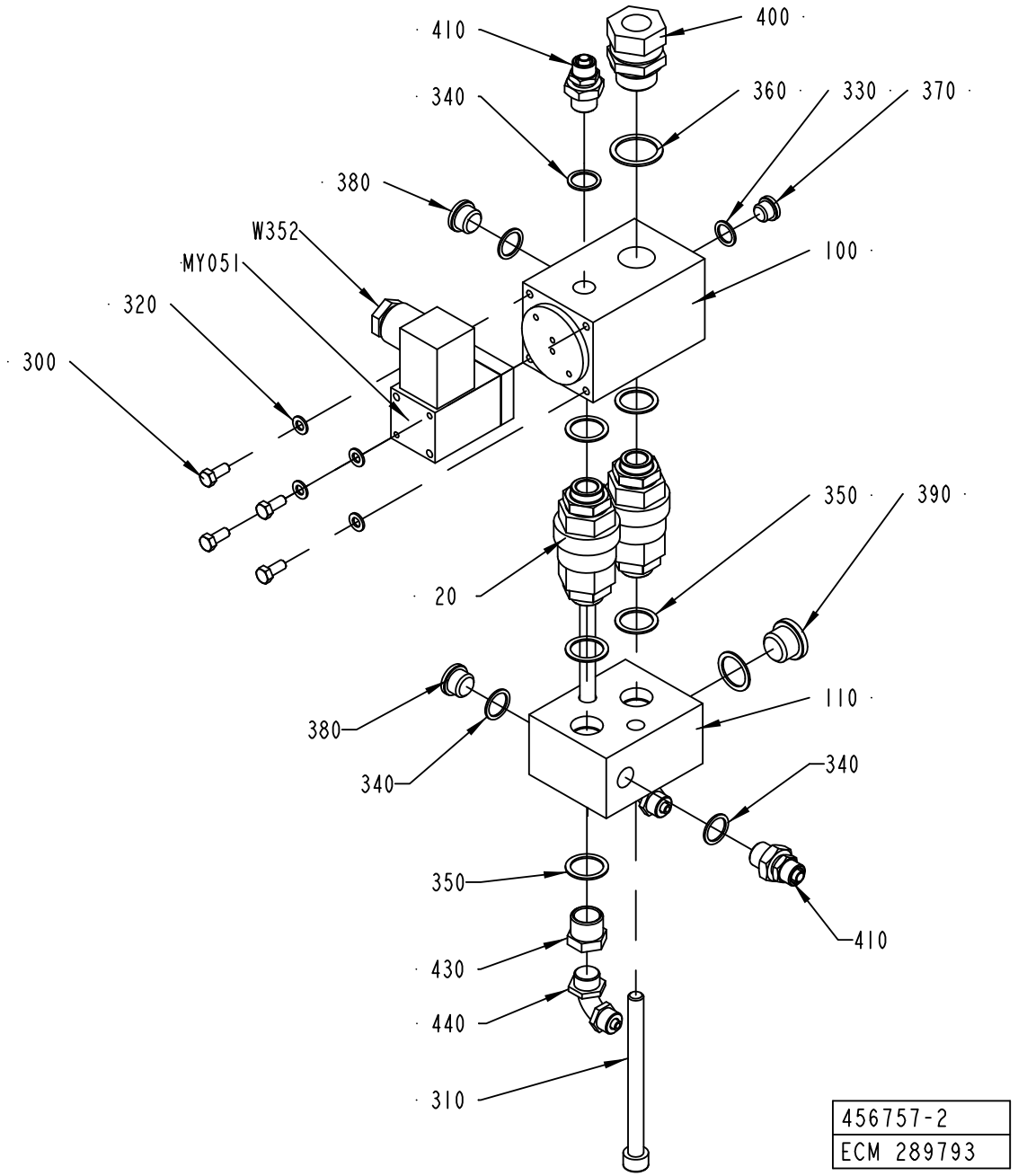
410
400
340
360
330
370
380
W352
MY051
100
320
300
350
390
20
380
110
340
340
350
410
430
440
310
456757-2
ECM 289793

ECM: 289798 - 20070126
Group number: 456757-0300
Assembly Drawing: 456757-2_1_AC

Pos	Part No	UN	Qty	Description	Page No
-					
020	491536-0200		2	NON-RETURN VALVE	**6-25**
100	456756-0000		1	BLOCK	
110	456755-0000		1	BLOCK	
300	312105-0327		4	SCREW M6S ISO 4017 M5X12 A480	
310	312111-0471		2	SCREW HEX.SOCK.HD.MC6S-TT 8X100 88 FZ	
320	315105-0146		4	WASHER BRB 5,3X10 RFR	
330	315233-0109		1	WASHER CAPTIVE SEALING G1/8	
340	315233-0110		4	WASHER CAPTIVE SEALING G1/4	
350	315233-0111		7	WASHER CAPTIVE SEALING G3/8	
360	315233-0113		1	WASHER CAPTIVE SEALING G1/2	
370	342713-0209		1	PLUG (QUANT.MINIMA= 10PC).	
380	342713-0210		2	PLUG,EXT THREAD HEX SOCKET(PAK OF 10 PCS	
390	342713-0211		1	PLUG, EXT THREAD HEX SOCKET 8638-00-380	
400	342720-0114		1	CONN. STR. GA-15-G1/2	
410	342921-0122		2	STRAIGHT COUPLING,EXT.THREADED 8/6-G1/4"	
420	342921-0123		2	STRAIGHT COUPLING,EXT.THREADED 8/6-G3/8"	
430	342701-0203		2	BUSHING, INT/EXT. G-THREAD NO. 3/8-1/4	
440	342931-0122		2	ELBOW 90 COUPL.,EXT.THREAD 8/6-G1/4"	
MY051	90042-0173		1	SOLENOID VALVE BÃ¼RKERT	
W352	351150-0431	M	3	CABLE OLFLEX 2X0,75 MM2 LIGHT/GREY	

Pos	Part No	UN	Qty	Description	Page No

NON-RETURN VALVE

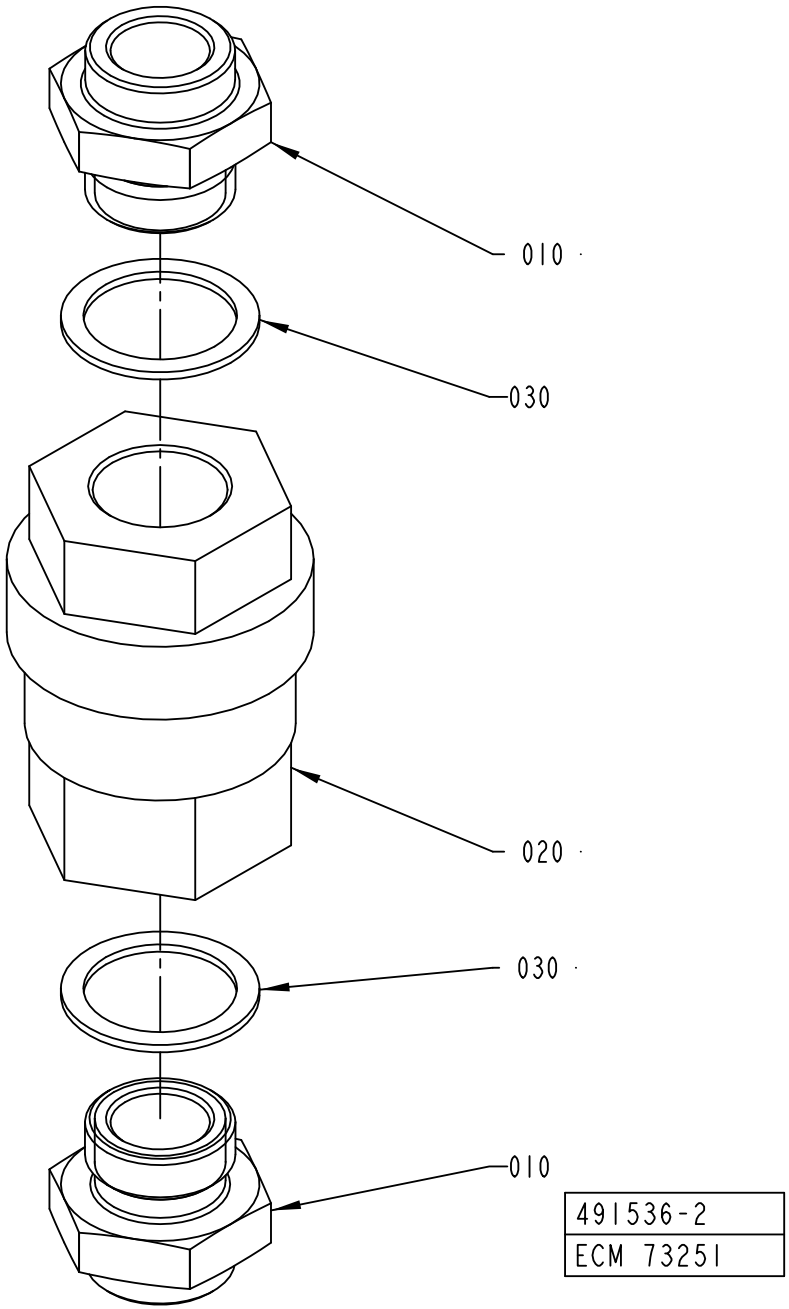

ECM: 211352 - 20050621
Group number: 491536-0200
Assembly Drawing: 491536-2_1_AA

Pos	Part No	UN	Qty	Description	Page No
-					
010	751086-0000		2	NIPPLE	
020	90230-0028		1	NON-RETURN VALVE H 151 R 3/8"	
030	315233-0111		2	WASHER CAPTIVE SEALING G3/8	

Pos	Part No	UN	Qty	Description	Page No

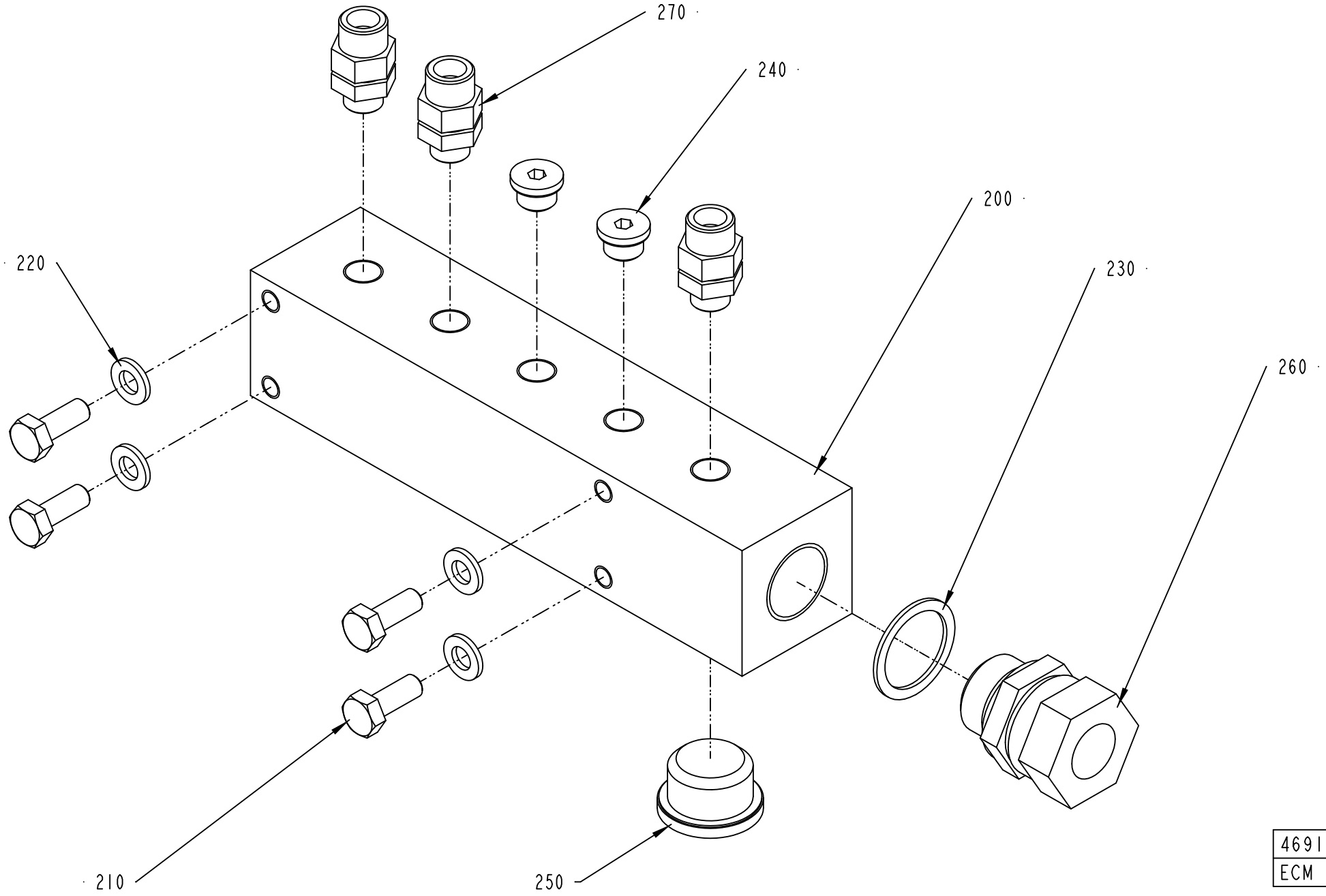

469121-5
ECM 73252

ECM: 73252 - 20011221
Group number: 469121-0400
Assembly Drawing: 469121-5_1_AA

Pos	Part No	UN	Qty	Description	Page No
-					
200	469122-0000		1	BLOCK	
210	312105-0368		4	SCREW M6S ISO 4017 M6X16 A480	
220	315105-0153		4	WASHER BRB 6,4X12 RFR	
230	315233-0113		1	WASHER CAPTIVE SEALING G1/2	
240	342713-0209		2	PLUG (QUANT.MINIMA= 10PC).	
250	342713-0213		1	PLUG, EXT THREAD HEX SOCKET 8638-00-120	
260	342720-0114		1	CONN. STR. GA-15-G1/2	
270	342921-0121		3	STRAIGHT CPLNG,EXT.THREADED 8/6-G1/8INCH	

Pos	Part No	UN	Qty	Description	Page No

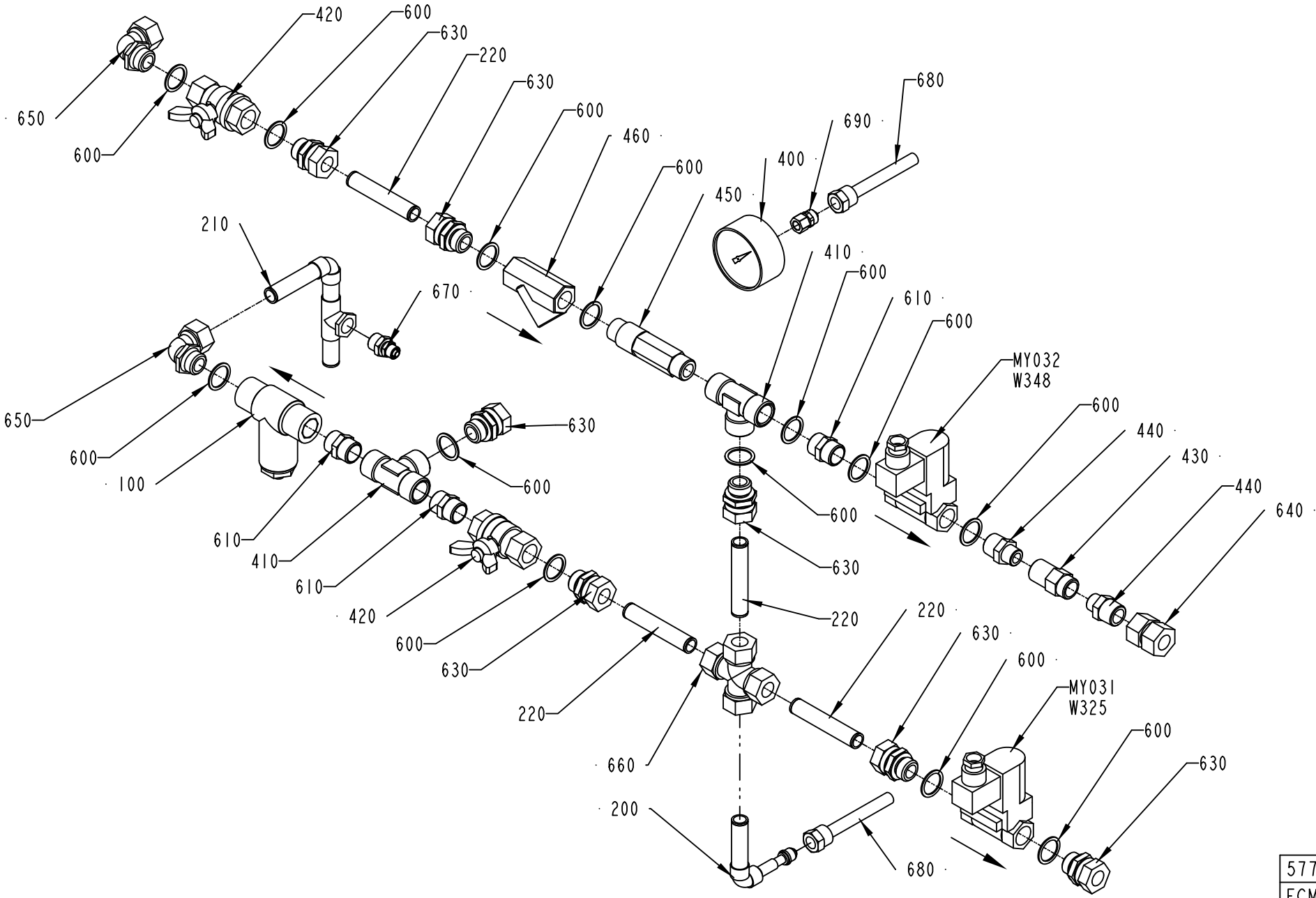
650
600
420
600
630
220
630
600
460
600
450
400
690
680
210
670
410
600
610
600
MY032
W348
600
440
430
440
640
650
600
100
630
600
610
410
610
420
600
630
220
630
600
660
220
220
630
600
MY031
W325
600
630
200
680
577824-2
ECM 260425

ECM: 273380 - 20060707
Group number: 577824-0200
Assembly Drawing: 577824-2_1_AB

Pos	Part No	UN	Qty	Description	Page No
-					
100	271823-0000		1	FILTER	
	90415-0325		*1*	*GASKET*	
	90415-0314		*1*	*FILTER INSERT / 5594-36*	
200	1512806-0000		1	PIPE	
210	1350188-0000		1	PIPE	
220	576287-0000		4	PIPE	
400	90043-0006		1	PRESSURE GAUGE, 2041 D=63 MM	
410	90140-0010		2	T-PIPE, INT. THREAD, 20031/2	
420	90187-0029		2	BALL VALVE G1/2, NPBR	
430	90270-0347		1	VALVE	
440	90330-0019		2	NIPPLES, EXT. THREAD. R1/2-R3/8	
450	90415-0018		1	FILTER FOR LIME SEPARATING / D MOD.AD	
460	90415-0019		1	FILTER / ART.NO. HH-M15-RG	
600	315233-0113		13	WASHER CAPTIVE SEALING G1/2	
610	342700-0113		3	NIPPLES,HEXAGON,EXT.G-THREAD G1/2"-G1/2"	
630	342720-0114		7	CONN. STR. GA-15-G1/2	
640	342723-0114		1	CONN. STR. PIPE GI-15-G1/2	
650	342730-0114		2	CONN. ELBOW WA-15-1/2	
660	90600-0916		1	CONN. CROSS K15L71X	
670	342921-0123		1	STRAIGHT COUPLING,EXT.THREADED 8/6-G3/8"	
680	342903-0121		2	NUT WITH SPRING, 1723 8/6-M12X1	
690	342923-0121		1	STRAIGHT COUPL.,INT.THREADED 8/6-G1/8"	
MY032	90042-0172		1	SOLENOID VALVE 4023/1005/1032 24VDC	
	90042-0467		*1*	*COIL 24VDC GSR*	
MY031	90042-0172		1	SOLENOID VALVE 4023/1005/1032 24VDC	
	90042-0467		*1*	*COIL 24VDC GSR*	
W325	351150-0403	M	3	CABLE OLFLEX 3X0,75 MM2 LIGHT/GREY	
W348	351150-0403	M	3	CABLE OLFLEX 3X0,75 MM2 LIGHT/GREY	

Pos	Part No	UN	Qty	Description	Page No

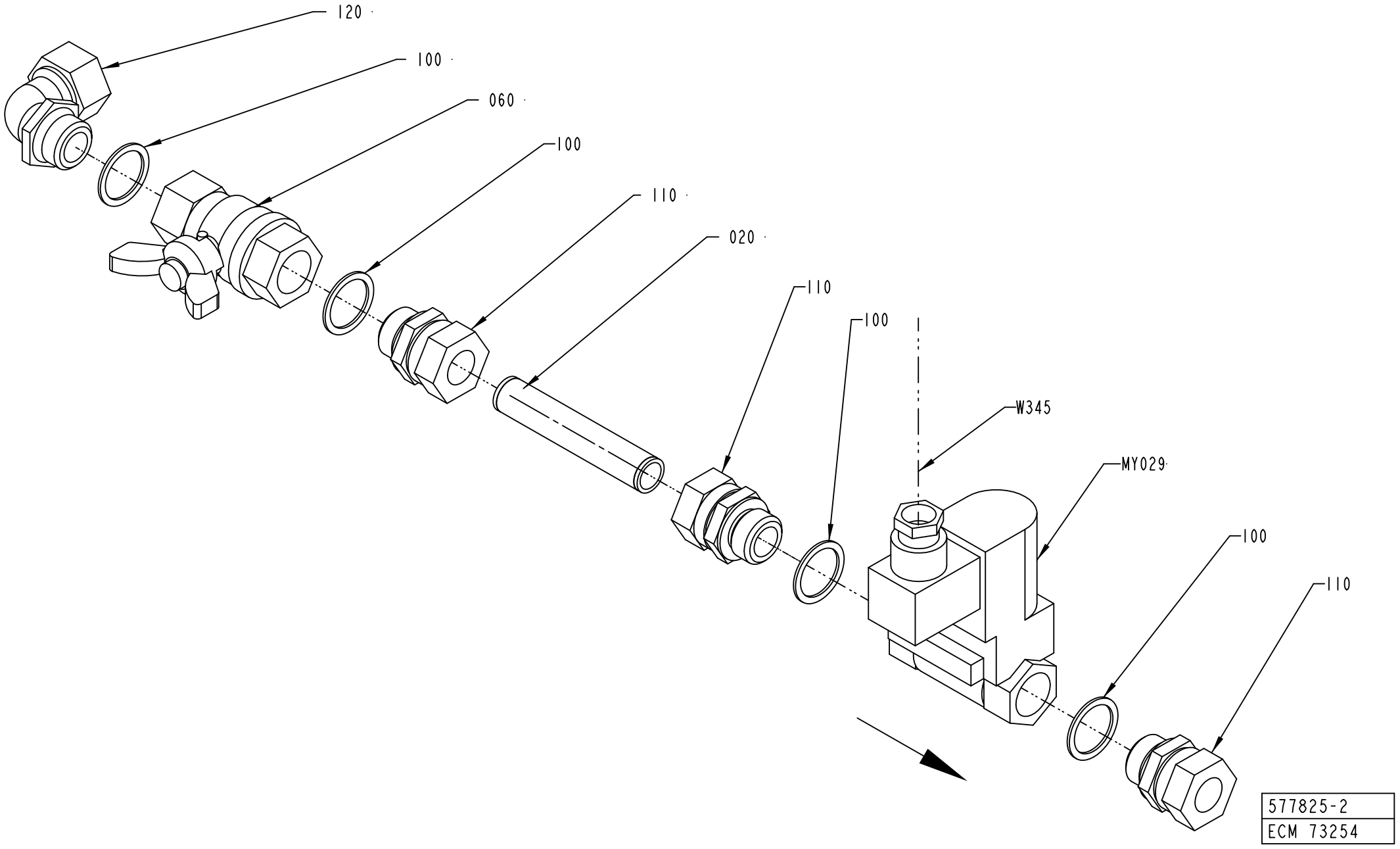
120
100
060
100
110
020
110
100
W345
MY029
100
110
577825-2
ECM 73254

ECM: 211355 - 20050621
Group number: 577825-0200
Assembly Drawing: 577825-2_1_AA

Pos	Part No	UN	Qty	Description	Page No
-					
20	576287-0000		1	PIPE	
60	90187-0029		1	BALL VALVE G1/2, NPBR	
100	315233-0113		4	WASHER CAPTIVE SEALING G1/2	
110	342720-0114		3	CONN. STR. GA-15-G1/2	
120	342730-0114		1	CONN. ELBOW WA-15-1/2	
MY029	90042-0172		1	SOLENOID VALVE 4023/1005/1032 24VDC	
	90042-0467		*1*	*COIL 24VDC GSR*	
W345	351150-0431	M	1	CABLE OLFLEX 2X0,75 MM2 LIGHT/GREY	

Pos	Part No	UN	Qty	Description	Page No

PRESSURE REGULATOR GROUP

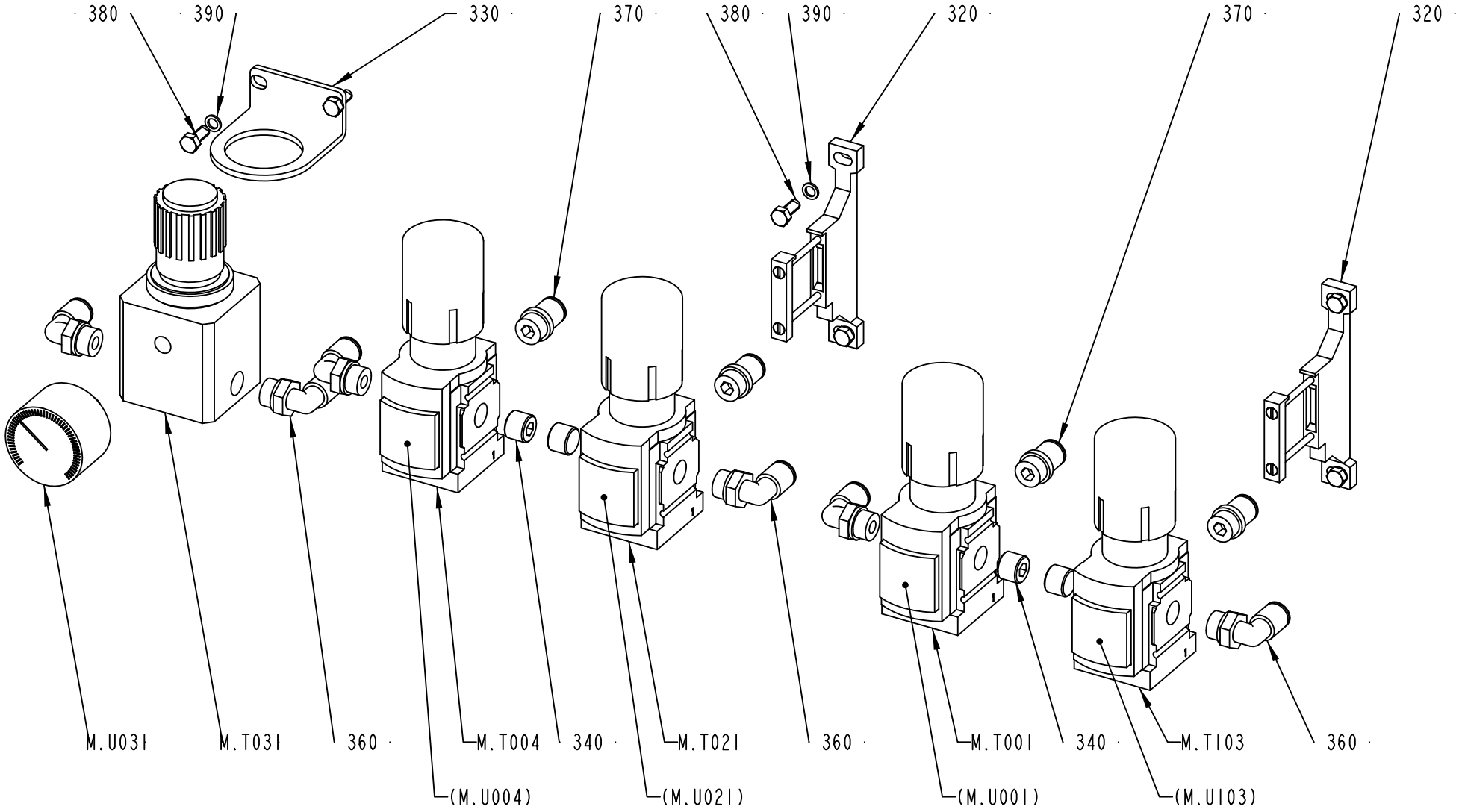

577822-3
260425

ECM: 273382 - 20060707
Group number: 577822-0300
Assembly Drawing: 577822-3_1_AB

Pos	Part No	UN	Qty	Description	Page No
-					
320	90459-2247		2	BRACKET, MS4-WP	
330	90458-2971		1	BRACKET, HR-1/4-P FOR LRP-1/4-0,7	
340	90087-0036		4	PLUG, KR 1/4	
360	350002-0009		6	PUSH-IN L-FITTING QSL-F-G1/4-8	
370	350003-0007		4	PUSH-IN FITTING QS-F-G1/4-8-I	
380	312105-0327		6	SCREW M6S ISO 4017 M5X12 A480	
390	315105-0146		6	WASHER BRB 5,3X10 RFR	
M.U031	90458-2969		1	PRESSURE GAUGE, MAP-40-1-1/8-EN	
M.T103	90459-2242		1	REGULATOR, MS4-LRB-1/4-D7-AS	
M.T031	90458-0254		1	PRECISION PRESSURE REGULATOR,LRP-1/4-0,7	
M.T021	90459-2241		1	REGULATOR, MS4-LRB-1/4-D5-AS	
M.T004	90459-2241		1	REGULATOR, MS4-LRB-1/4-D5-AS	
M.T001	90459-2241		1	REGULATOR, MS4-LRB-1/4-D5-AS	

Pos	Part No	UN	Qty	Description	Page No

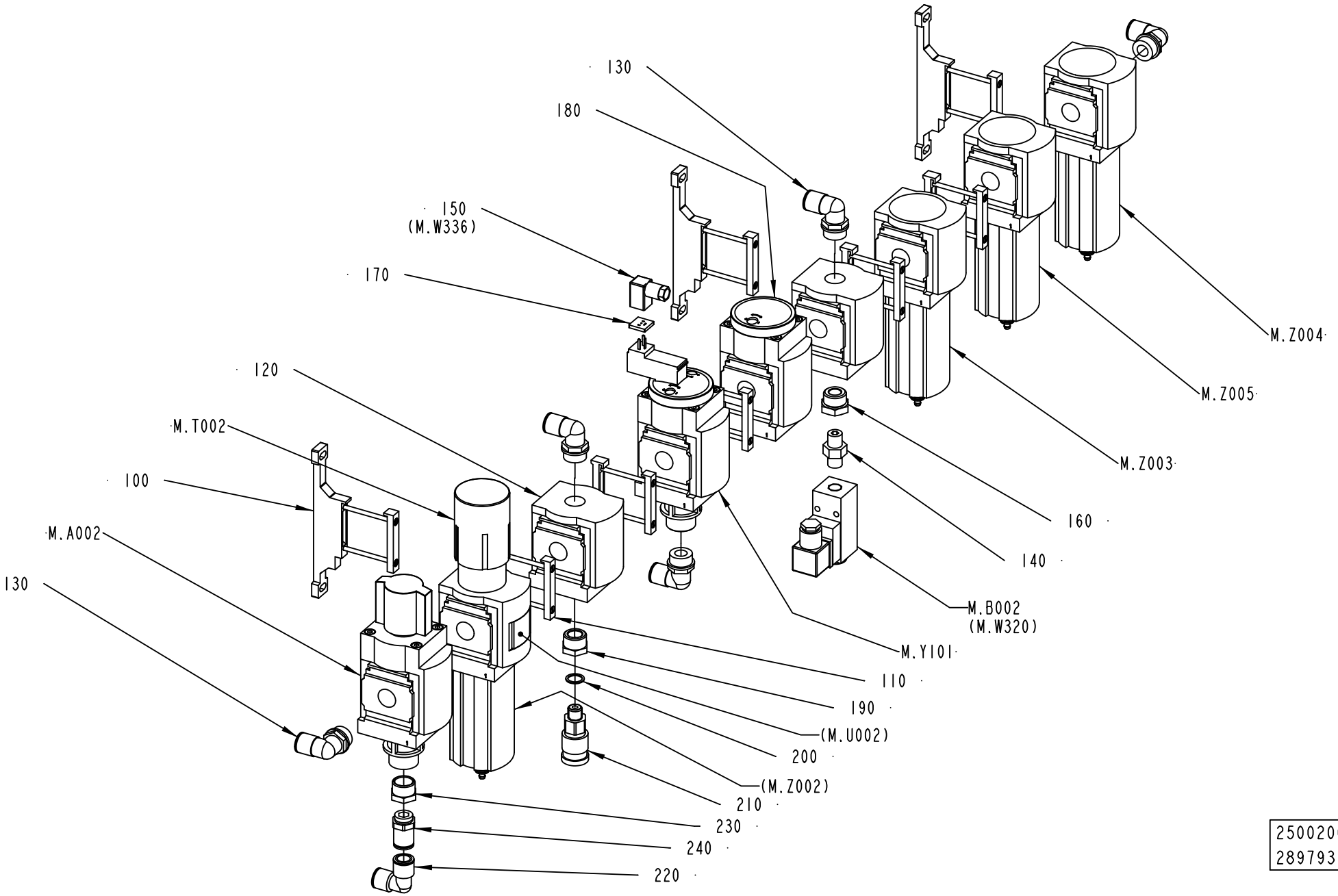

2500200-1
289793

ECM: 289797 - 20070126
Group number: 2500200-0100
Assembly Drawing: 2500200-1_1_AB

Pos	Part No	UN	Qty	Description	Page No
-					
100	90459-1858		3	BRACKET, MS6-WP	
110	90459-1859		5	BRACKET, MS6-MV	
	90459-4787		*1*	*SENSOR BRACKET WSM-12-J-M5*	
120	90459-1856		2	DISTRIBUTOR, MS6-FRM-1/2	
130	350002-0016		5	PUSH-IN L-FITTING QSL-F-G1/2-12	
140	90224-0372		1	CONN. STRAIGHT ESK-1/4-1/4 151521	
150	90458-2837		1	PLUG SOCKET, KMEB-1-24-5-LED	
160	90459-2216		1	BUSHING, INT/EXT. G-THREAD NO. 1/4X1/2	
170	90459-2137		1	ILLUMINATING SEAL, MEB-LD-12-24DC	
180	90459-1855		1	SOFT START VALVE, MS6-DL-1/2	
190	342701-0205		1	BUSHING,INT./EXT.G-THREAD G1/2"-G1/4"	
200	315233-0110		1	WASHER CAPTIVE SEALING G1/4	
210	90163-0016		1	QUICK COUPLING, (F) LP 006-0-WR013	
220	350004-0005		1	PUSH-IN L-FITTING QSL-F-12	
230	342701-0206		1	BUSHING,INT./EXT.G-THREAD G1/2"-G3/8"	
240	342722-0210		1	STRAIGHT COUPLING, D=12 MM - G3/8"	
M.Z005	90459-2773		1	FILTER, MS6-LFM-1/2-BRV	
	90459-3812		*1*	*FILTER CARTRIDGE, MS6-LFM-B*	
M.Z004	90459-2772		1	FILTER, MS6-LFM-1/2-ARV	
	90459-3811		*1*	*FILTER CARTRIDGE MS6-LFM-A*	
M.Z003	90459-1857		1	FILTER, MS6-LF-1/2-CRV	
	90459-3813		*1*	*FILTER CARTRIDGE, MS6-LFP-C*	
M.Y101	90459-1854		1	SHUT OFF VALVE, MS6-EE-1/2-10V24	
M.T002	90459-5804		1	FILTER REGULATOR, MS6-LFR-1/2-D6-ERV-AS	
	90459-3809		*1*	*FILTER CARTRIDGE, MS6-LFP-E*	
M.B002	90600-1385		1	PRESSURE GUARD, PEV-1/4-B SA234332	
M.A002	90459-1852		1	SHUT OFF VALVE, MS6-EM1-1/2	

Pos	Part No	UN	Qty	Description	Page No

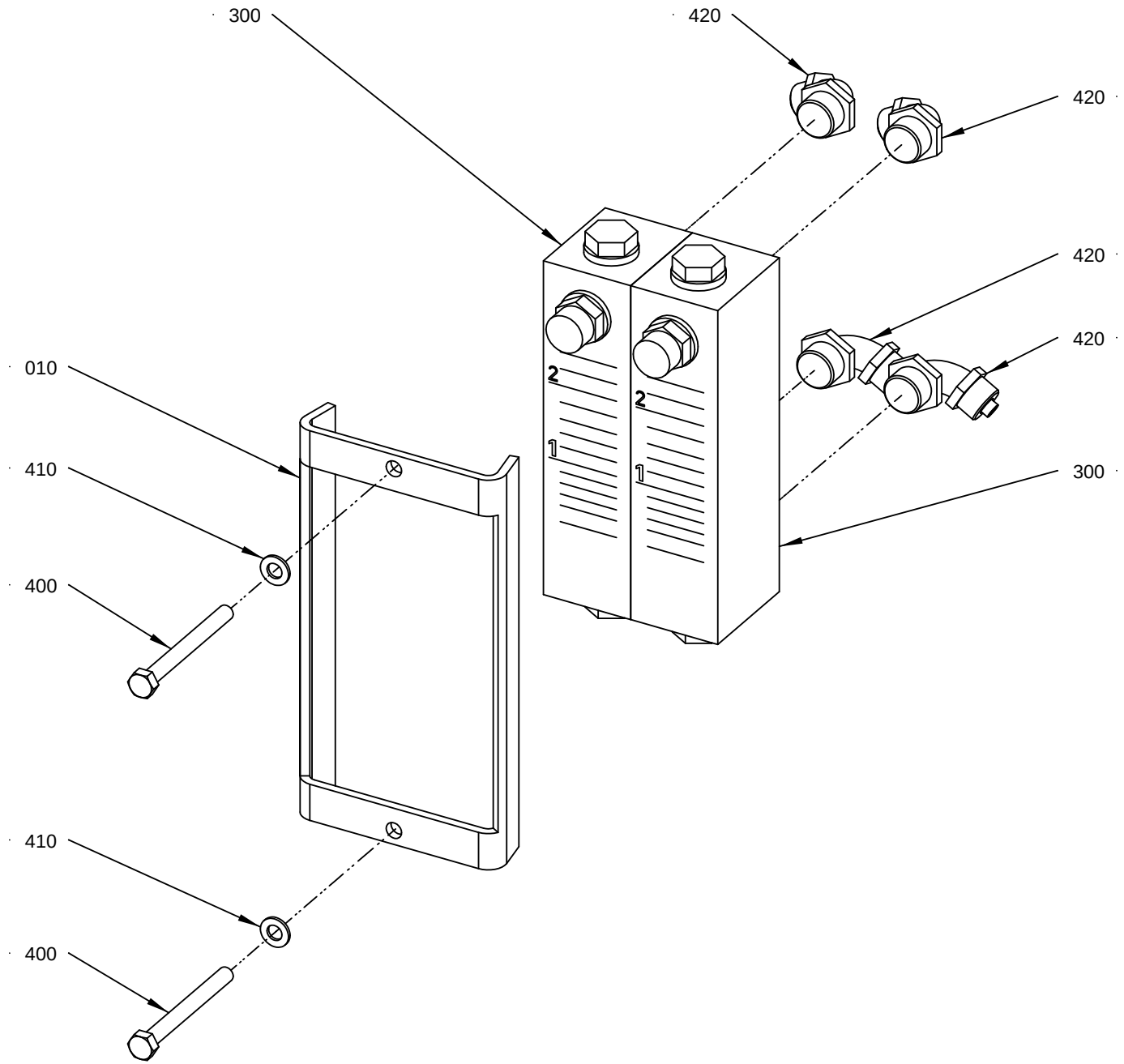

13490 90-2
214617

ECM: 249053 - 20060123
Group number: 1349090-0200
Assembly Drawing: 1349090-2_1_AA

Pos	Part No	UN	Qty	Description	Page No
-					
010	2500203-0000		1	HOLDER	
300	90243-0134		2	FLOW METER, EK-4244	
400	312105-0341		2	SCREW M6S ISO 4014 M5X50 A480	
410	315105-0146		2	WASHER BRB 5,3X10 RFR	
420	342931-0122		4	ELBOW 90 COUPL.,EXT.THREAD 8/6-G1/4"	

Pos	Part No	UN	Qty	Description	Page No

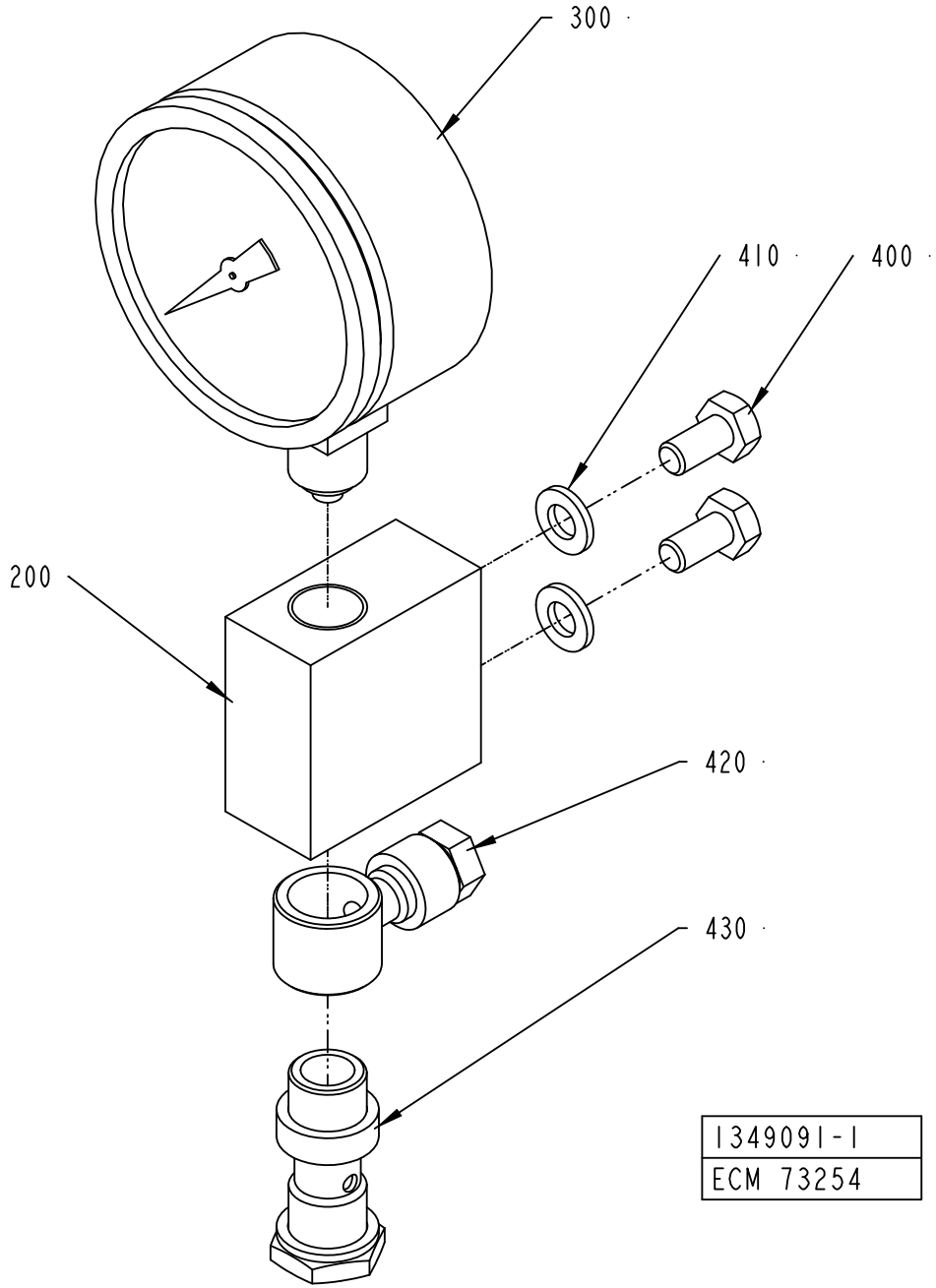
300
410
400
200
420
430
1349091-1
ECM 73254

ECM: 179450 - 20040910
Group number: 1349091-0100
Assembly Drawing: 1349091-1_1_AA

Pos	Part No	UN	Qty	Description	Page No
-					
200	1349092-0000		1	SUPPORT	
300	90043-0095		1	PRESSURE GAUGE, 2740, D=63 MM, GLYC.	
400	312105-0366		2	SCREW M6S ISO 4017 M6X12 A480	
410	315105-0153		2	WASHER BRB 6,4X12 RFR	
420	342797-0122		1	CONN. BANJO, RINGPIECE 6-1/4	
430	342980-0304		1	BANJO-HOLLOW BOLT COUPL,EXT.THR.01-G1/4	

Pos	Part No	UN	Qty	Description	Page No

VALVE PLATE

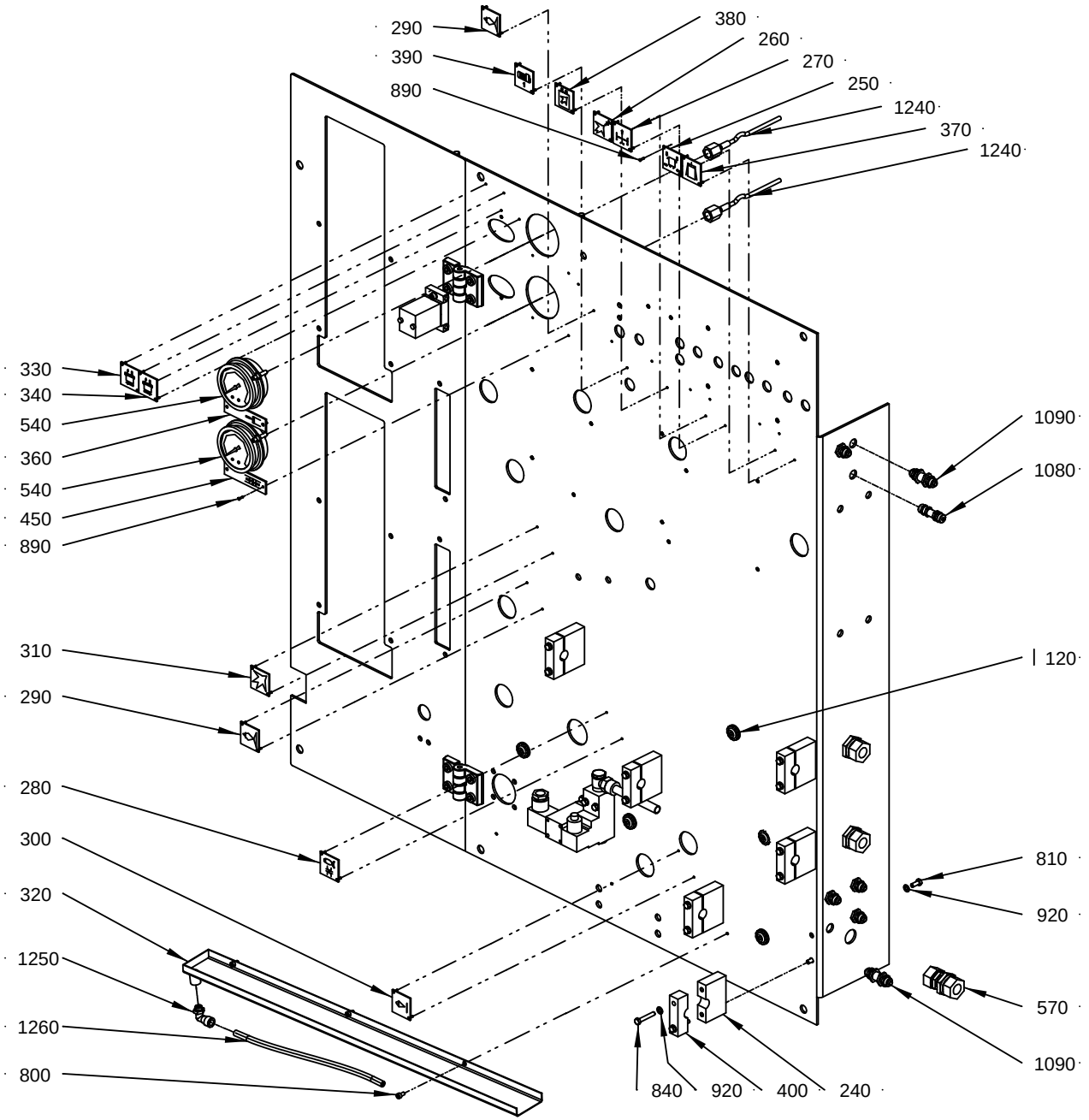

13490 94-2
214617

ECM: 291798 - 20070126
Group number: 1349094-0200
Assembly Drawing: 1349094-2_1_AA

This list covers pages from 6-40 to 6-43

Pos	Part No	UN	Qty	Description	Page No
-					
0200	2500202-0000		1	PLATE	
0220	2500201-0000		1	VALVE PLATE	
0230	295496-0000		1	BLOCKING PIECE	
0240	576286-0000		6	HOLDER	
0250	273449-0000		1	SIGN, FLAP SEALING	
0260	273450-0000		1	SIGN, AIR SPRAY	
0270	273452-0000		1	SIGN, ROLLING MACHINE FOR FABRICS	
0280	273454-0000		1	SIGN, COOLING JAWS	
0290	273455-0000		2	SIGN, COLD WATER	
0300	273456-0000		1	SIGN, HOT WATER	
0310	273458-0000		1	SIGN, AIR	
0320	1346061-0000		1	DRAIN CHUTE	
0330	445533-0000		1	SIGN, COLD WATER FLOW TS-LEFT	
0340	445534-0000		1	SIGN, COLD WATER FLOW TS-RIGHT	
0360	247385-0000		1	SIGN	
0370	929413-0000		1	SIGN	
0380	978603-0000		1	SIGN	
0390	979421-0000		1	SIGN	
0400	979446-0000		6	HOLDER	
0450	247386-0000		1	SIGN	
0540	90458-2421		2	PRESSURE GAUGE, 1453 W. BRACKET	
0570	90224-0296		3	CONN. BULKHEAD, ART.NO. 116 1500	
0580	90235-0450		1	PLATE	
0600	90248-0034		2	HINGE, 66073	
0800	312115-0287		3	SCREW ISO4762 M4X8 A4 80	
0810	312105-0327		14	SCREW M6S ISO 4017 M5X12 A480	
0820	312115-0329		2	SCREW ISO4762 M5X16 A4 80	
0830	312115-0447		8	SCREW ISO4762 M8X12 A4 80	
0840	312105-0335		12	SCREW M6S ISO 4014 M5X30 A480	
0850	312105-0339		2	SCREW M6S ISO 4014 M5X40 A480	
0890	90457-0104		30	BLANK RIVET 2X7,4	
0900	312605-0314		2	HEXAGON NUT, M6M M5 A280	
0920	315105-0146		32	WASHER BRB 5,3X10 RFR	
0930	315105-0153		2	WASHER BRB 6,4X12 RFR	
0940	315239-0109		2	NYLON WASHER G1/8	
0990	342722-0204		1	PIPE COUPLING	
1060	342921-0113		1	STRAIGHT COUPLING,EXT.THREADED 6/4-G1/8"	
1070	342921-0121		1	STRAIGHT CPLNG,EXT.THREADED 8/6-G1/8INCH	
1080	342960-0112		1	BULKHEAD COUPLING 6/4	
1090	342960-0122		6	BULKHEAD COUPLING 8/6	
1100	342980-0122		1	BANJO-CONNECTION,RING 8/6-G1/4 INCH	
1110	342980-0304		1	BANJO-HOLLOW BOLT COUPL,EXT.THR.01-G1/4	
1120	352101-0103		6	LEAD-IN, PR18,6/PG11, E-1457518	
1130	312605-0316		2	HEXAGON NUT, M6M M6 A280	
1140	312602-0316		8	NUT, EN 24032 M6M M6 NIPLBR	
1150	342903-0121		1	NUT WITH SPRING, 1723 8/6-M12X1	
1240	90458-2488		2	MEASURING HOSE DN2 L=1500MM, MAX 400BAR	
1250	90458-2964		1	ELBOW PIPE JOINT, EXT.THREAD, D=8MM-G1/8	
1260	90166-0061	M	1.5	HOSE 4/8 PVC TRANSP.	
1270	353101-0153		2	CABLE SHOE 4,0-6,0MM2 M6 YELLOW	
M.Y039	90042-0173		1	SOLENOID VALVE BÃ¼RKERT	
M.W391	351162-0106	M	4	CABLE AWM 1X4 MM2 YELLOW-GREEN	
M.W342	351150-0403	M	3	CABLE OLFLEX 3X0,75 MM2 LIGHT/GREY	
M.W321	351150-0403	M	3	CABLE OLFLEX 3X0,75 MM2 LIGHT/GREY	
M.W132	351162-0106	M	5	CABLE AWM 1X4 MM2 YELLOW-GREEN	
M.C001	90235-0708		1	VALVE	
M.B007	90459-6716		1	PRESSURE SWITCH, PEV-1/4-B-SA	

Machine Type | Group Description | Used-In | Group Number | Page No

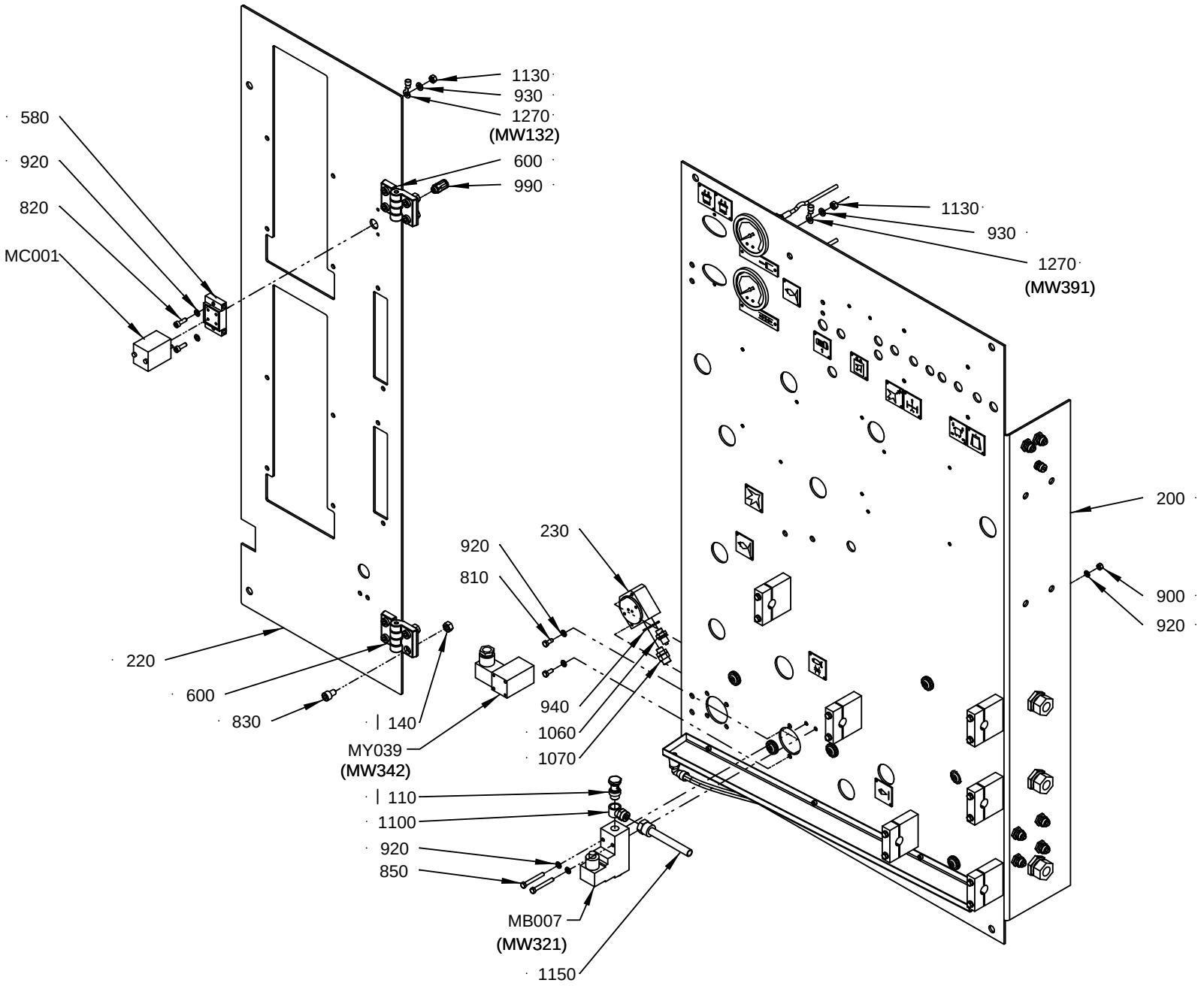

13490 94-2
214617

ECM: 291798 - 20070126
Group number: 1349094-0200
Assembly Drawing: 1349094-2_2_AA

This list covers pages from 6-40 to 6-43

Pos	Part No	UN	Qty	Description	Page No
-					
0200	2500202-0000		1	PLATE	
0220	2500201-0000		1	VALVE PLATE	
0230	295496-0000		1	BLOCKING PIECE	
0240	576286-0000		6	HOLDER	
0250	273449-0000		1	SIGN, FLAP SEALING	
0260	273450-0000		1	SIGN, AIR SPRAY	
0270	273452-0000		1	SIGN, ROLLING MACHINE FOR FABRICS	
0280	273454-0000		1	SIGN, COOLING JAWS	
0290	273455-0000		2	SIGN, COLD WATER	
0300	273456-0000		1	SIGN, HOT WATER	
0310	273458-0000		1	SIGN, AIR	
0320	1346061-0000		1	DRAIN CHUTE	
0330	445533-0000		1	SIGN, COLD WATER FLOW TS-LEFT	
0340	445534-0000		1	SIGN, COLD WATER FLOW TS-RIGHT	
0360	247385-0000		1	SIGN	
0370	929413-0000		1	SIGN	
0380	978603-0000		1	SIGN	
0390	979421-0000		1	SIGN	
0400	979446-0000		6	HOLDER	
0450	247386-0000		1	SIGN	
0540	90458-2421		2	PRESSURE GAUGE, 1453 W. BRACKET	
0570	90224-0296		3	CONN. BULKHEAD, ART.NO. 116 1500	
0580	90235-0450		1	PLATE	
0600	90248-0034		2	HINGE, 66073	
0800	312115-0287		3	SCREW ISO4762 M4X8 A4 80	
0810	312105-0327		14	SCREW M6S ISO 4017 M5X12 A480	
0820	312115-0329		2	SCREW ISO4762 M5X16 A4 80	
0830	312115-0447		8	SCREW ISO4762 M8X12 A4 80	
0840	312105-0335		12	SCREW M6S ISO 4014 M5X30 A480	
0850	312105-0339		2	SCREW M6S ISO 4014 M5X40 A480	
0890	90457-0104		30	BLANK RIVET 2X7,4	
0900	312605-0314		2	HEXAGON NUT, M6M M5 A280	
0920	315105-0146		32	WASHER BRB 5,3X10 RFR	
0930	315105-0153		2	WASHER BRB 6,4X12 RFR	
0940	315239-0109		2	NYLON WASHER G1/8	
0990	342722-0204		1	PIPE COUPLING	
1060	342921-0113		1	STRAIGHT COUPLING,EXT.THREADED 6/4-G1/8"	
1070	342921-0121		1	STRAIGHT CPLNG,EXT.THREADED 8/6-G1/8INCH	
1080	342960-0112		1	BULKHEAD COUPLING 6/4	
1090	342960-0122		6	BULKHEAD COUPLING 8/6	
1100	342980-0122		1	BANJO-CONNECTION,RING 8/6-G1/4 INCH	
1110	342980-0304		1	BANJO-HOLLOW BOLT COUPL,EXT.THR.01-G1/4	
1120	352101-0103		6	LEAD-IN, PR18,6/PG11, E-1457518	
1130	312605-0316		2	HEXAGON NUT, M6M M6 A280	
1140	312602-0316		8	NUT, EN 24032 M6M M6 NIPLBR	
1150	342903-0121		1	NUT WITH SPRING, 1723 8/6-M12X1	
1240	90458-2488		2	MEASURING HOSE DN2 L=1500MM, MAX 400BAR	
1250	90458-2964		1	ELBOW PIPE JOINT, EXT.THREAD, D=8MM-G1/8	
1260	90166-0061	M	1.5	HOSE 4/8 PVC TRANSP.	
1270	353101-0153		2	CABLE SHOE 4,0-6,0MM2 M6 YELLOW	
M.Y039	90042-0173		1	SOLENOID VALVE BÃ¼RKERT	
M.W391	351162-0106	M	4	CABLE AWM 1X4 MM2 YELLOW-GREEN	
M.W342	351150-0403	M	3	CABLE OLFLEX 3X0,75 MM2 LIGHT/GREY	
M.W321	351150-0403	M	3	CABLE OLFLEX 3X0,75 MM2 LIGHT/GREY	
M.W132	351162-0106	M	5	CABLE AWM 1X4 MM2 YELLOW-GREEN	
M.C001	90235-0708		1	VALVE	
M.B007	90459-6716		1	PRESSURE SWITCH, PEV-1/4-B-SA	

Machine Type | Group Description | Used-In | Group Number | Page No

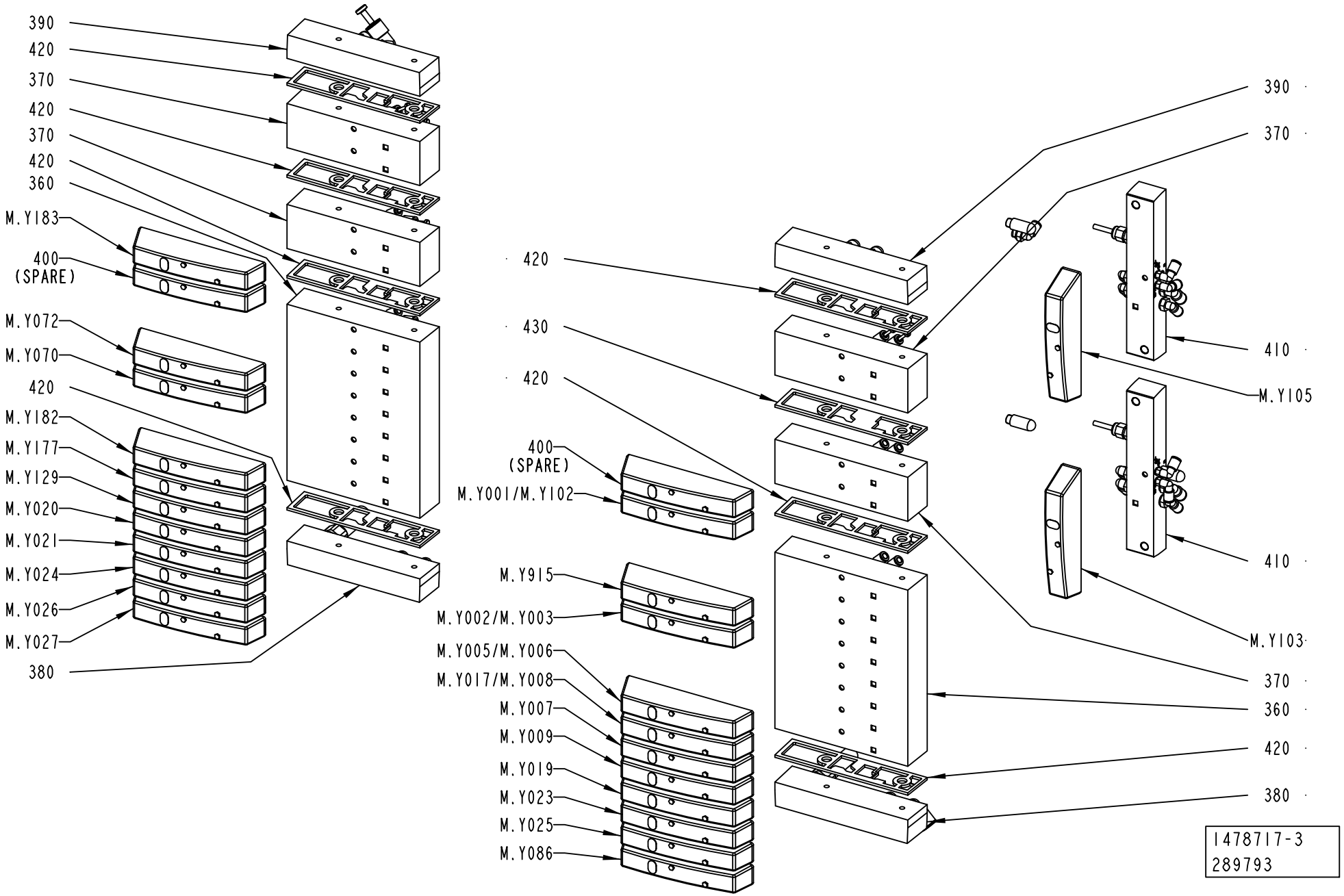
390
420
370
420
370
420
360
M.Y183
400
(SPARE)
M.Y072
M.Y070
420
M.Y182
M.Y177
M.Y129
M.Y020
M.Y021
M.Y024
M.Y026
M.Y027
380
420
430
420
400
(SPARE)
M.Y001/M.Y102
M.Y915
M.Y002/M.Y003
M.Y005/M.Y006
M.Y017/M.Y008
M.Y007
M.Y009
M.Y019
M.Y023
M.Y025
M.Y086
390
370
410
M.Y105
410
M.Y103
370
360
420
380
1478717-3
289793

ECM: 289796 - 20070126
Group number: 1478717-0200
Assembly Drawing: 1478717-3_1_AC

This list covers pages from 6-44 to 6-47

Pos	Part No	UN	Qty	Description	Page No
TBA					
350	350013-0002		12	PLUG QSC-6H	
M.Y183	90458-1215		1	COVER PLATE FOR EMPTY VALVE POSITION	
M.Y182	90458-1194		1	MONOSTABLE VALVE 5/2	
M.Y177	90458-1194		1	MONOSTABLE VALVE 5/2	
M.Y072	90458-1215		1	COVER PLATE FOR EMPTY VALVE POSITION	
M.Y070	90458-1215		1	COVER PLATE FOR EMPTY VALVE POSITION	
M.Y027	90458-1194		1	MONOSTABLE VALVE 5/2	
Common Parts					
300	350002-0006		52	PUSH-IN L-FITTING QSL-F-G1/8-6	
305	350002-0002		4	PUSH-IN L-FITTING QSL-F-M5-6	
310	350002-0007		6	PUSH-IN L-FITTING QSL-F-G1/8-8	
320	350002-0014		8	PUSH-IN L-FITTING QSL-F-G3/8-12	
330	90459-7549		3	FLOW CONTROL VALVE, GRLZ-1/8-QS-8-D	
360	90458-1205		2	BASIC SUB-BASE 8 VALVES, CDVI5.0-GB8-MP	
370	90458-1206		4	EXP. SUB-BASE 2 VALVES, CDVI5.0-EB	
380	90458-1212		2	LEFT ENDPLATE INCL. 10M CABLE	
390	90458-1214		2	RIGHT ENDPL EXT. PILOT AIR,CDVI5.0-EPR-S	
400	90458-1215		2	COVER PLATE FOR EMPTY VALVE POSITION	
410	90459-2591		2	SINGLE VALVE SUB-BASE CDSV5.0-AS-1/8	
420	90458-1207		7	SEALING, STANDARD	
430	90458-1208		1	SEALING, CHANNEL 1 BLOCKED	
440	90328-0047		5	SILENCER G1/8"	
450	350013-0005		1	PLUG QSC-12H	
M.Y915	90458-1194		1	MONOSTABLE VALVE 5/2	
M.Y129	90458-1194		1	MONOSTABLE VALVE 5/2	
M.Y105	90458-1194		1	MONOSTABLE VALVE 5/2	
M.Y103	90458-1200		1	VALVE OPEN IN MID-POSITION 5/3	
M.Y086	90458-1194		1	MONOSTABLE VALVE 5/2	
M.Y026	90458-1194		1	MONOSTABLE VALVE 5/2	
M.Y025	90458-1194		1	MONOSTABLE VALVE 5/2	
M.Y024	90458-1194		1	MONOSTABLE VALVE 5/2	
M.Y023	90458-1194		1	MONOSTABLE VALVE 5/2	
M.Y021	90458-1194		1	MONOSTABLE VALVE 5/2	
M.Y020	90458-1194		1	MONOSTABLE VALVE 5/2	
M.Y019	90458-1194		1	MONOSTABLE VALVE 5/2	
M.Y017/008	90458-1202		1	VALVES 2X3/2, CLOSED	
M.Y009	90458-1194		1	MONOSTABLE VALVE 5/2	
M.Y007	90458-1194		1	MONOSTABLE VALVE 5/2	
M.Y005/006	90458-1202		1	VALVES 2X3/2, CLOSED	
M.Y002/003	90458-1202		1	VALVES 2X3/2, CLOSED	
M.Y001/102	90458-1203		1	VALVE 2X3/2 1X OPEN 1X CLOSED	

Pos	Part No	UN	Qty	Description	Page No

Machine Type | Group Description | Used-In | Group Number | Page No

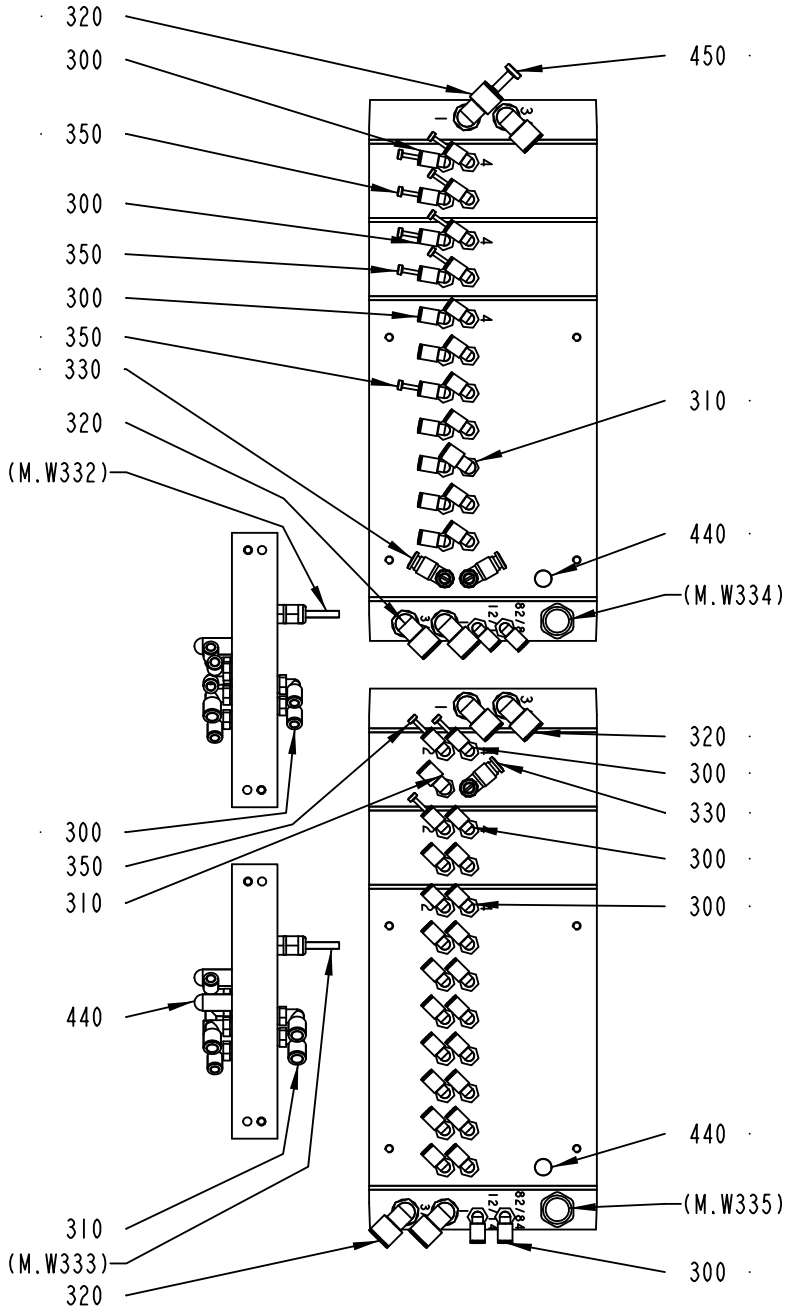

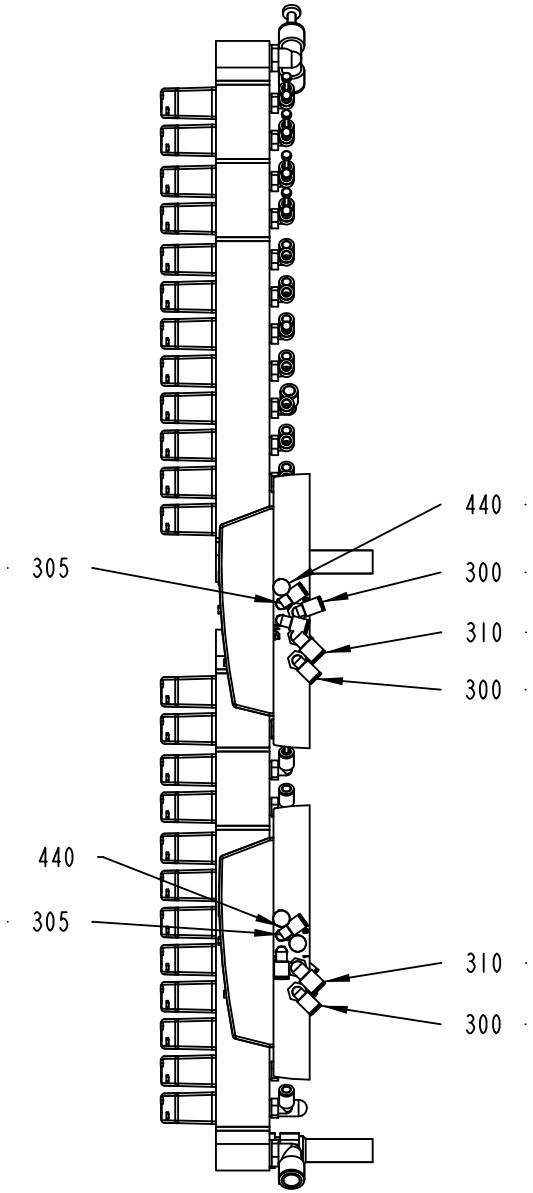

1478717-3
289793

Pos	Part No	UN	Qty	Description	Page No
TBA					
350	350013-0002		12	PLUG QSC-6H	
M.Y183	90458-1215		1	COVER PLATE FOR EMPTY VALVE POSITION	
M.Y182	90458-1194		1	MONOSTABLE VALVE 5/2	
M.Y177	90458-1194		1	MONOSTABLE VALVE 5/2	
M.Y072	90458-1215		1	COVER PLATE FOR EMPTY VALVE POSITION	
M.Y070	90458-1215		1	COVER PLATE FOR EMPTY VALVE POSITION	
M.Y027	90458-1194		1	MONOSTABLE VALVE 5/2	
Common Parts					
300	350002-0006		52	PUSH-IN L-FITTING QSL-F-G1/8-6	
305	350002-0002		4	PUSH-IN L-FITTING QSL-F-M5-6	
310	350002-0007		6	PUSH-IN L-FITTING QSL-F-G1/8-8	
320	350002-0014		8	PUSH-IN L-FITTING QSL-F-G3/8-12	
330	90459-7549		3	FLOW CONTROL VALVE, GRLZ-1/8-QS-8-D	
360	90458-1205		2	BASIC SUB-BASE 8 VALVES, CDVI5.0-GB8-MP	
370	90458-1206		4	EXP. SUB-BASE 2 VALVES, CDVI5.0-EB	
380	90458-1212		2	LEFT ENDPLATE INCL. 10M CABLE	
390	90458-1214		2	RIGHT ENDPL EXT. PILOT AIR,CDVI5.0-EPR-S	
400	90458-1215		2	COVER PLATE FOR EMPTY VALVE POSITION	
410	90459-2591		2	SINGLE VALVE SUB-BASE CDSV5.0-AS-1/8	
420	90458-1207		7	SEALING, STANDARD	
430	90458-1208		1	SEALING, CHANNEL 1 BLOCKED	
440	90328-0047		5	SILENCER G1/8"	
450	350013-0005		1	PLUG QSC-12H	
M.Y915	90458-1194		1	MONOSTABLE VALVE 5/2	
M.Y129	90458-1194		1	MONOSTABLE VALVE 5/2	
M.Y105	90458-1194		1	MONOSTABLE VALVE 5/2	
M.Y103	90458-1200		1	VALVE OPEN IN MID-POSITION 5/3	
M.Y086	90458-1194		1	MONOSTABLE VALVE 5/2	
M.Y026	90458-1194		1	MONOSTABLE VALVE 5/2	
M.Y025	90458-1194		1	MONOSTABLE VALVE 5/2	
M.Y024	90458-1194		1	MONOSTABLE VALVE 5/2	
M.Y023	90458-1194		1	MONOSTABLE VALVE 5/2	
M.Y021	90458-1194		1	MONOSTABLE VALVE 5/2	
M.Y020	90458-1194		1	MONOSTABLE VALVE 5/2	
M.Y019	90458-1194		1	MONOSTABLE VALVE 5/2	
M.Y017/008	90458-1202		1	VALVES 2X3/2, CLOSED	
M.Y009	90458-1194		1	MONOSTABLE VALVE 5/2	
M.Y007	90458-1194		1	MONOSTABLE VALVE 5/2	
M.Y005/006	90458-1202		1	VALVES 2X3/2, CLOSED	
M.Y002/003	90458-1202		1	VALVES 2X3/2, CLOSED	
M.Y001/102	90458-1203		1	VALVE 2X3/2 1X OPEN 1X CLOSED	

Pos	Part No	UN	Qty	Description	Page No

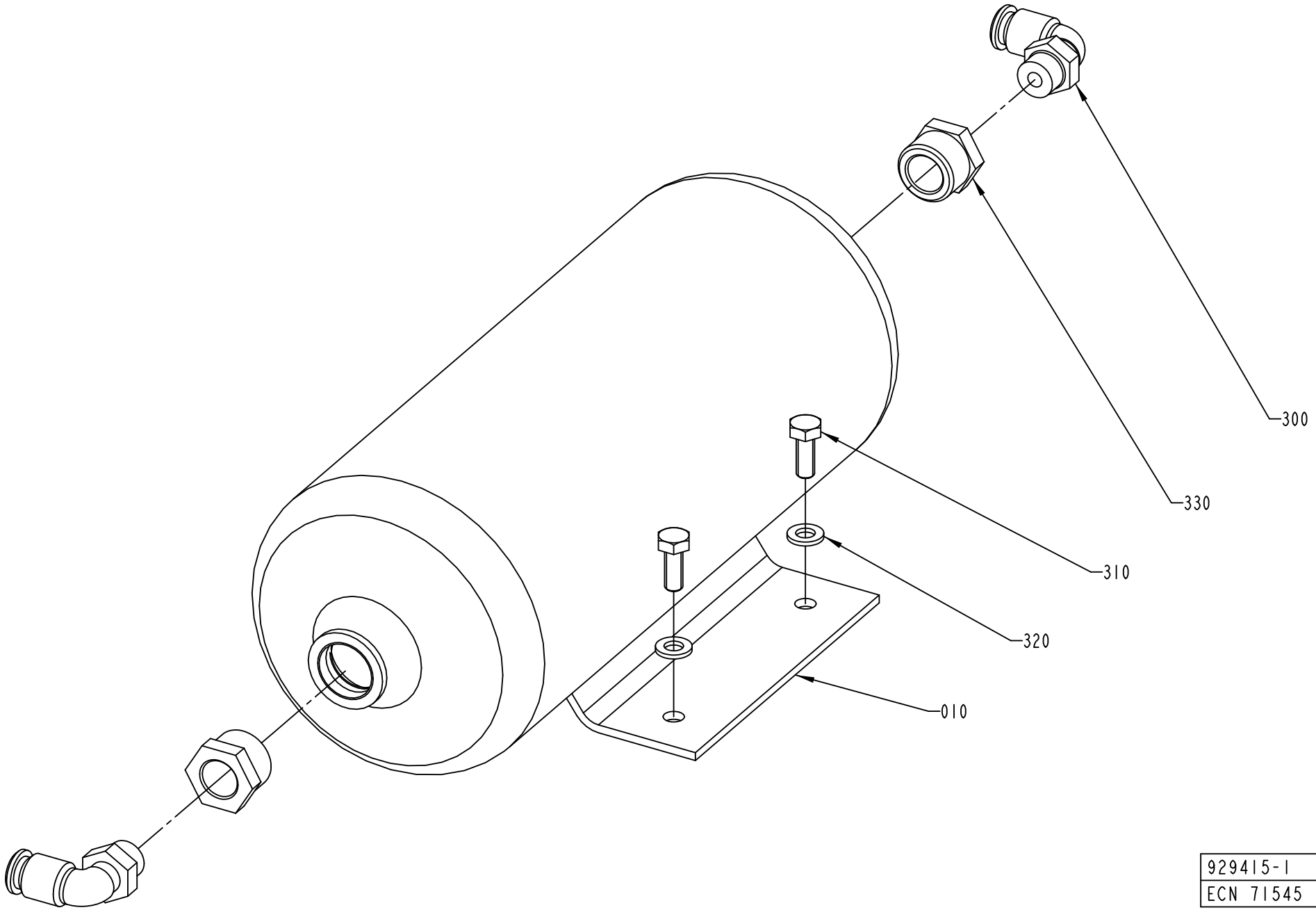
300
330
310
320
010
929415-1
ECN 71545

ECM: 211570 - 20050621
Group number: 929415-0100
Assembly Drawing: 929415-1_1_AC

Pos	Part No	UN	Qty	Description	Page No
-					
010	90457-0100		1	RESERVOIR, CRVZS-2	
300	342732-0104		2	ELBOW PIPE JOINT, EXT.THREAD, D=8MM-G1/4	
310	312105-0368		2	SCREW M6S ISO 4017 M6X16 A480	
320	315105-0153		2	WASHER BRB 6,4X12 RFR	
330	342701-0205		2	BUSHING,INT./EXT.G-THREAD G1/2"-G1/4"	

Pos	Part No	UN	Qty	Description	Page No

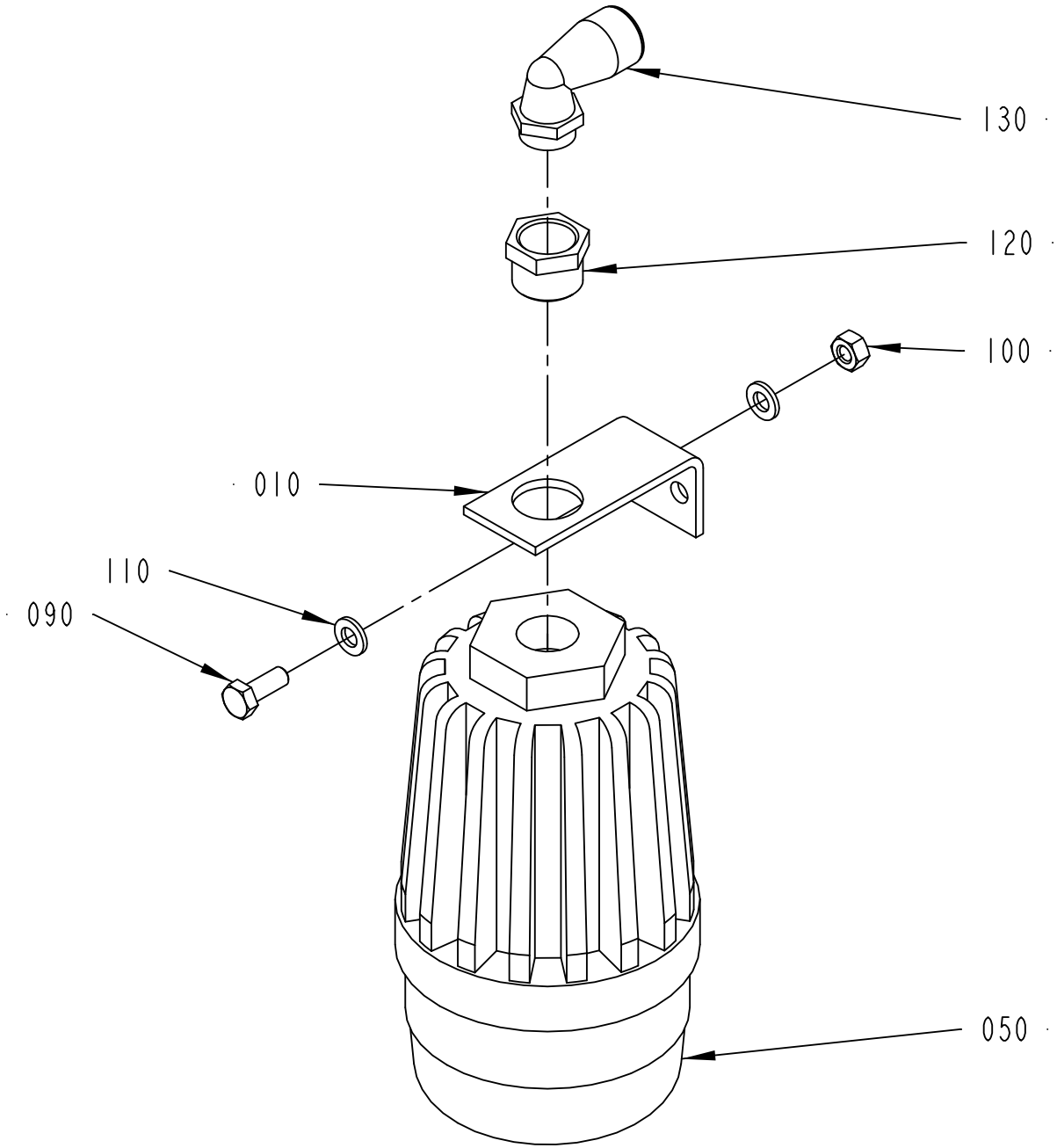

2814874-1
ECN 255871

ECM: 255889 - 20060303
Group number: 2814874-0100
Assembly Drawing: 2814874-1_1_AA

Pos	Part No	UN	Qty	Description	Page No
-					
010	1074209-0000		1	BRACKET	
050	90459-5786		1	FILTERED SILENCER, 10494 LFU-1/2	
	90459-7294		*1*	*FILTER CARTRIDGE, 10496 LFPU-1/2*	
090	312105-0368		2	SCREW M6S ISO 4017 M6X16 A480	
100	312605-0316		2	HEXAGON NUT, M6M M6 A280	
110	315105-0153		4	WASHER BRB 6,4X12 RFR	
120	342701-0206		1	BUSHING,INT./EXT.G-THREAD G1/2"-G3/8"	
130	90458-2960		1	ELBOW PIPE JOINT, EXT.THREAD,D=12MM-G3/8	

Pos	Part No	UN	Qty	Description	Page No

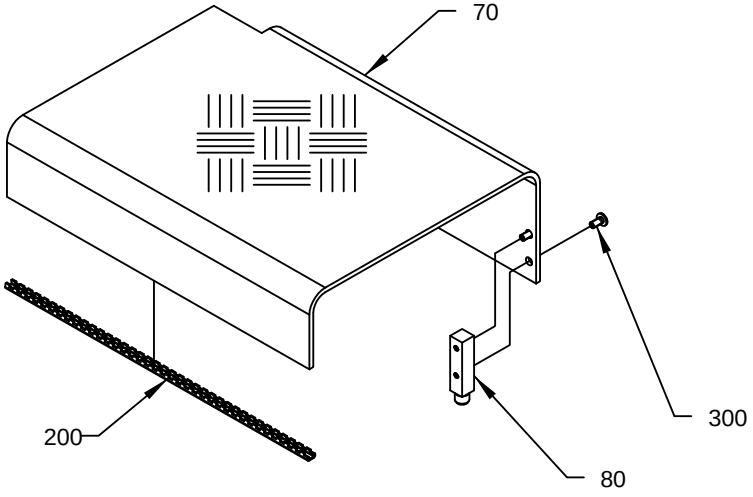

DETAIL A
SCALE 1:5

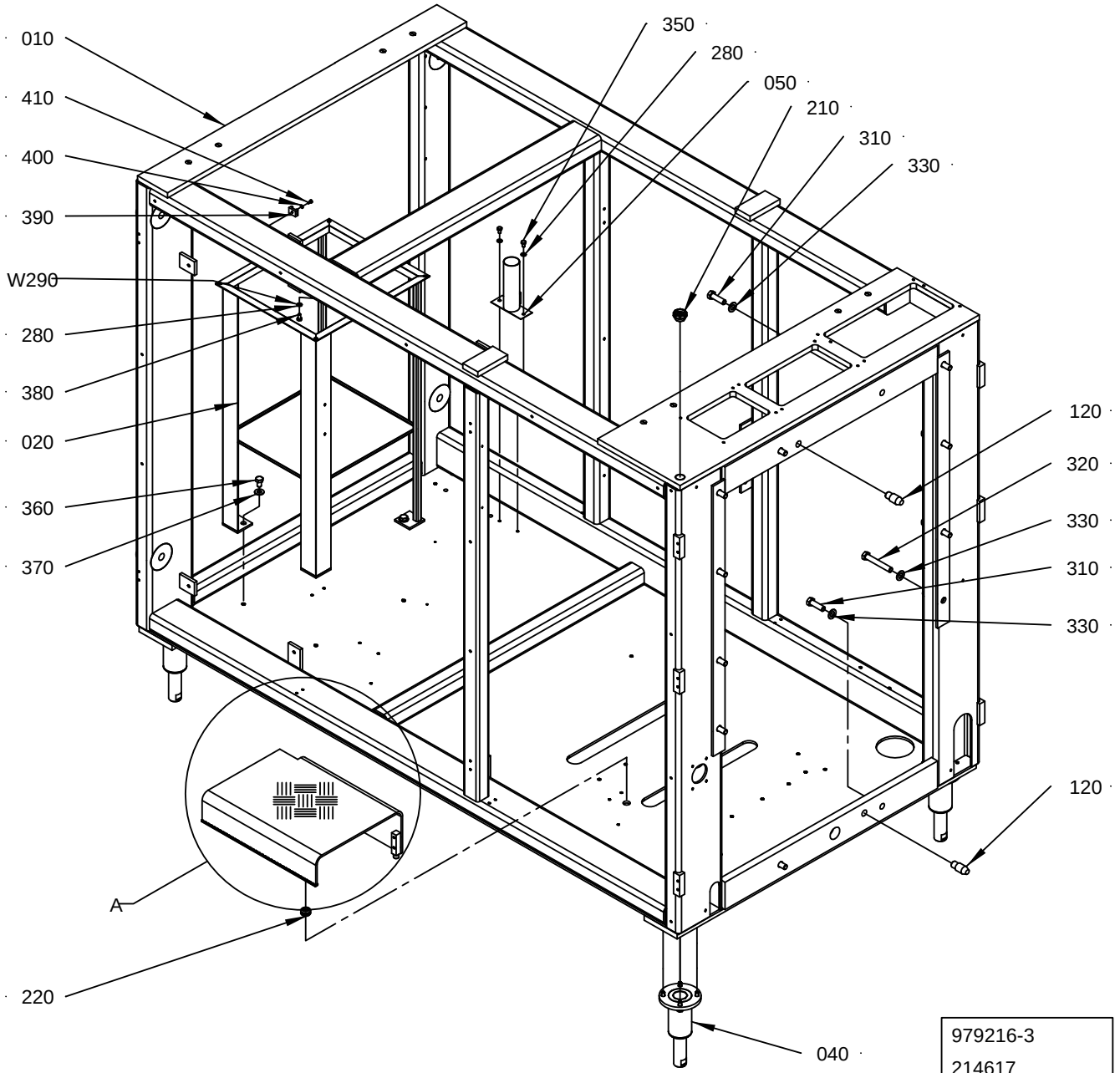

979216-3
214617

ECM: 215164 - 20060123
Group number: 979216-0300
Assembly Drawing: 979216-3_1_AA

Pos	Part No	UN	Qty	Description	Page No
-					
010	1512486-0000		1	MACHINE BODY	
020	2613754-0000		1	FRAME	
040	2773926-0100		4	LEG	**2-15, 6-55, 8-9**
050	295259-0000		1	HOLDER	
070	2518415-0000		1	COVER PLATE	
080	2518416-0000		2	JOINT BOLT	
120	1517252-0000		2	BOLT Ã˜20H7	
200	90143-0062	MM	380	STRIP	
210	90458-2487		1	SCREW PLUG HD-PE, M24	
220	90458-1227		2	LEAD-IN, BUSHING, DA 130/170/50	
280	315105-0153		3	WASHER BRB 6,4X12 RFR	
300	90287-0075		4	SCREW SLOT. PAN HEAD LKCS M6X12	
310	312105-0540		4	SCREW M6S ISO 4017 M12X40 A480	
320	312105-0548		8	SCREW M6S ISO 4014 M12X80 A480	
330	315105-0178		12	WASHER BRB 13X24 RFR	
350	312105-0364		2	SCREW M6S ISO 4017 M6X10 A480	
360	312105-0489		4	SCREW M6S ISO 4017 M10X16 A480	
370	315105-0173		4	WASHER BRB 10,5X22 RFR	
380	312105-0366		1	SCREW M6S ISO 4017 M6X12 A480	
390	352113-0203		2	ANCHOR PLATES FOR STRIPS, TYPE TM3S8-M0	
400	315105-0136		2	WASHER BRB 4,3X8 RFR	
410	312125-0287		2	SCREW ISO 1207 M4X8 A4	
W390	351162-0109	M	4	CABLE AWM 1X16 MM2 YELLOW-GREEN	

Pos	Part No	UN	Qty	Description	Page No

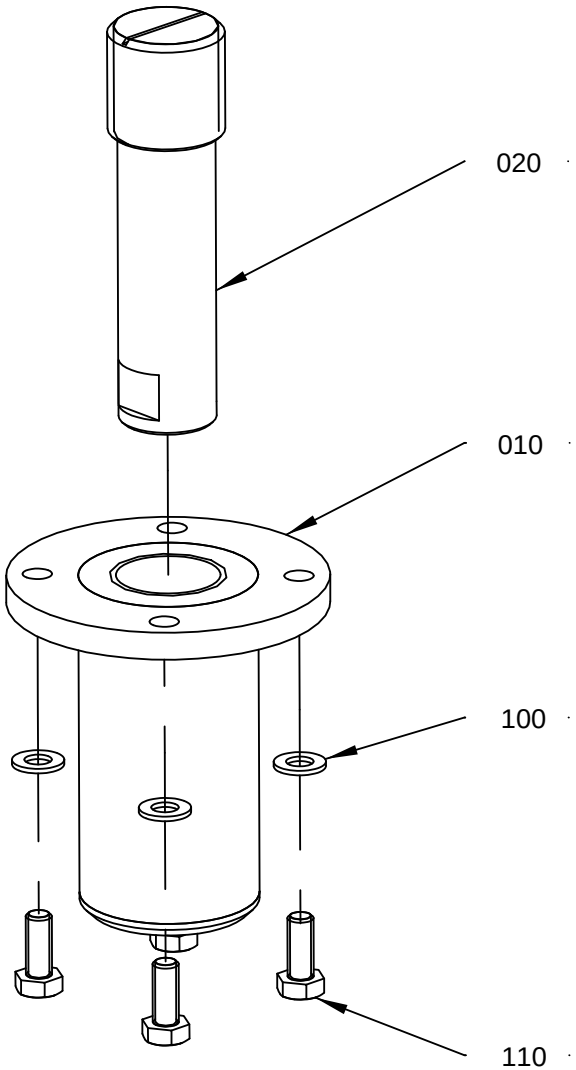

2773 926-1
224525

ECM: 224529 - 20051114
Group number: 2773926-0100
Assembly Drawing: 2773926-1_1_AA

Pos	Part No	UN	Qty	Description	Page No
-					
010	2773925-0000		1	LEG	
020	598148-0000		1	LEG	
100	315105-0165		4	WASHER BRB 8,4X16 RFR	
110	312105-0451		4	SCREW M6S ISO 4017 M8X20 A480	

Pos	Part No	UN	Qty	Description	Page No

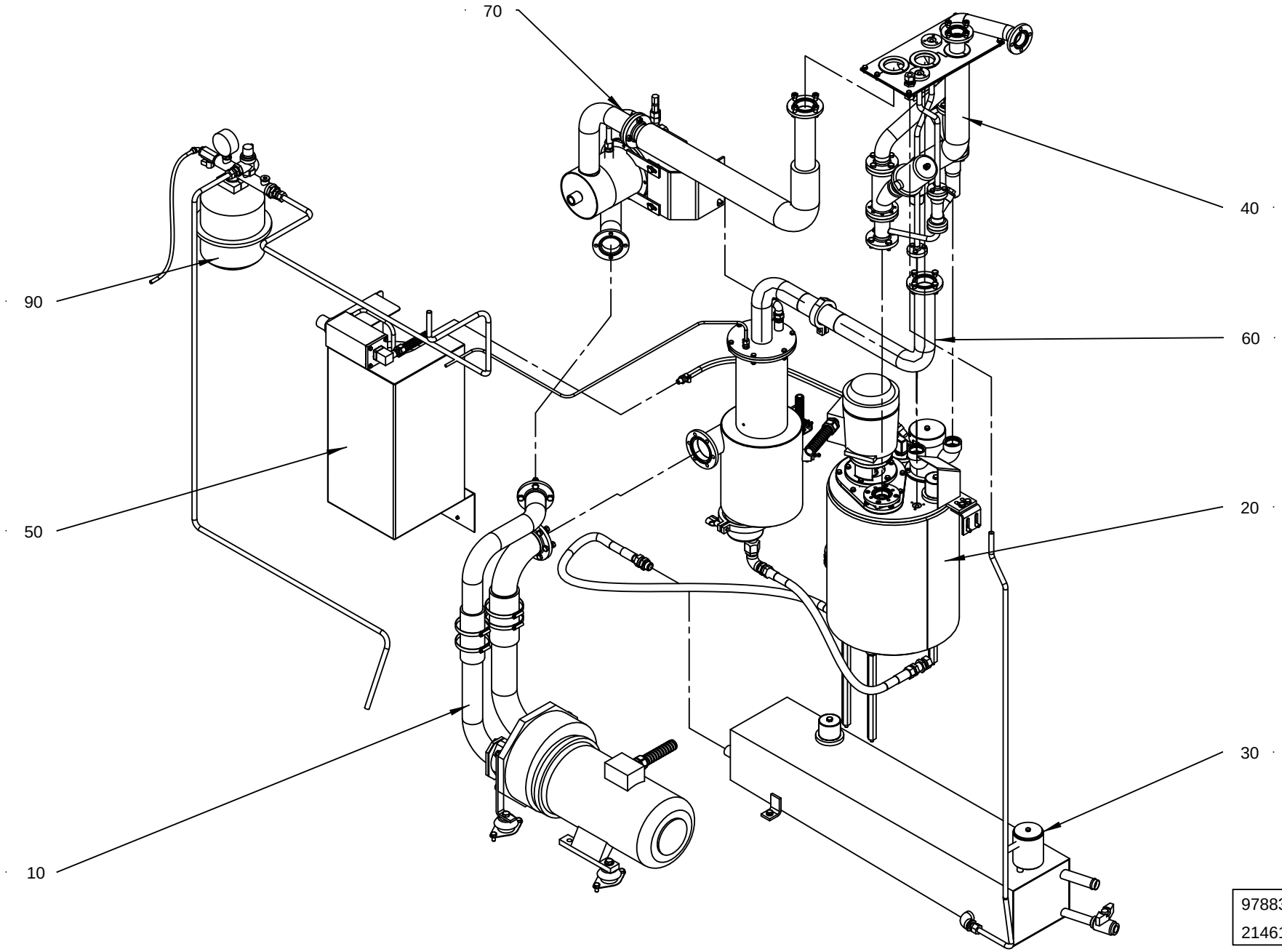

978834-3
214617

ECM: 251392 - 20060123
Group number: 978834-0300
Assembly Drawing: 978834-3_1_AA

Pos	Part No	UN	Qty	Description	Page No
-					
010	469452-0500		1	COMPRESSOR UNIT	**6-59**
020	751373-0300		1	PEROXIDE TANK	**6-61**
030	751398-0400		1	TANK	**6-67**
040	978835-0200		1	PIPE WORK	**6-69**
050	979328-0200		1	CABINET	**6-71**
060	978988-0300		1	SEPARATOR	**6-77, 6-79**
070	978989-0200		1	SCRUBBER	**6-81, 6-83**
090	979026-0200		1	WATER CIRCULATION	**6-85**

Pos	Part No	UN	Qty	Description	Page No

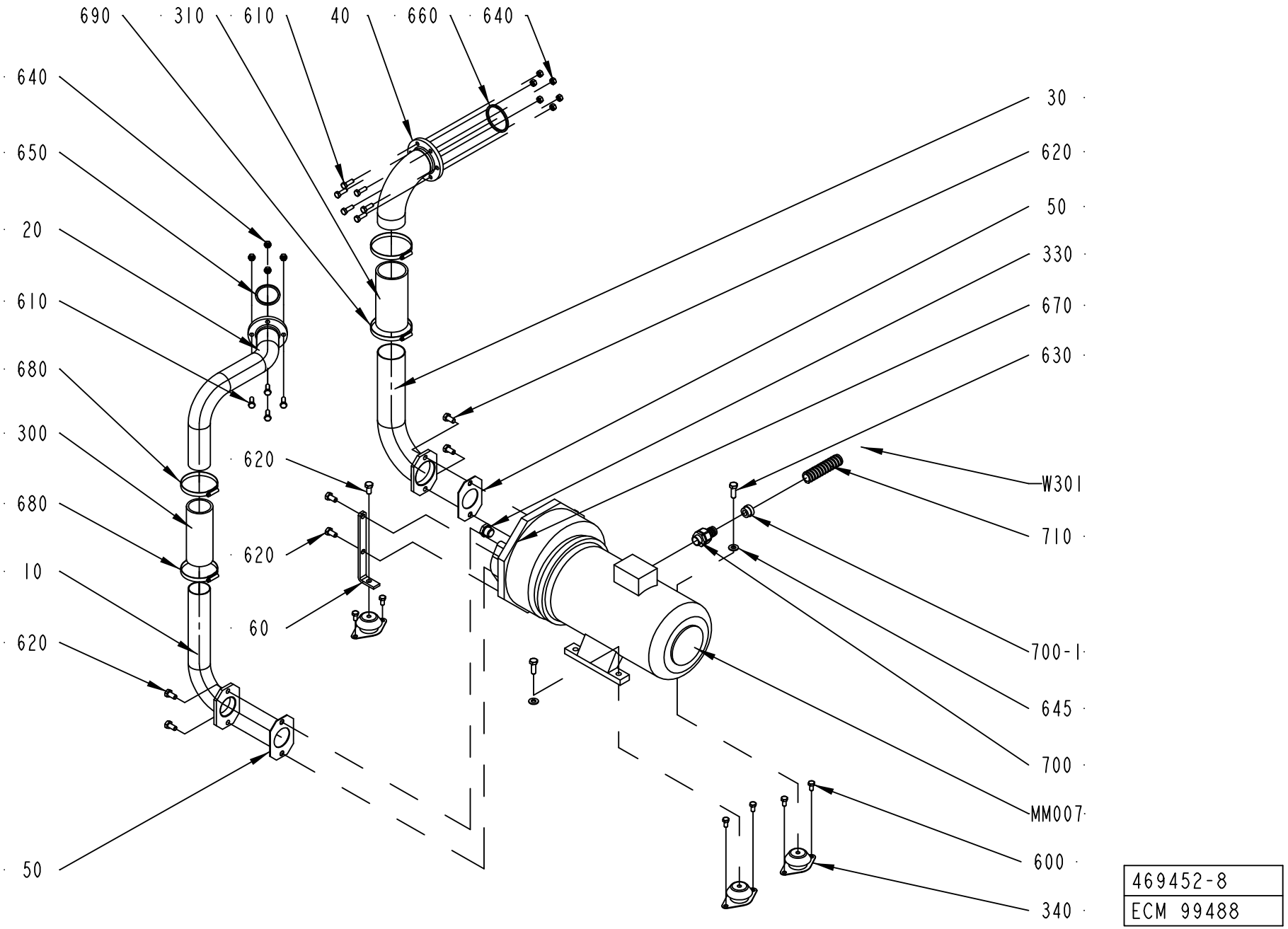
690
310
610
40
660
640
640
650
20
610
680
300
680
10
620
50
620
620
60
30
620
50
330
670
630
W301
710
700-1
645
700
MM007
600
340
469452-8
ECM 99488

ECM: 211350 - 20050621
Group number: 469452-0500
Assembly Drawing: 469452-8_1_AC

Pos	Part No	UN	Qty	Description	Page No
-					
010	978963-0000		1	PIPE	
020	1511774-0000		1	PIPE	
030	979069-0000		1	PIPE	
040	2514391-0000		1	PIPE	
050	230551-0000		2	GASKET	
060	269859-0000		2	BRACKET	
300	90166-0244	MM	200	RUBBER HOSE	
310	90166-0245	MM	200	RUBBER HOSE	
330	90330-0037		1	PLUG, EXT. G-THREAD, G1/2	
340	90347-0144		4	VIBRATION DAMPER, NO. RA 40EM-A	
600	312105-0449		8	SCREW M6S ISO 4017 M8X16 A480	
610	312105-0453		10	SCREW M6S ISO 4017 M8X25 A480	
620	312105-0491		10	SCREW M6S ISO 4017 M10X20 A480	
630	312105-0495		2	SCREW M6S ISO 4017 M10X30 A480	
640	312605-0318		10	HEXAGON NUT, M6M M8 A280	
645	315105-0173		2	WASHER BRB 10,5X22 RFR	
650	315229-0105		1	GASKETS, 48,5X55,5X3,7 MM 2" FDA	
660	315229-0106		1	GASKETS, 61,2X68,2X3,7 MM 2"1/2 FD	
670	315234-0113		1	WASHER PL.RND.CU.21,3//26 H=1,5	
680	342991-0112		2	HOSE CLIP,WORM DRIVE TYPE (73)-83	
690	342991-0113		2	HOSE CLIP,WORM DRIVE TYPE (83)-93	
700-1	353249-0013		1	INSERT, SINGEL HOLE, EK 154/13	
700	353243-0005		1	HOSE GLAND W/O INSERT PG16 EXTENDED	
710	90152-0051	M	2.5	SPIRAL CONDUIT, 25X18, UL 1816	
MM007	90270-0017		1	COMPRESSOR NASH/ELMO 112 MB/4-2083	
W301	351150-0418	M	4	CABLE OLFLEX 4X2,5 MM2 LIGHT/GREY	

Pos	Part No	UN	Qty	Description	Page No

PEROXIDE TANK

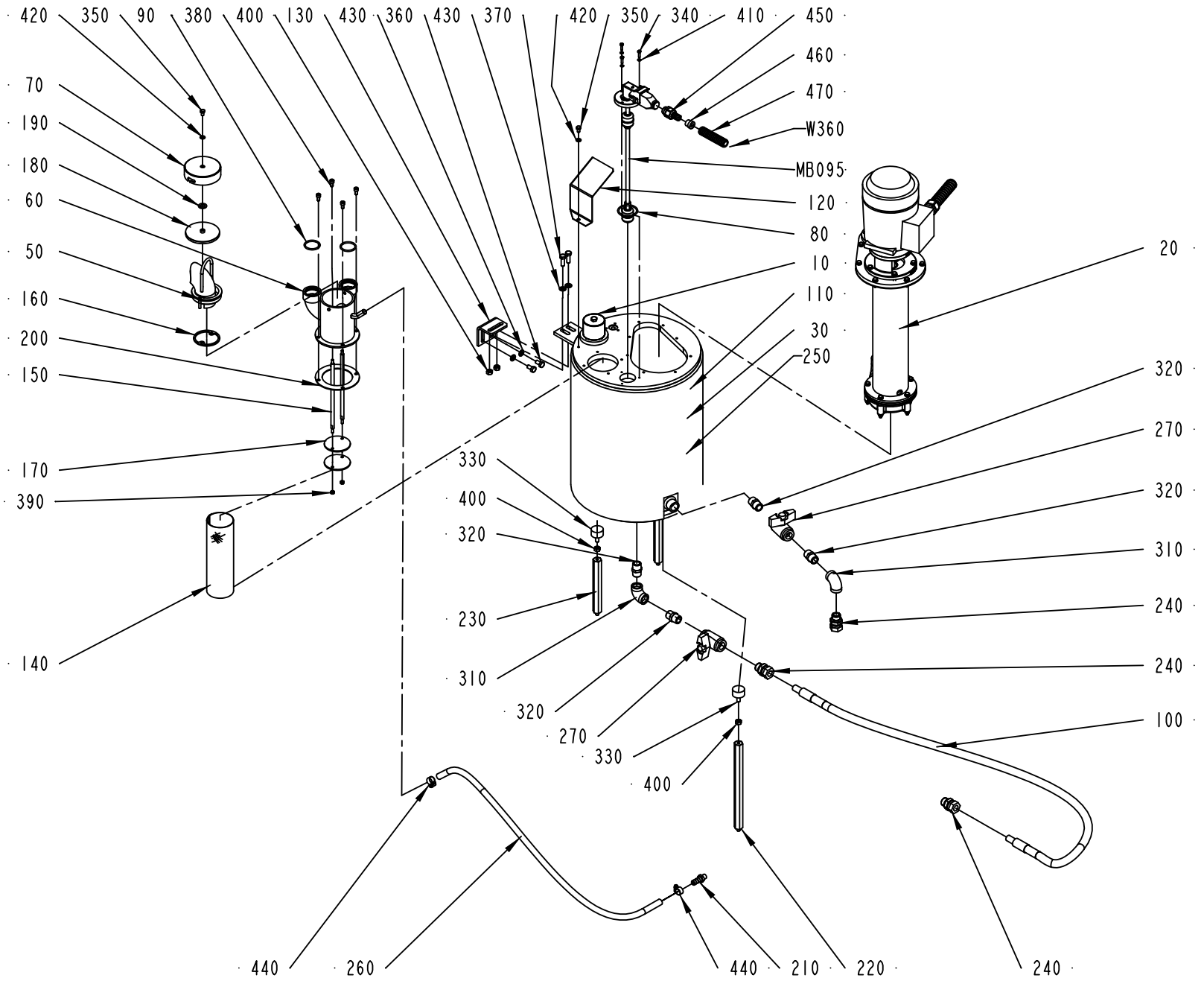

751373-4
ECN 99488

ECM: 211356 - 20050621
Group number: 751373-0300
Assembly Drawing: 751373-4_1_AC

Pos	Part No	UN	Qty	Description	Page No
-					
010	493652-0100		1	LID	**6-63**
020	751393-0300		1	PEROXIDE PUMP	**6-65**
030	1523058-0000		1	TANK	
050	1523059-0000		1	HOLDER	
060	1523060-0000		1	FILLER TUBE	
070	751220-0000		1	FILLER CAP	
080	927422-0007		1	O-RING 44.2X3 SILICONE	
090	927422-0014		2	O-RING 34.2X3 SILICONE	
100	978973-0001		1	HOSE	
110	1499899-0000		1	INSULATION CLOTH	
120	1296118-0000		1	PROTECTION	
130	1499060-0000		1	HOLDER	
140	257202-0000		1	STRAINER	
150	491203-0000		2	STRUT	
160	491303-0000		1	WASHER	
170	491304-0000		2	WASHER	
180	563286-0000		1	GASKET	
190	563287-0000		1	WASHER	
200	577773-0000		1	GASKET	
210	979336-0000		1	HOSE NIPPLE	
220	1499061-0000		2	PILLAR	
230	1499062-0000		1	PILLAR	
240	90030-0188		3	CONN. STR. GA-15-G1/2	
250	90153-0048		1	ADHESIVE,DEVCON TYPE 5-MIN-EPOXI 28G	
260	90166-0138	MM	1300	HOSE	
270	90187-0059		2	BALL VALVE FOR HYDR.PER. G1/2 3MM HOLE	
310	90330-0020		2	ELBOW, 90 INT. THREAD, R-2221/2	
320	90330-0021		4	NIPPLES, EXT. THREAD. R-207R1/2	
330	90347-0004		3	VIBRATION DAMPER D=30 TH=M8 H=17 H2=21MM	
340	312105-0293		3	SCREW M6S ISO 4017 M4X16 A470	
350	312105-0364		2	SCREW M6S ISO 4017 M6X10 A480	
360	312105-0449		2	SCREW M6S ISO 4017 M8X16 A480	
370	312105-0453		2	SCREW M6S ISO 4017 M8X25 A480	
380	312115-0366		4	SCREW ISO4762 M6X12 A4 80	
390	312605-0314		2	HEXAGON NUT, M6M M5 A280	
400	312605-0318		5	HEXAGON NUT, M6M M8 A280	
410	315105-0136		3	WASHER BRB 4,3X8 RFR	
420	315105-0153		2	WASHER BRB 6,4X12 RFR	
430	315105-0165		4	WASHER BRB 8,4X16 RFR	
440	342991-0101		2	HOSE CLIP,WORM DRIVE TYPE (13)-16	
450	353243-0002		1	HOSE GLAND W/O INSERT PG11 EXTENDED	
460	353249-0009		1	INSERT, SINGEL HOLE, EK 152/9	
470	90152-0059	M	2.5	SPIRAL CONDUIT, 18X12, UL 1211	
MB095	1282411-0000		1	FLOAT	
W360	351150-0405	M	3.5	CABLE OLFLEX 5X0,75 MM2 LIGHT/GREY	

Machine Type | Group Description | Used-In | Group Number | Page No

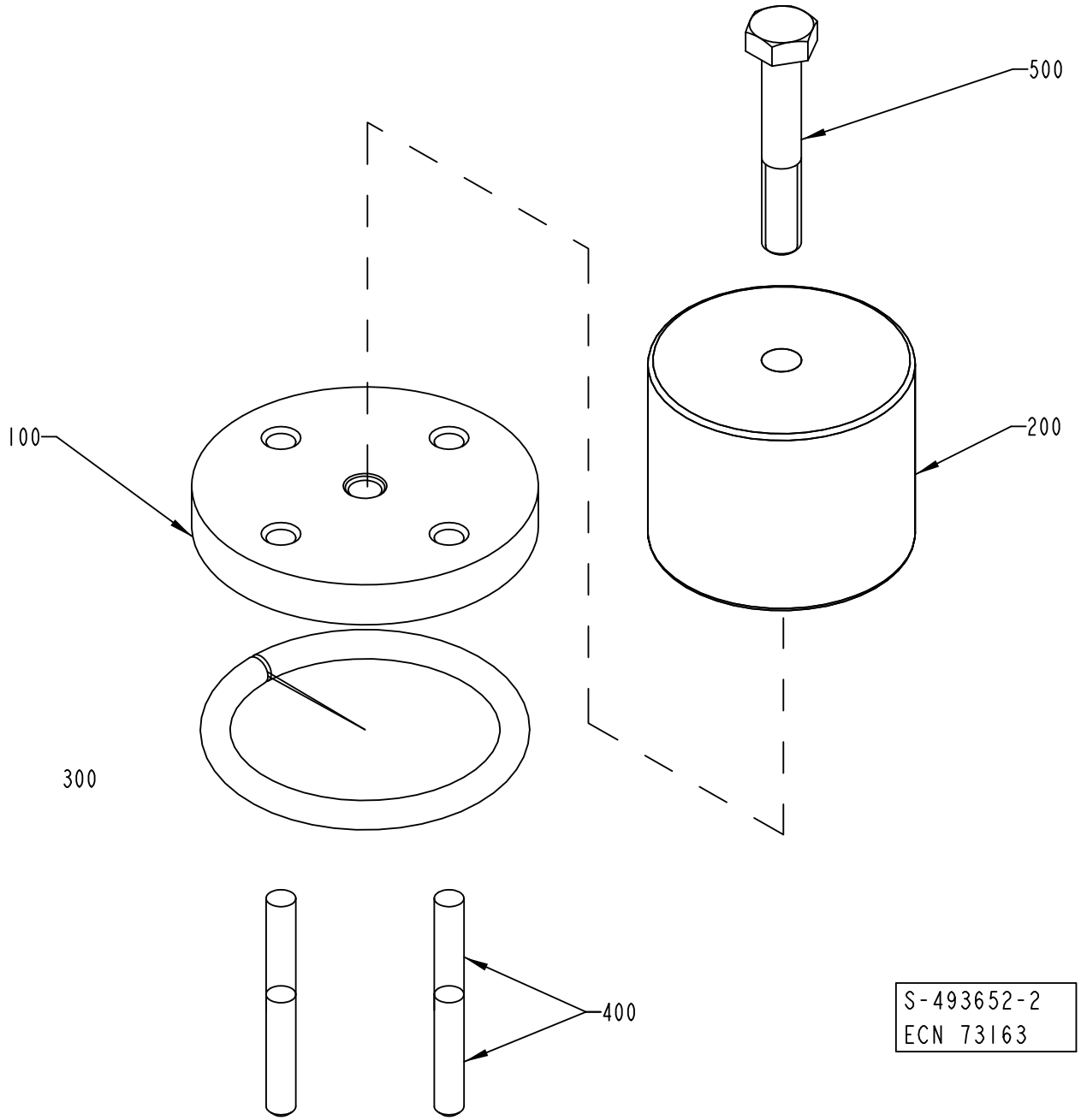
500
100
200
300
400
S-493652-2
ECN 73163

ECM: 73163 - 20000421
Group number: 493652-0100
Assembly Drawing: 493652-2_1_AB

Pos	Part No	UN	Qty	Description	Page No
-					
100	273964-0000		1	LID	
200	273965-0001		1	WEIGHT	
300	90143-0020	MM	190	STRIP	
400	311103-0357		4	PARALLEL PIN ISO 2338 6M6X30 A1	
500	312105-0461		1	SCREW M6S ISO 4014 M8X50 A480	

Pos	Part No	UN	Qty	Description	Page No

PEROXIDE PUMP

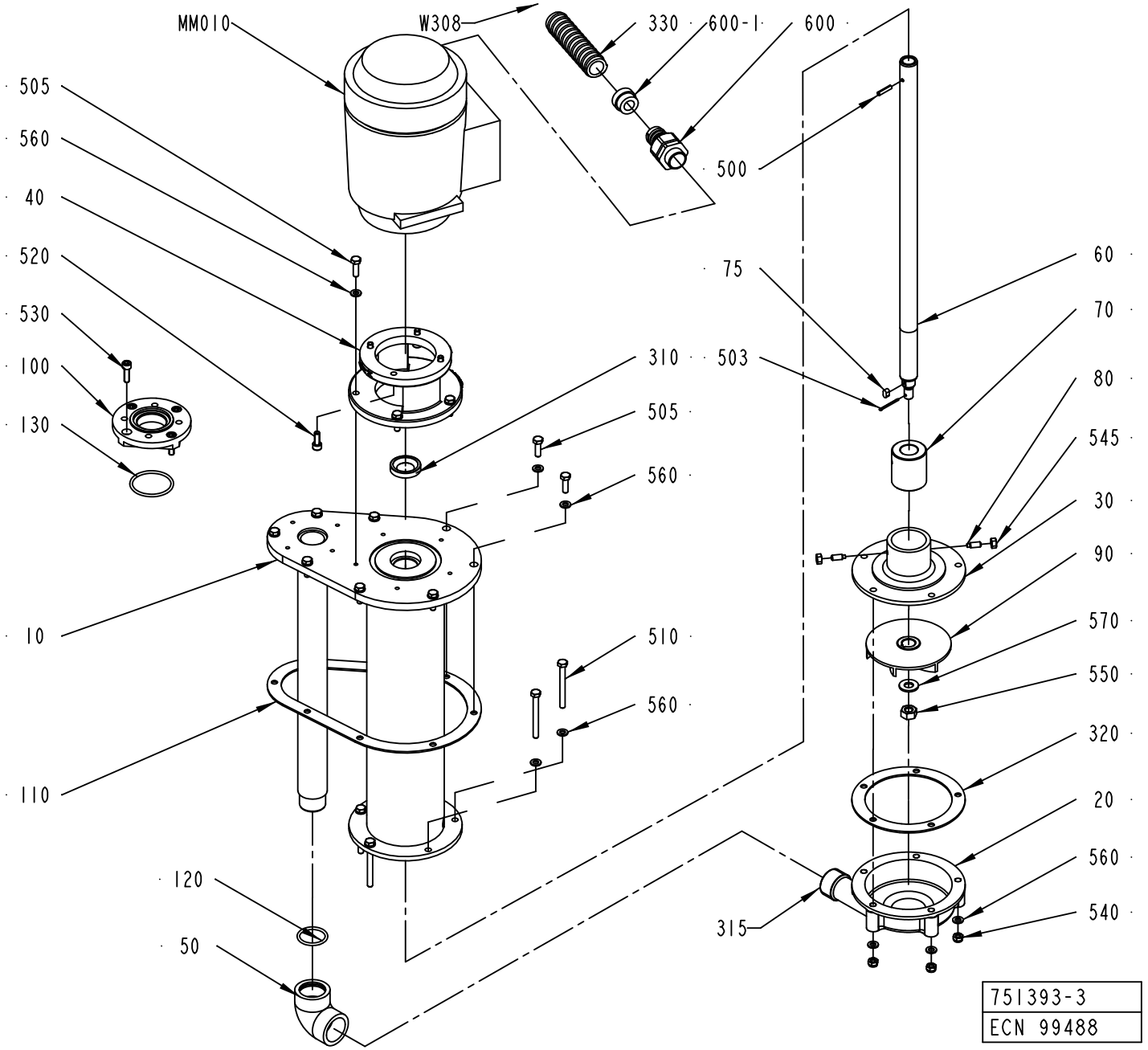

ECM: 211357 - 20050621
Group number: 751393-0300
Assembly Drawing: 751393-3_1_AB

Pos	Part No	UN	Qty	Description	Page No
-					
010	577769-0000		1	EXTENSION PIPE	
020	292449-0000		1	PUMP HOUSING	
030	292456-0000		1	BEARING COVER	
040	751395-0000		1	FLANGE	
050	751316-0000		1	ELBOW PIPE	
060	577771-0000		1	SHAFT	
070	491770-0000		1	BUSHING	
075	315705-0196		1	PARALLEL KEY W.ROUND ENDS 5X5X10	
080	312311-0368		2	SCREW ISO4028 M6X16 FZB	
090	491929-0000		1	IMPELLER WHEEL	
100	1523061-0000		1	FLANGE	
110	577770-0000		1	GASKET	
120	927422-0004		1	O-RING 29.2X3 SILICONE	
130	927422-0007		1	O-RING 44.2X3 SILICONE	
310	90091-0137		1	RADIAL SEAL VARILIP 20X35X7MM	
315	90144-0073	MM	1	TREBOFLON-TAPE W=13MM	
330	90152-0051	M	2.5	SPIRAL CONDUIT, 25X18, UL 1816	
500	311112-0256		1	SPRING PIN, ISO 8752 4X20-C	
503	311411-0169		1	SPLIT PIN SP2,5X25RFR	
505	312105-0370		14	SCREW M6S ISO 4017 M6X20 A480	
510	312105-0382		5	SCREW M6S ISO 4014 M6X60 A480	
520	312115-0368		4	SCREW ISO4762 M6X16 A4 80	
530	312115-0370		4	SCREW ISO4762 M6X20 A4 80	
540	312811-0316		5	NUT HEX.LOCK HELI COIL MID GRIP M6 SS	
545	312605-0316		2	HEXAGON NUT, M6M M6 A280	
550	312605-0320		1	HEXAGON NUT, M6M M10 A280	
560	315105-0153		24	WASHER BRB 6,4X12 RFR	
570	315105-0173		1	WASHER BRB 10,5X22 RFR	
600-1	353249-0013		1	INSERT, SINGEL HOLE, EK 154/13	
600	353243-0005		1	HOSE GLAND W/O INSERT PG16 EXTENDED	
MM010	90045-0087		1	MOTOR 3GAA 071002-CSA M2AA 71B	
W308	351150-0418	M	3.5	CABLE OLFLEX 4X2,5 MM2 LIGHT/GREY	

Pos	Part No	UN	Qty	Description	Page No

Machine Type | Group Description | Used-In | Group Number | Page No

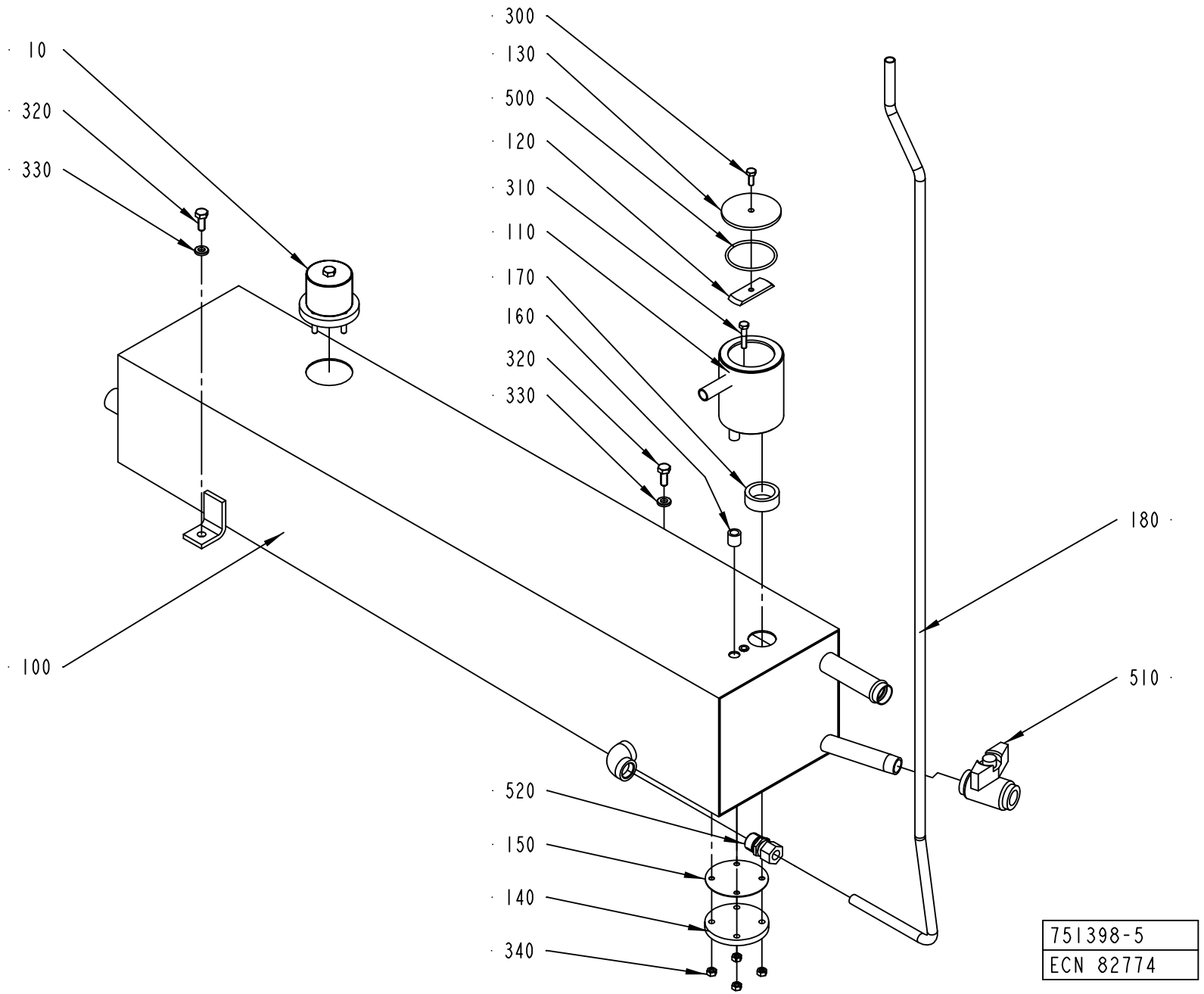
10
320
330
100
300
130
500
120
310
110
170
160
320
330
180
510
520
150
140
340
751398-5
ECN 82774

ECM: 211358 - 20050621
Group number: 751398-0400
Assembly Drawing: 751398-5_1_AB

Pos	Part No	UN	Qty	Description	Page No
-					
010	493652-0100		1	LID	**6-63**
100	1519389-0000		1	TANK	
110	978970-0000		1	METERING DEVICE	
120	751403-0000		1	BRACKET	
130	751223-0000		1	LID	
140	532205-0000		1	LID	
150	532206-0000		1	GASKET	
160	527906-0000		1	GASKET	
170	2514491-0000		1	METERING DEVICE	
180	1511683-0000		1	PIPE	
300	312105-0368		1	SCREW M6S ISO 4017 M6X16 A480	
310	312105-0374		1	SCREW M6S ISO 4014 M6X30 A480	
320	312105-0451		2	SCREW M6S ISO 4017 M8X20 A480	
330	315115-0165		2	WASHER PLAIN, TBRB 8,4/16 H=3	
340	312605-0316		4	HEXAGON NUT, M6M M6 A280	
500	927422-0009		1	O-RING 54.5X3 SILICONE	
510	90187-0059		1	BALL VALVE FOR HYDR.PER. G1/2 3MM HOLE	
520	90030-0109		1	STRAIGHT PIPE CONN. GE12LR1/271	

Pos	Part No	UN	Qty	Description	Page No

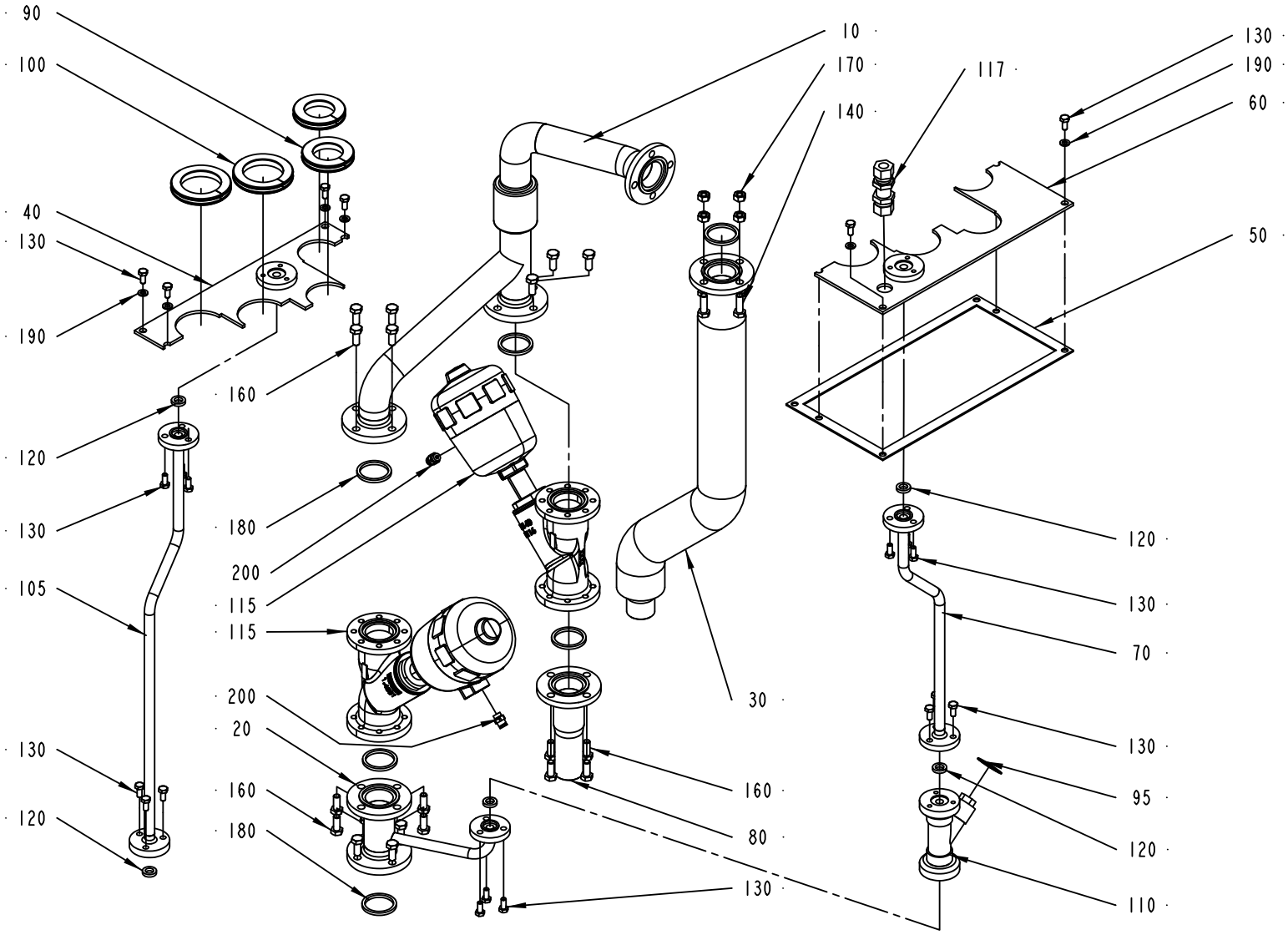

978835-2
ECM 260425

ECM: 267808 - 20060707
Group number: 978835-0200
Assembly Drawing: 978835-2_1_AE

Pos	Part No	UN	Qty	Description	Page No
-					
010	1523062-0000		1	FILLING PIPE	
020	1523063-0000		1	TUBE	
030	1523064-0000		1	RETURN PIPE	
040	1523065-0000		1	PLATE	
050	1523066-0000		1	GASKET	
060	1523067-0000		1	PLATE	
070	1523068-0000		1	PIPE	
080	1523069-0000		1	PIPE CONNECTION	
090	1517492-0000		2	GASKET	
095	2550181-0000		1	GASKET	
100	1517058-0000		2	GASKET	
105	1548316-0000		1	PIPE	
110	1511701-0000		1	FILTER	
115	90459-7440		2	ANGLE SEAT VALVE W. FLANGES, N.O. DN40	
117	90030-0030		1	CONN. BULKHEAD SV 12-L/SY	
120	315229-0101		5	GASKETS, 10,4X17,4X3,7 MM 1/2" FDA	
130	312105-0367		21	SCREW M6S ISO 4017 M6X14 A480	
140	312105-0453		4	SCREW M6S ISO 4017 M8X25 A480	
160	312105-0451		20	SCREW M6S ISO 4017 M8X20 A480	
170	312605-0318		4	HEXAGON NUT, M6M M8 A280	
180	315229-0104		6	GASKETS, 35,8X42,8X3,7 MM 1"1/2 FD	
190	315105-0153		6	WASHER BRB 6,4X12 RFR	
200	342722-0202		2	PIPE COUPLING 1/8" D=6MM	

Pos	Part No	UN	Qty	Description	Page No

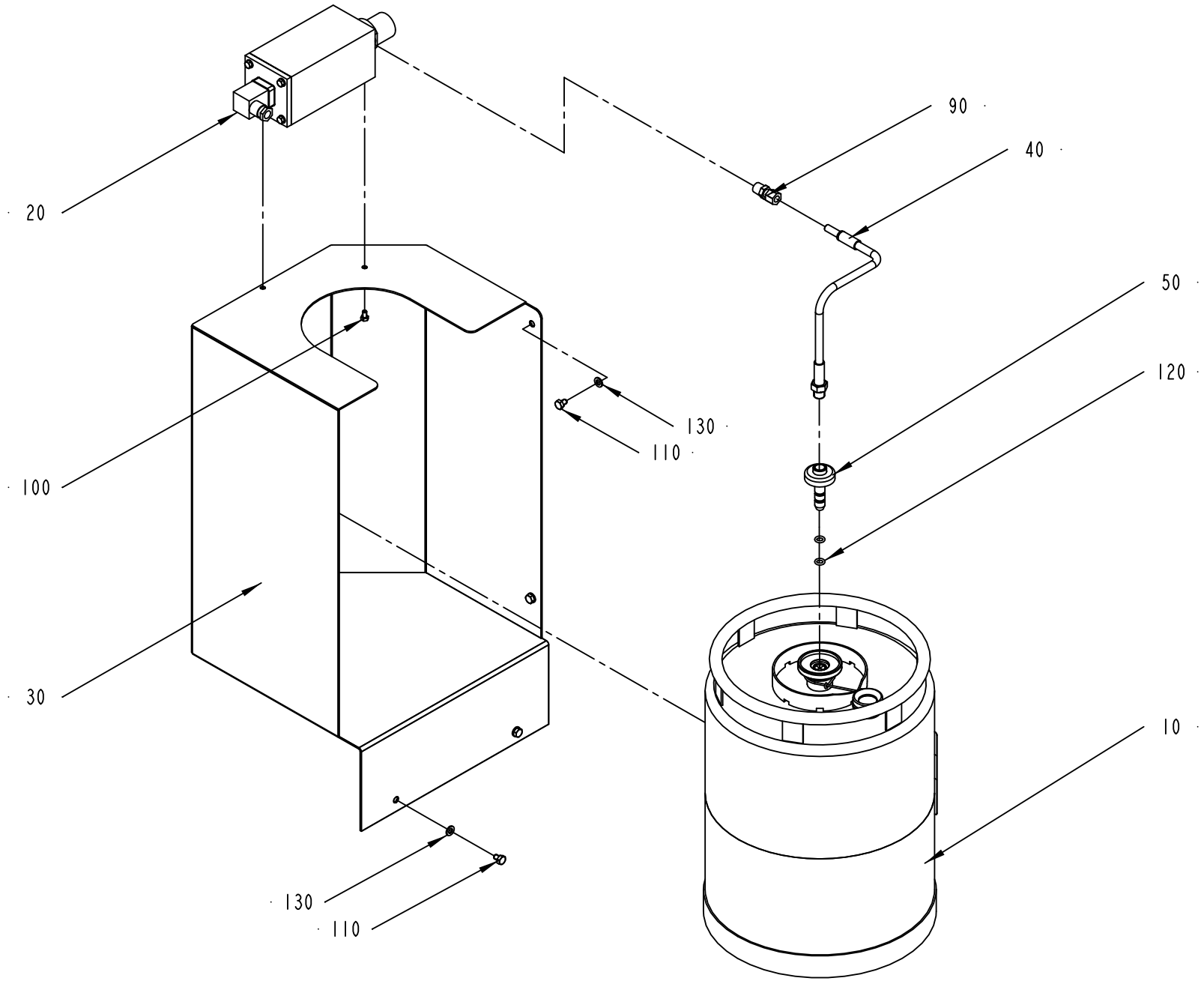

979328-2
ECN 82774

ECM: 211354 - 20050621
Group number: 979328-0200
Assembly Drawing: 979328-2_1_AB

Pos	Part No	UN	Qty	Description	Page No
-					
010	527898-0100		1	MKS CONTAINER H2O2	**6-73**
020	979329-0200		1	FILLING UNIT	**6-75**
030	1512805-0000		1	CABINET (SMALL)	
040	979300-0000		1	PIPE	
050	1511773-0000		1	CONNECTOR	
090	90030-0086		1	CONN. STR., 8-R1/4, EXT. THREAD	
100	312105-0323		2	SCREW M6S ISO 4017 M5X8 A480	
110	312105-0362		4	SCREW M6S ISO 4017 M6X8 A480	
120	927421-0005		2	O-RING 7.3X2.4 SILICONE	
130	315105-0153		4	WASHER BRB 6,4X12 RFR	

Pos	Part No	UN	Qty	Description	Page No

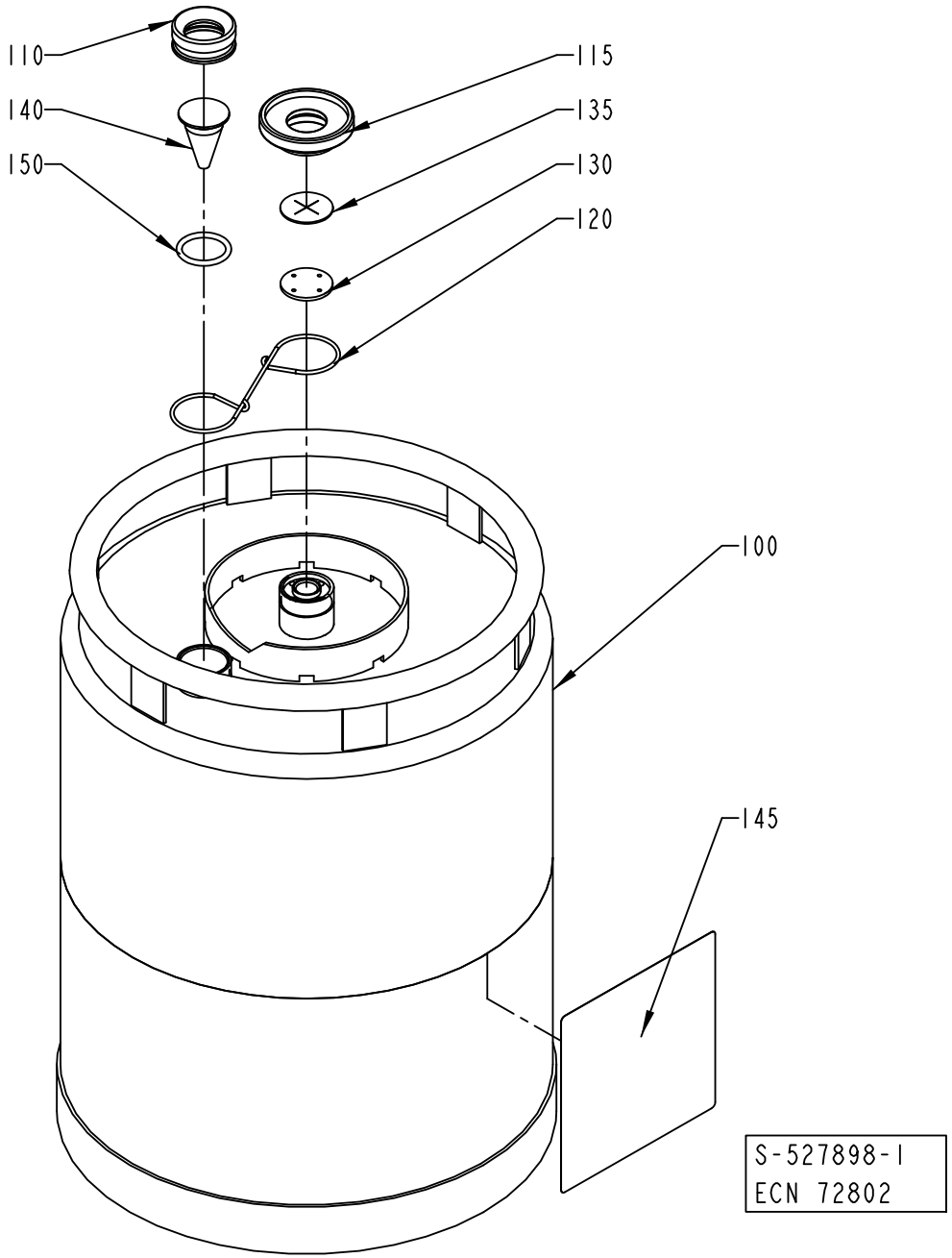
110
140
150
115
135
130
120
100
145
S-527898-I
ECN 72802

ECM: 224840 - 20050831
Group number: 527898-0100
Assembly Drawing: 527898-1_1_AB

Pos	Part No	UN	Qty	Description	Page No	Pos	Part No	UN	Qty	Description	Page No
-											
100	561427-0000		1	CONTAINER							
110	273977-0000		1	NUT							
115	273996-0000		1	NUT							
120	273980-0000		1	SPRING							
130	565250-0000		1	WASHER							
135	565251-0000		1	VALVE							
140	273978-0000		1	LEVEL GLAS							
145	532655-0000		1	CAUTION SIGN							
150	927422-0003		1	O.RING 24.2X3 SILICONE							

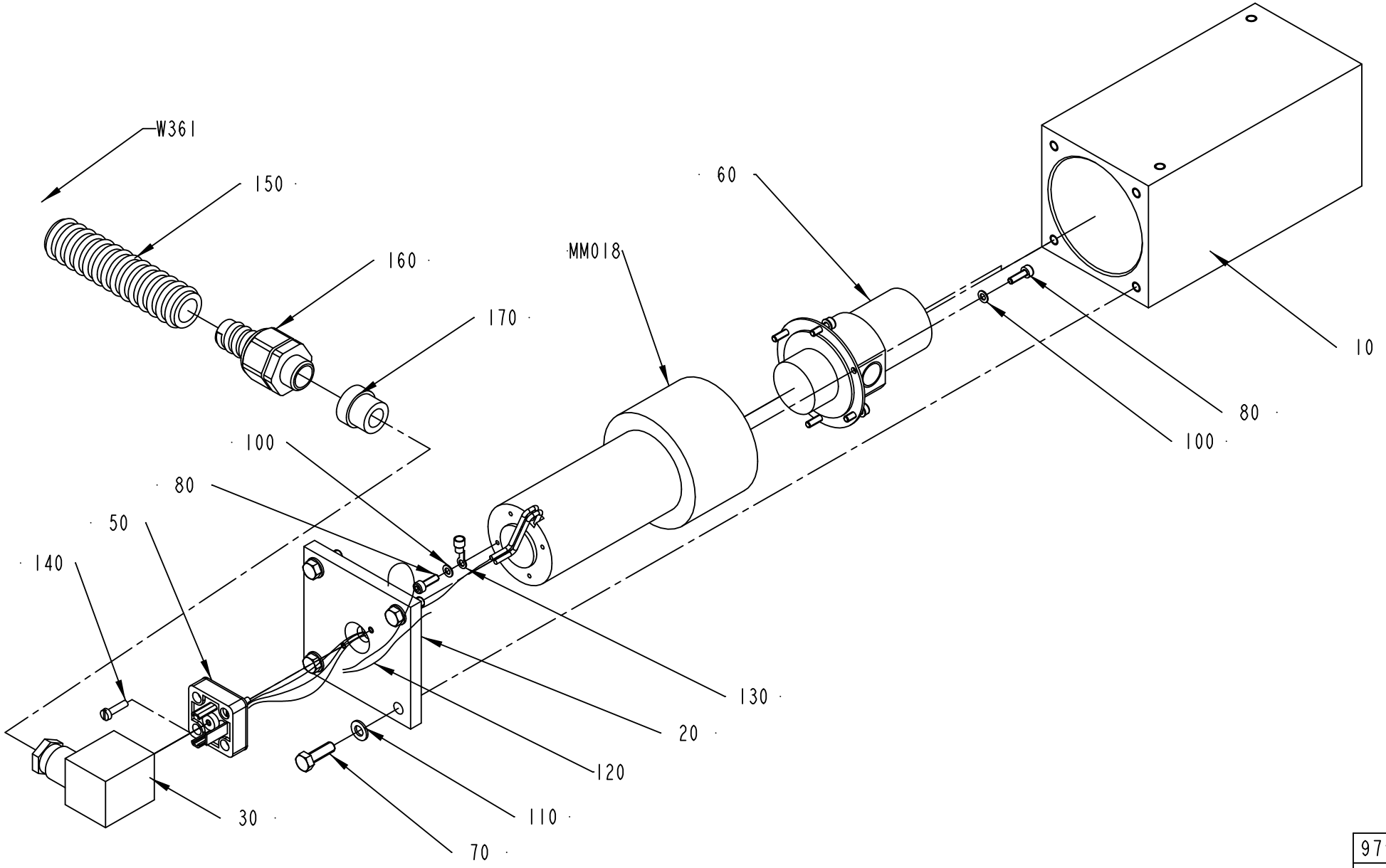

979329-2
ECN 99488

ECM: 179446 - 20040910
Group number: 979329-0200
Assembly Drawing: 979329-2_1_AB

Pos	Part No	UN	Qty	Description	Page No
-					
010	979279-0000		1	COVER HOUSING	
020	979280-0000		1	COVER	
030	90042-0398		1	CONTACT 3 POLE+EARTH	
050	90110-0207		1	SOCKET	
060	90321-0101		1	GEAR PUMP	
070	312105-0329		4	SCREW M6S ISO 4017 M5X16 A480	
080	312115-0224		7	SCREW ISO4762 M3X10 A4 80	
100	315105-0124		7	WASHER BRB 3,2X6 RFR	
110	315105-0146		4	WASHER BRB 5,3X10 RFR	
120	351175-0102	CM	15	CABLE AWM 1X 075 MM2 YELLOW-GREEN	
130	353101-0118		1	CABLE SHOE 0,5-1,5MM2 M3 RED	
140	312125-0226		2	SCREW ISO 1207 M3X12 A4	
150	90152-0059	M	1.6	SPIRAL CONDUIT, 18X12, UL 1211	
160	353243-0001		1	HOSE GLAND W/O INSERT PG9 EXTENDED	
170	353249-0009		1	INSERT, SINGEL HOLE, EK 152/9	
MM018	90045-0161		1	MOTOR MGCF11S	
W361	351150-0403	M	3	CABLE OLFLEX 3X0,75 MM2 LIGHT/GREY	

Pos	Part No	UN	Qty	Description	Page No

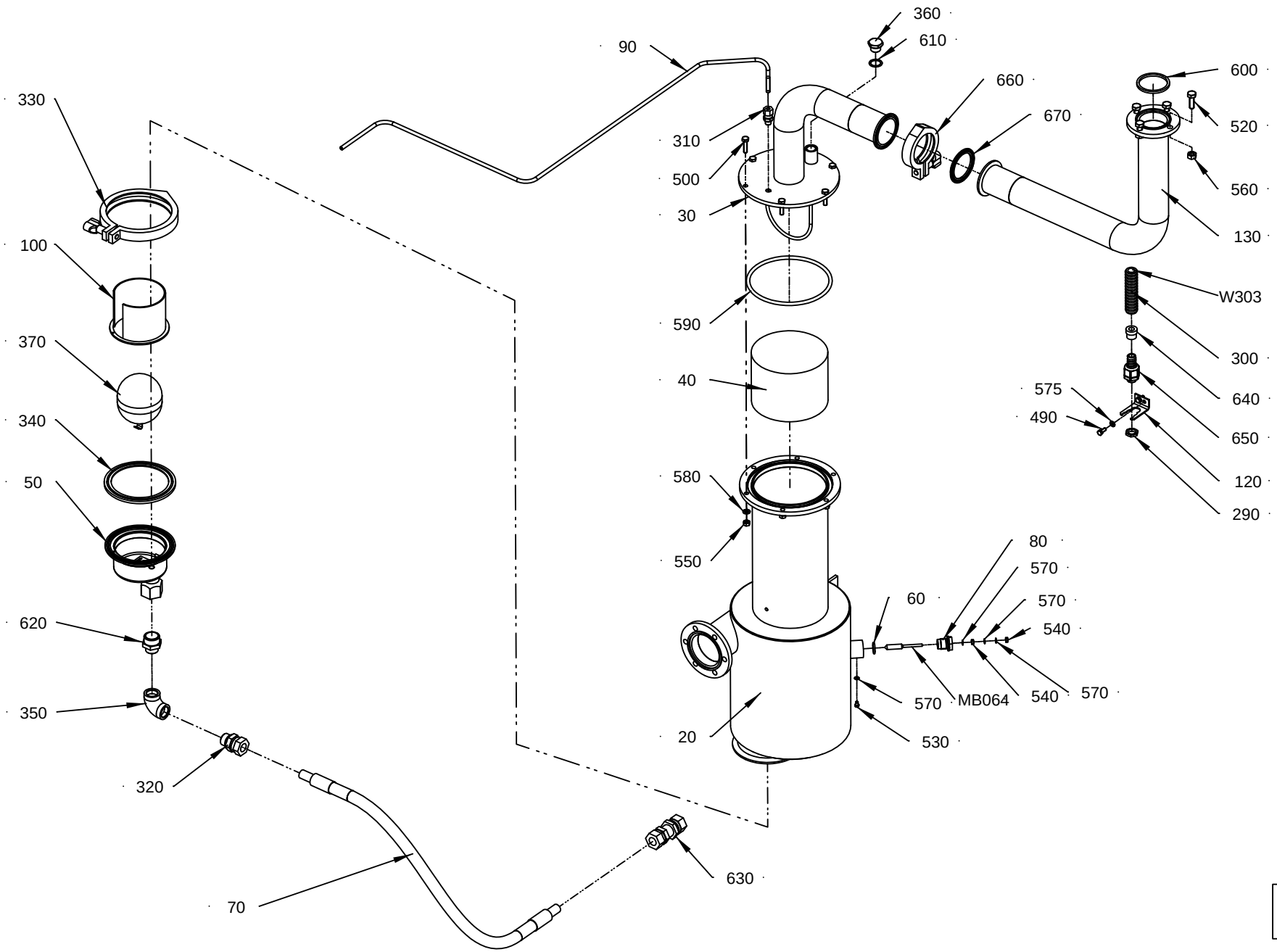

978988-4
214617

ECM: 251391 - 20060123
Group number: 978988-0300
Assembly Drawing: 978988-4_1_AA

This list covers pages from 6-76 to 6-79

Pos	Part No	UN	Qty	Description	Page No
50HZ (See drawing on page: 6-76)					
360	90330-0029		1	PLUG, EXT. G-THREAD, R-236R3/8	
60HZ (See drawing on page: 6-78)					
110	90030-0136		1	ADJUSTABLE ELBOW CONNECTION,EXT 12-G3/8	
Common Parts					
020	1511775-0000		1	SEPARATOR	
030	2563209-0000		1	LID	
040	546929-0000		1	FILTER	
050	571088-0000		1	DRAINING	
	90360-0304		*1*	*SPARE PART KIT*	
060	927421-0004		1	O-RING 15.3X2.4 SILICONE	
070	978973-0003		1	HOSE	
080	560931-0000		1	BRACKET	
090	2790835-0000		1	PIPE	
100	568828-0000		1	FLOAT GUARD	
120	977527-0000		1	BRACKET	
130	2563210-0000		1	PIPE	
290	90099-0001		1	NUT PG 9/PR 15,2	
300	90152-0059	M	2.5	SPIRAL CONDUIT, 18X12, UL 1211	
310	90030-0184		1	CONN. STR. GA-6-G1/8	
320	90030-0188		1	CONN. STR. GA-15-G1/2	
330	90217-0312		1	CLAMP, ISO2852 FOR PIPE 101,6 MM	
340	90217-0313		1	GASKET 97,8X121,2X5,5 MM	
350	90330-0020		1	ELBOW, 90 INT. THREAD, R-2221/2	
370	90360-0305		1	FLOAT, ART NO 10739920	
490	312105-0327		2	SCREW M6S ISO 4017 M5X12 A480	
500	312105-0372		6	SCREW M6S ISO 4017 M6X25 A480	
520	312105-0453		4	SCREW M6S ISO 4017 M8X25 A480	
530	312125-0285		1	SCREW ISO 1207 M4X6 A4	
540	312605-0312		2	HEXAGON NUT, M6M M4 A280	
550	312605-0318		6	HEXAGON NUT, M6M M8 A280	
560	312605-0318		4	HEXAGON NUT, M6M M8 A280	
570	315105-0136		4	WASHER BRB 4,3X8 RFR	
575	315105-0146		2	WASHER BRB 5,3X10 RFR	
580	315105-0153		6	WASHER BRB 6,4X12 RFR	
590	315202-0244		1	O-RING 134,3X5,7 MM	
600	315229-0105		1	GASKETS, 48,5X55,5X3,7 MM 2" FDA	
610	315233-0111		1	WASHER CAPTIVE SEALING G3/8	
620	342700-0210		1	NIPPLES,HEXAGON,EXT.G-THREAD G3/4"-G1/2"	
630	342762-0114		1	CONN. BULKHEAD SV 15-LFZB	
640	353249-0009		1	INSERT, SINGEL HOLE, EK 152/9	
650	353243-0001		1	HOSE GLAND W/O INSERT PG9 EXTENDED	
660	342840-0105		1	CLAMPING PIECE	
670	342850-0305		1	GASKET 47,8X62,6X5,2 MM 2" FDA	
MB064	567070-0012		1	ELECTRODE	
W303	351150-0431	M	3.5	CABLE OLFLEX 2X0,75 MM2 LIGHT/GREY	

Machine Type | Group Description | Used-In | Group Number | Page No

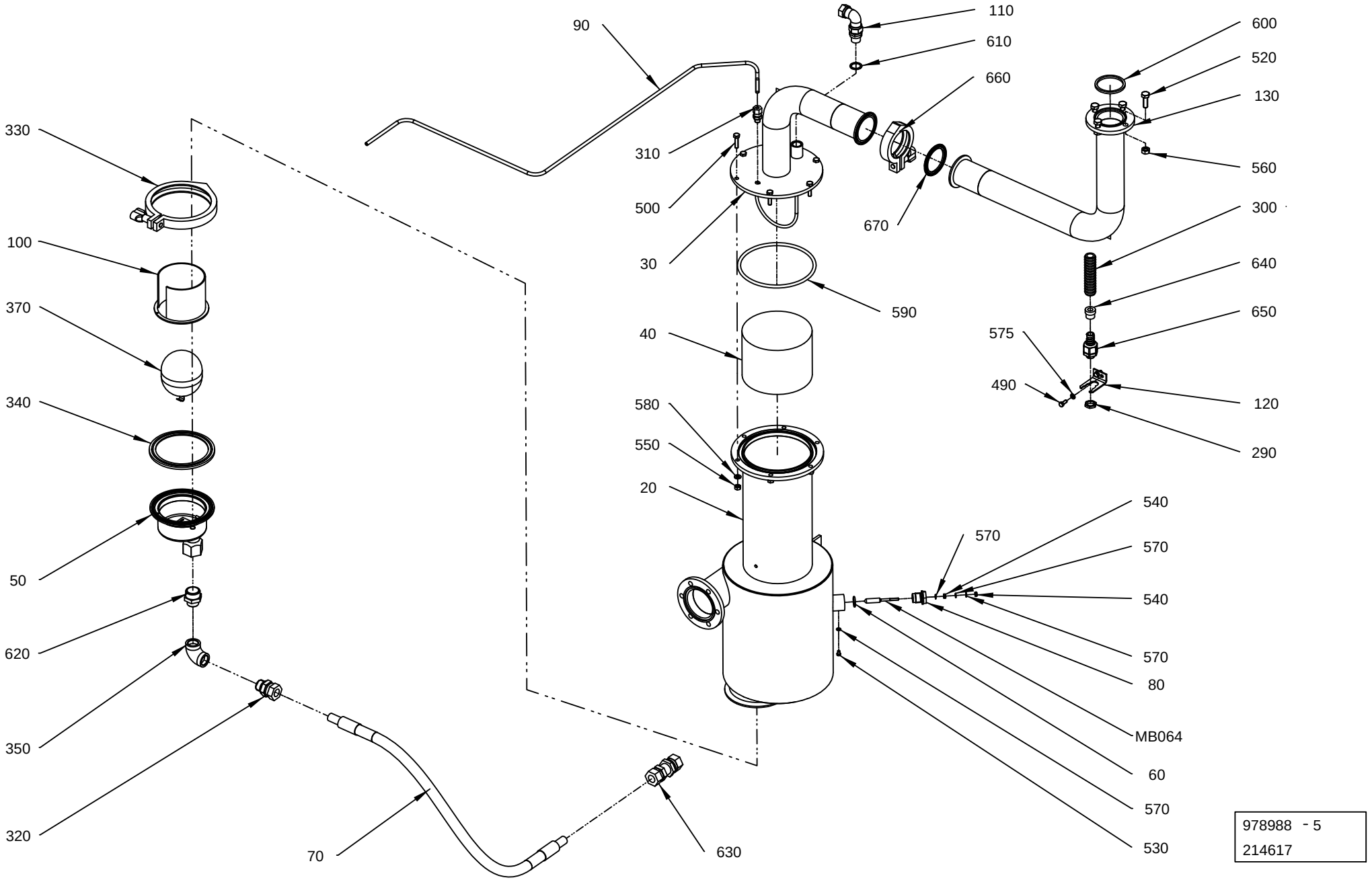
90
110
610
660
600
520
130
560
330
310
500
30
670
300
640
650
575
490
120
290
590
40
580
550
20
100
370
340
50
620
350
320
70
630
540
570
540
570
80
MB064
60
570
530
978988 - 5
214617

ECM: 251391 - 20060123
Group number: 978988-0300
Assembly Drawing: 978988-5_1_AA

This list covers pages from 6-76 to 6-79

Pos	Part No	UN	Qty	Description	Page No
50HZ (See drawing on page: 6-76)					
360	90330-0029		1	PLUG, EXT. G-THREAD, R-236R3/8	
60HZ (See drawing on page: 6-78)					
110	90030-0136		1	ADJUSTABLE ELBOW CONNECTION,EXT 12-G3/8	
Common Parts					
020	1511775-0000		1	SEPARATOR	
030	2563209-0000		1	LID	
040	546929-0000		1	FILTER	
050	571088-0000		1	DRAINING	
	90360-0304		*1*	*SPARE PART KIT*	
060	927421-0004		1	O-RING 15.3X2.4 SILICONE	
070	978973-0003		1	HOSE	
080	560931-0000		1	BRACKET	
090	2790835-0000		1	PIPE	
100	568828-0000		1	FLOAT GUARD	
120	977527-0000		1	BRACKET	
130	2563210-0000		1	PIPE	
290	90099-0001		1	NUT PG 9/PR 15,2	
300	90152-0059	M	2.5	SPIRAL CONDUIT, 18X12, UL 1211	
310	90030-0184		1	CONN. STR. GA-6-G1/8	
320	90030-0188		1	CONN. STR. GA-15-G1/2	
330	90217-0312		1	CLAMP, ISO2852 FOR PIPE 101,6 MM	
340	90217-0313		1	GASKET 97,8X121,2X5,5 MM	
350	90330-0020		1	ELBOW, 90 INT. THREAD, R-2221/2	
370	90360-0305		1	FLOAT, ART NO 10739920	
490	312105-0327		2	SCREW M6S ISO 4017 M5X12 A480	
500	312105-0372		6	SCREW M6S ISO 4017 M6X25 A480	
520	312105-0453		4	SCREW M6S ISO 4017 M8X25 A480	
530	312125-0285		1	SCREW ISO 1207 M4X6 A4	
540	312605-0312		2	HEXAGON NUT, M6M M4 A280	
550	312605-0318		6	HEXAGON NUT, M6M M8 A280	
560	312605-0318		4	HEXAGON NUT, M6M M8 A280	
570	315105-0136		4	WASHER BRB 4,3X8 RFR	
575	315105-0146		2	WASHER BRB 5,3X10 RFR	
580	315105-0153		6	WASHER BRB 6,4X12 RFR	
590	315202-0244		1	O-RING 134,3X5,7 MM	
600	315229-0105		1	GASKETS, 48,5X55,5X3,7 MM 2" FDA	
610	315233-0111		1	WASHER CAPTIVE SEALING G3/8	
620	342700-0210		1	NIPPLES,HEXAGON,EXT.G-THREAD G3/4"-G1/2"	
630	342762-0114		1	CONN. BULKHEAD SV 15-LFZB	
640	353249-0009		1	INSERT, SINGEL HOLE, EK 152/9	
650	353243-0001		1	HOSE GLAND W/O INSERT PG9 EXTENDED	
660	342840-0105		1	CLAMPING PIECE	
670	342850-0305		1	GASKET 47,8X62,6X5,2 MM 2" FDA	
MB064	567070-0012		1	ELECTRODE	
W303	351150-0431	M	3.5	CABLE OLFLEX 2X0,75 MM2 LIGHT/GREY	

Machine Type | Group Description | Used-In | Group Number | Page No

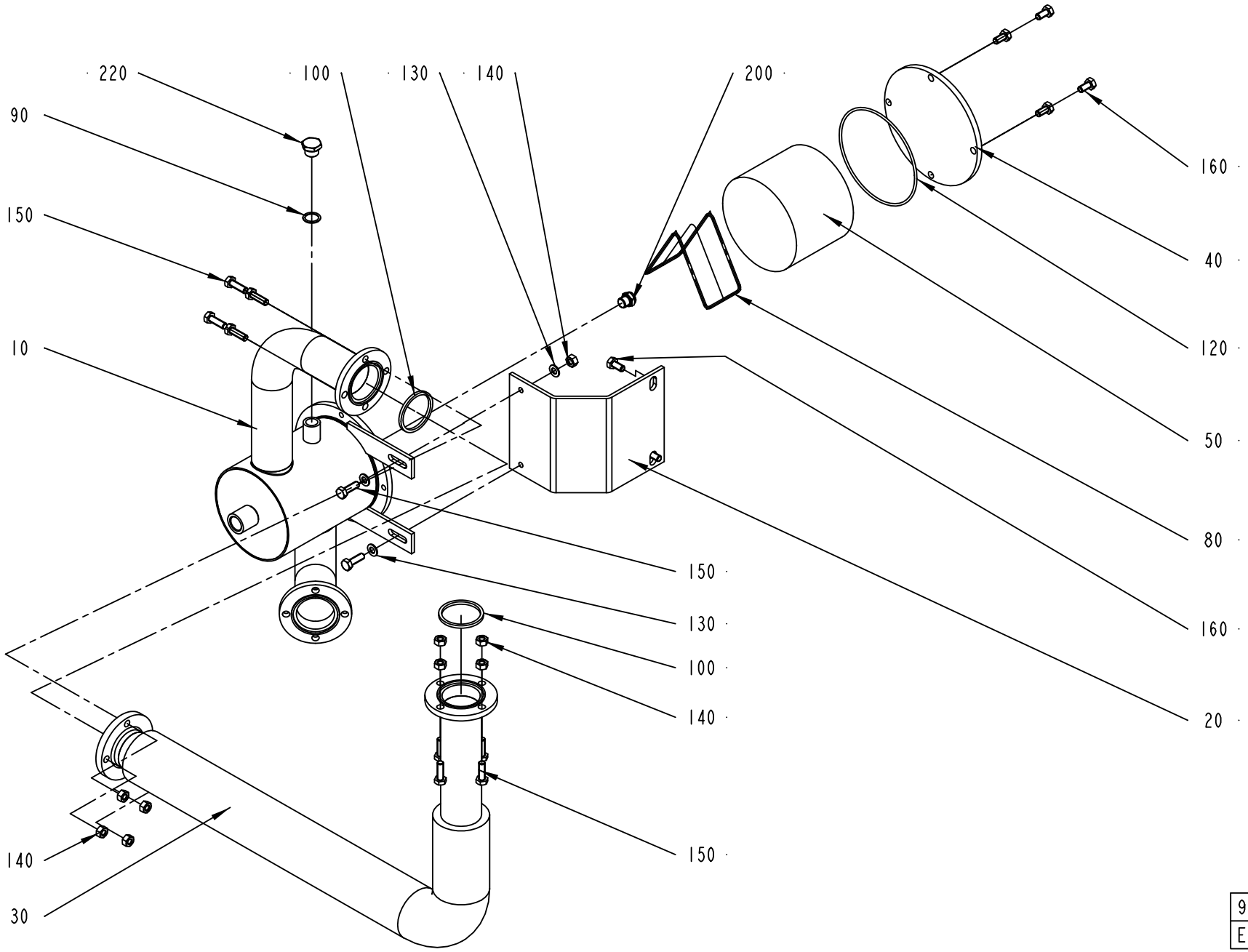

978989-2
ECN 82774

ECM: 211569 - 20050621
Group number: 978989-0200
Assembly Drawing: 978989-2_1_AB

This list covers pages from 6-80 to 6-83

Pos	Part No	UN	Qty	Description	Page No
50HZ (See drawing on page: 6-80)					
220	90330-0029		1	PLUG, EXT. G-THREAD, R-236R3/8	
60HZ (See drawing on page: 6-82)					
060	1519390-0000		1	PIPE(FOR 60HZ)	
070	1519391-0000		1	PIPE BEND	
170	279589-0000		1	NUT	
180	209146-0000		1	BARRIER NUT	
190	209145-0000		1	THROTTLE SCREW	
210	90030-0058		1	CONN. T-PIPE T-12	
230	90030-0181		1	CONN. STR. GE 12-3/8-18 NPTF	
Common Parts					
010	1519392-0000		1	SCRUBBER	
020	1519393-0000		1	PLATE	
030	1519394-0000		1	PIPE	
040	568806-0000		1	LID	
050	546929-0000		1	FILTER	
080	571087-0000		1	RETAINING RING	
090	315233-0111		1	WASHER CAPTIVE SEALING G3/8	
100	315229-0105		2	GASKETS, 48,5X55,5X3,7 MM 2" FDA	
120	315202-0317		1	O-RING 129,5X3 MM	
130	315105-0165		4	WASHER BRB 8,4X16 RFR	
140	312605-0318		10	HEXAGON NUT, M6M M8 A280	
150	312105-0453		10	SCREW M6S ISO 4017 M8X25 A480	
160	312105-0449		6	SCREW M6S ISO 4017 M8X16 A480	
200	90424-0054		1	SPRAY NOZZLE 120 DEG	

Pos	Part No	UN	Qty	Description	Page No

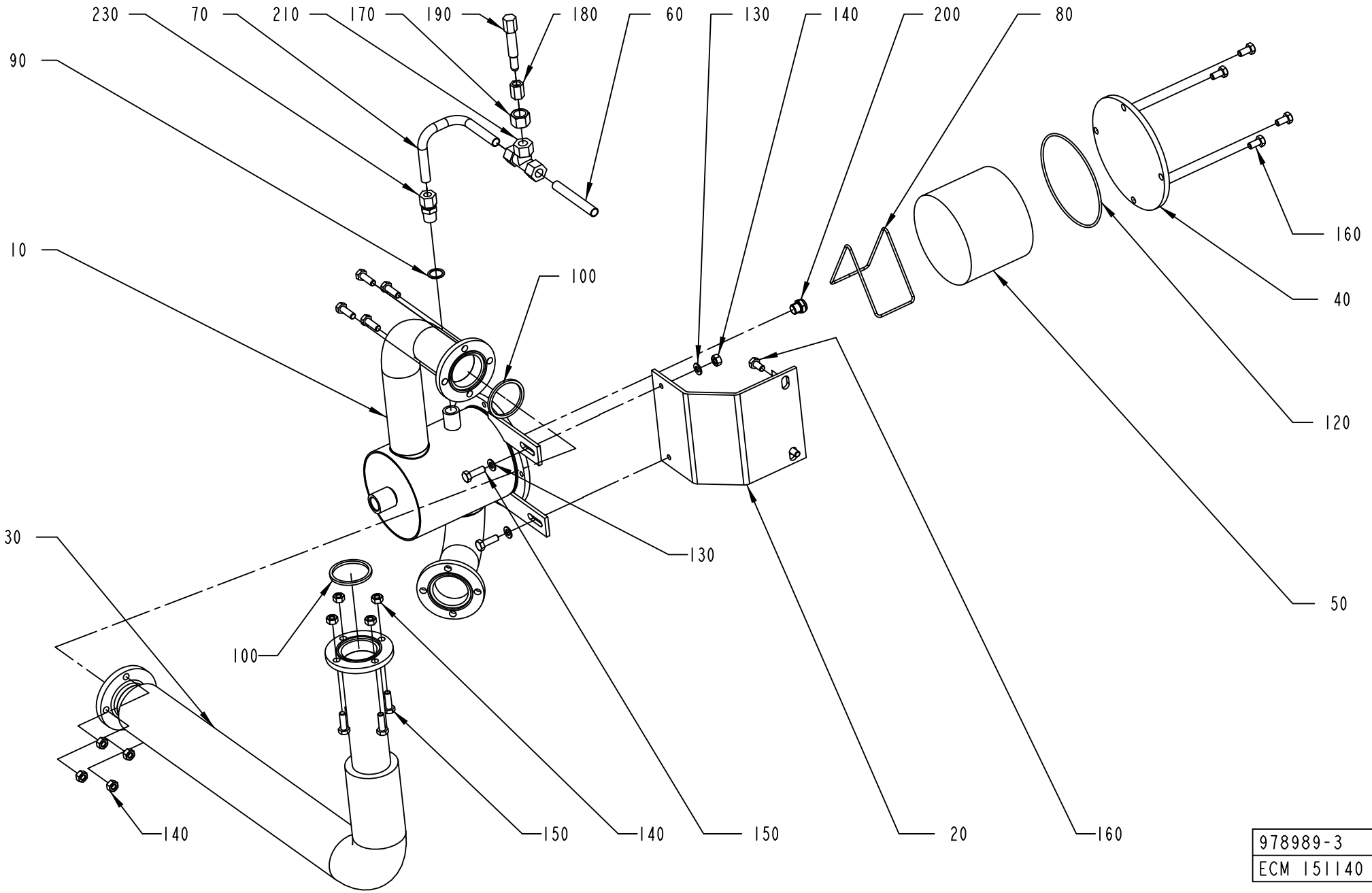

978989-3
ECM 151140

ECM: 211569 - 20050621
Group number: 978989-0200
Assembly Drawing: 978989-3_1_AA

This list covers pages from 6-80 to 6-83

Pos	Part No	UN	Qty	Description	Page No
50HZ (See drawing on page: 6-80)					
220	90330-0029		1	PLUG, EXT. G-THREAD, R-236R3/8	
60HZ (See drawing on page: 6-82)					
060	1519390-0000		1	PIPE(FOR 60HZ)	
070	1519391-0000		1	PIPE BEND	
170	279589-0000		1	NUT	
180	209146-0000		1	BARRIER NUT	
190	209145-0000		1	THROTTLE SCREW	
210	90030-0058		1	CONN. T-PIPE T-12	
230	90030-0181		1	CONN. STR. GE 12-3/8-18 NPTF	
Common Parts					
010	1519392-0000		1	SCRUBBER	
020	1519393-0000		1	PLATE	
030	1519394-0000		1	PIPE	
040	568806-0000		1	LID	
050	546929-0000		1	FILTER	
080	571087-0000		1	RETAINING RING	
090	315233-0111		1	WASHER CAPTIVE SEALING G3/8	
100	315229-0105		2	GASKETS, 48,5X55,5X3,7 MM 2" FDA	
120	315202-0317		1	O-RING 129,5X3 MM	
130	315105-0165		4	WASHER BRB 8,4X16 RFR	
140	312605-0318		10	HEXAGON NUT, M6M M8 A280	
150	312105-0453		10	SCREW M6S ISO 4017 M8X25 A480	
160	312105-0449		6	SCREW M6S ISO 4017 M8X16 A480	
200	90424-0054		1	SPRAY NOZZLE 120 DEG	

Pos	Part No	UN	Qty	Description	Page No

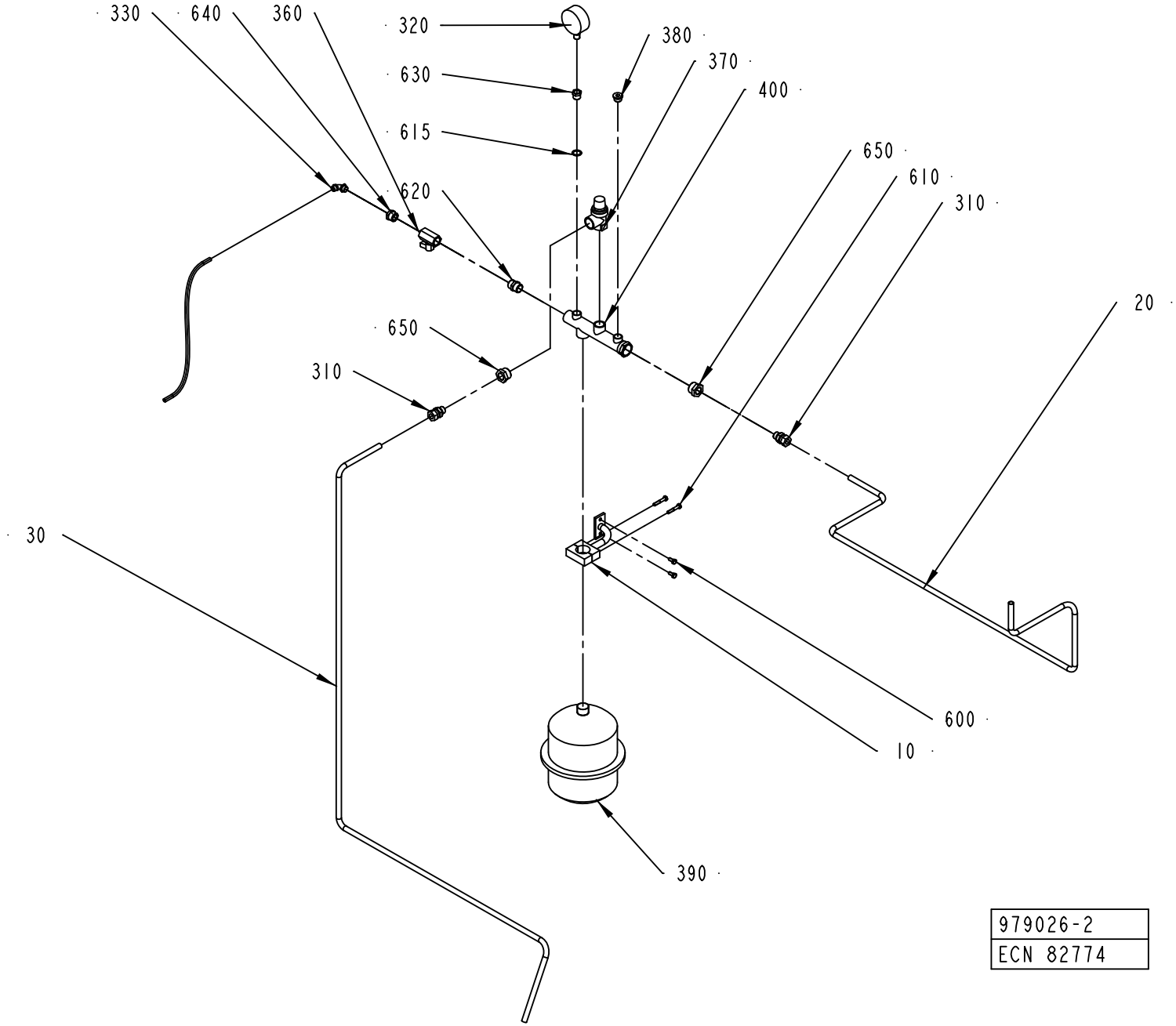
330
640
360
320
380
370
400
630
615
650
610
620
310
20
650
310
30
600
10
390
979026-2
ECN 82774

ECM: 179715 - 20040910
Group number: 979026-0200
Assembly Drawing: 979026-2_1_AB

Pos	Part No	UN	Qty	Description	Page No
-					
010	978953-0000		1	BRACKET	
020	1350187-0000		1	PIPE	
030	1350186-0000		1	PIPE	
310	342752-0110		2	CONN. STR. GA-12-G3/8	
320	90043-0002		1	PRESSURE GAUGE, 2040 D=63 MM	
330	342931-0122		1	ELBOW 90 COUPL.,EXT.THREAD 8/6-G1/4"	
350	90166-0118	MM	1800	TUBE 8 MM PA BLACK	
360	90187-0062		1	BALL VALVE G1/2, NPBR	
370	90187-0104		1	MKS SAFETY VALVE, PRESCOR DN20/1,5BAR	
380	342713-0211		1	PLUG, EXT THREAD HEX SOCKET 8638-00-380	
390	90304-0020		1	RECIPIENTE	
400	90304-0307		1	ATTACHMENT PIPE	
600	312105-0367		2	SCREW M6S ISO 4017 M6X14 A480	
610	312105-0376		2	SCREW M6S ISO 4014 M6X35 A480	
615	315233-0111		1	WASHER CAPTIVE SEALING G3/8	
620	342700-0113		1	NIPPLES,HEXAGON,EXT.G-THREAD G1/2"-G1/2"	
630	342701-0203		1	BUSHING, INT/EXT. G-THREAD NO. 3/8-1/4	
640	342701-0205		1	BUSHING,INT./EXT.G-THREAD G1/2"-G1/4"	
650	342701-0209		2	BUSHING,INT./EXT.G-THREAD G3/4"-G3/8"	

Pos	Part No	UN	Qty	Description	Page No

CENTRAL LUBRICATION

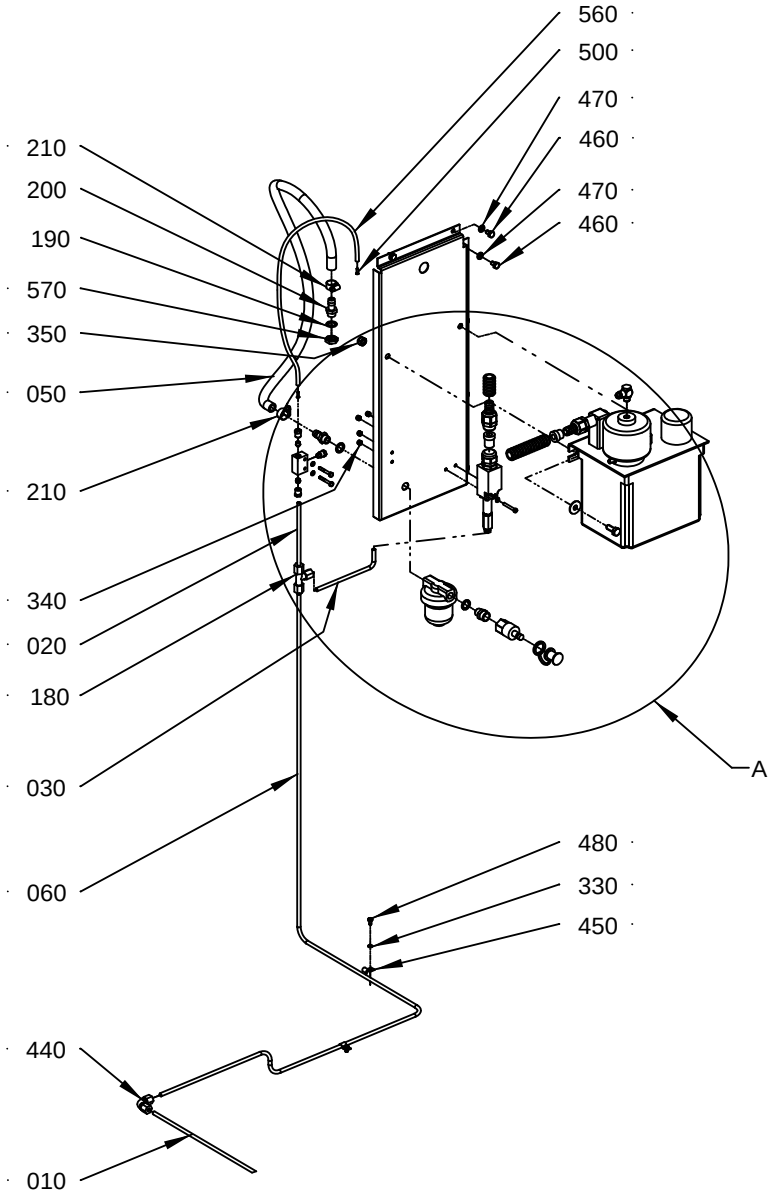

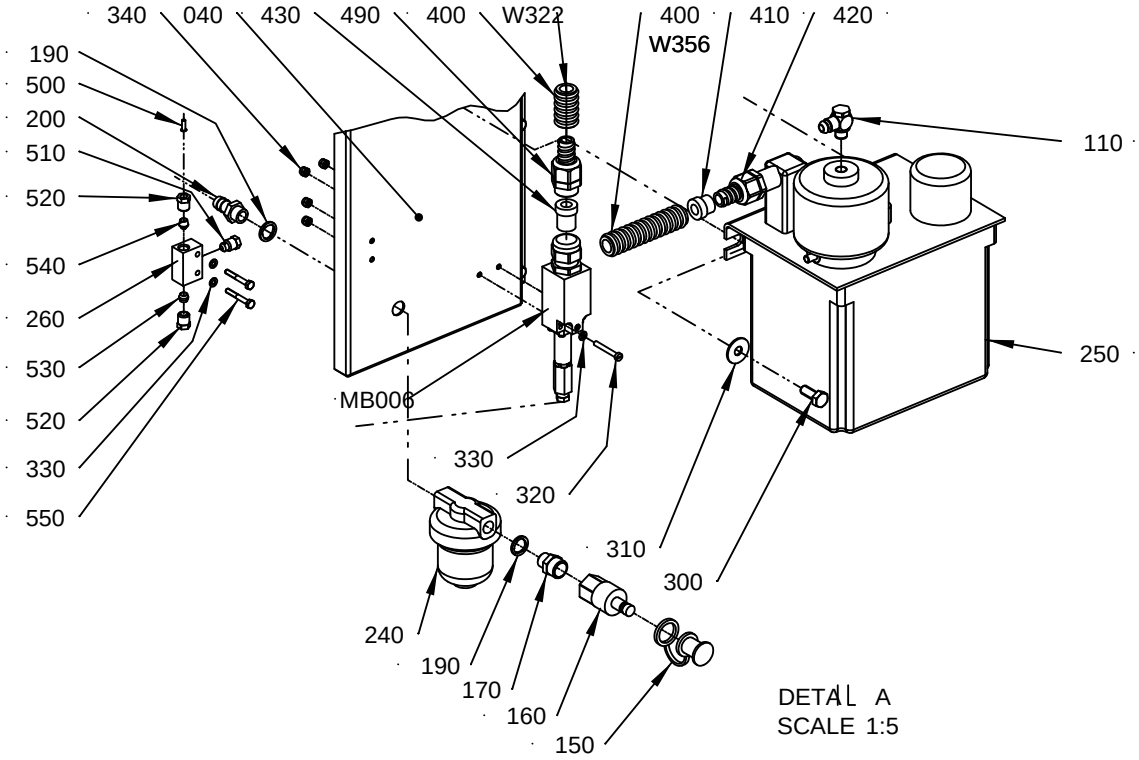

978823-3
214617

ECM: 265563 - 20060509
Group number: 978823-0300
Assembly Drawing: 978823-3_1_AA

Pos	Part No	UN	Qty	Description	Page No
-					
010	1538908-0000		1	PIPE	
020	2790834-0000		1	PIPE	
030	1538906-0000		1	PIPE	
040	2790833-0000		1	MOUNTING SHEET	
050	90166-0113	M	0.75	HOSE	
060	1539332-0000		1	PIPE	
110	90459-5522		1	CONN. BANJO, COR8PB6M10	
150	90163-0304		1	QUICK COUPLING, LP-006-5-74-KU (DUST CAP	
160	90163-0064		1	QUICK COUPLING, (M) LP-006-2-WR517	
170	342700-0203		1	NIPPLES,HEXAGON,EXT.G-THREAD G3/8"-G1/4"	
180	90030-0076		1	CONN. T-PIPE T-6	
190	315239-0110		3	NYLON WASHER G1/4	
200	90163-0052		2	HOSE NIPPLE, EXT.THR. 1/4-12 MM	
210	342991-0101		2	HOSE CLIP,WORM DRIVE TYPE (13)-16	
240	90415-0033		1	OIL FILTER REFILLING UC-HP-1229-25	
	90415-0330		*1*	*FILTER INSERT ART.NO. HR-1229-25UCC*	
250	90459-5481		1	OIL PUMP 3L, 10P-P3	
	90274-0052		*1*	*LEVEL GUARD, 10VA/250VDC/0,5A*	
	90048-0450		*1*	*SPARE PARTS KIT*	
260	90032-0043		1	DISTRIBUTION BLOCK 3 WAYS	
300	312101-0451		2	SCREW M6S M8X20 FZB	
310	90005-0105		2	WASHER PLAIN ROUND 8,4(M8)/24, H=1,5	
320	312125-0299		2	SCREW ISO 1207 M4X30 A4	
330	315105-0136		6	WASHER BRB 4,3X8 RFR	
340	312812-0312		4	HEXAGON NUT, NY-LOCK M4 A480	
350	312812-0318		2	HEXAGON NUT, NY-LOCK M8 A480	
400	90152-0059	M	5	SPIRAL CONDUIT, 18X12, UL 1211	
410	353249-0009		1	INSERT, SINGEL HOLE, EK 152/9	
420	353243-0001		1	HOSE GLAND W/O INSERT PG9 EXTENDED	
430	353249-0065		1	INSERT, SINGEL HOLE, E152/09	
440	342737-0204		1	CONN. ELBOW W-6 LRFR	
450	90165-0057		2	PIPE CLIP FOR TUBE D=6 MM	
460	312105-0364		6	SCREW M6S ISO 4017 M6X10 A480	
470	315105-0153		6	WASHER BRB 6,4X12 RFR	
480	312105-0287		2	SCREW M6S ISO 4017 M4X8 A470	
490	353242-0001		1	HOSE GLAND W/O INSERT PG13,5 NORMAL	
	353249-0065		*1*	*INSERT, SINGEL HOLE, E152/09*	
500	90134-0030		1	SLEEVE FOR PLASTIC TUBE	
510	90087-0019		1	PLUG M10X1 STAINLESS	
520	90134-0055		2	BUSHING/NUT INLET/OUTLET 6 MM	
530	90028-0022		1	CONE TUBE 6 MM	
540	90028-0025		1	CONE TUBE 6 MM	
550	312105-0299		2	SCREW M6S ISO 4017 M4X30 A470	
560	90166-0108	M	0.55	TUBE 6 MM PA,TRANSP.	
570	90330-0120		1	NUT, HEXAGON, G1/4	
MB006	90274-0084		1	PRESSURE GUARD, 1800 KPA	
W322	351150-0403	M	4	CABLE OLFLEX 3X0,75 MM2 LIGHT/GREY	
W356	351150-0404	MM	3500	CABLE OLFLEX 4X0,75 MM2 LIGHT/GREY	

Machine Type	Group Description	Used-In	Group Number	Page No

HYDRAULIC SYSTEM

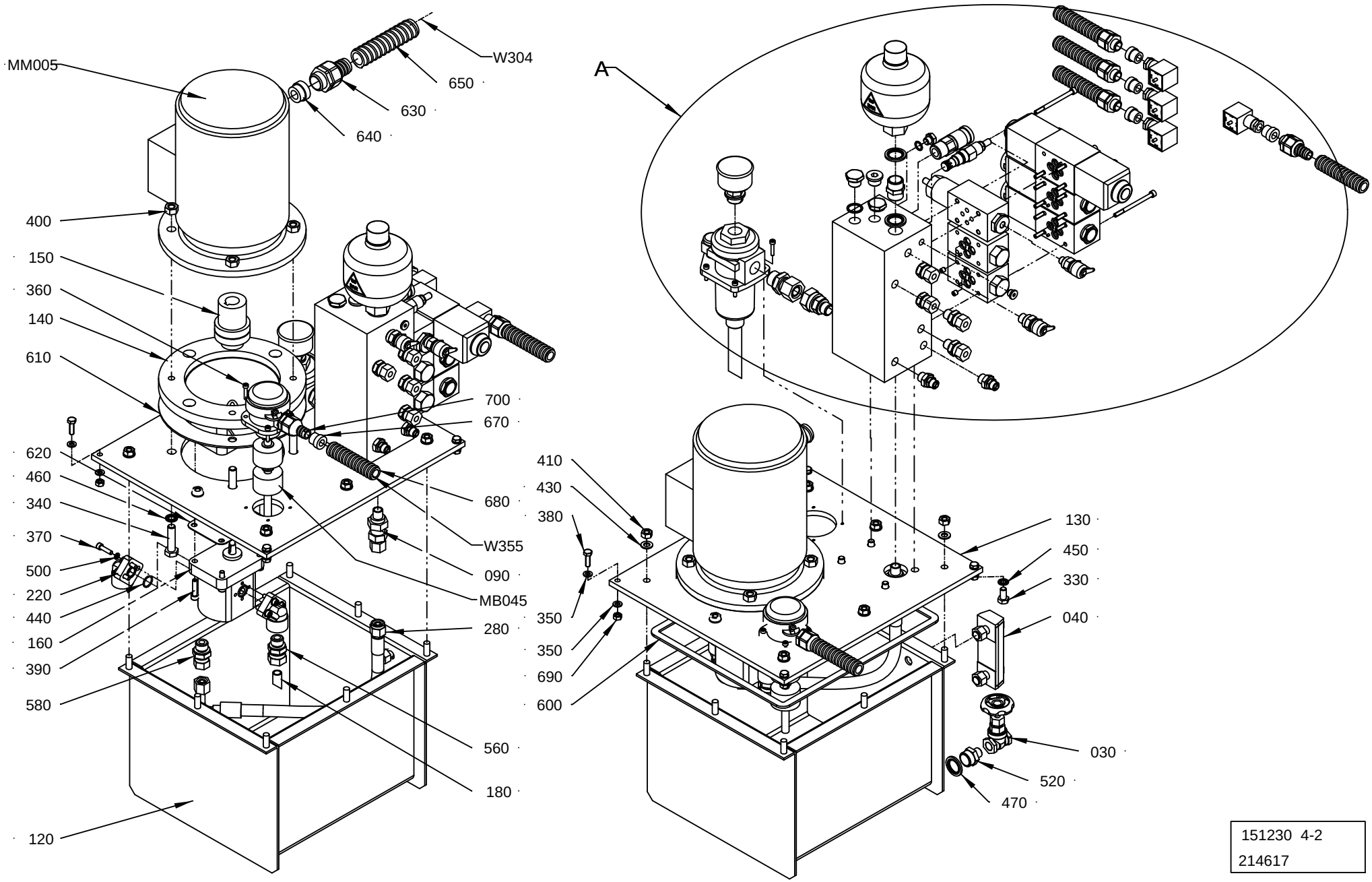

151230 4-2
214617

ECM: 215165 - 20060123
Group number: 1512304-0200
Assembly Drawing: 1512304-2_1_AA

This list covers pages from 6-88 to 6-91

Pos	Part No	UN	Qty	Description	Page No
-					
020	90163-0076		1	QUICK COUPLING, (F) LP-006-0-WR021	
030	90459-4816		1	FLAP VALVE, G1/4, L=33	
040	90199-0020		1	LEVEL GLASS/THERMOM. FSA 76.1.1./T/12	
050	90201-0136		2	DIRECT CHECK VALVE, NO. DGMDC-3-Y-PK-41	
060	90201-0014		1	VALVE	
080	90201-0407		3	BOLT KIT	
090	90230-0026		1	NON-RETURN VALVE RHZ 10-PLR-ED	
100	90330-0029		2	PLUG, EXT. G-THREAD, R-236R3/8	
110	90330-0066		1	PLUG, EXT. G-THREAD, G1/8	
120	90459-2707		1	TANK-12L, A2-18076	
130	90459-2708		1	LID, A2-18077	
140	90457-0013		1	PUMP-MOTOR BRACKET, LS-211, NO 1711121	
150	90457-0014		1	FLEXIBLE COUPLING, ND5-A, CON.10X19 MM	
160	90457-0015		1	HYDR.PUMP, TFP100/2,2-S-C001, NO 1111250	
170	90457-0016		1	HYDR. VALVE MANIFOLD BLOCK, NO A1-17253	
180	90457-0017		1	TANK RET. OUTLET PIPE, NO 8185-0187	
190	90457-0018		1	HYDR.ACCU, NO SBO210-0,32EI/112A-210AK60	
220	90457-0039		2	PUMP CONN. ELBOW FLANGE T-26/12-3/8	
240	90030-0629		2	REDUCER, 1,8MM, M6, NO. 815406	
250	90201-0133		1	VALVE	
260	90201-0132		1	VALVE	
270	90201-0131		1	VALVE	
280	90457-0022		1	HYDR. HOSE, 6,4 & M16X1,5 STR+90DEGR.CON	
290	90458-0726		1	PRESSURE GAUGE, D=50 MM WITH FILTER	
300	90457-0024		1	RETURNFILTER UNIT, RF-P/30-BB-010E1.0/-T	
	90459-7433		*1*	*FILTER INSERT, 0030-R-010-P*	
320	90457-0023		1	CONN.STRAIGHTG1/2-M22X1,5, VADKO15-RL/WD	
330	312101-0449		4	SCREW M6S M8X16 FZB	
340	312104-0499		4	SCREW M6S M10X40H FZB	
350	315105-0153		8	WASHER BRB 6,4X12 RFR	
360	312111-0295		8	SCREW HEX.SOCK.HD.MC6S-TT 4X20 88 FZB	
370	312111-0331		6	SCREW HEX.SOCK.HD.MC6S-TT 5X20 88 FZB	
380	312105-0370		4	SCREW M6S ISO 4017 M6X20 A480	
390	312111-0372		4	SCREW HEX.SOCK.HD.MC6S-TT 6X25 88 FZB	
400	312601-0320		4	HEXAGON NUT, M10 8 FZB, ISO 4032	
410	312605-0318		8	HEXAGON NUT, M6M M8 A280	
430	315105-0165		8	WASHER BRB 8,4X16 RFR	
440	315202-0112		2	O-RING 14,1X1,6 MM	
450	315211-0104		4	BONDED SEAL SS/NBR90 M8	
460	315211-0106		4	BONDED SEAL SS/NBR90 M10	
470	315211-0111		3	BONDED SEAL SS/NBR90 G1/2	
480	315234-0109		1	WASHER,PL.RND.CU.10,3/13,5 H=1,0	
490	315234-0111		2	WASHER,PL.RND.CU.17,5//21 H=1,5	
500	315402-0146		6	LOCK WASHER FBB 5,1	
510	342700-0113		1	NIPPLES,HEXAGON,EXT.G-THREAD G1/2"-G1/2"	
520	342700-0205		1	NIPPLES,HEXAGON,EXT.G-THREAD G1/2"-G1/4"	
530	342713-0209		1	PLUG (QUANT.MINIMA= 10PC).	
540	342713-0211		1	PLUG, EXT THREAD HEX SOCKET 8638-00-380	
550	342752-0103		4	CONN. STR. GA-8-G1/4	
560	342752-0110		1	CONN. STR. GA-12-G3/8	
570	342921-0122		2	STRAIGHT COUPLING,EXT.THREADED 8/6-G1/4"	
580	90457-0139		1	CONN.STRAIGHT G3/8-10 MM, A 10-L/R3/8/WD	
590	90457-0140		1	CONN.STRAIGHT G3/8-15 MM, A 15-L/R3/8/WD	
600	90457-0136		1	FLAT GASKET TAPE W. ADHESIVE, 10X3.0	
610	90457-0138		1	GASKET, DP-200	
620	90457-0137		1	GASKET, GP IP	
630	90458-0431		1	HOSE GLAND W/O INSERT M25 EXTENDED	
640	353249-0013		1	INSERT, SINGEL HOLE, EK 154/13	
650	90152-0051	M	1.7	SPIRAL CONDUIT, 25X18, UL 1816	
660	353243-0001		4	HOSE GLAND W/O INSERT PG9 EXTENDED	
670	353249-0009		5	INSERT, SINGEL HOLE, EK 152/9	
680	90152-0059	M	8.5	SPIRAL CONDUIT, 18X12, UL 1211	
690	312605-0316		4	HEXAGON NUT, M6M M6 A280	
700	353243-0002		1	HOSE GLAND W/O INSERT PG11 EXTENDED	
MY132	90201-0058		1	SOLENOID VALVE DC 24V	
	90201-0334		*1*	*SOL. COIL, 24VDC,NO 507848, F.90201-0058*	
MY131	90201-0058		1	SOLENOID VALVE DC 24V	
	90201-0334		*1*	*SOL. COIL, 24VDC,NO 507848, F.90201-0058*	
MY052	90459-1690		1	DIRECTIONAL VALVE, DG4V-3-6C-MUH-7-60-EN	
MM005	90045-0228		1	MOTOR 7AA80M4-B5	
MB045	90457-0019		1	LEVEL PROBE, HMFB-S=45-0=80-0=90-T70	
MY132.1	90110-0095		1	CONNECTOR 3 POLE + EARTH	
MY131.1	90110-0095		1	CONNECTOR 3 POLE + EARTH	
MY052B.1	90110-0095		1	CONNECTOR 3 POLE + EARTH	
MY052A.1	90110-0095		1	CONNECTOR 3 POLE + EARTH	
W304	351150-0418	M	3.5	CABLE OLFLEX 4X2,5 MM2 LIGHT/GREY	
W316	351150-0403	M	3	CABLE OLFLEX 3X0,75 MM2 LIGHT/GREY	
W317	351150-0403	M	3	CABLE OLFLEX 3X0,75 MM2 LIGHT/GREY	
W349	351150-0403	M	3	CABLE OLFLEX 3X0,75 MM2 LIGHT/GREY	
W350	351150-0403	M	3	CABLE OLFLEX 3X0,75 MM2 LIGHT/GREY	
W355	351150-0404	M	3	CABLE OLFLEX 4X0,75 MM2 LIGHT/GREY	

Machine Type	Group Description	Used-In	Group Number	Page No

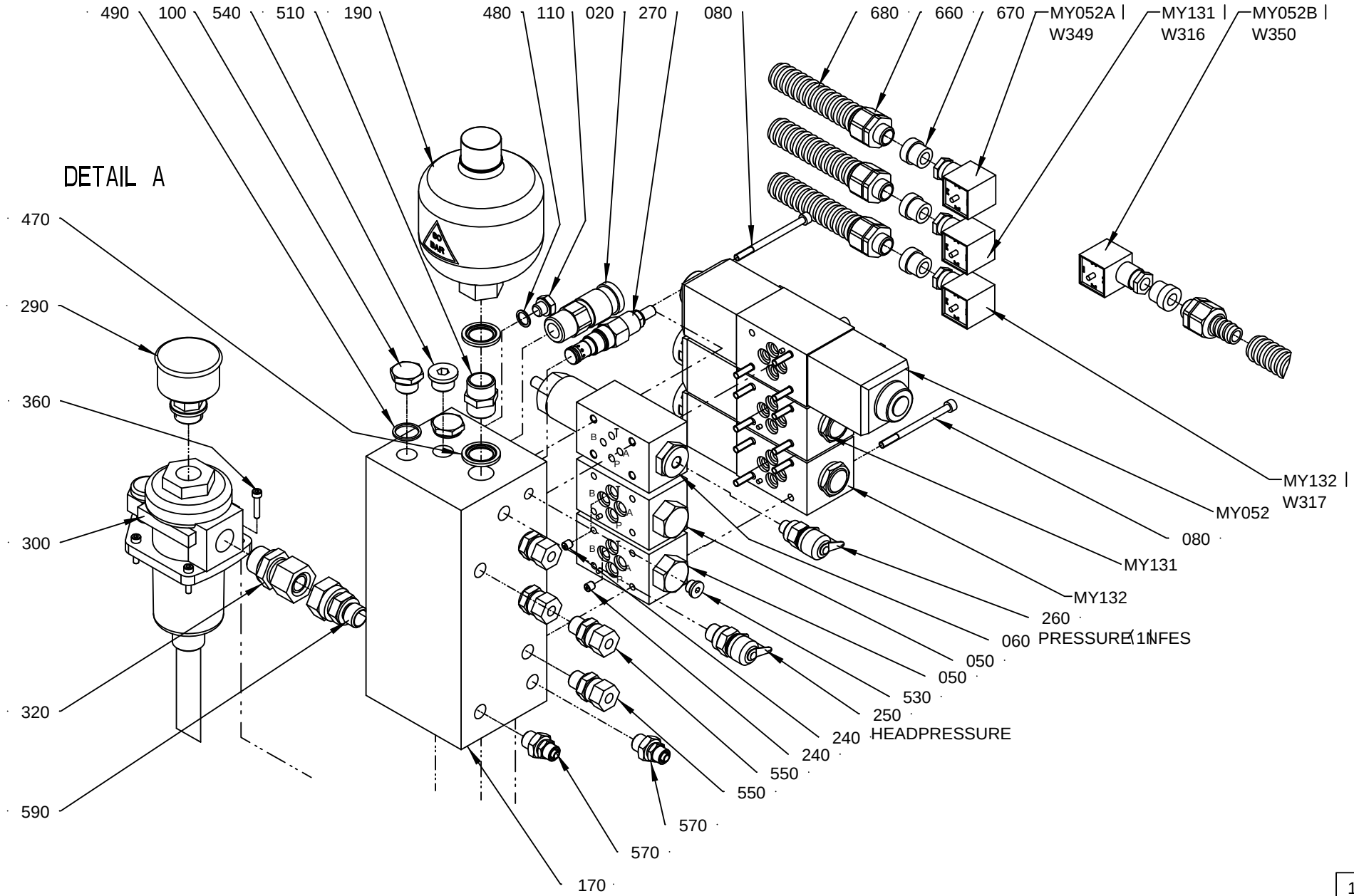

151230 4-2
214617

ECM: 215165 - 20060123
Group number: 1512304-0200
Assembly Drawing: 1512304-2_2_AA

This list covers pages from 6-88 to 6-91

Pos	Part No	UN	Qty	Description	Page No
-					
020	90163-0076		1	QUICK COUPLING, (F) LP-006-0-WR021	
030	90459-4816		1	FLAP VALVE, G1/4, L=33	
040	90199-0020		1	LEVEL GLASS/THERMOM. FSA 76.1.1./T/12	
050	90201-0136		2	DIRECT CHECK VALVE, NO. DGMDC-3-Y-PK-41	
060	90201-0014		1	VALVE	
080	90201-0407		3	BOLT KIT	
090	90230-0026		1	NON-RETURN VALVE RHZ 10-PLR-ED	
100	90330-0029		2	PLUG, EXT. G-THREAD, R-236R3/8	
110	90330-0066		1	PLUG, EXT. G-THREAD, G1/8	
120	90459-2707		1	TANK-12L, A2-18076	
130	90459-2708		1	LID, A2-18077	
140	90457-0013		1	PUMP-MOTOR BRACKET, LS-211, NO 1711121	
150	90457-0014		1	FLEXIBLE COUPLING, ND5-A, CON.10X19 MM	
160	90457-0015		1	HYDR.PUMP, TFP100/2,2-S-C001, NO 1111250	
170	90457-0016		1	HYDR. VALVE MANIFOLD BLOCK, NO A1-17253	
180	90457-0017		1	TANK RET. OUTLET PIPE, NO 8185-0187	
190	90457-0018		1	HYDR.ACCU, NO SBO210-0,32EI/112A-210AK60	
220	90457-0039		2	PUMP CONN. ELBOW FLANGE T-26/12-3/8	
240	90030-0629		2	REDUCER, 1,8MM, M6, NO. 815406	
250	90201-0133		1	VALVE	
260	90201-0132		1	VALVE	
270	90201-0131		1	VALVE	
280	90457-0022		1	HYDR. HOSE, 6,4 & M16X1,5 STR+90DEGR.CON	
290	90458-0726		1	PRESSURE GAUGE, D=50 MM WITH FILTER	
300	90457-0024		1	RETURNFILTER UNIT, RF-P/30-BB-010E1.0/-T	
	90459-7433		*1*	*FILTER INSERT, 0030-R-010-P*	
320	90457-0023		1	CONN.STRAIGHTG1/2-M22X1,5, VADKO15-RL/WD	
330	312101-0449		4	SCREW M6S M8X16 FZB	
340	312104-0499		4	SCREW M6S M10X40H FZB	
350	315105-0153		8	WASHER BRB 6,4X12 RFR	
360	312111-0295		8	SCREW HEX.SOCK.HD.MC6S-TT 4X20 88 FZB	
370	312111-0331		6	SCREW HEX.SOCK.HD.MC6S-TT 5X20 88 FZB	
380	312105-0370		4	SCREW M6S ISO 4017 M6X20 A480	
390	312111-0372		4	SCREW HEX.SOCK.HD.MC6S-TT 6X25 88 FZB	
400	312601-0320		4	HEXAGON NUT, M10 8 FZB, ISO 4032	
410	312605-0318		8	HEXAGON NUT, M6M M8 A280	
430	315105-0165		8	WASHER BRB 8,4X16 RFR	
440	315202-0112		2	O-RING 14,1X1,6 MM	
450	315211-0104		4	BONDED SEAL SS/NBR90 M8	
460	315211-0106		4	BONDED SEAL SS/NBR90 M10	
470	315211-0111		3	BONDED SEAL SS/NBR90 G1/2	
480	315234-0109		1	WASHER,PL.RND.CU.10,3/13,5 H=1,0	
490	315234-0111		2	WASHER,PL.RND.CU.17,5//21 H=1,5	
500	315402-0146		6	LOCK WASHER FBB 5,1	
510	342700-0113		1	NIPPLES,HEXAGON,EXT.G-THREAD G1/2"-G1/2"	
520	342700-0205		1	NIPPLES,HEXAGON,EXT.G-THREAD G1/2"-G1/4"	
530	342713-0209		1	PLUG (QUANT.MINIMA= 10PC).	
540	342713-0211		1	PLUG, EXT THREAD HEX SOCKET 8638-00-380	
550	342752-0103		4	CONN. STR. GA-8-G1/4	
560	342752-0110		1	CONN. STR. GA-12-G3/8	
570	342921-0122		2	STRAIGHT COUPLING,EXT.THREADED 8/6-G1/4"	
580	90457-0139		1	CONN.STRAIGHT G3/8-10 MM, A 10-L/R3/8/WD	
590	90457-0140		1	CONN.STRAIGHT G3/8-15 MM, A 15-L/R3/8/WD	
600	90457-0136		1	FLAT GASKET TAPE W. ADHESIVE, 10X3.0	
610	90457-0138		1	GASKET, DP-200	
620	90457-0137		1	GASKET, GP IP	
630	90458-0431		1	HOSE GLAND W/O INSERT M25 EXTENDED	
640	353249-0013		1	INSERT, SINGEL HOLE, EK 154/13	
650	90152-0051	M	1.7	SPIRAL CONDUIT, 25X18, UL 1816	
660	353243-0001		4	HOSE GLAND W/O INSERT PG9 EXTENDED	
670	353249-0009		5	INSERT, SINGEL HOLE, EK 152/9	
680	90152-0059	M	8.5	SPIRAL CONDUIT, 18X12, UL 1211	
690	312605-0316		4	HEXAGON NUT, M6M M6 A280	
700	353243-0002		1	HOSE GLAND W/O INSERT PG11 EXTENDED	
MY132	90201-0058		1	SOLENOID VALVE DC 24V	
	90201-0334		*1*	*SOL. COIL, 24VDC,NO 507848, F.90201-0058*	
MY131	90201-0058		1	SOLENOID VALVE DC 24V	
	90201-0334		*1*	*SOL. COIL, 24VDC,NO 507848, F.90201-0058*	
MY052	90459-1690		1	DIRECTIONAL VALVE, DG4V-3-6C-MUH-7-60-EN	
MM005	90045-0228		1	MOTOR 7AA80M4-B5	
MB045	90457-0019		1	LEVEL PROBE, HMFB-S=45-0=80-0=90-T70	
MY132.1	90110-0095		1	CONNECTOR 3 POLE + EARTH	
MY131.1	90110-0095		1	CONNECTOR 3 POLE + EARTH	
MY052B.1	90110-0095		1	CONNECTOR 3 POLE + EARTH	
MY052A.1	90110-0095		1	CONNECTOR 3 POLE + EARTH	
W304	351150-0418	M	3.5	CABLE OLFLEX 4X2,5 MM2 LIGHT/GREY	
W316	351150-0403	M	3	CABLE OLFLEX 3X0,75 MM2 LIGHT/GREY	
W317	351150-0403	M	3	CABLE OLFLEX 3X0,75 MM2 LIGHT/GREY	
W349	351150-0403	M	3	CABLE OLFLEX 3X0,75 MM2 LIGHT/GREY	
W350	351150-0403	M	3	CABLE OLFLEX 3X0,75 MM2 LIGHT/GREY	
W355	351150-0404	M	3	CABLE OLFLEX 4X0,75 MM2 LIGHT/GREY	

Machine Type	Group Description	Used-In	Group Number	Page No

PIPE WORK, AIR WATER

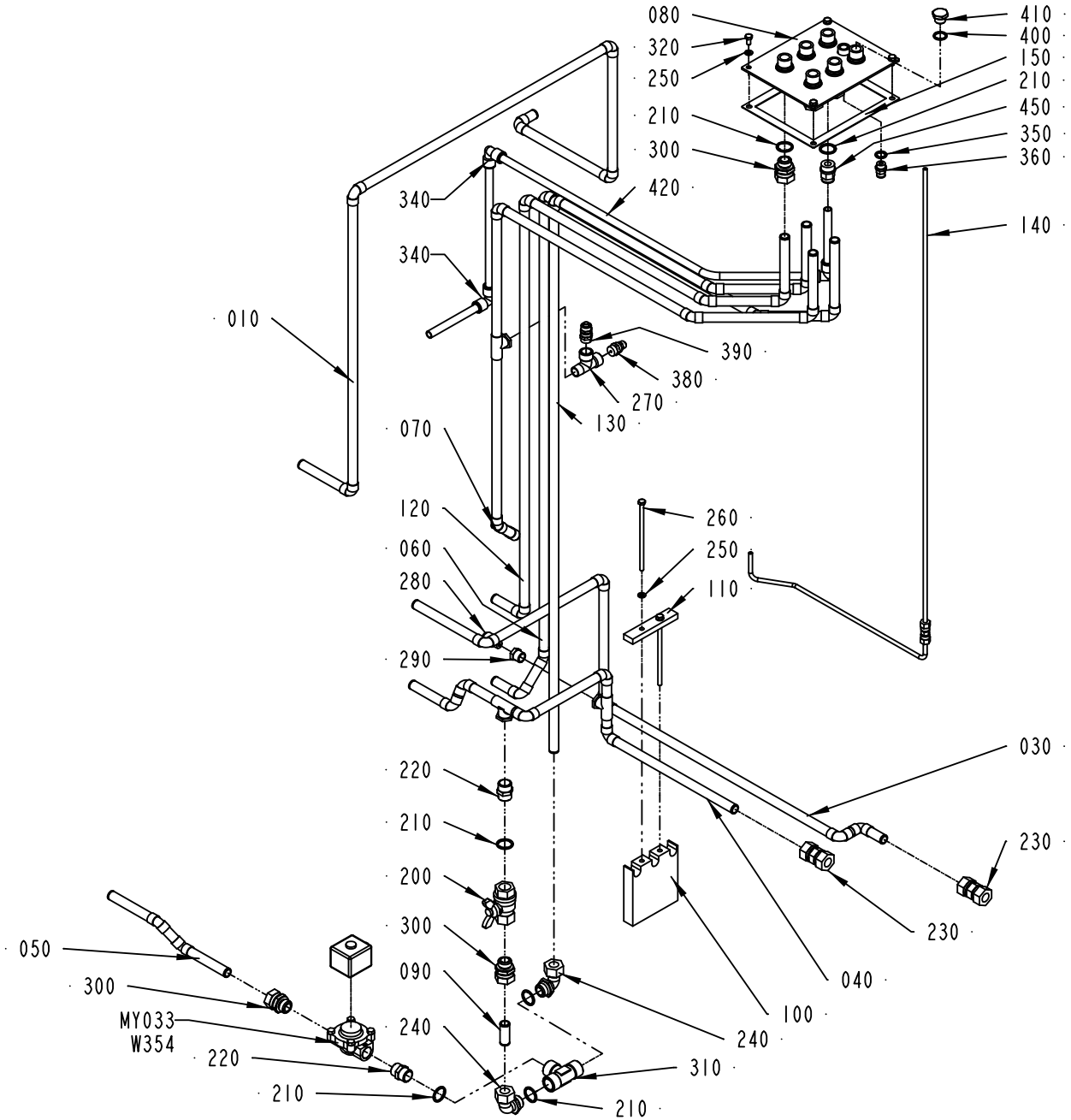

1350184-3
289793

ECM: 290157 - 20070126
Group number: 1350184-0200
Assembly Drawing: 1350184-3_1_AB

This list covers pages from 6-92 to 6-95

Pos	Part No	UN	Qty	Description	Page No
NOPT (See drawing on page: 6-92)					
210	315239-0113		9	NYLON WASHER G1/2	
400	315239-0111		1	NYLON WASHER G3/8	
410	90330-0029		1	PLUG, EXT. G-THREAD, R-236R3/8	
420	90166-0068	M	2	TUBE 12 MM PA BLUE	
450	350001-0016		1	PUSH-IN FITTING QS-F-G1/2-12	
PT19 (See drawing on page: 6-94)					
210	315239-0113		10	NYLON WASHER G1/2	
420	90166-0068	M	4	TUBE 12 MM PA BLUE	
430	90459-1749		1	ELBOW PIPE JOINT 12 MM	
440	315239-0113		1	NYLON WASHER G1/2	
450	350001-0016		2	PUSH-IN FITTING QS-F-G1/2-12	
Common Parts					
010	2788108-0000		1	PIPE	
030	2788109-0000		1	PIPE	
040	1517487-0000		1	PIPE	
050	1517488-0000		1	PIPE	
060	1517489-0000		1	PIPE	
070	2788107-0000		1	PIPE	
080	2788111-0000		1	CONNECTION PLATE	
090	1548156-0000		1	PIPE	
100	1517490-0000		1	INFERIOR HOLDER	
110	1517491-0000		1	INFERIOR HOLDER	
120	2788110-0000		1	PIPE	
130	1519576-0000		1	PIPE	
140	1512353-0000		1	PIPE	
150	1517181-0000		1	GASKET	
200	90187-0029		1	BALL VALVE G1/2, NPBR	
220	342700-0113		2	NIPPLES,HEXAGON,EXT.G-THREAD G1/2"-G1/2"	
230	342726-0114		2	CONN. PIPE G-15	
240	342730-0114		2	CONN. ELBOW WA-15-1/2	
250	315105-0153		6	WASHER BRB 6,4X12 RFR	
260	90457-0143		2	SCREW M6S ISO 4014 M6X130 A480	
270	90140-0023		1	T-PIPE, INT. THREAD, NO. 2070-3/8-3/8	
280	90224-0094		1	NIPPLE	
290	342701-0203		1	BUSHING, INT/EXT. G-THREAD NO. 3/8-1/4	
300	342720-0114		6	CONN. STR. GA-15-G1/2	
310	90140-0010		1	T-PIPE, INT. THREAD, 20031/2	
320	312105-0366		4	SCREW M6S ISO 4017 M6X12 A480	
340	350004-0005		3	PUSH-IN L-FITTING QSL-F-12	
350	315239-0110		1	NYLON WASHER G1/4	
360	350001-0009		1	PUSH-IN FITTING QS-F-G1/4-8	
380	342920-0115		1	STRAIGHT COUPLING,EXT.THREADED 6/4-R3/8"	
390	342920-0133		1	STRAIGHT COUPL.,EXT.THREADED 10/8-R3/8"	
460	90030-0184		1	CONN. STR. GA-6-G1/8	
470	90330-0012		1	SLEEVE, REDUCTION, INT, R-2021/4X1/8	
MY033	90042-0134		1	SOLENOID VALVE ASCO SCG 210 802 24VDC	
	90042-0428		*1*	*COIL ASCO 24VDC*	
W354	351150-0403	MM	3500	CABLE OLFLEX 3X0,75 MM2 LIGHT/GREY	

Machine Type | Group Description | Used-In | Group Number | Page No

PIPE WORK, AIR WATER

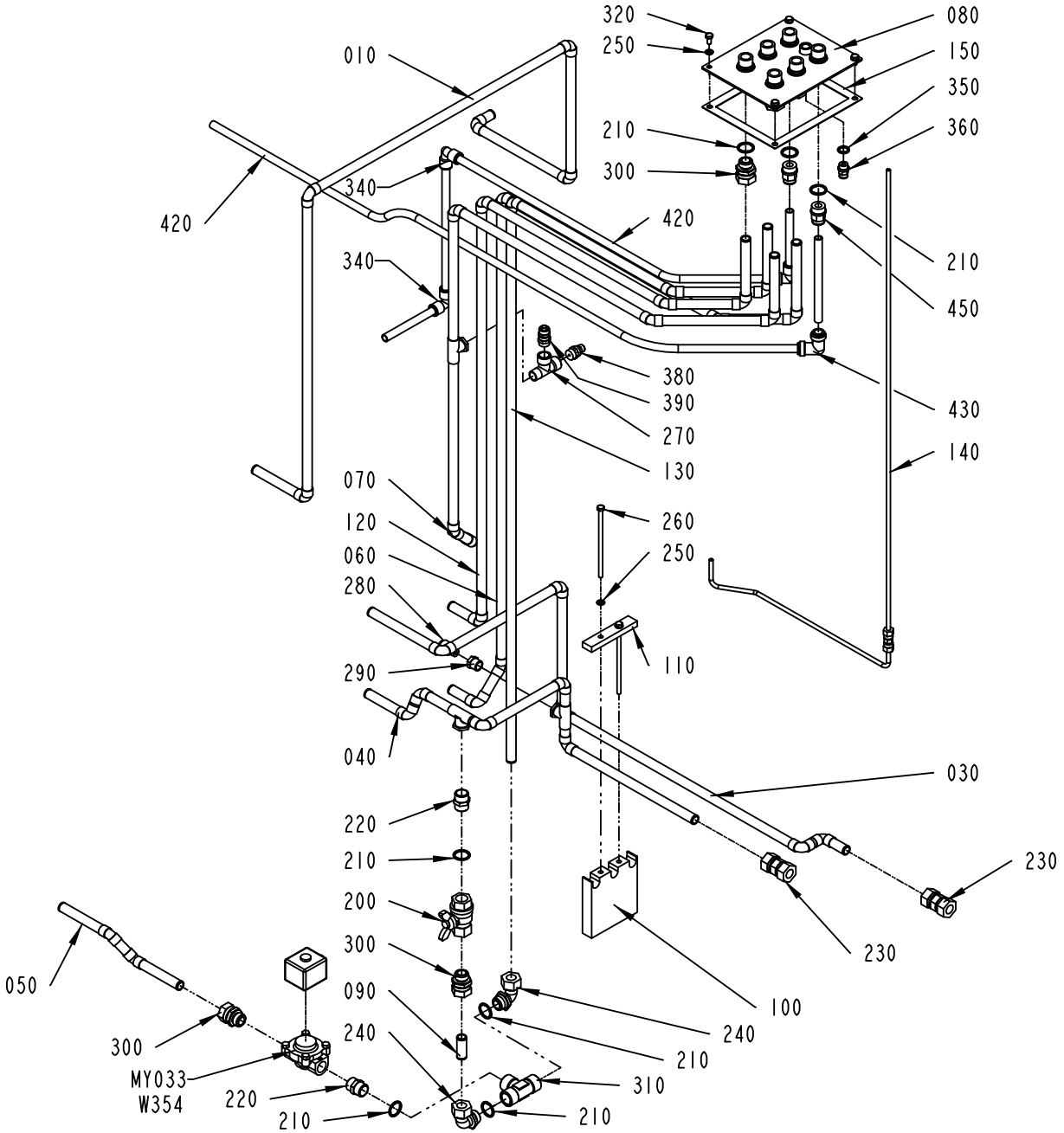

1350184-4
289793

ECM: 290157 - 20070126
Group number: 1350184-0200
Assembly Drawing: 1350184-4_1_AB

This list covers pages from 6-92 to 6-95

Pos	Part No	UN	Qty	Description	Page No
NOPT (See drawing on page: 6-92)					
210	315239-0113		9	NYLON WASHER G1/2	
400	315239-0111		1	NYLON WASHER G3/8	
410	90330-0029		1	PLUG, EXT. G-THREAD, R-236R3/8	
420	90166-0068	M	2	TUBE 12 MM PA BLUE	
450	350001-0016		1	PUSH-IN FITTING QS-F-G1/2-12	
PT19 (See drawing on page: 6-94)					
210	315239-0113		10	NYLON WASHER G1/2	
420	90166-0068	M	4	TUBE 12 MM PA BLUE	
430	90459-1749		1	ELBOW PIPE JOINT 12 MM	
440	315239-0113		1	NYLON WASHER G1/2	
450	350001-0016		2	PUSH-IN FITTING QS-F-G1/2-12	
Common Parts					
010	2788108-0000		1	PIPE	
030	2788109-0000		1	PIPE	
040	1517487-0000		1	PIPE	
050	1517488-0000		1	PIPE	
060	1517489-0000		1	PIPE	
070	2788107-0000		1	PIPE	
080	2788111-0000		1	CONNECTION PLATE	
090	1548156-0000		1	PIPE	
100	1517490-0000		1	INFERIOR HOLDER	
110	1517491-0000		1	INFERIOR HOLDER	
120	2788110-0000		1	PIPE	
130	1519576-0000		1	PIPE	
140	1512353-0000		1	PIPE	
150	1517181-0000		1	GASKET	
200	90187-0029		1	BALL VALVE G1/2, NPBR	
220	342700-0113		2	NIPPLES,HEXAGON,EXT.G-THREAD G1/2"-G1/2"	
230	342726-0114		2	CONN. PIPE G-15	
240	342730-0114		2	CONN. ELBOW WA-15-1/2	
250	315105-0153		6	WASHER BRB 6,4X12 RFR	
260	90457-0143		2	SCREW M6S ISO 4014 M6X130 A480	
270	90140-0023		1	T-PIPE, INT. THREAD, NO. 2070-3/8-3/8	
280	90224-0094		1	NIPPLE	
290	342701-0203		1	BUSHING, INT/EXT. G-THREAD NO. 3/8-1/4	
300	342720-0114		6	CONN. STR. GA-15-G1/2	
310	90140-0010		1	T-PIPE, INT. THREAD, 20031/2	
320	312105-0366		4	SCREW M6S ISO 4017 M6X12 A480	
340	350004-0005		3	PUSH-IN L-FITTING QSL-F-12	
350	315239-0110		1	NYLON WASHER G1/4	
360	350001-0009		1	PUSH-IN FITTING QS-F-G1/4-8	
380	342920-0115		1	STRAIGHT COUPLING,EXT.THREADED 6/4-R3/8"	
390	342920-0133		1	STRAIGHT COUPL.,EXT.THREADED 10/8-R3/8"	
460	90030-0184		1	CONN. STR. GA-6-G1/8	
470	90330-0012		1	SLEEVE, REDUCTION, INT, R-2021/4X1/8	
MY033	90042-0134		1	SOLENOID VALVE ASCO SCG 210 802 24VDC	
	90042-0428		*1*	*COIL ASCO 24VDC*	
W354	351150-0403	MM	3500	CABLE OLFLEX 3X0,75 MM2 LIGHT/GREY	

Machine Type | Group Description | Used-In | Group Number | Page No

PIPE WORK-HYDRAULIC

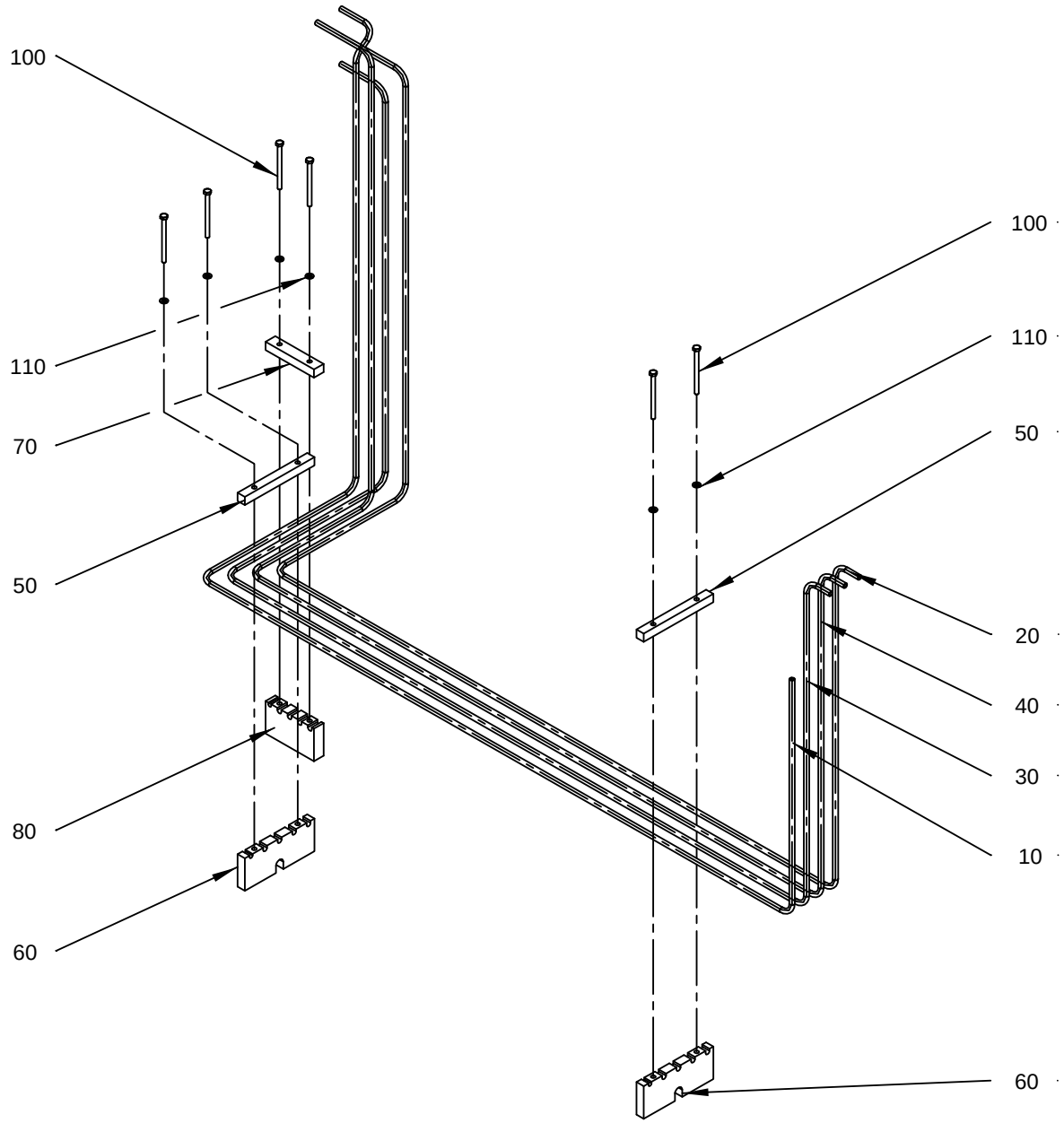

151966 3-2
214617

ECM: 215166 - 20060123
Group number: 1519663-0200
Assembly Drawing: 1519663-2_1_AA

Pos	Part No	UN	Qty	Description	Page No
-					
010	2761751-0000		1	PIPE	
020	2761752-0000		1	PIPE	
030	2761753-0000		1	PIPE	
040	2761754-0000		1	PIPE	
050	1519668-0000		2	PIPE HOLDER	
060	1519669-0000		2	PIPE HOLDER	
070	1519670-0000		1	PIPE HOLDER	
080	1519671-0000		1	PIPE HOLDER	
100	312105-0386		6	SCREW M6S ISO 4014 M6X80 A480	
110	315105-0153		6	WASHER BRB 6,4X12 RFR	

Pos	Part No	UN	Qty	Description	Page No

This page is intentionally left blank.

ECM: 70475 - 19961031
Group number: 469384-0100
Assembly Drawing:

Pos	Part No	UN	Qty	Description	Page No
-					
010	90296-0053	L	10	SHELL TELLUS OIL T 32	
020	90296-0075	ML	2500	SHELL OMALA OIL 320, DRUM 208 LITRES	
030	90298-0019		1	DETERGENT, SU 118, 20 LITRES	
040	90144-0003		1	TAPE	

Pos	Part No	UN	Qty	Description	Page No

Tetra Pak

SPC
Spare Parts Catalogue

STRIP APPLICATOR

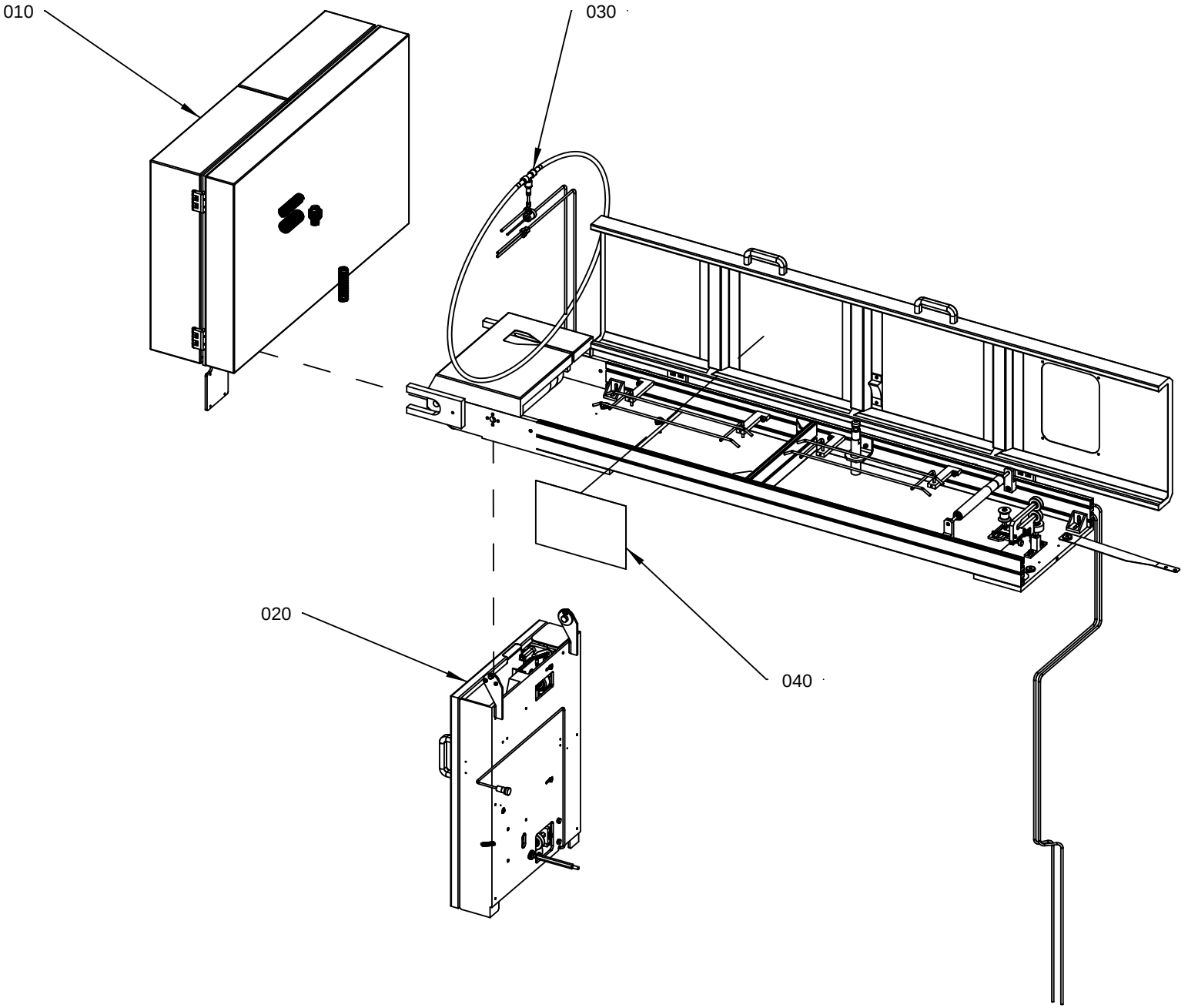

648107-1 7
ECM 240591

ECM: 253070 - 20060131
Group number: 648107-1300
Assembly Drawing: 648107-17_1_AA

Pos	Part No	UN	Qty	Description	Page No
-					
010	580037-0300		1	STRIP MAGAZINE	**7-5, 7-7**
020	580036-0200		1	STRIP APPLICATOR	**7-35, 7-37**
030	1499477-0100		1	WEB TUNNEL	**7-55**
040	2540724-0000		1	HOSE INSTALLATION	

Pos	Part No	UN	Qty	Description	Page No

STRIP MAGAZINE

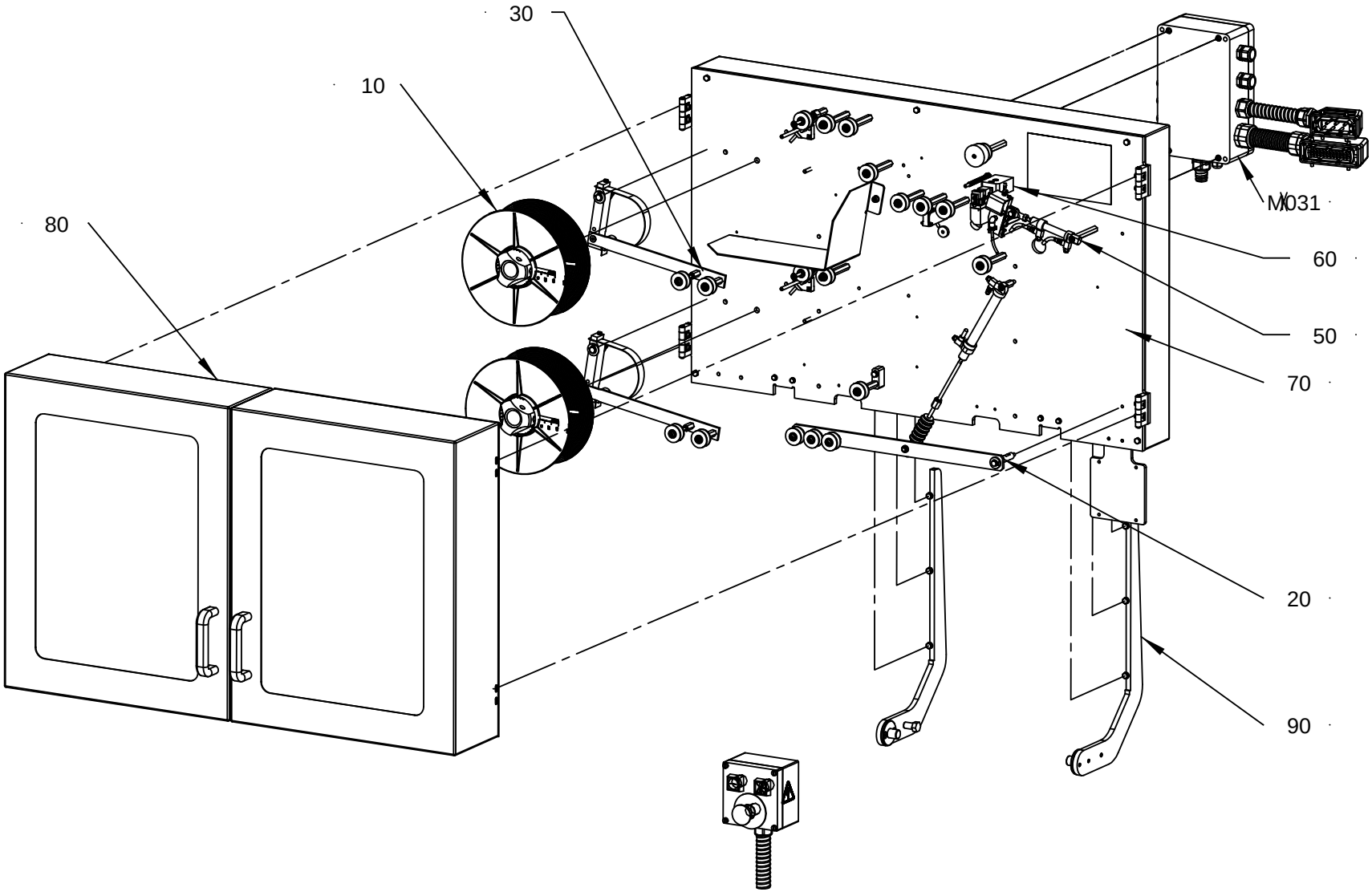

580037-4
236659

ECM: 236664 - 20060113
Group number: 580037-0300
Assembly Drawing: 580037-4_1_AA

This list covers pages from 7-4 to 7-7

Pos	Part No	UN	Qty	Description	Page No
NOPT (See drawing on page: 7-4)					
090	1498753-0100		1	MAGAZINE HOLDER	**7-9**
Common Parts					
010	580042-0100		2	HUB JUMBO	**7-11**
020	580044-0200		1	SPLICING MAGAZINE	**7-13**
030	580060-0200		2	BRAKE ARM	**7-15**
040	580329-0200		1	PUSH BUTTON BOX	**7-17**
050	1558897-0100		1	HEATING DEVICE	**7-19**
060	1524477-0100		1	CUTTING TABLE	**7-21**
070	1499480-0100		1	MOUNTING PLATE	**7-23, 7-25, 7-27, 7-29**
080	1498751-0200		1	DOOR	**7-31**
MX031	580064-0200		1	CONNECTION BOX	**7-33**

Pos	Part No	UN	Qty	Description	Page No

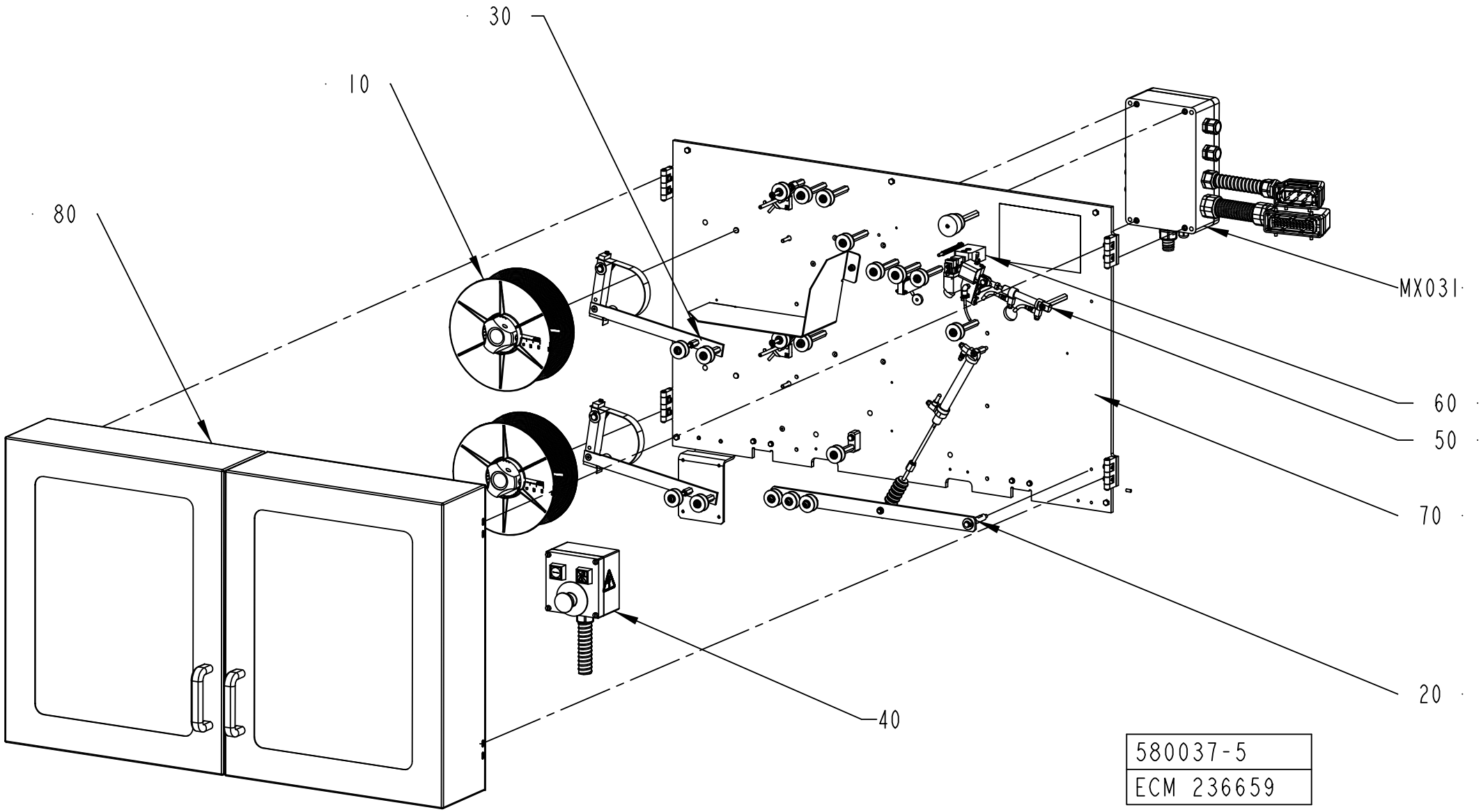
30
10
80
MX031
60
50
70
20
40
580037-5
ECM 236659

ECM: 236664 - 20060113
Group number: 580037-0300
Assembly Drawing: 580037-5_1_AA

This list covers pages from 7-4 to 7-7

Pos	Part No	UN	Qty	Description	Page No
NOPT (See drawing on page: 7-4)					
090	1498753-0100		1	MAGAZINE HOLDER	**7-9**
Common Parts					
010	580042-0100		2	HUB JUMBO	**7-11**
020	580044-0200		1	SPLICING MAGAZINE	**7-13**
030	580060-0200		2	BRAKE ARM	**7-15**
040	580329-0200		1	PUSH BUTTON BOX	**7-17**
050	1558897-0100		1	HEATING DEVICE	**7-19**
060	1524477-0100		1	CUTTING TABLE	**7-21**
070	1499480-0100		1	MOUNTING PLATE	**7-23, 7-25, 7-27, 7-29**
080	1498751-0200		1	DOOR	**7-31**
MX031	580064-0200		1	CONNECTION BOX	**7-33**

Pos	Part No	UN	Qty	Description	Page No

MAGAZINE HOLDER

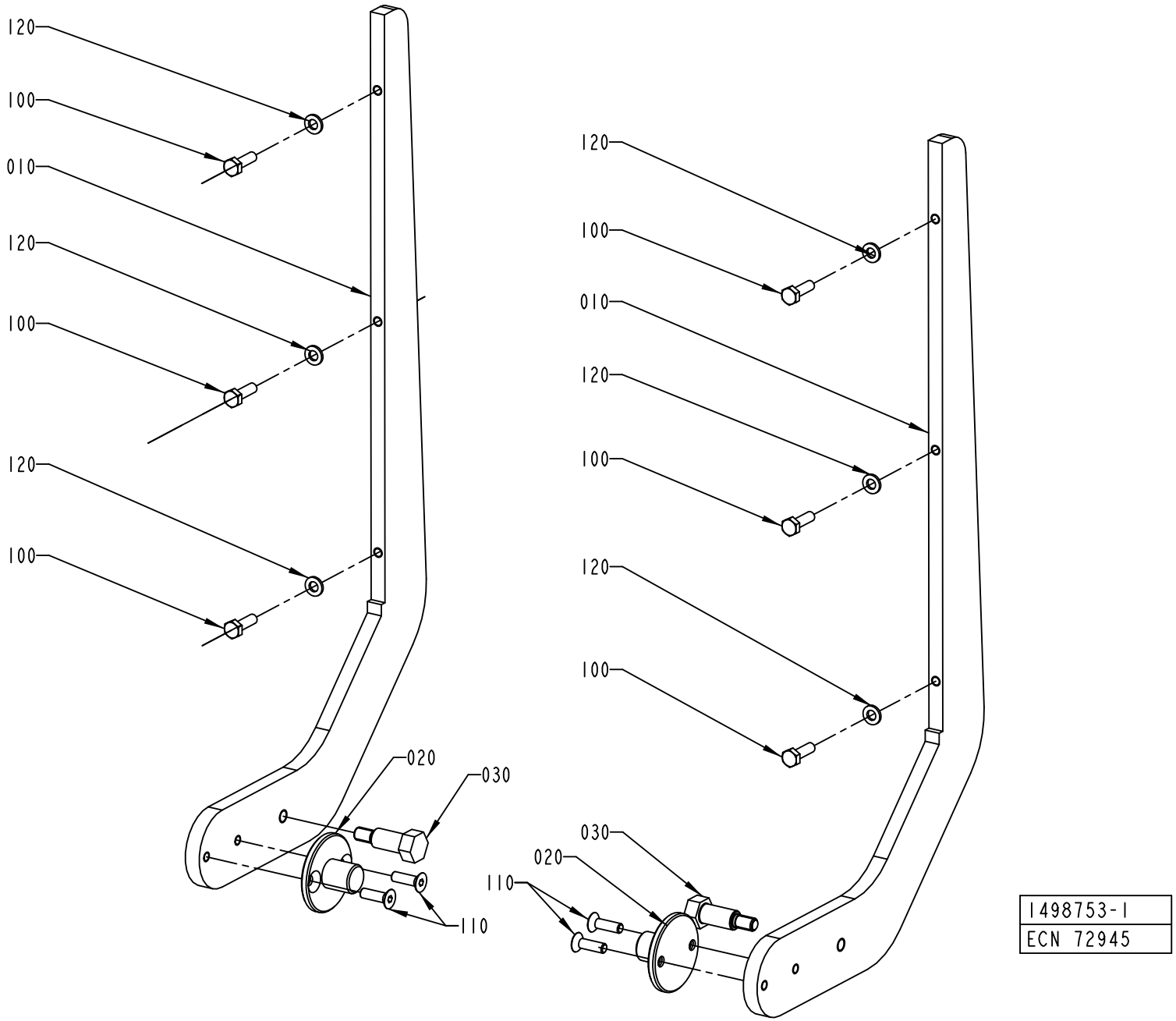

1498753-1
ECN 72945

ECM: 180865 - 20040910
Group number: 1498753-0100
Assembly Drawing: 1498753-1_1_AA

Pos	Part No	UN	Qty	Description	Page No
-					
010	1498761-0000		2	MAGAZINE HOLDER	
020	1498757-0000		2	FLANGE	
030	1498758-0000		2	AXLE PIN	
100	312105-0370		6	SCREW M6S ISO 4017 M6X20 A480	
110	312155-0368		4	SCREW DIN 7991 MF6S M6X16 A4 70	
120	315105-0153		6	WASHER BRB 6,4X12 RFR	

Pos	Part No	UN	Qty	Description	Page No

HUB JUMBO

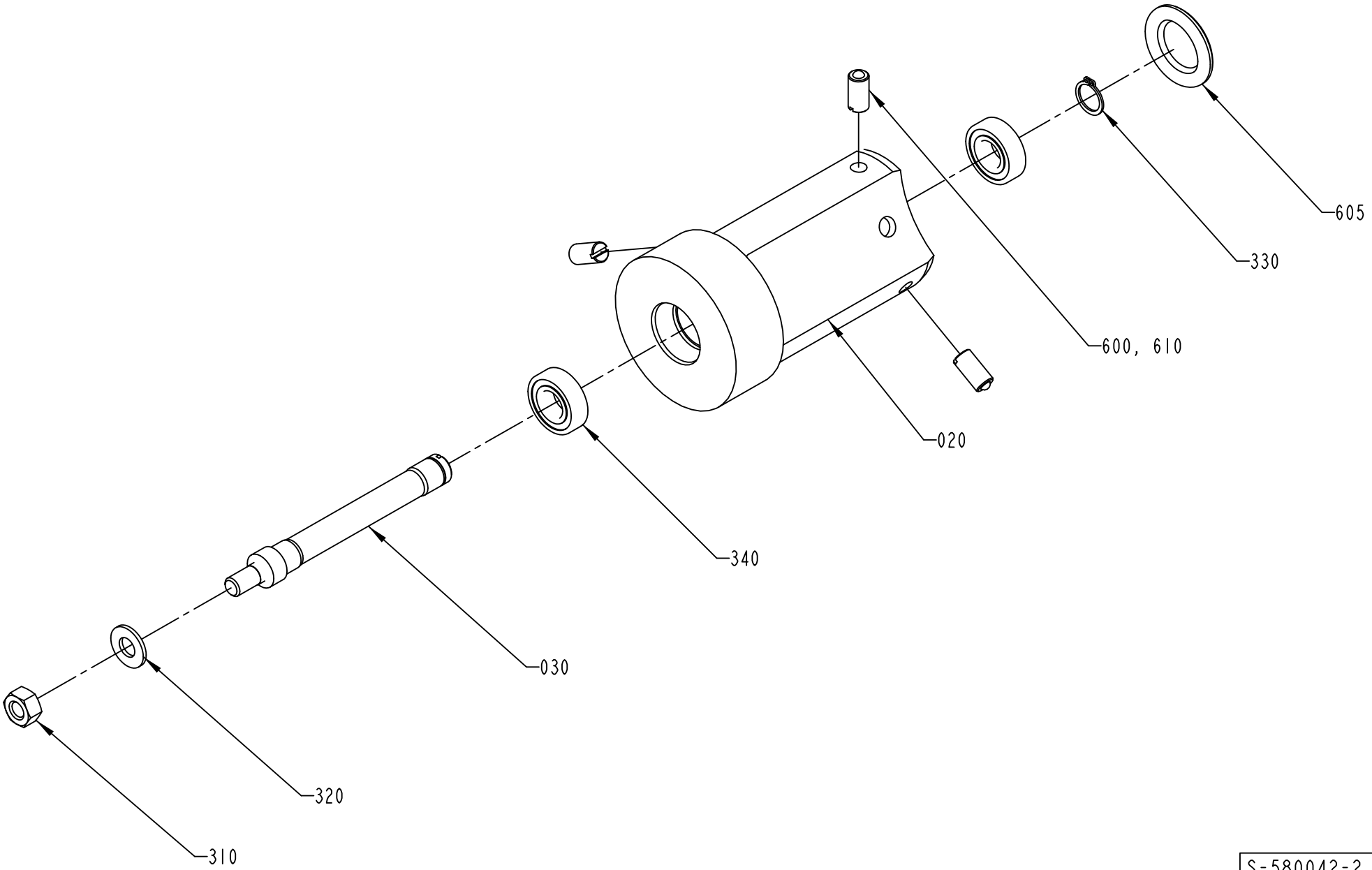

S-580042-2
ECN 72517

ECM: 243175 - 20060127
Group number: 580042-0100
Assembly Drawing: 580042-2_1_AB

Pos	Part No	UN	Qty	Description	Page No
TBA/19					
340	90214-0207		2	BALL BEARING, 15X32X9 MM	
Common Parts					
010	541751-0000		1	CONICAL BOBBIN	
020	536913-0000		1	HUB	
030	537327-0000		1	SHAFT	
310	312605-0320		1	HEXAGON NUT, M6M M10 A280	
320	315105-0173		1	WASHER BRB 10,5X22 RFR	
330	315751-0112		1	RETAINING RING FOR SHAFT DIN 471 15 A2	
600	90157-0016		1	LOCKING FLUID LOCTITE 242 50 ML	
605	90261-0049		1	PLUG, BLIND, PLASTIC, NO. SR1750	
610	90287-0106		3	SCREW SPRINGLOAD. SLOTTED HEAD M10X21	

Pos	Part No	UN	Qty	Description	Page No

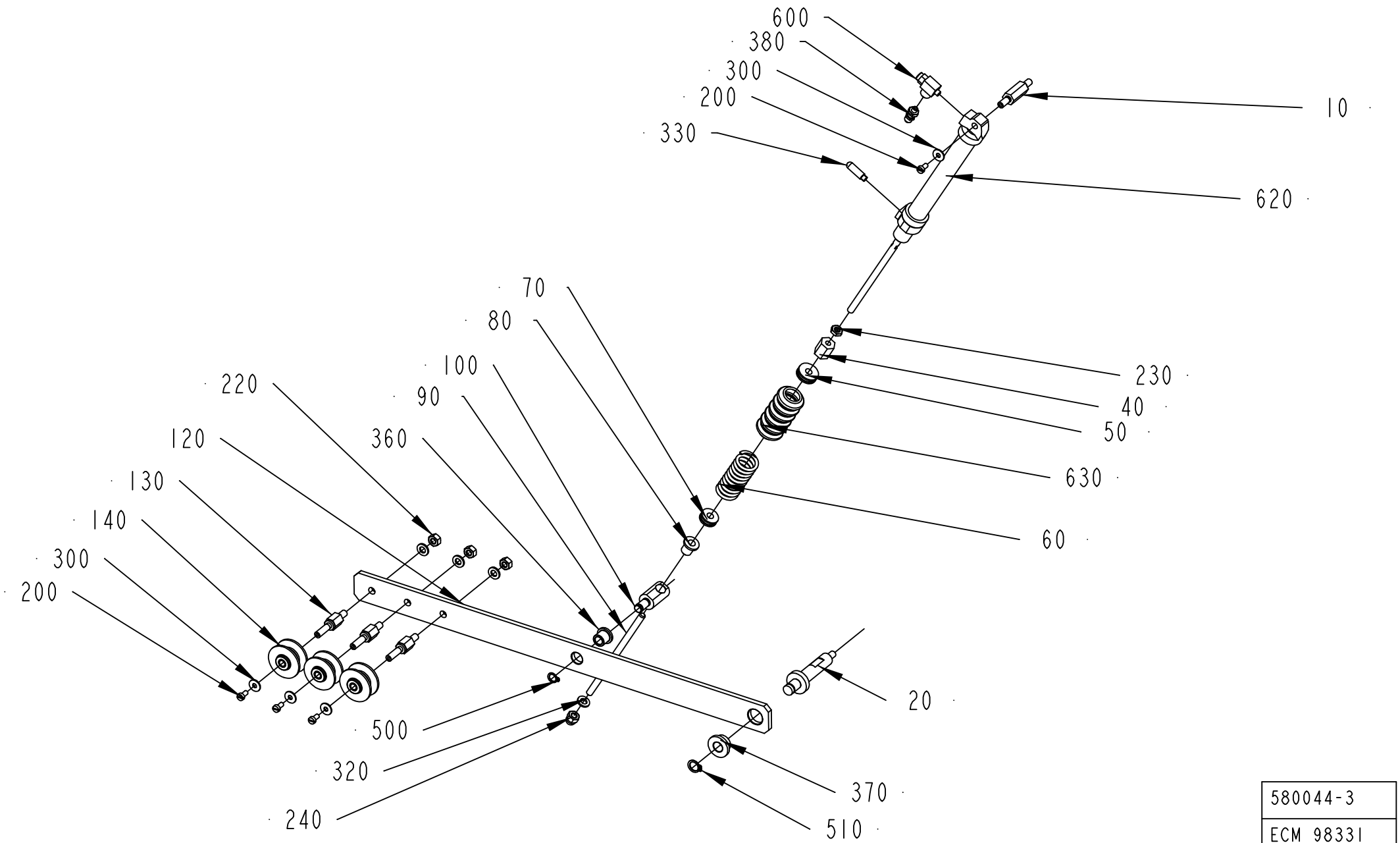

580044-3
ECM 98331

ECM: 180860 - 20040910
Group number: 580044-0200
Assembly Drawing: 580044-3_1_AC

Pos	Part No	UN	Qty	Description	Page No
-					
010	979576-0000		1	AXLE PIN	
020	979578-0000		1	AXLE PIN	
040	401186-0000		1	HEX NUT	
050	401371-0000		1	BUSHING	
060	400800-0000		1	SPRING	
070	401372-0000		1	BUSHING	
080	401370-0000		1	BUSHING	
090	1499515-0000		1	SHAFT	
100	401183-0000		1	GUIDE AXLE	
120	580055-0000		1	ARM	
130	579553-0000		3	SHAFT	
140	1512583-0000		3	ROLLER	
	321120-0101		*2*	*BEARING BUSH W/O FLANGE, 6X8X6 MM*	
200	312125-0287		4	SCREW ISO 1207 M4X8 A4	
220	312605-0316		3	HEXAGON NUT, M6M M6 A280	
230	312625-0316		1	HEXAGON THIN NUT, EN 24035 ML6M M6 A4	
240	312705-0316		1	NUT HEX. DOMED CAP MHM-6 M6 A280	
300	90005-0082		4	WASHER PLAIN ROUND 4,3(M4)/12,H=1	
320	315105-0153		4	WASHER BRB 6,4X12 RFR	
330	90328-0029		1	SILENCER M5	
360	321111-0097		1	FLANGE BUSHING, 8X12X12 MM	
370	321111-0135		1	FLANGE BUSHING, 10X16X10 MM	
380	342921-0111		1	STRAIGHT COUPL,EXT.THREAD.6/4-M5	
500	90141-0015		1	RETAINING RING FOR SHAFT DIN 471 8 A2	
510	90141-0016		1	RETAINING RING FOR SHAFT DIN 471 10 A2	
600	90235-0289		2	VALVE	
620	90239-0819		1	DOUBLE ACTING, MINI-ISO, CYL.16-100	
630	90342-0013		1	BELLOWS	

Pos	Part No	UN	Qty	Description	Page No

Machine Type | Group Description | Used-In | Group Number | Page No

BRAKE ARM

Drawing file: 580060-3_1_AB.hpgl

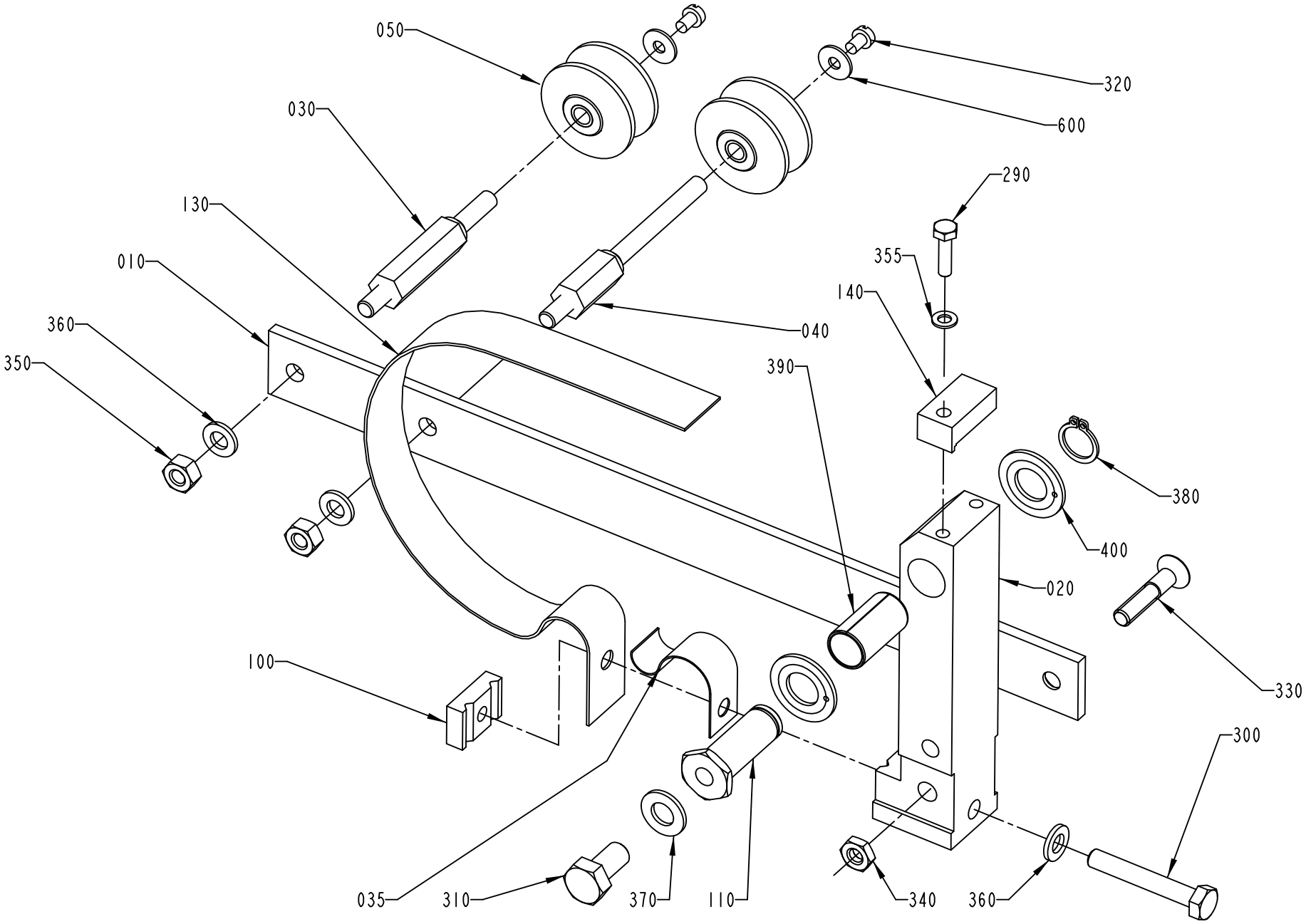

580060-3
ECM 98331

ECM: 107790 - 20051011
Group number: 580060-0200
Assembly Drawing: 580060-3_1_AB

Pos	Part No	UN	Qty	Description	Page No
-					
010	979994-0000		1	ARM	
020	1260678-0000		1	ARM	
030	536917-0000		1	AXLE PIN	
035	1484486-0000		1	SPRING	
040	544726-0000		1	AXLE PIN	
050	1512583-0000		2	ROLLER	
	321120-0101		*2*	*BEARING BUSH W/O FLANGE, 6X8X6 MM*	
100	583878-0000		1	SPRING BRACKET	
110	541070-0000		1	SHAFT	
130	979990-0000		1	BELT BRAKE	
140	979991-0000		1	BLOCK	
290	312105-0293		1	SCREW M6S ISO 4017 M4X16 A470	
300	312105-0378		1	SCREW M6S ISO 4014 M6X40 A480	
310	312105-0449		1	SCREW M6S ISO 4017 M8X16 A480	
320	312125-0285		2	SCREW ISO 1207 M4X6 A4	
330	312155-0374		1	SCREW DIN 7991 MF6S M6X30 A4 70	
340	312625-0316		1	HEXAGON THIN NUT, EN 24035 ML6M M6 A4	
350	312605-0316		2	HEXAGON NUT, M6M M6 A280	
355	315105-0136		1	WASHER BRB 4,3X8 RFR	
360	315105-0153		3	WASHER BRB 6,4X12 RFR	
370	315105-0165		1	WASHER BRB 8,4X16 RFR	
380	315751-0109		1	RETAINING RING FOR SHAFT DIN 471 12 A2	
390	321141-0193		1	BEARING BUSH W/O FLANGE, 12X14X25 MM	
400	321130-0180		2	THRUST WASHER, 12X24X1,5 MM	
600	90005-0082		2	WASHER PLAIN ROUND 4,3(M4)/12,H=1	

Pos	Part No	UN	Qty	Description	Page No

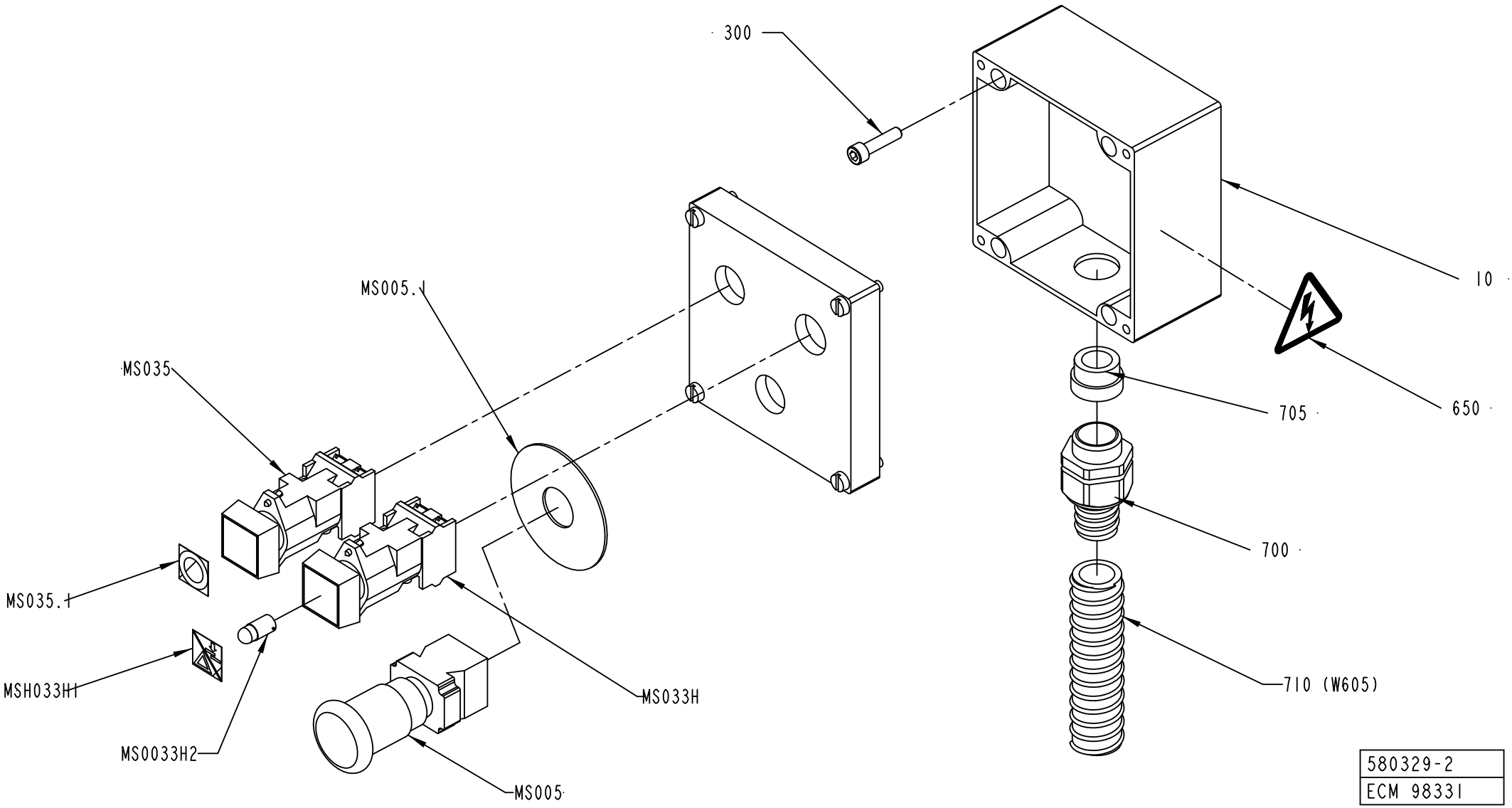

580329-2
ECM 98331

ECM: 180863 - 20040910
Group number: 580329-0200
Assembly Drawing: 580329-2_1_AB

Pos	Part No	UN	Qty	Description	Page No
-					
010	1558892-0000		1	CONNECTION BOX	
300	312115-0372		4	SCREW ISO4762 M6X25 A4 80	
650	359705-0015		1	WARNING SIGN ISO, RISK OF ELECTRIC SHOCK	
700	90458-0431		1	HOSE GLAND W/O INSERT M25 EXTENDED	
705	353249-0014		1	INSERT, SINGEL HOLE, EK 154/16	
710	90152-0051	MM	1600	SPIRAL CONDUIT, 25X18, UL 1816	
MS035	90064-0085		1	PUSH BUTTON, RED	
MS033H2	90036-0057		1	LIGHT BULB, BA9S 28V	
MS033H1	90459-0691		1	SIGN, STRIP SPLICE/ RESET ALARM	
MS033H	90064-0098		1	PUSH BUTTON, CLEAR	
MS005	90458-1651		1	EMERGENCY STOP, ZB4-BS-844 ZB4-BZ-104	
MS035.1	359301-0110		1	BUTTON SIGN, SHORT STOP	
MS005.1	486826-0001		1	SIGN "EMERGENCY STOP"	
W605	351150-0407	MM	1900	CABLE OLFLEX 12X0,75 MM2 LIGHT/GREY	

Pos	Part No	UN	Qty	Description	Page No

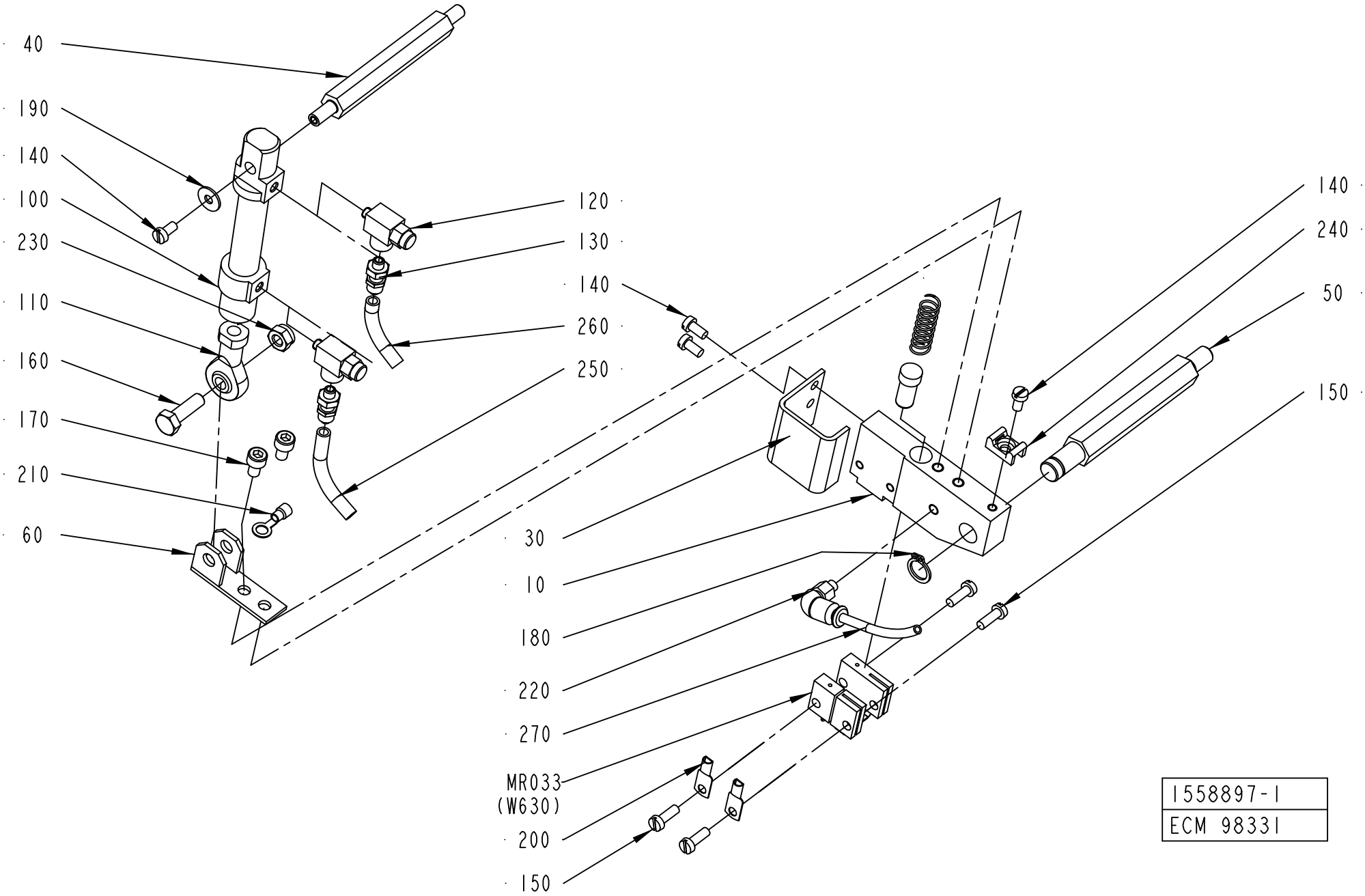
40
190
140
100
230
110
160
170
210
60
120
130
140
260
250
140
240
50
150
30
10
180
220
270
MR033
(W630)
200
150
1558897-1
ECM 98331

ECM: 180907 - 20040910
Group number: 1558897-0100
Assembly Drawing: 1558897-1_1_AA

Pos	Part No	UN	Qty	Description	Page No
-					
010	1490804-0000		1	HOLDER	
020	400833-0000		1	PLUNGER	
030	2523596-0000		1	COVER	
040	1037121-0000		1	SHAFT	
050	1037120-0000		1	SHAFT	
060	1037124-0000		1	HOLDER	
070	400828-0000		1	SPRING	
100	90450-0306		1	DOUBLE ACTING, MINI-ISO, CYL. 12-25	
110	90239-0491		1	ROD END,BALL JOINT EYE,MINI-ISO M6	
120	90235-0289		2	VALVE	
130	342921-0111		2	STRAIGHT COUPL,EXT.THREAD.6/4-M5	
140	312125-0287		4	SCREW ISO 1207 M4X8 A4	
150	312125-0291		4	SCREW ISO 1207 M4X12 A4	
160	312105-0370		1	SCREW M6S ISO 4017 M6X20 A480	
170	312115-0323		2	SCREW ISO4762 M5X8 A4 80	
180	90141-0016		1	RETAINING RING FOR SHAFT DIN 471 10 A2	
190	90005-0082		1	WASHER PLAIN ROUND 4,3(M4)/12,H=1	
200	353104-0140		2	CABLE SHOE, RING UNINS., YAV 06 M 4	
210	353101-0132		1	CABLE SHOE 1,5-2,5MM2 M5 BLUE	
220	342732-0099		1	ELBOW PIPE JOINT, (REEMP. 90458-2954)	
230	312812-0316		1	HEXAGON NUT, NY-LOCK M6 A480	
240	352113-0205		1	ANCHOR PLATES FOR STRIPS, TYPE TM2S8-C10	
250	90166-0193	MM	1000	TUBE 6 MM PUR BLUE	
260	90166-0193	MM	1000	TUBE 6 MM PUR BLUE	
270	90166-0095	MM	500	TUBE 4 MM PA BLUE (50M)	
MR033	1538473-0000		1	SEALING BLOCK	
W630	351120-0146	MM	1000	CABLE SILFLEX SIHF 3X4 0046026	

Pos	Part No	UN	Qty	Description	Page No

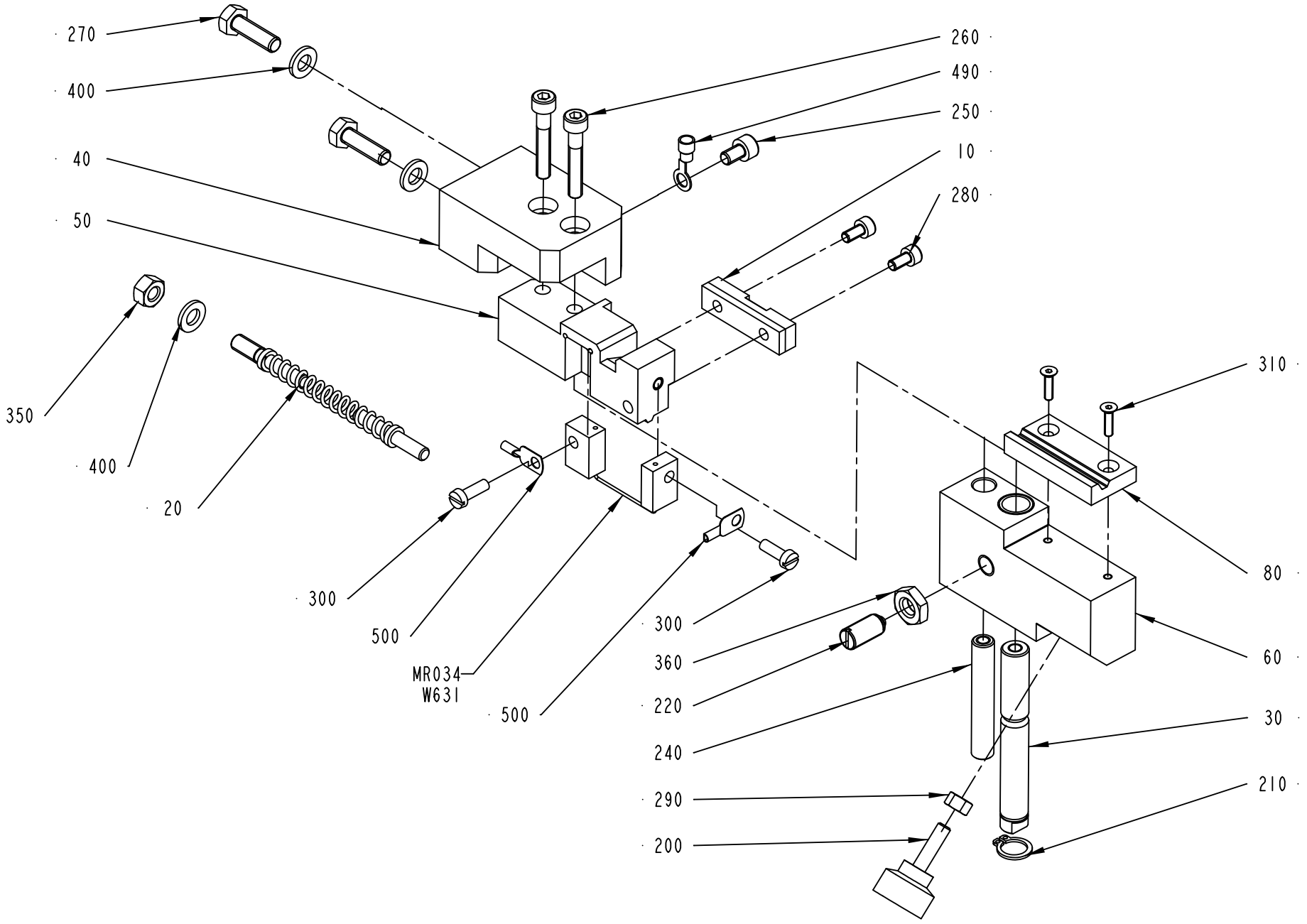

1524477-1
ECM 98331

ECM: 180906 - 20040910
Group number: 1524477-0100
Assembly Drawing: 1524477-1_1_AC

Pos	Part No	UN	Qty	Description	Page No
-					
010	1349014-0000		1	PAD	
020	2540726-0000		1	FINGER	
030	1517751-0000		1	SHAFT	
040	2523599-0000		1	SUPPORT	
050	2523598-0000		1	84LICING TABLE	
060	2523597-0000		1	SLIDER	
080	2523601-0000		1	PAD	
090	2523600-0000		1	PIN	
200	90051-0035		1	KNOB, EXTERNAL THREAD. NO. 8308-1135	
210	90141-0016		1	RETAINING RING FOR SHAFT DIN 471 10 A2	
220	90287-0112		1	SCREW SPRINGLOAD. SLOTTED HEAD M8X16	
250	312115-0323		1	SCREW ISO4762 M5X8 A4 80	
260	312115-0335		2	SCREW ISO4762 M5X30 A4 80	
270	312105-0370		2	SCREW M6S ISO 4017 M6X20 A480	
280	312115-0287		2	SCREW ISO4762 M4X8 A4 80	
290	312605-0314		1	HEXAGON NUT, M6M M5 A280	
300	312125-0291		1	SCREW ISO 1207 M4X12 A4	
305	312125-0293		1	SCREW ISO 1207 M4X16 A4	
310	312155-0226		2	SCREW DIN 7991 MF6S M3X12 A4 70	
350	312605-0316		1	HEXAGON NUT, M6M M6 A280	
360	312625-0318		1	HEXAGON THIN NUT, EN 24035 ML6M M8 A4	
400	315101-0153		3	WASHER PLAIN, BRB, 6,4/12 H=1,5	
490	353101-0132		1	CABLE SHOE 1,5-2,5MM2 M5 BLUE	
500	353101-0130		2	CABLE SHOE 1,5-2,5MM2 M4 BLUE	
MR034	1524481-0000		1	SEALING BLOCK	
W631	351120-0145	MM	1000	CABLE SILFLEX SIHF 3X2,5 0046020	

Pos	Part No	UN	Qty	Description	Page No

MOUNTING PLATE

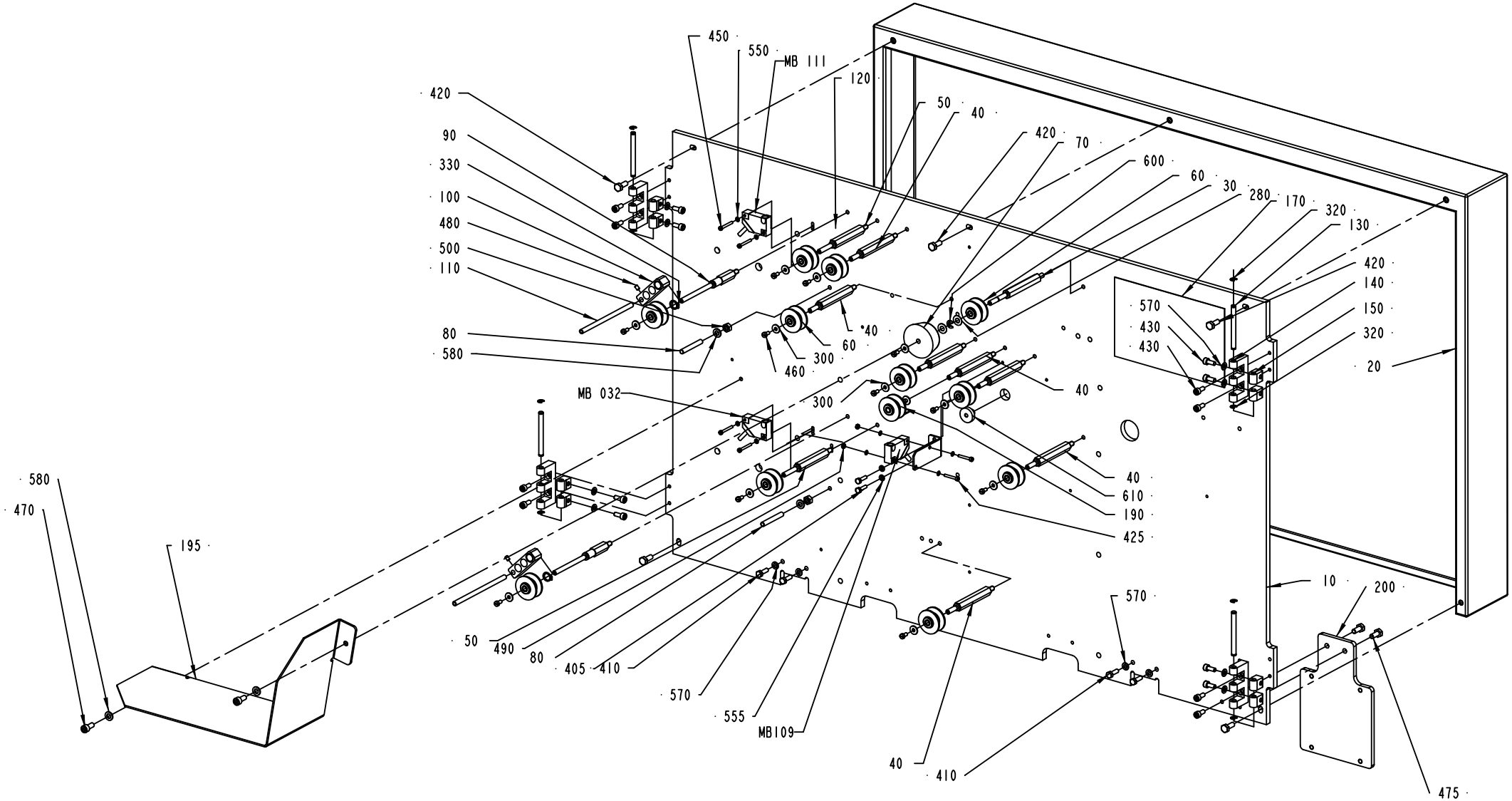

1499480-1
ECM 98331

ECM: 180900 - 20040910
Group number: 1499480-0100
Assembly Drawing: 1499480-1_1_AC

This list covers pages from 7-22 to 7-29

Pos	Part No	UN	Qty	Description	Page No
NOPT (See drawing on pages: 7-22, 7-24)					
020	1498764-0000		1	COVER	
200	1498775-0000		1	BOX BRACKET	
PT19 (See drawing on pages: 7-26, 7-28)					
200	2552624-0000		1	BOX BRACKET	
Common Parts					
010	1498748-0000		1	MOUNTING PLATE	
030	1498762-0000		1	AXLE PIN	
040	2547218-0000		7	AXLE PIN	
050	2547219-0000		2	AXLE PIN	
060	1512583-0000		11	ROLLER	
	321120-0101		*2*	*BEARING BUSH W/O FLANGE, 6X8X6 MM*	
070	1499481-0000		1	ROLLER	
080	469159-0000		2	PIN	
090	2547217-0000		2	AXLE PIN	
100	979667-0000		2	ARM	
110	979668-0000		2	FINGER	
120	979669-0000		2	FORCE PLATE	
130	1499512-0000		4	PIN	
140	1499514-0000		4	E-HINGE	
150	1035794-0000		8	BLOCKING PIECE	
160	2519644-0000		2	BRACKET	
170	1517464-0000		1	SIGN	
180	1538219-0000		1	SWITCH BRACKET	
190	1517293-0000		1	ROLLER	
	1512583-0000		*1*	*ROLLER*	
	321120-0101		*2*	*BEARING BUSH W/O FLANGE, 6X8X6 MM*	
195	2506478-0000		1	COVER	
220	2588000-0000		1	BRACKET	
230	2588001-0000		1	AXLE PIN	
280	2033-0013		2	WASHER	
290	352113-0206		9	ANCHOR PLATES FOR STRIPS, TYPE ABM100-AT	
300	90005-0082		12	WASHER PLAIN ROUND 4,3(M4)/12,H=1	
320	315755-0106		8	RETAINING RING SHAFT DIN 6799 4 A2	
330	90141-0016		2	RETAINING RING FOR SHAFT DIN 471 10 A2	
400	312155-0287		9	SCREW DIN 7991 MF6S M4X8 A4 70	
405	312105-0293		2	SCREW M6S ISO 4017 M4X16 A470	
410	312105-0329		4	SCREW M6S ISO 4017 M5X16 A480	
420	312105-0368		5	SCREW M6S ISO 4017 M6X16 A480	
425	312115-0230		2	SCREW ISO4762 M3X20 A4 80	
430	312115-0327		16	SCREW ISO4762 M5X12 A4 80	
450	312125-0232		4	SCREW ISO 1207 M3X25 A4	
460	312125-0287		12	SCREW ISO 1207 M4X8 A4	
470	312115-0367		2	SCREW ISO4762 M6X14 A4 80	
475	312105-0367		2	SCREW M6S ISO 4017 M6X14 A480	
480	312318-0285		2	SCREW ISO4029 M4X6 A4	
490	312605-0310		2	HEXAGON NUT, M6M M3 A280	
500	312605-0316		2	HEXAGON NUT, M6M M6 A280	
550	315105-0124		8	WASHER BRB 3,2X6 RFR	
555	315105-0136		2	WASHER BRB 4,3X8 RFR	
570	315105-0146		12	WASHER BRB 5,3X10 RFR	
580	315105-0153		4	WASHER BRB 6,4X12 RFR	
600	315755-0107		1	RETAINING RING SHAFT DIN 6799 5 A2	
610	90015-0020		1	LEAD-IN, TET5-7, E-1458016	
620	312105-0374		1	SCREW M6S ISO 4014 M6X30 A480	
MB111	90044-0194		1	PROX.SW. IN5329/IN3002-BPKG(EX90044-104)	
MB109	90044-0194		1	PROX.SW. IN5329/IN3002-BPKG(EX90044-104)	
MB032	90044-0194		1	PROX.SW. IN5329/IN3002-BPKG(EX90044-104)	

Machine Type | Group Description | Used-In | Group Number | Page No

MOUNTING PLATE

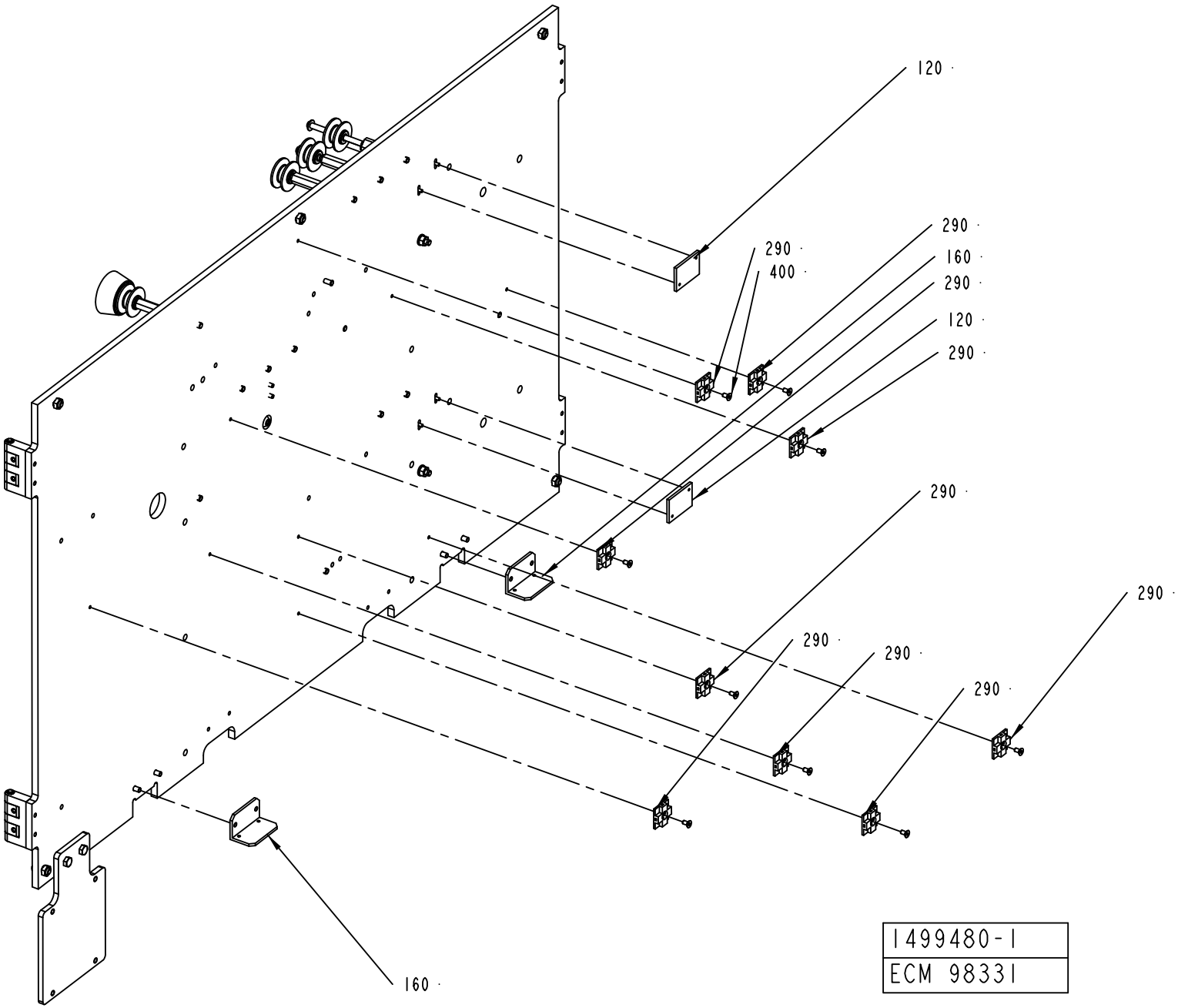

ECM: 180900 - 20040910
Group number: 1499480-0100
Assembly Drawing: 1499480-1_2_AC

This list covers pages from 7-22 to 7-29

Pos	Part No	UN	Qty	Description	Page No
NOPT (See drawing on pages: 7-22, 7-24)					
020	1498764-0000		1	COVER	
200	1498775-0000		1	BOX BRACKET	
PT19 (See drawing on pages: 7-26, 7-28)					
200	2552624-0000		1	BOX BRACKET	
Common Parts					
010	1498748-0000		1	MOUNTING PLATE	
030	1498762-0000		1	AXLE PIN	
040	2547218-0000		7	AXLE PIN	
050	2547219-0000		2	AXLE PIN	
060	1512583-0000		11	ROLLER	
	321120-0101		*2*	*BEARING BUSH W/O FLANGE, 6X8X6 MM*	
070	1499481-0000		1	ROLLER	
080	469159-0000		2	PIN	
090	2547217-0000		2	AXLE PIN	
100	979667-0000		2	ARM	
110	979668-0000		2	FINGER	
120	979669-0000		2	FORCE PLATE	
130	1499512-0000		4	PIN	
140	1499514-0000		4	E-HINGE	
150	1035794-0000		8	BLOCKING PIECE	
160	2519644-0000		2	BRACKET	
170	1517464-0000		1	SIGN	
180	1538219-0000		1	SWITCH BRACKET	
190	1517293-0000		1	ROLLER	
	1512583-0000		*1*	*ROLLER*	
	321120-0101		*2*	*BEARING BUSH W/O FLANGE, 6X8X6 MM*	
195	2506478-0000		1	COVER	
220	2588000-0000		1	BRACKET	
230	2588001-0000		1	AXLE PIN	
280	2033-0013		2	WASHER	
290	352113-0206		9	ANCHOR PLATES FOR STRIPS, TYPE ABM100-AT	
300	90005-0082		12	WASHER PLAIN ROUND 4,3(M4)/12,H=1	
320	315755-0106		8	RETAINING RING SHAFT DIN 6799 4 A2	
330	90141-0016		2	RETAINING RING FOR SHAFT DIN 471 10 A2	
400	312155-0287		9	SCREW DIN 7991 MF6S M4X8 A4 70	
405	312105-0293		2	SCREW M6S ISO 4017 M4X16 A470	
410	312105-0329		4	SCREW M6S ISO 4017 M5X16 A480	
420	312105-0368		5	SCREW M6S ISO 4017 M6X16 A480	
425	312115-0230		2	SCREW ISO4762 M3X20 A4 80	
430	312115-0327		16	SCREW ISO4762 M5X12 A4 80	
450	312125-0232		4	SCREW ISO 1207 M3X25 A4	
460	312125-0287		12	SCREW ISO 1207 M4X8 A4	
470	312115-0367		2	SCREW ISO4762 M6X14 A4 80	
475	312105-0367		2	SCREW M6S ISO 4017 M6X14 A480	
480	312318-0285		2	SCREW ISO4029 M4X6 A4	
490	312605-0310		2	HEXAGON NUT, M6M M3 A280	
500	312605-0316		2	HEXAGON NUT, M6M M6 A280	
550	315105-0124		8	WASHER BRB 3,2X6 RFR	
555	315105-0136		2	WASHER BRB 4,3X8 RFR	
570	315105-0146		12	WASHER BRB 5,3X10 RFR	
580	315105-0153		4	WASHER BRB 6,4X12 RFR	
600	315755-0107		1	RETAINING RING SHAFT DIN 6799 5 A2	
610	90015-0020		1	LEAD-IN, TET5-7, E-1458016	
620	312105-0374		1	SCREW M6S ISO 4014 M6X30 A480	
MB111	90044-0194		1	PROX.SW. IN5329/IN3002-BPKG(EX90044-104)	
MB109	90044-0194		1	PROX.SW. IN5329/IN3002-BPKG(EX90044-104)	
MB032	90044-0194		1	PROX.SW. IN5329/IN3002-BPKG(EX90044-104)	

Machine Type | Group Description | Used-In | Group Number | Page No

MOUNTING PLATE

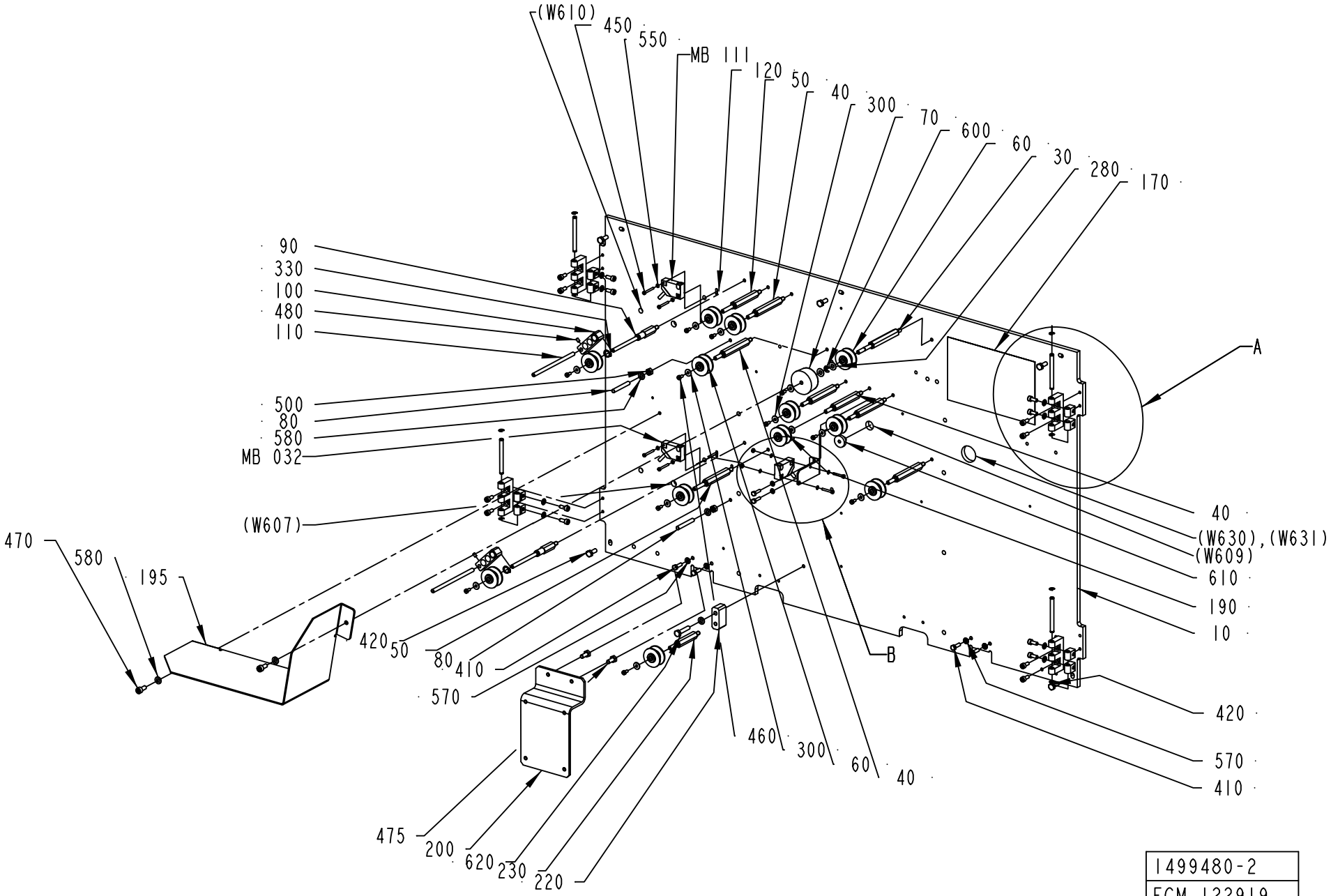

1499480-2
ECM 122919

ECM: 180900 - 20040910
Group number: 1499480-0100
Assembly Drawing: 1499480-2_1_AA

This list covers pages from 7-22 to 7-29

Pos	Part No	UN	Qty	Description	Page No
NOPT (See drawing on pages: 7-22, 7-24)					
020	1498764-0000		1	COVER	
200	1498775-0000		1	BOX BRACKET	
PT19 (See drawing on pages: 7-26, 7-28)					
200	2552624-0000		1	BOX BRACKET	
Common Parts					
010	1498748-0000		1	MOUNTING PLATE	
030	1498762-0000		1	AXLE PIN	
040	2547218-0000		7	AXLE PIN	
050	2547219-0000		2	AXLE PIN	
060	1512583-0000		11	ROLLER	
	321120-0101		*2*	*BEARING BUSH W/O FLANGE, 6X8X6 MM*	
070	1499481-0000		1	ROLLER	
080	469159-0000		2	PIN	
090	2547217-0000		2	AXLE PIN	
100	979667-0000		2	ARM	
110	979668-0000		2	FINGER	
120	979669-0000		2	FORCE PLATE	
130	1499512-0000		4	PIN	
140	1499514-0000		4	E-HINGE	
150	1035794-0000		8	BLOCKING PIECE	
160	2519644-0000		2	BRACKET	
170	1517464-0000		1	SIGN	
180	1538219-0000		1	SWITCH BRACKET	
190	1517293-0000		1	ROLLER	
	1512583-0000		*1*	*ROLLER*	
	321120-0101		*2*	*BEARING BUSH W/O FLANGE, 6X8X6 MM*	
195	2506478-0000		1	COVER	
220	2588000-0000		1	BRACKET	
230	2588001-0000		1	AXLE PIN	
280	2033-0013		2	WASHER	
290	352113-0206		9	ANCHOR PLATES FOR STRIPS, TYPE ABM100-AT	
300	90005-0082		12	WASHER PLAIN ROUND 4,3(M4)/12,H=1	
320	315755-0106		8	RETAINING RING SHAFT DIN 6799 4 A2	
330	90141-0016		2	RETAINING RING FOR SHAFT DIN 471 10 A2	
400	312155-0287		9	SCREW DIN 7991 MF6S M4X8 A4 70	
405	312105-0293		2	SCREW M6S ISO 4017 M4X16 A470	
410	312105-0329		4	SCREW M6S ISO 4017 M5X16 A480	
420	312105-0368		5	SCREW M6S ISO 4017 M6X16 A480	
425	312115-0230		2	SCREW ISO4762 M3X20 A4 80	
430	312115-0327		16	SCREW ISO4762 M5X12 A4 80	
450	312125-0232		4	SCREW ISO 1207 M3X25 A4	
460	312125-0287		12	SCREW ISO 1207 M4X8 A4	
470	312115-0367		2	SCREW ISO4762 M6X14 A4 80	
475	312105-0367		2	SCREW M6S ISO 4017 M6X14 A480	
480	312318-0285		2	SCREW ISO4029 M4X6 A4	
490	312605-0310		2	HEXAGON NUT, M6M M3 A280	
500	312605-0316		2	HEXAGON NUT, M6M M6 A280	
550	315105-0124		8	WASHER BRB 3,2X6 RFR	
555	315105-0136		2	WASHER BRB 4,3X8 RFR	
570	315105-0146		12	WASHER BRB 5,3X10 RFR	
580	315105-0153		4	WASHER BRB 6,4X12 RFR	
600	315755-0107		1	RETAINING RING SHAFT DIN 6799 5 A2	
610	90015-0020		1	LEAD-IN, TET5-7, E-1458016	
620	312105-0374		1	SCREW M6S ISO 4014 M6X30 A480	
MB111	90044-0194		1	PROX.SW. IN5329/IN3002-BPKG(EX90044-104)	
MB109	90044-0194		1	PROX.SW. IN5329/IN3002-BPKG(EX90044-104)	
MB032	90044-0194		1	PROX.SW. IN5329/IN3002-BPKG(EX90044-104)	

Machine Type | Group Description | Used-In | Group Number | Page No

MOUNTING PLATE

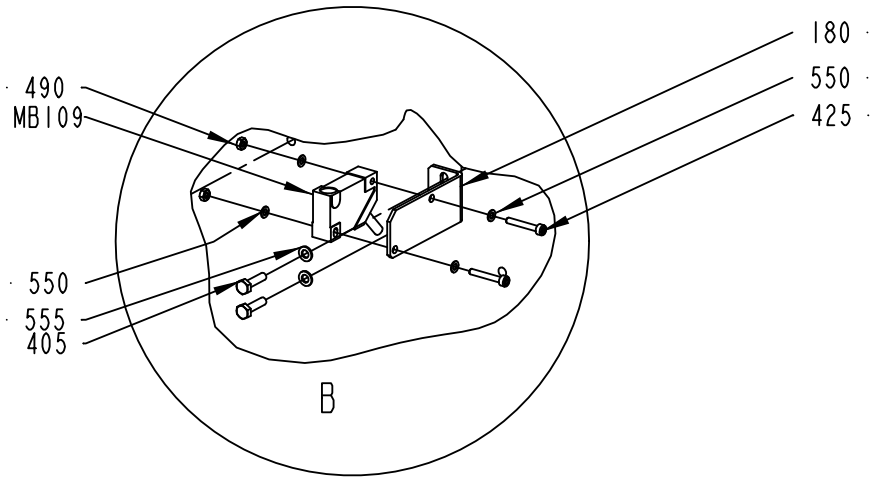

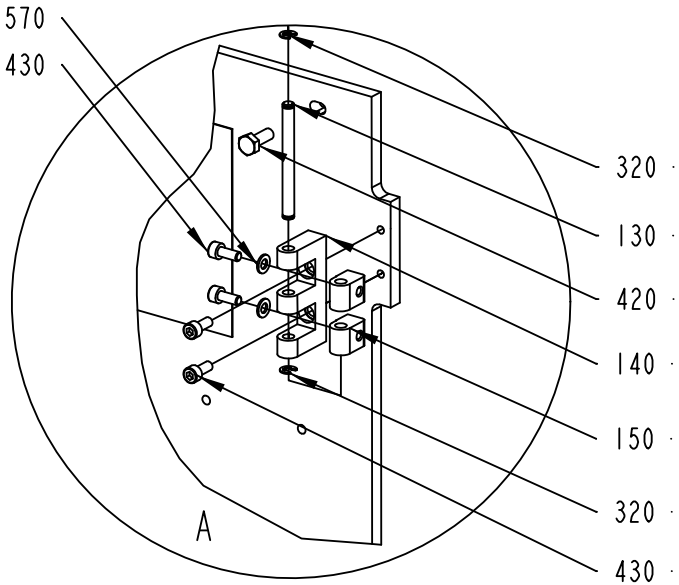

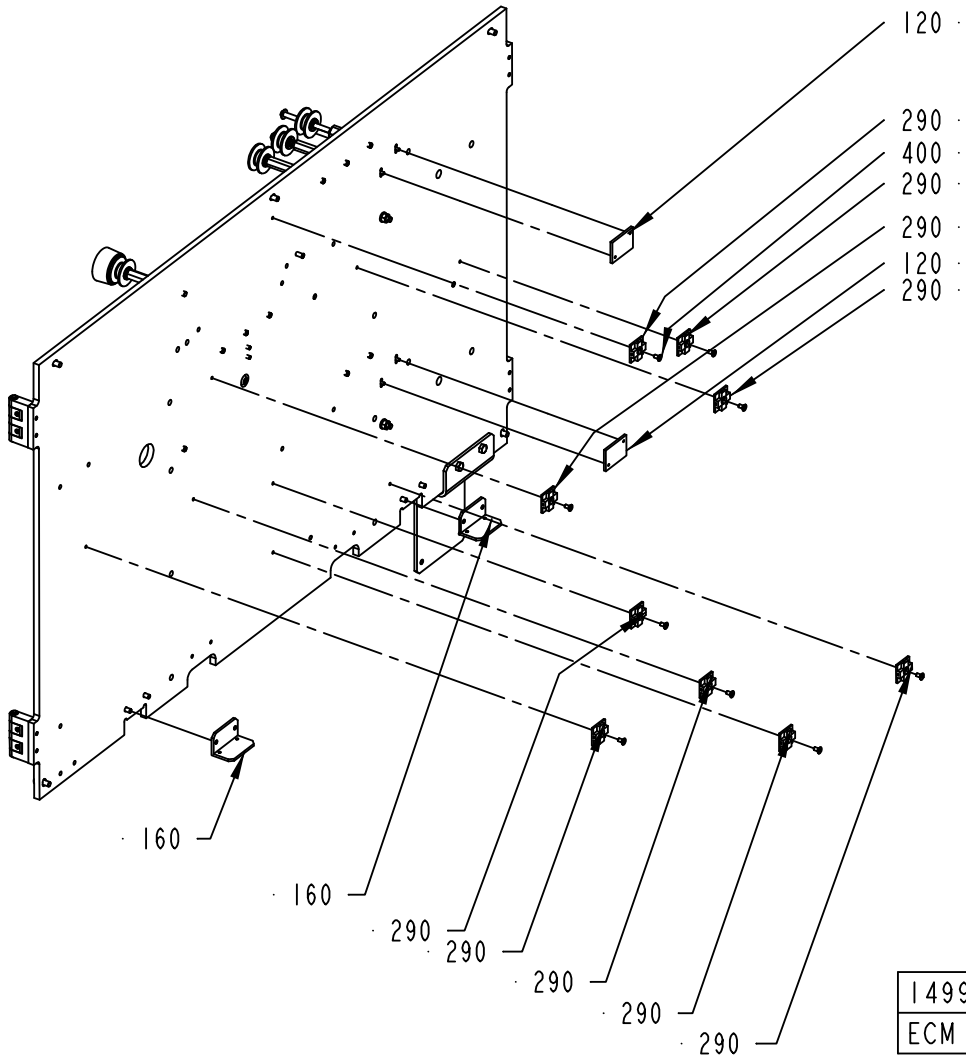

1499480-2
ECM 122919

ECM: 180900 - 20040910
Group number: 1499480-0100
Assembly Drawing: 1499480-2_2_AA

This list covers pages from 7-22 to 7-29

Pos	Part No	UN	Qty	Description	Page No
NOPT (See drawing on pages: 7-22, 7-24)					
020	1498764-0000		1	COVER	
200	1498775-0000		1	BOX BRACKET	
PT19 (See drawing on pages: 7-26, 7-28)					
200	2552624-0000		1	BOX BRACKET	
Common Parts					
010	1498748-0000		1	MOUNTING PLATE	
030	1498762-0000		1	AXLE PIN	
040	2547218-0000		7	AXLE PIN	
050	2547219-0000		2	AXLE PIN	
060	1512583-0000		11	ROLLER	
	321120-0101		*2*	*BEARING BUSH W/O FLANGE, 6X8X6 MM*	
070	1499481-0000		1	ROLLER	
080	469159-0000		2	PIN	
090	2547217-0000		2	AXLE PIN	
100	979667-0000		2	ARM	
110	979668-0000		2	FINGER	
120	979669-0000		2	FORCE PLATE	
130	1499512-0000		4	PIN	
140	1499514-0000		4	E-HINGE	
150	1035794-0000		8	BLOCKING PIECE	
160	2519644-0000		2	BRACKET	
170	1517464-0000		1	SIGN	
180	1538219-0000		1	SWITCH BRACKET	
190	1517293-0000		1	ROLLER	
	1512583-0000		*1*	*ROLLER*	
	321120-0101		*2*	*BEARING BUSH W/O FLANGE, 6X8X6 MM*	
195	2506478-0000		1	COVER	
220	2588000-0000		1	BRACKET	
230	2588001-0000		1	AXLE PIN	
280	2033-0013		2	WASHER	
290	352113-0206		9	ANCHOR PLATES FOR STRIPS, TYPE ABM100-AT	
300	90005-0082		12	WASHER PLAIN ROUND 4,3(M4)/12,H=1	
320	315755-0106		8	RETAINING RING SHAFT DIN 6799 4 A2	
330	90141-0016		2	RETAINING RING FOR SHAFT DIN 471 10 A2	
400	312155-0287		9	SCREW DIN 7991 MF6S M4X8 A4 70	
405	312105-0293		2	SCREW M6S ISO 4017 M4X16 A470	
410	312105-0329		4	SCREW M6S ISO 4017 M5X16 A480	
420	312105-0368		5	SCREW M6S ISO 4017 M6X16 A480	
425	312115-0230		2	SCREW ISO4762 M3X20 A4 80	
430	312115-0327		16	SCREW ISO4762 M5X12 A4 80	
450	312125-0232		4	SCREW ISO 1207 M3X25 A4	
460	312125-0287		12	SCREW ISO 1207 M4X8 A4	
470	312115-0367		2	SCREW ISO4762 M6X14 A4 80	
475	312105-0367		2	SCREW M6S ISO 4017 M6X14 A480	
480	312318-0285		2	SCREW ISO4029 M4X6 A4	
490	312605-0310		2	HEXAGON NUT, M6M M3 A280	
500	312605-0316		2	HEXAGON NUT, M6M M6 A280	
550	315105-0124		8	WASHER BRB 3,2X6 RFR	
555	315105-0136		2	WASHER BRB 4,3X8 RFR	
570	315105-0146		12	WASHER BRB 5,3X10 RFR	
580	315105-0153		4	WASHER BRB 6,4X12 RFR	
600	315755-0107		1	RETAINING RING SHAFT DIN 6799 5 A2	
610	90015-0020		1	LEAD-IN, TET5-7, E-1458016	
620	312105-0374		1	SCREW M6S ISO 4014 M6X30 A480	
MB111	90044-0194		1	PROX.SW. IN5329/IN3002-BPKG(EX90044-104)	
MB109	90044-0194		1	PROX.SW. IN5329/IN3002-BPKG(EX90044-104)	
MB032	90044-0194		1	PROX.SW. IN5329/IN3002-BPKG(EX90044-104)	

Machine Type | Group Description | Used-In | Group Number | Page No

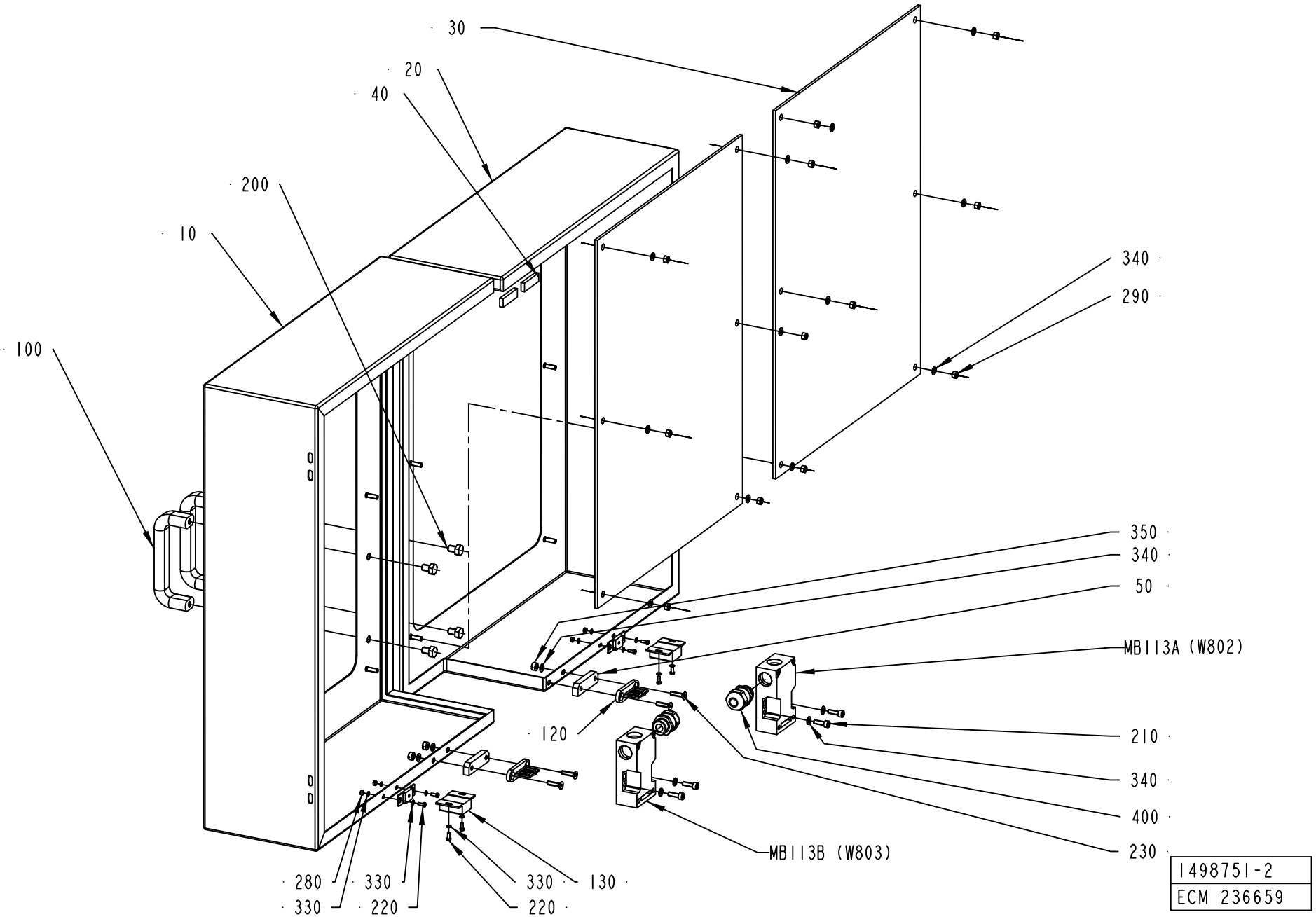

1498751-2
ECM 236659

ECM: 236663 - 20060113
Group number: 1498751-0200
Assembly Drawing: 1498751-2_1_AA

Pos	Part No	UN	Qty	Description	Page No
-					
010	1498749-0000		1	DOOR	
020	1498750-0000		1	DOOR	
030	1499511-0000		2	PANEL	
040	1511323-0000		2	STRIP ADHESIVE	
050	2506479-0000		2	PLATE	
100	90017-0022		2	HANDLE, NO. EL-037311	
120	90044-0310		2	KEY FOR SAFETY SWITCH AZ 15/16 B1	
130	90237-0046		2	MAGNETIC LOCK, 46X33X15 MM	
200	312105-0447		4	SCREW M6S ISO 4017 M8X12 A480	
210	312115-0329		4	SCREW ISO4762 M5X16 A4 80	
220	312125-0222		8	SCREW ISO 1207 M3X8 A4	
230	312155-0331		4	SCREW DIN 7991 MF6S M5X20 A4 70	
280	312605-0310		4	HEXAGON NUT, M6M M3 A280	
290	312605-0314		12	HEXAGON NUT, M6M M5 A280	
330	315105-0124		12	WASHER BRB 3,2X6 RFR	
340	315105-0146		20	WASHER BRB 5,3X10 RFR	
350	575034-0000		4	ROUND NUT	
400	90458-0315		2	CABLE GLAND, M20X1,5, NO.5311 1120	
MB113B	90459-0472		1	KEY SAF.SW. AZ 16 02ZVRK-M20-2152-2254	
MB113A	90459-0472		1	KEY SAF.SW. AZ 16 02ZVRK-M20-2152-2254	
W802	351150-0405	MM	600	CABLE OLFLEX 5X0,75 MM2 LIGHT/GREY	
W803	351150-0405	MM	600	CABLE OLFLEX 5X0,75 MM2 LIGHT/GREY	

Pos	Part No	UN	Qty	Description	Page No

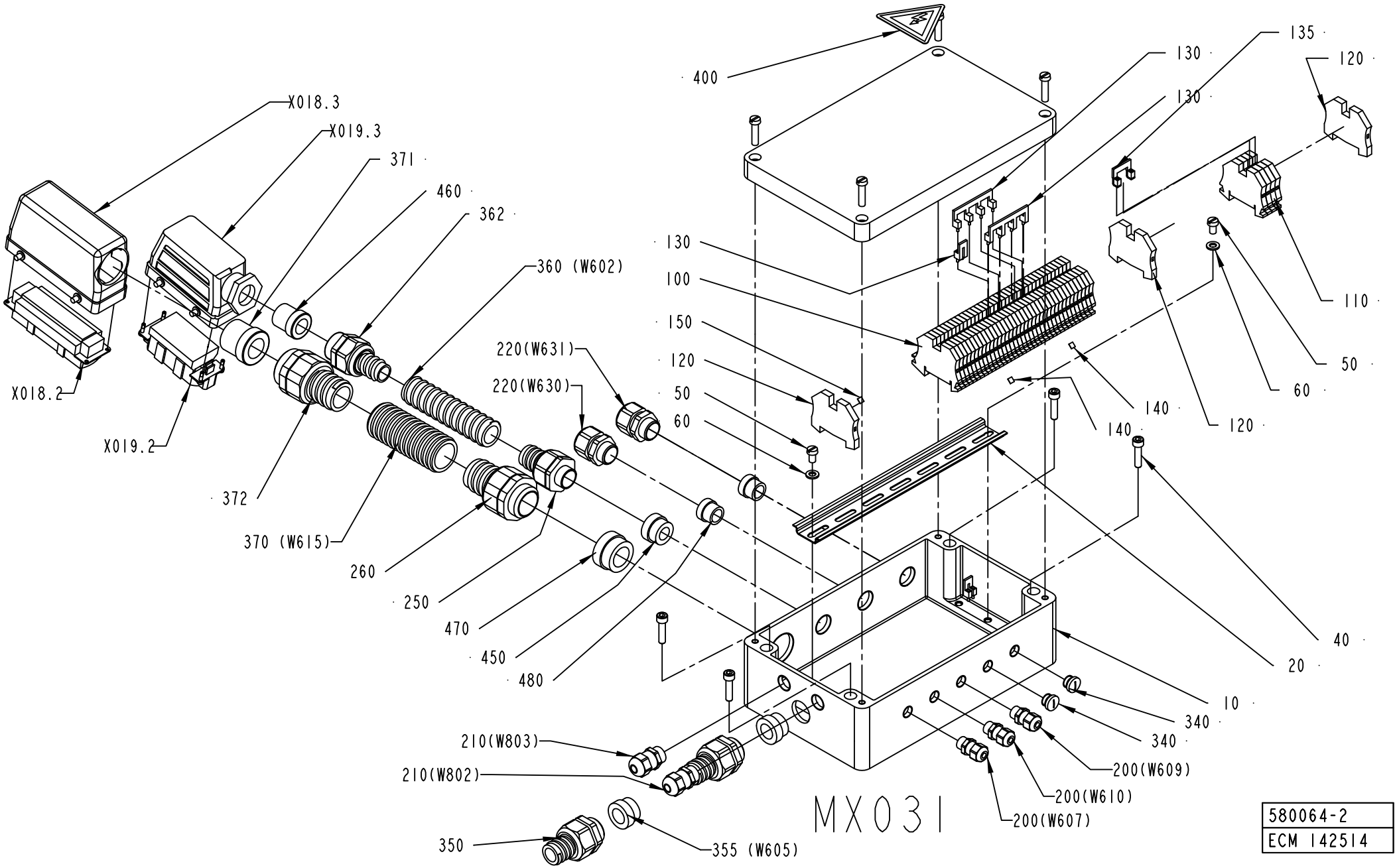
400
X018.3
X019.3
371
460
362
360 (W602)
130
100
150
120
50
60
220(W631)
220(W630)
X018.2
X019.2
372
370 (W615)
260
250
470
450
480
210(W803)
210(W802)
350
355 (W605)
MX031
135
130
130
120
110
50
60
140
140
120
40
20
10
340
340
200(W609)
200(W610)
200(W607)
580064-2
ECM 142514

ECM: 180862 - 20040910
Group number: 580064-0200
Assembly Drawing: 580064-2_1_AE

Pos	Part No	UN	Qty	Description	Page No
-					
010	1512283-0000		1	CONNECTION BOX	
020	1512352-0000		1	RAIL	
040	312115-0372		4	SCREW ISO4762 M6X25 A4 80	
050	312125-0364		2	SCREW ISO 1207 M6X10 A4	
060	315105-0153		2	WASHER BRB 6,4X12 RFR	
100	353021-0212		36	FEED THROUGH TERMINAL, 10200.0	
110	353021-0213		4	FEED THROUGH TERMINAL, 10201.0	
120	353024-0205		3	EARTH TERMINAL, 1010.1	
130	353034-0030		3	BRIDGE CONNECTOR WQV 2,5/10, 10544.6	
135	353034-0039		1	BRIDGE CONNECTOR WQV 4/4, 10546.6	
140	359011-0807		2	MARKING PLATES 5-FW 1-50	
150	359011-0819		1	MARKING PLATES 5-GW (EARTH)	
200	90458-0305		3	CABLE GLAND, M12X1,5, NO.5311 1000	
210	90458-0306		2	CABLE GLAND, M16X1,5, NO.5311 1010	
220	90458-0422		2	GLAND W/O INSERT M20 EXTENDED	
250	90458-0430		1	HOSE GLAND W/O INSERT M20 EXTENDED	
260	90458-0433		1	HOSE GLAND W/O INSERT M32 EXTENDED	
340	90458-1306		2	BLIND PLUG CIRCULAR, M12X1,5 514GFK/212	
350	90458-0431		1	HOSE GLAND W/O INSERT M25 EXTENDED	
355	353249-0014		1	INSERT, SINGEL HOLE, EK 154/16	
360	90152-0051	MM	1800	SPIRAL CONDUIT, 25X18, UL 1816	
362	90458-0146		1	HOSE GLAND W/O INSERT PG21 NORMAL	
370	90152-0070	MM	2100	METAL HOSE, 32,5X26, UL 2621	
371	353249-0072		1	INSERT, SINGEL HOLE, E155/20	
372	353242-0003		1	HOSE GLAND W/O INSERT PG29 NORMAL	
400	359705-0015		1	WARNING SIGN ISO, RISK OF ELECTRIC SHOCK	
450	353249-0013		1	INSERT, SINGEL HOLE, EK 154/13	
460	353249-0070		1	INSERT, SINGEL HOLE, E154/16	
470	353249-0061		1	INSERT, SINGEL HOLE, EK 155/20	
480	353249-0075		2	INSERT, SINGEL HOLE, EK 153/13	
W602	351150-0422	MM	2300	CABLE OLFLEX 3X4 MM2 LIGHT/GREY	
W605	351150-0407	MM	1900	CABLE OLFLEX 12X0,75 MM2 LIGHT/GREY	
W615	351150-0425	MM	2600	CABLE OLFLEX 25X0,75 MM2 LIGHT/GREY	
X018.2	90110-0150		1	MALE INSERT 121110 0000	
X018.3	90110-0346		1	CABLE HOOD 1211220 00 00	
X019.2	90110-0156		1	MALE INSERT 70.210.0653.0	
X019.3	90110-0244		1	CABLE HOOD 6-POL 70.350.1628.0	

Pos	Part No	UN	Qty	Description	Page No

STRIP APPLICATOR

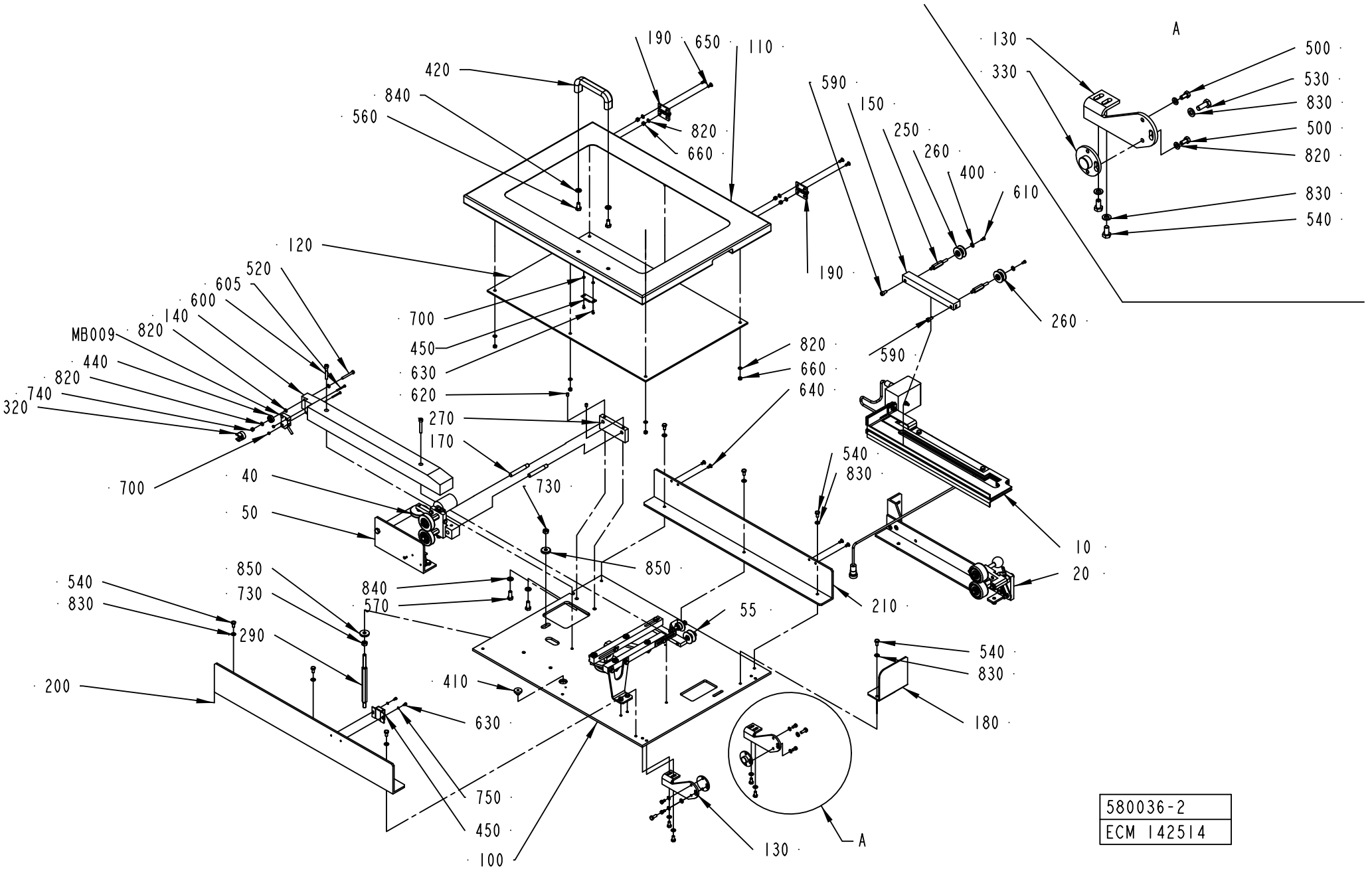

ECM: 227606 - 20051011
Group number: 580036-0200
Assembly Drawing: 580036-2_1_AF

This list covers pages from 7-34 to 7-37

Pos	Part No	UN	Qty	Description	Page No
NOPT (See drawing on page: 7-34)					
050	1279624-0200		1	SPLICE DETECTOR	**7-39, 7-41**
110	2552620-0000		1	DOOR	
120	1499483-0000		1	PANE	
180	2552619-0000		1	COVER	
190	90459-0075		2	HINGE, 1056-U30	
200	2552622-0000		1	HOLDER	
210	2552621-0000		1	HOLDER	
420	90017-0022		1	HANDLE, NO. EL-037311	
450	90237-0046		1	MAGNETIC LOCK, 46X33X15 MM	
540	312105-0366		11	SCREW M6S ISO 4017 M6X12 A480	
560	312105-0449		2	SCREW M6S ISO 4017 M8X16 A480	
630	312115-0220		4	SCREW ISO4762 M3X6 A4 80	
640	312155-0325		4	SCREW DIN 7991 MF6S M5X10 A4 70	
650	312155-0327		4	SCREW DIN 7991 MF6S M5X12 A4 70	
660	312605-0314		10	HEXAGON NUT, M6M M5 A280	
700	312605-0310		4	HEXAGON NUT, M6M M3 A280	
750	315105-0124		2	WASHER BRB 3,2X6 RFR	
820	315105-0146		17	WASHER BRB 5,3X10 RFR	
830	315105-0153		13	WASHER BRB 6,4X12 RFR	
840	315105-0165		4	WASHER BRB 8,4X16 RFR	
PT19 (See drawing on page: 7-36)					
030	2576243-0100		1	STRIP GUIDE	**7-43**
540	312105-0366		6	SCREW M6S ISO 4017 M6X12 A480	
560	312105-0449		3	SCREW M6S ISO 4017 M8X16 A480	
700	312605-0310		3	HEXAGON NUT, M6M M3 A280	
820	315105-0146		9	WASHER BRB 5,3X10 RFR	
830	315105-0153		8	WASHER BRB 6,4X12 RFR	
840	315105-0165		4	WASHER BRB 8,4X16 RFR	
860	266737-0000		2	WASHER	
870	979899-0000		1	BRACKET	
880	1035897-0000		1	SHAFT	
890	2524478-0000		1	BRACKET	
900	312115-0228		1	SCREW ISO4762 M3X16 A4 80	
910	315751-0109		1	RETAINING RING FOR SHAFT DIN 471 12 A2	
920	321141-0183		2	BEARING BUSH W/O FLANGE, 12X14X15 MM	
930	90335-0216		1	TENSION SPRING 40910, 0,5X5,5X27,7	
940	312105-0328		1	SCREW M6S ISO 4017 M5X14 A480	
Common Parts					
010	580038-0200		1	INDUCTOR	**7-45**
020	2506475-0100		1	PRESSURE ROLLER	**7-47**
040	2524476-0100		1	WEB GUIDE	**7-49**
055	2576240-0100		1	STRIP GUIDE	**7-51, 7-53**
100	2552630-0000		1	MOUNTING PLATE	
130	1498773-0000		2	CANTILEVER	
140	1517535-0000		1	STEERING	
150	1282988-0000		1	RAIL	
170	1498778-0000		2	SHAFT	
250	1282989-0000		2	AXLE PIN	
260	1512583-0000		2	ROLLER	
	321120-0101		*2*	*BEARING BUSH W/O FLANGE, 6X8X6 MM*	
270	1498777-0000		1	GUIDE HOLDER	
290	1498765-0000		1	AXLE PIN	
320	1517534-0000		1	RUNNER RING	
330	1334331-0000		2	FLANGE	
400	90005-0082		2	WASHER PLAIN ROUND 4,3(M4)/12,H=1	
410	90015-0020		1	LEAD-IN, TET5-7, E-1458016	
440	90214-0138		1	BALL BEARING, 5X19X6 MM	
500	312105-0325		4	SCREW M6S ISO 4017 M5X10 A480	
520	312105-0339		1	SCREW M6S ISO 4014 M5X40 A480	
530	312105-0368		2	SCREW M6S ISO 4017 M6X16 A480	
570	312105-0451		2	SCREW M6S ISO 4017 M8X20 A480	
590	312115-0366		2	SCREW ISO4762 M6X12 A4 80	
600	312115-0378		2	SCREW ISO4762 M6X40 A4 80	
605	312125-0234		2	SCREW ISO 1207 M3X30 A4	
610	312125-0287		2	SCREW ISO 1207 M4X8 A4	
620	312318-0362		2	SCREW ISO4029 M6X8 A4	
730	312605-0318		2	HEXAGON NUT, M6M M8 A280	
740	312812-0314		1	HEXAGON NUT, NY-LOCK M5 A480	
850	315125-0165		2	WASHER TBRSB 8,4X26X5 A4	
MB009	90044-0194		1	PROX.SW. IN5329/IN3002-BPKG(EX90044-104)	

Machine Type	Group Description	Used-In	Group Number	Page No

STRIP APPLICATOR

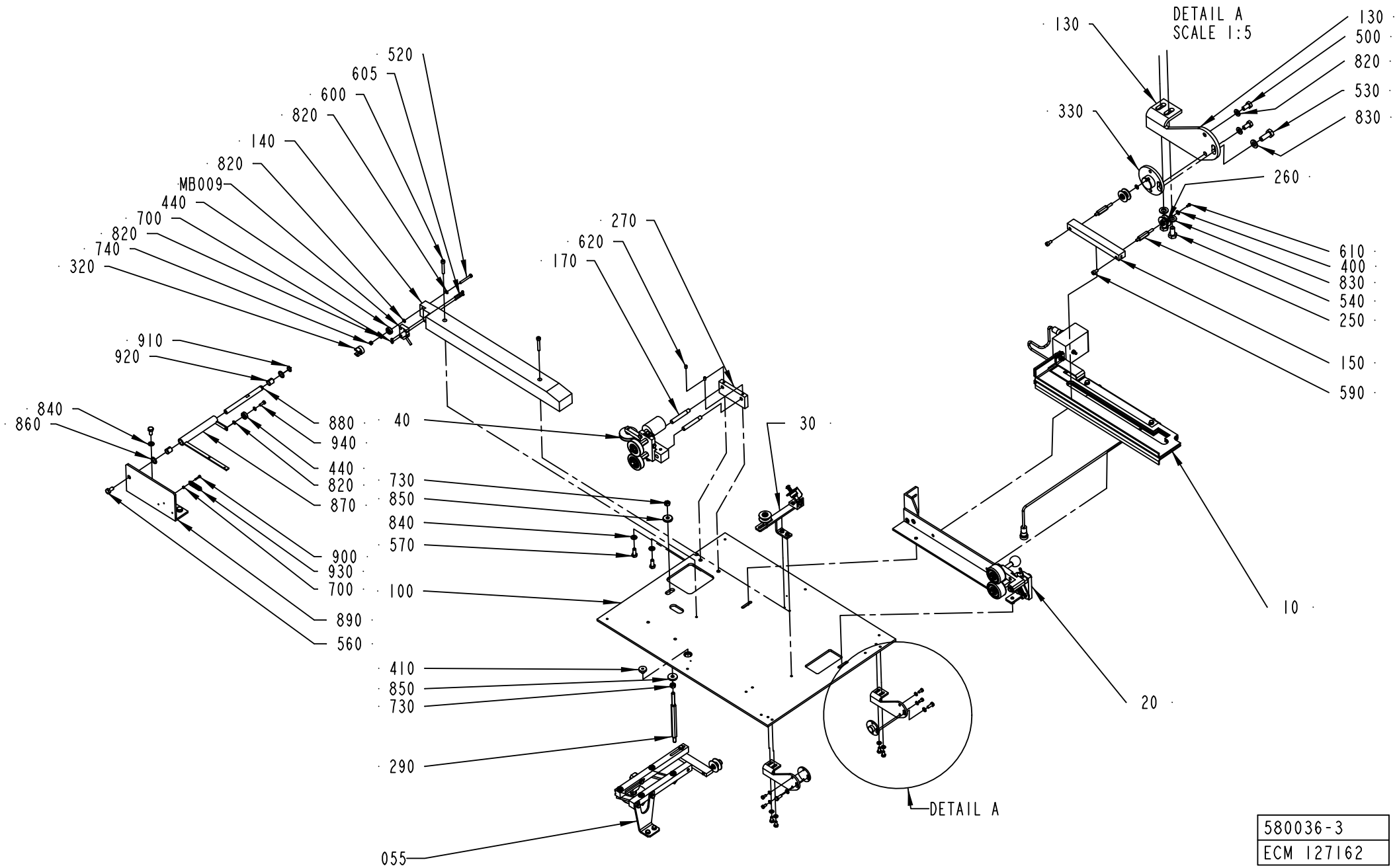

580036-3
ECM 127162

ECM: 227606 - 20051011
Group number: 580036-0200
Assembly Drawing: 580036-3_1_AB

This list covers pages from 7-34 to 7-37

Pos	Part No	UN	Qty	Description	Page No
NOPT (See drawing on page: 7-34)					
050	1279624-0200		1	SPLICE DETECTOR	**7-39, 7-41**
110	2552620-0000		1	DOOR	
120	1499483-0000		1	PANE	
180	2552619-0000		1	COVER	
190	90459-0075		2	HINGE, 1056-U30	
200	2552622-0000		1	HOLDER	
210	2552621-0000		1	HOLDER	
420	90017-0022		1	HANDLE, NO. EL-037311	
450	90237-0046		1	MAGNETIC LOCK, 46X33X15 MM	
540	312105-0366		11	SCREW M6S ISO 4017 M6X12 A480	
560	312105-0449		2	SCREW M6S ISO 4017 M8X16 A480	
630	312115-0220		4	SCREW ISO4762 M3X6 A4 80	
640	312155-0325		4	SCREW DIN 7991 MF6S M5X10 A4 70	
650	312155-0327		4	SCREW DIN 7991 MF6S M5X12 A4 70	
660	312605-0314		10	HEXAGON NUT, M6M M5 A280	
700	312605-0310		4	HEXAGON NUT, M6M M3 A280	
750	315105-0124		2	WASHER BRB 3,2X6 RFR	
820	315105-0146		17	WASHER BRB 5,3X10 RFR	
830	315105-0153		13	WASHER BRB 6,4X12 RFR	
840	315105-0165		4	WASHER BRB 8,4X16 RFR	
PT19 (See drawing on page: 7-36)					
030	2576243-0100		1	STRIP GUIDE	**7-43**
540	312105-0366		6	SCREW M6S ISO 4017 M6X12 A480	
560	312105-0449		3	SCREW M6S ISO 4017 M8X16 A480	
700	312605-0310		3	HEXAGON NUT, M6M M3 A280	
820	315105-0146		9	WASHER BRB 5,3X10 RFR	
830	315105-0153		8	WASHER BRB 6,4X12 RFR	
840	315105-0165		4	WASHER BRB 8,4X16 RFR	
860	266737-0000		2	WASHER	
870	979899-0000		1	BRACKET	
880	1035897-0000		1	SHAFT	
890	2524478-0000		1	BRACKET	
900	312115-0228		1	SCREW ISO4762 M3X16 A4 80	
910	315751-0109		1	RETAINING RING FOR SHAFT DIN 471 12 A2	
920	321141-0183		2	BEARING BUSH W/O FLANGE, 12X14X15 MM	
930	90335-0216		1	TENSION SPRING 40910, 0,5X5,5X27,7	
940	312105-0328		1	SCREW M6S ISO 4017 M5X14 A480	
Common Parts					
010	580038-0200		1	INDUCTOR	**7-45**
020	2506475-0100		1	PRESSURE ROLLER	**7-47**
040	2524476-0100		1	WEB GUIDE	**7-49**
055	2576240-0100		1	STRIP GUIDE	**7-51, 7-53**
100	2552630-0000		1	MOUNTING PLATE	
130	1498773-0000		2	CANTILEVER	
140	1517535-0000		1	STEERING	
150	1282988-0000		1	RAIL	
170	1498778-0000		2	SHAFT	
250	1282989-0000		2	AXLE PIN	
260	1512583-0000		2	ROLLER	
	321120-0101		*2*	*BEARING BUSH W/O FLANGE, 6X8X6 MM*	
270	1498777-0000		1	GUIDE HOLDER	
290	1498765-0000		1	AXLE PIN	
320	1517534-0000		1	RUNNER RING	
330	1334331-0000		2	FLANGE	
400	90005-0082		2	WASHER PLAIN ROUND 4,3(M4)/12,H=1	
410	90015-0020		1	LEAD-IN, TET5-7, E-1458016	
440	90214-0138		1	BALL BEARING, 5X19X6 MM	
500	312105-0325		4	SCREW M6S ISO 4017 M5X10 A480	
520	312105-0339		1	SCREW M6S ISO 4014 M5X40 A480	
530	312105-0368		2	SCREW M6S ISO 4017 M6X16 A480	
570	312105-0451		2	SCREW M6S ISO 4017 M8X20 A480	
590	312115-0366		2	SCREW ISO4762 M6X12 A4 80	
600	312115-0378		2	SCREW ISO4762 M6X40 A4 80	
605	312125-0234		2	SCREW ISO 1207 M3X30 A4	
610	312125-0287		2	SCREW ISO 1207 M4X8 A4	
620	312318-0362		2	SCREW ISO4029 M6X8 A4	
730	312605-0318		2	HEXAGON NUT, M6M M8 A280	
740	312812-0314		1	HEXAGON NUT, NY-LOCK M5 A480	
850	315125-0165		2	WASHER TBRSB 8,4X26X5 A4	
MB009	90044-0194		1	PROX.SW. IN5329/IN3002-BPKG(EX90044-104)	

Machine Type	Group Description	Used-In	Group Number	Page No

SPLICE DETECTOR

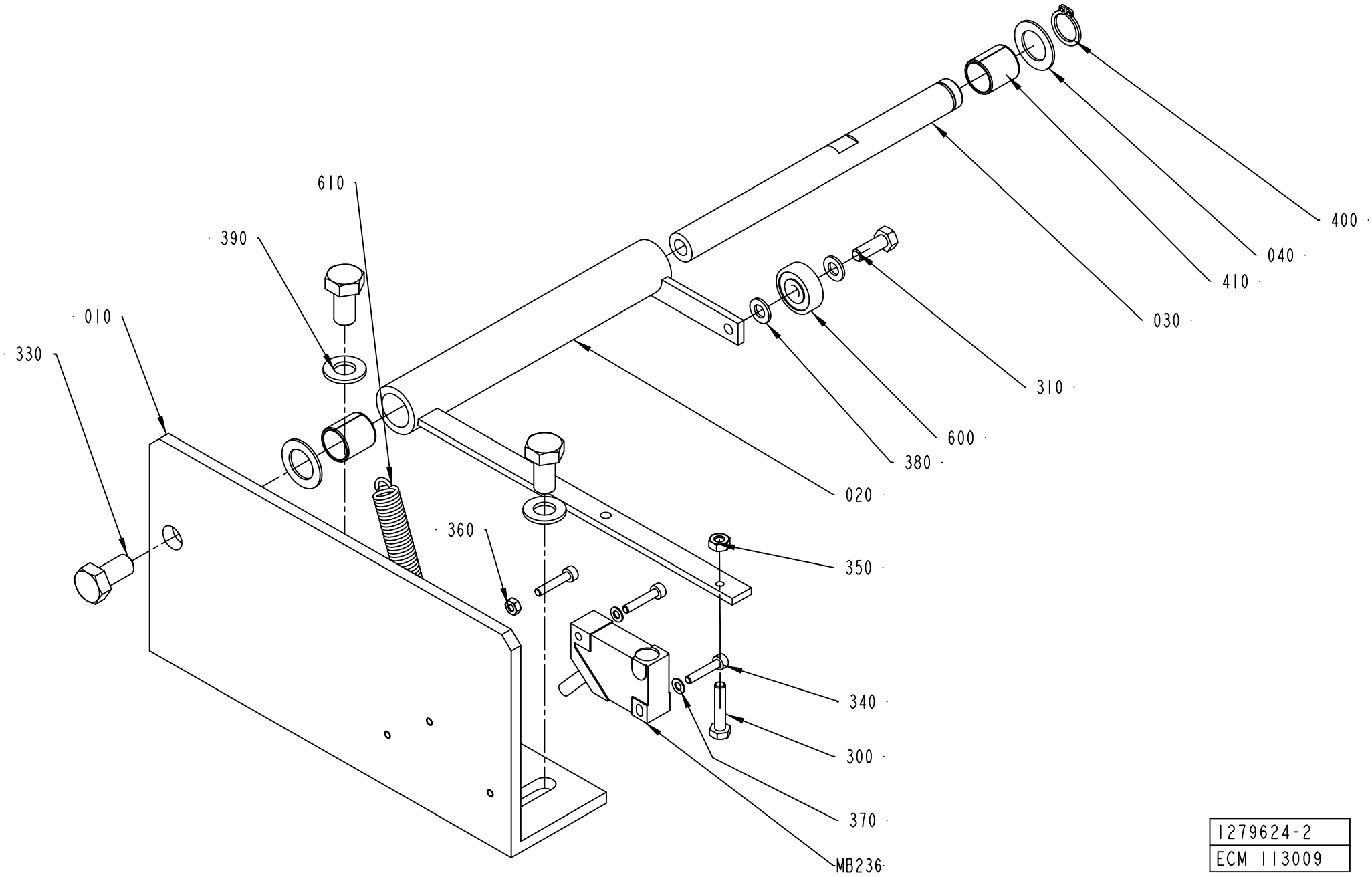

1279624-2
ECM 113009

ECM: 180857 - 20040910
Group number: 1279624-0200
Assembly Drawing: 1279624-2_1_AC

This list covers pages from 7-38 to 7-41

Pos	Part No	UN	Qty	Description	Page No
-					
010	2524478-0000		1	BRACKET	
020	979899-0000		1	BRACKET	
030	1035897-0000		1	SHAFT	
040	266737-0000		2	WASHER	
300	312105-0295		1	SCREW M6S ISO 4017 M4X20 A470	
310	312105-0328		1	SCREW M6S ISO 4017 M5X14 A480	
330	312105-0449		3	SCREW M6S ISO 4017 M8X16 A480	
340	312115-0228		3	SCREW ISO4762 M3X16 A4 80	
350	312605-0312		1	HEXAGON NUT, M6M M4 A280	
360	312605-0310		1	HEXAGON NUT, M6M M3 A280	
370	315105-0124		2	WASHER BRB 3,2X6 RFR	
380	315105-0146		2	WASHER BRB 5,3X10 RFR	
390	315105-0165		2	WASHER BRB 8,4X16 RFR	
400	315751-0109		1	RETAINING RING FOR SHAFT DIN 471 12 A2	
410	321141-0183		2	BEARING BUSH W/O FLANGE, 12X14X15 MM	
600	90214-0138		1	BALL BEARING, 5X19X6 MM	
610	90335-0216		1	TENSION SPRING 40910, 0,5X5,5X27,7	
MB236	90044-0194		1	PROX.SW. IN5329/IN3002-BPKG(EX90044-104)	

Pos	Part No	UN	Qty	Description	Page No

SPLICE DETECTOR

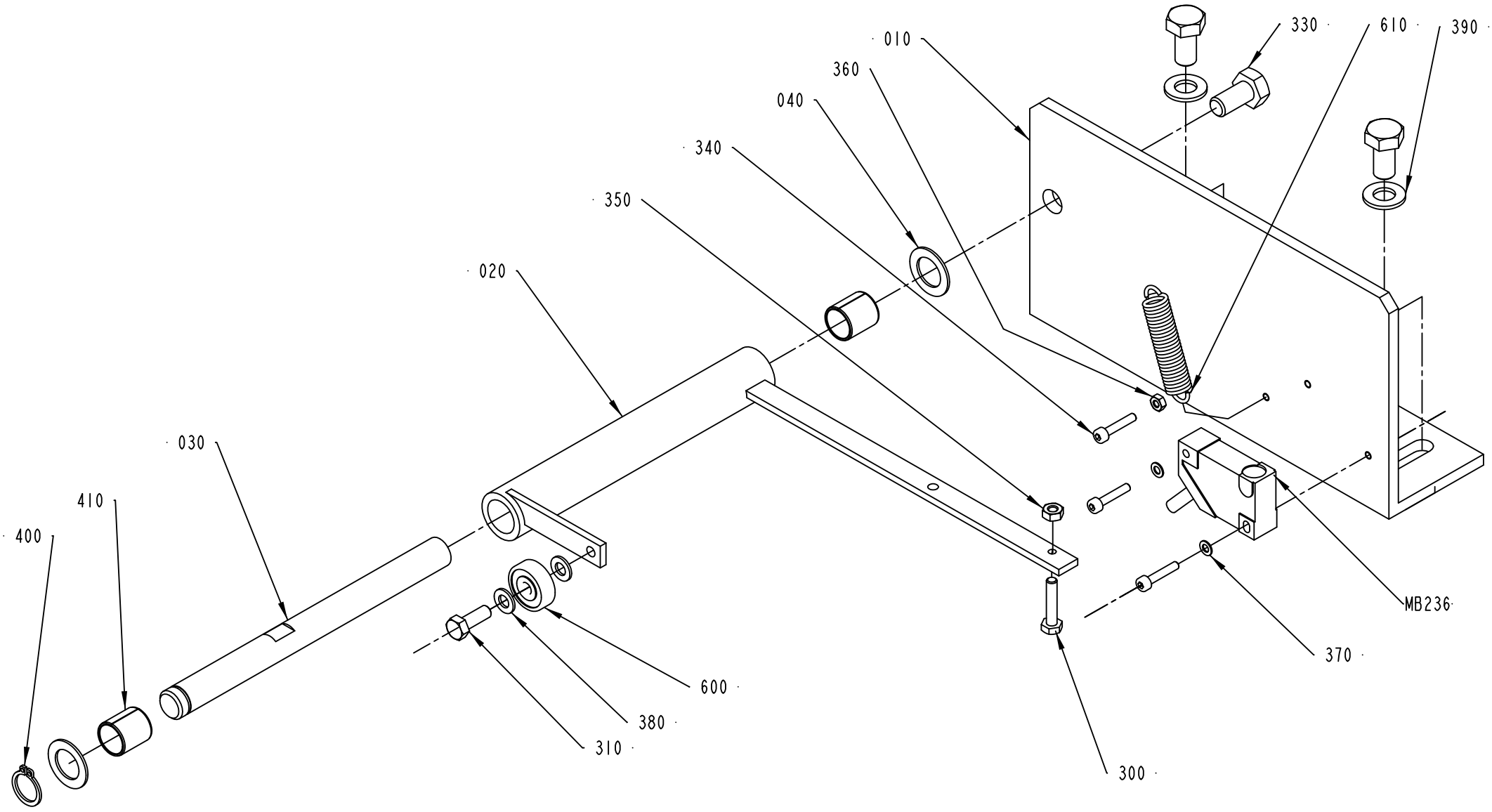

1279624-3
ECM 113009

ECM: 180857 - 20040910
Group number: 1279624-0200
Assembly Drawing: 1279624-3_1_AA

This list covers pages from 7-38 to 7-41

Pos	Part No	UN	Qty	Description	Page No
-					
010	2524478-0000		1	BRACKET	
020	979899-0000		1	BRACKET	
030	1035897-0000		1	SHAFT	
040	266737-0000		2	WASHER	
300	312105-0295		1	SCREW M6S ISO 4017 M4X20 A470	
310	312105-0328		1	SCREW M6S ISO 4017 M5X14 A480	
330	312105-0449		3	SCREW M6S ISO 4017 M8X16 A480	
340	312115-0228		3	SCREW ISO4762 M3X16 A4 80	
350	312605-0312		1	HEXAGON NUT, M6M M4 A280	
360	312605-0310		1	HEXAGON NUT, M6M M3 A280	
370	315105-0124		2	WASHER BRB 3,2X6 RFR	
380	315105-0146		2	WASHER BRB 5,3X10 RFR	
390	315105-0165		2	WASHER BRB 8,4X16 RFR	
400	315751-0109		1	RETAINING RING FOR SHAFT DIN 471 12 A2	
410	321141-0183		2	BEARING BUSH W/O FLANGE, 12X14X15 MM	
600	90214-0138		1	BALL BEARING, 5X19X6 MM	
610	90335-0216		1	TENSION SPRING 40910, 0,5X5,5X27,7	
MB236	90044-0194		1	PROX.SW. IN5329/IN3002-BPKG(EX90044-104)	

Pos	Part No	UN	Qty	Description	Page No

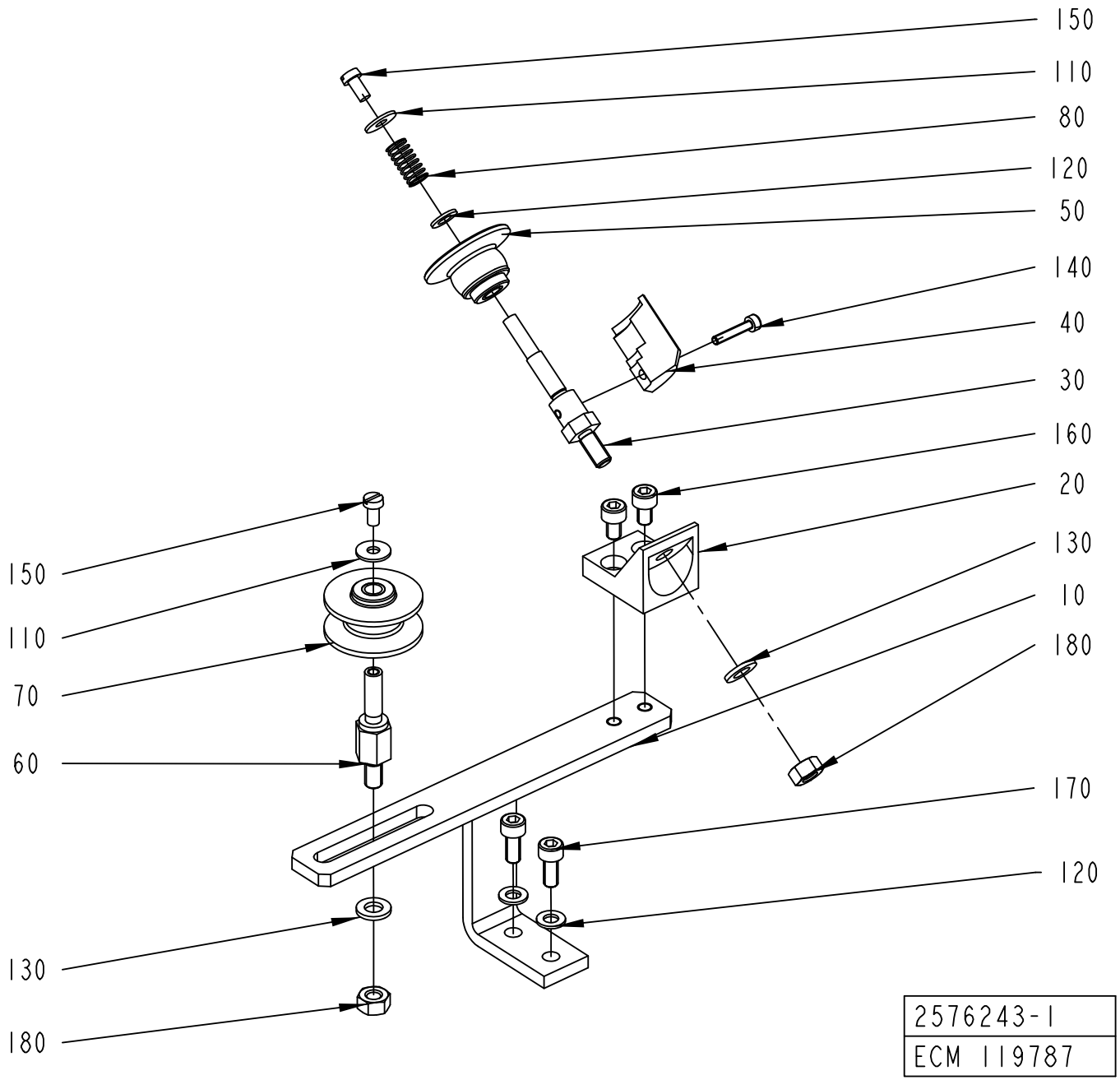
150
110
80
120
50
140
40
30
160
20
130
10
180
170
120
150
110
70
60
130
180
2576243-1
ECM 119787

ECM: 243217 - 20060127
Group number: 2576243-0100
Assembly Drawing: 2576243-1_1_AA

Pos	Part No	UN	Qty	Description	Page No
-					
010	2603016-0000		1	BRACKET	
020	979575-0000		1	ROLLER PLATE	
030	2552631-0000		1	AXLE PIN	
040	2552633-0000		1	ROLLER	
050	2552632-0000		1	ROLLER	
060	579553-0000		1	SHAFT	
070	1512583-0000		1	ROLLER	
	321120-0101		*2*	*BEARING BUSH W/O FLANGE, 6X8X6 MM*	
080	90335-0146		1	COMP. SPRING, 0,6X7,2X20	
110	90005-0082		2	WASHER PLAIN ROUND 4,3(M4)/12,H=1	
120	315105-0146		3	WASHER BRB 5,3X10 RFR	
130	315105-0153		2	WASHER BRB 6,4X12 RFR	
140	312115-0228		1	SCREW ISO4762 M3X16 A4 80	
150	312125-0287		2	SCREW ISO 1207 M4X8 A4	
160	312115-0323		2	SCREW ISO4762 M5X8 A4 80	
170	312115-0327		2	SCREW ISO4762 M5X12 A4 80	
180	312605-0316		2	HEXAGON NUT, M6M M6 A280	

Pos	Part No	UN	Qty	Description	Page No

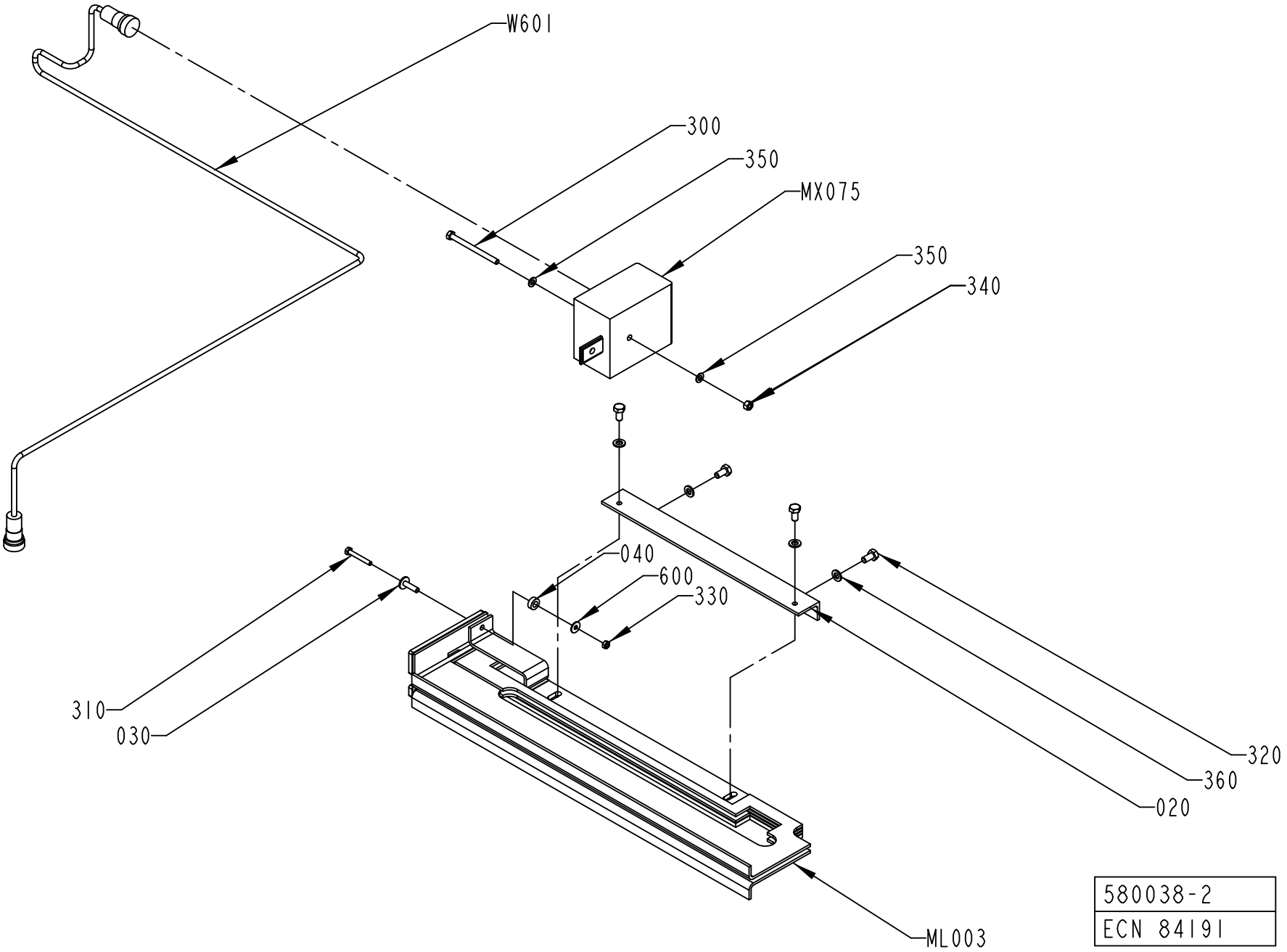
W601
300
350
MX075
350
340
040
600
330
310
030
320
360
020
ML003
580038-2
ECN 84191

ECM: 180858 - 20040910
Group number: 580038-0200
Assembly Drawing: 580038-2_1_AB

Pos	Part No	UN	Qty	Description	Page No
-					
020	1036588-0000		1	BRACKET	
030	1038016-0000		1	SPACER	
040	32644-0000		1	WASHER	
300	312101-0344		1	SCREW M6S M5X65 FZB	
310	312105-0299		1	SCREW M6S ISO 4017 M4X30 A470	
320	312105-0366		4	SCREW M6S ISO 4017 M6X12 A480	
330	312605-0312		1	HEXAGON NUT, M6M M4 A280	
340	312605-0314		1	HEXAGON NUT, M6M M5 A280	
350	315105-0146		2	WASHER BRB 5,3X10 RFR	
360	315105-0153		4	WASHER BRB 6,4X12 RFR	
600	90005-0082		1	WASHER PLAIN ROUND 4,3(M4)/12,H=1	
MX075	67380-0208		1	TRANSFORMER	
ML003	1035587-0000		1	INDUCTOR	
W601	548770-0006		1	COAXIAL CABLE L=1200 MM	

Pos	Part No	UN	Qty	Description	Page No

PRESSURE ROLLER

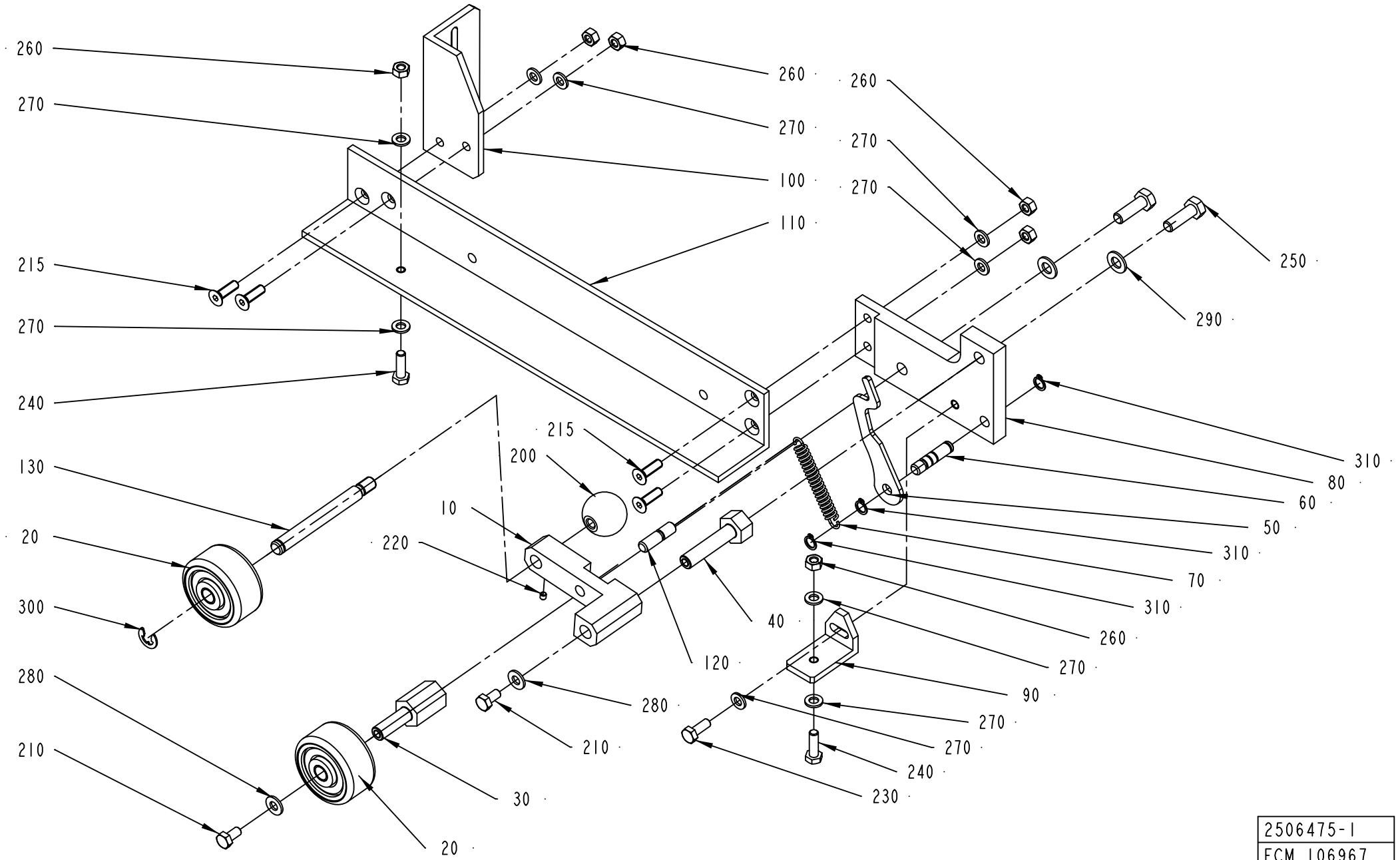

2506475-1
ECM 106967

ECM: 180899 - 20040910
Group number: 2506475-0100
Assembly Drawing: 2506475-1_1_AA

Pos	Part No	UN	Qty	Description	Page No
-					
010	2524482-0000		1	BRACKET	
020	1346988-0000		2	ROLL	
010	*90166-0056*	*MM*	*40*	*SHRINKABLE HOSE (2,5")*	
020	*321120-0104*		*2*	*BEARING BUSH W/O FLANGE, 10X12X10 MM*	
030	1035895-0000		1	SHAFT	
040	2529646-0000		1	SHAFT	
050	2524479-0000		1	PLATE	
060	2524480-0000		1	PIN	
070	1478303-0000		1	TENSION SPRING	
080	2506471-0000		1	BRACKET	
090	2506472-0000		1	HOLDER	
100	2506473-0000		1	BRACKET	
110	2506474-0000		1	FASTENING BRACKET	
120	2524484-0000		1	PIN	
130	2524485-0000		1	PIN	
200	318800-0104		1	HANDLE,SPHERICAL KNOB,INT.THRE.,D.30-M8	
210	312105-0366		2	SCREW M6S ISO 4017 M6X12 A480	
215	312155-0370		4	SCREW DIN 7991 MF6S M6X20 A4 70	
220	312318-0283		1	SCREW ISO4029 M4X4 A4	
230	312105-0368		1	SCREW M6S ISO 4017 M6X16 A480	
240	312105-0367		2	SCREW M6S ISO 4017 M6X14 A480	
250	312105-0453		2	SCREW M6S ISO 4017 M8X25 A480	
260	312605-0316		4	HEXAGON NUT, M6M M6 A280	
270	315105-0153		7	WASHER BRB 6,4X12 RFR	
280	315105-0156		2	WASHER BRB 6,7X14 RFR	
290	315105-0165		2	WASHER BRB 8,4X16 RFR	
300	315755-0801		1	RETAINING RING SHAFT DIN 6799 8 A2	
310	90141-0015		3	RETAINING RING FOR SHAFT DIN 471 8 A2	

Pos	Part No	UN	Qty	Description	Page No

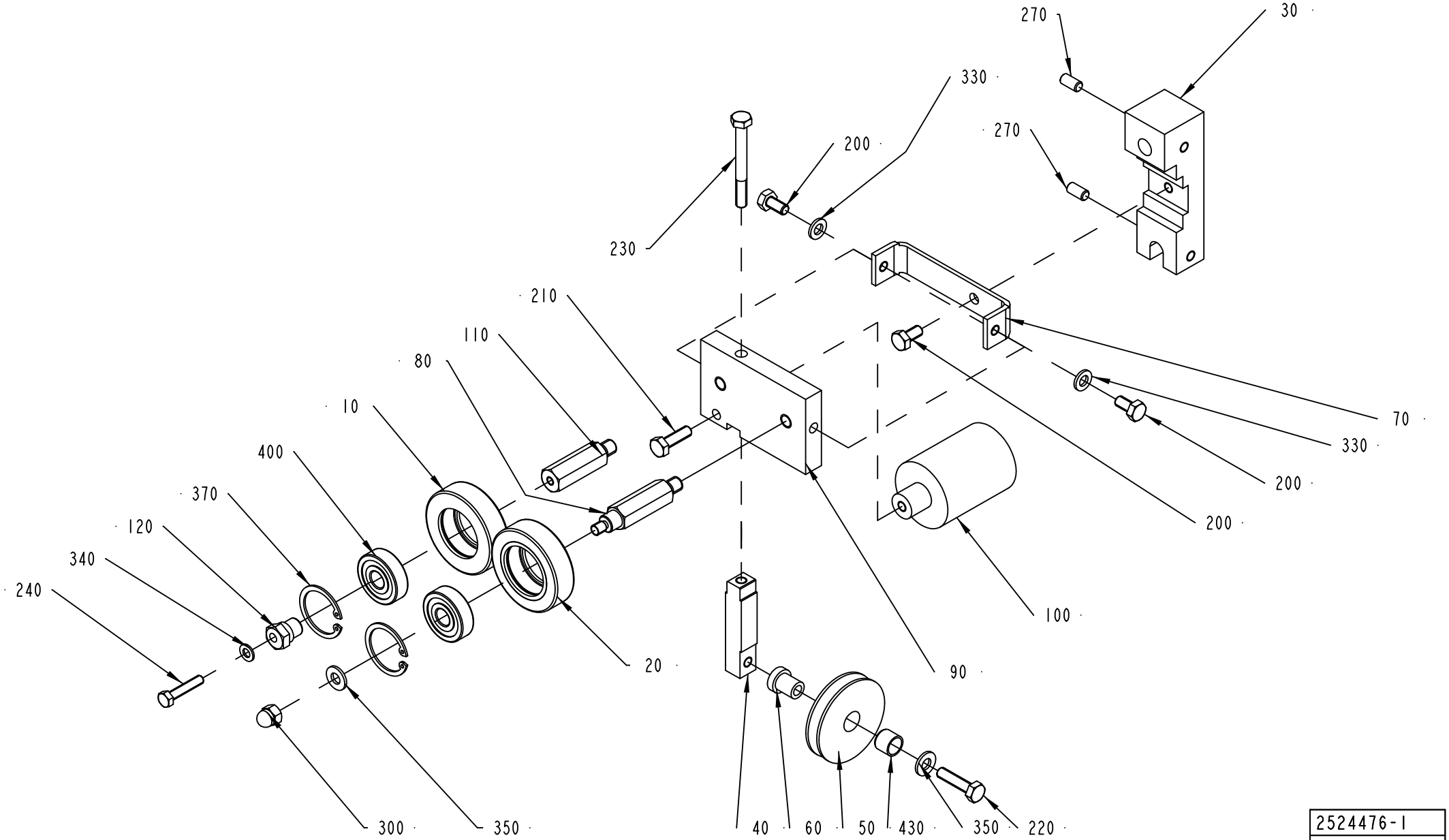

2524476-1
ECN 142514

ECM: 180903 - 20040910
Group number: 2524476-0100
Assembly Drawing: 2524476-1_1_AC

Pos	Part No	UN	Qty	Description	Page No
-					
010	1036622-0000		1	GUIDE ROLLER	
020	1036623-0000		1	GUIDE ROLLER	
030	1511002-0000		1	HOLDER	
040	1499024-0000		1	BAR	
050	2524477-0000		1	ROLLER	
060	1499026-0000		1	SHAFT	
070	1499027-0000		1	BRACKET	
080	1511001-0000		1	SHAFT	
090	1511000-0000		1	PLATE	
100	1511003-0000		1	WEIGHT	
110	2552628-0000		1	PIN	
120	1346612-0000		1	SHAFT	
200	312105-0366		3	SCREW M6S ISO 4017 M6X12 A480	
210	312105-0370		1	SCREW M6S ISO 4017 M6X20 A480	
220	312105-0372		1	SCREW M6S ISO 4017 M6X25 A480	
230	312105-0381		1	SCREW M6S ISO 4014 M6X55 A480	
240	312105-0333		1	SCREW M6S ISO 4017 M5X25 A480	
270	312318-0366		2	SCREW ISO4029 M6X12 A4	
300	312705-0316		2	NUT HEX. DOMED CAP MHM-6 M6 A280	
330	315105-0153		2	WASHER BRB 6,4X12 RFR	
340	315105-0146		1	WASHER BRB 5,3X10 RFR	
350	315105-0156		2	WASHER BRB 6,7X14 RFR	
370	315753-0122		2	RETAINING RING FOR BORE DIN 472 30 A2	
400	321313-0100		2	BALL BEARING, 10X30X9 MM	
430	90240-0287		1	BUSHING, 10X12X10 MM	

Pos	Part No	UN	Qty	Description	Page No

STRIP GUIDE

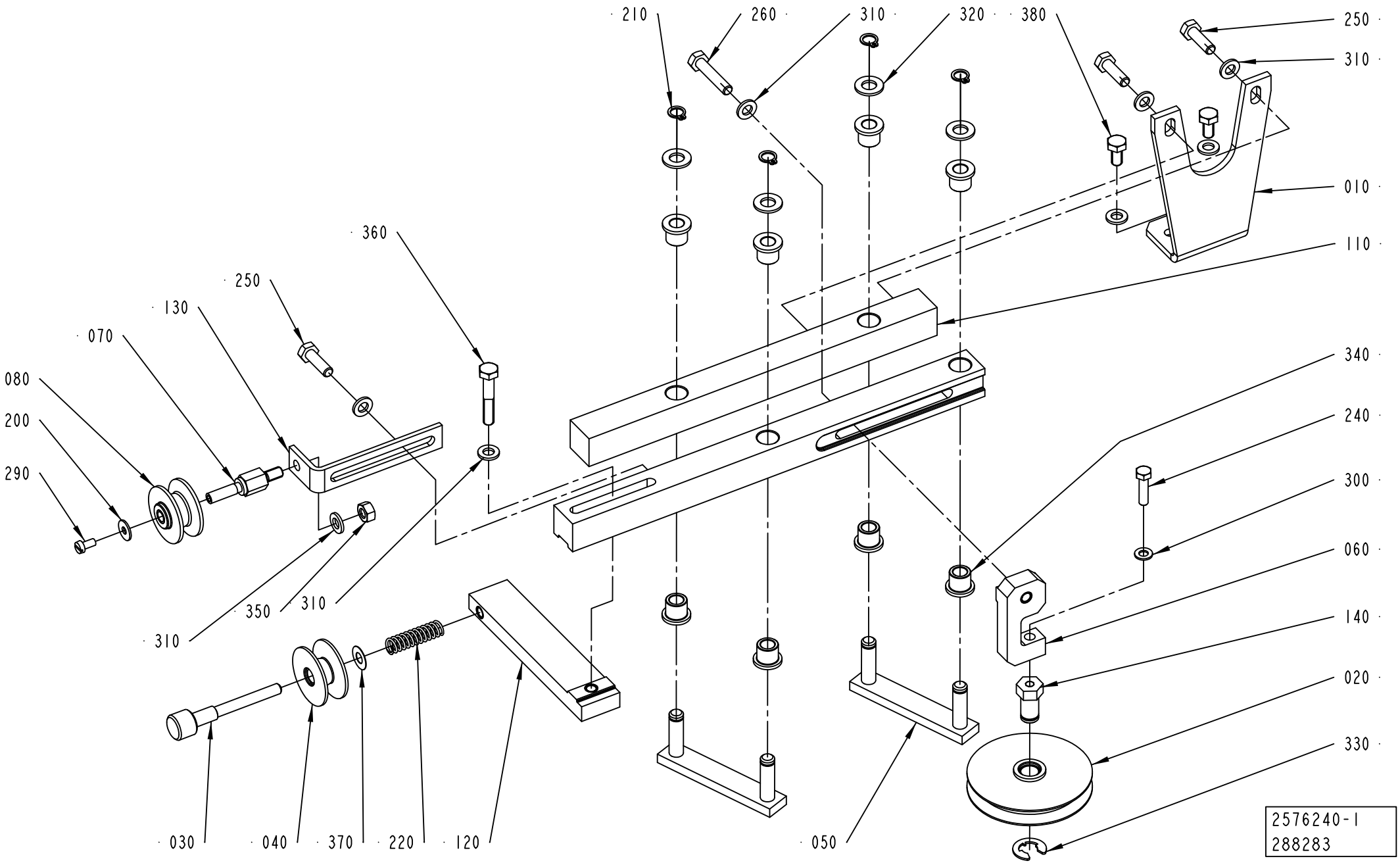
210
260
310
320
380
250
310
010
110
360
250
130
070
080
200
290
340
240
300
060
140
020
330
310
350
310
030
040
370
220
120
050
2576240-1
288283

Pos	Part No	UN	Qty	Description	Page No
NOPT (See drawing on page: 7-50)					
070	579553-0000		1	SHAFT	
080	1512583-0000		1	ROLLER	
	321120-0101		*2*	*BEARING BUSH W/O FLANGE, 6X8X6 MM*	
130	2839810-0000		1	BRACKET	
200	90005-0082		1	WASHER PLAIN ROUND 4,3(M4)/12,H=1	
290	312125-0287		1	SCREW ISO 1207 M4X8 A4	
350	312605-0316		1	HEXAGON NUT, M6M M6 A280	
Common Parts					
010	2576239-0000		1	HOLDER	
020	2850445-0000		1	GUIDE WHEEL	
	321141-0142		*1*	*BEARING BUSH W/O FLANGE, 10X12X12 MM*	
030	1035893-0000		1	ADJUSTING SCREW	
040	1285546-0000		1	ROLL	
050	1346746-0000		2	LEVER	
060	2575480-0000		1	HOLDER	
100	2570400-0000		1	ROD	
110	2570401-0000		1	ROD	
120	2575484-0000		1	HOLDER	
140	2575482-0000		1	PIN	
210	90141-0015		4	RETAINING RING FOR SHAFT DIN 471 8 A2	
220	90335-0027		1	COMP. SPRING 22170, 1,25X9,25X33	
240	312105-0331		1	SCREW M6S ISO 4017 M5X20 A480	
250	312105-0370		3	SCREW M6S ISO 4017 M6X20 A480	
260	312105-0374		1	SCREW M6S ISO 4014 M6X30 A480	
300	315105-0146		1	WASHER BRB 5,3X10 RFR	
310	315105-0153		8	WASHER BRB 6,4X12 RFR	
320	315105-0165		4	WASHER BRB 8,4X16 RFR	
330	315755-0110		1	RETAINING RING SHAFT DIN 6799 9 A2	
340	321111-0097		8	FLANGE BUSHING, 8X12X12 MM	
360	312105-0376		1	SCREW M6S ISO 4014 M6X35 A480	
370	2033-0013		1	WASHER	
380	312105-0366		2	SCREW M6S ISO 4017 M6X12 A480	

Pos	Part No	UN	Qty	Description	Page No

STRIP GUIDE

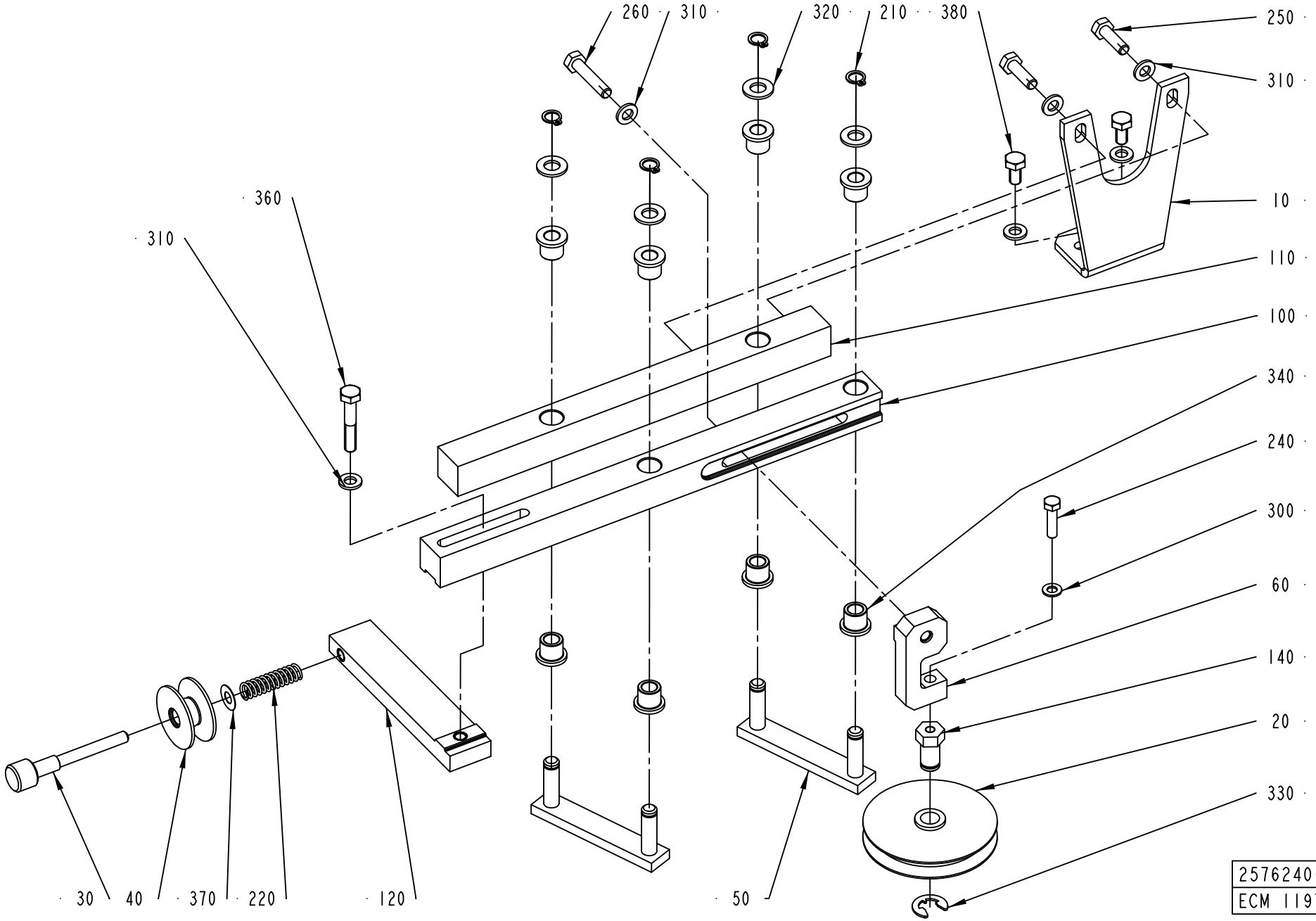
260
310
320
210
380
250
310
360
310
10
110
100
340
240
300
60
140
20
330
30
40
370
220
120
50
2576240-2
ECM 119787

ECM: 293072 - 20070126
Group number: 2576240-0100
Assembly Drawing: 2576240-2_1_AA

This list covers pages from 7-50 to 7-53

Pos	Part No	UN	Qty	Description	Page No
NOPT (See drawing on page: 7-50)					
070	579553-0000		1	SHAFT	
080	1512583-0000		1	ROLLER	
	321120-0101		*2*	*BEARING BUSH W/O FLANGE, 6X8X6 MM*	
130	2839810-0000		1	BRACKET	
200	90005-0082		1	WASHER PLAIN ROUND 4,3(M4)/12,H=1	
290	312125-0287		1	SCREW ISO 1207 M4X8 A4	
350	312605-0316		1	HEXAGON NUT, M6M M6 A280	
Common Parts					
010	2576239-0000		1	HOLDER	
020	2850445-0000		1	GUIDE WHEEL	
	321141-0142		*1*	*BEARING BUSH W/O FLANGE, 10X12X12 MM*	
030	1035893-0000		1	ADJUSTING SCREW	
040	1285546-0000		1	ROLL	
050	1346746-0000		2	LEVER	
060	2575480-0000		1	HOLDER	
100	2570400-0000		1	ROD	
110	2570401-0000		1	ROD	
120	2575484-0000		1	HOLDER	
140	2575482-0000		1	PIN	
210	90141-0015		4	RETAINING RING FOR SHAFT DIN 471 8 A2	
220	90335-0027		1	COMP. SPRING 22170, 1,25X9,25X33	
240	312105-0331		1	SCREW M6S ISO 4017 M5X20 A480	
250	312105-0370		3	SCREW M6S ISO 4017 M6X20 A480	
260	312105-0374		1	SCREW M6S ISO 4014 M6X30 A480	
300	315105-0146		1	WASHER BRB 5,3X10 RFR	
310	315105-0153		8	WASHER BRB 6,4X12 RFR	
320	315105-0165		4	WASHER BRB 8,4X16 RFR	
330	315755-0110		1	RETAINING RING SHAFT DIN 6799 9 A2	
340	321111-0097		8	FLANGE BUSHING, 8X12X12 MM	
360	312105-0376		1	SCREW M6S ISO 4014 M6X35 A480	
370	2033-0013		1	WASHER	
380	312105-0366		2	SCREW M6S ISO 4017 M6X12 A480	

Pos	Part No	UN	Qty	Description	Page No

Machine Type | Group Description | Used-In | Group Number | Page No

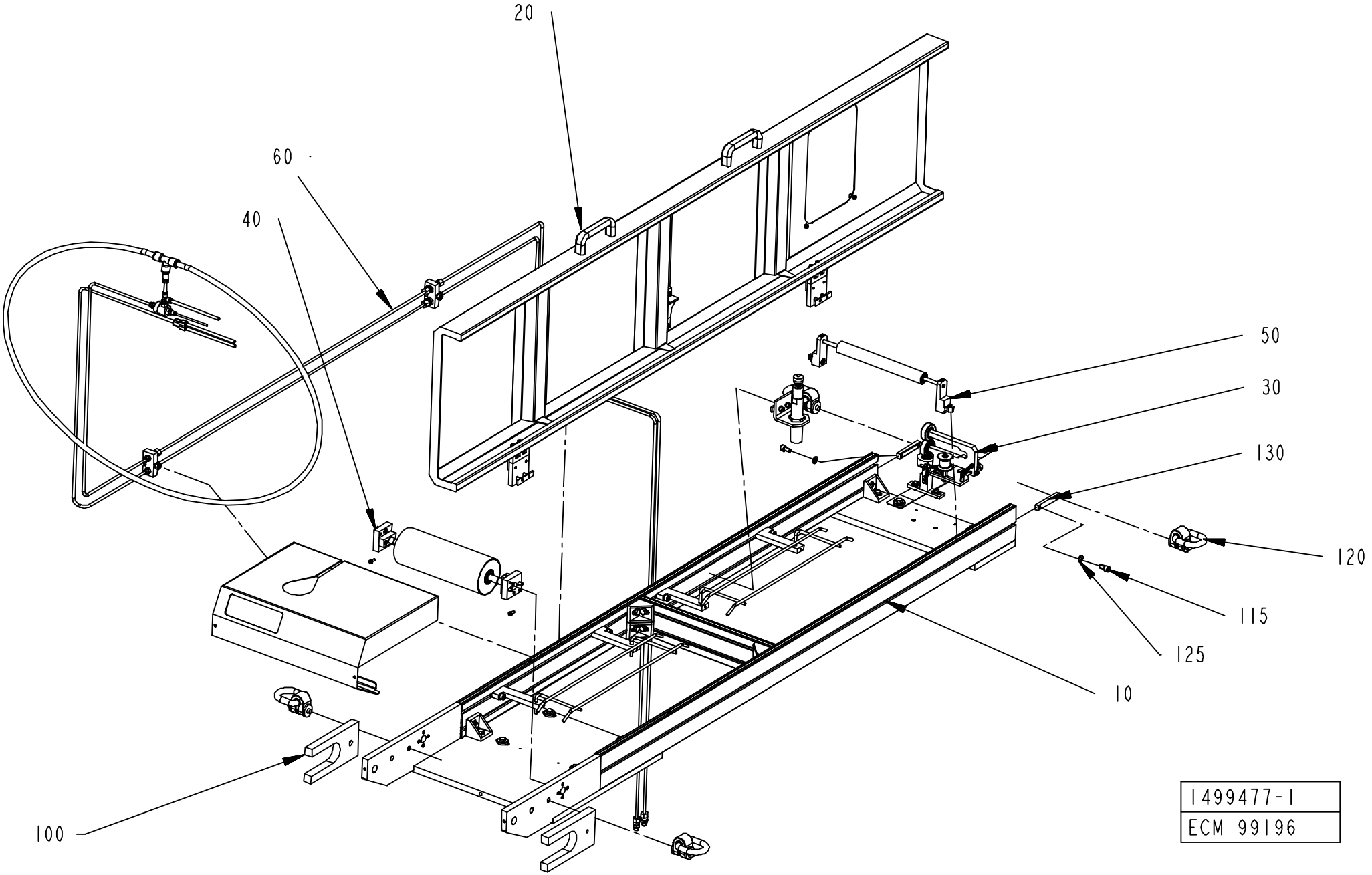
20
60
40
50
30
130
120
115
125
10
100
1499477-1
ECM 99196

ECM: 116565 - 20030113
Group number: 1499477-0100
Assembly Drawing: 1499477-1_1_AB

Pos	Part No	UN	Qty	Description	Page No
-					
010	1499484-0100		1	TUNNEL FRAME	**7-57**
020	1511319-0100		1	TUNNEL COVER	**7-59**
030	1517065-0100		1	WEB GUIDE	**7-61**
040	2570394-0100		1	BENDING ROLLER	**7-63**
050	1498756-0100		1	BENDING ROLLER	**7-65**
060	580335-0200		1	PIPE WORK-PNEUMATIC	**7-67**
100	1499485-0000		2	TRANSPORT BRACKET	

Pos	Part No	UN	Qty	Description	Page No

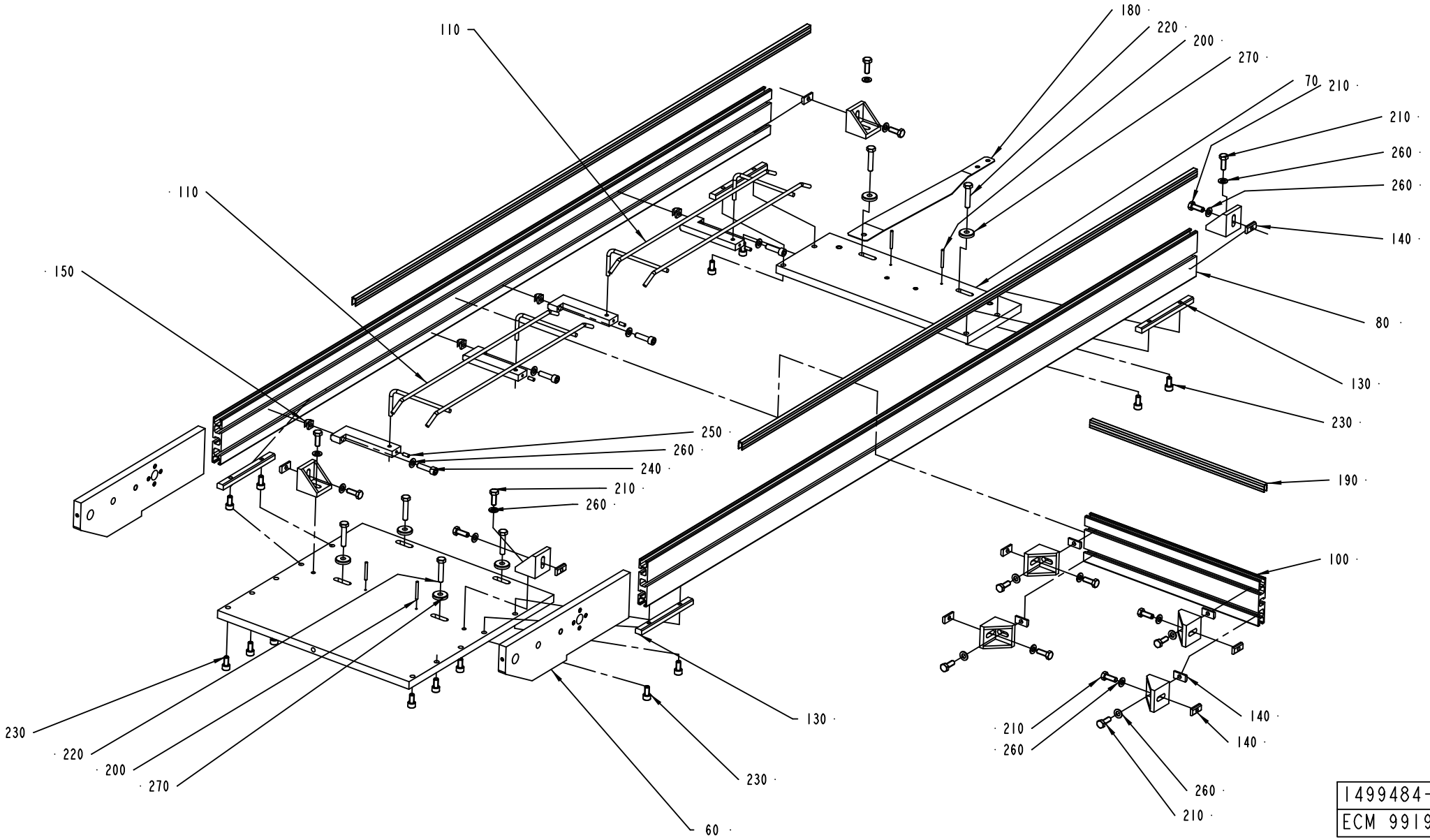
110
110
150
250
260
240
210
260
180
220
200
270
70
210
210
260
260
140
80
130
230
190
100
230
220
200
270
130
230
60
210
260
140
140
260
210
1499484-1
ECM 99196

ECM: 180901 - 20040910
Group number: 1499484-0100
Assembly Drawing: 1499484-1_1_AB

Pos	Part No	UN	Qty	Description	Page No
-					
050	1498766-0000		1	LOWER PLATE	
060	1498767-0000		2	SIDE PIECE	
070	1498768-0000		1	LOWER PLATE	
080	1498769-0000		2	WALL	
090	1498771-0000		4	HOLDER	
100	2540729-0000		1	WALL	
110	36316-0000		2	PAPER SUPPORT	
120	1498759-0000		8	ANGLE HOLDER	
130	1498763-0000		4	JOINT PIECE	
140	1511308-0000		12	NUT PLATE	
150	1511310-0000		4	NUT	
160	1511320-0000		2	STRIP	
180	1499371-0000		1	JOINT PLATE	
190	2540730-0000		1	STRIP	
200	311103-0278		4	PARALLEL PIN ISO 2338 4M6X35 A1	
210	312105-0452		16	SCREW M6S ISO 4017 M8X22 A4 80	
220	312109-0459		6	SCREW M6S ISO 4017 M8X40 A480	
230	312115-0449		14	SCREW ISO4762 M8X16 A4 80	
240	312115-0455		4	SCREW ISO4762 M8X30 A4 80	
250	312318-0327		4	SCREW ISO4029 M5X12 A4	
260	315105-0165		20	WASHER BRB 8,4X16 RFR	
270	315125-0165		6	WASHER TBRSB 8,4X26X5 A4	

Pos	Part No	UN	Qty	Description	Page No

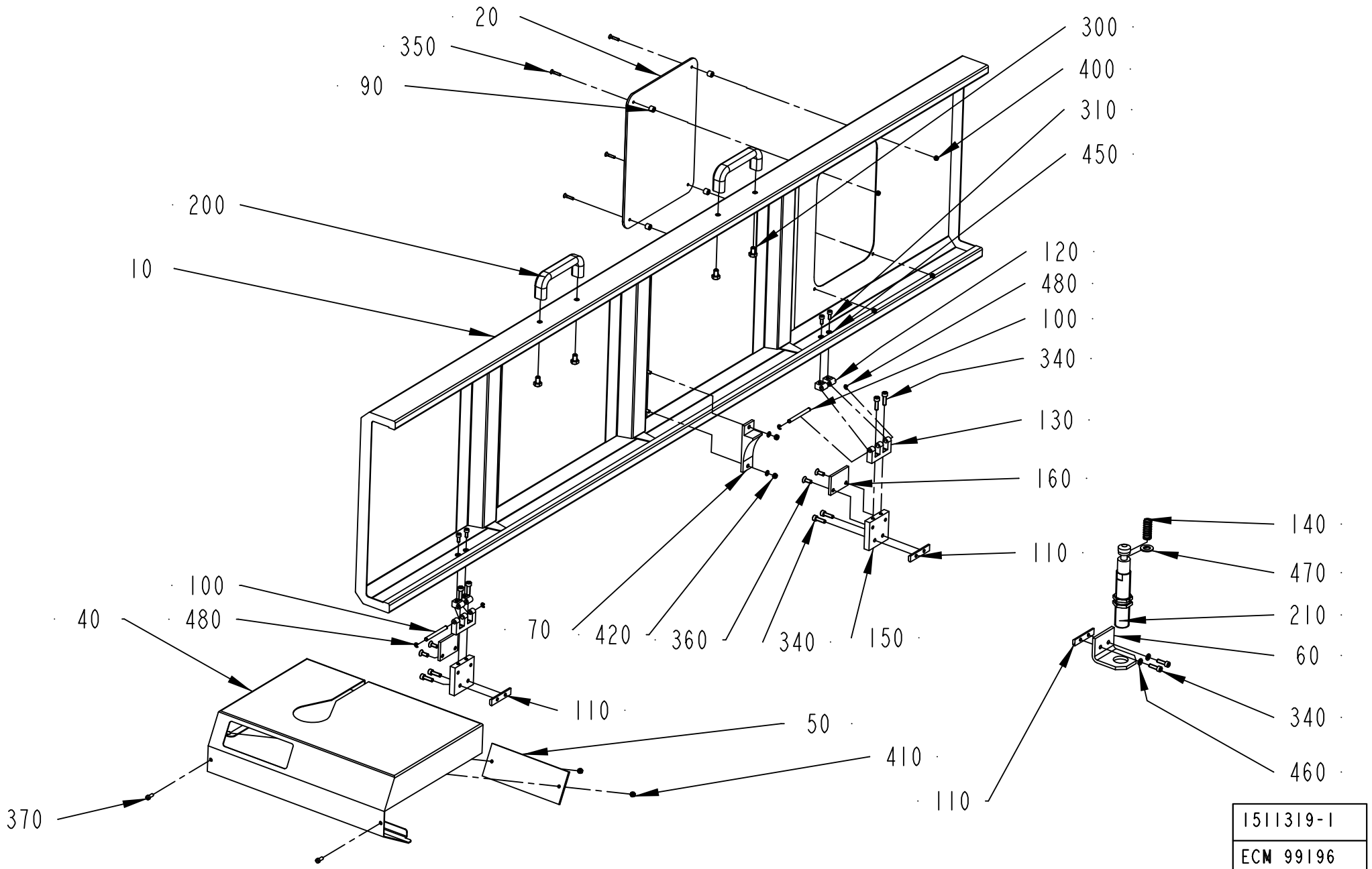
20
350
90
200
10
300
400
310
450
120
480
100
340
130
160
110
140
470
210
60
340
460
110
100
480
40
70
420
360
340
150
110
50
410
370
1511319-1
ECN 99196

ECM: 180902 - 20040910
Group number: 1511319-0100
Assembly Drawing: 1511319-1_1_AB

Pos	Part No	UN	Qty	Description	Page No
-					
010	1499486-0000		1	TOP COVER	
020	1511317-0000		1	PANE	
040	1498780-0000		1	BACK COVER	
050	1511311-0000		1	GLASS PANE	
060	1511314-0000		1	DAMPER BRACKET	
070	1511315-0000		1	SLIDE BLOCK	
090	1511318-0000		4	SPACER	
100	1499512-0000		2	PIN	
110	1499513-0000		3	NUT PLATE	
120	1035794-0000		4	BLOCKING PIECE	
130	1499514-0000		2	E-HINGE	
140	1511324-0000		1	SPRING	
150	2519647-0000		2	BRACKET	
160	2519646-0000		2	PLATE	
200	90017-0022		2	HANDLE, NO. EL-037311	
210	90347-0024		1	SHOCK ABSORBER, 370-120-400	
300	312105-0447		4	SCREW M6S ISO 4017 M8X12 A480	
310	312115-0327		4	SCREW ISO4762 M5X12 A4 80	
340	312115-0370		10	SCREW ISO4762 M6X20 A4 80	
350	312155-0295		4	SCREW DIN 7991 MF6S M4X20 A4 70	
360	312155-0368		4	SCREW DIN 7991 MF6S M6X16 A4 70	
370	312125-0327		2	SCREW ISO 1207 M5X12 A4	
400	312605-0312		4	HEXAGON NUT, M6M M4 A280	
410	312605-0314		2	HEXAGON NUT, M6M M5 A280	
420	312812-0314		2	HEXAGON NUT, NY-LOCK M5 A480	
450	315105-0146		6	WASHER BRB 5,3X10 RFR	
460	315105-0153		2	WASHER BRB 6,4X12 RFR	
470	315105-0178		1	WASHER BRB 13X24 RFR	
480	315755-0106		4	RETAINING RING SHAFT DIN 6799 4 A2	

Pos	Part No	UN	Qty	Description	Page No

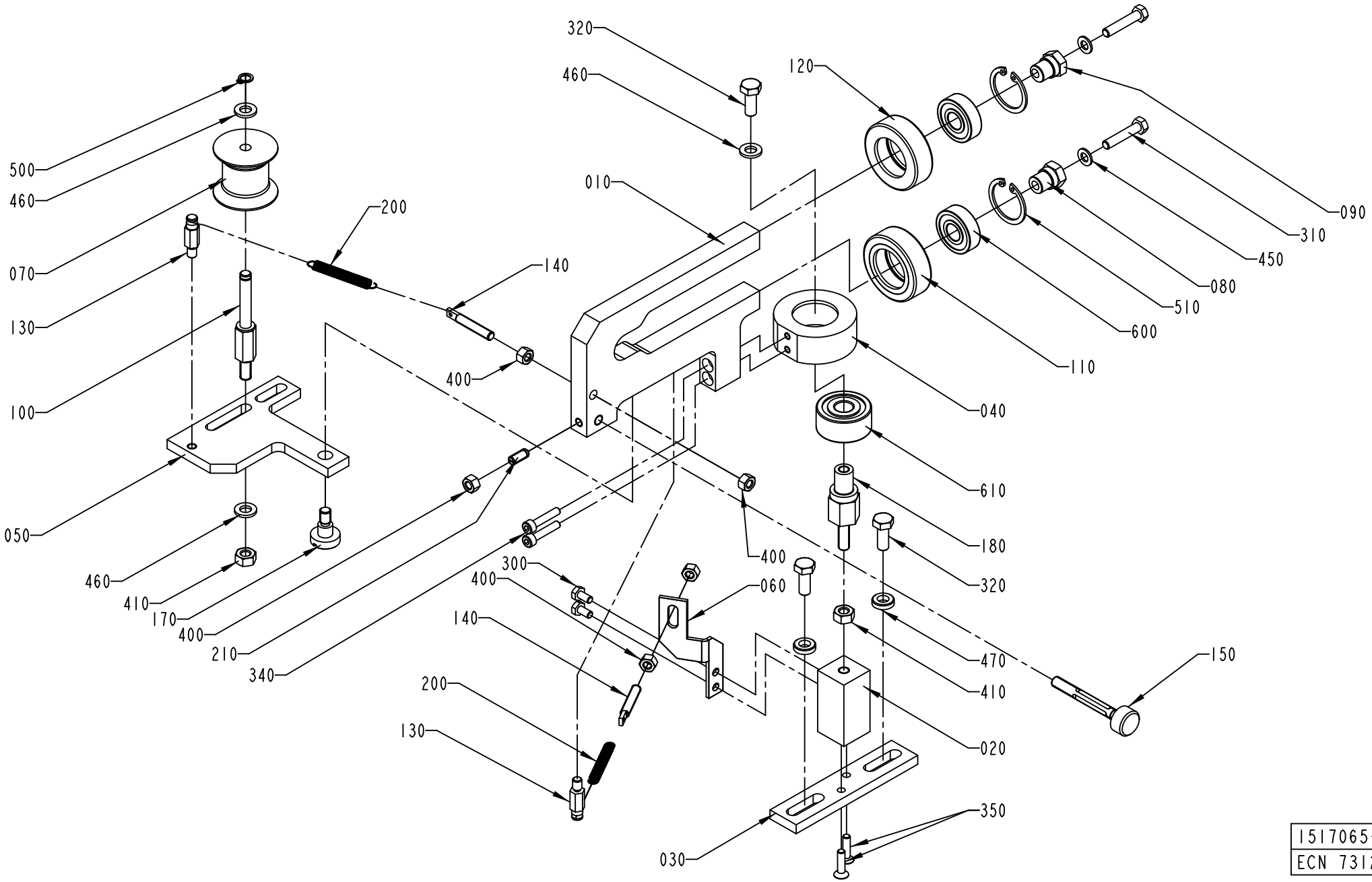

1517065-1
ECN 73123

ECM: 180904 - 20040910
Group number: 1517065-0100
Assembly Drawing: 1517065-1_1_AA

Pos	Part No	UN	Qty	Description	Page No
-					
010	1517071-0000		1	BOW CLAMP	
020	1517068-0000		1	PILLAR	
030	1517069-0000		1	CLAMP PLATE	
040	1517070-0000		1	BEARING SEAT	
050	1517066-0000		1	PIVOT ARM	
060	1517067-0000		1	SPRING HOLDER	
070	979582-0000		1	ROLLER	
080	1334256-0000		1	SHAFT	
090	1346612-0000		1	SHAFT	
100	1538107-0000		1	SHAFT	
110	583737-0000		1	ROLLER	
120	583738-0000		1	ROLLER	
130	583735-0000		2	PIN	
140	583749-0000		2	PIN	
150	589432-0000		1	SCREW	
170	556541-0000		1	SCREW	
180	1517753-0000		1	ADJUSTING NUT	
200	90335-0216		2	TENSION SPRING 40910, 0,5X5,5X27,7	
210	90287-0148		1	SCREW SPRINGLOAD. SLOTTED HEAD M5X12	
300	312105-0287		2	SCREW M6S ISO 4017 M4X8 A470	
310	312105-0333		2	SCREW M6S ISO 4017 M5X25 A480	
320	312105-0368		3	SCREW M6S ISO 4017 M6X16 A480	
340	312115-0295		2	SCREW ISO4762 M4X20 A4 80	
350	312155-0293		2	SCREW DIN 7991 MF6S M4X16 A4 70	
400	312605-0314		5	HEXAGON NUT, M6M M5 A280	
410	312605-0316		2	HEXAGON NUT, M6M M6 A280	
450	315105-0146		2	WASHER BRB 5,3X10 RFR	
460	315105-0153		3	WASHER BRB 6,4X12 RFR	
470	315115-0153		2	WASHER PLAIN, TBRB 6,4/12 H=3	
500	315751-0103		1	RETAINING RING FOR SHAFT DIN 471 6 A2	
510	315752-0120		2	RETAINING RING FOR BORE DIN 472 26 ST	
600	321308-0200		2	BALL BEARING, 10X26X8 MM	
610	321330-0100		1	ANG. BALL BEAR, 10X30X14 MM	

Pos	Part No	UN	Qty	Description	Page No

Machine Type | Group Description | Used-In | Group Number | Page No

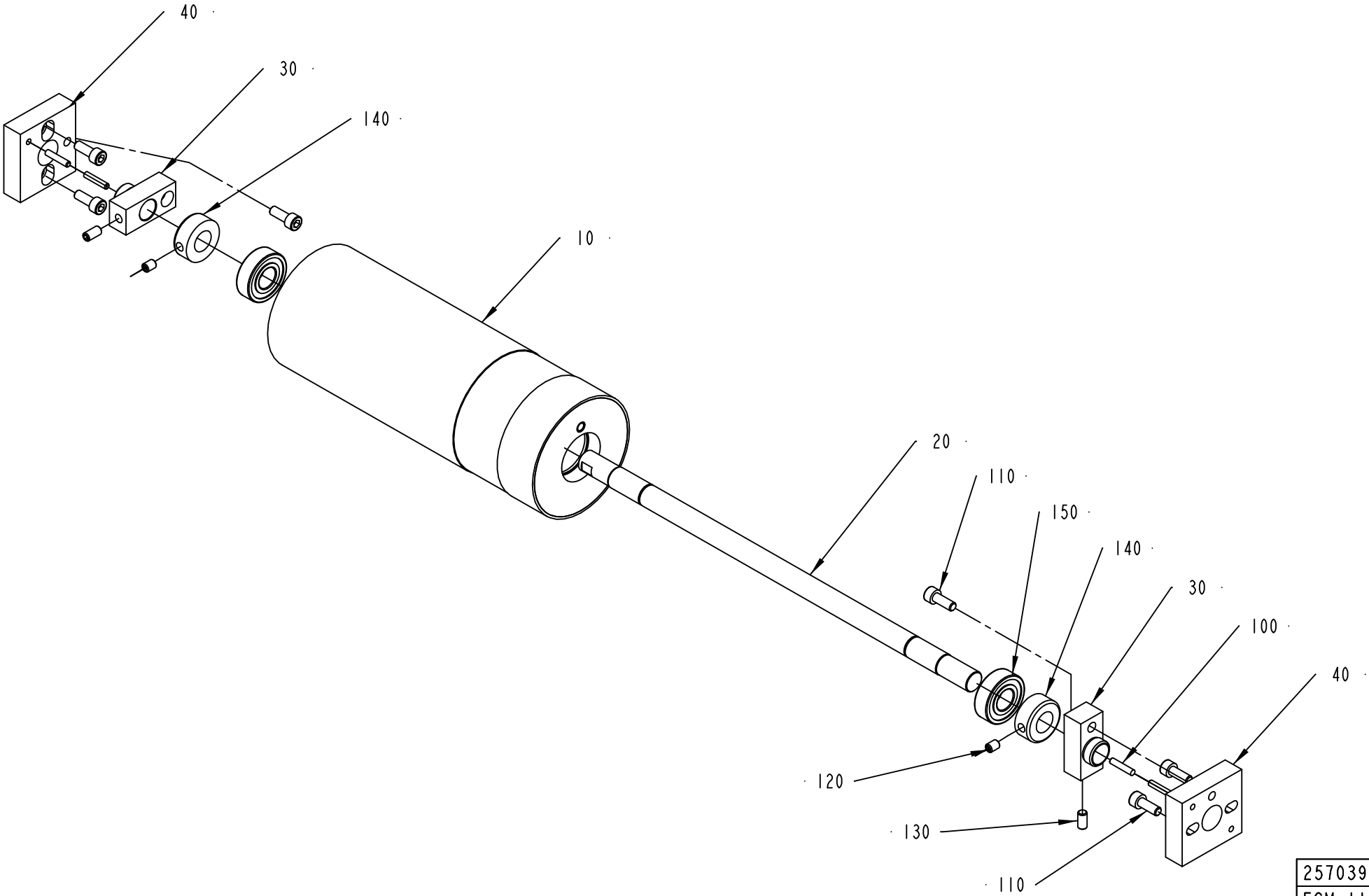
40
30
140
10
20
110
150
140
30
100
40
120
130
110
2570394-1
ECM 110376

ECM: 180905 - 20040910
Group number: 2570394-0100
Assembly Drawing: 2570394-1_1_AA

Pos	Part No	UN	Qty	Description	Page No
-					
010	2570393-0000		1	BENDING ROLLER	
020	583683-0000		1	SHAFT	
030	583684-0000		2	AXLE SUPPORT	
040	583685-0000		2	BEARING SEAT	
100	311103-0272		4	PARALLEL PIN ISO 2338 4M6X20 A1	
110	312115-0368		6	SCREW ISO4762 M6X16 A4 80	
120	312318-0362		2	SCREW ISO4029 M6X8 A4	
130	312318-0366		2	SCREW ISO4029 M6X12 A4	
140	315742-0111		2	RETAINING RING 15 SMS 199 RFR	
150	321313-0102		2	BALL BEARING, 15X35X11 MM	

Pos	Part No	UN	Qty	Description	Page No

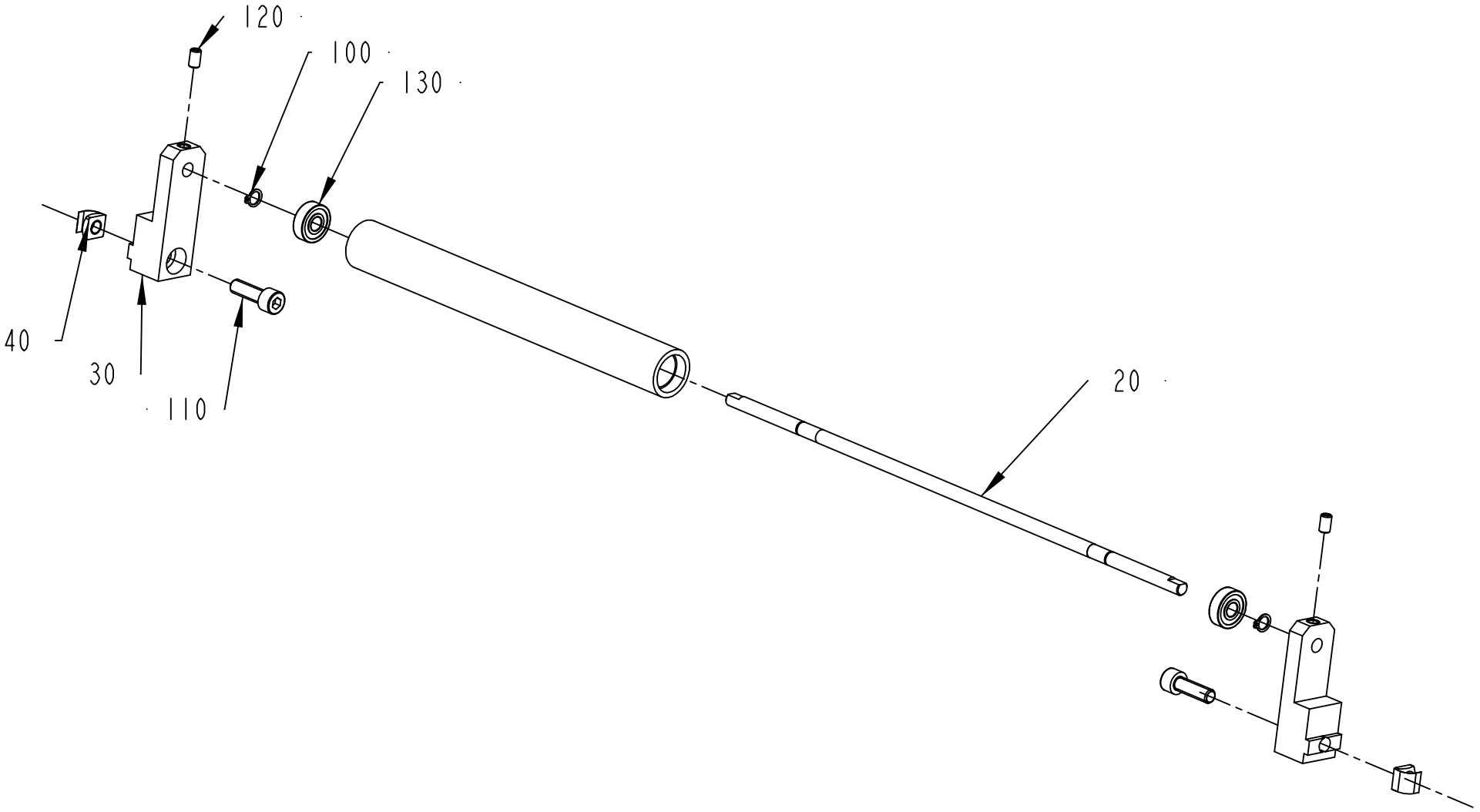

1498756-1
ECM 99196

ECM: 180898 - 20040910
Group number: 1498756-0100
Assembly Drawing: 1498756-1_1_AB

Pos	Part No	UN	Qty	Description	Page No
-					
010	1511307-0000		1	ROLLER	
020	1499517-0000		1	SHAFT	
030	2506480-0000		2	HOLDER	
040	1511310-0000		2	NUT	
050	2570392-0000		2	RETAINING RING	
110	312115-0453		2	SCREW ISO4762 M8X25 A4 80	
120	312318-0364		2	SCREW ISO4029 M6X10 A4	
130	321302-0298		2	BALL BEARING, 8X22X7 MM	
140	312311-0285		2	SCREW ISO4028 M4X6 FZB	

Pos	Part No	UN	Qty	Description	Page No

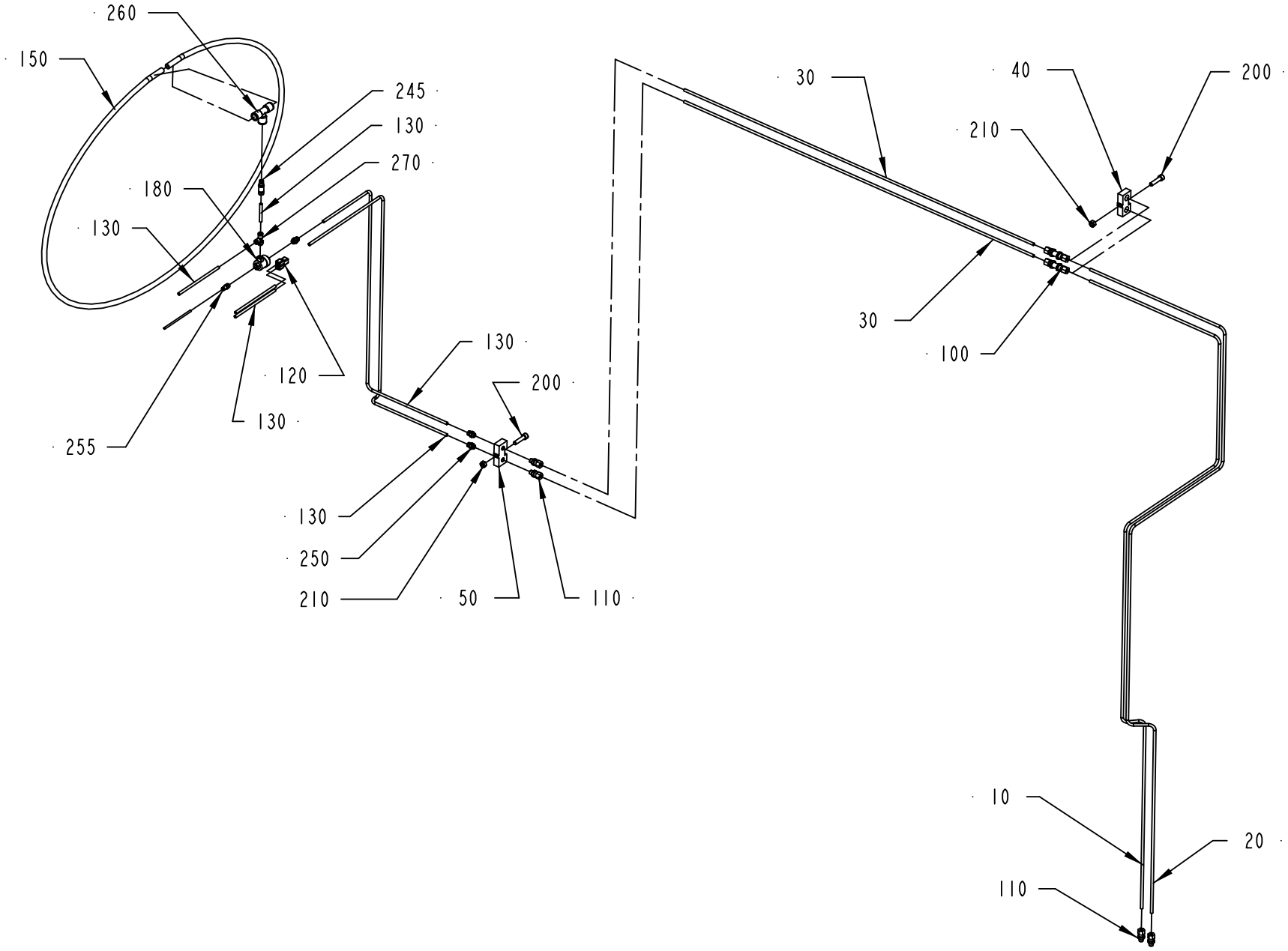

580335-2
ECM 99196

ECM: 180864 - 20040910
Group number: 580335-0200
Assembly Drawing: 580335-2_1_AB

Pos	Part No	UN	Qty	Description	Page No
-					
010	1511460-0000		1	PIPE 1050	
020	1511461-0000		1	PIPE 1051	
030	1511462-0000		2	STRAIGHT PIPE	
040	1511463-0000		1	PIPE HOLDER	
050	1511464-0000		1	PIPE HOLDER	
100	90030-0066		2	CONN. BULKHEAD SV 6-L/SY	
110	90030-0184		2	CONN. STR. GA-6-G1/8	
120	90055-0100		1	Y-CONNECTION, 6-6	
130	90166-0081	M	4	TUBE 6 MM PA BLUE	
140	90166-0095	M	1	TUBE 4 MM PA BLUE (50M)	
150	90166-0068	MM	2500	TUBE 12 MM PA BLUE	
180	90235-0259		1	VALVE	
200	312115-0457		2	SCREW ISO4762 M8X35 A4 80	
210	312605-0318		2	HEXAGON NUT, M6M M8 A280	
245	342716-0210		1	REDUCER 6-12	
250	342722-0202		3	PIPE COUPLING 1/8" D=6MM	
255	342722-0199		1	STRAIGHT COUPLING	
260	342748-0109		1	T-CONNECTION 12MM	
270	342772-0113		1	ELBOW FITTING, 6 - G1/8	
300	359000-0400		14	WIRE MARKING, YELLOW, PA2/4"0"	
310	359000-0401		14	WIRE MARKING, YELLOW, PA2/4"1"	
320	359000-0405		14	WIRE MARKING, YELLOW, PA2/4"5"	
330	359000-0404		7	WIRE MARKING, YELLOW, PA2/4"4"	
340	359000-0402		7	WIRE MARKING, YELLOW, PA2/4"2"	

Pos	Part No	UN	Qty	Description	Page No

Machine Type | Group Description | Used-In | Group Number | Page No

Tetra Pak

SPC
Spare Parts Catalogue

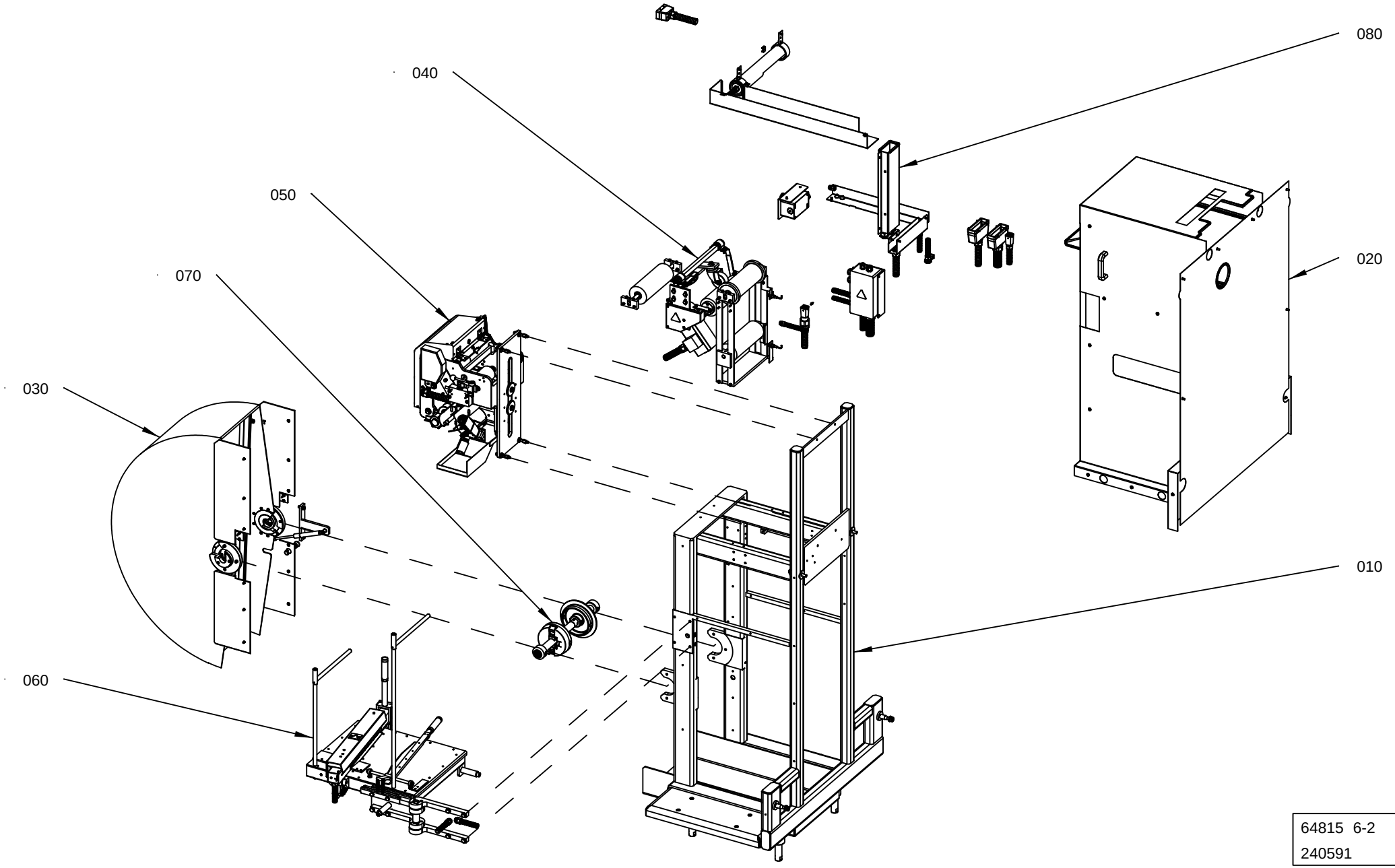

64815 6-2
240591

ECM: 267077 - 20060707
Group number: 648156-0200
Assembly Drawing: 648156-2_1_AA

Pos	Part No	UN	Qty	Description	Page No
-					
010	1549295-0200		1	MACHINE BODY	**8-5**
020	1549296-0200		1	COVER PLATE	**8-11, 8-13**
030	1549305-0100		1	COVER	**8-15**
040	1549300-0100		1	PAPER MAGAZINE	**8-17, 8-19**
050	579241-0200		1	DATING UNIT	**8-23**
060	2501836-0100		1	SPLICING DEVICE	**8-63**
070	1296814-0100		2	PAPER REEL HOLDER,JUMBO REEL	**8-75**
080	1549480-0100		1	ELECTRIC EQUIPMENT	**8-77**

Pos	Part No	UN	Qty	Description	Page No

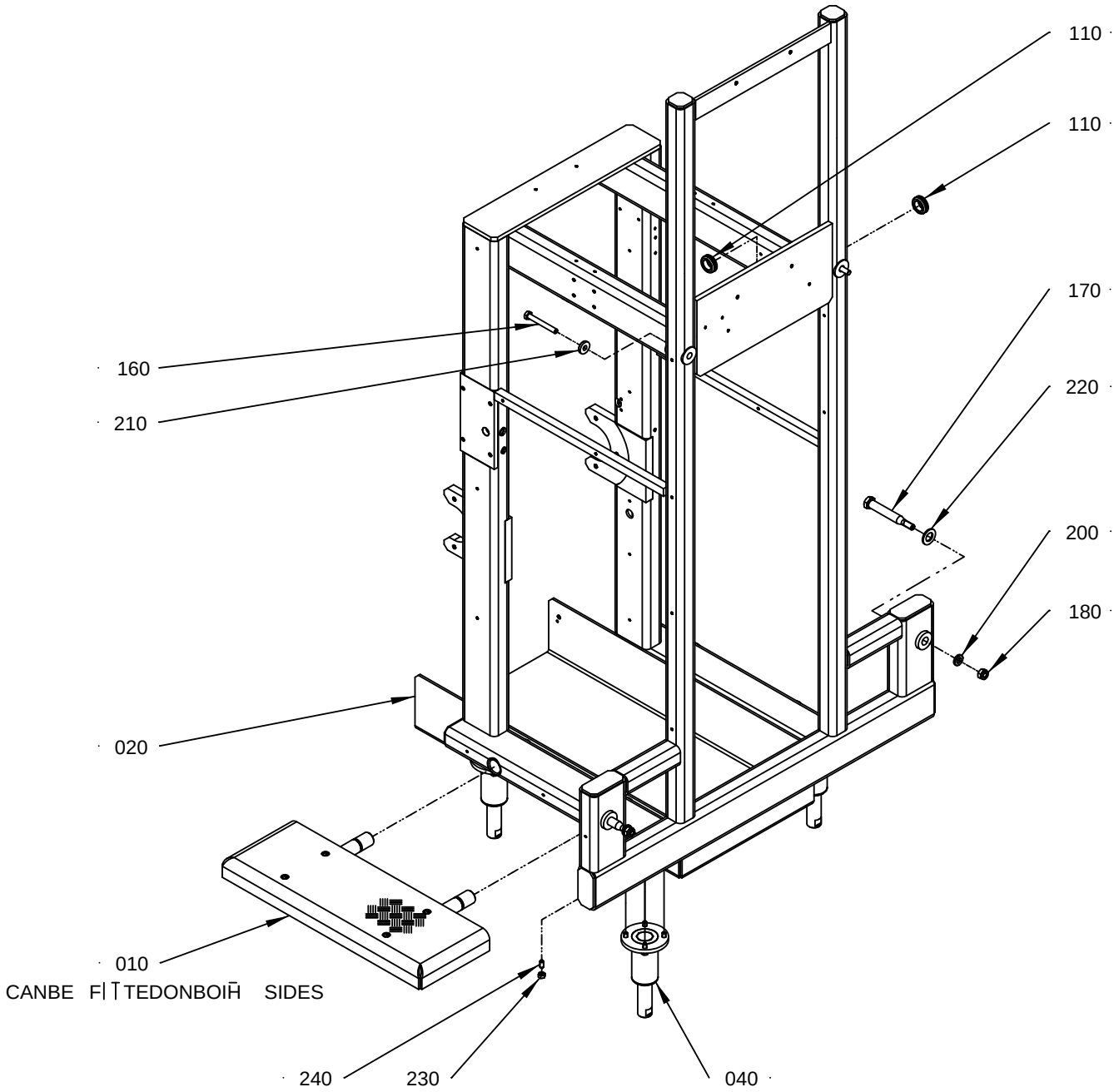

15492 95-2
224530

ECM: 224533 - 20051114
Group number: 1549295-0200
Assembly Drawing: 1549295-2_1_AA

Pos	Part No	UN	Qty	Description	Page No
-					
010	1558320-0100		1	PLATFORM	**8-7**
020	1549294-0000		1	MACHINE BODY	
040	2773926-0100		4	LEG	**2-15, 6-55, 8-9**
110	90458-1228		2	LEAD-IN, BUSHING, DA 230/300/60	
160	312105-0507		2	SCREW M6S ISO 4014 M10X80 A480	
170	1367022-0000		2	ALIGNMENT SCREW	
180	312812-0322		2	HEXAGON NUT, NY-LOCK M12 A480	
200	315115-0178		2	WASHER PLAIN, TBRB 13/24 H=4	
210	315125-0173		2	WASHER TBRSB 10,5X28X6 A4	
220	315105-0191		2	WASHER BRB 20X36 RFR	
230	312605-0318		2	HEXAGON NUT, M6M M8 A280	
240	90287-0112		2	SCREW SPRINGLOAD. SLOTTED HEAD M8X16	

Pos	Part No	UN	Qty	Description	Page No

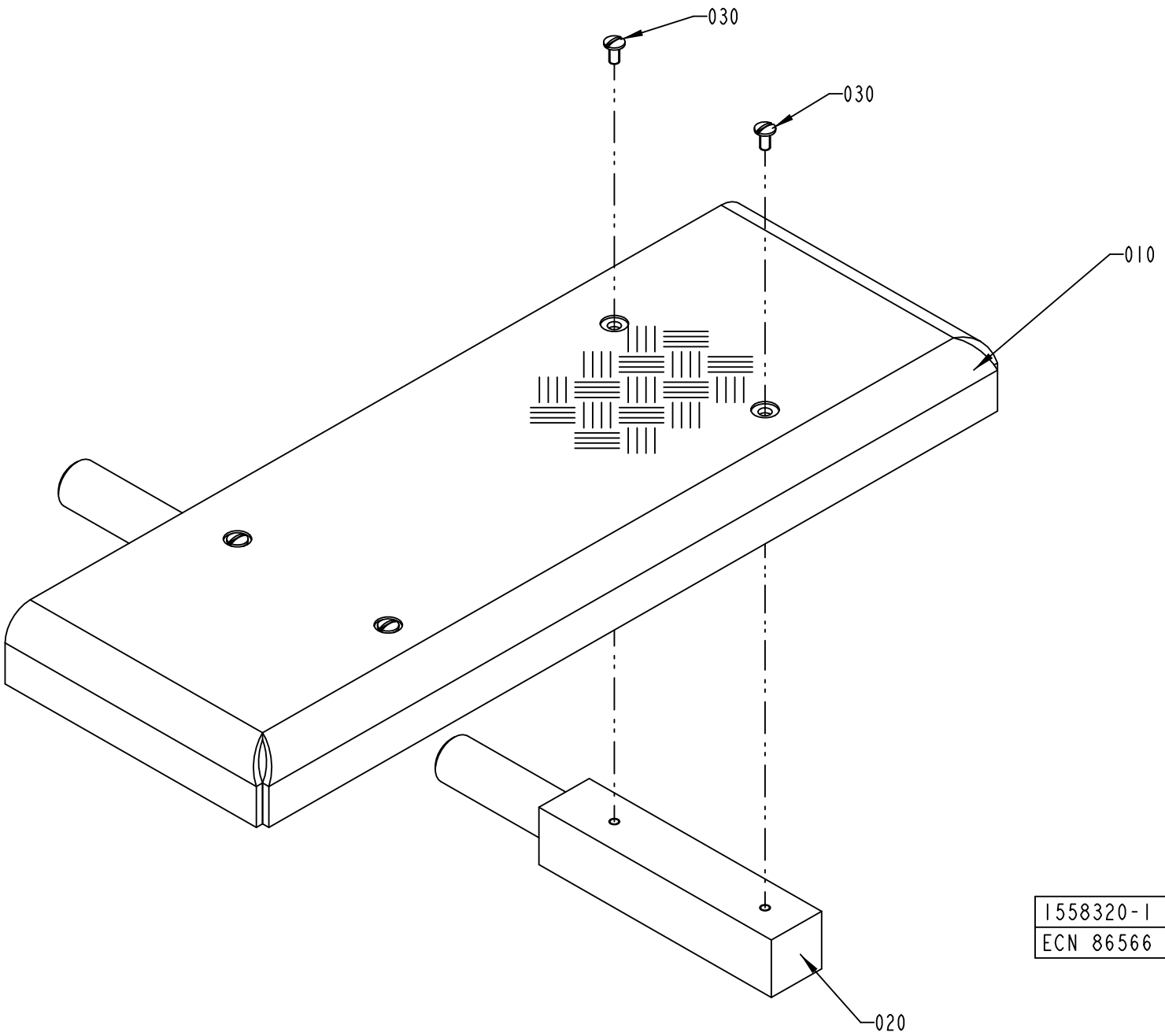

1558320-1
ECN 86566

ECM: 180788 - 20040911
Group number: 1558320-0100
Assembly Drawing: 1558320-1_1_AA

Pos	Part No	UN	Qty	Description	Page No
-					
010	1558321-0000		1	COVER PLATE	
020	1558322-0000		2	JOINT BOLT	
030	90287-0075		4	SCREW SLOT. PAN HEAD LKCS M6X12	

Pos	Part No	UN	Qty	Description	Page No

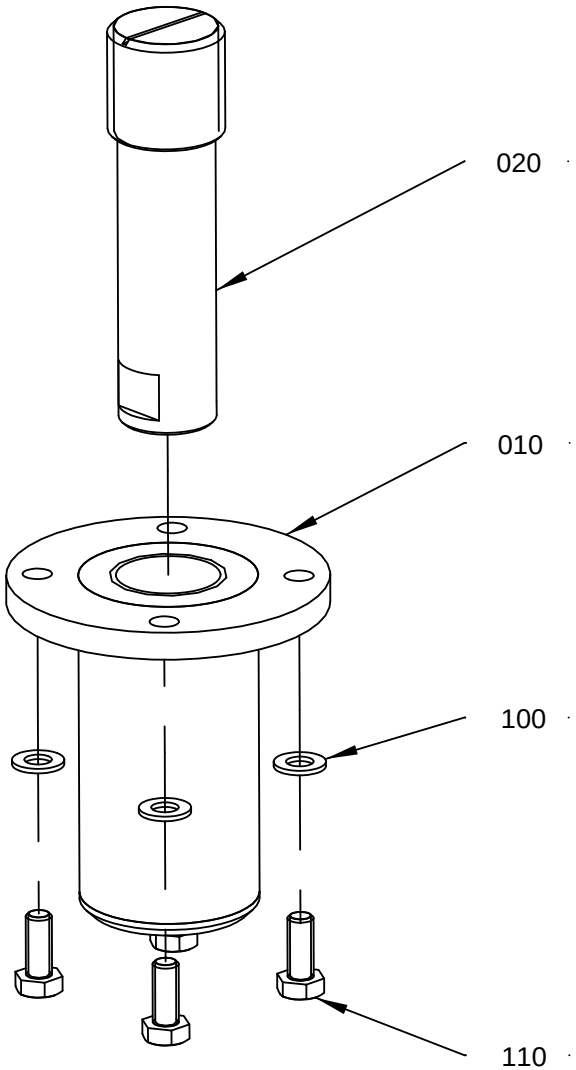

2773 926-1
224525

ECM: 224529 - 20051114
Group number: 2773926-0100
Assembly Drawing: 2773926-1_1_AA

Pos	Part No	UN	Qty	Description	Page No
-					
010	2773925-0000		1	LEG	
020	598148-0000		1	LEG	
100	315105-0165		4	WASHER BRB 8,4X16 RFR	
110	312105-0451		4	SCREW M6S ISO 4017 M8X20 A480	

Pos	Part No	UN	Qty	Description	Page No

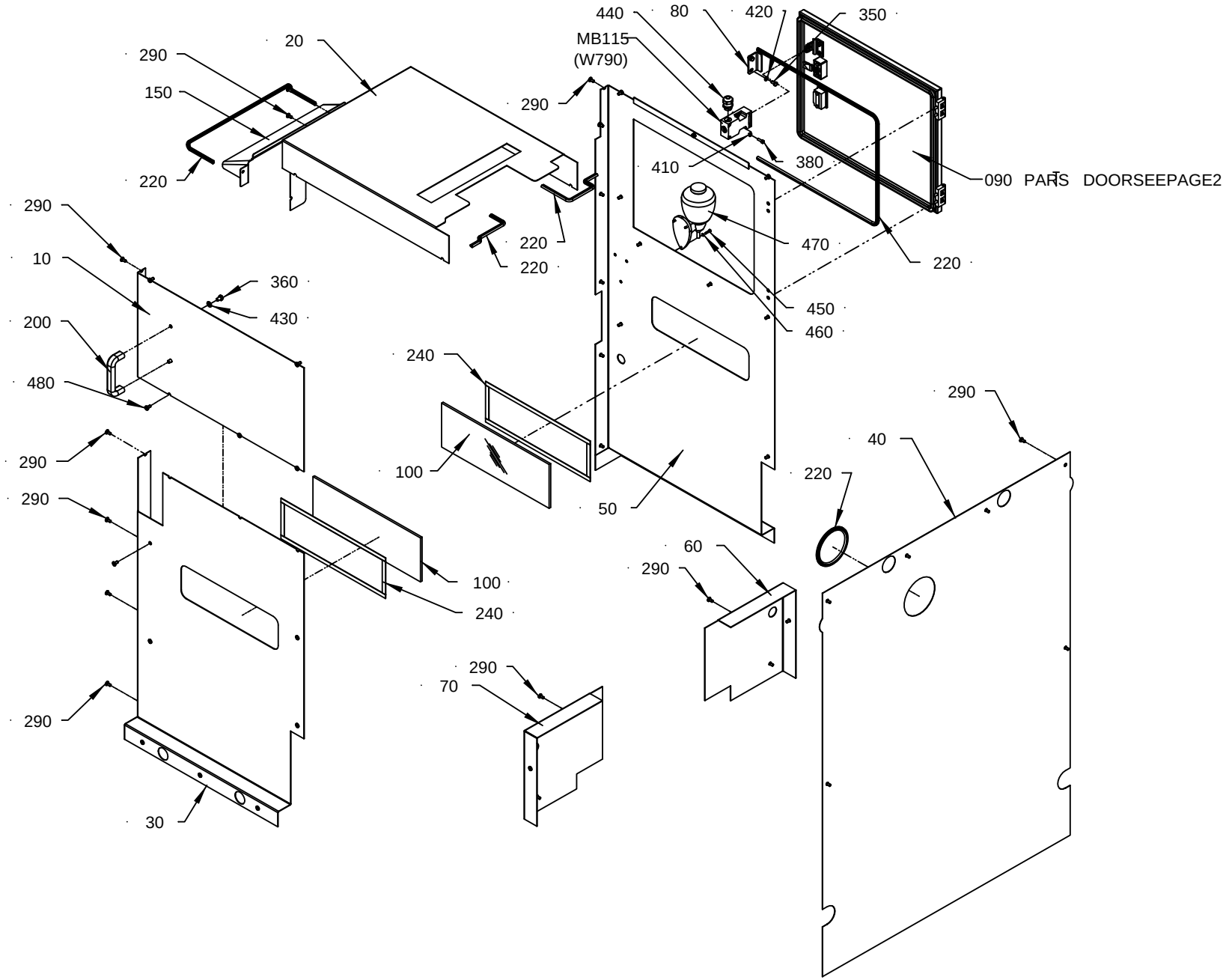

1549296-296-2
ECN 224530

ECM: 235043 - 20051114
Group number: 1549296-0200
Assembly Drawing: 1549296-2_1_AA

This list covers pages from 8-10 to 8-13

Pos	Part No	UN	Qty	Description	Page No
-					
010	1549299-0000		1	PLATE	
020	2748682-0000		1	PLATE	
030	1549484-0000		1	PLATE	
040	1549485-0000		1	PLATE	
050	1549486-0000		1	PLATE	
060	1549487-0000		1	PLATE	
070	1549488-0000		1	PLATE	
080	1549489-0000		1	BRACKET	
090	2748676-0000		1	DOOR	
100	2500050-0000		2	GLASS	
110	975917-0000		1	KEY FOR SAFETY SWITCH 90044-103	
120	988685-0000		2	PIN	
130	1035792-0000		2	E-HINGE	
140	1035794-0000		4	BLOCKING PIECE	
150	2748683-0000		1	COVER	
200	90017-0022		1	HANDLE, NO. EL-037311	
220	90143-0060	MM	7000	EDGE STRIP 9,5X6,3MM BLACK PVC	
230	90143-0068	M	1.6	RUBBER STRIP EMKA 1011-06	
240	90144-0072	M	2.1	TAPE SCOTCH VHBS 4945 W=12,7MM	
250	90237-0128		1	LOCK CYLINDER, 1109-U3	
260	90237-0150		1	TURNING HANDLE, NO. 1125-U190-0A	
270	90237-0155		1	LOCK ADAPTER, 1121-U40	
280	90237-0156		1	LOCK BOLT, 1000-16	
290	90287-0075		45	SCREW SLOT. PAN HEAD LKCS M6X12	
300	90237-0154		1	LOCK HOUSING, 1121-U60-0C	
350	312105-0366		2	SCREW M6S ISO 4017 M6X12 A480	
360	312105-0447		2	SCREW M6S ISO 4017 M8X12 A480	
370	312115-0327		4	SCREW ISO4762 M5X12 A4 80	
380	312115-0329		2	SCREW ISO4762 M5X16 A4 80	
390	312115-0368		4	SCREW ISO4762 M6X16 A4 80	
400	575034-0000		2	ROUND NUT	
405	975924-0000		1	WASHER	
410	315105-0146		6	WASHER BRB 5,3X10 RFR	
420	315105-0153		2	WASHER BRB 6,4X12 RFR	
430	315105-0165		2	WASHER BRB 8,4X16 RFR	
440	90458-0315		1	CABLE GLAND, M20X1,5, NO.5311 1120	
450	312105-0293		3	SCREW M6S ISO 4017 M4X16 A470	
460	315105-0136		3	WASHER BRB 4,3X8 RFR	
470	90243-0133		1	CONTAINER	
480	90287-0316		5	SCREW	
MB115	90459-0472		1	KEY SAF.SW. AZ 16 02ZVRK-M20-2152-2254	

Pos	Part No	UN	Qty	Description	Page No

Machine Type | Group Description | Used-In | Group Number | Page No

COVER PLATE

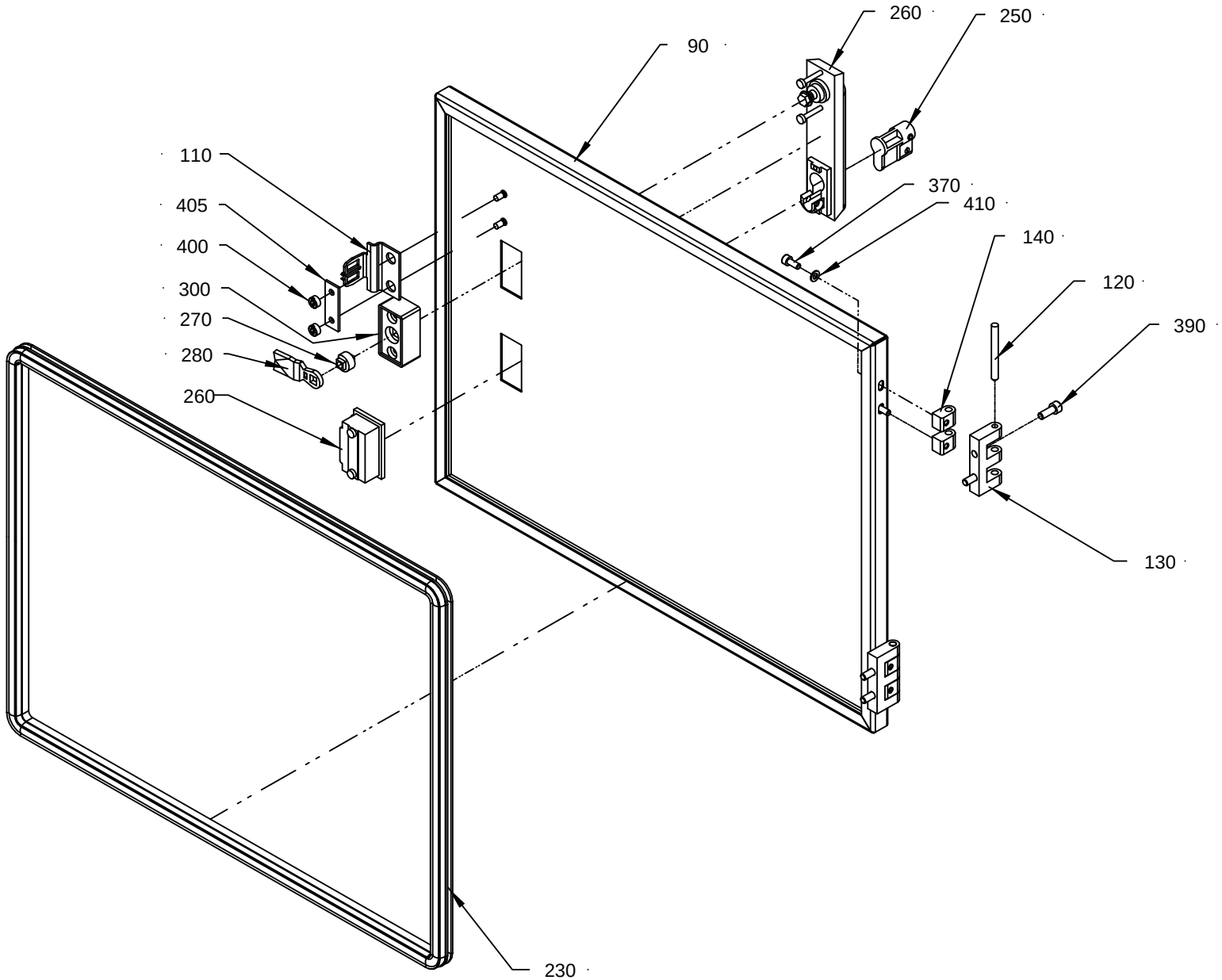

15492 96-2
ECM 224530

ECM: 235043 - 20051114
Group number: 1549296-0200
Assembly Drawing: 1549296-2_2_AA

This list covers pages from 8-10 to 8-13

Pos	Part No	UN	Qty	Description	Page No
-					
010	1549299-0000		1	PLATE	
020	2748682-0000		1	PLATE	
030	1549484-0000		1	PLATE	
040	1549485-0000		1	PLATE	
050	1549486-0000		1	PLATE	
060	1549487-0000		1	PLATE	
070	1549488-0000		1	PLATE	
080	1549489-0000		1	BRACKET	
090	2748676-0000		1	DOOR	
100	2500050-0000		2	GLASS	
110	975917-0000		1	KEY FOR SAFETY SWITCH 90044-103	
120	988685-0000		2	PIN	
130	1035792-0000		2	E-HINGE	
140	1035794-0000		4	BLOCKING PIECE	
150	2748683-0000		1	COVER	
200	90017-0022		1	HANDLE, NO. EL-037311	
220	90143-0060	MM	7000	EDGE STRIP 9,5X6,3MM BLACK PVC	
230	90143-0068	M	1.6	RUBBER STRIP EMKA 1011-06	
240	90144-0072	M	2.1	TAPE SCOTCH VHBS 4945 W=12,7MM	
250	90237-0128		1	LOCK CYLINDER, 1109-U3	
260	90237-0150		1	TURNING HANDLE, NO. 1125-U190-0A	
270	90237-0155		1	LOCK ADAPTER, 1121-U40	
280	90237-0156		1	LOCK BOLT, 1000-16	
290	90287-0075		45	SCREW SLOT. PAN HEAD LKCS M6X12	
300	90237-0154		1	LOCK HOUSING, 1121-U60-0C	
350	312105-0366		2	SCREW M6S ISO 4017 M6X12 A480	
360	312105-0447		2	SCREW M6S ISO 4017 M8X12 A480	
370	312115-0327		4	SCREW ISO4762 M5X12 A4 80	
380	312115-0329		2	SCREW ISO4762 M5X16 A4 80	
390	312115-0368		4	SCREW ISO4762 M6X16 A4 80	
400	575034-0000		2	ROUND NUT	
405	975924-0000		1	WASHER	
410	315105-0146		6	WASHER BRB 5,3X10 RFR	
420	315105-0153		2	WASHER BRB 6,4X12 RFR	
430	315105-0165		2	WASHER BRB 8,4X16 RFR	
440	90458-0315		1	CABLE GLAND, M20X1,5, NO.5311 1120	
450	312105-0293		3	SCREW M6S ISO 4017 M4X16 A470	
460	315105-0136		3	WASHER BRB 4,3X8 RFR	
470	90243-0133		1	CONTAINER	
480	90287-0316		5	SCREW	
MB115	90459-0472		1	KEY SAF.SW. AZ 16 02ZVRK-M20-2152-2254	

Machine Type	Group Description	Used-In	Group Number	Page No

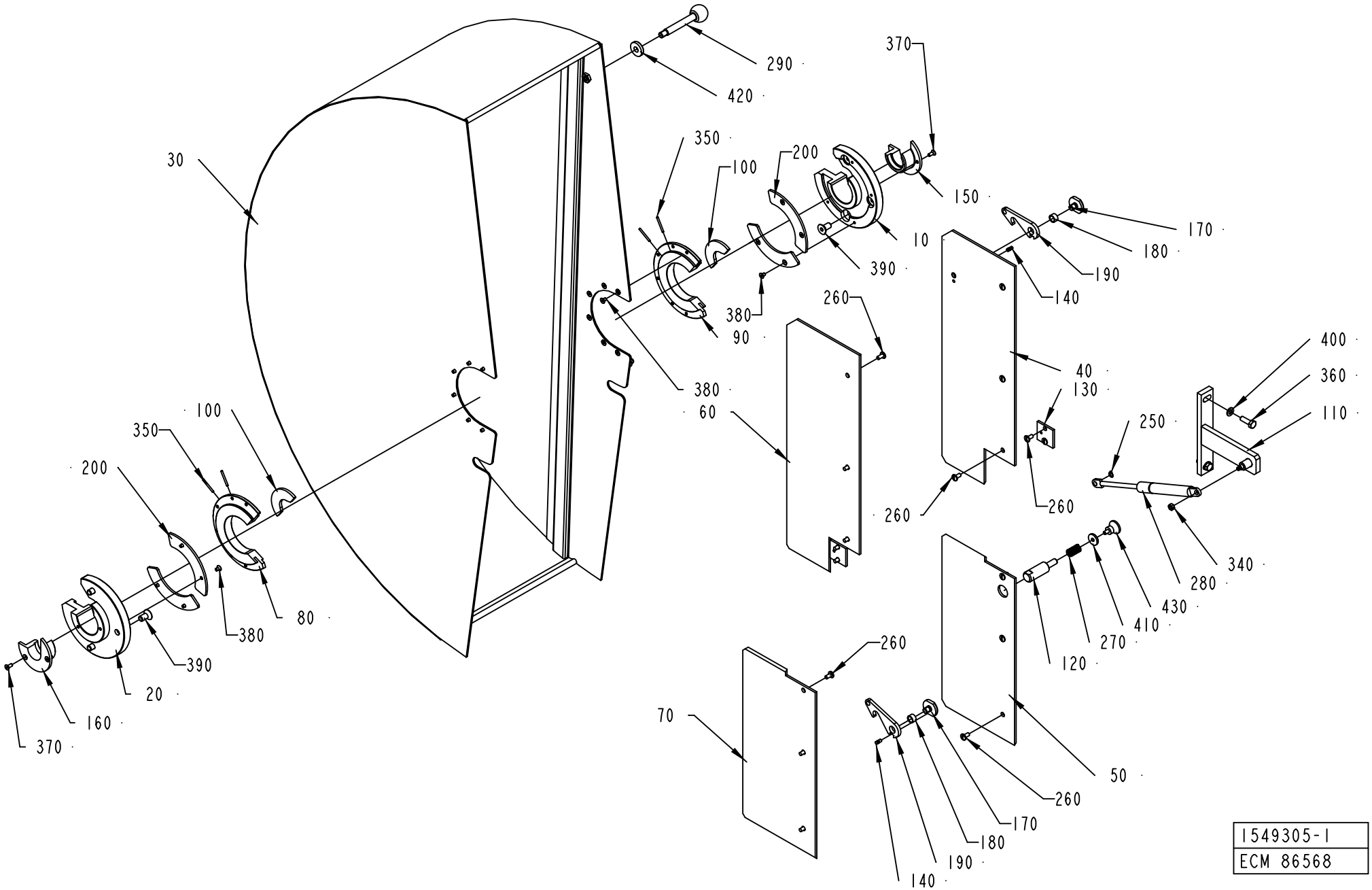
290
420
370
350
100
200
150
30
10
170
180
190
140
390
380
90
260
400
360
110
250
40
130
380
60
260
260
340
280
430
410
270
120
260
70
50
260
170
180
190
140
1549305-1
ECM 86568

ECM: 180783 - 20040911
Group number: 1549305-0100
Assembly Drawing: 1549305-1_1_AA

Pos	Part No	UN	Qty	Description	Page No
-					
010	1549297-0000		1	REEL HOLDER	
020	1549298-0000		1	REEL HOLDER	
030	1549306-0000		1	COVER	
040	1549476-0000		1	PLATE	
050	1549477-0000		1	PLATE	
060	1549478-0000		1	PLATE	
070	1549479-0000		1	PLATE	
080	1549481-0000		1	REEL HOLDER	
090	1549482-0000		1	REEL HOLDER	
100	1549491-0000		2	REEL HOLDER	
110	1549492-0000		1	HOLDER	
120	1558313-0000		1	SHAFT	
130	1558314-0000		2	BRACKET	
140	1013-0000		2	SHAFT	
150	440252-0000		1	SLEEVE	
160	440253-0000		1	SLEEVE	
170	440271-0000		2	SCREW	
180	457358-0000		2	SLEEVE	
190	476117-0000		2	CATCH	
200	2508118-0000		4	FIXING RING	
250	90141-0015		1	RETAINING RING FOR SHAFT DIN 471 8 A2	
260	90287-0075		16	SCREW SLOT. PAN HEAD LKCS M6X12	
270	90335-0036		1	COMP. SPRING 22450, 1,6X14,1X24	
280	90347-0108		1	GAS SPRING NO. 03-08-100-084174	
290	90458-1226		1	HANDLE, NO. GN 310-12-100-A-NI	
340	312605-0316		8	HEXAGON NUT, M6M M6 A280	
350	311103-0242		4	PARALLEL PIN ISO 2338 3M6X30 A1	
360	312105-0453		4	SCREW M6S ISO 4017 M8X25 A480	
370	312155-0327		4	SCREW DIN 7991 MF6S M5X12 A4 70	
380	312155-0323		20	SCREW DIN 7991 MF6S M5X8 A4 70	
390	312155-0491		6	SCREW DIN 7991 MF6S M10X20 A4 70	
400	315105-0165		2	WASHER BRB 8,4X16 RFR	
410	315125-0153		1	WASHER TBRSB 6,4X22X4 A4	
420	315125-0173		1	WASHER TBRSB 10,5X28X6 A4	
430	318871-0104		1	KNOB CIRCULAR, EXT THREAD, NO. 8302-6118	

Pos	Part No	UN	Qty	Description	Page No

Machine Type | Group Description | Used-In | Group Number | Page No

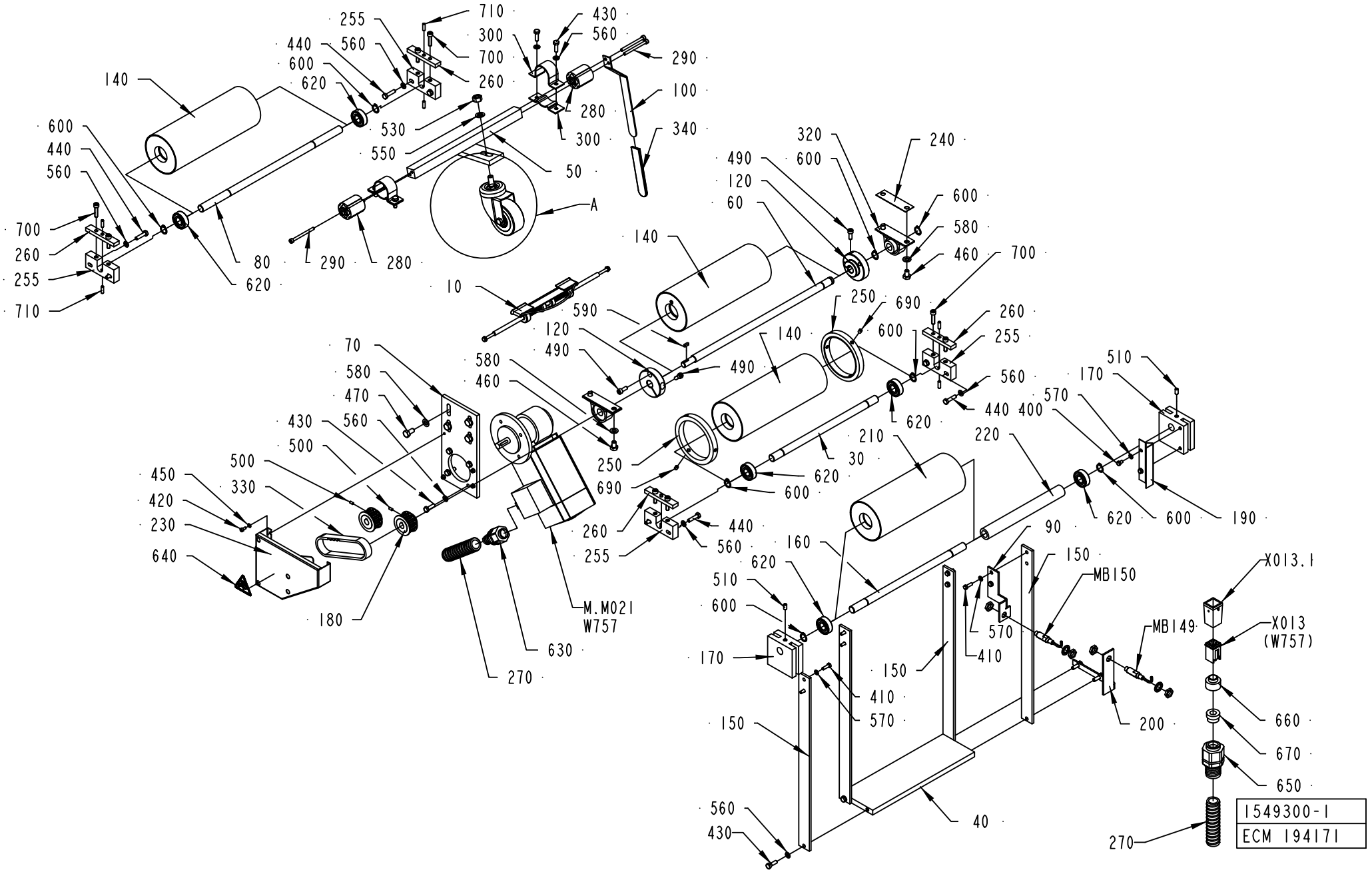
255
710
440
560
600
620
140
600
440
560
700
260
255
710
80
620
290
280
530
550
300
710
300
700
260
430
560
290
100
340
280
50
A
10
590
120
490
70
580
470
430
560
500
450
330
420
230
640
180
M.M021
W757
630
270
580
460
490
140
320
600
490
120
60
240
600
580
460
700
250
690
600
260
255
560
440 400
620
140
490
210
30
620
600
250
690
260
255
440
560
620
510
600
170
150
410
570
150
40
560
430
160
90
150
MB150
MB149
570
410
200
X013.1
X013
(W757)
660
670
650
270
620
600
190
510
170
570
220
1549300-1
ECM 194171

ECM: 239972 - 20051114
Group number: 1549300-0100
Assembly Drawing: 1549300-1_1_AE

This list covers pages from 8-16 to 8-19

Pos	Part No	UN	Qty	Description	Page No
-					
010	577800-0200		1	PAPER GUIDE	**8-21**
030	1549302-0000		1	SHAFT	
040	1549303-0000		1	PLATE	
050	1549304-0000		1	ARM	
060	2501613-0000		1	SHAFT	
070	1549307-0000		1	BRACKET	
080	1549474-0000		1	SHAFT	
090	1549475-0000		1	BRACKET	
100	1549493-0000		1	HANDSPIKE	
110	1558319-0000		2	BUSHING	
120	2501362-0000		2	CLAMP RING	
130	2555116-0000		1	WHEEL	
140	574932-0000		3	BENDING ROLLER	
150	2525340-0000		4	BRACKET	
160	574937-0000		1	SHAFT	
170	574940-0000		2	BLOCKING PIECE	
180	574945-0000		2	TOOTHED PULLEY	
190	574946-0000		1	FLAG	
200	576274-0000		1	BRACKET	
210	979555-0000		1	WEB TENSION ROLLER	
220	979946-0000		1	STEEL TUBE	
230	2509543-0000		1	PROTECTION	
240	2547005-0000		2	LACE	
250	1140996-0000		2	FLANGE	
255	2610111-0000		4	BEARING BRACKET	
260	2610112-0000		4	BEARING BRACKET	
270	90152-0051	M	2	SPIRAL CONDUIT, 25X18, UL 1816	
280	90458-1240		2	RUBBERSPRING DK-A 15X40	
290	90458-0058		4	SCREW M5X60 A280	
300	90458-1230		2	CLAMPING ELEMENT, DI=36 MM	
310	90458-1231		1	FORK HOLDER 913588/04	
320	90458-1232		2	BEARING BRACKET AY15	
330	90458-1233		1	TIMING BELT T10 340X16 MM	
340	90458-1234		1	PROTECTIVE CAP 2X20X1.2X100	
400	312101-0323		2	SCREW M6S M5X8 FZB	
410	312105-0329		8	SCREW M6S ISO 4017 M5X16 A480	
420	312115-0287		4	SCREW ISO4762 M4X8 A4 80	
430	312105-0370		12	SCREW M6S ISO 4017 M6X20 A480	
440	312105-0372		8	SCREW M6S ISO 4017 M6X25 A480	
450	315105-0136		4	WASHER BRB 4,3X8 RFR	
460	312105-0447		4	SCREW M6S ISO 4017 M8X12 A480	
470	312105-0449		4	SCREW M6S ISO 4017 M8X16 A480	
480	312115-0495		1	SCREW ISO4762 M10X30 A4 80	
490	312115-0368		3	SCREW ISO4762 M6X16 A4 80	
500	312318-0287		2	SCREW ISO4029 M4X8 A4	
510	312318-0366		2	SCREW ISO4029 M6X12 A4	
530	312605-0320		1	HEXAGON NUT, M6M M10 A280	
540	312625-0320		1	HEXAGON THIN NUT, EN 24035 ML6M M10 A4	
550	315105-0171		1	WASHER BRB 10X18 RFR	
560	315105-0153		20	WASHER BRB 6,4X12 RFR	
570	315105-0146		10	WASHER BRB 5,3X10 RFR	
580	315105-0165		8	WASHER BRB 8,4X16 RFR	
590	315705-0166		1	PARALLEL KEY W. ROUND ENDS 4X4X12 MM	
600	315751-0112		8	RETAINING RING FOR SHAFT DIN 471 15 A2	
610	321308-0202		2	BALL BEARING, 15X32X9 MM	
620	321313-0102		6	BALL BEARING, 15X35X11 MM	
630	90458-0449		1	HOSE GLAND EMC M20 EXTENDED	
640	359705-0001		1	WARNING SIGN ISO, ENTANGLEMENT	
650	353243-0005		1	HOSE GLAND W/O INSERT PG16 EXTENDED	
660	90089-0007		1	REDUCING SLEEVE, PR18,6/PR22,5	
670	353249-0013		1	INSERT, SINGEL HOLE, EK 154/13	
690	312318-0362		6	SCREW ISO4029 M6X8 A4	
700	312115-0372		8	SCREW ISO4762 M6X25 A4 80	
710	312318-0329		8	SCREW ISO4029 M5X16 A4	
MB150	90458-0675		1	PROXIMITY SENSOR, E2EG-X5MB1-5M	
MB149	90458-0675		1	PROXIMITY SENSOR, E2EG-X5MB1-5M	
M.M021	90459-2327		1	GEARS, WORM MOTOR IGL 80-60 + VE 31-G-R-	
W757	90220-0104	M	3	SCR. CABLE 4X1,5MM2	
X013	90459-2412		1	CONNECTOR 4 POLE + EARTH	
X013.1	90110-0371		1	COVER, HDC-HA-3-TOVL1/11165247-A/1	

Machine Type | Group Description | Used-In | Group Number | Page No

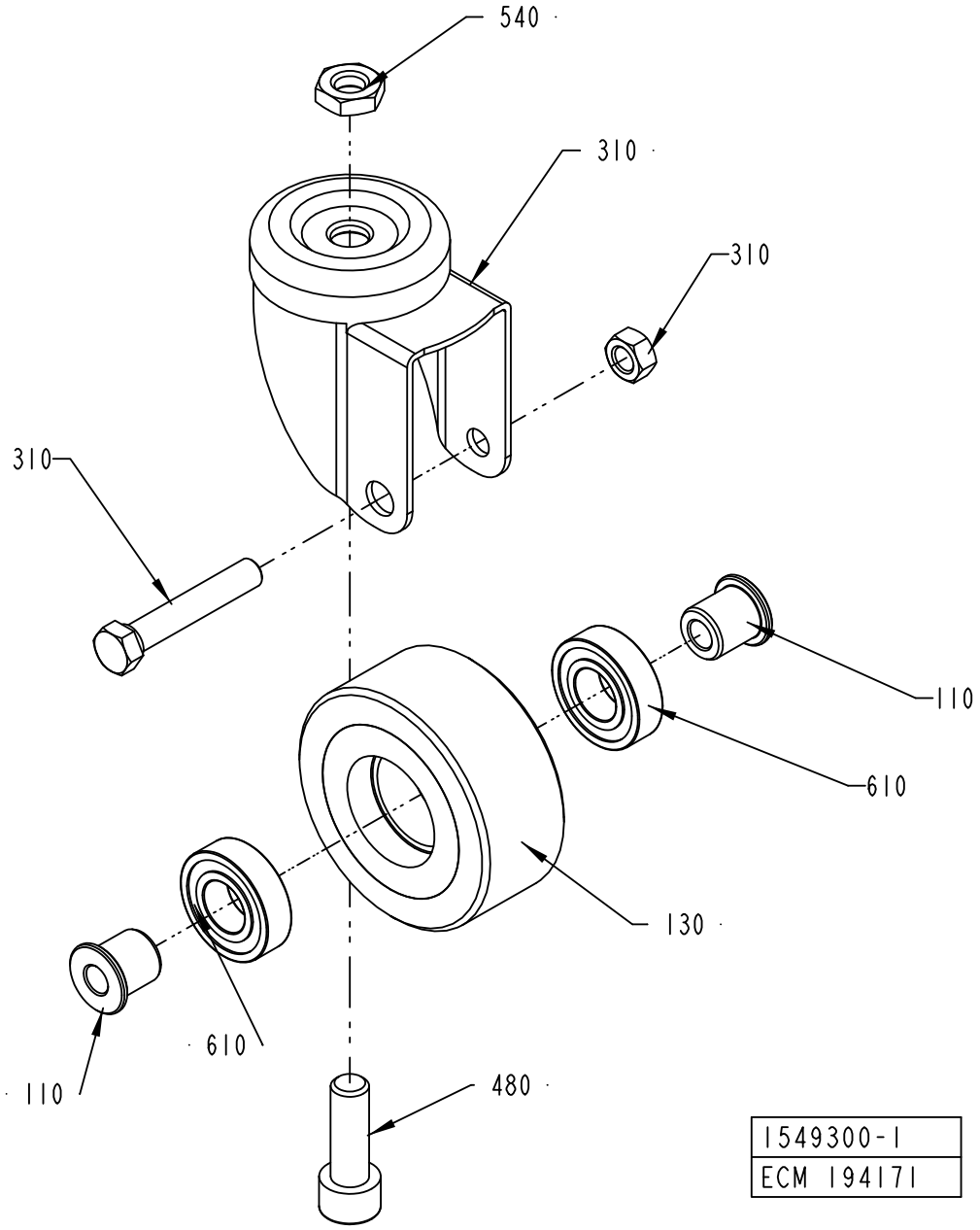

DETAIL A

ECM: 239972 - 20051114
Group number: 1549300-0100
Assembly Drawing: 1549300-1_2_AE

This list covers pages from 8-16 to 8-19

Pos	Part No	UN	Qty	Description	Page No
-					
010	577800-0200		1	PAPER GUIDE	**8-21**
030	1549302-0000		1	SHAFT	
040	1549303-0000		1	PLATE	
050	1549304-0000		1	ARM	
060	2501613-0000		1	SHAFT	
070	1549307-0000		1	BRACKET	
080	1549474-0000		1	SHAFT	
090	1549475-0000		1	BRACKET	
100	1549493-0000		1	HANDSPIKE	
110	1558319-0000		2	BUSHING	
120	2501362-0000		2	CLAMP RING	
130	2555116-0000		1	WHEEL	
140	574932-0000		3	BENDING ROLLER	
150	2525340-0000		4	BRACKET	
160	574937-0000		1	SHAFT	
170	574940-0000		2	BLOCKING PIECE	
180	574945-0000		2	TOOTHED PULLEY	
190	574946-0000		1	FLAG	
200	576274-0000		1	BRACKET	
210	979555-0000		1	WEB TENSION ROLLER	
220	979946-0000		1	STEEL TUBE	
230	2509543-0000		1	PROTECTION	
240	2547005-0000		2	LACE	
250	1140996-0000		2	FLANGE	
255	2610111-0000		4	BEARING BRACKET	
260	2610112-0000		4	BEARING BRACKET	
270	90152-0051	M	2	SPIRAL CONDUIT, 25X18, UL 1816	
280	90458-1240		2	RUBBERSPRING DK-A 15X40	
290	90458-0058		4	SCREW M5X60 A280	
300	90458-1230		2	CLAMPING ELEMENT, DI=36 MM	
310	90458-1231		1	FORK HOLDER 913588/04	
320	90458-1232		2	BEARING BRACKET AY15	
330	90458-1233		1	TIMING BELT T10 340X16 MM	
340	90458-1234		1	PROTECTIVE CAP 2X20X1.2X100	
400	312101-0323		2	SCREW M6S M5X8 FZB	
410	312105-0329		8	SCREW M6S ISO 4017 M5X16 A480	
420	312115-0287		4	SCREW ISO4762 M4X8 A4 80	
430	312105-0370		12	SCREW M6S ISO 4017 M6X20 A480	
440	312105-0372		8	SCREW M6S ISO 4017 M6X25 A480	
450	315105-0136		4	WASHER BRB 4,3X8 RFR	
460	312105-0447		4	SCREW M6S ISO 4017 M8X12 A480	
470	312105-0449		4	SCREW M6S ISO 4017 M8X16 A480	
480	312115-0495		1	SCREW ISO4762 M10X30 A4 80	
490	312115-0368		3	SCREW ISO4762 M6X16 A4 80	
500	312318-0287		2	SCREW ISO4029 M4X8 A4	
510	312318-0366		2	SCREW ISO4029 M6X12 A4	
530	312605-0320		1	HEXAGON NUT, M6M M10 A280	
540	312625-0320		1	HEXAGON THIN NUT, EN 24035 ML6M M10 A4	
550	315105-0171		1	WASHER BRB 10X18 RFR	
560	315105-0153		20	WASHER BRB 6,4X12 RFR	
570	315105-0146		10	WASHER BRB 5,3X10 RFR	
580	315105-0165		8	WASHER BRB 8,4X16 RFR	
590	315705-0166		1	PARALLEL KEY W. ROUND ENDS 4X4X12 MM	
600	315751-0112		8	RETAINING RING FOR SHAFT DIN 471 15 A2	
610	321308-0202		2	BALL BEARING, 15X32X9 MM	
620	321313-0102		6	BALL BEARING, 15X35X11 MM	
630	90458-0449		1	HOSE GLAND EMC M20 EXTENDED	
640	359705-0001		1	WARNING SIGN ISO, ENTANGLEMENT	
650	353243-0005		1	HOSE GLAND W/O INSERT PG16 EXTENDED	
660	90089-0007		1	REDUCING SLEEVE, PR18,6/PR22,5	
670	353249-0013		1	INSERT, SINGEL HOLE, EK 154/13	
690	312318-0362		6	SCREW ISO4029 M6X8 A4	
700	312115-0372		8	SCREW ISO4762 M6X25 A4 80	
710	312318-0329		8	SCREW ISO4029 M5X16 A4	
MB150	90458-0675		1	PROXIMITY SENSOR, E2EG-X5MB1-5M	
MB149	90458-0675		1	PROXIMITY SENSOR, E2EG-X5MB1-5M	
M.M021	90459-2327		1	GEARS, WORM MOTOR IGL 80-60 + VE 31-G-R-	
W757	90220-0104	M	3	SCR. CABLE 4X1,5MM2	
X013	90459-2412		1	CONNECTOR 4 POLE + EARTH	
X013.1	90110-0371		1	COVER, HDC-HA-3-TOVL1/11165247-A/1	

Machine Type | Group Description | Used-In | Group Number | Page No

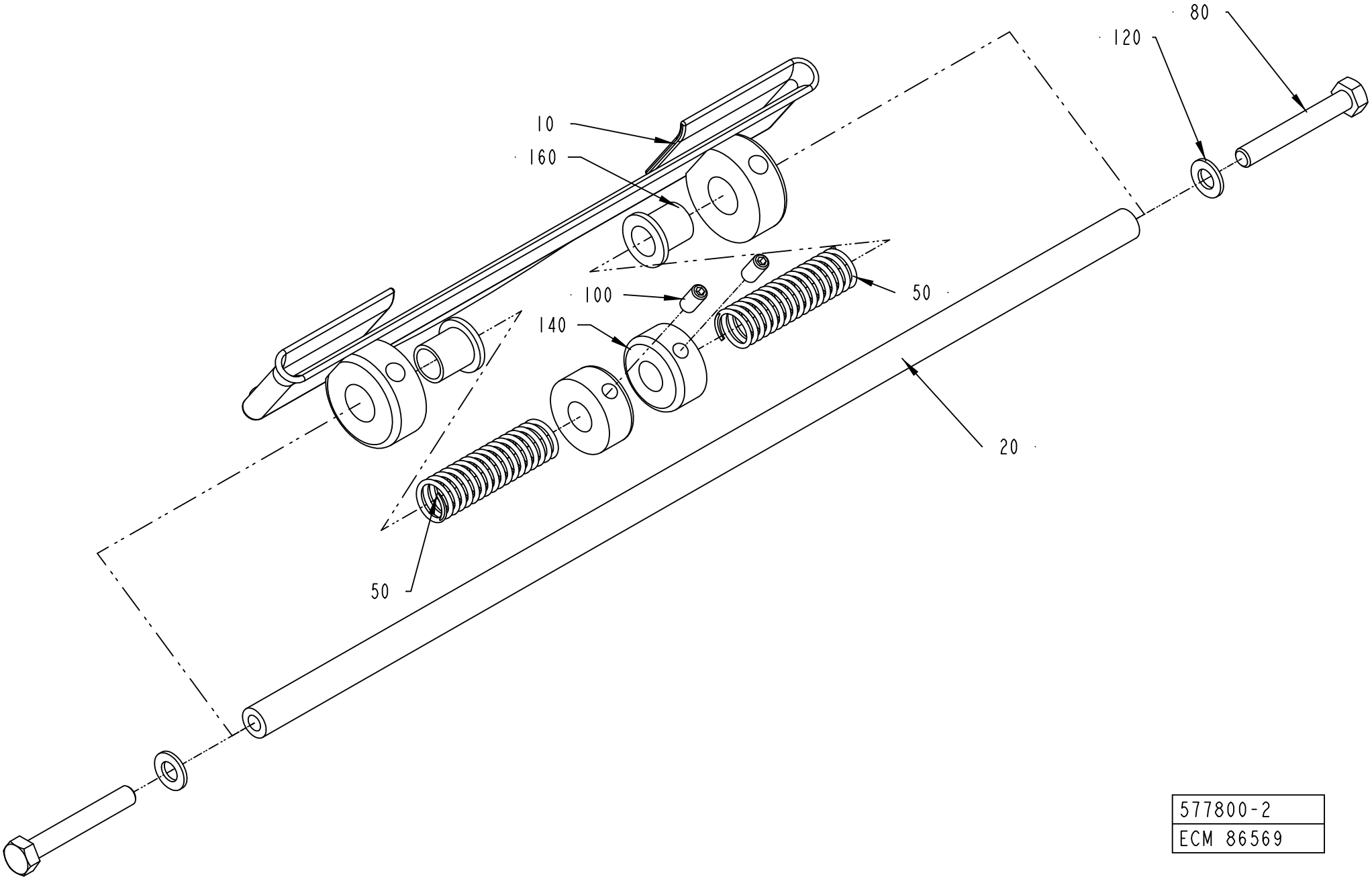

577800-2
ECM 86569

ECM: 276149 - 20070126
Group number: 577800-0200
Assembly Drawing: 577800-2_1_AA

Pos	Part No	UN	Qty	Description	Page No
TBA 0100B, TBA 0125S					
010	578685-0000		1	GUIDING ARBOR	
TBA 0160S, TBA 0200S					
010	577798-0000		1	GUIDING ARBOR	
TBA 0180B, TBA 0200B, TBA 0236B, TBA 0284B, TBA 0250B, TBA 0300S, TBA 0330S					
010	578686-0000		1	GUIDING ARBOR	
TBA 0200M, TBA 0250S					
010	578687-0000		1	GUIDING ARBOR	
Common Parts					
020	577799-0000		1	SHAFT	
050	752085-0000		2	SPRING	
080	312105-0337		2	SCREW M6S ISO 4014 M5X35 A480	
100	312318-0287		2	SCREW ISO4029 M4X8 A4	
120	315105-0146		2	WASHER BRB 5,3X10 RFR	
140	315742-0104		2	RETAINING RING 8 SMS 199 RFR	
160	90240-0121		2	FLANGE BUSHING, 8X10X12 MM	

Pos	Part No	UN	Qty	Description	Page No

This page is intentionally left blank.

ECM: 170390 - 20050428
Group number: 579241-0200
Assembly Drawing:

Pos	Part No	UN	Qty	Description	Page No
NOPT TBA 0200B, NOPT TBA 0180B, NOPT TBA 0330S, NOPT TBA 0300S, NOPT TBA 0250B, NOPT TBA 0284B, NOPT TBA 0200SQ					
030	752645-0400		1	DATING UNIT	**8-25, 8-27, 8-29**
PT19 TBA 0125S, PT19 TBA 0100B, PT19 TBA 0330S, PT19 TBA 0300S, PT19 TBA 0284B, PT19 TBA 0250S, PT19 TBA 0200M, PT19 TBA 0200B, PT19 TBA 0180B, PT19 TBA 0160S, PT19 TBA 0250B, PT19 TBA 0236B, PT19 TBA 0200S, NOPT TBA 0200S, NOPT TBA 0200M, NOPT TBA 0160S, NOPT TBA 0125S, NOPT TBA 0100B, NOPT TBA 0236B, NOPT TBA 0250S					
040	752646-0400		1	DATING UNIT	**8-45, 8-47, 8-49**

Pos	Part No	UN	Qty	Description	Page No

DATING UNIT

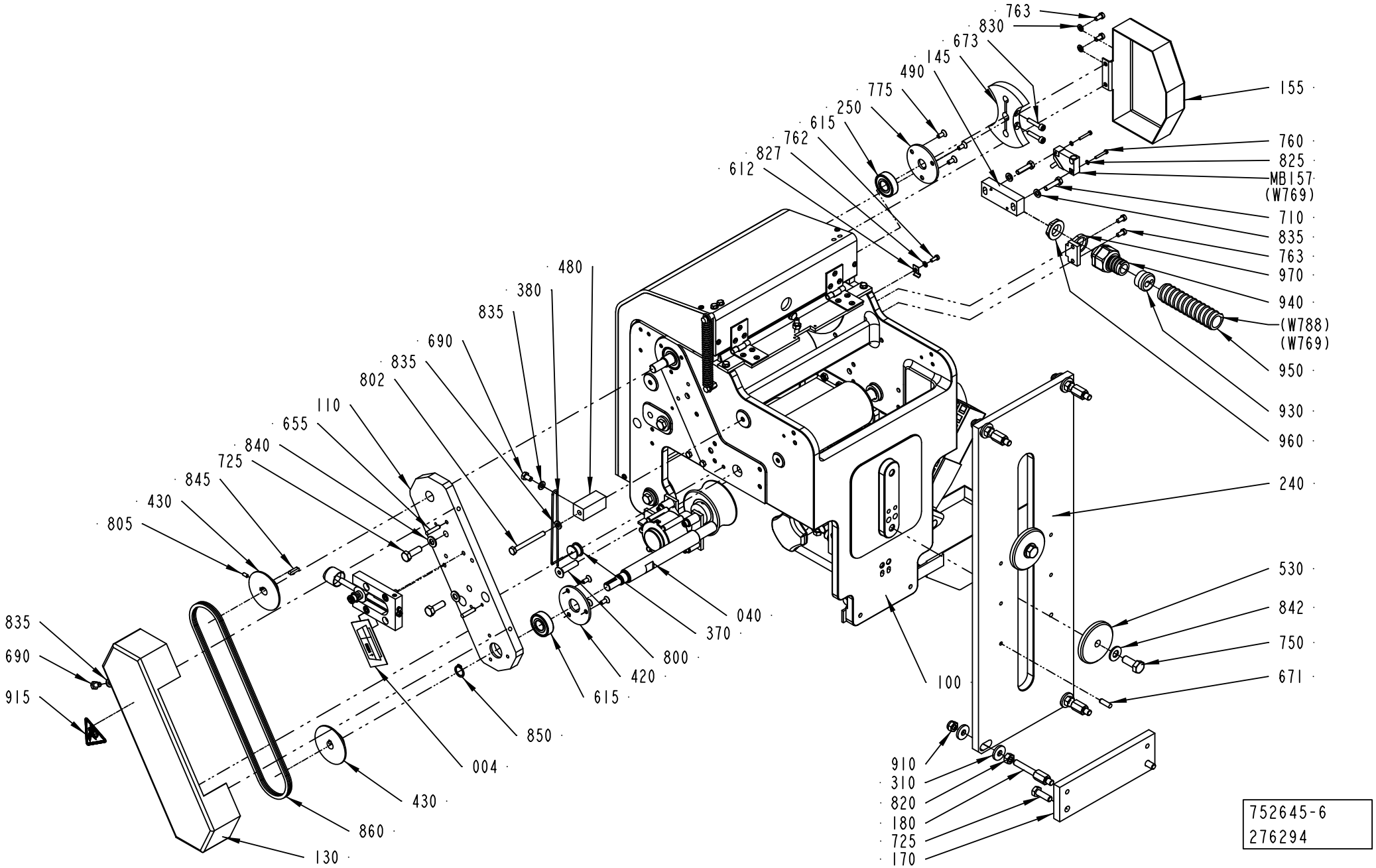
763
830
673
145
490
775
250
615
762
827
612
155
760
825
MB157
(W769)
710
835
763
970
940
(W788)
(W769)
950
930
960
240
530
842
750
671
100
910
310
820
180
725
170
480
380
835
690
835
802
110
655
840
725
845
430
805
040
370
800
420
615
850
004
430
860
130
835
690
915
752645-6
276294

ECM: 295165 - 20070126
Group number: 752645-0400
Assembly Drawing: 752645-6_1_AA

This list covers pages from 8-24 to 8-29

Pos	Part No	UN	Qty	Description	Page No
TBA 0180B					
010	752542-0001		1	BENDING ROLLER	
020	752543-0001		1	SHAFT	
030	456767-0000		2	CREASE BAR	
040	752536-0001		1	SHAFT	
050	441556-0006		2	SPACER	
060	256400-0000		1	SHAFT	
070	90166-0059	MM	24	HOSE PVC 12/16MM TRANSP.	
075	90166-0059	MM	24	HOSE PVC 12/16MM TRANSP.	
300	752535-0000		1	SHAFT	
560	456817-0001		16	SHIM	
700	312105-0366		4	SCREW M6S ISO 4017 M6X12 A480	
TBA 0200B					
010	752542-0001		1	BENDING ROLLER	
020	752543-0001		1	SHAFT	
030	456767-0000		2	CREASE BAR	
040	752536-0001		1	SHAFT	
050	441556-0004		2	SPACER	
060	256400-0000		1	SHAFT	
070	90166-0059	MM	24	HOSE PVC 12/16MM TRANSP.	
075	90166-0059	MM	24	HOSE PVC 12/16MM TRANSP.	
300	752535-0000		1	SHAFT	
560	456817-0001		16	SHIM	
700	312105-0366		4	SCREW M6S ISO 4017 M6X12 A480	
TBA 0200SQ					
010	752542-0001		1	BENDING ROLLER	
020	752543-0001		1	SHAFT	
030	1523314-0000		2	CREASE BAR	
040	752536-0001		1	SHAFT	
050	1523315-0000		2	SPACER	
060	256400-0000		1	SHAFT	
070	90166-0059	MM	24	HOSE PVC 12/16MM TRANSP.	
075	90166-0059	MM	24	HOSE PVC 12/16MM TRANSP.	
300	752535-0000		1	SHAFT	
560	456817-0001		16	SHIM	
700	312105-0366		4	SCREW M6S ISO 4017 M6X12 A480	
TBA 0250B					
010	752542-0001		1	BENDING ROLLER	
020	752543-0001		1	SHAFT	
030	456767-0000		2	CREASE BAR	
040	752536-0001		1	SHAFT	
050	441556-0002		2	SPACER	
060	256400-0000		1	SHAFT	
065	299643-0000		2	WASHER	
070	90166-0059	MM	24	HOSE PVC 12/16MM TRANSP.	
075	90166-0059	MM	24	HOSE PVC 12/16MM TRANSP.	
300	752535-0000		1	SHAFT	
560	456817-0001		16	SHIM	
700	312105-0366		4	SCREW M6S ISO 4017 M6X12 A480	
TBA 0284B, TBA 0300S, TBA 0330S					
010	752542-0001		1	BENDING ROLLER	
020	752543-0001		1	SHAFT	
030	456767-0000		2	CREASE BAR	
040	752536-0001		1	SHAFT	
050	441556-0001		2	SPACER	
060	256400-0000		1	SHAFT	
070	90166-0059	MM	24	HOSE PVC 12/16MM TRANSP.	
075	90166-0059	MM	24	HOSE PVC 12/16MM TRANSP.	
300	752535-0000		1	SHAFT	
560	456817-0001		16	SHIM	
700	312105-0366		4	SCREW M6S ISO 4017 M6X12 A480	
Common Parts					
001	293685-0200		2	PRINTING WHEEL SS	**8-31, 8-33, 12-37, 12-39**
002	458192-0300		1	INK UNIT SS	**8-35**
003	751718-0100		1	HOLDER	**8-37**
004	543143-0100		1	ADJUSTMENT DEVICE	**8-39, 8-41**
005	1549584-0100		1	PAPER BRAKE	**8-43**
090	979790-0000		1	COVER	
100	752200-0000		1	CANTILEVER	
110	752526-0000		1	PLATE	
120	572252-0000		1	BRACKET	
130	752528-0000		1	COVER	
140	752527-0000		1	CANTILEVER	
145	491965-0000		1	CAM	
150	979543-0000		1	SPLASH PLATE	
155	556422-0000		1	PROTECTION	
160	752529-0000		1	BEARING COVER	
170	578000-0000		1	BRACKET	
180	578001-0000		2	SCREW	
240	752539-0000		1	PLATE	
245	572460-0000		1	SHEET	
250	752240-0000		1	LID	
270	752538-0000		2	SHAFT	
280	752642-0000		1	BRACKET	

Machine Type | Group Description | Used-In | Group Number | Page No

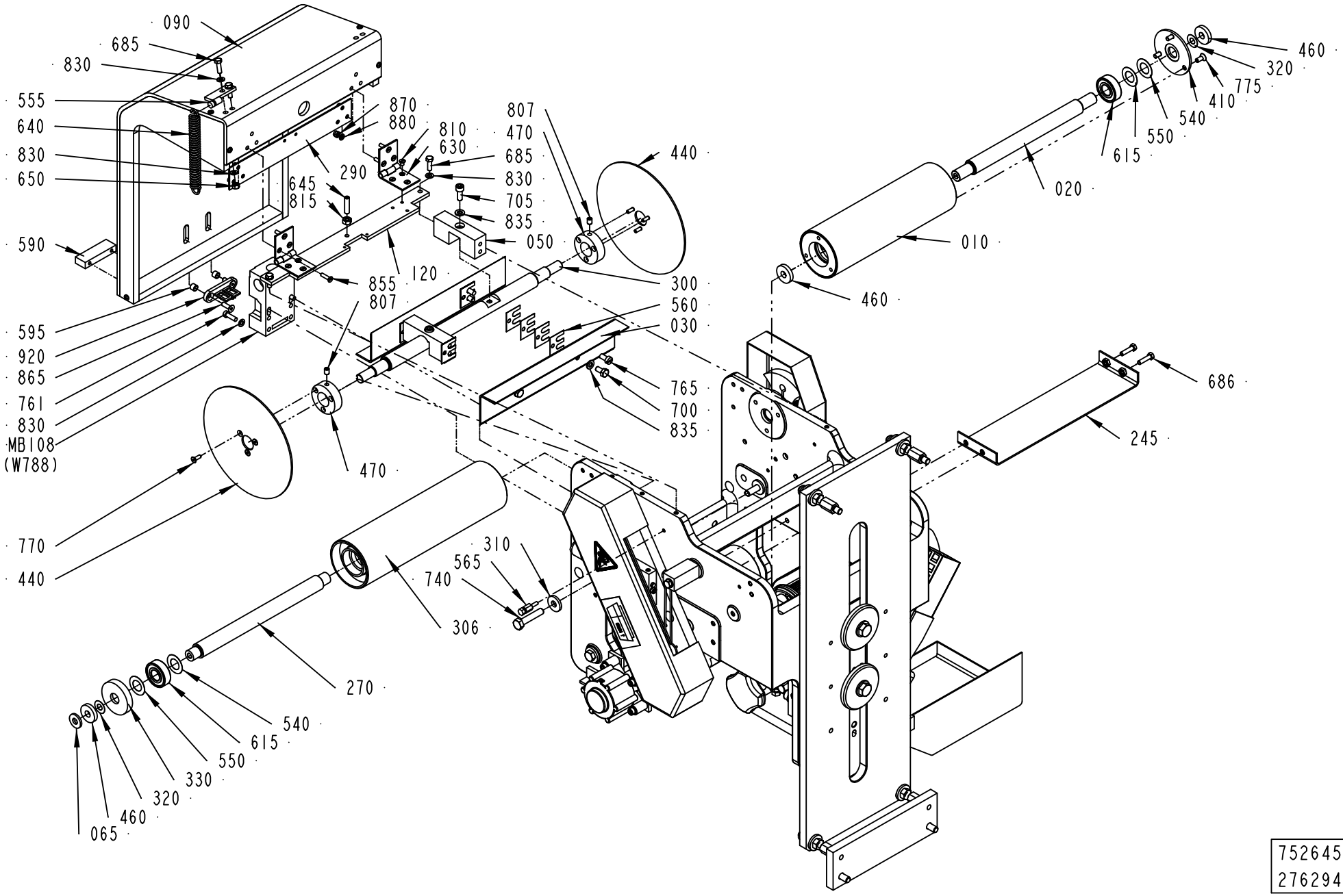

752645-6
276294

ECM: 295165 - 20070126
Group number: 752645-0400
Assembly Drawing: 752645-6_2_AA

This list covers pages from 8-24 to 8-29

Pos	Part No	UN	Qty	Description	Page No
Common Parts (Cont'd)					
290	572253-0000		1	SHEET	
306	979709-0000		2	BENDING ROLLER	
310	28036-0000		12	WASHER	
320	2033-0011		20	WASHER	
330	265568-0000		4	DUST COVER	
340	32925-0000		1	CARRIER	
350	32926-0000		1	ROLL	
360	32927-0000		1	SHAFT	
370	33182-0000		1	ROLL	
380	752237-0000		1	SPRING	
410	256248-0001		2	LID	
420	256398-0000		1	LID	
430	752530-0000		2	SPROCKET	
440	256406-0000		2	GABLE PLATE	
450	752644-0000		2	SCREW	
460	256409-0000		6	WASHER	
470	257141-0000		2	RETAINING RING	
480	752531-0000		1	BRACKET	
490	752534-0000		1	PLATE	
520	752541-0000		1	CANTILEVER	
530	253107-0000		2	WASHER	
540	752544-0001		6	SHIM	
550	752544-0002		8	SHIM	
555	979788-0000		1	SPRING HOLDER	
565	979789-0000		1	SPRING HOLDER	
590	572254-0000		1	HANDLE	
595	572255-0000		2	SPACER	
612	90165-0056		6	PIPE CLIP FOR TUBE D=4 MM	
615	90214-0098		10	BALL BEARING, 15X35X11 MM	
630	90248-0026		2	HINGE, 1703-80X32	
640	90335-0041		1	TENSION SPRING 42350, 2X14X68	
645	312318-0372		1	SCREW ISO4029 M6X25 A4	
650	312605-0314		2	HEXAGON NUT, M6M M5 A280	
655	311103-0312		2	PARALLEL PIN ISO 2338 5M6X25 A1	
670	311103-0357		1	PARALLEL PIN ISO 2338 6M6X30 A1	
671	311103-0353		2	PARALLEL PIN ISO 2338 6M6X20 A1	
673	312115-0333		2	SCREW ISO4762 M5X25 A4 80	
675	312111-0471		1	SCREW HEX.SOCK.HD.MC6S-TT 8X100 88 FZ	
685	312105-0329		5	SCREW M6S ISO 4017 M5X16 A480	
686	312105-0331		4	SCREW M6S ISO 4017 M5X20 A480	
690	312105-0364		3	SCREW M6S ISO 4017 M6X10 A480	
705	312115-0370		2	SCREW ISO4762 M6X20 A4 80	
710	312105-0372		5	SCREW M6S ISO 4017 M6X25 A480	
725	312105-0453		2	SCREW M6S ISO 4017 M8X25 A480	
735	312105-0457		1	SCREW M6S ISO 4014 M8X35 A480	
740	312105-0459		5	SCREW M6S ISO 4014 M8X40 A480	
750	312105-0493		2	SCREW M6S ISO 4017 M10X25 A480	
755	312109-0376		1	SCREW M6S ISO 4017 M6X35 A480	
760	312125-0230		2	SCREW ISO 1207 M3X20 A4	
761	312125-0329		2	SCREW ISO 1207 M5X16 A4	
762	312125-0289		6	SCREW ISO 1207 M4X10 A4	
763	312125-0325		4	SCREW ISO 1207 M5X10 A4	
765	312125-0366		4	SCREW ISO 1207 M6X12 A4	
770	312155-0291		6	SCREW DIN 7991 MF6S M4X12 A4 70	
775	312155-0327		15	SCREW DIN 7991 MF6S M5X12 A4 70	
800	312155-0457		2	SCREW DIN 7991 MF6S M8X35 A4 70	
802	312105-0382		1	SCREW M6S ISO 4014 M6X60 A480	
805	312318-0287		2	SCREW ISO4029 M4X8 A4	
807	312318-0362		3	SCREW ISO4029 M6X8 A4	
810	312145-0285		6	SCREW ISO 2009 MFS M4X6 A4	
815	312605-0316		2	HEXAGON NUT, M6M M6 A280	
820	312605-0318		4	HEXAGON NUT, M6M M8 A280	
825	315105-0124		2	WASHER BRB 3,2X6 RFR	
827	315105-0136		7	WASHER BRB 4,3X8 RFR	
830	315105-0146		11	WASHER BRB 5,3X10 RFR	
835	315105-0153		13	WASHER BRB 6,4X12 RFR	
840	315105-0165		5	WASHER BRB 8,4X16 RFR	
842	315105-0173		2	WASHER BRB 10,5X22 RFR	
845	315701-0169		2	PARALLEL KEY W. ROUND ENDS 4X4X18 MM	
850	315751-0112		1	RETAINING RING FOR SHAFT DIN 471 15 A2	
855	312145-0293		6	SCREW ISO 2009 MFS M4X16 A4	
860	318207-0168		1	ROLLER CHAIN, SINGLE 6MM-168	
865	312155-0329		2	SCREW DIN 7991 MF6S M5X16 A4 70	
870	312812-0312		6	HEXAGON NUT, NY-LOCK M4 A480	
880	315101-0136		6	WASHER BRB, 4,3/8 H=0,8	
900	352101-0103		1	LEAD-IN, PR18,6/PG11, E-1457518	
910	312812-0318		6	HEXAGON NUT, NY-LOCK M8 A480	
915	359705-0001		1	WARNING SIGN ISO, ENTANGLEMENT	
920	90044-0310		1	KEY FOR SAFETY SWITCH AZ 15/16 B1	
930	90458-1239		1	GLAND, INSERT, MULTI HOLE, 1X9/1X5,5	
940	90458-0430		1	HOSE GLAND W/O INSERT M20 EXTENDED	
950	90152-0051	M	3	SPIRAL CONDUIT, 25X18, UL 1816	
960	90458-0323		1	NUT, M20X1,5	

Machine Type | Group Description | Used-In | Group Number | Page No

DATING UNIT

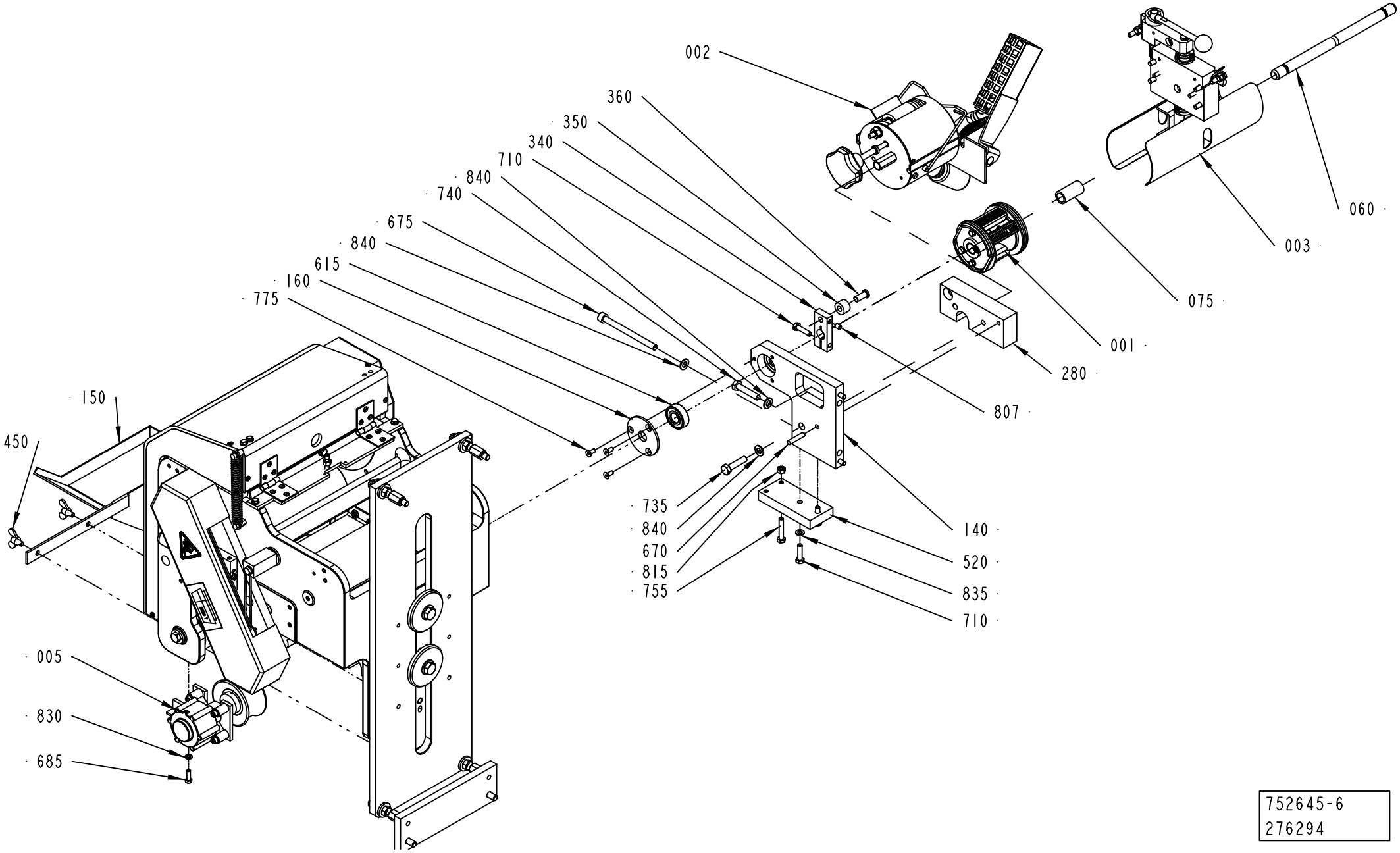

752645-6
276294

Pos	Part No	UN	Qty	Description	Page No
Common Parts (Cont'd)					
970	352135-0202		1	CLIP, 16 MM, 913.016	
MB157	90044-0104		1	PROX.SWITCH IFM IN 3002(RP 90044-194)	
MB108	90044-0103		1	KEY SAFETY SWITCH AZ 15 ZVR-2254	
	90044-0310		*1*	*KEY FOR SAFETY SWITCH AZ 15/16 B1*	

Pos	Part No	UN	Qty	Description	Page No

PRINTING WHEEL SS

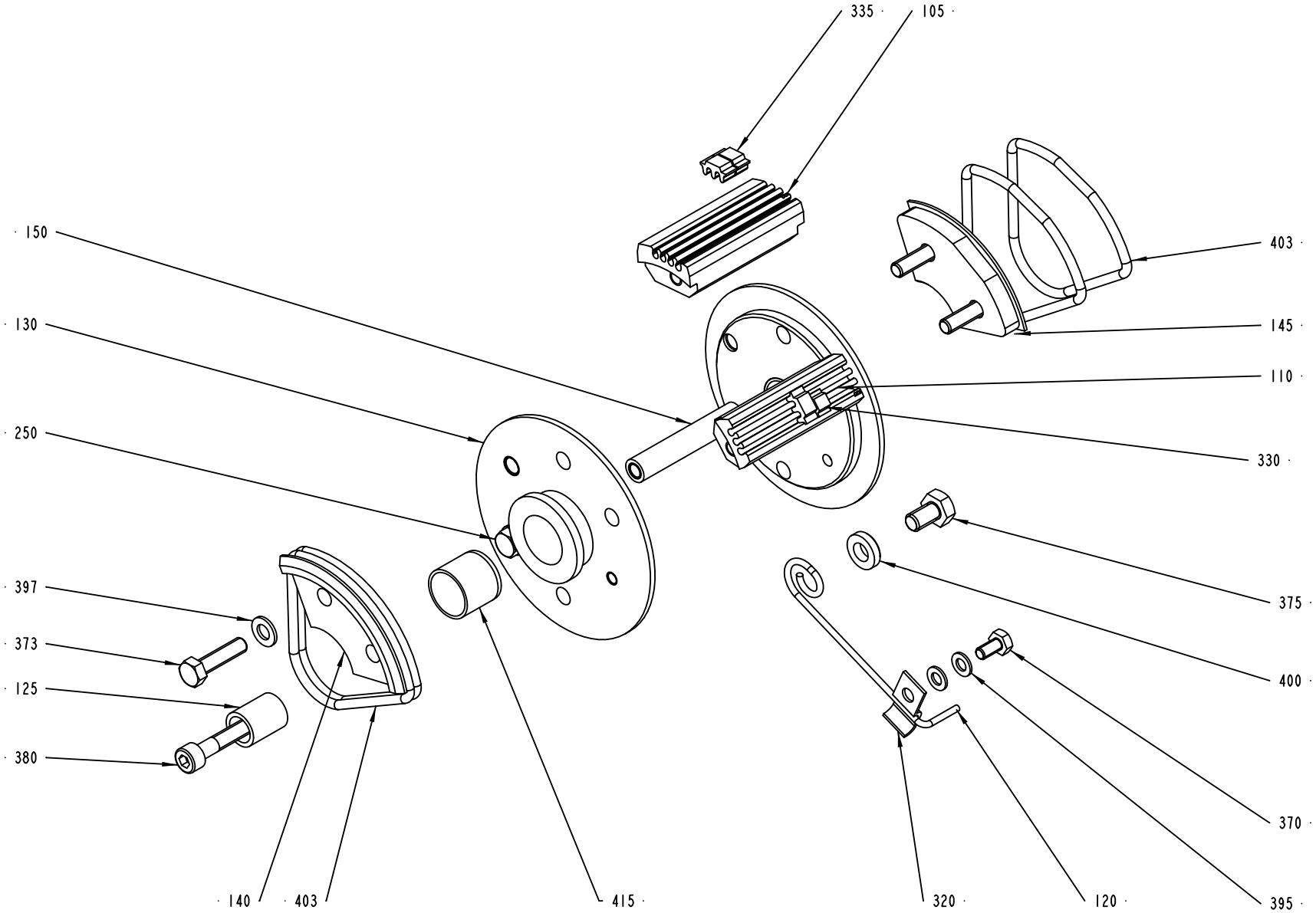

S-293685-2
ECN 73044

Pos	Part No	UN	Qty	Description	Page No
0100B, 0125S, 0180B, 0189B, 0200B, 0200S, 0236B, 0250B, 0284B, 0300B, 0300S, 0330S, 0200SQ					
105-02	293395-0002		2	TYPE HOLDER	
110-02	293395-0001		2	TYPE HOLDER	
130	292412-0000		1	END SECTION	
135	292413-0000		1	END SECTION	
140	292414-0000		1	CARRIER	
373-02	312101-0331		7	SCREW M6S M5X20 FZB	
397-02	315101-0146		7	WASHER PLAIN, BRB, 5,3/10 H=1	
405	315202-0304		2	O-RING 64,5X3 MM	
410	315202-0305		2	O-RING 69,5X3 MM	
0375S					
105	293395-0002		1	TYPE HOLDER	
110	293395-0001		1	TYPE HOLDER	
130	479236-0000		2	END SECTION	
140	479239-0000		1	CARRIER	
145	479240-0000		1	CARRIER	
150	293671-0000		1	SPACER	
250	312101-0329		2	SCREW M6S M5X16 FZB	
373	312101-0331		3	SCREW M6S M5X20 FZB	
397	315101-0146		5	WASHER PLAIN, BRB, 5,3/10 H=1	
403	315202-0224		4	O-RING 42,2X3 MM	
Common Parts					
120	32691-0000		1	LOCK SPRING	
125	33011-0000		1	SLEEVE	
320	90165-0010		1	CLIP	
330	90413-0043		1	CODE INSERT SET	
330	90413-0033		1	CODE INSERT SET C 2/16	
335	90413-0047		1	CODE INSERT SET A 2/16	
335	90413-0044		1	CODE INSERT SET	
370	312101-0287		1	SCREW M6S M4X8 FZB	
375	312101-0364		1	SCREW M6S M6X10 FZB	
380	312111-0335		1	SCREW HEX.SOCK.HD.MC6S-TT 5X30 88 FZB	
395	315101-0136		1	WASHER BRB, 4,3/8 H=0,8	
400	315111-0153		1	WASHER PLAIN, TBRB 6,4/12 H=3	
415	321120-0122		2	BEARING BUSH W/O FLANGE, 15X17X15 MM	

Pos	Part No	UN	Qty	Description	Page No

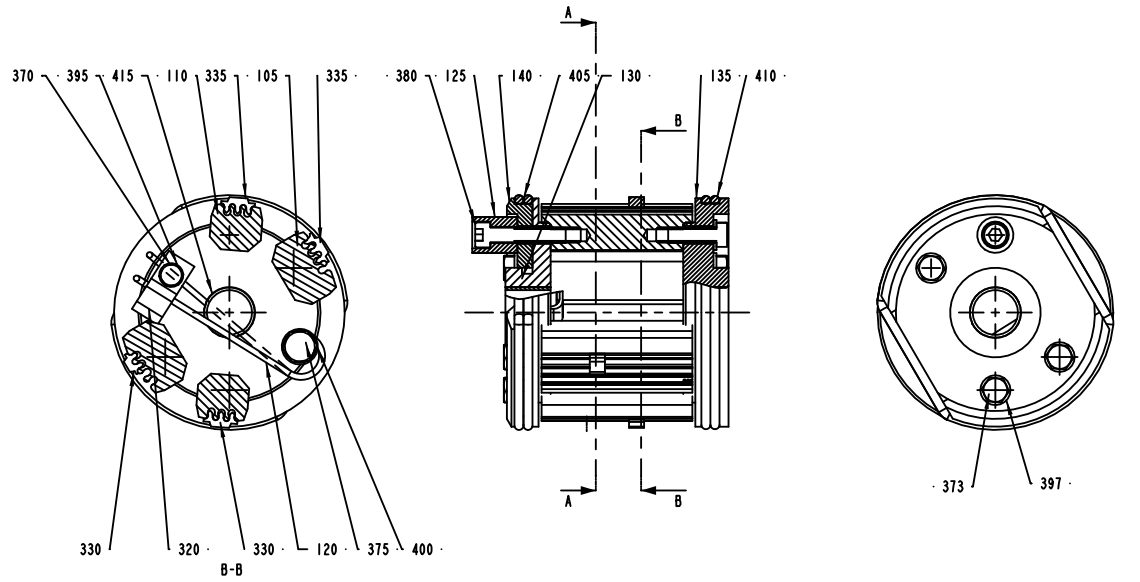
370
395
415
110
335
105
335
380
125
140
405
130
135
410
A
B
373
397
330
320
330
120
375
400
B-B

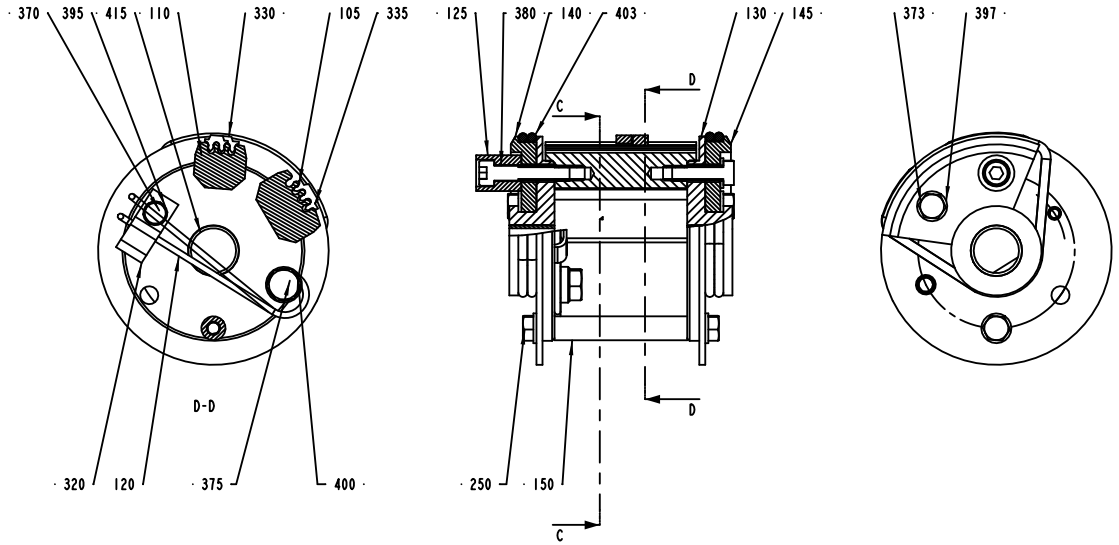
370
395
415
110
330
105
335
125
380
140
403
130
145
373
397
C
D
D-D
320
120
375
400
250
150

Pos	Part No	UN	Qty	Description	Page No
0100B, 0125S, 0180B, 0189B, 0200B, 0200S, 0236B, 0250B, 0284B, 0300B, 0300S, 0330S, 0200SQ					
105-02	293395-0002		2	TYPE HOLDER	
110-02	293395-0001		2	TYPE HOLDER	
130	292412-0000		1	END SECTION	
135	292413-0000		1	END SECTION	
140	292414-0000		1	CARRIER	
373-02	312101-0331		7	SCREW M6S M5X20 FZB	
397-02	315101-0146		7	WASHER PLAIN, BRB, 5,3/10 H=1	
405	315202-0304		2	O-RING 64,5X3 MM	
410	315202-0305		2	O-RING 69,5X3 MM	
0375S					
105	293395-0002		1	TYPE HOLDER	
110	293395-0001		1	TYPE HOLDER	
130	479236-0000		2	END SECTION	
140	479239-0000		1	CARRIER	
145	479240-0000		1	CARRIER	
150	293671-0000		1	SPACER	
250	312101-0329		2	SCREW M6S M5X16 FZB	
373	312101-0331		3	SCREW M6S M5X20 FZB	
397	315101-0146		5	WASHER PLAIN, BRB, 5,3/10 H=1	
403	315202-0224		4	O-RING 42,2X3 MM	
Common Parts					
120	32691-0000		1	LOCK SPRING	
125	33011-0000		1	SLEEVE	
320	90165-0010		1	CLIP	
330	90413-0043		1	CODE INSERT SET	
330	90413-0033		1	CODE INSERT SET C 2/16	
335	90413-0047		1	CODE INSERT SET A 2/16	
335	90413-0044		1	CODE INSERT SET	
370	312101-0287		1	SCREW M6S M4X8 FZB	
375	312101-0364		1	SCREW M6S M6X10 FZB	
380	312111-0335		1	SCREW HEX.SOCK.HD.MC6S-TT 5X30 88 FZB	
395	315101-0136		1	WASHER BRB, 4,3/8 H=0,8	
400	315111-0153		1	WASHER PLAIN, TBRB 6,4/12 H=3	
415	321120-0122		2	BEARING BUSH W/O FLANGE, 15X17X15 MM	

Pos	Part No	UN	Qty	Description	Page No

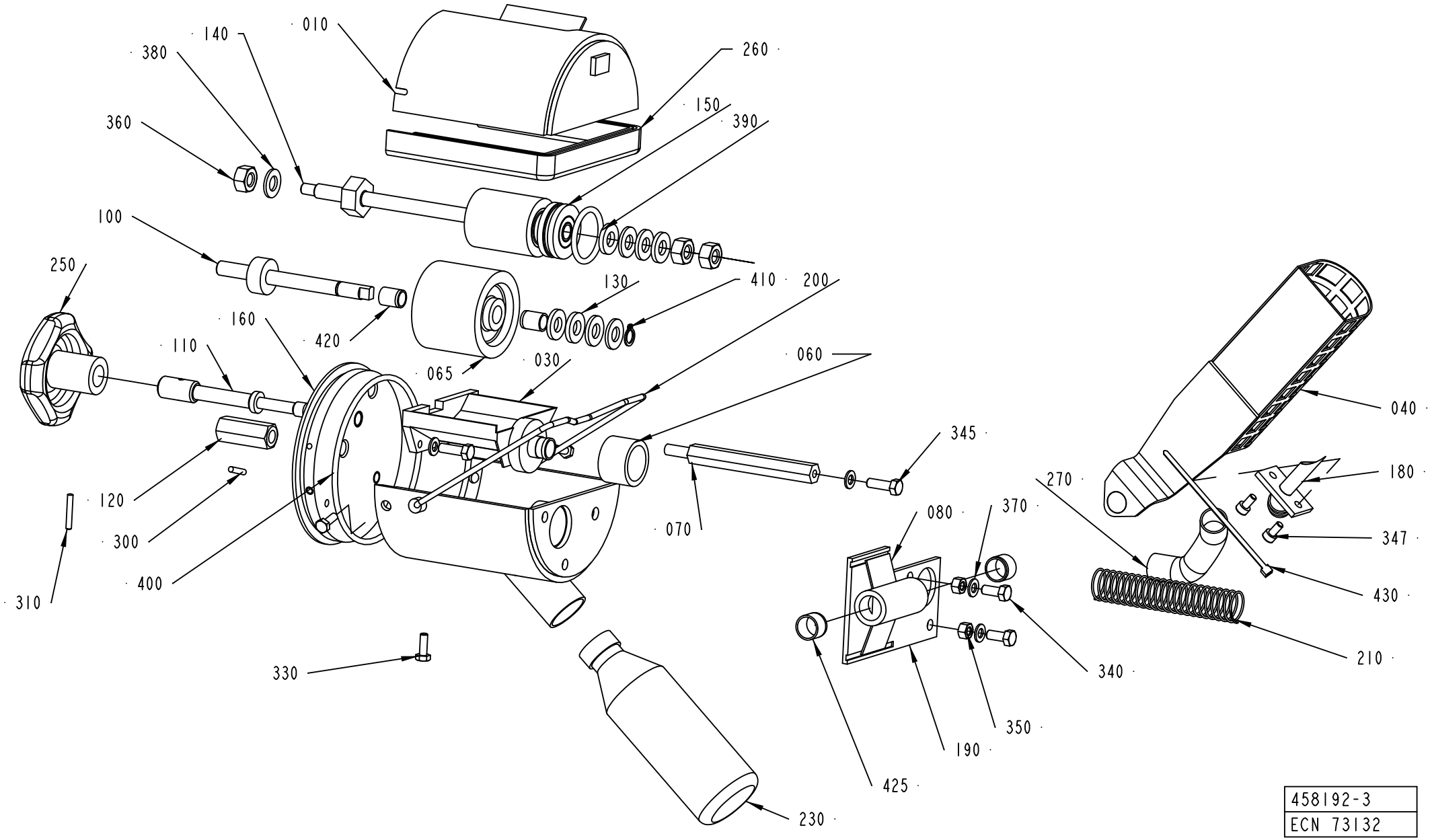

458192-3
ECN 73132

ECM: 227529 - 20051011
Group number: 458192-0300
Assembly Drawing: 458192-3_1_AB

Pos	Part No	UN	Qty	Description	Page No
TBA/19					
230	90050-0012		1	BOTTLE, 50ML PLASTIC	
Common Parts					
010	458364-0000		1	COVER	
030	297210-0000		1	INK WELL	
040	476356-0000		1	HOLDER FOR INK BOTTLE	
060	445542-0000		1	MANTEL RUBBER	
065	450355-0000		1	INK ROLLER	
070	33010-0000		1	SCREW	
080	35547-0000		1	SPRING	
100	292044-0000		1	SHAFT	
110	293667-0000		1	DOWEL	
120	436927-0000		1	NUT	
130	293669-0001		4	WASHER	
130	293669-0002		2	WASHER	
130	293669-0003		2	WASHER	
130	293669-0004		2	WASHER	
140	293670-0000		1	SHAFT	
150	543135-0000		1	INK TRANSFER ROLLER	
	321120-0100		*1*	*BEARING BUSH W/O FLANGE, 8X10X12 MM*	
	90153-0050		*1*	*ADHESIVE, 3M TYPE SCOTCH-WELD 2216 B/A*	
160	297213-0000		1	END SECTION	
180	476355-0000		1	CANNULAR TUBE	
190	456772-0000		1	PIVOT BRACKET	
200	434747-0000		1	BOW CLAMP	
210	537308-0000		1	SPRING	
250	90051-0077		1	HANDLE	
260	90143-0029	MM	295	STRIP	
270	90166-0138	MM	100	HOSE	
280	90299-0072		48	INK	
300	311103-0236		2	PARALLEL PIN ISO 2338 3M6X16 A1	
310	311103-0238		1	PARALLEL PIN ISO 2338 3M6X20 A1	
320	311103-0270		1	PARALLEL PIN ISO 2338 4M6X16 A1	
330	312105-0291		3	SCREW M6S ISO 4017 M4X12 A470	
340	312105-0327		2	SCREW M6S ISO 4017 M5X12 A480	
345	312105-0329		1	SCREW M6S ISO 4017 M5X16 A480	
347	312115-0287		2	SCREW ISO4762 M4X8 A4 80	
350	312605-0314		2	HEXAGON NUT, M6M M5 A280	
360	312605-0318		3	HEXAGON NUT, M6M M8 A280	
370	315105-0146		3	WASHER BRB 5,3X10 RFR	
380	315105-0165		2	WASHER BRB 8,4X16 RFR	
390	315202-0218		1	O-RING 26,2X3 MM	
400	315202-0309		1	O-RING 89,5X3 MM	
410	315750-0105		1	RETAINING RING SHAFT DIN 471 ST 8	
420	321120-0100		2	BEARING BUSH W/O FLANGE, 8X10X12 MM	
425	321120-0109		2	BEARING BUSH W/O FLANGE, 12X14X10 MM	
430	352113-0101		1	CABLE TIE, BLACK 92X2,5 MM	

Machine Type | Group Description | Used-In | Group Number | Page No

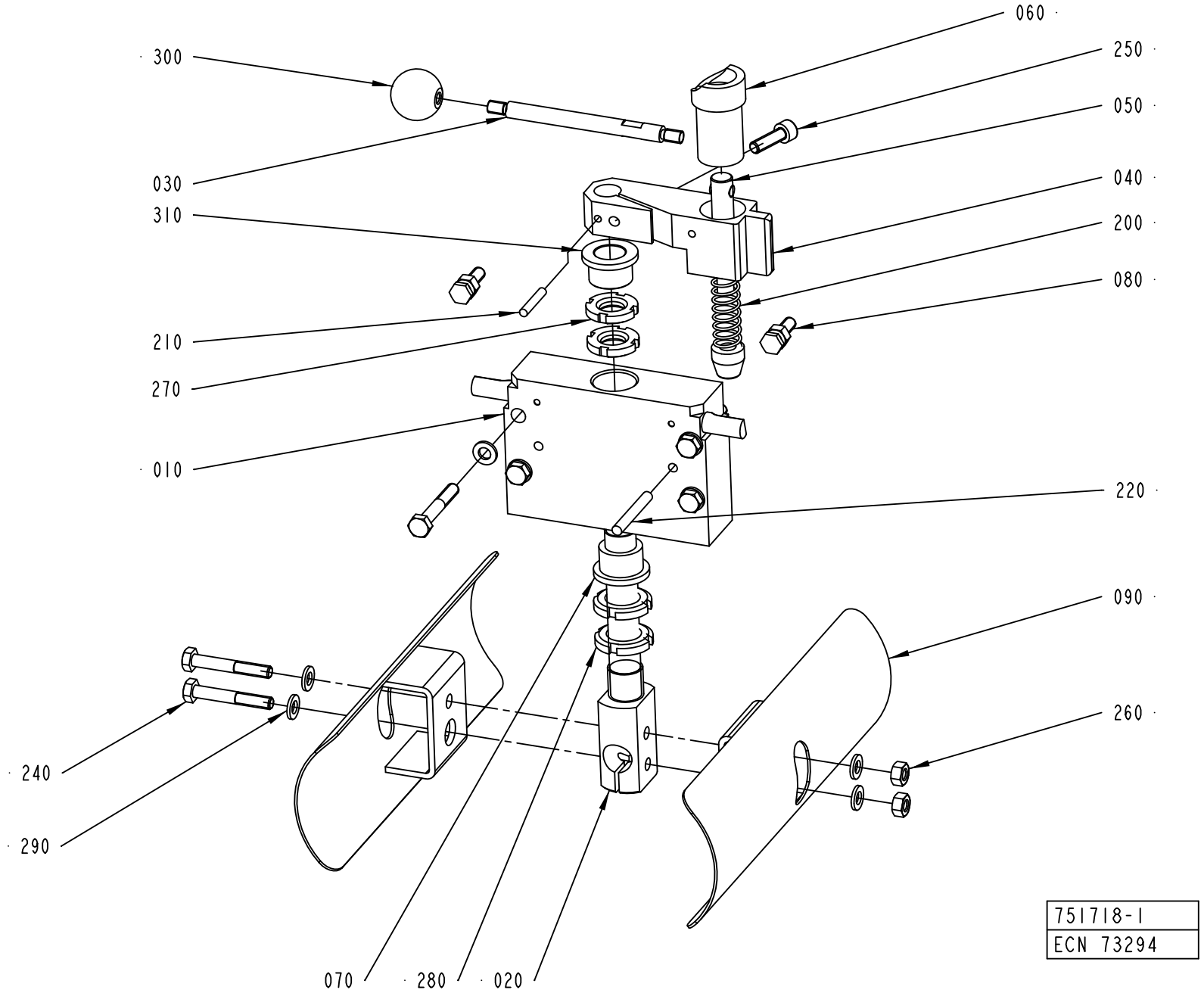
060
300
250
050
030
040
310
200
080
210
270
010
220
090
260
240
290
070
280
020
751718-1
ECN 73294

ECM: 180499 - 20040910
Group number: 751718-0100
Assembly Drawing: 751718-1_1_AD

Pos	Part No	UN	Qty	Description	Page No
-					
010	464009-0003		1	BLOCKING PIECE	
020	979960-0000		1	SHAFT	
030	450500-0000		1	DOWEL	
040	464010-0000		1	ARM	
050	464011-0000		1	LOCK STUD	
060	464012-0000		1	CURVE	
070	466430-0000		1	BUSHING	
080	476377-0000		2	SCREW	
090	979942-0000		2	COVER	
200	90335-0064		1	COMP. SPRING 22270, 1,25X13,75X62,5	
210	311103-0274		2	PARALLEL PIN ISO 2338 4M6X25 A1	
220	311103-0318		2	PARALLEL PIN ISO 2338 5M6X40 A1	
240	312105-0378		6	SCREW M6S ISO 4014 M6X40 A480	
250	312115-0370		1	SCREW ISO4762 M6X20 A4 80	
260	312605-0316		4	HEXAGON NUT, M6M M6 A280	
270	312805-0102		2	NUT ROUND WITH SLOTS M15X1 FE	
280	312805-0103		2	NUT ROUND WITH SLOTS M17X1 FE	
290	315105-0153		8	WASHER BRB 6,4X12 RFR	
300	318800-0103		1	HANDLES,SPHERICAL KNOB,INT.THRE.,D.25-M6	
310	321111-0212		1	FLANGE BUSHING, 15X21X15 MM	

Pos	Part No	UN	Qty	Description	Page No

ADJUSTMENT DEVICE

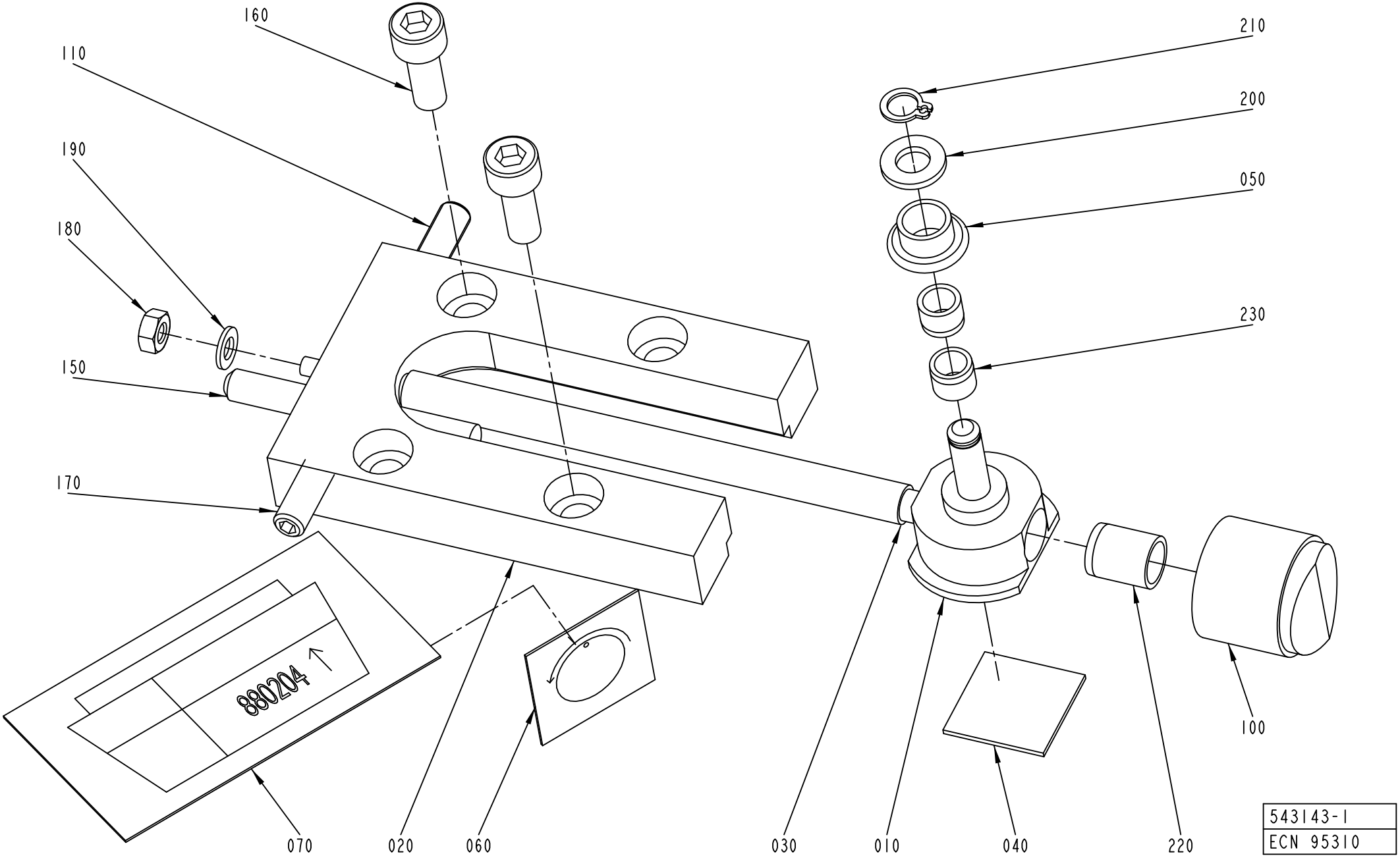

ECM: 180496 - 20040910
Group number: 543143-0100
Assembly Drawing: 543143-1_1_AC

This list covers pages from 8-38 to 8-41

Pos	Part No	UN	Qty	Description	Page No
-					
010	526984-0000		1	SADDLE	
020	526985-0000		1	PLATE	
030	526986-0001		1	SHAFT	
040	527649-0000		1	DISTANCE RUBBER	
050	529362-0000		1	SPROCKET	
060	543141-0000		1	SIGN	
070	543142-0000		1	SIGN	
100	90051-0089		1	SHIFTER HANDLE	
110	90287-0167		1	SCREW SPRINGLOAD. SOCK. HEX HEAD M6X20	
150	311103-0365		1	PARALLEL PIN ISO 2338 6M6X50 A1	
160	312115-0368		2	SCREW ISO4762 M6X16 A4 80	
170	312318-0368		1	SCREW ISO4029 M6X16 A4	
180	312605-0312		1	HEXAGON NUT, M6M M4 A280	
190	315105-0136		1	WASHER BRB 4,3X8 RFR	
200	315105-0153		1	WASHER BRB 6,4X12 RFR	
210	315751-0103		1	RETAINING RING FOR SHAFT DIN 471 6 A2	
220	321120-0100		1	BEARING BUSH W/O FLANGE, 8X10X12 MM	
230	321120-0101		2	BEARING BUSH W/O FLANGE, 6X8X6 MM	

Pos	Part No	UN	Qty	Description	Page No

ADJUSTMENT DEVICE

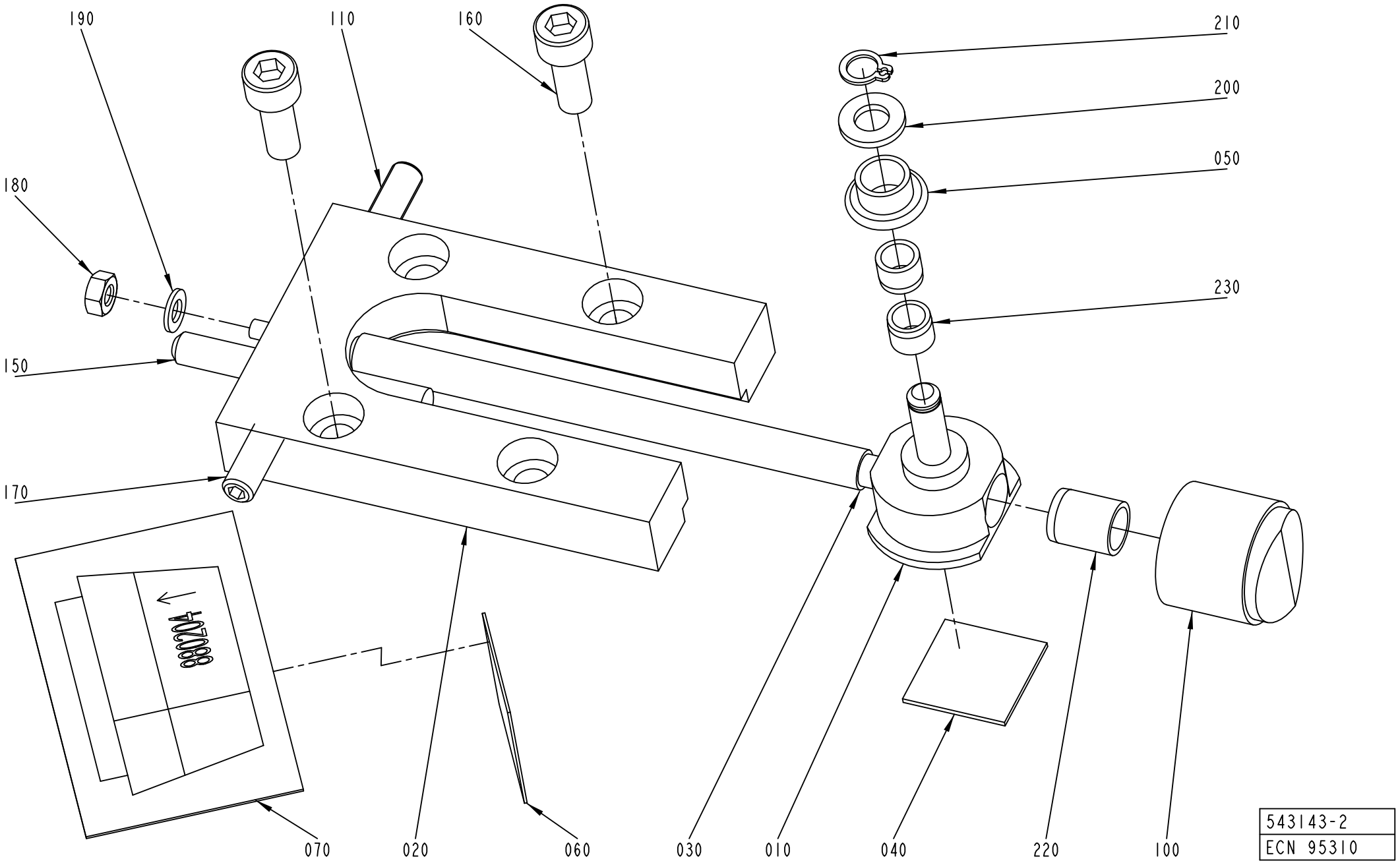

ECM: 180496 - 20040910
Group number: 543143-0100
Assembly Drawing: 543143-2_1_AB

This list covers pages from 8-38 to 8-41

Pos	Part No	UN	Qty	Description	Page No
-					
010	526984-0000		1	SADDLE	
020	526985-0000		1	PLATE	
030	526986-0001		1	SHAFT	
040	527649-0000		1	DISTANCE RUBBER	
050	529362-0000		1	SPROCKET	
060	543141-0000		1	SIGN	
070	543142-0000		1	SIGN	
100	90051-0089		1	SHIFTER HANDLE	
110	90287-0167		1	SCREW SPRINGLOAD. SOCK. HEX HEAD M6X20	
150	311103-0365		1	PARALLEL PIN ISO 2338 6M6X50 A1	
160	312115-0368		2	SCREW ISO4762 M6X16 A4 80	
170	312318-0368		1	SCREW ISO4029 M6X16 A4	
180	312605-0312		1	HEXAGON NUT, M6M M4 A280	
190	315105-0136		1	WASHER BRB 4,3X8 RFR	
200	315105-0153		1	WASHER BRB 6,4X12 RFR	
210	315751-0103		1	RETAINING RING FOR SHAFT DIN 471 6 A2	
220	321120-0100		1	BEARING BUSH W/O FLANGE, 8X10X12 MM	
230	321120-0101		2	BEARING BUSH W/O FLANGE, 6X8X6 MM	

Pos	Part No	UN	Qty	Description	Page No

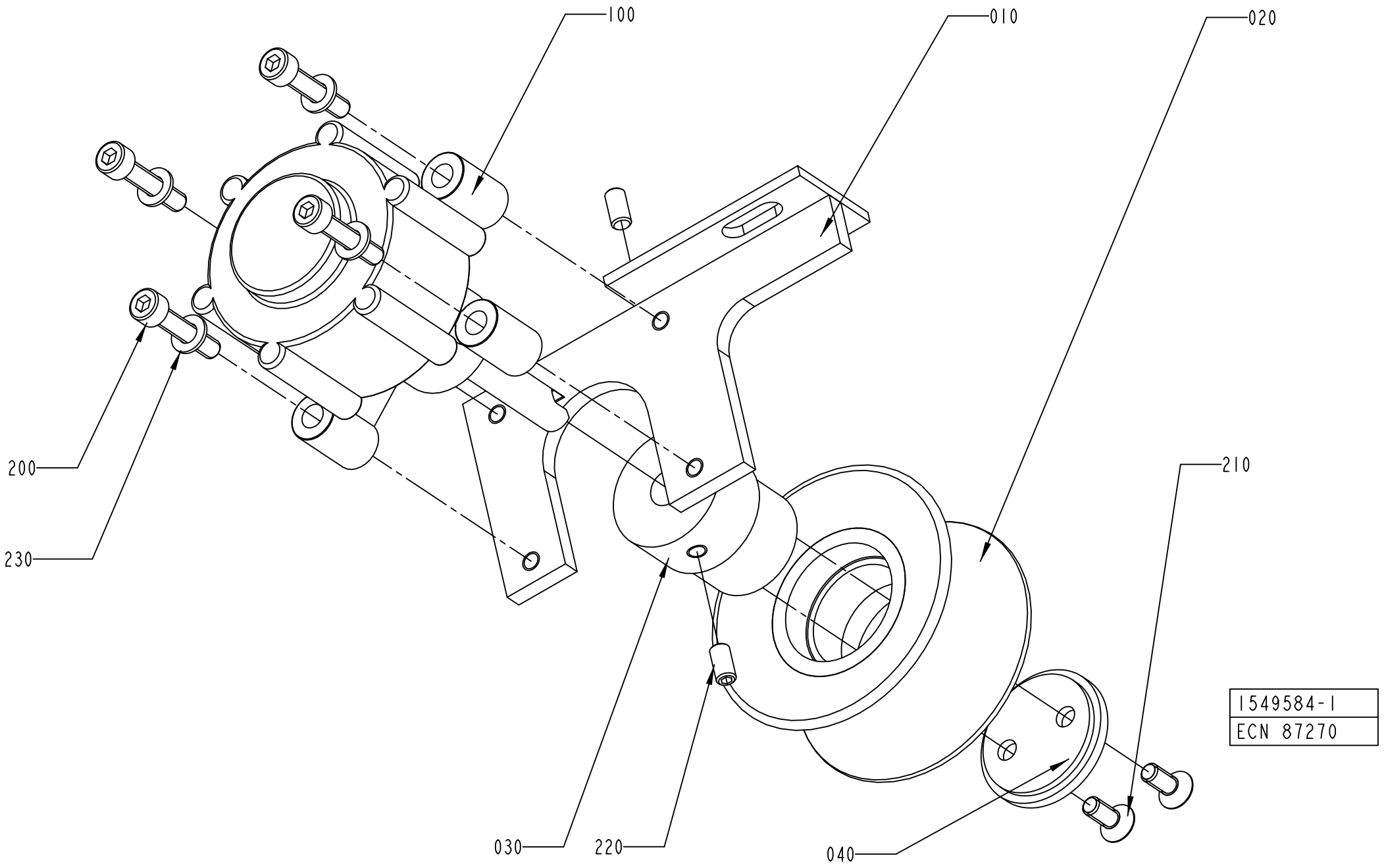
100
010
020
200
230
210
030
220
040
1549584-1
ECN 87270

ECM: 180720 - 20040911
Group number: 1549584-0100
Assembly Drawing: 1549584-1_1_AA

Pos	Part No	UN	Qty	Description	Page No
-					
010	980002-0000		1	BRACKET	
020	540719-0000		1	WHEEL	
030	980003-0000		1	SHAFT	
040	980004-0000		1	PLUG	
100	90347-0054		1	ROTARY DASHPOT, S-CRD-P277	
200	312115-0333		4	SCREW ISO4762 M5X25 A4 80	
210	312155-0327		2	SCREW DIN 7991 MF6S M5X12 A4 70	
220	312318-0325		2	SCREW ISO4029 M5X10 A4	
230	315105-0146		4	WASHER BRB 5,3X10 RFR	

Pos	Part No	UN	Qty	Description	Page No

DATING UNIT

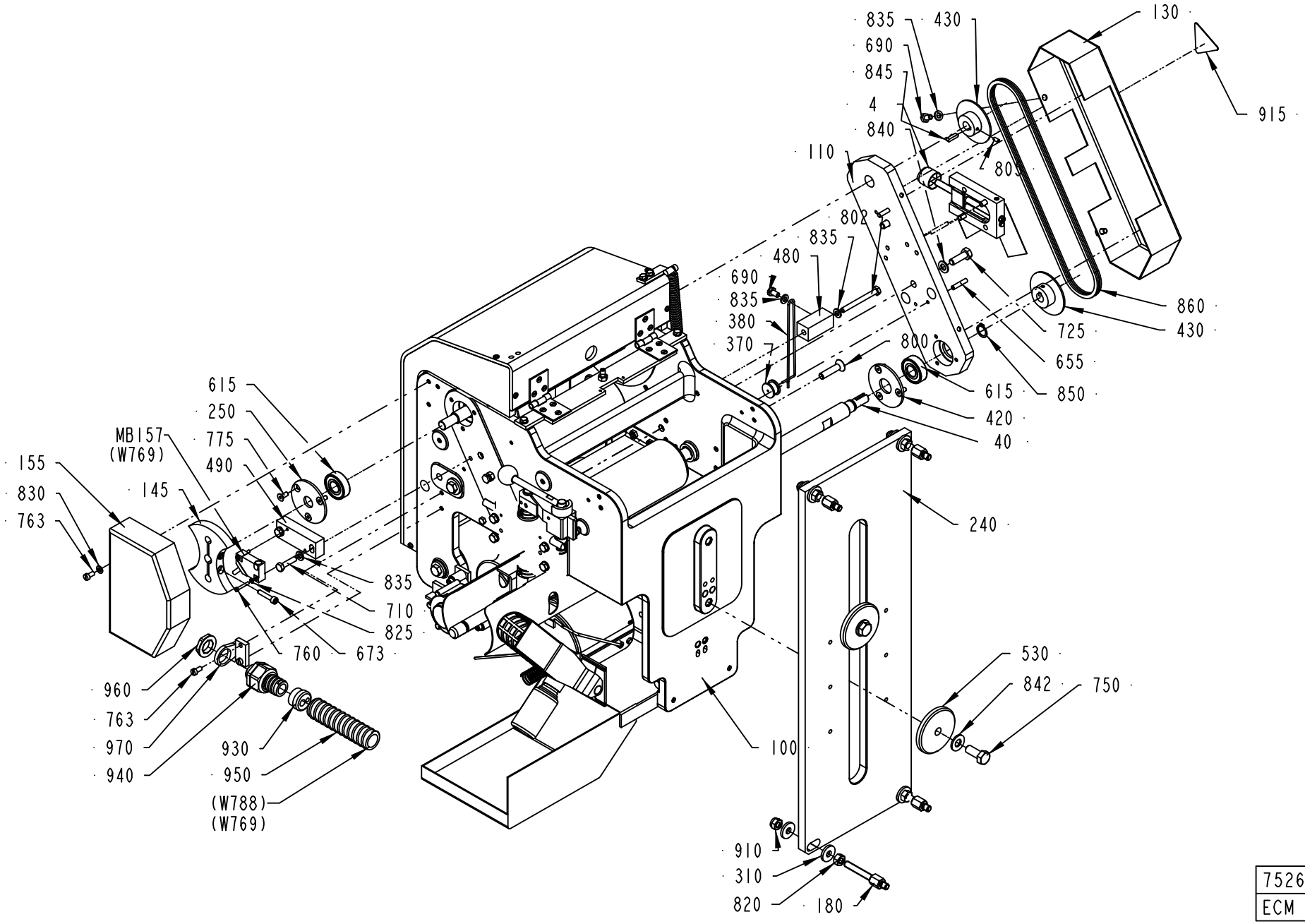

752646-6
ECM 276015

ECM: 276150 - 20070126
Group number: 752646-0400
Assembly Drawing: 752646-6_1_AE

This list covers pages from 8-44 to 8-49

Pos	Part No	UN	Qty	Description	Page No
TBA 0100B					
010	752542-0002		1	BENDING ROLLER	
020	752543-0002		1	SHAFT	
030	456327-0000		2	CREASE BAR	
040	752536-0002		1	SHAFT	
050	979769-0000		2	SPACER	
060	456334-0000		1	SHAFT	
070	90166-0059	MM	37	HOSE PVC 12/16MM TRANSP.	
075	90166-0059	MM	37	HOSE PVC 12/16MM TRANSP.	
520	752541-0000		1	CANTILEVER	
670	311103-0357		1	PARALLEL PIN ISO 2338 6M6X30 A1	
735	312105-0457		1	SCREW M6S ISO 4014 M8X35 A480	
TBA 0125S					
010	752542-0002		1	BENDING ROLLER	
020	752543-0002		1	SHAFT	
030	456327-0000		2	CREASE BAR	
040	752536-0002		1	SHAFT	
050	441556-0007		2	SPACER	
060	456334-0000		1	SHAFT	
070	90166-0059	MM	37	HOSE PVC 12/16MM TRANSP.	
075	90166-0059	MM	37	HOSE PVC 12/16MM TRANSP.	
520	752541-0000		1	CANTILEVER	
670	311103-0357		1	PARALLEL PIN ISO 2338 6M6X30 A1	
735	312105-0457		1	SCREW M6S ISO 4014 M8X35 A480	
TBA 0160S					
010	752542-0002		1	BENDING ROLLER	
020	752543-0002		1	SHAFT	
030	441554-0000		2	CREASE BAR	
040	752536-0002		1	SHAFT	
040	752536-0001		1	SHAFT	
050	441556-0011		2	SPACER	
060	456334-0000		1	SHAFT	
070	90166-0059	MM	37	HOSE PVC 12/16MM TRANSP.	
075	90166-0059	MM	37	HOSE PVC 12/16MM TRANSP.	
520	752541-0000		1	CANTILEVER	
670	311103-0357		1	PARALLEL PIN ISO 2338 6M6X30 A1	
735	312105-0457		1	SCREW M6S ISO 4014 M8X35 A480	
TBA 0180B					
010	752542-0001		1	BENDING ROLLER	
020	752543-0001		1	SHAFT	
030	456767-0000		2	CREASE BAR	
040	752536-0001		1	SHAFT	
050	441556-0006		2	SPACER	
060	256400-0000		1	SHAFT	
070	90166-0059	MM	24	HOSE PVC 12/16MM TRANSP.	
075	90166-0059	MM	24	HOSE PVC 12/16MM TRANSP.	
520	752541-0000		1	CANTILEVER	
670	311103-0357		1	PARALLEL PIN ISO 2338 6M6X30 A1	
735	312105-0457		1	SCREW M6S ISO 4014 M8X35 A480	
TBA 0200B					
010	752542-0001		1	BENDING ROLLER	
020	752543-0001		1	SHAFT	
030	456767-0000		2	CREASE BAR	
040	752536-0001		1	SHAFT	
050	441556-0004		2	SPACER	
060	256400-0000		1	SHAFT	
070	90166-0059	MM	24	HOSE PVC 12/16MM TRANSP.	
075	90166-0059	MM	24	HOSE PVC 12/16MM TRANSP.	
520	752541-0000		1	CANTILEVER	
670	311103-0357		1	PARALLEL PIN ISO 2338 6M6X30 A1	
735	312105-0457		1	SCREW M6S ISO 4014 M8X35 A480	
TBA 0200M					
010	752542-0003		1	BENDING ROLLER	
020	752543-0003		1	SHAFT	
030	441554-0000		2	CREASE BAR	
040	752536-0003		1	SHAFT	
050	441556-0002		2	SPACER	
060	574443-0000		1	SHAFT	
070	90166-0059	MM	30	HOSE PVC 12/16MM TRANSP.	
075	90166-0059	MM	30	HOSE PVC 12/16MM TRANSP.	
080	574444-0000		1	SPACER	
520	574445-0000		1	CANTILEVER	
670	311103-0361		1	PARALLEL PIN ISO 2338 6M6X40 A1	
736	312105-0460		1	SCREW M6S ISO 4014 M8X45 A480	
TBA 0200S					
010	752542-0002		1	BENDING ROLLER	
020	752543-0002		1	SHAFT	
030	441554-0000		2	CREASE BAR	
040	752536-0002		1	SHAFT	
050	441556-0009		2	SPACER	
060	456334-0000		1	SHAFT	
070	90166-0059	MM	37	HOSE PVC 12/16MM TRANSP.	
075	90166-0059	MM	37	HOSE PVC 12/16MM TRANSP.	
520	752541-0000		1	CANTILEVER	

Machine Type | Group Description | Used-In | Group Number | Page No

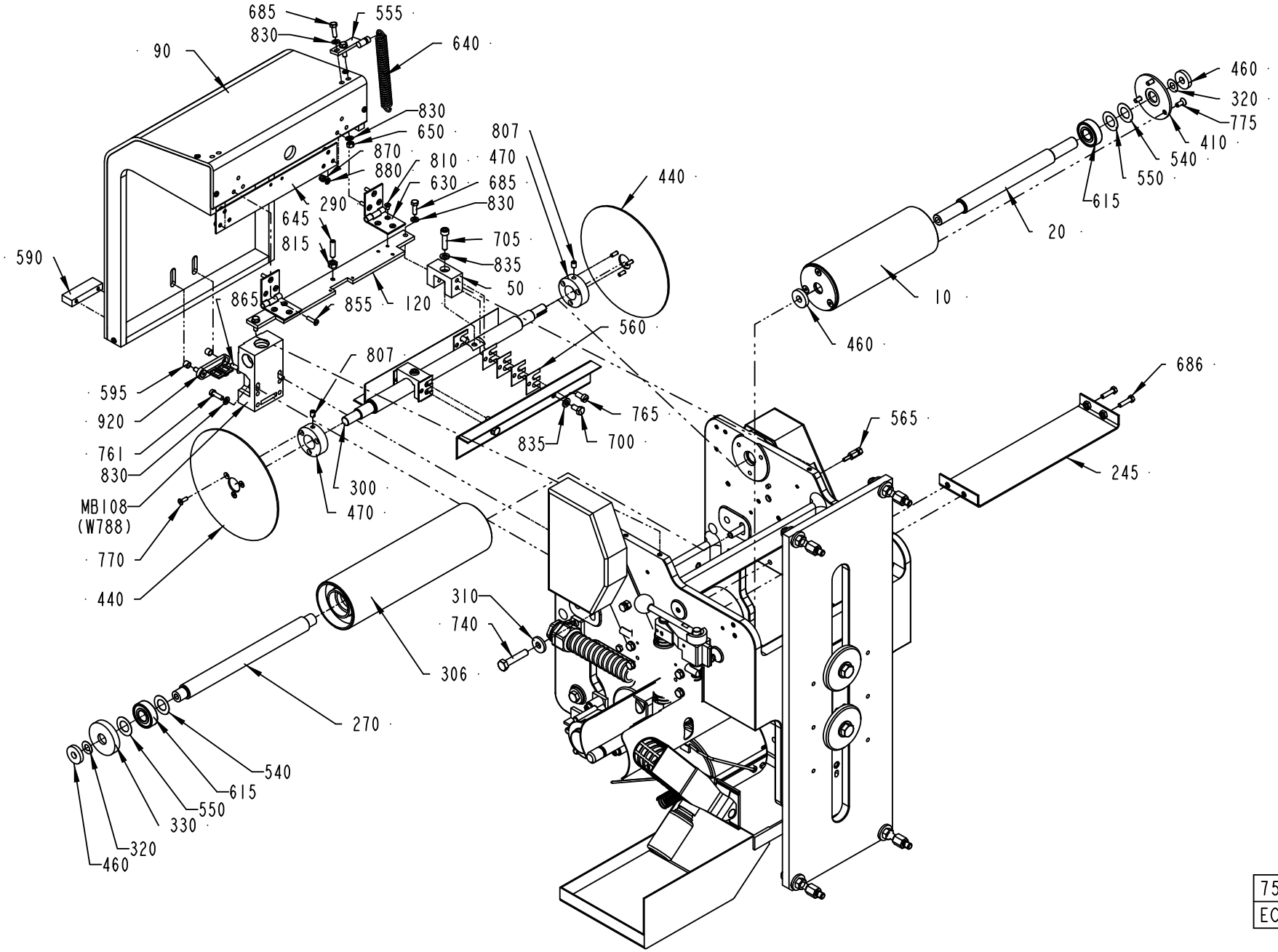

752646-6
ECM 276015

Pos	Part No	UN	Qty	Description	Page No
TBA 0200S (Cont'd)					
670	311103-0357		1	PARALLEL PIN ISO 2338 6M6X30 A1	
735	312105-0457		1	SCREW M6S ISO 4014 M8X35 A480	
TBA 0236B					
010	752542-0001		1	BENDING ROLLER	
020	752543-0001		1	SHAFT	
030	456767-0000		2	CREASE BAR	
040	752536-0001		1	SHAFT	
050	441556-0003		2	SPACER	
060	256400-0000		1	SHAFT	
070	90166-0059	MM	24	HOSE PVC 12/16MM TRANSP.	
075	90166-0059	MM	24	HOSE PVC 12/16MM TRANSP.	
520	752541-0000		1	CANTILEVER	
670	311103-0357		1	PARALLEL PIN ISO 2338 6M6X30 A1	
735	312105-0457		1	SCREW M6S ISO 4014 M8X35 A480	
TBA 0250B					
010	752542-0001		1	BENDING ROLLER	
020	752543-0001		1	SHAFT	
030	456767-0000		2	CREASE BAR	
040	752536-0001		1	SHAFT	
050	441556-0002		2	SPACER	
060	256400-0000		1	SHAFT	
065	299643-0000		2	WASHER	
070	90166-0059	MM	24	HOSE PVC 12/16MM TRANSP.	
075	90166-0059	MM	24	HOSE PVC 12/16MM TRANSP.	
520	752541-0000		1	CANTILEVER	
670	311103-0357		1	PARALLEL PIN ISO 2338 6M6X30 A1	
735	312105-0457		1	SCREW M6S ISO 4014 M8X35 A480	
TBA 0250S					
010	752542-0003		1	BENDING ROLLER	
020	752543-0003		1	SHAFT	
030	441554-0000		2	CREASE BAR	
040	752536-0003		1	SHAFT	
050	441556-0010		2	SPACER	
060	574443-0000		1	SHAFT	
070	90166-0059	MM	30	HOSE PVC 12/16MM TRANSP.	
075	90166-0059	MM	30	HOSE PVC 12/16MM TRANSP.	
080	574444-0000		1	SPACER	
520	574445-0000		1	CANTILEVER	
670	311103-0361		1	PARALLEL PIN ISO 2338 6M6X40 A1	
736	312105-0460		1	SCREW M6S ISO 4014 M8X45 A480	
TBA 0284B, TBA 0300S, TBA 0330S					
010	752542-0001		1	BENDING ROLLER	
020	752543-0001		1	SHAFT	
030	456767-0000		2	CREASE BAR	
040	752536-0001		1	SHAFT	
050	441556-0001		2	SPACER	
060	256400-0000		1	SHAFT	
070	90166-0059	MM	24	HOSE PVC 12/16MM TRANSP.	
075	90166-0059	MM	24	HOSE PVC 12/16MM TRANSP.	
520	752541-0000		1	CANTILEVER	
670	311103-0357		1	PARALLEL PIN ISO 2338 6M6X30 A1	
735	312105-0457		1	SCREW M6S ISO 4014 M8X35 A480	
Common Parts					
001	293684-0200		2	PRINTING WHEEL NSS	**8-51, 8-53, 8-55, 8-57, 8-59**
				.....	**12-27, 12-29, 12-31, 12-33, 12-35**
002	440286-0300		1	INK UNIT NSS	**8-61**
003	751718-0100		1	HOLDER	**8-37**
004	543143-0100		1	ADJUSTMENT DEVICE	**8-39, 8-41**
005	1549584-0100		1	PAPER BRAKE	**8-43**
090	979790-0000		1	COVER	
100	752200-0000		1	CANTILEVER	
110	752526-0000		1	PLATE	
120	572252-0000		1	BRACKET	
130	752528-0000		1	COVER	
140	752527-0000		1	CANTILEVER	
145	491965-0000		1	CAM	
150	979544-0000		1	SPLASH PLATE	
155	556422-0000		1	PROTECTION	
160	752529-0000		1	BEARING COVER	
180	2531115-0000		4	SCREW	
240	752539-0000		1	PLATE	
245	572460-0000		1	SHEET	
250	752240-0000		1	LID	
270	752538-0000		2	SHAFT	
280	752642-0000		1	BRACKET	
290	572253-0000		1	SHEET	
300	752535-0000		1	SHAFT	
306	979709-0000		2	BENDING ROLLER	
310	28036-0000		12	WASHER	
320	2033-0011		6	WASHER	
330	265568-0000		4	DUST COVER	
340	32925-0000		1	CARRIER	
350	32926-0000		1	ROLL	

Machine Type | Group Description | Used-In | Group Number | Page No

DATING UNIT

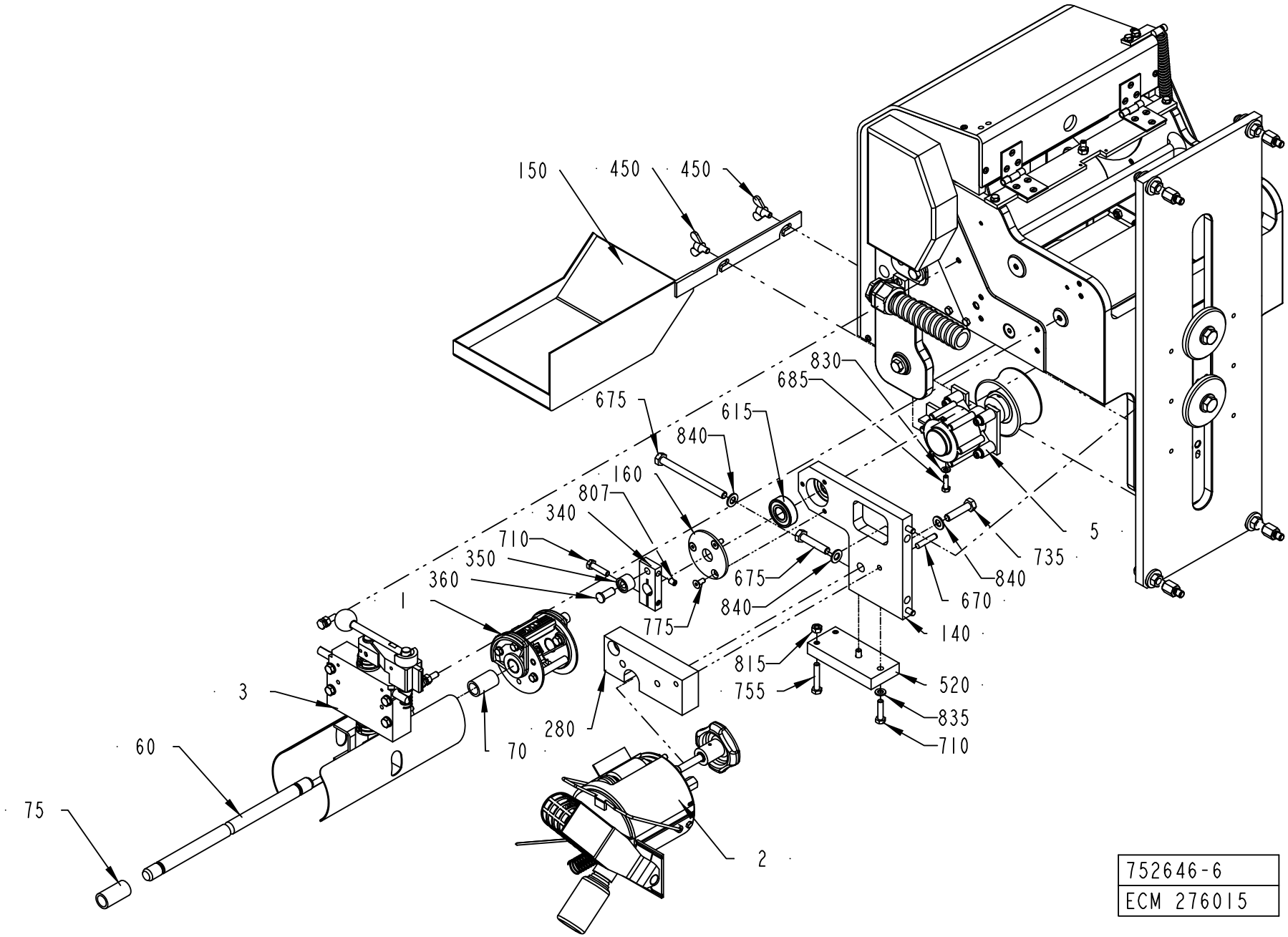

752646-6
ECM 276015

Pos	Part No	UN	Qty	Description	Page No
Common Parts (Cont'd)					
370	33182-0000		1	ROLL	
380	752237-0000		1	SPRING	
410	256248-0001		2	LID	
420	256398-0000		1	LID	
430	752530-0000		2	SPROCKET	
440	256406-0000		2	GABLE PLATE	
450	752644-0000		2	SCREW	
460	256409-0000		6	WASHER	
470	257141-0000		2	RETAINING RING	
480	752531-0000		1	BRACKET	
490	752534-0000		1	PLATE	
530	253107-0000		2	WASHER	
540	752544-0001		6	SHIM	
550	752544-0002		6	SHIM	
555	979789-0000		1	SPRING HOLDER	
560	456817-0001		16	SHIM	
565	979788-0000		1	SPRING HOLDER	
590	572254-0000		1	HANDLE	
595	572255-0000		2	SPACER	
615	90458-1704		10	BALL BEARING, 15X35X11 MM	
630	90248-0026		2	HINGE, 1703-80X32	
640	90335-0041		1	TENSION SPRING 42350, 2X14X68	
645	312318-0372		1	SCREW ISO4029 M6X25 A4	
650	312605-0314		2	HEXAGON NUT, M6M M5 A280	
655	311103-0312		2	PARALLEL PIN ISO 2338 5M6X25 A1	
673	312115-0333		2	SCREW ISO4762 M5X25 A4 80	
675	312111-0471		1	SCREW HEX.SOCK.HD.MC6S-TT 8X100 88 FZ	
685	312105-0329		5	SCREW M6S ISO 4017 M5X16 A480	
686	312105-0331		4	SCREW M6S ISO 4017 M5X20 A480	
690	312105-0364		3	SCREW M6S ISO 4017 M6X10 A480	
700	312105-0366		4	SCREW M6S ISO 4017 M6X12 A480	
705	312115-0372		2	SCREW ISO4762 M6X25 A4 80	
710	312105-0372		5	SCREW M6S ISO 4017 M6X25 A480	
725	312105-0453		2	SCREW M6S ISO 4017 M8X25 A480	
740	312105-0459		5	SCREW M6S ISO 4014 M8X40 A480	
750	312105-0493		2	SCREW M6S ISO 4017 M10X25 A480	
755	312109-0376		1	SCREW M6S ISO 4017 M6X35 A480	
760	312125-0230		2	SCREW ISO 1207 M3X20 A4	
761	312125-0329		2	SCREW ISO 1207 M5X16 A4	
763	312125-0325		4	SCREW ISO 1207 M5X10 A4	
765	312125-0366		4	SCREW ISO 1207 M6X12 A4	
770	312155-0291		6	SCREW DIN 7991 MF6S M4X12 A4 70	
775	312155-0327		15	SCREW DIN 7991 MF6S M5X12 A4 70	
800	312155-0457		2	SCREW DIN 7991 MF6S M8X35 A4 70	
802	312105-0382		1	SCREW M6S ISO 4014 M6X60 A480	
805	312318-0287		2	SCREW ISO4029 M4X8 A4	
807	312318-0362		3	SCREW ISO4029 M6X8 A4	
810	312145-0285		6	SCREW ISO 2009 MFS M4X6 A4	
815	312605-0316		2	HEXAGON NUT, M6M M6 A280	
820	312605-0318		4	HEXAGON NUT, M6M M8 A280	
825	315105-0124		2	WASHER BRB 3,2X6 RFR	
830	315105-0146		11	WASHER BRB 5,3X10 RFR	
835	315105-0153		14	WASHER BRB 6,4X12 RFR	
840	315105-0165		5	WASHER BRB 8,4X16 RFR	
842	315105-0173		2	WASHER BRB 10,5X22 RFR	
845	315701-0169		2	PARALLEL KEY W. ROUND ENDS 4X4X18 MM	
850	315751-0112		1	RETAINING RING FOR SHAFT DIN 471 15 A2	
855	312145-0293		6	SCREW ISO 2009 MFS M4X16 A4	
860	318207-0168		1	ROLLER CHAIN, SINGLE 6MM-168	
865	312155-0329		2	SCREW DIN 7991 MF6S M5X16 A4 70	
870	312812-0312		6	HEXAGON NUT, NY-LOCK M4 A480	
880	315101-0136		6	WASHER BRB, 4,3/8 H=0,8	
900	90458-0315		1	CABLE GLAND, M20X1,5, NO.5311 1120	
910	312812-0318		4	HEXAGON NUT, NY-LOCK M8 A480	
915	359705-0001		1	WARNING SIGN ISO, ENTANGLEMENT	
920	90044-0310		1	KEY FOR SAFETY SWITCH AZ 15/16 B1	
930	90458-1239		1	GLAND, INSERT, MULTI HOLE, 1X9/1X5,5	
940	90458-0430		1	HOSE GLAND W/O INSERT M20 EXTENDED	
950	90152-0051	M	3	SPIRAL CONDUIT, 25X18, UL 1816	
960	90458-0323		1	NUT, M20X1,5	
970	352135-0202		1	CLIP, 16 MM, 913.016	
MB157	90044-0194		1	PROX.SW. IN5329/IN3002-BPKG(EX90044-104)	
MB108	90044-0139		1	KEY SAF.SW. AZ16-02 ZVR K-2254 USE 90459	

Machine Type | Group Description | Used-In | Group Number | Page No

PRINTING WHEEL NSS

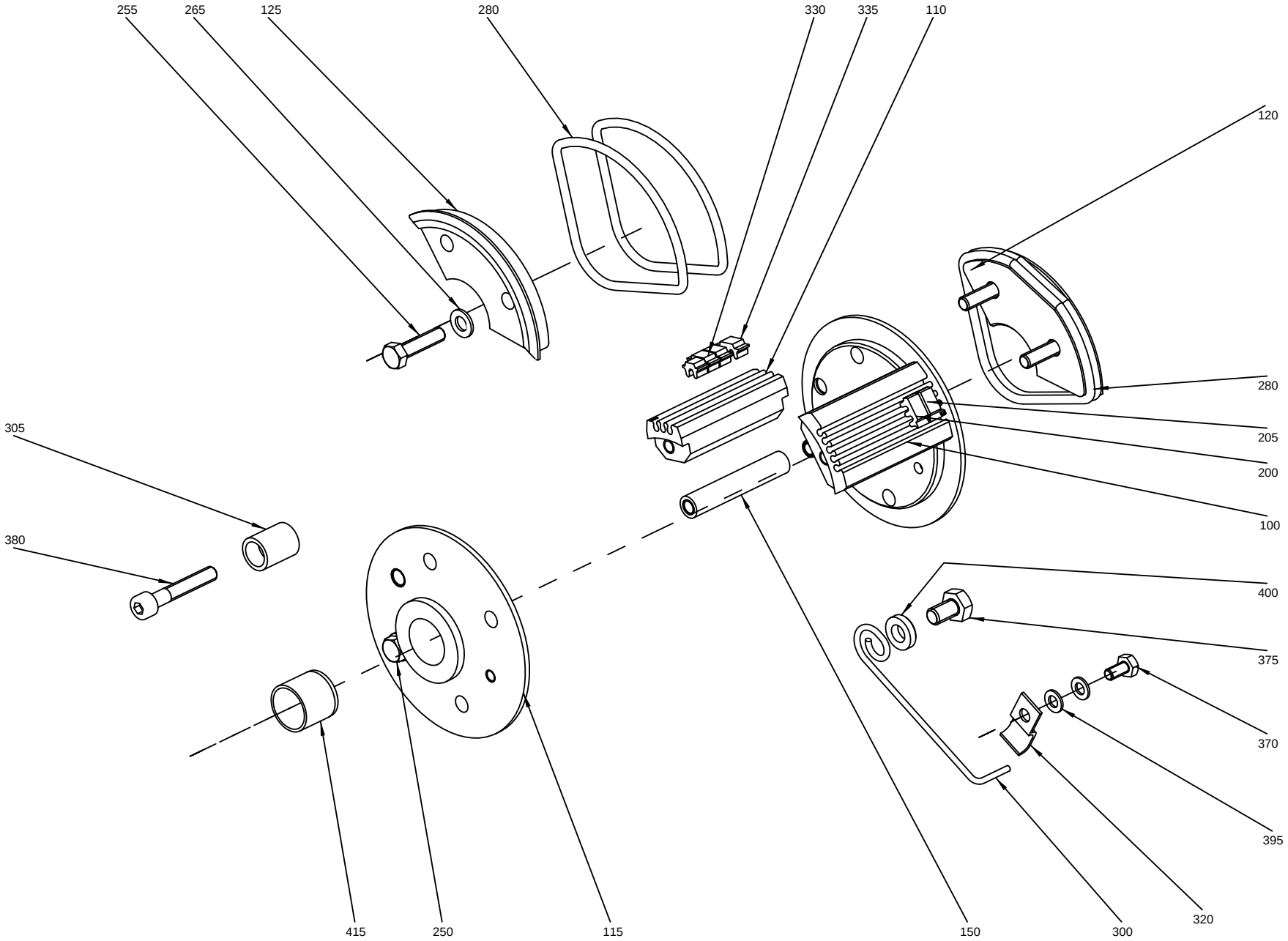

S-2 93684-3
ECN 73044

Pos	Part No	UN	Qty	Description	Page No
TBA 0100B, TBA 0180B, TBA 0125S, TBA 0160S, TBA 0200M, TBA 0189B, TBA 0200B, TBA 0236B, TBA 0200S, TBA 0250S, TBA 0250B, TBA 0300S, TBA 0330S (See drawing on pages: 8-56, 8-58, 12-32, 12-34)					
105	293395-0002		2	TYPE HOLDER	
110	293395-0001		2	TYPE HOLDER	
130	292412-0000		1	END SECTION	
135	292413-0000		1	END SECTION	
145	293659-0000		1	CARRIER	
255	312101-0331		7	SCREW M6S M5X20 FZB	
265	315101-0146		7	WASHER PLAIN, BRB, 5,3/10 H=1	
285	315202-0304		2	O-RING 64,5X3 MM	
410	315202-0305		2	O-RING 69,5X3 MM	
TBA 0284B (See drawing on pages: 8-56, 8-58, 12-32, 12-34)					
105	293395-0002		2	TYPE HOLDER	
110	293395-0001		2	TYPE HOLDER	
130	292412-0000		1	END SECTION	
135	292413-0000		1	END SECTION	
145	293659-0000		1	CARRIER	
255	312101-0331		7	SCREW M6S M5X20 FZB	
265	315101-0146		7	WASHER PLAIN, BRB, 5,3/10 H=1	
285	315202-0304		2	O-RING 64,5X3 MM	
410	315202-0305		2	O-RING 69,5X3 MM	
TBA 0375S, TBA 0400B, TBA 0355B, TBA 0500S, TBA 0750S (See drawing on pages: 8-56, 8-58, 12-32, 12-34)					
105	293395-0002		1	TYPE HOLDER	
110	293395-0001		1	TYPE HOLDER	
125	479237-0000		1	CARRIER	
140	479236-0000		2	END SECTION	
145	479238-0000		1	CARRIER	
150	293671-0000		1	SPACER	
250	312101-0329		2	SCREW M6S M5X16 FZB	
255	312101-0331		3	SCREW M6S M5X20 FZB	
265	315101-0146		5	WASHER PLAIN, BRB, 5,3/10 H=1	
275	315202-0224		4	O-RING 42,2X3 MM	
TBA 0500B (See drawing on pages: 8-50, 8-52, 8-54, 12-26, 12-28, 12-30)					
100	293395-0003		2	TYPE HOLDER	
110	293395-0001		2	TYPE HOLDER	
115	434787-0000		1	END SECTION	
120	292410-0000		1	END SECTION	
155	293676-0000		1	CARRIER	
200	90413-0048		1	CODE INSERT SET A 9/28	
205	90413-0049		1	CODE INSERT SET C 9/28	
255	312101-0331		7	SCREW M6S M5X20 FZB	
265	315101-0146		7	WASHER PLAIN, BRB, 5,3/10 H=1	
285	315202-0304		2	O-RING 64,5X3 MM	
410	315202-0305		2	O-RING 69,5X3 MM	
TBA 0500SQ, TBA 0750B, TBA 1000B LOFIN, TBA 1000SQ, TBA 1000S, TBA 1500S, TBA 1055B (See drawing on pages: 8-50, 8-52, 8-54, 12-26, 12-28, 12-30)					
100	293395-0003		1	TYPE HOLDER	
110	293395-0001		1	TYPE HOLDER	
115	292409-0000		2	END SECTION	
120	442072-0000		1	CARRIER	
125	292411-0000		1	CARRIER	
150	293671-0000		1	SPACER	
200	90413-0048		1	CODE INSERT SET A 9/28	
205	90413-0049		1	CODE INSERT SET C 9/28	
250	312101-0329		2	SCREW M6S M5X16 FZB	
255	312101-0331		3	SCREW M6S M5X20 FZB	
265	315101-0146		5	WASHER PLAIN, BRB, 5,3/10 H=1	
280	315202-0301		4	O-RING 49,5X3 MM	
TBA 1000B HIFIN (See drawing on pages: 8-50, 8-52, 8-54, 12-26, 12-28, 12-30)					
100	293395-0003		1	TYPE HOLDER	
110	293395-0001		1	TYPE HOLDER	
115	293690-0000		2	END SECTION	
120	442431-0000		1	CARRIER	
125	293688-0000		1	CARRIER	
150	293671-0000		1	SPACER	
200	90413-0048		1	CODE INSERT SET A 9/28	
205	90413-0049		1	CODE INSERT SET C 9/28	
250	312101-0329		2	SCREW M6S M5X16 FZB	
255	312101-0331		3	SCREW M6S M5X20 FZB	
265	315101-0146		5	WASHER PLAIN, BRB, 5,3/10 H=1	
280	315202-0301		4	O-RING 49,5X3 MM	
Common Parts					
300	32691-0000		1	LOCK SPRING	
305	33011-0000		1	SLEEVE	
320	1511572-0000		1	CLIP	
330	90413-0043		1	CODE INSERT SET	
330	90413-0033		1	CODE INSERT SET C 2/16	
335	90413-0047		1	CODE INSERT SET A 2/16	
335	90413-0044		1	CODE INSERT SET	
370	312101-0287		1	SCREW M6S M4X8 FZB	
375	312101-0364		1	SCREW M6S M6X10 FZB	
380	312111-0335		1	SCREW HEX.SOCK.HD.MC6S-TT 5X30 88 FZB	
395	315101-0136		2	WASHER BRB, 4,3/8 H=0,8	

Machine Type | Group Description | Used-In | Group Number | Page No

Volume: TB- 500SQ 568SQ 1000B LOFIN 1000S, 100SQ 1136B 1500B, ml
TBA- 500SQ 750B 1000B LOFIN 1000S, 1000SQ 1055B 1500S, ml
TBO- 1000B LOFIN TBO 1000SQ ml
TPA- 1000S ml

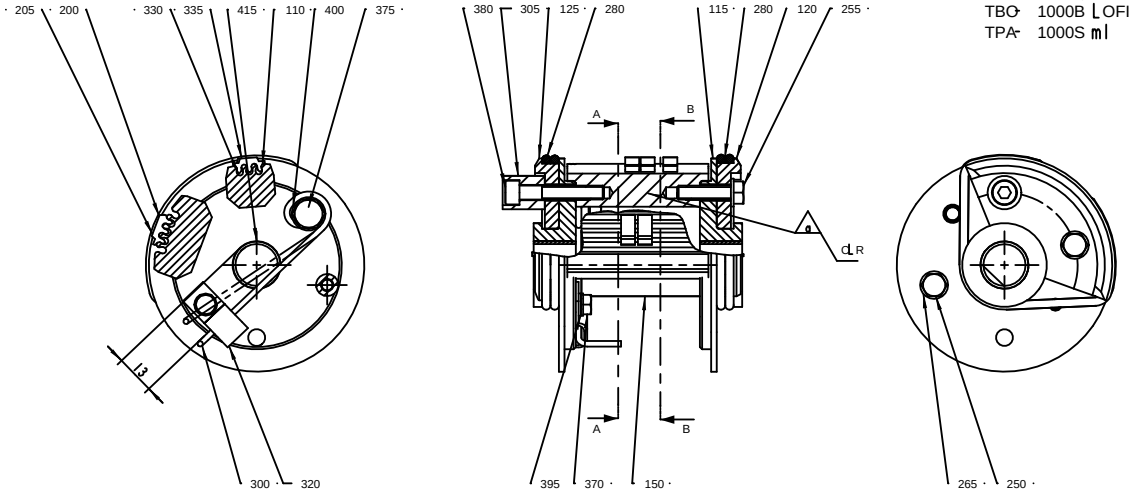

B-B

1:1

Volume: TB- 500B 568B ml
TBA- 500B ml

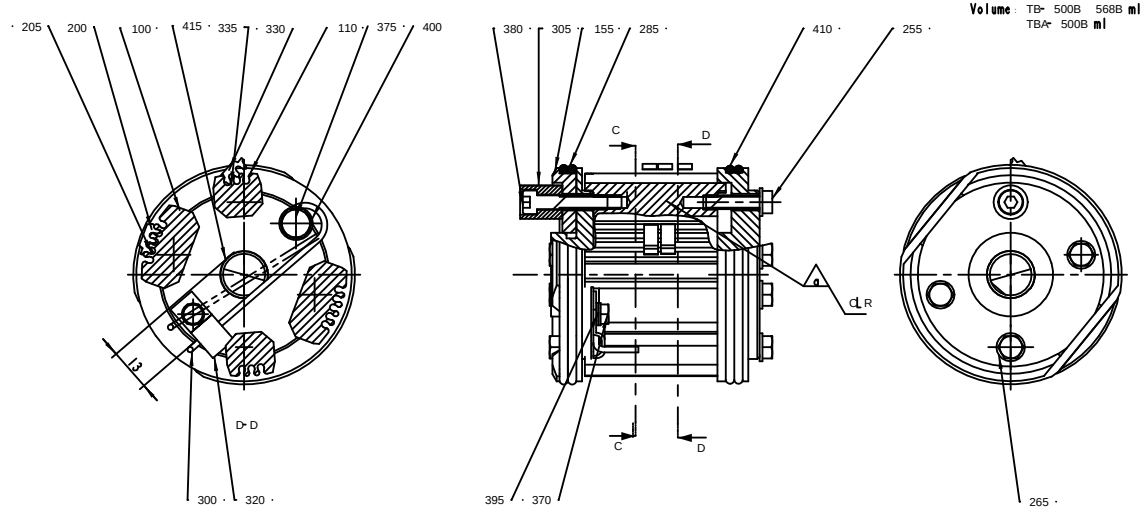

D-D

Pos	Part No	UN	Qty	Description	Page No
Common Parts (Cont'd)					
400	315111-0153		1	WASHER PLAIN, TBRB 6,4/12 H=3	
415	321120-0122		2	BEARING BUSH W/O FLANGE, 15X17X15 MM	

Pos	Part No	UN	Qty	Description	Page No

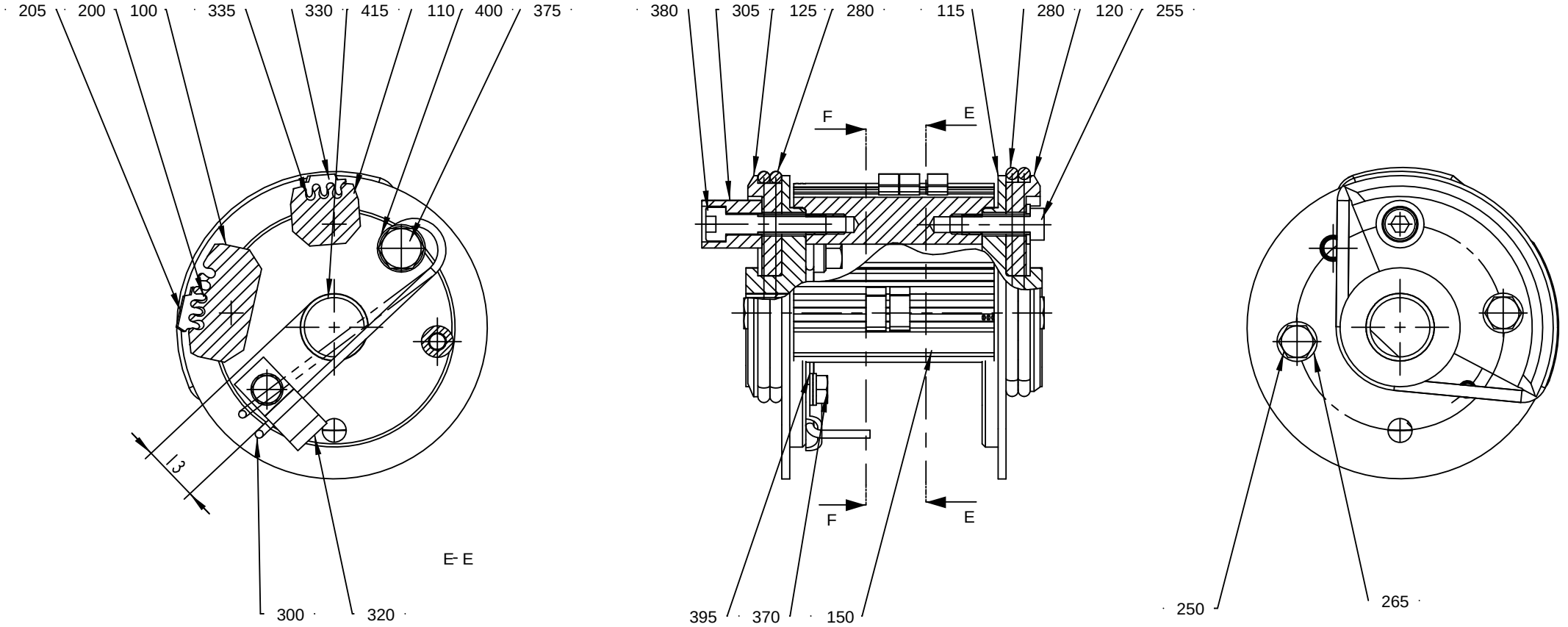
205
200
100
335
330
415
110
400
375
l3
E- E
300
320
380
305
125
280
115
280
120
255
F
E
F
E
395
370
150
250
265

ECM: 227528 - 20051011
Group number: 293684-0200
Assembly Drawing: 293684-3_3_AB

This list covers pages from 8-50 to 8-59

Pos	Part No	UN	Qty	Description	Page No	Pos	Part No	UN	Qty	Description	Page No

SEE PREVIOUS LISTS PAGES: 8-51, 8-53.

PRINTING WHEEL NSS

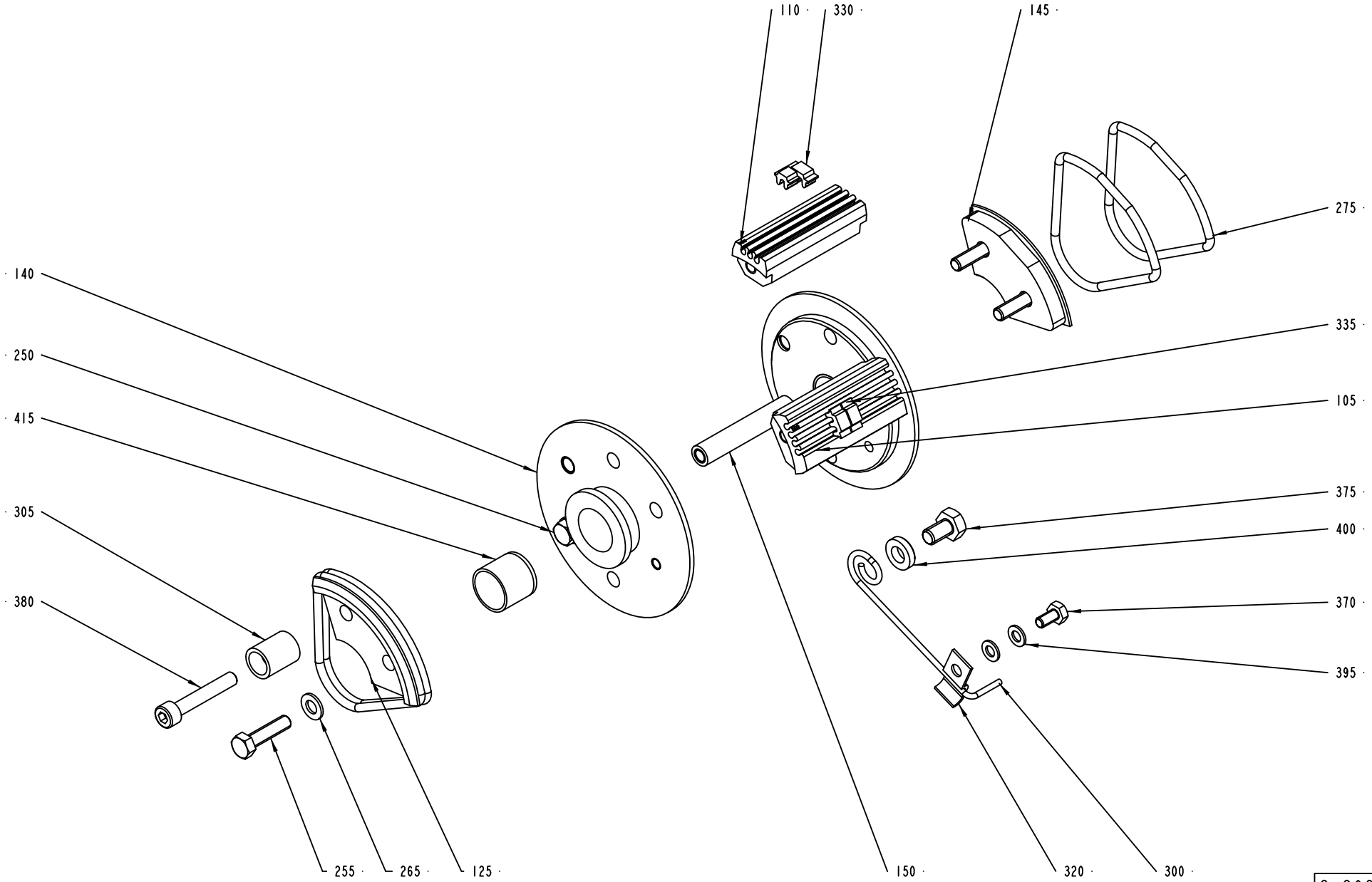

S-293684-4
ECN 73044

Pos	Part No	UN	Qty	Description	Page No	Pos	Part No	UN	Qty	Description	Page No

SEE PREVIOUS LISTS PAGES: 8-51, 8-53.

Volume: TB- 180B. 200B. 200M. 200S. 236B. 250S. 300B.ml
TBA- 100B. 125S. 160S. 180B. 189B. 200B. 200M.
TBA- 200S. 236B. 250B. 250S. 284B. 300S. 330S.ml
TPA- 250SQ. 330SQ.ml

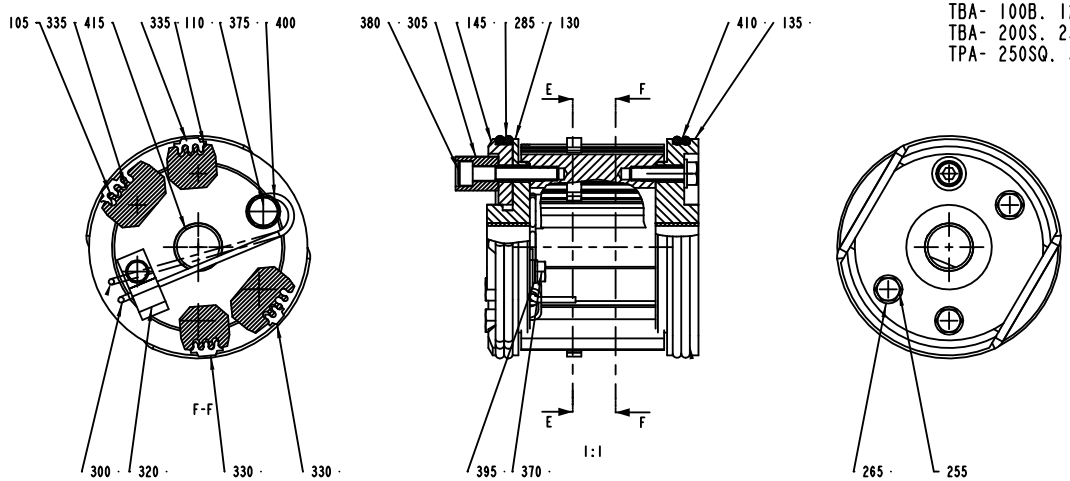

Volume: TB- 500S.ml
TBA- 355B. 375S. 400B. 500S. 750S.ml

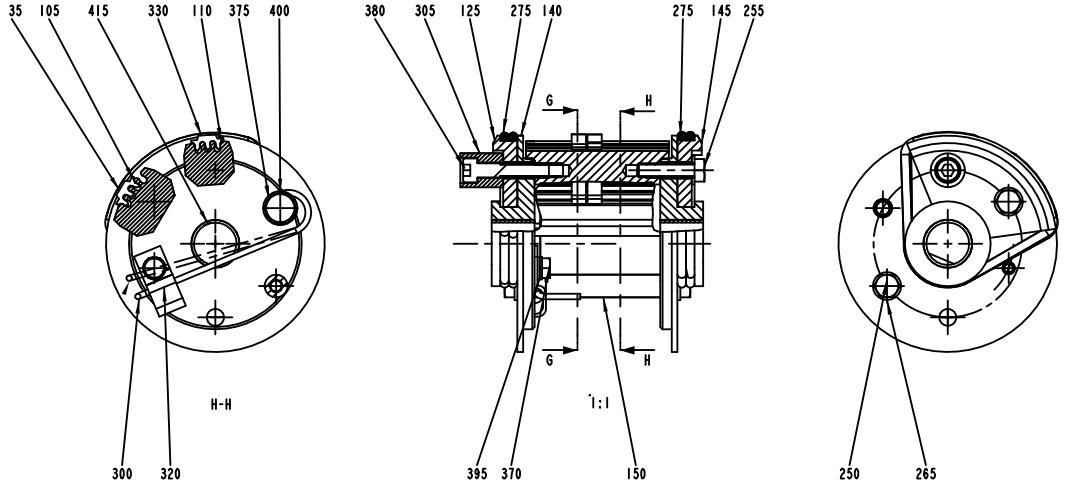

Pos	Part No	UN	Qty	Description	Page No	Pos	Part No	UN	Qty	Description	Page No

SEE PREVIOUS LISTS PAGES: 8-51, 8-53.

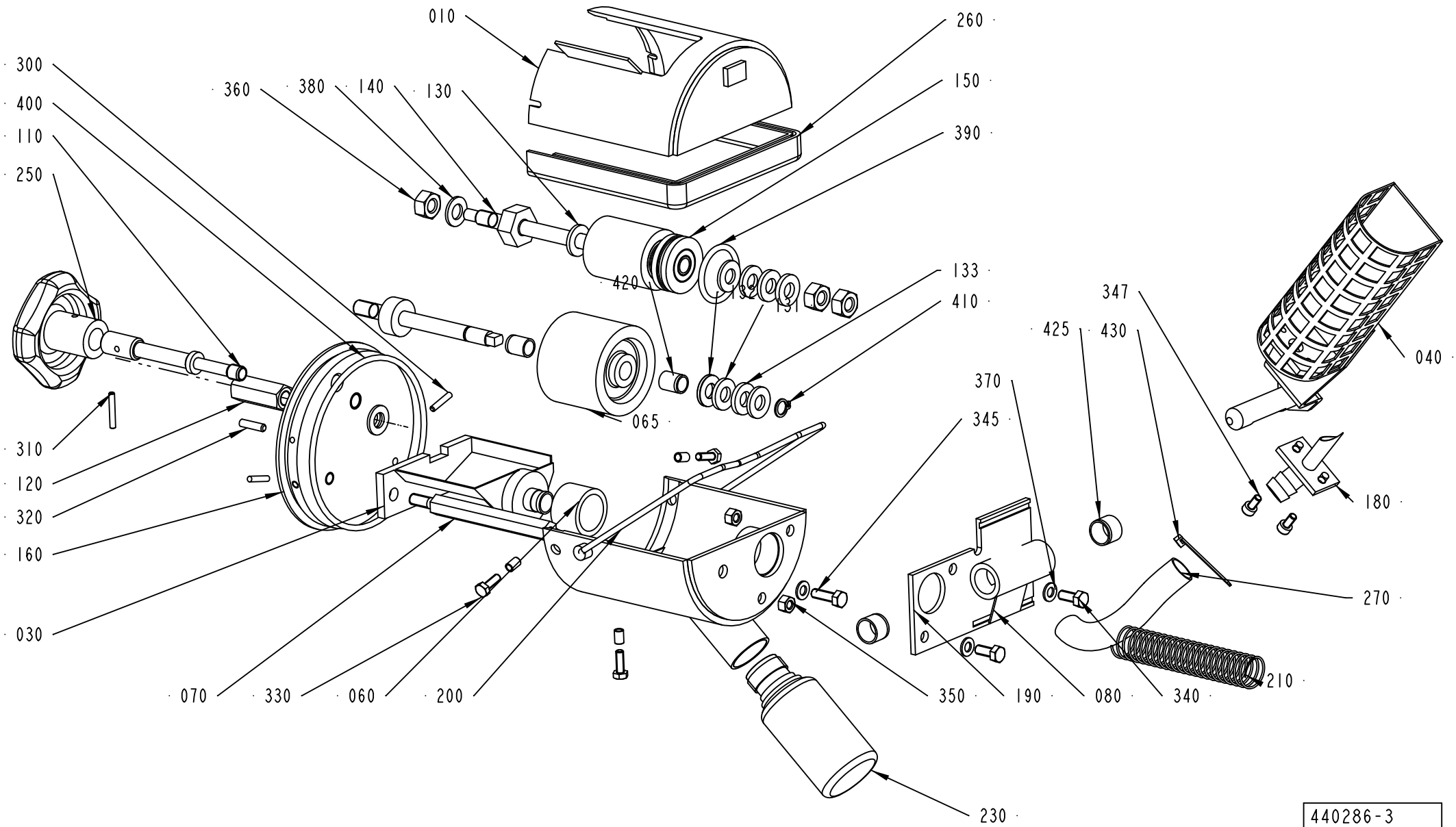

440286-3
ECN 95310

ECM: 180721 - 20040911
Group number: 440286-0300
Assembly Drawing: 440286-3_1_AC

Pos	Part No	UN	Qty	Description	Page No
TBA/19					
230	90050-0012		1	BOTTLE, 50ML PLASTIC	
Common Parts					
010	440287-0000		1	COVER	
030	297211-0000		1	INK WELL	
040	476356-0000		1	HOLDER FOR INK BOTTLE	
060	445542-0000		1	MANTEL RUBBER	
065	450355-0000		1	INK ROLLER	
070	33010-0000		1	SCREW	
080	35547-0000		1	SPRING	
100	292044-0000		1	SHAFT	
110	293667-0000		1	DOWEL	
120	436927-0000		1	NUT	
130	293669-0001		4	WASHER	
131	293669-0002		2	WASHER	
132	293669-0003		2	WASHER	
133	293669-0004		2	WASHER	
140	293670-0000		1	SHAFT	
150	543135-0000		1	INK TRANSFER ROLLER	
	321120-0100		*1*	*BEARING BUSH W/O FLANGE, 8X10X12 MM*	
	90153-0050		*1*	*ADHESIVE, 3M TYPE SCOTCH-WELD 2216 B/A*	
160	293697-0000		1	END SECTION	
180	476354-0000		1	CANNULAR TUBE	
190	456773-0000		1	PIVOT BRACKET	
200	434747-0000		1	BOW CLAMP	
210	537308-0000		1	SPRING	
250	90051-0077		1	HANDLE	
260	90143-0029	MM	295	STRIP	
270	90166-0138	MM	100	HOSE	
280	90299-0072		48	INK	
300	311103-0236		2	PARALLEL PIN ISO 2338 3M6X16 A1	
310	311103-0238		1	PARALLEL PIN ISO 2338 3M6X20 A1	
320	311103-0270		1	PARALLEL PIN ISO 2338 4M6X16 A1	
330	312105-0291		3	SCREW M6S ISO 4017 M4X12 A470	
340	312105-0327		2	SCREW M6S ISO 4017 M5X12 A480	
345	312105-0329		1	SCREW M6S ISO 4017 M5X16 A480	
347	312115-0287		2	SCREW ISO4762 M4X8 A4 80	
350	312605-0314		2	HEXAGON NUT, M6M M5 A280	
360	312605-0318		3	HEXAGON NUT, M6M M8 A280	
370	315105-0146		3	WASHER BRB 5,3X10 RFR	
380	315105-0165		2	WASHER BRB 8,4X16 RFR	
390	315202-0218		1	O-RING 26,2X3 MM	
400	315202-0309		1	O-RING 89,5X3 MM	
410	315750-0105		1	RETAINING RING SHAFT DIN 471 ST 8	
420	321120-0100		2	BEARING BUSH W/O FLANGE, 8X10X12 MM	
425	321120-0109		2	BEARING BUSH W/O FLANGE, 12X14X10 MM	
430	352113-0101		1	CABLE TIE, BLACK 92X2,5 MM	

Machine Type | Group Description | Used-In | Group Number | Page No

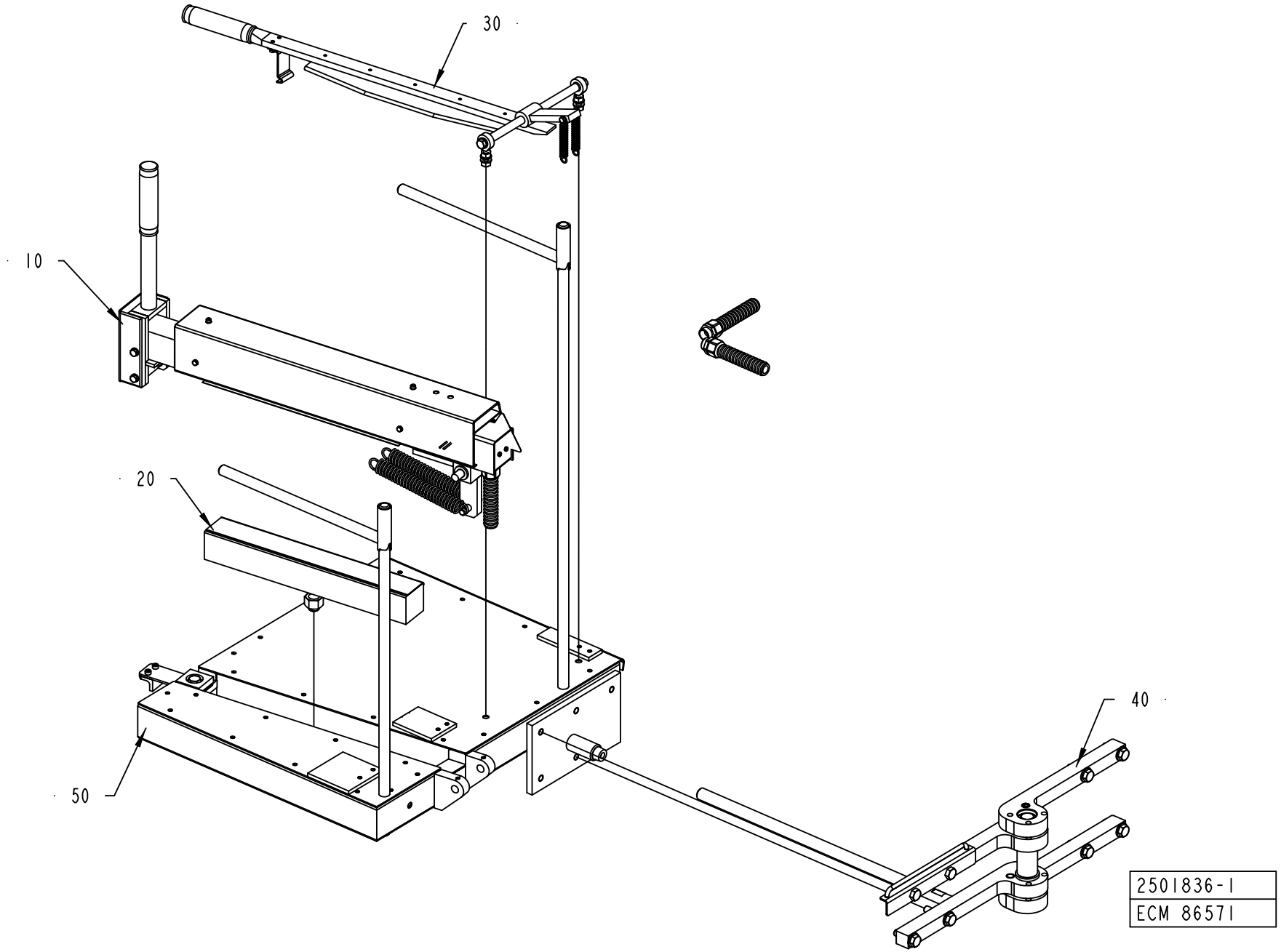
30
10
20
50
40
2501836-1
ECM 86571

ECM: 91613 - 20020111
Group number: 2501836-0100
Assembly Drawing: 2501836-1_1_AA

Pos	Part No	UN	Qty	Description	Page No
-					
010	37877-0400		1	HEATING BLOCK	**8-65**
020	37894-0100		1	COUNTER RAIL	**8-67**
030	450101-0300		1	TEARING DEVICE	**8-69**
040	2500587-0100		1	SUSPENSION ARM	**8-71**
050	271641-0500		1	SPLICING TABLE	**8-73**

Pos	Part No	UN	Qty	Description	Page No

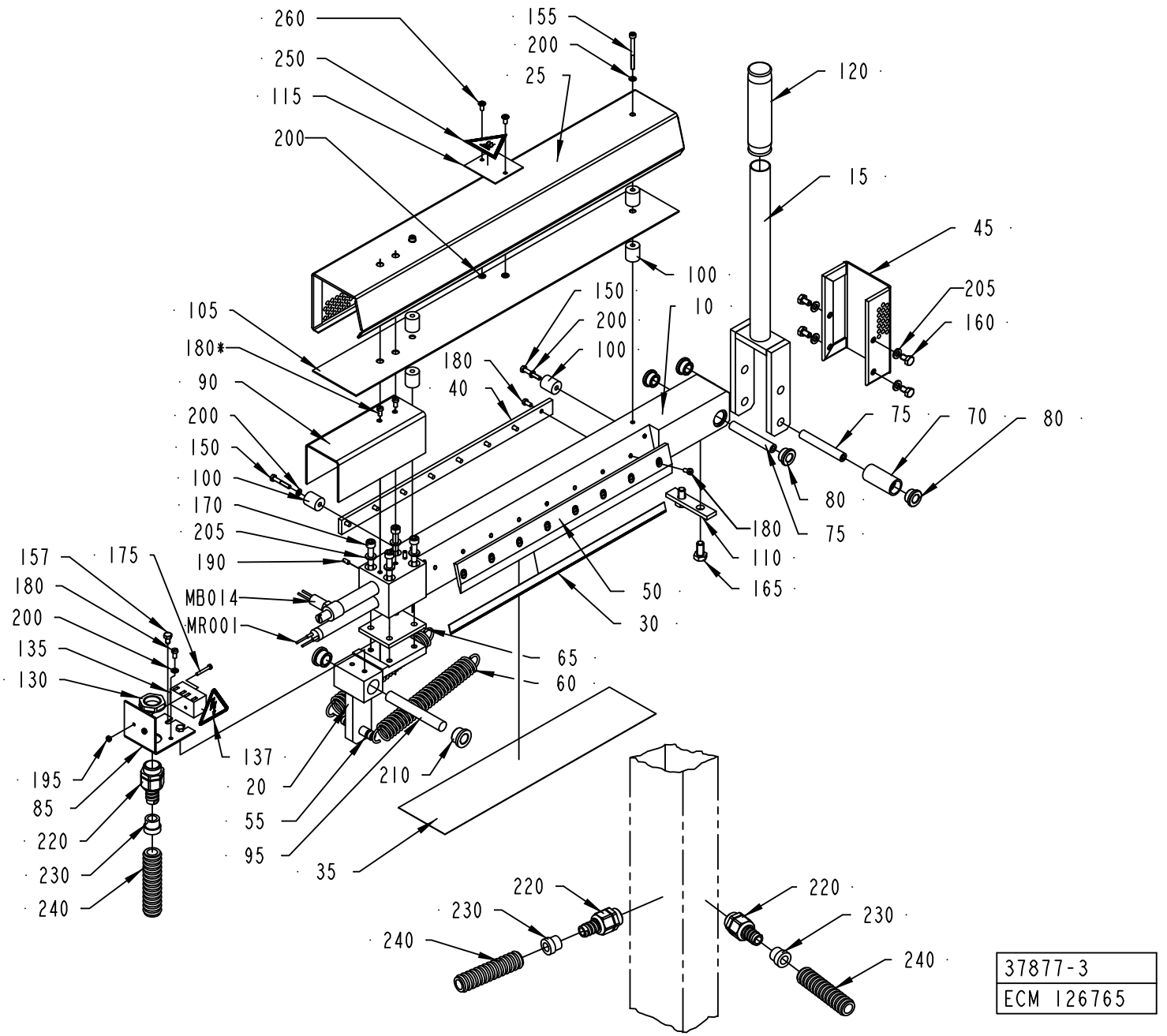
260
250
115
200
155
200
25
120
15
45
205
160
100
150
200
100
10
105
180*
90
200
150
100
170
205
190
180
40
75
70
80
80
75
180
110
165
50
30
157
175
180
200
135
130
MB014
MR001
65
60
137
20
55
95
210
35
195
85
220
230
240
220
230
240
220
230
240
37877-3
ECM 126765

ECM: 144963 - 20051011
Group number: 37877-0400
Assembly Drawing: 37877-3_1_AB

Pos	Part No	UN	Qty	Description	Page No
-					
010	255301-0000		1	HEATING RAIL	
015	37879-0000		1	LOCKING ARM	
020	37880-0000		1	HINGE	
025	243132-0000		1	PROTECTION PLATE	
030	31017-0000		1	KNIFE	
035	31723-0000		1	TEFLON STRIP	
040	31724-0000		1	LOCK BAR	
045	37882-0000		1	PROTECTION PLATE	
050	37883-0000		1	LOCK BAR	
055	37884-0000		1	SHAFT	
060	37885-0000		2	TENSION SPRING	
065	37886-0000		1	INSULATING DISK	
070	37888-0000		1	ROLL	
075	37889-0000		2	SHAFT	
080	37890-0000		4	FLANGE ROLLER	
085	2616035-0000		1	CONNECTION BOX	
090	37893-0000		1	LID	
095	208173-0000		1	SHAFT	
100	229775-0000		6	SPACER	
105	243133-0000		1	SHIELD PLATE	
110	245221-0000		1	STOP	
115	2641397-0000		1	PLATE	
120	90017-0001		1	BIKE HANDLE	
130	90458-0323		1	NUT, M20X1,5	
135	90077-0102		1	TERMINAL BLOCK, 1952.2	
137	359705-0015		1	WARNING SIGN ISO, RISK OF ELECTRIC SHOCK	
150	312105-0297		2	SCREW M6S ISO 4017 M4X25 A470	
155	312115-0304		2	SCREW ISO4762 M4X45 A4 80	
157	312105-0323		2	SCREW M6S ISO 4017 M5X8 A480	
160	312105-0364		4	SCREW M6S ISO 4017 M6X10 A480	
165	312105-0449		2	SCREW M6S ISO 4017 M8X16 A480	
170	312115-0380		4	SCREW ISO4762 M6X50 A4 80	
175	312125-0230		2	SCREW ISO 1207 M3X20 A4	
180	312125-0287		19	SCREW ISO 1207 M4X8 A4	
190	312318-0287		2	SCREW ISO4029 M4X8 A4	
195	312605-0310		2	HEXAGON NUT, M6M M3 A280	
200	315105-0136		7	WASHER BRB 4,3X8 RFR	
205	315105-0153		8	WASHER BRB 6,4X12 RFR	
210	321101-0173		2	FLANGE BUSHING, 12X18X12 MM	
220	90458-0428		3	HOSE GLAND W/O INSERT M20 EXTENDED	
230	353249-0010		3	INSERT, SINGEL HOLE, EK 152/11	
240	90152-0059	M	2	SPIRAL CONDUIT, 18X12, UL 1211	
250	359710-0001		1	WARNING SIGN ISO, HOT SURFACE	
260	311521-0152		2	BLANK RIVET 4X8	
MR001	90206-0053		1	HEATING ELEMENT 230V 1200W	
MB014	90059-0001		1	THERMOSTAT	

Machine Type	Group Description	Used-In	Group Number	Page No

COUNTER RAIL

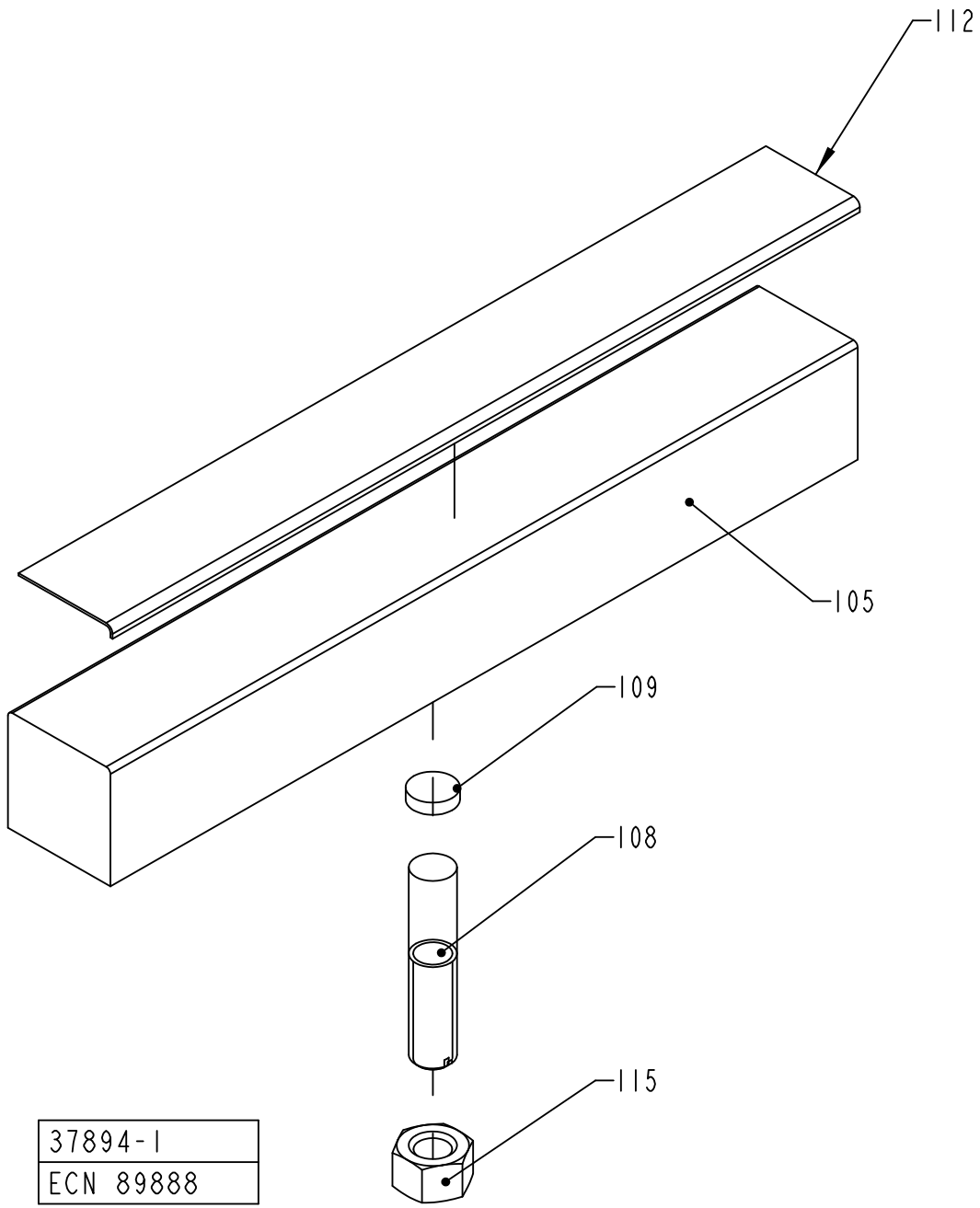

ECM: 180714 - 20040911
Group number: 37894-0100
Assembly Drawing: 37894-1_1_AB

Pos	Part No	UN	Qty	Description	Page No
-					
105	37895-0000		1	RAIL	
108	37896-0000		1	DOWEL	
109	37897-0000		1	WASHER	
112	90144-0030	MM	360	TAPE	
115	312605-0324		1	HEXAGON NUT, M6M M16 A280	

Pos	Part No	UN	Qty	Description	Page No

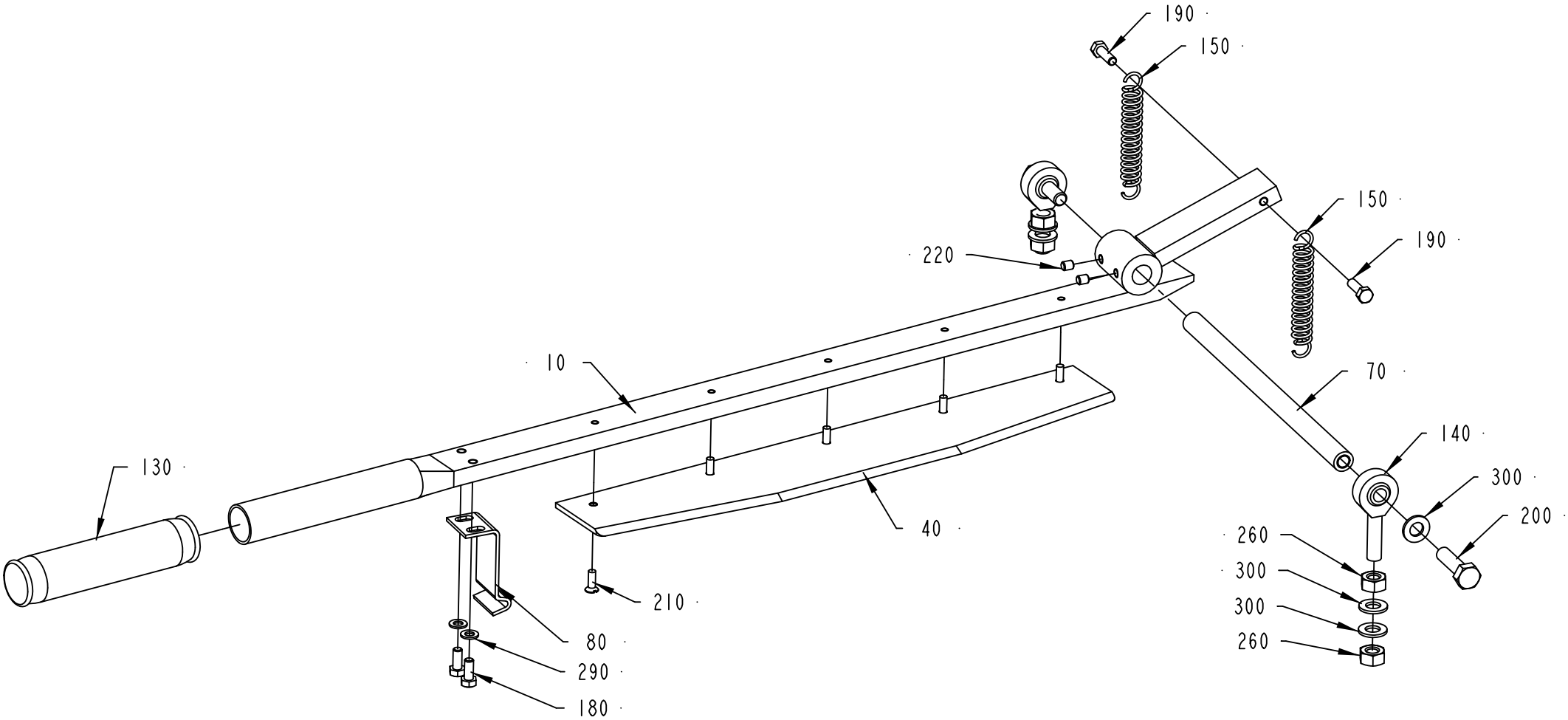

450101-3
ECM 86571

ECM: 180722 - 20040911
Group number: 450101-0300
Assembly Drawing: 450101-3_1_AA

Pos	Part No	UN	Qty	Description	Page No
-					
010	571920-0000		1	PRESSURE ARM	
040	37900-0000		1	KNIFE	
070	979784-0000		1	SHAFT	
080	206913-0000		1	LOCKING LOOP	
130	90017-0001		1	BIKE HANDLE	
140	90115-0054		2	ROD END, ID=8 MM, M8X1,25	
150	90458-1241		2	TENSION SPRING RZ-1221	
180	312101-0327		2	SCREW M6S M5X12 FZB	
190	312101-0329		2	SCREW M6S M5X16 FZB	
200	312105-0455		2	SCREW M6S ISO 4017 M8X30 A480	
210	312145-0291		5	SCREW ISO 2009 MFS M4X12 A4	
220	312316-0321		2	SCREW HEX.SOCK.SET CUP P.MSK6SS5X6 FZB	
260	312605-0318		4	HEXAGON NUT, M6M M8 A280	
290	315101-0146		2	WASHER PLAIN, BRB, 5,3/10 H=1	
300	315105-0165		6	WASHER BRB 8,4X16 RFR	

Pos	Part No	UN	Qty	Description	Page No

SUSPENSION ARM

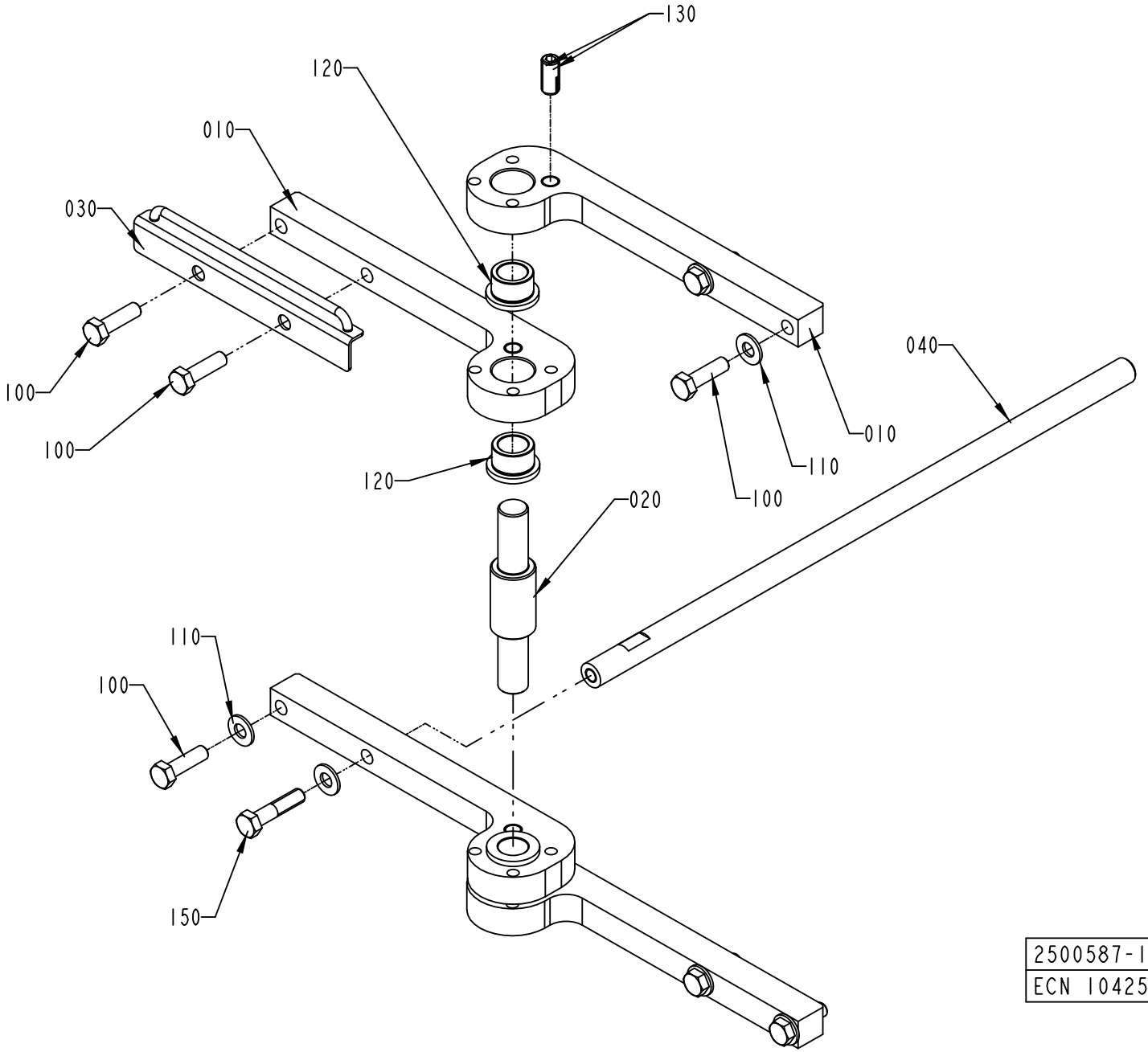

2500587-1
ECN 104253

ECM: 180677 - 20040911
Group number: 2500587-0100
Assembly Drawing: 2500587-1_1_AB

Pos	Part No	UN	Qty	Description	Page No
-					
010	1558317-0000		4	BRACKET	
020	2501385-0000		1	SHAFT	
030	2500593-0000		1	BOW CLAMP	
040	272862-0000		1	HOLDER	
100	312105-0497		7	SCREW M6S ISO 4017 M10X35 A480	
110	315105-0173		6	WASHER BRB 10,5X22 RFR	
120	321101-0233		4	FLANGE BUSHING, 20X28X20 MM	
130	90458-2078		2	SCREW SPRINGLOAD. SOCK. HEX HEAD M12X26	
150	312105-0500		1	SCREW M6S ISO 4014 M10X45 A480	

Pos	Part No	UN	Qty	Description	Page No

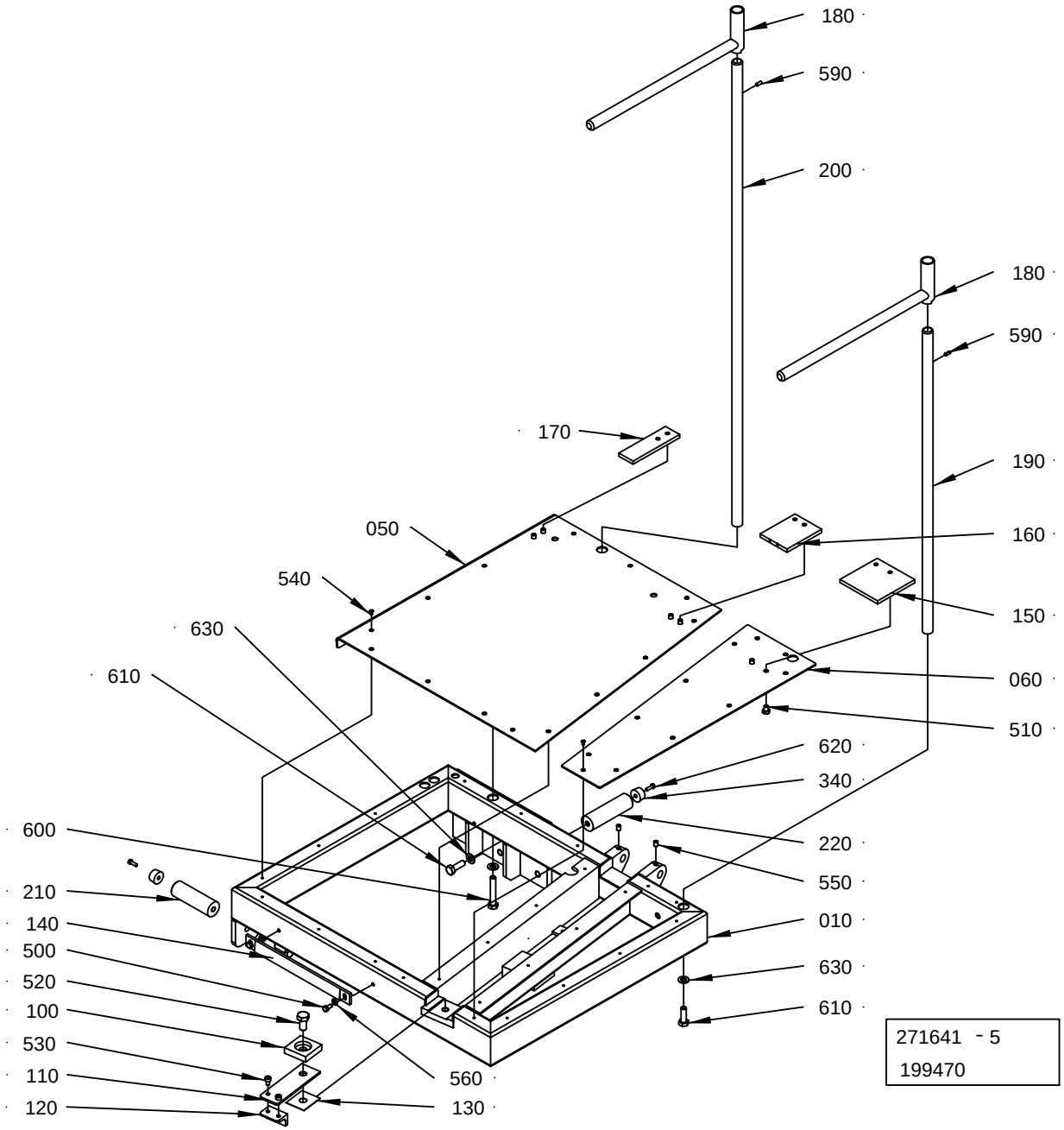
180
590
200
180
590
170
190
050
160
540
150
630
060
610
510
620
340
600
220
210
550
140
010
500
630
520
610
100
530
110
560
120
130
271641 - 5
199470

ECM: 276151 - 20070126
Group number: 271641-0500
Assembly Drawing: 271641-5_1_AC

Pos	Part No	UN	Qty	Description	Page No
TBA 0100B, TBA 0125S					
150	271642-0000		1	RULER	
160	271643-0000		1	RULER	
170	271644-0000		1	RULER	
TBA 0160S, TBA 0200S					
150	272886-0000		1	RULER	
160	272887-0000		1	RULER	
170	272888-0000		1	RULER	
TBA 0180B, TBA 0200B, TBA 0284B, TBA 0250B, TBA 0300S, TBA 0330S					
150	37913-0000		1	RULER	
160	37916-0000		1	RULER	
170	37917-0000		1	RULER	
TBA 0200M, TBA 0250S					
150	574426-0000		1	RULER	
160	574427-0000		1	RULER	
170	574428-0000		1	RULER	
Common Parts					
010	37905-0000		1	FRAME	
050	979783-0000		1	PLATE	
060	979204-0000		1	PLATE	
100	37908-0000		1	PLATE	
110	37909-0000		1	SPRING	
120	37910-0000		1	LOCK	
130	37911-0000		1	LACE	
140	37912-0000		1	LOCK PLATE	
180	469141-0000		2	HOLDER	
190	978876-0000		1	SHAFT	
200	978877-0000		1	SHAFT	
210	2501835-0000		1	SHAFT	
220	2732557-0000		1	SHAFT	
340	90347-0005		2	DAMPER, NO. F 1006 B	
500	312105-0325		2	SCREW M6S ISO 4017 M5X10 A480	
510	312105-0362		6	SCREW M6S ISO 4017 M6X8 A480	
520	312105-0491		1	SCREW M6S ISO 4017 M10X20 A480	
530	312115-0323		2	SCREW ISO4762 M5X8 A4 80	
540	312145-0220		25	SCREW ISO 2009 MFS M3X6 A4	
550	312318-0362		2	SCREW ISO4029 M6X8 A4	
560	315105-0146		2	WASHER BRB 5,3X10 RFR	
590	311103-0267		2	PARALLEL PIN ISO 2338 4M6X10 A1	
600	312105-0461		1	SCREW M6S ISO 4014 M8X50 A480	
610	312105-0453		3	SCREW M6S ISO 4017 M8X25 A480	
620	312125-0291		2	SCREW ISO 1207 M4X12 A4	
630	315105-0165		4	WASHER BRB 8,4X16 RFR	

Machine Type | Group Description | Used-In | Group Number | Page No

PAPER REEL HOLDER,JUMBO REEL

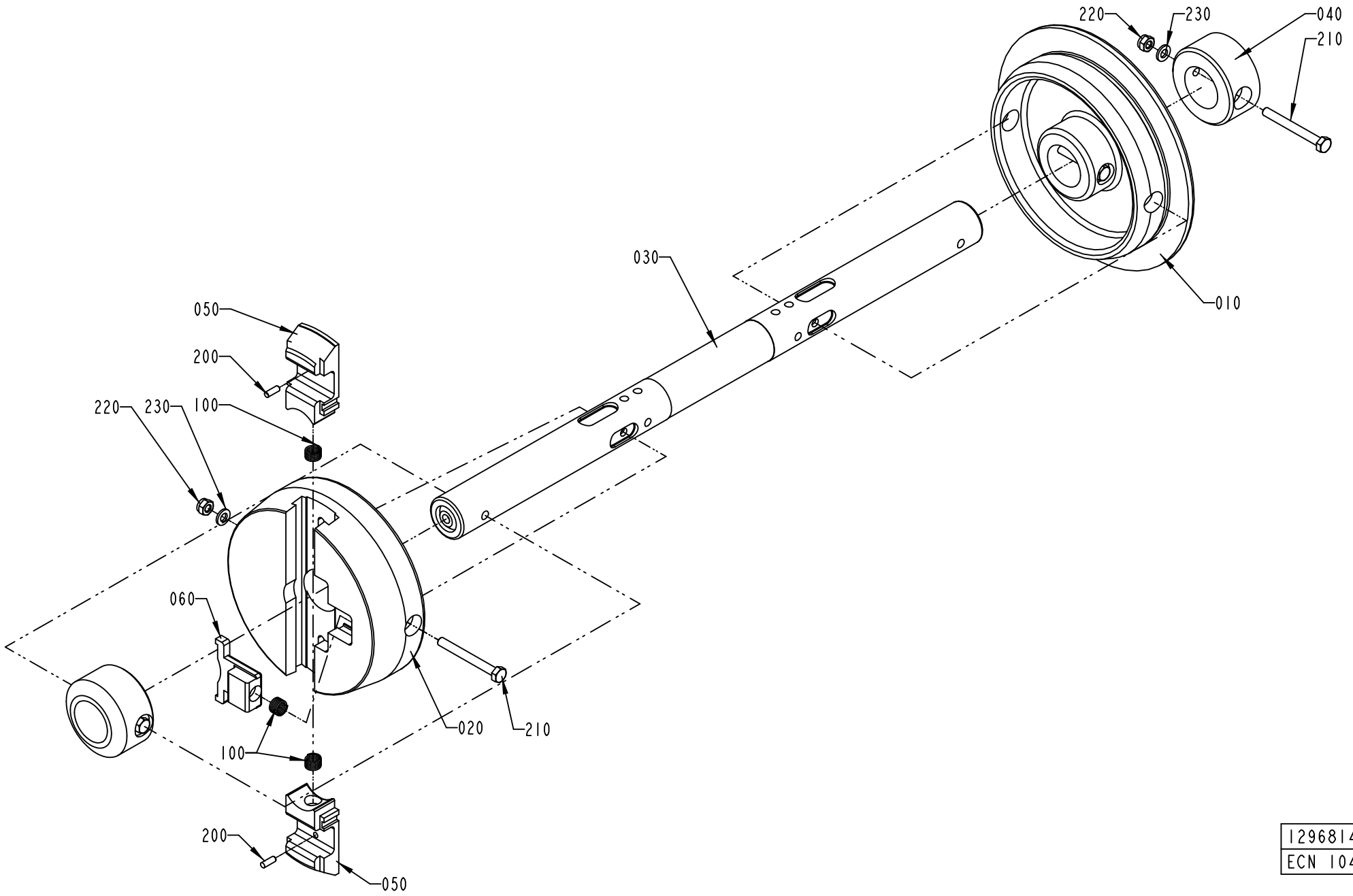

1296814-1
ECN 104253

ECM: 227533 - 20051011
Group number: 1296814-0100
Assembly Drawing: 1296814-1_1_AC

Pos	Part No	UN	Qty	Description	Page No
-					
010	979384-0000		1	SLEEVE	
020	979385-0000		1	SLEEVE	
030	979382-0000		1	SHAFT	
040	440259-0000		2	RETAINING RING	
050	979383-0000		2	PLUNGER	
060	272728-0000		1	BARRIER	
100	90335-0025		3	COMP. SPRING 22010, 1X11X26	
200	311103-0268		2	PARALLEL PIN ISO 2338 4M6X12 A1	
210	312101-0381		4	SCREW M6S M6X55 FZB	
220	312812-0316		4	HEXAGON NUT, NY-LOCK M6 A480	
230	315101-0153		4	WASHER PLAIN, BRB, 6,4/12 H=1,5	

Pos	Part No	UN	Qty	Description	Page No

Machine Type	Group Description	Used-In	Group Number	Page No

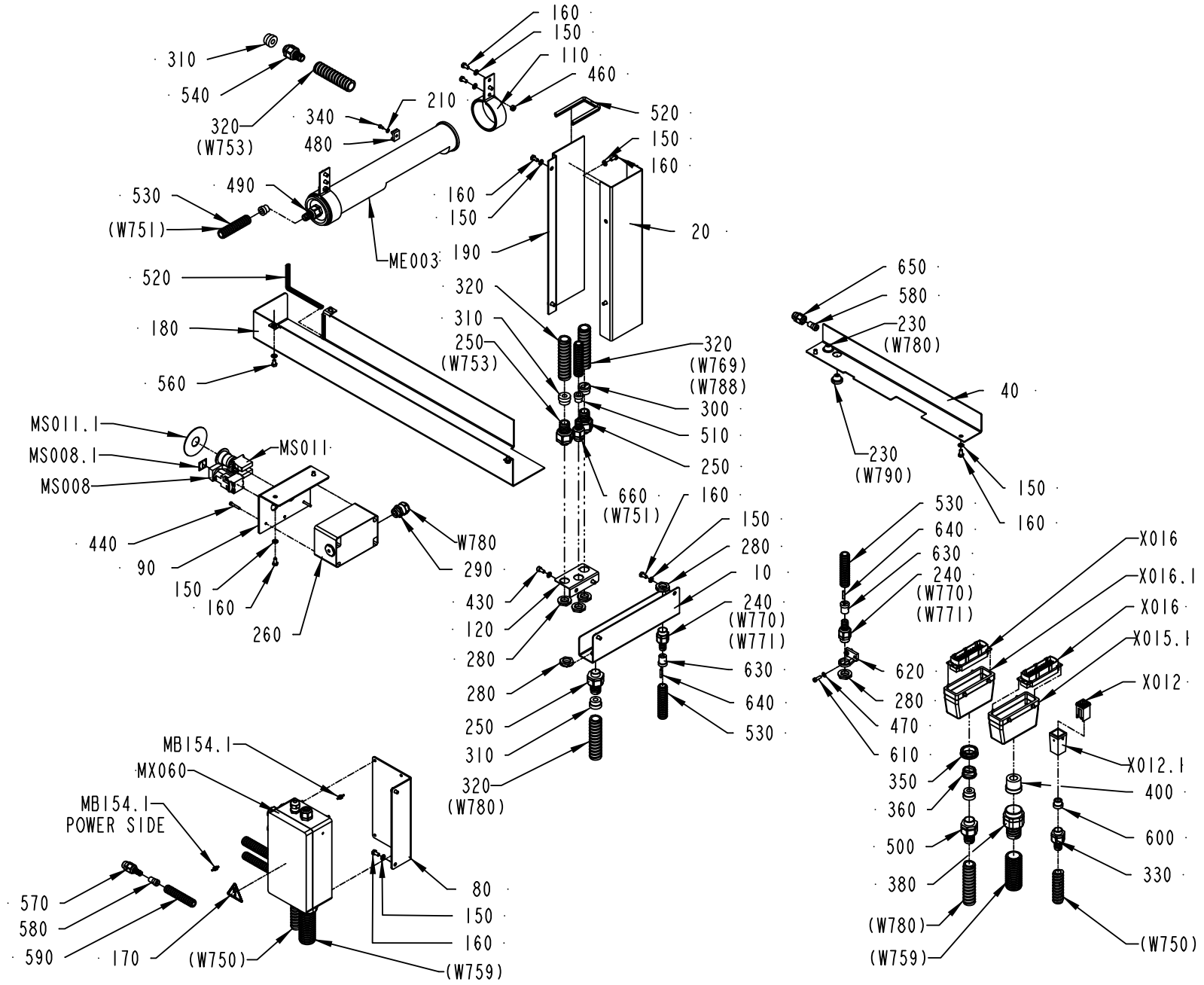

1549480-1
ECM 276294

ECM: 276294 - 20070126
Group number: 1549480-0100
Assembly Drawing: 1549480-1_1_AD

Pos	Part No	UN	Qty	Description	Page No
-					
010	2614227-0000		1	CABLE TRACK	
020	2614225-0000		1	CABLE TRACK	
040	2614228-0000		1	CABLE TRACK	
080	1558315-0000		1	BRACKET	
090	1558316-0000		1	BRACKET	
110	2526341-0000		2	LAMP HOLDER	
120	2526342-0000		1	BRACKET	
150	315105-0153		23	WASHER BRB 6,4X12 RFR	
160	312105-0366		18	SCREW M6S ISO 4017 M6X12 A480	
170	359705-0015		1	WARNING SIGN ISO, RISK OF ELECTRIC SHOCK	
180	2529564-0000		1	COVER	
190	2614226-0000		1	CABLE TRACK	
210	315105-0136		1	WASHER BRB 4,3X8 RFR	
230	90015-0023		2	LEAD-IN, TET7-10, E-1458019	
240	90458-0413		2	HOSE GLAND W/O INSERT M20 NORMAL	
250	90458-0430		3	HOSE GLAND W/O INSERT M20 EXTENDED	
260	2564115-0000		1	PUSH BUTTON BOX	
280	90458-0323		6	NUT, M20X1,5	
290	90458-0307		1	CABLE GLAND, M20X1,5, NO.5311 1020	
300	90458-1239		1	GLAND, INSERT, MULTI HOLE, 1X9/1X5,5	
310	353249-0012		4	INSERT, SINGEL HOLE, EK 154/11	
320	90152-0051	M	4	SPIRAL CONDUIT, 25X18, UL 1816	
330	353243-0003		1	HOSE GLAND W/O INSERT PG11 EXTENDED	
340	312125-0287		1	SCREW ISO 1207 M4X8 A4	
350	90089-0005		1	REDUCING SLEEVE, PR37/PR28,3	
360	90089-0004		1	REDUCING SLEEVE, PR28,3/PR22,5	
380	353242-0003		1	HOSE GLAND W/O INSERT PG29 NORMAL	
400	353249-0072		1	INSERT, SINGEL HOLE, E155/20	
430	312115-0366		2	SCREW ISO4762 M6X12 A4 80	
440	312125-0297		4	SCREW ISO 1207 M4X25 A4	
460	312605-0316		2	HEXAGON NUT, M6M M6 A280	
470	315105-0146		2	WASHER BRB 5,3X10 RFR	
480	352113-0203		1	ANCHOR PLATES FOR STRIPS, TYPE TM3S8-M0	
490	353243-0002		2	HOSE GLAND W/O INSERT PG11 EXTENDED	
510	353249-0010		2	INSERT, SINGEL HOLE, EK 152/11	
520	90143-0060	MM	850	EDGE STRIP 9,5X6,3MM BLACK PVC	
530	90152-0059	M	2.5	SPIRAL CONDUIT, 18X12, UL 1211	
540	90458-0429		1	HOSE GLAND W/O INSERT M20 EXTENDED	
560	312105-0364		3	SCREW M6S ISO 4017 M6X10 A480	
570	90458-0417		1	HOSE GLAND W/O INSERT M16 NORMAL	
580	90458-1238		2	GLAND, INSERT, SINGLE HOLE,	
590	90152-0058	M	0.5	SPIRAL CONDUIT, 15X9, UL 0909	
600	353249-0011		1	INSERT, SINGEL HOLE, EK 153/11	
610	312125-0329		2	SCREW ISO 1207 M5X16 A4	
620	352135-0202		1	CLIP, 16 MM, 913.016	
630	353249-0025		2	INSERT, MULTI HOLE, E152M3X4	
640	353249-0301		2	SEALING PIN, 4X20	
650	90458-0404		1	GLAND W/O INSERT M16 NORMAL	
660	90458-0428		1	HOSE GLAND W/O INSERT M20 EXTENDED	
MS011	90458-1651		1	EMERGENCY STOP, ZB4-BS-844 ZB4-BZ-104	
MS008	90064-0085		1	PUSH BUTTON, RED	
ME003	90164-0015		1	LIGHT FIXTURE, RL70CV-111 / 230V 50HZ	
	90297-0007		*1*	*FLUORESCENT TUBE, PLS 11*	
	92297-0301		*1*	*STARTER 4-65W S10, E 8219023*	
MX060	1558318-0100		1	CONNECTION BOX	**8-79**
MS011.1	486826-0001		1	SIGN "EMERGENCY STOP"	
MS008.1	359301-0110		1	BUTTON SIGN, SHORT STOP	
MB154.1	90232-0347		1	FIBRE LL3-TB01 5 308050	
W753	351150-0404	M	45	CABLE OLFLEX 4X0,75 MM2 LIGHT/GREY	
W780	351150-0406	M	4	CABLE OLFLEX 7X0,75 MM2 LIGHT/GREY	
X012	90459-2412		1	CONNECTOR 4 POLE + EARTH	
X012.1	90110-0371		1	COVER, HDC-HA-3-TOVL1/11165247-A/1	
X015	90110-0150		1	MALE INSERT 121110 0000	
X015.1	90110-0152		1	CABLE HOOD 24-POL 70.352.2428.1	
X016	90110-0150		1	MALE INSERT 121110 0000	
X016.1	90110-0152		1	CABLE HOOD 24-POL 70.352.2428.1	

Machine Type | Group Description | Used-In | Group Number | Page No

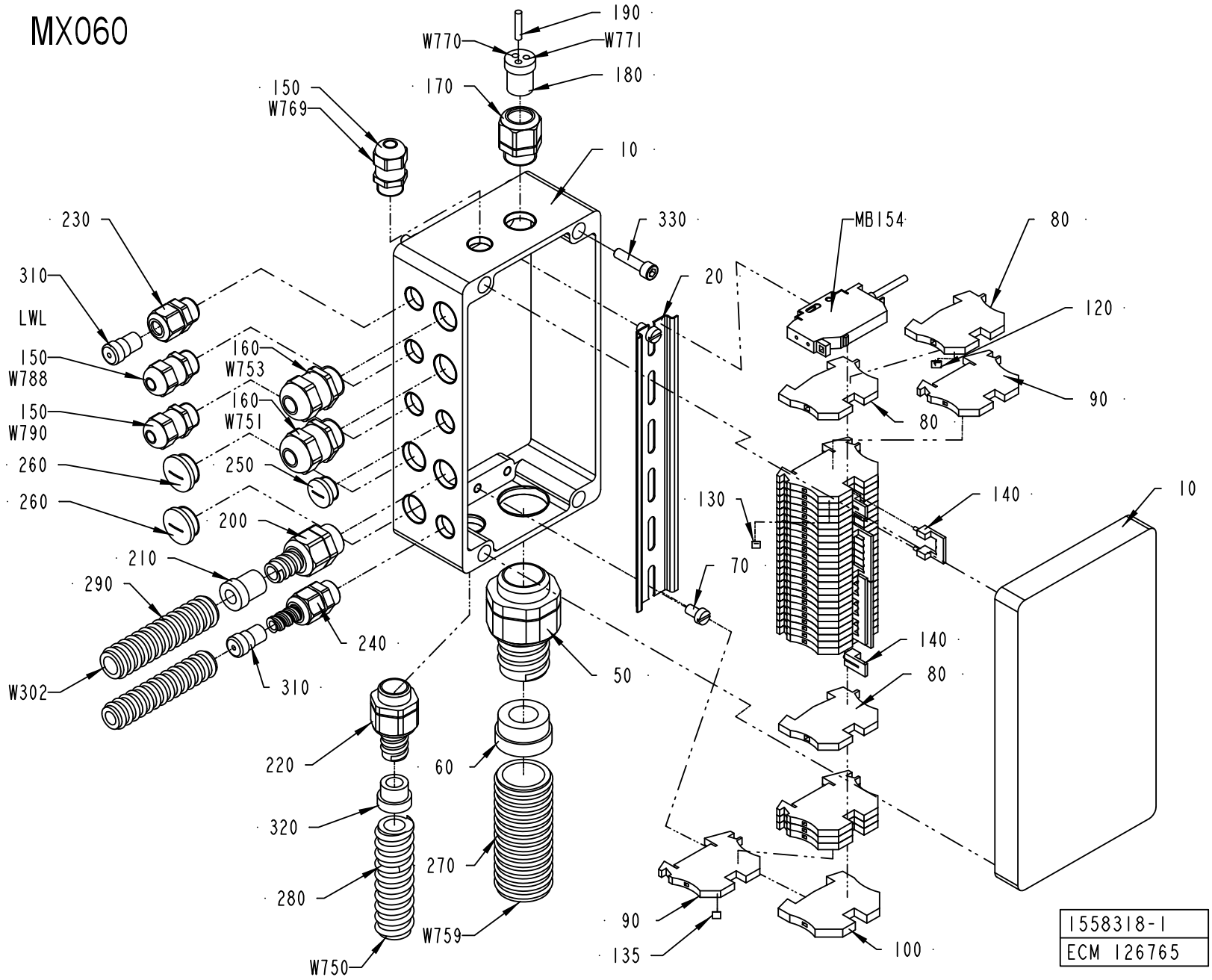
MX060
190
W770
W771
180
150
W769
170
10
230
330
MB154
80
310
LWL
20
120
150
W788
160
W753
160
W751
150
W790
90
80
260
250
260
200
130
140
10
210
290
70
140
240
80
W302
310
50
220
60
320
270
280
90
W759
135
100
W750
1558318-1
ECM 126765

ECM: 180785 - 20040911
Group number: 1558318-0100
Assembly Drawing: 1558318-1_1_AC

Pos	Part No	UN	Qty	Description	Page No
-					
010	2501265-0000		1	CONNECTION BOX	
020	2501266-0000		1	RAIL	
050	90458-0433		1	HOSE GLAND W/O INSERT M32 EXTENDED	
060	353249-0016		1	INSERT, SINGEL HOLE, EK 155/18	
070	312125-0364		2	SCREW ISO 1207 M6X10 A4	
080	353024-0204		3	EARTH TERMINAL WPE 2,5	
090	353021-0212		30	FEED THROUGH TERMINAL, 10200.0	
100	353024-0205		1	EARTH TERMINAL, 1010.1	
120	359011-0818		1	SYMBOL 5-GW (-) 50PC	
130	359011-0807		2	MARKING PLATES 5-FW 1-50	
135	359011-0809		2	MARKING PLATES 5-FW 101-150	
140	353034-0030		4	BRIDGE CONNECTOR WQV 2,5/10, 10544.6	
150	90458-0306		3	CABLE GLAND, M16X1,5, NO.5311 1010	
160	90458-0315		2	CABLE GLAND, M20X1,5, NO.5311 1120	
170	90458-0406		1	GLAND W/O INSERT M20 NORMAL	
180	353249-0025		1	INSERT, MULTI HOLE, E152M3X4	
190	353249-0301		1	SEALING PIN, 4X20	
200	90458-0413		1	HOSE GLAND W/O INSERT M20 NORMAL	
210	353249-0065		1	INSERT, SINGEL HOLE, E152/09	
220	90458-0429		1	HOSE GLAND W/O INSERT M20 EXTENDED	
230	90458-0404		1	GLAND W/O INSERT M16 NORMAL	
240	90458-0417		1	HOSE GLAND W/O INSERT M16 NORMAL	
250	90458-1307		1	BLIND PLUG CIRCULAR, M16X1,5 514GFK/216	
260	90458-1308		2	BLIND PLUG CIRCULAR, M20X1,5 514GFK/220	
270	90152-0070	M	1.5	METAL HOSE, 32,5X26, UL 2621	
280	90152-0050	M	2	SPIRAL CONDUIT, 20X13, UL 1313	
290	90152-0059	MM	500	SPIRAL CONDUIT, 18X12, UL 1211	
310	90458-1238		2	GLAND, INSERT, SINGLE HOLE,	
320	353249-0011		1	INSERT, SINGEL HOLE, EK 153/11	
330	312115-0372		4	SCREW ISO4762 M6X25 A4 80	
MB154	90232-0123		1	PH.CELL WLL170-P135-6011723	
W302	351120-0144	M	4	CABLE SILFLEX SIHF 3X1,5 0046014	
W750	351150-0414	M	2.5	CABLE OLFLEX 5X1,5 MM2 LIGHT/GREY	
W751	351150-0412	M	2.5	CABLE OLFLEX 3X1,5 MM2 LIGHT/GREY	
W753	351150-0406	M	4	CABLE OLFLEX 7X0,75 MM2 LIGHT/GREY	
W759	351150-0425	M	2.5	CABLE OLFLEX 25X0,75 MM2 LIGHT/GREY	
W788	351150-0405	M	4	CABLE OLFLEX 5X0,75 MM2 LIGHT/GREY	
W790	351150-0405	M	4	CABLE OLFLEX 5X0,75 MM2 LIGHT/GREY	

Pos	Part No	UN	Qty	Description	Page No

Tetra Pak

SPC
Spare Parts Catalogue

This page is intentionally left blank.

ECM: 290096 - 20070126
Group number: 648109-1300
Assembly Drawing:

Pos	Part No	UN	Qty	Description	Page No
ASU					
140	1520972-0000		2	TPO-BAR	
150	2517066-0000		5	DOLLY	
Common Parts					
050	2543594-0200		1	ELECTRICAL COMPONENTS	**9-5**
060	90459-0308		1	PAPER TROLLEY, STOCKA 32.04.250.9	**9-7**
090	531345-0200		1	PERSONAL PROTECT. EQ H2O2	**9-13**
100	77099-0300		1	TOOL KIT	**9-15**
110	2541126-0100		1	INSTALLATION ACCESSORIES	**9-17**
120	2501528-0200		1	PLMS KIT	**9-19**
130	2541886-0100		1	START-UP KIT	**9-33**
160	2832788-0000		1	SUPPORT	
310	579899-0000		1	LIFTING UNIT	
320	441725-0000		1	COVERING PLATE	
330	90220-0104	M	20	SCR. CABLE 4X1,5MM2	
340	351150-0405	M	100	CABLE OLFLEX 5X0,75 MM2 LIGHT/GREY	
350	90153-0015		1	ADHESIVE,LOCTITE IS 496/CYANOLOT 303	
360	779910-0101		1	PADLOCK	
600	579765-0000		1	MACHINE SIGN CE	
610	1178657-0000		1	LABEL 3A 17-10	
900	90003-0422		1	CORRUGATED CARDBOARD BOX	
910	90347-0175		14	MACHINE SHOE BRIK T 125	

Pos	Part No	UN	Qty	Description	Page No

This page is intentionally left blank.

ECM: 247458 - 20060111
Group number: 2543594-0200
Assembly Drawing:

Pos	Part No	UN	Qty	Description	Page No
-					
010	90082-0301		3	OVER VOLT. PROTECT. PU 0 C 833951	
020	90064-0315		1	LAMP REMOVER, NO:700	
030	90459-3881		1	FOLDED PAPER, 00420840	
040	90459-0087		1	PRINT WHEEL, 6-COLOURS	
050	779910-0101		1	PADLOCK	
060	90233-0027		5	TUBE FUSE, 16A	
	90233-0305		*1*	*INDICATOR*	
070	90233-0027		5	TUBE FUSE, 16A	
	90233-0305		*1*	*INDICATOR*	
080	90233-0029		5	TUBE FUSE, 25A	

Pos	Part No	UN	Qty	Description	Page No

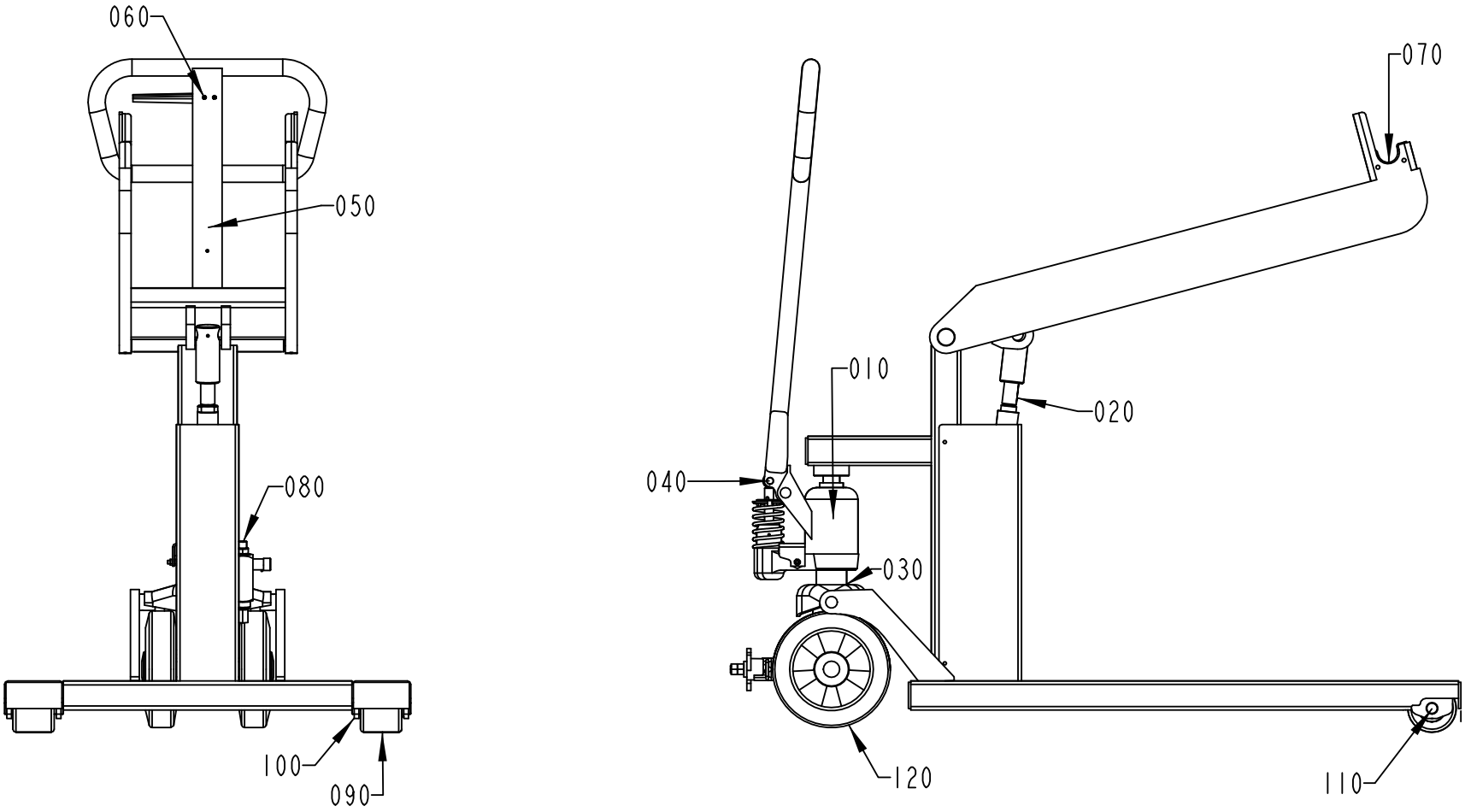

90459-0308
223142

ECM: 223144 - 20051012
Group number: 90459-0308
Assembly Drawing: 90459-0308_1_AC

Pos	Part No	UN	Qty	Description	Page No
-					
010	90458-1473		1	PUMP, 34 73 521 7	**9-9**
020	1558480-0100		1	LIFTING CYLINDER	**9-11**
030	90067-0334		1	AXIAL BEARING KIT, 32 14 174 9	
040	90067-0349		1	ROLLER KIT, 34 73 050 7	
050	90067-0359		1	SINK ROD, 34 74 021 7	
060	90067-0360		1	MOUNTING KIT, 34 74 022 5	
070	90067-0363		1	SLIDER, 32 04 160 1	
080	90067-0365		1	HYDRAULIC HOSE, 32 04 169 1	
090	90067-0370		1	WHEEL, 32 04 176 6	
100	90067-0371		1	SLEEVE, 32 04 175 8	
110	90067-0372		1	SHAFT, 32 04 174 1	
120	90459-3874		1	GUIDE ROLLER, 32441305	

Pos	Part No	UN	Qty	Description	Page No

PUMP, 34 73 521 7

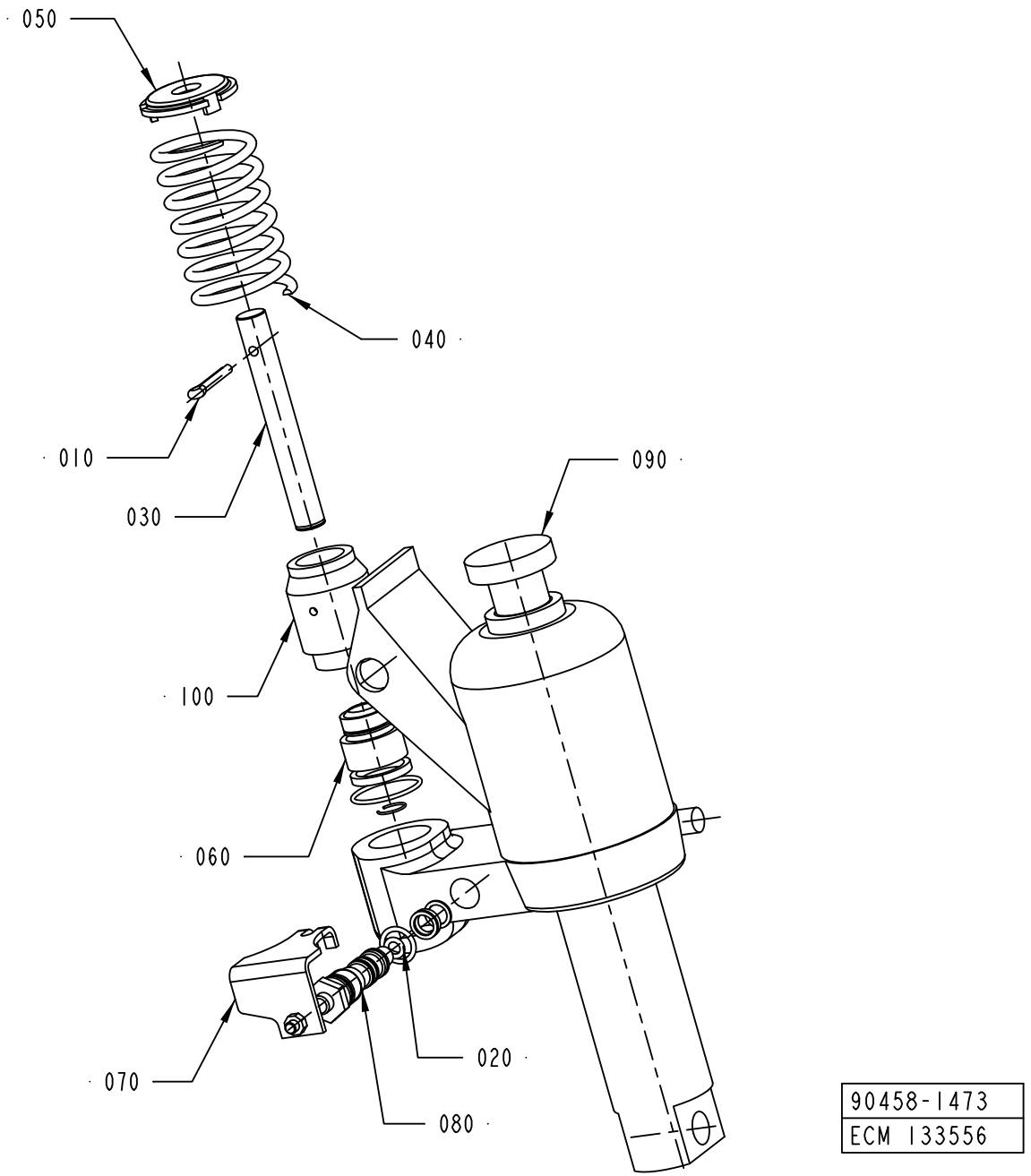

90458-1473
ECM 133556

ECM: 133556 - 20030513
Group number: 90458-1473
Assembly Drawing: 90458-1473_1_AB

Pos	Part No	UN	Qty	Description	Page No
-					
010	90458-1468		1	SPLIT PIN, 43 71 234 8	
020	90067-0351		1	SEAL KIT	
030	90067-0354		1	PUMP PISTON	
040	90067-0355		1	COMPRESSION SPRING	
050	90067-0356		1	TOP WASHER	
060	90067-0357		1	REPAIR KIT	
070	90067-0369		1	VALVE ARM	
080	90458-1470		1	SINK VALVE COMPL, 34 73 094 5	
090	90458-1469		1	PUMP HOUSING, 34 73 517 5	
100	90458-1393		1	PUMP CYLINDER, 34 73 522 5	

Pos	Part No	UN	Qty	Description	Page No

LIFTING CYLINDER

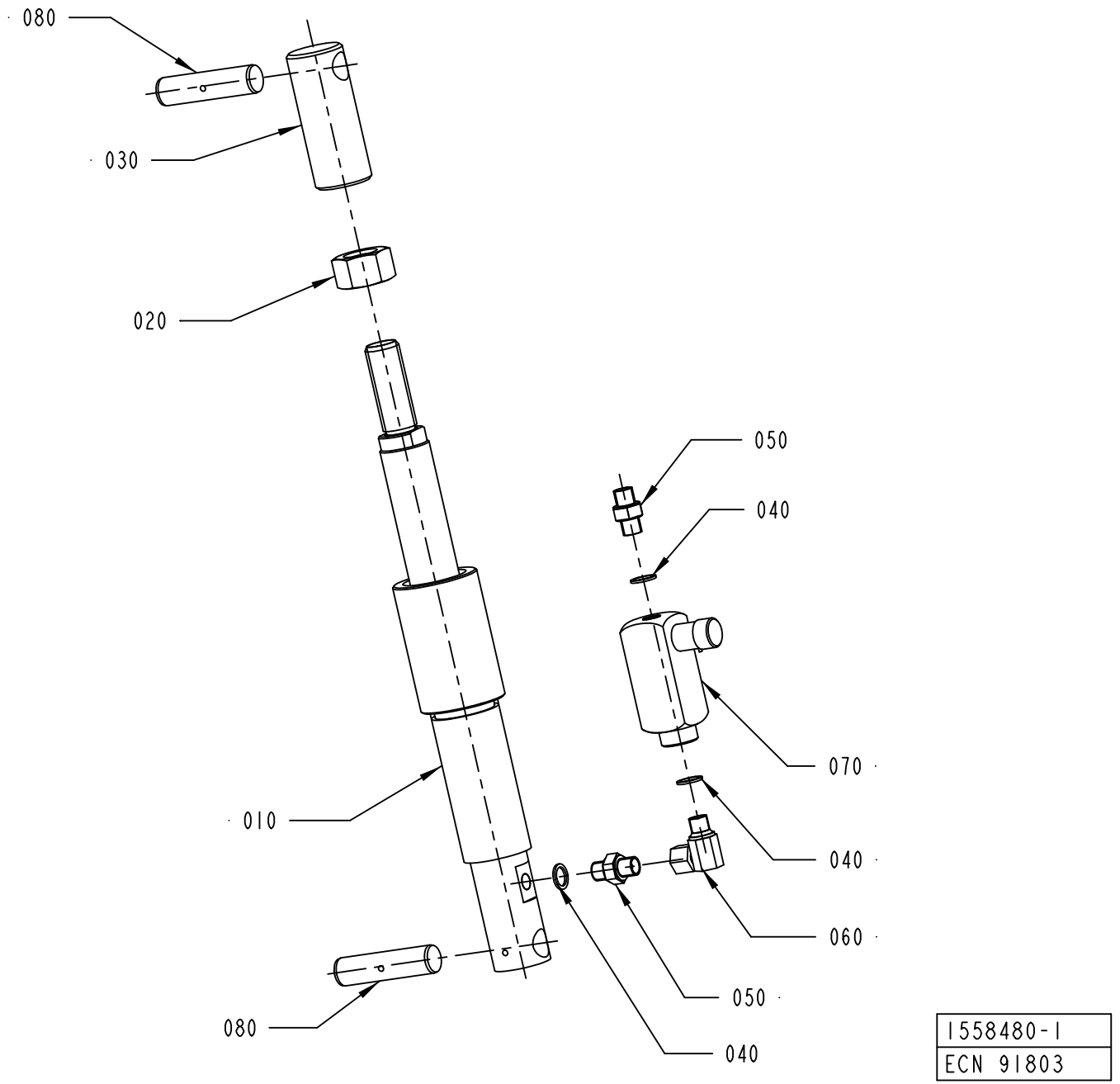

ECM: 289823 - 20070126
Group number: 1558480-0100
Assembly Drawing: 1558480-1_1_AA

Pos	Part No	UN	Qty	Description	Page No
-					
010	90458-1472		1	CYLINDER, 32 04 215 2	
020	312605-0328		1	HEXAGON NUT, M6M M24 A280	
030	90458-1471		1	PISTON ROD END, 32 04 214 5	
040	315234-0110		3	WASHER,PL.RND.CU.13,5/18 H=1,5	
050	90055-0042		2	NIPPLES, EXT. THREAD, HEXAGON, NO. 6835-	
060	90055-0145		1	ELBOW ADAPTOR-R1/4	
070	90201-0098		1	ADJ. FLOW CON. VALVE, NO. 9 PCCM 400SF	
080	90458-1476		2	AXLE PIN, 32 04 167 5	

Pos	Part No	UN	Qty	Description	Page No

This page is intentionally left blank.

ECM: 72190 - 19990628
Group number: 531345-0200
Assembly Drawing:

Pos	Part No	UN	Qty	Description	Page No	Pos	Part No	UN	Qty	Description	Page No
-											
	90303-0013		1	APRON							
	90303-0012		1	PROTECTIVE GLOVES							
	90303-0011		1	PROTECTIVE GOGGLES							

This page is intentionally left blank.

ECM: 103434 - 20020514
Group number: 77099-0300
Assembly Drawing:

Pos	Part No	UN	Qty	Description	Page No
TBA					
020	72947-0000		1	HOOK SPANNER	
040	76131-0000		1	ASSEMBLY CONE	
050	76132-0000		1	ASSEMBLY TOOL	
060	78801-0000		1	CALIBRATION TOOL	
130	777150-0801		2	SET OF SPANNERS, HEXAGONAL	

Pos	Part No	UN	Qty	Description	Page No

Machine Type	Group Description	Used-In	Group Number	Page No

This page is intentionally left blank.

ECM: 103435 - 20020514
Group number: 2541126-0100
Assembly Drawing:

Pos	Part No	UN	Qty	Description	Page No
-					
010	1512848-0000		1	BRACKET	
300	90458-1960		2	STRETCHING SCREW, 468-697MM MAX2950KG	
310	90458-1959		8	LIFTING EYE BOLT, LGB (3) 3T M24	
320	312105-0463		4	SCREW M6S ISO 4014 M8X60 A480	

Pos	Part No	UN	Qty	Description	Page No

This page is intentionally left blank.

ECM: 247457 - 20060111
Group number: 2501528-0200
Assembly Drawing:

Pos	Part No	UN	Qty	Description	Page No
TBA					
	359000-0109		10	WIRE MARKING, YELLOW, PY01/3"9"	
	90110-0518		5	CONNECTOR D-SUB, SUBCON 15/M-SH	
	359000-0108		10	WIRE MARKING, YELLOW, PY01/3"8"	
	353001-0101		50	END SLEEVE 0,5 MM2	
	359000-0104		10	WIRE MARKING, YELLOW, PY01/3"4"	
	359000-0105		10	WIRE MARKING, YELLOW, PY01/3"5"	
	359000-0103		10	WIRE MARKING, YELLOW, PY01/3"3"	
	359000-0102		10	WIRE MARKING, YELLOW, PY01/3"2"	
	359000-0106		10	WIRE MARKING, YELLOW, PY01/3"6"	
	359000-0101		10	WIRE MARKING, YELLOW, PY01/3"1"	
	359000-0100		10	WIRE MARKING, YELLOW, PY01/3"0"	
	359000-0107		10	WIRE MARKING, YELLOW, PY01/3"7"	
	353001-0102		50	END SLEEVE 0,75 MM2	
	2501547-0100		1	QUEUE GUARD	**9-21**
MA451	90453-0001		1	MODEM MA-12	
MX022	2510844-0100		1	CONNECTION BOX	**9-23**
Common Parts					
	82197-0104		1	USER MANUAL	
	2501471-0100		1	COUNTER	**9-25**
	2501472-0100		1	COUNTER	**9-27**
MX020	2501466-0100		1	CONNECTION BOX	**9-29**
MX021	2501465-0100		1	CONNECTION BOX	**9-31**
W951	90220-0091	M	200	PAIR TWISTED CABLE 2X2X0,25MM2	
W952	90220-0091	M	200	PAIR TWISTED CABLE 2X2X0,25MM2	
W956	90041-0068		1	DATACABLE MODEM PC	

Pos	Part No	UN	Qty	Description	Page No

QUEUE GUARD

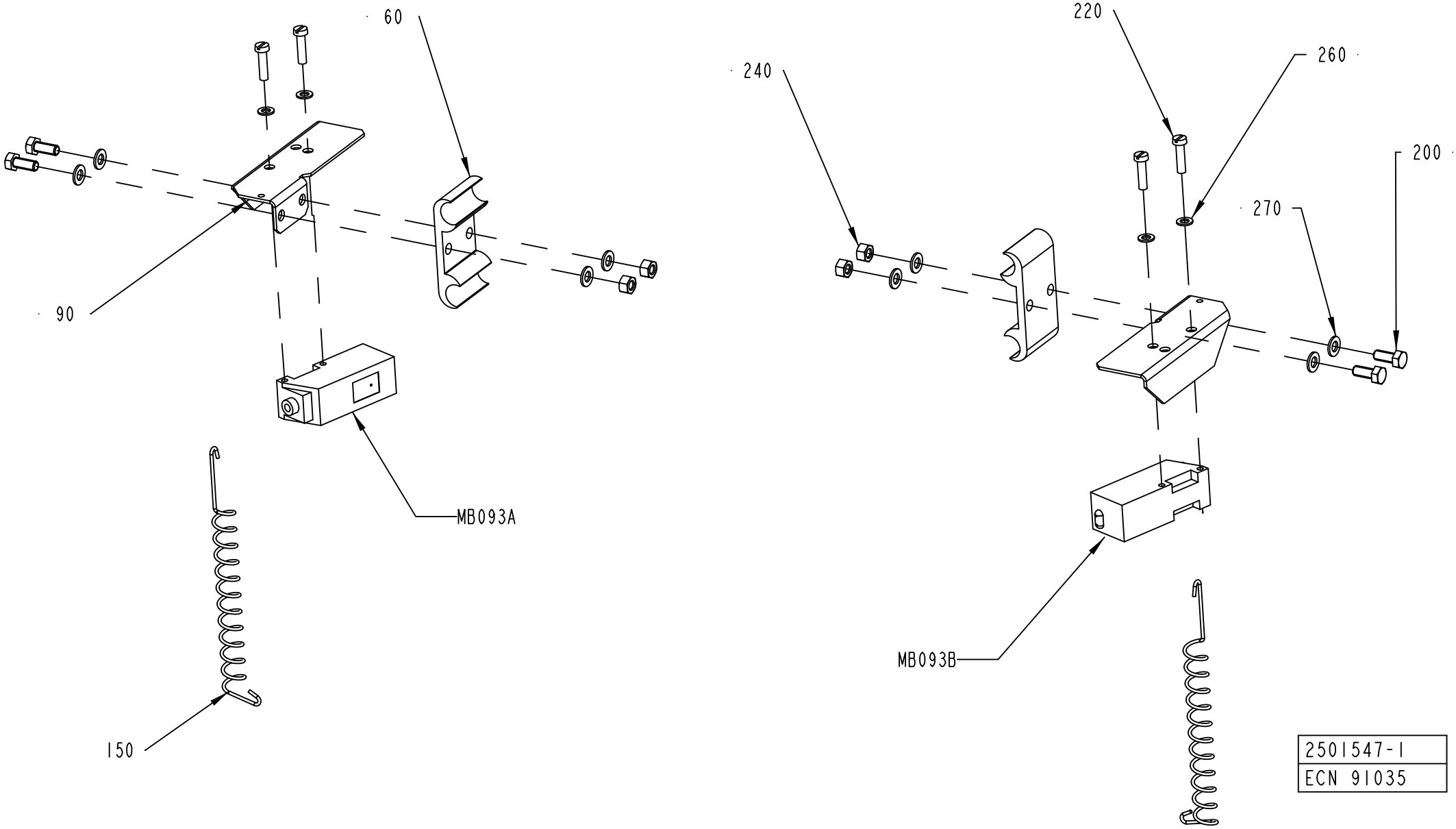

2501547-1
ECN 91035

ECM: 252130 - 20060127
Group number: 2501547-0100
Assembly Drawing: 2501547-1_1_AA

Pos	Part No	UN	Qty	Description	Page No
TBA 0100B, TBA 0125S					
060	1020638-0000		2	HOLDER	
TBA 0180B, TBA 0160S, TBA 0200M, TBA 0200B, TBA 0236B, TBA 0200S, TBA 0250S, TBA 0284B, TBA 0250B, TBA 0300S, TBA 0330S					
060	1020637-0000		2	HOLDER	
Common Parts					
090	1086888-0000		2	COVER	
150	532412-0000		2	SPRING	
200	312105-0327		4	SCREW M6S ISO 4017 M5X12 A480	
220	312125-0293		4	SCREW ISO 1207 M4X16 A4	
240	312605-0314		4	HEXAGON NUT, M6M M5 A280	
260	315105-0136		4	WASHER BRB 4,3X8 RFR	
270	315105-0146		8	WASHER BRB 5,3X10 RFR	
MB093B	90232-0104		1	PH.CELL E3S-CT61-D-5M	
MB093A	90232-0103		1	PH.CELL E3S-CT61-L-5M	

Pos	Part No	UN	Qty	Description	Page No

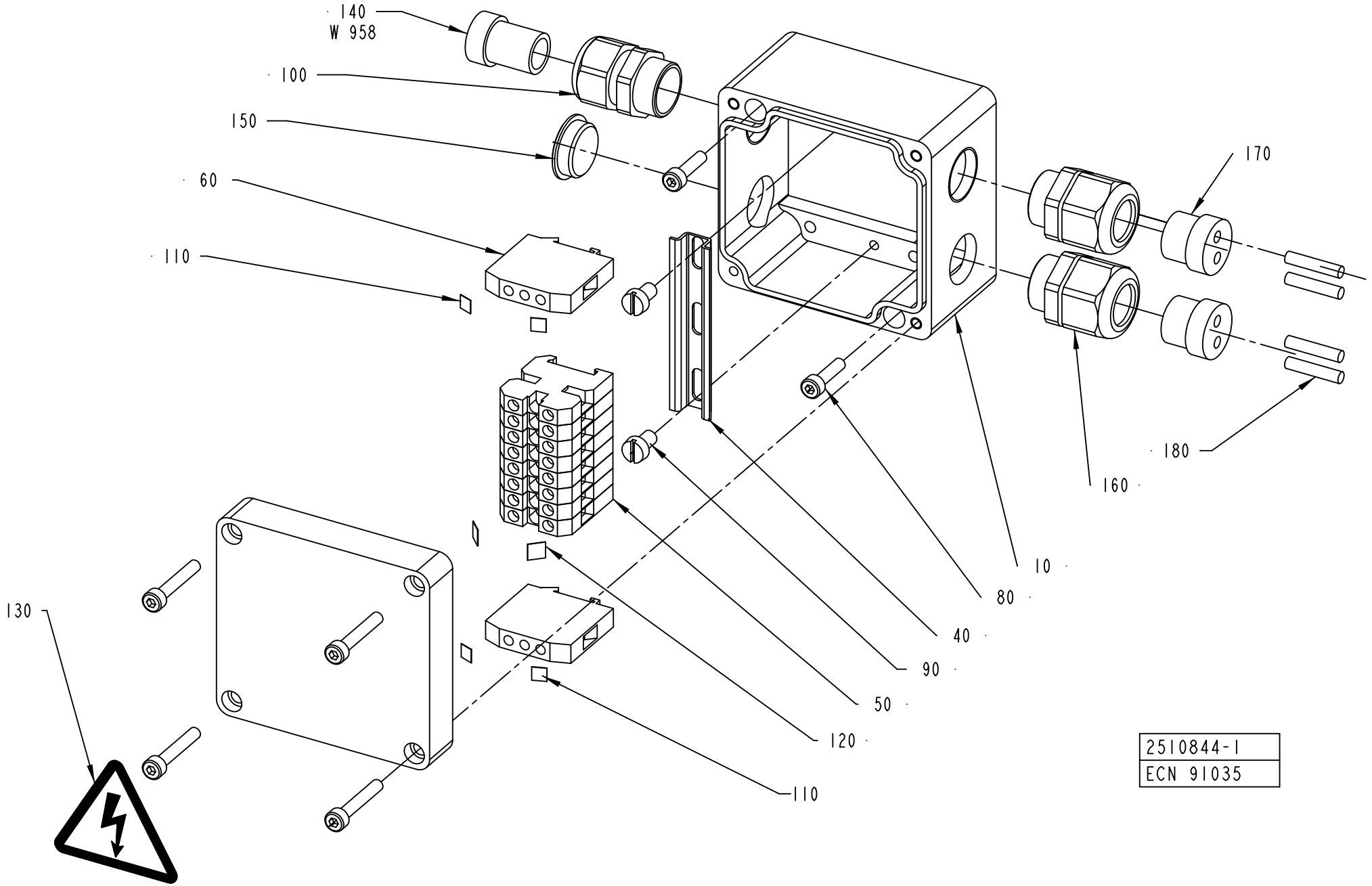
140
W 958
100
150
60
110
170
180
160
10
80
40
90
50
120
110
130
2510844-1
ECN 91035

ECM: 95640 - 20020514
Group number: 2510844-0100
Assembly Drawing: 2510844-1_1_AA

Pos	Part No	UN	Qty	Description	Page No
-					
010	1349568-0000		1	CONNECTION BOX	
040	90077-0328	M	65	RAIL TS15/5	
050	90077-0079		8	FEED THROUGH TERMINAL, 02943.6	
060	90135-0026		2	EARTH TERMINAL, 3802.6	
080	312115-0293		2	SCREW ISO4762 M4X16 A4 80	
090	312125-0323		2	SCREW ISO 1207 M5X8 A4	
100	353240-0002		1	GLAND W/O INSERT PG11 NORMAL	
110	359011-0819		4	MARKING PLATES 5-GW (EARTH)	
120	359011-0821		2	SET OF SIGNS 6-FW 1-50	
130	359705-0015		1	WARNING SIGN ISO, RISK OF ELECTRIC SHOCK	
140	353249-0003		1	INSERT, SINGEL HOLE, E151/11	
150	90002-0009		1	BLANK-OFF PLUG, PR 18.6 SKINDICHT-BLK11	
160	353249-0036		2	INSERT, MULTI HOLE, EK152 M 2X4	
160	353241-0002		2	GLAND W/O INSERT PG11 EXTENDED	
180	353249-0301		4	SEALING PIN, 4X20	
200	353001-0113		2	END SLEEVE 0,75MM2	
210	359000-0201		1	WIRE MARKING, YELLOW, PA02/3"1"	
220	359000-0204		1	WIRE MARKING, YELLOW, PA02/3"4"	
W958	351150-0405	M	40	CABLE OLFLEX 5X0,75 MM2 LIGHT/GREY	

Pos	Part No	UN	Qty	Description	Page No

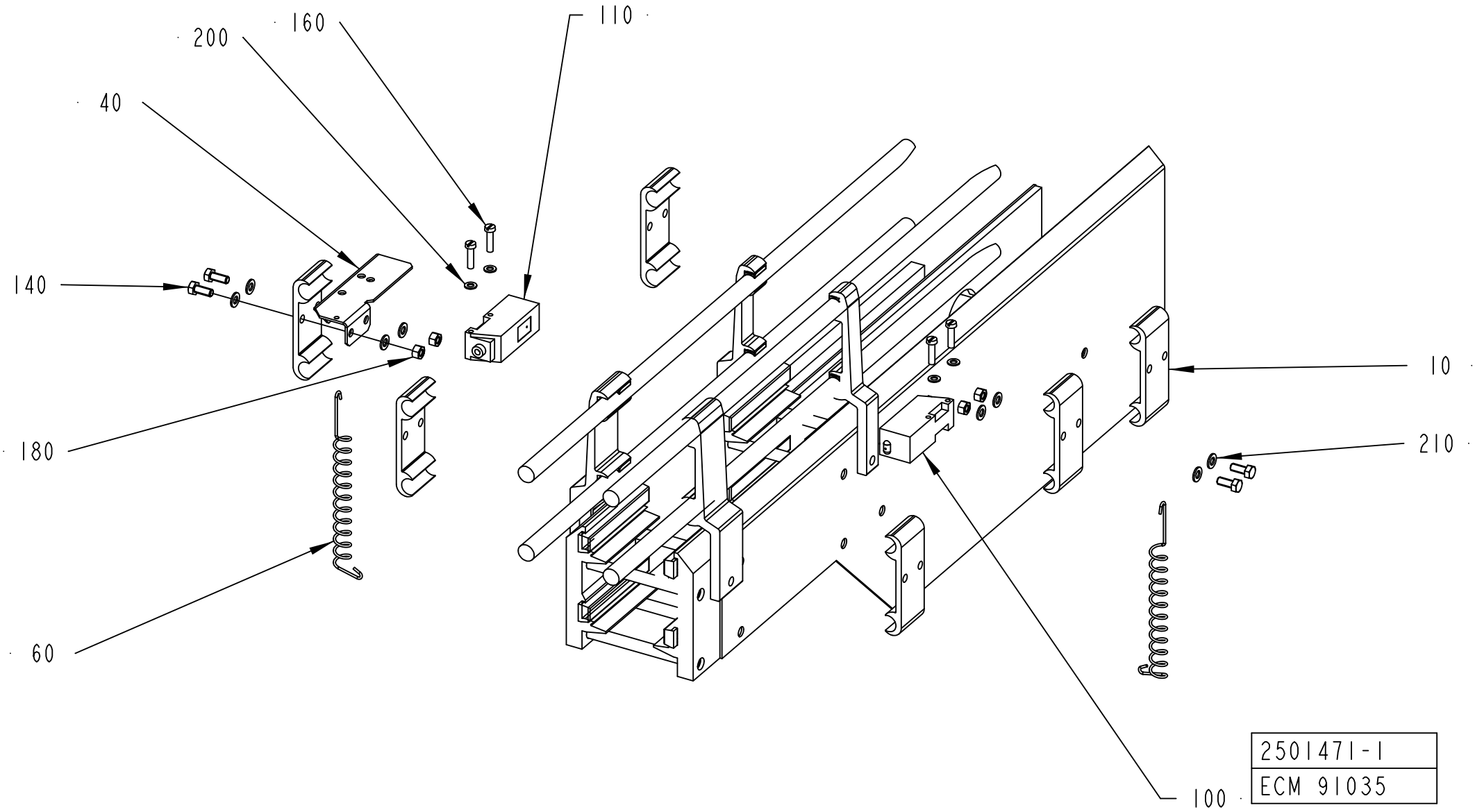
160
110
200
40
140
10
180
210
60
100
2501471-1
ECM 91035

ECM: 91092 - 20020514
Group number: 2501471-0100
Assembly Drawing: 2501471-1_1_AA

Pos	Part No	UN	Qty	Description	Page No
-					
010	1020637-0000		6	HOLDER	
030	1020638-0000		6	HOLDER	
040	1086888-0000		2	COVER	
060	532412-0000		2	SPRING	
070	1478659-0000		4	BRACKET	
140	312105-0327		16	SCREW M6S ISO 4017 M5X12 A480	
150	312105-0323		2	SCREW M6S ISO 4017 M5X8 A480	
160	312125-0293		4	SCREW ISO 1207 M4X16 A4	
180	312605-0314		16	HEXAGON NUT, M6M M5 A280	
190	312705-0314		2	NUT HEX. DOMED CAP MHM-6 M5 A280	
200	315105-0136		8	WASHER BRB 4,3X8 RFR	
210	315105-0146		12	WASHER BRB 5,3X10 RFR	
MB091B	90232-0104		1	PH.CELL E3S-CT61-D-5M	
MB091A	90232-0103		1	PH.CELL E3S-CT61-L-5M	

Pos	Part No	UN	Qty	Description	Page No

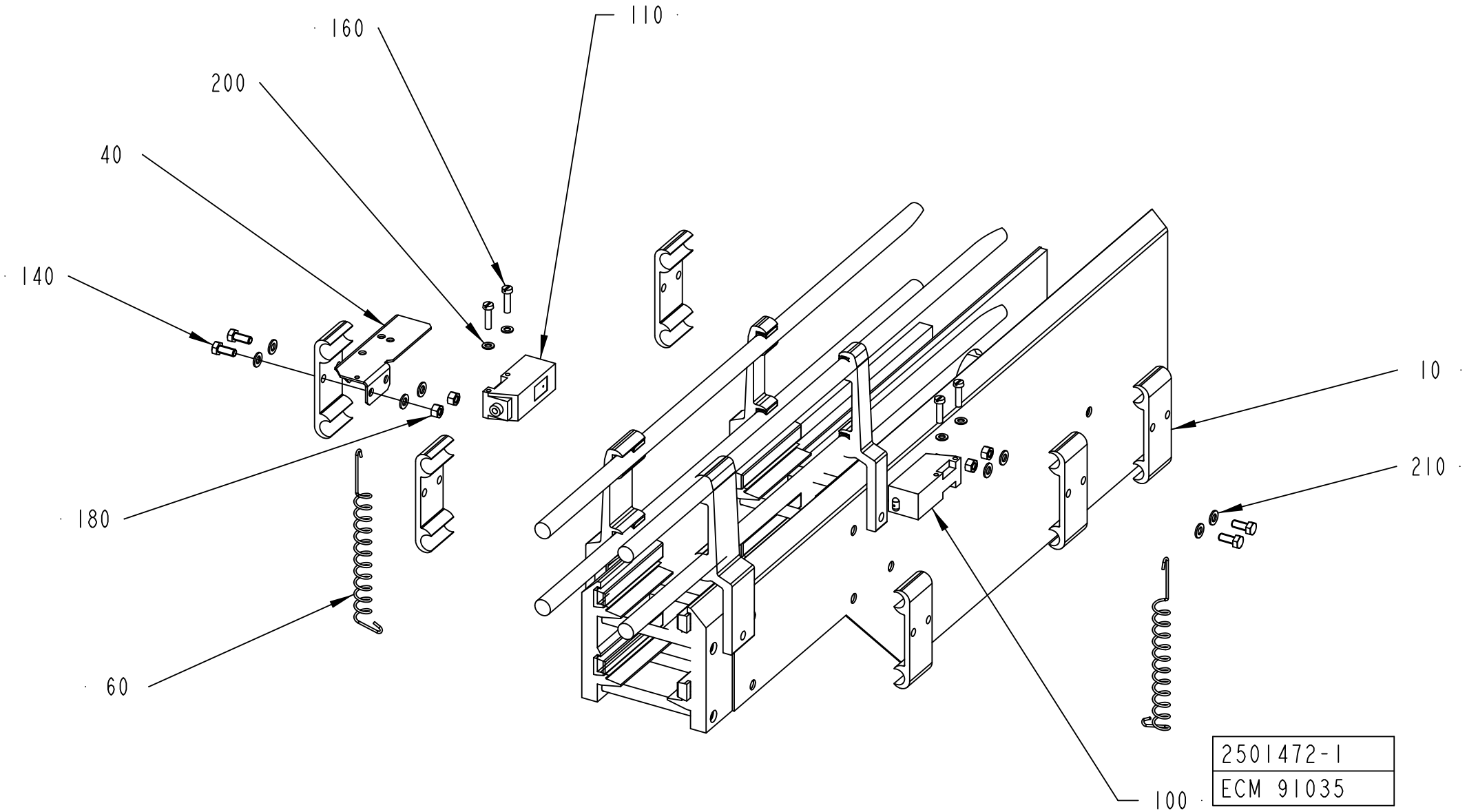
160
110
200
40
140
10
210
180
60
100
2501472-1
ECM 91035

ECM: 91093 - 20020514
Group number: 2501472-0100
Assembly Drawing: 2501472-1_1_AA

Pos	Part No	UN	Qty	Description	Page No
-					
010	1020637-0000		6	HOLDER	
030	1020638-0000		6	HOLDER	
040	1086888-0000		2	COVER	
060	532412-0000		2	SPRING	
070	1478659-0000		4	BRACKET	
140	312105-0327		16	SCREW M6S ISO 4017 M5X12 A480	
150	312105-0323		2	SCREW M6S ISO 4017 M5X8 A480	
160	312125-0293		4	SCREW ISO 1207 M4X16 A4	
180	312605-0314		16	HEXAGON NUT, M6M M5 A280	
190	312705-0314		2	NUT HEX. DOMED CAP MHM-6 M5 A280	
200	315105-0136		8	WASHER BRB 4,3X8 RFR	
210	315105-0146		12	WASHER BRB 5,3X10 RFR	
MB092B	90232-0104		1	PH.CELL E3S-CT61-D-5M	
MB092A	90232-0103		1	PH.CELL E3S-CT61-L-5M	

Pos	Part No	UN	Qty	Description	Page No

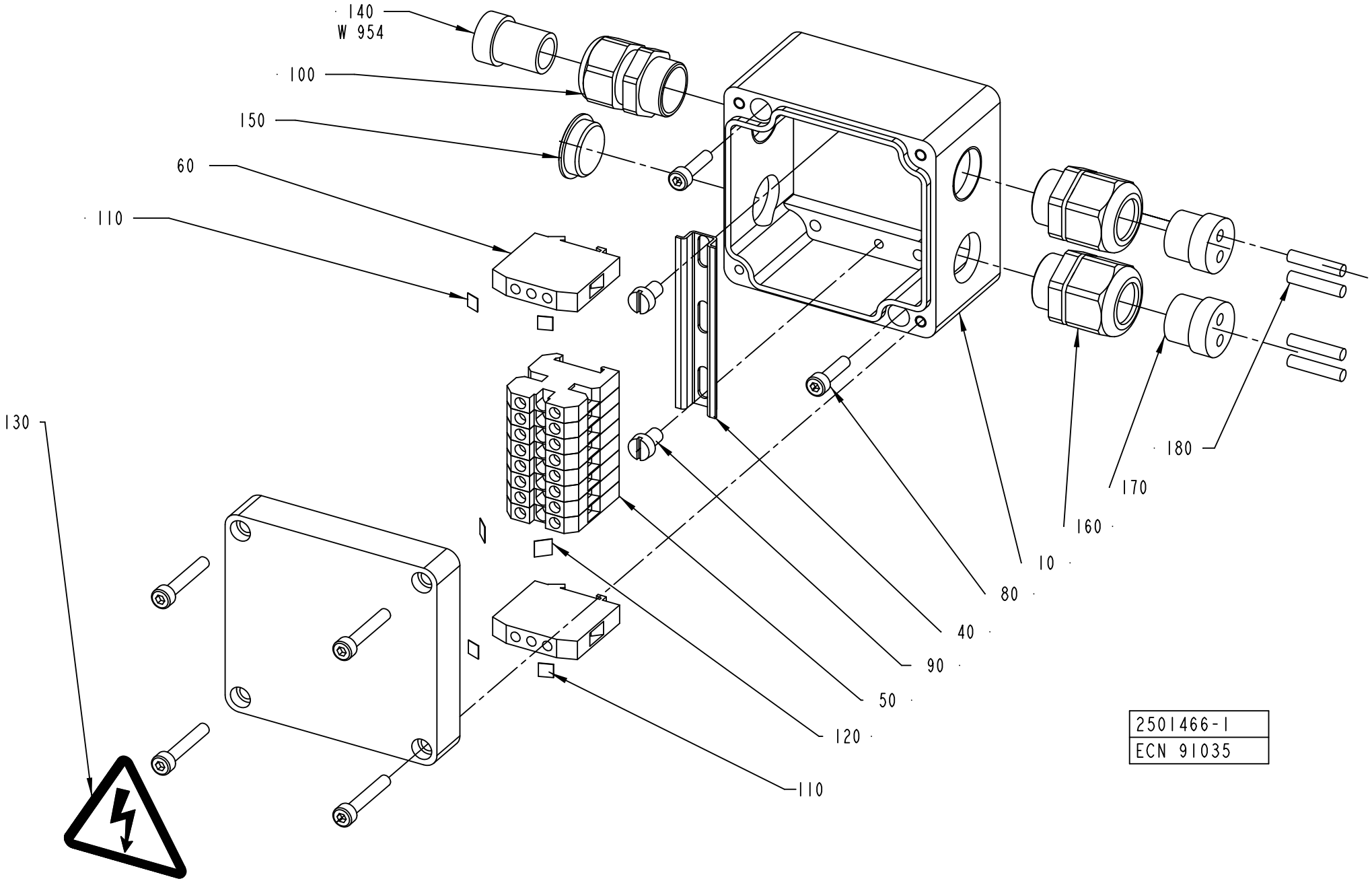
140
W 954
100
150
60
110
130
180
170
160
10
80
40
90
50
120
110
2501466-1
ECN 91035

ECM: 91048 - 20020514
Group number: 2501466-0100
Assembly Drawing: 2501466-1_1_AA

Pos	Part No	UN	Qty	Description	Page No
-					
010	1349568-0000		1	CONNECTION BOX	
040	90077-0328	M	65	RAIL TS15/5	
050	90077-0079		8	FEED THROUGH TERMINAL, 02943.6	
060	90135-0026		2	EARTH TERMINAL, 3802.6	
080	312115-0293		2	SCREW ISO4762 M4X16 A4 80	
090	312125-0323		2	SCREW ISO 1207 M5X8 A4	
100	353240-0002		1	GLAND W/O INSERT PG11 NORMAL	
110	359011-0819		4	MARKING PLATES 5-GW (EARTH)	
120	359011-0821		2	SET OF SIGNS 6-FW 1-50	
130	359705-0015		1	WARNING SIGN ISO, RISK OF ELECTRIC SHOCK	
140	353249-0003		1	INSERT, SINGEL HOLE, E151/11	
150	90002-0009		1	BLANK-OFF PLUG, PR 18.6 SKINDICHT-BLK11	
160	353249-0036		2	INSERT, MULTI HOLE, EK152 M 2X4	
160	353241-0002		2	GLAND W/O INSERT PG11 EXTENDED	
180	353249-0301		4	SEALING PIN, 4X20	
200	353001-0113		2	END SLEEVE 0,75MM2	
210	359000-0201		1	WIRE MARKING, YELLOW, PA02/3"1"	
220	359000-0204		1	WIRE MARKING, YELLOW, PA02/3"4"	
W954	351150-0405	M	20	CABLE OLFLEX 5X0,75 MM2 LIGHT/GREY	

Pos	Part No	UN	Qty	Description	Page No

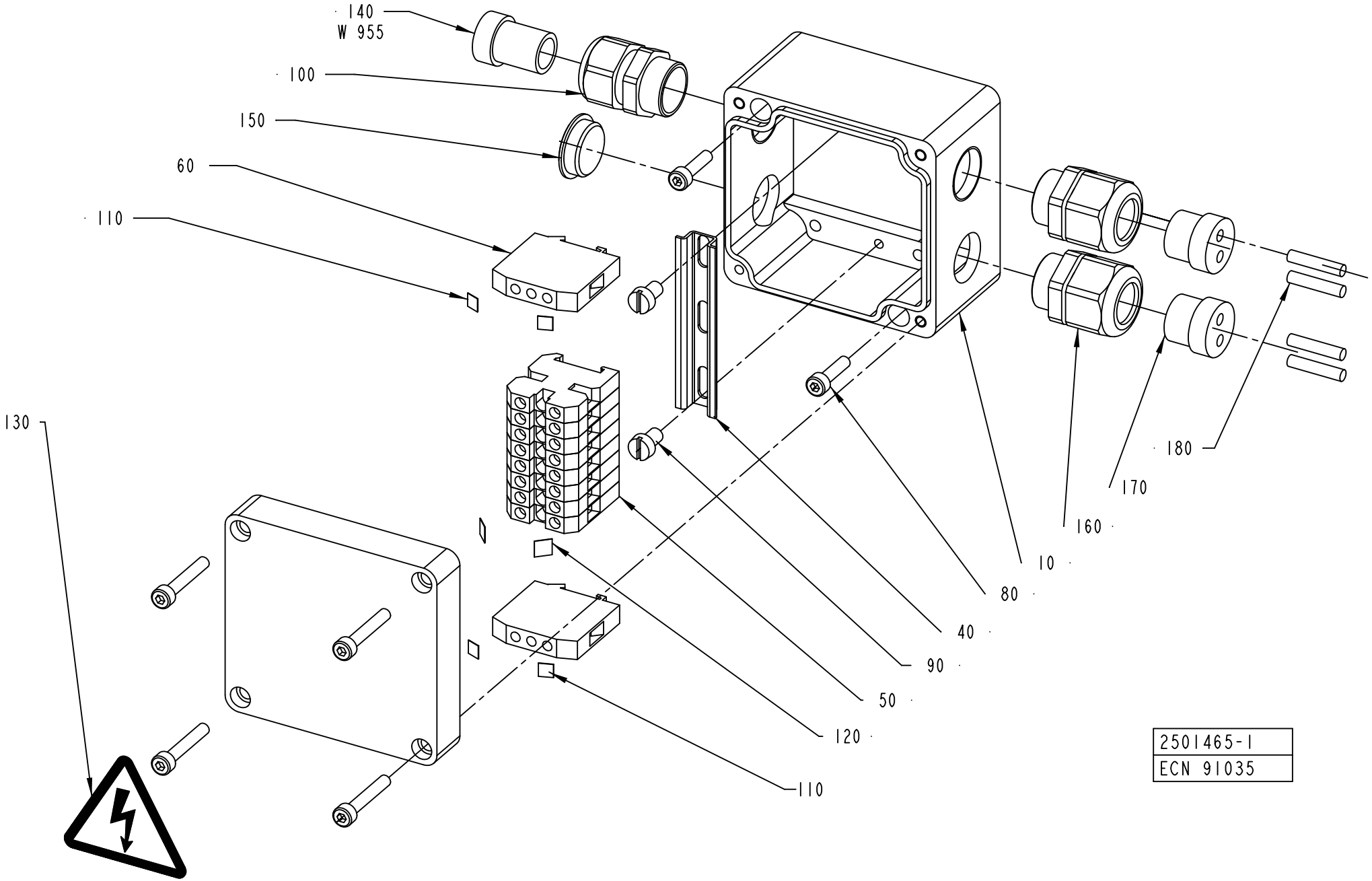
140
W 955
100
150
60
110
130
180
170
160
10
80
40
90
50
120
110
2501465-1
ECN 91035

ECM: 91047 - 20020514
Group number: 2501465-0100
Assembly Drawing: 2501465-1_1_AA

Pos	Part No	UN	Qty	Description	Page No
-					
010	1349568-0000		1	CONNECTION BOX	
040	90077-0328	MM	65	RAIL TS15/5	
050	90077-0079		8	FEED THROUGH TERMINAL, 02943.6	
060	90135-0026		2	EARTH TERMINAL, 3802.6	
080	312115-0293		2	SCREW ISO4762 M4X16 A4 80	
090	312125-0323		2	SCREW ISO 1207 M5X8 A4	
100	353240-0002		1	GLAND W/O INSERT PG11 NORMAL	
110	359011-0819		4	MARKING PLATES 5-GW (EARTH)	
120	359011-0821		2	SET OF SIGNS 6-FW 1-50	
130	359705-0015		1	WARNING SIGN ISO, RISK OF ELECTRIC SHOCK	
140	353249-0003		1	INSERT, SINGEL HOLE, E151/11	
150	90002-0009		1	BLANK-OFF PLUG, PR 18.6 SKINDICHT-BLK11	
160	353241-0002		2	GLAND W/O INSERT PG11 EXTENDED	
170	353249-0036		2	INSERT, MULTI HOLE, EK152 M 2X4	
180	353249-0301		4	SEALING PIN, 4X20	
200	353001-0113		2	END SLEEVE 0,75MM2	
210	359000-0201		1	WIRE MARKING, YELLOW, PA02/3"1"	
220	359000-0204		1	WIRE MARKING, YELLOW, PA02/3"4"	
W955	351150-0405	M	130	CABLE OLFLEX 5X0,75 MM2 LIGHT/GREY	

Pos	Part No	UN	Qty	Description	Page No

This page is intentionally left blank.

ECM: 106019 - 20020514
Group number: 2541886-0100
Assembly Drawing:

Pos	Part No	UN	Qty	Description	Page No
-					
010	295778-0600		1	START-UP KIT	**9-35**
020	469384-0200		1	START-UP KIT	**9-39**
030	295523-0500		1	START-UP KIT	**9-41**

Pos	Part No	UN	Qty	Description	Page No

This page is intentionally left blank.

ECM: 106020 - 20020514
Group number: 295778-0600
Assembly Drawing:

Pos	Part No	UN	Qty	Description	Page No
TBA 0100B, TBA 0125S, TBA 0160S, TBA 0200M, TBA 0200S, TBA 0250S					
030	272479-0000		1	PRESSURE ROLLER (10PCS)	
TBA 0180B, TBA 0200B, TBA 0236B, TBA 0200SQ, TBA 0284B, TBA 0250B, TBA 0300S, TBA 0330S					
020	257330-0000		1	PRESSURE ROLLER	
Common Parts					
010	1296877-0100		1	SEAL KIT	**9-37**
040	441804-0000		1	COIL HEATER	
050	484197-0000		1	FILTER	
060	491418-0001		1	O-RING 284X3 FPM	
070	578494-0000		1	O-RING 226X5,7 FPM	
080	578495-0000		1	O-RING	
100	90206-0031		1	HEATING ELEMENT 700+1200W, 220V	
110	90206-0070		1	HEATING ELEMENT 6000W 380/220V	
	90269-0308		*1*	*GASKET 59X68X3 MM*	
	90206-0326		*1*	*JUNCTION BOX FOR 90206-56*	
120	90424-0304		1	GASKET	
130	927421-0006		1	O-RING 17.3X2.4 SILICONE	
140	927422-0003		1	O.RING 24.2X3 SILICONE	
150	927422-0008		1	O-RING 49.5X3 SILICONE	
160	925998-0000		6	DIAPHRAGM	
170	736514-0000		1	SHOCK ABSORBER	
180	90328-0026		3	SILENCER G1/4"	
190	342850-0303		6	GASKET 22,7X49,1X5,2 MM 1" FDA	
200	342850-0304		6	GASKET 35,4X49,1X5,2 1"1/2 FDA	
210	342850-0305		2	GASKET 47,8X62,6X5,2 MM 2" FDA	
220	926822-0000		6	GASKET	
230	90458-0138		1	PROX. SWITCH, E2EG-X1R5B1-5M	

Pos	Part No	UN	Qty	Description	Page No

This page is intentionally left blank.

ECM: 70850 - 19970729
Group number: 1296877-0100
Assembly Drawing:

Pos	Part No	UN	Qty	Description	Page No
-					
010	530589-0000		4	SEAL RING	
020	530588-0000		1	SEAL RING	
030	533169-0000		1	DIAPHRAGM	
040	539212-0000		1	GASKET	
050	90091-0266		2	SEAL RING 10,4X16,3X2,5 MM	
060	90207-0363		1	GASKET	
070	90207-0365		1	GASKET	
100	315204-0215		1	O-RING 19,2X3 MM	
110	315204-0301		1	O-RING 49,5X3 MM	

Pos	Part No	UN	Qty	Description	Page No

Machine Type	Group Description	Used-In	Group Number	Page No

This page is intentionally left blank.

ECM: 106107 - 20020514
Group number: 469384-0200
Assembly Drawing:

Pos	Part No	UN	Qty	Description	Page No	Pos	Part No	UN	Qty	Description	Page No
-											
010	90298-0019		1	DETERGENT, SU 118, 20 LITRES							
020	90144-0003	MM	1	TAPE							

This page is intentionally left blank.

ECM: 292934 - 20070126
Group number: 295523-0500
Assembly Drawing:

Pos	Part No	UN	Qty	Description	Page No
TBA 0100B, TBA 0125S					
020	1110530-0000		2	INDUCTOR	
040	1520577-0001		20	DOLLY	
TBA 0160S, TBA 0200S					
020	1110532-0000		2	INDUCTOR	
055	1110391-0000		20	DOLLY	
TBA 0180B, TBA 0200B, TBA 0236B, TBA 0284B, TBA 0250B, TBA 0300S, TBA 0330S					
010	1110534-0000		2	INDUCTOR	
055	1110391-0000		20	DOLLY	
TBA 0200M, TBA 0250S					
028	1110535-0000		2	INDUCTOR	
055	1110391-0000		20	DOLLY	
TBA 0200SQ					
010	1520078-0000		2	INDUCTOR	
055	1110391-0000		20	DOLLY	

Pos	Part No	UN	Qty	Description	Page No

Tetra Pak

SPC

Spare Parts Catalogue

TBA/19 030V TBA

648160-0300

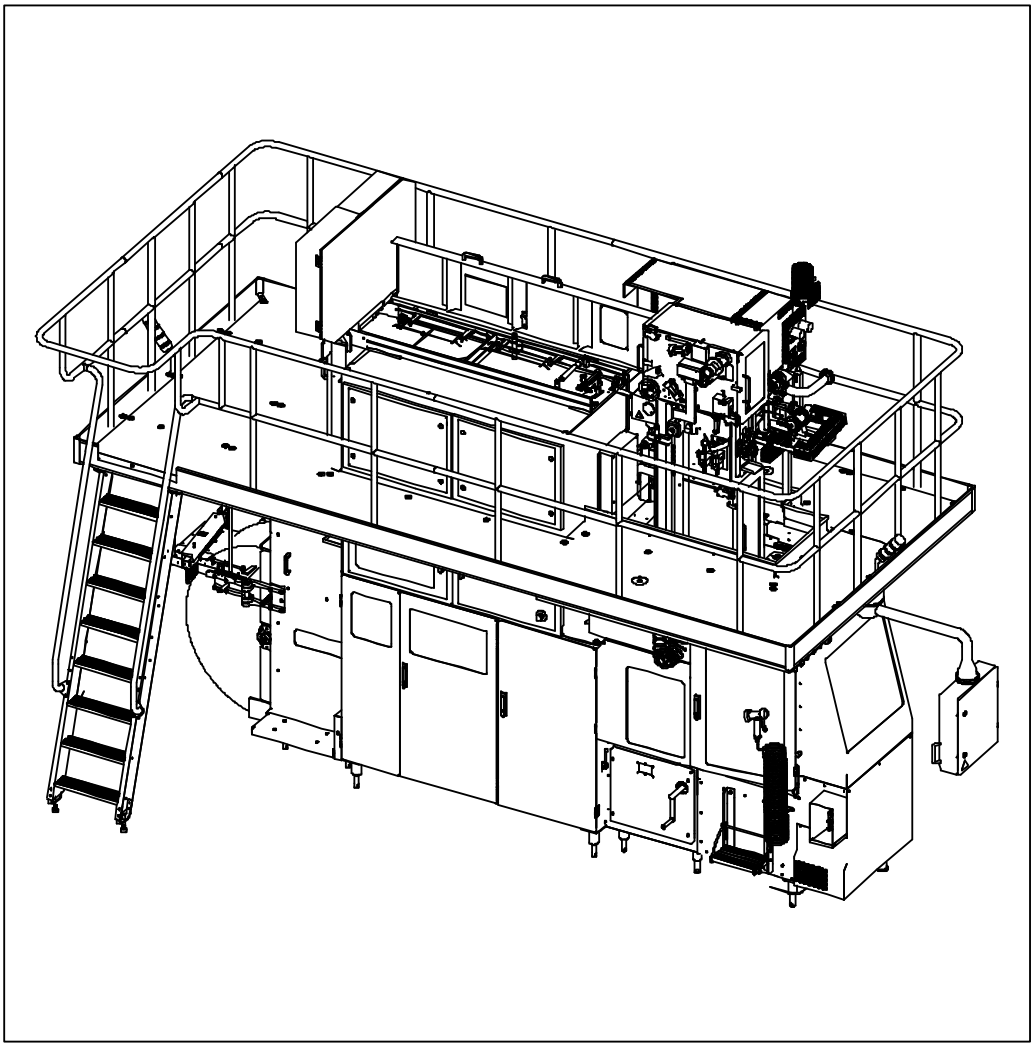

Tetra Pak

Doc. No: SPC-2771717-0103

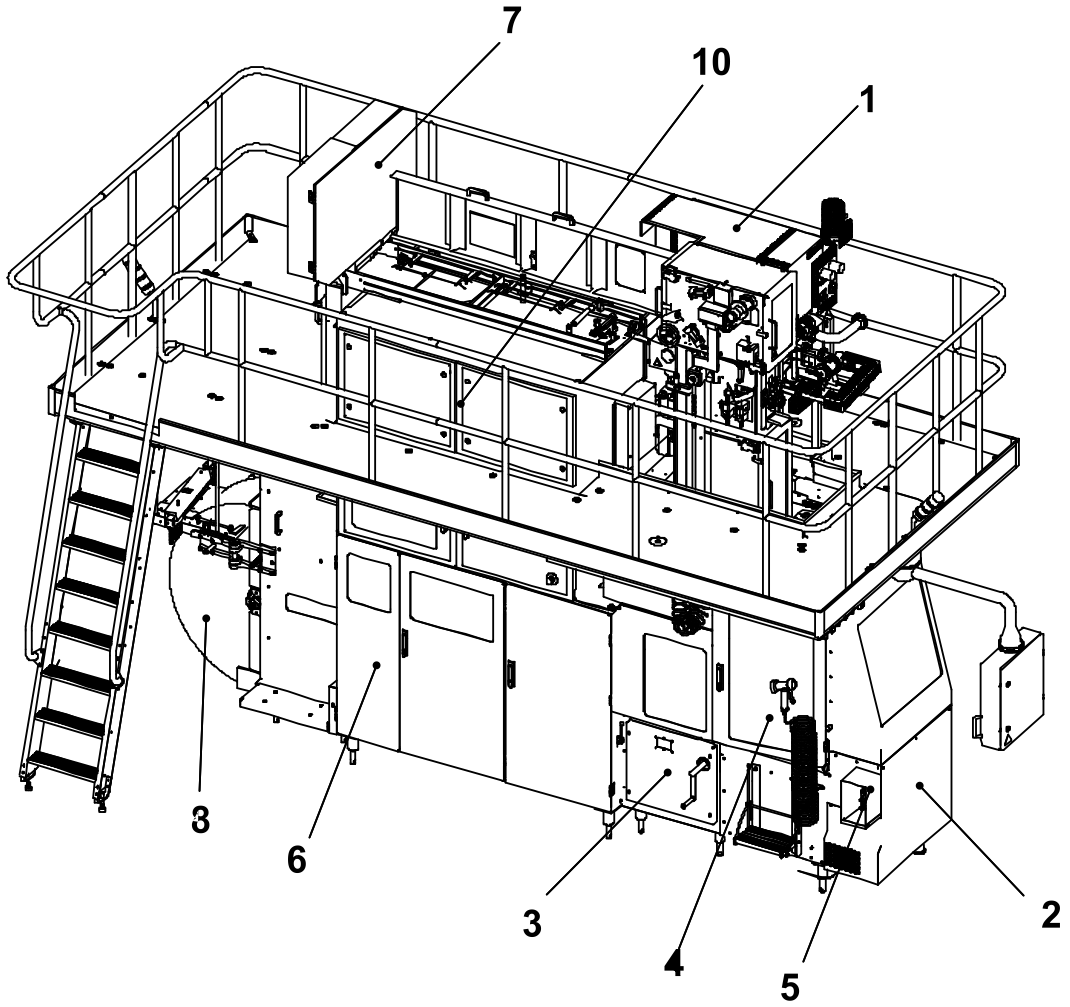

The position numbers in the illustration correspond with the chapter numbers listed on the next page.

Copyright © 2007 Tetra Pak Group

All rights reserved. No part of this document may be reproduced or copied in any form or by any means without written permission from Tetra Pak Packaging Solutions AB.

Tetra Pak and all Tetra Pak products are trademarks belonging to the Tetra Pak Group.

The content of this manual is in accordance with the design and construction of the machine or equipment at the time of publishing. Tetra Pak reserves the right to introduce design modifications without prior notice.

This document was produced by:

Tetra Pak Packaging Solutions AB
Ruben Rausings gata
221 86 Lund
SWEDEN

Additional copies can be ordered from Tetra Pak. When ordering additional copies, always provide the document number.

Doc. No. SPC-2771717-0103

Issue 2007-02

This document is valid from:

21210/00090

Series No/Machine No Sign.

SPC

Spare Parts Catalogue

TBA/19 030V TBA
648160-0300

Machine or equipment configurations that this catalogue is valid for are described on the next page.

Doc. No: SPC-2771717-0103

Issue 2007-02

BINDER 1

i Introduction

1 Superstructure TBA/19 .

2 Machine Body

3 Drive Unit

4 Jaw System

5 Final Folder

6 Service Unit

7 Strip Applicator

8 Packaging Material Infe.

9 Regular Accessories

BINDER 2

10 Electrical Cabinet

11 Electric Equipment

12 Optional Accessories

13 Optional Equipment

ii Part Number Index

iii Alphabetical Index

iv Ref. Des. Parts Index

Tetra Pak

Tetra Pak Packaging Solutions

Valid for:

Name	Drawing Specification and Development Step	Additional Information
TBA/19 030V TBA	648160-0300	Volume and package shapes - Valid for all TBA volumes Optional Equipment - Ink Jet Printer A300 HS, 90457-0048

SPC
Spare Parts Catalogue

ELECTRICAL CABINET

Drawing file: 648114-9_1_AA.hpgl

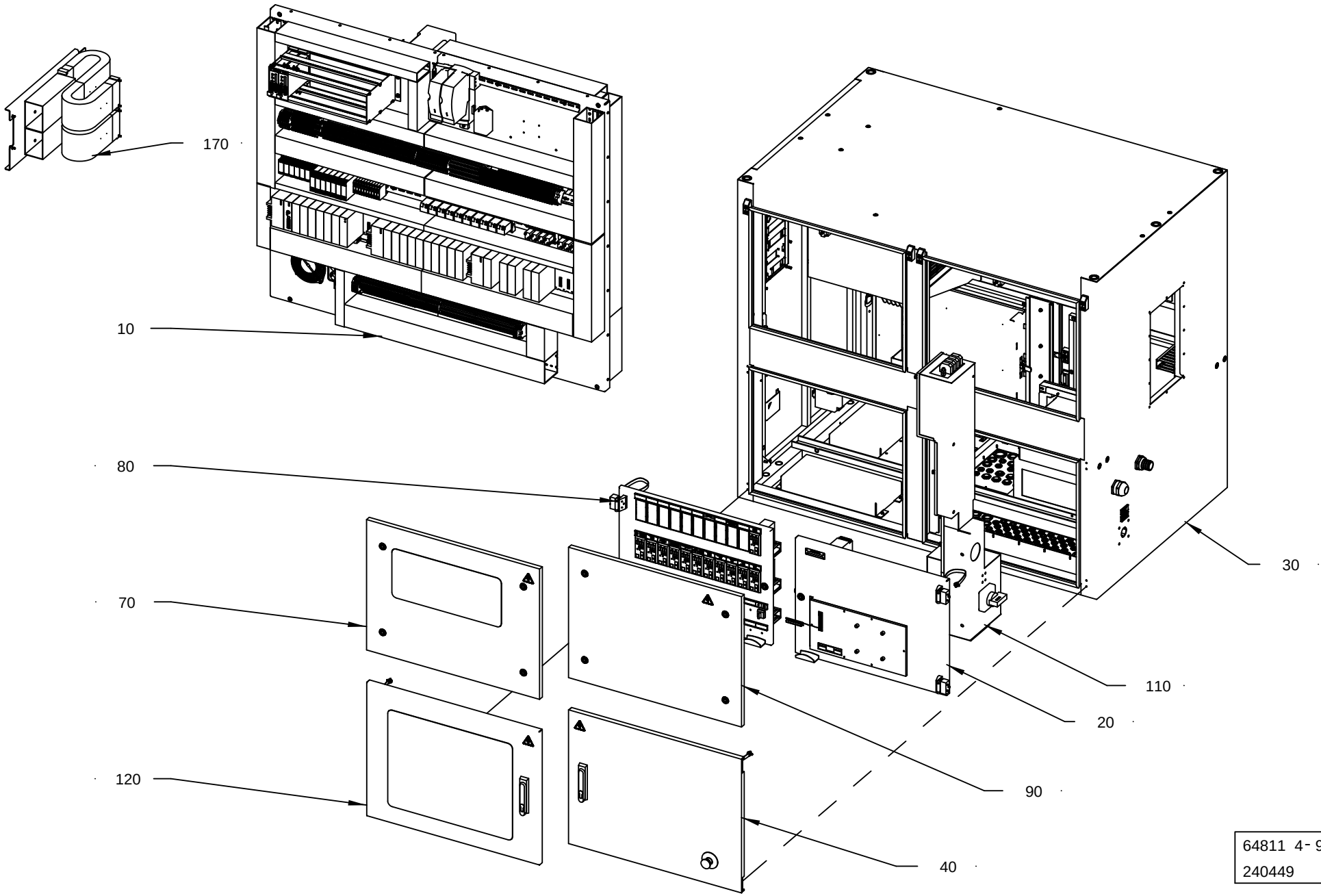

64811 4-9
240449

ECM: 240710 - 20051215
Group number: 648114-0200
Assembly Drawing: 648114-9_1_AA

This list covers pages from 10-2 to 10-5

Pos	Part No	UN	Qty	Description	Page No
-					
	1523972-0100		1	ELECTRICAL MATERIALS	**10-7, 10-9, 10-11**
010	1511779-0200		1	COMPONENT PLATES	**10-13, 10-15, 10-17, 10-19, 10-21**
020	1511790-0200		1	DOOR	**10-71**
030	1511795-0200		1	CABINET	**10-75, 10-77**
040	1511796-0200		1	DOOR	**10-105**
050	1511799-0200		1	DOOR	**10-107**
060	1511810-0200		1	DOOR	**10-109, 10-111**
070	1511811-0200		1	DOOR	**10-121**
080	1511814-0200		1	DOOR	**10-123, 10-125, 10-127**
090	1511819-0200		1	DOOR	**10-129**
100	1511820-0200		1	DOOR	**10-131**
110	1511821-0200		1	BOX	**10-133**
120	1511830-0100		1	EXTERNAL DOOR TERMOREGULATORS	**10-137**
130	1517653-0100		1	EXTERNAL DOOR FUSES	**10-139**
140	1517677-0100		1	COOLER	**10-141**
150	1517678-0200		1	TPIH GENERATOR	**10-143**
160	1523961-0100		1	PLATE	**10-145**
170	2598113-0100		1	CABLE LEAD-IN PLATE	**10-147**

Pos	Part No	UN	Qty	Description	Page No

ELECTRICAL CABINET

Drawing file: 648114-9_2_AA.hpgl

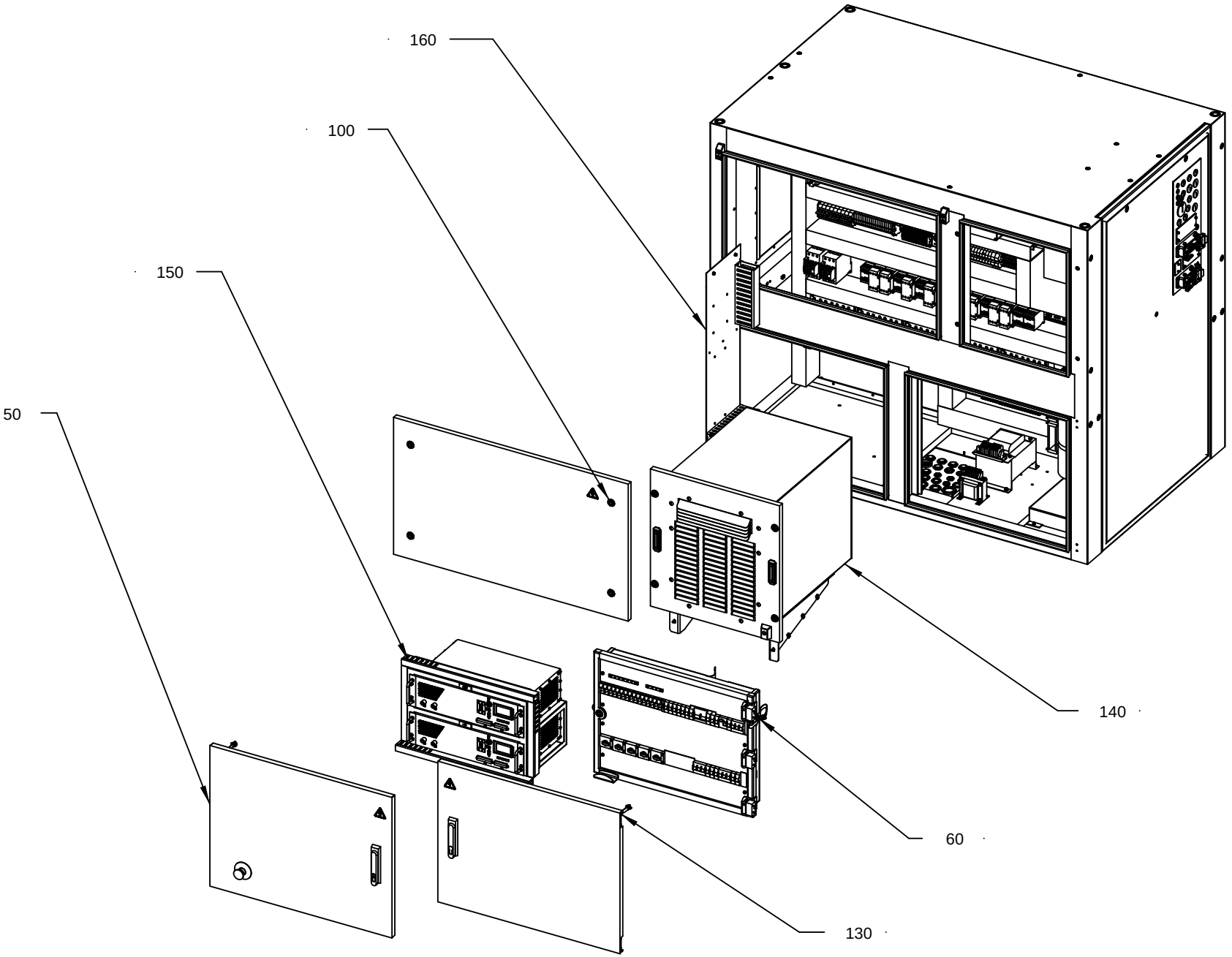

64811 4-9
240449

ECM: 240710 - 20051215
Group number: 648114-0200
Assembly Drawing: 648114-9_2_AA

This list covers pages from 10-2 to 10-5

Pos	Part No	UN	Qty	Description	Page No
-					
	1523972-0100		1	ELECTRICAL MATERIALS	**10-7, 10-9, 10-11**
010	1511779-0200		1	COMPONENT PLATES	**10-13, 10-15, 10-17, 10-19, 10-21**
020	1511790-0200		1	DOOR	**10-71**
030	1511795-0200		1	CABINET	**10-75, 10-77**
040	1511796-0200		1	DOOR	**10-105**
050	1511799-0200		1	DOOR	**10-107**
060	1511810-0200		1	DOOR	**10-109, 10-111**
070	1511811-0200		1	DOOR	**10-121**
080	1511814-0200		1	DOOR	**10-123, 10-125, 10-127**
090	1511819-0200		1	DOOR	**10-129**
100	1511820-0200		1	DOOR	**10-131**
110	1511821-0200		1	BOX	**10-133**
120	1511830-0100		1	EXTERNAL DOOR TERMOREGULATORS	**10-137**
130	1517653-0100		1	EXTERNAL DOOR FUSES	**10-139**
140	1517677-0100		1	COOLER	**10-141**
150	1517678-0200		1	TPIH GENERATOR	**10-143**
160	1523961-0100		1	PLATE	**10-145**
170	2598113-0100		1	CABLE LEAD-IN PLATE	**10-147**

Pos	Part No	UN	Qty	Description	Page No

This page is intentionally left blank.

ECM: 180359 - 20040910
Group number: 1523972-0100
Assembly Drawing:

This list covers pages from 10-6 to 10-11

Pos	Part No	UN	Qty	Description	Page No
TBA NOPT ASU HI					
010	351160-0102	M	155	CABLE (1UNIT = 100M)	
030	351161-0104	M	4	CABLE AWM LIGHTBLUE 1,5MM2	
050	351164-0104	M	4	CABLE AWM 1X1,5 MM2 BLACK	
070	351161-0105	M	1.9	CABLE AWM 1X2,5 MM2 LIGHTBLUE	
080	351162-0105	M	2.3	CABLE AWM 1X2,5 MM2 YELLOW-GREEN	
090	351164-0105	M	6	CABLE (1UNIT = 100M)	
100	351162-0106	M	2.7	CABLE AWM 1X4 MM2 YELLOW-GREEN	
110	351164-0106	M	6.3	CABLE AWM 1X4 MM2 BLACK	
120	351161-0106	M	2.9	CABLE AWM 1X4 MM2 LIGHTBLUE	
210	351164-0111	M	11.2	CABLE AWM 1X35 MM2 BLACK	
220	353001-0102		29	END SLEEVE 0,75 MM2	
250	353001-0115		7	END SLEEVE 2,5/14	
260	353001-0117		8	END SLEEVE H4.0/20 GREY	
280	353001-0119		72	END SLEEVE H 1.0/14 YELLOW	
290	353001-0120		6	END SLEEVE H 10/28	
320	353101-0130		1	CABLE SHOE 1,5-2,5MM2 M4 BLUE	
370	353103-0120		3	CABLE SHOE 1,25 MMÂ² RED	
390	353103-0138		2	CABLE SHOE	
TBA NOPT ASU NOHI					
010	351160-0102	M	105	CABLE (1UNIT = 100M)	
070	351161-0105	M	1.9	CABLE AWM 1X2,5 MM2 LIGHTBLUE	
080	351162-0105	M	2.3	CABLE AWM 1X2,5 MM2 YELLOW-GREEN	
090	351164-0105	M	6	CABLE (1UNIT = 100M)	
100	351162-0106	M	2.7	CABLE AWM 1X4 MM2 YELLOW-GREEN	
110	351164-0106	M	6.3	CABLE AWM 1X4 MM2 BLACK	
120	351161-0106	M	2.9	CABLE AWM 1X4 MM2 LIGHTBLUE	
210	351164-0111	M	11.2	CABLE AWM 1X35 MM2 BLACK	
220	353001-0102		29	END SLEEVE 0,75 MM2	
250	353001-0115		7	END SLEEVE 2,5/14	
260	353001-0117		8	END SLEEVE H4.0/20 GREY	
280	353001-0119		72	END SLEEVE H 1.0/14 YELLOW	
290	353001-0120		6	END SLEEVE H 10/28	
320	353101-0130		1	CABLE SHOE 1,5-2,5MM2 M4 BLUE	
370	353103-0120		3	CABLE SHOE 1,25 MMÂ² RED	
390	353103-0138		2	CABLE SHOE	
TBA NOPT NOASU HI					
010	351160-0102	M	50	CABLE (1UNIT = 100M)	
030	351161-0104	M	4	CABLE AWM LIGHTBLUE 1,5MM2	
050	351164-0104	M	4	CABLE AWM 1X1,5 MM2 BLACK	
TBA PT19 ASU HI					
010	351160-0102	M	383	CABLE (1UNIT = 100M)	
030	351161-0104	M	9.5	CABLE AWM LIGHTBLUE 1,5MM2	
040	351162-0104	M	6.8	CABLE AWM 1X1,5 MM2 YELLOW-GREEN	
050	351164-0104	M	25.5	CABLE AWM 1X1,5 MM2 BLACK	
070	351161-0105	M	4	CABLE AWM 1X2,5 MM2 LIGHTBLUE	
080	351162-0105	M	2.3	CABLE AWM 1X2,5 MM2 YELLOW-GREEN	
090	351164-0105	M	23.3	CABLE (1UNIT = 100M)	
100	351162-0106	M	2.7	CABLE AWM 1X4 MM2 YELLOW-GREEN	
110	351164-0106	M	6.3	CABLE AWM 1X4 MM2 BLACK	
120	351161-0106	M	2.9	CABLE AWM 1X4 MM2 LIGHTBLUE	
130	351160-0107	M	4.6	CABLE AWM 1X6 MM2 DARKBLUE	
140	351162-0107	M	5.1	CABLE AWM 1X6 MM2 YELLOW-GREEN	
150	351164-0107	M	6.6	CABLE AWM 1X6 MM2 BLACK	
210	351164-0111	M	11.2	CABLE AWM 1X35 MM2 BLACK	
220	353001-0102		76	END SLEEVE 0,75 MM2	
230	353001-0113		6	END SLEEVE 0,75MM2	
240	353001-0114		18	END SLEEVE 1,50 MM2	
250	353001-0115		25	END SLEEVE 2,5/14	
260	353001-0117		8	END SLEEVE H4.0/20 GREY	
270	353001-0118		5	END SLEEVE 6MM2 BLACK	
280	353001-0119		243	END SLEEVE H 1.0/14 YELLOW	
290	353001-0120		6	END SLEEVE H 10/28	
300	353101-0120		1	CABLE SHOE 0,5-1,5MM2 M4 RED	
330	353101-0132		2	CABLE SHOE 1,5-2,5MM2 M5 BLUE	
340	353101-0150		2	CABLE SHOE 4,0-6,0MM2 M4 YELLOW	
350	353101-0152		1	CABLE SHOE 4,0-6,0MM2 M5 YELLOW	
370	353103-0120		19	CABLE SHOE 1,25 MMÂ² RED	
390	353103-0138		9	CABLE SHOE	
470	90097-0017		5	FLAT PIN PLUG 6,3MM	
480	90097-0019		20	FLAT PIN PLUG 2,8MM	
TBA PT19 ASU NOHI					
010	351160-0102	M	333	CABLE (1UNIT = 100M)	
030	351161-0104	M	5.5	CABLE AWM LIGHTBLUE 1,5MM2	
040	351162-0104	M	6.8	CABLE AWM 1X1,5 MM2 YELLOW-GREEN	
050	351164-0104	M	21.5	CABLE AWM 1X1,5 MM2 BLACK	
070	351161-0105	M	4	CABLE AWM 1X2,5 MM2 LIGHTBLUE	
080	351162-0105	M	2.3	CABLE AWM 1X2,5 MM2 YELLOW-GREEN	
090	351164-0105	M	23.3	CABLE (1UNIT = 100M)	
100	351162-0106	M	2.7	CABLE AWM 1X4 MM2 YELLOW-GREEN	
110	351164-0106	M	6.3	CABLE AWM 1X4 MM2 BLACK	
120	351161-0106	M	2.9	CABLE AWM 1X4 MM2 LIGHTBLUE	
130	351160-0107	M	4.6	CABLE AWM 1X6 MM2 DARKBLUE	
140	351162-0107	M	5.1	CABLE AWM 1X6 MM2 YELLOW-GREEN	

Machine Type | Group Description | Used-In | Group Number | Page No

This page is intentionally left blank.

ECM: 180359 - 20040910
Group number: 1523972-0100
Assembly Drawing:

This list covers pages from 10-6 to 10-11

Pos	Part No	UN	Qty	Description	Page No
TBA PT19 ASU NOHI (Cont'd)					
150	351164-0107	M	6.6	CABLE AWM 1X6 MM2 BLACK	
210	351164-0111	M	11.2	CABLE AWM 1X35 MM2 BLACK	
220	353001-0102		76	END SLEEVE 0,75 MM2	
230	353001-0113		6	END SLEEVE 0,75MM2	
240	353001-0114		18	END SLEEVE 1,50 MM2	
250	353001-0115		25	END SLEEVE 2,5/14	
260	353001-0117		8	END SLEEVE H4.0/20 GREY	
270	353001-0118		5	END SLEEVE 6MM2 BLACK	
280	353001-0119		243	END SLEEVE H 1.0/14 YELLOW	
290	353001-0120		6	END SLEEVE H 10/28	
300	353101-0120		1	CABLE SHOE 0,5-1,5MM2 M4 RED	
330	353101-0132		2	CABLE SHOE 1,5-2,5MM2 M5 BLUE	
340	353101-0150		2	CABLE SHOE 4,0-6,0MM2 M4 YELLOW	
350	353101-0152		1	CABLE SHOE 4,0-6,0MM2 M5 YELLOW	
370	353103-0120		19	CABLE SHOE 1,25 MMÂ² RED	
390	353103-0138		9	CABLE SHOE	
470	90097-0017		5	FLAT PIN PLUG 6,3MM	
480	90097-0019		20	FLAT PIN PLUG 2,8MM	
TBA PT19 NOASU HI					
010	351160-0102	M	278	CABLE (1UNIT = 100M)	
030	351161-0104	M	9.5	CABLE AWM LIGHTBLUE 1,5MM2	
040	351162-0104	M	6.8	CABLE AWM 1X1,5 MM2 YELLOW-GREEN	
050	351164-0104	M	25.5	CABLE AWM 1X1,5 MM2 BLACK	
070	351161-0105	M	2.1	CABLE AWM 1X2,5 MM2 LIGHTBLUE	
090	351164-0105	M	17.3	CABLE (1UNIT = 100M)	
130	351160-0107	M	4.6	CABLE AWM 1X6 MM2 DARKBLUE	
140	351162-0107	M	5.1	CABLE AWM 1X6 MM2 YELLOW-GREEN	
150	351164-0107	M	6.6	CABLE AWM 1X6 MM2 BLACK	
220	353001-0102		47	END SLEEVE 0,75 MM2	
230	353001-0113		6	END SLEEVE 0,75MM2	
240	353001-0114		18	END SLEEVE 1,50 MM2	
250	353001-0115		18	END SLEEVE 2,5/14	
270	353001-0118		5	END SLEEVE 6MM2 BLACK	
280	353001-0119		171	END SLEEVE H 1.0/14 YELLOW	
300	353101-0120		1	CABLE SHOE 0,5-1,5MM2 M4 RED	
320	353101-0130		1	CABLE SHOE 1,5-2,5MM2 M4 BLUE	
330	353101-0132		2	CABLE SHOE 1,5-2,5MM2 M5 BLUE	
340	353101-0150		2	CABLE SHOE 4,0-6,0MM2 M4 YELLOW	
350	353101-0152		1	CABLE SHOE 4,0-6,0MM2 M5 YELLOW	
370	353103-0120		16	CABLE SHOE 1,25 MMÂ² RED	
390	353103-0138		7	CABLE SHOE	
470	90097-0017		5	FLAT PIN PLUG 6,3MM	
480	90097-0019		20	FLAT PIN PLUG 2,8MM	
TBA PT19 NOASU NOHI					
010	351160-0102	M	228	CABLE (1UNIT = 100M)	
030	351161-0104	M	5.5	CABLE AWM LIGHTBLUE 1,5MM2	
040	351162-0104	M	6.8	CABLE AWM 1X1,5 MM2 YELLOW-GREEN	
050	351164-0104	M	21.5	CABLE AWM 1X1,5 MM2 BLACK	
070	351161-0105	M	2.1	CABLE AWM 1X2,5 MM2 LIGHTBLUE	
090	351164-0105	M	17.3	CABLE (1UNIT = 100M)	
130	351160-0107	M	4.6	CABLE AWM 1X6 MM2 DARKBLUE	
140	351162-0107	M	5.1	CABLE AWM 1X6 MM2 YELLOW-GREEN	
150	351164-0107	M	6.6	CABLE AWM 1X6 MM2 BLACK	
220	353001-0102		47	END SLEEVE 0,75 MM2	
230	353001-0113		6	END SLEEVE 0,75MM2	
240	353001-0114		18	END SLEEVE 1,50 MM2	
250	353001-0115		18	END SLEEVE 2,5/14	
270	353001-0118		5	END SLEEVE 6MM2 BLACK	
280	353001-0119		171	END SLEEVE H 1.0/14 YELLOW	
300	353101-0120		1	CABLE SHOE 0,5-1,5MM2 M4 RED	
320	353101-0130		1	CABLE SHOE 1,5-2,5MM2 M4 BLUE	
330	353101-0132		2	CABLE SHOE 1,5-2,5MM2 M5 BLUE	
340	353101-0150		2	CABLE SHOE 4,0-6,0MM2 M4 YELLOW	
350	353101-0152		1	CABLE SHOE 4,0-6,0MM2 M5 YELLOW	
370	353103-0120		16	CABLE SHOE 1,25 MMÂ² RED	
390	353103-0138		7	CABLE SHOE	
470	90097-0017		5	FLAT PIN PLUG 6,3MM	
480	90097-0019		20	FLAT PIN PLUG 2,8MM	
Common Parts					
010	351160-0102	M	1164	CABLE (1UNIT = 100M)	
020	351166-0102	M	28	CABLE AWM 1X0,75 MM2 ORANGE	
030	351161-0104	M	80	CABLE AWM LIGHTBLUE 1,5MM2	
040	351162-0104	M	41	CABLE AWM 1X1,5 MM2 YELLOW-GREEN	
050	351164-0104	M	153	CABLE AWM 1X1,5 MM2 BLACK	
060	351160-0105	M	7.5	CABLE AWM 1X2,5 MM2 DARKBLUE	
070	351161-0105	M	7.5	CABLE AWM 1X2,5 MM2 LIGHTBLUE	
080	351162-0105	M	15.7	CABLE AWM 1X2,5 MM2 YELLOW-GREEN	
090	351164-0105	M	158	CABLE (1UNIT = 100M)	
110	351164-0106	M	5	CABLE AWM 1X4 MM2 BLACK	
120	351161-0106	M	2.8	CABLE AWM 1X4 MM2 LIGHTBLUE	
130	351160-0107	M	6.8	CABLE AWM 1X6 MM2 DARKBLUE	
140	351162-0107	M	31	CABLE AWM 1X6 MM2 YELLOW-GREEN	
150	351164-0107	M	55	CABLE AWM 1X6 MM2 BLACK	

Machine Type | Group Description | Used-In | Group Number | Page No

This page is intentionally left blank.

ECM: 180359 - 20040910
Group number: 1523972-0100
Assembly Drawing:

This list covers pages from 10-6 to 10-11

Pos	Part No	UN	Qty	Description	Page No
Common Parts (Cont'd)					
160	351163-0107	M	1.5	CABLE AWM 1X6 MM2 RED	
170	351162-0109	M	8.2	CABLE AWM 1X16 MM2 YELLOW-GREEN	
180	351161-0109	M	1.7	CABLE AWM 1X16 MM2 LIGHTBLUE	
190	351164-0110	M	55	CABLE AWM 1X25 MM2 BLACK	
200	351161-0110	M	2.1	CABLE AWM 1X25 MM2 LIGHTBLUE	
210	351164-0111	M	11.2	CABLE AWM 1X35 MM2 BLACK	
220	353001-0102		337	END SLEEVE 0,75 MM2	
230	353001-0113		44	END SLEEVE 0,75MM2	
240	353001-0114		191	END SLEEVE 1,50 MM2	
250	353001-0115		155	END SLEEVE 2,5/14	
260	353001-0117		16	END SLEEVE H4.0/20 GREY	
270	353001-0118		47	END SLEEVE 6MM2 BLACK	
280	353001-0119		893	END SLEEVE H 1.0/14 YELLOW	
290	353001-0120		3	END SLEEVE H 10/28	
300	353101-0120		1	CABLE SHOE 0,5-1,5MM2 M4 RED	
310	353101-0129		1	CABLE SHOE 1,5-2,5MM2 M3 BLUE	
320	353101-0130		70	CABLE SHOE 1,5-2,5MM2 M4 BLUE	
340	353101-0150		2	CABLE SHOE 4,0-6,0MM2 M4 YELLOW	
350	353101-0152		11	CABLE SHOE 4,0-6,0MM2 M5 YELLOW	
360	353101-0153		7	CABLE SHOE 4,0-6,0MM2 M6 YELLOW	
370	353103-0120		36	CABLE SHOE 1,25 MMÂ² RED	
380	353103-0130		2	CABLE SHOE	
390	353103-0138		16	CABLE SHOE	
400	353104-0164		2	CABLE SHOE, RING UNINS., YAV 10 M 10	
410	353104-0168		3	CABLE SHOE, RING UNINS., YAV 16 M 6	
420	353104-0175		15	CABLE SHOE, RING UNINS., YAV 25 M 6	
430	352113-0101		100	CABLE TIE, BLACK 92X2,5 MM	
440	352113-0102		30	CABLE TIE, BLACK 188X4,8 MM	
450	90024-0062	MM	600	CABLE PROTECTION, 40MM	
460	90024-0063	M	6	CABLE PROTECTION, 25MM	
470	90097-0017		35	FLAT PIN PLUG 6,3MM	
480	90097-0019		68	FLAT PIN PLUG 2,8MM	
490	90459-2912		46	BAR, TR1	
500	90459-3092	M	17	CABLE PROTECTION, CP10	

Pos	Part No	UN	Qty	Description	Page No

COMPONENT PLATES

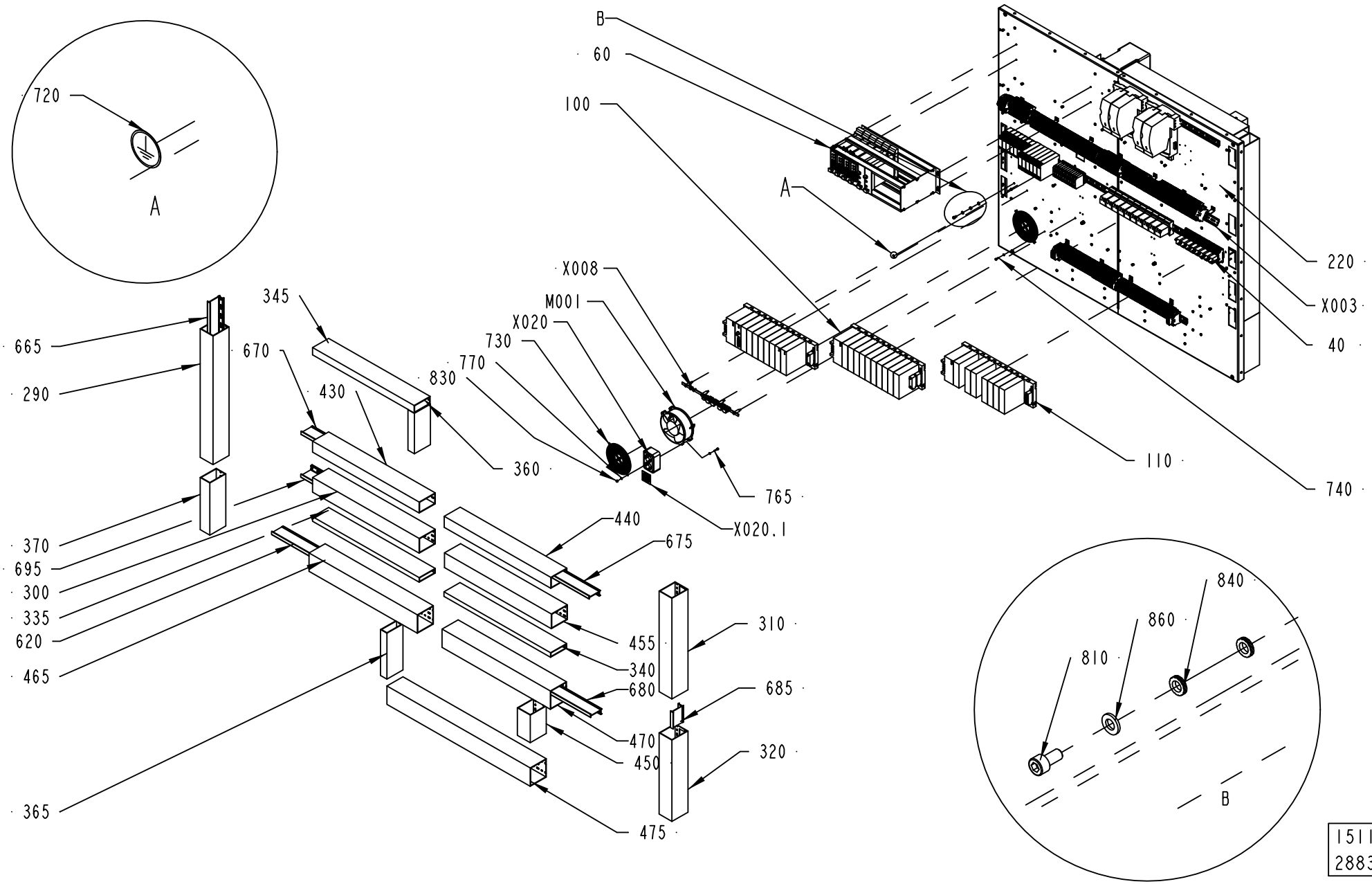

1511779-15
288383

ECM: 292299 - 20070126
Group number: 1511779-0200
Assembly Drawing: 1511779-15_1_AB

This list covers pages from 10-12 to 10-21

Pos	Part No	UN	Qty	Description	Page No
TBA NOPT ASU					
740	312115-0291		24	SCREW ISO4762 M4X12 A4 80	
750	312115-0325		40	SCREW ISO4762 M5X10 A4 80	
770	315105-0136		36	WASHER BRB 4,3X8 RFR	
790	315402-0146		40	LOCK WASHER FBB 5,1	
810	312115-0366		4	SCREW ISO4762 M6X12 A4 80	
G002	90459-3450		1	VARIABLE FREQUENCY DRIVE 22A-A4P5N104	
W069	90220-0183	M	3	SCR. CABLE 2X0,34MM2	
Z006	90458-1140		1	FERRITE, RI-26-28-13	
Z007	90458-1140		1	FERRITE, RI-26-28-13	
Z009	90459-3460		1	FOOTPRINT FILTER 22-RF010-AL	
TBA NOPT NOASU					
030	90458-1490		2	CABLE CLIPS, D=7,9 MM	
740	312115-0291		36	SCREW ISO4762 M4X12 A4 80	
750	312115-0325		32	SCREW ISO4762 M5X10 A4 80	
755	312115-0289		4	SCREW ISO4762 M4X10 A4 80	
770	315105-0136		34	WASHER BRB 4,3X8 RFR	
775	312115-0333		8	SCREW ISO4762 M5X25 A4 80	
790	315402-0146		32	LOCK WASHER FBB 5,1	
810	312115-0366		4	SCREW ISO4762 M6X12 A4 80	
850	315105-0146		3	WASHER BRB 5,3X10 RFR	
TBA PT19 ASU					
030	90458-1490		4	CABLE CLIPS, D=7,9 MM	
120	2553176-0100		1	EARTH BAR	**10-23**
740	312115-0291		26	SCREW ISO4762 M4X12 A4 80	
750	312115-0325		48	SCREW ISO4762 M5X10 A4 80	
755	312115-0291		8	SCREW ISO4762 M4X12 A4 80	
770	315105-0136		42	WASHER BRB 4,3X8 RFR	
775	312122-0366		9	SCREW ISO 1207 M6X12 NI PL BRASS	
790	315402-0146		48	LOCK WASHER FBB 5,1	
810	312115-0366		4	SCREW ISO4762 M6X12 A4 80	
850	315105-0146		9	WASHER BRB 5,3X10 RFR	
A002	90458-0397		1	SERVO DRIVE DMC2 50720 P	
A002.1	90045-0376		1	CONNECTOR KIT 9-032-011-970	
A015	90458-1300		1	2 AXIS DOCKING STATION D2/PLC	**10-25**
A016	90458-0746		1	STEP MOTOR DRIVE L50	
A017	90458-0746		1	STEP MOTOR DRIVE L50	
G002	90459-3450		1	VARIABLE FREQUENCY DRIVE 22A-A4P5N104	
G006	90459-3450		1	VARIABLE FREQUENCY DRIVE 22A-A4P5N104	
W069	90220-0183	M	3	SCR. CABLE 2X0,34MM2	
W129	90220-0092	M	1.5	PAIR TWISTED CABLE 3X2X0,25MM2	
X023	90458-1279		1	PLUG CONNECTOR DP1	
Z009	90459-3460		1	FOOTPRINT FILTER 22-RF010-AL	
Z023	90459-3698		1	FILTER, 6 A, 250 VAC	
Z024	90458-1140		1	FERRITE, RI-26-28-13	
Z025	90458-1140		1	FERRITE, RI-26-28-13	
Z033	90459-3460		1	FOOTPRINT FILTER 22-RF010-AL	
Z034	90458-1140		1	FERRITE, RI-26-28-13	
Z035	90458-1140		1	FERRITE, RI-26-28-13	
Z036	90024-0037		1	INPUT FILTER, 8 A	
TBA PT19 NOASU					
030	90458-1490		4	CABLE CLIPS, D=7,9 MM	
120	2553176-0100		1	EARTH BAR	**10-23**
740	312115-0291		39	SCREW ISO4762 M4X12 A4 80	
750	312115-0325		40	SCREW ISO4762 M5X10 A4 80	
755	312115-0291		8	SCREW ISO4762 M4X12 A4 80	
770	315105-0136		40	WASHER BRB 4,3X8 RFR	
775	312122-0366		9	SCREW ISO 1207 M6X12 NI PL BRASS	
790	315402-0146		40	LOCK WASHER FBB 5,1	
810	312115-0366		4	SCREW ISO4762 M6X12 A4 80	
850	315105-0146		9	WASHER BRB 5,3X10 RFR	
A002	90458-0397		1	SERVO DRIVE DMC2 50720 P	
A002.1	90045-0376		1	CONNECTOR KIT 9-032-011-970	
A015	90458-1300		1	2 AXIS DOCKING STATION D2/PLC	**10-25**
A016	90458-0746		1	STEP MOTOR DRIVE L50	
A017	90458-0746		1	STEP MOTOR DRIVE L50	
G006	90459-3450		1	VARIABLE FREQUENCY DRIVE 22A-A4P5N104	
W129	90220-0092	M	1.5	PAIR TWISTED CABLE 3X2X0,25MM2	
X023	90458-1279		1	PLUG CONNECTOR DP1	
Z023	90459-3698		1	FILTER, 6 A, 250 VAC	
Z024	90458-1140		1	FERRITE, RI-26-28-13	
Z025	90458-1140		1	FERRITE, RI-26-28-13	
Z033	90459-3460		1	FOOTPRINT FILTER 22-RF010-AL	
Z034	90458-1140		1	FERRITE, RI-26-28-13	
Z035	90458-1140		1	FERRITE, RI-26-28-13	
Z036	90024-0037		1	INPUT FILTER, 8 A	
Common Parts					
020	1511801-0100		1	SOLID STATE RELAY RAIL 1	**10-27**
040	1511803-0100		1	RELAYS RAIL	**10-29**
060	1511805-0100		1	RACK	**10-31**
070	1511808-0100		1	FREQUENCY CONVERTER EARTH BAR	**10-37**
080	1511824-0200		1	RAIL	**10-39**
090	1511825-0100		1	PLC RACK 1	**10-41**
100	1511826-0100		1	PLC RACK 2	**10-43**

Machine Type | Group Description | Used-In | Group Number | Page No

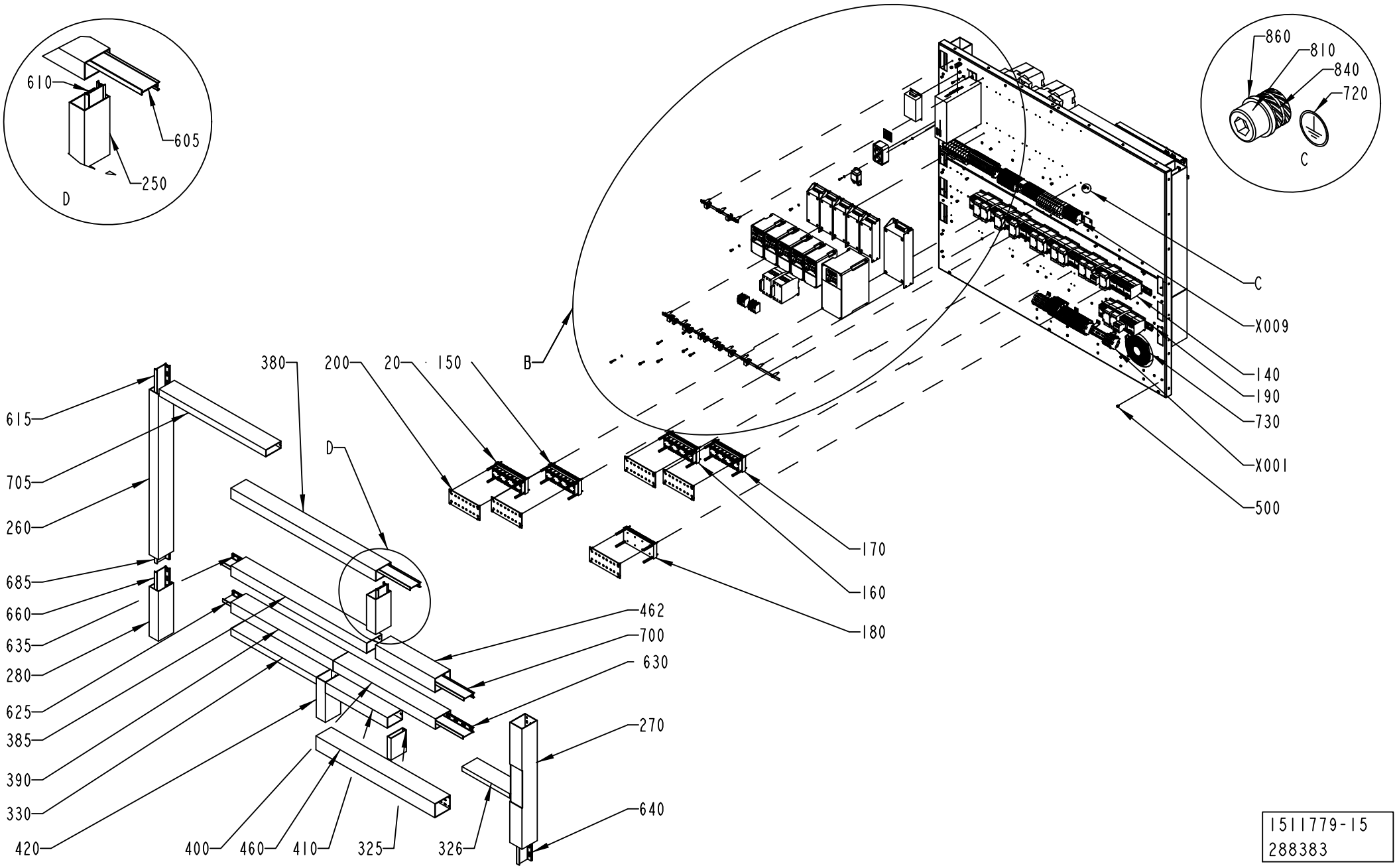

1511779-15
288383

ECM: 292299 - 20070126
Group number: 1511779-0200
Assembly Drawing: 1511779-15_2_AB

This list covers pages from 10-12 to 10-21

Pos	Part No	UN	Qty	Description	Page No
Common Parts (Cont'd)					
110	1511827-0100		1	PLC RACK 3	**10-45**
140	1511834-0200		1	RAIL	**10-47**
150	1517651-0100		1	SOLID STATE RELAY RAIL 2	**10-49, 10-51**
160	1517652-0100		1	SOLID STATE RELAY RAIL 3	**10-53**
170	1523445-0100		1	SOLID STATE RELAY RAIL 4	**10-55**
180	1523446-0100		1	SOLID STATE RELAY RAIL 5	**10-57**
190	2531998-0200		1	RAIL	**10-59**
200	2531996-0000		5	COVER	
220	2797581-0000		1	PLATE	
250	2604462-0000		1	CABLE DUCT	
260	2604461-0000		1	CABLE DUCT	
270	2604468-0000		1	CABLE DUCT	
280	2604463-0000		1	CABLE DUCT	
290	2604464-0000		1	CABLE DUCT	
300	2604466-0000		1	CABLE DUCT	
310	2604465-0000		1	CABLE DUCT	
320	2604467-0000		1	CABLE DUCT	
325	90459-2452	MM	125	CABLE DUCT 25X100MM	
326	90459-2452	MM	314	CABLE DUCT 25X100MM	
330	90181-0060	MM	560	CABLE DUCT 40X100MM	
335	90459-2452	MM	663	CABLE DUCT 25X100MM	
340	90459-2452	MM	663	CABLE DUCT 25X100MM	
345	90181-0060	MM	632	CABLE DUCT 40X100MM	
360	90181-0060	MM	220	CABLE DUCT 40X100MM	
365	90181-0060	MM	250	CABLE DUCT 40X100MM	
370	2604460-0000		1	CABLE DUCT	
380	90181-0061	MM	950	CABLE DUCT 60X100MM	
385	90181-0061	MM	890	CABLE DUCT 60X100MM	
390	90181-0061	MM	670	CABLE DUCT 60X100MM	
400	90181-0061	MM	670	CABLE DUCT 60X100MM	
410	90181-0061	MM	406	CABLE DUCT 60X100MM	
420	90181-0061	MM	230	CABLE DUCT 60X100MM	
430	90181-0061	MM	663	CABLE DUCT 60X100MM	
440	90181-0061	MM	663	CABLE DUCT 60X100MM	
450	90181-0174	MM	150	CABLE DUCT	
455	90181-0174	MM	665	CABLE DUCT	
460	90181-0174	MM	780	CABLE DUCT	
462	90181-0174	MM	390	CABLE DUCT	
465	90181-0062	MM	674	CABLE DUCT 100X100MM	
470	90181-0062	MM	674	CABLE DUCT 100X100MM	
475	90181-0062	MM	1100	CABLE DUCT 100X100MM	
500	90181-0064		42	LOCK ZP1 FOR CHANNEL T1	
605	90181-0067	MM	946	DIVIDING PLATE SEP80	
610	90181-0067	MM	61	DIVIDING PLATE SEP80	
615	90181-0067	MM	279	DIVIDING PLATE SEP80	
620	90181-0067	MM	660	DIVIDING PLATE SEP80	
625	90181-0067	MM	660	DIVIDING PLATE SEP80	
630	90181-0067	MM	660	DIVIDING PLATE SEP80	
635	90181-0067	MM	880	DIVIDING PLATE SEP80	
640	90181-0067	MM	233	DIVIDING PLATE SEP80	
660	90181-0067	MM	260	DIVIDING PLATE SEP80	
665	90181-0067	MM	586	DIVIDING PLATE SEP80	
670	90181-0067	MM	650	DIVIDING PLATE SEP80	
675	90181-0067	MM	650	DIVIDING PLATE SEP80	
680	90181-0067	MM	660	DIVIDING PLATE SEP80	
685	90181-0067	MM	89	DIVIDING PLATE SEP80	
690	90181-0067	MM	89	DIVIDING PLATE SEP80	
695	90181-0067	MM	386	DIVIDING PLATE SEP80	
700	90181-0067	MM	386	DIVIDING PLATE SEP80	
705	90181-0060	MM	700	CABLE DUCT 40X100MM	
710	90181-0313		137	RIVET DUCTAFIX R4	
720	90194-0163		2	SIGN, EARTH WITHIN CIRCLE	
730	90457-0057		2	GRID FOR FAN LZ36	
735	312115-0323		3	SCREW ISO4762 M5X8 A4 80	
765	312115-0295		4	SCREW ISO4762 M4X20 A4 80	
820	353042-0004	MM	650	RAIL TS 35/7,5	
830	312812-0312		4	HEXAGON NUT, NY-LOCK M4 A480	
840	90062-0061		8	LOCK WASHER NORD-LOCK,6,5/10,8, T=2,2	
860	315105-0153		4	WASHER BRB 6,4X12 RFR	
A012	90458-1300		1	2 AXIS DOCKING STATION D2/PLC	**10-25**
A013	90458-0746		1	STEP MOTOR DRIVE L50	
A014	90458-0746		1	STEP MOTOR DRIVE L50	
G001	90459-3450		1	VARIABLE FREQUENCY DRIVE 22A-A4P5N104	
G003	90459-3450		1	VARIABLE FREQUENCY DRIVE 22A-A4P5N104	
G004	90459-3446		1	FREQUENCY CONVERTER 5,5 KW	
G005	90459-3450		1	VARIABLE FREQUENCY DRIVE 22A-A4P5N104	
K003	90600-1758		1	CONTACTOR 30KW 24VDC,DILM65 +DILM65-XIP2	
K003.1	90459-5418		1	AUXILARY CONTACTS, DILM150-XHI22 2NO;2NC	
K030	90600-1758		1	CONTACTOR 30KW 24VDC,DILM65 +DILM65-XIP2	
K030.1	90459-5418		1	AUXILARY CONTACTS, DILM150-XHI22 2NO;2NC	
L001	90297-0306		1	BALLAST COIL 50/60 HZ	
M001	90457-0056		1	FAN 7450 ES	
W067	90220-0183	M	3	SCR. CABLE 2X0,34MM2	

Machine Type | Group Description | Used-In | Group Number | Page No

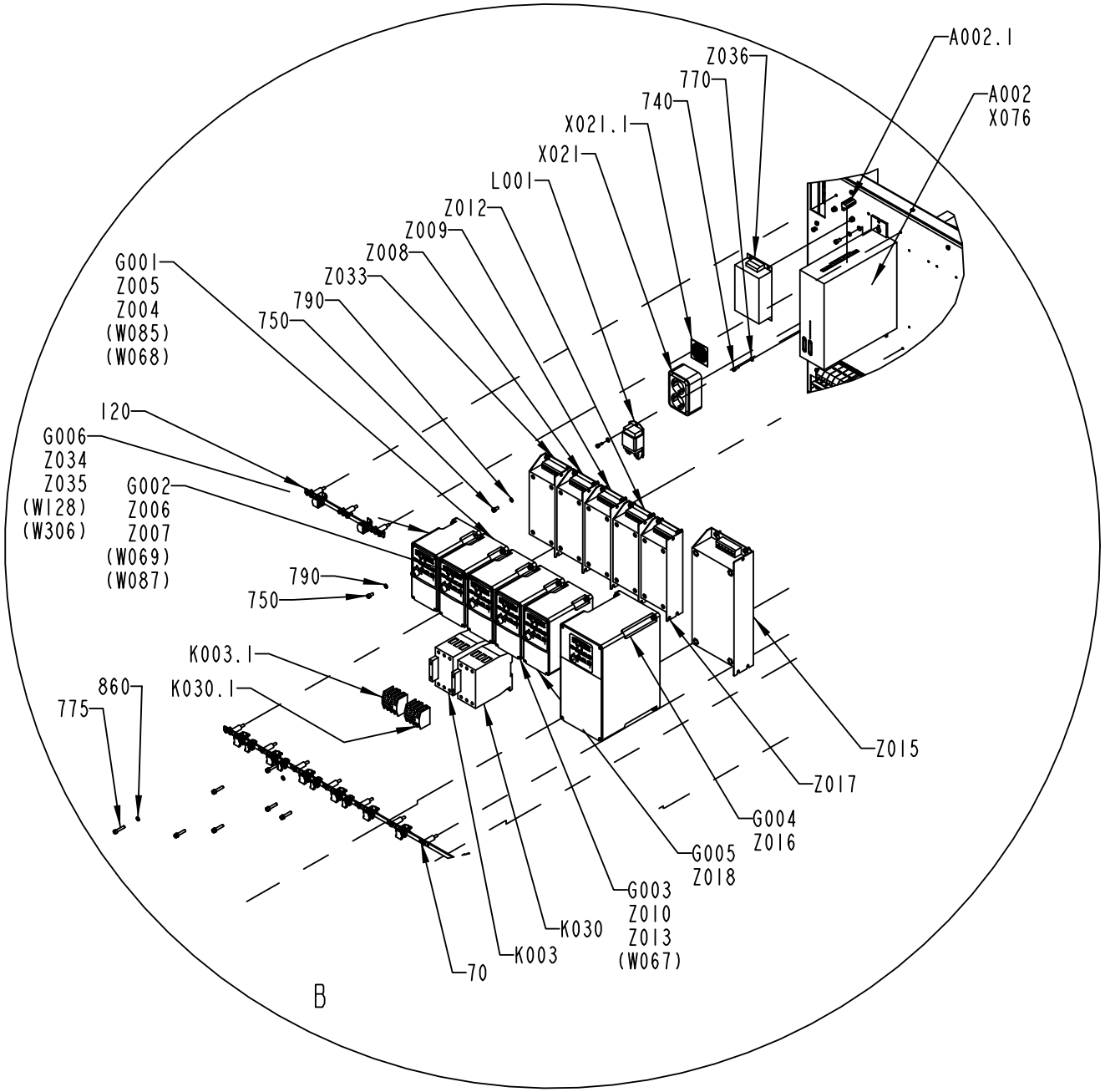

1511779-15
288383

Pos	Part No	UN	Qty	Description	Page No
Common Parts (Cont'd)					
W068	90220-0183	M	3	SCR. CABLE 2X0,34MM2	
W099	90220-0092	M	1.5	PAIR TWISTED CABLE 3X2X0,25MM2	
W0127	90220-0183	M	3	SCR. CABLE 2X0,34MM2	
X001	1511800-0100		1	POWER SIDE,BOTTOM TERMINAL BLOCK	**10-61**
X002	1511802-0200		1	TERMINAL BLOCK	**10-63**
X003	1511804-0100		1	LOGIC SIDE,TOP TERMINAL BLOCK	**10-65**
X008	1511828-0100		1	X008	**10-67**
X009	1511829-0100		1	POWER SIDE,TOP TERMINAL BLOCK	**10-69**
X020	90001-0033		1	WALL SOCKET OUTLET	
X020.1	90459-1738		1	MANDATORY ACTION SIGN ISO, READ MAINTENA	
X021	90001-0033		1	WALL SOCKET OUTLET	
X021.1	90459-1738		1	MANDATORY ACTION SIGN ISO, READ MAINTENA	
X027	90458-1279		1	PLUG CONNECTOR DP1	
Z004	90458-1140		1	FERRITE, RI-26-28-13	
Z005	90458-1140		1	FERRITE, RI-26-28-13	
Z008	90459-3460		1	FOOTPRINT FILTER 22-RF010-AL	
Z010	90458-1140		1	FERRITE, RI-26-28-13	
Z012	90459-3460		1	FOOTPRINT FILTER 22-RF010-AL	
Z013	90458-1140		1	FERRITE, RI-26-28-13	
Z015	90459-3459		1	FOOTPRINT FILTER, 22-RF018-CL	
Z016	90458-1140		1	FERRITE, RI-26-28-13	
Z017	90459-3460		1	FOOTPRINT FILTER 22-RF010-AL	
Z018	90458-1140		1	FERRITE, RI-26-28-13	
Z019	90459-3698		1	FILTER, 6 A, 250 VAC	
Z020	90458-1140		1	FERRITE, RI-26-28-13	
Z021	90458-1140		1	FERRITE, RI-26-28-13	

Pos	Part No	UN	Qty	Description	Page No

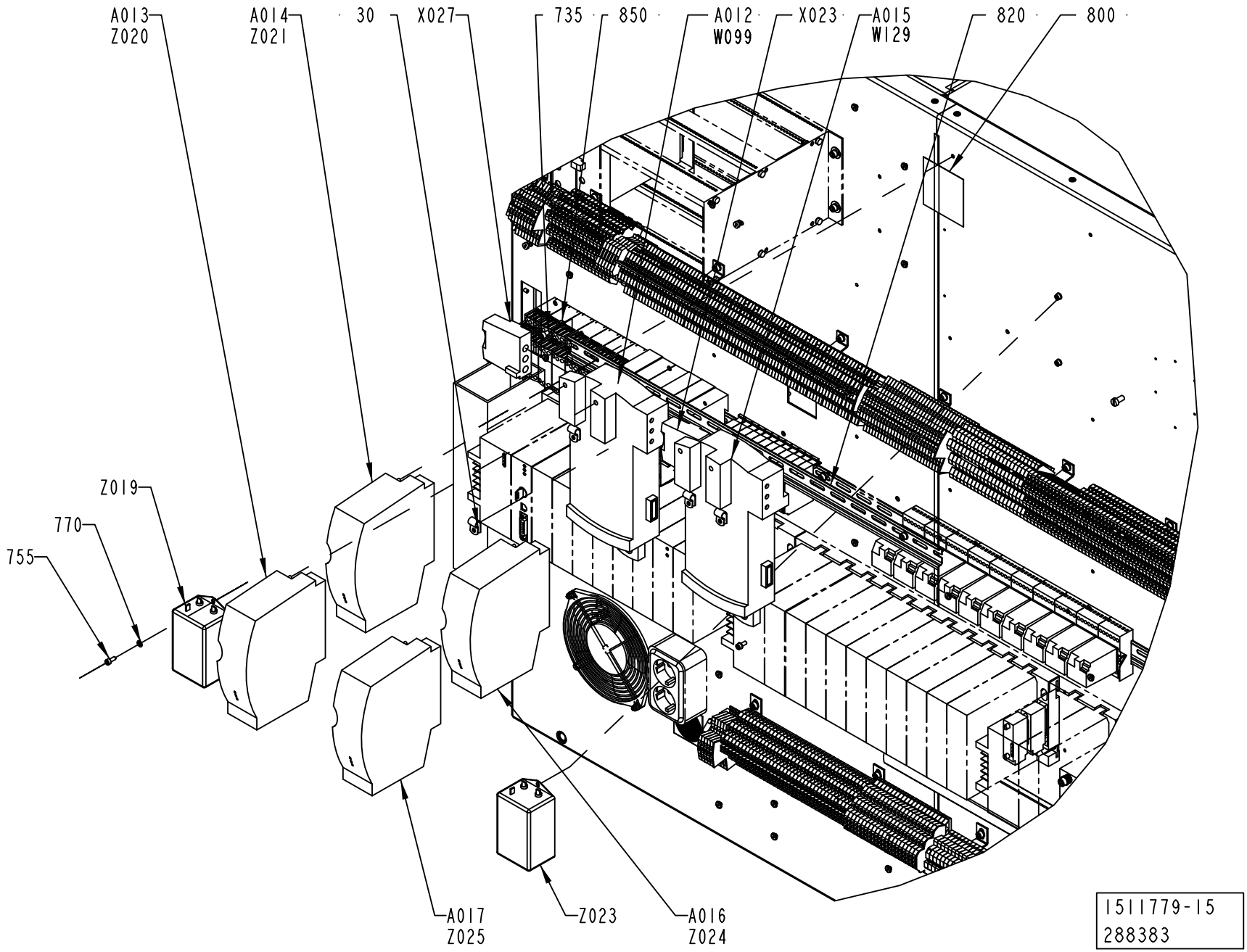
A013
Z020
A014
Z021
30
X027
735
850
A012
W099
X023
A015
W129
820
800
Z019
770
755
A017
Z025
Z023
A016
Z024
1511779-15
288383

Pos	Part No	UN	Qty	Description	Page No

SEE PREVIOUS LISTS PAGES: 10-13, 10-15, 10-17.

Pos	Part No	UN	Qty	Description	Page No

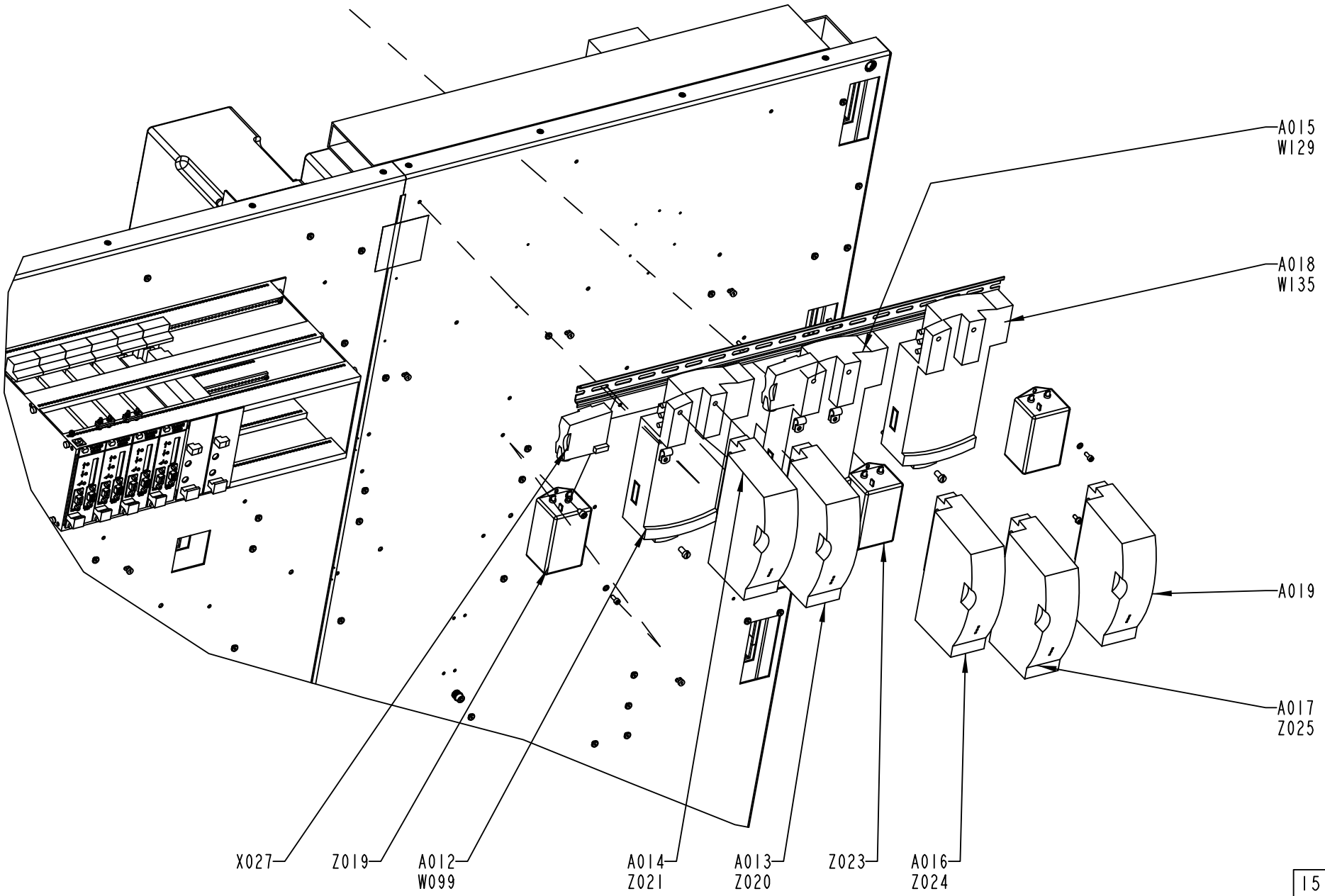
A015
W129
A018
W135
A019
A017
Z025
X027
Z019
A012
W099
A014
Z021
A013
Z020
Z023
A016
Z024
TPA PT-19
1511779-15
288383

Pos	Part No	UN	Qty	Description	Page No
SEE PREVIOUS LISTS PAGES: 10-13, 10-15, 10-17.					

Pos	Part No	UN	Qty	Description	Page No

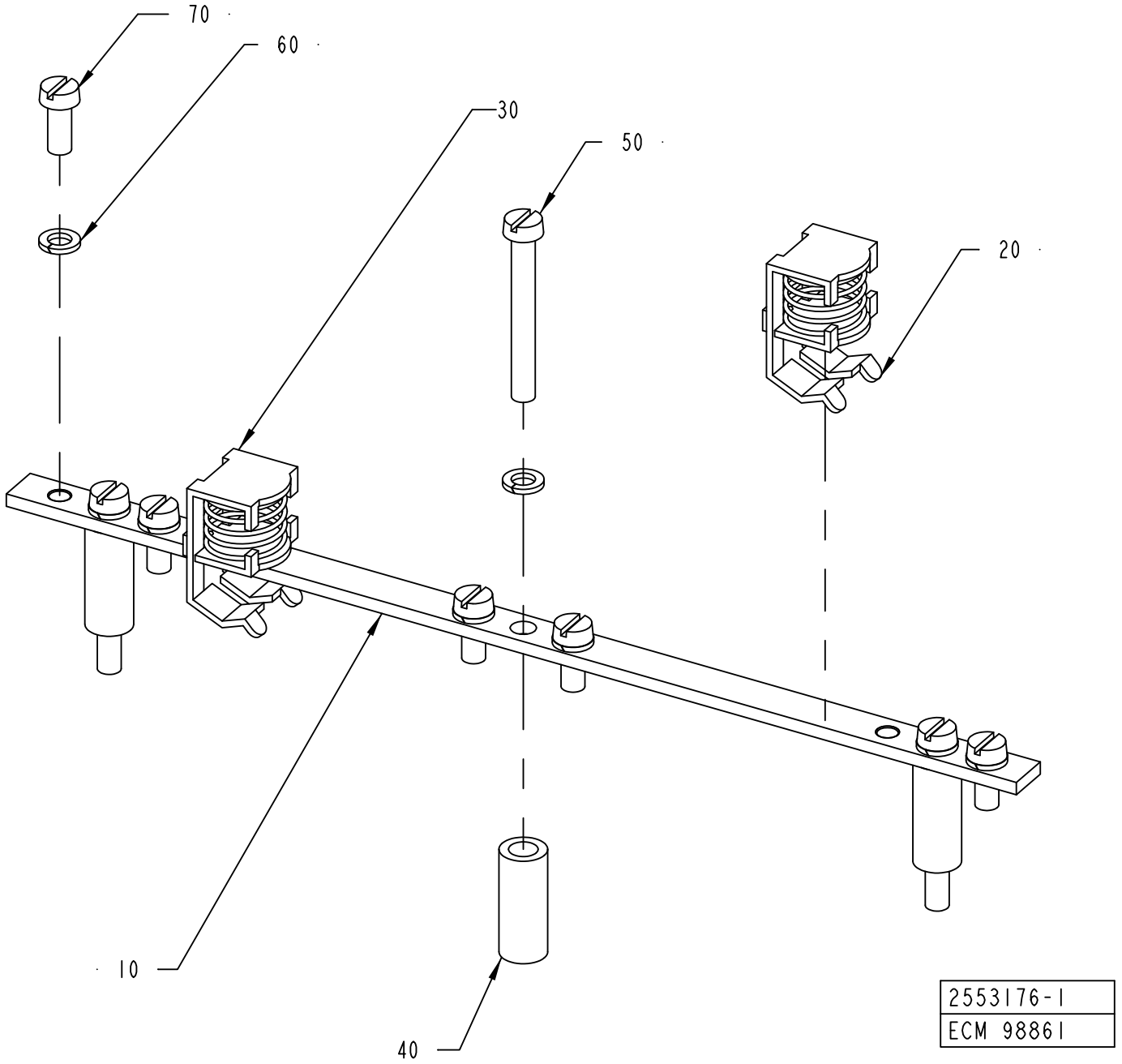
70
60
30
50
20
10
40
2553176-1
ECM 98861

ECM: 118446 - 20030922
Group number: 2553176-0100
Assembly Drawing: 2553176-1_1_AA

Pos	Part No	UN	Qty	Description	Page No
-					
010	2553175-0000		1	EARTH BAR	
020	90135-0039		1	SHIELD CLIP KLBU 4-13.5	
030	90135-0039		1	SHIELD CLIP KLBU 4-13.5	
040	988436-0000		3	SPACER SLEEVE	
050	312125-0339		3	SCREW ISO 1207 M5X40 A4	
060	315402-0146		8	LOCK WASHER FBB 5,1	
070	312125-0327		5	SCREW ISO 1207 M5X12 A4	

Pos	Part No	UN	Qty	Description	Page No

This page is intentionally left blank.

ECM: 185654 - 20041104
Group number: 90458-1300
Assembly Drawing:

Pos	Part No	UN	Qty	Description	Page No
-					
	90458-1856		1	ADHESIVE LABEL, CONNECTION DIAGRAM	

Pos	Part No	UN	Qty	Description	Page No

SOLID STATE RELAY RAIL 1

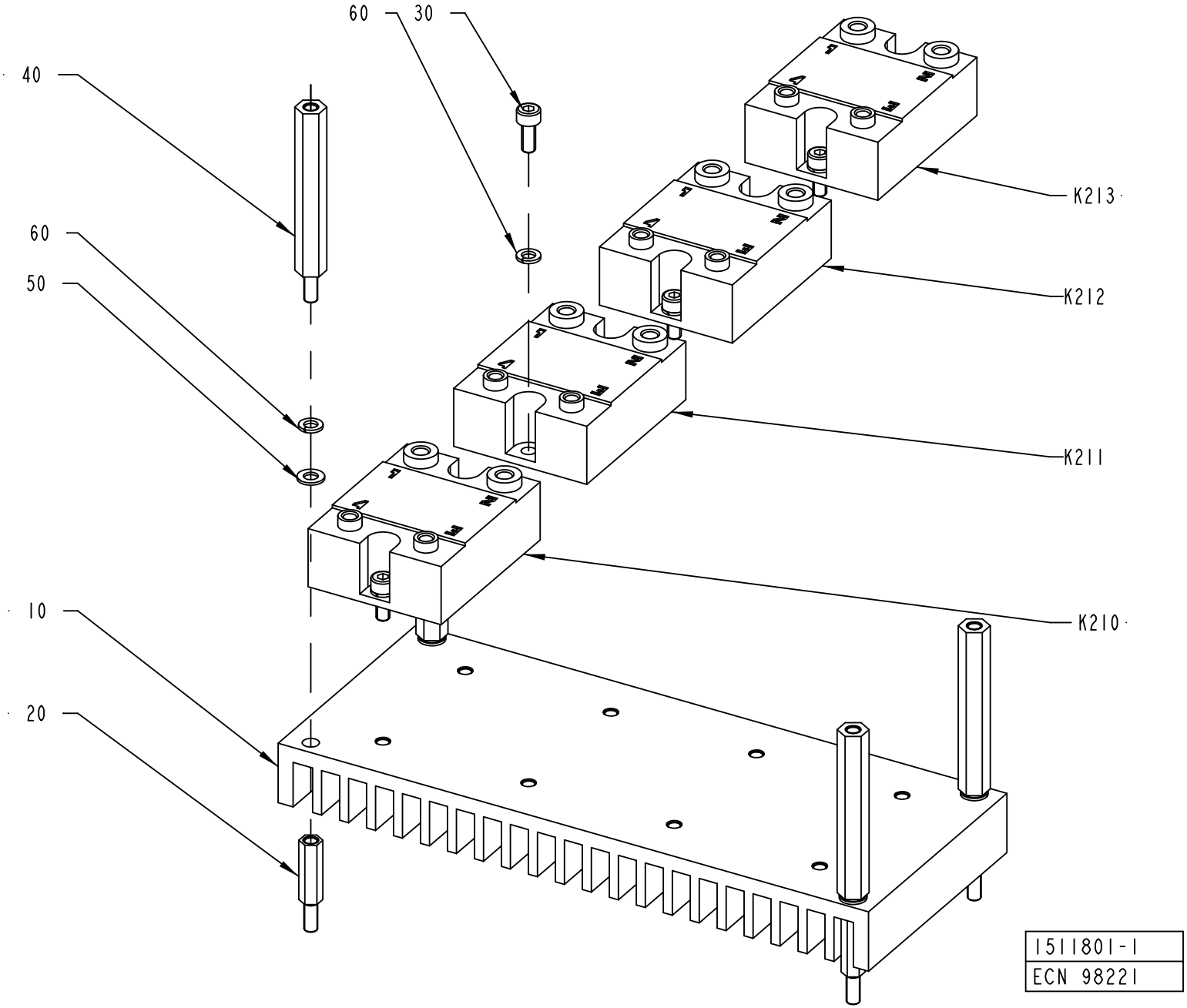

ECM: 180213 - 20040910
Group number: 1511801-0100
Assembly Drawing: 1511801-1_1_AB

Pos	Part No	UN	Qty	Description	Page No
-					
010	1498819-0000		1	COOLING PLATE	
020	1517675-0000		4	SPACER	
030	312115-0289		8	SCREW ISO4762 M4X10 A4 80	
040	2531997-0000		4	SPACER	
050	315105-0136		4	WASHER BRB 4,3X8 RFR	
060	315402-0136		12	LOCK WASHER FBB 4,1	
K210	90119-0067		1	SOLID-STATE RELAY, H12WD4850	
K211	90119-0067		1	SOLID-STATE RELAY, H12WD4850	
K212	90119-0067		1	SOLID-STATE RELAY, H12WD4850	
K213	90119-0067		1	SOLID-STATE RELAY, H12WD4850	

Pos	Part No	UN	Qty	Description	Page No

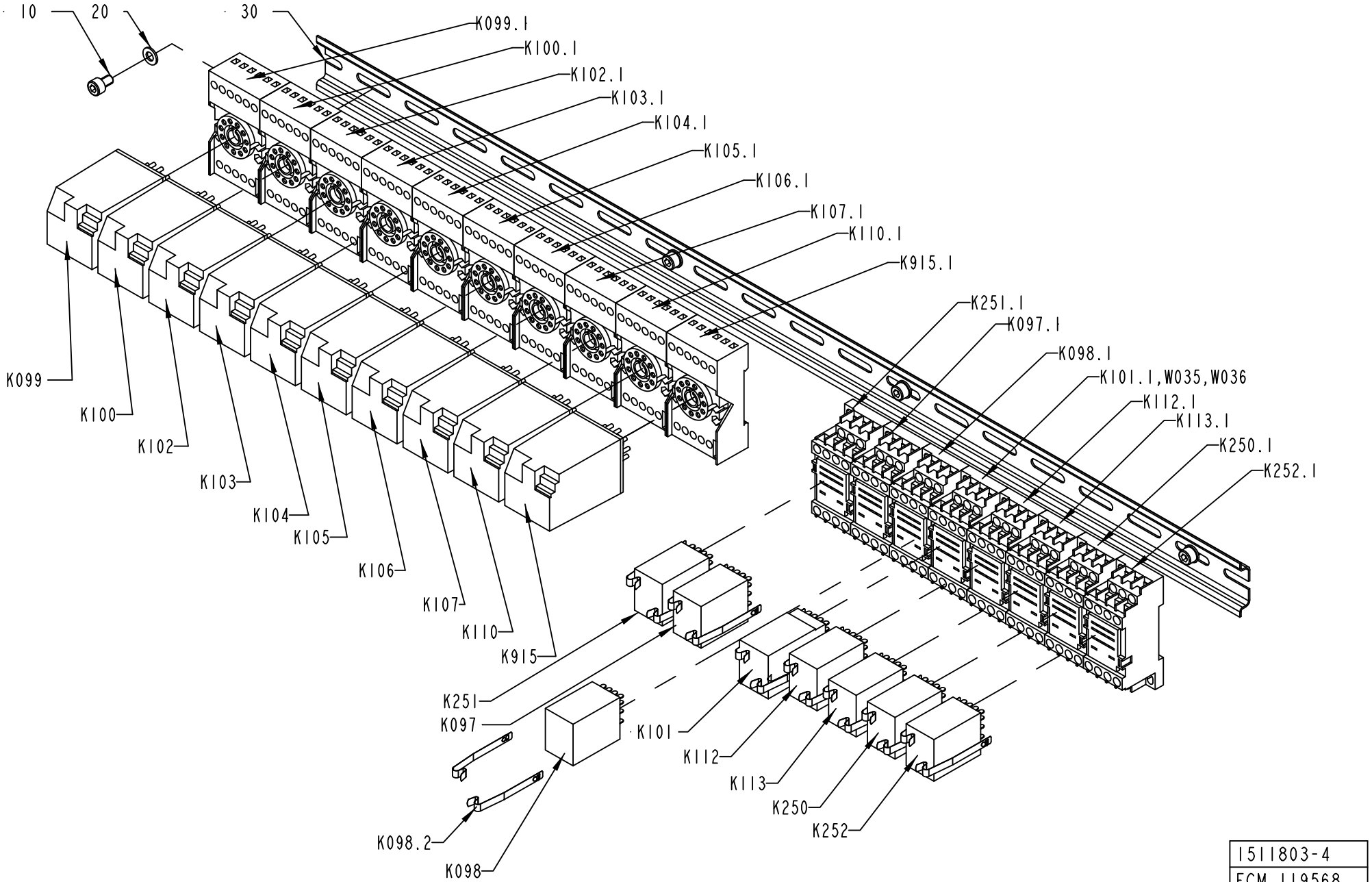

1511803-4
ECM 119568

ECM: 242042 - 20060127
Group number: 1511803-0100
Assembly Drawing: 1511803-4_1_AB

Pos	Part No	UN	Qty	Description	Page No
TBA ASU NOTCSB					
K112	90119-0086		1	RELAY, AUXILIARY MY4IN4 24VDC	
K112.1	90119-0309		1	BASE UNIT, TYPE PYF 14AE	
K112.2	90119-0310		1	CLAMP, TYPE PYC-A1	
TBA ASU TCSB					
K112	90119-0086		1	RELAY, AUXILIARY MY4IN4 24VDC	
K112.1	90119-0309		1	BASE UNIT, TYPE PYF 14AE	
K112.2	90119-0310		1	CLAMP, TYPE PYC-A1	
K915	90119-0056		1	RELAY, AUXILIARY MK3P5-S 24VDC	
K915.1	90129-0006		1	BASE, S3-B	
TBA NOASU TCSB					
K915	90119-0056		1	RELAY, AUXILIARY MK3P5-S 24VDC	
K915.1	90129-0006		1	BASE, S3-B	
Common Parts					
010	312115-0323		4	SCREW ISO4762 M5X8 A4 80	
020	315105-0146		4	WASHER BRB 5,3X10 RFR	
030	353042-0004	MM	690	RAIL TS 35/7,5	
K097	90119-0086		1	RELAY, AUXILIARY MY4IN4 24VDC	
K097.1	90119-0309		1	BASE UNIT, TYPE PYF 14AE	
K097.2	90119-0310		1	CLAMP, TYPE PYC-A1	
K098	90119-0086		1	RELAY, AUXILIARY MY4IN4 24VDC	
K098.1	90119-0309		1	BASE UNIT, TYPE PYF 14AE	
K098.2	90119-0310		1	CLAMP, TYPE PYC-A1	
K099	90119-0056		1	RELAY, AUXILIARY MK3P5-S 24VDC	
K099.1	90129-0006		1	BASE, S3-B	
K100	90119-0056		1	RELAY, AUXILIARY MK3P5-S 24VDC	
K100.1	90129-0006		1	BASE, S3-B	
K101	90119-0109		1	RELAY OMRON 24VDC MY4H	
K101.1	90119-0309		1	BASE UNIT, TYPE PYF 14AE	
K101.2	90119-0310		1	CLAMP, TYPE PYC-A1	
K102	90119-0056		1	RELAY, AUXILIARY MK3P5-S 24VDC	
K102.1	90129-0006		1	BASE, S3-B	
K103	90119-0056		1	RELAY, AUXILIARY MK3P5-S 24VDC	
K103.1	90129-0006		1	BASE, S3-B	
K104	90119-0056		1	RELAY, AUXILIARY MK3P5-S 24VDC	
K104.1	90129-0006		1	BASE, S3-B	
K105	90119-0056		1	RELAY, AUXILIARY MK3P5-S 24VDC	
K105.1	90129-0006		1	BASE, S3-B	
K106	90119-0056		1	RELAY, AUXILIARY MK3P5-S 24VDC	
K106.1	90129-0006		1	BASE, S3-B	
K107	90119-0056		1	RELAY, AUXILIARY MK3P5-S 24VDC	
K107.1	90129-0006		1	BASE, S3-B	
K110	90119-0056		1	RELAY, AUXILIARY MK3P5-S 24VDC	
K110.1	90129-0006		1	BASE, S3-B	
K113	90119-0086		1	RELAY, AUXILIARY MY4IN4 24VDC	
K113.1	90119-0309		1	BASE UNIT, TYPE PYF 14AE	
K113.2	90119-0310		1	CLAMP, TYPE PYC-A1	
K250	90119-0086		1	RELAY, AUXILIARY MY4IN4 24VDC	
K250.1	90119-0309		1	BASE UNIT, TYPE PYF 14AE	
K250.2	90119-0310		1	CLAMP, TYPE PYC-A1	
K251	90119-0086		1	RELAY, AUXILIARY MY4IN4 24VDC	
K251.1	90119-0309		1	BASE UNIT, TYPE PYF 14AE	
K251.2	90119-0310		1	CLAMP, TYPE PYC-A1	
K252	90119-0086		1	RELAY, AUXILIARY MY4IN4 24VDC	
K252.1	90119-0309		1	BASE UNIT, TYPE PYF 14AE	
K252.2	90119-0310		1	CLAMP, TYPE PYC-A1	
W035	90220-0059	MM	2000	THERMOCOUPLE CABLE K/PVC/20AWG 2X0,5MM2	
W036	90220-0059	MM	2000	THERMOCOUPLE CABLE K/PVC/20AWG 2X0,5MM2	

Machine Type | Group Description | Used-In | Group Number | Page No

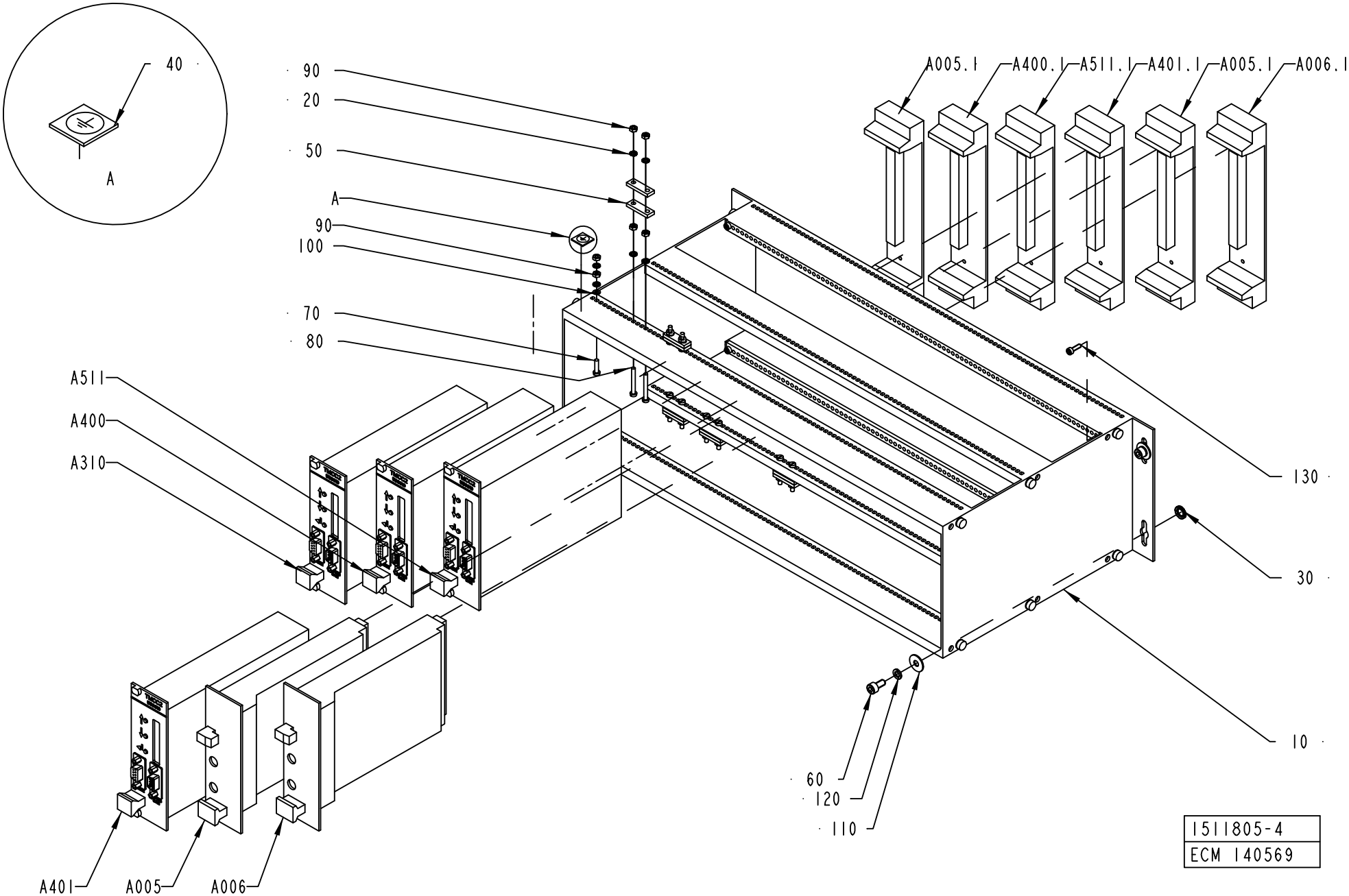
40
A
90
20
50
A
90
100
70
80
A005.1
A400.1
A511.1
A401.1
A005.1
A006.1
A511
A400
A310
130
30
10
60
120
110
A401
A005
A006
1511805-4
ECM 140569

ECM: 180217 - 20040910
Group number: 1511805-0100
Assembly Drawing: 1511805-4_1_AB

Pos	Part No	UN	Qty	Description	Page No
TBA NOPT ASU					
020	90062-0058		14	LOCK WASHER SERRAT.EXT.GEAR,3,2/6 H=0,4	
050	90220-0305		6	CLAMP FOR SCR.CABLE, 16MM,	
080	312125-0232		8	SCREW ISO 1207 M3X25 A4	
090	312605-0310		14	HEXAGON NUT, M6M M3 A280	
A511	559810-0101		1	TMCC2 CONTROLLER	
A511.1	67372-0101		1	BACKPLANE 8TE(32 POLE)	**10-33**
TBA NOPT NOASU					
020	90062-0058		14	LOCK WASHER SERRAT.EXT.GEAR,3,2/6 H=0,4	
050	90220-0305		6	CLAMP FOR SCR.CABLE, 16MM,	
080	312125-0232		8	SCREW ISO 1207 M3X25 A4	
090	312605-0310		14	HEXAGON NUT, M6M M3 A280	
TBA PT19 ASU					
020	90062-0058		22	LOCK WASHER SERRAT.EXT.GEAR,3,2/6 H=0,4	
050	90220-0305		10	CLAMP FOR SCR.CABLE, 16MM,	
080	312125-0232		10	SCREW ISO 1207 M3X25 A4	
090	312605-0310		22	HEXAGON NUT, M6M M3 A280	
A005	67347-0101		1	CARD BRAKEREG.MAGN.POWDER BRAKE	
A005:1	67372-0101		1	BACKPLANE 8TE(32 POLE)	**10-33**
A006	67347-0101		1	CARD BRAKEREG.MAGN.POWDER BRAKE	
A006.1	67372-0101		1	BACKPLANE 8TE(32 POLE)	**10-33**
A401	559810-0101		1	TMCC2 CONTROLLER	
A401.1	67372-0101		1	BACKPLANE 8TE(32 POLE)	**10-33**
A511	559810-0101		1	TMCC2 CONTROLLER	
A511.1	67372-0101		1	BACKPLANE 8TE(32 POLE)	**10-33**
TBA PT19 NOASU					
020	90062-0058		22	LOCK WASHER SERRAT.EXT.GEAR,3,2/6 H=0,4	
050	90220-0305		10	CLAMP FOR SCR.CABLE, 16MM,	
080	312125-0232		10	SCREW ISO 1207 M3X25 A4	
090	312605-0310		22	HEXAGON NUT, M6M M3 A280	
A005	67347-0101		1	CARD BRAKEREG.MAGN.POWDER BRAKE	
A005:1	67372-0101		1	BACKPLANE 8TE(32 POLE)	**10-33**
A006	67347-0101		1	CARD BRAKEREG.MAGN.POWDER BRAKE	
A006.1	67372-0101		1	BACKPLANE 8TE(32 POLE)	**10-33**
A401	559810-0101		1	TMCC2 CONTROLLER	
A401.1	67372-0101		1	BACKPLANE 8TE(32 POLE)	**10-33**
Common Parts					
010	67369-0102		1	RACK WALLMOUNTED 84TE	**10-35**
030	90062-0061		4	LOCK WASHER NORD-LOCK,6,5/10,8, T=2,2	
040	90194-0152		1	SIGN, EARTH	
060	312115-0325		4	SCREW ISO4762 M5X10 A4 80	
070	312125-0226		1	SCREW ISO 1207 M3X12 A4	
110	315125-0146		4	WASHER TBRSB 5.3X15X1 A4	
110	315105-0124		1	WASHER BRB 3,2X6 RFR	
120	315402-0146		4	LOCK WASHER FBB 5,1	
130	312115-0224		4	SCREW ISO4762 M3X10 A4 80	
A310	559810-0101		1	TMCC2 CONTROLLER	
A310.1	67372-0101		1	BACKPLANE 8TE(32 POLE)	**10-33**
A400	559810-0101		1	TMCC2 CONTROLLER	
A400.1	67372-0101		1	BACKPLANE 8TE(32 POLE)	**10-33**

Machine Type | Group Description | Used-In | Group Number | Page No

This page is intentionally left blank.

ECM: - -
Group number: 67372-0101
Assembly Drawing:

Pos	Part No	UN	Qty	Description	Page No
-					
0010	543336-0001		1	COMPONENTS WITHOUT TP-NO	
0020	543319-0000		1	PRINTED CIRCUIT BOARD	
0030	543337-0000		1	TERMINAL LABELS 1-4	

Pos	Part No	UN	Qty	Description	Page No

This page is intentionally left blank.

ECM: - -
Group number: 67369-0102
Assembly Drawing:

Pos	Part No	UN	Qty	Description	Page No	Pos	Part No	UN	Qty	Description	Page No
-											
030 2	540282-0002		1	COMPONENTS WITHOUT TP-NO							

FREQUENCY CONVERTER EARTH BAR

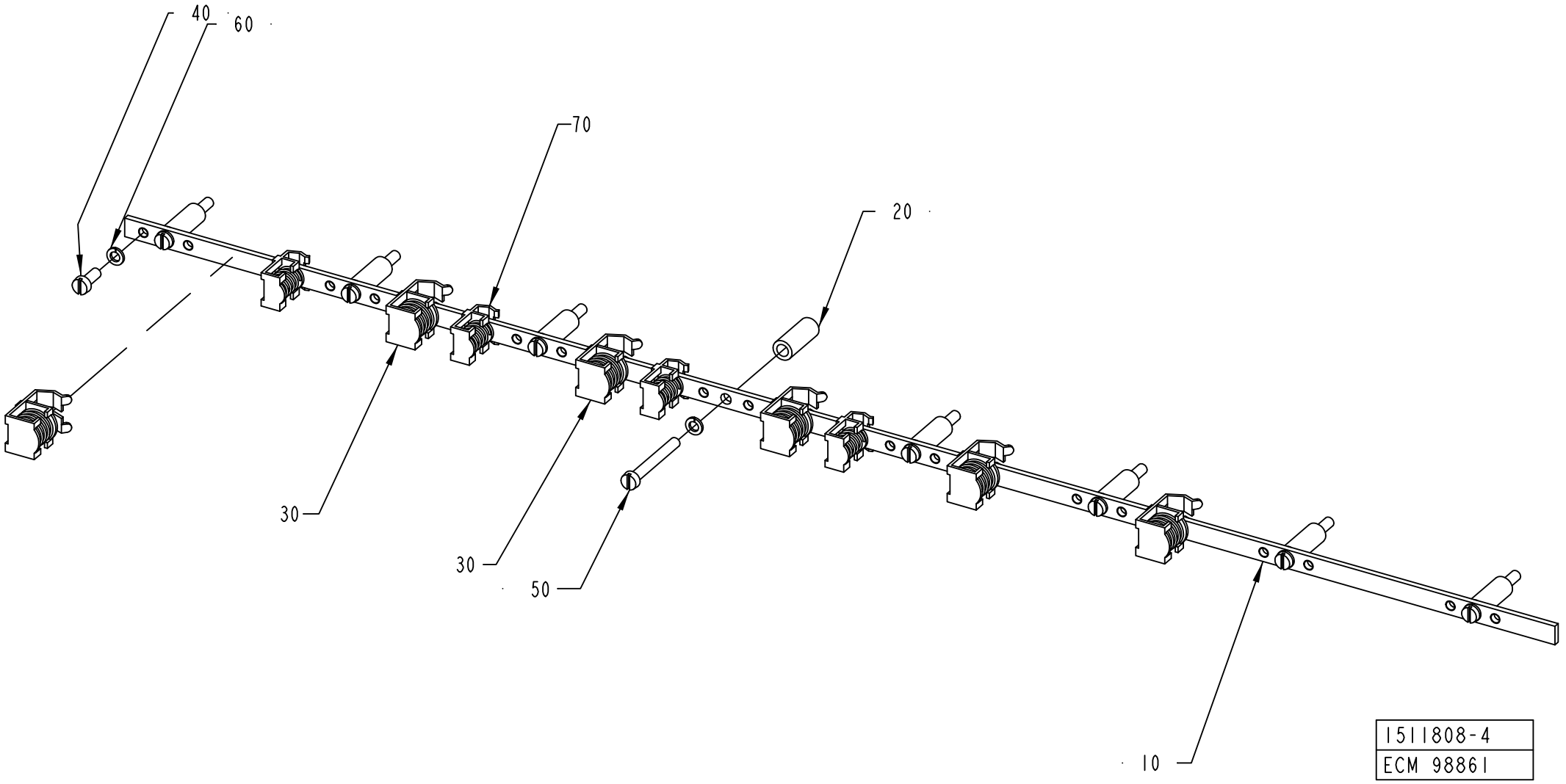

ECM: 243277 - 20060127
Group number: 1511808-0100
Assembly Drawing: 1511808-4_1_AA

Pos	Part No	UN	Qty	Description	Page No
TBA NOPT ASU, TBA PT19 NOASU					
030	90135-0039		5	SHIELD CLIP KLBU 4-13.5	
070	90135-0034		3	SHIELD CLAMP KLBU 3-8	
TBA NOPT NOASU					
030	90135-0039		4	SHIELD CLIP KLBU 4-13.5	
070	90135-0034		2	SHIELD CLAMP KLBU 3-8	
TBA PT19 ASU					
030	90135-0039		6	SHIELD CLIP KLBU 4-13.5	
070	90135-0034		4	SHIELD CLAMP KLBU 3-8	
Common Parts					
010	1523947-0000		1	EARTH BAR	
020	988436-0000		8	SPACER SLEEVE	
040	312125-0327		1	SCREW ISO 1207 M5X12 A4	
050	312125-0339		8	SCREW ISO 1207 M5X40 A4	
060	315402-0146		8	LOCK WASHER FBB 5,1	

Pos	Part No	UN	Qty	Description	Page No

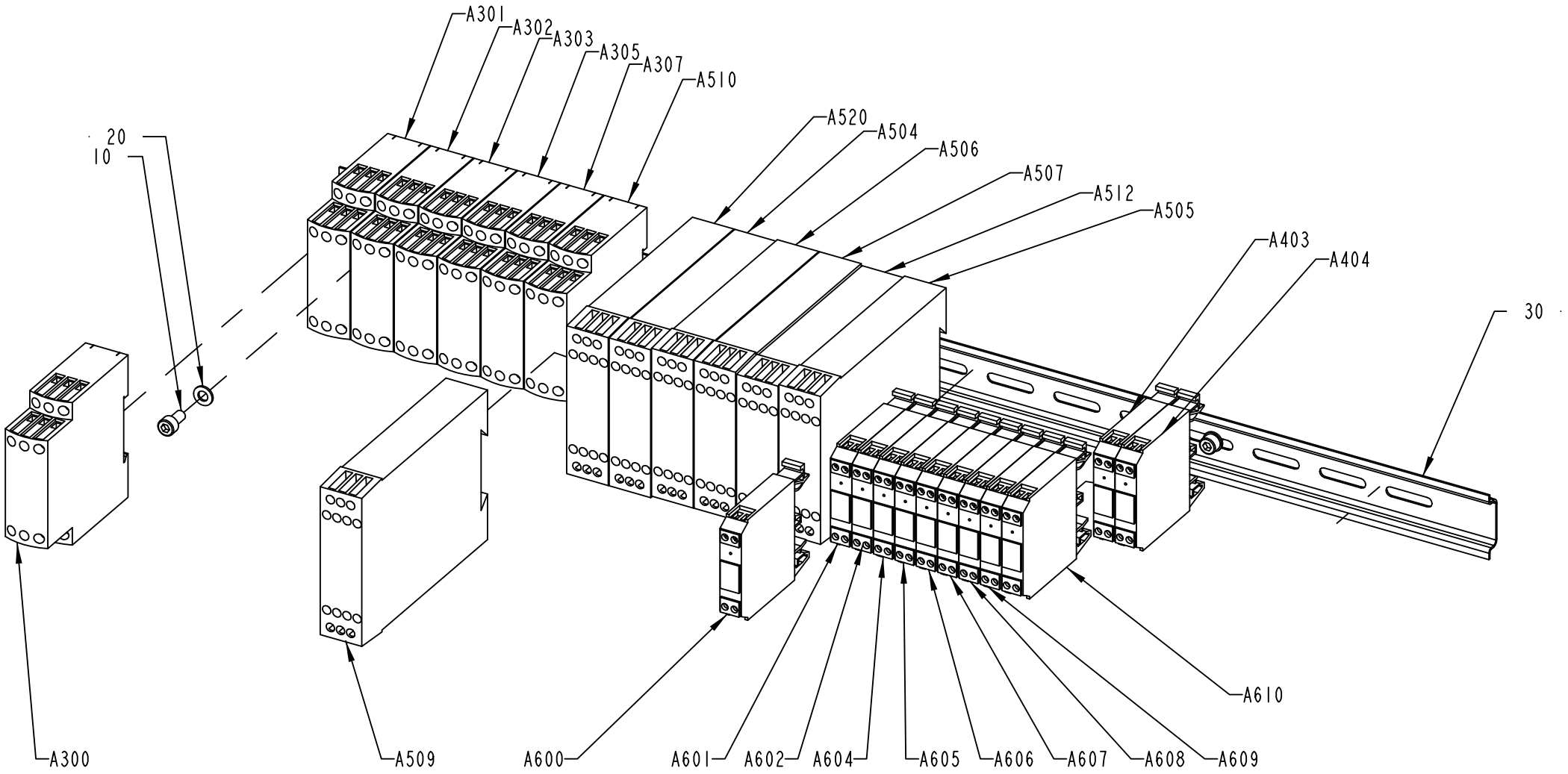

1511824-9
288383

ECM: 292614 - 20070126
Group number: 1511824-0200
Assembly Drawing: 1511824-9_1_AB

Pos	Part No	UN	Qty	Description	Page No
TBA NOPT ASU HI					
A505	90457-0092		1	SAFETY RELAY RT9-24VDC	
A510	90458-2580		1	LEVEL CONTROL RELAY RM4-LA32M	
TBA NOPT ASU NOHI					
A505	90457-0092		1	SAFETY RELAY RT9-24VDC	
TBA NOPT NOASU HI					
A510	90458-2580		1	LEVEL CONTROL RELAY RM4-LA32M	
TBA PT19 ASU HI					
A505	90457-0092		1	SAFETY RELAY RT9-24VDC	
A509	90457-0092		1	SAFETY RELAY RT9-24VDC	
A510	90458-2580		1	LEVEL CONTROL RELAY RM4-LA32M	
A520	90459-2291		1	SAFETY TIME RELAY, E1T-0.5S-24VDC	
TBA PT19 ASU NOHI					
A505	90457-0092		1	SAFETY RELAY RT9-24VDC	
A509	90457-0092		1	SAFETY RELAY RT9-24VDC	
A520	90459-2291		1	SAFETY TIME RELAY, E1T-0.5S-24VDC	
TBA PT19 NOASU HI					
A509	90457-0092		1	SAFETY RELAY RT9-24VDC	
A510	90458-2580		1	LEVEL CONTROL RELAY RM4-LA32M	
A520	90459-2291		1	SAFETY TIME RELAY, E1T-0.5S-24VDC	
TBA PT19 NOASU NOHI					
A509	90457-0092		1	SAFETY RELAY RT9-24VDC	
A520	90459-2291		1	SAFETY TIME RELAY, E1T-0.5S-24VDC	
Common Parts					
010	312115-0325		3	SCREW ISO4762 M5X10 A4 80	
020	315105-0146		3	WASHER BRB 5,3X10 RFR	
030	353042-0004	MM	623	RAIL TS 35/7,5	
A300	90458-2580		1	LEVEL CONTROL RELAY RM4-LA32M	
A301	90458-2580		1	LEVEL CONTROL RELAY RM4-LA32M	
A302	90458-2580		1	LEVEL CONTROL RELAY RM4-LA32M	
A303	90458-2580		1	LEVEL CONTROL RELAY RM4-LA32M	
A305	90458-2580		1	LEVEL CONTROL RELAY RM4-LA32M	
A307	90458-2580		1	LEVEL CONTROL RELAY RM4-LA32M	
A403	90119-0104		1	OPTO COUPLER AMMS 50070	
A404	90119-0104		1	OPTO COUPLER AMMS 50070	
A504	90457-0092		1	SAFETY RELAY RT9-24VDC	
A506	90457-0092		1	SAFETY RELAY RT9-24VDC	
A507	90457-0092		1	SAFETY RELAY RT9-24VDC	
A512	90457-0092		1	SAFETY RELAY RT9-24VDC	
A600	90119-0104		1	OPTO COUPLER AMMS 50070	
A601	90119-0063		1	OPTO-RELAY, DC/DC AMMS-10-1/30VDC	
A602	90119-0063		1	OPTO-RELAY, DC/DC AMMS-10-1/30VDC	
A604	90119-0063		1	OPTO-RELAY, DC/DC AMMS-10-1/30VDC	
A605	90119-0063		1	OPTO-RELAY, DC/DC AMMS-10-1/30VDC	
A606	90119-0063		1	OPTO-RELAY, DC/DC AMMS-10-1/30VDC	
A607	90119-0104		1	OPTO COUPLER AMMS 50070	
A608	90119-0104		1	OPTO COUPLER AMMS 50070	
A609	90119-0104		1	OPTO COUPLER AMMS 50070	
A610	90119-0104		1	OPTO COUPLER AMMS 50070	

Machine Type | Group Description | Used-In | Group Number | Page No

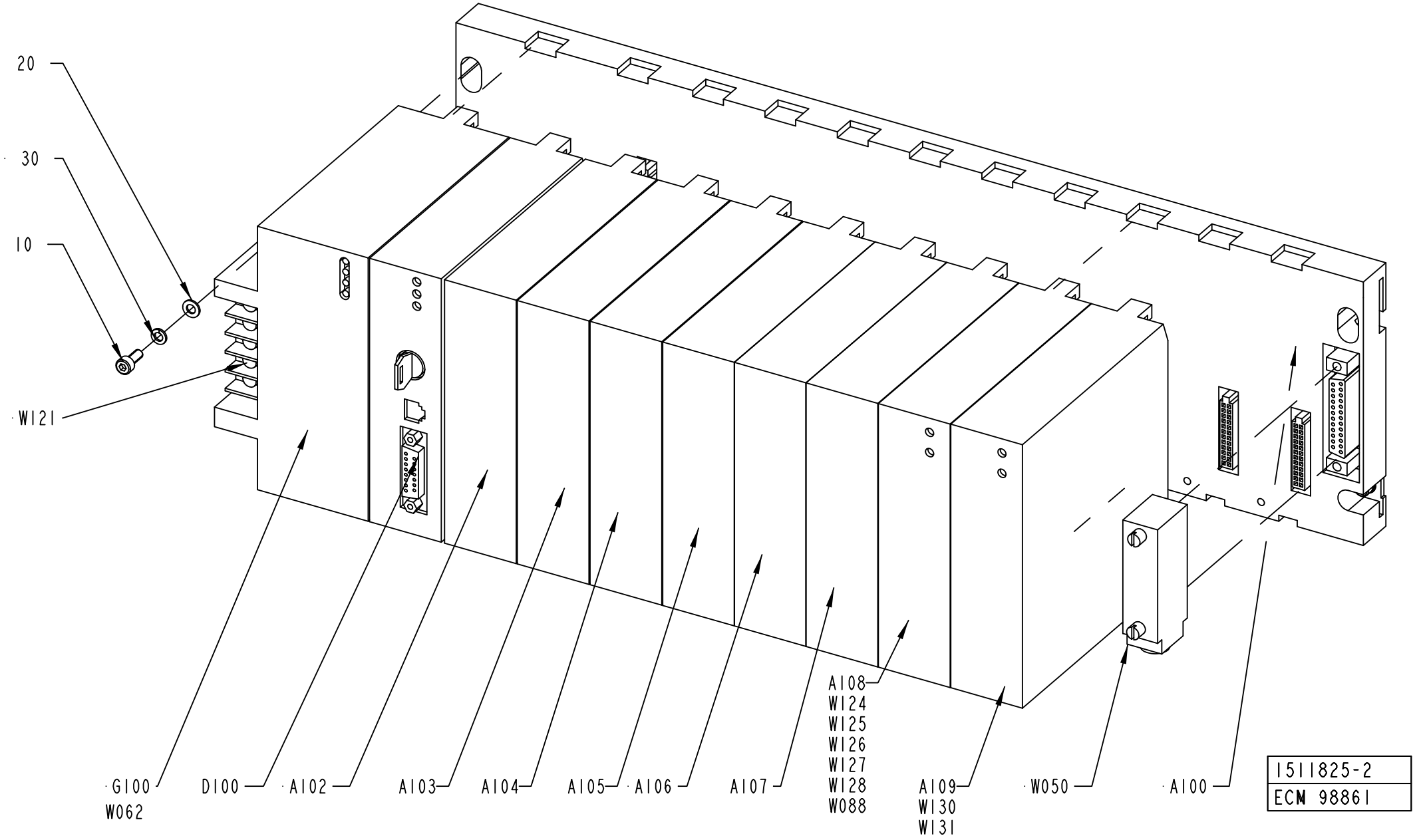
20
30
10
W121
G100
W062
D100
A102
A103
A104
A105
A106
A107
A108
W124
W125
W126
W127
W128
W088
A109
W130
W131
W050
A100
1511825-2
ECN 98861

ECM: 242047 - 20060127
Group number: 1511825-0100
Assembly Drawing: 1511825-2_1_AA

Pos	Part No	UN	Qty	Description	Page No
TBA NOPT ASU HI, TBA NOPT NOASU HI					
A109	90031-0063		1	PLC,ANALOG COMBO MODULE,IN-4PT/OUT-2PT	
W131	1512322-0000		1	COPPER BRAID	
TBA PT19 ASU HI, TBA PT19 ASU NOHI, TBA PT19 NOASU HI, TBA PT19 NOASU NOHI					
A109	90031-0063		1	PLC,ANALOG COMBO MODULE,IN-4PT/OUT-2PT	
W128	90220-0183	M	3.3	SCR. CABLE 2X0,34MM2	
W130	90220-0183	M	3	SCR. CABLE 2X0,34MM2	
W131	1512322-0000		1	COPPER BRAID	
Common Parts					
010	312115-0289		4	SCREW ISO4762 M4X10 A4 80	
020	315105-0136		4	WASHER BRB 4,3X8 RFR	
030	315402-0136		4	LOCK WASHER FBB 4,1	
A100	90031-0051		1	BASEPLATE, 10-SLOT	
A102	90031-0057		1	PLC, DIGITAL INPUT MODULE	
A103	90031-0057		1	PLC, DIGITAL INPUT MODULE	
A104	90031-0057		1	PLC, DIGITAL INPUT MODULE	
A105	90031-0057		1	PLC, DIGITAL INPUT MODULE	
A106	90031-0058		1	PLC, DIGITAL INPUT MODULE	
A107	90031-0059		1	PLC, DIGITAL OUTPUT MODULE	
A108	90031-0062		1	PLC, ANALOG OUTPUT MODULE 8PT/CURR/VOLT	
D100	90031-0075		1	CPU363, SERIAL COMMUNICATION	
G100	90031-0068		1	PLC, POWER SUPPLY	
	90031-0301		*1*	*SPARE BATTERY CPU,PCM,2PCS*	
	352551-0134		*1*	*FINE-WIRE FUSE 2 A SLOW,5X20MM*	
W050	90031-0305		1	I/O EXPANSION CABLE	
W088	1512322-0000		1	COPPER BRAID	
W121	1512322-0000		1	COPPER BRAID	
W124	90220-0183	M	3.5	SCR. CABLE 2X0,34MM2	
W125	90220-0183	M	3.5	SCR. CABLE 2X0,34MM2	
W126	90220-0183	M	3.5	SCR. CABLE 2X0,34MM2	
W127	90220-0183	M	2	SCR. CABLE 2X0,34MM2	

Pos	Part No	UN	Qty	Description	Page No

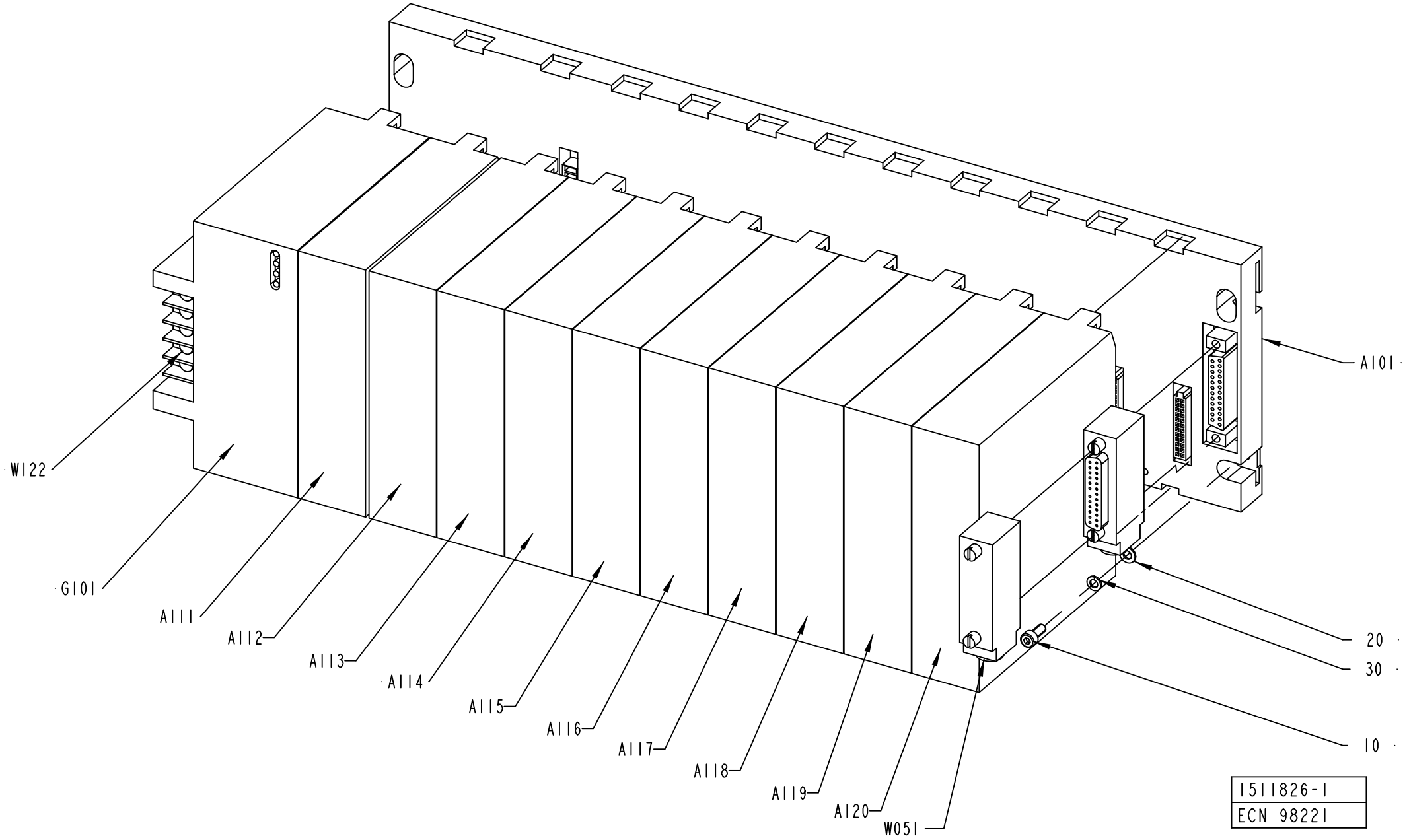
A101
W122
G101
A111
A112
A113
A114
A115
A116
A117
A118
A119
A120
W051
20
30
10
1511826-1
ECN 98221

ECM: 180329 - 20040910
Group number: 1511826-0100
Assembly Drawing: 1511826-1_1_AB

Pos	Part No	UN	Qty	Description	Page No
-					
010	312115-0289		4	SCREW ISO4762 M4X10 A4 80	
020	315105-0136		4	WASHER BRB 4,3X8 RFR	
030	315402-0136		4	LOCK WASHER FBB 4,1	
A101	90031-0053		1	BASEPLATE,10-SLOT	
	90031-0302		*1*	*I/O BUS TERMINATION PLUG*	
A111	90031-0057		1	PLC, DIGITAL INPUT MODULE	
A112	90031-0057		1	PLC, DIGITAL INPUT MODULE	
A113	90031-0057		1	PLC, DIGITAL INPUT MODULE	
A114	90031-0059		1	PLC, DIGITAL OUTPUT MODULE	
A115	90031-0059		1	PLC, DIGITAL OUTPUT MODULE	
A116	90031-0059		1	PLC, DIGITAL OUTPUT MODULE	
A117	90031-0059		1	PLC, DIGITAL OUTPUT MODULE	
A118	90031-0059		1	PLC, DIGITAL OUTPUT MODULE	
A119	90031-0059		1	PLC, DIGITAL OUTPUT MODULE	
A120	90031-0059		1	PLC, DIGITAL OUTPUT MODULE	
G101	90031-0068		1	PLC, POWER SUPPLY	
	90031-0301		*1*	*SPARE BATTERY CPU,PCM,2PCS*	
	352551-0134		*1*	*FINE-WIRE FUSE 2 A SLOW,5X20MM*	
W050	90031-0305		1	I/O EXPANSION CABLE	
W122	1512322-0000		1	COPPER BRAID	

Pos	Part No	UN	Qty	Description	Page No

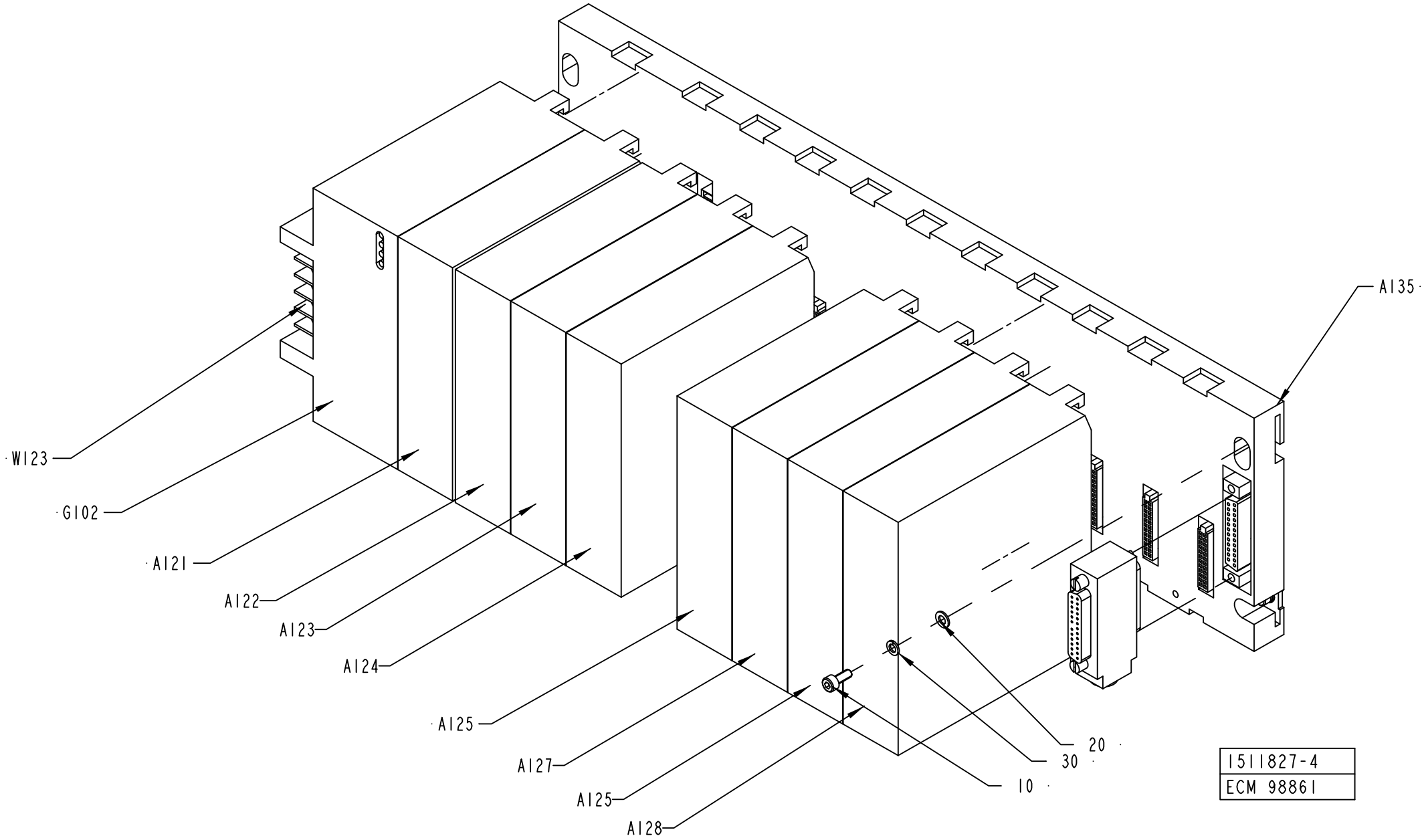
A135
W123
G102
A121
A122
A123
A124
A125
A127
A125
A128
20
30
10
1511827-4
ECM 98861

ECM: 242048 - 20060127
Group number: 1511827-0100
Assembly Drawing: 1511827-4_1_AA

Pos	Part No	UN	Qty	Description	Page No
TBA NOPT HI					
A122	90031-0059		1	PLC, DIGITAL OUTPUT MODULE	
TBA PT19 HI					
A122	90031-0059		1	PLC, DIGITAL OUTPUT MODULE	
A125	90031-0057		1	PLC, DIGITAL INPUT MODULE	
A128	90031-0057		1	PLC, DIGITAL INPUT MODULE	
TBA PT19 NOHI					
A125	90031-0057		1	PLC, DIGITAL INPUT MODULE	
A128	90031-0057		1	PLC, DIGITAL INPUT MODULE	
Common Parts					
0010	312115-0289		4	SCREW ISO4762 M4X10 A4 80	
0020	315105-0136		4	WASHER BRB 4,3X8 RFR	
030	315402-0136		4	LOCK WASHER FBB 4,1	
A121	90031-0059		1	PLC, DIGITAL OUTPUT MODULE	
A123	90031-0059		1	PLC, DIGITAL OUTPUT MODULE	
A124	90031-0059		1	PLC, DIGITAL OUTPUT MODULE	
A126	90031-0057		1	PLC, DIGITAL INPUT MODULE	
A127	90031-0057		1	PLC, DIGITAL INPUT MODULE	
A135	90031-0053		1	BASEPLATE,10-SLOT	
	90031-0302		*1*	*I/O BUS TERMINATION PLUG*	
G102	90031-0068		1	PLC, POWER SUPPLY	
	90031-0301		*1*	*SPARE BATTERY CPU,PCM,2PCS*	
	352551-0134		*1*	*FINE-WIRE FUSE 2 A SLOW,5X20MM*	
W123	1512322-0000		1	COPPER BRAID	

Pos	Part No	UN	Qty	Description	Page No

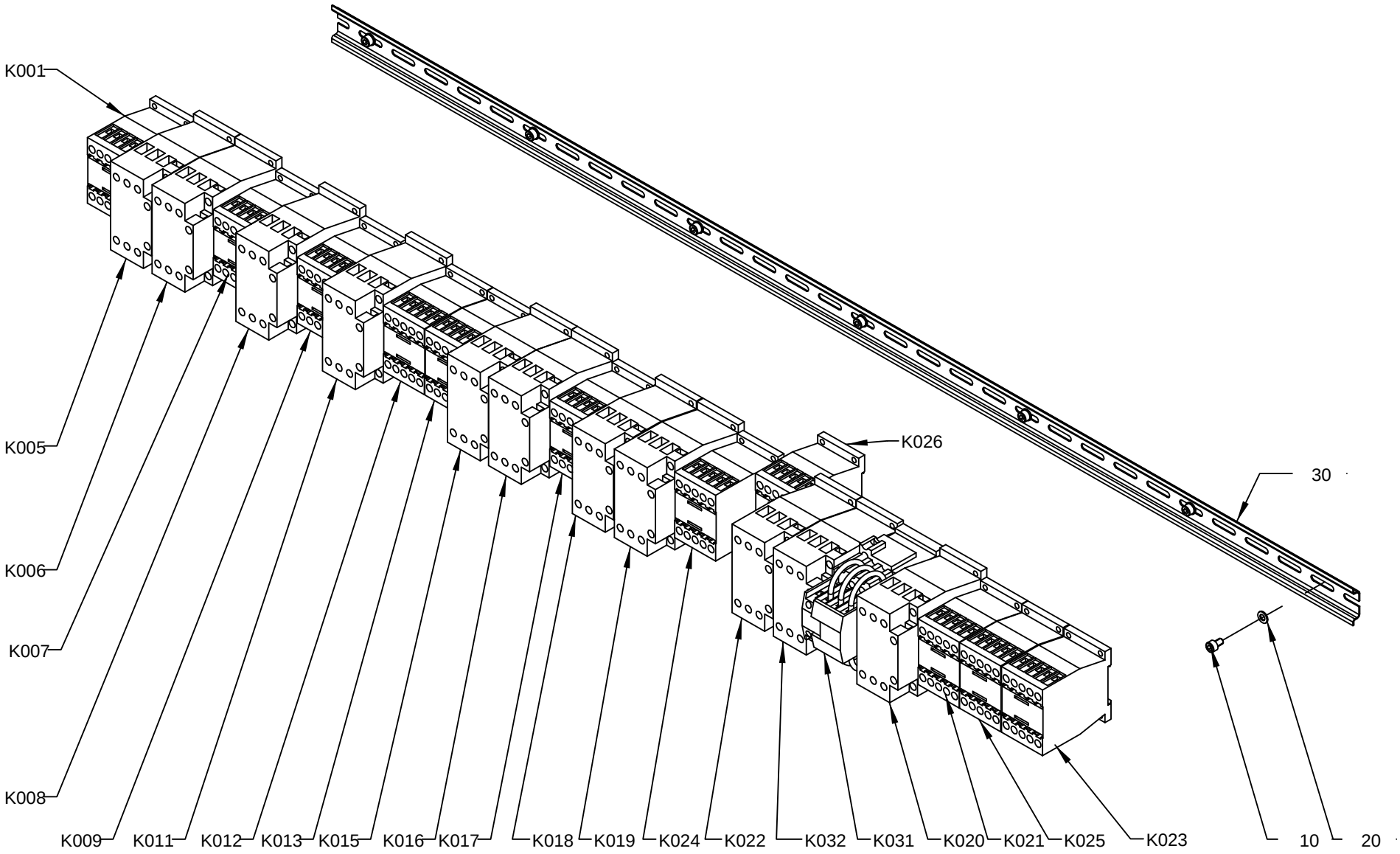

15| 1834 - 8
240449

ECM: 292298 - 20070126
Group number: 1511834-0200
Assembly Drawing: 1511834-8_1_AA

Pos	Part No	UN	Qty	Description	Page No
TBA NOPT ASU					
K022	90459-5441		1	CONTACTOR 7,5KW 24VDC, DILM17-01	
TBA PT19 ASU					
K020	90459-5441		1	CONTACTOR 7,5KW 24VDC, DILM17-01	
K021	90459-5440		1	CONTACTOR 4KW 24VDC, DILM9-01	
K022	90459-5441		1	CONTACTOR 7,5KW 24VDC, DILM17-01	
K031	90600-1643		1	CONTACTOR, DILK12-11	
K032	90459-5441		1	CONTACTOR 7,5KW 24VDC, DILM17-01	
TBA PT19 NOASU					
K020	90459-5441		1	CONTACTOR 7,5KW 24VDC, DILM17-01	
K021	90459-5440		1	CONTACTOR 4KW 24VDC, DILM9-01	
K031	90600-1643		1	CONTACTOR, DILK12-11	
K032	90459-5441		1	CONTACTOR 7,5KW 24VDC, DILM17-01	
Common Parts					
010	90459-5440		7	CONTACTOR 4KW 24VDC, DILM9-01	
020	315105-0146		7	WASHER BRB 5,3X10 RFR	
030	353042-0004	MM	1120	RAIL TS 35/7,5	
K001	90459-5440		1	CONTACTOR 4KW 24VDC, DILM9-01	
K005	90459-5441		1	CONTACTOR 7,5KW 24VDC, DILM17-01	
K006	90459-5441		1	CONTACTOR 7,5KW 24VDC, DILM17-01	
K007	90459-5440		1	CONTACTOR 4KW 24VDC, DILM9-01	
K008	90459-5441		1	CONTACTOR 7,5KW 24VDC, DILM17-01	
K009	90459-5440		1	CONTACTOR 4KW 24VDC, DILM9-01	
K011	90459-5441		1	CONTACTOR 7,5KW 24VDC, DILM17-01	
K012	90459-5440		1	CONTACTOR 4KW 24VDC, DILM9-01	
K013	90459-5440		1	CONTACTOR 4KW 24VDC, DILM9-01	
K015	90459-5441		1	CONTACTOR 7,5KW 24VDC, DILM17-01	
K016	90459-5441		1	CONTACTOR 7,5KW 24VDC, DILM17-01	
K017	90459-5440		1	CONTACTOR 4KW 24VDC, DILM9-01	
K018	90459-5441		1	CONTACTOR 7,5KW 24VDC, DILM17-01	
K019	90459-5441		1	CONTACTOR 7,5KW 24VDC, DILM17-01	
K023	90459-5440		1	CONTACTOR 4KW 24VDC, DILM9-01	
K024	90459-5440		1	CONTACTOR 4KW 24VDC, DILM9-01	
K025	90459-5440		1	CONTACTOR 4KW 24VDC, DILM9-01	
K026	90459-5440		1	CONTACTOR 4KW 24VDC, DILM9-01	

Pos	Part No	UN	Qty	Description	Page No

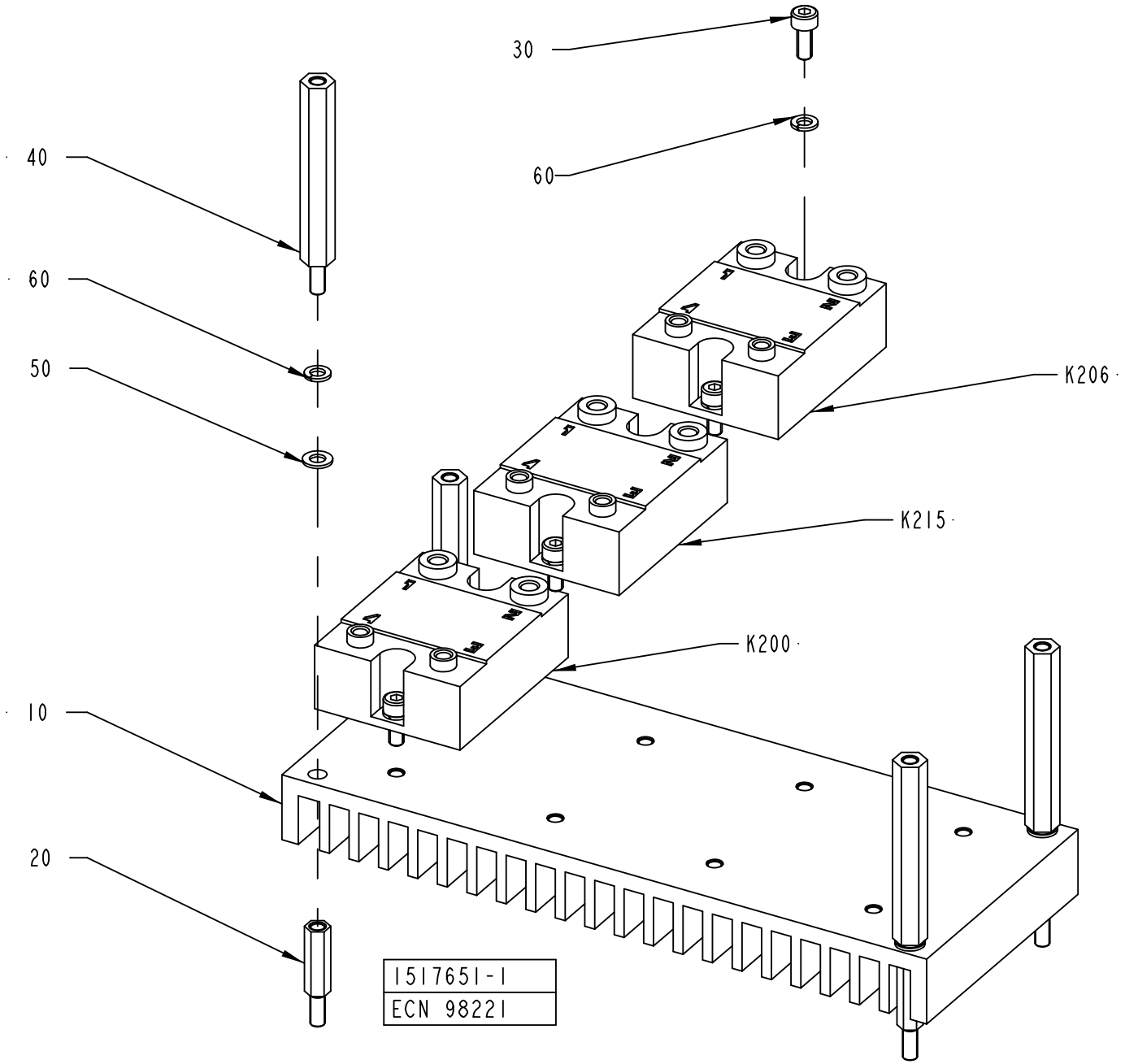
30
60
40
60
50
K206
K215
K200
10
20
1517651-1
ECN 98221

ECM: 180335 - 20040910
Group number: 1517651-0100
Assembly Drawing: 1517651-1_1_AB

This list covers pages from 10-48 to 10-51

Pos	Part No	UN	Qty	Description	Page No
TBA NOPT ASU (See drawing on page: 10-50)					
030	312115-0289		8	SCREW ISO4762 M4X10 A4 80	
060	315402-0136		12	LOCK WASHER FBB 4,1	
K205	90119-0067		1	SOLID-STATE RELAY, H12WD4850	
TBA NOPT NOASU (See drawing on page: 10-48)					
030	312115-0289		6	SCREW ISO4762 M4X10 A4 80	
060	315402-0136		10	LOCK WASHER FBB 4,1	
Common Parts					
010	1498819-0000		1	COOLING PLATE	
020	1517675-0000		4	SPACER	
040	2531997-0000		4	SPACER	
050	315105-0136		4	WASHER BRB 4,3X8 RFR	
K200	90119-0067		1	SOLID-STATE RELAY, H12WD4850	
K206	90119-0067		1	SOLID-STATE RELAY, H12WD4850	
K215	90119-0067		1	SOLID-STATE RELAY, H12WD4850	

Pos	Part No	UN	Qty	Description	Page No

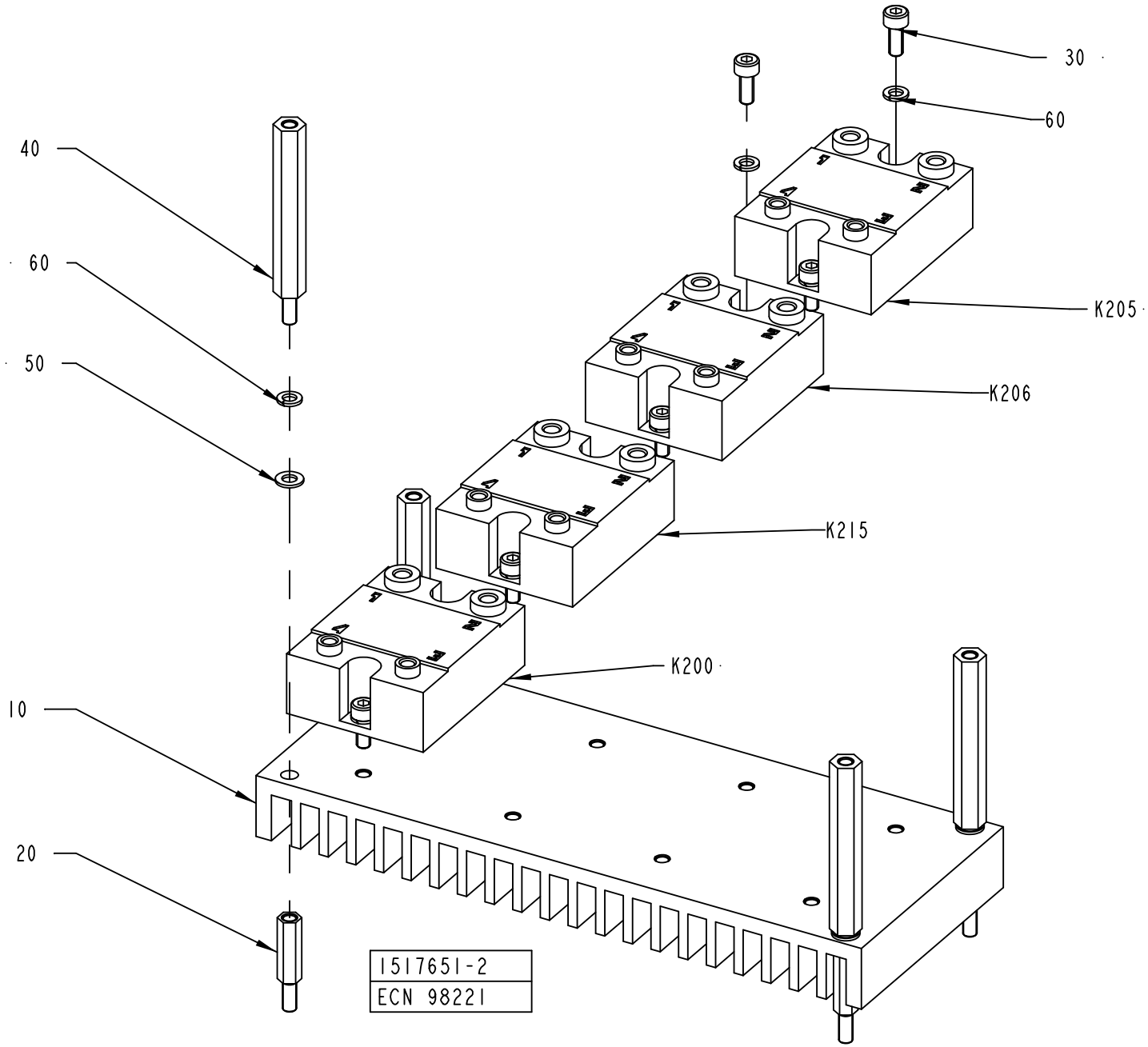
30
60
40
60
50
K205
K206
K215
K200
10
20
1517651-2
ECN 98221

ECM: 180335 - 20040910
Group number: 1517651-0100
Assembly Drawing: 1517651-2_1_AA

This list covers pages from 10-48 to 10-51

Pos	Part No	UN	Qty	Description	Page No
TBA NOPT ASU (See drawing on page: 10-50)					
030	312115-0289		8	SCREW ISO4762 M4X10 A4 80	
060	315402-0136		12	LOCK WASHER FBB 4,1	
K205	90119-0067		1	SOLID-STATE RELAY, H12WD4850	
TBA NOPT NOASU (See drawing on page: 10-48)					
030	312115-0289		6	SCREW ISO4762 M4X10 A4 80	
060	315402-0136		10	LOCK WASHER FBB 4,1	
Common Parts					
010	1498819-0000		1	COOLING PLATE	
020	1517675-0000		4	SPACER	
040	2531997-0000		4	SPACER	
050	315105-0136		4	WASHER BRB 4,3X8 RFR	
K200	90119-0067		1	SOLID-STATE RELAY, H12WD4850	
K206	90119-0067		1	SOLID-STATE RELAY, H12WD4850	
K215	90119-0067		1	SOLID-STATE RELAY, H12WD4850	

Pos	Part No	UN	Qty	Description	Page No

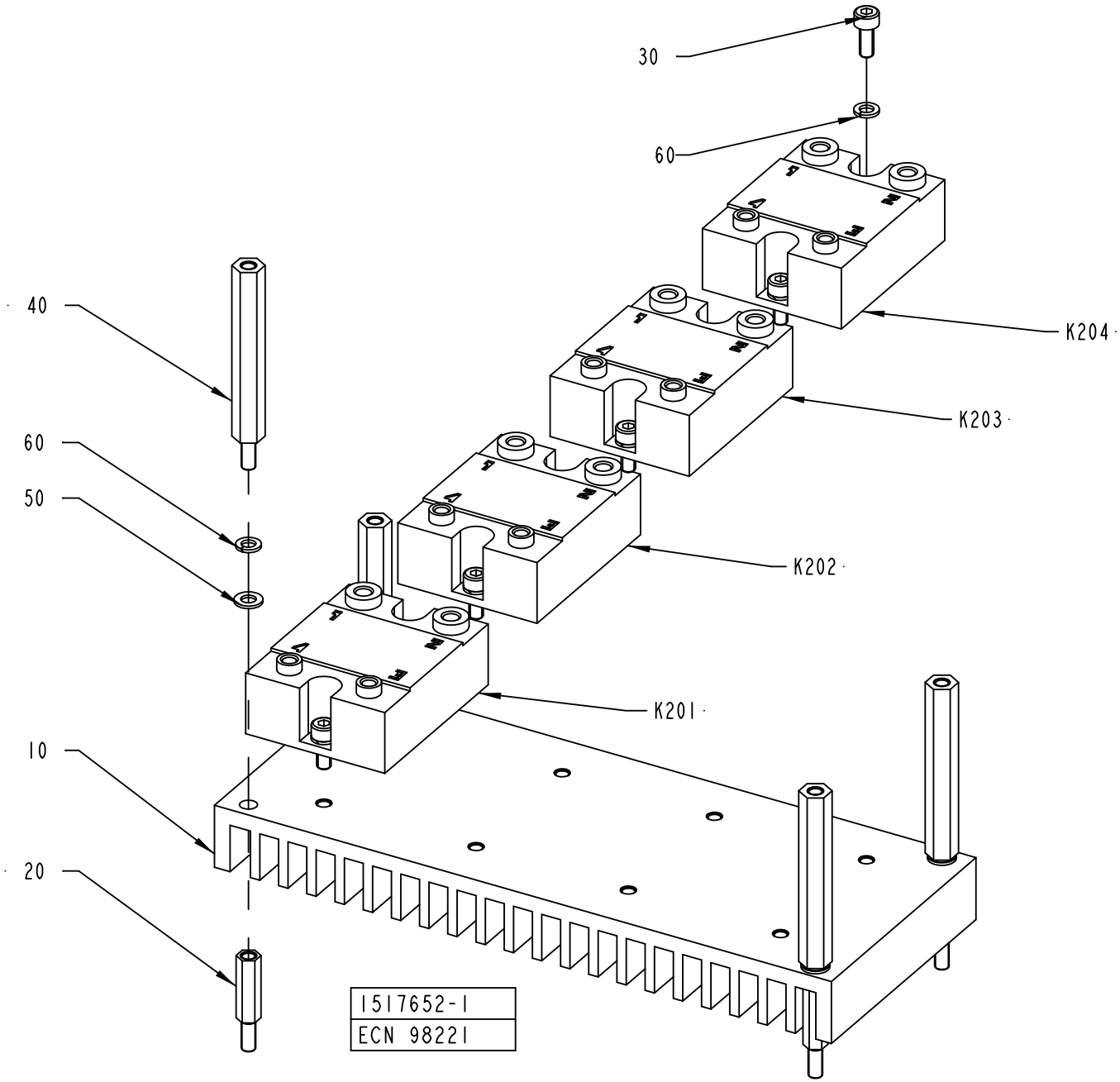
30
60
K204
K203
40
60
50
K202
K201
10
20
1517652-1
ECN 98221

ECM: 180336 - 20040910
Group number: 1517652-0100
Assembly Drawing: 1517652-1_1_AB

Pos	Part No	UN	Qty	Description	Page No
-					
010	1498819-0000		2	COOLING PLATE	
020	1517675-0000		4	SPACER	
030	312115-0289		8	SCREW ISO4762 M4X10 A4 80	
040	2531997-0000		4	SPACER	
050	315105-0136		12	WASHER BRB 4,3X8 RFR	
060	315402-0136		12	LOCK WASHER FBB 4,1	
K201	90119-0067		1	SOLID-STATE RELAY, H12WD4850	
K202	90119-0067		1	SOLID-STATE RELAY, H12WD4850	
K203	90119-0067		1	SOLID-STATE RELAY, H12WD4850	
K204	90119-0067		1	SOLID-STATE RELAY, H12WD4850	

Pos	Part No	UN	Qty	Description	Page No

SOLID STATE RELAY RAIL 4

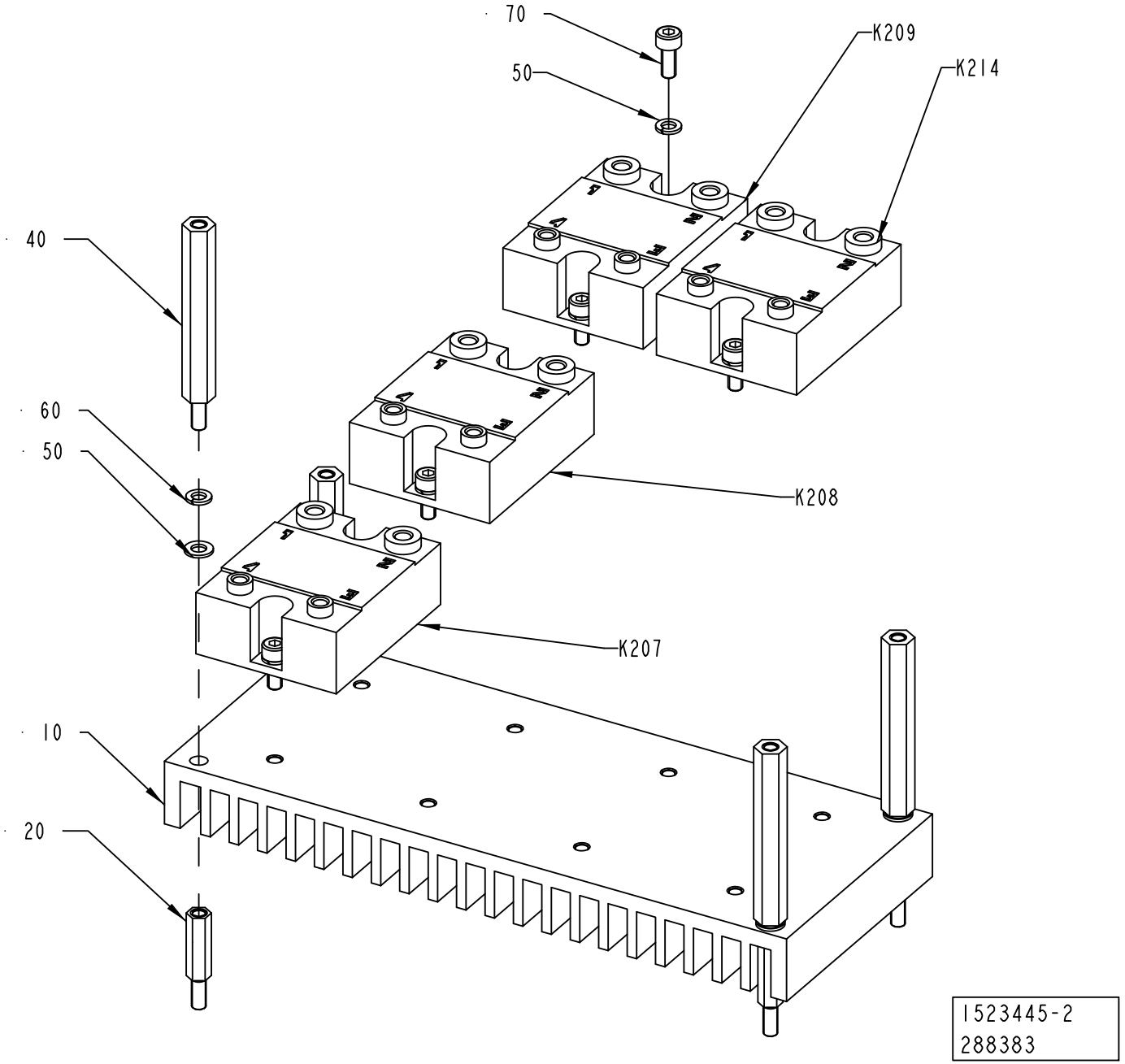

ECM: 292613 - 20070126
Group number: 1523445-0100
Assembly Drawing: 1523445-2_1_AB

Pos	Part No	UN	Qty	Description	Page No
TBA NOPT					
060	315402-0136		4	LOCK WASHER FBB 4,1	
TBA PT19					
060	315402-0136		10	LOCK WASHER FBB 4,1	
070	312115-0289		6	SCREW ISO4762 M4X10 A4 80	
K207	90119-0067		1	SOLID-STATE RELAY, H12WD4850	
K208	90119-0067		1	SOLID-STATE RELAY, H12WD4850	
K209	90119-0067		1	SOLID-STATE RELAY, H12WD4850	
Common Parts					
010	1498819-0000		1	COOLING PLATE	
020	1517675-0000		4	SPACER	
040	2531997-0000		4	SPACER	
050	315105-0136		4	WASHER BRB 4,3X8 RFR	

Pos	Part No	UN	Qty	Description	Page No

SOLID STATE RELAY RAIL 5

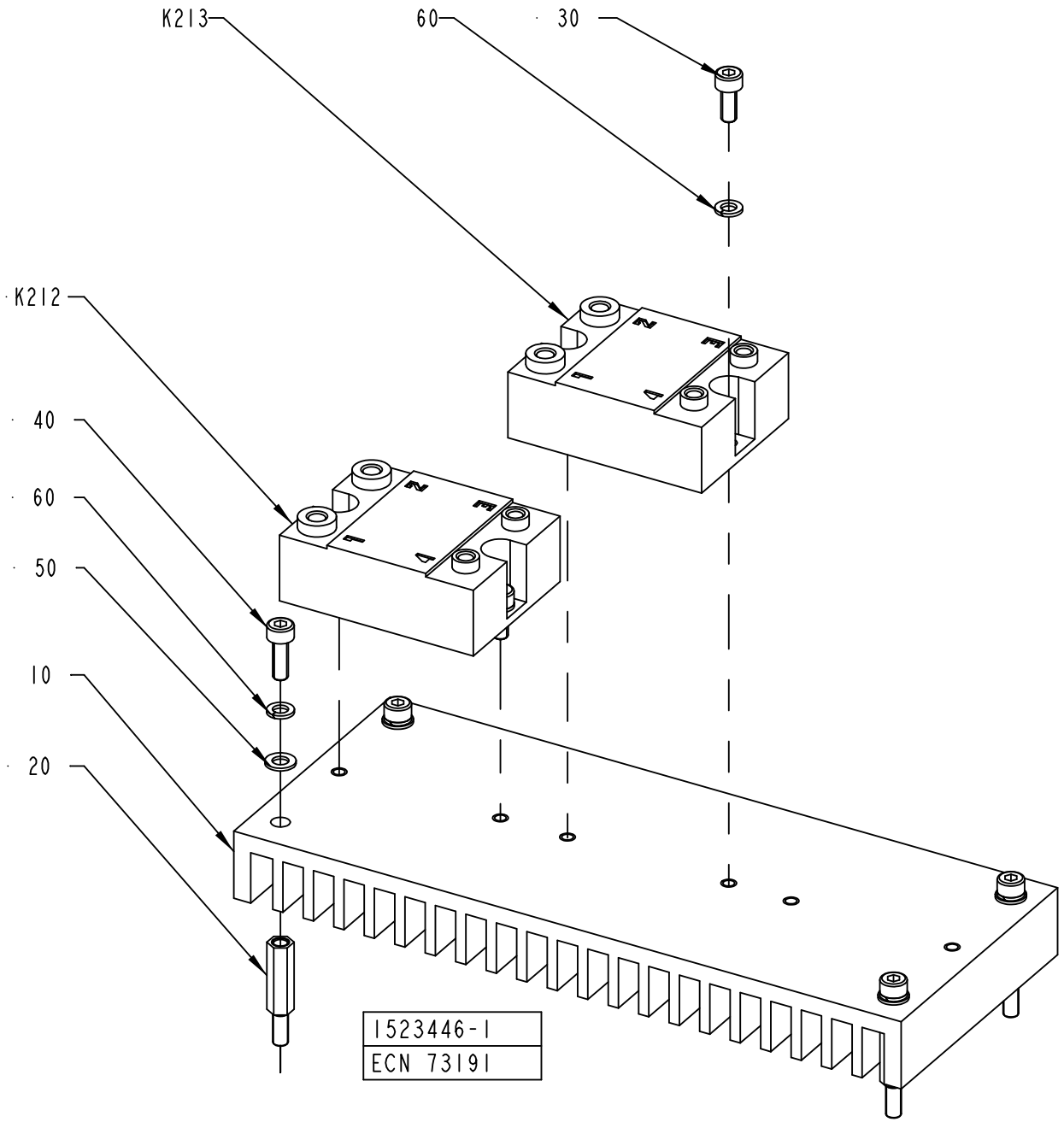

ECM: 180357 - 20040910
Group number: 1523446-0100
Assembly Drawing: 1523446-1_1_AA

Pos	Part No	UN	Qty	Description	Page No
-					
010	1498819-0000		1	COOLING PLATE	
020	1517675-0000		4	SPACER	
040	2531997-0000		4	SPACER	
050	315105-0136		4	WASHER BRB 4,3X8 RFR	
060	315402-0136		4	LOCK WASHER FBB 4,1	

Pos	Part No	UN	Qty	Description	Page No

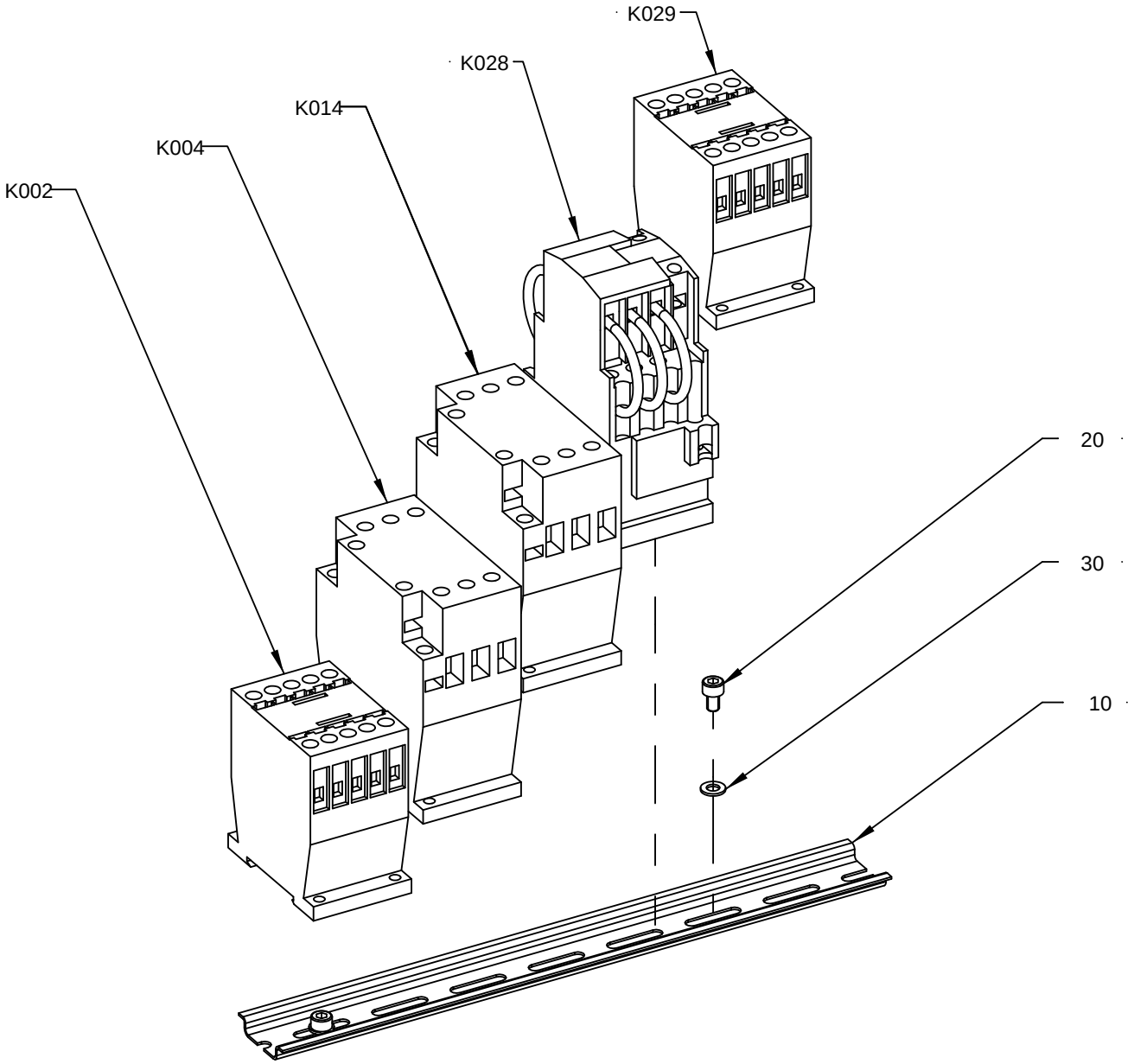

2531 998-3
240449

ECM: 292300 - 20070126
Group number: 2531998-0200
Assembly Drawing: 2531998-3_1_AA

Pos	Part No	UN	Qty	Description	Page No
-					
010	353042-0004	MM	280	RAIL TS 35/7,5	
020	312115-0323		2	SCREW ISO4762 M5X8 A4 80	
030	315105-0146		2	WASHER BRB 5,3X10 RFR	
K002	90459-5440		1	CONTACTOR 4KW 24VDC, DILM9-01	
K004	90459-5441		1	CONTACTOR 7,5KW 24VDC, DILM17-01	
K014	90459-5441		1	CONTACTOR 7,5KW 24VDC, DILM17-01	
K028	90600-1643		1	CONTACTOR, DILK12-11	
K029	90459-5308		1	CONTACTOR 4KW 24VDC, DILM9-10	

Pos	Part No	UN	Qty	Description	Page No

POWER SIDE,BOTTOM TERMINAL BLOCK

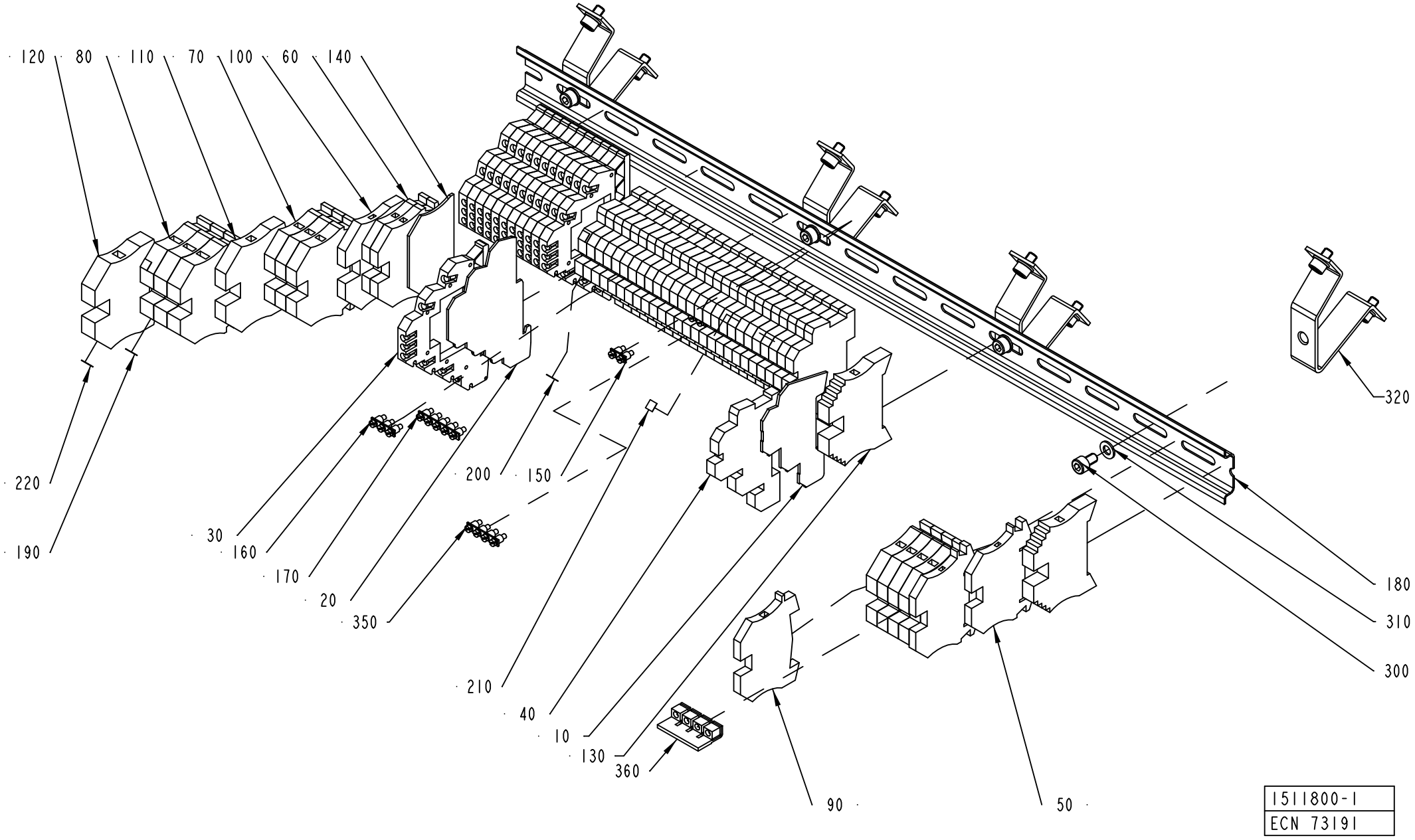

ECM: 180212 - 20040910
Group number: 1511800-0100
Assembly Drawing: 1511800-1_1_AA

Pos	Part No	UN	Qty	Description	Page No
-					
010	90457-0051		1	END PLATE	
020	90457-0052		1	END PLATE	
030	90457-0054		12	FEED THROUGH TERMINAL, 161527	
040	353021-0132		27	TERMINALS,TRIPLE-LEVEL, DLD 2,5/PE	
050	353021-0212		2	FEED THROUGH TERMINAL, 10200.0	
060	353021-0213		2	FEED THROUGH TERMINAL, 10201.0	
070	353021-0214		3	FEED THROUGH TERMINAL, 10202.0	
080	353021-0215		3	FEED THROUGH TERMINAL, 10203.0	
090	353024-0204		1	EARTH TERMINAL WPE 2,5	
100	353024-0205		1	EARTH TERMINAL, 1010.1	
110	353024-0206		1	EARTH TERMINAL, 1010.2	
120	353024-0207		1	EARTH TERMINAL, 1010.3	
130	353031-0203		2	END SUPPORT, WEW 35/2	
140	353032-0004		1	END PLATE WAP 2,5-10 BEIGE	
150	353034-0401		3	BRIDGE CONNECTOR Q2, 13125.0	
160	353034-0402		1	BRIDGE CONNECTOR Q3, 13126.0	
170	353034-0404		1	BRIDGE CONNECTOR Q10, 13131.0	
180	353042-0004	MM	530	RAIL TS 35/7,5	
190	359011-0807		4	MARKING PLATES 5-FW 1-50	
200	359011-0808		2	MARKING PLATES 5-FW 51-100	
210	359011-0809		2	MARKING PLATES 5-FW 101-150	
220	359011-0819		1	MARKING PLATES 5-GW (EARTH)	
300	312115-0323		4	SCREW ISO4762 M5X8 A4 80	
310	315105-0146		4	WASHER BRB 5,3X10 RFR	
320	90094-0005		4	RAIL BRACKET, TSTW 5/5M	
330	312125-0327		4	SCREW ISO 1207 M5X12 A4	
340	90458-1447		4	MOUNTING RAIL SUPPORT TST 128660	
350	353034-0403		1	BRIDGE CONNECTOR Q4, 13127,0	
360	353034-0032		1	BRIDGE CONNECTOR, WQV 6/10, 10522.6	

Pos	Part No	UN	Qty	Description	Page No

Machine Type | Group Description | Used-In | Group Number | Page No

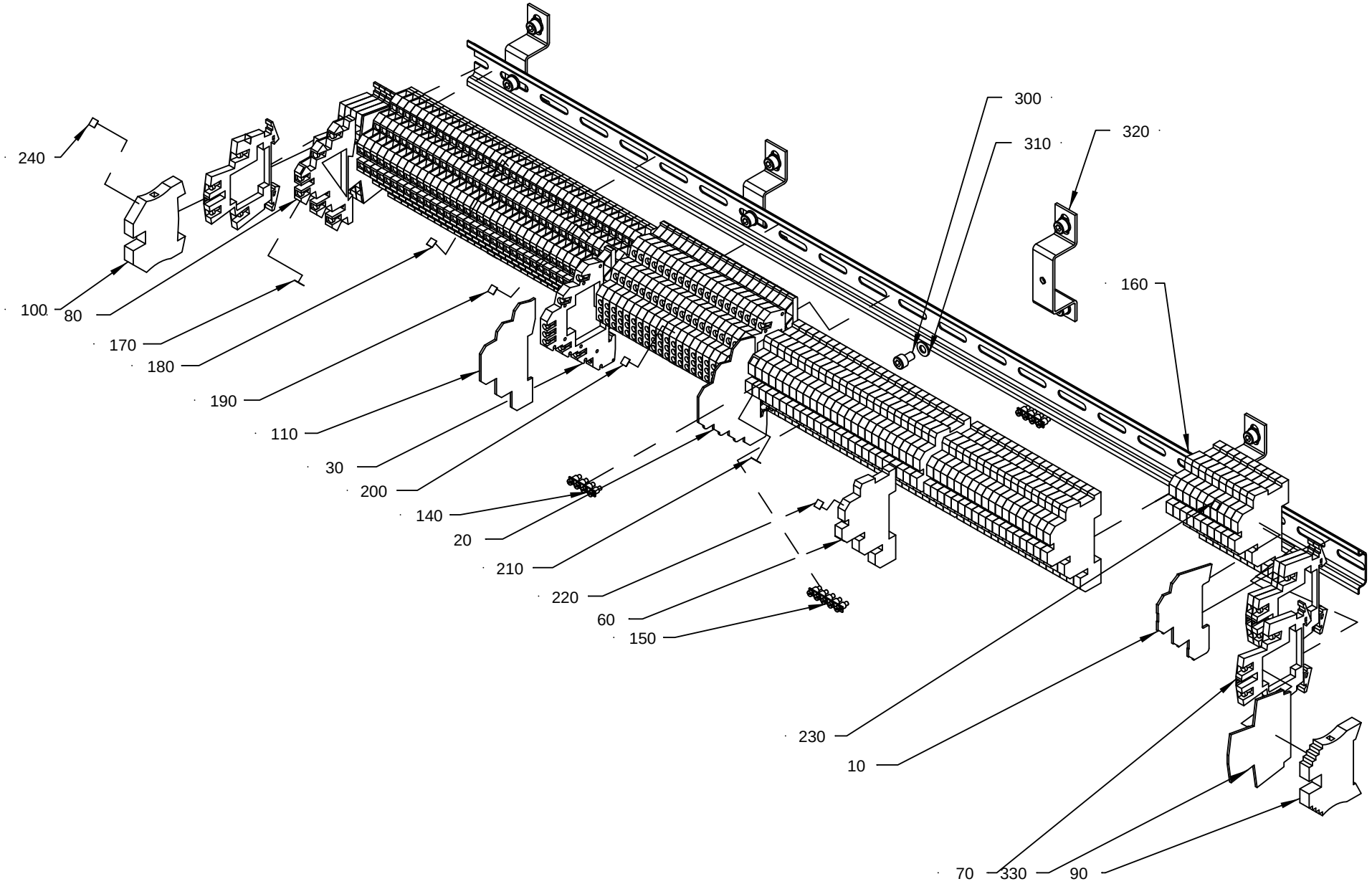

15| 1802-2
240449

ECM: 240714 - 20051215
Group number: 1511802-0200
Assembly Drawing: 1511802-2_1_AA

Pos	Part No	UN	Qty	Description	Page No
-					
010	90457-0051		1	END PLATE	
020	90457-0052		1	END PLATE	
030	353021-0133		21	FEED THROUGH TERMINAL, 161527	
060	353021-0132		54	TERMINALS,TRIPLE-LEVEL, DLD 2,5/PE	
070	90458-1136		8	TERMINAL BLOCK, 103630	
080	353021-0302		38	TERMINALS,TRIPLE-LEVEL, DLD 2,5/35 PA	
090	353031-0203		1	END SUPPORT, WEW 35/2	
100	353024-0206		1	EARTH TERMINAL, 1010.2	
110	353032-0302		1	END PLATE WAP, 13176.6	
140	353034-0403		2	BRIDGE CONNECTOR Q4, 13127,0	
150	353034-0404		1	BRIDGE CONNECTOR Q10, 13131.0	
160	353042-0004	MM	805	RAIL TS 35/7,5	
170	359011-0807		2	MARKING PLATES 5-FW 1-50	
180	359011-0808		2	MARKING PLATES 5-FW 51-100	
190	359011-0809		2	MARKING PLATES 5-FW 101-150	
200	359011-0810		2	MARKING PLATES 5-FW 151-200	
210	359011-0811		2	MARKING PLATES 5-FW 201-2	
220	359011-0812		2	SET OF SIGNS 5-FW 251-300	
230	359011-0813		2	SET OF SIGNS 5-FW 301-350	
240	359011-0819		2	MARKING PLATES 5-GW (EARTH)	
300	312115-0323		12	SCREW ISO4762 M5X8 A4 80	
310	315105-0146		12	WASHER BRB 5,3X10 RFR	
320	90458-1447		4	MOUNTING RAIL SUPPORT TST 128660	
330	353032-0009		2	END PLATE, WAP FOR WDK	

Pos	Part No	UN	Qty	Description	Page No

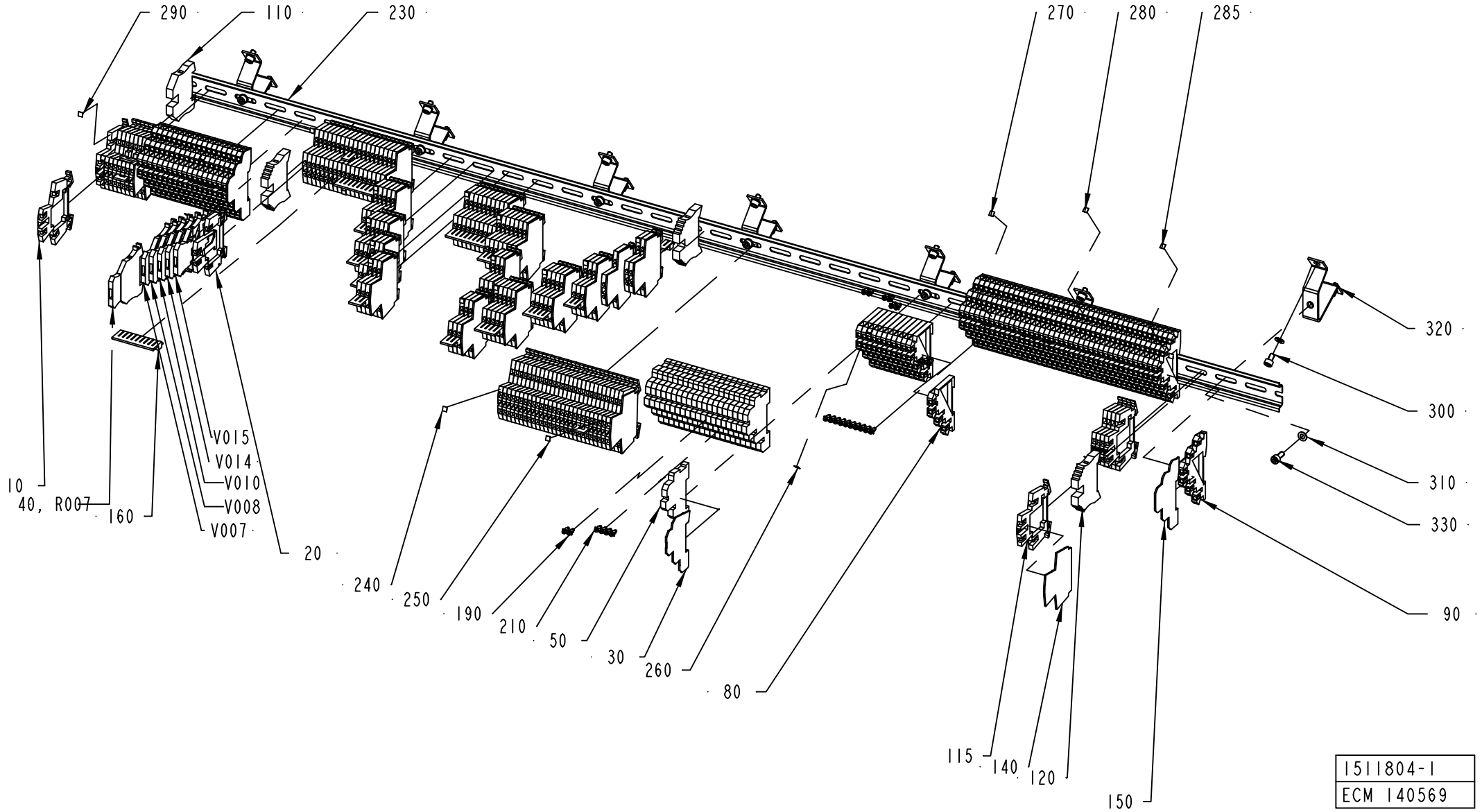
290
110
230
270
280
285
320
300
310
330
90
10
40, R007
160
V015
V014
V010
V008
V007
20
240
250
190
210
50
30
260
80
115
140
120
150
1511804-1
ECM 140569

ECM: 180216 - 20040910
Group number: 1511804-0100
Assembly Drawing: 1511804-1_1_AD

Pos	Part No	UN	Qty	Description	Page No
-					
010	90077-0113		35	FEED THROUGH TERMINAL, 10-00102150-1	
020	90457-0049		110	TERMINAL BLOCK, 102230	
030	90457-0051		1	END PLATE	
040	353021-0127		1	TERMINAL DISCONNECTABLE, WTR 2,5+WSD 2,5	
050	353021-0132		21	TERMINALS,TRIPLE-LEVEL, DLD 2,5/PE	
080	353021-0301		12	TERMINALS,TRIPLE-LEVEL, DLI 2,5/35 PA	
090	353021-0302		59	TERMINALS,TRIPLE-LEVEL, DLD 2,5/35 PA	
110	353024-0206		1	EARTH TERMINAL, 1010.2	
115	90458-1136		6	TERMINAL BLOCK, 103630	
120	353031-0203		3	END SUPPORT, WEW 35/2	
140	90077-0114		16	END PLATE, WAP/WDK 2,5	
150	353032-0302		2	END PLATE WAP, 13176.6	
160	353034-0030		19	BRIDGE CONNECTOR WQV 2,5/10, 10544.6	
190	353034-0401		11	BRIDGE CONNECTOR Q2, 13125.0	
210	353034-0403		2	BRIDGE CONNECTOR Q4, 13127,0	
220	353034-0404		9	BRIDGE CONNECTOR Q10, 13131.0	
230	353042-0004	MM	1328	RAIL TS 35/7,5	
240	359011-0807		18	MARKING PLATES 5-FW 1-50	
250	359011-0808		6	MARKING PLATES 5-FW 51-100	
260	359011-0809		3	MARKING PLATES 5-FW 101-150	
270	359011-0810		2	MARKING PLATES 5-FW 151-200	
280	359011-0811		2	MARKING PLATES 5-FW 201-2	
285	359011-0812		2	SET OF SIGNS 5-FW 251-300	
290	359011-0819		2	MARKING PLATES 5-GW (EARTH)	
300	312115-0323		14	SCREW ISO4762 M5X8 A4 80	
310	315105-0146		21	WASHER BRB 5,3X10 RFR	
320	90094-0005		7	RAIL BRACKET, TSTW 5/5M	
330	312115-0327		7	SCREW ISO4762 M5X12 A4 80	
R007	90121-0132		1	RESISTANCE FIXED, 0,51 KOHM, 0,25 W	
V007	353021-0122		1	TERMINAL DISCONNECTABLE, WTR 2,5 D	
V008	353021-0122		1	TERMINAL DISCONNECTABLE, WTR 2,5 D	
V010	353021-0122		1	TERMINAL DISCONNECTABLE, WTR 2,5 D	
V014	353021-0122		1	TERMINAL DISCONNECTABLE, WTR 2,5 D	
V015	353021-0122		1	TERMINAL DISCONNECTABLE, WTR 2,5 D	

Pos	Part No	UN	Qty	Description	Page No

Machine Type	Group Description	Used-In	Group Number	Page No

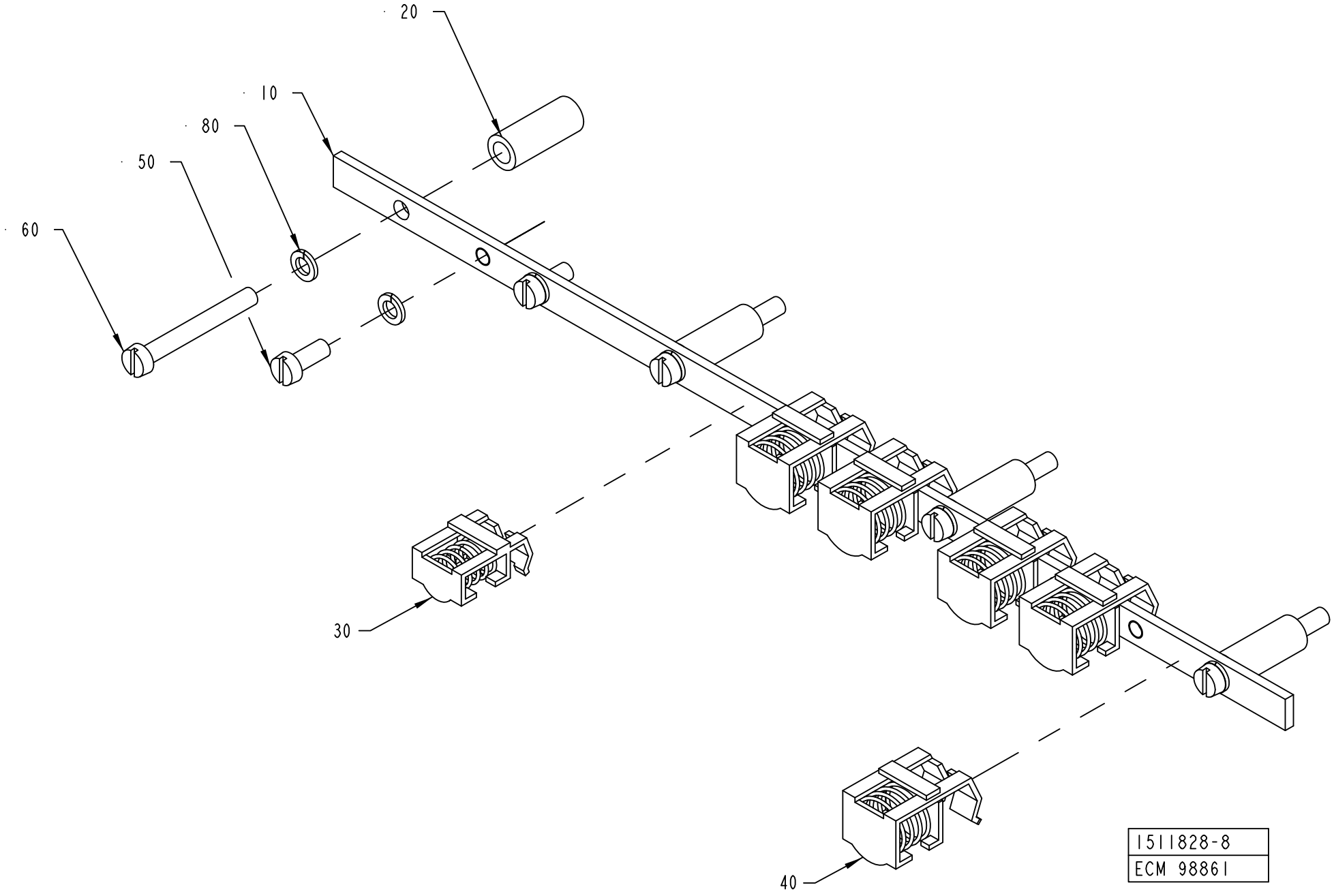
20
10
80
50
60
30
40
1511828-8
ECM 98861

ECM: 242049 - 20060127
Group number: 1511828-0100
Assembly Drawing: 1511828-8_1_AA

Pos	Part No	UN	Qty	Description	Page No
TBA NOPT ASU HI, TBA PT19 ASU NOHI					
030	90135-0034		1	SHIELD CLAMP KLBU 3-8	
040	90135-0039		4	SHIELD CLIP KLBU 4-13.5	
TBA NOPT ASU NOHI					
030	90135-0034		1	SHIELD CLAMP KLBU 3-8	
040	90135-0039		3	SHIELD CLIP KLBU 4-13.5	
TBA NOPT NOASU HI, TBA PT19 NOASU NOHI					
040	90135-0039		4	SHIELD CLIP KLBU 4-13.5	
TBA NOPT NOASU NOHI					
040	90135-0039		3	SHIELD CLIP KLBU 4-13.5	
TBA PT19 ASU HI					
030	90135-0034		1	SHIELD CLAMP KLBU 3-8	
040	90135-0039		5	SHIELD CLIP KLBU 4-13.5	
TBA PT19 NOASU HI					
040	90135-0039		5	SHIELD CLIP KLBU 4-13.5	
Common Parts					
010	1523948-0000		1	EARTH BAR	
020	988436-0000		4	SPACER SLEEVE	
050	312125-0327		2	SCREW ISO 1207 M5X12 A4	
060	312125-0339		4	SCREW ISO 1207 M5X40 A4	
080	315402-0146		6	LOCK WASHER FBB 5,1	

Pos	Part No	UN	Qty	Description	Page No

POWER SIDE,TOP TERMINAL BLOCK

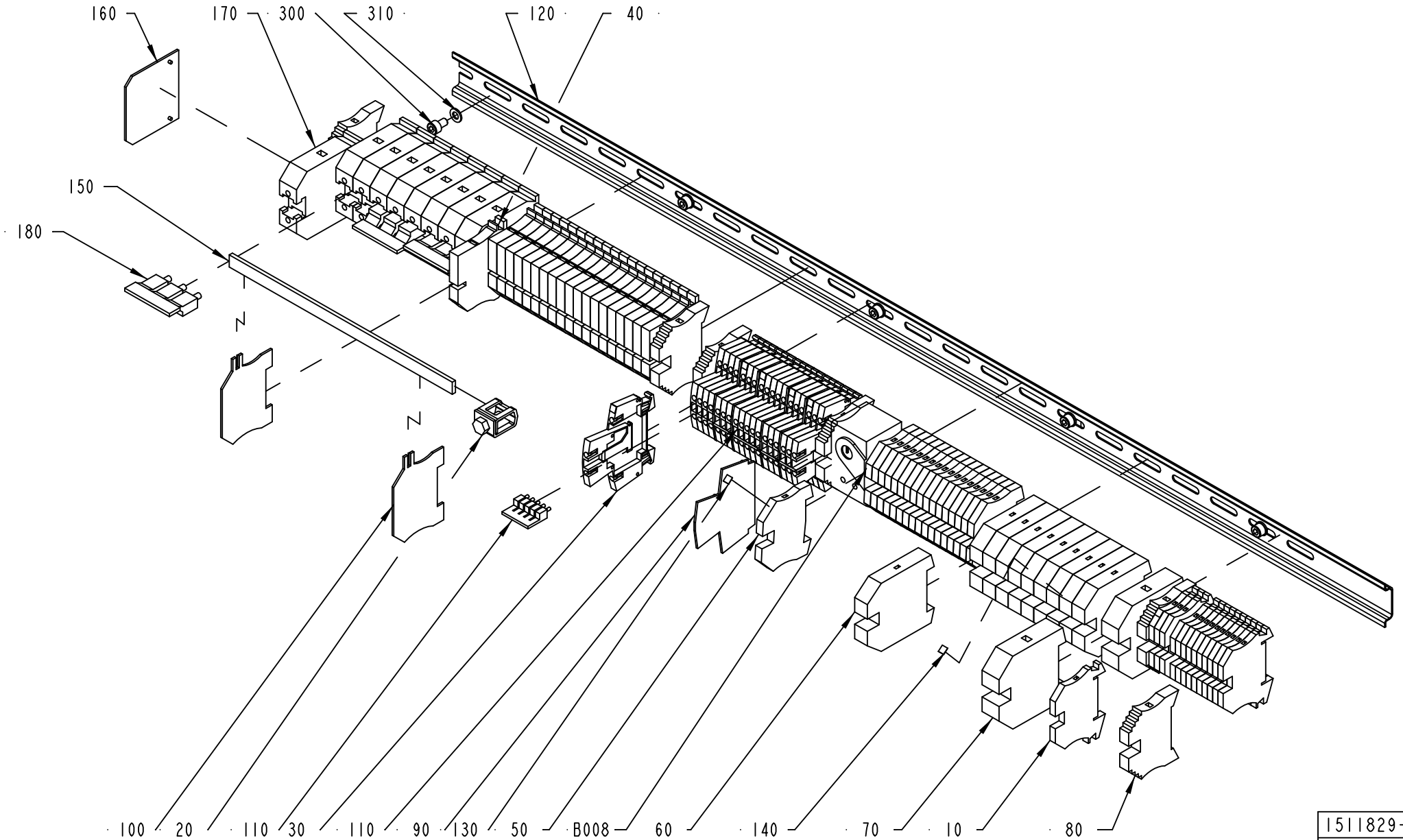

1511829-1
ECN 98221

ECM: 180332 - 20040910
Group number: 1511829-0100
Assembly Drawing: 1511829-1_1_AB

Pos	Part No	UN	Qty	Description	Page No
-					
010	353021-0212		14	FEED THROUGH TERMINAL, 10200.0	
020	90135-0019		1	CLAMP ZB 35	
030	90457-0049		19	TERMINAL BLOCK, 102230	
040	353022-0003		20	NEUTRAL TERMINAL, 10108.8	
050	353024-0205		18	EARTH TERMINAL, 1010.1	
060	353024-0208		10	EARTH TERMINAL, 1010.4	
070	353024-0209		2	EARTH TERMINAL, 1010.5	
080	353031-0203		7	END SUPPORT, WEW 35/2	
090	353032-0009		5	END PLATE, WAP FOR WDK	
100	353033-0104		2	END PLATE, 10502.8	
110	353034-0030		2	BRIDGE CONNECTOR WQV 2,5/10, 10544.6	
120	353042-0004	MM	880	RAIL TS 35/7,5	
130	359011-0807		11	MARKING PLATES 5-FW 1-50	
140	359011-0808		1	MARKING PLATES 5-FW 51-100	
150	495498-0021		1	CU-RAIL L=210MM	
160	353033-0105		1	PARTITITION, 10501.0	
170	353021-0219		9	FEED THROUGH TERMINAL, 10205.0	
180	353034-0035		1	BRIDGE CONNECTOR, WQV 35/10, 10531.6	
300	312115-0323		5	SCREW ISO4762 M5X8 A4 80	
310	315105-0146		5	WASHER BRB 5,3X10 RFR	
B008	90458-1114		1	BIMET. ELECTROMECH. THERMOSTAT K7H.020	

Pos	Part No	UN	Qty	Description	Page No

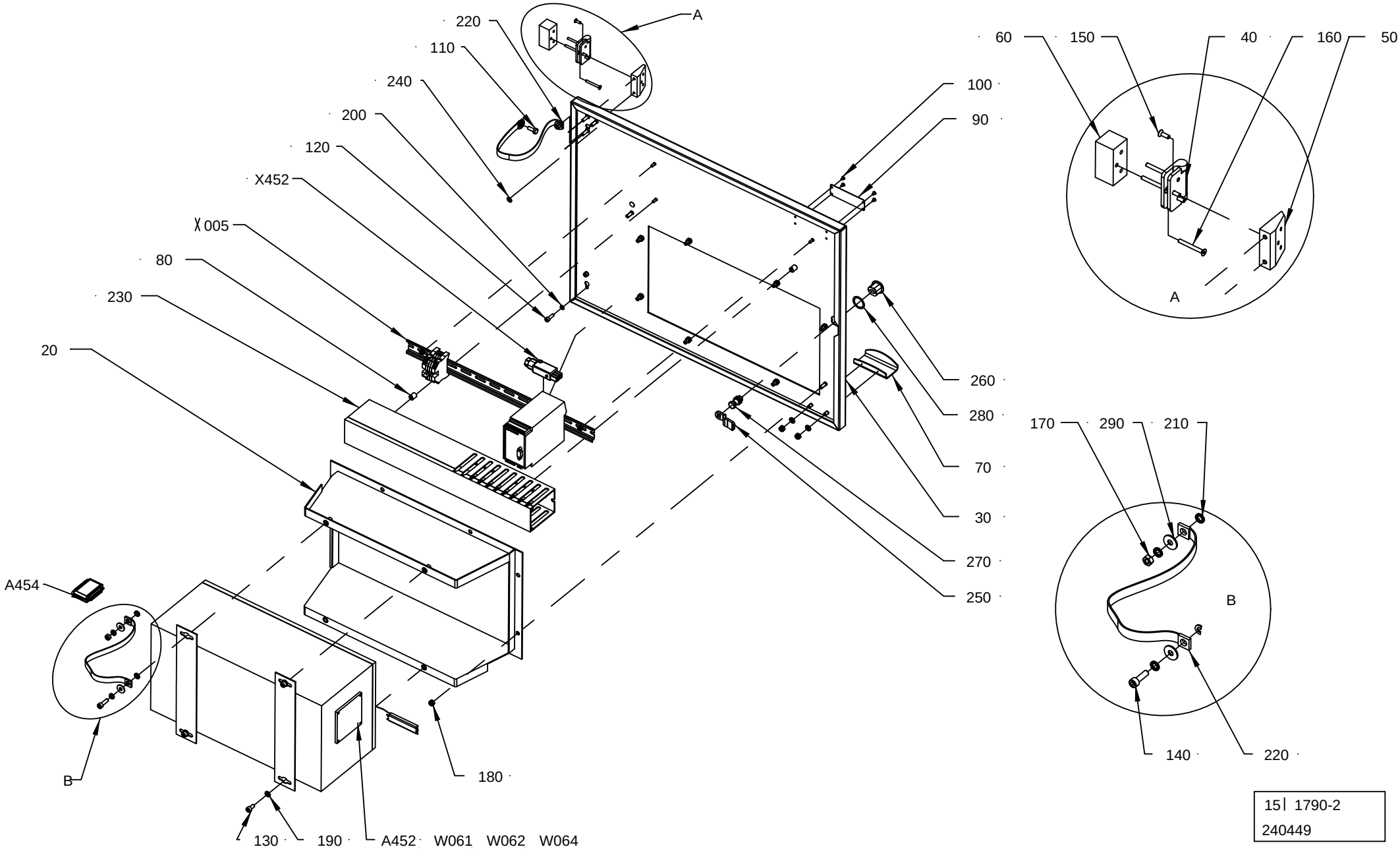

15| 1790-2
240449

ECM: 240712 - 20051215
Group number: 1511790-0200
Assembly Drawing: 1511790-2_1_AA

Pos	Part No	UN	Qty	Description	Page No
-					
020	1523435-0000		1	FRAME	
030	1523436-0000		1	DOOR	
040	1523437-0000		2	HINGE	
050	1523439-0000		2	SPACER	
060	1523440-0000		2	SPACER	
070	1523968-0000		1	HANDLE	
080	1285109-0000		2	NUT	
090	979548-0000		1	MACHINE PLATE	
100	311521-0142		4	BLANK RIVET 3,2X6	
110	312105-0368		1	SCREW M6S ISO 4017 M6X16 A480	
120	312115-0329		4	SCREW ISO4762 M5X16 A4 80	
130	312115-0366		3	SCREW ISO4762 M6X12 A4 80	
140	312115-0370		1	SCREW ISO4762 M6X20 A4 80	
150	312155-0291		6	SCREW DIN 7991 MF6S M4X12 A4 70	
160	312155-0301		6	SCREW DIN 7991 MF6S M4X35 A4 70	
170	312605-0316		2	HEXAGON NUT, M6M M6 A280	
180	312812-0316		10	HEXAGON NUT, NY-LOCK M6 A480	
190	315105-0153		6	WASHER BRB 6,4X12 RFR	
200	315402-0146		4	LOCK WASHER FBB 5,1	
210	90062-0015		7	LOCK WASHER SERRAT.EXT.GEAR,6,4/11 H=0,7	
220	90135-0044		2	EARTH WIRE, L=320 MM 16 MM2	
230	90181-0054	MM	465	CABLE DUCT 60X80MM	
240	90194-0163		2	SIGN, EARTH WITHIN CIRCLE	
250	90237-0157		1	LOCK BOLT, 1000-230	
260	90237-0319		1	LOCK HOUSING, 1000-U134	
270	90237-0320		1	LOCK HOUSING, 1000-U136	
280	90237-0322		1	LOCK GASKET, 1000-U137	
290	90457-0192		4	WASHER PLAIN ROUND, 6,5/18, H=1,5	
A452	2518145-0101		1	FLEXBOX TETRA BRIK	
100	*90459-0275*		*1*	*PC ENCLOSURE FLEX BOX ISIC, 02760-000*	
010	*90041-0029*		*1*	*FLOPPY DISC UNIT FD-235HF 1,4MB*	
020	*90041-0091*		*1*	*PC 2,5" HD BAY, 02330-000*	
030	*90264-0064*		*1*	*FAN / FL 12G308*	
040	*90264-0350*		*1*	*FILTER / 554141*	
050	*90459-0262*		*1*	*BACKPLANE CARD AR-MB7P*	
060	*90459-0283*		*1*	*POWER SUPPLY UNIT, 02571-000*	
110	*90459-0284*		*1*	*PROCESSOR BOARD CLIPS V, 02021-000*	
120	*90459-1352*		*1*	*PCI COMMUNICATION INTERFACE PCI-1612B-A*	
130	*90459-0261*		*1*	*ETHERNET NETW. INTERFACE CARD, 01181-000*	
140	*90459-6472*		*1*	*HARD DISC 2,5" , 03589-002*	
150	*90459-0291*		*1*	*CABLE CD UNIT, 01310-000*	
A454	90458-1102		1	INTOUCH OEM 2000 V.7.0/7.1 HW KEY	
W061	1254442-0000		1	CABLE SERIAL	
W062	1511793-0000		1	CABLE	
W064	1478661-0000		1	CABLE SERIAL	
W953	1366189-0000		1	CABLE LVDS 6M	
X005	1517659-0100		1	MODEM	**10-73**
X452	90110-0028		1	CONTACT UNIT 4-POLEADAPTER	

Machine Type	Group Description	Used-In	Group Number	Page No

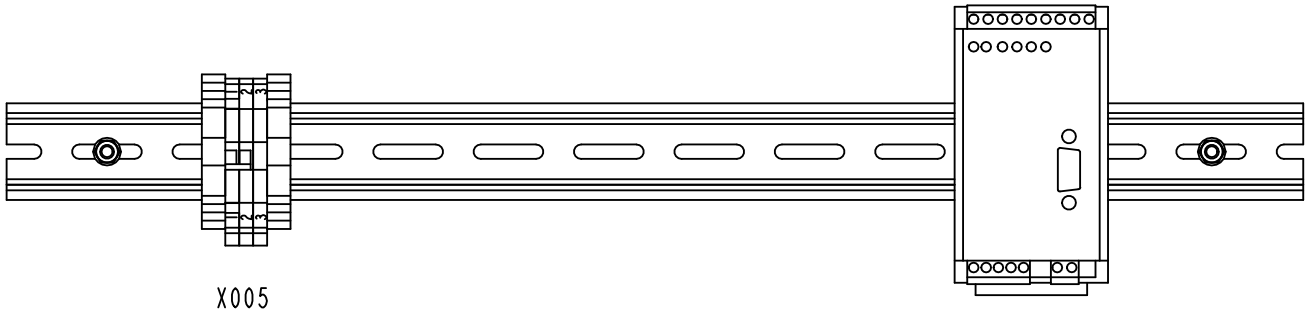

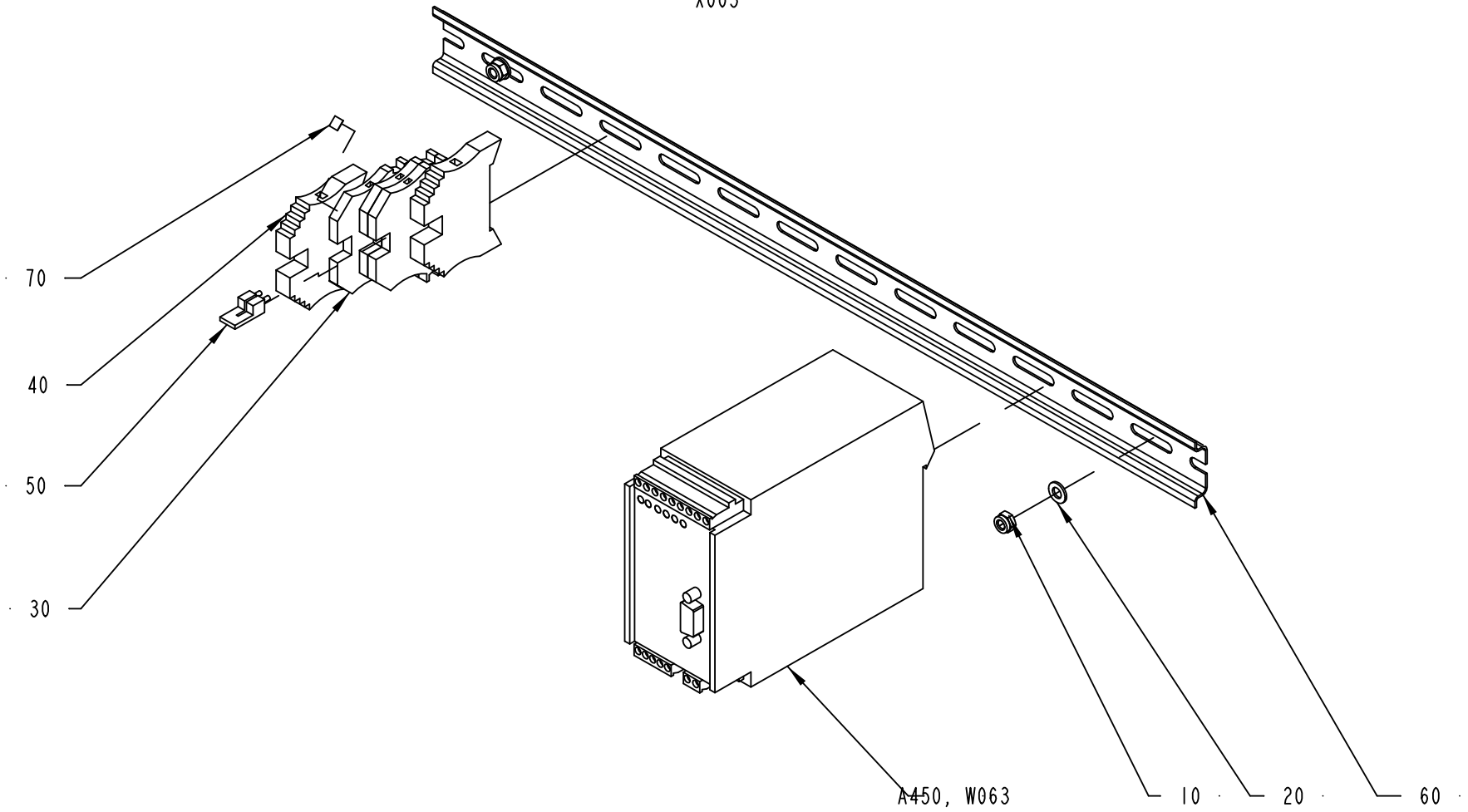

1517659-1
ECN 73191

ECM: 180338 - 20040910
Group number: 1517659-0100
Assembly Drawing: 1517659-1_1_AA

Pos	Part No	UN	Qty	Description	Page No
-					
010	312812-0314		2	HEXAGON NUT, NY-LOCK M5 A480	
020	315105-0146		2	WASHER BRB 5,3X10 RFR	
030	353021-0212		3	FEED THROUGH TERMINAL, 10200.0	
040	353031-0203		2	END SUPPORT, WEW 35/2	
050	353034-0030		1	BRIDGE CONNECTOR WQV 2,5/10, 10544.6	
060	353042-0004	MM	465	RAIL TS 35/7,5	
070	359011-0807		2	MARKING PLATES 5-FW 1-50	
A450	90453-0002		1	MODEM MD-12 DC	
W063	90220-0091	M	10	PAIR TWISTED CABLE 2X2X0,25MM2	

Pos	Part No	UN	Qty	Description	Page No

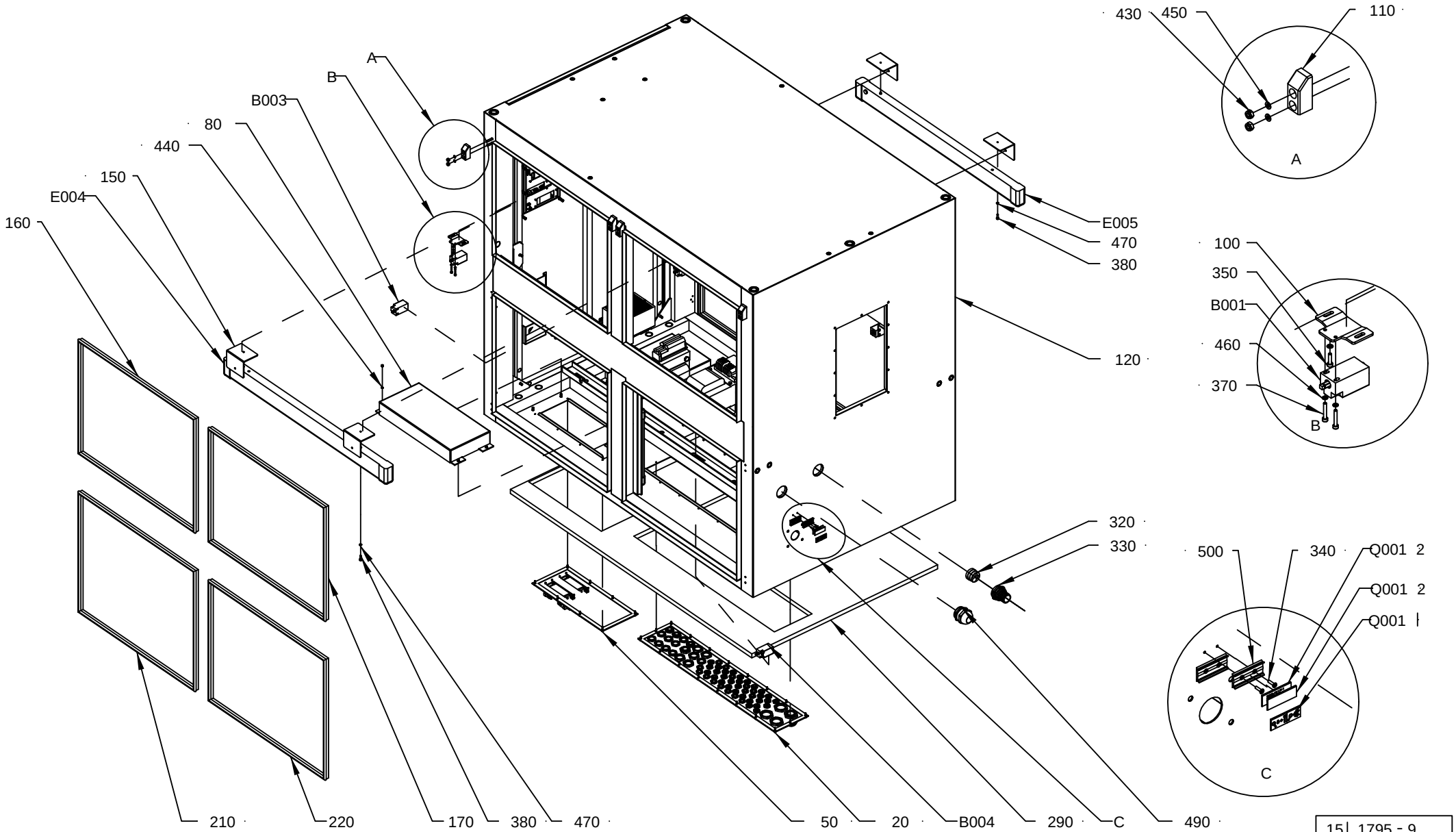
A
B
B003
80
440
150
E004
160
210
220
170
380
470
50
20
B004
290
C
490
120
E005
470
380
320
330
430
450
110
A
100
350
B001
460
370
B
500
340
Q001 2
Q001 2
Q001 1
C

ECM: 240713 - 20051215
Group number: 1511795-0200
Assembly Drawing: 1511795-9_1_AA

This list covers pages from 10-74 to 10-77

Pos	Part No	UN	Qty	Description	Page No
TBA NOPT ASU 50Hz, TBA NOPT ASU 60Hz					
400	312115-0368		6	SCREW ISO4762 M6X16 A4 80	
520	90457-0192		4	WASHER PLAIN ROUND, 6,5/18, H=1,5	
580	315401-0153		4	WASHER FBH6,1FZB	
T005	90245-0029		1	TRANSFORMER, 1280-3660/TP 182	
TBA NOPT NOASU 50Hz, TBA NOPT NOASU 60Hz					
400	312115-0368		2	SCREW ISO4762 M6X16 A4 80	
Common Parts					
010	1511784-0100		1	POWER CABLE INLETS	**10-79**
020	1511785-0100		1	CONTROL CABLE INLETS	**10-81**
040	1511788-0100		1	POWER CONNECTOR PLATE	**10-83, 10-85**
050	1511789-0100		1	CONTROL CONNECTOR PLATE	**10-87**
060	1511791-0200		1	DOOR	**10-89**
070	1517694-0000		2	END BLOCK	
080	1517697-0000		1	PROTECTION	
090	1517698-0000		1	PROTECTION	
100	1517699-0000		3	SUPPORT	
110	1517700-0000		6	EDGE GUIDE	
120	2797453-0000		1	WELDED CABINET	
130	1523459-0000		4	SUPPORT	
140	1523960-0000		1	SPACER	
150	1523974-0000		4	SUPPORT	
160	90143-0057	MM	2430	STRIP EMKA 1011-05 21X11MM	
170	90143-0057	MM	2430	STRIP EMKA 1011-05 21X11MM	
180	90143-0057	MM	2872	STRIP EMKA 1011-05 21X11MM	
190	90143-0057	MM	1960	STRIP EMKA 1011-05 21X11MM	
200	90143-0057	MM	4116	STRIP EMKA 1011-05 21X11MM	
210	90143-0057	MM	2850	STRIP EMKA 1011-05 21X11MM	
220	90143-0057	MM	2850	STRIP EMKA 1011-05 21X11MM	
230	90143-0057	MM	2850	STRIP EMKA 1011-05 21X11MM	
240	90143-0057	MM	2850	STRIP EMKA 1011-05 21X11MM	
250	90143-0073	MM	585	RUBBER STRIP	
260	90143-0073	MM	585	RUBBER STRIP	
270	90143-0073	MM	585	RUBBER STRIP	
280	90143-0073	MM	585	RUBBER STRIP	
290	1523464-0000		1	GASKET	
310	90194-0163		1	SIGN, EARTH WITHIN CIRCLE	
320	90457-0029		1	INSERT, MULTI HOLE, E156M5,9,11,19	
330	90458-1747		1	HOSE GLAND W/O INSERT M50 NORMAL	
340	311521-0146		4	BLANK RIVET 3,2X12	
350	312115-0293		6	SCREW ISO4762 M4X16 A4 80	
360	312115-0299		8	SCREW ISO4762 M4X30 A4 80	
370	312115-0297		6	SCREW ISO4762 M4X25 A4 80	
380	312115-0329		8	SCREW ISO4762 M5X16 A4 80	
390	312115-0366		10	SCREW ISO4762 M6X12 A4 80	
410	312155-0291		33	SCREW DIN 7991 MF6S M4X12 A4 70	
420	312812-0312		16	HEXAGON NUT, NY-LOCK M4 A480	
430	312812-0316		12	HEXAGON NUT, NY-LOCK M6 A480	
440	315105-0136		43	WASHER BRB 4,3X8 RFR	
450	315105-0146		14	WASHER BRB 5,3X10 RFR	
460	315402-0136		12	LOCK WASHER FBB 4,1	
470	315402-0146		8	LOCK WASHER FBB 5,1	
480	315402-0156		8	LOCK WASHER FBB 6,5	
490	90458-0311		1	CABLE GLAND, M50X1,5, NO.5311 1060	
500	359240-0100		2	SIGN HOLDER FOR 359240-0001	
510	90458-0327		2	NUT, M50X1,5	
530	315105-0153		4	WASHER BRB 6,4X12 RFR	
540	312115-0289		4	SCREW ISO4762 M4X10 A4 80	
550	352113-0205		25	ANCHOR PLATES FOR STRIPS, TYPE TM2S8-C10	
560	312115-0325		2	SCREW ISO4762 M5X10 A4 80	
B001	90044-0192		1	LIMIT SW. SZ2586.000	
B002	90044-0192		1	LIMIT SW. SZ2586.000	
B003	90044-0192		1	LIMIT SW. SZ2586.000	
B004	90044-0192		1	LIMIT SW. SZ2586.000	
B005	90044-0192		1	LIMIT SW. SZ2586.000	
B006	90044-0192		1	LIMIT SW. SZ2586.000	
B007	90044-0192		1	LIMIT SW. SZ2586.000	
E004	90459-2560		1	LIGHT FIXTURE, TMS121 1XTL-D30W/830 IP	
E005	90459-2560		1	LIGHT FIXTURE, TMS121 1XTL-D30W/830 IP	
E006	90459-3090		1	LIGHT FIXTURE, TMS121 1XTL8W/830 IP	
Q001.1	90457-0123		1	SIGN, MAIN SWITCH	
Q001.2	359241-0297		1	SIGN: " 50 HZ"	
T004	90458-1273		1	TRANSFORMER, OFL-1350	
T006	90458-0258		1	TRANSFORMER, 220VAC/6-9-12VAC	

Machine Type | Group Description | Used-In | Group Number | Page No

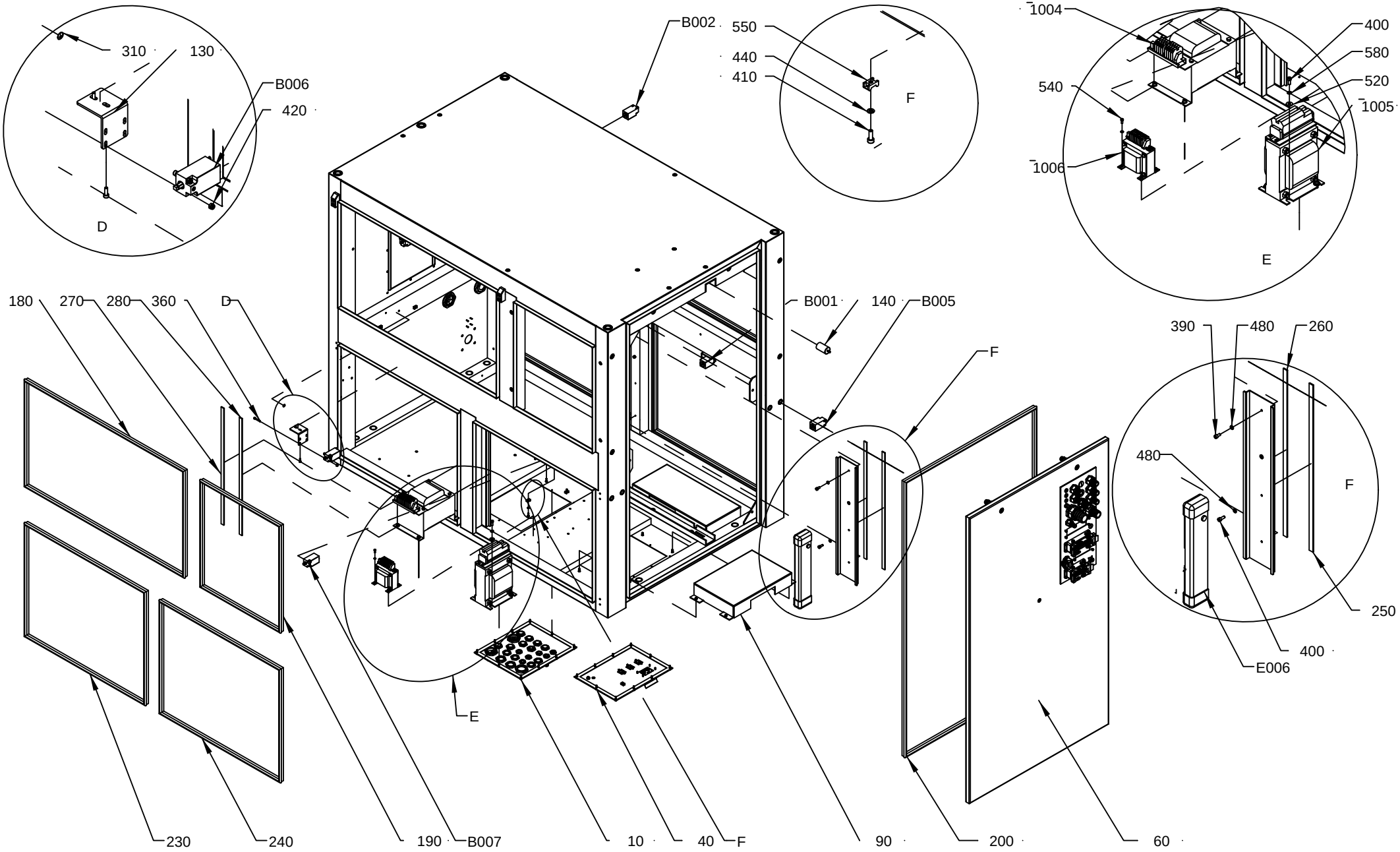
310
130
B006
420
D
B002
550
440
410
F
1004
400
580
520
1005
540
1006
E
180
270
280
360
D
B001
140
B005
F
390
480
260
480
F
250
400
E006
E
230
240
190
B007
10
40
F
90
200
60

ECM: 240713 - 20051215
Group number: 1511795-0200
Assembly Drawing: 1511795-9_2_AA

This list covers pages from 10-74 to 10-77

Pos	Part No	UN	Qty	Description	Page No
TBA NOPT ASU 50Hz, TBA NOPT ASU 60Hz					
400	312115-0368		6	SCREW ISO4762 M6X16 A4 80	
520	90457-0192		4	WASHER PLAIN ROUND, 6,5/18, H=1,5	
580	315401-0153		4	WASHER FBH6,1FZB	
T005	90245-0029		1	TRANSFORMER, 1280-3660/TP 182	
TBA NOPT NOASU 50Hz, TBA NOPT NOASU 60Hz					
400	312115-0368		2	SCREW ISO4762 M6X16 A4 80	
Common Parts					
010	1511784-0100		1	POWER CABLE INLETS	**10-79**
020	1511785-0100		1	CONTROL CABLE INLETS	**10-81**
040	1511788-0100		1	POWER CONNECTOR PLATE	**10-83, 10-85**
050	1511789-0100		1	CONTROL CONNECTOR PLATE	**10-87**
060	1511791-0200		1	DOOR	**10-89**
070	1517694-0000		2	END BLOCK	
080	1517697-0000		1	PROTECTION	
090	1517698-0000		1	PROTECTION	
100	1517699-0000		3	SUPPORT	
110	1517700-0000		6	EDGE GUIDE	
120	2797453-0000		1	WELDED CABINET	
130	1523459-0000		4	SUPPORT	
140	1523960-0000		1	SPACER	
150	1523974-0000		4	SUPPORT	
160	90143-0057	MM	2430	STRIP EMKA 1011-05 21X11MM	
170	90143-0057	MM	2430	STRIP EMKA 1011-05 21X11MM	
180	90143-0057	MM	2872	STRIP EMKA 1011-05 21X11MM	
190	90143-0057	MM	1960	STRIP EMKA 1011-05 21X11MM	
200	90143-0057	MM	4116	STRIP EMKA 1011-05 21X11MM	
210	90143-0057	MM	2850	STRIP EMKA 1011-05 21X11MM	
220	90143-0057	MM	2850	STRIP EMKA 1011-05 21X11MM	
230	90143-0057	MM	2850	STRIP EMKA 1011-05 21X11MM	
240	90143-0057	MM	2850	STRIP EMKA 1011-05 21X11MM	
250	90143-0073	MM	585	RUBBER STRIP	
260	90143-0073	MM	585	RUBBER STRIP	
270	90143-0073	MM	585	RUBBER STRIP	
280	90143-0073	MM	585	RUBBER STRIP	
290	1523464-0000		1	GASKET	
310	90194-0163		1	SIGN, EARTH WITHIN CIRCLE	
320	90457-0029		1	INSERT, MULTI HOLE, E156M5,9,11,19	
330	90458-1747		1	HOSE GLAND W/O INSERT M50 NORMAL	
340	311521-0146		4	BLANK RIVET 3,2X12	
350	312115-0293		6	SCREW ISO4762 M4X16 A4 80	
360	312115-0299		8	SCREW ISO4762 M4X30 A4 80	
370	312115-0297		6	SCREW ISO4762 M4X25 A4 80	
380	312115-0329		8	SCREW ISO4762 M5X16 A4 80	
390	312115-0366		10	SCREW ISO4762 M6X12 A4 80	
410	312155-0291		33	SCREW DIN 7991 MF6S M4X12 A4 70	
420	312812-0312		16	HEXAGON NUT, NY-LOCK M4 A480	
430	312812-0316		12	HEXAGON NUT, NY-LOCK M6 A480	
440	315105-0136		43	WASHER BRB 4,3X8 RFR	
450	315105-0146		14	WASHER BRB 5,3X10 RFR	
460	315402-0136		12	LOCK WASHER FBB 4,1	
470	315402-0146		8	LOCK WASHER FBB 5,1	
480	315402-0156		8	LOCK WASHER FBB 6,5	
490	90458-0311		1	CABLE GLAND, M50X1,5, NO.5311 1060	
500	359240-0100		2	SIGN HOLDER FOR 359240-0001	
510	90458-0327		2	NUT, M50X1,5	
530	315105-0153		4	WASHER BRB 6,4X12 RFR	
540	312115-0289		4	SCREW ISO4762 M4X10 A4 80	
550	352113-0205		25	ANCHOR PLATES FOR STRIPS, TYPE TM2S8-C10	
560	312115-0325		2	SCREW ISO4762 M5X10 A4 80	
B001	90044-0192		1	LIMIT SW. SZ2586.000	
B002	90044-0192		1	LIMIT SW. SZ2586.000	
B003	90044-0192		1	LIMIT SW. SZ2586.000	
B004	90044-0192		1	LIMIT SW. SZ2586.000	
B005	90044-0192		1	LIMIT SW. SZ2586.000	
B006	90044-0192		1	LIMIT SW. SZ2586.000	
B007	90044-0192		1	LIMIT SW. SZ2586.000	
E004	90459-2560		1	LIGHT FIXTURE, TMS121 1XTL-D30W/830 IP	
E005	90459-2560		1	LIGHT FIXTURE, TMS121 1XTL-D30W/830 IP	
E006	90459-3090		1	LIGHT FIXTURE, TMS121 1XTL8W/830 IP	
Q001.1	90457-0123		1	SIGN, MAIN SWITCH	
Q001.2	359241-0297		1	SIGN: " 50 HZ"	
T004	90458-1273		1	TRANSFORMER, OFL-1350	
T006	90458-0258		1	TRANSFORMER, 220VAC/6-9-12VAC	

Machine Type | Group Description | Used-In | Group Number | Page No

POWER CABLE INLETS

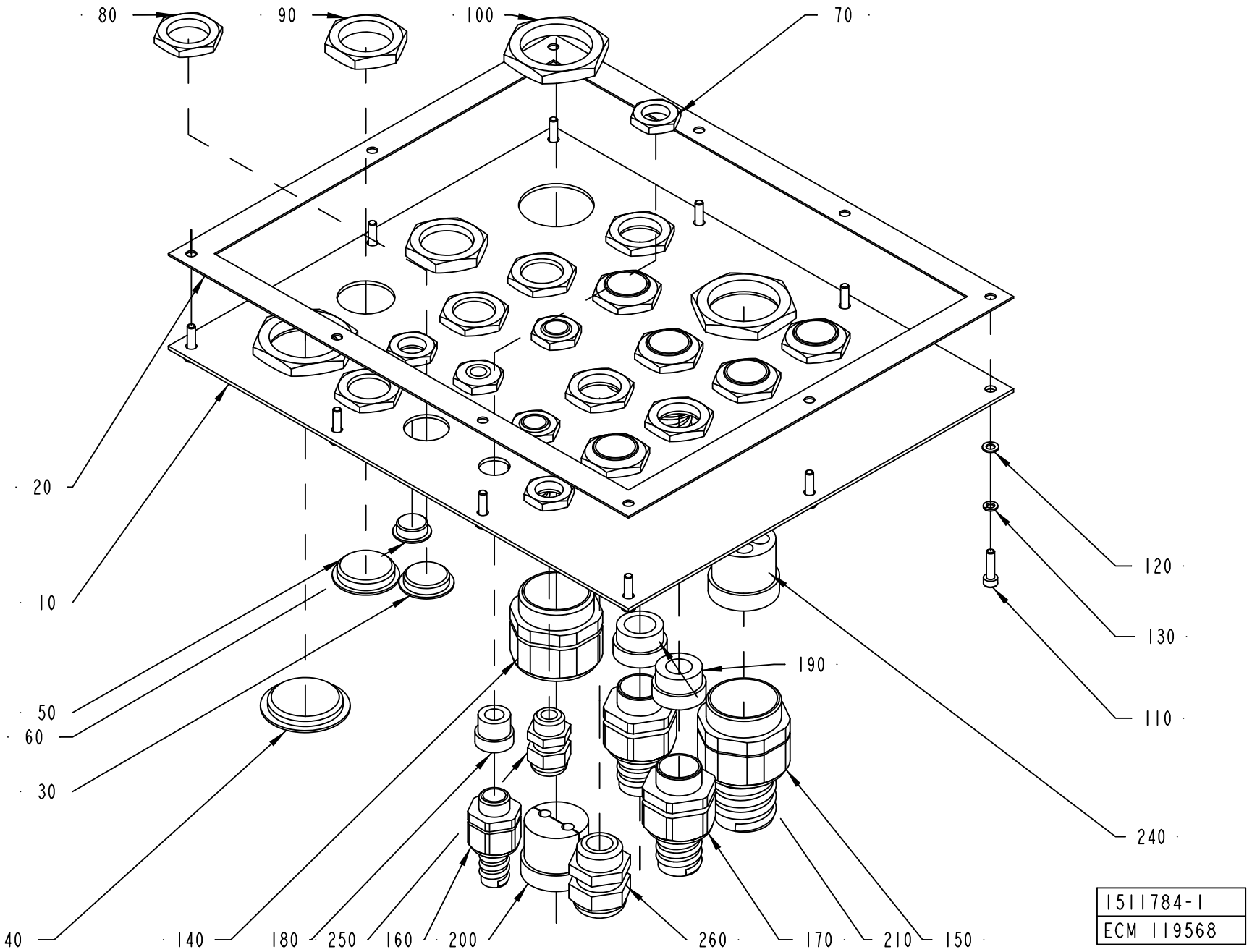

ECM: 180186 - 20040910
Group number: 1511784-0100
Assembly Drawing: 1511784-1_1_AB

Pos	Part No	UN	Qty	Description	Page No
-					
010	1511831-0000		1	PLATE	
020	1511841-0000		1	GASKET	
030	90002-0004		4	BLANK-OFF PLUG, PR 22,5 SKINDICHT-BLK16	
040	90002-0010		1	BLANK-OFF PLUG, PR 37 SKINDICHT-BLK29	
050	90002-0012		2	BLANK-OFF PLUG, PR 28,3 SKINDICHT-BLK21	
060	90002-0013		1	BLANK-OFF PLUG, PR 15,2 SKINDICHT-BLK9	
070	90099-0104		6	NUT, PR 15,2 (PG9)	
080	90099-0110		12	NUT, PR 22,5 (PG16)	
090	90099-0119		2	NUT, PR 28,3 (PG21)	
100	90099-0120		3	NUT, PR 37 (PG29)	
110	312115-0293		10	SCREW ISO4762 M4X16 A4 80	
120	315105-0136		10	WASHER BRB 4,3X8 RFR	
130	315402-0136		10	LOCK WASHER FBB 4,1	
140	353240-0006		1	GLAND W/O INSERT PG29 NORMAL	
150	353242-0003		1	HOSE GLAND W/O INSERT PG29 NORMAL	
160	353243-0001		3	HOSE GLAND W/O INSERT PG9 EXTENDED	
170	353243-0005		7	HOSE GLAND W/O INSERT PG16 EXTENDED	
180	353249-0009		3	INSERT, SINGEL HOLE, EK 152/9	
190	353249-0013		5	INSERT, SINGEL HOLE, EK 154/13	
200	2504449-0000		1	INSERT	
210	353249-0014		2	INSERT, SINGEL HOLE, EK 154/16	
240	90457-0027		1	INSERT, MULTI HOLE, E155M1X5/4X9	
250	352103-0101		2	CABLE GLAND, ST 9, PR15,2/PG9	
260	352103-0110		1	CABLE GLAND, STR 16, PR22,5/PG16	

Pos	Part No	UN	Qty	Description	Page No

CONTROL CABLE INLETS

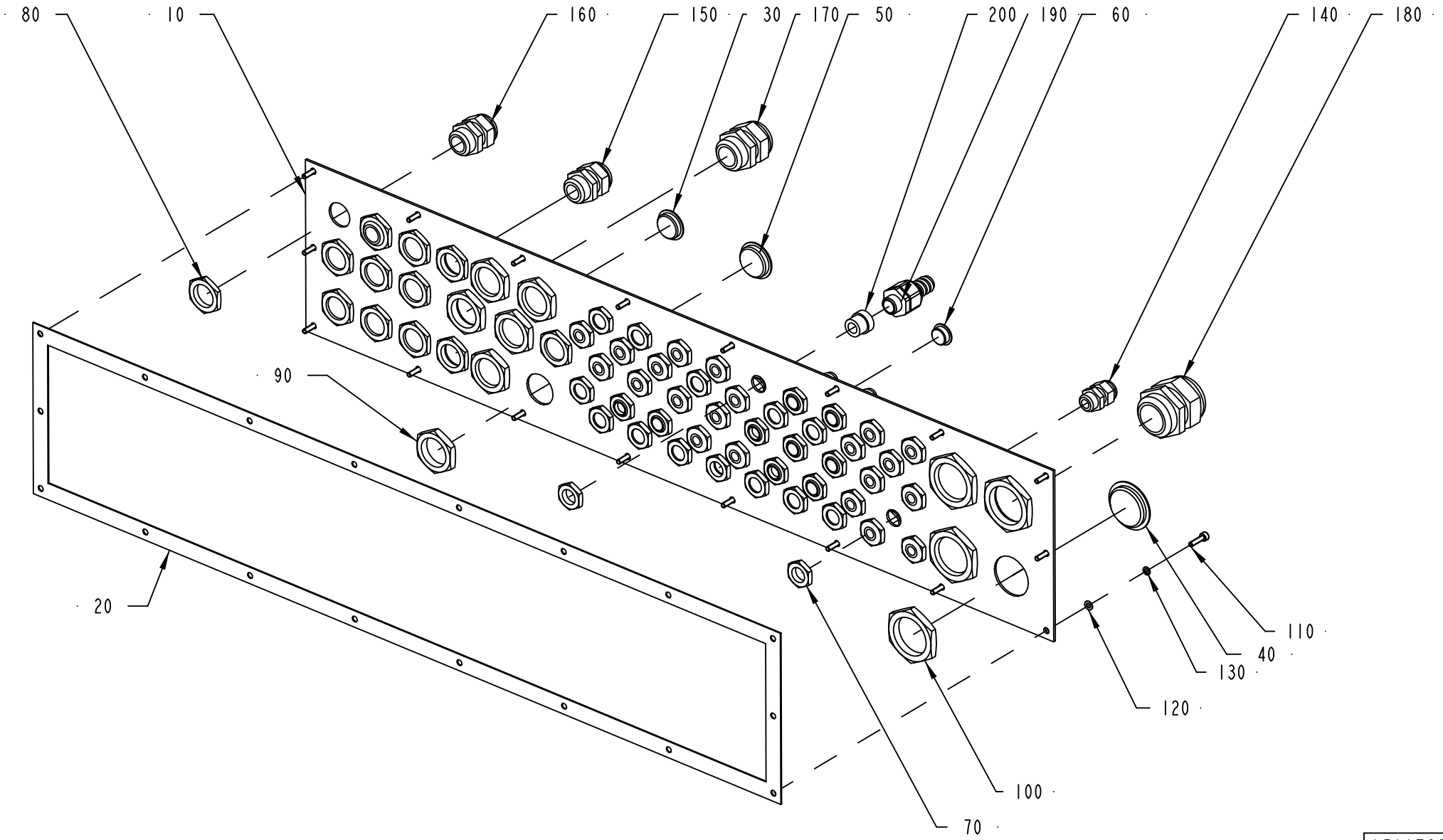

1511785-1
ECN 98221

ECM: 180187 - 20040910
Group number: 1511785-0100
Assembly Drawing: 1511785-1_1_AB

Pos	Part No	UN	Qty	Description	Page No
-					
010	1511842-0000		1	PLATE	
020	1511843-0000		1	GASKET	
030	90002-0004		9	BLANK-OFF PLUG, PR 22,5 SKINDICHT-BLK16	
040	90002-0010		3	BLANK-OFF PLUG, PR 37 SKINDICHT-BLK29	
050	90002-0012		5	BLANK-OFF PLUG, PR 28,3 SKINDICHT-BLK21	
060	90002-0013		12	BLANK-OFF PLUG, PR 15,2 SKINDICHT-BLK9	
070	90099-0104		45	NUT, PR 15,2 (PG9)	
080	90099-0110		12	NUT, PR 22,5 (PG16)	
090	90099-0119		6	NUT, PR 28,3 (PG21)	
100	90099-0120		4	NUT, PR 37 (PG29)	
110	312115-0293		18	SCREW ISO4762 M4X16 A4 80	
120	315105-0136		18	WASHER BRB 4,3X8 RFR	
130	315402-0136		18	LOCK WASHER FBB 4,1	
140	352103-0101		22	CABLE GLAND, ST 9, PR15,2/PG9	
150	352103-0110		1	CABLE GLAND, STR 16, PR22,5/PG16	
160	352103-0111		2	CABLE GLAND, ST 16, PR22,5/PG16	
170	352103-0116		1	CABLE GLAND, ST 21, PR28,3/PG21	
180	352103-0121		1	CABLE GLAND, ST 29, PR37,0/PG29	
190	353243-0001		10	HOSE GLAND W/O INSERT PG9 EXTENDED	
200	353249-0009		10	INSERT, SINGEL HOLE, EK 152/9	

Pos	Part No	UN	Qty	Description	Page No

POWER CONNECTOR PLATE

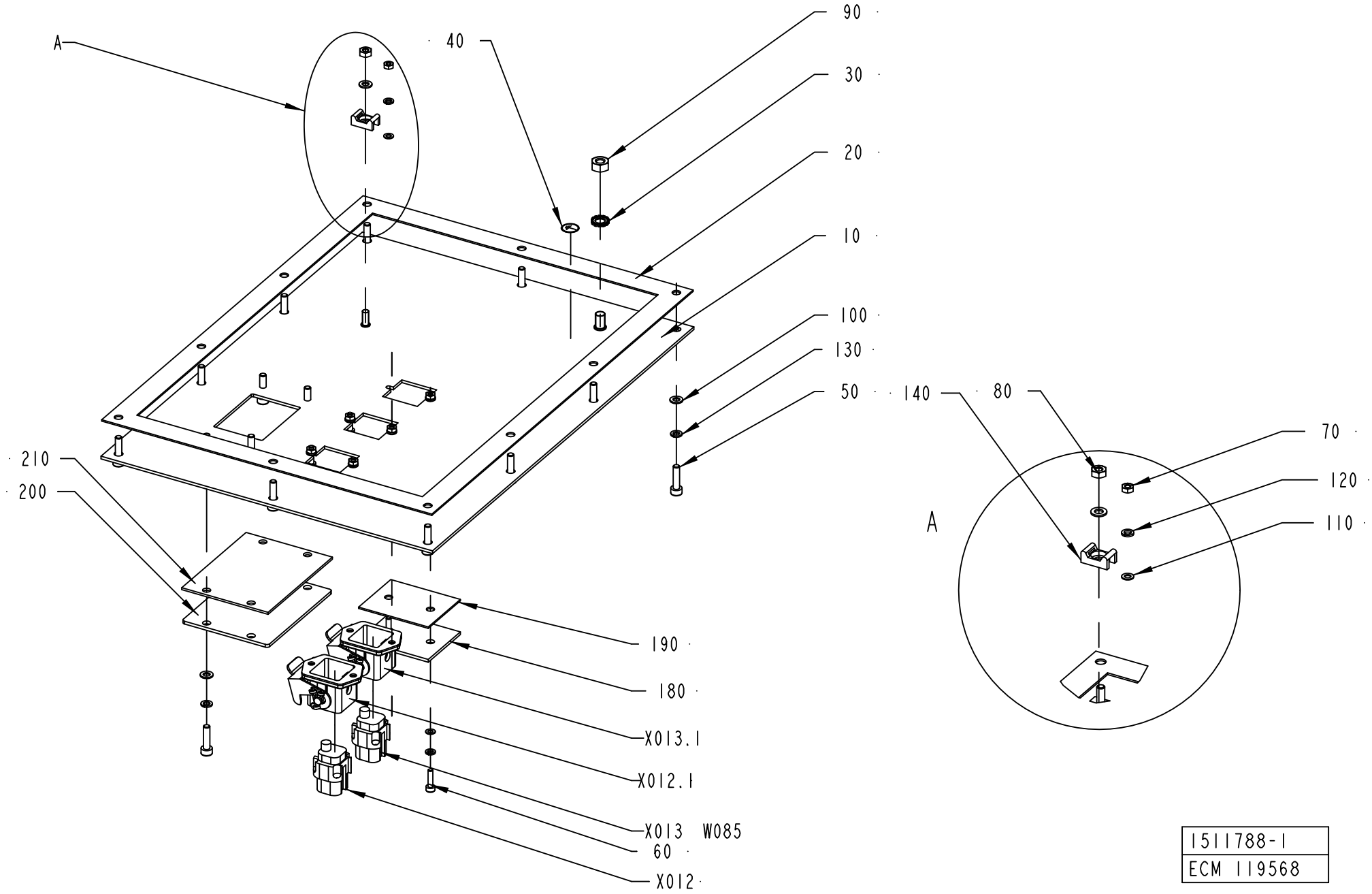

1511788-1
ECM 119568

ECM: 180189 - 20040910
Group number: 1511788-0100
Assembly Drawing: 1511788-1_1_AB

This list covers pages from 10-82 to 10-85

Pos	Part No	UN	Qty	Description	Page No
TBA NOPT ASU (See drawing on page: 10-84)					
X011	90458-0876		1	FEMALE INSERT HAN 6B 09 14 002 2751	
X011.1	90458-0871		1	HOUSING BULKHEAD MOUNTING HAN 6B-AGG-RB	
X011.2	90458-0875		1	HING. FR. HAN 6B HOUSING, 09 14 006 0313	
X014	90110-0296		1	FEMALE INSERT HDC-HA-4BS 149840-B/2	
X014.1	90457-0050		1	BULKHEAD HOUSING 149760	
TBA NOPT NOASU (See drawing on page: 10-82)					
180	1487430-0000		1	COVER	
190	1487431-0000		1	GASKET	
200	1037572-0000		1	COVER PLATE	
210	1037573-0000		1	GASKET	
Common Parts					
010	1511837-0000		1	PLATE	
020	1511838-0000		1	GASKET	
030	90062-0015		1	LOCK WASHER SERRAT.EXT.GEAR,6,4/11 H=0,7	
040	90194-0163		1	SIGN, EARTH WITHIN CIRCLE	
050	312115-0293		14	SCREW ISO4762 M4X16 A4 80	
060	312115-0226		6	SCREW ISO4762 M3X12 A4 80	
070	312605-0310		6	HEXAGON NUT, M6M M3 A280	
080	312605-0312		1	HEXAGON NUT, M6M M4 A280	
090	312605-0316		1	HEXAGON NUT, M6M M6 A280	
100	315105-0136		15	WASHER BRB 4,3X8 RFR	
110	315105-0124		12	WASHER BRB 3,2X6 RFR	
120	315402-0128		12	LOCK WASHER FBB 3,6	
130	315402-0136		14	LOCK WASHER FBB 4,1	
140	352113-0205		1	ANCHOR PLATES FOR STRIPS, TYPE TM2S8-C10	
W085	90220-0104	M	4	SCR. CABLE 4X1,5MM2	
X012	90110-0296		1	FEMALE INSERT HDC-HA-4BS 149840-B/2	
X012.1	90457-0050		1	BULKHEAD HOUSING 149760	
X013	90110-0296		1	FEMALE INSERT HDC-HA-4BS 149840-B/2	
X013.1	90457-0050		1	BULKHEAD HOUSING 149760	

Pos	Part No	UN	Qty	Description	Page No

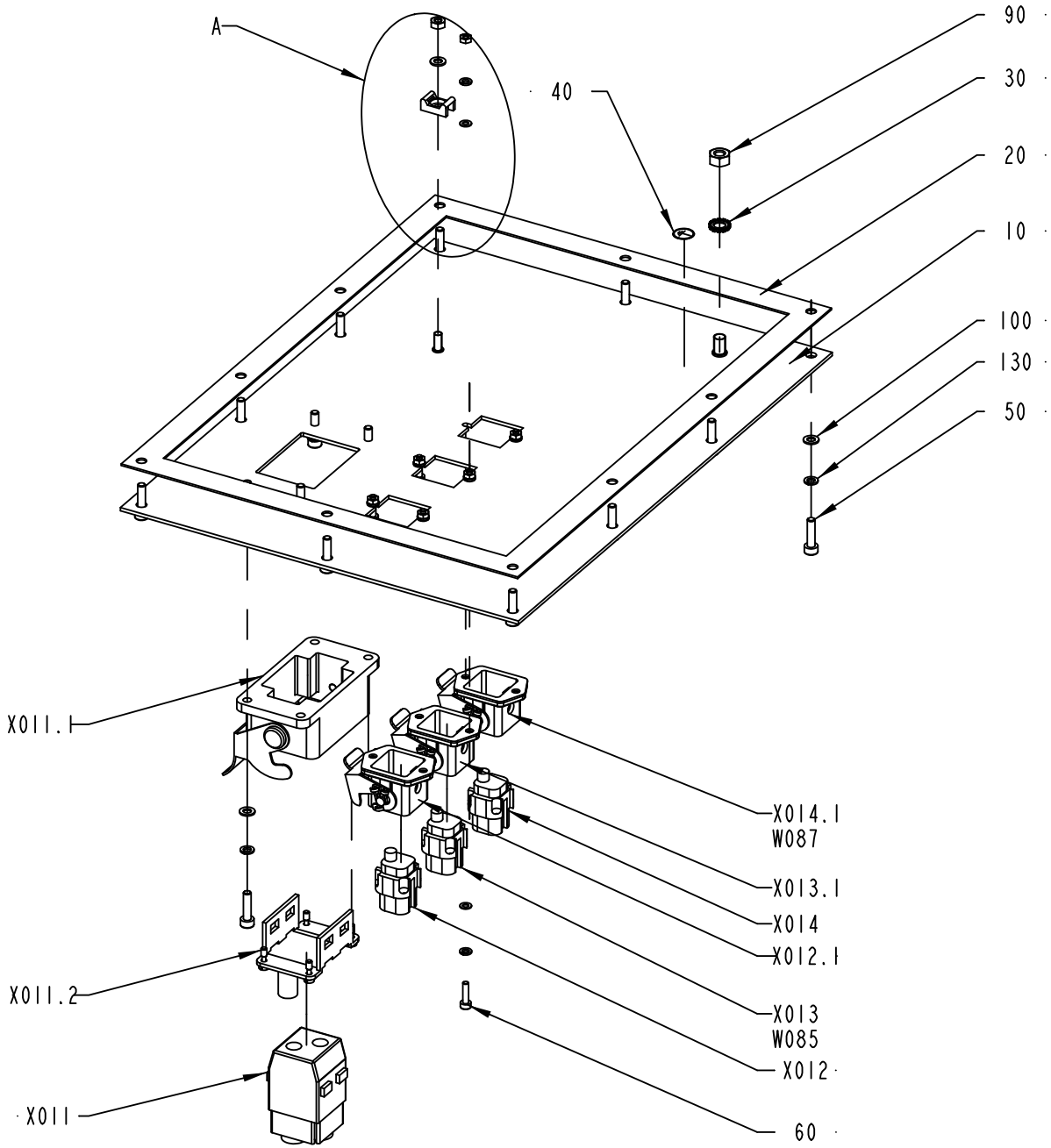

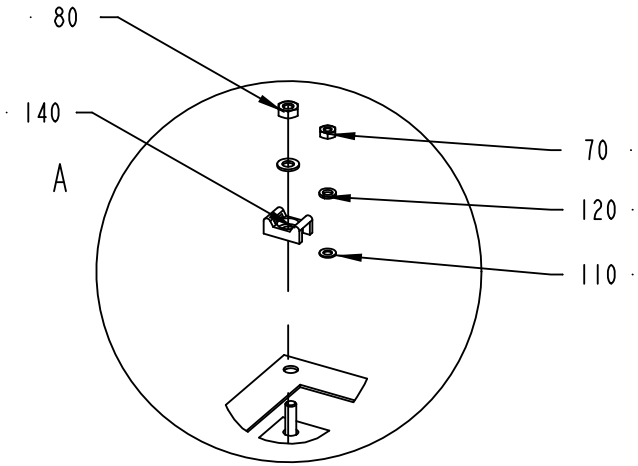

1511788-2
ECM 119568

ECM: 180189 - 20040910
Group number: 1511788-0100
Assembly Drawing: 1511788-2_1_AB

This list covers pages from 10-82 to 10-85

Pos	Part No	UN	Qty	Description	Page No
TBA NOPT ASU (See drawing on page: 10-84)					
X011	90458-0876		1	FEMALE INSERT HAN 6B 09 14 002 2751	
X011.1	90458-0871		1	HOUSING BULKHEAD MOUNTING HAN 6B-AGG-RB	
X011.2	90458-0875		1	HING. FR. HAN 6B HOUSING, 09 14 006 0313	
X014	90110-0296		1	FEMALE INSERT HDC-HA-4BS 149840-B/2	
X014.1	90457-0050		1	BULKHEAD HOUSING 149760	
TBA NOPT NOASU (See drawing on page: 10-82)					
180	1487430-0000		1	COVER	
190	1487431-0000		1	GASKET	
200	1037572-0000		1	COVER PLATE	
210	1037573-0000		1	GASKET	
Common Parts					
010	1511837-0000		1	PLATE	
020	1511838-0000		1	GASKET	
030	90062-0015		1	LOCK WASHER SERRAT.EXT.GEAR,6,4/11 H=0,7	
040	90194-0163		1	SIGN, EARTH WITHIN CIRCLE	
050	312115-0293		14	SCREW ISO4762 M4X16 A4 80	
060	312115-0226		6	SCREW ISO4762 M3X12 A4 80	
070	312605-0310		6	HEXAGON NUT, M6M M3 A280	
080	312605-0312		1	HEXAGON NUT, M6M M4 A280	
090	312605-0316		1	HEXAGON NUT, M6M M6 A280	
100	315105-0136		15	WASHER BRB 4,3X8 RFR	
110	315105-0124		12	WASHER BRB 3,2X6 RFR	
120	315402-0128		12	LOCK WASHER FBB 3,6	
130	315402-0136		14	LOCK WASHER FBB 4,1	
140	352113-0205		1	ANCHOR PLATES FOR STRIPS, TYPE TM2S8-C10	
W085	90220-0104	M	4	SCR. CABLE 4X1,5MM2	
X012	90110-0296		1	FEMALE INSERT HDC-HA-4BS 149840-B/2	
X012.1	90457-0050		1	BULKHEAD HOUSING 149760	
X013	90110-0296		1	FEMALE INSERT HDC-HA-4BS 149840-B/2	
X013.1	90457-0050		1	BULKHEAD HOUSING 149760	

Pos	Part No	UN	Qty	Description	Page No

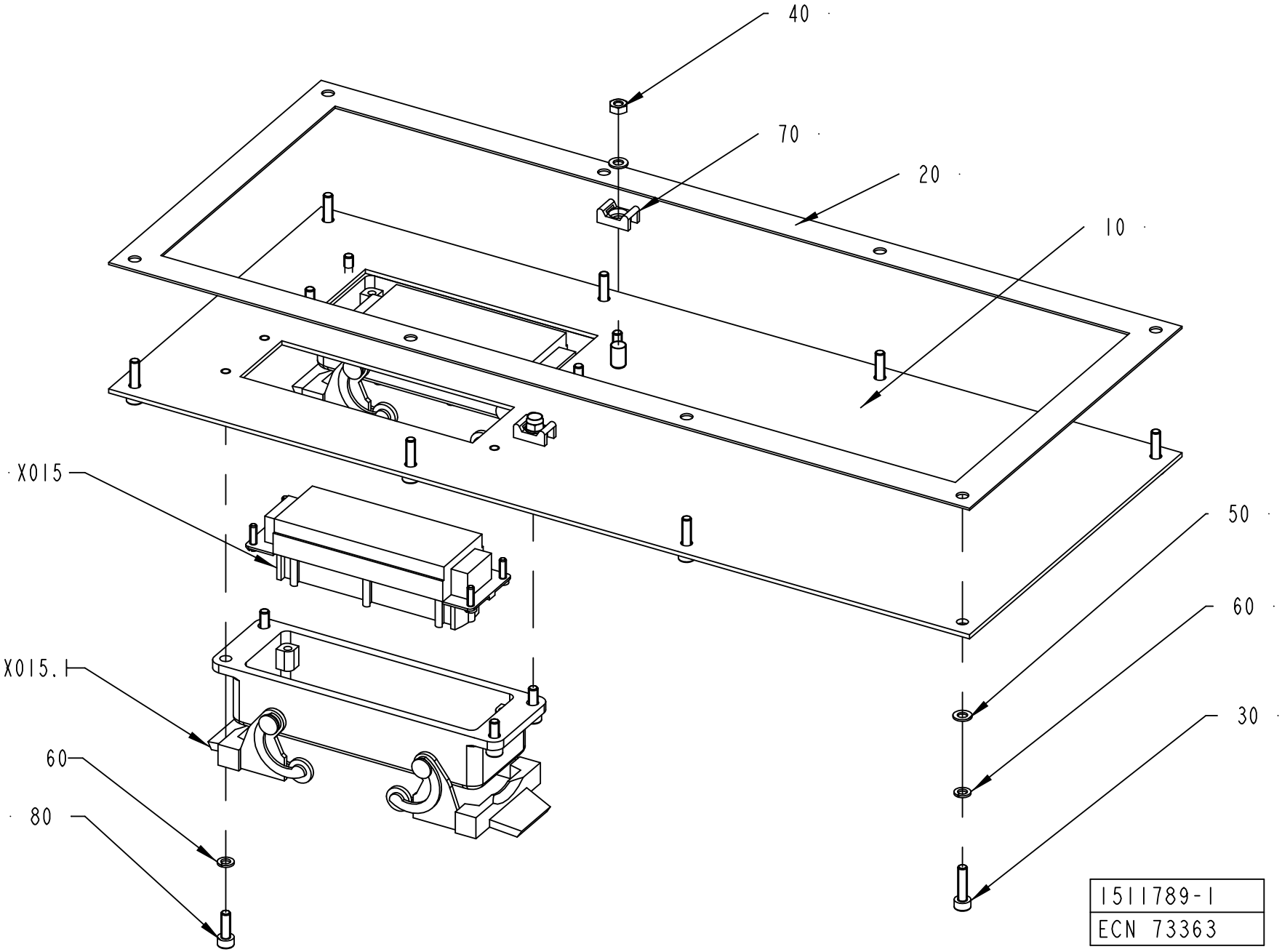
40
70
20
10
X015
50
60
X015.1
30
60
80
1511789-1
ECN 73363

ECM: 242040 - 20060127
Group number: 1511789-0100
Assembly Drawing: 1511789-1_1_AA

Pos	Part No	UN	Qty	Description	Page No
-					
010	1511839-0000		1	PLATE	
020	1511840-0000		1	GASKET	
030	312115-0293		8	SCREW ISO4762 M4X16 A4 80	
040	312605-0312		2	HEXAGON NUT, M6M M4 A280	
050	315105-0136		10	WASHER BRB 4,3X8 RFR	
060	315402-0136		8	LOCK WASHER FBB 4,1	
070	352113-0205		2	ANCHOR PLATES FOR STRIPS, TYPE TM2S8-C10	
080	312115-0291		8	SCREW ISO4762 M4X12 A4 80	
X015	90110-0151		1	FEMALE INSERT 24-POL 121130 0000	
X015.1	90110-0153		1	CHASSIS HOUSING 24-P CHI 24, 121240 0000	
X016	90110-0151		1	FEMALE INSERT 24-POL 121130 0000	
X016.1	90110-0153		1	CHASSIS HOUSING 24-P CHI 24, 121240 0000	

Pos	Part No	UN	Qty	Description	Page No

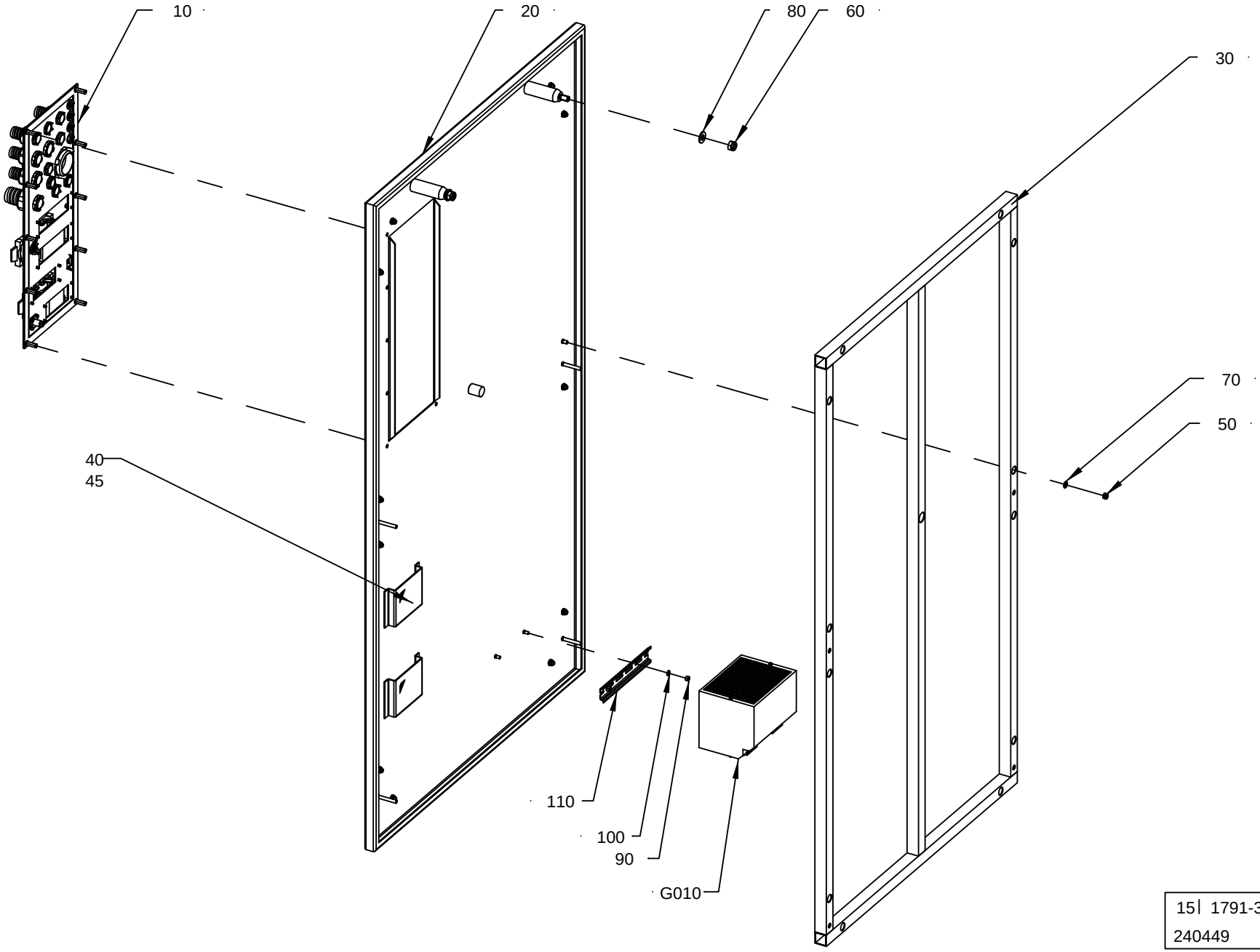

15| 1791-3
240449

ECM: 241395 - 20051215
Group number: 1511791-0200
Assembly Drawing: 1511791-3_1_AA

Pos	Part No	UN	Qty	Description	Page No
-					
010	1511787-0100		1	STRIP APPLICATOR CABLE INLETS	**10-91, 10-93, 10-95 ..... 10-97, 10-99, 10-101, 10-103**
020	2798052-0000		1	DOOR	
030	1511798-0000		1	FRAME	
040	970802-0000		2	DISCETTE BOX 3,5"	
045	90144-0072	MM	400	TAPE SCOTCH VHBS 4945 W=12,7MM	
050	312812-0316		12	HEXAGON NUT, NY-LOCK M6 A480	
060	312812-0320		2	HEXAGON NUT, NY-LOCK M10 A480	
070	315105-0153		12	WASHER BRB 6,4X12 RFR	
080	315105-0173		2	WASHER BRB 10,5X22 RFR	
90	312605-0314		2	HEXAGON NUT, M6M M5 A280	
100	315105-0146		2	WASHER BRB 5,3X10 RFR	
110	353042-0004	MM	200	RAIL TS 35/7,5	
G010	90459-4133		1	POWER SUPPLY UNIT 6EP1 436-3BA00	

Pos	Part No	UN	Qty	Description	Page No

STRIP APPLICATOR CABLE INLETS

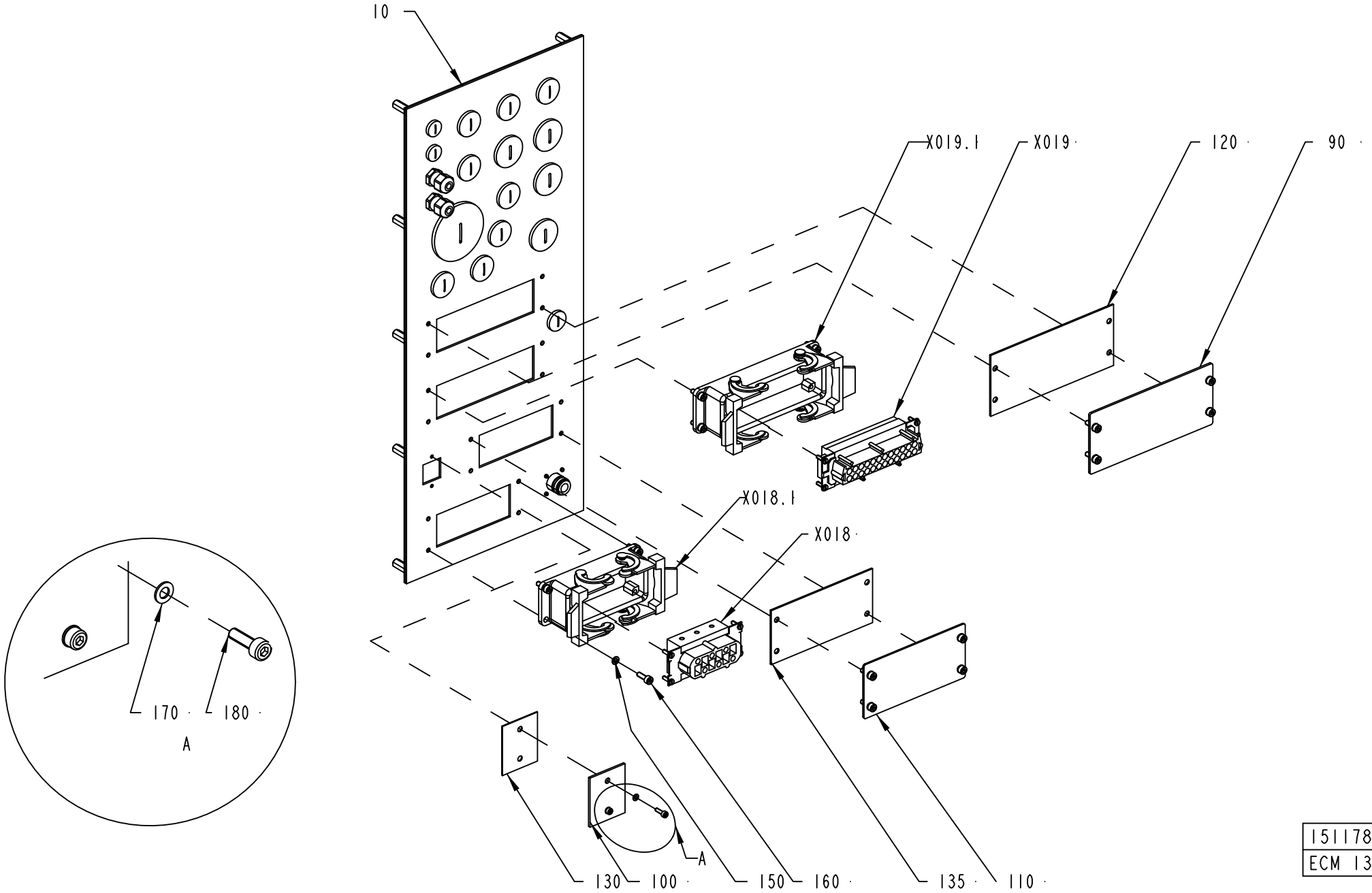

1511787-1
ECM 133152

ECM: 292612 - 20070126
Group number: 1511787-0100
Assembly Drawing: 1511787-1_1_AB

This list covers pages from 10-90 to 10-103

Pos	Part No	UN	Qty	Description	Page No
TBA NOPT (See drawing on pages: 10-90, 10-92, 10-94)					
090	1037574-0000		1	COVER PLATE	
100	1487430-0000		1	COVER	
110	1129481-0000		1	COVERING PLATE	
120	1037575-0000		1	GASKET	
130	1487431-0000		1	GASKET	
135	1129478-0000		1	GASKET	
210	90458-0305		2	CABLE GLAND, M12X1,5, NO.5311 1000	
220	90458-1306		2	BLIND PLUG CIRCULAR, M12X1,5 514GFK/212	
240	90458-1308		8	BLIND PLUG CIRCULAR, M20X1,5 514GFK/220	
260	90458-1309		4	BLIND PLUG CIRCULAR, M25X1,5 514GFK/225	
280	90458-1312		1	BLIND PLUG CIRCULAR, M50X1,5 514GFK/250	
TBA PT19 (See drawing on pages: 10-96, 10-98, 10-100, 10-102)					
210	90458-0305		1	CABLE GLAND, M12X1,5, NO.5311 1000	
220	90458-1306		3	BLIND PLUG CIRCULAR, M12X1,5 514GFK/212	
240	90458-1308		2	BLIND PLUG CIRCULAR, M20X1,5 514GFK/220	
260	90458-1309		1	BLIND PLUG CIRCULAR, M25X1,5 514GFK/225	
320	90458-0422		1	GLAND W/O INSERT M20 EXTENDED	
330	90458-0428		1	HOSE GLAND W/O INSERT M20 EXTENDED	
340	90458-0430		4	HOSE GLAND W/O INSERT M20 EXTENDED	
350	90458-0188		3	GLAND, INSERT, MULTI HOLE, 1X7/1X10,5	
360	90457-0147		1	GLAND, INSERT, MULTI HOLE, 2X7	
370	90458-0416		1	HOSE GLAND W/O INSERT M50 NORMAL	
380	2618387-0000		1	INSERT	
390	90458-0432		1	HOSE GLAND W/O INSERT M25 EXTENDED	
400	353249-0016		1	INSERT, SINGEL HOLE, EK 155/18	
410	353249-0075		1	INSERT, SINGEL HOLE, EK 153/13	
420	90458-0431		2	HOSE GLAND W/O INSERT M25 EXTENDED	
430	353249-0013		2	INSERT, SINGEL HOLE, EK 154/13	
X022	90110-0296		1	FEMALE INSERT HDC-HA-4BS 149840-B/2	
X022.1	90458-1181		1	BULKHEAD HOUSING HDC-HA-3-AWVL1/11	
X025	90110-0151		1	FEMALE INSERT 24-POL 121130 0000	
X025.1	90110-0153		1	CHASSIS HOUSING 24-P CHI 24, 121240 0000	
X026	90458-1406		1	FEMALE INSERT 120770	
X026.1	90110-0243		1	CONTACT HOUSING 16-POL 70.320.1628.0	
Common Parts					
010	1511832-0000		1	PLATE	
020	1511833-0000		1	GASKET	
030	1517676-0000		10	SPACER	
140	315105-0146		10	WASHER BRB 5,3X10 RFR	
150	315402-0136		16	LOCK WASHER FBB 4,1	
160	312115-0291		16	SCREW ISO4762 M4X12 A4 80	
170	315105-0124		2	WASHER BRB 3,2X6 RFR	
180	312115-0224		2	SCREW ISO4762 M3X10 A4 80	
190	90110-0127		1	COAXIAL CONNECTOR, GE 15057C10HBNT-2PT	
200	312115-0220		4	SCREW ISO4762 M3X6 A4 80	
230	90458-0321		4	NUT, M12X1,5	
250	90458-0461		8	GLAND, LOCK NUT, M20X1,5	
270	90458-0462		4	GLAND, LOCK NUT, M25X1,5	
290	90458-0465		1	GLAND, LOCK NUT, M50X1,5	
300	90458-0460		1	GLAND, LOCK NUT, M16X1,5	
310	90458-1307		1	BLIND PLUG CIRCULAR, M16X1,5 514GFK/216	
440	353249-0036		1	INSERT, MULTI HOLE, EK152 M 2X4	
X018	90110-0247		1	FEMALE INSERT 70.200.0653.0	
X018.1	90110-0243		1	CONTACT HOUSING 16-POL 70.320.1628.0	
X019	90110-0151		1	FEMALE INSERT 24-POL 121130 0000	
X019.1	90110-0153		1	CHASSIS HOUSING 24-P CHI 24, 121240 0000	

Machine Type	Group Description	Used-In	Group Number	Page No

STRIP APPLICATOR CABLE INLETS

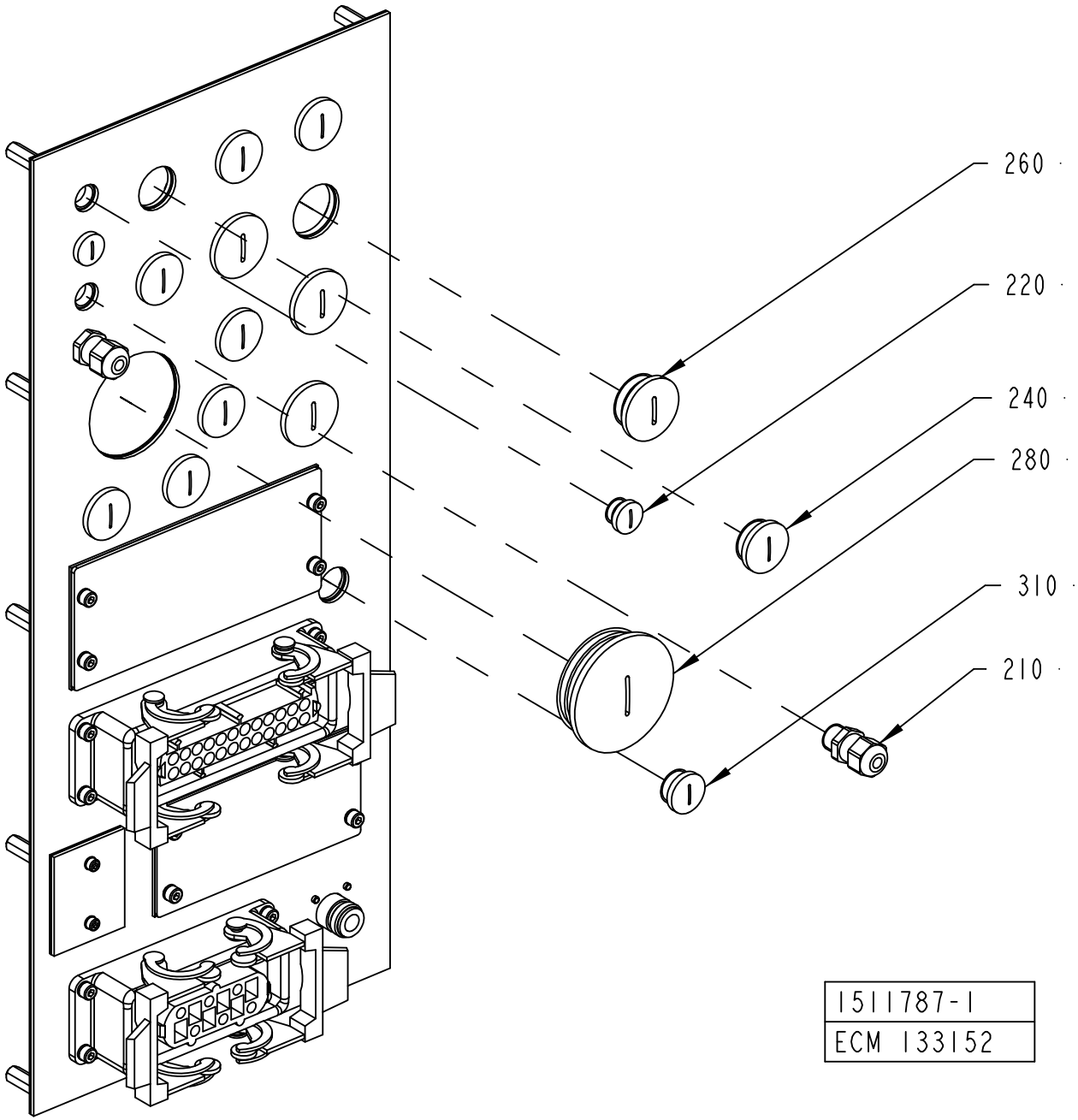

ECM: 292612 - 20070126
Group number: 1511787-0100
Assembly Drawing: 1511787-1_2_AB

This list covers pages from 10-90 to 10-103

Pos	Part No	UN	Qty	Description	Page No
TBA NOPT (See drawing on pages: 10-90, 10-92, 10-94)					
090	1037574-0000		1	COVER PLATE	
100	1487430-0000		1	COVER	
110	1129481-0000		1	COVERING PLATE	
120	1037575-0000		1	GASKET	
130	1487431-0000		1	GASKET	
135	1129478-0000		1	GASKET	
210	90458-0305		2	CABLE GLAND, M12X1,5, NO.5311 1000	
220	90458-1306		2	BLIND PLUG CIRCULAR, M12X1,5 514GFK/212	
240	90458-1308		8	BLIND PLUG CIRCULAR, M20X1,5 514GFK/220	
260	90458-1309		4	BLIND PLUG CIRCULAR, M25X1,5 514GFK/225	
280	90458-1312		1	BLIND PLUG CIRCULAR, M50X1,5 514GFK/250	
TBA PT19 (See drawing on pages: 10-96, 10-98, 10-100, 10-102)					
210	90458-0305		1	CABLE GLAND, M12X1,5, NO.5311 1000	
220	90458-1306		3	BLIND PLUG CIRCULAR, M12X1,5 514GFK/212	
240	90458-1308		2	BLIND PLUG CIRCULAR, M20X1,5 514GFK/220	
260	90458-1309		1	BLIND PLUG CIRCULAR, M25X1,5 514GFK/225	
320	90458-0422		1	GLAND W/O INSERT M20 EXTENDED	
330	90458-0428		1	HOSE GLAND W/O INSERT M20 EXTENDED	
340	90458-0430		4	HOSE GLAND W/O INSERT M20 EXTENDED	
350	90458-0188		3	GLAND, INSERT, MULTI HOLE, 1X7/1X10,5	
360	90457-0147		1	GLAND, INSERT, MULTI HOLE, 2X7	
370	90458-0416		1	HOSE GLAND W/O INSERT M50 NORMAL	
380	2618387-0000		1	INSERT	
390	90458-0432		1	HOSE GLAND W/O INSERT M25 EXTENDED	
400	353249-0016		1	INSERT, SINGEL HOLE, EK 155/18	
410	353249-0075		1	INSERT, SINGEL HOLE, EK 153/13	
420	90458-0431		2	HOSE GLAND W/O INSERT M25 EXTENDED	
430	353249-0013		2	INSERT, SINGEL HOLE, EK 154/13	
X022	90110-0296		1	FEMALE INSERT HDC-HA-4BS 149840-B/2	
X022.1	90458-1181		1	BULKHEAD HOUSING HDC-HA-3-AWVL1/11	
X025	90110-0151		1	FEMALE INSERT 24-POL 121130 0000	
X025.1	90110-0153		1	CHASSIS HOUSING 24-P CHI 24, 121240 0000	
X026	90458-1406		1	FEMALE INSERT 120770	
X026.1	90110-0243		1	CONTACT HOUSING 16-POL 70.320.1628.0	
Common Parts					
010	1511832-0000		1	PLATE	
020	1511833-0000		1	GASKET	
030	1517676-0000		10	SPACER	
140	315105-0146		10	WASHER BRB 5,3X10 RFR	
150	315402-0136		16	LOCK WASHER FBB 4,1	
160	312115-0291		16	SCREW ISO4762 M4X12 A4 80	
170	315105-0124		2	WASHER BRB 3,2X6 RFR	
180	312115-0224		2	SCREW ISO4762 M3X10 A4 80	
190	90110-0127		1	COAXIAL CONNECTOR, GE 15057C10HBNT-2PT	
200	312115-0220		4	SCREW ISO4762 M3X6 A4 80	
230	90458-0321		4	NUT, M12X1,5	
250	90458-0461		8	GLAND, LOCK NUT, M20X1,5	
270	90458-0462		4	GLAND, LOCK NUT, M25X1,5	
290	90458-0465		1	GLAND, LOCK NUT, M50X1,5	
300	90458-0460		1	GLAND, LOCK NUT, M16X1,5	
310	90458-1307		1	BLIND PLUG CIRCULAR, M16X1,5 514GFK/216	
440	353249-0036		1	INSERT, MULTI HOLE, EK152 M 2X4	
X018	90110-0247		1	FEMALE INSERT 70.200.0653.0	
X018.1	90110-0243		1	CONTACT HOUSING 16-POL 70.320.1628.0	
X019	90110-0151		1	FEMALE INSERT 24-POL 121130 0000	
X019.1	90110-0153		1	CHASSIS HOUSING 24-P CHI 24, 121240 0000	

Machine Type	Group Description	Used-In	Group Number	Page No

STRIP APPLICATOR CABLE INLETS

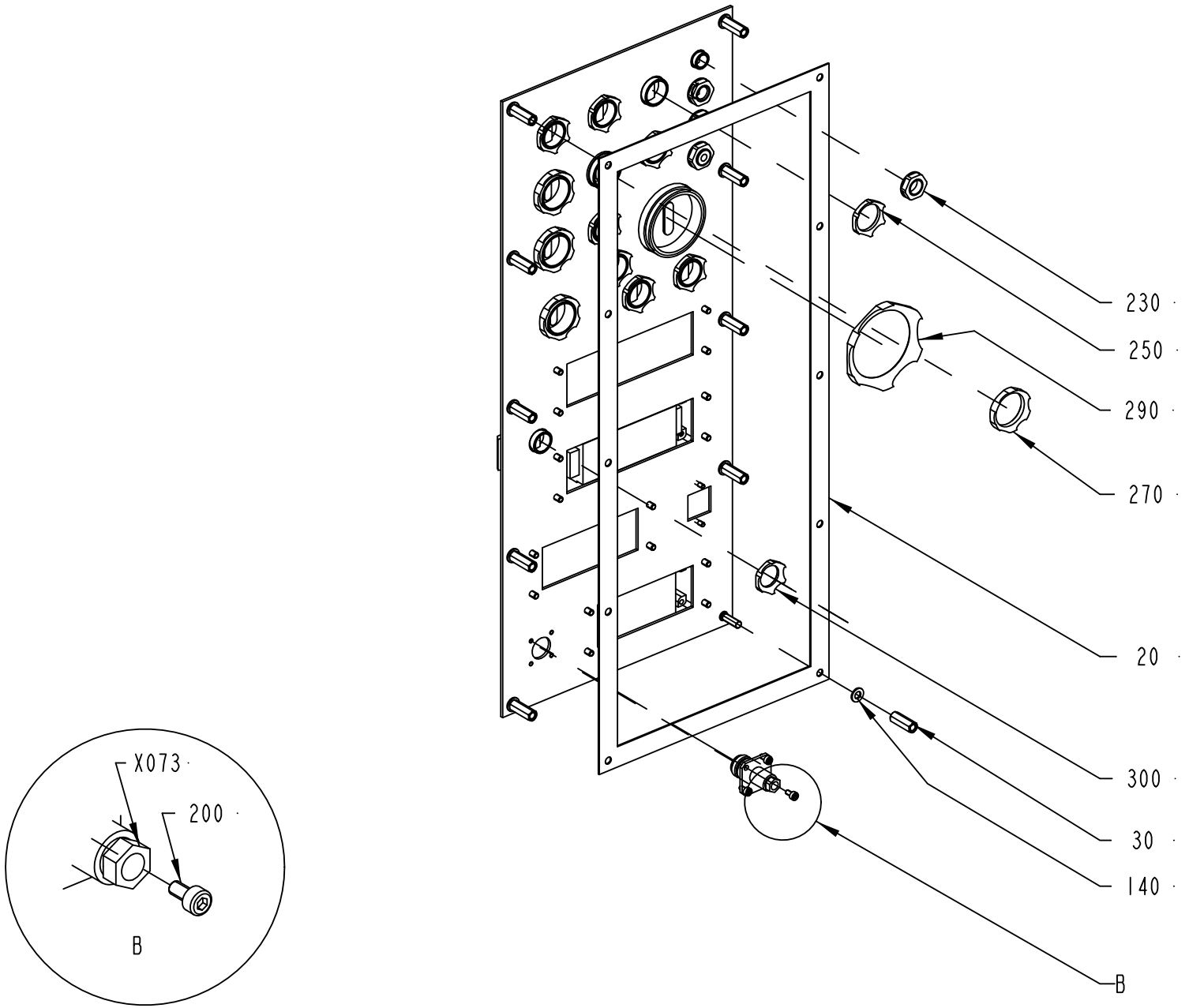

1511787-1
ECM 133152

ECM: 292612 - 20070126
Group number: 1511787-0100
Assembly Drawing: 1511787-1_3_AB

This list covers pages from 10-90 to 10-103

Pos	Part No	UN	Qty	Description	Page No
TBA NOPT (See drawing on pages: 10-90, 10-92, 10-94)					
090	1037574-0000		1	COVER PLATE	
100	1487430-0000		1	COVER	
110	1129481-0000		1	COVERING PLATE	
120	1037575-0000		1	GASKET	
130	1487431-0000		1	GASKET	
135	1129478-0000		1	GASKET	
210	90458-0305		2	CABLE GLAND, M12X1,5, NO.5311 1000	
220	90458-1306		2	BLIND PLUG CIRCULAR, M12X1,5 514GFK/212	
240	90458-1308		8	BLIND PLUG CIRCULAR, M20X1,5 514GFK/220	
260	90458-1309		4	BLIND PLUG CIRCULAR, M25X1,5 514GFK/225	
280	90458-1312		1	BLIND PLUG CIRCULAR, M50X1,5 514GFK/250	
TBA PT19 (See drawing on pages: 10-96, 10-98, 10-100, 10-102)					
210	90458-0305		1	CABLE GLAND, M12X1,5, NO.5311 1000	
220	90458-1306		3	BLIND PLUG CIRCULAR, M12X1,5 514GFK/212	
240	90458-1308		2	BLIND PLUG CIRCULAR, M20X1,5 514GFK/220	
260	90458-1309		1	BLIND PLUG CIRCULAR, M25X1,5 514GFK/225	
320	90458-0422		1	GLAND W/O INSERT M20 EXTENDED	
330	90458-0428		1	HOSE GLAND W/O INSERT M20 EXTENDED	
340	90458-0430		4	HOSE GLAND W/O INSERT M20 EXTENDED	
350	90458-0188		3	GLAND, INSERT, MULTI HOLE, 1X7/1X10,5	
360	90457-0147		1	GLAND, INSERT, MULTI HOLE, 2X7	
370	90458-0416		1	HOSE GLAND W/O INSERT M50 NORMAL	
380	2618387-0000		1	INSERT	
390	90458-0432		1	HOSE GLAND W/O INSERT M25 EXTENDED	
400	353249-0016		1	INSERT, SINGEL HOLE, EK 155/18	
410	353249-0075		1	INSERT, SINGEL HOLE, EK 153/13	
420	90458-0431		2	HOSE GLAND W/O INSERT M25 EXTENDED	
430	353249-0013		2	INSERT, SINGEL HOLE, EK 154/13	
X022	90110-0296		1	FEMALE INSERT HDC-HA-4BS 149840-B/2	
X022.1	90458-1181		1	BULKHEAD HOUSING HDC-HA-3-AWVL1/11	
X025	90110-0151		1	FEMALE INSERT 24-POL 121130 0000	
X025.1	90110-0153		1	CHASSIS HOUSING 24-P CHI 24, 121240 0000	
X026	90458-1406		1	FEMALE INSERT 120770	
X026.1	90110-0243		1	CONTACT HOUSING 16-POL 70.320.1628.0	
Common Parts					
010	1511832-0000		1	PLATE	
020	1511833-0000		1	GASKET	
030	1517676-0000		10	SPACER	
140	315105-0146		10	WASHER BRB 5,3X10 RFR	
150	315402-0136		16	LOCK WASHER FBB 4,1	
160	312115-0291		16	SCREW ISO4762 M4X12 A4 80	
170	315105-0124		2	WASHER BRB 3,2X6 RFR	
180	312115-0224		2	SCREW ISO4762 M3X10 A4 80	
190	90110-0127		1	COAXIAL CONNECTOR, GE 15057C10HBNT-2PT	
200	312115-0220		4	SCREW ISO4762 M3X6 A4 80	
230	90458-0321		4	NUT, M12X1,5	
250	90458-0461		8	GLAND, LOCK NUT, M20X1,5	
270	90458-0462		4	GLAND, LOCK NUT, M25X1,5	
290	90458-0465		1	GLAND, LOCK NUT, M50X1,5	
300	90458-0460		1	GLAND, LOCK NUT, M16X1,5	
310	90458-1307		1	BLIND PLUG CIRCULAR, M16X1,5 514GFK/216	
440	353249-0036		1	INSERT, MULTI HOLE, EK152 M 2X4	
X018	90110-0247		1	FEMALE INSERT 70.200.0653.0	
X018.1	90110-0243		1	CONTACT HOUSING 16-POL 70.320.1628.0	
X019	90110-0151		1	FEMALE INSERT 24-POL 121130 0000	
X019.1	90110-0153		1	CHASSIS HOUSING 24-P CHI 24, 121240 0000	

Machine Type	Group Description	Used-In	Group Number	Page No

STRIP APPLICATOR CABLE INLETS

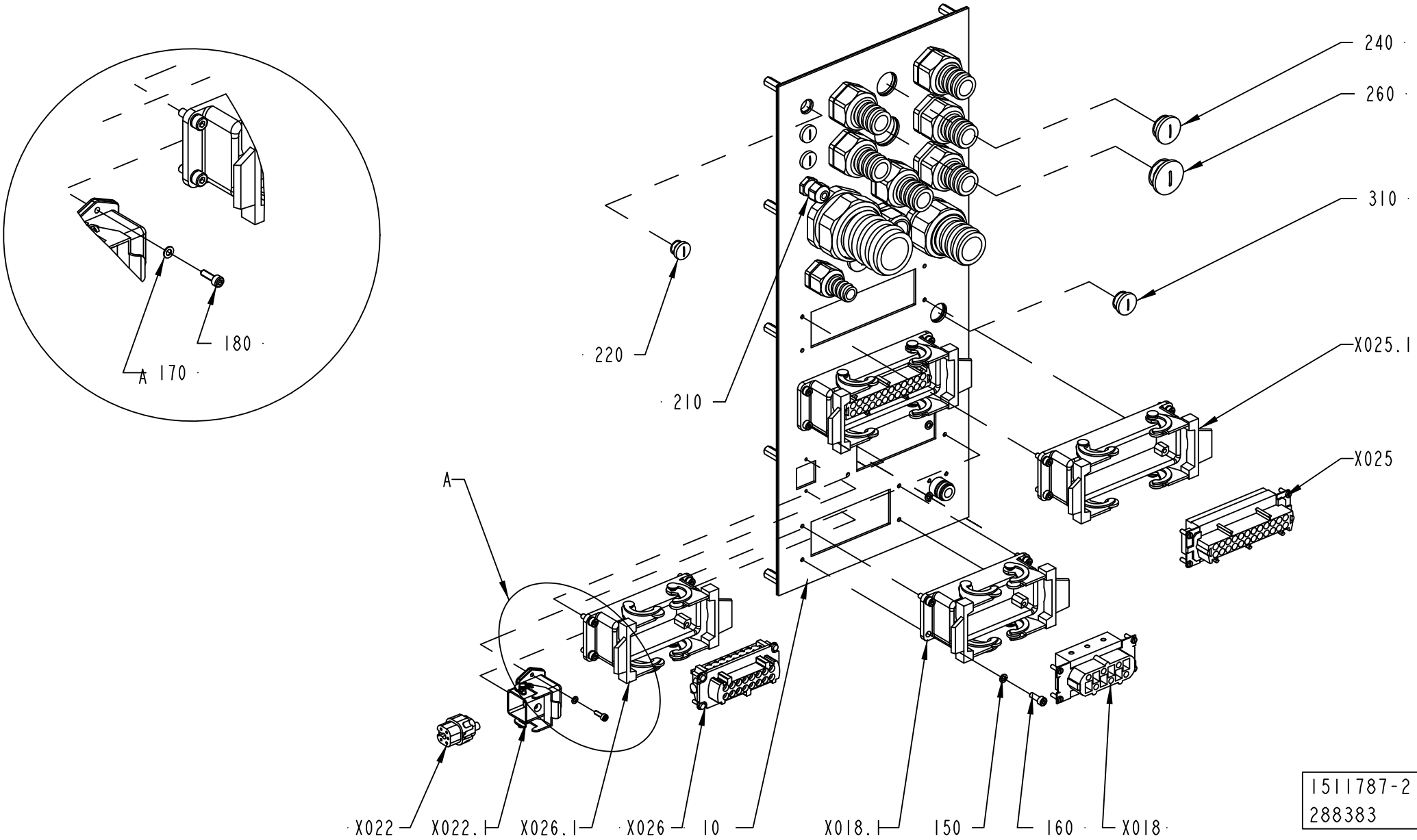

1511787-2
288383

ECM: 292612 - 20070126
Group number: 1511787-0100
Assembly Drawing: 1511787-2_1_AB

This list covers pages from 10-90 to 10-103

Pos	Part No	UN	Qty	Description	Page No
TBA NOPT (See drawing on pages: 10-90, 10-92, 10-94)					
090	1037574-0000		1	COVER PLATE	
100	1487430-0000		1	COVER	
110	1129481-0000		1	COVERING PLATE	
120	1037575-0000		1	GASKET	
130	1487431-0000		1	GASKET	
135	1129478-0000		1	GASKET	
210	90458-0305		2	CABLE GLAND, M12X1,5, NO.5311 1000	
220	90458-1306		2	BLIND PLUG CIRCULAR, M12X1,5 514GFK/212	
240	90458-1308		8	BLIND PLUG CIRCULAR, M20X1,5 514GFK/220	
260	90458-1309		4	BLIND PLUG CIRCULAR, M25X1,5 514GFK/225	
280	90458-1312		1	BLIND PLUG CIRCULAR, M50X1,5 514GFK/250	
TBA PT19 (See drawing on pages: 10-96, 10-98, 10-100, 10-102)					
210	90458-0305		1	CABLE GLAND, M12X1,5, NO.5311 1000	
220	90458-1306		3	BLIND PLUG CIRCULAR, M12X1,5 514GFK/212	
240	90458-1308		2	BLIND PLUG CIRCULAR, M20X1,5 514GFK/220	
260	90458-1309		1	BLIND PLUG CIRCULAR, M25X1,5 514GFK/225	
320	90458-0422		1	GLAND W/O INSERT M20 EXTENDED	
330	90458-0428		1	HOSE GLAND W/O INSERT M20 EXTENDED	
340	90458-0430		4	HOSE GLAND W/O INSERT M20 EXTENDED	
350	90458-0188		3	GLAND, INSERT, MULTI HOLE, 1X7/1X10,5	
360	90457-0147		1	GLAND, INSERT, MULTI HOLE, 2X7	
370	90458-0416		1	HOSE GLAND W/O INSERT M50 NORMAL	
380	2618387-0000		1	INSERT	
390	90458-0432		1	HOSE GLAND W/O INSERT M25 EXTENDED	
400	353249-0016		1	INSERT, SINGEL HOLE, EK 155/18	
410	353249-0075		1	INSERT, SINGEL HOLE, EK 153/13	
420	90458-0431		2	HOSE GLAND W/O INSERT M25 EXTENDED	
430	353249-0013		2	INSERT, SINGEL HOLE, EK 154/13	
X022	90110-0296		1	FEMALE INSERT HDC-HA-4BS 149840-B/2	
X022.1	90458-1181		1	BULKHEAD HOUSING HDC-HA-3-AWVL1/11	
X025	90110-0151		1	FEMALE INSERT 24-POL 121130 0000	
X025.1	90110-0153		1	CHASSIS HOUSING 24-P CHI 24, 121240 0000	
X026	90458-1406		1	FEMALE INSERT 120770	
X026.1	90110-0243		1	CONTACT HOUSING 16-POL 70.320.1628.0	
Common Parts					
010	1511832-0000		1	PLATE	
020	1511833-0000		1	GASKET	
030	1517676-0000		10	SPACER	
140	315105-0146		10	WASHER BRB 5,3X10 RFR	
150	315402-0136		16	LOCK WASHER FBB 4,1	
160	312115-0291		16	SCREW ISO4762 M4X12 A4 80	
170	315105-0124		2	WASHER BRB 3,2X6 RFR	
180	312115-0224		2	SCREW ISO4762 M3X10 A4 80	
190	90110-0127		1	COAXIAL CONNECTOR, GE 15057C10HBNT-2PT	
200	312115-0220		4	SCREW ISO4762 M3X6 A4 80	
230	90458-0321		4	NUT, M12X1,5	
250	90458-0461		8	GLAND, LOCK NUT, M20X1,5	
270	90458-0462		4	GLAND, LOCK NUT, M25X1,5	
290	90458-0465		1	GLAND, LOCK NUT, M50X1,5	
300	90458-0460		1	GLAND, LOCK NUT, M16X1,5	
310	90458-1307		1	BLIND PLUG CIRCULAR, M16X1,5 514GFK/216	
440	353249-0036		1	INSERT, MULTI HOLE, EK152 M 2X4	
X018	90110-0247		1	FEMALE INSERT 70.200.0653.0	
X018.1	90110-0243		1	CONTACT HOUSING 16-POL 70.320.1628.0	
X019	90110-0151		1	FEMALE INSERT 24-POL 121130 0000	
X019.1	90110-0153		1	CHASSIS HOUSING 24-P CHI 24, 121240 0000	

Machine Type	Group Description	Used-In	Group Number	Page No

STRIP APPLICATOR CABLE INLETS

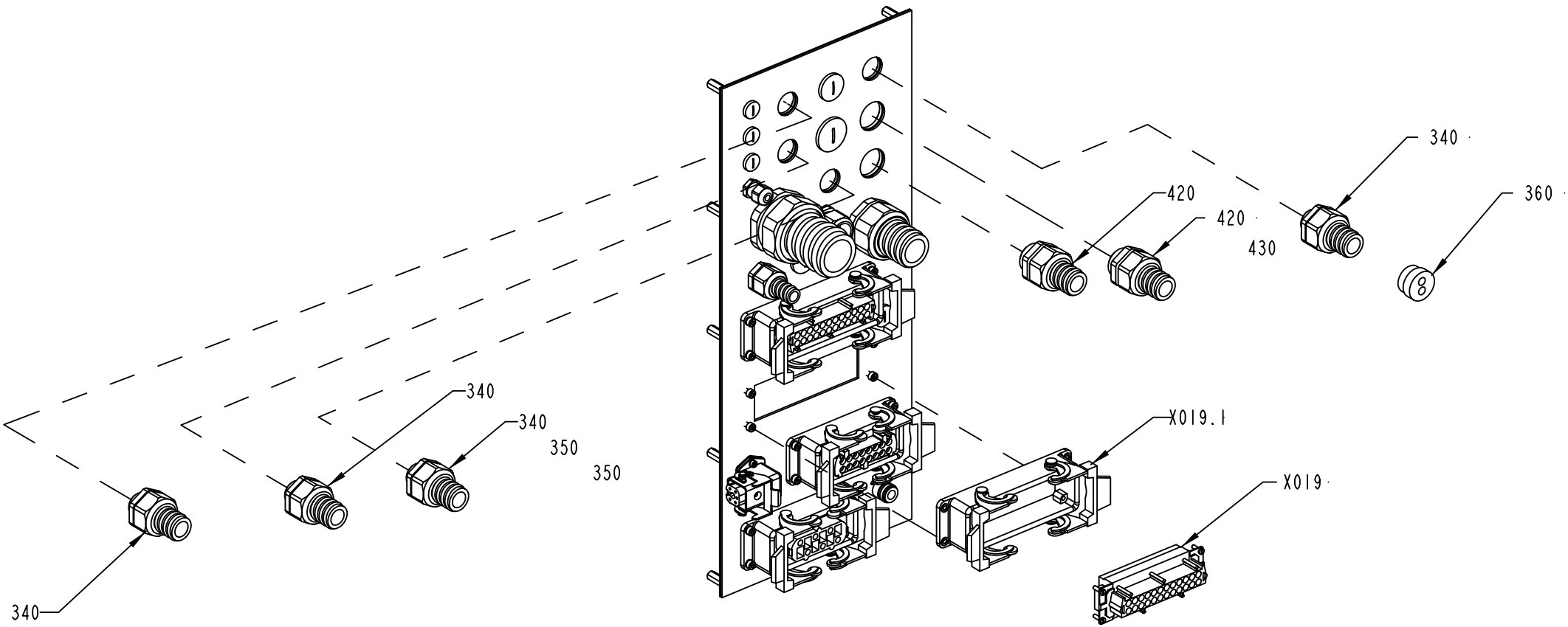

1511787-2
2003888383

ECM: 292612 - 20070126
Group number: 1511787-0100
Assembly Drawing: 1511787-2_2_AB

This list covers pages from 10-90 to 10-103

Pos	Part No	UN	Qty	Description	Page No
TBA NOPT (See drawing on pages: 10-90, 10-92, 10-94)					
090	1037574-0000		1	COVER PLATE	
100	1487430-0000		1	COVER	
110	1129481-0000		1	COVERING PLATE	
120	1037575-0000		1	GASKET	
130	1487431-0000		1	GASKET	
135	1129478-0000		1	GASKET	
210	90458-0305		2	CABLE GLAND, M12X1,5, NO.5311 1000	
220	90458-1306		2	BLIND PLUG CIRCULAR, M12X1,5 514GFK/212	
240	90458-1308		8	BLIND PLUG CIRCULAR, M20X1,5 514GFK/220	
260	90458-1309		4	BLIND PLUG CIRCULAR, M25X1,5 514GFK/225	
280	90458-1312		1	BLIND PLUG CIRCULAR, M50X1,5 514GFK/250	
TBA PT19 (See drawing on pages: 10-96, 10-98, 10-100, 10-102)					
210	90458-0305		1	CABLE GLAND, M12X1,5, NO.5311 1000	
220	90458-1306		3	BLIND PLUG CIRCULAR, M12X1,5 514GFK/212	
240	90458-1308		2	BLIND PLUG CIRCULAR, M20X1,5 514GFK/220	
260	90458-1309		1	BLIND PLUG CIRCULAR, M25X1,5 514GFK/225	
320	90458-0422		1	GLAND W/O INSERT M20 EXTENDED	
330	90458-0428		1	HOSE GLAND W/O INSERT M20 EXTENDED	
340	90458-0430		4	HOSE GLAND W/O INSERT M20 EXTENDED	
350	90458-0188		3	GLAND, INSERT, MULTI HOLE, 1X7/1X10,5	
360	90457-0147		1	GLAND, INSERT, MULTI HOLE, 2X7	
370	90458-0416		1	HOSE GLAND W/O INSERT M50 NORMAL	
380	2618387-0000		1	INSERT	
390	90458-0432		1	HOSE GLAND W/O INSERT M25 EXTENDED	
400	353249-0016		1	INSERT, SINGEL HOLE, EK 155/18	
410	353249-0075		1	INSERT, SINGEL HOLE, EK 153/13	
420	90458-0431		2	HOSE GLAND W/O INSERT M25 EXTENDED	
430	353249-0013		2	INSERT, SINGEL HOLE, EK 154/13	
X022	90110-0296		1	FEMALE INSERT HDC-HA-4BS 149840-B/2	
X022.1	90458-1181		1	BULKHEAD HOUSING HDC-HA-3-AWVL1/11	
X025	90110-0151		1	FEMALE INSERT 24-POL 121130 0000	
X025.1	90110-0153		1	CHASSIS HOUSING 24-P CHI 24, 121240 0000	
X026	90458-1406		1	FEMALE INSERT 120770	
X026.1	90110-0243		1	CONTACT HOUSING 16-POL 70.320.1628.0	
Common Parts					
010	1511832-0000		1	PLATE	
020	1511833-0000		1	GASKET	
030	1517676-0000		10	SPACER	
140	315105-0146		10	WASHER BRB 5,3X10 RFR	
150	315402-0136		16	LOCK WASHER FBB 4,1	
160	312115-0291		16	SCREW ISO4762 M4X12 A4 80	
170	315105-0124		2	WASHER BRB 3,2X6 RFR	
180	312115-0224		2	SCREW ISO4762 M3X10 A4 80	
190	90110-0127		1	COAXIAL CONNECTOR, GE 15057C10HBNT-2PT	
200	312115-0220		4	SCREW ISO4762 M3X6 A4 80	
230	90458-0321		4	NUT, M12X1,5	
250	90458-0461		8	GLAND, LOCK NUT, M20X1,5	
270	90458-0462		4	GLAND, LOCK NUT, M25X1,5	
290	90458-0465		1	GLAND, LOCK NUT, M50X1,5	
300	90458-0460		1	GLAND, LOCK NUT, M16X1,5	
310	90458-1307		1	BLIND PLUG CIRCULAR, M16X1,5 514GFK/216	
440	353249-0036		1	INSERT, MULTI HOLE, EK152 M 2X4	
X018	90110-0247		1	FEMALE INSERT 70.200.0653.0	
X018.1	90110-0243		1	CONTACT HOUSING 16-POL 70.320.1628.0	
X019	90110-0151		1	FEMALE INSERT 24-POL 121130 0000	
X019.1	90110-0153		1	CHASSIS HOUSING 24-P CHI 24, 121240 0000	

Machine Type	Group Description	Used-In	Group Number	Page No

STRIP APPLICATOR CABLE INLETS

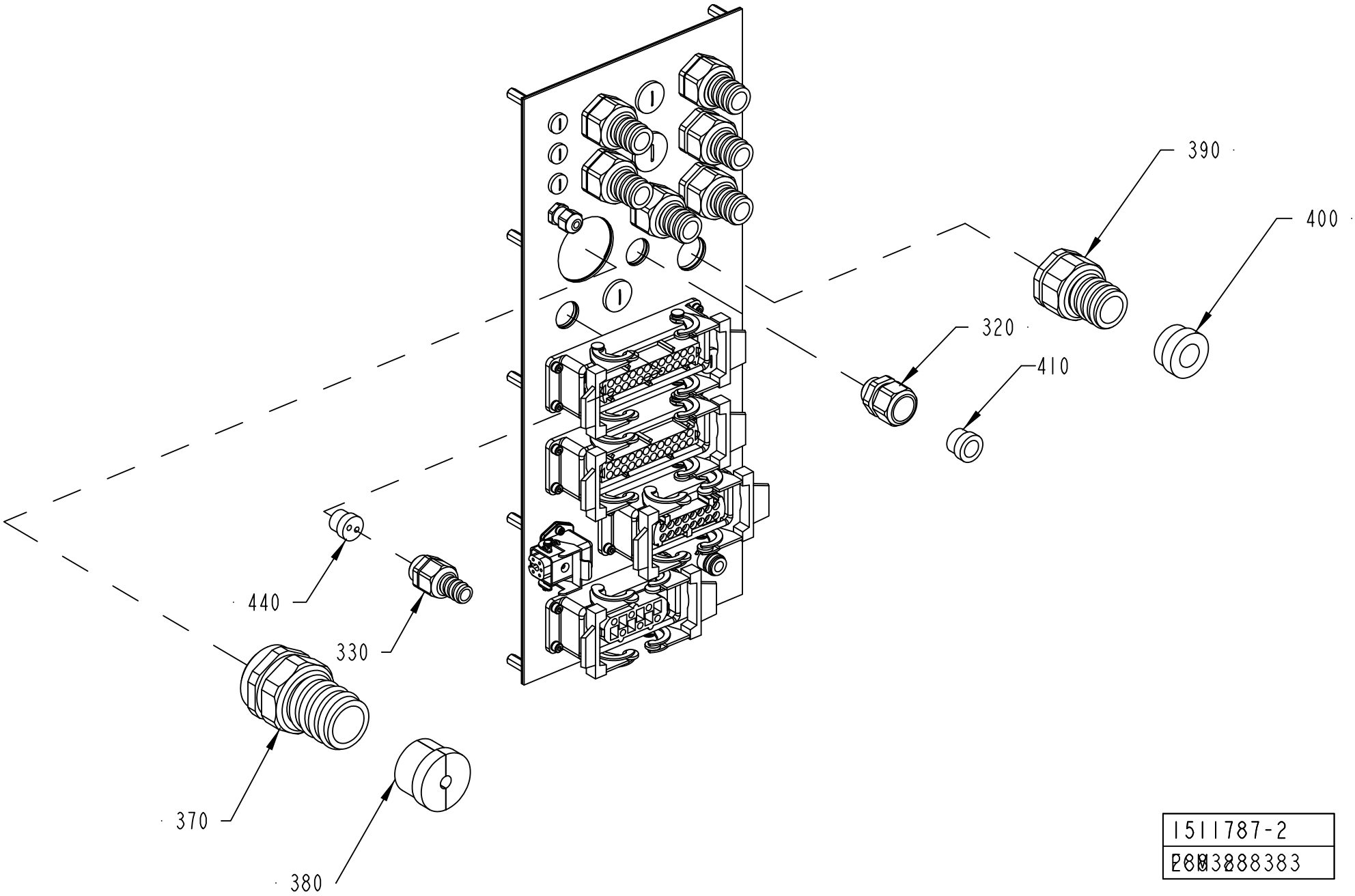

1511787-2
PRM3888383

ECM: 292612 - 20070126
Group number: 1511787-0100
Assembly Drawing: 1511787-2_3_AB

This list covers pages from 10-90 to 10-103

Pos	Part No	UN	Qty	Description	Page No
TBA NOPT (See drawing on pages: 10-90, 10-92, 10-94)					
090	1037574-0000		1	COVER PLATE	
100	1487430-0000		1	COVER	
110	1129481-0000		1	COVERING PLATE	
120	1037575-0000		1	GASKET	
130	1487431-0000		1	GASKET	
135	1129478-0000		1	GASKET	
210	90458-0305		2	CABLE GLAND, M12X1,5, NO.5311 1000	
220	90458-1306		2	BLIND PLUG CIRCULAR, M12X1,5 514GFK/212	
240	90458-1308		8	BLIND PLUG CIRCULAR, M20X1,5 514GFK/220	
260	90458-1309		4	BLIND PLUG CIRCULAR, M25X1,5 514GFK/225	
280	90458-1312		1	BLIND PLUG CIRCULAR, M50X1,5 514GFK/250	
TBA PT19 (See drawing on pages: 10-96, 10-98, 10-100, 10-102)					
210	90458-0305		1	CABLE GLAND, M12X1,5, NO.5311 1000	
220	90458-1306		3	BLIND PLUG CIRCULAR, M12X1,5 514GFK/212	
240	90458-1308		2	BLIND PLUG CIRCULAR, M20X1,5 514GFK/220	
260	90458-1309		1	BLIND PLUG CIRCULAR, M25X1,5 514GFK/225	
320	90458-0422		1	GLAND W/O INSERT M20 EXTENDED	
330	90458-0428		1	HOSE GLAND W/O INSERT M20 EXTENDED	
340	90458-0430		4	HOSE GLAND W/O INSERT M20 EXTENDED	
350	90458-0188		3	GLAND, INSERT, MULTI HOLE, 1X7/1X10,5	
360	90457-0147		1	GLAND, INSERT, MULTI HOLE, 2X7	
370	90458-0416		1	HOSE GLAND W/O INSERT M50 NORMAL	
380	2618387-0000		1	INSERT	
390	90458-0432		1	HOSE GLAND W/O INSERT M25 EXTENDED	
400	353249-0016		1	INSERT, SINGEL HOLE, EK 155/18	
410	353249-0075		1	INSERT, SINGEL HOLE, EK 153/13	
420	90458-0431		2	HOSE GLAND W/O INSERT M25 EXTENDED	
430	353249-0013		2	INSERT, SINGEL HOLE, EK 154/13	
X022	90110-0296		1	FEMALE INSERT HDC-HA-4BS 149840-B/2	
X022.1	90458-1181		1	BULKHEAD HOUSING HDC-HA-3-AWVL1/11	
X025	90110-0151		1	FEMALE INSERT 24-POL 121130 0000	
X025.1	90110-0153		1	CHASSIS HOUSING 24-P CHI 24, 121240 0000	
X026	90458-1406		1	FEMALE INSERT 120770	
X026.1	90110-0243		1	CONTACT HOUSING 16-POL 70.320.1628.0	
Common Parts					
010	1511832-0000		1	PLATE	
020	1511833-0000		1	GASKET	
030	1517676-0000		10	SPACER	
140	315105-0146		10	WASHER BRB 5,3X10 RFR	
150	315402-0136		16	LOCK WASHER FBB 4,1	
160	312115-0291		16	SCREW ISO4762 M4X12 A4 80	
170	315105-0124		2	WASHER BRB 3,2X6 RFR	
180	312115-0224		2	SCREW ISO4762 M3X10 A4 80	
190	90110-0127		1	COAXIAL CONNECTOR, GE 15057C10HBNT-2PT	
200	312115-0220		4	SCREW ISO4762 M3X6 A4 80	
230	90458-0321		4	NUT, M12X1,5	
250	90458-0461		8	GLAND, LOCK NUT, M20X1,5	
270	90458-0462		4	GLAND, LOCK NUT, M25X1,5	
290	90458-0465		1	GLAND, LOCK NUT, M50X1,5	
300	90458-0460		1	GLAND, LOCK NUT, M16X1,5	
310	90458-1307		1	BLIND PLUG CIRCULAR, M16X1,5 514GFK/216	
440	353249-0036		1	INSERT, MULTI HOLE, EK152 M 2X4	
X018	90110-0247		1	FEMALE INSERT 70.200.0653.0	
X018.1	90110-0243		1	CONTACT HOUSING 16-POL 70.320.1628.0	
X019	90110-0151		1	FEMALE INSERT 24-POL 121130 0000	
X019.1	90110-0153		1	CHASSIS HOUSING 24-P CHI 24, 121240 0000	

Machine Type	Group Description	Used-In	Group Number	Page No

STRIP APPLICATOR CABLE INLETS

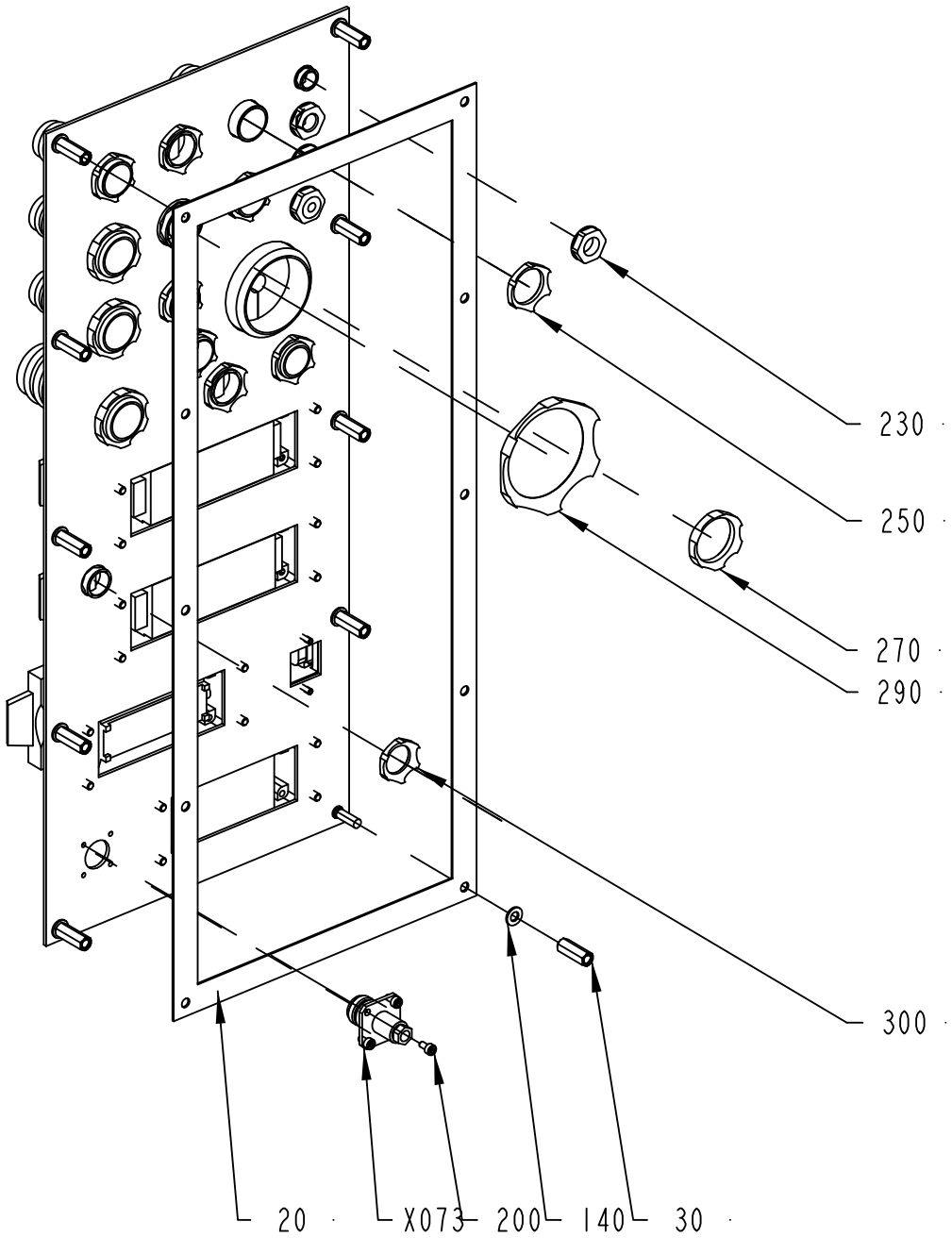

1511787-2
ECM 288383

ECM: 292612 - 20070126
Group number: 1511787-0100
Assembly Drawing: 1511787-2_4_AB

This list covers pages from 10-90 to 10-103

Pos	Part No	UN	Qty	Description	Page No
TBA NOPT (See drawing on pages: 10-90, 10-92, 10-94)					
090	1037574-0000		1	COVER PLATE	
100	1487430-0000		1	COVER	
110	1129481-0000		1	COVERING PLATE	
120	1037575-0000		1	GASKET	
130	1487431-0000		1	GASKET	
135	1129478-0000		1	GASKET	
210	90458-0305		2	CABLE GLAND, M12X1,5, NO.5311 1000	
220	90458-1306		2	BLIND PLUG CIRCULAR, M12X1,5 514GFK/212	
240	90458-1308		8	BLIND PLUG CIRCULAR, M20X1,5 514GFK/220	
260	90458-1309		4	BLIND PLUG CIRCULAR, M25X1,5 514GFK/225	
280	90458-1312		1	BLIND PLUG CIRCULAR, M50X1,5 514GFK/250	
TBA PT19 (See drawing on pages: 10-96, 10-98, 10-100, 10-102)					
210	90458-0305		1	CABLE GLAND, M12X1,5, NO.5311 1000	
220	90458-1306		3	BLIND PLUG CIRCULAR, M12X1,5 514GFK/212	
240	90458-1308		2	BLIND PLUG CIRCULAR, M20X1,5 514GFK/220	
260	90458-1309		1	BLIND PLUG CIRCULAR, M25X1,5 514GFK/225	
320	90458-0422		1	GLAND W/O INSERT M20 EXTENDED	
330	90458-0428		1	HOSE GLAND W/O INSERT M20 EXTENDED	
340	90458-0430		4	HOSE GLAND W/O INSERT M20 EXTENDED	
350	90458-0188		3	GLAND, INSERT, MULTI HOLE, 1X7/1X10,5	
360	90457-0147		1	GLAND, INSERT, MULTI HOLE, 2X7	
370	90458-0416		1	HOSE GLAND W/O INSERT M50 NORMAL	
380	2618387-0000		1	INSERT	
390	90458-0432		1	HOSE GLAND W/O INSERT M25 EXTENDED	
400	353249-0016		1	INSERT, SINGEL HOLE, EK 155/18	
410	353249-0075		1	INSERT, SINGEL HOLE, EK 153/13	
420	90458-0431		2	HOSE GLAND W/O INSERT M25 EXTENDED	
430	353249-0013		2	INSERT, SINGEL HOLE, EK 154/13	
X022	90110-0296		1	FEMALE INSERT HDC-HA-4BS 149840-B/2	
X022.1	90458-1181		1	BULKHEAD HOUSING HDC-HA-3-AWVL1/11	
X025	90110-0151		1	FEMALE INSERT 24-POL 121130 0000	
X025.1	90110-0153		1	CHASSIS HOUSING 24-P CHI 24, 121240 0000	
X026	90458-1406		1	FEMALE INSERT 120770	
X026.1	90110-0243		1	CONTACT HOUSING 16-POL 70.320.1628.0	
Common Parts					
010	1511832-0000		1	PLATE	
020	1511833-0000		1	GASKET	
030	1517676-0000		10	SPACER	
140	315105-0146		10	WASHER BRB 5,3X10 RFR	
150	315402-0136		16	LOCK WASHER FBB 4,1	
160	312115-0291		16	SCREW ISO4762 M4X12 A4 80	
170	315105-0124		2	WASHER BRB 3,2X6 RFR	
180	312115-0224		2	SCREW ISO4762 M3X10 A4 80	
190	90110-0127		1	COAXIAL CONNECTOR, GE 15057C10HBNT-2PT	
200	312115-0220		4	SCREW ISO4762 M3X6 A4 80	
230	90458-0321		4	NUT, M12X1,5	
250	90458-0461		8	GLAND, LOCK NUT, M20X1,5	
270	90458-0462		4	GLAND, LOCK NUT, M25X1,5	
290	90458-0465		1	GLAND, LOCK NUT, M50X1,5	
300	90458-0460		1	GLAND, LOCK NUT, M16X1,5	
310	90458-1307		1	BLIND PLUG CIRCULAR, M16X1,5 514GFK/216	
440	353249-0036		1	INSERT, MULTI HOLE, EK152 M 2X4	
X018	90110-0247		1	FEMALE INSERT 70.200.0653.0	
X018.1	90110-0243		1	CONTACT HOUSING 16-POL 70.320.1628.0	
X019	90110-0151		1	FEMALE INSERT 24-POL 121130 0000	
X019.1	90110-0153		1	CHASSIS HOUSING 24-P CHI 24, 121240 0000	

Machine Type	Group Description	Used-In	Group Number	Page No

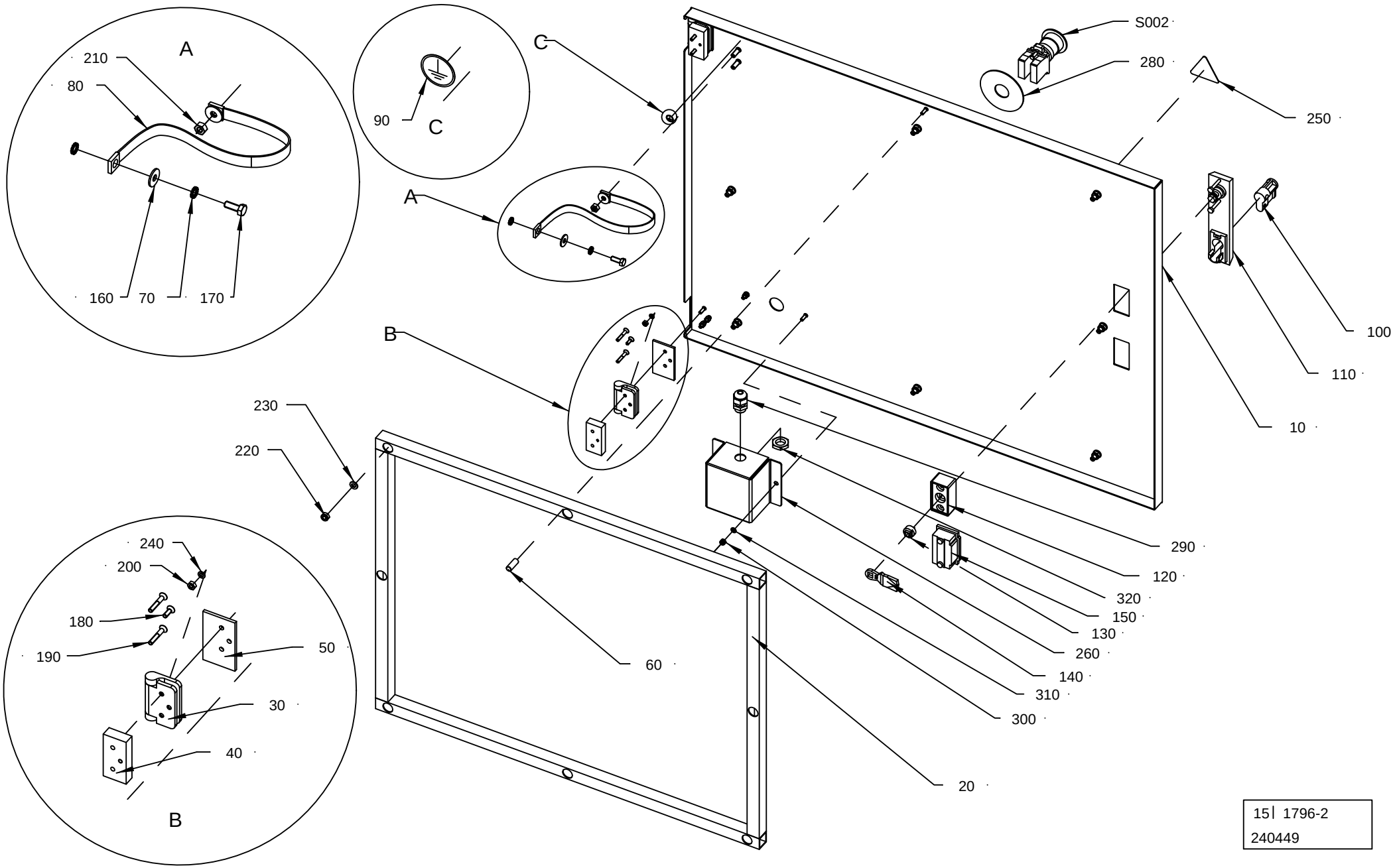

15| 1796-2
240449

ECM: 241396 - 20051215
Group number: 1511796-0200
Assembly Drawing: 1511796-2_1_AA

Pos	Part No	UN	Qty	Description	Page No
-					
010	1523969-0000		1	DOOR	
020	1517664-0000		1	FRAME	
030	1523438-0000		2	HINGE	
040	1523441-0000		2	SPACER SHEET	
050	1523442-0000		2	SPACER SHEET	
060	1523957-0000		2	SPACER	
070	90062-0015		4	LOCK WASHER SERRAT.EXT.GEAR,6,4/11 H=0,7	
080	90135-0044		1	EARTH WIRE, L=320 MM 16 MM2	
090	90194-0163		1	SIGN, EARTH WITHIN CIRCLE	
100	90237-0128		1	LOCK CYLINDER, 1109-U3	
110	90237-0150		1	TURNING HANDLE, NO. 1125-U190-0A	
120	90237-0154		1	LOCK HOUSING, 1121-U60-0C	
130	90237-0155		1	LOCK ADAPTER, 1121-U40	
140	90237-0156		1	LOCK BOLT, 1000-16	
150	90237-0176		1	TURNING HANDLE, 1125-U190-A	
160	90457-0192		2	WASHER PLAIN ROUND, 6,5/18, H=1,5	
170	312105-0368		1	SCREW M6S ISO 4017 M6X16 A480	
180	312155-0291		2	SCREW DIN 7991 MF6S M4X12 A4 70	
190	312155-0297		4	SCREW DIN 7991 MF6S M4X25 A4 70	
200	312605-0312		6	HEXAGON NUT, M6M M4 A280	
210	312605-0316		1	HEXAGON NUT, M6M M6 A280	
220	312812-0316		8	HEXAGON NUT, NY-LOCK M6 A480	
230	315105-0153		8	WASHER BRB 6,4X12 RFR	
240	315402-0136		6	LOCK WASHER FBB 4,1	
250	359705-0015		1	WARNING SIGN ISO, RISK OF ELECTRIC SHOCK	
260	1523971-0000		1	CONNECTION BOX	
280	486826-0000		1	SIGN	
290	352103-0101		1	CABLE GLAND, ST 9, PR15,2/PG9	
300	312812-0312		2	HEXAGON NUT, NY-LOCK M4 A480	
310	315105-0136		2	WASHER BRB 4,3X8 RFR	
320	90099-0104		1	NUT, PR 15,2 (PG9)	
S002	90458-1651		1	EMERGENCY STOP, ZB4-BS-844 ZB4-BZ-104	

Pos	Part No	UN	Qty	Description	Page No

Machine Type	Group Description	Used-In	Group Number	Page No

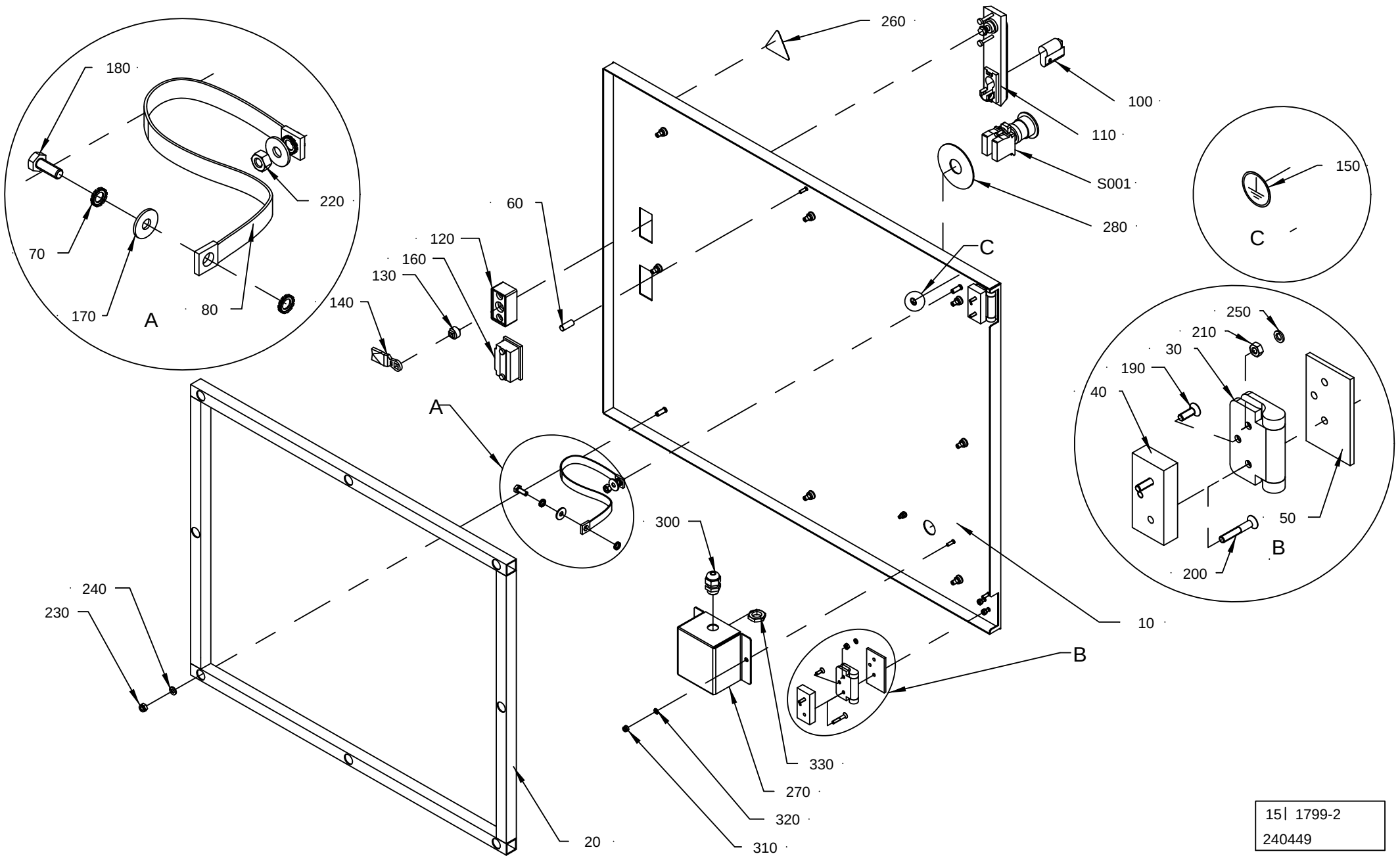

15| 1799-2
240449

ECM: 241397 - 20051215
Group number: 1511799-0200
Assembly Drawing: 1511799-2_1_AA

Pos	Part No	UN	Qty	Description	Page No
-					
020	1517664-0000		1	FRAME	
030	1523438-0000		2	HINGE	
040	1523441-0000		2	SPACER SHEET	
050	1523442-0000		2	SPACER SHEET	
060	1523957-0000		1	SPACER	
070	90062-0015		4	LOCK WASHER SERRAT.EXT.GEAR,6,4/11 H=0,7	
080	90135-0044		1	EARTH WIRE, L=320 MM 16 MM2	
090	1517667-0000		1	DOOR	
100	90237-0129		1	LOCK CYLINDER, 1109-U6	
110	90237-0150		1	TURNING HANDLE, NO. 1125-U190-0A	
120	90237-0154		1	LOCK HOUSING, 1121-U60-0C	
130	90237-0155		1	LOCK ADAPTER, 1121-U40	
140	90237-0156		1	LOCK BOLT, 1000-16	
150	90194-0163		1	SIGN, EARTH WITHIN CIRCLE	
160	90237-0176		1	TURNING HANDLE, 1125-U190-A	
170	90457-0192		2	WASHER PLAIN ROUND, 6,5/18, H=1,5	
180	312105-0368		1	SCREW M6S ISO 4017 M6X16 A480	
190	312155-0291		2	SCREW DIN 7991 MF6S M4X12 A4 70	
200	312155-0297		4	SCREW DIN 7991 MF6S M4X25 A4 70	
210	312605-0312		6	HEXAGON NUT, M6M M4 A280	
220	312605-0316		1	HEXAGON NUT, M6M M6 A280	
230	312812-0316		8	HEXAGON NUT, NY-LOCK M6 A480	
240	315105-0153		8	WASHER BRB 6,4X12 RFR	
250	315402-0136		6	LOCK WASHER FBB 4,1	
260	359705-0015		1	WARNING SIGN ISO, RISK OF ELECTRIC SHOCK	
270	1523971-0000		1	CONNECTION BOX	
290	486826-0000		1	SIGN	
300	352103-0101		1	CABLE GLAND, ST 9, PR15,2/PG9	
310	312812-0312		2	HEXAGON NUT, NY-LOCK M4 A480	
320	315105-0136		2	WASHER BRB 4,3X8 RFR	
330	90099-0104		1	NUT, PR 15,2 (PG9)	
S001	90458-1651		1	EMERGENCY STOP, ZB4-BS-844 ZB4-BZ-104	

Pos	Part No	UN	Qty	Description	Page No

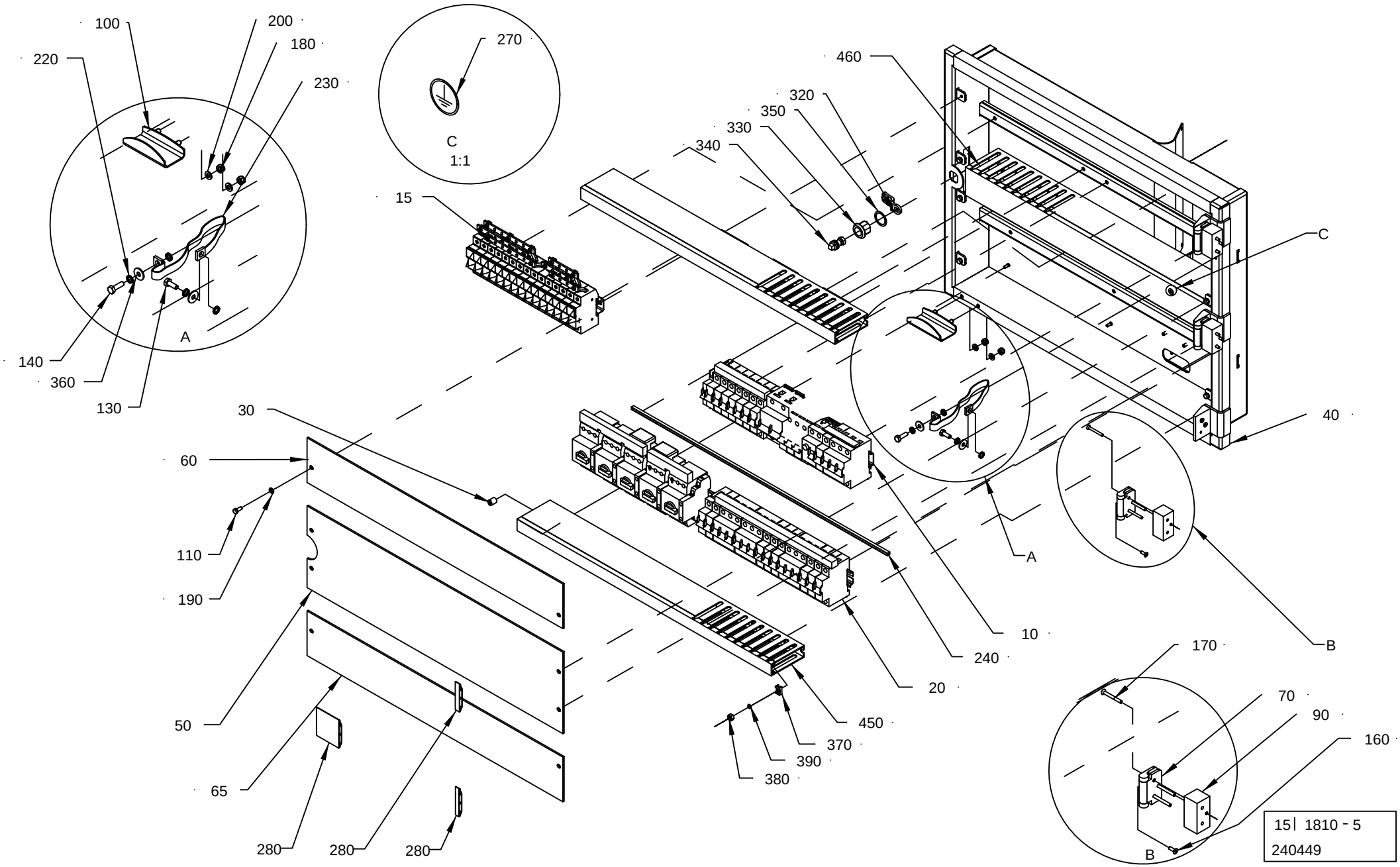
100
200
180
220
230
270
C
1:1
460
320
350
330
340
15
C
A
140
360
130
30
40
60
110
190
A
10
240
20
B
50
450
370
390
380
65
280
280
280
170
70
90
160
B
15| 1810 - 5
240449

ECM: 240715 - 20051215
Group number: 1511810-0200
Assembly Drawing: 1511810-5_1_AA

This list covers pages from 10-108 to 10-111

Pos	Part No	UN	Qty	Description	Page No
-					
010	1511822-0200		1	RAIL	**10-113**
015	1487447-0100		1	FUSE	**10-115**
020	1511823-0200		1	RAIL	**10-117**
030	1285109-0000		6	NUT	
040	2598114-0000		1	DOOR	
050	2542329-0000		1	COVER	
060	2542328-0000		1	COVER	
065	2542328-0000		1	COVER	
070	1523437-0000		2	HINGE	
090	1523440-0000		2	SPACER	
100	1523968-0000		1	HANDLE	
120	312105-0327		8	SCREW M6S ISO 4017 M5X12 A480	
130	312105-0368		1	SCREW M6S ISO 4017 M6X16 A480	
140	312105-0370		1	SCREW M6S ISO 4017 M6X20 A480	
160	312155-0291		6	SCREW DIN 7991 MF6S M4X12 A4 70	
170	312155-0301		6	SCREW DIN 7991 MF6S M4X35 A4 70	
180	312812-0316		2	HEXAGON NUT, NY-LOCK M6 A480	
190	315101-0146		10	WASHER PLAIN, BRB, 5,3/10 H=1	
200	315105-0153		2	WASHER BRB 6,4X12 RFR	
220	90062-0015		4	LOCK WASHER SERRAT.EXT.GEAR,6,4/11 H=0,7	
230	90135-0044		1	EARTH WIRE, L=320 MM 16 MM2	
240	90143-0094	MM	2330	SEAL	
270	90194-0163		1	SIGN, EARTH WITHIN CIRCLE	
280	90226-0455		1	BLIND PLATE ABB 1666060	
320	90237-0157		1	LOCK BOLT, 1000-230	
330	90237-0319		1	LOCK HOUSING, 1000-U134	
340	90237-0320		1	LOCK HOUSING, 1000-U136	
350	90237-0322		1	LOCK GASKET, 1000-U137	
360	90457-0192		2	WASHER PLAIN ROUND, 6,5/18, H=1,5	
370	352113-0205		3	ANCHOR PLATES FOR STRIPS, TYPE TM2S8-C10	
380	312605-0316		3	HEXAGON NUT, M6M M6 A280	
390	315105-0136		3	WASHER BRB 4,3X8 RFR	
450	2598375-0000		2	CABLE DUCT	
460	2598376-0000		1	CABLE DUCT	
470	2598377-0000		1	CABLE DUCT	
480	90181-0313		4	RIVET DUCTAFIX R4	

Pos	Part No	UN	Qty	Description	Page No

Machine Type | Group Description | Used-In | Group Number | Page No

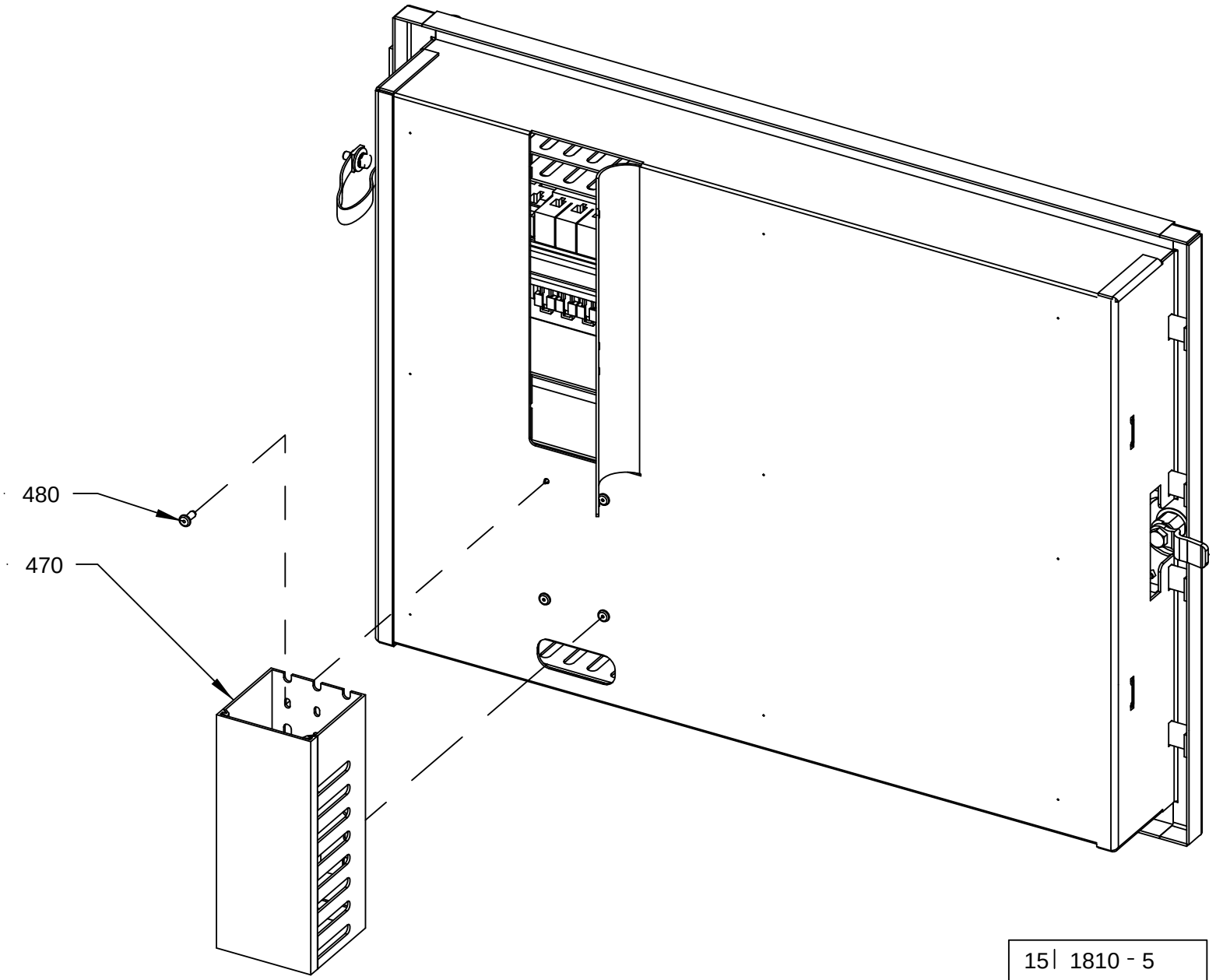

15 | 1810 - 5
240449

ECM: 240715 - 20051215
Group number: 1511810-0200
Assembly Drawing: 1511810-5_2_AA

This list covers pages from 10-108 to 10-111

Pos	Part No	UN	Qty	Description	Page No
-					
010	1511822-0200		1	RAIL	**10-113**
015	1487447-0100		1	FUSE	**10-115**
020	1511823-0200		1	RAIL	**10-117**
030	1285109-0000		6	NUT	
040	2598114-0000		1	DOOR	
050	2542329-0000		1	COVER	
060	2542328-0000		1	COVER	
065	2542328-0000		1	COVER	
070	1523437-0000		2	HINGE	
090	1523440-0000		2	SPACER	
100	1523968-0000		1	HANDLE	
120	312105-0327		8	SCREW M6S ISO 4017 M5X12 A480	
130	312105-0368		1	SCREW M6S ISO 4017 M6X16 A480	
140	312105-0370		1	SCREW M6S ISO 4017 M6X20 A480	
160	312155-0291		6	SCREW DIN 7991 MF6S M4X12 A4 70	
170	312155-0301		6	SCREW DIN 7991 MF6S M4X35 A4 70	
180	312812-0316		2	HEXAGON NUT, NY-LOCK M6 A480	
190	315101-0146		10	WASHER PLAIN, BRB, 5,3/10 H=1	
200	315105-0153		2	WASHER BRB 6,4X12 RFR	
220	90062-0015		4	LOCK WASHER SERRAT.EXT.GEAR,6,4/11 H=0,7	
230	90135-0044		1	EARTH WIRE, L=320 MM 16 MM2	
240	90143-0094	MM	2330	SEAL	
270	90194-0163		1	SIGN, EARTH WITHIN CIRCLE	
280	90226-0455		1	BLIND PLATE ABB 1666060	
320	90237-0157		1	LOCK BOLT, 1000-230	
330	90237-0319		1	LOCK HOUSING, 1000-U134	
340	90237-0320		1	LOCK HOUSING, 1000-U136	
350	90237-0322		1	LOCK GASKET, 1000-U137	
360	90457-0192		2	WASHER PLAIN ROUND, 6,5/18, H=1,5	
370	352113-0205		3	ANCHOR PLATES FOR STRIPS, TYPE TM2S8-C10	
380	312605-0316		3	HEXAGON NUT, M6M M6 A280	
390	315105-0136		3	WASHER BRB 4,3X8 RFR	
450	2598375-0000		2	CABLE DUCT	
460	2598376-0000		1	CABLE DUCT	
470	2598377-0000		1	CABLE DUCT	
480	90181-0313		4	RIVET DUCTAFIX R4	

Pos	Part No	UN	Qty	Description	Page No

Machine Type | Group Description | Used-In | Group Number | Page No

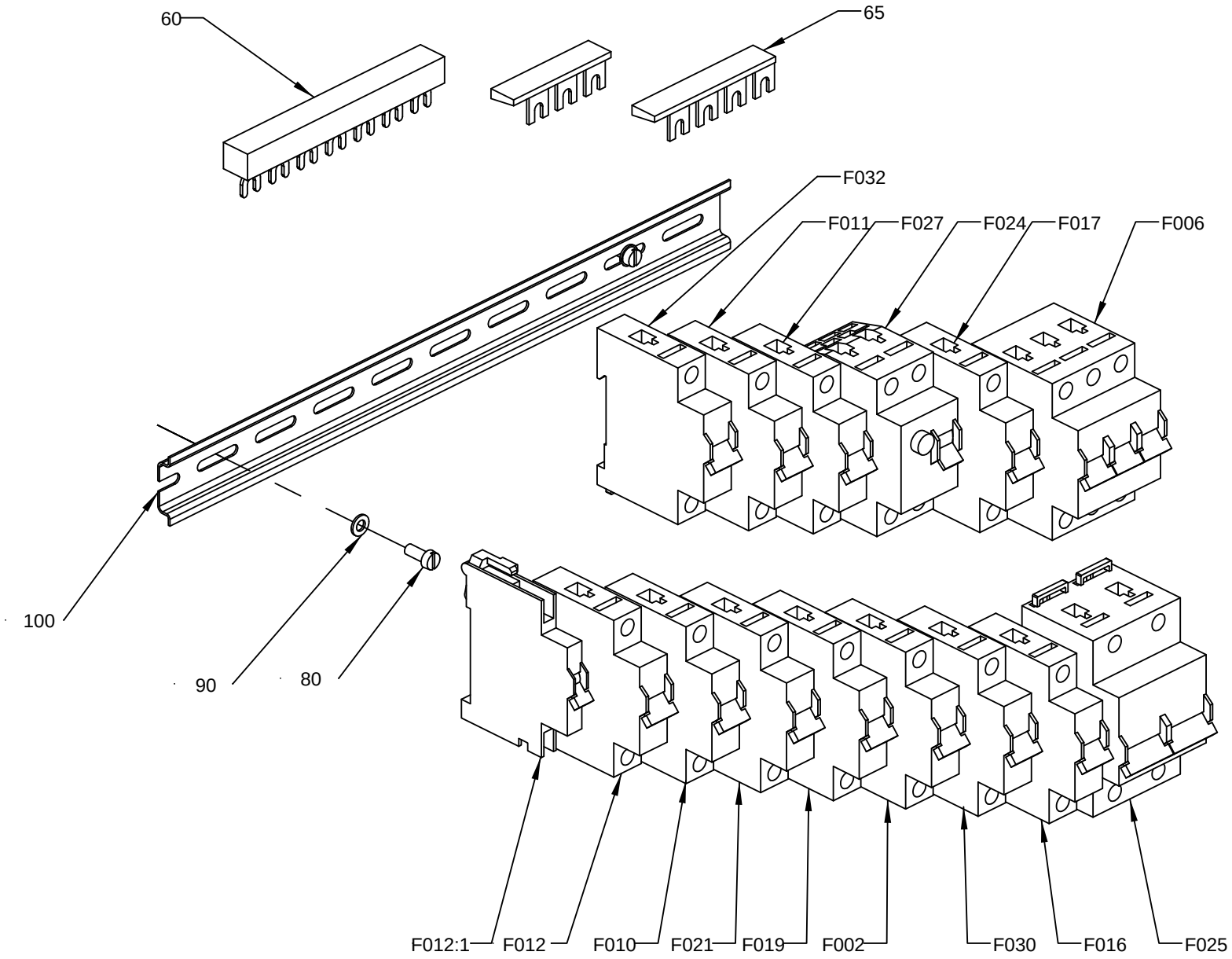

15| 1822 - 5
240449

ECM: 292610 - 20070126
Group number: 1511822-0200
Assembly Drawing: 1511822-5_1_AA

Pos	Part No	UN	Qty	Description	Page No
TBA NOPT ASU					
F016	351416-0160		1	MINIATURE CIRC. BREAK., FAZ -D16 1-POLE	
F025	90459-7072		1	MINIATURE CIRCUIT BREAKER, AZ-2-C100	
TBA PT19 ASU					
F011	354000-0100		1	MINIATURE CIRCUIT BREAKER, FAZ-C10/1	
F016	351416-0160		1	MINIATURE CIRC. BREAK., FAZ -D16 1-POLE	
F025	90459-7072		1	MINIATURE CIRCUIT BREAKER, AZ-2-C100	
F032	351416-0060		1	MINIATURE CIRC. BREAK., FAZ -D6 1-POLE	
TBA PT19 NOASU					
F011	354000-0100		1	MINIATURE CIRCUIT BREAKER, FAZ-C10/1	
F032	351416-0060		1	MINIATURE CIRC. BREAK., FAZ -D6 1-POLE	
Common Parts					
050	90457-0124		2	END CAP PSB-END6	
060	90459-5884		1	COMMONING BUSBAR, 3-P 3-PH 3X19 MOD 63A	
065	90459-5806		1	COMMONING BUSBAR, 1-P 1-PH 1X12 MOD 63A	
080	312125-0327		3	SCREW ISO 1207 M5X12 A4	
090	315105-0146		3	WASHER BRB 5,3X10 RFR	
100	353042-0004	MM	347	RAIL TS 35/7,5	
F002	354000-0100		1	MINIATURE CIRCUIT BREAKER, FAZ-C10/1	
F006	354002-0060		1	MINIATURE CIRCUIT BREAKER, FAZ-C6/3	
F010	351416-0100		1	3INIATURE CIRC. BREAK., FAZ -D10 1-POLE	
F012	354000-0010		1	MINIATURE CIRCUIT BREAKER, FAZ-C1/1	
F012.1	90459-5813		1	AUXILARY CONTACT, FAZ-XHI11	
F017	354000-0060		1	MINIATURE CIRCUIT BREAKER, FAZ-C6/1	
F019	354000-0100		1	MINIATURE CIRCUIT BREAKER, FAZ-C10/1	
F021	354000-0005		1	MINIATURE CIRCUIT BREAKER, FAZ-C0,5/1	
F024	90459-5811		1	RESIDUAL CURRENT DEVICE, FI-25/2/003-A	
F027	351416-0100		1	3INIATURE CIRC. BREAK., FAZ -D10 1-POLE	
F030	354000-0005		1	MINIATURE CIRCUIT BREAKER, FAZ-C0,5/1	

Pos	Part No	UN	Qty	Description	Page No

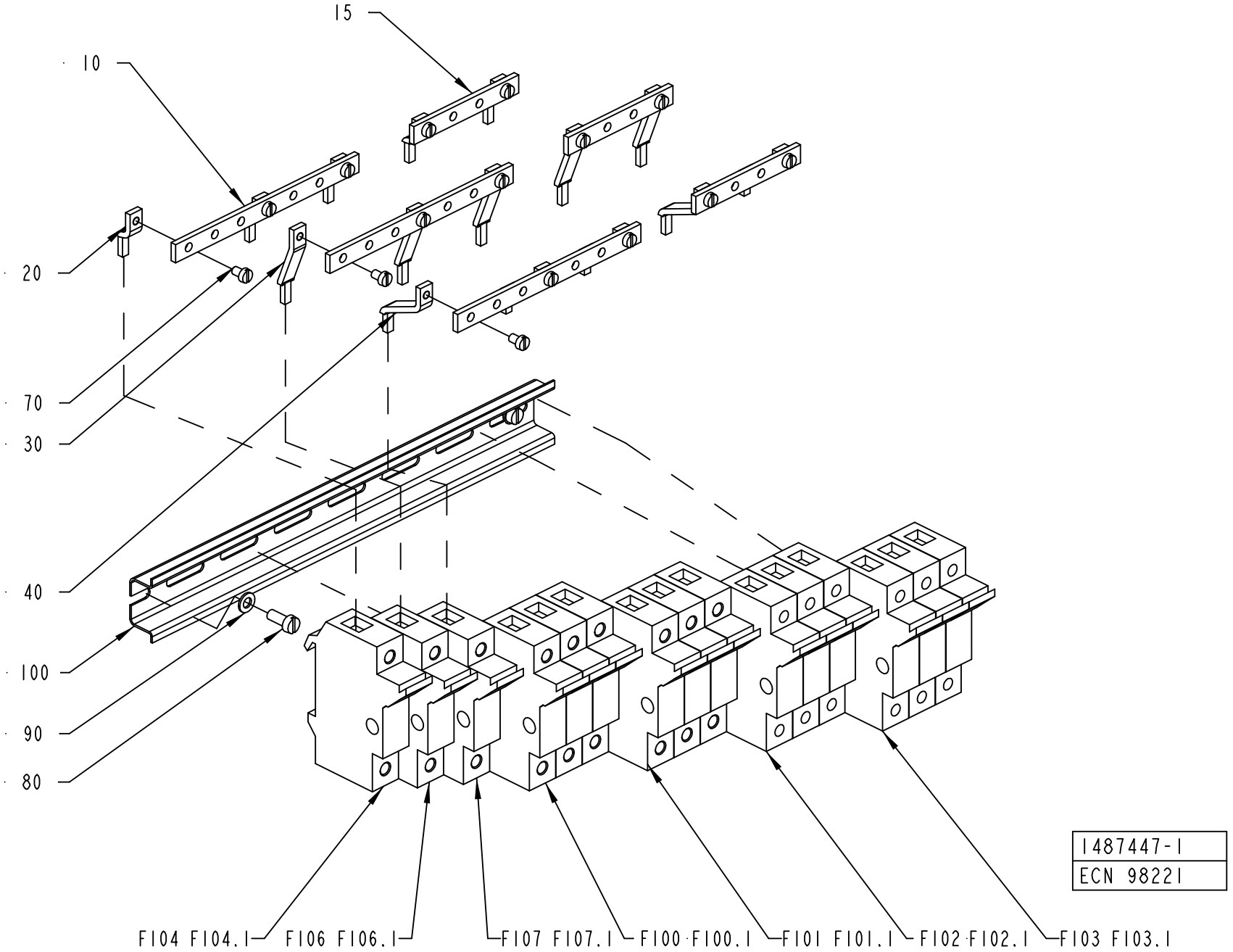
15
10
20
70
30
40
100
90
80
F104 F104.1
F106 F106.1
F107 F107.1
F100 F100.1
F101 F101.1
F102 F102.1
F103 F103.1
1487447-1
ECN 98221

ECM: 242037 - 20060127
Group number: 1487447-0100
Assembly Drawing: 1487447-1_1_AB

Pos	Part No	UN	Qty	Description	Page No
-					
010	732419-0007		3	RAIL	
015	732419-0004		3	RAIL	
020	971140-0000		5	PHASE BAR ANGLED	
030	971141-0000		5	PHASE BAR ANGLED	
040	971142-0000		5	PHASE BAR ANGLED	
070	312125-0285		15	SCREW ISO 1207 M4X6 A4	
080	312125-0327		2	SCREW ISO 1207 M5X12 A4	
090	315105-0146		2	WASHER BRB 5,3X10 RFR	
100	353042-0003	MM	269	RAIL TS35/15/1,5	
F100	90233-0027		3	TUBE FUSE, 16A	
	90233-0305		*1*	*INDICATOR*	
F100.1	90459-3800		3	FUSE HOLDER, MSC 10 3-POLE D250151	
F101	90233-0029		3	TUBE FUSE, 25A	
F101.1	90459-3800		3	FUSE HOLDER, MSC 10 3-POLE D250151	
F102	90459-1254		3	TUBE FUSE, 4A 500V	
F102.1	90459-3800		1	FUSE HOLDER, MSC 10 3-POLE D250151	
F103	90459-1254		3	TUBE FUSE, 4A 500V	
F103.1	90459-3800		1	FUSE HOLDER, MSC 10 3-POLE D250151	
F104	90233-0027		1	TUBE FUSE, 16A	
	90233-0305		*1*	*INDICATOR*	
F104.1	90459-3799		1	FUSE HOLDER, MSC 10 1-POLE A250148	
F106	90233-0028		1	TUBE FUSE, 10A	
F106.1	90459-3799		1	FUSE HOLDER, MSC 10 1-POLE A250148	
F107	90233-0028		1	TUBE FUSE, 10A	
F107.1	90459-3799		1	FUSE HOLDER, MSC 10 1-POLE A250148	

Pos	Part No	UN	Qty	Description	Page No

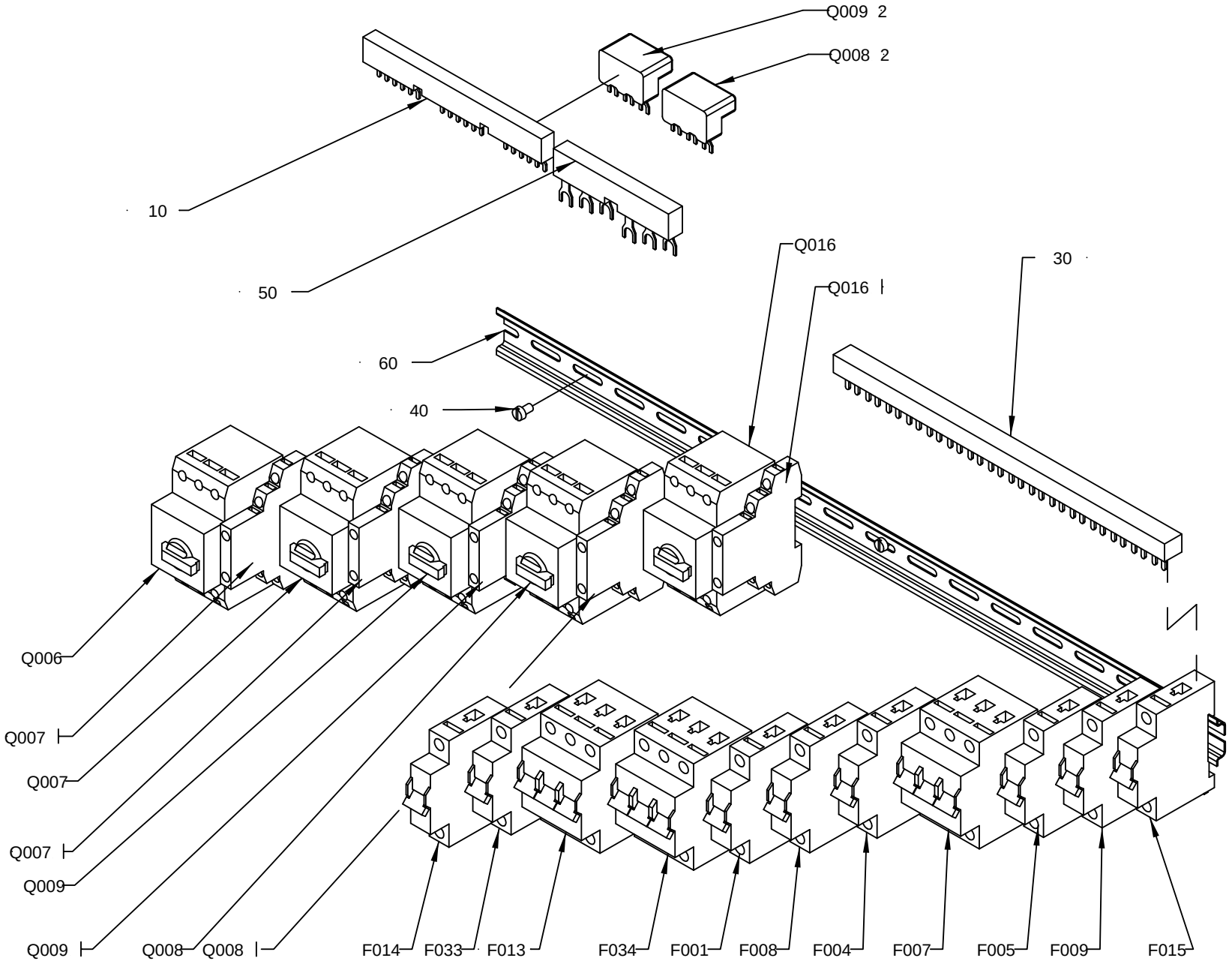

15 | 1823 - 5
240449

ECM: 240771 - 20051215
Group number: 1511823-0200
Assembly Drawing: 1511823-5_1_AA

Pos	Part No	UN	Qty	Description	Page No
TBA NOPT ASU					
030	90457-0125	MM	204	POWER RAIL SZ-PSB 12 N	**10-119**
F015	354000-0100		1	MINIATURE CIRCUIT BREAKER, FAZ-C10/1	
TBA NOPT NOASU					
030	90457-0125	MM	204	POWER RAIL SZ-PSB 12 N	**10-119**
TBA PT19 ASU					
030	90457-0125	MM	272	POWER RAIL SZ-PSB 12 N	**10-119**
F013	354002-0060		1	MINIATURE CIRCUIT BREAKER, FAZ-C6/3	
F014	354000-0060		1	MINIATURE CIRCUIT BREAKER, FAZ-C6/1	
F015	354000-0100		1	MINIATURE CIRCUIT BREAKER, FAZ-C10/1	
F033	354000-0100		1	MINIATURE CIRCUIT BREAKER, FAZ-C10/1	
TBA PT19 NOASU					
030	90457-0125	MM	272	POWER RAIL SZ-PSB 12 N	**10-119**
F013	354002-0060		1	MINIATURE CIRCUIT BREAKER, FAZ-C6/3	
F014	354000-0060		1	MINIATURE CIRCUIT BREAKER, FAZ-C6/1	
F033	354000-0100		1	MINIATURE CIRCUIT BREAKER, FAZ-C10/1	
Common Parts					
010	90259-0311		1	3 POLE BUSBAR K&M B3.1/5	
020	90457-0124		2	END CAP PSB-END6	
040	312125-0323		3	SCREW ISO 1207 M5X8 A4	
050	90259-0315		1	BUS BAR 3-POLE, K&M B 3.1/2-PKZM1	
060	353042-0004	MM	620	RAIL TS 35/7,5	
F001	354000-0100		1	MINIATURE CIRCUIT BREAKER, FAZ-C10/1	
F004	354000-0100		1	MINIATURE CIRCUIT BREAKER, FAZ-C10/1	
F005	354000-0060		1	MINIATURE CIRCUIT BREAKER, FAZ-C6/1	
F007	354002-0200		1	MINIATURE CIRCUIT BREAKER, FAZ-C20/3	
F008	354000-0100		1	MINIATURE CIRCUIT BREAKER, FAZ-C10/1	
F009	354000-0100		1	MINIATURE CIRCUIT BREAKER, FAZ-C10/1	
F034	354002-0020		1	MINIATURE CIRCUIT BREAKER, FAZ-C2/3	
Q006	90459-5328		1	OVERLOAD PROTECTION PKZM0-10	
Q006.1	90259-0313		1	AUX. CONTACT K&M NHI21-PKZM0	
Q007	90459-5326		1	OVERLOAD PROTECTION, PKZM0-4	
Q007.1	90259-0313		1	AUX. CONTACT K&M NHI21-PKZM0	
Q008	90459-5328		1	OVERLOAD PROTECTION PKZM0-10	
Q008.1	90259-0313		1	AUX. CONTACT K&M NHI21-PKZM0	
Q008.2	90259-0308		1	CONN.TERM.K&M BK 25/3-PKZ0	
Q009	90459-5324		1	OVERLOAD PROTECTION, PKZM0-1,6	
Q009.1	90259-0313		1	AUX. CONTACT K&M NHI21-PKZM0	
Q009.2	90259-0308		1	CONN.TERM.K&M BK 25/3-PKZ0	
Q016	90459-5320		1	OVERLOAD PROTECTION, PKZM0-0,25	
Q016.1	90259-0313		1	AUX. CONTACT K&M NHI21-PKZM0	

Pos	Part No	UN	Qty	Description	Page No

Machine Type | Group Description | Used-In | Group Number | Page No

This page is intentionally left blank.

ECM: 83329 - 20000919
Group number: 90457-0125
Assembly Drawing:

Pos	Part No	UN	Qty	Description	Page No
-					
	90457-0124		1	END CAP PSB-END6	

Pos	Part No	UN	Qty	Description	Page No

Machine Type	Group Description	Used-In	Group Number	Page No

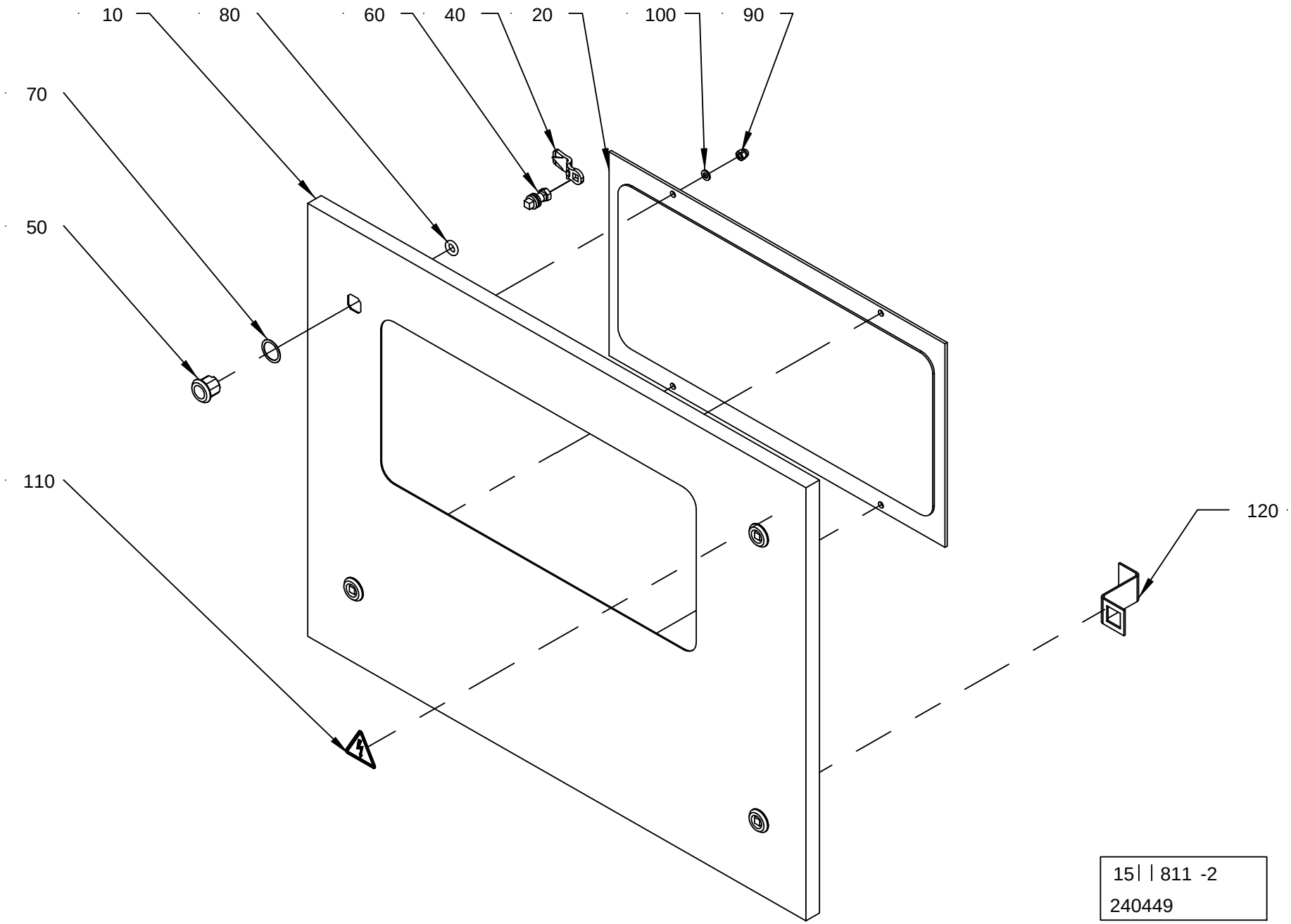
10
80
60
40
20
100
90
70
50
110
120
15 | | 811 -2
240449

ECM: 240716 - 20051215
Group number: 1511811-0200
Assembly Drawing: 1511811-2_1_AA

Pos	Part No	UN	Qty	Description	Page No
-					
010	2798073-0000		1	DOOR	
020	1511813-0000		1	WINDOW	
030	90144-0072	MM	1500	TAPE SCOTCH VHBS 4945 W=12,7MM	
040	90237-0157		4	LOCK BOLT, 1000-230	
050	90237-0319		4	LOCK HOUSING, 1000-U134	
060	90237-0320		4	LOCK HOUSING, 1000-U136	
070	90237-0322		4	LOCK GASKET, 1000-U137	
080	90237-0323		4	LOCK O-RING, 1000-24	
090	312705-0316		4	NUT HEX. DOMED CAP MHM-6 M6 A280	
100	315105-0153		4	WASHER BRB 6,4X12 RFR	
110	359705-0015		1	WARNING SIGN ISO, RISK OF ELECTRIC SHOCK	
120	2685647-0000		2	PROFILE	

Pos	Part No	UN	Qty	Description	Page No

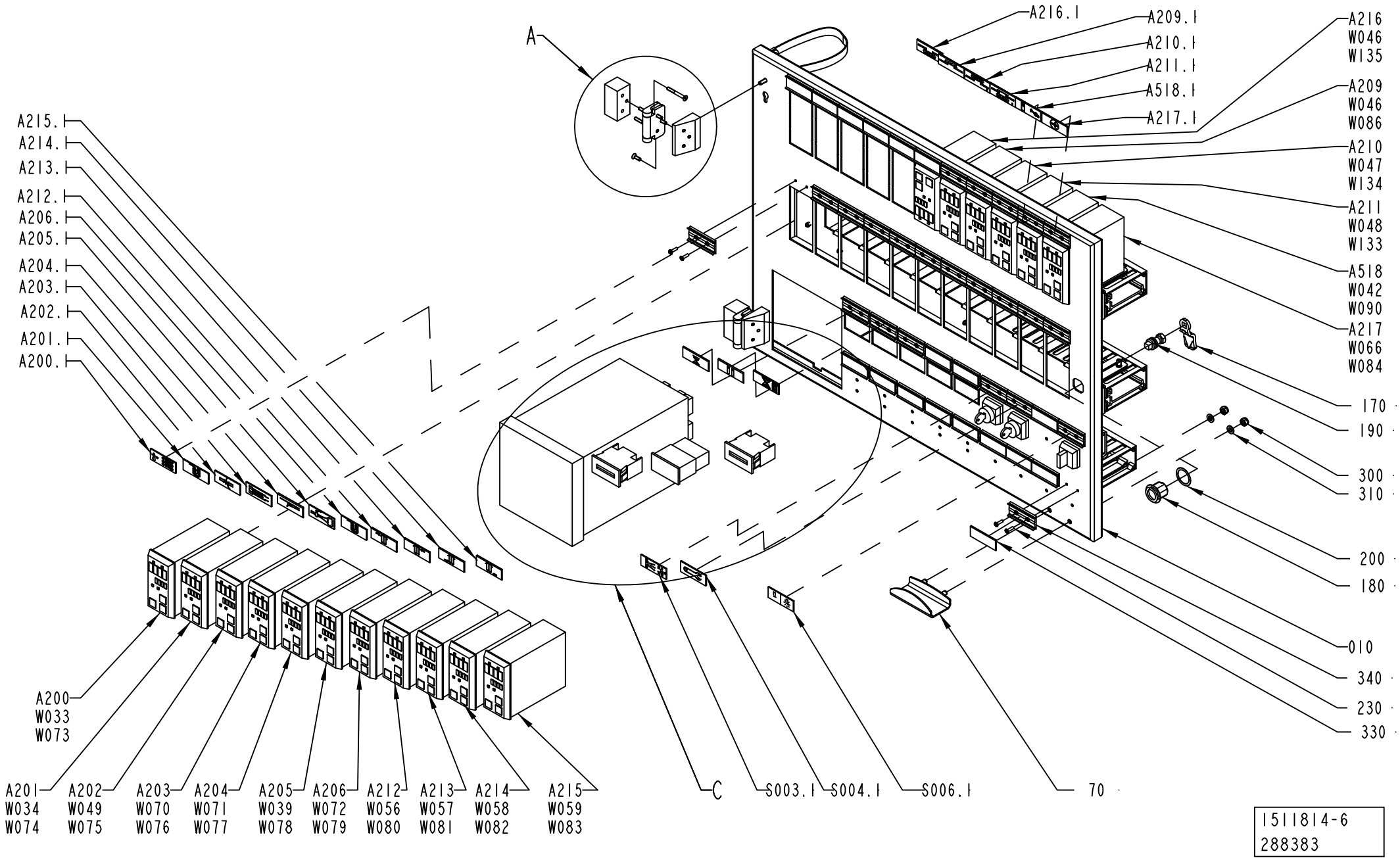
A
A216.1
A209.1
A210.1
A211.1
A518.1
A217.1
A216
W046
W135
A209
W046
W086
A210
W047
W134
A211
W048
W133
A518
W042
W090
A217
W066
W084
170
190
300
310
200
180
010
340
230
330
A215.1
A214.1
A213.1
A212.1
A206.1
A205.1
A204.1
A203.1
A202.1
A201.1
A200.1
A200
W033
W073
A201
W034
W074
A202
W049
W075
A203
W070
W076
A204
W071
W077
A205
W039
W078
A206
W072
W079
A212
W056
W080
A213
W057
W081
A214
W058
W082
A215
W059
W083
C
S003.1
S004.1
S006.1
70
1511814-6
288383

ECM: 292611 - 20070126
Group number: 1511814-0200
Assembly Drawing: 1511814-6_1_AB

This list covers pages from 10-122 to 10-127

Pos	Part No	UN	Qty	Description	Page No
TBA NOPT HI					
090	90062-0022		13	LOCKING WASHER D=6,4/11	
290	312605-0316		13	HEXAGON NUT, M6M M6 A280	
330	359240-0001		22	SIGN, NOT ENGRAVED	
A212	90410-0051		1	TEMPERATURE CONTROLLER, KS 40	
A212.1	359241-0338		1	SIGN: " FLAP HEATING TOP LEFT"	
A213	90410-0051		1	TEMPERATURE CONTROLLER, KS 40	
A213.1	359241-0337		1	SIGN: " FLAP HEATING TOP RIGHT"	
A518	90410-0051		1	TEMPERATURE CONTROLLER, KS 40	
A518.1	359241-0268		1	SIGN: " SPRAYING, HEAD SPACE"	
W042	90220-0059	M	3.5	THERMOCOUPLE CABLE K/PVC/20AWG 2X0,5MM2	
W090	1143884-0000		1	COPPER BRAID	
TBA NOPT NOHI					
090	90062-0022		12	LOCKING WASHER D=6,4/11	
290	312605-0316		12	HEXAGON NUT, M6M M6 A280	
330	359240-0001		23	SIGN, NOT ENGRAVED	
A212	90410-0051		1	TEMPERATURE CONTROLLER, KS 40	
A212.1	359241-0338		1	SIGN: " FLAP HEATING TOP LEFT"	
A213	90410-0051		1	TEMPERATURE CONTROLLER, KS 40	
A213.1	359241-0337		1	SIGN: " FLAP HEATING TOP RIGHT"	
TBA PT19 HI					
090	90062-0022		16	LOCKING WASHER D=6,4/11	
290	312605-0316		16	HEXAGON NUT, M6M M6 A280	
330	359240-0001		19	SIGN, NOT ENGRAVED	
A209	90410-0051		1	TEMPERATURE CONTROLLER, KS 40	
A209.1	359241-0439		1	SIGN"PATCH SEALER"	
A210	90410-0051		1	TEMPERATURE CONTROLLER, KS 40	
A210.1	359241-0460		1	SIGN "PATCH SEALER 2"	
A211	90410-0051		1	TEMPERATURE CONTROLLER, KS 40	
A211.1	359241-0444		1	SIGN"TAB RESEAL"	
A212	90410-0051		1	TEMPERATURE CONTROLLER, KS 40	
A212.1	359241-0338		1	SIGN: " FLAP HEATING TOP LEFT"	
A213	90410-0051		1	TEMPERATURE CONTROLLER, KS 40	
A213.1	359241-0337		1	SIGN: " FLAP HEATING TOP RIGHT"	
A518	90410-0051		1	TEMPERATURE CONTROLLER, KS 40	
A518.1	359241-0268		1	SIGN: " SPRAYING, HEAD SPACE"	
P004	90053-0031		1	HOUR COUNTER, B 609.10 10-50VDC	
P004.1	359241-0459		1	SIGN "PT HOUR METER"	
W042	90220-0059	M	3.5	THERMOCOUPLE CABLE K/PVC/20AWG 2X0,5MM2	
W046	90220-0059	M	5	THERMOCOUPLE CABLE K/PVC/20AWG 2X0,5MM2	
W047	90220-0059	M	5	THERMOCOUPLE CABLE K/PVC/20AWG 2X0,5MM2	
W048	90220-0059	M	5	THERMOCOUPLE CABLE K/PVC/20AWG 2X0,5MM2	
W086	1143884-0000		1	COPPER BRAID	
W090	1143884-0000		1	COPPER BRAID	
W133	1143884-0000		1	COPPER BRAID	
W134	1143884-0000		1	COPPER BRAID	
TBA PT19 NOHI					
090	90062-0022		15	LOCKING WASHER D=6,4/11	
290	312605-0316		15	HEXAGON NUT, M6M M6 A280	
330	359240-0001		20	SIGN, NOT ENGRAVED	
A209	90410-0051		1	TEMPERATURE CONTROLLER, KS 40	
A209.1	359241-0439		1	SIGN"PATCH SEALER"	
A210	90410-0051		1	TEMPERATURE CONTROLLER, KS 40	
A210.1	359241-0460		1	SIGN "PATCH SEALER 2"	
A211	90410-0051		1	TEMPERATURE CONTROLLER, KS 40	
A211.1	359241-0444		1	SIGN"TAB RESEAL"	
A212	90410-0051		1	TEMPERATURE CONTROLLER, KS 40	
A212.1	359241-0338		1	SIGN: " FLAP HEATING TOP LEFT"	
A213	90410-0051		1	TEMPERATURE CONTROLLER, KS 40	
A213.1	359241-0337		1	SIGN: " FLAP HEATING TOP RIGHT"	
P004	90053-0031		1	HOUR COUNTER, B 609.10 10-50VDC	
P004.1	359241-0459		1	SIGN "PT HOUR METER"	
W046	90220-0059	M	5	THERMOCOUPLE CABLE K/PVC/20AWG 2X0,5MM2	
W047	90220-0059	M	5	THERMOCOUPLE CABLE K/PVC/20AWG 2X0,5MM2	
W048	90220-0059	M	5	THERMOCOUPLE CABLE K/PVC/20AWG 2X0,5MM2	
W086	1143884-0000		1	COPPER BRAID	
W133	1143884-0000		1	COPPER BRAID	
W134	1143884-0000		1	COPPER BRAID	
Common Parts					
010	1511815-0000		1	DOOR	
020	1511817-0000		1	CABLE DUCT	
030	1523437-0000		2	HINGE	
040	1523439-0000		2	SPACER	
050	1523440-0000		2	SPACER	
060	1523444-0000		3	SPACER	
065	1523443-0000		1	COVER	
070	1523968-0000		1	HANDLE	
080	1285109-0000		3	NUT	
100	90062-0015		4	LOCK WASHER SERRAT.EXT.GEAR,6,4/11 H=0,7	
110	90135-0044		1	EARTH WIRE, L=320 MM 16 MM2	
120	90181-0064		8	LOCK ZP1 FOR CHANNEL T1	
125	90181-0054	MM	555	CABLE DUCT 60X80MM	
130	90181-0054	MM	555	CABLE DUCT 60X80MM	
135	90181-0054	MM	210	CABLE DUCT 60X80MM	

Machine Type | Group Description | Used-In | Group Number | Page No

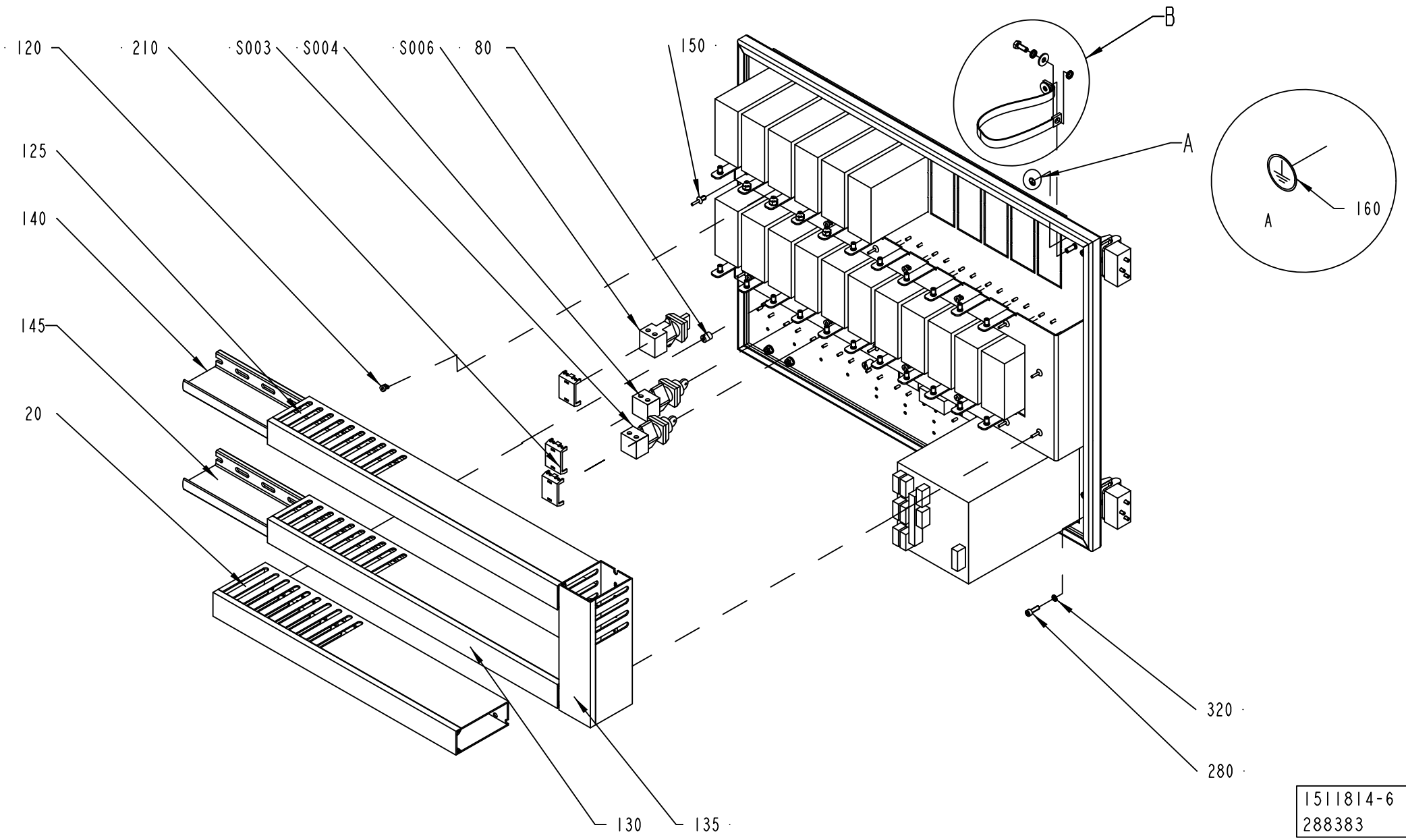
120
210
S003
S004
S006
80
150
B
A
125
140
145
20
160
A
320
280
130
135
1511814-6
288383

Pos	Part No	UN	Qty	Description	Page No
Common Parts (Cont'd)					
140	90181-0067	MM	555	DIVIDING PLATE SEP80	
145	90181-0067	MM	555	DIVIDING PLATE SEP80	
150	90181-0088		8	PLASTIC RIVET, PR 52314	
160	90194-0163		1	SIGN, EARTH WITHIN CIRCLE	
170	90237-0157		1	LOCK BOLT, 1000-230	
180	90237-0319		1	LOCK HOUSING, 1000-U134	
190	90237-0320		1	LOCK HOUSING, 1000-U136	
200	90237-0322		1	LOCK GASKET, 1000-U137	
210	90064-0335		3	TOUCHGUARD, 704-9645	
220	90457-0192		2	WASHER PLAIN ROUND, 6,5/18, H=1,5	
230	311521-0146		80	BLANK RIVET 3,2X12	
240	312105-0368		1	SCREW M6S ISO 4017 M6X16 A480	
250	312115-0222		3	SCREW ISO4762 M3X8 A4 80	
260	312155-0291		6	SCREW DIN 7991 MF6S M4X12 A4 70	
270	312155-0301		6	SCREW DIN 7991 MF6S M4X35 A4 70	
280	312115-0329		4	SCREW ISO4762 M5X16 A4 80	
300	312812-0316		2	HEXAGON NUT, NY-LOCK M6 A480	
310	315105-0153		2	WASHER BRB 6,4X12 RFR	
320	315402-0146		4	LOCK WASHER FBB 5,1	
340	359240-0100		40	SIGN HOLDER FOR 359240-0001	
A200	90410-0051		1	TEMPERATURE CONTROLLER, KS 40	
A200.1	359241-0123		1	SIGN: " TEMP. PRESTERILIZATION VALVE"	
A201	90410-0051		1	TEMPERATURE CONTROLLER, KS 40	
A201.1	359241-0141		1	SIGN: " WATER BATH"	
A202	90410-0051		1	TEMPERATURE CONTROLLER, KS 40	
A202.1	359241-0131		1	SIGN: " TEMP. LS"	
A203	90410-0051		1	TEMPERATURE CONTROLLER, KS 40	
A203.1	359241-0130		1	SIGN: " TEMP. AIR SUPER HEATER"	
A204	90410-0051		1	TEMPERATURE CONTROLLER, KS 40	
A204.1	359241-0126		1	SIGN: " TEMP. AIR KNIFE"	
A205	90410-0051		1	TEMPERATURE CONTROLLER, KS 40	
A205.1	359241-0121		1	SIGN: " STEAM"	
A206	90410-0051		1	TEMPERATURE CONTROLLER, KS 40	
A206.1	359241-0125		1	SIGN: " TEMP. PEROXIDE BATH"	
A214	90410-0051		1	TEMPERATURE CONTROLLER, KS 40	
A214.1	359241-0340		1	SIGN: " FLAP HEATING BOTTOM LEFT"	
A215	90410-0051		1	TEMPERATURE CONTROLLER, KS 40	
A215.1	359241-0339		1	SIGN: " FLAP HEATING BOTTOM RIGHT"	
A216	90410-0051		1	TEMPERATURE CONTROLLER, KS 40	
A216.1	90457-0058		1	SIGN, LS SHORT STOP	
P002	90053-0031		1	HOUR COUNTER, B 609.10 10-50VDC	
P002.1	359241-0201		1	SIGN: " HOUR METER"	
P003	90053-0029		1	COUNTER, F524.800FA3C 24VDC	
P003.1	359241-0180		1	SIGN: " PRODUCTION"	
P005	90459-0080		1	RECORDER 6-CHANNEL, LOGOPRINT 500	
S003	90111-0124		1	KEY SWITCH, 1NO,1NC CONTACT	
S003.1	359241-0122		1	SIGN: " CLEANING STEAM BARRIER SPACE"	
S004	90111-0122		1	KEY SWITCH, 2 NO CONTACTS	
S004.1	359241-0133		1	SIGN: " SERVICE SWITCH"	
S006	90111-0120		1	SWITCH, 2 POS.704.510 .0A+704.901.5/A	
S006.1	359241-0140		1	SIGN: " LIGHT OFF/ON"	
W033	90220-0059	M	4.6	THERMOCOUPLE CABLE K/PVC/20AWG 2X0,5MM2	
W034	90220-0059	M	4.6	THERMOCOUPLE CABLE K/PVC/20AWG 2X0,5MM2	
W037	90220-0059	M	5	THERMOCOUPLE CABLE K/PVC/20AWG 2X0,5MM2	
W038	90220-0059	M	5	THERMOCOUPLE CABLE K/PVC/20AWG 2X0,5MM2	
W039	90220-0059	M	4.6	THERMOCOUPLE CABLE K/PVC/20AWG 2X0,5MM2	
W040	90220-0059	M	5	THERMOCOUPLE CABLE K/PVC/20AWG 2X0,5MM2	
W049	90220-0059	M	3.55	THERMOCOUPLE CABLE K/PVC/20AWG 2X0,5MM2	
W056	90220-0059	M	3.65	THERMOCOUPLE CABLE K/PVC/20AWG 2X0,5MM2	
W057	90220-0059	M	3.65	THERMOCOUPLE CABLE K/PVC/20AWG 2X0,5MM2	
W058	90220-0059	M	3.65	THERMOCOUPLE CABLE K/PVC/20AWG 2X0,5MM2	
W059	90220-0059	M	3.65	THERMOCOUPLE CABLE K/PVC/20AWG 2X0,5MM2	
W066	90220-0059	M	4.6	THERMOCOUPLE CABLE K/PVC/20AWG 2X0,5MM2	
W070	90220-0059	MM	500	THERMOCOUPLE CABLE K/PVC/20AWG 2X0,5MM2	
W071	90220-0059	MM	500	THERMOCOUPLE CABLE K/PVC/20AWG 2X0,5MM2	
W072	90220-0059	MM	500	THERMOCOUPLE CABLE K/PVC/20AWG 2X0,5MM2	
W073	1143884-0000		1	COPPER BRAID	
W074	1143884-0000		1	COPPER BRAID	
W075	1143884-0000		1	COPPER BRAID	
W076	1143884-0000		1	COPPER BRAID	
W077	1143884-0000		1	COPPER BRAID	
W078	1143884-0000		1	COPPER BRAID	
W079	1143884-0000		1	COPPER BRAID	
W080	1143884-0000		1	COPPER BRAID	
W081	1143884-0000		1	COPPER BRAID	
W082	1143884-0000		1	COPPER BRAID	
W083	1143884-0000		1	COPPER BRAID	
W084	1143884-0000		1	COPPER BRAID	

Machine Type	Group Description	Used-In	Group Number	Page No

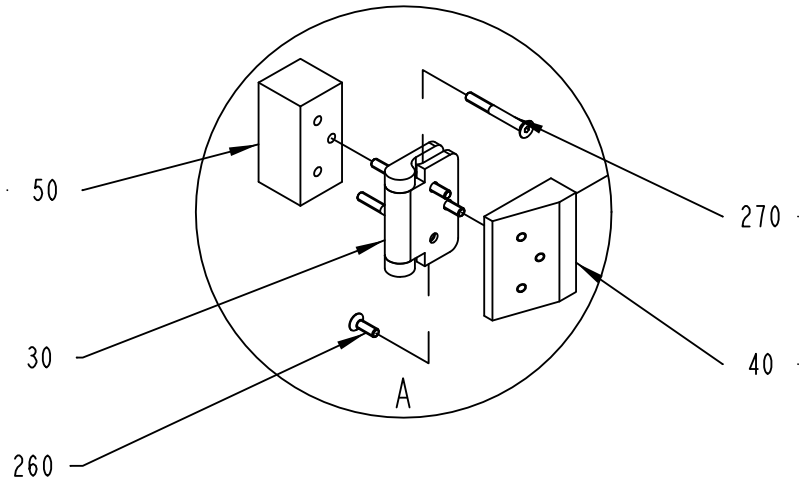

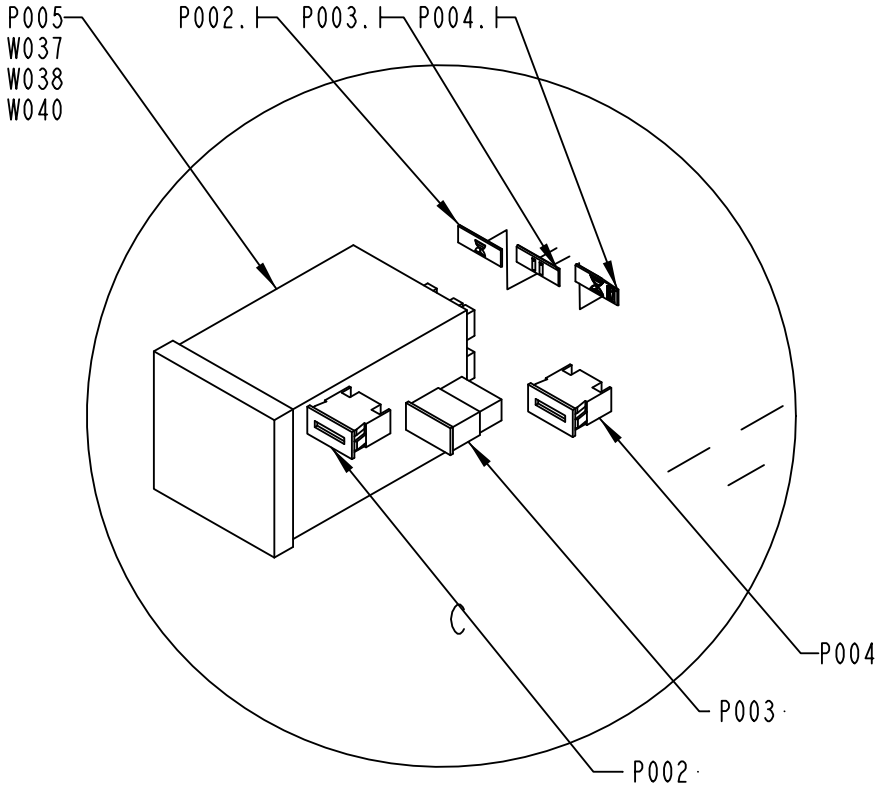

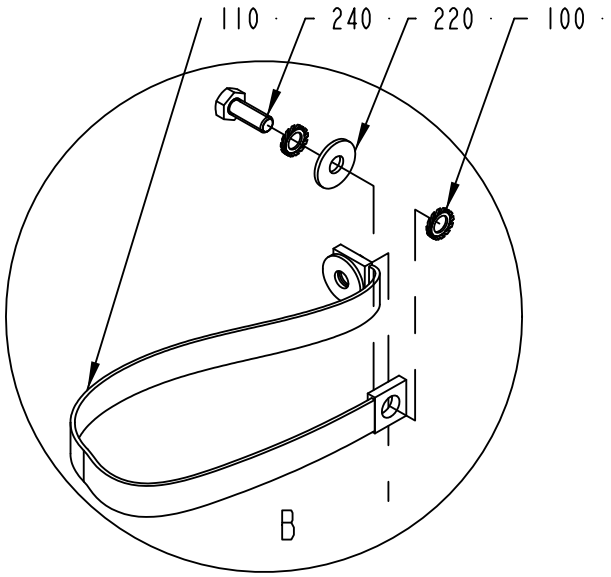

1511814-6
288383

Pos	Part No	UN	Qty	Description	Page No	Pos	Part No	UN	Qty	Description	Page No

SEE PREVIOUS LISTS PAGES: 10-123, 10-125.

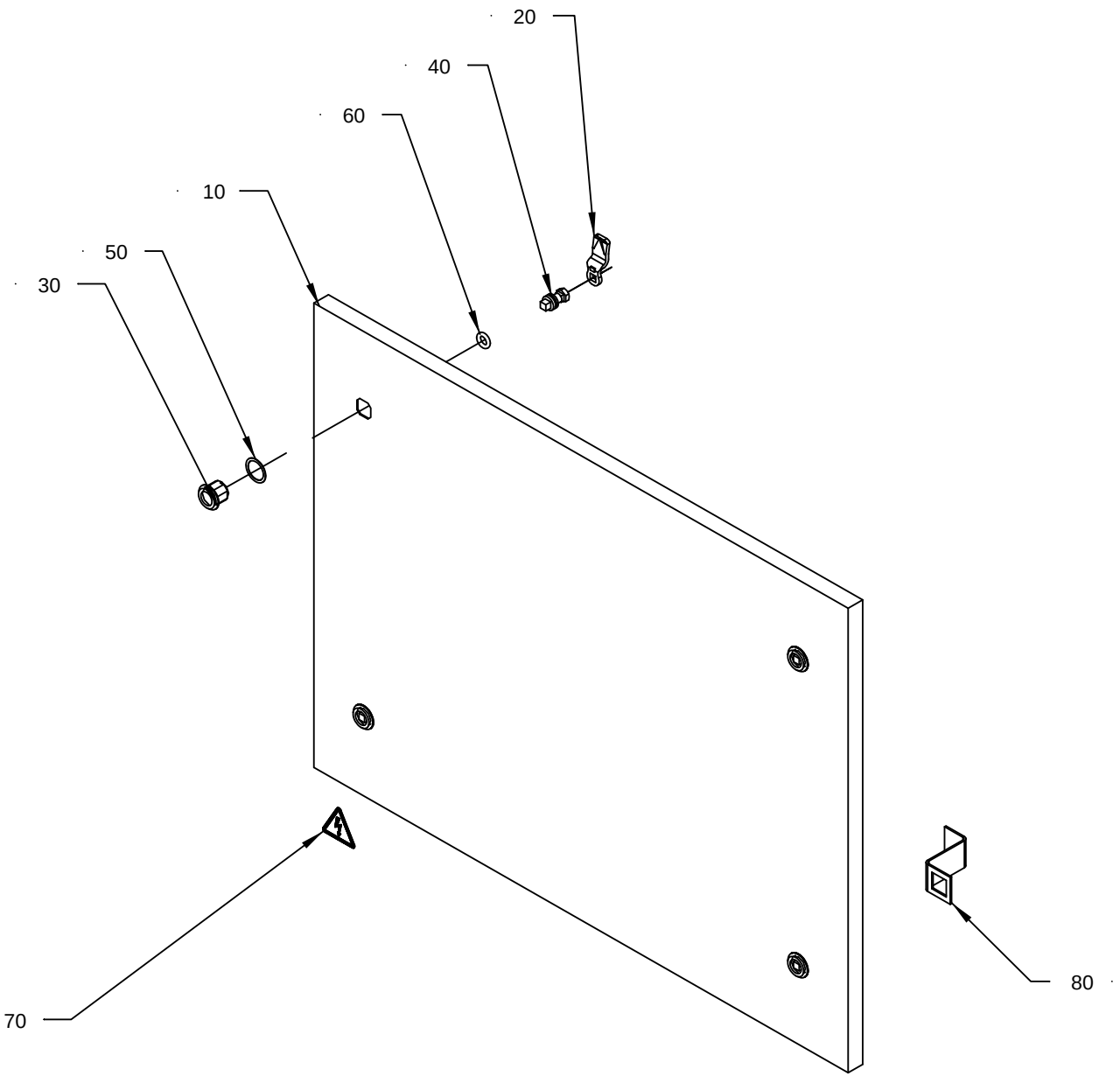

15| 1819-2
240449

ECM: 240718 - 20051215
Group number: 1511819-0200
Assembly Drawing: 1511819-2_1_AA

Pos	Part No	UN	Qty	Description	Page No
-					
010	2798074-0000		1	DOOR	
020	90237-0157		4	LOCK BOLT, 1000-230	
030	90237-0319		4	LOCK HOUSING, 1000-U134	
040	90237-0320		4	LOCK HOUSING, 1000-U136	
050	90237-0322		4	LOCK GASKET, 1000-U137	
060	90237-0323		4	LOCK O-RING, 1000-24	
070	359705-0015		1	WARNING SIGN ISO, RISK OF ELECTRIC SHOCK	
80	2685647-0000		2	PROFILE	

Pos	Part No	UN	Qty	Description	Page No

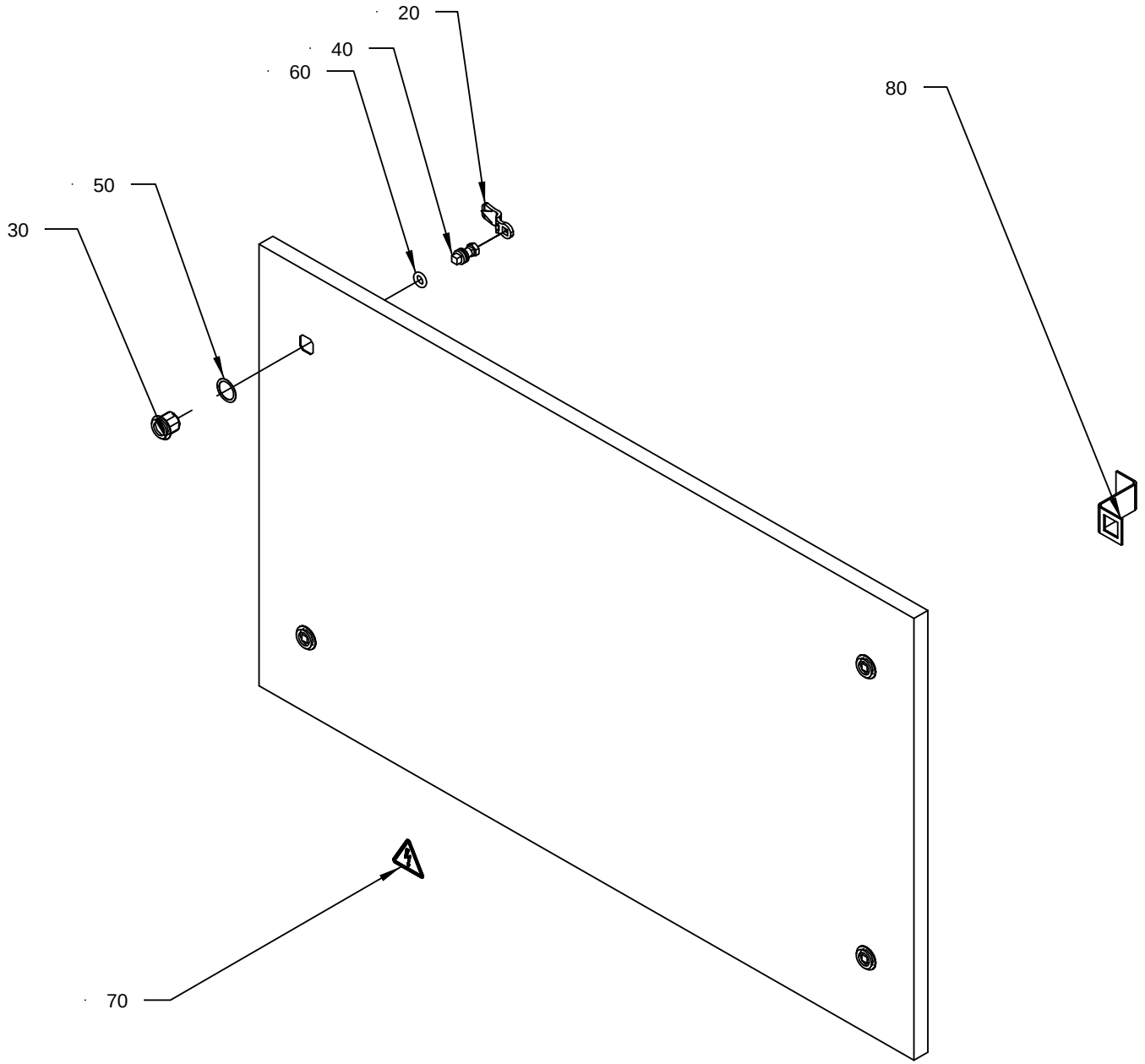

15| 1820-2
240449

ECM: 240719 - 20051215
Group number: 1511820-0200
Assembly Drawing: 1511820-2_1_AA

Pos	Part No	UN	Qty	Description	Page No
-					
010	2798075-0000		1	DOOR	
020	90237-0157		4	LOCK BOLT, 1000-230	
030	90237-0319		4	LOCK HOUSING, 1000-U134	
040	90237-0320		4	LOCK HOUSING, 1000-U136	
050	90237-0322		4	LOCK GASKET, 1000-U137	
060	90237-0323		4	LOCK O-RING, 1000-24	
070	359705-0015		1	WARNING SIGN ISO, RISK OF ELECTRIC SHOCK	
80	2685647-0000		2	PROFILE	

Pos	Part No	UN	Qty	Description	Page No

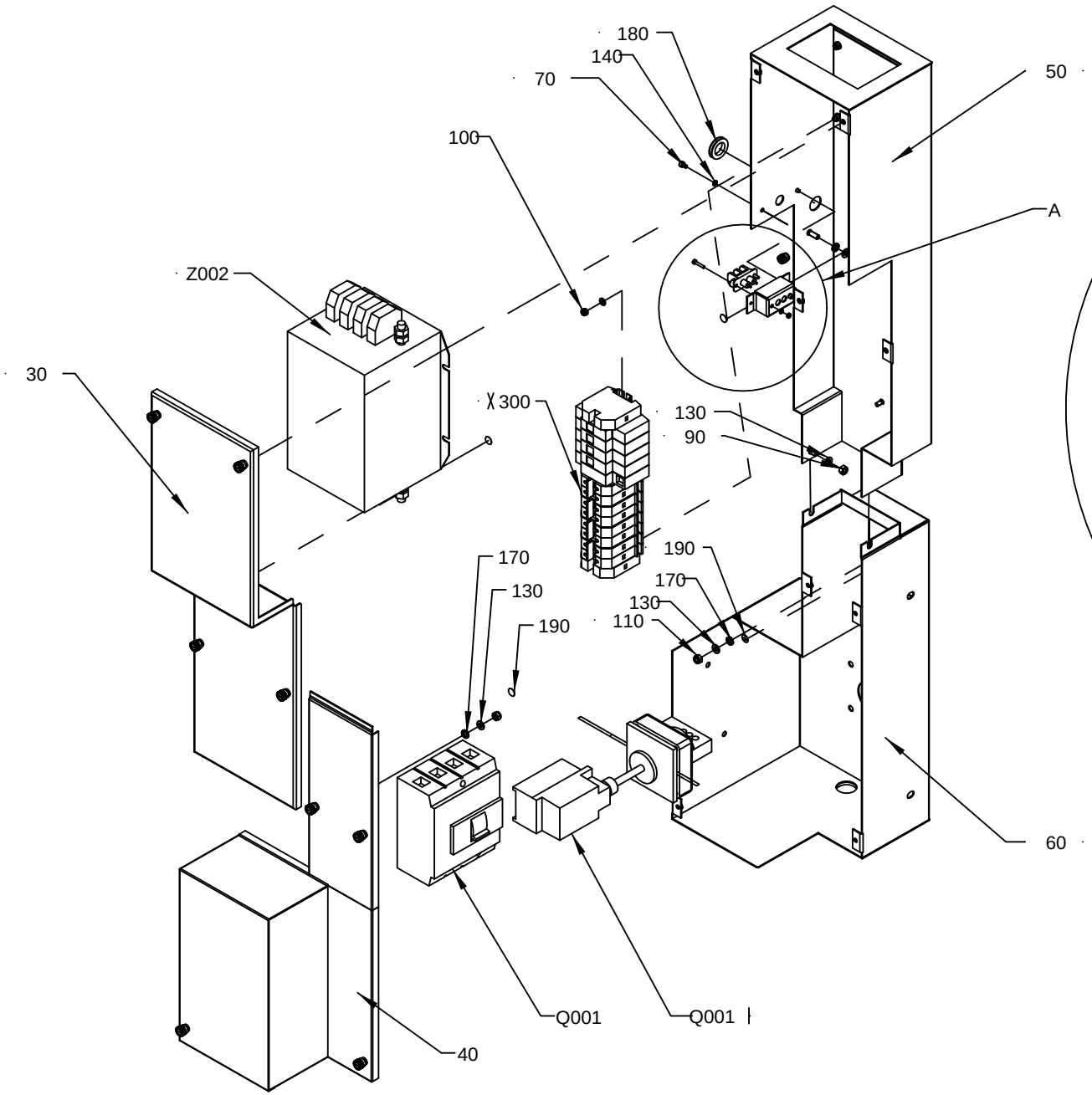

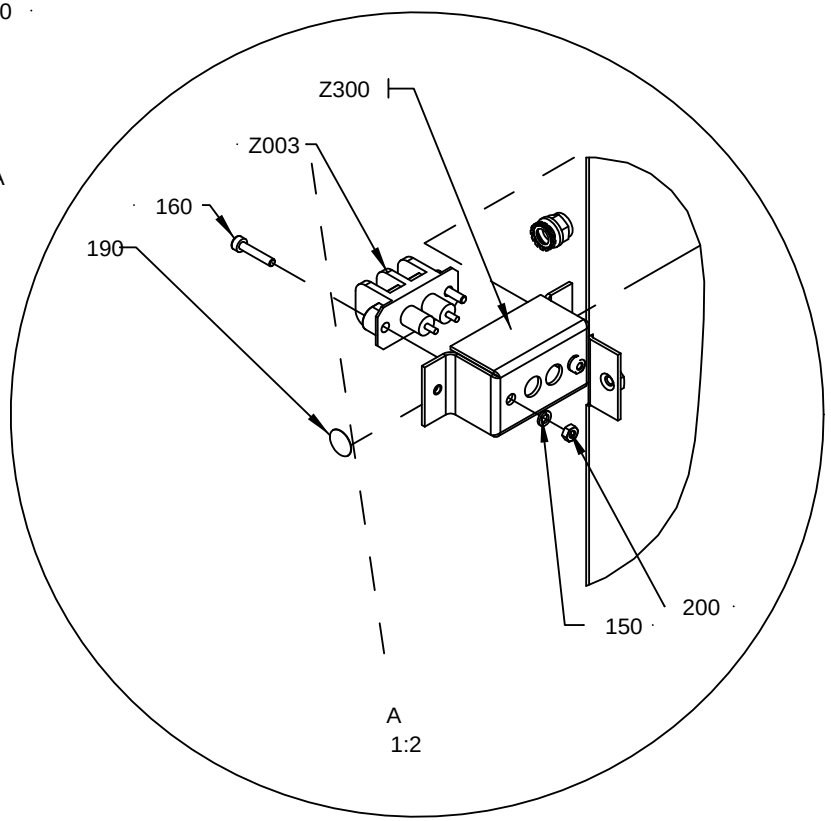

15| 1821-2
240449

ECM: 241192 - 20051215
Group number: 1511821-0200
Assembly Drawing: 1511821-2_1_AA

Pos	Part No	UN	Qty	Description	Page No
-					
030	1511780-0000		1	COVER	
040	2797730-0000		1	COVER	
050	1511782-0000		1	BOX	
060	2797731-0000		1	BOX	
070	312115-0285		2	SCREW ISO4762 M4X6 A4 80	
080	312115-0305		2	SCREW ISO4762 M4X50 A4 80	
090	312605-0316		2	HEXAGON NUT, M6M M6 A280	
100	312812-0314		4	HEXAGON NUT, NY-LOCK M5 A480	
110	312812-0316		4	HEXAGON NUT, NY-LOCK M6 A480	
120	315105-0146		4	WASHER BRB 5,3X10 RFR	
130	315105-0153		6	WASHER BRB 6,4X12 RFR	
140	315402-0136		4	LOCK WASHER FBB 4,1	
150	315402-0128		2	LOCK WASHER FBB 3,6	
160	312115-0228		2	SCREW ISO4762 M3X16 A4 80	
170	90062-0015		4	LOCK WASHER SERRAT.EXT.GEAR,6,4/11 H=0,7	
180	90143-0094	MM	100	SEAL	
190	90194-0163		4	SIGN, EARTH WITHIN CIRCLE	
200	312605-0310		2	HEXAGON NUT, M6M M3 A280	
Q001	90459-5518		1	CURR.LIM.CIRC.BREAKER, NZMB1-4-A63	
Q001.1	90459-4182		1	HANDLE, NZM1-XS-R	
X300	1511806-0100		1	X300	**10-135**
Z002	90024-0060		1	POWER LINE FILTER, 80 A 250/440 VAC	
Z003	90024-0036		1	FILTERED TERMINAL BLOCK	
Z003.1	1285108-0000		1	COVER	

Pos	Part No	UN	Qty	Description	Page No

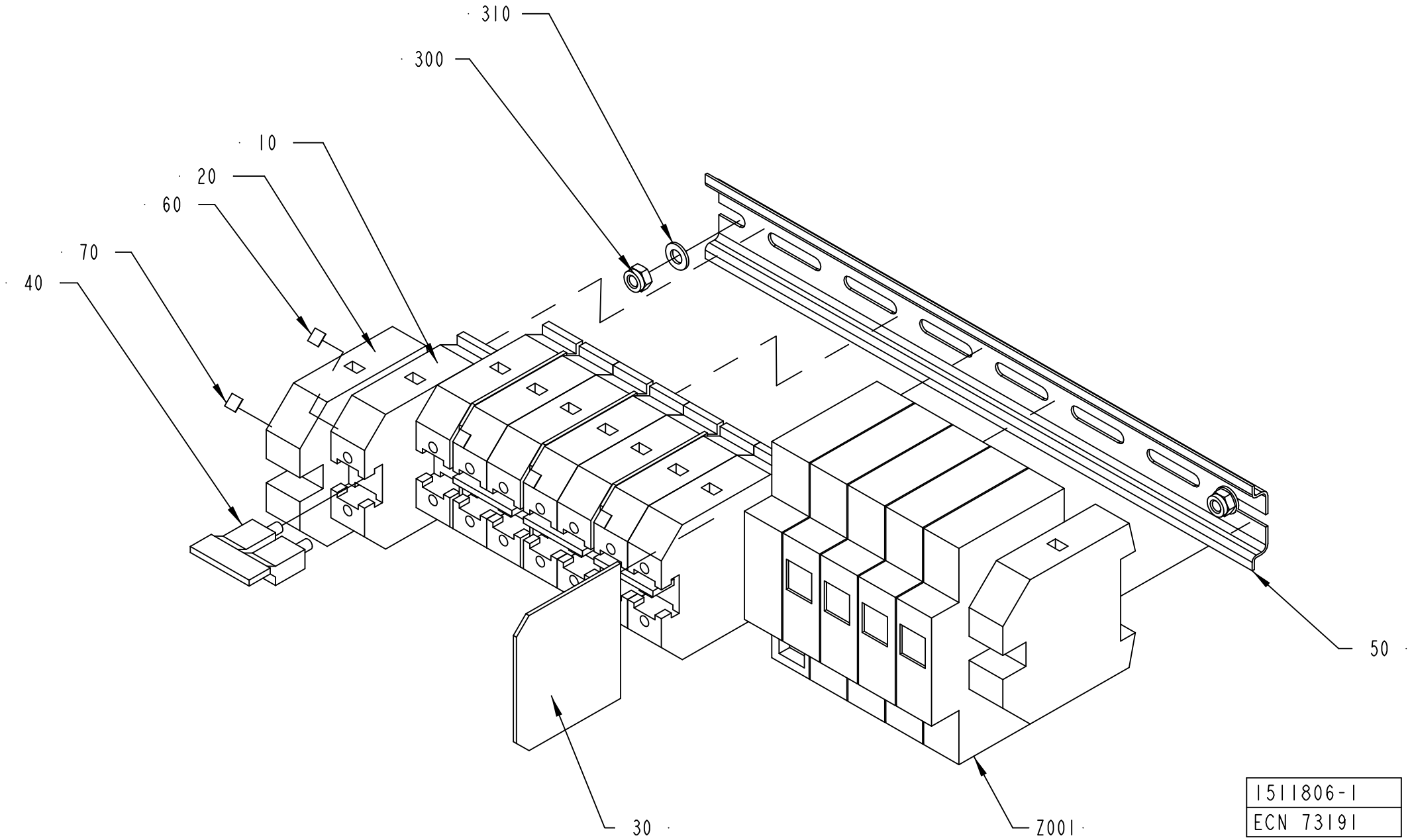

1511806-1
ECN 73191

ECM: 180218 - 20040910
Group number: 1511806-0100
Assembly Drawing: 1511806-1_1_AA

Pos	Part No	UN	Qty	Description	Page No
-					
010	353021-0219		8	FEED THROUGH TERMINAL, 10205.0	
020	353024-0209		2	EARTH TERMINAL, 1010.5	
030	353033-0105		1	PARTITITION, 10501.0	
040	353034-0026		4	BRIDGE CONNECTOR, WQV 35/2, 10530.6	
050	353042-0004	MM	260	RAIL TS 35/7,5	
060	359011-0807		4	MARKING PLATES 5-FW 1-50	
070	359011-0819		1	MARKING PLATES 5-GW (EARTH)	
300	312812-0314		2	HEXAGON NUT, NY-LOCK M5 A480	
310	315105-0146		2	WASHER BRB 5,3X10 RFR	
Z001	90082-0013		1	OVER VOLT. PROTECT. PU 4C-R 230 VAC	
	90082-0301		*3*	*OVER VOLT. PROTECT. PU 0 C 833951*	

Pos	Part No	UN	Qty	Description	Page No

EXTERNAL DOOR TERMOREGULATORS

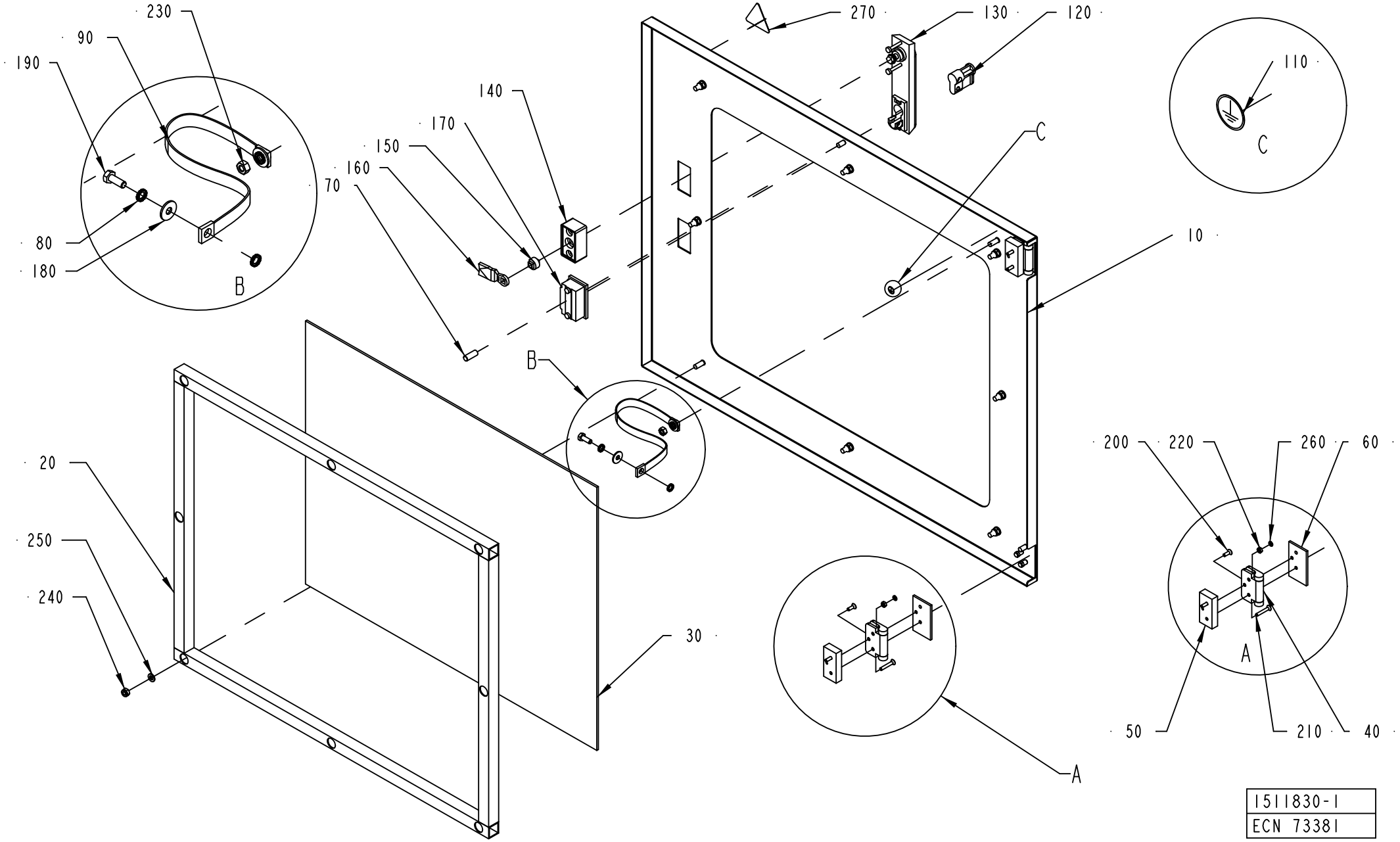

1511830-1
ECN 73381

ECM: 180333 - 20040910
Group number: 1511830-0100
Assembly Drawing: 1511830-1_1_AA

Pos	Part No	UN	Qty	Description	Page No
-					
010	1517663-0000		1	DOOR	
020	1517664-0000		1	FRAME	
030	1517665-0000		1	WINDOW	
040	1523438-0000		2	HINGE	
050	1523441-0000		2	SPACER SHEET	
060	1523442-0000		2	SPACER SHEET	
070	1523957-0000		1	SPACER	
080	90062-0015		4	LOCK WASHER SERRAT.EXT.GEAR,6,4/11 H=0,7	
090	90135-0044		1	EARTH WIRE, L=320 MM 16 MM2	
100	90144-0072	MM	2060	TAPE SCOTCH VHBS 4945 W=12,7MM	
110	90194-0163		1	SIGN, EARTH WITHIN CIRCLE	
120	90237-0128		1	LOCK CYLINDER, 1109-U3	
130	90237-0150		1	TURNING HANDLE, NO. 1125-U190-0A	
140	90237-0154		1	LOCK HOUSING, 1121-U60-0C	
150	90237-0155		1	LOCK ADAPTER, 1121-U40	
160	90237-0156		1	LOCK BOLT, 1000-16	
170	90237-0176		1	TURNING HANDLE, 1125-U190-A	
180	90457-0192		2	WASHER PLAIN ROUND, 6,5/18, H=1,5	
190	312105-0368		1	SCREW M6S ISO 4017 M6X16 A480	
200	312155-0291		2	SCREW DIN 7991 MF6S M4X12 A4 70	
210	312155-0297		4	SCREW DIN 7991 MF6S M4X25 A4 70	
220	312605-0312		6	HEXAGON NUT, M6M M4 A280	
230	312605-0316		1	HEXAGON NUT, M6M M6 A280	
240	312812-0316		8	HEXAGON NUT, NY-LOCK M6 A480	
250	315105-0153		8	WASHER BRB 6,4X12 RFR	
260	315402-0136		6	LOCK WASHER FBB 4,1	
270	359705-0015		1	WARNING SIGN ISO, RISK OF ELECTRIC SHOCK	

Pos	Part No	UN	Qty	Description	Page No

Machine Type | Group Description | Used-In | Group Number | Page No

EXTERNAL DOOR FUSES

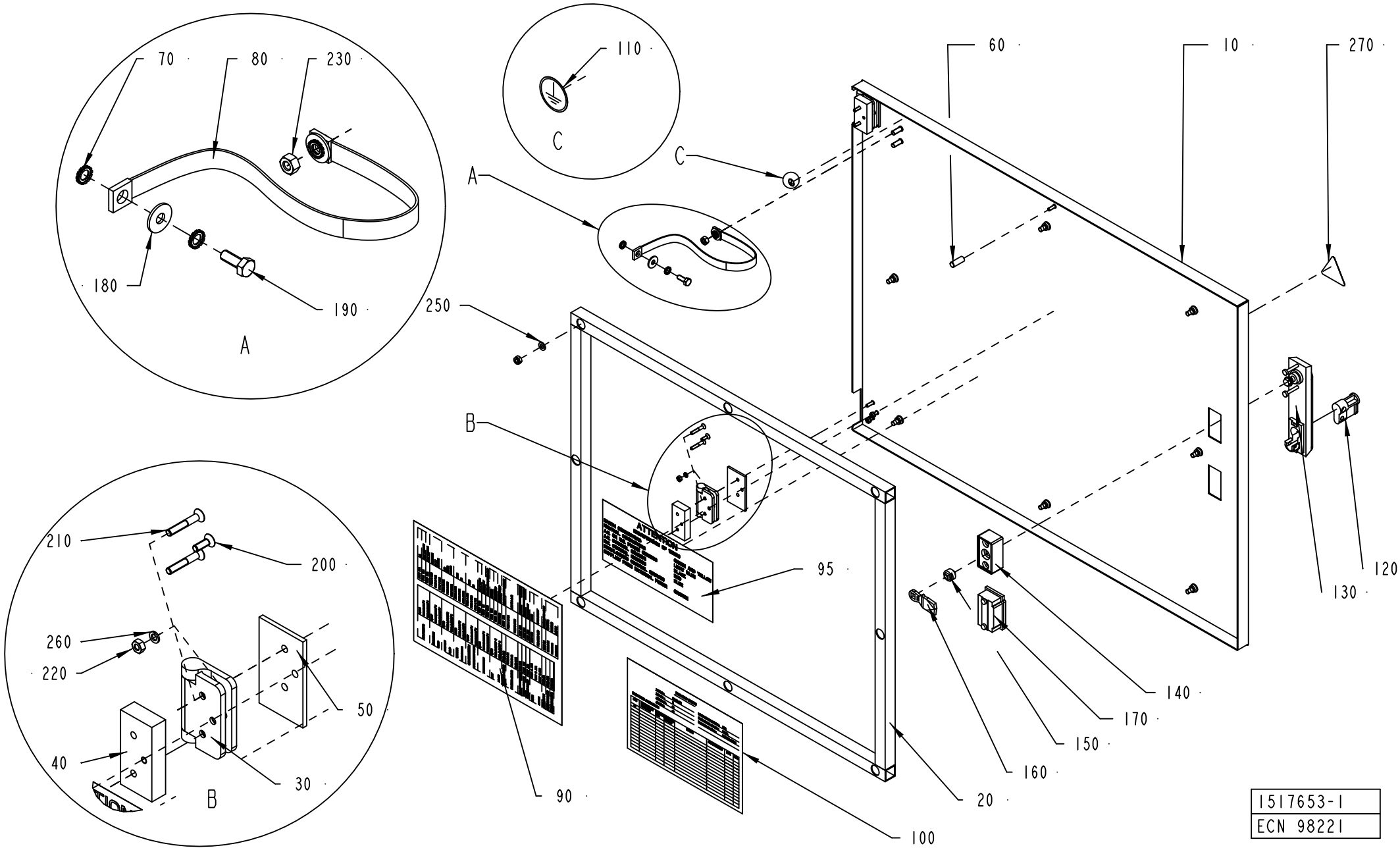

1517653-1
ECN 98221

ECM: 293791 - 20070126
Group number: 1517653-0100
Assembly Drawing: 1517653-1_1_AB

Pos	Part No	UN	Qty	Description	Page No
-					
010	1517667-0000		1	DOOR	
020	1517664-0000		1	FRAME	
030	1523438-0000		2	HINGE	
040	1523441-0000		2	SPACER SHEET	
050	1523442-0000		2	SPACER SHEET	
060	1523957-0000		1	SPACER	
070	90062-0015		4	LOCK WASHER SERRAT.EXT.GEAR,6,4/11 H=0,7	
080	90135-0044		1	EARTH WIRE, L=320 MM 16 MM2	
090	1538212-0000		1	FUSE BOARD	
095	90194-0080		1	SIGN, IDENTIFICATION OF WIRING	
100	2854815-0000		1	DELIVERED DESIGN	
110	90194-0163		1	SIGN, EARTH WITHIN CIRCLE	
120	90237-0128		1	LOCK CYLINDER, 1109-U3	
130	90237-0150		1	TURNING HANDLE, NO. 1125-U190-0A	
140	90237-0154		1	LOCK HOUSING, 1121-U60-0C	
150	90237-0155		1	LOCK ADAPTER, 1121-U40	
160	90237-0156		1	LOCK BOLT, 1000-16	
170	90237-0176		1	TURNING HANDLE, 1125-U190-A	
180	90457-0192		2	WASHER PLAIN ROUND, 6,5/18, H=1,5	
190	312105-0368		1	SCREW M6S ISO 4017 M6X16 A480	
200	312155-0291		2	SCREW DIN 7991 MF6S M4X12 A4 70	
210	312155-0297		4	SCREW DIN 7991 MF6S M4X25 A4 70	
220	312605-0312		6	HEXAGON NUT, M6M M4 A280	
230	312605-0316		1	HEXAGON NUT, M6M M6 A280	
240	312812-0316		8	HEXAGON NUT, NY-LOCK M6 A480	
250	315105-0153		8	WASHER BRB 6,4X12 RFR	
260	315402-0136		6	LOCK WASHER FBB 4,1	
270	359705-0015		1	WARNING SIGN ISO, RISK OF ELECTRIC SHOCK	

Pos	Part No	UN	Qty	Description	Page No

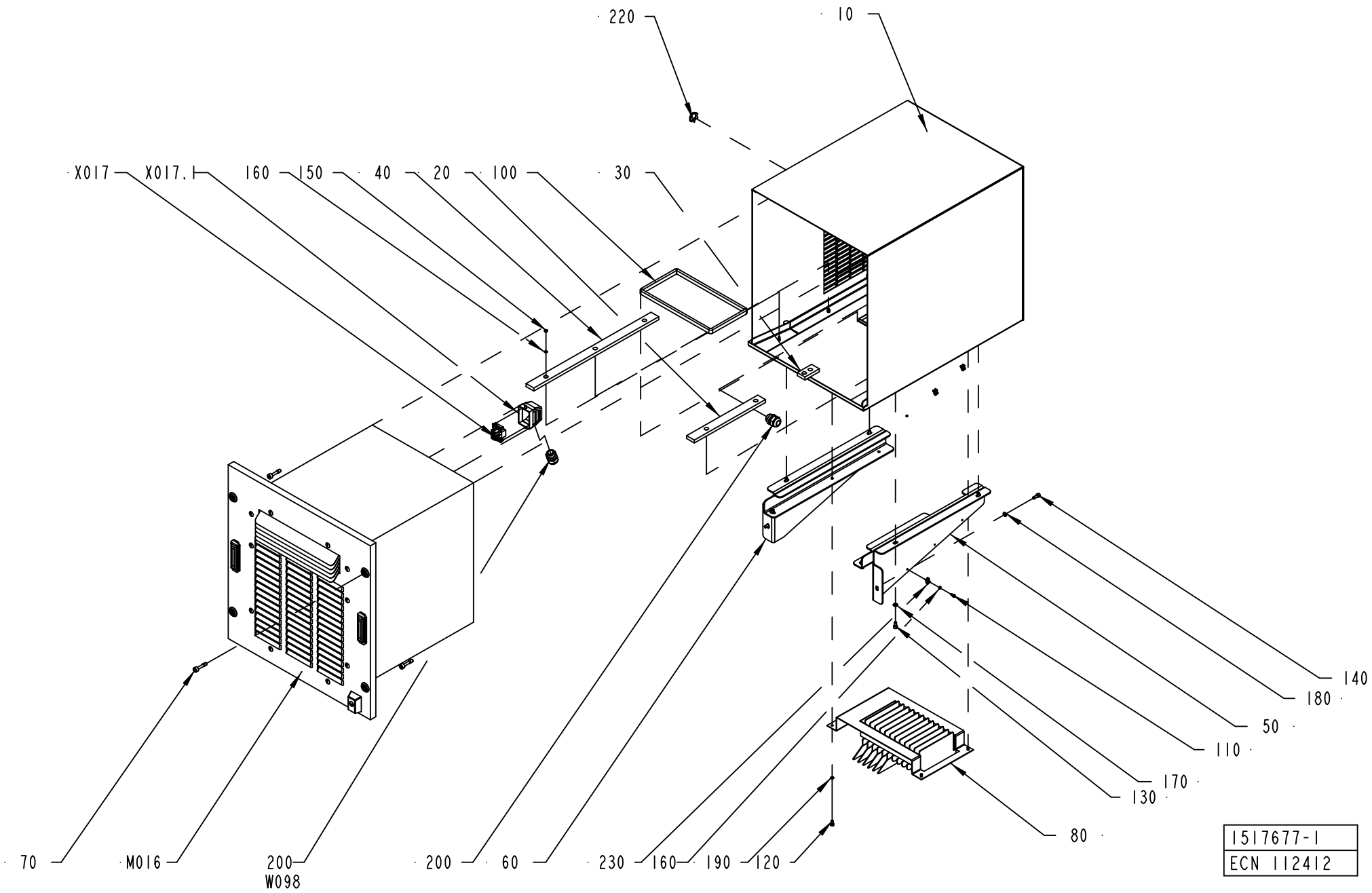
220
10
X017
X017.
160
150
40
20
100
30
140
180
50
110
170
130
80
70
M016
200
W098
200
60
230
160
190
120
1517677-1
ECN 112412

ECM: 180354 - 20040910
Group number: 1517677-0100
Assembly Drawing: 1517677-1_1_AB

Pos	Part No	UN	Qty	Description	Page No
-					
010	1523448-0000		1	FRAME	
020	1523449-0000		1	SLIDE	
030	1523450-0000		1	SLIDE	
040	1523451-0000		1	SLIDE	
050	1523452-0000		1	SUPPORT	
060	1523453-0000		1	SUPPORT	
070	1523454-0000		4	SCREW	
080	1523973-0000		1	FRAME	
100	90143-0059	MM	830	SEAL STRIP 4610069	
120	312115-0325		4	SCREW ISO4762 M5X10 A4 80	
130	312115-0366		4	SCREW ISO4762 M6X12 A4 80	
140	312115-0368		4	SCREW ISO4762 M6X16 A4 80	
150	312605-0312		7	HEXAGON NUT, M6M M4 A280	
160	315105-0136		7	WASHER BRB 4,3X8 RFR	
170	315105-0153		4	WASHER BRB 6,4X12 RFR	
180	315401-0153		4	WASHER FBH6,1FZB	
190	315402-0146		4	LOCK WASHER FBB 5,1	
200	352103-0111		2	CABLE GLAND, ST 16, PR22,5/PG16	
220	90099-0110		1	NUT, PR 22,5 (PG16)	
M016	90457-0063		1	COOLING UNIT, KB17TB.CBB	
W098	351150-0415	MM	3000	CABLE OLFLEX 7X1,5 MM2 LIGHT/GREY	
X017	90110-0163		1	FEMALE INSERT 70 300 0640 0	
X017.1	90110-0226		1	CABLE HOOD 6-POL 70.350.0628.0	

Pos	Part No	UN	Qty	Description	Page No

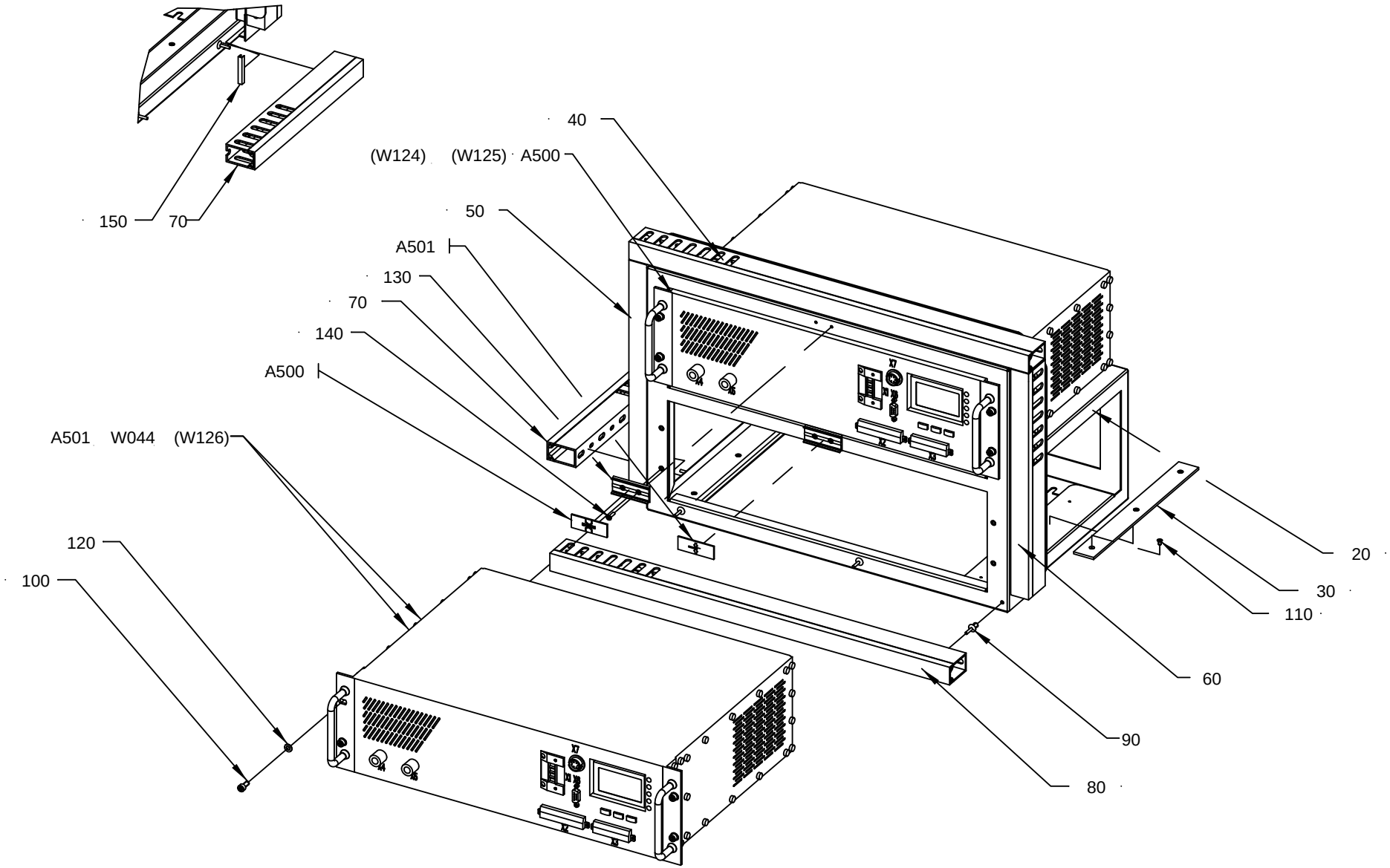

151767 8-2
ECM 240449

ECM: 245294 - 20051215
Group number: 1517678-0200
Assembly Drawing: 1517678-2_1_AA

Pos	Part No	UN	Qty	Description	Page No
-					
020	1523455-0000		1	FRAME	
030	1523456-0000		4	SLIDE	
040	90181-0037	MM	560	CABLE DUCT 25X40MM	
050	90181-0037	MM	320	CABLE DUCT 25X40MM	
060	90181-0037	MM	320	CABLE DUCT 25X40MM	
070	90181-0037	MM	263	CABLE DUCT 25X40MM	
080	90181-0037	MM	560	CABLE DUCT 25X40MM	
090	90181-0088		14	PLASTIC RIVET, PR 52314	
100	312115-0327		8	SCREW ISO4762 M5X12 A4 80	
110	312155-0220		12	SCREW DIN 7991 MF6S M3X6 A4 70	
120	315105-0146		8	WASHER BRB 5,3X10 RFR	
130	359240-0100		2	SIGN HOLDER FOR 359240-0001	
140	311521-0146		4	BLANK RIVET 3,2X12	
150	90143-0094	MM	38	SEAL	
A500	1499642-0201		1	TPIH GENERATOR	
A500.1	90458-1423		1	CONNECTOR, PC 4/4-STF-7.62	
A500.2	90458-1424		1	CONNECTOR, MSTB 2.5/10-STF-5.08	
A500.3	359241-0135		1	SIGN: " TRANSVERSAL SEALING"	
A501	1499642-0201		1	TPIH GENERATOR	
A501.1	90458-1423		1	CONNECTOR, PC 4/4-STF-7.62	
A501.2	90458-1424		1	CONNECTOR, MSTB 2.5/10-STF-5.08	
A501.3	359241-0132		1	SIGN: " TEMP. SA"	
W044	551969-0012		1	COAXIAL CABLE	
W102	90220-0183	M	4	SCR. CABLE 2X0,34MM2	
W103	90220-0183	M	4	SCR. CABLE 2X0,34MM2	
W104	90220-0183	M	4	SCR. CABLE 2X0,34MM2	

Pos	Part No	UN	Qty	Description	Page No

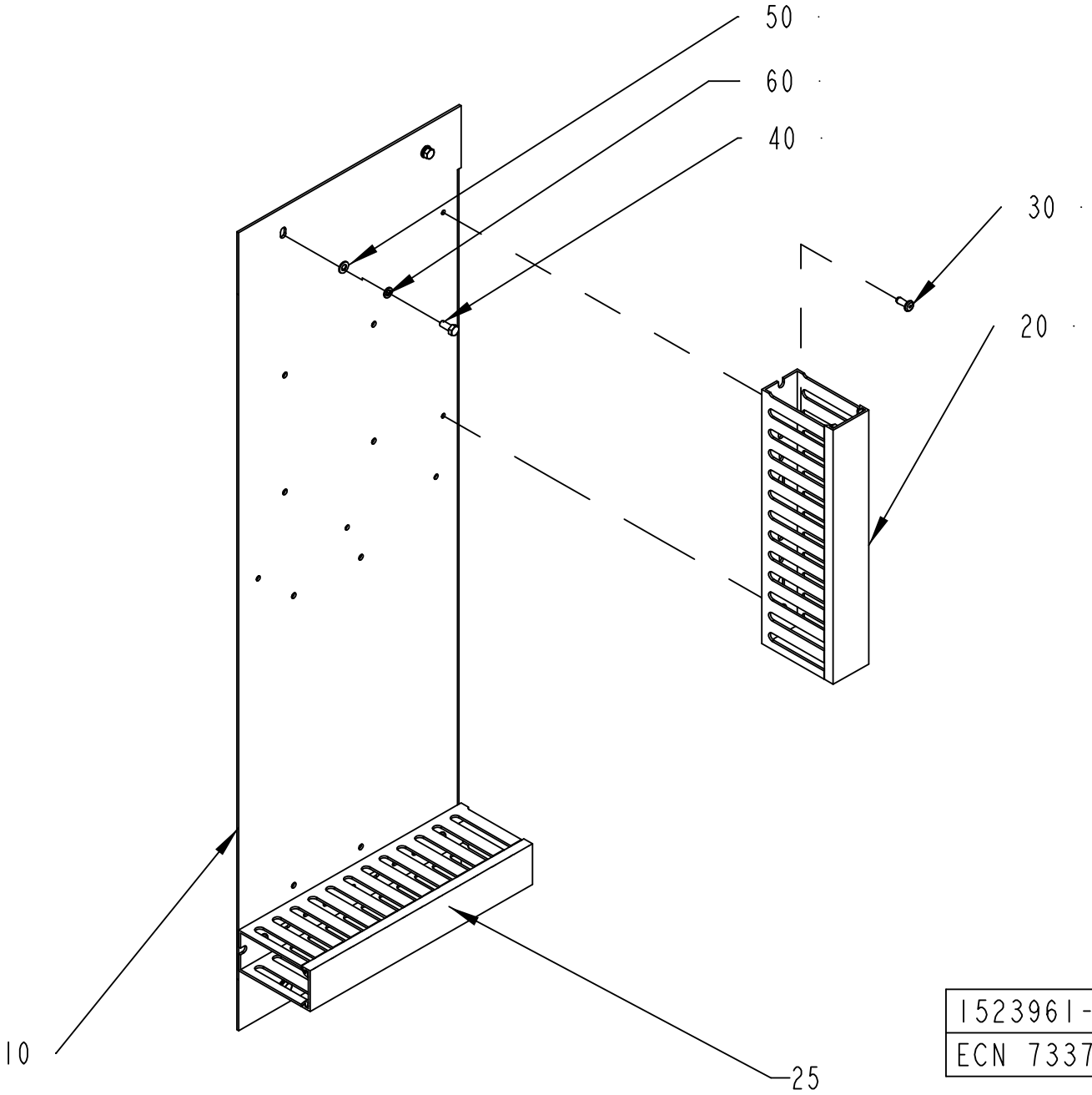

1523961-1
ECN 73370

ECM: 180358 - 20040910
Group number: 1523961-0100
Assembly Drawing: 1523961-1_1_AA

Pos	Part No	UN	Qty	Description	Page No
-					
010	1523963-0000		1	SUPPORT PLATE	
020	90181-0053	MM	250	CABLE DUCT 40X80MM	
025	90181-0053	MM	250	CABLE DUCT 40X80MM	
030	90181-0313		4	RIVET DUCTAFIX R4	
040	312105-0327		4	SCREW M6S ISO 4017 M5X12 A480	
050	315105-0146		4	WASHER BRB 5,3X10 RFR	
060	315402-0146		4	LOCK WASHER FBB 5,1	

Pos	Part No	UN	Qty	Description	Page No

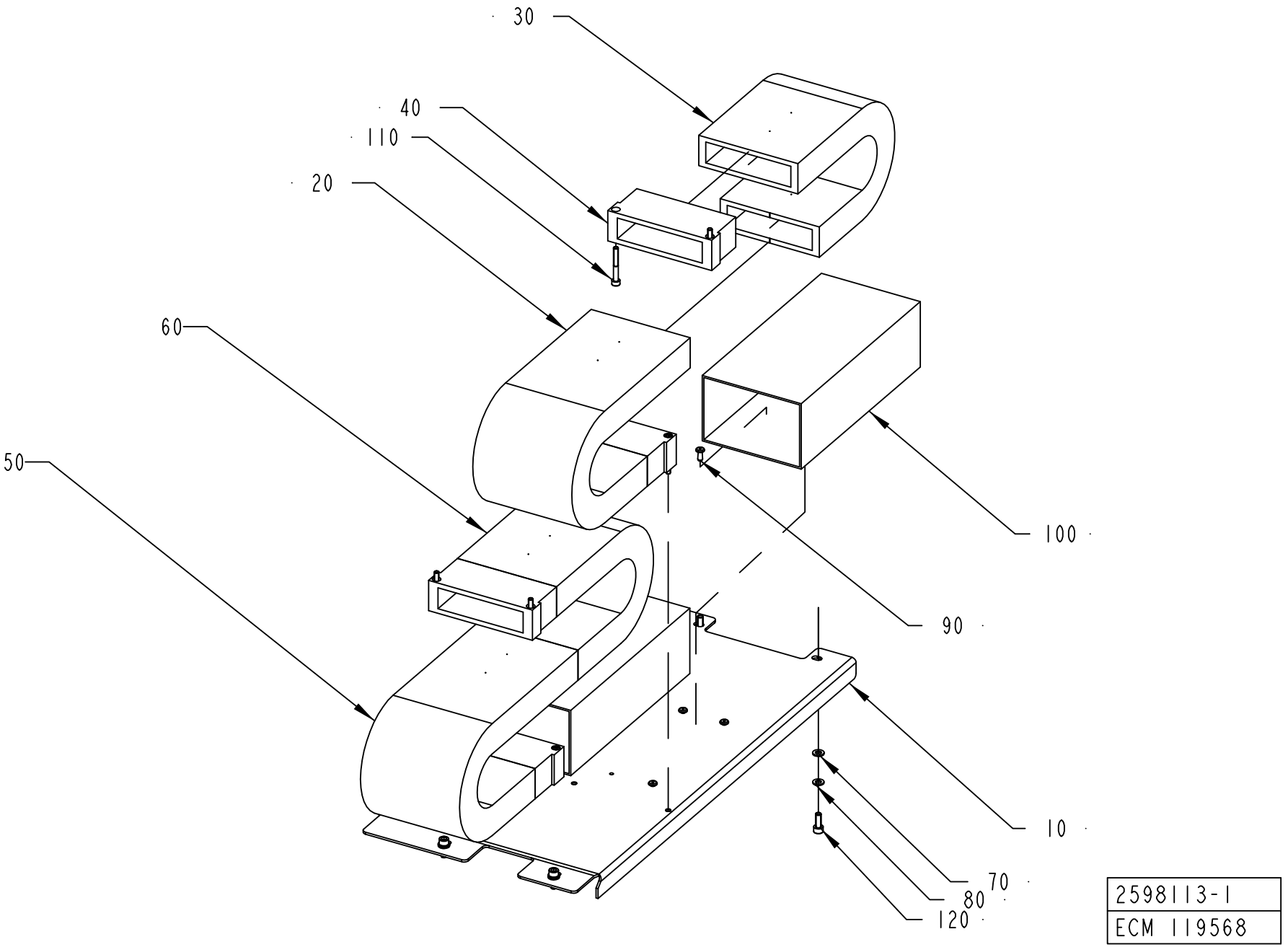
30
40
110
20
60
50
100
90
10
70
80
120
2598113-1
ECM 119568

ECM: 180363 - 20040910
Group number: 2598113-0100
Assembly Drawing: 2598113-1_1_AA

Pos	Part No	UN	Qty	Description	Page No
-					
010	2598430-0000		1	SUPPORT	
020	90459-2309	MM	405	FLEXIBLE CHAIN, A325A103KM	
030	90459-2309	MM	360	FLEXIBLE CHAIN, A325A103KM	
040	90459-2350		4	END BRACKET, A325A103KM	
050	90459-2309	MM	405	FLEXIBLE CHAIN, A325A103KM	
060	90459-2309	MM	360	FLEXIBLE CHAIN, A325A103KM	
070	315101-0153		4	WASHER PLAIN, BRB, 6,4/12 H=1,5	
080	315401-0153		4	WASHER FBH6,1FZB	
090	90181-0313		8	RIVET DUCTAFIX R4	
100	90181-0057	MM	500	CABLE DUCT 120X80MM	
110	312115-0339		8	SCREW ISO4762 M5X40 A4 80	
120	312115-0368		4	SCREW ISO4762 M6X16 A4 80	

Pos	Part No	UN	Qty	Description	Page No

Tetra Pak

SPC
Spare Parts Catalogue

This page is intentionally left blank.

ECM: 230553 - 20060111
Group number: 649452-0300
Assembly Drawing:

Pos	Part No	UN	Qty	Description	Page No
-					
0010	42413-0300		1	SOFTWARE	**11-5**
0020	42416-0300		1	ELECTRICAL DOCUMENT	

Pos	Part No	UN	Qty	Description	Page No

This page is intentionally left blank.

ECM: 297505 - 20070212
Group number: 42413-0300
Assembly Drawing:

Pos	Part No	UN	Qty	Description	Page No
-					
	2794874-0002		1	SOFTWARE CD	**11-7**
0040	2776750-0300		1	SOFTWARE TPOP	**11-9**

Pos	Part No	UN	Qty	Description	Page No

Machine Type | Group Description | Used-In | Group Number | Page No

This page is intentionally left blank.

ECM: 297504 - 20070212
Group number: 2794874-0002
Assembly Drawing:

Pos	Part No	UN	Qty	Description	Page No
-					
0101	2794874-1102		1	PROGRAM OBJECT CODE	
0102	2794874-1202		1	PROGRAM OBJECT CODE	
0103	2794874-1302		1	PROGRAM OBJECT CODE	
0105	2817312-1002		1	PROGRAM OBJECT CODE	
0110	1591155-1004		1	PROGRAM OBJECT CODE	
0115	2595678-1001		1	PROGRAM OBJECT CODE	
0120	2589438-1003		1	PROGRAM OBJECT CODE	
0125	2601509-1002		1	PROGRAM OBJECT CODE	
0127	2589434-1002		1	PROGRAM OBJECT CODE	
0130	2776757-1004		1	PROGRAM OBJECT CODE	
0135	2776751-1004		1	PROGRAM OBJECT CODE	
0140	2794854-1001		1	PROGRAM OBJECT CODE	
0145	1190006-1402		1	SOFTWARE PLMS SEND	
0150	2547131-1005		1	PLMS PERFORMANCE/PROCESS RUNTIME SW	
0155	2801770-1001		1	PROGRAM OBJECT CODE	
1001	2794875-0000		1	LABEL CD	
1002	2776759-0000		1	LABEL FLEXBOX	
1003	2776753-0000		1	LABEL FLEXBOX	
2001	90458-0118		1	COMPACT DISC RECORDABLE	

Pos	Part No	UN	Qty	Description	Page No

This page is intentionally left blank.

ECM: 295367 - 20070126
Group number: 2776750-0300
Assembly Drawing:

Pos	Part No	UN	Qty	Description	Page No
-					
0010	1369439-0302		1	PLMS ON-LINE PROGRAM	**11-11**
0020	1254471-0411		1	PLMS OFF-LINE	
0010	*47937-0411*		*1*	*PLMS OFF-LINE PROGRAM*	
0020	*2710271-0000*		*1*	*DOCUMENTATION DISKETTE*	
0030	*2710272-0000*		*1*	*LABELS, DISKETTE*	
0040	*2710273-0000*		*1*	*LABELS, CD*	
0050	*2710274-0000*		*1*	*SHORT FORM INSTRUCTIONS*	
0060	*47937-1411*		*1*	*SOFTWARE PLMS OFF-LINE*	
0070	*47937-2411*		*1*	*SOFTWARE 47937-1411 (PART 1)*	
0080	*47937-3411*		*1*	*SOFTWARE 47937-1411 (PART 2)*	
0020	*82351-0106*		*1*	*USER MANUAL PLMS OFF-LINE*	
0030	1190007-0402		1	PLMS RECEIVE	
A452.1	2545064-0101		1	PLMS COMMON SOFTWARE	**11-13**

Pos	Part No	UN	Qty	Description	Page No

This page is intentionally left blank.

ECM: 187353 - 20041018
Group number: 1369439-0302
Assembly Drawing:

Pos	Part No	UN	Qty	Description	Page No
-					
0010	48633-0302		1	PLMS ON-LINE CLIENT PROGRAM	
0020	48635-0302		1	PLMS ON-LINE SERVER PROGRAM	
0030	81595-0103		1	USER MANUAL PLMS ON-LINE	
0040	81596-0103		1	INSTALLATION MANUAL PLMS ON-LINE	

Pos	Part No	UN	Qty	Description	Page No

This page is intentionally left blank.

ECM: 121843 - 20030207
Group number: 2545064-0101
Assembly Drawing:

Pos	Part No	UN	Qty	Description	Page No
-					
0010	2545065-0001		1	TPOP BASIC PROGRAM	**11-15**
0020	2589391-0001		1	TPOP BASIC START PROGRAM	**11-17**
0030	2547125-0001		1	WINDOWS OEM W2000 PROGRAM	**11-19**

Pos	Part No	UN	Qty	Description	Page No

This page is intentionally left blank.

ECM: 184985 - 20040930
Group number: 2545065-0001
Assembly Drawing:

Pos	Part No	UN	Qty	Description	Page No	Pos	Part No	UN	Qty	Description	Page No
-											
0020	2545067-0000		1	DOCUMENTATION DISKETTE							
0030	2545068-0000		1	LABEL CD							
0040	2545069-0000		1	LABEL DISKETTE							
0050	2545070-0000		1	LABEL FLEXBOX							
0060	2545071-0000		1	SHORT FORM INSTRUCTION							
0070	2545065-1001		1	MASTER CD, TPOP BASIC							

This page is intentionally left blank.

ECM: 185552 - 20041104
Group number: 2589391-0001
Assembly Drawing:

Pos	Part No	UN	Qty	Description	Page No	Pos	Part No	UN	Qty	Description	Page No
-											
0020	2589393-0000		1	DOCUMENTATION DISKETTE							
0030	2589394-0000		1	LABEL DISKETTE							
0040	2589425-0000		1	LABEL FLEXBOX							
0050	2589395-0000		1	SHORT FORM INSTRUCTION							
0060	2589391-1001		1	MASTER DISKETTE, TPOP BASIC START							

Machine Type	Group Description	Used-In	Group Number	Page No

This page is intentionally left blank.

ECM: 184986 - 20040930
Group number: 2547125-0001
Assembly Drawing:

Pos	Part No	UN	Qty	Description	Page No	Pos	Part No	UN	Qty	Description	Page No
-											
0020	2547127-0000		1	DOCUMENTATION DISKETTE							
0030	2547128-0000		1	LABEL CD							
0040	2547129-0000		1	LABEL FLEXBOX							
0050	2547130-0000		1	SHORT FORM INSTRUCTION							

Machine Type | Group Description | Used-In | Group Number | Page No

Tetra Pak

SPC
Spare Parts Catalogue

This page is intentionally left blank.

ECM: 252394 - 20060131
Group number: 648119-1300
Assembly Drawing:

Pos	Part No	UN	Qty	Description	Page No
-					
	77093-0200		1	TRIMMING PARTS	**12-5**
	77091-0600		1	OPTIONAL PARTS	**12-7**
	77092-0600		1	SERVICE PARTS	**12-45**
	77094-0400		1	PRODUCTION PARTS	**12-147**

Pos	Part No	UN	Qty	Description	Page No

This page is intentionally left blank.

ECM: 70639 - 19970624
Group number: 77093-0200
Assembly Drawing:

Pos	Part No	UN	Qty	Description	Page No
TBA 0100B, TBA 0125S					
180	752466-0000		3	TRIMMING ROLLER PLUS	
190	752467-0000		3	TRIMMING ROLLER MINUS	
TBA 0160S, TBA 0200S					
160	752464-0000		3	TRIMMING ROLLER PLUS	
170	752465-0000		3	TRIMMING ROLLER MINUS	
TBA 0180B, TBA 0200B, TBA 0236B, TBA 0284B, TBA 0250B, TBA 0300S, TBA 0330S					
140	752462-0000		3	TRIMMING ROLLER PLUS	
150	752463-0000		3	TRIMMING ROLLER MINUS	
TBA 0200M, TBA 0250S					
200	574446-0000		3	TRIMMING ROLLER PLUS	
210	574447-0000		3	TRIMMING ROLLER MINUS	

Pos	Part No	UN	Qty	Description	Page No

This page is intentionally left blank.

ECM: 252662 - 20060131
Group number: 77091-0600
Assembly Drawing:

Pos	Part No	UN	Qty	Description	Page No
-					
0220	90245-0024		1	MATCHING TRANSF. 65 KVA	
0240	90048-0022		1	MANUAL PUMP INCL. BARROW 50-60 L	
	90048-0448		*1*	*REPAIR KIT*	
0250	90413-0187		1	CODE INSERT SET	
0251	90413-0188		1	CODE INSERT SET 0-9 (ARABIC 8MM)	
0252	90413-0189		1	CODE INSERT SET 0-9 (ARABIC 4MM)	
0253	90413-0190		1	CODE INSERT SET (ARABIC 4MM)	
0254	90413-0195		1	CODE INSERT SET 1-31 3MM(SWE-ARABIC)	
0255	90413-0196		1	CODE INSERT SET 1-12 3MM (SWE-ARABIC)	
0260	2538621-0100		1	ROUNDED DOLLY	**12-9**
0270	90459-0285		1	CD UNIT, 02413-000	
0280	90459-6473		1	HARDDISK COPYING TOOL, 03607-000	
F005	456975-0200		1	TOOL CABINET	**12-11**
F010	580873-0100		1	BOX FOR AIR FREIGHT	**12-13**
F040	1350148-0100		1	MACHINE CARRIAGE	**12-15**
F070	533014-0100		1	LEAK FINDING EQUIPMENT (SUPERSTRUCTURE)	**12-17**
				.....	**12-19**
F155	529345-0100		1	FILLING STATION H2O2	**12-23**
F160	532210-0100		1	PEROXIDE CONTAINER TROLLEY	**12-25**
F260	293684-0200		1	PRINTING WHEEL NSS	**8-51, 8-53, 8-55, 8-57, 8-59, 12-27**
				.....	**12-29, 12-31, 12-33, 12-35**
F261	293685-0200		1	PRINTING WHEEL SS	**8-31, 8-33, 12-37, 12-39**
F262	434074-0300		1	INK UNIT	**12-41**
F263	434774-0300		1	INK UNIT	**12-43**

Pos	Part No	UN	Qty	Description	Page No

Machine Type | Group Description | Used-In | Group Number | Page No

This page is intentionally left blank.

ECM: 92422 - 20020417
Group number: 2538621-0100
Assembly Drawing:

Pos	Part No	UN	Qty	Description	Page No
TBA 0180B, TBA 0160S, TBA 0200M, TBA 0200B, TBA 0236B, TBA 0200SQ, TBA 0200S, TBA 0250S, TBA 0284B, TBA 0250B, TBA 0300S, TBA 0330S					
	1110378-0001		4	DOLLY	
Common Parts					
	1110378-0001		4	DOLLY	

Pos	Part No	UN	Qty	Description	Page No

This page is intentionally left blank.

ECM: - -
Group number: 456975-0200
Assembly Drawing:

Pos	Part No	UN	Qty	Description	Page No
-					
035	36489-0000		1	ASSEMBLY TOOL	
040	77221-0000		1	TIGHTENING TOOL	
080	90226-0004		1	CABINET	
100	90278-0001		1	PUMP	
110	90279-0001		1	OIL CAN 0,4L, 42AM FLEX	
115	90243-0136		1	SPIRIT LEVEL	
125	315202-0224		1	O-RING 42,2X3 MM	
150	776422-0101		2	BRASS WIRESTE	
160	777100-0113		1	SCREW DRIVER	
170	777100-0184		1	SCREW DRIVER	
330	777510-0101		1	SCISSORS	
400	772220-0100		1	ASSEMBLY T VOMO 6-L	
410	772220-0101		1	ASSEMBLY T VOMO 8-L	
420	772220-0103		1	ASSEMBLY T VOMO 12-L	
430	772220-0104		1	ASSEMBLY T VOMO 15-L	

Pos	Part No	UN	Qty	Description	Page No

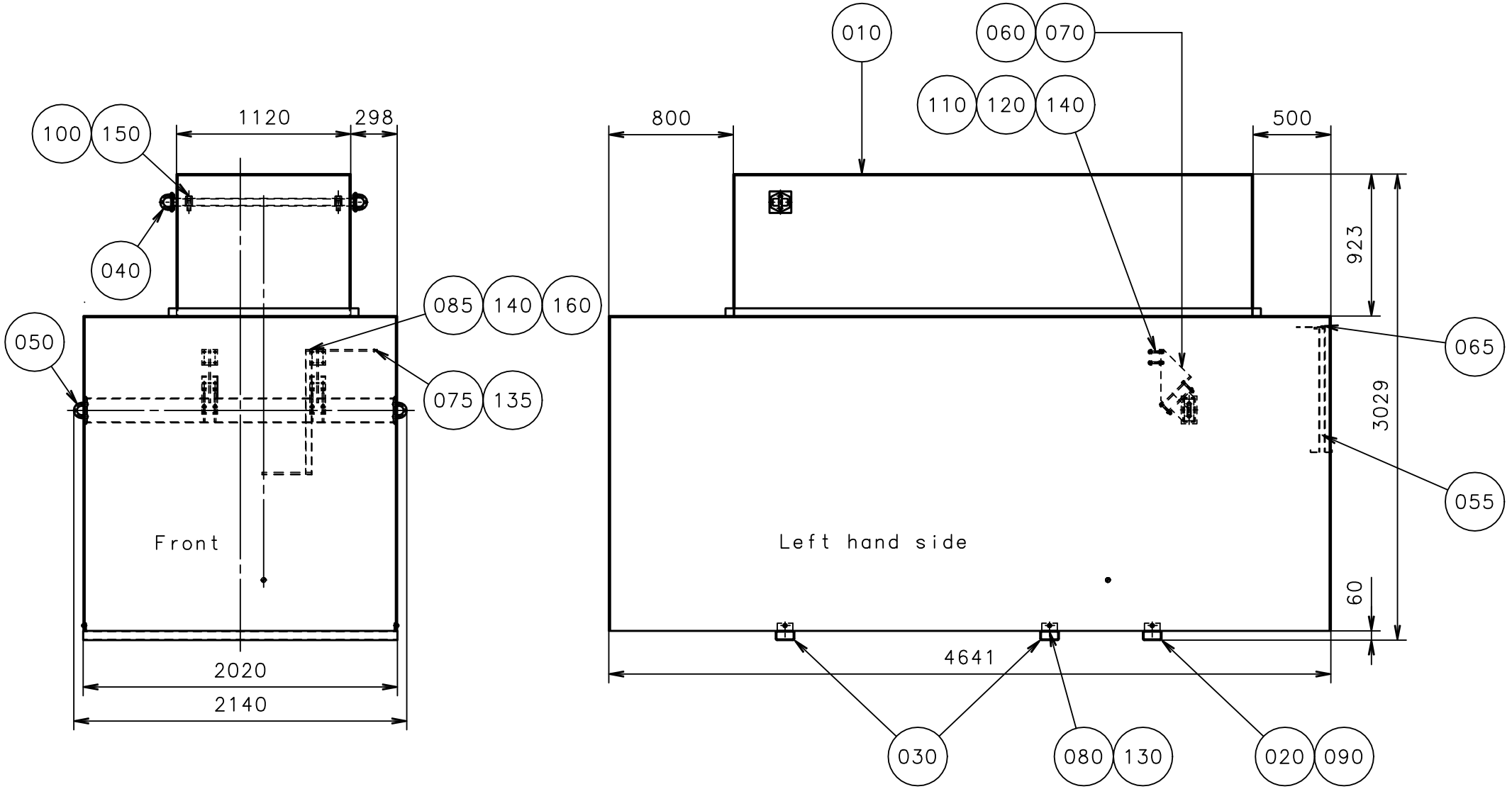
100
150
1120
298
040
085
140
160
050
075
135
Front
2020
2140
010
060
070
110
120
140
800
500
923
065
3029
055
Left hand side
60
4641
030
080
130
020
090

ECM: 70639 - 19970624
Group number: 580873-0100
Assembly Drawing: 580873-1_1_AB

Pos	Part No	UN	Qty	Description	Page No
TBA					
055	582850-0000		1	SUPPORT	
Common Parts					
010	580876-0000		1	PACKING	
020	580848-0000		1	TRANSPORT BEAM	
030	580849-0000		2	TRANSPORT BEAM	
040	580865-0000		1	TRANSPORT BEAM	
050	580866-0000		1	TRANSPORT BEAM	
060	580867-0000		2	BRACKET	
065	582851-0000		1	SUPPORT	
070	580868-0000		2	FASTENING PLATE	
075	312101-0493		1	SCREW M6S M10X25 FZB	
080	312101-0451		4	SCREW M6S M8X20 FZB	
085	312101-0548		1	SCREW M6S M12X80 FZB	
090	312101-0455		2	SCREW M6S M8X30 FZB	
110	312101-0550		16	SCREW M6S M12X90 FZB	
120	312810-0322		16	HEXAGON NUT, NY-LOCK M12 FZB	
130	315101-0165		6	WASHER PLAIN, BRB, 8,4/16 H=1,5	
135	315101-0173		1	WASHER PLAIN, BRB, 10,5/22 H=2	
140	315101-0178		34	WASHER PLAIN, BRB, 13/24 H=2	
150	315102-0198		2	WASHER PLAIN, BRFB 25/45 H=4	
160	312601-0322		1	HEXAGON NUT, DIN 934 M12 8 FZB	

Pos	Part No	UN	Qty	Description	Page No

MACHINE CARRIAGE

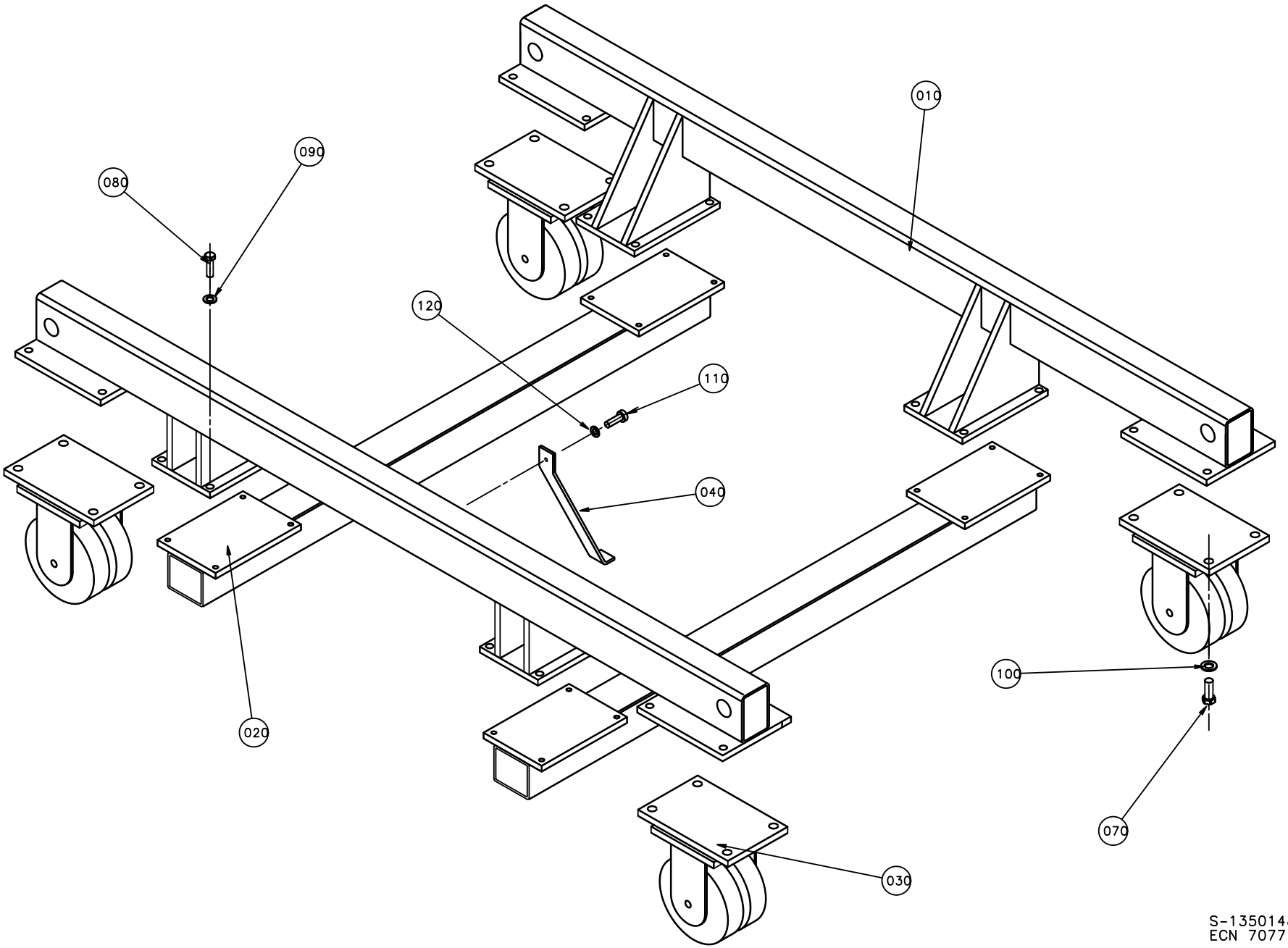

ECM: 70771 - 19971217
Group number: 1350148-0100
Assembly Drawing: 1350148-1_1_AA

Pos	Part No	UN	Qty	Description	Page No
-					
010	1350149-0000		2	BEAM	
020	1350150-0000		2	BEAM	
030	1140840-0000		4	WHEEL	
040	1334184-0000		4	BRACKET	
070	312105-0538		16	SCREW M6S ISO 4017 M12X35 A480	
080	312105-0630		16	SCREW M6S ISO 4017 M16X50 A480	
090	315105-0178		16	WASHER BRB 13X24 RFR	
100	315105-0186		16	WASHER BRB 17X30 RFR	
110	312105-0451		4	SCREW M6S ISO 4017 M8X20 A480	
120	315105-0165		4	WASHER BRB 8,4X16 RFR	

Pos	Part No	UN	Qty	Description	Page No

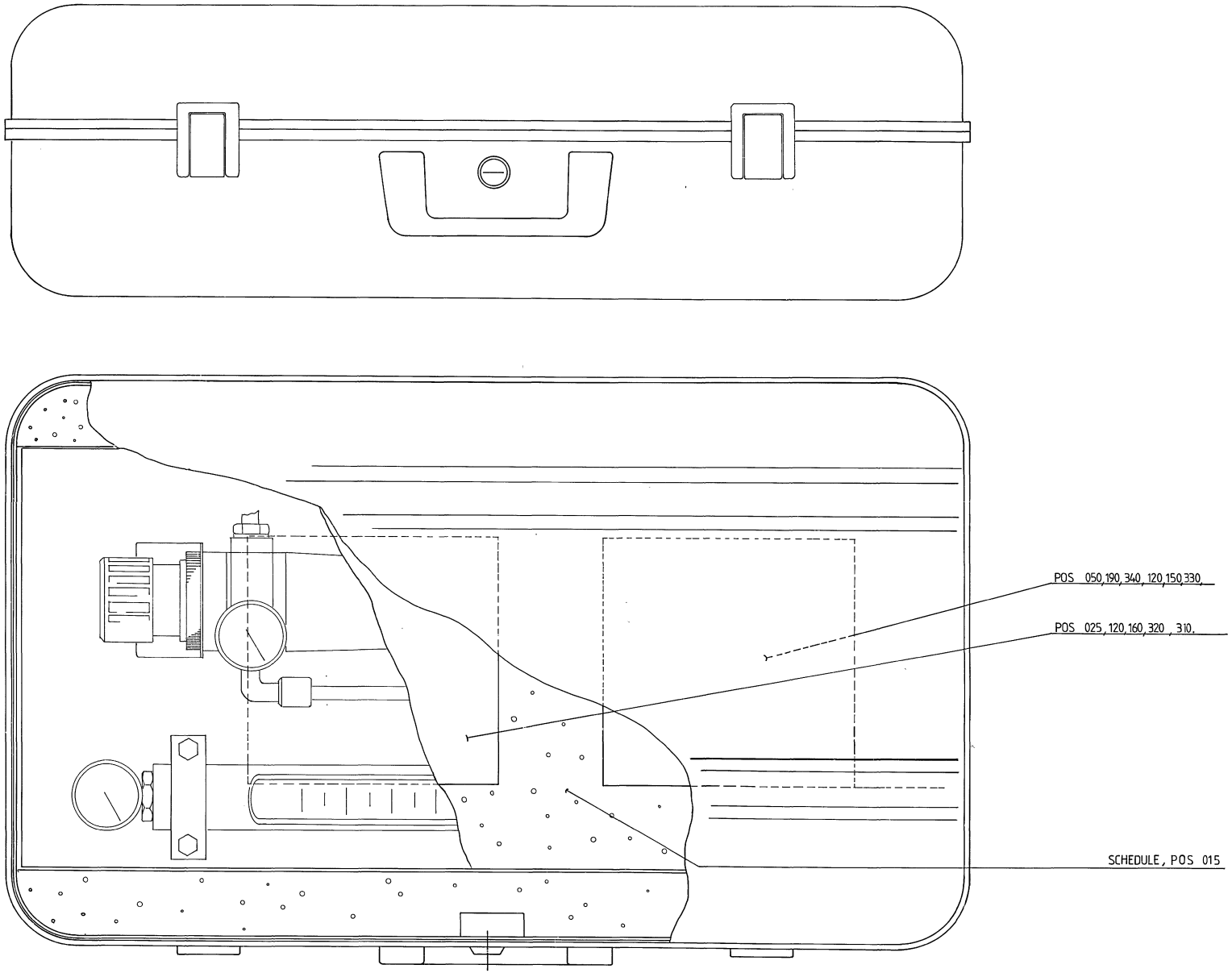
POS 050,190,340,120,150,330,
POS 025,120,160,320,310,
SCHEDULE, POS 015

ECM: 71889 - 19980924
Group number: 533014-0100
Assembly Drawing: 533014-1_1_AA

This list covers pages from 12-16 to 12-19

Pos	Part No	UN	Qty	Description	Page No
-					
010	532676-0000		1	SHEET	
010	533905-0100		1	PONCH	**12-21**
015	533015-0000		1	WIRING DIAGRAM	
020	1360399-0000		4	PIPE HOLDER	
025	493735-0000		1	NIPPLE	
030	532677-0000		1	PIPE	
040	532678-0000		1	DOWEL	
050	532679-0000		1	PLATE	
060	90030-0223		1	BUSHING, INT/EXT. G-THREAD NO. 2531	
070	90030-0224		1	NIPPLES, EXT. THREAD, HEXAGON, NO. 2511	
075	90030-0225		2	BUSHING, INT/EXT. R-THREAD 1/4X3/8	
080	90043-0021		1	PRESSURE GAUGE 0-1 BAR 1/8" D=40	
090	90043-0043		1	PRESSURE GAUGE 0-10 BAR 1/8"	
100	90113-0059		1	FILTER REGULATOR 50UM, B08-396-A3MG	
110	90140-0015		1	T-PIPE, INT. THREAD, 2003-1/8	
120	90163-0056		2	QUICK COUPLING, (F) 5054-6/4	
130	90163-0057		1	QUICK COUPLING, (M) 5150-1/8	
140	90163-0087		1	QUICK COUPLING, (M) 5150-1/4	
150	90166-0124	MM	1250	TUBE 6 MM PA,TRANSP.	
160	90166-0124	MM	1250	TUBE 6 MM PA,TRANSP.	
170	90224-0303		2	CONN. ELBOW 1020-8-1/4	
172	90113-0384		1	BRACKET FOR R11, 5203-06	
175	90243-0137		1	PRESSURE GAUGE KIT 0-50 MM WC, 229900	
180	90243-0147		1	FLOW METER	
190	90330-0029		1	PLUG, EXT. G-THREAD, R-236R3/8	
200	312105-0325		2	SCREW M6S ISO 4017 M5X10 A480	
210	312105-0383		4	SCREW M6S ISO 4014 M6X65 A480	
220	312602-0312		1	HEXAGON NUT, EN 24032 M6M M4 NIPLBR	
230	312605-0314		2	HEXAGON NUT, M6M M5 A280	
240	312605-0316		4	HEXAGON NUT, M6M M6 A280	
250	315103-0136		1	WASHER PLAIN, BRB, 4,3/8,H=0,8 NI PL BR	
260	315105-0146		4	WASHER BRB 5,3X10 RFR	
270	315105-0153		8	WASHER BRB 6,4X12 RFR	
280	315233-0109		2	WASHER CAPTIVE SEALING G1/8	
290	315233-0110		1	WASHER CAPTIVE SEALING G1/4	
295	315233-0111		2	WASHER CAPTIVE SEALING G3/8	
300	315233-0113		2	WASHER CAPTIVE SEALING G1/2	
310	342921-0113		1	STRAIGHT COUPLING,EXT.THREADED 6/4-G1/8"	
320	342921-0114		1	STRAIGHT COUPLING,EXT.THREADED 6/4-G1/4"	
330	342980-0114		1	BANJO-CONNECTION,RING 6/4-G1/4"	
340	342980-0314		1	BANJO-HOLLOW BOLT COUPL,EXT.THR.02-G1/4	
350	342701-0201		1	BUSHING,INT./EXT.G-THREAD G1/4"-G1/8"	

Machine Type | Group Description | Used-In | Group Number | Page No

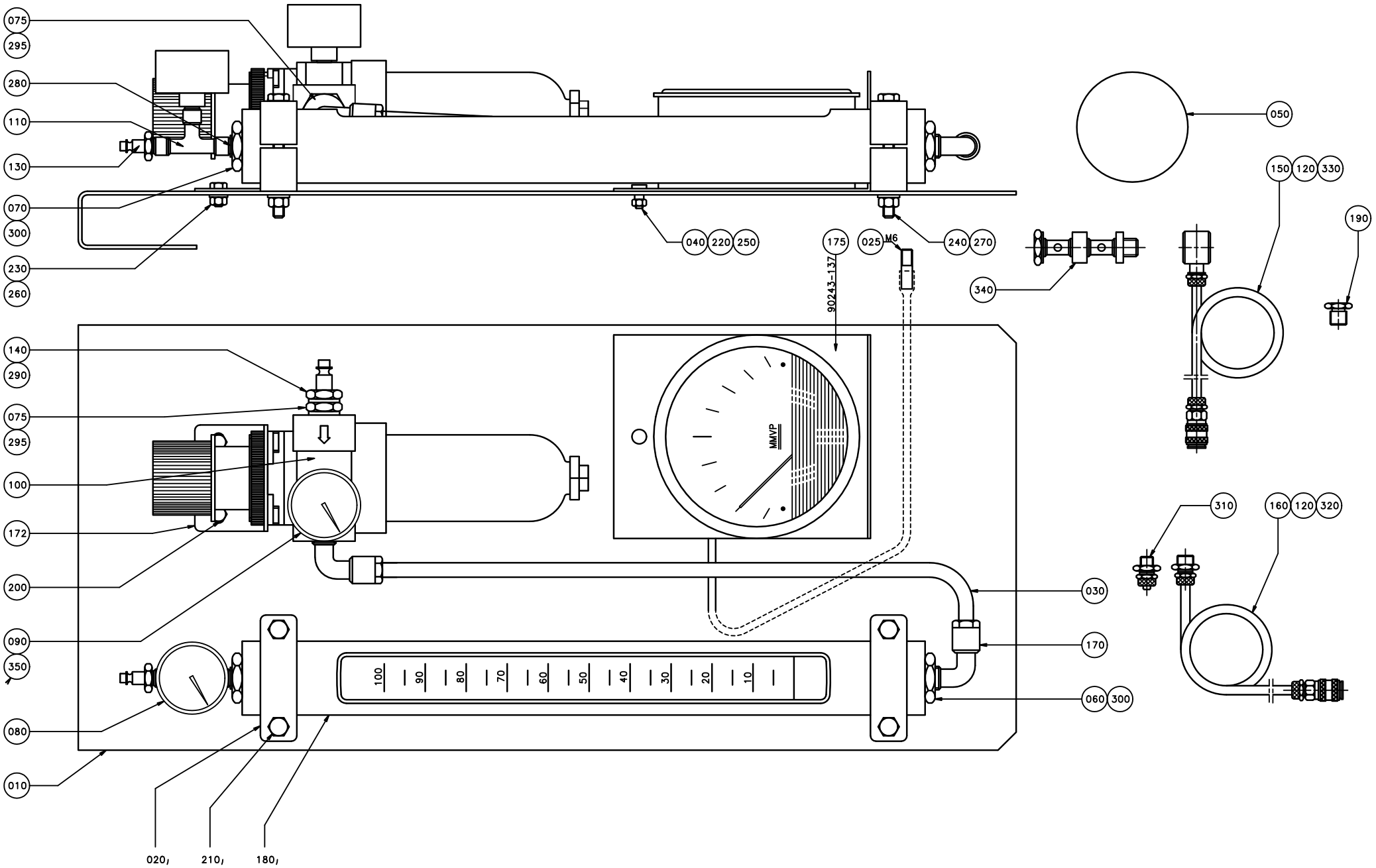
075
295
280
110
130
070
300
230
260
040
220
250
175
025
M6
240
270
90243-137
050
150
120
330
190
340
140
290
075
295
100
172
200
090
350
080
010
020
210
180
MMVP
100
90
80
70
60
50
40
30
20
10
030
170
060
300
310
160
120
320

ECM: 71889 - 19980924
Group number: 533014-0100
Assembly Drawing: 533014-2_1_AB

This list covers pages from 12-16 to 12-19

Pos	Part No	UN	Qty	Description	Page No
-					
010	532676-0000		1	SHEET	
010	533905-0100		1	PONCH	**12-21**
015	533015-0000		1	WIRING DIAGRAM	
020	1360399-0000		4	PIPE HOLDER	
025	493735-0000		1	NIPPLE	
030	532677-0000		1	PIPE	
040	532678-0000		1	DOWEL	
050	532679-0000		1	PLATE	
060	90030-0223		1	BUSHING, INT/EXT. G-THREAD NO. 2531	
070	90030-0224		1	NIPPLES, EXT. THREAD, HEXAGON, NO. 2511	
075	90030-0225		2	BUSHING, INT/EXT. R-THREAD 1/4X3/8	
080	90043-0021		1	PRESSURE GAUGE 0-1 BAR 1/8" D=40	
090	90043-0043		1	PRESSURE GAUGE 0-10 BAR 1/8"	
100	90113-0059		1	FILTER REGULATOR 50UM, B08-396-A3MG	
110	90140-0015		1	T-PIPE, INT. THREAD, 2003-1/8	
120	90163-0056		2	QUICK COUPLING, (F) 5054-6/4	
130	90163-0057		1	QUICK COUPLING, (M) 5150-1/8	
140	90163-0087		1	QUICK COUPLING, (M) 5150-1/4	
150	90166-0124	MM	1250	TUBE 6 MM PA,TRANSP.	
160	90166-0124	MM	1250	TUBE 6 MM PA,TRANSP.	
170	90224-0303		2	CONN. ELBOW 1020-8-1/4	
172	90113-0384		1	BRACKET FOR R11, 5203-06	
175	90243-0137		1	PRESSURE GAUGE KIT 0-50 MM WC, 229900	
180	90243-0147		1	FLOW METER	
190	90330-0029		1	PLUG, EXT. G-THREAD, R-236R3/8	
200	312105-0325		2	SCREW M6S ISO 4017 M5X10 A480	
210	312105-0383		4	SCREW M6S ISO 4014 M6X65 A480	
220	312602-0312		1	HEXAGON NUT, EN 24032 M6M M4 NIPLBR	
230	312605-0314		2	HEXAGON NUT, M6M M5 A280	
240	312605-0316		4	HEXAGON NUT, M6M M6 A280	
250	315103-0136		1	WASHER PLAIN, BRB, 4,3/8,H=0,8 NI PL BR	
260	315105-0146		4	WASHER BRB 5,3X10 RFR	
270	315105-0153		8	WASHER BRB 6,4X12 RFR	
280	315233-0109		2	WASHER CAPTIVE SEALING G1/8	
290	315233-0110		1	WASHER CAPTIVE SEALING G1/4	
295	315233-0111		2	WASHER CAPTIVE SEALING G3/8	
300	315233-0113		2	WASHER CAPTIVE SEALING G1/2	
310	342921-0113		1	STRAIGHT COUPLING,EXT.THREADED 6/4-G1/8"	
320	342921-0114		1	STRAIGHT COUPLING,EXT.THREADED 6/4-G1/4"	
330	342980-0114		1	BANJO-CONNECTION,RING 6/4-G1/4"	
340	342980-0314		1	BANJO-HOLLOW BOLT COUPL,EXT.THR.02-G1/4	
350	342701-0201		1	BUSHING,INT./EXT.G-THREAD G1/4"-G1/8"	

Machine Type | Group Description | Used-In | Group Number | Page No

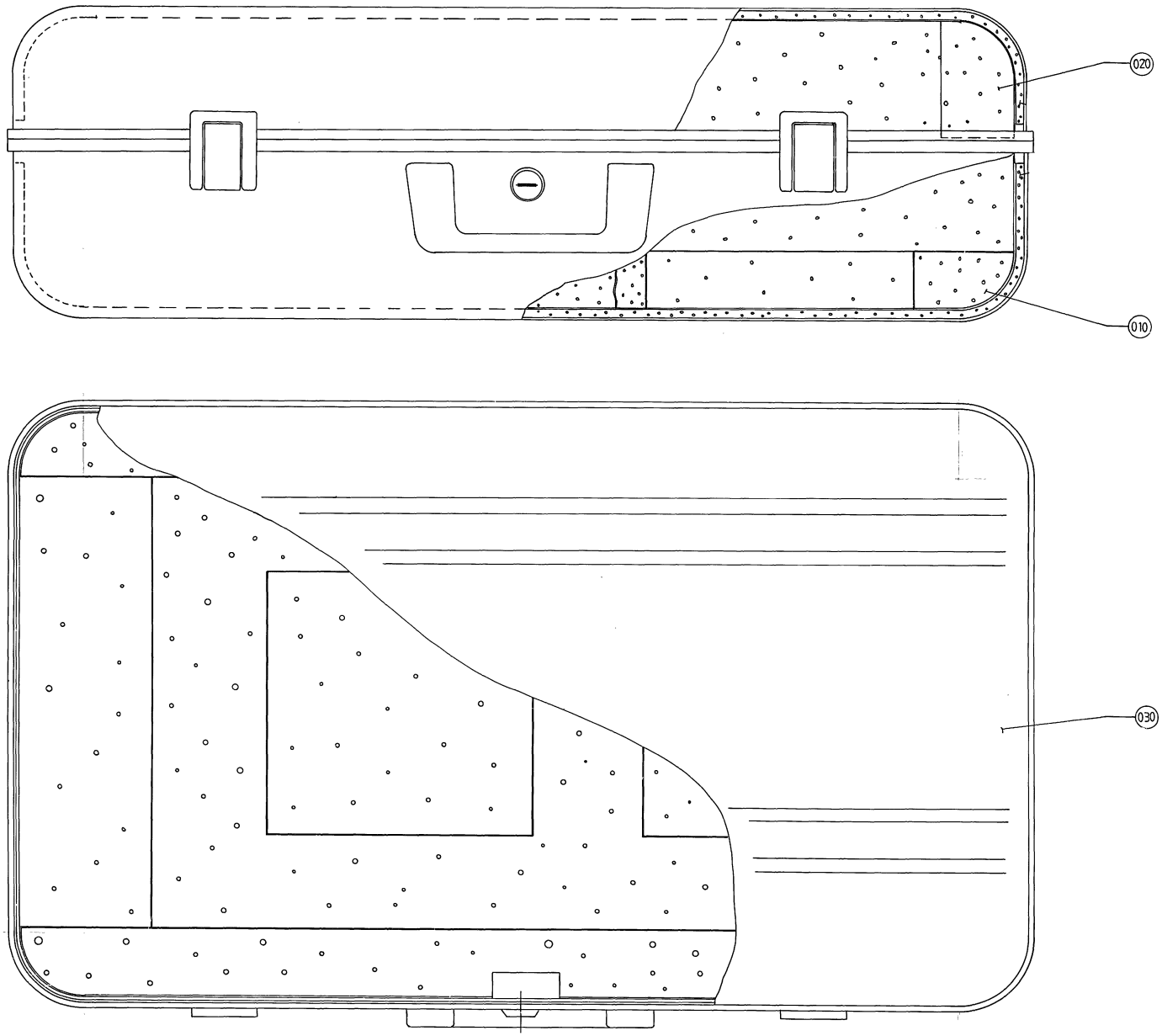
020
010
030

ECM: - -
Group number: 533905-0100
Assembly Drawing: 533905-1_1_AA

Pos	Part No	UN	Qty	Description	Page No
-					
010	533374-0000		1	FITMENT BOTTOM	
020	533906-0000		1	FITMENT COVER	
030	90243-0118		1	TOOL BOX, NO. ZERO 105X-SI	

Pos	Part No	UN	Qty	Description	Page No

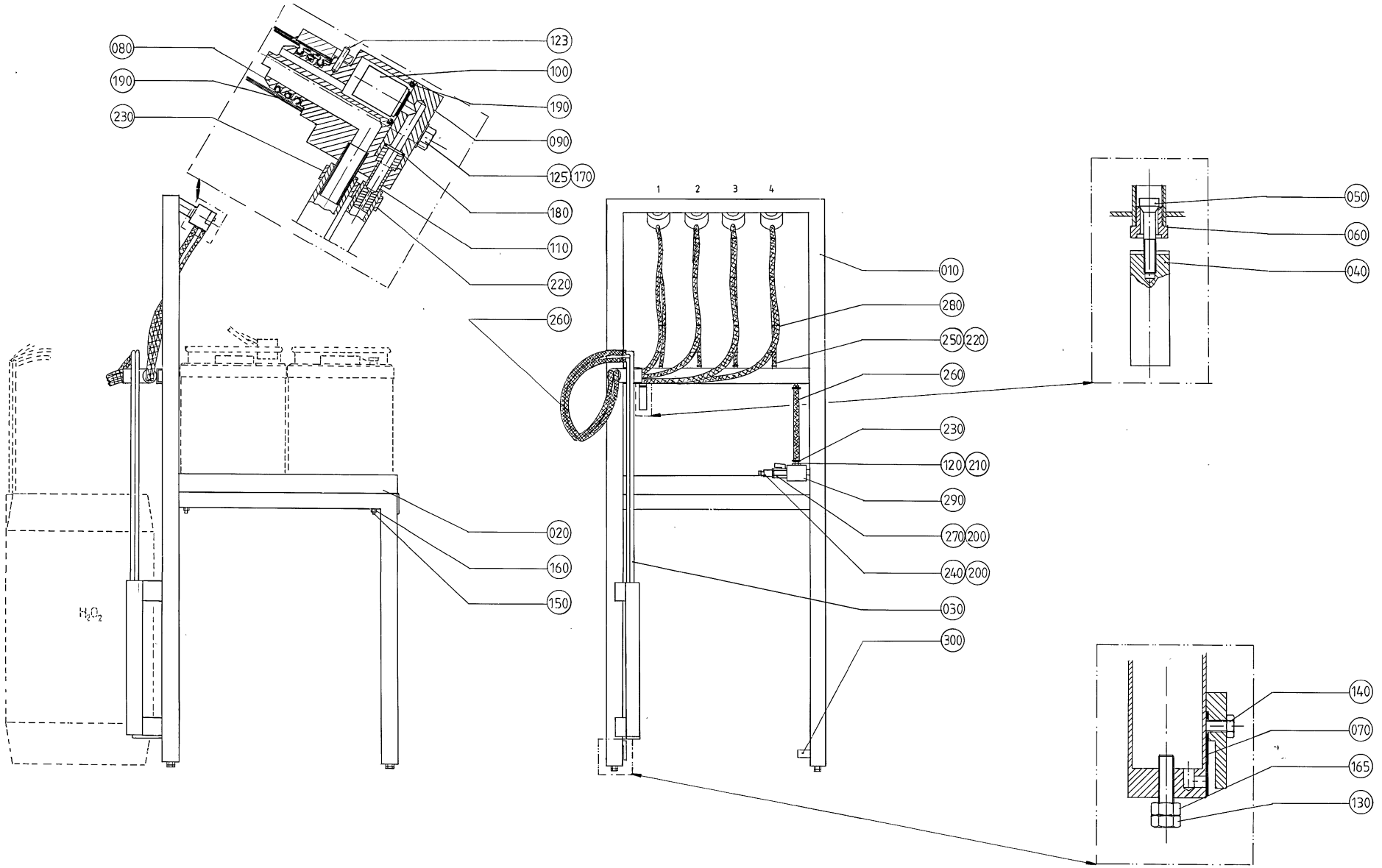
080
190
230
123
100
190
090
125
170
180
110
220
260
020
160
150
H_2O_2
1
2
3
4
010
280
250
220
260
230
120
210
290
270
200
240
200
030
300
050
060
040
140
070
165
130

ECM: - -
Group number: 529345-0100
Assembly Drawing: 529345-1_1_AA

Pos	Part No	UN	Qty	Description	Page No
-					
010	534692-0000		1	FRAME SECTION	
020	534693-0000		1	PLATE	
030	534694-0000		1	SUCTIONPIPE	
040	534695-0000		1	WEIGHT	
050	534696-0000		1	VALVE	
060	534697-0000		1	VALVE HOUSING	
070	534691-0000		1	DIAPHRAGM	
080	534637-0000		4	ATTACHMENT	
090	534636-0000		4	LEVEL GLAS	
100	534635-0000		4	VALVE	
110	534634-0000		4	PIPE	
120	534698-0000		1	NIPPLE	
123	311103-0235		1	PARALLEL PIN ISO 2338 3M6X14 A1	
125	312105-0374		8	SCREW M6S ISO 4014 M6X30 A480	
130	312105-0455		4	SCREW M6S ISO 4017 M8X30 A480	
140	312125-0327		1	SCREW ISO 1207 M5X12 A4	
150	312145-0380		4	SCREW ISO 2009 MFS M6X50 A4	
160	312812-0316		4	HEXAGON NUT, NY-LOCK M6 A480	
165	312605-0318		4	HEXAGON NUT, M6M M8 A280	
170	315105-0153		8	WASHER BRB 6,4X12 RFR	
180	927421-0005		4	O-RING 7.3X2.4 SILICONE	
190	927422-0001		16	O-RING 19.2X3 SILICONE	
200	315233-0110		2	WASHER CAPTIVE SEALING G1/4	
210	315233-0113		2	WASHER CAPTIVE SEALING G1/2	
220	342991-0100		8	HOSE CLIP,WORM DRIVE TYPE 10-13	
230	342991-0101		10	HOSE CLIP,WORM DRIVE TYPE (13)-16	
240	90163-0007		1	CONNECTION	
250	90166-0045	MM	3500	HOSE PVC TRANSP. 6/12	
260	90166-0113	MM	7500	HOSE	
270	90187-0045		1	BALL VALVE G1/4 CR PL	
280	352113-0102		30	CABLE TIE, BLACK 188X4,8 MM	
290	90425-0016		1	MECMAN TYPE E120 735-120-000	
300	90328-0025		1	SILENCER G1/2"	

Pos	Part No	UN	Qty	Description	Page No

PEROXIDE CONTAINER TROLLEY

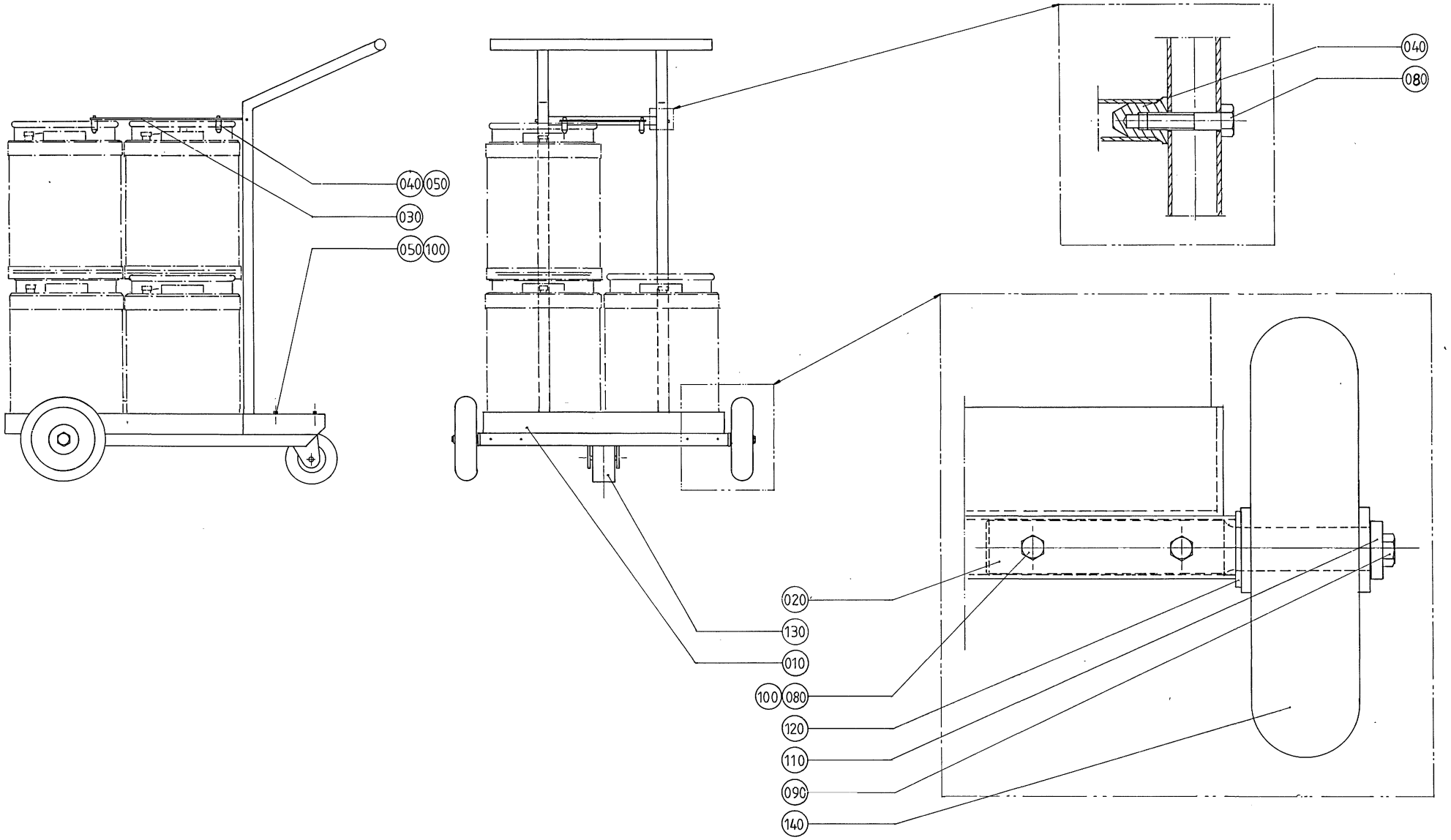

ECM: - -
Group number: 532210-0100
Assembly Drawing: 532210-1_1_AA

Pos	Part No	UN	Qty	Description	Page No
-					
010	273985-0000		1	CARRIAGE	
020	532208-0000		2	SHAFT	
030	532209-0000		1	SHEET	
040	532211-0000		6	DOWEL	
050	312105-0449		8	SCREW M6S ISO 4017 M8X16 A480	
080	312105-0459		6	SCREW M6S ISO 4014 M8X40 A480	
090	312105-0491		2	SCREW M6S ISO 4017 M10X20 A480	
100	312605-0318		4	HEXAGON NUT, M6M M8 A280	
110	315115-0173		2	WASHER PLAIN, TBRB 10,5/22 H=4	
120	315105-0192		2	WASHER BRB 21X36 RFR	
130	90191-0060		1	CASTOR WHEEL, NO. 1599PRT	
140	90191-0047		2	WHEEL, NO.798 821	

Pos	Part No	UN	Qty	Description	Page No

PRINTING WHEEL NSS

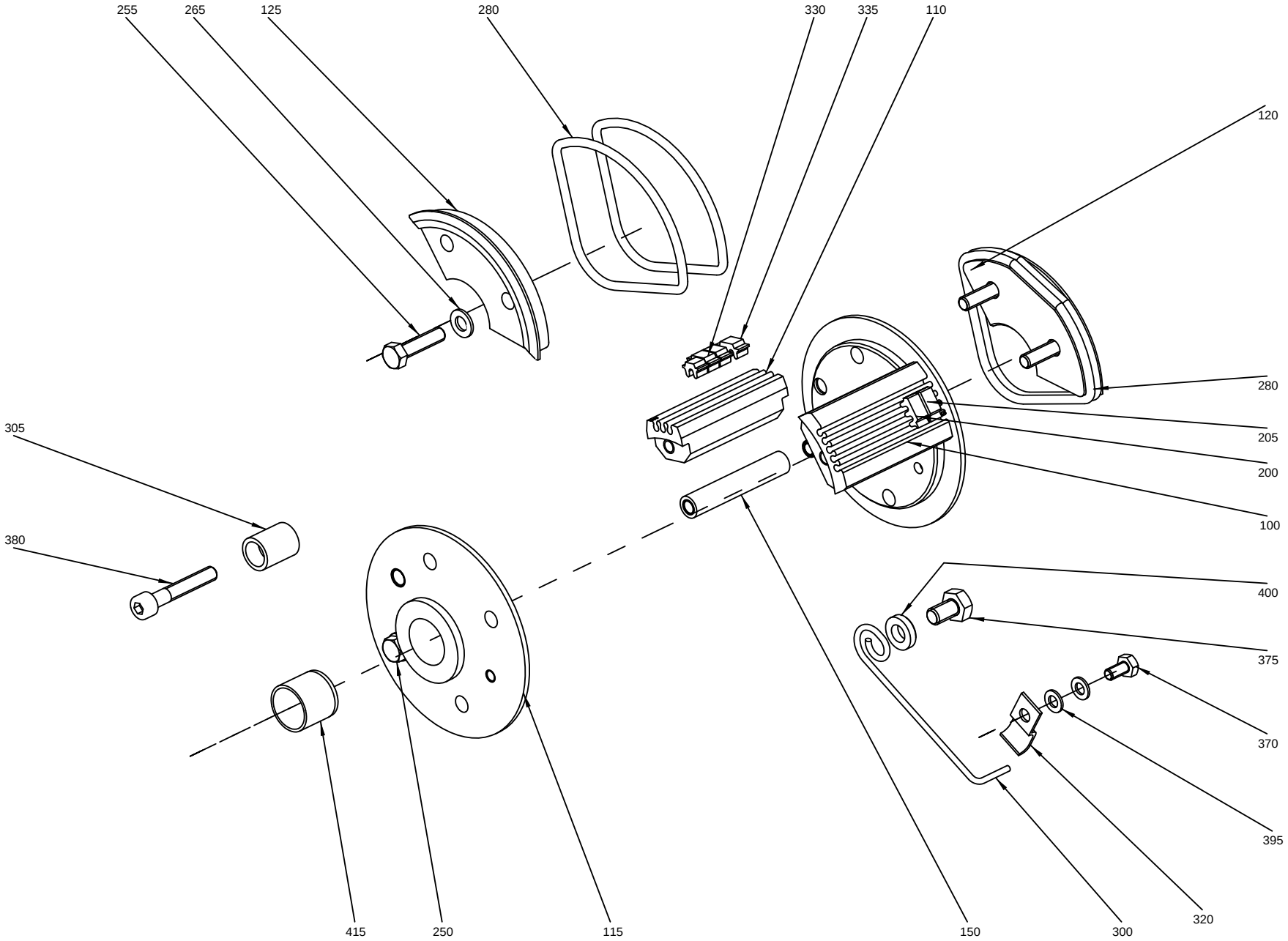

S-2 93684-3
ECN 73044

ECM: 227528 - 20051011
Group number: 293684-0200
Assembly Drawing: 293684-3_1_AB

This list covers pages from 12-26 to 12-35

Pos	Part No	UN	Qty	Description	Page No
TBA 0100B, TBA 0180B, TBA 0125S, TBA 0160S, TBA 0200M, TBA 0189B, TBA 0200B, TBA 0236B, TBA 0200S, TBA 0250S, TBA 0250B, TBA 0300S, TBA 0330S (See drawing on pages: 8-56, 8-58, 12-32, 12-34)					
105	293395-0002		2	TYPE HOLDER	
110	293395-0001		2	TYPE HOLDER	
130	292412-0000		1	END SECTION	
135	292413-0000		1	END SECTION	
145	293659-0000		1	CARRIER	
255	312101-0331		7	SCREW M6S M5X20 FZB	
265	315101-0146		7	WASHER PLAIN, BRB, 5,3/10 H=1	
285	315202-0304		2	O-RING 64,5X3 MM	
410	315202-0305		2	O-RING 69,5X3 MM	
TBA 0284B (See drawing on pages: 8-56, 8-58, 12-32, 12-34)					
105	293395-0002		2	TYPE HOLDER	
110	293395-0001		2	TYPE HOLDER	
130	292412-0000		1	END SECTION	
135	292413-0000		1	END SECTION	
145	293659-0000		1	CARRIER	
255	312101-0331		7	SCREW M6S M5X20 FZB	
265	315101-0146		7	WASHER PLAIN, BRB, 5,3/10 H=1	
285	315202-0304		2	O-RING 64,5X3 MM	
410	315202-0305		2	O-RING 69,5X3 MM	
TBA 0375S, TBA 0400B, TBA 0355B, TBA 0500S, TBA 0750S (See drawing on pages: 8-56, 8-58, 12-32, 12-34)					
105	293395-0002		1	TYPE HOLDER	
110	293395-0001		1	TYPE HOLDER	
125	479237-0000		1	CARRIER	
140	479236-0000		2	END SECTION	
145	479238-0000		1	CARRIER	
150	293671-0000		1	SPACER	
250	312101-0329		2	SCREW M6S M5X16 FZB	
255	312101-0331		3	SCREW M6S M5X20 FZB	
265	315101-0146		5	WASHER PLAIN, BRB, 5,3/10 H=1	
275	315202-0224		4	O-RING 42,2X3 MM	
TBA 0500B (See drawing on pages: 8-50, 8-52, 8-54, 12-26, 12-28, 12-30)					
100	293395-0003		2	TYPE HOLDER	
110	293395-0001		2	TYPE HOLDER	
115	434787-0000		1	END SECTION	
120	292410-0000		1	END SECTION	
155	293676-0000		1	CARRIER	
200	90413-0048		1	CODE INSERT SET A 9/28	
205	90413-0049		1	CODE INSERT SET C 9/28	
255	312101-0331		7	SCREW M6S M5X20 FZB	
265	315101-0146		7	WASHER PLAIN, BRB, 5,3/10 H=1	
285	315202-0304		2	O-RING 64,5X3 MM	
410	315202-0305		2	O-RING 69,5X3 MM	
TBA 0500SQ, TBA 0750B, TBA 1000B LOFIN, TBA 1000SQ, TBA 1000S, TBA 1500S, TBA 1055B (See drawing on pages: 8-50, 8-52, 8-54, 12-26, 12-28, 12-30)					
100	293395-0003		1	TYPE HOLDER	
110	293395-0001		1	TYPE HOLDER	
115	292409-0000		2	END SECTION	
120	442072-0000		1	CARRIER	
125	292411-0000		1	CARRIER	
150	293671-0000		1	SPACER	
200	90413-0048		1	CODE INSERT SET A 9/28	
205	90413-0049		1	CODE INSERT SET C 9/28	
250	312101-0329		2	SCREW M6S M5X16 FZB	
255	312101-0331		3	SCREW M6S M5X20 FZB	
265	315101-0146		5	WASHER PLAIN, BRB, 5,3/10 H=1	
280	315202-0301		4	O-RING 49,5X3 MM	
TBA 1000B HIFIN (See drawing on pages: 8-50, 8-52, 8-54, 12-26, 12-28, 12-30)					
100	293395-0003		1	TYPE HOLDER	
110	293395-0001		1	TYPE HOLDER	
115	293690-0000		2	END SECTION	
120	442431-0000		1	CARRIER	
125	293688-0000		1	CARRIER	
150	293671-0000		1	SPACER	
200	90413-0048		1	CODE INSERT SET A 9/28	
205	90413-0049		1	CODE INSERT SET C 9/28	
250	312101-0329		2	SCREW M6S M5X16 FZB	
255	312101-0331		3	SCREW M6S M5X20 FZB	
265	315101-0146		5	WASHER PLAIN, BRB, 5,3/10 H=1	
280	315202-0301		4	O-RING 49,5X3 MM	
Common Parts					
300	32691-0000		1	LOCK SPRING	
305	33011-0000		1	SLEEVE	
320	1511572-0000		1	CLIP	
330	90413-0043		1	CODE INSERT SET	
330	90413-0033		1	CODE INSERT SET C 2/16	
335	90413-0047		1	CODE INSERT SET A 2/16	
335	90413-0044		1	CODE INSERT SET	
370	312101-0287		1	SCREW M6S M4X8 FZB	
375	312101-0364		1	SCREW M6S M6X10 FZB	
380	312111-0335		1	SCREW HEX.SOCK.HD.MC6S-TT 5X30 88 FZB	
395	315101-0136		2	WASHER BRB, 4,3/8 H=0,8	

Machine Type | Group Description | Used-In | Group Number | Page No

PRINTING WHEEL NSS

Volume: TB- 500SQ 568SQ 1000B LOFIN 1000S, 100SQ 1136B 1500B, ml
TBA- 500SQ 750B 1000B LOFIN 1000S, 1000SQ 1055B 1500S, ml
TBO- 1000B LOFIN TBO 1000SQ ml
TPA- 1000S ml

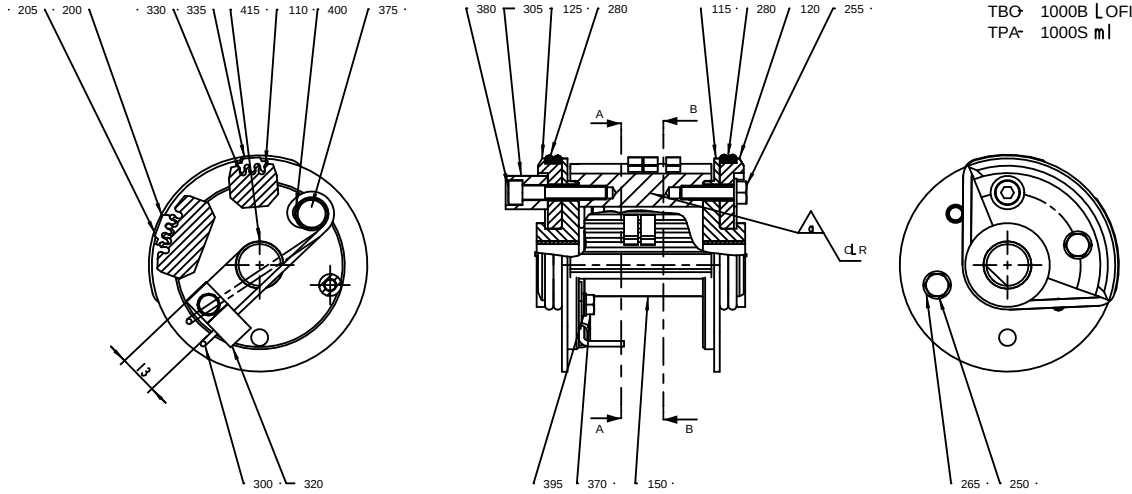

B-B

1:1

Volume: TB- 500B 568B ml
TBA- 500B ml

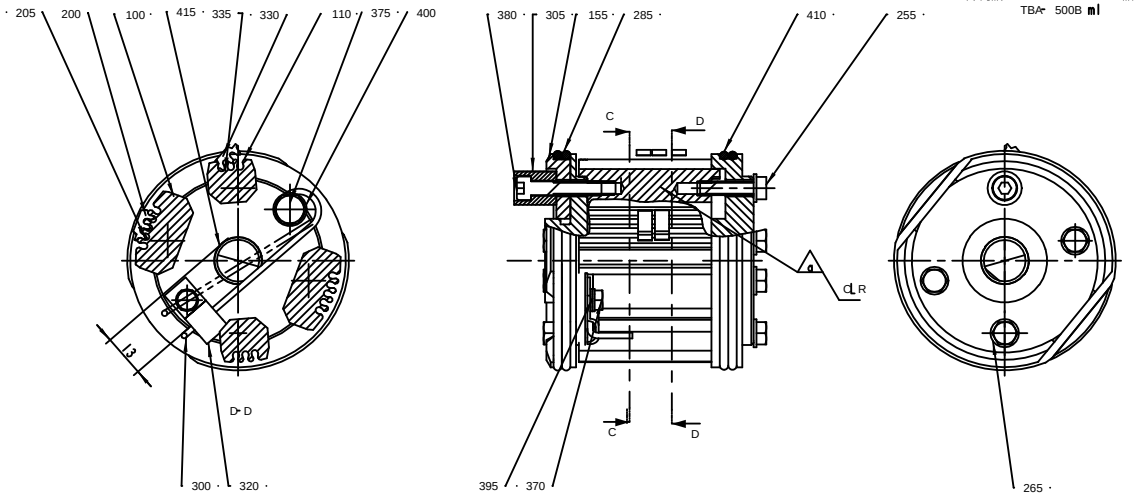

Pos	Part No	UN	Qty	Description	Page No
Common Parts (Cont'd)					
400	315111-0153		1	WASHER PLAIN, TBRB 6,4/12 H=3	
415	321120-0122		2	BEARING BUSH W/O FLANGE, 15X17X15 MM	

Pos	Part No	UN	Qty	Description	Page No

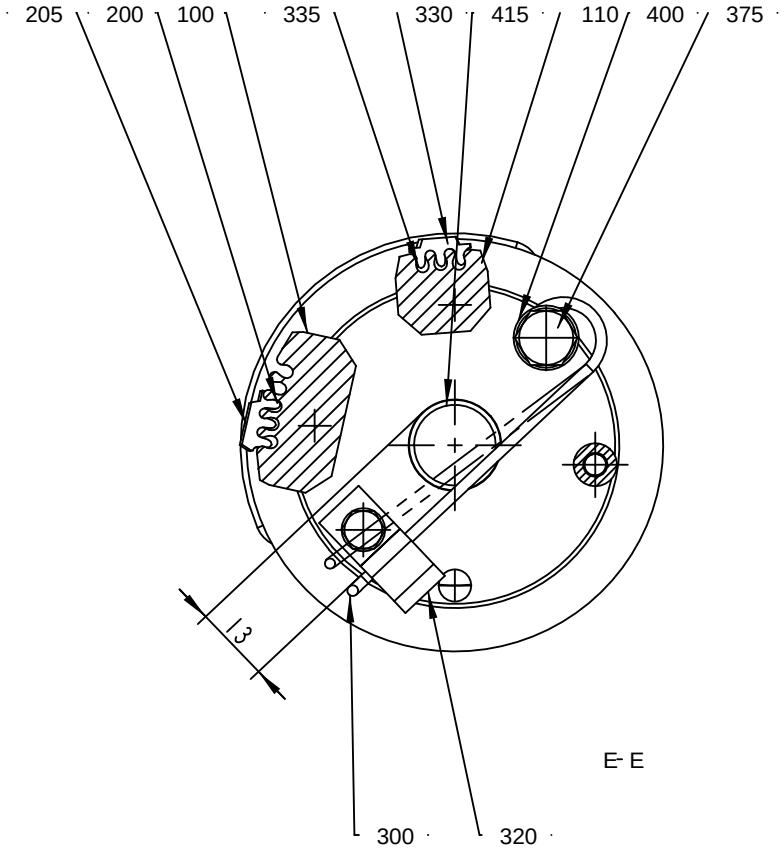
205
200
100
335
330
415
110
400
375
l3
E- E
300
320

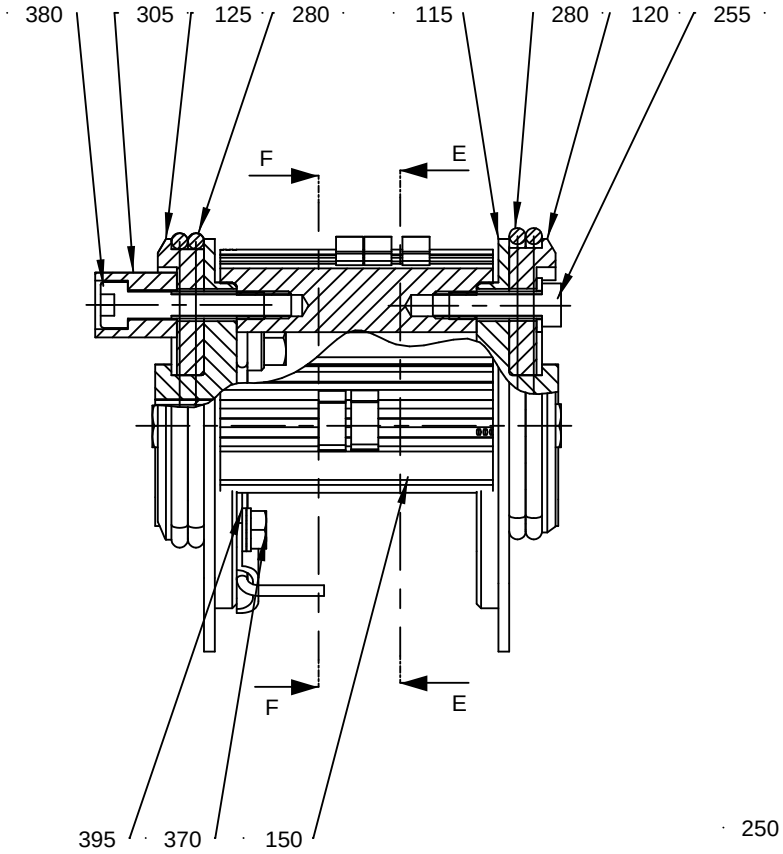
380
305
125
280
115
280
120
255
F
E
F
E
395
370
150

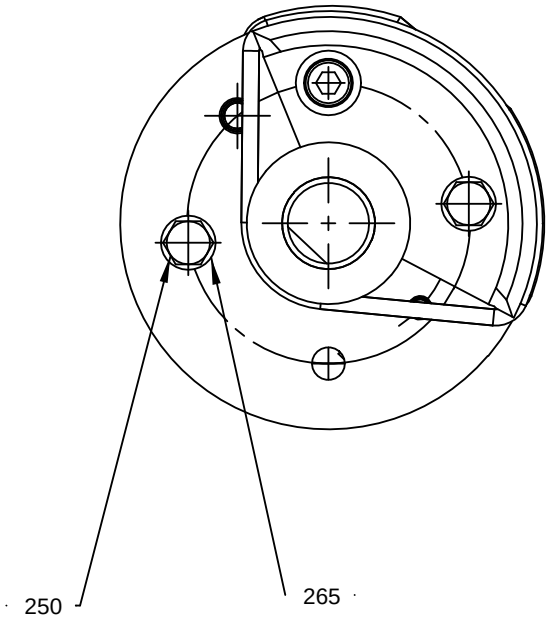
250
265

ECM: 227528 - 20051011
Group number: 293684-0200
Assembly Drawing: 293684-3_3_AB

This list covers pages from 12-26 to 12-35

Pos	Part No	UN	Qty	Description	Page No	Pos	Part No	UN	Qty	Description	Page No

SEE PREVIOUS LISTS PAGES: 12-27, 12-29.

PRINTING WHEEL NSS

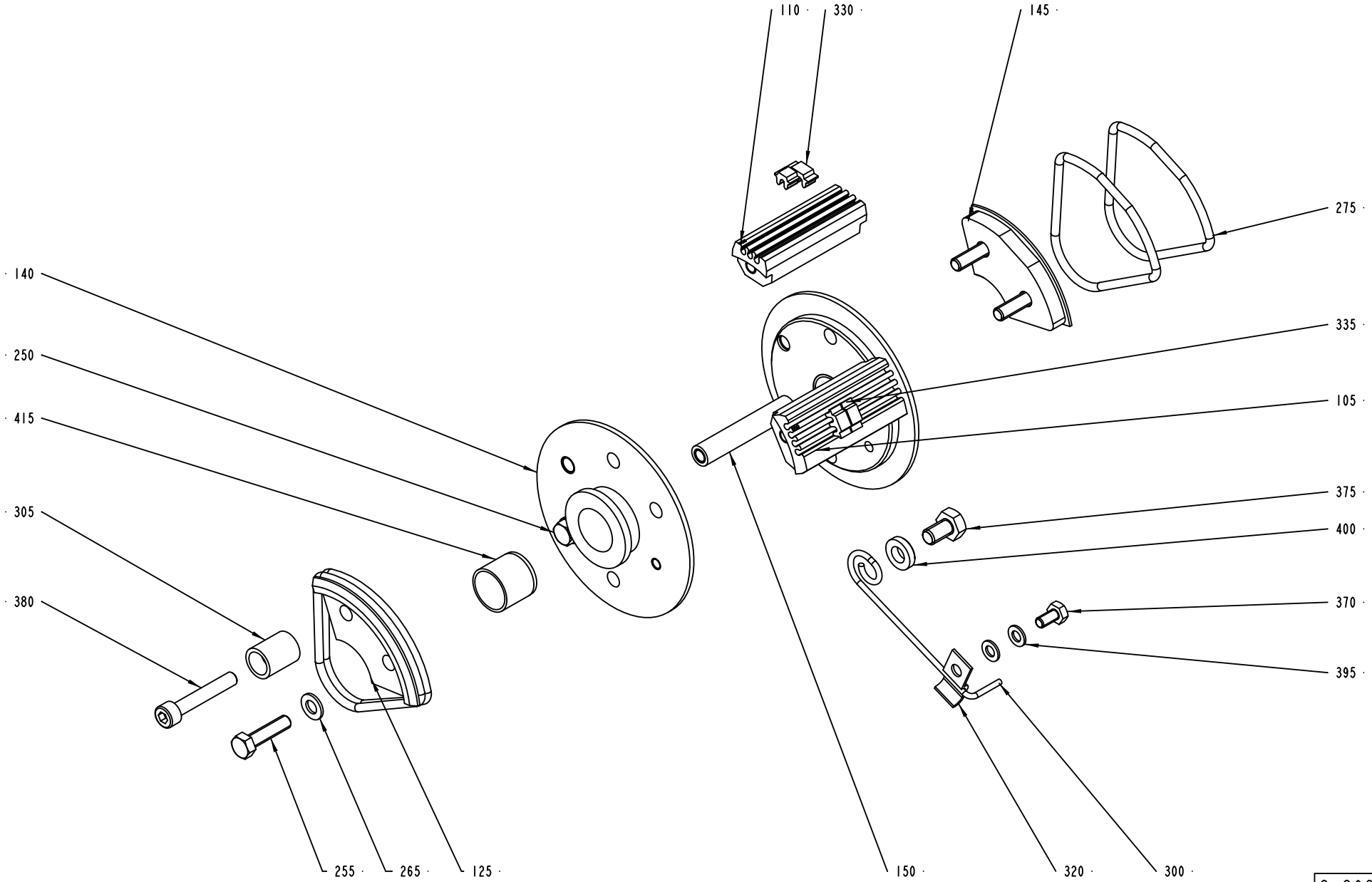

S-293684-4
ECN 73044

ECM: 227528 - 20051011
Group number: 293684-0200
Assembly Drawing: 293684-4_1_AB

This list covers pages from 12-26 to 12-35

Pos	Part No	UN	Qty	Description	Page No	Pos	Part No	UN	Qty	Description	Page No

SEE PREVIOUS LISTS PAGES: 12-27, 12-29.

Volume: TB- 180B. 200B. 200M. 200S. 236B. 250S. 300B.ml
TBA- 100B. 125S. 160S. 180B. 189B. 200B. 200M.
TBA- 200S. 236B. 250B. 250S. 284B. 300S. 330S.ml
TPA- 250SQ. 330SQ.ml

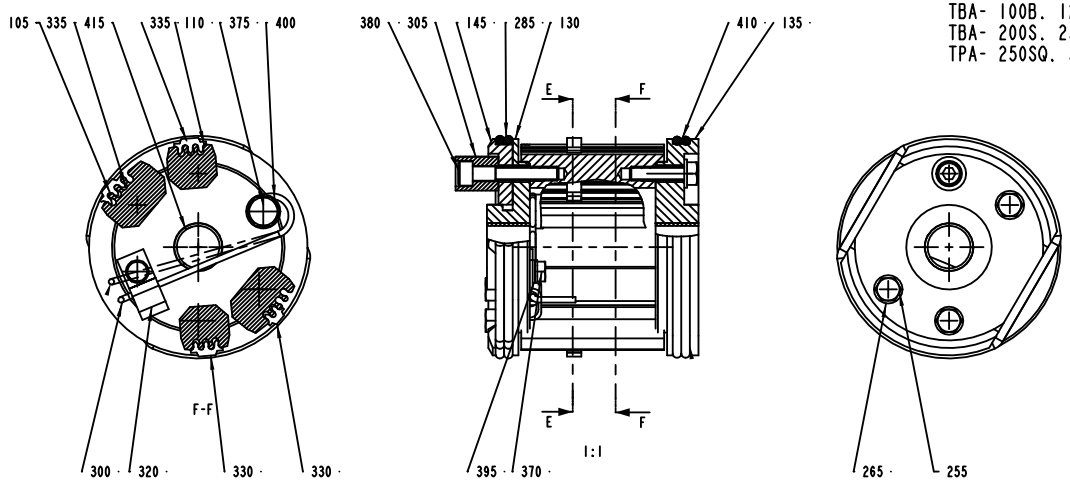

Volume: TB- 500S.ml
TBA- 355B. 375S. 400B. 500S. 750S.ml

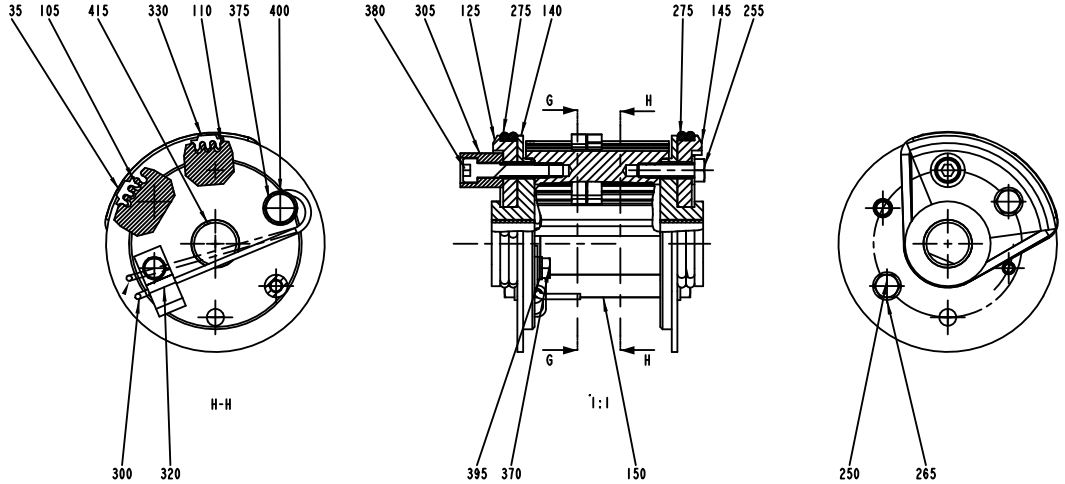

ECM: 227528 - 20051011
Group number: 293684-0200
Assembly Drawing: 293684-4_2_AB

This list covers pages from 12-26 to 12-35

Pos	Part No	UN	Qty	Description	Page No	Pos	Part No	UN	Qty	Description	Page No

SEE PREVIOUS LISTS PAGES: 12-27, 12-29.

PRINTING WHEEL SS

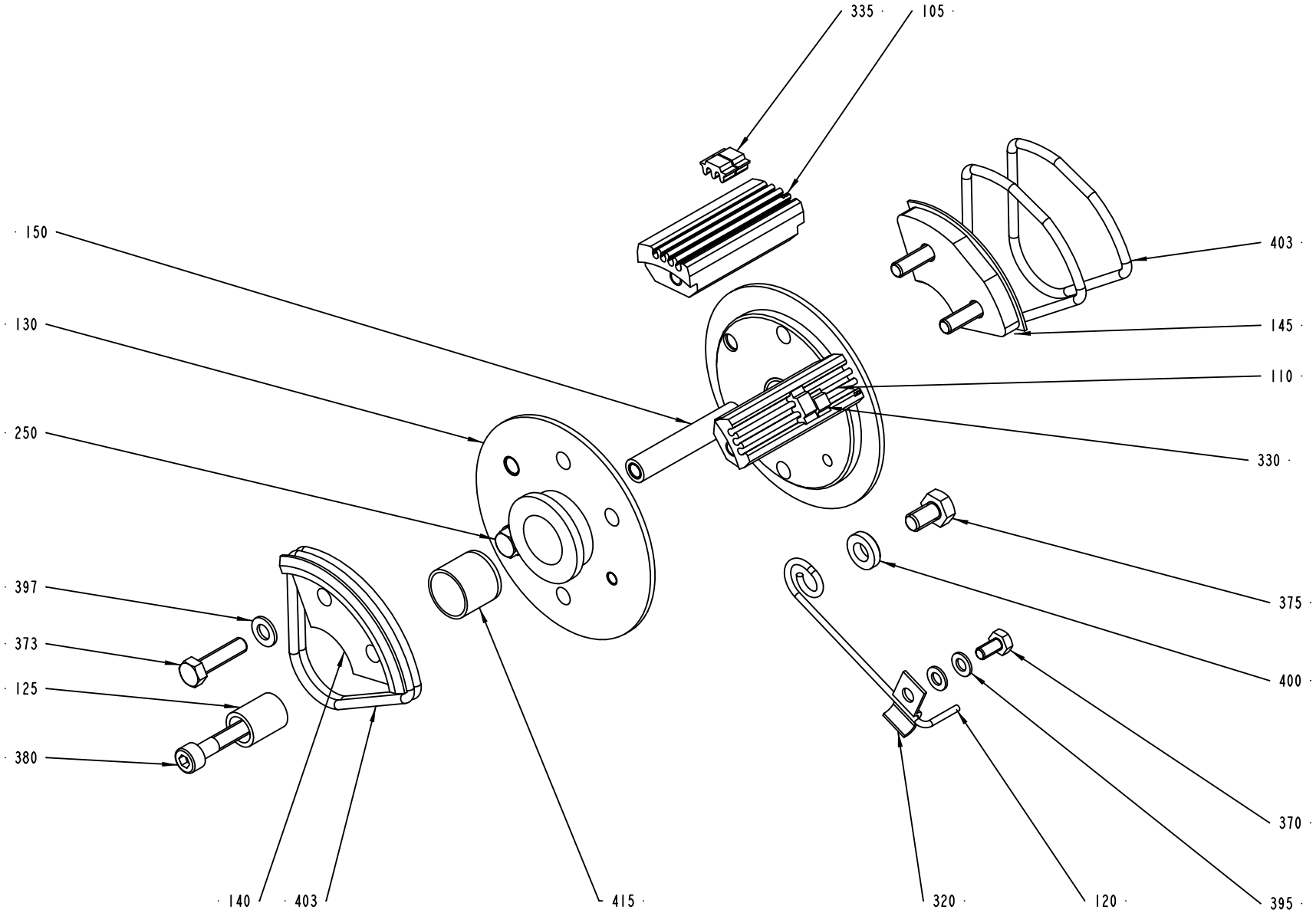

S-293685-2
ECN 73044

Pos	Part No	UN	Qty	Description	Page No
0100B, 0125S, 0180B, 0189B, 0200B, 0200S, 0236B, 0250B, 0284B, 0300B, 0300S, 0330S, 0200SQ					
105-02	293395-0002		2	TYPE HOLDER	
110-02	293395-0001		2	TYPE HOLDER	
130	292412-0000		1	END SECTION	
135	292413-0000		1	END SECTION	
140	292414-0000		1	CARRIER	
373-02	312101-0331		7	SCREW M6S M5X20 FZB	
397-02	315101-0146		7	WASHER PLAIN, BRB, 5,3/10 H=1	
405	315202-0304		2	O-RING 64,5X3 MM	
410	315202-0305		2	O-RING 69,5X3 MM	
0375S					
105	293395-0002		1	TYPE HOLDER	
110	293395-0001		1	TYPE HOLDER	
130	479236-0000		2	END SECTION	
140	479239-0000		1	CARRIER	
145	479240-0000		1	CARRIER	
150	293671-0000		1	SPACER	
250	312101-0329		2	SCREW M6S M5X16 FZB	
373	312101-0331		3	SCREW M6S M5X20 FZB	
397	315101-0146		5	WASHER PLAIN, BRB, 5,3/10 H=1	
403	315202-0224		4	O-RING 42,2X3 MM	
Common Parts					
120	32691-0000		1	LOCK SPRING	
125	33011-0000		1	SLEEVE	
320	90165-0010		1	CLIP	
330	90413-0043		1	CODE INSERT SET	
330	90413-0033		1	CODE INSERT SET C 2/16	
335	90413-0047		1	CODE INSERT SET A 2/16	
335	90413-0044		1	CODE INSERT SET	
370	312101-0287		1	SCREW M6S M4X8 FZB	
375	312101-0364		1	SCREW M6S M6X10 FZB	
380	312111-0335		1	SCREW HEX.SOCK.HD.MC6S-TT 5X30 88 FZB	
395	315101-0136		1	WASHER BRB, 4,3/8 H=0,8	
400	315111-0153		1	WASHER PLAIN, TBRB 6,4/12 H=3	
415	321120-0122		2	BEARING BUSH W/O FLANGE, 15X17X15 MM	

Pos	Part No	UN	Qty	Description	Page No

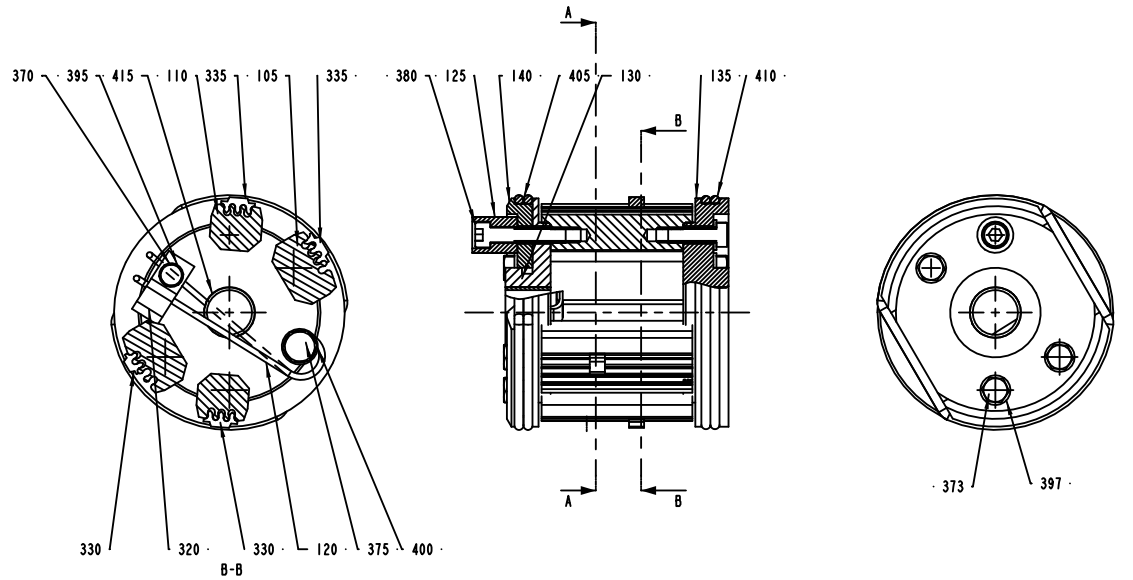
370
395
415
110
335
105
335
380
125
140
405
130
135
410
A
B
373
397
330
320
330
120
375
400
B-B

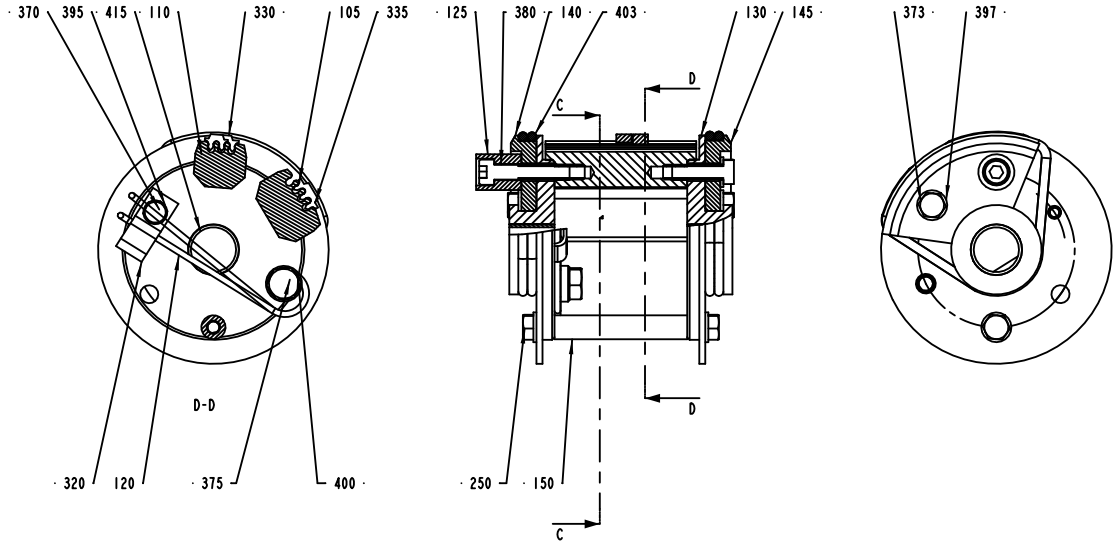
370
395
415
110
330
105
335
125
380
140
403
130
145
373
397
D
C
D-D
320
120
375
400
250
150

Pos	Part No	UN	Qty	Description	Page No
0100B, 0125S, 0180B, 0189B, 0200B, 0200S, 0236B, 0250B, 0284B, 0300B, 0300S, 0330S, 0200SQ					
105-02	293395-0002		2	TYPE HOLDER	
110-02	293395-0001		2	TYPE HOLDER	
130	292412-0000		1	END SECTION	
135	292413-0000		1	END SECTION	
140	292414-0000		1	CARRIER	
373-02	312101-0331		7	SCREW M6S M5X20 FZB	
397-02	315101-0146		7	WASHER PLAIN, BRB, 5,3/10 H=1	
405	315202-0304		2	O-RING 64,5X3 MM	
410	315202-0305		2	O-RING 69,5X3 MM	
0375S					
105	293395-0002		1	TYPE HOLDER	
110	293395-0001		1	TYPE HOLDER	
130	479236-0000		2	END SECTION	
140	479239-0000		1	CARRIER	
145	479240-0000		1	CARRIER	
150	293671-0000		1	SPACER	
250	312101-0329		2	SCREW M6S M5X16 FZB	
373	312101-0331		3	SCREW M6S M5X20 FZB	
397	315101-0146		5	WASHER PLAIN, BRB, 5,3/10 H=1	
403	315202-0224		4	O-RING 42,2X3 MM	
Common Parts					
120	32691-0000		1	LOCK SPRING	
125	33011-0000		1	SLEEVE	
320	90165-0010		1	CLIP	
330	90413-0043		1	CODE INSERT SET	
330	90413-0033		1	CODE INSERT SET C 2/16	
335	90413-0047		1	CODE INSERT SET A 2/16	
335	90413-0044		1	CODE INSERT SET	
370	312101-0287		1	SCREW M6S M4X8 FZB	
375	312101-0364		1	SCREW M6S M6X10 FZB	
380	312111-0335		1	SCREW HEX.SOCK.HD.MC6S-TT 5X30 88 FZB	
395	315101-0136		1	WASHER BRB, 4,3/8 H=0,8	
400	315111-0153		1	WASHER PLAIN, TBRB 6,4/12 H=3	
415	321120-0122		2	BEARING BUSH W/O FLANGE, 15X17X15 MM	

Pos	Part No	UN	Qty	Description	Page No

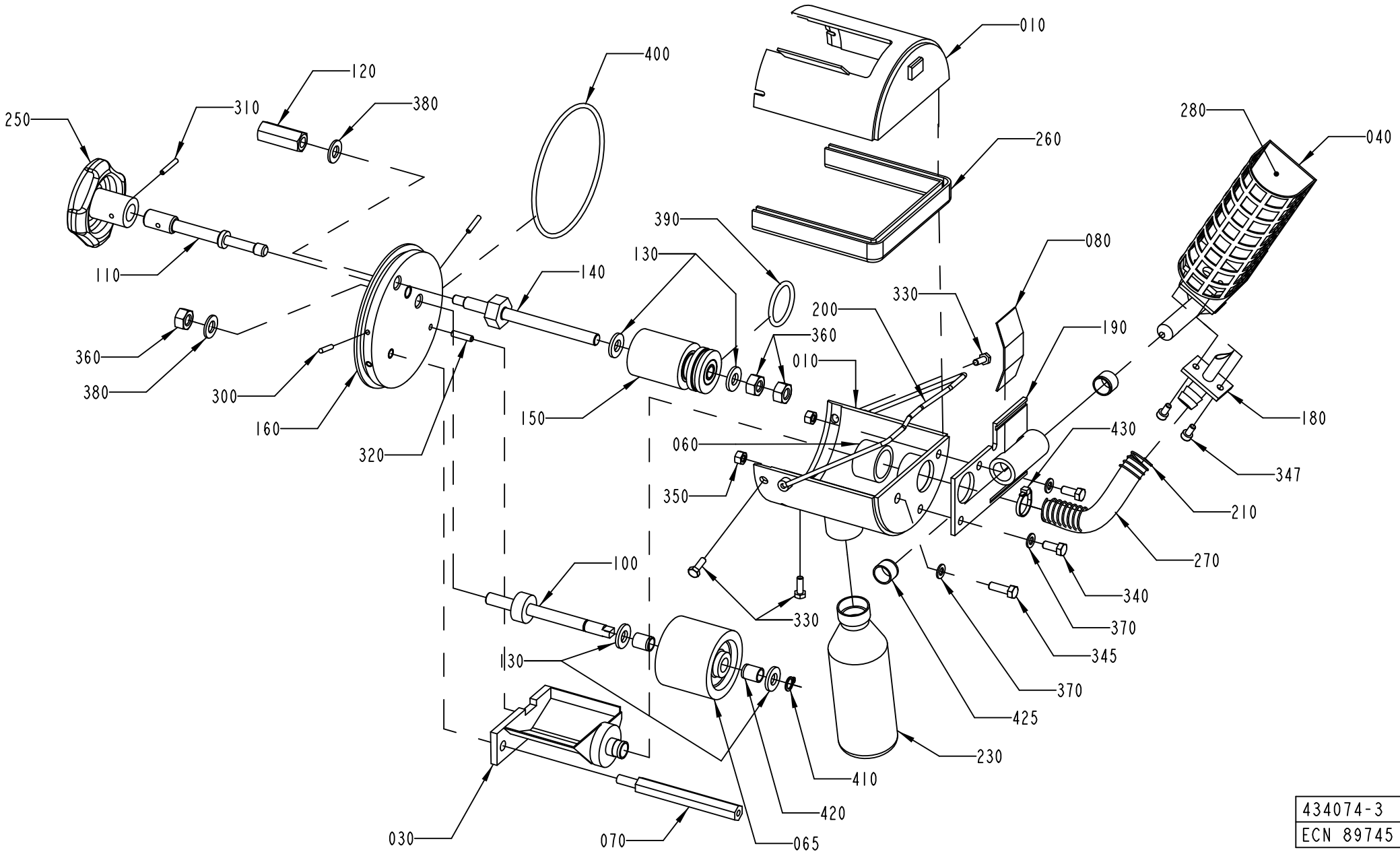
010
400
120
310
380
250
280
040
260
390
080
130
140
330
200
360
190
010
110
180
430
060
347
350
210
270
340
100
330
370
345
130
370
425
230
410
420
065
030
070
434074-3
ECN 89745

ECM: 108982 - 20020523
Group number: 434074-0300
Assembly Drawing: 434074-3_1_AB

Pos	Part No	UN	Qty	Description	Page No
TBA/19					
230	90050-0012		1	BOTTLE, 50ML PLASTIC	
Common Parts					
010	297988-0000		1	COVER	
030	297211-0000		1	INK WELL	
040	476356-0000		1	HOLDER FOR INK BOTTLE	
060	445542-0000		1	MANTEL RUBBER	
065	450355-0000		1	INK ROLLER	
070	33010-0000		1	SCREW	
080	35547-0000		1	SPRING	
100	292044-0000		1	SHAFT	
110	293667-0000		1	DOWEL	
120	436927-0000		1	NUT	
130	293669-0001		4	WASHER	
130	293669-0002		2	WASHER	
130	293669-0003		2	WASHER	
130	293669-0004		2	WASHER	
140	293670-0000		1	SHAFT	
150	543135-0000		1	INK TRANSFER ROLLER	
	321120-0100		*1*	*BEARING BUSH W/O FLANGE, 8X10X12 MM*	
	90153-0050		*1*	*ADHESIVE, 3M TYPE SCOTCH-WELD 2216 B/A*	
160	293697-0000		1	END SECTION	
180	476354-0000		1	CANNULAR TUBE	
190	456773-0000		1	PIVOT BRACKET	
200	434747-0000		1	BOW CLAMP	
210	537308-0000		1	SPRING	
250	90051-0077		1	HANDLE	
260	90143-0029	MM	295	STRIP	
270	90166-0138	MM	100	HOSE	
280	90299-0072		1	INK	
300	311103-0236		2	PARALLEL PIN ISO 2338 3M6X16 A1	
310	311103-0238		1	PARALLEL PIN ISO 2338 3M6X20 A1	
320	311103-0270		1	PARALLEL PIN ISO 2338 4M6X16 A1	
330	312105-0291		3	SCREW M6S ISO 4017 M4X12 A470	
340	312105-0327		2	SCREW M6S ISO 4017 M5X12 A480	
345	312105-0329		1	SCREW M6S ISO 4017 M5X16 A480	
347	312115-0287		2	SCREW ISO4762 M4X8 A4 80	
350	312605-0314		2	HEXAGON NUT, M6M M5 A280	
360	312605-0318		3	HEXAGON NUT, M6M M8 A280	
370	315105-0146		3	WASHER BRB 5,3X10 RFR	
380	315105-0165		2	WASHER BRB 8,4X16 RFR	
390	315202-0218		1	O-RING 26,2X3 MM	
400	315202-0309		1	O-RING 89,5X3 MM	
410	315750-0105		1	RETAINING RING SHAFT DIN 471 ST 8	
420	321120-0100		2	BEARING BUSH W/O FLANGE, 8X10X12 MM	
425	321120-0109		2	BEARING BUSH W/O FLANGE, 12X14X10 MM	
430	352113-0101		1	CABLE TIE, BLACK 92X2,5 MM	

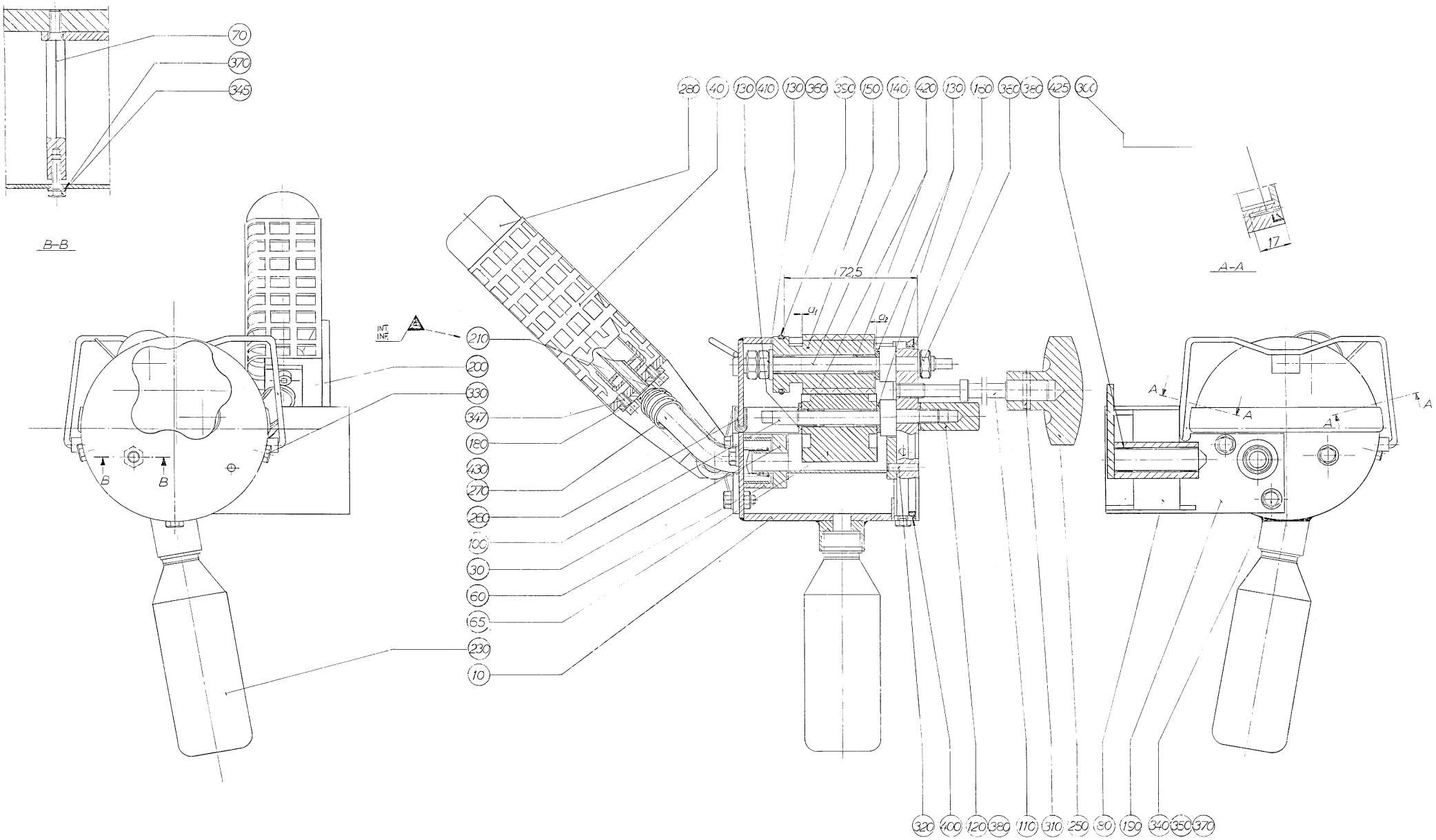
70
370
345
B–B
280
40
130
410
130
360
350
150
140
420
130
160
360
380
425
300
172,5
A–A
17
INT
INF
210
200
330
347
180
430
270
260
100
30
60
65
230
10
320
400
120
380
110
310
250
80
190
340
350
370

ECM: 102381 - 20011206
Group number: 434774-0300
Assembly Drawing: 434774-3_1_AA

Pos	Part No	UN	Qty	Description	Page No
TBA/19					
230	90050-0012		1	BOTTLE, 50ML PLASTIC	
Common Parts					
010	297989-0000		1	COVER	
030	297210-0000		1	INK WELL	
040	476356-0000		1	HOLDER FOR INK BOTTLE	
060	445542-0000		1	MANTEL RUBBER	
065	450355-0000		1	INK ROLLER	
070	33010-0000		1	SCREW	
080	35547-0000		1	SPRING	
100	292044-0000		1	SHAFT	
110	293667-0000		1	DOWEL	
120	436927-0000		1	NUT	
130	293669-0004		2	WASHER	
130	293669-0003		2	WASHER	
130	293669-0002		2	WASHER	
130	293669-0001		4	WASHER	
140	293670-0000		1	SHAFT	
150	543135-0000		1	INK TRANSFER ROLLER	
	321120-0100		*1*	*BEARING BUSH W/O FLANGE, 8X10X12 MM*	
	90153-0050		*1*	*ADHESIVE, 3M TYPE SCOTCH-WELD 2216 B/A*	
160	297213-0000		1	END SECTION	
180	476355-0000		1	CANNULAR TUBE	
190	456772-0000		1	PIVOT BRACKET	
200	434747-0000		1	BOW CLAMP	
210	537308-0000		1	SPRING	
250	90051-0077		1	HANDLE	
260	90143-0029	MM	295	STRIP	
270	90166-0138	MM	100	HOSE	
280	90299-0072		1	INK	
300	311103-0236		2	PARALLEL PIN ISO 2338 3M6X16 A1	
310	311103-0238		1	PARALLEL PIN ISO 2338 3M6X20 A1	
320	311103-0270		1	PARALLEL PIN ISO 2338 4M6X16 A1	
330	312105-0291		3	SCREW M6S ISO 4017 M4X12 A470	
340	312105-0327		2	SCREW M6S ISO 4017 M5X12 A480	
345	312105-0329		1	SCREW M6S ISO 4017 M5X16 A480	
347	312115-0287		2	SCREW ISO4762 M4X8 A4 80	
350	312605-0314		2	HEXAGON NUT, M6M M5 A280	
360	312605-0318		3	HEXAGON NUT, M6M M8 A280	
370	315105-0146		3	WASHER BRB 5,3X10 RFR	
380	315105-0165		2	WASHER BRB 8,4X16 RFR	
390	315202-0218		1	O-RING 26,2X3 MM	
400	315202-0309		1	O-RING 89,5X3 MM	
410	315750-0105		1	RETAINING RING SHAFT DIN 471 ST 8	
420	321120-0100		4	BEARING BUSH W/O FLANGE, 8X10X12 MM	
425	321120-0109		2	BEARING BUSH W/O FLANGE, 12X14X10 MM	
430	352113-0101		1	CABLE TIE, BLACK 92X2,5 MM	

This page is intentionally left blank.

ECM: 291763 - 20070126
Group number: 77092-0600
Assembly Drawing:

Pos	Part No	UN	Qty	Description	Page No
TBA 0100B, TBA 0125S					
030	75525-0400		1	TEMPLATE	**12-47, 12-49**
080	76133-0100		1	TEMPLATE LS-ELEMENT	**12-55**
230	76187-0000		1	TEMPLATE FILLING TUBE	
TBA 0160S, TBA 0200S					
030	75525-0400		1	TEMPLATE	**12-47, 12-49**
080	76606-0100		1	TEMPLATE LS-ELEMENT	**12-57**
230	76188-0000		1	TEMPLATE FILLING TUBE	
TBA 0180B, TBA 0200B, TBA 0236B, TBA 0284B, TBA 0250B, TBA 0300S, TBA 0330S					
030	75525-0400		1	TEMPLATE	**12-47, 12-49**
080	76595-0100		1	TEMPLATE LS-ELEMENT	**12-59**
230	76398-0000		1	TEMPLATE	
240	76467-0000		1	TEMPLATE	
TBA 0200M, TBA 0250S					
030	75525-0400		1	TEMPLATE	**12-47, 12-49**
080	590222-0200		1	TEMPLATE LS-ELEMENT	**12-61**
230	574453-0000		1	TEMPLATE	
Common Parts					
010	76600-0200		1	SETTING TOOL	**12-63**
015	577427-0100		1	MACH.ALIG.TOOLS+LASER EQ.	**12-95**
020	76350-0200		1	SETTING TOOL	**12-97**
040	74767-0102		1	DYNAMOMETER	**12-111**
050	75466-0300		1	SETTING TOOL	**12-113**
060	75467-0200		1	SETTING TOOL CURVES	**12-115**
070	76416-0100		1	CLAMPING PIECE	**12-117**
090	76175-0100		1	PULLER	**12-119**
100	77165-0100		1	EXTRACTOR	**12-121**
110	449969-0100		1	TOOL DISMOUNTING	**12-123**
120	565536-0100		1	PRESSURE TEST EQUIPMENT	**12-125**
130	563740-0100		1	TOOL FOR JAW OVERLOAD	**12-127**
180	590509-0100		1	RING	**12-129**
190	74305-0100		1	PULLER	**12-131**
255	79003-0000		1	PROTECTION PLATE	
260	76128-0000		1	TEMPLATE	
270	752099-0000		1	PASSIVATINGSEAL	
280	76602-0000		1	GAUGE	
290	79201-0000		2	EXTRACTOR BOLT	
300	1348968-0000		1	PLUG	
310	434448-0000		1	TOOL	
320	1517059-0000		1	SCREW	
330	1517060-0000		1	TOOL	
350	2614370-0200		1	SERVICE PARTS	**12-133**

Pos	Part No	UN	Qty	Description	Page No

Machine Type | Group Description | Used-In | Group Number | Page No

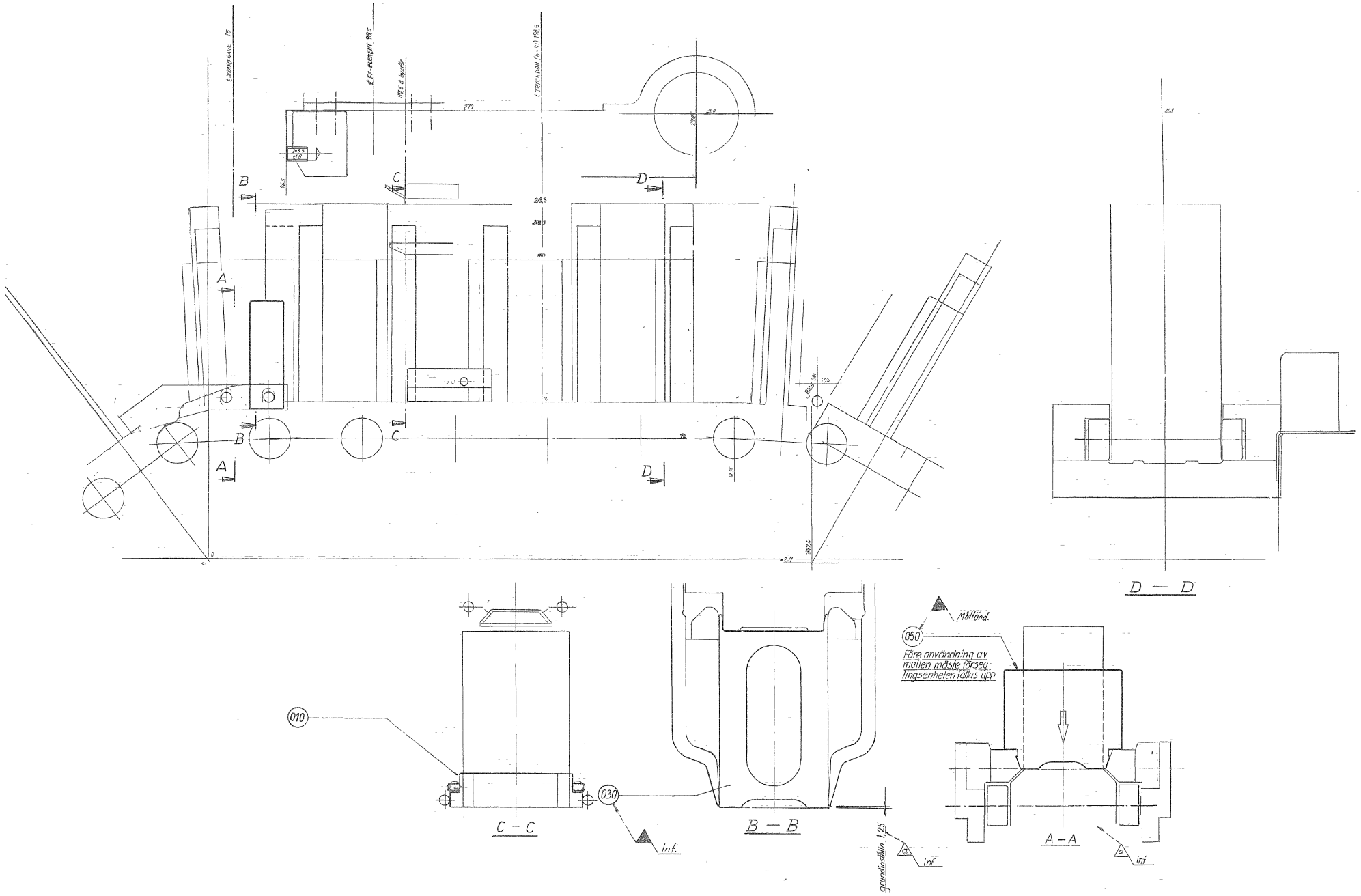
D — D
C — C
B — B
A — A
010
030
050
Inf.
Mätlönd.
Före användning av mallen måste försegelingsenheten fällas upp
grundinställn. 125
inf

Pos	Part No	UN	Qty	Description	Page No
0100B					
010	590247-0000		1	SETTING TEMPLATE	
020	590223-0000		1	SETTING TEMPLATE	
030	76307-0011		1	TEMPLATE	
050	75545-0000		1	TEMPLATE	
0125S					
010	590247-0000		1	SETTING TEMPLATE	
020	590223-0000		1	SETTING TEMPLATE	
030	76307-0005		1	TEMPLATE	
050	75545-0000		1	TEMPLATE	
0160S					
010	590249-0000		1	SETTING TEMPLATE	
020	590245-0000		1	SETTING TEMPLATE	
030	76307-0010		1	TEMPLATE	
050	75545-0000		1	TEMPLATE	
0180B					
010	590248-0000		1	SETTING TEMPLATE	
020	590224-0000		1	SETTING TEMPLATE	
030	76307-0004		1	TEMPLATE	
050	76308-0000		1	TEMPLATE	
0200B					
010	590248-0000		1	SETTING TEMPLATE	
020	590224-0000		1	SETTING TEMPLATE	
030	76307-0003		1	TEMPLATE	
050	76308-0000		1	TEMPLATE	
0200M					
010	590250-0000		1	SETTING TEMPLATE	
020	590246-0000		1	SETTING TEMPLATE	
030	76307-0013		1	TEMPLATE	
050	574442-0000		1	TEMPLATE	
0200S					
010	590249-0000		1	SETTING TEMPLATE	
020	590245-0000		1	SETTING TEMPLATE	
030	76307-0006		1	TEMPLATE	
050	75545-0000		1	TEMPLATE	
0200SQ					
	2501740-0100		1	TEMPLATE	**12-51, 12-53**
010	2588207-0000		1	TEMPLATE TOP NOZZLE	
020	2588208-0000		1	TEMPLATE BOTTOM NOZZLE	
030	76307-0014		1	TEMPLATE	
0236B					
010	590248-0000		1	SETTING TEMPLATE	
020	590224-0000		1	SETTING TEMPLATE	
030	76307-0002		1	TEMPLATE	
050	76308-0000		1	TEMPLATE	
0250B					
010	590248-0000		1	SETTING TEMPLATE	
020	590224-0000		1	SETTING TEMPLATE	
030	76307-0001		1	TEMPLATE	
050	76308-0000		1	TEMPLATE	
0250S					
010	590250-0000		1	SETTING TEMPLATE	
020	590246-0000		1	SETTING TEMPLATE	
030	76307-0009		1	TEMPLATE	
050	574442-0000		1	TEMPLATE	
0284B, 0300S					
010	590248-0000		1	SETTING TEMPLATE	
020	590224-0000		1	SETTING TEMPLATE	
030	76307-0008		1	TEMPLATE	
050	76308-0000		1	TEMPLATE	
0330S					
010	590248-0000		1	SETTING TEMPLATE	
020	590224-0000		1	SETTING TEMPLATE	
030	76307-0012		1	TEMPLATE	
050	76308-0000		1	TEMPLATE	

Machine Type | Group Description | Used-In | Group Number | Page No

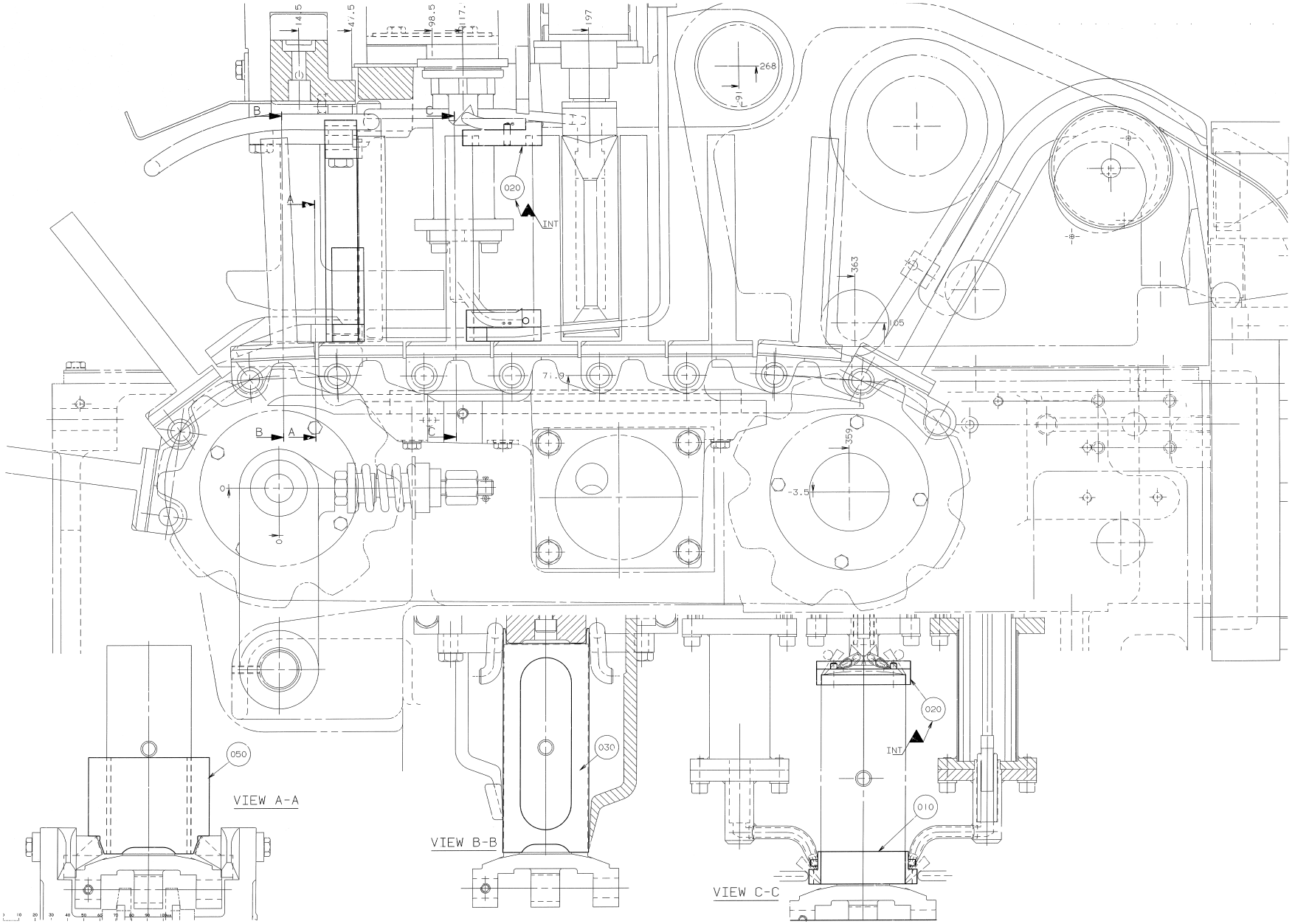
VIEW A-A
VIEW B-B
VIEW C-C
050
030
020
010
INT
268
363
359
71.9
98.5
197

Pos	Part No	UN	Qty	Description	Page No
0100B					
010	590247-0000		1	SETTING TEMPLATE	
020	590223-0000		1	SETTING TEMPLATE	
030	76307-0011		1	TEMPLATE	
050	75545-0000		1	TEMPLATE	
0125S					
010	590247-0000		1	SETTING TEMPLATE	
020	590223-0000		1	SETTING TEMPLATE	
030	76307-0005		1	TEMPLATE	
050	75545-0000		1	TEMPLATE	
0160S					
010	590249-0000		1	SETTING TEMPLATE	
020	590245-0000		1	SETTING TEMPLATE	
030	76307-0010		1	TEMPLATE	
050	75545-0000		1	TEMPLATE	
0180B					
010	590248-0000		1	SETTING TEMPLATE	
020	590224-0000		1	SETTING TEMPLATE	
030	76307-0004		1	TEMPLATE	
050	76308-0000		1	TEMPLATE	
0200B					
010	590248-0000		1	SETTING TEMPLATE	
020	590224-0000		1	SETTING TEMPLATE	
030	76307-0003		1	TEMPLATE	
050	76308-0000		1	TEMPLATE	
0200M					
010	590250-0000		1	SETTING TEMPLATE	
020	590246-0000		1	SETTING TEMPLATE	
030	76307-0013		1	TEMPLATE	
050	574442-0000		1	TEMPLATE	
0200S					
010	590249-0000		1	SETTING TEMPLATE	
020	590245-0000		1	SETTING TEMPLATE	
030	76307-0006		1	TEMPLATE	
050	75545-0000		1	TEMPLATE	
0200SQ					
	2501740-0100		1	TEMPLATE	**12-51, 12-53**
010	2588207-0000		1	TEMPLATE TOP NOZZLE	
020	2588208-0000		1	TEMPLATE BOTTOM NOZZLE	
030	76307-0014		1	TEMPLATE	
0236B					
010	590248-0000		1	SETTING TEMPLATE	
020	590224-0000		1	SETTING TEMPLATE	
030	76307-0002		1	TEMPLATE	
050	76308-0000		1	TEMPLATE	
0250B					
010	590248-0000		1	SETTING TEMPLATE	
020	590224-0000		1	SETTING TEMPLATE	
030	76307-0001		1	TEMPLATE	
050	76308-0000		1	TEMPLATE	
0250S					
010	590250-0000		1	SETTING TEMPLATE	
020	590246-0000		1	SETTING TEMPLATE	
030	76307-0009		1	TEMPLATE	
050	574442-0000		1	TEMPLATE	
0284B, 0300S					
010	590248-0000		1	SETTING TEMPLATE	
020	590224-0000		1	SETTING TEMPLATE	
030	76307-0008		1	TEMPLATE	
050	76308-0000		1	TEMPLATE	
0330S					
010	590248-0000		1	SETTING TEMPLATE	
020	590224-0000		1	SETTING TEMPLATE	
030	76307-0012		1	TEMPLATE	
050	76308-0000		1	TEMPLATE	

Machine Type | Group Description | Used-In | Group Number | Page No

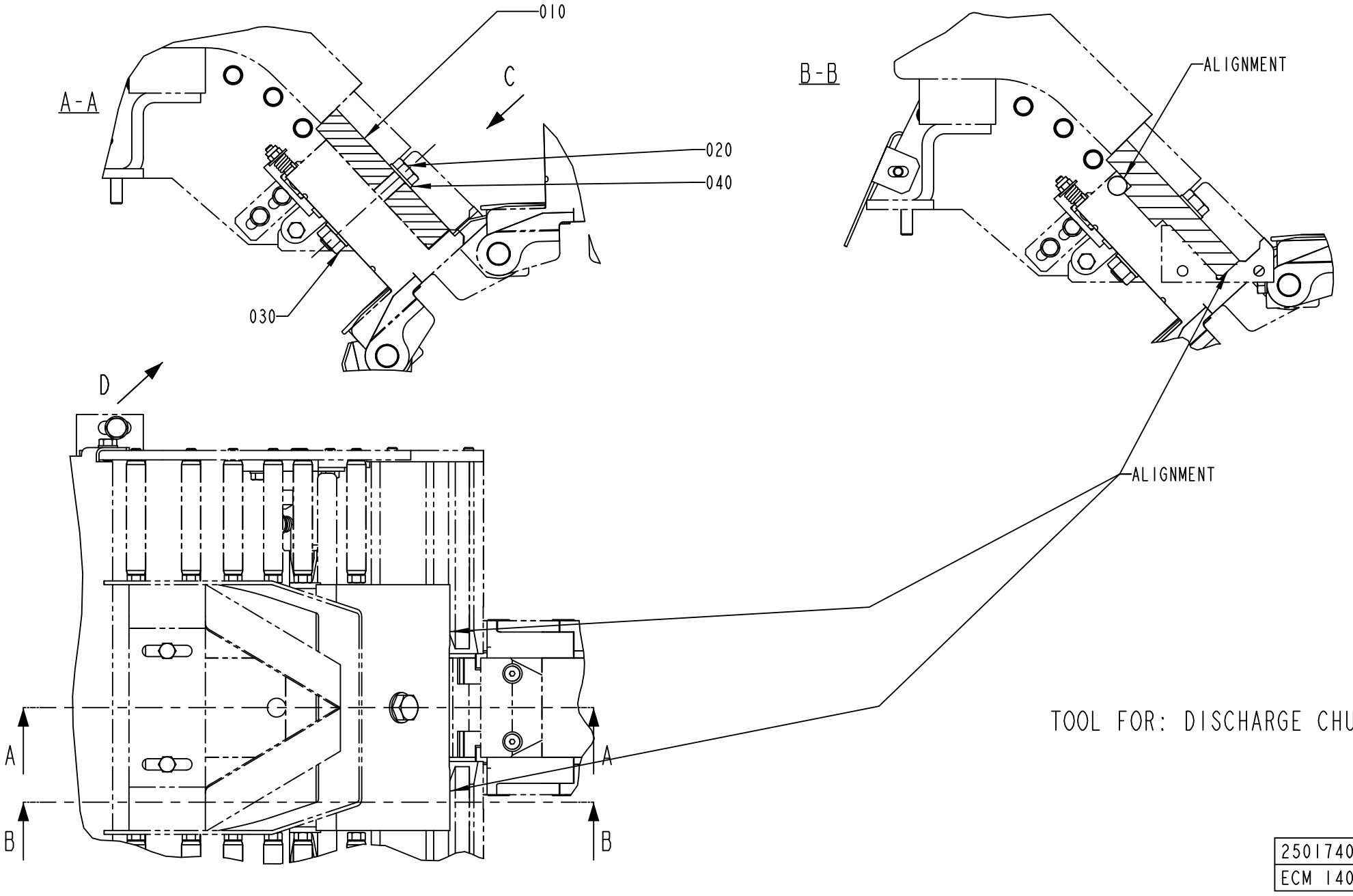
010
C
A-A
020
040
030
B-B
ALIGNMENT
D
ALIGNMENT
A
A
B
B
TOOL FOR: DISCHARGE CHUTE
2501740-1
ECM 140461

ECM: 151466 - 20040316
Group number: 2501740-0100
Assembly Drawing: 2501740-1_1_AB

This list covers pages from 12-50 to 12-53

Pos	Part No	UN	Qty	Description	Page No
-					
010	1549930-0000		1	TOOL	
020	312105-0462		1	SCREW M6S ISO 4014 M8X55 A480	
030	312605-0318		1	HEXAGON NUT, M6M M8 A280	
040	315105-0165		2	WASHER BRB 8,4X16 RFR	
050	2517796-0000		1	TOOL	

Pos	Part No	UN	Qty	Description	Page No

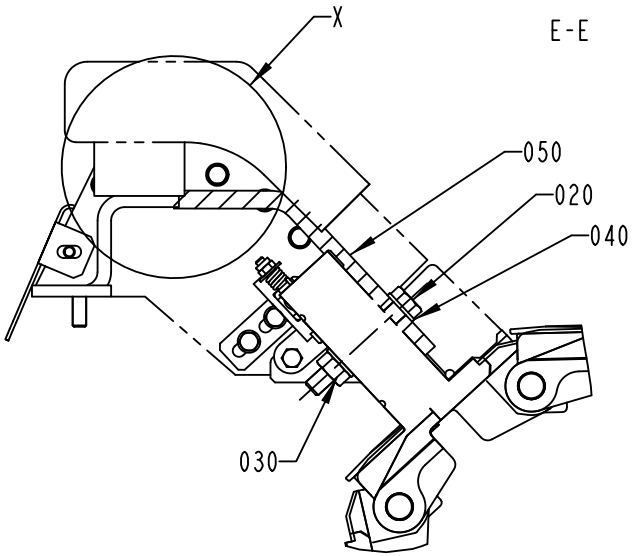

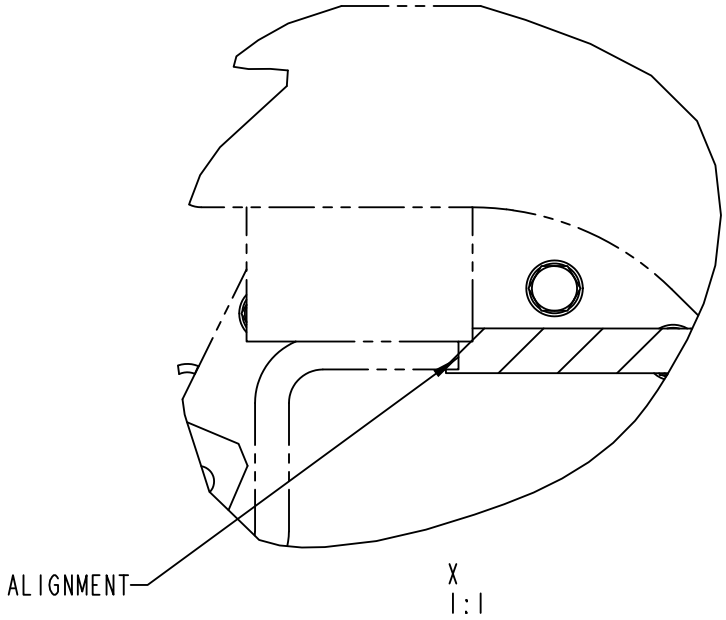

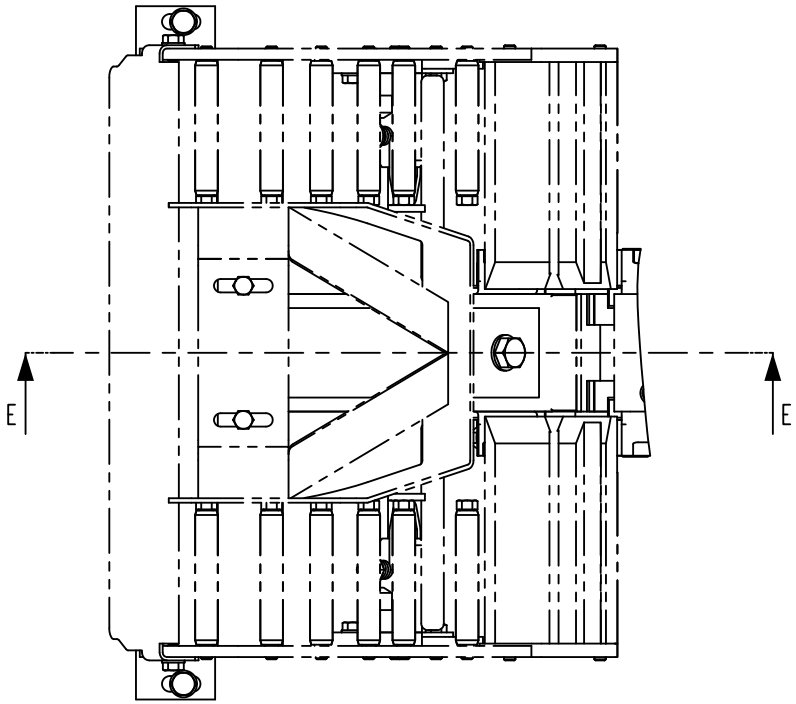

TOOL FOR : DISCHARGE CHUTE FRAME

2501740-1
ECM 140461

ECM: 151466 - 20040316
Group number: 2501740-0100
Assembly Drawing: 2501740-1_3_AB

This list covers pages from 12-50 to 12-53

Pos	Part No	UN	Qty	Description	Page No
-					
010	1549930-0000		1	TOOL	
020	312105-0462		1	SCREW M6S ISO 4014 M8X55 A480	
030	312605-0318		1	HEXAGON NUT, M6M M8 A280	
040	315105-0165		2	WASHER BRB 8,4X16 RFR	
050	2517796-0000		1	TOOL	

Pos	Part No	UN	Qty	Description	Page No

TEMPLATE LS-ELEMENT

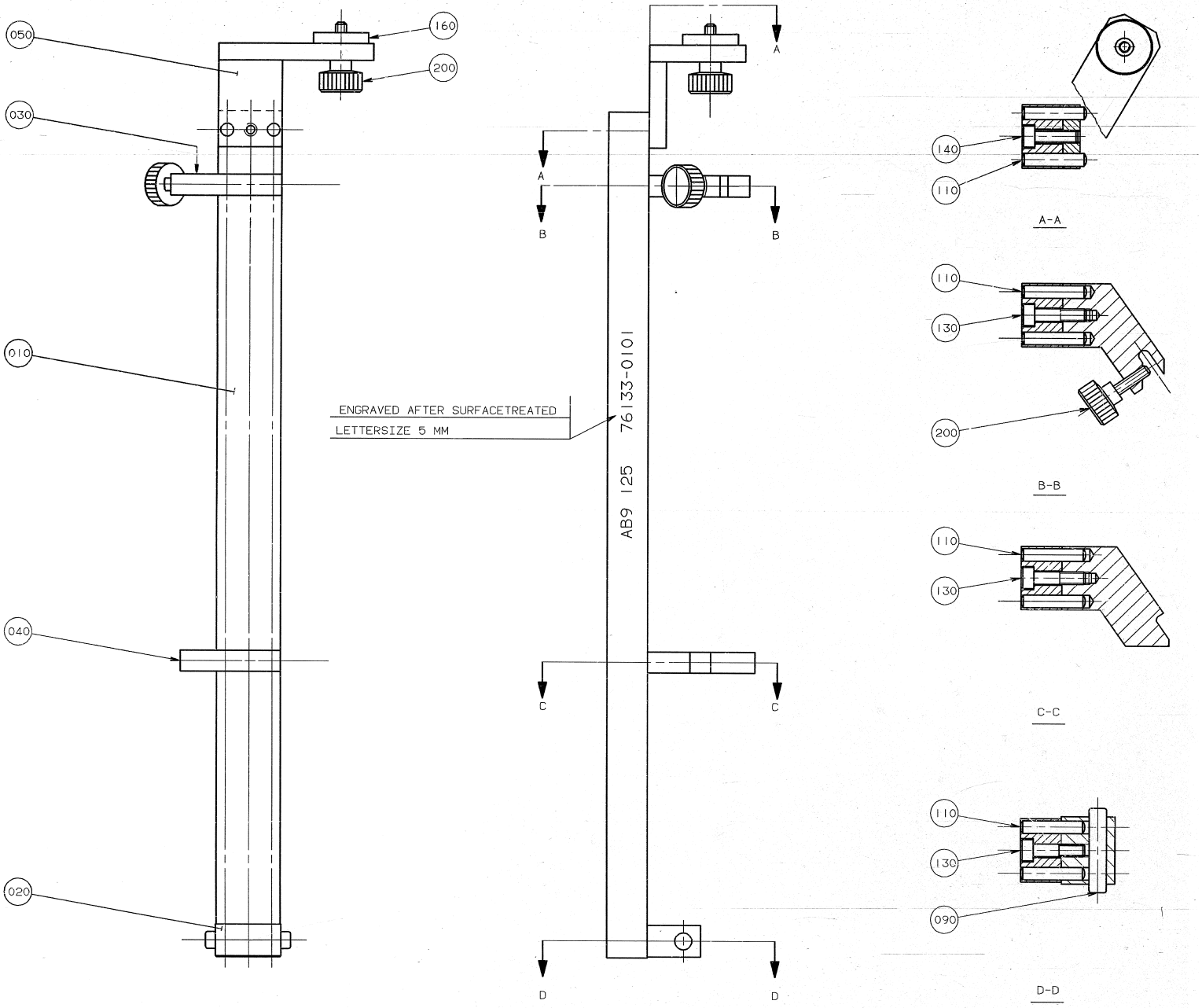

ECM: - -
Group number: 76133-0100
Assembly Drawing: 76133-1_1_AA

Pos	Part No	UN	Qty	Description	Page No
-					
010	76607-0000		1	RULER	
020	76605-0000		1	BRACKET	
030	76178-0000		1	STOPPER	
040	76179-0000		2	STOPPER	
050	76610-0000		1	BRACKET	
090	2873-0000		1	SHAFT	
110	311103-0357		8	PARALLEL PIN ISO 2338 6M6X30 A1	
130	312115-0372		3	SCREW ISO4762 M6X25 A4 80	
140	312115-0370		1	SCREW ISO4762 M6X20 A4 80	
160	315121-0165		1	WASHER PLAIN, TBRSB 8,4/26 H=5	
200	90051-0035		2	KNOB, EXTERNAL THREAD. NO. 8308-1135	

Pos	Part No	UN	Qty	Description	Page No

TEMPLATE LS-ELEMENT

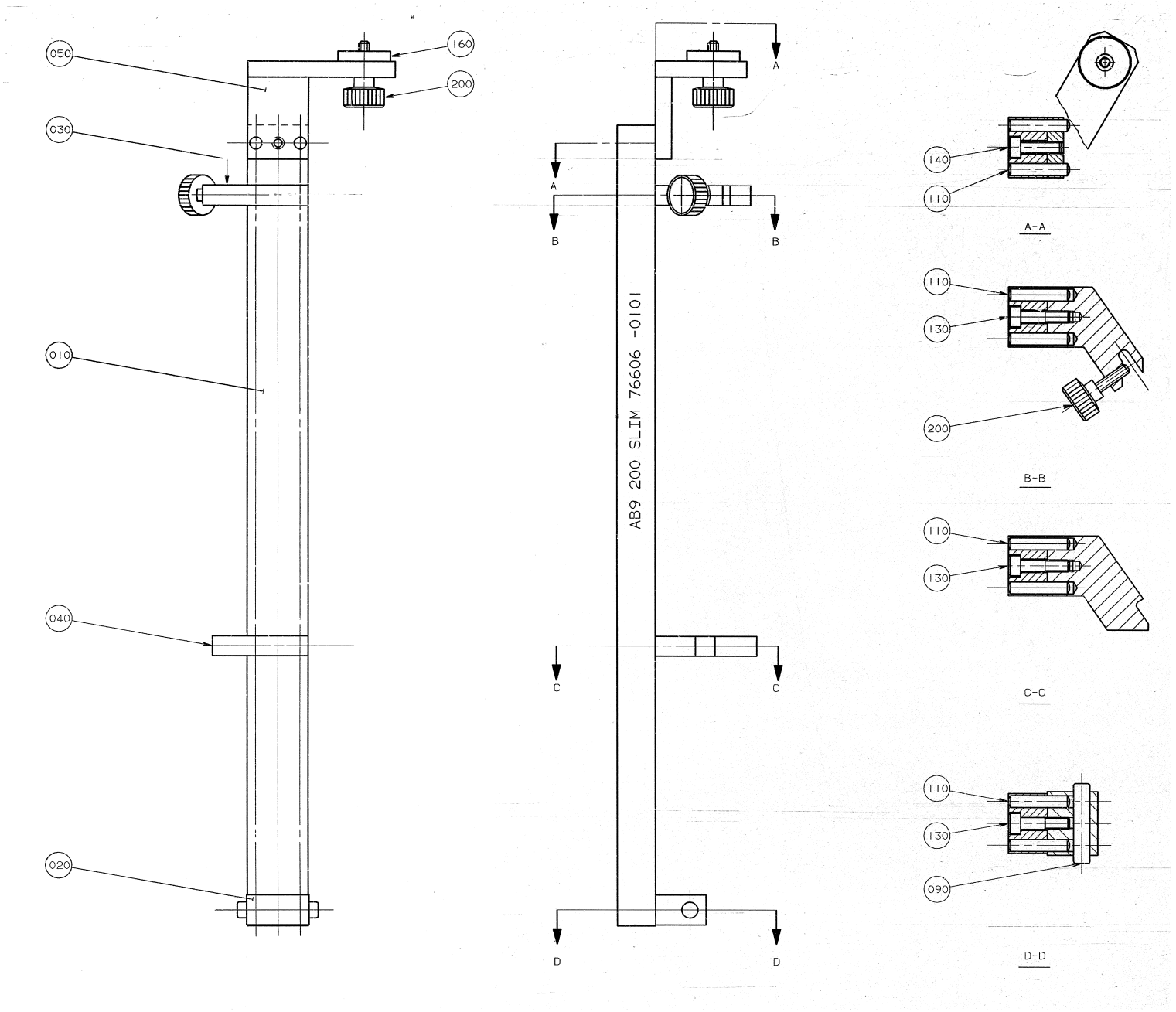

ECM: - -
Group number: 76606-0100
Assembly Drawing: 76606-1_1_AA

Pos	Part No	UN	Qty	Description	Page No
-					
010	76607-0000		1	RULER	
020	76605-0000		1	BRACKET	
030	76185-0000		1	STOPPER	
040	76186-0000		1	STOPPER	
050	76184-0000		1	BRACKET	
090	2873-0000		1	SHAFT	
110	311103-0357		8	PARALLEL PIN ISO 2338 6M6X30 A1	
130	312115-0372		3	SCREW ISO4762 M6X25 A4 80	
140	312115-0370		1	SCREW ISO4762 M6X20 A4 80	
160	315121-0165		1	WASHER PLAIN, TBRSB 8,4/26 H=5	
200	90051-0053		2	KNOB, INTERNAL THREAD, M6 24X17	

Pos	Part No	UN	Qty	Description	Page No

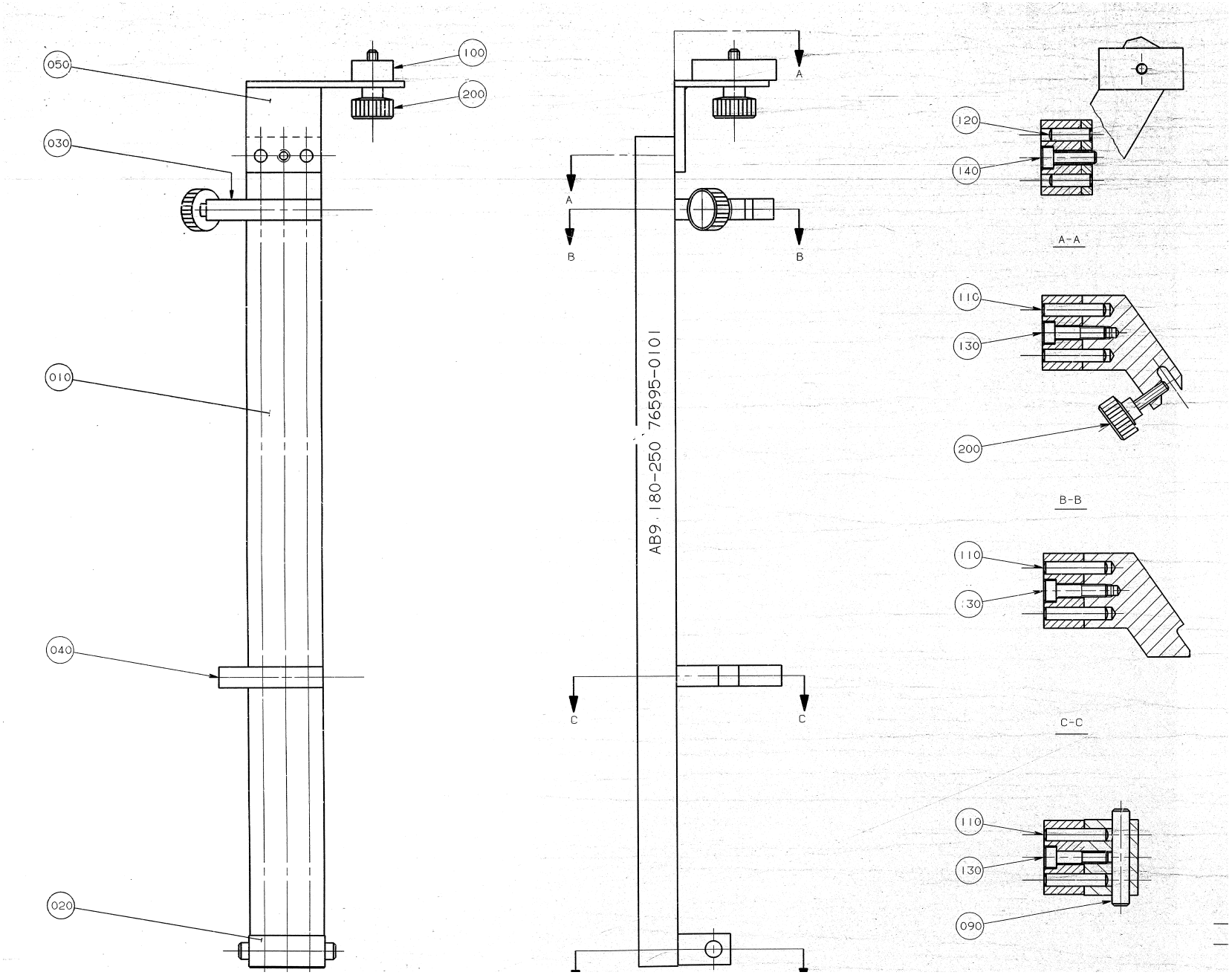
050
100
200
030
010
040
020
A
B
C
AB9.180-250 76595-0101
120
140
A-A
110
130
200
B-B
110
130
C-C
110
130
090

ECM: - -
Group number: 76595-0100
Assembly Drawing: 76595-1_1_AA

Pos	Part No	UN	Qty	Description	Page No
-					
010	76601-0000		1	RULER	
020	76164-0000		1	BRACKET	
030	76139-0000		1	STOPPER	
040	76597-0000		1	STOPPER	
050	76163-0000		1	BRACKET	
090	263655-0006		1	SHAFT	
100	76290-0000		1	SPACER	
110	311103-0357		6	PARALLEL PIN ISO 2338 6M6X30 A1	
120	311103-0353		2	PARALLEL PIN ISO 2338 6M6X20 A1	
130	312115-0372		3	SCREW ISO4762 M6X25 A4 80	
140	312115-0370		1	SCREW ISO4762 M6X20 A4 80	
200	90051-0035		2	KNOB, EXTERNAL THREAD. NO. 8308-1135	

Pos	Part No	UN	Qty	Description	Page No

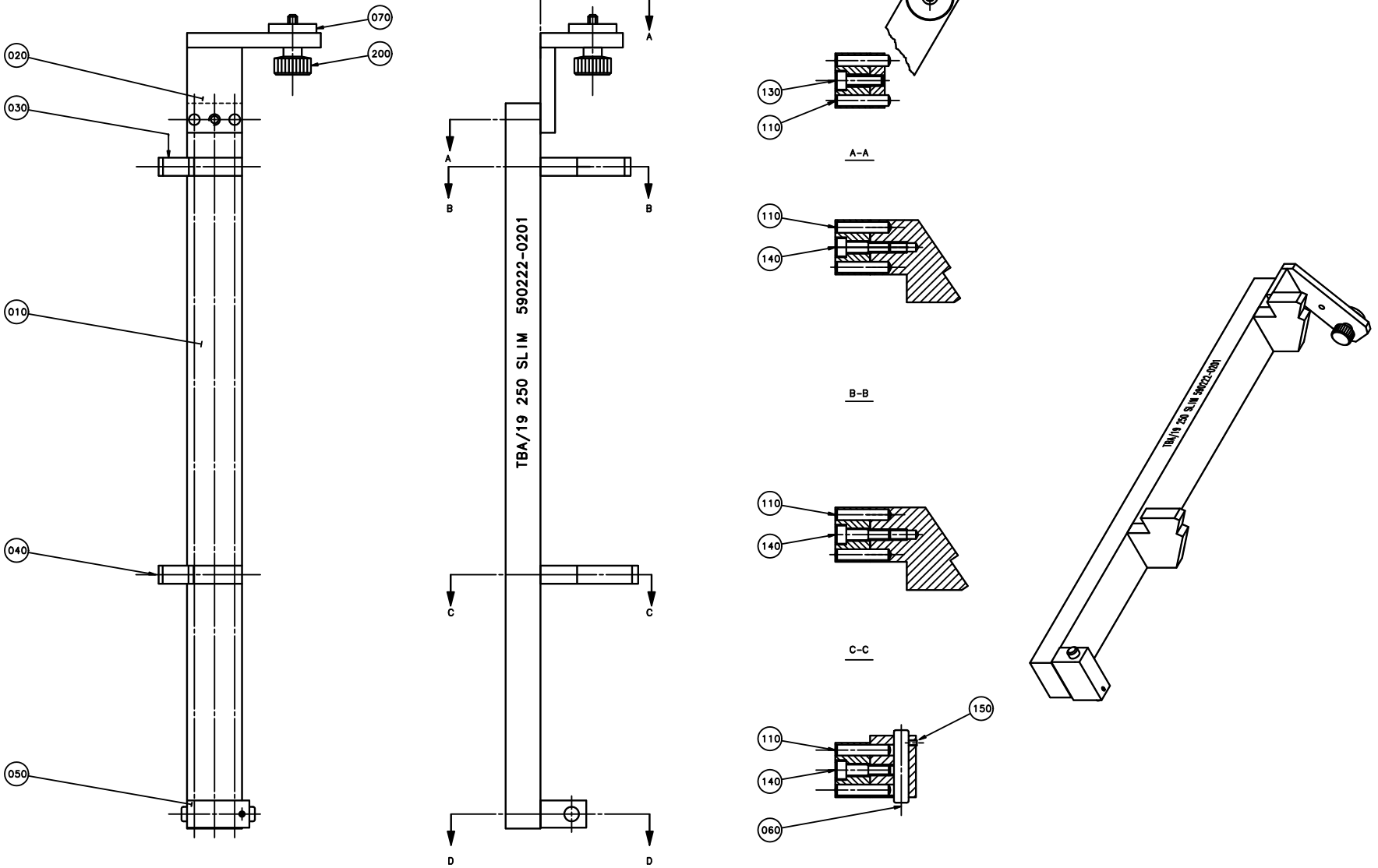
070
020
200
030
010
040
050
TBA/19 250 SLIM 590222-0201
A
B
C
D
130
110
A-A
140
B-B
C-C
150
060

ECM: 71280 - 19980112
Group number: 590222-0200
Assembly Drawing: 590222-2_1_AA

Pos	Part No	UN	Qty	Description	Page No
-					
010	76607-0000		1	RULER	
020	77245-0000		1	BRACKET	
030	1334570-0000		1	STOPPER	
040	1334571-0000		1	STOPPER	
050	1334572-0000		1	BRACKET	
060	1334573-0000		1	SHAFT	
070	1334631-0000		1	WASHER	
110	311103-0357		8	PARALLEL PIN ISO 2338 6M6X30 A1	
130	312115-0370		1	SCREW ISO4762 M6X20 A4 80	
140	312115-0372		3	SCREW ISO4762 M6X25 A4 80	
150	312318-0220		1	SCREW ISO4029 M3X6 A4	
200	90051-0053		1	KNOB, INTERNAL THREAD, M6 24X17	

Pos	Part No	UN	Qty	Description	Page No

This page is intentionally left blank.

ECM: 291764 - 20070126
Group number: 76600-0200
Assembly Drawing:

Pos	Part No	UN	Qty	Description	Page No
TBA 0100B, TBA 0125S					
016	76592-0100		1	TEMPLATE TUBE FORMING	**12-65**
TBA 0160S, TBA 0200M, TBA 0200S, TBA 0250S					
017	76598-0100		1	TEMPLATE TUBE FORMING	**12-67**
TBA 0180B, TBA 0200B, TBA 0236B, TBA 0200SQ, TBA 0284B, TBA 0250B, TBA 0300S					
020	76333-0100		1	TEMPLATE UPPER FORMING CLAMP	**12-69**
030	76407-0100		1	TEMPLATE DIVIDED FORMING RING	**12-71**
040	76409-0100		1	TEMPLATE MOVABLE FORMING RING	**12-73**
TBA 0330S					
020	76333-0100		1	TEMPLATE UPPER FORMING CLAMP	**12-69**
030	76407-0100		1	TEMPLATE DIVIDED FORMING RING	**12-71**
Common Parts					
005	76591-0100		1	PONCH	**12-75**
010	76335-0200		1	SETTING TOOL	**12-77, 12-79, 12-81**
050	76402-0200		1	TEMPLATE DRIVEN BENDING ROLLER	**12-93**

Pos	Part No	UN	Qty	Description	Page No

This page is intentionally left blank.

ECM: 73030 - 20000321
Group number: 76592-0100
Assembly Drawing:

Pos	Part No	UN	Qty	Description	Page No
-					
010	76593-0000		1	BRACKET	
020	76276-0000		2	SCREW	
500	311101-0308		2	PARALLEL PIN ISO 2338 5H6X16 ST	

Pos	Part No	UN	Qty	Description	Page No

This page is intentionally left blank.

ECM: 73030 - 20000321
Group number: 76598-0100
Assembly Drawing:

Pos	Part No	UN	Qty	Description	Page No	Pos	Part No	UN	Qty	Description	Page No
-											
010	76599-0000		1	BRACKET							
020	76276-0000		2	SCREW							
500	311101-0308		2	PARALLEL PIN ISO 2338 5H6X16 ST							

This page is intentionally left blank.

ECM: 73030 - 20000321
Group number: 76333-0100
Assembly Drawing:

Pos	Part No	UN	Qty	Description	Page No
-					
010	76599-0000		1	BRACKET	
020	76276-0000		2	SCREW	
500	311101-0308		2	PARALLEL PIN ISO 2338 5H6X16 ST	

Pos	Part No	UN	Qty	Description	Page No

Machine Type | Group Description | Used-In | Group Number | Page No

This page is intentionally left blank.

ECM: 73030 - 20000321
Group number: 76407-0100
Assembly Drawing:

Pos	Part No	UN	Qty	Description	Page No	Pos	Part No	UN	Qty	Description	Page No
-											
010	76408-0000		1	BRACKET							
020	76276-0000		2	SCREW							
500	311101-0308		2	PARALLEL PIN ISO 2338 5H6X16 ST							

This page is intentionally left blank.

ECM: 73030 - 20000321
Group number: 76409-0100
Assembly Drawing:

Pos	Part No	UN	Qty	Description	Page No	Pos	Part No	UN	Qty	Description	Page No
-											
010	76410-0000		1	BRACKET							
020	76276-0000		2	SCREW							
500	311101-0308		2	PARALLEL PIN ISO 2338 5H6X16 ST							

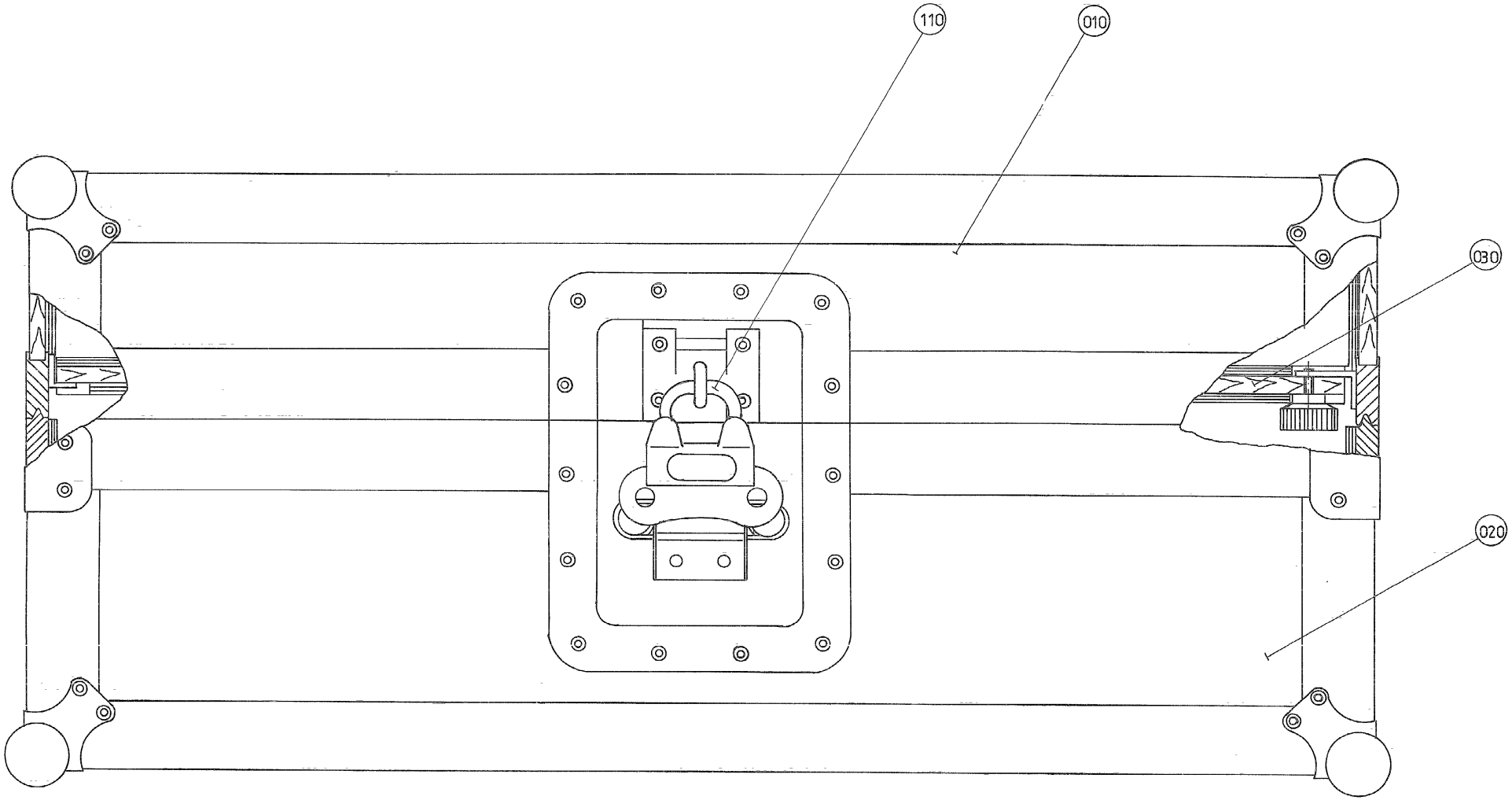
110
010
030
020

ECM: - -
Group number: 76591-0100
Assembly Drawing: 76591-1_1_AA

Pos	Part No	UN	Qty	Description	Page No
-					
010	76590-0000		1	PONCH	
	90194-0012		*1*	*LABEL REPL.BY 90194-0127*	
020	76337-0000		1	PONCH	
030	76484-0000		1	LID	
110	779911-0101		2	PADLOCK	

Pos	Part No	UN	Qty	Description	Page No

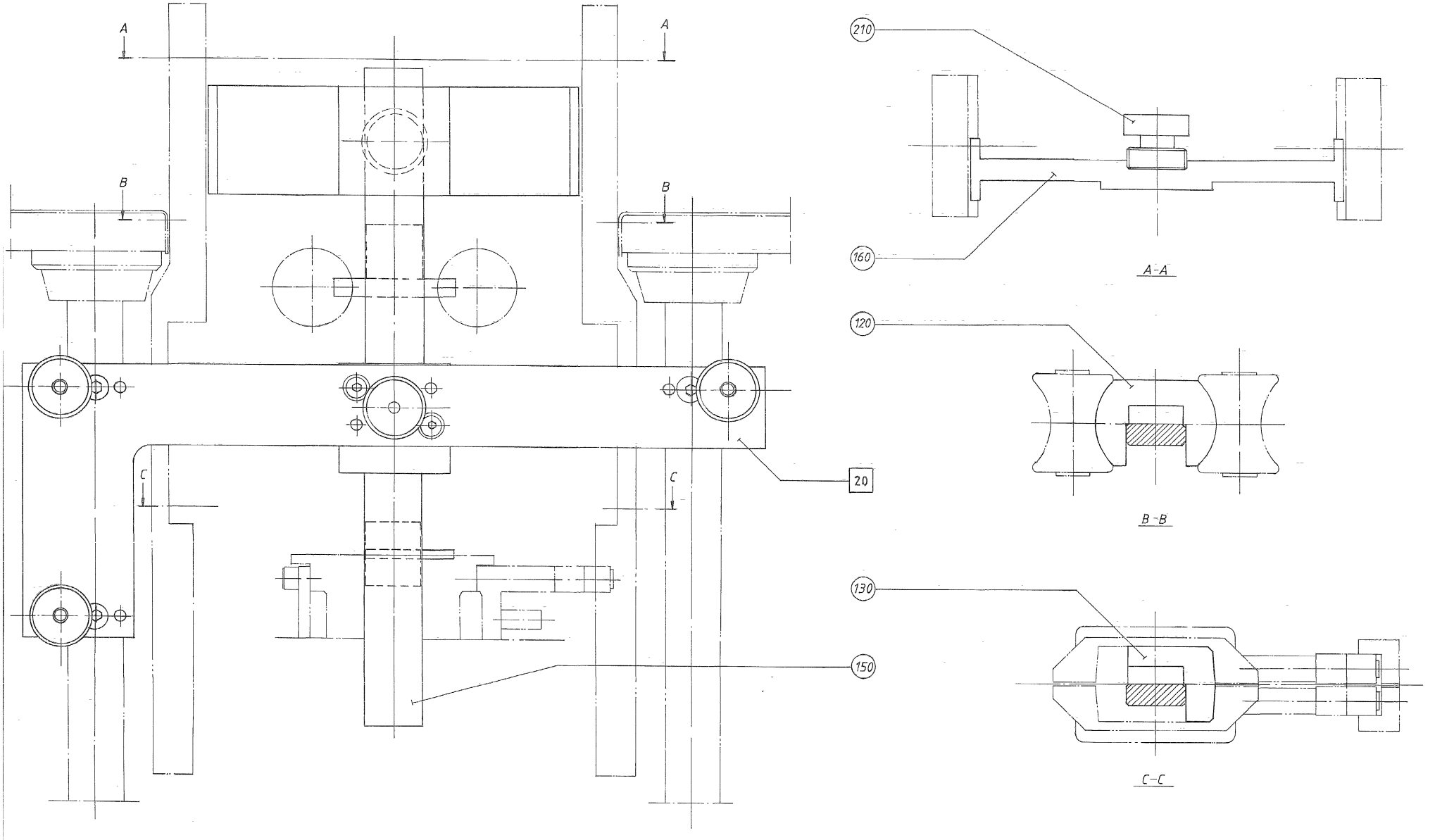
A
A
B
B
C
C
20
150
210
160
A-A
120
B-B
130
C-C

ECM: 291765 - 20070126
Group number: 76335-0200
Assembly Drawing: 76335-1_1_AA

This list covers pages from 12-76 to 12-81

Pos	Part No	UN	Qty	Description	Page No
TBA 0300S, TBA 0330S (See drawing on page: 12-76)					
010	75469-0300		1	SETTING TOOL VOLUME ADJUSTMENT	**12-83**
020	76291-0100		1	YOKE	**12-85**
030	76301-0100		1	TEMPLATE YOKE	**12-87**
040	76304-0100		1	COMPRESSION SPRING	**12-89**
120	75936-0000		1	TEMPLATE	
130	75939-0000		1	TEMPLATE	
140	75945-0000		1	CAM TEMPLATE	
150	76298-0000		1	RULER	
160	76299-0000		1	TEMPLATE SUPPORT ROLLERS	
170	76349-0000		1	CAM TEMPLATE	
210	90051-0059		1	KNOB, EXTERNAL THREAD. NO. 8308-1550	
TBA 0100B, TBA 0125S (See drawing on page: 12-78)					
110	75931-0009		1	SETTING TEMPLATE	
120	75937-0000		1	TEMPLATE	
130	75943-0000		1	TEMPLATE	
TBA 0160S (See drawing on pages: 12-76, 12-80)					
110	75931-0008		1	SETTING TEMPLATE	
120	75938-0000		1	TEMPLATE	
120	76176-0000		1	TEMPLATE	
130	75944-0000		1	TEMPLATE	
TBA 0180B (See drawing on page: 12-76)					
010	75469-0300		1	SETTING TOOL VOLUME ADJUSTMENT	**12-83**
020	76291-0100		1	YOKE	**12-85**
030	76301-0100		1	TEMPLATE YOKE	**12-87**
040	76304-0100		1	COMPRESSION SPRING	**12-89**
110	75931-0008		1	SETTING TEMPLATE	
120	75936-0000		1	TEMPLATE	
130	75939-0000		1	TEMPLATE	
140	75945-0000		1	CAM TEMPLATE	
150	76298-0000		1	RULER	
160	76299-0000		1	TEMPLATE SUPPORT ROLLERS	
170	76349-0000		1	CAM TEMPLATE	
210	90051-0059		1	KNOB, EXTERNAL THREAD. NO. 8308-1550	
TBA 0200B (See drawing on page: 12-76)					
010	75469-0300		1	SETTING TOOL VOLUME ADJUSTMENT	**12-83**
020	76291-0100		1	YOKE	**12-85**
030	76301-0100		1	TEMPLATE YOKE	**12-87**
040	76304-0100		1	COMPRESSION SPRING	**12-89**
110	75931-0011		1	SETTING TEMPLATE	
120	75936-0000		1	TEMPLATE	
130	75939-0000		1	TEMPLATE	
140	75945-0000		1	CAM TEMPLATE	
150	76298-0000		1	RULER	
160	76299-0000		1	TEMPLATE SUPPORT ROLLERS	
170	76349-0000		1	CAM TEMPLATE	
210	90051-0059		1	KNOB, EXTERNAL THREAD. NO. 8308-1550	
TBA 0200M (See drawing on page: 12-76)					
110	75931-0005		1	SETTING TEMPLATE	
120	574454-0000		1	TEMPLATE	
130	574455-0000		1	TEMPLATE	
TBA 0200S (See drawing on page: 12-76)					
110	75931-0010		1	SETTING TEMPLATE	
120	76176-0000		1	TEMPLATE	
130	75944-0000		1	TEMPLATE	
TBA 0200SQ (See drawing on pages: 12-76, 12-78, 12-80)					
010	75469-0300		1	SETTING TOOL VOLUME ADJUSTMENT	**12-83**
020	76291-0100		1	YOKE	**12-85**
030	929379-0100		1	TEMPLATE JAW SYSTEM	**12-91**
040	76304-0100		1	COMPRESSION SPRING	**12-89**
110	75931-0017		1	SETTING TEMPLATE	
120	1532527-0000		1	TEMPLATE	
130	1538757-0000		1	TOOL	
140	75945-0000		1	CAM TEMPLATE	
150	76298-0000		1	RULER	
160	76299-0000		1	TEMPLATE SUPPORT ROLLERS	
170	76349-0000		1	CAM TEMPLATE	
210	90051-0059		1	KNOB, EXTERNAL THREAD. NO. 8308-1550	
TBA 0236B (See drawing on page: 12-76)					
010	75469-0300		1	SETTING TOOL VOLUME ADJUSTMENT	**12-83**
020	76291-0100		1	YOKE	**12-85**
030	76301-0100		1	TEMPLATE YOKE	**12-87**
040	76304-0100		1	COMPRESSION SPRING	**12-89**
110	75931-0006		1	SETTING TEMPLATE	
120	75936-0000		1	TEMPLATE	
130	75939-0000		1	TEMPLATE	
140	75945-0000		1	CAM TEMPLATE	
150	76298-0000		1	RULER	
160	76299-0000		1	TEMPLATE SUPPORT ROLLERS	
170	76349-0000		1	CAM TEMPLATE	
210	90051-0059		1	KNOB, EXTERNAL THREAD. NO. 8308-1550	
TBA 0250B (See drawing on page: 12-76)					
010	75469-0300		1	SETTING TOOL VOLUME ADJUSTMENT	**12-83**
020	76291-0100		1	YOKE	**12-85**

Machine Type | Group Description | Used-In | Group Number | Page No

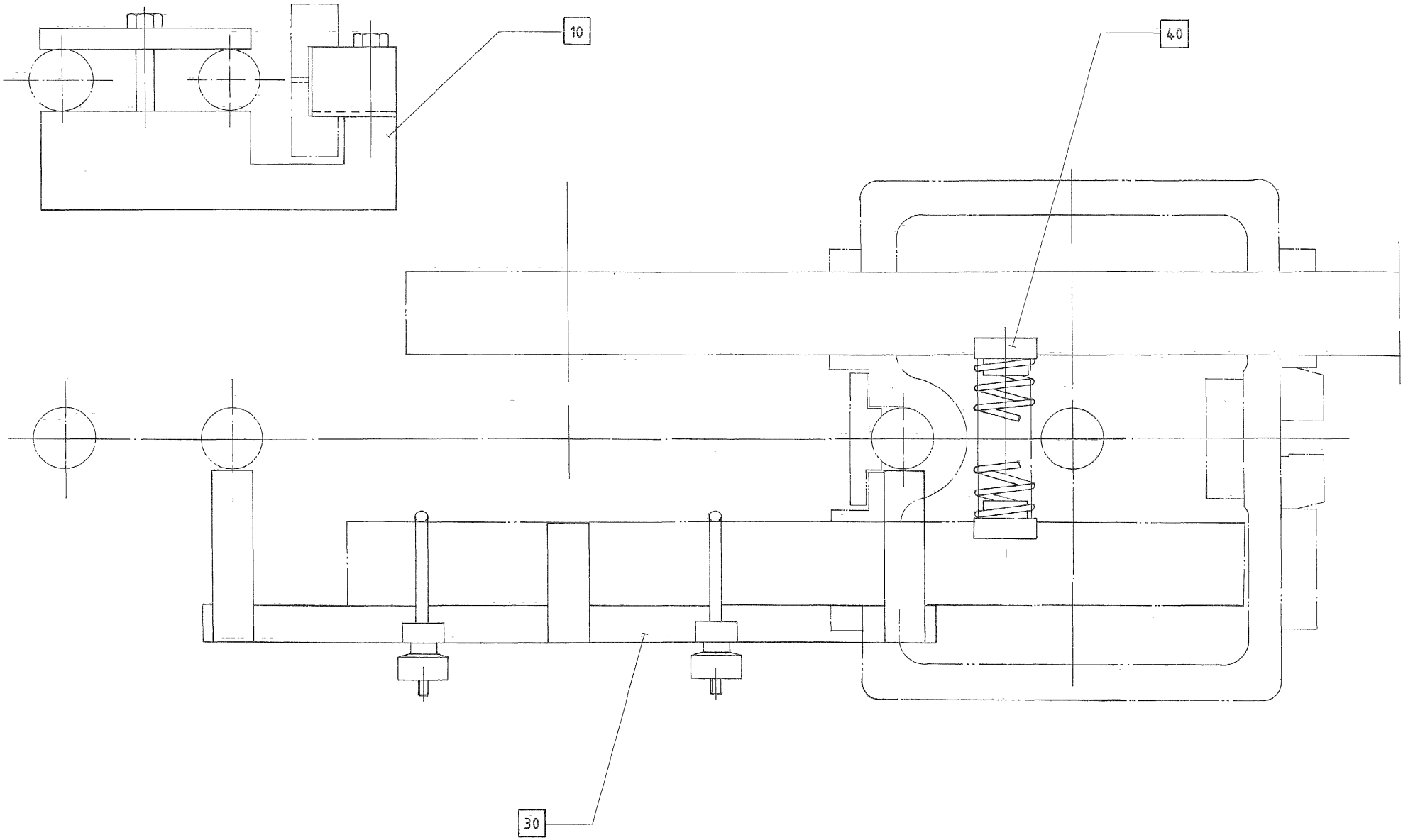
10
40
30

Pos	Part No	UN	Qty	Description	Page No
TBA 0250B (Cont'd) (See drawing on page: 12-76)					
030	76301-0100		1	TEMPLATE YOKE	**12-87**
040	76304-0100		1	COMPRESSION SPRING	**12-89**
110	75931-0005		1	SETTING TEMPLATE	
120	75936-0000		1	TEMPLATE	
130	75939-0000		1	TEMPLATE	
140	75945-0000		1	CAM TEMPLATE	
150	76298-0000		1	RULER	
160	76299-0000		1	TEMPLATE SUPPORT ROLLERS	
170	76349-0000		1	CAM TEMPLATE	
210	90051-0059		1	KNOB, EXTERNAL THREAD. NO. 8308-1550	
TBA 0250S (See drawing on page: 12-76)					
110	75931-0010		1	SETTING TEMPLATE	
120	574454-0000		1	TEMPLATE	
130	574455-0000		1	TEMPLATE	
TBA 0284B (See drawing on page: 12-76)					
010	75469-0300		1	SETTING TOOL VOLUME ADJUSTMENT	**12-83**
020	76291-0100		1	YOKE	**12-85**
030	76301-0100		1	TEMPLATE YOKE	**12-87**
040	76304-0100		1	COMPRESSION SPRING	**12-89**
110	75931-0012		1	SETTING TEMPLATE	
120	75936-0000		1	TEMPLATE	
130	75939-0000		1	TEMPLATE	
140	75945-0000		1	CAM TEMPLATE	
150	76298-0000		1	RULER	
160	76299-0000		1	TEMPLATE SUPPORT ROLLERS	
170	76349-0000		1	CAM TEMPLATE	
210	90051-0059		1	KNOB, EXTERNAL THREAD. NO. 8308-1550	
Common Parts					
110	75931-0004		1	SETTING TEMPLATE	

Pos	Part No	UN	Qty	Description	Page No

SETTING TOOL

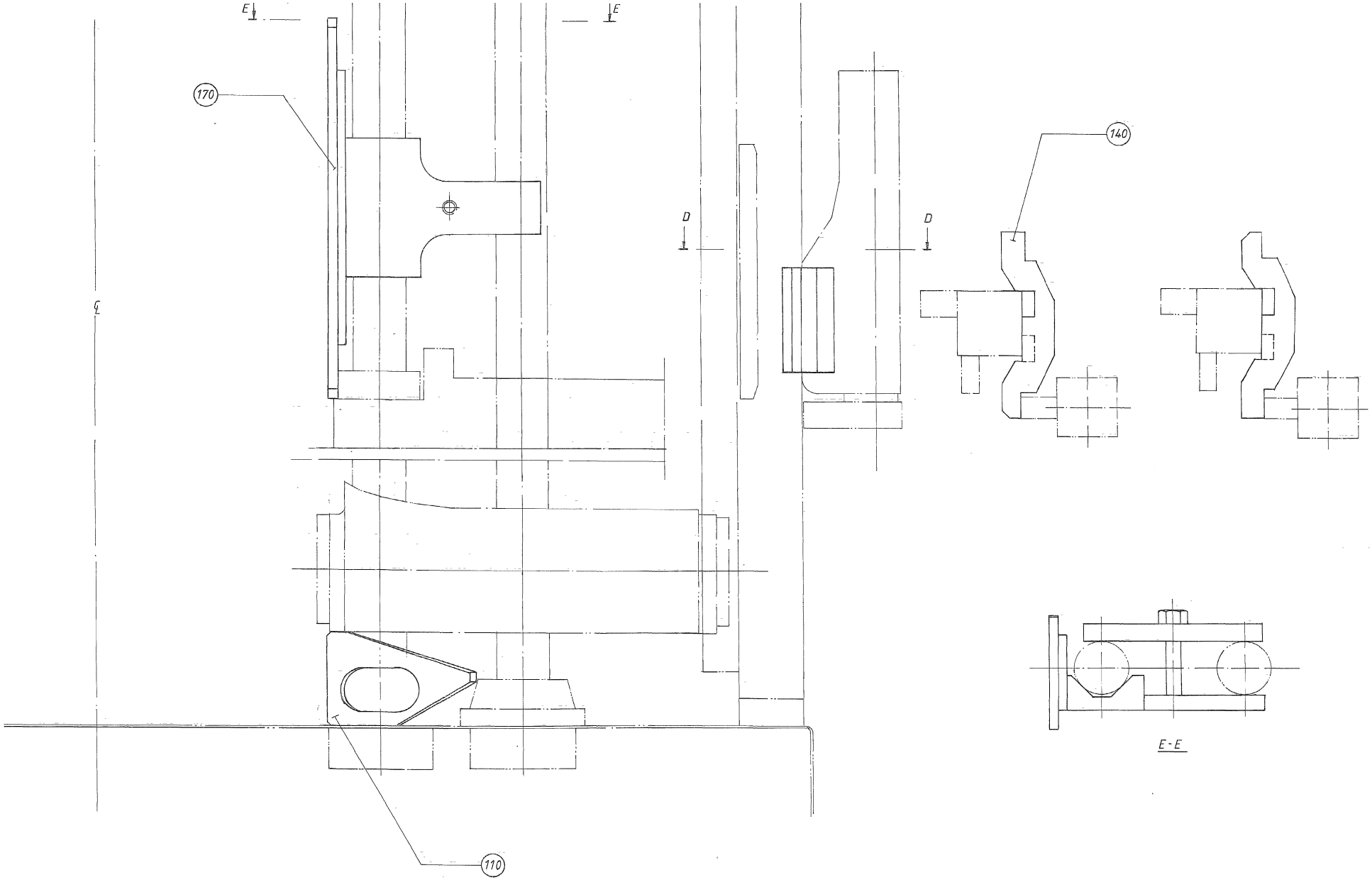

Pos	Part No	UN	Qty	Description	Page No	Pos	Part No	UN	Qty	Description	Page No

SEE PREVIOUS LISTS PAGES: 12-77, 12-79.

SETTING TOOL VOLUME ADJUSTMENT

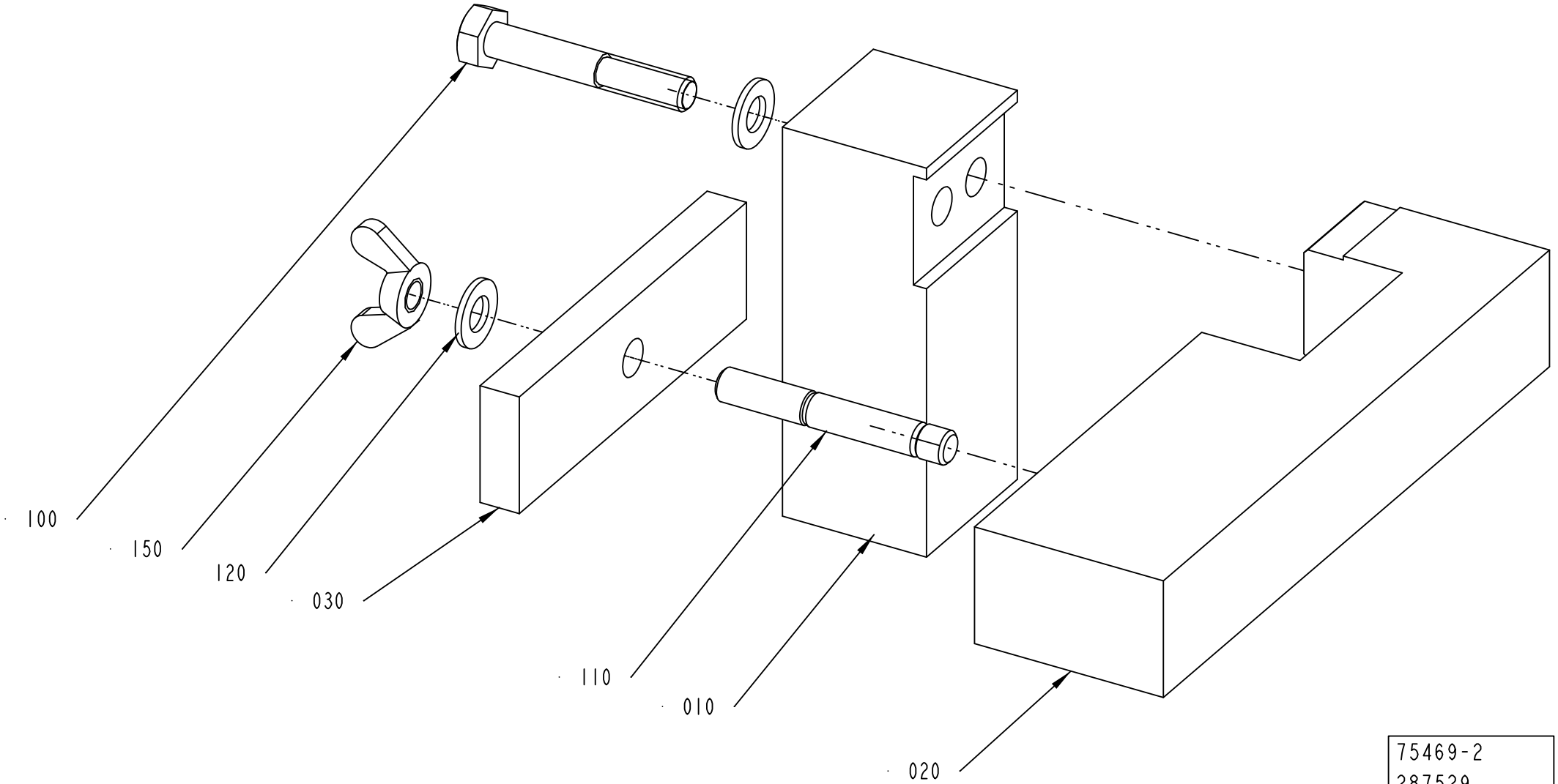

ECM: 291766 - 20070126
Group number: 75469-0300
Assembly Drawing: 75469-2_1_AA

Pos	Part No	UN	Qty	Description	Page No
TBA					
010	75470-0000		1	TEMPLATE	
Common Parts					
020	75471-0000		1	BRACKET	
030	75472-0000		1	CLAMP IRON	
100	312101-0461		1	SCREW M6S M8X50 FZB	
110	312303-0463		1	SCREW DIN 938 PS M8X50 A4 80	
120	315105-0165		2	WASHER BRB 8,4X16 RFR	
150	312715-0118		1	WING NUT DIN 315 A2 MVM-K M8	

Pos	Part No	UN	Qty	Description	Page No

Machine Type | Group Description | Used-In | Group Number | Page No

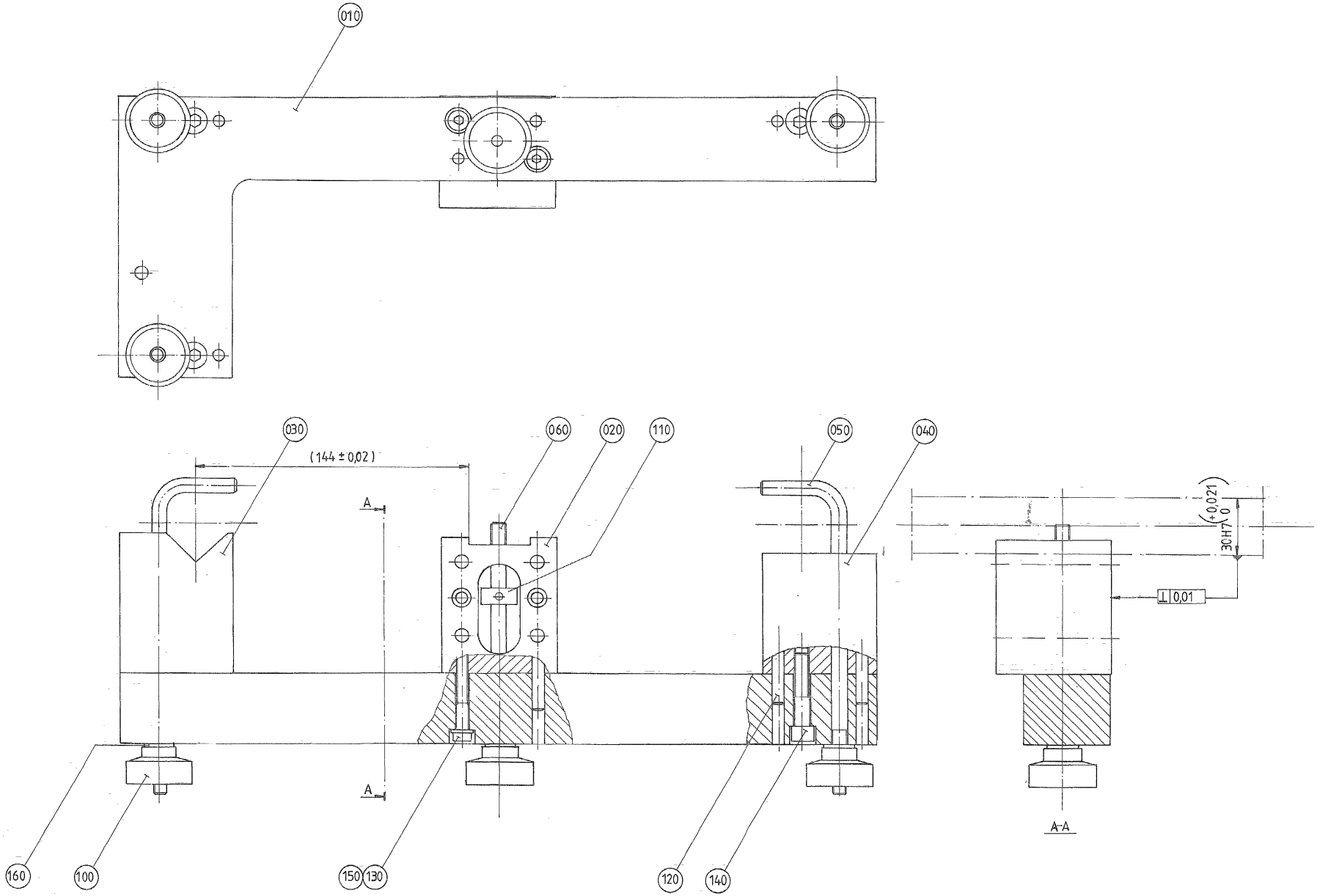
010
030
060
020
110
050
040
(144 ± 0,02)
A
A
30 H7 (+0,021 0)
⊥ 0,01
A-A
160
100
150
130
120
140

ECM: 71883 - 19990419
Group number: 76291-0100
Assembly Drawing: 76291-1_1_AA

Pos	Part No	UN	Qty	Description	Page No
TBA/19					
150	315105-0153		2	WASHER BRB 6,4X12 RFR	
160	315105-0165		4	WASHER BRB 8,4X16 RFR	
Common Parts					
010	76292-0000		1	YOKE	
020	76293-0000		1	CANTILEVER	
030	76294-0000		2	LOCATING PIECE	
040	76295-0000		1	SPACER	
050	76296-0000		3	HOOK	
060	76297-0000		1	SCREW	
100	90051-0040		3	KNOB, INTERNAL THREAD, NO. 8308-0627	
110	315742-0104		1	RETAINING RING 8 SMS 199 RFR	
120	311103-0357		8	PARALLEL PIN ISO 2338 6M6X30 A1	
130	312115-0378		2	SCREW ISO4762 M6X40 A4 80	
140	312115-0459		3	SCREW ISO4762 M8X40 A4 80	

Pos	Part No	UN	Qty	Description	Page No

TEMPLATE YOKE

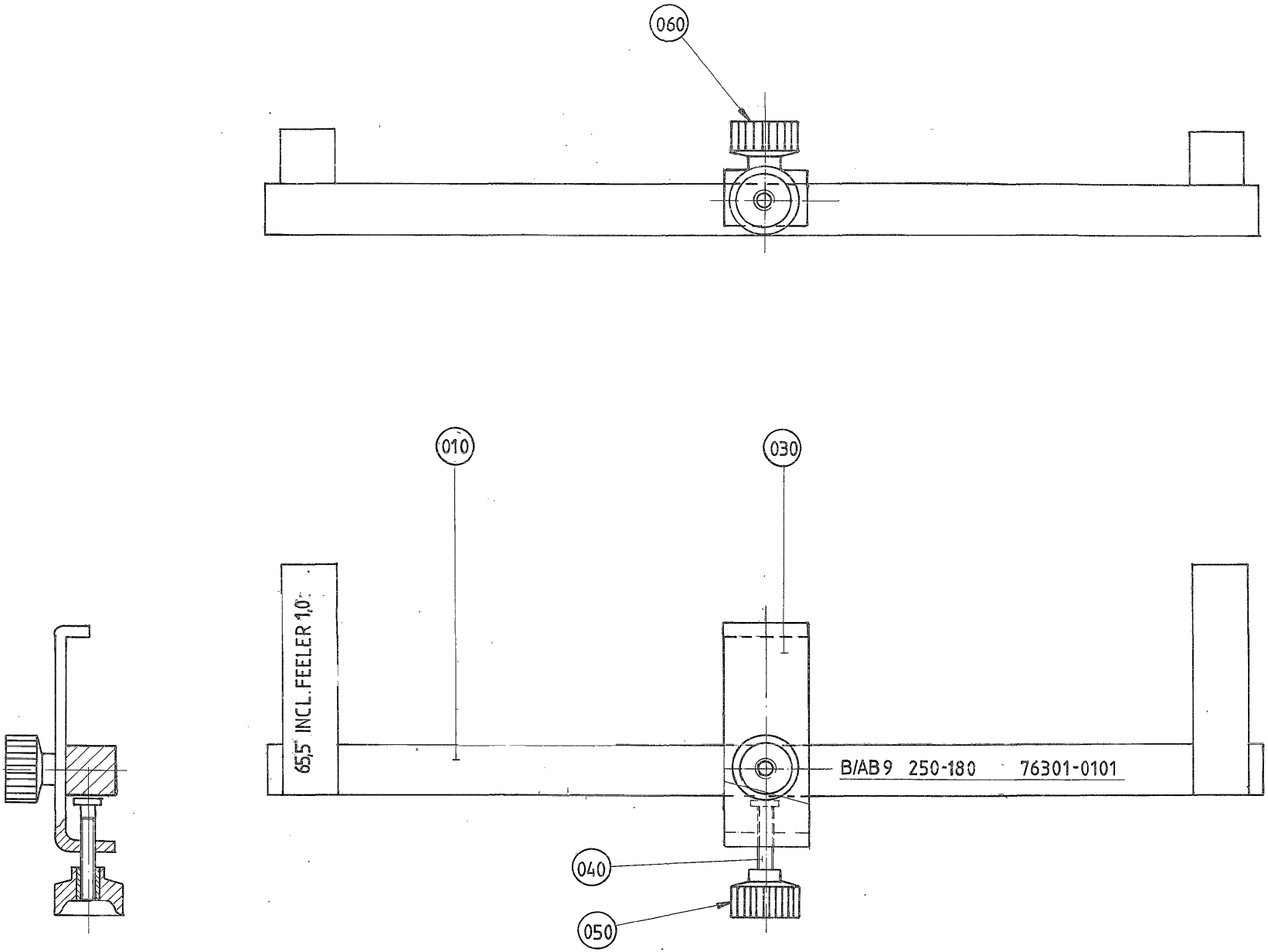

ECM: - -
Group number: 76301-0100
Assembly Drawing: 76301-1_1_AA

Pos	Part No	UN	Qty	Description	Page No	Pos	Part No	UN	Qty	Description	Page No
-											
010	76302-0000		1	BRACKET							
030	76464-0000		1	CANTILEVER							
040	76465-0000		1	SCREW							
050	90051-0053		1	KNOB, INTERNAL THREAD, M6 24X17							
060	90051-0083		1	KNOB, EXTERNAL THREAD. NO. 8308-1321							

COMPRESSION SPRING

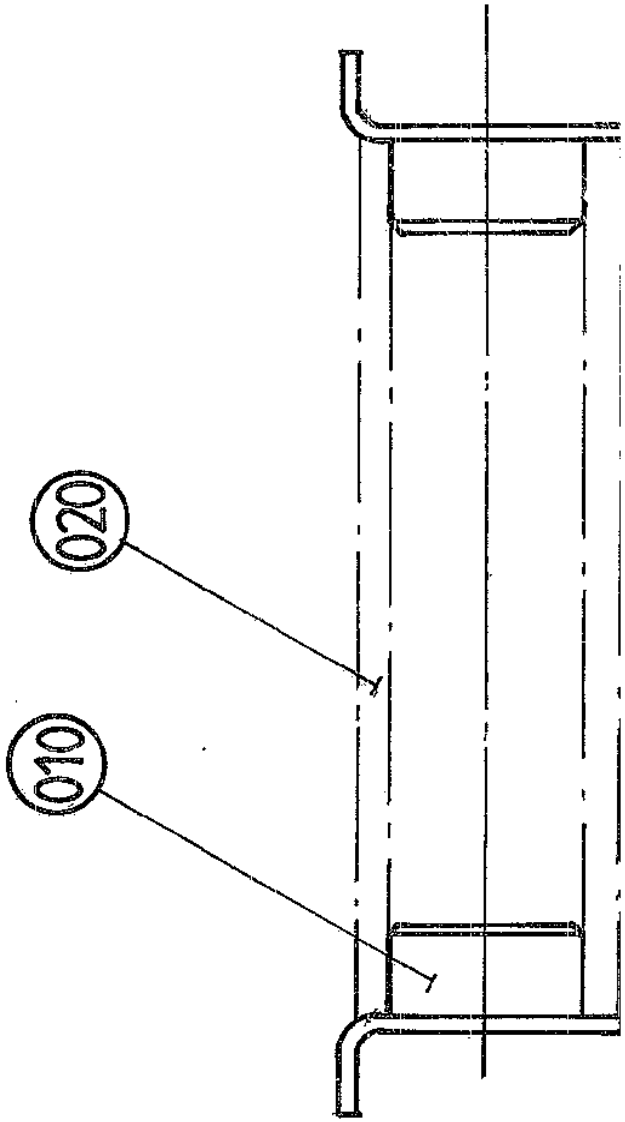

ECM: - -
Group number: 76304-0100
Assembly Drawing: 76304-1_1_AA

Pos	Part No	UN	Qty	Description	Page No
-					
010	76305-0000		2	BRACKET	
020	90335-0052		1	COMP. SPRING 23400, 3,2X28,2X94,5	

Pos	Part No	UN	Qty	Description	Page No

Note	ECN-no	Sign.	Date	Approved	Date
--	=AA int ECN 70639	RGI	970616	RGI	970616

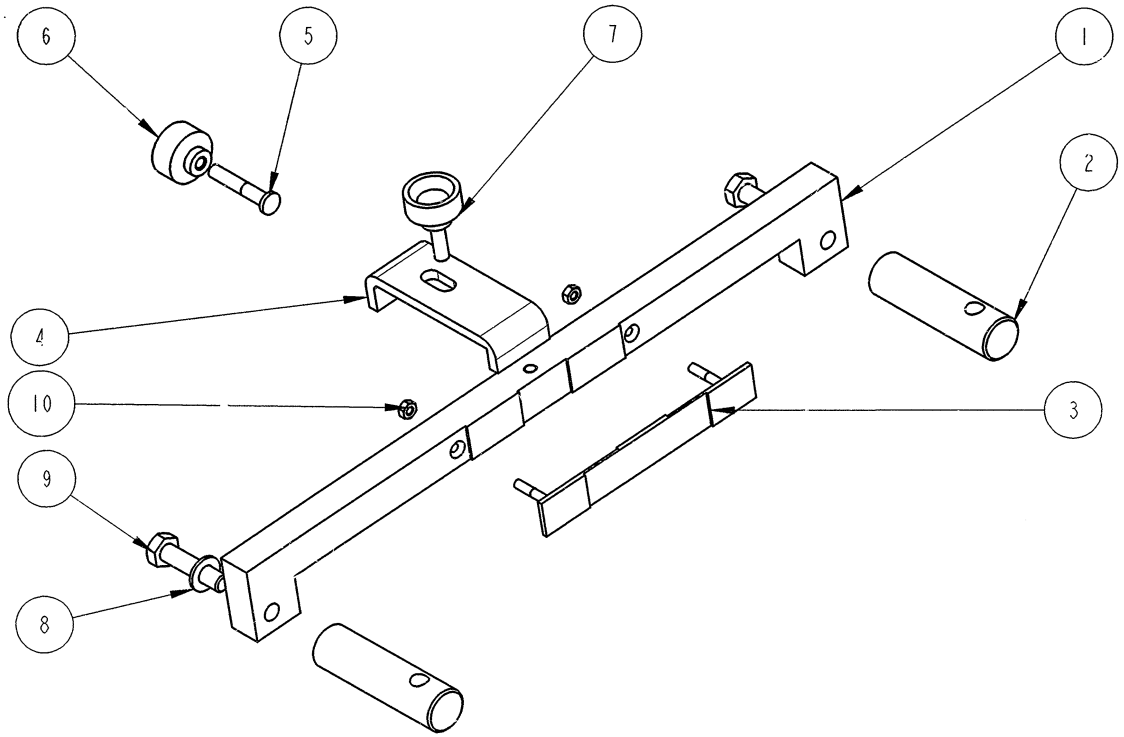

Marked with PART NUMBER Method . . . . . / . . . . . mm B 2103.10	Unless otherwise stated SHARP EDGES BROKEN Doc. class	Tolerance for non-toleranced dimensions Material
	Designer RGI Date 960524	Surface roughness Surface treatment
Scale 1:2		
Tetra Pak	Approved RGI Date 97XXXX	Denomination TEMPLATE JAW SYSTEM ATTREZZATURA JAW SYSTEM
Company Tetra Brik R&D S.p.A.	Drawing No S3-929379-1	Page 1(1)

ECM: 89086 - 20010226
Group number: 929379-0100
Assembly Drawing: 929379-1_1_AA

Pos	Part No	UN	Qty	Description	Page No
TBA 0200SQ					
002	1524835-0000		2	TEMPLATE	
003	1524836-0000		1	SPACER	
Common Parts					
001	929376-0000		1	TEMPLATE YOKE	
004	929381-0000		1	BRACKET	
005	76465-0000		1	SCREW	
006	90051-0053		1	KNOB, INTERNAL THREAD, M6 24X17	
007	90051-0083		1	KNOB, EXTERNAL THREAD. NO. 8308-1321	
008	315105-0165		2	WASHER BRB 8,4X16 RFR	
009	312109-0457		2	SCREW M6S ISO 4017 M8X35 A480	
010	312605-0312		2	HEXAGON NUT, M6M M4 A280	

Pos	Part No	UN	Qty	Description	Page No

TEMPLATE DRIVEN BENDING ROLLER

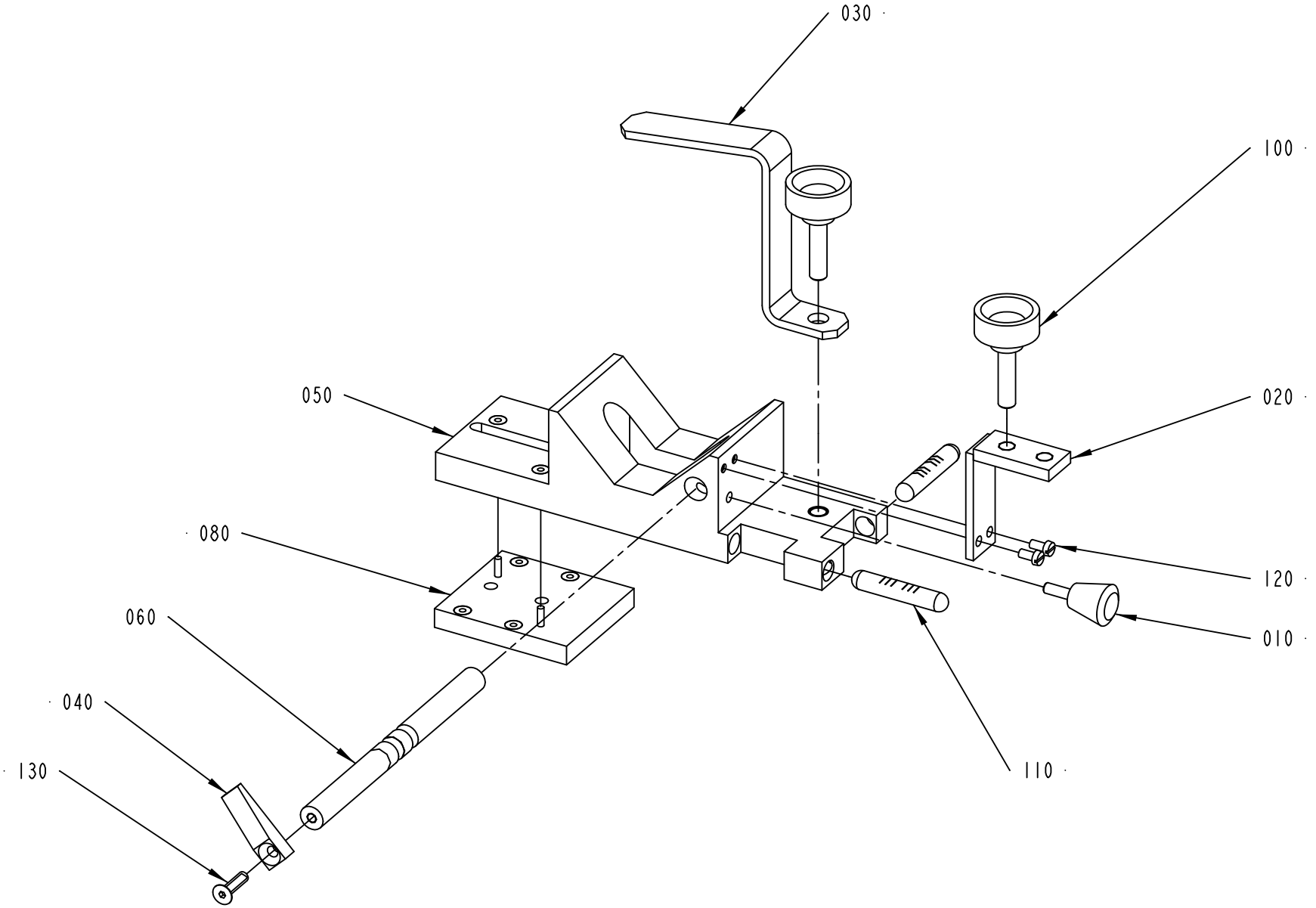

76402-2
181084

ECM: 224175 - 20050712
Group number: 76402-0200
Assembly Drawing: 76402-2_1_AB

Pos	Part No	UN	Qty	Description	Page No
-					
010	442113-0000		1	STOP	
020	752007-0000		1	HOLDER	
030	752668-0000		1	HOLDER	
040	1346000-0000		1	STOPPER	
050	1346001-0000		1	BLOCK	
060	1346002-0000		1	SHAFT	
070	1346003-0000		1	SHAFT	
080	1346004-0000		1	PLATE	
090	1346005-0000		1	PLATE	
100	90051-0059		2	KNOB, EXTERNAL THREAD. NO. 8308-1550	
110	90459-5200		2	SPIRIT LEVEL, 2864-0308	
120	312122-0287		2	SCREW ISO 1207 M4X8 NI PL BRASS	
130	312155-0331		1	SCREW DIN 7991 MF6S M5X20 A4 70	

Pos	Part No	UN	Qty	Description	Page No

This page is intentionally left blank.

ECM: - -
Group number: 577427-0100
Assembly Drawing:

Pos	Part No	UN	Qty	Description	Page No	Pos	Part No	UN	Qty	Description	Page No
-											
010	577333-0000		1	DOCUMENT FOLDER							

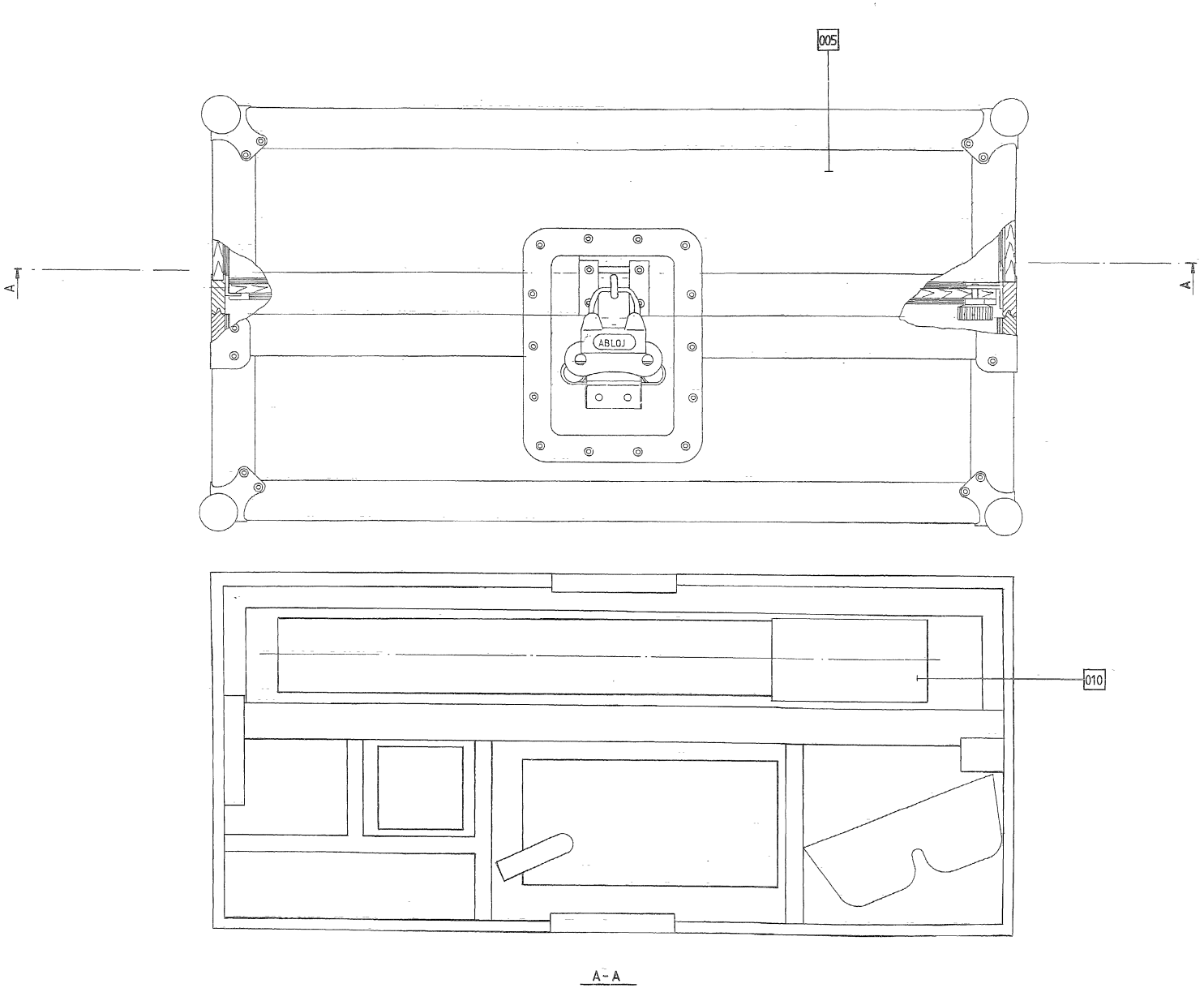
005
A
A
ABLOJ
010
A - A

ECM: 73030 - 20000321
Group number: 76350-0200
Assembly Drawing: 76350-1_1_AA

Pos	Part No	UN	Qty	Description	Page No
-					
F005	76470-0100		1	PONCH	**12-99**
F010	76594-0200		1	SETTING TOOL	**12-101**

Pos	Part No	UN	Qty	Description	Page No

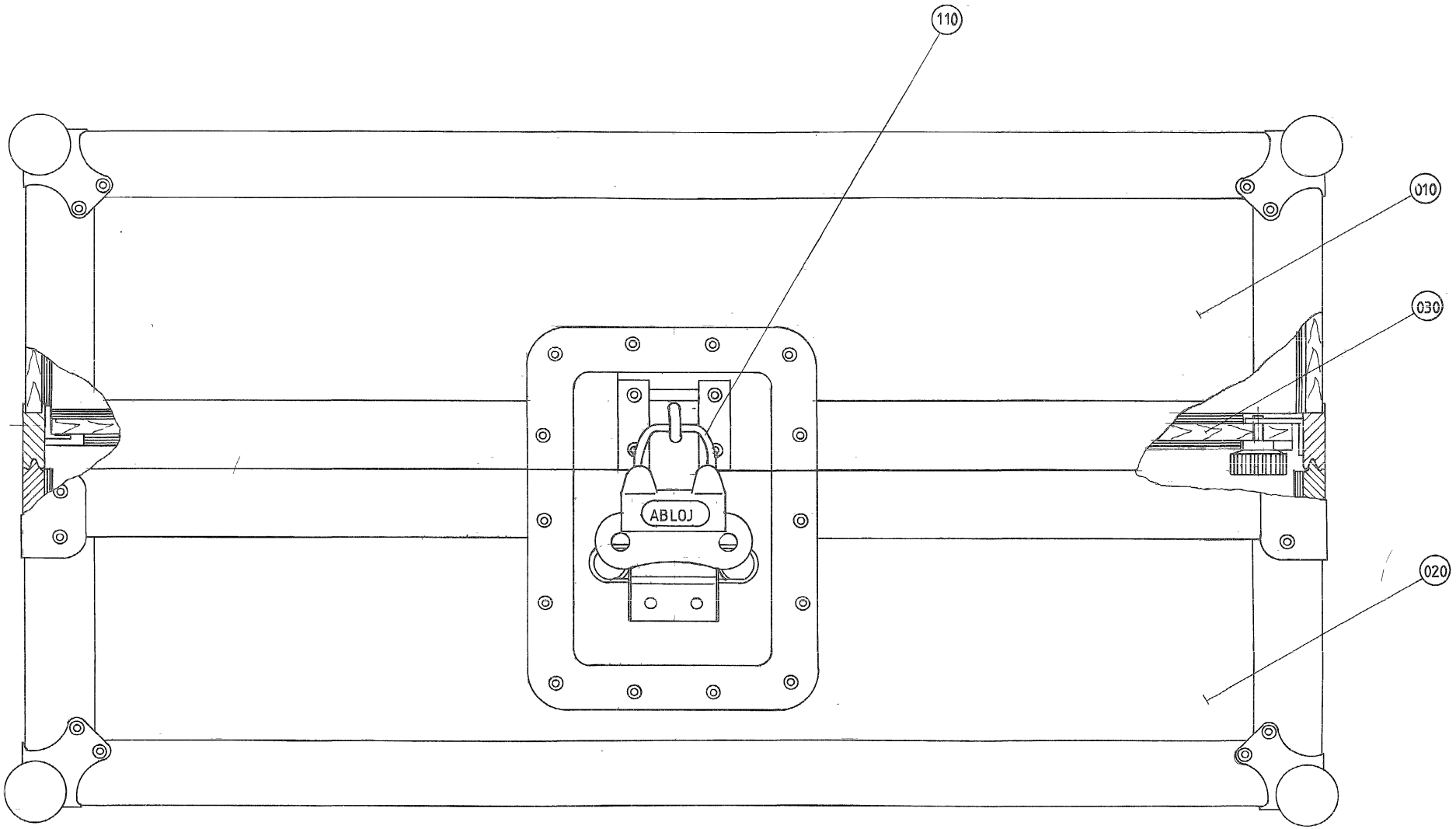
110
010
030
020
ABLOJ

ECM: - -
Group number: 76470-0100
Assembly Drawing: 76470-1_1_AA

Pos	Part No	UN	Qty	Description	Page No
-					
010	76471-0000		1	PONCH	
	90194-0012		*2*	*LABEL REPL.BY 90194-0127*	
020	76589-0000		1	PONCH	
030	76484-0000		1	LID	
110	779911-0101		2	PADLOCK	

Pos	Part No	UN	Qty	Description	Page No

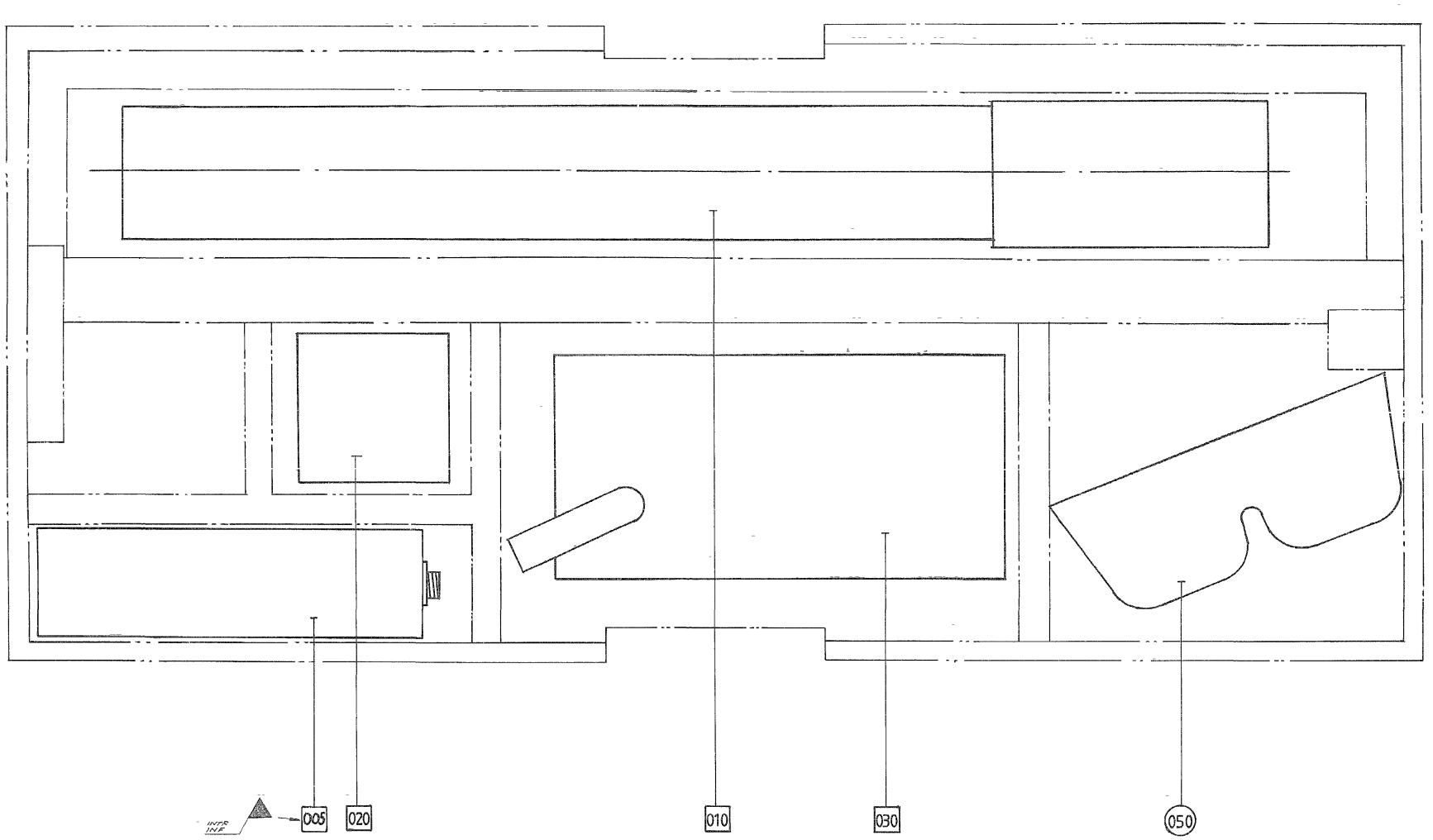
005
020
010
030
050

ECM: 72732 - 19990702
Group number: 76594-0200
Assembly Drawing: 76594-1_1_AA

Pos	Part No	UN	Qty	Description	Page No
TBA/19					
005	538432-0100		1	LASER DETECTOR	**12-103**
010	556662-0100		1	LASER	**12-105**
020	556672-0100		1	HOUSE	**12-107**
030	556667-0100		1	DISPLAY	**12-109**
050	90243-0126		1	PROTECTIVE GOGGLES	

Pos	Part No	UN	Qty	Description	Page No

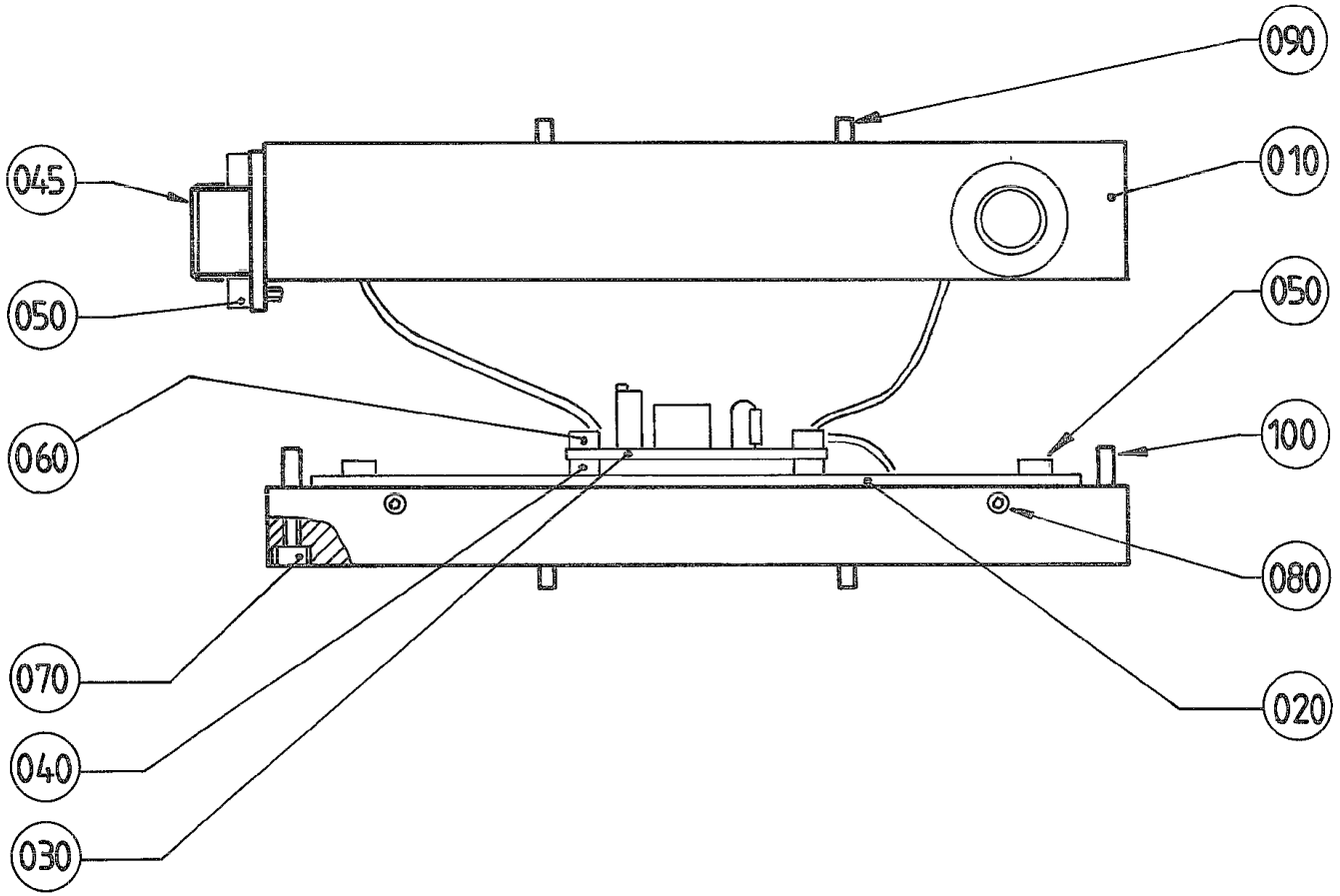
090
010
045
050
050
060
100
080
070
020
040
030

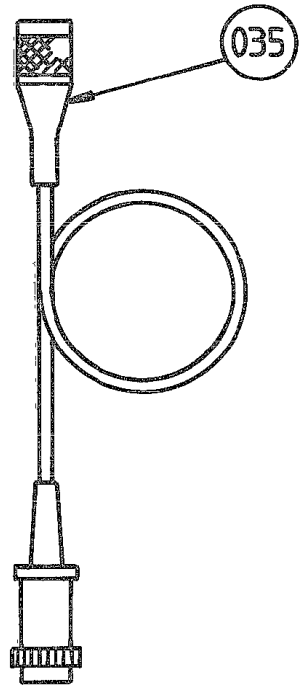
035

ECM: - -
Group number: 538432-0100
Assembly Drawing: 538432-1_1_AA

Pos	Part No	UN	Qty	Description	Page No
-					
010	538433-0000		1	DETECTOR BODY	
020	538434-0000		1	DETECTOR CARD	
030	442092-0000		1	CIRCUIT BOARD	
035	539692-0000		1	CABLE	
040	90287-0170		4	DISTANCE SCREW	
050	312115-0220		8	SCREW ISO4762 M3X6 A4 80	
060	312115-0226		4	SCREW ISO4762 M3X12 A4 80	
070	312115-0228		4	SCREW ISO4762 M3X16 A4 80	
080	312318-0220		6	SCREW ISO4029 M3X6 A4	
090	311103-0233		2	PARALLEL PIN ISO 2338 3M6X10 A1	
100	311103-0234		2	PARALLEL PIN ISO 2338 3M6X12 A1	

Pos	Part No	UN	Qty	Description	Page No

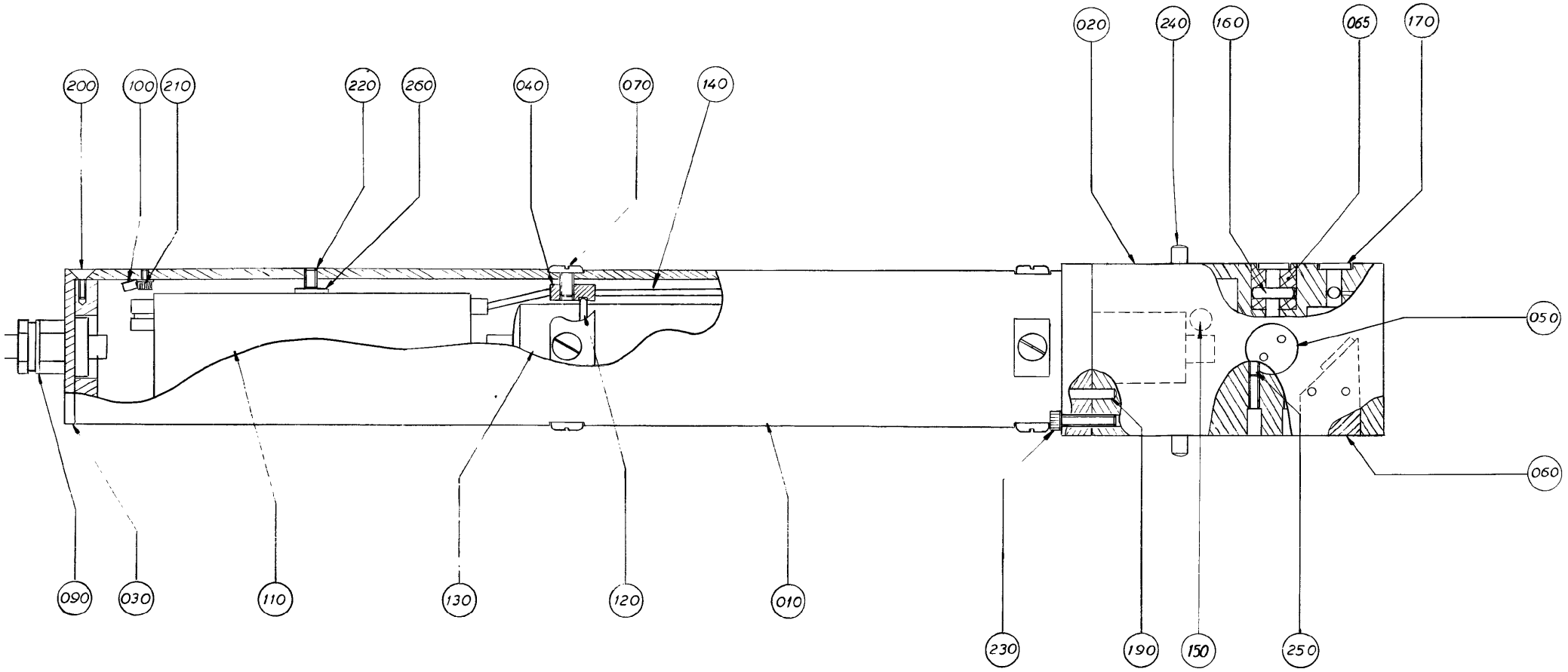
200
100
210
220
260
040
070
140
020
240
160
065
170
050
060
090
030
110
130
120
010
230
190
150
250

ECM: - -
Group number: 556662-0100
Assembly Drawing: 556662-1_1_AA

Pos	Part No	UN	Qty	Description	Page No
-					
010	556663-0000		1	HOUSE	
020	556664-0000		1	HEAD	
030	556665-0000		1	END SECTION	
040	442084-0000		2	RING	
050	442085-0000		1	JET DIVERTER	
060	442086-0000		1	REFLECTOR	
065	556666-0000		1	HOLDER	
070	312132-0287		8	SCREW SLOT. PAN HEAD MSCS M4X8	
090	352103-0096		1	CABLE GLAND, ST 7, PR 12,5/PG7	
100	353101-0120		1	CABLE SHOE 0,5-1,5MM2 M4 RED	
110	90243-0319		1	VOLTAGE SUPPLY UNIT	
120	315203-0219		2	O-RING 29,2X3 MM	
130	90243-0317		1	LASER	
140	90220-0057		1	CABLE TLPE 1X06MM2	
150	90121-0099		1	RESISTANCE FIXED, 100 KOHM, 6 W	
160	90243-0318		2	GLASS ROD	
170	90337-0342		2	GLASS-WINDOW D=12,5MM	
190	311102-0308		2	PARALLEL PIN ISO 2338 5M6X16 ST	
200	312151-0224		2	SCREW EN 10642 MF6S M3X10 10.9 EL.PL	
210	312115-0220		1	SCREW ISO4762 M3X6 A4 80	
220	312316-0289		1	SCREW HEX.SOCK.SET CUP P.MSK6SS4X10 FZB	
230	312115-0325		2	SCREW ISO4762 M5X10 A4 80	
240	311102-0351		4	PARALLEL PIN ISO 2338 6M6X16 ST	
250	312316-0291		4	SCREW HEX.SOCK.SET CUP P.MSK6SS4X12 FZB	
260	315101-0153		1	WASHER PLAIN, BRB, 6,4/12 H=1,5	

Pos	Part No	UN	Qty	Description	Page No

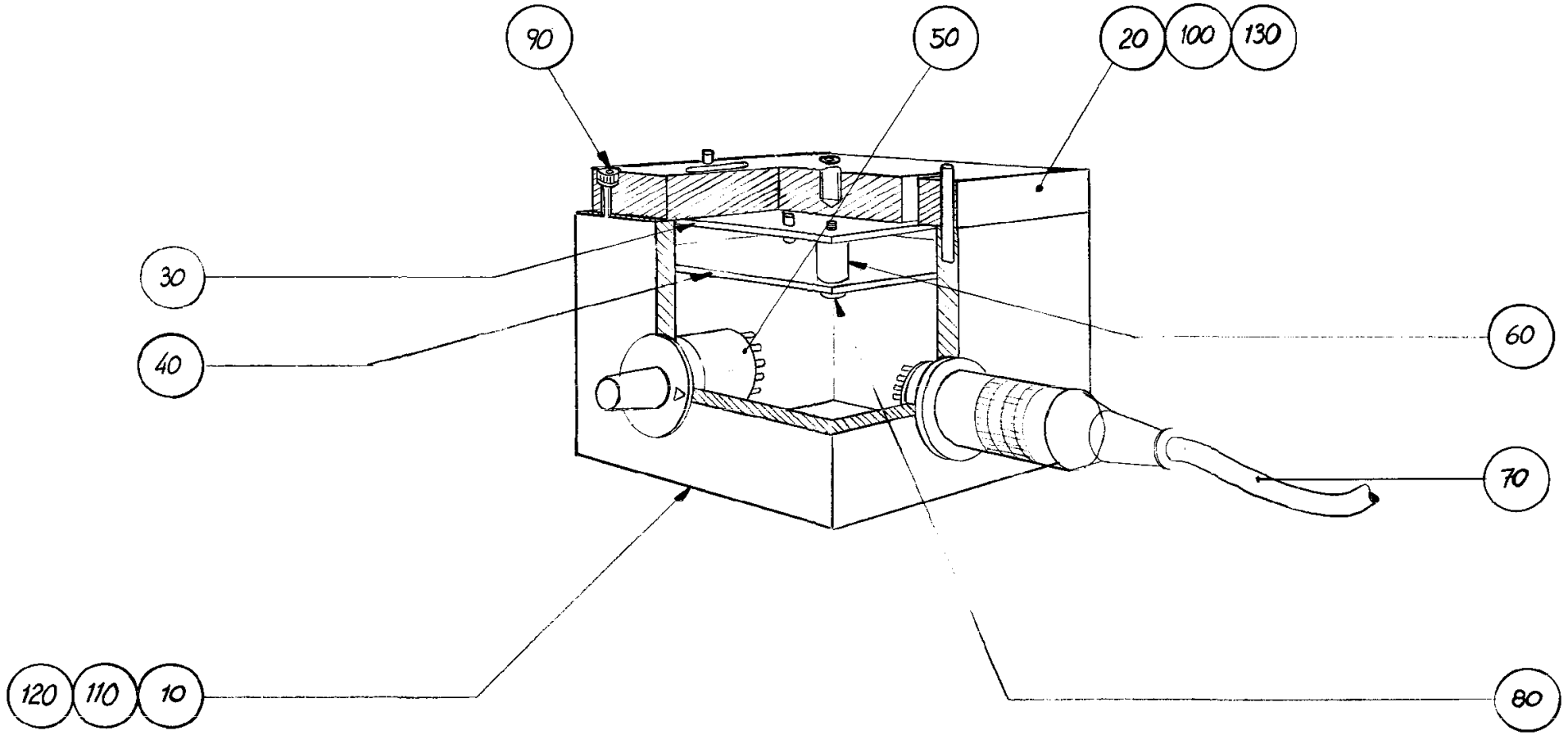
90
50
20
100
130
30
40
60
70
120
110
10
80

ECM: - -
Group number: 556672-0100
Assembly Drawing: 556672-1_1_AA

Pos	Part No	UN	Qty	Description	Page No
-					
010	556673-0000		1	HOUSE	
020	556674-0000		1	LID	
030	556679-0000		1	PRINTED CIRCUIT BOARD	
040	556680-0000		1	PRINTED CIRCUIT BOARD	
050	556681-0000		1	PRINTED CIRCUIT BOARD	
060	90287-0170		4	DISTANCE SCREW	
070	539691-0000		1	CABLE	
080	312115-0220		4	SCREW ISO4762 M3X6 A4 80	
090	312115-0228		4	SCREW ISO4762 M3X16 A4 80	
100	312318-0220		8	SCREW ISO4029 M3X6 A4	
110	312910-0113		2	THREADED INSERT, FREE RUNNING M5X1D	
120	311103-0234		2	PARALLEL PIN ISO 2338 3M6X12 A1	
130	311103-0239		2	PARALLEL PIN ISO 2338 3M6X22 A1	

Pos	Part No	UN	Qty	Description	Page No

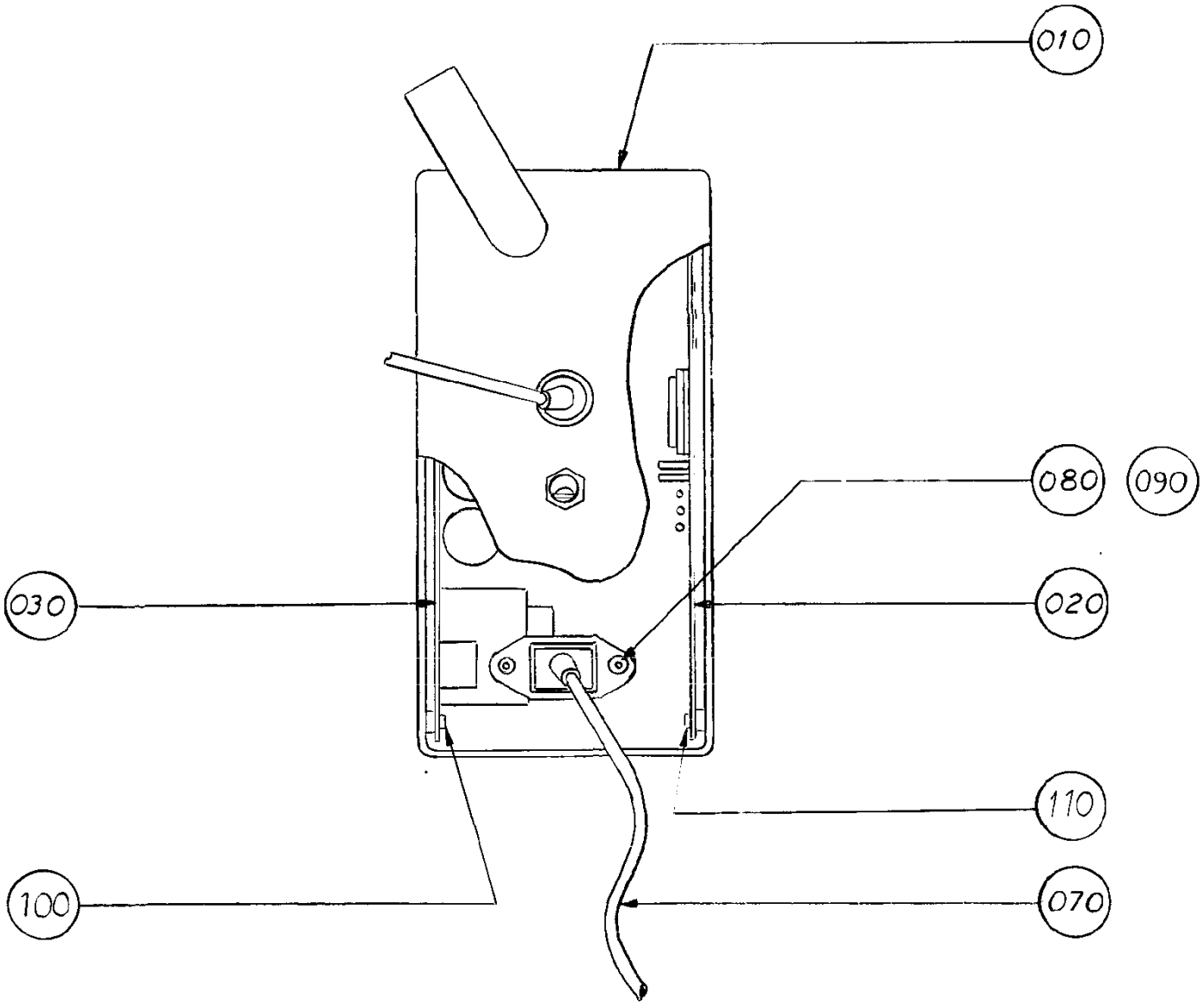
010
080
090
030
020
110
100
070

ECM: - -
Group number: 556667-0100
Assembly Drawing: 556667-1_1_AA

Pos	Part No	UN	Qty	Description	Page No
-					
010	556668-0000		1	BOX	
020	556677-0000		1	PRINTED CIRCUIT BOARD	
030	556678-0000		1	PRINTED CIRCUIT BOARD	
070	90220-0058		1	CABLE, POWER SUPPLY, RKK 2M	
080	312151-0222		2	SCREW EN 10642 MF6S M3X8 10.9 EL.PL	
090	312605-0310		8	HEXAGON NUT, M6M M3 A280	
100	312115-0220		4	SCREW ISO4762 M3X6 A4 80	
110	312503-0221		4	TAPPING SCREW ISO 7049-ST2,9X6,5-C-Z	

Pos	Part No	UN	Qty	Description	Page No

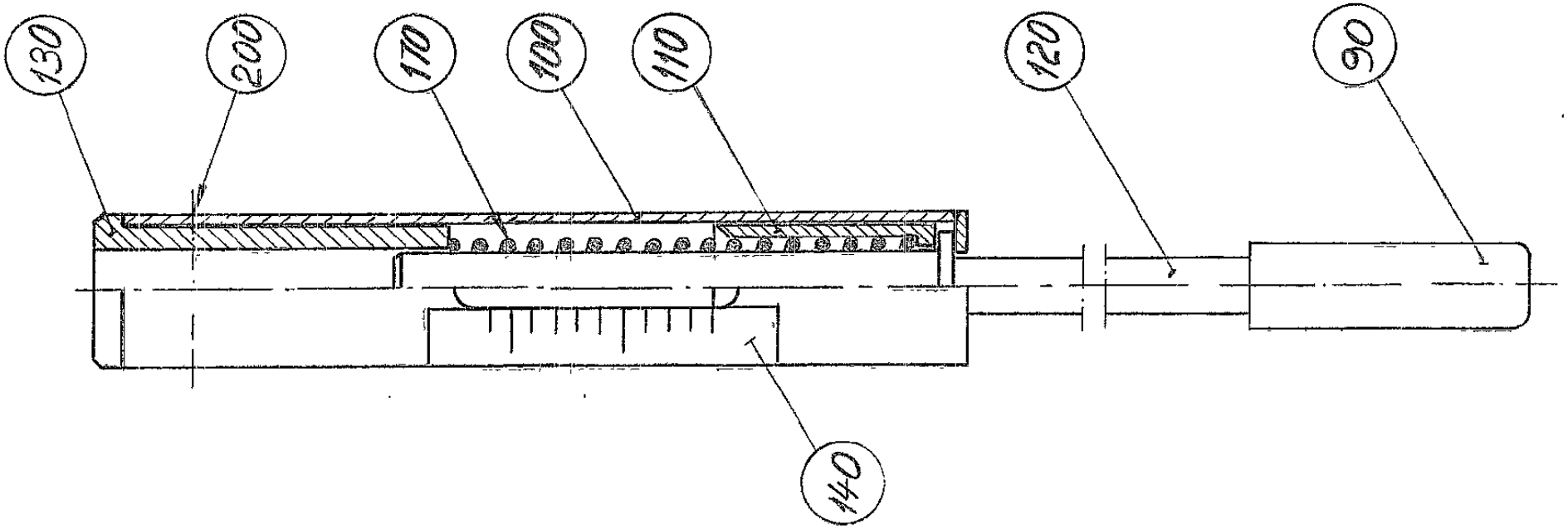
130
200
170
100
110
120
90
140

ECM: 71001 - 19970802
Group number: 74767-0102
Assembly Drawing: 74767-1_1_AA

Pos	Part No	UN	Qty	Description	Page No
-					
090	74912-0000		1	DOWEL	
100	74768-0000		1	SLEEVE	
110	74769-0000		1	SLEEVE	
120	74770-0000		1	ROD	
130	74771-0000		1	STEERING	
140	74772-0000		1	DIAL	
170	107000-0000		1	SPRING	
200	312125-0285		2	SCREW ISO 1207 M4X6 A4	

Pos	Part No	UN	Qty	Description	Page No

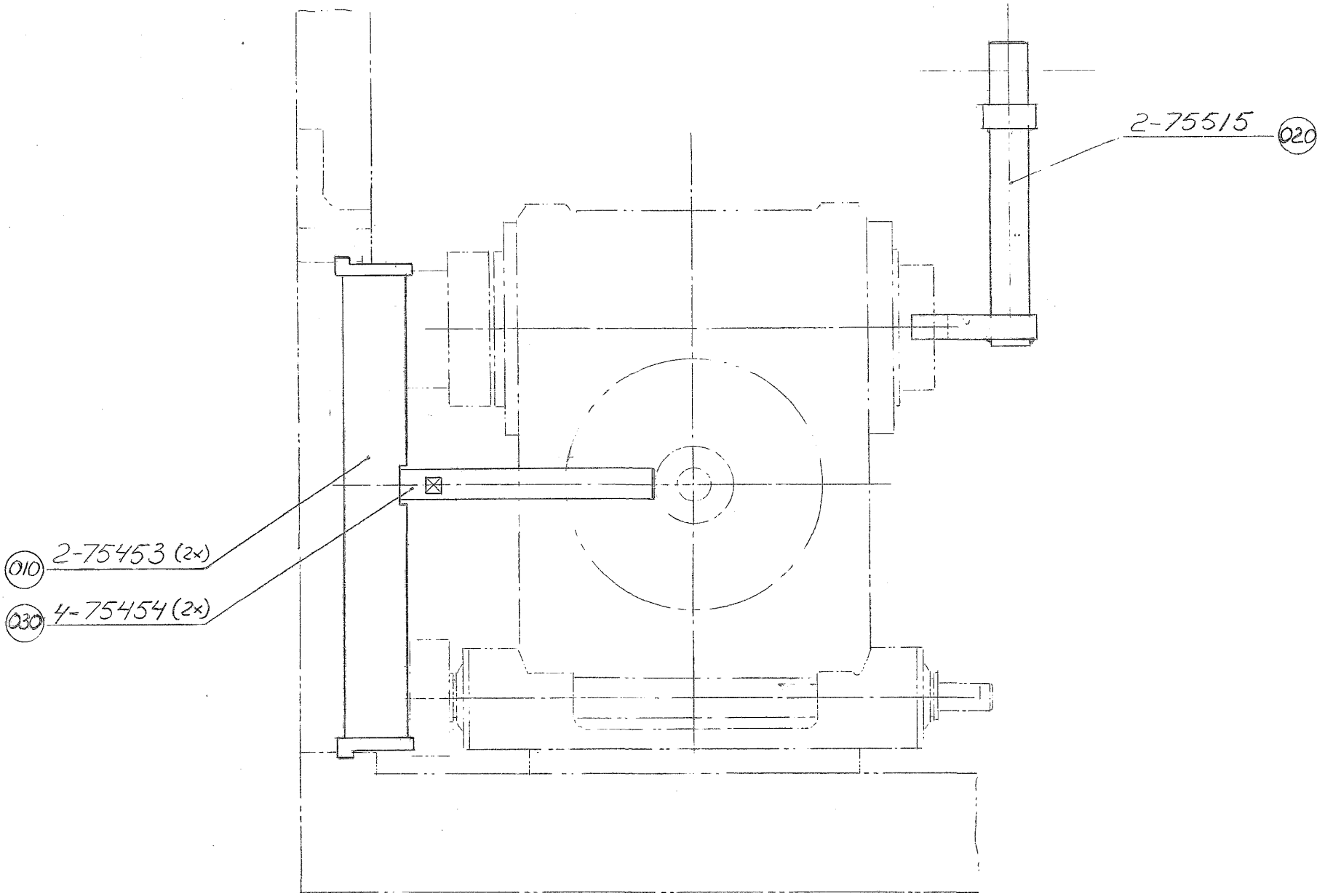
2-75515
020
010
2-75453 (2x)
030
4-75454 (2x)

ECM: 186183 - 20040928
Group number: 75466-0300
Assembly Drawing: 75466-1_1_AA

Pos	Part No	UN	Qty	Description	Page No
-					
010	75453-0000		2	HOLDER	
020	978421-0000		1	SETTING TEMPLATE	
030	75454-0000		2	ROD	

Pos	Part No	UN	Qty	Description	Page No

SETTING TOOL CURVES

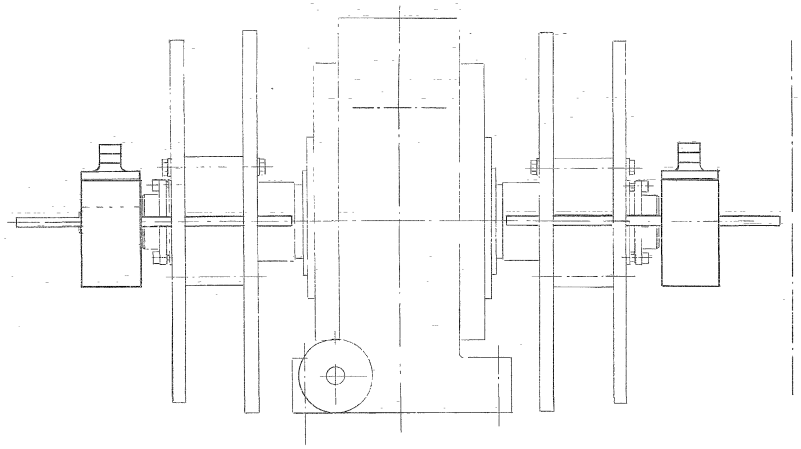

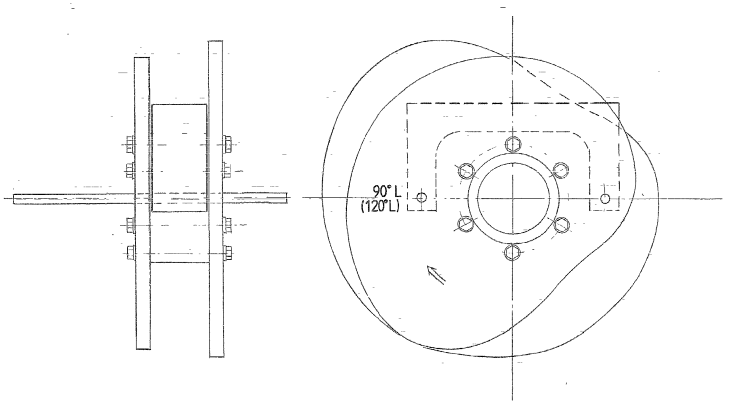

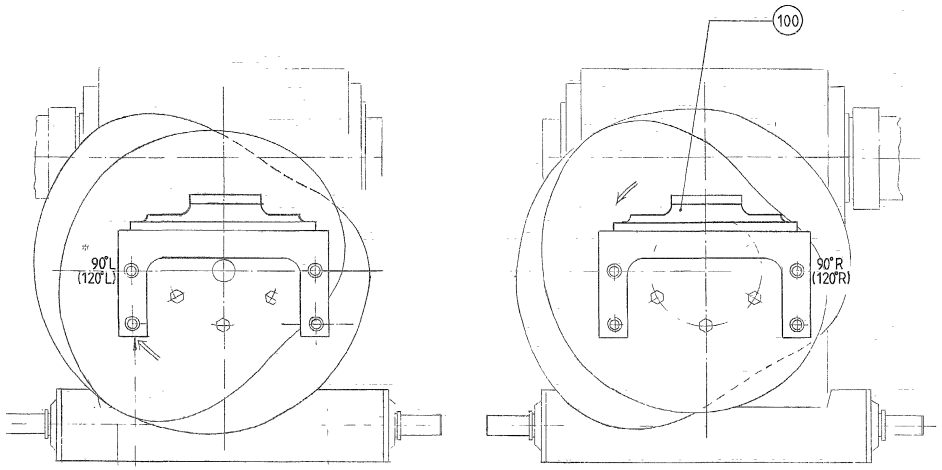

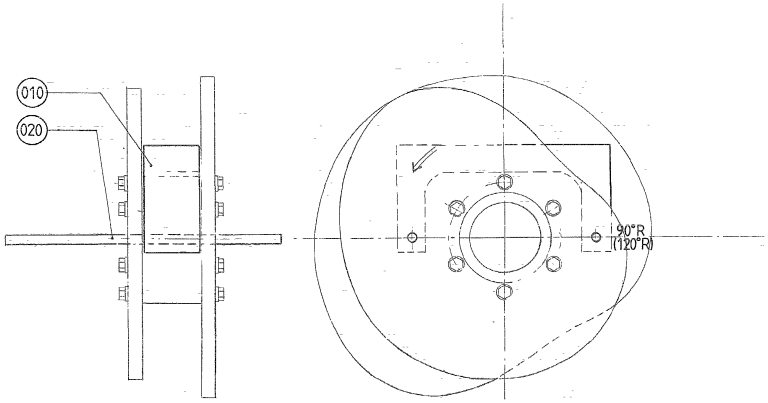

ECM: 186184 - 20040928
Group number: 75467-0200
Assembly Drawing: 75467-1_1_AA

Pos	Part No	UN	Qty	Description	Page No
-					
010	76338-0000		1	SETTING TOOL	
	90240-0113		*8*	*BEARING BUSHING W/O FLANGE*	
	76300-0000		*4*	*SLEEVE*	
020	75451-0000		2	GUIDE PIN	
100	783901-0106		1	SPIRIT LEVEL	

Pos	Part No	UN	Qty	Description	Page No

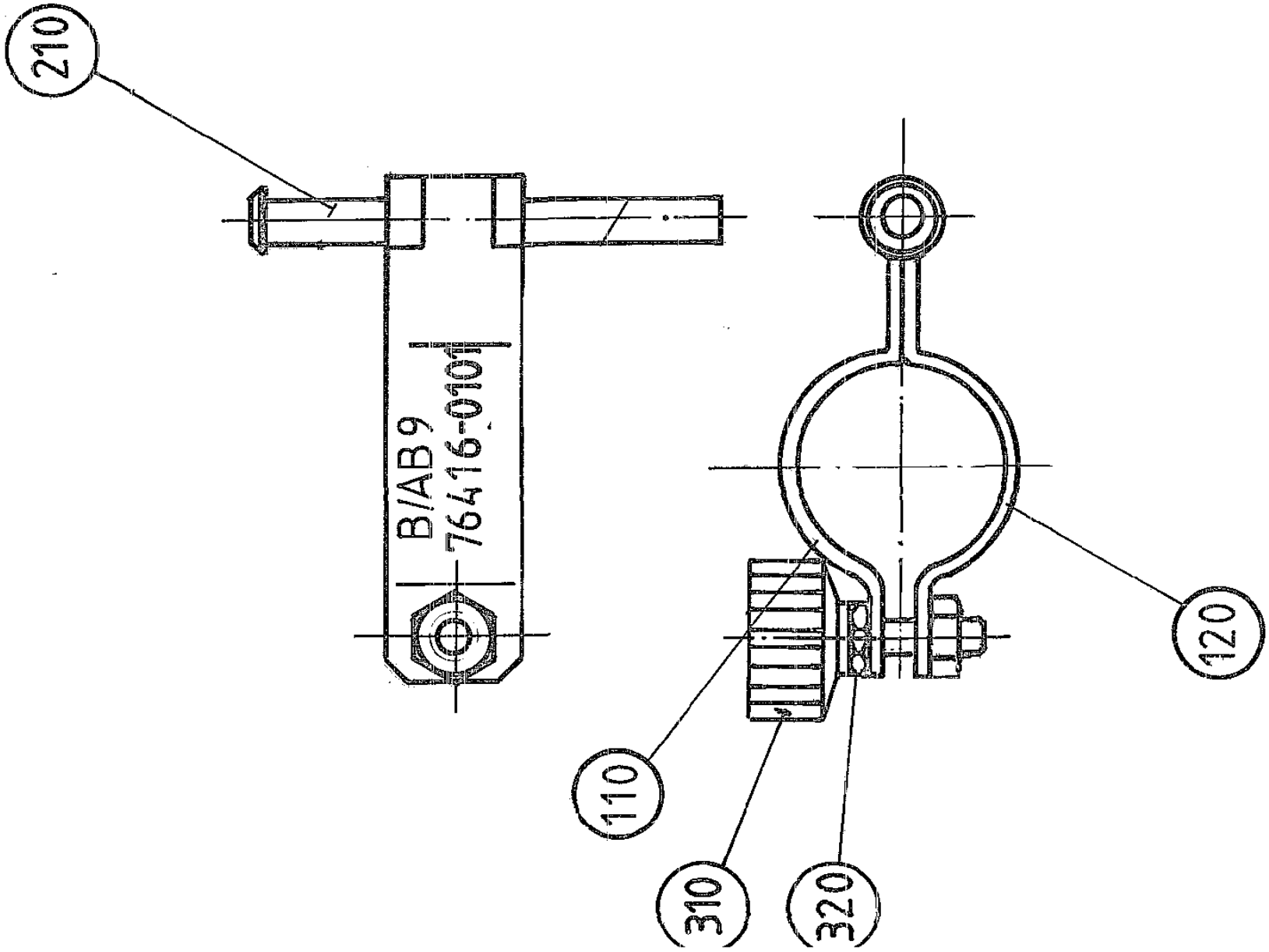
210
B/AB 9
76416-010
120
110
310
320

ECM: - -
Group number: 76416-0100
Assembly Drawing: 76416-1_1_AA

Pos	Part No	UN	Qty	Description	Page No
-					
110	76417-0000		1	CLAMPING PIECE	
120	76418-0000		1	CLAMPING PIECE	
210	76466-0000		1	SHAFT	
310	90051-0083		1	KNOB, EXTERNAL THREAD. NO. 8308-1321	
320	312601-0314		1	HEXAGON NUT, DIN 934 M5 8 FZB	

Pos	Part No	UN	Qty	Description	Page No

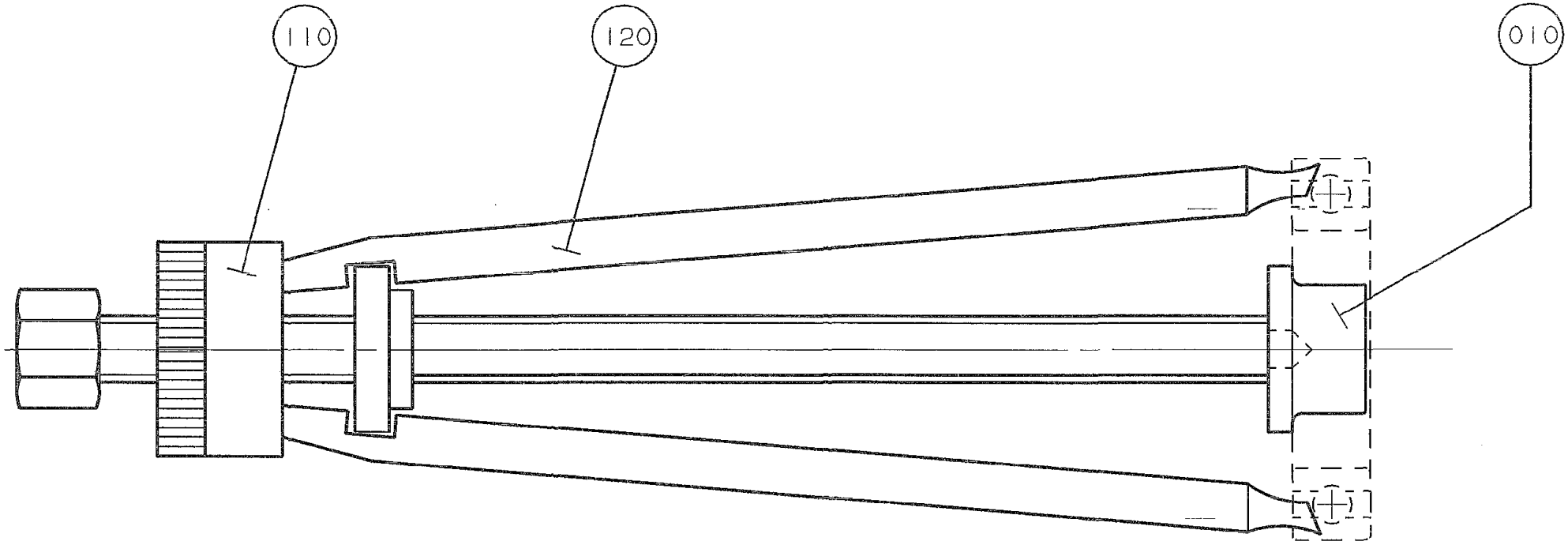
110
120
010

ECM: - -
Group number: 76175-0100
Assembly Drawing: 76175-1_1_AA

Pos	Part No	UN	Qty	Description	Page No
-					
010	76166-0000		1	STEER PLATE	
110	777603-0100		1	PULLER	
120	777603-0300		1	PULLER	

Pos	Part No	UN	Qty	Description	Page No

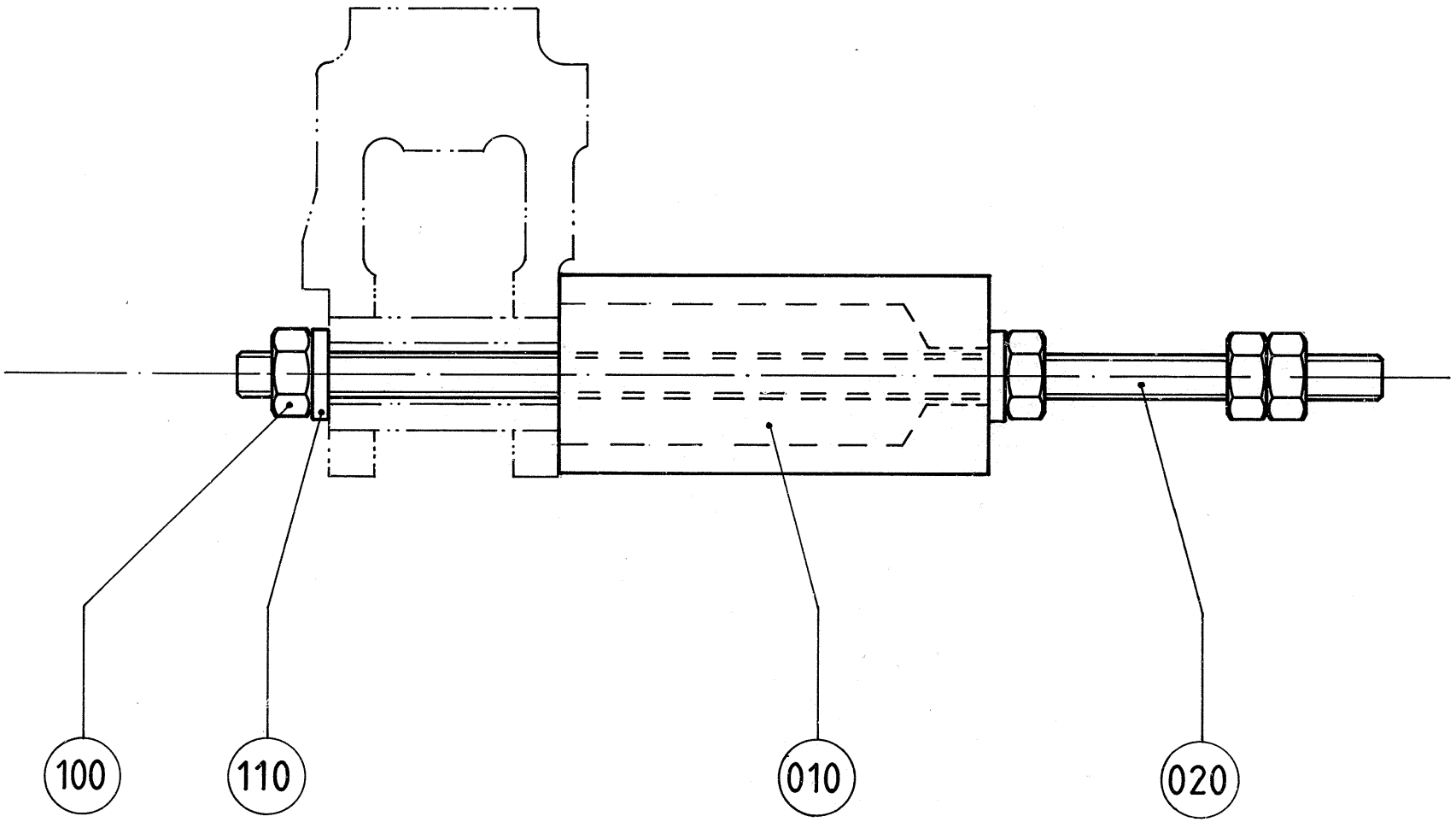
100
110
010
020

ECM: - -
Group number: 77165-0100
Assembly Drawing: 77165-1_1_AA

Pos	Part No	UN	Qty	Description	Page No
-					
010	77163-0000		1	SLEEVE	
020	77164-0000		1	STUD SCREW	
100	312605-0318		4	HEXAGON NUT, M6M M8 A280	
110	315115-0165		2	WASHER PLAIN, TBRB 8,4/16 H=3	

Pos	Part No	UN	Qty	Description	Page No

TOOL DISMOUNTING

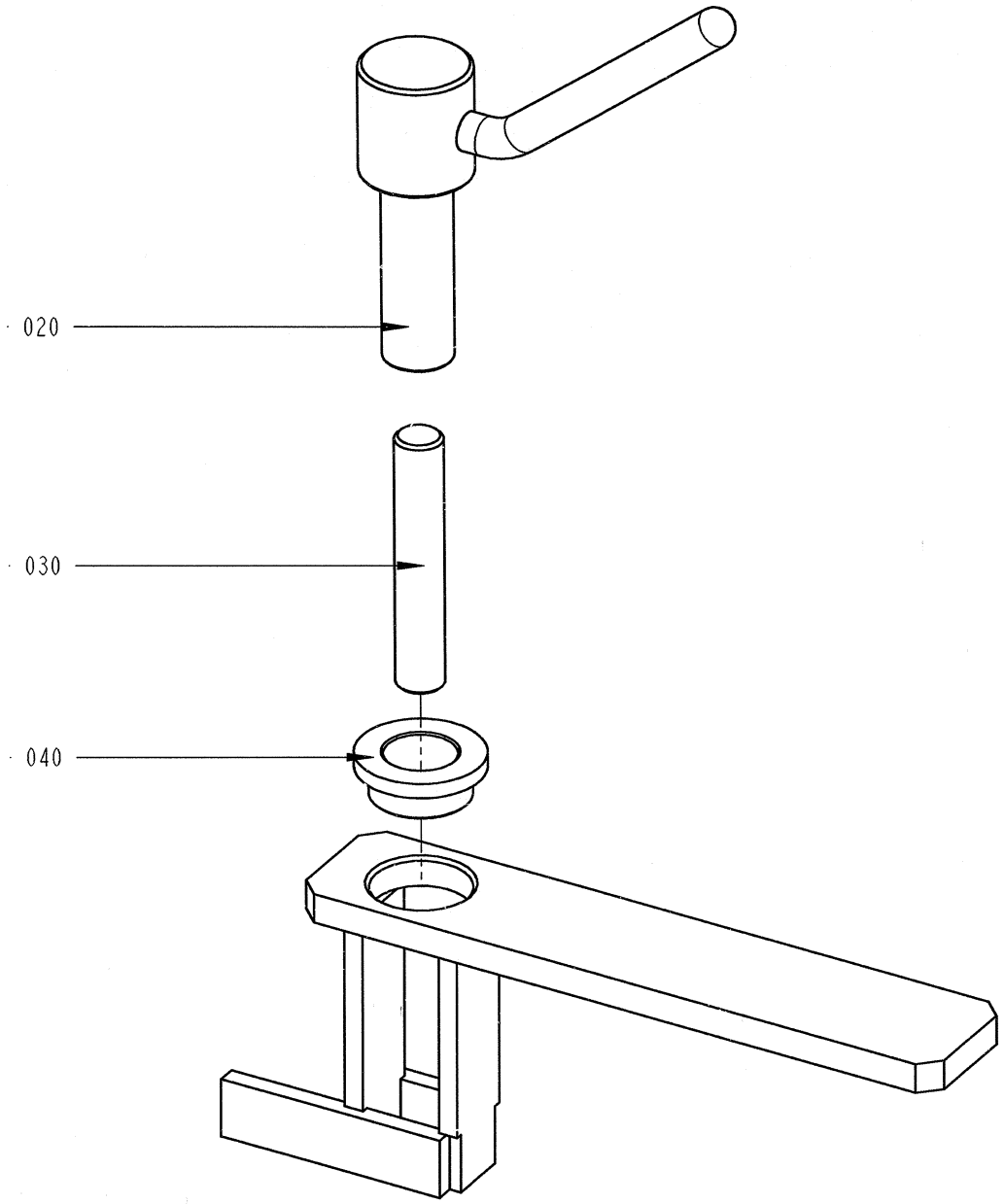

449969-1
ECN 93294

ECM: 6514 -
Group number: 449969-0100
Assembly Drawing: 449969-1_1_AA

Pos	Part No	UN	Qty	Description	Page No
-					
010	449970-0000		1	HOLDER	
020	449971-0000		1	SPINDLE	
030	312306-0546		1	SCREW ISO4026 M12X70 FZB	
040	321101-0222		1	FLANGE BUSHING, 18X25X12	

Pos	Part No	UN	Qty	Description	Page No

PRESSURE TEST EQUIPMENT

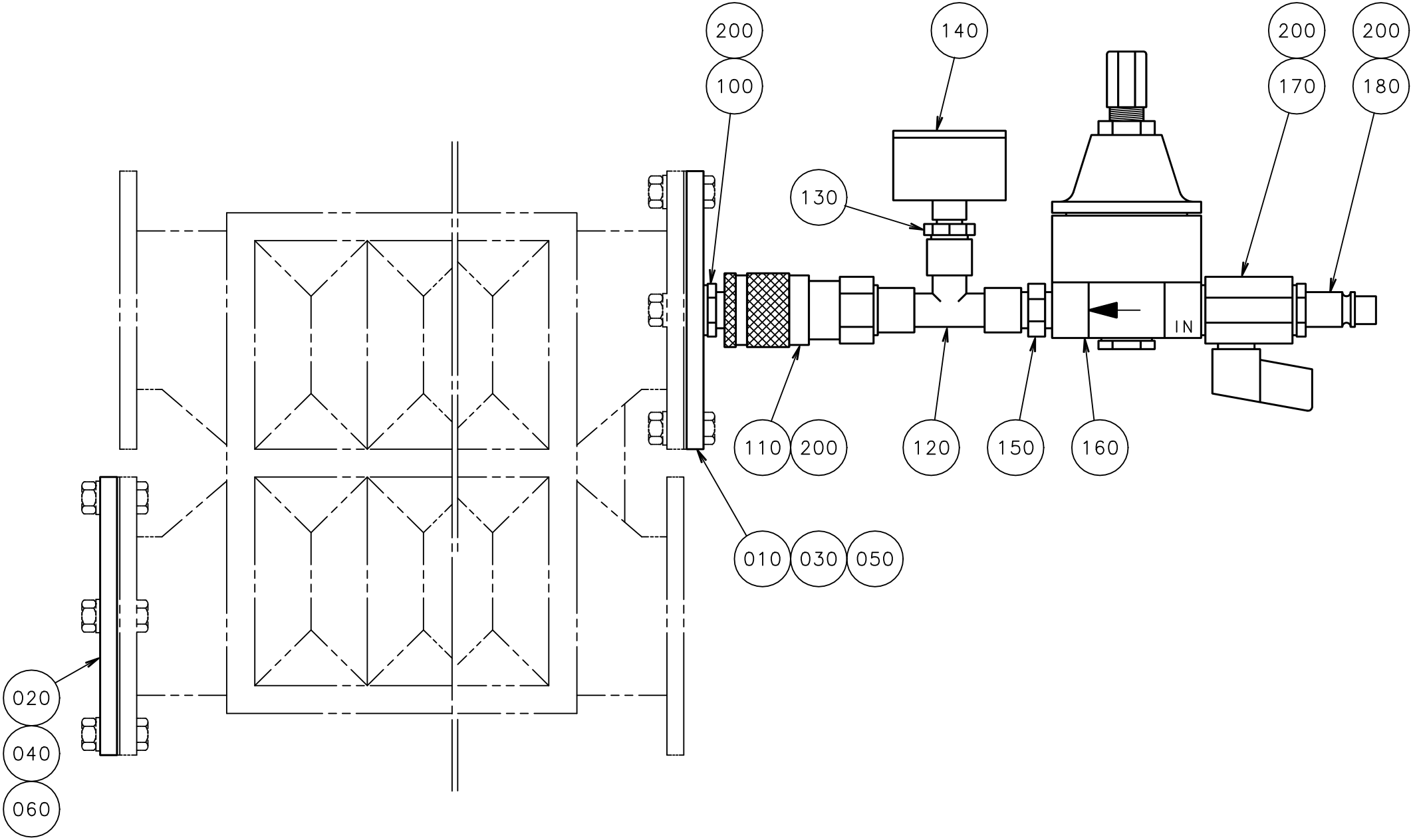

ECM: 70020 - 19960722
Group number: 565536-0100
Assembly Drawing: 565536-1_1_AB

Pos	Part No	UN	Qty	Description	Page No
-					
010	565534-0000		1	FLANGE	
020	565532-0000		1	BLANK-OFF FLANGE	
030	565535-0000		1	FLANGE	
040	565533-0000		1	BLANK-OFF FLANGE	
050	979951-0000		1	FLANGE	
060	979952-0000		1	BLANK FLANGE	
100	90163-0113		1	QUICK COUPLING, (M) LP-006-1-WR013-22	
110	90163-0016		1	QUICK COUPLING, (F) LP 006-0-WR013	
120	90140-0018		1	T-PIPE, INT. THREAD, 2003-1/4	
130	342701-0201		1	BUSHING,INT./EXT.G-THREAD G1/4"-G1/8"	
140	90043-0021		1	PRESSURE GAUGE 0-1 BAR 1/8" D=40	
150	342700-0110		1	NIPPLES,HEXAGON,EXT.G-THREAD G1/4"-G1/4"	
160	90113-0056		1	REGULATOR, 11-818-998	
170	90187-0045		1	BALL VALVE G1/4 CR PL	
180	90163-0007		1	CONNECTION	
200	315233-0110		4	WASHER CAPTIVE SEALING G1/4	
210	567372-0000		1	INSTRUCTION FOR USE	

Pos	Part No	UN	Qty	Description	Page No

TOOL FOR JAW OVERLOAD

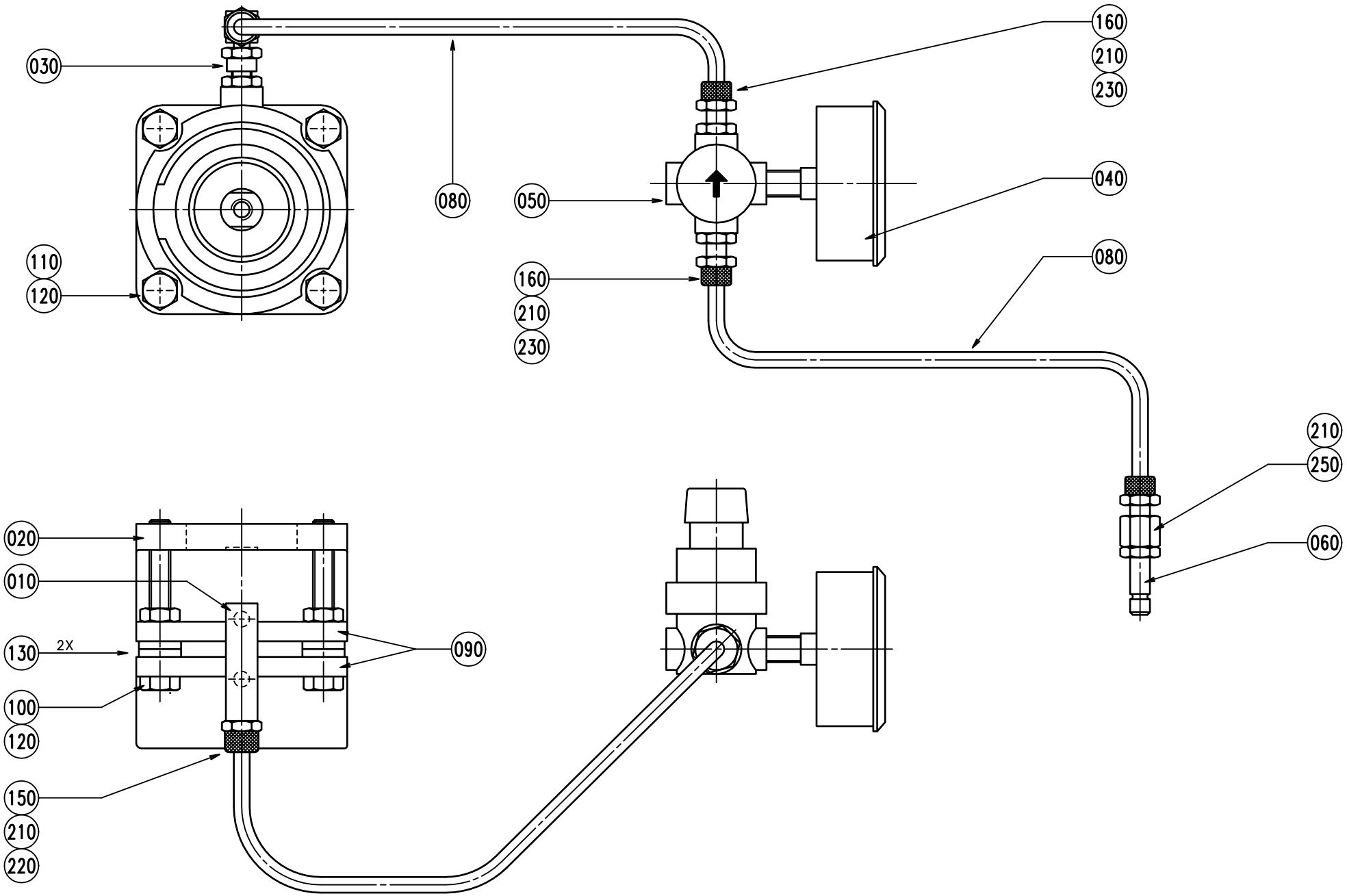

ECM: - -
Group number: 563740-0100
Assembly Drawing: 563740-1_1_AA

Pos	Part No	UN	Qty	Description	Page No
-					
010	563739-0000		1	ATTACHMENT	
020	567060-0000		1	SUPPORT	
030	90030-0184		2	CONN. STR. GA-6-G1/8	
040	90043-0006		1	PRESSURE GAUGE, 2041 D=63 MM	
050	90113-0021		1	AIR PRESSURE REGULATOR	
060	90163-0014		1	QUICK COUPLING, (M) LP-006-1-WR013	
080	90166-0117	MM	4500	HOSE 4/6 PVC BLUE	
090	90450-0160		2	CYLINDER, CLAMPING MODULE AV-63-10-B	
100	312104-0463		2	SCREW M6S M8X60H FZB	
110	312105-0457		2	SCREW M6S ISO 4014 M8X35 A480	
120	312605-0318		4	HEXAGON NUT, M6M M8 A280	
130	315111-0165		8	WASHER PLAIN, TBRB 8,4/16 H=3	
150	315233-0109		1	WASHER CAPTIVE SEALING G1/8	
160	315233-0110		2	WASHER CAPTIVE SEALING G1/4	
210	342903-0111		4	NUT WITH SPRING, 1723 6/4-M10X1	
220	342921-0113		1	STRAIGHT COUPLING,EXT.THREADED 6/4-G1/8"	
230	342921-0114		2	STRAIGHT COUPLING,EXT.THREADED 6/4-G1/4"	
250	342923-0114		1	STRAIGHT COUPL.,INT.THREADED 6/4-G1/4"	

Pos	Part No	UN	Qty	Description	Page No

This page is intentionally left blank.

ECM: 186186 - 20040928
Group number: 590509-0100
Assembly Drawing:

Pos	Part No	UN	Qty	Description	Page No
TBA 0100B, TBA 0125S					
030	590270-0000		1	RING	
TBA 0160S, TBA 0200S					
020	590269-0000		1	RING	
TBA 0180B, TBA 0200B, TBA 0236B, TBA 0284B, TBA 0250B, TBA 0300S, TBA 0330S					
040	590271-0000		1	RING	
TBA 0200M, TBA 0250S					
010	590268-0000		1	TEMPLATE	

Pos	Part No	UN	Qty	Description	Page No

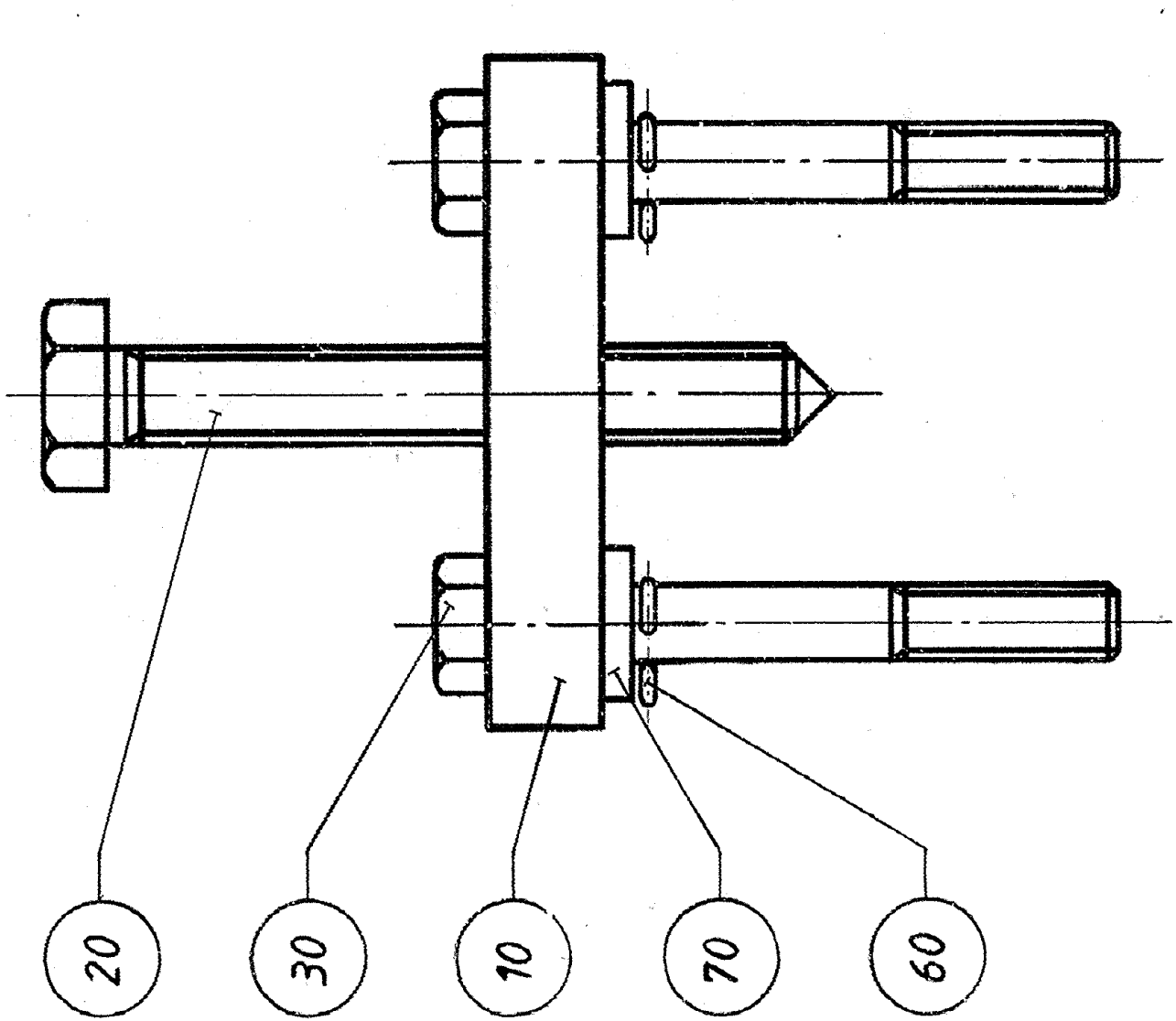
20
30
10
70
60

ECM: - -
Group number: 74305-0100
Assembly Drawing: 74305-1_1_AA

Pos	Part No	UN	Qty	Description	Page No
-					
010	74363-0000		1	FASTENING PLATE	
020	74364-0000		1	EXTRACTOR BOLT	
030	74365-0000		2	SCREW	
060	311411-0152		2	SPLIT PIN SP2X16RFR	
070	315115-0165		2	WASHER PLAIN, TBRB 8,4/16 H=3	

Pos	Part No	UN	Qty	Description	Page No

This page is intentionally left blank.

ECM: 254468 - 20060519
Group number: 2614370-0200
Assembly Drawing:

Pos	Part No	UN	Qty	Description	Page No
-					
010	2552941-0100		1	TOOL	**12-135**
010	2552943-0100		1	TOOL	**12-137**
020	2552944-0100		1	TOOL	**12-139**
030	2552946-0100		1	TOOL	**12-141**
040	2552947-0200		1	TOOL	**12-143**
060	2641477-0100		1	TOOL	**12-145**

Pos	Part No	UN	Qty	Description	Page No

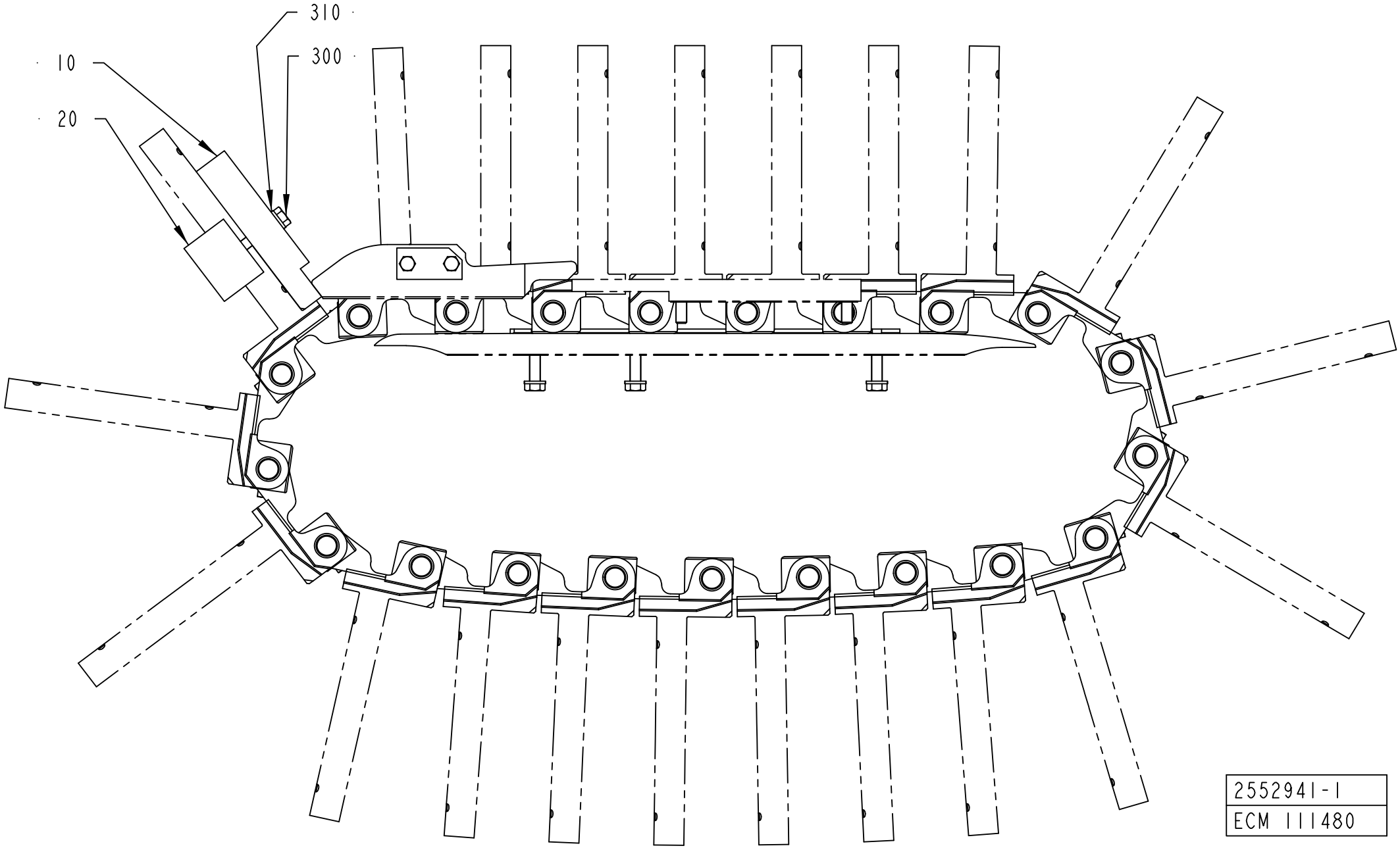
310
300
10
20
2552941-1
ECM 111480

ECM: 111571 - 20030820
Group number: 2552941-0100
Assembly Drawing: 2552941-1_1_AA

Pos	Part No	UN	Qty	Description	Page No
TBA 0100B, TBA 0125S, TBA 0160S, TBA 0200S					
020	1517518-0001		1	CLAMP	
TBA 0180B, TBA 0200B, TBA 0284B, TBA 0250B, TBA 0300S, TBA 0330S					
020	1517518-0002		1	CLAMP	
TBA 0200M, TBA 0250S					
020	1517518-0003		1	CLAMP	
Common Parts					
010	1517517-0000		1	TEMPLATE	
300	312105-0379		2	SCREW M6S ISO 4014 M6X45 A480	
310	315105-0153		2	WASHER BRB 6,4X12 RFR	

Pos	Part No	UN	Qty	Description	Page No

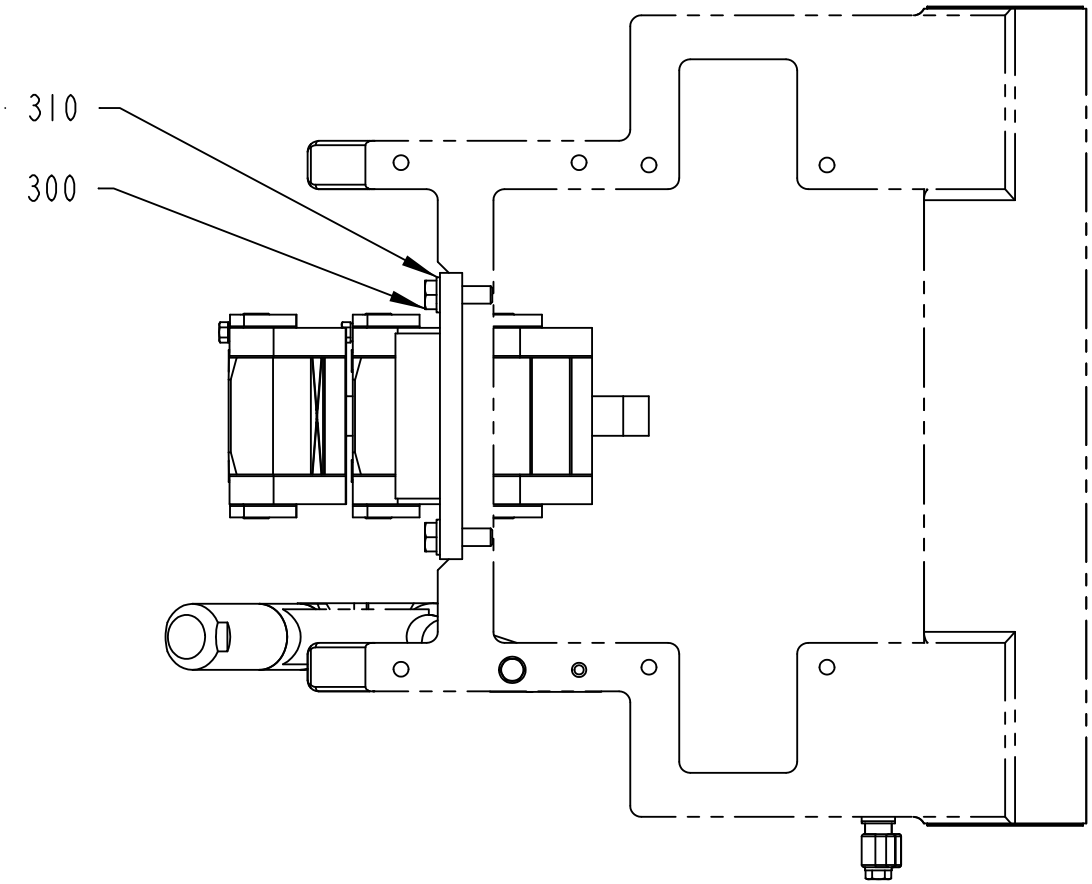
310
300

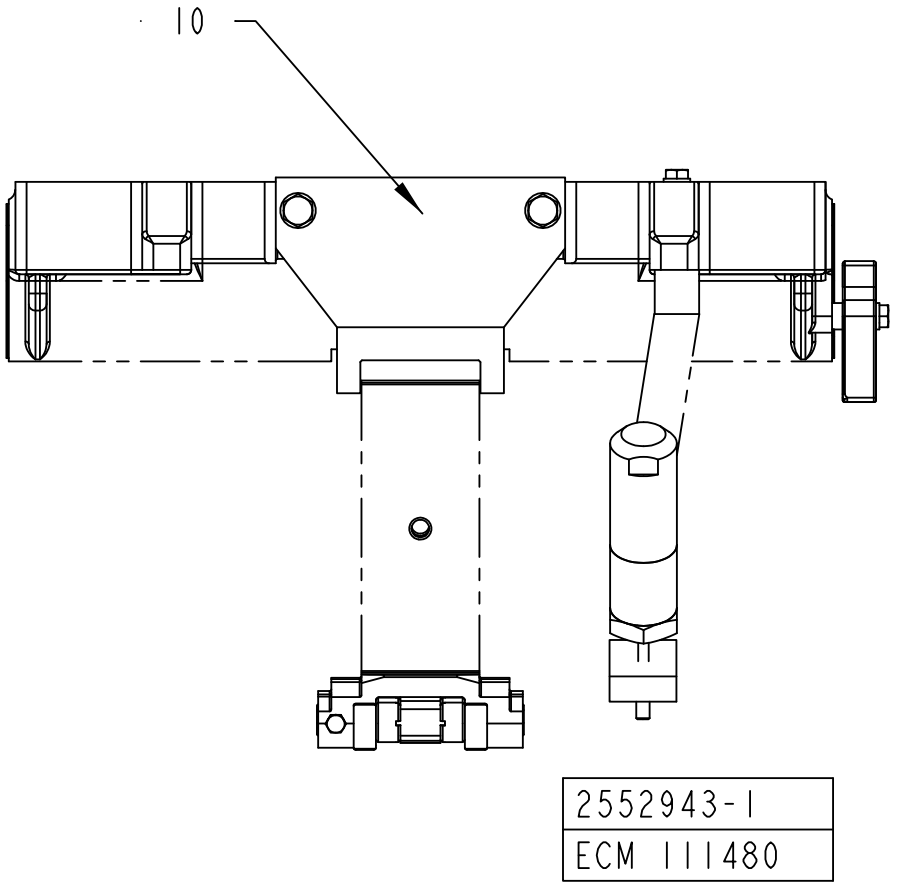
10
2552943-1
ECM 111480

ECM: 140959 - 20030821
Group number: 2552943-0100
Assembly Drawing: 2552943-1_1_AA

Pos	Part No	UN	Qty	Description	Page No
TBA 0100B					
010	1512453-0002		1	TEMPLATE	
TBA 0125S					
010	1512453-0003		1	TEMPLATE	
TBA 0160S					
010	1512453-0004		1	TEMPLATE	
TBA 0180B					
010	1512453-0005		1	TEMPLATE	
TBA 0200B					
010	1512453-0006		1	TEMPLATE	
TBA 0200M					
010	1512453-0007		1	TEMPLATE	
TBA 0200S					
010	1512453-0008		1	TEMPLATE	
TBA 0250B					
010	1512453-0009		1	TEMPLATE	
TBA 0250S					
010	1512453-0001		1	TEMPLATE	
TBA 0300S					
010	1512453-0011		1	TEMPLATE	
TBA 0330S					
010	1512453-0010		1	TEMPLATE	
Common Parts					
300	312105-0453		2	SCREW M6S ISO 4017 M8X25 A480	
310	315105-0165		2	WASHER BRB 8,4X16 RFR	

Pos	Part No	UN	Qty	Description	Page No

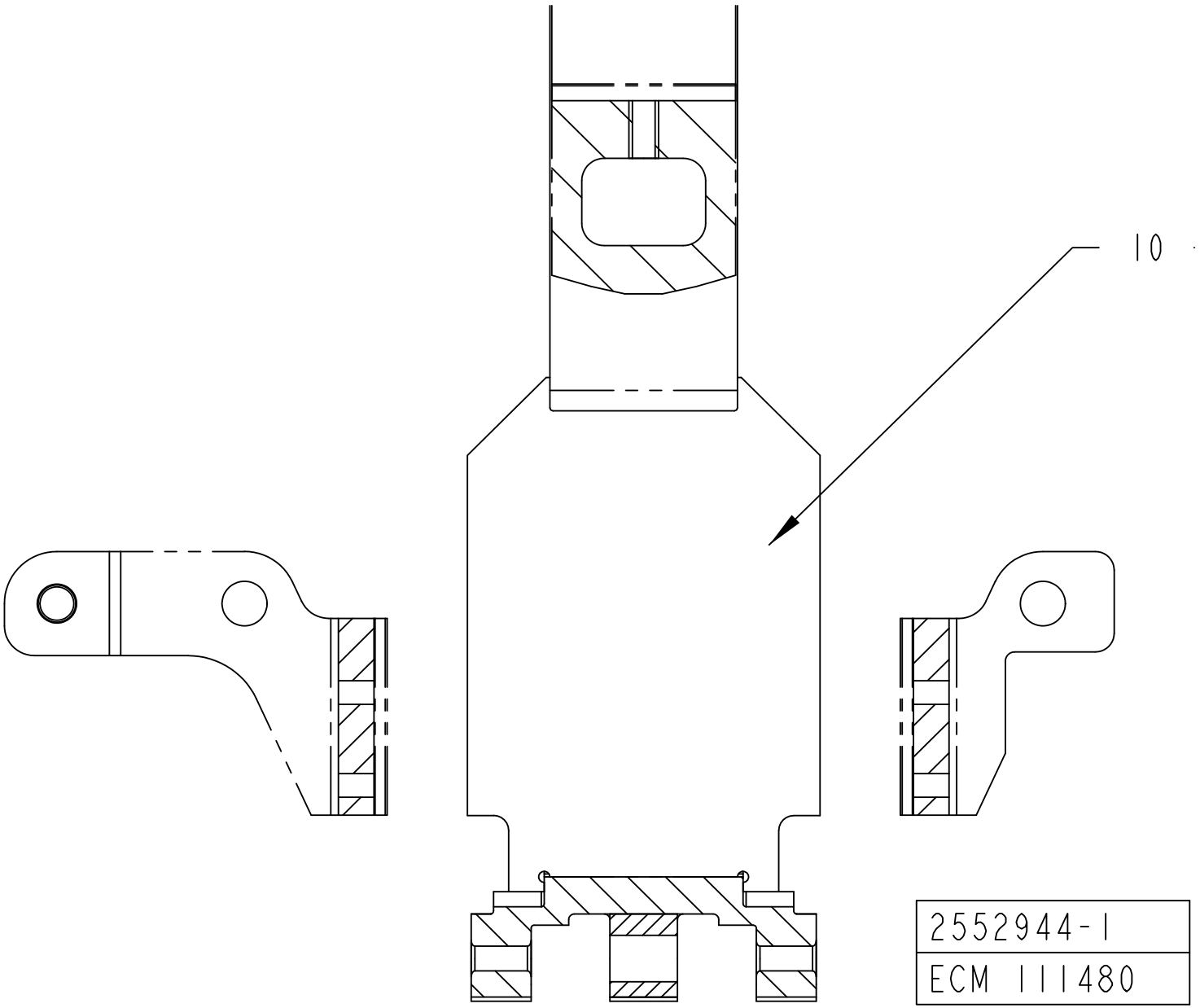
10
2552944-1
ECM 111480
A-A

ECM: 140960 - 20030821
Group number: 2552944-0100
Assembly Drawing: 2552944-1_1_AA

Pos	Part No	UN	Qty	Description	Page No
TBA 0100B					
010	2552945-0002		1	TEMPLATE	
TBA 0125S					
010	2552945-0003		1	TEMPLATE	
TBA 0160S					
010	2552945-0004		1	TEMPLATE	
TBA 0180B					
010	2552945-0005		1	TEMPLATE	
TBA 0200B					
010	2552945-0006		1	TEMPLATE	
TBA 0200M					
010	2552945-0007		1	TEMPLATE	
TBA 0200S					
010	2552945-0008		1	TEMPLATE	
TBA 0250B					
010	2552945-0009		1	TEMPLATE	
TBA 0250S					
010	2552945-0001		1	TEMPLATE	
TBA 0300S					
010	2552945-0011		1	TEMPLATE	
TBA 0330S					
010	2552945-0010		1	TEMPLATE	
Common Parts					
	2610198-0000		1	TOOL	
	2610197-0000		1	TOOL	

Pos	Part No	UN	Qty	Description	Page No

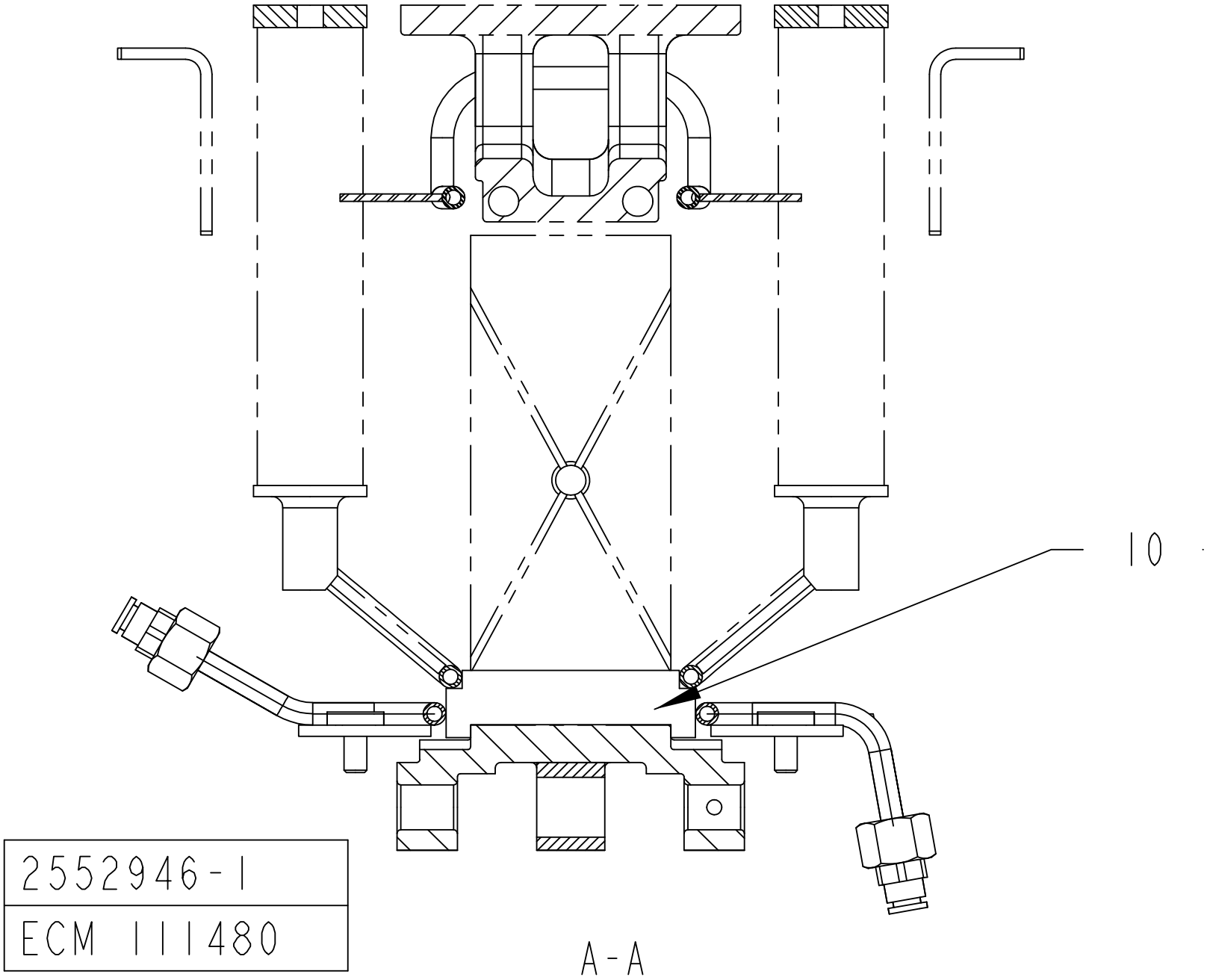
10
2552946-1
ECM 111480
A-A

ECM: 140961 - 20030821
Group number: 2552946-0100
Assembly Drawing: 2552946-1_1_AA

Pos	Part No	UN	Qty	Description	Page No
TBA 0100B, TBA 0125S					
010	1512450-0002		1	TEMPLATE	
TBA 0160S, TBA 0200S					
010	1512450-0004		1	TEMPLATE	
TBA 0180B, TBA 0200B, TBA 0284B, TBA 0250B, TBA 0300S, TBA 0330S					
010	1512450-0003		1	TEMPLATE	
TBA 0200M, TBA 0250S					
010	1512450-0001		1	TEMPLATE	

Pos	Part No	UN	Qty	Description	Page No

This page is intentionally left blank.

ECM: 254469 - 20060519
Group number: 2552947-0200
Assembly Drawing:

Pos	Part No	UN	Qty	Description	Page No
TBA 0100B, TBA 0125S					
010	2800345-0002		1	TEMPLATE	
TBA 0160S, TBA 0200S					
010	2800345-0004		1	TEMPLATE	
TBA 0180B, TBA 0200B, TBA 0284B, TBA 0250B, TBA 0300S, TBA 0330S					
010	2800345-0003		1	TEMPLATE	
TBA 0200M, TBA 0250S					
010	2800345-0001		1	TEMPLATE	

Pos	Part No	UN	Qty	Description	Page No

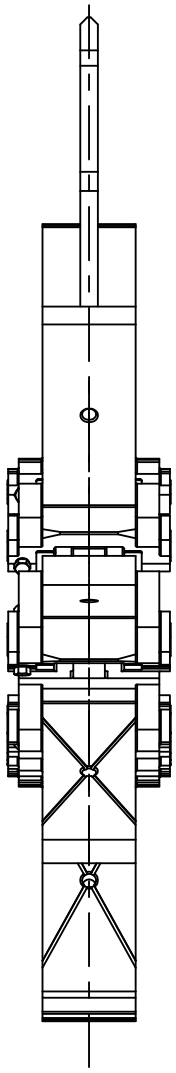

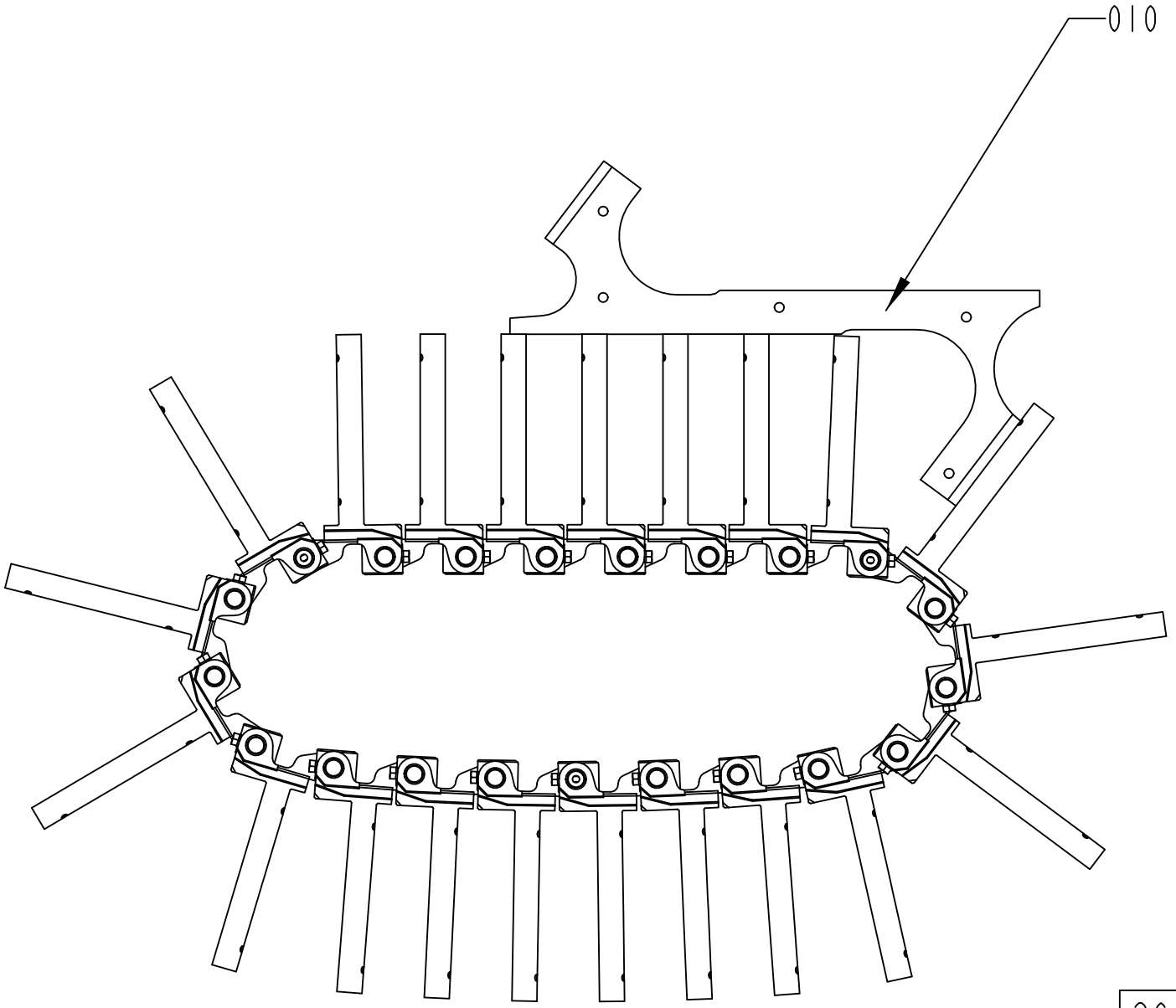

2641477-1
ECM 140998

ECM: 140998 - 20030821
Group number: 2641477-0100
Assembly Drawing: 2641477-1_1_AA

Pos	Part No	UN	Qty	Description	Page No	Pos	Part No	UN	Qty	Description	Page No
-											
010	76128-0000		1	TEMPLATE							

This page is intentionally left blank.

ECM: 266655 - 20060519
Group number: 77094-0400
Assembly Drawing:

Pos	Part No	UN	Qty	Description	Page No
0100B, 0125S					
240	76180-0000		1	TEMPLATE	
0160S, 0200S					
250	76181-0000		1	TEMPLATE	
0180B, 0200B, 0236B, 0250B, 0284B, 0300S, 0330S					
050	76580-0100		1	SETTING TOOL FINAL FOLDER	**12-149**
260	76499-0000		1	TEMPLATE	
0200M, 0250S					
265	574455-0000		1	TEMPLATE	
Common Parts					
010	76200-0100		1	CONVEYOR SECTION	**12-151, 12-153**
040	76447-0200		1	TEMPLATE	**12-155**
060	76460-0100		1	SETTING TOOL CURVES	**12-157**
080	449969-0100		1	TOOL DISMOUNTING	**12-123**
100	589885-0100		1	TEMPLATE HOUSE/BENDING ROLLER	**12-159**
120	589889-0100		1	TEMPLATE LEVELING MACHINE	**12-161**
130	590273-0100		1	TEMPLATE VOLUME CAM	**12-163**
140	590507-0100		1	TEMPLATE FOR CENTERING RING	**12-165**
150	1296900-0100		1	LIFTING UNIT (RAILING)	**12-167**
280	2566433-0100		1	TEMPLATE PT19-020V	**12-169**
290	2552947-0200		1	TOOL	**12-143**

Pos	Part No	UN	Qty	Description	Page No

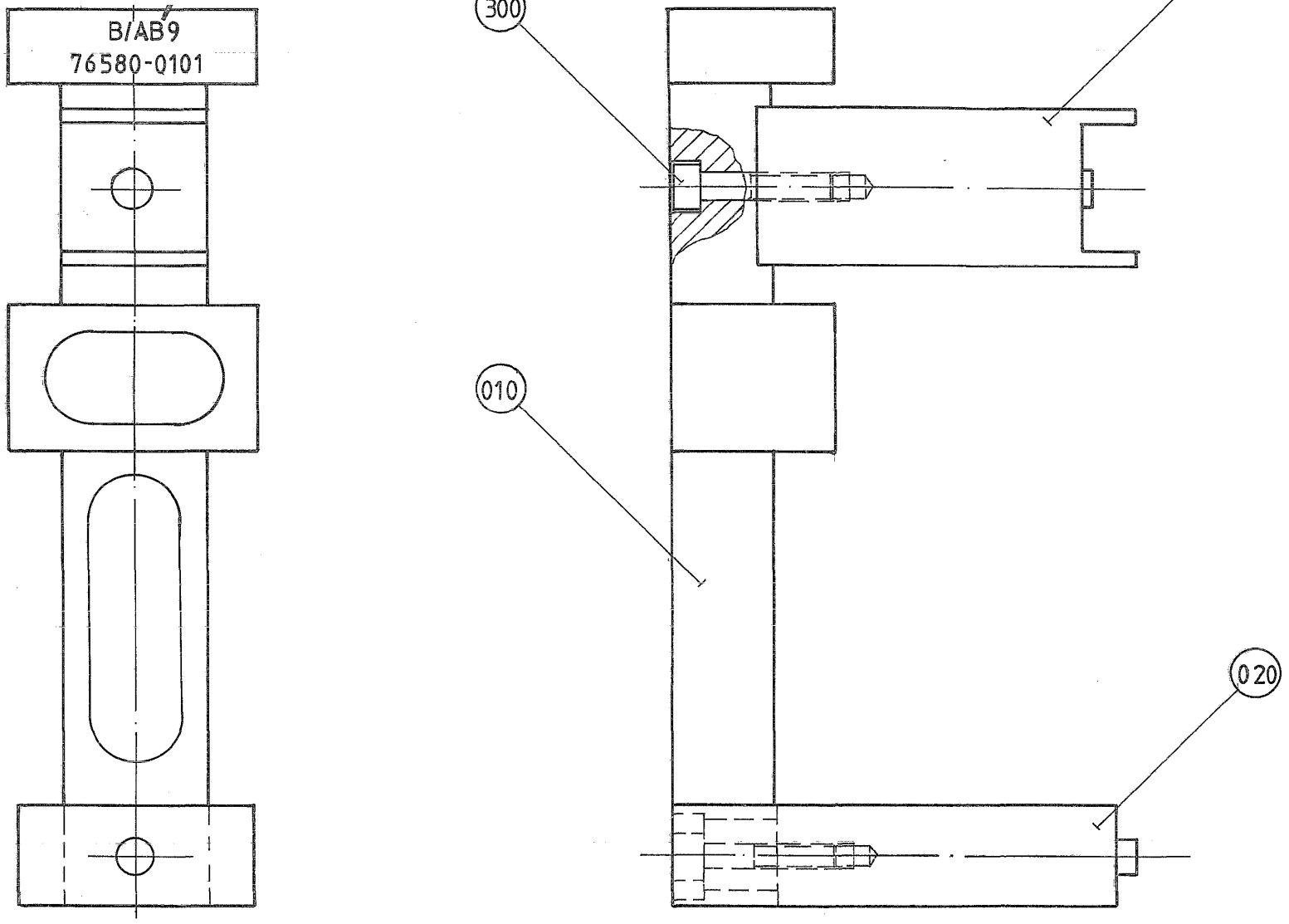
B/AB9
76580-0101
300
030
010
020

ECM: - -
Group number: 76580-0100
Assembly Drawing: 76580-1_1_AA

Pos	Part No	UN	Qty	Description	Page No
-					
010	76581-0000		1	VERTICAL PILLAR	
020	76582-0000		1	BLOCKING PIECE	
030	76583-0000		1	BLOCKING PIECE	
300	312115-0457		2	SCREW ISO4762 M8X35 A4 80	

Pos	Part No	UN	Qty	Description	Page No

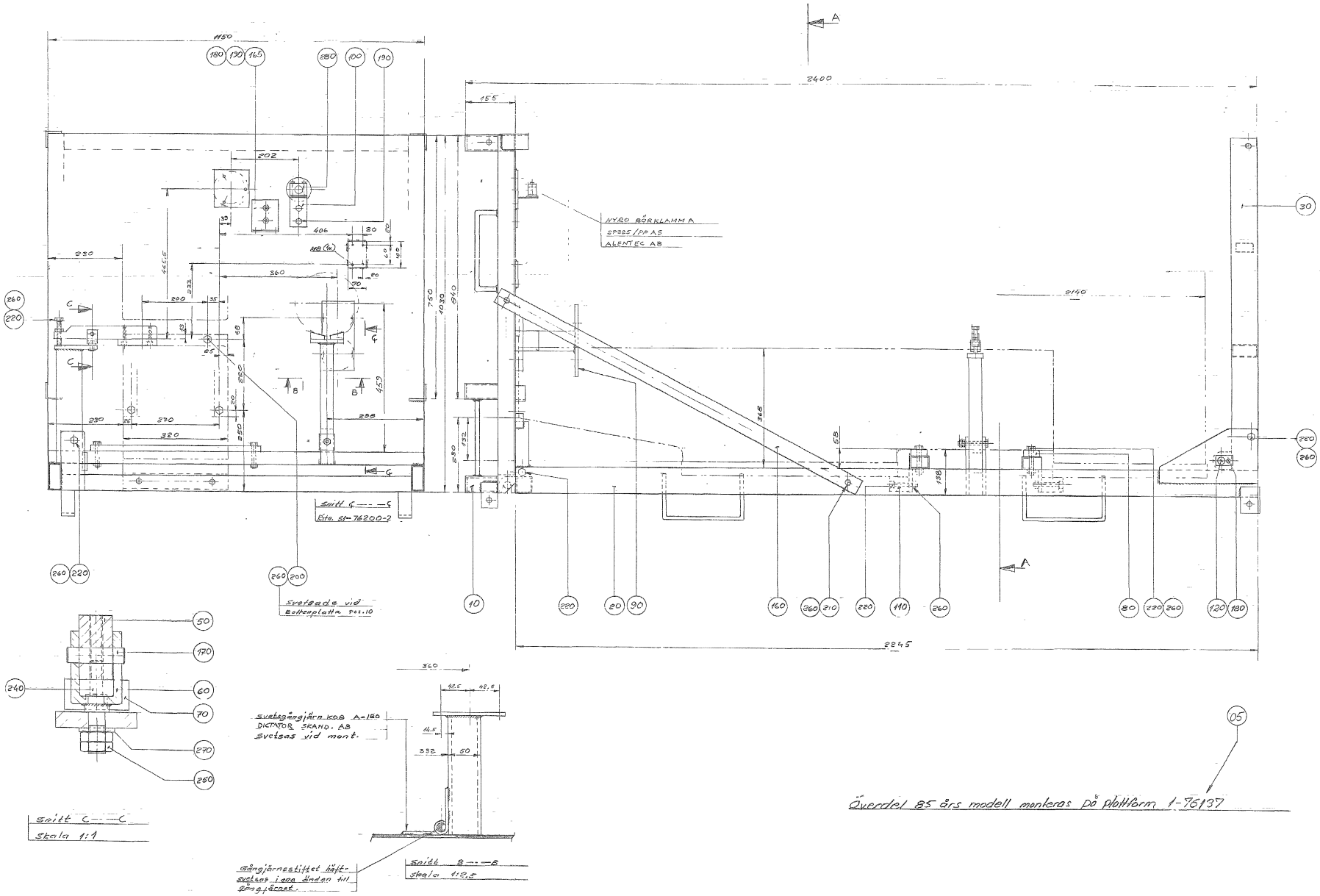
HYRO BÄRKLAMM A
CP325/PP A5
ALENTEC AB
Snitt C——C
Skala 1:1
Svetsgångjärn KOB A=180
DICTATOR SKAND. AB
Svetsas vid mont.
Gångjärnsstiftet höft-
svetsas i ena ändan till
gångjärnet.
Snitt B——B
Skala 1:2,5
Svetsade vid
Bottenplatta Pos.10
Snitt C——C
Ritn. 81-76200-2
Överdel 85 års modell monteras på plattform 1-76137

ECM: - -
Group number: 76200-0100
Assembly Drawing: 76200-1_1_AA

This list covers pages from 12-150 to 12-153

Pos	Part No	UN	Qty	Description	Page No
-					
005	76137-0000		1	PLATFORM TRANSPORT	
010	76201-0000		1	BOTTOM PLATE	
020	76202-0000		1	FRAME	
030	76203-0000		1	SUPPORT LEG	
040	76204-0000		1	ARM	
050	76205-0000		1	ARM	
060	76206-0000		1	JOINTED ARM	
070	76207-0000		1	STOPPER	
080	76208-0000		2	CUSHION	
090	76209-0000		1	SUPPORT	
100	76210-0000		1	BRACKET	
110	76211-0000		2	SUPPORT	
120	76212-0000		2	SHAFT	
130	76213-0000		2	SUPPORT	
140	76214-0000		1	ARM	
150	76215-0000		1	WASHER	
160	76216-0000		2	STRUT	
165	76217-0000		1	SUPPORT	
170	311102-0460		1	PARALLEL PIN ISO 2338 10M6X35 ST	
180	312101-0367		6	SCREW M6S M6X14 FZB	
190	312101-0449		2	SCREW M6S M8X16 FZB	
200	312101-0536		4	SCREW M6S M12X30 FZB	
210	312101-0544		4	SCREW M6S M12X60 FZB	
220	312101-0548		16	SCREW M6S M12X80 FZB	
230	312111-0451		6	SCREW HEX.SOCK.HD.MC6S-TT 8X20 88 FZB	
240	312111-0491		1	SCREW HEX.SOCK.HD.MC6S-TT 10X20 88 FZ	
250	312601-0320		1	HEXAGON NUT, M10 8 FZB, ISO 4032	
260	312601-0322		2	HEXAGON NUT, DIN 934 M12 8 FZB	
270	315105-0173		1	WASHER BRB 10,5X22 RFR	

Pos	Part No	UN	Qty	Description	Page No

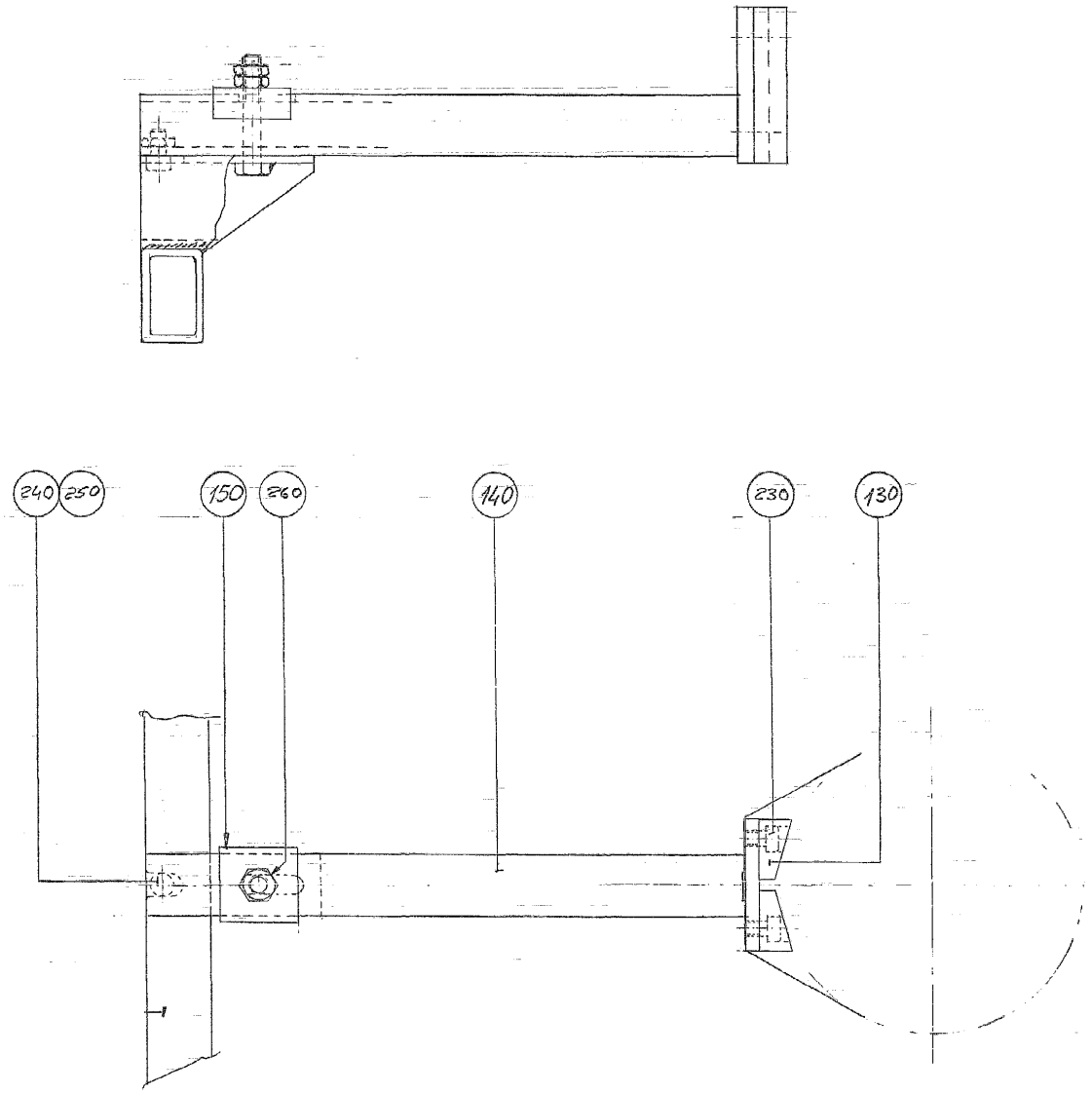
240
250
150
260
140
230
130

ECM: - -
Group number: 76200-0100
Assembly Drawing: 76200-2_1_AA

This list covers pages from 12-150 to 12-153

Pos	Part No	UN	Qty	Description	Page No
-					
005	76137-0000		1	PLATFORM TRANSPORT	
010	76201-0000		1	BOTTOM PLATE	
020	76202-0000		1	FRAME	
030	76203-0000		1	SUPPORT LEG	
040	76204-0000		1	ARM	
050	76205-0000		1	ARM	
060	76206-0000		1	JOINTED ARM	
070	76207-0000		1	STOPPER	
080	76208-0000		2	CUSHION	
090	76209-0000		1	SUPPORT	
100	76210-0000		1	BRACKET	
110	76211-0000		2	SUPPORT	
120	76212-0000		2	SHAFT	
130	76213-0000		2	SUPPORT	
140	76214-0000		1	ARM	
150	76215-0000		1	WASHER	
160	76216-0000		2	STRUT	
165	76217-0000		1	SUPPORT	
170	311102-0460		1	PARALLEL PIN ISO 2338 10M6X35 ST	
180	312101-0367		6	SCREW M6S M6X14 FZB	
190	312101-0449		2	SCREW M6S M8X16 FZB	
200	312101-0536		4	SCREW M6S M12X30 FZB	
210	312101-0544		4	SCREW M6S M12X60 FZB	
220	312101-0548		16	SCREW M6S M12X80 FZB	
230	312111-0451		6	SCREW HEX.SOCK.HD.MC6S-TT 8X20 88 FZB	
240	312111-0491		1	SCREW HEX.SOCK.HD.MC6S-TT 10X20 88 FZ	
250	312601-0320		1	HEXAGON NUT, M10 8 FZB, ISO 4032	
260	312601-0322		2	HEXAGON NUT, DIN 934 M12 8 FZB	
270	315105-0173		1	WASHER BRB 10,5X22 RFR	

Pos	Part No	UN	Qty	Description	Page No

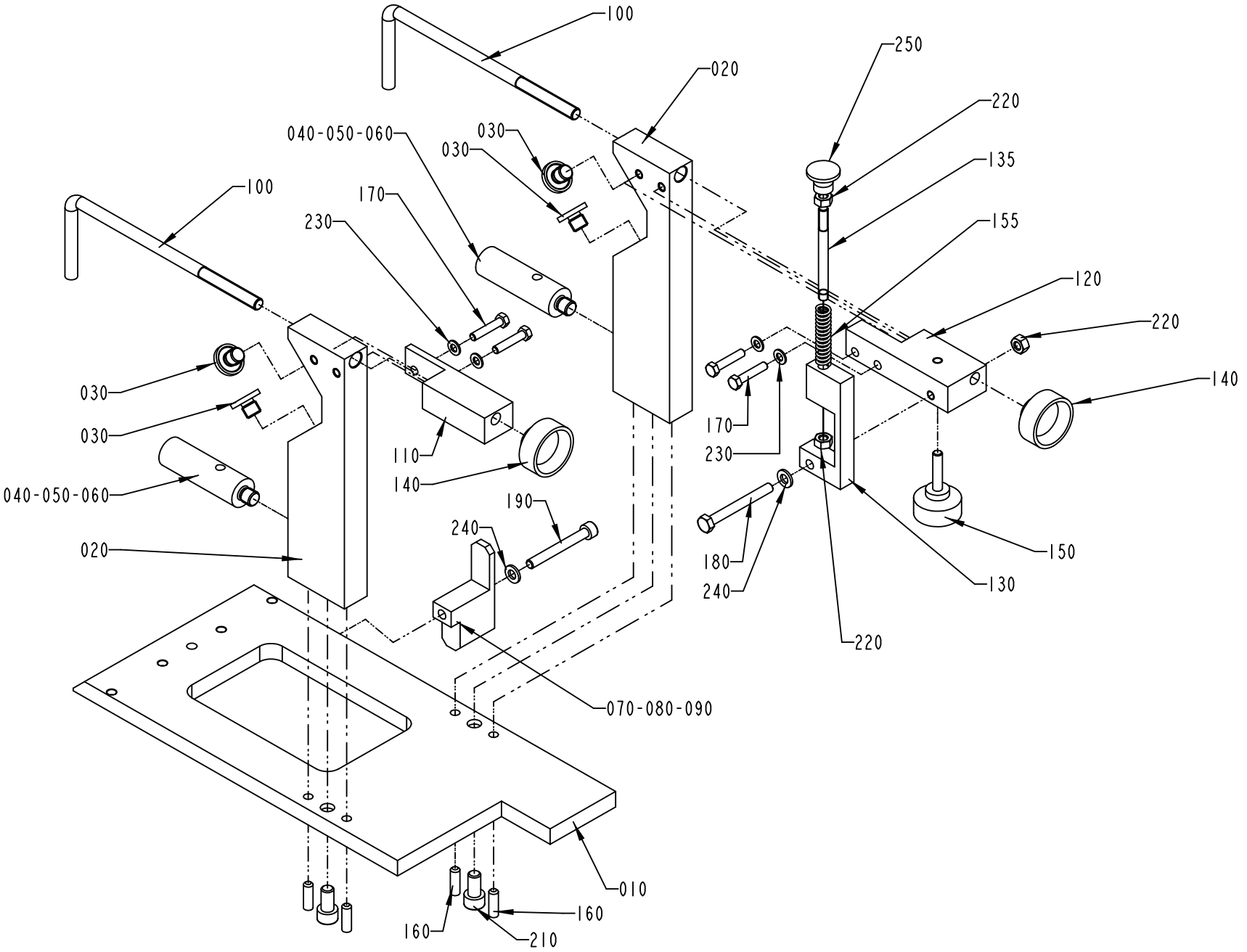

S-76447-2
ECN 73036

ECM: 73036 - 19991012
Group number: 76447-0200
Assembly Drawing: 76447-2_1_AB

Pos	Part No	UN	Qty	Description	Page No
-					
010	1334797-0000		1	PLATE	
020	1334798-0000		2	BLOCK	
030	1499674-0000		4	SPACER	
040	1334799-0002		2	SPACER	
050	1334799-0003		2	SPACER	
060	1334799-0004		2	SPACER	
070	1334800-0000		1	SUPPORT	
080	1334801-0000		1	SUPPORT	
090	1334802-0000		1	SUPPORT	
100	1334803-0000		2	HOOK	
110	1334804-0000		1	SPACER	
120	1334839-0000		1	SPACER	
130	1334840-0000		1	SUPPORT	
135	1511557-0000		1	STUD SCREW	
140	90051-0040		2	KNOB, INTERNAL THREAD, NO. 8308-0627	
150	90051-0084		1	KNOB, EXTERNAL THREAD. NO. 8308-1534	
155	90335-0149		1	COMP. SPRING, 1,6X9,6X35,5	
160	311103-0353		4	PARALLEL PIN ISO 2338 6M6X20 A1	
170	312105-0333		4	SCREW M6S ISO 4017 M5X25 A480	
180	312105-0381		1	SCREW M6S ISO 4014 M6X55 A480	
190	312115-0380		1	SCREW ISO4762 M6X50 A4 80	
210	312115-0449		2	SCREW ISO4762 M8X16 A4 80	
220	312605-0316		3	HEXAGON NUT, M6M M6 A280	
230	315105-0146		4	WASHER BRB 5,3X10 RFR	
240	315105-0153		2	WASHER BRB 6,4X12 RFR	
250	318873-0103		1	KNOB, CIRKUL, THREADED BUSH, M6 21X17 MM	

Pos	Part No	UN	Qty	Description	Page No

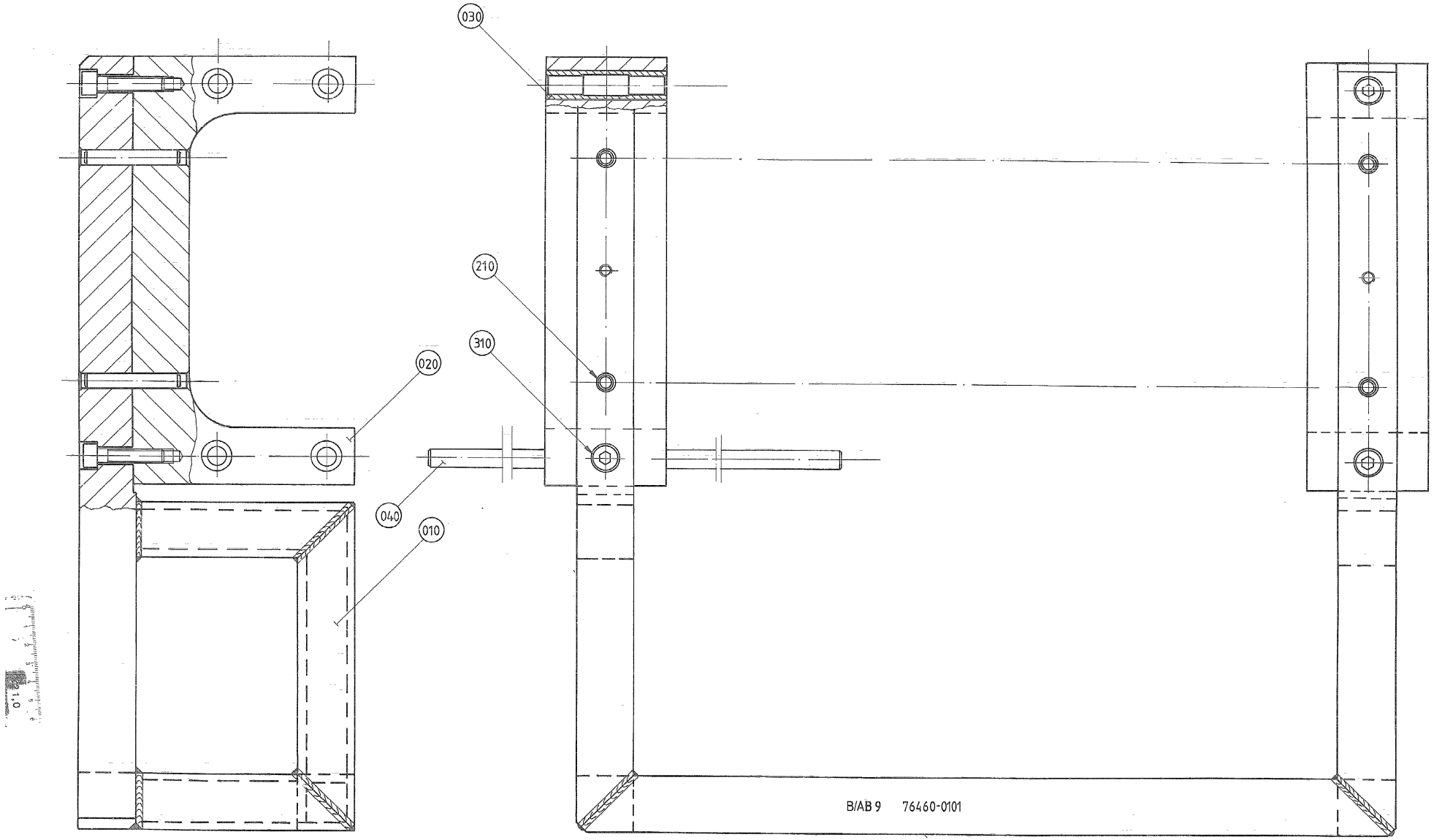
030
210
310
020
040
010
B/AB 9 76460-0101

ECM: - -
Group number: 76460-0100
Assembly Drawing: 76460-1_1_AA

Pos	Part No	UN	Qty	Description	Page No
-					
010	76461-0000		1	SUPPORT ARM	
020	76462-0000		2	TEMPLATE	
030	76463-0000		8	BUSHING	
040	75451-0000		4	GUIDE PIN	
210	311102-0413		4	PARALLEL PIN ISO 2338 8M6X50 ST	
310	312111-0457		4	SCREW HEX.SOCK.HD.MC6S-TT 8X35 88 FZB	

Pos	Part No	UN	Qty	Description	Page No

TEMPLATE HOUSE/BENDING ROLLER

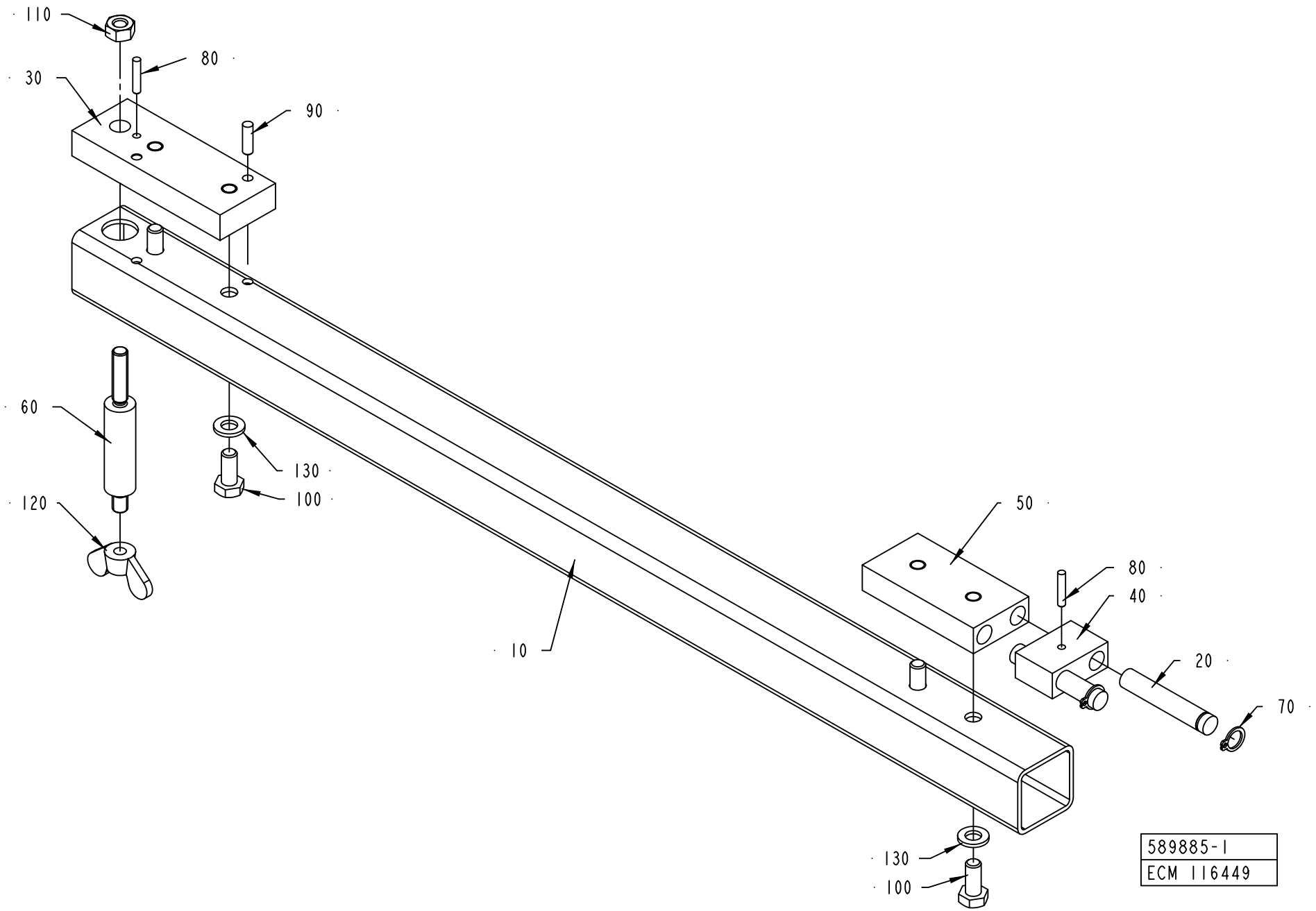

ECM: 117667 - 20031001
Group number: 589885-0100
Assembly Drawing: 589885-1_1_AB

Pos	Part No	UN	Qty	Description	Page No
-					
010	589910-0000		1	BEAM	
020	590205-0000		2	PIN	
030	590206-0000		1	BLOCK	
040	590207-0000		1	BLOCKING PIECE	
050	590208-0000		1	BLOCKING PIECE	
060	590219-0000		1	PIN	
070	90141-0015		2	RETAINING RING FOR SHAFT DIN 471 8 A2	
080	311103-0236		2	PARALLEL PIN ISO 2338 3M6X16 A1	
090	311103-0269		2	PARALLEL PIN ISO 2338 4M6X14 A1	
100	312115-0367		4	SCREW ISO4762 M6X14 A4 80	
110	312605-0316		1	HEXAGON NUT, M6M M6 A280	
120	312715-0116		1	WING NUT DIN 315 A2 MVM-K M6	
130	315105-0153		4	WASHER BRB 6,4X12 RFR	

Pos	Part No	UN	Qty	Description	Page No

Machine Type | Group Description | Used-In | Group Number | Page No

TEMPLATE LEVELING MACHINE

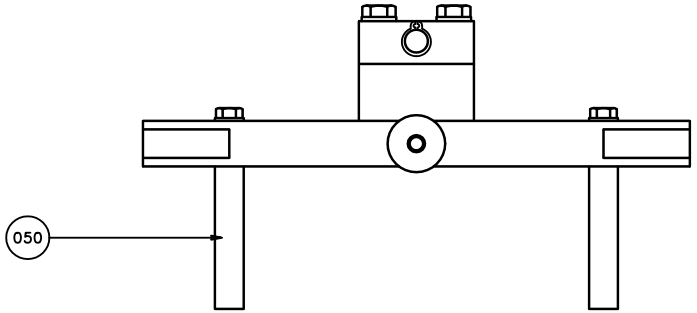

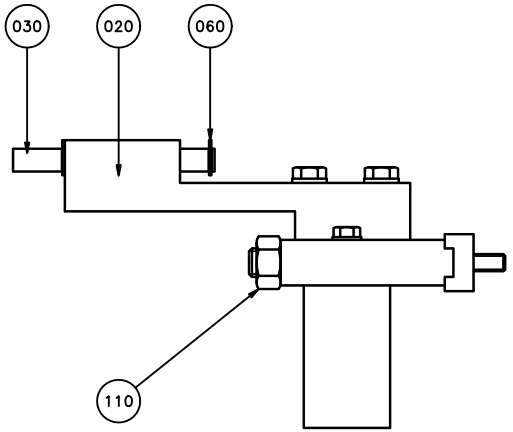

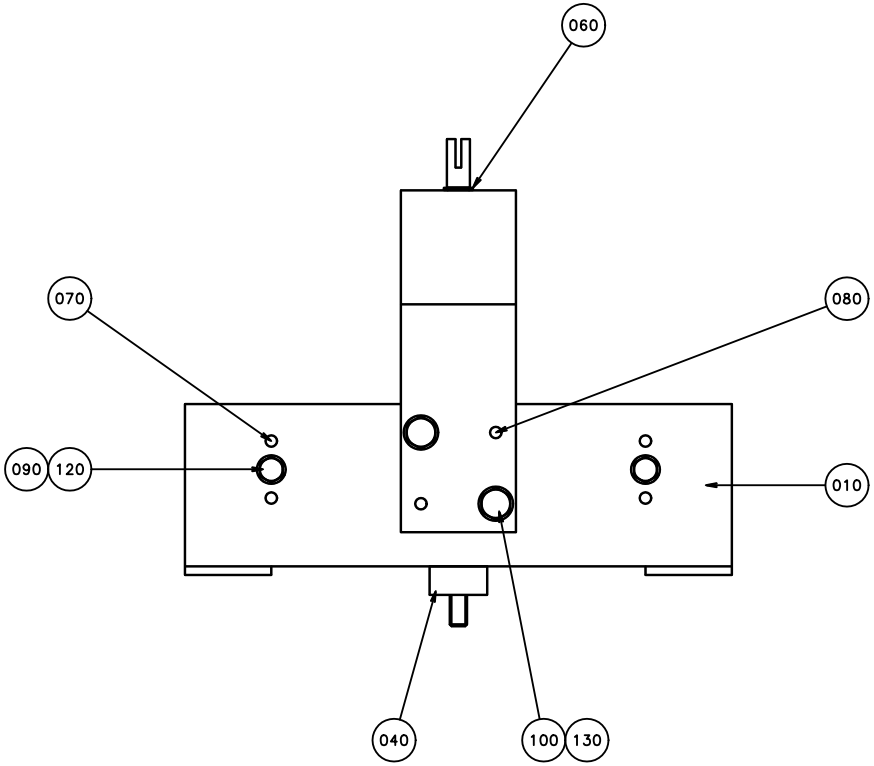

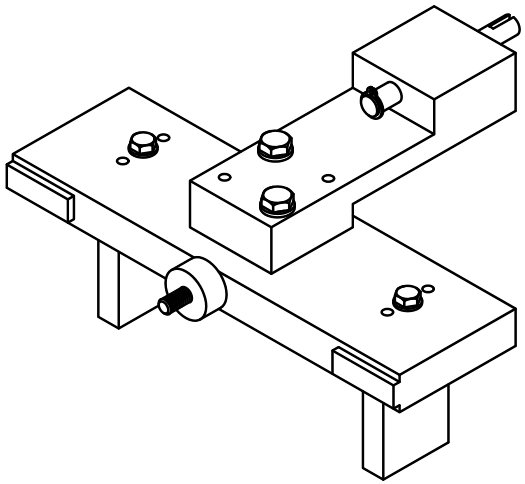

ECM: 70020 - 19960722
Group number: 589889-0100
Assembly Drawing: 589889-1_1_AA

Pos	Part No	UN	Qty	Description	Page No
-					
010	590262-0000		1	PLATE	
020	590263-0000		1	HOLDER	
030	590264-0000		1	SHAFT	
040	590265-0000		1	SHAFT	
050	590267-0000		2	BLOCKING PIECE	
060	90141-0015		2	RETAINING RING FOR SHAFT DIN 471 8 A2	
070	311103-0274		4	PARALLEL PIN ISO 2338 4M6X25 A1	
080	311103-0278		2	PARALLEL PIN ISO 2338 4M6X35 A1	
090	312105-0335		2	SCREW M6S ISO 4014 M5X30 A480	
100	312105-0376		2	SCREW M6S ISO 4014 M6X35 A480	
110	312605-0320		1	HEXAGON NUT, M6M M10 A280	
120	315105-0146		2	WASHER BRB 5,3X10 RFR	
130	315105-0153		2	WASHER BRB 6,4X12 RFR	

Pos	Part No	UN	Qty	Description	Page No

TEMPLATE VOLUME CAM

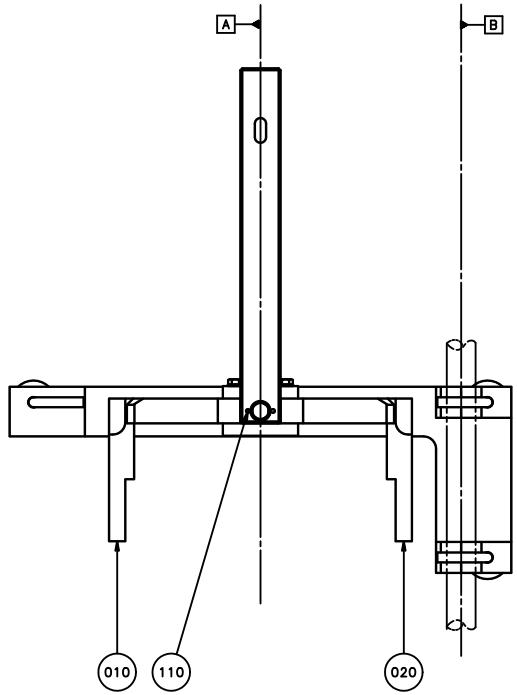

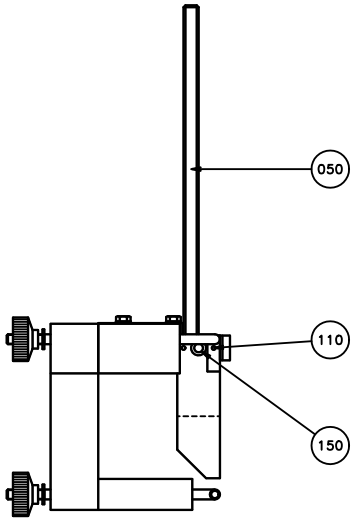

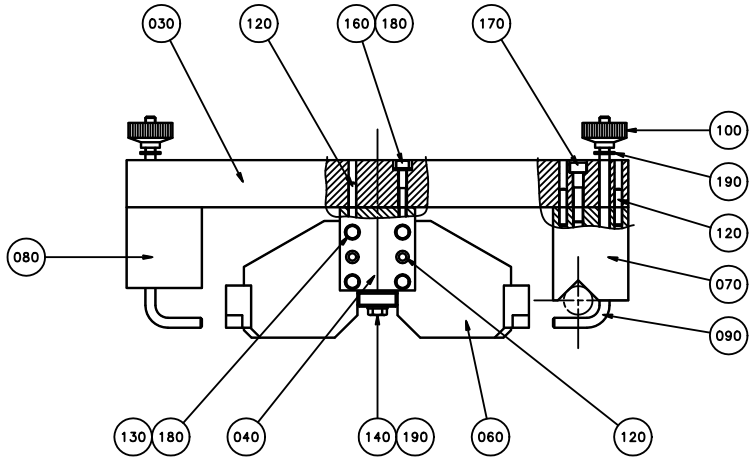

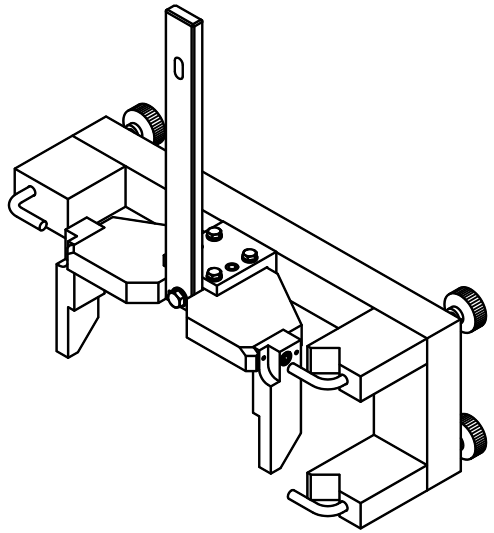

ECM: 70020 - 19960722
Group number: 590273-0100
Assembly Drawing: 590273-1_1_AA

Pos	Part No	UN	Qty	Description	Page No
-					
010	590274-0000		1	BRACKET RIGHT	
020	590275-0000		1	BRACKET LEFT	
030	590276-0000		1	HOLDER	
040	590277-0000		1	ANGLE BRACKET	
050	590278-0000		1	RULER	
060	590279-0000		1	PLATE	
070	76294-0000		2	LOCATING PIECE	
080	76295-0000		1	SPACER	
090	76296-0000		3	HOOK	
100	90051-0040		3	KNOB, INTERNAL THREAD, NO. 8308-0627	
110	311103-0276		6	PARALLEL PIN ISO 2338 4M6X30 A1	
120	311103-0357		10	PARALLEL PIN ISO 2338 6M6X30 A1	
130	312105-0370		4	SCREW M6S ISO 4017 M6X20 A480	
140	312105-0453		1	SCREW M6S ISO 4017 M8X25 A480	
150	312115-0370		2	SCREW ISO4762 M6X20 A4 80	
160	312115-0378		2	SCREW ISO4762 M6X40 A4 80	
170	312115-0459		3	SCREW ISO4762 M8X40 A4 80	
180	315105-0153		6	WASHER BRB 6,4X12 RFR	
190	315105-0165		4	WASHER BRB 8,4X16 RFR	

Pos	Part No	UN	Qty	Description	Page No

TEMPLATE FOR CENTERING RING

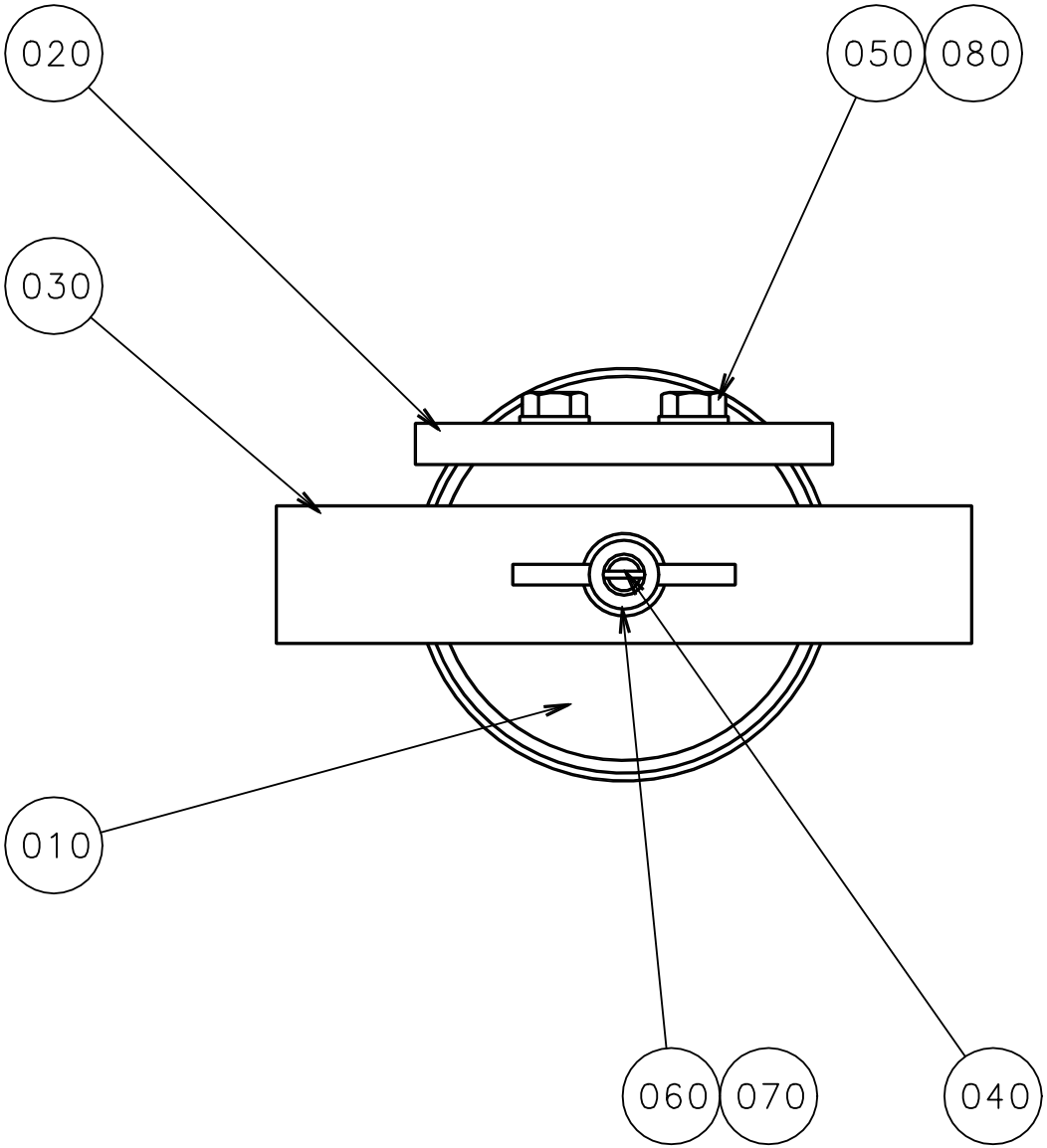

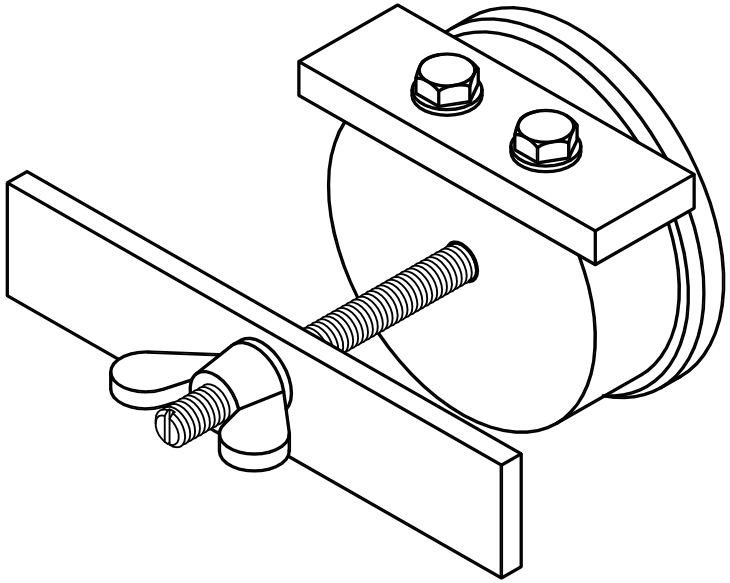

ECM: 71181 - 19980218
Group number: 590507-0100
Assembly Drawing: 590507-1_1_AA

Pos	Part No	UN	Qty	Description	Page No
TBA 0100B, TBA 0125S					
010	590285-0000		1	GAUGE	
020	590502-0000		1	PLATE	
TBA 0160S, TBA 0200S					
010	590280-0000		1	GAUGE	
020	590281-0000		1	PLATE	
TBA 0180B, TBA 0200B, TBA 0236B, TBA 0284B, TBA 0250B, TBA 0300S, TBA 0330S					
010	590283-0000		1	GAUGE	
020	590284-0000		1	PLATE	
TBA 0200M, TBA 0250S					
010	590503-0000		1	GAUGE	
020	590504-0000		1	PLATE	
Common Parts					
030	590282-0000		1	PLATE	
040	590508-0000		1	SCREW	
050	312105-0329		2	SCREW M6S ISO 4017 M5X16 A480	
060	312715-0116		1	WING NUT DIN 315 A2 MVM-K M6	
070	315105-0153		1	WASHER BRB 6,4X12 RFR	
080	315105-0146		2	WASHER BRB 5,3X10 RFR	

Pos	Part No	UN	Qty	Description	Page No

S-1296900-1

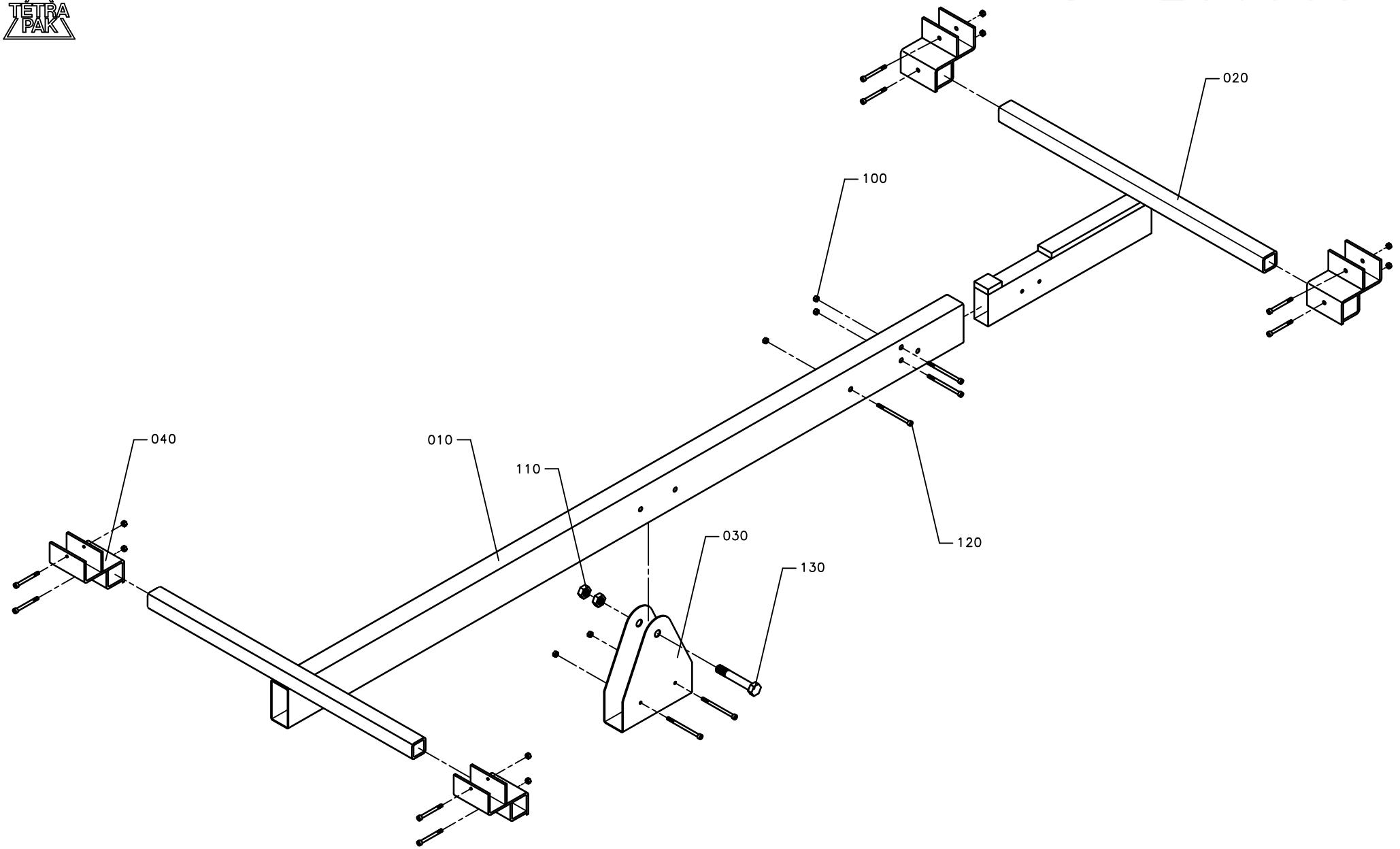

ECM: 71499 - 19980504
Group number: 1296900-0100
Assembly Drawing: 1296900-1_1_AA

Pos	Part No	UN	Qty	Description	Page No
-					
010	1296903-0000		1	BEAM	
020	1296904-0000		1	BEAM	
030	1296905-0000		1	SUPPORT	
040	1296901-0000		4	BRACKET	
100	312605-0316		13	HEXAGON NUT, M6M M6 A280	
110	90099-0131		2	NUT HEX. M16X2 SS	
120	312115-0384		13	SCREW ISO4762 M6X70 A4 80	
130	312105-0638		1	SCREW M6S ISO 4014 M16X90 A480	

Pos	Part No	UN	Qty	Description	Page No

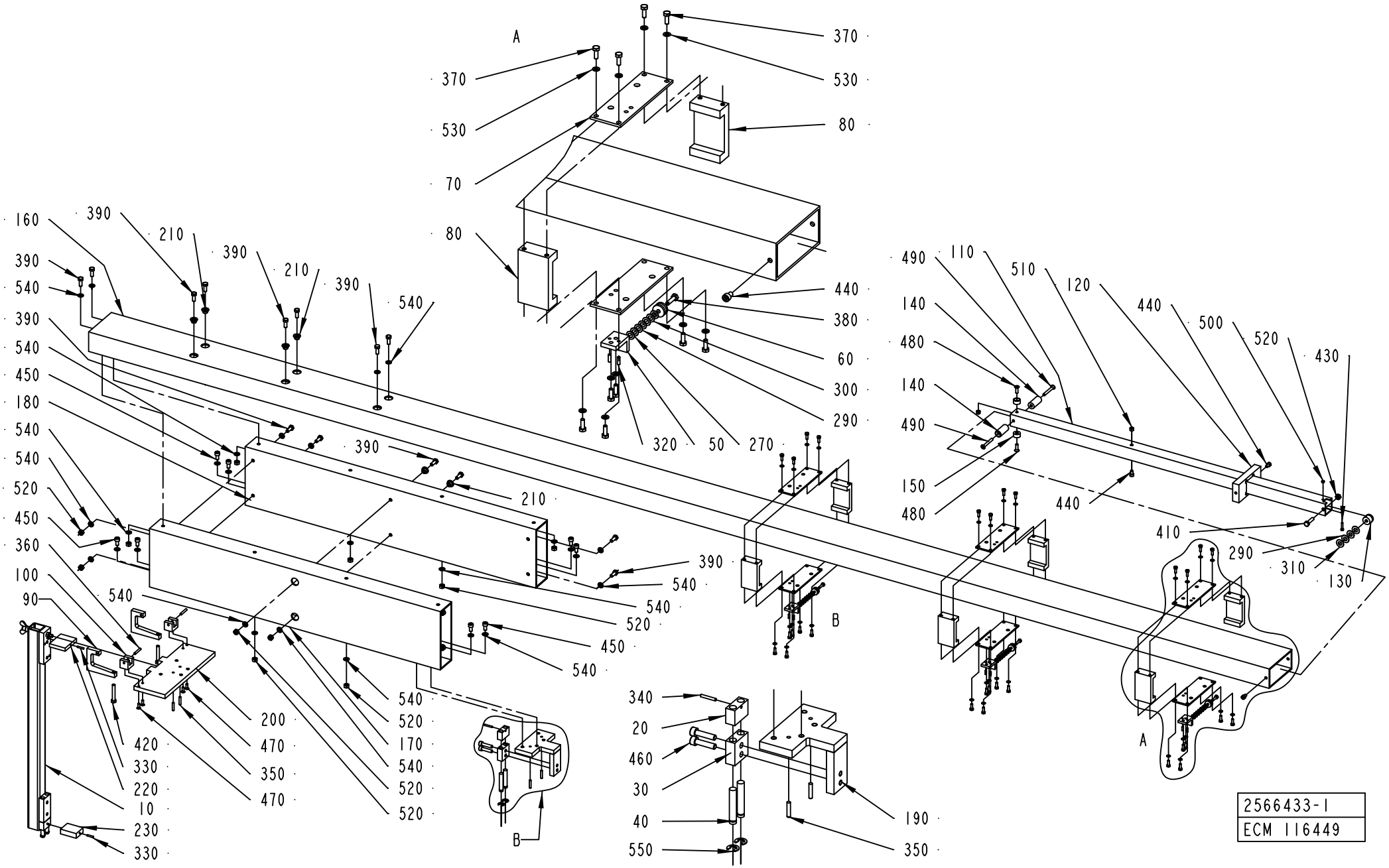
A
370
530
80
70
80
160
390
210
390
210
390
540
390
540
450
180
540
540
520
450
360
100
90
540
390
540
540
520
450
540
390
210
320
50
270
440
380
60
300
290
490
110
510
120
440
500
520
430
140
480
140
490
150
480
440
410
290
310
130
A
B
340
20
460
30
40
550
190
350
200
470
350
470
420
330
220
10
230
330
540
520
170
540
520
520
B
2566433-1
ECM 116449

ECM: 116451 - 20031001
Group number: 2566433-0100
Assembly Drawing: 2566433-1_1_AA

Pos	Part No	UN	Qty	Description	Page No
-					
010	589885-0100		1	TEMPLATE HOUSE/BENDING ROLLER	**12-159**
020	589908-0000		1	BLOCKING PIECE	
030	589909-0000		1	BLOCKING PIECE	
040	590205-0000		2	PIN	
050	590215-0000		3	SUPPORT	
060	590216-0000		3	ROLLER	
070	590217-0000		6	SHEET	
080	590218-0000		6	GUIDE	
090	2615467-0000		2	BRACKET	
100	590221-0000		2	BLOCK	
110	1350674-0000		1	EXTENSION	
120	1350675-0000		1	GUIDE	
130	1350676-0000		1	ROLLER	
140	1350677-0000		2	GUIDE	
150	1350678-0000		2	GUIDE	
160	2566434-0000		1	BEAM	
170	2566435-0000		1	BEAM	
180	2566436-0000		1	BEAM	
190	2566437-0000		1	ANGLE BRACKET	
200	2566438-0000		1	SUPPORT	
210	2566439-0000		6	BUSHING	
220	2594679-0000		1	BLOCK	
230	2594680-0000		1	BLOCK	
270	2033-0002		6	WASHER	
280	2033-0003		9	WASHER	
290	2033-0008		3	WASHER	
300	2033-0010		6	WASHER	
310	2033-0011		1	WASHER	
320	311103-0233		6	PARALLEL PIN ISO 2338 3M6X10 A1	
330	311103-0236		2	PARALLEL PIN ISO 2338 3M6X16 A1	
340	311103-0238		1	PARALLEL PIN ISO 2338 3M6X20 A1	
350	311103-0272		4	PARALLEL PIN ISO 2338 4M6X20 A1	
360	311103-1274		2	PARALLEL PIN ISO 2338 4M6X24 A1	
370	312105-0291		30	SCREW M6S ISO 4017 M4X12 A470	
380	312105-0293		3	SCREW M6S ISO 4017 M4X16 A470	
390	312105-0368		14	SCREW M6S ISO 4017 M6X16 A480	
400	312105-0370		3	SCREW M6S ISO 4017 M6X20 A480	
410	312105-0372		1	SCREW M6S ISO 4017 M6X25 A480	
420	312109-0378		2	SCREW M6S ISO 4017 M6X40 A480	
430	312115-0228		1	SCREW ISO4762 M3X16 A4 80	
440	312115-0323		3	SCREW ISO4762 M5X8 A4 80	
450	312115-0366		8	SCREW ISO4762 M6X12 A4 80	
460	312115-0372		2	SCREW ISO4762 M6X25 A4 80	
470	312155-0291		4	SCREW DIN 7991 MF6S M4X12 A4 70	
480	312155-0329		2	SCREW DIN 7991 MF6S M5X16 A4 70	
490	312155-0339		2	SCREW DIN 7991 MF6S M5X40 A4 70	
500	312605-0310		1	HEXAGON NUT, M6M M3 A280	
510	312605-0314		5	HEXAGON NUT, M6M M5 A280	
520	312605-0316		15	HEXAGON NUT, M6M M6 A280	
530	315105-0136		30	WASHER BRB 4,3X8 RFR	
540	315105-0153		30	WASHER BRB 6,4X12 RFR	
550	315755-0109		2	RETAINING RING SHAFT DIN 6799 7 A2	

Machine Type	Group Description	Used-In	Group Number	Page No

Tetra Pak

SPC
Spare Parts Catalogue

This page is intentionally left blank.

ECM: 292075 - 20061222
Group number: 648123-0300
Assembly Drawing:

Pos	Part No	UN	Qty	Description	Page No	Pos	Part No	UN	Qty	Description	Page No
TBA											
	90457-0048		1	INK JET PRINTER A300 HS							

Machine Type	Group Description	Used-In	Group Number	Page No

Tetra Pak

SPC
Spare Parts Catalogue

Part No	Description	Page No
1013-0000	SHAFT	8-15
1755-0001	WASHER	4-61, 4-63
1755-0002	WASHER	4-61, 4-63
1755-0003	WASHER	4-61, 4-63
2033-0002	WASHER	12-169
2033-0003	WASHER	12-169
2033-0007	WASHER	1-49, 1-51
2033-0008	WASHER	1-119, 1-121, 12-169
2033-0009	WASHER	4-65
2033-0010	WASHER	12-169
2033-0011	WASHER	1-103, 1-105, 1-107, 1-109, 1-111, 1-113, 1-115, 1-119, 1-121, 1-125, 1-127, 8-25, 8-27, 8-29, 8-45, 8-47, 8-49, 12-169
2033-0013	WASHER	7-23, 7-25, 7-27, 7-29, 7-51, 7-53
2033-0014	WASHER	4-65
2873-0000	SHAFT	12-55, 12-57
6161-0000	ROLL	1-159
12228-0000	COMPRESSION SPRING	3-27
12242-0001	GASKET 32X25X5,5	1-15, 1-65
12242-0003	GASKET 48X38X5,5	1-135
12242-0005	GASKET 61X51X5,5	1-49, 1-51, 1-135
18542-0000	WASHER	2-29
20239-0000	25MPRESSION SPRING	4-49, 4-51
21521-0000	COMPRESSION SPRING	1-37, 1-139
22463-0000	ROLL	4-5, 4-7, 4-9, 4-11, 4-13, 4-15
22475-0000	CURVE ROLLER	4-49, 4-51
26490-0000	WASHER	1-103, 1-105, 1-107, 1-109
27815-0000	WASHER	4-65
28036-0000	WASHER	1-49, 1-51, 1-159, 8-25, 8-27, 8-29, 8-45, 8-47, 8-49
28037-0000	WASHER	1-103, 1-105, 1-107, 1-109
28509-0000	WASHER	4-55, 4-57
29876-0000	COVER	1-43, 1-45
30298-0000	INSULATION	1-43, 1-45
31017-0000	KNIFE	8-65
31553-0001	WASHER	5-67
31559-0000	SPRING PLATE	5-67
31723-0000	TEFLON STRIP	8-65
31724-0000	LOCK BAR	8-65
32079-0000	WASHER	4-55, 4-57
32544-0000	INSULATION NUT	4-55, 4-57
32644-0000	WASHER	4-45, 4-47, 7-45
32691-0000	LOCK SPRING	8-31, 8-33, 8-51, 8-53, 12-27, 12-29, 12-37, 12-39
32925-0000	CARRIER	8-25, 8-27, 8-29, 8-45, 8-47, 8-49
32926-0000	ROLL	8-25, 8-27, 8-29, 8-45, 8-47, 8-49
32927-0000	SHAFT	8-25, 8-27, 8-29, 8-45, 8-47, 8-49
33010-0000	SCREW	8-35, 8-61, 12-41, 12-43
33011-0000	SLEEVE	8-31, 8-33, 8-51, 8-53, 12-27, 12-29, 12-37, 12-39
33182-0000	ROLL	8-25, 8-27, 8-29, 8-45, 8-47, 8-49
33408-0000	BEARING	4-5, 4-7, 4-9, 4-11, 4-13, 4-15
35547-0000	SPRING	8-35, 8-61, 12-41, 12-43
35918-0000	SHAFT	1-119, 1-121
35919-0000	COMPRESSION SPRING	1-119, 1-121
35962-0000	LID	6-13
36316-0000	PAPER SUPPORT	7-57
36325-0000	KNOB	1-119, 1-121
36489-0000	ASSEMBLY TOOL	12-11
37877-0400	HEATING BLOCK	8-63
37879-0000	LOCKING ARM	8-65
37880-0000	HINGE	8-65
37882-0000	PROTECTION PLATE	8-65
37883-0000	LOCK BAR	8-65
37884-0000	SHAFT	8-65
37885-0000	TENSION SPRING	8-65
37886-0000	INSULATING DISK	8-65
37888-0000	ROLL	8-65
37889-0000	SHAFT	8-65
37890-0000	FLANGE ROLLER	8-65
37893-0000	LID	8-65
37894-0100	COUNTER RAIL	8-63
37895-0000	RAIL	8-67
37896-0000	DOWEL	8-67
37897-0000	WASHER	8-67
37900-0000	KNIFE	8-69
37905-0000	FRAME	8-73
37908-0000	PLATE	8-73
37909-0000	SPRING	8-73
37910-0000	LOCK	8-73
37911-0000	LACE	8-73
37912-0000	LOCK PLATE	8-73
37913-0000	RULER	8-73
37916-0000	RULER	8-73
37917-0000	RULER	8-73
38087-0000	WASHER	2-49, 2-51
42062-0200	LEVEL PROBE	1-183
42063-0100	LEVEL DETECTOR	1-185

Part No	Description	Page No
42067-0100	SENSOR BOARD	1-187
42068-0100	CONVERTER BOARD	1-187
42413-0300	SOFTWARE	11-3
42416-0300	ELECTRICAL DOCUMENT	11-3
48633-0302	PLMS ON-LINE CLIENT PROGRAM	11-11
48635-0302	PLMS ON-LINE SERVER PROGRAM	11-11
67347-0101	CARD BRAKEREG.MAGN.POWDER BRAKE	10-31
67369-0102	RACK WALLMOUNTED 84TE	10-31
67372-0101	BACKPLANE 8TE(32 POLE)	10-31
67379-0262	TRANSFORMER	4-55, 4-57
67379-0264	TRANSFORMER	4-55, 4-57
67379-0265	TRANSFORMER	4-55, 4-57
67380-0208	TRANSFORMER	7-45
72947-0000	HOOK SPANNER	9-15
74305-0100	PULLER	12-45
74363-0000	FASTENING PLATE	12-131
74364-0000	EXTRACTOR BOLT	12-131
74365-0000	SCREW	12-131
74767-0102	DYNAMOMETER	12-45
74768-0000	SLEEVE	12-111
74769-0000	SLEEVE	12-111
74770-0000	ROD	12-111
74771-0000	STEERING	12-111
74772-0000	DIAL	12-111
74912-0000	DOWEL	12-111
75451-0000	GUIDE PIN	12-115, 12-157
75453-0000	HOLDER	12-113
75454-0000	ROD	12-113
75466-0300	SETTING TOOL	12-45
75467-0200	SETTING TOOL CURVES	12-45
75469-0300	SETTING TOOL VOLUME ADJUSTMENT	12-77, 12-79
75470-0000	TEMPLATE	12-83
75471-0000	BRACKET	12-83
75472-0000	CLAMP IRON	12-83
75525-0400	TEMPLATE	12-45
75545-0000	TEMPLATE	12-47, 12-49
75931-0004	SETTING TEMPLATE	12-77, 12-79
75931-0005	SETTING TEMPLATE	12-77, 12-79
75931-0006	SETTING TEMPLATE	12-77, 12-79
75931-0008	SETTING TEMPLATE	12-77, 12-79
75931-0009	SETTING TEMPLATE	12-77, 12-79
75931-0010	SETTING TEMPLATE	12-77, 12-79
75931-0011	SETTING TEMPLATE	12-77, 12-79
75931-0012	SETTING TEMPLATE	12-77, 12-79
75931-0017	SETTING TEMPLATE	12-77, 12-79
75936-0000	TEMPLATE	12-77, 12-79
75937-0000	TEMPLATE	12-77, 12-79
75938-0000	TEMPLATE	12-77, 12-79
75939-0000	TEMPLATE	12-77, 12-79
75943-0000	TEMPLATE	12-77, 12-79
75944-0000	TEMPLATE	12-77, 12-79
75945-0000	CAM TEMPLATE	12-77, 12-79
76128-0000	TEMPLATE	12-45, 12-145
76131-0000	ASSEMBLY CONE	9-15
76132-0000	ASSEMBLY TOOL	9-15
76133-0100	TEMPLATE LS-ELEMENT	12-45
76137-0000	PLATFORM TRANSPORT	12-151, 12-153
76139-0000	STOPPER	12-59
76163-0000	BRACKET	12-59
76164-0000	BRACKET	12-59
76166-0000	STEER PLATE	12-119
76175-0100	PULLER	12-45
76176-0000	TEMPLATE	12-77, 12-79
76178-0000	STOPPER	12-55
76179-0000	STOPPER	12-55
76180-0000	TEMPLATE	12-147
76181-0000	TEMPLATE	12-147
76184-0000	BRACKET	12-57
76185-0000	STOPPER	12-57
76186-0000	STOPPER	12-57
76187-0000	TEMPLATE FILLING TUBE	12-45
76188-0000	TEMPLATE FILLING TUBE	12-45
76200-0100	CONVEYOR SECTION	12-147
76201-0000	BOTTOM PLATE	12-151, 12-153
76202-0000	FRAME	12-151, 12-153
76203-0000	SUPPORT LEG	12-151, 12-153
76204-0000	ARM	12-151, 12-153
76205-0000	ARM	12-151, 12-153
76206-0000	JOINTED ARM	12-151, 12-153
76207-0000	STOPPER	12-151, 12-153
76208-0000	CUSHION	12-151, 12-153
76209-0000	SUPPORT	12-151, 12-153
76210-0000	BRACKET	12-151, 12-153
76211-0000	SUPPORT	12-151, 12-153

Part No	Description	Page No
76212-0000	SHAFT	12-151, 12-153
76213-0000	SUPPORT	12-151, 12-153
76214-0000	ARM	12-151, 12-153
76215-0000	WASHER	12-151, 12-153
76216-0000	STRUT	12-151, 12-153
76217-0000	SUPPORT	12-151, 12-153
76276-0000	SCREW	12-65, 12-67, 12-69, 12-71, 12-73
76290-0000	SPACER	12-59
76291-0100	YOKE	12-77, 12-79
76292-0000	YOKE	12-85
76293-0000	CANTILEVER	12-85
76294-0000	LOCATING PIECE	12-85, 12-163
76295-0000	SPACER	12-85, 12-163
76296-0000	HOOK	12-85, 12-163
76297-0000	SCREW	12-85
76298-0000	RULER	12-77, 12-79
76299-0000	TEMPLATE SUPPORT ROLLERS	12-77, 12-79
76301-0100	TEMPLATE YOKE	12-77, 12-79
76302-0000	BRACKET	12-87
76304-0100	COMPRESSION SPRING	12-77, 12-79
76305-0000	BRACKET	12-89
76307-0001	TEMPLATE	12-47, 12-49
76307-0002	TEMPLATE	12-47, 12-49
76307-0003	TEMPLATE	12-47, 12-49
76307-0004	TEMPLATE	12-47, 12-49
76307-0005	TEMPLATE	12-47, 12-49
76307-0006	TEMPLATE	12-47, 12-49
76307-0008	TEMPLATE	12-47, 12-49
76307-0009	TEMPLATE	12-47, 12-49
76307-0010	TEMPLATE	12-47, 12-49
76307-0011	TEMPLATE	12-47, 12-49
76307-0012	TEMPLATE	12-47, 12-49
76307-0013	TEMPLATE	12-47, 12-49
76307-0014	TEMPLATE	12-47, 12-49
76308-0000	TEMPLATE	12-47, 12-49
76333-0100	TEMPLATE UPPER FORMING CLAMP	12-63
76335-0200	SETTING TOOL	12-63
76337-0000	PONCH	12-75
76338-0000	SETTING TOOL	12-115
76349-0000	CAM TEMPLATE	12-77, 12-79
76350-0200	SETTING TOOL	12-45
76398-0000	TEMPLATE	12-45
76402-0200	TEMPLATE DRIVEN BENDING ROLLER	12-63
76407-0100	TEMPLATE DIVIDED FORMING RING	12-63
76408-0000	BRACKET	12-71
76409-0100	TEMPLATE MOVABLE FORMING RING	12-63
76410-0000	BRACKET	12-73
76416-0100	CLAMPING PIECE	12-45
76417-0000	CLAMPING PIECE	12-117
76418-0000	CLAMPING PIECE	12-117
76447-0200	TEMPLATE	12-147
76460-0100	SETTING TOOL CURVES	12-147
76461-0000	SUPPORT ARM	12-157
76462-0000	TEMPLATE	12-157
76463-0000	BUSHING	12-157
76464-0000	CANTILEVER	12-87
76465-0000	SCREW	12-87, 12-91
76466-0000	SHAFT	12-117
76467-0000	TEMPLATE	12-45
76470-0100	PONCH	12-97
76471-0000	PONCH	12-99
76484-0000	LID	12-75, 12-99
76499-0000	TEMPLATE	12-147
76580-0100	SETTING TOOL FINAL FOLDER	12-147
76581-0000	VERTICAL PILLAR	12-149
76582-0000	BLOCKING PIECE	12-149
76583-0000	BLOCKING PIECE	12-149
76589-0000	PONCH	12-99
76590-0000	PONCH	12-75
76591-0100	PONCH	12-63
76592-0100	TEMPLATE TUBE FORMING	12-63
76593-0000	BRACKET	12-65
76594-0200	SETTING TOOL	12-97
76595-0100	TEMPLATE LS-ELEMENT	12-45
76597-0000	STOPPER	12-59
76598-0100	TEMPLATE TUBE FORMING	12-63
76599-0000	BRACKET	12-67, 12-69
76600-0200	SETTING TOOL	12-45
76601-0000	RULER	12-59
76602-0000	GAUGE	12-45
76605-0000	BRACKET	12-55, 12-57
76606-0100	TEMPLATE LS-ELEMENT	12-45
76607-0000	RULER	12-55, 12-57, 12-61
76610-0000	BRACKET	12-55

Part No	Description	Page No
77091-0600	OPTIONAL PARTS	12-3
77092-0600	SERVICE PARTS	12-3
77093-0200	TRIMMING PARTS	12-3
77094-0400	PRODUCTION PARTS	12-3
77099-0300	TOOL KIT	9-3
77163-0000	SLEEVE	12-121
77164-0000	STUD SCREW	12-121
77165-0100	EXTRACTOR	12-45
77221-0000	TIGHTENING TOOL	12-11
77245-0000	BRACKET	12-61
78801-0000	CALIBRATION TOOL	9-15
79003-0000	PROTECTION PLATE	12-45
79201-0000	EXTRACTOR BOLT	12-45
81595-0103	USER MANUAL PLMS ON-LINE	11-11
81596-0103	INSTALLATION MANUAL PLMS ON-LINE	11-11
82197-0104	USER MANUAL	9-19
90001-0033	WALL SOCKET OUTLET	10-13, 10-15, 10-17
90002-0004	BLANK-OFF PLUG, PR 22,5 SKINDICHT-BLK16	1-155, 1-157, 5-49, 5-51, 10-79, 10-81
90002-0009	BLANK-OFF PLUG, PR 18.6 SKINDICHT-BLK11	2-19, 5-37, 5-49, 5-51, 9-23, 9-29, 9-31
90002-0010	BLANK-OFF PLUG, PR 37 SKINDICHT-BLK29	1-143, 1-145, 1-147, 1-149, 1-151, 1-153, 1-155, 1-157, 5-49, 5-51, 10-79, 10-81
90002-0012	BLANK-OFF PLUG, PR 28,3 SKINDICHT-BLK21	1-155, 1-157, 10-79, 10-81
90002-0013	BLANK-OFF PLUG, PR 15,2 SKINDICHT-BLK9	1-155, 1-157, 2-19, 10-79, 10-81
90002-0018	BLANK-OFF PLUG, PR 12,5 SKINDICHT-BLK7	1-13
90003-0422	CORRUGATED CARDBOARD BOX	9-3
90005-0003	BONDED SEAL SS/NBR M6	4-53, 4-67, 4-69
90005-0005	BONDED SEAL SS/NBR G1/4	4-67, 4-69
90005-0007	BONDED SEAL SS/NBR M8	4-67, 4-69
90005-0014	BONDED SEAL SS/NBR G1/2"	4-53
90005-0047	WASHER,PL.RND.CU.12,2/ H=1,5	4-59, 4-61, 4-63
90005-0060	WASHER PLAIN, RBS 6,4/M6)/18,H=1,5	1-175, 2-5, 2-7, 4-37, 4-39, 4-41, 4-43
90005-0077	WASHER PL.RND.NYL.8,4/7, H=2	2-73
90005-0082	WASHER PLAIN ROUND 4,3(M4)/12,H=1	7-13, 7-15, 7-19, 7-23, 7-25, 7-27, 7-29, 7-35, 7-37, 7-43, 7-45, 7-51, 7-53
90005-0105	WASHER PLAIN ROUND 8,4(M8)/24, H=1,5	6-87
90005-0143	SPACER 3,3/7, H=3	1-187
90012-0119	GLAND, EXTENDED WITH INSERT, PG9	1-185
90012-0126	HOSE GLAND W/O INSERT PG29 NORMAL	1-43, 1-45
90015-0020	LEAD-IN, TET5-7, E-1458016	1-143, 1-145, 1-147, 1-149, 1-151, 1-153, 7-23, 7-25, 7-27, 7-29, 7-35, 7-37
90015-0021	LEAD-IN, TET10-14, E-1458023	1-143, 1-145, 1-147, 1-149, 1-151, 1-153
90015-0023	LEAD-IN, TET7-10, E-1458019	1-143, 1-145, 1-147, 1-149, 1-151, 1-153, 8-77
90015-0028	LEAD-IN BUSHING	5-37
90016-0010	DISC SPRINGS,50X25,4X2	3-5
90017-0001	BIKE HANDLE	8-65, 8-69
90017-0016	HANDLE, NO. 14.4012.02.120	2-73
90017-0022	HANDLE, NO. EL-037311	7-31, 7-35, 7-37, 7-59, 8-11, 8-13
90024-0036	FILTERED TERMINAL BLOCK	10-133
90024-0037	INPUT FILTER, 8 A	10-13, 10-15, 10-17
90024-0060	POWER LINE FILTER, 80 A 250/440 VAC	10-133
90024-0062	CABLE PROTECTION, 40MM	10-7, 10-9, 10-11
90024-0063	CABLE PROTECTION, 25MM	10-7, 10-9, 10-11
90028-0001	CONE 5/32"	2-23, 2-25, 2-27
90028-0020	CONE TUBE 2,5MM	2-23, 2-25, 2-27, 3-9, 3-11, 3-13, 3-15, 4-53, 4-67, 4-69, 5-11, 5-37
90028-0021	CONE TUBE 4 MM	2-23, 2-25, 2-27, 3-9, 3-11, 3-13, 3-15, 5-11, 5-37
90028-0022	CONE TUBE 6 MM	6-87
90028-0025	CONE TUBE 6 MM	5-37, 6-87
90030-0030	CONN. BULKHEAD SV 12-L/SY	1-95, 1-97, 6-69
90030-0051	CONN. STR., 6-R1/8, EXT. THREAD	2-23, 2-25, 2-27
90030-0058	CONN. T-PIPE T-12	1-137, 6-81, 6-83
90030-0062	CONN. STR. GE 6-1/4-18 NPTF	1-7, 1-65
90030-0065	PIPE CONNECTION	2-31, 4-25, 4-27, 4-67, 4-69
90030-0066	CONN. BULKHEAD SV 6-L/SY	7-67
90030-0075	UNION FITTING 6MM, G06L71	1-95, 1-97
90030-0076	CONN. T-PIPE T-6	1-7, 1-91, 1-93, 6-87
90030-0086	CONN. STR., 8-R1/4, EXT. THREAD	6-71
90030-0089	STRAIGHT CONNECTION	1-87, 1-181
90030-0091	CONN. PIPE G-8	2-31
90030-0092	STRAIGHT CONN., 6-R1/4,EXT. TAPPERED	1-95, 1-97
90030-0096	CONN. ELBOW W-12	1-67, 1-69
90030-0098	ACCESSORIES, FERRULE 8	2-23, 2-25, 2-27
90030-0106	CONN. PIPE G-12	1-67, 1-69
90030-0109	STRAIGHT PIPE CONN. GE12LR1/271	1-89, 6-67
90030-0115	CONN. ELBOW WA 12-R3/8	1-21, 1-23, 1-89
90030-0116	NIPPLES, REDUCING, EXT. THR. NO. 2520	5-23
90030-0136	ADJUSTABLE ELBOW CONNECTION,EXT 12-G3/8	6-77, 6-79
90030-0137	CONN. ELBOW WA 6-R1/8	1-15
90030-0151	CONN. STR.,15-R1/2, EXT. THREAD	2-29
90030-0162	CONN. STR. 6-M10X1, EXT. THREAD	2-23, 2-25, 2-27
90030-0164	CONN. T-PIPE T6-LL	1-95, 1-97
90030-0170	REDUCER 2521-1/4"X3/8"	1-89
90030-0181	CONN. STR. GE 12-3/8-18 NPTF	6-81, 6-83
90030-0184	CONN. STR. GA-6-G1/8	1-9, 1-11, 1-35, 1-39, 1-41, 1-67, 1-69, 1-91, 1-93, 1-95, 1-97, 1-131, 1-137, 4-29, 4-67, 4-69, 6-77, 6-79, 6-93, 6-95, 7-67, 12-127

Part No	Description	Page No
90030-0186	CONN. STR. GA-10-G1/4	2-53, 2-55
90030-0187	CONN. STR. GA-12-G3/8	1-35, 1-37, 1-39, 1-67, 1-69, 1-137, 2-53, 2-55
90030-0188	CONN. STR. GA-15-G1/2	6-61, 6-77, 6-79
90030-0191	CONN. STR. GA-18-G1/2	1-89
90030-0200	CONN. ELBOW, 6-M10X1, EXT.THREAD	2-23, 2-25, 2-27
90030-0202	CONN. STR., 6-G1/4, EXT. THREAD	1-89, 1-91, 1-93
90030-0203	ADJUSTABLE ELBOW CONNECTION,EXT 6-G1/4	1-91, 1-93
90030-0212	NIPPLES, REDUSING, INT. THR. NO. 2521	1-67, 1-69
90030-0223	BUSHING, INT/EXT. G-THREAD NO. 2531	12-17, 12-19
90030-0224	NIPPLES, EXT. THREAD, HEXAGON, NO. 2511	12-17, 12-19
90030-0225	BUSHING, INT/EXT. R-THREAD 1/4X3/8	12-17, 12-19
90030-0230	CONN. BULKHEAD SV 6-	1-9, 1-11, 2-53, 2-55
90030-0233	CONN. STR., 6-G1/8, EXT. THREAD	1-9, 1-11
90030-0234	CONN. ELBOW, 6-R1/8 , EXT.THREAD	1-9, 1-11, 1-91, 1-93
90030-0336	CONN. STRAIGHT, 316L-12M-BVCO-3	1-75
90030-0338	NUT, PIPE & CONNECTORS, SS-8-BVCO-4	1-75
90030-0416	CONN. STR. 18-R1/2, EXT. TAPPERED	1-89
90030-0549	CONN. STRAIGHT, BULKHEAD, SS-4-VCO-61	1-19
90030-0612	ADJUSTABLE ELBOW CONNECTION,EXT 6-G1/4	1-89
90030-0629	REDUCER, 1,8MM, M6, NO. 815406	6-89, 6-91
90031-0051	BASEPLATE, 10-SLOT	10-41
90031-0053	BASEPLATE,10-SLOT	10-43, 10-45
90031-0057	PLC, DIGITAL INPUT MODULE	10-41, 10-43, 10-45
90031-0058	PLC, DIGITAL INPUT MODULE	10-41
90031-0059	PLC, DIGITAL OUTPUT MODULE	10-41, 10-43, 10-45
90031-0062	PLC, ANALOG OUTPUT MODULE 8PT/CURR/VOLT	10-41
90031-0063	PLC,ANALOG COMBO MODULE,IN-4PT/OUT-2PT	10-41
90031-0068	PLC, POWER SUPPLY	10-41, 10-43, 10-45
90031-0075	CPU363, SERIAL COMMUNICATION	10-41
90031-0305	I/O EXPANSION CABLE	10-41, 10-43
90032-0014	DISTR. BLOCK & DIST.5/16-24UNF X6	2-23, 2-25, 2-27
90032-0026	DISTR. BLOCK, 5/16-24UNF X2	2-23, 2-25, 2-27
90032-0030	DISTR. BLOCK, 5/16-24UNF X3	2-23, 2-25, 2-27
90032-0031	DISTR. BLOCK, 5/16-24UNF X5	2-23, 2-25, 2-27
90032-0038	BLOCK 2 WAYS	2-23, 2-25, 2-27
90032-0039	BLOCK 4 WAYS	2-23, 2-25, 2-27, 3-13, 3-15, 5-37
90032-0040	BLOCK 6 WAYS	3-9, 3-11, 5-11, 5-37
90032-0043	DISTRIBUTION BLOCK 3 WAYS	6-87
90036-0057	LIGHT BULB, BA9S 28V	7-17
90036-0068	BULB 6.5W 24V	2-47, 2-59
90041-0068	DATACABLE MODEM PC	9-19
90042-0134	SOLENOID VALVE ASCO SCG 210 802 24VDC	6-93, 6-95
90042-0171	SOLENOID VALVE BURKERT	1-9, 1-11, 1-91, 1-93
90042-0172	SOLENOID VALVE 4023/1005/1032 24VDC	6-29, 6-31
90042-0173	SOLENOID VALVE BÃ¼RKERT	6-23, 6-41, 6-43
90042-0398	CONTACT 3 POLE+EARTH	6-75
90043-0002	PRESSURE GAUGE, 2040 D=63 MM	6-85
90043-0006	PRESSURE GAUGE, 2041 D=63 MM	6-29, 12-127
90043-0021	PRESSURE GAUGE 0-1 BAR 1/8" D=40	12-17, 12-19, 12-125
90043-0034	PRESSURE GAUGE	1-95, 1-97
90043-0043	PRESSURE GAUGE 0-10 BAR 1/8"	12-17, 12-19
90043-0069	PRESSURE GAUGE 0-4BAR WIEGAND 2040	1-181
90043-0082	PRESSURE GAUGE, 2740, D=63 MM	1-89
90043-0095	PRESSURE GAUGE, 2740, D=63 MM, GLYC.	6-39
90043-0302	SCREW	1-95, 1-97
90044-0084	LIMIT SW. 14 CE1-4	1-21, 1-23
90044-0103	KEY SAFETY SWITCH AZ 15 ZVR-2254	8-25, 8-27, 8-29
90044-0104	PROX.SWITCH IFM IN 3002(RP 90044-194)	1-19, 1-59, 8-25, 8-27, 8-29
90044-0116	CYLINDER, SENSOR	1-37
90044-0117	PROX.SW. IX 0208	5-57
90044-0124	PROX.SW. 922AB2XM-A9P-050-LZ-876	3-33
90044-0139	KEY SAF.SW. AZ16-02 ZVR K-2254 USE 90459	8-45, 8-47, 8-49
90044-0151	LIMIT SW. GLEB24C	3-27
90044-0192	LIMIT SW. SZ2586.000	10-75, 10-77
90044-0194	PROX.SW. IN5329/IN3002-BPKG(EX90044-104)	1-15, 1-49, 1-51, 1-57, 1-67, 1-69, 1-137, 7-23, 7-25, 7-27, 7-29, 7-35, 7-37, 7-39, 7-41, 8-45, 8-47, 8-49
90044-0310	KEY FOR SAFETY SWITCH AZ 15/16 B1	1-49, 1-51, 2-35, 2-37, 7-31, 8-25, 8-27, 8-29, 8-45, 8-47, 8-49
90045-0087	MOTOR 3GAA 071002-CSA M2AA 71B	6-65
90045-0161	MOTOR MGCF11S	6-75
90045-0228	MOTOR 7AA80M4-B5	6-89, 6-91
90045-0376	CONNECTOR KIT 9-032-011-970	10-13, 10-15, 10-17
90048-0022	MANUAL PUMP INCL. BARROW 50-60 L	12-7
90050-0011	BOTTLE	6-13
90050-0012	BOTTLE, 50ML PLASTIC	8-35, 8-61, 12-41, 12-43
90051-0035	KNOB, EXTERNAL THREAD. NO. 8308-1135	7-21, 12-55, 12-59
90051-0040	KNOB, INTERNAL THREAD, NO. 8308-0627	12-85, 12-155, 12-163
90051-0053	KNOB, INTERNAL THREAD, M6 24X17	12-57, 12-61, 12-87, 12-91
90051-0059	KNOB, EXTERNAL THREAD. NO. 8308-1550	12-77, 12-79, 12-93
90051-0077	HANDLE	8-35, 8-61, 12-41, 12-43
90051-0083	KNOB, EXTERNAL THREAD. NO. 8308-1321	12-87, 12-91, 12-117
90051-0084	KNOB, EXTERNAL THREAD. NO. 8308-1534	12-155
90051-0089	SHIFTER HANDLE	8-39, 8-41
90053-0029	COUNTER, F524.800FA3C 24VDC	10-123, 10-125

Part No	Description	Page No
90053-0031	HOUR COUNTER, B 609.10 10-50VDC	10-123, 10-125
90055-0042	NIPPLES, EXT. THREAD, HEXAGON, NO. 6835-	9-11
90055-0100	Y-CONNECTION, 6-6	1-161, 1-163, 1-171, 1-173, 7-67
90055-0145	ELBOW ADAPTOR-R1/4	9-11
90055-0147	Y-FITTING QSY-12	6-15, 6-17, 6-19
90055-0217	ELBOW PIPE JOINT	2-13
90056-0071	WORM GEAR	5-69
90059-0001	THERMOSTAT	8-65
90061-0027	ANGLE ENCODER 670900035	3-33
90062-0015	LOCK WASHER SERRAT.EXT.GEAR,6,4/11 H=0,7	10-71, 10-83, 10-85, 10-105, 10-107, 10-109, 10-111, 10-123, 10-125, 10-133, 10-137, 10-139
90062-0022	LOCKING WASHER D=6,4/11	10-123, 10-125
90062-0058	LOCK WASHER SERRAT.EXT.GEAR,3,2/6 H=0,4	10-31
90062-0061	LOCK WASHER NORD-LOCK,6,5/10,8, T=2,2	10-13, 10-15, 10-17, 10-31
90064-0082	PUSH BUTTON, WHITE	2-73
90064-0084	PUSH BUTTON, YELLOW	2-73
90064-0085	PUSH BUTTON, RED	7-17, 8-77
90064-0086	PUSH BUTTON, WHITE	2-73
90064-0093	PUSH BUTTON, GREEN	2-73
90064-0098	PUSH BUTTON, CLEAR	2-73, 7-17
90064-0315	LAMP REMOVER, NO:700	9-5
90064-0335	TOUCHGUARD, 704-9645	10-123, 10-125
90066-0021	PUSH BUTTON BOX XAP-M1501	1-67, 1-69, 1-143, 1-145, 1-147, 1-149, 1-151, 1-153
90067-0334	AXIAL BEARING KIT, 32 14 174 9	9-7
90067-0349	ROLLER KIT, 34 73 050 7	9-7
90067-0351	SEAL KIT	9-9
90067-0354	PUMP PISTON	9-9
90067-0355	COMPRESSION SPRING	9-9
90067-0356	TOP WASHER	9-9
90067-0357	REPAIR KIT	9-9
90067-0359	SINK ROD, 34 74 021 7	9-7
90067-0360	MOUNTING KIT, 34 74 022 5	9-7
90067-0363	SLIDER, 32 04 160 1	9-7
90067-0365	HYDRAULIC HOSE, 32 04 169 1	9-7
90067-0369	VALVE ARM	9-9
90067-0370	WHEEL, 32 04 176 6	9-7
90067-0371	SLEEVE, 32 04 175 8	9-7
90067-0372	SHAFT, 32 04 174 1	9-7
90074-0001	CABLE CLIPS, D=10 MM	1-171, 1-173
90074-0026	PIPE CLIP FOR TUBE D=24-35 MM	3-5
90077-0079	FEED THROUGH TERMINAL, 02943.6	2-75, 9-23, 9-29, 9-31
90077-0102	TERMINAL BLOCK, 1952.2	8-65
90077-0113	FEED THROUGH TERMINAL, 10-00102150-1	5-49, 5-51, 10-65
90077-0114	END PLATE, WAP/WDK 2,5	10-65
90077-0122	END PLATE AP/AKZ 2,5	1-13
90077-0123	FEED THROUGH TERMINAL, 017596	1-13
90077-0328	RAIL TS15/5	2-75, 9-23, 9-29, 9-31
90082-0013	OVER VOLT. PROTECT. PU 4C-R 230 VAC	10-135
90082-0301	OVER VOLT. PROTECT. PU 0 C 833951	9-5
90083-0016	PLATE FOR AXK 2035	3-13, 3-15
90087-0002	PIPE PLUG	2-13
90087-0019	PLUG M10X1 STAINLESS	3-9, 3-11, 5-11, 5-37, 6-87
90087-0036	PLUG, KR 1/4	6-33
90089-0002	REDUCING SLEEVE, PR22,5/PR15,2	1-67, 1-69, 1-143, 1-145, 1-147, 1-149, 1-151, 1-153
90089-0004	REDUCING SLEEVE, PR28,3/PR22,5	8-77
90089-0005	REDUCING SLEEVE, PR37/PR28,3	8-77
90089-0007	REDUCING SLEEVE, PR18,6/PR22,5	8-17, 8-19
90090-0005	STEEL BALL 3MM, RB-3/IIIB	4-25, 4-27
90090-0008	STEEL BALL 7,1MM, RB-7.144/III	2-23, 2-25, 2-27
90090-0016	BALL, D=15 MM	1-171, 1-173
90091-0089	ROD SEAL, GLIDORING 16X22X2,5 MM	4-25, 4-27
90091-0091	ROD SEAL, GLIDORING 10X14X1,7 MM	4-5, 4-7, 4-9, 4-11, 4-13, 4-15
90091-0106	SCRAPER 30X40X10 MM	2-13
90091-0137	RADIAL SEAL VARILIP 20X35X7MM	6-65
90091-0162	WEAR RING 16X19X3,2 MM	4-25, 4-27
90091-0169	WEAR RING 12X15X3,2 MM	4-5, 4-7, 4-9, 4-11, 4-13, 4-15
90091-0170	WEAR RING 25X30X4,2 MM	4-25, 4-27
90091-0214	ROD SEAL, GLIDORING 16X20,9X2,2 MM	4-25, 4-27
90091-0215	ROD SEAL, GLIDORING 25X32,5X3,2 MM	4-25, 4-27
90091-0216	PISTON SEAL GLIDE RING 7,1X12X2,2 MM	4-5, 4-7, 4-9, 4-11, 4-13, 4-15
90091-0233	RADIAL SEAL 85X110X12 MM DUST LIP	5-57
90091-0237	ROD SEAL, GLIDORING 20X27,5X3 MM	1-77, 1-79, 1-81
90091-0238	WEAR RING 20X22X10 MM	1-77, 1-79, 1-81
90091-0266	SEAL RING 10,4X16,3X2,5 MM	1-75, 9-37
90091-0305	RADIAL SEAL 40X55X7 MM DUST LIP	5-57
90091-0306	RADIAL SEAL 30X47X7 MM DUST LIP	5-37
90091-0335	PISTON SEAL GLIDE RING 62,5X70X3 MM	1-79
90091-0336	PISTON SEAL GLIDE RING 79X90X4 MM	1-77, 1-81
90092-0052	METERING VALVE 10 MM3	2-23, 2-25, 2-27, 3-9, 3-11, 3-13, 3-15, 4-25, 4-27, 4-49, 4-51, 4-53, 4-67, 4-69, 5-11
90092-0053	METERING VALVE 30 MM3	2-23, 2-25, 2-27, 3-9, 3-11, 3-13, 3-15, 4-25, 4-27, 4-67, 4-69, 5-37
90092-0054	METERING VALVE 50 MM3	5-37
90094-0005	RAIL BRACKET, TSTW 5/5M	10-61, 10-65
90097-0017	FLAT PIN PLUG 6,3MM	10-7, 10-9, 10-11

Part No	Description	Page No
90097-0019	FLAT PIN PLUG 2,8MM	10-7, 10-9, 10-11
90099-0001	NUT PG 9/PR 15,2	2-31, 6-11, 6-77, 6-79
90099-0002	NUT PR 18,6 BRASS	2-17, 6-11
90099-0003	NUT PR 22,5	6-13
90099-0011	NUT PR 37 BRASS	1-143, 1-145, 1-147, 1-149, 1-151, 1-153, 6-11
90099-0057	NUT HEX. M20X1,5	5-23
90099-0085	NUT	2-57
90099-0087	NUT PR=20,4	2-31, 6-11
90099-0104	NUT, PR 15,2 (PG9)	1-155, 1-157, 10-79, 10-81, 10-105, 10-107
90099-0110	NUT, PR 22,5 (PG16)	1-155, 1-157, 10-79, 10-81, 10-141
90099-0117	NUT, PR 18,6 (PG11)	1-143, 1-145, 1-147, 1-149, 1-151, 1-153, 5-37
90099-0119	NUT, PR 28,3 (PG21)	1-9, 1-11, 1-143, 1-145, 1-147, 1-149, 1-151, 1-153, 1-155, 1-157, 10-79, 10-81
90099-0120	NUT, PR 37 (PG29)	1-9, 1-11, 1-143, 1-145, 1-147, 1-149, 1-151, 1-153, 1-155, 1-157, 10-79, 10-81
90099-0131	NUT HEX. M16X2 SS	12-167
90110-0028	CONTACT UNIT 4-POLEADAPTER	10-71
90110-0095	CONNECTOR 3 POLE + EARTH	6-89, 6-91
90110-0127	COAXIAL CONNECTOR, GE 15057C10HBNT-20T	10-91, 10-93, 10-95, 10-97, 10-99, 10-101, 10-103
90110-0150	MALE INSERT 121110 0000	7-33, 8-77
90110-0151	FEMALE INSERT 24-POL 121130 0000	10-87, 10-91, 10-93, 10-95, 10-97, 10-99, 10-101, 10-103
90110-0152	CABLE HOOD 24-POL 70.352.2428.1	8-77
90110-0153	CHASSIS HOUSING 24-P CHI 24, 121240 0000	10-87, 10-91, 10-93, 10-95, 10-97, 10-99, 10-101, 10-103
90110-0156	MALE INSERT 70.210.0653.0	7-33
90110-0163	FEMALE INSERT 70 300 0640 0	10-141
90110-0207	SOCKET	6-75
90110-0226	CABLE HOOD 6-POL 70.350.0628.0	10-141
90110-0243	CONTACT HOUSING 16-POL 70.320.1628.0	10-91, 10-93, 10-95, 10-97, 10-99, 10-101, 10-103
90110-0244	CABLE HOOD 6-POL 70.350.1628.0	7-33
90110-0247	FEMALE INSERT 70.200.0653.0	10-91, 10-93, 10-95, 10-97, 10-99, 10-101, 10-103
90110-0296	FEMALE INSERT HDC-HA-4BS 149840-B/2	10-83, 10-85, 10-91, 10-93, 10-95, 10-97, 10-99, 10-101, 10-103
90110-0346	CABLE HOOD 1211220 00 00	7-33
90110-0371	COVER, HDC-HA-3-TOVL1/11165247-A/1	8-17, 8-19, 8-77
90110-0518	CONNECTOR D-SUB, SUBCON 15/M-SH	9-19
90111-0120	SWITCH, 2 POS.704.510 .0A+704.901.5/A	2-73, 10-123, 10-125
90111-0122	KEY SWITCH, 2 NO CONTACTS	10-123, 10-125
90111-0124	KEY SWITCH, 1NO,1NC CONTACT	10-123, 10-125
90113-0021	AIR PRESSURE REGULATOR	12-127
90113-0056	REGULATOR, 11-818-998	12-125
90113-0059	FILTER REGULATOR 50UM, B08-396-A3MG	12-17, 12-19
90113-0384	BRACKET FOR R11, 5203-06	12-17, 12-19
90115-0054	ROD END, ID=8 MM, M8X1,25	8-69
90115-0173	ROD END, ID=6 MM, M6X1	2-21
90115-0181	ROD END, ID=10 MM M10X1,5	5-7, 5-9
90115-0182	ROD END, ID=10 MM M10X1,5LH	5-7, 5-9
90119-0056	RELAY, AUXILIARY MK3P5-S 24VDC	10-29
90119-0063	OPTO-RELAY, DC/DC AMMS-10-1/30VDC	10-39
90119-0067	SOLID-STATE RELAY, H12WD4850	10-27, 10-49, 10-51, 10-53, 10-55
90119-0086	RELAY, AUXILIARY MY4IN4 24VDC	10-29
90119-0104	OPTO COUPLER AMMS 50070	10-39
90119-0109	RELAY OMRON 24VDC MY4H	10-29
90119-0309	BASE UNIT, TYPE PYF 14AE	10-29
90119-0310	CLAMP, TYPE PYC-A1	10-29
90121-0099	RESISTANCE FIXED, 100 KOHM, 6 W	12-105
90121-0132	RESISTANCE FIXED, 0,51 KOHM, 0,25 W	10-65
90125-0020	PLATE COMPLETE	1-39
90129-0006	BASE, S3-B	10-29
90134-0003	BUSHING	2-23, 2-25, 2-27
90134-0004	PIPE CONNECTION R1/8	5-11, 5-37
90134-0030	SLEEVE FOR PLASTIC TUBE	2-23, 2-25, 2-27, 6-87
90134-0031	SLEEVE FOR PLASTIC TUBE	2-23, 2-25, 2-27, 3-9, 3-11, 5-11, 5-37
90134-0034	NIPPLE	2-23, 2-25, 2-27, 2-31
90134-0038	BUSHING/NUT INLET/OUTLET 4 MM	2-23, 2-25, 2-27, 3-9, 3-11, 3-13, 3-15, 5-37
90134-0039	BUSHING VALVE CONNECTION 2,5 MM	2-23, 2-25, 2-27, 3-9, 3-11, 3-13, 3-15, 4-53, 4-67, 4-69, 5-11, 5-37
90134-0040	BUSHING VALVE CONNECTION 4 MM	5-37
90134-0042	SPACER DOSING VALVE	4-25, 4-27
90134-0045	PLUG M12X1	4-25, 4-27
90134-0047	CONNECTION FOR DOSING VALVE	4-25, 4-27
90134-0051	SPACING COLLAR DOSING BLOCK	5-37
90134-0052	PLUG DOSING BLOCK	3-9, 3-11, 5-37
90134-0055	BUSHING/NUT INLET/OUTLET 6 MM	5-37, 6-87
90134-0058	CONNECTION	3-5, 3-9, 3-11, 3-13, 3-15, 4-5, 4-7, 4-9, 4-11, 4-13, 4-15, 4-25, 4-27, 4-49, 4-51, 4-53, 5-7, 5-9
90134-0065	CONNECTION M6 TUBE 2,5 MM	5-41
90134-0066	CONNECTION M6 TUBE 4 MM	4-67, 4-69
90134-0068	CONNECTION	3-29, 3-31, 4-49, 4-51, 4-67, 4-69
90135-0019	CLAMP ZB 35	10-69
90135-0026	EARTH TERMINAL, 3802.6	2-75, 9-23, 9-29, 9-31
90135-0034	SHIELD CLAMP KLBU 3-8	10-37, 10-67
90135-0039	SHIELD CLIP KLBU 4-13.5	10-23, 10-37, 10-67
90135-0042	EARTH TERMINAL, 130336	1-13
90135-0044	EARTH WIRE, L=320 MM 16 MM2	10-71, 10-105, 10-107, 10-109, 10-111, 10-123, 10-125

Part No	Description	Page No
		10-137, 10-139
90136-0001	PLUG, EXT. THREAD, NO. 100727	1-7, 1-43, 1-45
90136-0002	PLUG 5/16"24	2-23, 2-25, 2-27
90137-0010	BANJO CONN. M6, D=2,5 MM	2-13
90140-0010	T-PIPE, INT. THREAD, 20031/2	6-29, 6-93, 6-95
90140-0015	T-PIPE, INT. THREAD, 2003-1/8	1-9, 1-11, 12-17, 12-19
90140-0018	T-PIPE, INT. THREAD, 2003-1/4	12-125
90140-0023	T-PIPE, INT. THREAD, NO. 2070-3/8-3/8	6-93, 6-95
90141-0015	RETAINING RING FOR SHAFT DIN 471 8 A2	7-13, 7-47, 7-51, 7-53, 8-15, 12-159, 12-161
90141-0016	RETAINING RING FOR SHAFT DIN 471 10 A2	1-35, 7-13, 7-19, 7-21, 7-23, 7-25, 7-27, 7-29
90141-0017	RETAINING RING FOR SHAFT DIN 471 17 A2	1-19, 5-39
90141-0022	SNAP RING B 16	1-41, 1-63
90142-0005	HOSE	3-5
90143-0010	STRIP	2-13
90143-0012	STRIP	2-13
90143-0020	STRIP	6-63
90143-0028	STRIP	5-75
90143-0029	STRIP	8-35, 8-61, 12-41, 12-43
90143-0057	STRIP EMKA 1011-05 21X11MM	2-73, 10-75, 10-77
90143-0059	SEAL STRIP 4610069	1-9, 1-11, 2-9, 10-141
90143-0060	EDGE STRIP 9,5X6,3MM BLACK PVC	2-53, 2-55, 6-11, 8-11, 8-13, 8-77
90143-0062	STRIP	6-53
90143-0068	RUBBER STRIP EMKA 1011-06	2-35, 2-37, 2-39, 2-41, 2-65, 2-67, 6-5, 6-7, 8-11, 8-13
90143-0073	RUBBER STRIP	10-75, 10-77
90143-0076	PROFILE	2-49, 2-51
90143-0094	SEAL	10-109, 10-111, 10-133, 10-143
90144-0003	TAPE	6-99, 9-39
90144-0030	TAPE	8-67
90144-0072	TAPE SCOTCH VHBS 4945 W=12,7MM	8-11, 8-13, 10-89, 10-121, 10-137
90144-0073	TREBOFLON-TAPE W=13MM	1-7, 1-9, 1-11, 1-91, 1-93, 3-5, 5-37, 6-65
90148-0037	HYDRAULIC HOSE	2-23, 2-25, 2-27
90148-0038	HYDRAULIC HOSE	2-23, 2-25, 2-27
90151-0001	BRASS PIPE DI=2,6 MM	2-23, 2-25, 2-27
90152-0016	HOSE (SPIRAL)	2-43
90152-0017	HOSE (SPIRAL)	2-45
90152-0050	SPIRAL CONDUIT, 20X13, UL 1313	1-21, 1-23, 8-79
90152-0051	SPIRAL CONDUIT, 25X18, UL 1816	2-13, 2-35, 2-37, 2-69, 3-7, 5-75, 6-59, 6-65, 6-89, 6-91
		7-17, 7-33, 8-17, 8-19, 8-25, 8-27, 8-29, 8-45, 8-47, 8-49, 8-77
90152-0058	SPIRAL CONDUIT, 15X9, UL 0909	5-57, 8-77
90152-0059	SPIRAL CONDUIT, 18X12, UL 1211	2-11, 2-13, 6-13, 6-61, 6-75, 6-77, 6-79, 6-87, 6-89, 6-91
		8-65, 8-77, 8-79
90152-0060	SPIRAL CONDUIT, 42X35, UL3529	1-9, 1-11, 2-57
90152-0070	METAL HOSE, 32,5X26, UL 2621	1-9, 1-11, 1-21, 1-23, 1-43, 1-45, 2-13, 5-37, 7-33, 8-79
90153-0015	ADHESIVE,LOCTITE IS 496/CYANOLOT 303	4-5, 4-7, 4-9, 4-11, 4-13, 4-15, 9-3
90153-0016	ADHESIVE,TUBE 100G RHODORSIL CAF 3	1-21, 1-23
90153-0017	ADHESIVE, 2963 TUBE 160G	2-13
90153-0020	ADHESIVE, BOSTIK 1782 125ML	1-43, 1-45
90153-0023	ADHESIVE, SILICON 251470 TUB 90CC	1-21, 1-23, 5-13, 5-15, 5-17, 5-19, 5-21
90153-0035	ADHESIVE, CLIMAFLEX 1632864	6-15, 6-17, 6-19
90153-0043	ADHESIVE, LOCTITE 495 20G	1-9, 1-11
90153-0048	ADHESIVE,DEVCON TYPE 5-MIN-EPOXI 28G	6-61
90153-0060	ADHESIVE, 3M DP-190 B/A	2-73
90155-0008	HANGER CHAIN, 18	1-15, 1-19
90155-0016	CHAIN LONG LINK, LLB-3-R	1-133
90157-0016	LOCKING FLUID LOCTITE 242 50 ML	1-165, 2-13, 3-5, 3-9, 3-11, 3-13, 3-15, 3-19, 3-21, 7-11
90157-0021	LOCKING FLUID LOCTITE 270	4-61, 4-63
90157-0022	SEALING COMPOUND, SILICONE	2-13, 2-39, 2-41, 5-37
90157-0037	THREAD SEALANT LOCTITE 542	1-67, 1-69
90157-0041	SEALING COMPOUND, RHODORSEAL 5651	2-9, 2-35, 2-37, 2-65, 2-67, 6-5
90161-0001	O-RING MATERIAL 3 MM	2-5, 2-7
90163-0007	CONNECTION	12-23, 12-125
90163-0013	QUICK COUPLING, (F) LP 006-0-WR013-01-2	2-43, 2-45
90163-0014	QUICK COUPLING, (M) LP-006-1-WR013	12-127
90163-0015	QUICK COUPLING, (M) LP-006-1-WR513	2-43, 2-45
90163-0016	QUICK COUPLING, (F) LP 006-0-WR013	6-35, 12-125
90163-0046	SLEEVE LP-004-0-WR 0510-21-1 BRASS	5-37
90163-0048	NIPPLE LP-004-2-WR 510-23-1	5-11
90163-0052	HOSE NIPPLE, EXT.THR. 1/4-12 MM	5-69, 6-87
90163-0056	QUICK COUPLING, (F) 5054-6/4	12-17, 12-19
90163-0057	QUICK COUPLING, (M) 5150-1/8	1-67, 1-69, 1-87, 12-17, 12-19
90163-0062	QUICK COUPLING, (F) 5053-1/8	1-67, 1-69, 1-87, 5-37
90163-0064	QUICK COUPLING, (M) LP-006-2-WR517	6-87
90163-0076	QUICK COUPLING, (F) LP-006-0-WR021	6-89, 6-91
90163-0087	QUICK COUPLING, (M) 5150-1/4	12-17, 12-19
90163-0113	QUICK COUPLING, (M) LP-006-1-WR013-22	12-125
90163-0304	QUICK COUPLING, LP-006-5-74-KU (DUST CAP	6-87
90164-0015	LIGHT FIXTURE, RL70CV-111 / 230V 50HZ	2-11, 8-77
90164-0301	HOLDING FIXTURE	2-17
90165-0002	PIPE CLIP FOR TUBE D=4 MM	2-23, 2-25, 2-27, 3-9, 3-11, 3-13, 3-15
90165-0010	CLIP	8-31, 8-33, 12-37, 12-39
90165-0022	PIPE CLIP, FOR TUBE D=2,5 MM, B-3570	2-23, 2-25, 2-27, 3-9, 3-11, 3-13, 3-15
90165-0023	CLIP	2-23, 2-25, 2-27
90165-0039	PIPE CLAMP D=15 MM, GSK15/12	2-23, 2-25, 2-27
90165-0056	PIPE CLIP FOR TUBE D=4 MM	8-25, 8-27, 8-29

Part No	Description	Page No
90165-0057	PIPE CLIP FOR TUBE D=6 MM	6-87
90165-0065	PIPE CLAMP D=8 MM, GSK08/12	2-23, 2-25, 2-27, 3-13, 3-15, 3-29, 3-31
90165-0099	PIPE CLAMP, DOUBLE, RBP-108, D=8 MM	2-31
90166-0008	HOSE 7/10 PVC TRANSP.	6-13
90166-0013	TUBE 8 MM PA BLUE	5-37, 6-15, 6-17, 6-19
90166-0045	HOSE PVC TRANSP. 6/12	12-23
90166-0049	HOSE PVC 25/33-34	1-135
90166-0059	HOSE PVC 12/16MM TRANSP.	8-25, 8-27, 8-29, 8-45, 8-47, 8-49
90166-0060	HOSE 19/26-27 REINF.PVC	3-5
90166-0061	HOSE 4/8 PVC TRANSP.	6-41, 6-43
90166-0068	TUBE 12 MM PA BLUE	6-15, 6-17, 6-19, 6-93, 6-95, 7-67
90166-0081	TUBE 6 MM PA BLUE	2-23, 2-25, 2-27, 2-31, 6-15, 6-17, 6-19, 7-67
90166-0089	HOSE 4/6.2 PE BLUE	5-71, 5-73
90166-0090	HOSE 6/8.4 PE BLUE	5-71
90166-0095	TUBE 4 MM PA BLUE (50M)	4-29, 4-31, 4-33, 7-19, 7-67
90166-0108	TUBE 6 MM PA,TRANSP.	2-23, 2-25, 2-27, 2-31, 5-25, 5-27, 6-87
90166-0109	TUBE 4 MM PA,TRANSP.	2-23, 2-25, 2-27, 3-13, 3-15, 4-67, 4-69, 5-11, 5-37
90166-0113	HOSE	5-69, 6-87, 12-23
90166-0117	HOSE 4/6 PVC BLUE	12-127
90166-0118	TUBE 8 MM PA BLACK	2-23, 2-25, 2-27, 2-31, 6-15, 6-17, 6-19, 6-85
90166-0119	HOSE PUR 4/6 BLACK	1-95, 1-97, 1-161, 1-163, 6-15, 6-17, 6-19
90166-0124	TUBE 6 MM PA,TRANSP.	1-129, 12-17, 12-19
90166-0132	TUBE 6 MM PA,TRANSP.	1-7, 1-9, 1-11, 1-95, 1-97, 1-161, 1-163, 1-171, 1-173, 2-53, 2-55
90166-0133	TUBE 8 MM PA,TRANSP.	3-5
90166-0135	TUBE 10 MM PA BLACK	2-45
90166-0138	HOSE	6-61, 8-35, 8-61, 12-41, 12-43
90166-0143	TUBE 2,5 MM PA,TRANSP.	3-9, 3-11, 3-13, 3-15, 4-25, 4-27, 4-53, 4-67, 4-69, 5-11, 5-37
90166-0159	RUBBER HOSE	4-17, 4-19, 4-21, 4-23
90166-0193	TUBE 6 MM PUR BLUE	7-19
90166-0244	RUBBER HOSE	6-59
90166-0245	RUBBER HOSE	6-59
90181-0037	CABLE DUCT 25X40MM	10-143
90181-0053	CABLE DUCT 40X80MM	10-145
90181-0054	CABLE DUCT 60X80MM	10-71, 10-123, 10-125
90181-0057	CABLE DUCT 120X80MM	10-147
90181-0060	CABLE DUCT 40X100MM	10-13, 10-15, 10-17
90181-0061	CABLE DUCT 60X100MM	10-13, 10-15, 10-17
90181-0062	CABLE DUCT 100X100MM	10-13, 10-15, 10-17
90181-0064	LOCK ZP1 FOR CHANNEL T1	10-13, 10-15, 10-17, 10-123, 10-125
90181-0067	DIVIDING PLATE SEP80	10-13, 10-15, 10-17, 10-123, 10-125
90181-0088	PLASTIC RIVET, PR 52314	10-123, 10-125, 10-143
90181-0174	CABLE DUCT	10-13, 10-15, 10-17
90181-0190	CABLE DUCT, WALL BRACKET, B4 MINI	2-53, 2-55
90181-0313	RIVET DUCTAFIX R4	10-13, 10-15, 10-17, 10-109, 10-111, 10-145, 10-147
90187-0029	BALL VALVE G1/2, NPBR	6-29, 6-31, 6-93, 6-95
90187-0045	BALL VALVE G1/4 CR PL	12-23, 12-125
90187-0059	BALL VALVE FOR HYDR.PER. G1/2 3MM HOLE	6-61, 6-67
90187-0062	BALL VALVE G1/2, NPBR	6-85
90187-0082	BALL VALVE G1/2	1-89
90187-0104	MKS SAFETY VALVE, PRESCOR DN20/1,5BAR	6-85
90187-0105	PURGING VALVE, G3/8 FOR WATER	1-21, 1-23
90187-0112	COCK VALVE, G1/4, 4-WAY, VITON	1-89
90191-0047	WHEEL, NO.798 821	12-25
90191-0060	CASTOR WHEEL, NO. 1599PRT	12-25
90194-0016	WARNING SIGN, RISK OF ELECTRIC SHOCK	1-13, 2-19, 5-49, 5-51
90194-0080	SIGN, IDENTIFICATION OF WIRING	10-139
90194-0133	SIGN "DELIVERED DESIGN"	2-73
90194-0152	SIGN, EARTH	10-31
90194-0163	SIGN, EARTH WITHIN CIRCLE	10-13, 10-15, 10-17, 10-71, 10-75, 10-77, 10-83, 10-85, 10-105, 10-107, 10-109, 10-111, 10-123, 10-125, 10-133, 10-137, 10-139
90195-0020	TERMINAL BLOCK, BK 2CRN; 0624720000	2-17, 6-13
90195-0028	TERM.BLOCK 6-POLE STEATIT	1-43, 1-45
90195-0029	CONN. LINK NO324 FOR -28	1-43, 1-45
90199-0020	LEVEL GLASS/THERMOM. FSA 76.1.1./T/12	6-89, 6-91
90201-0014	VALVE	6-89, 6-91
90201-0058	SOLENOID VALVE DC 24V	6-89, 6-91
90201-0098	ADJ. FLOW CON. VALVE, NO. 9 PCCM 400SF	9-11
90201-0131	VALVE	6-89, 6-91
90201-0132	VALVE	6-89, 6-91
90201-0133	VALVE	6-89, 6-91
90201-0136	DIRECT CHECK VALVE, NO. DGMDC-3-Y-PK-41	6-89, 6-91
90201-0407	BOLT KIT	6-89, 6-91
90206-0031	HEATING ELEMENT 700+1200W, 220V	1-39, 9-35
90206-0053	HEATING ELEMENT 230V 1200W	8-65
90206-0070	HEATING ELEMENT 6000W 380/220V	1-21, 1-23, 9-35
90206-0322	GASKET	1-39
90206-0326	JUNCTION BOX FOR 90206-56	1-21, 1-23
90207-0363	GASKET	1-75, 9-37
90207-0365	GASKET	1-75, 9-37
90208-0031	BUSHING	5-59, 5-61
90208-0080	CLAMPING ELEMENT WITH SLEEVE, 25X34 MM	3-19, 3-21
90208-0091	CLAMPING ELEMENT WITH SLEEVE, 60X77 MM	3-19, 3-21
90208-0120	CONE CLAMP. ELEMENT 22/32, L=25	3-5
90214-0092	BALL BEARING, 17X30X7 MM	5-39

Part No	Description	Page No
90214-0098	BALL BEARING, 15X35X11 MM	8-25, 8-27, 8-29
90214-0122	BALL BEARING, 30X72X27 MM	5-63
90214-0138	BALL BEARING, 5X19X6 MM	7-35, 7-37, 7-39, 7-41
90214-0166	BALL BEARING, 20X37X12 MM	4-59
90214-0207	BALL BEARING, 15X32X9 MM	7-11
90214-0303	SEALING RING, 18,6X35X2 MM	1-57
90217-0041	NIPPLE LKBN, RD 60-6 - R1 1/2 M	5-81
90217-0203	UNION NUT, 1 APV, 07-01-276/17	1-15
90217-0204	ASEPT. MALE FITTING ISO, 03-32-406/42	1-133
90217-0206	UNION NUT, 1 1/2 APV, 07-01-376/17	1-133
90217-0207	ASEPT. MALE FITTING ISO, 03-32-456/42	1-67, 1-69
90217-0209	UNION NUT, 2 APV, 07-01-426/17	1-67, 1-69
90217-0312	CLAMP, ISO2852 FOR PIPE 101,6 MM	6-77, 6-79
90217-0313	GASKET 97,8X121,2X5,5 MM	6-77, 6-79
90217-0347	GASKET 32X22,6X3,6 MM	1-7, 1-15, 1-67, 1-69, 1-133, 1-135, 1-137
90217-0348	GASKET 35,4X46,8X4 MM	1-7, 1-67, 1-69, 1-133, 1-137
90217-0349	GASKET 48,4X59,8X4 MM	1-67, 1-69
90220-0034	THERMOCABLE TEX/SITW-20F-KX 2X0,5MM2	2-13, 5-13, 5-15, 5-17, 5-19, 5-21
90220-0057	CABLE TLPE 1X06MM2	12-105
90220-0058	CABLE, POWER SUPPLY, RKK 2M	12-109
90220-0059	THERMOCOUPLE CABLE K/PVC/20AWG 2X0,5MM2	1-15, 1-21, 1-23, 1-35, 1-39, 1-43, 1-45, 1-63, 1-67, 1-69, 1-137, 10-29, 10-123, 10-125
90220-0072	SCR. CABLE 4X0,34MM2	1-9, 1-11
90220-0085	CABLE, MULTI-CONDUCTOR SCREENED	1-185
90220-0091	PAIR TWISTED CABLE 2X2X0,25MM2	1-181, 9-19, 10-73
90220-0092	PAIR TWISTED CABLE 3X2X0,25MM2	10-13, 10-15, 10-17
90220-0104	SCR. CABLE 4X1,5MM2	1-47, 2-13, 8-17, 8-19, 9-3, 10-83, 10-85
90220-0105	SCR. CABLE 4X2,5MM2	3-7
90220-0107	SCR. CABLE 5X0,75MM2	4-31, 4-33
90220-0183	SCR. CABLE 2X0,34MM2	10-13, 10-15, 10-17, 10-41, 10-143
90220-0305	CLAMP FOR SCR.CABLE, 16MM,	10-31
90224-0094	NIPPLE	6-93, 6-95
90224-0296	CONN. BULKHEAD, ART.NO. 116 1500	6-41, 6-43
90224-0303	CONN. ELBOW 1020-8-1/4	12-17, 12-19
90224-0308	CONN. BANJO, ART. NO. 2023-1/8-1/8	1-67, 1-69, 1-87
90224-0372	CONN. STRAIGHT ESK-1/4-1/4 151521	6-35
90226-0004	CABINET	12-11
90226-0452	MOUNTING SCREW	1-9, 1-11
90226-0455	BLIND PLATE ABB 1666060	10-109, 10-111
90230-0025	NON-RETURN VALVE, 12MM, L=85	1-89
90230-0026	NON-RETURN VALVE RHZ 10-PLR-ED	6-89, 6-91
90230-0028	NON-RETURN VALVE H 151 R 3/8"	6-25
90230-0064	CHECK VALVE, 6 MM HIGH TEMP.	1-9, 1-11
90232-0103	PH.CELL E3S-CT61-L-5M	9-21, 9-25, 9-27
90232-0104	PH.CELL E3S-CT61-D-5M	9-21, 9-25, 9-27
90232-0123	PH.CELL WLL170-P135-6011723	8-79
90232-0347	FIBRE LL3-TB01 5 308050	8-77
90233-0027	TUBE FUSE, 16A	9-5, 10-115
90233-0028	TUBE FUSE, 10A	10-115
90233-0029	TUBE FUSE, 25A	9-5, 10-115
90235-0259	VALVE	1-67, 1-69, 1-95, 1-97, 7-67
90235-0274	THROTTLE CHECK VALVE, G1/8", SCU-604-1/8	1-39, 1-57, 1-59, 1-67, 1-69, 1-125, 1-127
90235-0280	THROTTLE CHECK VALVE,M5	1-35, 1-161, 1-163
90235-0289	VALVE	7-13, 7-19
90235-0297	VALVE 3/2, OPEN/CLOSED	6-15, 6-17, 6-19
90235-0450	PLATE	6-41, 6-43
90235-0708	VALVE	6-41, 6-43
90235-0844	THROTTLE CHECK VALVE, M5, MANUAL, 6MM	2-21
90236-0041	BRACKET	1-9, 1-11
90237-0046	MAGNETIC LOCK, 46X33X15 MM	7-31, 7-35, 7-37
90237-0128	LOCK CYLINDER, 1109-U3	2-65, 2-67, 6-5, 6-7, 8-11, 8-13, 10-105, 10-137, 10-139
90237-0129	LOCK CYLINDER, 1109-U6	6-5, 10-107
90237-0150	TURNING HANDLE, NO. 1125-U190-0A	8-11, 8-13, 10-105, 10-107, 10-137, 10-139
90237-0153	LOCK HOUSING, 1121-U26-0B	2-65, 2-67, 6-5, 6-7
90237-0154	LOCK HOUSING, 1121-U60-0C	8-11, 8-13, 10-105, 10-107, 10-137, 10-139
90237-0155	LOCK ADAPTER, 1121-U40	8-11, 8-13, 10-105, 10-107, 10-137, 10-139
90237-0156	LOCK BOLT, 1000-16	8-11, 8-13, 10-105, 10-107, 10-137, 10-139
90237-0157	LOCK BOLT, 1000-230	2-73, 10-71, 10-109, 10-111, 10-121, 10-123, 10-125, 10-129, 10-131
90237-0175	TURNING HANDLE, 1125-U185-0A	6-5, 6-7
90237-0176	TURNING HANDLE, 1125-U190-A	2-65, 2-67, 10-105, 10-107, 10-137, 10-139
90237-0319	LOCK HOUSING, 1000-U134	2-73, 10-71, 10-109, 10-111, 10-121, 10-123, 10-125, 10-129, 10-131
90237-0320	LOCK HOUSING, 1000-U136	2-73, 10-71, 10-109, 10-111, 10-121, 10-123, 10-125, 10-129, 10-131
90237-0322	LOCK GASKET, 1000-U137	10-71, 10-109, 10-111, 10-121, 10-123, 10-125, 10-129, 10-131
90237-0323	LOCK O-RING, 1000-24	10-121, 10-129, 10-131
90239-0357	ROD END, CLEVIS WITH AXLE M10X1,25	4-31, 4-33
90239-0405	ROD END,BALL JOINT EYE M10X1,25	1-57, 2-5, 2-7
90239-0453	BRACKET	1-57, 1-59, 1-125, 1-127, 1-139
90239-0460	BRACKET	1-35
90239-0486	REAR,CLEVIS,MINI-ISO 16	2-21
90239-0487	REAR,CLEVIS,MINI-ISO 20-25	1-39
90239-0489	ROD END, CLEVIS WITH AXLE M6X1,25	1-177
90239-0491	ROD END,BALL JOINT EYE,MINI-ISO M6	7-19
90239-0516	ROD END, CLEVIS WITH AXLE M10X1,25	1-35, 1-37, 1-59, 1-125, 1-127, 1-139
90239-0532	ROD END, CLEVIS WITH AXLE M8X1,25	1-35, 1-39

Part No	Description	Page No
90239-0773	CYLINDER	1-57, 1-59
90239-0779	CYLINDER	1-35, 1-125, 1-127, 1-139
90239-0817	DOUBLE ACTING, MINI-ISO, CYL.16-50	1-177
90239-0819	DOUBLE ACTING, MINI-ISO, CYL.16-100	7-13
90239-0840	DOUBLE ACTING, MINI-ISO, CYL.16-12	1-129
90239-0842	DOUBLE ACTING, MINI-ISO, CYL.16-50	2-21
90239-0847	DOUBLE ACTING, MINI-ISO, CYL.20-50	1-39
90240-0048	PLAIN BEAR,SELF ADJ.SPHER. 25X42X20 MM	3-9, 3-11, 3-13, 3-15
90240-0050	PLAIN BEAR,SELF ADJ. 20X35X24	3-9, 3-11, 3-13, 3-15
90240-0073	BEARING BUSHING W/O FL, 16X18X20 MM	2-5, 2-7
90240-0094	BEARING BUSHING W/O FL, 50X55X40 MM	5-23
90240-0121	FLANGE BUSHING, 8X10X12 MM	8-21
90240-0146	FLANGE BUSHING, 15X21X20 MM	1-21, 1-23
90240-0152	PLAIN BEAR,SELF ADJ.SPHER.12X22X10 MM	4-59
90240-0172	FLANGE BUSHING, 8X12X10 MM	1-103, 1-105, 1-107, 1-109, 1-111, 1-113, 1-115, 1-119, 1-121, 1-125, 1-127
90240-0180	FLANGE BUSHING 10X14X15MM	4-65
90240-0262	FLANGE BUSHING, 12X14X12 MM	5-7, 5-9
90240-0287	BUSHING, 10X12X10 MM	7-49
90240-0331	FLANGE BUSHING, 10X12X17 MM	5-53
90240-0332	FLANGE BUSHING, 16X18X12 MM	5-53
90242-0093	O-RING MATERIAL 1,5 MM	4-5, 4-7, 4-9, 4-11, 4-13, 4-15
90243-0061	AIR GUN, CEJN SERIE 204 ED: 90459-0173	2-43
90243-0118	TOOL BOX, NO. ZERO 105X-SI	12-21
90243-0126	PROTECTIVE GOGGLES	12-101
90243-0133	CONTAINER	8-11, 8-13
90243-0134	FLOW METER, EK-4244	6-37
90243-0136	SPIRIT LEVEL	12-11
90243-0137	PRESSURE GAUGE KIT 0-50 MM WC, 229900	12-17, 12-19
90243-0147	FLOW METER	12-17, 12-19
90243-0317	LASER	12-105
90243-0318	GLASS ROD	12-105
90243-0319	VOLTAGE SUPPLY UNIT	12-105
90245-0024	MATCHING TRANSF. 65 KVA	12-7
90245-0029	TRANSFORMER, 1280-3660/TP 182	10-75, 10-77
90248-0026	HINGE, 1703-80X32	8-25, 8-27, 8-29, 8-45, 8-47, 8-49
90248-0034	HINGE, 66073	6-41, 6-43
90248-0047	HINGE, 1150-U50	2-73
90257-0001	FILTER PLUG ART.NO.8145-00-140 TYPE F14	1-9, 1-11
90257-0002	FILTER PLUG, NO. 8145-00-120 TYPE F12	5-69
90258-0031	PIN, STRAIGHT SLOTTED SPRING FRP 3X20	4-59
90259-0308	CONN.TERM.K&M BK 25/3-PKZ0	10-117
90259-0311	3 POLE BUSBAR K&M B3.1/5	10-117
90259-0313	AUX. CONTACT K&M NHI21-PKZM0	10-117
90259-0315	BUS BAR 3-POLE, K&M B 3.1/2-PKZM1	10-117
90261-0049	PLUG, BLIND, PLASTIC, NO. SR1750	7-11
90261-0071	PLUG, BLIND, PLASTIC, NO. GPN500B58	1-21, 1-23
90261-0073	PLUG, BLIND, PLASTIC, NO. GPN250/15	5-69
90266-0006	TUBE	2-23, 2-25, 2-27
90266-0019	PIPE	2-23, 2-25, 2-27, 3-9, 3-11, 3-13, 3-15, 4-67, 4-69
90270-0017	COMPRESSOR NASH/ELMO 112 MB/4-2083	6-59
90270-0347	VALVE	6-29
90274-0045	PRESSURE GUARD, 14 KPA	2-19
90274-0066	PRESSURE SWITCH, 5,516 - 689,5 KPA	1-9, 1-11
90274-0084	PRESSURE GUARD, 1800 KPA	6-87
90277-0055	FILTER HOUSING / MDS 4463 G 08 H	1-89
90277-0062	FILTER HOUSING SS-4TF2-60	1-7
90277-0104	FILTER F64B-2GN-ARO	1-9, 1-11
90277-0323	FILTER HOUSING / ART.NO 95S6-1/4 S 5430	1-9, 1-11
90277-0324	FILTER CARTRIDGE 050-11-A	1-9, 1-11
90277-0407	FILTER ELEMENT 60Âµ, SS-4F-K4-60	1-7
90278-0001	PUMP	12-11
90279-0001	OIL CAN 0,4L, 42AM FLEX	12-11
90287-0075	SCREW SLOT. PAN HEAD LKCS M6X12	2-9, 2-13, 2-21, 2-65, 2-67, 4-31, 4-33, 6-9, 6-53, 8-7, 8-11, 8-13, 8-15
90287-0076	SCREW SLOT. PAN HEAD LKCS M6X20	2-13
90287-0081	SCREW MC6S M6X10 129	3-5
90287-0106	SCREW SPRINGLOAD. SLOTTED HEAD M10X21	7-11
90287-0112	SCREW SPRINGLOAD. SLOTTED HEAD M8X16	7-21, 8-5
90287-0143	SCREW ISO4762 M6X25 12.9	3-13, 3-15
90287-0144	SCREW ISO4762 M6X35 12.9	3-13, 3-15
90287-0145	SCREW ISO4762 M5X16 12.9	3-19, 3-21
90287-0148	SCREW SPRINGLOAD. SLOTTED HEAD M5X12	7-61
90287-0163	SCREW SPRINGLOAD. SLOTTED HEAD M6X14	3-27
90287-0167	SCREW SPRINGLOAD. SOCK. HEX HEAD M6X20	8-39, 8-41
90287-0170	DISTANCE SCREW	12-103, 12-107
90287-0295	SCREW HEX.SOCK.COUNT.MF6S M3X8 A280	4-5, 4-7, 4-9, 4-11, 4-13, 4-15
90287-0314	SCREW MC6S M4X60 A280	1-67, 1-69
90287-0316	SCREW	8-11, 8-13
90287-0335	SCREW MC6S M8X90 A280	5-13, 5-15, 5-17, 5-19, 5-21
90288-0066	ROLLER CHAIN, SINGLE 3/8 -365	1-21, 1-23
90296-0053	SHELL TELLUS OIL T 32	6-99
90296-0068	SHELL ALVANIA GREASE EP 2	3-5, 4-25, 4-27
90296-0070	SHELL ALVANIA GREASE EP 1	5-57, 5-63

Part No	Description	Page No
90296-0073	SHELL OMALA OIL 220	5-65, 5-69
90296-0075	SHELL OMALA OIL 320, DRUM 208 LITRES	3-5, 6-99
90296-0091	LUBRICATION GREASE	1-177, 1-179
90297-0006	FLUORESCENT TUBE, PL9	2-17
90297-0306	BALLAST COIL 50/60 HZ	10-13, 10-15, 10-17
90298-0019	DETERGENT, SU 118, 20 LITRES	6-99, 9-39
90299-0072	INK	8-35, 8-61, 12-41, 12-43
90303-0011	PROTECTIVE GOGGLES	9-13
90303-0012	PROTECTIVE GLOVES	9-13
90303-0013	APRON	9-13
90304-0020	RECIPIENTE	6-85
90304-0307	ATTACHMENT PIPE	6-85
90321-0037	PUMP C-6125P EP 220V, 50HZ	6-13
90321-0101	GEAR PUMP	6-75
90326-0012	PROTECTIVE COVER, T31A4618	1-15, 1-21, 1-23, 1-35, 1-39, 1-43, 1-45, 1-63, 1-67, 1-69, 1-137
90326-0020	PLUG, FEMALE YELLOW CR-AL	1-15, 1-21, 1-23, 1-35, 1-39, 1-43, 1-45, 1-63, 1-67, 1-69, 1-137
90326-0022	PLUG, MALE YELLOW CR-AL	1-15, 5-13, 5-15, 5-17, 5-19, 5-21
90326-0048	THERMOCOUPLE, 12826-31	1-35, 1-39
90326-0051	THERMOCOUPLE, 12826-33	1-43, 1-45, 1-63, 1-137
90326-0052	THERMO ELEMENT	1-21, 1-23
90326-0057	THERMOCOUPLE, CR-AL	1-35
90326-0060	THERMOCOUPLE, CR-AL	1-15
90326-0077	CONTACT	5-13, 5-15, 5-17, 5-19, 5-21
90326-0080	THERMOCOUPLE, 5110080-000	5-13, 5-15, 5-17, 5-19, 5-21
90326-0089	THERMOCOUPLE, 5110-089-000	1-67, 1-69
90326-0304	LEAD IN, 9041-15-KS-UB60	1-35, 1-39
90326-0306	GLAND FITTING 9041-45-KS-KR.1/8" D=4,5MM	1-35, 1-39
90328-0002	SILENCER, 338/12D	1-89
90328-0003	SILENCER, 338/110	1-95, 1-97
90328-0020	SILENCER U-M5,	1-177
90328-0025	SILENCER G1/2"	6-15, 6-17, 6-19, 12-23
90328-0026	SILENCER G1/4"	1-9, 1-11, 1-87, 1-181, 9-35
90328-0029	SILENCER M5	7-13
90328-0047	SILENCER G1/8"	1-67, 1-69, 6-45, 6-47
90330-0012	SLEEVE, REDUCTION, INT, R-2021/4X1/8	6-93, 6-95
90330-0013	NIPPLES, EXT. THREAD. ISO 7/1 R1/4-R1/8	1-91, 1-93
90330-0019	NIPPLES, EXT. THREAD. R1/2-R3/8	6-29
90330-0020	ELBOW, 90 INT. THREAD, R-2221/2	6-61, 6-77, 6-79
90330-0021	NIPPLES, EXT. THREAD. R-207R1/2	1-89, 6-61
90330-0025	BUSHING, INT/EXT. THR. R1/4-RP1/8	1-9, 1-11, 1-95, 1-97
90330-0026	PLUG, EXT. G-THREAD, G1/4	1-9, 1-11
90330-0029	PLUG, EXT. G-THREAD, R-236R3/8	1-37, 1-39, 6-77, 6-79, 6-81, 6-83, 6-89, 6-91, 6-93, 6-95
		12-17, 12-19
90330-0032	NIPPLES, EXT. THREAD. ISO 7/1 R1/8-R1/8	1-67, 1-69, 1-91, 1-93
90330-0037	PLUG, EXT. G-THREAD, G1/2	4-53, 6-59
90330-0043	NIPPLES, EXT. THREAD. R-207R1/4	1-9, 1-11
90330-0046	PLUG, EXT. G-THREAD, R-236G3/4	2-53, 2-55
90330-0066	PLUG, EXT. G-THREAD, G1/8	1-87, 1-95, 1-97, 4-5, 4-7, 4-9, 4-11, 4-13, 4-15, 5-23, 6-89, 6-91
90330-0078	BUSHING, INT/EXT. THR. R3/4-RP3/8	5-37
90330-0083	NIPPLES, EXT. THREAD. R3/8-R1/4	1-9, 1-11
90330-0085	BUSHING, INT/EXT. THR. R1/2-RP1/4	5-69
90330-0095	T-PIPE, INT. THREAD, R-221-R1/8	1-91, 1-93
90330-0097	NIPPLES, EXT. THREAD, G1/8	2-29
90330-0099	ELBOW, 90 INT. THREAD, R-222R1/8	2-29
90330-0101	NIPPLES, EXT. THREAD, G1/4	5-39
90330-0105	NUT, HEXAGON, R3/8	1-95, 1-97
90330-0106	PIPE COUPLING	1-89
90330-0120	NUT, HEXAGON, G1/4	6-87
90330-0169	ELBOW, 90 INT. THREAD, 4-4FE. SS	1-7
90335-0008	COMP. SPRING 22490, 1,6X14,1X115	1-103, 1-105, 1-107, 1-109
90335-0025	COMP. SPRING 22010, 1X11X26	8-75
90335-0027	COMP. SPRING 22170, 1,25X9,25X33	7-51, 7-53
90335-0036	COMP. SPRING 22450, 1,6X14,1X24	5-13, 5-15, 5-17, 5-19, 5-21, 8-15
90335-0041	TENSION SPRING 42350, 2X14X68	8-25, 8-27, 8-29, 8-45, 8-47, 8-49
90335-0052	COMP. SPRING 23400, 3,2X28,2X94,5	12-89
90335-0064	COMP. SPRING 22270, 1,25X13,75X62,5	8-37
90335-0146	COMP. SPRING, 0,6X7,2X20	7-43
90335-0149	COMP. SPRING, 1,6X9,6X35,5	12-155
90335-0152	COMP. SPRING 22300, 1,25X17,25X40,5	5-41
90335-0216	TENSION SPRING 40910, 0,5X5,5X27,7	7-35, 7-37, 7-39, 7-41, 7-61
90337-0315	FILTER INSERT / MCS 4463	1-89
90337-0342	GLASS-WINDOW D=12,5MM	12-105
90342-0013	BELLOWS	7-13
90344-0022	SPROCKET	3-27
90347-0004	VIBRATION DAMPER D=30 TH=M8 H=17 H2=21MM	2-61, 6-61
90347-0005	DAMPER, NO. F 1006 B	8-73
90347-0024	SHOCK ABSORBER, 370-120-400	7-59
90347-0054	ROTARY DASHPOT, S-CRD-P277	8-43
90347-0108	GAS SPRING NO. 03-08-100-084174	8-15
90347-0144	VIBRATION DAMPER, NO. RA 40EM-A	6-59
90347-0175	MACHINE SHOE BRIK T 125	9-3
90347-0189	SHOCK ABSORBER, 370-050-400	5-23
90348-0007	FREE-WHEEL COUPLING, 15,875X22,225 MM	1-47, 1-61
90355-0048	TORQUE RIGID COUPLING, 22X22 MM	3-17

Machine Type Group Description Page No

Part No	Description	Page No
90360-0020	STEAM TRAP / MK36/51 3/8 INCH	1-67, 1-69
90360-0305	FLOAT, ART NO 10739920	6-77, 6-79
90410-0051	TEMPERATURE CONTROLLER, KS 40	10-123, 10-125
90411-0005	INSULATOR	1-43, 1-45
90413-0033	CODE INSERT SET C 2/16	8-31, 8-33, 8-51, 8-53, 12-27, 12-29, 12-37, 12-39
90413-0043	CODE INSERT SET	8-31, 8-33, 8-51, 8-53, 12-27, 12-29, 12-37, 12-39
90413-0044	CODE INSERT SET	8-31, 8-33, 8-51, 8-53, 12-27, 12-29, 12-37, 12-39
90413-0047	CODE INSERT SET A 2/16	8-31, 8-33, 8-51, 8-53, 12-27, 12-29, 12-37, 12-39
90413-0048	CODE INSERT SET A 9/28	8-51, 8-53, 12-27, 12-29
90413-0049	CODE INSERT SET C 9/28	8-51, 8-53, 12-27, 12-29
90413-0187	CODE INSERT SET	12-7
90413-0188	CODE INSERT SET 0-9 (ARABIC 8MM)	12-7
90413-0189	CODE INSERT SET 0-9 (ARABIC 4MM)	12-7
90413-0190	CODE INSERT SET (ARABIC 4MM)	12-7
90413-0195	CODE INSERT SET 1-31 3MM(SWE-ARABIC)	12-7
90413-0196	CODE INSERT SET 1-12 3MM (SWE-ARABIC)	12-7
90415-0018	FILTER FOR LIME SEPARATING / D MOD.AD	6-29
90415-0019	FILTER / ART.NO. HH-M15-RG	6-29
90415-0022	FILTER / R1 1/2" TYP. 1012	5-81
90415-0033	OIL FILTER REFILLING UC-HP-1229-25	6-87
90419-0307	GASKET	2-47, 2-59
90424-0009	SPRAY NOZZLE 103 DEG	5-71
90424-0010	SPRAY NOZZLE 142 DEG BSPT 1/4 K5	5-37
90424-0016	SPRAY NOZZLE 103 DEG R 1/8 GG8W	5-71
90424-0017	SPRAY NOZZLE	1-65
90424-0025	SPRAY NOZZLE 145 DEG	5-39
90424-0027	SPRAY NOZZLE TIP, 8613-8V-TC	2-13
90424-0032	SPRAY NOZZLE 95 DEG	2-29
90424-0033	SPRAY NOZZLE 76 DEG	2-29
90424-0035	SPRAY NOZZLE 95 DEG	2-29
90424-0054	SPRAY NOZZLE 120 DEG	6-81, 6-83
90424-0068	AIR NOZZLE, G1/4, MOD. 216 BSP	5-23, 5-29, 5-31, 5-33
90424-0070	SPRAY NOZZLE 61 DEG	5-83
90424-0304	GASKET	9-35
90425-0016	MECMAN TYPE E120 735-120-000	12-23
90426-0003	HAND SHOWER	2-45
90432-0023	BRAKE ORTLINGHAUS	3-5
90450-0033	CYLINDER	2-5, 2-7
90450-0160	CYLINDER, CLAMPING MODULE AV-63-10-B	12-127
90450-0281	DOUBLE ACTING,PROF.CYL 32-80	1-41, 1-63
90450-0306	DOUBLE ACTING, MINI-ISO, CYL. 12-25	7-19
90450-0328	DOUBLE ACTING,PROFILE CYL32-25	1-37
90450-0654	BRACKET,REAR,EYE WITH AXLE 32	4-31, 4-33
90450-0669	SENSOR, BRACKET SERIES 168	1-37, 1-63
90450-0756	BRACKET, REAR EYE 32	1-37
90453-0001	MODEM MA-12	9-19
90453-0002	MODEM MD-12 DC	10-73
90457-0013	PUMP-MOTOR BRACKET, LS-211, NO 1711121	6-89, 6-91
90457-0014	FLEXIBLE COUPLING, ND5-A, CON.10X19 MM	6-89, 6-91
90457-0015	HYDR.PUMP, TFP100/2,2-S-C001, NO 1111250	6-89, 6-91
90457-0016	HYDR. VALVE MANIFOLD BLOCK, NO A1-17253	6-89, 6-91
90457-0017	TANK RET. OUTLET PIPE, NO 8185-0187	6-89, 6-91
90457-0018	HYDR.ACCU, NO SBO210-0,32EI/112A-210AK60	6-89, 6-91
90457-0019	LEVEL PROBE, HMFB-S=45-0=80-0=90-T70	6-89, 6-91
90457-0022	HYDR. HOSE, 6,4 & M16X1,5 STR+90DEGR.CON	6-89, 6-91
90457-0023	CONN.STRAIGHTG1/2-M22X1,5, VADKO15-RL/WD	6-89, 6-91
90457-0024	RETURNFILTER UNIT, RF-P/30-BB-010E1.0/-T	6-89, 6-91
90457-0027	INSERT, MULTI HOLE, E155M1X5/4X9	5-49, 5-51, 10-79
90457-0028	INSERT, MULTI HOLE, E154M5X5	5-47
90457-0029	INSERT, MULTI HOLE, E156M5,9,11,19	2-57, 10-75, 10-77
90457-0030	INSERT, MULTI HOLE, EK155M4X9	5-49, 5-51
90457-0031	HOSE GLAND W/O INSERT PG36 NORMAL	2-57
90457-0039	PUMP CONN. ELBOW FLANGE T-26/12-3/8	6-89, 6-91
90457-0047	SENSOR 2750-1-5111-1 W.ADAPTER PNP	1-63
90457-0048	INK JET PRINTER A300 HS	13-3
90457-0049	TERMINAL BLOCK, 102230	10-65, 10-69
90457-0050	BULKHEAD HOUSING 149760	10-83, 10-85
90457-0051	END PLATE	5-49, 5-51, 10-61, 10-63, 10-65
90457-0052	END PLATE	10-61, 10-63
90457-0054	FEED THROUGH TERMINAL, 161527	10-61
90457-0056	FAN 7450 ES	10-13, 10-15, 10-17
90457-0057	GRID FOR FAN LZ36	10-13, 10-15, 10-17
90457-0058	SIGN, LS SHORT STOP	10-123, 10-125
90457-0063	COOLING UNIT, KB17TB.CBB	10-141
90457-0086	BULKHEAD CONNECTOR 6MM	1-7, 1-95, 1-97, 2-53, 2-55
90457-0092	SAFETY RELAY RT9-24VDC	10-39
90457-0100	RESERVOIR, CRVZS-2	6-49
90457-0104	BLANK RIVET 2X7,4	6-41, 6-43
90457-0123	SIGN, MAIN SWITCH	10-75, 10-77
90457-0124	END CAP PSB-END6	10-113, 10-117, 10-119
90457-0125	POWER RAIL SZ-PSB 12 N	10-117
90457-0127	TENSIONER, TYPE SE-F-15	3-5, 3-7
90457-0128	CLAMPING ROLL	3-5, 3-7
90457-0131	PUMP SV805 R22T 50HZ	5-81

Part No	Description	Page No
90457-0132	VALVE, BUTTERFLY, N.O. ZVF1200BSAAO	5-73
90457-0136	FLAT GASKET TAPE W. ADHESIVE, 10X3.0	6-89, 6-91
90457-0137	GASKET, GP IP	6-89, 6-91
90457-0138	GASKET, DP-200	6-89, 6-91
90457-0139	CONN.STRAIGHT G3/8-10 MM, A 10-L/R3/8/WD	6-89, 6-91
90457-0140	CONN.STRAIGHT G3/8-15 MM, A 15-L/R3/8/WD	6-89, 6-91
90457-0141	BULKHEAD CONNECTOR, 8MM	5-13, 5-15, 5-17, 5-19, 5-21
90457-0143	SCREW M6S ISO 4014 M6X130 A480	6-93, 6-95
90457-0146	HOSE GLAND W/O INSERT M16 EXTENDED	1-143, 1-145, 1-147, 1-149, 1-151, 1-153
90457-0147	GLAND, INSERT, MULTI HOLE, 2X7	1-143, 1-145, 1-147, 1-149, 1-151, 1-153, 2-35, 2-37, 2-69, 10-91, 10-93, 10-95, 10-97, 10-99, 10-101, 10-103
90457-0148	SCREW CAP HEAD SQ. NECK M6X100 SS	6-11
90457-0150	FLEXIBLE COUPLING, 10X25 MM	3-33
90457-0151	WORM GEAR UCZ 151 SIZE 125 39:1	3-5
90457-0162	CLAMPING ELEMENT, 00203005	3-33
90457-0172	MOTOR 3GAA 131001-ASA	3-7
90457-0178	EQUAL BULKHEAD ELBOW CONNECTOR 36390800	2-31
90457-0179	ELBOW COUPLING 6179 04 10	2-31
90457-0180	ELBOW COUPLING 6179 06 10	2-31
90457-0181	EQUAL BULKHEAD ELBOW CONNECTOR 31390600	2-31
90457-0182	PIPE CLAMP, D=8 MM, RAPOD8X	2-31
90457-0183	COVER PLATE, DPA0X, FOR 90457-0182	2-31, 2-33
90457-0184	T-CONNECTION 6 MM 6104 06 00	2-31
90457-0192	WASHER PLAIN ROUND, 6,5/18, H=1,5	10-71, 10-75, 10-77, 10-105, 10-107, 10-109, 10-111, 10-123, 10-125, 10-137, 10-139
90457-0199	INSERT EK 156M 5X5/4X9	5-13, 5-15, 5-17, 5-19, 5-21, 5-37
90457-0937	SCREW MC6S M3X40 A480	4-29
90458-0058	SCREW M5X60 A280	8-17, 8-19
90458-0072	SCREW ISO 7380 S M6X12 A2	2-49, 2-51
90458-0073	WASHER 6,4/30, H=1,5	2-49, 2-51
90458-0118	COMPACT DISC RECORDABLE	11-7
90458-0138	PROX. SWITCH, E2EG-X1R5B1-5M	1-87, 3-29, 3-31, 9-35
90458-0145	SEALING, 3X15 MM CLOSED CELL SPONGE	2-9, 2-21, 2-69
90458-0146	HOSE GLAND W/O INSERT PG21 NORMAL	7-33
90458-0147	GLAND, INSERT, MULTI HOLE, 2X6,5	5-49, 5-51
90458-0188	GLAND, INSERT, MULTI HOLE, 1X7/1X10,5	10-91, 10-93, 10-95, 10-97, 10-99, 10-101, 10-103
90458-0220	TENSION ROLLER, M40/60-0-M EXCENTRIC	5-37, 5-57
90458-0254	PRECISION PRESSURE REGULATOR,LRP-1/4-0,7	6-33
90458-0256	PROXIMITY SWITCH IIA 3010-BPKG/6M	2-5, 2-7
90458-0258	TRANSFORMER, 220VAC/6-9-12VAC	10-75, 10-77
90458-0292	BASE, KT70-1001	2-47, 2-59
90458-0293	LIGHT ELEMENT, RED, KL70-401R	2-47, 2-59
90458-0294	LIGHT ELEMENT, YELLOW, KL70-401Y	2-47, 2-59
90458-0295	LIGHT ELEMENT, BLUE, KL70-401L	2-47, 2-59
90458-0302	SIREN WITH ADJUSTABLE VOLUME KS 70-3004	2-59
90458-0305	CABLE GLAND, M12X1,5, NO.5311 1000	7-33, 10-91, 10-93, 10-95, 10-97, 10-99, 10-101, 10-103
90458-0306	CABLE GLAND, M16X1,5, NO.5311 1010	1-49, 1-51, 7-33, 8-79
90458-0307	CABLE GLAND, M20X1,5, NO.5311 1020	2-57, 8-77
90458-0308	CABLE GLAND, M25X1,5, NO.5311 1030	2-57
90458-0310	CABLE GLAND, M40X1,5, NO.5311 1050	5-47
90458-0311	CABLE GLAND, M50X1,5, NO.5311 1060	2-53, 2-55, 10-75, 10-77
90458-0314	CABLE GLAND, M16X1,5, NO.5311 1110	2-57, 5-37
90458-0315	CABLE GLAND, M20X1,5, NO.5311 1120	7-31, 8-11, 8-13, 8-45, 8-47, 8-49, 8-79
90458-0316	CABLE GLAND, M25X1,5, NO.5311 1130	5-47
90458-0321	NUT, M12X1,5	10-91, 10-93, 10-95, 10-97, 10-99, 10-101, 10-103
90458-0322	NUT, M16X1,5	5-37, 5-57
90458-0323	NUT, M20X1,5	8-25, 8-27, 8-29, 8-45, 8-47, 8-49, 8-65, 8-77
90458-0326	NUT, M40X1,5	5-37
90458-0327	NUT, M50X1,5	2-53, 2-55, 10-75, 10-77
90458-0397	SERVO DRIVE DMC2 50720 P	10-13, 10-15, 10-17
90458-0404	GLAND W/O INSERT M16 NORMAL	8-77, 8-79
90458-0406	GLAND W/O INSERT M20 NORMAL	8-79
90458-0408	GLAND W/O INSERT M32 NORMAL	5-47
90458-0413	HOSE GLAND W/O INSERT M20 NORMAL	8-77, 8-79
90458-0416	HOSE GLAND W/O INSERT M50 NORMAL	10-91, 10-93, 10-95, 10-97, 10-99, 10-101, 10-103
90458-0417	HOSE GLAND W/O INSERT M16 NORMAL	8-77, 8-79
90458-0422	GLAND W/O INSERT M20 EXTENDED	7-33, 10-91, 10-93, 10-95, 10-97, 10-99, 10-101, 10-103
90458-0423	GLAND W/O INSERT M32 EXTENDED	5-47
90458-0427	HOSE GLAND W/O INSERT M16 EXTENDED	5-57
90458-0428	HOSE GLAND W/O INSERT M20 EXTENDED	8-65, 8-77, 10-91, 10-93, 10-95, 10-97, 10-99, 10-101, 10-103
90458-0429	HOSE GLAND W/O INSERT M20 EXTENDED	8-77, 8-79
90458-0430	HOSE GLAND W/O INSERT M20 EXTENDED	2-35, 2-37, 2-69, 5-81, 7-33, 8-25, 8-27, 8-29, 8-45, 8-47, 8-49, 8-77, 10-91, 10-93, 10-95, 10-97, 10-99, 10-101, 10-103
90458-0431	HOSE GLAND W/O INSERT M25 EXTENDED	5-75, 6-89, 6-91, 7-17, 7-33, 10-91, 10-93, 10-95, 10-97, 10-99, 10-101, 10-103
90458-0432	HOSE GLAND W/O INSERT M25 EXTENDED	10-91, 10-93, 10-95, 10-97, 10-99, 10-101, 10-103
90458-0433	HOSE GLAND W/O INSERT M32 EXTENDED	7-33, 8-79
90458-0438	GLAND, EXTENDED WITH INSERT, M20X1,5	1-47, 4-31, 4-33
90458-0449	HOSE GLAND EMC M20 EXTENDED	8-17, 8-19
90458-0450	HOSE GLAND EMC M25 EXTENDED	3-7
90458-0459	HOSE GLAND W/O INSERT M40 EXTENDED	5-13, 5-15, 5-17, 5-19, 5-21, 5-37
90458-0460	GLAND, LOCK NUT, M16X1,5	10-91, 10-93, 10-95, 10-97, 10-99, 10-101, 10-103

Part No	Description	Page No
90458-0461	GLAND, LOCK NUT, M20X1,5	10-91, 10-93, 10-95, 10-97, 10-99, 10-101, 10-103
90458-0462	GLAND, LOCK NUT, M25X1,5	10-91, 10-93, 10-95, 10-97, 10-99, 10-101, 10-103
90458-0465	GLAND, LOCK NUT, M50X1,5	10-91, 10-93, 10-95, 10-97, 10-99, 10-101, 10-103
90458-0601	CONTRAST SCANNER, KT15W-P2110S01	1-171, 1-173
90458-0675	PROXIMITY SENSOR, E2EG-X5MB1-5M	1-177, 8-17, 8-19
90458-0676	PROXIMITY SWITCH,E2EG-X5B1-6M	1-67, 1-69
90458-0726	PRESSURE GAUGE, D=50 MM WITH FILTER	6-89, 6-91
90458-0746	STEP MOTOR DRIVE L50	10-13, 10-15, 10-17
90458-0747	SENSOR FOR CYLINDER, SMH-1PC	4-31, 4-33
90458-0824	BUSHING, 8X10X8 MM	1-177
90458-0825	FLANGE BUSHING, 16X18X17 MM	1-177
90458-0871	HOUSING BULKHEAD MOUNTING HAN 6B-AGG-RB	10-83, 10-85
90458-0875	HING. FR. HAN 6B HOUSING, 09 14 006 0313	10-83, 10-85
90458-0876	FEMALE INSERT HAN 6B 09 14 002 2751	10-83, 10-85
90458-0894	PROXIMITY SENSOR E2E2-X10MB1-5M	5-37
90458-1092	PROPORTIONAL VALVE 0 - 10V/0-6 BAR	1-181
90458-1102	INTOUCH OEM 2000 V.7.0/7.1 HW KEY	10-71
90458-1114	BIMET. ELECTROMECH. THERMOSTAT K7H.020	10-69
90458-1136	TERMINAL BLOCK, 103630	5-49, 5-51, 10-63, 10-65
90458-1140	FERRITE, RI-26-28-13	10-13, 10-15, 10-17
90458-1181	BULKHEAD HOUSING HDC-HA-3-AWVL1/11	10-91, 10-93, 10-95, 10-97, 10-99, 10-101, 10-103
90458-1194	MONOSTABLE VALVE 5/2	6-45, 6-47
90458-1200	VALVE OPEN IN MID-POSITION 5/3	6-45, 6-47
90458-1202	VALVES 2X3/2, CLOSED	6-45, 6-47
90458-1203	VALVE 2X3/2 1X OPEN 1X CLOSED	6-45, 6-47
90458-1205	BASIC SUB-BASE 8 VALVES, CDVI5.0-GB8-MP	6-45, 6-47
90458-1206	EXP. SUB-BASE 2 VALVES, CDVI5.0-EB	6-45, 6-47
90458-1207	SEALING, STANDARD	6-45, 6-47
90458-1208	SEALING, CHANNEL 1 BLOCKED	6-45, 6-47
90458-1212	LEFT ENDPLATE INCL. 10M CABLE	6-45, 6-47
90458-1214	RIGHT ENDPL EXT. PILOT AIR,CDVI5.0-EPR-S	6-45, 6-47
90458-1215	COVER PLATE FOR EMPTY VALVE POSITION	6-45, 6-47
90458-1226	HANDLE, NO. GN 310-12-100-A-NI	8-15
90458-1227	LEAD-IN, BUSHING, DA 130/170/50	6-53
90458-1228	LEAD-IN, BUSHING, DA 230/300/60	8-5
90458-1230	CLAMPING ELEMENT, DI=36 MM	8-17, 8-19
90458-1231	FORK HOLDER 913588/04	8-17, 8-19
90458-1232	BEARING BRACKET AY15	8-17, 8-19
90458-1233	TIMING BELT T10 340X16 MM	8-17, 8-19
90458-1234	PROTECTIVE CAP 2X20X1.2X100	8-17, 8-19
90458-1238	GLAND, INSERT, SINGLE HOLE,	8-77, 8-79
90458-1239	GLAND, INSERT, MULTI HOLE, 1X9/1X5,5	8-25, 8-27, 8-29, 8-45, 8-47, 8-49, 8-77
90458-1240	RUBBERSPRING DK-A 15X40	8-17, 8-19
90458-1241	TENSION SPRING RZ-1221	8-69
90458-1273	TRANSFORMER, OFL-1350	10-75, 10-77
90458-1279	PLUG CONNECTOR DP1	10-13, 10-15, 10-17
90458-1298	CONNECTOR AND CABLE 403000E 18M 080	4-31, 4-33
90458-1300	2 AXIS DOCKING STATION D2/PLC	10-13, 10-15, 10-17
90458-1301	CYLINDER ETS32-M10NA2X-FM50-AEUM1D	4-31, 4-33
90458-1306	BLIND PLUG CIRCULAR, M12X1,5 514GFK/212	7-33, 10-91, 10-93, 10-95, 10-97, 10-99, 10-101, 10-103
90458-1307	BLIND PLUG CIRCULAR, M16X1,5 514GFK/216	8-79, 10-91, 10-93, 10-95, 10-97, 10-99, 10-101, 10-103
90458-1308	BLIND PLUG CIRCULAR, M20X1,5 514GFK/220	8-79, 10-91, 10-93, 10-95, 10-97, 10-99, 10-101, 10-103
90458-1309	BLIND PLUG CIRCULAR, M25X1,5 514GFK/225	10-91, 10-93, 10-95, 10-97, 10-99, 10-101, 10-103
90458-1310	BLIND PLUG CIRCULAR, M32X1,5 514GFK/232	5-47
90458-1312	BLIND PLUG CIRCULAR, M50X1,5 514GFK/250	10-91, 10-93, 10-95, 10-97, 10-99, 10-101, 10-103
90458-1393	PUMP CYLINDER, 34 73 522 5	9-9
90458-1406	FEMALE INSERT 120770	10-91, 10-93, 10-95, 10-97, 10-99, 10-101, 10-103
90458-1423	CONNECTOR, PC 4/4-STF-7.62	10-143
90458-1424	CONNECTOR, MSTB 2.5/10-STF-5.08	10-143
90458-1447	MOUNTING RAIL SUPPORT TST 128660	10-61, 10-63
90458-1468	SPLIT PIN, 43 71 234 8	9-9
90458-1469	PUMP HOUSING, 34 73 517 5	9-9
90458-1470	SINK VALVE COMPL, 34 73 094 5	9-9
90458-1471	PISTON ROD END, 32 04 214 5	9-11
90458-1472	CYLINDER, 32 04 215 2	9-11
90458-1473	PUMP, 34 73 521 7	9-7
90458-1476	AXLE PIN, 32 04 167 5	9-11
90458-1489	CABLE CLIPS, D=4,75 MM	2-31
90458-1490	CABLE CLIPS, D=7,9 MM	10-13, 10-15, 10-17
90458-1517	SCREW SPRINGLOAD. SOCK. HEX HEAD M8X18	4-59
90458-1590	KNOB WITH SHAFT, M6	3-27
90458-1612	SCREW CAP HEAD SQ. NECK M6X120 SS	6-11
90458-1613	SCREW CAP HEAD SQ. NECK M6X140 SS	6-11
90458-1651	EMERGENCY STOP, ZB4-BS-844 ZB4-BZ-104	1-67, 1-69, 1-143, 1-145, 1-147, 1-149, 1-151, 1-153, 2-73, 7-17, 8-77, 10-105, 10-107
90458-1704	BALL BEARING, 15X35X11 MM	1-47, 1-57, 1-61, 1-179, 8-45, 8-47, 8-49
90458-1721	INDEXING GEAR, 10.707.207	5-65
90458-1747	HOSE GLAND W/O INSERT M50 NORMAL	10-75, 10-77
90458-1790	BUSHING, 6X8X6 MM	1-177
90458-1856	ADHESIVE LABEL, CONNECTION DIAGRAM	10-25

Part No	Description	Page No
90458-1879	GEARS, WORM MOTOR 528V--L06-B01	1-61
90458-1906	GLAND, INSERT, MULTI HOLE, 4X5	5-49, 5-51
90458-1921	DISTRIBUTOR BLOCK, FR-8-1/4	6-15, 6-17, 6-19, 6-21
90458-1958	ARTICULATION, 300DEG WITH STOP	2-57
90458-1959	LIFTING EYE BOLT, LGB (3) 3T M24	9-17
90458-1960	STRETCHING SCREW, 468-697MM MAX2950KG	9-17
90458-2039	CONN. STR., 6-R1/8, EXT. THREAD	1-165
90458-2040	ELBOW PIPE JOINT, INT.THREAD, G1/8"D=6MM	1-165
90458-2078	SCREW SPRINGLOAD. SOCK. HEX HEAD M12X26	8-71
90458-2199	GASKET, LOWARA 168061340	5-81
90458-2200	ELECTROMAGNETIC CLUTCH, 30 MM/24 VDC	3-5
90458-2421	PRESSURE GAUGE, 1453 W. BRACKET	6-41, 6-43
90458-2487	SCREW PLUG HD-PE, M24	6-53
90458-2488	MEASURING HOSE DN2 L=1500MM, MAX 400BAR	6-41, 6-43
90458-2557	CABLE OLFLEX 25X1 MM2	2-57
90458-2580	LEVEL CONTROL RELAY RM4-LA32M	10-39
90458-2601	BALL VALVE 3A DAIRY CLAMP LOCKABLE	1-135
90458-2619	FLOW METER, D-6230-HGB-BB-AV-99-0-N2	1-9, 1-11
90458-2762	PUMP SV805 R406T 60HZ	5-81
90458-2837	PLUG SOCKET, KMEB-1-24-5-LED	6-35
90458-2840	SHAFT COUPLING 22,225H9/9	1-61
90458-2841	SHAFT COUPLING 22,225H9/15	1-47
90458-2954	ELBOW PIPE JOINT, EXT.THREAD, D=4MM M5	4-29
90458-2956	ELBOW PIPE JOINT, EXT.THREAD, D=6MM-G1/8	5-7, 5-9, 5-73
90458-2957	ELBOW PIPE JOINT, EXT.THREAD, D=6MM-G1/4	1-9, 1-11
90458-2960	ELBOW PIPE JOINT, EXT.THREAD,D=12MM-G3/8	6-51
90458-2964	ELBOW PIPE JOINT, EXT.THREAD, D=8MM-G1/8	6-41, 6-43
90458-2969	PRESSURE GAUGE, MAP-40-1-1/8-EN	6-33
90458-2971	BRACKET, HR-1/4-P FOR LRP-1/4-0,7	6-33
90459-0075	HINGE, 1056-U30	7-35, 7-37
90459-0080	RECORDER 6-CHANNEL, LOGOPRINT 500	10-123, 10-125
90459-0087	PRINT WHEEL, 6-COLOURS	9-5
90459-0251	DOUBLE ACTING, COMPACT, CYL 12-15	4-29
90459-0285	CD UNIT, 02413-000	12-7
90459-0287	DISPLAY UNIT 15", 02567-000	2-71
90459-0288	SLIM LINE TOUCH BEZEL 15", 1511	2-73
90459-0290	NON-RETURN VALVE, PUSH-IN 6 MM	6-15, 6-17, 6-19
90459-0308	PAPER TROLLEY, STOCKA 32.04.250.9	9-3
90459-0336	ANGLE SEAT VALVE G1/2, N.C. DN13	1-89
90459-0472	KEY SAF.SW. AZ 16 02ZVRK-M20-2152-2254	2-35, 2-37, 2-69, 7-31, 8-11, 8-13
90459-0486	BALL VALVE PANEL MOUNTED G1/8	1-161, 1-163
90459-0487	ELBOW PIPE JOINT, EXT.THREAD, D=6MM G1/8	1-161, 1-163
90459-0691	SIGN, STRIP SPLICE/ RESET ALARM	7-17
90459-0737	SAFETY CLUTCH, SK1 15/D/20/5-20	5-57
90459-0765	O-RING 78X2 MM	5-57
90459-0766	SLEEVE, CR 99334	5-57
90459-1060	VIBRATION DAMPER, T15688	2-69
90459-1066	LEAD-IN, BUSHING, DA 300/350/10	2-53, 2-55
90459-1094	HEATING ELEMENT 3000W 240V AC	1-35
90459-1194	KEY SAF.SW. AZ16-03 ZVRK-M16	1-49, 1-51
90459-1254	TUBE FUSE, 4A 500V	10-115
90459-1382	HEATING ELEMENT 1100W 220V	5-13, 5-15, 5-17, 5-19, 5-21
90459-1420	PROPORTIONAL VALVE 0 - 10V/0-6 BAR	1-9, 1-11
90459-1690	DIRECTIONAL VALVE, DG4V-3-6C-MUH-7-60-EN	6-89, 6-91
90459-1738	MANDATORY ACTION SIGN ISO, READ MAINTENA	10-13, 10-15, 10-17
90459-1749	ELBOW PIPE JOINT 12 MM	6-93, 6-95
90459-1845	DOUBLE ACTING, COMPACT, 50-30	5-7, 5-9
90459-1852	SHUT OFF VALVE, MS6-EM1-1/2	6-35
90459-1854	SHUT OFF VALVE, MS6-EE-1/2-10V24	6-35
90459-1855	SOFT START VALVE, MS6-DL-1/2	6-35
90459-1856	DISTRIBUTOR, MS6-FRM-1/2	6-35
90459-1857	FILTER, MS6-LF-1/2-CRV	6-35
90459-1858	BRACKET, MS6-WP	6-35
90459-1859	BRACKET, MS6-MV	6-35
90459-1948	BONDED SEAL SS/VITON G1/4	1-89
90459-2045	O-RING 14X4 MM	1-183
90459-2137	ILLUMINATING SEAL, MEB-LD-12-24DC	6-35
90459-2216	BUSHING, INT/EXT. G-THREAD NO. 1/4X1/2	6-35
90459-2241	REGULATOR, MS4-LRB-1/4-D5-AS	6-33
90459-2242	REGULATOR, MS4-LRB-1/4-D7-AS	6-33
90459-2247	BRACKET, MS4-WP	6-33
90459-2291	SAFETY TIME RELAY, E1T-0.5S-24VDC	10-39
90459-2309	FLEXIBLE CHAIN, A325A103KM	10-147
90459-2327	GEARS, WORM MOTOR IGL 80-60 + VE 31-G-R-	1-47, 8-17, 8-19
90459-2350	END BRACKET, A325A103KM	10-147
90459-2412	CONNECTOR 4 POLE + EARTH	8-17, 8-19, 8-77
90459-2425	PRESSURE REGULATOR IN-LINE, BSP-1/4	6-15, 6-17, 6-19
90459-2435	CONTAINER 1,8L , GN 1406	1-67, 1-69
90459-2452	CABLE DUCT 25X100MM	10-13, 10-15, 10-17
90459-2560	LIGHT FIXTURE, TMS121 1XTL-D30W/830 IP	10-75, 10-77
90459-2591	SINGLE VALVE SUB-BASE CDSV5.0-AS-1/8	6-45, 6-47
90459-2707	TANK-12L, A2-18076	6-89, 6-91
90459-2708	LID, A2-18077	6-89, 6-91
90459-2772	FILTER, MS6-LFM-1/2-ARV	6-35

Part No	Description	Page No
90459-2773	FILTER, MS6-LFM-1/2-BRV	6-35
90459-2912	BAR, TR1	10-7, 10-9, 10-11
90459-3090	LIGHT FIXTURE, TMS121 1XTL8W/830 IP	10-75, 10-77
90459-3092	CABLE PROTECTION, CP10	10-7, 10-9, 10-11
90459-3318	DOMED LOCKING NUT, M5 SS 304	1-59
90459-3446	FREQUENCY CONVERTER 5,5 KW	10-13, 10-15, 10-17
90459-3450	VARIABLE FREQUENCY DRIVE 22A-A4P5N104	10-13, 10-15, 10-17
90459-3459	FOOTPRINT FILTER, 22-RF018-CL	10-13, 10-15, 10-17
90459-3460	FOOTPRINT FILTER 22-RF010-AL	10-13, 10-15, 10-17
90459-3698	FILTER, 6 A, 250 VAC	10-13, 10-15, 10-17
90459-3799	FUSE HOLDER, MSC 10 1-POLE A250148	10-115
90459-3800	FUSE HOLDER, MSC 10 3-POLE D250151	10-115
90459-3874	GUIDE ROLLER, 32441305	9-7
90459-3881	FOLDED PAPER, 00420840	9-5
90459-4133	POWER SUPPLY UNIT 6EP1 436-3BA00	10-89
90459-4182	HANDLE, NZM1-XS-R	10-133
90459-4816	FLAP VALVE, G1/4, L=33	6-89, 6-91
90459-4968	DOUBLE ACTING, COMPACT, 50-20	5-29, 5-31, 5-33
90459-5200	SPIRIT LEVEL, 2864-0308	12-93
90459-5308	CONTACTOR 4KW 24VDC, DILM9-10	10-59
90459-5320	OVERLOAD PROTECTION, PKZM0-0,25	10-117
90459-5324	OVERLOAD PROTECTION, PKZM0-1,6	10-117
90459-5326	OVERLOAD PROTECTION, PKZM0-4	10-117
90459-5328	OVERLOAD PROTECTION PKZM0-10	10-117
90459-5418	AUXILARY CONTACTS, DILM150-XHI22 2NO;2NC	10-13, 10-15, 10-17
90459-5440	CONTACTOR 4KW 24VDC, DILM9-01	10-47, 10-59
90459-5441	CONTACTOR 7,5KW 24VDC, DILM17-01	10-47, 10-59
90459-5481	OIL PUMP 3L, 10P-P3	6-87
90459-5518	CURR.LIM.CIRC.BREAKER, NZMB1-4-A63	10-133
90459-5522	CONN. BANJO, COR8PB6M10	6-87
90459-5626	BUSHING, 8X10X15 MM	5-7, 5-9
90459-5786	FILTERED SILENCER, 10494 LFU-1/2	6-51
90459-5804	FILTER REGULATOR, MS6-LFR-1/2-D6-ERV-AS	6-35
90459-5806	COMMONING BUSBAR, 1-P 1-PH 1X12 MOD 63A	10-113
90459-5811	RESIDUAL CURRENT DEVICE, FI-25/2/003-A	10-113
90459-5813	AUXILARY CONTACT, FAZ-XHI11	10-113
90459-5884	COMMONING BUSBAR, 3-P 3-PH 3X19 MOD 63A	10-113
90459-5924	PLUG LD-PE, Ã¸10.7 NATUR	2-61
90459-6335	BALL BEARING, 8X22X7 MM	1-57
90459-6473	HARDDISK COPYING TOOL, 03607-000	12-7
90459-6716	PRESSURE SWITCH, PEV-1/4-B-SA	6-41, 6-43
90459-6727	SPHERICAL BEARING, 25X42X20 MM	3-25
90459-6738	SCREW ISO 7380 88-MKT M5X10 A4	5-7, 5-9
90459-6812	TIMING BELT T10X690X16 POLYURETHANE	5-57
90459-7072	MINIATURE CIRCUIT BREAKER, AZ-2-C100	10-113
90459-7440	ANGLE SEAT VALVE W. FLANGES, N.O. DN40	6-69
90459-7549	FLOW CONTROL VALVE, GRLZ-1/8-QS-8-D	6-45, 6-47
90600-0274	TIMING BELT T10X920X25 RUBBER	3-5
90600-0275	TIMING BELT T10X1000X25 RUBBER	3-5
90600-0352	BALL BEARING, 35X62X14 MM	3-5
90600-0491	ACTUATOR, 9650-0089-Z-I-OTI	1-15
90600-0493	DIAPHRAGM 3A, 600-008-M5A	1-15
90600-0913	PUSH-IN FITTING QSQ-G1/4-6	6-21
90600-0916	CONN. CROSS K15L71X	6-29
90600-1385	PRESSURE GUARD, PEV-1/4-B SA234332	6-35
90600-1643	CONTACTOR, DILK12-11	10-47, 10-59
90600-1738	WARNING SIGN ISO, ELECTRIC SHOCK	1-43, 1-45
90600-1758	CONTACTOR 30KW 24VDC,DILM65 +DILM65-XIP2	10-13, 10-15, 10-17
90600-2007	HEATING ELEM.15KW 3X230/400V,T90600-2007	1-43, 1-45
107000-0000	SPRING	12-111
206913-0000	LOCKING LOOP	8-69
208173-0000	SHAFT	8-65
209145-0000	THROTTLE SCREW	1-137, 6-81, 6-83
209146-0000	BARRIER NUT	1-137, 6-81, 6-83
209183-0000	RING	1-15, 1-19, 1-133
229207-0000	BEARING SLEEVE	5-45
229775-0000	SPACER	8-65
230551-0000	GASKET	6-59
239440-0000	SHAFT	1-125, 1-127
240797-0000	HANDLE	4-59
243132-0000	PROTECTION PLATE	8-65
243133-0000	SHIELD PLATE	8-65
245039-0000	GUIDE WHEEL	5-45
245221-0000	STOP	8-65
247248-0000	PIN	1-21, 1-23
247349-0000	STEERING	1-49, 1-51
247357-0000	SPROCKET	1-49, 1-51
247358-0000	SHIFTER HANDLE	1-49, 1-51
247385-0000	SIGN	6-41, 6-43
247386-0000	SIGN	6-41, 6-43
250590-0000	BEARING COVER	1-47
250592-0000	WASHER	1-47, 1-61
253107-0000	WASHER	8-25, 8-27, 8-29, 8-45, 8-47, 8-49
255301-0000	HEATING RAIL	8-65

Part No	Description	Page No
255609-0000 ..	ARM CUTTING JAW	4-49, 4-51
255653-0000 ..	FLANGE BUSHING	4-49, 4-51
255742-0000 ..	COMPRESSION SPRING	4-5, 4-7, 4-9, 4-11, 4-13, 4-15
255801-0000 ..	RETAINING RING	4-5, 4-7, 4-9, 4-11, 4-13, 4-15
255870-0000 ..	VALVE HOUSING	1-37
255874-0000 ..	BEARING COVER	1-139
255875-0000 ..	BUSHING	1-37, 1-139
255939-0000 ..	WASHER	2-5, 2-7
255940-0000 ..	SPACER	2-5, 2-7
255942-0000 ..	SLIDER	2-5, 2-7
255943-0000 ..	HOLDER	2-5, 2-7
255969-0000 ..	SHAFT	1-125, 1-127
255970-0000 ..	BUSHING	1-125, 1-127
255977-0000 ..	SHAFT	1-141
255978-0000 ..	FORK	1-141
255986-0000 ..	WHEEL	1-49, 1-51
255995-0000 ..	SCREW	1-59
256005-0000 ..	GASKET	1-21, 1-23
256014-0900 ..	BATH	1-3, 1-5
256022-0000 ..	BUSHING	1-59
256055-0700 ..	HOT AIR ELEMENT	1-3, 1-5
256082-0000 ..	CAP	4-49, 4-51
256084-0700 ..	CHANGE-OVER VALVE	1-3, 1-5
256095-0700 ..	HOT AIR ELEMENT	1-3, 1-5
256112-0000 ..	BRACKET	1-39
256163-0000 ..	SHAFT	1-49, 1-51
256170-0000 ..	DRIP PLATE	1-49, 1-51
256173-0700 ..	WORM GEAR	3-3
256176-0000 ..	GEAR WHEEL	3-5
256177-0000 ..	SHAFT	3-5
256178-0000 ..	FIXING RING	3-5
256179-0000 ..	SPACER SLEEVE	3-5
256181-0000 ..	SPACER PIPE	3-5
256197-0500 ..	ARM	3-3
256200-0300 ..	INTERMEDIARY SHAFT	3-3
256202-0700 ..	CURVE PACK	3-3
256204-0600 ..	CUTTING JAW	4-3
256205-0600 ..	CUTTING JAW	4-3
256208-0400 ..	KNIFE HOLDER	4-3
256212-0600 ..	PRESSURE JAW	4-3
256213-0600 ..	PRESSURE JAW	4-3
256214-0400 ..	PRESSURE RAIL	4-3
256217-0500 ..	GUIDE	4-3
256248-0001 ..	LID	8-25, 8-27, 8-29, 8-45, 8-47, 8-49
256279-0000 ..	ANGLE	1-111, 1-113, 1-115
256280-0000 ..	DOWEL	1-103, 1-105, 1-107, 1-109, 1-111, 1-113, 1-115
256309-0000 ..	SHAFT	1-103, 1-105, 1-107, 1-109
256312-0000 ..	WASHER	1-103, 1-105, 1-107, 1-109
256398-0000 ..	LID	8-25, 8-27, 8-29, 8-45, 8-47, 8-49
256400-0000 ..	SHAFT	8-25, 8-27, 8-29, 8-45, 8-47, 8-49
256406-0000 ..	GABLE PLATE	8-25, 8-27, 8-29, 8-45, 8-47, 8-49
256409-0000 ..	WASHER	8-25, 8-27, 8-29, 8-45, 8-47, 8-49
256410-0900 ..	INDEXING UNIT	5-3
256418-0000 ..	BEARING BRACKET	3-13, 3-15
256421-0000 ..	PULLEY	3-9, 3-11
256422-0000 ..	WASHER	3-9, 3-11, 3-13, 3-15
256426-0001 ..	WASHER	3-9, 3-11, 3-13, 3-15
256426-0002 ..	WASHER	3-9, 3-11, 3-13, 3-15
256427-0000 ..	SHAFT	3-9, 3-11, 3-13, 3-15
256437-0200 ..	DISC COUPLING	5-3
256438-0300 ..	WORM GEAR	5-3
256472-0000 ..	WASHER	3-9, 3-11, 3-13, 3-15
256487-0000 ..	CUTTING JAW	4-5, 4-7, 4-9, 4-11, 4-13, 4-15
256515-0000 ..	END PIECE	3-13, 3-15
256516-0000 ..	CAP	3-13, 3-15, 3-23
256517-0000 ..	SCREW	3-13, 3-15
256557-0001 ..	WASHER	4-25, 4-27
256557-0002 ..	WASHER	4-25, 4-27
256557-0003 ..	WASHER	4-25, 4-27
256576-0000 ..	ROLL	4-25, 4-27
256607-0000 ..	AXLE PIN	4-5, 4-7, 4-9, 4-11, 4-13, 4-15
256621-0000 ..	WASHER	4-31, 4-33
256626-0000 ..	EAR	4-5, 4-7, 4-9, 4-11, 4-13, 4-15
256628-0000 ..	PIECE	4-49, 4-51
256629-0001 ..	AXLE PIN	4-49, 4-51
256629-0003 ..	AXLE PIN	4-49, 4-51
256659-0000 ..	OPERATING ROD	4-5, 4-7, 4-9, 4-11, 4-13, 4-15
256665-0200 ..	HATCH	2-3
256674-0500 ..	BOTTOM VALVE	5-3
256704-0000 ..	WASHER	4-49, 4-51
256705-0000 ..	LACE	4-31, 4-33
256706-0000 ..	BEARING PLATE	4-5, 4-7, 4-9, 4-11, 4-13, 4-15
256707-0000 ..	BRACKET	4-31, 4-33
256710-0000 ..	SHAFT	4-49, 4-51

Part No	Description	Page No
256738-0000 ..	WASHER	4-53
256739-0000 ..	SCREW	4-53
256769-0000 ..	CUTTING JAW	4-5, 4-7, 4-9, 4-11, 4-13, 4-15
256812-0000 ..	SHAFT	3-27
256814-0000 ..	WASHER	3-27
256816-0000 ..	PIPE	3-27
256828-0000 ..	SPRING	3-27
256829-0000 ..	SCREW	4-49, 4-51, 4-53
256831-0001 ..	SPACER	4-49, 4-51
256831-0002 ..	SPACER	4-49, 4-51
256831-0003 ..	SPACER	4-49, 4-51, 4-53
256831-0004 ..	SPACER	4-53
256834-0000 ..	YOKE	4-49, 4-51
256849-0000 ..	VOLUMEFLAP 125 ML	4-17, 4-19, 4-21, 4-23
256859-0000 ..	SCREW	4-17, 4-19, 4-21, 4-23
256860-0000 ..	ROLL	4-17, 4-19, 4-21, 4-23
256870-0000 ..	BRACKET	4-49, 4-51
256882-0000 ..	WASHER	4-45, 4-47
256889-0000 ..	PLUNGER	4-49, 4-51
256890-0000 ..	LACE	4-49, 4-51
256891-0000 ..	LACE	4-49, 4-51
256899-0000 ..	SHAFT	1-159
256907-0000 ..	WASHER	5-71
256951-0500 ..	YOKE RIGHT	4-3
256952-0500 ..	YOKE LEFT	4-3
256953-0000 ..	BLOCK RIGHT	4-49
256954-0000 ..	BLOCK LEFT	4-51
257000-0000 ..	NIPPLE	4-67, 4-69
257040-0000 ..	FORK	1-125, 1-127
257041-0000 ..	FORK	1-125, 1-127
257042-0000 ..	BRACKET	1-125, 1-127
257043-0000 ..	ANGLE BRACKET	1-125, 1-127
257044-0000 ..	ROLL	1-125, 1-127
257090-0000 ..	SHIFTER HANDLE	1-103, 1-105, 1-107, 1-109
257141-0000 ..	RETAINING RING	8-25, 8-27, 8-29, 8-45, 8-47, 8-49
257174-0000 ..	SEALING WASHER	3-5
257175-0000 ..	WASHER	1-119, 1-121
257179-0000 ..	GEAR WHEEL	3-5, 3-27
257190-0000 ..	SEPARATION BLOCK	2-29
257202-0000 ..	STRAINER	6-61
257213-0000 ..	BUSHING	4-49, 4-51
257231-0000 ..	WINDOW	2-39, 2-41
257249-0000 ..	SCREW	4-25, 4-27
257250-0000 ..	LID	4-25, 4-27
257306-0000 ..	ROLL	3-9, 3-11
257308-0000 ..	SCREW	3-9, 3-11
257309-0000 ..	SHAFT	3-9, 3-11, 3-29, 3-31
257310-0000 ..	NUT	3-9, 3-11, 3-29, 3-31
257311-0000 ..	CAP	3-9, 3-11, 3-13, 3-15
257317-0000 ..	LACE	4-49, 4-51
257326-0000 ..	CRANK	3-27
257327-0000 ..	SLIDER	3-27
257328-0000 ..	END PIECE	3-27
257330-0000 ..	PRESSURE ROLLER	1-141, 9-35
257334-0000 ..	LEAF SPRING	4-31, 4-33
257362-0000 ..	LACE	4-5, 4-7, 4-9, 4-11, 4-13, 4-15
257379-0000 ..	HYDRAULIC PIPE RIGHT	4-67
257380-0000 ..	HYDRAULIC PIPE LEFT	4-69
257381-0300 ..	MANIFOLD RIGHT	4-3
257382-0300 ..	MANIFOLD LEFT	4-3
263311-0000 ..	WASHER	1-59
263655-0006 ..	SHAFT	1-49, 1-51, 12-59
265568-0000 ..	DUST COVER	8-25, 8-27, 8-29, 8-45, 8-47, 8-49
266737-0000 ..	WASHER	1-37, 1-139, 7-35, 7-37, 7-39, 7-41
266739-0000 ..	CABLE GLAND	1-39
267033-0000 ..	WASHER	1-49, 1-51
269859-0000 ..	BRACKET	6-59
271007-0000 ..	POINTER	3-19, 3-21
271100-0000 ..	DOWEL	4-49, 4-51
271121-0000 ..	FORCE SPRING	2-29
271163-0000 ..	CANTILEVER	2-5, 2-7
271169-0500 ..	VALVE	1-3, 1-5
271181-0600 ..	AIR SUPER-HEATER	1-3, 1-5
271261-0700 ..	CLEANING SYSTEM	2-23, 2-25, 2-27
271269-0000 ..	BUSHING	1-35, 1-39, 1-57
271284-0000 ..	BLOCKING PIECE	4-31, 4-33
271387-0400 ..	SPRAY GUN	2-3
271414-0300 ..	AIR JET GUN	2-3
271435-0000 ..	WASHER	5-81
271622-0000 ..	LACE	2-23, 2-25, 2-27
271623-0000 ..	LACE	2-23, 2-25, 2-27
271641-0500 ..	SPLICING TABLE	8-63
271642-0000 ..	RULER	8-73
271643-0000 ..	RULER	8-73

Part No	Description	Page No
271644-0000 ..	RULER	8-73
271689-0000 ..	WASHER	3-5
271820-0001 ..	STEERING RAIL	1-59
271820-0002 ..	STEERING RAIL	1-59
271823-0000 ..	FILTER	6-29
271824-0000 ..	AIR KNIFE, MOVABLE	1-59
271825-0000 ..	FIXED AIR KNIFE	1-59
271827-0001 ..	HEAD PLATE	1-59
271827-0002 ..	HEAD PLATE	1-59
271846-0000 ..	INSULATION NUT	4-45, 4-47
271848-0000 ..	SCREW	4-45, 4-47
271858-0000 ..	FLANGE	1-59
271860-0000 ..	CLAMP BLOCK	1-167, 1-169
271863-0000 ..	SHAFT	1-49, 1-51
271864-0000 ..	WASHER	1-49, 1-51
271898-0000 ..	SCREW	1-57
271899-0000 ..	SCREW	1-57
271939-0001 ..	SLIDE SHEET	5-29, 5-31, 5-33
271939-0003 ..	SLIDE SHEET	5-29, 5-31, 5-33
271942-0001 ..	AIR GUIDE	1-59
271942-0002 ..	AIR GUIDE	1-59
272002-0000 ..	PROTECTIVE COVER LEFT	1-49, 1-51
272003-0000 ..	PROTECTIVE COVER RIGHT	1-49, 1-51
272004-0500 ..	BENDING ROLLER	1-3, 1-5
272021-0900 ..	ASEPTIC CHAMBER	1-3, 1-5
272022-0000 ..	AIR KNIFE, MOVABLE	1-59
272023-0000 ..	FIXED AIR KNIFE	1-59
272024-0500 ..	CALENDER ROLLER	1-3, 1-5
272025-0600 ..	AIR KNIFE	1-3, 1-5
272026-0001 ..	AIR DISTRIBUTOR	1-59
272026-0002 ..	AIR DISTRIBUTOR	1-59
272028-0800 ..	BENDING ROLLER	1-3, 1-5
272033-0000 ..	BRACKET	1-57
272045-0001 ..	SLIDE SHEET	5-29, 5-31, 5-33
272045-0002 ..	SLIDE SHEET	5-29, 5-31, 5-33
272045-0003 ..	SLIDE SHEET	5-29, 5-31, 5-33
272045-0004 ..	SLIDE SHEET	5-29, 5-31, 5-33
272095-0000 ..	SHAFT	1-159
272116-0000 ..	CAP	3-9, 3-11
272118-0000 ..	YOKECAM 236ML	3-19, 3-21
272119-0000 ..	ARMCAM 236ML	3-19, 3-21
272140-0001 ..	HEAD PLATE	1-59
272140-0002 ..	HEAD PLATE	1-59
272141-0001 ..	FILTER	1-59
272141-0002 ..	FILTER	1-59
272191-0000 ..	DISTRIBUTOR	5-71
272275-0000 ..	LID	1-65
272277-0000 ..	GASKET	1-65
272286-0000 ..	AXLE SUPPORT	1-35
272287-0000 ..	AXLE SUPPORT	1-39
272325-0000 ..	SPIRAL	1-65
272329-0001 ..	LACE	1-59
272329-0002 ..	LACE	1-59
272337-0600 ..	VALVE	1-3, 1-5
272372-0000 ..	HOUSE	3-5
272376-0000 ..	SHUTTER	3-5
272377-0001 ..	CRAMP	3-5
272377-0002 ..	CRAMP	3-5
272388-0000 ..	CRAMP	3-5
272407-0400 ..	GENERATOR	1-3, 1-5
272415-0000 ..	ARM	4-49, 4-51
272419-0000 ..	CARRIER	4-5, 4-7, 4-9, 4-11, 4-13, 4-15
272420-0000 ..	FOLDING FLAP	4-5, 4-7, 4-9, 4-11, 4-13, 4-15
272421-0000 ..	FOLDING FLAP	4-5, 4-7, 4-9, 4-11, 4-13, 4-15
272422-0000 ..	FOLDING FLAP	4-5, 4-7, 4-9, 4-11, 4-13, 4-15
272423-0000 ..	FOLDING FLAP	4-5, 4-7, 4-9, 4-11, 4-13, 4-15
272427-0000 ..	BRACKET	4-5, 4-7, 4-9, 4-11, 4-13, 4-15
272442-0000 ..	CANTILEVER	3-9, 3-11
272454-0000 ..	PIVOT PIN	4-49, 4-51
272455-0000 ..	BEARING BRACKET	3-9, 3-11
272456-0000 ..	LINK	3-9, 3-11
272457-0000 ..	BOW CLAMP	3-9, 3-11
272458-0000 ..	ECCENTRIC SHAFT	3-9
272459-0000 ..	WASHER	3-9
272461-0000 ..	WASHER	3-9
272462-0000 ..	AXLE BOLT	3-13, 3-15
272464-0000 ..	ANGLE BRACKET	1-59
272472-0000 ..	END PIECE	3-29, 3-31
272479-0000 ..	PRESSURE ROLLER (10PCS)	1-141, 9-35
272490-0000 ..	SLEEVE	4-53
272491-0000 ..	BRACKET	4-31, 4-33
272492-0000 ..	ARM RIGHT	4-49
272493-0000 ..	ARM LEFT	4-51
272496-0000 ..	BRACKET RIGHT	4-49

Part No	Description	Page No
272497-0000 ..	BRACKET LEFT	4-51
272501-0000 ..	BRACKET RIGHT	4-25
272502-0000 ..	BRACKET LEFT	4-27
272503-0000 ..	CLAMPING PIECE	4-25, 4-27
272506-0000 ..	LACE	4-25, 4-27
272560-0900 ..	PRODUCT VALVE	1-3, 1-5
272600-0000 ..	ARM	2-5, 2-7
272602-0000 ..	SCREW	2-5, 2-7
272607-0000 ..	BELT HOLDER	3-13, 3-15
272608-0000 ..	BELT HOLDER	3-23
272623-0800 ..	SPRAY SYSTEM	1-3, 1-5
272640-0001 ..	COUNTER CAM	4-31, 4-33
272640-0002 ..	COUNTER CAM	4-31, 4-33
272640-0003 ..	COUNTER CAM	4-31, 4-33
272640-0005 ..	COUNTER CAM	4-31, 4-33
272640-0006 ..	COUNTER CAM	4-31, 4-33
272640-0007 ..	COUNTER CAM	4-31, 4-33
272640-0009 ..	COUNTER CAM	4-31, 4-33
272641-0000 ..	PILLAR	4-33
272642-0000 ..	PILLAR	4-31
272645-0000 ..	RAIL	4-31, 4-33
272654-0000 ..	ECCENTRIC SHAFT	4-31, 4-33
272664-0000 ..	CANTILEVER	3-27
272679-0000 ..	PIPE	2-29
272728-0000 ..	BARRIER	8-75
272736-0000 ..	CANTILEVER	3-27
272737-0000 ..	BRACKET	3-27
272742-0000 ..	FINGER	2-5, 2-7
272743-0000 ..	LID	5-75
272746-0000 ..	ROD	5-67
272747-0000 ..	CONNECTION	5-67
272753-0000 ..	STEERING	4-35
272755-0000 ..	NUT	4-35
272780-0000 ..	COVER SLIP	1-167
272781-0002 ..	COVER SLIP	1-169
272782-0000 ..	COVER SLIP	1-167, 1-169
272783-0002 ..	GLASS PANE	1-169
272783-0003 ..	GLASS PANE	1-167
272784-0002 ..	RUBBER STRIP	1-169
272785-0000 ..	RUBBER STRIP	1-167
272840-0000 ..	ROD	4-53
272844-0000 ..	BRACKET	1-91, 1-93
272852-0000 ..	HOLDER	2-5, 2-7
272853-0000 ..	SCREW	2-5, 2-7
272857-0000 ..	RING	3-17
272862-0000 ..	HOLDER	8-71
272886-0000 ..	RULER	8-73
272887-0000 ..	RULER	8-73
272888-0000 ..	RULER	8-73
272927-0000 ..	PRESSURE ARM	1-57
272945-0000 ..	LOCK	1-143, 1-145, 1-147, 1-149, 1-151, 1-153
272948-0003 ..	SHAFT	1-39
272949-0000 ..	VOLUME CAM LEFT	4-61, 4-63
272954-0000 ..	VOLUME CAM LEFT	4-61, 4-63
272956-0000 ..	VOLUME CAM LEFT	4-61, 4-63
272957-0000 ..	VOLUME CAM RIGHT	4-61, 4-63
272962-0000 ..	VOLUME CAM RIGHT	4-61, 4-63
272964-0000 ..	VOLUME CAM RIGHT	4-61, 4-63
272965-0000 ..	VOLUME CAM LEFT, WIDE	4-61, 4-63
272967-0000 ..	VOLUME CAM RIGHT, WIDE	4-61, 4-63
272973-0000 ..	DOWEL	4-61, 4-63
272986-0001 ..	VOLUME SHIM	4-17, 4-19, 4-21, 4-23
272986-0003 ..	VOLUME SHIM	4-17, 4-19, 4-21, 4-23
272986-0004 ..	VOLUME SHIM	4-17, 4-19, 4-21, 4-23
272986-0005 ..	VOLUME SHIM	4-17, 4-19, 4-21, 4-23
272986-0006 ..	VOLUME SHIM 330S	4-17, 4-19, 4-21, 4-23
272987-0000 ..	VOLUME SHIM	4-17, 4-19, 4-21, 4-23
272988-0004 ..	VOLUME BULGE	4-17, 4-19, 4-21, 4-23
272990-0000 ..	VOLUME BULGE	4-17, 4-19, 4-21, 4-23
272991-0000 ..	VOLUME SHIM	4-17, 4-19, 4-21, 4-23
272997-0000 ..	STOPPER	5-23
273429-0000 ..	WASHER	1-35, 1-39
273449-0000 ..	SIGN, FLAP SEALING	6-41, 6-43
273450-0000 ..	SIGN, AIR SPRAY	6-41, 6-43
273452-0000 ..	SIGN, ROLLING MACHINE FOR FABRICS	6-41, 6-43
273454-0000 ..	SIGN, COOLING JAWS	6-41, 6-43
273455-0000 ..	SIGN, COLD WATER	2-53, 2-55, 6-41, 6-43
273456-0000 ..	SIGN, HOT WATER	2-53, 2-55, 6-41, 6-43
273458-0000 ..	SIGN, AIR	2-53, 2-55, 6-41, 6-43
273953-0000 ..	SEAL	1-49, 1-51
273964-0000 ..	LID	6-63
273965-0001 ..	WEIGHT	6-63
273977-0000 ..	NUT	6-73
273978-0000 ..	LEVEL GLAS	6-73

Part No	Description	Page No
273980-0000 ..	SPRING	6-73
273985-0000 ..	CARRIAGE	12-25
273996-0000 ..	NUT	6-73
279008-0000 ..	BUSHING	1-49, 1-51
279589-0000 ..	NUT	1-137, 6-81, 6-83
292044-0000 ..	SHAFT	8-35, 8-61, 12-41, 12-43
292409-0000 ..	END SECTION	8-51, 8-53, 12-27, 12-29
292410-0000 ..	END SECTION	8-51, 8-53, 12-27, 12-29
292411-0000 ..	CARRIER	8-51, 8-53, 12-27, 12-29
292412-0000 ..	END SECTION	8-31, 8-33, 8-51, 8-53, 12-27, 12-29, 12-37, 12-39
292413-0000 ..	END SECTION	8-31, 8-33, 8-51, 8-53, 12-27, 12-29, 12-37, 12-39
292414-0000 ..	CARRIER	8-31, 8-33, 12-37, 12-39
292449-0000 ..	PUMP HOUSING	6-65
292456-0000 ..	BEARING COVER	6-65
293395-0001 ..	TYPE HOLDER	8-31, 8-33, 8-51, 8-53, 12-27, 12-29, 12-37, 12-39
293395-0002 ..	TYPE HOLDER	8-31, 8-33, 8-51, 8-53, 12-27, 12-29, 12-37, 12-39
293395-0003 ..	TYPE HOLDER	8-51, 8-53, 12-27, 12-29
293610-0000 ..	GEAR WHEEL	4-59
293659-0000 ..	CARRIER	8-51, 8-53, 12-27, 12-29
293667-0000 ..	DOWEL	8-35, 8-61, 12-41, 12-43
293669-0001 ..	WASHER	8-35, 8-61, 12-41, 12-43
293669-0002 ..	WASHER	8-35, 8-61, 12-41, 12-43
293669-0003 ..	WASHER	8-35, 8-61, 12-41, 12-43
293669-0004 ..	WASHER	8-35, 8-61, 12-41, 12-43
293670-0000 ..	SHAFT	8-35, 8-61, 12-41, 12-43
293671-0000 ..	SPACER	8-31, 8-33, 8-51, 8-53, 12-27, 12-29, 12-37, 12-39
293676-0000 ..	CARRIER	8-51, 8-53, 12-27, 12-29
293684-0200 ..	PRINTING WHEEL NSS	8-45, 8-47, 8-49, 12-7
293685-0200 ..	PRINTING WHEEL SS	8-25, 8-27, 8-29, 12-7
293688-0000 ..	CARRIER	8-51, 8-53, 12-27, 12-29
293690-0000 ..	END SECTION	8-51, 8-53, 12-27, 12-29
293697-0000 ..	END SECTION	8-61, 12-41
295045-0900 ..	PIPE WORK-PNEUMATIC	1-3, 1-5
295057-0001 ..	RAIL	5-29, 5-31, 5-33
295057-0002 ..	RAIL	5-29, 5-31, 5-33
295057-0003 ..	RAIL	5-29, 5-31, 5-33
295057-0004 ..	RAIL	5-29, 5-31, 5-33
295058-0001 ..	RAIL	5-29, 5-31, 5-33
295058-0002 ..	RAIL	5-29, 5-31, 5-33
295058-0003 ..	RAIL	5-29, 5-31, 5-33
295058-0004 ..	RAIL	5-29, 5-31, 5-33
295059-0000 ..	RAIL LEFT	5-29, 5-31, 5-33
295060-0000 ..	RAIL	5-29, 5-31, 5-33
295061-0000 ..	RAIL	5-29, 5-31, 5-33
295062-0000 ..	RAIL	5-29, 5-31, 5-33
295075-0000 ..	PROTECTION	2-5, 2-7
295097-0000 ..	SLIDER	2-5, 2-7
295140-0000 ..	PIN	3-5, 3-19, 3-21
295203-0000 ..	LID	5-43
295204-0001 ..	SHIM	5-23
295204-0002 ..	SHIM	5-23
295204-0003 ..	SHIM	5-23
295205-0000 ..	SPACER SLEEVE	5-23
295206-0000 ..	FLAP	5-23
295259-0000 ..	HOLDER	6-53
295376-0000 ..	SHAFT	1-141
295377-0001 ..	HOOD	1-141
295377-0002 ..	HOOD	1-141
295387-0000 ..	SIGN BOARD	6-13
295399-0000 ..	HOLDER	2-5, 2-7
295417-0000 ..	GASKET	2-29, 5-81
295426-0000 ..	CAP	1-49, 1-51
295427-0000 ..	LOCK	1-49, 1-51
295428-0000 ..	HINGE	1-49, 1-51
295429-0000 ..	HANDLE	1-49, 1-51
295434-0000 ..	BUSHING	5-81
295466-0000 ..	LOCK	1-143, 1-145, 1-147, 1-149, 1-151, 1-153
295496-0000 ..	BLOCKING PIECE	6-41, 6-43
295523-0400 ..	START-UP KIT	4-3
295523-0500 ..	START-UP KIT	9-33
295604-0000 ..	CRAMP	1-95, 1-97
295605-0000 ..	BRACKET	1-95, 1-97
295729-0000 ..	WASHER	5-35
295766-0000 ..	SCREW	3-5
295767-0000 ..	SEALING WASHER	3-5
295770-0000 ..	AXLE BOLT	3-9, 3-11
295778-0600 ..	START-UP KIT	9-33
295785-0000 ..	FORCE SPRING	2-29
295909-0000 ..	BUSHING	1-35
295910-0000 ..	BUSHING	1-39
295936-0000 ..	BUSHING	1-39
295978-0000 ..	PIPE	2-29
295983-0000 ..	CONNECTION	3-17
295984-0000 ..	DRIP GUARD	1-141

Part No	Description	Page No
295985-0000 ..	FORCE SPRING	2-29
295986-0000 ..	HOLDER	2-23, 2-25, 2-27
295993-0000 ..	GASKET HOLDER	1-65
297210-0000 ..	INK WELL	8-35, 12-43
297211-0000 ..	INK WELL	8-61, 12-41
297213-0000 ..	END SECTION	8-35, 12-43
297988-0000 ..	COVER	12-41
297989-0000 ..	COVER	12-43
299643-0000 ..	WASHER	8-25, 8-27, 8-29, 8-45, 8-47, 8-49
311101-0267 ..	PARALLEL PIN ISO 2338 4H6X10 ST	3-9, 3-11, 3-13, 3-15
311101-0308 ..	PARALLEL PIN ISO 2338 5H6X16 ST	12-65, 12-67, 12-69, 12-71, 12-73
311102-0153 ..	PARALLEL PIN ISO 2338 1,5M6X10 ST	3-5
311102-0308 ..	PARALLEL PIN ISO 2338 5M6X16 ST	12-105
311102-0351 ..	PARALLEL PIN ISO 2338 6M6X16 ST	12-105
311102-0413 ..	PARALLEL PIN ISO 2338 8M6X50 ST	12-157
311102-0460 ..	PARALLEL PIN ISO 2338 10M6X35 ST	12-151, 12-153
311103-0233 ..	PARALLEL PIN ISO 2338 3M6X10 A1	12-103, 12-169
311103-0234 ..	PARALLEL PIN ISO 2338 3M6X12 A1	12-103, 12-107
311103-0235 ..	PARALLEL PIN ISO 2338 3M6X14 A1	12-23
311103-0236 ..	PARALLEL PIN ISO 2338 3M6X16 A1	1-65, 8-35, 8-61, 12-41, 12-43, 12-159, 12-169
311103-0238 ..	PARALLEL PIN ISO 2338 3M6X20 A1	1-125, 1-127, 4-59, 8-35, 8-61, 12-41, 12-43, 12-169
311103-0239 ..	PARALLEL PIN ISO 2338 3M6X22 A1	12-107
311103-0242 ..	PARALLEL PIN ISO 2338 3M6X30 A1	4-25, 4-27, 8-15
311103-0267 ..	PARALLEL PIN ISO 2338 4M6X10 A1	3-9, 3-11, 3-13, 3-15, 8-73
311103-0268 ..	PARALLEL PIN ISO 2338 4M6X12 A1	4-49, 4-51, 8-75
311103-0269 ..	PARALLEL PIN ISO 2338 4M6X14 A1	12-159
311103-0270 ..	PARALLEL PIN ISO 2338 4M6X16 A1	1-21, 1-23, 4-45, 4-47, 8-35, 8-61, 12-41, 12-43
311103-0272 ..	PARALLEL PIN ISO 2338 4M6X20 A1	2-29, 3-19, 3-21, 5-53, 7-63, 12-169
311103-0274 ..	PARALLEL PIN ISO 2338 4M6X25 A1	8-37, 12-161
311103-0276 ..	PARALLEL PIN ISO 2338 4M6X30 A1	1-49, 1-51, 3-19, 3-21, 12-163
311103-0278 ..	PARALLEL PIN ISO 2338 4M6X35 A1	4-37, 4-39, 4-41, 4-43, 7-57, 12-161
311103-0280 ..	PARALLEL PIN ISO 2338 4M6X40 A1	4-37, 4-39, 4-41, 4-43
311103-0308 ..	PARALLEL PIN ISO 2338 5M6X16 A1	1-49, 1-51
311103-0309 ..	PARALLEL PIN ISO 2338 5M6X18 A1	5-29, 5-31, 5-33
311103-0310 ..	PARALLEL PIN ISO 2338 5M6X20 A1	1-49, 1-51
311103-0312 ..	PARALLEL PIN ISO 2338 5M6X25 A1	1-119, 1-121, 4-5, 4-7, 4-9, 4-11, 4-13, 4-15, 4-25, 4-27, 8-25, 8-27, 8-29, 8-45, 8-47, 8-49
311103-0313 ..	PARALLEL PIN ISO 2338 5M6X28 A1	1-49, 1-51, 5-29, 5-31, 5-33
311103-0314 ..	PARALLEL PIN ISO 2338 5M6X30 A1	1-55, 4-31, 4-33
311103-0316 ..	PARALLEL PIN ISO 2338 5M6X35 A1	4-31, 4-33
311103-0318 ..	PARALLEL PIN ISO 2338 5M6X40 A1	8-37
311103-0320 ..	PARALLEL PIN ISO 2338 5M6X45 A1	4-31, 4-33
311103-0351 ..	PARALLEL PIN ISO 2338 6M6X16 A1	5-7, 5-9
311103-0353 ..	PARALLEL PIN ISO 2338 6M6X20 A1	5-57, 8-25, 8-27, 8-29, 12-59, 12-155
311103-0355 ..	PARALLEL PIN ISO 2338 6M6X25 A1	1-21, 1-23, 4-61, 4-63
311103-0357 ..	PARALLEL PIN ISO 2338 6M6X30 A1	6-63, 8-25, 8-27, 8-29, 8-45, 8-47, 8-49, 12-55, 12-57, 12-59, 12-61, 12-85, 12-163
311103-0361 ..	PARALLEL PIN ISO 2338 6M6X40 A1	1-21, 1-23, 3-27, 8-45, 8-47, 8-49
311103-0365 ..	PARALLEL PIN ISO 2338 6M6X50 A1	8-39, 8-41
311103-0401 ..	PARALLEL PIN ISO 2338 8M6X20 A1	4-49, 4-51, 4-53, 5-37
311103-0407 ..	PARALLEL PIN ISO 2338 8M6X35 A1	5-75
311103-0409 ..	PARALLEL PIN ISO 2338 8M6X40 A1	4-31, 4-33, 5-43
311103-0413 ..	PARALLEL PIN ISO 2338 8M6X50 A1	1-167, 1-169
311103-0458 ..	PARALLEL PIN ISO 2338 10M6X30 A1	2-13, 5-75
311103-0466 ..	PARALLEL PIN ISO 2338 10M6X50 A1	2-13
311103-0470 ..	PARALLEL PIN ISO 2338 10M6X60 A1	3-27
311103-1274 ..	PARALLEL PIN ISO 2338 4M6X24 A1	12-169
311111-0207 ..	SPRING PIN ISO 8752 3X14-ST	4-5, 4-7, 4-9, 4-11, 4-13, 4-15
311111-0209 ..	SPRING PIN ISO 8752 3X18-ST	1-185
311111-0308 ..	SPRING PIN ISO 8752 5X20-ST	4-5, 4-7, 4-9, 4-11, 4-13, 4-15
311112-0256 ..	SPRING PIN, ISO 8752 4X20-C	1-49, 1-51, 4-59, 6-65
311112-0262 ..	SPRING PIN, ISO 8752 4X32-C	1-49, 1-51
311303-0234 ..	SLOTTED PIRPB3X12FZB	3-9
311307-0275 ..	SLOTTED PIRPD4X28FZB	3-27
311411-0140 ..	SPLIT PIN SP1,6X16RFR	1-125, 1-127
311411-0150 ..	SPLIT PIN SP2X12RFR	1-119, 1-121
311411-0152 ..	SPLIT PIN SP2X16RFR	12-131
311411-0165 ..	SPLIT PIN SP2,5X16RFR	1-119, 1-121
311411-0169 ..	SPLIT PIN SP2,5X25RFR	6-65
311521-0142 ..	BLANK RIVET 3,2X6	1-89, 10-71
311521-0146 ..	BLANK RIVET 3,2X12	10-75, 10-77, 10-123, 10-125, 10-143
311521-0152 ..	BLANK RIVET 4X8	8-65
312101-0287 ..	SCREW M6S M4X8 FZB	8-31, 8-33, 8-51, 8-53, 12-27, 12-29, 12-37, 12-39
312101-0289 ..	SCREW M6S M4X10 FZB	3-29, 3-31
312101-0295 ..	SCREW M6S M4X20 FZB	5-11
312101-0297 ..	SCREW M6S M4X25 FZB	3-9, 3-11, 3-13, 3-15
312101-0323 ..	SCREW M6S M5X8 FZB	8-17, 8-19
312101-0325 ..	SCREW M6S M5X10 FZB	3-19, 3-21
312101-0327 ..	SCREW M6S M5X12 FZB	8-69
312101-0329 ..	SCREW M6S M5X16 FZB	3-5, 8-31, 8-33, 8-51, 8-53, 8-69, 12-27, 12-29, 12-37, 12-39
312101-0331 ..	SCREW M6S M5X20 FZB	2-5, 2-7, 8-31, 8-33, 8-51, 8-53, 12-27, 12-29, 12-37, 12-39
312101-0333 ..	SCREW M6S M5X25 FZB	3-13, 3-15, 3-23
312101-0337 ..	SCREW M6S M5X35 FZB	2-23, 2-25, 2-27
312101-0343 ..	SCREW M6S M5X60 FZB	4-55, 4-57

Part No	Description	Page No
312101-0344 ..	SCREW M6S M5X65 FZB	7-45
312101-0362 ..	SCREW M6S M6X8 FZB	3-9, 3-11, 3-13, 3-15
312101-0364 ..	SCREW M6S M6X10 FZB	3-9, 3-11, 3-13, 3-15, 8-31, 8-33, 8-51, 8-53, 12-27, 12-29, 12-37, 12-39
312101-0366 ..	SCREW M6S M6X12 FZB	3-5
312101-0367 ..	SCREW M6S M6X14 FZB	12-151, 12-153
312101-0368 ..	SCREW M6S M6X16 FZB	3-5
312101-0370 ..	SCREW M6S M6X20 FZB	3-5
312101-0376 ..	SCREW M6S M6X35 FZB	3-5, 3-29, 3-31
312101-0381 ..	SCREW M6S M6X55 FZB	8-75
312101-0392 ..	SCREW M6S M6X110 FZB	2-31
312101-0449 ..	SCREW M6S M8X16 FZB	6-89, 6-91, 12-151, 12-153
312101-0451 ..	SCREW M6S M8X20 FZB	6-87, 12-13
312101-0453 ..	SCREW M6S M8X25 FZB	3-9, 3-11, 5-67
312101-0455 ..	SCREW M6S M8X30 FZB	5-67, 12-13
312101-0459 ..	SCREW M6S M8X40 FZB	5-67
312101-0461 ..	SCREW M6S M8X50 FZB	12-83
312101-0489 ..	SCREW M6S M10X16 FZB	3-5
312101-0493 ..	SCREW M6S M10X25 FZB	3-9, 3-11, 3-13, 3-15, 12-13
312101-0499 ..	SCREW M6S M10X40 FZB	2-5, 2-7
312101-0502 ..	SCREW M6S M10X55 FZB	3-11, 3-29, 3-31
312101-0504 ..	SCREW M6S M10X65 FZB	3-5, 3-9, 3-11, 3-13, 3-15
312101-0507 ..	SCREW M6S M10X80 FZB	3-9, 3-11
312101-0515 ..	SCREW M6S M10X120 FZB	3-13, 3-15
312101-0530 ..	SCREW M6S M12X16 FZB	5-59, 5-61
312101-0536 ..	SCREW M6S M12X30 FZB	12-151, 12-153
312101-0544 ..	SCREW M6S M12X60 FZB	12-151, 12-153
312101-0548 ..	SCREW M6S M12X80 FZB	12-13, 12-151, 12-153
312101-0550 ..	SCREW M6S M12X90 FZB	3-5, 12-13
312101-0552 ..	SCREW M6S M12X100 FZB	5-69
312104-0463 ..	SCREW M6S M8X60H FZB	12-127
312104-0499 ..	SCREW M6S M10X40H FZB	3-27, 6-89, 6-91
312105-0287 ..	SCREW M6S ISO 4017 M4X8 A470	1-39, 1-43, 1-45, 1-47, 1-61, 1-87, 1-159, 1-171, 1-173, 6-87, 7-61
312105-0289 ..	SCREW M6S ISO 4017 M4X10 A470	1-179
312105-0291 ..	SCREW M6S ISO 4017 M4X12 A470	5-57, 8-35, 8-61, 12-41, 12-43, 12-169
312105-0293 ..	SCREW M6S ISO 4017 M4X16 A470	1-57, 1-59, 6-61, 7-15, 7-23, 7-25, 7-27, 7-29, 8-11, 8-13, 12-169
312105-0295 ..	SCREW M6S ISO 4017 M4X20 A470	2-23, 2-25, 2-27, 7-39, 7-41
312105-0297 ..	SCREW M6S ISO 4017 M4X25 A470	2-23, 2-25, 2-27, 8-65
312105-0299 ..	SCREW M6S ISO 4017 M4X30 A470	6-87, 7-45
312105-0301 ..	SCREW M6S ISO 4017 M4X35 A470	1-177, 2-21, 3-27
312105-0303 ..	SCREW M6S ISO 4017 M4X40 A470	5-37
312105-0323 ..	SCREW M6S ISO 4017 M5X8 A480	1-59, 1-65, 5-41, 5-45, 6-11, 6-71, 8-65, 9-25, 9-27
312105-0325 ..	SCREW M6S ISO 4017 M5X10 A480	1-9, 1-11, 1-19, 1-43, 1-45, 1-47, 1-67, 1-69, 1-119, 1-121, 1-159, 1-177, 2-17, 4-55, 4-57, 6-15, 6-17, 6-19, 7-35, 7-37, 8-73, 12-17, 12-19
312105-0327 ..	SCREW M6S ISO 4017 M5X12 A480	1-21, 1-23, 1-35, 1-49, 1-51, 2-29, 2-31, 3-33, 4-37, 4-39, 4-41, 4-43, 6-23, 6-33, 6-41, 6-43, 6-77, 6-79, 8-35, 8-61, 9-21, 9-25, 9-27, 10-109, 10-111, 10-145, 12-41, 12-43
312105-0328 ..	SCREW M6S ISO 4017 M5X14 A480	1-161, 1-163, 4-55, 4-57, 5-57, 7-35, 7-37, 7-39, 7-41
312105-0329 ..	SCREW M6S ISO 4017 M5X16 A480	1-55, 1-119, 1-121, 1-171, 1-173, 1-181, 4-45, 4-47, 6-75, 7-23, 7-25, 7-27, 7-29, 8-17, 8-19, 8-25, 8-27, 8-29, 8-35, 8-45, 8-47, 8-49, 8-61, 12-41, 12-43, 12-165
312105-0331 ..	SCREW M6S ISO 4017 M5X20 A480	1-59, 1-125, 1-127, 1-177, 5-29, 5-31, 5-33, 5-35, 5-63, 7-51, 7-53, 8-25, 8-27, 8-29, 8-45, 8-47, 8-49
312105-0332 ..	SCREW M6S ISO 4017 M5X22 A470	1-103, 1-105, 1-107, 1-109, 1-119, 1-121
312105-0333 ..	SCREW M6S ISO 4017 M5X25 A480	1-15, 1-159, 2-57, 4-65, 7-49, 7-61, 12-155
312105-0335 ..	SCREW M6S ISO 4014 M5X30 A480	1-9, 1-11, 1-61, 4-55, 4-57, 5-59, 5-61, 6-41, 6-43, 12-161
312105-0337 ..	SCREW M6S ISO 4014 M5X35 A480	2-13, 8-21
312105-0339 ..	SCREW M6S ISO 4014 M5X40 A480	6-41, 6-43, 7-35, 7-37
312105-0341 ..	SCREW M6S ISO 4014 M5X50 A480	6-37
312105-0362 ..	SCREW M6S ISO 4017 M6X8 A480	1-35, 1-49, 1-51, 1-129, 2-73, 4-5, 4-7, 4-9, 4-11, 4-13, 4-15, 5-13, 5-15, 5-17, 5-19, 5-21, 5-29, 5-31, 5-33, 6-71, 8-73
312105-0364 ..	SCREW M6S ISO 4017 M6X10 A480	1-9, 1-11, 1-39, 1-57, 1-59, 1-89, 1-95, 1-97, 1-125, 1-127, 1-133, 1-137, 1-139, 1-141, 1-143, 1-145, 1-147, 1-149, 1-151, 1-153, 1-175, 2-9, 2-29, 4-59, 5-25, 5-27, 6-53, 6-61, 6-87, 8-25, 8-27, 8-29, 8-45, 8-47, 8-49, 8-65, 8-77
312105-0366 ..	SCREW M6S ISO 4017 M6X12 A480	1-37, 1-39, 1-47, 1-57, 1-59, 1-87, 1-91, 1-93, 1-129, 1-137, 1-143, 1-145, 1-147, 1-149, 1-151, 1-153, 1-159, 1-167, 1-169, 1-171, 1-173, 1-175, 1-177, 2-5, 2-7, 2-13, 2-19, 2-31, 2-45, 2-53, 2-55, 3-27, 4-59, 5-37, 5-45, 5-55, 5-75, 5-83, 6-11, 6-13, 6-15, 6-17, 6-19, 6-39, 6-53, 6-93, 6-95, 7-35, 7-37, 7-45, 7-47, 7-49, 7-51, 7-53, 8-11, 8-13, 8-25, 8-27, 8-29, 8-45, 8-47, 8-49, 8-77
312105-0367 ..	SCREW M6S ISO 4017 M6X14 A480	1-19, 1-21, 1-23, 1-131, 1-177, 4-5, 4-7, 4-9, 4-11, 4-13, 4-15, 5-7, 5-9, 6-69, 6-85, 7-23, 7-25, 7-27, 7-29, 7-47
312105-0368 ..	SCREW M6S ISO 4017 M6X16 A480	1-21, 1-23, 1-35, 1-39, 1-49, 1-51, 1-59, 1-61, 1-65, 1-89, 1-95, 1-97, 1-103, 1-105, 1-107, 1-109, 1-111, 1-113, 1-115, 1-117, 1-119, 1-121, 1-125, 1-127, 1-175, 1-177, 2-5, 2-7, 2-11, 2-35, 2-37, 2-47, 2-59, 2-61, 2-69, 3-27, 4-31, 4-33, 4-37, 4-39, 4-41, 4-43, 4-49, 4-51, 5-13, 5-15, 5-17, 5-19, 5-21, 5-29, 5-31, 5-33, 5-45, 5-81, 6-5, 6-7, 6-27, 6-49, 6-51, 6-67, 7-23, 7-25, 7-27, 7-29, 7-35, 7-37, 7-47, 7-61, 10-71, 10-105, 10-107, 10-109, 10-111, 10-123, 10-125, 10-137, 10-139, 12-169
312105-0370 ..	SCREW M6S ISO 4017 M6X20 A480	1-35, 1-39, 1-41, 1-59, 1-63, 1-87, 1-117, 1-119, 1-121, 1-125, 1-127, 1-129, 1-133, 1-139, 1-171, 1-173, 3-25, 3-27, 4-25, 4-27, 5-7, 5-9, 5-29, 5-31, 5-33, 5-41, 5-43, 5-57, 5-65, 5-75, 5-81, 6-13, 6-65, 6-89, 6-91, 7-9, 7-19, 7-21, 7-49, 7-51, 7-53, 8-17, 8-19, 10-109, 10-111, 12-163, 12-169
312105-0371 ..	SCREW M6S ISO 4017 M6X22 A480	1-103, 1-105, 1-107, 1-109, 1-135, 2-49, 2-51
312105-0372 ..	SCREW M6S ISO 4017 M6X25 A480	1-17, 1-21, 1-23, 1-35, 1-37, 1-39, 1-49, 1-51, 1-125, 1-127, 1-131, 1-141, 1-175, 2-5, 2-7, 2-23, 2-25, 2-27, 4-31, 4-33, 4-37, 4-39, 4-41, 4-43, 4-53, 5-7, 5-9, 5-35, 5-37, 5-43, 5-81, 6-77, 6-79, 7-49, 8-17, 8-19, 8-25, 8-27, 8-29, 8-45, 8-47, 8-49, 12-169
312105-0374 ..	SCREW M6S ISO 4014 M6X30 A480	2-13, 3-9, 3-11, 3-13, 3-15, 4-5, 4-7, 4-9, 4-11, 4-13, 4-15

Part No	Description	Page No
		4-25, 4-27, 4-53, 5-7, 5-9, 5-23, 5-71, 6-67, 7-23, 7-25, 7-27, 7-29, 7-51, 7-53, 12-23
312105-0376 ..	SCREW M6S ISO 4014 M6X35 A480	1-35, 2-5, 2-7, 4-5, 4-7, 4-9, 4-11, 4-13, 4-15, 4-25, 4-27
		4-49, 4-51, 4-67, 4-69, 5-7, 5-9, 6-85, 7-51, 7-53, 12-161
312105-0378 ..	SCREW M6S ISO 4014 M6X40 A480	1-17, 1-49, 1-51, 2-29, 5-71, 6-15, 6-17, 6-19, 7-15, 8-37
312105-0379 ..	SCREW M6S ISO 4014 M6X45 A480	1-49, 1-51, 4-17, 4-19, 4-21, 4-23, 12-135
312105-0380 ..	SCREW M6S ISO 4014 M6X50 A480	2-5, 2-7, 4-31, 4-33, 4-49, 4-51, 4-59, 5-23, 5-53, 5-71
312105-0381 ..	SCREW M6S ISO 4014 M6X55 A480	1-119, 1-121, 7-49, 12-155
312105-0382 ..	SCREW M6S ISO 4014 M6X60 A480	6-65, 8-25, 8-27, 8-29, 8-45, 8-47, 8-49
312105-0383 ..	SCREW M6S ISO 4014 M6X65 A480	12-17, 12-19
312105-0384 ..	SCREW M6S ISO 4014 M6X70 A480	4-31, 4-33, 6-11
312105-0386 ..	SCREW M6S ISO 4014 M6X80 A480	6-97
312105-0447 ..	SCREW M6S ISO 4017 M8X12 A480	1-57, 1-59, 1-125, 1-127, 2-69, 2-73, 4-25, 4-27, 5-45, 6-15
		6-17, 6-19, 7-31, 7-59, 8-11, 8-13, 8-17, 8-19
312105-0449 ..	SCREW M6S ISO 4017 M8X16 A480	1-21, 1-23, 1-35, 1-61, 1-89, 1-171, 1-173, 2-61, 2-69, 4-59
		5-85, 6-59, 6-61, 6-81, 6-83, 7-15, 7-35, 7-37, 7-39, 7-41, 8-17, 8-19, 8-65, 12-25
312105-0451 ..	SCREW M6S ISO 4017 M8X20 A480	1-49, 1-51, 1-55, 1-67, 1-69, 1-103, 1-105, 1-107, 1-109
		1-111, 1-113, 1-115, 1-125, 1-127, 1-167, 1-169, 1-175, 1-183, 2-5, 2-7, 2-15, 2-61, 2-69, 4-59
		5-75, 5-77, 5-79, 6-55, 6-67, 6-69, 7-35, 7-37, 8-9, 12-15
312105-0452 ..	SCREW M6S ISO 4017 M8X22 A4 80	1-183, 4-53, 7-57
312105-0453 ..	SCREW M6S ISO 4017 M8X25 A480	1-9, 1-11, 1-17, 1-41, 1-43, 1-45, 1-63, 1-65, 1-67, 1-69
		1-125, 1-127, 1-129, 1-131, 1-137, 2-69, 3-27, 4-25, 4-27, 4-31, 4-33, 4-49, 4-51, 5-7, 5-9, 5-13
		5-15, 5-17, 5-19, 5-21, 6-59, 6-61, 6-69, 6-77, 6-79, 6-81, 6-83, 7-47, 8-15, 8-25, 8-27, 8-29, 8-45
		8-47, 8-49, 8-73, 12-137, 12-163
312105-0455 ..	SCREW M6S ISO 4017 M8X30 A480	1-35, 1-39, 1-61, 1-111, 1-113, 1-115, 2-5, 2-7, 3-7, 4-25
		4-27, 4-31, 4-33, 4-49, 4-51, 5-13, 5-15, 5-17, 5-19, 5-21, 5-29, 5-31, 5-33, 5-53, 5-57, 5-79, 8-69, 12-23
312105-0457 ..	SCREW M6S ISO 4014 M8X35 A480	1-43, 1-45, 1-111, 1-113, 1-115, 4-65, 5-29, 5-31, 5-33
		8-25, 8-27, 8-29, 8-45, 8-47, 8-49, 12-127
312105-0459 ..	SCREW M6S ISO 4014 M8X40 A480	2-29, 4-31, 4-33, 5-29, 5-31, 5-33, 5-37, 8-25, 8-27, 8-29
		8-45, 8-47, 8-49, 12-25
312105-0460 ..	SCREW M6S ISO 4014 M8X45 A480	4-53, 5-7, 5-9, 8-45, 8-47, 8-49
312105-0461 ..	SCREW M6S ISO 4014 M8X50 A480	6-63, 8-73
312105-0462 ..	SCREW M6S ISO 4014 M8X55 A480	1-35, 4-5, 4-7, 4-9, 4-11, 4-13, 4-15, 12-51, 12-53
312105-0463 ..	SCREW M6S ISO 4014 M8X60 A480	5-71, 9-17
312105-0464 ..	SCREW M6S ISO 4014 M8X65 A480	1-59, 5-29, 5-31, 5-33, 6-15, 6-17, 6-19
312105-0469 ..	SCREW M6S ISO 4014 M8X90 A480	5-29, 5-31, 5-33, 5-81
312105-0489 ..	SCREW M6S ISO 4017 M10X16 A480	2-13, 6-53
312105-0491 ..	SCREW M6S ISO 4017 M10X20 A480	5-81, 6-59, 8-73, 12-25
312105-0493 ..	SCREW M6S ISO 4017 M10X25 A480	8-25, 8-27, 8-29, 8-45, 8-47, 8-49
312105-0495 ..	SCREW M6S ISO 4017 M10X30 A480	1-57, 1-119, 1-121, 3-7, 5-7, 5-9, 6-59
312105-0497 ..	SCREW M6S ISO 4017 M10X35 A480	5-23, 8-71
312105-0499 ..	SCREW M6S ISO 4014 M10X40 A480	1-49, 1-51
312105-0500 ..	SCREW M6S ISO 4014 M10X45 A480	8-71
312105-0503 ..	SCREW M6S ISO 4014 M10X60 A480	1-89
312105-0507 ..	SCREW M6S ISO 4014 M10X80 A480	8-5
312105-0511 ..	SCREW M6S ISO 4014 M10X100 A480	2-57
312105-0515 ..	SCREW M6S ISO 4014 M10X120 A480	2-69
312105-0532 ..	SCREW M6S ISO 4017 M12X20 A480	3-7, 3-25, 5-81
312105-0534 ..	SCREW M6S ISO 4017 M12X25 A480	2-49, 2-51, 5-63
312105-0536 ..	SCREW M6S ISO 4017 M12X30 A480	1-57, 1-119, 1-121, 1-125, 1-127, 1-129
312105-0538 ..	SCREW M6S ISO 4017 M12X35 A480	12-15
312105-0540 ..	SCREW M6S ISO 4017 M12X40 A480	6-53
312105-0544 ..	SCREW M6S ISO 4014 M12X60 A480	5-43, 5-75
312105-0547 ..	SCREW M6S ISO 4014 M12X75 A480	5-65
312105-0548 ..	SCREW M6S ISO 4014 M12X80 A480	6-53
312105-0622 ..	SCREW M6S ISO 4017 M16X25 A480	2-49, 2-51
312105-0628 ..	SCREW M6S ISO 4017 M16X40 A480	2-49, 2-51, 5-81
312105-0630 ..	SCREW M6S ISO 4017 M16X50 A480	12-15
312105-0638 ..	SCREW M6S ISO 4014 M16X90 A480	12-167
312105-0648 ..	SCREW M6S M16X150 A280	2-49, 2-51
312109-0335 ..	SCREW M6S ISO 4017 M5X30 A480	1-171, 1-173
312109-0376 ..	SCREW M6S ISO 4017 M6X35 A480	1-95, 1-97, 8-25, 8-27, 8-29, 8-45, 8-47, 8-49
312109-0378 ..	SCREW M6S ISO 4017 M6X40 A480	2-5, 2-7, 12-169
312109-0457 ..	SCREW M6S ISO 4017 M8X35 A480	1-35, 5-13, 5-15, 5-17, 5-19, 5-21, 12-91
312109-0459 ..	SCREW M6S ISO 4017 M8X40 A480	7-57
312109-0499 ..	SCREW M6S ISO 4017 M10X40 A480	5-7, 5-9
312111-0295 ..	SCREW HEX.SOCK.HD.MC6S-TT 4X20 88 FZB	6-89, 6-91
312111-0331 ..	SCREW HEX.SOCK.HD.MC6S-TT 5X20 88 FZB	6-89, 6-91
312111-0335 ..	SCREW HEX.SOCK.HD.MC6S-TT 5X30 88 FZB	8-31, 8-33, 8-51, 8-53, 12-27, 12-29, 12-37, 12-39
312111-0368 ..	SCREW HEX.SOCK.HD.MC6S-TT 6X16 88 FZB	3-17
312111-0372 ..	SCREW HEX.SOCK.HD.MC6S-TT 6X25 88 FZB	6-89, 6-91
312111-0376 ..	SCREW HEX.SOCK.HD.MC6S-TT 6X35 88 FZB	3-9, 3-11
312111-0378 ..	SCREW HEX.SOCK.HD.MC6S-TT 6X40 88 FZB	3-9, 3-11
312111-0451 ..	SCREW HEX.SOCK.HD.MC6S-TT 8X20 88 FZB	12-151, 12-153
312111-0457 ..	SCREW HEX.SOCK.HD.MC6S-TT 8X35 88 FZB	12-157
312111-0471 ..	SCREW HEX.SOCK.HD.MC6S-TT 8X100 88 FZ	6-23, 8-25, 8-27, 8-29, 8-45, 8-47, 8-49
312111-0491 ..	SCREW HEX.SOCK.HD.MC6S-TT 10X20 88 FZ	12-151, 12-153
312115-0220 ..	SCREW ISO4762 M3X6 A4 80	7-35, 7-37, 10-91, 10-93, 10-95, 10-97, 10-99, 10-101, 10-103
		12-103, 12-105, 12-107, 12-109
312115-0222 ..	SCREW ISO4762 M3X8 A4 80	10-123, 10-125
312115-0224 ..	SCREW ISO4762 M3X10 A4 80	1-39, 6-75, 10-31, 10-91, 10-93, 10-95, 10-97, 10-99, 10-101, 10-103
312115-0226 ..	SCREW ISO4762 M3X12 A4 80	3-33, 10-83, 10-85, 12-103
312115-0228 ..	SCREW ISO4762 M3X16 A4 80	1-67, 1-69, 1-137, 7-35, 7-37, 7-39, 7-41, 7-43, 10-133, 12-103
		12-107, 12-169
312115-0230 ..	SCREW ISO4762 M3X20 A4 80	7-23, 7-25, 7-27, 7-29

Part No	Description	Page No
312115-0285 ..	SCREW ISO4762 M4X6 A4 80	10-133
312115-0287 ..	SCREW ISO4762 M4X8 A4 80	1-87, 2-5, 2-7, 2-57, 6-41, 6-43, 7-21, 8-17, 8-19, 8-35, 8-61, 12-41, 12-43
312115-0289 ..	SCREW ISO4762 M4X10 A4 80	1-9, 1-11, 2-23, 2-25, 2-27, 5-41, 10-13, 10-15, 10-17, 10-27, 10-41, 10-43, 10-45, 10-49, 10-51, 10-53, 10-55, 10-75, 10-77
312115-0291 ..	SCREW ISO4762 M4X12 A4 80	1-15, 1-81, 4-29, 5-41, 5-69, 10-13, 10-15, 10-17, 10-87, 10-91, 10-93, 10-95, 10-97, 10-99, 10-101, 10-103
312115-0293 ..	SCREW ISO4762 M4X16 A4 80	4-45, 4-47, 9-23, 9-29, 9-31, 10-75, 10-77, 10-79, 10-81, 10-83, 10-85, 10-87
312115-0295 ..	SCREW ISO4762 M4X20 A4 80	5-57, 7-61, 10-13, 10-15, 10-17
312115-0297 ..	SCREW ISO4762 M4X25 A4 80	10-75, 10-77
312115-0299 ..	SCREW ISO4762 M4X30 A4 80	1-181, 10-75, 10-77
312115-0304 ..	SCREW ISO4762 M4X45 A4 80	8-65
312115-0305 ..	SCREW ISO4762 M4X50 A4 80	1-9, 1-11, 1-67, 1-69, 1-181, 10-133
312115-0323 ..	SCREW ISO4762 M5X8 A4 80	1-91, 1-93, 7-19, 7-21, 7-43, 8-73, 10-13, 10-15, 10-17, 10-29, 10-59, 10-61, 10-63, 10-65, 10-69, 12-169
312115-0325 ..	SCREW ISO4762 M5X10 A4 80	1-9, 1-11, 1-59, 2-53, 2-55, 10-13, 10-15, 10-17, 10-31, 10-39, 10-75, 10-77, 10-141, 12-105
312115-0327 ..	SCREW ISO4762 M5X12 A4 80	1-89, 2-35, 2-37, 2-65, 2-67, 6-5, 6-7, 7-23, 7-25, 7-27, 7-29, 7-43, 7-59, 8-11, 8-13, 10-65, 10-143
312115-0329 ..	SCREW ISO4762 M5X16 A4 80	1-49, 1-51, 1-67, 1-69, 1-137, 2-35, 2-37, 2-65, 2-67, 2-69, 4-5 4-7, 4-9, 4-11, 4-13, 4-15, 5-57, 6-5, 6-7, 6-41, 6-43, 7-31, 8-11, 8-13, 10-71, 10-75, 10-77, 10-123, 10-125
312115-0331 ..	SCREW ISO4762 M5X20 A4 80	1-21, 1-23, 2-17, 4-45, 4-47
312115-0333 ..	SCREW ISO4762 M5X25 A4 80	1-89, 8-25, 8-27, 8-29, 8-43, 8-45, 8-47, 8-49, 10-13, 10-15, 10-17
312115-0335 ..	SCREW ISO4762 M5X30 A4 80	7-21
312115-0337 ..	SCREW ISO4762 M5X35 A4 80	1-89
312115-0339 ..	SCREW ISO4762 M5X40 A4 80	1-89, 10-147
312115-0340 ..	SCREW ISO4762 M5X45 A4 80	1-67, 1-69
312115-0362 ..	SCREW ISO4762 M6X8 A4 80	3-5
312115-0364 ..	SCREW ISO4762 M6X10 A4 80	1-61, 1-139, 2-29, 4-29
312115-0366 ..	SCREW ISO4762 M6X12 A4 80	1-21, 1-23, 1-33, 1-59, 1-139, 1-165, 4-5, 4-7, 4-9, 4-11, 4-13 4-15, 5-49, 5-51, 6-61, 7-35, 7-37, 8-77, 10-13, 10-15, 10-17, 10-71, 10-75, 10-77, 10-141, 12-169
312115-0367 ..	SCREW ISO4762 M6X14 A4 80	7-23, 7-25, 7-27, 7-29, 12-159
312115-0368 ..	SCREW ISO4762 M6X16 A4 80	5-7, 5-9, 6-5, 6-65, 7-63, 8-11, 8-13, 8-17, 8-19, 8-39, 8-41, 10-75, 10-77, 10-141, 10-147
312115-0370 ..	SCREW ISO4762 M6X20 A4 80	1-47, 1-49, 1-51, 4-5, 4-7, 4-9, 4-11, 4-13, 4-15, 4-65, 6-65, 7-59, 8-25, 8-27, 8-29, 8-37, 10-71, 12-55, 12-57, 12-59, 12-61, 12-163
312115-0371 ..	SCREW ISO4762 M6X22 A4	4-25, 4-27
312115-0372 ..	SCREW ISO4762 M6X25 A4 80	1-47, 1-177, 2-19, 2-31, 3-5, 4-5, 4-7, 4-9, 4-11, 4-13, 4-15, 4-53 5-37, 5-49, 5-51, 6-21, 7-17, 7-33, 8-17, 8-19, 8-45, 8-47, 8-49, 8-79, 12-55, 12-57, 12-59, 12-61, 12-169
312115-0374 ..	SCREW ISO4762 M6X30 A4 80	1-47, 1-49, 1-51, 2-53, 2-55, 5-57
312115-0376 ..	SCREW ISO4762 M6X35 A4 80	5-29, 5-31, 5-33
312115-0378 ..	SCREW ISO4762 M6X40 A4 80	7-35, 7-37, 12-85, 12-163
312115-0380 ..	SCREW ISO4762 M6X50 A4 80	8-65, 12-155
312115-0382 ..	SCREW ISO4762 M6X60 A4 80	6-15, 6-17, 6-19
312115-0384 ..	SCREW ISO4762 M6X70 A4 80	5-29, 5-31, 5-33, 12-167
312115-0385 ..	SCREW ISO4762 M6X75 A4 80	2-53, 2-55
312115-0386 ..	SCREW ISO4762 M6X80 A4 80	5-7, 5-9
312115-0447 ..	SCREW ISO4762 M8X12 A4 80	6-41, 6-43
312115-0449 ..	SCREW ISO4762 M8X16 A4 80	1-129, 7-57, 12-155
312115-0451 ..	SCREW ISO4762 M8X20 A4 80	5-13, 5-15, 5-17, 5-19, 5-21
312115-0453 ..	SCREW ISO4762 M8X25 A4 80	3-19, 3-21, 4-31, 4-33, 4-61, 4-63, 5-29, 5-31, 5-33, 5-57, 7-65
312115-0455 ..	SCREW ISO4762 M8X30 A4 80	1-61, 1-141, 7-57
312115-0457 ..	SCREW ISO4762 M8X35 A4 80	5-13, 5-15, 5-17, 5-19, 5-21, 7-67, 12-149
312115-0459 ..	SCREW ISO4762 M8X40 A4 80	5-13, 5-15, 5-17, 5-19, 5-21, 12-85, 12-163
312115-0460 ..	SCREW ISO4762 M8X45 A4 80	5-13, 5-15, 5-17, 5-19, 5-21
312115-0461 ..	SCREW ISO4762 M8X50 A4 80	5-13, 5-15, 5-17, 5-19, 5-21
312115-0463 ..	SCREW ISO4762 M8X60 A4 80	2-39, 2-41, 5-13, 5-15, 5-17, 5-19, 5-21
312115-0465 ..	SCREW ISO4762 M8X70 A4 80	5-13, 5-15, 5-17, 5-19, 5-21
312115-0467 ..	SCREW ISO4762 M8X80 A4 80	5-13, 5-15, 5-17, 5-19, 5-21
312115-0495 ..	SCREW ISO4762 M10X30 A4 80	8-17, 8-19
312115-0500 ..	SCREW ISO4762 M10X45 A4 80	3-19, 3-21, 5-37, 5-57
312115-0503 ..	SCREW ISO4762 M10X60 A4 80	2-13
312115-0630 ..	SCREW ISO4762 M16X50 A4 80	2-63
312121-0287 ..	SCREW ISO 1207 M4X8 4.8 - 5.8 Z.PL.	3-9, 3-11, 3-13, 3-15
312121-0289 ..	SCREW ISO 1207 M4X10 4.8 - 5.8 Z.PL.	2-23, 2-25, 2-27
312121-0323 ..	SCREW ISO 1207 M5X8 4.8 - 5.8 Z.PL.	3-5
312122-0287 ..	SCREW ISO 1207 M4X8 NI PL BRASS	12-93
312122-0294 ..	SCREW ISO 1207 M4X18 NI PL BRASS	4-55, 4-57
312122-0366 ..	SCREW ISO 1207 M6X12 NI PL BRASS	10-13, 10-15, 10-17
312125-0220 ..	SCREW ISO 1207 M3X6 A4	1-39, 2-17, 4-29
312125-0222 ..	SCREW ISO 1207 M3X8 A4	2-13, 7-31
312125-0226 ..	SCREW ISO 1207 M3X12 A4	6-75, 10-31
312125-0228 ..	SCREW ISO 1207 M3X16 A4	1-15, 1-19, 1-57, 1-187
312125-0230 ..	SCREW ISO 1207 M3X20 A4	1-49, 1-51, 1-59, 2-17, 8-25, 8-27, 8-29, 8-45, 8-47, 8-49, 8-65
312125-0232 ..	SCREW ISO 1207 M3X25 A4	7-23, 7-25, 7-27, 7-29, 10-31
312125-0234 ..	SCREW ISO 1207 M3X30 A4	7-35, 7-37
312125-0285 ..	SCREW ISO 1207 M4X6 A4	1-13, 1-21, 1-23, 1-39, 1-91, 1-93, 4-31, 4-33, 6-77, 6-79, 7-15, 10-115, 12-111
312125-0287 ..	SCREW ISO 1207 M4X8 A4	1-49, 1-51, 2-23, 2-25, 2-27, 2-31, 2-69, 3-33, 5-47, 6-53, 7-13, 7-19, 7-23, 7-25, 7-27, 7-29, 7-35, 7-37, 7-43, 7-51, 7-53, 8-65, 8-77
312125-0289 ..	SCREW ISO 1207 M4X10 A4	8-25, 8-27, 8-29
312125-0291 ..	SCREW ISO 1207 M4X12 A4	1-39, 2-39, 2-41, 7-19, 7-21, 8-73
312125-0293 ..	SCREW ISO 1207 M4X16 A4	1-13, 7-21, 9-21, 9-25, 9-27

Part No	Description	Page No
312125-0297 ..	SCREW ISO 1207 M4X25 A4	8-77
312125-0299 ..	SCREW ISO 1207 M4X30 A4	6-87
312125-0323 ..	SCREW ISO 1207 M5X8 A4	1-35, 1-43, 1-45, 1-77, 1-79, 1-81, 1-143, 1-145, 1-147, 1-149, 1-151, 1-153, 2-5, 2-7, 2-13, 2-23, 2-25, 2-27, 9-23, 9-29, 9-31, 10-117
312125-0325 ..	SCREW ISO 1207 M5X10 A4	2-59, 6-11, 8-25, 8-27, 8-29, 8-45, 8-47, 8-49
312125-0327 ..	SCREW ISO 1207 M5X12 A4	7-59, 10-23, 10-37, 10-61, 10-67, 10-113, 10-115, 12-23
312125-0329 ..	SCREW ISO 1207 M5X16 A4	2-39, 8-25, 8-27, 8-29, 8-45, 8-47, 8-49, 8-77
312125-0331 ..	SCREW ISO 1207 M5X20 A4	1-43, 1-45
312125-0333 ..	SCREW ISO 1207 M5X25 A4	1-67, 1-69, 1-143, 1-145, 1-147, 1-149, 1-151, 1-153
312125-0339 ..	SCREW ISO 1207 M5X40 A4	10-23, 10-37, 10-67
312125-0364 ..	SCREW ISO 1207 M6X10 A4	1-43, 1-45, 2-19, 5-49, 5-51, 7-33, 8-79
312125-0366 ..	SCREW ISO 1207 M6X12 A4	8-25, 8-27, 8-29, 8-45, 8-47, 8-49
312132-0287 ..	SCREW SLOT. PAN HEAD MSCS M4X8	12-105
312145-0220 ..	SCREW ISO 2009 MFS M3X6 A4	3-9, 3-11, 3-13, 3-15, 8-73
312145-0228 ..	SCREW ISO 2009 MFS M3X16 A4	1-39
312145-0285 ..	SCREW ISO 2009 MFS M4X6 A4	8-25, 8-27, 8-29, 8-45, 8-47, 8-49
312145-0289 ..	SCREW ISO 2009 MFS M4X10 A4	4-5, 4-7, 4-9, 4-11, 4-13, 4-15
312145-0291 ..	SCREW ISO 2009 MFS M4X12 A4	1-9, 1-11, 4-5, 4-7, 4-9, 4-11, 4-13, 4-15, 4-17, 4-19, 4-21, 4-23, 8-69
312145-0293 ..	SCREW ISO 2009 MFS M4X16 A4	8-25, 8-27, 8-29, 8-45, 8-47, 8-49
312145-0325 ..	SCREW ISO 2009 MFS M5X10 A4	1-9, 1-11
312145-0366 ..	SCREW ISO 2009 MFS M6X12 A4	1-9, 1-11
312145-0380 ..	SCREW ISO 2009 MFS M6X50 A4	12-23
312151-0222 ..	SCREW EN 10642 MF6S M3X8 10.9 EL.PL	12-109
312151-0224 ..	SCREW EN 10642 MF6S M3X10 10.9 EL.PL	12-105
312151-0287 ..	SCREW EN 10642 MF6S M4X8 10.9 EL.PL	3-9, 3-11, 3-13, 3-15
312151-0364 ..	SCREW EN 10642 MF6S M6X10 10.9 EL.PL	3-9, 3-11, 3-13, 3-15
312155-0220 ..	SCREW DIN 7991 MF6S M3X6 A4 70	10-143
312155-0226 ..	SCREW DIN 7991 MF6S M3X12 A4 70	7-21
312155-0285 ..	SCREW DIN 7991 MF6S M4X6 A4 70	4-45, 4-47
312155-0287 ..	SCREW DIN 7991 MF6S M4X8 A4 70	1-9, 1-11, 4-45, 4-47, 7-23, 7-25, 7-27, 7-29
312155-0291 ..	SCREW DIN 7991 MF6S M4X12 A4 70	8-25, 8-27, 8-29, 8-45, 8-47, 8-49, 10-71, 10-75, 10-77, 10-105, 10-107, 10-109, 10-111, 10-123, 10-125, 10-137, 10-139, 12-169
312155-0293 ..	SCREW DIN 7991 MF6S M4X16 A4 70	7-61
312155-0295 ..	SCREW DIN 7991 MF6S M4X20 A4 70	7-59
312155-0297 ..	SCREW DIN 7991 MF6S M4X25 A4 70	10-105, 10-107, 10-137, 10-139
312155-0299 ..	SCREW DIN 7991 MF6S M4X30 A4 70	5-39
312155-0301 ..	SCREW DIN 7991 MF6S M4X35 A4 70	10-71, 10-109, 10-111, 10-123, 10-125
312155-0323 ..	SCREW DIN 7991 MF6S M5X8 A4 70	4-17, 4-19, 4-21, 4-23, 8-15
312155-0325 ..	SCREW DIN 7991 MF6S M5X10 A4 70	2-13, 7-35, 7-37
312155-0327 ..	SCREW DIN 7991 MF6S M5X12 A4 70	7-35, 7-37, 8-15, 8-25, 8-27, 8-29, 8-43, 8-45, 8-47, 8-49
312155-0329 ..	SCREW DIN 7991 MF6S M5X16 A4 70	1-167, 1-169, 2-35, 2-37, 6-5, 6-7, 8-25, 8-27, 8-29, 8-45, 8-47, 8-49, 12-169
312155-0331 ..	SCREW DIN 7991 MF6S M5X20 A4 70	5-45, 7-31, 12-93
312155-0339 ..	SCREW DIN 7991 MF6S M5X40 A4 70	12-169
312155-0364 ..	SCREW DIN 7991 MF6S M6X10 A4 70	1-33, 1-37, 1-139
312155-0366 ..	SCREW DIN 7991 MF6S M6X12 A4 70	3-27
312155-0368 ..	SCREW DIN 7991 MF6S M6X16 A4 70	2-5, 2-7, 4-37, 4-39, 4-41, 4-43, 5-25, 5-27, 7-9, 7-59
312155-0370 ..	SCREW DIN 7991 MF6S M6X20 A4 70	1-19, 1-177, 5-43, 7-47
312155-0372 ..	SCREW DIN 7991 MF6S M6X25A4 70	5-35, 5-37
312155-0374 ..	SCREW DIN 7991 MF6S M6X30 A4 70	1-37, 7-15
312155-0449 ..	SCREW DIN 7991 MF6S M8X16 A4 70	3-5, 5-79
312155-0451 ..	SCREW DIN 7991 MF6S M8X20 A4 70	4-61, 4-63
312155-0457 ..	SCREW DIN 7991 MF6S M8X35 A4 70	8-25, 8-27, 8-29, 8-45, 8-47, 8-49
312155-0459 ..	SCREW DIN 7991 MF6S M8X40 A4 70	4-61, 4-63
312155-0491 ..	SCREW DIN 7991 MF6S M10X20 A4 70	8-15
312155-0532 ..	SCREW DIN 7991 MF6S M12X20 A4 70	1-67, 1-69
312156-0297 ..	SCREW EN 10642 MF6S M4X25 A470	1-89
312156-0329 ..	SCREW EN 10642 MF6S M5X16 A470	5-57
312156-0449 ..	SCREW EN 10642 MF6S M8X16 A470	5-57
312156-0453 ..	SCREW EN 10642 MF6S M8X25 A470	5-57
312303-0463 ..	SCREW DIN 938 PS M8X50 A4 80	12-83
312306-0546 ..	SCREW ISO4026 M12X70 FZB	12-123
312311-0285 ..	SCREW ISO4028 M4X6 FZB	7-65
312311-0287 ..	SCREW ISO4028 M4X8 FZB	1-61
312311-0321 ..	SCREW ISO4028 M5X6 FZB	1-47, 3-13, 3-15
312311-0327 ..	SCREW ISO4028 M5X12 FZB	2-57
312311-0366 ..	SCREW ISO4028 M6X12 FZB	1-47, 1-61
312311-0368 ..	SCREW ISO4028 M6X16 FZB	6-65
312316-0289 ..	SCREW HEX.SOCK.SET CUP P.MSK6SS4X10 FZB	12-105
312316-0291 ..	SCREW HEX.SOCK.SET CUP P.MSK6SS4X12 FZB	12-105
312316-0321 ..	SCREW HEX.SOCK.SET CUP P.MSK6SS5X6 FZB	8-69
312318-0220 ..	SCREW ISO4029 M3X6 A4	12-61, 12-103, 12-107
312318-0222 ..	SCREW ISO4029 M3X8 A4	5-57
312318-0283 ..	SCREW ISO4029 M4X4 A4	7-47
312318-0285 ..	SCREW ISO4029 M4X6 A4	1-119, 1-121, 1-125, 1-127, 7-23, 7-25, 7-27, 7-29
312318-0287 ..	SCREW ISO4029 M4X8 A4	8-17, 8-19, 8-21, 8-25, 8-27, 8-29, 8-45, 8-47, 8-49, 8-65
312318-0323 ..	SCREW ISO4029 M5X8 A4	5-7, 5-9
312318-0325 ..	SCREW ISO4029 M5X10 A4	1-171, 1-173, 5-7, 5-9, 8-43
312318-0327 ..	SCREW ISO4029 M5X12 A4	7-57
312318-0329 ..	SCREW ISO4029 M5X16 A4	8-17, 8-19
312318-0360 ..	SCREW ISO4029 M6X6 A4	4-49, 4-51
312318-0362 ..	SCREW ISO4029 M6X8 A4	1-57, 3-23, 3-27, 7-35, 7-37, 7-63, 8-17, 8-19, 8-25, 8-27, 8-29, 8-45, 8-47, 8-49, 8-73

Part No	Description	Page No
312318-0364 ..	SCREW ISO4029 M6X10 A4	3-19, 3-21, 7-65
312318-0366 ..	SCREW ISO4029 M6X12 A4	3-27, 7-49, 7-63, 8-17, 8-19
312318-0368 ..	SCREW ISO4029 M6X16 A4	1-125, 1-127, 4-49, 4-51, 5-7, 5-9, 8-39, 8-41
312318-0372 ..	SCREW ISO4029 M6X25 A4	8-25, 8-27, 8-29, 8-45, 8-47, 8-49
312318-0447 ..	SCREW ISO4029 M8X12 A4	2-61, 2-63
312318-0451 ..	SCREW ISO4029 M8X20 A4	1-125, 1-127
312502-0120 ..	DRIVE SCREW ROUND HEAD KDS 0X5	1-95, 1-97, 2-53, 2-55
312503-0221 ..	TAPPING SCREW ISO 7049-ST2,9X6,5-C-Z	12-109
312601-0314 ..	HEXAGON NUT, DIN 934 M5 8 FZB	12-117
312601-0318 ..	HEXAGON NUT, DIN 934 M8 8 FZB	3-9, 3-11, 3-13, 3-15
312601-0320 ..	HEXAGON NUT, M10 8 FZB, ISO 4032	2-5, 2-7, 6-89, 6-91, 12-151, 12-153
312601-0322 ..	HEXAGON NUT, DIN 934 M12 8 FZB	12-13, 12-151, 12-153
312601-0324 ..	HEXAGON NUT, DIN 934 M16 8 FZB	3-13, 3-15
312602-0312 ..	HEXAGON NUT, EN 24032 M6M M4 NIPLBR	4-55, 4-57, 12-17, 12-19
312602-0316 ..	NUT, EN 24032 M6M M6 NIPLBR	6-41, 6-43
312605-0310 ..	HEXAGON NUT, M6M M3 A280	1-59, 4-29, 7-23, 7-25, 7-27, 7-29, 7-31, 7-35, 7-37, 7-39, 7-41, 8-65, 10-31, 10-83, 10-85, 10-133, 12-109, 12-169
312605-0312 ..	HEXAGON NUT, M6M M4 A280	1-9, 1-11, 1-21, 1-23, 1-91, 1-93, 1-159, 2-39, 2-41, 2-65, 2-67, 3-27, 6-77, 6-79, 7-39, 7-41, 7-45, 7-59, 8-39, 8-41, 10-83, 10-85, 10-87, 10-105, 10-107, 10-137, 10-139, 10-141, 12-91
312605-0314 ..	HEXAGON NUT, M6M M5 A280	1-9, 1-11, 1-59, 1-65, 1-167, 1-169, 2-53, 2-55, 5-37, 5-45, 6-7, 6-11, 6-41, 6-43, 6-61, 7-21, 7-31, 7-35, 7-37, 7-45, 7-59, 7-61, 8-25, 8-27, 8-29, 8-35, 8-45, 8-47, 8-49, 8-61, 9-21, 9-25, 9-27, 10-89, 12-17, 12-19, 12-41, 12-43, 12-169
312605-0316 ..	HEXAGON NUT, M6M M6 A280	1-17, 1-19, 1-21, 1-23, 1-47, 1-49, 1-51, 1-125, 1-127, 1-131, 1-133, 1-143, 1-145, 1-147, 1-149, 1-151, 1-153, 1-175, 1-177, 2-11, 2-49, 2-51, 2-53, 2-55, 2-61, 2-73, 5-7, 5-9, 5-45, 5-55, 5-71, 5-81, 6-11, 6-13, 6-15, 6-17, 6-19, 6-41, 6-43, 6-51, 6-65, 6-67, 6-89, 6-91, 7-13, 7-15, 7-21, 7-23, 7-25, 7-27, 7-29, 7-43, 7-47, 7-51, 7-53, 7-61, 8-15, 8-25, 8-27, 8-29, 8-37, 8-45, 8-47, 8-49, 8-77, 10-71, 10-83, 10-85, 10-105, 10-107, 10-109, 10-111, 10-123, 10-125, 10-133, 10-137, 10-139, 12-17, 12-19, 12-155, 12-159, 12-167, 12-169
312605-0318 ..	HEXAGON NUT, M6M M8 A280	1-9, 1-11, 1-17, 1-35, 1-41, 1-43, 1-45, 1-55, 1-63, 1-65, 1-111, 1-113, 1-115, 1-125, 1-127, 1-129, 1-131, 1-137, 1-141, 1-159, 1-175, 2-5, 2-7, 2-61, 4-5, 4-7, 4-9, 4-11, 4-13, 4-15, 4-61, 4-63, 5-79, 6-15, 6-17, 6-19, 6-59, 6-61, 6-69, 6-77, 6-79, 6-81, 6-83, 6-89, 6-91, 7-35, 7-37, 7-67, 8-5, 8-25, 8-27, 8-29, 8-35, 8-45, 8-47, 8-49, 8-61, 8-69, 12-23, 12-25, 12-41, 12-43, 12-51, 12-53, 12-121, 12-127
312605-0320 ..	HEXAGON NUT, M6M M10 A280	1-57, 1-125, 1-127, 3-27, 5-7, 5-9, 5-13, 5-15, 5-17, 5-19, 5-21, 5-23, 6-65, 7-11, 8-17, 8-19, 12-161
312605-0322 ..	HEXAGON NUT, M6M M12 A280	1-129, 2-61, 5-13, 5-15, 5-17, 5-19, 5-21, 5-65
312605-0324 ..	HEXAGON NUT, M6M M16 A280	8-67
312605-0328 ..	HEXAGON NUT, M6M M24 A280	9-11
312607-0314 ..	HEXAGON NUT, EN 24032 M6M M5 A480	1-181
312607-0316 ..	HEXAGON NUT, EN 24032 M6M M6 A480	1-89
312607-0320 ..	HEXAGON NUT, EN 24032 M6M M10 A480	1-89
312625-0316 ..	HEXAGON THIN NUT, EN 24035 ML6M M6 A4	3-27, 7-13, 7-15
312625-0318 ..	HEXAGON THIN NUT, EN 24035 ML6M M8 A4	7-21
312625-0320 ..	HEXAGON THIN NUT, EN 24035 ML6M M10 A4	8-17, 8-19
312625-0326 ..	HEXAGON THIN NUT, EN 24035 ML6M M20 A4	1-95, 1-97
312705-0312 ..	NUT HEX. DOMED CAP MHM-6 M4 A280	6-5, 6-7
312705-0314 ..	NUT HEX. DOMED CAP MHM-6 M5 A280	9-25, 9-27
312705-0316 ..	NUT HEX. DOMED CAP MHM-6 M6 A280	1-143, 1-145, 1-147, 1-149, 1-151, 1-153, 2-21, 7-13, 7-49, 10-121
312715-0116 ..	WING NUT DIN 315 A2 MVM-K M6	12-159, 12-165
312715-0118 ..	WING NUT DIN 315 A2 MVM-K M8	12-83
312805-0102 ..	NUT ROUND WITH SLOTS M15X1 FE	8-37
312805-0103 ..	NUT ROUND WITH SLOTS M17X1 FE	8-37
312805-0106 ..	NUT ROUND WITH SLOTS M30X1,5 FE	5-63
312810-0314 ..	HEXAGON NUT, NY-LOCK M5 FZB	2-39
312810-0322 ..	HEXAGON NUT, NY-LOCK M12 FZB	12-13
312811-0316 ..	NUT HEX.LOCK HELI COIL MID GRIP M6 SS	1-135, 6-65
312811-0318 ..	NUT HEX.LOCK HELI COIL M8 SS	4-49, 4-51
312811-0320 ..	NUT HEX.LOCK HELI COIL MID GRIP M10 SS	4-65
312811-0322 ..	NUT HEX.LOCK HELI COIL MID GRIP M12 SS	3-9
312811-0324 ..	NUT HEX.LOCK HELI COIL MID GRIP M16 SS	3-9, 3-11, 3-13, 3-15
312811-0326 ..	NUT HEX.LOCK HELI COIL MID GRIP M20 SS	3-9, 3-11, 3-13, 3-15
312812-0310 ..	HEXAGON NUT, NY-LOCK M3 A480	1-187
312812-0312 ..	HEXAGON NUT, NY-LOCK M4 A480	1-181, 2-21, 6-87, 8-25, 8-27, 8-29, 8-45, 8-47, 8-49, 10-13, 10-15, 10-17, 10-75, 10-77, 10-105, 10-107
312812-0314 ..	HEXAGON NUT, NY-LOCK M5 A480	10-15, 1-55, 2-65, 2-67, 7-35, 7-37, 7-59, 10-73, 10-133, 10-135
312812-0316 ..	HEXAGON NUT, NY-LOCK M6 A480	1-171, 1-173, 2-21, 7-19, 8-75, 10-71, 10-75, 10-77, 10-89, 10-105, 10-107, 10-109, 10-111, 10-123, 10-125, 10-133, 10-137, 10-139, 12-23
312812-0318 ..	HEXAGON NUT, NY-LOCK M8 A480	1-171, 1-173, 6-87, 8-25, 8-27, 8-29, 8-45, 8-47, 8-49
312812-0320 ..	HEXAGON NUT, NY-LOCK M10 A480	3-25, 10-89
312812-0322 ..	HEXAGON NUT, NY-LOCK M12 A480	8-5
312812-0324 ..	HEXAGON NUT, NY-LOCK M16 A480	2-49, 2-51
312901-0324 ..	NUT M6M16VFZB	3-13, 3-15
312902-0316 ..	NUT HEX. LEFT THREAD, M6 A280	1-177
312902-0320 ..	NUT HEX. LEFT THREAD, M10 A280	5-7, 5-9
312910-0113 ..	THREADED INSERT, FREE RUNNING M5X1D	12-107
315101-0136 ..	WASHER BRB, 4,3/8 H=0,8	3-9, 3-11, 3-13, 3-15, 5-57, 8-25, 8-27, 8-29, 8-31, 8-33, 8-45, 8-47, 8-49, 8-51, 8-53, 12-27, 12-29, 12-37, 12-39
315101-0146 ..	WASHER PLAIN, BRB, 5,3/10 H=1	2-23, 2-25, 2-27, 3-13, 3-15, 3-19, 3-21, 3-23, 8-31, 8-33, 8-51, 8-53, 8-69, 10-109, 10-111, 12-27, 12-29, 12-37, 12-39
315101-0153 ..	WASHER PLAIN, BRB, 6,4/12 H=1,5	2-31, 3-5, 3-9, 3-11, 3-13, 3-15, 3-29, 3-31, 7-21, 8-75, 10-147, 12-105
315101-0165 ..	WASHER PLAIN, BRB, 8,4/16 H=1,5	3-9, 3-11, 3-27, 12-13

Part No	Description	Page No
315101-0173 ..	WASHER PLAIN, BRB, 10,5/22 H=2	3-9, 3-11, 3-13, 3-15, 3-19, 3-21, 12-13
315101-0178 ..	WASHER PLAIN, BRB, 13/24 H=2	5-69, 12-13
315101-0186 ..	WASHER PLAIN, BRB, 17/30 H=3	3-9, 3-11, 3-13, 3-15
315102-0198 ..	WASHER PLAIN, BRFB 25/45 H=4	12-13
315103-0136 ..	WASHER PLAIN, BRB, 4,3/8,H=0,8 NI PL BR	12-17, 12-19
315105-0124 ..	WASHER BRB 3,2X6 RFR	1-15, 1-19, 1-49, 1-51, 1-67, 1-69, 1-137, 1-187, 2-17, 3-33, 4-29, 6-75, 7-23, 7-25, 7-27, 7-29, 7-31, 7-35, 7-37, 7-39, 7-41, 8-25, 8-27, 8-29, 8-45, 8-47, 8-49, 10-31, 10-83, 10-85, 10-91, 10-93, 10-95, 10-97, 10-99, 10-101, 10-103
315105-0136 ..	WASHER BRB 4,3X8 RFR	1-9, 1-11, 1-13, 1-21, 1-23, 1-39, 1-67, 1-69, 1-87, 1-91, 1-93, 1-119, 1-121, 1-181, 2-5, 2-7, 2-21, 2-57, 2-65, 2-67, 2-69, 3-27, 3-33, 4-29, 4-45, 4-47, 5-11, 5-37, 5-69, 6-5, 6-7, 6-53, 6-61, 6-77, 6-79, 6-87, 7-15, 7-23, 7-25, 7-27, 7-29, 8-11, 8-13, 8-17, 8-19, 8-25, 8-27, 8-29, 8-39, 8-41, 8-65, 8-77, 9-21, 9-25, 9-27, 10-13, 10-15, 10-17, 10-27, 10-41, 10-43, 10-45, 10-49, 10-51, 10-53, 10-55, 10-57, 10-75, 10-77, 10-79, 10-81, 10-83, 10-85, 10-87, 10-105, 10-107, 10-109, 10-111, 10-141, 12-169
315105-0146 ..	WASHER BRB 5,3X10 RFR	1-9, 1-11, 1-15, 1-19, 1-35, 1-43, 1-45, 1-49, 1-51, 1-55, 1-59, 1-61, 1-65, 1-67, 1-69, 1-89, 1-143, 1-145, 1-147, 1-149, 1-151, 1-153, 1-155, 1-157, 1-161, 1-163, 1-167, 1-169, 1-171, 1-173, 1-177, 1-181, 2-5, 2-7, 2-13, 2-17, 2-29, 2-31, 2-35, 2-37, 2-39, 2-53, 2-55, 2-65, 2-67, 2-69, 3-27, 3-33, 4-37, 4-39, 4-41, 4-43, 4-45, 4-47, 4-55, 4-57, 5-37, 5-45, 5-57, 5-59, 5-61, 5-63, 6-5, 6-7, 6-11, 6-23, 6-33, 6-37, 6-41, 6-43, 6-75, 6-77, 6-79, 7-23, 7-25, 7-27, 7-29, 7-31, 7-35, 7-37, 7-39, 7-41, 7-43, 7-45, 7-49, 7-51, 7-53, 7-59, 7-61, 8-11, 8-13, 8-17, 8-19, 8-21, 8-25, 8-27, 8-29, 8-35, 8-43, 8-45, 8-47, 8-49, 8-61, 8-73, 8-77, 9-21, 9-25, 9-27, 10-13, 10-15, 10-17, 10-29, 10-39, 10-47, 10-59, 10-61, 10-63, 10-65, 10-69, 10-73, 10-75, 10-77, 10-89, 10-91, 10-93, 10-95, 10-97, 10-99, 10-101, 10-103, 10-113, 10-115, 10-133, 10-135, 10-143, 10-145, 12-17, 12-19, 12-41, 12-43, 12-155, 12-161, 12-165
315105-0153 ..	WASHER BRB 6,4X12 RFR	1-9, 1-11, 1-17, 1-19, 1-21, 1-23, 1-33, 1-37, 1-39, 1-47, 1-49, 1-51, 1-57, 1-59, 1-61, 1-87, 1-89, 1-91, 1-93, 1-125, 1-127, 1-129, 1-133, 1-137, 1-139, 1-143, 1-145, 1-147, 1-149, 1-151, 1-153, 1-159, 1-165, 1-171, 1-173, 1-175, 1-177, 2-5, 2-7, 2-9, 2-11, 2-13, 2-19, 2-21, 2-29, 2-31, 2-35, 2-37, 2-45, 2-47, 2-49, 2-51, 2-53, 2-55, 2-59, 2-61, 2-69, 3-25, 3-27, 4-25, 4-27, 4-29, 4-31, 4-33, 4-37, 4-39, 4-41, 4-43, 4-53, 4-59, 4-65, 5-13, 5-15, 5-17, 5-19, 5-21, 5-23, 5-25, 5-27, 5-29, 5-31, 5-33, 5-35, 5-37, 5-41, 5-43, 5-45, 5-53, 5-55, 5-71, 5-75, 5-81, 5-83, 6-5, 6-7, 6-11, 6-13, 6-15, 6-17, 6-19, 6-27, 6-39, 6-41, 6-43, 6-49, 6-51, 6-53, 6-61, 6-65, 6-69, 6-71, 6-77, 6-79, 6-87, 6-89, 6-91, 6-93, 6-95, 6-97, 7-9, 7-13, 7-15, 7-23, 7-25, 7-27, 7-29, 7-33, 7-35, 7-37, 7-43, 7-45, 7-47, 7-49, 7-51, 7-53, 7-59, 7-61, 8-11, 8-13, 8-17, 8-19, 8-25, 8-27, 8-29, 8-37, 8-39, 8-41, 8-45, 8-47, 8-49, 8-65, 8-77, 10-13, 10-15, 10-17, 10-71, 10-75, 10-77, 10-89, 10-105, 10-107, 10-109, 10-111, 10-121, 10-123, 10-125, 10-133, 10-137, 10-139, 10-141, 12-17, 12-19, 12-23, 12-85, 12-135, 12-155, 12-159, 12-161, 12-163, 12-165, 12-169
315105-0156 ..	WASHER BRB 6,7X14 RFR	5-55, 7-47, 7-49
315105-0165 ..	WASHER BRB 8,4X16 RFR	1-9, 1-11, 1-21, 1-23, 1-35, 1-43, 1-45, 1-55, 1-67, 1-69, 1-103, 1-105, 1-107, 1-109, 1-119, 1-121, 1-125, 1-127, 1-129, 1-175, 2-5, 2-7, 2-15, 2-39, 2-41, 2-61, 2-69, 3-7, 4-25, 4-27, 4-31, 4-33, 4-49, 4-51, 4-53, 4-59, 4-61, 4-63, 5-7, 5-9, 5-13, 5-15, 5-17, 5-19, 5-21, 5-29, 5-31, 5-33, 5-45, 5-53, 5-57, 5-75, 5-77, 5-79, 5-81, 5-85, 6-15, 6-17, 6-19, 6-55, 6-61, 6-81, 6-83, 6-89, 6-91, 7-15, 7-35, 7-37, 7-39, 7-41, 7-47, 7-51, 7-53, 7-57, 8-9, 8-11, 8-13, 8-15, 8-17, 8-19, 8-25, 8-27, 8-29, 8-35, 8-45, 8-47, 8-49, 8-61, 8-69, 8-73, 12-15, 12-41, 12-43, 12-51, 12-53, 12-83, 12-85, 12-91, 12-137, 12-163
315105-0171 ..	WASHER BRB 10X18 RFR	1-185, 8-17, 8-19
315105-0173 ..	WASHER BRB 10,5X22 RFR	1-89, 2-57, 3-7, 3-25, 4-65, 5-13, 5-15, 5-17, 5-19, 5-21, 6-53, 6-59, 6-65, 7-11, 8-25, 8-27, 8-29, 8-45, 8-47, 8-49, 8-71, 10-89, 12-151, 12-153
315105-0178 ..	WASHER BRB 13X24 RFR	2-49, 2-51, 3-7, 3-33, 5-43, 5-65, 5-75, 5-81, 6-53, 7-59, 12-15
315105-0186 ..	WASHER BRB 17X30 RFR	2-49, 2-51, 2-63, 5-81, 12-15
315105-0191 ..	WASHER BRB 20X36 RFR	8-5
315105-0192 ..	WASHER BRB 21X36 RFR	12-25
315111-0153 ..	WASHER PLAIN, TBRB 6,4/12 H=3	8-31, 8-33, 8-51, 8-53, 12-27, 12-29, 12-37, 12-39
315111-0165 ..	WASHER PLAIN, TBRB 8,4/16 H=3	5-37, 12-127
315111-0173 ..	WASHER PLAIN, TBRB 10,5/22 H=4	3-5, 3-9, 3-11, 3-13, 3-15
315111-0178 ..	WASHER PLAIN, TBRB 13/24 H=4	3-5
315115-0153 ..	WASHER PLAIN, TBRB 6,4/12 H=3	1-49, 1-51, 1-57, 1-171, 1-173, 4-5, 4-7, 4-9, 4-11, 4-13, 4-15, 4-25, 4-27, 4-37, 4-39, 4-41, 4-43, 4-49, 4-51, 4-67, 4-69, 7-61
315115-0165 ..	WASHER PLAIN, TBRB 8,4/16 H=3	1-49, 1-51, 1-61, 1-103, 1-105, 1-107, 1-109, 1-111, 1-113, 1-115, 1-125, 1-127, 1-171, 1-173, 1-183, 2-5, 2-7, 4-31, 4-33, 4-65, 6-67, 12-121, 12-131
315115-0173 ..	WASHER PLAIN, TBRB 10,5/22 H=4	1-49, 1-51, 12-25
315115-0178 ..	WASHER PLAIN, TBRB 13/24 H=4	1-119, 1-121, 1-125, 1-127, 8-5
315121-0153 ..	WASHER PLAIN, TBRSB 6,4/22 H=4	3-5
315121-0165 ..	WASHER PLAIN, TBRSB 8,4/26 H=5	12-55, 12-57
315121-0173 ..	WASHER PLAIN, TBRSB 10,5/28 H=6	3-11, 3-29, 3-31
315121-0178 ..	WASHER PLAIN, TBRSB 13/36 H=6	3-5, 3-25
315125-0146 ..	WASHER TBRSB 5.3X15X1 A4	10-31
315125-0153 ..	WASHER TBRSB 6,4X22X4 A4	1-35, 1-49, 1-51, 1-141, 3-27, 8-15
315125-0165 ..	WASHER TBRSB 8,4X26X5 A4	1-35, 1-39, 1-67, 1-69, 7-35, 7-37, 7-57
315125-0173 ..	WASHER TBRSB 10,5X28X6 A4	2-69, 8-5, 8-15
315202-0102 ..	O-RING 4,1X1,6 MM	4-25, 4-27, 4-45, 4-47
315202-0105 ..	O-RING 7,1X1,6 MM	2-39, 2-41
315202-0106 ..	O-RING 8,1X1,6 MM	4-25, 4-27, 4-53
315202-0108 ..	O-RING 10,1X1,6 MM	4-25, 4-27
315202-0110 ..	O-RING 12,1X1,6 MM	4-5, 4-7, 4-9, 4-11, 4-13, 4-15
315202-0112 ..	O-RING 14,1X1,6 MM	6-89, 6-91
315202-0118 ..	O-RING 22,1X1,6 MM	5-37
315202-0120 ..	O-RING 27,1X1,6 MM	1-185
315202-0204 ..	O-RING 5,3X2,4 MM	4-53
315202-0206 ..	O-RING 7,3X2,4 MM	2-5, 2-7, 4-49, 4-51
315202-0207 ..	O-RING 8,3X2,4 MM	4-49, 4-51, 4-53
315202-0211 ..	O-RING 13,3X2,4 MM	2-13
315202-0215 ..	O-RING 19,2X3 MM	5-23, 5-65, 5-81
315202-0217 ..	O-RING 24,2X3 MM	5-39
315202-0218 ..	O-RING 26,2X3 MM	5-57, 5-65, 8-35, 8-61, 12-41, 12-43

Part No	Description	Page No
315202-0219 ..	O-RING 29,2X3 MM	4-49, 4-51, 4-53
315202-0223 ..	O-RING 39,2X3 MM	5-57
315202-0224 ..	O-RING 42,2X3 MM	8-31, 8-33, 8-51, 8-53, 12-11, 12-27, 12-29, 12-37, 12-39
315202-0244 ..	O-RING 134,3X5,7 MM	6-77, 6-79
315202-0265 ..	O-RING 12,3X2,4 MM	4-5, 4-7, 4-9, 4-11, 4-13, 4-15
315202-0301 ..	O-RING 49,5X3 MM	8-51, 8-53, 12-27, 12-29
315202-0304 ..	O-RING 64,5X3 MM	1-79, 8-31, 8-33, 8-51, 8-53, 12-27, 12-29, 12-37, 12-39
315202-0305 ..	O-RING 69,5X3 MM	5-57, 8-31, 8-33, 8-51, 8-53, 12-27, 12-29, 12-37, 12-39
315202-0306 ..	O-RING 74,5X3 MM	5-59, 5-61, 5-63
315202-0307 ..	O-RING 79,5X3 MM	2-57
315202-0308 ..	O-RING 84,5X3 MM	1-77, 1-81
315202-0309 ..	O-RING 89,5X3 MM	8-35, 8-61, 12-41, 12-43
315202-0317 ..	O-RING 129,5X3 MM	6-81, 6-83
315202-0505 ..	O-RING 6,07X1,78 MM	5-29, 5-31, 5-33
315203-0219 ..	O-RING 29,2X3 MM	12-105
315204-0109 ..	O-RING 11,1X1,6 MM	1-49, 1-51
315204-0110 ..	O-RING 12,1X1,6 MM	1-37, 1-139
315204-0111 ..	O-RING 13,1X1,6 MM	1-57
315204-0119 ..	O-RING 25,1X1,6 MM	1-137
315204-0207 ..	O-RING 8,3X2,4 MM	1-15
315204-0213 ..	O-RING 15,2X2,4 MM	1-9, 1-11
315204-0215 ..	O-RING 19,2X3 MM	1-77, 1-79, 1-81, 9-37
315204-0222 ..	O-RING 36,2X3 MM	1-139
315204-0223 ..	O-RING 39,2X3 MM	1-63
315204-0301 ..	O-RING 49,5X3 MM	1-49, 1-51, 1-79, 1-137, 9-37
315204-0302 ..	O-RING 54,5X3 MM	1-37, 1-139
315204-0309 ..	O-RING 89,5X3 MM	1-49, 1-51, 1-61
315205-0505 ..	O-RING 6,07X1,78 MM	1-7, 1-15, 1-19
315205-0705 ..	O-RING 17,17X1,78 MM	5-57
315206-0701 ..	O-RING 10,82X1,78 MM	1-87
315211-0101 ..	BONDED SEAL SS/NBR90 M4	4-5, 4-7, 4-9, 4-11, 4-13, 4-15
315211-0103 ..	BONDED SEAL SS/NBR90 M6	4-5, 4-7, 4-9, 4-11, 4-13, 4-15, 5-57
315211-0104 ..	BONDED SEAL SS/NBR90 M8	5-71, 6-89, 6-91
315211-0106 ..	BONDED SEAL SS/NBR90 M10	6-89, 6-91
315211-0107 ..	BONDED SEAL SS/NBR90 M12	5-81
315211-0111 ..	BONDED SEAL SS/NBR90 G1/2	6-89, 6-91
315217-0111 ..	BONDED SEAL SS/VITON G1/2	1-89
315220-0167 ..	V-RINGS 27X35X10,5 MM V-30S	1-61
315220-0210 ..	V-RINGS 54X64X13 MM V-60S	5-59, 5-61, 5-63
315221-0169 ..	RADIAL SEAL 30X47X7 MM	3-5
315221-0175 ..	RADIAL SEAL 35X47X7 MM	5-57
315221-0177 ..	RADIAL SEAL 35X52X7 MM	5-63
315221-0185 ..	RADIAL SEAL 40X62X7 MM	5-57
315229-0101 ..	GASKETS, 10,4X17,4X3,7 MM 1/2" FDA	1-21, 1-23, 1-131, 6-69
315229-0103 ..	GASKETS, 23,1X30,1X3,7 MM 1" FDA	1-21, 1-23
315229-0104 ..	GASKETS, 35,8X42,8X3,7 MM 1"1/2 FD	1-15, 1-131, 1-135, 6-69
315229-0105 ..	GASKETS, 48,5X55,5X3,7 MM 2" FDA	1-129, 6-59, 6-77, 6-79, 6-81, 6-83
315229-0106 ..	GASKETS, 61,2X68,2X3,7 MM 2"1/2 FD	6-59
315229-0203 ..	GASKET 22,1X31,1X3,7 MM 1"	1-63, 1-137
315229-0204 ..	GASKET 34,8X42,8X3,7 MM 1"1/2	1-43, 1-45, 1-63
315229-0205 ..	GASKET 47,5X55,5X3,7 MM 2 INCH	1-17, 1-41, 1-43, 1-45, 1-63, 1-65
315229-0206 ..	GASKET 60,2X68,2X3,7 MM 2"1/2	1-41, 1-43, 1-45, 1-63, 1-137
315230-0157 ..	BEARING SEAL 12X16X3 MM	4-5, 4-7, 4-9, 4-11, 4-13, 4-15
315233-0101 ..	WASHER CAPTIVE SEALING M5(NEW315239-101)	1-77, 1-79, 1-81
315233-0109 ..	WASHER CAPTIVE SEALING G1/8	1-165, 4-31, 4-33, 6-23, 12-17, 12-19, 12-127
315233-0110 ..	WASHER CAPTIVE SEALING G1/4	2-43, 2-45, 6-23, 6-35, 12-17, 12-19, 12-23, 12-125, 12-127
315233-0111 ..	WASHER CAPTIVE SEALING G3/82-5, 2-7, 6-23, 6-25, 6-77, 6-79, 6-81, 6-83, 6-85, 12-17, 12-19	
315233-0113 ..	WASHER CAPTIVE SEALING G1/2	2-29, 2-45, 6-23, 6-27, 6-29, 6-31, 12-17, 12-19, 12-23
315234-0109 ..	WASHER,PL.RND.CU.10,3/13,5 H=1,0	1-7, 1-21, 1-23, 1-35, 1-39, 1-43, 1-45, 1-67, 1-69, 2-23, 2-25, 2-27, 4-25, 4-27, 6-89, 6-91
315234-0110 ..	WASHER,PL.RND.CU.13,5/18 H=1,5	5-69, 9-11
315234-0111 ..	WASHER,PL.RND.CU.17,5//21 H=1,5	6-89, 6-91
315234-0113 ..	WASHER PL.RND.CU.21,3//26 H=1,5	5-69, 6-59
315237-0106 ..	WASHER,PL.RND.AL.6/10,H=1	4-5, 4-7, 4-9, 4-11, 4-13, 4-15, 4-25, 4-27
315237-0107 ..	WASHER,PL.RND.AL.8/14,H=1	4-25, 4-27
315237-0109 ..	WASHER,PL.RND.AL.10/14,H=1,5	4-5, 4-7, 4-9, 4-11, 4-13, 4-15
315237-0110 ..	WASHER,PL.RND.AL.13,5/18,H=1,5	1-9, 1-11
315239-0101 ..	NYLON WASHER M5(RP315233-101)	5-5, 6-15, 6-17, 6-19
315239-0109 ..	NYLON WASHER G1/8	1-87, 2-13, 5-37, 6-41, 6-43
315239-0110 ..	NYLON WASHER G1/4	6-87, 6-93, 6-95
315239-0111 ..	NYLON WASHER G3/8	5-37, 6-93, 6-95
315239-0113 ..	NYLON WASHER G1/2	6-93, 6-95
315239-0115 ..	NYLON WASHER G3/4	2-53, 2-55
315250-0103 ..	GASKET 48X38X5,5 MM	5-81
315250-0104 ..	GASKET 61X51X5,5 MM	5-73
315259-0102 ..	FELT SEAL 22-47 MM	2-13
315400-0004 ..	TUBE PUN-H-8X1,25-BL	5-13, 5-15, 5-17, 5-19, 5-21, 5-71
315401-0153 ..	WASHER FBH6,1FZB	10-75, 10-77, 10-141, 10-147
315402-0128 ..	LOCK WASHER FBB 3,6	10-83, 10-85, 10-133
315402-0136 ..	LOCK WASHER FBB 4,1	1-81, 10-27, 10-41, 10-43, 10-45, 10-49, 10-51, 10-53, 10-55, 10-57, 10-75, 10-77, 10-79, 10-81, 10-83, 10-85, 10-87, 10-91, 10-93, 10-95, 10-97, 10-99, 10-101, 10-103, 10-105, 10-107, 10-133, 10-137, 10-139
315402-0146 ..	LOCK WASHER FBB 5,1	1-155, 1-157, 6-89, 6-91, 10-13, 10-15, 10-17, 10-23, 10-31, 10-37, 10-67, 10-71, 10-75, 10-77, 10-123, 10-125, 10-141, 10-145

Part No	Description	Page No
315402-0156 ..	LOCK WASHER FBB 6,5	10-75, 10-77
315410-0106 ..	LOCK WASHER MB 6 D=30 H=1,25	5-63
315701-0169 ..	PARALLEL KEY W. ROUND ENDS 4X4X18 MM	8-25, 8-27, 8-29, 8-45, 8-47, 8-49
315701-0234 ..	PARALLEL KEY W. ROUND ENDS 6X6X25 MM	5-57
315701-0235 ..	PARALLEL KEY W. ROUND ENDS 6X6X28 MM	3-17
315701-0239 ..	PARALLEL KEY W. ROUND ENDS 6X6X40 MM	3-5, 3-17
315701-0268 ..	PARALLEL KEY W. ROUND ENDS 8X7X32 MM	3-5
315701-0335 ..	PARALLEL KEY W. ROUND ENDS 12X8X56 MM	3-9, 3-11, 3-13, 3-15
315705-0166 ..	PARALLEL KEY W. ROUND ENDS 4X4X12 MM	8-17, 8-19
315705-0196 ..	PARALLEL KEY W.ROUND ENDS 5X5X10	6-65
315705-0201 ..	PARALLEL KEY W. ROUND ENDS 5X5X20 MM	1-47
315705-0232 ..	PARALLEL KEY W. ROUND ENDS 6X6X20 MM	3-27, 5-57, 5-65
315705-0265 ..	PARALLEL KEY W. ROUND ENDS 8X7X25 MM	5-57
315705-0269 ..	PARALLEL KEY W. ROUND ENDS 8X7X35 MM	3-5
315705-0271 ..	PARALLEL KEY W. ROUND ENDS 8X7X45 MM	5-65
315705-0307 ..	PARALLEL KEY W. ROUND ENDS 10X8X70 MM	3-7
315742-0102 ..	RETAINING RING 6 SMS 199 RFR	4-31, 4-33
315742-0104 ..	RETAINING RING 8 SMS 199 RFR	8-21, 12-85
315742-0111 ..	RETAINING RING 15 SMS 199 RFR	7-63
315742-0112 ..	RETAINING RING 16 SMS 199 RFR	1-57
315742-0116 ..	RETAINING RING 20 SMS 199 RFR	3-27
315750-0105 ..	RETAINING RING SHAFT DIN 471 ST 8	8-35, 8-61, 12-41, 12-43
315751-0103 ..	RETAINING RING FOR SHAFT DIN 471 6 A2	2-21, 4-29, 7-61, 8-39, 8-41
315751-0109 ..	RETAINING RING FOR SHAFT DIN 471 12 A2	4-59, 4-61, 4-63, 7-15, 7-35, 7-37, 7-39, 7-41
315751-0112 ..	RETAINING RING FOR SHAFT DIN 471 15 A2	1-57, 1-61, 1-179, 7-11, 8-17, 8-19, 8-25, 8-27, 8-29, 8-45, 8-47, 8-49
315751-0116 ..	RETAINING RING FOR SHAFT DIN 471 20 A2	4-59
315751-0119 ..	RETAINING RING FOR SHAFT DIN 471 25 A2	3-25
315751-0122 ..	RETAINING RING FOR SHAFT DIN 471 30 A2	4-59
315751-0124 ..	RETAINING RING FOR SHAFT DIN 471 35 A2	5-57
315752-0120 ..	RETAINING RING FOR BORE DIN 472 26 ST	7-61
315752-0125 ..	RETAINING RING FOR BORE DIN 472 37 ST	4-59
315753-0122 ..	RETAINING RING FOR BORE DIN 472 30 A2	7-49
315753-0124 ..	RETAINING RING FOR BORE DIN 472 35 A2	1-57, 1-61
315753-0132 ..	RETAINING RING FOR BORE DIN 472 52 A2	5-57
315754-0113 ..	LOCKING WAE 15	1-77, 1-79, 1-81
315755-0106 ..	RETAINING RING SHAFT DIN 6799 4 A2	7-23, 7-25, 7-27, 7-29, 7-59
315755-0107 ..	RETAINING RING SHAFT DIN 6799 5 A2	1-177, 7-23, 7-25, 7-27, 7-29
315755-0109 ..	RETAINING RING SHAFT DIN 6799 7 A2	12-169
315755-0110 ..	RETAINING RING SHAFT DIN 6799 9 A2	7-51, 7-53
315755-0801 ..	RETAINING RING SHAFT DIN 6799 8 A2	7-47
318201-0150 ..	ROLLER CHAIN, SINGLE 3/8 -150	3-27
318207-0168 ..	ROLLER CHAIN, SINGLE 6MM-168	8-25, 8-27, 8-29, 8-45, 8-47, 8-49
318800-0103 ..	HANDLES,SPHERICAL KNOB,INT.THRE.,D.25-M6	1-49, 1-51, 8-37
318800-0104 ..	HANDLE,SPHERICAL KNOB,INT.THRE.,D.30-M8	7-47
318860-0106 ..	KNOB, ADJUST.HI.EXT.THREAD, NO 8324-3674	2-57
318871-0104 ..	KNOB CIRCULAR, EXT THREAD, NO. 8302-6118	8-15
318873-0103 ..	KNOB, CIRKUL, THREADED BUSH, M6 21X17 MM	12-155
321101-0143 ..	FLANGE BUSHING, 8X14X8 MM	1-171, 1-173
321101-0172 ..	FLANGE BUSHING, 12X18X10 MM	4-59
321101-0173 ..	FLANGE BUSHING, 12X18X12 MM	4-61, 4-63, 8-65
321101-0222 ..	FLANGE BUSHING, 18X25X12	12-123
321101-0233 ..	FLANGE BUSHING, 20X28X20 MM	8-71
321111-0097 ..	FLANGE BUSHING, 8X12X12 MM	7-13, 7-51, 7-53
321111-0135 ..	FLANGE BUSHING, 10X16X10 MM	7-13
321111-0212 ..	FLANGE BUSHING, 15X21X15 MM	8-37
321120-0098 ..	BEARING BUSH W/O FLANGE, 10X12X8 MM	4-31, 4-33
321120-0100 ..	BEARING BUSH W/O FLANGE, 8X10X12 MM	8-35, 8-39, 8-41, 8-61, 12-41, 12-43
321120-0101 ..	BEARING BUSH W/O FLANGE, 6X8X6 MM	8-39, 8-41
321120-0109 ..	BEARING BUSH W/O FLANGE, 12X14X10 MM	8-35, 8-61, 12-41, 12-43
321120-0118 ..	BEARING BUSH W/O FLANGE, 14X16X15 MM	4-31, 4-33
321120-0122 ..	BEARING BUSH W/O FLANGE, 15X17X15 MM	8-31, 8-33, 8-51, 8-53, 12-27, 12-29, 12-37, 12-39
321120-0132 ..	BEARING BUSH W/O FLANGE, 18X20X20 MM	4-25, 4-27
321120-0153 ..	BEARING BUSH W/O FLANGE, 24X27X20 MM	4-31, 4-33
321129-0137 ..	THRUST WASHER, 22X38X1,5 MM	3-9, 3-11
321130-0180 ..	THRUST WASHER, 12X24X1,5 MM	7-15
321130-0200 ..	THRUST WASHER, 14X26X1,5 MM	5-7, 5-9
321130-0260 ..	THRUST WASHER, 20X36X1,5 MM	3-27
321135-0183 ..	BUSHING, 12X14X15 MM	5-7, 5-9
321141-0142 ..	BEARING BUSH W/O FLANGE, 10X12X12 MM	5-41
321141-0183 ..	BEARING BUSH W/O FLANGE, 12X14X15 MM	7-35, 7-37, 7-39, 7-41
321141-0193 ..	BEARING BUSH W/O FLANGE, 12X14X25 MM	7-15
321141-0260 ..	BEARING BUSH W/O FLANGE, 20X23X20 MM	3-27
321302-0298 ..	BALL BEARING, 8X22X7 MM	7-65
321306-0107 ..	BALL BEARING, 35X62X14 MM	5-57
321308-0200 ..	BALL BEARING, 10X26X8 MM	7-61
321308-0202 ..	BALL BEARING, 15X32X9 MM	8-17, 8-19
321309-0104 ..	BALL BEARING, 20X47X14 MM	5-57
321309-0105 ..	BALL BEARING, 25X52X15 MM	5-57
321313-0100 ..	BALL BEARING, 10X30X9 MM	7-49
321313-0102 ..	BALL BEARING, 15X35X11 MM	7-63, 8-17, 8-19
321313-0105 ..	BALL BEARING, 25X52X15MM	3-5
321330-0100 ..	ANG. BALL BEAR, 10X30X14 MM	7-61
321330-0106 ..	ANG. BALL BEAR, 30X62X23,8 MM	5-57

Part No	Description	Page No
321531-0248 ..	NEEDLE SLEEVE W/O CONE, 20X26X16 MM	3-9, 3-11, 3-13, 3-15
321576-0260 ..	ROLLER BEARING, 20X47X25 MM	3-9, 3-11, 3-13, 3-15
321600-0114 ..	SEAL COVER LL3052	3-5
341001-0148 ..	COPPER TUBE	6-15, 6-17, 6-19
342700-0110 ..	NIPPLES,HEXAGON,EXT.G-THREAD G1/4"-G1/4"	12-125
342700-0113 ..	NIPPLES,HEXAGON,EXT.G-THREAD G1/2"-G1/2"	6-29, 6-85, 6-89, 6-91, 6-93, 6-95
342700-0203 ..	NIPPLES,HEXAGON,EXT.G-THREAD G3/8"-G1/4"	6-87
342700-0205 ..	NIPPLES,HEXAGON,EXT.G-THREAD G1/2"-G1/4"	6-89, 6-91
342700-0210 ..	NIPPLES,HEXAGON,EXT.G-THREAD G3/4"-G1/2"	6-77, 6-79
342701-0201 ..	BUSHING,INT./EXT.G-THREAD G1/4"-G1/8"	12-17, 12-19, 12-125
342701-0203 ..	BUSHING, INT/EXT. G-THREAD NO. 3/8-1/4	6-23, 6-85, 6-93, 6-95
342701-0205 ..	BUSHING,INT./EXT.G-THREAD G1/2"-G1/4"	2-45, 6-35, 6-49, 6-85
342701-0206 ..	BUSHING,INT./EXT.G-THREAD G1/2"-G3/8"	6-35, 6-51
342701-0208 ..	BUSHING, INT/EXT. G-THREAD NO. 3/4-1/4	3-5
342701-0209 ..	BUSHING,INT./EXT.G-THREAD G3/4"-G3/8"	6-85
342703-0208 ..	NUT, PIPES & CONNECTORS,NUT M-8 SS	2-23, 2-25, 2-27
342706-0130 ..	ACCESSORIES, INSERT SLEEVE 6 MM	1-7, 1-9, 1-11, 1-95, 1-97, 2-31
342707-0109 ..	SLEEVE, INT. THREAD, NO. 2543-1/8	1-181
342710-0115 ..	REDUCTION RBM 16/8	2-29
342713-0209 ..	PLUG (QUANT.MINIMA= 10PC).	2-29, 4-25, 4-27, 6-23, 6-27, 6-89, 6-91
342713-0210 ..	PLUG,EXT THREAD HEX SOCKET(PAK OF 10 PCS	1-9, 1-11, 6-15, 6-17, 6-19, 6-23
342713-0211 ..	PLUG, EXT THREAD HEX SOCKET 8638-00-380	6-23, 6-85, 6-89, 6-91
342713-0213 ..	PLUG, EXT THREAD HEX SOCKET 8638-00-120	6-15, 6-17, 6-19, 6-27
342716-0202 ..	REDUCER 4-6	2-31
342716-0203 ..	REDUCER 6-8	2-23, 2-25, 2-27
342716-0210 ..	REDUCER 6-12	7-67
342720-0114 ..	CONN. STR. GA-15-G1/2	2-29, 6-23, 6-27, 6-29, 6-31, 6-93, 6-95
342722-0197 ..	STRAIGHT COUPLING	1-177
342722-0199 ..	STRAIGHT COUPLING	7-67
342722-0202 ..	PIPE COUPLING 1/8" D=6MM	1-161, 1-163, 5-25, 5-27, 6-69, 7-67
342722-0203 ..	STRAIGHT COUPLING	1-9, 1-11
342722-0204 ..	PIPE COUPLING	6-41, 6-43
342722-0210 ..	STRAIGHT COUPLING, D=12 MM - G3/8"	6-35
342723-0114 ..	CONN. STR. PIPE GI-15-G1/2	6-29
342725-0108 ..	CONN. STR. PIPE GI-10-G1/4	2-43
342726-0109 ..	CONN. PIPE G-12	2-29
342726-0114 ..	CONN. PIPE G-15	6-93, 6-95
342727-0102 ..	CONN. PIPE G-6-LFZB	2-23, 2-25, 2-27
342730-0114 ..	CONN. ELBOW WA-15-1/2	6-29, 6-31, 6-93, 6-95
342732-0099 ..	ELBOW PIPE JOINT, (REEMP. 90458-2954)	7-19
342732-0104 ..	ELBOW PIPE JOINT, EXT.THREAD, D=8MM-G1/4	6-49
342736-0114 ..	CONN. ELBOW W-15	2-29
342737-0204 ..	CONN. ELBOW W-6 LRFR	1-67, 1-69, 6-87
342738-0208 ..	ADJUSTABLE ELBOW CONNECTION,EXT 8-G1/4	2-31
342746-0114 ..	CONN. T-PIPE T-15	2-29, 5-71
342748-0100 ..	T-CONNECTION 4MM	4-29
342748-0102 ..	T-CONNECTION 6MM	1-7, 2-31
342748-0103 ..	T-CONNECTION 8MM	2-23, 2-25, 2-27
342748-0109 ..	T-CONNECTION 12MM	7-67
342751-0204 ..	CONN. L-PIPE, EXT. LE-6-R1/8	1-95, 1-97
342752-0103 ..	CONN. STR. GA-8-G1/4	6-89, 6-91
342752-0110 ..	CONN. STR. GA-12-G3/8	6-85, 6-89, 6-91
342762-0114 ..	CONN. BULKHEAD SV 15-LFZB	6-77, 6-79
342767-0100 ..	CONN. BULKHEAD G1/8	2-23, 2-25, 2-27, 2-31
342767-0104 ..	CONN. BULKHEAD G1/4	2-31
342768-0102 ..	BULKHEAD CONNECTOR, 6 MM	2-13, 2-31
342770-0101 ..	STRAIGHT COUPLING INT, D=4 MM - G1/8	4-29
342772-0113 ..	ELBOW FITTING, 6 - G1/8	1-9, 1-11, 7-67
342772-0114 ..	ELBOW FITTING, 6 - G1/4	1-9, 1-11
342790-0102 ..	CONN. PRESS. GAUGE MAV6-LRFZB	1-89
342797-0121 ..	CONN. BANJO, RINGPIECE 6-1/8	1-35, 1-37, 1-39, 1-57, 1-63, 1-95, 1-97, 1-125, 1-127, 1-139, 2-23, 2-25, 2-27
342797-0122 ..	CONN. BANJO, RINGPIECE 6-1/4	1-89, 6-39
342803-0103 ..	UNION NUT, RD 60-6 (SMS 38)	5-81
342807-0104 ..	PIPE ELBOW 90 DEGR. SMS1220, D=51 MM	5-73
342840-0101 ..	CLAMP, 12,7 AND 19,1 MM 3-A PCS+PMCS	5-83
342840-0103 ..	CLAMPING PIECE	1-135
342840-0105 ..	CLAMPING PIECE	6-77, 6-79
342841-0103 ..	FERRULE, 3-A, GC-CLAMP 25,4 MM (1")	1-135
342850-0101 ..	GASKET, FDA, 3-A, 1/2	5-83
342850-0203 ..	GASKET 22,7X49,1X5,2 MM 1" FDA 3-A	1-135
342850-0303 ..	GASKET 22,7X49,1X5,2 MM 1" FDA	9-35
342850-0304 ..	GASKET 35,4X49,1X5,2 1"1/2 FDA	9-35
342850-0305 ..	GASKET 47,8X62,6X5,2 MM 2" FDA	6-77, 6-79, 9-35
342903-0111 ..	NUT WITH SPRING, 1723 6/4-M10X1	12-127
342903-0121 ..	NUT WITH SPRING, 1723 8/6-M12X1	2-5, 2-7, 6-29, 6-41, 6-43
342920-0115 ..	STRAIGHT COUPLING,EXT.THREADED 6/4-R3/8"	6-93, 6-95
342920-0133 ..	STRAIGHT COUPL.,EXT.THREADED 10/8-R3/8"	6-93, 6-95
342921-0111 ..	STRAIGHT COUPL,EXT.THREAD.6/4-M5	7-13, 7-19
342921-0113 ..	STRAIGHT COUPLING,EXT.THREADED 6/4-G1/8"	5-37, 6-41, 6-43, 12-17, 12-19, 12-127
342921-0114 ..	STRAIGHT COUPLING,EXT.THREADED 6/4-G1/4"	12-17, 12-19, 12-127
342921-0121 ..	STRAIGHT CPLNG,EXT.THREADED 8/6-G1/8INCH	6-27, 6-41, 6-43
342921-0122 ..	STRAIGHT COUPLING,EXT.THREADED 8/6-G1/4"	6-23, 6-89, 6-91
342921-0123 ..	STRAIGHT COUPLING,EXT.THREADED 8/6-G3/8"	6-23, 6-29

Part No	Description	Page No
342923-0114 ..	STRAIGHT COUPL.,INT.THREADED 6/4-G1/4"	12-127
342923-0121 ..	STRAIGHT COUPL.,INT.THREADED 8/6-G1/8"	6-29
342923-0132 ..	STRAIGHT COUPL.,INT.THREADED 10/8-G1/4"	2-45
342930-0122 ..	ELBOW 90 COUPL.,EXT.THREAD 8/6-R1/4"	3-5
342931-0122 ..	ELBOW 90 COUPL.,EXT.THREAD 8/6-G1/4"	6-23, 6-37, 6-85
342946-0112 ..	T-COUPLING,UNION 6/4	1-161, 1-163, 6-15, 6-17, 6-19
342946-0122 ..	T-COUPLING,UNION 8/6	6-15, 6-17, 6-19
342960-0112 ..	BULKHEAD COUPLING 6/4	5-37, 5-71, 6-41, 6-43
342960-0121 ..	BULKHEAD COUPLING 8/6-6/4	5-71
342960-0122 ..	BULKHEAD COUPLING 8/6	5-37, 5-71, 6-41, 6-43
342980-0111 ..	BANJO-CONNECTION,RING 6/4-M5	1-129
342980-0113 ..	BANJO-CONNECTION,RING 6/4-G1/8 INCH	1-37, 1-59, 1-95, 1-97, 1-161, 1-163
342980-0114 ..	BANJO-CONNECTION,RING 6/4-G1/4"	12-17, 12-19
342980-0121 ..	BANJO-CONNECTION,RING 8/6-G1/8	2-5, 2-7, 4-67, 4-69
342980-0122 ..	BANJO-CONNECTION,RING 8/6-G1/4 INCH	3-5, 6-41, 6-43
342980-0301 ..	BANJO-HOLLOW BOLT COUPL.,EXT.THREA.01-M5	1-129
342980-0303 ..	BANJO-HOLLOW BOLT COUPL,EXT.THR.01-G1/8	1-63, 1-67, 1-69, 1-87, 1-95, 1-97, 1-139, 1-161, 1-163, 2-5, 2-7, 2-23, 2-25, 2-27, 4-67, 4-69
342980-0304 ..	BANJO-HOLLOW BOLT COUPL,EXT.THR.01-G1/4	1-89, 3-5, 6-39, 6-41, 6-43
342980-0313 ..	BANJO-HOLLOW BOLT COUPL,EXT.THR.02-G1/8	1-37
342980-0314 ..	BANJO-HOLLOW BOLT COUPL,EXT.THR.02-G1/4	12-17, 12-19
342991-0100 ..	HOSE CLIP,WORM DRIVE TYPE 10-13	12-23
342991-0101 ..	HOSE CLIP,WORM DRIVE TYPE (13)-16	5-69, 6-61, 6-87, 12-23
342991-0104 ..	HOSE CLIP,WORM DRIVE TYPE (23)-27	3-5
342991-0106 ..	HOSE CLIP,WORM DRIVE TYPE (30)-36	1-135
342991-0112 ..	HOSE CLIP,WORM DRIVE TYPE (73)-83	6-59
342991-0113 ..	HOSE CLIP,WORM DRIVE TYPE (83)-93	6-59
350001-0008 ..	PUSH-IN FITTING QS-F-G1/4-6	6-15, 6-17, 6-19
350001-0009 ..	PUSH-IN FITTING QS-F-G1/4-8	6-15, 6-17, 6-19, 6-21, 6-93, 6-95
350001-0016 ..	PUSH-IN FITTING QS-F-G1/2-12	6-93, 6-95
350002-0002 ..	PUSH-IN L-FITTING QSL-F-M5-6	5-29, 5-31, 5-33, 6-45, 6-47
350002-0006 ..	PUSH-IN L-FITTING QSL-F-G1/8-6	1-9, 1-11, 5-29, 5-31, 5-33, 6-45, 6-47
350002-0007 ..	PUSH-IN L-FITTING QSL-F-G1/8-8	6-45, 6-47
350002-0008 ..	PUSH-IN L-FITTING QSL-F-G1/4-6	1-181, 6-15, 6-17, 6-19
350002-0009 ..	PUSH-IN L-FITTING QSL-F-G1/4-8	6-15, 6-17, 6-19, 6-33
350002-0011 ..	PUSH-IN L-FITTING QSL-F-G1/4-12	6-15, 6-17, 6-19, 6-21
350002-0014 ..	PUSH-IN L-FITTING QSL-F-G3/8-12	6-45, 6-47
350002-0016 ..	PUSH-IN L-FITTING QSL-F-G1/2-12	6-15, 6-17, 6-19, 6-21, 6-35
350003-0007 ..	PUSH-IN FITTING QS-F-G1/4-8-I	6-33
350004-0005 ..	PUSH-IN L-FITTING QSL-F-12	6-15, 6-17, 6-19, 6-35, 6-93, 6-95
350005-0002 ..	PUSH-IN T-FITTING QST-F-6	6-15, 6-17, 6-19
350006-0003 ..	PUSH-IN FITTING QS-F-8H-6	6-15, 6-17, 6-19
350006-0008 ..	PUSH-IN FITTING QS-F-12H-8	6-15, 6-17, 6-19
350007-0006 ..	PUSH-IN T-FITTING QST-F-G1/8-6	1-181
350008-0003 ..	PUSH-IN FITTING QSF-F-G1/8-6	1-181
350013-0002 ..	PLUG QSC-6H	6-21, 6-45, 6-47
350013-0005 ..	PLUG QSC-12H	6-45, 6-47
350015-0003 ..	Y-FITTING QSY-F-8	5-71, 6-15, 6-17, 6-19
351120-0144 ..	CABLE SILFLEX SIHF 3X1,5 0046014	1-39, 5-13, 5-15, 5-17, 5-19, 5-21, 8-79
351120-0145 ..	CABLE SILFLEX SIHF 3X2,5 0046020	1-35, 7-21
351120-0146 ..	CABLE SILFLEX SIHF 3X4 0046026	7-19
351120-0168 ..	CABLE SIHF 4X10MM2 GREEN/YELLOW	1-43, 1-45
351120-0267 ..	CABLE SILFLEX SIHF 4X6 00460333	1-21, 1-23
351150-0403 ..	CABLE OLFLEX 3X0,75 MM2 LIGHT/GREY	1-9, 1-11, 1-21, 1-23, 1-91, 1-93, 6-29, 6-41, 6-43, 6-75, 6-87, 6-89, 6-91, 6-93, 6-95
351150-0404 ..	CABLE OLFLEX 4X0,75 MM2 LIGHT/GREY	1-9, 1-11, 1-91, 1-93, 6-87, 6-89, 6-91, 8-77
351150-0405 ..	CABLE OLFLEX 5X0,75 MM2 LIGHT/GREY	1-49, 1-51, 1-67, 1-69, 1-143, 1-145, 1-147, 1-149, 1-151, 1-153, 3-27, 6-61, 7-31, 8-79, 9-3, 9-23, 9-29, 9-31
351150-0406 ..	CABLE OLFLEX 7X0,75 MM2 LIGHT/GREY	2-47, 2-57, 8-77, 8-79
351150-0407 ..	CABLE OLFLEX 12X0,75 MM2 LIGHT/GREY	7-17, 7-33
351150-0412 ..	CABLE OLFLEX 3X1,5 MM2 LIGHT/GREY	1-21, 1-23, 2-9, 2-13, 6-13, 8-79
351150-0413 ..	CABLE OLFLEX 4X1,5 MM2 LIGHT/GREY	1-61, 2-13
351150-0414 ..	CABLE OLFLEX 5X1,5 MM2 LIGHT/GREY	8-79
351150-0415 ..	CABLE OLFLEX 7X1,5 MM2 LIGHT/GREY	10-141
351150-0418 ..	CABLE OLFLEX 4X2,5 MM2 LIGHT/GREY	2-13, 6-59, 6-65, 6-89, 6-91
351150-0422 ..	CABLE OLFLEX 3X4 MM2 LIGHT/GREY	7-33
351150-0425 ..	CABLE OLFLEX 25X0,75 MM2 LIGHT/GREY	1-9, 1-11, 2-13, 7-33, 8-79
351150-0428 ..	CABLE OLFLEX 41X0,75 MM2 LIGHT/GREY	2-13
351150-0431 ..	CABLE OLFLEX 2X0,75 MM2 LIGHT/GREY	1-21, 1-23, 1-87, 2-35, 2-37, 2-69, 5-81, 6-23, 6-31, 6-77, 6-79
351160-0102 ..	CABLE (1UNIT = 100M)	1-13, 10-7, 10-9, 10-11
351160-0105 ..	CABLE AWM 1X2,5 MM2 DARKBLUE	10-7, 10-9, 10-11
351160-0107 ..	CABLE AWM 1X6 MM2 DARKBLUE	10-7, 10-9, 10-11
351161-0104 ..	CABLE AWM LIGHTBLUE 1,5MM2	10-7, 10-9, 10-11
351161-0105 ..	CABLE AWM 1X2,5 MM2 LIGHTBLUE	10-7, 10-9, 10-11
351161-0106 ..	CABLE AWM 1X4 MM2 LIGHTBLUE	10-7, 10-9, 10-11
351161-0109 ..	CABLE AWM 1X16 MM2 LIGHTBLUE	10-7, 10-9, 10-11
351161-0110 ..	CABLE AWM 1X25 MM2 LIGHTBLUE	10-7, 10-9, 10-11
351162-0104 ..	CABLE AWM 1X1,5 MM2 YELLOW-GREEN	10-7, 10-9, 10-11
351162-0105 ..	CABLE AWM 1X2,5 MM2 YELLOW-GREEN	10-7, 10-9, 10-11
351162-0106 ..	CABLE AWM 1X4 MM2 YELLOW-GREEN	2-13, 2-57, 6-41, 6-43, 10-7, 10-9, 10-11
351162-0107 ..	CABLE AWM 1X6 MM2 YELLOW-GREEN	10-7, 10-9, 10-11
351162-0109 ..	CABLE AWM 1X16 MM2 YELLOW-GREEN	6-53, 10-7, 10-9, 10-11
351163-0107 ..	CABLE AWM 1X6 MM2 RED	10-7, 10-9, 10-11

Part No	Description	Page No
351164-0104 ..	CABLE AWM 1X1,5 MM2 BLACK	10-7, 10-9, 10-11
351164-0105 ..	CABLE (1UNIT = 100M)	10-7, 10-9, 10-11
351164-0106 ..	CABLE AWM 1X4 MM2 BLACK	10-7, 10-9, 10-11
351164-0107 ..	CABLE AWM 1X6 MM2 BLACK	10-7, 10-9, 10-11
351164-0110 ..	CABLE AWM 1X25 MM2 BLACK	10-7, 10-9, 10-11
351164-0111 ..	CABLE AWM 1X35 MM2 BLACK	10-7, 10-9, 10-11
351166-0102 ..	CABLE AWM 1X0,75 MM2 ORANGE	10-7, 10-9, 10-11
351175-0102 ..	CABLE AWM 1X 075 MM2 YELLOW-GREEN	6-75
351416-0060 ..	MINIATURE CIRC. BREAK., FAZ -D6 1-POLE	10-113
351416-0100 ..	3INIATURE CIRC. BREAK., FAZ -D10 1-POLE	10-113
351416-0160 ..	MINIATURE CIRC. BREAK., FAZ -D16 1-POLE	10-113
352100-0106 ..	CABLE GLAND NO.18,6-10,5	1-35
352101-0103 ..	LEAD-IN, PR18,6/PG11, E-1457518	6-15, 6-17, 6-19, 6-41, 6-43, 8-25, 8-27, 8-29
352101-0107 ..	LEAD-IN, PR37/PG29, E-1457537	1-143, 1-145, 1-147, 1-149, 1-151, 1-153
352103-0096 ..	CABLE GLAND, ST 7, PR 12,5/PG7	1-13, 12-105
352103-0100 ..	CABLE GLAND, STR 9, PR15,2/PG9	2-13
352103-0101 ..	CABLE GLAND, ST 9, PR15,2/PG9	1-13, 1-49, 1-51, 1-67, 1-69, 1-143, 1-145, 1-147, 1-149, 1-151, 1-153, 1-155, 1-157, 2-19, 2-31, 6-11, 10-79, 10-81, 10-105, 10-107
352103-0106 ..	CABLE GLAND, ST 11, PR18,6/PG11	1-39, 1-183, 2-19, 5-49, 5-51, 6-11
352103-0108 ..	CABLE GLAND, ST 13,5 , PR20,4/PG13,5	2-31, 6-11
352103-0110 ..	CABLE GLAND, STR 16, PR22,5/PG16	1-155, 1-157, 10-79, 10-81
352103-0111 ..	CABLE GLAND, ST 16, PR22,5/PG16	1-155, 1-157, 10-81, 10-141
352103-0116 ..	CABLE GLAND, ST 21, PR28,3/PG21	1-13, 1-155, 1-157, 2-19, 10-81
352103-0120 ..	CABLE GLAND, STR 29, PR37,0/PG29	1-155, 1-157
352103-0121 ..	CABLE GLAND, ST 29, PR37,0/PG29	1-155, 1-157, 5-49, 5-51, 10-81
352110-0100 ..	CABLE CLIPS, D=5-7 MM	1-49, 1-51
352110-0103 ..	CABLE CLIPS, D=14-20 MM	5-69
352113-0101 ..	CABLE TIE, BLACK 92X2,5 MM	2-23, 2-25, 2-27, 3-13, 3-15, 4-31, 4-33, 6-13, 8-35, 8-61, 10-7, 10-9, 10-11, 12-41, 12-43
352113-0102 ..	CABLE TIE, BLACK 188X4,8 MM	1-183, 5-47, 10-7, 10-9, 10-11, 12-23
352113-0104 ..	CABLE TIE, BLACK 300X4,8 MM	6-15, 6-17, 6-19
352113-0203 ..	ANCHOR PLATES FOR STRIPS, TYPE TM3S8-M0	6-53, 8-77
352113-0204 ..	ANCHOR PLATES FOR STRIPS, TYPE TM3S25-M	2-69, 6-11
352113-0205 ..	ANCHOR PLATES FOR STRIPS, TYPE TM2S8-C10	3-33, 4-31, 4-33, 5-47, 7-19, 10-75, 10-77, 10-83, 10-85, 10-87, 10-109, 10-111
352113-0206 ..	ANCHOR PLATES FOR STRIPS, TYPE ABM100-AT	7-23, 7-25, 7-27, 7-29
352135-0202 ..	CLIP, 16 MM, 913.016	8-25, 8-27, 8-29, 8-45, 8-47, 8-49, 8-77
353001-0101 ..	END SLEEVE 0,5 MM2	9-19
353001-0102 ..	END SLEEVE 0,75 MM2	9-19, 10-7, 10-9, 10-11
353001-0113 ..	END SLEEVE 0,75MM2	9-23, 9-29, 9-31, 10-7, 10-9, 10-11
353001-0114 ..	END SLEEVE 1,50 MM2	10-7, 10-9, 10-11
353001-0115 ..	END SLEEVE 2,5/14	10-7, 10-9, 10-11
353001-0117 ..	END SLEEVE H4.0/20 GREY	10-7, 10-9, 10-11
353001-0118 ..	END SLEEVE 6MM2 BLACK	10-7, 10-9, 10-11
353001-0119 ..	END SLEEVE H 1.0/14 YELLOW	10-7, 10-9, 10-11
353001-0120 ..	END SLEEVE H 10/28	10-7, 10-9, 10-11
353021-0122 ..	TERMINAL DISCONNECTABLE, WTR 2,5 D	10-65
353021-0127 ..	TERMINAL DISCONNECTABLE, WTR 2,5+WSD 2,5	10-65
353021-0132 ..	TERMINALS,TRIPLE-LEVEL, DLD 2,5/PE	5-49, 5-51, 10-61, 10-63, 10-65
353021-0133 ..	FEED THROUGH TERMINAL, 161527	10-63
353021-0212 ..	FEED THROUGH TERMINAL, 10200.0	2-19, 7-33, 8-79, 10-61, 10-69, 10-73
353021-0213 ..	FEED THROUGH TERMINAL, 10201.0	5-49, 5-51, 7-33, 10-61
353021-0214 ..	FEED THROUGH TERMINAL, 10202.0	10-61
353021-0215 ..	FEED THROUGH TERMINAL, 10203.0	10-61
353021-0219 ..	FEED THROUGH TERMINAL, 10205.0	10-69, 10-135
353021-0301 ..	TERMINALS,TRIPLE-LEVEL, DLI 2,5/35 PA	5-49, 5-51, 10-65
353021-0302 ..	TERMINALS,TRIPLE-LEVEL, DLD 2,5/35 PA	5-49, 5-51, 10-63, 10-65
353022-0003 ..	NEUTRAL TERMINAL, 10108.8	10-69
353024-0204 ..	EARTH TERMINAL WPE 2,5	2-19, 5-49, 5-51, 8-79, 10-61
353024-0205 ..	EARTH TERMINAL, 1010.1	7-33, 8-79, 10-61, 10-69
353024-0206 ..	EARTH TERMINAL, 1010.2	5-49, 5-51, 10-61, 10-63, 10-65
353024-0207 ..	EARTH TERMINAL, 1010.3	10-61
353024-0208 ..	EARTH TERMINAL, 1010.4	10-69
353024-0209 ..	EARTH TERMINAL, 1010.5	10-69, 10-135
353031-0203 ..	END SUPPORT, WEW 35/2	2-19, 10-61, 10-63, 10-65, 10-69, 10-73
353032-0004 ..	END PLATE WAP 2,5-10 BEIGE	5-49, 5-51, 10-61
353032-0009 ..	END PLATE, WAP FOR WDK	5-49, 5-51, 10-63, 10-69
353032-0013 ..	END PLATE, 13818.6	5-49, 5-51
353032-0302 ..	END PLATE WAP, 13176.6	5-49, 5-51, 10-63, 10-65
353033-0104 ..	END PLATE, 10502.8	10-69
353033-0105 ..	PARTITITION, 10501.0	10-69, 10-135
353034-0026 ..	BRIDGE CONNECTOR, WQV 35/2, 10530.6	10-135
353034-0030 ..	BRIDGE CONNECTOR WQV 2,5/10, 10544.6	2-19, 7-33, 8-79, 10-65, 10-69, 10-73
353034-0032 ..	BRIDGE CONNECTOR, WQV 6/10, 10522.6	10-61
353034-0035 ..	BRIDGE CONNECTOR, WQV 35/10, 10531.6	10-69
353034-0039 ..	BRIDGE CONNECTOR WQV 4/4, 10546.6	7-33
353034-0401 ..	BRIDGE CONNECTOR Q2, 13125.0	5-49, 5-51, 10-61, 10-65
353034-0402 ..	BRIDGE CONNECTOR Q3, 13126.0	5-49, 5-51, 10-61
353034-0403 ..	BRIDGE CONNECTOR Q4, 13127,0	10-61, 10-63, 10-65
353034-0404 ..	BRIDGE CONNECTOR Q10, 13131.0	5-49, 5-51, 10-61, 10-63, 10-65
353042-0003 ..	RAIL TS35/15/1,5	10-115
353042-0004 ..	RAIL TS 35/7,5	10-13, 10-15, 10-17, 10-29, 10-39, 10-47, 10-59, 10-61, 10-63, 10-65, 10-69, 10-73, 10-89, 10-113, 10-117, 10-135
353042-0005 ..	RAIL TS 35/7.5	5-49, 5-51

Part No	Description	Page No
353101-0118 ..	CABLE SHOE 0,5-1,5MM2 M3 RED	6-75
353101-0120 ..	CABLE SHOE 0,5-1,5MM2 M4 RED	10-7, 10-9, 10-11, 12-105
353101-0123 ..	CABLE SHOE 0,5-1,5MM2 M6 RED	5-81
353101-0126 ..	CABLE SHOE	5-81
353101-0129 ..	CABLE SHOE 1,5-2,5MM2 M3 BLUE	10-7, 10-9, 10-11
353101-0130 ..	CABLE SHOE 1,5-2,5MM2 M4 BLUE	7-21, 10-7, 10-9, 10-11
353101-0132 ..	CABLE SHOE 1,5-2,5MM2 M5 BLUE	1-35, 7-19, 7-21, 10-7, 10-9, 10-11
353101-0150 ..	CABLE SHOE 4,0-6,0MM2 M4 YELLOW	10-7, 10-9, 10-11
353101-0152 ..	CABLE SHOE 4,0-6,0MM2 M5 YELLOW	10-7, 10-9, 10-11
353101-0153 ..	CABLE SHOE 4,0-6,0MM2 M6 YELLOW	6-41, 6-43, 10-7, 10-9, 10-11
353103-0120 ..	CABLE SHOE 1,25 MMÂ² RED	10-7, 10-9, 10-11
353103-0130 ..	CABLE SHOE	10-7, 10-9, 10-11
353103-0138 ..	CABLE SHOE	10-7, 10-9, 10-11
353104-0130 ..	CABLE SHOE, RING UNINS., YAV 025 M 4	1-39
353104-0140 ..	CABLE SHOE, RING UNINS., YAV 06 M 4	7-19
353104-0164 ..	CABLE SHOE, RING UNINS., YAV 10 M 10	10-7, 10-9, 10-11
353104-0168 ..	CABLE SHOE, RING UNINS., YAV 16 M 6	10-7, 10-9, 10-11
353104-0175 ..	CABLE SHOE, RING UNINS., YAV 25 M 6	10-7, 10-9, 10-11
353240-0002 ..	GLAND W/O INSERT PG11 NORMAL	9-23, 9-29, 9-31
353240-0003 ..	GLAND W/O INSERT PG13,5 NORMAL	3-27
353240-0004 ..	GLAND W/O INSERT PG16 NORMAL	5-49, 5-51
353240-0005 ..	GLAND W/O INSERT PG21 NORMAL	5-49, 5-51
353240-0006 ..	GLAND W/O INSERT PG29 NORMAL	5-49, 5-51, 6-11, 10-79
353241-0002 ..	GLAND W/O INSERT PG11 EXTENDED	9-23, 9-29, 9-31
353241-0005 ..	GLAND W/O INSERT PG13,5 EXTENDED	5-49, 5-51
353241-0007 ..	GLAND W/O INSERT PG16 EXTENDED	5-49, 5-51
353242-0001 ..	HOSE GLAND W/O INSERT PG13,5 NORMAL	6-13, 6-87
353242-0003 ..	HOSE GLAND W/O INSERT PG29 NORMAL	7-33, 8-77, 10-79
353243-0001 ..	HOSE GLAND W/O INSERT PG9 EXTENDED	6-75, 6-77, 6-79, 6-87, 6-89, 6-91, 10-79, 10-81
353243-0002 ..	HOSE GLAND W/O INSERT PG11 EXTENDED	1-143, 1-145, 1-147, 1-149, 1-151, 1-153, 2-11, 2-17, 6-61, 6-89, 6-91, 8-77
353243-0003 ..	HOSE GLAND W/O INSERT PG11 EXTENDED	1-21, 1-23, 1-143, 1-145, 1-147, 1-149, 1-151, 1-153, 8-77
353243-0005 ..	HOSE GLAND W/O INSERT PG16 EXTENDED	6-59, 6-65, 8-17, 8-19, 10-79
353243-0007 ..	HOSE GLAND W/O INSERT PG21 EXTENDED	1-9, 1-11, 1-21, 1-23, 1-143, 1-145, 1-147, 1-149, 1-151, 1-153
353243-0008 ..	HOSE GLAND W/O INSERT PG29 EXTENDED	1-9, 1-11
353249-0003 ..	INSERT, SINGEL HOLE, E151/11	9-23, 9-29, 9-31
353249-0008 ..	INSERT, SINGEL HOLE, EK 152/7	5-57
353249-0009 ..	INSERT, SINGEL HOLE, EK 152/9	2-17, 6-61, 6-75, 6-77, 6-79, 6-87, 6-89, 6-91, 10-79, 10-81
353249-0010 ..	INSERT, SINGEL HOLE, EK 152/11	1-143, 1-145, 1-147, 1-149, 1-151, 1-153, 2-11, 8-65, 8-77
353249-0011 ..	INSERT, SINGEL HOLE, EK 153/11	1-21, 1-23, 1-143, 1-145, 1-147, 1-149, 1-151, 1-153, 8-77, 8-79
353249-0012 ..	INSERT, SINGEL HOLE, EK 154/11	8-77
353249-0013 ..	INSERT, SINGEL HOLE, EK 154/13	5-75, 6-59, 6-65, 6-89, 6-91, 7-33, 8-17, 8-19, 10-79, 10-91, 10-93, 10-95, 10-97, 10-99, 10-101, 10-103
353249-0014 ..	INSERT, SINGEL HOLE, EK 154/16	5-81, 7-17, 7-33, 10-79
353249-0016 ..	INSERT, SINGEL HOLE, EK 155/18	1-21, 1-23, 1-143, 1-145, 1-147, 1-149, 1-151, 1-153, 8-79, 10-91, 10-93, 10-95, 10-97, 10-99, 10-101, 10-103
353249-0017 ..	INSERT, SINGEL HOLE, HI.TEMP, EK152I7	1-9, 1-11
353249-0025 ..	INSERT, MULTI HOLE, E152M3X4	8-77, 8-79
353249-0028 ..	INSERT, MULTI HOLE, E153M2X8	5-71
353249-0036 ..	INSERT, MULTI HOLE, EK152 M 2X4	9-23, 9-29, 9-31, 10-91, 10-93, 10-95, 10-97, 10-99, 10-101, 10-103
353249-0037 ..	INSERT, MULTI HOLE, EK155M4X8	5-47
353249-0051 ..	INSERT, MULTI HOLE, E154M4X6	5-49, 5-51
353249-0059 ..	GLAND, INSERT, MULTI HOLE, 4X8	5-49, 5-51
353249-0060 ..	INSERT, MULTI HOLE, E155M2X13	5-49, 5-51
353249-0061 ..	INSERT, SINGEL HOLE, EK 155/20	1-143, 1-145, 1-147, 1-149, 1-151, 1-153, 7-33
353249-0065 ..	INSERT, SINGEL HOLE, E152/09	3-27, 6-13, 6-87, 8-79
353249-0070 ..	INSERT, SINGEL HOLE, E154/16	7-33
353249-0072 ..	INSERT, SINGEL HOLE, E155/20	7-33, 8-77
353249-0075 ..	INSERT, SINGEL HOLE, EK 153/13	7-33, 10-91, 10-93, 10-95, 10-97, 10-99, 10-101, 10-103
353249-0084 ..	INSERT, MULTI HOLE, EK 154M4X7,5	5-47, 5-49, 5-51
353249-0301 ..	SEALING PIN, 4X20	8-77, 8-79, 9-23, 9-29, 9-31
353249-0304 ..	SEALING PIN, 6X25	5-49, 5-51
353249-0307 ..	SEALING PIN, 7,5X20	5-47
353249-0308 ..	SEALING PIN, 8X20	5-49, 5-51
353249-0309 ..	SEALING PIN, 9,3X20	5-49, 5-51
353300-0006 ..	SHRINKABLE HOSE	1-9, 1-11
354000-0005 ..	MINIATURE CIRCUIT BREAKER, FAZ-C0,5/1	10-113
354000-0010 ..	MINIATURE CIRCUIT BREAKER, FAZ-C1/1	10-113
354000-0060 ..	MINIATURE CIRCUIT BREAKER, FAZ-C6/1	10-113, 10-117
354000-0100 ..	MINIATURE CIRCUIT BREAKER, FAZ-C10/1	10-113, 10-117
354002-0020 ..	MINIATURE CIRCUIT BREAKER, FAZ-C2/3	10-117
354002-0060 ..	MINIATURE CIRCUIT BREAKER, FAZ-C6/3	10-113, 10-117
354002-0200 ..	MINIATURE CIRCUIT BREAKER, FAZ-C20/3	10-117
359000-0100 ..	WIRE MARKING, YELLOW, PY01/3"0"	9-19
359000-0101 ..	WIRE MARKING, YELLOW, PY01/3"1"	9-19
359000-0102 ..	WIRE MARKING, YELLOW, PY01/3"2"	9-19
359000-0103 ..	WIRE MARKING, YELLOW, PY01/3"3"	9-19
359000-0104 ..	WIRE MARKING, YELLOW, PY01/3"4"	9-19
359000-0105 ..	WIRE MARKING, YELLOW, PY01/3"5"	9-19
359000-0106 ..	WIRE MARKING, YELLOW, PY01/3"6"	9-19
359000-0107 ..	WIRE MARKING, YELLOW, PY01/3"7"	9-19

Part No	Description	Page No
359000-0108 ..	WIRE MARKING, YELLOW, PY01/3"8"	9-19
359000-0109 ..	WIRE MARKING, YELLOW, PY01/3"9"	9-19
359000-0201 ..	WIRE MARKING, YELLOW, PA02/3"1"	9-23, 9-29, 9-31
359000-0204 ..	WIRE MARKING, YELLOW, PA02/3"4"	9-23, 9-29, 9-31
359000-0400 ..	WIRE MARKING, YELLOW, PA2/4"0"	1-7, 1-9, 1-11, 1-95, 1-97, 1-129, 1-161, 1-163, 2-23, 2-25, 2-27, 5-71, 6-15, 6-17, 6-19, 7-67
359000-0401 ..	WIRE MARKING, YELLOW, PA2/4"1"	1-7, 1-9, 1-11, 1-95, 1-97, 1-129, 1-161, 1-163, 2-23, 2-25, 2-27, 5-71, 6-15, 6-17, 6-19, 7-67
359000-0402 ..	WIRE MARKING, YELLOW, PA2/4"2"	1-95, 1-97, 1-129, 1-161, 1-163, 2-23, 2-25, 2-27, 5-71, 6-15, 6-17, 6-19, 7-67
359000-0403 ..	WIRE MARKING, YELLOW, PA2/4"3"	1-9, 1-11, 1-95, 1-97, 1-129, 1-161, 1-163, 2-23, 2-25, 2-27, 5-71, 6-15, 6-17, 6-19
359000-0404 ..	WIRE MARKING, YELLOW, PA2/4"4"	1-9, 1-11, 1-95, 1-97, 5-71, 6-15, 6-17, 6-19, 7-67
359000-0405 ..	WIRE MARKING, YELLOW, PA2/4"5"	1-7, 1-9, 1-11, 1-95, 1-97, 2-23, 2-25, 2-27, 6-15, 6-17, 6-19, 7-67
359000-0406 ..	WIRE MARKING, YELLOW, PA2/4"6"	1-9, 1-11, 1-95, 1-97, 2-23, 2-25, 2-27, 6-15, 6-17, 6-19
359000-0407 ..	WIRE MARKING, YELLOW, PA2/4"7"	1-9, 1-11, 1-95, 1-97, 2-23, 2-25, 2-27, 5-71, 6-15, 6-17, 6-19
359000-0408 ..	WIRE MARKING, YELLOW, PA2/4"8"	1-95, 1-97, 6-15, 6-17, 6-19
359000-0409 ..	WIRE MARKING, YELLOW, PA2/4"9"	1-95, 1-97, 1-161, 1-163, 5-71, 6-15, 6-17, 6-19
359000-0771 ..	WIRE MARKING, YELLOW, PA2/4"V"	1-95, 1-97, 1-161, 1-163, 2-23, 2-25, 2-27, 5-71, 6-15, 6-17, 6-19
359011-0807 ..	MARKING PLATES 5-FW 1-50	1-13, 2-19, 5-49, 5-51, 7-33, 8-79, 10-61, 10-63, 10-65, 10-69, 10-73, 10-135
359011-0808 ..	MARKING PLATES 5-FW 51-100	5-49, 5-51, 10-61, 10-63, 10-65, 10-69
359011-0809 ..	MARKING PLATES 5-FW 101-150	8-79, 10-61, 10-63, 10-65
359011-0810 ..	MARKING PLATES 5-FW 151-200	10-63, 10-65
359011-0811 ..	MARKING PLATES 5-FW 201-2	10-63, 10-65
359011-0812 ..	SET OF SIGNS 5-FW 251-300	10-63, 10-65
359011-0813 ..	SET OF SIGNS 5-FW 301-350	10-63
359011-0818 ..	SYMBOL 5-GW (-) 50PC	5-49, 5-51, 8-79
359011-0819 ..	MARKING PLATES 5-GW (EAR-TIE)	1-13, 2-19, 2-75, 7-33, 9-23, 9-29, 9-31, 10-61, 10-63, 10-65, 10-135
359011-0821 ..	SET OF SIGNS 6-FW 1-50	2-75, 9-23, 9-29, 9-31
359240-0001 ..	SIGN, NOT ENGRAVED	10-123, 10-125
359240-0100 ..	SIGN HOLDER FOR 359240-0001	10-75, 10-77, 10-123, 10-125, 10-143
359241-0121 ..	SIGN: " STEAM"	10-123, 10-125
359241-0122 ..	SIGN: " CLEANING STEAM BARRIER SPACE"	10-123, 10-125
359241-0123 ..	SIGN: " TEMP. PRESTERILIZATION VALVE"	10-123, 10-125
359241-0125 ..	SIGN: " TEMP. PEROXIDE BATH"	10-123, 10-125
359241-0126 ..	SIGN: " TEMP. AIR KNIFE"	10-123, 10-125
359241-0130 ..	SIGN: " TEMP. AIR SUPER HEATER"	10-123, 10-125
359241-0131 ..	SIGN: " TEMP. LS"	10-123, 10-125
359241-0132 ..	SIGN: " TEMP. SA"	10-143
359241-0133 ..	SIGN: " SERVICE SWITCH"	10-123, 10-125
359241-0135 ..	SIGN: " TRANSVERSAL SEALING"	10-143
359241-0140 ..	SIGN: " LIGHT OFF/ON"	10-123, 10-125
359241-0141 ..	SIGN: " WATER BATH"	10-123, 10-125
359241-0180 ..	SIGN: " PRODUCTION"	10-123, 10-125
359241-0201 ..	SIGN: " HOUR METER"	10-123, 10-125
359241-0268 ..	SIGN: " SPRAYING, HEAD SPACE"	10-123, 10-125
359241-0297 ..	SIGN: " 50 HZ"	10-75, 10-77
359241-0337 ..	SIGN: " FLAP HEATING TOP RIGHT"	10-123, 10-125
359241-0338 ..	SIGN: " FLAP HEATING TOP LEFT"	10-123, 10-125
359241-0339 ..	SIGN: " FLAP HEATING BOTTOM RIGHT"	10-123, 10-125
359241-0340 ..	SIGN: " FLAP HEATING BOTTOM LEFT"	10-123, 10-125
359241-0439 ..	SIGN"PATCH SEALER"	10-123, 10-125
359241-0444 ..	SIGN"TAB RESEAL"	10-123, 10-125
359241-0459 ..	SIGN "PT HOUR METER"	10-123, 10-125
359241-0460 ..	SIGN "PATCH SEALER 2"	10-123, 10-125
359301-0001 ..	BUTTON SIGN, UP	2-73
359301-0005 ..	BUTTON SIGN, DOWN	2-73
359301-0050 ..	BUTTON SIGN, DROP CHUTE BRIK	2-73
359301-0090 ..	BUTTON SIGN, INCHING	2-73
359301-0091 ..	BUTTON SIGN, INCHING FINAL FOLDER	2-73
359301-0110 ..	BUTTON SIGN, SHORT STOP	2-73, 7-17, 8-77
359301-0130 ..	BUTTON SIGN, LAMP TEST	2-73
359301-0160 ..	BUTTON SIGN, DRAINAGE OF PRODUCT TUBE	2-73
359301-0170 ..	BUTTON SIGN, SPOOLING OF FINAL FOLDER	2-73
359301-0519 ..	SIGN "TPOP RESET"	2-73
359705-0001 ..	WARNING SIGN ISO, ENTANGLEMENT	8-17, 8-19, 8-25, 8-27, 8-29, 8-45, 8-47, 8-49
359705-0003 ..	WARNING SIGN ISO, DANGEROUS CHEMICALS	1-133
359705-0007 ..	WARNING SIGN ISO, HOT SURFACE	5-13, 5-15, 5-17, 5-19, 5-21
359705-0015 ..	WARNING SIGN ISO, RISK OF ELECTRIC SHOCK	1-21, 1-23, 1-143, 1-145, 1-147, 1-149, 1-151, 1-153, 2-73, 4-55, 4-57, 5-13, 5-15, 5-17, 5-19, 5-21, 7-17, 7-33, 8-65, 8-77, 9-23, 9-29, 9-31, 10-105, 10-107, 10-121, 10-129, 10-131, 10-137, 10-139
359710-0001 ..	WARNING SIGN ISO, HOT SURFACE	1-21, 1-23, 1-49, 1-51, 1-67, 1-69, 1-167, 1-169, 8-65
400800-0000 ..	SPRING	7-13
400828-0000 ..	SPRING	7-19
400833-0000 ..	PLUNGER	7-19
401183-0000 ..	GUIDE AXLE	7-13
401186-0000 ..	HEX NUT	7-13
401370-0000 ..	BUSHING	7-13
401371-0000 ..	BUSHING	7-13
401372-0000 ..	BUSHING	7-13
434074-0300 ..	INK UNIT	12-7

Part No	Description	Page No
434448-0000 ..	TOOL	12-45
434747-0000 ..	BOW CLAMP	8-35, 8-61, 12-41, 12-43
434774-0300 ..	INK UNIT	12-7
434787-0000 ..	END SECTION	8-51, 8-53, 12-27, 12-29
436927-0000 ..	NUT	8-35, 8-61, 12-41, 12-43
440252-0000 ..	SLEEVE	8-15
440253-0000 ..	SLEEVE	8-15
440259-0000 ..	RETAINING RING	8-75
440271-0000 ..	SCREW	8-15
440286-0300 ..	INK UNIT NSS	8-45, 8-47, 8-49
440287-0000 ..	COVER	8-61
440647-0000 ..	SLEEVE	1-67, 1-69
440650-0000 ..	WASHER	1-81
440655-0000 ..	RING	1-77
440659-0000 ..	CYLINDRICAL PIN	1-81
440660-0000 ..	COMPRESSION SPRING	1-81
440661-0000 ..	COMPRESSION SPRING	1-81
440662-0000 ..	COMPRESSION SPRING	1-79
440663-0000 ..	COMPRESSION SPRING	1-77, 1-81
440731-0000 ..	PLATE	1-67, 1-69
441024-0000 ..	LACE	3-5
441031-0000 ..	LINK BEARING	4-53
441077-0000 ..	NOZZLE BRACKET	2-13
441212-0000 ..	HOLDER	2-13
441217-0000 ..	BUSHING LOWER	2-13
441218-0000 ..	BUSHING UPPER	2-13
441221-0000 ..	WASHER	2-13
441268-0000 ..	GUIDE	4-53
441269-0000 ..	GUIDE	4-53
441304-0400 ..	MOVABLE FORMING RING	1-3, 1-5
441307-0300 ..	UPPER TUBE SUPPORT	1-3, 1-5
441339-0000 ..	SHAFT	3-17
441353-0000 ..	TENSION SPRING	3-23
441355-0000 ..	BLEEDING SCREW	4-25, 4-27, 4-53, 4-67, 4-69
441356-0000 ..	BRACKET	3-5
441360-0000 ..	PLATE	3-5
441385-0000 ..	HUB	4-25, 4-27
441483-0000 ..	CYLINDER BRACKET	1-125, 1-127, 1-139
441486-0400 ..	DIVIDED FORMING RING	1-3, 1-5
441501-0000 ..	INSULATION	1-65
441534-0200 ..	LIGHT FIXTURE	2-13
441536-0000 ..	GASKET	2-17
441554-0000 ..	CREASE BAR	8-45, 8-47, 8-49
441556-0001 ..	SPACER	8-25, 8-27, 8-29, 8-45, 8-47, 8-49
441556-0002 ..	SPACER	8-25, 8-27, 8-29, 8-45, 8-47, 8-49
441556-0003 ..	SPACER	8-45, 8-47, 8-49
441556-0004 ..	SPACER	8-25, 8-27, 8-29, 8-45, 8-47, 8-49
441556-0006 ..	SPACER	8-25, 8-27, 8-29, 8-45, 8-47, 8-49
441556-0007 ..	SPACER	8-45, 8-47, 8-49
441556-0009 ..	SPACER	8-45, 8-47, 8-49
441556-0010 ..	SPACER	8-45, 8-47, 8-49
441556-0011 ..	SPACER	8-45, 8-47, 8-49
441576-0000 ..	SPACER	1-59
441578-0001 ..	CYLINDER BRACKET	1-59
441578-0002 ..	CYLINDER BRACKET	1-57
441593-0000 ..	GASKET	2-13
441665-0000 ..	FORCE SPRING	2-29
441677-0000 ..	FRONT PLATE	2-13
441679-0000 ..	STAIR	2-61
441695-0600 ..	MACHINE BODY	5-3
441706-0000 ..	WASHER	4-49, 4-51
441718-0000 ..	SPACER	1-167, 1-169
441720-0000 ..	SPACER	3-17
441725-0000 ..	COVERING PLATE	9-3
441727-0000 ..	CUTTING JAW	4-5, 4-7, 4-9, 4-11, 4-13, 4-15
441737-0000 ..	WASHER	1-167, 1-169
441739-0000 ..	WASHER	1-167, 1-169
441740-0000 ..	HINGE FLANGE	1-167, 1-169
441741-0000 ..	HINGE FLANGE	1-167, 1-169
441750-0000 ..	YOKE	4-53
441751-0000 ..	LACE	4-53
441758-0000 ..	PIPE RIGHT	4-61, 4-63
441759-0000 ..	PIPE LEFT	4-61, 4-63
441764-0000 ..	SHAFT	4-25, 4-27
441792-0000 ..	HEAD	5-39
441793-0000 ..	BEARING HOUSING	5-39
441794-0000 ..	PIVOT PIN	5-39
441795-0000 ..	WASHER	5-39
441796-0000 ..	SEAL	5-39
441797-0000 ..	SHIM	5-39
441800-0000 ..	STRAIGHT FITTING	5-39
441804-0000 ..	COIL HEATER	9-35
441811-0100 ..	ROTOR	5-37, 5-81
441850-0700 ..	CABLE	5-3

Part No	Description	Page No
441871-0000 ..	PENDULUM SUSPENSION	1-41, 1-63
441876-0000 ..	ROLL	1-49, 1-51
441904-0000 ..	ARM	1-57
441905-0000 ..	RETARD PIN	2-61
441918-0000 ..	BRACKET	1-119, 1-121
441957-0000 ..	BEARING COVER	1-37
442072-0000 ..	CARRIER	8-51, 8-53, 12-27, 12-29
442084-0000 ..	RING	12-105
442085-0000 ..	JET DIVERTER	12-105
442086-0000 ..	REFLECTOR	12-105
442092-0000 ..	CIRCUIT BOARD	12-103
442113-0000 ..	STOP	12-93
442237-0000 ..	PORCA	1-137
442431-0000 ..	CARRIER	8-51, 8-53, 12-27, 12-29
445533-0000 ..	SIGN, COLD WATER FLOW TS-LEFT	6-41, 6-43
445534-0000 ..	SIGN, COLD WATER FLOW TS-RIGHT	6-41, 6-43
445542-0000 ..	MANTEL RUBBER	8-35, 8-61, 12-41, 12-43
449969-0100 ..	TOOL DISMOUNTING	12-45, 12-147
449970-0000 ..	HOLDER	12-123
449971-0000 ..	SPINDLE	12-123
450101-0300 ..	TEARING DEVICE	8-63
450355-0000 ..	INK ROLLER	8-35, 8-61, 12-41, 12-43
450500-0000 ..	DOWEL	8-37
450833-0000 ..	FILTER	1-91, 1-93
451117-0000 ..	ROLL	1-119, 1-121
451148-0000 ..	BRACKET	1-119, 1-121
451149-0000 ..	SHAFT	1-119, 1-121
451430-0000 ..	CONNECTION HOUS.(MINOR)	1-43, 1-45
456002-0000 ..	BEARING	4-53
456004-0000 ..	SPACER	4-53
456005-0001 ..	VOLUME BULGE	4-17, 4-19, 4-21, 4-23
456005-0003 ..	VOLUME BULGE	4-17, 4-19, 4-21, 4-23
456009-0000 ..	LINK	4-35
456017-0000 ..	HOSE HOLDER RIGHT	4-67
456018-0000 ..	HOSE HOLDER LEFT	4-69
456042-0000 ..	SCREW	1-103, 1-105, 1-107, 1-109
456128-0000 ..	FORCE SPRING	2-29
456129-0001 ..	FORCE SPRING	2-29
456129-0002 ..	FORCE SPRING	2-29
456137-0000 ..	HOSE	6-15, 6-17, 6-19
456181-0000 ..	SPACER	1-119, 1-121
456182-0000 ..	PLATE	1-119, 1-121
456199-0000 ..	LOCK PLATE	1-119, 1-121
456230-0000 ..	ANGLE BRACKET	1-119, 1-121
456263-0000 ..	SHEET	2-17
456264-0000 ..	GLASS	2-17
456309-0600 ..	LOWER FORMING RING	1-3, 1-5
456311-0000 ..	TORSION SPRING RIGHT	4-25
456312-0000 ..	TORSION SPRING LEFT	4-27
456327-0000 ..	CREASE BAR	8-45, 8-47, 8-49
456334-0000 ..	SHAFT	8-45, 8-47, 8-49
456395-0000 ..	GASKET	5-81
456396-0000 ..	GASKET	5-81
456407-0000 ..	LACE	2-23, 2-25, 2-27
456455-0700 ..	PIPE WORK	5-3
456472-0000 ..	ANGLE	1-21, 1-23
456474-0000 ..	ADJUSTMENT PLATE	1-21, 1-23
456555-0600 ..	SUCTION PIPE	1-3, 1-5
456556-0400 ..	PEROXIDE PIPE	1-3, 1-5
456744-0000 ..	HUB	3-19, 3-21
456755-0000 ..	BLOCK	6-23
456756-0000 ..	BLOCK	6-23
456757-0300 ..	AIR INJECTOR	6-15, 6-17, 6-19
456760-0003 ..	FOLDING FLAP CAM 200S	4-31, 4-33
456760-0010 ..	FOLDING FLAP CAM 200B & 125S	4-31, 4-33
456760-0011 ..	FOLDING FLAP CAM 250B	4-31, 4-33
456760-0012 ..	FOLDING FLAP CAM	4-31, 4-33
456767-0000 ..	CREASE BAR	8-25, 8-27, 8-29, 8-45, 8-47, 8-49
456772-0000 ..	PIVOT BRACKET	8-35, 12-43
456773-0000 ..	PIVOT BRACKET	8-61, 12-41
456794-0000 ..	RING	1-49, 1-51
456796-0000 ..	ROLLER	1-49, 1-51
456797-0000 ..	AXLE SUPPORT	1-49, 1-51
456817-0001 ..	SHIM	8-25, 8-27, 8-29, 8-45, 8-47, 8-49
456827-0400 ..	CONNECTION BOX	2-13
456836-0700 ..	CLEANING SYSTEM	1-3, 1-5
456837-0000 ..	HOLDER	1-125, 1-127
456853-0001 ..	PIPE CLAMP	5-71
456853-0002 ..	PIPE CLAMP	5-71
456853-0003 ..	PIPE CLAMP	5-71
456854-0001 ..	CRAMP	5-71
456854-0002 ..	CRAMP	5-71
456872-0000 ..	LOCK PLATE	1-119, 1-121
456900-0000 ..	PIPE	1-91, 1-93

Part No	Description	Page No
456905-0000 ..	FASTENING PLATE	1-103, 1-105, 1-107, 1-109
456907-0000 ..	LOCK PLATE	1-103, 1-105, 1-107, 1-109
456934-0000 ..	SEALING WASHER	3-5
456975-0200 ..	TOOL CABINET	12-7
456976-0700 ..	HEAT EXCHANGER	1-3, 1-5
456995-0000 ..	CARRIER	1-21, 1-23
456996-0000 ..	ROLLER	1-49, 1-51
457358-0000 ..	SLEEVE	8-15
457367-0000 ..	SHAFT	1-171, 1-173
457368-0000 ..	SPRING	1-171, 1-173
457696-0001 ..	JOINT PIECE	5-45
458192-0300 ..	INK UNIT SS	8-25, 8-27, 8-29
458364-0000 ..	COVER	8-35
464009-0003 ..	BLOCKING PIECE	8-37
464010-0000 ..	ARM	8-37
464011-0000 ..	LOCK STUD	8-37
464012-0000 ..	CURVE	8-37
464173-0000 ..	LABEL HOLDER	1-95, 1-97
464174-0000 ..	SIGN, LONGITUDINAL SEALING	1-95, 1-97
464175-0000 ..	SIGN, LONGITUDINAL SEALING SHORT STOP	1-95, 1-97
466074-0002 ..	SLIDER	5-45
466430-0000 ..	BUSHING	8-37
466477-0000 ..	INNER PIPE	1-139
466478-0000 ..	OUTER PIPE	1-139
466479-0000 ..	PIECE	1-139
466483-0000 ..	CLAMPING PIECE	1-139
466484-0000 ..	NET	1-139
469041-0000 ..	HOLDER	1-111, 1-113, 1-115
469047-0000 ..	ANGLE	1-111, 1-113, 1-115
469078-0000 ..	HOLDER	1-111, 1-113, 1-115
469091-0500 ..	FILLER TUBE	1-3, 1-5
469121-0400 ..	JUNCTION BLOCK	6-15, 6-17, 6-19
469122-0000 ..	BLOCK	6-27
469131-0000 ..	LACE	2-23, 2-25, 2-27
469132-0000 ..	PIPE	2-23, 2-25, 2-27
469133-0000 ..	PIPE	2-23, 2-25, 2-27
469141-0000 ..	HOLDER	8-73
469146-0000 ..	HOSE	2-29
469159-0000 ..	PIN	7-23, 7-25, 7-27, 7-29
469336-0000 ..	COVER	2-17
469337-0000 ..	REFLECTOR	2-17
469369-0000 ..	YOKECAM 180ML	3-19, 3-21
469370-0000 ..	ARMCAM 180ML	3-19, 3-21
469374-0700 ..	CABLE TRENCH	1-3, 1-5
469384-0100 ..	START-UP KIT	6-3
469384-0200 ..	START-UP KIT	9-33
469452-0500 ..	COMPRESSOR UNIT	6-57
469458-0000 ..	BRACKET	1-159
469459-0000 ..	BRACKET	1-159
469460-0000 ..	BRACKET	1-159
469461-0000 ..	ROLL	1-159
469463-0000 ..	SHAFT	1-159
469464-0000 ..	ROLL	1-159
469466-0000 ..	PLATE	1-159
469501-0400 ..	AIR NOZZLE	1-3, 1-5
469502-0000 ..	SLIDER	2-5, 2-7
469745-0000 ..	BRACKET	1-119, 1-121
469781-0400 ..	TUBE FLUSHING DEVICE	1-3, 1-5
469867-0000 ..	HOSE HOLDER	3-5
469937-0000 ..	PIPE	2-13
469964-0000 ..	LID	2-39
469999-0000 ..	FLANGE	3-5
476117-0000 ..	CATCH	8-15
476220-0000 ..	SPACER	5-45
476354-0000 ..	CANNULAR TUBE	8-61, 12-41
476355-0000 ..	CANNULAR TUBE	8-35, 12-43
476356-0000 ..	HOLDER FOR INK BOTTLE	8-35, 8-61, 12-41, 12-43
476377-0000 ..	SCREW	8-37
476859-0300 ..	WEAC-VALVE	1-137
479236-0000 ..	END SECTION	8-31, 8-33, 8-51, 8-53, 12-27, 12-29, 12-37, 12-39
479237-0000 ..	CARRIER	8-51, 8-53, 12-27, 12-29
479238-0000 ..	CARRIER	8-51, 8-53, 12-27, 12-29
479239-0000 ..	CARRIER	8-31, 8-33, 12-37, 12-39
479240-0000 ..	CARRIER	8-31, 8-33, 12-37, 12-39
484196-0000 ..	FILTER	1-91, 1-93
484197-0000 ..	FILTER	9-35
486826-0000 ..	SIGN	10-105, 10-107
486826-0001 ..	SIGN "EMERGENCY STOP"	1-67, 1-69, 1-143, 1-145, 1-147, 1-149, 1-151, 1-153, 7-17, 8-77
490518-0000 ..	HOLDER	1-125, 1-127
490761-0200 ..	DETERGENT PUMP	6-3
490768-0000 ..	BOX	6-13
490769-0000 ..	BRACKET	6-13
490876-0000 ..	BRACKET	1-171, 1-173
490890-0000 ..	NUT PLATE	1-21, 1-23

Part No	Description	Page No
490900-0000 ..	SEALING RING	1-49, 1-51
490901-0000 ..	SEAL	1-49, 1-51
490902-0000 ..	AXLE SUPPORT	1-49, 1-51
490903-0000 ..	SHAFT	1-49, 1-51
490916-0000 ..	AXLE PIN	3-9, 3-11, 3-13, 3-15
490940-0000 ..	CYLINDER	4-25, 4-27
490942-0000 ..	COMPRESSION SPRING	4-25, 4-27
490943-0000 ..	COMPRESSION SPRING	4-25, 4-27
490964-0000 ..	COVER	1-49, 1-51
490985-0000 ..	SPACER SHEET	1-67, 1-69
490998-0000 ..	THROTTLE SCREW	1-137
491022-0000 ..	CYLINDER BRACKET	1-125, 1-127
491097-0000 ..	HEAT GUARD	1-39
491128-0000 ..	GASKET	1-49, 1-51
491143-0000 ..	BRACKET	1-159
491153-0000 ..	COMPRESSION GLAND	1-103, 1-105, 1-107, 1-109
491165-0000 ..	ROLL	3-13, 3-15
491166-0000 ..	SHAFT	3-13, 3-15
491169-0000 ..	PIVOT ARM	1-35
491170-0000 ..	COVER	1-35
491171-0000 ..	BEARING BLOCK	1-35
491172-0000 ..	GASKET	1-35
491173-0000 ..	BRACKET	1-35
491174-0000 ..	ARM	1-35
491175-0000 ..	LINK	1-35
491177-0000 ..	ARM	1-35
491203-0000 ..	STRUT	6-61
491223-0000 ..	COVER	1-39
491224-0000 ..	BRACKET	1-39
491227-0000 ..	SLIDER	5-5
491228-0001 ..	SHAFT	5-5
491228-0002 ..	SHAFT	5-5
491229-0000 ..	BUSHING	5-5
491230-0000 ..	GRUB SCREW	5-5
491231-0000 ..	BUSHING	5-5
491258-0000 ..	DRIVE WHEEL	5-59, 5-61
491266-0000 ..	SHIM	5-35
491274-0000 ..	HUB	3-5
491291-0000 ..	LID	5-63
491303-0000 ..	WASHER	6-61
491304-0000 ..	WASHER	6-61
491305-0000 ..	CONN.DIAGRAM AIR SUPERH.	1-43, 1-45
491319-0000 ..	LACE	3-13, 3-15
491349-0000 ..	BEARING SEAT	4-49, 4-51
491350-0000 ..	SLIDER	4-49, 4-51
491390-0000 ..	PIPE CENTRAL LUBRICATION	2-23, 2-25, 2-27
491409-0000 ..	WASHER	3-5
491410-0000 ..	LACE	3-5
491418-0001 ..	O-RING 284X3 FPM	1-141, 9-35
491418-0002 ..	O-RING 352X3 FPM	1-49, 1-51
491441-0000 ..	HOOD	1-141
491487-0000 ..	BUSHING	1-35
491536-0200 ..	NON-RETURN VALVE	6-23
491545-0000 ..	BRACKET	1-39
491570-0300 ..	DOOR	1-3, 1-5
491579-0300 ..	DOOR	1-3, 1-5
491602-0000 ..	GASKET HOLDER	1-49, 1-51
491681-0000 ..	GASKET	4-45, 4-47
491770-0000 ..	BUSHING	6-65
491814-0300 ..	SLEWING BRACKET RIGHT	3-3
491815-0300 ..	SLEWING BRACKET LEFT	3-3
491846-0300 ..	TENSION SPROCKET	5-3
491850-0100 ..	DRIVE WHEEL	5-3
491851-0000 ..	LID	5-59, 5-61
491854-0000 ..	PIPE WATER	2-23, 2-25, 2-27
491859-0000 ..	HOLDER	2-23, 2-25, 2-27
491860-0000 ..	HOLDER	2-23, 2-25, 2-27
491868-0000 ..	VOLUME BULGE	4-17, 4-19, 4-21, 4-23
491880-0000 ..	FASTENING PLATE	1-171, 1-173
491916-0000 ..	CAMSEGMENT R	3-19, 3-21
491917-0000 ..	CAMSEGMENT L	3-19, 3-21
491918-0000 ..	CAMSEGMENT R	3-19, 3-21
491919-0000 ..	CAMSEGMENT L	3-19, 3-21
491929-0000 ..	IMPELLER WHEEL	6-65
491931-0000 ..	SHAFT	1-35
491965-0000 ..	CAM	8-25, 8-27, 8-29, 8-45, 8-47, 8-49
491976-0400 ..	PHOTOCELL UNIT	1-3, 1-5
493652-0100 ..	LID	6-61, 6-67
493735-0000 ..	NIPPLE	12-17, 12-19
495498-0021 ..	CU-RAIL L=210MM	10-69
497748-0000 ..	PIN	1-83, 1-85
520072-0000 ..	SIGN BOARD	1-9, 1-11
526984-0000 ..	SADDLE	8-39, 8-41
526985-0000 ..	PLATE	8-39, 8-41

Part No	Description	Page No
526986-0001 ..	SHAFT	8-39, 8-41
527649-0000 ..	DISTANCE RUBBER	8-39, 8-41
527898-0100 ..	MKS CONTAINER H2O2	6-71
527906-0000 ..	GASKET	6-67
529146-0000 ..	ANGLE BRACKET	1-33
529147-0000 ..	SPRING BRACKET	1-33
529148-0000 ..	STEERING	1-33
529149-0000 ..	DOLLY WASHER	1-33
529345-0100 ..	FILLING STATION H2O2	12-7
529362-0000 ..	SPROCKET	8-39, 8-41
530587-0000 ..	WASHER	1-79
530588-0000 ..	SEAL RING	9-37
530589-0000 ..	SEAL RING	1-41, 1-63, 9-37
530590-0000 ..	VALVE CONE	1-41, 1-63
530591-0000 ..	HOLDER	1-81
530595-0000 ..	SEAL RING HOLDER	1-77
530597-0000 ..	WASHER	1-81
530598-0000 ..	WASHER	1-81
530599-0000 ..	RING	1-41, 1-63, 1-81
530600-0100 ..	GUIDING PULLTAB	1-21, 1-23
531345-0200 ..	PERSONAL PROTECT. EQ H2O2	9-3
531731-0000 ..	GASKET	1-43, 1-45
532117-0000 ..	CLAMP RING	1-83
532118-0000 ..	CLAMP RING	1-85
532205-0000 ..	LID	6-67
532206-0000 ..	GASKET	6-67
532208-0000 ..	SHAFT	12-25
532209-0000 ..	SHEET	12-25
532210-0100 ..	PEROXIDE CONTAINER TROLLEY	12-7
532211-0000 ..	DOWEL	12-25
532349-0000 ..	PLAIN BEARING	1-41, 1-63
532412-0000 ..	SPRING	9-21, 9-25, 9-27
532655-0000 ..	CAUTION SIGN	6-73
532676-0000 ..	SHEET	12-17, 12-19
532677-0000 ..	PIPE	12-17, 12-19
532678-0000 ..	DOWEL	12-17, 12-19
532679-0000 ..	PLATE	12-17, 12-19
533014-0100 ..	LEAK FINDING EQUIPMENT (SUPERSTRUCTURE)	12-7
533015-0000 ..	WIRING DIAGRAM	12-17, 12-19
533169-0000 ..	DIAPHRAGM	1-77, 9-37
533374-0000 ..	FITMENT BOTTOM	12-21
533905-0100 ..	PONCH	12-17, 12-19
533906-0000 ..	FITMENT COVER	12-21
534634-0000 ..	PIPE	12-23
534635-0000 ..	VALVE	12-23
534636-0000 ..	LEVEL GLAS	12-23
534637-0000 ..	ATTACHMENT	12-23
534691-0000 ..	DIAPHRAGM	12-23
534692-0000 ..	FRAME SECTION	12-23
534693-0000 ..	PLATE	12-23
534694-0000 ..	SUCTIONPIPE	12-23
534695-0000 ..	WEIGHT	12-23
534696-0000 ..	VALVE	12-23
534697-0000 ..	VALVE HOUSING	12-23
534698-0000 ..	NIPPLE	12-23
536374-0000 ..	WASHER	1-171, 1-173
536913-0000 ..	HUB	7-11
536917-0000 ..	AXLE PIN	7-15
537308-0000 ..	SPRING	8-35, 8-61, 12-41, 12-43
537327-0000 ..	SHAFT	7-11
538432-0100 ..	LASER DETECTOR	12-101
538433-0000 ..	DETECTOR BODY	12-103
538434-0000 ..	DETECTOR CARD	12-103
539212-0000 ..	GASKET	1-75, 9-37
539691-0000 ..	CABLE	12-107
539692-0000 ..	CABLE	12-103
540282-0002 ..	COMPONENTS WITHOUT TP-NO	10-35
540719-0000 ..	WHEEL	8-43
541070-0000 ..	SHAFT	7-15
541163-0200 ..	CLAMP RING	1-75
541164-0200 ..	CLAMP RING	1-75
541165-0000 ..	WASHER	1-83, 1-85
541166-0000 ..	WASHER	1-77
541751-0000 ..	CONICAL BOBBIN	7-11
543135-0000 ..	INK TRANSFER ROLLER	8-35, 8-61, 12-41, 12-43
543141-0000 ..	SIGN	8-39, 8-41
543142-0000 ..	SIGN	8-39, 8-41
543143-0100 ..	ADJUSTMENT DEVICE	8-25, 8-27, 8-29, 8-45, 8-47, 8-49
543319-0000 ..	PRINTED CIRCUIT BOARD	10-33
543336-0001 ..	COMPONENTS WITHOUT TP-NO	10-33
543337-0000 ..	TERMINAL LABELS 1-4	10-33
544726-0000 ..	AXLE PIN	7-15
544906-0000 ..	SOLENOID VALVE	1-21, 1-23, 1-91, 1-93
546929-0000 ..	FILTER	6-77, 6-79, 6-81, 6-83

Part No	Description	Page No
548770-0006 ..	COAXIAL CABLE L=1200 MM	7-45
551969-0006 ..	COAXIAL CABLES	2-13
551969-0012 ..	COAXIAL CABLE	10-143
553586-0000 ..	SPACER	1-135
553607-0000 ..	SLEEVE	1-77, 1-79, 1-81
554162-0000 ..	SCREW	1-83, 1-85
555458-0000 ..	SEALING WASHER	1-81
555541-0000 ..	BRACKET	1-139
556133-0000 ..	SEALING WASHER	1-79
556422-0000 ..	PROTECTION	8-25, 8-27, 8-29, 8-45, 8-47, 8-49
556541-0000 ..	SCREW	7-61
556662-0100 ..	LASER	12-101
556663-0000 ..	HOUSE	12-105
556664-0000 ..	HEAD	12-105
556665-0000 ..	END SECTION	12-105
556666-0000 ..	HOLDER	12-105
556667-0100 ..	DISPLAY	12-101
556668-0000 ..	BOX	12-109
556672-0100 ..	HOUSE	12-101
556673-0000 ..	HOUSE	12-107
556674-0000 ..	LID	12-107
556677-0000 ..	PRINTED CIRCUIT BOARD	12-109
556678-0000 ..	PRINTED CIRCUIT BOARD	12-109
556679-0000 ..	PRINTED CIRCUIT BOARD	12-107
556680-0000 ..	PRINTED CIRCUIT BOARD	12-107
556681-0000 ..	PRINTED CIRCUIT BOARD	12-107
559810-0101 ..	TMCC2 CONTROLLER	10-31
560931-0000 ..	BRACKET	1-9, 1-11, 1-21, 1-23, 1-91, 1-93, 6-77, 6-79
561427-0000 ..	CONTAINER	6-73
562118-0000 ..	LID	4-55, 4-57
562119-0000 ..	GASKET	4-55, 4-57
562120-0000 ..	ARM PRESSURE JAW	4-49, 4-51
563286-0000 ..	GASKET	6-61
563287-0000 ..	WASHER	6-61
563739-0000 ..	ATTACHMENT	12-127
563740-0100 ..	TOOL FOR JAW OVERLOAD	12-45
565250-0000 ..	WASHER	6-73
565251-0000 ..	VALVE	6-73
565462-0100 ..	LOCK PLATE	1-111, 1-113, 1-115
565532-0000 ..	BLANK-OFF FLANGE	12-125
565533-0000 ..	BLANK-OFF FLANGE	12-125
565534-0000 ..	FLANGE	12-125
565535-0000 ..	FLANGE	12-125
565536-0100 ..	PRESSURE TEST EQUIPMENT	12-45
566191-0000 ..	BENDING ROLLER	1-21, 1-23
566404-0001 ..	TIMING BELT	3-23
566404-0002 ..	TIMING BELT	3-23
566404-0003 ..	TIMING BELT	3-23
566404-0005 ..	TIMING BELT	3-23
566669-0000 ..	NIPPLE	1-129
566696-0000 ..	GUIDE CONSOLE	1-57
566697-0000 ..	AXLE SUPPORT	1-57
567018-0000 ..	STEAM HOUSE	1-75
567060-0000 ..	SUPPORT	12-127
567070-0010 ..	ELECTRODE	1-91, 1-93
567070-0011 ..	ELECTRODE	1-21, 1-23
567070-0012 ..	ELECTRODE	6-77, 6-79
567070-0014 ..	ELECTRODE	1-9, 1-11
567070-0015 ..	ELECTRODE	1-91, 1-93
567070-0019 ..	ELECTRODE	1-21, 1-23
567372-0000 ..	INSTRUCTION FOR USE	12-125
568577-0000 ..	AIR NOZZLE	1-159
568578-0000 ..	AIR NOZZLE	1-159
568581-0000 ..	DISTRIBUTOR WING	1-159
568583-0000 ..	FORK	1-141
568806-0000 ..	LID	6-81, 6-83
568828-0000 ..	FLOAT GUARD	6-77, 6-79
571087-0000 ..	RETAINING RING	6-81, 6-83
571088-0000 ..	DRAINING	6-77, 6-79
571532-0000 ..	BRACKET	1-39
571533-0000 ..	BRACKET	1-39
571534-0000 ..	PLATE	1-103, 1-105, 1-107, 1-109
571535-0000 ..	CANTILEVER	1-103, 1-105, 1-107, 1-109
571536-0000 ..	CANTILEVER	1-103, 1-105, 1-107, 1-109
571537-0000 ..	RING	1-49, 1-51
571538-0000 ..	RING	1-49, 1-51
571539-0000 ..	RING	1-49, 1-51
571540-0000 ..	PIN	1-49, 1-51
571543-0000 ..	BEARING PLATE	1-125, 1-127
571544-0000 ..	BEARING PLATE	1-125, 1-127
571871-0000 ..	BUSBAR,RIGHT	4-55
571872-0000 ..	BUSBAR,LEFT	4-57
571873-0000 ..	SEAL	4-55, 4-57
571874-0000 ..	SEALING PLUG	4-55, 4-57

Part No	Description	Page No
571920-0000 ..	PRESSURE ARM	8-69
572157-0000 ..	BEARING PANEL	1-61
572158-0000 ..	BEARING PANEL	1-61
572252-0000 ..	BRACKET	8-25, 8-27, 8-29, 8-45, 8-47, 8-49
572253-0000 ..	SHEET	8-25, 8-27, 8-29, 8-45, 8-47, 8-49
572254-0000 ..	HANDLE	8-25, 8-27, 8-29, 8-45, 8-47, 8-49
572255-0000 ..	SPACER	8-25, 8-27, 8-29, 8-45, 8-47, 8-49
572460-0000 ..	SHEET	8-25, 8-27, 8-29, 8-45, 8-47, 8-49
572485-0000 ..	BRACKET	1-129
572486-0000 ..	PISTON	1-129
572487-0000 ..	THROTTLING	1-129
572642-0200 ..	TRANSFER	4-3
572643-0200 ..	TRANSFER	4-3
574333-0000 ..	ROLL	1-49, 1-51
574334-0000 ..	RING	1-49, 1-51
574335-0000 ..	RING	1-49, 1-51
574336-0000 ..	SEAL	1-49, 1-51
574337-0000 ..	BRACKET	1-125, 1-127
574341-0000 ..	FORK	1-125, 1-127
574346-0000 ..	ROLL	1-125, 1-127
574347-0000 ..	COUNTER ROLLER	1-125, 1-127
574348-0000 ..	RAIL LEFT	5-29, 5-31, 5-33
574349-0000 ..	RAIL RIGHT	5-29, 5-31, 5-33
574365-0000 ..	VOLUMEFLAP 250S	4-17, 4-19, 4-21, 4-23
574366-0000 ..	VOLUME SHIM	4-17, 4-19, 4-21, 4-23
574367-0000 ..	VOLUME BULGE	4-17, 4-19, 4-21, 4-23
574369-0000 ..	CARRIER RULER RIGHT	4-5, 4-7, 4-9
574370-0000 ..	CARRIER RULER RIGHT	4-5, 4-7, 4-9
574371-0000 ..	CARRIER RULER LEFT	4-11, 4-13, 4-15
574372-0000 ..	CARRIER RULER LEFT	4-11, 4-13, 4-15
574385-0000 ..	ROLLER TBA250SL	4-65
574386-0000 ..	CUTTING JAW	4-5, 4-7, 4-9, 4-11, 4-13, 4-15
574393-0000 ..	LOCK PLATE	1-119, 1-121
574395-0000 ..	SHAFT	1-119, 1-121
574396-0000 ..	BRACKET	1-119, 1-121
574397-0000 ..	ROLL	1-119, 1-121
574398-0000 ..	ROLL	1-119, 1-121
574399-0000 ..	ROLL	1-119, 1-121
574400-0000 ..	ROLL	1-119, 1-121
574401-0000 ..	ROLL	1-119, 1-121
574402-0000 ..	ROLL	1-119, 1-121
574403-0000 ..	ROLL	1-119, 1-121
574404-0000 ..	BRACKET	1-103, 1-105, 1-107, 1-109
574415-0000 ..	INDICATOR 250S	1-47
574416-0000 ..	BRACKET	1-111, 1-113, 1-115
574417-0000 ..	ROLL	1-111, 1-113, 1-115
574418-0000 ..	ROLL	1-111, 1-113, 1-115
574426-0000 ..	RULER	8-73
574427-0000 ..	RULER	8-73
574428-0000 ..	RULER	8-73
574442-0000 ..	TEMPLATE	12-47, 12-49
574443-0000 ..	SHAFT	8-45, 8-47, 8-49
574444-0000 ..	SPACER	8-45, 8-47, 8-49
574445-0000 ..	CANTILEVER	8-45, 8-47, 8-49
574446-0000 ..	TRIMMING ROLLER PLUS	12-5
574447-0000 ..	TRIMMING ROLLER MINUS	12-5
574449-0000 ..	SLIDER	2-5, 2-7
574452-0000 ..	PROTECTION	2-5, 2-7
574453-0000 ..	TEMPLATE	12-45
574454-0000 ..	TEMPLATE	12-77, 12-79
574455-0000 ..	TEMPLATE	12-77, 12-79, 12-147
574456-0000 ..	BRACKET	1-119, 1-121
574479-0000 ..	ROLL	1-103, 1-105, 1-107, 1-109
574480-0000 ..	ROLL	1-103, 1-105, 1-107, 1-109
574481-0000 ..	ROLL	1-103, 1-105, 1-107, 1-109
574494-0000 ..	FOLDING FLAP CAM	4-31, 4-33
574932-0000 ..	BENDING ROLLER	8-17, 8-19
574937-0000 ..	SHAFT	8-17, 8-19
574940-0000 ..	BLOCKING PIECE	8-17, 8-19
574945-0000 ..	TOOTHED PULLEY	8-17, 8-19
574946-0000 ..	FLAG	8-17, 8-19
575034-0000 ..	ROUND NUT	1-167, 1-169, 2-65, 2-67, 7-31, 8-11, 8-13
576274-0000 ..	BRACKET	8-17, 8-19
576286-0000 ..	HOLDER	6-41, 6-43
576287-0000 ..	PIPE	6-29, 6-31
576293-0000 ..	PIPE	6-15, 6-17, 6-19
576434-0200 ..	AP-VALVE 51-38	1-67, 1-69
576436-0100 ..	A-CYLINDER	1-75
576437-0100 ..	C-CYLINDER	1-75
576438-0100 ..	B-CYLINDER	1-75
576439-0000 ..	CYLINDER HOUSING	1-77, 1-81
576440-0000 ..	END SECTION	1-77, 1-81
576441-0000 ..	PISTON	1-77, 1-81
576442-0000 ..	PISTON ROD	1-81

Part No	Description	Page No
576443-0000 ..	CYLINDER HOUSING	1-79
576444-0000 ..	END SECTION	1-79
576445-0000 ..	PISTON	1-79
576446-0000 ..	PISTON ROD	1-77
576447-0000 ..	PISTON ROD	1-79
576448-0000 ..	SPACER	1-77
576449-0000 ..	SPACER	1-77
576450-0000 ..	SPACER	1-81
576451-0000 ..	SPACER	1-79
577211-0000 ..	VOLUMEFLAP 160 ML	4-17, 4-19, 4-21, 4-23
577212-0000 ..	VOLUME SHIM	4-17, 4-19, 4-21, 4-23
577213-0000 ..	VOLUME BULGE 160 ML	4-17, 4-19, 4-21, 4-23
577217-0000 ..	YOKECAM 160ML	3-19, 3-21
577218-0000 ..	ARMCAM 160ML	3-19, 3-21
577219-0000 ..	CAMSEGMENT R	3-19, 3-21
577220-0000 ..	CAMSEGMENT L	3-19, 3-21
577225-0000 ..	FOLDING FLAP CAM	4-31, 4-33
577333-0000 ..	DOCUMENT FOLDER	12-95
577360-0000 ..	CANTILEVER	1-67, 1-69
577427-0100 ..	MACH.ALIG.TOOLS+LASER EQ.	12-45
577462-0000 ..	CABLE TRENCH	1-143, 1-145, 1-147, 1-149, 1-151, 1-153
577467-0000 ..	LID	1-143, 1-145, 1-147, 1-149, 1-151, 1-153
577468-0000 ..	LID	1-143, 1-145, 1-147, 1-149, 1-151, 1-153
577469-0000 ..	LID	1-143, 1-145, 1-147, 1-149, 1-151, 1-153
577470-0000 ..	LID	1-143, 1-145, 1-147, 1-149, 1-151, 1-153
577541-0000 ..	TUBE 90	1-95, 1-97
577542-0000 ..	TUBE 90	1-95, 1-97
577769-0000 ..	EXTENSION PIPE	6-65
577770-0000 ..	GASKET	6-65
577771-0000 ..	SHAFT	6-65
577773-0000 ..	GASKET	6-61
577782-0000 ..	TUBE 200	1-95, 1-97
577783-0000 ..	TUBE 201	1-95, 1-97
577784-0000 ..	TUBE260	1-95, 1-97
577785-0000 ..	TUBE 261	1-95, 1-97
577786-0000 ..	TUBE 240	1-95, 1-97
577787-0000 ..	TUBE 241	1-95, 1-97
577788-0000 ..	TUBE 80	1-95, 1-97
577789-0000 ..	TUBE 90	1-95, 1-97
577790-0000 ..	TUBE 70	1-95, 1-97
577791-0000 ..	TUBE 40	1-95, 1-97
577798-0000 ..	GUIDING ARBOR	8-21
577799-0000 ..	SHAFT	8-21
577800-0200 ..	PAPER GUIDE	8-17, 8-19
577822-0300 ..	PRESSURE REGULATOR GROUP	6-15, 6-17, 6-19
577824-0200 ..	COOL WATER VALVE	6-15, 6-17, 6-19
577825-0200 ..	HOT WATER VALVE	6-15, 6-17, 6-19
577832-0000 ..	PIPE	6-15, 6-17, 6-19
578000-0000 ..	BRACKET	8-25, 8-27, 8-29
578001-0000 ..	SCREW	8-25, 8-27, 8-29
578004-0000 ..	TUBE 211	1-95, 1-97
578005-0000 ..	TUBE 213	1-95, 1-97
578013-0000 ..	TUBE 213 AND 211	1-95, 1-97
578019-0000 ..	TUBE40	1-91, 1-93
578020-0000 ..	TUBE 70	1-95, 1-97
578022-0000 ..	TUBE 211	1-95, 1-97
578023-0000 ..	TUBE 213	1-95, 1-97
578026-0000 ..	PIPE	1-91, 1-93
578027-0000 ..	CRAMP	1-95, 1-97
578028-0000 ..	BRACKET	1-95, 1-97
578030-0000 ..	GASKET	1-95, 1-97
578031-0000 ..	VALVE HOUSING	1-139
578035-0000 ..	LID	1-143, 1-145, 1-147, 1-149, 1-151, 1-153
578091-0000 ..	BRANCH PIPE	2-29
578104-0000 ..	SHEET	4-55, 4-57
578480-0000 ..	BRACKET	1-67, 1-69
578486-0000 ..	WHEEL	1-21, 1-23
578490-0000 ..	LID	1-21, 1-23
578491-0000 ..	LID	1-21, 1-23
578492-0000 ..	LID	1-21, 1-23
578493-0000 ..	SHAFT	1-21, 1-23
578494-0000 ..	O-RING 226X5,7 FPM	1-21, 1-23, 9-35
578495-0000 ..	O-RING	1-21, 1-23, 9-35
578496-0000 ..	LID	1-143, 1-145, 1-147, 1-149, 1-151, 1-153
578500-0000 ..	PIPE	1-143, 1-145, 1-147, 1-149, 1-151, 1-153
578676-0000 ..	RAIL	2-19
578685-0000 ..	GUIDING ARBOR	8-21
578686-0000 ..	GUIDING ARBOR	8-21
578687-0000 ..	GUIDING ARBOR	8-21
579241-0200 ..	DATING UNIT	8-3
579553-0000 ..	SHAFT	7-13, 7-43, 7-51, 7-53
579623-0000 ..	PROTECTIVE CASING	3-25
579624-0000 ..	GASKET	3-25
579625-0300 ..	PROTECTIVE GRATING	1-3, 1-5

Part No	Description	Page No
579629-0000 ..	TOUCH GUARD	1-175
579630-0000 ..	BRACKET	1-175
579633-0000 ..	BRACKET	1-175
579637-0000 ..	CATCH	1-135
579765-0000 ..	MACHINE SIGN CE	9-3
579771-0000 ..	CATCH	1-135
579899-0000 ..	LIFTING UNIT	9-3
580036-0200 ..	STRIP APPLICATOR	7-3
580037-0300 ..	STRIP MAGAZINE	7-3
580038-0200 ..	INDUCTOR	7-35, 7-37
580042-0100 ..	HUB JUMBO	7-5, 7-7
580044-0200 ..	SPLICING MAGAZINE	7-5, 7-7
580055-0000 ..	ARM	7-13
580060-0200 ..	BRAKE ARM	7-5, 7-7
580064-0200 ..	CONNECTION BOX	7-5, 7-7
580329-0200 ..	PUSH BUTTON BOX	7-5, 7-7
580335-0200 ..	PIPE WORK-PNEUMATIC	7-55
580356-0000 ..	YOKECAM 250ML SLIM	3-19, 3-21
580357-0000 ..	ARMCAM 250ML SLIM	3-19, 3-21
580358-0000 ..	CAM SEGMENT L	3-19, 3-21
580359-0000 ..	CAM SEGMENT R	3-19, 3-21
580363-0000 ..	PIPE 71	1-95, 1-97
580364-0000 ..	PIPE 71	1-95, 1-97
580848-0000 ..	TRANSPORT BEAM	12-13
580849-0000 ..	TRANSPORT BEAM	12-13
580865-0000 ..	TRANSPORT BEAM	12-13
580866-0000 ..	TRANSPORT BEAM	12-13
580867-0000 ..	BRACKET	12-13
580868-0000 ..	FASTENING PLATE	12-13
580873-0100 ..	BOX FOR AIR FREIGHT	12-7
580876-0000 ..	PACKING	12-13
580993-0000 ..	WATER DIAGRAM	6-15, 6-17, 6-19
581015-0000 ..	PIPE 91	1-95, 1-97
581016-0000 ..	PIPE 91	1-95, 1-97
581341-0000 ..	TOUCH GUARD	1-17
581533-0000 ..	YOKE CAM 284ML	3-19, 3-21
581534-0000 ..	ARM CAM 284ML	3-19, 3-21
581535-0000 ..	CAMSEGMENT R 284ML	3-19, 3-21
581536-0000 ..	CAMSEGMENT L 284ML	3-19, 3-21
582162-0000 ..	FOLDING FLAP CAM	4-31, 4-33
582163-0000 ..	VOLUME FLAP 330S	4-17, 4-19, 4-21, 4-23
582164-0000 ..	VOLUME CAM R 330S	4-61, 4-63
582165-0000 ..	VOLUME CAM R WIDE 330S	4-61, 4-63
582166-0000 ..	VOLUME CAM L 330S	4-61, 4-63
582167-0000 ..	VOLUME CAM L WIDE 330S	4-61, 4-63
582195-0000 ..	ARM CAM 330S	3-19, 3-21
582197-0000 ..	YOKE CAM 330S	3-19, 3-21
582199-0000 ..	CAM SEGMENT RIGHT	3-19, 3-21
582200-0000 ..	CAM SEGMENT LEFT	3-19, 3-21
582850-0000 ..	SUPPORT	12-13
582851-0000 ..	SUPPORT	12-13
583683-0000 ..	SHAFT	7-63
583684-0000 ..	AXLE SUPPORT	7-63
583685-0000 ..	BEARING SEAT	7-63
583735-0000 ..	PIN	7-61
583737-0000 ..	ROLLER	7-61
583738-0000 ..	ROLLER	7-61
583749-0000 ..	PIN	7-61
583878-0000 ..	SPRING BRACKET	7-15
589432-0000 ..	SCREW	7-61
589449-0000 ..	NOZZLE	1-161, 1-163
589885-0100 ..	TEMPLATE HOUSE/BENDING ROLLER	12-147, 12-169
589889-0100 ..	TEMPLATE LEVELING MACHINE	12-147
589908-0000 ..	BLOCKING PIECE	12-169
589909-0000 ..	BLOCKING PIECE	12-169
589910-0000 ..	BEAM	12-159
590205-0000 ..	PIN	12-159, 12-169
590206-0000 ..	BLOCK	12-159
590207-0000 ..	BLOCKING PIECE	12-159
590208-0000 ..	BLOCKING PIECE	12-159
590215-0000 ..	SUPPORT	12-169
590216-0000 ..	ROLLER	12-169
590217-0000 ..	SHEET	12-169
590218-0000 ..	GUIDE	12-169
590219-0000 ..	PIN	12-159
590221-0000 ..	BLOCK	12-169
590222-0200 ..	TEMPLATE LS-ELEMENT	12-45
590223-0000 ..	SETTING TEMPLATE	12-47, 12-49
590224-0000 ..	SETTING TEMPLATE	12-47, 12-49
590245-0000 ..	SETTING TEMPLATE	12-47, 12-49
590246-0000 ..	SETTING TEMPLATE	12-47, 12-49
590247-0000 ..	SETTING TEMPLATE	12-47, 12-49
590248-0000 ..	SETTING TEMPLATE	12-47, 12-49
590249-0000 ..	SETTING TEMPLATE	12-47, 12-49

Part No	Description	Page No
590250-0000 ..	SETTING TEMPLATE	12-47, 12-49
590262-0000 ..	PLATE	12-161
590263-0000 ..	HOLDER	12-161
590264-0000 ..	SHAFT	12-161
590265-0000 ..	SHAFT	12-161
590267-0000 ..	BLOCKING PIECE	12-161
590268-0000 ..	TEMPLATE	12-129
590269-0000 ..	RING	12-129
590270-0000 ..	RING	12-129
590271-0000 ..	RING	12-129
590273-0100 ..	TEMPLATE VOLUME CAM	12-147
590274-0000 ..	BRACKET RIGHT	12-163
590275-0000 ..	BRACKET LEFT	12-163
590276-0000 ..	HOLDER	12-163
590277-0000 ..	ANGLE BRACKET	12-163
590278-0000 ..	RULER	12-163
590279-0000 ..	PLATE	12-163
590280-0000 ..	GAUGE	12-165
590281-0000 ..	PLATE	12-165
590282-0000 ..	PLATE	12-165
590283-0000 ..	GAUGE	12-165
590284-0000 ..	PLATE	12-165
590285-0000 ..	GAUGE	12-165
590502-0000 ..	PLATE	12-165
590503-0000 ..	GAUGE	12-165
590504-0000 ..	PLATE	12-165
590507-0100 ..	TEMPLATE FOR CENTERING RING	12-147
590508-0000 ..	SCREW	12-165
590509-0100 ..	RING	12-45
595430-0200 ..	LIGHT FIXTURE	2-9
598148-0000 ..	LEG	2-15, 5-77, 6-55, 8-9
598762-0300 ..	LADDER	2-3
732419-0004 ..	RAIL	10-115
732419-0007 ..	RAIL	10-115
736514-0000 ..	SHOCK ABSORBER	1-87, 1-185, 9-35
751009-0000 ..	INSULATION	1-43, 1-45
751010-0000 ..	GASKET	1-159
751015-0000 ..	GASKET	1-39
751016-0000 ..	GASKET	1-17
751018-0000 ..	WASHER	1-39
751019-0000 ..	WASHER	1-35
751020-0000 ..	GASKET	1-35
751023-0000 ..	GASKET	1-35, 1-39
751024-0000 ..	GASKET	1-159
751078-0000 ..	BRACKET RIGHT	3-13
751079-0000 ..	BRACKET LEFT	3-15
751085-0000 ..	BUSHING	2-13
751086-0000 ..	NIPPLE	6-25
751109-0000 ..	RAIL RIGHT	5-35
751110-0000 ..	RAIL LEFT	5-35
751131-0000 ..	SHAFT	1-49, 1-51
751132-0000 ..	SHAFT	1-57
751165-0000 ..	BUSHING	1-59
751212-0000 ..	ARM	3-9, 3-11, 3-13, 3-15
751220-0000 ..	FILLER CAP	6-61
751223-0000 ..	LID	6-67
751230-0000 ..	PLAIN BEARING	1-49, 1-51
751245-0000 ..	FLANGE	3-5
751267-0000 ..	CANTILEVER	1-111, 1-113, 1-115
751283-0000 ..	ROLL	1-111, 1-113, 1-115
751284-0000 ..	ROLL	1-111, 1-113, 1-115
751287-0000 ..	PLATE	1-111, 1-113, 1-115
751288-0000 ..	PLATE	1-111, 1-113, 1-115
751316-0000 ..	ELBOW PIPE	6-65
751318-0000 ..	SHAFT	1-119, 1-121
751331-0000 ..	GASKET	1-21, 1-23
751333-0000 ..	SETTING PLATE	1-103, 1-105, 1-107, 1-109
751334-0000 ..	SPACER	1-103, 1-105, 1-107, 1-109
751373-0300 ..	PEROXIDE TANK	6-57
751393-0300 ..	PEROXIDE PUMP	6-61
751395-0000 ..	FLANGE	6-65
751398-0400 ..	TANK	6-57
751403-0000 ..	BRACKET	6-67
751457-0000 ..	CANTILEVER	1-171, 1-173
751476-0000 ..	CANTILEVER	1-171, 1-173
751491-0000 ..	ROLL	1-103, 1-105, 1-107, 1-109
751492-0000 ..	ROLL	1-103, 1-105, 1-107, 1-109
751494-0000 ..	ROLL	1-103, 1-105, 1-107, 1-109
751495-0000 ..	ROLL	1-119, 1-121
751496-0000 ..	ROLL	1-119, 1-121
751497-0000 ..	ROLL	1-119, 1-121
751498-0000 ..	ROLL	1-119, 1-121
751499-0000 ..	ROLL	1-119, 1-121
751500-0000 ..	ROLL	1-119, 1-121

Part No	Description	Page No
751501-0000 ..	ROLL	1-119, 1-121
751502-0000 ..	ROLLER	1-125, 1-127
751503-0000 ..	COUNTER ROLLER	1-125, 1-127
751575-0000 ..	RULERPART R	4-5, 4-7, 4-9
751576-0000 ..	RULERPART L	4-11, 4-13, 4-15
751577-0000 ..	RULERPART R	4-5, 4-7, 4-9
751578-0000 ..	RULERPART L	4-11, 4-13, 4-15
751579-0000 ..	ADJUSTING SCREW	4-5, 4-7, 4-9, 4-11, 4-13, 4-15
751580-0000 ..	SHIM	4-5, 4-7, 4-9, 4-11, 4-13, 4-15
751680-0000 ..	SCREW	1-21, 1-23
751718-0100 ..	HOLDER	8-25, 8-27, 8-29, 8-45, 8-47, 8-49
751722-0000 ..	PIPE-LINE	1-159
751731-0000 ..	BEARING COVER	1-37
751732-0000 ..	BRACKET	1-37
751733-0000 ..	HEATING PIPE	1-39
751743-0000 ..	PISTON	4-25, 4-27
751769-0000 ..	SLEEVE	4-25, 4-27
752007-0000 ..	HOLDER	12-93
752009-0000 ..	RULERPART R	4-5, 4-7, 4-9
752010-0000 ..	RULERPART R	4-5, 4-7, 4-9
752011-0000 ..	RULERPART L	4-11, 4-13, 4-15
752012-0000 ..	RULERPART L	4-11, 4-13, 4-15
752014-0000 ..	RULERPART R	4-5, 4-7, 4-9
752015-0000 ..	RULERPART R	4-5, 4-7, 4-9
752016-0000 ..	RULERPART L	4-11, 4-13, 4-15
752017-0000 ..	RULERPART L	4-11, 4-13, 4-15
752038-0000 ..	SHIM	1-125, 1-127
752047-0000 ..	BUSHING	1-125, 1-127
752085-0000 ..	SPRING	8-21
752099-0000 ..	PASSIVATINGSEAL	12-45
752115-0000 ..	PLUNGER	4-5, 4-7, 4-9, 4-11, 4-13, 4-15
752126-0000 ..	FORMING ROLLER	1-103, 1-105, 1-107, 1-109
752127-0000 ..	FORMING ROLLER	1-103, 1-105, 1-107, 1-109
752128-0000 ..	FORMING ROLLER	1-103, 1-105, 1-107, 1-109
752129-0000 ..	FORMING ROLLER	1-111, 1-113, 1-115
752130-0000 ..	FORMING ROLLER	1-111, 1-113, 1-115
752131-0000 ..	FORMING ROLLER	1-119, 1-121
752132-0000 ..	FORMING ROLLER	1-119, 1-121
752133-0000 ..	FORMING ROLLER	1-119, 1-121
752134-0000 ..	FORMING ROLLER	1-119, 1-121
752135-0000 ..	FORMING ROLLER	1-119, 1-121
752136-0000 ..	FORMING ROLLER	1-119, 1-121
752137-0000 ..	FORMING ROLLER	1-119, 1-121
752138-0000 ..	FORMING ROLLER	1-125, 1-127
752140-0000 ..	COUNTER ROLLER	1-125, 1-127
752141-0000 ..	FORMING ROLLER	1-103, 1-105, 1-107, 1-109
752142-0000 ..	FORMING ROLLER	1-103, 1-105, 1-107, 1-109
752143-0000 ..	FORMING ROLLER	1-103, 1-105, 1-107, 1-109
752144-0000 ..	FORMING ROLLER	1-111, 1-113, 1-115
752145-0000 ..	FORMING ROLLER	1-111, 1-113, 1-115
752146-0000 ..	FORMING ROLLER	1-119, 1-121
752147-0000 ..	FORMING ROLLER	1-119, 1-121
752148-0000 ..	FORMING ROLLER	1-119, 1-121
752149-0000 ..	FORMING ROLLER	1-119, 1-121
752150-0000 ..	FORMING ROLLER	1-119, 1-121
752151-0000 ..	FORMING ROLLER	1-119, 1-121
752152-0000 ..	FORMING ROLLER	1-119, 1-121
752153-0000 ..	FORMING ROLLER	1-125, 1-127
752155-0000 ..	COUNTER ROLLER	1-125, 1-127
752156-0000 ..	FLANGE BUSHING	1-103, 1-105, 1-107, 1-109, 1-119, 1-121
752174-0000 ..	HEATING PIPE	1-35
752185-0000 ..	SHAFT	1-119, 1-121
752186-0001 ..	SHAFT	1-111, 1-113, 1-115
752186-0002 ..	SHAFT	1-103, 1-105, 1-107, 1-109
752186-0003 ..	SHAFT	1-119, 1-121, 1-125, 1-127
752186-0004 ..	SHAFT	1-111, 1-113, 1-115, 1-119, 1-121, 1-125, 1-127
752186-0005 ..	SHAFT	1-103, 1-105, 1-107, 1-109, 1-119, 1-121, 1-125, 1-127
752186-0006 ..	SHAFT	1-103, 1-105, 1-107, 1-109, 1-119, 1-121
752186-0007 ..	SHAFT	1-119, 1-121
752186-0008 ..	SHAFT	1-103, 1-105, 1-107, 1-109
752186-0009 ..	SHAFT	1-103, 1-105, 1-107, 1-109
752186-0010 ..	SHAFT	1-111, 1-113, 1-115
752186-0011 ..	SHAFT	1-111, 1-113, 1-115
752186-0012 ..	SHAFT	1-111, 1-113, 1-115, 1-125, 1-127
752187-0000 ..	SHAFT	1-103, 1-105, 1-107, 1-109
752200-0000 ..	CANTILEVER	8-25, 8-27, 8-29, 8-45, 8-47, 8-49
752212-0000 ..	VOLUME FLAP 200 ML	4-17, 4-19, 4-21, 4-23
752218-0000 ..	ATTACHMENT	1-159
752237-0000 ..	SPRING	8-25, 8-27, 8-29, 8-45, 8-47, 8-49
752240-0000 ..	LID	8-25, 8-27, 8-29, 8-45, 8-47, 8-49
752282-0000 ..	CONNECTION RIGHT	4-25
752283-0000 ..	CONNECTION LEFT	4-27
752284-0000 ..	SHAFT	4-25, 4-27
752288-0000 ..	SLEEVE	4-5, 4-7, 4-9, 4-11, 4-13, 4-15

Part No	Description	Page No
752289-0000 ..	CLAMP RIGHT	4-25
752290-0000 ..	CLAMP LEFT	4-27
752292-0000 ..	VOLUMEFLAP 180 ML	4-17, 4-19, 4-21, 4-23
752425-0000 ..	LINK	4-37, 4-39, 4-41, 4-43
752462-0000 ..	TRIMMING ROLLER PLUS	12-5
752463-0000 ..	TRIMMING ROLLER MINUS	12-5
752464-0000 ..	TRIMMING ROLLER PLUS	12-5
752465-0000 ..	TRIMMING ROLLER MINUS	12-5
752466-0000 ..	TRIMMING ROLLER PLUS	12-5
752467-0000 ..	TRIMMING ROLLER MINUS	12-5
752476-0000 ..	SCREW	4-5, 4-7, 4-9, 4-11, 4-13, 4-15, 4-25, 4-27
752495-0400 ..	ATTACHMENT	1-133
752499-0000 ..	RING	1-135
752519-0002 ..	PIN	1-49, 1-51
752526-0000 ..	PLATE	8-25, 8-27, 8-29, 8-45, 8-47, 8-49
752527-0000 ..	CANTILEVER	8-25, 8-27, 8-29, 8-45, 8-47, 8-49
752528-0000 ..	COVER	8-25, 8-27, 8-29, 8-45, 8-47, 8-49
752529-0000 ..	BEARING COVER	8-25, 8-27, 8-29, 8-45, 8-47, 8-49
752530-0000 ..	SPROCKET	8-25, 8-27, 8-29, 8-45, 8-47, 8-49
752531-0000 ..	BRACKET	8-25, 8-27, 8-29, 8-45, 8-47, 8-49
752534-0000 ..	PLATE	8-25, 8-27, 8-29, 8-45, 8-47, 8-49
752535-0000 ..	SHAFT	8-25, 8-27, 8-29, 8-45, 8-47, 8-49
752536-0001 ..	SHAFT	8-25, 8-27, 8-29, 8-45, 8-47, 8-49
752536-0002 ..	SHAFT	8-45, 8-47, 8-49
752536-0003 ..	SHAFT	8-45, 8-47, 8-49
752538-0000 ..	SHAFT	8-25, 8-27, 8-29, 8-45, 8-47, 8-49
752539-0000 ..	PLATE	8-25, 8-27, 8-29, 8-45, 8-47, 8-49
752541-0000 ..	CANTILEVER	8-25, 8-27, 8-29, 8-45, 8-47, 8-49
752542-0001 ..	BENDING ROLLER	8-25, 8-27, 8-29, 8-45, 8-47, 8-49
752542-0002 ..	BENDING ROLLER	8-45, 8-47, 8-49
752542-0003 ..	BENDING ROLLER	8-45, 8-47, 8-49
752543-0001 ..	SHAFT	8-25, 8-27, 8-29, 8-45, 8-47, 8-49
752543-0002 ..	SHAFT	8-45, 8-47, 8-49
752543-0003 ..	SHAFT	8-45, 8-47, 8-49
752544-0001 ..	SHIM	8-25, 8-27, 8-29, 8-45, 8-47, 8-49
752544-0002 ..	SHIM	8-25, 8-27, 8-29, 8-45, 8-47, 8-49
752554-0000 ..	SPACER	1-171, 1-173
752556-0000 ..	SPACER	4-37, 4-39, 4-41, 4-43
752559-0000 ..	STOP PERF 1	4-37, 4-39
752560-0000 ..	STOP PERF 2	4-41, 4-43
752561-0000 ..	STOP PERF 1	4-37, 4-39
752562-0000 ..	STOP PERF 2	4-41, 4-43
752563-0000 ..	STOP PERF 1	4-37, 4-39
752564-0000 ..	STOP PERF 2	4-41, 4-43
752576-0000 ..	CONTAINER	1-91, 1-93
752598-0000 ..	SHAFT	4-17, 4-19, 4-21, 4-23
752615-0000 ..	SPACER	4-17, 4-19, 4-21, 4-23
752642-0000 ..	BRACKET	8-25, 8-27, 8-29, 8-45, 8-47, 8-49
752644-0000 ..	SCREW	8-25, 8-27, 8-29, 8-45, 8-47, 8-49
752645-0400 ..	DATING UNIT	8-23
752646-0400 ..	DATING UNIT	8-23
752655-0000 ..	GUIDE PIN	5-29, 5-31, 5-33
752668-0000 ..	HOLDER	12-93
752671-0100 ..	SHOCK ABSORBER	4-3
752672-0100 ..	SHOCK ABSORBER	4-3
752673-0000 ..	SPACER	4-37, 4-39, 4-41, 4-43
752678-0000 ..	SPRING PERF 1	4-37, 4-39
752679-0000 ..	SPRING PERF 2	4-41, 4-43
752680-0000 ..	SLEEVE	4-37, 4-39, 4-41, 4-43
752681-0000 ..	WASHER	4-37, 4-39, 4-41, 4-43
752739-0000 ..	VOLUME BULGE	4-17, 4-19, 4-21, 4-23
752774-0000 ..	PLUNGER	3-19, 3-21
752857-0000 ..	POINTER	1-47
752858-0000 ..	POINTER	1-47
752859-0000 ..	POINTER	1-47
752999-0000 ..	VOLUME FLAP 200S	4-17, 4-19, 4-21, 4-23
772220-0100 ..	ASSEMBLY T VOMO 6-L	12-11
772220-0101 ..	ASSEMBLY T VOMO 8-L	12-11
772220-0103 ..	ASSEMBLY T VOMO 12-L	12-11
772220-0104 ..	ASSEMBLY T VOMO 15-L	12-11
776422-0101 ..	BRASS WIRESTE	12-11
777100-0113 ..	SCREW DRIVER	12-11
777100-0184 ..	SCREW DRIVER	12-11
777150-0801 ..	SET OF SPANNERS, HEXAGONAL	9-15
777510-0101 ..	SCISSORS	12-11
777603-0100 ..	PULLER	12-119
777603-0300 ..	PULLER	12-119
779910-0101 ..	PADLOCK	9-3, 9-5
779911-0101 ..	PADLOCK	12-75, 12-99
783901-0106 ..	SPIRIT LEVEL	12-115
925877-0000 ..	SUPPORT	1-185
925991-0200 ..	LEVEL PROBE	1-3, 1-5
925998-0000 ..	DIAPHRAGM	1-87, 9-35
925999-0000 ..	PROTECTION PIPE	1-185

Part No	Description	Page No
926820-0000 ..	PLUG	1-185
926822-0000 ..	GASKET	9-35
926906-0000 ..	SPACER	1-87
926907-0000 ..	SCREW	1-87
926909-0000 ..	COMPRESSION SPRING	1-87
926934-0000 ..	SUPPORT	1-87
927007-0000 ..	SHUTTER	1-87
927044-0000 ..	SPACER	1-87
927081-0000 ..	SUPPORT	1-19
927194-0000 ..	BODY	1-87
927203-0000 ..	COVER	1-87
927205-0200 ..	REGULATING VALVE	1-67, 1-69
927421-0003 ..	O-RING 13.3X2.4 SILICONE	1-21, 1-23, 1-91, 1-93
927421-0004 ..	O-RING 15.3X2.4 SILICONE	1-21, 1-23, 1-91, 1-93, 6-77, 6-79
927421-0005 ..	O-RING 7.3X2.4 SILICONE	6-71, 12-23
927421-0006 ..	O-RING 17.3X2.4 SILICONE	9-35
927422-0001 ..	O-RING 19.2X3 SILICONE	5-13, 5-15, 5-17, 5-19, 5-21, 12-23
927422-0003 ..	O.RING 24.2X3 SILICONE	6-73, 9-35
927422-0004 ..	O-RING 29.2X3 SILICONE	6-65
927422-0007 ..	O-RING 44.2X3 SILICONE	6-61, 6-65
927422-0008 ..	O-RING 49.5X3 SILICONE	1-129, 9-35
927422-0009 ..	O-RING 54.5X3 SILICONE	6-67
927422-0011 ..	O-RING 69.5X3 SILICONE	1-91, 1-93
927422-0014 ..	O-RING 34.2X3 SILICONE	1-21, 1-23, 6-61
927422-0015 ..	O-RING 39.2X3 SILICONE	1-129
929316-0001 ..	BEARING	4-5, 4-7, 4-9, 4-11, 4-13, 4-15
929316-0002 ..	BEARING	4-5, 4-7, 4-9, 4-11, 4-13, 4-15
929376-0000 ..	TEMPLATE YOKE	12-91
929379-0100 ..	TEMPLATE JAW SYSTEM	12-77, 12-79
929381-0000 ..	BRACKET	12-91
929402-0000 ..	ARM	4-31, 4-33
929413-0000 ..	SIGN	6-41, 6-43
929415-0100 ..	BALANCE TANK	6-15, 6-17, 6-19
929438-0100 ..	ARM	3-3
929444-0000 ..	PIN	3-19, 3-21
970802-0000 ..	DISCETTE BOX 3,5"	10-89
971140-0000 ..	PHASE BAR ANGLED	10-115
971141-0000 ..	PHASE BAR ANGLED	10-115
971142-0000 ..	PHASE BAR ANGLED	10-115
975917-0000 ..	KEY FOR SAFETY SWITCH 90044-103	8-11, 8-13
975924-0000 ..	WASHER	8-11, 8-13
977527-0000 ..	BRACKET	5-57, 6-77, 6-79

Part No	Description	Page No
978010-0000 ..	SIGN BOARD	2-53, 2-55
978031-0000 ..	VOLUMEFLAP 284 ML	4-17, 4-19, 4-21, 4-23
978184-0000 ..	STOPPER	4-31, 4-33
978185-0000 ..	SHIM	4-31, 4-33
978207-0000 ..	SPACER PIPE	3-25
978209-0000 ..	NUT	3-25
978235-0000 ..	VALVE PLATE	1-9, 1-11
978262-0000 ..	GUIDE PIN	3-19, 3-21
978272-0000 ..	BRACKET	3-9, 3-11, 3-13, 3-15
978275-0000 ..	BEARING HOLDER	3-9, 3-11, 3-13, 3-15
978340-0000 ..	SPACER	3-19, 3-21
978366-0000 ..	VOLUME FLAP 250 ML	4-17, 4-19, 4-21, 4-23
978380-0000 ..	BLIND PLUG	1-19
978381-0000 ..	WASHER 56X2MM	1-19
978421-0000 ..	SETTING TEMPLATE	12-113
978440-0000 ..	CRAMP	1-15
978462-0000 ..	PROTECTION PLATE	1-57
978531-0000 ..	BRACKET	1-49, 1-51
978532-0000 ..	BRACKET	1-49, 1-51
978539-0000 ..	CABLE CONDUIT	1-143, 1-145, 1-147, 1-149, 1-151, 1-153
978540-0000 ..	CABLE CONDUIT	1-143, 1-145, 1-147, 1-149, 1-151, 1-153
978542-0000 ..	FRAME	1-167
978543-0000 ..	FRAME	1-169
978603-0000 ..	SIGN	6-41, 6-43
978609-0000 ..	ALIGNMENT TEMPLATE	3-19, 3-21
978714-0000 ..	CARRIER LEFT	4-11, 4-13, 4-15
978715-0000 ..	CARRIER RIGHT	4-5, 4-7, 4-9
978735-0000 ..	FASTENING PLATE	1-171, 1-173
978736-0000 ..	BRACKET	1-35
978745-0000 ..	CATCH	4-5, 4-7, 4-9, 4-11, 4-13, 4-15
978746-0000 ..	CATCH	4-25, 4-27
978756-0000 ..	PIN	4-65
978757-0000 ..	ROLLER 180-284ML	4-65
978758-0000 ..	ROLLER 125ML	4-65
978760-0000 ..	ROLLER TBA200SL	4-65
978768-0000 ..	YOKECURVE200ML	3-19, 3-21
978769-0000 ..	ARMCURVE 200ML	3-19, 3-21
978770-0000 ..	CAMSEGMENTL	3-19, 3-21
978771-0000 ..	CAMSEGMENTL	3-19, 3-21
978772-0000 ..	YOKECURVE 200SL	3-19, 3-21
978773-0000 ..	ARMCURVE 200SL	3-19, 3-21
978774-0000 ..	CAMSEGMENT R	3-19, 3-21

Part No	Description	Page No
978775-0000 ..	CAMSEGMENT L	3-19, 3-21
978776-0000 ..	YOKECURVE 250ML	3-19, 3-21
978777-0000 ..	ARMCURVE 250ML	3-19, 3-21
978778-0000 ..	CAMSEGMENT R	3-19, 3-21
978779-0000 ..	CAMSEGMENT L	3-19, 3-21
978790-0000 ..	BRACKET	1-119, 1-121
978791-0000 ..	HOLDER	1-111, 1-113, 1-115
978792-0000 ..	PLATE	1-103, 1-105, 1-107, 1-109
978793-0000 ..	YOKECURVE 125ML	3-19, 3-21
978794-0000 ..	ARMCURVE 125ML	3-19, 3-21
978795-0000 ..	CAMSEGMENT R	3-19, 3-21
978796-0000 ..	CAMSEGMENT L	3-19, 3-21
978823-0300 ..	CENTRAL LUBRICATION	6-3
978834-0300 ..	PEROXID AND STERILSYSTEM	6-3
978835-0200 ..	PIPE WORK	6-57
978838-0000 ..	HEAT EXCHANGER	1-137
978865-0000 ..	HOUSE	1-49, 1-51
978870-0000 ..	BEARING PLATE	1-49, 1-51
978871-0000 ..	BEARING PLATE	1-49, 1-51
978872-0000 ..	LOCK WASHER	1-49, 1-51
978876-0000 ..	SHAFT	8-73
978877-0000 ..	SHAFT	8-73
978879-0000 ..	CONTAINER	1-65
978953-0000 ..	BRACKET	6-85
978963-0000 ..	PIPE	6-59
978970-0000 ..	METERING DEVICE	6-67
978971-0000 ..	DISCHARGE TRAY	1-65
978972-0000 ..	DISCHARGE TRAY	1-65
978973-0001 ..	HOSE	6-61
978973-0003 ..	HOSE	6-77, 6-79
978988-0300 ..	SEPARATOR	6-57
978989-0200 ..	SCRUBBER	6-57
978996-0000 ..	BRANCH PIPE	1-63
979026-0200 ..	WATER CIRCULATION	6-57
979028-0000 ..	PIPE	1-137
979031-0000 ..	PIPE	1-137
979069-0000 ..	PIPE	6-59
979204-0000 ..	PLATE	8-73
979215-0200 ..	COVER PLATE	6-3
979216-0300 ..	MACHINE BODY	6-3
979217-0000 ..	PIPE	6-13
979247-0000 ..	HOUSE	1-17
979254-0000 ..	SUPPORT	1-19
979279-0000 ..	COVER HOUSING	6-75
979280-0000 ..	COVER	6-75
979300-0000 ..	PIPE	6-71
979326-0000 ..	FLOAT	1-183
979328-0200 ..	CABINET	6-57
979329-0200 ..	FILLING UNIT	6-71
979330-0000 ..	FLOATER	1-183
979336-0000 ..	HOSE NIPPLE	6-61
979368-0000 ..	HOLDER	1-183
979382-0000 ..	SHAFT	8-75
979383-0000 ..	PLUNGER	8-75
979384-0000 ..	SLEEVE	8-75
979385-0000 ..	SLEEVE	8-75
979421-0000 ..	SIGN	6-41, 6-43
979434-0000 ..	FERRULE	1-87
979446-0000 ..	HOLDER	6-41, 6-43
979474-0000 ..	BRACKET	1-9, 1-11
979475-0000 ..	CONNECTION BOX	1-13
979476-0000 ..	RAIL	1-13
979486-0000 ..	LUBRICATING PIPE	2-23, 2-25, 2-27
979500-0001 ..	ELECTRODE	1-21, 1-23
979543-0000 ..	SPLASH PLATE	8-25, 8-27, 8-29
979544-0000 ..	SPLASH PLATE	8-45, 8-47, 8-49
979548-0000 ..	MACHINE PLATE	10-71
979555-0000 ..	WEB TENSION ROLLER	8-17, 8-19
979559-0000 ..	HINGE	1-21, 1-23
979575-0000 ..	ROLLER PLATE	7-43
979576-0000 ..	AXLE PIN	7-13
979578-0000 ..	AXLE PIN	7-13
979582-0000 ..	ROLLER	7-61
979667-0000 ..	ARM	7-23, 7-25, 7-27, 7-29
979668-0000 ..	FINGER	7-23, 7-25, 7-27, 7-29
979669-0000 ..	FORCE PLATE	7-23, 7-25, 7-27, 7-29
979709-0000 ..	BENDING ROLLER	8-25, 8-27, 8-29, 8-45, 8-47, 8-49
979722-0000 ..	BLOCK	1-37
979728-0000 ..	CATCH	1-135
979737-0000 ..	RAIL LEFT	5-29, 5-31, 5-33
979738-0000 ..	RAIL RIGHT	5-29, 5-31, 5-33
979751-0000 ..	VOLUME FLAP 100	4-17, 4-19, 4-21, 4-23
979754-0000 ..	VOLUME SHIM 100	4-17, 4-19, 4-21, 4-23
979755-0000 ..	VOLUME BULGE 100	4-17, 4-19, 4-21, 4-23

Part No	Description	Page No
979756-0000 ..	SHAFT	4-17, 4-19, 4-21, 4-23
979757-0000 ..	SPACER	4-17, 4-19, 4-21, 4-23
979758-0000 ..	STOP PERF 1	4-37, 4-39
979759-0000 ..	STOP PERF 2	4-41, 4-43
979760-0000 ..	SPACER	4-37, 4-39, 4-41, 4-43
979761-0000 ..	SLEEVE	4-37, 4-39, 4-41, 4-43
979762-0000 ..	CARRIER RIGHT 100	4-5, 4-7, 4-9
979763-0000 ..	CARRIER LEFT 100	4-11, 4-13, 4-15
979764-0000 ..	CARRIER RIGHT 100	4-25
979765-0000 ..	CARRIER LEFT 100	4-27
979769-0000 ..	SPACER	8-45, 8-47, 8-49
979770-0000 ..	FOLDING FLAP CAM 100	4-31, 4-33
979771-0000 ..	COUNTER CAM 100	4-31, 4-33
979772-0000 ..	VOLUME CAM L 100	4-61, 4-63
979773-0000 ..	VOLUME CAM L WIDE 100	4-61, 4-63
979774-0000 ..	VOLUME CAM R 100	4-61, 4-63
979775-0000 ..	VOLUME CAM R WIDE 100	4-61, 4-63
979778-0000 ..	YOKE CAM 100	3-19, 3-21
979779-0000 ..	ARM CAM 100	3-19, 3-21
979780-0000 ..	CAM SEGMENT R 100	3-19, 3-21
979781-0000 ..	CAM SEGMENT L 100	3-19, 3-21
979783-0000 ..	PLATE	8-73
979784-0000 ..	SHAFT	8-69
979788-0000 ..	SPRING HOLDER	8-25, 8-27, 8-29, 8-45, 8-47, 8-49
979789-0000 ..	SPRING HOLDER	8-25, 8-27, 8-29, 8-45, 8-47, 8-49
979790-0000 ..	COVER	8-25, 8-27, 8-29, 8-45, 8-47, 8-49
979792-0000 ..	VOLUME BULGE	4-17, 4-19, 4-21, 4-23
979793-0000 ..	CARRIER	4-25
979794-0000 ..	CARRIER	4-27
979814-0000 ..	BRACKET	1-15
979860-0000 ..	VOLUME BULGE	4-17, 4-19, 4-21, 4-23
979861-0000 ..	VOLUME SHIM	4-17, 4-19, 4-21, 4-23
979864-0000 ..	RAIL LEFT	5-29, 5-31, 5-33
979865-0000 ..	RAIL RIGHT	5-29, 5-31, 5-33
979899-0000 ..	BRACKET	7-35, 7-37, 7-39, 7-41
979931-0000 ..	VOLUME BULGE	4-17, 4-19, 4-21, 4-23
979938-0000 ..	SLIDER	2-5, 2-7
979942-0000 ..	COVER	8-37
979946-0000 ..	STEEL TUBE	8-17, 8-19
979951-0000 ..	FLANGE	12-125
979952-0000 ..	BLANK FLANGE	12-125
979953-0000 ..	WASHER	1-139
979956-0000 ..	SOLENOID VALVE	1-9, 1-11
979960-0000 ..	SHAFT	8-37
979966-0000 ..	BRACKET	2-61
979990-0000 ..	BELT BRAKE	7-15
979991-0000 ..	BLOCK	7-15
979994-0000 ..	ARM	7-15
980002-0000 ..	BRACKET	8-43
980003-0000 ..	SHAFT	8-43
980004-0000 ..	PLUG	8-43
988436-0000 ..	SPACER SLEEVE	10-23, 10-37, 10-67
988685-0000 ..	PIN	2-35, 2-37, 2-65, 2-67, 6-5, 6-7, 8-11, 8-13
1020637-0000 .	HOLDER	9-21, 9-25, 9-27
1020638-0000 .	HOLDER	9-21, 9-25, 9-27
1035587-0000 .	INDUCTOR	7-45
1035792-0000 .	E-HINGE	2-35, 2-37, 2-65, 2-67, 6-5, 6-7, 8-11, 8-13
1035794-0000 .	BLOCKING PIECE	2-35, 2-37, 2-65, 2-67, 6-5, 6-7, 7-23, 7-25, 7-27, 7-29, 7-59, 8-11, 8-13
1035893-0000 .	ADJUSTING SCREW	7-51, 7-53
1035895-0000 .	SHAFT	7-47
1035897-0000 .	SHAFT	7-35, 7-37, 7-39, 7-41
1036187-0000 .	T-PIPE	1-63
1036188-0000 .	SHAFT	1-41, 1-63
1036189-0000 .	SPINDEL GUIDE	1-41, 1-63
1036191-0000 .	SEAL HOLDER	1-41, 1-63
1036192-0000 .	SPACER ROD	1-41, 1-63
1036193-0000 .	CYLINDER BRACKET	1-41, 1-63
1036194-0000 .	T-PIPE	1-41, 1-63
1036443-0000 .	CONTACT UNIT	5-13, 5-15, 5-17, 5-19, 5-21
1036588-0000 .	BRACKET	7-45
1036622-0000 .	GUIDE ROLLER	7-49
1036623-0000 .	GUIDE ROLLER	7-49
1037120-0000 .	SHAFT	7-19
1037121-0000 .	SHAFT	7-19
1037124-0000 .	HOLDER	7-19
1037572-0000 .	COVER PLATE	10-83, 10-85
1037573-0000 .	GASKET	10-83, 10-85
1037574-0000 .	COVER PLATE	10-91, 10-93, 10-95, 10-97, 10-99, 10-101, 10-103
1037575-0000 .	GASKET	10-91, 10-93, 10-95, 10-97, 10-99, 10-101, 10-103
1037761-0000 .	PIN	2-13
1038016-0000 .	SPACER	7-45
1041609-0000 .	NUT	2-73
1074209-0000 .	BRACKET	6-51
1086888-0000 .	COVER	9-21, 9-25, 9-27

Part No	Description	Page No
1091683-0000	.SPACER	5-45
1091684-0000	.RAIL	5-45
1091685-0000	.RAIL	5-45
1091686-0000	.SPACER	5-45
1091719-0000	.BRACKET	5-45
1095597-0100	.TERMINAL	2-73
1110378-0001	.DOLLY	12-9
1110391-0000	.DOLLY	4-5, 4-7, 4-9, 4-11, 4-13, 4-15, 4-71, 9-41
1110530-0000	.INDUCTOR	4-45, 4-47, 4-71, 9-41
1110532-0000	.INDUCTOR	4-45, 4-47, 4-71, 9-41
1110534-0000	.INDUCTOR	4-45, 4-47, 4-71, 9-41
1110535-0000	.INDUCTOR	4-45, 4-47, 4-71, 9-41
1110820-0000	.CUTTING RAIL	4-5, 4-7, 4-9, 4-11, 4-13, 4-15
1110829-0000	.CUTTING RAIL	4-5, 4-7, 4-9, 4-11, 4-13, 4-15
1129274-0000	.GUIDE LUG	2-65, 2-67, 6-5, 6-7
1129478-0000	.GASKET	10-91, 10-93, 10-95, 10-97, 10-99, 10-101, 10-103
1129481-0000	.COVERING PLATE	10-91, 10-93, 10-95, 10-97, 10-99, 10-101, 10-103
1140129-0000	.HOLDER	2-11
1140840-0000	.WHEEL	12-15
1140996-0000	.FLANGE	8-17, 8-19
1143884-0000	.COPPER BRAID	10-123, 10-125
1143975-0000	.DRIVE WHEEL	5-59, 5-61
1144059-0000	.WIRE	5-13, 5-15, 5-17, 5-19, 5-21
1144122-0000	.REDUCTION	5-13, 5-15, 5-17, 5-19, 5-21
1144507-0000	.BUSHING	5-7, 5-9
1144521-0000	.CLAMP	5-7, 5-9
1144943-0000	.SPACER	5-45
1178657-0000	.LABEL 3A 17-10	9-3
1190006-1402	.SOFTWARE PLMS SEND	11-7
1190007-0402	.PLMS RECEIVE	11-9
1195044-0000	.SPRING	5-7, 5-9
1195428-0000	.GASKET	2-13
1195454-0000	.BRACKET	5-41
1195456-0000	.SHAFT	5-41
1254027-0000	.CORNER STRIP	2-49, 2-51
1254028-0000	.FASTENING PLATE	2-49, 2-51
1254442-0000	.CABLE SERIAL	10-71
1254471-0411	.PLMS OFF-LINE	11-9
1255541-0000	.BUSHING	4-5, 4-7, 4-9, 4-11, 4-13, 4-15, 4-25, 4-27
1255874-0000	.SPACER	5-49, 5-51
1255876-0200	.CHAIN TENSIONER	5-37
1255924-0000	.LABEL	1-89
1260065-0000	.BRACKET	5-53
1260068-0000	.SHAFT	5-53
1260069-0000	.ROLLER	5-53
1260070-0000	.SHAFT	5-53
1260311-0000	.COVER	1-89
1260480-0000	.PIPE	1-137
1260481-0000	.PIPE	1-137
1260486-0000	.PLATE	1-171, 1-173
1260487-0000	.PLATE	1-171, 1-173
1260489-0000	.PIPE	1-137
1260490-0000	.NUT	1-171, 1-173
1260491-0000	.NUT	1-171, 1-173
1260678-0000	.ARM	7-15
1260743-0000	.HEAT GUARD	1-35
1279044-0000	.HATCH	2-39
1279045-0000	.HATCH	2-41
1279086-0000	.LOCKING PLATE	1-119, 1-121
1279087-0000	.LOCKING PLATE	1-103, 1-105, 1-107, 1-109, 1-117
1279088-0000	.LOCKING PLATE	1-111, 1-113, 1-115
1279089-0000	.LOCKING PLATE	1-111, 1-113, 1-115
1279090-0000	.LOCKING PLATE	1-119, 1-121
1279091-0000	.LOCKING PLATE	1-103, 1-105, 1-107, 1-109
1279092-0000	.LOCKING PLATE	1-125, 1-127
1279093-0000	.LOCKING PLATE	1-119, 1-121
1279094-0000	.LOCKING PLATE	1-119, 1-121
1279095-0000	.LOCKING PLATE	1-125, 1-127
1279096-0000	.LOCKING PLATE	1-125, 1-127
1279456-0000	.LABEL	1-89
1279624-0200	.SPLICE DETECTOR	7-35, 7-37
1279701-0000	.WASHER	5-63
1279702-0000	.BRACKET	5-13, 5-15, 5-17, 5-19, 5-21
1282309-0000	.ARM CAM 200 ML MID	3-19, 3-21
1282310-0000	.YOKE CAM 200ML MID	3-19, 3-21
1282311-0000	.CAM SEGMENT L	3-19, 3-21
1282312-0000	.CAM SEGMENT R	3-19, 3-21
1282315-0000	.VOLUME CAM LEFT	4-61, 4-63
1282316-0000	.VOLUME CAM RIGHT	4-61, 4-63
1282411-0000	.FLOAT	6-61
1282426-0000	.CLIP	2-13, 4-55, 4-57
1282581-0000	.BENDING ROLLER	1-21, 1-23
1282645-0000	.KNIFE	4-35
1282646-0000	.KNIFE	4-35

Part No	Description	Page No
1282647-0000	.KNIFE	4-35
1282988-0000	.RAIL	7-35, 7-37
1282989-0000	.AXLE PIN	7-35, 7-37
1285108-0000	.COVER	10-133
1285109-0000	.NUT	10-71, 10-109, 10-111, 10-123, 10-125
1285546-0000	.ROLL	7-51, 7-53
1285580-0000	.SPRING	1-141
1286000-0000	.PIPE	2-53, 2-55
1296118-0000	.PROTECTION	6-61
1296415-0000	.GASKET	5-13, 5-15, 5-17, 5-19, 5-21
1296814-0100	.PAPER REEL HOLDER,JUMBO REEL	8-3
1296815-0100	.HATCH	2-3
1296849-0000	.DISCHARGE TRAY	1-43, 1-45
1296850-0000	.DISCHARGE TRAY	1-43, 1-45
1296854-0000	.PIPE	2-53, 2-55
1296855-0000	.BATH	1-21, 1-23
1296877-0100	.SEAL KIT	9-35
1296900-0100	.LIFTING UNIT (RAILING)	12-147
1296901-0000	.BRACKET	12-167
1296903-0000	.BEAM	12-167
1296904-0000	.BEAM	12-167
1296905-0000	.SUPPORT	12-167
1296912-0000	.ROLL	1-103, 1-105, 1-107, 1-109
1296913-0000	.ROLL	1-103, 1-105, 1-107, 1-109
1296914-0000	.ROLL	1-103, 1-105, 1-107, 1-109
1296915-0000	.ROLL	1-103, 1-105, 1-107, 1-109
1317228-0000	.WASHER	5-25, 5-27
1317262-0000	.COVER	1-67, 1-69
1317526-0200	.STATION CHAIN	5-3
1317663-0000	.PIPE	1-67, 1-69
1317756-0000	.PIPE	1-67, 1-69
1317905-0000	.BRACKET	1-67, 1-69
1317914-0000	.UPPER FILLING TUBE	1-141
1317989-0000	.UPPER FILLING TUBE	1-141
1317991-0000	.SPRING	1-141
1334184-0000	.BRACKET	12-15
1334234-0000	.HUB	1-47, 1-61
1334256-0000	.SHAFT	7-61
1334331-0000	.FLANGE	7-35, 7-37
1334570-0000	.STOPPER	12-61
1334571-0000	.STOPPER	12-61
1334572-0000	.BRACKET	12-61
1334573-0000	.SHAFT	12-61
1334631-0000	.WASHER	12-61
1334694-0000	.CONNECTION PLATE	2-53, 2-55
1334721-0000	.BLOCK	5-41
1334769-0000	.LID	1-143, 1-145, 1-147, 1-149, 1-151, 1-153
1334797-0000	.PLATE	12-155
1334798-0000	.BLOCK	12-155
1334799-0002	.SPACER	12-155
1334799-0003	.SPACER	12-155
1334799-0004	.SPACER	12-155
1334800-0000	.SUPPORT	12-155
1334801-0000	.SUPPORT	12-155
1334802-0000	.SUPPORT	12-155
1334803-0000	.HOOK	12-155
1334804-0000	.SPACER	12-155
1334839-0000	.SPACER	12-155
1334840-0000	.SUPPORT	12-155
1334841-0300	.T.C.S.B UNIT	1-67, 1-69
1346000-0000	.STOPPER	12-93
1346001-0000	.BLOCK	12-93
1346002-0000	.SHAFT	12-93
1346003-0000	.SHAFT	12-93
1346004-0000	.PLATE	12-93
1346005-0000	.PLATE	12-93
1346061-0000	.DRAIN CHUTE	6-41, 6-43
1346612-0000	.SHAFT	7-49, 7-61
1346746-0000	.LEVER	7-51, 7-53
1346933-0000	.BRACKET	5-41
1346988-0000	.ROLL	7-47
1348053-0000	.BRACKET	4-5, 4-7, 4-9, 4-11, 4-13, 4-15
1348476-0000	.TOUCH GUARD	1-67, 1-69
1348477-0000	.TOUCH GUARD	1-137
1348636-0000	.TOUCH GUARD	1-67, 1-69
1348637-0000	.TOUCH GUARD	1-137
1348968-0000	.PLUG	12-45
1349014-0000	.PAD	7-21
1349029-0200	.VALVE PANEL	6-3
1349090-0200	.FLOW METER	6-15, 6-17, 6-19
1349091-0100	.GAUGE GROUP	6-15, 6-17, 6-19
1349092-0000	.SUPPORT	6-39
1349094-0200	.VALVE PLATE	6-15, 6-17, 6-19
1349568-0000	.CONNECTION BOX	9-23, 9-29, 9-31

Part No	Description	Page No
1350148-0100	.MACHINE CARRIAGE	12-7
1350149-0000	.BEAM	12-15
1350150-0000	.BEAM	12-15
1350184-0200	.PIPE WORK, AIR WATER	6-3
1350186-0000	.PIPE	6-85
1350187-0000	.PIPE	6-85
1350188-0000	.PIPE	6-29
1350307-0000	.PIPE	2-53, 2-55
1350308-0000	.PIPE	2-53, 2-55
1350309-0000	.PIPE	2-53, 2-55
1350472-0000	.HOLDER	2-53, 2-55
1350473-0000	.HOLDER	2-53, 2-55
1350529-0200	.DOORS LEFT SIDE	6-3
1350531-0100	.DOORS RIGHT SIDE	6-3
1350674-0000	.EXTENSION	12-169
1350675-0000	.GUIDE	12-169
1350676-0000	.ROLLER	12-169
1350677-0000	.GUIDE	12-169
1350678-0000	.GUIDE	12-169
1359565-0000	.NUT	5-45
1360399-0000	.PIPE HOLDER	12-17, 12-19
1366189-0000	.CABLE LVDS 6M	10-71
1366726-0000	.HOLDER	5-45
1366727-0000	.CLAMP	5-45
1367022-0000	.ALIGNMENT SCREW	8-5
1369439-0302	.PLMS ON-LINE PROGRAM	11-9
1478222-0000	.BEARING HOUSING	4-5, 4-7, 4-9, 4-11, 4-13, 4-15
1478223-0000	.BEARING HOUSING	4-5, 4-7, 4-9, 4-11, 4-13, 4-15
1478224-0000	.BEARING HOUSING	4-5, 4-7, 4-9, 4-11, 4-13, 4-15
1478225-0000	.BEARING HOUSING	4-5, 4-7, 4-9, 4-11, 4-13, 4-15
1478303-0000	.TENSION SPRING	7-47
1478659-0000	.BRACKET	9-25, 9-27
1478661-0000	.CABLE SERIAL	10-71
1478717-0200	.VALVE GROUP	6-15, 6-17, 6-19
1478814-0000	.SENSOR	1-87
1484452-0000	.SHAFT	3-25
1484453-0000	.SPACER	3-25
1484454-0000	.ROCKER ARM	3-25
1484455-0000	.SPACER	3-25
1484456-0000	.SHAFT	3-25
1484457-0000	.BRACKET	3-25
1484461-0000	.SPACER	3-25
1484486-0000	.SPRING	7-15
1484791-0000	.SCALE	3-9, 3-11, 3-13, 3-15
1484792-0000	.SCALE	3-9, 3-11, 3-13, 3-15
1487430-0000	.COVER	10-83, 10-85, 10-91, 10-93, 10-95, 10-97, 10-99, 10-101, 10-103
1487431-0000	.GASKET	10-83, 10-85, 10-91, 10-93, 10-95, 10-97, 10-99, 10-101, 10-103
1487447-0100	.FUSE	10-109, 10-111
1490113-0000	.LINK HEAD	3-29, 3-31
1490114-0000	.PIN	3-29, 3-31
1490116-0000	.SPACER	3-29, 3-31
1490117-0000	.NUT	3-29, 3-31
1490118-0000	.LINK	3-29, 3-31
1490119-0000	.SHAFT	3-29, 3-31
1490120-0100	.DISCONNECTION LINK LEFT	3-3
1490133-0000	.SPACER	3-29, 3-31
1490235-0000	.VOLUME CAM	4-61, 4-63
1490236-0000	.VOLUME CAM	4-61, 4-63
1490237-0000	.VOLUME CAM, WIDE	4-61, 4-63
1490238-0000	.VOLUME CAM, WIDE	4-61, 4-63
1490239-0000	.VOLUME CAM	4-61, 4-63
1490240-0000	.VOLUME CAM	4-61, 4-63
1490407-0000	.WASHER	1-47
1490804-0000	.HOLDER	7-19
1490839-0000	.PIPE	1-21, 1-23
1490840-0000	.PIPE	1-21, 1-23
1490928-0000	.SHAFT	5-63
1490931-0000	.WHEEL	4-29
1490932-0000	.SHAFT	4-29
1498194-0000	.SPACER	3-29, 3-31
1498216-0000	.LID	5-13, 5-15, 5-17, 5-19, 5-21
1498217-0000	.HEATING CHAMBER	5-13, 5-15, 5-17, 5-19, 5-21
1498218-0000	.PIPE	5-13, 5-15, 5-17, 5-19, 5-21
1498219-0000	.PIPE	5-13, 5-15, 5-17, 5-19, 5-21
1498220-0000	.PIPE	5-13, 5-15, 5-17, 5-19, 5-21
1498221-0000	.PIPE	5-13, 5-15, 5-17, 5-19, 5-21
1498222-0000	.PLATE	5-13, 5-15, 5-17, 5-19, 5-21
1498223-0000	.PLATE	5-13, 5-15, 5-17, 5-19, 5-21
1498224-0000	.PLATE	5-13, 5-15, 5-17, 5-19, 5-21
1498233-0000	.GASKET	5-13, 5-15, 5-17, 5-19, 5-21
1498245-0000	.SUPPORTING ARM	5-37
1498748-0000	.MOUNTING PLATE	7-23, 7-25, 7-27, 7-29
1498749-0000	.DOOR	7-31
1498750-0000	.DOOR	7-31

Part No	Description	Page No
1498751-0200	.DOOR	7-5, 7-7
1498753-0100	.MAGAZINE HOLDER	7-5, 7-7
1498756-0100	.BENDING ROLLER	7-55
1498757-0000	.FLANGE	7-9
1498758-0000	.AXLE PIN	7-9
1498759-0000	.ANGLE HOLDER	7-57
1498761-0000	.MAGAZINE HOLDER	7-9
1498762-0000	.AXLE PIN	7-23, 7-25, 7-27, 7-29
1498763-0000	.JOINT PIECE	7-57
1498764-0000	.COVER	7-23, 7-25, 7-27, 7-29
1498765-0000	.AXLE PIN	7-35, 7-37
1498766-0000	.LOWER PLATE	7-57
1498767-0000	.SIDE PIECE	7-57
1498768-0000	.LOWER PLATE	7-57
1498769-0000	.WALL	7-57
1498771-0000	.HOLDER	7-57
1498773-0000	.CANTILEVER	7-35, 7-37
1498775-0000	.BOX BRACKET	7-23, 7-25, 7-27, 7-29
1498777-0000	.GUIDE HOLDER	7-35, 7-37
1498778-0000	.SHAFT	7-35, 7-37
1498780-0000	.BACK COVER	7-59
1498819-0000	.COOLING PLATE	10-27, 10-49, 10-51, 10-53, 10-55, 10-57
1499024-0000	.BAR	7-49
1499026-0000	.SHAFT	7-49
1499027-0000	.BRACKET	7-49
1499060-0000	.HOLDER	6-61
1499061-0000	.PILLAR	6-61
1499062-0000	.PILLAR	6-61
1499371-0000	.JOINT PLATE	7-57
1499477-0100	.WEB TUNNEL	7-3
1499480-0100	.MOUNTING PLATE	7-5, 7-7
1499481-0000	.ROLLER	7-23, 7-25, 7-27, 7-29
1499483-0000	.PANE	7-35, 7-37
1499484-0100	.TUNNEL FRAME	7-55
1499485-0000	.TRANSPORT BRACKET	7-55
1499486-0000	.TOP COVER	7-59
1499511-0000	.PANEL	7-31
1499512-0000	.PIN	7-23, 7-25, 7-27, 7-29, 7-59
1499513-0000	.NUT PLATE	7-59
1499514-0000	.E-HINGE	7-23, 7-25, 7-27, 7-29, 7-59
1499515-0000	.SHAFT	7-13
1499517-0000	.SHAFT	7-65
1499642-0201	.TPIH GENERATOR	10-143
1499674-0000	.SPACER	12-155
1499899-0000	.INSULATION CLOTH	6-61
1511000-0000	.PLATE	7-49
1511001-0000	.SHAFT	7-49
1511002-0000	.HOLDER	7-49
1511003-0000	.WEIGHT	7-49
1511021-0000	.SHAFT	5-7, 5-9
1511069-0100	.TUBE FOLDING DEVICE	4-3
1511291-0000	.CURVE	5-81
1511293-0000	.BRACKET	5-81
1511294-0000	.CLEANING PIPE	5-81
1511307-0000	.ROLLER	7-65
1511308-0000	.NUT PLATE	7-57
1511310-0000	.NUT	7-57, 7-65
1511311-0000	.GLASS PANE	7-59
1511314-0000	.DAMPER BRACKET	7-59
1511315-0000	.SLIDE BLOCK	7-59
1511317-0000	.PANE	7-59
1511318-0000	.SPACER	7-59
1511319-0100	.TUNNEL COVER	7-55
1511320-0000	.STRIP	7-57
1511323-0000	.STRIP ADHESIVE	7-31
1511324-0000	.SPRING	7-59
1511403-0100	.SUPPORT ROLLER	4-3
1511404-0000	.ECCENTRIC SHAFT	4-65
1511405-0001	.BRACKET	4-65
1511405-0002	.BRACKET	4-65
1511405-0003	.BRACKET	4-65
1511405-0004	.BRACKET	4-65
1511406-0000	.BRACKET	4-65
1511407-0000	.BRACKET	4-65
1511437-0000	.BRACKET	2-35, 2-37
1511460-0000	.PIPE 1050	7-67
1511461-0000	.PIPE 1051	7-67
1511462-0000	.STRAIGHT PIPE	7-67
1511463-0000	.PIPE HOLDER	7-67
1511464-0000	.PIPE HOLDER	7-67
1511487-0000	.STUD SCREW	5-65
1511557-0000	.STUD SCREW	12-155
1511572-0000	.CLIP	8-51, 8-53, 12-27, 12-29
1511600-0000	.SPACER	1-87

Part No	Description	Page No
1511609-0000	.COVER	6-7
1511610-0000	.COVER	6-7
1511611-0000	.GASKET	6-7
1511612-0000	.GASKET	6-7
1511613-0000	.LOCKING ARM	6-5, 6-7
1511614-0000	.LOCKING ARM	6-5
1511681-0000	.LOCKING ARM	6-7
1511683-0000	.PIPE	6-67
1511701-0000	.FILTER	6-69
1511773-0000	.CONNECTOR	6-71
1511774-0000	.PIPE	6-59
1511775-0000	.SEPARATOR	6-77, 6-79
1511779-0200	.COMPONENT PLATES	10-3, 10-5
1511780-0000	.COVER	10-133
1511782-0000	.BOX	10-133
1511784-0100	.POWER CABLE INLETS	10-75, 10-77
1511785-0100	.CONTROL CABLE INLETS	10-75, 10-77
1511786-0100	.TOWER CABLE INLETS	1-143, 1-145, 1-147, 1-149, 1-151, 1-153
1511787-0100	.STRIP APPLICATOR CABLE INLETS	10-89
1511788-0100	.POWER CONNECTOR PLATE	10-75, 10-77
1511789-0100	.CONTROL CONNECTOR PLATE	10-75, 10-77
1511790-0200	.DOOR	10-3, 10-5
1511791-0200	.DOOR	10-75, 10-77
1511793-0000	.CABLE	10-71
1511795-0200	.CABINET	10-3, 10-5
1511796-0200	.DOOR	10-3, 10-5
1511798-0000	.FRAME	10-89
1511799-0200	.DOOR	10-3, 10-5
1511800-0100	.POWER SIDE,BOTTOM TERMINAL BLOCK	10-13, 10-15, 10-17
1511801-0100	.SOLID STATE RELAY RAIL 1	10-13, 10-15, 10-17
1511802-0200	.TERMINAL BLOCK	10-13, 10-15, 10-17
1511803-0100	.RELAYS RAIL	10-13, 10-15, 10-17
1511804-0100	.LOGIC SIDE,TOP TERMINAL BLOCK	10-13, 10-15, 10-17
1511805-0100	.RACK	10-13, 10-15, 10-17
1511806-0100	.X300	10-133
1511808-0100	.FREQUENCY CONVERTER EARTH BAR	10-13, 10-15, 10-17
1511810-0200	.DOOR	10-3, 10-5
1511811-0200	.DOOR	10-3, 10-5
1511813-0000	.WINDOW	10-121
1511814-0200	.DOOR	10-3, 10-5
1511815-0000	.DOOR	10-123, 10-125
1511817-0000	.CABLE DUCT	10-123, 10-125
1511819-0200	.DOOR	10-3, 10-5
1511820-0200	.DOOR	10-3, 10-5
1511821-0200	.BOX	10-3, 10-5
1511822-0200	.RAIL	10-109, 10-111
1511823-0200	.RAIL	10-109, 10-111
1511824-0200	.RAIL	10-13, 10-15, 10-17
1511825-0100	.PLC RACK 1	10-13, 10-15, 10-17
1511826-0100	.PLC RACK 2	10-13, 10-15, 10-17
1511827-0100	.PLC RACK 3	10-13, 10-15, 10-17
1511828-0100	.X008	10-13, 10-15, 10-17
1511829-0100	.POWER SIDE,TOP TERMINAL BLOCK	10-13, 10-15, 10-17
1511830-0100	.EXTERNAL DOOR TERMOREGULATORS	10-3, 10-5
1511831-0000	.PLATE	10-79
1511832-0000	.PLATE	10-91, 10-93, 10-95, 10-97, 10-99, 10-101, 10-103
1511833-0000	.GASKET	10-91, 10-93, 10-95, 10-97, 10-99, 10-101, 10-103
1511834-0200	.RAIL	10-13, 10-15, 10-17
1511835-0000	.PLATE	1-155, 1-157
1511836-0000	.GASKET	1-155, 1-157
1511837-0000	.PLATE	10-83, 10-85
1511838-0000	.GASKET	10-83, 10-85
1511839-0000	.PLATE	10-87
1511840-0000	.GASKET	10-87
1511841-0000	.GASKET	10-79
1511842-0000	.PLATE	10-81
1511843-0000	.GASKET	10-81
1511887-0000	.DISTRIBUTOR	5-71
1512128-0000	.PLUG	5-23
1512129-0000	.BRACKET	5-23
1512133-0000	.STOP	5-23
1512283-0000	.CONNECTION BOX	7-33
1512284-0100	.ANGLE ENCODER	3-3
1512286-0100	.CRANK	3-3
1512304-0200	.HYDRAULIC SYSTEM	6-3
1512305-0100	.MOTORIZED DESIGN CONTROL SYSTEM, LEFT	4-3
1512306-0100	.MOTORIZED DESIGN CONTROL SYSTEM, RIGHT	4-3
1512322-0000	.COPPER BRAID	10-41, 10-43, 10-45
1512350-0000	.PLATFORM	2-49, 2-51
1512351-0000	.PLATFORM	2-49, 2-51
1512352-0000	.RAIL	7-33
1512353-0000	.PIPE	6-93, 6-95
1512354-0000	.BRACKET	3-27
1512355-0000	.ECCENTRIC SHAFT	3-27

Part No	Description	Page No
1512356-0000	.CONNECTION DEVICE	1-95, 1-97
1512377-0000	.COVER	1-67, 1-69
1512411-0000	.PIPE	1-67, 1-69
1512440-0000	.BRACKET	5-81
1512442-0000	.CONNECTING PIPE	5-37
1512443-0000	.PLATE CHOKE	5-41
1512444-0000	.GUIDE RAIL	5-41
1512448-0000	.PIPE CONNECTION	5-37
1512450-0001	.TEMPLATE	12-141
1512450-0002	.TEMPLATE	12-141
1512450-0003	.TEMPLATE	12-141
1512450-0004	.TEMPLATE	12-141
1512453-0001	.TEMPLATE	12-137
1512453-0002	.TEMPLATE	12-137
1512453-0003	.TEMPLATE	12-137
1512453-0004	.TEMPLATE	12-137
1512453-0005	.TEMPLATE	12-137
1512453-0006	.TEMPLATE	12-137
1512453-0007	.TEMPLATE	12-137
1512453-0008	.TEMPLATE	12-137
1512453-0009	.TEMPLATE	12-137
1512453-0010	.TEMPLATE	12-137
1512453-0011	.TEMPLATE	12-137
1512486-0000	.MACHINE BODY	6-53
1512583-0000	.ROLLER	7-13, 7-15, 7-23, 7-25, 7-27, 7-29, 7-35, 7-37, 7-43, 7-51, 7-53
1512631-0000	.CHECKER PLATE	2-49, 2-51
1512632-0000	.CHECKER PLATE	2-49, 2-51
1512633-0000	.CHECKER PLATE	2-49, 2-51
1512635-0000	.RAILING	2-63
1512636-0000	.RAILING	2-63
1512637-0000	.RAILING	2-63
1512640-0000	.TOE PLATE	2-49, 2-51
1512641-0000	.TOE PLATE	2-49, 2-51
1512642-0000	.TOE PLATE	2-49, 2-51
1512643-0000	.TOE PLATE	2-49, 2-51
1512660-0200	.PLATFORM	2-3
1512666-0000	.TOE PLATE	2-49, 2-51
1512667-0000	.CONNECTION BOX	2-19
1512805-0000	.CABINET (SMALL)	6-71
1512806-0000	.PIPE	6-29
1512826-0000	.DOOR	6-5
1512829-0000	.DOOR	6-7
1512830-0000	.DOOR	6-7
1512831-0000	.DOOR	6-7
1512840-0000	.BRACKET	2-19
1512845-0000	.CHECKER PLATE	2-49, 2-51
1512846-0000	.CHECKER PLATE	2-49, 2-51
1512847-0000	.BRACKET	2-49, 2-51
1512848-0000	.BRACKET	9-17
1512851-0000	.COVER	2-49, 2-51
1517058-0000	.GASKET	6-69
1517059-0000	.SCREW	12-45
1517060-0000	.TOOL	12-45
1517065-0100	.WEB GUIDE	7-55
1517066-0000	.PIVOT ARM	7-61
1517067-0000	.SPRING HOLDER	7-61
1517068-0000	.PILLAR	7-61
1517069-0000	.CLAMP PLATE	7-61
1517070-0000	.BEARING SEAT	7-61
1517071-0000	.BOW CLAMP	7-61
1517072-0000	.PLATE	6-9
1517073-0000	.PLATE	6-9
1517074-0000	.PLATE	6-9
1517075-0000	.PLATE	6-9
1517076-0000	.PLATE	6-9
1517077-0000	.PLATE	6-9
1517181-0000	.GASKET	6-93, 6-95
1517182-0000	.SPACER	6-5, 6-7
1517230-0000	.BRACKET	3-7
1517231-0000	.RUBBER SHIM	3-7
1517248-0000	.BRACKET	2-47, 2-59
1517249-0000	.BRACKET	2-49, 2-51
1517252-0000	.BOLT Ã˜20H7	6-53
1517268-0000	.CABLE TRENCH	1-143, 1-145, 1-147, 1-149, 1-151, 1-153
1517269-0000	.CABLE TRENCH	1-143, 1-145, 1-147, 1-149, 1-151, 1-153
1517270-0000	.LID	1-143, 1-145, 1-147, 1-149, 1-151, 1-153
1517271-0000	.LID	1-143, 1-145, 1-147, 1-149, 1-151, 1-153
1517293-0000	.ROLLER	7-23, 7-25, 7-27, 7-29
1517464-0000	.SIGN	7-23, 7-25, 7-27, 7-29
1517487-0000	.PIPE	6-93, 6-95
1517488-0000	.PIPE	6-93, 6-95
1517489-0000	.PIPE	6-93, 6-95
1517490-0000	.INFERIOR HOLDER	6-93, 6-95
1517491-0000	.INFERIOR HOLDER	6-93, 6-95

Part No	Description	Page No
1517492-0000	.GASKET	6-69
1517493-0000	.PIPE	1-91, 1-93
1517495-0000	.PIPE	1-91, 1-93
1517504-0000	.AIR NOZZLE	5-13, 5-15, 5-17, 5-19, 5-21
1517505-0000	.AIR NOZZLE	5-13, 5-15, 5-17, 5-19, 5-21
1517506-0000	.SHIM	5-63
1517510-0000	.PIPE	5-83
1517517-0000	.TEMPLATE	12-135
1517518-0001	.CLAMP	12-135
1517518-0002	.CLAMP	12-135
1517518-0003	.CLAMP	12-135
1517519-0000	.PLATE	5-71
1517523-0000	.BLOCK	5-81
1517534-0000	.RUNNER RING	7-35, 7-37
1517535-0000	.STEERING	7-35, 7-37
1517651-0100	.SOLID STATE RELAY RAIL 2	10-13, 10-15, 10-17
1517652-0100	.SOLID STATE RELAY RAIL 3	10-13, 10-15, 10-17
1517653-0100	.EXTERNAL DOOR FUSES	10-3, 10-5
1517659-0100	.MODEM	10-71
1517663-0000	.DOOR	10-137
1517664-0000	.FRAME	10-105, 10-107, 10-137, 10-139
1517665-0000	.WINDOW	10-137
1517667-0000	.DOOR	10-107, 10-139
1517675-0000	.SPACER	10-27, 10-49, 10-51, 10-53, 10-55, 10-57
1517676-0000	.SPACER	1-155, 1-157, 10-91, 10-93, 10-95, 10-97, 10-99, 10-101, 10-103
1517677-0100	.COOLER	10-3, 10-5
1517678-0200	.TPIH GENERATOR	10-3, 10-5
1517694-0000	.END BLOCK	10-75, 10-77
1517697-0000	.PROTECTION	10-75, 10-77
1517698-0000	.PROTECTION	10-75, 10-77
1517699-0000	.SUPPORT	10-75, 10-77
1517700-0000	.EDGE GUIDE	10-75, 10-77
1517751-0000	.SHAFT	7-21
1517753-0000	.ADJUSTING NUT	7-61
1517983-0000	.BRACKET	3-27
1517984-0000	.SHAFT	3-27
1517985-0000	.SETTING RING	3-27
1517986-0000	.SCREW BUSHING	3-27
1519086-0100	.LAMP	2-3
1519117-0100	.VOLUME ADJUSTER	4-3
1519118-0100	.VOLUM CURVE PIECE	4-59
1519133-0000	.JOINT	4-61, 4-63
1519134-0000	.JOINT	4-61, 4-63
1519214-0000	.CARRIER	4-25
1519215-0000	.BEARING HOUSING	4-5, 4-7, 4-9, 4-11, 4-13, 4-15
1519216-0000	.CARRIER RULER	4-5, 4-7, 4-9
1519219-0000	.CARRIER	4-5, 4-7, 4-9
1519227-0000	.STOP	4-37, 4-39
1519228-0000	.STOP	4-41, 4-43
1519230-0000	.CARRIER	4-27
1519231-0000	.CARRIER RULER	4-11, 4-13, 4-15
1519307-0000	.AIR NOZZLE	5-13, 5-15, 5-17, 5-19, 5-21
1519308-0000	.AIR NOZZLE	5-13, 5-15, 5-17, 5-19, 5-21
1519313-0000	.AIR NOZZLE	5-13, 5-15, 5-17, 5-19, 5-21
1519314-0000	.AIR NOZZLE	5-13, 5-15, 5-17, 5-19, 5-21
1519318-0000	.AIR NOZZLE	5-13, 5-15, 5-17, 5-19, 5-21
1519319-0000	.AIR NOZZLE	5-13, 5-15, 5-17, 5-19, 5-21
1519374-0001	.CARRIER	4-17, 4-19, 4-21, 4-23
1519374-0002	.CARRIER	4-17, 4-19, 4-21, 4-23
1519375-0001	.SHAFT	4-17, 4-19, 4-21, 4-23
1519376-0000	.AXLE PIN	4-17, 4-19, 4-21, 4-23
1519377-0000	.WASHER	4-17, 4-19, 4-21, 4-23
1519380-0000	.PIPE	1-137
1519381-0000	.PIPE	1-137
1519382-0000	.PIPE	1-137
1519383-0000	.PIPE	1-137
1519384-0000	.PIPE	1-137
1519385-0000	.PIPE	1-137
1519386-0000	.PIPE	1-137
1519387-0000	.PIPE	1-137
1519388-0000	.PIPE	1-137
1519389-0000	.TANK	6-67
1519390-0000	.PIPE(FOR 60HZ)	6-81, 6-83
1519391-0000	.PIPE BEND	6-81, 6-83
1519392-0000	.SCRUBBER	6-81, 6-83
1519393-0000	.PLATE	6-81, 6-83
1519394-0000	.PIPE	6-81, 6-83
1519401-0000	.SUCTION PIPE	1-129
1519402-0000	.SUCTION PIPE	1-129
1519403-0000	.SUCTION PIPE	1-129
1519417-0000	.STAIR	5-79
1519418-0000	.PLATE	5-79
1519421-0000	.BUSHING	5-79
1519422-0000	.BUSHING	5-79

Part No	Description	Page No
1519423-0000	.SUPPORT	5-79
1519424-0000	.SUPPORT	5-79
1519425-0000	.SPACER	5-79
1519426-0100	.STAIR	5-75
1519427-0100	.VOLUME FLAP	4-3
1519482-0000	.PIPE	1-43, 1-45
1519483-0000	.HEATING PIPE	1-43, 1-45
1519484-0000	.SUPPORT	1-43, 1-45
1519536-0000	.CARRIER	4-11, 4-13, 4-15
1519576-0000	.PIPE	6-93, 6-95
1519601-0000	.BUSHING	1-43, 1-45
1519602-0200	.RAILING	2-3
1519663-0200	.PIPE WORK-HYDRAULIC	6-3
1519668-0000	.PIPE HOLDER	6-97
1519669-0000	.PIPE HOLDER	6-97
1519670-0000	.PIPE HOLDER	6-97
1519671-0000	.PIPE HOLDER	6-97
1519758-0000	.CABLE DUCT	6-11
1519759-0000	.CABLE DUCT	6-11
1519760-0000	.CABLE DUCT	6-11
1519761-0000	.CABLE DUCT	6-11
1519762-0000	.CABLE DUCT	6-11
1519763-0000	.CABLE DUCT	6-11
1519764-0000	.SPACER	6-11
1519765-0001	.SUPPORT	6-11
1519765-0002	.SUPPORT	6-11
1519934-0000	.PIPE	1-37
1519936-0000	.PIPE	1-67, 1-69
1519937-0000	.1REGULATOR BODY	1-87
1520078-0000	.INDUCTOR	4-45, 4-47, 4-71, 9-41
1520577-0001	.DOLLY	4-5, 4-7, 4-9, 4-11, 4-13, 4-15, 4-71, 9-41
1520972-0000	.TPO-BAR	9-3
1523049-0000	.PIPE	1-131
1523050-0000	.PIPE	1-131
1523051-0000	.PIPE	1-131
1523052-0000	.PIPE	1-131
1523053-0000	.PIPE	1-131
1523057-0000	.AP-VALVE-BODY (51-38)	1-75
1523058-0000	.TANK	6-61
1523059-0000	.HOLDER	6-61
1523060-0000	.FILLER TUBE	6-61
1523061-0000	.FLANGE	6-65
1523062-0000	.FILLING PIPE	6-69
1523063-0000	.TUBE	6-69
1523064-0000	.RETURN PIPE	6-69
1523065-0000	.PLATE	6-69
1523066-0000	.GASKET	6-69
1523067-0000	.PLATE	6-69
1523068-0000	.PIPE	6-69
1523069-0000	.PIPE CONNECTION	6-69
1523151-0000	.BRACKET	3-33
1523152-0000	.ANGLE ENCODER	3-33
1523158-0001	.SHIM	1-49, 1-51
1523158-0002	.SHIM	1-49, 1-51
1523158-0003	.SHIM	1-49, 1-51
1523210-0100	.MOTOR	3-3
1523211-0000	.WASHER	3-7
1523215-0000	.TIMING PULLEY	3-7
1523222-0000	.PLATE	1-141
1523223-0000	.NUT	1-141
1523224-0000	.NUT	1-141
1523225-0000	.FASTENING PLATE	1-141
1523228-0000	.FLANGE	1-47
1523314-0000	.CREASE BAR	8-25, 8-27, 8-29
1523315-0000	.SPACER	8-25, 8-27, 8-29
1523364-0000	.LID	1-133
1523365-0000	.PIPE	1-133
1523366-0000	.PIPE	1-133
1523383-0000	.CONNECTION PLATE	2-31
1523384-0000	.CONNECTION PLATE	2-31
1523431-0000	.PIPE	2-31
1523432-0000	.PIPE	2-31
1523433-0000	.PIPE	2-31
1523434-0000	.PIPE	2-31
1523435-0000	.FRAME	10-71
1523436-0000	.DOOR	10-71
1523437-0000	.HINGE	10-71, 10-109, 10-111, 10-123, 10-125
1523438-0000	.HINGE	10-105, 10-107, 10-137, 10-139
1523439-0000	.SPACER	10-71, 10-123, 10-125
1523440-0000	.SPACER	10-71, 10-109, 10-111, 10-123, 10-125
1523441-0000	.SPACER SHEET	10-105, 10-107, 10-137, 10-139
1523442-0000	.SPACER SHEET	10-105, 10-107, 10-137, 10-139
1523443-0000	.COVER	10-123, 10-125
1523444-0000	.SPACER	10-123, 10-125

Part No	Description	Page No
1523445-0100	.SOLID STATE RELAY RAIL 4	10-13, 10-15, 10-17
1523446-0100	.SOLID STATE RELAY RAIL 5	10-13, 10-15, 10-17
1523448-0000	.FRAME	10-141
1523449-0000	.SLIDE	10-141
1523450-0000	.SLIDE	10-141
1523451-0000	.SLIDE	10-141
1523452-0000	.SUPPORT	10-141
1523453-0000	.SUPPORT	10-141
1523454-0000	.SCREW	10-141
1523455-0000	.FRAME	10-143
1523456-0000	.SLIDE	10-143
1523459-0000	.SUPPORT	10-75, 10-77
1523464-0000	.GASKET	10-75, 10-77
1523494-0000	.PILLAR	1-49, 1-51
1523754-0000	.MACHINE BODY	2-13
1523755-0000	.COVERING PLATE	2-13
1523756-0000	.COVER	2-13
1523757-0000	.PLATE	2-13
1523758-0000	.PLATE	2-13
1523759-0000	.COVER	2-13
1523760-0000	.FRONT PLATE	2-13
1523828-0000	.SPACER	3-19, 3-21
1523829-0100	.DISTRIBUTOR BLOCK	2-23, 2-25, 2-27
1523832-0000	.HOSE HOLDER	2-31
1523886-0000	.SPACER PLATE	2-31
1523887-0000	.SPACER PLATE	2-31
1523924-0000	.CATCH	4-5, 4-7, 4-9, 4-11, 4-13, 4-15
1523947-0000	.EARTH BAR	10-37
1523948-0000	.EARTH BAR	10-67
1523957-0000	.SPACER	10-105, 10-107, 10-137, 10-139
1523960-0000	.SPACER	10-75, 10-77
1523961-0100	.PLATE	10-3, 10-5
1523963-0000	.SUPPORT PLATE	10-145
1523968-0000	.HANDLE	10-71, 10-109, 10-111, 10-123, 10-125
1523969-0000	.DOOR	10-105
1523971-0000	.CONNECTION BOX	10-105, 10-107
1523972-0100	.ELECTRICAL MATERIALS	10-3, 10-5
1523973-0000	.FRAME	10-141
1523974-0000	.SUPPORT	10-75, 10-77
1524319-0100	.CABLE DUCT	6-3
1524477-0100	.CUTTING TABLE	7-5, 7-7
1524481-0000	.SEALING BLOCK	7-21
1524653-0000	.BRACKET	1-59
1524654-0000	.ARM	1-59
1524655-0000	.PROTECTION PLATE	1-59
1524662-0000	.AIR NOZZLE	1-39
1524663-0000	.TUBE 55	1-95, 1-97
1524664-0000	.TUBE 861	1-95, 1-97
1524665-0000	.TUBE 860	1-95, 1-97
1524666-0000	.TUBE 230	1-95, 1-97
1524667-0000	.TUBE 231	1-95, 1-97
1524669-0000	.PIPE	1-95, 1-97
1524670-0000	.PIPE	1-95, 1-97
1524673-0000	.BRACKET	1-95, 1-97
1524674-0000	.REDUCTION SLEEVE	1-95, 1-97
1524780-0000	.PLATE	1-61
1524805-0000	.PLATE	1-61
1524814-0000	.BRACKET	1-177
1524829-0000	.PLATE	1-177
1524830-0000	.SHAFT	1-177
1524835-0000	.TEMPLATE	12-91
1524836-0000	.SPACER	12-91
1532440-0000	.FOLDING FLAP	4-5, 4-7, 4-9, 4-11, 4-13, 4-15
1532441-0000	.FOLDING FLAP	4-5, 4-7, 4-9, 4-11, 4-13, 4-15
1532526-0000	.ROLLER	4-65
1532527-0000	.TEMPLATE	12-77, 12-79
1532584-0200	.MACHINE BODY	2-3
1538039-0000	.CURVE	4-53
1538089-0000	.PLATE	6-9
1538096-0000	.CALENDER ROLLER	1-57
1538097-0000	.CALENDER ROLLER	1-57
1538098-0000	.CLAMP	1-57
1538103-0000	.FORK	1-57
1538107-0000	.SHAFT	7-61
1538109-0000	.COMPRESSION SPRING	4-35
1538150-0000	.ROLLER	1-125, 1-127
1538151-0000	.COUNTER ROLLER	1-125, 1-127
1538212-0000	.FUSE BOARD	10-139
1538219-0000	.SWITCH BRACKET	7-23, 7-25, 7-27, 7-29
1538473-0000	.SEALING BLOCK	7-19
1538756-0000	.VOLUME BULGE	4-5, 4-7, 4-9, 4-11, 4-13, 4-15
1538757-0000	.TOOL	12-77, 12-79
1538758-0000	.SPACER	1-181
1538868-0000	.BRACKET	2-69, 6-5, 6-7

Part No	Description	Page No
1538906-0000	.PIPE	6-87
1538908-0000	.PIPE	6-87
1538924-0000	.RAILING	2-63
1538942-0000	.CARRIER	4-17, 4-19, 4-21, 4-23
1538948-0000	.ROLLER	4-59
1538949-0000	.ECCENTRIC	4-59
1539101-0000	.BRACKET	4-61, 4-63
1539102-0000	.ARM	4-61, 4-63
1539103-0000	.ARM	4-61, 4-63
1539104-0000	.SPINDLE	4-61, 4-63
1539105-0000	.BOX	4-59
1539106-0000	.SHAFT	4-59
1539107-0000	.TIMING BELT	4-59
1539108-0000	.TIMING BELT PULLEY	4-59
1539109-0000	.SHAFT	4-59
1539110-0000	.LID	4-59
1539111-0000	.SUPPORT	4-59
1539112-0000	.SUPPORT	4-59
1539113-0000	.COVER	2-57
1539120-0000	.VOLUME BULGE	4-45, 4-47
1539238-0000	.PIPE	1-67, 1-69
1539250-0000	.SPACER	1-95, 1-97
1539256-0000	.TOOTHED PULLEY	5-57
1539260-0000	.TOOTHED PULLEY	5-57
1539261-0000	.WASHER	5-57, 5-65
1539265-0100	.OUTFEED UNIT	5-3
1539266-0000	.CAM	5-53
1539267-0000	.DRUM	5-53
1539268-0000	.CARRIER	5-53
1539301-0000	.TOOTHED PULLEY	5-65
1539302-0000	.SPACER	5-65
1539332-0000	.PIPE	6-87
1539593-0000	.COVER	4-45, 4-47
1539596-0000	.PIPE	1-17
1539597-0000	.T-PIECE	1-15
1539599-0100	.HEAT EXCHANGER	1-7
1539600-0000	.SUPPORT	1-19
1539601-0000	.CLEANING PIPE	1-7
1539602-0100	.CONNECTION SYSTEM	1-7
1539603-0000	.PIPE	1-17
1539604-0000	.PIPE	1-7
1539605-0000	.COOLING PIPE	1-7
1539606-0002	.SPRAY NOZZLE	1-15
1539606-0003	.SPRAY NOZZLE	1-15
1539606-0004	.SPRAY NOZZLE	1-15
1539606-0005	.SPRAY NOZZLE	1-15
1539766-0100	.DISCONNECTION LINK RIGHT	3-3
1539920-0200	.PENDULUM	1-3, 1-5
1539947-0000	.PIPE	5-81
1539948-0000	.SHAFT	5-43
1539949-0100	.FIXING UNIT	5-3
1539950-0000	.WASHER	5-43
1539951-0000	.HOUSE	5-43
1539953-0000	.PROTECTIVE COVER	5-37
1539956-0000	.PLATE	5-55
1539957-0000	.PLATE	5-37
1539960-0000	.MACHINE BODY	5-75
1539965-0000	.PLATE	5-43
1539966-0000	.BRACKET	5-13, 5-15, 5-17, 5-19, 5-21
1539967-0000	.GASKET	5-13, 5-15, 5-17, 5-19, 5-21
1539968-0200	.FLAP HEATER	5-3
1539969-0200	.GUIDE	5-3
1539970-0200	.FOLDING BAR	5-3
1539995-0200	.CANTILEVER	5-3
1539996-0000	.SHAFT	1-179
1539997-0000	.AXLE SUPPORT	1-61
1548000-0200	.FRAME	5-3
1548003-0000	.LINK	1-177
1548004-0001	.LINK	1-177
1548004-0002	.LINK	1-177
1548005-0000	.SHAFT	1-177
1548006-0000	.ADJUSTING SCREW	1-177
1548010-0200	.PENDULUM ROLLER	1-177
1548052-0000	.ROLLER	1-179
1548053-0000	.COVER	1-179
1548056-0000	.AXLE SUPPORT	1-47
1548059-0000	.AXLE SUPPORT	1-177
1548141-0000	.WASHER	1-177
1548142-0000	.BUSHING	1-177
1548143-0000	.END PLATE	1-61
1548147-0000	.PLATE	1-177
1548148-0000	.PLATE	1-177
1548152-0000	.PIN	1-177
1548155-0000	.COAXIAL CABLE	4-55, 4-57

Part No	Description	Page No
1548156-0000	.PIPE	6-93, 6-95
1548225-0000	.CLAMP	1-177
1548275-0000	.SEAL COVER	1-47
1548276-0000	.LEVER	1-177
1548277-0000	.FLANGE	1-177
1548284-0000	.ROLLER	1-47
1548313-0000	.FORCE LIMITING DEVICE	3-29, 3-31
1548315-0000	.PIPE	1-131
1548316-0000	.PIPE	6-69
1548332-0000	.PRESSURE FLANGE	1-183
1548532-0000	.LEVER	1-177
1548576-0100	.PIPE WORK	2-3
1548833-0000	.BRACKET	1-133
1548942-0000	.CUTTING JAW	4-5, 4-7, 4-9, 4-11, 4-13, 4-15
1549182-0000	.CARRIER	5-53
1549183-0000	.CARRIER	5-53
1549184-0000	.CARRIER	5-53
1549186-0000	.CARRIER	5-53
1549187-0000	.CARRIER	5-53
1549190-0000	.CARRIER	5-53
1549191-0000	.CARRIER	5-53
1549193-0000	.CARRIER	5-53
1549294-0000	.MACHINE BODY	8-5
1549295-0200	.MACHINE BODY	8-3
1549296-0200	.COVER PLATE	8-3
1549297-0000	.REEL HOLDER	8-15
1549298-0000	.REEL HOLDER	8-15
1549299-0000	.PLATE	8-11, 8-13
1549300-0100	.PAPER MAGAZINE	8-3
1549302-0000	.SHAFT	8-17, 8-19
1549303-0000	.PLATE	8-17, 8-19
1549304-0000	.ARM	8-17, 8-19
1549305-0100	.COVER	8-3
1549306-0000	.COVER	8-15
1549307-0000	.BRACKET	8-17, 8-19
1549474-0000	.SHAFT	8-17, 8-19
1549475-0000	.BRACKET	8-17, 8-19
1549476-0000	.PLATE	8-15
1549477-0000	.PLATE	8-15
1549478-0000	.PLATE	8-15
1549479-0000	.PLATE	8-15
1549480-0100	.ELECTRIC EQUIPMENT	8-3
1549481-0000	.REEL HOLDER	8-15
1549482-0000	.REEL HOLDER	8-15
1549484-0000	.PLATE	8-11, 8-13
1549485-0000	.PLATE	8-11, 8-13
1549486-0000	.PLATE	8-11, 8-13
1549487-0000	.PLATE	8-11, 8-13
1549488-0000	.PLATE	8-11, 8-13
1549489-0000	.BRACKET	8-11, 8-13
1549491-0000	.REEL HOLDER	8-15
1549492-0000	.HOLDER	8-15
1549493-0000	.HANDSPIKE	8-17, 8-19
1549540-0000	.BRACKET	4-29
1549581-0100	.VOLUME FLAP	4-3
1549584-0100	.PAPER BRAKE	8-25, 8-27, 8-29, 8-45, 8-47, 8-49
1549603-0100	.LAMP	2-3
1549608-0000	.GLASS PANE	2-9
1549930-0000	.TOOL	12-51, 12-53
1558124-0000	.FORK HEAD	4-29
1558126-0000	.PIPE	4-29
1558127-0000	.PIPE	4-29
1558128-0100	.NOZZLE	1-161, 1-163
1558129-0000	.BRACKET	4-29
1558130-0000	.BRACKET	4-29
1558313-0000	.SHAFT	8-15
1558314-0000	.BRACKET	8-15
1558315-0000	.BRACKET	8-77
1558316-0000	.BRACKET	8-77
1558317-0000	.BRACKET	8-71
1558318-0100	.CONNECTION BOX	8-77
1558319-0000	.BUSHING	8-17, 8-19
1558320-0100	.PLATFORM	8-5
1558321-0000	.COVER PLATE	8-7
1558322-0000	.JOINT BOLT	8-7
1558403-0000	.DISC	1-61
1558442-0000	.UPPER FILLING TUBE	1-141
1558443-0000	.FILLING PIPE	1-183
1558444-0000	.PRESSURE FLANGE	1-183
1558446-0000	.PRESSURE FLANGE	1-183
1558480-0100	.LIFTING CYLINDER	9-7
1558892-0000	.CONNECTION BOX	7-17
1558897-0100	.HEATING DEVICE	7-5, 7-7
1558949-0000	.PLATE	2-57

Part No	Description	Page No
1591155-1004	.PROGRAM OBJECT CODE	11-7
2500050-0000	.GLASS	8-11, 8-13
2500200-0100	.AIR INLET GROUP	6-15, 6-17, 6-19
2500201-0000	.VALVE PLATE	6-41, 6-43
2500202-0000	.PLATE	6-41, 6-43
2500203-0000	.HOLDER	6-37
2500207-0000	.BRACKET	1-181
2500214-0100	.PIPE WORK	2-49, 2-51
2500215-0000	.CABLE DUCT	2-53, 2-55
2500216-0000	.CABLE DUCT	2-53, 2-55
2500217-0000	.BRACKET	2-53, 2-55
2500218-0000	.CABLE TRENCH	2-53, 2-55
2500233-0100	.CONVEYOR	5-3
2500234-0000	.PLATE	5-45
2500235-0000	.PLATE	5-45
2500236-0000	.RAIL	5-45
2500259-0000	.BRACKET	2-57
2500260-0000	.ARM	2-57
2500261-0000	.FIXING RING	2-57
2500293-0000	.PLATE	1-165
2500294-0000	.PIPE	1-165
2500332-0100	.PIVOT ARM	2-49, 2-51
2500587-0100	.SUSPENSION ARM	8-63
2500593-0000	.BOW CLAMP	8-71
2501265-0000	.CONNECTION BOX	8-79
2501266-0000	.RAIL	8-79
2501362-0000	.CLAMP RING	8-17, 8-19
2501385-0000	.SHAFT	8-71
2501465-0100	.CONNECTION BOX	9-19
2501466-0100	.CONNECTION BOX	9-19
2501471-0100	.COUNTER	9-19
2501472-0100	.COUNTER	9-19
2501528-0200	.PLMS KIT	9-3
2501542-0000	.AXLE SUPPORT	1-47
2501547-0100	.QUEUE GUARD	9-19
2501613-0000	.SHAFT	8-17, 8-19
2501740-0100	.TEMPLATE	12-47, 12-49
2501835-0000	.SHAFT	8-73
2501836-0100	.SPLICING DEVICE	8-3
2502192-0000	.CARRIER	5-53
2502194-0000	.CARRIER	5-53
2502197-0000	.PIPE	1-95, 1-97
2502198-0000	.PIPE	1-95, 1-97
2502199-0000	.PIPE	1-95, 1-97
2502424-0200	.LUBRICATION	5-7, 5-9
2504445-0000	.PLATE	2-5, 2-7
2504449-0000	.INSERT	6-11, 10-79
2504952-0000	.PROTRACTOR	3-19, 3-21
2505236-0000	.PLATFORM	2-49, 2-51
2505282-0000	.CHECKER PLATE	2-49, 2-51
2506319-0000	.HEAD PLATE	2-5, 2-7
2506320-0000	.HEAD PLATE	2-5, 2-7
2506321-0000	.HEAD PLATE	2-5, 2-7
2506322-0000	.HEAD PLATE	2-5, 2-7
2506323-0000	.HEAD PLATE	2-5, 2-7
2506324-0000	.HEAD PLATE	2-5, 2-7
2506331-0200	.CONNECTION BOX	5-47
2506332-0000	.BOX	5-49, 5-51
2506432-0000	.LOCKING FINGER	1-183
2506433-0000	.LOCKING FINGER	1-183
2506471-0000	.BRACKET	7-47
2506472-0000	.HOLDER	7-47
2506473-0000	.BRACKET	7-47
2506474-0000	.FASTENING BRACKET	7-47
2506475-0100	.PRESSURE ROLLER	7-35, 7-37
2506478-0000	.COVER	7-23, 7-25, 7-27, 7-29
2506479-0000	.PLATE	7-31
2506480-0000	.HOLDER	7-65
2506530-0000	.LOCKING FINGER	1-183
2506608-0000	.PLATE	2-49, 2-51
2506609-0000	.PLATE	2-49, 2-51
2506638-0000	.VOLUME CAM	4-61, 4-63
2506639-0000	.VOLUME CAM	4-61, 4-63
2506640-0000	.VOLUME CAM	4-61, 4-63
2506641-0000	.VOLUME CAM	4-61, 4-63
2506642-0000	.VOLUME CAM	4-61, 4-63
2506643-0000	.VOLUME CAM	4-61, 4-63
2506644-0000	.VOLUME CAM	4-61, 4-63
2506645-0000	.VOLUME CAM	4-61, 4-63
2506790-0100	.HOLD-DOWN DEVICE	3-3
2507014-0100	.ROCKER ARM	3-23
2508118-0000	.FIXING RING	8-15
2509543-0000	.PROTECTION	8-17, 8-19
2510532-0000	.PROTECTION	1-177

Part No	Description	Page No
2510541-0000	.PRESSURE FLANGE	1-183
2510844-0100	.CONNECTION BOX	9-19
2511330-0000	.SPACER	1-9, 1-11
2511668-0000	.SUPPORT	5-45
2512787-0000	.HOLDER	4-31, 4-33
2512805-0000	.TOE PLATE	2-49, 2-51
2514018-0000	.TOP TIE PLATE	2-49, 2-51
2514041-0000	.PROTECTION	4-31
2514042-0000	.PROTECTION	4-33
2514090-0000	.FORCE PLATE	4-53
2514091-0000	.BRACKET	4-53
2514112-0000	.COVER	2-61
2514301-0000	.PRESSURE FLANGE	1-183
2514391-0000	.PIPE	6-59
2514491-0000	.METERING DEVICE	6-67
2516972-0000	.HOSE HOLDER	2-29
2517051-0000	.PIPE	6-15, 6-17, 6-19
2517066-0000	.DOLLY	9-3
2517796-0000	.TOOL	12-51, 12-53
2518102-0000	.RAIL	5-45
2518103-0000	.RAIL	5-45
2518145-0101	.FLEXBOX TETRA BRIK	10-71
2518146-0100	.TPOP PANEL 15"	2-3
2518147-0109	.PANEL UNIT 15"	2-71
2518148-0000	.PANEL	2-73
2518149-0000	.FOIL	2-73
2518157-0000	.DOOR	2-73
2518410-0000	.FLANGE	3-5
2518415-0000	.COVER PLATE	6-53
2518416-0000	.JOINT BOLT	6-53
2519460-0000	.SPRING BRACKET	3-23
2519644-0000	.BRACKET	7-23, 7-25, 7-27, 7-29
2519646-0000	.PLATE	7-59
2519647-0000	.BRACKET	7-59
2522105-0000	.HEAD PLATE	2-5, 2-7
2522106-0000	.HEAD PLATE	2-5, 2-7
2522107-0000	.HEAD PLATE	2-5, 2-7
2522108-0000	.HEAD PLATE	2-5, 2-7
2522109-0000	.HEAD PLATE	2-5, 2-7
2522110-0000	.PLATE	2-5, 2-7
2522248-0000	.BRACKET	1-61
2522249-0000	.SHAFT	1-61
2523596-0000	.COVER	7-19
2523597-0000	.SLIDER	7-21
2523598-0000	.84LICING TABLE	7-21
2523599-0000	.SUPPORT	7-21
2523600-0000	.PIN	7-21
2523601-0000	.PAD	7-21
2523703-0000	.PIPE	2-53, 2-55
2523725-0200	.PRESSURE DEVICE	5-3
2523736-0000	.SHAFT	5-7, 5-9
2523737-0000	.SHAFT	5-7, 5-9
2523738-0000	.BUSHING	5-7, 5-9
2524341-0000	.FILLING PIPE	1-183
2524342-0000	.FILLING PIPE	1-183
2524343-0000	.FILLING PIPE	1-183
2524394-0000	.BRACKET	2-45
2524476-0100	.WEB GUIDE	7-35, 7-37
2524477-0000	.ROLLER	7-49
2524478-0000	.BRACKET	7-35, 7-37, 7-39, 7-41
2524479-0000	.PLATE	7-47
2524480-0000	.PIN	7-47
2524482-0000	.BRACKET	7-47
2524484-0000	.PIN	7-47
2524485-0000	.PIN	7-47
2524579-0004	.BLOCK	5-7, 5-9
2524579-0005	.BLOCK	5-7, 5-9
2524579-0008	.BLOCK	5-7, 5-9
2524579-0010	.BLOCK	5-7, 5-9
2524579-0011	.BLOCK	5-7, 5-9
2525340-0000	.BRACKET	8-17, 8-19
2526300-0000	.DROP CHUTE	2-5, 2-7
2526301-0000	.DROP CHUTE	2-5, 2-7
2526302-0000	.DROP CHUTE	2-5, 2-7
2526303-0000	.DROP CHUTE	2-5, 2-7
2526304-0000	.DROP CHUTE	2-5, 2-7
2526305-0000	.DROP CHUTE	2-5, 2-7
2526306-0000	.DROP CHUTE	2-5, 2-7
2526307-0000	.DROP CHUTE	2-5, 2-7
2526308-0000	.DROP CHUTE	2-5, 2-7
2526309-0000	.DROP CHUTE	2-5, 2-7
2526310-0000	.DROP CHUTE	2-5, 2-7
2526311-0000	.DROP CHUTE	2-5, 2-7
2526323-0000	.LEAF SPRING	2-5, 2-7

Part No	Description	Page No
2526324-0000	.LEAF SPRING	2-5, 2-7
2526325-0000	.LEAF SPRING	2-5, 2-7
2526326-0000	.LEAF SPRING	2-5, 2-7
2526327-0000	.LEAF SPRING	2-5, 2-7
2526328-0000	.LEAF SPRING	2-5, 2-7
2526329-0000	.LEAF SPRING	2-5, 2-7
2526338-0100	.DROP CHUTE	2-3
2526341-0000	.LAMP HOLDER	8-77
2526342-0000	.BRACKET	8-77
2526343-0000	.PLATE	5-35
2526344-0000	.PLATE	5-35
2526843-0000	.CABLE TRENCH	1-143, 1-145, 1-147, 1-149, 1-151, 1-153
2526844-0000	.LID	1-143, 1-145, 1-147, 1-149, 1-151, 1-153
2526846-0000	.LID	1-143, 1-145, 1-147, 1-149, 1-151, 1-153
2526847-0000	.CABLE TRENCH	1-143, 1-145, 1-147, 1-149, 1-151, 1-153
2526848-0000	.CABLE TRENCH	1-143, 1-145, 1-147, 1-149, 1-151, 1-153
2526863-0000	.PUMP	1-21, 1-23
2527135-0000	.RAIL (TITANIUM)	4-45, 4-47
2527136-0000	.RAIL	4-45, 4-47
2527137-0000	.RAIL (TITANIUM)	4-45, 4-47
2527337-0000	.CYLINDER BRACKET	1-37
2527454-0000	.SHIM	5-7, 5-9
2527513-0000	.SIDE PIECE	2-61
2527514-0000	.SIDE PIECE	2-61
2527651-0000	.SPACER	3-5
2527652-0000	.ARM	3-5
2527706-0000	.FILLING PIPE	1-183
2527707-0000	.FILLING PIPE	1-183
2527708-0000	.PRESSURE FLANGE	1-183
2527710-0000	.FILLING PIPE	1-183
2527714-0000	.FILLING PIPE	1-183
2527715-0000	.PRESSURE FLANGE	1-183
2527717-0000	.FILLING PIPE	1-183
2527718-0000	.SPACER	1-61
2527724-0000	.CARRIER	4-5, 4-7, 4-9, 4-11, 4-13, 4-15
2528094-0000	.PIPE	1-21, 1-23
2528095-0000	.PIPE	1-129
2528199-0000	.HANDLE	5-13, 5-15, 5-17, 5-19, 5-21
2529075-0000	.RAIL	4-45, 4-47
2529564-0000	.COVER	8-77
2529646-0000	.SHAFT	7-47
2530400-0100	.TRANSMISSION UNIT	5-3
2530401-0000	.SHIM	5-7, 5-9
2531115-0000	.SCREW	8-45, 8-47, 8-49
2531996-0000	.COVER	10-13, 10-15, 10-17
2531997-0000	.SPACER	10-27, 10-49, 10-51, 10-53, 10-55, 10-57
2531998-0200	.RAIL	10-13, 10-15, 10-17
2532539-0000	.FOLDING FLAP	4-5, 4-7, 4-9, 4-11, 4-13, 4-15
2532540-0000	.FOLDING FLAP	4-5, 4-7, 4-9, 4-11, 4-13, 4-15
2532541-0000	.FOLDING FLAP	4-5, 4-7, 4-9, 4-11, 4-13, 4-15
2532542-0000	.FOLDING FLAP	4-5, 4-7, 4-9, 4-11, 4-13, 4-15
2532543-0000	.FOLDING FLAP	4-5, 4-7, 4-9, 4-11, 4-13, 4-15
2532544-0000	.BUSHING	4-5, 4-7, 4-9, 4-11, 4-13, 4-15, 4-25, 4-27
2532923-0000	.PIPE	1-21, 1-23
2538621-0100	.ROUNDED DOLLY	12-7
2540724-0000	.HOSE INSTALLATION	7-3
2540726-0000	.FINGER	7-21
2540729-0000	.WALL	7-57
2540730-0000	.STRIP	7-57
2541126-0100	.INSTALLATION ACCESSORIES	9-3
2541886-0100	.START-UP KIT	9-3
2542328-0000	.COVER	10-109, 10-111
2542329-0000	.COVER	10-109, 10-111
2543594-0200	.ELECTRICAL COMPONENTS	9-3
2544855-0000	.PIPE	1-95, 1-97
2544856-0000	.PIPE	1-95, 1-97
2544863-0000	.PIPE	1-95, 1-97
2544864-0000	.PIPE	1-95, 1-97
2544868-0000	.PIPE	1-95, 1-97
2544869-0000	.PIPE	1-95, 1-97
2544957-0000	.AXLE SUPPORT	5-57
2544958-0000	.BEARING FLANGE	5-57
2544959-0000	.PIPE	5-81
2544961-0100	.RAIL	5-3
2544962-0000	.SHAFT	5-57
2544963-0000	.SHAFT	5-57
2544964-0000	.FLANGE	5-57
2544965-0000	.TOOTHED PULLEY	5-57
2544966-0000	.PLATE	5-37
2544968-0000	.INNER RING	5-57
2544969-0000	.SPACER	5-57
2544970-0000	.FLANGE	5-57
2544971-0000	.BRACKET	5-57
2544973-0000	.CUP	5-57

Part No	Description	Page No
2544974-0000	.BLANK PLUG	5-57
2544975-0000	.SHEET	5-57
2544979-0000	.PIPE	5-83
2544980-0200	.CLEANING SYSTEM	5-3
2544981-0100	.CLEANING CIRCUIT	5-81
2545062-0000	.CLEANING PIPE	1-7
2545064-0101	.PLMS COMMON SOFTWARE	11-9
2545065-0001	.TPOP BASIC PROGRAM	11-13
2545065-1001	.MASTER CD, TPOP BASIC	11-15
2545067-0000	.DOCUMENTATION DISKETTE	11-15
2545068-0000	.LABEL CD	11-15
2545069-0000	.LABEL DISKETTE	11-15
2545070-0000	.LABEL FLEXBOX	11-15
2545071-0000	.SHORT FORM INSTRUCTION	11-15
2545080-0200	.INJECTION SYSTEM	1-7
2545083-0200	.CONTROL CABINET	1-7
2545132-0000	.TRANSITION PIPE	1-15
2545134-0000	.SPRAY NOZZLE	1-15
2545155-0000	.PLUG	1-15
2545249-0000	.TEFLON HOSE	4-25, 4-27
2545425-0000	.SPRAY PIPE	1-9, 1-11
2545426-0000	.MOUNTING PLATE	1-9, 1-11
2545427-0000	.FILLING PIPE	1-9, 1-11
2545428-0000	.RETURN PIPE	1-9, 1-11
2545429-0000	.PIPE	1-9, 1-11
2545432-0000	.CLEANING PIPE	1-7
2545667-0000	.GUIDE	5-55
2546226-0000	.SUPPORT	5-45
2546444-0000	.PIPE	1-7
2546445-0000	.AIR PIPE	1-7
2546446-0000	.PIPE	1-7
2546447-0000	.SPRAY PIPE	1-7
2546448-0000	.SUPPORT	1-9, 1-11
2546471-0000	.AIR PIPE	1-7
2546472-0000	.PIPE	1-7
2546473-0000	.FILLING PIPE	1-7
2547005-0000	.LACE	8-17, 8-19
2547006-0000	.RETURN PIPE	1-7
2547007-0000	.RETURN PIPE	1-7
2547125-0001	.WINDOWS OEM W2000 PROGRAM	11-13
2547127-0000	.DOCUMENTATION DISKETTE	11-19
2547128-0000	.LABEL CD	11-19
2547129-0000	.LABEL FLEXBOX	11-19
2547130-0000	.SHORT FORM INSTRUCTION	11-19
2547131-1005	.PLMS PERFORMANCE/PROCESS RUNTIME SW	11-7
2547217-0000	.AXLE PIN	7-23, 7-25, 7-27, 7-29
2547218-0000	.AXLE PIN	7-23, 7-25, 7-27, 7-29
2547219-0000	.AXLE PIN	7-23, 7-25, 7-27, 7-29
2547232-0000	.PIVOT ARM	2-5, 2-7
2547315-0000	.SUPPORT	1-9, 1-11
2550181-0000	.GASKET	6-69
2552073-0000	.SEAL	5-13, 5-15, 5-17, 5-19, 5-21
2552081-0000	.REDUCTION	5-13, 5-15, 5-17, 5-19, 5-21
2552527-0000	.BEARING HOUSING	4-25, 4-27
2552528-0000	.BEARING HOUSING	4-25, 4-27
2552529-0000	.BEARING HOUSING	4-25, 4-27
2552530-0000	.BEARING HOUSING	4-25, 4-27
2552531-0000	.BEARING HOUSING	4-25, 4-27
2552619-0000	.COVER	7-35, 7-37
2552620-0000	.DOOR	7-35, 7-37
2552621-0000	.HOLDER	7-35, 7-37
2552622-0000	.HOLDER	7-35, 7-37
2552624-0000	.BOX BRACKET	7-23, 7-25, 7-27, 7-29
2552628-0000	.PIN	7-49
2552630-0000	.MOUNTING PLATE	7-35, 7-37
2552631-0000	.AXLE PIN	7-43
2552632-0000	.ROLLER	7-43
2552633-0000	.ROLLER	7-43
2552679-0000	.GLASS PANE	2-65, 2-67
2552680-0200	.DOOR	2-3
2552681-0200	.DOOR	2-3
2552682-0000	.LOCKING ARM	2-65, 2-67
2552683-0000	.LOCKING ARM	2-65, 2-67
2552684-0000	.CHUTE	2-69
2552685-0000	.CHUTE	2-69
2552686-0000	.KEY	2-65, 2-67
2552687-0000	.SPACER	2-65, 2-67
2552688-0000	.GUIDE BRACKET	2-65, 2-67
2552691-0000	.DOOR	2-65
2552692-0000	.DOOR	2-67
2552694-0200	.DOOR	2-3
2552695-0200	.DOOR	2-3
2552697-0000	.LID	2-21
2552698-0000	.DISCHARGE CHUTE	2-21

Machine Type Group Description Page No

Part No	Description	Page No
2552699-0100	.DISCHARGE CHUTE	2-3
2552700-0100	.COVER PLATES	2-3
2552701-0000	.TOP SECTION	2-9
2552702-0000	.COVER	2-9
2552703-0000	.COVER	2-9
2552704-0000	.COVER PLATE	2-9
2552705-0000	.FRONT COVER	2-9
2552706-0000	.COVER	2-9
2552707-0000	.COVER PLATE	2-9
2552708-0000	.COVERING PLATE	2-9
2552709-0000	.COVERING PLATE	2-9
2552710-0000	.COVER	2-9
2552711-0000	.COVER	2-9
2552713-0000	.BUSHING	2-21
2552714-0000	.BRACKET	2-21
2552721-0000	.CAM	5-7, 5-9
2552722-0000	.AXLE PIN	5-7, 5-9
2552723-0000	.SPRING BRACKET	5-7, 5-9
2552724-0000	.SUPPORT	5-7, 5-9
2552726-0000	.GUIDE	5-7, 5-9
2552727-0000	.PLATE	5-7, 5-9
2552731-0000	.WASHER	5-7, 5-9
2552732-0000	.SPRING BRACKET	5-7, 5-9
2552734-0001	.BLOCK	5-7, 5-9
2552734-0002	.BLOCK	5-7, 5-9
2552941-0100	.TOOL	12-133
2552943-0100	.TOOL	12-133
2552944-0100	.TOOL	12-133
2552945-0001	.TEMPLATE	12-139
2552945-0002	.TEMPLATE	12-139
2552945-0003	.TEMPLATE	12-139
2552945-0004	.TEMPLATE	12-139
2552945-0005	.TEMPLATE	12-139
2552945-0006	.TEMPLATE	12-139
2552945-0007	.TEMPLATE	12-139
2552945-0008	.TEMPLATE	12-139
2552945-0009	.TEMPLATE	12-139
2552945-0010	.TEMPLATE	12-139
2552945-0011	.TEMPLATE	12-139
2552946-0100	.TOOL	12-133
2552947-0200	.TOOL	12-133, 12-147
2553110-0000	.CAM	4-61, 4-63
2553111-0000	.CAM	4-61, 4-63
2553175-0000	.EARTH BAR	10-23
2553176-0100	.EARTH BAR	10-13, 10-15, 10-17
2553830-0100	.FRAME	2-3
2553831-0000	.FRAME	2-69
2553832-0000	.FRAME	2-69
2553895-0000	.COVER	2-9
2554959-0000	.GUIDE	2-65, 2-67
2554960-0000	.BUSBAR LEFT	4-57
2554961-0000	.BUSBAR RIGHT	4-55
2554975-0000	.COVER	2-21
2554977-0001	.BLOCK	5-7, 5-9
2554977-0002	.BLOCK	5-7, 5-9
2554977-0003	.BLOCK	5-7, 5-9
2554977-0004	.BLOCK	5-7, 5-9
2555063-0000	.PIN	2-63
2555070-0000	.SIGN	2-53, 2-55
2555116-0000	.WHEEL	8-17, 8-19
2555310-0000	.COIL	1-17
2555562-0000	.GUIDE	5-55
2555563-0000	.GUIDE	5-55
2555564-0000	.GUIDE	5-55
2555565-0000	.GUIDE	5-55
2555566-0000	.GUIDE	5-55
2555567-0000	.GUIDE	5-55
2555568-0000	.GUIDE	5-55
2555569-0000	.GUIDE	5-55
2555571-0000	.GUIDE	5-55
2555633-0000	.SHAFT	1-57
2555634-0000	.SHAFT	1-57
2556243-0000	.SPACER	2-65, 2-67
2556246-0000	.HATCH	2-13
2558133-0000	.PRESSURE REGULATOR	1-89
2558134-0000	.PRESSURE REGULATOR	1-89
2558744-0000	.PIPE	1-9, 1-11
2558745-0000	.PIPE	1-9, 1-11
2559068-0000	.BENDING ROLLER	1-61
2559069-0000	.BENDING ROLLER	1-61
2559070-0000	.BENDING ROLLER	1-61
2559071-0000	.BENDING ROLLER	1-61
2559087-0000	.CLAMP	1-61
2559121-0000	.BRACKET	5-45

Part No	Description	Page No
2559122-0000	.FLANGE	5-57
2563209-0000	.LID	6-77, 6-79
2563210-0000	.PIPE	6-77, 6-79
2564115-0000	.PUSH BUTTON BOX	8-77
2565515-0000	.TOUCH GUARD	1-175
2565516-0000	.TOUCH GUARD	1-175
2565517-0000	.TOUCH GUARD	1-175
2565736-0000	.RESERVOIR	1-9, 1-11
2566433-0100	.TEMPLATE PT19-020V	12-147
2566434-0000	.BEAM	12-169
2566435-0000	.BEAM	12-169
2566436-0000	.BEAM	12-169
2566437-0000	.ANGLE BRACKET	12-169
2566438-0000	.SUPPORT	12-169
2566439-0000	.BUSHING	12-169
2568779-0000	.DIAGRAM	1-7
2569884-0000	.TENSION SPROCKET	5-63
2570391-0000	.PIPE	1-9, 1-11
2570392-0000	.RETAINING RING	7-65
2570393-0000	.BENDING ROLLER	7-63
2570394-0100	.BENDING ROLLER	7-55
2570400-0000	.ROD	7-51, 7-53
2570401-0000	.ROD	7-51, 7-53
2572676-0000	.SUPPORT	1-9, 1-11
2574348-0000	.VALVE BRACKET	1-9, 1-11
2575480-0000	.HOLDER	7-51, 7-53
2575482-0000	.PIN	7-51, 7-53
2575484-0000	.HOLDER	7-51, 7-53
2575624-0001	.BLOCK	5-7, 5-9
2575624-0002	.BLOCK	5-7, 5-9
2575624-0003	.BLOCK	5-7, 5-9
2575624-0004	.BLOCK	5-7, 5-9
2575624-0005	.BLOCK	5-7, 5-9
2575624-0006	.BLOCK	5-7, 5-9
2575624-0007	.BLOCK	5-7, 5-9
2575624-0008	.BLOCK	5-7, 5-9
2575624-0009	.BLOCK	5-7, 5-9
2575624-0010	.BLOCK	5-7, 5-9
2575624-0011	.BLOCK	5-7, 5-9
2575625-0001	.BLOCK	5-7, 5-9
2575625-0002	.BLOCK	5-7, 5-9
2575625-0003	.BLOCK	5-7, 5-9
2575625-0004	.BLOCK	5-7, 5-9
2575625-0005	.BLOCK	5-7, 5-9
2575625-0006	.BLOCK	5-7, 5-9
2575625-0007	.BLOCK	5-7, 5-9
2575625-0008	.BLOCK	5-7, 5-9
2575625-0009	.BLOCK	5-7, 5-9
2575625-0010	.BLOCK	5-7, 5-9
2575625-0011	.BLOCK	5-7, 5-9
2576239-0000	.HOLDER	7-51, 7-53
2576240-0100	.STRIP GUIDE	7-35, 7-37
2576243-0100	.STRIP GUIDE	7-35, 7-37
2576346-0000	.ROLLER	5-7, 5-9
2576347-0000	.SHAFT	5-7, 5-9
2576349-0000	.ROLLER	5-7, 5-9
2576350-0000	.ROLLER	5-7, 5-9
2576351-0000	.AXLE PIN	5-7, 5-9
2576352-0000	.PLATE	5-7, 5-9
2576353-0000	.SUPPORT	5-7, 5-9
2576398-0000	.SPACER	1-87
2582602-0000	.BRACKET	1-175
2582603-0000	.BRACKET	1-175
2582639-0000	.BRACKET	1-175
2588000-0000	.BRACKET	7-23, 7-25, 7-27, 7-29
2588001-0000	.AXLE PIN	7-23, 7-25, 7-27, 7-29
2588207-0000	.TEMPLATE TOP NOZZLE	12-47, 12-49
2588208-0000	.TEMPLATE BOTTOM NOZZLE	12-47, 12-49
2589391-0001	.TPOP BASIC START PROGRAM	11-13
2589391-1001	.MASTER DISKETTE, TPOP BASIC START	11-17
2589393-0000	.DOCUMENTATION DISKETTE	11-17
2589394-0000	.LABEL DISKETTE	11-17
2589395-0000	.SHORT FORM INSTRUCTION	11-17
2589425-0000	.LABEL FLEXBOX	11-17
2589434-1002	.PROGRAM OBJECT CODE	11-7
2589438-1003	.PROGRAM OBJECT CODE	11-7
2594128-0000	.COVER	2-9
2594221-0000	.BOW CLAMP	2-9
2594657-0000	.AXLE PIN	5-7, 5-9
2594658-0000	.LEVER	5-7, 5-9
2594659-0000	.AXLE PIN	5-7, 5-9
2594679-0000	.BLOCK	12-169
2594680-0000	.BLOCK	12-169
2595678-1001	.PROGRAM OBJECT CODE	11-7

Part No	Description	Page No
2597663-0000	.FOLDING FLAP	4-5, 4-7, 4-9, 4-11, 4-13, 4-15
2598113-0100	.CABLE LEAD-IN PLATE	10-3, 10-5
2598114-0000	.DOOR	10-109, 10-111
2598375-0000	.CABLE DUCT	10-109, 10-111
2598376-0000	.CABLE DUCT	10-109, 10-111
2598377-0000	.CABLE DUCT	10-109, 10-111
2598430-0000	.SUPPORT	10-147
2601509-1002	.PROGRAM OBJECT CODE	11-7
2603016-0000	.BRACKET	7-43
2603631-0000	.BRACKET	1-67, 1-69
2604460-0000	.CABLE DUCT	10-13, 10-15, 10-17
2604461-0000	.CABLE DUCT	10-13, 10-15, 10-17
2604462-0000	.CABLE DUCT	10-13, 10-15, 10-17
2604463-0000	.CABLE DUCT	10-13, 10-15, 10-17
2604464-0000	.CABLE DUCT	10-13, 10-15, 10-17
2604465-0000	.CABLE DUCT	10-13, 10-15, 10-17
2604466-0000	.CABLE DUCT	10-13, 10-15, 10-17
2604467-0000	.CABLE DUCT	10-13, 10-15, 10-17
2604468-0000	.CABLE DUCT	10-13, 10-15, 10-17
2606879-0000	.PLATE	5-7, 5-9
2606880-0000	.HOLDER	5-7, 5-9
2606881-0000	.ADJUSTING SCREW	5-7, 5-9
2610111-0000	.BEARING BRACKET	8-17, 8-19
2610112-0000	.BEARING BRACKET	8-17, 8-19
2610197-0000	.TOOL	12-139
2610198-0000	.TOOL	12-139
2611008-0000	.BRACKET	1-175
2611151-0003	.AIR NOZZLE	5-13, 5-15, 5-17, 5-19, 5-21
2611151-0004	.AIR NOZZLE	5-13, 5-15, 5-17, 5-19, 5-21
2611190-0011	.SPACER	5-13, 5-15, 5-17, 5-19, 5-21
2611190-0012	.SPACER	5-13, 5-15, 5-17, 5-19, 5-21
2611190-0013	.SPACER	5-13, 5-15, 5-17, 5-19, 5-21
2611190-0014	.SPACER	5-13, 5-15, 5-17, 5-19, 5-21
2611190-0015	.SPACER	5-13, 5-15, 5-17, 5-19, 5-21
2611190-0016	.SPACER	5-13, 5-15, 5-17, 5-19, 5-21
2611190-0017	.SPACER	5-13, 5-15, 5-17, 5-19, 5-21
2611190-0018	.SPACER	5-13, 5-15, 5-17, 5-19, 5-21
2611190-0019	.SPACER	5-13, 5-15, 5-17, 5-19, 5-21
2613035-0000	.SUPPORT	2-53, 2-55
2613754-0000	.FRAME	6-53
2614225-0000	.CABLE TRACK	8-77
2614226-0000	.CABLE TRACK	8-77
2614227-0000	.CABLE TRACK	8-77
2614228-0000	.CABLE TRACK	8-77
2614370-0200	.SERVICE PARTS	12-45
2615467-0000	.BRACKET	12-169
2616035-0000	.CONNECTION BOX	8-65
2618263-0000	.CONTAINER	1-67, 1-69
2618264-0000	.PIPE	1-67, 1-69
2618266-0000	.PIPE	1-67, 1-69
2618387-0000	.INSERT	10-91, 10-93, 10-95, 10-97, 10-99, 10-101, 10-103
2619758-0200	.HEAD SPACE BY INJECTION	1-3, 1-5
2623674-0100	.CONNECTION BOX	1-9, 1-11
2632603-0000	.CHECKER PLATE	2-49, 2-51
2633435-0000	.PLATE	5-37
2634940-0000	.BRACKET	1-175
2635109-0000	.CLAMP	1-67, 1-69
2638206-0000	.BRACKET	1-91, 1-93
2640155-0000	.BRACKET	1-161, 1-163
2640262-0000	.AXLE PIN	1-55
2640265-0000	.LOCK SPRING	1-55
2640472-0000	.HOLDER	1-137
2641397-0000	.PLATE	8-65
2641477-0100	.TOOL	12-133
2646248-0000	.MOUNTING BRACKET	1-55
2652212-0000	.PLATE	5-7, 5-9
2652213-0000	.THRUST WASHER	5-7, 5-9
2665718-0000	.CARRIER	4-5, 4-7, 4-9, 4-11, 4-13, 4-15
2674158-0000	.STEAM PIPE	1-89
2674161-0000	.STEAM PIPE	1-89
2685647-0000	.PROFILE	10-121, 10-129, 10-131
2685677-0001	.LEVER	5-7, 5-9
2685677-0002	.LEVER	5-7, 5-9
2685677-0003	.LEVER	5-7, 5-9
2685677-0004	.LEVER	5-7, 5-9
2685677-0005	.LEVER	5-7, 5-9
2685677-0006	.LEVER	5-7, 5-9
2685677-0007	.LEVER	5-7, 5-9
2685677-0008	.LEVER	5-7, 5-9
2685677-0009	.LEVER	5-7, 5-9
2685677-0010	.LEVER	5-7, 5-9
2685677-0011	.LEVER	5-7, 5-9
2685679-0000	.LID	5-29, 5-31, 5-33
2685680-0000	.LID	1-21, 1-23

Part No	Description	Page No
2685681-0000	.LID	1-21, 1-23
2687095-0000	.STEAM PIPE	1-89
2691065-0000	.PIPE	1-89
2701082-0000	.AIR NOZZLE	5-13, 5-15, 5-17, 5-19, 5-21
2701083-0000	.AIR NOZZLE	5-13, 5-15, 5-17, 5-19, 5-21
2721238-0000	.PIPE	1-67, 1-69
2721239-0000	.SPACER	1-67, 1-69
2721240-0000	.BRACKET	1-67, 1-69
2721241-0000	.SUPPORT	1-67, 1-69
2732557-0000	.SHAFT	8-73
2743327-0000	.LID	1-91, 1-93
2743328-0000	.PIPE	1-91, 1-93
2743329-0000	.PIPE	1-91, 1-93
2743331-0000	.PIPE	1-91, 1-93
2748669-0000	.PNEUMATIC DIAGRAM	6-15, 6-17, 6-19
2748676-0000	.DOOR	8-11, 8-13
2748677-0000	.DOOR	2-35
2748678-0000	.DOOR	2-37
2748679-0000	.GLASS	2-35, 2-37
2748682-0000	.PLATE	8-11, 8-13
2748683-0000	.COVER	8-11, 8-13
2751443-0000	.TIMING BELT PULLEY	3-5
2751445-0000	.PIPE	5-25, 5-27
2751446-0000	.ARM	5-29, 5-31, 5-33
2751447-0000	.BRACKET	5-29, 5-31, 5-33
2751448-0000	.BLOCKING PIECE	5-29, 5-31, 5-33
2751450-0000	.FASTENING PLATE	5-29, 5-31, 5-33
2751451-0000	.ARM	5-29, 5-31, 5-33
2761751-0000	.PIPE	6-97
2761752-0000	.PIPE	6-97
2761753-0000	.PIPE	6-97
2761754-0000	.PIPE	6-97
2761755-0000	.BRACKET	1-89
2761756-0000	.PIPE HOLDER	1-89
2761757-0000	.PIPE HOLDER	1-89
2761758-0000	.TOUCH GUARD	1-89
2761759-0000	.PIPE	1-67, 1-69
2761760-0000	.PIPE	1-67, 1-69
2764343-0000	.AIR CONNECTION	5-29, 5-31, 5-33
2764344-0100	.PULL-DOWN DEVICE	5-3
2764345-0000	.BLOCKING PIECE	5-29, 5-31, 5-33
2764346-0000	.PIPE	5-25, 5-27
2764347-0000	.ARM	5-29, 5-31, 5-33
2764348-0000	.ARM	5-29, 5-31, 5-33
2764349-0000	.FASTENING PLATE	5-29, 5-31, 5-33
2769984-0000	.RAIL	2-61
2769985-0000	.RAIL	2-61
2769988-0000	.BRACKET	2-61
2769991-0000	.RAILING	2-63
2769992-0000	.RAILING	2-63
2773918-0000	.CABLE TRENCH	1-143, 1-145, 1-147, 1-149, 1-151, 1-153
2773919-0000	.LID	1-143, 1-145, 1-147, 1-149, 1-151, 1-153
2773920-0000	.CLEANING TANK	5-81
2773922-0000	.BOTTOM PLATE	5-75
2773923-0000	.LEG	5-77
2773924-0100	.LEG	5-75
2773925-0000	.LEG	2-15, 6-55, 8-9
2773926-0100	.LEG	2-13, 6-53, 8-5
2774503-0100	.CONVERTER	1-3, 1-5
2774504-0000	.BRACKET	1-181
2776725-0000	.GUIDE	5-29, 5-31, 5-33
2776726-0000	.GUIDE BRACKET	5-29, 5-31, 5-33
2776727-0000	.SPACER	5-29, 5-31, 5-33
2776729-0000	.ARM	5-29, 5-31, 5-33
2776730-0000	.ARM	5-29, 5-31, 5-33
2776731-0000	.FASTENING PLATE	5-29, 5-31, 5-33
2776732-0000	.PIPE	5-25, 5-27
2776733-0000	.BLOCKING PIECE	5-29, 5-31, 5-33
2776734-0000	.SLIDE SHEET	5-29, 5-31, 5-33
2776735-0000	.FASTENING PLATE	5-29, 5-31, 5-33
2776736-0000	.ARM	5-29, 5-31, 5-33
2776737-0000	.ARM	5-29, 5-31, 5-33
2776738-0000	.PIPE	5-25, 5-27
2776741-0000	.FOLDING BAR RIGHT	5-35
2776742-0000	.FOLDING BAR LEFT	5-35
2776743-0000	.SIDE PIPE	5-25, 5-27
2776744-0000	.SIDE PIPE	5-25, 5-27
2776750-0300	.SOFTWARE TPOP	11-5
2776751-1004	.PROGRAM OBJECT CODE	11-7
2776753-0000	.LABEL FLEXBOX	11-7
2776757-1004	.PROGRAM OBJECT CODE	11-7
2776759-0000	.LABEL FLEXBOX	11-7
2781021-0000	.LEG	5-85
2781214-0000	.TOUCH GUARD	1-175

Part No	Description	Page No
2781215-0000	.TOUCH GUARD	1-175
2781216-0000	.PLATE	1-143, 1-145, 1-147, 1-149, 1-151, 1-153
2781218-0000	.COLLAR	2-13
2781220-0000	.CABLE TRENCH	1-143, 1-145, 1-147, 1-149, 1-151, 1-153
2781221-0000	.CLEANING PIPE	1-135
2781222-0000	.CLEANING PIPE	1-135
2781223-0000	.CLEANING PIPE	1-135
2788107-0000	.PIPE	6-93, 6-95
2788108-0000	.PIPE	6-93, 6-95
2788109-0000	.PIPE	6-93, 6-95
2788110-0000	.PIPE	6-93, 6-95
2788111-0000	.CONNECTION PLATE	6-93, 6-95
2788117-0000	.GLASS PANE	6-5
2788118-0000	.PIPE	1-181
2788121-0000	.GLASS PANE	6-5
2788122-0000	.DOOR	6-5
2788123-0000	.DOOR	6-5
2790830-0000	.SUPPORT BAR	1-55
2790831-0000	.SUPPORT PLATE	1-55
2790832-0100	.SUPPORT	1-49, 1-51
2790833-0000	.MOUNTING SHEET	6-87
2790834-0000	.PIPE	6-87
2790835-0000	.PIPE	6-77, 6-79
2794854-1001	.PROGRAM OBJECT CODE	11-7
2794874-0002	.SOFTWARE CD	11-5
2794874-1102	.PROGRAM OBJECT CODE	11-7
2794874-1202	.PROGRAM OBJECT CODE	11-7
2794874-1302	.PROGRAM OBJECT CODE	11-7
2794875-0000	.LABEL CD	11-7
2795368-0000	.SEAL	1-21, 1-23
2797453-0000	.WELDED CABINET	10-75, 10-77
2797581-0000	.PLATE	10-13, 10-15, 10-17
2797730-0000	.COVER	10-133
2797731-0000	.BOX	10-133
2798052-0000	.DOOR	10-89
2798073-0000	.DOOR	10-121
2798074-0000	.DOOR	10-129
2798075-0000	.DOOR	10-131
2800334-0001	.CARTON STATION	5-5
2800334-0002	.CARTON STATION	5-5
2800334-0003	.CARTON STATION	5-5
2800334-0004	.CARTON STATION	5-5
2800334-0006	.CARTON STATION	5-5
2800334-0007	.CARTON STATION	5-5
2800335-0001	.CARTON STATION	5-5
2800335-0002	.CARTON STATION	5-5
2800336-0001	.CARTON STATION	5-5
2800336-0002	.CARTON STATION	5-5
2800336-0003	.CARTON STATION	5-5
2800336-0004	.CARTON STATION	5-5
2800338-0000	.FOLDING BAR	5-35
2800339-0000	.FOLDING BAR	5-35
2800340-0000	.FOLDING BAR	5-35
2800341-0000	.FOLDING BAR	5-35
2800342-0000	.ARM	5-29, 5-31, 5-33
2800343-0000	.ARM	5-29, 5-31, 5-33
2800344-0000	.BLOCKING PIECE	5-29, 5-31, 5-33
2800345-0001	.TEMPLATE	12-143
2800345-0002	.TEMPLATE	12-143
2800345-0003	.TEMPLATE	12-143
2800345-0004	.TEMPLATE	12-143
2800346-0000	.FASTENING PLATE	5-29, 5-31, 5-33
2800347-0000	.SPACER	5-29, 5-31, 5-33
2800348-0000	.PIPE	5-25, 5-27
2800350-0000	.FOLDING BAR	5-35
2800351-0000	.FOLDING BAR	5-35
2800352-0000	.CABINET	1-9, 1-11
2800353-0000	.COVER	1-9, 1-11
2801770-1001	.PROGRAM OBJECT CODE	11-7
2814873-0000	.PLATE	5-13, 5-15, 5-17, 5-19, 5-21
2814874-0100	.SILENCER	6-15, 6-17, 6-19
2814875-0000	.PIVOT ARM	5-23
2814876-0000	.SHIELD PLATE	5-37
2814877-0000	.VALVE BODY	1-15
2814879-0000	.PIPE	5-25, 5-27
2814880-0000	.FASTENING PLATE	5-29, 5-31, 5-33
2814881-0000	.ARM	5-29, 5-31, 5-33
2814882-0000	.ARM	5-29, 5-31, 5-33
2814883-0000	.PIPE	5-25, 5-27
2814885-0000	.ARM	5-29, 5-31, 5-33
2814886-0000	.ARM	5-29, 5-31, 5-33
2814887-0000	.FASTENING PLATE	5-29, 5-31, 5-33
2814888-0000	.FOLDING BAR	5-35
2814889-0000	.FOLDING BAR	5-35

Part No	Description	Page No	Part No	Description	Page No

Machine Type	Group Description	Page No

Tetra Pak

SPC
Spare Parts Catalogue

Part No	Description	Page No
1519937-0000	.1REGULATOR BODY	1-87
90458-1300	2 AXIS DOCKING STATION D2/PLC	10-13, 10-15, 10-17
20239-0000	25MPRESSION SPRING	4-49, 4-51
90259-0311	3 POLE BUSBAR K&M B3.1/5	10-117
351416-0100 ..	3INIATURE CIRC. BREAK., FAZ -D10 1-POLE	10-113
2523598-0000	.84LICING TABLE	7-21
576436-0100 ..	A-CYLINDER	1-75
90030-0098	ACCESSORIES, FERRULE 8	2-23, 2-25, 2-27
342706-0130 ..	ACCESSORIES, INSERT SLEEVE 6 MM	1-7, 1-9, 1-11, 1-95, 1-97, 2-31
90600-0491	ACTUATOR, 9650-0089-Z-I-OTI	1-15
90458-1856	ADHESIVE LABEL, CONNECTION DIAGRAM	10-25
90153-0017	ADHESIVE, 2963 TUBE 160G	2-13
90153-0060	ADHESIVE, 3M DP-190 B/A	2-73
90153-0020	ADHESIVE, BOSTIK 1782 125ML	1-43, 1-45
90153-0035	ADHESIVE, CLIMAFLEX 1632864	6-15, 6-17, 6-19
90153-0043	ADHESIVE, LOCTITE 495 20G	1-9, 1-11
90153-0023	ADHESIVE, SILICON 251470 TUB 90CC	1-21, 1-23, 5-13, 5-15, 5-17, 5-19, 5-21
90153-0048	ADHESIVE,DEVCON TYPE 5-MIN-EPOXI 28G	6-61
90153-0015	ADHESIVE,LOCTITE IS 496/CYANOLOT 303	4-5, 4-7, 4-9, 4-11, 4-13, 4-15, 9-3
90153-0016	ADHESIVE,TUBE 100G RHODORSIL CAF 3	1-21, 1-23
90201-0098	ADJ. FLOW CON. VALVE, NO. 9 PCCM 400SF	9-11
90030-0136	ADJUSTABLE ELBOW CONNECTION,EXT 12-G3/8	6-77, 6-79
90030-0203	ADJUSTABLE ELBOW CONNECTION,EXT 6-G1/4	1-91, 1-93
90030-0612	ADJUSTABLE ELBOW CONNECTION,EXT 6-G1/4	1-89
342738-0208 ..	ADJUSTABLE ELBOW CONNECTION,EXT 8-G1/4	2-31
1517753-0000	.ADJUSTING NUT	7-61
751579-0000 ..	ADJUSTING SCREW	4-5, 4-7, 4-9, 4-11, 4-13, 4-15
1035893-0000	.ADJUSTING SCREW	7-51, 7-53
1548006-0000	.ADJUSTING SCREW	1-177
2606881-0000	.ADJUSTING SCREW	5-7, 5-9
543143-0100 ..	ADJUSTMENT DEVICE	8-25, 8-27, 8-29, 8-45, 8-47, 8-49
456474-0000 ..	ADJUSTMENT PLATE	1-21, 1-23
2764343-0000	.AIR CONNECTION	5-29, 5-31, 5-33
272026-0001 ..	AIR DISTRIBUTOR	1-59
272026-0002 ..	AIR DISTRIBUTOR	1-59
2846063-0100	.AIR DISTRIBUTOR	6-15, 6-17, 6-19
271942-0001 ..	AIR GUIDE	1-59
271942-0002 ..	AIR GUIDE	1-59
90243-0061	AIR GUN, CEJN SERIE 204 ED: 90459-0173	2-43
456757-0300 ..	AIR INJECTOR	6-15, 6-17, 6-19
2500200-0100	.AIR INLET GROUP	6-15, 6-17, 6-19
271414-0300 ..	AIR JET GUN	2-3
272025-0600 ..	AIR KNIFE	1-3, 1-5
271824-0000 ..	AIR KNIFE, MOVABLE	1-59
272022-0000 ..	AIR KNIFE, MOVABLE	1-59
469501-0400 ..	AIR NOZZLE	1-3, 1-5
568577-0000 ..	AIR NOZZLE	1-159
568578-0000 ..	AIR NOZZLE	1-159
1517504-0000	.AIR NOZZLE	5-13, 5-15, 5-17, 5-19, 5-21
1517505-0000	.AIR NOZZLE	5-13, 5-15, 5-17, 5-19, 5-21
1519307-0000	.AIR NOZZLE	5-13, 5-15, 5-17, 5-19, 5-21
1519308-0000	.AIR NOZZLE	5-13, 5-15, 5-17, 5-19, 5-21
1519313-0000	.AIR NOZZLE	5-13, 5-15, 5-17, 5-19, 5-21
1519314-0000	.AIR NOZZLE	5-13, 5-15, 5-17, 5-19, 5-21
1519318-0000	.AIR NOZZLE	5-13, 5-15, 5-17, 5-19, 5-21
1519319-0000	.AIR NOZZLE	5-13, 5-15, 5-17, 5-19, 5-21
1524662-0000	.AIR NOZZLE	1-39
2611151-0003	.AIR NOZZLE	5-13, 5-15, 5-17, 5-19, 5-21
2611151-0004	.AIR NOZZLE	5-13, 5-15, 5-17, 5-19, 5-21
2701082-0000	.AIR NOZZLE	5-13, 5-15, 5-17, 5-19, 5-21
2701083-0000	.AIR NOZZLE	5-13, 5-15, 5-17, 5-19, 5-21
90424-0068	AIR NOZZLE, G1/4, MOD. 216 BSP	5-23, 5-29, 5-31, 5-33
2546445-0000	.AIR PIPE	1-7
2546471-0000	.AIR PIPE	1-7
90113-0021	AIR PRESSURE REGULATOR	12-127
271181-0600 ..	AIR SUPER-HEATER	1-3, 1-5
1367022-0000	.ALIGNMENT SCREW	8-5
978609-0000 ..	ALIGNMENT TEMPLATE	3-19, 3-21
352113-0206 ..	ANCHOR PLATES FOR STRIPS, TYPE ABM100-AT	7-23, 7-25, 7-27, 7-29
352113-0205 ..	ANCHOR PLATES FOR STRIPS, TYPE TM2S8-C10	3-33, 4-31, 4-33, 5-47, 7-19, 10-75, 10-77, 10-83, 10-85, 10-87, 10-109, 10-111
352113-0204 ..	ANCHOR PLATES FOR STRIPS, TYPE TM3S25-M	2-69, 6-11
352113-0203 ..	ANCHOR PLATES FOR STRIPS, TYPE TM3S8-M0	6-53, 8-77
321330-0100 ..	ANG. BALL BEAR, 10X30X14 MM	7-61
321330-0106 ..	ANG. BALL BEAR, 30X62X23,8 MM	5-57
256279-0000 ..	ANGLE	1-111, 1-113, 1-115
456472-0000 ..	ANGLE	1-21, 1-23
469047-0000 ..	ANGLE	1-111, 1-113, 1-115
257043-0000 ..	ANGLE BRACKET	1-125, 1-127
272464-0000 ..	ANGLE BRACKET	1-59
456230-0000 ..	ANGLE BRACKET	1-119, 1-121
529146-0000 ..	ANGLE BRACKET	1-33
590277-0000 ..	ANGLE BRACKET	12-163
2566437-0000	.ANGLE BRACKET	12-169

Part No	Description	Page No
1512284-0100	ANGLE ENCODER	3-3
1523152-0000	ANGLE ENCODER	3-33
90061-0027	ANGLE ENCODER 670900035	3-33
1498759-0000	ANGLE HOLDER	7-57
90459-0336	ANGLE SEAT VALVE G1/2, N.C. DN13	1-89
90459-7440	ANGLE SEAT VALVE W. FLANGES, N.O. DN40	6-69
576434-0200	AP-VALVE 51-38	1-67, 1-69
1523057-0000	AP-VALVE-BODY (51-38)	1-75
90303-0013	APRON	9-13
76204-0000	ARM	12-151, 12-153
76205-0000	ARM	12-151, 12-153
76214-0000	ARM	12-151, 12-153
256197-0500	ARM	3-3
272415-0000	ARM	4-49, 4-51
272600-0000	ARM	2-5, 2-7
441904-0000	ARM	1-57
464010-0000	ARM	8-37
491174-0000	ARM	1-35
491177-0000	ARM	1-35
580055-0000	ARM	7-13
751212-0000	ARM	3-9, 3-11, 3-13, 3-15
929402-0000	ARM	4-31, 4-33
929438-0100	ARM	3-3
979667-0000	ARM	7-23, 7-25, 7-27, 7-29
979994-0000	ARM	7-15
1260678-0000	ARM	7-15
1524654-0000	ARM	1-59
1539102-0000	ARM	4-61, 4-63
1539103-0000	ARM	4-61, 4-63
1549304-0000	ARM	8-17, 8-19
2500260-0000	ARM	2-57
2527652-0000	ARM	3-5
2751446-0000	ARM	5-29, 5-31, 5-33
2751451-0000	ARM	5-29, 5-31, 5-33
2764347-0000	ARM	5-29, 5-31, 5-33
2764348-0000	ARM	5-29, 5-31, 5-33
2776729-0000	ARM	5-29, 5-31, 5-33
2776730-0000	ARM	5-29, 5-31, 5-33
2776736-0000	ARM	5-29, 5-31, 5-33
2776737-0000	ARM	5-29, 5-31, 5-33
2800342-0000	ARM	5-29, 5-31, 5-33
2800343-0000	ARM	5-29, 5-31, 5-33
2814881-0000	ARM	5-29, 5-31, 5-33
2814882-0000	ARM	5-29, 5-31, 5-33
2814885-0000	ARM	5-29, 5-31, 5-33
2814886-0000	ARM	5-29, 5-31, 5-33
2814891-0000	ARM	5-29, 5-31, 5-33
2814892-0000	ARM	5-29, 5-31, 5-33
2830501-0000	ARM	5-29, 5-31, 5-33
2830502-0000	ARM	5-29, 5-31, 5-33
2830505-0000	ARM	5-29, 5-31, 5-33
2830506-0000	ARM	5-29, 5-31, 5-33
979779-0000	ARM CAM 100	3-19, 3-21
1282309-0000	ARM CAM 200 ML MID	3-19, 3-21
581534-0000	ARM CAM 284ML	3-19, 3-21
582195-0000	ARM CAM 330S	3-19, 3-21
255609-0000	ARM CUTTING JAW	4-49, 4-51
272493-0000	ARM LEFT	4-51
562120-0000	ARM PRESSURE JAW	4-49, 4-51
272492-0000	ARM RIGHT	4-49
577218-0000	ARMCAM 160ML	3-19, 3-21
469370-0000	ARMCAM 180ML	3-19, 3-21
272119-0000	ARMCAM 236ML	3-19, 3-21
580357-0000	ARMCAM 250ML SLIM	3-19, 3-21
978794-0000	ARMCURVE 125ML	3-19, 3-21
978769-0000	ARMCURVE 200ML	3-19, 3-21
978773-0000	ARMCURVE 200SL	3-19, 3-21
978777-0000	ARMCURVE 250ML	3-19, 3-21
90458-1958	ARTICULATION, 300DEG WITH STOP	2-57
90217-0204	ASEPT. MALE FITTING ISO, 03-32-406/42	1-133
90217-0207	ASEPT. MALE FITTING ISO, 03-32-456/42	1-67, 1-69
272021-0900	ASEPTIC CHAMBER	1-3, 1-5
76131-0000	ASSEMBLY CONE	9-15
772220-0103	ASSEMBLY T VOMO 12-L	12-11
772220-0104	ASSEMBLY T VOMO 15-L	12-11
772220-0100	ASSEMBLY T VOMO 6-L	12-11
772220-0101	ASSEMBLY T VOMO 8-L	12-11
36489-0000	ASSEMBLY TOOL	12-11
76132-0000	ASSEMBLY TOOL	9-15
534637-0000	ATTACHMENT	12-23
563739-0000	ATTACHMENT	12-127
752218-0000	ATTACHMENT	1-159
752495-0400	ATTACHMENT	1-133
90304-0307	ATTACHMENT PIPE	6-85

Part No	Description	Page No
90259-0313	AUX. CONTACT K&M NHI21-PKZM0	10-117
90459-5813	AUXILARY CONTACT, FAZ-XHI11	10-113
90459-5418	AUXILARY CONTACTS, DILM150-XHI22 2NO;2NC	10-13, 10-15, 10-17
90067-0334	AXIAL BEARING KIT, 32 14 174 9	9-7
272462-0000 ..	AXLE BOLT	3-13, 3-15
295770-0000 ..	AXLE BOLT	3-9, 3-11
256607-0000 ..	AXLE PIN	4-5, 4-7, 4-9, 4-11, 4-13, 4-15
256629-0001 ..	AXLE PIN	4-49, 4-51
256629-0003 ..	AXLE PIN	4-49, 4-51
490916-0000 ..	AXLE PIN	3-9, 3-11, 3-13, 3-15
536917-0000 ..	AXLE PIN	7-15
544726-0000 ..	AXLE PIN	7-15
979576-0000 ..	AXLE PIN	7-13
979578-0000 ..	AXLE PIN	7-13
1282989-0000 .	AXLE PIN	7-35, 7-37
1498758-0000 .	AXLE PIN	7-9
1498762-0000 .	AXLE PIN	7-23, 7-25, 7-27, 7-29
1498765-0000 .	AXLE PIN	7-35, 7-37
1519376-0000 .	AXLE PIN	4-17, 4-19, 4-21, 4-23
2547217-0000 .	AXLE PIN	7-23, 7-25, 7-27, 7-29
2547218-0000 .	AXLE PIN	7-23, 7-25, 7-27, 7-29
2547219-0000 .	AXLE PIN	7-23, 7-25, 7-27, 7-29
2552631-0000 .	AXLE PIN	7-43
2552722-0000 .	AXLE PIN	5-7, 5-9
2576351-0000 .	AXLE PIN	5-7, 5-9
2588001-0000 .	AXLE PIN	7-23, 7-25, 7-27, 7-29
2594657-0000 .	AXLE PIN	5-7, 5-9
2594659-0000 .	AXLE PIN	5-7, 5-9
2640262-0000 .	AXLE PIN	1-55
90458-1476	AXLE PIN, 32 04 167 5	9-11
272286-0000 ..	AXLE SUPPORT	1-35
272287-0000 ..	AXLE SUPPORT	1-39
456797-0000 ..	AXLE SUPPORT	1-49, 1-51
490902-0000 ..	AXLE SUPPORT	1-49, 1-51
566697-0000 ..	AXLE SUPPORT	1-57
583684-0000 ..	AXLE SUPPORT	7-63
1539997-0000 .	AXLE SUPPORT	1-61
1548056-0000 .	AXLE SUPPORT	1-47
1548059-0000 .	AXLE SUPPORT	1-177
2501542-0000 .	AXLE SUPPORT	1-47
2544957-0000 .	AXLE SUPPORT	5-57
576438-0100 ..	B-CYLINDER	1-75
1498780-0000 .	BACK COVER	7-59
67372-0101	BACKPLANE 8TE(32 POLE)	10-31
929415-0100 ..	BALANCE TANK	6-15, 6-17, 6-19
321308-0200 ..	BALL BEARING, 10X26X8 MM	7-61
321313-0100 ..	BALL BEARING, 10X30X9 MM	7-49
90214-0207	BALL BEARING, 15X32X9 MM	7-11
321308-0202 ..	BALL BEARING, 15X32X9 MM	8-17, 8-19
90214-0098	BALL BEARING, 15X35X11 MM	8-25, 8-27, 8-29
90458-1704	BALL BEARING, 15X35X11 MM	1-47, 1-57, 1-61, 1-179, 8-45, 8-47, 8-49
321313-0102 ..	BALL BEARING, 15X35X11 MM	7-63, 8-17, 8-19
90214-0092	BALL BEARING, 17X30X7 MM	5-39
90214-0166	BALL BEARING, 20X37X12 MM	4-59
321309-0104 ..	BALL BEARING, 20X47X14 MM	5-57
321309-0105 ..	BALL BEARING, 25X52X15 MM	5-57
321313-0105 ..	BALL BEARING, 25X52X15MM	3-5
90214-0122	BALL BEARING, 30X72X27 MM	5-63
90600-0352	BALL BEARING, 35X62X14 MM	3-5
321306-0107 ..	BALL BEARING, 35X62X14 MM	5-57
90214-0138	BALL BEARING, 5X19X6 MM	7-35, 7-37, 7-39, 7-41
90459-6335	BALL BEARING, 8X22X7 MM	1-57
321302-0298 ..	BALL BEARING, 8X22X7 MM	7-65
90458-2601	BALL VALVE 3A DAIRY CLAMP LOCKABLE	1-135
90187-0059	BALL VALVE FOR HYDR.PER. G1/2 3MM HOLE	6-61, 6-67
90187-0082	BALL VALVE G1/2	1-89
90187-0029	BALL VALVE G1/2, NPBR	6-29, 6-31, 6-93, 6-95
90187-0062	BALL VALVE G1/2, NPBR	6-85
90187-0045	BALL VALVE G1/4 CR PL	12-23, 12-125
90459-0486	BALL VALVE PANEL MOUNTED G1/8	1-161, 1-163
90090-0016	BALL, D=15 MM	1-171, 1-173
90297-0306	BALLAST COIL 50/60 HZ	10-13, 10-15, 10-17
90137-0010	BANJO CONN. M6, D=2,5 MM	2-13
342980-0114 ..	BANJO-CONNECTION,RING 6/4-G1/4"	12-17, 12-19
342980-0113 ..	BANJO-CONNECTION,RING 6/4-G1/8 INCH	1-37, 1-59, 1-95, 1-97, 1-161, 1-163
342980-0111 ..	BANJO-CONNECTION,RING 6/4-M5	1-129
342980-0122 ..	BANJO-CONNECTION,RING 8/6-G1/4 INCH	3-5, 6-41, 6-43
342980-0121 ..	BANJO-CONNECTION,RING 8/6-G1/8	2-5, 2-7, 4-67, 4-69
342980-0304 ..	BANJO-HOLLOW BOLT COUPL,EXT.THR.01-G1/4	1-89, 3-5, 6-39, 6-41, 6-43
342980-0303 ..	BANJO-HOLLOW BOLT COUPL,EXT.THR.01-G1/8	1-63, 1-67, 1-69, 1-87, 1-95, 1-97, 1-139 1-161, 1-163, 2-5, 2-7, 2-23, 2-25, 2-27, 4-67, 4-69
342980-0314 ..	BANJO-HOLLOW BOLT COUPL,EXT.THR.02-G1/4	12-17, 12-19
342980-0313 ..	BANJO-HOLLOW BOLT COUPL,EXT.THR.02-G1/8	1-37
342980-0301 ..	BANJO-HOLLOW BOLT COUPL.,EXT.THREA.01-M5	1-129

Part No	Description	Page No
1499024-0000	BAR	7-49
90459-2912	BAR, TR1	10-7, 10-9, 10-11
272728-0000	BARRIER	8-75
209146-0000	BARRIER NUT	1-137, 6-81, 6-83
90119-0309	BASE UNIT, TYPE PYF 14AE	10-29
90458-0292	BASE, KT70-1001	2-47, 2-59
90129-0006	BASE, S3-B	10-29
90031-0051	BASEPLATE, 10-SLOT	10-41
90031-0053	BASEPLATE,10-SLOT	10-43, 10-45
90458-1205	BASIC SUB-BASE 8 VALVES, CDVI5.0-GB8-MP	6-45, 6-47
256014-0900	BATH	1-3, 1-5
1296855-0000	BATH	1-21, 1-23
589910-0000	BEAM	12-159
1296903-0000	BEAM	12-167
1296904-0000	BEAM	12-167
1350149-0000	BEAM	12-15
1350150-0000	BEAM	12-15
2566434-0000	BEAM	12-169
2566435-0000	BEAM	12-169
2566436-0000	BEAM	12-169
33408-0000	BEARING	4-5, 4-7, 4-9, 4-11, 4-13, 4-15
456002-0000	BEARING	4-53
929316-0001	BEARING	4-5, 4-7, 4-9, 4-11, 4-13, 4-15
929316-0002	BEARING	4-5, 4-7, 4-9, 4-11, 4-13, 4-15
491171-0000	BEARING BLOCK	1-35
256418-0000	BEARING BRACKET	3-13, 3-15
272455-0000	BEARING BRACKET	3-9, 3-11
2610111-0000	BEARING BRACKET	8-17, 8-19
2610112-0000	BEARING BRACKET	8-17, 8-19
90458-1232	BEARING BRACKET AY15	8-17, 8-19
321141-0142	BEARING BUSH W/O FLANGE, 10X12X12 MM	5-41
321120-0098	BEARING BUSH W/O FLANGE, 10X12X8 MM	4-31, 4-33
321120-0109	BEARING BUSH W/O FLANGE, 12X14X10 MM	8-35, 8-61, 12-41, 12-43
321141-0183	BEARING BUSH W/O FLANGE, 12X14X15 MM	7-35, 7-37, 7-39, 7-41
321141-0193	BEARING BUSH W/O FLANGE, 12X14X25 MM	7-15
321120-0118	BEARING BUSH W/O FLANGE, 14X16X15 MM	4-31, 4-33
321120-0122	BEARING BUSH W/O FLANGE, 15X17X15 MM	8-31, 8-33, 8-51, 8-53, 12-27, 12-29, 12-37, 12-39
321120-0132	BEARING BUSH W/O FLANGE, 18X20X20 MM	4-25, 4-27
321141-0260	BEARING BUSH W/O FLANGE, 20X23X20 MM	3-27
321120-0153	BEARING BUSH W/O FLANGE, 24X27X20 MM	4-31, 4-33
321120-0101	BEARING BUSH W/O FLANGE, 6X8X6 MM	8-39, 8-41
321120-0100	BEARING BUSH W/O FLANGE, 8X10X12 MM	8-35, 8-39, 8-41, 8-61, 12-41, 12-43
90240-0073	BEARING BUSHING W/O FL, 16X18X20 MM	2-5, 2-7
90240-0094	BEARING BUSHING W/O FL, 50X55X40 MM	5-23
250590-0000	BEARING COVER	1-47
255874-0000	BEARING COVER	1-139
292456-0000	BEARING COVER	6-65
441957-0000	BEARING COVER	1-37
751731-0000	BEARING COVER	1-37
752529-0000	BEARING COVER	8-25, 8-27, 8-29, 8-45, 8-47, 8-49
2544958-0000	BEARING FLANGE	5-57
978275-0000	BEARING HOLDER	3-9, 3-11, 3-13, 3-15
441793-0000	BEARING HOUSING	5-39
1478222-0000	BEARING HOUSING	4-5, 4-7, 4-9, 4-11, 4-13, 4-15
1478223-0000	BEARING HOUSING	4-5, 4-7, 4-9, 4-11, 4-13, 4-15
1478224-0000	BEARING HOUSING	4-5, 4-7, 4-9, 4-11, 4-13, 4-15
1478225-0000	BEARING HOUSING	4-5, 4-7, 4-9, 4-11, 4-13, 4-15
1519215-0000	BEARING HOUSING	4-5, 4-7, 4-9, 4-11, 4-13, 4-15
2552527-0000	BEARING HOUSING	4-25, 4-27
2552528-0000	BEARING HOUSING	4-25, 4-27
2552529-0000	BEARING HOUSING	4-25, 4-27
2552530-0000	BEARING HOUSING	4-25, 4-27
2552531-0000	BEARING HOUSING	4-25, 4-27
572157-0000	BEARING PANEL	1-61
572158-0000	BEARING PANEL	1-61
256706-0000	BEARING PLATE	4-5, 4-7, 4-9, 4-11, 4-13, 4-15
571543-0000	BEARING PLATE	1-125, 1-127
571544-0000	BEARING PLATE	1-125, 1-127
978870-0000	BEARING PLATE	1-49, 1-51
978871-0000	BEARING PLATE	1-49, 1-51
315230-0157	BEARING SEAL 12X16X3 MM	4-5, 4-7, 4-9, 4-11, 4-13, 4-15
491349-0000	BEARING SEAT	4-49, 4-51
583685-0000	BEARING SEAT	7-63
1517070-0000	BEARING SEAT	7-61
229207-0000	BEARING SLEEVE	5-45
90342-0013	BELLOWS	7-13
979990-0000	BELT BRAKE	7-15
272607-0000	BELT HOLDER	3-13, 3-15
272608-0000	BELT HOLDER	3-23
272004-0500	BENDING ROLLER	1-3, 1-5
272028-0800	BENDING ROLLER	1-3, 1-5
566191-0000	BENDING ROLLER	1-21, 1-23
574932-0000	BENDING ROLLER	8-17, 8-19
752542-0001	BENDING ROLLER	8-25, 8-27, 8-29, 8-45, 8-47, 8-49

Part No	Description	Page No
752542-0002 ..	BENDING ROLLER	8-45, 8-47, 8-49
752542-0003 ..	BENDING ROLLER	8-45, 8-47, 8-49
979709-0000 ..	BENDING ROLLER	8-25, 8-27, 8-29, 8-45, 8-47, 8-49
1282581-0000 .	BENDING ROLLER	1-21, 1-23
1498756-0100 .	BENDING ROLLER	7-55
2559068-0000 .	BENDING ROLLER	1-61
2559069-0000 .	BENDING ROLLER	1-61
2559070-0000 .	BENDING ROLLER	1-61
2559071-0000 .	BENDING ROLLER	1-61
2570393-0000 .	BENDING ROLLER	7-63
2570394-0100 .	BENDING ROLLER	7-55
90017-0001	BIKE HANDLE	8-65, 8-69
90458-1114	BIMET. ELECTROMECH. THERMOSTAT K7H.020	10-69
979952-0000 ..	BLANK FLANGE	12-125
2544974-0000 .	BLANK PLUG	5-57
90457-0104	BLANK RIVET 2X7,4	6-41, 6-43
311521-0146 ..	BLANK RIVET 3,2X12	10-75, 10-77, 10-123, 10-125, 10-143
311521-0142 ..	BLANK RIVET 3,2X6	1-89, 10-71
311521-0152 ..	BLANK RIVET 4X8	8-65
565532-0000 ..	BLANK-OFF FLANGE	12-125
565533-0000 ..	BLANK-OFF FLANGE	12-125
90002-0018	BLANK-OFF PLUG, PR 12,5 SKINDICHT-BLK7	1-13
90002-0013	BLANK-OFF PLUG, PR 15,2 SKINDICHT-BLK9	1-155, 1-157, 2-19, 10-79, 10-81
90002-0009	BLANK-OFF PLUG, PR 18.6 SKINDICHT-BLK11	2-19, 5-37, 5-49, 5-51, 9-23, 9-29, 9-31
90002-0004	BLANK-OFF PLUG, PR 22,5 SKINDICHT-BLK16	1-155, 1-157, 5-49, 5-51, 10-79, 10-81
90002-0012	BLANK-OFF PLUG, PR 28,3 SKINDICHT-BLK21	1-155, 1-157, 10-79, 10-81
90002-0010	BLANK-OFF PLUG, PR 37 SKINDICHT-BLK29	1-143, 1-145, 1-147, 1-149, 1-151, 1-153, 1-155
		1-157, 5-49, 5-51, 10-79, 10-81
441355-0000 ..	BLEEDING SCREW	4-25, 4-27, 4-53, 4-67, 4-69
90226-0455	BLIND PLATE ABB 1666060	10-109, 10-111
978380-0000 ..	BLIND PLUG	1-19
90458-1306	BLIND PLUG CIRCULAR, M12X1,5 514GFK/212	7-33, 10-91, 10-93, 10-95, 10-97, 10-99
		10-101, 10-103
90458-1307	BLIND PLUG CIRCULAR, M16X1,5 514GFK/216	8-79, 10-91, 10-93, 10-95, 10-97, 10-99
		10-101, 10-103
90458-1308	BLIND PLUG CIRCULAR, M20X1,5 514GFK/220	8-79, 10-91, 10-93, 10-95, 10-97, 10-99
		10-101, 10-103
90458-1309	BLIND PLUG CIRCULAR, M25X1,5 514GFK/225	10-91, 10-93, 10-95, 10-97, 10-99, 10-101
		10-103
90458-1310	BLIND PLUG CIRCULAR, M32X1,5 514GFK/232	5-47
90458-1312	BLIND PLUG CIRCULAR, M50X1,5 514GFK/250	10-91, 10-93, 10-95, 10-97, 10-99, 10-101, 10-103
456755-0000 ..	BLOCK	6-23
456756-0000 ..	BLOCK	6-23
469122-0000 ..	BLOCK	6-27
590206-0000 ..	BLOCK	12-159
590221-0000 ..	BLOCK	12-169
979722-0000 ..	BLOCK	1-37
979991-0000 ..	BLOCK	7-15
1334721-0000 .	BLOCK	5-41
1334798-0000 .	BLOCK	12-155
1346001-0000 .	BLOCK	12-93
1517523-0000 .	BLOCK	5-81
2524579-0004 .	BLOCK	5-7, 5-9
2524579-0005 .	BLOCK	5-7, 5-9
2524579-0008 .	BLOCK	5-7, 5-9
2524579-0010 .	BLOCK	5-7, 5-9
2524579-0011 .	BLOCK	5-7, 5-9
2552734-0001 .	BLOCK	5-7, 5-9
2552734-0002 .	BLOCK	5-7, 5-9
2554977-0001 .	BLOCK	5-7, 5-9
2554977-0002 .	BLOCK	5-7, 5-9
2554977-0003 .	BLOCK	5-7, 5-9
2554977-0004 .	BLOCK	5-7, 5-9
2575624-0001 .	BLOCK	5-7, 5-9
2575624-0002 .	BLOCK	5-7, 5-9
2575624-0003 .	BLOCK	5-7, 5-9
2575624-0004 .	BLOCK	5-7, 5-9
2575624-0005 .	BLOCK	5-7, 5-9
2575624-0006 .	BLOCK	5-7, 5-9
2575624-0007 .	BLOCK	5-7, 5-9
2575624-0008 .	BLOCK	5-7, 5-9
2575624-0009 .	BLOCK	5-7, 5-9
2575624-0010 .	BLOCK	5-7, 5-9
2575624-0011 .	BLOCK	5-7, 5-9
2575625-0001 .	BLOCK	5-7, 5-9
2575625-0002 .	BLOCK	5-7, 5-9
2575625-0003 .	BLOCK	5-7, 5-9
2575625-0004 .	BLOCK	5-7, 5-9
2575625-0005 .	BLOCK	5-7, 5-9
2575625-0006 .	BLOCK	5-7, 5-9
2575625-0007 .	BLOCK	5-7, 5-9
2575625-0008 .	BLOCK	5-7, 5-9
2575625-0009 .	BLOCK	5-7, 5-9
2575625-0010 .	BLOCK	5-7, 5-9

Part No	Description	Page No
2575625-0011	BLOCK	5-7, 5-9
2594679-0000	BLOCK	12-169
2594680-0000	BLOCK	12-169
90032-0038	BLOCK 2 WAYS	2-23, 2-25, 2-27
90032-0039	BLOCK 4 WAYS	2-23, 2-25, 2-27, 3-13, 3-15, 5-37
90032-0040	BLOCK 6 WAYS	3-9, 3-11, 5-11, 5-37
256954-0000	BLOCK LEFT	4-51
256953-0000	BLOCK RIGHT	4-49
76582-0000	BLOCKING PIECE	12-149
76583-0000	BLOCKING PIECE	12-149
271284-0000	BLOCKING PIECE	4-31, 4-33
295496-0000	BLOCKING PIECE	6-41, 6-43
464009-0003	BLOCKING PIECE	8-37
574940-0000	BLOCKING PIECE	8-17, 8-19
589908-0000	BLOCKING PIECE	12-169
589909-0000	BLOCKING PIECE	12-169
590207-0000	BLOCKING PIECE	12-159
590208-0000	BLOCKING PIECE	12-159
590267-0000	BLOCKING PIECE	12-161
1035794-0000	BLOCKING PIECE	2-35, 2-37, 2-65, 2-67, 6-5, 6-7, 7-23, 7-25, 7-27, 7-29, 7-59, 8-11, 8-13
2751448-0000	BLOCKING PIECE	5-29, 5-31, 5-33
2764345-0000	BLOCKING PIECE	5-29, 5-31, 5-33
2776733-0000	BLOCKING PIECE	5-29, 5-31, 5-33
2800344-0000	BLOCKING PIECE	5-29, 5-31, 5-33
927194-0000	BODY	1-87
90201-0407	BOLT KIT	6-89, 6-91
1517252-0000	BOLT Ã˜20H7	6-53
90005-0014	BONDED SEAL SS/NBR G1/2"	4-53
90005-0005	BONDED SEAL SS/NBR G1/4	4-67, 4-69
90005-0003	BONDED SEAL SS/NBR M6	4-53, 4-67, 4-69
90005-0007	BONDED SEAL SS/NBR M8	4-67, 4-69
315211-0111	BONDED SEAL SS/NBR90 G1/2	6-89, 6-91
315211-0106	BONDED SEAL SS/NBR90 M10	6-89, 6-91
315211-0107	BONDED SEAL SS/NBR90 M12	5-81
315211-0101	BONDED SEAL SS/NBR90 M4	4-5, 4-7, 4-9, 4-11, 4-13, 4-15
315211-0103	BONDED SEAL SS/NBR90 M6	4-5, 4-7, 4-9, 4-11, 4-13, 4-15, 5-57
315211-0104	BONDED SEAL SS/NBR90 M8	5-71, 6-89, 6-91
315217-0111	BONDED SEAL SS/VITON G1/2	1-89
90459-1948	BONDED SEAL SS/VITON G1/4	1-89
90050-0011	BOTTLE	6-13
90050-0012	BOTTLE, 50ML PLASTIC	8-35, 8-61, 12-41, 12-43
76201-0000	BOTTOM PLATE	12-151, 12-153
2773922-0000	BOTTOM PLATE	5-75
256674-0500	BOTTOM VALVE	5-3
272457-0000	BOW CLAMP	3-9, 3-11
434747-0000	BOW CLAMP	8-35, 8-61, 12-41, 12-43
1517071-0000	BOW CLAMP	7-61
2500593-0000	BOW CLAMP	8-71
2594221-0000	BOW CLAMP	2-9
490768-0000	BOX	6-13
556668-0000	BOX	12-109
1511782-0000	BOX	10-133
1511821-0200	BOX	10-3, 10-5
1539105-0000	BOX	4-59
2506332-0000	BOX	5-49, 5-51
2797731-0000	BOX	10-133
1498775-0000	BOX BRACKET	7-23, 7-25, 7-27, 7-29
2552624-0000	BOX BRACKET	7-23, 7-25, 7-27, 7-29
580873-0100	BOX FOR AIR FREIGHT	12-7
75471-0000	BRACKET	12-83
76163-0000	BRACKET	12-59
76164-0000	BRACKET	12-59
76184-0000	BRACKET	12-57
76210-0000	BRACKET	12-151, 12-153
76302-0000	BRACKET	12-87
76305-0000	BRACKET	12-89
76408-0000	BRACKET	12-71
76410-0000	BRACKET	12-73
76593-0000	BRACKET	12-65
76599-0000	BRACKET	12-67, 12-69
76605-0000	BRACKET	12-55, 12-57
76610-0000	BRACKET	12-55
77245-0000	BRACKET	12-61
90236-0041	BRACKET	1-9, 1-11
90239-0453	BRACKET	1-57, 1-59, 1-125, 1-127, 1-139
90239-0460	BRACKET	1-35
256112-0000	BRACKET	1-39
256707-0000	BRACKET	4-31, 4-33
256870-0000	BRACKET	4-49, 4-51
257042-0000	BRACKET	1-125, 1-127
269859-0000	BRACKET	6-59
272033-0000	BRACKET	1-57
272427-0000	BRACKET	4-5, 4-7, 4-9, 4-11, 4-13, 4-15
272491-0000	BRACKET	4-31, 4-33

Part No	Description	Page No
272737-0000 ..	BRACKET	3-27
272844-0000 ..	BRACKET	1-91, 1-93
295605-0000 ..	BRACKET	1-95, 1-97
441356-0000 ..	BRACKET	3-5
441918-0000 ..	BRACKET	1-119, 1-121
451148-0000 ..	BRACKET	1-119, 1-121
469458-0000 ..	BRACKET	1-159
469459-0000 ..	BRACKET	1-159
469460-0000 ..	BRACKET	1-159
469745-0000 ..	BRACKET	1-119, 1-121
490769-0000 ..	BRACKET	6-13
490876-0000 ..	BRACKET	1-171, 1-173
491143-0000 ..	BRACKET	1-159
491173-0000 ..	BRACKET	1-35
491224-0000 ..	BRACKET	1-39
491545-0000 ..	BRACKET	1-39
555541-0000 ..	BRACKET	1-139
560931-0000 ..	BRACKET	1-9, 1-11, 1-21, 1-23, 1-91, 1-93, 6-77, 6-79
571532-0000 ..	BRACKET	1-39
571533-0000 ..	BRACKET	1-39
572252-0000 ..	BRACKET	8-25, 8-27, 8-29, 8-45, 8-47, 8-49
572485-0000 ..	BRACKET	1-129
574337-0000 ..	BRACKET	1-125, 1-127
574396-0000 ..	BRACKET	1-119, 1-121
574404-0000 ..	BRACKET	1-103, 1-105, 1-107, 1-109
574416-0000 ..	BRACKET	1-111, 1-113, 1-115
574456-0000 ..	BRACKET	1-119, 1-121
576274-0000 ..	BRACKET	8-17, 8-19
578000-0000 ..	BRACKET	8-25, 8-27, 8-29
578028-0000 ..	BRACKET	1-95, 1-97
578480-0000 ..	BRACKET	1-67, 1-69
579630-0000 ..	BRACKET	1-175
579633-0000 ..	BRACKET	1-175
580867-0000 ..	BRACKET	12-13
751403-0000 ..	BRACKET	6-67
751732-0000 ..	BRACKET	1-37
752531-0000 ..	BRACKET	8-25, 8-27, 8-29, 8-45, 8-47, 8-49
752642-0000 ..	BRACKET	8-25, 8-27, 8-29, 8-45, 8-47, 8-49
929381-0000 ..	BRACKET	12-91
977527-0000 ..	BRACKET	5-57, 6-77, 6-79
978272-0000 ..	BRACKET	3-9, 3-11, 3-13, 3-15
978531-0000 ..	BRACKET	1-49, 1-51
978532-0000 ..	BRACKET	1-49, 1-51
978736-0000 ..	BRACKET	1-35
978790-0000 ..	BRACKET	1-119, 1-121
978953-0000 ..	BRACKET	6-85
979474-0000 ..	BRACKET	1-9, 1-11
979814-0000 ..	BRACKET	1-15
979899-0000 ..	BRACKET	7-35, 7-37, 7-39, 7-41
979966-0000 ..	BRACKET	2-61
980002-0000 ..	BRACKET	8-43
1036588-0000	.BRACKET	7-45
1074209-0000	.BRACKET	6-51
1091719-0000	.BRACKET	5-45
1195454-0000	.BRACKET	5-41
1260065-0000	.BRACKET	5-53
1279702-0000	.BRACKET	5-13, 5-15, 5-17, 5-19, 5-21
1296901-0000	.BRACKET	12-167
1317905-0000	.BRACKET	1-67, 1-69
1334184-0000	.BRACKET	12-15
1334572-0000	.BRACKET	12-61
1346933-0000	.BRACKET	5-41
1348053-0000	.BRACKET	4-5, 4-7, 4-9, 4-11, 4-13, 4-15
1478659-0000	.BRACKET	9-25, 9-27
1484457-0000	.BRACKET	3-25
1499027-0000	.BRACKET	7-49
1511293-0000	.BRACKET	5-81
1511405-0001	.BRACKET	4-65
1511405-0002	.BRACKET	4-65
1511405-0003	.BRACKET	4-65
1511405-0004	.BRACKET	4-65
1511406-0000	.BRACKET	4-65
1511407-0000	.BRACKET	4-65
1511437-0000	.BRACKET	2-35, 2-37
1512129-0000	.BRACKET	5-23
1512354-0000	.BRACKET	3-27
1512440-0000	.BRACKET	5-81
1512840-0000	.BRACKET	2-19
1512847-0000	.BRACKET	2-49, 2-51
1512848-0000	.BRACKET	9-17
1517230-0000	.BRACKET	3-7
1517248-0000	.BRACKET	2-47, 2-59
1517249-0000	.BRACKET	2-49, 2-51
1517983-0000	.BRACKET	3-27

Part No	Description	Page No
1523151-0000	.BRACKET	3-33
1524653-0000	.BRACKET	1-59
1524673-0000	.BRACKET	1-95, 1-97
1524814-0000	.BRACKET	1-177
1538868-0000	.BRACKET	2-69, 6-5, 6-7
1539101-0000	.BRACKET	4-61, 4-63
1539966-0000	.BRACKET	5-13, 5-15, 5-17, 5-19, 5-21
1548833-0000	.BRACKET	1-133
1549307-0000	.BRACKET	8-17, 8-19
1549475-0000	.BRACKET	8-17, 8-19
1549489-0000	.BRACKET	8-11, 8-13
1549540-0000	.BRACKET	4-29
1558129-0000	.BRACKET	4-29
1558130-0000	.BRACKET	4-29
1558314-0000	.BRACKET	8-15
1558315-0000	.BRACKET	8-77
1558316-0000	.BRACKET	8-77
1558317-0000	.BRACKET	8-71
2500207-0000	.BRACKET	1-181
2500217-0000	.BRACKET	2-53, 2-55
2500259-0000	.BRACKET	2-57
2506471-0000	.BRACKET	7-47
2506473-0000	.BRACKET	7-47
2514091-0000	.BRACKET	4-53
2519644-0000	.BRACKET	7-23, 7-25, 7-27, 7-29
2519647-0000	.BRACKET	7-59
2522248-0000	.BRACKET	1-61
2524394-0000	.BRACKET	2-45
2524478-0000	.BRACKET	7-35, 7-37, 7-39, 7-41
2524482-0000	.BRACKET	7-47
2525340-0000	.BRACKET	8-17, 8-19
2526342-0000	.BRACKET	8-77
2544971-0000	.BRACKET	5-57
2552714-0000	.BRACKET	2-21
2559121-0000	.BRACKET	5-45
2582602-0000	.BRACKET	1-175
2582603-0000	.BRACKET	1-175
2582639-0000	.BRACKET	1-175
2588000-0000	.BRACKET	7-23, 7-25, 7-27, 7-29
2603016-0000	.BRACKET	7-43
2603631-0000	.BRACKET	1-67, 1-69
2611008-0000	.BRACKET	1-175
2615467-0000	.BRACKET	12-169
2634940-0000	.BRACKET	1-175
2638206-0000	.BRACKET	1-91, 1-93
2640155-0000	.BRACKET	1-161, 1-163
2721240-0000	.BRACKET	1-67, 1-69
2751447-0000	.BRACKET	5-29, 5-31, 5-33
2761755-0000	.BRACKET	1-89
2769988-0000	.BRACKET	2-61
2774504-0000	.BRACKET	1-181
2839810-0000	.BRACKET	7-51, 7-53
90113-0384	.... BRACKET FOR R11, 5203-06	12-17, 12-19
272497-0000	.. BRACKET LEFT	4-51
272502-0000	.. BRACKET LEFT	4-27
590275-0000	.. BRACKET LEFT	12-163
751079-0000	.. BRACKET LEFT	3-15
272496-0000	.. BRACKET RIGHT	4-49
272501-0000	.. BRACKET RIGHT	4-25
590274-0000	.. BRACKET RIGHT	12-163
751078-0000	.. BRACKET RIGHT	3-13
90458-2971	.... BRACKET, HR-1/4-P FOR LRP-1/4-0,7	6-33
90459-2247	.... BRACKET, MS4-WP	6-33
90459-1859	.... BRACKET, MS6-MV	6-35
90459-1858	.... BRACKET, MS6-WP	6-35
90450-0756	.... BRACKET, REAR EYE 32	1-37
90450-0654	.... BRACKET,REAR,EYE WITH AXLE 32	4-31, 4-33
580060-0200	.. BRAKE ARM	7-5, 7-7
90432-0023	.... BRAKE ORTLINGHAUS	3-5
578091-0000	.. BRANCH PIPE	2-29
978996-0000	.. BRANCH PIPE	1-63
90151-0001	.... BRASS PIPE DI=2,6 MM	2-23, 2-25, 2-27
776422-0101	.. BRASS WIRESTE	12-11
353034-0404	.. BRIDGE CONNECTOR Q10, 13131.0	5-49, 5-51, 10-61, 10-63, 10-65
353034-0401	.. BRIDGE CONNECTOR Q2, 13125.0	5-49, 5-51, 10-61, 10-65
353034-0402	.. BRIDGE CONNECTOR Q3, 13126.0	5-49, 5-51, 10-61
353034-0403	.. BRIDGE CONNECTOR Q4, 13127,0	10-61, 10-63, 10-65
353034-0030	.. BRIDGE CONNECTOR WQV 2,5/10, 10544.6	2-19, 7-33, 8-79, 10-65, 10-69, 10-73
353034-0039	.. BRIDGE CONNECTOR WQV 4/4, 10546.6	7-33
353034-0035	.. BRIDGE CONNECTOR, WQV 35/10, 10531.6	10-69
353034-0026	.. BRIDGE CONNECTOR, WQV 35/2, 10530.6	10-135
353034-0032	.. BRIDGE CONNECTOR, WQV 6/10, 10522.6	10-61
90036-0068	.... BULB 6.5W 24V	2-47, 2-59
90457-0086	.... BULKHEAD CONNECTOR 6MM	1-7, 1-95, 1-97, 2-53, 2-55

Part No	Description	Page No
342768-0102 ..	BULKHEAD CONNECTOR, 6 MM	2-13, 2-31
90457-0141	BULKHEAD CONNECTOR, 8MM	5-13, 5-15, 5-17, 5-19, 5-21
342960-0112 ..	BULKHEAD COUPLING 6/4	5-37, 5-71, 6-41, 6-43
342960-0122 ..	BULKHEAD COUPLING 8/6	5-37, 5-71, 6-41, 6-43
342960-0121 ..	BULKHEAD COUPLING 8/6-6/4	5-71
90457-0050	BULKHEAD HOUSING 149760	10-83, 10-85
90458-1181	BULKHEAD HOUSING HDC-HA-3-AWVL1/11	10-91, 10-93, 10-95, 10-97, 10-99, 10-101, 10-103
90259-0315	BUS BAR 3-POLE, K&M B 3.1/2-PKZM1	10-117
2554960-0000 .	BUSBAR LEFT	4-57
2554961-0000 .	BUSBAR RIGHT	4-55
571872-0000 ..	BUSBAR,LEFT	4-57
571871-0000 ..	BUSBAR,RIGHT	4-55
76463-0000	BUSHING	12-157
90134-0003	BUSHING	2-23, 2-25, 2-27
90208-0031	BUSHING	5-59, 5-61
255875-0000 ..	BUSHING	1-37, 1-139
255970-0000 ..	BUSHING	1-125, 1-127
256022-0000 ..	BUSHING	1-59
257213-0000 ..	BUSHING	4-49, 4-51
271269-0000 ..	BUSHING	1-35, 1-39, 1-57
279008-0000 ..	BUSHING	1-49, 1-51
295434-0000 ..	BUSHING	5-81
295909-0000 ..	BUSHING	1-35
295910-0000 ..	BUSHING	1-39
295936-0000 ..	BUSHING	1-39
401370-0000 ..	BUSHING	7-13
401371-0000 ..	BUSHING	7-13
401372-0000 ..	BUSHING	7-13
466430-0000 ..	BUSHING	8-37
491229-0000 ..	BUSHING	5-5
491231-0000 ..	BUSHING	5-5
491487-0000 ..	BUSHING	1-35
491770-0000 ..	BUSHING	6-65
751085-0000 ..	BUSHING	2-13
751165-0000 ..	BUSHING	1-59
752047-0000 ..	BUSHING	1-125, 1-127
1144507-0000 .	BUSHING	5-7, 5-9
1255541-0000 .	BUSHING	4-5, 4-7, 4-9, 4-11, 4-13, 4-15, 4-25, 4-27
1519421-0000 .	BUSHING	5-79
1519422-0000 .	BUSHING	5-79
1519601-0000 .	BUSHING	1-43, 1-45
1548142-0000 .	BUSHING	1-177
1558319-0000 .	BUSHING	8-17, 8-19
2523738-0000 .	BUSHING	5-7, 5-9
2532544-0000 .	BUSHING	4-5, 4-7, 4-9, 4-11, 4-13, 4-15, 4-25, 4-27
2552713-0000 .	BUSHING	2-21
2566439-0000 .	BUSHING	12-169
441217-0000 ..	BUSHING LOWER	2-13
441218-0000 ..	BUSHING UPPER	2-13
90134-0039	BUSHING VALVE CONNECTION 2,5 MM	2-23, 2-25, 2-27, 3-9, 3-11, 3-13, 3-15, 4-53, 4-67, 4-69, 5-11, 5-37
90134-0040	BUSHING VALVE CONNECTION 4 MM	5-37
90240-0287	BUSHING, 10X12X10 MM	7-49
321135-0183 ..	BUSHING, 12X14X15 MM	5-7, 5-9
90458-1790	BUSHING, 6X8X6 MM	1-177
90459-5626	BUSHING, 8X10X15 MM	5-7, 5-9
90458-0824	BUSHING, 8X10X8 MM	1-177
90030-0223	BUSHING, INT/EXT. G-THREAD NO. 2531	12-17, 12-19
342701-0208 ..	BUSHING, INT/EXT. G-THREAD NO. 3/4-1/4	3-5
342701-0203 ..	BUSHING, INT/EXT. G-THREAD NO. 3/8-1/4	6-23, 6-85, 6-93, 6-95
90459-2216	BUSHING, INT/EXT. G-THREAD NO. 1/4X1/2	6-35
90030-0225	BUSHING, INT/EXT. R-THREAD 1/4X3/8	12-17, 12-19
90330-0085	BUSHING, INT/EXT. THR. R1/2-RP1/4	5-69
90330-0025	BUSHING, INT/EXT. THR. R1/4-RP1/8	1-9, 1-11, 1-95, 1-97
90330-0078	BUSHING, INT/EXT. THR. R3/4-RP3/8	5-37
342701-0205 ..	BUSHING,INT./EXT.G-THREAD G1/2"-G1/4"	2-45, 6-35, 6-49, 6-85
342701-0206 ..	BUSHING,INT./EXT.G-THREAD G1/2"-G3/8"	6-35, 6-51
342701-0201 ..	BUSHING,INT./EXT.G-THREAD G1/4"-G1/8"	12-17, 12-19, 12-125
342701-0209 ..	BUSHING,INT./EXT.G-THREAD G3/4"-G3/8"	6-85
90134-0038	BUSHING/NUT INLET/OUTLET 4 MM	2-23, 2-25, 2-27, 3-9, 3-11, 3-13, 3-15, 5-37
90134-0055	BUSHING/NUT INLET/OUTLET 6 MM	5-37, 6-87
359301-0005 ..	BUTTON SIGN, DOWN	2-73
359301-0160 ..	BUTTON SIGN, DRAINAGE OF PRODUCT TUBE	2-73
359301-0050 ..	BUTTON SIGN, DROP CHUTE BRIK	2-73
359301-0090 ..	BUTTON SIGN, INCHING	2-73
359301-0091 ..	BUTTON SIGN, INCHING FINAL FOLDER	2-73
359301-0130 ..	BUTTON SIGN, LAMP TEST	2-73
359301-0110 ..	BUTTON SIGN, SHORT STOP	2-73, 7-17, 8-77
359301-0170 ..	BUTTON SIGN, SPOOLING OF FINAL FOLDER	2-73
359301-0001 ..	BUTTON SIGN, UP	2-73
576437-0100 ..	C-CYLINDER	1-75
90226-0004	CABINET	12-11
979328-0200 ..	CABINET	6-57
1511795-0200 .	CABINET	10-3, 10-5

Part No	Description	Page No
2800352-0000	CABINET	1-9, 1-11
1512805-0000	CABINET (SMALL)	6-71
441850-0700 ..	CABLE	5-3
539691-0000 ..	CABLE	12-107
539692-0000 ..	CABLE	12-103
1511793-0000	CABLE	10-71
351160-0102 ..	CABLE (1UNIT = 100M)	1-13, 10-7, 10-9, 10-11
351164-0105 ..	CABLE (1UNIT = 100M)	10-7, 10-9, 10-11
351175-0102 ..	CABLE AWM 1X 075 MM2 YELLOW-GREEN	6-75
351166-0102 ..	CABLE AWM 1X0,75 MM2 ORANGE	10-7, 10-9, 10-11
351164-0104 ..	CABLE AWM 1X1,5 MM2 BLACK	10-7, 10-9, 10-11
351162-0104 ..	CABLE AWM 1X1,5 MM2 YELLOW-GREEN	10-7, 10-9, 10-11
351161-0109 ..	CABLE AWM 1X16 MM2 LIGHTBLUE	10-7, 10-9, 10-11
351162-0109 ..	CABLE AWM 1X16 MM2 YELLOW-GREEN	6-53, 10-7, 10-9, 10-11
351160-0105 ..	CABLE AWM 1X2,5 MM2 DARKBLUE	10-7, 10-9, 10-11
351161-0105 ..	CABLE AWM 1X2,5 MM2 LIGHTBLUE	10-7, 10-9, 10-11
351162-0105 ..	CABLE AWM 1X2,5 MM2 YELLOW-GREEN	10-7, 10-9, 10-11
351164-0110 ..	CABLE AWM 1X25 MM2 BLACK	10-7, 10-9, 10-11
351161-0110 ..	CABLE AWM 1X25 MM2 LIGHTBLUE	10-7, 10-9, 10-11
351164-0111 ..	CABLE AWM 1X35 MM2 BLACK	10-7, 10-9, 10-11
351164-0106 ..	CABLE AWM 1X4 MM2 BLACK	10-7, 10-9, 10-11
351161-0106 ..	CABLE AWM 1X4 MM2 LIGHTBLUE	10-7, 10-9, 10-11
351162-0106 ..	CABLE AWM 1X4 MM2 YELLOW-GREEN	2-13, 2-57, 6-41, 6-43, 10-7, 10-9, 10-11
351164-0107 ..	CABLE AWM 1X6 MM2 BLACK	10-7, 10-9, 10-11
351160-0107 ..	CABLE AWM 1X6 MM2 DARKBLUE	10-7, 10-9, 10-11
351163-0107 ..	CABLE AWM 1X6 MM2 RED	10-7, 10-9, 10-11
351162-0107 ..	CABLE AWM 1X6 MM2 YELLOW-GREEN	10-7, 10-9, 10-11
351161-0104 ..	CABLE AWM LIGHTBLUE 1,5MM2	10-7, 10-9, 10-11
90074-0001	CABLE CLIPS, D=10 MM	1-171, 1-173
352110-0103 ..	CABLE CLIPS, D=14-20 MM	5-69
90458-1489	CABLE CLIPS, D=4,75 MM	2-31
352110-0100 ..	CABLE CLIPS, D=5-7 MM	1-49, 1-51
90458-1490	CABLE CLIPS, D=7,9 MM	10-13, 10-15, 10-17
978539-0000 ..	CABLE CONDUIT	1-143, 1-145, 1-147, 1-149, 1-151, 1-153
978540-0000 ..	CABLE CONDUIT	1-143, 1-145, 1-147, 1-149, 1-151, 1-153
90181-0174	CABLE DUCT	10-13, 10-15, 10-17
1511817-0000	CABLE DUCT	10-123, 10-125
1519758-0000	CABLE DUCT	6-11
1519759-0000	CABLE DUCT	6-11
1519760-0000	CABLE DUCT	6-11
1519761-0000	CABLE DUCT	6-11
1519762-0000	CABLE DUCT	6-11
1519763-0000	CABLE DUCT	6-11
1524319-0100	CABLE DUCT	6-3
2500215-0000	CABLE DUCT	2-53, 2-55
2500216-0000	CABLE DUCT	2-53, 2-55
2598375-0000	CABLE DUCT	10-109, 10-111
2598376-0000	CABLE DUCT	10-109, 10-111
2598377-0000	CABLE DUCT	10-109, 10-111
2604460-0000	CABLE DUCT	10-13, 10-15, 10-17
2604461-0000	CABLE DUCT	10-13, 10-15, 10-17
2604462-0000	CABLE DUCT	10-13, 10-15, 10-17
2604463-0000	CABLE DUCT	10-13, 10-15, 10-17
2604464-0000	CABLE DUCT	10-13, 10-15, 10-17
2604465-0000	CABLE DUCT	10-13, 10-15, 10-17
2604466-0000	CABLE DUCT	10-13, 10-15, 10-17
2604467-0000	CABLE DUCT	10-13, 10-15, 10-17
2604468-0000	CABLE DUCT	10-13, 10-15, 10-17
90181-0062	CABLE DUCT 100X100MM	10-13, 10-15, 10-17
90181-0057	CABLE DUCT 120X80MM	10-147
90459-2452	CABLE DUCT 25X100MM	10-13, 10-15, 10-17
90181-0037	CABLE DUCT 25X40MM	10-143
90181-0060	CABLE DUCT 40X100MM	10-13, 10-15, 10-17
90181-0053	CABLE DUCT 40X80MM	10-145
90181-0061	CABLE DUCT 60X100MM	10-13, 10-15, 10-17
90181-0054	CABLE DUCT 60X80MM	10-71, 10-123, 10-125
90181-0190	CABLE DUCT, WALL BRACKET, B4 MINI	2-53, 2-55
266739-0000 ..	CABLE GLAND	1-39
352100-0106 ..	CABLE GLAND NO.18,6-10,5	1-35
90458-0305	CABLE GLAND, M12X1,5, NO.5311 1000	7-33, 10-91, 10-93, 10-95, 10-97, 10-99, 10-101 10-103
90458-0306	CABLE GLAND, M16X1,5, NO.5311 1010	1-49, 1-51, 7-33, 8-79
90458-0314	CABLE GLAND, M16X1,5, NO.5311 1110	2-57, 5-37
90458-0307	CABLE GLAND, M20X1,5, NO.5311 1020	2-57, 8-77
90458-0315	CABLE GLAND, M20X1,5, NO.5311 1120	7-31, 8-11, 8-13, 8-45, 8-47, 8-49, 8-79
90458-0308	CABLE GLAND, M25X1,5, NO.5311 1030	2-57
90458-0316	CABLE GLAND, M25X1,5, NO.5311 1130	5-47
90458-0310	CABLE GLAND, M40X1,5, NO.5311 1050	5-47
90458-0311	CABLE GLAND, M50X1,5, NO.5311 1060	2-53, 2-55, 10-75, 10-77
352103-0106 ..	CABLE GLAND, ST 11, PR18,6/PG11	1-39, 1-183, 2-19, 5-49, 5-51, 6-11
352103-0108 ..	CABLE GLAND, ST 13,5 , PR20,4/PG13,5	2-31, 6-11
352103-0111 ..	CABLE GLAND, ST 16, PR22,5/PG16	1-155, 1-157, 10-81, 10-141
352103-0116 ..	CABLE GLAND, ST 21, PR28,3/PG21	1-13, 1-155, 1-157, 2-19, 10-81
352103-0121 ..	CABLE GLAND, ST 29, PR37,0/PG29	1-155, 1-157, 5-49, 5-51, 10-81

Part No	Description	Page No
352103-0096 ..	CABLE GLAND, ST 7, PR 12,5/PG7	1-13, 12-105
352103-0101 ..	CABLE GLAND, ST 9, PR15,2/PG9	1-13, 1-49, 1-51, 1-67, 1-69, 1-143, 1-145, 1-147, 1-149, 1-151, 1-153, 1-155, 1-157, 2-19, 2-31, 6-11, 10-79, 10-81, 10-105, 10-107
352103-0110 ..	CABLE GLAND, STR 16, PR22,5/PG16	1-155, 1-157, 10-79, 10-81
352103-0120 ..	CABLE GLAND, STR 29, PR37,0/PG29	1-155, 1-157
352103-0100 ..	CABLE GLAND, STR 9, PR15,2/PG9	2-13
90110-0346	CABLE HOOD 1211220 00 00	7-33
90110-0152	CABLE HOOD 24-POL 70.352.2428.1	8-77
90110-0226	CABLE HOOD 6-POL 70.350.0628.0	10-141
90110-0244	CABLE HOOD 6-POL 70.350.1628.0	7-33
2598113-0100 .	CABLE LEAD-IN PLATE	10-3, 10-5
1366189-0000 .	CABLE LVDS 6M	10-71
351150-0407 ..	CABLE OLFLEX 12X0,75 MM2 LIGHT/GREY	7-17, 7-33
351150-0425 ..	CABLE OLFLEX 25X0,75 MM2 LIGHT/GREY	1-9, 1-11, 2-13, 7-33, 8-79
90458-2557	CABLE OLFLEX 25X1 MM2	2-57
351150-0431 ..	CABLE OLFLEX 2X0,75 MM2 LIGHT/GREY	1-21, 1-23, 1-87, 2-35, 2-37, 2-69, 5-81, 6-23, 6-31, 6-77, 6-79
351150-0403 ..	CABLE OLFLEX 3X0,75 MM2 LIGHT/GREY	1-9, 1-11, 1-21, 1-23, 1-91, 1-93, 6-29, 6-41, 6-43, 6-75, 6-87, 6-89, 6-91, 6-93, 6-95
351150-0412 ..	CABLE OLFLEX 3X1,5 MM2 LIGHT/GREY	1-21, 1-23, 2-9, 2-13, 6-13, 8-79
351150-0422 ..	CABLE OLFLEX 3X4 MM2 LIGHT/GREY	7-33
351150-0428 ..	CABLE OLFLEX 41X0,75 MM2 LIGHT/GREY	2-13
351150-0404 ..	CABLE OLFLEX 4X0,75 MM2 LIGHT/GREY	1-9, 1-11, 1-91, 1-93, 6-87, 6-89, 6-91, 8-77
351150-0413 ..	CABLE OLFLEX 4X1,5 MM2 LIGHT/GREY	1-61, 2-13
351150-0418 ..	CABLE OLFLEX 4X2,5 MM2 LIGHT/GREY	2-13, 6-59, 6-65, 6-89, 6-91
351150-0405 ..	CABLE OLFLEX 5X0,75 MM2 LIGHT/GREY	1-49, 1-51, 1-67, 1-69, 1-143, 1-145, 1-147, 1-149, 1-151, 1-153, 3-27, 6-61, 7-31, 8-79, 9-3, 9-23, 9-29, 9-31
351150-0414 ..	CABLE OLFLEX 5X1,5 MM2 LIGHT/GREY	8-79
351150-0406 ..	CABLE OLFLEX 7X0,75 MM2 LIGHT/GREY	2-47, 2-57, 8-77, 8-79
351150-0415 ..	CABLE OLFLEX 7X1,5 MM2 LIGHT/GREY	10-141
90024-0063	CABLE PROTECTION, 25MM	10-7, 10-9, 10-11
90024-0062	CABLE PROTECTION, 40MM	10-7, 10-9, 10-11
90459-3092	CABLE PROTECTION, CP10	10-7, 10-9, 10-11
1254442-0000 .	CABLE SERIAL	10-71
1478661-0000 .	CABLE SERIAL	10-71
353101-0126 ..	CABLE SHOE	5-81
353103-0130 ..	CABLE SHOE	10-7, 10-9, 10-11
353103-0138 ..	CABLE SHOE	10-7, 10-9, 10-11
353101-0118 ..	CABLE SHOE 0,5-1,5MM2 M3 RED	6-75
353101-0120 ..	CABLE SHOE 0,5-1,5MM2 M4 RED	10-7, 10-9, 10-11, 12-105
353101-0123 ..	CABLE SHOE 0,5-1,5MM2 M6 RED	5-81
353103-0120 ..	CABLE SHOE 1,25 MMÂ² RED	10-7, 10-9, 10-11
353101-0129 ..	CABLE SHOE 1,5-2,5MM2 M3 BLUE	10-7, 10-9, 10-11
353101-0130 ..	CABLE SHOE 1,5-2,5MM2 M4 BLUE	7-21, 10-7, 10-9, 10-11
353101-0132 ..	CABLE SHOE 1,5-2,5MM2 M5 BLUE	1-35, 7-19, 7-21, 10-7, 10-9, 10-11
353101-0150 ..	CABLE SHOE 4,0-6,0MM2 M4 YELLOW	10-7, 10-9, 10-11
353101-0152 ..	CABLE SHOE 4,0-6,0MM2 M5 YELLOW	10-7, 10-9, 10-11
353101-0153 ..	CABLE SHOE 4,0-6,0MM2 M6 YELLOW	6-41, 6-43, 10-7, 10-9, 10-11
353104-0130 ..	CABLE SHOE, RING UNINS., YAV 025 M 4	1-39
353104-0140 ..	CABLE SHOE, RING UNINS., YAV 06 M 4	7-19
353104-0164 ..	CABLE SHOE, RING UNINS., YAV 10 M 10	10-7, 10-9, 10-11
353104-0168 ..	CABLE SHOE, RING UNINS., YAV 16 M 6	10-7, 10-9, 10-11
353104-0175 ..	CABLE SHOE, RING UNINS., YAV 25 M 6	10-7, 10-9, 10-11
351120-0168 ..	CABLE SIHF 4X10MM2 GREEN/YELLOW	1-43, 1-45
351120-0144 ..	CABLE SILFLEX SIHF 3X1,5 0046014	1-39, 5-13, 5-15, 5-17, 5-19, 5-21, 8-79
351120-0145 ..	CABLE SILFLEX SIHF 3X2,5 0046020	1-35, 7-21
351120-0146 ..	CABLE SILFLEX SIHF 3X4 0046026	7-19
351120-0267 ..	CABLE SILFLEX SIHF 4X6 00460333	1-21, 1-23
352113-0102 ..	CABLE TIE, BLACK 188X4,8 MM	1-183, 5-47, 10-7, 10-9, 10-11, 12-23
352113-0104 ..	CABLE TIE, BLACK 300X4,8 MM	6-15, 6-17, 6-19
352113-0101 ..	CABLE TIE, BLACK 92X2,5 MM	2-23, 2-25, 2-27, 3-13, 3-15, 4-31, 4-33, 6-13, 8-35, 8-61, 10-7, 10-9, 10-11, 12-41, 12-43
90220-0057	CABLE TLPE 1X06MM2	12-105
2614225-0000 .	CABLE TRACK	8-77
2614226-0000 .	CABLE TRACK	8-77
2614227-0000 .	CABLE TRACK	8-77
2614228-0000 .	CABLE TRACK	8-77
469374-0700 ..	CABLE TRENCH	1-3, 1-5
577462-0000 ..	CABLE TRENCH	1-143, 1-145, 1-147, 1-149, 1-151, 1-153
1517268-0000 .	CABLE TRENCH	1-143, 1-145, 1-147, 1-149, 1-151, 1-153
1517269-0000 .	CABLE TRENCH	1-143, 1-145, 1-147, 1-149, 1-151, 1-153
2500218-0000 .	CABLE TRENCH	2-53, 2-55
2526843-0000 .	CABLE TRENCH	1-143, 1-145, 1-147, 1-149, 1-151, 1-153
2526847-0000 .	CABLE TRENCH	1-143, 1-145, 1-147, 1-149, 1-151, 1-153
2526848-0000 .	CABLE TRENCH	1-143, 1-145, 1-147, 1-149, 1-151, 1-153
2773918-0000 .	CABLE TRENCH	1-143, 1-145, 1-147, 1-149, 1-151, 1-153
2781220-0000 .	CABLE TRENCH	1-143, 1-145, 1-147, 1-149, 1-151, 1-153
90220-0085	CABLE, MULTI-CONDUCTOR SCREENED	1-185
90220-0058	CABLE, POWER SUPPLY, RKK 2M	12-109
272024-0500 ..	CALENDER ROLLER	1-3, 1-5
1538096-0000 .	CALENDER ROLLER	1-57
1538097-0000 .	CALENDER ROLLER	1-57
78801-0000	CALIBRATION TOOL	9-15
491965-0000 ..	CAM	8-25, 8-27, 8-29, 8-45, 8-47, 8-49

Part No	Description	Page No
1539266-0000	.CAM	5-53
2552721-0000	.CAM	5-7, 5-9
2553110-0000	.CAM	4-61, 4-63
2553111-0000	.CAM	4-61, 4-63
580358-0000	.. CAM SEGMENT L	3-19, 3-21
1282311-0000	.CAM SEGMENT L	3-19, 3-21
979781-0000	.. CAM SEGMENT L 100	3-19, 3-21
582200-0000	.. CAM SEGMENT LEFT	3-19, 3-21
580359-0000	.. CAM SEGMENT R	3-19, 3-21
1282312-0000	.CAM SEGMENT R	3-19, 3-21
979780-0000	.. CAM SEGMENT R 100	3-19, 3-21
582199-0000	.. CAM SEGMENT RIGHT	3-19, 3-21
75945-0000	.... CAM TEMPLATE	12-77, 12-79
76349-0000	.... CAM TEMPLATE	12-77, 12-79
491917-0000	.. CAMSEGMENT L	3-19, 3-21
491919-0000	.. CAMSEGMENT L	3-19, 3-21
577220-0000	.. CAMSEGMENT L	3-19, 3-21
978775-0000	.. CAMSEGMENT L	3-19, 3-21
978779-0000	.. CAMSEGMENT L	3-19, 3-21
978796-0000	.. CAMSEGMENT L	3-19, 3-21
581536-0000	.. CAMSEGMENT L 284ML	3-19, 3-21
491916-0000	.. CAMSEGMENT R	3-19, 3-21
491918-0000	.. CAMSEGMENT R	3-19, 3-21
577219-0000	.. CAMSEGMENT R	3-19, 3-21
978774-0000	.. CAMSEGMENT R	3-19, 3-21
978778-0000	.. CAMSEGMENT R	3-19, 3-21
978795-0000	.. CAMSEGMENT R	3-19, 3-21
581535-0000	.. CAMSEGMENT R 284ML	3-19, 3-21
978770-0000	.. CAMSEGMENTL	3-19, 3-21
978771-0000	.. CAMSEGMENTL	3-19, 3-21
476354-0000	.. CANNULAR TUBE	8-61, 12-41
476355-0000	.. CANNULAR TUBE	8-35, 12-43
76293-0000	.... CANTILEVER	12-85
76464-0000	.... CANTILEVER	12-87
271163-0000	.. CANTILEVER	2-5, 2-7
272442-0000	.. CANTILEVER	3-9, 3-11
272664-0000	.. CANTILEVER	3-27
272736-0000	.. CANTILEVER	3-27
571535-0000	.. CANTILEVER	1-103, 1-105, 1-107, 1-109
571536-0000	.. CANTILEVER	1-103, 1-105, 1-107, 1-109
574445-0000	.. CANTILEVER	8-45, 8-47, 8-49
577360-0000	.. CANTILEVER	1-67, 1-69
751267-0000	.. CANTILEVER	1-111, 1-113, 1-115
751457-0000	.. CANTILEVER	1-171, 1-173
751476-0000	.. CANTILEVER	1-171, 1-173
752200-0000	.. CANTILEVER	8-25, 8-27, 8-29, 8-45, 8-47, 8-49
752527-0000	.. CANTILEVER	8-25, 8-27, 8-29, 8-45, 8-47, 8-49
752541-0000	.. CANTILEVER	8-25, 8-27, 8-29, 8-45, 8-47, 8-49
1498773-0000	.CANTILEVER	7-35, 7-37
1539995-0200	.CANTILEVER	5-3
256082-0000	.. CAP	4-49, 4-51
256516-0000	.. CAP	3-13, 3-15, 3-23
257311-0000	.. CAP	3-9, 3-11, 3-13, 3-15
272116-0000	.. CAP	3-9, 3-11
295426-0000	.. CAP	1-49, 1-51
67347-0101	.... CARD BRAKEREG.MAGN.POWDER BRAKE	10-31
273985-0000	.. CARRIAGE	12-25
32925-0000	.... CARRIER	8-25, 8-27, 8-29, 8-45, 8-47, 8-49
272419-0000	.. CARRIER	4-5, 4-7, 4-9, 4-11, 4-13, 4-15
292411-0000	.. CARRIER	8-51, 8-53, 12-27, 12-29
292414-0000	.. CARRIER	8-31, 8-33, 12-37, 12-39
293659-0000	.. CARRIER	8-51, 8-53, 12-27, 12-29
293676-0000	.. CARRIER	8-51, 8-53, 12-27, 12-29
293688-0000	.. CARRIER	8-51, 8-53, 12-27, 12-29
442072-0000	.. CARRIER	8-51, 8-53, 12-27, 12-29
442431-0000	.. CARRIER	8-51, 8-53, 12-27, 12-29
456995-0000	.. CARRIER	1-21, 1-23
479237-0000	.. CARRIER	8-51, 8-53, 12-27, 12-29
479238-0000	.. CARRIER	8-51, 8-53, 12-27, 12-29
479239-0000	.. CARRIER	8-31, 8-33, 12-37, 12-39
479240-0000	.. CARRIER	8-31, 8-33, 12-37, 12-39
979793-0000	.. CARRIER	4-25
979794-0000	.. CARRIER	4-27
1519214-0000	.CARRIER	4-25
1519219-0000	.CARRIER	4-5, 4-7, 4-9
1519230-0000	.CARRIER	4-27
1519374-0001	.CARRIER	4-17, 4-19, 4-21, 4-23
1519374-0002	.CARRIER	4-17, 4-19, 4-21, 4-23
1519536-0000	.CARRIER	4-11, 4-13, 4-15
1538942-0000	.CARRIER	4-17, 4-19, 4-21, 4-23
1539268-0000	.CARRIER	5-53
1549182-0000	.CARRIER	5-53
1549183-0000	.CARRIER	5-53
1549184-0000	.CARRIER	5-53

Part No	Description	Page No
1549186-0000	.CARRIER	5-53
1549187-0000	.CARRIER	5-53
1549190-0000	.CARRIER	5-53
1549191-0000	.CARRIER	5-53
1549193-0000	.CARRIER	5-53
2502192-0000	.CARRIER	5-53
2502194-0000	.CARRIER	5-53
2527724-0000	.CARRIER	4-5, 4-7, 4-9, 4-11, 4-13, 4-15
2665718-0000	.CARRIER	4-5, 4-7, 4-9, 4-11, 4-13, 4-15
978714-0000	.. CARRIER LEFT	4-11, 4-13, 4-15
979763-0000	.. CARRIER LEFT 100	4-11, 4-13, 4-15
979765-0000	.. CARRIER LEFT 100	4-27
978715-0000	.. CARRIER RIGHT	4-5, 4-7, 4-9
979762-0000	.. CARRIER RIGHT 100	4-5, 4-7, 4-9
979764-0000	.. CARRIER RIGHT 100	4-25
1519216-0000	.CARRIER RULER	4-5, 4-7, 4-9
1519231-0000	.CARRIER RULER	4-11, 4-13, 4-15
574371-0000	.. CARRIER RULER LEFT	4-11, 4-13, 4-15
574372-0000	.. CARRIER RULER LEFT	4-11, 4-13, 4-15
574369-0000	.. CARRIER RULER RIGHT	4-5, 4-7, 4-9
574370-0000	.. CARRIER RULER RIGHT	4-5, 4-7, 4-9
2800334-0001	.CARTON STATION	5-5
2800334-0002	.CARTON STATION	5-5
2800334-0003	.CARTON STATION	5-5
2800334-0004	.CARTON STATION	5-5
2800334-0006	.CARTON STATION	5-5
2800334-0007	.CARTON STATION	5-5
2800335-0001	.CARTON STATION	5-5
2800335-0002	.CARTON STATION	5-5
2800336-0001	.CARTON STATION	5-5
2800336-0002	.CARTON STATION	5-5
2800336-0003	.CARTON STATION	5-5
2800336-0004	.CARTON STATION	5-5
90191-0060	.... CASTOR WHEEL, NO. 1599PRT	12-25
476117-0000	.. CATCH	8-15
579637-0000	.. CATCH	1-135
579771-0000	.. CATCH	1-135
978745-0000	.. CATCH	4-5, 4-7, 4-9, 4-11, 4-13, 4-15
978746-0000	.. CATCH	4-25, 4-27
979728-0000	.. CATCH	1-135
1523924-0000	.CATCH	4-5, 4-7, 4-9, 4-11, 4-13, 4-15
532655-0000	.. CAUTION SIGN	6-73
90459-0285	.... CD UNIT, 02413-000	12-7
978823-0300	.. CENTRAL LUBRICATION	6-3
90155-0016	.... CHAIN LONG LINK, LLB-3-R	1-133
1255876-0200	.CHAIN TENSIONER	5-37
256084-0700	.. CHANGE-OVER VALVE	1-3, 1-5
90110-0153	.... CHASSIS HOUSING 24-P CHI 24, 121240 0000	10-87, 10-91, 10-93, 10-95, 10-97, 10-99, 10-101, 10-103
90230-0064	.... CHECK VALVE, 6 MM HIGH TEMP.	1-9, 1-11
1512631-0000	.CHECKER PLATE	2-49, 2-51
1512632-0000	.CHECKER PLATE	2-49, 2-51
1512633-0000	.CHECKER PLATE	2-49, 2-51
1512845-0000	.CHECKER PLATE	2-49, 2-51
1512846-0000	.CHECKER PLATE	2-49, 2-51
2505282-0000	.CHECKER PLATE	2-49, 2-51
2632603-0000	.CHECKER PLATE	2-49, 2-51
2552684-0000	.CHUTE	2-69
2552685-0000	.CHUTE	2-69
442092-0000	.. CIRCUIT BOARD	12-103
1144521-0000	.CLAMP	5-7, 5-9
1366727-0000	.CLAMP	5-45
1517518-0001	.CLAMP	12-135
1517518-0002	.CLAMP	12-135
1517518-0003	.CLAMP	12-135
1538098-0000	.CLAMP	1-57
1548225-0000	.CLAMP	1-177
2559087-0000	.CLAMP	1-61
2635109-0000	.CLAMP	1-67, 1-69
271860-0000	.. CLAMP BLOCK	1-167, 1-169
90220-0305	.... CLAMP FOR SCR.CABLE, 16MM,	10-31
75472-0000	.... CLAMP IRON	12-83
752290-0000	.. CLAMP LEFT	4-27
1517069-0000	.CLAMP PLATE	7-61
752289-0000	.. CLAMP RIGHT	4-25
532117-0000	.. CLAMP RING	1-83
532118-0000	.. CLAMP RING	1-85
541163-0200	.. CLAMP RING	1-75
541164-0200	.. CLAMP RING	1-75
2501362-0000	.CLAMP RING	8-17, 8-19
90135-0019	.... CLAMP ZB 35	10-69
342840-0101	.. CLAMP, 12,7 AND 19,1 MM 3-A PCS+PMCS	5-83
90217-0312	.... CLAMP, ISO2852 FOR PIPE 101,6 MM	6-77, 6-79
90119-0310	.... CLAMP, TYPE PYC-A1	10-29

Part No	Description	Page No
90208-0080	CLAMPING ELEMENT WITH SLEEVE, 25X34 MM	3-19, 3-21
90208-0091	CLAMPING ELEMENT WITH SLEEVE, 60X77 MM	3-19, 3-21
90457-0162	CLAMPING ELEMENT, 00203005	3-33
90458-1230	CLAMPING ELEMENT, DI=36 MM	8-17, 8-19
76416-0100	CLAMPING PIECE	12-45
76417-0000	CLAMPING PIECE	12-117
76418-0000	CLAMPING PIECE	12-117
272503-0000	CLAMPING PIECE	4-25, 4-27
342840-0103	CLAMPING PIECE	1-135
342840-0105	CLAMPING PIECE	6-77, 6-79
466483-0000	CLAMPING PIECE	1-139
90457-0128	CLAMPING ROLL	3-5, 3-7
2544981-0100	CLEANING CIRCUIT	5-81
1511294-0000	CLEANING PIPE	5-81
1539601-0000	CLEANING PIPE	1-7
2545062-0000	CLEANING PIPE	1-7
2545432-0000	CLEANING PIPE	1-7
2781221-0000	CLEANING PIPE	1-135
2781222-0000	CLEANING PIPE	1-135
2781223-0000	CLEANING PIPE	1-135
271261-0700	CLEANING SYSTEM	2-23, 2-25, 2-27
456836-0700	CLEANING SYSTEM	1-3, 1-5
2544980-0200	CLEANING SYSTEM	5-3
2773920-0000	CLEANING TANK	5-81
90165-0010	CLIP	8-31, 8-33, 12-37, 12-39
90165-0023	CLIP	2-23, 2-25, 2-27
1282426-0000	CLIP	2-13, 4-55, 4-57
1511572-0000	CLIP	8-51, 8-53, 12-27, 12-29
352135-0202	CLIP, 16 MM, 913.016	8-25, 8-27, 8-29, 8-45, 8-47, 8-49, 8-77
551969-0012	COAXIAL CABLE	10-143
1548155-0000	COAXIAL CABLE	4-55, 4-57
548770-0006	COAXIAL CABLE L=1200 MM	7-45
551969-0006	COAXIAL CABLES	2-13
90110-0127	COAXIAL CONNECTOR, GE 15057C10HBNT-20T	10-91, 10-93, 10-95, 10-97, 10-99, 10-101, 10-103
90187-0112	COCK VALVE, G1/4, 4-WAY, VITON	1-89
90413-0043	CODE INSERT SET	8-31, 8-33, 8-51, 8-53, 12-27, 12-29, 12-37, 12-39
90413-0044	CODE INSERT SET	8-31, 8-33, 8-51, 8-53, 12-27, 12-29, 12-37, 12-39
90413-0187	CODE INSERT SET	12-7
90413-0190	CODE INSERT SET (ARABIC 4MM)	12-7
90413-0189	CODE INSERT SET 0-9 (ARABIC 4MM)	12-7
90413-0188	CODE INSERT SET 0-9 (ARABIC 8MM)	12-7
90413-0196	CODE INSERT SET 1-12 3MM (SWE-ARABIC)	12-7
90413-0195	CODE INSERT SET 1-31 3MM(SWE-ARABIC)	12-7
90413-0047	CODE INSERT SET A 2/16	8-31, 8-33, 8-51, 8-53, 12-27, 12-29, 12-37, 12-39
90413-0048	CODE INSERT SET A 9/28	8-51, 8-53, 12-27, 12-29
90413-0033	CODE INSERT SET C 2/16	8-31, 8-33, 8-51, 8-53, 12-27, 12-29, 12-37, 12-39
90413-0049	CODE INSERT SET C 9/28	8-51, 8-53, 12-27, 12-29
2555310-0000	COIL	1-17
441804-0000	COIL HEATER	9-35
2781218-0000	COLLAR	2-13
90459-5806	COMMONING BUSBAR, 1-P 1-PH 1X12 MOD 63A	10-113
90459-5884	COMMONING BUSBAR, 3-P 3-PH 3X19 MOD 63A	10-113
90335-0025	COMP. SPRING 22010, 1X11X26	8-75
90335-0027	COMP. SPRING 22170, 1,25X9,25X33	7-51, 7-53
90335-0064	COMP. SPRING 22270, 1,25X13,75X62,5	8-37
90335-0152	COMP. SPRING 22300, 1,25X17,25X40,5	5-41
90335-0036	COMP. SPRING 22450, 1,6X14,1X24	5-13, 5-15, 5-17, 5-19, 5-21, 8-15
90335-0008	COMP. SPRING 22490, 1,6X14,1X115	1-103, 1-105, 1-107, 1-109
90335-0052	COMP. SPRING 23400, 3,2X28,2X94,5	12-89
90335-0146	COMP. SPRING, 0,6X7,2X20	7-43
90335-0149	COMP. SPRING, 1,6X9,6X35,5	12-155
90458-0118	COMPACT DISC RECORDABLE	11-7
1511779-0200	COMPONENT PLATES	10-3, 10-5
540282-0002	COMPONENTS WITHOUT TP-NO	10-35
543336-0001	COMPONENTS WITHOUT TP-NO	10-33
491153-0000	COMPRESSION GLAND	1-103, 1-105, 1-107, 1-109
12228-0000	COMPRESSION SPRING	3-27
21521-0000	COMPRESSION SPRING	1-37, 1-139
35919-0000	COMPRESSION SPRING	1-119, 1-121
76304-0100	COMPRESSION SPRING	12-77, 12-79
90067-0355	COMPRESSION SPRING	9-9
255742-0000	COMPRESSION SPRING	4-5, 4-7, 4-9, 4-11, 4-13, 4-15
440660-0000	COMPRESSION SPRING	1-81
440661-0000	COMPRESSION SPRING	1-81
440662-0000	COMPRESSION SPRING	1-79
440663-0000	COMPRESSION SPRING	1-77, 1-81
490942-0000	COMPRESSION SPRING	4-25, 4-27
490943-0000	COMPRESSION SPRING	4-25, 4-27
926909-0000	COMPRESSION SPRING	1-87
1538109-0000	COMPRESSION SPRING	4-35
90270-0017	COMPRESSOR NASH/ELMO 112 MB/4-2083	6-59
469452-0500	COMPRESSOR UNIT	6-57
90028-0001	CONE 5/32"	2-23, 2-25, 2-27
90208-0120	CONE CLAMP. ELEMENT 22/32, L=25	3-5

Part No	Description	Page No
90028-0020	CONE TUBE 2,5MM	2-23, 2-25, 2-27, 3-9, 3-11, 3-13, 3-15, 4-53, 4-67, 4-69, 5-11, 5-37
90028-0021	CONE TUBE 4 MM	2-23, 2-25, 2-27, 3-9, 3-11, 3-13, 3-15, 5-11, 5-37
90028-0022	CONE TUBE 6 MM	6-87
90028-0025	CONE TUBE 6 MM	5-37, 6-87
541751-0000 ..	CONICAL BOBBIN	7-11
90224-0308	CONN. BANJO, ART. NO. 2023-1/8-1/8	1-67, 1-69, 1-87
90459-5522	CONN. BANJO, COR8PB6M10	6-87
342797-0122 ..	CONN. BANJO, RINGPIECE 6-1/4	1-89, 6-39
342797-0121 ..	CONN. BANJO, RINGPIECE 6-1/8	1-35, 1-37, 1-39, 1-57, 1-63, 1-95, 1-97, 1-125, 1-127, 1-139, 2-23, 2-25, 2-27
342767-0104 ..	CONN. BULKHEAD G1/4	2-31
342767-0100 ..	CONN. BULKHEAD G1/8	2-23, 2-25, 2-27, 2-31
90030-0030	CONN. BULKHEAD SV 12-L/SY	1-95, 1-97, 6-69
342762-0114 ..	CONN. BULKHEAD SV 15-LFZB	6-77, 6-79
90030-0230	CONN. BULKHEAD SV 6-	1-9, 1-11, 2-53, 2-55
90030-0066	CONN. BULKHEAD SV 6-L/SY	7-67
90224-0296	CONN. BULKHEAD, ART.NO. 116 1500	6-41, 6-43
90600-0916	CONN. CROSS K15L71X	6-29
90224-0303	CONN. ELBOW 1020-8-1/4	12-17, 12-19
90030-0096	CONN. ELBOW W-12	1-67, 1-69
342736-0114 ..	CONN. ELBOW W-15	2-29
342737-0204 ..	CONN. ELBOW W-6 LRFR	1-67, 1-69, 6-87
90030-0115	CONN. ELBOW WA 12-R3/8	1-21, 1-23, 1-89
90030-0137	CONN. ELBOW WA 6-R1/8	1-15
342730-0114 ..	CONN. ELBOW WA-15-1/2	6-29, 6-31, 6-93, 6-95
90030-0200	CONN. ELBOW, 6-M10X1, EXT.THREAD	2-23, 2-25, 2-27
90030-0234	CONN. ELBOW, 6-R1/8 , EXT.THREAD	1-9, 1-11, 1-91, 1-93
342751-0204 ..	CONN. L-PIPE, EXT. LE-6-R1/8	1-95, 1-97
90195-0029	CONN. LINK NO324 FOR -28	1-43, 1-45
90030-0106	CONN. PIPE G-12	1-67, 1-69
342726-0109 ..	CONN. PIPE G-12	2-29
342726-0114 ..	CONN. PIPE G-15	6-93, 6-95
342727-0102 ..	CONN. PIPE G-6-LFZB	2-23, 2-25, 2-27
90030-0091	CONN. PIPE G-8	2-31
342790-0102 ..	CONN. PRESS. GAUGE MAV6-LRFZB	1-89
90030-0416	CONN. STR. 18-R1/2, EXT. TAPPERED	1-89
90030-0162	CONN. STR. 6-M10X1, EXT. THREAD	2-23, 2-25, 2-27
90030-0186	CONN. STR. GA-10-G1/4	2-53, 2-55
90030-0187	CONN. STR. GA-12-G3/8	1-35, 1-37, 1-39, 1-67, 1-69, 1-137, 2-53, 2-55
342752-0110 ..	CONN. STR. GA-12-G3/8	6-85, 6-89, 6-91
90030-0188	CONN. STR. GA-15-G1/2	6-61, 6-77, 6-79
342720-0114 ..	CONN. STR. GA-15-G1/2	2-29, 6-23, 6-27, 6-29, 6-31, 6-93, 6-95
90030-0191	CONN. STR. GA-18-G1/2	1-89
90030-0184	CONN. STR. GA-6-G1/8	1-9, 1-11, 1-35, 1-39, 1-41, 1-67, 1-69, 1-91, 1-93, 1-95, 1-97, 1-131, 1-137, 4-29, 4-67, 4-69, 6-77, 6-79, 6-93, 6-95, 7-67, 12-127
342752-0103 ..	CONN. STR. GA-8-G1/4	6-89, 6-91
90030-0181	CONN. STR. GE 12-3/8-18 NPTF	6-81, 6-83
90030-0062	CONN. STR. GE 6-1/4-18 NPTF	1-7, 1-65
342725-0108 ..	CONN. STR. PIPE GI-10-G1/4	2-43
342723-0114 ..	CONN. STR. PIPE GI-15-G1/2	6-29
90030-0202	CONN. STR., 6-G1/4, EXT. THREAD	1-89, 1-91, 1-93
90030-0233	CONN. STR., 6-G1/8, EXT. THREAD	1-9, 1-11
90030-0051	CONN. STR., 6-R1/8, EXT. THREAD	2-23, 2-25, 2-27
90458-2039	CONN. STR., 6-R1/8, EXT. THREAD	1-165
90030-0086	CONN. STR., 8-R1/4, EXT. THREAD	6-71
90030-0151	CONN. STR.,15-R1/2, EXT. THREAD	2-29
90224-0372	CONN. STRAIGHT ESK-1/4-1/4 151521	6-35
90030-0336	CONN. STRAIGHT, 316L-12M-BVCO-3	1-75
90030-0549	CONN. STRAIGHT, BULKHEAD, SS-4-VCO-61	1-19
90030-0058	CONN. T-PIPE T-12	1-137, 6-81, 6-83
342746-0114 ..	CONN. T-PIPE T-15	2-29, 5-71
90030-0076	CONN. T-PIPE T-6	1-7, 1-91, 1-93, 6-87
90030-0164	CONN. T-PIPE T6-LL	1-95, 1-97
491305-0000 ..	CONN.DIAGRAM AIR SUPERH.	1-43, 1-45
90457-0139	CONN.STRAIGHT G3/8-10 MM, A 10-L/R3/8/WD	6-89, 6-91
90457-0140	CONN.STRAIGHT G3/8-15 MM, A 15-L/R3/8/WD	6-89, 6-91
90457-0023	CONN.STRAIGHTG1/2-M22X1,5, VADKO15-RL/WD	6-89, 6-91
90259-0308	CONN.TERM.K&M BK 25/3-PKZ0	10-117
1512442-0000 .	CONNECTING PIPE	5-37
90134-0058	CONNECTION	3-5, 3-9, 3-11, 3-13, 3-15, 4-5, 4-7, 4-9, 4-11, 4-13, 4-15, 4-25, 4-27, 4-49, 4-51, 4-53, 5-7, 5-9
90134-0068	CONNECTION	3-29, 3-31, 4-49, 4-51, 4-67, 4-69
90163-0007	CONNECTION	12-23, 12-125
272747-0000 ..	CONNECTION	5-67
295983-0000 ..	CONNECTION	3-17
456827-0400 ..	CONNECTION BOX	2-13
580064-0200 ..	CONNECTION BOX	7-5, 7-7
979475-0000 ..	CONNECTION BOX	1-13
1349568-0000 .	CONNECTION BOX	9-23, 9-29, 9-31
1512283-0000 .	CONNECTION BOX	7-33
1512667-0000 .	CONNECTION BOX	2-19
1523971-0000 .	CONNECTION BOX	10-105, 10-107
1558318-0100 .	CONNECTION BOX	8-77
1558892-0000 .	CONNECTION BOX	7-17

Part No	Description	Page No
2501265-0000	CONNECTION BOX	8-79
2501465-0100	CONNECTION BOX	9-19
2501466-0100	CONNECTION BOX	9-19
2506331-0200	CONNECTION BOX	5-47
2510844-0100	CONNECTION BOX	9-19
2616035-0000	CONNECTION BOX	8-65
2623674-0100	CONNECTION BOX	1-9, 1-11
1512356-0000	CONNECTION DEVICE	1-95, 1-97
90134-0047	CONNECTION FOR DOSING VALVE	4-25, 4-27
451430-0000	CONNECTION HOUS.(MINOR)	1-43, 1-45
752283-0000	CONNECTION LEFT	4-27
90134-0065	CONNECTION M6 TUBE 2,5 MM	5-41
90134-0066	CONNECTION M6 TUBE 4 MM	4-67, 4-69
1334694-0000	CONNECTION PLATE	2-53, 2-55
1523383-0000	CONNECTION PLATE	2-31
1523384-0000	CONNECTION PLATE	2-31
2788111-0000	CONNECTION PLATE	6-93, 6-95
752282-0000	CONNECTION RIGHT	4-25
1539602-0100	CONNECTION SYSTEM	1-7
1511773-0000	CONNECTOR	6-71
90110-0095	CONNECTOR 3 POLE + EARTH	6-89, 6-91
90459-2412	CONNECTOR 4 POLE + EARTH	8-17, 8-19, 8-77
90458-1298	CONNECTOR AND CABLE 403000E 18M 080	4-31, 4-33
90110-0518	CONNECTOR D-SUB, SUBCON 15/M-SH	9-19
90045-0376	CONNECTOR KIT 9-032-011-970	10-13, 10-15, 10-17
90458-1424	CONNECTOR, MSTB 2.5/10-STF-5.08	10-143
90458-1423	CONNECTOR, PC 4/4-STF-7.62	10-143
90326-0077	CONTACT	5-13, 5-15, 5-17, 5-19, 5-21
90042-0398	CONTACT 3 POLE+EARTH	6-75
90110-0243	CONTACT HOUSING 16-POL 70.320.1628.0	10-91, 10-93, 10-95, 10-97, 10-99, 10-101, 10-103
1036443-0000	CONTACT UNIT	5-13, 5-15, 5-17, 5-19, 5-21
90110-0028	CONTACT UNIT 4-POLEADAPTER	10-71
90600-1758	CONTACTOR 30KW 24VDC,DILM65 +DILM65-XIP2	10-13, 10-15, 10-17
90459-5440	CONTACTOR 4KW 24VDC, DILM9-01	10-47, 10-59
90459-5308	CONTACTOR 4KW 24VDC, DILM9-10	10-59
90459-5441	CONTACTOR 7,5KW 24VDC, DILM17-01	10-47, 10-59
90600-1643	CONTACTOR, DILK12-11	10-47, 10-59
90243-0133	CONTAINER	8-11, 8-13
561427-0000	CONTAINER	6-73
752576-0000	CONTAINER	1-91, 1-93
978879-0000	CONTAINER	1-65
2618263-0000	CONTAINER	1-67, 1-69
90459-2435	CONTAINER 1,8L , GN 1406	1-67, 1-69
90458-0601	CONTRAST SCANNER, KT15W-P2110S01	1-171, 1-173
2545083-0200	CONTROL CABINET	1-7
1511785-0100	CONTROL CABLE INLETS	10-75, 10-77
1511789-0100	CONTROL CONNECTOR PLATE	10-75, 10-77
2774503-0100	CONVERTER	1-3, 1-5
42068-0100	CONVERTER BOARD	1-187
2500233-0100	CONVEYOR	5-3
76200-0100	CONVEYOR SECTION	12-147
577824-0200	COOL WATER VALVE	6-15, 6-17, 6-19
1517677-0100	COOLER	10-3, 10-5
1539605-0000	COOLING PIPE	1-7
1498819-0000	COOLING PLATE	10-27, 10-49, 10-51, 10-53, 10-55, 10-57
90457-0063	COOLING UNIT, KB17TB.CBB	10-141
1143884-0000	COPPER BRAID	10-123, 10-125
1512322-0000	COPPER BRAID	10-41, 10-43, 10-45
341001-0148	COPPER TUBE	6-15, 6-17, 6-19
1254027-0000	CORNER STRIP	2-49, 2-51
90003-0422	CORRUGATED CARDBOARD BOX	9-3
2501471-0100	COUNTER	9-19
2501472-0100	COUNTER	9-19
272640-0001	COUNTER CAM	4-31, 4-33
272640-0002	COUNTER CAM	4-31, 4-33
272640-0003	COUNTER CAM	4-31, 4-33
272640-0005	COUNTER CAM	4-31, 4-33
272640-0006	COUNTER CAM	4-31, 4-33
272640-0007	COUNTER CAM	4-31, 4-33
272640-0009	COUNTER CAM	4-31, 4-33
979771-0000	COUNTER CAM 100	4-31, 4-33
37894-0100	COUNTER RAIL	8-63
574347-0000	COUNTER ROLLER	1-125, 1-127
751503-0000	COUNTER ROLLER	1-125, 1-127
752140-0000	COUNTER ROLLER	1-125, 1-127
752155-0000	COUNTER ROLLER	1-125, 1-127
1538151-0000	COUNTER ROLLER	1-125, 1-127
90053-0029	COUNTER, F524.800FA3C 24VDC	10-123, 10-125
29876-0000	COVER	1-43, 1-45
297988-0000	COVER	12-41
297989-0000	COVER	12-43
440287-0000	COVER	8-61
458364-0000	COVER	8-35
469336-0000	COVER	2-17

Part No	Description	Page No
490964-0000 ..	COVER	1-49, 1-51
491170-0000 ..	COVER	1-35
491223-0000 ..	COVER	1-39
752528-0000 ..	COVER	8-25, 8-27, 8-29, 8-45, 8-47, 8-49
927203-0000 ..	COVER	1-87
979280-0000 ..	COVER	6-75
979790-0000 ..	COVER	8-25, 8-27, 8-29, 8-45, 8-47, 8-49
979942-0000 ..	COVER	8-37
1086888-0000 .	COVER	9-21, 9-25, 9-27
1260311-0000 .	COVER	1-89
1285108-0000 .	COVER	10-133
1317262-0000 .	COVER	1-67, 1-69
1487430-0000 .	COVER	10-83, 10-85, 10-91, 10-93, 10-95, 10-97, 10-99, 10-101, 10-103
1498764-0000 .	COVER	7-23, 7-25, 7-27, 7-29
1511609-0000 .	COVER	6-7
1511610-0000 .	COVER	6-7
1511780-0000 .	COVER	10-133
1512377-0000 .	COVER	1-67, 1-69
1512851-0000 .	COVER	2-49, 2-51
1523443-0000 .	COVER	10-123, 10-125
1523756-0000 .	COVER	2-13
1523759-0000 .	COVER	2-13
1539113-0000 .	COVER	2-57
1539593-0000 .	COVER	4-45, 4-47
1548053-0000 .	COVER	1-179
1549305-0100 .	COVER	8-3
1549306-0000 .	COVER	8-15
2506478-0000 .	COVER	7-23, 7-25, 7-27, 7-29
2514112-0000 .	COVER	2-61
2523596-0000 .	COVER	7-19
2529564-0000 .	COVER	8-77
2531996-0000 .	COVER	10-13, 10-15, 10-17
2542328-0000 .	COVER	10-109, 10-111
2542329-0000 .	COVER	10-109, 10-111
2552619-0000 .	COVER	7-35, 7-37
2552702-0000 .	COVER	2-9
2552703-0000 .	COVER	2-9
2552706-0000 .	COVER	2-9
2552710-0000 .	COVER	2-9
2552711-0000 .	COVER	2-9
2553895-0000 .	COVER	2-9
2554975-0000 .	COVER	2-21
2594128-0000 .	COVER	2-9
2748683-0000 .	COVER	8-11, 8-13
2797730-0000 .	COVER	10-133
2800353-0000 .	COVER	1-9, 1-11
979279-0000 ..	COVER HOUSING	6-75
979215-0200 ..	COVER PLATE	6-3
1037572-0000 .	COVER PLATE	10-83, 10-85
1037574-0000 .	COVER PLATE	10-91, 10-93, 10-95, 10-97, 10-99, 10-101, 10-103
1549296-0200 .	COVER PLATE	8-3
1558321-0000 .	COVER PLATE	8-7
2518415-0000 .	COVER PLATE	6-53
2552704-0000 .	COVER PLATE	2-9
2552707-0000 .	COVER PLATE	2-9
2815751-0001 .	COVER PLATE	1-59
2815751-0002 .	COVER PLATE	1-59
90458-1215	COVER PLATE FOR EMPTY VALVE POSITION	6-45, 6-47
90457-0183	COVER PLATE, DPA0X, FOR 90457-0182	2-31, 2-33
2552700-0100 .	COVER PLATES	2-3
272780-0000 ..	COVER SLIP	1-167
272781-0002 ..	COVER SLIP	1-169
272782-0000 ..	COVER SLIP	1-167, 1-169
90110-0371	COVER, HDC-HA-3-TOVL1/11165247-A/1	8-17, 8-19, 8-77
441725-0000 ..	COVERING PLATE	9-3
1129481-0000 .	COVERING PLATE	10-91, 10-93, 10-95, 10-97, 10-99, 10-101, 10-103
1523755-0000 .	COVERING PLATE	2-13
2552708-0000 .	COVERING PLATE	2-9
2552709-0000 .	COVERING PLATE	2-9
90031-0075	CPU363, SERIAL COMMUNICATION	10-41
272377-0001 ..	CRAMP	3-5
272377-0002 ..	CRAMP	3-5
272388-0000 ..	CRAMP	3-5
295604-0000 ..	CRAMP	1-95, 1-97
456854-0001 ..	CRAMP	5-71
456854-0002 ..	CRAMP	5-71
578027-0000 ..	CRAMP	1-95, 1-97
978440-0000 ..	CRAMP	1-15
257326-0000 ..	CRANK	3-27
1512286-0100 .	CRANK	3-3
441554-0000 ..	CREASE BAR	8-45, 8-47, 8-49
456327-0000 ..	CREASE BAR	8-45, 8-47, 8-49
456767-0000 ..	CREASE BAR	8-25, 8-27, 8-29, 8-45, 8-47, 8-49
1523314-0000 .	CREASE BAR	8-25, 8-27, 8-29

Part No	Description	Page No
495498-0021 ..	CU-RAIL L=210MM	10-69
2544973-0000 .	CUP	5-57
90459-5518	CURR.LIM.CIRC.BREAKER, NZMB1-4-A63	10-133
464012-0000 ..	CURVE	8-37
1511291-0000 .	CURVE	5-81
1538039-0000 .	CURVE	4-53
256202-0700 ..	CURVE PACK	3-3
22475-0000	CURVE ROLLER	4-49, 4-51
76208-0000	CUSHION	12-151, 12-153
256204-0600 ..	CUTTING JAW	4-3
256205-0600 ..	CUTTING JAW	4-3
256487-0000 ..	CUTTING JAW	4-5, 4-7, 4-9, 4-11, 4-13, 4-15
256769-0000 ..	CUTTING JAW	4-5, 4-7, 4-9, 4-11, 4-13, 4-15
441727-0000 ..	CUTTING JAW	4-5, 4-7, 4-9, 4-11, 4-13, 4-15
574386-0000 ..	CUTTING JAW	4-5, 4-7, 4-9, 4-11, 4-13, 4-15
1548942-0000 .	CUTTING JAW	4-5, 4-7, 4-9, 4-11, 4-13, 4-15
1110820-0000 .	CUTTING RAIL	4-5, 4-7, 4-9, 4-11, 4-13, 4-15
1110829-0000 .	CUTTING RAIL	4-5, 4-7, 4-9, 4-11, 4-13, 4-15
1524477-0100 .	CUTTING TABLE	7-5, 7-7
90239-0773	CYLINDER	1-57, 1-59
90239-0779	CYLINDER	1-35, 1-125, 1-127, 1-139
90450-0033	CYLINDER	2-5, 2-7
490940-0000 ..	CYLINDER	4-25, 4-27
441483-0000 ..	CYLINDER BRACKET	1-125, 1-127, 1-139
441578-0001 ..	CYLINDER BRACKET	1-59
441578-0002 ..	CYLINDER BRACKET	1-57
491022-0000 ..	CYLINDER BRACKET	1-125, 1-127
1036193-0000 .	CYLINDER BRACKET	1-41, 1-63
2527337-0000 .	CYLINDER BRACKET	1-37
90458-1301	CYLINDER ETS32-M10NA2X-FM50-AEUM1D	4-31, 4-33
576439-0000 ..	CYLINDER HOUSING	1-77, 1-81
576443-0000 ..	CYLINDER HOUSING	1-79
90458-1472	CYLINDER, 32 04 215 2	9-11
90450-0160	CYLINDER, CLAMPING MODULE AV-63-10-B	12-127
90044-0116	CYLINDER, SENSOR	1-37
440659-0000 ..	CYLINDRICAL PIN	1-81
1511314-0000 .	DAMPER BRACKET	7-59
90347-0005	DAMPER, NO. F 1006 B	8-73
90041-0068	DATACABLE MODEM PC	9-19
579241-0200 ..	DATING UNIT	8-3
752645-0400 ..	DATING UNIT	8-23
752646-0400 ..	DATING UNIT	8-23
2854815-0000 .	DELIVERED DESIGN	10-139
538433-0000 ..	DETECTOR BODY	12-103
538434-0000 ..	DETECTOR CARD	12-103
490761-0200 ..	DETERGENT PUMP	6-3
90298-0019	DETERGENT, SU 118, 20 LITRES	6-99, 9-39
2568779-0000 .	DIAGRAM	1-7
74772-0000	DIAL	12-111
533169-0000 ..	DIAPHRAGM	1-77, 9-37
534691-0000 ..	DIAPHRAGM	12-23
925998-0000 ..	DIAPHRAGM	1-87, 9-35
90600-0493	DIAPHRAGM 3A, 600-008-M5A	1-15
90201-0136	DIRECT CHECK VALVE, NO. DGMDC-3-Y-PK-41	6-89, 6-91
90459-1690	DIRECTIONAL VALVE, DG4V-3-6C-MUH-7-60-EN	6-89, 6-91
1558403-0000 .	DISC	1-61
256437-0200 ..	DISC COUPLING	5-3
90016-0010	DISC SPRINGS,50X25,4X2	3-5
970802-0000 ..	DISCETTE BOX 3,5"	10-89
2552698-0000 .	DISCHARGE CHUTE	2-21
2552699-0100 .	DISCHARGE CHUTE	2-3
978971-0000 ..	DISCHARGE TRAY	1-65
978972-0000 ..	DISCHARGE TRAY	1-65
1296849-0000 .	DISCHARGE TRAY	1-43, 1-45
1296850-0000 .	DISCHARGE TRAY	1-43, 1-45
1490120-0100 .	DISCONNECTION LINK LEFT	3-3
1539766-0100 .	DISCONNECTION LINK RIGHT	3-3
556667-0100 ..	DISPLAY	12-101
90459-0287	DISPLAY UNIT 15", 02567-000	2-71
527649-0000 ..	DISTANCE RUBBER	8-39, 8-41
90287-0170	DISTANCE SCREW	12-103, 12-107
90032-0014	DISTR. BLOCK & DIST.5/16-24UNF X6	2-23, 2-25, 2-27
90032-0026	DISTR. BLOCK, 5/16-24UNF X2	2-23, 2-25, 2-27
90032-0030	DISTR. BLOCK, 5/16-24UNF X3	2-23, 2-25, 2-27
90032-0031	DISTR. BLOCK, 5/16-24UNF X5	2-23, 2-25, 2-27
90032-0043	DISTRIBUTION BLOCK 3 WAYS	6-87
272191-0000 ..	DISTRIBUTOR	5-71
1511887-0000 .	DISTRIBUTOR	5-71
1523829-0100 .	DISTRIBUTOR BLOCK	2-23, 2-25, 2-27
90458-1921	DISTRIBUTOR BLOCK, FR-8-1/4	6-15, 6-17, 6-19, 6-21
568581-0000 ..	DISTRIBUTOR WING	1-159
90459-1856	DISTRIBUTOR, MS6-FRM-1/2	6-35
441486-0400 ..	DIVIDED FORMING RING	1-3, 1-5
90181-0067	DIVIDING PLATE SEP80	10-13, 10-15, 10-17, 10-123, 10-125

Part No	Description	Page No
577333-0000 ..	DOCUMENT FOLDER	12-95
2545067-0000 .	DOCUMENTATION DISKETTE	11-15
2547127-0000 .	DOCUMENTATION DISKETTE	11-19
2589393-0000 .	DOCUMENTATION DISKETTE	11-17
1110378-0001 .	DOLLY	12-9
1110391-0000 .	DOLLY	4-5, 4-7, 4-9, 4-11, 4-13, 4-15, 4-71, 9-41
1520577-0001 .	DOLLY	4-5, 4-7, 4-9, 4-11, 4-13, 4-15, 4-71, 9-41
2517066-0000 .	DOLLY	9-3
529149-0000 ..	DOLLY WASHER	1-33
90459-3318	DOMED LOCKING NUT, M5 SS 304	1-59
491570-0300 ..	DOOR	1-3, 1-5
491579-0300 ..	DOOR	1-3, 1-5
1498749-0000 .	DOOR	7-31
1498750-0000 .	DOOR	7-31
1498751-0200 .	DOOR	7-5, 7-7
1511790-0200 .	DOOR	10-3, 10-5
1511791-0200 .	DOOR	10-75, 10-77
1511796-0200 .	DOOR	10-3, 10-5
1511799-0200 .	DOOR	10-3, 10-5
1511810-0200 .	DOOR	10-3, 10-5
1511811-0200 .	DOOR	10-3, 10-5
1511814-0200 .	DOOR	10-3, 10-5
1511815-0000 .	DOOR	10-123, 10-125
1511819-0200 .	DOOR	10-3, 10-5
1511820-0200 .	DOOR	10-3, 10-5
1512826-0000 .	DOOR	6-5
1512829-0000 .	DOOR	6-7
1512830-0000 .	DOOR	6-7
1512831-0000 .	DOOR	6-7
1517663-0000 .	DOOR	10-137
1517667-0000 .	DOOR	10-107, 10-139
1523436-0000 .	DOOR	10-71
1523969-0000 .	DOOR	10-105
2518157-0000 .	DOOR	2-73
2552620-0000 .	DOOR	7-35, 7-37
2552680-0200 .	DOOR	2-3
2552681-0200 .	DOOR	2-3
2552691-0000 .	DOOR	2-65
2552692-0000 .	DOOR	2-67
2552694-0200 .	DOOR	2-3
2552695-0200 .	DOOR	2-3
2598114-0000 .	DOOR	10-109, 10-111
2748676-0000 .	DOOR	8-11, 8-13
2748677-0000 .	DOOR	2-35
2748678-0000 .	DOOR	2-37
2788122-0000 .	DOOR	6-5
2788123-0000 .	DOOR	6-5
2798052-0000 .	DOOR	10-89
2798073-0000 .	DOOR	10-121
2798074-0000 .	DOOR	10-129
2798075-0000 .	DOOR	10-131
1350529-0200 .	DOORS LEFT SIDE	6-3
1350531-0100 .	DOORS RIGHT SIDE	6-3
90459-4968	DOUBLE ACTING, COMPACT, 50-20	5-29, 5-31, 5-33
90459-1845	DOUBLE ACTING, COMPACT, 50-30	5-7, 5-9
90459-0251	DOUBLE ACTING, COMPACT, CYL 12-15	4-29
90450-0306	DOUBLE ACTING, MINI-ISO, CYL. 12-25	7-19
90239-0819	DOUBLE ACTING, MINI-ISO, CYL.16-100	7-13
90239-0840	DOUBLE ACTING, MINI-ISO, CYL.16-12	1-129
90239-0817	DOUBLE ACTING, MINI-ISO, CYL.16-50	1-177
90239-0842	DOUBLE ACTING, MINI-ISO, CYL.16-50	2-21
90239-0847	DOUBLE ACTING, MINI-ISO, CYL.20-50	1-39
90450-0281	DOUBLE ACTING,PROF.CYL 32-80	1-41, 1-63
90450-0328	DOUBLE ACTING,PROFILE CYL32-25	1-37
37896-0000	DOWEL	8-67
74912-0000	DOWEL	12-111
256280-0000 ..	DOWEL	1-103, 1-105, 1-107, 1-109, 1-111, 1-113, 1-115
271100-0000 ..	DOWEL	4-49, 4-51
272973-0000 ..	DOWEL	4-61, 4-63
293667-0000 ..	DOWEL	8-35, 8-61, 12-41, 12-43
450500-0000 ..	DOWEL	8-37
532211-0000 ..	DOWEL	12-25
532678-0000 ..	DOWEL	12-17, 12-19
1346061-0000 .	DRAIN CHUTE	6-41, 6-43
571088-0000 ..	DRAINING	6-77, 6-79
295984-0000 ..	DRIP GUARD	1-141
256170-0000 ..	DRIP PLATE	1-49, 1-51
312502-0120 ..	DRIVE SCREW ROUND HEAD KDS 0X5	1-95, 1-97, 2-53, 2-55
491258-0000 ..	DRIVE WHEEL	5-59, 5-61
491850-0100 ..	DRIVE WHEEL	5-3
1143975-0000 .	DRIVE WHEEL	5-59, 5-61
2526300-0000 .	DROP CHUTE	2-5, 2-7
2526301-0000 .	DROP CHUTE	2-5, 2-7
2526302-0000 .	DROP CHUTE	2-5, 2-7

Part No	Description	Page No
2526303-0000	.DROP CHUTE	2-5, 2-7
2526304-0000	.DROP CHUTE	2-5, 2-7
2526305-0000	.DROP CHUTE	2-5, 2-7
2526306-0000	.DROP CHUTE	2-5, 2-7
2526307-0000	.DROP CHUTE	2-5, 2-7
2526308-0000	.DROP CHUTE	2-5, 2-7
2526309-0000	.DROP CHUTE	2-5, 2-7
2526310-0000	.DROP CHUTE	2-5, 2-7
2526311-0000	.DROP CHUTE	2-5, 2-7
2526338-0100	.DROP CHUTE	2-3
1539267-0000	.DRUM	5-53
265568-0000	.. DUST COVER	8-25, 8-27, 8-29, 8-45, 8-47, 8-49
74767-0102	.... DYNAMOMETER	12-45
1035792-0000	.E-HINGE	2-35, 2-37, 2-65, 2-67, 6-5, 6-7, 8-11, 8-13
1499514-0000	.E-HINGE	7-23, 7-25, 7-27, 7-29, 7-59
256626-0000	.. EAR	4-5, 4-7, 4-9, 4-11, 4-13, 4-15
1523947-0000	.EARTH BAR	10-37
1523948-0000	.EARTH BAR	10-67
2553175-0000	.EARTH BAR	10-23
2553176-0100	.EARTH BAR	10-13, 10-15, 10-17
353024-0204	.. EARTH TERMINAL WPE 2,5	2-19, 5-49, 5-51, 8-79, 10-61
353024-0205	.. EARTH TERMINAL, 1010.1	7-33, 8-79, 10-61, 10-69
353024-0206	.. EARTH TERMINAL, 1010.2	5-49, 5-51, 10-61, 10-63, 10-65
353024-0207	.. EARTH TERMINAL, 1010.3	10-61
353024-0208	.. EARTH TERMINAL, 1010.4	10-69
353024-0209	.. EARTH TERMINAL, 1010.5	10-69, 10-135
90135-0042	.... EARTH TERMINAL, 130336	1-13
90135-0026	.... EARTH TERMINAL, 3802.6	2-75, 9-23, 9-29, 9-31
90135-0044	.... EARTH WIRE, L=320 MM 16 MM2	10-71, 10-105, 10-107, 10-109, 10-111, 10-123, 10-125, 10-137, 10-139
1538949-0000	.ECCENTRIC	4-59
272458-0000	.. ECCENTRIC SHAFT	3-9
272654-0000	.. ECCENTRIC SHAFT	4-31, 4-33
1511404-0000	.ECCENTRIC SHAFT	4-65
1512355-0000	.ECCENTRIC SHAFT	3-27
1517700-0000	.EDGE GUIDE	10-75, 10-77
90143-0060	.... EDGE STRIP 9,5X6,3MM BLACK PVC	2-53, 2-55, 6-11, 8-11, 8-13, 8-77
342931-0122	.. ELBOW 90 COUPL.,EXT.THREAD 8/6-G1/4"	6-23, 6-37, 6-85
342930-0122	.. ELBOW 90 COUPL.,EXT.THREAD 8/6-R1/4"	3-5
90055-0145	.... ELBOW ADAPTOR-R1/4	9-11
90457-0179	.... ELBOW COUPLING 6179 04 10	2-31
90457-0180	.... ELBOW COUPLING 6179 06 10	2-31
342772-0114	.. ELBOW FITTING, 6 - G1/4	1-9, 1-11
342772-0113	.. ELBOW FITTING, 6 - G1/8	1-9, 1-11, 7-67
751316-0000	.. ELBOW PIPE	6-65
90055-0217	.... ELBOW PIPE JOINT	2-13
90459-1749	.... ELBOW PIPE JOINT 12 MM	6-93, 6-95
342732-0099	.. ELBOW PIPE JOINT, (REEMP. 90458-2954)	7-19
90458-2954	.... ELBOW PIPE JOINT, EXT.THREAD, D=4MM M5	4-29
90459-0487	.... ELBOW PIPE JOINT, EXT.THREAD, D=6MM G1/8	1-161, 1-163
90458-2957	.... ELBOW PIPE JOINT, EXT.THREAD, D=6MM-G1/4	1-9, 1-11
90458-2956	.... ELBOW PIPE JOINT, EXT.THREAD, D=6MM-G1/8	5-7, 5-9, 5-73
342732-0104	.. ELBOW PIPE JOINT, EXT.THREAD, D=8MM-G1/4	6-49
90458-2964	.... ELBOW PIPE JOINT, EXT.THREAD, D=8MM-G1/8	6-41, 6-43
90458-2960	.... ELBOW PIPE JOINT, EXT.THREAD,D=12MM-G3/8	6-51
90458-2040	.... ELBOW PIPE JOINT, INT.THREAD, G1/8"D=6MM	1-165
90330-0169	.... ELBOW, 90 INT. THREAD, 4-4FE. SS	1-7
90330-0020	.... ELBOW, 90 INT. THREAD, R-2221/2	6-61, 6-77, 6-79
90330-0099	.... ELBOW, 90 INT. THREAD, R-222R1/8	2-29
1549480-0100	.ELECTRIC EQUIPMENT	8-3
2543594-0200	.ELECTRICAL COMPONENTS	9-3
42416-0300	.... ELECTRICAL DOCUMENT	11-3
1523972-0100	.ELECTRICAL MATERIALS	10-3, 10-5
567070-0010	.. ELECTRODE	1-91, 1-93
567070-0011	.. ELECTRODE	1-21, 1-23
567070-0012	.. ELECTRODE	6-77, 6-79
567070-0014	.. ELECTRODE	1-9, 1-11
567070-0015	.. ELECTRODE	1-91, 1-93
567070-0019	.. ELECTRODE	1-21, 1-23
979500-0001	.. ELECTRODE	1-21, 1-23
90458-2200	.... ELECTROMAGNETIC CLUTCH, 30 MM/24 VDC	3-5
90458-1651	.... EMERGENCY STOP, ZB4-BS-844 ZB4-BZ-104	1-67, 1-69, 1-143, 1-145, 1-147, 1-149, 1-151, 1-153, 2-73, 7-17, 8-77, 10-105, 10-107
1517694-0000	.END BLOCK	10-75, 10-77
90459-2350	.... END BRACKET, A325A103KM	10-147
90457-0124	.... END CAP PSB-END6	10-113, 10-117, 10-119
256515-0000	.. END PIECE	3-13, 3-15
257328-0000	.. END PIECE	3-27
272472-0000	.. END PIECE	3-29, 3-31
90457-0051	.... END PLATE	5-49, 5-51, 10-61, 10-63, 10-65
90457-0052	.... END PLATE	10-61, 10-63
1548143-0000	.END PLATE	1-61
90077-0122	.... END PLATE AP/AKZ 2,5	1-13
353032-0004	.. END PLATE WAP 2,5-10 BEIGE	5-49, 5-51, 10-61

Part No	Description	Page No
353032-0302 ..	END PLATE WAP, 13176.6	5-49, 5-51, 10-63, 10-65
353033-0104 ..	END PLATE, 10502.8	10-69
353032-0013 ..	END PLATE, 13818.6	5-49, 5-51
353032-0009 ..	END PLATE, WAP FOR WDK	5-49, 5-51, 10-63, 10-69
90077-0114	END PLATE, WAP/WDK 2,5	10-65
292409-0000 ..	END SECTION	8-51, 8-53, 12-27, 12-29
292410-0000 ..	END SECTION	8-51, 8-53, 12-27, 12-29
292412-0000 ..	END SECTION	8-31, 8-33, 8-51, 8-53, 12-27, 12-29, 12-37, 12-39
292413-0000 ..	END SECTION	8-31, 8-33, 8-51, 8-53, 12-27, 12-29, 12-37, 12-39
293690-0000 ..	END SECTION	8-51, 8-53, 12-27, 12-29
293697-0000 ..	END SECTION	8-61, 12-41
297213-0000 ..	END SECTION	8-35, 12-43
434787-0000 ..	END SECTION	8-51, 8-53, 12-27, 12-29
479236-0000 ..	END SECTION	8-31, 8-33, 8-51, 8-53, 12-27, 12-29, 12-37, 12-39
556665-0000 ..	END SECTION	12-105
576440-0000 ..	END SECTION	1-77, 1-81
576444-0000 ..	END SECTION	1-79
353001-0101 ..	END SLEEVE 0,5 MM2	9-19
353001-0102 ..	END SLEEVE 0,75 MM2	9-19, 10-7, 10-9, 10-11
353001-0113 ..	END SLEEVE 0,75MM2	9-23, 9-29, 9-31, 10-7, 10-9, 10-11
353001-0114 ..	END SLEEVE 1,50 MM2	10-7, 10-9, 10-11
353001-0115 ..	END SLEEVE 2,5/14	10-7, 10-9, 10-11
353001-0118 ..	END SLEEVE 6MM2 BLACK	10-7, 10-9, 10-11
353001-0119 ..	END SLEEVE H 1.0/14 YELLOW	10-7, 10-9, 10-11
353001-0120 ..	END SLEEVE H 10/28	10-7, 10-9, 10-11
353001-0117 ..	END SLEEVE H4.0/20 GREY	10-7, 10-9, 10-11
353031-0203 ..	END SUPPORT, WEW 35/2	2-19, 10-61, 10-63, 10-65, 10-69, 10-73
90457-0181	EQUAL BULKHEAD ELBOW CONNECTOR 31390600	2-31
90457-0178	EQUAL BULKHEAD ELBOW CONNECTOR 36390800	2-31
90458-1206	EXP. SUB-BASE 2 VALVES, CDVI5.0-EB	6-45, 6-47
1350674-0000 .	EXTENSION	12-169
577769-0000 ..	EXTENSION PIPE	6-65
1517653-0100 .	EXTERNAL DOOR FUSES	10-3, 10-5
1511830-0100 .	EXTERNAL DOOR TERMOREGULATORS	10-3, 10-5
77165-0100	EXTRACTOR	12-45
74364-0000	EXTRACTOR BOLT	12-131
79201-0000	EXTRACTOR BOLT	12-45
90457-0056	FAN 7450 ES	10-13, 10-15, 10-17
2506474-0000 .	FASTENING BRACKET	7-47
74363-0000	FASTENING PLATE	12-131
456905-0000 ..	FASTENING PLATE	1-103, 1-105, 1-107, 1-109
491880-0000 ..	FASTENING PLATE	1-171, 1-173
580868-0000 ..	FASTENING PLATE	12-13
978735-0000 ..	FASTENING PLATE	1-171, 1-173
1254028-0000 .	FASTENING PLATE	2-49, 2-51
1523225-0000 .	FASTENING PLATE	1-141
2751450-0000 .	FASTENING PLATE	5-29, 5-31, 5-33
2764349-0000 .	FASTENING PLATE	5-29, 5-31, 5-33
2776731-0000 .	FASTENING PLATE	5-29, 5-31, 5-33
2776735-0000 .	FASTENING PLATE	5-29, 5-31, 5-33
2800346-0000 .	FASTENING PLATE	5-29, 5-31, 5-33
2814880-0000 .	FASTENING PLATE	5-29, 5-31, 5-33
2814887-0000 .	FASTENING PLATE	5-29, 5-31, 5-33
2830500-0000 .	FASTENING PLATE	5-29, 5-31, 5-33
2830504-0000 .	FASTENING PLATE	5-29, 5-31, 5-33
90077-0123	FEED THROUGH TERMINAL, 017596	1-13
90077-0079	FEED THROUGH TERMINAL, 02943.6	2-75, 9-23, 9-29, 9-31
90077-0113	FEED THROUGH TERMINAL, 10-00102150-1	5-49, 5-51, 10-65
353021-0212 ..	FEED THROUGH TERMINAL, 10200.0	2-19, 7-33, 8-79, 10-61, 10-69, 10-73
353021-0213 ..	FEED THROUGH TERMINAL, 10201.0	5-49, 5-51, 7-33, 10-61
353021-0214 ..	FEED THROUGH TERMINAL, 10202.0	10-61
353021-0215 ..	FEED THROUGH TERMINAL, 10203.0	10-61
353021-0219 ..	FEED THROUGH TERMINAL, 10205.0	10-69, 10-135
90457-0054	FEED THROUGH TERMINAL, 161527	10-61
353021-0133 ..	FEED THROUGH TERMINAL, 161527	10-63
315259-0102 ..	FELT SEAL 22-47 MM	2-13
90458-1406	FEMALE INSERT 120770	10-91, 10-93, 10-95, 10-97, 10-99, 10-101, 10-103
90110-0151	FEMALE INSERT 24-POL 121130 0000	10-87, 10-91, 10-93, 10-95, 10-97, 10-99, 10-101, 10-103
90110-0163	FEMALE INSERT 70 300 0640 0	10-141
90110-0247	FEMALE INSERT 70.200.0653.0	10-91, 10-93, 10-95, 10-97, 10-99, 10-101, 10-103
90458-0876	FEMALE INSERT HAN 6B 09 14 002 2751	10-83, 10-85
90110-0296	FEMALE INSERT HDC-HA-4BS 149840-B/2	10-83, 10-85, 10-91, 10-93, 10-95, 10-97, 10-99, 10-101, 10-103
90458-1140	FERRITE, RI-26-28-13	10-13, 10-15, 10-17
979434-0000 ..	FERRULE	1-87
342841-0103 ..	FERRULE, 3-A, GC-CLAMP 25,4 MM (1")	1-135
90232-0347	FIBRE LL3-TB01 5 308050	8-77
751220-0000 ..	FILLER CAP	6-61
469091-0500 ..	FILLER TUBE	1-3, 1-5
1523060-0000 .	FILLER TUBE	6-61
1523062-0000 .	FILLING PIPE	6-69
1558443-0000 .	FILLING PIPE	1-183
2524341-0000 .	FILLING PIPE	1-183

Part No	Description	Page No
2524342-0000	FILLING PIPE	1-183
2524343-0000	FILLING PIPE	1-183
2527706-0000	FILLING PIPE	1-183
2527707-0000	FILLING PIPE	1-183
2527710-0000	FILLING PIPE	1-183
2527714-0000	FILLING PIPE	1-183
2527717-0000	FILLING PIPE	1-183
2545427-0000	FILLING PIPE	1-9, 1-11
2546473-0000	FILLING PIPE	1-7
529345-0100	FILLING STATION H2O2	12-7
979329-0200	FILLING UNIT	6-71
271823-0000	FILTER	6-29
272141-0001	FILTER	1-59
272141-0002	FILTER	1-59
450833-0000	FILTER	1-91, 1-93
484196-0000	FILTER	1-91, 1-93
484197-0000	FILTER	9-35
546929-0000	FILTER	6-77, 6-79, 6-81, 6-83
1511701-0000	FILTER	6-69
90415-0019	FILTER / ART.NO. HH-M15-RG	6-29
90415-0022	FILTER / R1 1/2" TYP. 1012	5-81
90277-0324	FILTER CARTRIDGE 050-11-A	1-9, 1-11
90277-0407	FILTER ELEMENT 60Âµ, SS-4F-K4-60	1-7
90277-0104	FILTER F64B-2GN-ARO	1-9, 1-11
90415-0018	FILTER FOR LIME SEPARATING / D MOD.AD	6-29
90277-0323	FILTER HOUSING / ART.NO 95S6-1/4 S 5430	1-9, 1-11
90277-0055	FILTER HOUSING / MDS 4463 G 08 H	1-89
90277-0062	FILTER HOUSING SS-4TF2-60	1-7
90337-0315	FILTER INSERT / MCS 4463	1-89
90257-0001	FILTER PLUG ART.NO.8145-00-140 TYPE F14	1-9, 1-11
90257-0002	FILTER PLUG, NO. 8145-00-120 TYPE F12	5-69
90113-0059	FILTER REGULATOR 50UM, B08-396-A3MG	12-17, 12-19
90459-5804	FILTER REGULATOR, MS6-LFR-1/2-D6-ERV-AS	6-35
90459-3698	FILTER, 6 A, 250 VAC	10-13, 10-15, 10-17
90459-1857	FILTER, MS6-LF-1/2-CRV	6-35
90459-2772	FILTER, MS6-LFM-1/2-ARV	6-35
90459-2773	FILTER, MS6-LFM-1/2-BRV	6-35
90459-5786	FILTERED SILENCER, 10494 LFU-1/2	6-51
90024-0036	FILTERED TERMINAL BLOCK	10-133
272742-0000	FINGER	2-5, 2-7
979668-0000	FINGER	7-23, 7-25, 7-27, 7-29
2540726-0000	FINGER	7-21
533374-0000	FITMENT BOTTOM	12-21
533906-0000	FITMENT COVER	12-21
271825-0000	FIXED AIR KNIFE	1-59
272023-0000	FIXED AIR KNIFE	1-59
256178-0000	FIXING RING	3-5
2500261-0000	FIXING RING	2-57
2508118-0000	FIXING RING	8-15
1539949-0100	FIXING UNIT	5-3
574946-0000	FLAG	8-17, 8-19
271858-0000	FLANGE	1-59
469999-0000	FLANGE	3-5
565534-0000	FLANGE	12-125
565535-0000	FLANGE	12-125
751245-0000	FLANGE	3-5
751395-0000	FLANGE	6-65
979951-0000	FLANGE	12-125
1140996-0000	FLANGE	8-17, 8-19
1334331-0000	FLANGE	7-35, 7-37
1498757-0000	FLANGE	7-9
1523061-0000	FLANGE	6-65
1523228-0000	FLANGE	1-47
1548277-0000	FLANGE	1-177
2518410-0000	FLANGE	3-5
2544964-0000	FLANGE	5-57
2544970-0000	FLANGE	5-57
2559122-0000	FLANGE	5-57
255653-0000	FLANGE BUSHING	4-49, 4-51
752156-0000	FLANGE BUSHING	1-103, 1-105, 1-107, 1-109, 1-119, 1-121
90240-0180	FLANGE BUSHING 10X14X15MM	4-65
90240-0331	FLANGE BUSHING, 10X12X17 MM	5-53
321111-0135	FLANGE BUSHING, 10X16X10 MM	7-13
90240-0262	FLANGE BUSHING, 12X14X12 MM	5-7, 5-9
321101-0172	FLANGE BUSHING, 12X18X10 MM	4-59
321101-0173	FLANGE BUSHING, 12X18X12 MM	4-61, 4-63, 8-65
321111-0212	FLANGE BUSHING, 15X21X15 MM	8-37
90240-0146	FLANGE BUSHING, 15X21X20 MM	1-21, 1-23
90240-0332	FLANGE BUSHING, 16X18X12 MM	5-53
90458-0825	FLANGE BUSHING, 16X18X17 MM	1-177
321101-0222	FLANGE BUSHING, 18X25X12	12-123
321101-0233	FLANGE BUSHING, 20X28X20 MM	8-71
90240-0121	FLANGE BUSHING, 8X10X12 MM	8-21
90240-0172	FLANGE BUSHING, 8X12X10 MM	1-103, 1-105, 1-107, 1-109, 1-111, 1-113, 1-115, 1-119

Part No	Description	Page No
		1-121, 1-125, 1-127
321111-0097 ..	FLANGE BUSHING, 8X12X12 MM	7-13, 7-51, 7-53
321101-0143 ..	FLANGE BUSHING, 8X14X8 MM	1-171, 1-173
37890-0000	FLANGE ROLLER	8-65
295206-0000 ..	FLAP	5-23
1539968-0200 .	FLAP HEATER	5-3
90459-4816	FLAP VALVE, G1/4, L=33	6-89, 6-91
90457-0136	FLAT GASKET TAPE W. ADHESIVE, 10X3.0	6-89, 6-91
90097-0019	FLAT PIN PLUG 2,8MM	10-7, 10-9, 10-11
90097-0017	FLAT PIN PLUG 6,3MM	10-7, 10-9, 10-11
2518145-0101 .	FLEXBOX TETRA BRIK	10-71
90459-2309	FLEXIBLE CHAIN, A325A103KM	10-147
90457-0150	FLEXIBLE COUPLING, 10X25 MM	3-33
90457-0014	FLEXIBLE COUPLING, ND5-A, CON.10X19 MM	6-89, 6-91
979326-0000 ..	FLOAT	1-183
1282411-0000 .	FLOAT	6-61
568828-0000 ..	FLOAT GUARD	6-77, 6-79
90360-0305	FLOAT, ART NO 10739920	6-77, 6-79
979330-0000 ..	FLOATER	1-183
90459-7549	FLOW CONTROL VALVE, GRLZ-1/8-QS-8-D	6-45, 6-47
90243-0147	FLOW METER	12-17, 12-19
1349090-0200 .	FLOW METER	6-15, 6-17, 6-19
90458-2619	FLOW METER, D-6230-HGB-BB-AV-99-0-N2	1-9, 1-11
90243-0134	FLOW METER, EK-4244	6-37
90297-0006	FLUORESCENT TUBE, PL9	2-17
2518149-0000 .	FOIL	2-73
90459-3881	FOLDED PAPER, 00420840	9-5
1539970-0200 .	FOLDING BAR	5-3
2800338-0000 .	FOLDING BAR	5-35
2800339-0000 .	FOLDING BAR	5-35
2800340-0000 .	FOLDING BAR	5-35
2800341-0000 .	FOLDING BAR	5-35
2800350-0000 .	FOLDING BAR	5-35
2800351-0000 .	FOLDING BAR	5-35
2814888-0000 .	FOLDING BAR	5-35
2814889-0000 .	FOLDING BAR	5-35
2776742-0000 .	FOLDING BAR LEFT	5-35
2776741-0000 .	FOLDING BAR RIGHT	5-35
272420-0000 ..	FOLDING FLAP	4-5, 4-7, 4-9, 4-11, 4-13, 4-15
272421-0000 ..	FOLDING FLAP	4-5, 4-7, 4-9, 4-11, 4-13, 4-15
272422-0000 ..	FOLDING FLAP	4-5, 4-7, 4-9, 4-11, 4-13, 4-15
272423-0000 ..	FOLDING FLAP	4-5, 4-7, 4-9, 4-11, 4-13, 4-15
1532440-0000 .	FOLDING FLAP	4-5, 4-7, 4-9, 4-11, 4-13, 4-15
1532441-0000 .	FOLDING FLAP	4-5, 4-7, 4-9, 4-11, 4-13, 4-15
2532539-0000 .	FOLDING FLAP	4-5, 4-7, 4-9, 4-11, 4-13, 4-15
2532540-0000 .	FOLDING FLAP	4-5, 4-7, 4-9, 4-11, 4-13, 4-15
2532541-0000 .	FOLDING FLAP	4-5, 4-7, 4-9, 4-11, 4-13, 4-15
2532542-0000 .	FOLDING FLAP	4-5, 4-7, 4-9, 4-11, 4-13, 4-15
2532543-0000 .	FOLDING FLAP	4-5, 4-7, 4-9, 4-11, 4-13, 4-15
2597663-0000 .	FOLDING FLAP	4-5, 4-7, 4-9, 4-11, 4-13, 4-15
456760-0012 ..	FOLDING FLAP CAM	4-31, 4-33
574494-0000 ..	FOLDING FLAP CAM	4-31, 4-33
577225-0000 ..	FOLDING FLAP CAM	4-31, 4-33
582162-0000 ..	FOLDING FLAP CAM	4-31, 4-33
979770-0000 ..	FOLDING FLAP CAM 100	4-31, 4-33
456760-0010 ..	FOLDING FLAP CAM 200B & 125S	4-31, 4-33
456760-0003 ..	FOLDING FLAP CAM 200S	4-31, 4-33
456760-0011 ..	FOLDING FLAP CAM 250B	4-31, 4-33
90459-3460	FOOTPRINT FILTER 22-RF010-AL	10-13, 10-15, 10-17
90459-3459	FOOTPRINT FILTER, 22-RF018-CL	10-13, 10-15, 10-17
1548313-0000 .	FORCE LIMITING DEVICE	3-29, 3-31
979669-0000 ..	FORCE PLATE	7-23, 7-25, 7-27, 7-29
2514090-0000 .	FORCE PLATE	4-53
271121-0000 ..	FORCE SPRING	2-29
295785-0000 ..	FORCE SPRING	2-29
295985-0000 ..	FORCE SPRING	2-29
441665-0000 ..	FORCE SPRING	2-29
456128-0000 ..	FORCE SPRING	2-29
456129-0001 ..	FORCE SPRING	2-29
456129-0002 ..	FORCE SPRING	2-29
255978-0000 ..	FORK	1-141
257040-0000 ..	FORK	1-125, 1-127
257041-0000 ..	FORK	1-125, 1-127
568583-0000 ..	FORK	1-141
574341-0000 ..	FORK	1-125, 1-127
1538103-0000 .	FORK	1-57
1558124-0000 .	FORK HEAD	4-29
90458-1231	FORK HOLDER 913588/04	8-17, 8-19
752126-0000 ..	FORMING ROLLER	1-103, 1-105, 1-107, 1-109
752127-0000 ..	FORMING ROLLER	1-103, 1-105, 1-107, 1-109
752128-0000 ..	FORMING ROLLER	1-103, 1-105, 1-107, 1-109
752129-0000 ..	FORMING ROLLER	1-111, 1-113, 1-115
752130-0000 ..	FORMING ROLLER	1-111, 1-113, 1-115

Part No	Description	Page No
752131-0000 ..	FORMING ROLLER	1-119, 1-121
752132-0000 ..	FORMING ROLLER	1-119, 1-121
752133-0000 ..	FORMING ROLLER	1-119, 1-121
752134-0000 ..	FORMING ROLLER	1-119, 1-121
752135-0000 ..	FORMING ROLLER	1-119, 1-121
752136-0000 ..	FORMING ROLLER	1-119, 1-121
752137-0000 ..	FORMING ROLLER	1-119, 1-121
752138-0000 ..	FORMING ROLLER	1-125, 1-127
752141-0000 ..	FORMING ROLLER	1-103, 1-105, 1-107, 1-109
752142-0000 ..	FORMING ROLLER	1-103, 1-105, 1-107, 1-109
752143-0000 ..	FORMING ROLLER	1-103, 1-105, 1-107, 1-109
752144-0000 ..	FORMING ROLLER	1-111, 1-113, 1-115
752145-0000 ..	FORMING ROLLER	1-111, 1-113, 1-115
752146-0000 ..	FORMING ROLLER	1-119, 1-121
752147-0000 ..	FORMING ROLLER	1-119, 1-121
752148-0000 ..	FORMING ROLLER	1-119, 1-121
752149-0000 ..	FORMING ROLLER	1-119, 1-121
752150-0000 ..	FORMING ROLLER	1-119, 1-121
752151-0000 ..	FORMING ROLLER	1-119, 1-121
752152-0000 ..	FORMING ROLLER	1-119, 1-121
752153-0000 ..	FORMING ROLLER	1-125, 1-127
37905-0000	FRAME	8-73
76202-0000	FRAME	12-151, 12-153
978542-0000 ..	FRAME	1-167
978543-0000 ..	FRAME	1-169
1511798-0000 .	FRAME	10-89
1517664-0000 .	FRAME	10-105, 10-107, 10-137, 10-139
1523435-0000 .	FRAME	10-71
1523448-0000 .	FRAME	10-141
1523455-0000 .	FRAME	10-143
1523973-0000 .	FRAME	10-141
1548000-0200 .	FRAME	5-3
2553830-0100 .	FRAME	2-3
2553831-0000 .	FRAME	2-69
2553832-0000 .	FRAME	2-69
2613754-0000 .	FRAME	6-53
2815750-0001 .	FRAME	1-59
2815750-0002 .	FRAME	1-59
534692-0000 ..	FRAME SECTION	12-23
90348-0007	FREE-WHEEL COUPLING, 15,875X22,225 MM	1-47, 1-61
90459-3446	FREQUENCY CONVERTER 5,5 KW	10-13, 10-15, 10-17
1511808-0100 .	FREQUENCY CONVERTER EARTH BAR	10-13, 10-15, 10-17
2552705-0000 .	FRONT COVER	2-9
441677-0000 ..	FRONT PLATE	2-13
1523760-0000 .	FRONT PLATE	2-13
1487447-0100 .	FUSE	10-109, 10-111
1538212-0000 .	FUSE BOARD	10-139
90459-3799	FUSE HOLDER, MSC 10 1-POLE A250148	10-115
90459-3800	FUSE HOLDER, MSC 10 3-POLE D250151	10-115
256406-0000 ..	GABLE PLATE	8-25, 8-27, 8-29, 8-45, 8-47, 8-49
90347-0108	GAS SPRING NO. 03-08-100-084174	8-15
90206-0322	GASKET	1-39
90207-0363	GASKET	1-75, 9-37
90207-0365	GASKET	1-75, 9-37
90419-0307	GASKET	2-47, 2-59
90424-0304	GASKET	9-35
230551-0000 ..	GASKET	6-59
256005-0000 ..	GASKET	1-21, 1-23
272277-0000 ..	GASKET	1-65
295417-0000 ..	GASKET	2-29, 5-81
441536-0000 ..	GASKET	2-17
441593-0000 ..	GASKET	2-13
456395-0000 ..	GASKET	5-81
456396-0000 ..	GASKET	5-81
491128-0000 ..	GASKET	1-49, 1-51
491172-0000 ..	GASKET	1-35
491681-0000 ..	GASKET	4-45, 4-47
527906-0000 ..	GASKET	6-67
531731-0000 ..	GASKET	1-43, 1-45
532206-0000 ..	GASKET	6-67
539212-0000 ..	GASKET	1-75, 9-37
562119-0000 ..	GASKET	4-55, 4-57
563286-0000 ..	GASKET	6-61
577770-0000 ..	GASKET	6-65
577773-0000 ..	GASKET	6-61
578030-0000 ..	GASKET	1-95, 1-97
579624-0000 ..	GASKET	3-25
751010-0000 ..	GASKET	1-159
751015-0000 ..	GASKET	1-39
751016-0000 ..	GASKET	1-17
751020-0000 ..	GASKET	1-35
751023-0000 ..	GASKET	1-35, 1-39
751024-0000 ..	GASKET	1-159
751331-0000 ..	GASKET	1-21, 1-23

Part No	Description	Page No
926822-0000 ..	GASKET	9-35
1037573-0000 .	GASKET	10-83, 10-85
1037575-0000 .	GASKET	10-91, 10-93, 10-95, 10-97, 10-99, 10-101, 10-103
1129478-0000 .	GASKET	10-91, 10-93, 10-95, 10-97, 10-99, 10-101, 10-103
1195428-0000 .	GASKET	2-13
1296415-0000 .	GASKET	5-13, 5-15, 5-17, 5-19, 5-21
1487431-0000 .	GASKET	10-83, 10-85, 10-91, 10-93, 10-95, 10-97, 10-99, 10-101, 10-103
1498233-0000 .	GASKET	5-13, 5-15, 5-17, 5-19, 5-21
1511611-0000 .	GASKET	6-7
1511612-0000 .	GASKET	6-7
1511833-0000 .	GASKET	10-91, 10-93, 10-95, 10-97, 10-99, 10-101, 10-103
1511836-0000 .	GASKET	1-155, 1-157
1511838-0000 .	GASKET	10-83, 10-85
1511840-0000 .	GASKET	10-87
1511841-0000 .	GASKET	10-79
1511843-0000 .	GASKET	10-81
1517058-0000 .	GASKET	6-69
1517181-0000 .	GASKET	6-93, 6-95
1517492-0000 .	GASKET	6-69
1523066-0000 .	GASKET	6-69
1523464-0000 .	GASKET	10-75, 10-77
1539967-0000 .	GASKET	5-13, 5-15, 5-17, 5-19, 5-21
2550181-0000 .	GASKET	6-69
315229-0203 ..	GASKET 22,1X31,1X3,7 MM 1"	1-63, 1-137
342850-0303 ..	GASKET 22,7X49,1X5,2 MM 1" FDA	9-35
342850-0203 ..	GASKET 22,7X49,1X5,2 MM 1" FDA 3-A	1-135
90217-0347	GASKET 32X22,6X3,6 MM	1-7, 1-15, 1-67, 1-69, 1-133, 1-135, 1-137
12242-0001	GASKET 32X25X5,5	1-15, 1-65
315229-0204 ..	GASKET 34,8X42,8X3,7 MM 1"1/2	1-43, 1-45, 1-63
90217-0348	GASKET 35,4X46,8X4 MM	1-7, 1-67, 1-69, 1-133, 1-137
342850-0304 ..	GASKET 35,4X49,1X5,2 1"1/2 FDA	9-35
315229-0205 ..	GASKET 47,5X55,5X3,7 MM 2 INCH	1-17, 1-41, 1-43, 1-45, 1-63, 1-65
342850-0305 ..	GASKET 47,8X62,6X5,2 MM 2" FDA	6-77, 6-79, 9-35
90217-0349	GASKET 48,4X59,8X4 MM	1-67, 1-69
12242-0003	GASKET 48X38X5,5	1-135
315250-0103 ..	GASKET 48X38X5,5 MM	5-81
315229-0206 ..	GASKET 60,2X68,2X3,7 MM 2"1/2	1-41, 1-43, 1-45, 1-63, 1-137
12242-0005	GASKET 61X51X5,5	1-49, 1-51, 1-135
315250-0104 ..	GASKET 61X51X5,5 MM	5-73
90217-0313	GASKET 97,8X121,2X5,5 MM	6-77, 6-79
295993-0000 ..	GASKET HOLDER	1-65
491602-0000 ..	GASKET HOLDER	1-49, 1-51
90457-0138	GASKET, DP-200	6-89, 6-91
342850-0101 ..	GASKET, FDA, 3-A, 1/2	5-83
90457-0137	GASKET, GP IP	6-89, 6-91
90458-2199	GASKET, LOWARA 168061340	5-81
315229-0101 ..	GASKETS, 10,4X17,4X3,7 MM 1/2" FDA	1-21, 1-23, 1-131, 6-69
315229-0103 ..	GASKETS, 23,1X30,1X3,7 MM 1" FDA	1-21, 1-23
315229-0104 ..	GASKETS, 35,8X42,8X3,7 MM 1"1/2 FD	1-15, 1-131, 1-135, 6-69
315229-0105 ..	GASKETS, 48,5X55,5X3,7 MM 2" FDA	1-129, 6-59, 6-77, 6-79, 6-81, 6-83
315229-0106 ..	GASKETS, 61,2X68,2X3,7 MM 2"1/2 FD	6-59
76602-0000	GAUGE	12-45
590280-0000 ..	GAUGE	12-165
590283-0000 ..	GAUGE	12-165
590285-0000 ..	GAUGE	12-165
590503-0000 ..	GAUGE	12-165
1349091-0100 .	GAUGE GROUP	6-15, 6-17, 6-19
90321-0101	GEAR PUMP	6-75
256176-0000 ..	GEAR WHEEL	3-5
257179-0000 ..	GEAR WHEEL	3-5, 3-27
293610-0000 ..	GEAR WHEEL	4-59
90458-1879	GEARS, WORM MOTOR 528V--L06-B01	1-61
90459-2327	GEARS, WORM MOTOR IGL 80-60 + VE 31-G-R-	1-47, 8-17, 8-19
272407-0400 ..	GENERATOR	1-3, 1-5
90458-0404	GLAND W/O INSERT M16 NORMAL	8-77, 8-79
90458-0422	GLAND W/O INSERT M20 EXTENDED	7-33, 10-91, 10-93, 10-95, 10-97, 10-99, 10-101, 10-103
90458-0406	GLAND W/O INSERT M20 NORMAL	8-79
90458-0423	GLAND W/O INSERT M32 EXTENDED	5-47
90458-0408	GLAND W/O INSERT M32 NORMAL	5-47
353241-0002 ..	GLAND W/O INSERT PG11 EXTENDED	9-23, 9-29, 9-31
353240-0002 ..	GLAND W/O INSERT PG11 NORMAL	9-23, 9-29, 9-31
353241-0005 ..	GLAND W/O INSERT PG13,5 EXTENDED	5-49, 5-51
353240-0003 ..	GLAND W/O INSERT PG13,5 NORMAL	3-27
353241-0007 ..	GLAND W/O INSERT PG16 EXTENDED	5-49, 5-51
353240-0004 ..	GLAND W/O INSERT PG16 NORMAL	5-49, 5-51
353240-0005 ..	GLAND W/O INSERT PG21 NORMAL	5-49, 5-51
90326-0306	GLAND FITTING 9041-45-KS-KR.1/8" D=4,5MM	1-35, 1-39
353240-0006 ..	GLAND W/O INSERT PG29 NORMAL	5-49, 5-51, 6-11, 10-79
90458-0438	GLAND, EXTENDED WITH INSERT, M20X1,5	1-47, 4-31, 4-33
90012-0119	GLAND, EXTENDED WITH INSERT, PG9	1-185
90458-0188	GLAND, INSERT, MULTI HOLE, 1X7/1X10,5	10-91, 10-93, 10-95, 10-97, 10-99, 10-101, 10-103
90458-1239	GLAND, INSERT, MULTI HOLE, 1X9/1X5,5	8-25, 8-27, 8-29, 8-45, 8-47, 8-49, 8-77
90458-0147	GLAND, INSERT, MULTI HOLE, 2X6,5	5-49, 5-51
90457-0147	GLAND, INSERT, MULTI HOLE, 2X7	1-143, 1-145, 1-147, 1-149, 1-151, 1-153, 2-35, 2-37, 2-69

Part No	Description	Page No
		10-91, 10-93, 10-95, 10-97, 10-99, 10-101, 10-103
90458-1906	GLAND, INSERT, MULTI HOLE, 4X5	5-49, 5-51
353249-0059 ..	GLAND, INSERT, MULTI HOLE, 4X8	5-49, 5-51
90458-1238	GLAND, INSERT, SINGLE HOLE,	8-77, 8-79
90458-0460	GLAND, LOCK NUT, M16X1,5	10-91, 10-93, 10-95, 10-97, 10-99, 10-101, 10-103
90458-0461	GLAND, LOCK NUT, M20X1,5	10-91, 10-93, 10-95, 10-97, 10-99, 10-101, 10-103
90458-0462	GLAND, LOCK NUT, M25X1,5	10-91, 10-93, 10-95, 10-97, 10-99, 10-101, 10-103
90458-0465	GLAND, LOCK NUT, M50X1,5	10-91, 10-93, 10-95, 10-97, 10-99, 10-101, 10-103
456264-0000 ..	GLASS	2-17
2500050-0000 .	GLASS	8-11, 8-13
2748679-0000 .	GLASS	2-35, 2-37
272783-0002 ..	GLASS PANE	1-169
272783-0003 ..	GLASS PANE	1-167
1511311-0000 .	GLASS PANE	7-59
1549608-0000 .	GLASS PANE	2-9
2552679-0000 .	GLASS PANE	2-65, 2-67
2788117-0000 .	GLASS PANE	6-5
2788121-0000 .	GLASS PANE	6-5
90243-0318	GLASS ROD	12-105
90337-0342	GLASS-WINDOW D=12,5MM	12-105
90457-0057	GRID FOR FAN LZ36	10-13, 10-15, 10-17
491230-0000 ..	GRUB SCREW	5-5
256217-0500 ..	GUIDE	4-3
441268-0000 ..	GUIDE	4-53
441269-0000 ..	GUIDE	4-53
590218-0000 ..	GUIDE	12-169
1350675-0000 .	GUIDE	12-169
1350677-0000 .	GUIDE	12-169
1350678-0000 .	GUIDE	12-169
1539969-0200 .	GUIDE	5-3
2545667-0000 .	GUIDE	5-55
2552726-0000 .	GUIDE	5-7, 5-9
2554959-0000 .	GUIDE	2-65, 2-67
2555562-0000 .	GUIDE	5-55
2555563-0000 .	GUIDE	5-55
2555564-0000 .	GUIDE	5-55
2555565-0000 .	GUIDE	5-55
2555566-0000 .	GUIDE	5-55
2555567-0000 .	GUIDE	5-55
2555568-0000 .	GUIDE	5-55
2555569-0000 .	GUIDE	5-55
2555571-0000 .	GUIDE	5-55
2776725-0000 .	GUIDE	5-29, 5-31, 5-33
401183-0000 ..	GUIDE AXLE	7-13
2552688-0000 .	GUIDE BRACKET	2-65, 2-67
2776726-0000 .	GUIDE BRACKET	5-29, 5-31, 5-33
566696-0000 ..	GUIDE CONSOLE	1-57
1498777-0000 .	GUIDE HOLDER	7-35, 7-37
1129274-0000 .	GUIDE LUG	2-65, 2-67, 6-5, 6-7
75451-0000	GUIDE PIN	12-115, 12-157
752655-0000 ..	GUIDE PIN	5-29, 5-31, 5-33
978262-0000 ..	GUIDE PIN	3-19, 3-21
1512444-0000 .	GUIDE RAIL	5-41
1036622-0000 .	GUIDE ROLLER	7-49
1036623-0000 .	GUIDE ROLLER	7-49
90459-3874	GUIDE ROLLER, 32441305	9-7
245039-0000 ..	GUIDE WHEEL	5-45
2850445-0000 .	GUIDE WHEEL	7-51, 7-53
577798-0000 ..	GUIDING ARBOR	8-21
578685-0000 ..	GUIDING ARBOR	8-21
578686-0000 ..	GUIDING ARBOR	8-21
578687-0000 ..	GUIDING ARBOR	8-21
530600-0100 ..	GUIDING PULLTAB	1-21, 1-23
90426-0003	HAND SHOWER	2-45
90051-0077	HANDLE	8-35, 8-61, 12-41, 12-43
240797-0000 ..	HANDLE	4-59
295429-0000 ..	HANDLE	1-49, 1-51
572254-0000 ..	HANDLE	8-25, 8-27, 8-29, 8-45, 8-47, 8-49
1523968-0000 .	HANDLE	10-71, 10-109, 10-111, 10-123, 10-125
2528199-0000 .	HANDLE	5-13, 5-15, 5-17, 5-19, 5-21
90017-0016	HANDLE, NO. 14.4012.02.120	2-73
90017-0022	HANDLE, NO. EL-037311	7-31, 7-35, 7-37, 7-59, 8-11, 8-13
90458-1226	HANDLE, NO. GN 310-12-100-A-NI	8-15
90459-4182	HANDLE, NZM1-XS-R	10-133
318800-0104 ..	HANDLE,SPHERICAL KNOB,INT.THRE.,D.30-M8	7-47
318800-0103 ..	HANDLES,SPHERICAL KNOB,INT.THRE.,D.25-M6	1-49, 1-51, 8-37
1549493-0000 .	HANDSPIKE	8-17, 8-19
90155-0008	HANGER CHAIN, 18	1-15, 1-19
90459-6473	HARDDISK COPYING TOOL, 03607-000	12-7
256665-0200 ..	HATCH	2-3
1279044-0000 .	HATCH	2-39
1279045-0000 .	HATCH	2-41
1296815-0100 .	HATCH	2-3

Part No	Description	Page No
2556246-0000	HATCH	2-13
441792-0000	HEAD	5-39
556664-0000	HEAD	12-105
271827-0001	HEAD PLATE	1-59
271827-0002	HEAD PLATE	1-59
272140-0001	HEAD PLATE	1-59
272140-0002	HEAD PLATE	1-59
2506319-0000	HEAD PLATE	2-5, 2-7
2506320-0000	HEAD PLATE	2-5, 2-7
2506321-0000	HEAD PLATE	2-5, 2-7
2506322-0000	HEAD PLATE	2-5, 2-7
2506323-0000	HEAD PLATE	2-5, 2-7
2506324-0000	HEAD PLATE	2-5, 2-7
2522105-0000	HEAD PLATE	2-5, 2-7
2522106-0000	HEAD PLATE	2-5, 2-7
2522107-0000	HEAD PLATE	2-5, 2-7
2522108-0000	HEAD PLATE	2-5, 2-7
2522109-0000	HEAD PLATE	2-5, 2-7
2619758-0200	HEAD SPACE BY INJECTION	1-3, 1-5
456976-0700	HEAT EXCHANGER	1-3, 1-5
978838-0000	HEAT EXCHANGER	1-137
1539599-0100	HEAT EXCHANGER	1-7
491097-0000	HEAT GUARD	1-39
1260743-0000	HEAT GUARD	1-35
37877-0400	HEATING BLOCK	8-63
1498217-0000	HEATING CHAMBER	5-13, 5-15, 5-17, 5-19, 5-21
1558897-0100	HEATING DEVICE	7-5, 7-7
90600-2007	HEATING ELEM.15KW 3X230/400V,T90600-2007	1-43, 1-45
90459-1382	HEATING ELEMENT 1100W 220V	5-13, 5-15, 5-17, 5-19, 5-21
90206-0053	HEATING ELEMENT 230V 1200W	8-65
90459-1094	HEATING ELEMENT 3000W 240V AC	1-35
90206-0070	HEATING ELEMENT 6000W 380/220V	1-21, 1-23, 9-35
90206-0031	HEATING ELEMENT 700+1200W, 220V	1-39, 9-35
751733-0000	HEATING PIPE	1-39
752174-0000	HEATING PIPE	1-35
1519483-0000	HEATING PIPE	1-43, 1-45
255301-0000	HEATING RAIL	8-65
401186-0000	HEX NUT	7-13
312601-0320	HEXAGON NUT, M10 8 FZB, ISO 4032	2-5, 2-7, 6-89, 6-91, 12-151, 12-153
312601-0322	HEXAGON NUT, DIN 934 M12 8 FZB	12-13, 12-151, 12-153
312601-0324	HEXAGON NUT, DIN 934 M16 8 FZB	3-13, 3-15
312601-0314	HEXAGON NUT, DIN 934 M5 8 FZB	12-117
312601-0318	HEXAGON NUT, DIN 934 M8 8 FZB	3-9, 3-11, 3-13, 3-15
312607-0320	HEXAGON NUT, EN 24032 M6M M10 A480	1-89
312602-0312	HEXAGON NUT, EN 24032 M6M M4 NIPLBR	4-55, 4-57, 12-17, 12-19
312607-0314	HEXAGON NUT, EN 24032 M6M M5 A480	1-181
312607-0316	HEXAGON NUT, EN 24032 M6M M6 A480	1-89
312605-0320	HEXAGON NUT, M6M M10 A280	1-57, 1-125, 1-127, 3-27, 5-7, 5-9, 5-13, 5-15, 5-17, 5-19, 5-21, 5-23, 6-65, 7-11, 8-17, 8-19, 12-161
312605-0322	HEXAGON NUT, M6M M12 A280	1-129, 2-61, 5-13, 5-15, 5-17, 5-19, 5-21, 5-65
312605-0324	HEXAGON NUT, M6M M16 A280	8-67
312605-0328	HEXAGON NUT, M6M M24 A280	9-11
312605-0310	HEXAGON NUT, M6M M3 A280	1-59, 4-29, 7-23, 7-25, 7-27, 7-29, 7-31, 7-35, 7-37, 7-39, 7-41, 8-65, 10-31, 10-83, 10-85, 10-133, 12-109, 12-169
312605-0312	HEXAGON NUT, M6M M4 A280	1-9, 1-11, 1-21, 1-23, 1-91, 1-93, 1-159, 2-39, 2-41, 2-65, 2-67 3-27, 6-77, 6-79, 7-39, 7-41, 7-45, 7-59, 8-39, 8-41, 10-83, 10-85, 10-87, 10-105, 10-107, 10-137 10-139, 10-141, 12-91
312605-0314	HEXAGON NUT, M6M M5 A280	1-9, 1-11, 1-59, 1-65, 1-167, 1-169, 2-53, 2-55, 5-37, 5-45, 6-7 6-11, 6-41, 6-43, 6-61, 7-21, 7-31, 7-35, 7-37, 7-45, 7-59, 7-61, 8-25, 8-27, 8-29, 8-35, 8-45, 8-47 8-49, 8-61, 9-21, 9-25, 9-27, 10-89, 12-17, 12-19, 12-41, 12-43, 12-169
312605-0316	HEXAGON NUT, M6M M6 A280	1-17, 1-19, 1-21, 1-23, 1-47, 1-49, 1-51, 1-125, 1-127, 1-131 1-133, 1-143, 1-145, 1-147, 1-149, 1-151, 1-153, 1-175, 1-177, 2-11, 2-49, 2-51, 2-53, 2-55, 2-61 2-73, 5-7, 5-9, 5-45, 5-55, 5-71, 5-81, 6-11, 6-13, 6-15, 6-17, 6-19, 6-41, 6-43, 6-51, 6-65, 6-67 6-89, 6-91, 7-13, 7-15, 7-21, 7-23, 7-25, 7-27, 7-29, 7-43, 7-47, 7-51, 7-53, 7-61, 8-15, 8-25, 8-27 8-29, 8-37, 8-45, 8-47, 8-49, 8-77, 10-71, 10-83, 10-85, 10-105, 10-107, 10-109, 10-111, 10-123 10-125, 10-133, 10-137, 10-139, 12-17, 12-19, 12-155, 12-159, 12-167, 12-169
312605-0318	HEXAGON NUT, M6M M8 A280	1-9, 1-11, 1-17, 1-35, 1-41, 1-43, 1-45, 1-55, 1-63, 1-65, 1-111 1-113, 1-115, 1-125, 1-127, 1-129, 1-131, 1-137, 1-141, 1-159, 1-175, 2-5, 2-7, 2-61, 4-5, 4-7, 4-9 4-11, 4-13, 4-15, 4-61, 4-63, 5-79, 6-15, 6-17, 6-19, 6-59, 6-61, 6-69, 6-77, 6-79, 6-81, 6-83, 6-89 6-91, 7-35, 7-37, 7-67, 8-5, 8-25, 8-27, 8-29, 8-35, 8-45, 8-47, 8-49, 8-61, 8-69, 12-23, 12-25 12-41, 12-43, 12-51, 12-53, 12-121, 12-127
312812-0320	HEXAGON NUT, NY-LOCK M10 A480	3-25, 10-89
312812-0322	HEXAGON NUT, NY-LOCK M12 A480	8-5
312810-0322	HEXAGON NUT, NY-LOCK M12 FZB	12-13
312812-0324	HEXAGON NUT, NY-LOCK M16 A480	2-49, 2-51
312812-0310	HEXAGON NUT, NY-LOCK M3 A480	1-187
312812-0312	HEXAGON NUT, NY-LOCK M4 A480	1-181, 2-21, 6-87, 8-25, 8-27, 8-29, 8-45, 8-47, 8-49 10-13, 10-15, 10-17, 10-75, 10-77, 10-105, 10-107
312812-0314	HEXAGON NUT, NY-LOCK M5 A480	10-15, 1-55, 2-65, 2-67, 7-35, 7-37, 7-59, 10-73, 10-133, 10-135
312810-0314	HEXAGON NUT, NY-LOCK M5 FZB	2-39
312812-0316	HEXAGON NUT, NY-LOCK M6 A480	1-171, 1-173, 2-21, 7-19, 8-75, 10-71, 10-75, 10-77, 10-89 10-105, 10-107, 10-109, 10-111, 10-123, 10-125, 10-133, 10-137, 10-139, 12-23
312812-0318	HEXAGON NUT, NY-LOCK M8 A480	1-171, 1-173, 6-87, 8-25, 8-27, 8-29, 8-45, 8-47, 8-49
312625-0320	HEXAGON THIN NUT, EN 24035 ML6M M10 A4	8-17, 8-19

Part No	Description	Page No
312625-0326 ..	HEXAGON THIN NUT, EN 24035 ML6M M20 A4	1-95, 1-97
312625-0316 ..	HEXAGON THIN NUT, EN 24035 ML6M M6 A4	3-27, 7-13, 7-15
312625-0318 ..	HEXAGON THIN NUT, EN 24035 ML6M M8 A4	7-21
90458-0875	HING. FR. HAN 6B HOUSING, 09 14 006 0313	10-83, 10-85
37880-0000	HINGE	8-65
295428-0000 ..	HINGE	1-49, 1-51
979559-0000 ..	HINGE	1-21, 1-23
1523437-0000 .	HINGE	10-71, 10-109, 10-111, 10-123, 10-125
1523438-0000 .	HINGE	10-105, 10-107, 10-137, 10-139
441740-0000 ..	HINGE FLANGE	1-167, 1-169
441741-0000 ..	HINGE FLANGE	1-167, 1-169
90459-0075	HINGE, 1056-U30	7-35, 7-37
90248-0047	HINGE, 1150-U50	2-73
90248-0026	HINGE, 1703-80X32	8-25, 8-27, 8-29, 8-45, 8-47, 8-49
90248-0034	HINGE, 66073	6-41, 6-43
2506790-0100 .	HOLD-DOWN DEVICE	3-3
75453-0000	HOLDER	12-113
255943-0000 ..	HOLDER	2-5, 2-7
272852-0000 ..	HOLDER	2-5, 2-7
272862-0000 ..	HOLDER	8-71
295259-0000 ..	HOLDER	6-53
295399-0000 ..	HOLDER	2-5, 2-7
295986-0000 ..	HOLDER	2-23, 2-25, 2-27
441212-0000 ..	HOLDER	2-13
449970-0000 ..	HOLDER	12-123
456837-0000 ..	HOLDER	1-125, 1-127
469041-0000 ..	HOLDER	1-111, 1-113, 1-115
469078-0000 ..	HOLDER	1-111, 1-113, 1-115
469141-0000 ..	HOLDER	8-73
490518-0000 ..	HOLDER	1-125, 1-127
491859-0000 ..	HOLDER	2-23, 2-25, 2-27
491860-0000 ..	HOLDER	2-23, 2-25, 2-27
530591-0000 ..	HOLDER	1-81
556666-0000 ..	HOLDER	12-105
576286-0000 ..	HOLDER	6-41, 6-43
590263-0000 ..	HOLDER	12-161
590276-0000 ..	HOLDER	12-163
751718-0100 ..	HOLDER	8-25, 8-27, 8-29, 8-45, 8-47, 8-49
752007-0000 ..	HOLDER	12-93
752668-0000 ..	HOLDER	12-93
978791-0000 ..	HOLDER	1-111, 1-113, 1-115
979368-0000 ..	HOLDER	1-183
979446-0000 ..	HOLDER	6-41, 6-43
1020637-0000 .	HOLDER	9-21, 9-25, 9-27
1020638-0000 .	HOLDER	9-21, 9-25, 9-27
1037124-0000 .	HOLDER	7-19
1140129-0000 .	HOLDER	2-11
1350472-0000 .	HOLDER	2-53, 2-55
1350473-0000 .	HOLDER	2-53, 2-55
1366726-0000 .	HOLDER	5-45
1490804-0000 .	HOLDER	7-19
1498771-0000 .	HOLDER	7-57
1499060-0000 .	HOLDER	6-61
1511002-0000 .	HOLDER	7-49
1523059-0000 .	HOLDER	6-61
1549492-0000 .	HOLDER	8-15
2500203-0000 .	HOLDER	6-37
2506472-0000 .	HOLDER	7-47
2506480-0000 .	HOLDER	7-65
2512787-0000 .	HOLDER	4-31, 4-33
2552621-0000 .	HOLDER	7-35, 7-37
2552622-0000 .	HOLDER	7-35, 7-37
2575480-0000 .	HOLDER	7-51, 7-53
2575484-0000 .	HOLDER	7-51, 7-53
2576239-0000 .	HOLDER	7-51, 7-53
2606880-0000 .	HOLDER	5-7, 5-9
2640472-0000 .	HOLDER	1-137
2815756-0000 .	HOLDER	1-171, 1-173
476356-0000 ..	HOLDER FOR INK BOTTLE	8-35, 8-61, 12-41, 12-43
90164-0301	HOLDING FIXTURE	2-17
295377-0001 ..	HOOD	1-141
295377-0002 ..	HOOD	1-141
491441-0000 ..	HOOD	1-141
76296-0000	HOOK	12-85, 12-163
1334803-0000 .	HOOK	12-155
72947-0000	HOOK SPANNER	9-15
90142-0005	HOSE	3-5
90166-0113	HOSE	5-69, 6-87, 12-23
90166-0138	HOSE	6-61, 8-35, 8-61, 12-41, 12-43
456137-0000 ..	HOSE	6-15, 6-17, 6-19
469146-0000 ..	HOSE	2-29
978973-0001 ..	HOSE	6-61
978973-0003 ..	HOSE	6-77, 6-79
90152-0016	HOSE (SPIRAL)	2-43

Part No	Description	Page No
90152-0017	HOSE (SPIRAL)	2-45
90166-0060	HOSE 19/26-27 REINF.PVC	3-5
90166-0117	HOSE 4/6 PVC BLUE	12-127
90166-0089	HOSE 4/6.2 PE BLUE	5-71, 5-73
90166-0061	HOSE 4/8 PVC TRANSP.	6-41, 6-43
90166-0090	HOSE 6/8.4 PE BLUE	5-71
90166-0008	HOSE 7/10 PVC TRANSP.	6-13
342991-0101	HOSE CLIP,WORM DRIVE TYPE (13)-16	5-69, 6-61, 6-87, 12-23
342991-0104	HOSE CLIP,WORM DRIVE TYPE (23)-27	3-5
342991-0106	HOSE CLIP,WORM DRIVE TYPE (30)-36	1-135
342991-0112	HOSE CLIP,WORM DRIVE TYPE (73)-83	6-59
342991-0113	HOSE CLIP,WORM DRIVE TYPE (83)-93	6-59
342991-0100	HOSE CLIP,WORM DRIVE TYPE 10-13	12-23
90458-0449	HOSE GLAND EMC M20 EXTENDED	8-17, 8-19
90458-0450	HOSE GLAND EMC M25 EXTENDED	3-7
90457-0146	HOSE GLAND W/O INSERT M16 EXTENDED	1-143, 1-145, 1-147, 1-149, 1-151, 1-153
90458-0427	HOSE GLAND W/O INSERT M16 EXTENDED	5-57
90458-0417	HOSE GLAND W/O INSERT M16 NORMAL	8-77, 8-79
90458-0428	HOSE GLAND W/O INSERT M20 EXTENDED	8-65, 8-77, 10-91, 10-93, 10-95, 10-97, 10-99, 10-101, 10-103
90458-0429	HOSE GLAND W/O INSERT M20 EXTENDED	8-77, 8-79
90458-0430	HOSE GLAND W/O INSERT M20 EXTENDED	2-35, 2-37, 2-69, 5-81, 7-33, 8-25, 8-27, 8-29, 8-45, 8-47, 8-49, 8-77, 10-91, 10-93, 10-95, 10-97, 10-99, 10-101, 10-103
90458-0413	HOSE GLAND W/O INSERT M20 NORMAL	8-77, 8-79
90458-0431	HOSE GLAND W/O INSERT M25 EXTENDED	5-75, 6-89, 6-91, 7-17, 7-33, 10-91, 10-93, 10-95, 10-97, 10-99, 10-101, 10-103
90458-0432	HOSE GLAND W/O INSERT M25 EXTENDED	10-91, 10-93, 10-95, 10-97, 10-99, 10-101, 10-103
90458-0433	HOSE GLAND W/O INSERT M32 EXTENDED	7-33, 8-79
90458-0459	HOSE GLAND W/O INSERT M40 EXTENDED	5-13, 5-15, 5-17, 5-19, 5-21, 5-37
90458-0416	HOSE GLAND W/O INSERT M50 NORMAL	10-91, 10-93, 10-95, 10-97, 10-99, 10-101, 10-103
90458-1747	HOSE GLAND W/O INSERT M50 NORMAL	10-75, 10-77
353243-0002	HOSE GLAND W/O INSERT PG11 EXTENDED	1-143, 1-145, 1-147, 1-149, 1-151, 1-153, 2-11, 2-17, 6-61, 6-89, 6-91, 8-77
353243-0003	HOSE GLAND W/O INSERT PG11 EXTENDED	1-21, 1-23, 1-143, 1-145, 1-147, 1-149, 1-151, 1-153, 8-77
353242-0001	HOSE GLAND W/O INSERT PG13,5 NORMAL	6-13, 6-87
353243-0005	HOSE GLAND W/O INSERT PG16 EXTENDED	6-59, 6-65, 8-17, 8-19, 10-79
353243-0007	HOSE GLAND W/O INSERT PG21 EXTENDED	1-9, 1-11, 1-21, 1-23, 1-143, 1-145, 1-147, 1-149, 1-151, 1-153
90458-0146	HOSE GLAND W/O INSERT PG21 NORMAL	7-33
353243-0008	HOSE GLAND W/O INSERT PG29 EXTENDED	1-9, 1-11
90012-0126	HOSE GLAND W/O INSERT PG29 NORMAL	1-43, 1-45
353242-0003	HOSE GLAND W/O INSERT PG29 NORMAL	7-33, 8-77, 10-79
90457-0031	HOSE GLAND W/O INSERT PG36 NORMAL	2-57
353243-0001	HOSE GLAND W/O INSERT PG9 EXTENDED	6-75, 6-77, 6-79, 6-87, 6-89, 6-91, 10-79, 10-81
469867-0000	HOSE HOLDER	3-5
1523832-0000	HOSE HOLDER	2-31
2516972-0000	HOSE HOLDER	2-29
456018-0000	HOSE HOLDER LEFT	4-69
456017-0000	HOSE HOLDER RIGHT	4-67
2540724-0000	HOSE INSTALLATION	7-3
979336-0000	HOSE NIPPLE	6-61
90163-0052	HOSE NIPPLE, EXT.THR. 1/4-12 MM	5-69, 6-87
90166-0119	HOSE PUR 4/6 BLACK	1-95, 1-97, 1-161, 1-163, 6-15, 6-17, 6-19
90166-0059	HOSE PVC 12/16MM TRANSP.	8-25, 8-27, 8-29, 8-45, 8-47, 8-49
90166-0049	HOSE PVC 25/33-34	1-135
90166-0045	HOSE PVC TRANSP. 6/12	12-23
256055-0700	HOT AIR ELEMENT	1-3, 1-5
256095-0700	HOT AIR ELEMENT	1-3, 1-5
577825-0200	HOT WATER VALVE	6-15, 6-17, 6-19
90053-0031	HOUR COUNTER, B 609.10 10-50VDC	10-123, 10-125
272372-0000	HOUSE	3-5
556663-0000	HOUSE	12-105
556672-0100	HOUSE	12-101
556673-0000	HOUSE	12-107
978865-0000	HOUSE	1-49, 1-51
979247-0000	HOUSE	1-17
1539951-0000	HOUSE	5-43
90458-0871	HOUSING BULKHEAD MOUNTING HAN 6B-AGG-RB	10-83, 10-85
441385-0000	HUB	4-25, 4-27
456744-0000	HUB	3-19, 3-21
491274-0000	HUB	3-5
536913-0000	HUB	7-11
1334234-0000	HUB	1-47, 1-61
580042-0100	HUB JUMBO	7-5, 7-7
90457-0022	HYDR. HOSE, 6,4 & M16X1,5 STR+90DEGR.CON	6-89, 6-91
90457-0016	HYDR. VALVE MANIFOLD BLOCK, NO A1-17253	6-89, 6-91
90457-0018	HYDR.ACCU, NO SBO210-0,32EI/112A-210AK60	6-89, 6-91
90457-0015	HYDR.PUMP, TFP100/2,2-S-C001, NO 1111250	6-89, 6-91
90148-0037	HYDRAULIC HOSE	2-23, 2-25, 2-27
90148-0038	HYDRAULIC HOSE	2-23, 2-25, 2-27
90067-0365	HYDRAULIC HOSE, 32 04 169 1	9-7
257380-0000	HYDRAULIC PIPE LEFT	4-69
257379-0000	HYDRAULIC PIPE RIGHT	4-67

Part No	Description	Page No
1512304-0200	HYDRAULIC SYSTEM	6-3
90031-0305	I/O EXPANSION CABLE	10-41, 10-43
90459-2137	ILLUMINATING SEAL, MEB-LD-12-24DC	6-35
491929-0000	IMPELLER WHEEL	6-65
90458-1721	INDEXING GEAR, 10.707.207	5-65
256410-0900	INDEXING UNIT	5-3
574415-0000	INDICATOR 250S	1-47
580038-0200	INDUCTOR	7-35, 7-37
1035587-0000	INDUCTOR	7-45
1110530-0000	INDUCTOR	4-45, 4-47, 4-71, 9-41
1110532-0000	INDUCTOR	4-45, 4-47, 4-71, 9-41
1110534-0000	INDUCTOR	4-45, 4-47, 4-71, 9-41
1110535-0000	INDUCTOR	4-45, 4-47, 4-71, 9-41
1520078-0000	INDUCTOR	4-45, 4-47, 4-71, 9-41
1517490-0000	INFERIOR HOLDER	6-93, 6-95
1517491-0000	INFERIOR HOLDER	6-93, 6-95
2545080-0200	INJECTION SYSTEM	1-7
90299-0072	INK	8-35, 8-61, 12-41, 12-43
90457-0048	INK JET PRINTER A300 HS	13-3
450355-0000	INK ROLLER	8-35, 8-61, 12-41, 12-43
543135-0000	INK TRANSFER ROLLER	8-35, 8-61, 12-41, 12-43
434074-0300	INK UNIT	12-7
434774-0300	INK UNIT	12-7
440286-0300	INK UNIT NSS	8-45, 8-47, 8-49
458192-0300	INK UNIT SS	8-25, 8-27, 8-29
297210-0000	INK WELL	8-35, 12-43
297211-0000	INK WELL	8-61, 12-41
466477-0000	INNER PIPE	1-139
2544968-0000	INNER RING	5-57
90024-0037	INPUT FILTER, 8 A	10-13, 10-15, 10-17
2504449-0000	INSERT	6-11, 10-79
2618387-0000	INSERT	10-91, 10-93, 10-95, 10-97, 10-99, 10-101, 10-103
90457-0199	INSERT EK 156M 5X5/4X9	5-13, 5-15, 5-17, 5-19, 5-21, 5-37
353249-0025	INSERT, MULTI HOLE, E152M3X4	8-77, 8-79
353249-0028	INSERT, MULTI HOLE, E153M2X8	5-71
353249-0051	INSERT, MULTI HOLE, E154M4X6	5-49, 5-51
90457-0028	INSERT, MULTI HOLE, E154M5X5	5-47
90457-0027	INSERT, MULTI HOLE, E155M1X5/4X9	5-49, 5-51, 10-79
353249-0060	INSERT, MULTI HOLE, E155M2X13	5-49, 5-51
90457-0029	INSERT, MULTI HOLE, E156M5,9,11,19	2-57, 10-75, 10-77
353249-0084	INSERT, MULTI HOLE, EK 154M4X7,5	5-47, 5-49, 5-51
353249-0036	INSERT, MULTI HOLE, EK152 M 2X4	9-23, 9-29, 9-31, 10-91, 10-93, 10-95, 10-97, 10-99
		10-101, 10-103
353249-0037	INSERT, MULTI HOLE, EK155M4X8	5-47
90457-0030	INSERT, MULTI HOLE, EK155M4X9	5-49, 5-51
353249-0003	INSERT, SINGEL HOLE, E151/11	9-23, 9-29, 9-31
353249-0065	INSERT, SINGEL HOLE, E152/09	3-27, 6-13, 6-87, 8-79
353249-0070	INSERT, SINGEL HOLE, E154/16	7-33
353249-0072	INSERT, SINGEL HOLE, E155/20	7-33, 8-77
353249-0010	INSERT, SINGEL HOLE, EK 152/11	1-143, 1-145, 1-147, 1-149, 1-151, 1-153, 2-11, 8-65, 8-77
353249-0008	INSERT, SINGEL HOLE, EK 152/7	5-57
353249-0009	INSERT, SINGEL HOLE, EK 152/9	2-17, 6-61, 6-75, 6-77, 6-79, 6-87, 6-89, 6-91, 10-79, 10-81
353249-0011	INSERT, SINGEL HOLE, EK 153/11	1-21, 1-23, 1-143, 1-145, 1-147, 1-149, 1-151, 1-153, 8-77, 8-79
353249-0075	INSERT, SINGEL HOLE, EK 153/13	7-33, 10-91, 10-93, 10-95, 10-97, 10-99, 10-101, 10-103
353249-0012	INSERT, SINGEL HOLE, EK 154/11	8-77
353249-0013	INSERT, SINGEL HOLE, EK 154/13	5-75, 6-59, 6-65, 6-89, 6-91, 7-33, 8-17, 8-19, 10-79, 10-91
		10-93, 10-95, 10-97, 10-99, 10-101, 10-103
353249-0014	INSERT, SINGEL HOLE, EK 154/16	5-81, 7-17, 7-33, 10-79
353249-0016	INSERT, SINGEL HOLE, EK 155/18	1-21, 1-23, 1-143, 1-145, 1-147, 1-149, 1-151, 1-153, 8-79
		10-91, 10-93, 10-95, 10-97, 10-99, 10-101, 10-103
353249-0061	INSERT, SINGEL HOLE, EK 155/20	1-143, 1-145, 1-147, 1-149, 1-151, 1-153, 7-33
353249-0017	INSERT, SINGEL HOLE, HI.TEMP, EK152I7	1-9, 1-11
2541126-0100	INSTALLATION ACCESSORIES	9-3
81596-0103	INSTALLATION MANUAL PLMS ON-LINE	11-11
567372-0000	INSTRUCTION FOR USE	12-125
37886-0000	INSULATING DISK	8-65
30298-0000	INSULATION	1-43, 1-45
441501-0000	INSULATION	1-65
751009-0000	INSULATION	1-43, 1-45
1499899-0000	INSULATION CLOTH	6-61
32544-0000	INSULATION NUT	4-55, 4-57
271846-0000	INSULATION NUT	4-45, 4-47
90411-0005	INSULATOR	1-43, 1-45
256200-0300	INTERMEDIARY SHAFT	3-3
90458-1102	INTOUCH OEM 2000 V.7.0/7.1 HW KEY	10-71
442085-0000	JET DIVERTER	12-105
1519133-0000	JOINT	4-61, 4-63
1519134-0000	JOINT	4-61, 4-63
1558322-0000	JOINT BOLT	8-7
2518416-0000	JOINT BOLT	6-53
457696-0001	JOINT PIECE	5-45
1498763-0000	JOINT PIECE	7-57
1499371-0000	JOINT PLATE	7-57

Part No	Description	Page No
76206-0000	JOINTED ARM	12-151, 12-153
469121-0400	JUNCTION BLOCK	6-15, 6-17, 6-19
90206-0326	JUNCTION BOX FOR 90206-56	1-21, 1-23
2552686-0000	KEY	2-65, 2-67
975917-0000	KEY FOR SAFETY SWITCH 90044-103	8-11, 8-13
90044-0310	KEY FOR SAFETY SWITCH AZ 15/16 B1	1-49, 1-51, 2-35, 2-37, 7-31, 8-25, 8-27, 8-29, 8-45, 8-47, 8-49
90459-0472	KEY SAF.SW. AZ 16 02ZVRK-M20-2152-2254	2-35, 2-37, 2-69, 7-31, 8-11, 8-13
90044-0139	KEY SAF.SW. AZ16-02 ZVR K-2254 USE 90459	8-45, 8-47, 8-49
90459-1194	KEY SAF.SW. AZ16-03 ZVRK-M16	1-49, 1-51
90044-0103	KEY SAFETY SWITCH AZ 15 ZVR-2254	8-25, 8-27, 8-29
90111-0124	KEY SWITCH, 1NO,1NC CONTACT	10-123, 10-125
90111-0122	KEY SWITCH, 2 NO CONTACTS	10-123, 10-125
31017-0000	KNIFE	8-65
37900-0000	KNIFE	8-69
1282645-0000	KNIFE	4-35
1282646-0000	KNIFE	4-35
1282647-0000	KNIFE	4-35
256208-0400	KNIFE HOLDER	4-3
36325-0000	KNOB	1-119, 1-121
318871-0104	KNOB CIRCULAR, EXT THREAD, NO. 8302-6118	8-15
90458-1590	KNOB WITH SHAFT, M6	3-27
318860-0106	KNOB, ADJUST.HI.EXT.THREAD, NO 8324-3674	2-57
318873-0103	KNOB, CIRKUL, THREADED BUSH, M6 21X17 MM	12-155
90051-0035	KNOB, EXTERNAL THREAD. NO. 8308-1135	7-21, 12-55, 12-59
90051-0083	KNOB, EXTERNAL THREAD. NO. 8308-1321	12-87, 12-91, 12-117
90051-0084	KNOB, EXTERNAL THREAD. NO. 8308-1534	12-155
90051-0059	KNOB, EXTERNAL THREAD. NO. 8308-1550	12-77, 12-79, 12-93
90051-0053	KNOB, INTERNAL THREAD, M6 24X17	12-57, 12-61, 12-87, 12-91
90051-0040	KNOB, INTERNAL THREAD, NO. 8308-0627	12-85, 12-155, 12-163
1255924-0000	LABEL	1-89
1279456-0000	LABEL	1-89
1178657-0000	LABEL 3A 17-10	9-3
2545068-0000	LABEL CD	11-15
2547128-0000	LABEL CD	11-19
2794875-0000	LABEL CD	11-7
2545069-0000	LABEL DISKETTE	11-15
2589394-0000	LABEL DISKETTE	11-17
2545070-0000	LABEL FLEXBOX	11-15
2547129-0000	LABEL FLEXBOX	11-19
2589425-0000	LABEL FLEXBOX	11-17
2776753-0000	LABEL FLEXBOX	11-7
2776759-0000	LABEL FLEXBOX	11-7
464173-0000	LABEL HOLDER	1-95, 1-97
37911-0000	LACE	8-73
256705-0000	LACE	4-31, 4-33
256890-0000	LACE	4-49, 4-51
256891-0000	LACE	4-49, 4-51
257317-0000	LACE	4-49, 4-51
257362-0000	LACE	4-5, 4-7, 4-9, 4-11, 4-13, 4-15
271622-0000	LACE	2-23, 2-25, 2-27
271623-0000	LACE	2-23, 2-25, 2-27
272329-0001	LACE	1-59
272329-0002	LACE	1-59
272506-0000	LACE	4-25, 4-27
441024-0000	LACE	3-5
441751-0000	LACE	4-53
456407-0000	LACE	2-23, 2-25, 2-27
469131-0000	LACE	2-23, 2-25, 2-27
491319-0000	LACE	3-13, 3-15
491410-0000	LACE	3-5
2547005-0000	LACE	8-17, 8-19
598762-0300	LADDER	2-3
1519086-0100	LAMP	2-3
1549603-0100	LAMP	2-3
2526341-0000	LAMP HOLDER	8-77
90064-0315	LAMP REMOVER, NO:700	9-5
90243-0317	LASER	12-105
556662-0100	LASER	12-101
538432-0100	LASER DETECTOR	12-101
90326-0304	LEAD IN, 9041-15-KS-UB60	1-35, 1-39
90015-0028	LEAD-IN BUSHING	5-37
90458-1227	LEAD-IN, BUSHING, DA 130/170/50	6-53
90458-1228	LEAD-IN, BUSHING, DA 230/300/60	8-5
90459-1066	LEAD-IN, BUSHING, DA 300/350/10	2-53, 2-55
352101-0103	LEAD-IN, PR18,6/PG11, E-1457518	6-15, 6-17, 6-19, 6-41, 6-43, 8-25, 8-27, 8-29
352101-0107	LEAD-IN, PR37/PG29, E-1457537	1-143, 1-145, 1-147, 1-149, 1-151, 1-153
90015-0021	LEAD-IN, TET10-14, E-1458023	1-143, 1-145, 1-147, 1-149, 1-151, 1-153
90015-0020	LEAD-IN, TET5-7, E-1458016	1-143, 1-145, 1-147, 1-149, 1-151, 1-153, 7-23, 7-25, 7-27, 7-29, 7-35, 7-37
90015-0023	LEAD-IN, TET7-10, E-1458019	1-143, 1-145, 1-147, 1-149, 1-151, 1-153, 8-77
257334-0000	LEAF SPRING	4-31, 4-33
2526323-0000	LEAF SPRING	2-5, 2-7
2526324-0000	LEAF SPRING	2-5, 2-7

Part No	Description	Page No
2526325-0000	LEAF SPRING	2-5, 2-7
2526326-0000	LEAF SPRING	2-5, 2-7
2526327-0000	LEAF SPRING	2-5, 2-7
2526328-0000	LEAF SPRING	2-5, 2-7
2526329-0000	LEAF SPRING	2-5, 2-7
533014-0100	LEAK FINDING EQUIPMENT (SUPERSTRUCTURE)	12-7
90458-1212	LEFT ENDPLATE INCL. 10M CABLE	6-45, 6-47
598148-0000	LEG	2-15, 5-77, 6-55, 8-9
2773923-0000	LEG	5-77
2773924-0100	LEG	5-75
2773925-0000	LEG	2-15, 6-55, 8-9
2773926-0100	LEG	2-13, 6-53, 8-5
2781021-0000	LEG	5-85
2854818-0100	LEG	5-81
2854819-0000	LEG	5-85
90458-2580	LEVEL CONTROL RELAY RM4-LA32M	10-39
42063-0100	LEVEL DETECTOR	1-185
273978-0000	LEVEL GLAS	6-73
534636-0000	LEVEL GLAS	12-23
90199-0020	LEVEL GLASS/THERMOM. FSA 76.1.1./T/12	6-89, 6-91
42062-0200	LEVEL PROBE	1-183
925991-0200	LEVEL PROBE	1-3, 1-5
90457-0019	LEVEL PROBE, HMFB-S=45-0=80-0=90-T70	6-89, 6-91
1346746-0000	LEVER	7-51, 7-53
1548276-0000	LEVER	1-177
1548532-0000	LEVER	1-177
2594658-0000	LEVER	5-7, 5-9
2685677-0001	LEVER	5-7, 5-9
2685677-0002	LEVER	5-7, 5-9
2685677-0003	LEVER	5-7, 5-9
2685677-0004	LEVER	5-7, 5-9
2685677-0005	LEVER	5-7, 5-9
2685677-0006	LEVER	5-7, 5-9
2685677-0007	LEVER	5-7, 5-9
2685677-0008	LEVER	5-7, 5-9
2685677-0009	LEVER	5-7, 5-9
2685677-0010	LEVER	5-7, 5-9
2685677-0011	LEVER	5-7, 5-9
35962-0000	LID	6-13
37893-0000	LID	8-65
76484-0000	LID	12-75, 12-99
256248-0001	LID	8-25, 8-27, 8-29, 8-45, 8-47, 8-49
256398-0000	LID	8-25, 8-27, 8-29, 8-45, 8-47, 8-49
257250-0000	LID	4-25, 4-27
272275-0000	LID	1-65
272743-0000	LID	5-75
273964-0000	LID	6-63
295203-0000	LID	5-43
469964-0000	LID	2-39
491291-0000	LID	5-63
491851-0000	LID	5-59, 5-61
493652-0100	LID	6-61, 6-67
532205-0000	LID	6-67
556674-0000	LID	12-107
562118-0000	LID	4-55, 4-57
568806-0000	LID	6-81, 6-83
577467-0000	LID	1-143, 1-145, 1-147, 1-149, 1-151, 1-153
577468-0000	LID	1-143, 1-145, 1-147, 1-149, 1-151, 1-153
577469-0000	LID	1-143, 1-145, 1-147, 1-149, 1-151, 1-153
577470-0000	LID	1-143, 1-145, 1-147, 1-149, 1-151, 1-153
578035-0000	LID	1-143, 1-145, 1-147, 1-149, 1-151, 1-153
578490-0000	LID	1-21, 1-23
578491-0000	LID	1-21, 1-23
578492-0000	LID	1-21, 1-23
578496-0000	LID	1-143, 1-145, 1-147, 1-149, 1-151, 1-153
751223-0000	LID	6-67
752240-0000	LID	8-25, 8-27, 8-29, 8-45, 8-47, 8-49
1334769-0000	LID	1-143, 1-145, 1-147, 1-149, 1-151, 1-153
1498216-0000	LID	5-13, 5-15, 5-17, 5-19, 5-21
1517270-0000	LID	1-143, 1-145, 1-147, 1-149, 1-151, 1-153
1517271-0000	LID	1-143, 1-145, 1-147, 1-149, 1-151, 1-153
1523364-0000	LID	1-133
1539110-0000	LID	4-59
2526844-0000	LID	1-143, 1-145, 1-147, 1-149, 1-151, 1-153
2526846-0000	LID	1-143, 1-145, 1-147, 1-149, 1-151, 1-153
2552697-0000	LID	2-21
2563209-0000	LID	6-77, 6-79
2685679-0000	LID	5-29, 5-31, 5-33
2685680-0000	LID	1-21, 1-23
2685681-0000	LID	1-21, 1-23
2743327-0000	LID	1-91, 1-93
2773919-0000	LID	1-143, 1-145, 1-147, 1-149, 1-151, 1-153
90459-2708	LID, A2-18077	6-89, 6-91
1558480-0100	LIFTING CYLINDER	9-7

Part No	Description	Page No
90458-1959	LIFTING EYE BOLT, LGB (3) 3T M24	9-17
579899-0000	LIFTING UNIT	9-3
1296900-0100	LIFTING UNIT (RAILING)	12-147
90036-0057	LIGHT BULB, BA9S 28V	7-17
90458-0295	LIGHT ELEMENT, BLUE, KL70-401L	2-47, 2-59
90458-0293	LIGHT ELEMENT, RED, KL70-401R	2-47, 2-59
90458-0294	LIGHT ELEMENT, YELLOW, KL70-401Y	2-47, 2-59
441534-0200	LIGHT FIXTURE	2-13
595430-0200	LIGHT FIXTURE	2-9
90164-0015	LIGHT FIXTURE, RL70CV-111 / 230V 50HZ	2-11, 8-77
90459-2560	LIGHT FIXTURE, TMS121 1XTL-D30W/830 IP	10-75, 10-77
90459-3090	LIGHT FIXTURE, TMS121 1XTL8W/830 IP	10-75, 10-77
90044-0084	LIMIT SW. 14 CE1-4	1-21, 1-23
90044-0151	LIMIT SW. GLEB24C	3-27
90044-0192	LIMIT SW. SZ2586.000	10-75, 10-77
272456-0000	LINK	3-9, 3-11
456009-0000	LINK	4-35
491175-0000	LINK	1-35
752425-0000	LINK	4-37, 4-39, 4-41, 4-43
1490118-0000	LINK	3-29, 3-31
1548003-0000	LINK	1-177
1548004-0001	LINK	1-177
1548004-0002	LINK	1-177
441031-0000	LINK BEARING	4-53
1490113-0000	LINK HEAD	3-29, 3-31
76294-0000	LOCATING PIECE	12-85, 12-163
37910-0000	LOCK	8-73
272945-0000	LOCK	1-143, 1-145, 1-147, 1-149, 1-151, 1-153
295427-0000	LOCK	1-49, 1-51
295466-0000	LOCK	1-143, 1-145, 1-147, 1-149, 1-151, 1-153
90237-0155	LOCK ADAPTER, 1121-U40	8-11, 8-13, 10-105, 10-107, 10-137, 10-139
31724-0000	LOCK BAR	8-65
37883-0000	LOCK BAR	8-65
90237-0156	LOCK BOLT, 1000-16	8-11, 8-13, 10-105, 10-107, 10-137, 10-139
90237-0157	LOCK BOLT, 1000-230	2-73, 10-71, 10-109, 10-111, 10-121, 10-123, 10-125, 10-129, 10-131
90237-0128	LOCK CYLINDER, 1109-U3	2-65, 2-67, 6-5, 6-7, 8-11, 8-13, 10-105, 10-137, 10-139
90237-0129	LOCK CYLINDER, 1109-U6	6-5, 10-107
90237-0322	LOCK GASKET, 1000-U137	10-71, 10-109, 10-111, 10-121, 10-123, 10-125, 10-129, 10-131
90237-0319	LOCK HOUSING, 1000-U1342-73, 10-71, 10-109, 10-111, 10-121, 10-123, 10-125, 10-129, 10-131	
90237-0320	LOCK HOUSING, 1000-U1362-73, 10-71, 10-109, 10-111, 10-121, 10-123, 10-125, 10-129, 10-131	
90237-0153	LOCK HOUSING, 1121-U26-0B	2-65, 2-67, 6-5, 6-7
90237-0154	LOCK HOUSING, 1121-U60-0C	8-11, 8-13, 10-105, 10-107, 10-137, 10-139
90237-0323	LOCK O-RING, 1000-24	10-121, 10-129, 10-131
37912-0000	LOCK PLATE	8-73
456199-0000	LOCK PLATE	1-119, 1-121
456872-0000	LOCK PLATE	1-119, 1-121
456907-0000	LOCK PLATE	1-103, 1-105, 1-107, 1-109
565462-0100	LOCK PLATE	1-111, 1-113, 1-115
574393-0000	LOCK PLATE	1-119, 1-121
32691-0000	LOCK SPRING	8-31, 8-33, 8-51, 8-53, 12-27, 12-29, 12-37, 12-39
2640265-0000	LOCK SPRING	1-55
464011-0000	LOCK STUD	8-37
978872-0000	LOCK WASHER	1-49, 1-51
315402-0128	LOCK WASHER FBB 3,6	10-83, 10-85, 10-133
315402-0136	LOCK WASHER FBB 4,1	1-81, 10-27, 10-41, 10-43, 10-45, 10-49, 10-51, 10-53, 10-55, 10-57 10-75, 10-77, 10-79, 10-81, 10-83, 10-85, 10-87, 10-91, 10-93, 10-95, 10-97, 10-99, 10-101 10-103, 10-105, 10-107, 10-133, 10-137, 10-139
315402-0146	LOCK WASHER FBB 5,1	1-155, 1-157, 6-89, 6-91, 10-13, 10-15, 10-17, 10-23, 10-31, 10-37 10-67, 10-71, 10-75, 10-77, 10-123, 10-125, 10-141, 10-145
315402-0156	LOCK WASHER FBB 6,5	10-75, 10-77
315410-0106	LOCK WASHER MB 6 D=30 H=1,25	5-63
90062-0061	LOCK WASHER NORD-LOCK,6,5/10,8, T=2,2	10-13, 10-15, 10-17, 10-31
90062-0058	LOCK WASHER SERRAT.EXT.GEAR,3,2/6 H=0,4	10-31
90062-0015	LOCK WASHER SERRAT.EXT.GEAR,6,4/11 H=0,7	10-71, 10-83, 10-85, 10-105, 10-107 10-109, 10-111, 10-123, 10-125, 10-133, 10-137, 10-139
90181-0064	LOCK ZP1 FOR CHANNEL T1	10-13, 10-15, 10-17, 10-123, 10-125
37879-0000	LOCKING ARM	8-65
1511613-0000	LOCKING ARM	6-5, 6-7
1511614-0000	LOCKING ARM	6-5
1511681-0000	LOCKING ARM	6-7
2552682-0000	LOCKING ARM	2-65, 2-67
2552683-0000	LOCKING ARM	2-65, 2-67
2506432-0000	LOCKING FINGER	1-183
2506433-0000	LOCKING FINGER	1-183
2506530-0000	LOCKING FINGER	1-183
90157-0016	LOCKING FLUID LOCTITE 242 50 ML	1-165, 2-13, 3-5, 3-9, 3-11, 3-13, 3-15, 3-19, 3-21, 7-11
90157-0021	LOCKING FLUID LOCTITE 270	4-61, 4-63
206913-0000	LOCKING LOOP	8-69
1279086-0000	LOCKING PLATE	1-119, 1-121
1279087-0000	LOCKING PLATE	1-103, 1-105, 1-107, 1-109, 1-117
1279088-0000	LOCKING PLATE	1-111, 1-113, 1-115
1279089-0000	LOCKING PLATE	1-111, 1-113, 1-115
1279090-0000	LOCKING PLATE	1-119, 1-121
1279091-0000	LOCKING PLATE	1-103, 1-105, 1-107, 1-109

Part No	Description	Page No
1279092-0000	LOCKING PLATE	1-125, 1-127
1279093-0000	LOCKING PLATE	1-119, 1-121
1279094-0000	LOCKING PLATE	1-119, 1-121
1279095-0000	LOCKING PLATE	1-125, 1-127
1279096-0000	LOCKING PLATE	1-125, 1-127
315754-0113	LOCKING WAE 15	1-77, 1-79, 1-81
90062-0022	LOCKING WASHER D=6,4/11	10-123, 10-125
1511804-0100	LOGIC SIDE,TOP TERMINAL BLOCK	10-13, 10-15, 10-17
456309-0600	LOWER FORMING RING	1-3, 1-5
1498766-0000	LOWER PLATE	7-57
1498768-0000	LOWER PLATE	7-57
979486-0000	LUBRICATING PIPE	2-23, 2-25, 2-27
2502424-0200	LUBRICATION	5-7, 5-9
90296-0091	LUBRICATION GREASE	1-177, 1-179
577427-0100	MACH.ALIG.TOOLS+LASER EQ.	12-45
441695-0600	MACHINE BODY	5-3
979216-0300	MACHINE BODY	6-3
1512486-0000	MACHINE BODY	6-53
1523754-0000	MACHINE BODY	2-13
1532584-0200	MACHINE BODY	2-3
1539960-0000	MACHINE BODY	5-75
1549294-0000	MACHINE BODY	8-5
1549295-0200	MACHINE BODY	8-3
1350148-0100	MACHINE CARRIAGE	12-7
979548-0000	MACHINE PLATE	10-71
90347-0175	MACHINE SHOE BRIK T 125	9-3
579765-0000	MACHINE SIGN CE	9-3
1498753-0100	MAGAZINE HOLDER	7-5, 7-7
1498761-0000	MAGAZINE HOLDER	7-9
90237-0046	MAGNETIC LOCK, 46X33X15 MM	7-31, 7-35, 7-37
90110-0150	MALE INSERT 121110 0000	7-33, 8-77
90110-0156	MALE INSERT 70.210.0653.0	7-33
90459-1738	MANDATORY ACTION SIGN ISO, READ MAINTENA	10-13, 10-15, 10-17
257382-0300	MANIFOLD LEFT	4-3
257381-0300	MANIFOLD RIGHT	4-3
445542-0000	MANTEL RUBBER	8-35, 8-61, 12-41, 12-43
90048-0022	MANUAL PUMP INCL. BARROW 50-60 L	12-7
359011-0807	MARKING PLATES 5-FW 1-50	1-13, 2-19, 5-49, 5-51, 7-33, 8-79, 10-61, 10-63, 10-65, 10-69, 10-73, 10-135
359011-0809	MARKING PLATES 5-FW 101-150	8-79, 10-61, 10-63, 10-65
359011-0810	MARKING PLATES 5-FW 151-200	10-63, 10-65
359011-0811	MARKING PLATES 5-FW 201-2	10-63, 10-65
359011-0808	MARKING PLATES 5-FW 51-100	5-49, 5-51, 10-61, 10-63, 10-65, 10-69
359011-0819	MARKING PLATES 5-GW (EARTH)	1-13, 2-19, 2-75, 7-33, 9-23, 9-29, 9-31, 10-61, 10-63, 10-65, 10-135
2545065-1001	MASTER CD, TPOP BASIC	11-15
2589391-1001	MASTER DISKETTE, TPOP BASIC START	11-17
90245-0024	MATCHING TRANSF. 65 KVA	12-7
90458-2488	MEASURING HOSE DN2 L=1500MM, MAX 400BAR	6-41, 6-43
90425-0016	MECMAN TYPE E120 735-120-000	12-23
90152-0070	METAL HOSE, 32,5X26, UL 2621	1-9, 1-11, 1-21, 1-23, 1-43, 1-45, 2-13, 5-37, 7-33, 8-79
978970-0000	METERING DEVICE	6-67
2514491-0000	METERING DEVICE	6-67
90092-0052	METERING VALVE 10 MM3	2-23, 2-25, 2-27, 3-9, 3-11, 3-13, 3-15, 4-25, 4-27, 4-49, 4-51, 4-53, 4-67, 4-69, 5-11
90092-0053	METERING VALVE 30 MM3	2-23, 2-25, 2-27, 3-9, 3-11, 3-13, 3-15, 4-25, 4-27, 4-67, 4-69, 5-37
90092-0054	METERING VALVE 50 MM3	5-37
351416-0160	MINIATURE CIRC. BREAK., FAZ -D16 1-POLE	10-113
351416-0060	MINIATURE CIRC. BREAK., FAZ -D6 1-POLE	10-113
90459-7072	MINIATURE CIRCUIT BREAKER, AZ-2-C100	10-113
354000-0005	MINIATURE CIRCUIT BREAKER, FAZ-C0,5/1	10-113
354000-0010	MINIATURE CIRCUIT BREAKER, FAZ-C1/1	10-113
354000-0100	MINIATURE CIRCUIT BREAKER, FAZ-C10/1	10-113, 10-117
354002-0020	MINIATURE CIRCUIT BREAKER, FAZ-C2/3	10-117
354002-0200	MINIATURE CIRCUIT BREAKER, FAZ-C20/3	10-117
354000-0060	MINIATURE CIRCUIT BREAKER, FAZ-C6/1	10-113, 10-117
354002-0060	MINIATURE CIRCUIT BREAKER, FAZ-C6/3	10-113, 10-117
527898-0100	MKS CONTAINER H2O2	6-71
90187-0104	MKS SAFETY VALVE, PRESCOR DN20/1,5BAR	6-85
1517659-0100	MODEM	10-71
90453-0001	MODEM MA-12	9-19
90453-0002	MODEM MD-12 DC	10-73
90458-1194	MONOSTABLE VALVE 5/2	6-45, 6-47
1523210-0100	MOTOR	3-3
90045-0087	MOTOR 3GAA 071002-CSA M2AA 71B	6-65
90457-0172	MOTOR 3GAA 131001-ASA	3-7
90045-0228	MOTOR 7AA80M4-B5	6-89, 6-91
90045-0161	MOTOR MGCF11S	6-75
1512305-0100	MOTORIZED DESIGN CONTROL SYSTEM, LEFT	4-3
1512306-0100	MOTORIZED DESIGN CONTROL SYSTEM, RIGHT	4-3
2646248-0000	MOUNTING BRACKET	1-55
90067-0360	MOUNTING KIT, 34 74 022 5	9-7
1498748-0000	MOUNTING PLATE	7-23, 7-25, 7-27, 7-29
1499480-0100	MOUNTING PLATE	7-5, 7-7

Part No	Description	Page No
2545426-0000	MOUNTING PLATE	1-9, 1-11
2552630-0000	MOUNTING PLATE	7-35, 7-37
90458-1447	MOUNTING RAIL SUPPORT TST 128660	10-61, 10-63
90226-0452	MOUNTING SCREW	1-9, 1-11
2790833-0000	MOUNTING SHEET	6-87
441304-0400	MOVABLE FORMING RING	1-3, 1-5
321531-0248	NEEDLE SLEEVE W/O CONE, 20X26X16 MM	3-9, 3-11, 3-13, 3-15
466484-0000	NET	1-139
353022-0003	NEUTRAL TERMINAL, 10108.8	10-69
90134-0034	NIPPLE	2-23, 2-25, 2-27, 2-31
90224-0094	NIPPLE	6-93, 6-95
257000-0000	NIPPLE	4-67, 4-69
493735-0000	NIPPLE	12-17, 12-19
534698-0000	NIPPLE	12-23
566669-0000	NIPPLE	1-129
751086-0000	NIPPLE	6-25
90217-0041	NIPPLE LKBN, RD 60-6 - R1 1/2 M	5-81
90163-0048	NIPPLE LP-004-2-WR 510-23-1	5-11
90330-0101	NIPPLES, EXT. THREAD, G1/4	5-39
90330-0097	NIPPLES, EXT. THREAD, G1/8	2-29
90030-0224	NIPPLES, EXT. THREAD, HEXAGON, NO. 2511	12-17, 12-19
90055-0042	NIPPLES, EXT. THREAD, HEXAGON, NO. 6835-	9-11
90330-0013	NIPPLES, EXT. THREAD. ISO 7/1 R1/4-R1/8	1-91, 1-93
90330-0032	NIPPLES, EXT. THREAD. ISO 7/1 R1/8-R1/8	1-67, 1-69, 1-91, 1-93
90330-0021	NIPPLES, EXT. THREAD. R-207R1/2	1-89, 6-61
90330-0043	NIPPLES, EXT. THREAD. R-207R1/4	1-9, 1-11
90330-0019	NIPPLES, EXT. THREAD. R1/2-R3/8	6-29
90330-0083	NIPPLES, EXT. THREAD. R3/8-R1/4	1-9, 1-11
90030-0116	NIPPLES, REDUCING, EXT. THR. NO. 2520	5-23
90030-0212	NIPPLES, REDUSING, INT. THR. NO. 2521	1-67, 1-69
342700-0113	NIPPLES,HEXAGON,EXT.G-THREAD G1/2"-G1/2"	6-29, 6-85, 6-89, 6-91, 6-93, 6-95
342700-0205	NIPPLES,HEXAGON,EXT.G-THREAD G1/2"-G1/4"	6-89, 6-91
342700-0110	NIPPLES,HEXAGON,EXT.G-THREAD G1/4"-G1/4"	12-125
342700-0210	NIPPLES,HEXAGON,EXT.G-THREAD G3/4"-G1/2"	6-77, 6-79
342700-0203	NIPPLES,HEXAGON,EXT.G-THREAD G3/8"-G1/4"	6-87
491536-0200	NON-RETURN VALVE	6-23
90230-0028	NON-RETURN VALVE H 151 R 3/8"	6-25
90230-0026	NON-RETURN VALVE RHZ 10-PLR-ED	6-89, 6-91
90230-0025	NON-RETURN VALVE, 12MM, L=85	1-89
90459-0290	NON-RETURN VALVE, PUSH-IN 6 MM	6-15, 6-17, 6-19
589449-0000	NOZZLE	1-161, 1-163
1558128-0100	NOZZLE	1-161, 1-163
441077-0000	NOZZLE BRACKET	2-13
90099-0085	NUT	2-57
257310-0000	NUT	3-9, 3-11, 3-29, 3-31
272755-0000	NUT	4-35
273977-0000	NUT	6-73
273996-0000	NUT	6-73
279589-0000	NUT	1-137, 6-81, 6-83
436927-0000	NUT	8-35, 8-61, 12-41, 12-43
978209-0000	NUT	3-25
1041609-0000	NUT	2-73
1260490-0000	NUT	1-171, 1-173
1260491-0000	NUT	1-171, 1-173
1285109-0000	NUT	10-71, 10-109, 10-111, 10-123, 10-125
1359565-0000	NUT	5-45
1490117-0000	NUT	3-29, 3-31
1511310-0000	NUT	7-57, 7-65
1523223-0000	NUT	1-141
1523224-0000	NUT	1-141
312901-0324	NUT M6M16VFZB	3-13, 3-15
312705-0312	NUT HEX. DOMED CAP MHM-6 M4 A280	6-5, 6-7
312705-0314	NUT HEX. DOMED CAP MHM-6 M5 A280	9-25, 9-27
312705-0316	NUT HEX. DOMED CAP MHM-6 M6 A280	1-143, 1-145, 1-147, 1-149, 1-151, 1-153, 2-21, 7-13, 7-49, 10-121
312902-0320	NUT HEX. LEFT THREAD, M10 A280	5-7, 5-9
312902-0316	NUT HEX. LEFT THREAD, M6 A280	1-177
90099-0131	NUT HEX. M16X2 SS	12-167
90099-0057	NUT HEX. M20X1,5	5-23
312811-0318	NUT HEX.LOCK HELI COIL M8 SS	4-49, 4-51
312811-0320	NUT HEX.LOCK HELI COIL MID GRIP M10 SS	4-65
312811-0322	NUT HEX.LOCK HELI COIL MID GRIP M12 SS	3-9
312811-0324	NUT HEX.LOCK HELI COIL MID GRIP M16 SS	3-9, 3-11, 3-13, 3-15
312811-0326	NUT HEX.LOCK HELI COIL MID GRIP M20 SS	3-9, 3-11, 3-13, 3-15
312811-0316	NUT HEX.LOCK HELI COIL MID GRIP M6 SS	1-135, 6-65
90099-0001	NUT PG 9/PR 15,2	2-31, 6-11, 6-77, 6-79
490890-0000	NUT PLATE	1-21, 1-23
1499513-0000	NUT PLATE	7-59
1511308-0000	NUT PLATE	7-57
90099-0002	NUT PR 18,6 BRASS	2-17, 6-11
90099-0003	NUT PR 22,5	6-13
90099-0011	NUT PR 37 BRASS	1-143, 1-145, 1-147, 1-149, 1-151, 1-153, 6-11
90099-0087	NUT PR=20,4	2-31, 6-11
312805-0102	NUT ROUND WITH SLOTS M15X1 FE	8-37

Part No	Description	Page No
312805-0103	NUT ROUND WITH SLOTS M17X1 FE	8-37
312805-0106	NUT ROUND WITH SLOTS M30X1,5 FE	5-63
342903-0111	NUT WITH SPRING, 1723 6/4-M10X1	12-127
342903-0121	NUT WITH SPRING, 1723 8/6-M12X1	2-5, 2-7, 6-29, 6-41, 6-43
312602-0316	NUT, EN 24032 M6M M6 NIPLBR	6-41, 6-43
90330-0120	NUT, HEXAGON, G1/4	6-87
90330-0105	NUT, HEXAGON, R3/8	1-95, 1-97
90458-0321	NUT, M12X1,5	10-91, 10-93, 10-95, 10-97, 10-99, 10-101, 10-103
90458-0322	NUT, M16X1,5	5-37, 5-57
90458-0323	NUT, M20X1,5	8-25, 8-27, 8-29, 8-45, 8-47, 8-49, 8-65, 8-77
90458-0326	NUT, M40X1,5	5-37
90458-0327	NUT, M50X1,5	2-53, 2-55, 10-75, 10-77
90030-0338	NUT, PIPE & CONNECTORS, SS-8-BVCO-4	1-75
342703-0208	NUT, PIPES & CONNECTORS,NUT M-8 SS	2-23, 2-25, 2-27
90099-0104	NUT, PR 15,2 (PG9)	1-155, 1-157, 10-79, 10-81, 10-105, 10-107
90099-0117	NUT, PR 18,6 (PG11)	1-143, 1-145, 1-147, 1-149, 1-151, 1-153, 5-37
90099-0110	NUT, PR 22,5 (PG16)	1-155, 1-157, 10-79, 10-81, 10-141
90099-0119	NUT, PR 28,3 (PG21)	9, 1-11, 1-143, 1-145, 1-147, 1-149, 1-151, 1-153, 1-155, 1-157, 10-79, 10-81
90099-0120	NUT, PR 37 (PG29)	1-9, 1-11, 1-143, 1-145, 1-147, 1-149, 1-151, 1-153, 1-155, 1-157, 10-79, 10-81
315239-0113	NYLON WASHER G1/2	6-93, 6-95
315239-0110	NYLON WASHER G1/4	6-87, 6-93, 6-95
315239-0109	NYLON WASHER G1/8	1-87, 2-13, 5-37, 6-41, 6-43
315239-0115	NYLON WASHER G3/4	2-53, 2-55
315239-0111	NYLON WASHER G3/8	5-37, 6-93, 6-95
315239-0101	NYLON WASHER M5(RP315233-101)	5-5, 6-15, 6-17, 6-19
578495-0000	O-RING	1-21, 1-23, 9-35
315202-0108	O-RING 10,1X1,6 MM	4-25, 4-27
315206-0701	O-RING 10,82X1,78 MM	1-87
315204-0109	O-RING 11,1X1,6 MM	1-49, 1-51
315202-0110	O-RING 12,1X1,6 MM	4-5, 4-7, 4-9, 4-11, 4-13, 4-15
315204-0110	O-RING 12,1X1,6 MM	1-37, 1-139
315202-0265	O-RING 12,3X2,4 MM	4-5, 4-7, 4-9, 4-11, 4-13, 4-15
315202-0317	O-RING 129,5X3 MM	6-81, 6-83
315204-0111	O-RING 13,1X1,6 MM	1-57
315202-0211	O-RING 13,3X2,4 MM	2-13
927421-0003	O-RING 13.3X2.4 SILICONE	1-21, 1-23, 1-91, 1-93
315202-0244	O-RING 134,3X5,7 MM	6-77, 6-79
315202-0112	O-RING 14,1X1,6 MM	6-89, 6-91
90459-2045	O-RING 14X4 MM	1-183
315204-0213	O-RING 15,2X2,4 MM	1-9, 1-11
927421-0004	O-RING 15.3X2.4 SILICONE	1-21, 1-23, 1-91, 1-93, 6-77, 6-79
315205-0705	O-RING 17,17X1,78 MM	5-57
927421-0006	O-RING 17.3X2.4 SILICONE	9-35
315202-0215	O-RING 19,2X3 MM	5-23, 5-65, 5-81
315204-0215	O-RING 19,2X3 MM	1-77, 1-79, 1-81, 9-37
927422-0001	O-RING 19.2X3 SILICONE	5-13, 5-15, 5-17, 5-19, 5-21, 12-23
315202-0118	O-RING 22,1X1,6 MM	5-37
578494-0000	O-RING 226X5,7 FPM	1-21, 1-23, 9-35
315202-0217	O-RING 24,2X3 MM	5-39
315204-0119	O-RING 25,1X1,6 MM	1-137
315202-0218	O-RING 26,2X3 MM	5-57, 5-65, 8-35, 8-61, 12-41, 12-43
315202-0120	O-RING 27,1X1,6 MM	1-185
491418-0001	O-RING 284X3 FPM	1-141, 9-35
315202-0219	O-RING 29,2X3 MM	4-49, 4-51, 4-53
315203-0219	O-RING 29,2X3 MM	12-105
927422-0004	O-RING 29.2X3 SILICONE	6-65
927422-0014	O-RING 34.2X3 SILICONE	1-21, 1-23, 6-61
491418-0002	O-RING 352X3 FPM	1-49, 1-51
315204-0222	O-RING 36,2X3 MM	1-139
315202-0223	O-RING 39,2X3 MM	5-57
315204-0223	O-RING 39,2X3 MM	1-63
927422-0015	O-RING 39.2X3 SILICONE	1-129
315202-0102	O-RING 4,1X1,6 MM	4-25, 4-27, 4-45, 4-47
315202-0224	O-RING 42,2X3 MM	8-31, 8-33, 8-51, 8-53, 12-11, 12-27, 12-29, 12-37, 12-39
927422-0007	O-RING 44.2X3 SILICONE	6-61, 6-65
315202-0301	O-RING 49,5X3 MM	8-51, 8-53, 12-27, 12-29
315204-0301	O-RING 49,5X3 MM	1-49, 1-51, 1-79, 1-137, 9-37
927422-0008	O-RING 49.5X3 SILICONE	1-129, 9-35
315202-0204	O-RING 5,3X2,4 MM	4-53
315204-0302	O-RING 54,5X3 MM	1-37, 1-139
927422-0009	O-RING 54.5X3 SILICONE	6-67
315202-0505	O-RING 6,07X1,78 MM	5-29, 5-31, 5-33
315205-0505	O-RING 6,07X1,78 MM	1-7, 1-15, 1-19
315202-0304	O-RING 64,5X3 MM	1-79, 8-31, 8-33, 8-51, 8-53, 12-27, 12-29, 12-37, 12-39
315202-0305	O-RING 69,5X3 MM	5-57, 8-31, 8-33, 8-51, 8-53, 12-27, 12-29, 12-37, 12-39
927422-0011	O-RING 69.5X3 SILICONE	1-91, 1-93
315202-0105	O-RING 7,1X1,6 MM	2-39, 2-41
315202-0206	O-RING 7,3X2,4 MM	2-5, 2-7, 4-49, 4-51
927421-0005	O-RING 7.3X2.4 SILICONE	6-71, 12-23
315202-0306	O-RING 74,5X3 MM	5-59, 5-61, 5-63
90459-0765	O-RING 78X2 MM	5-57
315202-0307	O-RING 79,5X3 MM	2-57
315202-0106	O-RING 8,1X1,6 MM	4-25, 4-27, 4-53
315202-0207	O-RING 8,3X2,4 MM	4-49, 4-51, 4-53

Part No	Description	Page No
315204-0207 ..	O-RING 8,3X2,4 MM	1-15
315202-0308 ..	O-RING 84,5X3 MM	1-77, 1-81
315202-0309 ..	O-RING 89,5X3 MM	8-35, 8-61, 12-41, 12-43
315204-0309 ..	O-RING 89,5X3 MM	1-49, 1-51, 1-61
90242-0093	O-RING MATERIAL 1,5 MM	4-5, 4-7, 4-9, 4-11, 4-13, 4-15
90161-0001	O-RING MATERIAL 3 MM	2-5, 2-7
927422-0003 ..	O.RING 24.2X3 SILICONE	6-73, 9-35
90279-0001	OIL CAN 0,4L, 42AM FLEX	12-11
90415-0033	OIL FILTER REFILLING UC-HP-1229-25	6-87
90459-5481	OIL PUMP 3L, 10P-P3	6-87
256659-0000 ..	OPERATING ROD	4-5, 4-7, 4-9, 4-11, 4-13, 4-15
77091-0600	OPTIONAL PARTS	12-3
90119-0104	OPTO COUPLER AMMS 50070	10-39
90119-0063	OPTO-RELAY, DC/DC AMMS-10-1/30VDC	10-39
466478-0000 ..	OUTER PIPE	1-139
1539265-0100 .	OUTFEED UNIT	5-3
90082-0301	OVER VOLT. PROTECT. PU 0 C 833951	9-5
90082-0013	OVER VOLT. PROTECT. PU 4C-R 230 VAC	10-135
90459-5328	OVERLOAD PROTECTION PKZM0-10	10-117
90459-5320	OVERLOAD PROTECTION, PKZM0-0,25	10-117
90459-5324	OVERLOAD PROTECTION, PKZM0-1,6	10-117
90459-5326	OVERLOAD PROTECTION, PKZM0-4	10-117
580876-0000 ..	PACKING	12-13
1349014-0000 .	PAD	7-21
2523601-0000 .	PAD	7-21
779910-0101 ..	PADLOCK	9-3, 9-5
779911-0101 ..	PADLOCK	12-75, 12-99
90220-0091	PAIR TWISTED CABLE 2X2X0,25MM2	1-181, 9-19, 10-73
90220-0092	PAIR TWISTED CABLE 3X2X0,25MM2	10-13, 10-15, 10-17
1499483-0000 .	PANE	7-35, 7-37
1511317-0000 .	PANE	7-59
1499511-0000 .	PANEL	7-31
2518148-0000 .	PANEL	2-73
2518147-0109 .	PANEL UNIT 15"	2-71
1549584-0100 .	PAPER BRAKE	8-25, 8-27, 8-29, 8-45, 8-47, 8-49
577800-0200 ..	PAPER GUIDE	8-17, 8-19
1549300-0100 .	PAPER MAGAZINE	8-3
1296814-0100 .	PAPER REEL HOLDER,JUMBO REEL	8-3
36316-0000	PAPER SUPPORT	7-57
90459-0308	PAPER TROLLEY, STOCKA 32.04.250.9	9-3
315705-0307 ..	PARALLEL KEY W. ROUND ENDS 10X8X70 MM	3-7
315701-0335 ..	PARALLEL KEY W. ROUND ENDS 12X8X56 MM	3-9, 3-11, 3-13, 3-15
315705-0166 ..	PARALLEL KEY W. ROUND ENDS 4X4X12 MM	8-17, 8-19
315701-0169 ..	PARALLEL KEY W. ROUND ENDS 4X4X18 MM	8-25, 8-27, 8-29, 8-45, 8-47, 8-49
315705-0201 ..	PARALLEL KEY W. ROUND ENDS 5X5X20 MM	1-47
315705-0232 ..	PARALLEL KEY W. ROUND ENDS 6X6X20 MM	3-27, 5-57, 5-65
315701-0234 ..	PARALLEL KEY W. ROUND ENDS 6X6X25 MM	5-57
315701-0235 ..	PARALLEL KEY W. ROUND ENDS 6X6X28 MM	3-17
315701-0239 ..	PARALLEL KEY W. ROUND ENDS 6X6X40 MM	3-5, 3-17
315705-0265 ..	PARALLEL KEY W. ROUND ENDS 8X7X25 MM	5-57
315701-0268 ..	PARALLEL KEY W. ROUND ENDS 8X7X32 MM	3-5
315705-0269 ..	PARALLEL KEY W. ROUND ENDS 8X7X35 MM	3-5
315705-0271 ..	PARALLEL KEY W. ROUND ENDS 8X7X45 MM	5-65
315705-0196 ..	PARALLEL KEY W.ROUND ENDS 5X5X10	6-65
311102-0153 ..	PARALLEL PIN ISO 2338 1,5M6X10 ST	3-5
311103-0458 ..	PARALLEL PIN ISO 2338 10M6X30 A1	2-13, 5-75
311102-0460 ..	PARALLEL PIN ISO 2338 10M6X35 ST	12-151, 12-153
311103-0466 ..	PARALLEL PIN ISO 2338 10M6X50 A1	2-13
311103-0470 ..	PARALLEL PIN ISO 2338 10M6X60 A1	3-27
311103-0233 ..	PARALLEL PIN ISO 2338 3M6X10 A1	12-103, 12-169
311103-0234 ..	PARALLEL PIN ISO 2338 3M6X12 A1	12-103, 12-107
311103-0235 ..	PARALLEL PIN ISO 2338 3M6X14 A1	12-23
311103-0236 ..	PARALLEL PIN ISO 2338 3M6X16 A1	1-65, 8-35, 8-61, 12-41, 12-43, 12-159, 12-169
311103-0238 ..	PARALLEL PIN ISO 2338 3M6X20 A1	1-125, 1-127, 4-59, 8-35, 8-61, 12-41, 12-43, 12-169
311103-0239 ..	PARALLEL PIN ISO 2338 3M6X22 A1	12-107
311103-0242 ..	PARALLEL PIN ISO 2338 3M6X30 A1	4-25, 4-27, 8-15
311101-0267 ..	PARALLEL PIN ISO 2338 4H6X10 ST	3-9, 3-11, 3-13, 3-15
311103-0267 ..	PARALLEL PIN ISO 2338 4M6X10 A1	3-9, 3-11, 3-13, 3-15, 8-73
311103-0268 ..	PARALLEL PIN ISO 2338 4M6X12 A1	4-49, 4-51, 8-75
311103-0269 ..	PARALLEL PIN ISO 2338 4M6X14 A1	12-159
311103-0270 ..	PARALLEL PIN ISO 2338 4M6X16 A1	1-21, 1-23, 4-45, 4-47, 8-35, 8-61, 12-41, 12-43
311103-0272 ..	PARALLEL PIN ISO 2338 4M6X20 A1	2-29, 3-19, 3-21, 5-53, 7-63, 12-169
311103-1274 ..	PARALLEL PIN ISO 2338 4M6X24 A1	12-169
311103-0274 ..	PARALLEL PIN ISO 2338 4M6X25 A1	8-37, 12-161
311103-0276 ..	PARALLEL PIN ISO 2338 4M6X30 A1	1-49, 1-51, 3-19, 3-21, 12-163
311103-0278 ..	PARALLEL PIN ISO 2338 4M6X35 A1	4-37, 4-39, 4-41, 4-43, 7-57, 12-161
311103-0280 ..	PARALLEL PIN ISO 2338 4M6X40 A1	4-37, 4-39, 4-41, 4-43
311101-0308 ..	PARALLEL PIN ISO 2338 5H6X16 ST	12-65, 12-67, 12-69, 12-71, 12-73
311103-0308 ..	PARALLEL PIN ISO 2338 5M6X16 A1	1-49, 1-51
311102-0308 ..	PARALLEL PIN ISO 2338 5M6X16 ST	12-105
311103-0309 ..	PARALLEL PIN ISO 2338 5M6X18 A1	5-29, 5-31, 5-33
311103-0310 ..	PARALLEL PIN ISO 2338 5M6X20 A1	1-49, 1-51
311103-0312 ..	PARALLEL PIN ISO 2338 5M6X25 A1	1-119, 1-121, 4-5, 4-7, 4-9, 4-11, 4-13, 4-15, 4-25, 4-27, 8-25, 8-27, 8-29, 8-45, 8-47, 8-49

Part No	Description	Page No
311103-0313 ..	PARALLEL PIN ISO 2338 5M6X28 A1	1-49, 1-51, 5-29, 5-31, 5-33
311103-0314 ..	PARALLEL PIN ISO 2338 5M6X30 A1	1-55, 4-31, 4-33
311103-0316 ..	PARALLEL PIN ISO 2338 5M6X35 A1	4-31, 4-33
311103-0318 ..	PARALLEL PIN ISO 2338 5M6X40 A1	8-37
311103-0320 ..	PARALLEL PIN ISO 2338 5M6X45 A1	4-31, 4-33
311103-0351 ..	PARALLEL PIN ISO 2338 6M6X16 A1	5-7, 5-9
311102-0351 ..	PARALLEL PIN ISO 2338 6M6X16 ST	12-105
311103-0353 ..	PARALLEL PIN ISO 2338 6M6X20 A1	5-57, 8-25, 8-27, 8-29, 12-59, 12-155
311103-0355 ..	PARALLEL PIN ISO 2338 6M6X25 A1	1-21, 1-23, 4-61, 4-63
311103-0357 ..	PARALLEL PIN ISO 2338 6M6X30 A1	6-63, 8-25, 8-27, 8-29, 8-45, 8-47, 8-49, 12-55, 12-57, 12-59, 12-61, 12-85, 12-163
311103-0361 ..	PARALLEL PIN ISO 2338 6M6X40 A1	1-21, 1-23, 3-27, 8-45, 8-47, 8-49
311103-0365 ..	PARALLEL PIN ISO 2338 6M6X50 A1	8-39, 8-41
311103-0401 ..	PARALLEL PIN ISO 2338 8M6X20 A1	4-49, 4-51, 4-53, 5-37
311103-0407 ..	PARALLEL PIN ISO 2338 8M6X35 A1	5-75
311103-0409 ..	PARALLEL PIN ISO 2338 8M6X40 A1	4-31, 4-33, 5-43
311103-0413 ..	PARALLEL PIN ISO 2338 8M6X50 A1	1-167, 1-169
311102-0413 ..	PARALLEL PIN ISO 2338 8M6X50 ST	12-157
353033-0105 ..	PARTITITION, 10501.0	10-69, 10-135
752099-0000 ..	PASSIVATINGSEAL	12-45
1539920-0200 .	PENDULUM	1-3, 1-5
1548010-0200 .	PENDULUM ROLLER	1-177
441871-0000 ..	PENDULUM SUSPENSION	1-41, 1-63
978834-0300 ..	PEROXID AND STERILSYSTEM	6-3
532210-0100 ..	PEROXIDE CONTAINER TROLLEY	12-7
456556-0400 ..	PEROXIDE PIPE	1-3, 1-5
751393-0300 ..	PEROXIDE PUMP	6-61
751373-0300 ..	PEROXIDE TANK	6-57
531345-0200 ..	PERSONAL PROTECT. EQ H2O2	9-3
90232-0104	PH.CELL E3S-CT61-D-5M	9-21, 9-25, 9-27
90232-0103	PH.CELL E3S-CT61-L-5M	9-21, 9-25, 9-27
90232-0123	PH.CELL WLL170-P135-6011723	8-79
971140-0000 ..	PHASE BAR ANGLED	10-115
971141-0000 ..	PHASE BAR ANGLED	10-115
971142-0000 ..	PHASE BAR ANGLED	10-115
491976-0400 ..	PHOTOCELL UNIT	1-3, 1-5
256628-0000 ..	PIECE	4-49, 4-51
466479-0000 ..	PIECE	1-139
272641-0000 ..	PILLAR	4-33
272642-0000 ..	PILLAR	4-31
1499061-0000 .	PILLAR	6-61
1499062-0000 .	PILLAR	6-61
1517068-0000 .	PILLAR	7-61
1523494-0000 .	PILLAR	1-49, 1-51
247248-0000 ..	PIN	1-21, 1-23
295140-0000 ..	PIN	3-5, 3-19, 3-21
469159-0000 ..	PIN	7-23, 7-25, 7-27, 7-29
497748-0000 ..	PIN	1-83, 1-85
571540-0000 ..	PIN	1-49, 1-51
583735-0000 ..	PIN	7-61
583749-0000 ..	PIN	7-61
590205-0000 ..	PIN	12-159, 12-169
590219-0000 ..	PIN	12-159
752519-0002 ..	PIN	1-49, 1-51
929444-0000 ..	PIN	3-19, 3-21
978756-0000 ..	PIN	4-65
988685-0000 ..	PIN	2-35, 2-37, 2-65, 2-67, 6-5, 6-7, 8-11, 8-13
1037761-0000 .	PIN	2-13
1490114-0000 .	PIN	3-29, 3-31
1499512-0000 .	PIN	7-23, 7-25, 7-27, 7-29, 7-59
1548152-0000 .	PIN	1-177
2523600-0000 .	PIN	7-21
2524480-0000 .	PIN	7-47
2524484-0000 .	PIN	7-47
2524485-0000 .	PIN	7-47
2552628-0000 .	PIN	7-49
2555063-0000 .	PIN	2-63
2575482-0000 .	PIN	7-51, 7-53
90258-0031	PIN, STRAIGHT SLOTTED SPRING FRP 3X20	4-59
90266-0019	PIPE	2-23, 2-25, 2-27, 3-9, 3-11, 3-13, 3-15, 4-67, 4-69
256816-0000 ..	PIPE	3-27
272679-0000 ..	PIPE	2-29
295978-0000 ..	PIPE	2-29
456900-0000 ..	PIPE	1-91, 1-93
469132-0000 ..	PIPE	2-23, 2-25, 2-27
469133-0000 ..	PIPE	2-23, 2-25, 2-27
469937-0000 ..	PIPE	2-13
532677-0000 ..	PIPE	12-17, 12-19
534634-0000 ..	PIPE	12-23
576287-0000 ..	PIPE	6-29, 6-31
576293-0000 ..	PIPE	6-15, 6-17, 6-19
577832-0000 ..	PIPE	6-15, 6-17, 6-19
578026-0000 ..	PIPE	1-91, 1-93
578500-0000 ..	PIPE	1-143, 1-145, 1-147, 1-149, 1-151, 1-153

Part No	Description	Page No
978963-0000 ..	PIPE	6-59
979028-0000 ..	PIPE	1-137
979031-0000 ..	PIPE	1-137
979069-0000 ..	PIPE	6-59
979217-0000 ..	PIPE	6-13
979300-0000 ..	PIPE	6-71
1260480-0000 .	PIPE	1-137
1260481-0000 .	PIPE	1-137
1260489-0000 .	PIPE	1-137
1286000-0000 .	PIPE	2-53, 2-55
1296854-0000 .	PIPE	2-53, 2-55
1317663-0000 .	PIPE	1-67, 1-69
1317756-0000 .	PIPE	1-67, 1-69
1350186-0000 .	PIPE	6-85
1350187-0000 .	PIPE	6-85
1350188-0000 .	PIPE	6-29
1350307-0000 .	PIPE	2-53, 2-55
1350308-0000 .	PIPE	2-53, 2-55
1350309-0000 .	PIPE	2-53, 2-55
1490839-0000 .	PIPE	1-21, 1-23
1490840-0000 .	PIPE	1-21, 1-23
1498218-0000 .	PIPE	5-13, 5-15, 5-17, 5-19, 5-21
1498219-0000 .	PIPE	5-13, 5-15, 5-17, 5-19, 5-21
1498220-0000 .	PIPE	5-13, 5-15, 5-17, 5-19, 5-21
1498221-0000 .	PIPE	5-13, 5-15, 5-17, 5-19, 5-21
1511683-0000 .	PIPE	6-67
1511774-0000 .	PIPE	6-59
1512353-0000 .	PIPE	6-93, 6-95
1512411-0000 .	PIPE	1-67, 1-69
1512806-0000 .	PIPE	6-29
1517487-0000 .	PIPE	6-93, 6-95
1517488-0000 .	PIPE	6-93, 6-95
1517489-0000 .	PIPE	6-93, 6-95
1517493-0000 .	PIPE	1-91, 1-93
1517495-0000 .	PIPE	1-91, 1-93
1517510-0000 .	PIPE	5-83
1519380-0000 .	PIPE	1-137
1519381-0000 .	PIPE	1-137
1519382-0000 .	PIPE	1-137
1519383-0000 .	PIPE	1-137
1519384-0000 .	PIPE	1-137
1519385-0000 .	PIPE	1-137
1519386-0000 .	PIPE	1-137
1519387-0000 .	PIPE	1-137
1519388-0000 .	PIPE	1-137
1519394-0000 .	PIPE	6-81, 6-83
1519482-0000 .	PIPE	1-43, 1-45
1519576-0000 .	PIPE	6-93, 6-95
1519934-0000 .	PIPE	1-37
1519936-0000 .	PIPE	1-67, 1-69
1523049-0000 .	PIPE	1-131
1523050-0000 .	PIPE	1-131
1523051-0000 .	PIPE	1-131
1523052-0000 .	PIPE	1-131
1523053-0000 .	PIPE	1-131
1523068-0000 .	PIPE	6-69
1523365-0000 .	PIPE	1-133
1523366-0000 .	PIPE	1-133
1523431-0000 .	PIPE	2-31
1523432-0000 .	PIPE	2-31
1523433-0000 .	PIPE	2-31
1523434-0000 .	PIPE	2-31
1524669-0000 .	PIPE	1-95, 1-97
1524670-0000 .	PIPE	1-95, 1-97
1538906-0000 .	PIPE	6-87
1538908-0000 .	PIPE	6-87
1539238-0000 .	PIPE	1-67, 1-69
1539332-0000 .	PIPE	6-87
1539596-0000 .	PIPE	1-17
1539603-0000 .	PIPE	1-17
1539604-0000 .	PIPE	1-7
1539947-0000 .	PIPE	5-81
1548156-0000 .	PIPE	6-93, 6-95
1548315-0000 .	PIPE	1-131
1548316-0000 .	PIPE	6-69
1558126-0000 .	PIPE	4-29
1558127-0000 .	PIPE	4-29
2500294-0000 .	PIPE	1-165
2502197-0000 .	PIPE	1-95, 1-97
2502198-0000 .	PIPE	1-95, 1-97
2502199-0000 .	PIPE	1-95, 1-97
2514391-0000 .	PIPE	6-59
2517051-0000 .	PIPE	6-15, 6-17, 6-19
2523703-0000 .	PIPE	2-53, 2-55

Part No	Description	Page No
2528094-0000	.PIPE	1-21, 1-23
2528095-0000	.PIPE	1-129
2532923-0000	.PIPE	1-21, 1-23
2544855-0000	.PIPE	1-95, 1-97
2544856-0000	.PIPE	1-95, 1-97
2544863-0000	.PIPE	1-95, 1-97
2544864-0000	.PIPE	1-95, 1-97
2544868-0000	.PIPE	1-95, 1-97
2544869-0000	.PIPE	1-95, 1-97
2544959-0000	.PIPE	5-81
2544979-0000	.PIPE	5-83
2545429-0000	.PIPE	1-9, 1-11
2546444-0000	.PIPE	1-7
2546446-0000	.PIPE	1-7
2546472-0000	.PIPE	1-7
2558744-0000	.PIPE	1-9, 1-11
2558745-0000	.PIPE	1-9, 1-11
2563210-0000	.PIPE	6-77, 6-79
2570391-0000	.PIPE	1-9, 1-11
2618264-0000	.PIPE	1-67, 1-69
2618266-0000	.PIPE	1-67, 1-69
2691065-0000	.PIPE	1-89
2721238-0000	.PIPE	1-67, 1-69
2743328-0000	.PIPE	1-91, 1-93
2743329-0000	.PIPE	1-91, 1-93
2743331-0000	.PIPE	1-91, 1-93
2751445-0000	.PIPE	5-25, 5-27
2761751-0000	.PIPE	6-97
2761752-0000	.PIPE	6-97
2761753-0000	.PIPE	6-97
2761754-0000	.PIPE	6-97
2761759-0000	.PIPE	1-67, 1-69
2761760-0000	.PIPE	1-67, 1-69
2764346-0000	.PIPE	5-25, 5-27
2776732-0000	.PIPE	5-25, 5-27
2776738-0000	.PIPE	5-25, 5-27
2788107-0000	.PIPE	6-93, 6-95
2788108-0000	.PIPE	6-93, 6-95
2788109-0000	.PIPE	6-93, 6-95
2788110-0000	.PIPE	6-93, 6-95
2788118-0000	.PIPE	1-181
2790834-0000	.PIPE	6-87
2790835-0000	.PIPE	6-77, 6-79
2800348-0000	.PIPE	5-25, 5-27
2814879-0000	.PIPE	5-25, 5-27
2814883-0000	.PIPE	5-25, 5-27
2814890-0000	.PIPE	5-25, 5-27
2830499-0000	.PIPE	5-25, 5-27
2830503-0000	.PIPE	5-25, 5-27
2830507-0000	.PIPE	5-25, 5-27
1511460-0000	.PIPE 1050	7-67
1511461-0000	.PIPE 1051	7-67
580363-0000	.. PIPE 71	1-95, 1-97
580364-0000	.. PIPE 71	1-95, 1-97
581015-0000	.. PIPE 91	1-95, 1-97
581016-0000	.. PIPE 91	1-95, 1-97
1519391-0000	.PIPE BEND	6-81, 6-83
491390-0000	.. PIPE CENTRAL LUBRICATION	2-23, 2-25, 2-27
456853-0001	.. PIPE CLAMP	5-71
456853-0002	.. PIPE CLAMP	5-71
456853-0003	.. PIPE CLAMP	5-71
90165-0039	.... PIPE CLAMP D=15 MM, GSK15/12	2-23, 2-25, 2-27
90165-0065	.... PIPE CLAMP D=8 MM, GSK08/12	2-23, 2-25, 2-27, 3-13, 3-15, 3-29, 3-31
90457-0182	.... PIPE CLAMP, D=8 MM, RAPOD8X	2-31
90165-0099	.... PIPE CLAMP, DOUBLE, RBP-108, D=8 MM	2-31
90074-0026	.... PIPE CLIP FOR TUBE D=24-35 MM	3-5
90165-0002	.... PIPE CLIP FOR TUBE D=4 MM	2-23, 2-25, 2-27, 3-9, 3-11, 3-13, 3-15
90165-0056	.... PIPE CLIP FOR TUBE D=4 MM	8-25, 8-27, 8-29
90165-0057	.... PIPE CLIP FOR TUBE D=6 MM	6-87
90165-0022	.... PIPE CLIP, FOR TUBE D=2,5 MM, B-3570	2-23, 2-25, 2-27, 3-9, 3-11, 3-13, 3-15
90030-0065	.... PIPE CONNECTION	2-31, 4-25, 4-27, 4-67, 4-69
1512448-0000	.PIPE CONNECTION	5-37
1523069-0000	.PIPE CONNECTION	6-69
90134-0004	.... PIPE CONNECTION R1/8	5-11, 5-37
90330-0106	.... PIPE COUPLING	1-89
342722-0204	.. PIPE COUPLING	6-41, 6-43
342722-0202	.. PIPE COUPLING 1/8" D=6MM	1-161, 1-163, 5-25, 5-27, 6-69, 7-67
342807-0104	.. PIPE ELBOW 90 DEGR. SMS1220, D=51 MM	5-73
1360399-0000	.PIPE HOLDER	12-17, 12-19
1511463-0000	.PIPE HOLDER	7-67
1511464-0000	.PIPE HOLDER	7-67
1519668-0000	.PIPE HOLDER	6-97
1519669-0000	.PIPE HOLDER	6-97
1519670-0000	.PIPE HOLDER	6-97

Part No	Description	Page No
1519671-0000	PIPE HOLDER	6-97
2761756-0000	PIPE HOLDER	1-89
2761757-0000	PIPE HOLDER	1-89
441759-0000	PIPE LEFT	4-61, 4-63
90087-0002	PIPE PLUG	2-13
441758-0000	PIPE RIGHT	4-61, 4-63
491854-0000	PIPE WATER	2-23, 2-25, 2-27
456455-0700	PIPE WORK	5-3
978835-0200	PIPE WORK	6-57
1548576-0100	PIPE WORK	2-3
2500214-0100	PIPE WORK	2-49, 2-51
1350184-0200	PIPE WORK, AIR WATER	6-3
1519663-0200	PIPE WORK-HYDRAULIC	6-3
295045-0900	PIPE WORK-PNEUMATIC	1-3, 1-5
580335-0200	PIPE WORK-PNEUMATIC	7-55
1519390-0000	PIPE(FOR 60HZ)	6-81, 6-83
751722-0000	PIPE-LINE	1-159
572486-0000	PISTON	1-129
576441-0000	PISTON	1-77, 1-81
576445-0000	PISTON	1-79
751743-0000	PISTON	4-25, 4-27
576442-0000	PISTON ROD	1-81
576446-0000	PISTON ROD	1-77
576447-0000	PISTON ROD	1-79
90458-1471	PISTON ROD END, 32 04 214 5	9-11
90091-0335	PISTON SEAL GLIDE RING 62,5X70X3 MM	1-79
90091-0216	PISTON SEAL GLIDE RING 7,1X12X2,2 MM	4-5, 4-7, 4-9, 4-11, 4-13, 4-15
90091-0336	PISTON SEAL GLIDE RING 79X90X4 MM	1-77, 1-81
491169-0000	PIVOT ARM	1-35
1517066-0000	PIVOT ARM	7-61
2500332-0100	PIVOT ARM	2-49, 2-51
2547232-0000	PIVOT ARM	2-5, 2-7
2814875-0000	PIVOT ARM	5-23
456772-0000	PIVOT BRACKET	8-35, 12-43
456773-0000	PIVOT BRACKET	8-61, 12-41
272454-0000	PIVOT PIN	4-49, 4-51
441794-0000	PIVOT PIN	5-39
90240-0050	PLAIN BEAR,SELF ADJ. 20X35X24	3-9, 3-11, 3-13, 3-15
90240-0048	PLAIN BEAR,SELF ADJ.SPHER. 25X42X20 MM	3-9, 3-11, 3-13, 3-15
90240-0152	PLAIN BEAR,SELF ADJ.SPHER.12X22X10 MM	4-59
532349-0000	PLAIN BEARING	1-41, 1-63
751230-0000	PLAIN BEARING	1-49, 1-51
90181-0088	PLASTIC RIVET, PR 52314	10-123, 10-125, 10-143
37908-0000	PLATE	8-73
90235-0450	PLATE	6-41, 6-43
440731-0000	PLATE	1-67, 1-69
441360-0000	PLATE	3-5
456182-0000	PLATE	1-119, 1-121
469466-0000	PLATE	1-159
526985-0000	PLATE	8-39, 8-41
532679-0000	PLATE	12-17, 12-19
534693-0000	PLATE	12-23
571534-0000	PLATE	1-103, 1-105, 1-107, 1-109
590262-0000	PLATE	12-161
590279-0000	PLATE	12-163
590281-0000	PLATE	12-165
590282-0000	PLATE	12-165
590284-0000	PLATE	12-165
590502-0000	PLATE	12-165
590504-0000	PLATE	12-165
751287-0000	PLATE	1-111, 1-113, 1-115
751288-0000	PLATE	1-111, 1-113, 1-115
752526-0000	PLATE	8-25, 8-27, 8-29, 8-45, 8-47, 8-49
752534-0000	PLATE	8-25, 8-27, 8-29, 8-45, 8-47, 8-49
752539-0000	PLATE	8-25, 8-27, 8-29, 8-45, 8-47, 8-49
978792-0000	PLATE	1-103, 1-105, 1-107, 1-109
979204-0000	PLATE	8-73
979783-0000	PLATE	8-73
1260486-0000	PLATE	1-171, 1-173
1260487-0000	PLATE	1-171, 1-173
1334797-0000	PLATE	12-155
1346004-0000	PLATE	12-93
1346005-0000	PLATE	12-93
1498222-0000	PLATE	5-13, 5-15, 5-17, 5-19, 5-21
1498223-0000	PLATE	5-13, 5-15, 5-17, 5-19, 5-21
1498224-0000	PLATE	5-13, 5-15, 5-17, 5-19, 5-21
1511000-0000	PLATE	7-49
1511831-0000	PLATE	10-79
1511832-0000	PLATE	10-91, 10-93, 10-95, 10-97, 10-99, 10-101, 10-103
1511835-0000	PLATE	1-155, 1-157
1511837-0000	PLATE	10-83, 10-85
1511839-0000	PLATE	10-87
1511842-0000	PLATE	10-81
1517072-0000	PLATE	6-9

Part No	Description	Page No
1517073-0000	.PLATE	6-9
1517074-0000	.PLATE	6-9
1517075-0000	.PLATE	6-9
1517076-0000	.PLATE	6-9
1517077-0000	.PLATE	6-9
1517519-0000	.PLATE	5-71
1519393-0000	.PLATE	6-81, 6-83
1519418-0000	.PLATE	5-79
1523065-0000	.PLATE	6-69
1523067-0000	.PLATE	6-69
1523222-0000	.PLATE	1-141
1523757-0000	.PLATE	2-13
1523758-0000	.PLATE	2-13
1523961-0100	.PLATE	10-3, 10-5
1524780-0000	.PLATE	1-61
1524805-0000	.PLATE	1-61
1524829-0000	.PLATE	1-177
1538089-0000	.PLATE	6-9
1539956-0000	.PLATE	5-55
1539957-0000	.PLATE	5-37
1539965-0000	.PLATE	5-43
1548147-0000	.PLATE	1-177
1548148-0000	.PLATE	1-177
1549299-0000	.PLATE	8-11, 8-13
1549303-0000	.PLATE	8-17, 8-19
1549476-0000	.PLATE	8-15
1549477-0000	.PLATE	8-15
1549478-0000	.PLATE	8-15
1549479-0000	.PLATE	8-15
1549484-0000	.PLATE	8-11, 8-13
1549485-0000	.PLATE	8-11, 8-13
1549486-0000	.PLATE	8-11, 8-13
1549487-0000	.PLATE	8-11, 8-13
1549488-0000	.PLATE	8-11, 8-13
1558949-0000	.PLATE	2-57
2500202-0000	.PLATE	6-41, 6-43
2500234-0000	.PLATE	5-45
2500235-0000	.PLATE	5-45
2500293-0000	.PLATE	1-165
2504445-0000	.PLATE	2-5, 2-7
2506479-0000	.PLATE	7-31
2506608-0000	.PLATE	2-49, 2-51
2506609-0000	.PLATE	2-49, 2-51
2519646-0000	.PLATE	7-59
2522110-0000	.PLATE	2-5, 2-7
2524479-0000	.PLATE	7-47
2526343-0000	.PLATE	5-35
2526344-0000	.PLATE	5-35
2544966-0000	.PLATE	5-37
2552727-0000	.PLATE	5-7, 5-9
2576352-0000	.PLATE	5-7, 5-9
2606879-0000	.PLATE	5-7, 5-9
2633435-0000	.PLATE	5-37
2641397-0000	.PLATE	8-65
2652212-0000	.PLATE	5-7, 5-9
2748682-0000	.PLATE	8-11, 8-13
2781216-0000	.PLATE	1-143, 1-145, 1-147, 1-149, 1-151, 1-153
2797581-0000	.PLATE	10-13, 10-15, 10-17
2814873-0000	.PLATE	5-13, 5-15, 5-17, 5-19, 5-21
2832787-0000	.PLATE	1-67, 1-69
2832789-0000	.PLATE	1-181
1512443-0000	.PLATE CHOKE	5-41
90125-0020	.... PLATE COMPLETE	1-39
90083-0016	.... PLATE FOR AXK 2035	3-13, 3-15
1512350-0000	.PLATFORM	2-49, 2-51
1512351-0000	.PLATFORM	2-49, 2-51
1512660-0200	.PLATFORM	2-3
1558320-0100	.PLATFORM	8-5
2505236-0000	.PLATFORM	2-49, 2-51
76137-0000	.... PLATFORM TRANSPORT	12-151, 12-153
1511825-0100	.PLC RACK 1	10-13, 10-15, 10-17
1511826-0100	.PLC RACK 2	10-13, 10-15, 10-17
1511827-0100	.PLC RACK 3	10-13, 10-15, 10-17
90031-0062	.... PLC, ANALOG OUTPUT MODULE 8PT/CURR/VOLT	10-41
90031-0057	.... PLC, DIGITAL INPUT MODULE	10-41, 10-43, 10-45
90031-0058	.... PLC, DIGITAL INPUT MODULE	10-41
90031-0059	.... PLC, DIGITAL OUTPUT MODULE	10-41, 10-43, 10-45
90031-0068	.... PLC, POWER SUPPLY	10-41, 10-43, 10-45
90031-0063	.... PLC,ANALOG COMBO MODULE,IN-4PT/OUT-2PT	10-41
2545064-0101	.PLMS COMMON SOFTWARE	11-9
2501528-0200	.PLMS KIT	9-3
1254471-0411	.PLMS OFF-LINE	11-9
48633-0302	.... PLMS ON-LINE CLIENT PROGRAM	11-11
1369439-0302	.PLMS ON-LINE PROGRAM	11-9

Part No	Description	Page No
48635-0302	PLMS ON-LINE SERVER PROGRAM	11-11
2547131-1005 .	PLMS PERFORMANCE/PROCESS RUNTIME SW	11-7
1190007-0402 .	PLMS RECEIVE	11-9
926820-0000 ..	PLUG	1-185
980004-0000 ..	PLUG	8-43
1348968-0000 .	PLUG	12-45
1512128-0000 .	PLUG	5-23
2545155-0000 .	PLUG	1-15
342713-0209 ..	PLUG (QUANT.MINIMA= 10PC).	2-29, 4-25, 4-27, 6-23, 6-27, 6-89, 6-91
90136-0002	PLUG 5/16"24	2-23, 2-25, 2-27
90458-1279	PLUG CONNECTOR DP1	10-13, 10-15, 10-17
90134-0052	PLUG DOSING BLOCK	3-9, 3-11, 5-37
90459-5924	PLUG LD-PE, Ã¸10.7 NATUR	2-61
90087-0019	PLUG M10X1 STAINLESS	3-9, 3-11, 5-11, 5-37, 6-87
90134-0045	PLUG M12X1	4-25, 4-27
350013-0005 ..	PLUG QSC-12H	6-45, 6-47
350013-0002 ..	PLUG QSC-6H	6-21, 6-45, 6-47
90458-2837	PLUG SOCKET, KMEB-1-24-5-LED	6-35
90261-0073	PLUG, BLIND, PLASTIC, NO. GPN250/15	5-69
90261-0071	PLUG, BLIND, PLASTIC, NO. GPN500B58	1-21, 1-23
90261-0049	PLUG, BLIND, PLASTIC, NO. SR1750	7-11
342713-0213 ..	PLUG, EXT THREAD HEX SOCKET 8638-00-120	6-15, 6-17, 6-19, 6-27
342713-0211 ..	PLUG, EXT THREAD HEX SOCKET 8638-00-380	6-23, 6-85, 6-89, 6-91
90330-0037	PLUG, EXT. G-THREAD, G1/2	4-53, 6-59
90330-0026	PLUG, EXT. G-THREAD, G1/4	1-9, 1-11
90330-0066	PLUG, EXT. G-THREAD, G1/8	1-87, 1-95, 1-97, 4-5, 4-7, 4-9, 4-11, 4-13, 4-15, 5-23, 6-89, 6-91
90330-0046	PLUG, EXT. G-THREAD, R-236G3/4	2-53, 2-55
90330-0029	PLUG, EXT. G-THREAD, R-236R3/8	1-37, 1-39, 6-77, 6-79, 6-81, 6-83, 6-89, 6-91, 6-93, 6-95, 12-17, 12-19
90136-0001	PLUG, EXT. THREAD, NO. 100727	1-7, 1-43, 1-45
90326-0020	PLUG, FEMALE YELLOW CR-AL	1-15, 1-21, 1-23, 1-35, 1-39, 1-43, 1-45, 1-63, 1-67, 1-69, 1-137
90087-0036	PLUG, KR 1/4	6-33
90326-0022	PLUG, MALE YELLOW CR-AL	1-15, 5-13, 5-15, 5-17, 5-19, 5-21
342713-0210 ..	PLUG,EXT THREAD HEX SOCKET(PAK OF 10 PCS	1-9, 1-11, 6-15, 6-17, 6-19, 6-23
256889-0000 ..	PLUNGER	4-49, 4-51
400833-0000 ..	PLUNGER	7-19
752115-0000 ..	PLUNGER	4-5, 4-7, 4-9, 4-11, 4-13, 4-15
752774-0000 ..	PLUNGER	3-19, 3-21
979383-0000 ..	PLUNGER	8-75
2748669-0000 .	PNEUMATIC DIAGRAM	6-15, 6-17, 6-19
271007-0000 ..	POINTER	3-19, 3-21
752857-0000 ..	POINTER	1-47
752858-0000 ..	POINTER	1-47
752859-0000 ..	POINTER	1-47
76337-0000	PONCH	12-75
76470-0100	PONCH	12-97
76471-0000	PONCH	12-99
76589-0000	PONCH	12-99
76590-0000	PONCH	12-75
76591-0100	PONCH	12-63
533905-0100 ..	PONCH	12-17, 12-19
442237-0000 ..	PORCA	1-137
1511784-0100 .	POWER CABLE INLETS	10-75, 10-77
1511788-0100 .	POWER CONNECTOR PLATE	10-75, 10-77
90024-0060	POWER LINE FILTER, 80 A 250/440 VAC	10-133
90457-0125	POWER RAIL SZ-PSB 12 N	10-117
1511800-0100 .	POWER SIDE,BOTTOM TERMINAL BLOCK	10-13, 10-15, 10-17
1511829-0100 .	POWER SIDE,TOP TERMINAL BLOCK	10-13, 10-15, 10-17
90459-4133	POWER SUPPLY UNIT 6EP1 436-3BA00	10-89
90458-0254	PRECISION PRESSURE REGULATOR,LRP-1/4-0,7	6-33
272927-0000 ..	PRESSURE ARM	1-57
571920-0000 ..	PRESSURE ARM	8-69
2523725-0200 .	PRESSURE DEVICE	5-3
1548332-0000 .	PRESSURE FLANGE	1-183
1558444-0000 .	PRESSURE FLANGE	1-183
1558446-0000 .	PRESSURE FLANGE	1-183
2510541-0000 .	PRESSURE FLANGE	1-183
2514301-0000 .	PRESSURE FLANGE	1-183
2527708-0000 .	PRESSURE FLANGE	1-183
2527715-0000 .	PRESSURE FLANGE	1-183
90043-0034	PRESSURE GAUGE	1-95, 1-97
90043-0021	PRESSURE GAUGE 0-1 BAR 1/8" D=40	12-17, 12-19, 12-125
90043-0043	PRESSURE GAUGE 0-10 BAR 1/8"	12-17, 12-19
90043-0069	PRESSURE GAUGE 0-4BAR WIEGAND 2040	1-181
90243-0137	PRESSURE GAUGE KIT 0-50 MM WC, 229900	12-17, 12-19
90458-2421	PRESSURE GAUGE, 1453 W. BRACKET	6-41, 6-43
90043-0002	PRESSURE GAUGE, 2040 D=63 MM	6-85
90043-0006	PRESSURE GAUGE, 2041 D=63 MM	6-29, 12-127
90043-0082	PRESSURE GAUGE, 2740, D=63 MM	1-89
90043-0095	PRESSURE GAUGE, 2740, D=63 MM, GLYC.	6-39
90458-0726	PRESSURE GAUGE, D=50 MM WITH FILTER	6-89, 6-91
90458-2969	PRESSURE GAUGE, MAP-40-1-1/8-EN	6-33
90274-0045	PRESSURE GUARD, 14 KPA	2-19
90274-0084	PRESSURE GUARD, 1800 KPA	6-87

Part No	Description	Page No
90600-1385	PRESSURE GUARD, PEV-1/4-B SA234332	6-35
256212-0600 ..	PRESSURE JAW	4-3
256213-0600 ..	PRESSURE JAW	4-3
256214-0400 ..	PRESSURE RAIL	4-3
2558133-0000 .	PRESSURE REGULATOR	1-89
2558134-0000 .	PRESSURE REGULATOR	1-89
577822-0300 ..	PRESSURE REGULATOR GROUP	6-15, 6-17, 6-19
90459-2425	PRESSURE REGULATOR IN-LINE, BSP-1/4	6-15, 6-17, 6-19
257330-0000 ..	PRESSURE ROLLER	1-141, 9-35
2506475-0100 .	PRESSURE ROLLER	7-35, 7-37
272479-0000 ..	PRESSURE ROLLER (10PCS)	1-141, 9-35
90274-0066	PRESSURE SWITCH, 5,516 - 689,5 KPA	1-9, 1-11
90459-6716	PRESSURE SWITCH, PEV-1/4-B-SA	6-41, 6-43
565536-0100 ..	PRESSURE TEST EQUIPMENT	12-45
90459-0087	PRINT WHEEL, 6-COLOURS	9-5
543319-0000 ..	PRINTED CIRCUIT BOARD	10-33
556677-0000 ..	PRINTED CIRCUIT BOARD	12-109
556678-0000 ..	PRINTED CIRCUIT BOARD	12-109
556679-0000 ..	PRINTED CIRCUIT BOARD	12-107
556680-0000 ..	PRINTED CIRCUIT BOARD	12-107
556681-0000 ..	PRINTED CIRCUIT BOARD	12-107
293684-0200 ..	PRINTING WHEEL NSS	8-45, 8-47, 8-49, 12-7
293685-0200 ..	PRINTING WHEEL SS	8-25, 8-27, 8-29, 12-7
272560-0900 ..	PRODUCT VALVE	1-3, 1-5
77094-0400	PRODUCTION PARTS	12-3
90143-0076	PROFILE	2-49, 2-51
2685647-0000 .	PROFILE	10-121, 10-129, 10-131
1591155-1004 .	PROGRAM OBJECT CODE	11-7
2589434-1002 .	PROGRAM OBJECT CODE	11-7
2589438-1003 .	PROGRAM OBJECT CODE	11-7
2595678-1001 .	PROGRAM OBJECT CODE	11-7
2601509-1002 .	PROGRAM OBJECT CODE	11-7
2776751-1004 .	PROGRAM OBJECT CODE	11-7
2776757-1004 .	PROGRAM OBJECT CODE	11-7
2794854-1001 .	PROGRAM OBJECT CODE	11-7
2794874-1102 .	PROGRAM OBJECT CODE	11-7
2794874-1202 .	PROGRAM OBJECT CODE	11-7
2794874-1302 .	PROGRAM OBJECT CODE	11-7
2801770-1001 .	PROGRAM OBJECT CODE	11-7
2817312-1002 .	PROGRAM OBJECT CODE	11-7
90458-1092	PROPORTIONAL VALVE 0 - 10V/0-6 BAR	1-181
90459-1420	PROPORTIONAL VALVE 0 - 10V/0-6 BAR	1-9, 1-11
295075-0000 ..	PROTECTION	2-5, 2-7
556422-0000 ..	PROTECTION	8-25, 8-27, 8-29, 8-45, 8-47, 8-49
574452-0000 ..	PROTECTION	2-5, 2-7
1296118-0000 .	PROTECTION	6-61
1517697-0000 .	PROTECTION	10-75, 10-77
1517698-0000 .	PROTECTION	10-75, 10-77
2509543-0000 .	PROTECTION	8-17, 8-19
2510532-0000 .	PROTECTION	1-177
2514041-0000 .	PROTECTION	4-31
2514042-0000 .	PROTECTION	4-33
925999-0000 ..	PROTECTION PIPE	1-185
37882-0000	PROTECTION PLATE	8-65
79003-0000	PROTECTION PLATE	12-45
243132-0000 ..	PROTECTION PLATE	8-65
978462-0000 ..	PROTECTION PLATE	1-57
1524655-0000 .	PROTECTION PLATE	1-59
90458-1234	PROTECTIVE CAP 2X20X1.2X100	8-17, 8-19
579623-0000 ..	PROTECTIVE CASING	3-25
1539953-0000 .	PROTECTIVE COVER	5-37
272002-0000 ..	PROTECTIVE COVER LEFT	1-49, 1-51
272003-0000 ..	PROTECTIVE COVER RIGHT	1-49, 1-51
90326-0012	PROTECTIVE COVER, T31A4618	1-15, 1-21, 1-23, 1-35, 1-39, 1-43, 1-45, 1-63, 1-67, 1-69, 1-137
90303-0012	PROTECTIVE GLOVES	9-13
90243-0126	PROTECTIVE GOGGLES	12-101
90303-0011	PROTECTIVE GOGGLES	9-13
579625-0300 ..	PROTECTIVE GRATING	1-3, 1-5
2504952-0000 .	PROTRACTOR	3-19, 3-21
90458-0138	PROX. SWITCH, E2EG-X1R5B1-5M	1-87, 3-29, 3-31, 9-35
90044-0124	PROX.SW. 922AB2XM-A9P-050-LZ-876	3-33
90044-0194	PROX.SW. IN5329/IN3002-BPKG(EX90044-104)	1-15, 1-49, 1-51, 1-57, 1-67, 1-69, 1-137, 7-23, 7-25, 7-27, 7-29, 7-35, 7-37, 7-39, 7-41, 8-45, 8-47, 8-49
90044-0117	PROX.SW. IX 0208	5-57
90044-0104	PROX.SWITCH IFM IN 3002(RP 90044-194)	1-19, 1-59, 8-25, 8-27, 8-29
90458-0894	PROXIMITY SENSOR E2E2-X10MB1-5M	5-37
90458-0675	PROXIMITY SENSOR, E2EG-X5MB1-5M	1-177, 8-17, 8-19
90458-0256	PROXIMITY SWITCH IIA 3010-BPKG/6M	2-5, 2-7
90458-0676	PROXIMITY SWITCH,E2EG-X5B1-6M	1-67, 1-69
2764344-0100 .	PULL-DOWN DEVICE	5-3
74305-0100	PULLER	12-45
76175-0100	PULLER	12-45
777603-0100 ..	PULLER	12-119
777603-0300 ..	PULLER	12-119

Part No	Description	Page No
256421-0000 ..	PULLEY	3-9, 3-11
90278-0001	PUMP	12-11
2526863-0000 .	PUMP	1-21, 1-23
90321-0037	PUMP C-6125P EP 220V, 50HZ	6-13
90457-0039	PUMP CONN. ELBOW FLANGE T-26/12-3/8	6-89, 6-91
90458-1393	PUMP CYLINDER, 34 73 522 5	9-9
292449-0000 ..	PUMP HOUSING	6-65
90458-1469	PUMP HOUSING, 34 73 517 5	9-9
90067-0354	PUMP PISTON	9-9
90457-0131	PUMP SV805 R22T 50HZ	5-81
90458-2762	PUMP SV805 R406T 60HZ	5-81
90458-1473	PUMP, 34 73 521 7	9-7
90457-0013	PUMP-MOTOR BRACKET, LS-211, NO 1711121	6-89, 6-91
90187-0105	PURGING VALVE, G3/8 FOR WATER	1-21, 1-23
580329-0200 ..	PUSH BUTTON BOX	7-5, 7-7
2564115-0000 .	PUSH BUTTON BOX	8-77
90066-0021	PUSH BUTTON BOX XAP-M1501	1-67, 1-69, 1-143, 1-145, 1-147, 1-149, 1-151, 1-153
90064-0098	PUSH BUTTON, CLEAR	2-73, 7-17
90064-0093	PUSH BUTTON, GREEN	2-73
90064-0085	PUSH BUTTON, RED	7-17, 8-77
90064-0082	PUSH BUTTON, WHITE	2-73
90064-0086	PUSH BUTTON, WHITE	2-73
90064-0084	PUSH BUTTON, YELLOW	2-73
350006-0008 ..	PUSH-IN FITTING QS-F-12H-8	6-15, 6-17, 6-19
350006-0003 ..	PUSH-IN FITTING QS-F-8H-6	6-15, 6-17, 6-19
350001-0016 ..	PUSH-IN FITTING QS-F-G1/2-12	6-93, 6-95
350001-0008 ..	PUSH-IN FITTING QS-F-G1/4-6	6-15, 6-17, 6-19
350001-0009 ..	PUSH-IN FITTING QS-F-G1/4-8	6-15, 6-17, 6-19, 6-21, 6-93, 6-95
350003-0007 ..	PUSH-IN FITTING QS-F-G1/4-8-I	6-33
350008-0003 ..	PUSH-IN FITTING QSF-F-G1/8-6	1-181
90600-0913	PUSH-IN FITTING QSQ-G1/4-6	6-21
350004-0005 ..	PUSH-IN L-FITTING QSL-F-12	6-15, 6-17, 6-19, 6-35, 6-93, 6-95
350002-0016 ..	PUSH-IN L-FITTING QSL-F-G1/2-12	6-15, 6-17, 6-19, 6-21, 6-35
350002-0011 ..	PUSH-IN L-FITTING QSL-F-G1/4-12	6-15, 6-17, 6-19, 6-21
350002-0008 ..	PUSH-IN L-FITTING QSL-F-G1/4-6	1-181, 6-15, 6-17, 6-19
350002-0009 ..	PUSH-IN L-FITTING QSL-F-G1/4-8	6-15, 6-17, 6-19, 6-33
350002-0006 ..	PUSH-IN L-FITTING QSL-F-G1/8-6	1-9, 1-11, 5-29, 5-31, 5-33, 6-45, 6-47
350002-0007 ..	PUSH-IN L-FITTING QSL-F-G1/8-8	6-45, 6-47
350002-0014 ..	PUSH-IN L-FITTING QSL-F-G3/8-12	6-45, 6-47
350002-0002 ..	PUSH-IN L-FITTING QSL-F-M5-6	5-29, 5-31, 5-33, 6-45, 6-47
350005-0002 ..	PUSH-IN T-FITTING QST-F-6	6-15, 6-17, 6-19
350007-0006 ..	PUSH-IN T-FITTING QST-F-G1/8-6	1-181
2501547-0100 .	QUEUE GUARD	9-19
90163-0062	QUICK COUPLING, (F) 5053-1/8	1-67, 1-69, 1-87, 5-37
90163-0056	QUICK COUPLING, (F) 5054-6/4	12-17, 12-19
90163-0016	QUICK COUPLING, (F) LP 006-0-WR013	6-35, 12-125
90163-0013	QUICK COUPLING, (F) LP 006-0-WR013-01-2	2-43, 2-45
90163-0076	QUICK COUPLING, (F) LP-006-0-WR021	6-89, 6-91
90163-0087	QUICK COUPLING, (M) 5150-1/4	12-17, 12-19
90163-0057	QUICK COUPLING, (M) 5150-1/8	1-67, 1-69, 1-87, 12-17, 12-19
90163-0014	QUICK COUPLING, (M) LP-006-1-WR013	12-127
90163-0113	QUICK COUPLING, (M) LP-006-1-WR013-22	12-125
90163-0015	QUICK COUPLING, (M) LP-006-1-WR513	2-43, 2-45
90163-0064	QUICK COUPLING, (M) LP-006-2-WR517	6-87
90163-0304	QUICK COUPLING, LP-006-5-74-KU (DUST CAP	6-87
1511805-0100 .	RACK	10-13, 10-15, 10-17
67369-0102	RACK WALLMOUNTED 84TE	10-31
315221-0169 ..	RADIAL SEAL 30X47X7 MM	3-5
90091-0306	RADIAL SEAL 30X47X7 MM DUST LIP	5-37
315221-0175 ..	RADIAL SEAL 35X47X7 MM	5-57
315221-0177 ..	RADIAL SEAL 35X52X7 MM	5-63
90091-0305	RADIAL SEAL 40X55X7 MM DUST LIP	5-57
315221-0185 ..	RADIAL SEAL 40X62X7 MM	5-57
90091-0233	RADIAL SEAL 85X110X12 MM DUST LIP	5-57
90091-0137	RADIAL SEAL VARILIP 20X35X7MM	6-65
37895-0000	RAIL	8-67
272645-0000 ..	RAIL	4-31, 4-33
295057-0001 ..	RAIL	5-29, 5-31, 5-33
295057-0002 ..	RAIL	5-29, 5-31, 5-33
295057-0003 ..	RAIL	5-29, 5-31, 5-33
295057-0004 ..	RAIL	5-29, 5-31, 5-33
295058-0001 ..	RAIL	5-29, 5-31, 5-33
295058-0002 ..	RAIL	5-29, 5-31, 5-33
295058-0003 ..	RAIL	5-29, 5-31, 5-33
295058-0004 ..	RAIL	5-29, 5-31, 5-33
295060-0000 ..	RAIL	5-29, 5-31, 5-33
295061-0000 ..	RAIL	5-29, 5-31, 5-33
295062-0000 ..	RAIL	5-29, 5-31, 5-33
578676-0000 ..	RAIL	2-19
732419-0004 ..	RAIL	10-115
732419-0007 ..	RAIL	10-115
979476-0000 ..	RAIL	1-13
1091684-0000 .	RAIL	5-45
1091685-0000 .	RAIL	5-45

Part No	Description	Page No
1282988-0000	RAIL	7-35, 7-37
1511822-0200	RAIL	10-109, 10-111
1511823-0200	RAIL	10-109, 10-111
1511824-0200	RAIL	10-13, 10-15, 10-17
1511834-0200	RAIL	10-13, 10-15, 10-17
1512352-0000	RAIL	7-33
2500236-0000	RAIL	5-45
2501266-0000	RAIL	8-79
2518102-0000	RAIL	5-45
2518103-0000	RAIL	5-45
2527136-0000	RAIL	4-45, 4-47
2529075-0000	RAIL	4-45, 4-47
2531998-0200	RAIL	10-13, 10-15, 10-17
2544961-0100	RAIL	5-3
2769984-0000	RAIL	2-61
2769985-0000	RAIL	2-61
2527135-0000	RAIL (TITANIUM)	4-45, 4-47
2527137-0000	RAIL (TITANIUM)	4-45, 4-47
90094-0005	RAIL BRACKET, TSTW 5/5M	10-61, 10-65
295059-0000	RAIL LEFT	5-29, 5-31, 5-33
574348-0000	RAIL LEFT	5-29, 5-31, 5-33
751110-0000	RAIL LEFT	5-35
979737-0000	RAIL LEFT	5-29, 5-31, 5-33
979864-0000	RAIL LEFT	5-29, 5-31, 5-33
574349-0000	RAIL RIGHT	5-29, 5-31, 5-33
751109-0000	RAIL RIGHT	5-35
979738-0000	RAIL RIGHT	5-29, 5-31, 5-33
979865-0000	RAIL RIGHT	5-29, 5-31, 5-33
353042-0004	RAIL TS 35/7,5	10-13, 10-15, 10-17, 10-29, 10-39, 10-47, 10-59, 10-61, 10-63, 10-65, 10-69, 10-73, 10-89, 10-113, 10-117, 10-135
353042-0005	RAIL TS 35/7.5	5-49, 5-51
90077-0328	RAIL TS15/5	2-75, 9-23, 9-29, 9-31
353042-0003	RAIL TS35/15/1,5	10-115
1512635-0000	RAILING	2-63
1512636-0000	RAILING	2-63
1512637-0000	RAILING	2-63
1519602-0200	RAILING	2-3
1538924-0000	RAILING	2-63
2769991-0000	RAILING	2-63
2769992-0000	RAILING	2-63
90239-0486	REAR,CLEVIS,MINI-ISO 16	2-21
90239-0487	REAR,CLEVIS,MINI-ISO 20-25	1-39
90304-0020	RECIPIENTE	6-85
90459-0080	RECORDER 6-CHANNEL, LOGOPRINT 500	10-123, 10-125
90030-0170	REDUCER 2521-1/4"X3/8"	1-89
342716-0202	REDUCER 4-6	2-31
342716-0210	REDUCER 6-12	7-67
342716-0203	REDUCER 6-8	2-23, 2-25, 2-27
90030-0629	REDUCER, 1,8MM, M6, NO. 815406	6-89, 6-91
90089-0007	REDUCING SLEEVE, PR18,6/PR22,5	8-17, 8-19
90089-0002	REDUCING SLEEVE, PR22,5/PR15,2	1-67, 1-69, 1-143, 1-145, 1-147, 1-149, 1-151, 1-153
90089-0004	REDUCING SLEEVE, PR28,3/PR22,5	8-77
90089-0005	REDUCING SLEEVE, PR37/PR28,3	8-77
1144122-0000	REDUCTION	5-13, 5-15, 5-17, 5-19, 5-21
2552081-0000	REDUCTION	5-13, 5-15, 5-17, 5-19, 5-21
342710-0115	REDUCTION RBM 16/8	2-29
1524674-0000	REDUCTION SLEEVE	1-95, 1-97
1549297-0000	REEL HOLDER	8-15
1549298-0000	REEL HOLDER	8-15
1549481-0000	REEL HOLDER	8-15
1549482-0000	REEL HOLDER	8-15
1549491-0000	REEL HOLDER	8-15
442086-0000	REFLECTOR	12-105
469337-0000	REFLECTOR	2-17
927205-0200	REGULATING VALVE	1-67, 1-69
90113-0056	REGULATOR, 11-818-998	12-125
90459-2241	REGULATOR, MS4-LRB-1/4-D5-AS	6-33
90459-2242	REGULATOR, MS4-LRB-1/4-D7-AS	6-33
90119-0109	RELAY OMRON 24VDC MY4H	10-29
90119-0056	RELAY, AUXILIARY MK3P5-S 24VDC	10-29
90119-0086	RELAY, AUXILIARY MY4IN4 24VDC	10-29
1511803-0100	RELAYS RAIL	10-13, 10-15, 10-17
90067-0357	REPAIR KIT	9-9
2565736-0000	RESERVOIR	1-9, 1-11
90457-0100	RESERVOIR, CRVZS-2	6-49
90459-5811	RESIDUAL CURRENT DEVICE, FI-25/2/003-A	10-113
90121-0132	RESISTANCE FIXED, 0,51 KOHM, 0,25 W	10-65
90121-0099	RESISTANCE FIXED, 100 KOHM, 6 W	12-105
255801-0000	RETAINING RING	4-5, 4-7, 4-9, 4-11, 4-13, 4-15
257141-0000	RETAINING RING	8-25, 8-27, 8-29, 8-45, 8-47, 8-49
440259-0000	RETAINING RING	8-75
571087-0000	RETAINING RING	6-81, 6-83
2570392-0000	RETAINING RING	7-65
315742-0111	RETAINING RING 15 SMS 199 RFR	7-63

Part No	Description	Page No
315742-0112 ..	RETAINING RING 16 SMS 199 RFR	1-57
315742-0116 ..	RETAINING RING 20 SMS 199 RFR	3-27
315742-0102 ..	RETAINING RING 6 SMS 199 RFR	4-31, 4-33
315742-0104 ..	RETAINING RING 8 SMS 199 RFR	8-21, 12-85
315752-0120 ..	RETAINING RING FOR BORE DIN 472 26 ST	7-61
315753-0122 ..	RETAINING RING FOR BORE DIN 472 30 A2	7-49
315753-0124 ..	RETAINING RING FOR BORE DIN 472 35 A2	1-57, 1-61
315752-0125 ..	RETAINING RING FOR BORE DIN 472 37 ST	4-59
315753-0132 ..	RETAINING RING FOR BORE DIN 472 52 A2	5-57
90141-0016	RETAINING RING FOR SHAFT DIN 471 10 A2	1-35, 7-13, 7-19, 7-21, 7-23, 7-25, 7-27, 7-29
315751-0109 ..	RETAINING RING FOR SHAFT DIN 471 12 A2	4-59, 4-61, 4-63, 7-15, 7-35, 7-37, 7-39, 7-41
315751-0112 ..	RETAINING RING FOR SHAFT DIN 471 15 A2	1-57, 1-61, 1-179, 7-11, 8-17, 8-19, 8-25, 8-27, 8-29, 8-45, 8-47, 8-49
90141-0017	RETAINING RING FOR SHAFT DIN 471 17 A2	1-19, 5-39
315751-0116 ..	RETAINING RING FOR SHAFT DIN 471 20 A2	4-59
315751-0119 ..	RETAINING RING FOR SHAFT DIN 471 25 A2	3-25
315751-0122 ..	RETAINING RING FOR SHAFT DIN 471 30 A2	4-59
315751-0124 ..	RETAINING RING FOR SHAFT DIN 471 35 A2	5-57
315751-0103 ..	RETAINING RING FOR SHAFT DIN 471 6 A2	2-21, 4-29, 7-61, 8-39, 8-41
90141-0015	RETAINING RING FOR SHAFT DIN 471 8 A2	7-13, 7-47, 7-51, 7-53, 8-15, 12-159, 12-161
315750-0105 ..	RETAINING RING SHAFT DIN 471 ST 8	8-35, 8-61, 12-41, 12-43
315755-0106 ..	RETAINING RING SHAFT DIN 6799 4 A2	7-23, 7-25, 7-27, 7-29, 7-59
315755-0107 ..	RETAINING RING SHAFT DIN 6799 5 A2	1-177, 7-23, 7-25, 7-27, 7-29
315755-0109 ..	RETAINING RING SHAFT DIN 6799 7 A2	12-169
315755-0801 ..	RETAINING RING SHAFT DIN 6799 8 A2	7-47
315755-0110 ..	RETAINING RING SHAFT DIN 6799 9 A2	7-51, 7-53
441905-0000 ..	RETARD PIN	2-61
1523064-0000 .	RETURN PIPE	6-69
2545428-0000 .	RETURN PIPE	1-9, 1-11
2547006-0000 .	RETURN PIPE	1-7
2547007-0000 .	RETURN PIPE	1-7
90457-0024	RETURNFILTER UNIT, RF-P/30-BB-010E1.0/-T	6-89, 6-91
90458-1214	RIGHT ENDPL EXT. PILOT AIR,CDVI5.0-EPR-S	6-45, 6-47
209183-0000 ..	RING	1-15, 1-19, 1-133
272857-0000 ..	RING	3-17
440655-0000 ..	RING	1-77
442084-0000 ..	RING	12-105
456794-0000 ..	RING	1-49, 1-51
530599-0000 ..	RING	1-41, 1-63, 1-81
571537-0000 ..	RING	1-49, 1-51
571538-0000 ..	RING	1-49, 1-51
571539-0000 ..	RING	1-49, 1-51
574334-0000 ..	RING	1-49, 1-51
574335-0000 ..	RING	1-49, 1-51
590269-0000 ..	RING	12-129
590270-0000 ..	RING	12-129
590271-0000 ..	RING	12-129
590509-0100 ..	RING	12-45
752499-0000 ..	RING	1-135
90181-0313	RIVET DUCTAFIX R4	10-13, 10-15, 10-17, 10-109, 10-111, 10-145, 10-147
1484454-0000 .	ROCKER ARM	3-25
2507014-0100 .	ROCKER ARM	3-23
74770-0000	ROD	12-111
75454-0000	ROD	12-113
272746-0000 ..	ROD	5-67
272840-0000 ..	ROD	4-53
2570400-0000 .	ROD	7-51, 7-53
2570401-0000 .	ROD	7-51, 7-53
90239-0357	ROD END, CLEVIS WITH AXLE M10X1,25	4-31, 4-33
90239-0516	ROD END, CLEVIS WITH AXLE M10X1,25	1-35, 1-37, 1-59, 1-125, 1-127, 1-139
90239-0489	ROD END, CLEVIS WITH AXLE M6X1,25	1-177
90239-0532	ROD END, CLEVIS WITH AXLE M8X1,25	1-35, 1-39
90115-0181	ROD END, ID=10 MM M10X1,5	5-7, 5-9
90115-0182	ROD END, ID=10 MM M10X1,5LH	5-7, 5-9
90115-0173	ROD END, ID=6 MM, M6X1	2-21
90115-0054	ROD END, ID=8 MM, M8X1,25	8-69
90239-0405	ROD END,BALL JOINT EYE M10X1,25	1-57, 2-5, 2-7
90239-0491	ROD END,BALL JOINT EYE,MINI-ISO M6	7-19
90091-0091	ROD SEAL, GLIDORING 10X14X1,7 MM	4-5, 4-7, 4-9, 4-11, 4-13, 4-15
90091-0214	ROD SEAL, GLIDORING 16X20,9X2,2 MM	4-25, 4-27
90091-0089	ROD SEAL, GLIDORING 16X22X2,5 MM	4-25, 4-27
90091-0237	ROD SEAL, GLIDORING 20X27,5X3 MM	1-77, 1-79, 1-81
90091-0215	ROD SEAL, GLIDORING 25X32,5X3,2 MM	4-25, 4-27
6161-0000	ROLL	1-159
22463-0000	ROLL	4-5, 4-7, 4-9, 4-11, 4-13, 4-15
32926-0000	ROLL	8-25, 8-27, 8-29, 8-45, 8-47, 8-49
33182-0000	ROLL	8-25, 8-27, 8-29, 8-45, 8-47, 8-49
37888-0000	ROLL	8-65
256576-0000 ..	ROLL	4-25, 4-27
256860-0000 ..	ROLL	4-17, 4-19, 4-21, 4-23
257044-0000 ..	ROLL	1-125, 1-127
257306-0000 ..	ROLL	3-9, 3-11
441876-0000 ..	ROLL	1-49, 1-51
451117-0000 ..	ROLL	1-119, 1-121

Part No	Description	Page No
469461-0000 ..	ROLL	1-159
469464-0000 ..	ROLL	1-159
491165-0000 ..	ROLL	3-13, 3-15
574333-0000 ..	ROLL	1-49, 1-51
574346-0000 ..	ROLL	1-125, 1-127
574397-0000 ..	ROLL	1-119, 1-121
574398-0000 ..	ROLL	1-119, 1-121
574399-0000 ..	ROLL	1-119, 1-121
574400-0000 ..	ROLL	1-119, 1-121
574401-0000 ..	ROLL	1-119, 1-121
574402-0000 ..	ROLL	1-119, 1-121
574403-0000 ..	ROLL	1-119, 1-121
574417-0000 ..	ROLL	1-111, 1-113, 1-115
574418-0000 ..	ROLL	1-111, 1-113, 1-115
574479-0000 ..	ROLL	1-103, 1-105, 1-107, 1-109
574480-0000 ..	ROLL	1-103, 1-105, 1-107, 1-109
574481-0000 ..	ROLL	1-103, 1-105, 1-107, 1-109
751283-0000 ..	ROLL	1-111, 1-113, 1-115
751284-0000 ..	ROLL	1-111, 1-113, 1-115
751491-0000 ..	ROLL	1-103, 1-105, 1-107, 1-109
751492-0000 ..	ROLL	1-103, 1-105, 1-107, 1-109
751494-0000 ..	ROLL	1-103, 1-105, 1-107, 1-109
751495-0000 ..	ROLL	1-119, 1-121
751496-0000 ..	ROLL	1-119, 1-121
751497-0000 ..	ROLL	1-119, 1-121
751498-0000 ..	ROLL	1-119, 1-121
751499-0000 ..	ROLL	1-119, 1-121
751500-0000 ..	ROLL	1-119, 1-121
751501-0000 ..	ROLL	1-119, 1-121
1285546-0000 .	ROLL	7-51, 7-53
1296912-0000 .	ROLL	1-103, 1-105, 1-107, 1-109
1296913-0000 .	ROLL	1-103, 1-105, 1-107, 1-109
1296914-0000 .	ROLL	1-103, 1-105, 1-107, 1-109
1296915-0000 .	ROLL	1-103, 1-105, 1-107, 1-109
1346988-0000 .	ROLL	7-47
456796-0000 ..	ROLLER	1-49, 1-51
456996-0000 ..	ROLLER	1-49, 1-51
583737-0000 ..	ROLLER	7-61
583738-0000 ..	ROLLER	7-61
590216-0000 ..	ROLLER	12-169
751502-0000 ..	ROLLER	1-125, 1-127
979582-0000 ..	ROLLER	7-61
1260069-0000 .	ROLLER	5-53
1350676-0000 .	ROLLER	12-169
1499481-0000 .	ROLLER	7-23, 7-25, 7-27, 7-29
1511307-0000 .	ROLLER	7-65
1512583-0000 .	ROLLER	7-13, 7-15, 7-23, 7-25, 7-27, 7-29, 7-35, 7-37, 7-43, 7-51, 7-53
1517293-0000 .	ROLLER	7-23, 7-25, 7-27, 7-29
1532526-0000 .	ROLLER	4-65
1538150-0000 .	ROLLER	1-125, 1-127
1538948-0000 .	ROLLER	4-59
1548052-0000 .	ROLLER	1-179
1548284-0000 .	ROLLER	1-47
2524477-0000 .	ROLLER	7-49
2552632-0000 .	ROLLER	7-43
2552633-0000 .	ROLLER	7-43
2576346-0000 .	ROLLER	5-7, 5-9
2576349-0000 .	ROLLER	5-7, 5-9
2576350-0000 .	ROLLER	5-7, 5-9
978758-0000 ..	ROLLER 125ML	4-65
978757-0000 ..	ROLLER 180-284ML	4-65
321576-0260 ..	ROLLER BEARING, 20X47X25 MM	3-9, 3-11, 3-13, 3-15
318201-0150 ..	ROLLER CHAIN, SINGLE 3/8 -150	3-27
90288-0066	ROLLER CHAIN, SINGLE 3/8 -365	1-21, 1-23
318207-0168 ..	ROLLER CHAIN, SINGLE 6MM-168	8-25, 8-27, 8-29, 8-45, 8-47, 8-49
90067-0349	ROLLER KIT, 34 73 050 7	9-7
979575-0000 ..	ROLLER PLATE	7-43
978760-0000 ..	ROLLER TBA200SL	4-65
574385-0000 ..	ROLLER TBA250SL	4-65
90347-0054	ROTARY DASHPOT, S-CRD-P277	8-43
441811-0100 ..	ROTOR	5-37, 5-81
575034-0000 ..	ROUND NUT	1-167, 1-169, 2-65, 2-67, 7-31, 8-11, 8-13
2538621-0100 .	ROUNDED DOLLY	12-7
90166-0159	RUBBER HOSE	4-17, 4-19, 4-21, 4-23
90166-0244	RUBBER HOSE	6-59
90166-0245	RUBBER HOSE	6-59
1517231-0000 .	RUBBER SHIM	3-7
90143-0073	RUBBER STRIP	10-75, 10-77
272784-0002 ..	RUBBER STRIP	1-169
272785-0000 ..	RUBBER STRIP	1-167
90143-0068	RUBBER STRIP EMKA 1011-06	2-35, 2-37, 2-39, 2-41, 2-65, 2-67, 6-5, 6-7, 8-11, 8-13
90458-1240	RUBBERSPRING DK-A 15X40	8-17, 8-19
37913-0000	RULER	8-73
37916-0000	RULER	8-73

Part No	Description	Page No
37917-0000	RULER	8-73
76298-0000	RULER	12-77, 12-79
76601-0000	RULER	12-59
76607-0000	RULER	12-55, 12-57, 12-61
271642-0000 ..	RULER	8-73
271643-0000 ..	RULER	8-73
271644-0000 ..	RULER	8-73
272886-0000 ..	RULER	8-73
272887-0000 ..	RULER	8-73
272888-0000 ..	RULER	8-73
574426-0000 ..	RULER	8-73
574427-0000 ..	RULER	8-73
574428-0000 ..	RULER	8-73
590278-0000 ..	RULER	12-163
751576-0000 ..	RULERPART L	4-11, 4-13, 4-15
751578-0000 ..	RULERPART L	4-11, 4-13, 4-15
752011-0000 ..	RULERPART L	4-11, 4-13, 4-15
752012-0000 ..	RULERPART L	4-11, 4-13, 4-15
752016-0000 ..	RULERPART L	4-11, 4-13, 4-15
752017-0000 ..	RULERPART L	4-11, 4-13, 4-15
751575-0000 ..	RULERPART R	4-5, 4-7, 4-9
751577-0000 ..	RULERPART R	4-5, 4-7, 4-9
752009-0000 ..	RULERPART R	4-5, 4-7, 4-9
752010-0000 ..	RULERPART R	4-5, 4-7, 4-9
752014-0000 ..	RULERPART R	4-5, 4-7, 4-9
752015-0000 ..	RULERPART R	4-5, 4-7, 4-9
1517534-0000 .	RUNNER RING	7-35, 7-37
526984-0000 ..	SADDLE	8-39, 8-41
90459-0737	SAFETY CLUTCH, SK1 15/D/20/5-20	5-57
90457-0092	SAFETY RELAY RT9-24VDC	10-39
90459-2291	SAFETY TIME RELAY, E1T-0.5S-24VDC	10-39
1484791-0000 .	SCALE	3-9, 3-11, 3-13, 3-15
1484792-0000 .	SCALE	3-9, 3-11, 3-13, 3-15
777510-0101 ..	SCISSORS	12-11
90220-0183	SCR. CABLE 2X0,34MM2	10-13, 10-15, 10-17, 10-41, 10-143
90220-0072	SCR. CABLE 4X0,34MM2	1-9, 1-11
90220-0104	SCR. CABLE 4X1,5MM2	1-47, 2-13, 8-17, 8-19, 9-3, 10-83, 10-85
90220-0105	SCR. CABLE 4X2,5MM2	3-7
90220-0107	SCR. CABLE 5X0,75MM2	4-31, 4-33
90091-0106	SCRAPER 30X40X10 MM	2-13
33010-0000	SCREW	8-35, 8-61, 12-41, 12-43
74365-0000	SCREW	12-131
76276-0000	SCREW	12-65, 12-67, 12-69, 12-71, 12-73
76297-0000	SCREW	12-85
76465-0000	SCREW	12-87, 12-91
90043-0302	SCREW	1-95, 1-97
90287-0316	SCREW	8-11, 8-13
255995-0000 ..	SCREW	1-59
256517-0000 ..	SCREW	3-13, 3-15
256739-0000 ..	SCREW	4-53
256829-0000 ..	SCREW	4-49, 4-51, 4-53
256859-0000 ..	SCREW	4-17, 4-19, 4-21, 4-23
257249-0000 ..	SCREW	4-25, 4-27
257308-0000 ..	SCREW	3-9, 3-11
271848-0000 ..	SCREW	4-45, 4-47
271898-0000 ..	SCREW	1-57
271899-0000 ..	SCREW	1-57
272602-0000 ..	SCREW	2-5, 2-7
272853-0000 ..	SCREW	2-5, 2-7
295766-0000 ..	SCREW	3-5
440271-0000 ..	SCREW	8-15
456042-0000 ..	SCREW	1-103, 1-105, 1-107, 1-109
476377-0000 ..	SCREW	8-37
554162-0000 ..	SCREW	1-83, 1-85
556541-0000 ..	SCREW	7-61
578001-0000 ..	SCREW	8-25, 8-27, 8-29
589432-0000 ..	SCREW	7-61
590508-0000 ..	SCREW	12-165
751680-0000 ..	SCREW	1-21, 1-23
752476-0000 ..	SCREW	4-5, 4-7, 4-9, 4-11, 4-13, 4-15, 4-25, 4-27
752644-0000 ..	SCREW	8-25, 8-27, 8-29, 8-45, 8-47, 8-49
926907-0000 ..	SCREW	1-87
1517059-0000 .	SCREW	12-45
1523454-0000 .	SCREW	10-141
2531115-0000 .	SCREW	8-45, 8-47, 8-49
1517986-0000 .	SCREW BUSHING	3-27
90457-0148	SCREW CAP HEAD SQ. NECK M6X100 SS	6-11
90458-1612	SCREW CAP HEAD SQ. NECK M6X120 SS	6-11
90458-1613	SCREW CAP HEAD SQ. NECK M6X140 SS	6-11
312155-0491 ..	SCREW DIN 7991 MF6S M10X20 A4 70	8-15
312155-0532 ..	SCREW DIN 7991 MF6S M12X20 A4 70	1-67, 1-69
312155-0226 ..	SCREW DIN 7991 MF6S M3X12 A4 70	7-21
312155-0220 ..	SCREW DIN 7991 MF6S M3X6 A4 70	10-143
312155-0291 ..	SCREW DIN 7991 MF6S M4X12 A4 70	8-25, 8-27, 8-29, 8-45, 8-47, 8-49, 10-71, 10-75, 10-77

Part No	Description	Page No
		10-105, 10-107, 10-109, 10-111, 10-123, 10-125, 10-137, 10-139, 12-169
312155-0293 ..	SCREW DIN 7991 MF6S M4X16 A4 70	7-61
312155-0295 ..	SCREW DIN 7991 MF6S M4X20 A4 70	7-59
312155-0297 ..	SCREW DIN 7991 MF6S M4X25 A4 70	10-105, 10-107, 10-137, 10-139
312155-0299 ..	SCREW DIN 7991 MF6S M4X30 A4 70	5-39
312155-0301 ..	SCREW DIN 7991 MF6S M4X35 A4 70	10-71, 10-109, 10-111, 10-123, 10-125
312155-0285 ..	SCREW DIN 7991 MF6S M4X6 A4 70	4-45, 4-47
312155-0287 ..	SCREW DIN 7991 MF6S M4X8 A4 70	1-9, 1-11, 4-45, 4-47, 7-23, 7-25, 7-27, 7-29
312155-0325 ..	SCREW DIN 7991 MF6S M5X10 A4 70	2-13, 7-35, 7-37
312155-0327 ..	SCREW DIN 7991 MF6S M5X12 A4 70	7-35, 7-37, 8-15, 8-25, 8-27, 8-29, 8-43, 8-45, 8-47, 8-49
312155-0329 ..	SCREW DIN 7991 MF6S M5X16 A4 70	1-167, 1-169, 2-35, 2-37, 6-5, 6-7, 8-25, 8-27, 8-29, 8-45
		8-47, 8-49, 12-169
312155-0331 ..	SCREW DIN 7991 MF6S M5X20 A4 70	5-45, 7-31, 12-93
312155-0339 ..	SCREW DIN 7991 MF6S M5X40 A4 70	12-169
312155-0323 ..	SCREW DIN 7991 MF6S M5X8 A4 70	4-17, 4-19, 4-21, 4-23, 8-15
312155-0364 ..	SCREW DIN 7991 MF6S M6X10 A4 70	1-33, 1-37, 1-139
312155-0366 ..	SCREW DIN 7991 MF6S M6X12 A4 70	3-27
312155-0368 ..	SCREW DIN 7991 MF6S M6X16 A4 70	2-5, 2-7, 4-37, 4-39, 4-41, 4-43, 5-25, 5-27, 7-9, 7-59
312155-0370 ..	SCREW DIN 7991 MF6S M6X20 A4 70	1-19, 1-177, 5-43, 7-47
312155-0372 ..	SCREW DIN 7991 MF6S M6X25A4 70	5-35, 5-37
312155-0374 ..	SCREW DIN 7991 MF6S M6X30 A4 70	1-37, 7-15
312155-0449 ..	SCREW DIN 7991 MF6S M8X16 A4 70	3-5, 5-79
312155-0451 ..	SCREW DIN 7991 MF6S M8X20 A4 70	4-61, 4-63
312155-0457 ..	SCREW DIN 7991 MF6S M8X35 A4 70	8-25, 8-27, 8-29, 8-45, 8-47, 8-49
312155-0459 ..	SCREW DIN 7991 MF6S M8X40 A4 70	4-61, 4-63
312303-0463 ..	SCREW DIN 938 PS M8X50 A4 80	12-83
777100-0113 ..	SCREW DRIVER	12-11
777100-0184 ..	SCREW DRIVER	12-11
312151-0224 ..	SCREW EN 10642 MF6S M3X10 10.9 EL.PL	12-105
312151-0222 ..	SCREW EN 10642 MF6S M3X8 10.9 EL.PL	12-109
312156-0297 ..	SCREW EN 10642 MF6S M4X25 A470	1-89
312151-0287 ..	SCREW EN 10642 MF6S M4X8 10.9 EL.PL	3-9, 3-11, 3-13, 3-15
312156-0329 ..	SCREW EN 10642 MF6S M5X16 A470	5-57
312151-0364 ..	SCREW EN 10642 MF6S M6X10 10.9 EL.PL	3-9, 3-11, 3-13, 3-15
312156-0449 ..	SCREW EN 10642 MF6S M8X16 A470	5-57
312156-0453 ..	SCREW EN 10642 MF6S M8X25 A470	5-57
90287-0295	SCREW HEX.SOCK.COUNT.MF6S M3X8 A280	4-5, 4-7, 4-9, 4-11, 4-13, 4-15
312111-0491 ..	SCREW HEX.SOCK.HD.MC6S-TT 10X20 88 FZ	12-151, 12-153
312111-0295 ..	SCREW HEX.SOCK.HD.MC6S-TT 4X20 88 FZB	6-89, 6-91
312111-0331 ..	SCREW HEX.SOCK.HD.MC6S-TT 5X20 88 FZB	6-89, 6-91
312111-0335 ..	SCREW HEX.SOCK.HD.MC6S-TT 5X30 88 FZB	8-31, 8-33, 8-51, 8-53, 12-27, 12-29, 12-37, 12-39
312111-0368 ..	SCREW HEX.SOCK.HD.MC6S-TT 6X16 88 FZB	3-17
312111-0372 ..	SCREW HEX.SOCK.HD.MC6S-TT 6X25 88 FZB	6-89, 6-91
312111-0376 ..	SCREW HEX.SOCK.HD.MC6S-TT 6X35 88 FZB	3-9, 3-11
312111-0378 ..	SCREW HEX.SOCK.HD.MC6S-TT 6X40 88 FZB	3-9, 3-11
312111-0471 ..	SCREW HEX.SOCK.HD.MC6S-TT 8X100 88 FZ	6-23, 8-25, 8-27, 8-29, 8-45, 8-47, 8-49
312111-0451 ..	SCREW HEX.SOCK.HD.MC6S-TT 8X20 88 FZB	12-151, 12-153
312111-0457 ..	SCREW HEX.SOCK.HD.MC6S-TT 8X35 88 FZB	12-157
312316-0289 ..	SCREW HEX.SOCK.SET CUP P.MSK6SS4X10 FZB	12-105
312316-0291 ..	SCREW HEX.SOCK.SET CUP P.MSK6SS4X12 FZB	12-105
312316-0321 ..	SCREW HEX.SOCK.SET CUP P.MSK6SS5X6 FZB	8-69
312125-0226 ..	SCREW ISO 1207 M3X12 A4	6-75, 10-31
312125-0228 ..	SCREW ISO 1207 M3X16 A4	1-15, 1-19, 1-57, 1-187
312125-0230 ..	SCREW ISO 1207 M3X20 A4	1-49, 1-51, 1-59, 2-17, 8-25, 8-27, 8-29, 8-45, 8-47, 8-49, 8-65
312125-0232 ..	SCREW ISO 1207 M3X25 A4	7-23, 7-25, 7-27, 7-29, 10-31
312125-0234 ..	SCREW ISO 1207 M3X30 A4	7-35, 7-37
312125-0220 ..	SCREW ISO 1207 M3X6 A4	1-39, 2-17, 4-29
312125-0222 ..	SCREW ISO 1207 M3X8 A4	2-13, 7-31
312121-0289 ..	SCREW ISO 1207 M4X10 4.8 - 5.8 Z.PL.	2-23, 2-25, 2-27
312125-0289 ..	SCREW ISO 1207 M4X10 A4	8-25, 8-27, 8-29
312125-0291 ..	SCREW ISO 1207 M4X12 A4	1-39, 2-39, 2-41, 7-19, 7-21, 8-73
312125-0293 ..	SCREW ISO 1207 M4X16 A4	1-13, 7-21, 9-21, 9-25, 9-27
312122-0294 ..	SCREW ISO 1207 M4X18 NI PL BRASS	4-55, 4-57
312125-0297 ..	SCREW ISO 1207 M4X25 A4	8-77
312125-0299 ..	SCREW ISO 1207 M4X30 A4	6-87
312125-0285 ..	SCREW ISO 1207 M4X6 A4	1-13, 1-21, 1-23, 1-39, 1-91, 1-93, 4-31, 4-33, 6-77, 6-79, 7-15
		10-115, 12-111
312121-0287 ..	SCREW ISO 1207 M4X8 4.8 - 5.8 Z.PL.	3-9, 3-11, 3-13, 3-15
312125-0287 ..	SCREW ISO 1207 M4X8 A4	1-49, 1-51, 2-23, 2-25, 2-27, 2-31, 2-69, 3-33, 5-47, 6-53, 7-13
		7-19, 7-23, 7-25, 7-27, 7-29, 7-35, 7-37, 7-43, 7-51, 7-53, 8-65, 8-77
312122-0287 ..	SCREW ISO 1207 M4X8 NI PL BRASS	12-93
312125-0325 ..	SCREW ISO 1207 M5X10 A4	2-59, 6-11, 8-25, 8-27, 8-29, 8-45, 8-47, 8-49
312125-0327 ..	SCREW ISO 1207 M5X12 A4	7-59, 10-23, 10-37, 10-61, 10-67, 10-113, 10-115, 12-23
312125-0329 ..	SCREW ISO 1207 M5X16 A4	2-39, 8-25, 8-27, 8-29, 8-45, 8-47, 8-49, 8-77
312125-0331 ..	SCREW ISO 1207 M5X20 A4	1-43, 1-45
312125-0333 ..	SCREW ISO 1207 M5X25 A4	1-67, 1-69, 1-143, 1-145, 1-147, 1-149, 1-151, 1-153
312125-0339 ..	SCREW ISO 1207 M5X40 A4	10-23, 10-37, 10-67
312121-0323 ..	SCREW ISO 1207 M5X8 4.8 - 5.8 Z.PL.	3-5
312125-0323 ..	SCREW ISO 1207 M5X8 A4	1-35, 1-43, 1-45, 1-77, 1-79, 1-81, 1-143, 1-145, 1-147, 1-149
		1-151, 1-153, 2-5, 2-7, 2-13, 2-23, 2-25, 2-27, 9-23, 9-29, 9-31, 10-117
312125-0364 ..	SCREW ISO 1207 M6X10 A4	1-43, 1-45, 2-19, 5-49, 5-51, 7-33, 8-79
312125-0366 ..	SCREW ISO 1207 M6X12 A4	8-25, 8-27, 8-29, 8-45, 8-47, 8-49
312122-0366 ..	SCREW ISO 1207 M6X12 NI PL BRASS	10-13, 10-15, 10-17

Part No	Description	Page No
312145-0228 ..	SCREW ISO 2009 MFS M3X16 A4	1-39
312145-0220 ..	SCREW ISO 2009 MFS M3X6 A4	3-9, 3-11, 3-13, 3-15, 8-73
312145-0289 ..	SCREW ISO 2009 MFS M4X10 A4	4-5, 4-7, 4-9, 4-11, 4-13, 4-15
312145-0291 ..	SCREW ISO 2009 MFS M4X12 A4	1-9, 1-11, 4-5, 4-7, 4-9, 4-11, 4-13, 4-15, 4-17, 4-19, 4-21, 4-23, 8-69
312145-0293 ..	SCREW ISO 2009 MFS M4X16 A4	8-25, 8-27, 8-29, 8-45, 8-47, 8-49
312145-0285 ..	SCREW ISO 2009 MFS M4X6 A4	8-25, 8-27, 8-29, 8-45, 8-47, 8-49
312145-0325 ..	SCREW ISO 2009 MFS M5X10 A4	1-9, 1-11
312145-0366 ..	SCREW ISO 2009 MFS M6X12 A4	1-9, 1-11
312145-0380 ..	SCREW ISO 2009 MFS M6X50 A4	12-23
90459-6738	SCREW ISO 7380 88-MKT M5X10 A4	5-7, 5-9
90458-0072	SCREW ISO 7380 S M6X12 A2	2-49, 2-51
312306-0546 ..	SCREW ISO4026 M12X70 FZB	12-123
312311-0285 ..	SCREW ISO4028 M4X6 FZB	7-65
312311-0287 ..	SCREW ISO4028 M4X8 FZB	1-61
312311-0327 ..	SCREW ISO4028 M5X12 FZB	2-57
312311-0321 ..	SCREW ISO4028 M5X6 FZB	1-47, 3-13, 3-15
312311-0366 ..	SCREW ISO4028 M6X12 FZB	1-47, 1-61
312311-0368 ..	SCREW ISO4028 M6X16 FZB	6-65
312318-0220 ..	SCREW ISO4029 M3X6 A4	12-61, 12-103, 12-107
312318-0222 ..	SCREW ISO4029 M3X8 A4	5-57
312318-0283 ..	SCREW ISO4029 M4X4 A4	7-47
312318-0285 ..	SCREW ISO4029 M4X6 A4	1-119, 1-121, 1-125, 1-127, 7-23, 7-25, 7-27, 7-29
312318-0287 ..	SCREW ISO4029 M4X8 A4	8-17, 8-19, 8-21, 8-25, 8-27, 8-29, 8-45, 8-47, 8-49, 8-65
312318-0325 ..	SCREW ISO4029 M5X10 A4	1-171, 1-173, 5-7, 5-9, 8-43
312318-0327 ..	SCREW ISO4029 M5X12 A4	7-57
312318-0329 ..	SCREW ISO4029 M5X16 A4	8-17, 8-19
312318-0323 ..	SCREW ISO4029 M5X8 A4	5-7, 5-9
312318-0364 ..	SCREW ISO4029 M6X10 A4	3-19, 3-21, 7-65
312318-0366 ..	SCREW ISO4029 M6X12 A4	3-27, 7-49, 7-63, 8-17, 8-19
312318-0368 ..	SCREW ISO4029 M6X16 A4	1-125, 1-127, 4-49, 4-51, 5-7, 5-9, 8-39, 8-41
312318-0372 ..	SCREW ISO4029 M6X25 A4	8-25, 8-27, 8-29, 8-45, 8-47, 8-49
312318-0360 ..	SCREW ISO4029 M6X6 A4	4-49, 4-51
312318-0362 ..	SCREW ISO4029 M6X8 A4	1-57, 3-23, 3-27, 7-35, 7-37, 7-63, 8-17, 8-19, 8-25, 8-27, 8-29, 8-45, 8-47, 8-49, 8-73
312318-0447 ..	SCREW ISO4029 M8X12 A4	2-61, 2-63
312318-0451 ..	SCREW ISO4029 M8X20 A4	1-125, 1-127
312115-0495 ..	SCREW ISO4762 M10X30 A4 80	8-17, 8-19
312115-0500 ..	SCREW ISO4762 M10X45 A4 80	3-19, 3-21, 5-37, 5-57
312115-0503 ..	SCREW ISO4762 M10X60 A4 80	2-13
312115-0630 ..	SCREW ISO4762 M16X50 A4 80	2-63
312115-0224 ..	SCREW ISO4762 M3X10 A4 80	1-39, 6-75, 10-31, 10-91, 10-93, 10-95, 10-97, 10-99, 10-101, 10-103
312115-0226 ..	SCREW ISO4762 M3X12 A4 80	3-33, 10-83, 10-85, 12-103
312115-0228 ..	SCREW ISO4762 M3X16 A4 80	1-67, 1-69, 1-137, 7-35, 7-37, 7-39, 7-41, 7-43, 10-133, 12-103, 12-107, 12-169
312115-0230 ..	SCREW ISO4762 M3X20 A4 80	7-23, 7-25, 7-27, 7-29
312115-0220 ..	SCREW ISO4762 M3X6 A4 80	7-35, 7-37, 10-91, 10-93, 10-95, 10-97, 10-99, 10-101, 10-103, 12-103, 12-105, 12-107, 12-109
312115-0222 ..	SCREW ISO4762 M3X8 A4 80	10-123, 10-125
312115-0289 ..	SCREW ISO4762 M4X10 A4 80	1-9, 1-11, 2-23, 2-25, 2-27, 5-41, 10-13, 10-15, 10-17, 10-27, 10-41, 10-43, 10-45, 10-49, 10-51, 10-53, 10-55, 10-75, 10-77
312115-0291 ..	SCREW ISO4762 M4X12 A4 80	1-15, 1-81, 4-29, 5-41, 5-69, 10-13, 10-15, 10-17, 10-87, 10-91, 10-93, 10-95, 10-97, 10-99, 10-101, 10-103
312115-0293 ..	SCREW ISO4762 M4X16 A4 80	4-45, 4-47, 9-23, 9-29, 9-31, 10-75, 10-77, 10-79, 10-81, 10-83, 10-85, 10-87
312115-0295 ..	SCREW ISO4762 M4X20 A4 80	5-57, 7-61, 10-13, 10-15, 10-17
312115-0297 ..	SCREW ISO4762 M4X25 A4 80	10-75, 10-77
312115-0299 ..	SCREW ISO4762 M4X30 A4 80	1-181, 10-75, 10-77
312115-0304 ..	SCREW ISO4762 M4X45 A4 80	8-65
312115-0305 ..	SCREW ISO4762 M4X50 A4 80	1-9, 1-11, 1-67, 1-69, 1-181, 10-133
312115-0285 ..	SCREW ISO4762 M4X6 A4 80	10-133
312115-0287 ..	SCREW ISO4762 M4X8 A4 80	1-87, 2-5, 2-7, 2-57, 6-41, 6-43, 7-21, 8-17, 8-19, 8-35, 8-61, 12-41, 12-43
312115-0325 ..	SCREW ISO4762 M5X10 A4 80	1-9, 1-11, 1-59, 2-53, 2-55, 10-13, 10-15, 10-17, 10-31, 10-39, 10-75, 10-77, 10-141, 12-105
312115-0327 ..	SCREW ISO4762 M5X12 A4 80	1-89, 2-35, 2-37, 2-65, 2-67, 6-5, 6-7, 7-23, 7-25, 7-27, 7-29, 7-43, 7-59, 8-11, 8-13, 10-65, 10-143
90287-0145	SCREW ISO4762 M5X16 12.9	3-19, 3-21
312115-0329 ..	SCREW ISO4762 M5X16 A4 80	1-49, 1-51, 1-67, 1-69, 1-137, 2-35, 2-37, 2-65, 2-67, 2-69, 4-5 4-7, 4-9, 4-11, 4-13, 4-15, 5-57, 6-5, 6-7, 6-41, 6-43, 7-31, 8-11, 8-13, 10-71, 10-75, 10-77, 10-123, 10-125
312115-0331 ..	SCREW ISO4762 M5X20 A4 80	1-21, 1-23, 2-17, 4-45, 4-47
312115-0333 ..	SCREW ISO4762 M5X25 A4 80	1-89, 8-25, 8-27, 8-29, 8-43, 8-45, 8-47, 8-49, 10-13, 10-15, 10-17
312115-0335 ..	SCREW ISO4762 M5X30 A4 80	7-21
312115-0337 ..	SCREW ISO4762 M5X35 A4 80	1-89
312115-0339 ..	SCREW ISO4762 M5X40 A4 80	1-89, 10-147
312115-0340 ..	SCREW ISO4762 M5X45 A4 80	1-67, 1-69
312115-0323 ..	SCREW ISO4762 M5X8 A4 80	1-91, 1-93, 7-19, 7-21, 7-43, 8-73, 10-13, 10-15, 10-17, 10-29, 10-59, 10-61, 10-63, 10-65, 10-69, 12-169
312115-0364 ..	SCREW ISO4762 M6X10 A4 80	1-61, 1-139, 2-29, 4-29
312115-0366 ..	SCREW ISO4762 M6X12 A4 80	1-21, 1-23, 1-33, 1-59, 1-139, 1-165, 4-5, 4-7, 4-9, 4-11, 4-13 4-15, 5-49, 5-51, 6-61, 7-35, 7-37, 8-77, 10-13, 10-15, 10-17, 10-71, 10-75, 10-77, 10-141, 12-169
312115-0367 ..	SCREW ISO4762 M6X14 A4 80	7-23, 7-25, 7-27, 7-29, 12-159
312115-0368 ..	SCREW ISO4762 M6X16 A4 80	5-7, 5-9, 6-5, 6-65, 7-63, 8-11, 8-13, 8-17, 8-19, 8-39, 8-41, 10-75, 10-77, 10-141, 10-147

Part No	Description	Page No
312115-0370 ..	SCREW ISO4762 M6X20 A4 80	1-47, 1-49, 1-51, 4-5, 4-7, 4-9, 4-11, 4-13, 4-15, 4-65, 6-65, 7-59, 8-25, 8-27, 8-29, 8-37, 10-71, 12-55, 12-57, 12-59, 12-61, 12-163
312115-0371 ..	SCREW ISO4762 M6X22 A4	4-25, 4-27
90287-0143	SCREW ISO4762 M6X25 12.9	3-13, 3-15
312115-0372 ..	SCREW ISO4762 M6X25 A4 80	1-47, 1-177, 2-19, 2-31, 3-5, 4-5, 4-7, 4-9, 4-11, 4-13, 4-15, 4-53, 5-37, 5-49, 5-51, 6-21, 7-17, 7-33, 8-17, 8-19, 8-45, 8-47, 8-49, 8-79, 12-55, 12-57, 12-59, 12-61, 12-169
312115-0374 ..	SCREW ISO4762 M6X30 A4 80	1-47, 1-49, 1-51, 2-53, 2-55, 5-57
90287-0144	SCREW ISO4762 M6X35 12.9	3-13, 3-15
312115-0376 ..	SCREW ISO4762 M6X35 A4 80	5-29, 5-31, 5-33
312115-0378 ..	SCREW ISO4762 M6X40 A4 80	7-35, 7-37, 12-85, 12-163
312115-0380 ..	SCREW ISO4762 M6X50 A4 80	8-65, 12-155
312115-0382 ..	SCREW ISO4762 M6X60 A4 80	6-15, 6-17, 6-19
312115-0384 ..	SCREW ISO4762 M6X70 A4 80	5-29, 5-31, 5-33, 12-167
312115-0385 ..	SCREW ISO4762 M6X75 A4 80	2-53, 2-55
312115-0362 ..	SCREW ISO4762 M6X8 A4 80	3-5
312115-0386 ..	SCREW ISO4762 M6X80 A4 80	5-7, 5-9
312115-0447 ..	SCREW ISO4762 M8X12 A4 80	6-41, 6-43
312115-0449 ..	SCREW ISO4762 M8X16 A4 80	1-129, 7-57, 12-155
312115-0451 ..	SCREW ISO4762 M8X20 A4 80	5-13, 5-15, 5-17, 5-19, 5-21
312115-0453 ..	SCREW ISO4762 M8X25 A4 80	3-19, 3-21, 4-31, 4-33, 4-61, 4-63, 5-29, 5-31, 5-33, 5-57, 7-65
312115-0455 ..	SCREW ISO4762 M8X30 A4 80	1-61, 1-141, 7-57
312115-0457 ..	SCREW ISO4762 M8X35 A4 80	5-13, 5-15, 5-17, 5-19, 5-21, 7-67, 12-149
312115-0459 ..	SCREW ISO4762 M8X40 A4 80	5-13, 5-15, 5-17, 5-19, 5-21, 12-85, 12-163
312115-0460 ..	SCREW ISO4762 M8X45 A4 80	5-13, 5-15, 5-17, 5-19, 5-21
312115-0461 ..	SCREW ISO4762 M8X50 A4 80	5-13, 5-15, 5-17, 5-19, 5-21
312115-0463 ..	SCREW ISO4762 M8X60 A4 80	2-39, 2-41, 5-13, 5-15, 5-17, 5-19, 5-21
312115-0465 ..	SCREW ISO4762 M8X70 A4 80	5-13, 5-15, 5-17, 5-19, 5-21
312115-0467 ..	SCREW ISO4762 M8X80 A4 80	5-13, 5-15, 5-17, 5-19, 5-21
90458-0058	SCREW M5X60 A280	8-17, 8-19
312105-0511 ..	SCREW M6S ISO 4014 M10X100 A480	2-57
312105-0515 ..	SCREW M6S ISO 4014 M10X120 A480	2-69
312105-0499 ..	SCREW M6S ISO 4014 M10X40 A480	1-49, 1-51
312105-0500 ..	SCREW M6S ISO 4014 M10X45 A480	8-71
312105-0503 ..	SCREW M6S ISO 4014 M10X60 A480	1-89
312105-0507 ..	SCREW M6S ISO 4014 M10X80 A480	8-5
312105-0544 ..	SCREW M6S ISO 4014 M12X60 A480	5-43, 5-75
312105-0547 ..	SCREW M6S ISO 4014 M12X75 A480	5-65
312105-0548 ..	SCREW M6S ISO 4014 M12X80 A480	6-53
312105-0638 ..	SCREW M6S ISO 4014 M16X90 A480	12-167
312105-0335 ..	SCREW M6S ISO 4014 M5X30 A480	1-9, 1-11, 1-61, 4-55, 4-57, 5-59, 5-61, 6-41, 6-43, 12-161
312105-0337 ..	SCREW M6S ISO 4014 M5X35 A480	2-13, 8-21
312105-0339 ..	SCREW M6S ISO 4014 M5X40 A480	6-41, 6-43, 7-35, 7-37
312105-0341 ..	SCREW M6S ISO 4014 M5X50 A480	6-37
90457-0143	SCREW M6S ISO 4014 M6X130 A480	6-93, 6-95
312105-0374 ..	SCREW M6S ISO 4014 M6X30 A480	2-13, 3-9, 3-11, 3-13, 3-15, 4-5, 4-7, 4-9, 4-11, 4-13, 4-15, 4-25, 4-27, 4-53, 5-7, 5-9, 5-23, 5-71, 6-67, 7-23, 7-25, 7-27, 7-29, 7-51, 7-53, 12-23
312105-0376 ..	SCREW M6S ISO 4014 M6X35 A480	1-35, 2-5, 2-7, 4-5, 4-7, 4-9, 4-11, 4-13, 4-15, 4-25, 4-27, 4-49, 4-51, 4-67, 4-69, 5-7, 5-9, 6-85, 7-51, 7-53, 12-161
312105-0378 ..	SCREW M6S ISO 4014 M6X40 A480	1-17, 1-49, 1-51, 2-29, 5-71, 6-15, 6-17, 6-19, 7-15, 8-37
312105-0379 ..	SCREW M6S ISO 4014 M6X45 A480	1-49, 1-51, 4-17, 4-19, 4-21, 4-23, 12-135
312105-0380 ..	SCREW M6S ISO 4014 M6X50 A480	2-5, 2-7, 4-31, 4-33, 4-49, 4-51, 4-59, 5-23, 5-53, 5-71
312105-0381 ..	SCREW M6S ISO 4014 M6X55 A480	1-119, 1-121, 7-49, 12-155
312105-0382 ..	SCREW M6S ISO 4014 M6X60 A480	6-65, 8-25, 8-27, 8-29, 8-45, 8-47, 8-49
312105-0383 ..	SCREW M6S ISO 4014 M6X65 A480	12-17, 12-19
312105-0384 ..	SCREW M6S ISO 4014 M6X70 A480	4-31, 4-33, 6-11
312105-0386 ..	SCREW M6S ISO 4014 M6X80 A480	6-97
312105-0457 ..	SCREW M6S ISO 4014 M8X35 A480	1-43, 1-45, 1-111, 1-113, 1-115, 4-65, 5-29, 5-31, 5-33, 8-25, 8-27, 8-29, 8-45, 8-47, 8-49, 12-127
312105-0459 ..	SCREW M6S ISO 4014 M8X40 A480	2-29, 4-31, 4-33, 5-29, 5-31, 5-33, 5-37, 8-25, 8-27, 8-29, 8-45, 8-47, 8-49, 12-25
312105-0460 ..	SCREW M6S ISO 4014 M8X45 A480	4-53, 5-7, 5-9, 8-45, 8-47, 8-49
312105-0461 ..	SCREW M6S ISO 4014 M8X50 A480	6-63, 8-73
312105-0462 ..	SCREW M6S ISO 4014 M8X55 A480	1-35, 4-5, 4-7, 4-9, 4-11, 4-13, 4-15, 12-51, 12-53
312105-0463 ..	SCREW M6S ISO 4014 M8X60 A480	5-71, 9-17
312105-0464 ..	SCREW M6S ISO 4014 M8X65 A480	1-59, 5-29, 5-31, 5-33, 6-15, 6-17, 6-19
312105-0469 ..	SCREW M6S ISO 4014 M8X90 A480	5-29, 5-31, 5-33, 5-81
312105-0489 ..	SCREW M6S ISO 4017 M10X16 A480	2-13, 6-53
312105-0491 ..	SCREW M6S ISO 4017 M10X20 A480	5-81, 6-59, 8-73, 12-25
312105-0493 ..	SCREW M6S ISO 4017 M10X25 A480	8-25, 8-27, 8-29, 8-45, 8-47, 8-49
312105-0495 ..	SCREW M6S ISO 4017 M10X30 A480	1-57, 1-119, 1-121, 3-7, 5-7, 5-9, 6-59
312105-0497 ..	SCREW M6S ISO 4017 M10X35 A480	5-23, 8-71
312109-0499 ..	SCREW M6S ISO 4017 M10X40 A480	5-7, 5-9
312105-0532 ..	SCREW M6S ISO 4017 M12X20 A480	3-7, 3-25, 5-81
312105-0534 ..	SCREW M6S ISO 4017 M12X25 A480	2-49, 2-51, 5-63
312105-0536 ..	SCREW M6S ISO 4017 M12X30 A480	1-57, 1-119, 1-121, 1-125, 1-127, 1-129
312105-0538 ..	SCREW M6S ISO 4017 M12X35 A480	12-15
312105-0540 ..	SCREW M6S ISO 4017 M12X40 A480	6-53
312105-0622 ..	SCREW M6S ISO 4017 M16X25 A480	2-49, 2-51
312105-0628 ..	SCREW M6S ISO 4017 M16X40 A480	2-49, 2-51, 5-81
312105-0630 ..	SCREW M6S ISO 4017 M16X50 A480	12-15
312105-0289 ..	SCREW M6S ISO 4017 M4X10 A470	1-179
312105-0291 ..	SCREW M6S ISO 4017 M4X12 A470	5-57, 8-35, 8-61, 12-41, 12-43, 12-169
312105-0293 ..	SCREW M6S ISO 4017 M4X16 A470	1-57, 1-59, 6-61, 7-15, 7-23, 7-25, 7-27, 7-29, 8-11, 8-13, 12-169
312105-0295 ..	SCREW M6S ISO 4017 M4X20 A470	2-23, 2-25, 2-27, 7-39, 7-41

Part No	Description	Page No
312105-0297 ..	SCREW M6S ISO 4017 M4X25 A470	2-23, 2-25, 2-27, 8-65
312105-0299 ..	SCREW M6S ISO 4017 M4X30 A470	6-87, 7-45
312105-0301 ..	SCREW M6S ISO 4017 M4X35 A470	1-177, 2-21, 3-27
312105-0303 ..	SCREW M6S ISO 4017 M4X40 A470	5-37
312105-0287 ..	SCREW M6S ISO 4017 M4X8 A470	1-39, 1-43, 1-45, 1-47, 1-61, 1-87, 1-159, 1-171, 1-173, 6-87, 7-61
312105-0325 ..	SCREW M6S ISO 4017 M5X10 A480	1-9, 1-11, 1-19, 1-43, 1-45, 1-47, 1-67, 1-69, 1-119, 1-121, 1-159, 1-177, 2-17, 4-55, 4-57, 6-15, 6-17, 6-19, 7-35, 7-37, 8-73, 12-17, 12-19
312105-0327 ..	SCREW M6S ISO 4017 M5X12 A480	1-21, 1-23, 1-35, 1-49, 1-51, 2-29, 2-31, 3-33, 4-37, 4-39, 4-41, 4-43, 6-23, 6-33, 6-41, 6-43, 6-77, 6-79, 8-35, 8-61, 9-21, 9-25, 9-27, 10-109, 10-111, 10-145, 12-41, 12-43
312105-0328 ..	SCREW M6S ISO 4017 M5X14 A480	1-161, 1-163, 4-55, 4-57, 5-57, 7-35, 7-37, 7-39, 7-41
312105-0329 ..	SCREW M6S ISO 4017 M5X16 A480	1-55, 1-119, 1-121, 1-171, 1-173, 1-181, 4-45, 4-47, 6-75, 7-23, 7-25, 7-27, 7-29, 8-17, 8-19, 8-25, 8-27, 8-29, 8-35, 8-45, 8-47, 8-49, 8-61, 12-41, 12-43, 12-165
312105-0331 ..	SCREW M6S ISO 4017 M5X20 A480	1-59, 1-125, 1-127, 1-177, 5-29, 5-31, 5-33, 5-35, 5-63, 7-51, 7-53, 8-25, 8-27, 8-29, 8-45, 8-47, 8-49
312105-0332 ..	SCREW M6S ISO 4017 M5X22 A470	1-103, 1-105, 1-107, 1-109, 1-119, 1-121
312105-0333 ..	SCREW M6S ISO 4017 M5X25 A480	1-15, 1-159, 2-57, 4-65, 7-49, 7-61, 12-155
312109-0335 ..	SCREW M6S ISO 4017 M5X30 A480	1-171, 1-173
312105-0323 ..	SCREW M6S ISO 4017 M5X8 A480	1-59, 1-65, 5-41, 5-45, 6-11, 6-71, 8-65, 9-25, 9-27
312105-0364 ..	SCREW M6S ISO 4017 M6X10 A480	1-9, 1-11, 1-39, 1-57, 1-59, 1-89, 1-95, 1-97, 1-125, 1-127, 1-133, 1-137, 1-139, 1-141, 1-143, 1-145, 1-147, 1-149, 1-151, 1-153, 1-175, 2-9, 2-29, 4-59, 5-25, 5-27, 6-53, 6-61, 6-87, 8-25, 8-27, 8-29, 8-45, 8-47, 8-49, 8-65, 8-77
312105-0366 ..	SCREW M6S ISO 4017 M6X12 A480	1-37, 1-39, 1-47, 1-57, 1-59, 1-87, 1-91, 1-93, 1-129, 1-137, 1-143, 1-145, 1-147, 1-149, 1-151, 1-153, 1-159, 1-167, 1-169, 1-171, 1-173, 1-175, 1-177, 2-5, 2-7, 2-13, 2-19, 2-31, 2-45, 2-53, 2-55, 3-27, 4-59, 5-37, 5-45, 5-55, 5-75, 5-83, 6-11, 6-13, 6-15, 6-17, 6-19, 6-39, 6-53, 6-93, 6-95, 7-35, 7-37, 7-45, 7-47, 7-49, 7-51, 7-53, 8-11, 8-13, 8-25, 8-27, 8-29, 8-45, 8-47, 8-49, 8-77
312105-0367 ..	SCREW M6S ISO 4017 M6X14 A480	1-19, 1-21, 1-23, 1-131, 1-177, 4-5, 4-7, 4-9, 4-11, 4-13, 4-15, 5-7, 5-9, 6-69, 6-85, 7-23, 7-25, 7-27, 7-29, 7-47
312105-0368 ..	SCREW M6S ISO 4017 M6X16 A480	1-21, 1-23, 1-35, 1-39, 1-49, 1-51, 1-59, 1-61, 1-65, 1-89, 1-95, 1-97, 1-103, 1-105, 1-107, 1-109, 1-111, 1-113, 1-115, 1-117, 1-119, 1-121, 1-125, 1-127, 1-175, 1-177, 2-5, 2-7, 2-11, 2-35, 2-37, 2-47, 2-59, 2-61, 2-69, 3-27, 4-31, 4-33, 4-37, 4-39, 4-41, 4-43, 4-49, 4-51, 5-13, 5-15, 5-17, 5-19, 5-21, 5-29, 5-31, 5-33, 5-45, 5-81, 6-5, 6-7, 6-27, 6-49, 6-51, 6-67, 7-23, 7-25, 7-27, 7-29, 7-35, 7-37, 7-47, 7-61, 10-71, 10-105, 10-107, 10-109, 10-111, 10-123, 10-125, 10-137, 10-139, 12-169
312105-0370 ..	SCREW M6S ISO 4017 M6X20 A480	1-35, 1-39, 1-41, 1-59, 1-63, 1-87, 1-117, 1-119, 1-121, 1-125, 1-127, 1-129, 1-133, 1-139, 1-171, 1-173, 3-25, 3-27, 4-25, 4-27, 5-7, 5-9, 5-29, 5-31, 5-33, 5-41, 5-43, 5-57, 5-65, 5-75, 5-81, 6-13, 6-65, 6-89, 6-91, 7-9, 7-19, 7-21, 7-49, 7-51, 7-53, 8-17, 8-19, 10-109, 10-111, 12-163, 12-169
312105-0371 ..	SCREW M6S ISO 4017 M6X22 A480	1-103, 1-105, 1-107, 1-109, 1-135, 2-49, 2-51
312105-0372 ..	SCREW M6S ISO 4017 M6X25 A480	1-17, 1-21, 1-23, 1-35, 1-37, 1-39, 1-49, 1-51, 1-125, 1-127, 1-131, 1-141, 1-175, 2-5, 2-7, 2-23, 2-25, 2-27, 4-31, 4-33, 4-37, 4-39, 4-41, 4-43, 4-53, 5-7, 5-9, 5-35, 5-37, 5-43, 5-81, 6-77, 6-79, 7-49, 8-17, 8-19, 8-25, 8-27, 8-29, 8-45, 8-47, 8-49, 12-169
312109-0376 ..	SCREW M6S ISO 4017 M6X35 A480	1-95, 1-97, 8-25, 8-27, 8-29, 8-45, 8-47, 8-49
312109-0378 ..	SCREW M6S ISO 4017 M6X40 A480	2-5, 2-7, 12-169
312105-0362 ..	SCREW M6S ISO 4017 M6X8 A480	1-35, 1-49, 1-51, 1-129, 2-73, 4-5, 4-7, 4-9, 4-11, 4-13, 4-15, 5-13, 5-15, 5-17, 5-19, 5-21, 5-29, 5-31, 5-33, 6-71, 8-73
312105-0447 ..	SCREW M6S ISO 4017 M8X12 A480	1-57, 1-59, 1-125, 1-127, 2-69, 2-73, 4-25, 4-27, 5-45, 6-15, 6-17, 6-19, 7-31, 7-59, 8-11, 8-13, 8-17, 8-19
312105-0449 ..	SCREW M6S ISO 4017 M8X16 A480	1-21, 1-23, 1-35, 1-61, 1-89, 1-171, 1-173, 2-61, 2-69, 4-59, 5-85, 6-59, 6-61, 6-81, 6-83, 7-15, 7-35, 7-37, 7-39, 7-41, 8-17, 8-19, 8-65, 12-25
312105-0451 ..	SCREW M6S ISO 4017 M8X20 A480	1-49, 1-51, 1-55, 1-67, 1-69, 1-103, 1-105, 1-107, 1-109, 1-111, 1-113, 1-115, 1-125, 1-127, 1-167, 1-169, 1-175, 1-183, 2-5, 2-7, 2-15, 2-61, 2-69, 4-59, 5-75, 5-77, 5-79, 6-55, 6-67, 6-69, 7-35, 7-37, 8-9, 12-15
312105-0452 ..	SCREW M6S ISO 4017 M8X22 A4 80	1-183, 4-53, 7-57
312105-0453 ..	SCREW M6S ISO 4017 M8X25 A480	1-9, 1-11, 1-17, 1-41, 1-43, 1-45, 1-63, 1-65, 1-67, 1-69, 1-125, 1-127, 1-129, 1-131, 1-137, 2-69, 3-27, 4-25, 4-27, 4-31, 4-33, 4-49, 4-51, 5-7, 5-9, 5-13, 5-15, 5-17, 5-19, 5-21, 6-59, 6-61, 6-69, 6-77, 6-79, 6-81, 6-83, 7-47, 8-15, 8-25, 8-27, 8-29, 8-45, 8-47, 8-49, 8-73, 12-137, 12-163
312105-0455 ..	SCREW M6S ISO 4017 M8X30 A480	1-35, 1-39, 1-61, 1-111, 1-113, 1-115, 2-5, 2-7, 3-7, 4-25, 4-27, 4-31, 4-33, 4-49, 4-51, 5-13, 5-15, 5-17, 5-19, 5-21, 5-29, 5-31, 5-33, 5-53, 5-57, 5-79, 8-69, 12-23
312109-0457 ..	SCREW M6S ISO 4017 M8X35 A480	1-35, 5-13, 5-15, 5-17, 5-19, 5-21, 12-91
312109-0459 ..	SCREW M6S ISO 4017 M8X40 A480	7-57
312101-0515 ..	SCREW M6S M10X120 FZB	3-13, 3-15
312101-0489 ..	SCREW M6S M10X16 FZB	3-5
312101-0493 ..	SCREW M6S M10X25 FZB	3-9, 3-11, 3-13, 3-15, 12-13
312101-0499 ..	SCREW M6S M10X40 FZB	2-5, 2-7
312104-0499 ..	SCREW M6S M10X40H FZB	3-27, 6-89, 6-91
312101-0502 ..	SCREW M6S M10X55 FZB	3-11, 3-29, 3-31
312101-0504 ..	SCREW M6S M10X65 FZB	3-5, 3-9, 3-11, 3-13, 3-15
312101-0507 ..	SCREW M6S M10X80 FZB	3-9, 3-11
312101-0552 ..	SCREW M6S M12X100 FZB	5-69
312101-0530 ..	SCREW M6S M12X16 FZB	5-59, 5-61
312101-0536 ..	SCREW M6S M12X30 FZB	12-151, 12-153
312101-0544 ..	SCREW M6S M12X60 FZB	12-151, 12-153
312101-0548 ..	SCREW M6S M12X80 FZB	12-13, 12-151, 12-153
312101-0550 ..	SCREW M6S M12X90 FZB	3-5, 12-13
312105-0648 ..	SCREW M6S M16X150 A280	2-49, 2-51
312101-0289 ..	SCREW M6S M4X10 FZB	3-29, 3-31
312101-0295 ..	SCREW M6S M4X20 FZB	5-11
312101-0297 ..	SCREW M6S M4X25 FZB	3-9, 3-11, 3-13, 3-15
312101-0287 ..	SCREW M6S M4X8 FZB	8-31, 8-33, 8-51, 8-53, 12-27, 12-29, 12-37, 12-39
312101-0325 ..	SCREW M6S M5X10 FZB	3-19, 3-21

Part No	Description	Page No
312101-0327 ..	SCREW M6S M5X12 FZB	8-69
312101-0329 ..	SCREW M6S M5X16 FZB	3-5, 8-31, 8-33, 8-51, 8-53, 8-69, 12-27, 12-29, 12-37, 12-39
312101-0331 ..	SCREW M6S M5X20 FZB	2-5, 2-7, 8-31, 8-33, 8-51, 8-53, 12-27, 12-29, 12-37, 12-39
312101-0333 ..	SCREW M6S M5X25 FZB	3-13, 3-15, 3-23
312101-0337 ..	SCREW M6S M5X35 FZB	2-23, 2-25, 2-27
312101-0343 ..	SCREW M6S M5X60 FZB	4-55, 4-57
312101-0344 ..	SCREW M6S M5X65 FZB	7-45
312101-0323 ..	SCREW M6S M5X8 FZB	8-17, 8-19
312101-0364 ..	SCREW M6S M6X10 FZB	3-9, 3-11, 3-13, 3-15, 8-31, 8-33, 8-51, 8-53, 12-27, 12-29, 12-37, 12-39
312101-0392 ..	SCREW M6S M6X110 FZB	2-31
312101-0366 ..	SCREW M6S M6X12 FZB	3-5
312101-0367 ..	SCREW M6S M6X14 FZB	12-151, 12-153
312101-0368 ..	SCREW M6S M6X16 FZB	3-5
312101-0370 ..	SCREW M6S M6X20 FZB	3-5
312101-0376 ..	SCREW M6S M6X35 FZB	3-5, 3-29, 3-31
312101-0381 ..	SCREW M6S M6X55 FZB	8-75
312101-0362 ..	SCREW M6S M6X8 FZB	3-9, 3-11, 3-13, 3-15
312101-0449 ..	SCREW M6S M8X16 FZB	6-89, 6-91, 12-151, 12-153
312101-0451 ..	SCREW M6S M8X20 FZB	6-87, 12-13
312101-0453 ..	SCREW M6S M8X25 FZB	3-9, 3-11, 5-67
312101-0455 ..	SCREW M6S M8X30 FZB	5-67, 12-13
312101-0459 ..	SCREW M6S M8X40 FZB	5-67
312101-0461 ..	SCREW M6S M8X50 FZB	12-83
312104-0463 ..	SCREW M6S M8X60H FZB	12-127
90457-0937	SCREW MC6S M3X40 A480	4-29
90287-0314	SCREW MC6S M4X60 A280	1-67, 1-69
90287-0081	SCREW MC6S M6X10 129	3-5
90287-0335	SCREW MC6S M8X90 A280	5-13, 5-15, 5-17, 5-19, 5-21
90458-2487	SCREW PLUG HD-PE, M24	6-53
90287-0075	SCREW SLOT. PAN HEAD LKCS M6X12	2-9, 2-13, 2-21, 2-65, 2-67, 4-31, 4-33, 6-9, 6-53, 8-7, 8-11, 8-13, 8-15
90287-0076	SCREW SLOT. PAN HEAD LKCS M6X20	2-13
312132-0287 ..	SCREW SLOT. PAN HEAD MSCS M4X8	12-105
90287-0106	SCREW SPRINGLOAD. SLOTTED HEAD M10X21	7-11
90287-0148	SCREW SPRINGLOAD. SLOTTED HEAD M5X12	7-61
90287-0163	SCREW SPRINGLOAD. SLOTTED HEAD M6X14	3-27
90287-0112	SCREW SPRINGLOAD. SLOTTED HEAD M8X16	7-21, 8-5
90458-2078	SCREW SPRINGLOAD. SOCK. HEX HEAD M12X26	8-71
90287-0167	SCREW SPRINGLOAD. SOCK. HEX HEAD M6X20	8-39, 8-41
90458-1517	SCREW SPRINGLOAD. SOCK. HEX HEAD M8X18	4-59
978989-0200 ..	SCRUBBER	6-57
1519392-0000 .	SCRUBBER	6-81, 6-83
90143-0094	SEAL	10-109, 10-111, 10-133, 10-143
273953-0000 ..	SEAL	1-49, 1-51
441796-0000 ..	SEAL	5-39
490901-0000 ..	SEAL	1-49, 1-51
571873-0000 ..	SEAL	4-55, 4-57
574336-0000 ..	SEAL	1-49, 1-51
2552073-0000 .	SEAL	5-13, 5-15, 5-17, 5-19, 5-21
2795368-0000 .	SEAL	1-21, 1-23
1548275-0000 .	SEAL COVER	1-47
321600-0114 ..	SEAL COVER LL3052	3-5
1036191-0000 .	SEAL HOLDER	1-41, 1-63
90067-0351	SEAL KIT	9-9
1296877-0100 .	SEAL KIT	9-35
530588-0000 ..	SEAL RING	9-37
530589-0000 ..	SEAL RING	1-41, 1-63, 9-37
2826440-0000 .	SEAL RING	1-79
2826441-0000 .	SEAL RING	1-77, 1-81
2833037-0000 .	SEAL RING	1-77
90091-0266	SEAL RING 10,4X16,3X2,5 MM	1-75, 9-37
530595-0000 ..	SEAL RING HOLDER	1-77
90143-0059	SEAL STRIP 4610069	1-9, 1-11, 2-9, 10-141
1524481-0000 .	SEALING BLOCK	7-21
1538473-0000 .	SEALING BLOCK	7-19
90157-0041	SEALING COMPOUND, RHODORSEAL 5651	2-9, 2-35, 2-37, 2-65, 2-67, 6-5
90157-0022	SEALING COMPOUND, SILICONE	2-13, 2-39, 2-41, 5-37
353249-0301 ..	SEALING PIN, 4X20	8-77, 8-79, 9-23, 9-29, 9-31
353249-0304 ..	SEALING PIN, 6X25	5-49, 5-51
353249-0307 ..	SEALING PIN, 7,5X20	5-47
353249-0308 ..	SEALING PIN, 8X20	5-49, 5-51
353249-0309 ..	SEALING PIN, 9,3X20	5-49, 5-51
571874-0000 ..	SEALING PLUG	4-55, 4-57
490900-0000 ..	SEALING RING	1-49, 1-51
90214-0303	SEALING RING, 18,6X35X2 MM	1-57
257174-0000 ..	SEALING WASHER	3-5
295767-0000 ..	SEALING WASHER	3-5
456934-0000 ..	SEALING WASHER	3-5
555458-0000 ..	SEALING WASHER	1-81
556133-0000 ..	SEALING WASHER	1-79
90458-0145	SEALING, 3X15 MM CLOSED CELL SPONGE	2-9, 2-21, 2-69
90458-1208	SEALING, CHANNEL 1 BLOCKED	6-45, 6-47
90458-1207	SEALING, STANDARD	6-45, 6-47
1478814-0000 .	SENSOR	1-87

Part No	Description	Page No
90457-0047	SENSOR 2750-1-5111-1 W.ADAPTER PNP	1-63
42067-0100	SENSOR BOARD	1-187
90458-0747	SENSOR FOR CYLINDER, SMH-1PC	4-31, 4-33
90450-0669	SENSOR, BRACKET SERIES 168	1-37, 1-63
257190-0000	SEPARATION BLOCK	2-29
978988-0300	SEPARATOR	6-57
1511775-0000	SEPARATOR	6-77, 6-79
77092-0600	SERVICE PARTS	12-3
2614370-0200	SERVICE PARTS	12-45
90458-0397	SERVO DRIVE DMC2 50720 P	10-13, 10-15, 10-17
359011-0812	SET OF SIGNS 5-FW 251-300	10-63, 10-65
359011-0813	SET OF SIGNS 5-FW 301-350	10-63
359011-0821	SET OF SIGNS 6-FW 1-50	2-75, 9-23, 9-29, 9-31
777150-0801	SET OF SPANNERS, HEXAGONAL	9-15
751333-0000	SETTING PLATE	1-103, 1-105, 1-107, 1-109
1517985-0000	SETTING RING	3-27
75931-0004	SETTING TEMPLATE	12-77, 12-79
75931-0005	SETTING TEMPLATE	12-77, 12-79
75931-0006	SETTING TEMPLATE	12-77, 12-79
75931-0008	SETTING TEMPLATE	12-77, 12-79
75931-0009	SETTING TEMPLATE	12-77, 12-79
75931-0010	SETTING TEMPLATE	12-77, 12-79
75931-0011	SETTING TEMPLATE	12-77, 12-79
75931-0012	SETTING TEMPLATE	12-77, 12-79
75931-0017	SETTING TEMPLATE	12-77, 12-79
590223-0000	SETTING TEMPLATE	12-47, 12-49
590224-0000	SETTING TEMPLATE	12-47, 12-49
590245-0000	SETTING TEMPLATE	12-47, 12-49
590246-0000	SETTING TEMPLATE	12-47, 12-49
590247-0000	SETTING TEMPLATE	12-47, 12-49
590248-0000	SETTING TEMPLATE	12-47, 12-49
590249-0000	SETTING TEMPLATE	12-47, 12-49
590250-0000	SETTING TEMPLATE	12-47, 12-49
978421-0000	SETTING TEMPLATE	12-113
75466-0300	SETTING TOOL	12-45
76335-0200	SETTING TOOL	12-63
76338-0000	SETTING TOOL	12-115
76350-0200	SETTING TOOL	12-45
76594-0200	SETTING TOOL	12-97
76600-0200	SETTING TOOL	12-45
75467-0200	SETTING TOOL CURVES	12-45
76460-0100	SETTING TOOL CURVES	12-147
76580-0100	SETTING TOOL FINAL FOLDER	12-147
75469-0300	SETTING TOOL VOLUME ADJUSTMENT	12-77, 12-79
1013-0000	SHAFT	8-15
2873-0000	SHAFT	12-55, 12-57
32927-0000	SHAFT	8-25, 8-27, 8-29, 8-45, 8-47, 8-49
35918-0000	SHAFT	1-119, 1-121
37884-0000	SHAFT	8-65
37889-0000	SHAFT	8-65
76212-0000	SHAFT	12-151, 12-153
76466-0000	SHAFT	12-117
208173-0000	SHAFT	8-65
239440-0000	SHAFT	1-125, 1-127
255969-0000	SHAFT	1-125, 1-127
255977-0000	SHAFT	1-141
256163-0000	SHAFT	1-49, 1-51
256177-0000	SHAFT	3-5
256309-0000	SHAFT	1-103, 1-105, 1-107, 1-109
256400-0000	SHAFT	8-25, 8-27, 8-29, 8-45, 8-47, 8-49
256427-0000	SHAFT	3-9, 3-11, 3-13, 3-15
256710-0000	SHAFT	4-49, 4-51
256812-0000	SHAFT	3-27
256899-0000	SHAFT	1-159
257309-0000	SHAFT	3-9, 3-11, 3-29, 3-31
263655-0006	SHAFT	1-49, 1-51, 12-59
271863-0000	SHAFT	1-49, 1-51
272095-0000	SHAFT	1-159
272948-0003	SHAFT	1-39
292044-0000	SHAFT	8-35, 8-61, 12-41, 12-43
293670-0000	SHAFT	8-35, 8-61, 12-41, 12-43
295376-0000	SHAFT	1-141
441339-0000	SHAFT	3-17
441764-0000	SHAFT	4-25, 4-27
451149-0000	SHAFT	1-119, 1-121
456334-0000	SHAFT	8-45, 8-47, 8-49
457367-0000	SHAFT	1-171, 1-173
469463-0000	SHAFT	1-159
490903-0000	SHAFT	1-49, 1-51
491166-0000	SHAFT	3-13, 3-15
491228-0001	SHAFT	5-5
491228-0002	SHAFT	5-5
491931-0000	SHAFT	1-35
526986-0001	SHAFT	8-39, 8-41

Part No	Description	Page No
532208-0000 ..	SHAFT	12-25
537327-0000 ..	SHAFT	7-11
541070-0000 ..	SHAFT	7-15
574395-0000 ..	SHAFT	1-119, 1-121
574443-0000 ..	SHAFT	8-45, 8-47, 8-49
574937-0000 ..	SHAFT	8-17, 8-19
577771-0000 ..	SHAFT	6-65
577799-0000 ..	SHAFT	8-21
578493-0000 ..	SHAFT	1-21, 1-23
579553-0000 ..	SHAFT	7-13, 7-43, 7-51, 7-53
583683-0000 ..	SHAFT	7-63
590264-0000 ..	SHAFT	12-161
590265-0000 ..	SHAFT	12-161
751131-0000 ..	SHAFT	1-49, 1-51
751132-0000 ..	SHAFT	1-57
751318-0000 ..	SHAFT	1-119, 1-121
752185-0000 ..	SHAFT	1-119, 1-121
752186-0001 ..	SHAFT	1-111, 1-113, 1-115
752186-0002 ..	SHAFT	1-103, 1-105, 1-107, 1-109
752186-0003 ..	SHAFT	1-119, 1-121, 1-125, 1-127
752186-0004 ..	SHAFT	1-111, 1-113, 1-115, 1-119, 1-121, 1-125, 1-127
752186-0005 ..	SHAFT	1-103, 1-105, 1-107, 1-109, 1-119, 1-121, 1-125, 1-127
752186-0006 ..	SHAFT	1-103, 1-105, 1-107, 1-109, 1-119, 1-121
752186-0007 ..	SHAFT	1-119, 1-121
752186-0008 ..	SHAFT	1-103, 1-105, 1-107, 1-109
752186-0009 ..	SHAFT	1-103, 1-105, 1-107, 1-109
752186-0010 ..	SHAFT	1-111, 1-113, 1-115
752186-0011 ..	SHAFT	1-111, 1-113, 1-115
752186-0012 ..	SHAFT	1-111, 1-113, 1-115, 1-125, 1-127
752187-0000 ..	SHAFT	1-103, 1-105, 1-107, 1-109
752284-0000 ..	SHAFT	4-25, 4-27
752535-0000 ..	SHAFT	8-25, 8-27, 8-29, 8-45, 8-47, 8-49
752536-0001 ..	SHAFT	8-25, 8-27, 8-29, 8-45, 8-47, 8-49
752536-0002 ..	SHAFT	8-45, 8-47, 8-49
752536-0003 ..	SHAFT	8-45, 8-47, 8-49
752538-0000 ..	SHAFT	8-25, 8-27, 8-29, 8-45, 8-47, 8-49
752543-0001 ..	SHAFT	8-25, 8-27, 8-29, 8-45, 8-47, 8-49
752543-0002 ..	SHAFT	8-45, 8-47, 8-49
752543-0003 ..	SHAFT	8-45, 8-47, 8-49
752598-0000 ..	SHAFT	4-17, 4-19, 4-21, 4-23
978876-0000 ..	SHAFT	8-73
978877-0000 ..	SHAFT	8-73
979382-0000 ..	SHAFT	8-75
979756-0000 ..	SHAFT	4-17, 4-19, 4-21, 4-23
979784-0000 ..	SHAFT	8-69
979960-0000 ..	SHAFT	8-37
980003-0000 ..	SHAFT	8-43
1035895-0000 .	SHAFT	7-47
1035897-0000 .	SHAFT	7-35, 7-37, 7-39, 7-41
1036188-0000 .	SHAFT	1-41, 1-63
1037120-0000 .	SHAFT	7-19
1037121-0000 .	SHAFT	7-19
1195456-0000 .	SHAFT	5-41
1260068-0000 .	SHAFT	5-53
1260070-0000 .	SHAFT	5-53
1334256-0000 .	SHAFT	7-61
1334573-0000 .	SHAFT	12-61
1346002-0000 .	SHAFT	12-93
1346003-0000 .	SHAFT	12-93
1346612-0000 .	SHAFT	7-49, 7-61
1484452-0000 .	SHAFT	3-25
1484456-0000 .	SHAFT	3-25
1490119-0000 .	SHAFT	3-29, 3-31
1490928-0000 .	SHAFT	5-63
1490932-0000 .	SHAFT	4-29
1498778-0000 .	SHAFT	7-35, 7-37
1499026-0000 .	SHAFT	7-49
1499515-0000 .	SHAFT	7-13
1499517-0000 .	SHAFT	7-65
1511001-0000 .	SHAFT	7-49
1511021-0000 .	SHAFT	5-7, 5-9
1517751-0000 .	SHAFT	7-21
1517984-0000 .	SHAFT	3-27
1519375-0001 .	SHAFT	4-17, 4-19, 4-21, 4-23
1524830-0000 .	SHAFT	1-177
1538107-0000 .	SHAFT	7-61
1539106-0000 .	SHAFT	4-59
1539109-0000 .	SHAFT	4-59
1539948-0000 .	SHAFT	5-43
1539996-0000 .	SHAFT	1-179
1548005-0000 .	SHAFT	1-177
1549302-0000 .	SHAFT	8-17, 8-19
1549474-0000 .	SHAFT	8-17, 8-19
1558313-0000 .	SHAFT	8-15

Part No	Description	Page No
2501385-0000	SHAFT	8-71
2501613-0000	SHAFT	8-17, 8-19
2501835-0000	SHAFT	8-73
2522249-0000	SHAFT	1-61
2523736-0000	SHAFT	5-7, 5-9
2523737-0000	SHAFT	5-7, 5-9
2529646-0000	SHAFT	7-47
2544962-0000	SHAFT	5-57
2544963-0000	SHAFT	5-57
2555633-0000	SHAFT	1-57
2555634-0000	SHAFT	1-57
2576347-0000	SHAFT	5-7, 5-9
2732557-0000	SHAFT	8-73
90458-2841	SHAFT COUPLING 22,225H9/15	1-47
90458-2840	SHAFT COUPLING 22,225H9/9	1-61
90067-0372	SHAFT, 32 04 174 1	9-7
456263-0000	SHEET	2-17
532209-0000	SHEET	12-25
532676-0000	SHEET	12-17, 12-19
572253-0000	SHEET	8-25, 8-27, 8-29, 8-45, 8-47, 8-49
572460-0000	SHEET	8-25, 8-27, 8-29, 8-45, 8-47, 8-49
578104-0000	SHEET	4-55, 4-57
590217-0000	SHEET	12-169
2544975-0000	SHEET	5-57
90296-0070	SHELL ALVANIA GREASE EP 1	5-57, 5-63
90296-0068	SHELL ALVANIA GREASE EP 2	3-5, 4-25, 4-27
90296-0073	SHELL OMALA OIL 220	5-65, 5-69
90296-0075	SHELL OMALA OIL 320, DRUM 208 LITRES	3-5, 6-99
90296-0053	SHELL TELLUS OIL T 32	6-99
90135-0034	SHIELD CLAMP KLBU 3-8	10-37, 10-67
90135-0039	SHIELD CLIP KLBU 4-13.5	10-23, 10-37, 10-67
243133-0000	SHIELD PLATE	8-65
2814876-0000	SHIELD PLATE	5-37
90051-0089	SHIFTER HANDLE	8-39, 8-41
247358-0000	SHIFTER HANDLE	1-49, 1-51
257090-0000	SHIFTER HANDLE	1-103, 1-105, 1-107, 1-109
295204-0001	SHIM	5-23
295204-0002	SHIM	5-23
295204-0003	SHIM	5-23
441797-0000	SHIM	5-39
456817-0001	SHIM	8-25, 8-27, 8-29, 8-45, 8-47, 8-49
491266-0000	SHIM	5-35
751580-0000	SHIM	4-5, 4-7, 4-9, 4-11, 4-13, 4-15
752038-0000	SHIM	1-125, 1-127
752544-0001	SHIM	8-25, 8-27, 8-29, 8-45, 8-47, 8-49
752544-0002	SHIM	8-25, 8-27, 8-29, 8-45, 8-47, 8-49
978185-0000	SHIM	4-31, 4-33
1517506-0000	SHIM	5-63
1523158-0001	SHIM	1-49, 1-51
1523158-0002	SHIM	1-49, 1-51
1523158-0003	SHIM	1-49, 1-51
2527454-0000	SHIM	5-7, 5-9
2530401-0000	SHIM	5-7, 5-9
736514-0000	SHOCK ABSORBER	1-87, 1-185, 9-35
752671-0100	SHOCK ABSORBER	4-3
752672-0100	SHOCK ABSORBER	4-3
90347-0189	SHOCK ABSORBER, 370-050-400	5-23
90347-0024	SHOCK ABSORBER, 370-120-400	7-59
2545071-0000	SHORT FORM INSTRUCTION	11-15
2547130-0000	SHORT FORM INSTRUCTION	11-19
2589395-0000	SHORT FORM INSTRUCTION	11-17
353300-0006	SHRINKABLE HOSE	1-9, 1-11
90459-1854	SHUT OFF VALVE, MS6-EE-1/2-10V24	6-35
90459-1852	SHUT OFF VALVE, MS6-EM1-1/2	6-35
272376-0000	SHUTTER	3-5
927007-0000	SHUTTER	1-87
1498767-0000	SIDE PIECE	7-57
2527513-0000	SIDE PIECE	2-61
2527514-0000	SIDE PIECE	2-61
2776743-0000	SIDE PIPE	5-25, 5-27
2776744-0000	SIDE PIPE	5-25, 5-27
247385-0000	SIGN	6-41, 6-43
247386-0000	SIGN	6-41, 6-43
486826-0000	SIGN	10-105, 10-107
543141-0000	SIGN	8-39, 8-41
543142-0000	SIGN	8-39, 8-41
929413-0000	SIGN	6-41, 6-43
978603-0000	SIGN	6-41, 6-43
979421-0000	SIGN	6-41, 6-43
1517464-0000	SIGN	7-23, 7-25, 7-27, 7-29
2555070-0000	SIGN	2-53, 2-55
90194-0133	SIGN "DELIVERED DESIGN"	2-73
486826-0001	SIGN "EMERGENCY STOP"	1-67, 1-69, 1-143, 1-145, 1-147, 1-149, 1-151, 1-153, 7-17, 8-77
359241-0460	SIGN "PATCH SEALER 2"	10-123, 10-125

Part No	Description	Page No
359241-0459 ..	SIGN "PT HOUR METER"	10-123, 10-125
359301-0519 ..	SIGN "TPOP RESET"	2-73
295387-0000 ..	SIGN BOARD	6-13
520072-0000 ..	SIGN BOARD	1-9, 1-11
978010-0000 ..	SIGN BOARD	2-53, 2-55
359240-0100 ..	SIGN HOLDER FOR 359240-0001	10-75, 10-77, 10-123, 10-125, 10-143
359241-0439 ..	SIGN"PATCH SEALER"	10-123, 10-125
359241-0444 ..	SIGN"TAB RESEAL"	10-123, 10-125
273458-0000 ..	SIGN, AIR	2-53, 2-55, 6-41, 6-43
273450-0000 ..	SIGN, AIR SPRAY	6-41, 6-43
273455-0000 ..	SIGN, COLD WATER	2-53, 2-55, 6-41, 6-43
445533-0000 ..	SIGN, COLD WATER FLOW TS-LEFT	6-41, 6-43
445534-0000 ..	SIGN, COLD WATER FLOW TS-RIGHT	6-41, 6-43
273454-0000 ..	SIGN, COOLING JAWS	6-41, 6-43
90194-0152	SIGN, EARTH	10-31
90194-0163	SIGN, EARTH WITHIN CIRCLE	10-13, 10-15, 10-17, 10-71, 10-75, 10-77, 10-83, 10-85, 10-105, 10-107, 10-109, 10-111, 10-123, 10-125, 10-133, 10-137, 10-139
273449-0000 ..	SIGN, FLAP SEALING	6-41, 6-43
273456-0000 ..	SIGN, HOT WATER	2-53, 2-55, 6-41, 6-43
90194-0080	SIGN, IDENTIFICATION OF WIRING	10-139
464174-0000 ..	SIGN, LONGITUDINAL SEALING	1-95, 1-97
464175-0000 ..	SIGN, LONGITUDINAL SEALING SHORT STOP	1-95, 1-97
90457-0058	SIGN, LS SHORT STOP	10-123, 10-125
90457-0123	SIGN, MAIN SWITCH	10-75, 10-77
359240-0001 ..	SIGN, NOT ENGRAVED	10-123, 10-125
273452-0000 ..	SIGN, ROLLING MACHINE FOR FABRICS	6-41, 6-43
90459-0691	SIGN, STRIP SPLICE/ RESET ALARM	7-17
359241-0297 ..	SIGN: " 50 HZ"	10-75, 10-77
359241-0122 ..	SIGN: " CLEANING STEAM BARRIER SPACE"	10-123, 10-125
359241-0340 ..	SIGN: " FLAP HEATING BOTTOM LEFT"	10-123, 10-125
359241-0339 ..	SIGN: " FLAP HEATING BOTTOM RIGHT"	10-123, 10-125
359241-0338 ..	SIGN: " FLAP HEATING TOP LEFT"	10-123, 10-125
359241-0337 ..	SIGN: " FLAP HEATING TOP RIGHT"	10-123, 10-125
359241-0201 ..	SIGN: " HOUR METER"	10-123, 10-125
359241-0140 ..	SIGN: " LIGHT OFF/ON"	10-123, 10-125
359241-0180 ..	SIGN: " PRODUCTION"	10-123, 10-125
359241-0133 ..	SIGN: " SERVICE SWITCH"	10-123, 10-125
359241-0268 ..	SIGN: " SPRAYING, HEAD SPACE"	10-123, 10-125
359241-0121 ..	SIGN: " STEAM"	10-123, 10-125
359241-0126 ..	SIGN: " TEMP. AIR KNIFE"	10-123, 10-125
359241-0130 ..	SIGN: " TEMP. AIR SUPER HEATER"	10-123, 10-125
359241-0131 ..	SIGN: " TEMP. LS"	10-123, 10-125
359241-0125 ..	SIGN: " TEMP. PEROXIDE BATH"	10-123, 10-125
359241-0123 ..	SIGN: " TEMP. PRESTERILIZATION VALVE"	10-123, 10-125
359241-0132 ..	SIGN: " TEMP. SA"	10-143
359241-0135 ..	SIGN: " TRANSVERSAL SEALING"	10-143
359241-0141 ..	SIGN: " WATER BATH"	10-123, 10-125
2814874-0100 .	SILENCER	6-15, 6-17, 6-19
90328-0025	SILENCER G1/2"	6-15, 6-17, 6-19, 12-23
90328-0026	SILENCER G1/4"	1-9, 1-11, 1-87, 1-181, 9-35
90328-0047	SILENCER G1/8"	1-67, 1-69, 6-45, 6-47
90328-0029	SILENCER M5	7-13
90328-0020	SILENCER U-M5,	1-177
90328-0003	SILENCER, 338/110	1-95, 1-97
90328-0002	SILENCER, 338/12D	1-89
90459-2591	SINGLE VALVE SUB-BASE CDSV5.0-AS-1/8	6-45, 6-47
90067-0359	SINK ROD, 34 74 021 7	9-7
90458-1470	SINK VALVE COMPL, 34 73 094 5	9-9
90458-0302	SIREN WITH ADJUSTABLE VOLUME KS 70-3004	2-59
33011-0000	SLEEVE	8-31, 8-33, 8-51, 8-53, 12-27, 12-29, 12-37, 12-39
74768-0000	SLEEVE	12-111
74769-0000	SLEEVE	12-111
77163-0000	SLEEVE	12-121
272490-0000 ..	SLEEVE	4-53
440252-0000 ..	SLEEVE	8-15
440253-0000 ..	SLEEVE	8-15
440647-0000 ..	SLEEVE	1-67, 1-69
457358-0000 ..	SLEEVE	8-15
553607-0000 ..	SLEEVE	1-77, 1-79, 1-81
751769-0000 ..	SLEEVE	4-25, 4-27
752288-0000 ..	SLEEVE	4-5, 4-7, 4-9, 4-11, 4-13, 4-15
752680-0000 ..	SLEEVE	4-37, 4-39, 4-41, 4-43
979384-0000 ..	SLEEVE	8-75
979385-0000 ..	SLEEVE	8-75
979761-0000 ..	SLEEVE	4-37, 4-39, 4-41, 4-43
90134-0030	SLEEVE FOR PLASTIC TUBE	2-23, 2-25, 2-27, 6-87
90134-0031	SLEEVE FOR PLASTIC TUBE	2-23, 2-25, 2-27, 3-9, 3-11, 5-11, 5-37
90163-0046	SLEEVE LP-004-0-WR 0510-21-1 BRASS	5-37
90067-0371	SLEEVE, 32 04 175 8	9-7
90459-0766	SLEEVE, CR 99334	5-57
342707-0109 ..	SLEEVE, INT. THREAD, NO. 2543-1/8	1-181
90330-0012	SLEEVE, REDUCTION, INT, R-2021/4X1/8	6-93, 6-95
491815-0300 ..	SLEWING BRACKET LEFT	3-3
491814-0300 ..	SLEWING BRACKET RIGHT	3-3

Part No	Description	Page No
1523449-0000	SLIDE	10-141
1523450-0000	SLIDE	10-141
1523451-0000	SLIDE	10-141
1523456-0000	SLIDE	10-143
1511315-0000	SLIDE BLOCK	7-59
271939-0001	SLIDE SHEET	5-29, 5-31, 5-33
271939-0003	SLIDE SHEET	5-29, 5-31, 5-33
272045-0001	SLIDE SHEET	5-29, 5-31, 5-33
272045-0002	SLIDE SHEET	5-29, 5-31, 5-33
272045-0003	SLIDE SHEET	5-29, 5-31, 5-33
272045-0004	SLIDE SHEET	5-29, 5-31, 5-33
2776734-0000	SLIDE SHEET	5-29, 5-31, 5-33
255942-0000	SLIDER	2-5, 2-7
257327-0000	SLIDER	3-27
295097-0000	SLIDER	2-5, 2-7
466074-0002	SLIDER	5-45
469502-0000	SLIDER	2-5, 2-7
491227-0000	SLIDER	5-5
491350-0000	SLIDER	4-49, 4-51
574449-0000	SLIDER	2-5, 2-7
979938-0000	SLIDER	2-5, 2-7
2523597-0000	SLIDER	7-21
90067-0363	SLIDER, 32 04 160 1	9-7
90459-0288	SLIM LINE TOUCH BEZEL 15", 1511	2-73
311303-0234	SLOTTED PIRPB3X12FZB	3-9
311307-0275	SLOTTED PIRPD4X28FZB	3-27
90141-0022	SNAP RING B 16	1-41, 1-63
90110-0207	SOCKET	6-75
90459-1855	SOFT START VALVE, MS6-DL-1/2	6-35
42413-0300	SOFTWARE	11-3
2794874-0002	SOFTWARE CD	11-5
1190006-1402	SOFTWARE PLMS SEND	11-7
2776750-0300	SOFTWARE TPOP	11-5
544906-0000	SOLENOID VALVE	1-21, 1-23, 1-91, 1-93
979956-0000	SOLENOID VALVE	1-9, 1-11
90042-0172	SOLENOID VALVE 4023/1005/1032 24VDC	6-29, 6-31
90042-0134	SOLENOID VALVE ASCO SCG 210 802 24VDC	6-93, 6-95
90042-0171	SOLENOID VALVE BURKERT	1-9, 1-11, 1-91, 1-93
90042-0173	SOLENOID VALVE BÃ¼RKERT	6-23, 6-41, 6-43
90201-0058	SOLENOID VALVE DC 24V	6-89, 6-91
1511801-0100	SOLID STATE RELAY RAIL 1	10-13, 10-15, 10-17
1517651-0100	SOLID STATE RELAY RAIL 2	10-13, 10-15, 10-17
1517652-0100	SOLID STATE RELAY RAIL 3	10-13, 10-15, 10-17
1523445-0100	SOLID STATE RELAY RAIL 4	10-13, 10-15, 10-17
1523446-0100	SOLID STATE RELAY RAIL 5	10-13, 10-15, 10-17
90119-0067	SOLID-STATE RELAY, H12WD4850	10-27, 10-49, 10-51, 10-53, 10-55
76290-0000	SPACER	12-59
76295-0000	SPACER	12-85, 12-163
229775-0000	SPACER	8-65
255940-0000	SPACER	2-5, 2-7
256831-0001	SPACER	4-49, 4-51
256831-0002	SPACER	4-49, 4-51
256831-0003	SPACER	4-49, 4-51, 4-53
256831-0004	SPACER	4-53
293671-0000	SPACER	8-31, 8-33, 8-51, 8-53, 12-27, 12-29, 12-37, 12-39
441556-0001	SPACER	8-25, 8-27, 8-29, 8-45, 8-47, 8-49
441556-0002	SPACER	8-25, 8-27, 8-29, 8-45, 8-47, 8-49
441556-0003	SPACER	8-45, 8-47, 8-49
441556-0004	SPACER	8-25, 8-27, 8-29, 8-45, 8-47, 8-49
441556-0006	SPACER	8-25, 8-27, 8-29, 8-45, 8-47, 8-49
441556-0007	SPACER	8-45, 8-47, 8-49
441556-0009	SPACER	8-45, 8-47, 8-49
441556-0010	SPACER	8-45, 8-47, 8-49
441556-0011	SPACER	8-45, 8-47, 8-49
441576-0000	SPACER	1-59
441718-0000	SPACER	1-167, 1-169
441720-0000	SPACER	3-17
456004-0000	SPACER	4-53
456181-0000	SPACER	1-119, 1-121
476220-0000	SPACER	5-45
553586-0000	SPACER	1-135
572255-0000	SPACER	8-25, 8-27, 8-29, 8-45, 8-47, 8-49
574444-0000	SPACER	8-45, 8-47, 8-49
576448-0000	SPACER	1-77
576449-0000	SPACER	1-77
576450-0000	SPACER	1-81
576451-0000	SPACER	1-79
751334-0000	SPACER	1-103, 1-105, 1-107, 1-109
752554-0000	SPACER	1-171, 1-173
752556-0000	SPACER	4-37, 4-39, 4-41, 4-43
752615-0000	SPACER	4-17, 4-19, 4-21, 4-23
752673-0000	SPACER	4-37, 4-39, 4-41, 4-43
926906-0000	SPACER	1-87
927044-0000	SPACER	1-87

Part No	Description	Page No
978340-0000 ..	SPACER	3-19, 3-21
979757-0000 ..	SPACER	4-17, 4-19, 4-21, 4-23
979760-0000 ..	SPACER	4-37, 4-39, 4-41, 4-43
979769-0000 ..	SPACER	8-45, 8-47, 8-49
1038016-0000 .	SPACER	7-45
1091683-0000 .	SPACER	5-45
1091686-0000 .	SPACER	5-45
1144943-0000 .	SPACER	5-45
1255874-0000 .	SPACER	5-49, 5-51
1334799-0002 .	SPACER	12-155
1334799-0003 .	SPACER	12-155
1334799-0004 .	SPACER	12-155
1334804-0000 .	SPACER	12-155
1334839-0000 .	SPACER	12-155
1484453-0000 .	SPACER	3-25
1484455-0000 .	SPACER	3-25
1484461-0000 .	SPACER	3-25
1490116-0000 .	SPACER	3-29, 3-31
1490133-0000 .	SPACER	3-29, 3-31
1498194-0000 .	SPACER	3-29, 3-31
1499674-0000 .	SPACER	12-155
1511318-0000 .	SPACER	7-59
1511600-0000 .	SPACER	1-87
1517182-0000 .	SPACER	6-5, 6-7
1517675-0000 .	SPACER	10-27, 10-49, 10-51, 10-53, 10-55, 10-57
1517676-0000 .	SPACER	1-155, 1-157, 10-91, 10-93, 10-95, 10-97, 10-99, 10-101, 10-103
1519425-0000 .	SPACER	5-79
1519764-0000 .	SPACER	6-11
1523315-0000 .	SPACER	8-25, 8-27, 8-29
1523439-0000 .	SPACER	10-71, 10-123, 10-125
1523440-0000 .	SPACER	10-71, 10-109, 10-111, 10-123, 10-125
1523444-0000 .	SPACER	10-123, 10-125
1523828-0000 .	SPACER	3-19, 3-21
1523957-0000 .	SPACER	10-105, 10-107, 10-137, 10-139
1523960-0000 .	SPACER	10-75, 10-77
1524836-0000 .	SPACER	12-91
1538758-0000 .	SPACER	1-181
1539250-0000 .	SPACER	1-95, 1-97
1539302-0000 .	SPACER	5-65
2511330-0000 .	SPACER	1-9, 1-11
2527651-0000 .	SPACER	3-5
2527718-0000 .	SPACER	1-61
2531997-0000 .	SPACER	10-27, 10-49, 10-51, 10-53, 10-55, 10-57
2544969-0000 .	SPACER	5-57
2552687-0000 .	SPACER	2-65, 2-67
2556243-0000 .	SPACER	2-65, 2-67
2576398-0000 .	SPACER	1-87
2611190-0011 .	SPACER	5-13, 5-15, 5-17, 5-19, 5-21
2611190-0012 .	SPACER	5-13, 5-15, 5-17, 5-19, 5-21
2611190-0013 .	SPACER	5-13, 5-15, 5-17, 5-19, 5-21
2611190-0014 .	SPACER	5-13, 5-15, 5-17, 5-19, 5-21
2611190-0015 .	SPACER	5-13, 5-15, 5-17, 5-19, 5-21
2611190-0016 .	SPACER	5-13, 5-15, 5-17, 5-19, 5-21
2611190-0017 .	SPACER	5-13, 5-15, 5-17, 5-19, 5-21
2611190-0018 .	SPACER	5-13, 5-15, 5-17, 5-19, 5-21
2611190-0019 .	SPACER	5-13, 5-15, 5-17, 5-19, 5-21
2721239-0000 .	SPACER	1-67, 1-69
2776727-0000 .	SPACER	5-29, 5-31, 5-33
2800347-0000 .	SPACER	5-29, 5-31, 5-33
90005-0143	SPACER 3,3/7, H=3	1-187
90134-0042	SPACER DOSING VALVE	4-25, 4-27
256181-0000 ..	SPACER PIPE	3-5
978207-0000 ..	SPACER PIPE	3-25
1523886-0000 .	SPACER PLATE	2-31
1523887-0000 .	SPACER PLATE	2-31
1036192-0000 .	SPACER ROD	1-41, 1-63
490985-0000 ..	SPACER SHEET	1-67, 1-69
1523441-0000 .	SPACER SHEET	10-105, 10-107, 10-137, 10-139
1523442-0000 .	SPACER SHEET	10-105, 10-107, 10-137, 10-139
256179-0000 ..	SPACER SLEEVE	3-5
295205-0000 ..	SPACER SLEEVE	5-23
988436-0000 ..	SPACER SLEEVE	10-23, 10-37, 10-67
90134-0051	SPACING COLLAR DOSING BLOCK	5-37
90459-6727	SPHERICAL BEARING, 25X42X20 MM	3-25
1036189-0000 .	SPINDEL GUIDE	1-41, 1-63
449971-0000 ..	SPINDLE	12-123
1539104-0000 .	SPINDLE	4-61, 4-63
272325-0000 ..	SPIRAL	1-65
90152-0058	SPIRAL CONDUIT, 15X9, UL 0909	5-57, 8-77
90152-0059	SPIRAL CONDUIT, 18X12, UL 1211	2-11, 2-13, 6-13, 6-61, 6-75, 6-77, 6-79, 6-87, 6-89, 6-91, 8-65, 8-77, 8-79
90152-0050	SPIRAL CONDUIT, 20X13, UL 1313	1-21, 1-23, 8-79
90152-0051	SPIRAL CONDUIT, 25X18, UL 1816	2-13, 2-35, 2-37, 2-69, 3-7, 5-75, 6-59, 6-65, 6-89, 6-91, 7-17, 7-33, 8-17, 8-19, 8-25, 8-27, 8-29, 8-45, 8-47, 8-49, 8-77

Part No	Description	Page No
90152-0060	SPIRAL CONDUIT, 42X35, UL3529	1-9, 1-11, 2-57
90243-0136	SPIRIT LEVEL	12-11
783901-0106 ..	SPIRIT LEVEL	12-115
90459-5200	SPIRIT LEVEL, 2864-0308	12-93
979543-0000 ..	SPLASH PLATE	8-25, 8-27, 8-29
979544-0000 ..	SPLASH PLATE	8-45, 8-47, 8-49
1279624-0200 .	SPLICE DETECTOR	7-35, 7-37
2501836-0100 .	SPLICING DEVICE	8-3
580044-0200 ..	SPLICING MAGAZINE	7-5, 7-7
271641-0500 ..	SPLICING TABLE	8-63
311411-0140 ..	SPLIT PIN SP1,6X16RFR	1-125, 1-127
311411-0165 ..	SPLIT PIN SP2,5X16RFR	1-119, 1-121
311411-0169 ..	SPLIT PIN SP2,5X25RFR	6-65
311411-0150 ..	SPLIT PIN SP2X12RFR	1-119, 1-121
311411-0152 ..	SPLIT PIN SP2X16RFR	12-131
90458-1468	SPLIT PIN, 43 71 234 8	9-9
271387-0400 ..	SPRAY GUN	2-3
90424-0017	SPRAY NOZZLE	1-65
1539606-0002 .	SPRAY NOZZLE	1-15
1539606-0003 .	SPRAY NOZZLE	1-15
1539606-0004 .	SPRAY NOZZLE	1-15
1539606-0005 .	SPRAY NOZZLE	1-15
2545134-0000 .	SPRAY NOZZLE	1-15
90424-0009	SPRAY NOZZLE 103 DEG	5-71
90424-0016	SPRAY NOZZLE 103 DEG R 1/8 GG8W	5-71
90424-0054	SPRAY NOZZLE 120 DEG	6-81, 6-83
90424-0010	SPRAY NOZZLE 142 DEG BSPT 1/4 K5	5-37
90424-0025	SPRAY NOZZLE 145 DEG	5-39
90424-0070	SPRAY NOZZLE 61 DEG	5-83
90424-0033	SPRAY NOZZLE 76 DEG	2-29
90424-0032	SPRAY NOZZLE 95 DEG	2-29
90424-0035	SPRAY NOZZLE 95 DEG	2-29
90424-0027	SPRAY NOZZLE TIP, 8613-8V-TC	2-13
2545425-0000 .	SPRAY PIPE	1-9, 1-11
2546447-0000 .	SPRAY PIPE	1-7
272623-0800 ..	SPRAY SYSTEM	1-3, 1-5
35547-0000	SPRING	8-35, 8-61, 12-41, 12-43
37909-0000	SPRING	8-73
107000-0000 ..	SPRING	12-111
256828-0000 ..	SPRING	3-27
273980-0000 ..	SPRING	6-73
400800-0000 ..	SPRING	7-13
400828-0000 ..	SPRING	7-19
457368-0000 ..	SPRING	1-171, 1-173
532412-0000 ..	SPRING	9-21, 9-25, 9-27
537308-0000 ..	SPRING	8-35, 8-61, 12-41, 12-43
752085-0000 ..	SPRING	8-21
752237-0000 ..	SPRING	8-25, 8-27, 8-29, 8-45, 8-47, 8-49
1195044-0000 .	SPRING	5-7, 5-9
1285580-0000 .	SPRING	1-141
1317991-0000 .	SPRING	1-141
1484486-0000 .	SPRING	7-15
1511324-0000 .	SPRING	7-59
529147-0000 ..	SPRING BRACKET	1-33
583878-0000 ..	SPRING BRACKET	7-15
2519460-0000 .	SPRING BRACKET	3-23
2552723-0000 .	SPRING BRACKET	5-7, 5-9
2552732-0000 .	SPRING BRACKET	5-7, 5-9
979788-0000 ..	SPRING HOLDER	8-25, 8-27, 8-29, 8-45, 8-47, 8-49
979789-0000 ..	SPRING HOLDER	8-25, 8-27, 8-29, 8-45, 8-47, 8-49
1517067-0000 .	SPRING HOLDER	7-61
752678-0000 ..	SPRING PERF 1	4-37, 4-39
752679-0000 ..	SPRING PERF 2	4-41, 4-43
311111-0207 ..	SPRING PIN ISO 8752 3X14-ST	4-5, 4-7, 4-9, 4-11, 4-13, 4-15
311111-0209 ..	SPRING PIN ISO 8752 3X18-ST	1-185
311111-0308 ..	SPRING PIN ISO 8752 5X20-ST	4-5, 4-7, 4-9, 4-11, 4-13, 4-15
311112-0256 ..	SPRING PIN, ISO 8752 4X20-C	1-49, 1-51, 4-59, 6-65
311112-0262 ..	SPRING PIN, ISO 8752 4X32-C	1-49, 1-51
31559-0000	SPRING PLATE	5-67
90344-0022	SPROCKET	3-27
247357-0000 ..	SPROCKET	1-49, 1-51
529362-0000 ..	SPROCKET	8-39, 8-41
752530-0000 ..	SPROCKET	8-25, 8-27, 8-29, 8-45, 8-47, 8-49
441679-0000 ..	STAIR	2-61
1519417-0000 .	STAIR	5-79
1519426-0100 .	STAIR	5-75
295523-0400 ..	START-UP KIT	4-3
295523-0500 ..	START-UP KIT	9-33
295778-0600 ..	START-UP KIT	9-33
469384-0100 ..	START-UP KIT	6-3
469384-0200 ..	START-UP KIT	9-33
2541886-0100 .	START-UP KIT	9-3
1317526-0200 .	STATION CHAIN	5-3
567018-0000 ..	STEAM HOUSE	1-75

Part No	Description	Page No
2674158-0000	STEAM PIPE	1-89
2674161-0000	STEAM PIPE	1-89
2687095-0000	STEAM PIPE	1-89
90360-0020	STEAM TRAP / MK36/51 3/8 INCH	1-67, 1-69
90090-0005	STEEL BALL 3MM, RB-3/IIIB	4-25, 4-27
90090-0008	STEEL BALL 7,1MM, RB-7.144/III	2-23, 2-25, 2-27
979946-0000	STEEL TUBE	8-17, 8-19
76166-0000	STEER PLATE	12-119
74771-0000	STEERING	12-111
247349-0000	STEERING	1-49, 1-51
272753-0000	STEERING	4-35
529148-0000	STEERING	1-33
1517535-0000	STEERING	7-35, 7-37
271820-0001	STEERING RAIL	1-59
271820-0002	STEERING RAIL	1-59
90458-0746	STEP MOTOR DRIVE L50	10-13, 10-15, 10-17
245221-0000	STOP	8-65
442113-0000	STOP	12-93
1512133-0000	STOP	5-23
1519227-0000	STOP	4-37, 4-39
1519228-0000	STOP	4-41, 4-43
752559-0000	STOP PERF 1	4-37, 4-39
752561-0000	STOP PERF 1	4-37, 4-39
752563-0000	STOP PERF 1	4-37, 4-39
979758-0000	STOP PERF 1	4-37, 4-39
752560-0000	STOP PERF 2	4-41, 4-43
752562-0000	STOP PERF 2	4-41, 4-43
752564-0000	STOP PERF 2	4-41, 4-43
979759-0000	STOP PERF 2	4-41, 4-43
76139-0000	STOPPER	12-59
76178-0000	STOPPER	12-55
76179-0000	STOPPER	12-55
76185-0000	STOPPER	12-57
76186-0000	STOPPER	12-57
76207-0000	STOPPER	12-151, 12-153
76597-0000	STOPPER	12-59
272997-0000	STOPPER	5-23
978184-0000	STOPPER	4-31, 4-33
1334570-0000	STOPPER	12-61
1334571-0000	STOPPER	12-61
1346000-0000	STOPPER	12-93
90030-0092	STRAIGHT CONN., 6-R1/4,EXT. TAPPERED	1-95, 1-97
90030-0089	STRAIGHT CONNECTION	1-87, 1-181
342921-0111	STRAIGHT COUPL,EXT.THREAD.6/4-M5	7-13, 7-19
342920-0133	STRAIGHT COUPL.,EXT.THREADED 10/8-R3/8"	6-93, 6-95
342923-0132	STRAIGHT COUPL.,INT.THREADED 10/8-G1/4"	2-45
342923-0114	STRAIGHT COUPL.,INT.THREADED 6/4-G1/4"	12-127
342923-0121	STRAIGHT COUPL.,INT.THREADED 8/6-G1/8"	6-29
342722-0197	STRAIGHT COUPLING	1-177
342722-0199	STRAIGHT COUPLING	7-67
342722-0203	STRAIGHT COUPLING	1-9, 1-11
342770-0101	STRAIGHT COUPLING INT, D=4 MM - G1/8	4-29
342722-0210	STRAIGHT COUPLING, D=12 MM - G3/8"	6-35
342921-0114	STRAIGHT COUPLING,EXT.THREADED 6/4-G1/4"	12-17, 12-19, 12-127
342921-0113	STRAIGHT COUPLING,EXT.THREADED 6/4-G1/8"	5-37, 6-41, 6-43, 12-17, 12-19, 12-127
342920-0115	STRAIGHT COUPLING,EXT.THREADED 6/4-R3/8"	6-93, 6-95
342921-0122	STRAIGHT COUPLING,EXT.THREADED 8/6-G1/4"	6-23, 6-89, 6-91
342921-0123	STRAIGHT COUPLING,EXT.THREADED 8/6-G3/8"	6-23, 6-29
342921-0121	STRAIGHT CPLNG,EXT.THREADED 8/6-G1/8INCH	6-27, 6-41, 6-43
441800-0000	STRAIGHT FITTING	5-39
1511462-0000	STRAIGHT PIPE	7-67
90030-0109	STRAIGHT PIPE CONN. GE12LR1/271	1-89, 6-67
257202-0000	STRAINER	6-61
90458-1960	STRETCHING SCREW, 468-697MM MAX2950KG	9-17
90143-0010	STRIP	2-13
90143-0012	STRIP	2-13
90143-0020	STRIP	6-63
90143-0028	STRIP	5-75
90143-0029	STRIP	8-35, 8-61, 12-41, 12-43
90143-0062	STRIP	6-53
1511320-0000	STRIP	7-57
2540730-0000	STRIP	7-57
1511323-0000	STRIP ADHESIVE	7-31
580036-0200	STRIP APPLICATOR	7-3
1511787-0100	STRIP APPLICATOR CABLE INLETS	10-89
90143-0057	STRIP EMKA 1011-05 21X11MM	2-73, 10-75, 10-77
2576240-0100	STRIP GUIDE	7-35, 7-37
2576243-0100	STRIP GUIDE	7-35, 7-37
580037-0300	STRIP MAGAZINE	7-3
76216-0000	STRUT	12-151, 12-153
491203-0000	STRUT	6-61
77164-0000	STUD SCREW	12-121
1511487-0000	STUD SCREW	5-65
1511557-0000	STUD SCREW	12-155

Part No	Description	Page No
456555-0600 ..	SUCTION PIPE	1-3, 1-5
1519401-0000 .	SUCTION PIPE	1-129
1519402-0000 .	SUCTION PIPE	1-129
1519403-0000 .	SUCTION PIPE	1-129
534694-0000 ..	SUCTIONPIPE	12-23
76209-0000	SUPPORT	12-151, 12-153
76211-0000	SUPPORT	12-151, 12-153
76213-0000	SUPPORT	12-151, 12-153
76217-0000	SUPPORT	12-151, 12-153
567060-0000 ..	SUPPORT	12-127
582850-0000 ..	SUPPORT	12-13
582851-0000 ..	SUPPORT	12-13
590215-0000 ..	SUPPORT	12-169
925877-0000 ..	SUPPORT	1-185
926934-0000 ..	SUPPORT	1-87
927081-0000 ..	SUPPORT	1-19
979254-0000 ..	SUPPORT	1-19
1296905-0000 .	SUPPORT	12-167
1334800-0000 .	SUPPORT	12-155
1334801-0000 .	SUPPORT	12-155
1334802-0000 .	SUPPORT	12-155
1334840-0000 .	SUPPORT	12-155
1349092-0000 .	SUPPORT	6-39
1517699-0000 .	SUPPORT	10-75, 10-77
1519423-0000 .	SUPPORT	5-79
1519424-0000 .	SUPPORT	5-79
1519484-0000 .	SUPPORT	1-43, 1-45
1519765-0001 .	SUPPORT	6-11
1519765-0002 .	SUPPORT	6-11
1523452-0000 .	SUPPORT	10-141
1523453-0000 .	SUPPORT	10-141
1523459-0000 .	SUPPORT	10-75, 10-77
1523974-0000 .	SUPPORT	10-75, 10-77
1539111-0000 .	SUPPORT	4-59
1539112-0000 .	SUPPORT	4-59
1539600-0000 .	SUPPORT	1-19
2511668-0000 .	SUPPORT	5-45
2523599-0000 .	SUPPORT	7-21
2546226-0000 .	SUPPORT	5-45
2546448-0000 .	SUPPORT	1-9, 1-11
2547315-0000 .	SUPPORT	1-9, 1-11
2552724-0000 .	SUPPORT	5-7, 5-9
2566438-0000 .	SUPPORT	12-169
2572676-0000 .	SUPPORT	1-9, 1-11
2576353-0000 .	SUPPORT	5-7, 5-9
2598430-0000 .	SUPPORT	10-147
2613035-0000 .	SUPPORT	2-53, 2-55
2721241-0000 .	SUPPORT	1-67, 1-69
2790832-0100 .	SUPPORT	1-49, 1-51
2832788-0000 .	SUPPORT	9-3
76461-0000	SUPPORT ARM	12-157
2790830-0000 .	SUPPORT BAR	1-55
76203-0000	SUPPORT LEG	12-151, 12-153
1523963-0000 .	SUPPORT PLATE	10-145
2790831-0000 .	SUPPORT PLATE	1-55
1511403-0100 .	SUPPORT ROLLER	4-3
1498245-0000 .	SUPPORTING ARM	5-37
2500587-0100 .	SUSPENSION ARM	8-63
1538219-0000 .	SWITCH BRACKET	7-23, 7-25, 7-27, 7-29
90111-0120	SWITCH, 2 POS.704.510 .0A+704.901.5/A	2-73, 10-123, 10-125
359011-0818 ..	SYMBOL 5-GW (-) 50PC	5-49, 5-51, 8-79
342748-0109 ..	T-CONNECTION 12MM	7-67
342748-0100 ..	T-CONNECTION 4MM	4-29
90457-0184	T-CONNECTION 6 MM 6104 06 00	2-31
342748-0102 ..	T-CONNECTION 6MM	1-7, 2-31
342748-0103 ..	T-CONNECTION 8MM	2-23, 2-25, 2-27
342946-0112 ..	T-COUPLING,UNION 6/4	1-161, 1-163, 6-15, 6-17, 6-19
342946-0122 ..	T-COUPLING,UNION 8/6	6-15, 6-17, 6-19
1539597-0000 .	T-PIECE	1-15
1036187-0000 .	T-PIPE	1-63
1036194-0000 .	T-PIPE	1-41, 1-63
90140-0018	T-PIPE, INT. THREAD, 2003-1/4	12-125
90140-0015	T-PIPE, INT. THREAD, 2003-1/8	1-9, 1-11, 12-17, 12-19
90140-0010	T-PIPE, INT. THREAD, 20031/2	6-29, 6-93, 6-95
90140-0023	T-PIPE, INT. THREAD, NO. 2070-3/8-3/8	6-93, 6-95
90330-0095	T-PIPE, INT. THREAD, R-221-R1/8	1-91, 1-93
1334841-0300 .	T.C.S.B UNIT	1-67, 1-69
751398-0400 ..	TANK	6-57
1519389-0000 .	TANK	6-67
1523058-0000 .	TANK	6-61
90457-0017	TANK RET. OUTLET PIPE, NO 8185-0187	6-89, 6-91
90459-2707	TANK-12L, A2-18076	6-89, 6-91
90144-0003	TAPE	6-99, 9-39
90144-0030	TAPE	8-67

Part No	Description	Page No
90144-0072	TAPE SCOTCH VHBS 4945 W=12,7MM	8-11, 8-13, 10-89, 10-121, 10-137
312503-0221 ..	TAPPING SCREW ISO 7049-ST2,9X6,5-C-Z	12-109
450101-0300 ..	TEARING DEVICE	8-63
2545249-0000 .	TEFLON HOSE	4-25, 4-27
31723-0000	TEFLON STRIP	8-65
90410-0051	TEMPERATURE CONTROLLER, KS 40	10-123, 10-125
75470-0000	TEMPLATE	12-83
75525-0400	TEMPLATE	12-45
75545-0000	TEMPLATE	12-47, 12-49
75936-0000	TEMPLATE	12-77, 12-79
75937-0000	TEMPLATE	12-77, 12-79
75938-0000	TEMPLATE	12-77, 12-79
75939-0000	TEMPLATE	12-77, 12-79
75943-0000	TEMPLATE	12-77, 12-79
75944-0000	TEMPLATE	12-77, 12-79
76128-0000	TEMPLATE	12-45, 12-145
76176-0000	TEMPLATE	12-77, 12-79
76180-0000	TEMPLATE	12-147
76181-0000	TEMPLATE	12-147
76307-0001	TEMPLATE	12-47, 12-49
76307-0002	TEMPLATE	12-47, 12-49
76307-0003	TEMPLATE	12-47, 12-49
76307-0004	TEMPLATE	12-47, 12-49
76307-0005	TEMPLATE	12-47, 12-49
76307-0006	TEMPLATE	12-47, 12-49
76307-0008	TEMPLATE	12-47, 12-49
76307-0009	TEMPLATE	12-47, 12-49
76307-0010	TEMPLATE	12-47, 12-49
76307-0011	TEMPLATE	12-47, 12-49
76307-0012	TEMPLATE	12-47, 12-49
76307-0013	TEMPLATE	12-47, 12-49
76307-0014	TEMPLATE	12-47, 12-49
76308-0000	TEMPLATE	12-47, 12-49
76398-0000	TEMPLATE	12-45
76447-0200	TEMPLATE	12-147
76462-0000	TEMPLATE	12-157
76467-0000	TEMPLATE	12-45
76499-0000	TEMPLATE	12-147
574442-0000 ..	TEMPLATE	12-47, 12-49
574453-0000 ..	TEMPLATE	12-45
574454-0000 ..	TEMPLATE	12-77, 12-79
574455-0000 ..	TEMPLATE	12-77, 12-79, 12-147
590268-0000 ..	TEMPLATE	12-129
1512450-0001 .	TEMPLATE	12-141
1512450-0002 .	TEMPLATE	12-141
1512450-0003 .	TEMPLATE	12-141
1512450-0004 .	TEMPLATE	12-141
1512453-0001 .	TEMPLATE	12-137
1512453-0002 .	TEMPLATE	12-137
1512453-0003 .	TEMPLATE	12-137
1512453-0004 .	TEMPLATE	12-137
1512453-0005 .	TEMPLATE	12-137
1512453-0006 .	TEMPLATE	12-137
1512453-0007 .	TEMPLATE	12-137
1512453-0008 .	TEMPLATE	12-137
1512453-0009 .	TEMPLATE	12-137
1512453-0010 .	TEMPLATE	12-137
1512453-0011 .	TEMPLATE	12-137
1517517-0000 .	TEMPLATE	12-135
1524835-0000 .	TEMPLATE	12-91
1532527-0000 .	TEMPLATE	12-77, 12-79
2501740-0100 .	TEMPLATE	12-47, 12-49
2552945-0001 .	TEMPLATE	12-139
2552945-0002 .	TEMPLATE	12-139
2552945-0003 .	TEMPLATE	12-139
2552945-0004 .	TEMPLATE	12-139
2552945-0005 .	TEMPLATE	12-139
2552945-0006 .	TEMPLATE	12-139
2552945-0007 .	TEMPLATE	12-139
2552945-0008 .	TEMPLATE	12-139
2552945-0009 .	TEMPLATE	12-139
2552945-0010 .	TEMPLATE	12-139
2552945-0011 .	TEMPLATE	12-139
2800345-0001 .	TEMPLATE	12-143
2800345-0002 .	TEMPLATE	12-143
2800345-0003 .	TEMPLATE	12-143
2800345-0004 .	TEMPLATE	12-143
2588208-0000 .	TEMPLATE BOTTOM NOZZLE	12-47, 12-49
76407-0100	TEMPLATE DIVIDED FORMING RING	12-63
76402-0200	TEMPLATE DRIVEN BENDING ROLLER	12-63
76187-0000	TEMPLATE FILLING TUBE	12-45
76188-0000	TEMPLATE FILLING TUBE	12-45
590507-0100 ..	TEMPLATE FOR CENTERING RING	12-147
589885-0100 ..	TEMPLATE HOUSE/BENDING ROLLER	12-147, 12-169

Part No	Description	Page No
929379-0100 ..	TEMPLATE JAW SYSTEM	12-77, 12-79
589889-0100 ..	TEMPLATE LEVELING MACHINE	12-147
76133-0100	TEMPLATE LS-ELEMENT	12-45
76595-0100	TEMPLATE LS-ELEMENT	12-45
76606-0100	TEMPLATE LS-ELEMENT	12-45
590222-0200 ..	TEMPLATE LS-ELEMENT	12-45
76409-0100	TEMPLATE MOVABLE FORMING RING	12-63
2566433-0100 .	TEMPLATE PT19-020V	12-147
76299-0000	TEMPLATE SUPPORT ROLLERS	12-77, 12-79
2588207-0000 .	TEMPLATE TOP NOZZLE	12-47, 12-49
76592-0100	TEMPLATE TUBE FORMING	12-63
76598-0100	TEMPLATE TUBE FORMING	12-63
76333-0100	TEMPLATE UPPER FORMING CLAMP	12-63
590273-0100 ..	TEMPLATE VOLUME CAM	12-147
76301-0100	TEMPLATE YOKE	12-77, 12-79
929376-0000 ..	TEMPLATE YOKE	12-91
90458-0220	TENSION ROLLER, M40/60-0-M EXCENTRIC	5-37, 5-57
37885-0000	TENSION SPRING	8-65
441353-0000 ..	TENSION SPRING	3-23
1478303-0000 .	TENSION SPRING	7-47
90335-0216	TENSION SPRING 40910, 0,5X5,5X27,7	7-35, 7-37, 7-39, 7-41, 7-61
90335-0041	TENSION SPRING 42350, 2X14X68	8-25, 8-27, 8-29, 8-45, 8-47, 8-49
90458-1241	TENSION SPRING RZ-1221	8-69
491846-0300 ..	TENSION SPROCKET	5-3
2569884-0000 .	TENSION SPROCKET	5-63
90457-0127	TENSIONER, TYPE SE-F-15	3-5, 3-7
90195-0028	TERM.BLOCK 6-POLE STEATIT	1-43, 1-45
1095597-0100 .	TERMINAL	2-73
1511802-0200 .	TERMINAL BLOCK	10-13, 10-15, 10-17
90457-0049	TERMINAL BLOCK, 102230	10-65, 10-69
90458-1136	TERMINAL BLOCK, 103630	5-49, 5-51, 10-63, 10-65
90077-0102	TERMINAL BLOCK, 1952.2	8-65
90195-0020	TERMINAL BLOCK, BK 2CRN; 0624720000	2-17, 6-13
353021-0122 ..	TERMINAL DISCONNECTABLE, WTR 2,5 D	10-65
353021-0127 ..	TERMINAL DISCONNECTABLE, WTR 2,5+WSD 2,5	10-65
543337-0000 ..	TERMINAL LABELS 1-4	10-33
353021-0302 ..	TERMINALS,TRIPLE-LEVEL, DLD 2,5/35 PA	5-49, 5-51, 10-63, 10-65
353021-0132 ..	TERMINALS,TRIPLE-LEVEL, DLD 2,5/PE	5-49, 5-51, 10-61, 10-63, 10-65
353021-0301 ..	TERMINALS,TRIPLE-LEVEL, DLI 2,5/35 PA	5-49, 5-51, 10-65
90326-0052	THERMO ELEMENT	1-21, 1-23
90220-0034	THERMOCABLE TEX/SITW-20F-KX 2X0,5MM2	2-13, 5-13, 5-15, 5-17, 5-19, 5-21
90220-0059	THERMOCOUPLE CABLE K/PVC/20AWG 2X0,5MM2	1-15, 1-21, 1-23, 1-35, 1-39, 1-43, 1-45
		1-63, 1-67, 1-69, 1-137, 10-29, 10-123, 10-125
90326-0048	THERMOCOUPLE, 12826-31	1-35, 1-39
90326-0051	THERMOCOUPLE, 12826-33	1-43, 1-45, 1-63, 1-137
90326-0089	THERMOCOUPLE, 5110-089-000	1-67, 1-69
90326-0080	THERMOCOUPLE, 5110080-000	5-13, 5-15, 5-17, 5-19, 5-21
90326-0057	THERMOCOUPLE, CR-AL	1-35
90326-0060	THERMOCOUPLE, CR-AL	1-15
90059-0001	THERMOSTAT	8-65
90157-0037	THREAD SEALANT LOCTITE 542	1-67, 1-69
312910-0113 ..	THREADED INSERT, FREE RUNNING M5X1D	12-107
90235-0274	THROTTLE CHECK VALVE, G1/8", SCU-604-1/8	1-39, 1-57, 1-59, 1-67, 1-69, 1-125, 1-127
90235-0844	THROTTLE CHECK VALVE, M5, MANUAL, 6MM	2-21
90235-0280	THROTTLE CHECK VALVE,M5	1-35, 1-161, 1-163
209145-0000 ..	THROTTLE SCREW	1-137, 6-81, 6-83
490998-0000 ..	THROTTLE SCREW	1-137
2832785-0000 .	THROTTLE SCREW	1-137
572487-0000 ..	THROTTLING	1-129
2652213-0000 .	THRUST WASHER	5-7, 5-9
321130-0180 ..	THRUST WASHER, 12X24X1,5 MM	7-15
321130-0200 ..	THRUST WASHER, 14X26X1,5 MM	5-7, 5-9
321130-0260 ..	THRUST WASHER, 20X36X1,5 MM	3-27
321129-0137 ..	THRUST WASHER, 22X38X1,5 MM	3-9, 3-11
77221-0000	TIGHTENING TOOL	12-11
566404-0001 ..	TIMING BELT	3-23
566404-0002 ..	TIMING BELT	3-23
566404-0003 ..	TIMING BELT	3-23
566404-0005 ..	TIMING BELT	3-23
1539107-0000 .	TIMING BELT	4-59
1539108-0000 .	TIMING BELT PULLEY	4-59
2751443-0000 .	TIMING BELT PULLEY	3-5
90458-1233	TIMING BELT T10 340X16 MM	8-17, 8-19
90600-0275	TIMING BELT T10X1000X25 RUBBER	3-5
90459-6812	TIMING BELT T10X690X16 POLYURETHANE	5-57
90600-0274	TIMING BELT T10X920X25 RUBBER	3-5
1523215-0000 .	TIMING PULLEY	3-7
559810-0101 ..	TMCC2 CONTROLLER	10-31
1512640-0000 .	TOE PLATE	2-49, 2-51
1512641-0000 .	TOE PLATE	2-49, 2-51
1512642-0000 .	TOE PLATE	2-49, 2-51
1512643-0000 .	TOE PLATE	2-49, 2-51
1512666-0000 .	TOE PLATE	2-49, 2-51

Part No	Description	Page No
2512805-0000	TOE PLATE	2-49, 2-51
434448-0000	TOOL	12-45
1517060-0000	TOOL	12-45
1538757-0000	TOOL	12-77, 12-79
1549930-0000	TOOL	12-51, 12-53
2517796-0000	TOOL	12-51, 12-53
2552941-0100	TOOL	12-133
2552943-0100	TOOL	12-133
2552944-0100	TOOL	12-133
2552946-0100	TOOL	12-133
2552947-0200	TOOL	12-133, 12-147
2610197-0000	TOOL	12-139
2610198-0000	TOOL	12-139
2641477-0100	TOOL	12-133
90243-0118	TOOL BOX, NO. ZERO 105X-SI	12-21
456975-0200	TOOL CABINET	12-7
449969-0100	TOOL DISMOUNTING	12-45, 12-147
563740-0100	TOOL FOR JAW OVERLOAD	12-45
77099-0300	TOOL KIT	9-3
574945-0000	TOOTHED PULLEY	8-17, 8-19
1539256-0000	TOOTHED PULLEY	5-57
1539260-0000	TOOTHED PULLEY	5-57
1539301-0000	TOOTHED PULLEY	5-65
2544965-0000	TOOTHED PULLEY	5-57
1499486-0000	TOP COVER	7-59
2552701-0000	TOP SECTION	2-9
2514018-0000	TOP TIE PLATE	2-49, 2-51
90067-0356	TOP WASHER	9-9
90355-0048	TORQUE RIGID COUPLING, 22X22 MM	3-17
456312-0000	TORSION SPRING LEFT	4-27
456311-0000	TORSION SPRING RIGHT	4-25
579629-0000	TOUCH GUARD	1-175
581341-0000	TOUCH GUARD	1-17
1348476-0000	TOUCH GUARD	1-67, 1-69
1348477-0000	TOUCH GUARD	1-137
1348636-0000	TOUCH GUARD	1-67, 1-69
1348637-0000	TOUCH GUARD	1-137
2565515-0000	TOUCH GUARD	1-175
2565516-0000	TOUCH GUARD	1-175
2565517-0000	TOUCH GUARD	1-175
2761758-0000	TOUCH GUARD	1-89
2781214-0000	TOUCH GUARD	1-175
2781215-0000	TOUCH GUARD	1-175
90064-0335	TOUCHGUARD, 704-9645	10-123, 10-125
1511786-0100	TOWER CABLE INLETS	1-143, 1-145, 1-147, 1-149, 1-151, 1-153
1499642-0201	TPIH GENERATOR	10-143
1517678-0200	TPIH GENERATOR	10-3, 10-5
1520972-0000	TPO-BAR	9-3
2545065-0001	TPOP BASIC PROGRAM	11-13
2589391-0001	TPOP BASIC START PROGRAM	11-13
2518146-0100	TPOP PANEL 15"	2-3
572642-0200	TRANSFER	4-3
572643-0200	TRANSFER	4-3
67379-0262	TRANSFORMER	4-55, 4-57
67379-0264	TRANSFORMER	4-55, 4-57
67379-0265	TRANSFORMER	4-55, 4-57
67380-0208	TRANSFORMER	7-45
90245-0029	TRANSFORMER, 1280-3660/TP 182	10-75, 10-77
90458-0258	TRANSFORMER, 220VAC/6-9-12VAC	10-75, 10-77
90458-1273	TRANSFORMER, OFL-1350	10-75, 10-77
2545132-0000	TRANSITION PIPE	1-15
2530400-0100	TRANSMISSION UNIT	5-3
580848-0000	TRANSPORT BEAM	12-13
580849-0000	TRANSPORT BEAM	12-13
580865-0000	TRANSPORT BEAM	12-13
580866-0000	TRANSPORT BEAM	12-13
1499485-0000	TRANSPORT BRACKET	7-55
90144-0073	TREBOFLON-TAPE W=13MM	1-7, 1-9, 1-11, 1-91, 1-93, 3-5, 5-37, 6-65
77093-0200	TRIMMING PARTS	12-3
574447-0000	TRIMMING ROLLER MINUS	12-5
752463-0000	TRIMMING ROLLER MINUS	12-5
752465-0000	TRIMMING ROLLER MINUS	12-5
752467-0000	TRIMMING ROLLER MINUS	12-5
574446-0000	TRIMMING ROLLER PLUS	12-5
752462-0000	TRIMMING ROLLER PLUS	12-5
752464-0000	TRIMMING ROLLER PLUS	12-5
752466-0000	TRIMMING ROLLER PLUS	12-5
90266-0006	TUBE	2-23, 2-25, 2-27
1523063-0000	TUBE	6-69
2850447-0000	TUBE	2-57
90166-0135	TUBE 10 MM PA BLACK	2-45
90166-0068	TUBE 12 MM PA BLUE	6-15, 6-17, 6-19, 6-93, 6-95, 7-67
90166-0143	TUBE 2,5 MM PA,TRANSP.	3-9, 3-11, 3-13, 3-15, 4-25, 4-27, 4-53, 4-67, 4-69, 5-11, 5-37
577782-0000	TUBE 200	1-95, 1-97

Part No	Description	Page No
577783-0000 ..	TUBE 201	1-95, 1-97
578004-0000 ..	TUBE 211	1-95, 1-97
578022-0000 ..	TUBE 211	1-95, 1-97
578005-0000 ..	TUBE 213	1-95, 1-97
578023-0000 ..	TUBE 213	1-95, 1-97
578013-0000 ..	TUBE 213 AND 211	1-95, 1-97
1524666-0000 .	TUBE 230	1-95, 1-97
1524667-0000 .	TUBE 231	1-95, 1-97
577786-0000 ..	TUBE 240	1-95, 1-97
577787-0000 ..	TUBE 241	1-95, 1-97
577785-0000 ..	TUBE 261	1-95, 1-97
90166-0095	TUBE 4 MM PA BLUE (50M)	4-29, 4-31, 4-33, 7-19, 7-67
90166-0109	TUBE 4 MM PA,TRANSP.	2-23, 2-25, 2-27, 3-13, 3-15, 4-67, 4-69, 5-11, 5-37
577791-0000 ..	TUBE 40	1-95, 1-97
1524663-0000 .	TUBE 55	1-95, 1-97
90166-0081	TUBE 6 MM PA BLUE	2-23, 2-25, 2-27, 2-31, 6-15, 6-17, 6-19, 7-67
90166-0108	TUBE 6 MM PA,TRANSP.	2-23, 2-25, 2-27, 2-31, 5-25, 5-27, 6-87
90166-0124	TUBE 6 MM PA,TRANSP.	1-129, 12-17, 12-19
90166-0132	TUBE 6 MM PA,TRANSP.	1-7, 1-9, 1-11, 1-95, 1-97, 1-161, 1-163, 1-171, 1-173, 2-53, 2-55
90166-0193	TUBE 6 MM PUR BLUE	7-19
577790-0000 ..	TUBE 70	1-95, 1-97
578020-0000 ..	TUBE 70	1-95, 1-97
90166-0118	TUBE 8 MM PA BLACK	2-23, 2-25, 2-27, 2-31, 6-15, 6-17, 6-19, 6-85
90166-0013	TUBE 8 MM PA BLUE	5-37, 6-15, 6-17, 6-19
90166-0133	TUBE 8 MM PA,TRANSP.	3-5
577788-0000 ..	TUBE 80	1-95, 1-97
1524665-0000 .	TUBE 860	1-95, 1-97
1524664-0000 .	TUBE 861	1-95, 1-97
577541-0000 ..	TUBE 90	1-95, 1-97
577542-0000 ..	TUBE 90	1-95, 1-97
577789-0000 ..	TUBE 90	1-95, 1-97
469781-0400 ..	TUBE FLUSHING DEVICE	1-3, 1-5
1511069-0100 .	TUBE FOLDING DEVICE	4-3
90233-0028	TUBE FUSE, 10A	10-115
90233-0027	TUBE FUSE, 16A	9-5, 10-115
90233-0029	TUBE FUSE, 25A	9-5, 10-115
90459-1254	TUBE FUSE, 4A 500V	10-115
315400-0004 ..	TUBE PUN-H-8X1,25-BL	5-13, 5-15, 5-17, 5-19, 5-21, 5-71
577784-0000 ..	TUBE260	1-95, 1-97
578019-0000 ..	TUBE40	1-91, 1-93
1511319-0100 .	TUNNEL COVER	7-55
1499484-0100 .	TUNNEL FRAME	7-55
90237-0175	TURNING HANDLE, 1125-U185-0A	6-5, 6-7
90237-0176	TURNING HANDLE, 1125-U190-A	2-65, 2-67, 10-105, 10-107, 10-137, 10-139
90237-0150	TURNING HANDLE, NO. 1125-U190-0A	8-11, 8-13, 10-105, 10-107, 10-137, 10-139
293395-0001 ..	TYPE HOLDER	8-31, 8-33, 8-51, 8-53, 12-27, 12-29, 12-37, 12-39
293395-0002 ..	TYPE HOLDER	8-31, 8-33, 8-51, 8-53, 12-27, 12-29, 12-37, 12-39
293395-0003 ..	TYPE HOLDER	8-51, 8-53, 12-27, 12-29
90030-0075	UNION FITTING 6MM, G06L71	1-95, 1-97
90217-0206	UNION NUT, 1 1/2 APV, 07-01-376/17	1-133
90217-0203	UNION NUT, 1 APV, 07-01-276/17	1-15
90217-0209	UNION NUT, 2 APV, 07-01-426/17	1-67, 1-69
342803-0103 ..	UNION NUT, RD 60-6 (SMS 38)	5-81
1317914-0000 .	UPPER FILLING TUBE	1-141
1317989-0000 .	UPPER FILLING TUBE	1-141
1558442-0000 .	UPPER FILLING TUBE	1-141
441307-0300 ..	UPPER TUBE SUPPORT	1-3, 1-5
82197-0104	USER MANUAL	9-19
81595-0103	USER MANUAL PLMS ON-LINE	11-11
315220-0167 ..	V-RINGS 27X35X10,5 MM V-30S	1-61
315220-0210 ..	V-RINGS 54X64X13 MM V-60S	5-59, 5-61, 5-63
90201-0014	VALVE	6-89, 6-91
90201-0131	VALVE	6-89, 6-91
90201-0132	VALVE	6-89, 6-91
90201-0133	VALVE	6-89, 6-91
90235-0259	VALVE	1-67, 1-69, 1-95, 1-97, 7-67
90235-0289	VALVE	7-13, 7-19
90235-0708	VALVE	6-41, 6-43
90270-0347	VALVE	6-29
271169-0500 ..	VALVE	1-3, 1-5
272337-0600 ..	VALVE	1-3, 1-5
534635-0000 ..	VALVE	12-23
534696-0000 ..	VALVE	12-23
565251-0000 ..	VALVE	6-73
90458-1203	VALVE 2X3/2 1X OPEN 1X CLOSED	6-45, 6-47
90235-0297	VALVE 3/2, OPEN/CLOSED	6-15, 6-17, 6-19
90067-0369	VALVE ARM	9-9
2814877-0000 .	VALVE BODY	1-15
2574348-0000 .	VALVE BRACKET	1-9, 1-11
530590-0000 ..	VALVE CONE	1-41, 1-63
2826439-0000 .	VALVE CONE	1-79
2826442-0000 .	VALVE CONE	1-77, 1-81
1478717-0200 .	VALVE GROUP	6-15, 6-17, 6-19
255870-0000 ..	VALVE HOUSING	1-37

Part No	Description	Page No
534697-0000 ..	VALVE HOUSING	12-23
578031-0000 ..	VALVE HOUSING	1-139
90458-1200	VALVE OPEN IN MID-POSITION 5/3	6-45, 6-47
1349029-0200 .	VALVE PANEL	6-3
978235-0000 ..	VALVE PLATE	1-9, 1-11
1349094-0200 .	VALVE PLATE	6-15, 6-17, 6-19
2500201-0000 .	VALVE PLATE	6-41, 6-43
90457-0132	VALVE, BUTTERFLY, N.O. ZVF1200BSAAO	5-73
90458-1202	VALVES 2X3/2, CLOSED	6-45, 6-47
90459-3450	VARIABLE FREQUENCY DRIVE 22A-A4P5N104	10-13, 10-15, 10-17
76581-0000	VERTICAL PILLAR	12-149
90347-0004	VIBRATION DAMPER D=30 TH=M8 H=17 H2=21MM	2-61, 6-61
90347-0144	VIBRATION DAMPER, NO. RA 40EM-A	6-59
90459-1060	VIBRATION DAMPER, T15688	2-69
90243-0319	VOLTAGE SUPPLY UNIT	12-105
1519118-0100 .	VOLUM CURVE PIECE	4-59
1519117-0100 .	VOLUME ADJUSTER	4-3
272988-0004 ..	VOLUME BULGE	4-17, 4-19, 4-21, 4-23
272990-0000 ..	VOLUME BULGE	4-17, 4-19, 4-21, 4-23
456005-0001 ..	VOLUME BULGE	4-17, 4-19, 4-21, 4-23
456005-0003 ..	VOLUME BULGE	4-17, 4-19, 4-21, 4-23
491868-0000 ..	VOLUME BULGE	4-17, 4-19, 4-21, 4-23
574367-0000 ..	VOLUME BULGE	4-17, 4-19, 4-21, 4-23
752739-0000 ..	VOLUME BULGE	4-17, 4-19, 4-21, 4-23
979792-0000 ..	VOLUME BULGE	4-17, 4-19, 4-21, 4-23
979860-0000 ..	VOLUME BULGE	4-17, 4-19, 4-21, 4-23
979931-0000 ..	VOLUME BULGE	4-17, 4-19, 4-21, 4-23
1538756-0000 .	VOLUME BULGE	4-5, 4-7, 4-9, 4-11, 4-13, 4-15
1539120-0000 .	VOLUME BULGE	4-45, 4-47
979755-0000 ..	VOLUME BULGE 100	4-17, 4-19, 4-21, 4-23
577213-0000 ..	VOLUME BULGE 160 ML	4-17, 4-19, 4-21, 4-23
1490235-0000 .	VOLUME CAM	4-61, 4-63
1490236-0000 .	VOLUME CAM	4-61, 4-63
1490239-0000 .	VOLUME CAM	4-61, 4-63
1490240-0000 .	VOLUME CAM	4-61, 4-63
2506638-0000 .	VOLUME CAM	4-61, 4-63
2506639-0000 .	VOLUME CAM	4-61, 4-63
2506640-0000 .	VOLUME CAM	4-61, 4-63
2506641-0000 .	VOLUME CAM	4-61, 4-63
2506642-0000 .	VOLUME CAM	4-61, 4-63
2506643-0000 .	VOLUME CAM	4-61, 4-63
2506644-0000 .	VOLUME CAM	4-61, 4-63
2506645-0000 .	VOLUME CAM	4-61, 4-63
979772-0000 ..	VOLUME CAM L 100	4-61, 4-63
582166-0000 ..	VOLUME CAM L 330S	4-61, 4-63
979773-0000 ..	VOLUME CAM L WIDE 100	4-61, 4-63
582167-0000 ..	VOLUME CAM L WIDE 330S	4-61, 4-63
272949-0000 ..	VOLUME CAM LEFT	4-61, 4-63
272954-0000 ..	VOLUME CAM LEFT	4-61, 4-63
272956-0000 ..	VOLUME CAM LEFT	4-61, 4-63
1282315-0000 .	VOLUME CAM LEFT	4-61, 4-63
272965-0000 ..	VOLUME CAM LEFT, WIDE	4-61, 4-63
979774-0000 ..	VOLUME CAM R 100	4-61, 4-63
582164-0000 ..	VOLUME CAM R 330S	4-61, 4-63
979775-0000 ..	VOLUME CAM R WIDE 100	4-61, 4-63
582165-0000 ..	VOLUME CAM R WIDE 330S	4-61, 4-63
272957-0000 ..	VOLUME CAM RIGHT	4-61, 4-63
272962-0000 ..	VOLUME CAM RIGHT	4-61, 4-63
272964-0000 ..	VOLUME CAM RIGHT	4-61, 4-63
1282316-0000 .	VOLUME CAM RIGHT	4-61, 4-63
272967-0000 ..	VOLUME CAM RIGHT, WIDE	4-61, 4-63
1490237-0000 .	VOLUME CAM, WIDE	4-61, 4-63
1490238-0000 .	VOLUME CAM, WIDE	4-61, 4-63
1519427-0100 .	VOLUME FLAP	4-3
1549581-0100 .	VOLUME FLAP	4-3
979751-0000 ..	VOLUME FLAP 100	4-17, 4-19, 4-21, 4-23
752212-0000 ..	VOLUME FLAP 200 ML	4-17, 4-19, 4-21, 4-23
752999-0000 ..	VOLUME FLAP 200S	4-17, 4-19, 4-21, 4-23
978366-0000 ..	VOLUME FLAP 250 ML	4-17, 4-19, 4-21, 4-23
582163-0000 ..	VOLUME FLAP 330S	4-17, 4-19, 4-21, 4-23
272986-0001 ..	VOLUME SHIM	4-17, 4-19, 4-21, 4-23
272986-0003 ..	VOLUME SHIM	4-17, 4-19, 4-21, 4-23
272986-0004 ..	VOLUME SHIM	4-17, 4-19, 4-21, 4-23
272986-0005 ..	VOLUME SHIM	4-17, 4-19, 4-21, 4-23
272987-0000 ..	VOLUME SHIM	4-17, 4-19, 4-21, 4-23
272991-0000 ..	VOLUME SHIM	4-17, 4-19, 4-21, 4-23
574366-0000 ..	VOLUME SHIM	4-17, 4-19, 4-21, 4-23
577212-0000 ..	VOLUME SHIM	4-17, 4-19, 4-21, 4-23
979861-0000 ..	VOLUME SHIM	4-17, 4-19, 4-21, 4-23
979754-0000 ..	VOLUME SHIM 100	4-17, 4-19, 4-21, 4-23
272986-0006 ..	VOLUME SHIM 330S	4-17, 4-19, 4-21, 4-23
256849-0000 ..	VOLUMEFLAP 125 ML	4-17, 4-19, 4-21, 4-23
577211-0000 ..	VOLUMEFLAP 160 ML	4-17, 4-19, 4-21, 4-23
752292-0000 ..	VOLUMEFLAP 180 ML	4-17, 4-19, 4-21, 4-23

Part No	Description	Page No
574365-0000 ..	VOLUMEFLAP 250S	4-17, 4-19, 4-21, 4-23
978031-0000 ..	VOLUMEFLAP 284 ML	4-17, 4-19, 4-21, 4-23
1498769-0000 .	WALL	7-57
2540729-0000 .	WALL	7-57
90001-0033	WALL SOCKET OUTLET	10-13, 10-15, 10-17
359705-0003 ..	WARNING SIGN ISO, DANGEROUS CHEMICALS	1-133
90600-1738	WARNING SIGN ISO, ELECTRIC SHOCK	1-43, 1-45
359705-0001 ..	WARNING SIGN ISO, ENTANGLEMENT	8-17, 8-19, 8-25, 8-27, 8-29, 8-45, 8-47, 8-49
359705-0007 ..	WARNING SIGN ISO, HOT SURFACE	5-13, 5-15, 5-17, 5-19, 5-21
359710-0001 ..	WARNING SIGN ISO, HOT SURFACE	1-21, 1-23, 1-49, 1-51, 1-67, 1-69, 1-167, 1-169, 8-65
359705-0015 ..	WARNING SIGN ISO, RISK OF ELECTRIC SHOCK	1-21, 1-23, 1-143, 1-145, 1-147, 1-149 1-151, 1-153, 2-73, 4-55, 4-57, 5-13, 5-15, 5-17, 5-19, 5-21, 7-17, 7-33, 8-65, 8-77, 9-23, 9-29 9-31, 10-105, 10-107, 10-121, 10-129, 10-131, 10-137, 10-139
90194-0016	WARNING SIGN, RISK OF ELECTRIC SHOCK	1-13, 2-19, 5-49, 5-51
1755-0001	WASHER	4-61, 4-63
1755-0002	WASHER	4-61, 4-63
1755-0003	WASHER	4-61, 4-63
2033-0002	WASHER	12-169
2033-0003	WASHER	12-169
2033-0007	WASHER	1-49, 1-51
2033-0008	WASHER	1-119, 1-121, 12-169
2033-0009	WASHER	4-65
2033-0010	WASHER	12-169
2033-0011	WASHER	1-103, 1-105, 1-107, 1-109, 1-111, 1-113, 1-115, 1-119, 1-121, 1-125, 1-127, 8-25 8-27, 8-29, 8-45, 8-47, 8-49, 12-169
2033-0013	WASHER	7-23, 7-25, 7-27, 7-29, 7-51, 7-53
2033-0014	WASHER	4-65
18542-0000	WASHER	2-29
26490-0000	WASHER	1-103, 1-105, 1-107, 1-109
27815-0000	WASHER	4-65
28036-0000	WASHER	1-49, 1-51, 1-159, 8-25, 8-27, 8-29, 8-45, 8-47, 8-49
28037-0000	WASHER	1-103, 1-105, 1-107, 1-109
28509-0000	WASHER	4-55, 4-57
31553-0001	WASHER	5-67
32079-0000	WASHER	4-55, 4-57
32644-0000	WASHER	4-45, 4-47, 7-45
37897-0000	WASHER	8-67
38087-0000	WASHER	2-49, 2-51
76215-0000	WASHER	12-151, 12-153
250592-0000 ..	WASHER	1-47, 1-61
253107-0000 ..	WASHER	8-25, 8-27, 8-29, 8-45, 8-47, 8-49
255939-0000 ..	WASHER	2-5, 2-7
256312-0000 ..	WASHER	1-103, 1-105, 1-107, 1-109
256409-0000 ..	WASHER	8-25, 8-27, 8-29, 8-45, 8-47, 8-49
256422-0000 ..	WASHER	3-9, 3-11, 3-13, 3-15
256426-0001 ..	WASHER	3-9, 3-11, 3-13, 3-15
256426-0002 ..	WASHER	3-9, 3-11, 3-13, 3-15
256472-0000 ..	WASHER	3-9, 3-11, 3-13, 3-15
256557-0001 ..	WASHER	4-25, 4-27
256557-0002 ..	WASHER	4-25, 4-27
256557-0003 ..	WASHER	4-25, 4-27
256621-0000 ..	WASHER	4-31, 4-33
256704-0000 ..	WASHER	4-49, 4-51
256738-0000 ..	WASHER	4-53
256814-0000 ..	WASHER	3-27
256882-0000 ..	WASHER	4-45, 4-47
256907-0000 ..	WASHER	5-71
257175-0000 ..	WASHER	1-119, 1-121
263311-0000 ..	WASHER	1-59
266737-0000 ..	WASHER	1-37, 1-139, 7-35, 7-37, 7-39, 7-41
267033-0000 ..	WASHER	1-49, 1-51
271435-0000 ..	WASHER	5-81
271689-0000 ..	WASHER	3-5
271864-0000 ..	WASHER	1-49, 1-51
272459-0000 ..	WASHER	3-9
272461-0000 ..	WASHER	3-9
273429-0000 ..	WASHER	1-35, 1-39
293669-0001 ..	WASHER	8-35, 8-61, 12-41, 12-43
293669-0002 ..	WASHER	8-35, 8-61, 12-41, 12-43
293669-0003 ..	WASHER	8-35, 8-61, 12-41, 12-43
293669-0004 ..	WASHER	8-35, 8-61, 12-41, 12-43
295729-0000 ..	WASHER	5-35
299643-0000 ..	WASHER	8-25, 8-27, 8-29, 8-45, 8-47, 8-49
440650-0000 ..	WASHER	1-81
441221-0000 ..	WASHER	2-13
441706-0000 ..	WASHER	4-49, 4-51
441737-0000 ..	WASHER	1-167, 1-169
441739-0000 ..	WASHER	1-167, 1-169
441795-0000 ..	WASHER	5-39
491303-0000 ..	WASHER	6-61
491304-0000 ..	WASHER	6-61
491409-0000 ..	WASHER	3-5
530587-0000 ..	WASHER	1-79
530597-0000 ..	WASHER	1-81

Part No	Description	Page No
530598-0000 ..	WASHER	1-81
536374-0000 ..	WASHER	1-171, 1-173
541165-0000 ..	WASHER	1-83, 1-85
541166-0000 ..	WASHER	1-77
563287-0000 ..	WASHER	6-61
565250-0000 ..	WASHER	6-73
751018-0000 ..	WASHER	1-39
751019-0000 ..	WASHER	1-35
752681-0000 ..	WASHER	4-37, 4-39, 4-41, 4-43
975924-0000 ..	WASHER	8-11, 8-13
979953-0000 ..	WASHER	1-139
1279701-0000 .	WASHER	5-63
1317228-0000 .	WASHER	5-25, 5-27
1334631-0000 .	WASHER	12-61
1490407-0000 .	WASHER	1-47
1519377-0000 .	WASHER	4-17, 4-19, 4-21, 4-23
1523211-0000 .	WASHER	3-7
1539261-0000 .	WASHER	5-57, 5-65
1539950-0000 .	WASHER	5-43
1548141-0000 .	WASHER	1-177
2552731-0000 .	WASHER	5-7, 5-9
978381-0000 ..	WASHER 56X2MM	1-19
90458-0073	WASHER 6,4/30, H=1,5	2-49, 2-51
315105-0173 ..	WASHER BRB 10,5X22 RFR	1-89, 2-57, 3-7, 3-25, 4-65, 5-13, 5-15, 5-17, 5-19, 5-21, 6-53, 6-59, 6-65, 7-11, 8-25, 8-27, 8-29, 8-45, 8-47, 8-49, 8-71, 10-89, 12-151, 12-153
315105-0171 ..	WASHER BRB 10X18 RFR	1-185, 8-17, 8-19
315105-0178 ..	WASHER BRB 13X24 RFR	2-49, 2-51, 3-7, 3-33, 5-43, 5-65, 5-75, 5-81, 6-53, 7-59, 12-15
315105-0186 ..	WASHER BRB 17X30 RFR	2-49, 2-51, 2-63, 5-81, 12-15
315105-0191 ..	WASHER BRB 20X36 RFR	8-5
315105-0192 ..	WASHER BRB 21X36 RFR	12-25
315105-0124 ..	WASHER BRB 3,2X6 RFR	1-15, 1-19, 1-49, 1-51, 1-67, 1-69, 1-137, 1-187, 2-17, 3-33, 4-29, 6-75, 7-23, 7-25, 7-27, 7-29, 7-31, 7-35, 7-37, 7-39, 7-41, 8-25, 8-27, 8-29, 8-45, 8-47, 8-49, 10-31, 10-83, 10-85, 10-91, 10-93, 10-95, 10-97, 10-99, 10-101, 10-103
315105-0136 ..	WASHER BRB 4,3X8 RFR	1-9, 1-11, 1-13, 1-21, 1-23, 1-39, 1-67, 1-69, 1-87, 1-91, 1-93, 1-119, 1-121, 1-181, 2-5, 2-7, 2-21, 2-57, 2-65, 2-67, 2-69, 3-27, 3-33, 4-29, 4-45, 4-47, 5-11, 5-37, 5-69, 6-5, 6-7, 6-53, 6-61, 6-77, 6-79, 6-87, 7-15, 7-23, 7-25, 7-27, 7-29, 8-11, 8-13, 8-17, 8-19, 8-25, 8-27, 8-29, 8-39, 8-41, 8-65, 8-77, 9-21, 9-25, 9-27, 10-13, 10-15, 10-17, 10-27, 10-41, 10-43, 10-45, 10-49, 10-51, 10-53, 10-55, 10-57, 10-75, 10-77, 10-79, 10-81, 10-83, 10-85, 10-87, 10-105, 10-107, 10-109, 10-111, 10-141, 12-169
315105-0146 ..	WASHER BRB 5,3X10 RFR	1-9, 1-11, 1-15, 1-19, 1-35, 1-43, 1-45, 1-49, 1-51, 1-55, 1-59, 1-61, 1-65, 1-67, 1-69, 1-89, 1-143, 1-145, 1-147, 1-149, 1-151, 1-153, 1-155, 1-157, 1-161, 1-163, 1-167, 1-169, 1-171, 1-173, 1-177, 1-181, 2-5, 2-7, 2-13, 2-17, 2-29, 2-31, 2-35, 2-37, 2-39, 2-53, 2-55, 2-65, 2-67, 2-69, 3-27, 3-33, 4-37, 4-39, 4-41, 4-43, 4-45, 4-47, 4-55, 4-57, 5-37, 5-45, 5-57, 5-59, 5-61, 5-63, 6-5, 6-7, 6-11, 6-23, 6-33, 6-37, 6-41, 6-43, 6-75, 6-77, 6-79, 7-23, 7-25, 7-27, 7-29, 7-31, 7-35, 7-37, 7-39, 7-41, 7-43, 7-45, 7-49, 7-51, 7-53, 7-59, 7-61, 8-11, 8-13, 8-17, 8-19, 8-21, 8-25, 8-27, 8-29, 8-35, 8-43, 8-45, 8-47, 8-49, 8-61, 8-73, 8-77, 9-21, 9-25, 9-27, 10-13, 10-15, 10-17, 10-29, 10-39, 10-47, 10-59, 10-61, 10-63, 10-65, 10-69, 10-73, 10-75, 10-77, 10-89, 10-91, 10-93, 10-95, 10-97, 10-99, 10-101, 10-103, 10-113, 10-115, 10-133, 10-135, 10-143, 10-145, 12-17, 12-19, 12-41, 12-43, 12-155, 12-161, 12-165
315105-0153 ..	WASHER BRB 6,4X12 RFR	1-9, 1-11, 1-17, 1-19, 1-21, 1-23, 1-33, 1-37, 1-39, 1-47, 1-49, 1-51, 1-57, 1-59, 1-61, 1-87, 1-89, 1-91, 1-93, 1-125, 1-127, 1-129, 1-133, 1-137, 1-139, 1-143, 1-145, 1-147, 1-149, 1-151, 1-153, 1-159, 1-165, 1-171, 1-173, 1-175, 1-177, 2-5, 2-7, 2-9, 2-11, 2-13, 2-19, 2-21, 2-29, 2-31, 2-35, 2-37, 2-45, 2-47, 2-49, 2-51, 2-53, 2-55, 2-59, 2-61, 2-69, 3-25, 3-27, 4-25, 4-27, 4-29, 4-31, 4-33, 4-37, 4-39, 4-41, 4-43, 4-53, 4-59, 4-65, 5-13, 5-15, 5-17, 5-19, 5-21, 5-23, 5-25, 5-27, 5-29, 5-31, 5-33, 5-35, 5-37, 5-41, 5-43, 5-45, 5-53, 5-55, 5-71, 5-75, 5-81, 5-83, 6-5, 6-7, 6-11, 6-13, 6-15, 6-17, 6-19, 6-27, 6-39, 6-41, 6-43, 6-49, 6-51, 6-53, 6-61, 6-65, 6-69, 6-71, 6-77, 6-79, 6-87, 6-89, 6-91, 6-93, 6-95, 6-97, 7-9, 7-13, 7-15, 7-23, 7-25, 7-27, 7-29, 7-33, 7-35, 7-37, 7-43, 7-45, 7-47, 7-49, 7-51, 7-53, 7-59, 7-61, 8-11, 8-13, 8-17, 8-19, 8-25, 8-27, 8-29, 8-37, 8-39, 8-41, 8-45, 8-47, 8-49, 8-65, 8-77, 10-13, 10-15, 10-17, 10-71, 10-75, 10-77, 10-89, 10-105, 10-107, 10-109, 10-111, 10-121, 10-123, 10-125, 10-133, 10-137, 10-139, 10-141, 12-17, 12-19, 12-23, 12-85, 12-135, 12-155, 12-159, 12-161, 12-163, 12-165, 12-169
315105-0156 ..	WASHER BRB 6,7X14 RFR	5-55, 7-47, 7-49
315105-0165 ..	WASHER BRB 8,4X16 RFR	1-9, 1-11, 1-21, 1-23, 1-35, 1-43, 1-45, 1-55, 1-67, 1-69, 1-103, 1-105, 1-107, 1-109, 1-119, 1-121, 1-125, 1-127, 1-129, 1-175, 2-5, 2-7, 2-15, 2-39, 2-41, 2-61, 2-69, 3-7, 4-25, 4-27, 4-31, 4-33, 4-49, 4-51, 4-53, 4-59, 4-61, 4-63, 5-7, 5-9, 5-13, 5-15, 5-17, 5-19, 5-21, 5-29, 5-31, 5-33, 5-45, 5-53, 5-57, 5-75, 5-77, 5-79, 5-81, 5-85, 6-15, 6-17, 6-19, 6-55, 6-61, 6-81, 6-83, 6-89, 6-91, 7-15, 7-35, 7-37, 7-39, 7-41, 7-47, 7-51, 7-53, 7-57, 8-9, 8-11, 8-13, 8-15, 8-17, 8-19, 8-25, 8-27, 8-29, 8-35, 8-45, 8-47, 8-49, 8-61, 8-69, 8-73, 12-15, 12-41, 12-43, 12-51, 12-53, 12-83, 12-85, 12-91, 12-137, 12-163
315101-0136 ..	WASHER BRB, 4,3/8 H=0,8	3-9, 3-11, 3-13, 3-15, 5-57, 8-25, 8-27, 8-29, 8-31, 8-33, 8-45, 8-47, 8-49, 8-51, 8-53, 12-27, 12-29, 12-37, 12-39
315233-0113 ..	WASHER CAPTIVE SEALING G1/2	2-29, 2-45, 6-23, 6-27, 6-29, 6-31, 12-17, 12-19, 12-23
315233-0110 ..	WASHER CAPTIVE SEALING G1/4	2-43, 2-45, 6-23, 6-35, 12-17, 12-19, 12-23, 12-125, 12-127
315233-0109 ..	WASHER CAPTIVE SEALING G1/8	1-165, 4-31, 4-33, 6-23, 12-17, 12-19, 12-127
315233-0111 ..	WASHER CAPTIVE SEALING G3/82-5, 2-7, 6-23, 6-25, 6-77, 6-79, 6-81, 6-83, 6-85, 12-17, 12-19	
315233-0101 ..	WASHER CAPTIVE SEALING M5(NEW315239-101)	1-77, 1-79, 1-81
315401-0153 ..	WASHER FBH6,1FZB	10-75, 10-77, 10-141, 10-147
315234-0113 ..	WASHER PL.RND.CU.21,3//26 H=1,5	5-69, 6-59
90005-0077	WASHER PL.RND.NYL.8,4/7, H=2	2-73
90005-0082	WASHER PLAIN ROUND 4,3(M4)/12,H=1	7-13, 7-15, 7-19, 7-23, 7-25, 7-27, 7-29, 7-35, 7-37, 7-43, 7-45, 7-51, 7-53
90005-0105	WASHER PLAIN ROUND 8,4(M8)/24, H=1,5	6-87
90457-0192	WASHER PLAIN ROUND, 6,5/18, H=1,5	10-71, 10-75, 10-77, 10-105, 10-107, 10-109, 10-111

Part No	Description	Page No
		10-123, 10-125, 10-137, 10-139
315101-0173 ..	WASHER PLAIN, BRB, 10,5/22 H=2	3-9, 3-11, 3-13, 3-15, 3-19, 3-21, 12-13
315101-0178 ..	WASHER PLAIN, BRB, 13/24 H=2	5-69, 12-13
315101-0186 ..	WASHER PLAIN, BRB, 17/30 H=3	3-9, 3-11, 3-13, 3-15
315103-0136 ..	WASHER PLAIN, BRB, 4,3/8,H=0,8 NI PL BR	12-17, 12-19
315101-0146 ..	WASHER PLAIN, BRB, 5,3/10 H=1	2-23, 2-25, 2-27, 3-13, 3-15, 3-19, 3-21, 3-23, 8-31, 8-33, 8-51, 8-53, 8-69, 10-109, 10-111, 12-27, 12-29, 12-37, 12-39
315101-0153 ..	WASHER PLAIN, BRB, 6,4/12 H=1,5	2-31, 3-5, 3-9, 3-11, 3-13, 3-15, 3-29, 3-31, 7-21, 8-75, 10-147, 12-105
315101-0165 ..	WASHER PLAIN, BRB, 8,4/16 H=1,5	3-9, 3-11, 3-27, 12-13
315102-0198 ..	WASHER PLAIN, BRFB 25/45 H=4	12-13
90005-0060	WASHER PLAIN, RBS 6,4/M6)/18,H=1,5	1-175, 2-5, 2-7, 4-37, 4-39, 4-41, 4-43
315111-0173 ..	WASHER PLAIN, TBRB 10,5/22 H=4	3-5, 3-9, 3-11, 3-13, 3-15
315115-0173 ..	WASHER PLAIN, TBRB 10,5/22 H=4	1-49, 1-51, 12-25
315111-0178 ..	WASHER PLAIN, TBRB 13/24 H=4	3-5
315115-0178 ..	WASHER PLAIN, TBRB 13/24 H=4	1-119, 1-121, 1-125, 1-127, 8-5
315111-0153 ..	WASHER PLAIN, TBRB 6,4/12 H=3	8-31, 8-33, 8-51, 8-53, 12-27, 12-29, 12-37, 12-39
315115-0153 ..	WASHER PLAIN, TBRB 6,4/12 H=3	1-49, 1-51, 1-57, 1-171, 1-173, 4-5, 4-7, 4-9, 4-11, 4-13, 4-15, 4-25, 4-27, 4-37, 4-39, 4-41, 4-43, 4-49, 4-51, 4-67, 4-69, 7-61
315111-0165 ..	WASHER PLAIN, TBRB 8,4/16 H=3	5-37, 12-127
315115-0165 ..	WASHER PLAIN, TBRB 8,4/16 H=3	1-49, 1-51, 1-61, 1-103, 1-105, 1-107, 1-109, 1-111, 1-113, 1-115, 1-125, 1-127, 1-171, 1-173, 1-183, 2-5, 2-7, 4-31, 4-33, 4-65, 6-67, 12-121, 12-131
315121-0173 ..	WASHER PLAIN, TBRSB 10,5/28 H=6	3-11, 3-29, 3-31
315121-0178 ..	WASHER PLAIN, TBRSB 13/36 H=6	3-5, 3-25
315121-0153 ..	WASHER PLAIN, TBRSB 6,4/22 H=4	3-5
315121-0165 ..	WASHER PLAIN, TBRSB 8,4/26 H=5	12-55, 12-57
315125-0173 ..	WASHER TBRSB 10,5X28X6 A4	2-69, 8-5, 8-15
315125-0146 ..	WASHER TBRSB 5.3X15X1 A4	10-31
315125-0153 ..	WASHER TBRSB 6,4X22X4 A4	1-35, 1-49, 1-51, 1-141, 3-27, 8-15
315125-0165 ..	WASHER TBRSB 8,4X26X5 A4	1-35, 1-39, 1-67, 1-69, 7-35, 7-37, 7-57
315237-0109 ..	WASHER,PL.RND.AL.10/14,H=1,5	4-5, 4-7, 4-9, 4-11, 4-13, 4-15
315237-0110 ..	WASHER,PL.RND.AL.13,5/18,H=1,5	1-9, 1-11
315237-0106 ..	WASHER,PL.RND.AL.6/10,H=1	4-5, 4-7, 4-9, 4-11, 4-13, 4-15, 4-25, 4-27
315237-0107 ..	WASHER,PL.RND.AL.8/14,H=1	4-25, 4-27
315234-0109 ..	WASHER,PL.RND.CU.10,3/13,5 H=1,0	1-7, 1-21, 1-23, 1-35, 1-39, 1-43, 1-45, 1-67, 1-69, 2-23, 2-25, 2-27, 4-25, 4-27, 6-89, 6-91
90005-0047	WASHER,PL.RND.CU.12,2/ H=1,5	4-59, 4-61, 4-63
315234-0110 ..	WASHER,PL.RND.CU.13,5/18 H=1,5	5-69, 9-11
315234-0111 ..	WASHER,PL.RND.CU.17,5//21 H=1,5	6-89, 6-91
979026-0200 ..	WATER CIRCULATION	6-57
580993-0000 ..	WATER DIAGRAM	6-15, 6-17, 6-19
476859-0300 ..	WEAC-VALVE	1-137
90091-0169	WEAR RING 12X15X3,2 MM	4-5, 4-7, 4-9, 4-11, 4-13, 4-15
90091-0162	WEAR RING 16X19X3,2 MM	4-25, 4-27
90091-0238	WEAR RING 20X22X10 MM	1-77, 1-79, 1-81
90091-0170	WEAR RING 25X30X4,2 MM	4-25, 4-27
1517065-0100 .	WEB GUIDE	7-55
2524476-0100 .	WEB GUIDE	7-35, 7-37
979555-0000 ..	WEB TENSION ROLLER	8-17, 8-19
1499477-0100 .	WEB TUNNEL	7-3
273965-0001 ..	WEIGHT	6-63
534695-0000 ..	WEIGHT	12-23
1511003-0000 .	WEIGHT	7-49
2797453-0000 .	WELDED CABINET	10-75, 10-77
255986-0000 ..	WHEEL	1-49, 1-51
540719-0000 ..	WHEEL	8-43
578486-0000 ..	WHEEL	1-21, 1-23
1140840-0000 .	WHEEL	12-15
1490931-0000 .	WHEEL	4-29
2555116-0000 .	WHEEL	8-17, 8-19
90067-0370	WHEEL, 32 04 176 6	9-7
90191-0047	WHEEL, NO.798 821	12-25
257231-0000 ..	WINDOW	2-39, 2-41
1511813-0000 .	WINDOW	10-121
1517665-0000 .	WINDOW	10-137
2547125-0001 .	WINDOWS OEM W2000 PROGRAM	11-13
312715-0116 ..	WING NUT DIN 315 A2 MVM-K M6	12-159, 12-165
312715-0118 ..	WING NUT DIN 315 A2 MVM-K M8	12-83
1144059-0000 .	WIRE	5-13, 5-15, 5-17, 5-19, 5-21
359000-0201 ..	WIRE MARKING, YELLOW, PA02/3"1"	9-23, 9-29, 9-31
359000-0204 ..	WIRE MARKING, YELLOW, PA02/3"4"	9-23, 9-29, 9-31
359000-0400 ..	WIRE MARKING, YELLOW, PA2/4"0"	1-7, 1-9, 1-11, 1-95, 1-97, 1-129, 1-161, 1-163, 2-23, 2-25, 2-27, 5-71, 6-15, 6-17, 6-19, 7-67
359000-0401 ..	WIRE MARKING, YELLOW, PA2/4"1"	1-7, 1-9, 1-11, 1-95, 1-97, 1-129, 1-161, 1-163, 2-23, 2-25, 2-27, 5-71, 6-15, 6-17, 6-19, 7-67
359000-0402 ..	WIRE MARKING, YELLOW, PA2/4"2"	1-95, 1-97, 1-129, 1-161, 1-163, 2-23, 2-25, 2-27, 5-71, 6-15, 6-17, 6-19, 7-67
359000-0403 ..	WIRE MARKING, YELLOW, PA2/4"3"	1-9, 1-11, 1-95, 1-97, 1-129, 1-161, 1-163, 2-23, 2-25, 2-27, 5-71, 6-15, 6-17, 6-19
359000-0404 ..	WIRE MARKING, YELLOW, PA2/4"4"	1-9, 1-11, 1-95, 1-97, 5-71, 6-15, 6-17, 6-19, 7-67
359000-0405 ..	WIRE MARKING, YELLOW, PA2/4"5"	1-7, 1-9, 1-11, 1-95, 1-97, 2-23, 2-25, 2-27, 6-15, 6-17, 6-19, 7-67
359000-0406 ..	WIRE MARKING, YELLOW, PA2/4"6"	1-9, 1-11, 1-95, 1-97, 2-23, 2-25, 2-27, 6-15, 6-17, 6-19

Part No	Description	Page No

Part No	Description	Page No

Machine Type	Group Description	Page No

Tetra Pak

SPC
Spare Parts Catalogue

Pos	Part No	Description	Page No
A			
A002	90458-0397	SERVO DRIVE DMC2 50720 P	10-13, 10-15, 10-17
A002.1	90045-0376	CONNECTOR KIT 9-032-011-970	10-13, 10-15, 10-17
A005	67347-0101	CARD BRAKEREG.MAGN.POWDER BRAKE	10-31
A005:1	67372-0101	BACKPLANE 8TE(32 POLE)	10-31
A006	67347-0101	CARD BRAKEREG.MAGN.POWDER BRAKE	10-31
A006.1	67372-0101	BACKPLANE 8TE(32 POLE)	10-31
A012	90458-1300	2 AXIS DOCKING STATION D2/PLC	10-13, 10-15, 10-17
A013	90458-0746	STEP MOTOR DRIVE L50	10-13, 10-15, 10-17
A014	90458-0746	STEP MOTOR DRIVE L50	10-13, 10-15, 10-17
A015	90458-1300	2 AXIS DOCKING STATION D2/PLC	10-13, 10-15, 10-17
A016	90458-0746	STEP MOTOR DRIVE L50	10-13, 10-15, 10-17
A017	90458-0746	STEP MOTOR DRIVE L50	10-13, 10-15, 10-17
M.A002	90459-1852	SHUT OFF VALVE, MS6-EM1-1/2	6-35
A100	90031-0051	BASEPLATE, 10-SLOT	10-41
A101	90031-0053	BASEPLATE,10-SLOT	10-43
A102	90031-0057	PLC, DIGITAL INPUT MODULE	10-41
A103	90031-0057	PLC, DIGITAL INPUT MODULE	10-41
A104	90031-0057	PLC, DIGITAL INPUT MODULE	10-41
A105	90031-0057	PLC, DIGITAL INPUT MODULE	10-41
A106	90031-0058	PLC, DIGITAL INPUT MODULE	10-41
A107	90031-0059	PLC, DIGITAL OUTPUT MODULE	10-41
A108	90031-0062	PLC, ANALOG OUTPUT MODULE 8PT/CURR/VOLT	10-41
A109	90031-0063	PLC,ANALOG COMBO MODULE,IN-4PT/OUT-2PT	10-41
A111	90031-0057	PLC, DIGITAL INPUT MODULE	10-43
A112	90031-0057	PLC, DIGITAL INPUT MODULE	10-43
A113	90031-0057	PLC, DIGITAL INPUT MODULE	10-43
A114	90031-0059	PLC, DIGITAL OUTPUT MODULE	10-43
A115	90031-0059	PLC, DIGITAL OUTPUT MODULE	10-43
A116	90031-0059	PLC, DIGITAL OUTPUT MODULE	10-43
A117	90031-0059	PLC, DIGITAL OUTPUT MODULE	10-43
A118	90031-0059	PLC, DIGITAL OUTPUT MODULE	10-43
A119	90031-0059	PLC, DIGITAL OUTPUT MODULE	10-43
A120	90031-0059	PLC, DIGITAL OUTPUT MODULE	10-43
A121	90031-0059	PLC, DIGITAL OUTPUT MODULE	10-45
A122	90031-0059	PLC, DIGITAL OUTPUT MODULE	10-45
A123	90031-0059	PLC, DIGITAL OUTPUT MODULE	10-45
A124	90031-0059	PLC, DIGITAL OUTPUT MODULE	10-45
A125	90031-0057	PLC, DIGITAL INPUT MODULE	10-45
A126	90031-0057	PLC, DIGITAL INPUT MODULE	10-45
A127	90031-0057	PLC, DIGITAL INPUT MODULE	10-45
A128	90031-0057	PLC, DIGITAL INPUT MODULE	10-45
A135	90031-0053	BASEPLATE,10-SLOT	10-45
A200	90410-0051	TEMPERATURE CONTROLLER, KS 40	10-123, 10-125
A200.1	359241-0123	SIGN: " TEMP. PRESTERILIZATION VALVE"	10-123, 10-125
A201	90410-0051	TEMPERATURE CONTROLLER, KS 40	10-123, 10-125
A201.1	359241-0141	SIGN: " WATER BATH"	10-123, 10-125
A202	90410-0051	TEMPERATURE CONTROLLER, KS 40	10-123, 10-125
A202.1	359241-0131	SIGN: " TEMP. LS"	10-123, 10-125
A203	90410-0051	TEMPERATURE CONTROLLER, KS 40	10-123, 10-125
A203.1	359241-0130	SIGN: " TEMP. AIR SUPER HEATER"	10-123, 10-125
A204	90410-0051	TEMPERATURE CONTROLLER, KS 40	10-123, 10-125
A204.1	359241-0126	SIGN: " TEMP. AIR KNIFE"	10-123, 10-125
A205	90410-0051	TEMPERATURE CONTROLLER, KS 40	10-123, 10-125
A205.1	359241-0121	SIGN: " STEAM"	10-123, 10-125
A206	90410-0051	TEMPERATURE CONTROLLER, KS 40	10-123, 10-125
A206.1	359241-0125	SIGN: " TEMP. PEROXIDE BATH"	10-123, 10-125
A209	90410-0051	TEMPERATURE CONTROLLER, KS 40	10-123, 10-125
A209.1	359241-0439	SIGN"PATCH SEALER"	10-123, 10-125
A210	90410-0051	TEMPERATURE CONTROLLER, KS 40	10-123, 10-125
A210.1	359241-0460	SIGN "PATCH SEALER 2"	10-123, 10-125
A211	90410-0051	TEMPERATURE CONTROLLER, KS 40	10-123, 10-125
A211.1	359241-0444	SIGN"TAB RESEAL"	10-123, 10-125
A212	90410-0051	TEMPERATURE CONTROLLER, KS 40	10-123, 10-125
A212.1	359241-0338	SIGN: " FLAP HEATING TOP LEFT"	10-123, 10-125
A213	90410-0051	TEMPERATURE CONTROLLER, KS 40	10-123, 10-125
A213.1	359241-0337	SIGN: " FLAP HEATING TOP RIGHT"	10-123, 10-125
A214	90410-0051	TEMPERATURE CONTROLLER, KS 40	10-123, 10-125
A214.1	359241-0340	SIGN: " FLAP HEATING BOTTOM LEFT"	10-123, 10-125
A215	90410-0051	TEMPERATURE CONTROLLER, KS 40	10-123, 10-125
A215.1	359241-0339	SIGN: " FLAP HEATING BOTTOM RIGHT"	10-123, 10-125
A216	90410-0051	TEMPERATURE CONTROLLER, KS 40	10-123, 10-125
A216.1	90457-0058	SIGN, LS SHORT STOP	10-123, 10-125
A300	90458-2580	LEVEL CONTROL RELAY RM4-LA32M	10-39
A301	90458-2580	LEVEL CONTROL RELAY RM4-LA32M	10-39
A302	90458-2580	LEVEL CONTROL RELAY RM4-LA32M	10-39
A303	90458-2580	LEVEL CONTROL RELAY RM4-LA32M	10-39
A305	90458-2580	LEVEL CONTROL RELAY RM4-LA32M	10-39
A307	90458-2580	LEVEL CONTROL RELAY RM4-LA32M	10-39
A310	559810-0101	TMCC2 CONTROLLER	10-31
A310.1	67372-0101	BACKPLANE 8TE(32 POLE)	10-31
A400	559810-0101	TMCC2 CONTROLLER	10-31
A400.1	67372-0101	BACKPLANE 8TE(32 POLE)	10-31

Pos	Part No	Description	Page No
A			
A401	559810-0101	TMCC2 CONTROLLER	10-31
A401.1	67372-0101	BACKPLANE 8TE(32 POLE)	10-31
A403	90119-0104	OPTO COUPLER AMMS 50070	10-39
A404	90119-0104	OPTO COUPLER AMMS 50070	10-39
A450	90453-0002	MODEM MD-12 DC	10-73
A452	2518145-0101	FLEXBOX TETRA BRIK	10-71
A452.1	2545064-0101	PLMS COMMON SOFTWARE	11-9
A454	90458-1102	INTOUCH OEM 2000 V.7.0/7.1 HW KEY	10-71
A500	1499642-0201	TPIH GENERATOR	10-143
A500.1	90458-1423	CONNECTOR, PC 4/4-STF-7.62	10-143
A500.2	90458-1424	CONNECTOR, MSTB 2.5/10-STF-5.08	10-143
A500.3	359241-0135	SIGN: " TRANSVERSAL SEALING"	10-143
A501	1499642-0201	TPIH GENERATOR	10-143
A501.1	90458-1423	CONNECTOR, PC 4/4-STF-7.62	10-143
A501.2	90458-1424	CONNECTOR, MSTB 2.5/10-STF-5.08	10-143
A501.3	359241-0132	SIGN: " TEMP. SA"	10-143
A504	90457-0092	SAFETY RELAY RT9-24VDC	10-39
A505	90457-0092	SAFETY RELAY RT9-24VDC	10-39
A506	90457-0092	SAFETY RELAY RT9-24VDC	10-39
A507	90457-0092	SAFETY RELAY RT9-24VDC	10-39
A509	90457-0092	SAFETY RELAY RT9-24VDC	10-39
A510	90458-2580	LEVEL CONTROL RELAY RM4-LA32M	10-39
A511	559810-0101	TMCC2 CONTROLLER	10-31
A511.1	67372-0101	BACKPLANE 8TE(32 POLE)	10-31
A512	90457-0092	SAFETY RELAY RT9-24VDC	10-39
A518	90410-0051	TEMPERATURE CONTROLLER, KS 40	10-123, 10-125
A518.1	359241-0268	SIGN: " SPRAYING, HEAD SPACE"	10-123, 10-125
A520	90459-2291	SAFETY TIME RELAY, E1T-0.5S-24VDC	10-39
A600	90119-0104	OPTO COUPLER AMMS 50070	10-39
A601	90119-0063	OPTO-RELAY, DC/DC AMMS-10-1/30VDC	10-39
A602	90119-0063	OPTO-RELAY, DC/DC AMMS-10-1/30VDC	10-39
A604	90119-0063	OPTO-RELAY, DC/DC AMMS-10-1/30VDC	10-39
A605	90119-0063	OPTO-RELAY, DC/DC AMMS-10-1/30VDC	10-39
A606	90119-0063	OPTO-RELAY, DC/DC AMMS-10-1/30VDC	10-39
A607	90119-0104	OPTO COUPLER AMMS 50070	10-39
A608	90119-0104	OPTO COUPLER AMMS 50070	10-39
A609	90119-0104	OPTO COUPLER AMMS 50070	10-39
A610	90119-0104	OPTO COUPLER AMMS 50070	10-39
B			
B001	90044-0192	LIMIT SW. SZ2586.000	10-75, 10-77
B002	90044-0192	LIMIT SW. SZ2586.000	10-75, 10-77
B003	90044-0192	LIMIT SW. SZ2586.000	10-75, 10-77
B004	90044-0192	LIMIT SW. SZ2586.000	10-75, 10-77
B005	90044-0192	LIMIT SW. SZ2586.000	10-75, 10-77
B006	90044-0192	LIMIT SW. SZ2586.000	10-75, 10-77
B007	90044-0192	LIMIT SW. SZ2586.000	10-75, 10-77
B008	90458-1114	BIMET. ELECTROMECH. THERMOSTAT K7H.020	10-69
M.B117	90458-0138	PROX. SWITCH, E2EG-X1R5B1-5M	1-87
M.B007	90459-6716	PRESSURE SWITCH, PEV-1/4-B-SA	6-41, 6-43
M.B002	90600-1385	PRESSURE GUARD, PEV-1/4-B SA234332	6-35
M.B116	1478814-0000	SENSOR	1-87
C			
M.C001	90235-0708	VALVE	6-41, 6-43
D			
D100	90031-0075	CPU363, SERIAL COMMUNICATION	10-41
E			
E004	90459-2560	LIGHT FIXTURE, TMS121 1XTL-D30W/830 IP	10-75, 10-77
E005	90459-2560	LIGHT FIXTURE, TMS121 1XTL-D30W/830 IP	10-75, 10-77
E006	90459-3090	LIGHT FIXTURE, TMS121 1XTL8W/830 IP	10-75, 10-77
M.E002	90458-1921	DISTRIBUTOR BLOCK, FR-8-1/4	6-15
M.E001	90458-1921	DISTRIBUTOR BLOCK, FR-8-1/4	6-15
M.E002	90458-1921	DISTRIBUTOR BLOCK, FR-8-1/4	6-17
M.E001	90458-1921	DISTRIBUTOR BLOCK, FR-8-1/4	6-17
M.E002	90458-1921	DISTRIBUTOR BLOCK, FR-8-1/4	6-19
M.E001	90458-1921	DISTRIBUTOR BLOCK, FR-8-1/4	6-19
F			
F001	354000-0100	MINIATURE CIRCUIT BREAKER, FAZ-C10/1	10-117
F002	354000-0100	MINIATURE CIRCUIT BREAKER, FAZ-C10/1	10-113
F004	354000-0100	MINIATURE CIRCUIT BREAKER, FAZ-C10/1	10-117
F005	76470-0100	PONCH	12-97
F005	354000-0060	MINIATURE CIRCUIT BREAKER, FAZ-C6/1	10-117
F005	456975-0200	TOOL CABINET	12-7
F006	354002-0060	MINIATURE CIRCUIT BREAKER, FAZ-C6/3	10-113
F007	354002-0200	MINIATURE CIRCUIT BREAKER, FAZ-C20/3	10-117
F008	354000-0100	MINIATURE CIRCUIT BREAKER, FAZ-C10/1	10-117
F009	354000-0100	MINIATURE CIRCUIT BREAKER, FAZ-C10/1	10-117
F010	76594-0200	SETTING TOOL	12-97
F010	351416-0100	3INIATURE CIRC. BREAK., FAZ -D10 1-POLE	10-113
F010	580873-0100	BOX FOR AIR FREIGHT	12-7
F011	354000-0100	MINIATURE CIRCUIT BREAKER, FAZ-C10/1	10-113
F012	354000-0010	MINIATURE CIRCUIT BREAKER, FAZ-C1/1	10-113
F012.1	90459-5813	AUXILARY CONTACT, FAZ-XHI11	10-113

Pos	Part No	Description	Page No
F			
F013	354002-0060	MINIATURE CIRCUIT BREAKER, FAZ-C6/3	10-117
F014	354000-0060	MINIATURE CIRCUIT BREAKER, FAZ-C6/1	10-117
F015	354000-0100	MINIATURE CIRCUIT BREAKER, FAZ-C10/1	10-117
F016	351416-0160	MINIATURE CIRC. BREAK., FAZ -D16 1-POLE	10-113
F017	354000-0060	MINIATURE CIRCUIT BREAKER, FAZ-C6/1	10-113
F019	354000-0100	MINIATURE CIRCUIT BREAKER, FAZ-C10/1	10-113
F021	354000-0005	MINIATURE CIRCUIT BREAKER, FAZ-C0,5/1	10-113
F024	90459-5811	RESIDUAL CURRENT DEVICE, FI-25/2/003-A	10-113
F025	90459-7072	MINIATURE CIRCUIT BREAKER, AZ-2-C100	10-113
F027	351416-0100	3INIATURE CIRC. BREAK., FAZ -D10 1-POLE	10-113
F030	354000-0005	MINIATURE CIRCUIT BREAKER, FAZ-C0,5/1	10-113
F032	351416-0060	MINIATURE CIRC. BREAK., FAZ -D6 1-POLE	10-113
F033	354000-0100	MINIATURE CIRCUIT BREAKER, FAZ-C10/1	10-117
F034	354002-0020	MINIATURE CIRCUIT BREAKER, FAZ-C2/3	10-117
F040	1350148-0100	MACHINE CARRIAGE	12-7
M.F002	90235-0297	VALVE 3/2, OPEN/CLOSED	6-15, 6-17, 6-19
F070	533014-0100	LEAK FINDING EQUIPMENT (SUPERSTRUCTURE)	12-7
F100	90233-0027	TUBE FUSE, 16A	10-115
F100.1	90459-3800	FUSE HOLDER, MSC 10 3-POLE D250151	10-115
F101	90233-0029	TUBE FUSE, 25A	10-115
F101.1	90459-3800	FUSE HOLDER, MSC 10 3-POLE D250151	10-115
F102	90459-1254	TUBE FUSE, 4A 500V	10-115
F102.1	90459-3800	FUSE HOLDER, MSC 10 3-POLE D250151	10-115
F103	90459-1254	TUBE FUSE, 4A 500V	10-115
F103.1	90459-3800	FUSE HOLDER, MSC 10 3-POLE D250151	10-115
F104	90233-0027	TUBE FUSE, 16A	10-115
F104.1	90459-3799	FUSE HOLDER, MSC 10 1-POLE A250148	10-115
F106	90233-0028	TUBE FUSE, 10A	10-115
F106.1	90459-3799	FUSE HOLDER, MSC 10 1-POLE A250148	10-115
F107	90233-0028	TUBE FUSE, 10A	10-115
F107.1	90459-3799	FUSE HOLDER, MSC 10 1-POLE A250148	10-115
F155	529345-0100	FILLING STATION H2O2	12-7
F160	532210-0100	PEROXIDE CONTAINER TROLLEY	12-7
F260	293684-0200	PRINTING WHEEL NSS	12-7
F261	293685-0200	PRINTING WHEEL SS	12-7
F262	434074-0300	INK UNIT	12-7
F263	434774-0300	INK UNIT	12-7
G			
G001	90459-3450	VARIABLE FREQUENCY DRIVE 22A-A4P5N104	10-13, 10-15, 10-17
G002	90459-3450	VARIABLE FREQUENCY DRIVE 22A-A4P5N104	10-13, 10-15, 10-17
G003	90459-3450	VARIABLE FREQUENCY DRIVE 22A-A4P5N104	10-13, 10-15, 10-17
G004	90459-3446	FREQUENCY CONVERTER 5,5 KW	10-13, 10-15, 10-17
G005	90459-3450	VARIABLE FREQUENCY DRIVE 22A-A4P5N104	10-13, 10-15, 10-17
G006	90459-3450	VARIABLE FREQUENCY DRIVE 22A-A4P5N104	10-13, 10-15, 10-17
G010	90459-4133	POWER SUPPLY UNIT 6EP1 436-3BA00	10-89
G100	90031-0068	PLC, POWER SUPPLY	10-41
G101	90031-0068	PLC, POWER SUPPLY	10-43
G102	90031-0068	PLC, POWER SUPPLY	10-45
K			
K001	90459-5440	CONTACTOR 4KW 24VDC, DILM9-01	10-47
K002	90459-5440	CONTACTOR 4KW 24VDC, DILM9-01	10-59
K003	90600-1758	CONTACTOR 30KW 24VDC,DILM65 +DILM65-XIP2	10-13, 10-15, 10-17
K003.1	90459-5418	AUXILARY CONTACTS, DILM150-XHI22 2NO;2NC	10-13, 10-15, 10-17
K004	90459-5441	CONTACTOR 7,5KW 24VDC, DILM17-01	10-59
K005	90459-5441	CONTACTOR 7,5KW 24VDC, DILM17-01	10-47
K006	90459-5441	CONTACTOR 7,5KW 24VDC, DILM17-01	10-47
K007	90459-5440	CONTACTOR 4KW 24VDC, DILM9-01	10-47
K008	90459-5441	CONTACTOR 7,5KW 24VDC, DILM17-01	10-47
K009	90459-5440	CONTACTOR 4KW 24VDC, DILM9-01	10-47
K011	90459-5441	CONTACTOR 7,5KW 24VDC, DILM17-01	10-47
K012	90459-5440	CONTACTOR 4KW 24VDC, DILM9-01	10-47
K013	90459-5440	CONTACTOR 4KW 24VDC, DILM9-01	10-47
K014	90459-5441	CONTACTOR 7,5KW 24VDC, DILM17-01	10-59
K015	90459-5441	CONTACTOR 7,5KW 24VDC, DILM17-01	10-47
K016	90459-5441	CONTACTOR 7,5KW 24VDC, DILM17-01	10-47
K017	90459-5440	CONTACTOR 4KW 24VDC, DILM9-01	10-47
K018	90459-5441	CONTACTOR 7,5KW 24VDC, DILM17-01	10-47
K019	90459-5441	CONTACTOR 7,5KW 24VDC, DILM17-01	10-47
K020	90459-5441	CONTACTOR 7,5KW 24VDC, DILM17-01	10-47
K021	90459-5440	CONTACTOR 4KW 24VDC, DILM9-01	10-47
K022	90459-5441	CONTACTOR 7,5KW 24VDC, DILM17-01	10-47
K023	90459-5440	CONTACTOR 4KW 24VDC, DILM9-01	10-47
K024	90459-5440	CONTACTOR 4KW 24VDC, DILM9-01	10-47
K025	90459-5440	CONTACTOR 4KW 24VDC, DILM9-01	10-47
K026	90459-5440	CONTACTOR 4KW 24VDC, DILM9-01	10-47
K028	90600-1643	CONTACTOR, DILK12-11	10-59
K029	90459-5308	CONTACTOR 4KW 24VDC, DILM9-10	10-59
K030	90600-1758	CONTACTOR 30KW 24VDC,DILM65 +DILM65-XIP2	10-13, 10-15, 10-17
K030.1	90459-5418	AUXILARY CONTACTS, DILM150-XHI22 2NO;2NC	10-13, 10-15, 10-17
K031	90600-1643	CONTACTOR, DILK12-11	10-47
K032	90459-5441	CONTACTOR 7,5KW 24VDC, DILM17-01	10-47
K097	90119-0086	RELAY, AUXILIARY MY4IN4 24VDC	10-29

Pos	Part No	Description	Page No
K			
K097.1	90119-0309	BASE UNIT, TYPE PYF 14AE	10-29
K097.2	90119-0310	CLAMP, TYPE PYC-A1	10-29
K098	90119-0086	RELAY, AUXILIARY MY4IN4 24VDC	10-29
K098.1	90119-0309	BASE UNIT, TYPE PYF 14AE	10-29
K098.2	90119-0310	CLAMP, TYPE PYC-A1	10-29
K099	90119-0056	RELAY, AUXILIARY MK3P5-S 24VDC	10-29
K099.1	90129-0006	BASE, S3-B	10-29
K100	90119-0056	RELAY, AUXILIARY MK3P5-S 24VDC	10-29
K100.1	90129-0006	BASE, S3-B	10-29
K101	90119-0109	RELAY OMRON 24VDC MY4H	10-29
K101.1	90119-0309	BASE UNIT, TYPE PYF 14AE	10-29
K101.2	90119-0310	CLAMP, TYPE PYC-A1	10-29
K102	90119-0056	RELAY, AUXILIARY MK3P5-S 24VDC	10-29
K102.1	90129-0006	BASE, S3-B	10-29
K103	90119-0056	RELAY, AUXILIARY MK3P5-S 24VDC	10-29
K103.1	90129-0006	BASE, S3-B	10-29
K104	90119-0056	RELAY, AUXILIARY MK3P5-S 24VDC	10-29
K104.1	90129-0006	BASE, S3-B	10-29
K105	90119-0056	RELAY, AUXILIARY MK3P5-S 24VDC	10-29
K105.1	90129-0006	BASE, S3-B	10-29
K106	90119-0056	RELAY, AUXILIARY MK3P5-S 24VDC	10-29
K106.1	90129-0006	BASE, S3-B	10-29
K107	90119-0056	RELAY, AUXILIARY MK3P5-S 24VDC	10-29
K107.1	90129-0006	BASE, S3-B	10-29
K110	90119-0056	RELAY, AUXILIARY MK3P5-S 24VDC	10-29
K110.1	90129-0006	BASE, S3-B	10-29
K112	90119-0086	RELAY, AUXILIARY MY4IN4 24VDC	10-29
K112.1	90119-0309	BASE UNIT, TYPE PYF 14AE	10-29
K112.2	90119-0310	CLAMP, TYPE PYC-A1	10-29
K113	90119-0086	RELAY, AUXILIARY MY4IN4 24VDC	10-29
K113.1	90119-0309	BASE UNIT, TYPE PYF 14AE	10-29
K113.2	90119-0310	CLAMP, TYPE PYC-A1	10-29
K200	90119-0067	SOLID-STATE RELAY, H12WD4850	10-49, 10-51
K201	90119-0067	SOLID-STATE RELAY, H12WD4850	10-53
K202	90119-0067	SOLID-STATE RELAY, H12WD4850	10-53
K203	90119-0067	SOLID-STATE RELAY, H12WD4850	10-53
K204	90119-0067	SOLID-STATE RELAY, H12WD4850	10-53
K205	90119-0067	SOLID-STATE RELAY, H12WD4850	10-49, 10-51
K206	90119-0067	SOLID-STATE RELAY, H12WD4850	10-49, 10-51
K207	90119-0067	SOLID-STATE RELAY, H12WD4850	10-55
K208	90119-0067	SOLID-STATE RELAY, H12WD4850	10-55
K209	90119-0067	SOLID-STATE RELAY, H12WD4850	10-55
K210	90119-0067	SOLID-STATE RELAY, H12WD4850	10-27
K211	90119-0067	SOLID-STATE RELAY, H12WD4850	10-27
K212	90119-0067	SOLID-STATE RELAY, H12WD4850	10-27
K213	90119-0067	SOLID-STATE RELAY, H12WD4850	10-27
K215	90119-0067	SOLID-STATE RELAY, H12WD4850	10-49, 10-51
K250	90119-0086	RELAY, AUXILIARY MY4IN4 24VDC	10-29
K250.1	90119-0309	BASE UNIT, TYPE PYF 14AE	10-29
K250.2	90119-0310	CLAMP, TYPE PYC-A1	10-29
K251	90119-0086	RELAY, AUXILIARY MY4IN4 24VDC	10-29
K251.1	90119-0309	BASE UNIT, TYPE PYF 14AE	10-29
K251.2	90119-0310	CLAMP, TYPE PYC-A1	10-29
K252	90119-0086	RELAY, AUXILIARY MY4IN4 24VDC	10-29
K252.1	90119-0309	BASE UNIT, TYPE PYF 14AE	10-29
K252.2	90119-0310	CLAMP, TYPE PYC-A1	10-29
K915	90119-0056	RELAY, AUXILIARY MK3P5-S 24VDC	10-29
K915.1	90129-0006	BASE, S3-B	10-29
L			
L001	90297-0306	BALLAST COIL 50/60 HZ	10-13, 10-15, 10-17
M			
M.Z2521	2814874-0100	SILENCER	6-15, 6-17, 6-19
MY132.1	90110-0095	CONNECTOR 3 POLE + EARTH	6-89
MY131.1	90110-0095	CONNECTOR 3 POLE + EARTH	6-89
MY052B.1	90110-0095	CONNECTOR 3 POLE + EARTH	6-89
MY052A.1	90110-0095	CONNECTOR 3 POLE + EARTH	6-89
MY132.1	90110-0095	CONNECTOR 3 POLE + EARTH	6-91
MY131.1	90110-0095	CONNECTOR 3 POLE + EARTH	6-91
MY052B.1	90110-0095	CONNECTOR 3 POLE + EARTH	6-91
MY052A.1	90110-0095	CONNECTOR 3 POLE + EARTH	6-91
MB154.1	90232-0347	FIBRE LL3-TB01 5 308050	8-77
MX038.1	90326-0012	PROTECTIVE COVER, T31A4618	1-21
MX004.1	90326-0012	PROTECTIVE COVER, T31A4618	1-21
MX038.1	90326-0012	PROTECTIVE COVER, T31A4618	1-23
MX004.1	90326-0012	PROTECTIVE COVER, T31A4618	1-23
MX037A.1	90326-0012	PROTECTIVE COVER, T31A4618	1-35
MX037B.1	90326-0012	PROTECTIVE COVER, T31A4618	1-35
MX079.1	90326-0012	PROTECTIVE COVER, T31A4618	1-39
MX039.1	90326-0012	PROTECTIVE COVER, T31A4618	1-43, 1-45
MX055.1	90326-0012	PROTECTIVE COVER, T31A4618	1-63
MX050.1	90326-0012	PROTECTIVE COVER, T31A4618	1-67, 1-69
MX040.1	90326-0012	PROTECTIVE COVER, T31A4618	1-137

M

Pos	Part No	Description	Page No
MX518.1	90326-0020	PLUG, FEMALE YELLOW CR-AL	1-15
MH035R.1	90458-0293	LIGHT ELEMENT, RED, KL70-401R	2-47
MH034R.1	90458-0293	LIGHT ELEMENT, RED, KL70-401R	2-59
MH035Y.1	90458-0294	LIGHT ELEMENT, YELLOW, KL70-401Y	2-47
MH034Y.1	90458-0294	LIGHT ELEMENT, YELLOW, KL70-401Y	2-59
MH035B.1	90458-0295	LIGHT ELEMENT, BLUE, KL70-401L	2-47
MH034B.1	90458-0295	LIGHT ELEMENT, BLUE, KL70-401L	2-59
MB080:1	90458-0601	CONTRAST SCANNER, KT15W-P2110S01	1-171, 1-173
MS035.1	359301-0110	BUTTON SIGN, SHORT STOP	7-17
MS008.1	359301-0110	BUTTON SIGN, SHORT STOP	8-77
MS012.1	486826-0001	SIGN "EMERGENCY STOP"	1-67, 1-69
MS004.1	486826-0001	SIGN "EMERGENCY STOP"	1-143, 1-145, 1-147, 1-149, 1-151, 1-153
MS005.1	486826-0001	SIGN "EMERGENCY STOP"	7-17
MS011.1	486826-0001	SIGN "EMERGENCY STOP"	8-77
MB043.1	567070-0010	ELECTRODE	1-91, 1-93
MB510.1	567070-0014	ELECTRODE	1-9, 1-11
MX518.2	90326-0012	PROTECTIVE COVER, T31A4618	1-15
MB080:2	90458-0601	CONTRAST SCANNER, KT15W-P2110S01	1-171, 1-173
MB510.2	567070-0014	ELECTRODE	1-9, 1-11
MB043.2	567070-0015	ELECTRODE	1-91, 1-93
M001	90457-0056	FAN 7450 ES	10-13, 10-15, 10-17
M016	90457-0063	COOLING UNIT, KB17TB.CBB	10-141
MA451	90453-0001	MODEM MA-12	9-19
MBO79	90326-0048	THERMOCOUPLE, 12826-31	1-39
MB001	90061-0027	ANGLE ENCODER 670900035	3-33
MB004	90326-0052	THERMO ELEMENT	1-21, 1-23
MB006	90274-0084	PRESSURE GUARD, 1800 KPA	6-87
MB009	90044-0194	PROX.SW. IN5329/IN3002-BPKG(EX90044-104)	7-35, 7-37
MB010	90044-0151	LIMIT SW. GLEB24C	3-27
MB011	90459-0472	KEY SAF.SW. AZ 16 02ZVRK-M20-2152-2254	2-69
MB012	90459-0472	KEY SAF.SW. AZ 16 02ZVRK-M20-2152-2254	2-69
MB013	312105-0372	SCREW M6S ISO 4017 M6X25 A480	5-81
MB014	90059-0001	THERMOSTAT	8-65
MB015	90459-0472	KEY SAF.SW. AZ 16 02ZVRK-M20-2152-2254	2-35
MB016A	90458-0138	PROX. SWITCH, E2EG-X1R5B1-5M	3-29
MB016B	90458-0138	PROX. SWITCH, E2EG-X1R5B1-5M	3-31
MB019	90459-0472	KEY SAF.SW. AZ 16 02ZVRK-M20-2152-2254	2-37
MB020	90458-0894	PROXIMITY SENSOR E2E2-X10MB1-5M	5-37
MB021C	90459-1194	KEY SAF.SW. AZ16-03 ZVRK-M16	1-49
MB021B	90459-1194	KEY SAF.SW. AZ16-03 ZVRK-M16	1-49
MB021A	90459-1194	KEY SAF.SW. AZ16-03 ZVRK-M16	1-49
MB021C	90459-1194	KEY SAF.SW. AZ16-03 ZVRK-M16	1-51
MB021B	90459-1194	KEY SAF.SW. AZ16-03 ZVRK-M16	1-51
MB021A	90459-1194	KEY SAF.SW. AZ16-03 ZVRK-M16	1-51
MB032	90044-0194	PROX.SW. IN5329/IN3002-BPKG(EX90044-104)	7-23, 7-25, 7-27, 7-29
MB034	567070-0011	ELECTRODE	1-21, 1-23
MB034	567070-0019	ELECTRODE	1-21, 1-23
MB037A	90326-0048	THERMOCOUPLE, 12826-31	1-35
MB037B	90326-0057	THERMOCOUPLE, CR-AL	1-35
MB038	90326-0052	THERMO ELEMENT	1-21, 1-23
MB039	90326-0051	THERMOCOUPLE, 12826-33	1-43, 1-45
MB040	90326-0051	THERMOCOUPLE, 12826-33	1-137
MB045	90457-0019	LEVEL PROBE, HMFB-S=45-0=80-0=90-T70	6-89, 6-91
MB046	90044-0194	PROX.SW. IN5329/IN3002-BPKG(EX90044-104)	1-57
MB047	90044-0104	PROX.SWITCH IFM IN 3002(RP 90044-194)	1-59
MB048B	90044-0084	LIMIT SW. 14 CE1-4	1-21
MB048A	90044-0084	LIMIT SW. 14 CE1-4	1-21
MB048B	90044-0084	LIMIT SW. 14 CE1-4	1-23
MB048A	90044-0084	LIMIT SW. 14 CE1-4	1-23
MB050	90326-0089	THERMOCOUPLE, 5110-089-000	1-67, 1-69
MB051	90458-0676	PROXIMITY SWITCH,E2EG-X5B1-6M	1-67, 1-69
MB052	90044-0194	PROX.SW. IN5329/IN3002-BPKG(EX90044-104)	1-67, 1-69
MB053	90044-0194	PROX.SW. IN5329/IN3002-BPKG(EX90044-104)	1-67, 1-69
MB054	90044-0194	PROX.SW. IN5329/IN3002-BPKG(EX90044-104)	1-67, 1-69
MB055	90326-0051	THERMOCOUPLE, 12826-33	1-63
MB061	90044-0194	PROX.SW. IN5329/IN3002-BPKG(EX90044-104)	1-49, 1-51
MB062	90274-0045	PRESSURE GUARD, 14 KPA	2-19
MB063	90044-0194	PROX.SW. IN5329/IN3002-BPKG(EX90044-104)	1-137
MB064	567070-0012	ELECTRODE	6-77, 6-79
MB071	90457-0047	SENSOR 2750-1-5111-1 W.ADAPTER PNP	1-63
MB072	90326-0080	THERMOCOUPLE, 5110080-000	5-13, 5-15, 5-17, 5-19, 5-21
MB073	90326-0080	THERMOCOUPLE, 5110080-000	5-13, 5-15, 5-17, 5-19, 5-21
MB074	90326-0080	THERMOCOUPLE, 5110080-000	5-13, 5-15, 5-17, 5-19, 5-21
MB075	90326-0080	THERMOCOUPLE, 5110080-000	5-13, 5-15, 5-17, 5-19, 5-21
MB085	979500-0001	ELECTRODE	1-21, 1-23
MB091A	90232-0103	PH.CELL E3S-CT61-L-5M	9-25
MB091B	90232-0104	PH.CELL E3S-CT61-D-5M	9-25
MB092A	90232-0103	PH.CELL E3S-CT61-L-5M	9-27
MB092B	90232-0104	PH.CELL E3S-CT61-D-5M	9-27
MB093A	90232-0103	PH.CELL E3S-CT61-L-5M	9-21
MB093B	90232-0104	PH.CELL E3S-CT61-D-5M	9-21
MB094	90044-0116	CYLINDER, SENSOR	1-37

Pos	Part No	Description	Page No
M			
MB095	1282411-0000	FLOAT	6-61
MB104	90044-0194	PROX.SW. IN5329/IN3002-BPKG(EX90044-104)	1-67, 1-69
MB108	90044-0103	KEY SAFETY SWITCH AZ 15 ZVR-2254	8-25, 8-27, 8-29
MB108	90044-0139	KEY SAF.SW. AZ16-02 ZVR K-2254 USE 90459	8-45, 8-47, 8-49
MB109	90044-0194	PROX.SW. IN5329/IN3002-BPKG(EX90044-104)	7-23, 7-25, 7-27, 7-29
MB111	90044-0194	PROX.SW. IN5329/IN3002-BPKG(EX90044-104)	7-23, 7-25, 7-27, 7-29
MB112	42063-0100	LEVEL DETECTOR	1-185
MB113B	90459-0472	KEY SAF.SW. AZ 16 02ZVRK-M20-2152-2254	7-31
MB113A	90459-0472	KEY SAF.SW. AZ 16 02ZVRK-M20-2152-2254	7-31
MB115	90459-0472	KEY SAF.SW. AZ 16 02ZVRK-M20-2152-2254	8-11, 8-13
MB119	90044-0117	PROX.SW. IX 0208	5-57
MB120	90044-0124	PROX.SW. 922AB2XM-A9P-050-LZ-876	3-33
MB132	90458-0747	SENSOR FOR CYLINDER, SMH-1PC	4-33
MB134	90458-0747	SENSOR FOR CYLINDER, SMH-1PC	4-31
MB149	90458-0675	PROXIMITY SENSOR, E2EG-X5MB1-5M	8-17, 8-19
MB150	90458-0675	PROXIMITY SENSOR, E2EG-X5MB1-5M	8-17, 8-19
MB153	90044-0194	PROX.SW. IN5329/IN3002-BPKG(EX90044-104)	1-15
MB154	90232-0123	PH.CELL WLL170-P135-6011723	8-79
MB157	90044-0104	PROX.SWITCH IFM IN 3002(RP 90044-194)	8-25, 8-27, 8-29
MB157	90044-0194	PROX.SW. IN5329/IN3002-BPKG(EX90044-104)	8-45, 8-47, 8-49
MB160	90458-0675	PROXIMITY SENSOR, E2EG-X5MB1-5M	1-177
MB236	90044-0194	PROX.SW. IN5329/IN3002-BPKG(EX90044-104)	7-39, 7-41
MB511	90274-0066	PRESSURE SWITCH, 5,516 - 689,5 KPA	1-9, 1-11
MB512	90458-0676	PROXIMITY SWITCH,E2EG-X5B1-6M	1-67, 1-69
MB517	90044-0104	PROX.SWITCH IFM IN 3002(RP 90044-194)	1-19
MB518	90326-0060	THERMOCOUPLE, CR-AL	1-15
MB519	90044-0104	PROX.SWITCH IFM IN 3002(RP 90044-194)	1-19
MB521	90458-2619	FLOW METER, D-6230-HGB-BB-AV-99-0-N2	1-9, 1-11
ME001B	441534-0200	LIGHT FIXTURE	2-13
ME001A	441534-0200	LIGHT FIXTURE	2-13
ME001C	595430-0200	LIGHT FIXTURE	2-9
ME003	90164-0015	LIGHT FIXTURE, RL70CV-111 / 230V 50HZ	8-77
MH034Y	90036-0068	BULB 6.5W 24V	2-59
MH034R	90036-0068	BULB 6.5W 24V	2-59
MH034B	90036-0068	BULB 6.5W 24V	2-59
MH034S	90458-0302	SIREN WITH ADJUSTABLE VOLUME KS 70-3004	2-59
MH035Y	90036-0068	BULB 6.5W 24V	2-47
MH035R	90036-0068	BULB 6.5W 24V	2-47
MH035B	90036-0068	BULB 6.5W 24V	2-47
ML001	571872-0000	BUSBAR,LEFT	4-57
ML001	2554960-0000	BUSBAR LEFT	4-57
ML002	571871-0000	BUSBAR,RIGHT	4-55
ML002	2554961-0000	BUSBAR RIGHT	4-55
ML003	1035587-0000	INDUCTOR	7-45
M.M013	90459-2327	GEARS, WORM MOTOR IGL 80-60 + VE 31-G-R-	1-47
M.M021	90459-2327	GEARS, WORM MOTOR IGL 80-60 + VE 31-G-R-	8-17, 8-19
MM001	90457-0172	MOTOR 3GAA 131001-ASA	3-7
MM004	90457-0131	PUMP SV805 R22T 50HZ	5-81
MM004	90458-2762	PUMP SV805 R406T 60HZ	5-81
MM005	90045-0228	MOTOR 7AA80M4-B5	6-89, 6-91
MM006	90321-0037	PUMP C-6125P EP 220V, 50HZ	6-13
MM007	90270-0017	COMPRESSOR NASH/ELMO 112 MB/4-2083	6-59
MM010	90045-0087	MOTOR 3GAA 071002-CSA M2AA 71B	6-65
MM017	2526863-0000	PUMP	1-21, 1-23
MM018	90045-0161	MOTOR MGCF11S	6-75
MM019	90458-1879	GEARS, WORM MOTOR 528V--L06-B01	1-61
MM132	90458-1301	CYLINDER ETS32-M10NA2X-FM50-AEUM1D	4-33
MM134	90458-1301	CYLINDER ETS32-M10NA2X-FM50-AEUM1D	4-31
MR001	90206-0053	HEATING ELEMENT 230V 1200W	8-65
MR005C	90459-1382	HEATING ELEMENT 1100W 220V	5-13
MR005D	90459-1382	HEATING ELEMENT 1100W 220V	5-13
MR005C	90459-1382	HEATING ELEMENT 1100W 220V	5-13
MR005D	90459-1382	HEATING ELEMENT 1100W 220V	5-13
MR005C	90459-1382	HEATING ELEMENT 1100W 220V	5-13
MR005D	90459-1382	HEATING ELEMENT 1100W 220V	5-13
MR005C	90459-1382	HEATING ELEMENT 1100W 220V	5-13
MR005D	90459-1382	HEATING ELEMENT 1100W 220V	5-13
MR005C	90459-1382	HEATING ELEMENT 1100W 220V	5-13
MR005D	90459-1382	HEATING ELEMENT 1100W 220V	5-13
MR005C	90459-1382	HEATING ELEMENT 1100W 220V	5-13
MR005D	90459-1382	HEATING ELEMENT 1100W 220V	5-13
MR005C	90459-1382	HEATING ELEMENT 1100W 220V	5-13
MR005D	90459-1382	HEATING ELEMENT 1100W 220V	5-13
MR005C	90459-1382	HEATING ELEMENT 1100W 220V	5-13
MR005D	90459-1382	HEATING ELEMENT 1100W 220V	5-13
MR005C	90459-1382	HEATING ELEMENT 1100W 220V	5-13
MR005D	90459-1382	HEATING ELEMENT 1100W 220V	5-13
MR005C	90459-1382	HEATING ELEMENT 1100W 220V	5-13
MR005D	90459-1382	HEATING ELEMENT 1100W 220V	5-13
MR005A	90459-1382	HEATING ELEMENT 1100W 220V	5-13

M

Pos	Part No	Description	Page No
MR005B	90459-1382	HEATING ELEMENT 1100W 220V	5-13
MR005C	90459-1382	HEATING ELEMENT 1100W 220V	5-15
MR005D	90459-1382	HEATING ELEMENT 1100W 220V	5-15

Pos	Part No	Description	Page No
M			
MR005D	90459-1382	HEATING ELEMENT 1100W 220V	5-21
MR005C	90459-1382	HEATING ELEMENT 1100W 220V	5-21
MR005D	90459-1382	HEATING ELEMENT 1100W 220V	5-21
MR005C	90459-1382	HEATING ELEMENT 1100W 220V	5-21
MR005D	90459-1382	HEATING ELEMENT 1100W 220V	5-21
MR005C	90459-1382	HEATING ELEMENT 1100W 220V	5-21
MR005D	90459-1382	HEATING ELEMENT 1100W 220V	5-21
MR005C	90459-1382	HEATING ELEMENT 1100W 220V	5-21
MR005D	90459-1382	HEATING ELEMENT 1100W 220V	5-21
MR005C	90459-1382	HEATING ELEMENT 1100W 220V	5-21
MR005D	90459-1382	HEATING ELEMENT 1100W 220V	5-21
MR005A	90459-1382	HEATING ELEMENT 1100W 220V	5-21
MR005B	90459-1382	HEATING ELEMENT 1100W 220V	5-21
MR032	90600-2007	HEATING ELEM.15KW 3X230/400V,T90600-2007	1-43, 1-45
MR033	1538473-0000	SEALING BLOCK	7-19
MR034	1524481-0000	SEALING BLOCK	7-21
MR035	90459-1094	HEATING ELEMENT 3000W 240V AC	1-35
MR036	90206-0070	HEATING ELEMENT 6000W 380/220V	1-21, 1-23
MR037	90206-0031	HEATING ELEMENT 700+1200W, 220V	1-39
MS004	90458-1651	EMERGENCY STOP, ZB4-BS-844 ZB4-BZ-104	1-143, 1-145, 1-147, 1-149 1-151, 1-153
MS005	90458-1651	EMERGENCY STOP, ZB4-BS-844 ZB4-BZ-104	7-17
MS008	90064-0085	PUSH BUTTON, RED	8-77
MS011	90458-1651	EMERGENCY STOP, ZB4-BS-844 ZB4-BZ-104	8-77
MS012	90458-1651	EMERGENCY STOP, ZB4-BS-844 ZB4-BZ-104	1-67, 1-69
MS033H2	90036-0057	LIGHT BULB, BA9S 28V	7-17
MS033H	90064-0098	PUSH BUTTON, CLEAR	7-17
MS033H1	90459-0691	SIGN, STRIP SPLICE/ RESET ALARM	7-17
MS035	90064-0085	PUSH BUTTON, RED	7-17
MT001	67379-0262	TRANSFORMER	4-57
MT001	67379-0264	TRANSFORMER	4-57
MT001	67379-0265	TRANSFORMER	4-57
MT002	67379-0262	TRANSFORMER	4-55
MT002	67379-0264	TRANSFORMER	4-55
MT002	67379-0265	TRANSFORMER	4-55
MW327	90220-0091	PAIR TWISTED CABLE 2X2X0,25MM2	1-181
MW380	90220-0091	PAIR TWISTED CABLE 2X2X0,25MM2	1-181
MXO79	90326-0020	PLUG, FEMALE YELLOW CR-AL	1-39
MX002	2506331-0200	CONNECTION BOX	5-47
MX004	90326-0020	PLUG, FEMALE YELLOW CR-AL	1-21, 1-23
MX006	90195-0020	TERMINAL BLOCK, BK 2CRN; 0624720000	6-13
MX007	456827-0400	CONNECTION BOX	2-13
MX008	1036443-0000	CONTACT UNIT	5-13, 5-15, 5-17, 5-19, 5-21
MX009	1036443-0000	CONTACT UNIT	5-13, 5-15, 5-17, 5-19, 5-21
MX010	1036443-0000	CONTACT UNIT	5-13, 5-15, 5-17, 5-19, 5-21
MX011	1036443-0000	CONTACT UNIT	5-13, 5-15, 5-17, 5-19, 5-21
MX020	2501466-0100	CONNECTION BOX	9-19
MX021	2501465-0100	CONNECTION BOX	9-19
MX022	2510844-0100	CONNECTION BOX	9-19
MX031	580064-0200	CONNECTION BOX	7-5, 7-7
MX037A	90326-0020	PLUG, FEMALE YELLOW CR-AL	1-35
MX037B	90326-0020	PLUG, FEMALE YELLOW CR-AL	1-35
MX038	90326-0020	PLUG, FEMALE YELLOW CR-AL	1-21, 1-23
MX039	90326-0020	PLUG, FEMALE YELLOW CR-AL	1-43, 1-45
MX040	90326-0020	PLUG, FEMALE YELLOW CR-AL	1-137
MX050	90326-0020	PLUG, FEMALE YELLOW CR-AL	1-67, 1-69
MX055	90326-0020	PLUG, FEMALE YELLOW CR-AL	1-63
MX060	1558318-0100	CONNECTION BOX	8-77
MX075	67380-0208	TRANSFORMER	7-45
MX212	90326-0022	PLUG, MALE YELLOW CR-AL	5-13, 5-15, 5-17, 5-19, 5-21
MX212,1	90326-0077	CONTACT	5-13, 5-15, 5-17, 5-19, 5-21
MX213	90326-0022	PLUG, MALE YELLOW CR-AL	5-13, 5-15, 5-17, 5-19, 5-21
MX213,1	90326-0077	CONTACT	5-13, 5-15, 5-17, 5-19, 5-21
MX214	90326-0022	PLUG, MALE YELLOW CR-AL	5-13, 5-15, 5-17, 5-19, 5-21
MX214,1	90326-0077	CONTACT	5-13, 5-15, 5-17, 5-19, 5-21
MX215	90326-0022	PLUG, MALE YELLOW CR-AL	5-13, 5-15, 5-17, 5-19, 5-21
MX215,1	90326-0077	CONTACT	5-13, 5-15, 5-17, 5-19, 5-21
MX518	90326-0022	PLUG, MALE YELLOW CR-AL	1-15
MY004	90042-0171	SOLENOID VALVE BURKERT	1-91, 1-93
MY022	90458-2200	ELECTROMAGNETIC CLUTCH, 30 MM/24 VDC	3-5
MY029	90042-0172	SOLENOID VALVE 4023/1005/1032 24VDC	6-31
MY031	90042-0172	SOLENOID VALVE 4023/1005/1032 24VDC	6-29
MY032	90042-0172	SOLENOID VALVE 4023/1005/1032 24VDC	6-29
MY033	90042-0134	SOLENOID VALVE ASCO SCG 210 802 24VDC	6-93, 6-95
MY034	544906-0000	SOLENOID VALVE	1-91, 1-93
MY035	544906-0000	SOLENOID VALVE	1-91, 1-93
MY043	90432-0023	BRAKE ORTLINGHAUS	3-5
MY051	90042-0173	SOLENOID VALVE BÃ¼RKERT	6-23
MY052	90459-1690	DIRECTIONAL VALVE, DG4V-3-6C-MUH-7-60-EN	6-89, 6-91
MY107	90458-1092	PROPORTIONAL VALVE 0 - 10V/0-6 BAR	1-181

Pos	Part No	Description	Page No
M			
MY108	544906-0000	SOLENOID VALVE	1-21, 1-23
MY131	90201-0058	SOLENOID VALVE DC 24V	6-89, 6-91
MY132	90201-0058	SOLENOID VALVE DC 24V	6-89, 6-91
MY184	90458-1092	PROPORTIONAL VALVE 0 - 10V/0-6 BAR	1-181
MY510	979956-0000	SOLENOID VALVE	1-9, 1-11
MY513	90042-0171	SOLENOID VALVE BURKERT	1-9, 1-11
MY514	90042-0171	SOLENOID VALVE BURKERT	1-11
MY515	90042-0171	SOLENOID VALVE BURKERT	1-11
MY516	90042-0171	SOLENOID VALVE BURKERT	1-11
MY517	90042-0171	SOLENOID VALVE BURKERT	1-11
MY519	90459-1420	PROPORTIONAL VALVE 0 - 10V/0-6 BAR	1-9, 1-11
MY519	90600-0491	ACTUATOR, 9650-0089-Z-I-OTI	1-15
P			
P002	90053-0031	HOUR COUNTER, B 609.10 10-50VDC	10-123, 10-125
P002.1	359241-0201	SIGN: " HOUR METER"	10-123, 10-125
P003	90053-0029	COUNTER, F524.800FA3C 24VDC	10-123, 10-125
P003.1	359241-0180	SIGN: " PRODUCTION"	10-123, 10-125
P004	90053-0031	HOUR COUNTER, B 609.10 10-50VDC	10-123, 10-125
P004.1	359241-0459	SIGN "PT HOUR METER"	10-123, 10-125
P005	90459-0080	RECORDER 6-CHANNEL, LOGOPRINT 500	10-123, 10-125
Q			
Q001	90459-5518	CURR.LIM.CIRC.BREAKER, NZMB1-4-A63	10-133
Q001.1	90457-0123	SIGN, MAIN SWITCH	10-75, 10-77
Q001.1	90459-4182	HANDLE, NZM1-XS-R	10-133
Q001.2	359241-0297	SIGN: " 50 HZ"	10-75, 10-77
Q006	90459-5328	OVERLOAD PROTECTION PKZM0-10	10-117
Q006.1	90259-0313	AUX. CONTACT K&M NHI21-PKZM0	10-117
Q007	90459-5326	OVERLOAD PROTECTION, PKZM0-4	10-117
Q007.1	90259-0313	AUX. CONTACT K&M NHI21-PKZM0	10-117
Q008	90459-5328	OVERLOAD PROTECTION PKZM0-10	10-117
Q008.1	90259-0313	AUX. CONTACT K&M NHI21-PKZM0	10-117
Q008.2	90259-0308	CONN.TERM.K&M BK 25/3-PKZ0	10-117
Q009	90459-5324	OVERLOAD PROTECTION, PKZM0-1,6	10-117
Q009.1	90259-0313	AUX. CONTACT K&M NHI21-PKZM0	10-117
Q009.2	90259-0308	CONN.TERM.K&M BK 25/3-PKZ0	10-117
Q016	90459-5320	OVERLOAD PROTECTION, PKZM0-0,25	10-117
Q016.1	90259-0313	AUX. CONTACT K&M NHI21-PKZM0	10-117
R			
R007	90121-0132	RESISTANCE FIXED, 0,51 KOHM, 0,25 W	10-65
S			
S001	90458-1651	EMERGENCY STOP, ZB4-BS-844 ZB4-BZ-104	10-107
S002	90458-1651	EMERGENCY STOP, ZB4-BS-844 ZB4-BZ-104	10-105
S003	90111-0124	KEY SWITCH, 1NO,1NC CONTACT	10-123, 10-125
S003.1	359241-0122	SIGN: " CLEANING STEAM BARRIER SPACE"	10-123, 10-125
S004	90111-0122	KEY SWITCH, 2 NO CONTACTS	10-123, 10-125
S004.1	359241-0133	SIGN: " SERVICE SWITCH"	10-123, 10-125
S006	90111-0120	SWITCH, 2 POS.704.510 .0A+704.901.5/A	10-123, 10-125
S006.1	359241-0140	SIGN: " LIGHT OFF/ON"	10-123, 10-125
S900	90458-1651	EMERGENCY STOP, ZB4-BS-844 ZB4-BZ-104	2-73
S901	90064-0082	PUSH BUTTON, WHITE	2-73
S901:1	359301-0519	SIGN "TPOP RESET"	2-73
S902	90064-0082	PUSH BUTTON, WHITE	2-73
S902:1	359301-0130	BUTTON SIGN, LAMP TEST	2-73
S903	90111-0120	SWITCH, 2 POS.704.510 .0A+704.901.5/A	2-73
S904	90064-0082	PUSH BUTTON, WHITE	2-73
S904:1	359301-0170	BUTTON SIGN, SPOOLING OF FINAL FOLDER	2-73
S905	90064-0098	PUSH BUTTON, CLEAR	2-73
S905:1	359301-0091	BUTTON SIGN, INCHING FINAL FOLDER	2-73
S906	90064-0082	PUSH BUTTON, WHITE	2-73
S906:1	359301-0050	BUTTON SIGN, DROP CHUTE BRIK	2-73
S907	90064-0098	PUSH BUTTON, CLEAR	2-73
S907:1	359301-0090	BUTTON SIGN, INCHING	2-73
S908	90064-0084	PUSH BUTTON, YELLOW	2-73
S908:1	359301-0110	BUTTON SIGN, SHORT STOP	2-73
S909	90064-0086	PUSH BUTTON, WHITE	2-73
S909:1	359301-0160	BUTTON SIGN, DRAINAGE OF PRODUCT TUBE	2-73
S911	90064-0093	PUSH BUTTON, GREEN	2-73
S911:1	359301-0001	BUTTON SIGN, UP	2-73
S912	90064-0082	PUSH BUTTON, WHITE	2-73
S912:1	359301-0005	BUTTON SIGN, DOWN	2-73
T			
T004	90458-1273	TRANSFORMER, OFL-1350	10-75, 10-77
T005	90245-0029	TRANSFORMER, 1280-3660/TP 182	10-75, 10-77
T006	90458-0258	TRANSFORMER, 220VAC/6-9-12VAC	10-75, 10-77
M.T031	90458-0254	PRECISION PRESSURE REGULATOR,LRP-1/4-0,7	6-33
M.T021	90459-2241	REGULATOR, MS4-LRB-1/4-D5-AS	6-33
M.T004	90459-2241	REGULATOR, MS4-LRB-1/4-D5-AS	6-33
M.T001	90459-2241	REGULATOR, MS4-LRB-1/4-D5-AS	6-33
M.T103	90459-2242	REGULATOR, MS4-LRB-1/4-D7-AS	6-33
M.T002	90459-5804	FILTER REGULATOR, MS6-LFR-1/2-D6-ERV-AS	6-35
U			
M.U031	90458-2969	PRESSURE GAUGE, MAP-40-1-1/8-EN	6-33

Pos	Part No	Description	Page No
V			
V007	353021-0122	TERMINAL DISCONNECTABLE, WTR 2,5 D	10-65
V008	353021-0122	TERMINAL DISCONNECTABLE, WTR 2,5 D	10-65
V010	353021-0122	TERMINAL DISCONNECTABLE, WTR 2,5 D	10-65
V014	353021-0122	TERMINAL DISCONNECTABLE, WTR 2,5 D	10-65
V015	353021-0122	TERMINAL DISCONNECTABLE, WTR 2,5 D	10-65
W			
W005	351150-0418	CABLE OLFLEX 4X2,5 MM2 LIGHT/GREY	2-13
W006	351150-0412	CABLE OLFLEX 3X1,5 MM2 LIGHT/GREY	2-13
W007	351150-0412	CABLE OLFLEX 3X1,5 MM2 LIGHT/GREY	2-13
W009	351150-0406	CABLE OLFLEX 7X0,75 MM2 LIGHT/GREY	2-47, 2-57
W010	351150-0431	CABLE OLFLEX 2X0,75 MM2 LIGHT/GREY	2-35
W011	351150-0431	CABLE OLFLEX 2X0,75 MM2 LIGHT/GREY	2-37
W013	351150-0431	CABLE OLFLEX 2X0,75 MM2 LIGHT/GREY	5-81
W018	90458-2557	CABLE OLFLEX 25X1 MM2	2-57
W019	351150-0412	CABLE OLFLEX 3X1,5 MM2 LIGHT/GREY	2-9
W023	90220-0104	SCR. CABLE 4X1,5MM2	2-13
W025	351150-0428	CABLE OLFLEX 41X0,75 MM2 LIGHT/GREY	2-13
W033	90220-0059	THERMOCOUPLE CABLE K/PVC/20AWG 2X0,5MM2	10-123, 10-125
W034	90220-0059	THERMOCOUPLE CABLE K/PVC/20AWG 2X0,5MM2	10-123, 10-125
W035	90220-0059	THERMOCOUPLE CABLE K/PVC/20AWG 2X0,5MM2	10-29
W036	90220-0059	THERMOCOUPLE CABLE K/PVC/20AWG 2X0,5MM2	10-29
W037	90220-0059	THERMOCOUPLE CABLE K/PVC/20AWG 2X0,5MM2	10-123, 10-125
W038	90220-0059	THERMOCOUPLE CABLE K/PVC/20AWG 2X0,5MM2	10-123, 10-125
W039	90220-0059	THERMOCOUPLE CABLE K/PVC/20AWG 2X0,5MM2	10-123, 10-125
W040	90220-0059	THERMOCOUPLE CABLE K/PVC/20AWG 2X0,5MM2	10-123, 10-125
W042	90220-0059	THERMOCOUPLE CABLE K/PVC/20AWG 2X0,5MM2	10-123, 10-125
W044	551969-0012	COAXIAL CABLE	10-143
W046	90220-0059	THERMOCOUPLE CABLE K/PVC/20AWG 2X0,5MM2	10-123, 10-125
W047	90220-0059	THERMOCOUPLE CABLE K/PVC/20AWG 2X0,5MM2	10-123, 10-125
W048	90220-0059	THERMOCOUPLE CABLE K/PVC/20AWG 2X0,5MM2	10-123, 10-125
W049	90220-0059	THERMOCOUPLE CABLE K/PVC/20AWG 2X0,5MM2	10-123, 10-125
W050	90031-0305	I/O EXPANSION CABLE	10-41, 10-43
W056	90220-0059	THERMOCOUPLE CABLE K/PVC/20AWG 2X0,5MM2	10-123, 10-125
W057	90220-0059	THERMOCOUPLE CABLE K/PVC/20AWG 2X0,5MM2	10-123, 10-125
W058	90220-0059	THERMOCOUPLE CABLE K/PVC/20AWG 2X0,5MM2	10-123, 10-125
W059	90220-0059	THERMOCOUPLE CABLE K/PVC/20AWG 2X0,5MM2	10-123, 10-125
W061	1254442-0000	CABLE SERIAL	10-71
W062	1511793-0000	CABLE	10-71
W063	90220-0091	PAIR TWISTED CABLE 2X2X0,25MM2	10-73
W064	1478661-0000	CABLE SERIAL	10-71
W066	90220-0059	THERMOCOUPLE CABLE K/PVC/20AWG 2X0,5MM2	10-123, 10-125
W067	90220-0183	SCR. CABLE 2X0,34MM2	10-13, 10-15, 10-17
W068	90220-0183	SCR. CABLE 2X0,34MM2	10-13, 10-15, 10-17
W069	90220-0183	SCR. CABLE 2X0,34MM2	10-13, 10-15, 10-17
W070	90220-0059	THERMOCOUPLE CABLE K/PVC/20AWG 2X0,5MM2	10-123, 10-125
W071	90220-0059	THERMOCOUPLE CABLE K/PVC/20AWG 2X0,5MM2	10-123, 10-125
W072	90220-0059	THERMOCOUPLE CABLE K/PVC/20AWG 2X0,5MM2	10-123, 10-125
W073	1143884-0000	COPPER BRAID	10-123, 10-125
W074	1143884-0000	COPPER BRAID	10-123, 10-125
W075	1143884-0000	COPPER BRAID	10-123, 10-125
W076	1143884-0000	COPPER BRAID	10-123, 10-125
W077	1143884-0000	COPPER BRAID	10-123, 10-125
W078	1143884-0000	COPPER BRAID	10-123, 10-125
W079	1143884-0000	COPPER BRAID	10-123, 10-125
W080	1143884-0000	COPPER BRAID	10-123, 10-125
W081	1143884-0000	COPPER BRAID	10-123, 10-125
W082	1143884-0000	COPPER BRAID	10-123, 10-125
W083	1143884-0000	COPPER BRAID	10-123, 10-125
W084	1143884-0000	COPPER BRAID	10-123, 10-125
W085	90220-0104	SCR. CABLE 4X1,5MM2	10-83, 10-85
W086	1143884-0000	COPPER BRAID	10-123, 10-125
M.W342	351150-0403	CABLE OLFLEX 3X0,75 MM2 LIGHT/GREY	6-41
M.W321	351150-0403	CABLE OLFLEX 3X0,75 MM2 LIGHT/GREY	6-41
M.W342	351150-0403	CABLE OLFLEX 3X0,75 MM2 LIGHT/GREY	6-43
M.W321	351150-0403	CABLE OLFLEX 3X0,75 MM2 LIGHT/GREY	6-43
M.W391	351162-0106	CABLE AWM 1X4 MM2 YELLOW-GREEN	6-41
M.W132	351162-0106	CABLE AWM 1X4 MM2 YELLOW-GREEN	6-41
M.W391	351162-0106	CABLE AWM 1X4 MM2 YELLOW-GREEN	6-43
M.W132	351162-0106	CABLE AWM 1X4 MM2 YELLOW-GREEN	6-43
W088	1512322-0000	COPPER BRAID	10-41
W090	1143884-0000	COPPER BRAID	10-123, 10-125
W098	351150-0415	CABLE OLFLEX 7X1,5 MM2 LIGHT/GREY	10-141
W099	90220-0092	PAIR TWISTED CABLE 3X2X0,25MM2	10-13, 10-15, 10-17
W101	90220-0105	SCR. CABLE 4X2,5MM2	3-7
W102	90220-0183	SCR. CABLE 2X0,34MM2	10-143
W102	351150-0405	CABLE OLFLEX 5X0,75 MM2 LIGHT/GREY	3-27
W103	90220-0183	SCR. CABLE 2X0,34MM2	10-143
W104	90220-0183	SCR. CABLE 2X0,34MM2	10-143
W108	351150-0425	CABLE OLFLEX 25X0,75 MM2 LIGHT/GREY	2-13
W110	351150-0413	CABLE OLFLEX 4X1,5 MM2 LIGHT/GREY	2-13
W121	1512322-0000	COPPER BRAID	10-41
W122	1512322-0000	COPPER BRAID	10-43

W

Pos	Part No	Description	Page No
W123	1512322-0000	COPPER BRAID	10-45
W124	90220-0183	SCR. CABLE 2X0,34MM2	10-41
W125	90220-0183	SCR. CABLE 2X0,34MM2	10-41
W126	90220-0183	SCR. CABLE 2X0,34MM2	10-41
W0127	90220-0183	SCR. CABLE 2X0,34MM2	10-13, 10-15, 10-17
W127	90220-0183	SCR. CABLE 2X0,34MM2	10-41
W128	90220-0183	SCR. CABLE 2X0,34MM2	10-41
W129	90220-0092	PAIR TWISTED CABLE 3X2X0,25MM2	10-13, 10-15, 10-17
W130	90220-0183	SCR. CABLE 2X0,34MM2	10-41
W131	1512322-0000	COPPER BRAID	10-41
W133	1143884-0000	COPPER BRAID	10-123, 10-125
W134	1143884-0000	COPPER BRAID	10-123, 10-125
W230	351150-0412	CABLE OLFLEX 3X1,5 MM2 LIGHT/GREY	2-13
W231	351150-0412	CABLE OLFLEX 3X1,5 MM2 LIGHT/GREY	2-13
W232	351150-0412	CABLE OLFLEX 3X1,5 MM2 LIGHT/GREY	2-13
W233	351150-0412	CABLE OLFLEX 3X1,5 MM2 LIGHT/GREY	2-13
W234	90220-0034	THERMOCABLE TEX/SITW-20F-KX 2X0,5MM2	2-13
W235	90220-0034	THERMOCABLE TEX/SITW-20F-KX 2X0,5MM2	2-13
W236	90220-0034	THERMOCABLE TEX/SITW-20F-KX 2X0,5MM2	2-13
W237	90220-0034	THERMOCABLE TEX/SITW-20F-KX 2X0,5MM2	2-13
W238	90220-0034	THERMOCABLE TEX/SITW-20F-KX 2X0,5MM2	5-13, 5-15, 5-17, 5-19, 5-21
W239	90220-0034	THERMOCABLE TEX/SITW-20F-KX 2X0,5MM2	5-13, 5-15, 5-17, 5-19, 5-21
W240	90220-0034	THERMOCABLE TEX/SITW-20F-KX 2X0,5MM2	5-13, 5-15, 5-17, 5-19, 5-21
W241	90220-0034	THERMOCABLE TEX/SITW-20F-KX 2X0,5MM2	5-13, 5-15, 5-17, 5-19, 5-21
W242	351120-0144	CABLE SILFLEX SIHF 3X1,5 0046014	5-13, 5-15, 5-17, 5-19, 5-21
W243	351120-0144	CABLE SILFLEX SIHF 3X1,5 0046014	5-13, 5-15, 5-17, 5-19, 5-21
W244	351120-0144	CABLE SILFLEX SIHF 3X1,5 0046014	5-13, 5-15, 5-17, 5-19, 5-21
W245	351120-0144	CABLE SILFLEX SIHF 3X1,5 0046014	5-13, 5-15, 5-17, 5-19, 5-21
W246	351150-0431	CABLE OLFLEX 2X0,75 MM2 LIGHT/GREY	2-69
W247	351150-0431	CABLE OLFLEX 2X0,75 MM2 LIGHT/GREY	2-35
W248	351150-0431	CABLE OLFLEX 2X0,75 MM2 LIGHT/GREY	2-69
W249	351150-0431	CABLE OLFLEX 2X0,75 MM2 LIGHT/GREY	2-37
W290	351162-0106	CABLE AWM 1X4 MM2 YELLOW-GREEN	2-13
W301	351150-0418	CABLE OLFLEX 4X2,5 MM2 LIGHT/GREY	6-59
W302	351120-0144	CABLE SILFLEX SIHF 3X1,5 0046014	8-79
W303	351150-0431	CABLE OLFLEX 2X0,75 MM2 LIGHT/GREY	6-77, 6-79
W304	351150-0418	CABLE OLFLEX 4X2,5 MM2 LIGHT/GREY	6-89, 6-91
W305	351150-0412	CABLE OLFLEX 3X1,5 MM2 LIGHT/GREY	6-13
W308	351150-0418	CABLE OLFLEX 4X2,5 MM2 LIGHT/GREY	6-65
W312	351150-0412	CABLE OLFLEX 3X1,5 MM2 LIGHT/GREY	1-21, 1-23
W316	351150-0403	CABLE OLFLEX 3X0,75 MM2 LIGHT/GREY	6-89, 6-91
W317	351150-0403	CABLE OLFLEX 3X0,75 MM2 LIGHT/GREY	6-89, 6-91
W322	351150-0403	CABLE OLFLEX 3X0,75 MM2 LIGHT/GREY	6-87
W325	351150-0403	CABLE OLFLEX 3X0,75 MM2 LIGHT/GREY	6-29
W345	351150-0431	CABLE OLFLEX 2X0,75 MM2 LIGHT/GREY	6-31
W348	351150-0403	CABLE OLFLEX 3X0,75 MM2 LIGHT/GREY	6-29
W349	351150-0403	CABLE OLFLEX 3X0,75 MM2 LIGHT/GREY	6-89, 6-91
W350	351150-0403	CABLE OLFLEX 3X0,75 MM2 LIGHT/GREY	6-89, 6-91
W352	351150-0431	CABLE OLFLEX 2X0,75 MM2 LIGHT/GREY	6-23
W354	351150-0403	CABLE OLFLEX 3X0,75 MM2 LIGHT/GREY	6-93, 6-95
W355	351150-0404	CABLE OLFLEX 4X0,75 MM2 LIGHT/GREY	6-89, 6-91
W356	351150-0404	CABLE OLFLEX 4X0,75 MM2 LIGHT/GREY	6-87
W360	351150-0405	CABLE OLFLEX 5X0,75 MM2 LIGHT/GREY	6-61
W361	351150-0403	CABLE OLFLEX 3X0,75 MM2 LIGHT/GREY	6-75
W370	551969-0006	COAXIAL CABLES	2-13
W371	551969-0006	COAXIAL CABLES	2-13
W372	1548155-0000	COAXIAL CABLE	4-57
W373	1548155-0000	COAXIAL CABLE	4-55
W390	351162-0109	CABLE AWM 1X16 MM2 YELLOW-GREEN	6-53
W392	351162-0106	CABLE AWM 1X4 MM2 YELLOW-GREEN	2-57
W401	351120-0267	CABLE SILFLEX SIHF 4X6 00460333	1-21, 1-23
W402	351120-0144	CABLE SILFLEX SIHF 3X1,5 0046014	1-39
W403	351120-0145	CABLE SILFLEX SIHF 3X2,5 0046020	1-35
W404	90220-0104	SCR. CABLE 4X1,5MM2	1-47
W405	351150-0431	CABLE OLFLEX 2X0,75 MM2 LIGHT/GREY	1-87
W406	90220-0059	THERMOCOUPLE CABLE K/PVC/20AWG 2X0,5MM2	1-21, 1-23
W407	90220-0059	THERMOCOUPLE CABLE K/PVC/20AWG 2X0,5MM2	1-137
W408	90220-0059	THERMOCOUPLE CABLE K/PVC/20AWG 2X0,5MM2	1-21, 1-23
W409	90220-0059	THERMOCOUPLE CABLE K/PVC/20AWG 2X0,5MM2	1-43, 1-45
W410	90220-0059	THERMOCOUPLE CABLE K/PVC/20AWG 2X0,5MM2	1-35
W411	90220-0059	THERMOCOUPLE CABLE K/PVC/20AWG 2X0,5MM2	1-63
W412	90220-0059	THERMOCOUPLE CABLE K/PVC/20AWG 2X0,5MM2	1-67, 1-69
W416	351150-0405	CABLE OLFLEX 5X0,75 MM2 LIGHT/GREY	1-49, 1-51
W417	351150-0405	CABLE OLFLEX 5X0,75 MM2 LIGHT/GREY	1-49, 1-51
W418	351150-0405	CABLE OLFLEX 5X0,75 MM2 LIGHT/GREY	1-49, 1-51
W420	90220-0085	CABLE, MULTI-CONDUCTOR SCREENED	1-185
W425	351150-0404	CABLE OLFLEX 4X0,75 MM2 LIGHT/GREY	1-91, 1-93
W426	351150-0403	CABLE OLFLEX 3X0,75 MM2 LIGHT/GREY	1-21, 1-23
W427	351150-0431	CABLE OLFLEX 2X0,75 MM2 LIGHT/GREY	1-21, 1-23
W428	351150-0431	CABLE OLFLEX 2X0,75 MM2 LIGHT/GREY	1-21, 1-23
W430	351150-0403	CABLE OLFLEX 3X0,75 MM2 LIGHT/GREY	1-91, 1-93
W431	351150-0403	CABLE OLFLEX 3X0,75 MM2 LIGHT/GREY	1-91, 1-93

Pos	Part No	Description	Page No
W			
W432	351150-0403	CABLE OLFLEX 3X0,75 MM2 LIGHT/GREY	1-91, 1-93
W433	90220-0059	THERMOCOUPLE CABLE K/PVC/20AWG 2X0,5MM2	1-39
W434	351150-0405	CABLE OLFLEX 5X0,75 MM2 LIGHT/GREY	1-143, 1-145, 1-147, 1-149, 1-151, 1-153
W436	351150-0405	CABLE OLFLEX 5X0,75 MM2 LIGHT/GREY	1-67, 1-69
W442	90458-1298	CONNECTOR AND CABLE 403000E 18M 080	4-33
W444	90458-1298	CONNECTOR AND CABLE 403000E 18M 080	4-31
W449	90220-0107	SCR. CABLE 5X0,75MM2	4-33
W450	90220-0059	THERMOCOUPLE CABLE K/PVC/20AWG 2X0,5MM2	1-35
W451	90220-0107	SCR. CABLE 5X0,75MM2	4-31
W452	351120-0168	CABLE SIHF 4X10MM2 GREEN/YELLOW	1-43, 1-45
W459	351150-0413	CABLE OLFLEX 4X1,5 MM2 LIGHT/GREY	1-61
W601	548770-0006	COAXIAL CABLE L=1200 MM	7-45
W602	351150-0422	CABLE OLFLEX 3X4 MM2 LIGHT/GREY	7-33
W605	351150-0407	CABLE OLFLEX 12X0,75 MM2 LIGHT/GREY	7-17, 7-33
W615	351150-0425	CABLE OLFLEX 25X0,75 MM2 LIGHT/GREY	7-33
W630	351120-0146	CABLE SILFLEX SIHF 3X4 0046026	7-19
W631	351120-0145	CABLE SILFLEX SIHF 3X2,5 0046020	7-21
W701	351150-0403	CABLE OLFLEX 3X0,75 MM2 LIGHT/GREY	1-9, 1-11
W703	351150-0403	CABLE OLFLEX 3X0,75 MM2 LIGHT/GREY	1-11
W704	351150-0403	CABLE OLFLEX 3X0,75 MM2 LIGHT/GREY	1-11
W705	351150-0403	CABLE OLFLEX 3X0,75 MM2 LIGHT/GREY	1-11
W706	351150-0403	CABLE OLFLEX 3X0,75 MM2 LIGHT/GREY	1-11
W707	351150-0404	CABLE OLFLEX 4X0,75 MM2 LIGHT/GREY	1-9, 1-11
W715	351150-0425	CABLE OLFLEX 25X0,75 MM2 LIGHT/GREY	1-9, 1-11
W716	90220-0059	THERMOCOUPLE CABLE K/PVC/20AWG 2X0,5MM2	1-15
W717	351150-0403	CABLE OLFLEX 3X0,75 MM2 LIGHT/GREY	1-9, 1-11
W721	90220-0072	SCR. CABLE 4X0,34MM2	1-9, 1-11
W721.1	353300-0006	SHRINKABLE HOSE	1-9, 1-11
W722	90220-0072	SCR. CABLE 4X0,34MM2	1-9, 1-11
W722.1	353300-0006	SHRINKABLE HOSE	1-9, 1-11
W750	351150-0414	CABLE OLFLEX 5X1,5 MM2 LIGHT/GREY	8-79
W751	351150-0412	CABLE OLFLEX 3X1,5 MM2 LIGHT/GREY	8-79
W753	351150-0404	CABLE OLFLEX 4X0,75 MM2 LIGHT/GREY	8-77
W753	351150-0406	CABLE OLFLEX 7X0,75 MM2 LIGHT/GREY	8-79
W757	90220-0104	SCR. CABLE 4X1,5MM2	8-17, 8-19
W759	351150-0425	CABLE OLFLEX 25X0,75 MM2 LIGHT/GREY	8-79
W780	351150-0406	CABLE OLFLEX 7X0,75 MM2 LIGHT/GREY	8-77
W788	351150-0405	CABLE OLFLEX 5X0,75 MM2 LIGHT/GREY	8-79
W790	351150-0405	CABLE OLFLEX 5X0,75 MM2 LIGHT/GREY	8-79
W802	351150-0405	CABLE OLFLEX 5X0,75 MM2 LIGHT/GREY	7-31
W803	351150-0405	CABLE OLFLEX 5X0,75 MM2 LIGHT/GREY	7-31
W951	90220-0091	PAIR TWISTED CABLE 2X2X0,25MM2	9-19
W952	90220-0091	PAIR TWISTED CABLE 2X2X0,25MM2	9-19
W953	1366189-0000	CABLE LVDS 6M	10-71
W954	351150-0405	CABLE OLFLEX 5X0,75 MM2 LIGHT/GREY	9-29
W955	351150-0405	CABLE OLFLEX 5X0,75 MM2 LIGHT/GREY	9-31
W956	90041-0068	DATACABLE MODEM PC	9-19
W958	351150-0405	CABLE OLFLEX 5X0,75 MM2 LIGHT/GREY	9-23
X			
X001	1511800-0100	POWER SIDE,BOTTOM TERMINAL BLOCK	10-13, 10-15, 10-17
X002	1511802-0200	TERMINAL BLOCK	10-13, 10-15, 10-17
X003	1511804-0100	LOGIC SIDE,TOP TERMINAL BLOCK	10-13, 10-15, 10-17
X005	1517659-0100	MODEM	10-71
X008	1511828-0100	X008	10-13, 10-15, 10-17
X009	1511829-0100	POWER SIDE,TOP TERMINAL BLOCK	10-13, 10-15, 10-17
X011	90458-0876	FEMALE INSERT HAN 6B 09 14 002 2751	10-83, 10-85
X011.1	90458-0871	HOUSING BULKHEAD MOUNTING HAN 6B-AGG-RB	10-83, 10-85
X011.2	90458-0875	HING. FR. HAN 6B HOUSING, 09 14 006 0313	10-83, 10-85
X012	90110-0296	FEMALE INSERT HDC-HA-4BS 149840-B/2	10-83, 10-85
X012	90459-2412	CONNECTOR 4 POLE + EARTH	8-77
X012.1	90110-0371	COVER, HDC-HA-3-TOVL1/11165247-A/1	8-77
X012.1	90457-0050	BULKHEAD HOUSING 149760	10-83, 10-85
X013	90110-0296	FEMALE INSERT HDC-HA-4BS 149840-B/2	10-83, 10-85
X013	90459-2412	CONNECTOR 4 POLE + EARTH	8-17, 8-19
X013.1	90110-0371	COVER, HDC-HA-3-TOVL1/11165247-A/1	8-17, 8-19
X013.1	90457-0050	BULKHEAD HOUSING 149760	10-83, 10-85
X014	90110-0296	FEMALE INSERT HDC-HA-4BS 149840-B/2	10-83, 10-85
X014.1	90457-0050	BULKHEAD HOUSING 149760	10-83, 10-85
X015	90110-0150	MALE INSERT 121110 0000	8-77
X015	90110-0151	FEMALE INSERT 24-POL 121130 0000	10-87
X015.1	90110-0152	CABLE HOOD 24-POL 70.352.2428.1	8-77
X015.1	90110-0153	CHASSIS HOUSING 24-P CHI 24, 121240 0000	10-87
X016	90110-0150	MALE INSERT 121110 0000	8-77
X016	90110-0151	FEMALE INSERT 24-POL 121130 0000	10-87
X016.1	90110-0152	CABLE HOOD 24-POL 70.352.2428.1	8-77
X016.1	90110-0153	CHASSIS HOUSING 24-P CHI 24, 121240 0000	10-87
X017	90110-0163	FEMALE INSERT 70 300 0640 0	10-141
X017.1	90110-0226	CABLE HOOD 6-POL 70.350.0628.0	10-141
X018	90110-0247	FEMALE INSERT 70.200.0653.0	10-91, 10-93, 10-95, 10-97, 10-99, 10-101, 10-103
X018.1	90110-0243	CONTACT HOUSING 16-POL 70.320.1628.0	10-91, 10-93, 10-95, 10-97, 10-99, 10-101, 10-103
X018.2	90110-0150	MALE INSERT 121110 0000	7-33

Pos	Part No	Description	Page No
X			
X018.3	90110-0346	CABLE HOOD 1211220 00 00	7-33
X019	90110-0151	FEMALE INSERT 24-POL 121130 0000	10-91, 10-93, 10-95, 10-97, 10-99, 10-101, 10-103
X019.1	90110-0153	CHASSIS HOUSING 24-P CHI 24, 121240 0000	10-91, 10-93, 10-95, 10-97, 10-99, 10-101, 10-103
X019.2	90110-0156	MALE INSERT 70.210.0653.0	7-33
X019.3	90110-0244	CABLE HOOD 6-POL 70.350.1628.0	7-33
X020	90001-0033	WALL SOCKET OUTLET	10-13, 10-15, 10-17
X020.1	90459-1738	MANDATORY ACTION SIGN ISO, READ MAINTENA	10-13, 10-15, 10-17
X021	90001-0033	WALL SOCKET OUTLET	10-13, 10-15, 10-17
X021.1	90459-1738	MANDATORY ACTION SIGN ISO, READ MAINTENA	10-13, 10-15, 10-17
X022	90110-0296	FEMALE INSERT HDC-HA-4BS 149840-B/2	10-91, 10-93, 10-95, 10-97, 10-99, 10-101, 10-103
X022.1	90458-1181	BULKHEAD HOUSING HDC-HA-3-AWVL1/11	10-91, 10-93, 10-95, 10-97, 10-99, 10-101, 10-103
X023	90458-1279	PLUG CONNECTOR DP1	10-13, 10-15, 10-17
X025	90110-0151	FEMALE INSERT 24-POL 121130 0000	10-91, 10-93, 10-95, 10-97, 10-99, 10-101, 10-103
X025.1	90110-0153	CHASSIS HOUSING 24-P CHI 24, 121240 0000	10-91, 10-93, 10-95, 10-97, 10-99, 10-101, 10-103
X026	90458-1406	FEMALE INSERT 120770	10-91, 10-93, 10-95, 10-97, 10-99, 10-101, 10-103
X026.1	90110-0243	CONTACT HOUSING 16-POL 70.320.1628.0	10-91, 10-93, 10-95, 10-97, 10-99, 10-101, 10-103
X027	90458-1279	PLUG CONNECTOR DP1	10-13, 10-15, 10-17
X300	1511806-0100	X300	10-133
X452	90110-0028	CONTACT UNIT 4-POLEADAPTER	10-71
X901	1095597-0100	TERMINAL	2-73
Y			
M.Y039	90042-0173	SOLENOID VALVE BÃ¼RKERT	6-41, 6-43
M.Y182	90458-1194	MONOSTABLE VALVE 5/2	6-45
M.Y177	90458-1194	MONOSTABLE VALVE 5/2	6-45
M.Y027	90458-1194	MONOSTABLE VALVE 5/2	6-45
M.Y915	90458-1194	MONOSTABLE VALVE 5/2	6-45
M.Y129	90458-1194	MONOSTABLE VALVE 5/2	6-45
M.Y105	90458-1194	MONOSTABLE VALVE 5/2	6-45
M.Y086	90458-1194	MONOSTABLE VALVE 5/2	6-45
M.Y026	90458-1194	MONOSTABLE VALVE 5/2	6-45
M.Y025	90458-1194	MONOSTABLE VALVE 5/2	6-45
M.Y024	90458-1194	MONOSTABLE VALVE 5/2	6-45
M.Y023	90458-1194	MONOSTABLE VALVE 5/2	6-45
M.Y021	90458-1194	MONOSTABLE VALVE 5/2	6-45
M.Y020	90458-1194	MONOSTABLE VALVE 5/2	6-45
M.Y019	90458-1194	MONOSTABLE VALVE 5/2	6-45
M.Y009	90458-1194	MONOSTABLE VALVE 5/2	6-45
M.Y007	90458-1194	MONOSTABLE VALVE 5/2	6-45
M.Y182	90458-1194	MONOSTABLE VALVE 5/2	6-47
M.Y177	90458-1194	MONOSTABLE VALVE 5/2	6-47
M.Y027	90458-1194	MONOSTABLE VALVE 5/2	6-47
M.Y915	90458-1194	MONOSTABLE VALVE 5/2	6-47
M.Y129	90458-1194	MONOSTABLE VALVE 5/2	6-47
M.Y105	90458-1194	MONOSTABLE VALVE 5/2	6-47
M.Y086	90458-1194	MONOSTABLE VALVE 5/2	6-47
M.Y026	90458-1194	MONOSTABLE VALVE 5/2	6-47
M.Y025	90458-1194	MONOSTABLE VALVE 5/2	6-47
M.Y024	90458-1194	MONOSTABLE VALVE 5/2	6-47
M.Y023	90458-1194	MONOSTABLE VALVE 5/2	6-47
M.Y021	90458-1194	MONOSTABLE VALVE 5/2	6-47
M.Y020	90458-1194	MONOSTABLE VALVE 5/2	6-47
M.Y019	90458-1194	MONOSTABLE VALVE 5/2	6-47
M.Y009	90458-1194	MONOSTABLE VALVE 5/2	6-47
M.Y007	90458-1194	MONOSTABLE VALVE 5/2	6-47
M.Y103	90458-1200	VALVE OPEN IN MID-POSITION 5/3	6-45, 6-47
M.Y017/008	90458-1202	VALVES 2X3/2, CLOSED	6-45
M.Y005/006	90458-1202	VALVES 2X3/2, CLOSED	6-45
M.Y002/003	90458-1202	VALVES 2X3/2, CLOSED	6-45
M.Y017/008	90458-1202	VALVES 2X3/2, CLOSED	6-47
M.Y005/006	90458-1202	VALVES 2X3/2, CLOSED	6-47
M.Y002/003	90458-1202	VALVES 2X3/2, CLOSED	6-47
M.Y001/102	90458-1203	VALVE 2X3/2 1X OPEN 1X CLOSED	6-45, 6-47
M.Y183	90458-1215	COVER PLATE FOR EMPTY VALVE POSITION	6-45
M.Y072	90458-1215	COVER PLATE FOR EMPTY VALVE POSITION	6-45
M.Y070	90458-1215	COVER PLATE FOR EMPTY VALVE POSITION	6-45
M.Y183	90458-1215	COVER PLATE FOR EMPTY VALVE POSITION	6-47
M.Y072	90458-1215	COVER PLATE FOR EMPTY VALVE POSITION	6-47
M.Y070	90458-1215	COVER PLATE FOR EMPTY VALVE POSITION	6-47
M.Y101	90459-1854	SHUT OFF VALVE, MS6-EE-1/2-10V24	6-35
Z			
Z001	90082-0013	OVER VOLT. PROTECT. PU 4C-R 230 VAC	10-135
Z002	90024-0060	POWER LINE FILTER, 80 A 250/440 VAC	10-133
Z003	90024-0036	FILTERED TERMINAL BLOCK	10-133
Z003.1	1285108-0000	COVER	10-133
Z004	90458-1140	FERRITE, RI-26-28-13	10-13, 10-15, 10-17

Pos	Part No	Description	Page No
Z			
Z005	90458-1140	FERRITE, RI-26-28-13	10-13, 10-15, 10-17
Z006	90458-1140	FERRITE, RI-26-28-13	10-13, 10-15, 10-17
Z007	90458-1140	FERRITE, RI-26-28-13	10-13, 10-15, 10-17
Z008	90459-3460	FOOTPRINT FILTER 22-RF010-AL	10-13, 10-15, 10-17
Z009	90459-3460	FOOTPRINT FILTER 22-RF010-AL	10-13, 10-15, 10-17
Z010	90458-1140	FERRITE, RI-26-28-13	10-13, 10-15, 10-17
Z012	90459-3460	FOOTPRINT FILTER 22-RF010-AL	10-13, 10-15, 10-17
Z013	90458-1140	FERRITE, RI-26-28-13	10-13, 10-15, 10-17
Z015	90459-3459	FOOTPRINT FILTER, 22-RF018-CL	10-13, 10-15, 10-17
Z016	90458-1140	FERRITE, RI-26-28-13	10-13, 10-15, 10-17
Z017	90459-3460	FOOTPRINT FILTER 22-RF010-AL	10-13, 10-15, 10-17
Z018	90458-1140	FERRITE, RI-26-28-13	10-13, 10-15, 10-17
Z019	90459-3698	FILTER, 6 A, 250 VAC	10-13, 10-15, 10-17
Z020	90458-1140	FERRITE, RI-26-28-13	10-13, 10-15, 10-17
Z021	90458-1140	FERRITE, RI-26-28-13	10-13, 10-15, 10-17
Z023	90459-3698	FILTER, 6 A, 250 VAC	10-13, 10-15, 10-17
Z024	90458-1140	FERRITE, RI-26-28-13	10-13, 10-15, 10-17
Z025	90458-1140	FERRITE, RI-26-28-13	10-13, 10-15, 10-17
Z033	90459-3460	FOOTPRINT FILTER 22-RF010-AL	10-13, 10-15, 10-17
Z034	90458-1140	FERRITE, RI-26-28-13	10-13, 10-15, 10-17
Z035	90458-1140	FERRITE, RI-26-28-13	10-13, 10-15, 10-17
Z036	90024-0037	INPUT FILTER, 8 A	10-13, 10-15, 10-17
M.Z003	90459-1857	FILTER, MS6-LF-1/2-CRV	6-35
M.Z004	90459-2772	FILTER, MS6-LFM-1/2-ARV	6-35
M.Z005	90459-2773	FILTER, MS6-LFM-1/2-BRV	6-35

Tetra Pak

SPC binder labels. 40 mm Full width *Note! This page is generated* **automatically.**
using the **variable definitions** *made in the* **front page** *file!!*

TBA/19 030V TBA 1(2)
648160-0300
Issue: 2007-02 Doc No: SPC-2771717-0103

TBA/19 030V TBA 1(2)
648160-0300
Issue: 2007-02 Doc No: SPC-2771717-0103

TBA/19 030V TBA 2(2)
648160-0300
Issue: 2007-02 Doc No: SPC-2771717-0103

TBA/19 030V TBA 2(2)
648160-0300
Issue: 2007-02 Doc No: SPC-2771717-0103

TBA/19 030V TBA 1(2)
648160-0300
Issue: 2007-02 Doc No: SPC-2771717-0103

TBA/19 030V TBA 1(2)
648160-0300
Issue: 2007-02 Doc No: SPC-2771717-0103

TBA/19 030V TBA 2(2)
648160-0300
Issue: 2007-02 Doc No: SPC-2771717-0103

TBA/19 030V TBA 2(2)
648160-0300
Issue: 2007-02 Doc No: SPC-2771717-0103

TBA/19 030V TBA 1(2)
648160-0300
Issue: 2007-02 Doc No: SPC-2771717-0103

TBA/19 030V TBA 1(2)
648160-0300
Issue: 2007-02 Doc No: SPC-2771717-0103

TBA/19 030V TBA 2(2)
648160-0300
Issue: 2007-02 Doc No: SPC-2771717-0103

TBA/19 030V TBA 2(2)
648160-0300
Issue: 2007-02 Doc No: SPC-2771717-0103

SPC binder labels. 30 mm Half width *Note! This page is generated* **automatically.**
using the **variable definitions** *made in the* **front page** *file!!*

TBA/19 030V TBA 1(2)
648160-0300
Issue: 2007-02 Doc No: SPC-2771717-0103

TBA/19 030V TBA 1(2)
648160-0300
Issue: 2007-02 Doc No: SPC-2771717-0103

TBA/19 030V TBA 2(2)
648160-0300
Issue: 2007-02 Doc No: SPC-2771717-0103

TBA/19 030V TBA 2(2)
648160-0300
Issue: 2007-02 Doc No: SPC-2771717-0103

TBA/19 030V TBA 1(2)
648160-0300
Issue: 2007-02 Doc No: SPC-2771717-0103

TBA/19 030V TBA 1(2)
648160-0300
Issue: 2007-02 Doc No: SPC-2771717-0103

TBA/19 030V TBA 2(2)
648160-0300
Issue: 2007-02 Doc No: SPC-2771717-0103

TBA/19 030V TBA 2(2)
648160-0300
Issue: 2007-02 Doc No: SPC-2771717-0103

TBA/19 030V TBA 1(2)
648160-0300
Issue: 2007-02 Doc No: SPC-2771717-0103

TBA/19 030V TBA 1(2)
648160-0300
Issue: 2007-02 Doc No: SPC-2771717-0103

TBA/19 030V TBA 2(2)
648160-0300
Issue: 2007-02 Doc No: SPC-2771717-0103

TBA/19 030V TBA 2(2)
648160-0300
Issue: 2007-02 Doc No: SPC-2771717-0103

TBA/19 030V TBA 1(2)
648160-0300
Issue: 2007-02 Doc No: SPC-2771717-0103

TBA/19 030V TBA 1(2)
648160-0300
Issue: 2007-02 Doc No: SPC-2771717-0103

TBA/19 030V TBA 2(2)
648160-0300
Issue: 2007-02 Doc No: SPC-2771717-0103

TBA/19 030V TBA 2(2)
648160-0300
Issue: 2007-02 Doc No: SPC-2771717-0103