SPC

Spare Parts Catalogue

TBA/19 0400

648160-0400

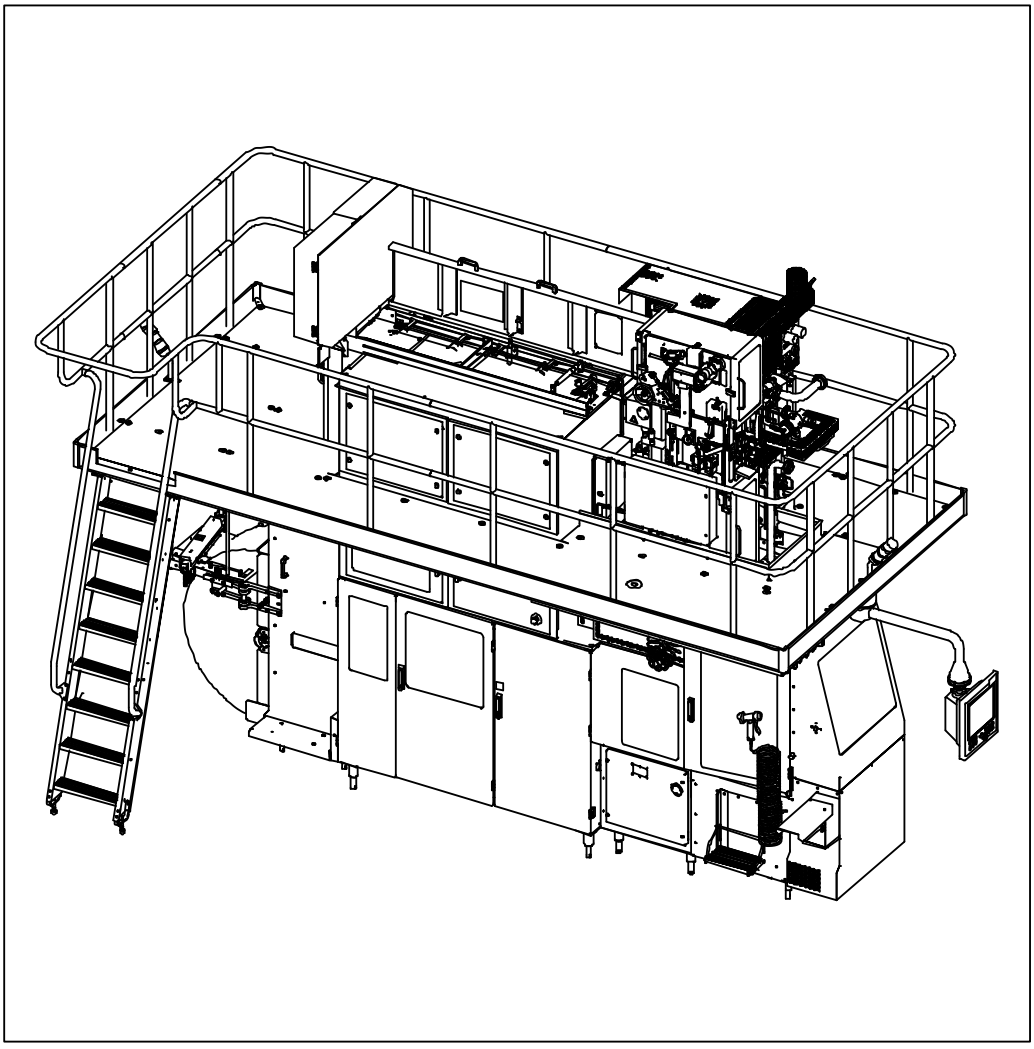

Tetra Pak

Doc. No: SPC-1531320-0107

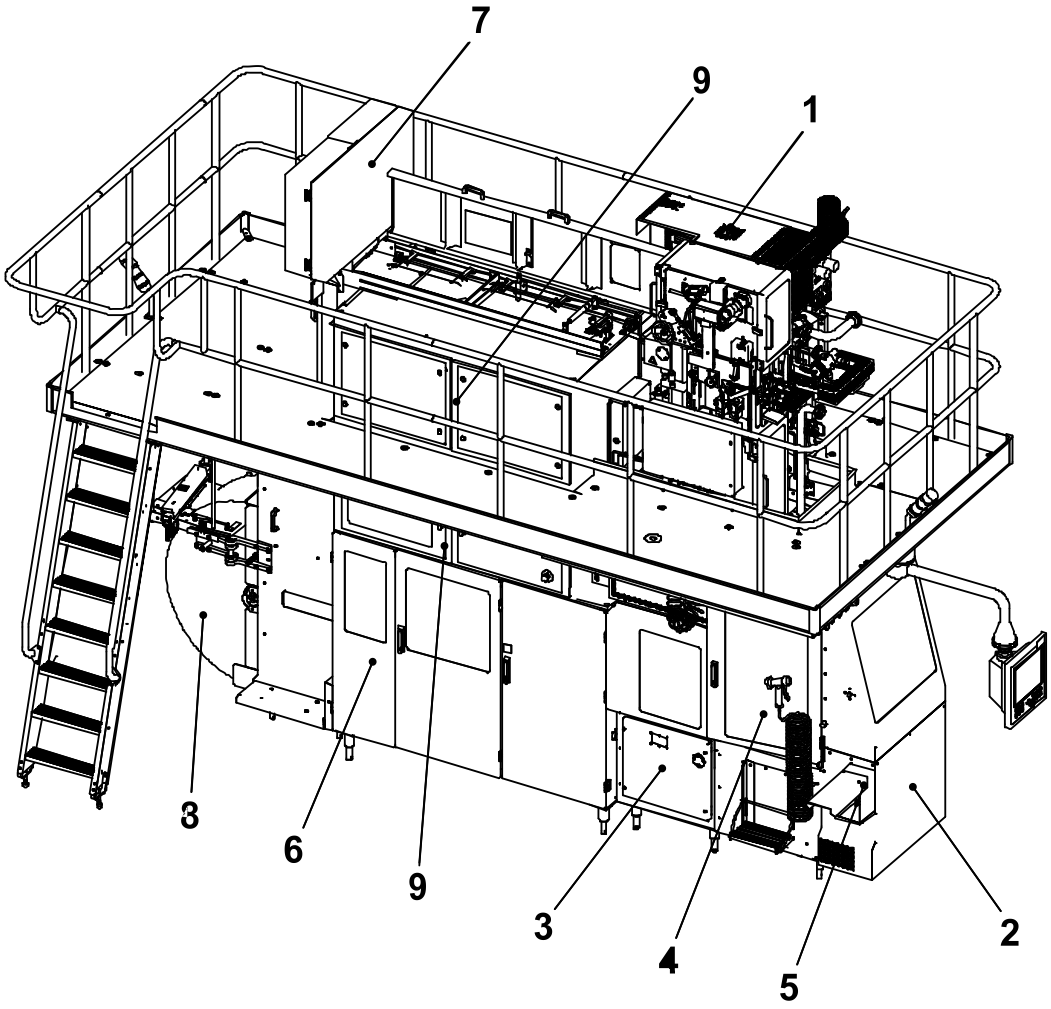

The position numbers in the illustration correspond with the chapter numbers listed on the next page.

Copyright © 2012 Tetra Pak Group

All rights reserved. No part of this document may be reproduced or copied in any form or by any means without written permission from Tetra Pak Packaging Solutions AB.

Tetra Pak and all Tetra Pak products are trademarks belonging to the Tetra Pak Group.

The content of this manual is in accordance with the design and construction of the machine or equipment at the time of publishing. Tetra Pak reserves the right to introduce design modifications without prior notice.

This document was produced by:

Tetra Pak Packaging Solutions AB
Technical Publications
Ruben Rausings gata
221 86 Lund Sweden

Additional copies can be ordered from Tetra Pak. When ordering additional copies, always provide the document number.

Doc. No. SPC-1531320-0107

Issue 2012-05

This document is valid for:

Series No/Machine No Sign.

SPC

Spare Parts Catalogue

TBA/19 0400
648160-0400

i Introduction
1 Superstructure TBA/19
2 Machine Body
3 Drive Unit
4 Jaw System
5 Final Folder
6 Service Unit
7 Strip Applicator
8 Pack. Material Infeed
9 Electrical Cabinet
10 Electric Equipment
11 Regular Accessories
12 Optional Accessories
ii Part Number Index
iii Alphabetical Index
iv Ref. Des. Parts Index

Machine or equipment configurations that this catalogue is valid for are described on the next page.

Doc. No: SPC-1531320-0107

Issue 2012-05

Tetra Pak

Tetra Pak Packaging Solutions AB

Valid for:

Name	Drawing Specification and Development Step	Additional Information
TBA/19 0400	648160-0400	Valid for all volumes and package shapes

Update Log for Doc. No. SPC-1531320-0107

This table shows all changes made to this catalogue, including installed rebuilding kits, added or removed pages.

Date	Installed Kit	Added Pages (Doc. No.)	Removed Pages	Signature

Date	Installed Kit	Added Pages (Doc. No.)	Removed Pages	Signature

i Introduction

en About the Introduction Chapter
This chapter contains basic information about this catalogue and related Tetra Pak equipment.

bg За уводната глава
Тази глава съдържа основна информация за този каталог и приложимото Tetra Pak оборудване.

cs O kapitole Úvod
Tato kapitola obsahuje základní informace o této příručce a souvisejícím zařízení Tetra Pak.

da Om indledningen
Kapitlet indeholder grundlæggende oplysninger om dette katalog og tilhørende Tetra Pak-udstyr.

de Über das Einleitungskapitel
Diese Kapitel enthält grundlegende Informationen über diesen Katalog und die zugehörige Tetra Pak-Ausrüstung.

el Σχετικά με το Κεφάλαιο 'Εισαγωγή'
Αυτό το κεφάλαιο περιέχει βασικές πληροφορίες για τον παρόντα κατάλογο και τον σχετικό εξοπλισμό της Tetra Pak.

es Acerca del capítulo Introducción
Este capítulo contiene información básica sobre este catálogo y el equipo Tetra Pak relacionado.

et Sissejuhatava peatüki kohta
See peatükk sisaldab teavet käesoleva kataloogi ja sellega seonduva Tetra Paki seadme kohta.

fi Tietoja Johdanto-luvusta
Tässä luvussa on perustietoja tästä luettelosta ja Tetra Pak -laitteesta.

fr À propos du chapitre Introduction
Ce chapitre contient les informations de base à propos de ce catalogue et de l'équipement Tetra Pak concerné.

hu A Bevezetés fejezetről
Ez a fejezet alapvető információkat tartalmaz a katalógusról és a hozzá tartozó Tetra Pak berendezésről.

is Um inngangskaflann
Þessi kafli inniheldur grundvallarupplýsingar um þennan vörulista og tengdan Tetra Pak búnað.

it Informazioni sul capitolo Introduzione
Questo capitolo contiene informazioni generali sul presente catalogo e sulla relativa macchina Tetra Pak.

lt Apie įvadinį skyrių
Šiame skyriuje pateikta pagrindinė informacija apie šį katalogą ir su juo susijusią "Tetra Pak" įrangą.

lv Par Ievada nodaļu
Šī nodaļa ietver galveno informāciju par šo katalogu un saistītajām Tetra Pak iekārtām.

nl Over de inleiding
Dit hoofdstuk bevat basisinformatie omtrent deze catalogus en aanverwante Tetra Pak-installatie.

no Om kapitlet Introduksjon
Dette kapitlet inneholder grunnleggende informasjon om denne katalogen og relatert Tetra Pak-ustyr.

pl Informacje na temat rozdziału wprowadzającego
Rozdział wprowadzający zawiera podstawowe informacje dotyczące niniejszego katalogu i związanej z nim maszyny Tetra Pak.

pt Acerca do Capítulo de Introdução
Este capítulo contém informações básicas sobre este catálogo e os equipamentos relacionados da Tetra Pak.

ro Despre capitolul introductiv
Acest capitol conține informații de bază despre acest catalog și despre echipamentul Tetra Pak corelat.

sk O kapitole Úvod
Táto kapitola obsahuje základné informácie o tomto návode a informácie súvisiace so zariadením Tetra Pak.

sl O uvodnem poglavju
To poglavje vsebuje osnovne informacije o tem katalogu in opremi Tetra Pak.

sv Om inledningskapitlet
Det här kapitlet innehåller grundläggande information om katalogen och Tetra Pak-utrustningen.

Manual Information

Illustrations . . . . . i - 7

English Text . . . . . i - 9

Информация за ръководството

Илюстрации . . . . . i - 7

Текст на български език . . . . . i - 15

Informace o příručce

Obrázky . . . . . i - 7

Český text . . . . . i - 21

Oplysninger om vejledninger

Illustrationer . . . . . i - 7

Dansk tekst . . . . . i - 27

Handbuch-Informationen

Abbildungen . . . . . i - 7

Deutscher Text . . . . . i - 33

Πληροφορίες εγχειριδίου

Εικόνες . . . . . i - 7

Ελληνικό Κείμενο . . . . . i - 39

Información del manual

Ilustraciones . . . . . i - 7

Texto en español . . . . . i - 45

Manuaali informatsioon

Joonised . . . . . i - 7

Eestikeelne tekst . . . . . i - 51

Tiedot käsikirjasta

Kuvat . . . . . i - 7

Suomenkielinen teksti . . . . . i - 57

Information sur le manuel

Illustrations . . . . . i - 7

Texte français . . . . . i - 63

Kézikönyv információ

Ábrák . . . . . i - 7

Magyar szöveg . . . . . i - 69

Handbókaupplýsingar

Skýringarmyndir . . . . . i - 7

Íslenskur texti . . . . . i - 75

Informazioni sul manuale

Figure . . . . . i - 7

Testo in italiano . . . . . i - 81

Vadovo informacija

Paveikslėliai . . . . . i - 7

Lietuviškas tekstas . . . . . i - 87

Informācija par instrukciju

Ilustrācijas . . . . . i - 7

Teksts latviešu valodā . . . . . i - 93

Handboekinformatie

Afbeeldingen . . . . . i - 7

Nederlands tekst . . . . . i - 99

Informasjon om manualen

Illustrasjoner . . . . . i - 7

Norsk tekst . . . . . i - 105

Informacje na temat instrukcji

Rysunki . . . . . i - 7

Tekst polski . . . . . i - 111

Informação do Manual

Ilustrações . . . . . i - 7

Texto em português . . . . . i - 117

Informațiile de manual

Ilustrații . . . . . i - 7

Text în limba română . . . . . i - 123

Informácie o príručke

Ilustrácie . . . . . i - 7

Slovenský text . . . . . i - 129

Informacije o navodilu

Slike . . . . . i - 7

Slovensko besedilo . . . . . i - 135

Information om handboken

Bilder . . . . . i - 7

Svensk text . . . . . i - 141

This page intentionally left blank

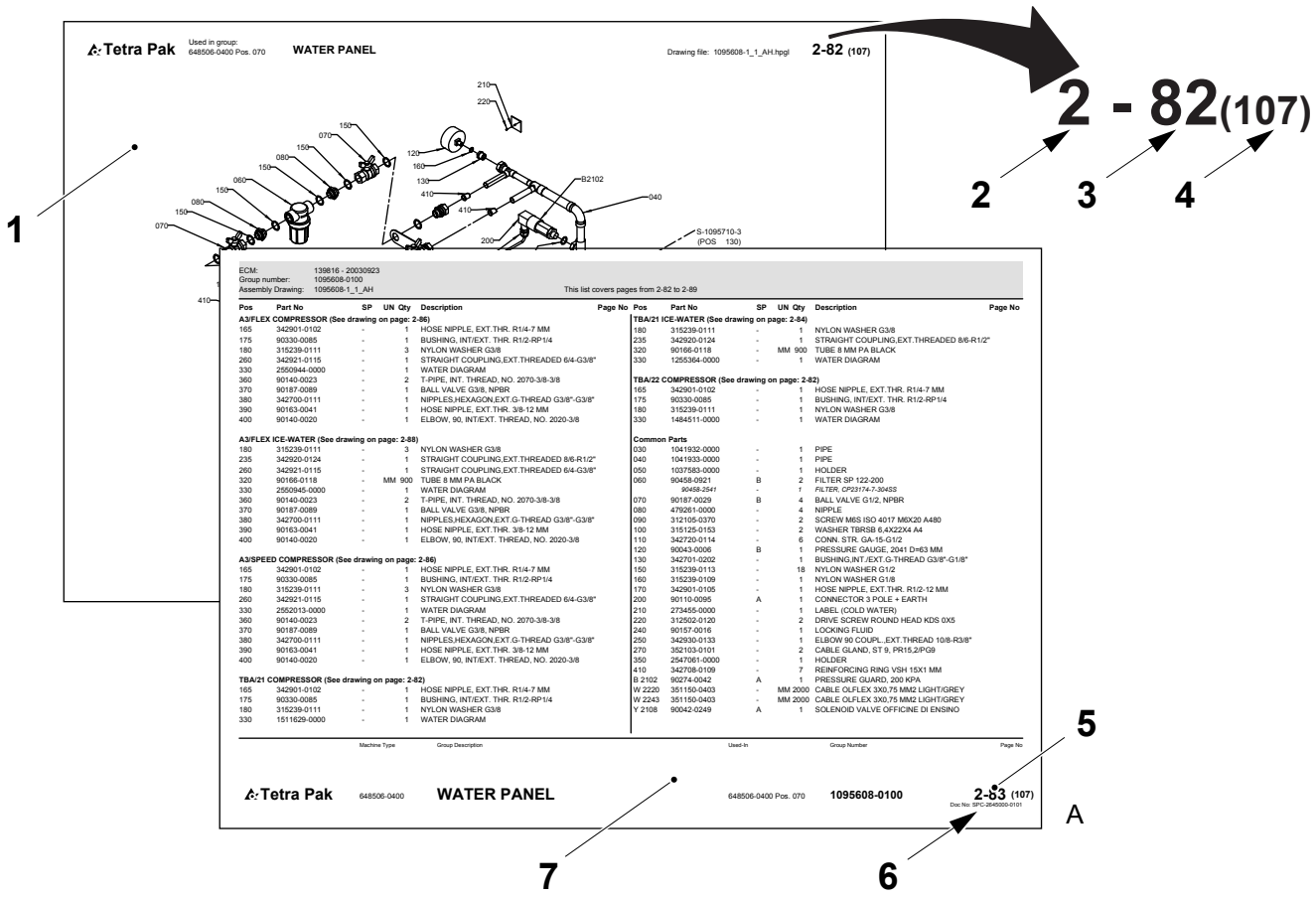
Tetra Pak
Used in group:
648506-0400 Pos. 070
WATER PANEL
Drawing file: 1095608-1_1_AH.hpgl
2-82 (107)
2 - 82(107)
1
2
3
4
5
6
7
A
S-1095710-3
(POS 130)
ECM: 139816 - 20030923
Group number: 1095608-0100
Assembly Drawing: 1095608-1_1_AH
This list covers pages from 2-82 to 2-89
Tetra Pak
648506-0400
WATER PANEL
648506-0400 Pos. 070
1095608-0100
2-83 (107)

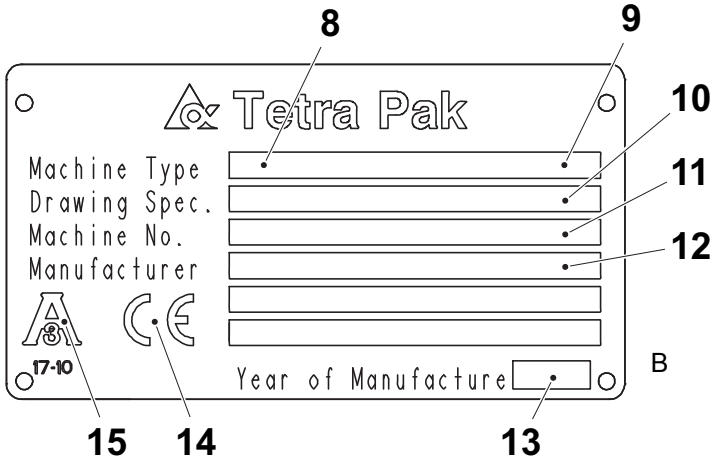
8
9
10
11
12
Tetra Pak
Machine Type
Drawing Spec.
Machine No.
Manufacturer
17-10
Year of Manufacture
B
15
14
13

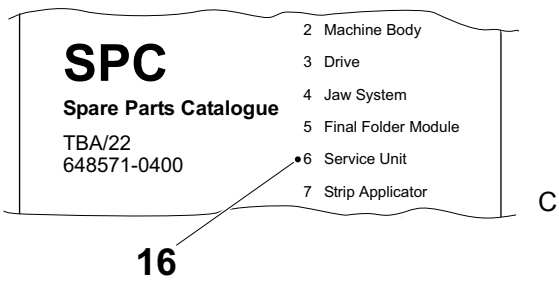
SPC
Spare Parts Catalogue
TBA/22
648571-0400
2 Machine Body
3 Drive
4 Jaw System
5 Final Folder Module
6 Service Unit
7 Strip Applicator
C
16

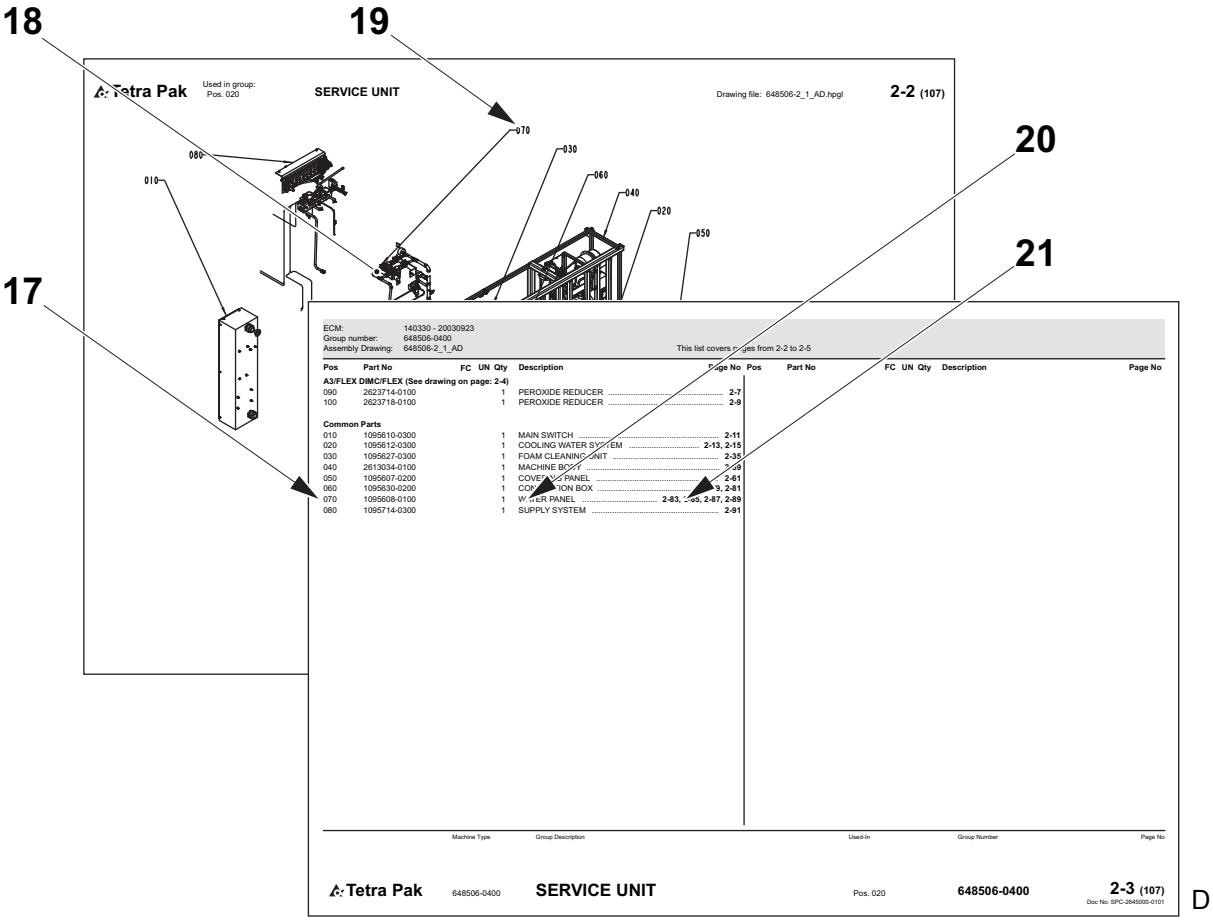
18
19
20
21
17
Tetra Pak
Used in group:
Pos. 020
SERVICE UNIT
Drawing file: 648506-2_1_AD.hpgl
2-2 (107)
070
030
060
040
020
050
080
010
ECM: 140330 - 20030923
Group number: 648506-0400
Assembly Drawing: 648506-2_1_AD
This list covers pages from 2-2 to 2-5
Pos Part No FC UN Qty Description Page No
A3/FLEX DIMC/FLEX (See drawing on page: 2-4)
090 2623714-0100 1 PEROXIDE REDUCER 2-7
100 2623718-0100 1 PEROXIDE REDUCER 2-9
Common Parts
010 1095610-0300 1 MAIN SWITCH 2-11
020 1095612-0300 1 COOLING WATER SYSTEM 2-13, 2-15
030 1095627-0300 1 FOAM CLEANING UNIT 2-35
040 2613034-0100 1 MACHINE BODY 2-39
050 1095607-0200 1 COVER SIDE PANEL 2-61
060 1095630-0200 1 CONNECTION BOX 2-81
070 1095608-0100 1 WATER PANEL 2-83, 2-85, 2-87, 2-89
080 1095714-0300 1 SUPPLY SYSTEM 2-91
Pos Part No FC UN Qty Description Page No
Machine Type
Group Description
Used-In
Group Number
Page No
Tetra Pak
648506-0400
SERVICE UNIT
Pos. 020
648506-0400
2-3 (107)
Doc No: SPC-2645000-0101
D

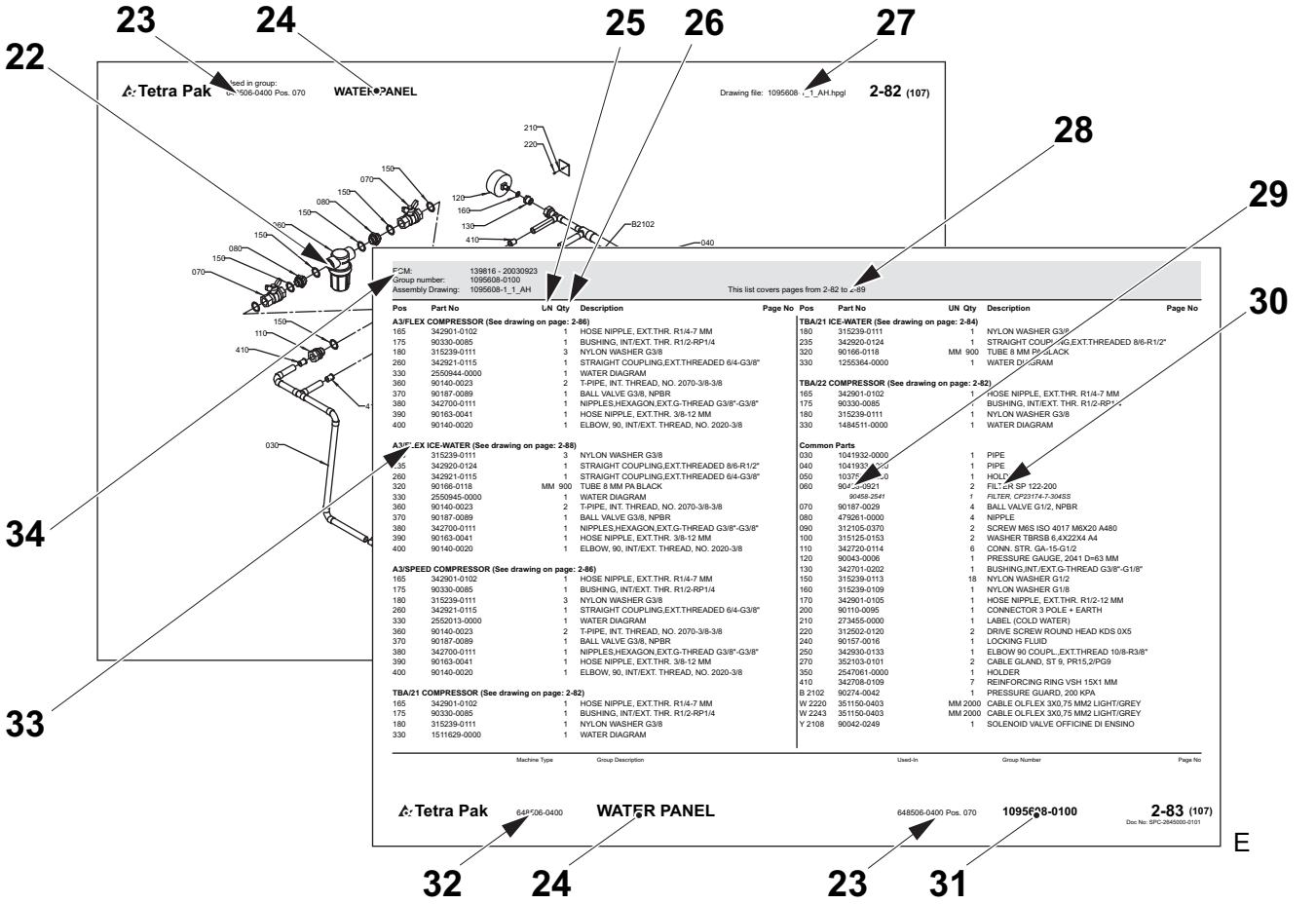
22
23
24
25
26
27
28
29
30
34
33
Tetra Pak
Used in group:
WATER PANEL
Drawing file: 1095608-1_1_AH.hpgl
2-82 (107)
210
220
150
070
080
120
160
130
B2102
040
410
030
ECM: 139816 - 20030923
Group number: 1095608-0100
Assembly Drawing: 1095608-1_1_AH
This list covers pages from 2-82 to 2-89
Pos Part No UN Qty Description Page No
A3/FLEX COMPRESSOR (See drawing on page: 2-86)
165 342901-0102 1 HOSE NIPPLE, EXT.THR. R1/4-7 MM
175 90330-0085 1 BUSHING, INT/EXT. THR. R1/2-RP1/4
180 315239-0111 3 NYLON WASHER G3/8
260 342921-0115 1 STRAIGHT COUPLING,EXT.THREADED 6/4-G3/8"
330 2550944-0000 1 WATER DIAGRAM
360 90140-0023 2 T-PIPE, INT. THREAD, NO. 2070-3/8-3/8
370 90187-0089 1 BALL VALVE G3/8, NPBR
380 342700-0111 1 NIPPLES,HEXAGON,EXT.G-THREAD G3/8"-G3/8"
390 90163-0041 1 HOSE NIPPLE, EXT.THR. 3/8-12 MM
400 90140-0020 1 ELBOW, 90, INT/EXT. THREAD, NO. 2020-3/8
A3/FLEX ICE-WATER (See drawing on page: 2-88)
155 315239-0111 3 NYLON WASHER G3/8
235 342920-0124 1 STRAIGHT COUPLING,EXT.THREADED 8/6-R1/2"
260 342921-0115 1 STRAIGHT COUPLING,EXT.THREADED 6/4-G3/8"
320 90166-0118 MM 900 TUBE 8 MM PA BLACK
330 2550945-0000 1 WATER DIAGRAM
360 90140-0023 2 T-PIPE, INT. THREAD, NO. 2070-3/8-3/8
370 90187-0089 1 BALL VALVE G3/8, NPBR
380 342700-0111 1 NIPPLES,HEXAGON,EXT.G-THREAD G3/8"-G3/8"
390 90163-0041 1 HOSE NIPPLE, EXT.THR. 3/8-12 MM
400 90140-0020 1 ELBOW, 90, INT/EXT. THREAD, NO. 2020-3/8
A3/SPEED COMPRESSOR (See drawing on page: 2-86)
165 342901-0102 1 HOSE NIPPLE, EXT.THR. R1/4-7 MM
175 90330-0085 1 BUSHING, INT/EXT. THR. R1/2-RP1/4
180 315239-0111 3 NYLON WASHER G3/8
260 342921-0115 1 STRAIGHT COUPLING,EXT.THREADED 6/4-G3/8"
330 2552013-0000 1 WATER DIAGRAM
360 90140-0023 2 T-PIPE, INT. THREAD, NO. 2070-3/8-3/8
370 90187-0089 1 BALL VALVE G3/8, NPBR
380 342700-0111 1 NIPPLES,HEXAGON,EXT.G-THREAD G3/8"-G3/8"
390 90163-0041 1 HOSE NIPPLE, EXT.THR. 3/8-12 MM
400 90140-0020 1 ELBOW, 90, INT/EXT. THREAD, NO. 2020-3/8
TBA/21 COMPRESSOR (See drawing on page: 2-82)
165 342901-0102 1 HOSE NIPPLE, EXT.THR. R1/4-7 MM
175 90330-0085 1 BUSHING, INT/EXT. THR. R1/2-RP1/4
180 315239-0111 1 NYLON WASHER G3/8
330 1511629-0000 1 WATER DIAGRAM
TBA/21 ICE-WATER (See drawing on page: 2-84)
180 315239-0111 1 NYLON WASHER G3/8
235 342920-0124 1 STRAIGHT COUPLING,EXT.THREADED 8/6-R1/2"
320 90166-0118 MM 900 TUBE 8 MM PA BLACK
330 1255364-0000 1 WATER DIAGRAM
TBA/22 COMPRESSOR (See drawing on page: 2-82)
165 342901-0102 1 HOSE NIPPLE, EXT.THR. R1/4-7 MM
175 90330-0085 1 BUSHING, INT/EXT. THR. R1/2-RP1/4
180 315239-0111 1 NYLON WASHER G3/8
330 1484511-0000 1 WATER DIAGRAM
Common Parts
030 1041932-0000 1 PIPE
040 1041933-0000 1 PIPE
050 1037[illegible]-0000 1 HOLDER
060 90458-0921 2 FILTER SP 122-200
90458-2541 1 FILTER, CP23174-7-3/4SS
070 90187-0029 4 BALL VALVE G1/2, NPBR
080 479261-0000 4 NIPPLE
090 312105-0370 2 SCREW M6S ISO 4017 M6X20 A480
100 315125-0153 2 WASHER TBRSB 6.4X22X4 A4
110 342720-0114 6 CONN. STR. GA-15-G1/2
120 90043-0006 1 PRESSURE GAUGE, 2041 D=63 MM
130 342701-0202 1 BUSHING,INT./EXT.G-THREAD G3/8"-G1/8"
150 315239-0113 18 NYLON WASHER G1/2
160 315239-0109 1 NYLON WASHER G1/8
170 342901-0105 1 HOSE NIPPLE, EXT.THR. R1/2-12 MM
200 90110-0095 1 CONNECTOR 3 POLE + EARTH
210 273455-0000 1 LABEL (COLD WATER)
220 312502-0120 2 DRIVE SCREW ROUND HEAD KDS 0X5
240 90157-0016 1 LOCKING FLUID
250 342930-0133 1 ELBOW 90 COUPL.,EXT.THREAD 10/8-R3/8"
270 352103-0101 2 CABLE GLAND, ST 9, PR15,2/PG9
350 2547061-0000 1 HOLDER
410 342708-0109 7 REINFORCING RING VSH 15X1 MM
B 2102 90274-0042 1 PRESSURE GUARD, 200 KPA
W 2220 351150-0403 MM 2000 CABLE OLFLEX 3X0,75 MM2 LIGHT/GREY
W 2243 351150-0403 MM 2000 CABLE OLFLEX 3X0,75 MM2 LIGHT/GREY
Y 2108 90042-0249 1 SOLENOID VALVE OFFICINE DI ENSINO
Pos Part No UN Qty Description Page No
Machine Type
Group Description
Used-In
Group Number
Page No
Tetra Pak
648506-0400
WATER PANEL
648506-0400 Pos. 070
1095608-0100
2-83 (107)
Doc No: SPC-2645000-0101
E
32
24
23
31

Manual Information

Tetra Pak recommends reading all delivered manuals carefully. Make sure that the delivered manuals are available to personnel who operate or maintain the equipment.

It is important to keep this catalogue for the lifetime of the equipment and to pass the catalogue on to any subsequent holder or user.

Tetra Pak will not be held responsible for any damage to the equipment caused by not following the instructions given in the manuals that accompany this equipment.

Delivered Manuals

Manuals delivered with this equipment:

CM

The Conversion Manual provides technicians with information on converting the equipment between different production modes.

EM

The Electrical Manual provides technicians with information about the equipment’s electrical system.

IM

The Installation Manual provides technicians with information required to safely install the equipment.

MM

The Maintenance Manual provides technicians with information on maintaining the equipment.

OM

The Operation Manual provides the operator with information on handling and operating the equipment before, during, and after production.

RM

The Rebuilding Manual provides technicians with information required to safely install a kit to an installed machine or equipment.

(Cont'd)

(Cont'd)

SPC

The Spare Parts Catalogue provides the information necessary to order spare parts from Tetra Pak.

TeM

The Technical Manual provides technicians with information which can be:

- information required to safely install the equipment
- information required to maintaining the equipment
- information about the machine's/equipment's electrical system
- information necessary to order spare parts from Tetra Pak
- other technical information

UP

The Update Pages provides new pages to update existing machine manuals.

Page Layout

Refer to the illustration (A) on page i-7: The main pages in a Spare Parts Catalogue consist of an illustration page (1) and a corresponding list page (7). The page number (5) is shown in the header of an illustration page and in the footer of a list page. The document number (6) is shown in the footer of a list page.

Page Numbering

Refer to the illustration (A) on page i-7: A page number (5) has three parts:

- chapter number (2)
- consecutive page number within the chapter (3)
- total number of pages in the chapter (4)

Note! The letters UP may replace the chapter number (2) if the manual includes update pages. The consecutive page number (3) and the total number of pages (4) of update pages do not follow the existing sequential page numbering of the chapter.

Machine Introduction

Manufacturer

For the manufacturer’s name and address, see the second page of this catalogue.

Service

Tetra Pak does not accept responsibility for any damages or any injuries to equipment, staff or consumers that is caused by spare parts that are not genuine Tetra Pak spare parts.

To order genuine Tetra Pak spare parts for this machine contact the nearest Tetra Pak office.

Identification

CE Classification

This equipment complies with the basic health and safety regulations of the European Economic Area (EEA).

(Cont'd)

(Cont'd)

3-A Compliance

If the machine plate contains the 3-A mark (15) (see illustration (B) on page i-7) this equipment complies with the 3-A Sanitary Standards for Formers, Fillers, and Sealers of Containers for Fluid Milk and Fluid Milk Products, Number 17-10.

Machine Plate

The illustration (B) on page i-7 shows an example of a machine plate. An illustration of the valid machine plate and its location on the equipment is shown in the Introduction chapter of the manuals delivered with this equipment. The machine plate contains the data listed below, needed when contacting Tetra Pak concerning this specific equipment.

- Machine type (8)
- Volume (9)
- Drawing specifications (10)
- Machine serial number (11)
- Manufacturer (12)
- Year of manufacture (13)
- CE mark (14)
- 3-A mark (if applicable) (15)

Make sure that the equipment data in the front pages of this manual corresponds to the machine plate data and the machine specification.

How to Use This Spare Parts Catalogue

Locate a Spare Part Number

a) Refer to the illustration (C) on page i-7: Go to the chapter number (16) indicated beside the main group that contains the part you want to locate.

Items b) and c) refer to the illustration (D) on page i-8.

b) On the main group illustration, look for the machine subgroup (18) that contains the part or subgroup you are looking for. Note the position number (19) and go to the list page that follows the illustration.

c) Look for the position number/reference designation (17) or the subgroup name (20). Go to the corresponding page number (21) listed in the right-hand column. Tetra Pak has chosen to always use the function oriented structure for reference designation. The prefix indicating function oriented structure (=) is not shown in the reference designation

(Cont'd)

(Cont'd)

Items d) and e) refer to the illustration (E) on page i-8.

d) Locate the part (22) that you are looking for on the subgroup illustration and note the part's position number.

e) The part number (29) and part description (30) are listed beside the position number on the list page.

Information Listed in a Spare Parts Catalogue

The list below refers to the illustration (E) on page i-8. A Spare Parts Catalogue contains the following information about groups, subgroups, and spare parts for the equipment:

- Group structure reference (23). Indicates the next higher group in the equipment list structure.
- Group name (24)
- Unit of measure (25)
- Quantity (26)
- Assembly drawing number (27)
- List page range (28). Included if there are multiple pages in the group illustration or list.
- Part or subgroup number (29)
- Subgroup name or part description (30)
- Group number (31)
- Equipment number (32)
- Group information heading (33). Indicates if the section below the heading is for a specific machine variant or if it is a list of common parts. If a list has more than one variant and each variant has its own assembly drawing, a page reference to the variant's assembly drawing is shown.
- Internal information (34)

Support and Feedback

For assistance when operating this equipment, or other inquiries, comments, or suggestions, pose the questions or give feedback on the E-Liaison home page at http://e-liaison.tetrapak.com. If access to the Tetra Pak intranet is not available, contact the nearest Tetra Pak representative.

Информация за ръководството

Tetra Pak препоръчва внимателното прочитане на всички доставени ръководства. Уверете се, че всички доставени ръководства са достъпни за персонала, който работи с оборудването или го поддържа.

Важно е да съхранявате това ръководство през целия експлоатационен срок на оборудването и да го предадете на всеки следващ собственик или ползвател.

Tetra Pak няма да носи отговорност за никакви повреди на оборудването, предизвикани от неспазването на инструкциите, дадени в ръководството, което придружава това оборудване.

Доставени ръководства

Ръководства, доставени с това оборудване:

CM

Ръководството за преустройство предоставя на техниците информация за преустройство на оборудването за различните производствени режими.

EM

Електрическият наръчник осигурява на техниците информация за електрическата система на оборудването.

IM

Наръчникът за инсталацията осигурява на техниците информация за безопасно инсталиране на оборудването.

MM

Наръчникът за поддръжка осигурява на техниците информация за поддържане на оборудването.

OM

Ръководството за експлоатация предоставя на оператора информацията, която му е необходима за работата и експлоатацията на оборудването, преди, по време на и след производство.

PP

Ръководството за възстановяване предоставя на техниците информация, необходима за безопасно монтиране на .принадлежности на инсталирана машина или оборудване.

(Продължение)

(Продължение)

SPC

Каталогът за резервни части осигурява информация за поръчка на резервни части от Tetra pak.

TeM

Техническите ръководства, осигуряват на техниците информация, която може да бъде:

- информация, необходима за безопасното инсталиране на оборудването
- информация, необходима за поддръжката на оборудването
- информацията за електрическата система на оборудването/машината
- предоставя информацията необходима за поръчката на резервни части от Tetra Pak
- друга техническа информация.

НАГОРЕ

Страниците с актуализации предоставят нови страници за актуализиране на вече съществуващите ръководства за машината.

Разположение на страниците

Вижте илюстрация (A) на страница i-7: Основните страници на Каталога с резервни части съдържат страница с илюстрация (1) и страница със съответен списък (7). Номерът на страницата (5) е даден в горната част на илюстрованата страница и в долната част на страницата със списък.. Номерът на документа (6) е даден в долната част на списъчната страница.

Номериране на страниците

Вижте илюстрация (A) на страница i-7: Номерът на страница (5) има три части:

- номер на глава (2)
- пореден номер на страница (3) в рамките на главата
- общ брой страници (4) в главата.

Забележка! Буквите UP може да заместват номера на главата (2), ако ръководството включва страници с актуализации. Поредният номер на страница (3) и общият брой страници (4) на страниците с актуализации не следват съществуващата поредност в номерата на страниците на главата..

Въведение на машината

Производител

За името на производителя и адреса му, виж на втора страница от този каталог.

Обслужване

Tetra pak не носи отговорност за щети или наранявания на оборудване, персонал или клиенти, които са причинени от резервни части, които не са оригинални резервни части Tetra pak.

За да поръчате оригинални резервни части Tetra pak за тази машина, свържете се с най-близкия офис на Tetra pak.

Идентификация

CE Класификация

Това оборудване съответства на основните разпоредби за опазване на здравето и безопасност на Европейската Икономическа Зона (EEA).

(Продължение)

(Продължение)

3-A Съответствие

Ако табелката на машината съдържа означението 3-A (15) (виж илюстрация (B) на страница i-7), оборудването съответства на 3-A Санитарните стандарти за формоващи, пълнещи и запечатващи устройства за контейнери за течно мляко и течни млечни продукти, номер 17-10.

Табела с технически данни на машината

Илюстрация (B) на страница i-7 показва примерна табела с технически данни на машината.
Илюстрация на реална табела с технически данни на машината и нейното местоположение върху оборудването е дадена в глава Въведение на ръководството, придружаващо оборудването. Табелата с технически данни за машината съдържа данните, описани по-долу, необходими, когато се свързвате с Tetra pak относно това оборудване.

- Тип на машината (8)
- Обем (9)
- Спецификации (10)
- Сериен номер на машината (11)
- Производител (12)
- Година на производство (13)
- CE маркировка (14)
- 3-A маркировка (ако е приложимо) (15)

Уверете се, че данните за оборудването, дадени на първите страници на това ръководство съответстват на данните върху табелата с технически спецификации, и спецификацията на машината.

Как да ползвате Каталога за резервни части

Откриване номер на резервна част

a) Вижте илюстрация (C) на страница i-7: Преминете на глава номер (16), посочена .до основната група, която съдържа частта, която желаете да откриете.

Позиции b) и c) вижте на илюстрации (D) на страница i-8.

b) На главната илюстрация на група, потърсете машинната подгрупа (18), която съдържа частта или подгрупата, която търсите. Отбележете номера на позицията (19) и отидете на страницата със списъка, който следва илюстрацията.

c) Потърсете номера на позиция/вижте обозначението (17) или наименованието на подгрупата (20). Преминете на съответния номер на страница (21), вписан в дясната колона.
От Tetra Pak са избрали, винаги да се използва функционално ориентирана структура за обозначение препратка.
Представката посочва функционално ориентирана структура (=) не се показва в обозначението препратка.

(Продължение)

(Продължение)

Позиции d) и e) вижте на илюстрация (E) на страница i-8.

d) Открийте частта (22), която търсите на илюстрацията с подгрупи и отбележете номера на позицията на частта.

e) Номерът на частта (29) и описанието на частта (30) са вписани до номера на позицията на страницата със списъка.

Информация в Каталога за резервни части

Списъкът по-долу се отнася за илюстрация (E) на страница i-8.
Каталогът за резервни части съдържа следната информация за групи, подгрупи и резервни части за оборудването:

- Препратка към структура на групата (23). Посочва по-горната група в структурата на оборудването.
- Наименование на групата (24)
- Мерна единица (25)
- Количество (26)
- Номер от сборния чертеж (27)
- Серия страници със списък (28). Включен, ако има няколко страници в групова илюстрация или списък
- Част или номер на подгрупа (29)
- Наименование на подгрупа или описание на част (30)
- Номер на група (31)
- Номер на оборудването (32)
- Информационен надпис за група (33). Индицира, че раздела под заглавието е за определен модел машина или че е списък на унифицирани части. Ако списъкът има повече от един вариант и всеки вариант има своя монтажна схема, е показана препратка към страница със сборния чертеж.
- Международна информация (34)

Поддръжка и обратна връзка

За помощ при работа с това оборудване или за други запитвания, коментари или предложения, задайте въпросите си или изпратете информация за обратна връзка на страницата на E-Liaison http://e-liaison.tetrapak.com. Ако достъпът до вътрешната мрежа на Tetra pak не е възможен, свържете се с най-близкия представител на Tetra pak.

Informace o příručce

Společnost Tetra Pak doporučuje se důkladně seznámit se všemi dodanými příručkami. Dodané příručky musí být k dispozici pracovníkům, kteří provádějí obsluhu nebo údržbu zařízení.

Tento katalog je třeba uchovávat po celou dobu životnosti zařízení a předat jej každému dalšímu vlastníkovi nebo uživateli.

Společnost Tetra Pak nezodpovídá za škody na zařízení způsobené nedodržováním pokynů uvedených v příručkách, které doprovází toto zařízení.

Dodané příručky

Příručky dodávané s tímto zařízením:

CM

Příručka pro konverzi poskytuje technikům informace o konverzi zařízení mezi různými produkčními režimy.

EM

Příručka elektrického zařízení (EM) poskytuje technikům informace o elektrickém systému zařízení.

IM

Montážní příručka (IM) poskytuje technikům informace nutné pro bezpečné provedení montáže zařízení.

MM

Příručky údržby (MM) poskytuje technikům informace o údržbě zařízení.

OM

Návod k obsluze poskytuje technikům informace o manipulaci a provozu zařízení před, během a po ukončení výroby.

RM

Příručka pro rekonstrukci poskytuje technikům informace požadované pro bezpečnou instalaci soupravy na nainstalovaný stroj nebo zařízení.

(Pokračování)

(Pokračování)

SPC

Katalog náhradních dílů (SPC) obsahuje informace nezbytné pro objednávání náhradních dílů od společnosti Tetra Pak

TeM

Technická příručka poskytuje technikům informace, kterými mohou být:

- potřebné informace pro bezpečnou instalaci zařízení
- potřebné pro údržbu zařízení
- informace o elektrickém systému zařízení/stroje
- informace nezbytné pro objednávání náhradních dílů od společnosti Tetra Pak
- ostatní technické informace

UP

Aktualizované stránky poskytují nové stránky k existujícím příručkám k zařízení.

Vzhled stránky

Podívejte se na obrázek (A) na straně i-7: hlavní stránky v Katalogu náhradních dílů tvoří stránky s ilustracemi (1) a odpovídající stránka se seznamem (7). Číslo stránky (5) je uvedeno v záhlaví stránky s ilustrací a v zápatí stránky se seznamem. Číslo dokumentu (6) je uvedeno v zápatí stránky se seznamem.

Číslování stránek

Podívejte se na obrázek (A) na straně i-7: číslo stránky (5) má tři části:

- číslo kapitoly (2)
- číslo další stránky v rámci kapitoly (3),
- celkového počtu stránek v kapitole (4)

Poznámka! Písmena UP mohou nahradit číslo kapitoly (2) v případě, že manuál obsahuje aktualizované stránky. Následující číslo stránky (3) a celkový počet stran (4) aktualizovaných stránek se nedrží existujícího sekvenčního číslování stránek v této kapitole.

Seznámení se zařízením

Výrobce

Jméno a adresu výrobce najdete na druhé straně tohoto katalogu.

Servis

Tetra Pak nepřebírá odpovědnost za jakékoli škody na zařízení nebo za zranění zaměstnance nebo spotřebitele, které budou způsobeny tím, že se nepoužijí originální náhradní díly Tetra Pak.

Chcete-li pro tento stroj objednat originální náhradní díly Tetra Pak, kontaktujte nejbližší kancelář společnosti Tetra Pak.

Označení

Klasifikace CE

Toto zařízení vyhovuje základním zdravotním a bezpečnostním směrnicím EU.

(Pokračování)

(Pokračování)

3-A Soulad

Pokud štítek stroje obsahuje označení 3-A (15) (viz obrázek (B) na straně i-7), pak je toto zařízení v souladu s hygienickými normami 3-A pro formování, plnění a uzavírání obalů pro tekuté mléko a tekuté mléčné výrobky, číslo 17-10.

Typový štítek

Obrázek (B) na straně i-7 ukazuje příklad typového štítku.
Obrázek platného typového štítku a jeho umístění na zařízení je uvedeno v úvodní kapitole příruček dodaných s tímto zařízením.
Typový štítek obsahuje údaje uvedené níže, tyto údaje jsou zapotřebí, když kontaktujete společnost Tetra Pak ve věci týkající se tohoto specifického vybavení.

- Typ stroje (8)
- Objem (9)
- Specifikace výkresů (10)
- Sériové číslo stroje (11)
- Výrobce (12)
- Rok výroby (13)
- Symbol CE (14)
- Symbol 3-A (pokud se používá) (15)

Údaje o zařízení uvedené na předních stránkách této příručky musí souhlasit s údaji na typovém štítku a specifikacím zařízení.

Jak používat tento katalog náhradních dílů

Vyhledat číslo náhradního dílu

a) Viz obrázek (C) na straně i-7: Přejít na číslo kapitoly (16) uvedené vedle hlavní skupiny, která obsahuje díl, který chcete najít.

Položky b) a c) se vztahují k obrázku (D) na straně i-8.

b) Na obrázku hlavní skupiny se podívejte na podskupinu stroje (18), která obsahuje díly nebo podskupiny, které hledáte. Poznamenejte si číslo pozice (19) a přejděte na stránku seznamu, který následuje za obrázkem.

c) Podívejte se na číslo pozice/označení reference (17) nebo na název podskupiny (20). Přejděte na odpovídající číslo strany (21) uvedené v seznamu ve sloupci na pravé straně. Firma Tetra Pak si pro referenční označení zvolila vždy používat funkčně orientovanou strukturu. Předpona označující funkčně orientovanou strukturu (=) není uvedena v referenčním označení.

(Pokračování)

(Pokračování)

Položky d) a e) se vztahují k obrázku (E) na straně i-8.

d) Lokalizujte díl (22), který hledáte, na obrázku podskupiny a poznamenejte si číslo pozice dílu.

e) Číslo dílu (29) a popis dílu (30) jsou uvedeny vedle čísla pozice na stránce se seznamem.

Informace uvedené v katalogu náhradních dílů

Níže uvedený seznam se odkazuje na obrázek (E) na stránce i-8.
Katalog náhradních dílů obsahuje následující informace o skupinách, podskupinách a náhradních dílech pro zařízení:

- Reference struktury skupiny (23). Označuje následující vyšší skupinu ve struktuře seznamu výbavy.
- Název skupiny (24)
- Měrná jednotka (25)
- Množství (26)
- Číslo montážního výkresu (27)
- Rozsah stránek se seznamem (28). Zahrnuty, pokud existuje více stránek ve skupině obrázků nebo seznamu.
- Číslo dílu nebo podskupiny (29)
- Název podskupiny nebo popis dílu (30)
- Číslo skupiny (31)
- Číslo výbavy (32)
- Záhlaví informací o skupině (33). Označuje, zdali se část pod záhlavím týká konkrétní varianty stroje, nebo zdali se jedná o seznam společných dílů. Pokud seznam obsahuje více než jednu variantu a každá varianta má své vlastní montážní výkresy, je zobrazen odkaz na stránku s montážním výkresem varianty.
- Vnitřní informace (34)

Podpora a zpětná vazba

Můžete se na nás obracet s žádostí o pomoc při provozu tohoto zařízení nebo s jinými dotazy, připomínkami nebo náměty pomocí internetové kontaktní domovské stránky http://e-liaison.tetrapak.com, kde můžete rovněž poskytnout svou zpětnou vazbu. Pokud nemáte přístup na intranet společnosti Tetra Pak, obraťte se na nejbližšího zástupce firmy Tetra Pak.

Oplysninger om vejledninger

Tetra Pak anbefaler, at alle leverede vejledninger læses grundigt.
Sørg for, at de leverede vejledninger er til rådighed for det personale, som betjener eller vedligeholder udstyret.

Det er vigtigt, at dette katalog opbevares i hele udstyrets levetid og overdrages til en efterfølgende ejer eller bruger.

Tetra Pak hæfter ikke for skader på udstyret, som skyldes manglende overholdelse af anvisningerne i de vejledninger, som følger med dette udstyr.

Leverede vejledninger

Vejledninger, der leveres sammen med dette udstyr:

CM

Konverteringsvejledningen forsyner teknikere med oplysninger om konvertering af udstyret mellem forskellige produktionstilstande.

EM

Den elektriske vejledning forsyner teknikere med oplysninger om udstyrets elektriske system.

IM

Installationsvejledningen forsyner teknikere med oplysninger, som er nødvendige til sikker installation af udstyret.

MM

Vedligeholdelsesvejledningen forsyner teknikere med oplysninger om vedligeholdelsen af udstyret.

OM

Driftsvejledningen forsyner operatøren med oplysninger om håndteringen og betjeningen af udstyret før, under og efter produktion.

RM

Ombygningsvejledningen forsyner teknikere med oplysninger, der er nødvendige til sikker installation af et sæt på en installeret maskine eller installeret udstyr.

(Forts.)

(Forts.)

SPC

Reservedelskataloget indeholder de oplysninger, som er nødvendige til at bestille reservedele fra Tetra Pak.

TeM

Den Tekniske vejledning forsyner tekniker med oplysninger, der kan være:

- nødvendige oplysninger til sikker installation af udstyret
- nødvendige oplysninger til vedligeholdelse af udstyret
- oplysninger om maskinens/udstyrets elektriske system
- oplysninger, som er nødvendige til bestilling af reservedele fra Tetra Pak
- andre tekniske oplysninger

UP

Opdateringssiderne indeholder nye sider til opdatering af eksisterende maskinvejledninger.

Sidelayout

Se illustrationen (A) på side i-7: Hovedsiden i et reservedelskatalog består af en illustrationsside (1) og en tilsvarende listeside (7). Sidetallet (5) vises i overskriften på en illustrationsside og i fodteksten på en listeside. Dokumentnumret (6) vises i fodteksten på en listeside.

Sidenummerering

Se illustrationen (A) på side i-7: Et sidetal (5) har tre dele:

- kapitelnummer (2)
- fortløbende sidetal inden for kapitlet (3)
- det samlede antal sider i kapitlet (4)

Bemærk! Bogstaverne UP kan erstatte kapitelnumret (2), hvis vejledningen inkluderer opdateringssider. Det fortløbende sidetal (3) og det samlede antal sider (4) af opdateringssider følger ikke kapitlets eksisterende fortløbende sidenummerering.

Præsentation af maskinen

Producent

For producentens navn og adresse se anden side i dette katalog.

Service

Tetra Pak påtager sig intet ansvar for skader på udstyret eller kvæstelser af personale eller forbrugere, som forårsages af reservedele, der ikke er ægte reservedele fra Tetra Pak.

For at bestille ægte reservedele fra Tetra Pak til denne maskine kontakt det nærmeste Tetra Pak-kontor.

Identifikation

CE-klassificering

Dette udstyr overholder det Europæiske Økonomiske Samarbejdsområdes (EØS) grundlæggende sundheds- og sikkerhedsbestemmelser.

(Forts.)

(Forts.)

3-A overholdelse

Hvis typeskiltet indeholder 3-A-mærket (15) (se illustration (B) på side i-7), overholder dette udstyr 3-A-sanitetsstandarderne for formnings-, fylde- og forseglingsmaskiner for beholdere til flydende mælk og flydende mælkeprodukter, nummer 17-10.

Maskinens typeskilt

Illustration (B) på side i-7 viser et eksempel på et typeskilt.
En illustration af maskinens gældende typeskilt og dens placering på udstyret vises i kapitlet Indledning af de vejledninger, der leveres sammen med dette udstyr. Maskinens typeskilt indeholder de data, der opføres nedenfor og om der er brug for, hvis der rettes henvendelse til Tetra Pak vedrørende det specifikke udstyr.

- Maskintype (8)
- Volumen (9)
- Tegningsspecifikationer (10)
- Maskinens serienummer (11)
- Producent (12)
- Fremstillingsår (13)
- CE-mærke (14)
- 3-A mærke (i givet fald) (15)

Kontrollér, at udstyrsdataene på de første sider i denne vejledning svarer til dataene på typeskiltet og maskinens specifikation.

Sådan bruges dette reservedelskatalog

Sådan finder men et reservedelsnummer

a) Se illustrationen (C) på side i-7: Gå til kapitelnumret (16), der vises ved siden af hovedgruppen, som indeholder den del, der skal findes.

Punkterne b) og c) refererer til illustrationen (D) på side i-8.

b) På hovedgruppens illustration søg efter den maskinundergruppe (18), der indeholder den del eller undergruppe, der ledes efter. Notér positionsnumret (19) og gå til den listeside, der følger illustrationen.

c) Søg efter positionsnumret/henvisningsbetegnelsen (17) eller undergruppens navn (20). Gå til det tilsvarende sidetal (21), der er opført i højre spalte. Tetra Pak har valgt altid at bruge funktionen orienteret struktur til henvisningsbetegnelse. Det præfiks, der angiver funktionsorienteret struktur (=) vises ikke i henvisningsbetegnelsen.

(Forts.)

(Forts.)

Punkterne d) og e) refererer til illustrationen (E) på side i-8.

d) Find den del (22), der ledes efter, på undergruppens illustration og notér delens positionsnummer.

e) Delnumret (29) og delbeskrivelsen (30) er opført ved siden af positionsnumret på listesiden.

Oplysninger, der er opført i et reservedelskatalog

Listen nedenfor refererer til illustrationen (E) på side i-8.
Et reservedelskatalog indeholder følgende oplysninger om grupper, undergrupper og reservedele for udstyret:

- Gruppens strukturhenvisning (23). Viser den næste højere gruppe i udstyrets listestruktur.
- Gruppenavn (24)
- Måleenhed (25)
- Mængde (26)
- Monteringstegningens nummer (27)
- Listesideområde (28). Inkluderet, hvis gruppeillustrationen eller listen har flere sider.
- Del- eller undergruppenummer (29)
- Undergruppenavn eller delbeskrivelse (30)
- Gruppenummer (31)
- Udstyrsnummer (32)
- Gruppeinformationsoverskrift (33). Angiver, om afsnittet under overskriften gælder for en bestemt maskinversion eller om det er en liste over fælles dele. Hvis en liste har mere end en version og hver version har en egen monteringstegning, vises der en sidehenvisning til versionens monteringstegning.
- Interne oplysninger (34)

Support og feedback

For hjælp med betjening af dette udstyr, eller ved andre forespørgsler, kommentarer eller forslag, kan der stilles spørgsmål eller gives feedback på E-Liaison hjemmesiden på http://e-liaison.tetrapak.com.
Hvis adgang til Tetra Paks intranet ikke er til rådighed, kontakt den nærmeste Tetra Pak-repræsentant.

Handbuch-Informationen

Tetra Pak empfiehlt, alle gelieferten Handbücher sorgfältig zu lesen.
Es muss sichergestellt werden, dass die gelieferten Handbücher dem Bediener- oder Wartungspersonal der Ausrüstung verfügbar sind.

Es ist wichtig, diesen Katalog während der Lebensdauer der Ausrüstung vorzuhalten und an nachfolgende Halter oder Benutzer weiterzugeben.

Tetra Pak ist nicht verantwortlich für Schäden an der Ausrüstung, die durch die Nichtbefolgung der beiliegenden Anweisungen der Handbücher verursacht werden.

Gelieferte Handbücher

Mit dieser Ausrüstung gelieferte Handbücher

CM

Das Umbauhandbuch liefert den Technikern Informationen über den Umbau der Ausrüstung zwischen den verschiedenen Produktionsweisen.

EM

Das Elektrohandbuch liefert den Technikern Informationen zum Elektrosystem der Ausrüstung.

IM

Das Installationshandbuch liefert den Technikern Informationen für die sichere Installation der Ausrüstung.

MM

Das Wartungshandbuch liefert den Technikern Informationen über die Wartung der Ausrüstung.

OM

Das Betriebshandbuch enthält Informationen für den Bediener zu Handhabung und Betrieb der Ausrüstung vor, während und nach der Produktion.

RM

Das Umbauhandbuchliefert Informationen an die Techniker, die diese benötigen, um die Ausrüstung aus dem Kit sicher zu installieren.

(Forts.)

(Forts.)

SPC

Der Ersatzteilkatalog liefert die für die Bestellung von Ersatzteilen bei Tetra Pak erforderlichen Informationen.

TeM

Das Technische Handbuch liefert den Technikern folgende Informationen:

- Informationen für die sichere Installation der Ausrüstung
- Informationen für die Wartung der Ausrüstung
- Informationen über das Elektrosystem der Maschine/Ausrüstung.
- Notwendige Informationen für die Bestellung von Ersatzteilen bei Tetra Pak.
- andere technische Informationen

UP

Die Aktualisierungsseiten sind neu, um die Maschinenhandbücher zu aktualisieren.

Seitenlayout

Siehe die Abbildung (A) auf Seite i-7: Die Hauptseiten in einem Ersatzteilkatalog bestehen auf dem Abbildungsseite (1) und einer entsprechenden Listenseite (7). Die Seitennummer (5) ist im Kopf einer Abbildungsseite und im Fuß einer Listenseite aufgeführt.
Die Dokumentennummer (6) ist im Fuß einer Listenseite angegeben.

Seitennummerierung

Siehe die Abbildung (A) auf Seite i-7: Eine Seitennummer (5) hat drei Teile

- Kapitel Nummer (2)
- Fortlaufende Seitennummer (2) innerhalb des Kapitels (3)
- Gesamtanzahl der Seiten im Kapitel (4)

Hinweis! Die Buchstaben UP können die Kapitelnummer (2) ersetzen, wenn das Handbuch aktualisierte Seiten enthält. Die fortlaufende Seitennummer (3) und die Gesamtanzahl der Seiten (4) der aktualisierten Seiten folgen nicht der laufenden Seitennummerierung des Kapitels.

Einführung in die Maschine

Hersteller

Die zweite Seite des Katalogs enthält Name und Anschrift des Herstellers.

Service

Tetra Pak übernimmt keine Verantwortung für Schäden an Ausrüstungen und Verletzungen von Personen, verursacht durch Ersatzteile, die keine echten Tetra Pak-Ersatzteile sind.

Für die Bestellung echter Tetra Pak-Ersatzteile für die Maschine wende man sich an die nächstgelegene Tetra Pak-Stelle.

Identifizierung

CE-Klassifizierung

Diese Ausrüstung entspricht den grundlegenden Gesundheits- und Sicherheitsvorschriften des Europäischen Wirtschaftsraumes (EWR).

(Forts.)

(Forts.)

3-A Erfüllung

Wenn die Maschinenplatte eine 3-A Markierung (15) enthält (siehe Abbildung (B) auf Seite i-7), entspricht diese Ausrüstung den 3-A Sanitärnormen für Former, Füller und Versiegler von Containern für lose Milch und Milchprodukte Nummer 17-10.

Maschinenschild

Die Abbildung (B) auf Seite i-7 zeigt ein Beispiel eines Maschinenschildes. Eine Abbildung eines gültigen Maschinenschildes und dessen Lage an der Ausrüstung finden Sie in der Einleitung zu dem mit der Ausrüstung gelieferten Handbuch. Das Maschinenschild enthält die nachstehenden Daten, erforderlich für die Kontaktnahme mit Tetra Pak bezüglich dieser spezifischen Ausrüstung.

- Maschinentyp (8)
- Volumen (9)
- Zeichnungsspezifikationen (10)
- Serien-Nummer der Maschine (11)
- Hersteller (12)
- Baujahr (13)
- CE-Markierung (14)
- 3-A Markierung (falls zutreffend) (15)

Es muss sichergestellt sein, dass die in den Frontseiten dieses Handbuchs aufgeführten Ausrüstungsdaten mit den Daten des Maschinenschildes und der Maschinenspezifikation übereinstimmen.

Benutzung dieses Ersatzteilkatalogs

Lokalisieren einer Teilenummer

a) Bezugnahme auf Abbildung (C) auf Seite i-7: Weiter zu Kapitel Nummer (16) neben der Hauptgruppe, die das entsprechende Teil enthält.

Pos. b) und c) beziehen sich auf die Abb. (D) auf Seite i-8.

b) Auf der Abbildung der Hauptgruppe die Untergruppe (18) der Maschine suchen, welche das Teil oder die Untergruppe enthält, das/die Sie suchen. Die Positionsnummer (19) notieren und zu der Listenseite gehen, die auf die Abbildung folgt.

c) Suchen Sie die Positionsnummer/Referenzbezeichnung (17) oder den Untergruppennamen (20). Weiter zur entsprechenden Seitennummer (21) in der rechten Spalte. Tetra Pak verwendet die funktionsorientierte Struktur für die Referenzbezeichnung. Präfix zur funktionsorientierten Struktur (=) ist in der Referenzbezeichnung nicht dargestellt.

(Forts.)

(Forts.)

Pos. d) und e) beziehen sich auf die Abbildung (E) auf Seite i-8.

d) Das gesuchte Teil (22) auf der Untergruppen-Abbildung suchen und die Positionsnummer (060) des Teils notieren.

e) Die Teilenummer (29) und die Beschreibung (30) des Teils sind neben der Positionsnummer auf der Listenseite angegeben.

Information in einem Ersatzteilkatalog

Nachstehende Liste bezieht sich auf die Abbildung (E) auf Seite i-8.
Ein Ersatzteilkatalog enthält folgende Informationen zu Gruppen, Untergruppen und Ersatzteile der Ausrüstung.

- Verweis auf Gruppenstruktur (23). zeigt die nächsthöhere Gruppe in der Listenstruktur.
- Gruppenbezeichnung (24)
- Maßeinheit (25)
- Menge (26)
- Nummer der Montagezeichnung (27)
- Liste Seitenbereich (28). vorhanden, wenn mehrere Seiten in der Gruppenabbildung oder Liste vorhanden sind.
- Teile- oder Untergruppen-Nummer (29)
- Untergruppenbezeichnung oder Beschreibung des Teils (30)
- Gruppennummer (31)
- Gerätenummer (32)
- Gruppeninformations-Überschrift (33). erläutert, ob der Abschnitt unter der Überschrift für eine spezifische Maschinenvariante gilt oder ob es sich um eine Liste allgemeiner Teile handelt. Hat eine Liste mehr als eine Variante und ist jeder Variante eine eigene Montagezeichnung zugeordnet, wird ein Seiten-Querverweis auf die Montagezeichnung der Variante angegeben.
- Interne Informationen (34)

Unterstützung und Feedback

Für Hilfeleistung beim Betrieb der Ausrüstung oder für Anfragen, Kommentare oder Vorschläge wollen Sie Fragen oder Feedback richten an E-Liaison Home Page unter http://e-liaison.tetrapak.com.
Wenn kein Zugang zum Tetra Pak Intranet verfügbar ist, wenden Sie sich an den nächsten Tetra Pak-Vertreter.

Πληροφορίες εγχειριδίου

Η Tetra Pak συνιστά να διαβάζετε προσεκτικά όλα τα παρεχόμενα εγχειρίδια. Βεβαιωθείτε ότι τα παρεχόμενα εγχειρίδια είναι διαθέσιμα στο προσωπικό που χειρίζεται ή συντηρεί τον εξοπλισμό.

Είναι σημαντικό να διατηρήσετε το εγχειρίδιο αυτό καθ' όλη τη διάρκεια ζωής του εξοπλισμού και να το μεταβιβάσετε σε οποιονδήποτε επακόλουθο κάτοχο ή χρήστη.

Η Tetra Pak δεν μπορεί να καταστεί υπεύθυνη για οποιαδήποτε ζημιά στον εξοπλισμό που οφείλεται σε μη τήρηση των οδηγιών που παρατίθενται στα εγχειρίδια που συνοδεύουν τον εξοπλισμό.

Παρεχόμενα εγχειρίδια

Τα εγχειρίδια παρέχονται μαζί με αυτό τον εξοπλισμό:

CM

Το Εγχειρίδιο Μετατροπών (CM) παρέχει πληροφορίες στους τεχνικούς σχετικά με τη μετατροπή του εξοπλισμού για τους διαφορετικούς τρόπους παραγωγής.

EM

Το Ηλεκτρολογικό Εγχειρίδιο (EM) παρέχει στους τεχνικούς τις πληροφορίες για το ηλεκτρικό σύστημα του εξοπλισμού.

IM

Το Εγχειρίδιο Εγκατάστασης (IM) παρέχει στους τεχνικούς τις πληροφορίες που απαιτούνται για την ασφαλή τοποθέτηση του εξοπλισμού.

MM

Το Εγχειρίδιο Συντήρησης (MM) παρέχει στους τεχνικούς πληροφορίες σχετικά με τη συντήρηση του εξοπλισμού.

OM

Το Εγχειρίδιο Χειρισμού (OM) παρέχει στο χειριστή πληροφορίες σχετικά με το χειρισμό και τη λειτουργία του εξοπλισμού πριν, κατά και μετά την παραγωγή.

RM

Το Εγχειρίδιο Μετασκευής (RM) παρέχει πληροφορίες στους τεχνικούς σχετικά με την ασφαλή εγκατάσταση ενός κιτ σε μια εγκατεστημένη μηχανή ή εξοπλισμό.

(Συνέχεια)

(Συνέχεια)

SPC

Ο Κατάλογος Ανταλλακτικών (SPC) παρέχει πληροφορίες που είναι απαραίτητες για την παραγγελία ανταλλακτικών από την Tetra Pak

TeM

Το Τεχνικό Εγχειρίδιο (TeM) παρέχει στους τεχνικούς πληροφορίες που μπορεί να είναι:

- πληροφορίες που είναι απαραίτητες για την ασφαλή εγκατάσταση του εξοπλισμού
- πληροφορίες που απαιτούνται για τη συντήρηση του εξοπλισμού
- πληροφορίες σχετικά με το ηλεκτρικό σύστημα της μηχανής/ εξοπλισμού.
- απαραίτητες πληροφορίες για να παραγγείλετε ανταλλακτικά από την Tetra Pak.
- άλλες τεχνικές πληροφορίες

ΠΑΝΩ

Οι Σελίδες Ενημέρωσης παρέχουν νέες σελίδες για την ενημέρωση των υφιστάμενων εγχειριδίων της μηχανής.

Διάταξη σελίδας

Βλέπε εικόνα (A) στη σελίδα i-7: Οι κύριες σελίδες του Καταλόγου Ανταλλακτικών αποτελούνται από μία σελίδα με εικόνα (1) και μια σελίδα με αντίστοιχη λίστα (7). Ο αριθμός σελίδας (5) αναγράφεται στο πάνω μέρος της σελίδας με την εικόνα και στο κάτω μέρος της σελίδες με τη λίστα.
Ο αριθμός εγγράφου (6) αναγράφεται στο κάτω μέρος της σελίδας με τη λίστα.

Αρίθμηση σελίδων

Βλέπε εικόνα (A) στη σελίδα i-7: Ο αριθμός σελίδας (5) αποτελείται από τρία μέρη:

- τον αριθμό κεφαλαίου (2)
- τον αύξοντα αριθμό σελίδας (3) εντός του κεφαλαίου
- τον συνολικό αριθμό σελίδων (4) στο κεφάλαιο

Σημειωση! Αν το εγχειρίδιο περιέχει σελίδες ενημέρωσης, ο αριθμός κεφαλαίου (2) μπορεί να αντικαθίσταται με τα γράμματα «UP».
Ο αύξων αριθμός σελίδας (3) και ο συνολικός αριθμός σελίδων (4) των σελίδων ενημέρωσης δεν ακολουθούν την αρχική αύξουσα αρίθμηση σελίδων του κεφαλαίου.

Εισαγωγικές πληροφορίες για τη μηχανή

Κατασκευαστής

Για το όνομα και τη διεύθυνση του κατασκευαστή, βλέπε τη δεύτερη σελίδα αυτού του καταλόγου.

Τεχνική εξυπηρέτηση

Η Tetra Pak δεν αναλαμβάνει καμία ευθύνη για οποιαδήποτε ζημιά στον εξοπλισμό ή τραυματισμό του προσωπικού ή των καταναλωτών που οφείλεται σε χρήση ανταλλακτικών που δεν είναι γνήσια ανταλλακτικά της Tetra Pak.

Για να παραγγείλετε γνήσια ανταλλακτικά της Tetra Pak για αυτή τη μηχανή, επικοινωνήστε με το πλησιέστερο γραφείο Tetra Pak.

Αναγνώριση

Ταξινόμηση CE

Ο εξοπλισμός αυτός συμμορφώνεται με τους βασικούς κανονισμούς υγείας και ασφάλειας του Ευρωπαϊκού Οικονομικού Χώρου (EEA).

(Συνέχεια)

(Συνέχεια)

Συμμόρφωση 3-A

Αν η πλάκα μηχανής περιλαμβάνει το σήμα 3-A (15) (βλέπε απεικόνιση (B) στη σελίδα i-7), ο εξοπλισμός αυτός συμμορφώνεται με τα υγειονομικά πρότυπα για διαμορφωτές, γεμιστικές μηχανές και διατάξεις σφράγισης των περιεκτών για υγρό γάλα και προϊόντα υγρού γάλακτος, αριθμός 17-10.

Πινακίδα χαρακτηριστικών μηχανής

Η εικόνα (B) στη σελίδα i-7 δείχνει ένα παράδειγμα μιας πινακίδας τύπου. Για μια εικόνα της πινακίδας τύπου της συγκεκριμένης μηχανής και της θέσης της πάνω στον εξοπλισμό, βλέπε το κεφάλαιο «Εισαγωγή» των εγχειριδίων που παραδίδονται μαζί με τον εξοπλισμό. Η πινακίδα τύπου περιέχει τα παρακάτω στοιχεία, τα οποία θα χρειάζεστε όταν επικοινωνείτε με την Tetra Pak σχετικά με τον συγκεκριμένο εξοπλισμό.

- Τύπος μηχανής (8)
- Όγκος (9)
- Στοιχεία σχεδίου (10)
- Αριθμός σειράς μηχανής (11)
- Κατασκευαστής (12)
- Έτος κατασκευής (13)
- Σήμανση CE (14)
- Σήμανση 3-A (εάν εφαρμόζεται) (15)

Βεβαιωθείτε ότι τα δεδομένα εξοπλισμού στις μπροστινές σελίδες αυτού του εγχειριδίου αντιστοιχούν στην πινακίδα χαρακτηριστικών της μηχανής και τις προδιαγραφής αυτής.

Πως να χρησιμοποιήσετε αυτό τον Κατάλογο Ανταλλακτικών

Παράδειγμα: Εντοπισμός αριθμού ανταλλακτικού

a) Βλέπε εικόνα (C) στη σελίδα i-7: Ανοίξτε το κεφάλαιο (16) που αναφέρεται δίπλα στην κυρίως ομάδα που περιέχει το εξάρτημα που θέλετε να εντοπίσετε.

Τα στοιχεία b) και c) αναφέρονται στην εικόνα (D) στη σελίδα i-8.

b) Στην απεικόνιση της k;yriaw ομάδας αναζητήστε την υποομάδα της μηχανής (18) που περιλαμβάνει το εξάρτημα ή την υποομάδα που αναζητάτε. Σημειώστε τον αριθμό θέσης (19) και μεταβείτε στη σελίδα λίστας που ακολουθεί την απεικόνιση.

c) Αναζητήστε τον αριθμό θέσης / χαρακτηρισμό αναφοράς (17) ή το όνομα της υπο-ομάδας (20). Ανοίξτε την αντίστοιχη σελίδα (21) που αναφέρεται στη δεξιά στήλη. Η Tetra Pak έχει επιλέξει να χρησιμοποιεί πάντα τη διάρθρωση που προσανατολίζεται στη λειτουργία για τον ορισμό αναφοράς. Το πρόθεμα που υποδεικνύει διάρθρωση που προσανατολίζεται στη λειτουργία (=) δεν εμφανίζεται στον ορισμό αναφοράς.

(Συνέχεια)

(Συνέχεια)

Τα στοιχεία d) και e) αναφέρονται στην εικόνα (E) στη σελίδα i-8.

d) Εντοπίστε το εξάρτημα (22) που αναζητάτε στην απεικόνιση της υποομάδας και σημειώστε τον αριθμο θέσης του εξαρτήματος.

e) Ο αριθμός εξαρτήματος (29) και η περιγραφή εξαρτήματος (30) παρατίθενται δίπλα στον αριθμό θέσης στη σελίδα λίστας.

Πληροφορίες που αναφέρονται στον Κατάλογο ανταλλακτικών

Η λίστα που ακολουθεί παραπέμπει στην εικόνα (E) στη σελίδα i-8.
Ο Κατάλογος Ανταλλακτικών περιέχει τις εξής πληροφορίες σχετικά με ομάδες, υπο-ομάδες και ανταλλακτικά για τον εξοπλισμό:

- Αναφορά στη δομή της ομάδας (23). Δείχνει την αμέσως μεγαλύτερη ομάδα στη δομή του καταλόγου του εξοπλισμού.
- Όνομα ομάδας (24)
- Μονάδα μέτρησης (25)
- Ποσότητα (26)
- Αριθμός σχεδίου συναρμολόγησης (27)
- Εύρος σελίδων της λίστας (28). Περιλαμβάνεται όταν υπάρχουν πολλαπλές σελίδες στην ομάδα ή στη λίστα.
- Αριθμός εξαρτήματος ή υποομάδας (29)
- Όνομα υποομάδας ή περιγραφή εξαρτήματος (30)
- Αριθμός ομάδας (31)
- Αριθμός εξοπλισμού (32)
- Επικεφαλίδα πληροφοριών ομάδας (33). Δείχνει αν το τμήμα της λίστας κάτω από την επικεφαλίδα ισχύει για συγκεκριμένη παραλλαγή της μηχανής ή αν πρόκειται για κατάλογο κοινών εξαρτημάτων.
  Αν μια λίστα αναφέρεται σε περισσότερες από μία παραλλαγές και κάθε παραλλαγή έχει το δικό της σχέδιο συναρμολόγησης, υπάρχει εδώ μια παραμπομπή στη σελίδα που δείχνει το σχέδιο συναρμολόγησης της παραλλαγής.
- Εσωτερικές πληροφορίες (34)

Υποστήριξη και σχολιασμός

Αν χρειαστείτε βοήθεια με τον χειρισμό αυτού του εξοπλισμού, ή αν έχετε απορίες, σχόλια ή προτάσεις, υποβάλετε τις ερωτήσεις ή τις παρατηρήσεις σας στην ιστοσελίδα της E-Liaison, στη διεύθυνση http://e-liaison.tetrapak.com. Αν δεν έχετε πρόσβαση στο Intranet της Tetra Pak, επικοινωνήστε με τον πλησιέστερο αντιπρόσωπο της Tetra Pak.

Información del manual

Tetra Pak recomienda que se lean cuidadosamente todos los manuales entregados. Comprobar que todos los manuales entregados estén disponibles para el personal que efectúe la operación o el mantenimiento del equipo.

Es importante conservar este manual durante la vida útil del equipo, así como facilitárselo a cualquier propietario o usuario posterior.

Tetra Pak no se responsabilizará de daños en la máquina o equipo debidos a la inobservancia de las instrucciones dadas en los manuales que acompañan este equipo.

Manuales entregados

Manuales entregados con este equipo:

CM

El Manual de conversión proporciona a los técnicos información sobre cómo convertir el equipo entre diferentes modos de producción.

EM

El Manual eléctrico proporciona a los técnicos información acerca del sistema eléctrico del equipo.

IM

El Manual de instalación proporciona a los técnicos la información requerida para instalar el equipo con seguridad.

MM

El Manual de mantenimiento proporciona a los técnicos información sobre el mantenimiento del equipo.

OM

El Manual de servicio proporciona a los operadores información sobre la manipulación y operación del equipo antes, durante y después de la producción.

RM

El Manual de Modificación provee la información necesaria a los técnicos para instalar con seguridad un kit en una máquina o equipo ya instalado.

(Continúa)

(Continuación)

SPC

El Catálogo de piezas de recambio proporciona la información necesaria para pedir piezas de recambio de Tetra Pak.

TeM

El Manual técnico proporciona información a los técnicos, que puede ser:

- la información requerida para instalar el equipo con seguridad
- información requerida para el mantenimiento del equipo
- información acerca del sistema eléctrico de la máquina/del equipo
- la información necesaria para pedir piezas de recambio a Tetra Pak
- otras informaciones técnicas

PA

Las Páginas de Actualización suministran nuevas páginas para actualizar los manuales de máquinas ya existentes.

Organización de las páginas

Remitirse a la ilustración (A) en la página i-7: Las páginas principales en un Catálogo de piezas de recambio se componen de una página de ilustración (1) y una página de lista correspondiente (7). El número de la página (5) se muestra en el encabezado de una página de ilustración y en el pie de página de una página de lista. El número del documento (6) se muestra en el pie de página de una página de lista.

Numeración de las páginas

Remitirse a la ilustración (A) en la página i-7:
Un número de página (5) se compone de tres partes:

- Número de capítulo (2)
- número de página consecutivo dentro del capítulo (3)
- número total de páginas del capítulo (4).

¡Nota! Las letras UP pueden reemplazar el número del capítulo (2) si el manual incluye páginas de actualización. El número de página consecutivo (3) y el número total de páginas (4) de páginas de actualización no siguen la numeración secuencial de páginas del capítulo.

Introducción a la máquina

Fabricante

Para el nombre y la dirección del fabricante, ver la segunda página de este catálogo.

Servicio

Tetra Pak no se hace responsable de cualquier daño o lesión al equipo, personal o consumidores que sea causado por piezas de recambio que no sean piezas Tetra Pak genuinas.

Para pedir piezas de recambio Tetra Pak genuinas para esta máquina, comunicarse con la oficina de Tetra Pak más cercana.

Identificación

Clasificación de la CE

Este equipo cumple los requisitos esenciales relativos a la salud y la seguridad del Área Económica Europea (EEA).

(Continúa)

(Continuación)

Conformidad con 3-A

Si la placa de la máquina contiene la marca 3-A (15) (consultar la ilustración (B) en la página i-7), este equipo cumple con las Normas sanitarias 3-A para formadoras, llenadoras y selladoras de envases para para leche fluida y productos de leche fluida 17-10.

Placa de la máquina

La ilustración (B) en la página i-7 muestra un ejemplo de placa de máquina. En la Introducción del capítulo de los manuales entregados con este equipo se muestra una ilustración de la placa de máquina válida y su ubicación en el equipo La placa de máquina contiene los datos listados a continuación requeridos al contactar con Tetra Pak en relación a este equipo específico.

- Tipo de máquina (8)
- Volumen (9)
- Especificaciones de plano (10)
- Número de serie de la máquina (11)
- Fabricante (12)
- Año de fabricación (13)
- Marca de la CE (14)
- Marca 3-A (si procede) (15)

Asegúrese que los datos de equipo listados en las páginas de cubierta de este manual corresponden a los datos de la placa de máquina y a la especificación máquina.

Cómo utilizar este Catálogo de piezas de recambio

Localizar un número de pieza de recambio

a) Remitirse a la ilustración (C) en la página i-7: Ir al número de capítulo (16) indicado al lado del grupo principal que contiene la pieza que usted desea localizar.

Los items b) y c) se refieren a la ilustración (D) en la página i-8.

b) En la ilustración del grupo principal, buscar el subgrupo máquina (18) que contiene la pieza o subgrupo que usted busca.
Anote el número de posición (19) y vaya a la página de lista que sigue a la ilustración.

c) Buscar el número de posición/designación de referencia (17) o el nombre del subgrupo (20). Vaya al número de página correspondiente (21) listado en la columna de la derecha. Tetra Pak ha elegido utilizar siempre la estructura orientada a la función para la designación de referencia. El prefijo que indica la estructura orientada a la función (=) no se muestra en la designación de referencia

(Continúa)

(Continuación)

Los Items d) y e) se refieren a la ilustración (E) en la página i-8.

d) Localizar la pieza (22) que busca en la ilustración del subgrupo y anotar el número de posición de la pieza.

e) El número de la pieza (29) y la descripción de la pieza (30) están listados al lado del número de posición en la página de lista.

Información listada en un Catálogo de piezas de recambio

La lista a continuación remite a la ilustración (E) en la página i-8.
Un Catálogo de piezas de recambio contiene la siguiente información sobre grupos, subgrupos y piezas de recambio para el equipo:

- Referencia de estructura de grupo (23). Indica el siguiente grupo más alto en la estructura de lista del equipo.
- Nombre de grupo (24)
- Unidad de medida (25)
- Cantidad (26)
- Número de plano de montaje (27)
- Rango de la página de lista (28). Incluida si hay páginas múltiples en la ilustración o lista de grupo.
- Número de pieza o subgrupo (29)
- Nombre del subgrupo o descripción de la pieza (30)
- Número de grupo (31)
- Número de equipo (32)
- Encabezado de información de grupo (33). Indica si la sección debajo del encabezado es para una variante máquina específica o si es una lista de piezas comunes. Si la lista tiene más de una variante y cada variante tiene su propio plano de conjunto, se muestra una referencia página para el plano de conjunto de la variante.
- Información interna (34)

Soporte y retroalimentación

Para asistencia al operar este equipo u otras preguntas, comentarios o sugerencias, haga sus preguntas u ofrezca información en la página de inicio de E-Liaison en http://e-liaison.tetrapak.com. Si no dispone de acceso a la intranet de Tetra Pak, comuníquese con el representante de Tetra Pak más cercano.

Manuaali informatsioon

Tetra Pak soovitab kõiki saadetud manuaale hoolikalt lugeda. Kindlustage saadetud manuaalide kättesaadavus seadmetega töötavale või neid hooldavale personalile.

Kataloog tuleb seadmete eluea jooksul alles hoida ning anda üle seadmete järgmisele omanikule või kasutajale.

Tetra Pak ei vastuta seadmete kahjustuste eest, mis on tekkinud seadmetega kaasapandud juhendites antud juhiste eiramise tagajärjel.

Kättetoimetatud manuaalid

Antud seadmega kaasasolevad manuaalid:

CM

Muutmise juhend annab tehnikutele informatsiooni seadmete muutmiseks vastavalt erinevatele tootmisrežiimidele.

EM

Elektrialane kasutusjuhend annab tehnikutele informatsiooni seadmete elektrisüsteemi kohta.

IM

Paigaldusjuhend annab tehnikutele seadmete turvaliseks paigaldamiseks vajalikku informatsiooni.

MM

Hooldusjuhend annab tehnikutele informatsiooni seadmete hooldamiseks.

OM

Kasutusjuhend annab operaatorile informatsiooni seadmete käsitsemiseks ja nendega töötamiseks enne tootmise alustamist, tootmise ajal ja pärast selle lõpetamist.

RM

Ümberehituse juhend annab tehnikutele vajalikku informatsiooni komplekti ohutuks paigaldamiseks eelnevalt paigaldatud masinale või seadmetele.

(Jätkub)

(Jätkub)

SPC

Varuosade kataloog annab vajalikku informatsiooni Tetra Pakist varuosade tellimiseks.

TeM

Tehniline juhend annab tehnikutele informatsiooni, mis võib olla näiteks:

- vajalik informatsioon seadmete ohutuks paigaldamiseks
- vajalik informatsioon seadmete hooldamiseks
- informatsioon masina/seadmestiku elektrisüsteemi kohta
- vajalik informatsioon tagavaraosade tellimiseks Tetra Pakist
- muu tehniline informatsioon

UP

Ajakohastatud leheküljed sisaldavad uusi lehekülgi olemasolevate masina juhendite ajakohastamiseks.

Lehekülje kujundus

Vaadake joonist (A) leheküljel i-7: varuosade kataloogi põhileheküljed koosnevad joonise leheküljest (1) ja vastava loendi leheküljest (7). Lehekülje number (5) näidatakse joonise lehekülje päises ja loendi lehekülje jaluses. Dokumendi number (6) näidatakse loendi lehekülje jaluses.

Lehekülgede nummerdamine

Vaadake joonist (A) leheküljel i-7: lehekülje numbril (5) on kolm osa:

- peatüki number (2)
- järjestikune lehekülje number peatükis (3)
- lehekülgede koguarv (4) peatükis

Pange tähele! Kui juhend sisaldab ajakohastatud lehekülgi, võivad peatüki numbrit (2) asendada tähed UP. Ajakohastatud lehekülgede järjestikune lehekülje number (3) ja lehekülgede koguarv (4) ei järgi peatüki olemasolevat järjestikust lehekülgede nummerdamist.

Masina sissejuhatus

Tootja

Tootja nime ja aadressi leiate kataloogi teiselt leheküljelt.

Teenindus

Tetra Pak ei vastuta seadmetele, töötajatele või tarbijatele põhjustatud kahjustuste või kehavigastuste eest, mis on tekkinud selliste varuosade kasutamise tagajärjel, mis ei ole Tetra Paki originaalvaruosad.

Tetra Paki originaalvaruosade tellimiseks käesoleva masina jaoks pöörduge lähimasse Tetra Paki kontorisse.

Identifikatsioon

CE klassifikatsioon

Need seadmed on vastavuses Euroopa Majanduspiirkonna (EEA) tervisekaitse ja ohutusmeetmete põhireeglitega.

(Jätkub)

(Jätkub)

3-A vastavus

Kui masina andmeplaadil on märk "3-A" (15) (vt joonist (B) lk i-7), vastab käesolev seadmestik piima- ja piimatoodete mahutite vormimis-, villimis- ja sulgemisseadmete sanitaarnormidele 3-A, number 17-10.

Seadmeplaat

Masina andmeplaadi näidis on toodud leheküljel i-7 oleval joonisel (B). Kehtiv andmeplaat ja selle asukoht seadmel on näidatud joonisel, mille leiate koos seadmestikuga tarnitud juhendite sissejuhatavast peatükist.
Masina andmeplaat sisaldab allpool loetletud andmeid, mida Te vajate antud seadme asjus Tetra Pakiga ühenduse võtmisel.

- Masina tüüp (8)
- Maht (9)
- Joonise spetsifikatsioonid (10)
- Masina seerianumber (11)
- Tootja (12)
- Valmistamise aasta (13)
- CE-märgistus (14)
- 3-A-märgistus (kui on asjakohane) (15)

Veenduge, et antud juhendi esilehtedel olevad andmed vastaksid masina andmesildil olevatele andmetele ja masina tehnilistele andmetele.

Varuosade kataloogi kasutamine

Leidke varuosa number

a) Vaadake joonist (C) leheküljel i-7: minge peatüki juurde, mille number (16) on näidatud selle põhigrupi kõrval, mis sisaldab Teie poolt otsitavat varuosa.

Elemendid b) ja c) viitavad joonisele (D) leheküljel i-8.

b) Põhigrupi joonisel otsige masina alamgruppi (18), mis sisaldab Teie poolt otsitavat varuosa või alamgruppi. Märkige üles positsiooni number (19) ja minge loendi leheküljele, mis järgneb joonisele.

c) Otsige üles positsiooni number/viitetähis (17) või alamgrupi nimi (20). Minge vastavale leheküljele, mille numbri (21) leiate parempoolses veerus olevast loetelust. Tetra Pak kasutab viitetähistes alati funktsioonile orienteeritud struktuuri. Prefiksit, mis näitab funktsioonile orienteeritud struktuuri (=), viitetähises ei näidata.

(Jätkub)

(Jätkub)

Elemendid d) ja e) viitavad joonisele (E) leheküljel i-8.

d) Leidke alamgrupi jooniselt üles otsitav varuosa (22) ja pange kirja varuosa positsiooni number.

e) Varuosa numbri (29) ja varuosa kirjelduse (30) leiate loendi leheküljelt positsiooni numbri kõrvalt.

Varuosade kataloogis loetletud informatsioon

Allpool antud loend viitab joonisele (E) leheküljel i-8.
Varuosade kataloog sisaldab alljärgnevat informatsiooni seadmete gruppide, alamgruppide ja varuosade kohta:

- Grupi struktuuri viide (23). Näitab järgmist kõrgemat gruppi seadmete loetelu struktuuris.
- Grupi nimetus (24)
- Mõõtühik (25)
- Kogus (26)
- Koostejoonise number (27)
- Loendi lehekülgede vahemik (28). Lisatakse juhul, kui grupi joonis või loend paiknevad mitmel leheküljel.
- Varuosa või alamgrupi number (29)
- Alamgrupi nimetus või varuosa kirjeldus (30)
- Grupi number (31)
- Seadme number (32)
- Grupis sisalduva informatsiooni pealkiri (33). Näitab, kas pealkirja all olev lõik puudutab konkreetset masina varianti või sisaldab see üldiste varuosade loendit. Kui loendis on variante rohkem kui üks ning nendel kõigil on eraldi koostejoonised, siis näidatakse konkreetse variandi koostejoonise lehekülgede numbrid.
- Siseinformatsioon (34)

Tugi ja tagasiside

Kui vajate abi seadmete kasutamisel või siis, kui Teil on küsimusi või soovite teha märkusi või ettepanekuid, esitage küsimused ja andke tagasisidet E-Liaisoni kodulehe kaudu aadressil http://e-liaison.tetrapak.com. Kui juurdepääs Tetra Paki intranetile puudub, võtke ühendust lähima Tetra Paki esindajaga.

Tiedot käsikirjasta

Tetra Pak suosittelee kaikkien toimitettujen käyttöohjeiden huolellista lukemista. Varmista että toimitetut käsikirjat ovat niiden henkilöiden käytettävissä, jotka käyttävät tai huoltavat laitetta.

On tärkeää, että käsikirjaa pidetään tallella koko laitteen käyttöiän ajan ja että käsikirja annetaan jokaiselle laitteen tulevalle omistajalle tai käyttäjälle.

Tetra Pak ei ole vastuussa mistään laitteille aiheutuneista vahingoista, jotka ovat johtuneet tämän käsikirjan ohjeiden noudattamatta jättämisestä.

Toimitetut käsikirjat

Laitteen mukana toimitetut käsikirjat:

CM

Muunnoskäsikirja (CM) palvelee teknikoita antamalla tiedot laitteen muuntamisesta erilaisiin tuotantotiloihin.

EM

Sähkökäsikirja (EM) palvelee teknikoita antamalla tiedot laitteen sähköjärjestelmästä.

IM

Asennuskäsikirja (IM) palvelee teknikoita antamalla tiedot laitteiden turvalliseksi asentamiseksi.

MM

Huoltokäsikirja (MM) palvelee teknikoita antamalla tiedot laitteiden huoltamisesta.

OM

Käyttäjän käsikirja (OM) palvelee käyttäjää antamalla tiedot laitteen käyttämisestä ennen tuotantoa, sen aikana ja sen jälkeen.

RM

Korjaus käsikirja antaa teknikoille vaadittavat tiedot turvallisesti asentaa rakennussarja valmiiseen koneeseen tai laitteeseen.

(Jatkuu)

(Jatkoa)

SPC

Varaosaluettelo antaa ne tarpeelliset tiedot, joiden avulla voi tilata varaosia Tetra Pakilta

TeM

Tekninen käsikirja antaa teknikoille tietoja, joka voi olla:

- tietoja laitteen turvallista asennusta varten
- tietoja, joita tarvitaan laitteita huollettaessa
- tietoja koneen/laitteen sähköjärjestelmästä
- tietoja, joita tarvitaan tilattaessa varaosia Tetra Pakilta.
- muita teknisiä tietoja.

SP

Sivujen Päivitys tarjoaa uusia sivuja jo olemassa oleviin koneen käyttöohjeisiin.

Sivutaitto

Katso kuvaa (A) sivulla i-7: Varaosaluettelon pääsivut koostuvat kuvitetusta sivusta (1) ja sitä vastaavasta luettelo sivusta (7). Sivunumero (5) näkyy kuvasivun otsikossa ja luettelo sivun alatunnisteessa.
Dokumentin numero (6) näkyy luettelo sivun alatunnisteessa.

Sivunumerointi

Katso kuvaa (A) sivulla i-7: sivunumerossa (5) on kolme osaa:

- kappaleen numero (2)
- juokseva sivunumero kappaleessa (2)
- kappaleen kokonaissivumäärä (3)

Huom! Kirjaimet SP voivat korvata kappaleen numeron (2) jos sivujen päivitys sisältyy käyttöohjeisiin. Peräkkäisten sivujen numero (3) ja päivitys sivujen kokonaismäärä (4) eivät noudata käytössä olevaa kappaleiden juoksevaa sivunumerointia.

Koneen esittely

Valmistaja

Katso valmistajan nimi ja osoite tämän luettelon toiselta sivulta.

Huolto

Tetra Pak ei vastaa sellaisista vahingoista tai mistään työvälineiden, henkilöstön tai kuluttajien vaurioista, jotka johtuvat varaosista, jotka eivät ole aitoja Tetra Pakin varaosia.

Aitoja Tetra Pakin tämän laitteen varaosia voi tilata ottamalla yhteys lähimpään Tetra Pak toimistoon.

Koneen tunnistaminen

CE-luokitus

Tämä laite täyttää Euroopan talousalueen (ETA) perus turvallisuus- ja terveysvaatimukset.

(Jatkuu)

(Jatkoa)

3-A Soveltuvuus

Jos konekilvessä on merkintä A-3 (15) (ks. kuvasta (B) sivulla i-7) se tarkoittaa, että laite täyttää A-3 -standardin puhtausvaatimukset muotoilimille, täyttimille ja tiivisteille astioissa, jotka on tarkoitettu maidolle ja maitotuotteille, numero 17-10.

Konekilpi

Kuva (B) sivulla i-7 näyttää esimerkin konekilvestä.
Esimerkki voimassa olevasta konekilvestä ja sen sijainnista laitteessa näkyy tämän laitteen mukana toimitettujen käyttöohjeiden johdanto luvussa.
Konekilpi sisältää alla luetellut tiedot, joita tarvitaan kun otetaan yhteyttä Tetra Pakkiin koskien erityisesti tätä laitetta.

- Koneen tyyppi (8)
- Teho (9)
- Piirustus erittelyt (10)
- Koneen sarjanumero (11)
- Valmistaja (12)
- Valmistusvuosi (13)
- CE-merkintä (14)
- 3-A merkintä (tarvittaessa) (15)

Varmista, että tämän käsikirjan etusivuilla olevat tuotetiedot vastaavat konekilven tietoja ja laitteen teknistä erittelyä.

Kuinka tätä varaosaluetteloa käytetään

Löydä ensin varaosan numero

a) Katso kuvaa (C) sivulla i-7: Mene pääryhmän vieressä ilmoitettuun kappaleeseen (16), joka sisältää sen osan, jonka haluat löytää.

Osat b) ja c) katso kuvaa (D) sivulla i-8.

b) Pääryhmän kuvassa etsi sitä koneen alaryhmää (18), joka sisältää etsimäsi osan tai alaryhmän. Huomioi sijaintinumero (19) ja siirry kuvaa seuraavaa luettelosivulle.

c) Etsi sijaintinumeroa/viitenimitystä (17) tai alaryhmän nimeä (20). Siirry vastaavalle sivunumerolle (21), joka on mainittu oikeanpuoleisessa sarakkeessa. Tetra Pak käyttää aina viitteissä toiminnallisia rakenteita. Prefiksi ilmaisin toiminto rakenne (=) ei näy viitenimityksissä.

(Jatkuu)

(Jatkoa)

Osat d) ja e) katso kuvaa (E) sivulla i-8.

d) Paikanna etsimäsi osa (22) alaryhmän piirroksessa ja huomioi osan sijaintinumero.

e) Osanumero (29) ja osan kuvaus (30) on luetteloitu sijaintinumeron vieressä luettelosivulla.

Varaosaluettelossa luetellut tiedot

Seuraava luettelo viittaa kuvaan (E) sivulla i-8. Varaosaluettelo sisältää seuraavat tiedot ryhmistä, alaryhmistä ja varaosista laitteelle:

- Viite ryhmän rakenteeseen (23). Osoittaa seuraavan ylemmän ryhmän laiteluettelon rakenteessa.
- Ryhmän nimi (24)
- Mittayksikkö (25)
- Määrä (26)
- Kokoamispiirustus numero (27)
- Luettelon sivualue (28). Sisällytetty, jos ryhmän kuvissa tai luetteloisssa on useita sivuja.
- Osan tai alaryhmän numero (29)
- Alaryhmän nimi tai osan kuvaus (30)
- Ryhmän numero (31)
- Laitteen numero (32)
- Ryhmätietojen otsikko (33). Ilmoittaa, onko otsikon alla oleva kohta erityiselle konevaihtoehdolle vai onko se luettelo yhteisistä osista. Jos luettelossa on useampi kuin yksi muunnos ja kullakin muunnoksella on oma asennuspiirroksensa, näytetään sivuviite muunnoksen asennuspiirustukseen.
- Sisäinen tiedotus (34)

Tuotetuki ja palaute

Tämän laitteen käyttöön, tai muihin tiedusteluihin, kommentteihin tai ehdotuksiin, esitettyihin kysymyksiin tai palautteeseen saa apua E-yhteystoimiston kotisivuilta osoitteesta http://e-liaison.tetrapak.com.
Jos pääsy Tetra Pak intranet sivuille ei ole saatavilla, ota yhteyttä lähimpään Tetra Pak edustajaan.

Information sur le manuel

Tetra Pak recommande de lire attentivement tous les manuels fournis. S'assurer que les manuels fournis sont accessibles au personnel qui s'occupe du fonctionnement ou de la maintenance de l'équipement.

Il est important de conserver ce manuel pendant toute la durée d'utilisation de la machine et de le transmettre à tout détenteur ou utilisateur ultérieur.

Tetra Pak ne sera pas tenu responsable d'un dommage causé à la machine ou à l'équipement par le fait de ne pas avoir respecté les instructions figurant dans le présent manuel.

Manuels fournis

Manuels fournis avec l'équipement:

CM

Le Manuel de Conversion fournit aux techniciens les informations nécessaires pour convertir la machine en vue des différents modes de production.

EM

Ce manuel électrique fournit aux techniciens les informations sur le système électrique de la machine.

IM

Ce manuel de Mise en place fournit aux techniciens les informations nécessaires pour l'installation de la machine en toute sécurité.

MM

Ce manuel de Maintenance fournit aux techniciens les informations pour la maintenance.

OM

Le Manuel d'Opérateur fournit à l'opérateur les informations sur la manutention et le fonctionnement de l'équipement avant, pendant et après la production.

RM

Le Manuel de Conversion fournit aux techniciens les renseignements nécessaires pour installer en toute sécurité un ensemble sur une machine ou un équipement mis en place.

(Suite à la page suivante)

(Suite de la page précédente)

SPC

Le Catalogue de pièces de rechange fournit les renseignements nécessaires pour commander les pièces de rechange chez Tetra Pak.

TeM

Le Manuel technique offre aux techniciens des informations qui peuvent être:

- des informations nécessaires pour installer l'équipement en toute sécurité,
- des informations nécessaires pour entretenir l'équipement
- des informations concernant le système électrique de l'équipement/des machines.
- des informations nécessaires à la commande de pièces de rechange auprès de Tetra Pak
- d'autres informations techniques.

HAUT

Les pages de Mise à Jour fournissent de nouvelles pages pour mettre à jour les manuels de machine existants.

Présentation d'une page

Se référer à la figure (A) à la page i-7: Les pages principales du Catalogue des Pièces de Rechange sont composées d'une page de figure (1) et d'une page de liste correspondante (7). Le numéro de page (5) est indiqué dans le titre de la page de figure et dans le bas de page d'une page de liste. Le numéro de document (6) est indiqué dans le bas de page de la page de liste.

Numérotation de page

Se référer (A) à la page i-7: Un numéro de page (5) possède trois parties:

- Numéro de chapitre (2)
- numéro de page consécutif (2) à l'intérieur du chapitre (3)
- nombre total de pages dans le chapitre (4)

Remarque! Les lettres UP peuvent remplacer le numéro de chapitre (2), si le manuel comprend des pages de mise à jour. Le numéro de page consécutif (3) et le nombre total de pages (4) des pages de mise à jour ne suivent pas la pagination séquentielle du chapitre.

Présentation de la machine

Fabricant

Pour le nom et l'adresse du fabricant, voir la deuxième page de ce catalogue.

Assistance technique

Tetra Pak ne sera pas tenu responsable des dommages sur l'équipement ou des blessures au personnel ou aux consommateurs qui pourraient être causés par des pièces de rechange qui ne sont pas des pièces de rechange Tetra Pak originales.

Pour commander les pièces de rechange originales de cette machine, prendre contact avec le bureau Tetra Pak le plus proche.

Identification

Certification CE

Cet équipement est conforme aux réglementations essentielles d'hygiène et de sécurité de la Communauté Économique Européenne (CEE).

(Suite à la page suivante)

(Suite de la page précédente)

3-A Conformité

Si la plaque de machine contient le repère 3-A (15) (voir la figure (B) à la page i-7), cet équipement est conforme aux Normes Sanitaires 3-A pour les moules, les remplisseuses et systèmes de soudure de conteneurs pour lait liquide et produits laitiers liquides, Numéro 17-10.

Plaque signalétique de la machine

La figure (B) à la page i-7 montre un exemple d'une plaque signalétique de machine.
Une représentation de la plaque de machine valable et son emplacement sur l'équipement est indiquée au chapitre Introduction des manuels fournis avec l'équipement. La plaque de machine contient les caractéristiques figurant dans la liste ci-dessous, nécessaires pour prendre contact avec Tetra Pak au sujet de cet équipement spécifique.

- Type de machine (8)
- Volume (9)
- Spécifications du plan (10)
- Numéro de série de la machine (11)
- Fabricant (12)
- Année de fabrication (13)
- Marquage CE (14)
- Repère 3-A (s'il y a lieu) (15)

S'assurer que les caractéristiques de l'équipement figurant dans la liste des pages de garde de ce manuel correspondent aux caractéristiques de la plaque signalétique de la machine et à ses spécifications.

Comment utiliser ce Catalogue de Pièces de Rechange

Localiser un Numéro de Pièce de rechange.

a) Se référer à la figure (C) à la page i-7: Aller au numéro de chapitre (16) indiqué à côté du groupe principal qui contient la pièce que vous souhaitez localiser.

Les articles b) et c) se réfèrent à la figure (D) à la page i-8.

b) Sur la figure du groupe principal, chercher la sous-groupe de machine (18) qui contient la pièce ou le sous-groupe que recherché. Noter le numéro de repère (19) et aller à la page de liste qui suit la figure.

c) Rechercher le numéro de repère/la désignation de référence (17) ou le nom de sous-groupe (20). Aller au numéro de page correspondant (21) figurant dans la liste de la colonne de droite. Tetra Pak a choisi de toujours utiliser la structure orientée vers la fonction pour la désignation de référence. Le préfixe indiquant la structure orientée vers la fonction (=) n'est pas indiquée dans la désignation de référence.

(Suite à la page suivante)

(Suite de la page précédente)

Les articles d) et e) se réfèrent à la figure (E) à la page i-8.

d) Localiser la pièce (22) recherchée sur la figure de sous-groupe et noter le numéro de repère de la pièce.
e) Le numéro de pièce (29) et la description de la pièce (30) figurent dans la liste à côté du numéro de repère sur la page de liste.

Informations figurant dans la Liste dans un Catalogue de Pièces de Rechange.

La liste ci-dessous se réfère à la figure (E) à la page i-8. Un Catalogue de Pièces de Rechange contient les renseignements suivants relatifs aux groupes, sous-groupes et pièces de rechange de l'équipement.

- Référence de structure de groupe (23). Indique le groupe supérieur suivant dans la structure de liste d'équipement.
- Nom du groupe (24)
- Unité de mesure (25)
- Quantité (26)
- Numéro de plan de montage (27)
- Gamme de la page de liste (28). Incluse s'il y a des pages multiples dans la figure de groupe ou dans la liste.
- Numéro de pièce ou de sous-groupe (29)
- Nom de sous-groupe ou description de la pièce (30)
- No. de groupe (31)
- Numéro de l'équipement (32)
- Titre des informations de groupe (33). Indique si la section sous le titre est pour une variante de machine spécifique ou s'il y a une liste de pièces communes. Si une liste comporte plus d'une variante et que chaque variante possède son propre plan de montage, une référence de page au plan de montage de la variante est alors indiqué.
- Informations internes (34)

Service Assistance et Réaction ("Support and Feeback")

Pour toute assistance lors de l'utilisation de cet équipement, ou pour toutes autres questions, commentaires ou suggestions, poser les questions ou faire part des réactions sur la page d'accueil du site de liaison électronique: http://e-liaison.tetrapak.com. Si l'accès au réseau interne Tetra Pak n'est pas disponible, prendre contact avec le représentant Tetra Pak le plus proche.

Kézikönyv információ

A Tetra Pak az összes leszállított kézikönyv alapos átolvasását javasolja. Gondoskodjon arról, hogy a készüléket üzemeltető és karbantartó személyzet számára elérhetőek legyenek a leszállított kézikönyvek.

Fontos, hogy a kézikönyvet a berendezés teljes élettartama alatt megőrizzék, és továbbadják azt minden későbbi tulajdonosnak és felhasználónak.

A Tetra Pak nem vállal felelősséget semmilyen a készülékben keletkező kárért, amely a berendezéshez mellékelt kézikönyvben lévő utasítások be nem tartásának következménye.

Leszállított kézikönyvek

A berendezéssel leszállított kézikönyvek:

CM

A CM Átállítási kézikönyv ellátja a szakembereket a különböző gyártási üzemmódokra való átállításról szóló információkkal.

EM

Az EM Elektromossági kézikönyv ellátja a szakembereket a készülék elektromos rendszerével kapcsolatos információkkal.

IM

Az IM Telepítési kézikönyv a készülék biztonságos telepítéséhez szolgáltat információkat a szakemberek számára.

MM

Az MM Karbantartási kézikönyv a készülék karbantartásával kapcsolatosan szolgáltat információkat a szakemberek számára.

OM

Az OM Üzemeltetési kézikönyv a kezelők részére szolgáltat információkat a berendezés kezeléséről és működtetéséről a gyártás előtt, alatt és után.

RM

Az RM újraépítési kézikönyv ellátja a szakembereket azokkal az információkkal, amelyek egy készletnek a már telepített gépre való biztonságos felszereléséhez szükségesek.

(Folyt.)

(Folyt.)

SPC

Az SPC Alkatrész-katalógus a Tetra Paktól megrendelhető alkatrészek megrendeléséhez szükséges információkat tartalmazza.

TeM

A TeM Műszaki útmutató az alábbi információkkal látja el a technikusokat:

- a berendezés biztonságos felszereléséhez szükséges információkkal,
- a berendezés karbantartásához szükséges információkkal,
- a gép/berendezés elektromos rendszerével kapcsolatos információkkal,
- A Tetra Paktól történő cserealkatrész rendeléshez szükséges információkkal,
- egyéb műszaki információkkal.

UP

A UP Termékfrissítési oldalak új oldalakkal frissíti a gépkönyveket.

Oldal elrendezés

Lásd az (A) ábrát a(z) i-7 oldalon: Az Alkatrész-katalógus fő oldalai egy ábrákat tartalmazó oldalból (1) és a megfelelő listát tartalmazó oldalból (7) állnak. Az oldalszám (5) az ábrákat tartalmazó oldal fejlécében és a listát tartalmazó oldal láblécében jelenik meg. A dokumentumszám a listát tartalmazó oldal (6) láblécében jelenik meg.

Oldalszámozás

Lásd az ábrát (A) a(z) i-7 oldalon: Az oldalszám (5) három részből áll:

- fejezetszám (2)
- fejezeten belüli egymást követő oldalak száma (3)
- a fejezet összoldalszáma (4)

Megjegyzés! A UP betűk helyettesíthetik a fejezetszámot (2), ha a kézikönyv termékfrissítési oldalakat tartalmaz. A termékfrissítési oldalak egymást követő oldalai (3) és összoldalszáma (4) nem igazodik a fejezet egymást követő oldalszámozásához.

Gép bevezetés

Gyártó

A gyártó neve és címe a katalógus második oldalán található.

Szerviz

A Tetra Pak nem vállal felelősséget a berendezés, személyzet vagy fogyasztók olyan sérüléseiért, amelyet nem eredeti Tetra Pak pótalkatrészek használata okozott.

Eredeti Tetra Pak pótalkatrészeket a legközelebbi Tetra Pak irodából rendelhet.

Azonosítás

CE besorolás

A berendezés megfelel az Európai Gazdasági Térség (EEA) alapvető egészségügyi és biztonsági előírásainak.

(Folyt.)

(Folyt.)

3-A megfelelőség

Ha a gép adattáblája tartalmazza a 3-A jelzést (15) (lásd (B) ábra az i-7 oldalon), akkor ez a berendezés megfelelő a 3-A Egészségügyi szabványok folyékony tej és folyékony tejtermékek csomagolásának alakító, töltő és lezáró eszközeire, 17-10. sz.

Géptábla

A (B) ábra a(z) i-7 oldalon egy példa a géptáblára.
Az érvényes géptáblát és annak a gépen elfoglalt helyét bemutató ábra a berendezéshez mellékelt kézikönyvek bevezető fejezetében található. A géptábla az alább felsorolt adatokat tartalmazza, amelyekre akkor van szükség, amikor felveszi a kapcsolatot a Tetra Pakkal ezzel a sajátos berendezéssel kapcsolatban.

- Géptípus (8)
- Térfogat (9)
- Tervrajz specifikációk (10)
- Gép gyártási száma (11)
- Gyártó (12)
- Gyártási év (13)
- CE jelölés (14)
- 3-A jelölés (ha van ilyen) (15)

Bizonyosodjon meg arról, hogy a kézikönyv első oldalán található berendezés-adatok megfelelnek a géptábla adatainak és a gép specifikációinak.

Az Alkatrész-katalógus használata

Keresse meg az alkatrész-számot

a) Lásd a (C) ábrát a(z) i-7 oldalon: Ugorjon a fejezetszámra (16), amely a keresett alkatrészt tartalmazó fő csoport mellett található.

A(z) b) és c) adatok a(z) i-8 oldalon található (D) ábrára vonatkoznak.

b) A főcsoport ábráját lásd a gép alcsoportban (18), amely a keresett alkatrészt vagy alcsoportot tartalmazza. Jegyezze fel a pozíció számot (19) és ugorjon az illusztrációt követő lista oldalra.

c) Keresse a pozíció számot/referencia elnevezést (17) vagy az alcsoport nevét (20). Ugorjon a jobboldali oszlopban feltüntetett megfelelő oldalszámra (21). A Tetra Pak úgy döntött, hogy referencia elnevezésre mindig a funkcióorientált szerkezetet alkalmazza. A funkcióorientált szerkezetet jelző előtag (=) nem jelenik meg a referencia elnevezésben.

(Folyt.)

(Folyt.)

A(z) d) és e) adatok a(z) i-8 oldalon található (E) ábrára vonatkoznak.

d) Keresse meg az alkatrészt (22) az alcsoport ábrán és jegyezze fel az alkatrész pozíció számát.

e) Az alkatrész-szám (29) és az alkatrész leírása (30) a lista oldalon a pozíció szám mellett van feltüntetve.

Az Alkatrész-katalógusban feltüntetett információk

Az alábbi lista a(z) i-8 oldalon lévő (E) ábrára vonatkozik.
Az Alkatrész-katalógus a következő információkat tartalmazza a berendezés alcsoportokról, csoportokról és alkatrészekről.

- Csoportszerkezet referencia (23). A következő nagyobb csoportot jelzi a berendezés listaszerkezetében.
- Csoportnév (24)
- Mértékegység (25)
- Mennyiség (26)
- Szerelési rajz száma (27)
- Listaoldal tartomány (28). Akkor található meg, ha több oldalt tartalmaz a csoportábrában vagy a listában.
- Alkatrész vagy alcsoport szám (29)
- Alcsoport név vagy alkatrész leírás (30)
- Csoportszám (31)
- Berendezés szám (32)
- Csoportinformáció címsor (33). Azt jelzi, hogy az alábbi szakaszban a címsor egy bizonyos gépváltozatra vonatkozik, vagy általános alkatrészek egy listája Ha egy lista egynél több változattal rendelkezik, és mindegyik változatnak saját összeszerelési rajza van, a változatok szerelési rajzának egy oldal-hivatkozása jelenik meg.
- Belső információk (34)

Támogatás és visszajelzés

A berendezés üzemeltetésére vonatkozó segítséghez, vagy egyéb kérésekhez, megjegyzésekhez vagy javaslatokhoz az E-Liaison http://e-liaison.tetrapak.com honlapján kell feltenni kérdéseket vagy visszajelzést adni. Ha a Tetra Pak intranet nem érhető el, forduljon a legközelebbi Tetra Pak képviselethez.

Handbókaupplýsingar

Tetra Pak mælir með því að allar handbækur séu lesnar vandlega.
Gangið úr skugga um að afhentar handbækur séu tiltækar starfsmönnum sem reka tækin eða viðhalda þeim.

Mikilvægt er geyma þessa handbók á endingartíma búnaðarins og afhenda hana arftökum eða öðrum notendum.

Tetra Pak ber ekki ábyrgð á neinu tjóni á tækjunum sem stafar af því að ekki var farið eftir leiðbeiningum í þessari handbók.

Afhentar handbækur

Handbækur sem afhentar voru með þessum tækjum:

CM

Breytingahandbók veitir tæknimönnum upplýsingar um breytingar á tækjunum svo að þau hæfi hinum ýmsu framleiðsluháttum.

EM

Raftækjahandbók veitir tæknimönnum upplýsingar um rafkerfi tækjanna.

IM

Uppsetningarhandbók veitir tæknimönnum nauðsynlegar upplýsingar um örugga uppsetningu tækjanna.

MM

Viðhaldshandbók veitir tæknimönnum upplýsingar um viðhald tækjanna.

OM

Rekstrarhandbók veitir stjórnanda upplýsingar um meðhöndlun og rekstur tækjanna fyrir og eftir framleiðslu.

RM

Endurbyggingarhandbók veitir tæknimönnum nauðsynlegar upplýsingar um örugga uppsetningu viðbótarbúnaðar við þegar uppsetta vél eða tæki.

(frh.)

(frh.)

SPC

Varahlutalisti veitir upplýsingar sem nauðsynlegar eru til að panta varahluti frá Tetra Pak.

TeM

Í Tæknihandbókinni eru tæknimönnum veittar upplýsingar, svo sem:

- upplýsingar um örugga uppsetningu tækjanna
- upplýsingar um viðhald tækjanna
- upplýsingar um rafkerfi vélarinnar/búnaðarins
- nauðsynlegar upplýsingar um pantanir varahluta frá Tetra Pak
- aðrar tæknilegar upplýsingar

UP

Uppfærslublaðsíður eru nýjar blaðsíður til að uppfæra eldri vélahandbækur.

Umbrot

Vísað er til myndar (A) á bls. i-7: Meginblaðsíður í Varahlutalistanum eru myndablaðsíða (1) og samsvarandi listablaðsíða (7). Blaðsíða númer (5) er sýnd í fyrirsögn myndablaðsíðu og neðst á listablaðsíðu. Skjalsnúmer (6) er neðst á listablaðsíðu.

Blaðsíðunúmer

Vísað er til myndar (A) á blaðsíðu i-7: Blaðsíðunúmer (5) skiptist í þrjá hluta:

- kaflanúmer (2)
- raðnúmer (3) innan kaflans
- heildarfjölda blaðsíðna (4) í kaflanum.

Ath.! Stafirnir UP kunna að koma í stað kaflanúmers (2) ef uppfærslublaðsíður eru í handbókinni. Raðnúmer blaðsíðu (3) og heildarfjöldi síðna (4) af uppfærslublaðsíðum sýna ekki eldri raðnúmer í kaflanum.

Inngangur um vélina

Framleiðandi

Nafn og heimilisfang framleiðanda er birt á 2. bls. þessa vörulista.

Þjónusta

Tetra Pak ber enga ábyrgð á tjóni eða slysum á tækjum, starfsmönnum eða neytendum af völdum varahluta sem eru ekki ekta Tetra Pak-varahlutir.

Pantanir á ekta Tetra Pak-varahlutum í þessa vél skulu sendar næstu skrifstofu Tetra Pak.

Auðkenni

CE flokkun

Þessi tæki fullnægja grundvallarheilbrigðis- og öryggisreglugerðum Evrópska efnahagssvæðisins (EES).

(frh.)

(frh.)

3-A samræmi

Ef vélarplatan inniheldur 3-A merkingu (15) (sjá mynd (B) á bls. i-7) er þessi búnaður í samræmi við 3-A hreinlætisstaðla fyrir mótara, áfyllara og lokara íláta fyrir mjólkurvökva og mjólkurvökvavörur, nr. 17-10.

Vélarskilti

Myndin (B) á bls. i-7 sýnir dæmi um vélarskilti.
Mynd af gildandi vélarskilti og staðsetning þess á búnaðinun er birt í inngangskafla handbókanna sem afhentar eru með þessum búnaði.
Á vélarskiltinu er að finna þau gögn sem talin eru upp hér að neðan og þörf er fyrir þegar haft er samband við Tetra Pak vegna þessa sérstaka búnaðar.

- Vélargerð (8)
- Magn (9)
- Tækniteikningar (10)
- Raðnúmer vélar (11)
- Framleiðandi vélar (12)
- Framleiðsluár(13)
- CE-merki (14)
- 3-A-merki (ef við á) (15)

Gangið úr skugga um að gögn um búnaðinn á fyrstu blaðsíðum þessarar handbókar komi heim og saman við vélarskiltið og tæknilýsingu vélarinnar.

Notkun þessa varahlutalista

Finna ber númer varahlutar

a) Vísað er til myndar (C) á bls. i-7: Fletta skal upp á kafla (16) sem birtist við hlið meginhópsins sem hefur að geyma þann hlut sem ætlunin er að finna.

Atriði b) og c) vísa til myndar (D) á bls. i-8.

b) Á mynd af meginhópnum ber að gá að undirflokki (18) vélar sem hefur að geyma hlut eða undirflokk sem leitað er að.
Aðgæta skal staðsetningarnúmerið (19) og fletta upp á listablaðsíðu sem fylgir myndinni.

c) Finna ber staðsetningarnúmer/tilvísaða skilgreiningu (17) eða heiti undirhóps (20). Aðgæta skal viðeigandi blaðsíðunúmer (21) sem birt er í dálkinum hægra megin. Tetra Pak hefur valið að nota ávallt virkniform sem skilgreiningarhlut. Forskeytið, sem bendir til virkniformsins (=), er ekki sýnt í skilgreiningarhlutnum

(frh.)

(frh.)

Atriði d) og e) eiga við um mynd (E) á bls. i-8.

d) Finna ber hlutinn (22) sem leitað er að í undirhópsmyndinni og aðgæta hvert er staðsetningarnúmer hlutarins.

e) Hlutarnúmerið (29) og lýsing hlutarins (30) eru listuð við hlið staðsetningarnúmersins á listablaðsíðunni.

Upplýsingar sem birtar eru í Varahlutalistanum

Listinn hér að neðan á við um mynd (E) á bls. i-8. Í Varahlutalista er að finna eftirfarandi upplýsingar um hópa, undirhópa og varahluti fyrir tækin:

- Skilgreining uppbyggingar hóps (23). Bendir til næsta hóps fyrir ofan í uppbyggingu hlutalistans.
- Heiti hóps (24)
- Mælieiningar (25)
- Magn (26)
- Númer á samsetningarteikningu (27)
- Svið listablaðsíðu (28). Fylgir með ef um er að ræða margar blaðsíður á hópmyndninni eða listanum.
- Númer hlutar eða undirflokks (29)
- Heiti undirhóps eða lýsing hlutar (30)
- Hópnúmer (31)
- Númer búnaðar (32)
- Fyrirsögn upplýsingar um hóp (33). Bendir til þess hvort kaflinn undir fyrirsögninni fjalli um sérstaka gerð vélar eða í honum sé listi yfir almenna hluti. Ef í listanum er að finna fleiri en einn frábrugðinn hlut og birt er samsetningarteikning fyrir sérhvern frábrugðinn hlut er vísað til blaðsíðunnar með samsetningarteikningu hins frábrugðna hlutar.
- Innri upplýsingar (34)

Stuðningur og endurgjöf

Ef óskað er aðstoðar við notkun þessa búnaðar, eða að bera fram fyrirspurnir, athugasemdir eða tillögur, á að bera upp spurningar eða veita endurgjöf á E-Liaison-heimasíðunni http://e-liaison.tetrapak.com. Ef ekki er um að ræða aðgang að Tetra Pak-heimasíðunni ber að hafa samband við næsta umboðsmann Tetra Pak.

Informazioni sul manuale

Tetra Pak raccomanda di leggere con attenzione tutti i manuali forniti. Assicurarsi che i manuali forniti siano disponibili per il personale che opera o mantiene in efficienza l'equipaggiamento.

E' importante conservare questo catalogo per tutta la durata dell'equipaggiamento e consegnarlo ad ogni successivo possessore o utilizzatore.

Tetra Pak non si assumerà alcuna responsabilità per qualsiasi danno all'equipaggiamento causato dall'inosservanza delle istruzioni contenute nei manuali forniti con questo equipaggiamento.

Manuali forniti

Manuali forniti con questo equipaggiamento:

CM

Il Manuale di Conversione fornisce ai tecnici le informazioni sulla conversione dell'equipaggiamento tra i diversi modi di produzione.

EM

Il Manuale Elettrico fornisce ai tecnici le informazioni sul sistema elettrico dell'equipaggiamento.

IM

Il Manuale d'Installazione fornisce ai tecnici le informazioni necessarie per installare facilmente l'equipaggiamento.

MM

Il Manuale di Manutenzione fornisce ai tecnici le informazioni sulla manutenzione dell'equipaggiamento.

OM

Il Manuale Operativo fornisce all'operatore informazioni su come movimentare ed azionare l'equipaggiamento prima, durante e dopo la produzione.

RM

Il Manuale di modifica fornisce ai tecnici le informazioni necessarie per installare facilmente un kit ad una macchina o ad un equipaggiamento.

(Continua)

(Continuazione)

SPC

Il Catalogo parti di ricambio fornisce informazioni necessarie per ordinare le parti di ricambio da Tetra Pak.

TeM

Il Manuale Tecnico fornisce le informazioni ai tecnici che possono essere:

- informazioni necessarie per installare in modo sicuro l'equipaggiamento
- informazioni necessarie per la manutenzione dell'equipaggiamento
- informazioni sul sistema elettrico della macchina/equipaggiamento
- informazioni necessarie per ordinare le parti di ricambio a Tetra Pak.
- altre informazioni tecniche

SU

Le pagine di aggiornamento forniscono nuove pagine per aggiornare i manuali delle macchine esistenti.

Schema pagina

Fare riferimento alla figura (A) a pagina i-7: Le pagine principali in un catalogo parti di ricambio consistono di una pagina di illustrazione (1) ed una corrispondente pagina della lista (7). Il numero di pagina (5) è indicato nell'intestazione di una pagina di illustrazione e nel piè di pagina di una pagina della lista. Il numero di documento (6) è indicato nel piè di pagina di una pagina della lista.

Numerazione pagina

Fare riferimento alla figura (A) a pagina i-7: Un numero di pagina (5) ha tre parti:

- numero capitolo (2)
- numero pagina consecutivo nel capitolo (3)
- numero totale di pagine nel capitolo (4)

Nota! Le lettere UP possono sostituire il numero del capitolo (2) se il manuale include le pagine di aggiornamento. Il numero di pagina consecutivo (3) ed il numero totale di pagine (4) delle pagine di aggiornamento non seguono la numerazione esistente sequenziale delle pagine del capitolo.

Introduzione macchina

Fabbricante

Per il nome e l'indirizzo del fabbricante, vedere la seconda pagina di questo catalogo.

Assistenza

Tetra Pak non si assume alcuna responsabilità per qualsiasi danno all'equipaggiamento, o lesioni al personale o ai clienti che sia stato causato da parti di ricambio non originali Tetra Pak.

Per ordinare le parti di ricambio originali Tetra Pak per questa macchina, contattare l'ufficio Tetra Pak più vicino.

Identificazione

Classificazione CE

Questa macchina è conforme alle norme sanitarie e di sicurezza dell'Area Economica Europea (EEA).

(Continua)

(Continuazione)

Conformità 3-A

Se la targhetta macchina contiene il marchio 3-A (15) (vedere la figura (B) a pagina i-7), questo equipaggiamento è conforme alle norme sanitarie 3-A per formatrici, riempitrici e saldatori di contenitori per latte liquido e prodotti lattiero-caseari liquidi, numero 17-10.

Targhetta macchina

La figura (B) a pagina i-7 mostra un esempio della targhetta della macchina. Una figura della targhetta della macchina valida e la relativa posizione sull'equipaggiamento è mostrata nel capitolo Introduzione dei manuali forniti con questo equipaggiamento. La targhetta della macchina contiene i dati elencati in basso, necessari quando si contatta Tetra Pak in merito a questo specifico equipaggiamento.

- Tipo di macchina (8)
- Volume (9)
- Specifiche disegni (10)
- Numero di serie della macchina (11)
- Fabbricante (12)
- Anno di fabbricazione (13)
- Sigla CE (14)
- Marcatura 3-A (se applicabile) (15)

Assicurarsi che i dati dell'equipaggiamento nelle pagine anteriori di questo manuale corrispondano alla targhetta della macchina ed alle specifiche della macchina stessa.

Come usare questo catalogo parti di ricambio

Individuazione di un numero di parte di ricambio

a) Fare riferimento alla figura (C) a pagina i-7: Passare al numero del capitolo (16) indicato accanto al gruppo principale che contiene la parte che si vuole individuare.

Punti b) e c) fare riferimento alla figura (D) a pagina i-8.

b) Sulla figura del gruppo principale, cercare il sottogruppo della macchina (18) che contiene la parte o il sottogruppo che si sta cercando. Annotare il numero di posizione (19) e passare alla pagina della lista che segue la figura.

c) Cercare il numero di posizione/denominazione di riferimento (17) o il nome del sottogruppo (20). Passare al numero di pagina corrispondente (21) elencato nella colonna destra. Tetra Pak ha scelto di utilizzare sempre la funzione della struttura orientata per la denominazione di riferimento. Il prefisso che indica la funzione della struttura orientata (=) non è mostrato nella denominazione di riferimento

(Continua)

(Continuazione)

Punti d) e e) fare riferimento alla figura (E) a pagina i-8 .

d) Individuare la parte (22) che si sta cercando sulla figura del sottogruppo ed annotare il numero di posizione della parte.

e) Il numero della parte (29) e la descrizione della parte (30) sono elencati accanto al numero di posizione nella pagina della lista.

Informazioni elencate nel catalogo parti di ricambio

La lista in basso si riferisce alla figura (E) a pagina i-8. Un catalogo parti di ricambio contiene le seguenti informazioni sui gruppi, sottogruppi e parti di ricambio per l'equipaggiamento:

- Riferimento struttura gruppo (23). Indica il gruppo successivo superiore nella struttura della lista dell'equipaggiamento.
- Nome del gruppo (24)
- Unità di misura (25)
- Quantità (26)
- Numero disegno di montaggio (27)
- Gamma di pagine della lista (28). Inclusa se ci sono pagine multiple nella figura del gruppo o della lista.
- Numero della parte o del sottogruppo (29)
- Nome del sottogruppo o descrizione della parte (30)
- Numero gruppo (31)
- Numero dell'equipaggiamento (32)
- Sezione informazioni del gruppo (33). Indica se la sezione sotto l'intestazione è per una variante macchina specifica o se è una lista di parti comuni. Se una lista ha più di una variante e ogni variante ha il proprio disegno di montaggio, un riferimento della pagina è indicato nel disegno di montaggio della variante.
- Informazioni interne (34)

Supporto e feedback

Per l'assistenza durante il funzionamento di questo equipaggiamento, o altre richieste, commenti, o suggerimenti, presentare le domande o fornire il feedback sulla pagina iniziale E-Liaison a http://e-liaison.tetrapak.com. Se l'accesso all'intranet Tetra Pak non è disponibile, contattare il rappresentante Tetra Pak più vicino.

Vadovo informacija

Tetra Pak rekomenduoja atidžiai perskaityti visus pristatomus vadovus. Įsitikinkite, kad pristatomi vadovai yra prieinami personalui, kuris dirba su įranga arba ją prižiūri.

Svarbu saugoti šį vadovą visam įrangos gyvavimo laikotarpiui ir perduoti vadovą kiekvienam sekančiam savininkui arba naudotojui.

Tetra Pak neatsako už bet kokius įrangos gedimus, atsiradusius nesilaikant šią įrangą lydinčiuose vadovuose pateiktų instrukcijų.

Pristatomi vadovai

Kartu su šia įranga pristatomi vadovai:

CM

Perjungimų vadove specialistams suteikiama informacija apie įrangos perjungimą tarp įvairių gamybos režimų.

EM

Elektrinės dalies vadove pateikiama informacija specialistams apie įrangos elektros sistemą.

IM

Montavimo vadove pateikiama specialistams informacija, reikalinga saugiam įrangos montavimui

MM

Priežiūros vadove pateikiama specialistams informacija, reikalinga prižiūrint įrangą.

OM

Darbo vadove pateikiama informacija operatoriams apie darbą su įranga ir įrangos valdymą prieš gamybą, gamybos metu ir po gamybos.

RM

Restauravimo vadove pateikiama specialistams informacija, reikalinga saugiai sumontuoti komplektą dalių į sumontuotą mašiną ar įrangą.

(Tęsiama)

(Tęsiama)

SPC

Atsarginių dalių kataloge pateikiama informacija, reikalinga užsakant atsargines dalis iš Tetra Pak.

TeM

Techniniame vadove pateikiama specialistams informacija, kuri gali būti:

- informacija, reikalinga saugiam įrangos montavimui
- informacija, reikalinga atliekant techninę įrangos priežiūrą
- informacija apie mašinos / įrangos elektros sistemą
- informacija, reikalinga užsakant atsargines dalis iš Tetra Pak
- kitokia techninė informacija

UP

Nauji puslapiai skirti esamų mašinos vadovų atnaujinimui naujais puslapiais.

Puslapio išdėstymas

Vadovaukitės (A) paveikslėliu i-7 puslapyje: atsarginių dalių katalogo pagrindinius puslapius sudaro paveikslėlių puslapis (1) ir atitinkamo sąrašo puslapis (7). Puslapio numeris (5) nurodytas paveikslėlių puslapio antraštėje ir apatinėje sąrašo puslapio poraštėje. Dokumento numeris (6) nurodytas apatinėje sąrašo puslapio poraštėje.

Puslapių numeravimas

Vadovaukitės (A) paveikslėliu i-7 puslapyje: puslapio numerį (5) sudaro trys dalys:

- skyriaus numeris (2)
- puslapio eilės numeris (3) skyriuje
- bendras puslapių skaičius (4) skyriuje

Pastaba! Jei vadove yra atnaujinimų puslapiai, UP raidės gali būti vietoje skyriaus numerio (2). Atnaujinimo puslapio eilės numeris (3) ir bendras atnaujinimo puslapių skaičius (4) neatitinka nuoseklios skyriaus puslapių numeracijos.

Mašinos įvadas

Gamintojas

Apie gamintojo įmonės pavadinimą ir adresą skaitykite antrame šio katalogo puslapyje.

Aptarnavimas

Tetra Pak neprisiims jokios atsakomybės už žalą ir įrangos gedimus ar darbuotojų arba vartotojų traumas, patirtas naudojant atsargines dalis, kurios nėra originalios Tetra Pak atsarginės dalys.

Norėdami užsakyti originalias Tetra Pak atsargines dalis susisiekite su artimiausia Tetra Pak įstaiga.

Identifikacija

CE klasifikacija

Ši įranga tenkina pagrindines Europos Ekonominės Zonos (EEA) sveikatos ir saugumo taisykles.

(Tęsiama)

(Tęsiama)

3-A atitiktis

Jei mašinos lentelėje yra ženklas 3-A (15) (žr. (B) iliustraciją i-7 puslapyje), ši įranga atitinka 3-A higienos standartus skysto pieno ir skysto prieno produktų talpyklų formuotojams, pripildytojams ir sandarikliams, numeris 17-10.

Mašinos plokštė

Paveikslėlyje (B), esančiame i-7 puslapyje, pavaizduotas įrenginio kortelės pavyzdys.
Mašinos galiojančios kortelės paveikslėlis ir kortelės vieta ant įrangos nurodyta kartu su įranga tiekiamų vadovų įžanginiame skyriuje. Įrangos kortelėje pateikiami išvardinti duomenys, kurių reikia kreipiantis į Tetra Pak dėl konkrečios įrangos.

- Mašinos tipas (8)
- Tūris (9)
- Brėžinio specifikacijos (10)
- Mašinos serijos numeris (11)
- Gamintojas (12)
- Pagaminimo metai (13)
- CE ženklas (14)
- 3-A ženklas (jei taikomas) (15)

Įsitikinkite, kad šio vadovo pirmuose puslapiuose pateikti įrangos duomenis atitinka duomenis pateiktus mašinos informacinėje lentelėje ir mašinos specifikacijoje.

Kaip naudotis šiuo atsarginių dalių katalogu?

Nustatykite atsarginės dalies numerį

a) Vadovaukitės (C) paveikslėliu, esančiu i-7 puslapyje: atsiverskite skyrių, kurio numeris (16) nurodytas prieš pagrindinę grupę, kurioje yra reikiama surasti dalis.

Elementai b) ir c) atitinka (D) paveikslėlį, esantį i-8 puslapyje.

b) Pagrindinės grupės paveikslėlyje ieškokite mašinos dalinės grupės (18), kurioje yra ieškoma dalis ar dalinė grupė. Įsidėmėkite pozicijos numerį (19) ir atsiverskite už paveikslėlio esantį sąrašo puslapį.

c) Suraskite pozicijos numerio / nuorodos aprašymą (17) ar dalinės grupės pavadinimą (20). Atsiverskite atitinkamą puslapio numerį (21), nurodytą dešiniajame stulpelyje. Tetra Pak nuorodų aprašymams pasirinko visuomet naudoti su atliekama funkcija susietą struktūrą. Nuorodos aprašyme nenaudojamas priešdėlis, pažymintis su atliekama funkcija susietą struktūrą (=)

(Tęsiama)

(Tęsiama)

Elementai d) ir e) atitinka (E) paveikslėlį, esantį i-8 puslapyje.

d) Ieškomą dalį (22) suraskite dalinės grupės paveikslėlyje ir įsidėmėkite dalies pozicijos numerį.

e) Dalies numeris (29) ir dalies aprašymas (30) nurodyti sąrašo puslapyje prie pozicijos numerio.

Atsarginių dalių kataloge pateikiama informacija

Pateiktas sąrašas atitinka (E) paveikslėlį, esantį i-8 puslapyje. Atsarginių dalių kataloge pateikiama tokia informacija apie įrangos grupes, dalines grupes ir atsargines dalis:

- Grupės struktūros apibūdinimas (23). Nurodo kitą aukščiausią grupę įrangos sąrašo struktūroje.
- Grupės pavadinimas (24)
- Mato vienetas (25)
- Kiekis (26)
- Surinkimo brėžinio numeris (27)
- Sąrašo puslapių intervalas (28). Nurodomas tuomet, kai grupės paveikslėlį ar sąrašą sudaro keli puslapiai.
- Dalies ar dalinės grupės numeris (29)
- Dalinės grupės pavadinimas arba dalies aprašymas (30)
- Grupės numeris (31)
- Įrangos numeris (32)
- Grupės informacijos antraštė (33). Pažymi, ar po antrašte esantis skyrius skirtas konkrečiam mašinos variantui, ar tai bendrų dalių sąrašas. Jei sąrašą sudaro daugiau kaip vienas variantas ir kiekvienas iš jų atitinka skirtingą surinkimo numerį, pateikiama varianto surinkimo brėžinio puslapio nuoroda.
- Vidinė informacija (34)

Techninė pagalba ir grįžtamasis ryšys

Dėl techninės pagalbos ar kitokių pasiteiravimų eksploatuojant šią įrangą, norėdami pateikti pastabas arba pasiūlymus, užduokite klausimus ar suteikite grįžtamąją informaciją E-Liaison pagrindiniame puslapyje, adresu http://e-liaison.tetrapak.com. Jei nepavyks pasiekti vidinio Tetra Pak tinklo, susisiekite su artimiausia Tetra Pak atstovybe.

Informācija par instrukciju

Tetra Pak iesaka uzmanīgi izlasīt visas piegādātās instrukcijas. Nodrošiniet, lai piegādātās instrukcijas būtu pieejamas personālam, kurš ekspluatē un apkalpo iekārtu.

Ir svarīgi saglabāt šo katalogu visā ierīces kalpošanas laikā un nodot to jebkuram sekojošam īpašniekam vai lietotājam.

Tetra Pak neuzņemas atbildību par jebkādiem šīs iekārtas bojājumiem, ko izraisa šim aprīkojumam pievienotajās rokasgrāmatās sniegto instrukciju neievērošana.

Piegādātās instrukcijas

Ar iekārtu piegādātās instrukcijas:

CM

Šī Maiņas instrukcija (CM) nodrošina tehnisko personālu ar informāciju par iekārtas pārvēršanu dažādiem ražošanas režīmiem.

EM

Elektrisko savienojumu instrukcija (EM) nodrošina tehniķus ar informāciju par iekārtas elektrisko sistēmu.

IM

Instalācijas instrukcija (IM) nodrošina tehniķus ar informāciju, kas ir nepieciešama drošai iekārtas instalācijai.

MM

Tehniskās apkopes instrukcija (MM) sniedz tehniķiem informāciju par aprīkojuma tehnisko apkopi.

OM

Ekspluatācijas instrukcija (OM) nodrošina operatorus ar informāciju par rīcību ar iekārtu un tās ekspluatāciju pirms un pēc ražošanas procesa, kā arī tā laikā.

RM

Pārveidošanas instrukcija (RM) sniedz tehniķiem informāciju, kas nepieciešama, lai uz uzstādītas iekārtas vai aprīkojuma droši uzstādītu komplektu.

(Turpinājums seko)

(Turpinājums seko)

SPC

Rezerves daļu katalogs (SPC) sniedz informāciju, kas ir nepieciešama rezerves daļu pasūtīšanai no Tetra Pak.

TeM

Tehniskā instrukcija (TeM) sniedz tehniķiem informāciju, kas var būt:

- informācija, kura nepieciešama, lai droši uzstādītu aprīkojumu;
- informācija, kura nepieciešama, lai veiktu aprīkojuma tehnisko apkopi;
- informācija par iekārtas/ aprīkojuma elektrosistēmu;
- informācija, kura nepieciešama rezerves daļu pasūtīšanai no Tetra Pak;
- cita tehniskā informācija.

UP

Atjauninājuma lappuses ir jaunas lapas, kas nepieciešamas, lai atjauninātu iekārtas esošās rokasgrāmatas.

Lappuses formāts

Skatiet attēlu (A) lappusē i-7: Rezerves daļu kataloga (SPC) galvenās lapas iekļauj ilustrāciju lapu (1) un attiecīgo saraksta lapu (7). Lappuses numurs (5) ir attēlots ilustrācijas lapas galvenes daļā un saraksta lapas kājenes daļā. Dokumenta numurs (6) ir attēlots saraksta lapas kājenes daļā.

Lappušu numerācija

Skatiet attēlu (A) lappusē i-7: lappuses numuram (5) ir trīs daļas:

- sadaļas numurs (2);
- lappuses kārtas numurs (2) sadaļā;
- kopējais lappušu skaits (3) sadaļā.

Piezīme! Burti UP var aizvietot sadaļas numuru (2), ja rokasgrāmata iekļauj atjauninājumu lappuses. Lappuses kārtas numurs (3) un atjauninājumu lappušu kopējais lappušu skaits (4) neatbilst sadaļas esošajai secīgajai lappušu numerācijai.

Ievads par ierīci

Ražotājs

Ražotāja nosaukumu un adresi skatiet šī kataloga otrajā lappusē.

Serviss

Tetra Pak neuzņemas atbildību par bojājumiem vai kaitējumu aprīkojumam, personālam vai klientiem, ko rada tādu rezerves daļu izmantošana, kas nav oriģinālas Tetra Pak rezerves daļas.

Lai pasūtītu oriģinālas Tetra Pak rezerves daļas šai iekārtai, sazinieties ar tuvāko Tetra Pak biroju.

Identifikācija

CE klasifikācija

Šī iekārta atbilst Eiropas Ekonomiskās Telpas (EEA) galvenajiem veselības un drošības noteikumiem.

(Turpinājums seko)

(Turpinājums seko)

3-A atbilstība

Ja uz iekārtas datu plāksnītes ir 3-A marķējums (15) (skatīt attēlu (B) lappusē i-7), šāds aprīkojums atbilst 3-A Šķidrā piena un šķidro piena produktu iepakojuma formētāju, pildītāju un sakausētāju sanitārajām normām Nr. 17-10.

Iekārtas datu plāksne

Attēlā (B) lappusē i-7 ir attēlots iekārtas datu plāksnes piemērs. Iekārtas datu plāksnes attēls, kā arī šīs plāksnes atrašanās vieta uz aprīkojuma ir attēlota līdz ar šo iekārtu piegādāto rokasgrāmatu ievada sadaļā. Iekārtas datu plāksnē ir iekļauti tālāk norādītie dati, kas ir nepieciešami, sazinoties ar Tetra Pak jautājumos, kuri saistīti ar šo specifisko aprīkojumu.

- Iekārtas tips (8)
- Tilpums (9)
- Rasējuma specifikācijas (10)
- Iekārtas sērijas numurs (11)
- Ražotājs (12)
- Ražošanas gads (13)
- CE marķējums (14)
- 3-A marķējums (ja piemērojams) (15)

Pārliecinieties, vai iekārtas dati šīs instrukcijas pirmajā lappusē atbilst datiem iekārtas datu plāksnē un iekārtas specifikācijai.

Kā lietot šo Rezerves daļu katalogu

Atrodiet rezerves daļas numuru

a) Skatiet attēlu (C) lappusē i-7: atrodiet sadaļas numuru (16), kas norādīts līdzās galvenajai grupai, kur atrodas meklējamā detaļa.

Punkti b) un c) attiecas uz attēlu (D) lappusē i-8.

b) Galvenās grupas attēlā atrodiet iekārtas apakšgrupu (18), kur atrodas meklējamā detaļa vai apakšgrupa. Atcerieties pozīcijas numuru (19) un skatiet sarakstu, kas seko pēc šī attēla.

c) Atrodiet pozīcijas numuru/ atsauces apzīmējumu (17) vai apakšgrupas nosaukumu (20). Atšķiriet attiecīgo lappusi (21), kas norādīta labajā ailē. Atsauču apzīmējumiem Tetra Pak vienmēr izvēlas lietot uz funkciju orientētu struktūru. Prefikss, kas apzīmē uz funkciju orientēto struktūru (=), atsauču apzīmējumos nav norādīts.

(Turpinājums seko)

(Turpinājums seko)

Punkti d) un e) attiecas uz attēlu (E) lappusē i-8.

d) Apakšgrupas attēlā atrodiet meklēto detaļu (22) un atcerieties detaļas pozīcijas numuru.

e) Detaļas numurs (29) un detaļas apraksts (30) ir sniegts saraksta lapā blakus pozīcijas numuram.

Informācija, kas sniegta Rezerves daļu katalogā

Tālāk sniegtais saraksts attiecas uz attēlu (E) lappusē i-8.
Rezerves daļu katalogs satur šādu informāciju par grupām, apakšgrupām un aprīkojuma rezerves daļām:

- grupas struktūras atsauci (23). Norāda uz aprīkojuma saraksta struktūras nākamo augstāko grupu.
- Grupas nosaukumu (24).
- Mērvienība (25)
- Daudzums (26)
- Montāžas rasējuma numurs (27)
- Saraksta lappušu diapazons (28). Ja grupas attēli vai saraksts iekļauj vairākas lappuses.
- Detaļas vai apakšgrupas numurs (29)
- Apakšgrupas nosaukums vai detaļas apraksts (30)
- Grupas numurs (31)
- Aprīkojuma numurs (32)
- Grupas informācijas virsraksts (33). Ja sadaļa, kas seko pēc virsraksta, attiecas uz specifisku iekārtas versiju, vai kopēju detaļu saraksta gadījumā. Ja sarakstā ir vairāk nekā viena versija un katrai versijai ir savs montāžas rasējums, ir sniegta atsauce uz konkrētās versijas montāžas rasējuma lappusi.
- Iekšējā informācija (34)

Atbalsts un atgriezeniskā saite

Lai saņemtu palīdzību attiecībā uz darbu ar šo aprīkojumu, pieprasītu informāciju, izteiktu komentārus, sniegtu ieteikumus, uzdotu jautājumus vai sniegtu atsauksmes, apmeklējiet E-Liaison mājas lapu: http://e-liaison.tetrapak.com. Ja piekļuve Tetra Pak iekštīklam nav iespējama, sazinieties ar tuvāko Tetra Pak pārstāvniecību.

Handboekinformatie

Tetra Pak raadt aan alle geleverde documentatie zorgvuldig te lezen. Ga na of de geleverde documentatie ter beschikking is van het personeel dat de machine moet bedienen of servicewerkzaamheden moet uitvoeren.

Het is belangrijk deze catalogus voor de duur van de machine te bewaren en de catalogus door te geven aan elke volgende eigenaar of gebruiker.

Tetra Pak aanvaardt geen verantwoordelijkheid voor om het even welke soort beschadiging aan de machine als gevolg van het niet opvolgen van de in dit handboek gegeven instructies.

Meegeleverde handboeken

Met deze apparatuur meegeleverde handboeken:

CM

Dit conversiehandboek geeft technici informatie over het ombouwen van de apparatuur tussen verschillende productiemodi.

EM

Het Elektrisch Handboek geeft technici informatie betreffende het elektrisch systeem van de apparatuur.

IM

Het Installatiehandboek geeft technici informatie om op veilige wijze de apparatuur te installeren.

MM

Het Onderhoudshandboek geeft technici informatie over het onderhoud van de apparatuur.

OM

Het Bedieningshandboek geeft operators informatie over hoe de machine moet worden bediend en hoe ermee moet worden omgegaan voor, tijdens en na productie.

RM

Het Ombouwhandboek bevat de nodige informatie voor technici om een kit veilig aan een geïnstalleerde machine of apparatuur te installeren.

(Zie volg. blz.)

(Vervolg)

SPC

De Catalogus Reservedelen geeft informatie die nodig is om reserveonderdelen bij Tetra Pak te bestellen.

TeM

Het Technische Handboek bevat informatie voor technici betreffende:

- het veilig installeren van de apparatuur
- het onderhoud van de apparatuur
- het elektrische systeem van de machine/apparatuur.
- het bestellen van reserveonderdelen bij Tetra Pak
- andere technische informatie

UP

De Update Pages bevat nieuwe bladzijden voor het updaten van de bestaande machinehandboeken.

Pagina lay-out

Zie de illustratie (A) op bladzijde i-7: De belangrijkste bladzijden van een Catalogus Reserveonderdelen bestaan uit een bladzijde met een illustratie (1) en een corresponderende bladzijde met een lijst (7).
Het bladzijdenummer (5) is te vinden in de kop van een illustratiebladzijde en in de voetnoot van de lijstbladzijde. Het documentnummer (6) is te vinden in de voetnoot van een lijstbladzijde.

Bladzijdenummering

Zie de illustratie (A) op bladzijde i-7: een bladzijdenummer (5) bestaat uit drie delen.

- hoofdstuknummer (2)
- opeenvolgende bladzijdenummer in het hoofdstuk (3)
- totaal aantal bladzijden in het hoofdstuk (4)

N.B.! De letters UP kunnen het hoofdstuknummer (2) vervangen als het handboek update-bladzijden omvat. Het opeenvolgende bladzijdenummer (3) en het totale aantal bladzijden (4) van de updatebladzijden volgen niet de bestaande volgordenummering van het hoofdstuk.

Introductie van de machine

Fabrikant

Voor naam en adres van de fabrikant, zie de tweede bladzijde van deze catalogus.

Service

Tetra Pak wijst elke verantwoordelijkheid af voor schade aan machines of letsels aan personeel of consumenten die zijn veroorzaakt door reserveonderdelen die geen originele Tetra Pak-reserveonderdelen zijn.

Neem voor het bestellen van originele Tetra Pak-reserveonderdelen voor deze machine contact op met het dichtstbijzijnde Tetra Pak-kantoor.

Identificatie

CE-classificatie

Deze apparatuur voldoet aan de basiseisen voor gezondheid en veiligheid voor de Europese Economische Ruimte (EEA).

(Zie volg. blz.)

(Vervolg)

3-A Naleving

Als het machineplaatje het 3-A merkteken (15) bevat (zie illustratie (B) op bladzijde i-7), voldoet deze apparatuur aan de 3-A hygiënenormen voor vorm-, vul- en sluitmachines van containers voor vloeibare melk en vloeibare melkproducten, nummer 17-10.

Machineplaatje

De illustratie (B) op bladzijde i-7 toont een voorbeeld van een machineplaatje.
Een illustratie van het wettige machineplaatje en de plaatsing ervan wordt getoond in het hoofdstuk Introductie van de handboeken, meegeleverd met deze apparatuur. Het machineplaatje bevat onderstaande gegevens die nodig zijn wanneer Tetra Pak moet worden gecontacteerd betreffende deze apparatuur.

- Machinetype (8)
- Volume (9)
- Tekeningspecificaties (10)
- Serienummer machine (11)
- Fabrikant (12)
- Fabricagejaar (13)
- CE-markering (14)
- Markering 3-A (indien van toepassing) (15)

Controleer of de gegevens betreffende de apparatuur in de voorste bladzijden van dit handboek overeenkomen met de gegevens op het machineplaatje en de machinespecificatie.

Hoe dient deze catalogus reserveonderdelen te worden gebruikt.

Lokaliseren van een nummer van een reserveonderdeel

a) Zie de illustratie (C) op bladzijde i-7: ga naar het hoofdstuknummer (16), naast de hoofdgroep die het gewenste deel bevat.

Items b) en c) refereren naar de illustratie (D) op bladzijde i-8.

b) Zoek in de illustratie van de hoofdgroep de machinesubgroep (18) op die het deel van de gewenste subgroep bevat. Noteer het positienummer (19) en ga naar de lijstbladzijde die op de illustratie volgt.

c) Zoek het positienummer/referentiebenaming (17) of de naam van de subgroep (20). Ga naar het corresponderende bladzijdenummer (21), aangegeven in de rechterkolom. Tetra Pak heeft altijd gekozen voor een functiegerichte structuur voor referentiebenaming. Het prefix dat de functiegerichte structuur aangeeft (=) wordt niet getoond in de referentiebenaming.

(Zie volg. blz.)

(Vervolg)

Items d) en e) refereren naar de illustratie (E) op bladzijde i-8.

d) Lokaliseer het gewenste onderdeel (22) in de illustratie van de subgroep en noteer het positienummer van het onderdeel.

e) Het onderdeelnummer (29) en de beschrijving ervan (30) worden naast het positienummer op de lijstbladzijde weergegeven.

Informatie die in een Catalogus reserveonderdelen wordt gegeven

Onderstaande lijst verwijst naar de illustratie (E) op bladzijde i-8.
Een Catalogus reserveonderdelen bevat de volgende informatie betreffende groepen, subgroepen en reserveonderdelen voor de apparatuur.

- Referentie groepsstructuur (23). Geeft de volgende hoogste groep in de structuur van de apparatuur aan.
- Groepsnaam (24)
- Meeteenheid (25)
- Hoeveelheid (26)
- Nummer montagetekening (27)
- Bereik lijstbladzijde (28). Inclusief indien er meerdere bladzijden in de groepsillustratie of lijst voorkomen.
- Onderdeel of subgroepsnummer (29)
- Naam subgroep of beschrijving onderdeel (30)
- Groepsnummer (31)
- Apparatuurnummer (32)
- Kopregel groepsinformatie (33). Geeft aan of het deel onder de titel bedoeld is voor een specifieke machinevariant dan wel of het een lijst is met algemene onderdelen. Indien een lijst meer dan één variant bevat en elke variant heeft zijn eigen montagetekening, wordt een bladzijdereferentie naar de montagetekening van de variant gegeven.
- Interne informatie (34)

Ondersteuning en feedback

Voor hulp bij het gebruik van deze apparatuur, of met andere vragen, commentaar, suggesties of feedback kunt u terecht op de E-Liaison homepage op http://e-liaison.tetrapak.com. Als u geen toegang hebt tot het intranet van Tetra Pak, dient u contact op te nemen met de dichtstbijzijnde Tetra Pak-vertegenwoordiger.

Informasjon om manualen

Tetra Pak anbefaler at du leser alle medfølgende manualer nøye. Kontroller at personalet som bruker eller vedlikeholder utstyret har adgang til de medfølgende manualene.

Det er viktig at denne manualen oppbevares trygt gjennom hele utstyrets levetid, og at den gis videre til senere eiere eller brukere av utstyret.

Tetra Pak kan ikke holdes ansvarlig for skader på utstyr som skyldes at instruksjonene i manualene som følger dette utstyret ikke er fulgt.

Medfølgende manualer

Manualer som følger med dette utstyret:

CM

Konverteringsmanualen gir teknikere opplysninger om konvertering av utstyret mellom forskjellige produksjonsmodus.

EM

Denne manualen gir teknikere opplysninger om utstyrets elektriske system.

IM

Denne manualen gir teknikere informasjonen som trengs for sikker installasjon av utstyret.

MM

Denne manualen gir teknikere informasjon om vedlikehold av utstyret.

OM

Driftsmanualen gir operatørene informasjon om håndtering og drift av utstyret før, under og etter produksjon.

RM

Ombyggingsmanualen gir teknikere informasjon som kreves for å installere et sett trygt på en installert maskin eller et utstyr.

(Forts.)

(Forts.)

SPC

Reservedelskatalogen gir nødvendige opplysninger for å kunne bestille reservedeler fra Tetra Pak.

TeM

Den tekniske manualen gir teknikerne informasjon som kan være:

- informasjon som kreves for en trygg installering av utstyret
- informasjon som kreves for vedlikehold av utstyret
- informasjon om maskinens/utstyrets elektriske system
- nødvendig informasjon for å bestille reservedeler fra Tetra Pak.
- annen teknisk informasjon

OPP

Oppdateringssidene har nye sider for å oppdatere eksisterende maskinmanualer.

Sideoppsett

Gå til illustrasjonen (A) på side i-7: Hovedsidene i en reservedelskatalog består av en illustrasjonsside (1) og en korresponderende oversiktsside (7). Sidenummeret (5) vises i overskriften på en illustrasjonsside og i fotnoten på en oversiktsside. Dokumentnummeret (6) vises i fotnoten på en oversiktsside.

Sidenummerering

Gå til illustrasjon (A) på side i-7: Et sidenummer (5) har tre deler:

- kapittelnummer (2)
- neste sidenummer innen kapitlet (3)
- totalt antall sider i kapitlet (4)

Merk! Bokstavene UP kan erstatte kapittelnummer (2) hvis manualen inkluderer oppdateringssidene. Følgende sidenummer (3) og totalt antall sider (4) på oppdateringssidene følger ikke eksisterende sekvensnummerering av sidene i kapitlet.

Innføring i maskinen

Produsent

For produsentens navn og adresse, se andre siden i denne katalogen.

Service

Tetra Pak aksepter ikke ansvar for skader eller personskader på utstyr, ansatte eller brukere forårsaket av reservedeler som ikke er originale Tetra Pak reservedeler.

For å bestille originale Tetra Pak reservedeler til denne maskinen, kontakt nærmeste Tetra Pak kontor.

Identifikasjon

CE-klassifisering

Dette utstyret tilfredsstiller grunnleggende helse- og sikkerhetskrav i Det europeiske økonomiske samarbeidsområde (EØS).

(Forts.)

(Forts.)

3-A samsvar

Hvis maskinplaten er 3-A-merket (15) (se illustrasjon (B) på side i-7), er dette utstyret i samsvar med 3-A Sanitærstandarder for formings-, påfyllings-, og tetningssystemer for beholdere for flytende melkeprodukter, nummer 17-10.

Merkeplate

Illustrasjonen (B) på side i-7 viser et eksempel på en maskinplate.
En illustrasjon av gyldig maskinplate og dennes plassering på utstyret vises i introduksjonskapitlet i manualene som følger dette utstyret.
Maskinplaten inneholder dataen som er oppført under, som er nødvendig når du kontakter Tetra Pak om dette spesifikke utstyret.

- Maskintype (8)
- Volum (9)
- Tegnespesifikasjoner (10)
- Maskinens serienummer (11)
- Produsent (12)
- Produksjonsår (13)
- CE merke (14)
- 3-A merke (hvis relevant) (15)

Pass på at utstyrsdataen på forsidene i denne manualen stemmer overens med merkeplaten og maskinspesifikasjonen.

Hvordan bruke denne reservedelskatalogen

Finn et reservedelsnummer

a) Gå til illustrasjonen (C) på side i-7: Gå til kapittelnummer (16) som er indikert ved siden av hovedgruppen som inneholder delen du ønsker å lokalisere.

Deler b) og c) viser til illustrasjonen (D) på side i-8.

b) På hovedgruppeillustrasjonen, se etter maskinundergruppen (18) som inneholder delen eller undergruppen du ser etter.
Merk posisjonsnummeret (19) og gå til oversiktssiden som følger illustrasjonen.

c) Se etter posisjonsnummer /referanseanvisning (17) eller undergruppenavnet (20). Gå til korresponderende sidenummer (21) oppført i søylen på høyre hånd. Tetra Pak har valgt alltid å bruke funksjonsorientert struktur for referansebestemmelse.
Forinnstilt indikering av funksjonsorientert struktur (=) vises ikke i referansehenvisningen

(Forts.)

(Forts.)

Deler d) og e) viser til illustrasjonen (E) på side i-8.

d) Finn delen (22) som du leter etter i undergruppeillustrasjonen og merk delens posisjonsnummer.

e) Delenummeret (29) og delebeskrivelsen (30) er oppført ved siden av posisjonsnummeret på listesiden.

Informasjon oppført i en reservedelskatalog

Listen under viser til illustrasjonen (E) på side i-8. En reservedelskatalog inneholder følgende informasjon om grupper, undergrupper og reservedeler for utstyret:

- Gruppestrukturreferanse (23). Indikerer den neste gruppen over i utstyrslistestrukturen.
- Gruppenavn (24)
- Måleenhet (25)
- Antall (26)
- Monteringstegningens nummer (27)
- Oversiktssideomfang (28). Inkludert hvis det er mange sider i gruppeillustrasjonen eller listen.
- Delenummer eller undergruppenummer (29)
- Undergruppenavn eller delebeskrivelse (30)
- Gruppenavn (31)
- Utstyrsnummer (32)
- Gruppeinformasjon overskrift (33). Indikerer om seksjonen under overskriften er for en spesiell maskinvariant eller om det er en liste med fellesdeler. Hvis en liste har mer enn en variant og hver variant har sin egen monteringstegning, vil det vises en sidereferanse til denne variantens monteringstegning.
- Intern informasjon (34)

Støtte og tilbakemeldinger

For hjelp med bruk av utstyret, eller andre spørsmål, kommentarer, eller forslag kan du stille spørsmålene eller gi tilbakemelding på E-Liason hjemmesiden på http://e-liaison.tetrapak.com. Hvis tilgang på Tetra Pak intranet ikke finnes, kontakt den nærmeste Tetra Pak representanten.

Informacje na temat instrukcji

Tetra Pak zaleca, aby uważnie przeczytano dostarczone instrukcje. Należy dopilnować, aby instrukcje zostały udostępnione pracownikom, którzy obsługują lub wykonują przeglądy urządzenia.

Ważne jest, aby zachować niniejszy katalog przez okres użytkowania maszyny i przekazać go kolejnemu właścicielowi lub użytkownikowi.

Tetra Pak nie ponosi odpowiedzialności za uszkodzenia maszyny spowodowane nieprzestrzeganiem wskazówek podanych w niniejszej instrukcji dołączonej do maszyny.

Dostarczone instrukcje

Instrukcje dostarczone w raz z maszyną:

CM

Instrukcja przestawienia dostarcza technikom informacji na temat przestawiania maszyny między różnymi trybami produkcji.

EM

Instrukcja elektryczna dostarcza technikom informacji na temat układu elektrycznego maszyny.

IM

Instrukcja instalacyjna dostarcza technikom informacji niezbędnych do bezpiecznej instalacji maszyny.

MM

Instrukcja serwisowa dostarcza technikom informacji na temat przeglądów i napraw maszyny.

OM

Instrukcja obsługi dostarcza operatorowi informacji na temat obsługi maszyny przed, w trakcie i po zakończeniu produkcji.

RM

Instrukcja przebudowy dostarcza technikom informacji niezbędnych do wykonania bezpiecznej instalacji zestawu do przebudowy w zainstalowanej maszynie lub wyposażeniu.

(Ciąg dalszy)

(Ciąg dalszy)

SPC

Katalog części zamiennych dostarcza informacji niezbędnych do zamawiania części zamiennych w Tetra Pak.

TeM

Instrukcja techniczna dostarcza technikom informacji, które mogą być:

- informacjami wymaganymi do bezpiecznej instalacji wyposażenia
- informacjami wymaganymi do wykonywania przeglądów i napraw wyposażenia
- informacjami o systemie elektrycznym maszyny/wyposażenia.
- informacjami niezbędnymi do zamawiania części zamiennych w Tetra Pak.
- innymi informacjami technicznymi

UP

Rozdział Strony aktualizacji zawiera nowe strony użyte do aktualizacji istniejących instrukcji maszyny.

Układ strony

Zapoznaj się z rysunkiem (A) na stronie i-7: Główne strony w Katalogu Części Zamiennych zawierają stronę z rysunkiem (1) i odpowiednią stronę z wykazem (7). Numer strony (5) znajduje się w nagłówku strony z rysunkiem oraz w stopce strony z wykazem. Numer dokumentu (6) znajduje się w stopce strony z wykazem.

Numeracja stron

Zapoznaj się z rysunkiem (A) na stronie i-7: Numer strony (5) składa się z trzech części:

- numer rozdziału (2)
- kolejny numer strony (3) w danym rozdziale
- całkowita ilość stron (4) w rozdziale

Uwaga! Litery UP mogą zastępować numer rozdziału (2) jeśli instrukcja zawiera strony aktualizacji. Kolejny numer strony (3) i całkowita ilość stron (4) aktualizacji nie odpowiada istniejącej numeracji stron rozdziału.

Informacje na temat maszyny

Producent

Nazwa i adres producenta, patrz druga strona niniejszego katalogu.

Serwis

Tetra Pak nie odpowiada za wszelkie uszkodzenia wyposażenia, obrażenia personelu lub konsumentów spowodowane przez części zamienne, które nie są oryginalnymi częściami zamiennymi Tetra Pak.

W celu zamówienia oryginalnych części zamiennych Tetra Pak dla maszyny, skontaktuj się z najbliższym biurem Tetra Pak.

Identyfikacja

Znak CE

Oznacza on, iż urządzenie spełnia wymagania określone w podstawowych przepisach dotyczących bezpieczeństwa i zdrowia, obowiązujących w Europejskiej Strefie Ekonomicznej (EEA).

(Ciąg dalszy)

(Ciąg dalszy)

Zgodność z normą 3-A

Jeśli tabliczka znamionowa maszyny zawiera znak 3-A (15) (patrz rysunek (B) na stronie i-7), oznacza to, że wyposażenie jest zgodne z normami sanitarnymi 3-A dla jednostek formowania, maszyn napełniających i zgrzewarek pojemników dla mleka płynnego i płynnych produktów mlecznych, numer 17-10.

Tabliczka znamionowa

Na rysunku (B) na stronie i-7 pokazano przykład tabliczki znamionowej. Rysunek tabliczki znamionowej i jej lokalizacja na wyposażeniu znajduje się w rozdziale Wstęp instrukcji dostarczonych wraz z wyposażeniem. Tabliczka znamionowa zawiera dane przedstawione poniżej, które trzeba podać kontaktując się z Tetra Pak w sprawach dotyczących określonego wyposażenia.

- Typ maszyny (8)
- Pojemność (9)
- Specyfikacje rysunkowe (10)
- Numer seryjny maszyny (11)
- Producent (12)
- Rok produkcji (13)
- Znak CE (14)
- Znak 3-A (jeśli ma zastosowanie) (15)

Upewnij się, czy dane wyposażenia na pierwszych stronach niniejszej instrukcji odpowiadają danym przedstawionym na tabliczce znamionowej maszyny i specyfikacji maszyny.

Jak korzystać z Katalogu Części Zamiennych

Lokalizacja numeru części zamiennej

a) Zapoznaj się z rysunkiem (C) na stronie i-7: Przejdź do numeru rozdziału (16) wskazanego obok głównej grupy, która zawiera część, którą chcesz zlokalizować.

Pozycje b) i c) dotyczą rysunku (D) na stronie i-8.

b) Na rysunku głównej grupy, poszukaj podgrupy maszyny (18), która zawiera część lub podgrupę, której szukasz. Zanotuj numer pozycji (19) i przejdź na stronę z wykazem odpowiadającym rysunkowi.

c) Poszukaj numeru pozycji/oznaczenia referencyjnego (17) lub nazwy podgrupy (20). Przejdź na odpowiedni numer strony (21) podany w prawej kolumnie. Do oznaczania referencyjnego firma Tetra Pak zdecydowała się zawsze wykorzystywać strukturę zorientowaną na funkcję. Przedrostek wskazujący strukturę zorientowaną na funkcję (=) nie jest uwzględniony w oznaczeniu referencyjnym.

(Ciąg dalszy)

(Ciąg dalszy)

Pozycje d) i e) dotyczą rysunku (E) na stronie i-8.

d) Zlokalizuj część (22), której szukasz na rysunku podgrupy i zanotuj jej numer pozycji.

e) Numer części (29) i opis części (30) znajdują się obok numeru pozycji na stronie z wykazem.

Informacje podane w Katalogu Części Zamiennych

Poniższy wykaz dotyczy rysunku (E) na stronie i-8.
Katalog Części Zamiennych zawiera następujące informacje o grupach, podgrupach i częściach zamiennych wyposażenia.

- Odnośnik struktury grupy (23). Wskazuje następną wyższą grupę w strukturze wykazu wyposażenia.
- Nazwa grupy (24)
- Jednostka miary (25)
- Ilość (26)
- Numer rysunku zespołu (27)
- Zakres stron (28). Dołączony, jeśli na wykazie lub rysunku grupy znajdują się strony o numerach wieloczęściowych.
- Numer części lub podgrupy (29)
- Nazwa podgrupy lub opis części (30)
- Numer grupy (31)
- Numer wyposażenia (32)
- Nagłówek z informacją o grupie (33). Wskazuje czy sekcja poniżej nagłówka przynależy do określonej wersji maszyny, lub czy jest wykazem części. Jeśli wykaz ma więcej niż jedną wersję i każda wersja ma swój własny rysunek montażowy, podany będzie numer strony z rysunkiem montażowym danej wersji.
- Informacje wewnętrzne (34)

Wsparcie techniczne i informacje zwrotne

Jeśli będziesz potrzebował pomocy odnośnie obsługi wyposażenia, lub będziesz miał pytania, komentarze albo sugestie, umieść swoje pytania lub przekaż informacje zwrotne na internetowej stronie pod adresem http://e-liaison.tetrapak.com. Jeśli dostęp do sieci wewnętrznej Tetra Pak nie jest możliwy, skontaktuj się z najbliższym przedstawicielem Tetra Pak.

Informação do Manual

A Tetra Pak recomenda ler cuidadosamente todos os manuais fornecidos. Verificar se os manuais fornecidos estão ao dispor do pessoal que trabalha com o equipamento ou que faz a manutenção do mesmo.

É importante guardar este catálogo durante o tempo útil de vida da máquina ou do equipamento e de entregar o catálogo a qualquer proprietário ou utilizador subsequente.

A Tetra Pak não toma a responsabilidade por quaisquer danos no equipamento causados devido ao facto de que as instruções dadas nos manuais que acompanham este equipamento não foram seguidas.

Manuais fornecidos

Manuais fornecidos com este equipamento:

CM

O Manual de conversão fornece aos técnicos as informações sobre a conversão do equipamento entre os diferentes modos de produção.

EM

Este Manual Eléctrico fornece aos técnicos as informações sobre o sistema eléctrico do equipamento.

IM

Este Manual de Instalação fornece aos técnicos as informações necessárias para instalar seguramente o equipamento.

MM

Este Manual de Manutenção fornece aos técnicos as informações para a manutenção do equipamento.

OM

O Manual de Operação fornece ao operador as informações que ele necessita para manusear e accionar o equipamento antes, durante e depois da produção.

RM

O Manual de Remodelação fornece aos técnicos as informações necessárias para instalar seguramente um conjunto numa máquina ou equipamento instalado.

(Cont.)

(Cont.)

SPC

O Catálogo de Peças Sobressalentes fornece as informações necessárias para se encomendar peças sobressalentes à Tetra Pak.

TeM

O Manual Técnico fornece os técnicos com informações que podem ser:

- informações necessárias para instalar seguramente o equipamento,
- informações necessárias para a manutenção do equipamento
- informações sobre o sistema eléctrico da máquina/do equipamento.
- informações necessárias para encomendar peças sobressalentes à Tetra Pak.
- outras informações técnicas

UP

As Páginas de Actualização fornecem novas páginas para actualizar os manuais existentes da máquina.

Disposição da página

Referência à ilustração (A) na página i-7: As páginas principais num Catálogo de Peças Sobressalentes consistem numa página ilustrada (1) e numa página com a lista correspondente (7). O número da página (5) é mostrado no cabeçalho de uma página ilustrada e no rodapé de uma página com lista. O número do documento (6) é mostrado no rodapé de uma página com lista.

Numeração da página

Referência à ilustração (A) na página i-7: Um número de página (5) tem três partes:

- Número do capítulo (2)
- número consecutivo da página dentro do capítulo (3)
- número total de páginas no capítulo (4)

Nota! As letras UP podem substituir o número do capítulo (2) se o manual incluir páginas de actualização. O número consecutivo da página (3) e o número total de páginas (4) das páginas de actualização não seguem a numeração sequente das páginas do capítulo.

Introdução da máquina

Fabricante

Para o nome e morada do fabricante, ver a segunda página deste catálogo.

Assistência técnica

Tetra Pak não aceita responsabilidade por quaisquer danos ou prejuízos no equipamento, equipa ou consumidores que sejam causados por peças sobressalentes não originais da Tetra Pak.

Para encomendar as peças sobressalentes originais para esta máquina, contactar o representante Tetra Pak mais próximo.

Identificação

Classificação CE

Este equipamento está de acordo com os regulamentos de segurança e saúde da Área Económica Europeia (EEA).

(Cont.)

(Cont.)

3-A Concordância

Se a placa da máquina conter a marca 3-A (15) (ver a ilustração (B) na página i-7), este equipamento cumpre com as Normas Sanitárias 3-A para Formadores, Enchedores e Vedadores de Recipientes para Leite Líquido e Produtos de Leite Líquido, Número 17-10.

Placa da máquina

A ilustração (B) na página i-7 mostra um exemplo de uma placa da máquina. Uma ilustração da placa da máquina válida e a sua localização no equipamento é mostrada no capítulo Introdução dos manuais fornecidos com este equipamento. A placa da máquina contem os dados alistados em baixo, necessários quando se contactar a Tetra Pak relacionando-se a este equipamento em específico.

- Tipo da máquina (8)
- Volume (9)
- Especificações dos desenhos (10)
- Número de série da máquina (11)
- Fabricante (12)
- Ano de construção (13)
- Marca CE (14)
- Marca 3-A (se aplicável) (15)

Verificar se os dados do equipamento indicados nas páginas da frente deste manual correspondem aos dados na placa da máquina e à especificação da máquina.

Como usar este Catálogo de Peças Sobressalentes

Localizar um Número da peça sobressalente

a) Referência à ilustração (C) na página i-7: Para o número do capítulo (16) indicado ao lado do grupo principal que contem a peça que quer localizar.

Itens b) e c) referem-se à ilustração (D) na página i-8.

b) Na ilustração do grupo principal, procurar o subgrupo da máquina (18) que contem a peça ou subgrupo que está à procura. Anotar o número da posição (19) e passar para a página da lista que segue a ilustração.

c) Procurar o número/referência da posição (17) ou o nome do subgrupo (20). Passar para o número da página correspondente (21) alistado na coluna do lado direito. A Tetra Pak escolheu para usar sempre a estrutura orientada na função para a designação da referência.
O prefixo indicando a estrutura orientada na função (=) não está mostrada na designação de referência.

(Cont.)

(Cont.)

Itens d) e e) referem-se à ilustração (E) na página i-8.

d) Localizar a peça (22) que está à procura na ilustração do subgrupo e anotar o número da posição da peça.

e) O número da peça (29) e a descrição da peça (30) estão alistados ao lado do número da posição na página da lista.

Informações indicadas num Catálogo de Peças Sobressalentes

A lista em baixo refere-se à ilustração (E) na página i-8.
Um Catálogo de Peças Sobressalentes contem as seguintes informações sobre grupos, subgrupos e peças sobressalentes para o equipamento:

- Referência da estrutura do grupo (23). Indica o grupo a seguir mais elevado na estrutura da lista do equipamento.
- Nome do grupo (24)
- Unidade de medição (25)
- Quantidade (26)
- Número do desenho de montagem (27)
- Gama da página de lista (28). Incluída se houver páginas múltiplas na ilustração do grupo ou lista.
- Número da peça ou do subgrupo (29)
- Nome do subgrupo ou descrição da peça (30)
- Número do grupo (31)
- Número do equipamento (32)
- Título da informação do grupo (33). Indica se a secção abaixo do título é para uma variante de máquina específica ou se é uma lista de peças comuns. Se uma lista tiver mais do que uma variante e cada variante tiver o seu próprio desenho de montagem, é mostrada uma referência para a página do desenho de montagem da variante.
- Informação interna (34)

Apoio e retro alimentação

Para assistência durante o accionamento deste equipamento, ou outros inquéritos, comentários ou sugestões, fazer as questões ou dar feedback no site da E-Liaison em http://e-liaison.tetrapak.com. Se não estiver disponível o acesso à intranet Tetra Pak, contactar por favor o representante Tetra Pak mais próximo.

Informațiile de manual

Tetra Pak recomandă citirea cu atenție a tuturor manualelor livrate. Asigurați-vă că manuale livrate sunt adecvate pentru personalul ce manipulează sau întreține instalația.

Este important să păstrați acest catalog pe tot parcursul funcționării instalației și să-l transmiteți următorului utilizator sau proprietar.

Tetra Pak nu își asumă nicio responsabilitate pentru nicio defecțiune a instalației cauzată de nerespectarea instrucțiunilor din manualul care însoțește instalația.

Manuale livrate

Manualele livrate împreună cu instalația

CM

Manualul de conversie (CM) furnizează tehnicienilor informații pentru conversia (adaptarea) echipamentului la diferite moduri de producție.

EM

Manualul electric oferă technicienilor informații despre sistemul electric al instalației.

IM

Manualul de instalare oferă tehnicienilor informații legate de montarea în siguranță a instalației.

MM

Manualul de întreținere oferă tehnicienilor informații privind întreținerea instalației.

OM

Manualul de funcționare (OM) oferă operatorului informații despre manipularea și funcționarea echipamentului înainte, în timpul și după procesul tehnologic.

RM

Manualul de reconstrucție oferă tehnicienilor informații necesare pentru montarea în siguranță a unui set pe un utilaj sau echipament montat.

(se continuă)

(se continuă)

SPC

Catalogul cu piese de schimb oferă informații necesare pentru comandarea pieselor de schimb de la Tetra Pak.

TeM

Manualul tehnic furnizează informații tehnicienilor ca de exemplu:

- informații necesare pentru a instala în condiții de siguranță echipamentul
- informații necesare pentru a întreține echipamentul
- informații privind sistemul electric al utilajului/echipamentului
- informațiile necesare pentru a comanda piesele de schimb de la Tetra Pak.
- alte informații tehnice

UP

Paginile pentru actualizare furnizează pagini noi pentru actualizarea manualelor existente ale utilajelor.

Configurația paginii

Consultați ilustrația (A) de la pagina i-7: Paginile principale din Catalogul pieselor de schimb sunt formate dintr-o pagină a ilustrațiilor (1) și o pagină a listei corespunzătoare (7). Numărul paginii (5) este prezentat în antetul unei pagini cu ilustrații și în subsolul unei pagini cu lista. Numărul documentului (6) este prezentat în subsolul unei pagini cu lista.

Numerotarea paginilor

Consultați ilustrația (A) de la pagina i-7: Numărul paginii (5) are trei părți:

- numărul capitolului (2)
- numărul consecutiv al paginii din cadrul capitolului (3)
- numărul total de pagini din capitol (4)

Notă! Literele UP pot înlocui numărul capitolului (2) dacă manualul include pagini actualizate. Numărul consecutiv al paginii (3) și numărul total de pagini (4) al paginilor actualizate nu urmează numerotarea existentă, secvențială a paginilor din cadrul capitolului.

Prezentarea aparatului

Producător

Pentru numele și adresa producătorului, vezi pagina a doua a acestui catalog.

Service

Tetra Pak nu își asumă responsabilitatea pentru nicio avarie sau rănire asupra echipamentului, personalului sau clienților, produsă de piese de schimb care nu sunt piese de schimb originale Tetra Pak.

Pentru a comanda piese de schimb originale Tetra Pak pentru acest utilaj, adresați-vă celui mai apropiat birou Tetra Pak.

Identificare

Clasificare CE

Acest echipament este în conformitate cu regulamentele de bază sanitare și de protecție ale Agenție Europene de Mediu (EEA).

(se continuă)

(se continuă)

Conformitatea 3-A

Dacă plăcuța cu numele utilajului conține marcajul 3-A (15) (vezi ilustrația (B) de la pagina i-7), acest echipament respectă standardele sanitare 3-A pentru dispozitive de formare, umplere și etanșare a containerelor pentru lapte lichid și produse lactate lichide, numărul 17-10.

Plăcuța mașinii

Ilustrația (B) de la pagina i-7 prezintă un exemplu al plăcuței mașinii. O ilustrație a plăcuței valabile a mașinii și a amplasării sale pe echipament este prezentată în capitolul Introducere al manualelor livrate cu acest echipament. Plăcuța mașinii conține datele prezentate mai jos, necesare când vă adresați Tetra Pak referitor la acest echipament.

- Tipul utilajului (8)
- Volum (9)
- Specificațiile desenului (10)
- Numărul de serie al utilajului (11)
- Producător (12)
- Anul de fabricație (13)
- Marcaj CE (14)
- Marcaj 3-A (dacă este cazul) (15)

Verificați dacă datele instalației din primele pagini ale acestui manual corespund cu datele de pe plăcuța mașinii și cu specificația mașinii.

Cum să folosiți acest catalog pentru piese de schimb

Localizați numărul piesei de schimb

a) Consultați ilustrația (C) de la pagina i-7: Mergeți la numărul capitolului (16) indicat lângă grupul principal care conține piesa pe care doriți să o localizați.

Elementele b) și c) se referă la ilustrația (D) de la pagina i-8.

b) Pe ilustrația grupului principal, căutați subgrupul mașinii (18) care conține piesa sau subgrupul pe care îl căutați. Notați numărul poziției (19) și mergeți la pagina listei de după ilustrație.

c) Căutați numărul poziției/denumirea referinței (17) sau numele subgrupului (20). Mergeți la numărul corespunzător al paginii (21) precizat în coloana din dreapta. Tetra Pak a ales să utilizeze întotdeuana structura orientată pe funcții pentru denumirea referinței. Prefixul care indică structura orientată pe funcții (=) nu este prezentat în denumirea referinței.

(se continuă)

(se continuă)

Elementele d) și e) se referă la ilustrația (E) de la pagina i-8.

d) Localizați piesa (22) pe care o căutați în ilustrația subgrupului și notați numărul poziției piesei.
e) Numărul piesei (29) și descrierea piesei (30) sunt listate lângă numărul poziției de pe pagina listei.

Informațiile enumerate în catalogul pentru piese de schimb

Lista de mai jos se referă la ilustrația (E) de la pagina i-8.
Un Catalog cu piese de schimb conține următoarele informații despre grupuri, subgrupuri și piese de schimb pentru echipament.

- Referința structurii grupului (23). Indică următorul grup superior din structura listei echipamentului.
- Numele grupului (24)
- Unitate de măsură (25)
- Cantitate (26)
- Numărul desenului de ansamblu (27)
- Domeniul paginii listei (28). Inclus dacă există mai multe pagini în ilustrația sau lista grupului.
- Numărul piesei sau subgrupului (29)
- Numele subgrupului sau descrierea piesei (30)
- Numărul grupului (31)
- Numărul echipamentului (32)
- Titlul cu informațiile grupului (33). Indică dacă secțiunea de sub titlu este pentru o anumită variantă de mașină sau este o listă de piese comune. Dacă o mașină are mai mult de o variantă și fiecare variantă își are propriul desen de ansamblu, este prezentată o referință a paginii la desenul de ansamblu al variantei.
- Informații interne (34)

Asistență şi feedback

Pentru asistență la operarea acestui echipament sau alte probleme, comentarii sau sugestii, adresați întrebările sau acordați feedback pe pagina E-Liaison, la http://e-liaison.tetrapak.com. Dacă nu este disponibil accesul la intranetul Tetra Pak, adresați-vă celui mai apropiat reprezentant Tetra Pak.

Informácie o príručke

Tetra Pak odporúča, aby ste si pozorne prečítali všetky dodané príručky. Presvedčite sa, či sú dodané príručky k dispozícii personálu, ktorý obsluhuje alebo vykonáva údržbu zariadenia.

Je dôležité, aby ste uchovávali tento katalóg po celý čas životnosti zariadenia, a odovzdali katalóg každému ďalšiemu vlastníkovi alebo užívateľovi zariadenia.

Spoločnosť Tetra Pak nezodpovedá za škody na zariadení spôsobené nedodržaním pokynov uvedených v príručkách, ktoré doprevádzajú toto zariadenie.

Dodané príručky

Príručky dodávané s týmto zariadením:

CM

Príručka na adaptáciu poskytuje technikom informácie o adaptácii zariadenia medzi rôznymi výrobnými režimami.

EM

Táto Elektrická príručka poskytuje technikom informácie o elektrickom systéme zariadenia.

IM

Táto Inštalačná príručka poskytuje technikom informácie potrebné pre bezpečnú inštaláciu zariadenia

MM

Táto Údržbárska príručka poskytuje technikom informácie o vykonávaní údržby zariadenia.

OM

Tento Návod na obsluhu poskytuje operátorovi informácie o tom, ako treba manipulovať so strojom a obsluhovať ho pred, počas a po výrobe.

RM

Príručka na prestavbu poskytuje technikom informácie potrebné pre bezpečnú inštaláciu súpravy na nainštalovaný stroj alebo zariadenie.

(Pokrač.)

(Pokrač.)

SPC

Katalóg náhradných dielov poskytuje informácie potrebné pre objednanie náhradných dielov od Tetra Pak.

TeM

Technická príručka poskytuje technikom informácie, ktorými môžu byť:

- potrebné informácie pre bezpečnú inštaláciu zariadenia
- potrebné informácie pre údržbu zariadenia
- informácie o elektrickom systéme stroja/zariadenia.
- poskytuje informácie potrebné na objednanie náhradných dielov od firmy Tetra Pak
- ostatné technické informácie

NAHOR

Aktualizované stránky poskytujú nové stránky k existujúcim príručkám na zariadenie.

Usporiadanie strany

Pozrite sa na obrázok (A) na strane i-7: hlavné stránky v Katalógu náhradných dielov tvorí stránky s ilustráciami (1) a odpovedajúca stránka so zoznamom (7). Číslo stránky (5) je uvedené v záhlaví stránky s obrázkom a v zápätí stránky so zoznamom. Číslo dokumentu (6) je uvedené v zápätí stránky so zoznamom.

Číslovanie strán

Pozrite sa na obrázok (A) na strane i-7: číslo stránky (5) má tri časti:

- číslo kapitoly (2)
- číslo ďalšej stránky v rámci kapitoly (3),
- celkový počet stránok v kapitole (4)

Poznámka! Písmena UP môžu nahradiť číslo kapitoly (2) v prípade, že manuál obsahuje aktualizované stránky. Nasledujúce číslo stránky (3) a celkový počet strán (4) aktualizovaných stránok sa nedrží existujúceho sekvenčného číslovania stránok v tejto kapitole.

Úvod k zariadeniu

Výrobca

Meno a adresu výrobcu nájdete na druhej strane tohto katalógu.

Servis

Tetra Pak nepreberá zodpovednosť za akúkoľvek škodu na zariadení alebo za zranení zamestnanca alebo spotrebiteľa, ktoré budú spôsobené tým, že sa nepoužijú originálne náhradné diele Tetra Pak.

Ak chcete pre tento stroj objednať originálne náhradné diely Tetra Pak, kontaktujte najbližšiu kanceláriu spoločnosti Tetra Pak.

Identifikácia

Klasifikácia CE

Toto zariadenie vyhovuje základným zdravotným a bezpečnostným predpisom Európskej hospodárskej oblasti (EEA).

(Pokrač.)

(Pokrač.)

3-A Súlad

Ak štítok stroja obsahuje označenie 3-A (15) (pozri obrázok (B) na strane i-7), potom je toto zariadenie v súlade s hygienickými normami 3-A pre formovanie, plnenie a uzatváranie obalov na tekuté mlieko a tekuté mliečne výrobky, číslo 17 -10.

Štítok zariadenia

Obrázok (B) na strane i-7 ukazuje príklad typového štítku.
Obrázok platného typového štítku a jeho umiestnenia na zariadení je uvedený v úvodnej kapitole príručiek dodaných s týmto zariadením.
Typový štítok obsahuje údaje uvedené nižšie, tieto údaje sú treba, keď kontaktujete spoločnosť Tetra Pak vo veci týkajúcej sa tohto špecifického vybavenia.

- Typ stroja (8)
- Objem (9)
- Špecifikácie výkresov (10)
- Sériové číslo stroja (11)
- Výrobca (12)
- Rok výroby (13)
- Symbol CE (14)
- Symbol 3-A (ak sa používa) (15)

Presvedčte sa, či dáta uvedené na čelnej strane tohoto manuálu korešpondujú s údajmi na identifikačnom typovom štítku stroja a so špecifikáciou stroja.

Ako používať tento katalóg náhradných dielov

Vyhľadať číslo náhradného dielu

a) Pozrite obrázok (C) na strane i-7: Prejsť na číslo kapitoly (16) uvedené vedľa hlavnej skupiny, ktorá obsahuje diel, ktorý chcete nájsť.

Položky b) a c) sa vzťahujú na obrázok (D) na strane i-8.

b) Na obrázku hlavnej skupiny sa pozrite na podskupinu stroja (18), ktorá obsahuje diely alebo podskupiny, ktoré hľadáte. Poznamenajte si číslo pozície (19) a prejdite na stránku zoznamu, ktorý nasleduje za obrázkom.

c) Pozrite sa na číslo pozície/označenie referencie (17) alebo na názov podskupiny (20). Prejdite na odpovedajúce číslo strany (21) uvedené v zozname v stĺpci na pravej strane. Spoločnosť Tetra Pak si zvolila vždy používať pre referenčné označenie štruktúru zameranú na funkciu. Predpona označujúca funkčne orientovanú štruktúru (=) nie je uvedená v referenčnom označení.

(Pokrač.)

(Pokrač.)

Položky d) a e) sa vzťahujú na obrázok (E) na strane i-8.

d) Lokalizujte diel (22), ktorý hľadáte, na obrázku podskupiny a poznamenajte si číslo pozície dielu.

e) Číslo dielu (29) a popis dielu (30) sú uvedené vedľa čísla pozície na stránke so zoznamom.

Informácie uvedené v katalógu náhradných dielov

Niže uvedený zoznam sa odkazuje na obrázok (E) na stránke i-8.
Katalóg náhradných dielov obsahuje nasledujúce informácie o skupinách, podskupinách a náhradných dieloch pre zariadenie:

- Referencia štruktúry skupiny (23). Označuje nasledujúcu vyššiu skupinu vo štruktúre zoznamu výbavy.
- Názov skupiny (24)
- Merná jednotka (25)
- Množstvo (26)
- Číslo montážneho výkresu (27)
- Rozsah stránok so zoznamom (28). Zahrnuté, ak existuje viac stránok v skupine obrázkov alebo v zozname.
- Číslo dielu alebo podskupiny (29)
- Názov podskupiny alebo popis dielu (30)
- Číslo skupiny (31)
- Číslo výbavy (32)
- Záhlavie informácií o skupine (33). Označuje, či sa časť pod záhlavím týka konkrétneho variantu stroja, alebo či sa jedná o zoznam spoločných dielov. Ak zoznam obsahuje viac ako jeden variant a každý variant má svoje vlastné montážne výkresy, je zobrazený odkaz na stránku s montážnym výkresom variantu.
- Vnútorné informácie (34)

Podpora a spätná väzba

Môžete sa na nás obracať s žiadosťou o pomoc počas prevádzky tohto zariadenia alebo s inými dotazmi, pripomienkami alebo námetmi pomocou internetovej kontaktnej domovskej stránky http://e-liaison.tetrapak.com, kde môžete takisto poskytnúť svoju spätnú väzbu. Ak nemáte prístup na intranet spoločnosti Tetra Pak, obráťte sa na najbližšieho zástupcu firmy Tetra Pak.

Informacije o navodilu

Tetra Pak priporoča, da vsa dobavljena navodila pazljivo prebrete. Prepričajte se, da so dobavljena navodila na razpolagu osebju, ki dela s strojem ali pa izvaja vzdrževalna dela na opremi.

Ta navodila je potrebno shraniti do konca življenjske dobe opreme in navodilo predati vsakemu naslednjemu imetniku ali uporabniku.

Tetra Pak ne nosi odgovornosti za poškodbo na opremi, do katere je prišlo zaradi neupoštevanja teh navodilih.

Dobavljena navodila

Navodila, ki se dobavljajo s to opremo:

CM

Navodila za spremembo (CM) oskrbujejo tehnike z informacijami glede zamenjav opreme med različnimi načini proizvodnje.

EM

Električna navodila oskrbujejo tehnike z informacijami glede električnega sistema opreme.

IM

Navodila za inštalacijo oskrbujejo tehnike z informacijami, ki so potrebne za varno inštalacijo opreme.

MM

Navodila za vzdrževanje oskrbujejo tehnika z informacijami glede vzdrževanja opreme.

OM

Navodila za delovanje (OM) oskrbijo strojnike z informacijami glede rokovanja z opremo in delovanjem le-te pred, med in po proizvodnji.

RM

Navodila za predelavo (RM) oskrbujejo tehnike z informacijami, ki so potrebne za varno inštalacijo opreme na inštalirani stroj ali opremo.

(Obrnite)

(Obrnite)

SPC

Katalog rezervnih delov prinaša informacije, ki so potrebne za naročanje rezervnih delov iz podjetja Tetra Pak.

TeM

Tehnološka navodila tehnikom podajo informacije, ki so lahko:

- potrebne za varno inštalacijo opreme
- potrebne za vzdževanje opreme
- vezane na električni sistem stroja/opreme
- ponujajo informacije, ki so potrebna za naročanje nadomestnih delov pri Tetra Paku
- druge tehnične informacije

GOR

Strani za posodobitev podajo nove strani za posodabljanje obstoječih navodil stroja.

Ureditev strani

Sklicujte se na ilustracijo (A) na strani i-7: Glavne strani v katalogu rezervnih delov so sestavljene iz strani z ilustracijami (1) in stranjo s seznamom (7). Številka strani (5) je prikazana v glavi strani z ilustracijo in v nogi strani s seznamom. Številka dokumenta (6) je prikazana v nogi strani s seznamom.

Oštevilčenje strani

Sklicujte se na ilustracijo (A) na strani i-7: Številka strani (5) ima tri dele:

- številko poglavja (2)
- zaporedno številko strani (2) znotraj poglavja (3)
- skupno število strani v poglavju (4)

Opomba! Črke UP lahko zamenjajo številko poglavja (2), če so v navodilih vključene posodobljene strani. Zaporedna številka strani (3) in skupno število strani (4) posodobljenih strani se ne ujemajo z obstoječim zaporedjem strani v poglavju.

Predstavitev stroja

Proizvajalec

Ime in naslov proizvajalca se nahajata na drugi strani tega kataloga.

Servisiranje

Tetra Pak ne prevzema odgovornosti za okvare ali poškodbe opreme, osebja ali potrošnikov, ki ga povzročijo rezervni deli, ki niso originalni Tetra Pak rezervni deli.

Za naročanje originalnih Tetra Pak rezervnih delov kontaktirajte najbližjo pisarno Tetra Pak.

Identifikacija

CE klasifikacija

Ta oprema izpolnjuje osnovne zdravstvene in varnostne ukrepe Evropskega ekonomskega prostora (EEA).

(Obrnite)

(Obrnite)

3-A Skladnost

Če ploščica stroja vsebuje oznako 3-A (15) (glejte ilustracijo (B) na strani i-7), ta oprema ustreza sanitetnim standardom 3-A za kalupe, polnilce in tesnila zbiralnikov za tekoče mleko in izdelke iz tekočega mleka, številka 17-10.

Strojna plošča

Ilustracija (B) na strani i-7 prikazuje primer ploščice za identifikacijo stroja. Ilustracija veljavne ploščice za identifikacijo stroja in njene lokacije na opremi je prikazana v uvodnem poglavju navodil, ki so bila dostavljena s to opremo. Ploščica za identifikacijo stroja vsebuje spodaj navedene podatke, ki so potrebni ob kontaktiranju podjetja Tetra Pak glede te specifične opreme.

- Tip stroja (8)
- Prostornina (9)
- Specifikacije skice (10)
- Serijska številka stroja (11)
- Proizvajalec (12)
- Leto izdelave (13)
- CE oznaka (14)
- 3-A oznaka (če obstaja) (15)

Prepričajte se, da se podatki o opremi, ki se nahajajo na sprednjih straneh teh navodil, v skladu s podatki strojne plošče in specifikacije stroja.

Kako uporabljati ta katalog rezrevnih delov

Poiščite številko rezervnega dela

a) Sklicujte se na ilustracijo (C) na strani i-7: Pojdite na številko poglavja (16), ki se nahaja poleg glavne skupine in ki vsebuje del, ki ga želite poiskati.

Predmeti b) in c) se nanašajo na ilustracijo (D) na strani i-8.

b) Na ilustraciji glavne skupine poiščite podskupino stroja (18), ki vsebuje del ali podskupino, ki jo iščete. Opazite položaj številke (19) in pojdite na stran seznama, ki sledi ilustraciji.

c) Poiščite številko lokacije/referenco (17) ali pa ime podskupine (20). Pojdite na ustrezno številko strani (21), ki je navedena v stolpcu na desni strani. Tetra Pak se je odločil za to, da vedno uporablja funkcijsko naravnano strukturo kot referenco. Predpona, ki nakazuje funkcijsko naravnano strukturo (=), ni prikazana v referenci.

(Obrnite)

(Obrnite)

Predmeti d) in e) se nanašajo na ilustracijo (E) na strani i-8.

d) Poiščite del (22), ki ga iščete, na ilustraciji podskupine in zabeležite številko lokacije dela.

e) Številka dela (29) in opis dela (30) sta navedena poleg lokacije številke na strani s seznamom.

Informacije, ki so navedene v katalogu rezervnih delov

Spodnji seznam se nanaša na ilustracijo (E) na strani i-8. Katalog rezervnih delov vsebuje naslednje informacije o skupinah, podskupinah in rezervnih delih za opremo.

- Referenca strukture skupine (23). Določa naslednjo višjo skupino v strukturi seznama opreme.
- Ime skupine (24)
- Enota merjenja (25)
- Količina (26)
- Številka skice sistema (27)
- Razpon seznama strani (28). Vključeno, če obstaja več strani v ilustraciji skupine ali na seznamu.
- Del ali številka podskupine (29)
- Ime podskupine ali opis dela (30)
- Številka skupine (31)
- Številka opreme (32)
- Naslov informacije o skupini (33). Nakazuje ali je spodnji odsek naslov specifične različice stroja ali pa če gre za seznam splošnih delov. Če ima seznam več kot eno različico in ima vsaka različica svojo skico sistema, je prikazana referenca strani na skici sistema vsake različice.
- Notranje informacije (34)

Podpora in ponovna uporaba

Za pomoč pri rokovanju z opremo ali druga vprašanja, komentarje ali predloge, se obrnite ali podajte mnenje na domači spletni strani sodelavcev na naslovu http://e-liaison.tetrapak.com. Če dostop do Tetra Pak intraneta ni na voljo, kontaktirajte najbližjega zastopnika podjetja Tetra Pak.

Information om handboken

Tetra Pak rekommenderar att alla handböcker läses noggrant.
Se till att handböckerna är tillgängliga för personalen som använder eller underhåller utrustningen.

Det är viktigt att denna katalog behålls under utrustningens livslängd, och att katalogen överlämnas till varje efterföljande innehavare eller användare.

Tetra Pak kan inte hållas ansvarig för eventuella skador på utrustningen som orsakas av man inte följer de instruktioner som ges i de handböcker som medföljer denna utrustning.

Medföljande handböcker

Handböcker som levereras tillsammans med denna utrustning:

CM

Konverteringshandboken ger tekniker information om konvertering av utrustningen mellan olika produktionssätt.

EM

Den elektriska handboken ger teknikerna information om utrustningens elektriska system.

IM

Installationshandboken ger teknikerna information som krävs för att kunna installera utrustningen säkert.

MM

Underhållshandboken ger teknikerna information om hur utrustningen ska underhållas.

OM

Drifthandboken ger operatören information om hur utrustningen ska hanteras före, under och efter produktion.

RM

Ombyggnadshandboken ger teknikerna den information som krävs för att säkert installera en sats på en installerad maskin eller utrustning.

(Forts.)

(Forts.)

SPC

Reservdelskatalogen (SPC) ger den information som krävs för att kunna beställa reservdelar från Tetra Pak.

TeM

Teknisk handbok ger tekniker information i form av:

- information som krävs för att säkert kunna installera utrustningen
- information som krävs för att underhålla utrustningen
- information om maskinens/utrustningens elsystem
- information som krävs för beställning av reservdelar från Tetra Pak
- annan teknisk information

UPP

Uppdateringssidorna innehåller nya sidor för att uppdatera befintliga maskinhandböcker.

Sidlayout

Se illustration (A) på sidan i-7: Huvudsidorna i en Reservdelskatalog består av en illustrationssida (1) och en tillhörande listsida (7).
Sidnumret (5) visas i sidhuvudet på en illustrationssida och i sidfoten på en listsida. Dokumentnumret (6) visas i sidfoten på listsidan.

Sidnumrering

Se illustration (A) på sidan i-7: Ett sidnummer (5) har tre delar:

- kapitelnummer (2)
- löpande sidnummer inom kapitlet (3)
- totalt sidantal i kapitlet (4)

OBS! Bokstäverna UP kan ersätta kapitelnumret (2) om handboken innehåller uppdateringssidor. Det löpande sidnumret (3) och det totala antalet sidor (4) för uppdateringssidor följer inte den befintliga löpande sidnumreringen av kapitlet.

Introduktion till maskinen

Tillverkare

För tillverkarens namn and adress, se andra sidan i denna katalog.

Service

Tetra Pak tar inte något ansvar för eventuella skador eller eventuella personskador på utrustning, personal eller konsumenter som orsakas av att reservdelarna inte är original Tetra Pak reservdelar.

Vid beställning av original Tetra Pak reservdelar för denna maskin, kontakta närmaste Tetra Pak-kontor.

Identifiering

CE-klassificering

Denna utrustning uppfyller de grundläggande hälso- och säkerhetskraven inom European Economic Area (EEA).

(Forts.)

(Forts.)

3-A överensstämmelse

Om maskinskylten är märkt med 3-A (15) (se bild (B) på sidan i-7), uppfyller denna utrustning 3-A Hygienstandarder för resare, fyllare och förseglare av behållare för flytande mjölk och flytande mjölkprodukter, Nummer 17-10.

Maskinskylt

Illustration (B) på sidan i-7 visar ett exempel på en maskinskylt.
En illustration av gällande maskinskylt och dess placering på utrustningen visas i Introduktion-kapitlet i de handböcker som levereras med denna utrustning. Maskinskylten innehåller data som listas nedan, vilken behövs för att kontakta Tetra Pak rörande denna specifika utrustning.

- Maskintyp (8)
- Volym (9)
- Ritningsspecifikationer (10)
- Maskinnummer (11)
- Tillverkare (12)
- Tillverkningsår (13)
- CE-märkning (14)
- 3A-märke (om tillämpligt) (15)

Kontrollera att utrustningsdata som finns på de inledande sidorna i denna handbok överensstämmer med maskinskyltens data och maskinspecifikationen.

Hur man använder denna reservdelskatalog

Hitta ett reservdelsnummer

a) Se illustration (C) på sidan i-7: Gå till det kapitelnummer (16) som anges bredvid huvudgruppen som innehåller delen du vill lokalisera.

Punkterna b) och c) refererar till illustration (D) på sidan i-8.

b) Leta på huvudgruppens bild upp den undergrupp (18) i maskinen som innehåller delen eller undergruppen du letar efter. Notera positionsnumret (19) och gå till listsidan som följer på bilden.

c) Leta upp positionsnummer/referensbeteckning (17) eller undergruppens namn (20). Gå till motsvarande sidnummer (21) som anges i den högra kolumnen. Tetra Pak har valt att alltid använda en funktionsorienterad struktur för referensbeteckning. Prefix som anger funktionsorienterad struktur (=) visas inte i referensbeteckningen.

(Forts.)

(Forts.)

Punkterna d) och e) refererar till illustration (E) på sidan i-8.

d) Leta upp den del (22) som du letar efter på undergruppens bild och notera delens positionsnummer.

e) Artikelnumret (29) och artikelbeskrivningen (30) anges bredvid positionsnumret på listsidan.

Information som anges i en Reservdelskatalog

Listan nedan refererar till illustration (E) på sidan i-8. En Reservdelskatalog innehåller följande information om grupper, undergrupper och reservdelar för utrustningen:

- Gruppstrukturreferens (23). Anger närmast högre grupp i utrustningens liststruktur.
- Gruppnamn (24)
- Måttenhet (25)
- Antal (26)
- Sammanställningsritningens nummer (27)
- Listans sidomfång (28). Anges om det finns flera sidor i gruppens bild eller lista.
- Artikel- eller undergruppnummer (29)
- Undergruppens namn eller beskrivning av delen (30)
- Gruppnummer (31)
- Utrustningsnummer (32)
- Gruppinformationsrubrik (33). Anger om avsnittet under rubriken gäller för en specifik maskinvariant eller om det är en lista över gemensamma delar. Om en lista har mer än en variant och varje variant har sin egen sammanställningsritning, visas en sidreferens till variantens sammanställningsritning.
- Intern information (34)

Support och feedback

För hjälp med att handha denna utrustning, eller andra frågor, kommentarer eller förslag, ställ frågorna eller ge feedback på E-Liaison hemsida på http://e-liaison.tetrapak.com. Om tillgång till Tetra Pak intranet inte föreligger, kontakta närmaste Tetra Pak-representant.

This page intentionally left blank

SPC
Spare Parts Catalogue

SUPERSTRUCTURE TBA/19 040V

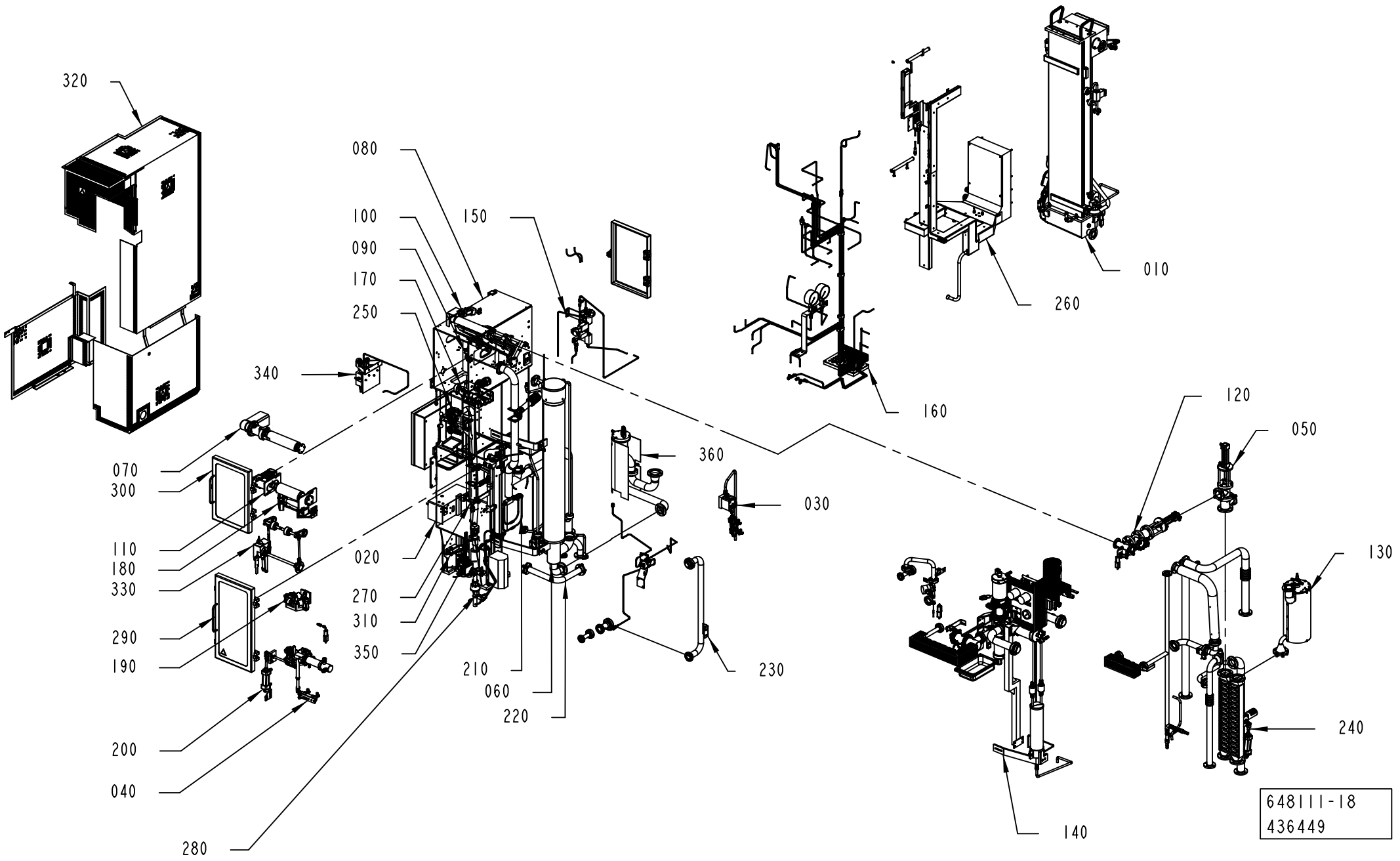

ECM: 532115 - 20111124
Group number: 648111-1400
Assembly Drawing: 648111-18_1_AB

This list covers pages from 1-2 to 1-7

Pos	Part No	UN	Qty	Description	Page No
HI (See drawing on page: 1-2)					
140	272560-1000		1	PRODUCT VALVE	**1-9, 1-11, 1-13, 1-15**
360	2619758-0200		1	HEAD SPACE BY INJECTION	**1-33**
HVA (See drawing on page: 1-6)					
140	2924213-0200		1	PRODUCT VALVE	**1-49**
355	1317503-0200		1	LEVEL PROBE	**1-53**
NOHI, NOHVA (See drawing on page: 1-4)					
140	272560-1000		1	PRODUCT VALVE	**1-9, 1-11, 1-13, 1-15**
Common Parts					
010	256014-0900		1	BATH	**1-55, 1-57, 1-59, 1-61, 1-63, 1-65**
020	256055-0800		1	HOT AIR ELEMENT	**1-69**
030	256084-0800		1	CHANGE-OVER VALVE	**1-71**
040	256095-0700		1	HOT AIR ELEMENT	**1-73**
050	271169-0500		1	VALVE	**1-75**
060	271181-0600		1	AIR SUPER-HEATER	**1-77, 1-79**
070	272004-0500		1	BENDING ROLLER	**1-81**
080	272021-1000		1	ASEPTIC CHAMBER	**1-83, 1-85, 1-87**
090	272024-0500		1	CALENDER ROLLER	**1-91**
100	272025-0600		1	AIR KNIFE	**1-93, 1-95**
110	272028-0800		1	BENDING ROLLER	**1-97**
120	272337-0600		1	VALVE	**1-99**
130	272407-0400		1	GENERATOR	**1-101**
150	272623-0900		1	SPRAY SYSTEM	**1-103, 1-105**
160	295045-0900		1	PIPE WORK-PNEUMATIC	**1-107, 1-109, 1-111, 1-113, 1-115** **1-117, 1-119, 1-121, 1-123**
170	441304-0400		1	MOVABLE FORMING RING	**1-125, 1-127, 1-129, 1-131, 1-133**
180	441307-0300		1	UPPER TUBE SUPPORT	**1-135, 1-137, 1-139**
190	441486-0400		1	DIVIDED FORMING RING	**1-143, 1-145, 1-147**
200	456309-0600		1	LOWER FORMING RING	**1-149, 1-151, 1-153**
210	456555-0700		1	SUCTION PIPE	**1-155**
220	456556-0400		1	PEROXIDE PIPE	**1-157**
230	456836-0800		1	CLEANING SYSTEM	**1-159, 1-161**
240	456976-0800		1	HEAT EXCHANGER	**1-165, 1-167**
250	469091-0600		1	FILLER TUBE	**1-171**
260	469374-0800		1	CABLE TRENCH	**1-173, 1-175, 1-177, 1-179, 1-181, 1-183**
270	469501-0400		1	AIR NOZZLE	**1-193, 1-195**
280	469781-0500		1	TUBE FLUSHING DEVICE	**1-197, 1-199, 1-201**
290	2914827-0100		1	DOOR	**1-205**
300	2914826-0100		2	DOOR	**1-207**
310	491976-0400		1	PHOTOCELL UNIT	**1-209, 1-211**
320	579625-0400		1	PROTECTIVE COVER	**1-213, 1-215, 1-217**
330	1539920-0300		1	PENDULUM	**1-219**
340	2774503-0100		1	CONVERTER	**1-223**
350	925991-0300		1	LEVEL PROBE	**1-225**

Machine Type | Group Description | Used-In | Group Number | Page No

SUPERSTRUCTURE TBA/19 040V

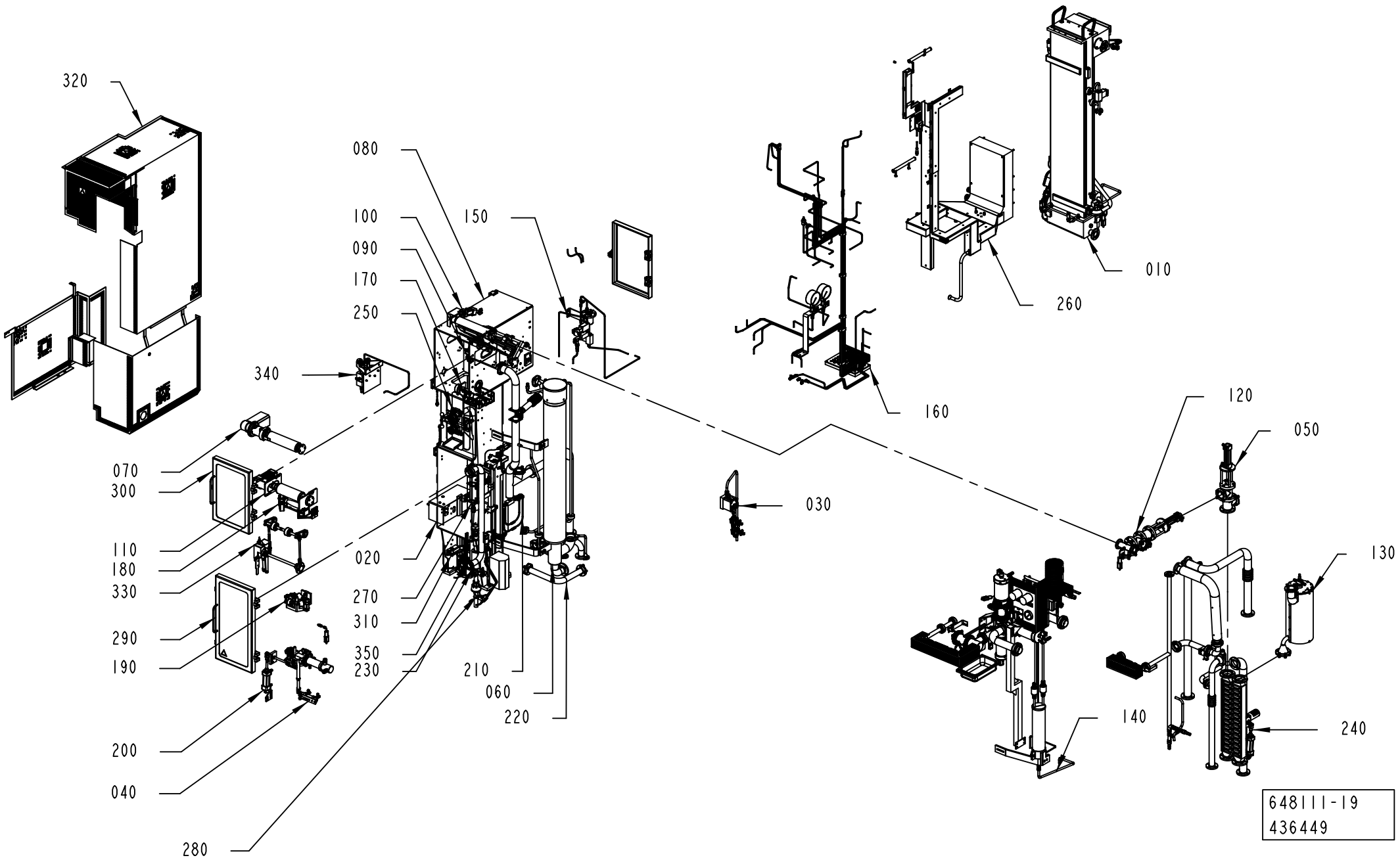

ECM: 532115 - 20111124
Group number: 648111-1400
Assembly Drawing: 648111-19_1_AB

This list covers pages from 1-2 to 1-7

Pos	Part No	UN	Qty	Description	Page No
HI (See drawing on page: 1-2)					
140	272560-1000		1	PRODUCT VALVE	**1-9, 1-11, 1-13, 1-15**
360	2619758-0200		1	HEAD SPACE BY INJECTION	**1-33**
HVA (See drawing on page: 1-6)					
140	2924213-0200		1	PRODUCT VALVE	**1-49**
355	1317503-0200		1	LEVEL PROBE	**1-53**
NOHI, NOHVA (See drawing on page: 1-4)					
140	272560-1000		1	PRODUCT VALVE	**1-9, 1-11, 1-13, 1-15**
Common Parts					
010	256014-0900		1	BATH	**1-55, 1-57, 1-59, 1-61, 1-63, 1-65**
020	256055-0800		1	HOT AIR ELEMENT	**1-69**
030	256084-0800		1	CHANGE-OVER VALVE	**1-71**
040	256095-0700		1	HOT AIR ELEMENT	**1-73**
050	271169-0500		1	VALVE	**1-75**
060	271181-0600		1	AIR SUPER-HEATER	**1-77, 1-79**
070	272004-0500		1	BENDING ROLLER	**1-81**
080	272021-1000		1	ASEPTIC CHAMBER	**1-83, 1-85, 1-87**
090	272024-0500		1	CALENDER ROLLER	**1-91**
100	272025-0600		1	AIR KNIFE	**1-93, 1-95**
110	272028-0800		1	BENDING ROLLER	**1-97**
120	272337-0600		1	VALVE	**1-99**
130	272407-0400		1	GENERATOR	**1-101**
150	272623-0900		1	SPRAY SYSTEM	**1-103, 1-105**
160	295045-0900		1	PIPE WORK-PNEUMATIC	**1-107, 1-109, 1-111, 1-113, 1-115** **1-117, 1-119, 1-121, 1-123**
170	441304-0400		1	MOVABLE FORMING RING	**1-125, 1-127, 1-129, 1-131, 1-133**
180	441307-0300		1	UPPER TUBE SUPPORT	**1-135, 1-137, 1-139**
190	441486-0400		1	DIVIDED FORMING RING	**1-143, 1-145, 1-147**
200	456309-0600		1	LOWER FORMING RING	**1-149, 1-151, 1-153**
210	456555-0700		1	SUCTION PIPE	**1-155**
220	456556-0400		1	PEROXIDE PIPE	**1-157**
230	456836-0800		1	CLEANING SYSTEM	**1-159, 1-161**
240	456976-0800		1	HEAT EXCHANGER	**1-165, 1-167**
250	469091-0600		1	FILLER TUBE	**1-171**
260	469374-0800		1	CABLE TRENCH	**1-173, 1-175, 1-177, 1-179, 1-181, 1-183**
270	469501-0400		1	AIR NOZZLE	**1-193, 1-195**
280	469781-0500		1	TUBE FLUSHING DEVICE	**1-197, 1-199, 1-201**
290	2914827-0100		1	DOOR	**1-205**
300	2914826-0100		2	DOOR	**1-207**
310	491976-0400		1	PHOTOCELL UNIT	**1-209, 1-211**
320	579625-0400		1	PROTECTIVE COVER	**1-213, 1-215, 1-217**
330	1539920-0300		1	PENDULUM	**1-219**
340	2774503-0100		1	CONVERTER	**1-223**
350	925991-0300		1	LEVEL PROBE	**1-225**

Machine Type | Group Description | Used-In | Group Number | Page No

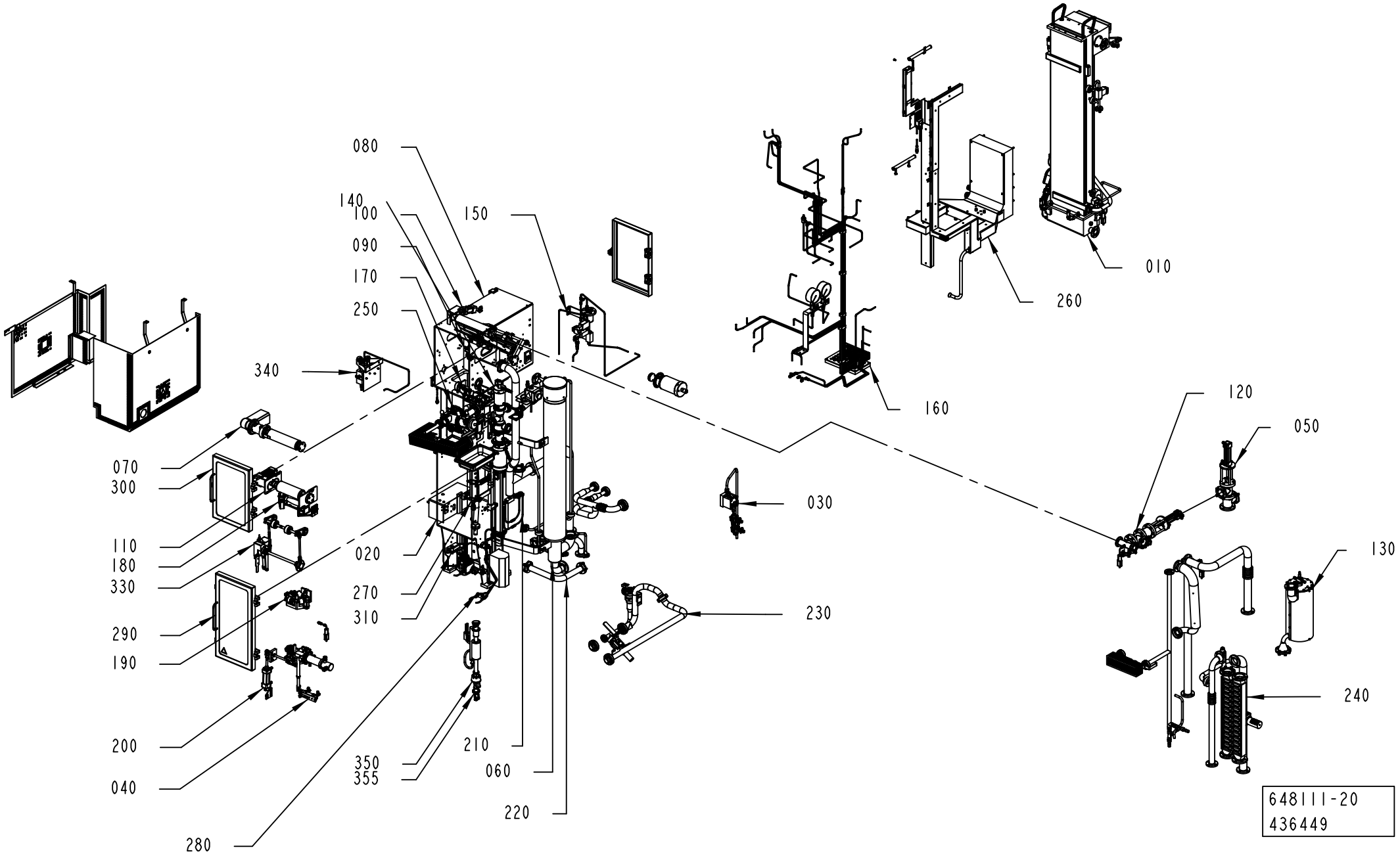
080
140
100
090
170
250
150
340
070
300
110
180
330
290
190
200
040
280
020
270
310
350
355
210
060
220
030
230
160
260
010
120
050
130
240
648111-20
436449

ECM: 532115 - 20111124
Group number: 648111-1400
Assembly Drawing: 648111-20_1_AB

This list covers pages from 1-2 to 1-7

Pos	Part No	UN	Qty	Description	Page No
HI (See drawing on page: 1-2)					
140	272560-1000		1	PRODUCT VALVE	**1-9, 1-11, 1-13, 1-15**
360	2619758-0200		1	HEAD SPACE BY INJECTION	**1-33**
HVA (See drawing on page: 1-6)					
140	2924213-0200		1	PRODUCT VALVE	**1-49**
355	1317503-0200		1	LEVEL PROBE	**1-53**
NOHI, NOHVA (See drawing on page: 1-4)					
140	272560-1000		1	PRODUCT VALVE	**1-9, 1-11, 1-13, 1-15**
Common Parts					
010	256014-0900		1	BATH	**1-55, 1-57, 1-59, 1-61, 1-63, 1-65**
020	256055-0800		1	HOT AIR ELEMENT	**1-69**
030	256084-0800		1	CHANGE-OVER VALVE	**1-71**
040	256095-0700		1	HOT AIR ELEMENT	**1-73**
050	271169-0500		1	VALVE	**1-75**
060	271181-0600		1	AIR SUPER-HEATER	**1-77, 1-79**
070	272004-0500		1	BENDING ROLLER	**1-81**
080	272021-1000		1	ASEPTIC CHAMBER	**1-83, 1-85, 1-87**
090	272024-0500		1	CALENDER ROLLER	**1-91**
100	272025-0600		1	AIR KNIFE	**1-93, 1-95**
110	272028-0800		1	BENDING ROLLER	**1-97**
120	272337-0600		1	VALVE	**1-99**
130	272407-0400		1	GENERATOR	**1-101**
150	272623-0900		1	SPRAY SYSTEM	**1-103, 1-105**
160	295045-0900		1	PIPE WORK-PNEUMATIC	**1-107, 1-109, 1-111, 1-113, 1-115** **1-117, 1-119, 1-121, 1-123**
170	441304-0400		1	MOVABLE FORMING RING	**1-125, 1-127, 1-129, 1-131, 1-133**
180	441307-0300		1	UPPER TUBE SUPPORT	**1-135, 1-137, 1-139**
190	441486-0400		1	DIVIDED FORMING RING	**1-143, 1-145, 1-147**
200	456309-0600		1	LOWER FORMING RING	**1-149, 1-151, 1-153**
210	456555-0700		1	SUCTION PIPE	**1-155**
220	456556-0400		1	PEROXIDE PIPE	**1-157**
230	456836-0800		1	CLEANING SYSTEM	**1-159, 1-161**
240	456976-0800		1	HEAT EXCHANGER	**1-165, 1-167**
250	469091-0600		1	FILLER TUBE	**1-171**
260	469374-0800		1	CABLE TRENCH	**1-173, 1-175, 1-177, 1-179, 1-181, 1-183**
270	469501-0400		1	AIR NOZZLE	**1-193, 1-195**
280	469781-0500		1	TUBE FLUSHING DEVICE	**1-197, 1-199, 1-201**
290	2914827-0100		1	DOOR	**1-205**
300	2914826-0100		2	DOOR	**1-207**
310	491976-0400		1	PHOTOCELL UNIT	**1-209, 1-211**
320	579625-0400		1	PROTECTIVE COVER	**1-213, 1-215, 1-217**
330	1539920-0300		1	PENDULUM	**1-219**
340	2774503-0100		1	CONVERTER	**1-223**
350	925991-0300		1	LEVEL PROBE	**1-225**

Machine Type | Group Description | Used-In | Group Number | Page No

PRODUCT VALVE

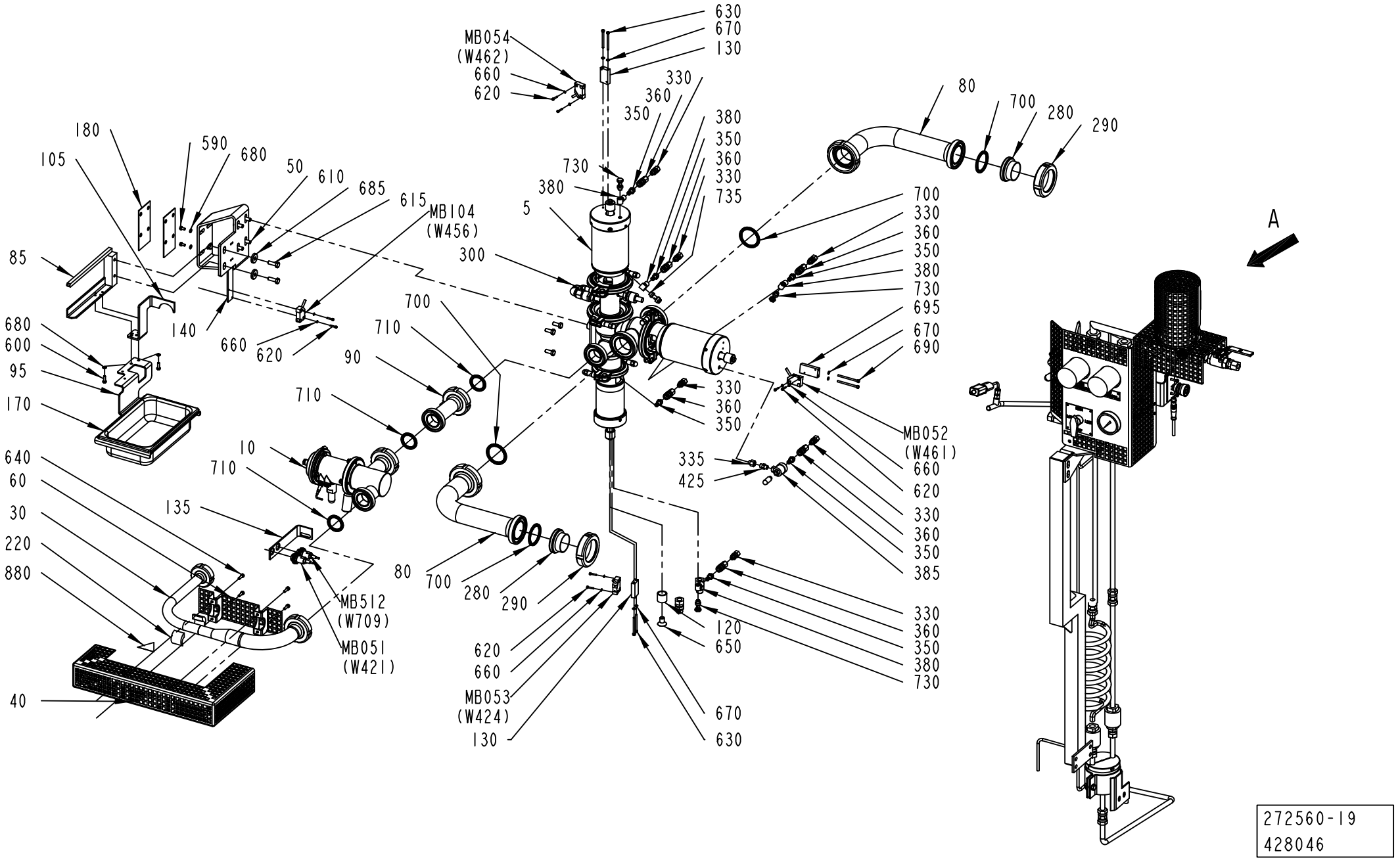

ECM: 430654 - 20091221
Group number: 272560-1000
Assembly Drawing: 272560-19_1_AB

This list covers pages from 1-8 to 1-15

Pos	Part No	UN	Qty	Description	Page No
HI (See drawing on pages: 1-8, 1-10)					
M.B512	90600-0467		1	INDUCTIVE SWITCH,E2A-M18KS05-WP-B1-TP 6M	
Common Parts					
005	576434-0200		1	AP-VALVE 51-38	**1-17**
010	927205-0200		1	REGULATING VALVE	**1-29**
015	2618264-0000		1	PIPE	
020	1512411-0000		2	PIPE	
025	2618263-0000		1	CONTAINER	
030	2721238-0000		1	PIPE	
035	1317756-0000		1	PIPE	
040	1348476-0000		1	TOUCH GUARD	
050	577360-0000		1	CANTILEVER	
060	1348636-0000		1	TOUCH GUARD	
070	2761759-0000		1	PIPE	
075	2761760-0000		1	PIPE	
080	1519936-0000		2	PIPE	
085	2721241-0000		1	SUPPORT	
090	1317663-0000		1	PIPE	
095	2603631-0000		1	BRACKET	
100	2618266-0000		1	PIPE	
105	2721240-0000		1	BRACKET	
120	440647-0000		1	SLEEVE	
130	440731-0000		2	PLATE	
135	1317905-0000		1	BRACKET	
140	578480-0000		1	BRACKET	
150	1317262-0000		1	COVER	
160	1512377-0000		1	COVER	
170	90459-2435		1	CONTAINER 1,8L , GN 1406	
180	490985-0000		2	SPACER SHEET	
190	1334841-0400		1	T.C.S.B UNIT	**1-31**
200	2635109-0000		1	CLAMP	
210	1539238-0000		1	PIPE	
220	2721239-0000		2	SPACER	
230	3015473-0000		1	PIPE	
240	3015475-0000		1	PIPE	
280	90217-0207		2	ASEPT. MALE FITTING ISO, 03-32-456/42	
290	90217-0209		2	UNION NUT, 2 APV, 07-01-426/17	
300	90030-0096		1	ELBOW CONNECTION 12	
305	90030-0106		3	PIPE CONNECTION G 12	
315	90030-0187		4	CONN. STR. GE12LRED71	
330	90030-0184		6	CONN. STR., GE06LRED71	
335	90030-0212		1	NIPPLES, REDUSING, INT. THR. NO. 2521	
350	90163-0057		6	QUICK COUPLING, (M) 5150-1/8	
355	90157-0037	L	1	THREAD SEALANT LOCTITE 542	
360	90163-0062		6	QUICK COUPLING, (F) 5053-1/8	
380	90224-0308		4	CONN. BANJO, ART. NO. 2023-1/8-1/8	
385	90235-0259		1	VALVE	
410	90328-0047		1	SILENCER, G1/8"	
425	90330-0032		1	NIPPLE, EXT.THREAD, HEXAGON, R1/8-R1/8	
460	90360-0020		2	STEAM TRAP / MK36/51 3/8 INCH	
	90360-0310		*1*	*CAPSULE, FOR STEAM TRAP 90360-20*	
	90360-0309		*1*	*STRAINER, FOR STEAM TRAP 90360-20*	
530	312115-0297		2	SCREW ISO4762 M4X25 A4 80	
580	315105-0165		1	WASHER PLAIN, 8,4X16X1,6 A4 BRB	
590	312105-0325		6	SCREW, M6S ISO 4017 M5X10 A4 80	
610	312105-0451		8	SCREW, M6S ISO 4017 M8X20 A4 80	
615	312105-0453		3	SCREW, M6S ISO 4017 M8X25 A4 80	
620	312115-0228		8	SCREW ISO4762 M3X16 A4 80	
630	312115-0305		4	SCREW ISO4762 M4X50 A4 80	
640	312115-0329		4	SCREW ISO4762 M5X16 A4 80	
645	312115-0340		1	SCREW ISO4762 M5X45 A4 80	
650	312155-0532		1	SCREW DIN 7991 MF6S M12X20 A4 70	
660	315105-0124		8	WASHER PLAIN, 3,2X6X0,5 A4 BRB	
670	315105-0136		8	WASHER PLAIN, 4,3X9X0,8 A4 BRB	
680	315105-0146		6	WASHER PLAIN, 5,3X10X1 A4 BRB	
685	315125-0165		2	WASHER HIGH, TBRSB 8,4X26X5 A4	
690	90287-0314		2	SCREW MC6S M4X60 A470	
695	2832787-0000		1	PLATE	
700	90217-0349		4	GASKET 48,4X59,8X4 MM	
710	90217-0348		3	GASKET 35,4X46,8X4 MM	
720	90217-0347		2	GASKET 32X22,6X3,6 MM	
730	342980-0303		3	BANJO-HOLLOW BOLT COUPL,EXT.THR.01-G1/8	
735	90235-0274		1	THROTTLE CHECK VALVE, G1/8", SCU-604-1/8	
860	342737-0204		1	ELBOW CONNECTION 6, W06L71	
870	315234-0109		1	WASHER,PL.RND.CU.10,3/13,5 H=1,0	
880	359710-0001		1	WARNING SIGN ISO, HOT SURFACE	
M.B050	90326-0089		1	THERMOCOUPLE, 5110 089-000	
M.B051	90600-0467		1	INDUCTIVE SWITCH,E2A-M18KS05-WP-B1-TP 6M	
M.B052	90044-0194		1	INDUCTIVE SENSOR, IN 5329	
M.B053	90044-0194		1	INDUCTIVE SENSOR, IN 5329	
M.B054	90044-0194		1	INDUCTIVE SENSOR, IN 5329	
M.B104	90044-0194		1	INDUCTIVE SENSOR, IN 5329	
M.S012	90600-6048		1	EMERG. STOP SMILE 11 EA TINA, 30-050-00	
M.W650	90600-0936		1	CABLE M12-C612 5 POLE, 20-056-22	

Machine Type | Group Description | Used-In | Group Number | Page No

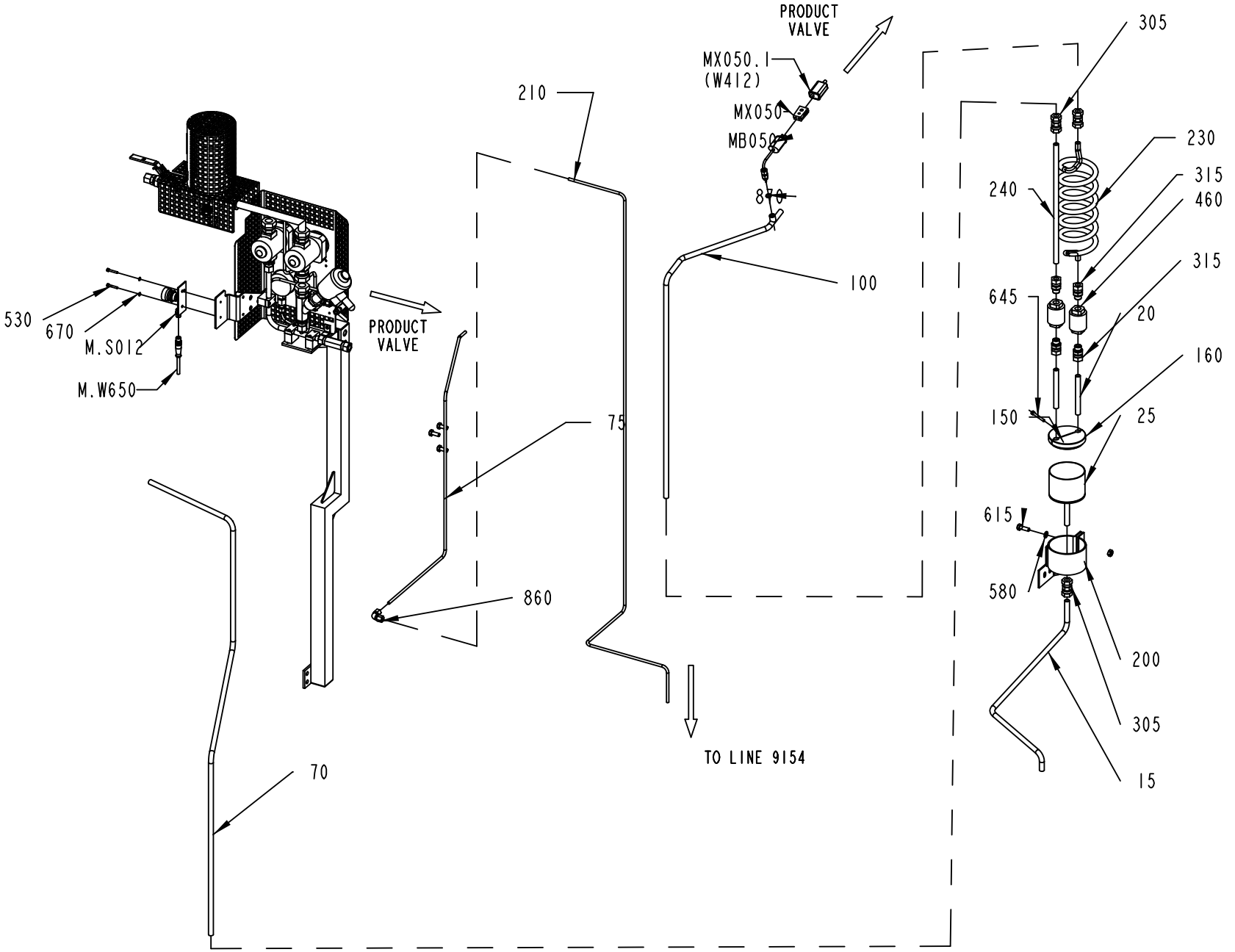

272560-19
428046

ECM: 430654 - 20091221
Group number: 272560-1000
Assembly Drawing: 272560-19_2_AB

This list covers pages from 1-8 to 1-15

Pos	Part No	UN	Qty	Description	Page No
Common Parts (Cont'd)					
M.X050	90326-0020		1	SOCKET, FEMALE YELLOW CR-AL, 03-22000A	
M.X050.1	90326-0012		1	PROTECTIVE COVER, 03-001 10	
W412	90220-0059	M	5	THERMOCOUPLE CABLE, P/PTW-20F-K 2X0,5MM2	

Pos	Part No	UN	Qty	Description	Page No

PRODUCT VALVE

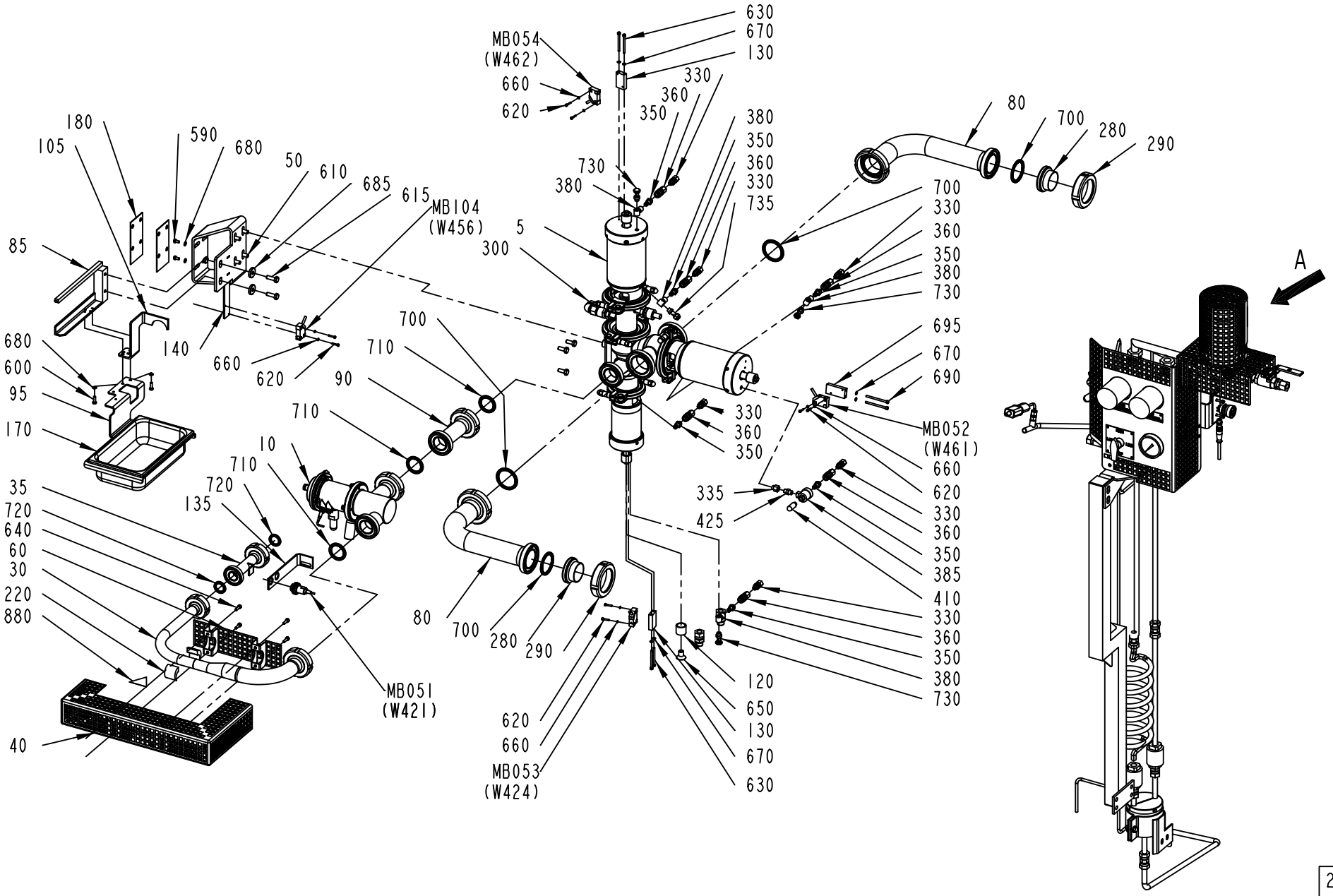

272560-20
428046

Pos	Part No	UN	Qty	Description	Page No	Pos	Part No	UN	Qty	Description	Page No

SEE PREVIOUS LISTS PAGES: 1-9, 1-11.

PRODUCT VALVE

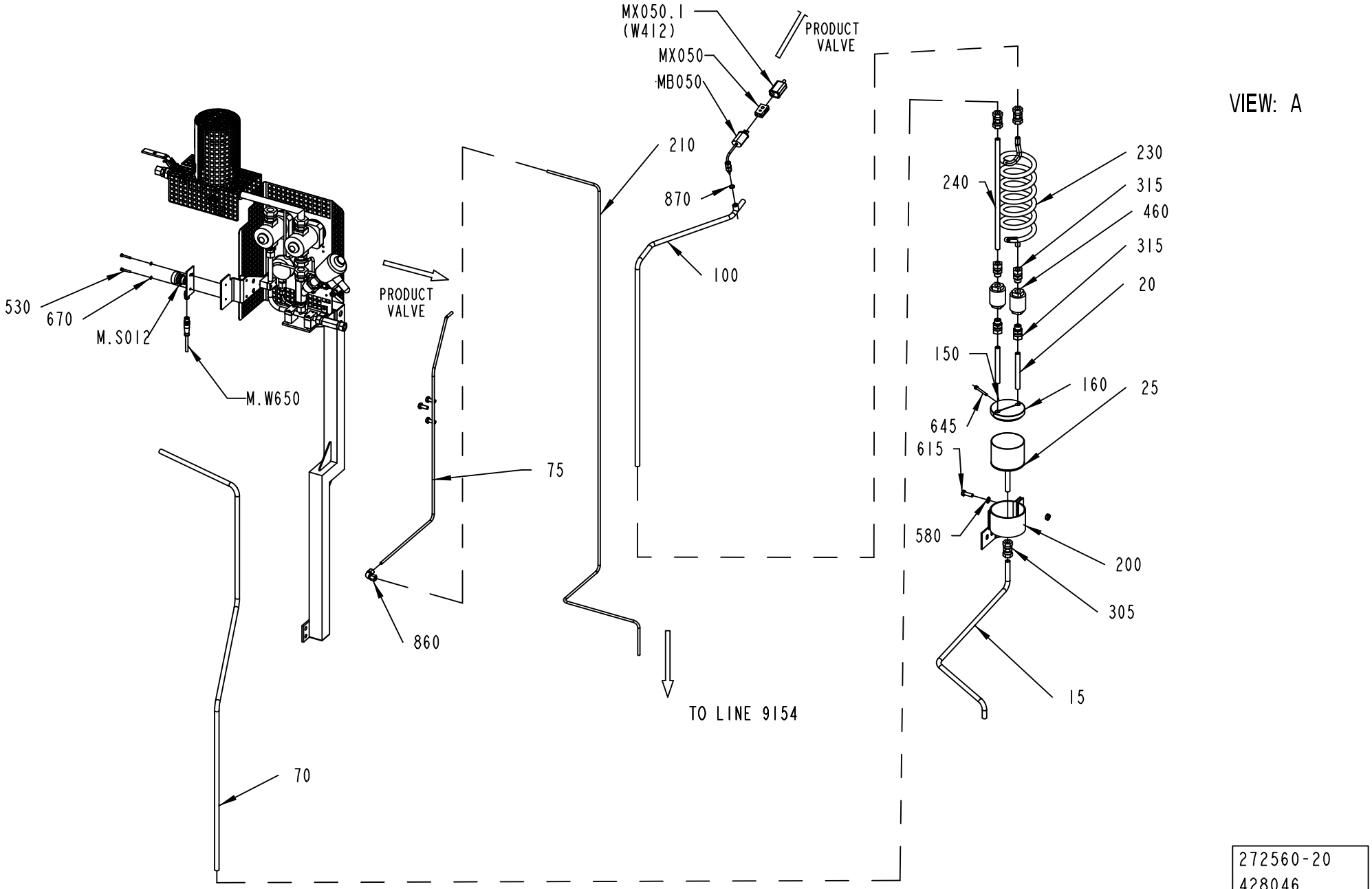

272560-20
428046

ECM: 430654 - 20091221
Group number: 272560-1000
Assembly Drawing: 272560-20_2_AB

This list covers pages from 1-8 to 1-15

Pos	Part No	UN	Qty	Description	Page No
SEE PREVIOUS LISTS PAGES: 1-9, 1-11.					

Pos	Part No	UN	Qty	Description	Page No

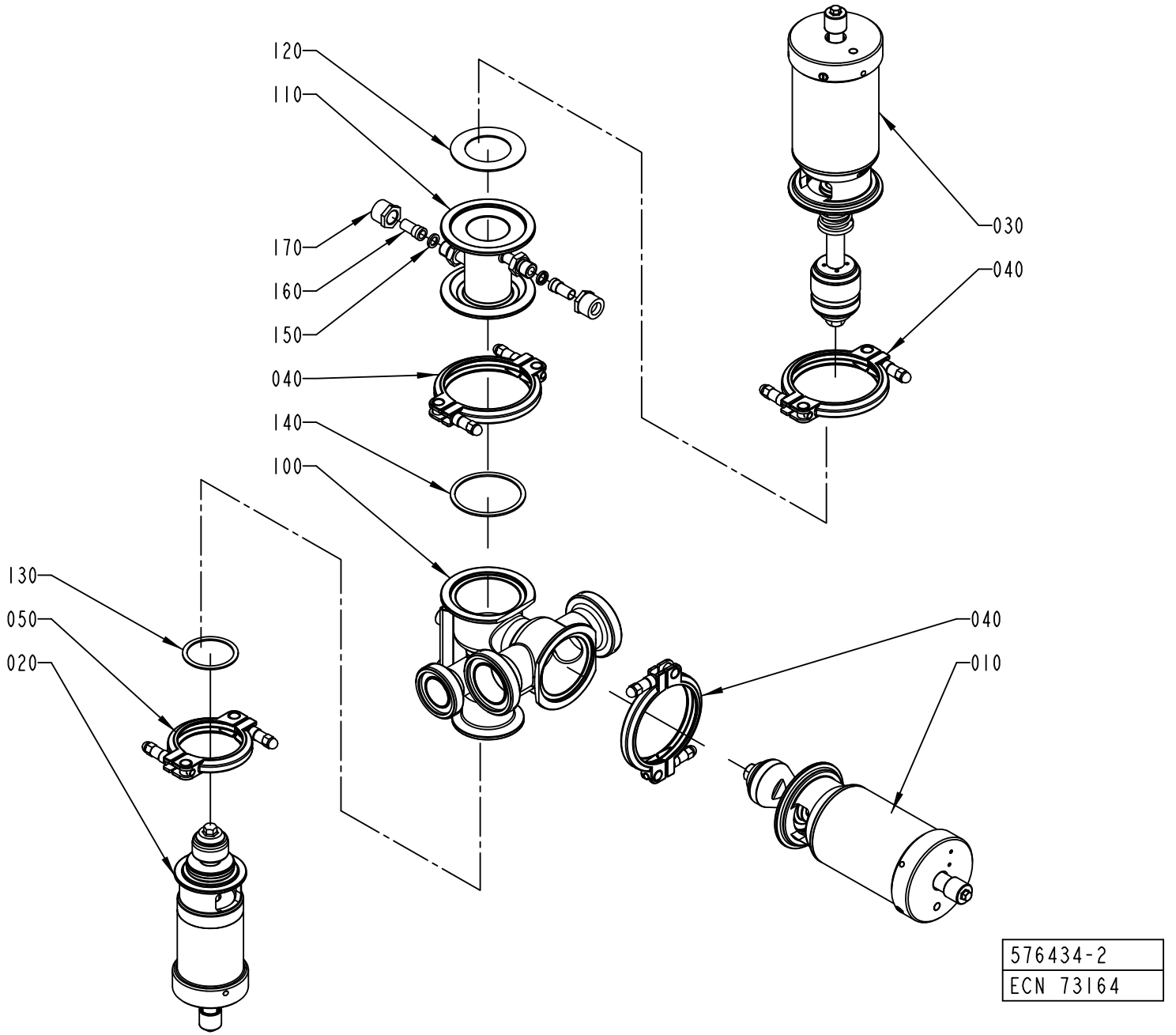
120
110
170
160
150
040
140
100
130
050
020
030
040
040
010
576434-2
ECN 73164

ECM: 177592 - 20040910
Group number: 576434-0200
Assembly Drawing: 576434-2_1_AA

Pos	Part No	UN	Qty	Description	Page No
-					
010	576436-0100		1	A-CYLINDER	**1-19**
020	576438-0100		1	B-CYLINDER	**1-21**
030	576437-0100		1	C-CYLINDER	**1-23**
040	541163-0200		3	CLAMP RING	**1-25**
050	541164-0200		1	CLAMP RING	**1-27**
100	1523057-0000		1	AP-VALVE-BODY (51-38)	
110	567018-0000		1	STEAM HOUSE	
120	539212-0000		1	GASKET	
130	90207-0365		1	GASKET 53X63X1,8 MM 2,5" FDA 3-A	
140	90207-0363		1	GASKET 75X85X1,8 MM 3" FDA 3-A	
150	90091-0266		2	SEAL RING 10,4X16,3X2,5 MM	
160	90030-0336		2	CONN. STRAIGHT, 316L-12M-BVCO-3	
170	90030-0338		2	NUT, PIPE & CONNECTORS, SS-8-BVCO-4	

Pos	Part No	UN	Qty	Description	Page No

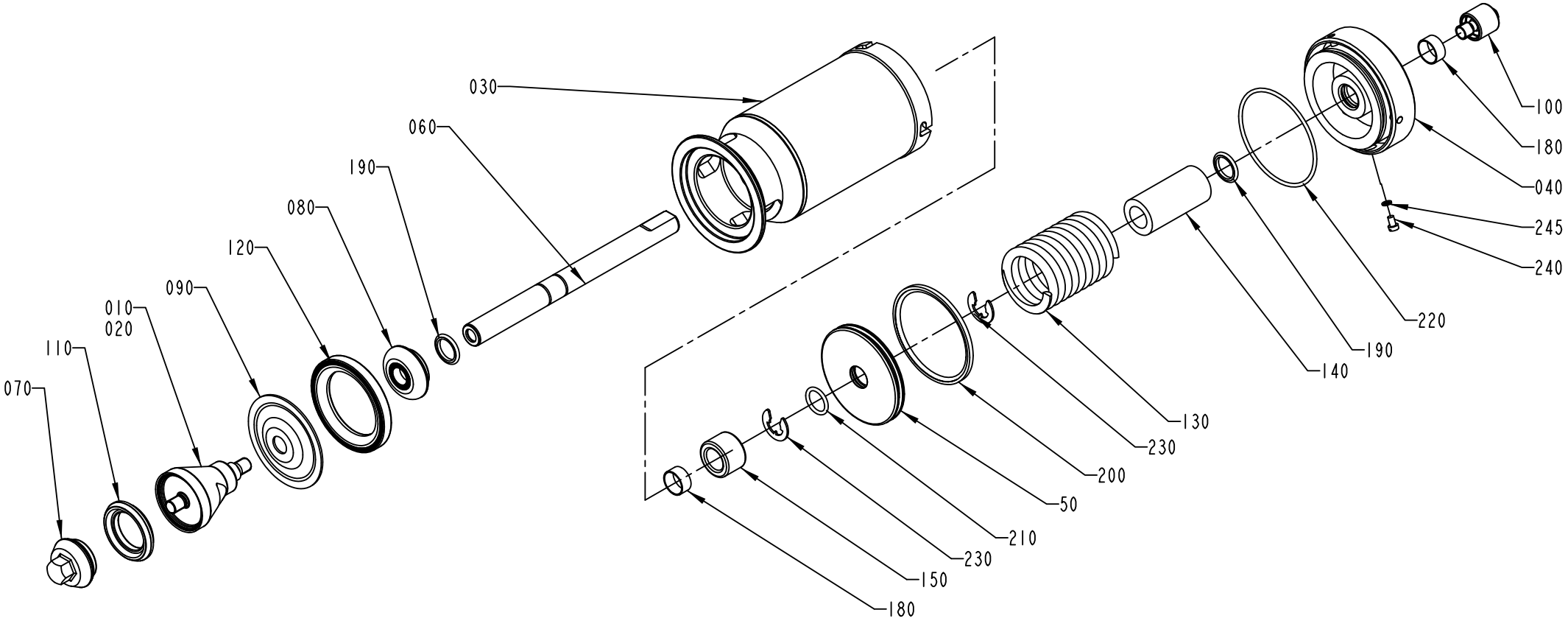

576436-1
ECN 261676

ECM: 477664 - 20110401
Group number: 576436-0100
Assembly Drawing: 576436-1_1_AC

Pos	Part No	UN	Qty	Description	Page No
2" HVA					
010	2833037-0000		1	SEAL RING	
070	2898203-0000		1	VALVE CONE	
2" NOHVA					
010	2833037-0000		1	SEAL RING	
070	2826442-0000		1	VALVE CONE	
3" NOHVA					
010	530595-0000		1	SEAL RING HOLDER	
070	2826442-0000		1	VALVE CONE	
Common Parts					
030	576439-0000		1	CYLINDER HOUSING	
040	576440-0000		1	END SECTION	
050	576441-0000		1	PISTON	
060	576446-0000		1	PISTON ROD	
080	541166-0000		1	WASHER	
090	533169-0000		1	DIAPHRAGM	
100	553607-0000		1	SLEEVE	
110	2826441-0000		1	SEAL RING	
120	440655-0000		1	RING	
130	440663-0000		1	COMPRESSION SPRING	
140	576448-0000		1	SPACER	
150	576449-0000		1	SPACER	
180	90091-0238		2	WEAR RING 20X22X10 MM	
190	90091-0237		2	ROD SEAL GLYD RING 20X27,5X3 MM	
200	90091-0336		1	PISTON SEAL GLYD RING 79X90X4,2 MM	
210	315204-0215		1	O-RING 19,2X3 MM	
220	315202-0308		1	O-RING 84,5X3 MM	
230	315754-0113		2	RETAINING RING SHAFT DIN 6799 15	
240	312125-0323		1	SLOTTED HEAD SCREW, ISO1207 M5X8 A4	
245	315239-0101		1	NYLON WASHER M5, M5RRP	

Pos	Part No	UN	Qty	Description	Page No

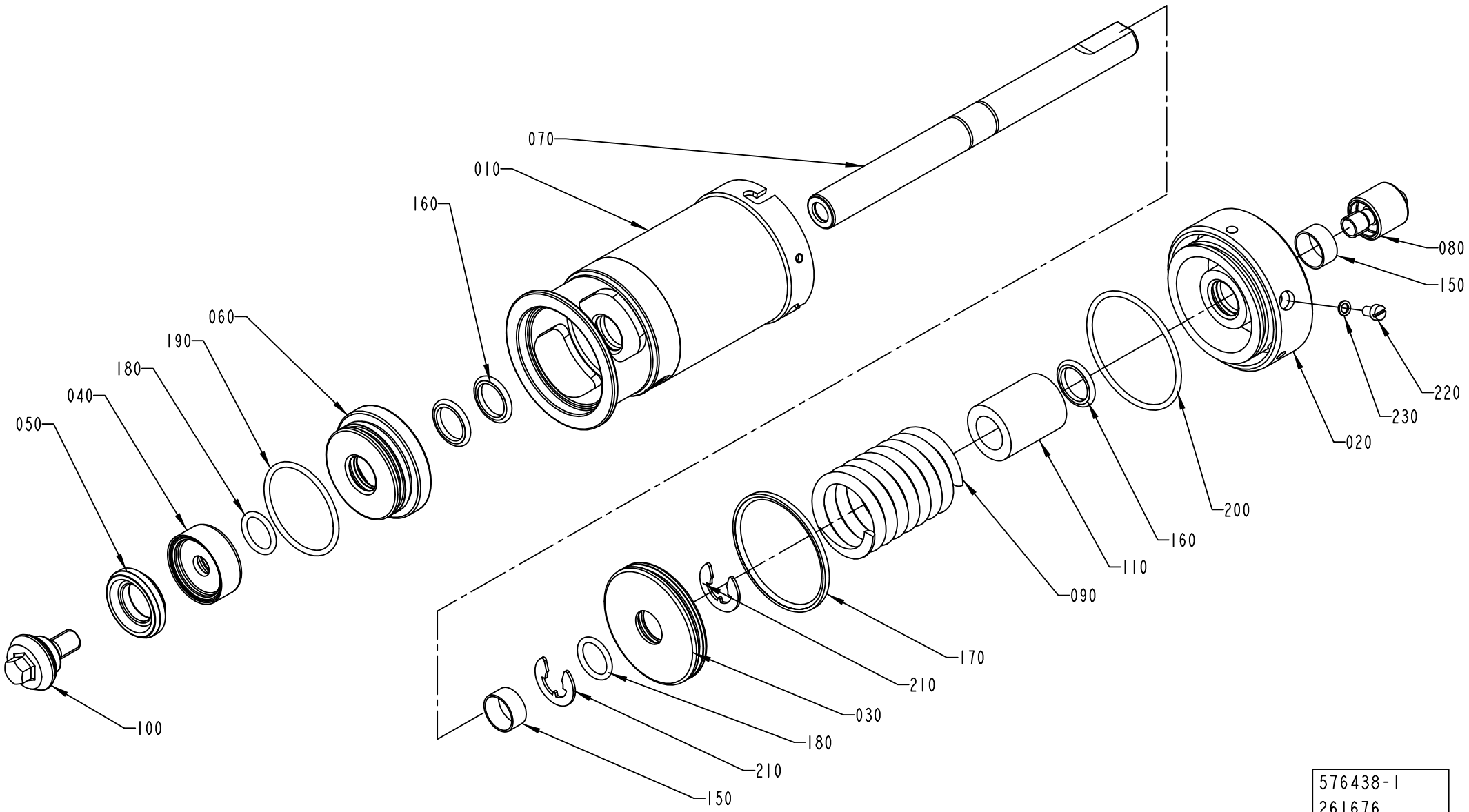

576438-1
261676

ECM: 456625 - 20110101
Group number: 576438-0100
Assembly Drawing: 576438-1_1_AC

Pos	Part No	UN	Qty	Description	Page No
-					
010	576443-0000		1	CYLINDER HOUSING	
020	576444-0000		1	END SECTION	
030	576445-0000		1	PISTON	
040	530587-0000		1	WASHER	
050	2826440-0000		1	SEAL RING	
060	556133-0000		1	SEALING WASHER	
070	576447-0000		1	PISTON ROD	
080	553607-0000		1	SLEEVE	
090	440662-0000		1	COMPRESSION SPRING	
100	2826439-0000		1	VALVE CONE	
110	576451-0000		1	SPACER	
150	90091-0238		2	WEAR RING 20X22X10 MM	
160	90091-0237		3	ROD SEAL GLYD RING 20X27,5X3 MM	
170	90091-0335		1	PISTON SEAL GLYD RING 62,5X70X3,2 MM	
180	90602-2911		2	O-RING 19,2X3 MM FDA, 3-A	
190	90602-2912		1	O-RING 49,5X3 MM FDA, 3-A	
200	315202-0304		1	O-RING 64,5X3 MM	
210	315754-0113		2	RETAINING RING SHAFT DIN 6799 15	
220	312125-0323		1	SLOTTED HEAD SCREW, ISO1207 M5X8 A4	
230	315239-0101		1	NYLON WASHER M5, M5RRP	

Pos	Part No	UN	Qty	Description	Page No

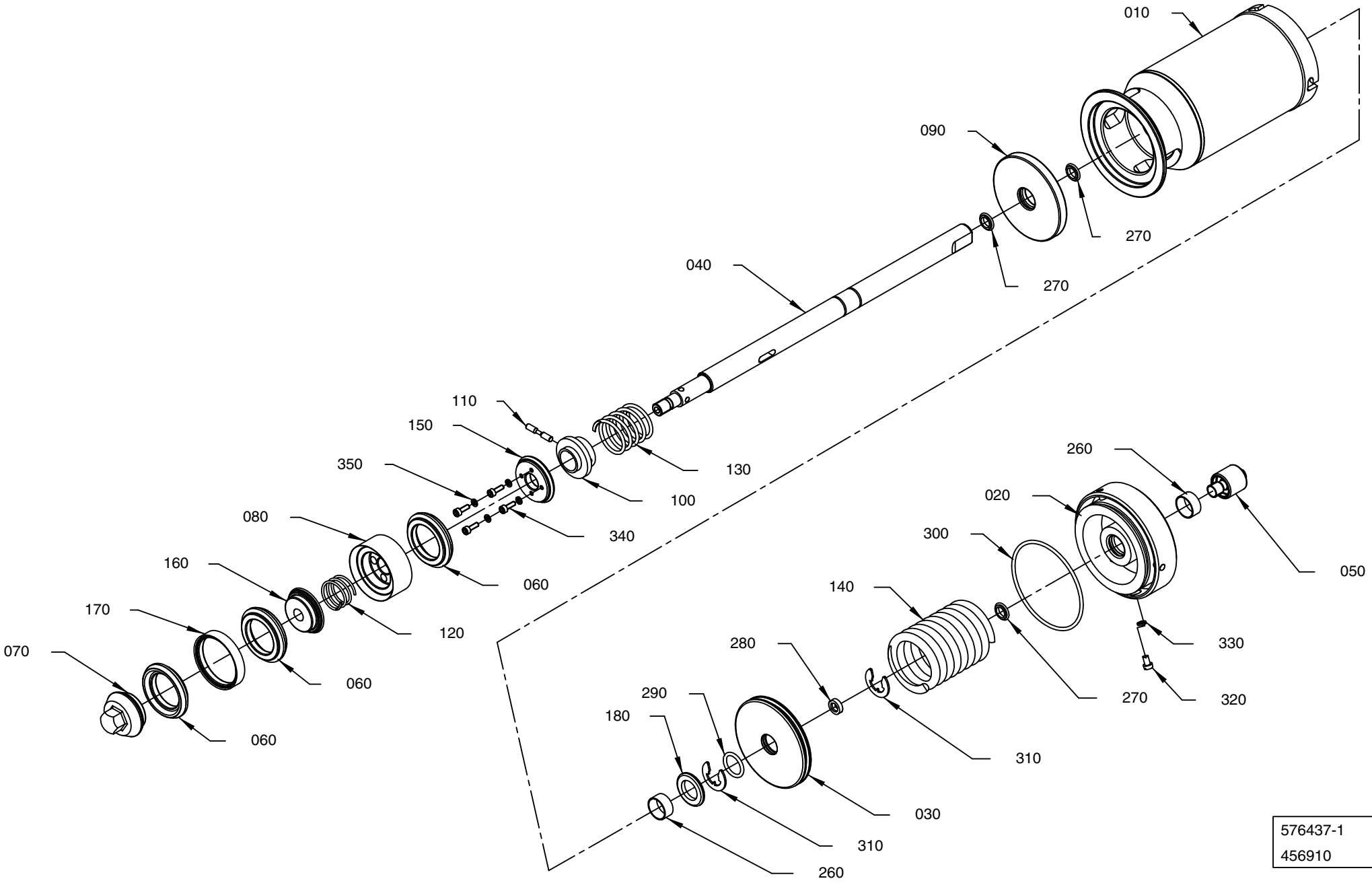

576437-1
456910

ECM: 460041 - 20101001
Group number: 576437-0100
Assembly Drawing: 576437-1_1_AD

Pos	Part No	UN	Qty	Description	Page No
-					
010	576439-0000		1	CYLINDER HOUSING	
020	576440-0000		1	END SECTION	
030	576441-0000		1	PISTON	
040	576442-0000		1	PISTON ROD	
050	553607-0000		1	SLEEVE	
060	2826441-0000		3	SEAL RING	
070	2826442-0000		1	VALVE CONE	
080	530591-0000		1	HOLDER	
090	555458-0000		1	SEALING WASHER	
100	3112808-0000		1	WASHER	
110	440659-0000		1	CYLINDRICAL PIN	
120	440660-0000		1	COMPRESSION SPRING	
130	440661-0000		1	COMPRESSION SPRING	
140	440663-0000		1	COMPRESSION SPRING	
150	530597-0000		1	WASHER	
160	530598-0000		1	WASHER	
170	530599-0000		2	RING	
180	576450-0000		1	SPACER	
260	90091-0238		2	WEAR RING 20X22X10 MM	
270	90091-0237		3	ROD SEAL GLYD RING 20X27,5X3 MM	
280	90091-0336		1	PISTON SEAL GLYD RING 79X90X4,2 MM	
290	315204-0215		1	O-RING 19,2X3 MM	
300	315202-0308		1	O-RING 84,5X3 MM	
310	315754-0113		2	RETAINING RING SHAFT DIN 6799 15	
320	312125-0323		1	SLOTTED HEAD SCREW, ISO1207 M5X8 A4	
330	315239-0101		1	NYLON WASHER M5, M5RRP	
340	312115-0291		4	SCREW ISO4762 M4X12 A4 80	
350	315402-0136		4	LOCK WASHER, DIN127B 4,1 A4, M4-5/32	

Pos	Part No	UN	Qty	Description	Page No

CLAMP RING

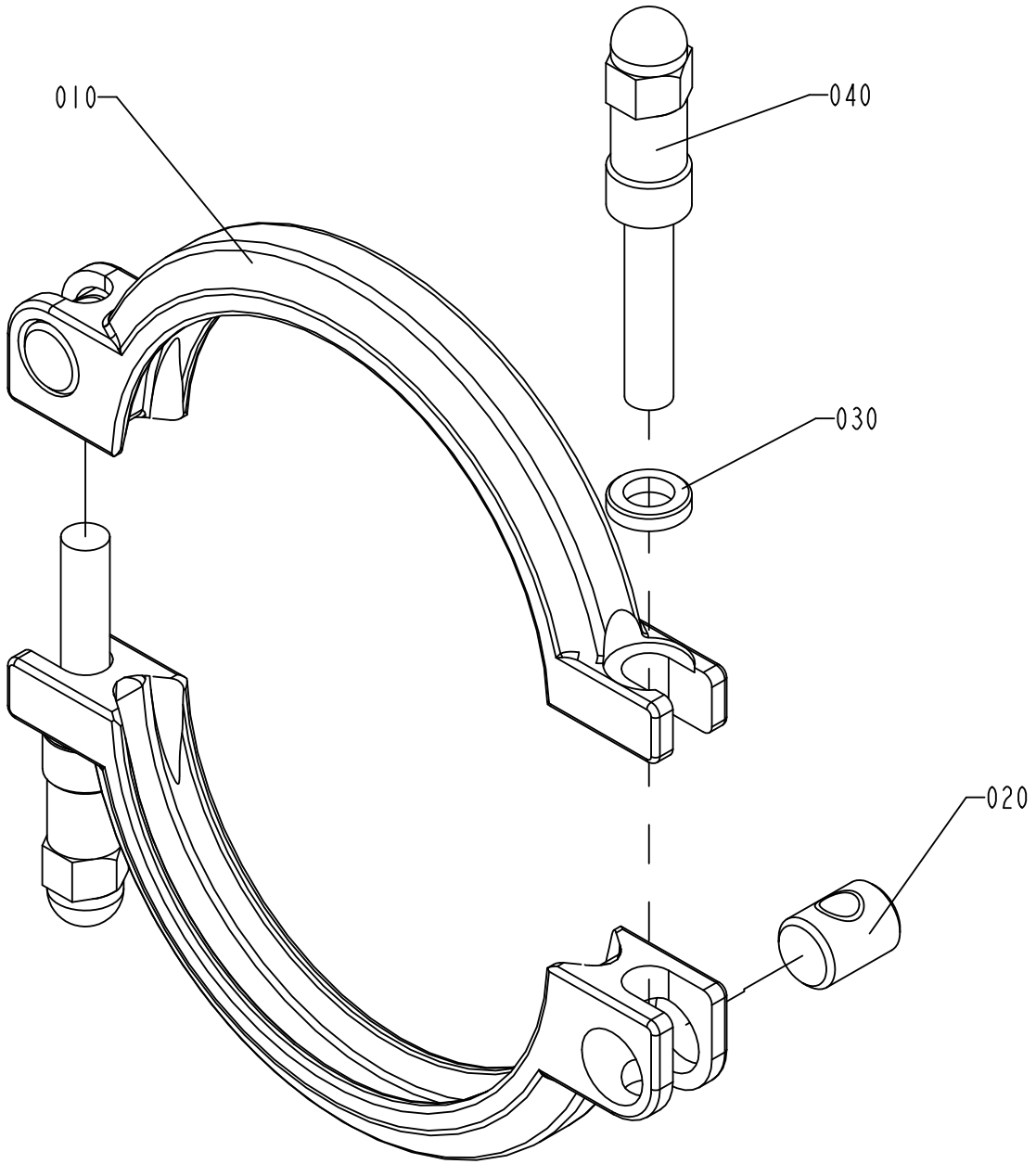

S-541163-2
ECN 71956

ECM: 343597 - 20080402
Group number: 541163-0200
Assembly Drawing: 541163-2_1_AB

Pos	Part No	UN	Qty	Description	Page No
-					
010	532117-0000		2	CLAMP RING	
020	497748-0000		2	PIN	
030	541165-0000		2	WASHER	
040	554162-0000		2	SCREW	

Pos	Part No	UN	Qty	Description	Page No

Machine Type | Group Description | Used-In | Group Number | Page No

CLAMP RING

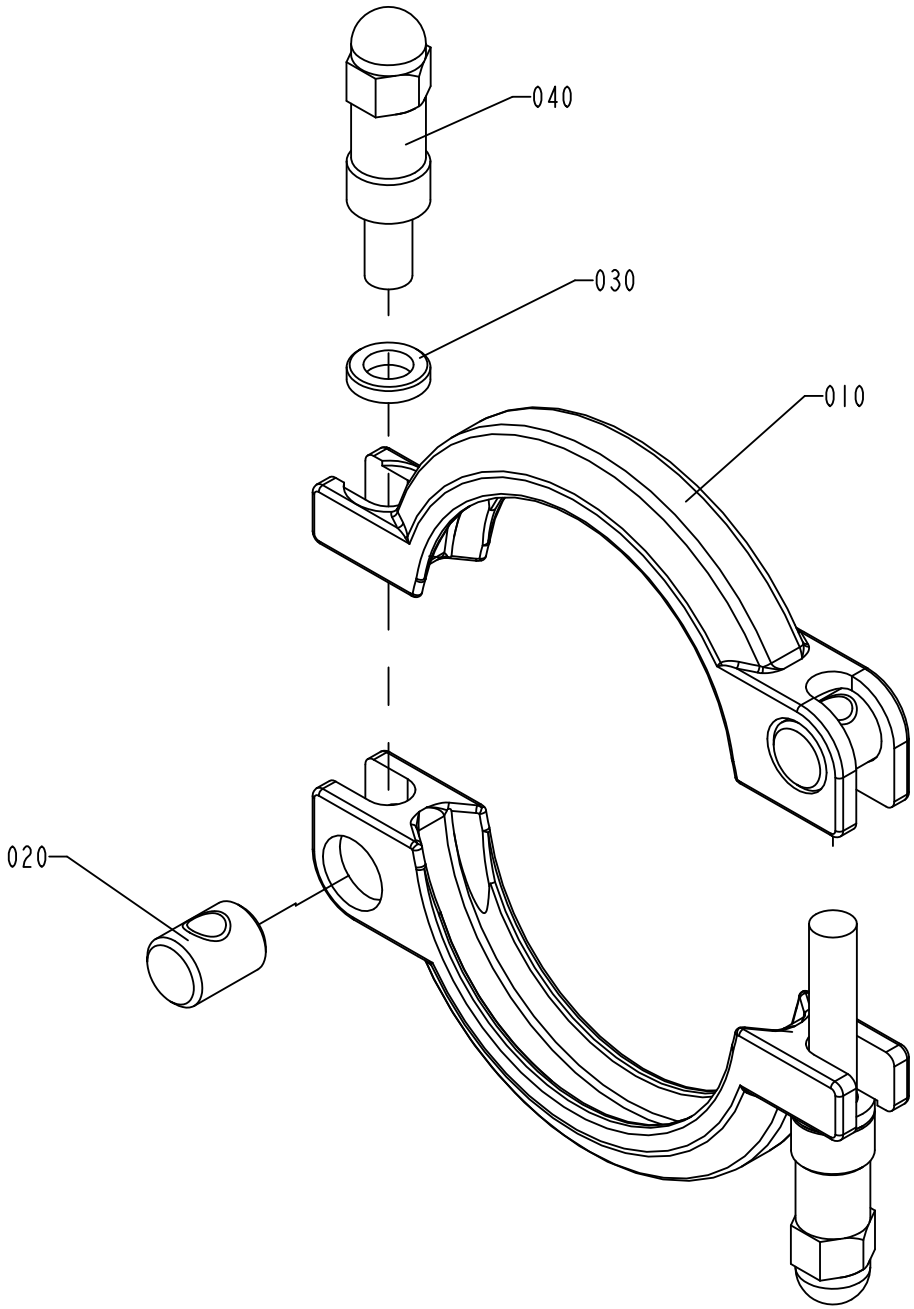

S-541164-2
ECN 71956

ECM: 343598 - 20080402
Group number: 541164-0200
Assembly Drawing: 541164-2_1_AB

Pos	Part No	UN	Qty	Description	Page No
-					
010	532118-0000		2	CLAMP RING	
020	497748-0000		2	PIN	
030	541165-0000		2	WASHER	
040	554162-0000		2	SCREW	

Pos	Part No	UN	Qty	Description	Page No

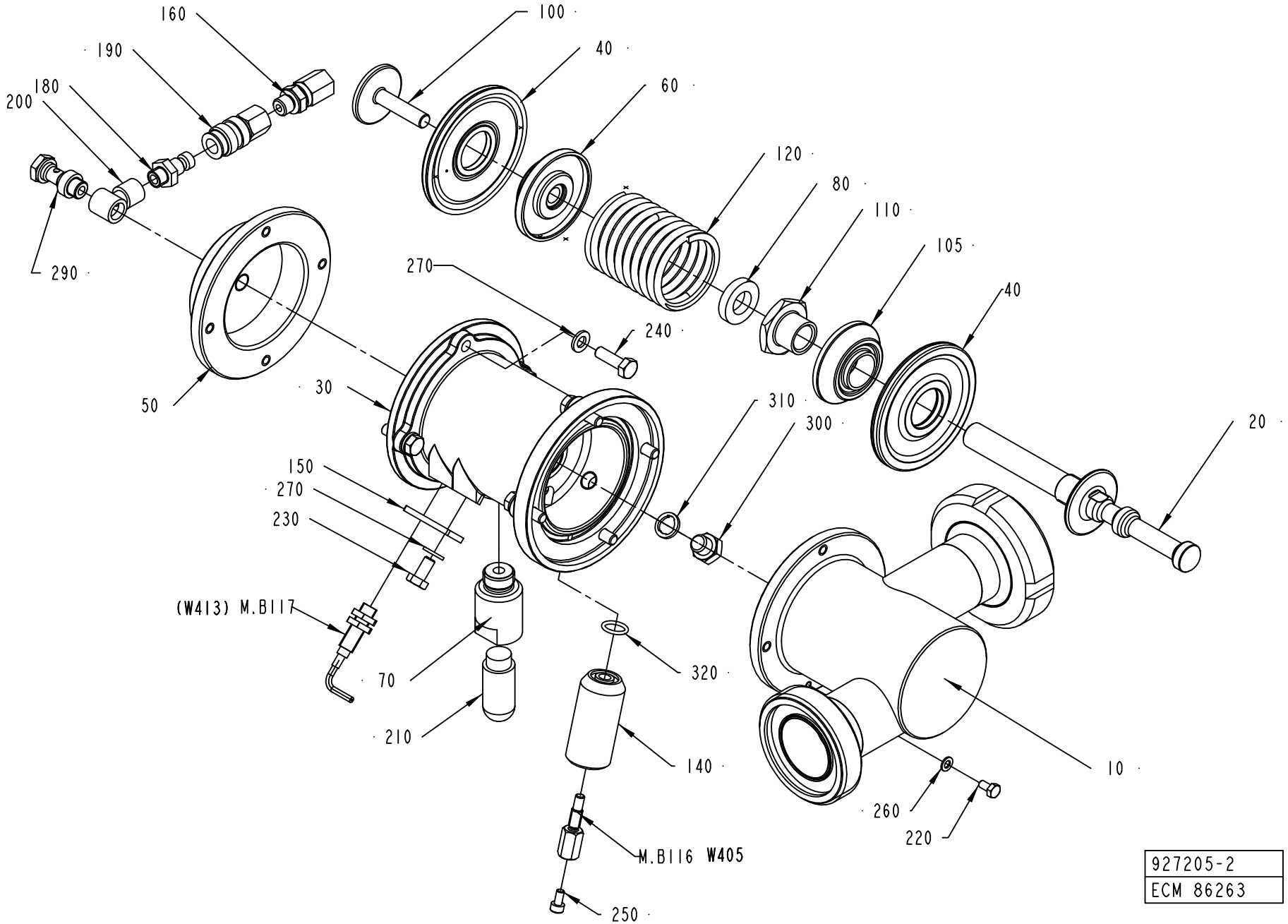
160
190
200
180
290
100
40
60
120
80
110
105
40
270
240
50
30
310
300
20
150
270
230
(W413) M.B117
70
210
320
140
M.B116 W405
250
260
220
10
927205-2
ECM 86263

ECM: 179735 - 20041217
Group number: 927205-0200
Assembly Drawing: 927205-2_1_AB

Pos	Part No	UN	Qty	Description	Page No
-					
010	1519937-0000		1	REGULATOR BODY	
020	927007-0000		1	SHUTTER	
030	927194-0000		1	BODY	
040	925998-0000		2	DIAPHRAGM	
050	927203-0000		1	COVER	
060	926906-0000		1	SPACER	
070	927044-0000		1	SPACER	
080	736514-0000		1	SHOCK ABSORBER	
100	926907-0000		1	SCREW	
105	1511600-0000		1	SPACER	
110	979434-0000		1	FERRULE	
120	926909-0000		1	COMPRESSION SPRING	
140	2576398-0000		1	SPACER	
150	926934-0000		1	SUPPORT	
160	90030-0089		1	STRAIGHT CONNECTION	
180	90163-0057		1	QUICK COUPLING, (M) 5150-1/8	
190	90163-0062		1	QUICK COUPLING, (F) 5053-1/8	
200	90224-0308		1	CONN. BANJO, ART. NO. 2023-1/8-1/8	
210	90328-0026		1	SILENCER, G1/4"	
220	312105-0287		1	SCREW, M6S ISO 4017 M4X8 A4 70	
230	312105-0366		1	SCREW, M6S ISO 4017 M6X12 A4 80	
240	312105-0370		8	SCREW, M6S ISO 4017 M6X20 A4 80	
250	312115-0287		1	SCREW ISO4762 M4X8 A4 80	
260	315105-0136		1	WASHER PLAIN, 4,3X9X0,8 A4 BRB	
270	315105-0153		9	WASHER PLAIN, 6,4X12X1,5 A4 BRB	
290	342980-0303		1	BANJO-HOLLOW BOLT COUPL,EXT.THR.01-G1/8	
300	90330-0066		1	PLUG, G1/8EXT, G1/8	
310	315239-0109		1	NYLON WASHER G1/8, 1/8RRP	
320	315206-0701		1	O-RING 10,82X1,78 MM	
M.B117	90458-0138		1	PROX.SWITCH E2EG-X1R5B1-5M	
M.B116	1478814-0000		1	SENSOR	
W405	351150-0431	M	5	CABLE OLFLEX 2X0,75 MM2 LIGHT/GREY	

Pos	Part No	UN	Qty	Description	Page No

Machine Type	Group Description	Used-In	Group Number	Page No

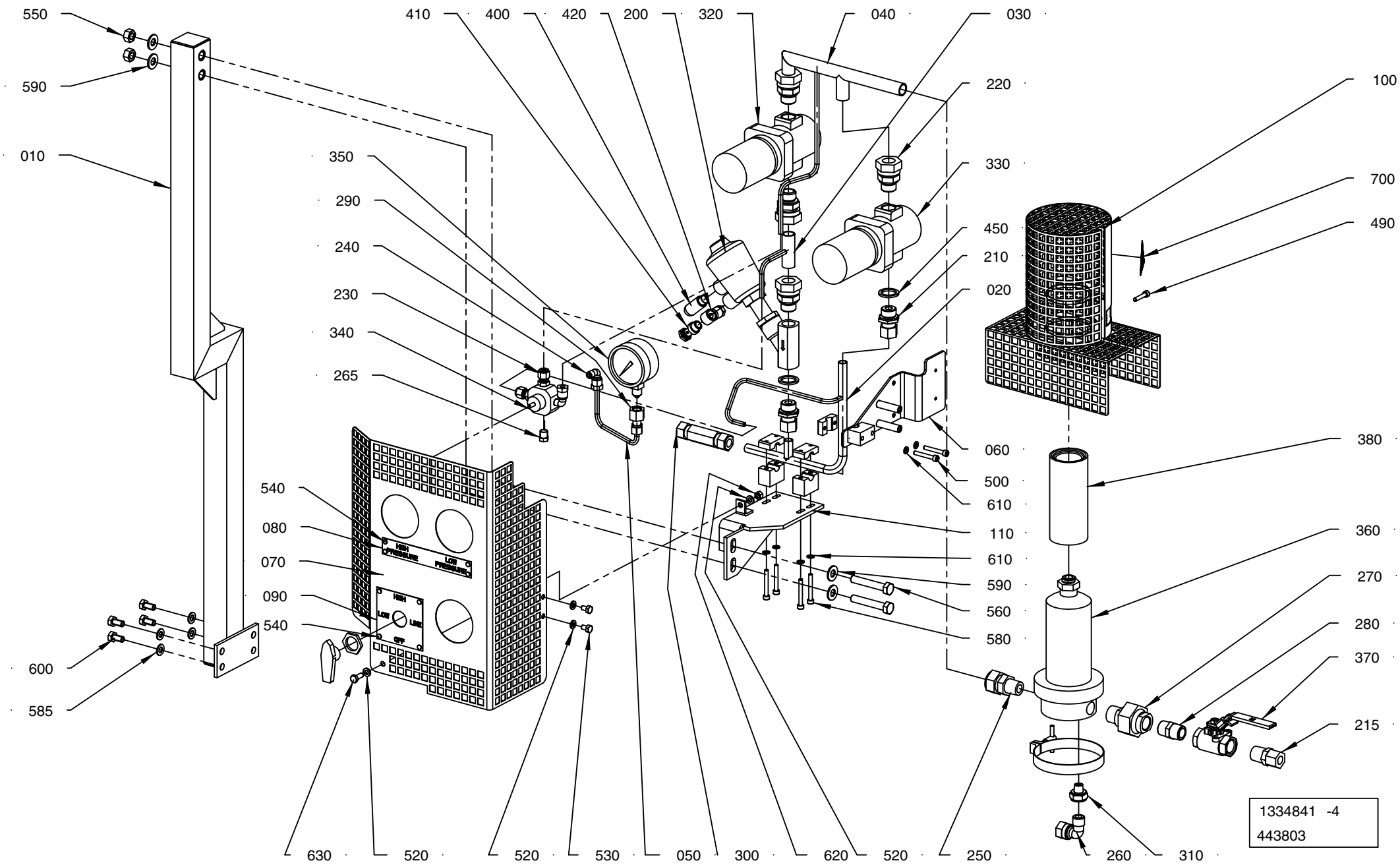
550
590
010
410
400
420
200
320
040
030
220
100
350
330
700
290
450
490
240
210
230
020
340
265
060
380
500
610
540
110
080
610
360
070
590
270
090
560
280
540
580
370
600
215
585
630
520
520
530
050
300
620
520
250
260
310
1334841 -4
443803

ECM: 448758 - 20100524
Group number: 1334841-0400
Assembly Drawing: 1334841-4_1_AB

Pos	Part No	UN	Qty	Description	Page No
-					
010	2761755-0000		1	BRACKET	
020	2949465-0000		1	STEAM PIPE	
030	2949467-0000		1	STEAM PIPE	
040	2949466-0000		1	STEAM PIPE	
050	2949468-0000		1	PIPE	
060	2914839-0000		1	PIPE HOLDER	
070	2949463-0000		1	TOUCH GUARD	
080	1279456-0000		1	LABEL	
090	2949464-0000		1	SIGN	
100	1260311-0000		1	COVER	
110	2761756-0000		1	PIPE HOLDER	
200	90459-0336		1	ANGLE SEAT VALVE, G1/2, N.C. DN13	
210	90030-0109		2	STRAIGHT PIPE CONN. GE12LR1/271	
215	90030-0180		1	CONN. STR. GE12L1/2NPT71	
220	90030-0191		4	CONN. STR. GE18LRED71	
230	90458-1477		2	CONNECTOR 6-1/8 NPT, EXT. TAPERED	
240	90030-0137		2	CONN. ELBOW, WE06LR71	
250	90030-0416		1	CONN. STR. M12MSC1/2K-316	
260	90030-0115		1	CONN. ELBOW, WE12LR71	
265	90087-0046		1	PLUG, EXT. 1/8 NPT-THREAD, 2PH-SS	
270	90330-0106		1	PIPE COUPLING	
280	90330-0021		1	NIPPLE, EXT.THREAD, HEXAGON, R1/2-R1/2	
290	342790-0102		1	MAV PRESSUR GAUGE CONNECTOR 6	
300	90601-7910		1	NON RETURN VALVE, M12A-C6L-5-EPR-SS	
310	90030-0170		1	REDUCER 2521-1/4X3/8	
320	2558134-0000		1	PRESSURE REGULATOR	
330	2558133-0000		1	PRESSURE REGULATOR	
340	90600-4958		1	BALL VALVE 1/8NPT 5-WAY, SS-43ZF2-049	
350	90043-0082		1	PRESSURE GAUGE, 2840, D=63 MM	
360	90277-0055		1	FILTER HOUSING / MDS 4463 G 08 H	
	90277-0339		*1*	*O-RING, ACS0272 EU FOR PALL FILTER*	
370	90600-3701		1	BALL VALVE, 1/2NPT	
380	90337-0315		1	FILTER INSERT / MCS 4463	
	90458-2549		*1*	*O-RING 72,69X2,62 MM*	
400	90328-0026		1	SILENCER, G1/4"	
410	342980-0304		1	BANJO-HOLLOW BOLT COUPL,EXT.THR.01-G1/4	
420	342797-0122		1	BANJO CONN., RINGPIECE 6-1/4	
450	315217-0111		2	BONDED SEAL SS/VITON G1/2	
490	312115-0333		1	SCREW ISO4762 M5X25 A4 80	
500	312115-0337		2	SCREW ISO4762 M5X35 A4 80	
520	315105-0153		4	WASHER PLAIN, 6,4X12X1,5 A4 BRB	
530	312105-0364		2	SCREW, M6S ISO 4017 M6X10 A4 80	
540	311521-0142		8	RIVET, BLANK 3,2X6	
550	312607-0320		2	HEXAGON NUT, EN 24032 M6M M10 A480	
560	312105-0503		2	SCREW, M6S ISO 4014 M10X60 A4 80	
580	312115-0339		4	SCREW ISO4762 M5X40 A4 80	
585	315105-0165		4	WASHER PLAIN, 8,4X16X1,6 A4 BRB	
590	315105-0173		4	WASHER PLAIN, 10,5X22X2 A4 BRB	
600	312105-0449		4	SCREW, M6S ISO 4017 M8X16 A4 80	
610	315105-0146		6	WASHER PLAIN, 5,3X10X1 A4 BRB	
620	312607-0316		1	HEXAGON NUT, EN 24032 M6M M6 A480	
630	312105-0368		1	SCREW, M6S ISO 4017 M6X16 A4 80	
700	359710-0001		1	WARNING SIGN ISO, HOT SURFACE	

Machine Type	Group Description	Used-In	Group Number	Page No

HEAD SPACE BY INJECTION

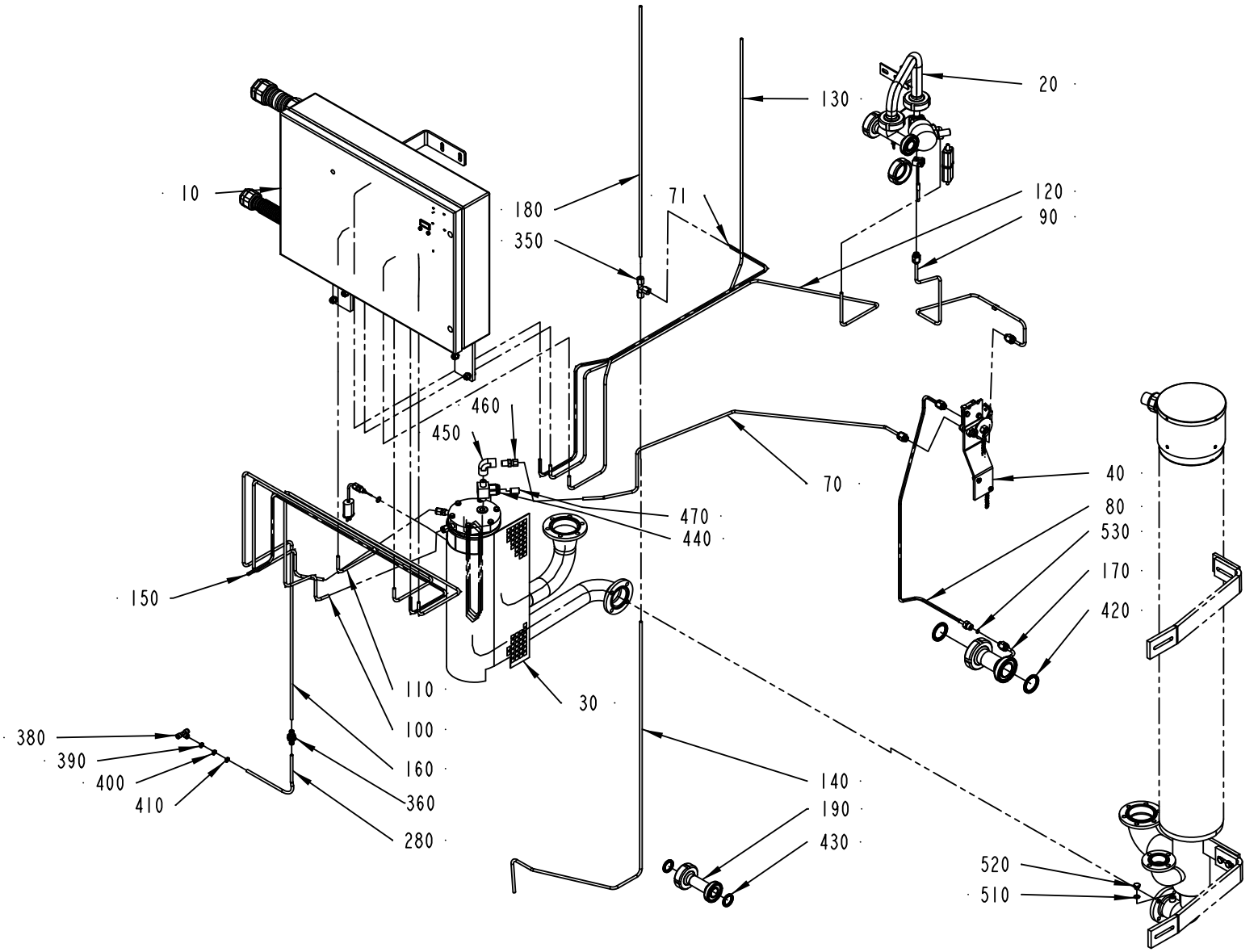

2619758-2
ECM 266817

ECM: 275057 - 20070126
Group number: 2619758-0200
Assembly Drawing: 2619758-2_1_AA

Pos	Part No	UN	Qty	Description	Page No
-					
	2568779-0000		1	DIAGRAM	
10	2545083-0200		1	CONTROL CABINET	**1-35, 1-37, 1-39**
20	2545080-0200		1	INJECTION SYSTEM	**1-43**
30	1539599-0100		1	HEAT EXCHANGER	**1-45**
40	1539602-0100		1	CONNECTION SYSTEM	**1-47**
070	1539604-0000		1	PIPE	
071	2546472-0000		1	PIPE	
080	2545432-0000		1	CLEANING PIPE	
090	1539605-0000		1	COOLING PIPE	
100	2546444-0000		1	PIPE	
110	2546447-0000		1	SPRAY PIPE	
120	2546471-0000		1	AIR PIPE	
130	2546473-0000		1	FILLING PIPE	
140	2547007-0000		1	RETURN PIPE	
150	2546446-0000		1	PIPE	
160	2546445-0000		1	AIR PIPE	
170	2545062-0000		1	CLEANING PIPE	
180	2547006-0000		1	RETURN PIPE	
190	1539601-0000		1	CLEANING PIPE	
260	90144-0073		1	TREBOFLON-TAPE W=13MM	
280	90166-0132	MM	2500	TUBE 6 MM PA,TRANSP.	
340	342706-0130		1	STIFFNER SLEEVE FOR HOSE 6X1	
350	90030-0076		1	CONN. T-PIPE T06L71	
360	90457-0086		2	BULKHEAD CONNECTOR 6MM	
380	342748-0102		1	T-CONNECTION 6MM	
390	359000-0400		1	WIRE MARKING, YELLOW, PA2/4"0"	
400	359000-0401		1	WIRE MARKING, YELLOW, PA2/4"1"	
410	359000-0405		1	WIRE MARKING, YELLOW, PA2/4"5"	
420	90217-0348		2	GASKET 35,4X46,8X4 MM	
430	90217-0347		2	GASKET 32X22,6X3,6 MM	
440	90277-0062		1	FILTER HOUSING SS-4TF2-60	
	90277-0347		*1*	*FILTER*	
450	90330-0169		1	ELBOW, 90 INT. THREAD, 4-4FE. SS	
460	90030-0062		1	CONN. STR. GE06L1/4NPT71	
470	90277-0407		1	FILTER ELEMENT 60Âµ, SS-4F-K4-60	
510	315234-0109		1	WASHER,PL.RND.CU.10,3/13,5 H=1,0	
520	90136-0001		1	PLUG, EXT. THREAD, NO. 100727	
530	315205-0505		1	O-RING 6,07X1,78 MM	

Pos	Part No	UN	Qty	Description	Page No

Machine Type | Group Description | Used-In | Group Number | Page No

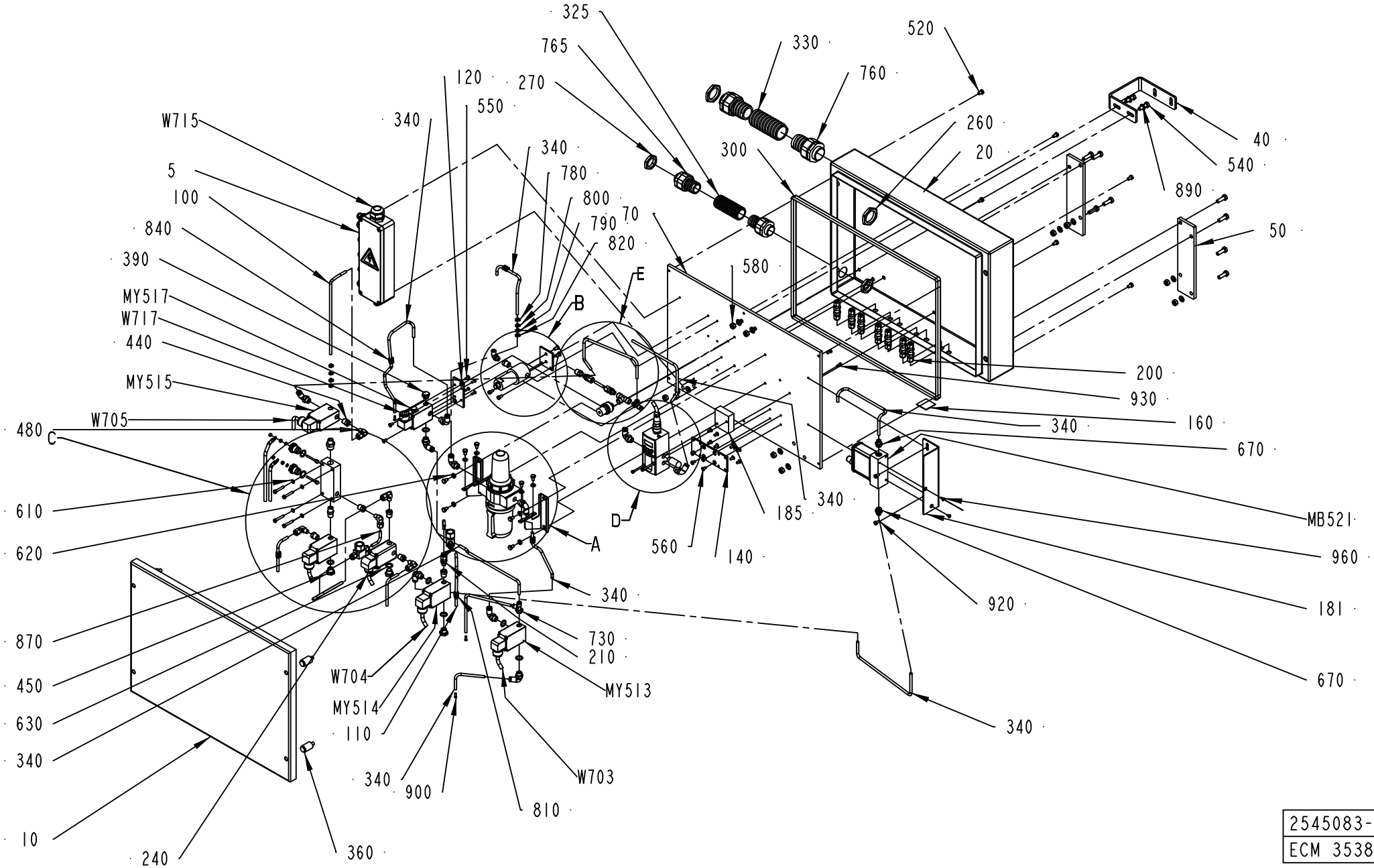

2545083-2
ECM 353842

ECM: 368331 - 20080925
Group number: 2545083-0200
Assembly Drawing: 2545083-2_1_AC

This list covers pages from 1-34 to 1-39

Pos	Part No	UN	Qty	Description	Page No
-					
005	2623674-0100		1	CONNECTION BOX	**1-41**
010	2800353-0000		1	COVER	
020	2800352-0000		1	CABINET	
030	2565736-0000		1	RESERVOIR	
040	2546448-0000		1	SUPPORT	
050	2547315-0000		2	SUPPORT	
070	2545426-0000		1	MOUNTING PLATE	
080	2545425-0000		1	SPRAY PIPE	
090	2545427-0000		1	FILLING PIPE	
100	2545428-0000		1	RETURN PIPE	
110	2545429-0000		1	PIPE	
120	978235-0000		1	VALVE PLATE	
140	2574348-0000		1	VALVE BRACKET	
150	979474-0000		1	BRACKET	
160	520072-0000		1	SIGN BOARD	
170	560931-0000		2	BRACKET	
181	2873064-0000		1	BRACKET	
182	2570391-0000		1	PIPE	
185	2511330-0000		1	SPACER	
190	2558744-0000		1	PIPE	
195	2558745-0000		2	PIPE	
200	90030-0230		7	CONN. BULKHEAD BCM6-316	
210	90030-0233		1	CONN. STR., M6MSC1/8BR-316	
220	90030-0234		1	CONN. ELBOW, M6MSEL1/8K-316	
260	90099-0120		2	PLUG PR 37 (PG29)	
270	90099-0119		2	PLUG, PR 28,3 (PG21)	
290	90140-0015		1	T-PIPE, INT. THREAD, 2003-1/8	
300	90143-0097	M	2	SELF GRIPPING GASKET, 1011-24	
310	90144-0073		1	TREBOFLON-TAPE W=13MM	
325	90152-0070	MM	1200	HOSE, SPIRAL CONDUIT, 32,5X26, UL 2621	
330	90152-0060	MM	1200	HOSE, SPIRAL CONDUIT, 42X35, UL3529	
335	90153-0043		1	ADHESIVE, LOCTITE 495 20G	
340	90166-0132	M	10	TUBE 6 MM PA,TRANSP.	
350	90458-2957		10	ELBOW PIPE JOINT, EXT.THREAD, D=6MM-G1/4	
360	90226-0452		4	MOUNTING SCREW	
370	90236-0041		1	BRACKET, 74504-50	
380	350002-0006		1	PUSH-IN L-FITTING QSL-F-G1/8-6	
390	90257-0001		1	FILTER PLUG ART.NO.8145-00-140 TYPE F14	
410	90277-0104		1	FILTER F64B-2GN-ARO	
	90113-0458		*1*	*FILTER ELEMENTS, 5350-99*	
	90113-0457		*1*	*FILTER ELEMENTS*	
420	90277-0323		1	FILTER HOUSING / ART.NO 95S6-1/4 S 5430	
430	90277-0324		1	FILTER CARTRIDGE 050-11-A	
440	90330-0025		8	BUSHING, INT.EXT. THR. R1/4-G1/8	
450	90330-0026		3	PLUG, EXT. G-THREAD, G1/4	
470	90330-0043		1	NIPPLE, EXT.THREAD, HEXAGON, R1/4-R1/4	
480	90030-0234		5	CONN. ELBOW, M6MSEL1/8K-316	
490	90330-0083		1	NIPPLE, EXT.THREAD, HEXAGON, R3/8-R1/4	
510	312105-0335		4	SCREW, M6S ISO 4014 M5X30 A4 80	
520	312105-0364		14	SCREW, M6S ISO 4017 M6X10 A4 80	
530	312115-0325		2	SCREW ISO4762 M5X10 A4 80	
540	312105-0453		10	SCREW, M6S ISO 4017 M8X25 A4 80	
550	312145-0291		12	SCREW ISO 2009 MFS M4X12 A4	
560	312145-0325		14	SCREW ISO 2009 MFS M5X10 A4	
570	312145-0366		2	SCREW ISO 2009 MFS M6X12 A4	
580	312605-0318		10	HEXAGON NUT, M6M M8 A280	
585	312605-0312		4	HEXAGON NUT, M6M M4 A280	
590	312605-0314		8	HEXAGON NUT, M6M M5 A280	
595	315105-0136		4	WASHER PLAIN, 4,3X9X0,8 A4 BRB	
600	315105-0153		12	WASHER PLAIN, 6,4X12X1,5 A4 BRB	
610	315105-0146		12	WASHER PLAIN, 5,3X10X1 A4 BRB	
630	315237-0110		6	WASHER,PL.RND.AL.13,5/18,H=1,5	
660	342713-0210		1	PLUG, EXT THREAD HEX SOCKET	
670	342722-0203		2	STRAIGHT COUPLING	
730	342772-0114		1	ELBOW FITTING, 6 - G1/4	
735	342772-0113		1	ELBOW FITTING, 6 - G1/8	
760	353243-0008		2	GLAND FITTING, VK 15556YUL29	
765	353243-0007		2	GLAND FITTING, VK 15455YUL21	
780	359000-0400		6	WIRE MARKING, YELLOW, PA2/4"0"	
790	359000-0401		8	WIRE MARKING, YELLOW, PA2/4"1"	
800	359000-0403		3	WIRE MARKING, YELLOW, PA2/4"3"	
810	359000-0404		8	WIRE MARKING, YELLOW, PA2/4"4"	
820	359000-0405		8	WIRE MARKING, YELLOW, PA2/4"5"	
830	359000-0406		1	WIRE MARKING, YELLOW, PA2/4"6"	
840	359000-0407		1	WIRE MARKING, YELLOW, PA2/4"7"	
850	315204-0213		2	O-RING 15,3X2,4 MM	
860	90230-0064		2	CHECK VALVE, 6 MM HIGH TEMP.	
890	315105-0165		12	WASHER PLAIN, 8,4X16X1,6 A4 BRB	
900	342706-0130		3	STIFFNER SLEEVE FOR HOSE 6X1	
916	353249-0017		2	INSERT, SINGLE HOLE, HI.TEMP, EK152 I 7	
920	312105-0325		2	SCREW, M6S ISO 4017 M5X10 A4 80	
930	312115-0289		2	SCREW ISO4762 M4X10 A4 80	
940	312115-0305		2	SCREW ISO4762 M4X50 A4 80	

Machine Type | Group Description | Used-In | Group Number | Page No

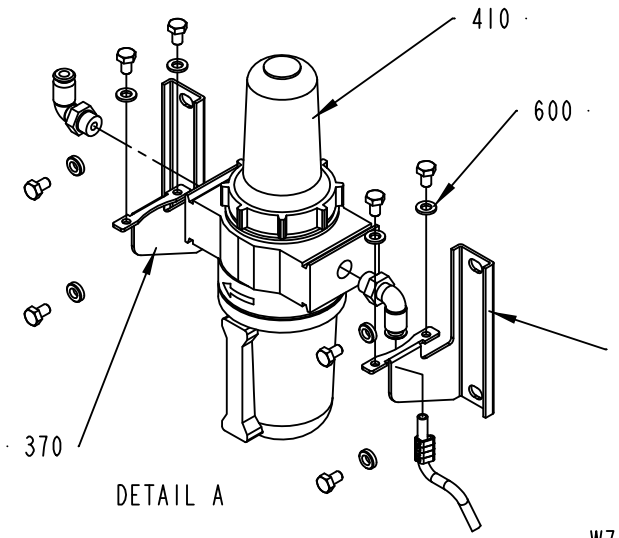

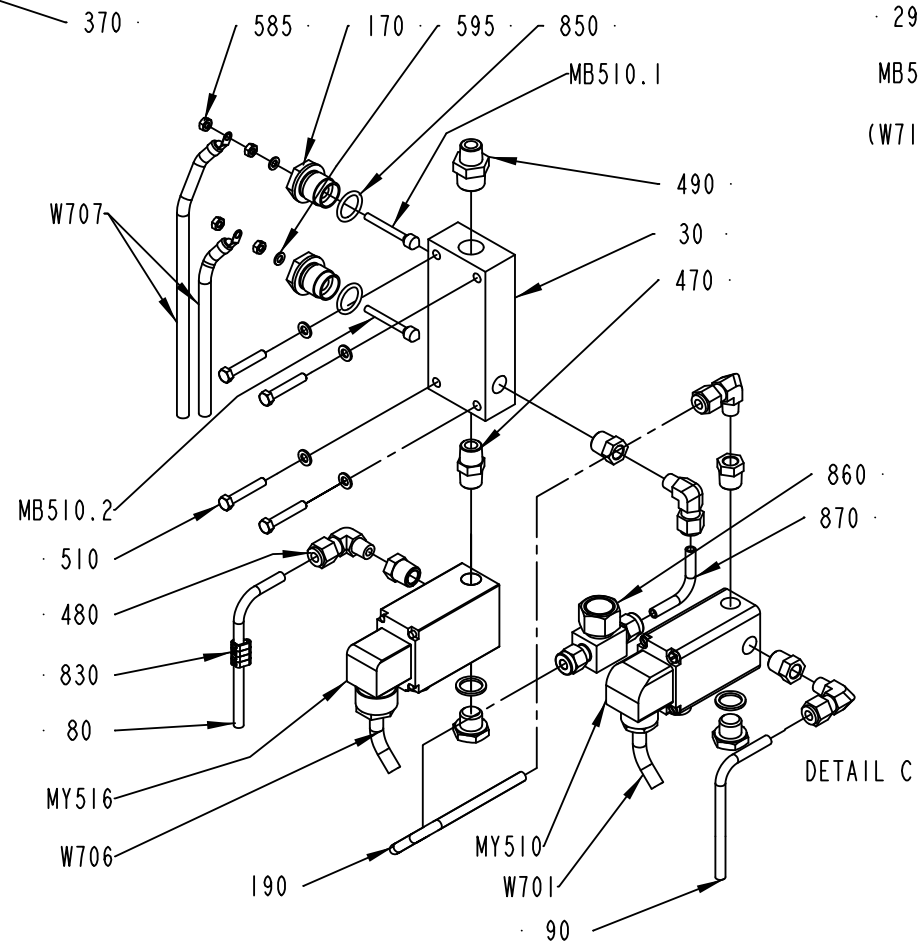

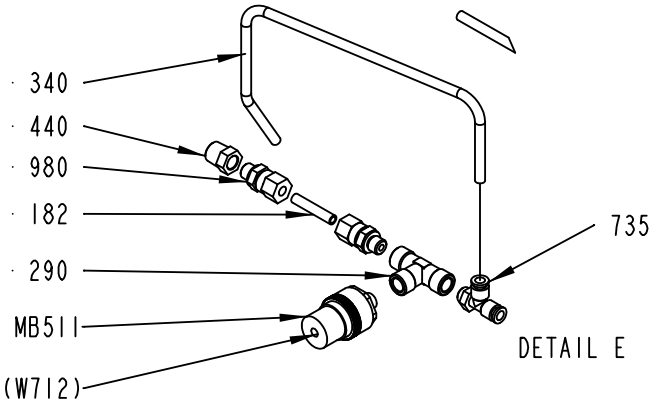

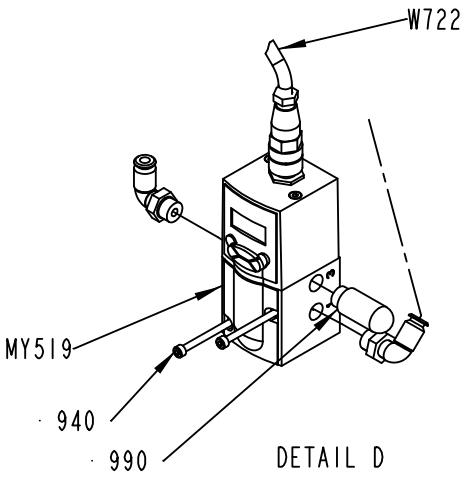

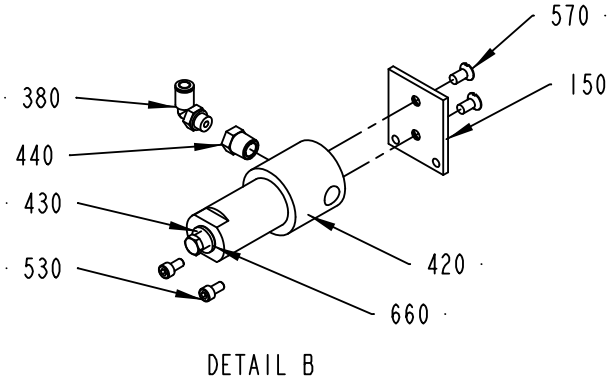

2545083-2
ECM 353842

Pos	Part No	UN	Qty	Description	Page No
- (Cont'd)					
960	312155-0287		2	SCREW DIN 7991 MF6S M4X8 A4 70	
980	90030-0184		2	CONN. STR., GE06LRED71	
990	90328-0026		1	SILENCER, G1/4"	
MY519	90459-1420		1	PROPORTIONAL VALVE 0 - 10V/0-6 BAR	
	90458-1262		*1*	*CONNECTOR, FOR PROP.VALVE, 131028001*	
MY517	90042-0171		1	SOLENOID VALVE, 330 3/2 NC	
	90042-0466		*1*	*DIAPHRAGM 330.95.2 VITON*	
MY516	90042-0171		1	SOLENOID VALVE, 330 3/2 NC	
	90042-0466		*1*	*DIAPHRAGM 330.95.2 VITON*	
MY515	90042-0171		1	SOLENOID VALVE, 330 3/2 NC	
	90042-0466		*1*	*DIAPHRAGM 330.95.2 VITON*	
MY514	90042-0171		1	SOLENOID VALVE, 330 3/2 NC	
	90042-0466		*1*	*DIAPHRAGM 330.95.2 VITON*	
MY513	90042-0171		1	SOLENOID VALVE, 330 3/2 NC	
	90042-0466		*1*	*DIAPHRAGM 330.95.2 VITON*	
MY510	979956-0000		1	SOLENOID VALVE	
MB521	90600-1154		1	FLOW METER,D-6230-HGB-BB-AV-99-0-N2/IP65	
MB511	90274-0066		1	PRESSURE SWITCH, 5,516 - 689,5 KPA	
MB510.1	567070-0014		2	ELECTRODE	
MB510.2	567070-0014		1	ELECTRODE	
W701	351150-0403	MM	720	CABLE OLFLEX 3X0,75 MM2 LIGHT/GREY	
W703	351150-0403	MM	980	CABLE OLFLEX 3X0,75 MM2 LIGHT/GREY	
W704	351150-0403	MM	780	CABLE OLFLEX 3X0,75 MM2 LIGHT/GREY	
W705	351150-0403	MM	780	CABLE OLFLEX 3X0,75 MM2 LIGHT/GREY	
W706	351150-0403	MM	580	CABLE OLFLEX 3X0,75 MM2 LIGHT/GREY	
W707	351150-0404	MM	630	CABLE OLFLEX 4X0,75 MM2 LIGHT/GREY	
W715	351150-0425	M	4	CABLE OLFLEX 25X0,75 MM2 LIGHT/GREY	
W717	351150-0403	MM	860	CABLE OLFLEX 3X0,75 MM2 LIGHT/GREY	
W721	90220-0072	M	7	SCR. CABLE 4X0,34MM2	
W721.1	353300-0006	MM	150	HEATSHRINK TUBING	
W722	90220-0072	M	7	SCR. CABLE 4X0,34MM2	
W722.1	353300-0006	MM	150	HEATSHRINK TUBING	

Pos	Part No	UN	Qty	Description	Page No

2545083-2
ECM 353842

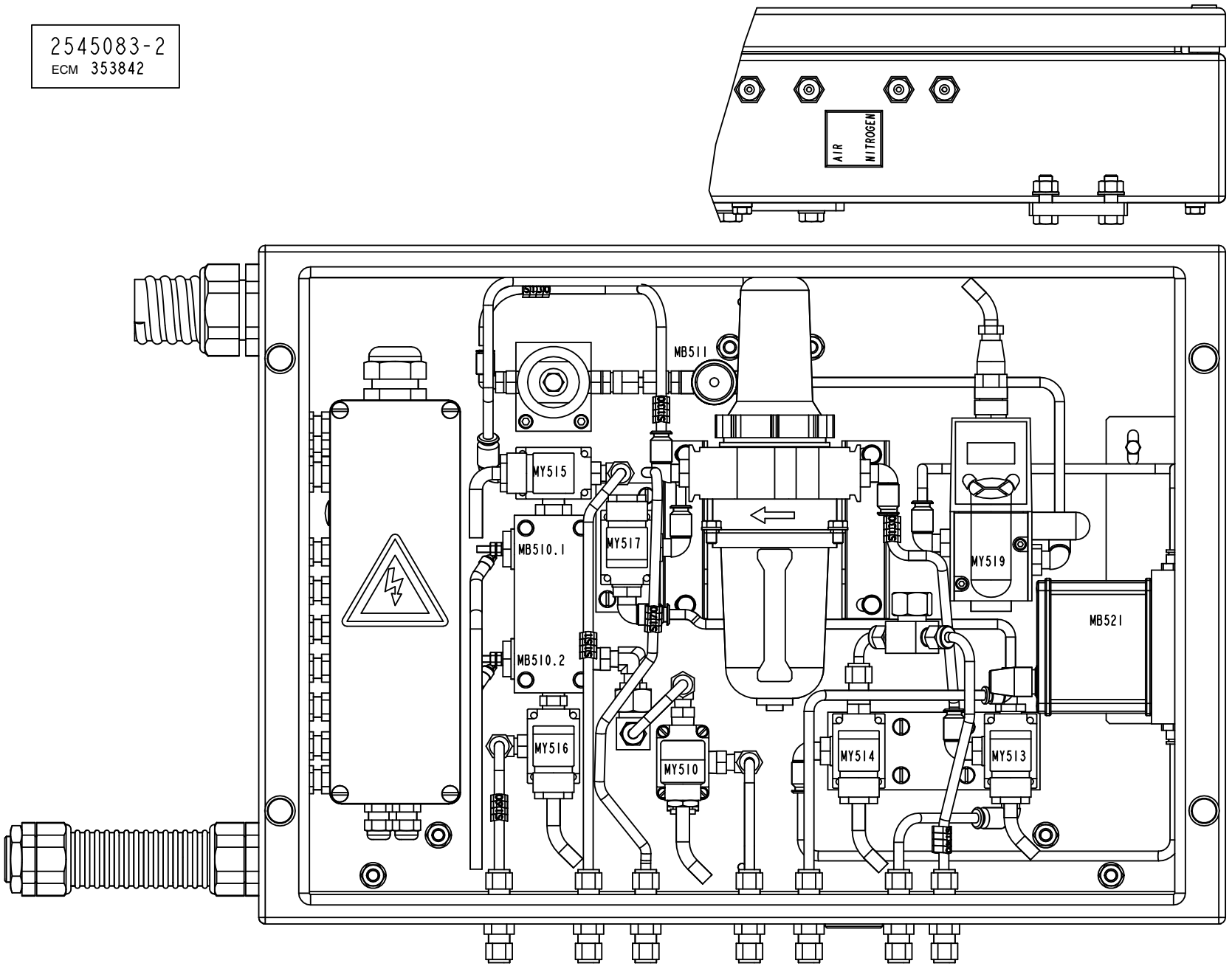

Pos	Part No	UN	Qty	Description	Page No	Pos	Part No	UN	Qty	Description	Page No

SEE PREVIOUS LISTS PAGES: 1-35, 1-37.

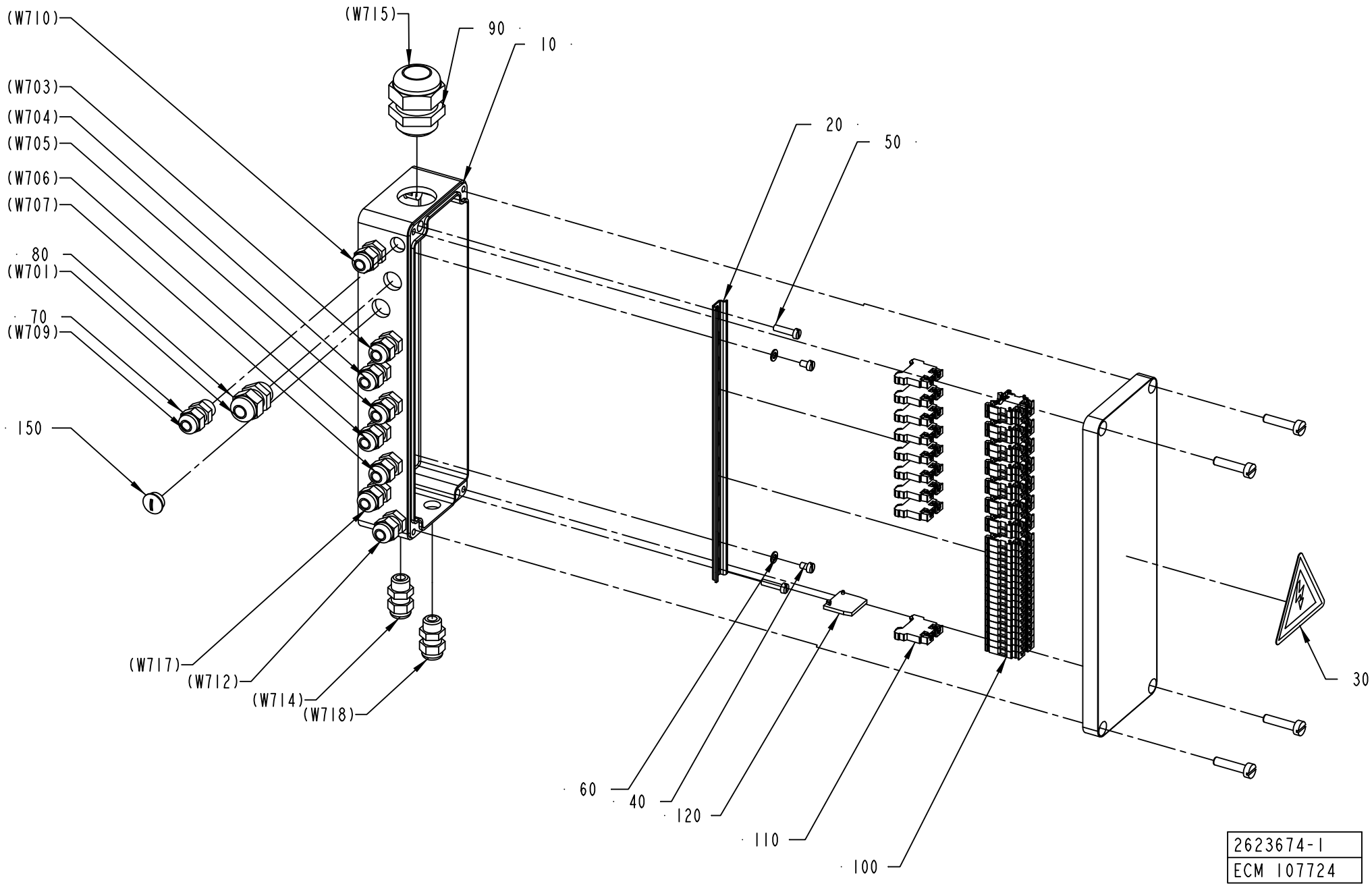
(W710)
(W703)
(W704)
(W705)
(W706)
(W707)
80
(W701)
70
(W709)
150
(W717)
(W712)
(W714)
(W718)
(W715)
90
10
20
50
60
40
120
110
100
30
2623674-1
ECM 107724

ECM: 227627 - 20051011
Group number: 2623674-0100
Assembly Drawing: 2623674-1_1_AA

Pos	Part No	UN	Qty	Description	Page No
-					
010	979475-0000		1	CONNECTION BOX	
020	979476-0000		1	RAIL	
030	90194-0016		1	WARNING SIGN, RISK OF ELECTRIC SHOCK	
040	312125-0285		2	SLOTTED HEAD SCREW, ISO1207 M4X6 A4	
050	312125-0293		2	SLOTTED HEAD SCREW, ISO1207 M4X16 A4	
060	315105-0136		2	WASHER PLAIN, 4,3X9X0,8 A4 BRB	
070	352103-0096		5	CABLE GLAND, ST 7, PR 12,5/PG7	
080	352103-0101		7	CABLE GLAND, ST 9, PR15,2/PG9	
090	352103-0116		1	CABLE GLAND, ST 21, PR28,3/PG21	
100	90077-0123		32	TERMINAL FEED THROUGH	
110	90135-0042		9	EARTH TERMINAL AKE 2,5	
120	90077-0122		1	END PLATE, AP AKZ 2,5	
130	359011-0807		2	MARKING, DEK 5 FW 1-50	
140	359011-0819		1	MARKING, EARTH, DEK 5 GW ERDE I.KR.	
150	90002-0018		1	BLANK-OFF PLUG, PR 12,5 SKINDICHT-BLK7	
160	351160-0102	MM	1200	WIRE AWM 1X0,75 MM2 DARKBLUE	

Pos	Part No	UN	Qty	Description	Page No

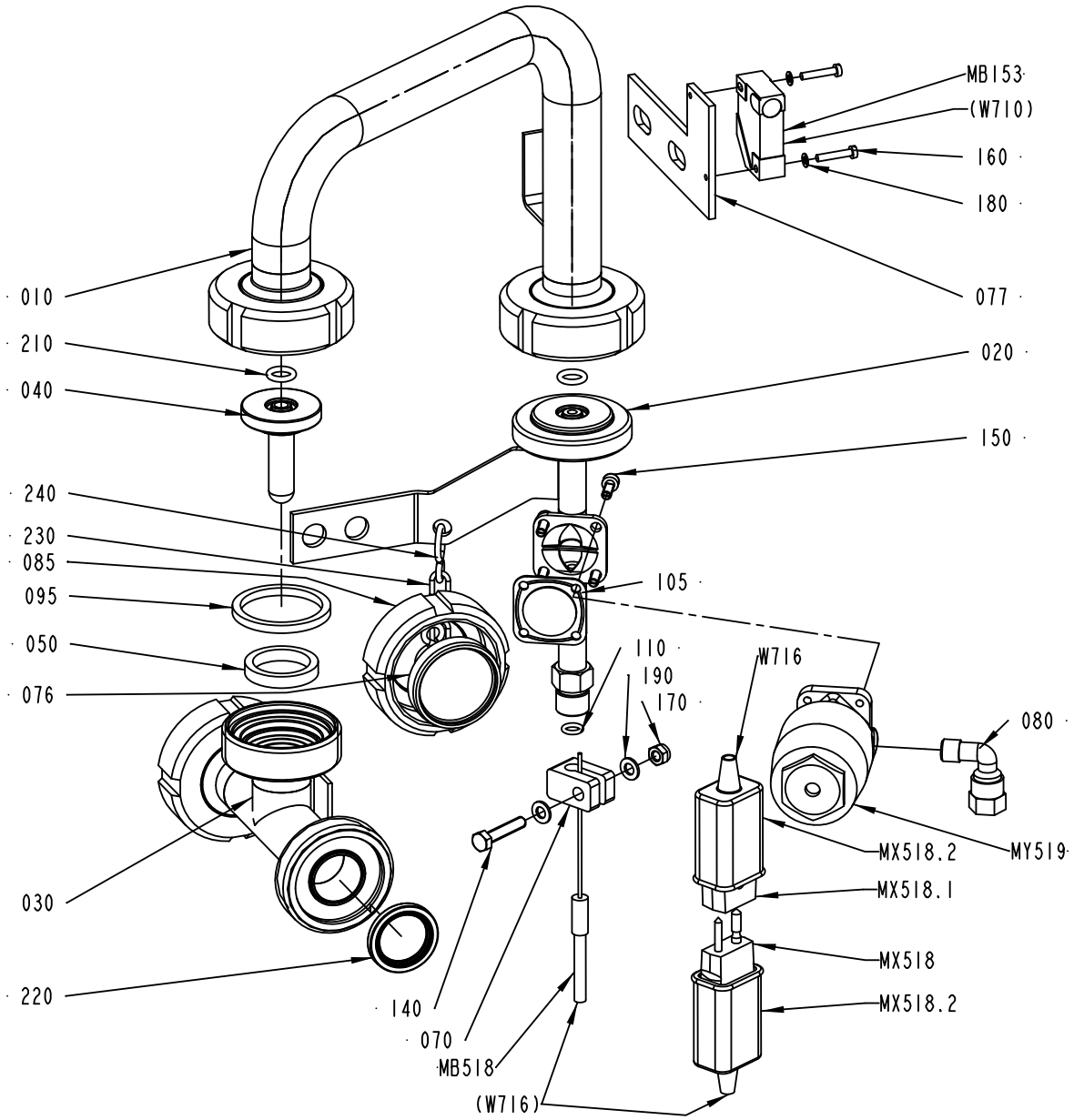
MB153
(W710)
160
180
077
010
210
040
020
150
240
230
085
095
105
050
076
110
190
170
W716
080
030
220
140
070
MB518
(W716)
MX518.2
MY519
MX518.1
MX518
MX518.2
2545080-2
ECM 254456

ECM: 291010 - 20061205
Group number: 2545080-0200
Assembly Drawing: 2545080-2_1_AA

Pos	Part No	UN	Qty	Description	Page No
-					
010	2545132-0000		1	TRANSITION PIPE	
020	2814877-0000		1	VALVE BODY	
030	1539597-0000		1	T-PIECE	
040	2545134-0000		1	SPRAY NOZZLE	
040	1539606-0005		1	SPRAY NOZZLE	
040	1539606-0004		1	SPRAY NOZZLE	
040	1539606-0003		1	SPRAY NOZZLE	
040	1539606-0002		1	SPRAY NOZZLE	
050	12242-0001		1	GASKET 32X25X5,5	
070	978440-0000		1	CRAMP	
076	2545155-0000		1	PLUG	
077	979814-0000		1	BRACKET	
080	90030-0137		1	CONN. ELBOW, WE06LR71	
085	90217-0203		1	UNION NUT, 1 APV, 07-01-276/17	
095	315229-0104		1	SQUARE RING, 35,8X42,8X3,7 MM 1"1/2 FD	
105	90600-0493		1	DIAPHRAGM 3A, 600-8M-5AD	
110	315205-0505		1	O-RING 6,07X1,78 MM	
140	312105-0333		1	SCREW, M6S ISO 4017 M5X25 A4 80	
150	312115-0291		4	SCREW ISO4762 M4X12 A4 80	
160	312125-0228		2	SLOTTED HEAD SCREW, ISO1207 M3X16 A4	
170	312812-0314		1	HEXAGON NUT, NY-LOCK M5 A4 80	
180	315105-0124		2	WASHER PLAIN, 3,2X6X0,5 A4 BRB	
190	315105-0146		2	WASHER PLAIN, 5,3X10X1 A4 BRB	
210	315204-0207		2	O-RING 8,3X2,4 MM	
220	90217-0347		1	GASKET 32X22,6X3,6 MM	
230	90155-0008	MM	200	HANGER CHAIN, 18	
240	209183-0000		2	RING	
MY519	90600-0491		1	ACTUATOR, 9650-0089-Z-I-OTI	
MX518	90326-0022		1	PLUG, MALE YELLOW CR-AL, 03-21000A	
MB518	90326-0060		1	THERMOCOUPLE, 5110060-000 CR-AL	
MB153	90044-0194		1	INDUCTIVE SENSOR, IN 5329	
MX518.1	90326-0020		1	SOCKET, FEMALE YELLOW CR-AL, 03-22000A	
MX518.2	90326-0012		2	PROTECTIVE COVER, 03-001 10	
W716	90220-0059	MM	4500	THERMOCOUPLE CABLE, P/PTW-20F-K 2X0,5MM2	

Pos	Part No	UN	Qty	Description	Page No

Machine Type | Group Description | Used-In | Group Number | Page No

HEAT EXCHANGER

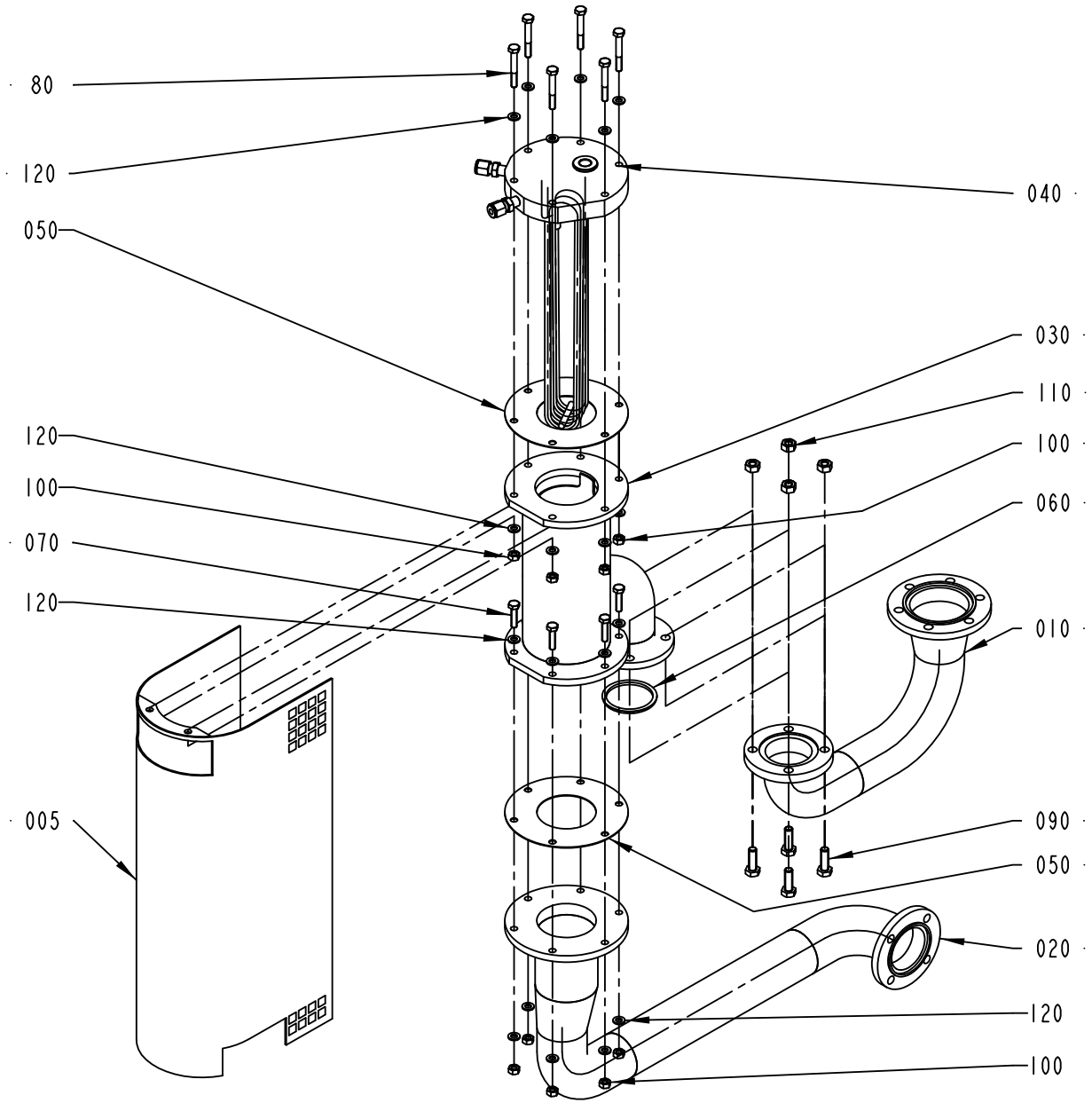

1539599-1
ECM 107724

ECM: 227634 - 20051011
Group number: 1539599-0100
Assembly Drawing: 1539599-1_1_AA

Pos	Part No	UN	Qty	Description	Page No
-					
005	581341-0000		1	TOUCH GUARD	
010	1539603-0000		1	PIPE	
020	1539596-0000		1	PIPE	
030	979247-0000		1	HOUSE	
040	2555310-0000		1	COIL	
050	751016-0000		2	GASKET	
060	315229-0205		1	GASKET 47,5X55,5X3,7 MM 2 INCH	
070	312105-0372		6	SCREW, M6S ISO 4017 M6X25 A4 80	
080	312105-0378		6	SCREW, M6S ISO 4014 M6X40 A4 80	
090	312105-0453		4	SCREW, M6S ISO 4017 M8X25 A4 80	
100	312605-0316		12	HEXAGON NUT, M6M M6 A280	
110	312605-0318		4	HEXAGON NUT, M6M M8 A280	
120	315105-0153		24	WASHER PLAIN, 6,4X12X1,5 A4 BRB	

Pos	Part No	UN	Qty	Description	Page No

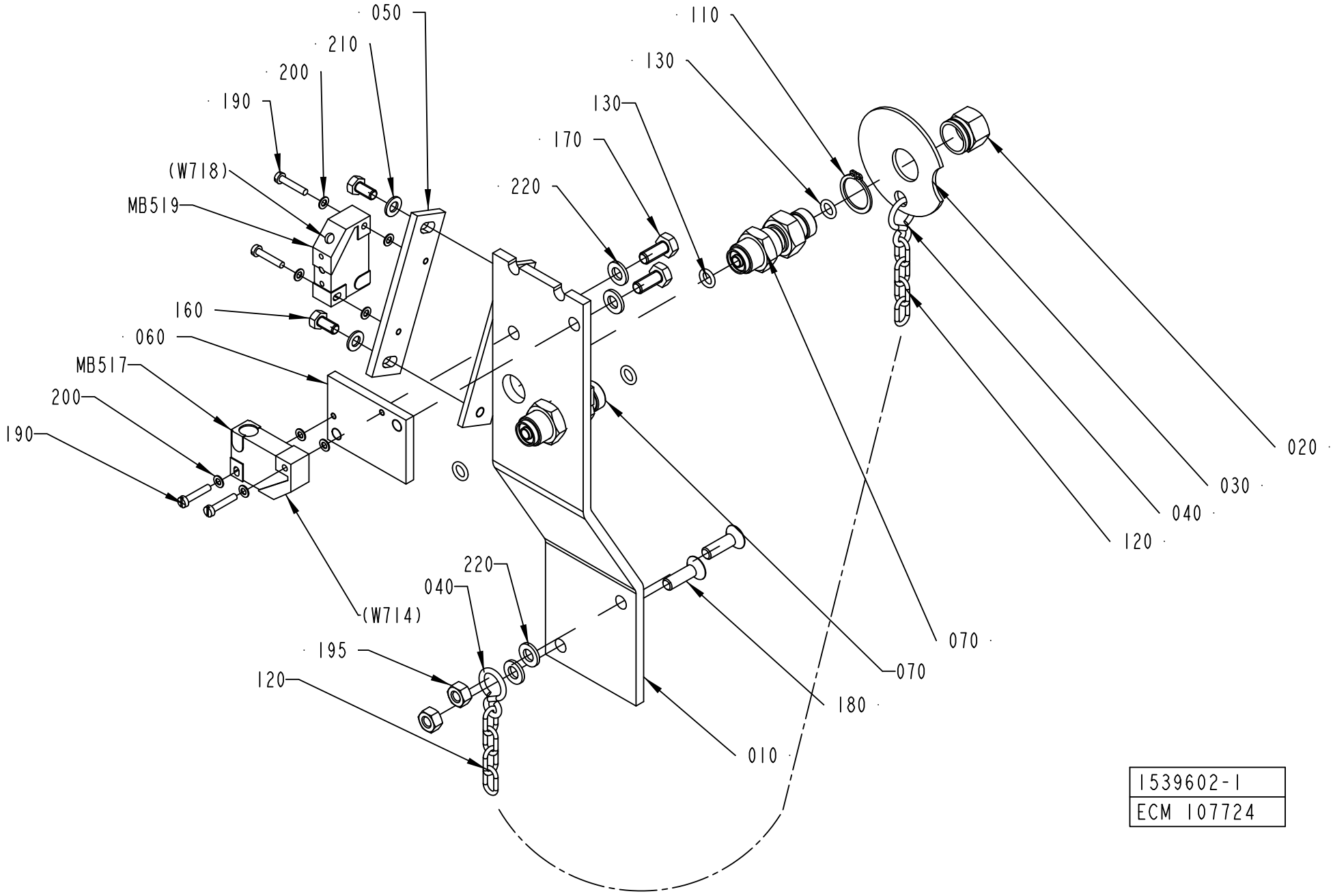

1539602-1
ECM 107724

ECM: 189532 - 20051011
Group number: 1539602-0100
Assembly Drawing: 1539602-1_1_AA

Pos	Part No	UN	Qty	Description	Page No
-					
010	1539600-0000		1	SUPPORT	
020	978380-0000		1	BLIND PLUG	
030	978381-0000		1	WASHER 56X2MM	
040	209183-0000		2	RING	
050	927081-0000		1	SUPPORT	
060	979254-0000		1	SUPPORT	
070	90030-0549		2	CONN. STRAIGHT, BULKHEAD, SS-4-VCO-61	
110	90141-0017		1	RETAINING RING FOR SHAFT DIN 471 17 SS	
120	90155-0008	MM	200	HANGER CHAIN, 18	
130	315205-0505		4	O-RING 6,07X1,78 MM	
160	312105-0325		2	SCREW, M6S ISO 4017 M5X10 A4 80	
170	312105-0367		2	SCREW, M6S ISO 4017 M6X14 A4 80	
180	312155-0370		2	SCREW DIN 7991 MF6S M6X20 A4 70	
190	312125-0228		4	SLOTTED HEAD SCREW, ISO1207 M3X16 A4	
195	312605-0316		2	HEXAGON NUT, M6M M6 A280	
200	315105-0124		4	WASHER PLAIN, 3,2X6X0,5 A4 BRB	
210	315105-0146		2	WASHER PLAIN, 5,3X10X1 A4 BRB	
220	315105-0153		4	WASHER PLAIN, 6,4X12X1,5 A4 BRB	
MB519	90044-0104		1	INDUCTIVE SENSOR IN5227S	
MB517	90044-0104		1	INDUCTIVE SENSOR IN5227S	

Pos	Part No	UN	Qty	Description	Page No

PRODUCT VALVE

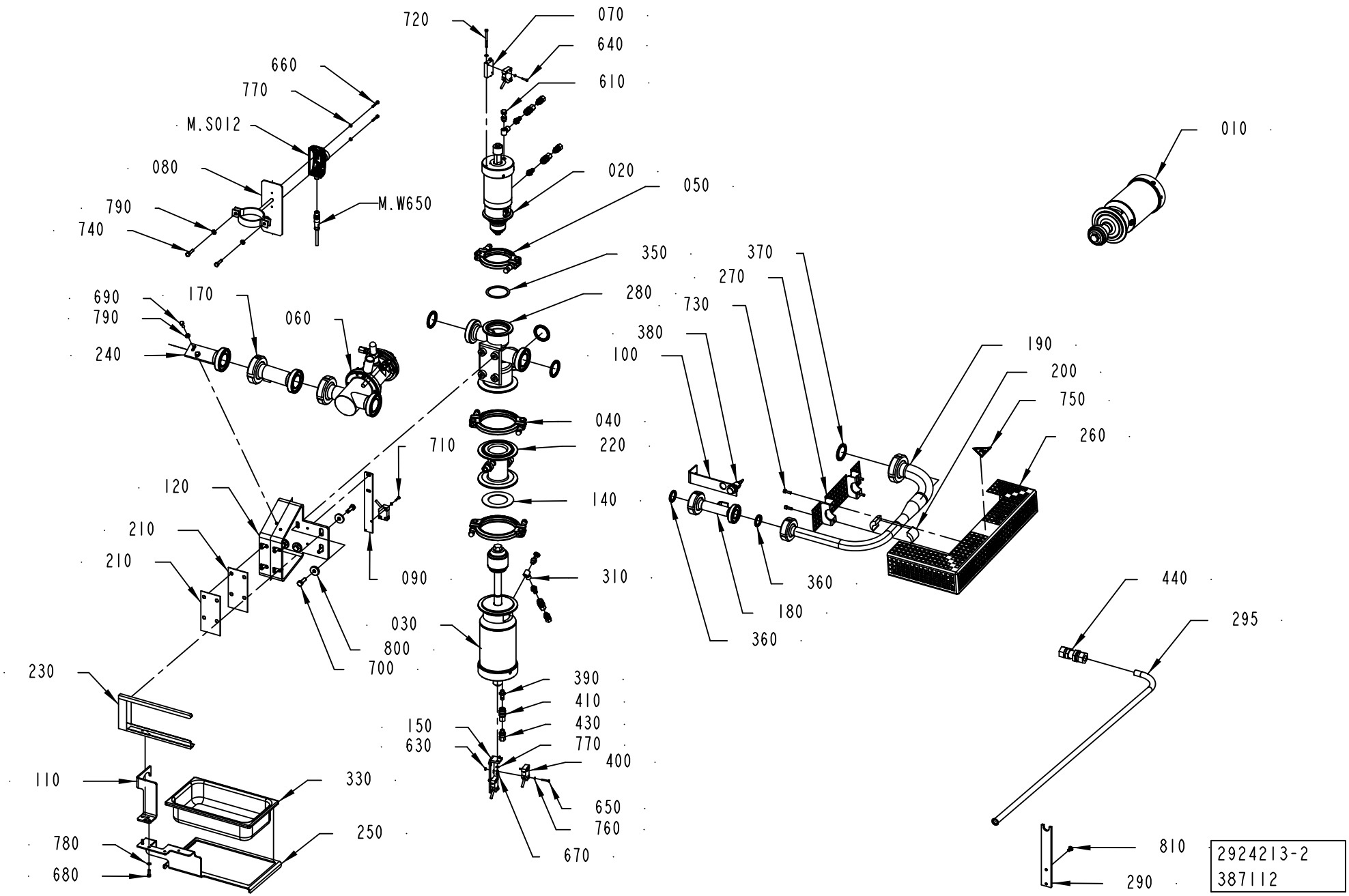

ECM: 404392 - 20090709
Group number: 2924213-0200
Assembly Drawing: 2924213-2_1_AA

Pos	Part No	UN	Qty	Description	Page No
-					
010	576436-0100		1	A-CYLINDER	**1-19**
020	576438-0100		1	B-CYLINDER	**1-21**
030	576437-0200		1	C-CYLINDER	**1-51**
040	541163-0200		2	CLAMP RING	**1-25**
050	541164-0200		1	CLAMP RING	**1-27**
060	927205-0200		1	REGULATING VALVE	**1-29**
070	440731-0000		1	PLATE	
080	2914842-0000		1	PIPE HOLDER	
090	578480-0000		1	BRACKET	
100	1317905-0000		1	BRACKET	
110	2721240-0000		1	BRACKET	
120	2898124-0000		1	BRACKET	
140	539212-0000		1	GASKET	
150	735549-0000		1	HOOK HOLDER	
170	1317663-0000		1	PIPE	
180	1317756-0000		1	PIPE	
190	2721238-0000		1	PIPE	
200	2721239-0000		2	SPACER	
210	490985-0000		2	SPACER SHEET	
220	567018-0000		1	STEAM HOUSE	
230	2721241-0000		1	SUPPORT	
240	2913726-0000		1	SUPPORT	
250	2603631-0000		1	BRACKET	
260	1348476-0000		1	TOUCH GUARD	
270	1348636-0000		1	TOUCH GUARD	
280	2889197-0000		1	VALVE BODY (51-38)	
290	2913730-0000		1	BRACKET	
295	2924201-0000		1	TUBE	
310	90224-0308		2	CONN. BANJO, ART. NO. 2023-1/8-1/8	
330	90459-2435		1	CONTAINER 1,8L , GN 1406	
350	90207-0365		1	GASKET 53X63X1,8 MM 2,5" FDA 3-A	
360	90217-0347		2	GASKET 32X22,6X3,6 MM	
370	90217-0348		4	GASKET 35,4X46,8X4 MM	
380	90600-0467		1	INDUCTIVE SWITCH,E2A-M18KS05-WP-B1-TP 6M	
390	90163-0057	MM	4	QUICK COUPLING, (M) 5150-1/8	
400	90044-0194		4	INDUCTIVE SENSOR, IN 5329	
410	90163-0062		4	QUICK COUPLING, (F) 5053-1/8	
430	90030-0184		4	CONN. STR., GE06LRED71	
440	90030-0159		1	CONN. BULKHEAD SV15L71	
610	342980-0303		2	BANJO-HOLLOW BOLT COUPL,EXT.THR.01-G1/8	
630	312605-0310		4	HEXAGON NUT, M6M M3 A280	
640	312125-0228		2	SLOTTED HEAD SCREW, ISO1207 M3X16 A4	
650	312125-0230		4	SLOTTED HEAD SCREW, ISO1207 M3X20 A4	
660	312115-0333		2	SCREW ISO4762 M5X25 A4 80	
670	312105-0289		2	SCREW, M6S ISO 4017 M4X10 A4 70	
680	312105-0329		2	SCREW, M6S ISO 4017 M5X16 A4 80	
690	312105-0368		2	SCREW, M6S ISO 4017 M6X16 A4 80	
700	312105-0453		10	SCREW, M6S ISO 4017 M8X25 A4 80	
710	312115-0228		2	SCREW ISO4762 M3X16 A4 80	
720	312115-0305		2	SCREW ISO4762 M4X50 A4 80	
730	312115-0329		4	SCREW ISO4762 M5X16 A4 80	
740	312105-0372		2	SCREW, M6S ISO 4017 M6X25 A4 80	
750	359710-0001		1	WARNING SIGN ISO, HOT SURFACE	
760	315105-0124		8	WASHER PLAIN, 3,2X6X0,5 A4 BRB	
770	315105-0136		6	WASHER PLAIN, 4,3X9X0,8 A4 BRB	
780	315105-0146		2	WASHER PLAIN, 5,3X10X1 A4 BRB	
790	315105-0153		4	WASHER PLAIN, 6,4X12X1,5 A4 BRB	
800	315125-0165		10	WASHER HIGH, TBRSB 8,4X26X5 A4	
810	312155-0366		2	SCREW DIN 7991 MF6S M6X12 A4 70	

Machine Type	Group Description	Used-In	Group Number	Page No

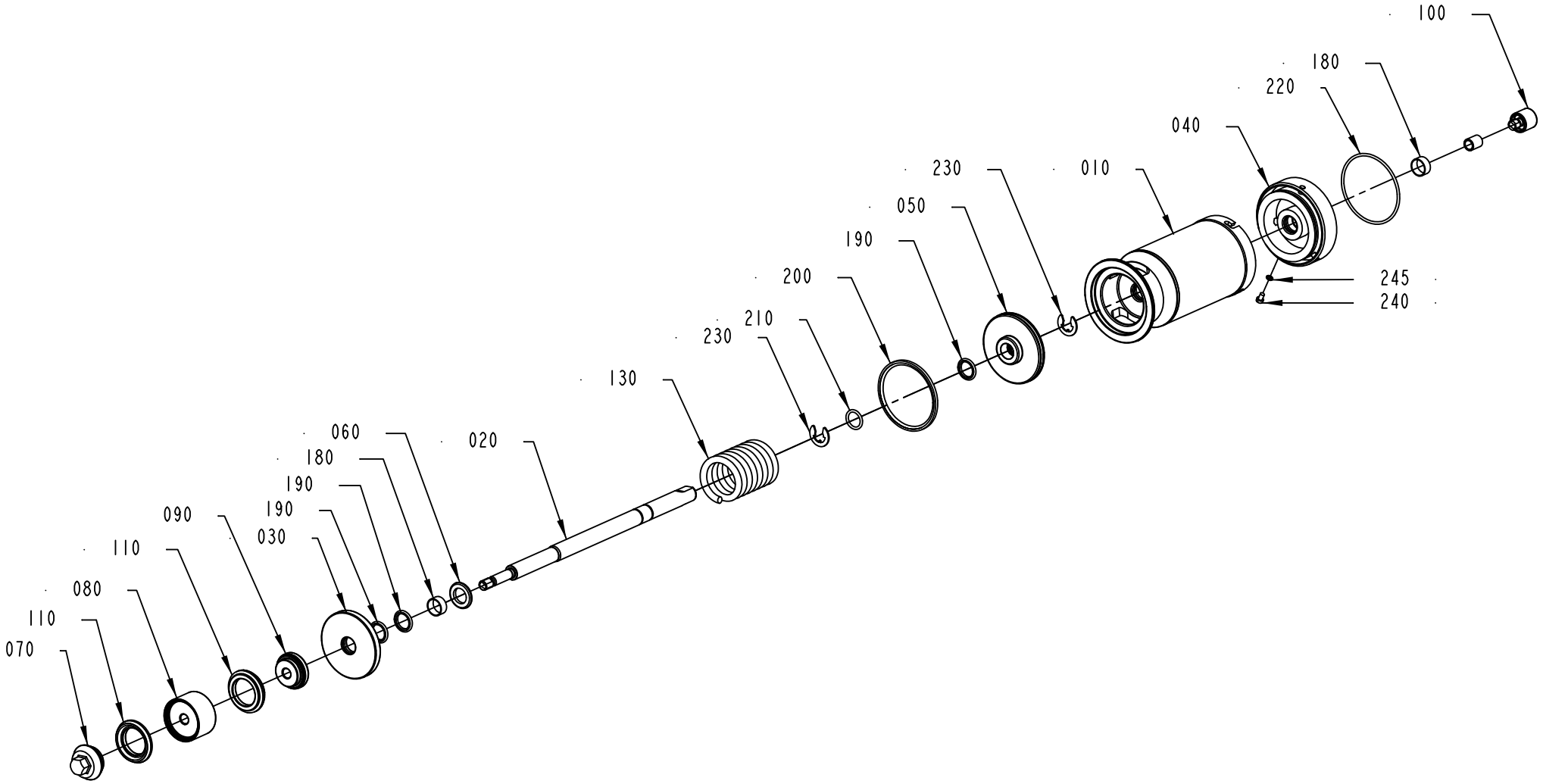

576437-2
332496

ECM: 333762 - 20071204
Group number: 576437-0200
Assembly Drawing: 576437-2_1_AA

Pos	Part No	UN	Qty	Description	Page No
-					
010	576439-0000		1	CYLINDER HOUSING	
020	2913732-0000		1	PISTON ROD	
030	555458-0000		1	SEALING WASHER	
040	576440-0000		1	END SECTION	
050	576441-0000		1	PISTON	
060	576450-0000		3	SPACER	
070	2826442-0000		1	VALVE CONE	
080	925471-0000		1	SEAL HOLDER	
090	925472-0000		1	SEAL HOLDER	
100	553607-0000		1	SLEEVE	
110	2826441-0000		2	SEAL RING	
130	440663-0000		1	COMPRESSION SPRING	
180	90091-0238		2	WEAR RING 20X22X10 MM	
190	90091-0237		3	ROD SEAL GLYD RING 20X27,5X3 MM	
200	90091-0336		1	PISTON SEAL GLYD RING 79X90X4,2 MM	
210	315204-0215		1	O-RING 19,2X3 MM	
220	315202-0308		1	O-RING 84,5X3 MM	
230	315754-0113		2	RETAINING RING SHAFT DIN 6799 15	
240	312125-0323		1	SLOTTED HEAD SCREW, ISO1207 M5X8 A4	
245	315233-0101		1	WASHER CAPTIVE SEALING M5(NEW315239-101)	

Pos	Part No	UN	Qty	Description	Page No

LEVEL PROBE

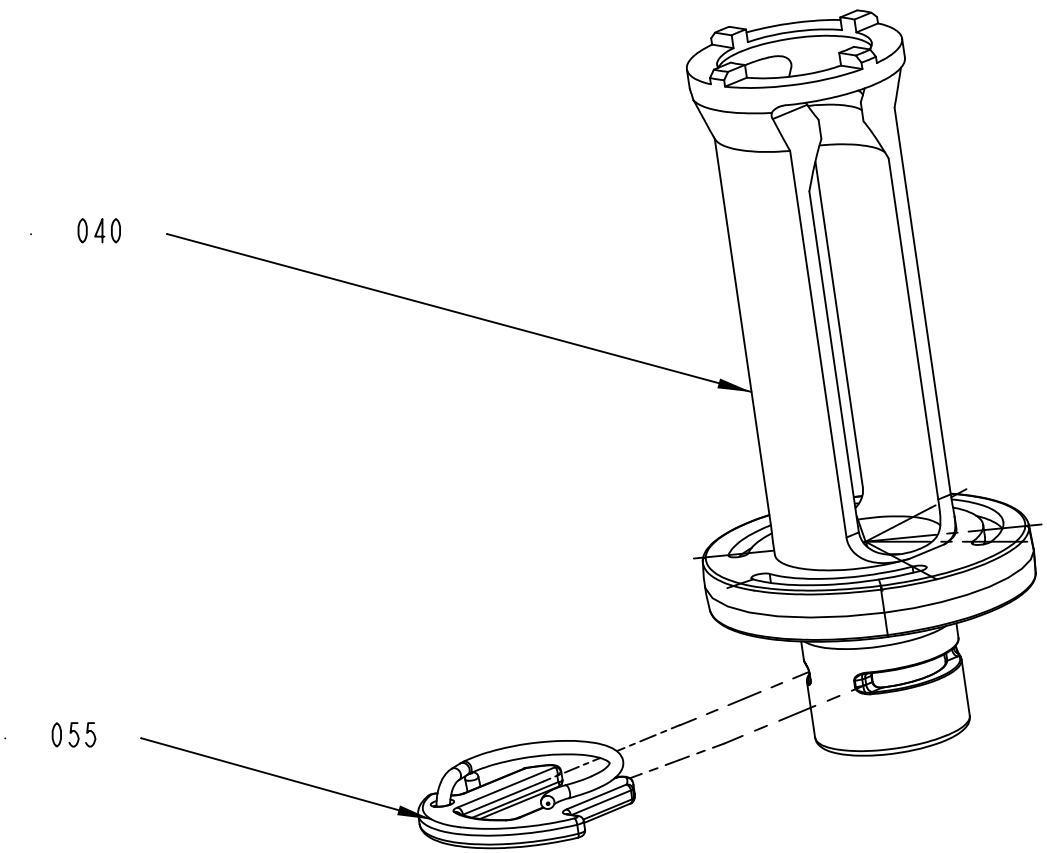

1317503-3
386245

ECM: 422648 - 20111122
Group number: 1317503-0200
Assembly Drawing: 1317503-3_1_AC

Pos	Part No	UN	Qty	Description	Page No
TBA 0100B, TBA 0125S					
040	2914815-0000		1	PRESSURE FLANGE	
055	2796072-0002		1	LOCKING FORK	
TBA 0160S, TBA 0200S					
040	2914816-0000		1	PRESSURE FLANGE	
055	2796072-0002		1	LOCKING FORK	
TBA 0200B					
040	2914813-0000		1	PRESSURE FLANGE	
055	2796072-0001		1	LOCKING FORK	
TBA 0200M, TBA 0250S					
040	2914818-0000		1	PRESSURE FLANGE	
055	2796072-0002		1	LOCKING FORK	
TBA 0284B, TBA 0300S, TBA 0330S					
040	2914814-0000		1	PRESSURE FLANGE	
055	2796072-0001		1	LOCKING FORK	
TBA 0250B					
040	2914817-0000		1	PRESSURE FLANGE	
055	2796072-0001		1	LOCKING FORK	

Pos	Part No	UN	Qty	Description	Page No

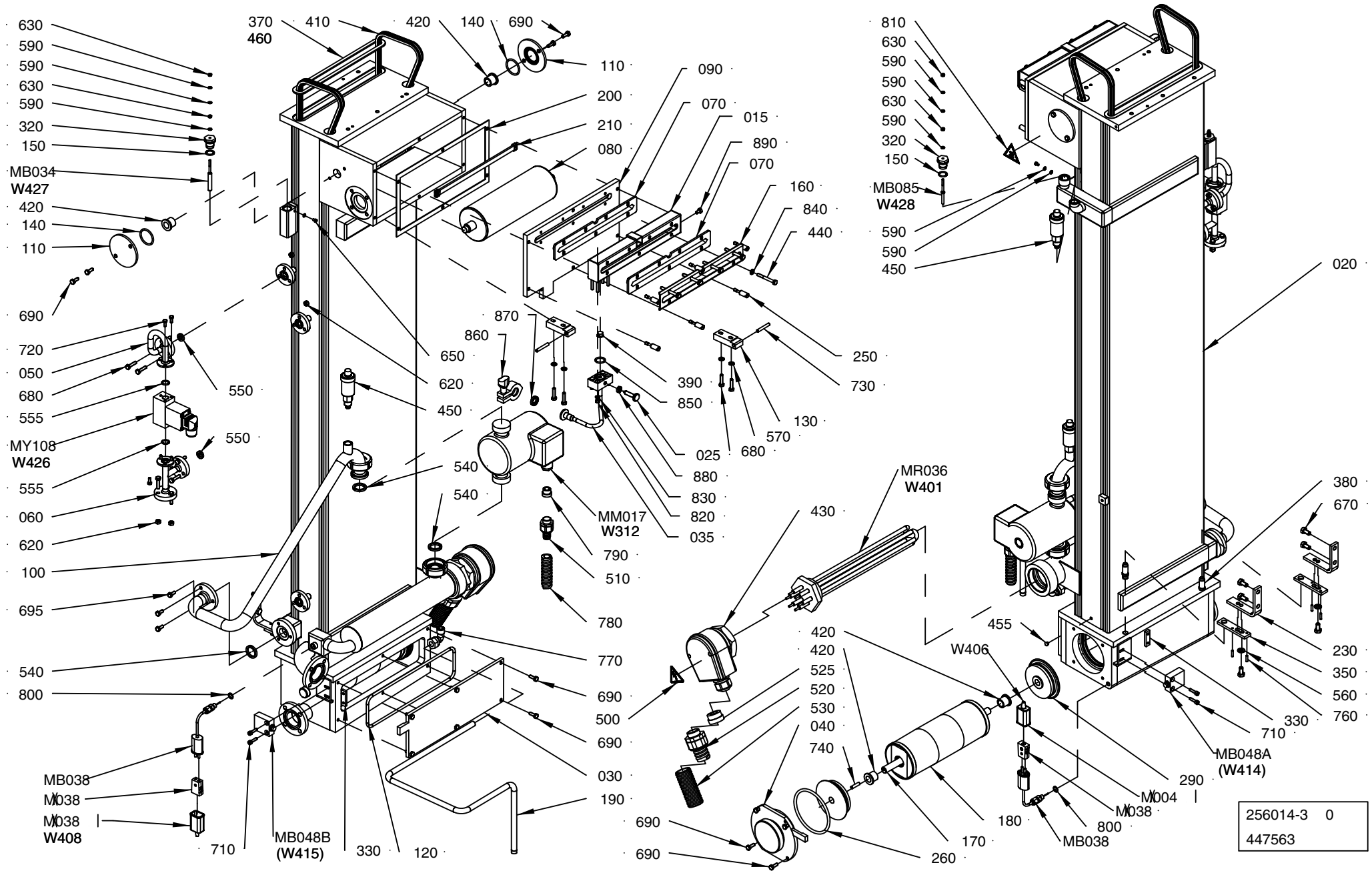
630
590
590
630
590
320
150
MB034
W427
420
140
110
690
720
050
680
555
MY108
W426
555
060
620
100
695
540
800
MB038
M038
M038
W408
710
MB048B
(W415)
330
120
370
460
410
420
140
690
110
200
210
080
090
070
015
890
070
160
840
440
650
620
450
870
860
390
850
025
880
830
820
035
540
540
550
550
MM017
W312
790
510
780
770
690
500
690
030
190
690
690
250
730
130
570
680
810
630
590
590
630
590
320
150
MB085
W428
590
590
450
020
380
670
MR036
W401
430
420
420
525
520
530
040
740
455
W406
230
350
560
760
330
710
MB048A
(W414)
290
M004
M038
800
180
MB038
170
260
256014-3 0
447563

ECM: 451122 - 20100524
Group number: 256014-0900
Assembly Drawing: 256014-30_1_AD

This list covers pages from 1-54 to 1-65

Pos	Part No	UN	Qty	Description	Page No
NOPT TBA 0200B, NOPT TBA 0200S, NOPT TBA 0200M, NOPT TBA 0160S, NOPT TBA 0125S, NOPT TBA 0100B, NOPT TBA 0330S, NOPT TWA 0125S, NOPT TWA 0200S, NOPT TBA 0250B (See drawing on pages: 1-54, 1-56, 1-58)					
MB034	567070-0019		1	ELECTRODE	
NOPT TBA 0300S, NOPT TBA 0284B, NOPT TBA 0250S (See drawing on pages: 1-54, 1-56, 1-58)					
MB034	567070-0011		1	ELECTRODE	
PT19 TBA 0125S, PT19 TBA 0100B, PT19 TBA 0330S, PT19 TPA 0330SQ, PT19 TPA 0250SQ, PT19 TBA 0200M, PT19 TBA 0200B, PT19 TBA 0160S, PT19 TBA 0250B, PT19 TBA 0200S, PT19 TPA 0200SQ (See drawing on pages: 1-60, 1-62, 1-64)					
010	2983247-0100		1	GUIDING PULLTAB	**1-67**
MB034	567070-0019		1	ELECTRODE	
PT19 TBA 0300S, PT19 TBA 0284B, PT19 TBA 0250S (See drawing on pages: 1-60, 1-62, 1-64)					
010	2983247-0100		1	GUIDING PULLTAB	**1-67**
MB034	567070-0011		1	ELECTRODE	
Common Parts					
015	2964430-0000		1	CHAMBER	
020	1296855-0000		1	BATH	
025	2964432-0000		1	SCREW	
030	578492-0000		1	LID	
035	2964433-0000		1	THROTTLE	
040	578491-0000		1	LID	
050	1490840-0000		1	PIPE	
060	1490839-0000		1	PIPE	
070	2795368-0000		2	SEAL	
080	1282581-0000		1	BENDING ROLLER	
090	2685680-0000		1	LID	
100	2528094-0000		1	PIPE	
110	578490-0000		2	LID	
120	578494-0000		1	O-RING 226X5,7 FPM	
130	979559-0000		2	HINGE	
140	927422-0014		2	O-RING 34.2X3 SILICONE	
150	927421-0004		2	O-RING 15.3X2.4 SILICONE	
160	2964431-0000		1	LID	
170	578493-0000		1	SHAFT	
180	566191-0000		1	BENDING ROLLER	
190	2532923-0000		1	PIPE	
200	751331-0000		1	GASKET	
210	456995-0000		1	CARRIER	
230	456472-0000		2	ANGLE	
250	2974314-0000		6	SCREW	
260	578495-0000		1	O-RING	
290	578486-0000		2	WHEEL	
320	560931-0000		2	BRACKET	
330	490890-0000		2	NUT PLATE	
350	456474-0000		2	ADJUSTMENT PLATE	
370	256005-0000		1	GASKET	
380	247248-0000		2	PIN	
390	3062160-0000		1	STRAINER	
410	90288-0066		2	ROLLER CHAIN, SIMPLEX 3/8 -365, SS	
420	90240-0146		4	FLANGE BUSHING, 15X21X20 MM	
430	90206-0326		1	CONNECTION BOX K2 FOR 90206-56 AND -70	
440	312105-0380		7	SCREW, M6S ISO 4014 M6X50 A4 80	
450	90187-0105		2	PURGING VALVE, G3/8 FOR WATER	
	90600-4411		*1*	*O-RING 13,46X2,08 MM*	
	90600-4412		*1*	*O-RING 22,0X2,0 MM*	
	315205-0506		*1*	*O-RING 7,65X1,78 MM*	
455	90261-0071		1	PLUG, BLIND, PLASTIC, NO. GPN500B58	
460	90153-0016		1	ADHESIVE,TUBE 100G RHODORSIL CAF 3	
470	90153-0023		1	ADHESIVE, SILICON 251470 TUB 90CC(UN1993	
500	359705-0015		1	WARNING SIGN ISO, RISK OF ELECTRIC SHOCK	
510	353243-0003		1	GLAND FITTING, VK 15153YUL13	
520	353243-0007		1	GLAND FITTING, VK 15455YUL21	
525	353249-0016		1	INSERT, SINGLE HOLE, EK155 18	
530	90152-0070	MM	800	HOSE, SPIRAL CONDUIT, 32,5X26, UL 2621	
540	315229-0103		3	SQUARE RING, 23,1X30,1X3,7 MM 1" FDA	
550	315229-0101		2	SQUARE RING, 10,4X17,4X3,7 MM 1/2" FDA	
555	927421-0003		2	O-RING 13.3X2.4 SILICONE	
560	315105-0165		2	WASHER PLAIN, 8,4X16X1,6 A4 BRB	
570	315105-0153		4	WASHER PLAIN, 6,4X12X1,5 A4 BRB	
590	315105-0136		9	WASHER PLAIN, 4,3X9X0,8 A4 BRB	
620	312605-0316		9	HEXAGON NUT, M6M M6 A280	
630	312605-0312		4	HEXAGON NUT, M6M M4 A280	
650	312125-0285		2	SLOTTED HEAD SCREW, ISO1207 M4X6 A4	
670	312105-0449		6	SCREW, M6S ISO 4017 M8X16 A4 80	
680	312105-0372		13	SCREW, M6S ISO 4017 M6X25 A4 80	
690	312105-0368		14	SCREW, M6S ISO 4017 M6X16 A4 80	
695	312105-0367		3	SCREW, M6S ISO 4017 M6X14 A4 80	
710	312115-0331		4	SCREW ISO4762 M5X20 A4 80	
720	312105-0327		6	SCREW, M6S ISO 4017 M5X12 A4 80	
730	311103-0361		2	PARALLEL PIN ISO 2338 6M6X40 A1	
740	311103-0355		1	PARALLEL PIN ISO 2338 6M6X25 A1	
760	311103-0270		4	PARALLEL PIN ISO 2338 4M6X16 A1	
770	90030-0115		1	CONN. ELBOW, WE12LR71	
780	90152-0050	M	0.5	HOSE, SPIRAL CONDUIT, 20X13, UL 1313	

Machine Type | Group Description | Used-In | Group Number | Page No

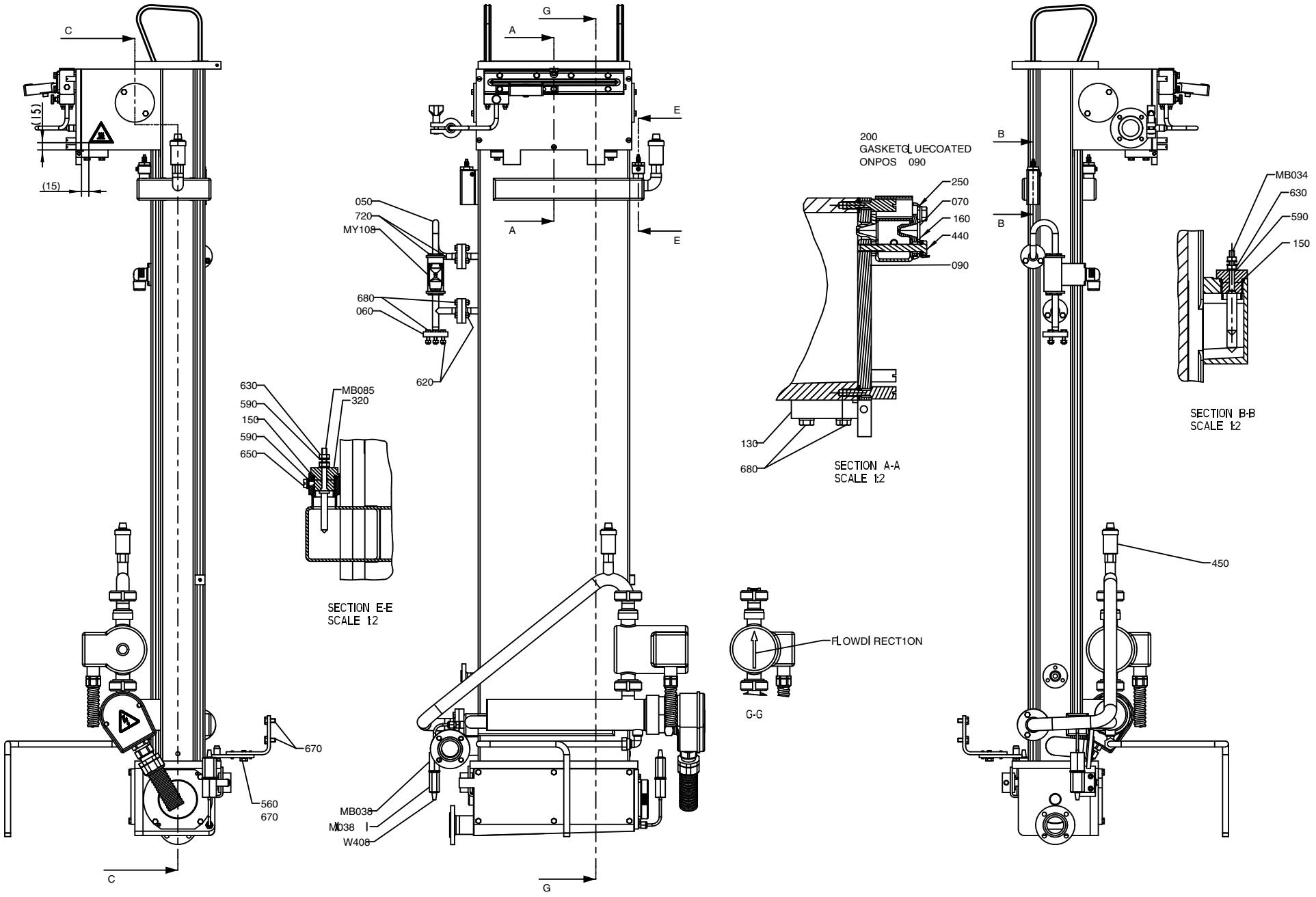
C
(15)
(15)
C
670
560
670
G
A
E
050
720
MY108
680
060
620
A
E
630
590
150
590
650
MB085
320
SECTION E-E
SCALE 1:2
MB038
MB038
W408
G
200
GASKETGLUECOATED
ONPOS 090
250
070
160
440
090
130
680
SECTION A-A
SCALE 1:2
FLOWDIRECTION
G-G
B
B
MB034
630
590
150
SECTION B-B
SCALE 1:2
450

Pos	Part No	UN	Qty	Description	Page No
Common Parts (Cont'd)					
790	353249-0011		1	INSERT, SINGLE HOLE, EK153 11	
800	315234-0109		2	WASHER,PL.RND.CU.10,3/13,5 H=1,0	
810	359710-0001		1	WARNING SIGN ISO, HOT SURFACE	
820	312607-0314		4	HEXAGON NUT, EN 24032 M6M M5 A480	
830	315106-0146		4	WASHER PLAIN, M5 ISO7089-5-200 HV A4	
840	315106-0153		7	WASHER PLAIN, M6 ISO7089-6-200 HV A4	
850	315207-0514		1	O-RING 18,72X2,62 MM	
860	342840-0101		1	CLAMP, 12,7 AND 19,1 MM 3-A PCS+PMCS	
870	342850-0201		1	GASKET 11,1X21,8X4,45 MM 1/2" FDA 3-A	
880	90099-0058		1	HEXAGON NUT, M8X1, DIN936	
890	312105-0364		1	SCREW, M6S ISO 4017 M6X10 A4 80	
MY108	544906-0000		1	SOLENOID VALVE	
	90042-0465		*1*	*O-RING VITON 17,17X1,78*	
	90042-0464		*1*	*DIAPHRAGM VITON 1211321*	
MX038	90326-0020		1	SOCKET, FEMALE YELLOW CR-AL, 03-22000A	
MX004	90326-0020		1	SOCKET, FEMALE YELLOW CR-AL, 03-22000A	
MR036	90206-0070		1	HEATING ELEMENT 6000W 380/220V	
	90269-0308		*1*	*GASKET 59X68X3 MM*	
	90206-0326		*1*	*CONNECTION BOX K2 FOR 90206-56 AND -70*	
MM017	2526863-0000		1	PUMP	
MB085	979500-0001		1	ELECTRODE	
MB048B	90044-0084		1	5IMIT SW. 14 CE1-4	
MB048A	90044-0084		1	5IMIT SW. 14 CE1-4	
MB038	90326-0052		1	THERMO ELEMENT	
MB004	90326-0052		1	THERMO ELEMENT	
MX038.1	90326-0012		1	PROTECTIVE COVER, 03-001 10	
MX004.1	90326-0012		1	PROTECTIVE COVER, 03-001 10	
W312	351150-0412	M	5	CABLE OLFLEX 3X1,5 MM2 LIGHT/GREY	
W401	351120-0267	M	3.9	CABLE Ã–LFLEX HEAT 180 SIHF 4X6	
W406	90220-0059	M	3.3	THERMOCOUPLE CABLE, P/PTW-20F-K 2X0,5MM2	
W408	90220-0059	M	3.2	THERMOCOUPLE CABLE, P/PTW-20F-K 2X0,5MM2	
W426	351150-0403	M	3	CABLE OLFLEX 3X0,75 MM2 LIGHT/GREY	
W427	351150-0431	M	3.3	CABLE OLFLEX 2X0,75 MM2 LIGHT/GREY	
W428	351150-0431	M	3.4	CABLE OLFLEX 2X0,75 MM2 LIGHT/GREY	

Pos	Part No	UN	Qty	Description	Page No

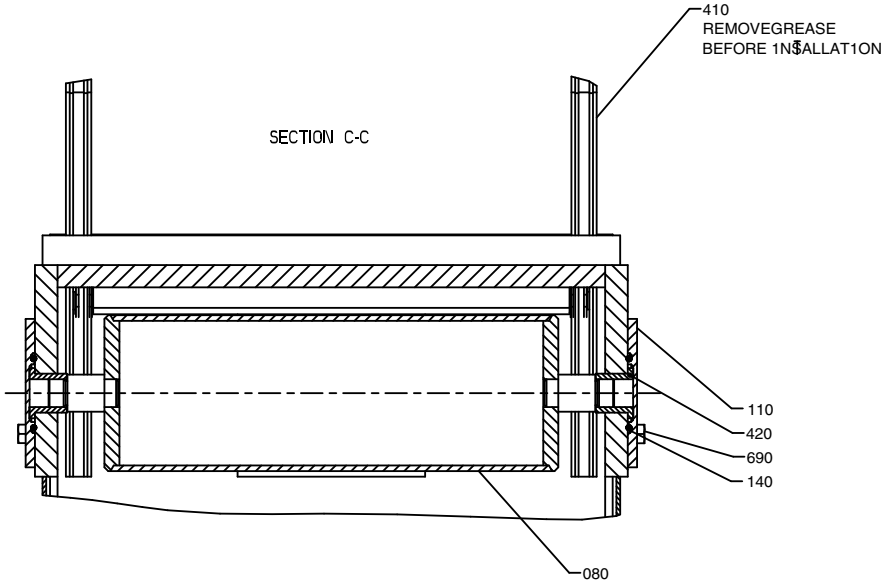
410
REMOVEGREASE
BEFORE 1N$ALLAT1ON
SECTION C-C
110
420
690
140
080

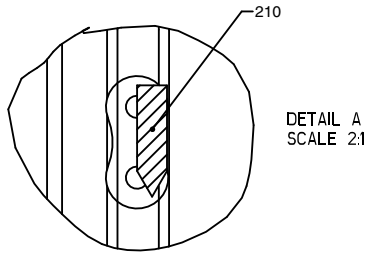
210
DETAIL A
SCALE 2:1

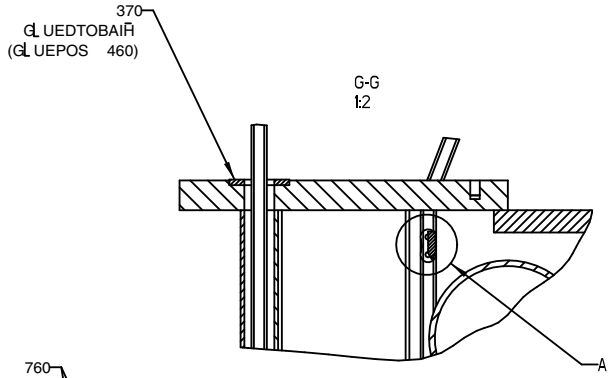
370
GLUEDTOBAIH
(GLUEPOS 460)
G-G
1:2
A

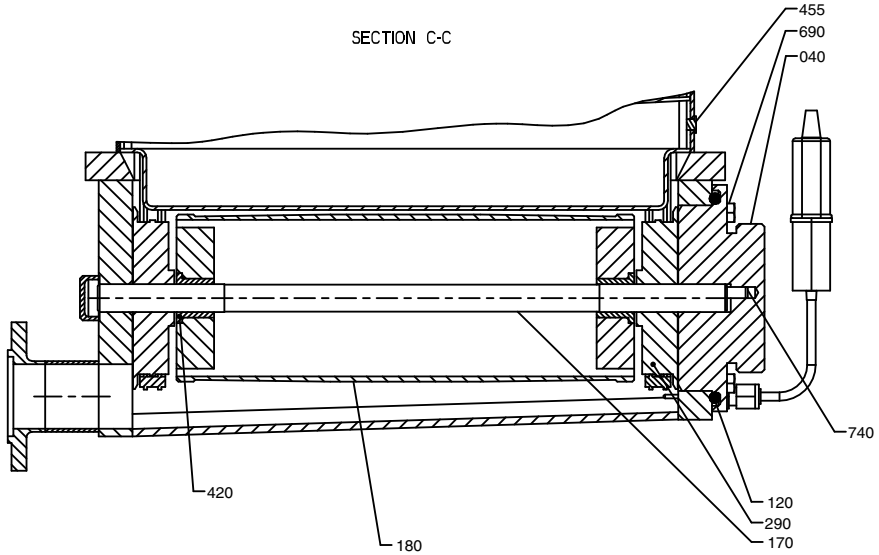
SECTION C-C
455
690
040
740
420
180
120
290
170

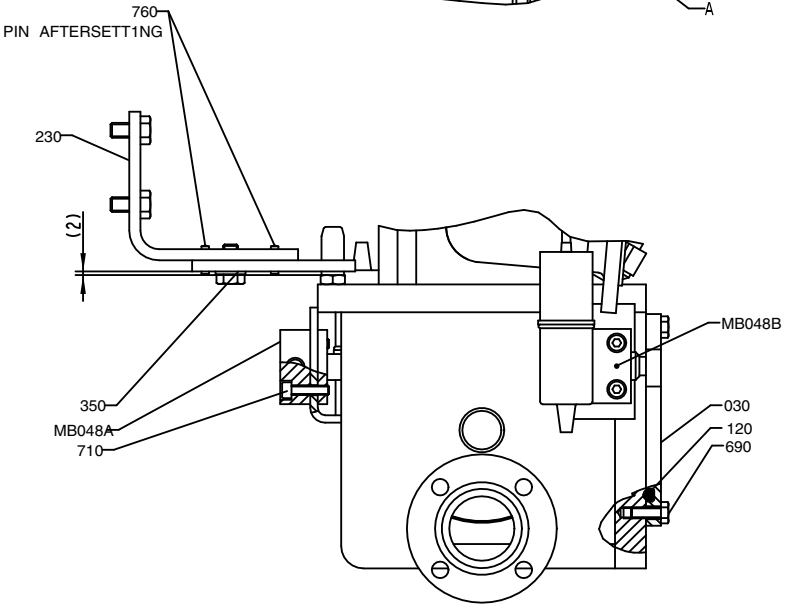
760
PIN AFTERSETT1NG
230
(2)
MB048B
350
MB048A
710
030
120
690

Pos	Part No	UN	Qty	Description	Page No	Pos	Part No	UN	Qty	Description	Page No

SEE PREVIOUS LISTS PAGES: 1-55, 1-57.

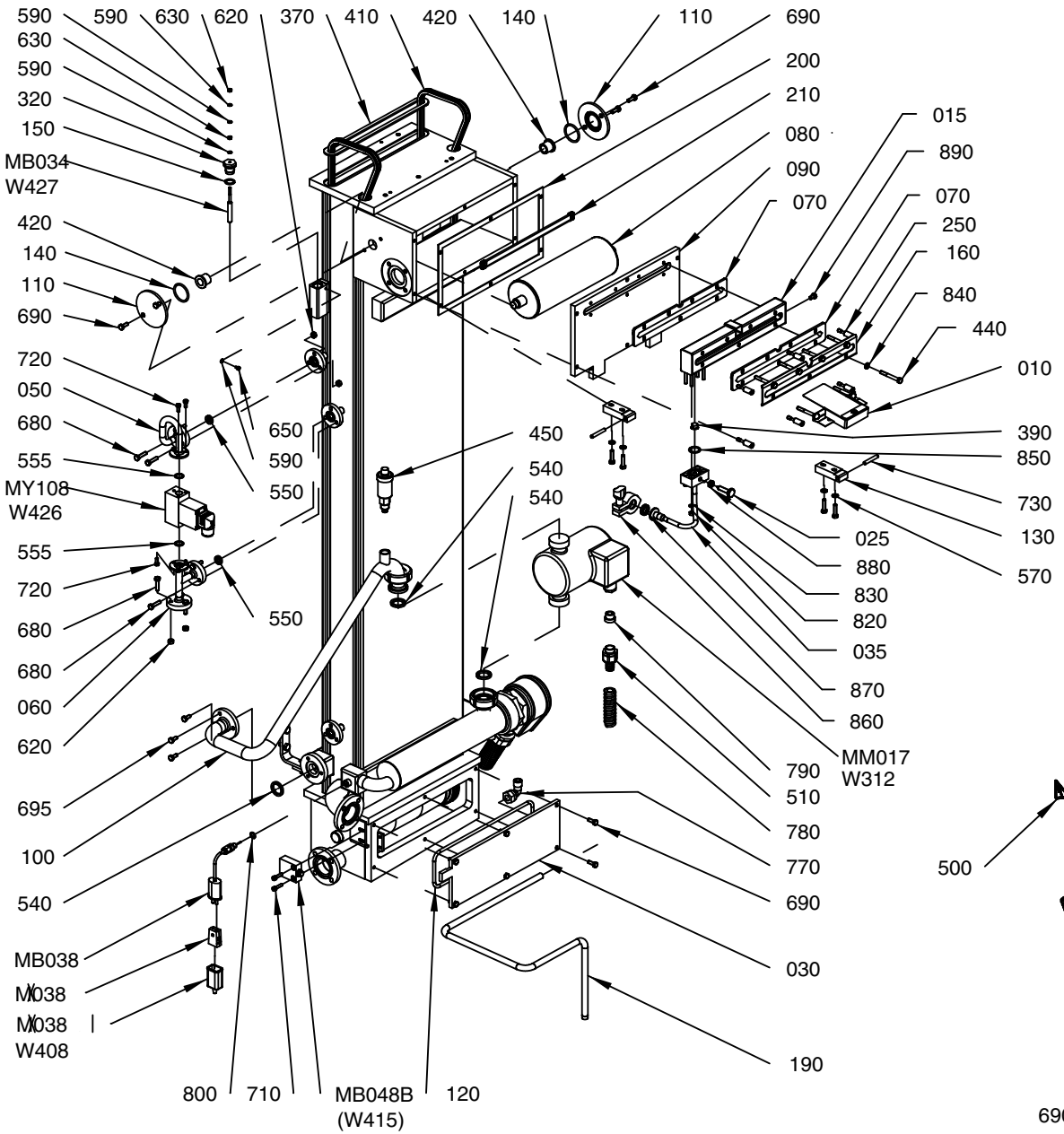

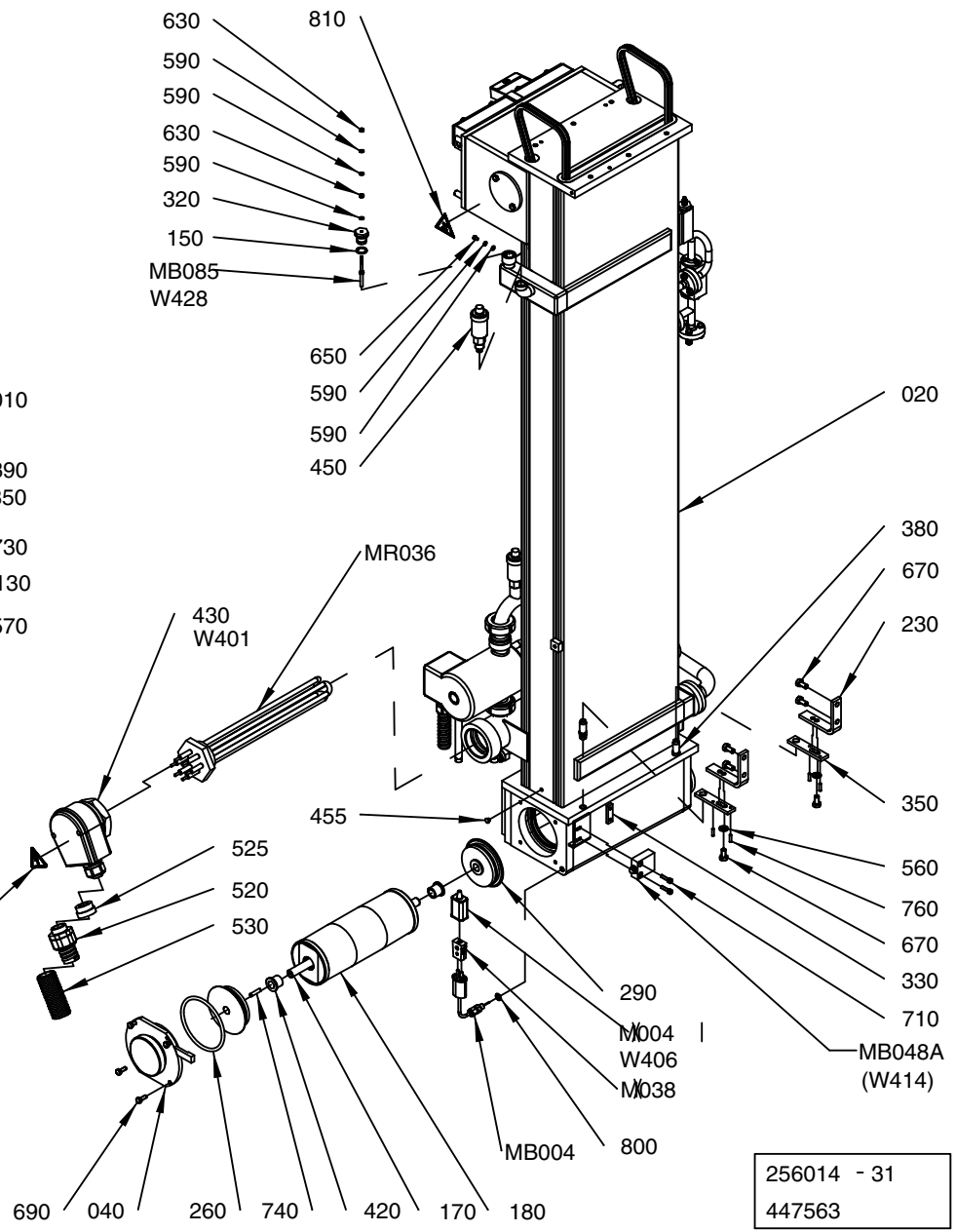

256014 - 31
447563

Pos	Part No	UN	Qty	Description	Page No
SEE PREVIOUS LISTS PAGES: 1-55, 1-57.					

Pos	Part No	UN	Qty	Description	Page No

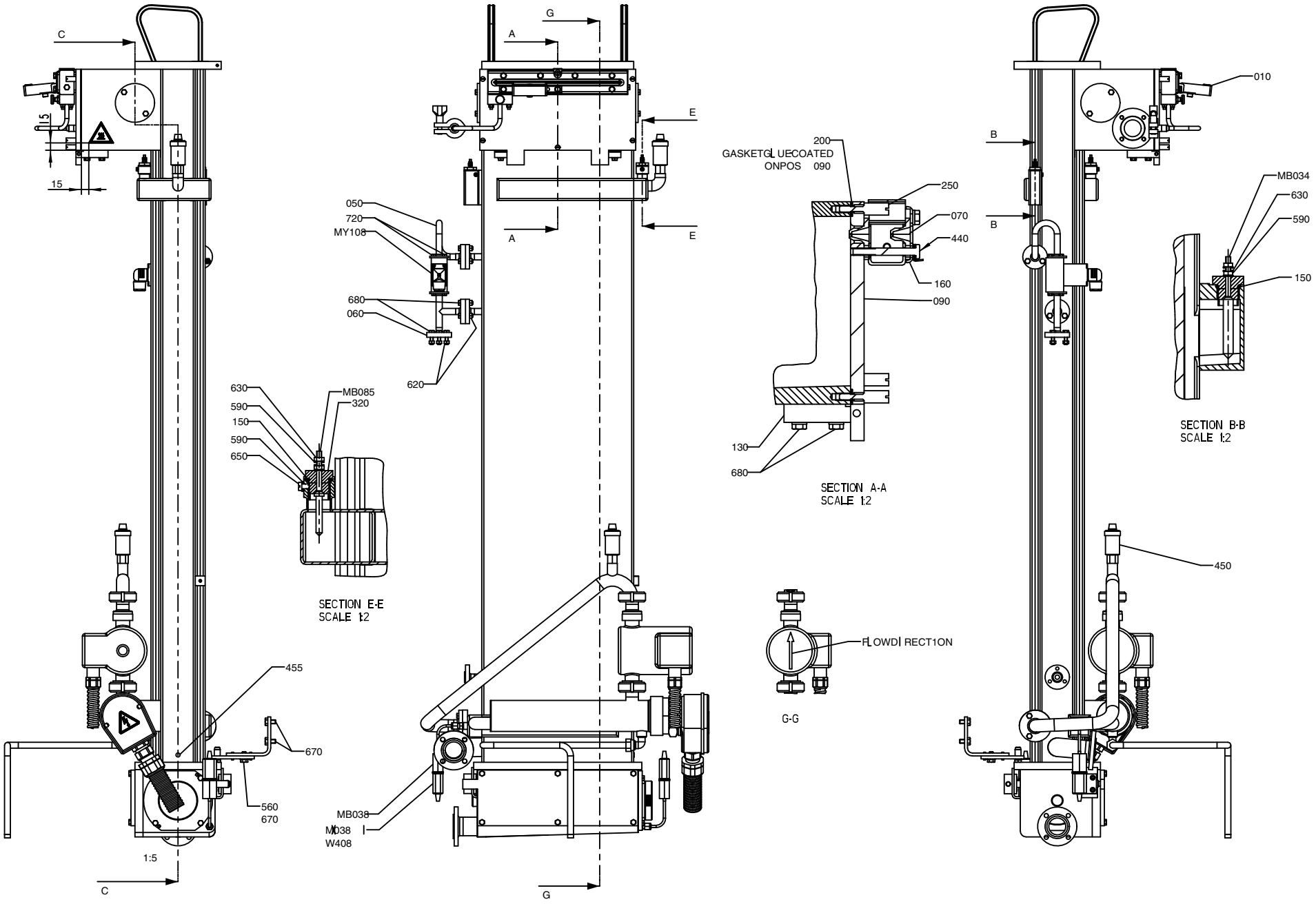
C
15
15
1:5
C
455
670
560
670
MB038
MD38
W408
G
A
E
A
E
050
720
MY108
680
060
620
630
590
150
590
650
MB085
320
SECTION E-E
SCALE 1:2
G
200
GASKETGL UECOATED
ONPOS 090
250
070
440
160
090
130
680
SECTION A-A
SCALE 1:2
FLOWDI RECT1ON
G-G
010
B
B
MB034
630
590
150
SECTION B-B
SCALE 1:2
450

ECM: 451122 - 20100524
Group number: 256014-0900
Assembly Drawing: 256014-31_2_AD

This list covers pages from 1-54 to 1-65

Pos	Part No	UN	Qty	Description	Page No
SEE PREVIOUS LISTS PAGES: 1-55, 1-57.					

Pos	Part No	UN	Qty	Description	Page No

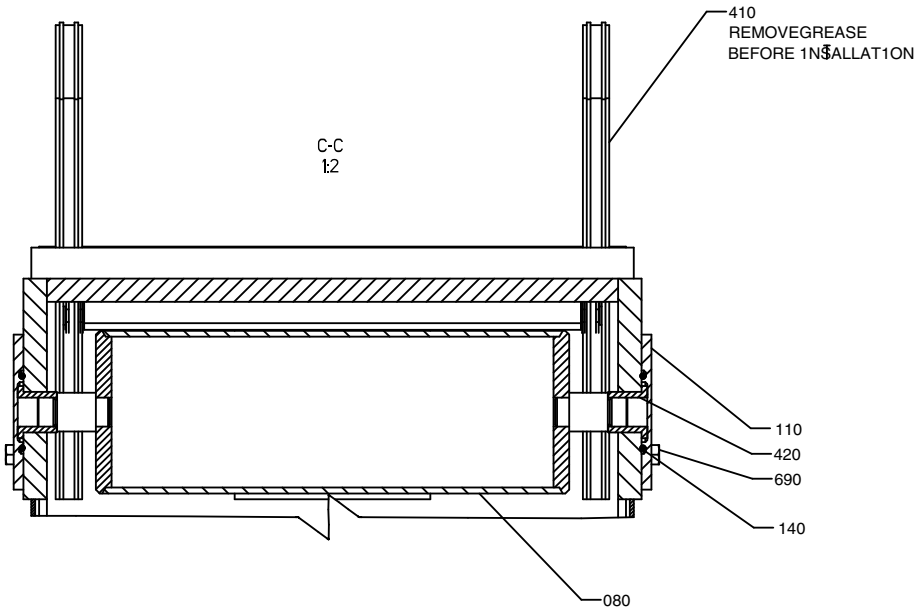
410
REMOVEGREASE
BEFORE 1NSTALLAT1ON
C-C
1:2
110
420
690
140
080

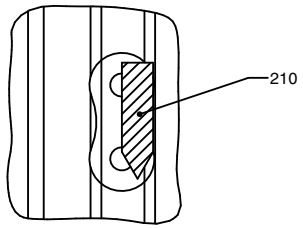
DETAIL A
SCALE 2:1
210

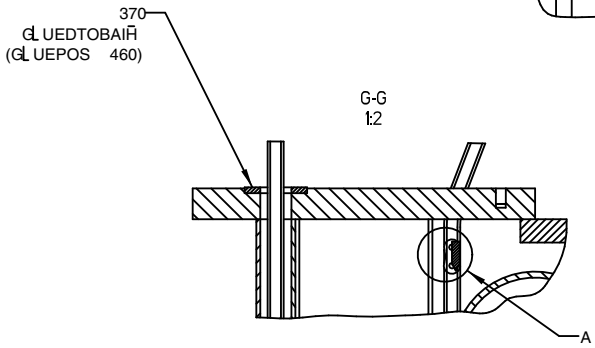
370
GLUEDTOBAIH
(GLUEPOS 460)
G-G
1:2
A

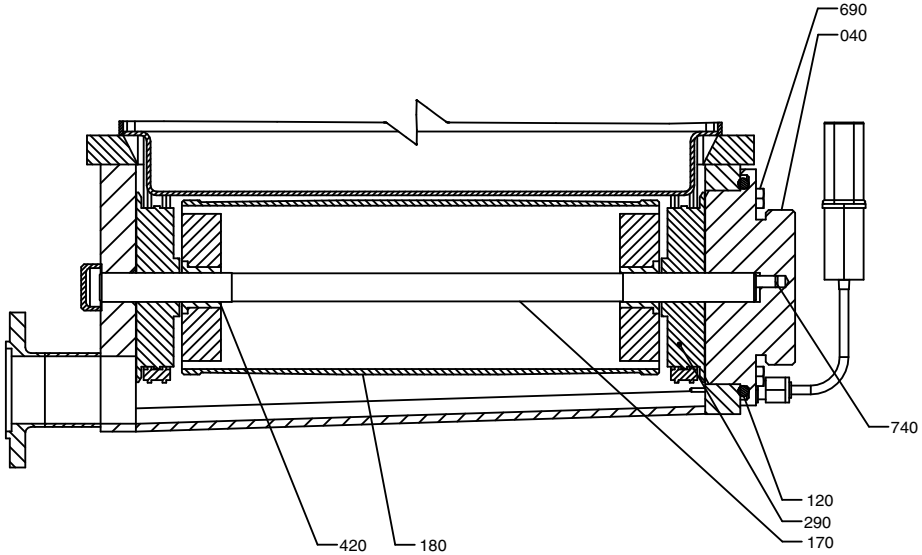
690
040
740
120
290
170
420
180

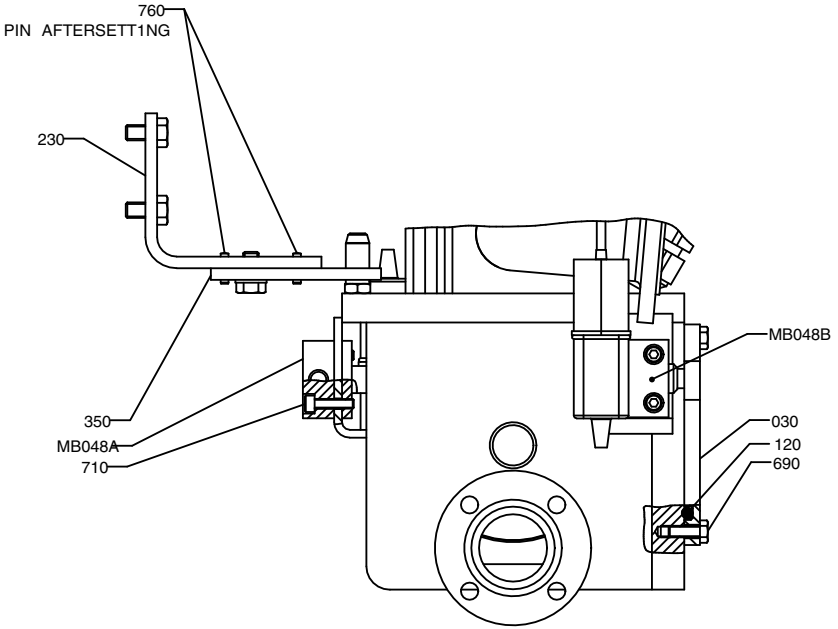
760
PIN AFTERSETT1NG
230
MB048B
350
MB048A
710
030
120
690

ECM: 451122 - 20100524
Group number: 256014-0900
Assembly Drawing: 256014-31_3_AD

This list covers pages from 1-54 to 1-65

Pos	Part No	UN	Qty	Description	Page No
SEE PREVIOUS LISTS PAGES: 1-55, 1-57.					

Pos	Part No	UN	Qty	Description	Page No

GUIDING PULLTAB

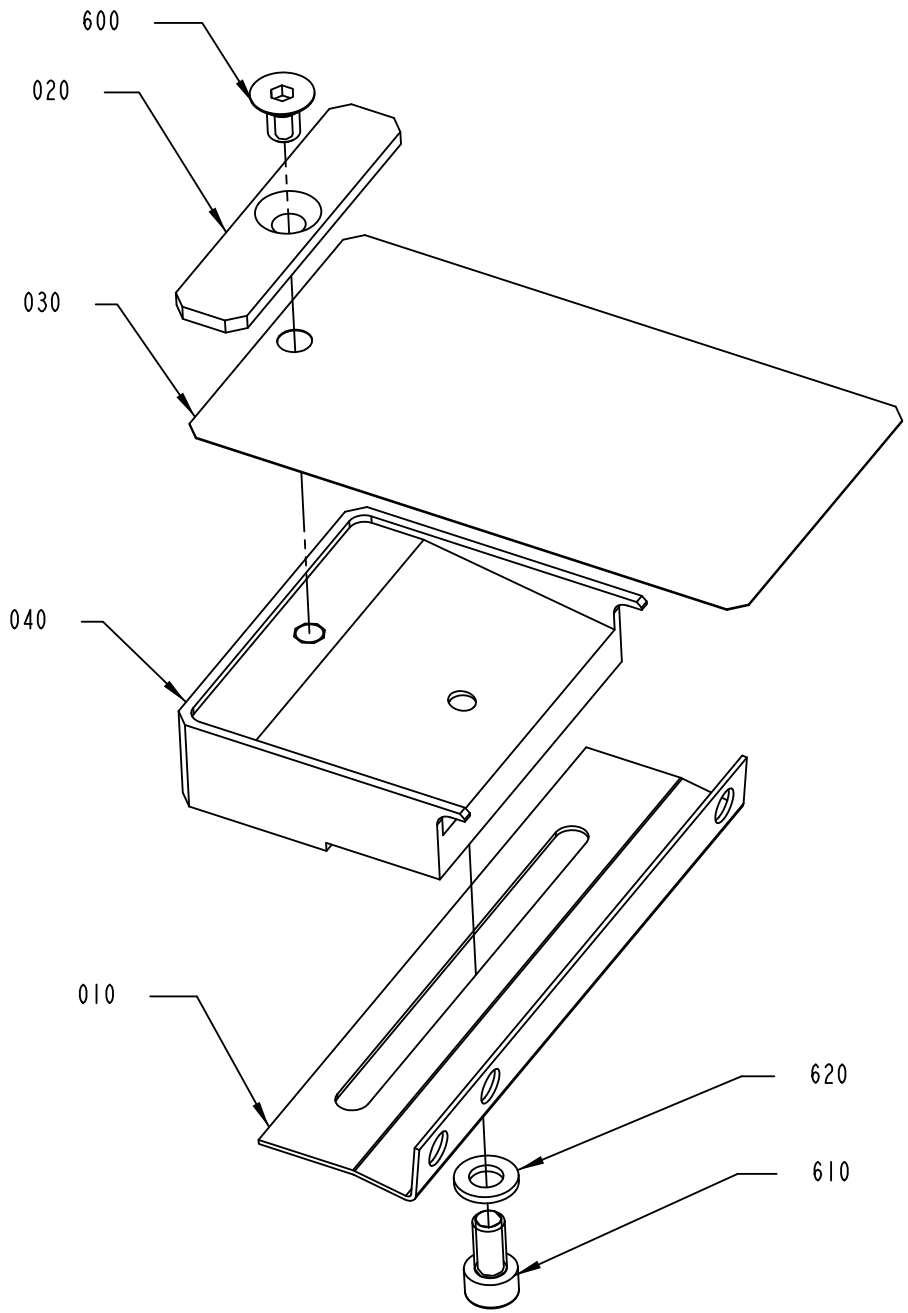

2983247-1
368758

ECM: 375078 - 20081219
Group number: 2983247-0100
Assembly Drawing: 2983247-1_1_AA

Pos	Part No	UN	Qty	Description	Page No
-					
010	529146-0000		1	ANGLE BRACKET	
020	529149-0000		1	DOLLY WASHER	
030	2964437-0000		1	GUIDE	
040	529147-0000		1	SPRING BRACKET	
600	312155-0364		1	SCREW DIN 7991 MF6S M6X10 A4 70	
610	312115-0366		1	SCREW ISO4762 M6X12 A4 80	
620	315105-0153		1	WASHER PLAIN, 6,4X12X1,5 A4 BRB	

Pos	Part No	UN	Qty	Description	Page No

HOT AIR ELEMENT

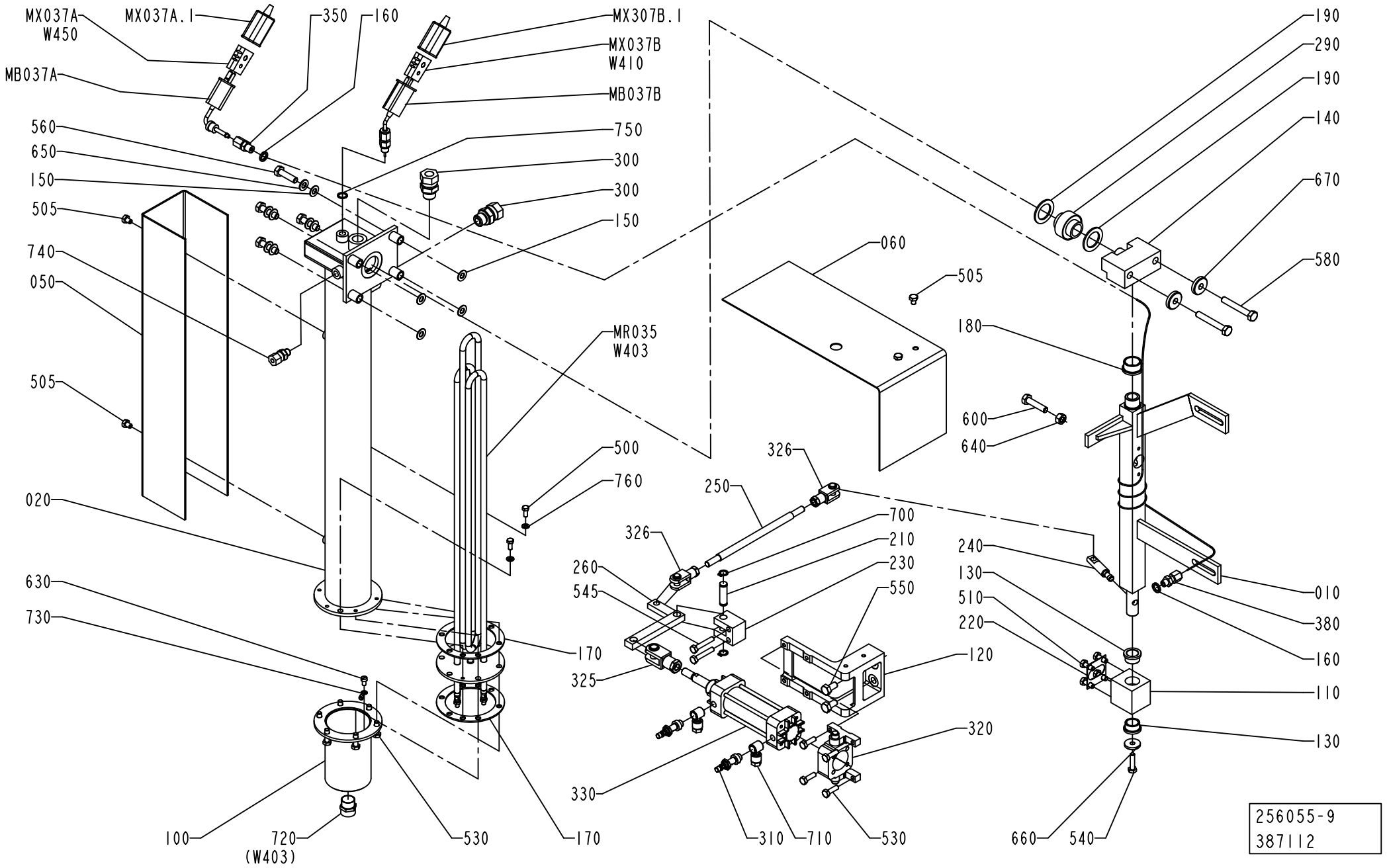

ECM: 403273 - 20090709
Group number: 256055-0800
Assembly Drawing: 256055-9_1_AA

Pos	Part No	UN	Qty	Description	Page No
-					
010	491169-0000		1	PIVOT ARM	
020	752174-0000		1	HEATING PIPE	
050	1260743-0000		1	HEAT GUARD	
060	2914851-0000		1	TOUCH GUARD	
100	491170-0000		1	COVER	
110	491171-0000		1	BEARING BLOCK	
120	978736-0000		1	BRACKET	
130	271269-0000		2	BUSHING	
140	272286-0000		1	AXLE SUPPORT	
150	751019-0000		8	WASHER	
160	273429-0000		2	WASHER	
170	751020-0000		2	GASKET	
180	295909-0000		1	BUSHING	
190	751023-0000		2	GASKET	
210	491931-0000		1	SHAFT	
220	491172-0000		1	GASKET	
230	491173-0000		1	BRACKET	
240	491174-0000		1	ARM	
250	491175-0000		1	LINK	
260	491177-0000		1	ARM	
290	491487-0000		1	BUSHING	
300	90030-0187		2	CONN. STR. GE12LRED71	
310	90235-0280		2	THROTTLE CHECK VALVE,M5	
320	90239-0460		1	BRACKET	
325	90239-0516		1	ROD END, CLEVIS WITH AXLE M10X1,25	
326	90239-0532		2	ROD END, CLEVIS WITH AXLE M8X1,25	
330	90239-0779		1	CYLINDER	
	90239-0442		*1*	*SEAL KIT*	
350	90326-0306		1	COMPRESSION FITTING, 5101015-010	
380	90326-0304		1	COMPRESSION FITTING, 5101015-005	
500	312105-0327		2	SCREW, M6S ISO 4017 M5X12 A4 80	
505	312105-0362		4	SCREW, M6S ISO 4017 M6X8 A4 80	
510	312105-0368		4	SCREW, M6S ISO 4017 M6X16 A4 80	
530	312105-0370		10	SCREW, M6S ISO 4017 M6X20 A4 80	
540	312105-0372		1	SCREW, M6S ISO 4017 M6X25 A4 80	
545	312105-0376		2	SCREW, M6S ISO 4014 M6X35 A4 80	
550	312105-0449		2	SCREW, M6S ISO 4017 M8X16 A4 80	
560	312105-0455		4	SCREW, M6S ISO 4017 M8X30 A4 80	
580	312105-0462		2	SCREW, M6S ISO 4014 M8X55 A4 80	
600	312109-0457		1	SCREW, M6S ISO 4017 M8X35 A4 80	
630	312125-0323		1	SLOTTED HEAD SCREW, ISO1207 M5X8 A4	
640	312605-0318		1	HEXAGON NUT, M6M M8 A280	
650	315105-0165		4	WASHER PLAIN, 8,4X16X1,6 A4 BRB	
660	315125-0153		1	WASHER HIGH, TBRSB 6,4X22X4 A4	
670	315125-0165		2	WASHER HIGH, TBRSB 8,4X26X5 A4	
700	90141-0016		2	RETAINING RING FOR SHAFT DIN 471 10 SS	
710	342797-0121		2	BANJO CONN., RINGPIECE 6-1/8	
720	352100-0106		1	CABLE GLAND NO.18,6-10,5	
730	353101-0132		1	CABLE SHOE 1,5-2,5MM2 M5 BLUE	
740	90030-0184		1	CONN. STR., GE06LRED71	
750	315234-0109		1	WASHER,PL.RND.CU.10,3/13,5 H=1,0	
760	315105-0146		2	WASHER PLAIN, 5,3X10X1 A4 BRB	
MB037A	90326-0048		1	THERMOCOUPLE, 5110 048-000	
	90326-0304		*1*	*COMPRESSION FITTING, 5101015-005*	
MB037B	90326-0057		1	THERMOCOUPLE, 5110 057-000	
MR035	90459-1094		1	HEATING ELEMENT 3000W 240V AC	
MX037A	90326-0020		1	SOCKET, FEMALE YELLOW CR-AL, 03-22000A	
MX037B	90326-0020		1	SOCKET, FEMALE YELLOW CR-AL, 03-22000A	
MX037A.1	90326-0012		1	PROTECTIVE COVER, 03-001 10	
MX037B.1	90326-0012		1	PROTECTIVE COVER, 03-001 10	
W403	351120-0145	M	6	CABLE Ã–LFLEX HEAT 180 SIHF 3X2,5	
W410	90220-0059	MM	3500	THERMOCOUPLE CABLE, P/PTW-20F-K 2X0,5MM2	
W450	90220-0059	MM	3500	THERMOCOUPLE CABLE, P/PTW-20F-K 2X0,5MM2	

Machine Type | Group Description | Used-In | Group Number | Page No

CHANGE-OVER VALVE

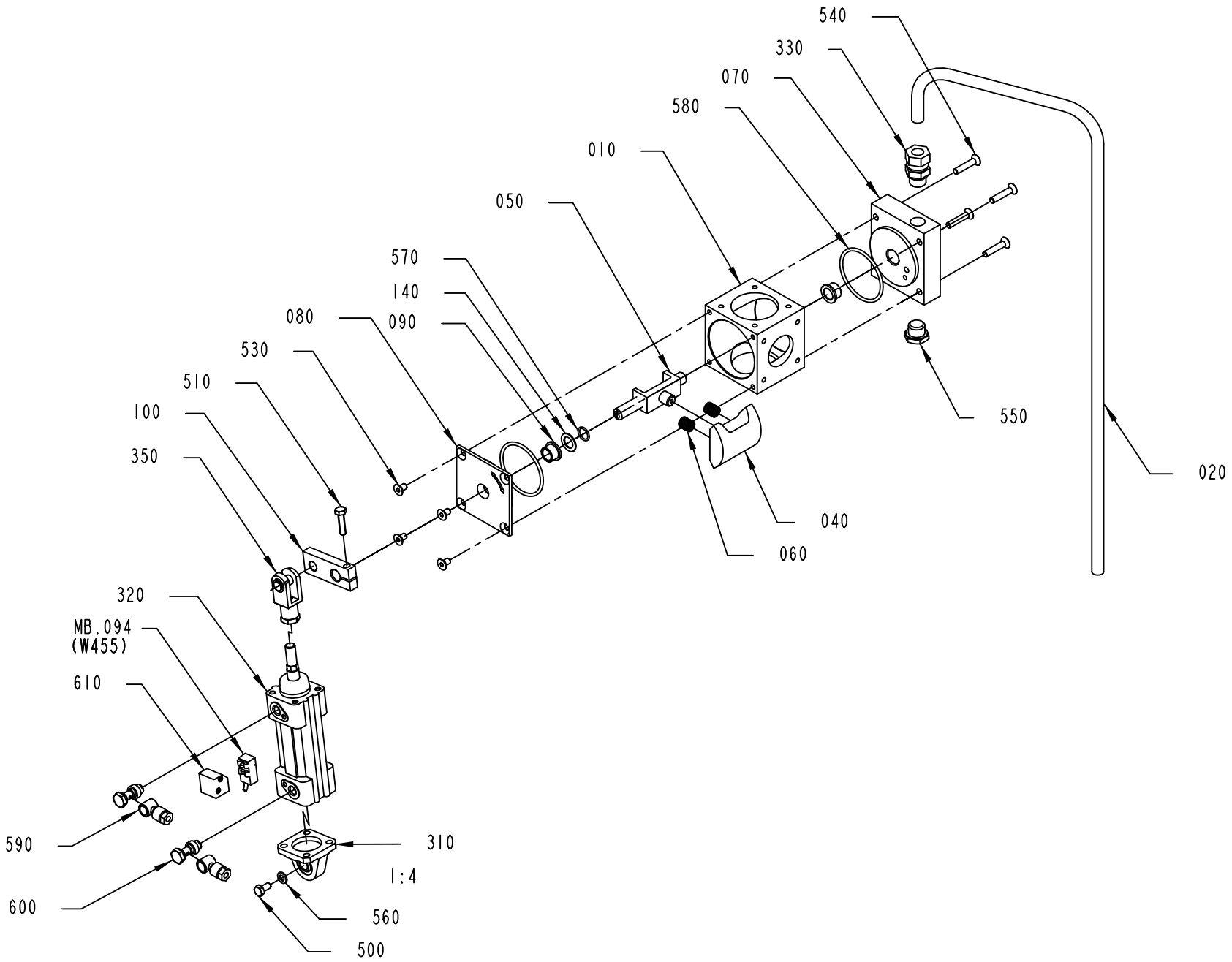

256084-8
ECM 368758

ECM: 375076 - 20081219
Group number: 256084-0800
Assembly Drawing: 256084-8_1_AA

Pos	Part No	UN	Qty	Description	Page No
-					
010	255870-0000		1	VALVE HOUSING	
020	1519934-0000		1	PIPE	
040	979722-0000		1	BLOCK	
050	751732-0000		1	BRACKET	
060	21521-0000		2	COMPRESSION SPRING	
070	751731-0000		1	BEARING COVER	
080	441957-0000		1	BEARING COVER	
090	255875-0000		2	BUSHING	
100	2527337-0000		1	CYLINDER BRACKET	
140	266737-0000		1	WASHER	
310	90450-0756		1	BRACKET, REAR EYE 32	
320	90450-0328		1	DOUBLE ACTING,PROFILE CYL32-25	
330	90030-0187		1	CONN. STR. GE12LRED71	
350	90239-0516		1	ROD END, CLEVIS WITH AXLE M10X1,25	
500	312105-0366		1	SCREW, M6S ISO 4017 M6X12 A4 80	
510	312105-0372		1	SCREW, M6S ISO 4017 M6X25 A4 80	
530	312155-0364		4	SCREW DIN 7991 MF6S M6X10 A4 70	
540	312155-0374		4	SCREW DIN 7991 MF6S M6X30 A4 70	
550	90330-0029		1	PLUG, G3/8EXT, R-236R3/8	
560	315105-0153		1	WASHER PLAIN, 6,4X12X1,5 A4 BRB	
570	315204-0110		1	O-RING 12,1X1,6 MM	
580	315204-0302		2	O-RING 54,5X3 MM	
590	342797-0121		2	BANJO CONN., RINGPIECE 6-1/8	
600	342980-0303		2	BANJO-HOLLOW BOLT COUPL,EXT.THR.01-G1/8	
610	90450-0669		1	SENSOR, BRACKET SERIES 168	
MB094	90457-0047		1	SENSOR 2750-1-5111-1 W.ADAPTER PNP	

Pos	Part No	UN	Qty	Description	Page No

Machine Type | Group Description | Used-In | Group Number | Page No

HOT AIR ELEMENT

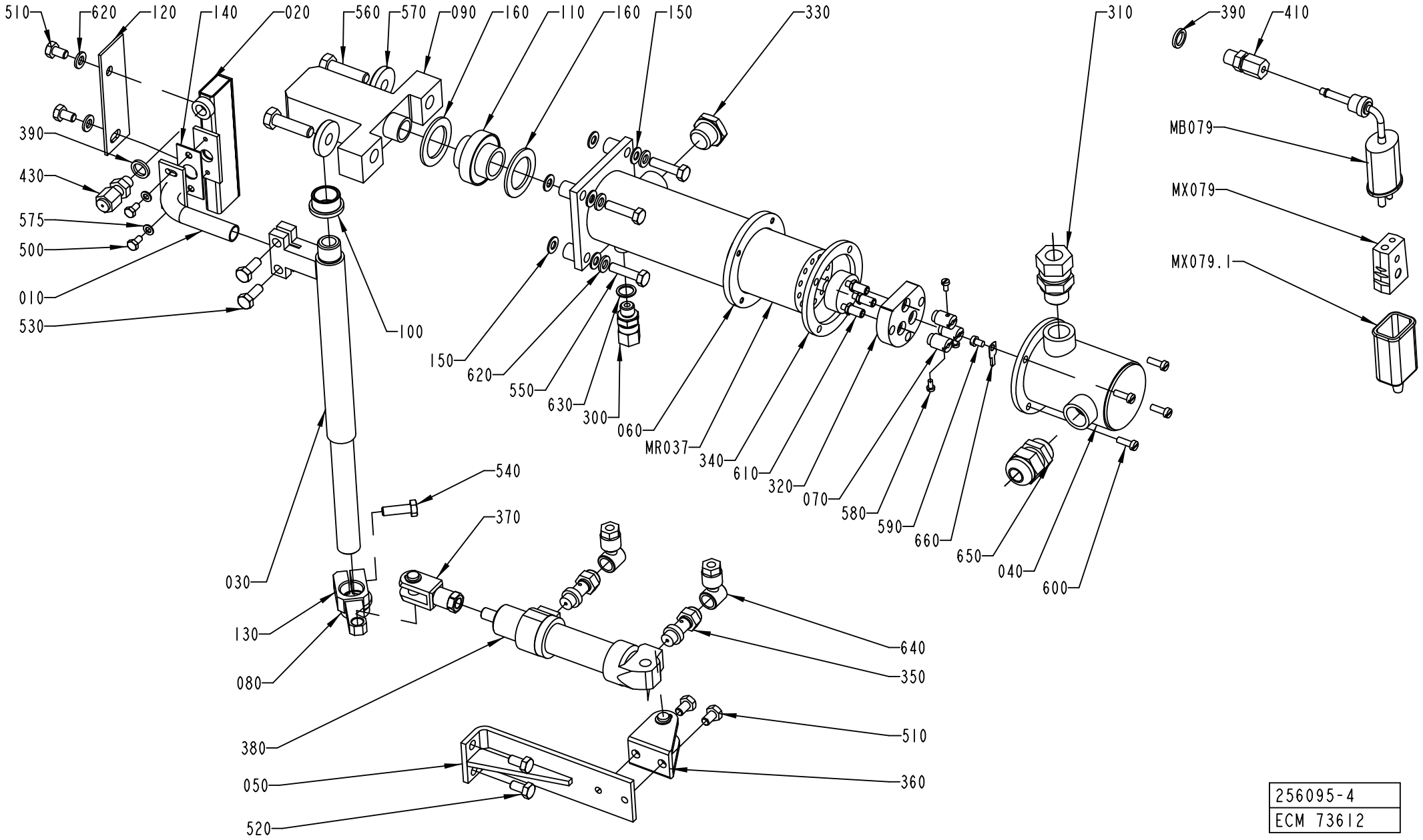

256095-4
ECM 73612

ECM: 276146 - 20070126
Group number: 256095-0700
Assembly Drawing: 256095-4_1_AA

Pos	Part No	UN	Qty	Description	Page No
TBA 0100B, TBA 0125S, TWA 0125S					
010	571533-0000		1	BRACKET	
TBA 0160S, TBA 0200M, TBA 0200S, TBA 0250S, TPA 0250SQ, TWA 0200S, TPA 0200SQ					
010	571532-0000		1	BRACKET	
TBA 0200B, TBA 0284B, TBA 0250B, TBA 0300S, TBA 0330S, TPA 0330SQ					
010	256112-0000		1	BRACKET	
Common Parts					
020	1524662-0000		1	AIR NOZZLE	
030	272948-0003		1	SHAFT	
040	491223-0000		1	COVER	
050	491224-0000		1	BRACKET	
060	751733-0000		1	HEATING PIPE	
070	266739-0000		3	CABLE GLAND	
080	271269-0000		1	BUSHING	
090	272287-0000		1	AXLE SUPPORT	
100	295910-0000		1	BUSHING	
110	295936-0000		1	BUSHING	
120	491097-0000		1	HEAT GUARD	
130	491545-0000		1	BRACKET	
140	751015-0000		1	GASKET	
150	751018-0000		8	WASHER	
160	751023-0000		2	GASKET	
300	90030-0184		1	CONN. STR., GE06LRED71	
310	90030-0187		1	CONN. STR. GE12LRED71	
320	90125-0020		1	PLATE COMPLETE	
	294464-0000		*1*	*BASE PLATE*	
	270927-0000		*3*	*SCREW*	
	270926-0000		*6*	*NUT*	
330	90330-0029		1	PLUG, G3/8EXT, R-236R3/8	
340	90206-0322		1	SPARE PART GASKET, 4056	
350	90235-0274		2	THROTTLE CHECK VALVE, G1/8", SCU-604-1/8	
360	90239-0487		1	REAR, CLEVIS, MINI-ISO 20-25	
370	90239-0532		1	ROD END, CLEVIS WITH AXLE M8X1,25	
380	90239-0847		1	DOUBLE ACTING, MINI-ISO, CYL.20-50	
390	273429-0000		2	WASHER	
410	90326-0306		1	COMPRESSION FITTING, 5101015-010	
430	90326-0304		1	COMPRESSION FITTING, 5101015-005	
500	312105-0287		2	SCREW, M6S ISO 4017 M4X8 A4 70	
510	312105-0364		4	SCREW, M6S ISO 4017 M6X10 A4 80	
520	312105-0366		2	SCREW, M6S ISO 4017 M6X12 A4 80	
530	312105-0368		2	SCREW, M6S ISO 4017 M6X16 A4 80	
540	312105-0370		1	SCREW, M6S ISO 4017 M6X20 A4 80	
550	312105-0372		4	SCREW, M6S ISO 4017 M6X25 A4 80	
560	312105-0455		2	SCREW, M6S ISO 4017 M8X30 A4 80	
570	315125-0165		2	WASHER HIGH, TBRSB 8,4X26X5 A4	
575	315105-0136		2	WASHER PLAIN, 4,3X9X0,8 A4 BRB	
580	312125-0220		3	SCREW ISO 1207 M3X6 A4	
590	312125-0285		1	SLOTTED HEAD SCREW, ISO1207 M4X6 A4	
600	312125-0291		4	SLOTTED HEAD SCREW, ISO1207 M4X12 A4	
610	312145-0228		3	SCREW ISO 2009 MFS M3X16 A4	
620	315105-0153		6	WASHER PLAIN, 6,4X12X1,5 A4 BRB	
630	315234-0109		1	WASHER,PL.RND.CU.10,3/13,5 H=1,0	
640	342797-0121		2	BANJO CONN., RINGPIECE 6-1/8	
650	352103-0106		1	CABLE GLAND, ST 11, PR18,6/PG11	
660	353104-0130		1	CABLE SHOE, RING UNINS., YAV 025 M 4	
MBO79	90326-0048		1	THERMOCOUPLE, 5110 048-000	
	90326-0304		*1*	*COMPRESSION FITTING, 5101015-005*	
MR037	90206-0031		1	HEATING ELEMENT 700+1200W, 220V	
MXO79	90326-0020		1	SOCKET, FEMALE YELLOW CR-AL, 03-22000A	
MX079.1	90326-0012		1	PROTECTIVE COVER, 03-001 10	
W402	351120-0144	M	6	CABLE Ã–LFLEX HEAT 180 SIHF 3X1,5	
W433	90220-0059	M	6	THERMOCOUPLE CABLE, P/PTW-20F-K 2X0,5MM2	

Machine Type | Group Description | Used-In | Group Number | Page No

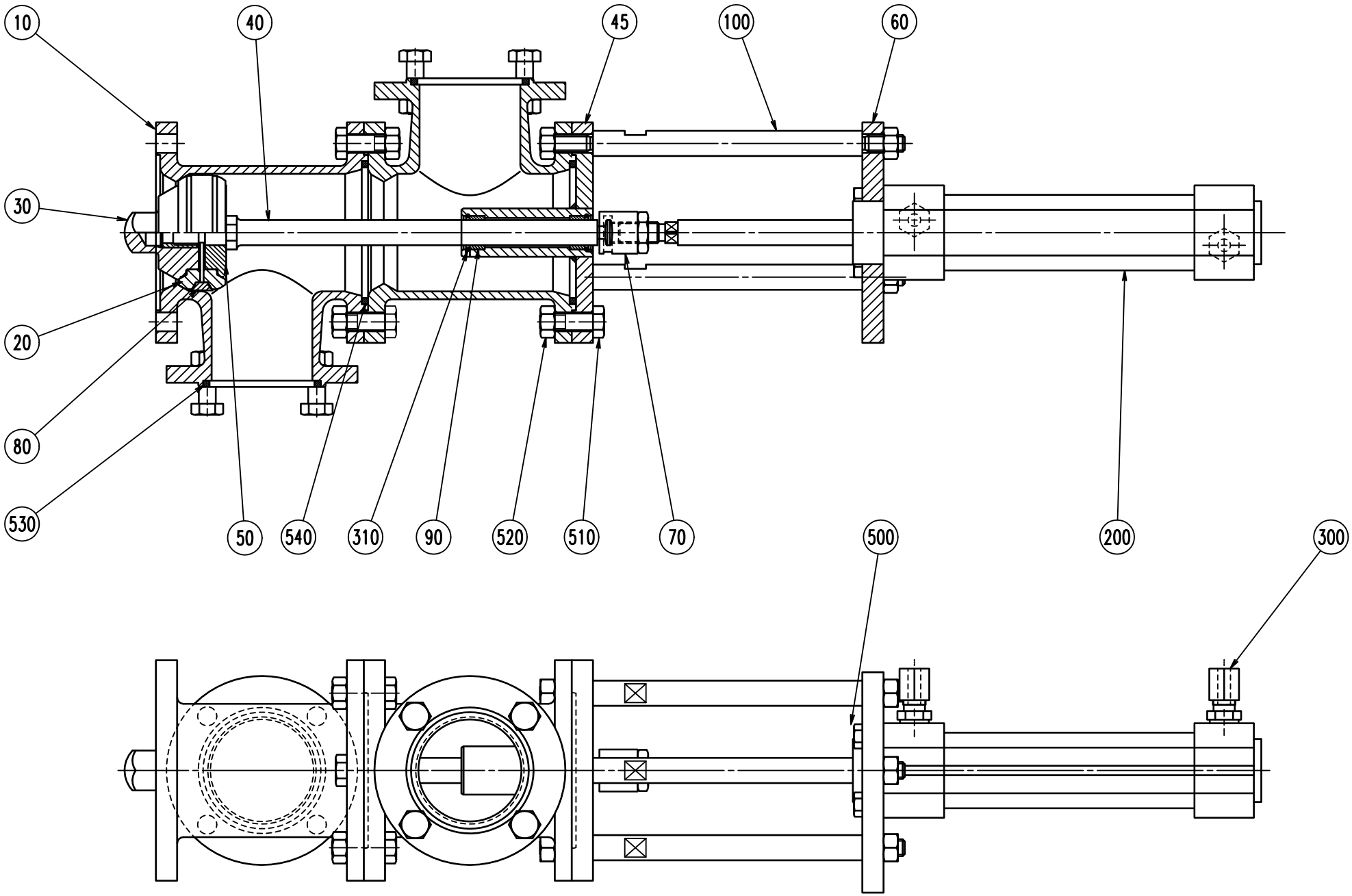
10
40
45
100
60
30
20
80
530
50
540
310
90
520
510
70
200
500
300

ECM: 178604 - 20040910
Group number: 271169-0500
Assembly Drawing: 271169-5_1_AA

Pos	Part No	UN	Qty	Description	Page No
-					
010	1036194-0000		2	T-PIPE	
020	530589-0000		2	SEAL RING	
030	530590-0000		1	VALVE CONE	
040	1036188-0000		1	SHAFT	
045	1036189-0000		1	SPINDEL GUIDE	
050	1036191-0000		1	SEAL HOLDER	
060	1036193-0000		1	CYLINDER BRACKET	
070	441871-0000		1	PENDULUM SUSPENSION	
080	530599-0000		1	RING	
090	532349-0000		2	PLAIN BEARING	
100	1036192-0000		3	SPACER ROD	
200	90450-0281		1	DOUBLE ACTING,PROF.CYL 32-80	
300	90030-0184		2	CONN. STR., GE06LRED71	
310	90141-0022		2	SNAP RING B 16	
500	312105-0370		4	SCREW, M6S ISO 4017 M6X20 A4 80	
510	312105-0453		17	SCREW, M6S ISO 4017 M8X25 A4 80	
520	312605-0318		23	HEXAGON NUT, M6M M8 A280	
530	315229-0205		2	GASKET 47,5X55,5X3,7 MM 2 INCH	
540	315229-0206		2	GASKET 60,2X68,2X3,7 MM 2"1/2	

Pos	Part No	UN	Qty	Description	Page No

AIR SUPER-HEATER

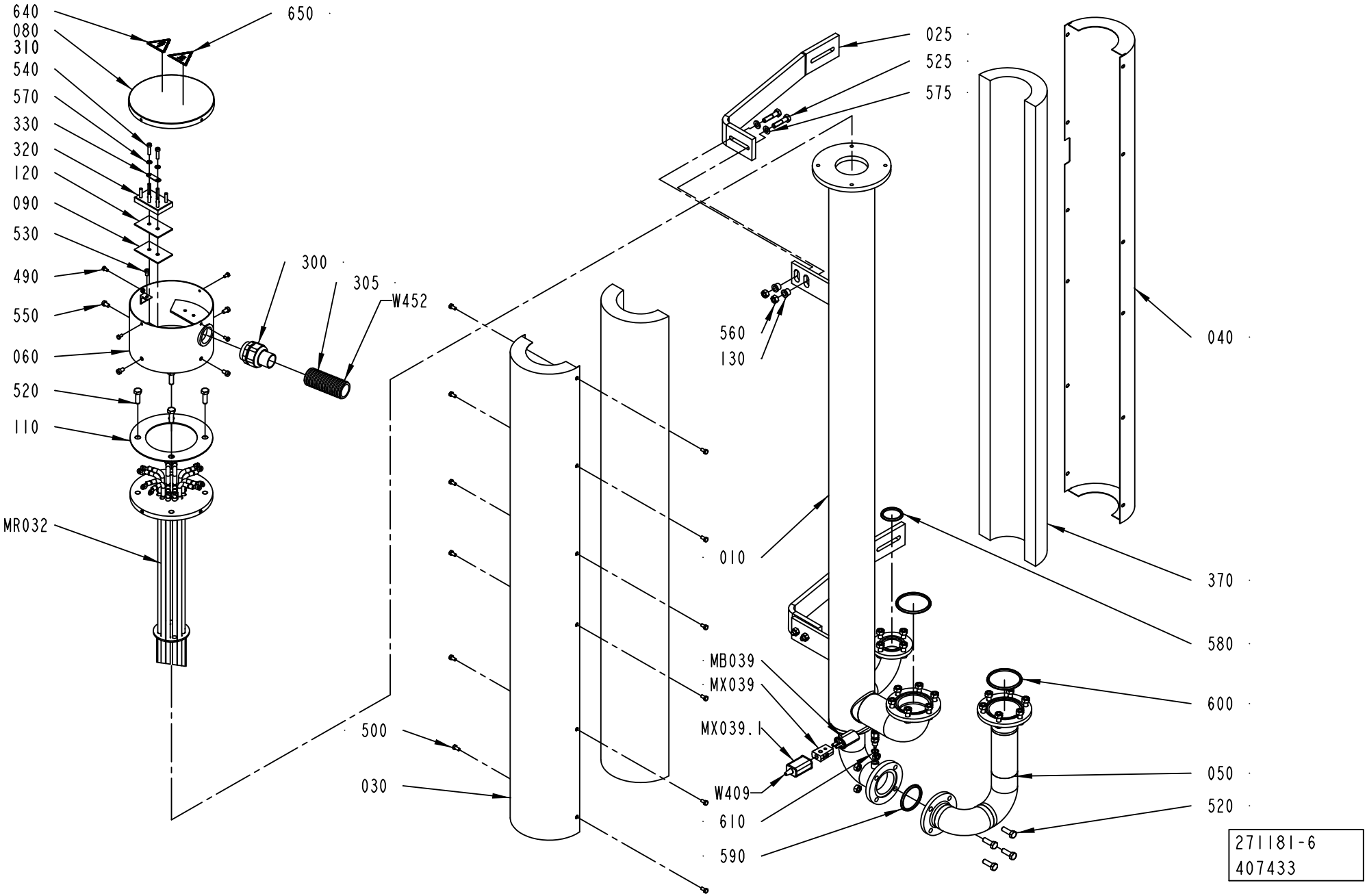

ECM: 407436 - 20090916
Group number: 271181-0600
Assembly Drawing: 271181-6_1_AD

This list covers pages from 1-76 to 1-79

Pos	Part No	UN	Qty	Description	Page No
HI (See drawing on page: 1-78)					
600	315229-0206		1	GASKET 60,2X68,2X3,7 MM 2"1/2	
620	315234-0109		1	WASHER,PL.RND.CU.10,3/13,5 H=1,0	
630	90136-0001		1	PLUG, EXT. THREAD, NO. 100727	
NOHI (See drawing on page: 1-76)					
050	1519482-0000		1	PIPE	
600	315229-0206		2	GASKET 60,2X68,2X3,7 MM 2"1/2	
Common Parts					
010	1519483-0000		1	HEATING PIPE	
025	1519484-0000		2	SUPPORT	
030	1296849-0000		1	DISCHARGE TRAY	
040	1296850-0000		1	DISCHARGE TRAY	
060	451430-0000		1	CONNECTION HOUS.(MINOR)	
080	29876-0000		1	COVER	
090	30298-0000		1	INSULATION	
100	491305-0000		1	CONN.DIAGRAM AIR SUPERH.	
110	531731-0000		1	GASKET	
120	751009-0000		1	INSULATION	
130	1519601-0000		2	BUSHING	
300	90012-0126		1	GLAND FITTING, 155 ULI2120	
305	90152-0070	MM	1700	HOSE, SPIRAL CONDUIT, 32,5X26, UL 2621	
310	90153-0020	ML	1	ADHESIVE, BOSTIK 1782 125ML	
320	90195-0028		1	TERMINAL BLOCK, 6440	
330	90195-0029		3	CONN. LINK NO324 FOR -28	
370	90411-0005	MM	1100	INSULATION 1200MM SERIE 21 89/154X30	
490	312105-0287		4	SCREW, M6S ISO 4017 M4X8 A4 70	
500	312105-0325		12	SCREW, M6S ISO 4017 M5X10 A4 80	
520	312105-0453		26	SCREW, M6S ISO 4017 M8X25 A4 80	
525	312105-0457		4	SCREW, M6S ISO 4014 M8X35 A4 80	
530	312125-0323		1	SLOTTED HEAD SCREW, ISO1207 M5X8 A4	
540	312125-0331		2	SLOTTED HEAD SCREW, ISO1207 M5X20 A4	
550	312125-0364		4	SCREW ISO 1207 M6X10 A4	
560	312605-0318		30	HEXAGON NUT, M6M M8 A280	
570	315105-0146		2	WASHER PLAIN, 5,3X10X1 A4 BRB	
575	315105-0165		4	WASHER PLAIN, 8,4X16X1,6 A4 BRB	
580	315229-0204		1	GASKET 34,8X42,8X3,7 MM 1"1/2	
590	315229-0205		1	GASKET 47,5X55,5X3,7 MM 2 INCH	
610	315234-0109		1	WASHER,PL.RND.CU.10,3/13,5 H=1,0	
640	90600-1738		1	WARNING SIGN ISO, ELECTRIC SHOCK	
650	359710-0001		1	WARNING SIGN ISO, HOT SURFACE	
MX039	90326-0020		1	SOCKET, FEMALE YELLOW CR-AL, 03-22000A	
MR032	90600-2007		1	HEATING ELEM.15KW 3X230/400V,T90600-2007	
MB039	90326-0051		1	THERMOCOUPLE, 5110 051-000	
MX039.1	90326-0012		1	PROTECTIVE COVER, 03-001 10	
W409	90220-0059	M	4	THERMOCOUPLE CABLE, P/PTW-20F-K 2X0,5MM2	
W452	351120-0168	M	6	CABLE SIHF 4X10MM2 GREEN/YELLOW	

Machine Type | Group Description | Used-In | Group Number | Page No

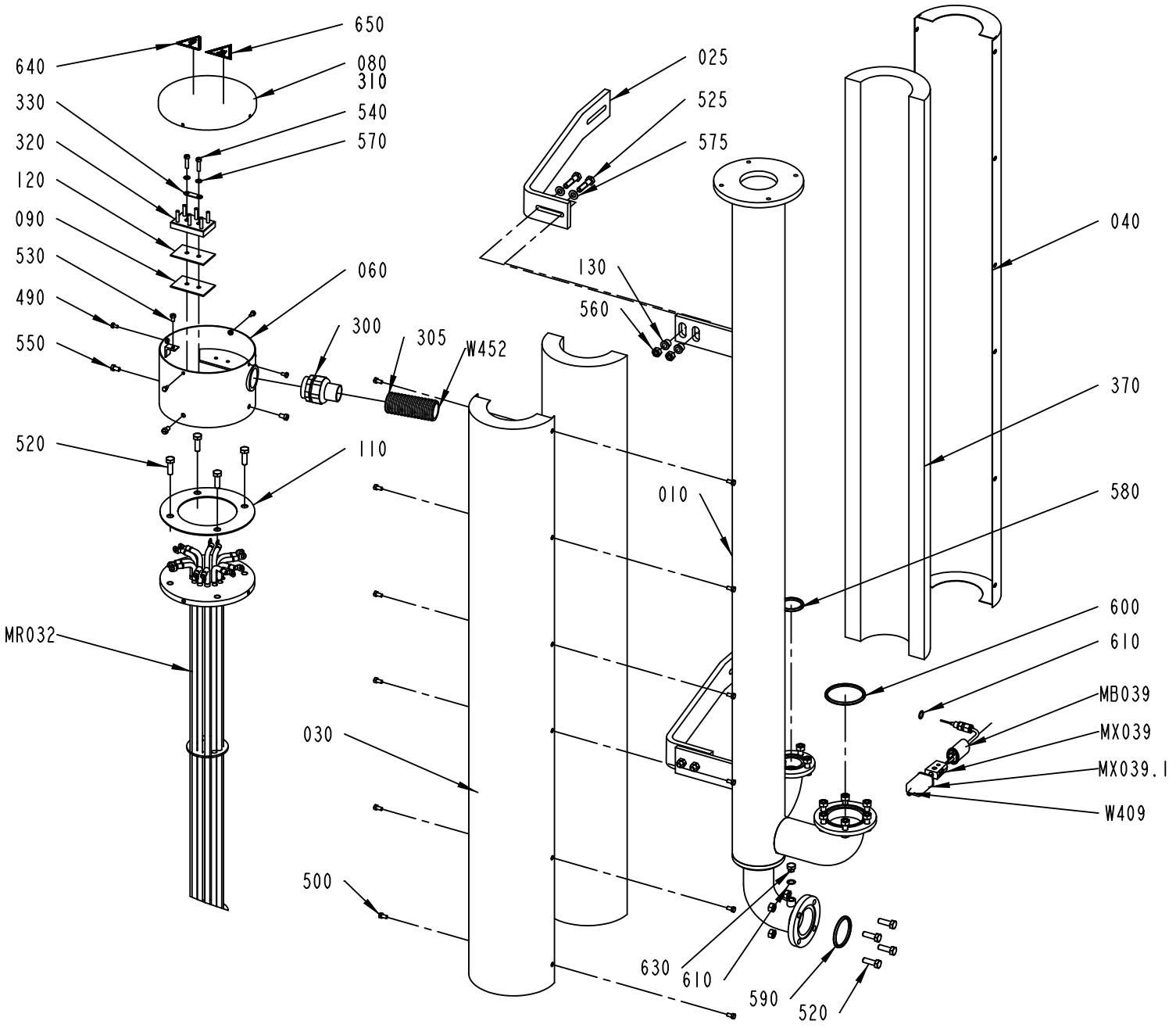

271181-7
407433

ECM: 407436 - 20090916
Group number: 271181-0600
Assembly Drawing: 271181-7_1_AC

This list covers pages from 1-76 to 1-79

Pos	Part No	UN	Qty	Description	Page No
HI (See drawing on page: 1-78)					
600	315229-0206		1	GASKET 60,2X68,2X3,7 MM 2"1/2	
620	315234-0109		1	WASHER,PL.RND.CU.10,3/13,5 H=1,0	
630	90136-0001		1	PLUG, EXT. THREAD, NO. 100727	
NOHI (See drawing on page: 1-76)					
050	1519482-0000		1	PIPE	
600	315229-0206		2	GASKET 60,2X68,2X3,7 MM 2"1/2	
Common Parts					
010	1519483-0000		1	HEATING PIPE	
025	1519484-0000		2	SUPPORT	
030	1296849-0000		1	DISCHARGE TRAY	
040	1296850-0000		1	DISCHARGE TRAY	
060	451430-0000		1	CONNECTION HOUS.(MINOR)	
080	29876-0000		1	COVER	
090	30298-0000		1	INSULATION	
100	491305-0000		1	CONN.DIAGRAM AIR SUPERH.	
110	531731-0000		1	GASKET	
120	751009-0000		1	INSULATION	
130	1519601-0000		2	BUSHING	
300	90012-0126		1	GLAND FITTING, 155 ULI2120	
305	90152-0070	MM	1700	HOSE, SPIRAL CONDUIT, 32,5X26, UL 2621	
310	90153-0020	ML	1	ADHESIVE, BOSTIK 1782 125ML	
320	90195-0028		1	TERMINAL BLOCK, 6440	
330	90195-0029		3	CONN. LINK NO324 FOR -28	
370	90411-0005	MM	1100	INSULATION 1200MM SERIE 21 89/154X30	
490	312105-0287		4	SCREW, M6S ISO 4017 M4X8 A4 70	
500	312105-0325		12	SCREW, M6S ISO 4017 M5X10 A4 80	
520	312105-0453		26	SCREW, M6S ISO 4017 M8X25 A4 80	
525	312105-0457		4	SCREW, M6S ISO 4014 M8X35 A4 80	
530	312125-0323		1	SLOTTED HEAD SCREW, ISO1207 M5X8 A4	
540	312125-0331		2	SLOTTED HEAD SCREW, ISO1207 M5X20 A4	
550	312125-0364		4	SCREW ISO 1207 M6X10 A4	
560	312605-0318		30	HEXAGON NUT, M6M M8 A280	
570	315105-0146		2	WASHER PLAIN, 5,3X10X1 A4 BRB	
575	315105-0165		4	WASHER PLAIN, 8,4X16X1,6 A4 BRB	
580	315229-0204		1	GASKET 34,8X42,8X3,7 MM 1"1/2	
590	315229-0205		1	GASKET 47,5X55,5X3,7 MM 2 INCH	
610	315234-0109		1	WASHER,PL.RND.CU.10,3/13,5 H=1,0	
640	90600-1738		1	WARNING SIGN ISO, ELECTRIC SHOCK	
650	359710-0001		1	WARNING SIGN ISO, HOT SURFACE	
MX039	90326-0020		1	SOCKET, FEMALE YELLOW CR-AL, 03-22000A	
MR032	90600-2007		1	HEATING ELEM.15KW 3X230/400V,T90600-2007	
MB039	90326-0051		1	THERMOCOUPLE, 5110 051-000	
MX039.1	90326-0012		1	PROTECTIVE COVER, 03-001 10	
W409	90220-0059	M	4	THERMOCOUPLE CABLE, P/PTW-20F-K 2X0,5MM2	
W452	351120-0168	M	6	CABLE SIHF 4X10MM2 GREEN/YELLOW	

Machine Type | Group Description | Used-In | Group Number | Page No

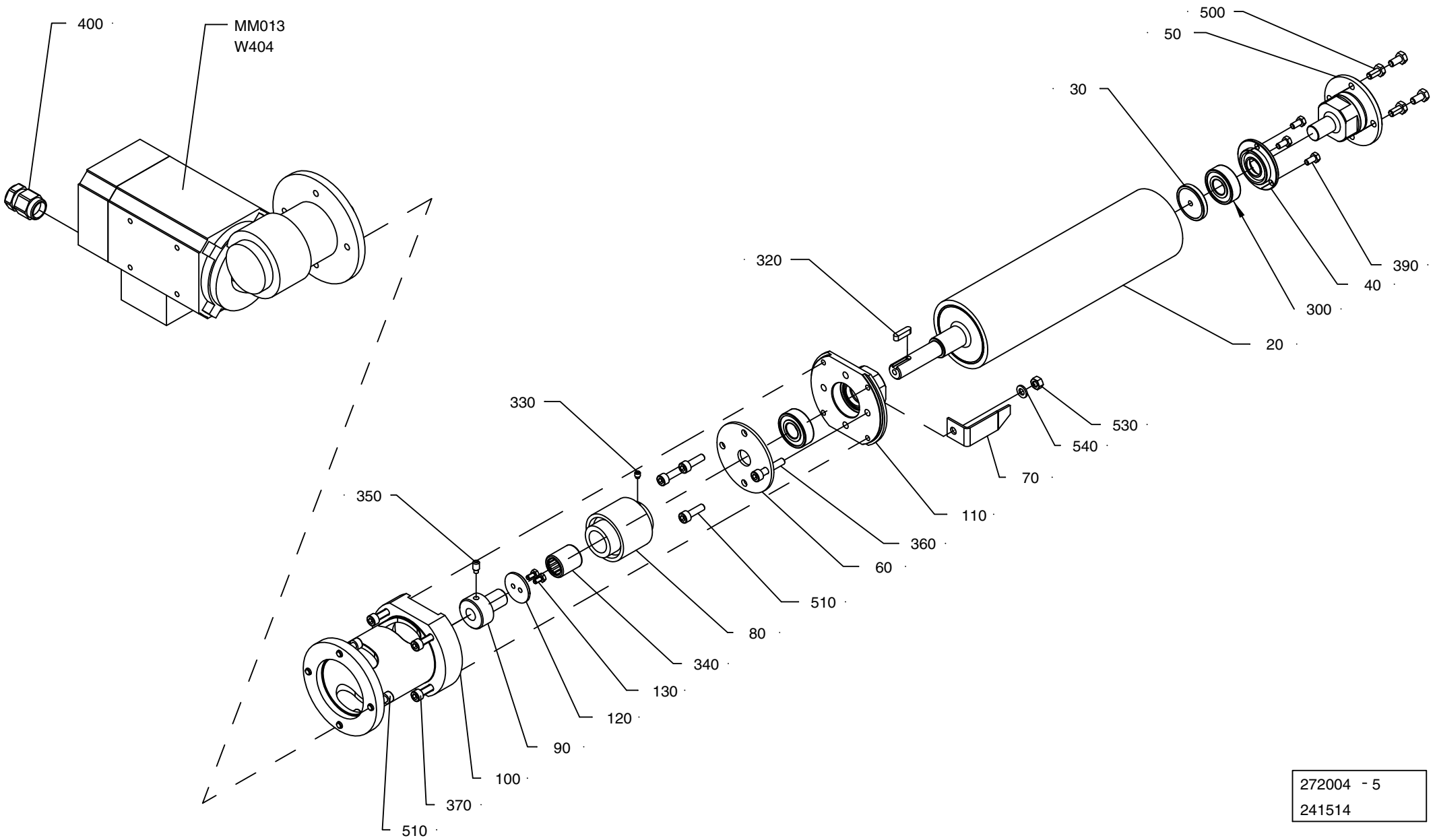

272004 - 5
241514

ECM: 276147 - 20070126
Group number: 272004-0500
Assembly Drawing: 272004-5_1_AC

Pos	Part No	UN	Qty	Description	Page No
TBA 0100B, TBA 0125S, TWA 0125S					
070	752859-0000		1	POINTER	
TBA 0160S, TBA 0200S, TPA 0250SQ, TWA 0200S, TPA 0200SQ					
070	752858-0000		1	POINTER	
TBA 0200B, TBA 0200SQ, TBA 0284B, TBA 0250B, TBA 0300S, TBA 0330S					
070	752857-0000		1	POINTER	
TBA 0200M, TBA 0250S					
070	574415-0000		1	INDICATOR 250S	
TPA 0330SQ					
070	929288-0000		1	INDICATOR	
Common Parts					
020	1548284-0000		1	ROLLER	
030	1490407-0000		1	WASHER	
040	1548275-0000		1	SEAL COVER	
050	1548056-0000		1	AXLE SUPPORT	
060	250590-0000		1	BEARING COVER	
080	90458-2841		1	SHAFT COUPLING 22,225H9/15	
090	1334234-0000		1	HUB	
100	1523228-0000		1	FLANGE	
110	2501542-0000		1	AXLE SUPPORT	
120	250592-0000		1	WASHER	
130	312105-0287		2	SCREW, M6S ISO 4017 M4X8 A4 70	
300	90458-1704		2	BALL BEARING 15/35X11	
320	315705-0201		1	PARALLEL KEY W. ROUND ENDS, 5X5X20 MM	
330	312311-0321		1	SET SCREW, DOG POINT ISO4028 M5X6 FZB	
340	90348-0007		1	FREE-WHEEL COUPLING, 15,875X22,225 MM	
350	312311-0366		1	SET SCREW, DOG POINT ISO4028 M6X12 FZB	
360	312115-0374		1	SCREW ISO4762 M6X30 A4 80	
370	312115-0372		4	SCREW ISO4762 M6X25 A4 80	
390	312105-0325		3	SCREW, M6S ISO 4017 M5X10 A4 80	
400	90458-0438		1	GLAND, EXTENDED WITH INSERT, M20X1,5	
500	312105-0366		4	SCREW, M6S ISO 4017 M6X12 A4 80	
510	312115-0370		7	SCREW ISO4762 M6X20 A4 80	
530	312605-0316		1	HEXAGON NUT, M6M M6 A280	
540	315105-0153		1	WASHER PLAIN, 6,4X12X1,5 A4 BRB	
M.M013	90459-2327		1	GEARS, WORM MOTOR IGL 80-60 + VE 31GR5	
W404	90220-0104	M	4.4	SCR. CABLE 4X1,5MM2	

Pos	Part No	UN	Qty	Description	Page No

Machine Type | Group Description | Used-In | Group Number | Page No

ASEPTIC CHAMBER

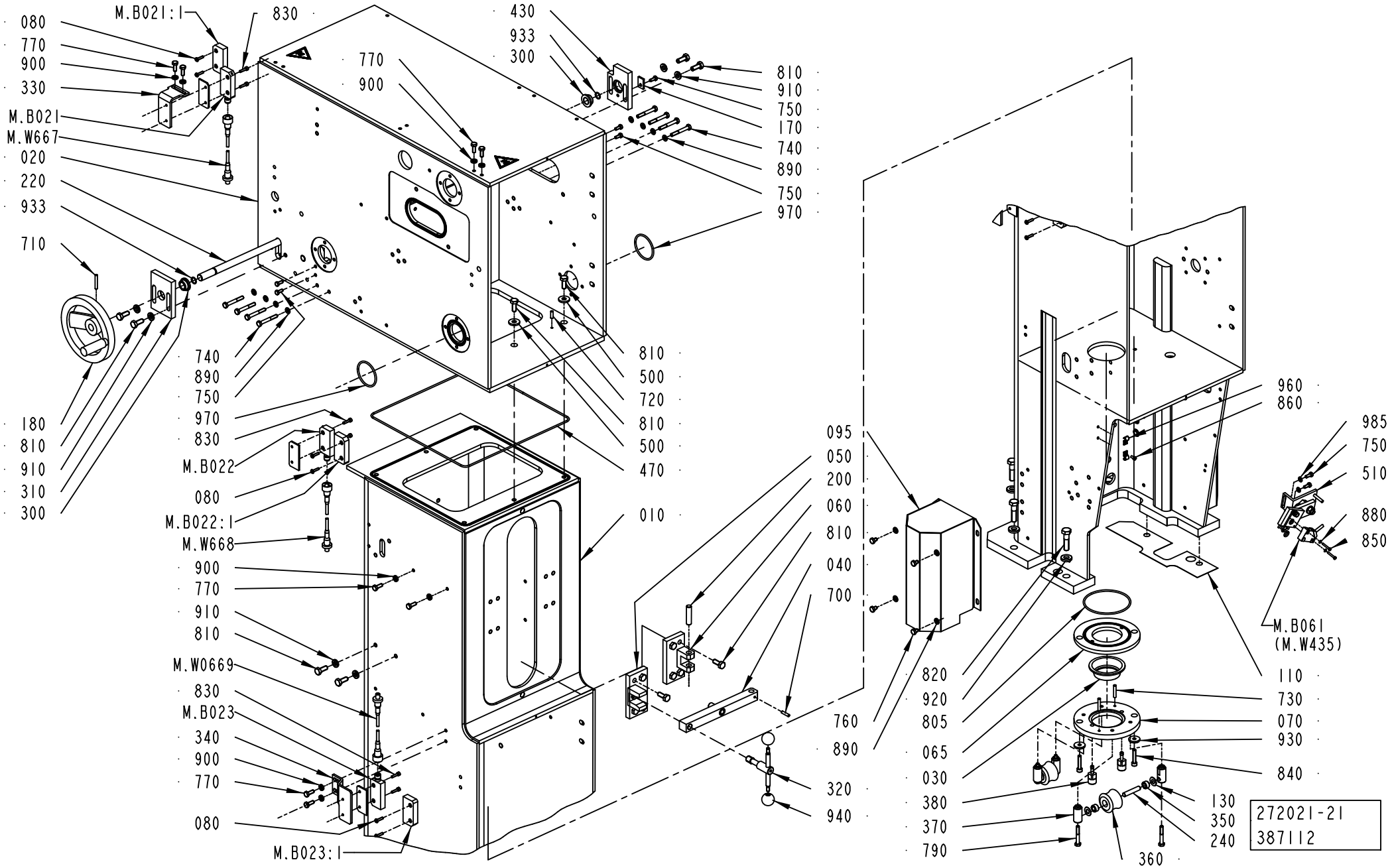

Pos	Part No	UN	Qty	Description	Page No
TBA 0100B, TBA 0125S, TWA 0125S					
030	490900-0000		1	SEALING RING	
065	571537-0000		1	RING	
070	571538-0000		1	RING	
240	490903-0000		2	SHAFT	
350	751230-0000		4	PLAIN BEARING	
360	441876-0000		2	ROLL	
370	490902-0000		4	AXLE SUPPORT	
380	571540-0000		2	PIN	
730	311103-0313		2	PARALLEL PIN ISO 2338 5M6X28 A1	
805	315204-0309		1	O-RING 89,5X3 MM	
840	312115-0374		2	SCREW ISO4762 M6X30 A4 80	
TBA 0160S, TBA 0200S, TPA 0250SQ, TWA 0200S, TPA 0200SQ					
030	490901-0000		1	SEAL	
065	571537-0000		1	RING	
070	571539-0000		1	RING	
240	490903-0000		2	SHAFT	
350	751230-0000		4	PLAIN BEARING	
360	456996-0000		2	ROLLER	
370	490902-0000		4	AXLE SUPPORT	
380	571540-0000		2	PIN	
730	311103-0313		2	PARALLEL PIN ISO 2338 5M6X28 A1	
805	315204-0309		1	O-RING 89,5X3 MM	
840	312115-0374		2	SCREW ISO4762 M6X30 A4 80	
TBA 0200B, TBA 0284B, TBA 0250B, TBA 0300S, TBA 0330S					
030	273953-0000		1	SEAL	
070	456794-0000		1	RING	
240	263655-0006		2	SHAFT	
360	456796-0000		2	ROLLER	
370	456797-0000		4	AXLE SUPPORT	
380	752519-0002		2	PIN	
730	311103-0310		2	PARALLEL PIN ISO 2338 5M6X20 A1	
840	312115-0370		2	SCREW ISO4762 M6X20 A4 80	
TBA 0200M, TBA 0250S					
030	574336-0000		1	SEAL	
065	574334-0000		1	RING	
070	574335-0000		1	RING	
240	490903-0000		2	SHAFT	
350	751230-0000		4	PLAIN BEARING	
360	574333-0000		2	ROLL	
370	490902-0000		4	AXLE SUPPORT	
380	571540-0000		2	PIN	
730	311103-0313		2	PARALLEL PIN ISO 2338 5M6X28 A1	
805	315204-0309		1	O-RING 89,5X3 MM	
840	312115-0374		2	SCREW ISO4762 M6X30 A4 80	
TPA 0330SQ					
030	929286-0000		1	SEAL	
070	456794-0000		1	RING	
240	263655-0006		2	SHAFT	
360	929284-0000		2	ROLLER	
370	456797-0000		4	AXLE SUPPORT	
380	752519-0002		2	PIN	
730	311103-0310		2	PARALLEL PIN ISO 2338 5M6X20 A1	
840	312115-0370		2	SCREW ISO4762 M6X20 A4 80	
Common Parts					
010	1523494-0000		1	PILLAR	
015	12242-0005		1	GASKET 61X51X5,5	
020	978865-0000		1	HOUSE	
040	295426-0000		1	CAP	
050	295427-0000		1	LOCK	
060	295428-0000		1	HINGE	
080	2872726-0000		6	SCREW	
095	490964-0000		2	COVER	
110	1523158-0001		1	SHIM	
110	1523158-0002		1	SHIM	
110	1523158-0003		1	SHIM	
130	2033-0007		8	WASHER	
140	247349-0000		2	STEERING	
150	491602-0000		2	GASKET HOLDER	
170	978872-0000		1	LOCK WASHER	
180	247358-0000		1	SHIFTER HANDLE	
190	255986-0000		2	WHEEL	
200	256163-0000		1	SHAFT	
210	247357-0000		2	SPROCKET	
220	751131-0000		1	SHAFT	
230	256170-0000		2	DRIP PLATE	
250	267033-0000		2	WASHER	
260	271863-0000		2	SHAFT	
270	271864-0000		2	WASHER	
280	272002-0000		1	PROTECTIVE COVER LEFT	
290	272003-0000		1	PROTECTIVE COVER RIGHT	
300	279008-0000		2	BUSHING	
310	978870-0000		1	BEARING PLATE	
320	295429-0000		1	HANDLE	

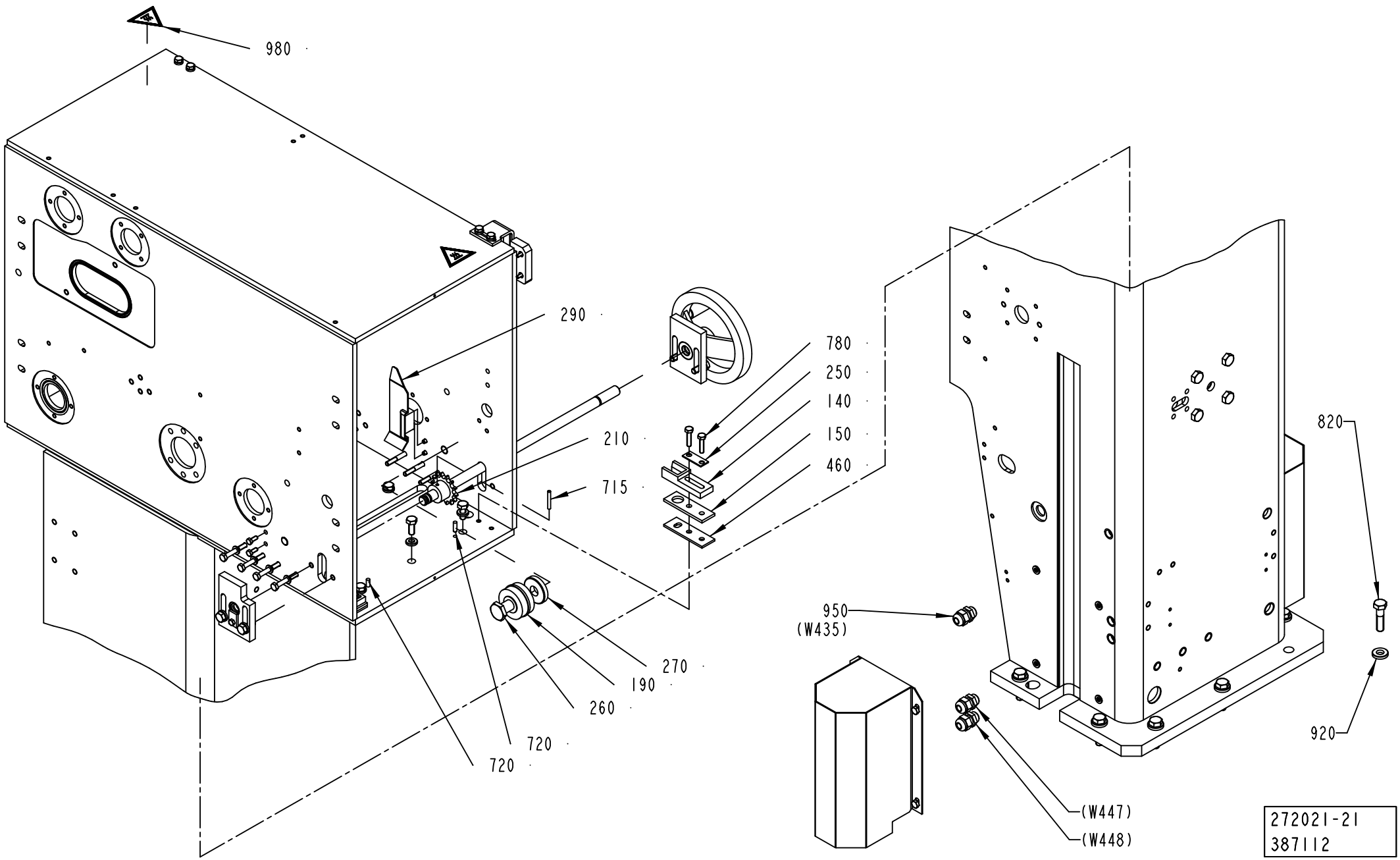
980
290
210
715
780
250
140
150
460
820
950
(W435)
270
190
260
720
720
920
(W447)
(W448)
272021-21
387112

Pos	Part No	UN	Qty	Description	Page No
Common Parts (Cont'd)					
330	2914829-0000		1	BRACKET	
340	2914830-0000		1	BRACKET	
430	978871-0000		1	BEARING PLATE	
460	491128-0000		2	GASKET	
470	491418-0002		1	O-RING 352X3 FPM	
500	28036-0000		6	WASHER	
510	2790832-0100		1	SUPPORT	**1-89**
700	311112-0256		1	SPRING PIN, ISO 8752 4X20 A2	
710	311112-0262		1	SPRING PIN, ISO 8752 4X32 A2	
715	311103-0276		2	PARALLEL PIN ISO 2338 4M6X30 A1	
720	311103-0308		4	PARALLEL PIN ISO 2338 5M6X16 A1	
740	312105-0379		8	SCREW, M6S ISO 4014 M6X45 A4 80	
750	312105-0327		7	SCREW, M6S ISO 4017 M5X12 A4 80	
760	312105-0362		8	SCREW, M6S ISO 4017 M6X8 A4 80	
770	312105-0368		8	SCREW, M6S ISO 4017 M6X16 A4 80	
780	312105-0372		4	SCREW, M6S ISO 4017 M6X25 A4 80	
790	312105-0378		4	SCREW, M6S ISO 4014 M6X40 A4 80	
810	312105-0451		26	SCREW, M6S ISO 4017 M8X20 A4 80	
820	312105-0499		7	SCREW, M6S ISO 4014 M10X40 A4 80	
830	312115-0293		6	SCREW ISO4762 M4X16 A4 80	
850	312125-0230		2	SLOTTED HEAD SCREW, ISO1207 M3X20 A4	
860	312125-0287		4	SLOTTED HEAD SCREW, ISO1207 M4X8 A4	
870	312605-0316		8	HEXAGON NUT, M6M M6 A280	
880	315105-0124		2	WASHER PLAIN, 3,2X6X0,5 A4 BRB	
890	315105-0153		16	WASHER PLAIN, 6,4X12X1,5 A4 BRB	
900	315115-0153		8	WASHER PLAIN, TBRB 6,4/12 H=3	
910	315115-0165		12	WASHER PLAIN, TBRB 8,4/16 H=3	
920	315115-0173		7	WASHER PLAIN, TBRB 10,5/22 H=4	
930	315125-0153		2	WASHER HIGH, TBRSB 6,4X22X4 A4	
933	315204-0109		2	O-RING 11,1X1,6 MM	
940	318800-0103		2	HANDLES,SPHERICAL KNOB,INT.THRE.,D.25-M6	
950	352103-0101		3	CABLE GLAND, ST 9, PR15,2/PG9	
955	90458-0306		3	CABLE GLAND, M16X1,5, 5311 1010	
960	352110-0100		4	CABLE CLIPS, D=5-7 MM	
970	315204-0301		2	O-RING 49,5X3 MM	
980	359710-0001		2	WARNING SIGN ISO, HOT SURFACE	
985	312105-0327		2	SCREW, M6S ISO 4017 M5X12 A4 80	
990	315105-0146		2	WASHER PLAIN, 5,3X10X1 A4 BRB	
M.W669	90459-7095		1	FOCUS JUMPER CABLE M12 5P 1M, 20-056-20	
M.W668	90459-7095		1	FOCUS JUMPER CABLE M12 5P 1M, 20-056-20	
M.W667	90459-7095		1	FOCUS JUMPER CABLE M12 5P 1M, 20-056-20	
M.B061	90044-0194		1	INDUCTIVE SENSOR, IN 5329	
M.B023:1	90458-2794		1	SAFETY SENSOR, EVA 20-046-00	
M.B023	90459-4142		1	SAFETY SENSOR, ADAM M12, 20-051-00	
M.B022:1	90458-2794		1	SAFETY SENSOR, EVA 20-046-00	
M.B022	90459-4142		1	SAFETY SENSOR, ADAM M12, 20-051-00	
M.B021:1	90458-2794		1	SAFETY SENSOR, EVA 20-046-00	
M.B021	90459-4142		1	SAFETY SENSOR, ADAM M12, 20-051-00	

ASEPTIC CHAMBER

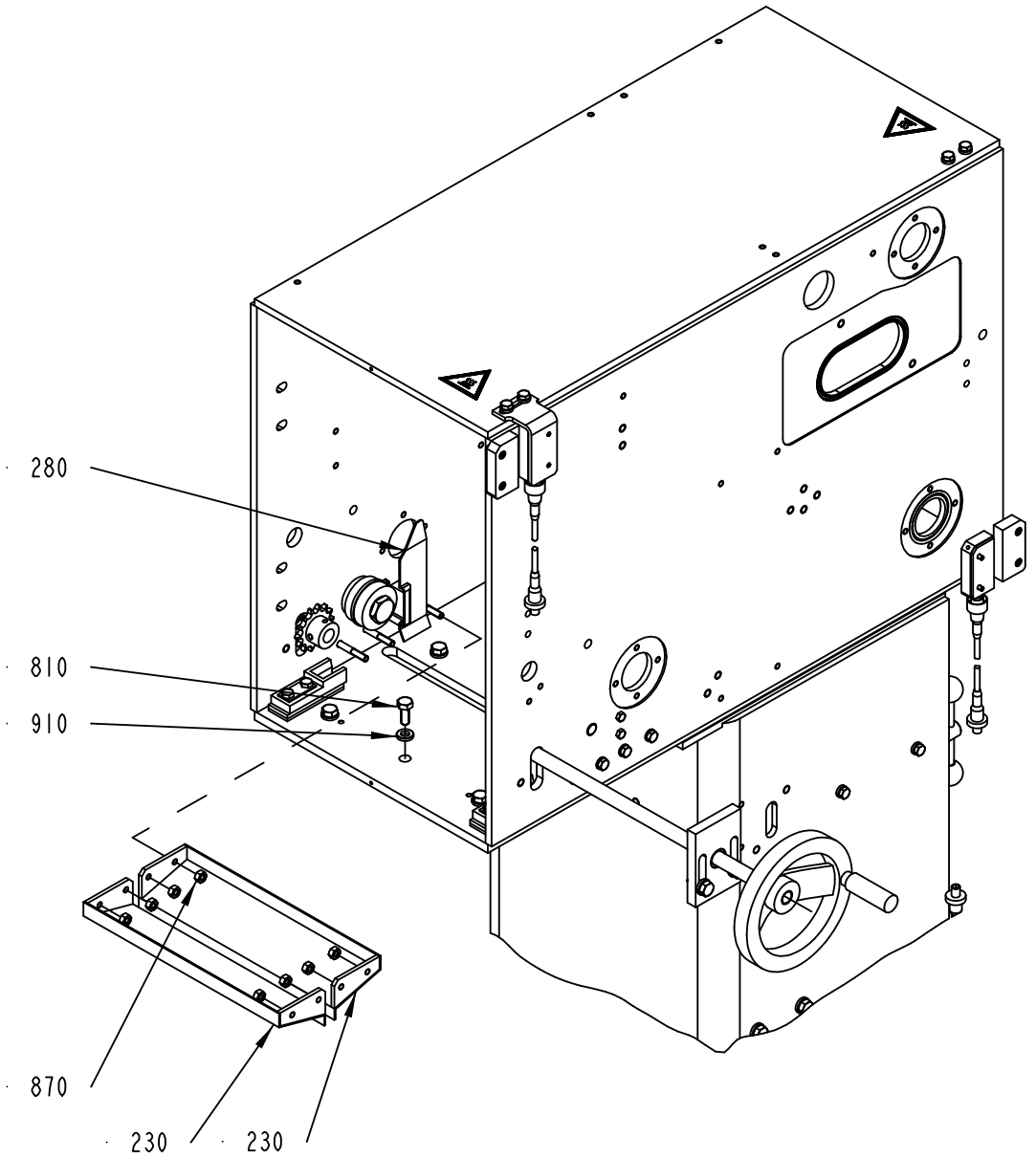

Pos	Part No	UN	Qty	Description	Page No	Pos	Part No	UN	Qty	Description	Page No

SEE PREVIOUS LISTS PAGES: 1-83, 1-85.

SUPPORT

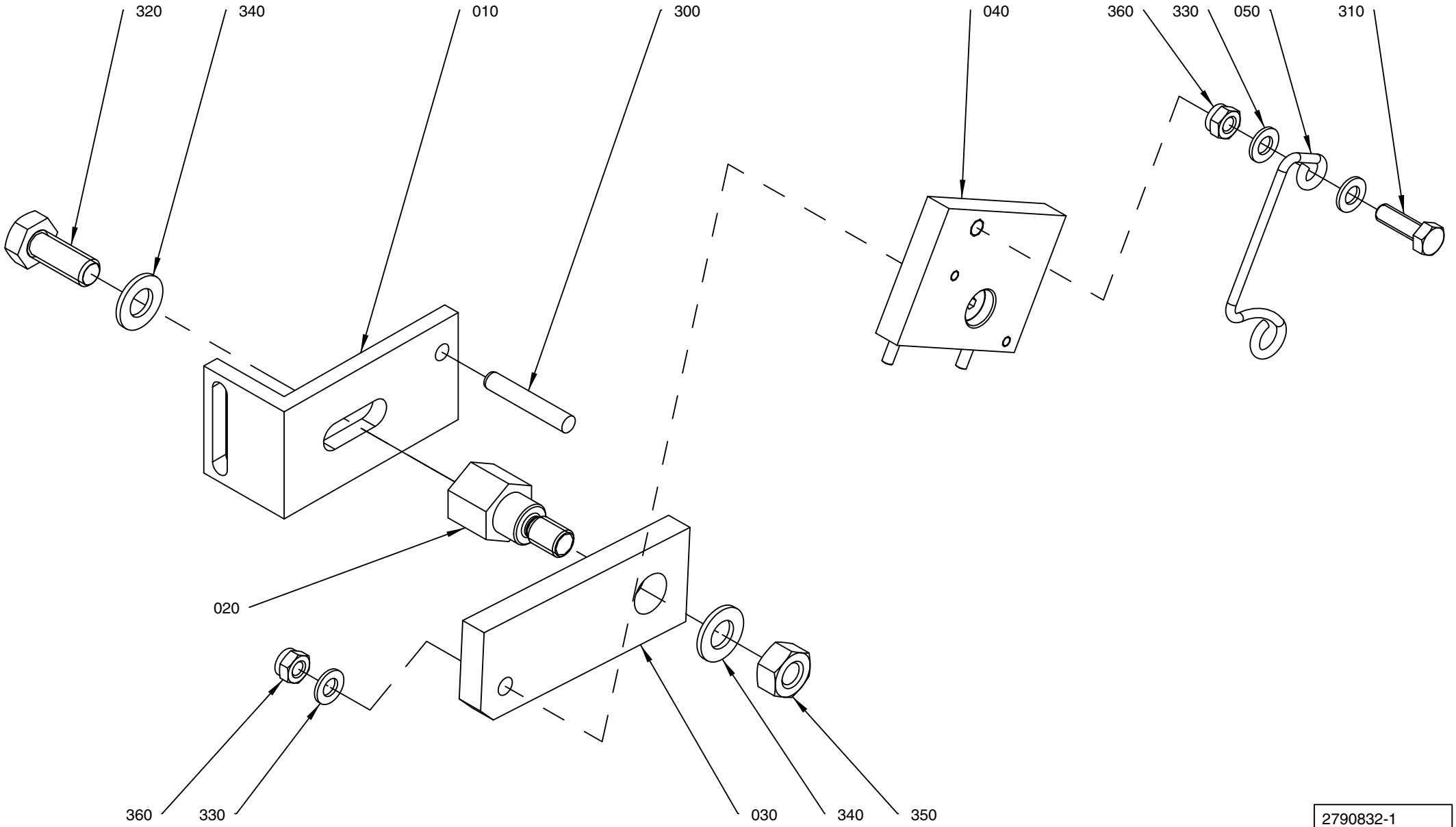

2790832-1
2193 92

ECM: 236147 - 20051104
Group number: 2790832-0100
Assembly Drawing: 2790832-1_1_AA

Pos	Part No	UN	Qty	Description	Page No
-					
010	2646248-0000		1	MOUNTING BRACKET	
020	2640262-0000		1	AXLE PIN	
030	2790830-0000		1	SUPPORT BAR	
040	2790831-0000		1	SUPPORT PLATE	
050	2640265-0000		1	LOCK SPRING	
300	311103-0314		1	PARALLEL PIN ISO 2338 5M6X30 A1	
310	312105-0329		1	SCREW, M6S ISO 4017 M5X16 A4 80	
320	312105-0451		1	SCREW, M6S ISO 4017 M8X20 A4 80	
330	315105-0146		3	WASHER PLAIN, 5,3X10X1 A4 BRB	
340	315105-0165		2	WASHER PLAIN, 8,4X16X1,6 A4 BRB	
350	312605-0318		1	HEXAGON NUT, M6M M8 A280	
360	312812-0314		2	HEXAGON NUT, NY-LOCK M5 A4 80	

Pos	Part No	UN	Qty	Description	Page No

CALENDER ROLLER

Drawing file: 272024-5_1_AC.hpgl

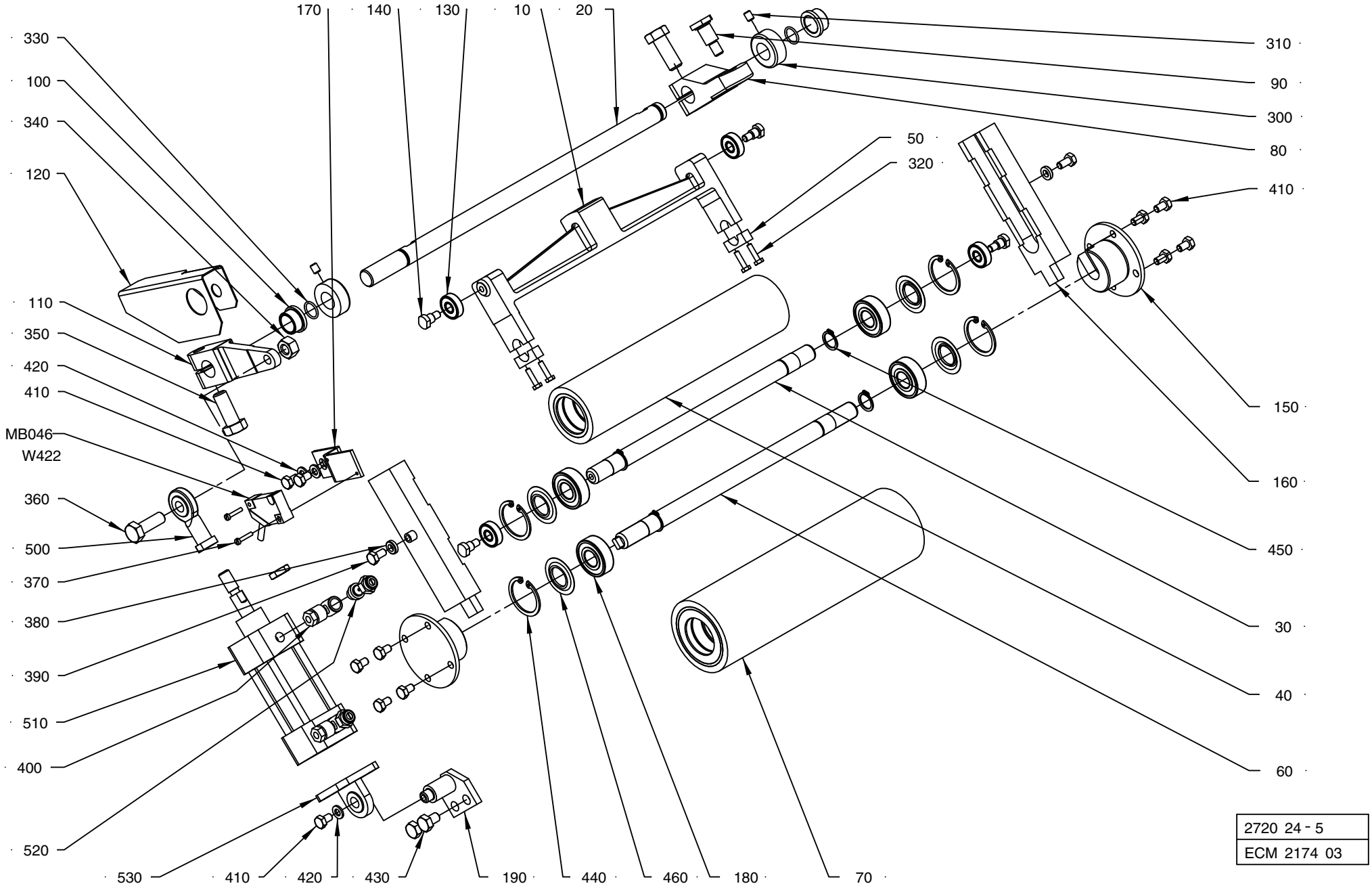

2720 24 - 5
ECM 2174 03

ECM: 252131 - 20060127
Group number: 272024-0500
Assembly Drawing: 272024-5_1_AC

Pos	Part No	UN	Qty	Description	Page No
-					
010	1538103-0000		1	FORK	
020	751132-0000		1	SHAFT	
030	2555634-0000		1	SHAFT	
040	1538097-0000		1	CALENDER ROLLER	
050	1538098-0000		2	CLAMP	
060	2555633-0000		1	SHAFT	
070	1538096-0000		1	CALENDER ROLLER	
080	272927-0000		1	PRESSURE ARM	
090	271898-0000		1	SCREW	
100	271269-0000		2	BUSHING	
110	441904-0000		1	ARM	
120	978462-0000		1	PROTECTION PLATE	
130	90459-6335		4	BALL BEARING 8/22X7	
140	271899-0000		4	SCREW	
150	566697-0000		2	AXLE SUPPORT	
160	566696-0000		2	GUIDE CONSOLE	
170	272033-0000		1	BRACKET	
180	90458-1704		4	BALL BEARING 15/35X11	
190	441578-0002		1	CYLINDER BRACKET	
300	315742-0112		2	RETAINING RING, 16 SMS 199 RFR	
310	312318-0362		2	SET SCREW, CUP END ISO4029 M6X8 A4	
320	312105-0293		4	SCREW, M6S ISO 4017 M4X16 A4 70	
330	315204-0111		2	O-RING 13,1X1,6 MM	
340	312605-0320		1	HEXAGON NUT, M6M M10 A280	
350	312105-0536		2	SCREW, M6S ISO 4017 M12X30 A4 80	
360	312105-0495		1	SCREW, M6S ISO 4017 M10X30 A4 80	
370	312125-0228		2	SLOTTED HEAD SCREW, ISO1207 M3X16 A4	
380	315115-0153		2	WASHER PLAIN, TBRB 6,4/12 H=3	
390	312105-0366		2	SCREW, M6S ISO 4017 M6X12 A4 80	
400	342797-0121		2	BANJO CONN., RINGPIECE 6-1/8	
410	312105-0364		11	SCREW, M6S ISO 4017 M6X10 A4 80	
420	315105-0153		3	WASHER PLAIN, 6,4X12X1,5 A4 BRB	
430	312105-0447		2	SCREW, M6S ISO 4017 M8X12 A4 80	
440	315753-0124		4	RETAINING RING FOR BORE DIN 472 35 SS	
450	315751-0112		4	RETAINING RING FOR SHAFT DIN 471 15 SS	
460	90214-0303		4	SEALING RING, 18,6X35X2 MM	
500	90239-0405		1	ROD END,BALL JOINT EYE M10X1,25	
510	90239-0773		1	CYLINDER, SHUTTLE 25-310	
	90239-0442		*1*	*SEAL KIT*	
520	90235-0274		2	THROTTLE CHECK VALVE, G1/8", SCU-604-1/8	
530	90239-0453		1	BRACKET	
MB046	90044-0194		1	INDUCTIVE SENSOR, IN 5329	

Machine Type	Group Description	Used-In	Group Number	Page No

AIR KNIFE

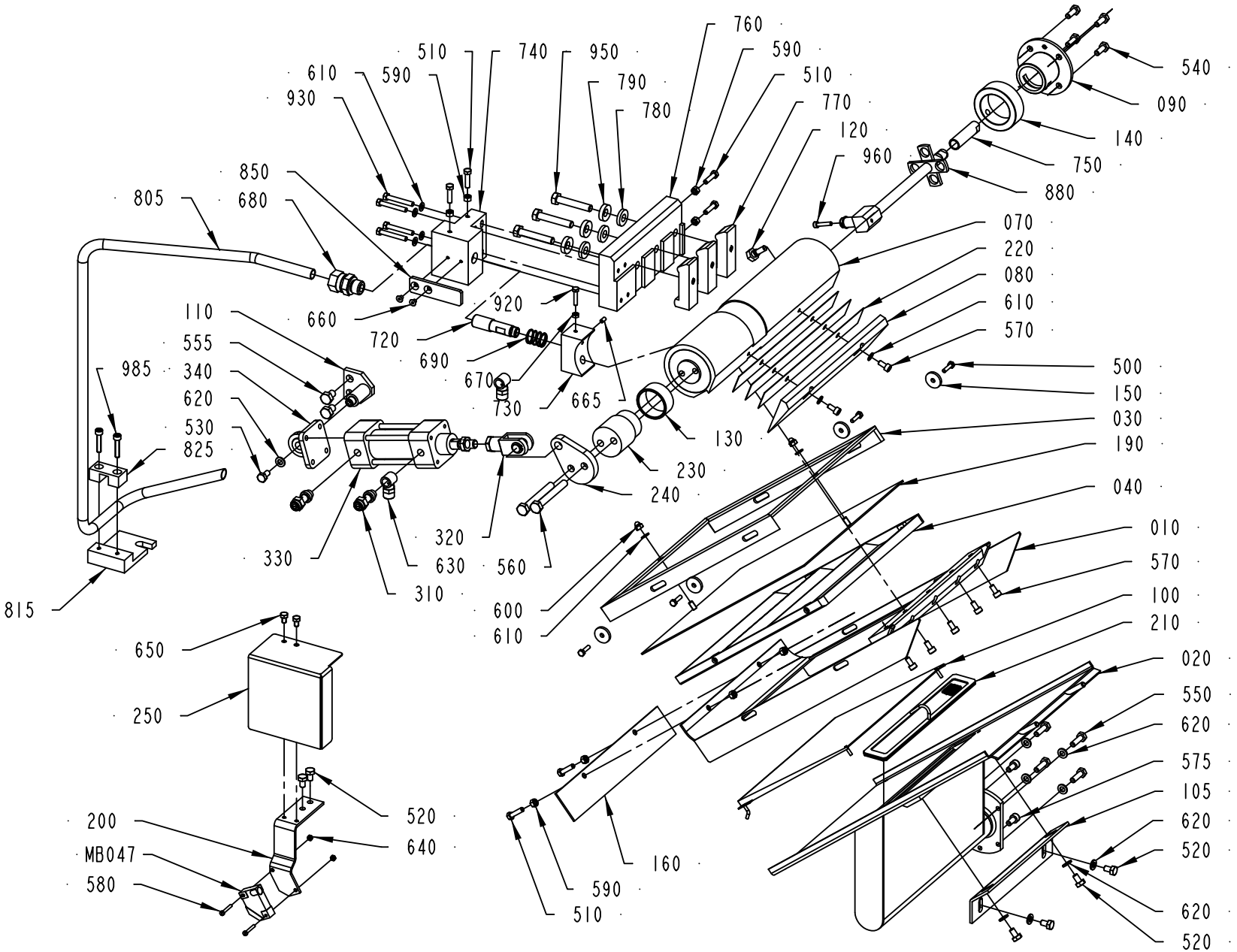

272025-8
ECM 275422

ECM: 275422 - 20070126
Group number: 272025-0600
Assembly Drawing: 272025-8_1_AA

This list covers pages from 1-92 to 1-95

Pos	Part No	UN	Qty	Description	Page No
TBA 0125S, TBA 0100B, TWA 0125S (See drawing on page: 1-94)					
010	271824-0000		1	AIR KNIFE, MOVABLE	
020	271825-0000		1	FIXED AIR KNIFE	
030	2815750-0001		1	FRAME	
040	271942-0001		1	AIR GUIDE	
070	272026-0001		1	AIR DISTRIBUTOR	
080	271820-0001		1	STEERING RAIL	
100	272140-0001		1	HEAD PLATE	
160	271827-0001		1	HEAD PLATE	
190	2815751-0001		1	COVER PLATE	
210	272141-0001		1	FILTER	
220	272329-0001		2	LACE	
510	312105-0331		2	SCREW, M6S ISO 4017 M5X20 A4 80	
570	312115-0325		5	SCREW ISO4762 M5X10 A4 80	
590	312605-0314		4	HEXAGON NUT, M6M M5 A280	
610	315105-0146		4	WASHER PLAIN, 5,3X10X1 A4 BRB	
TBA 0160S, TBA 0200M, TBA 0200B, TBA 0200S, TBA 0250S, TBA 0284B, TBA 0250B, TBA 0300S, TBA 0330S, TWA 0200S, TPA 0250SQ 6000/H, TPA 0330SQ 6000/H (See drawing on page: 1-94)					
010	272022-0000		1	AIR KNIFE, MOVABLE	
020	272023-0000		1	FIXED AIR KNIFE	
030	2815750-0002		1	FRAME	
040	271942-0002		1	AIR GUIDE	
070	272026-0002		1	AIR DISTRIBUTOR	
080	271820-0002		1	STEERING RAIL	
100	272140-0002		1	HEAD PLATE	
160	271827-0002		1	HEAD PLATE	
190	2815751-0002		1	COVER PLATE	
210	272141-0002		1	FILTER	
220	272329-0002		3	LACE	
510	312105-0331		2	SCREW, M6S ISO 4017 M5X20 A4 80	
570	312115-0325		7	SCREW ISO4762 M5X10 A4 80	
590	312605-0314		4	HEXAGON NUT, M6M M5 A280	
610	315105-0146		4	WASHER PLAIN, 5,3X10X1 A4 BRB	
TPA 0200SQ 7500/H, TPA 0250SQ 7500/H (See drawing on page: 1-92)					
010	272022-0000		1	AIR KNIFE, MOVABLE	
020	272023-0000		1	FIXED AIR KNIFE	
030	2815750-0002		1	FRAME	
040	271942-0002		1	AIR GUIDE	
070	1523332-0000		1	AIR DISTRIBUTOR	
080	271820-0002		1	STEERING RAIL	
100	272140-0002		1	HEAD PLATE	
160	271827-0002		1	HEAD PLATE	
190	2815751-0002		1	COVER PLATE	
210	272141-0002		1	FILTER	
220	272329-0002		3	LACE	
510	312105-0331		6	SCREW, M6S ISO 4017 M5X20 A4 80	
570	312115-0325		7	SCREW ISO4762 M5X10 A4 80	
590	312605-0314		8	HEXAGON NUT, M6M M5 A280	
610	315105-0146		8	WASHER PLAIN, 5,3X10X1 A4 BRB	
660	312155-0285		2	SCREW DIN 7991 MF6S M4X6 A4 70	
665	312318-0287		1	SET SCREW, CUP END ISO4029 M4X8 A4	
670	312605-0312		1	HEXAGON NUT, M6M M4 A280	
680	90030-0187		1	CONN. STR. GE12LRED71	
690	90335-0152		1	COMP. SPRING, 22300, 1,25X17,25X40,5	
720	1523333-0000		1	AXLE PIN	
730	1523334-0000		1	PLUG	
740	1523335-0000		1	SUPPORT	
750	1523336-0000		1	PIPE	
760	1523337-0000		1	PLATE	
770	1523338-0000		3	BLOCK	
780	1523339-0000		3	WASHER	
790	1523340-0000		3	WASHER	
805	2549261-0000		1	TUBE	
815	2549262-0000		1	PLATE	
825	2549263-0000		1	CRAMP	
850	1523346-0000		1	PLATE	
880	1523350-0000		1	PIPE	
920	312105-0295		1	SCREW, M6S ISO 4017 M4X20 A4 70	
930	312105-0337		4	SCREW, M6S ISO 4014 M5X35 A4 80	
950	312105-0460		3	SCREW, M6S ISO 4014 M8X45 A4 80	
960	312115-0295		1	SCREW ISO4762 M4X20 A4 80	
985	312115-0333		2	SCREW ISO4762 M5X25 A4 80	
Common Parts					
090	271858-0000		1	FLANGE	
105	272464-0000		1	ANGLE BRACKET	
110	441578-0001		1	CYLINDER BRACKET	
120	255995-0000		1	SCREW	
130	751165-0000		1	BUSHING	
140	256022-0000		1	BUSHING	
150	263311-0000		4	WASHER	
200	1524653-0000		1	BRACKET	
230	441576-0000		1	SPACER	
240	1524654-0000		1	ARM	
250	1524655-0000		1	PROTECTION PLATE	

AIR KNIFE

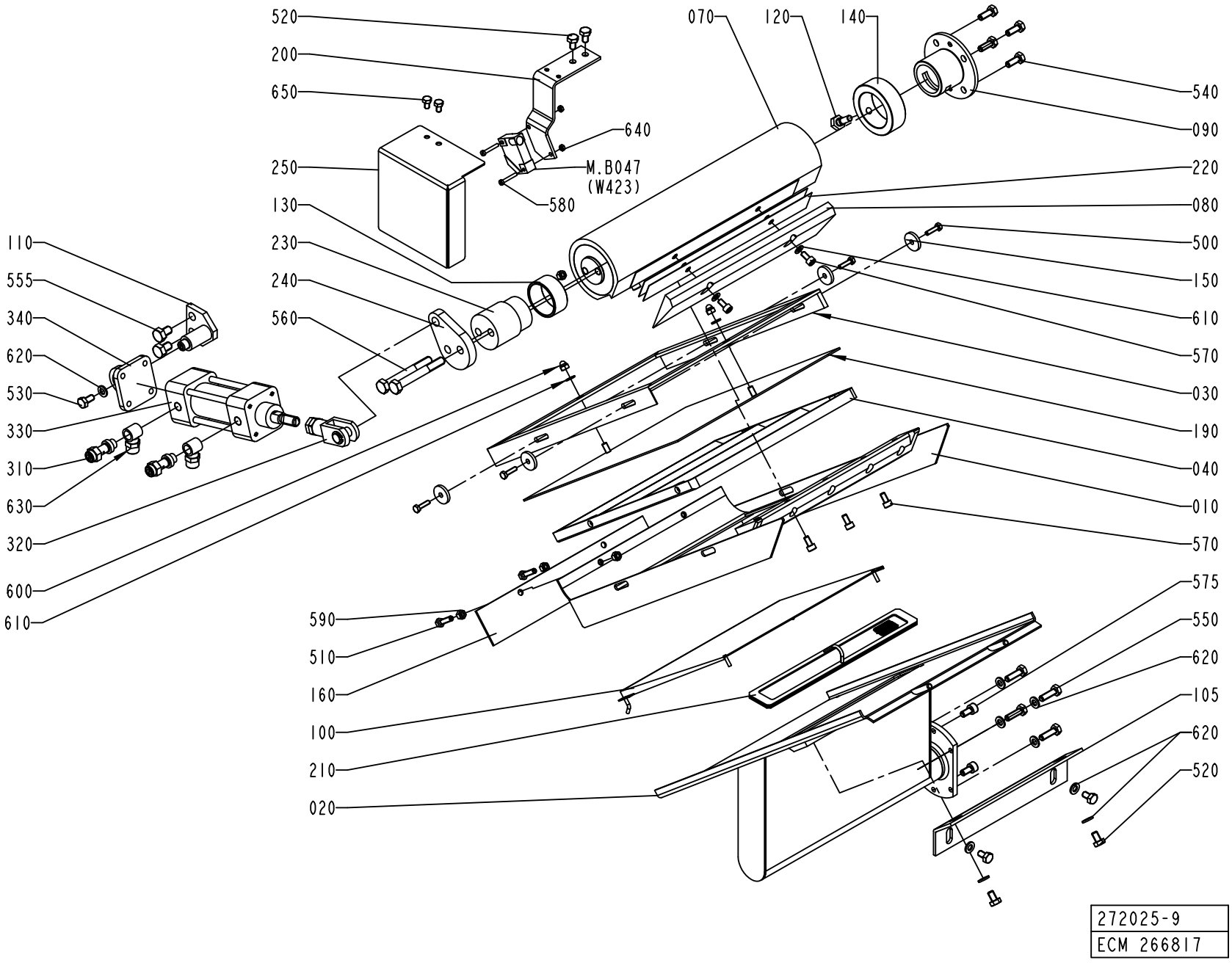
520
200
650
640
250
M.B047
(W423)
580
130
230
240
560
070
120
140
540
090
220
080
500
150
610
570
030
190
040
010
570
575
550
620
105
620
520
110
555
340
620
530
330
310
630
320
600
610
590
510
160
100
210
020
272025-9
ECM 266817

Pos	Part No	UN	Qty	Description	Page No
Common Parts (Cont'd)					
310	90235-0274		2	THROTTLE CHECK VALVE, G1/8", SCU-604-1/8	
320	90239-0516		1	ROD END, CLEVIS WITH AXLE M10X1,25	
330	90239-0773		1	CYLINDER, SHUTTLE 25-310	
	90239-0442		*1*	*SEAL KIT*	
340	90239-0453		1	BRACKET	
500	312105-0293		4	SCREW, M6S ISO 4017 M4X16 A4 70	
520	312105-0364		6	SCREW, M6S ISO 4017 M6X10 A4 80	
530	312105-0366		1	SCREW, M6S ISO 4017 M6X12 A4 80	
540	312105-0368		4	SCREW, M6S ISO 4017 M6X16 A4 80	
550	312105-0370		4	SCREW, M6S ISO 4017 M6X20 A4 80	
555	312105-0447		2	SCREW, M6S ISO 4017 M8X12 A4 80	
560	312105-0464		2	SCREW, M6S ISO 4014 M8X65 A4 80	
575	312115-0366		2	SCREW ISO4762 M6X12 A4 80	
580	312125-0230		2	SLOTTED HEAD SCREW, ISO1207 M3X20 A4	
600	90459-3318		2	DOMED LOCKING NUT, M5 SS 304	
620	315105-0153		9	WASHER PLAIN, 6,4X12X1,5 A4 BRB	
630	342980-0113		2	HOSE FITTING, BANJO RING L PO G1/8 6/4	
640	312605-0310		2	HEXAGON NUT, M6M M3 A280	
650	312105-0323		2	SCREW, M6S ISO 4017 M5X8 A4 80	
MB047	90044-0104		1	INDUCTIVE SENSOR IN5227S	

Pos	Part No	UN	Qty	Description	Page No

BENDING ROLLER

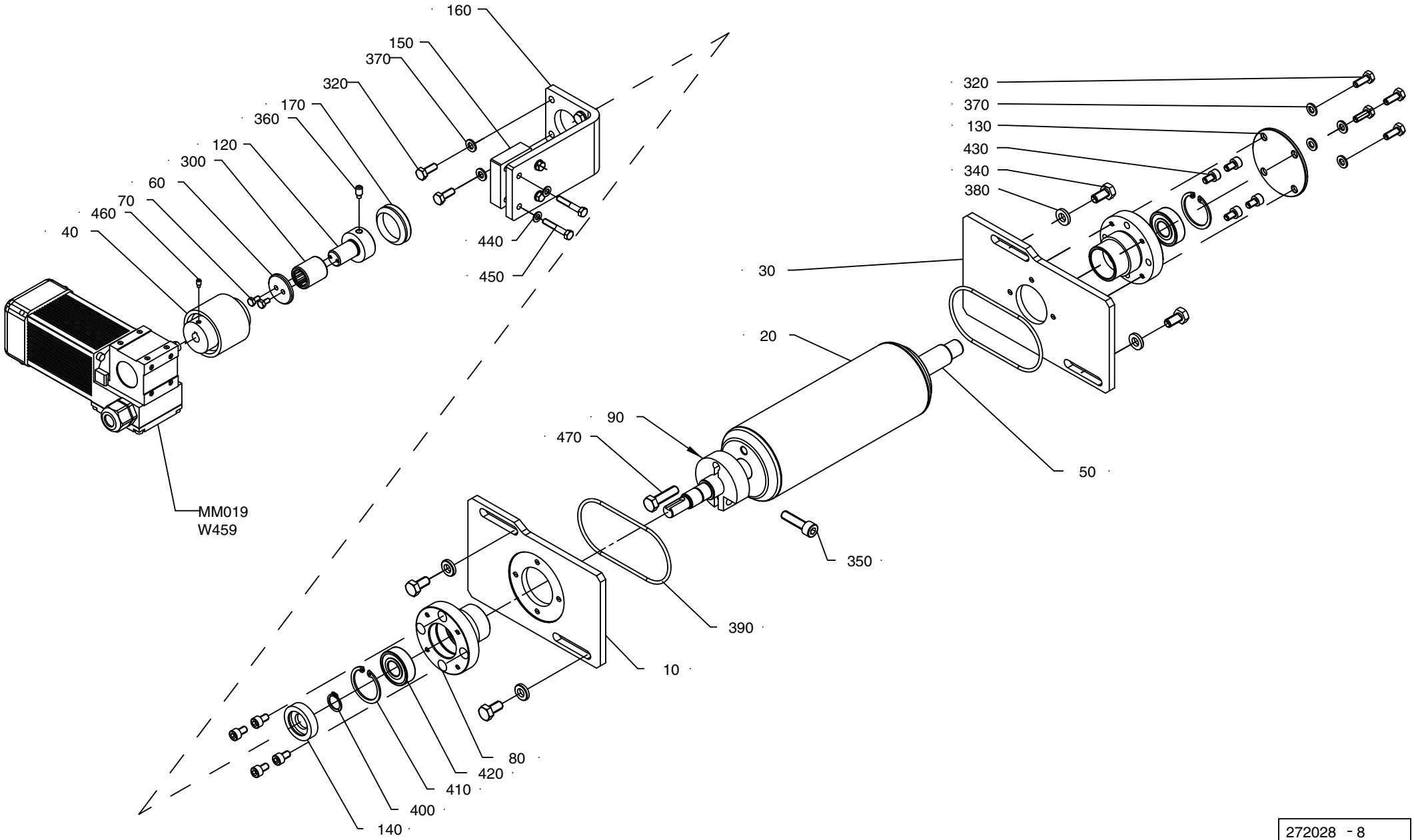

272028 - 8
ECM 241514

ECM: 276162 - 20070126
Group number: 272028-0800
Assembly Drawing: 272028-8_1_AC

Pos	Part No	UN	Qty	Description	Page No
TBA 0100B, TBA 0125S, TWA 0125S					
010	1524780-0000		1	PLATE	
020	2559069-0000		1	BENDING ROLLER	
030	572157-0000		1	BEARING PANEL	
TBA 0160S, TBA 0200S, TPA 0250SQ, TWA 0200S, TPA 0200SQ					
010	1524780-0000		1	PLATE	
020	2559071-0000		1	BENDING ROLLER	
030	572157-0000		1	BEARING PANEL	
TBA 0200B, TBA 0200SQ, TBA 0284B, TBA 0250B, TBA 0300S, TBA 0330S					
010	1524805-0000		1	PLATE	
020	2559068-0000		1	BENDING ROLLER	
030	572158-0000		1	BEARING PANEL	
TBA 0200M, TBA 0250S					
010	1524780-0000		1	PLATE	
020	2559070-0000		1	BENDING ROLLER	
030	572157-0000		1	BEARING PANEL	
TPA 0330SQ					
010	1524805-0000		1	PLATE	
020	2672115-0000		1	BENDING ROLLER	
030	572158-0000		1	BEARING PANEL	
Common Parts					
040	90458-2840		1	SHAFT COUPLING 22,225H9/9	
050	2522249-0000		1	SHAFT	
060	250592-0000		1	WASHER	
070	312105-0287		2	SCREW, M6S ISO 4017 M4X8 A4 70	
080	1539997-0000		2	AXLE SUPPORT	
090	2559087-0000		1	CLAMP	
120	1334234-0000		1	HUB	
130	1548143-0000		1	END PLATE	
140	1558403-0000		1	DISC	
150	2527718-0000		1	SPACER	
160	2522248-0000		1	BRACKET	
170	315220-0167		1	V-RING 27X35X10,5 MM V-30S	
300	90348-0007		1	FREE-WHEEL COUPLING, 15,875X22,225 MM	
320	312105-0368		8	SCREW, M6S ISO 4017 M6X16 A4 80	
340	312105-0449		4	SCREW, M6S ISO 4017 M8X16 A4 80	
350	312115-0455		2	SCREW ISO4762 M8X30 A4 80	
360	312311-0366		1	SET SCREW, DOG POINT ISO4028 M6X12 FZB	
370	315105-0153		8	WASHER PLAIN, 6,4X12X1,5 A4 BRB	
380	315115-0165		4	WASHER PLAIN, TBRB 8,4/16 H=3	
390	315204-0309		2	O-RING 89,5X3 MM	
400	315751-0112		1	RETAINING RING FOR SHAFT DIN 471 15 SS	
410	315753-0124		2	RETAINING RING FOR BORE DIN 472 35 SS	
420	90458-1704		2	BALL BEARING 15/35X11	
430	312115-0364		8	SCREW ISO4762 M6X10 A4 80	
440	315105-0146		4	WASHER PLAIN, 5,3X10X1 A4 BRB	
450	312105-0335		4	SCREW, M6S ISO 4014 M5X30 A4 80	
460	312311-0287		1	SET SCREW, DOG POINT ISO4028 M4X8 FZB	
470	312105-0455		1	SCREW, M6S ISO 4017 M8X30 A4 80	
MM019	90458-1879		1	GEARS, WORM MOTOR 528V--L06-B01	
W459	351150-0413	M	5	CABLE OLFLEX 4GX1,5 MM2 LIGHT/GREY	

Machine Type | Group Description | Used-In | Group Number | Page No

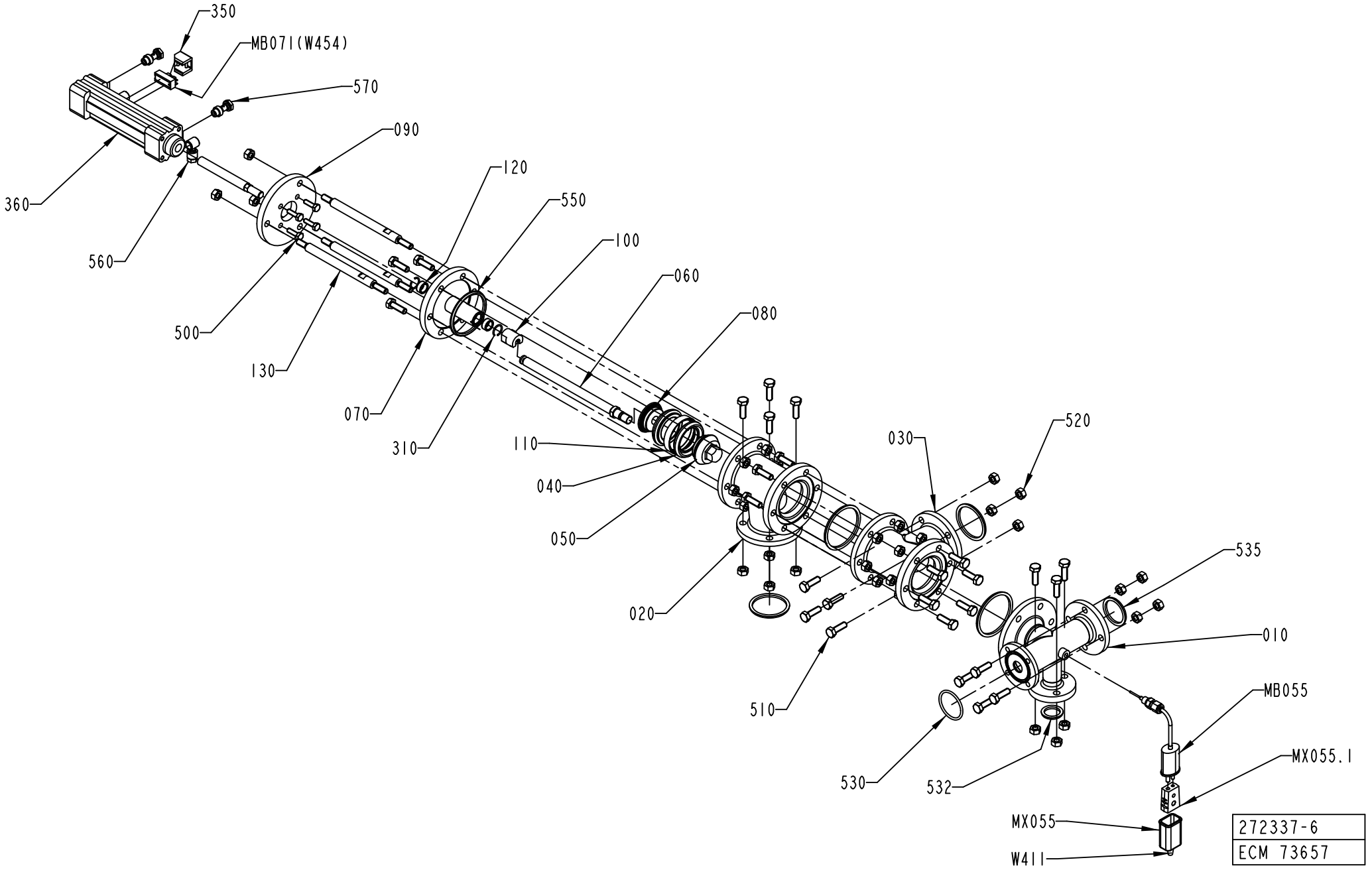
350
MB071(W454)
570
090
120
550
100
060
080
360
560
500
130
070
310
110
040
050
020
030
520
535
010
MB055
MX055.1
510
530
532
MX055
W411
272337-6
ECM 73657

ECM: 178605 - 20040910
Group number: 272337-0600
Assembly Drawing: 272337-6_1_AA

Pos	Part No	UN	Qty	Description	Page No
-					
010	978996-0000		1	BRANCH PIPE	
020	1036187-0000		1	T-PIPE	
030	1036194-0000		1	T-PIPE	
040	530589-0000		2	SEAL RING	
050	530590-0000		1	VALVE CONE	
060	1036188-0000		1	SHAFT	
070	1036189-0000		1	SPINDEL GUIDE	
080	1036191-0000		1	SEAL HOLDER	
090	1036193-0000		1	CYLINDER BRACKET	
100	441871-0000		1	PENDULUM SUSPENSION	
110	530599-0000		1	RING	
120	532349-0000		2	PLAIN BEARING	
130	1036192-0000		3	SPACER ROD	
310	90141-0022		2	SNAP RING B 16	
350	90450-0669		1	SENSOR, BRACKET SERIES 168	
360	90450-0281		1	DOUBLE ACTING,PROF.CYL 32-80	
500	312105-0370		4	SCREW, M6S ISO 4017 M6X20 A4 80	
510	312105-0453		30	SCREW, M6S ISO 4017 M8X25 A4 80	
520	312605-0318		36	HEXAGON NUT, M6M M8 A280	
530	315204-0223		1	O-RING 39,2X3 MM	
532	315229-0203		1	GASKET 22,1X30,1X3,7 MM 1"	
535	315229-0204		1	GASKET 34,8X42,8X3,7 MM 1"1/2	
540	315229-0205		2	GASKET 47,5X55,5X3,7 MM 2 INCH	
550	315229-0206		3	GASKET 60,2X68,2X3,7 MM 2"1/2	
560	342797-0121		2	BANJO CONN., RINGPIECE 6-1/8	
570	342980-0303		2	BANJO-HOLLOW BOLT COUPL,EXT.THR.01-G1/8	
MX055	90326-0020		1	SOCKET, FEMALE YELLOW CR-AL, 03-22000A	
MB071	90457-0047		1	SENSOR 2750-1-5111-1 W.ADAPTER PNP	
MB055	90326-0051		1	THERMOCOUPLE, 5110 051-000	
MX055.1	90326-0012		1	PROTECTIVE COVER, 03-001 10	
W411	90220-0059	M	5	THERMOCOUPLE CABLE, P/PTW-20F-K 2X0,5MM2	

Pos	Part No	UN	Qty	Description	Page No

Machine Type | Group Description | Used-In | Group Number | Page No

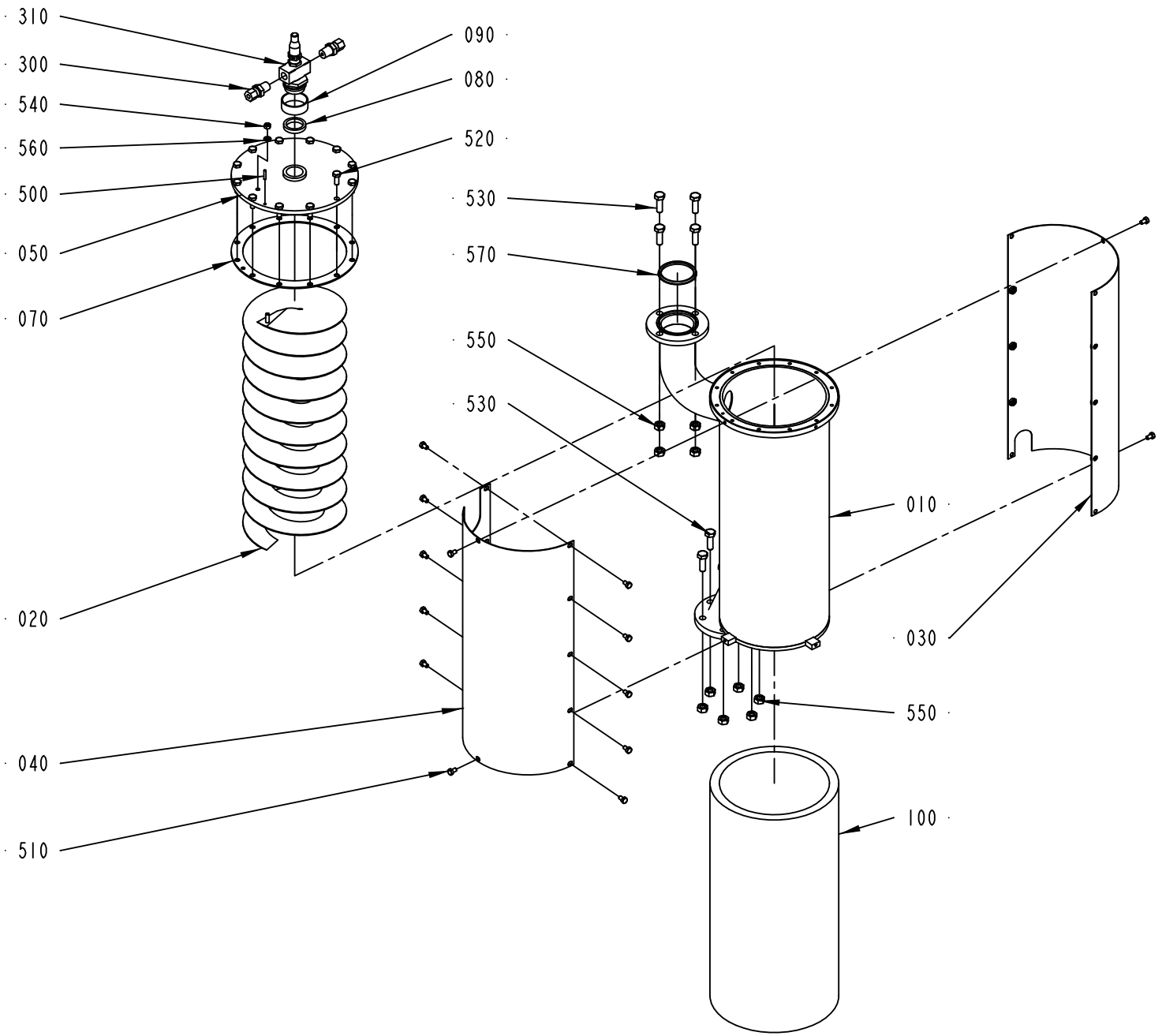

272407-3
225021

ECM: 225021 - 20050804
Group number: 272407-0400
Assembly Drawing: 272407-3_1_AD

Pos	Part No	UN	Qty	Description	Page No
-					
010	978879-0000		1	CONTAINER	
020	272325-0000		1	SPIRAL	
030	978971-0000		1	DISCHARGE TRAY	
040	978972-0000		1	DISCHARGE TRAY	
050	272275-0000		1	LID	
070	272277-0000		1	GASKET	
080	12242-0001		1	GASKET 32X25X5,5	
090	295993-0000		1	GASKET HOLDER	
100	441501-0000		1	INSULATION	
300	90030-0062		2	CONN. STR. GE06L1/4NPT71	
310	90424-0017		1	SPRAY NOZZLE, 1/4NPT JCO-SS-12....	
	90424-0304		*1*	*GASKET*	
	90424-0303		*1*	*BACK SEAL GASKET, CP10439*	
	90424-0302		*1*	*FLUID CAP GASKET, CP3612-AL*	
	90424-0301		*1*	*SLEEVE*	
500	311103-0236		1	PARALLEL PIN ISO 2338 3M6X16 A1	
510	312105-0323		14	SCREW, M6S ISO 4017 M5X8 A4 80	
520	312105-0368		12	SCREW, M6S ISO 4017 M6X16 A4 80	
530	312105-0453		10	SCREW, M6S ISO 4017 M8X25 A4 80	
540	312605-0314		1	HEXAGON NUT, M6M M5 A280	
550	312605-0318		10	HEXAGON NUT, M6M M8 A280	
560	315105-0146		1	WASHER PLAIN, 5,3X10X1 A4 BRB	
570	315229-0205		1	GASKET 47,5X55,5X3,7 MM 2 INCH	

Pos	Part No	UN	Qty	Description	Page No

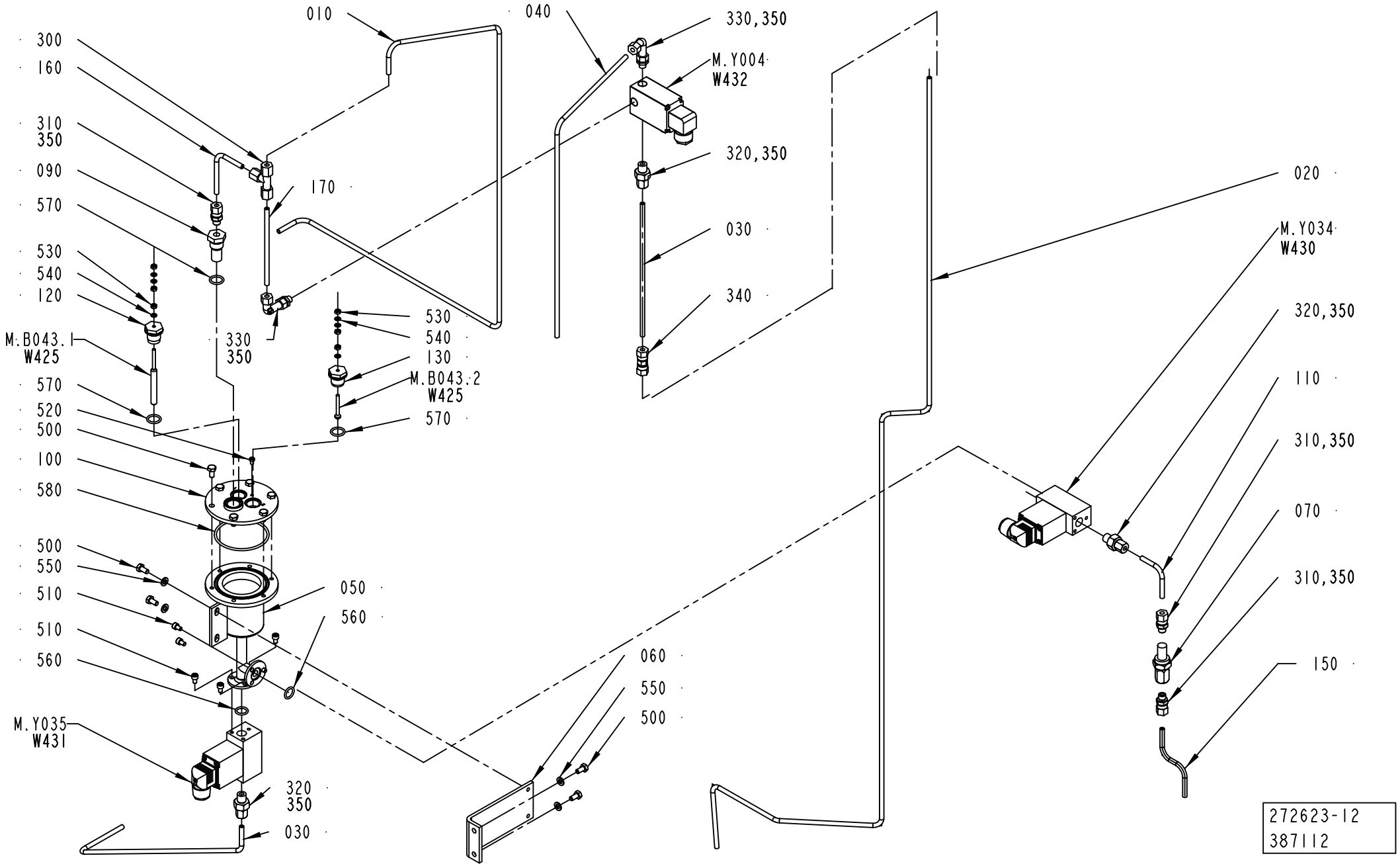
010
040
330,350
M.Y004
W432
320,350
030
340
020
M.Y034
W430
320,350
110
310,350
070
310,350
150
300
160
310
350
090
570
530
540
120
M.B043.1
W425
570
520
500
100
580
500
550
510
510
560
M.Y035
W431
320
350
030
170
330
350
530
540
130
M.B043.2
W425
570
050
560
060
550
500
272623-12
387112

ECM: 403274 - 20090709
Group number: 272623-0900
Assembly Drawing: 272623-12_1_AA

This list covers pages from 1-102 to 1-105

Pos	Part No	UN	Qty	Description	Page No
HI (See drawing on page: 1-104)					
310	90030-0184		2	CONN. STR., GE06LRED71	
320	90030-0202		2	CONN. STR., 6-G1/4, EXT. THREAD	
590	90330-0013		1	NIPPLE, EXT.THREAD, HEXAGON, R1/4-R1/8	
600	90330-0095		1	T-PIPE, INT. THREAD, R-221-R1/8	
610	90030-0234		1	CONN. ELBOW, M6MSEL1/8K-316	
620	90330-0032		1	NIPPLE, EXT.THREAD, HEXAGON, R1/8-R1/8	
NOHI (See drawing on page: 1-102)					
020	1517493-0000		1	PIPE	
030	2888967-0000		1	PIPE	
110	456900-0000		1	PIPE	
310	90030-0184		3	CONN. STR., GE06LRED71	
320	90030-0202		3	CONN. STR., 6-G1/4, EXT. THREAD	
340	90030-0075		1	PIPE CONNECTION G 6	
Common Parts					
010	2743328-0000		1	PIPE	
030	1517495-0000		1	PIPE	
040	578019-0000		1	TUBE40	
050	752576-0000		1	CONTAINER	
060	272844-0000		1	BRACKET	
070	484196-0000		1	FILTER	
090	450833-0000		1	FILTER	
100	2743327-0000		1	LID	
120	560931-0000		1	BRACKET	
130	2638206-0000		1	BRACKET	
150	3024355-0000		1	PIPE	
160	2743329-0000		1	PIPE	
170	2743331-0000		1	PIPE	
300	90030-0076		1	CONN. T-PIPE T06L71	
330	90030-0203		2	ADJUSTABLE ELBOW CONNECTION 6-G1/4	
350	90144-0073		1	TREBOFLON-TAPE W=13MM	
500	312105-0366		10	SCREW, M6S ISO 4017 M6X12 A4 80	
510	312115-0323		6	SCREW ISO4762 M5X8 A4 80	
520	312125-0285		1	SLOTTED HEAD SCREW, ISO1207 M4X6 A4	
530	312605-0312		6	HEXAGON NUT, M6M M4 A280	
540	315105-0136		6	WASHER PLAIN, 4,3X9X0,8 A4 BRB	
550	315105-0153		4	WASHER PLAIN, 6,4X12X1,5 A4 BRB	
560	927421-0003		2	O-RING 13.3X2.4 SILICONE	
570	927421-0004		3	O-RING 15.3X2.4 SILICONE	
580	927422-0011		1	O-RING 69.5X3 SILICONE	
MY035	544906-0000		1	SOLENOID VALVE	
	90042-0465		*1*	*O-RING VITON 17,17X1,78*	
	90042-0464		*1*	*DIAPHRAGM VITON 1211321*	
MY034	544906-0000		1	SOLENOID VALVE	
	90042-0465		*1*	*O-RING VITON 17,17X1,78*	
	90042-0464		*1*	*DIAPHRAGM VITON 1211321*	
MY004	90042-0171		1	SOLENOID VALVE, 330 3/2 NC	
	90042-0466		*1*	*DIAPHRAGM 330.95.2 VITON*	
MB043.1	567070-0010		1	ELECTRODE	
MB043.2	567070-0015		1	ELECTRODE	
W425	351150-0404	M	5	CABLE OLFLEX 4X0,75 MM2 LIGHT/GREY	
W430	351150-0403	M	4	CABLE OLFLEX 3X0,75 MM2 LIGHT/GREY	
W431	351150-0403	M	4	CABLE OLFLEX 3X0,75 MM2 LIGHT/GREY	
W432	351150-0403	M	4	CABLE OLFLEX 3X0,75 MM2 LIGHT/GREY	

Machine Type | Group Description | Used-In | Group Number | Page No

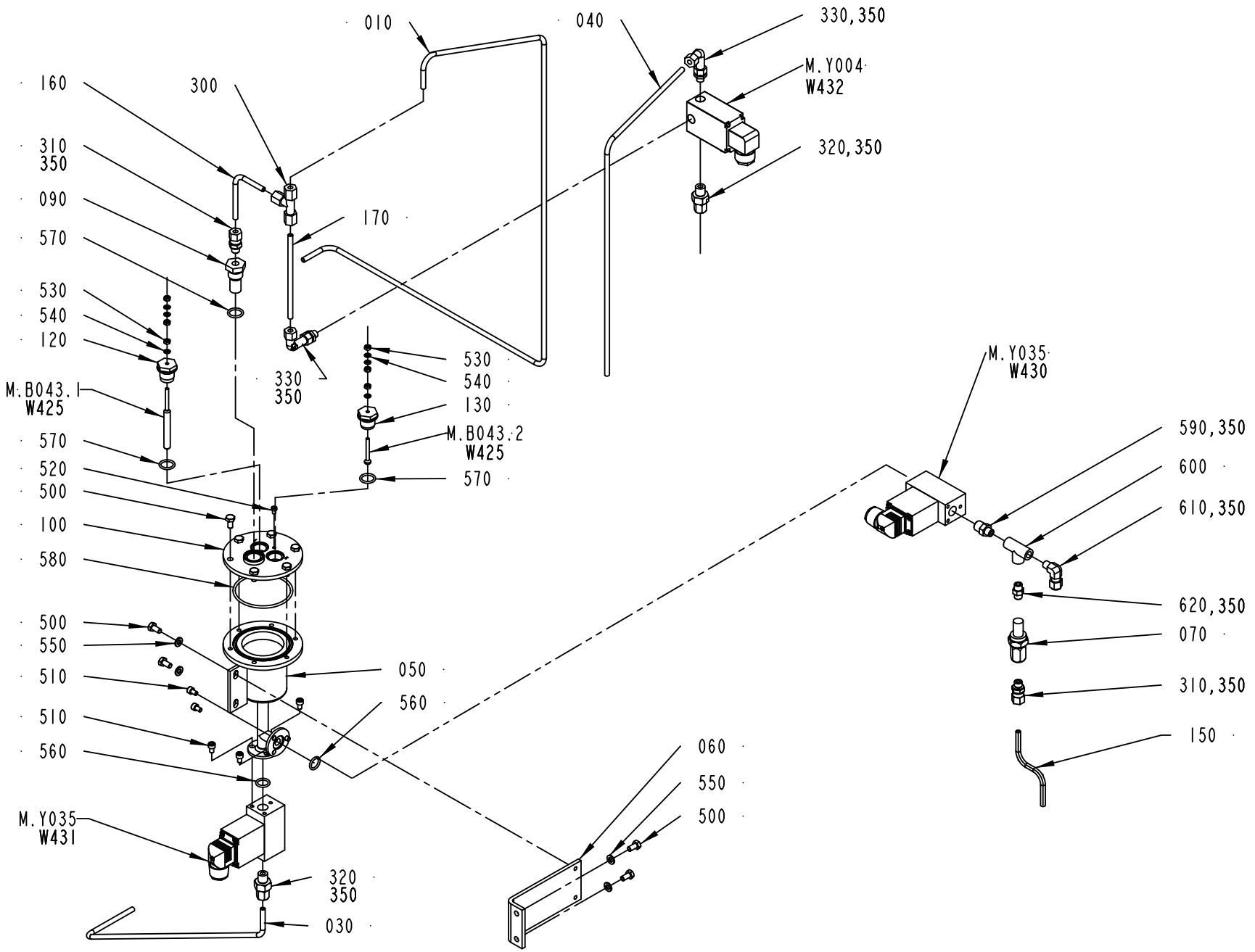

272623-13
ECM 387112

ECM: 403274 - 20090709
Group number: 272623-0900
Assembly Drawing: 272623-13_1_AA

This list covers pages from 1-102 to 1-105

Pos	Part No	UN	Qty	Description	Page No
HI (See drawing on page: 1-104)					
310	90030-0184		2	CONN. STR., GE06LREDT71	
320	90030-0202		2	CONN. STR., 6-G1/4, EXT. THREAD	
590	90330-0013		1	NIPPLE, EXT.THREAD, HEXAGON, R1/4-R1/8	
600	90330-0095		1	T-PIPE, INT. THREAD, R-221-R1/8	
610	90030-0234		1	CONN. ELBOW, M6MSEL1/8K-316	
620	90330-0032		1	NIPPLE, EXT.THREAD, HEXAGON, R1/8-R1/8	
NOHI (See drawing on page: 1-102)					
020	1517493-0000		1	PIPE	
030	2888967-0000		1	PIPE	
110	456900-0000		1	PIPE	
310	90030-0184		3	CONN. STR., GE06LREDT71	
320	90030-0202		3	CONN. STR., 6-G1/4, EXT. THREAD	
340	90030-0075		1	PIPE CONNECTION G 6	
Common Parts					
010	2743328-0000		1	PIPE	
030	1517495-0000		1	PIPE	
040	578019-0000		1	TUBE40	
050	752576-0000		1	CONTAINER	
060	272844-0000		1	BRACKET	
070	484196-0000		1	FILTER	
090	450833-0000		1	FILTER	
100	2743327-0000		1	LID	
120	560931-0000		1	BRACKET	
130	2638206-0000		1	BRACKET	
150	3024355-0000		1	PIPE	
160	2743329-0000		1	PIPE	
170	2743331-0000		1	PIPE	
300	90030-0076		1	CONN. T-PIPE T06L71	
330	90030-0203		2	ADJUSTABLE ELBOW CONNECTION 6-G1/4	
350	90144-0073		1	TREBOFLON-TAPE W=13MM	
500	312105-0366		10	SCREW, M6S ISO 4017 M6X12 A4 80	
510	312115-0323		6	SCREW ISO4762 M5X8 A4 80	
520	312125-0285		1	SLOTTED HEAD SCREW, ISO1207 M4X6 A4	
530	312605-0312		6	HEXAGON NUT, M6M M4 A280	
540	315105-0136		6	WASHER PLAIN, 4,3X9X0,8 A4 BRB	
550	315105-0153		4	WASHER PLAIN, 6,4X12X1,5 A4 BRB	
560	927421-0003		2	O-RING 13.3X2.4 SILICONE	
570	927421-0004		3	O-RING 15.3X2.4 SILICONE	
580	927422-0011		1	O-RING 69.5X3 SILICONE	
MY035	544906-0000		1	SOLENOID VALVE	
	90042-0465		*1*	*O-RING VITON 17,17X1,78*	
	90042-0464		*1*	*DIAPHRAGM VITON 1211321*	
MY034	544906-0000		1	SOLENOID VALVE	
	90042-0465		*1*	*O-RING VITON 17,17X1,78*	
	90042-0464		*1*	*DIAPHRAGM VITON 1211321*	
MY004	90042-0171		1	SOLENOID VALVE, 330 3/2 NC	
	90042-0466		*1*	*DIAPHRAGM 330.95.2 VITON*	
MB043.1	567070-0010		1	ELECTRODE	
MB043.2	567070-0015		1	ELECTRODE	
W425	351150-0404	M	5	CABLE OLFLEX 4X0,75 MM2 LIGHT/GREY	
W430	351150-0403	M	4	CABLE OLFLEX 3X0,75 MM2 LIGHT/GREY	
W431	351150-0403	M	4	CABLE OLFLEX 3X0,75 MM2 LIGHT/GREY	
W432	351150-0403	M	4	CABLE OLFLEX 3X0,75 MM2 LIGHT/GREY	

Machine Type	Group Description	Used-In	Group Number	Page No

PIPE WORK-PNEUMATIC

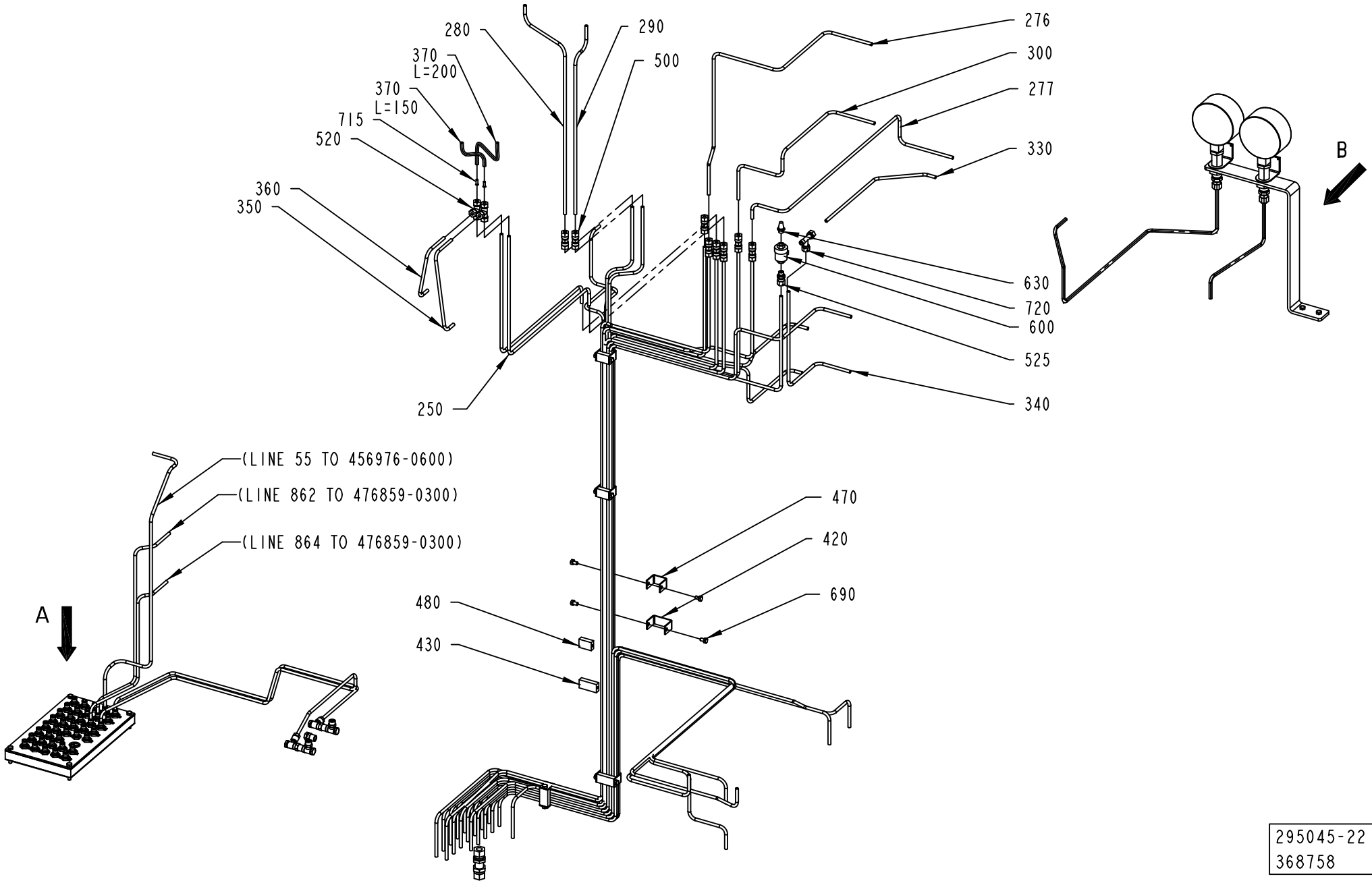

295045-22
368758

ECM: 375077 - 20081219
Group number: 295045-0900
Assembly Drawing: 295045-22_1_AF

This list covers pages from 1-106 to 1-123

Pos	Part No	UN	Qty	Description	Page No
TBA NOPT HVA (See drawing on pages: 1-118, 1-120, 1-122)					
320	2927582-0000		1	CONNECTION DEVICE	
500	90030-0075		5	PIPE CONNECTION G 6	
TBA PT19 HVA (See drawing on pages: 1-118, 1-120, 1-122)					
320	2927582-0000		1	CONNECTION DEVICE	
500	90030-0075		5	PIPE CONNECTION G 6	
TBA PT19 NOHVA (See drawing on pages: 1-112, 1-114, 1-116)					
010	2502199-0000		1	PIPE	
120	577789-0000		1	TUBE 90	
130	577790-0000		1	TUBE 70	
275	580363-0000		1	PIPE 71	
276	580364-0000		1	PIPE 71	
277	581015-0000		1	PIPE 91	
278	581016-0000		1	PIPE 91	
300	578020-0000		1	TUBE 70	
320	1512356-0000		1	CONNECTION DEVICE	
330	577541-0000		1	TUBE 90	
340	577542-0000		1	TUBE 90	
500	90030-0075		8	PIPE CONNECTION G 6	
525	90030-0184		1	CONN. STR., GE06LRED71	
580	90166-0119	MM	2100	TUBE 6 MM PA BLACK	
600	90235-0259		1	VALVE	
630	90328-0003		1	SILENCER, 338/110	
715	342706-0130		2	STIFFNER SLEEVE FOR HOSE 6X1	
720	342751-0204		1	PIPE FITTING TEE, LE06LR71	
730	342797-0121		3	BANJO CONN., RINGPIECE 6-1/8	
760	342980-0113		3	HOSE FITTING, BANJO RING L PO G1/8 6/4	
770	342980-0303		6	BANJO-HOLLOW BOLT COUPL,EXT.THR.01-G1/8	
TWA NOPT, TPA PT19, TBA NOPT NOHVA (See drawing on pages: 1-106, 1-108, 1-110)					
120	577789-0000		1	TUBE 90	
130	577790-0000		1	TUBE 70	
275	580363-0000		1	PIPE 71	
276	580364-0000		1	PIPE 71	
277	581015-0000		1	PIPE 91	
278	581016-0000		1	PIPE 91	
300	578020-0000		1	TUBE 70	
320	1512356-0000		1	CONNECTION DEVICE	
330	577541-0000		1	TUBE 90	
340	577542-0000		1	TUBE 90	
500	90030-0075		8	PIPE CONNECTION G 6	
525	90030-0184		1	CONN. STR., GE06LRED71	
580	90166-0119	MM	2100	TUBE 6 MM PA BLACK	
600	90235-0259		1	VALVE	
630	90328-0003		1	SILENCER, 338/110	
650	90330-0066		1	PLUG, G1/8EXT, G1/8	
715	342706-0130		2	STIFFNER SLEEVE FOR HOSE 6X1	
720	342751-0204		1	PIPE FITTING TEE, LE06LR71	
730	342797-0121		2	BANJO CONN., RINGPIECE 6-1/8	
760	342980-0113		2	HOSE FITTING, BANJO RING L PO G1/8 6/4	
770	342980-0303		4	BANJO-HOLLOW BOLT COUPL,EXT.THR.01-G1/8	
Common Parts					
020	2502197-0000		1	PIPE	
030	2502198-0000		1	PIPE	
050	577782-0000		1	TUBE 200	
060	577783-0000		1	TUBE 201	
070	577784-0000		1	TUBE260	
080	577785-0000		1	TUBE 261	
090	577786-0000		1	TUBE 240	
100	577787-0000		1	TUBE 241	
110	577788-0000		1	TUBE 80	
140	577791-0000		1	TUBE 40	
150	2544863-0000		1	PIPE	
160	2544864-0000		1	PIPE	
170	578004-0000		1	TUBE 211	
180	578005-0000		1	TUBE 213	
190	1524666-0000		1	TUBE 230	
200	1524667-0000		1	TUBE 231	
210	2544855-0000		1	PIPE	
220	2544856-0000		1	PIPE	
230	1524665-0000		1	TUBE 860	
240	1524664-0000		1	TUBE 861	
250	578013-0000		2	TUBE 213 AND 211	
270	2815767-0000		1	PIPE	
279	1524663-0000		1	TUBE 55	
280	2544868-0000		1	PIPE	
290	2544869-0000		1	PIPE	
350	578022-0000		1	TUBE 211	
360	578023-0000		1	TUBE 213	
370	90166-0132	MM	350	TUBE 6 MM PA,TRANSP.	
390	578030-0000		2	GASKET	
400	2815768-0000		1	PIPE	
410	2815765-0000		1	BRACKET	
420	295604-0000		3	CRAMP	
430	295605-0000		3	BRACKET	

Machine Type | Group Description | Used-In | Group Number | Page No

VIEW A

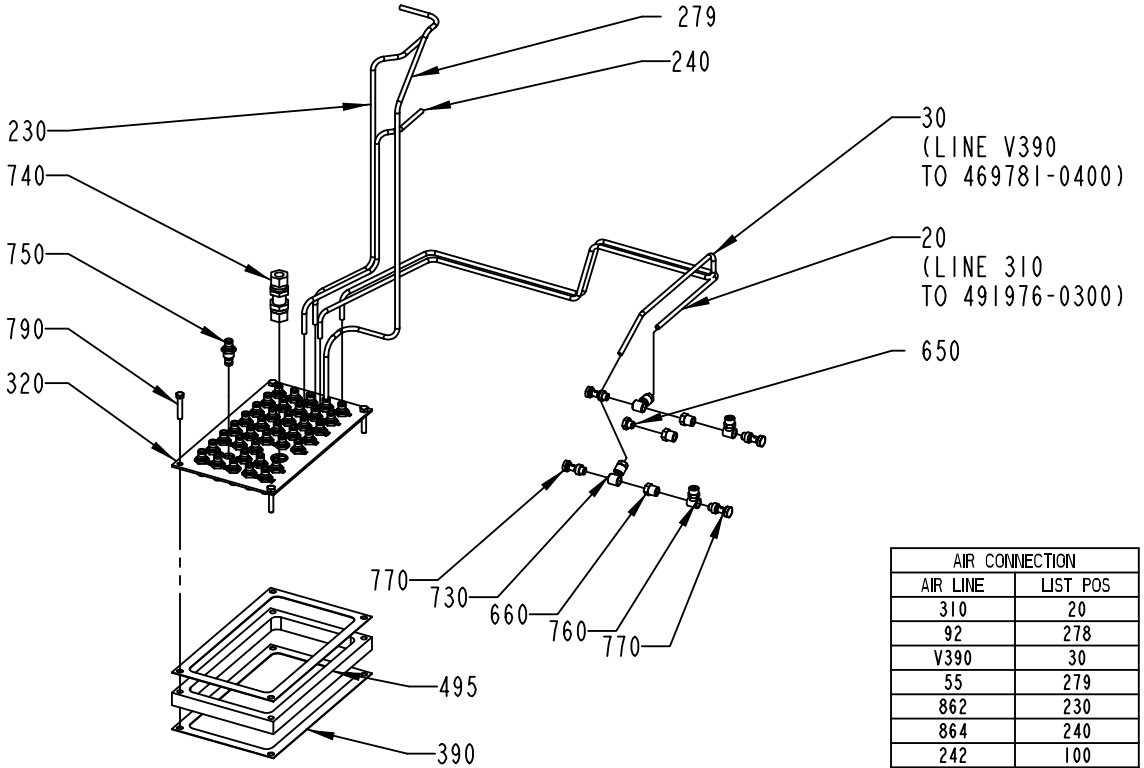

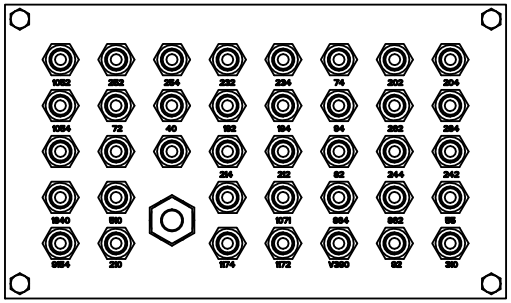

AIR CONNECTION	
AIR LINE	LIST POS
310	20
92	278
V390	30
55	279
862	230
864	240
242	100
244	90
82	110
212	170
214	180
264	80
262	70
94	120
194	150
192	160
40	140
72	275
204	50
202	60
74	130
234	190
232	200
254	210
252	220

VIEW B

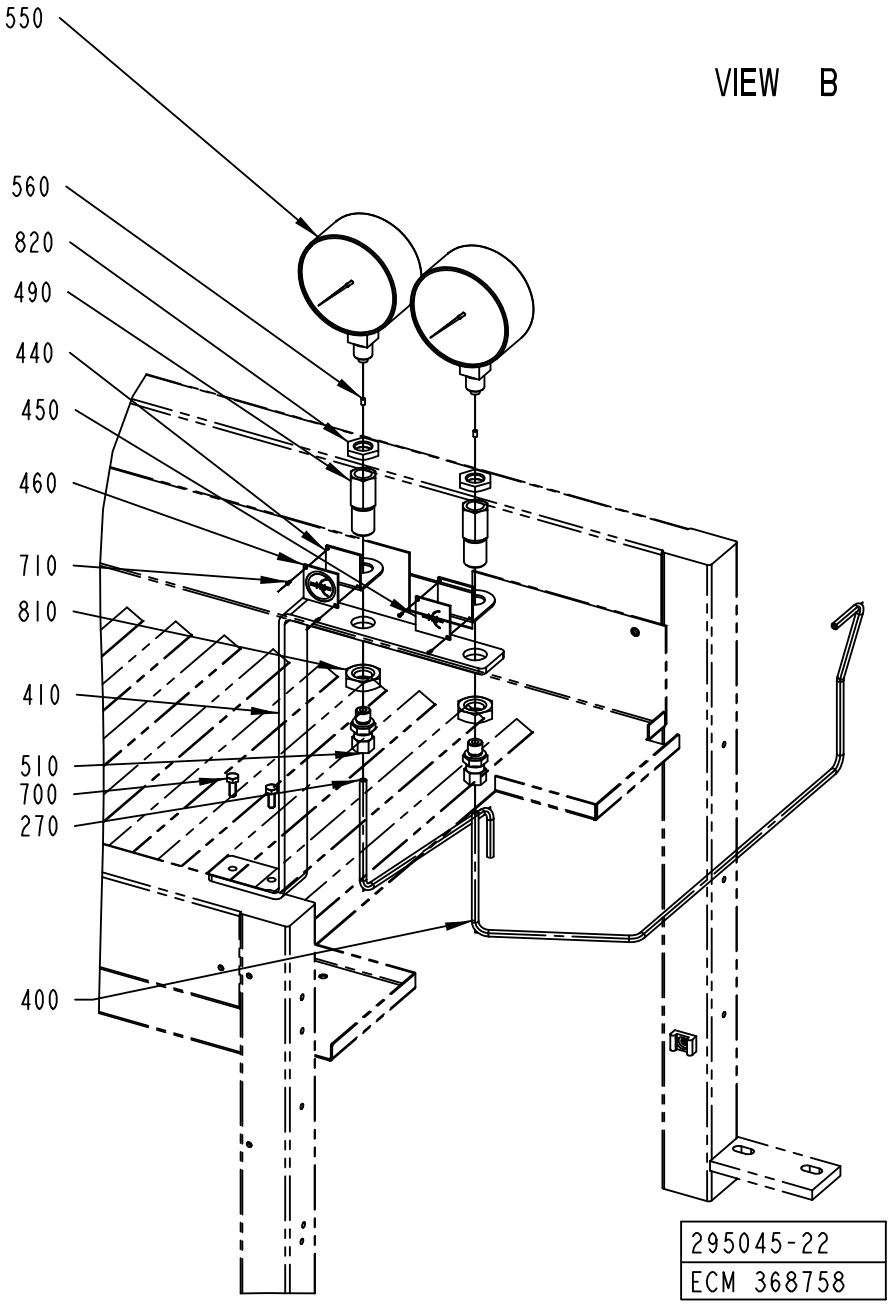

295045-22
ECM 368758

Pos	Part No	UN	Qty	Description	Page No
Common Parts (Cont'd)					
440	464173-0000		2	LABEL HOLDER	
450	464174-0000		1	SIGN, LONGITUDINAL SEALING	
460	464175-0000		1	SIGN, LONGITUDINAL SEALING SHORT STOP	
470	578027-0000		3	CRAMP	
480	578028-0000		3	BRACKET	
490	1524674-0000		2	REDUCTION SLEEVE	
495	1539250-0000		1	SPACER	
510	90030-0092		2	STRAIGHT CONN., 6-R1/4,EXT. TAPPERED	
520	90030-0164		2	CONN. T-PIPE T06LLCF	
550	90043-0034		2	PRESSURE GAUGE	
560	90043-0302		2	SCREW	
590	90166-0132	MM	1500	TUBE 6 MM PA,TRANSP.	
660	90330-0025		3	BUSHING, INT.EXT. THR. R1/4-G1/8	
690	312105-0364		12	SCREW, M6S ISO 4017 M6X10 A4 80	
700	312105-0368		2	SCREW, M6S ISO 4017 M6X16 A4 80	
710	312502-0120		4	DRIVE SCREW ROUND HEAD KDS 0X5	
740	90030-0030		1	CONN. BULKHEAD SV12L71	
750	90457-0086		38	BULKHEAD CONNECTOR 6MM	
780	359000-0409		20	WIRE MARKING, YELLOW, PA2/4"9"	
780	359000-0408		6	WIRE MARKING, YELLOW, PA2/4"8"	
780	359000-0407		12	WIRE MARKING, YELLOW, PA2/4"7"	
780	359000-0406		8	WIRE MARKING, YELLOW, PA2/4"6"	
780	359000-0771		2	WIRE MARKING, YELLOW, PA2/4"V"	
780	359000-0405		8	WIRE MARKING, YELLOW, PA2/4"5"	
780	359000-0404		40	WIRE MARKING, YELLOW, PA2/4"4"	
780	359000-0403		8	WIRE MARKING, YELLOW, PA2/4"3"	
780	359000-0402		72	WIRE MARKING, YELLOW, PA2/4"2"	
780	359000-0401		36	WIRE MARKING, YELLOW, PA2/4"1"	
780	359000-0400		16	WIRE MARKING, YELLOW, PA2/4"0"	
790	312109-0376		4	SCREW, M6S ISO 4017 M6X35 A4 80	
810	312625-0326		2	HEXAGON THIN NUT, EN 24035 ML6M M20 A4	
820	90330-0105		2	NUT, HEXAGON SS, G 3/8	

Pos	Part No	UN	Qty	Description	Page No

AIR CONNECTION	
AIR LINE	LIST POS
310	20
92	278
V390	30
55	279
862	230
864	240
242	100
244	90
82	110
212	170
214	180
264	80
262	70
94	120
194	150
192	160
40	140
72	275
204	50
202	60
74	130
234	190
232	200
254	210
252	220

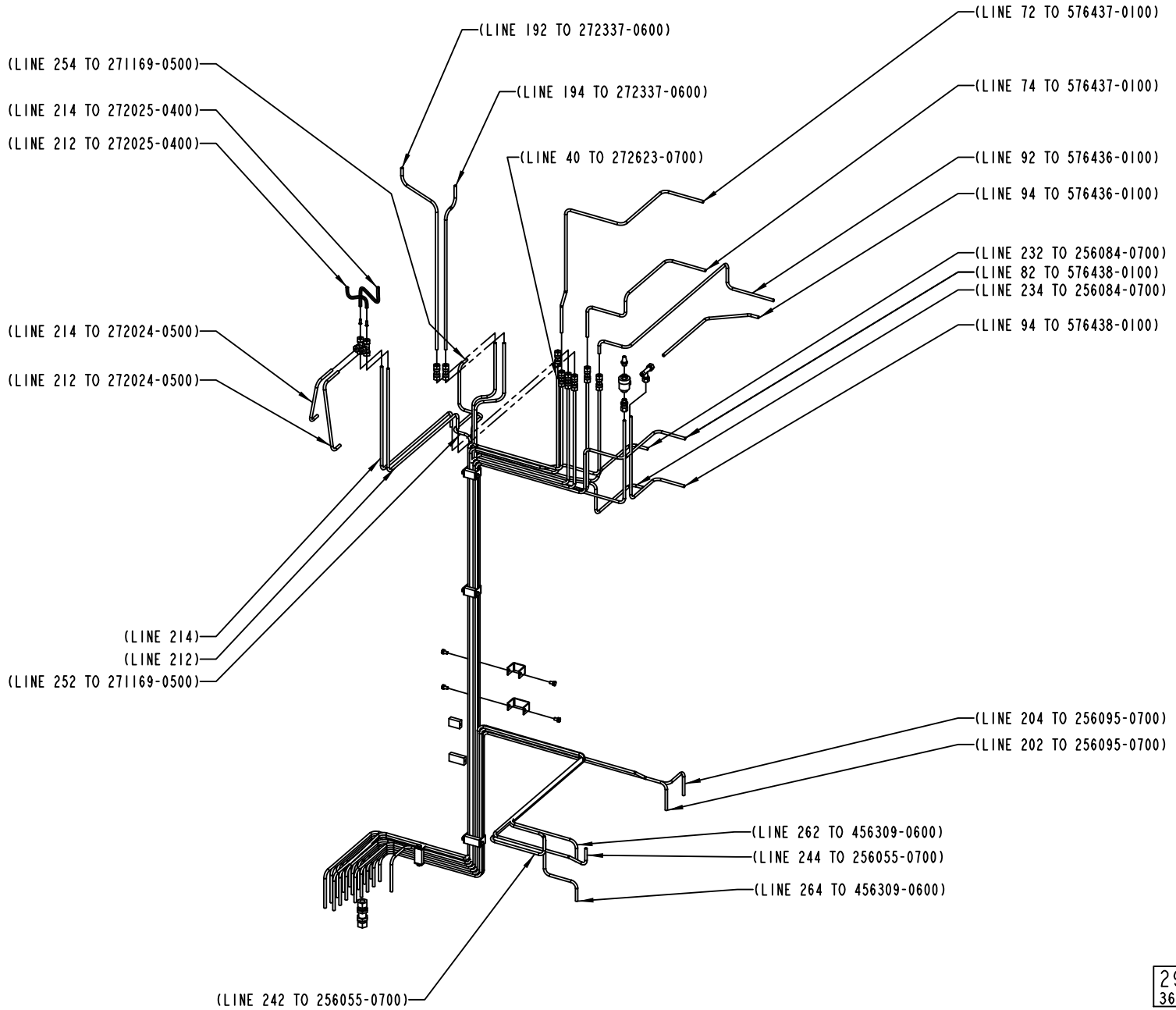

295045-22
368758

Pos	Part No	UN	Qty	Description	Page No
SEE PREVIOUS LISTS PAGES: 1-107, 1-109.					

Pos	Part No	UN	Qty	Description	Page No

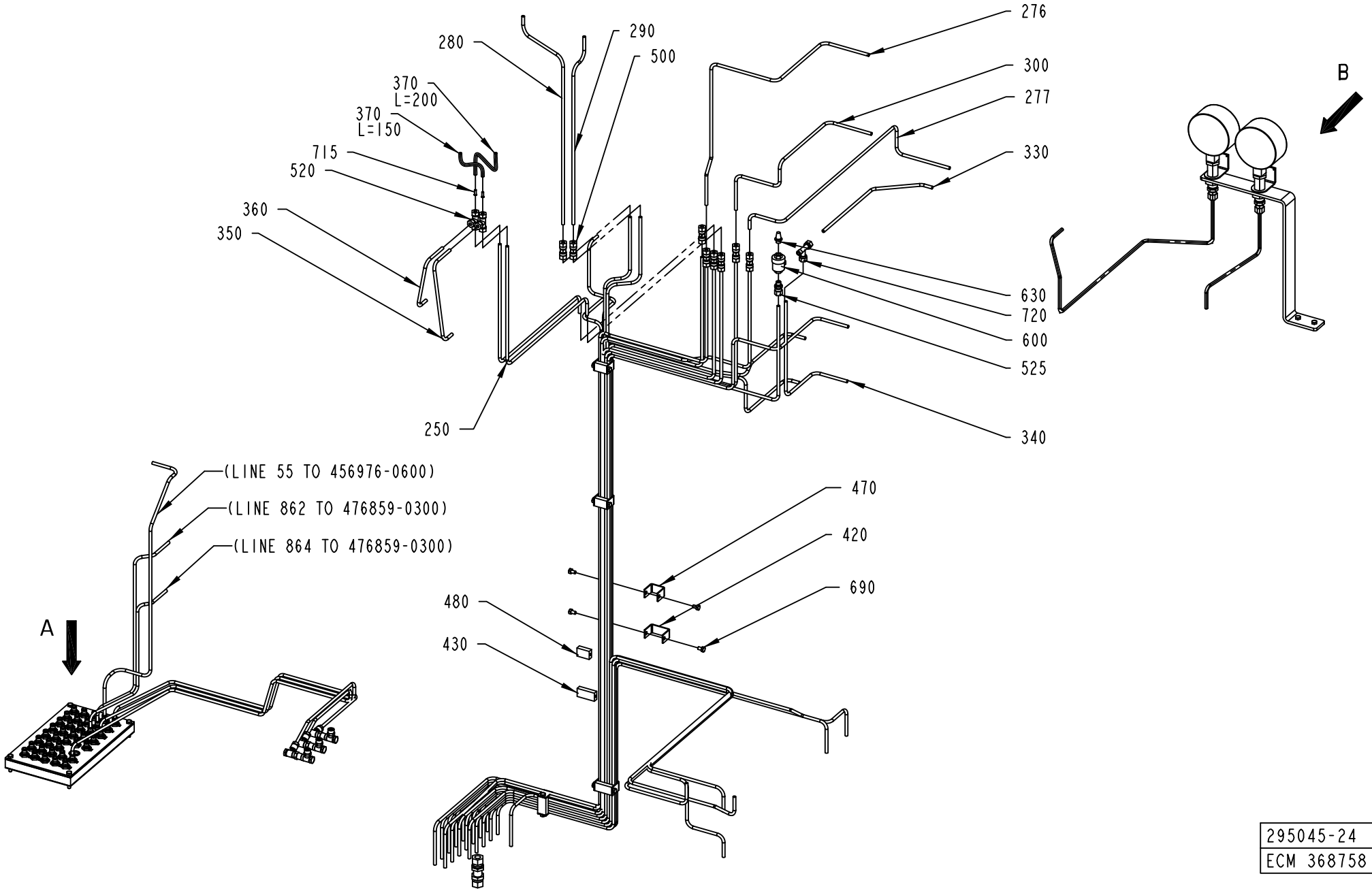

295045-24
ECM 368758

Pos	Part No	UN	Qty	Description	Page No	Pos	Part No	UN	Qty	Description	Page No

SEE PREVIOUS LISTS PAGES: 1-107, 1-109.

VIEW A

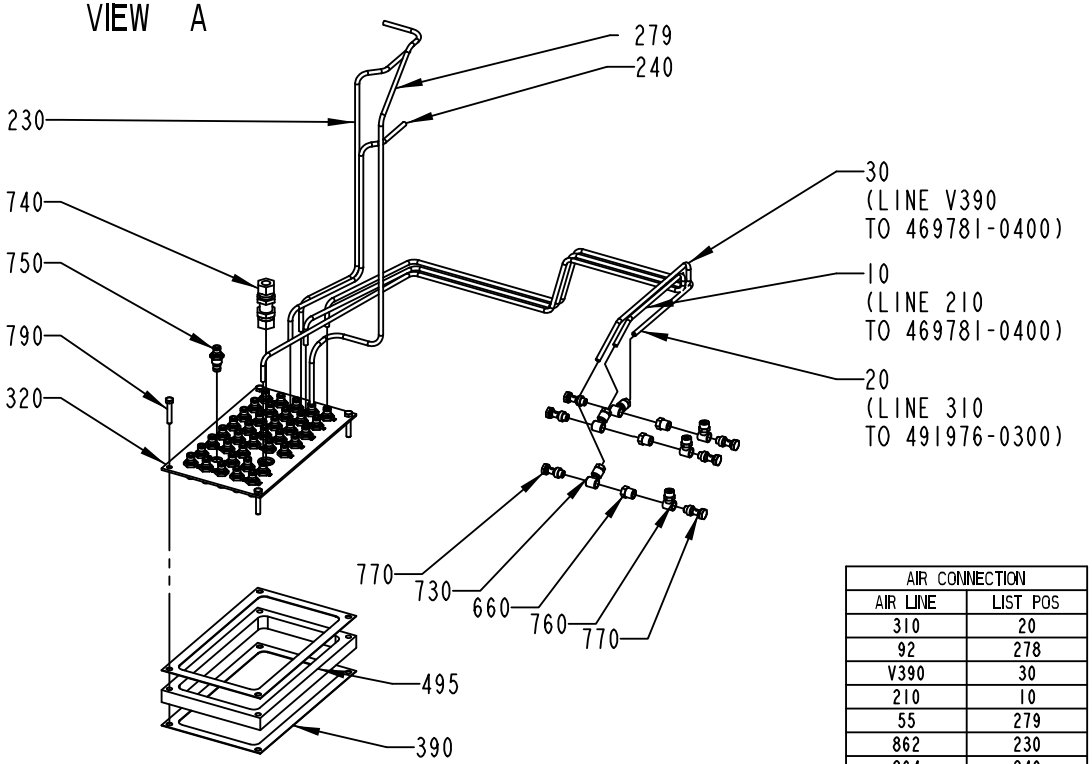

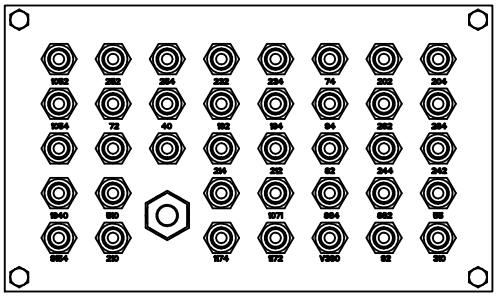

AIR CONNECTION	
AIR LINE	LIST POS
310	20
92	278
V390	30
210	10
55	279
862	230
864	240
242	100
244	90
82	110
212	170
214	180
264	80
262	70
94	120
194	150
192	160
40	140
72	275
204	50
202	60
74	130
234	190
232	200
254	210
252	220

VIEW B

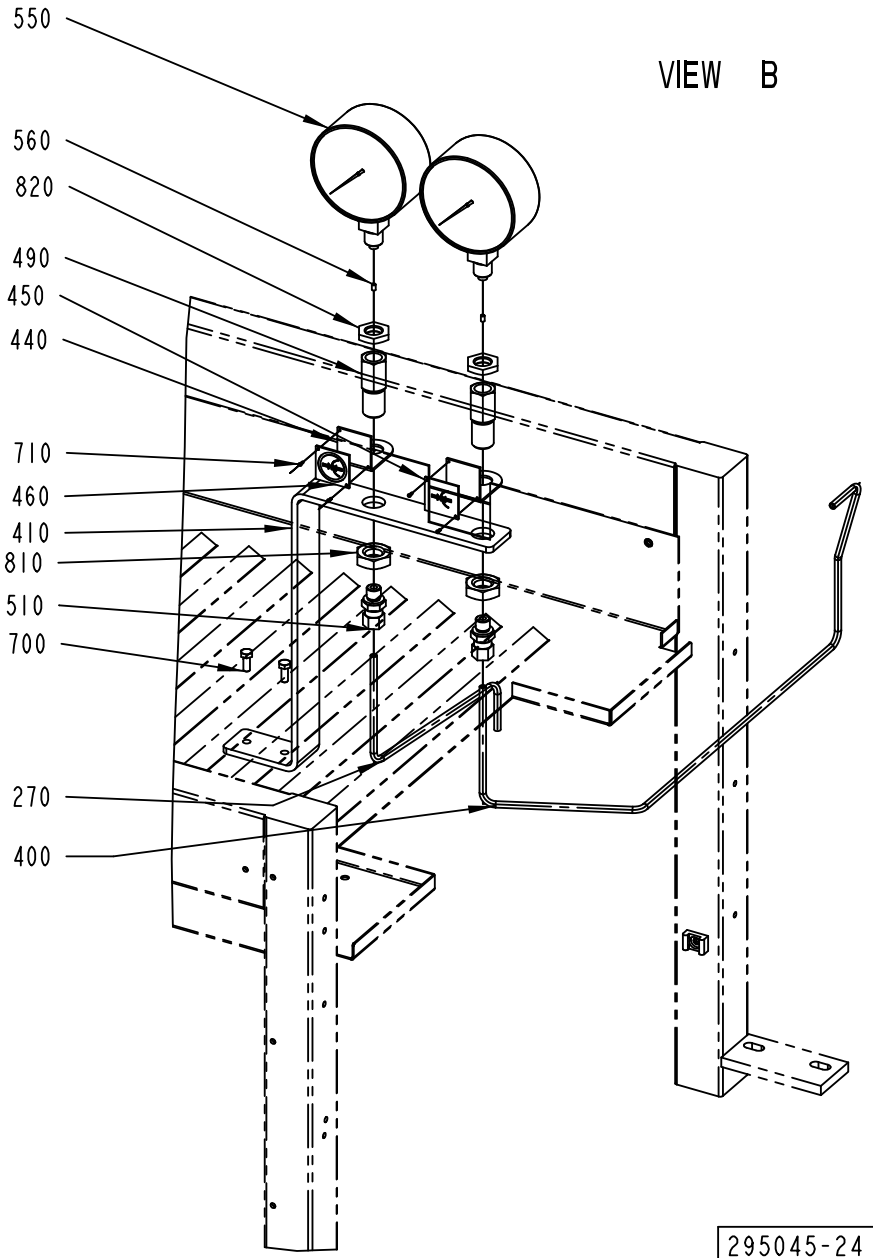

295045-24
ECM 368758

Pos	Part No	UN	Qty	Description	Page No	Pos	Part No	UN	Qty	Description	Page No

SEE PREVIOUS LISTS PAGES: 1-107, 1-109.

AIR CONNECTION	
AIR LINE	LIST POS
310	20
92	278
V390	30
210	10
55	279
862	230
864	240
242	100
244	90
82	110
212	170
214	180
264	80
262	70
94	120
194	150
192	160
40	140
72	275
204	50
202	60
74	130
234	190
232	200
254	210
252	220

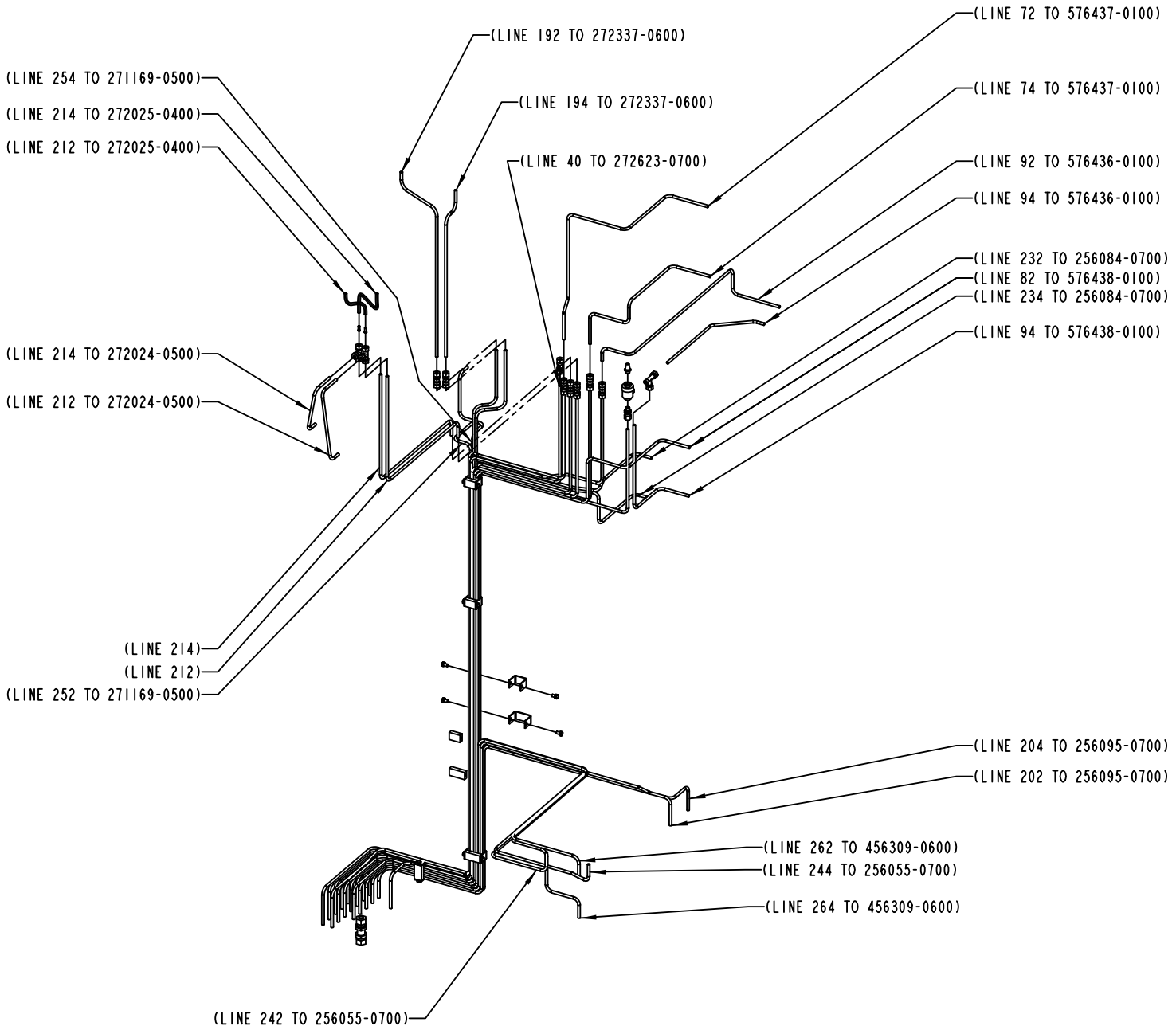

295045-24
368758

Pos	Part No	UN	Qty	Description	Page No	Pos	Part No	UN	Qty	Description	Page No

SEE PREVIOUS LISTS PAGES: 1-107, 1-109.

PIPE WORK-PNEUMATIC

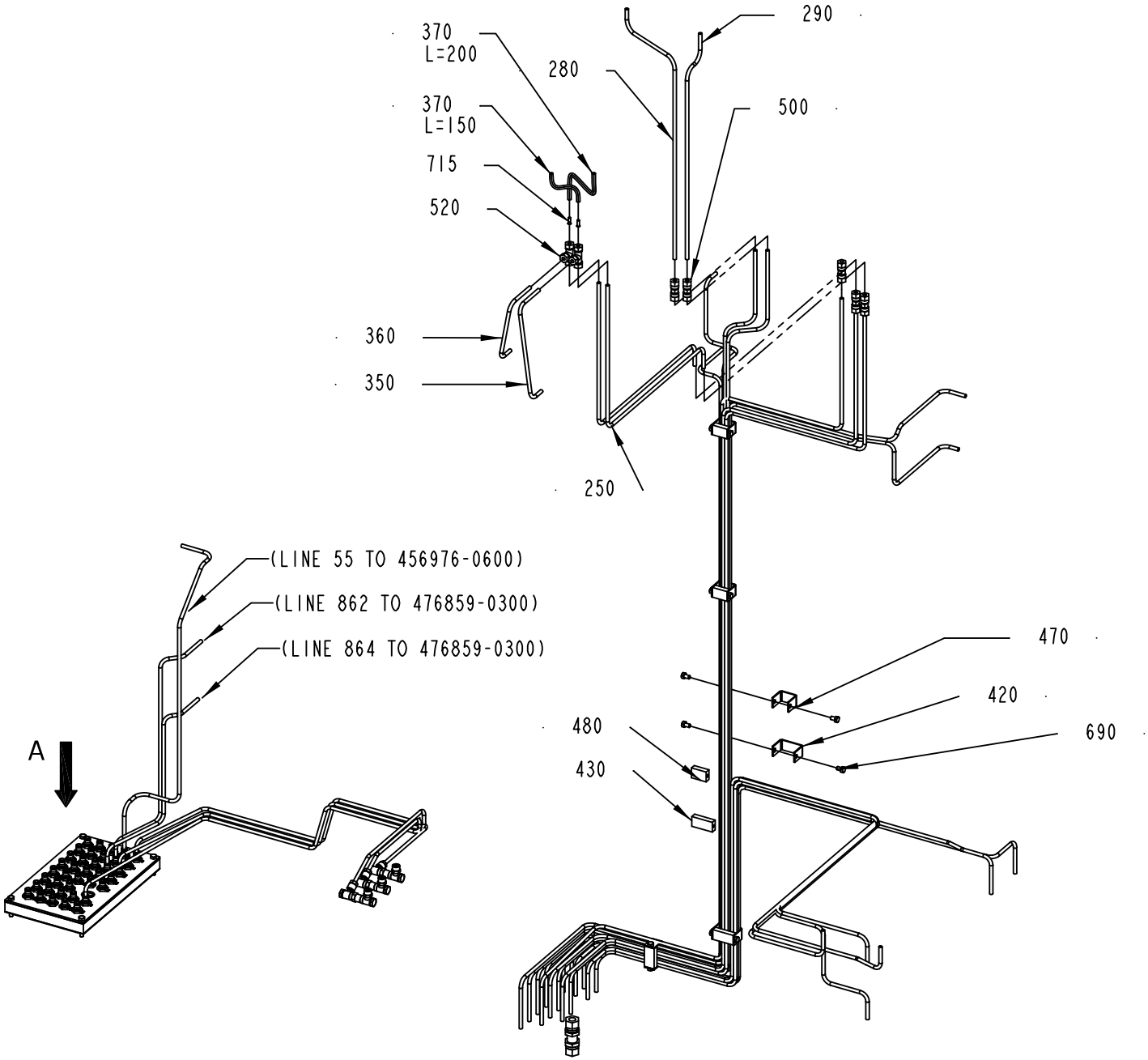

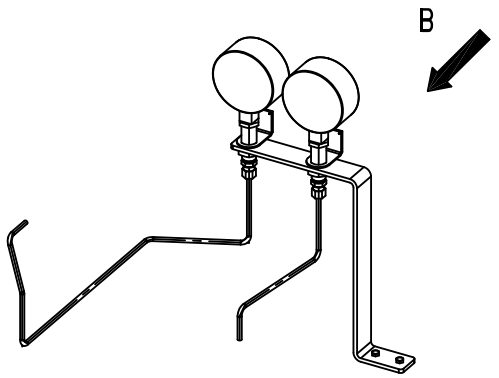

295045-26
368758

Pos	Part No	UN	Qty	Description	Page No
SEE PREVIOUS LISTS PAGES: 1-107, 1-109.					

Pos	Part No	UN	Qty	Description	Page No

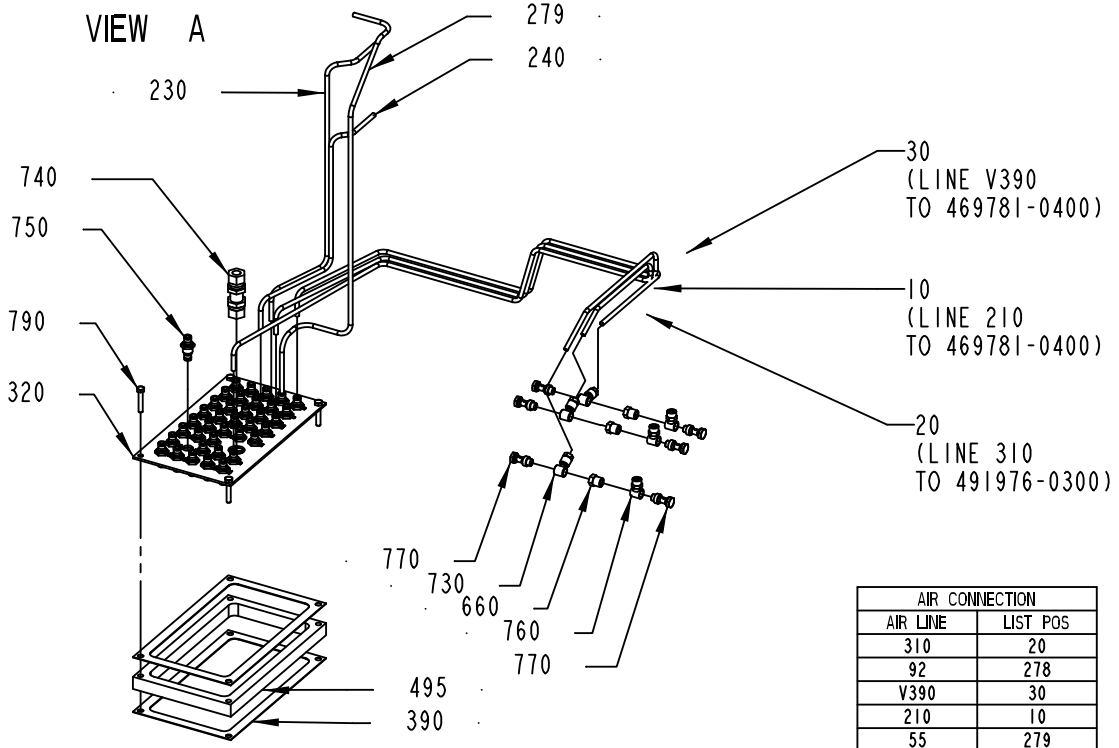

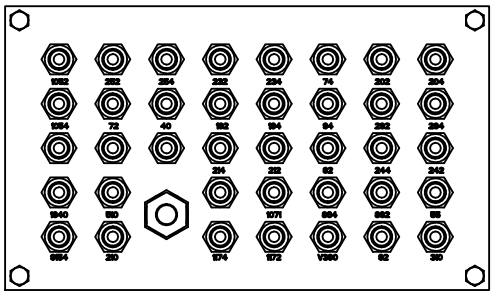

33:100

AIR CONNECTION	
AIR LINE	LIST POS
310	20
92	278
V390	30
210	10
55	279
862	230
864	240
242	100
244	90
82	110
212	170
214	180
264	80
262	70
94	120
194	150
192	160
40	140
72	275
204	50
202	60
74	130
234	190
232	200
254	210
252	220

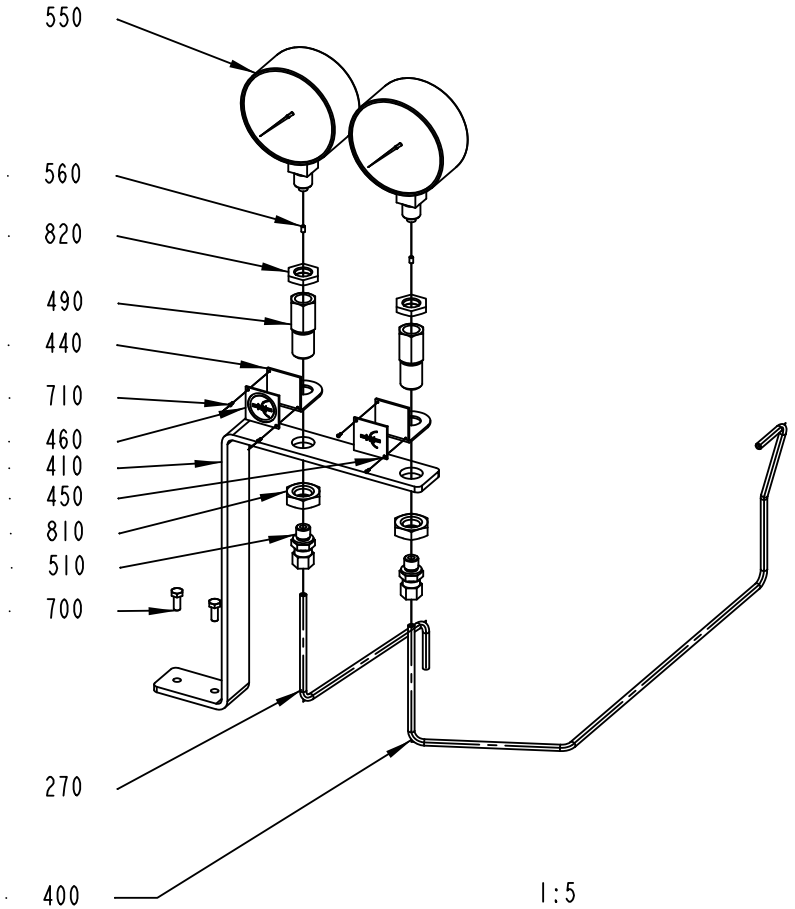

1:5

295045-26
648111514

Pos	Part No	UN	Qty	Description	Page No
SEE PREVIOUS LISTS PAGES: 1-107, 1-109.					

Pos	Part No	UN	Qty	Description	Page No

AIR CONNECTION	
AIR LINE	LIST POS
310	20
92	278
V390	30
210	10
55	279
862	230
864	240
242	100
244	90
82	110
212	170
214	180
264	80
262	70
94	120
194	150
192	160
40	140
72	275
204	50
202	60
74	130
234	190
232	200
254	210
252	220

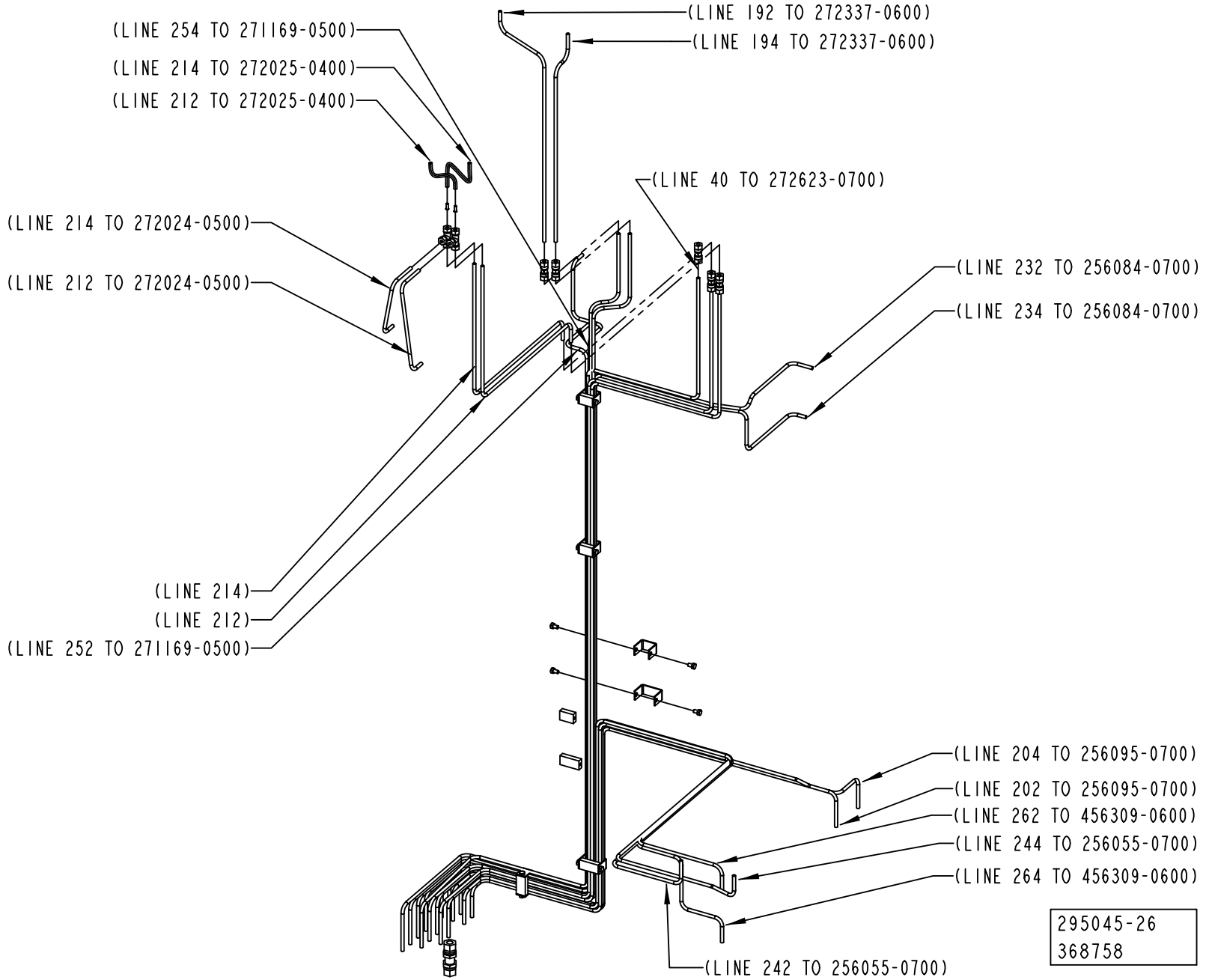

Pos	Part No	UN	Qty	Description	Page No
SEE PREVIOUS LISTS PAGES: 1-107, 1-109.					

Pos	Part No	UN	Qty	Description	Page No

MOVABLE FORMING RING

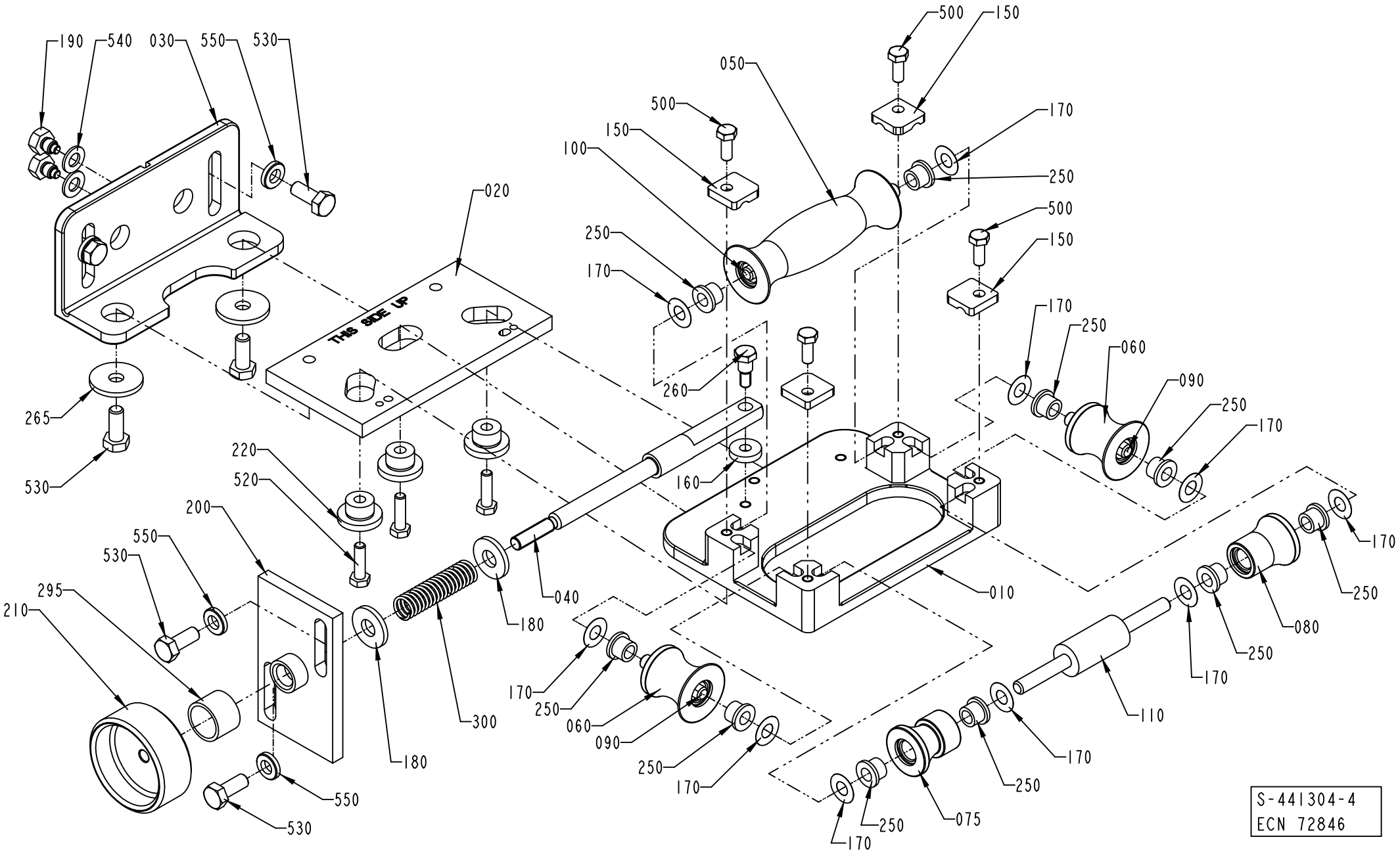

S-441304-4
ECN 72846

ECM: 171187 - 20050713
Group number: 441304-0400
Assembly Drawing: 441304-4_1_AD

This list covers pages from 1-124 to 1-133

Pos	Part No	UN	Qty	Description	Page No
TBA 0100B, TBA 0125S, TWA 0125S (See drawing on page: 1-130)					
010	456905-0000		1	FASTENING PLATE	
030	571536-0000		1	CANTILEVER	
050	752141-0000		1	FORMING ROLLER	
060	752142-0000		2	FORMING ROLLER	
075	1296912-0000		1	ROLL	
080	752143-0000		1	FORMING ROLLER	
090	752186-0002		2	SHAFT	
100	752186-0008		1	SHAFT	
110	752186-0006		2	SHAFT	
140	456907-0000		2	LOCK PLATE	
150	1279091-0000		4	LOCKING PLATE	
250	90240-0172		6	FLANGE BUSHING, 8X12X10 MM	
255	752156-0000		4	FLANGE BUSHING	
500	312105-0332		6	SCREW, M6S ISO 4017 M5X22 A4 70	
TBA 0160S, TBA 0200S, TPA 0250SQ, TPA 0200SQ, TWA 0180S, TWA 0200S NOCLEAR (See drawing on page: 1-126)					
010	456905-0000		1	FASTENING PLATE	
030	571535-0000		1	CANTILEVER	
050	752126-0000		1	FORMING ROLLER	
060	752127-0000		2	FORMING ROLLER	
075	1296914-0000		1	ROLL	
080	752128-0000		1	FORMING ROLLER	
090	752186-0002		2	SHAFT	
100	752186-0008		1	SHAFT	
110	752186-0006		2	SHAFT	
140	456907-0000		2	LOCK PLATE	
150	1279091-0000		4	LOCKING PLATE	
250	90240-0172		6	FLANGE BUSHING, 8X12X10 MM	
255	752156-0000		4	FLANGE BUSHING	
500	312105-0332		6	SCREW, M6S ISO 4017 M5X22 A4 70	
TBA 0200SQ, TBA 0284B, TBA 0250B, TBA 0300S, TBA 0330S, TPA 0330SQ, TBA 0200B (See drawing on page: 1-124)					
010	978792-0000		1	PLATE	
030	571535-0000		1	CANTILEVER	
050	751491-0000		1	ROLL	
060	751492-0000		2	ROLL	
075	1296913-0000		1	ROLL	
080	751494-0000		1	ROLL	
090	752186-0005		2	SHAFT	
100	752186-0009		1	SHAFT	
110	752187-0000		1	SHAFT	
150	1279091-0000		4	LOCKING PLATE	
250	90240-0172		10	FLANGE BUSHING, 8X12X10 MM	
500	312105-0368		4	SCREW, M6S ISO 4017 M6X16 A4 80	
TBA 0200M, TBA 0250S (See drawing on page: 1-128)					
010	574404-0000		1	BRACKET	
030	571535-0000		1	CANTILEVER	
050	574479-0000		1	ROLL	
060	574480-0000		2	ROLL	
075	1296915-0000		1	ROLL	
080	574481-0000		1	ROLL	
090	752186-0002		2	SHAFT	
100	752186-0008		1	SHAFT	
110	752186-0006		2	SHAFT	
140	1279087-0000		2	LOCKING PLATE	
150	1279091-0000		4	LOCKING PLATE	
250	90240-0172		6	FLANGE BUSHING, 8X12X10 MM	
255	752156-0000		4	FLANGE BUSHING	
500	312105-0332		6	SCREW, M6S ISO 4017 M5X22 A4 70	
TWA 0200S CLEAR (See drawing on page: 1-132)					
010	456905-0000		1	FASTENING PLATE	
030	571535-0000		1	CANTILEVER	
050	752126-0000		1	FORMING ROLLER	
060	752127-0000		2	FORMING ROLLER	
090	752186-0002		2	SHAFT	
100	752186-0008		1	SHAFT	
110	752186-0006		2	SHAFT	
140	456907-0000		2	LOCK PLATE	
150	1279091-0000		2	LOCKING PLATE	
250	90240-0172		6	FLANGE BUSHING, 8X12X10 MM	
255	752156-0000		4	FLANGE BUSHING	
310	2612575-0000		2	SUPPORT ROLLER	
320	2612576-0000		2	SHAFT	
330	2612578-0000		2	ROLLER	
370	2644651-0000		2	BRACKET	
380	2644652-0000		2	LOCK PLATE	
500	312105-0332		4	SCREW, M6S ISO 4017 M5X22 A4 70	
510	312105-0341		2	SCREW, M6S ISO 4014 M5X50 A4 80	
580	315103-0153		4	WASHER PLAIN, 6,4X12X1,5 BR NI PL	
590	312625-0316		6	HEXAGON THIN NUT, EN 24035 ML6M M6 A4	
Common Parts					
020	751333-0000		1	SETTING PLATE	
040	256309-0000		1	SHAFT	

Machine Type	Group Description	Used-In	Group Number	Page No

MOVABLE FORMING RING

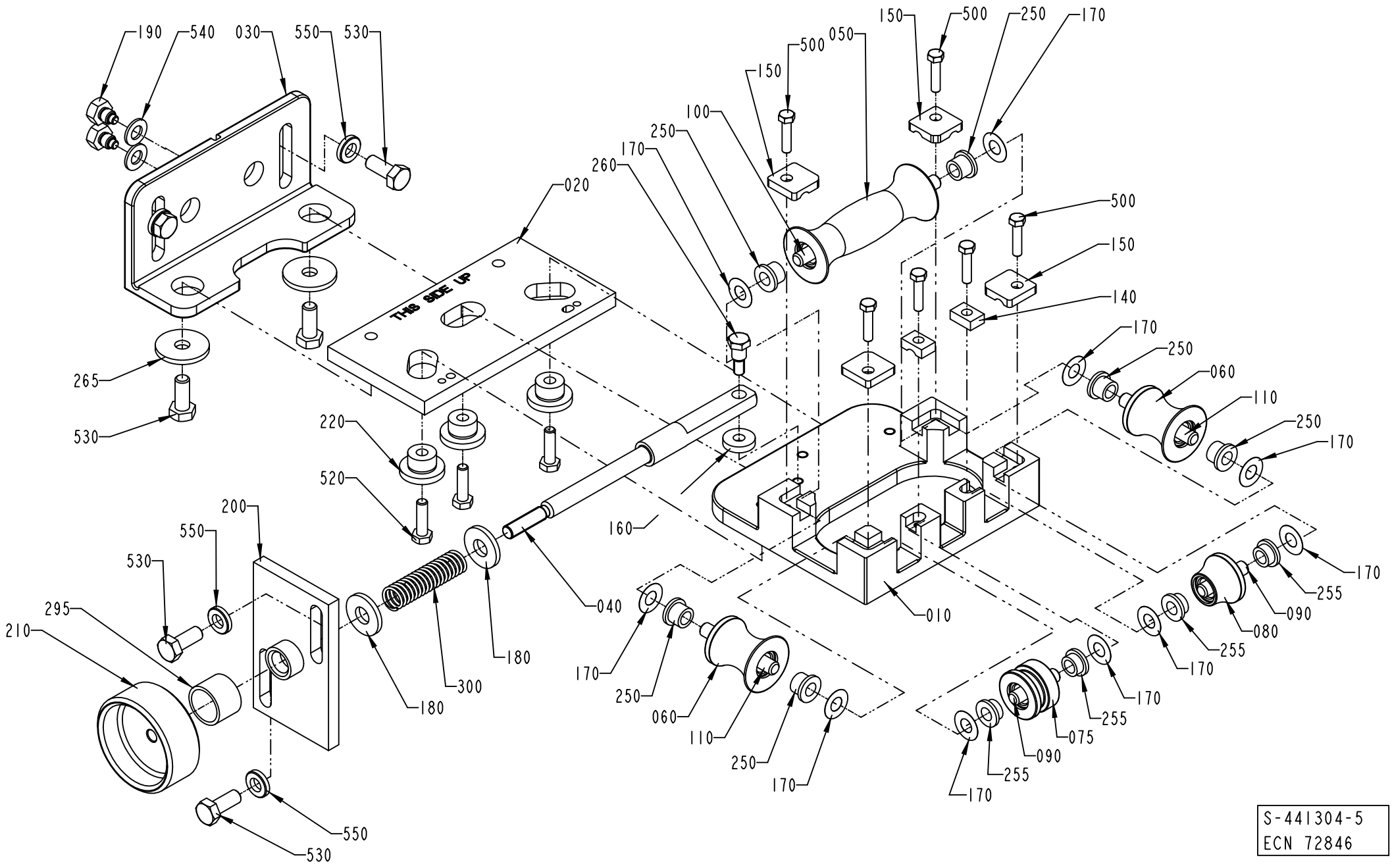

ECM: 171187 - 20050713
Group number: 441304-0400
Assembly Drawing: 441304-5_1_AD

This list covers pages from 1-124 to 1-133

Pos	Part No	UN	Qty	Description	Page No
Common Parts (Cont'd)					
160	256312-0000		1	WASHER	
170	2033-0011		10	WASHER	
180	26490-0000		2	WASHER	
190	256280-0000		2	DOWEL	
200	571534-0000		1	PLATE	
210	257090-0000		1	SHIFTER HANDLE	
220	751334-0000		3	SPACER	
260	456042-0000		1	SCREW	
265	28037-0000		2	WASHER	
295	491153-0000		1	COMPRESSION GLAND	
300	90335-0008		1	COMP. SPRING, 22490, 1,6X14,1X115	
520	312105-0371		3	SCREW, M6S ISO 4017 M6X22 A4 80	
530	312105-0451		6	SCREW, M6S ISO 4017 M8X20 A4 80	
540	315105-0165		2	WASHER PLAIN, 8,4X16X1,6 A4 BRB	
550	315115-0165		4	WASHER PLAIN, TBRB 8,4/16 H=3	

Pos	Part No	UN	Qty	Description	Page No

MOVABLE FORMING RING

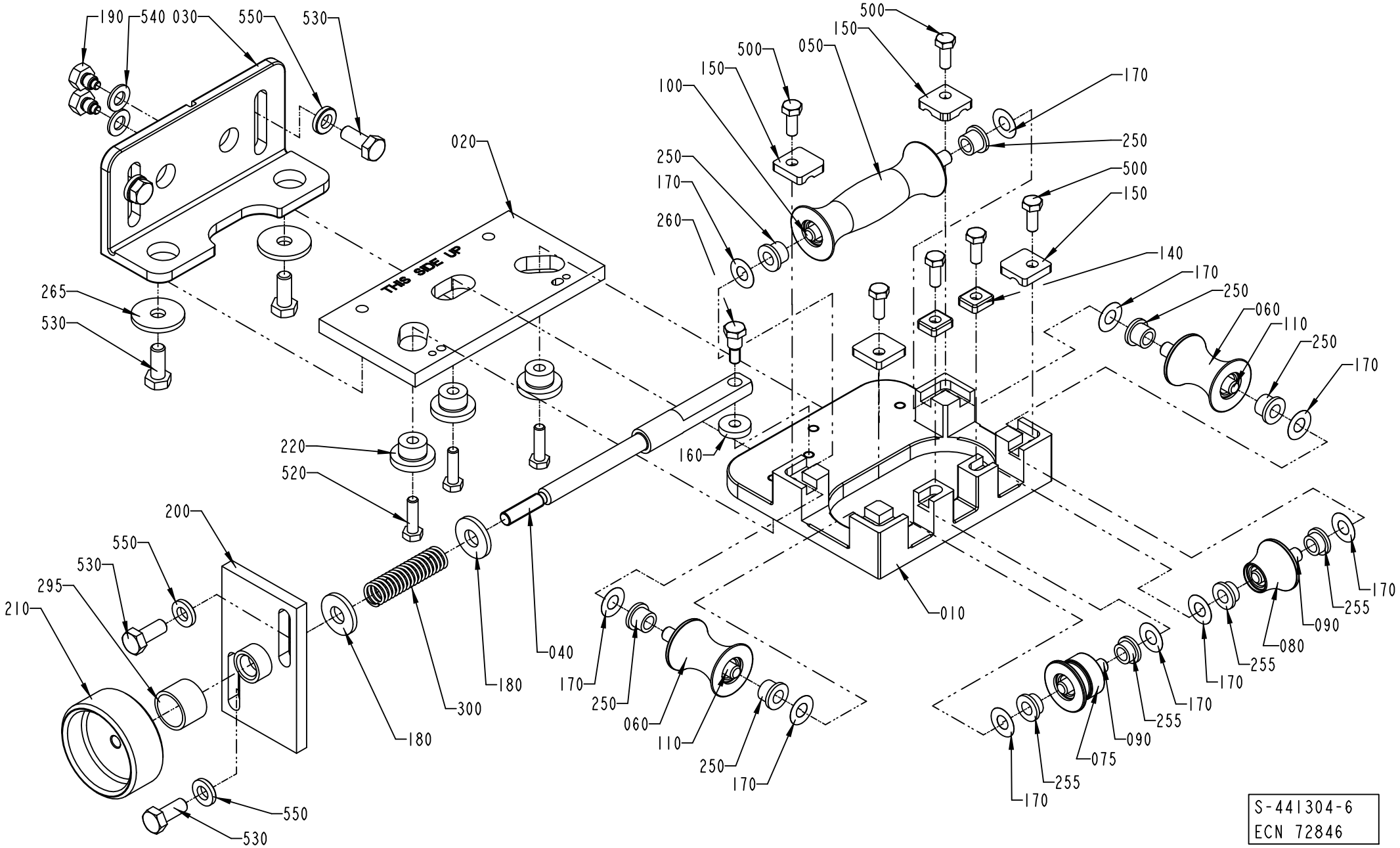

ECM: 171187 - 20050713
Group number: 441304-0400
Assembly Drawing: 441304-6_1_AD

This list covers pages from 1-124 to 1-133

Pos	Part No	UN	Qty	Description	Page No
SEE PREVIOUS LISTS PAGES: 1-125, 1-127.					

Pos	Part No	UN	Qty	Description	Page No

Machine Type | Group Description | Used-In | Group Number | Page No

MOVABLE FORMING RING

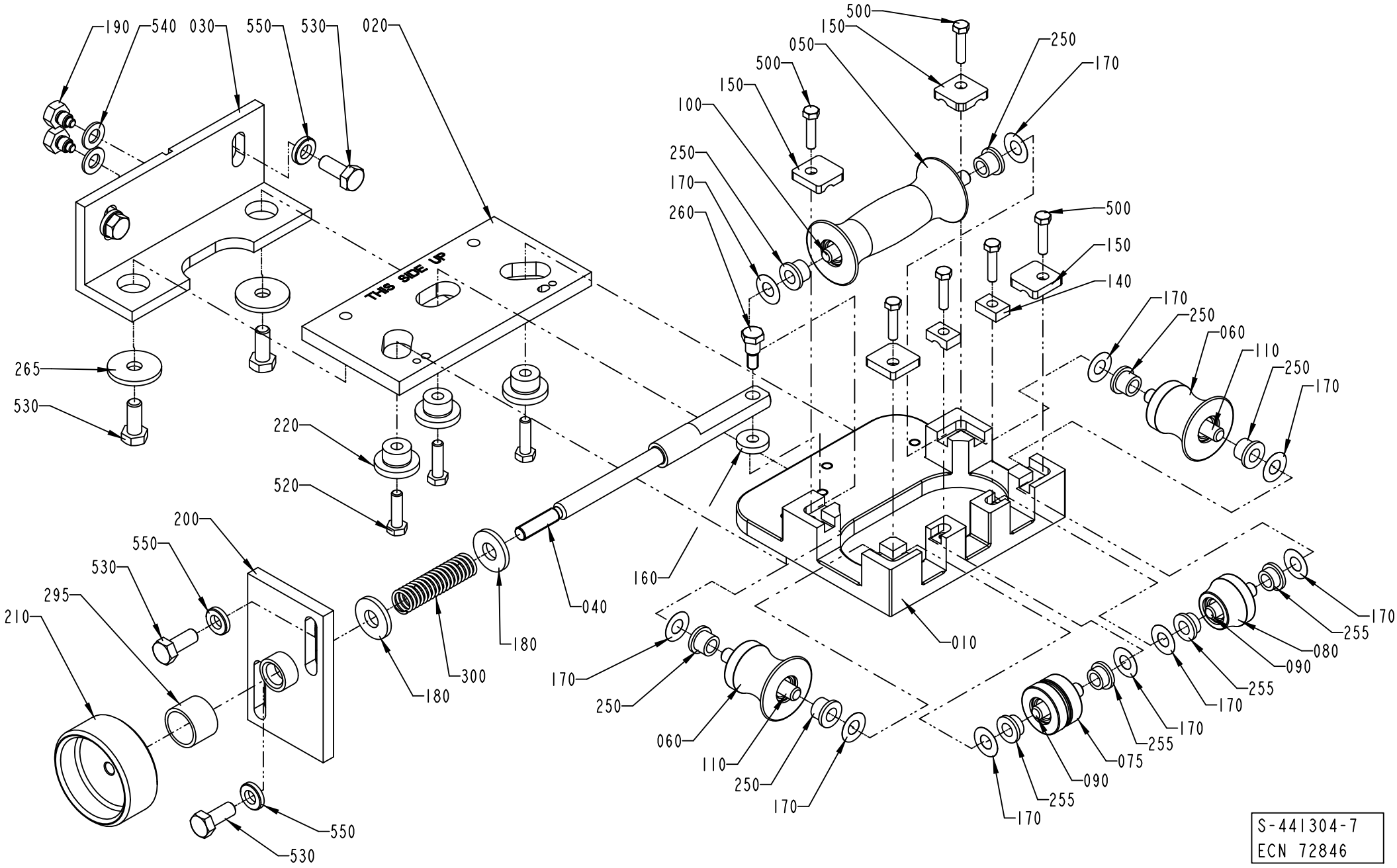

S-441304-7
ECN 72846

Pos	Part No	UN	Qty	Description	Page No
SEE PREVIOUS LISTS PAGES: 1-125, 1-127.					

Pos	Part No	UN	Qty	Description	Page No

MOVABLE FORMING RING

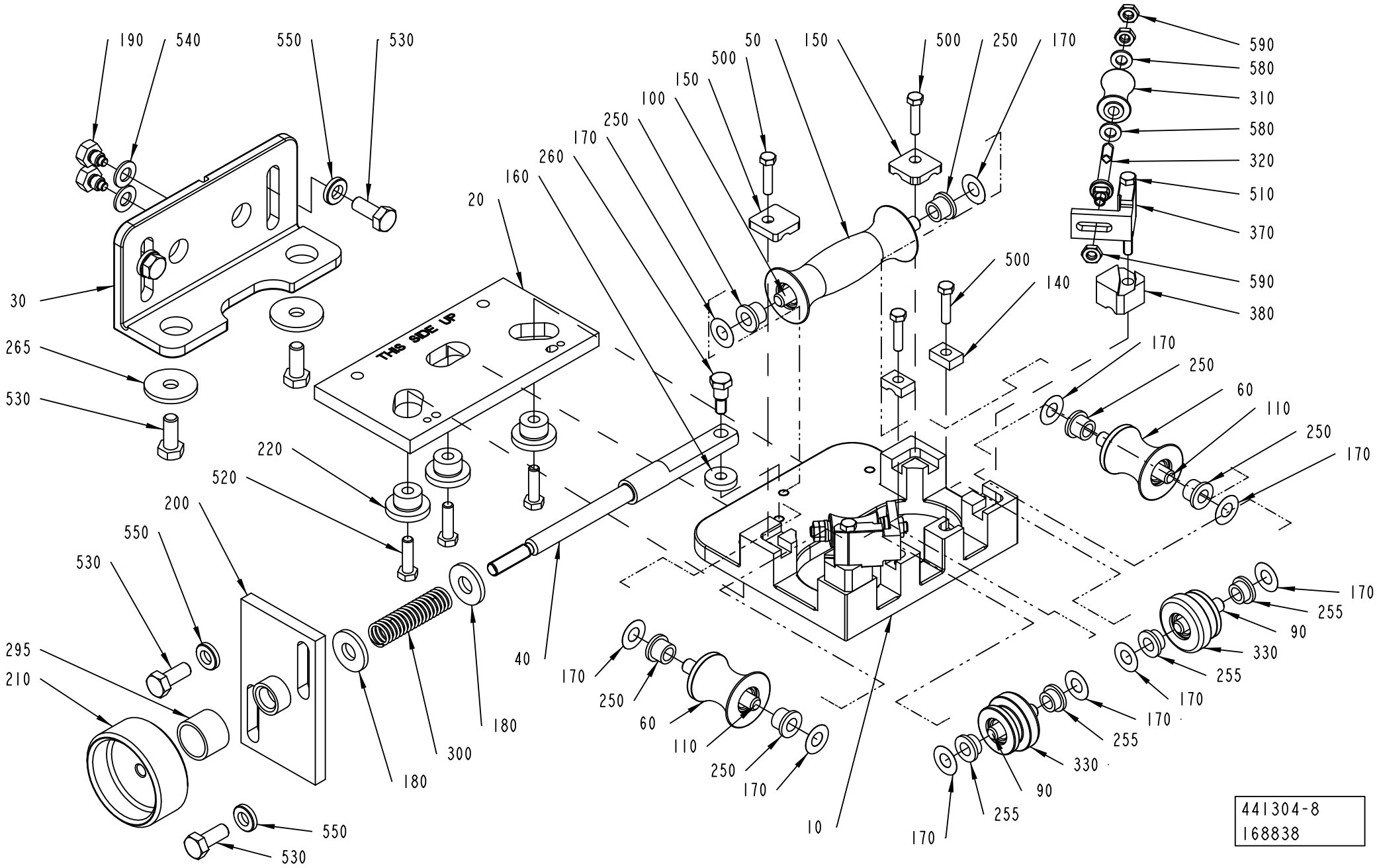

Pos	Part No	UN	Qty	Description	Page No
SEE PREVIOUS LISTS PAGES: 1-125, 1-127.					

Pos	Part No	UN	Qty	Description	Page No

UPPER TUBE SUPPORT

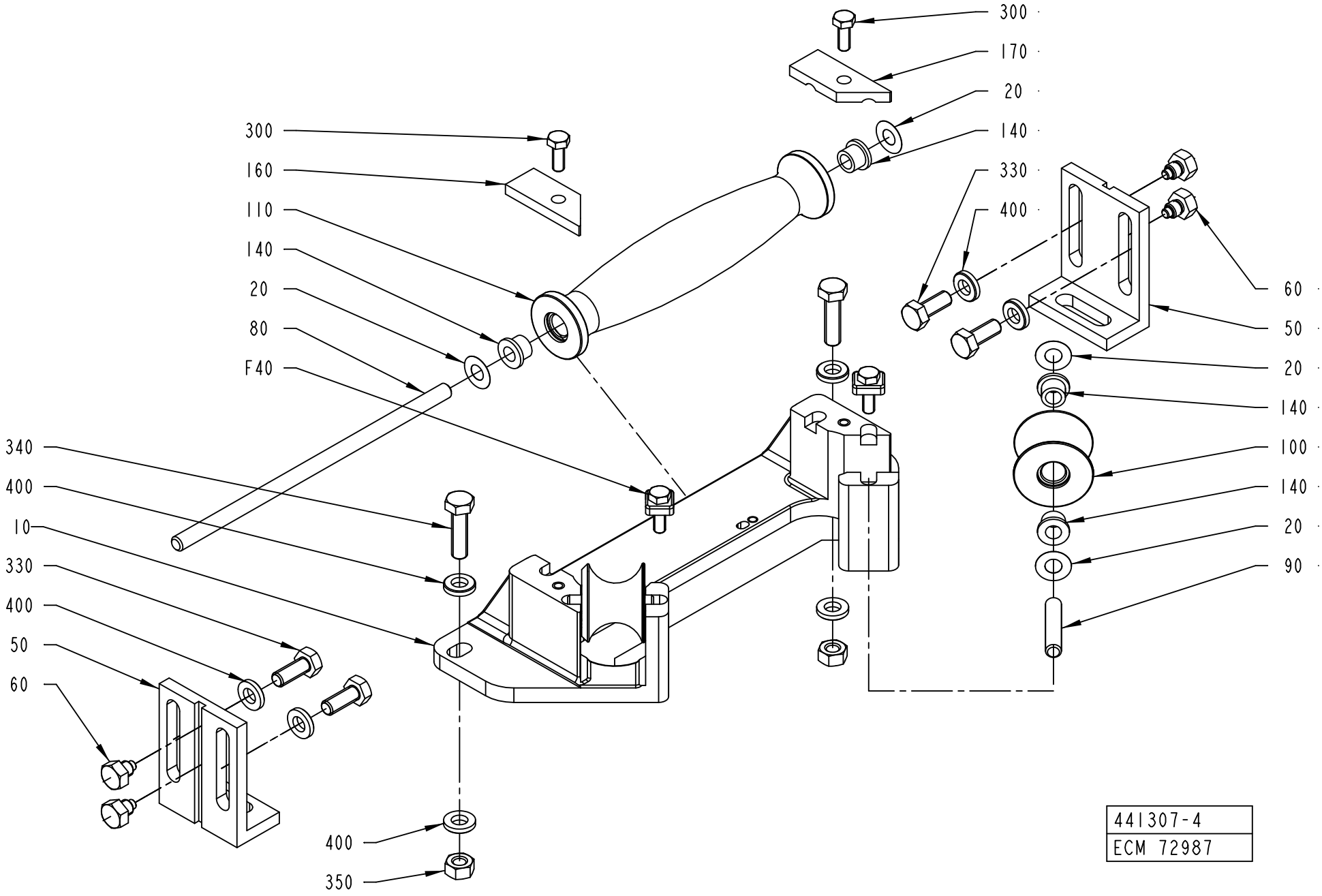

ECM: 178603 - 20040910
Group number: 441307-0300
Assembly Drawing: 441307-4_1_AC

This list covers pages from 1-134 to 1-139

Pos	Part No	UN	Qty	Description	Page No
TBA 0100B, TBA 0125S, TWA 0125S (See drawing on page: 1-136)					
010	469078-0000		1	HOLDER	
050	256279-0000		2	ANGLE	
080	752186-0010		1	SHAFT	
090	752186-0001		2	SHAFT	
100	752145-0000		2	FORMING ROLLER	
110	752144-0000		1	FORMING ROLLER	
160	1279089-0000		1	LOCKING PLATE	
170	1279088-0000		1	LOCKING PLATE	
290	312105-0368		2	SCREW, M6S ISO 4017 M6X16 A4 80	
345	312105-0457		2	SCREW, M6S ISO 4014 M8X35 A4 80	
TBA 0200S, TPA 0250SQ, TWA 0200S, TPA 0200SQ, TWA 0180S, TBA 0160S (See drawing on page: 1-138)					
010	469041-0000		1	HOLDER	
050	469047-0000		2	ANGLE	
080	752186-0010		1	SHAFT	
090	752186-0004		2	SHAFT	
100	752130-0000		2	FORMING ROLLER	
110	752129-0000		1	FORMING ROLLER	
160	1279089-0000		1	LOCKING PLATE	
170	1279088-0000		1	LOCKING PLATE	
300	312105-0368		2	SCREW, M6S ISO 4017 M6X16 A4 80	
340	312105-0455		2	SCREW, M6S ISO 4017 M8X30 A4 80	
TBA 0200B, TBA 0200SQ, TBA 0284B, TBA 0250B, TBA 0300S, TBA 0330S (See drawing on page: 1-134)					
010	978791-0000		1	HOLDER	
050	751267-0000		2	CANTILEVER	
080	752186-0011		1	SHAFT	
090	752186-0004		2	SHAFT	
100	751284-0000		2	ROLL	
110	751283-0000		1	ROLL	
160	751287-0000		1	PLATE	
170	751288-0000		1	PLATE	
300	312105-0368		2	SCREW, M6S ISO 4017 M6X16 A4 80	
340	312105-0455		2	SCREW, M6S ISO 4017 M8X30 A4 80	
TBA 0200M, TBA 0250S (See drawing on page: 1-138)					
010	574416-0000		1	BRACKET	
050	469047-0000		2	ANGLE	
080	752186-0010		1	SHAFT	
090	752186-0012		2	SHAFT	
100	574418-0000		2	ROLL	
110	574417-0000		1	ROLL	
160	1279089-0000		1	LOCKING PLATE	
170	1279088-0000		1	LOCKING PLATE	
300	312105-0368		2	SCREW, M6S ISO 4017 M6X16 A4 80	
340	312105-0455		2	SCREW, M6S ISO 4017 M8X30 A4 80	
TPA 0330SQ (See drawing on page: 1-134)					
010	978791-0000		1	HOLDER	
050	751267-0000		2	CANTILEVER	
080	752186-0011		1	SHAFT	
090	752186-0004		2	SHAFT	
100	929441-0000		2	ROLL	
110	929442-0000		1	ROLL	
160	751287-0000		1	PLATE	
170	751288-0000		1	PLATE	
300	312105-0368		2	SCREW, M6S ISO 4017 M6X16 A4 80	
340	312105-0455		2	SCREW, M6S ISO 4017 M8X30 A4 80	
Common Parts					
020	2033-0011		6	WASHER	
040	565462-0100		1	LOCK PLATE	**1-141**
060	256280-0000		4	DOWEL	
100	751284-0000		2	ROLL	
140	90240-0172		6	FLANGE BUSHING, 8X12X10 MM	
330	312105-0451		4	SCREW, M6S ISO 4017 M8X20 A4 80	
350	312605-0318		2	HEXAGON NUT, M6M M8 A280	
400	315115-0165		8	WASHER PLAIN, TBRB 8,4/16 H=3	

Machine Type | Group Description | Used-In | Group Number | Page No

UPPER TUBE SUPPORT

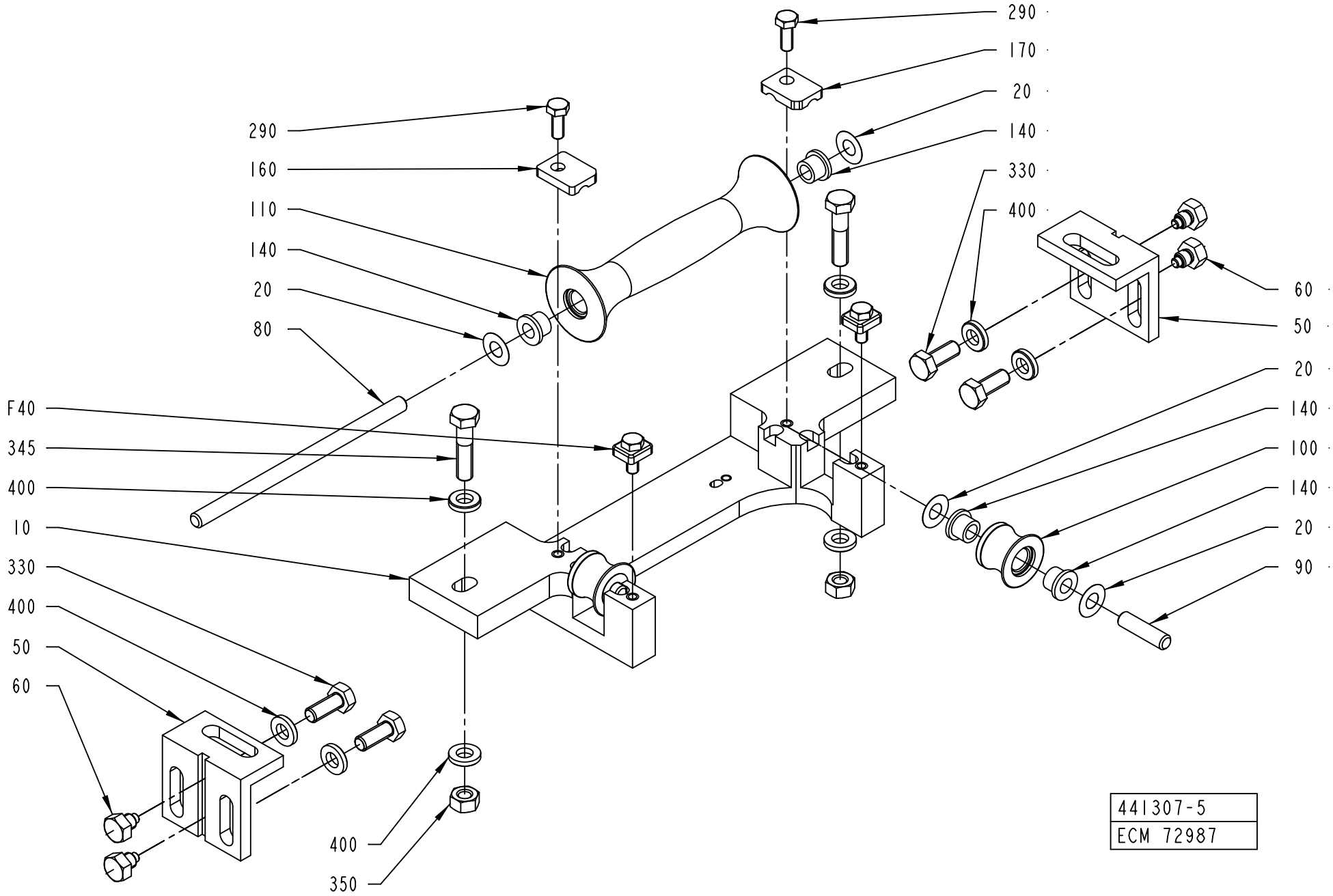

ECM: 178603 - 20040910
Group number: 441307-0300
Assembly Drawing: 441307-5_1_AC

This list covers pages from 1-134 to 1-139

Pos	Part No	UN	Qty	Description	Page No
TBA 0100B, TBA 0125S, TWA 0125S (See drawing on page: 1-136)					
010	469078-0000		1	HOLDER	
050	256279-0000		2	ANGLE	
080	752186-0010		1	SHAFT	
090	752186-0001		2	SHAFT	
100	752145-0000		2	FORMING ROLLER	
110	752144-0000		1	FORMING ROLLER	
160	1279089-0000		1	LOCKING PLATE	
170	1279088-0000		1	LOCKING PLATE	
290	312105-0368		2	SCREW, M6S ISO 4017 M6X16 A4 80	
345	312105-0457		2	SCREW, M6S ISO 4014 M8X35 A4 80	
TBA 0200S, TPA 0250SQ, TWA 0200S, TPA 0200SQ, TWA 0180S, TBA 0160S (See drawing on page: 1-138)					
010	469041-0000		1	HOLDER	
050	469047-0000		2	ANGLE	
080	752186-0010		1	SHAFT	
090	752186-0004		2	SHAFT	
100	752130-0000		2	FORMING ROLLER	
110	752129-0000		1	FORMING ROLLER	
160	1279089-0000		1	LOCKING PLATE	
170	1279088-0000		1	LOCKING PLATE	
300	312105-0368		2	SCREW, M6S ISO 4017 M6X16 A4 80	
340	312105-0455		2	SCREW, M6S ISO 4017 M8X30 A4 80	
TBA 0200B, TBA 0200SQ, TBA 0284B, TBA 0250B, TBA 0300S, TBA 0330S (See drawing on page: 1-134)					
010	978791-0000		1	HOLDER	
050	751267-0000		2	CANTILEVER	
080	752186-0011		1	SHAFT	
090	752186-0004		2	SHAFT	
100	751284-0000		2	ROLL	
110	751283-0000		1	ROLL	
160	751287-0000		1	PLATE	
170	751288-0000		1	PLATE	
300	312105-0368		2	SCREW, M6S ISO 4017 M6X16 A4 80	
340	312105-0455		2	SCREW, M6S ISO 4017 M8X30 A4 80	
TBA 0200M, TBA 0250S (See drawing on page: 1-138)					
010	574416-0000		1	BRACKET	
050	469047-0000		2	ANGLE	
080	752186-0010		1	SHAFT	
090	752186-0012		2	SHAFT	
100	574418-0000		2	ROLL	
110	574417-0000		1	ROLL	
160	1279089-0000		1	LOCKING PLATE	
170	1279088-0000		1	LOCKING PLATE	
300	312105-0368		2	SCREW, M6S ISO 4017 M6X16 A4 80	
340	312105-0455		2	SCREW, M6S ISO 4017 M8X30 A4 80	
TPA 0330SQ (See drawing on page: 1-134)					
010	978791-0000		1	HOLDER	
050	751267-0000		2	CANTILEVER	
080	752186-0011		1	SHAFT	
090	752186-0004		2	SHAFT	
100	929441-0000		2	ROLL	
110	929442-0000		1	ROLL	
160	751287-0000		1	PLATE	
170	751288-0000		1	PLATE	
300	312105-0368		2	SCREW, M6S ISO 4017 M6X16 A4 80	
340	312105-0455		2	SCREW, M6S ISO 4017 M8X30 A4 80	
Common Parts					
020	2033-0011		6	WASHER	
040	565462-0100		1	LOCK PLATE	**1-141**
060	256280-0000		4	DOWEL	
100	751284-0000		2	ROLL	
140	90240-0172		6	FLANGE BUSHING, 8X12X10 MM	
330	312105-0451		4	SCREW, M6S ISO 4017 M8X20 A4 80	
350	312605-0318		2	HEXAGON NUT, M6M M8 A280	
400	315115-0165		8	WASHER PLAIN, TBRB 8,4/16 H=3	

Machine Type | Group Description | Used-In | Group Number | Page No

UPPER TUBE SUPPORT

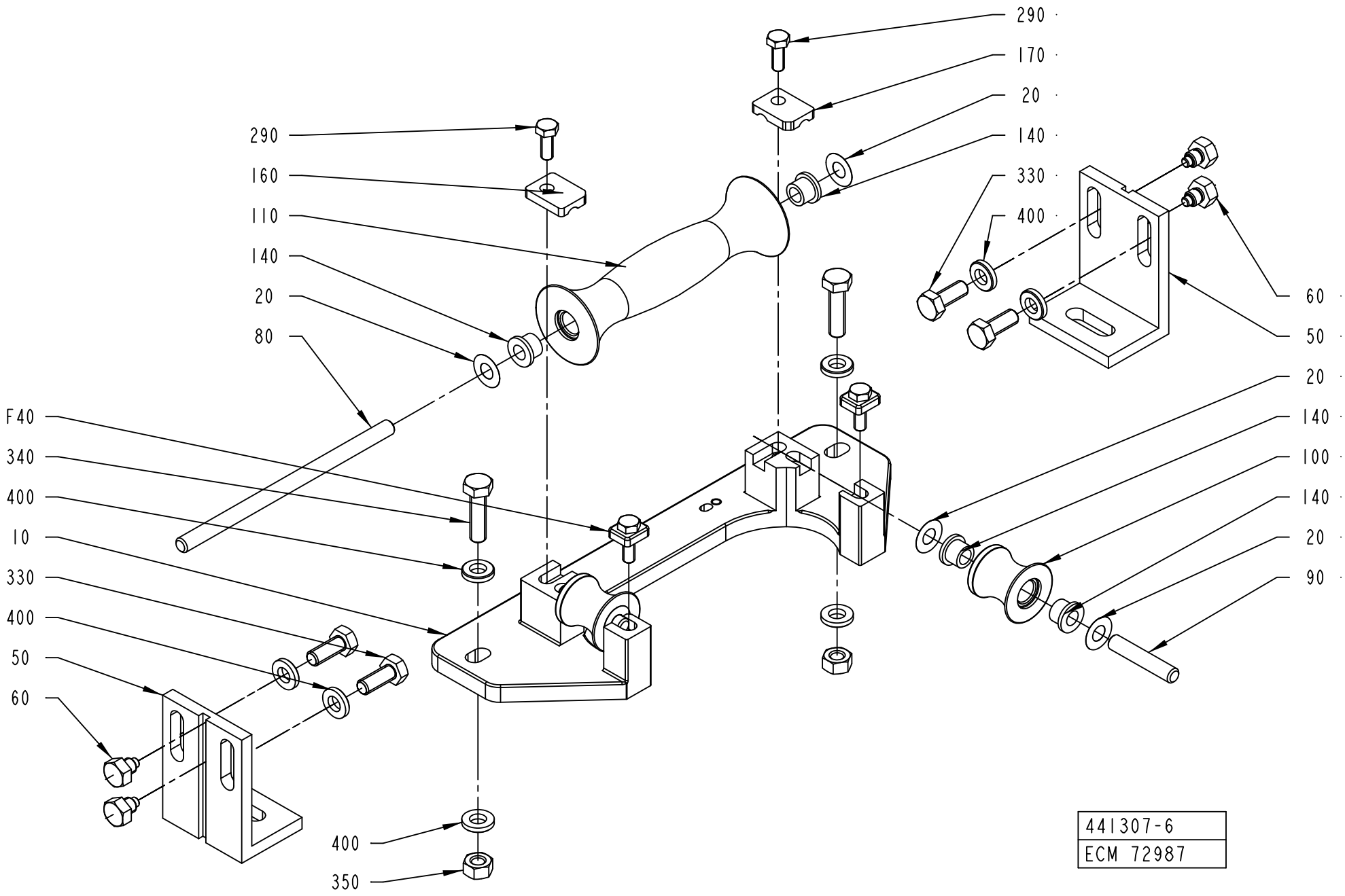

ECM: 178603 - 20040910
Group number: 441307-0300
Assembly Drawing: 441307-6_1_AC

This list covers pages from 1-134 to 1-139

Pos	Part No	UN	Qty	Description	Page No
TBA 0100B, TBA 0125S, TWA 0125S (See drawing on page: 1-136)					
010	469078-0000		1	HOLDER	
050	256279-0000		2	ANGLE	
080	752186-0010		1	SHAFT	
090	752186-0001		2	SHAFT	
100	752145-0000		2	FORMING ROLLER	
110	752144-0000		1	FORMING ROLLER	
160	1279089-0000		1	LOCKING PLATE	
170	1279088-0000		1	LOCKING PLATE	
290	312105-0368		2	SCREW, M6S ISO 4017 M6X16 A4 80	
345	312105-0457		2	SCREW, M6S ISO 4014 M8X35 A4 80	
TBA 0200S, TPA 0250SQ, TWA 0200S, TPA 0200SQ, TWA 0180S, TBA 0160S (See drawing on page: 1-138)					
010	469041-0000		1	HOLDER	
050	469047-0000		2	ANGLE	
080	752186-0010		1	SHAFT	
090	752186-0004		2	SHAFT	
100	752130-0000		2	FORMING ROLLER	
110	752129-0000		1	FORMING ROLLER	
160	1279089-0000		1	LOCKING PLATE	
170	1279088-0000		1	LOCKING PLATE	
300	312105-0368		2	SCREW, M6S ISO 4017 M6X16 A4 80	
340	312105-0455		2	SCREW, M6S ISO 4017 M8X30 A4 80	
TBA 0200B, TBA 0200SQ, TBA 0284B, TBA 0250B, TBA 0300S, TBA 0330S (See drawing on page: 1-134)					
010	978791-0000		1	HOLDER	
050	751267-0000		2	CANTILEVER	
080	752186-0011		1	SHAFT	
090	752186-0004		2	SHAFT	
100	751284-0000		2	ROLL	
110	751283-0000		1	ROLL	
160	751287-0000		1	PLATE	
170	751288-0000		1	PLATE	
300	312105-0368		2	SCREW, M6S ISO 4017 M6X16 A4 80	
340	312105-0455		2	SCREW, M6S ISO 4017 M8X30 A4 80	
TBA 0200M, TBA 0250S (See drawing on page: 1-138)					
010	574416-0000		1	BRACKET	
050	469047-0000		2	ANGLE	
080	752186-0010		1	SHAFT	
090	752186-0012		2	SHAFT	
100	574418-0000		2	ROLL	
110	574417-0000		1	ROLL	
160	1279089-0000		1	LOCKING PLATE	
170	1279088-0000		1	LOCKING PLATE	
300	312105-0368		2	SCREW, M6S ISO 4017 M6X16 A4 80	
340	312105-0455		2	SCREW, M6S ISO 4017 M8X30 A4 80	
TPA 0330SQ (See drawing on page: 1-134)					
010	978791-0000		1	HOLDER	
050	751267-0000		2	CANTILEVER	
080	752186-0011		1	SHAFT	
090	752186-0004		2	SHAFT	
100	929441-0000		2	ROLL	
110	929442-0000		1	ROLL	
160	751287-0000		1	PLATE	
170	751288-0000		1	PLATE	
300	312105-0368		2	SCREW, M6S ISO 4017 M6X16 A4 80	
340	312105-0455		2	SCREW, M6S ISO 4017 M8X30 A4 80	
Common Parts					
020	2033-0011		6	WASHER	
040	565462-0100		1	LOCK PLATE	**1-141**
060	256280-0000		4	DOWEL	
100	751284-0000		2	ROLL	
140	90240-0172		6	FLANGE BUSHING, 8X12X10 MM	
330	312105-0451		4	SCREW, M6S ISO 4017 M8X20 A4 80	
350	312605-0318		2	HEXAGON NUT, M6M M8 A280	
400	315115-0165		8	WASHER PLAIN, TBRB 8,4/16 H=3	

Machine Type	Group Description	Used-In	Group Number	Page No

This page is intentionally left blank.

ECM: 537026 - 20120120
Group number: 565462-0100
Assembly Drawing:

Pos	Part No	UN	Qty	Description	Page No
TBA 0100B, TBA 0125S, TWA 0125S					
020	312105-0368		2	SCREW, M6S ISO 4017 M6X16 A4 80	
TBA 0160S, TBA 0200M, TBA 0200B, TBA 0200SQ, TBA 0200S, TBA 0250S, TBA 0284B, TBA 0250B, TBA 0300S, TBA 0330S, TPA 0330SQ, TPA 0250SQ, TWA 0200S, TPA 0200SQ, TWA 200S UF 180 A1					
020	312105-0370		2	SCREW, M6S ISO 4017 M6X20 A4 80	
Common Parts					
010	1279087-0000		2	LOCKING PLATE	

Pos	Part No	UN	Qty	Description	Page No

DIVIDED FORMING RING

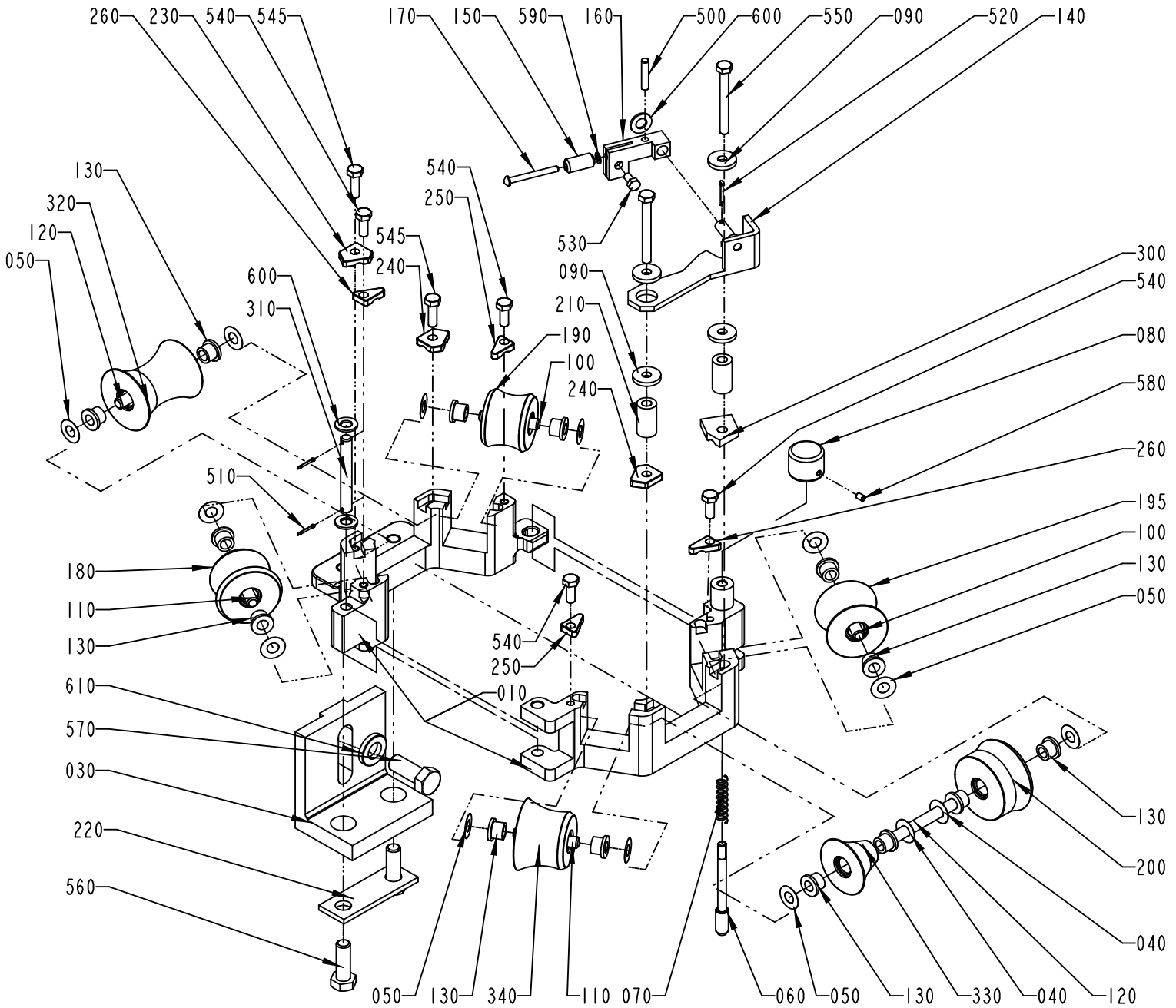

441486-7
427455

ECM: 427945 - 20091201
Group number: 441486-0400
Assembly Drawing: 441486-7_1_AD

This list covers pages from 1-142 to 1-147

Pos	Part No	UN	Qty	Description	Page No
TBA 0100B, TBA 0125S, TWA 0125S (See drawing on page: 1-144)					
010	469745-0000		1	BRACKET	
050	2033-0011		14	WASHER	
100	752186-0003		4	SHAFT	
120	752186-0006		1	SHAFT	
125	752185-0000		1	SHAFT	
130	90240-0172		12	FLANGE BUSHING, 8X12X10 MM	
180	752147-0000		1	FORMING ROLLER	
190	752148-0000		1	FORMING ROLLER	
195	752150-0000		1	FORMING ROLLER	
200	752151-0000		1	FORMING ROLLER	
300	456872-0000		1	LOCK PLATE	
320	752146-0000		1	FORMING ROLLER	
330	752152-0000		1	FORMING ROLLER	
340	752149-0000		1	FORMING ROLLER	
350	752156-0000		2	FLANGE BUSHING	
535	312105-0329		4	SCREW, M6S ISO 4017 M5X16 A4 80	
536	312105-0332		4	SCREW, M6S ISO 4017 M5X22 A4 70	
600	315105-0165		2	WASHER PLAIN, 8,4X16X1,6 A4 BRB	
TBA 0160S, TBA 0200S, TPA 0250SQ, TWA 0200S, TPA 0200SQ, TWA 0180S (See drawing on page: 1-144)					
010	469745-0000		1	BRACKET	
050	2033-0011		14	WASHER	
100	752186-0003		4	SHAFT	
120	752186-0006		1	SHAFT	
125	752185-0000		1	SHAFT	
130	90240-0172		12	FLANGE BUSHING, 8X12X10 MM	
180	752132-0000		1	FORMING ROLLER	
190	752133-0000		1	FORMING ROLLER	
195	752135-0000		1	FORMING ROLLER	
200	752136-0000		1	FORMING ROLLER	
300	456872-0000		1	LOCK PLATE	
320	752131-0000		1	FORMING ROLLER	
330	752137-0000		1	FORMING ROLLER	
340	752134-0000		1	FORMING ROLLER	
350	752156-0000		2	FLANGE BUSHING	
535	312105-0329		4	SCREW, M6S ISO 4017 M5X16 A4 80	
536	312105-0332		4	SCREW, M6S ISO 4017 M5X22 A4 70	
600	315105-0165		2	WASHER PLAIN, 8,4X16X1,6 A4 BRB	
TBA 0200B, TBA 0200SQ, TBA 0284B, TBA 0250B, TBA 0300S, TBA 0330S, TPA 0330SQ (See drawing on page: 1-142)					
010	978790-0000		1	BRACKET	
040	2033-0008		2	WASHER	
050	2033-0011		12	WASHER	
090	257175-0000		4	WASHER	
100	752186-0004		2	SHAFT	
110	752186-0005		2	SHAFT	
120	752186-0007		2	SHAFT	
130	90240-0172		14	FLANGE BUSHING, 8X12X10 MM	
140	441918-0000		1	BRACKET	
150	451117-0000		1	ROLL	
160	451148-0000		1	BRACKET	
170	451149-0000		1	SHAFT	
180	751499-0000		1	ROLL	
190	751497-0000		1	ROLL	
195	751496-0000		1	ROLL	
200	751495-0000		1	ROLL	
210	456181-0000		2	SPACER	
300	456199-0000		1	LOCK PLATE	
320	751498-0000		1	ROLL	
330	751501-0000		1	ROLL	
340	751500-0000		1	ROLL	
500	311103-0312		1	PARALLEL PIN ISO 2338 5M6X25 A1	
520	311411-0165		1	SPLIT PIN SP2,5X16RFR	
530	312105-0325		1	SCREW, M6S ISO 4017 M5X10 A4 80	
540	312105-0368		4	SCREW, M6S ISO 4017 M6X16 A4 80	
545	312105-0370		2	SCREW, M6S ISO 4017 M6X20 A4 80	
550	312105-0381		2	SCREW, M6S ISO 4014 M6X55 A4 80	
590	315105-0136		1	WASHER PLAIN, 4,3X9X0,8 A4 BRB	
600	315105-0165		3	WASHER PLAIN, 8,4X16X1,6 A4 BRB	
TBA 0200M, TBA 0250S (See drawing on page: 1-146)					
010	574396-0000		1	BRACKET	
050	2033-0011		14	WASHER	
090	257175-0000		4	WASHER	
100	752186-0004		4	SHAFT	
120	752186-0006		1	SHAFT	
125	574395-0000		1	SHAFT	
130	90240-0172		12	FLANGE BUSHING, 8X12X10 MM	
140	574456-0000		1	BRACKET	
150	451117-0000		1	ROLL	
160	451148-0000		1	BRACKET	
170	451149-0000		1	SHAFT	
180	574397-0000		1	ROLL	
190	574399-0000		1	ROLL	
195	574400-0000		1	ROLL	

Machine Type | Group Description | Used-In | Group Number | Page No

DIVIDED FORMING RING

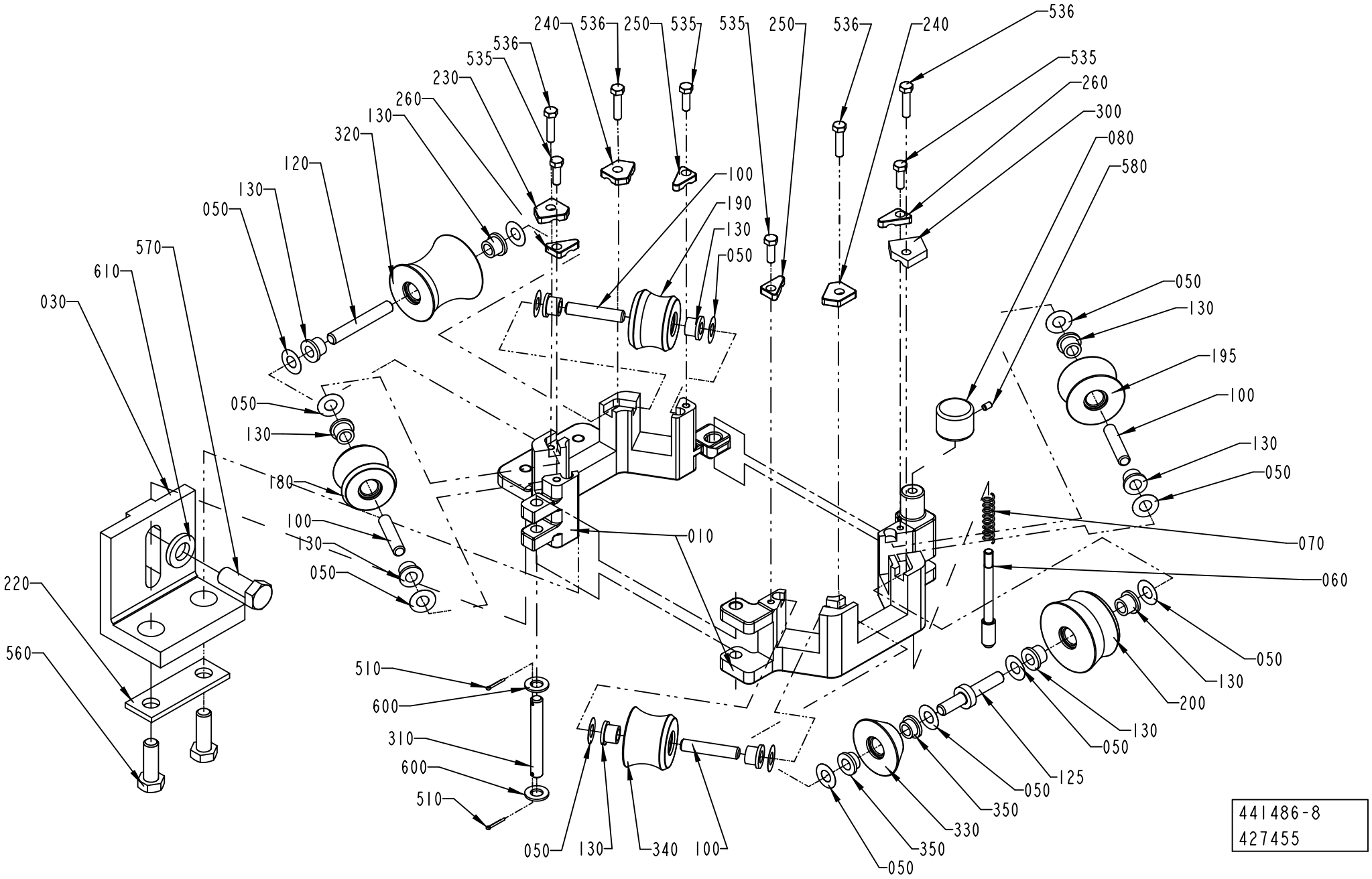

Pos	Part No	UN	Qty	Description	Page No
TBA 0200M, TBA 0250S (Cont'd) (See drawing on page: 1-146)					
200	574401-0000		1	ROLL	
210	456181-0000		2	SPACER	
300	574393-0000		1	LOCK PLATE	
320	574398-0000		1	ROLL	
330	574402-0000		1	ROLL	
340	574403-0000		1	ROLL	
350	752156-0000		2	FLANGE BUSHING	
500	311103-0312		1	PARALLEL PIN ISO 2338 5M6X25 A1	
520	311411-0165		1	SPLIT PIN SP2,5X16RFR	
530	312105-0325		1	SCREW, M6S ISO 4017 M5X10 A4 80	
535	312105-0329		4	SCREW, M6S ISO 4017 M5X16 A4 80	
536	312105-0332		2	SCREW, M6S ISO 4017 M5X22 A4 70	
550	312105-0381		2	SCREW, M6S ISO 4014 M6X55 A4 80	
590	315105-0136		1	WASHER PLAIN, 4,3X9X0,8 A4 BRB	
600	315105-0165		3	WASHER PLAIN, 8,4X16X1,6 A4 BRB	
Common Parts					
030	456230-0000		1	ANGLE BRACKET	
060	35918-0000		1	SHAFT	
070	35919-0000		1	COMPRESSION SPRING	
080	36325-0000		1	KNOB	
220	456182-0000		1	PLATE	
230	1279086-0000		1	LOCKING PLATE	
240	1279090-0000		2	LOCKING PLATE	
250	1279093-0000		2	LOCKING PLATE	
260	1279094-0000		2	LOCKING PLATE	
310	751318-0000		1	SHAFT	
510	311411-0150		2	SPLIT PIN SP2X12RFR	
560	312105-0495		2	SCREW, M6S ISO 4017 M10X30 A4 80	
570	312105-0536		1	SCREW, M6S ISO 4017 M12X30 A4 80	
580	312318-0285		1	SET SCREW, CUP END ISO4029 M4X6 A4	
610	315115-0178		1	WASHER PLAIN, TBRB 13/24 H=4	

Pos	Part No	UN	Qty	Description	Page No

DIVIDED FORMING RING

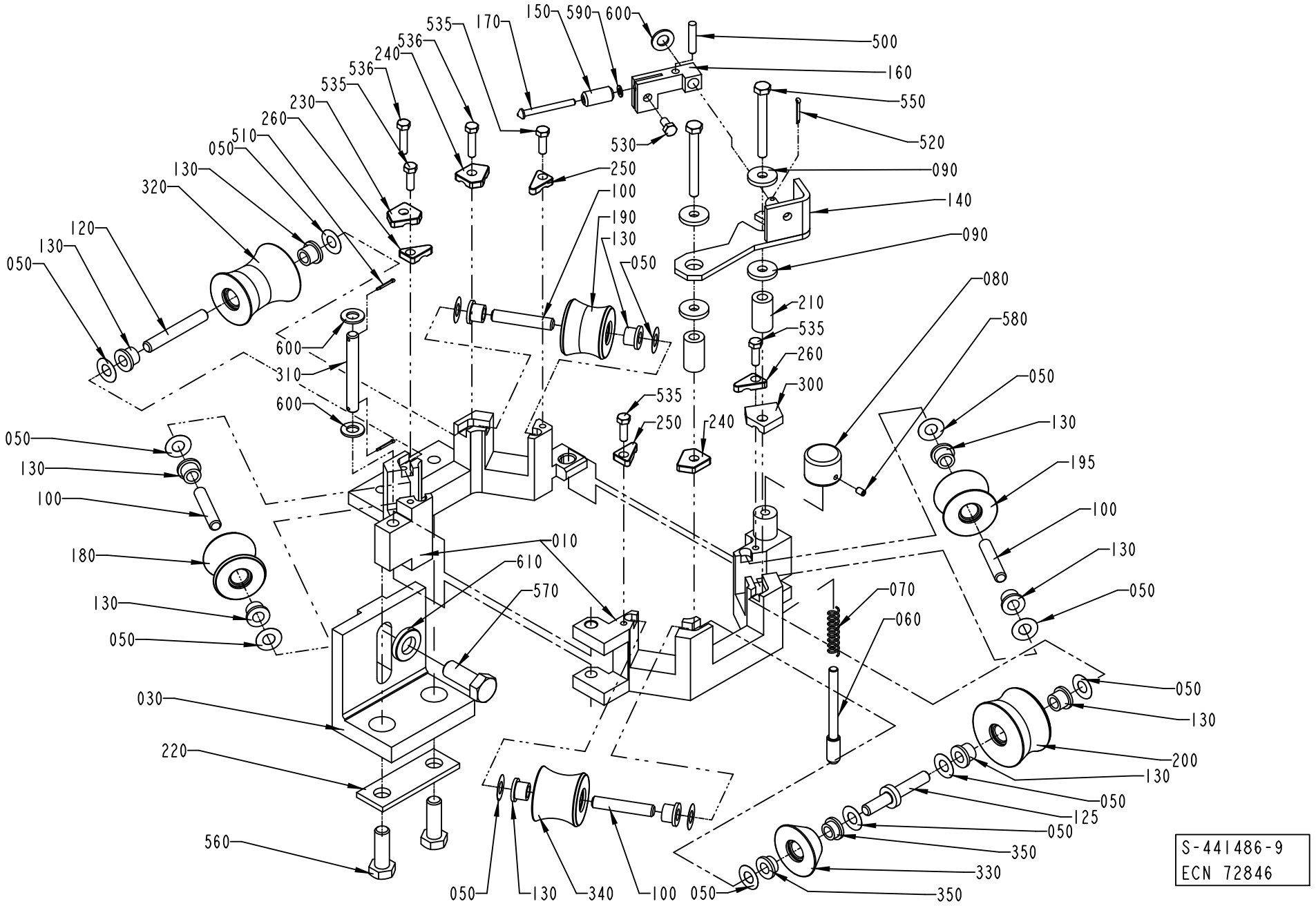

S-441486-9
ECN 72846

Pos	Part No	UN	Qty	Description	Page No
SEE PREVIOUS LISTS PAGES: 1-143, 1-145.					

Pos	Part No	UN	Qty	Description	Page No

LOWER FORMING RING

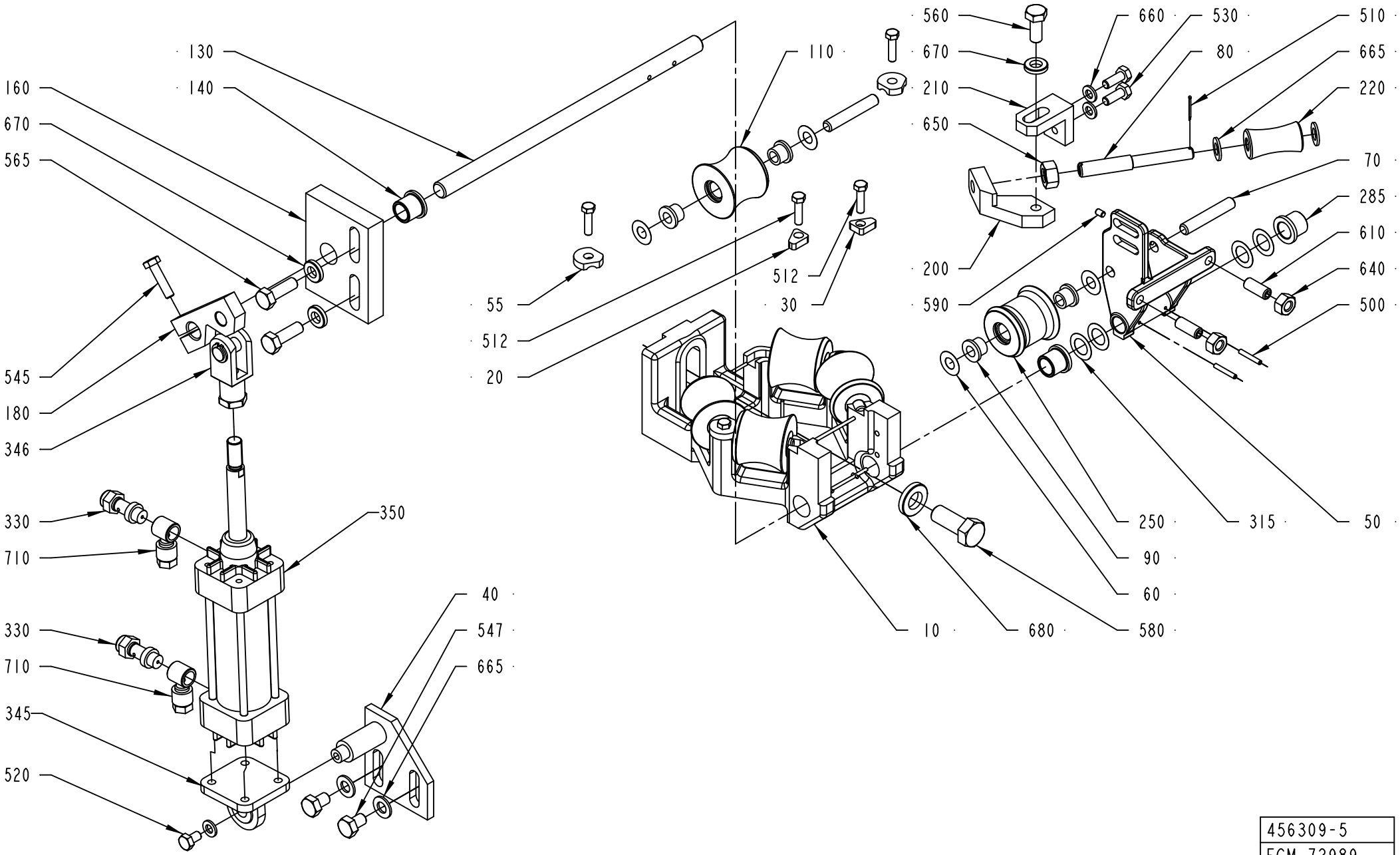

456309-5
ECM 72989

ECM: 292527 - 20070126
Group number: 456309-0600
Assembly Drawing: 456309-5_1_AC

This list covers pages from 1-148 to 1-153

Pos	Part No	UN	Qty	Description	Page No
TBA 0100B, TBA 0125S, TWA 0125S (See drawing on page: 1-150)					
010	456837-0000		1	HOLDER	
050	257041-0000		1	FORK	
070	752186-0003		4	SHAFT	
075	752186-0012		2	SHAFT	
110	752153-0000		5	FORMING ROLLER	
140	255970-0000		3	BUSHING	
160	571544-0000		1	BEARING PLATE	
220	257044-0000		1	ROLL	
250	752155-0000		1	COUNTER ROLLER	
510	311411-0140		1	SPLIT PIN SP1,6X16RFR	
512	312105-0331		2	SCREW, M6S ISO 4017 M5X20 A4 80	
540	312105-0370		4	SCREW, M6S ISO 4017 M6X20 A4 80	
600	312318-0368		2	SET SCREW, CUP END ISO4029 M6X16 A4	
630	312605-0316		2	HEXAGON NUT, M6M M6 A280	
650	312605-0320		1	HEXAGON NUT, M6M M10 A280	
665	315105-0165		4	WASHER PLAIN, 8,4X16X1,6 A4 BRB	
TBA 0160S, TBA 0200S, TPA 0250SQ, TWA 0200S, TPA 0200SQ (See drawing on page: 1-150)					
010	456837-0000		1	HOLDER	
050	257041-0000		1	FORK	
070	752186-0003		4	SHAFT	
075	752186-0012		2	SHAFT	
110	752138-0000		5	FORMING ROLLER	
140	255970-0000		3	BUSHING	
160	571544-0000		1	BEARING PLATE	
220	257044-0000		1	ROLL	
250	752140-0000		1	COUNTER ROLLER	
510	311411-0140		1	SPLIT PIN SP1,6X16RFR	
512	312105-0331		2	SCREW, M6S ISO 4017 M5X20 A4 80	
540	312105-0370		4	SCREW, M6S ISO 4017 M6X20 A4 80	
600	312318-0368		2	SET SCREW, CUP END ISO4029 M6X16 A4	
630	312605-0316		2	HEXAGON NUT, M6M M6 A280	
650	312605-0320		1	HEXAGON NUT, M6M M10 A280	
665	315105-0165		4	WASHER PLAIN, 8,4X16X1,6 A4 BRB	
TBA 0200B, TBA 0284B, TBA 0250B, TBA 0300S, TBA 0330S (See drawing on page: 1-148)					
010	490518-0000		1	HOLDER	
050	257040-0000		1	FORK	
070	752186-0005		6	SHAFT	
110	751502-0000		5	ROLLER	
140	255970-0000		1	BUSHING	
160	571543-0000		1	BEARING PLATE	
220	257044-0000		1	ROLL	
250	751503-0000		1	COUNTER ROLLER	
	90166-0179	*M*	*1*	*SHRINKABLE HOSE (1 1/2")*	
285	752047-0000		2	BUSHING	
510	311411-0140		1	SPLIT PIN SP1,6X16RFR	
512	312105-0331		6	SCREW, M6S ISO 4017 M5X20 A4 80	
610	312318-0451		2	SET SCREW, CUP END ISO4029 M8X20 A4	
640	312605-0318		2	HEXAGON NUT, M6M M8 A280	
650	312605-0320		1	HEXAGON NUT, M6M M10 A280	
665	315105-0165		4	WASHER PLAIN, 8,4X16X1,6 A4 BRB	
TBA 0200M, TBA 0250S (See drawing on page: 1-150)					
010	574337-0000		1	BRACKET	
050	574341-0000		1	FORK	
070	752186-0003		1	SHAFT	
075	752186-0004		5	SHAFT	
110	574346-0000		5	ROLL	
140	255970-0000		3	BUSHING	
160	571544-0000		1	BEARING PLATE	
220	257044-0000		1	ROLL	
250	574347-0000		1	COUNTER ROLLER	
510	311411-0140		1	SPLIT PIN SP1,6X16RFR	
512	312105-0331		2	SCREW, M6S ISO 4017 M5X20 A4 80	
540	312105-0370		4	SCREW, M6S ISO 4017 M6X20 A4 80	
600	312318-0368		2	SET SCREW, CUP END ISO4029 M6X16 A4	
630	312605-0316		2	HEXAGON NUT, M6M M6 A280	
650	312605-0320		1	HEXAGON NUT, M6M M10 A280	
665	315105-0165		4	WASHER PLAIN, 8,4X16X1,6 A4 BRB	
TBA 0200SQ (See drawing on page: 1-148)					
010	490518-0000		1	HOLDER	
050	257040-0000		1	FORK	
070	752186-0005		6	SHAFT	
110	1538150-0000		5	ROLLER	
140	255970-0000		1	BUSHING	
160	571543-0000		1	BEARING PLATE	
220	257044-0000		1	ROLL	
250	1538151-0000		1	COUNTER ROLLER	
285	752047-0000		2	BUSHING	
510	311411-0140		1	SPLIT PIN SP1,6X16RFR	
512	312105-0331		6	SCREW, M6S ISO 4017 M5X20 A4 80	
610	312318-0451		2	SET SCREW, CUP END ISO4029 M8X20 A4	
640	312605-0318		2	HEXAGON NUT, M6M M8 A280	
650	312605-0320		1	HEXAGON NUT, M6M M10 A280	
665	315105-0165		4	WASHER PLAIN, 8,4X16X1,6 A4 BRB	

Machine Type | Group Description | Used-In | Group Number | Page No

LOWER FORMING RING

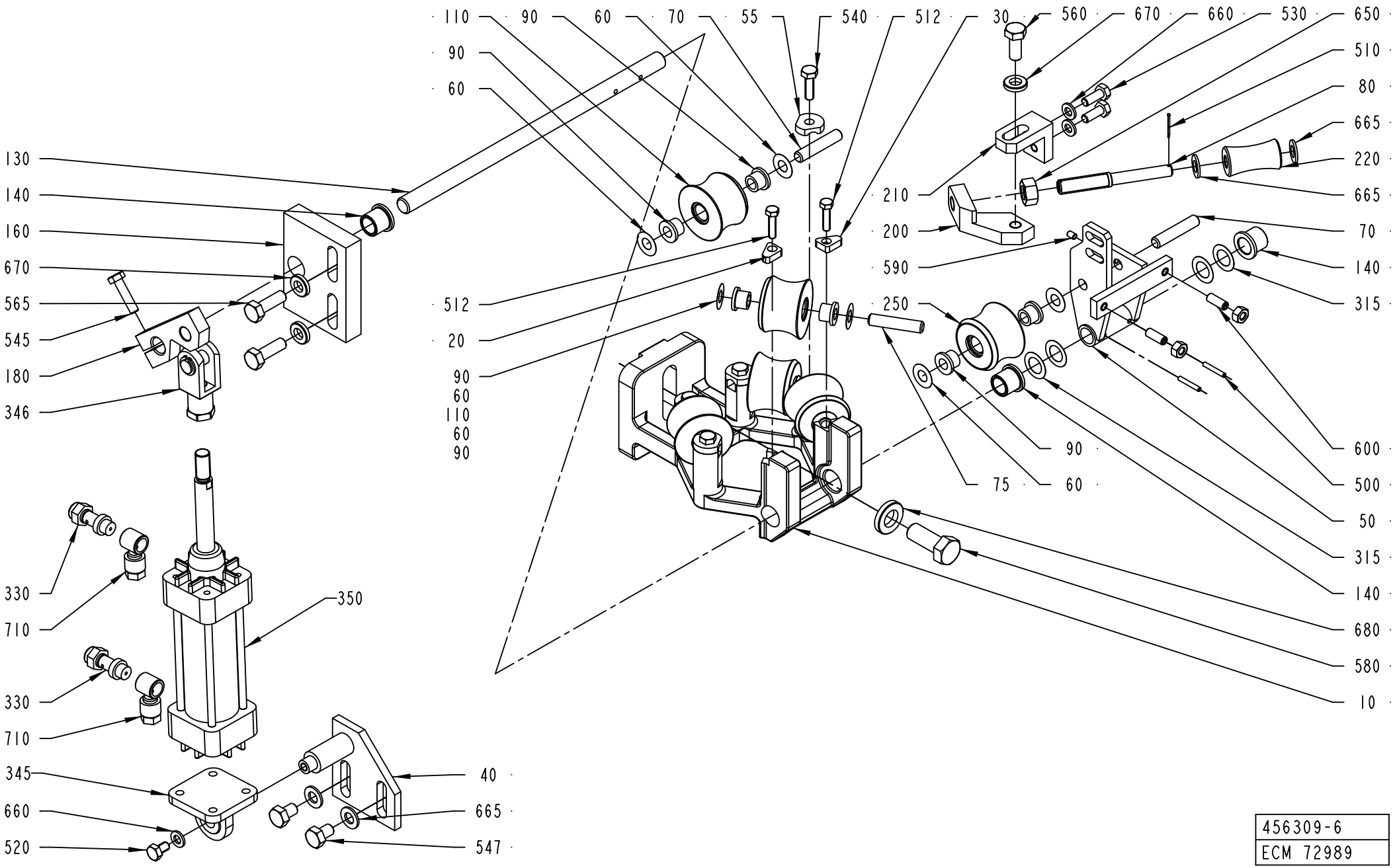

456309-6
ECM 72989

ECM: 292527 - 20070126
Group number: 456309-0600
Assembly Drawing: 456309-6_1_AD

This list covers pages from 1-148 to 1-153

Pos	Part No	UN	Qty	Description	Page No
TBA 0200SQ (Cont'd) (See drawing on page: 1-148)					
665	315105-0165		4	WASHER PLAIN, 8,4X16X1,6 A4 BRB	
TPA 0330SQ (See drawing on page: 1-152)					
010	490518-0000		1	HOLDER	
050	257040-0000		1	FORK	
070	752186-0005		6	SHAFT	
110	929279-0000		5	ROLLER	
140	255970-0000		1	BUSHING	
160	571543-0000		1	BEARING PLATE	
220	257044-0000		2	ROLL	
230	1539607-0000		1	HOLDER	
240	1539608-0000		1	SHAFT	
250	929280-0000		1	COUNTER ROLLER	
285	752047-0000		2	BUSHING	
510	311411-0140		2	SPLIT PIN SP1,6X16RFR	
512	312105-0331		5	SCREW, M6S ISO 4017 M5X20 A4 80	
513	312105-0343		1	SCREW, M6S ISO 4014 M5X60 A4 80	
610	312318-0451		2	SET SCREW, CUP END ISO4029 M8X20 A4	
640	312605-0318		2	HEXAGON NUT, M6M M8 A280	
650	312605-0320		3	HEXAGON NUT, M6M M10 A280	
665	315105-0165		6	WASHER PLAIN, 8,4X16X1,6 A4 BRB	
Common Parts					
020	1279095-0000		1	LOCKING PLATE	
030	1279096-0000		1	LOCKING PLATE	
040	491022-0000		1	CYLINDER BRACKET	
055	1279092-0000		4	LOCKING PLATE	
060	2033-0011		12	WASHER	
080	239440-0000		1	SHAFT	
090	90240-0172		12	FLANGE BUSHING, 8X12X10 MM	
130	255969-0000		1	SHAFT	
180	441483-0000		1	CYLINDER BRACKET	
200	257042-0000		1	BRACKET	
210	257043-0000		1	ANGLE BRACKET	
315	752038-0000		4	SHIM	
330	90235-0274		2	THROTTLE CHECK VALVE, G1/8", SCU-604-1/8	
345	90239-0453		1	BRACKET	
346	90239-0516		1	ROD END, CLEVIS WITH AXLE M10X1,25	
350	90239-0779		1	CYLINDER	
	90239-0442		*1*	*SEAL KIT*	
500	311103-0238		2	PARALLEL PIN ISO 2338 3M6X20 A1	
520	312105-0364		1	SCREW, M6S ISO 4017 M6X10 A4 80	
530	312105-0368		2	SCREW, M6S ISO 4017 M6X16 A4 80	
545	312105-0372		1	SCREW, M6S ISO 4017 M6X25 A4 80	
547	312105-0447		2	SCREW, M6S ISO 4017 M8X12 A4 80	
560	312105-0451		1	SCREW, M6S ISO 4017 M8X20 A4 80	
565	312105-0453		2	SCREW, M6S ISO 4017 M8X25 A4 80	
580	312105-0536		1	SCREW, M6S ISO 4017 M12X30 A4 80	
590	312318-0285		1	SET SCREW, CUP END ISO4029 M4X6 A4	
660	315105-0153		3	WASHER PLAIN, 6,4X12X1,5 A4 BRB	
670	315115-0165		3	WASHER PLAIN, TBRB 8,4/16 H=3	
680	315115-0178		1	WASHER PLAIN, TBRB 13/24 H=4	
710	342797-0121		2	BANJO CONN., RINGPIECE 6-1/8	

Machine Type	Group Description	Used-In	Group Number	Page No

LOWER FORMING RING

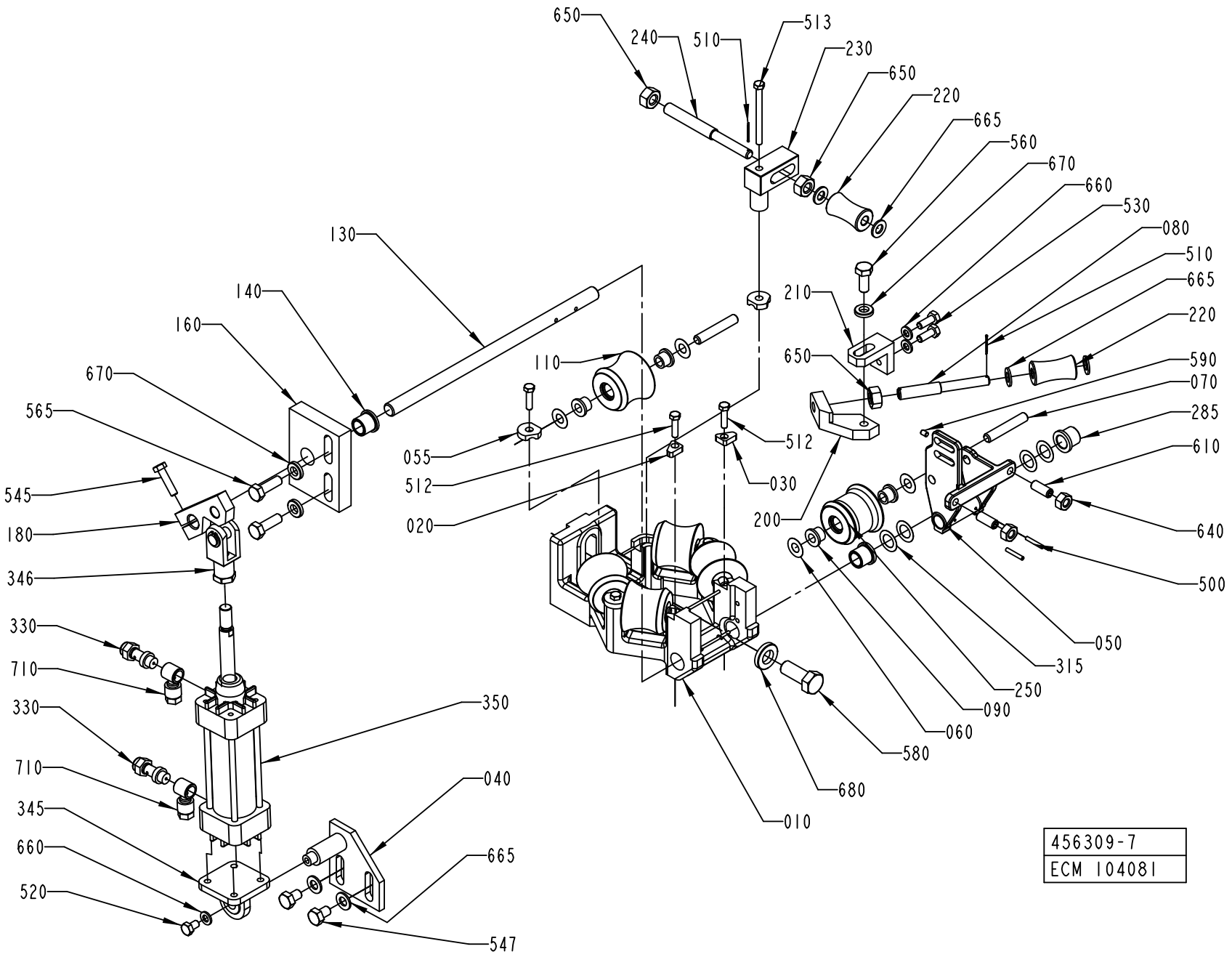

456309-7
ECM 104081

ECM: 292527 - 20070126
Group number: 456309-0600
Assembly Drawing: 456309-7_1_AA

This list covers pages from 1-148 to 1-153

Pos	Part No	UN	Qty	Description	Page No
SEE PREVIOUS LISTS PAGES: 1-149, 1-151.					

Pos	Part No	UN	Qty	Description	Page No

SUCTION PIPE

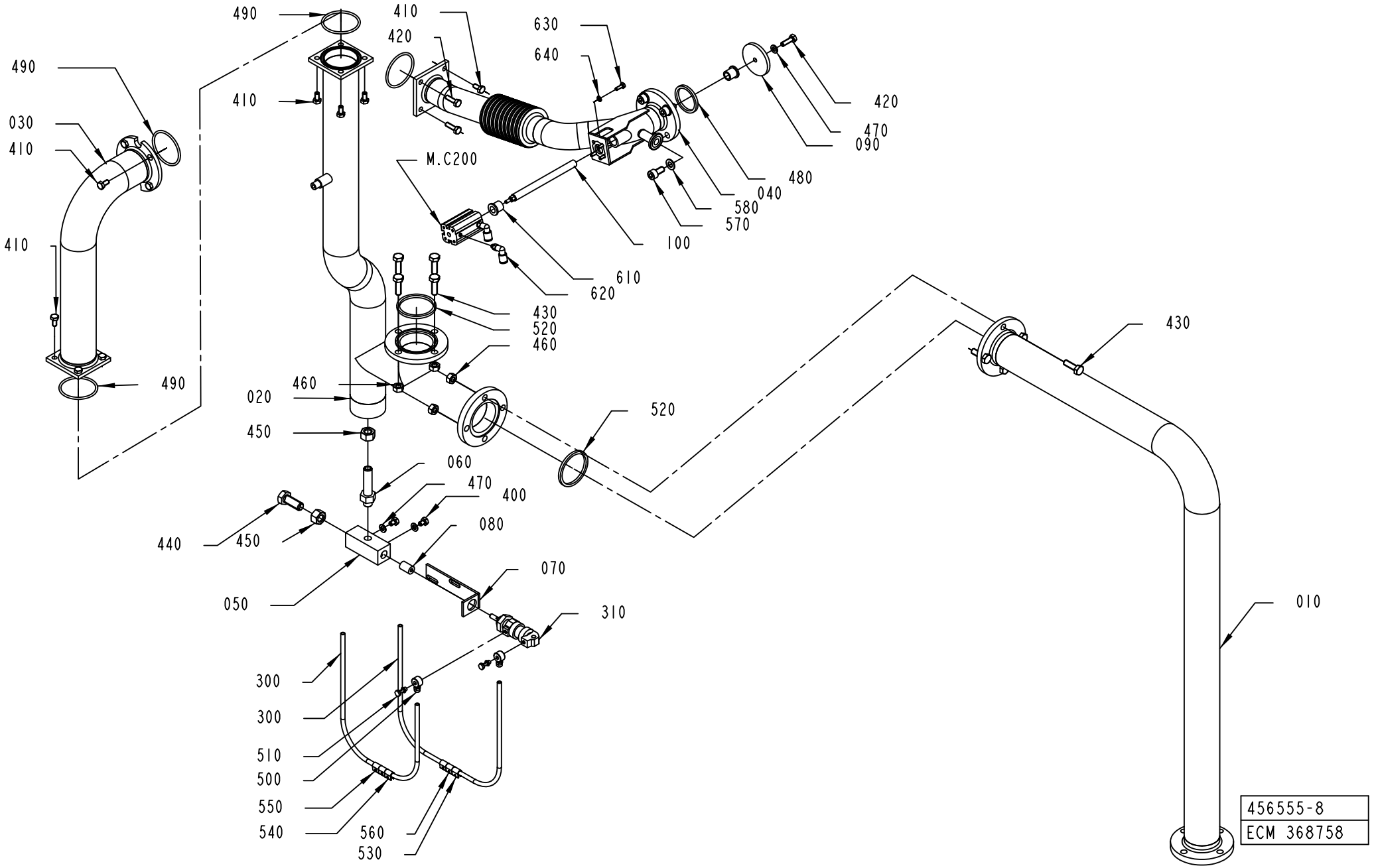

ECM: 427946 - 20091201
Group number: 456555-0700
Assembly Drawing: 456555-8_1_AA

Pos	Part No	UN	Qty	Description	Page No
-					
010	1519401-0000		1	SUCTION PIPE	
020	1519402-0000		1	SUCTION PIPE	
030	1519403-0000		1	SUCTION PIPE	
040	2964439-0000		1	SUCTION PIPE	
050	572487-0000		1	THROTTLING	
060	566669-0000		1	NIPPLE	
070	572485-0000		1	BRACKET	
080	572486-0000		1	PISTON	
090	2958807-0000		1	LID	
100	2958808-0000		1	SHAFT	
300	315400-0001	M	22	TUBE PUN-H-6X1-BL	
310	90239-0840		1	DOUBLE ACTING, MINI-ISO, CYL.16-12	
400	312105-0362		2	SCREW, M6S ISO 4017 M6X8 A4 80	
410	312105-0366		14	SCREW, M6S ISO 4017 M6X12 A4 80	
420	312105-0370		3	SCREW, M6S ISO 4017 M6X20 A4 80	
430	312105-0453		8	SCREW, M6S ISO 4017 M8X25 A4 80	
440	312105-0536		1	SCREW, M6S ISO 4017 M12X30 A4 80	
450	312605-0322		2	HEXAGON NUT, M6M M12 A280	
460	312605-0318		8	HEXAGON NUT, M6M M8 A280	
470	315105-0153		2	WASHER PLAIN, 6,4X12X1,5 A4 BRB	
480	315229-0104		1	SQUARE RING, 35,8X42,8X3,7 MM 1"1/2 FD	
490	927422-0008		4	O-RING 49.5X3 SILICONE	
500	342980-0111		2	HOSE FITTING, BANJO RING L PO M5 6/4	
510	342980-0301		2	BANJO-HOLLOW BOLT COUPL.,EXT.THREA.01-M5	
	315233-0101		*1*	*WASHER CAPTIVE SEALING M5(NEW315239-101)*	
520	315229-0105		2	SQUARE RING, 48,5X55,5X3,7 MM 2" FDA	
530	359000-0400		1	WIRE MARKING, YELLOW, PA2/4"0"	
540	359000-0401		1	WIRE MARKING, YELLOW, PA2/4"1"	
550	359000-0402		2	WIRE MARKING, YELLOW, PA2/4"2"	
560	359000-0403		2	WIRE MARKING, YELLOW, PA2/4"3"	
570	312115-0449		4	SCREW ISO4762 M8X16 A4 80	
580	315105-0165		4	WASHER PLAIN, 8,4X16X1,6 A4 BRB	
600	315106-0153		1	WASHER PLAIN, M6 ISO7089-6-200 HV A4	
610	90240-0180		2	FLANGE BUSHING 10X14X15MM	
620	350002-0002		2	PUSH-IN L-FITTING QSL-F-M5-6	
630	312105-0291		4	SCREW, M6S ISO 4017 M4X12 A4 70	
640	315103-0136		4	WASHER PLAIN, 4,3X8X0,8 BR NI PL	
M.C200	90459-2360		1	DOUBLE ACTING, COMPACT, 16-15	

Pos	Part No	UN	Qty	Description	Page No

Machine Type | Group Description | Used-In | Group Number | Page No

PEROXIDE PIPE

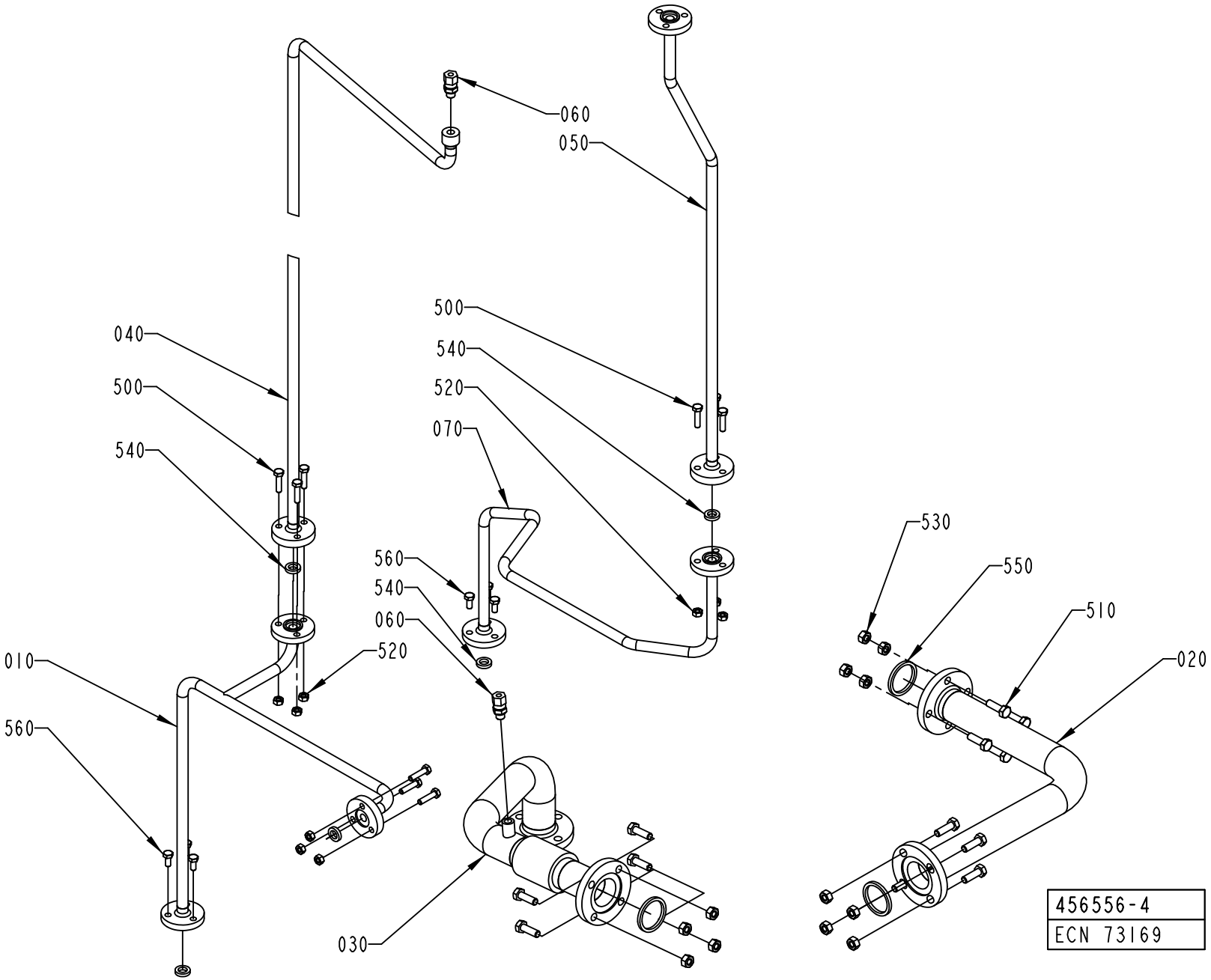

ECM: 178348 - 20040910
Group number: 456556-0400
Assembly Drawing: 456556-4_1_AA

Pos	Part No	UN	Qty	Description	Page No
-					
010	1523049-0000		1	PIPE	
020	1523050-0000		1	PIPE	
030	1523051-0000		1	PIPE	
040	1523052-0000		1	PIPE	
050	1523053-0000		1	PIPE	
060	90030-0184		2	CONN. STR., GE06LRED71	
070	1548315-0000		1	PIPE	
500	312105-0372		9	SCREW, M6S ISO 4017 M6X25 A4 80	
510	312105-0453		12	SCREW, M6S ISO 4017 M8X25 A4 80	
520	312605-0316		9	HEXAGON NUT, M6M M6 A280	
530	312605-0318		12	HEXAGON NUT, M6M M8 A280	
540	315229-0101		5	SQUARE RING, 10,4X17,4X3,7 MM 1/2" FDA	
550	315229-0104		3	SQUARE RING, 35,8X42,8X3,7 MM 1"1/2 FD	
560	312105-0367		6	SCREW, M6S ISO 4017 M6X14 A4 80	

Pos	Part No	UN	Qty	Description	Page No

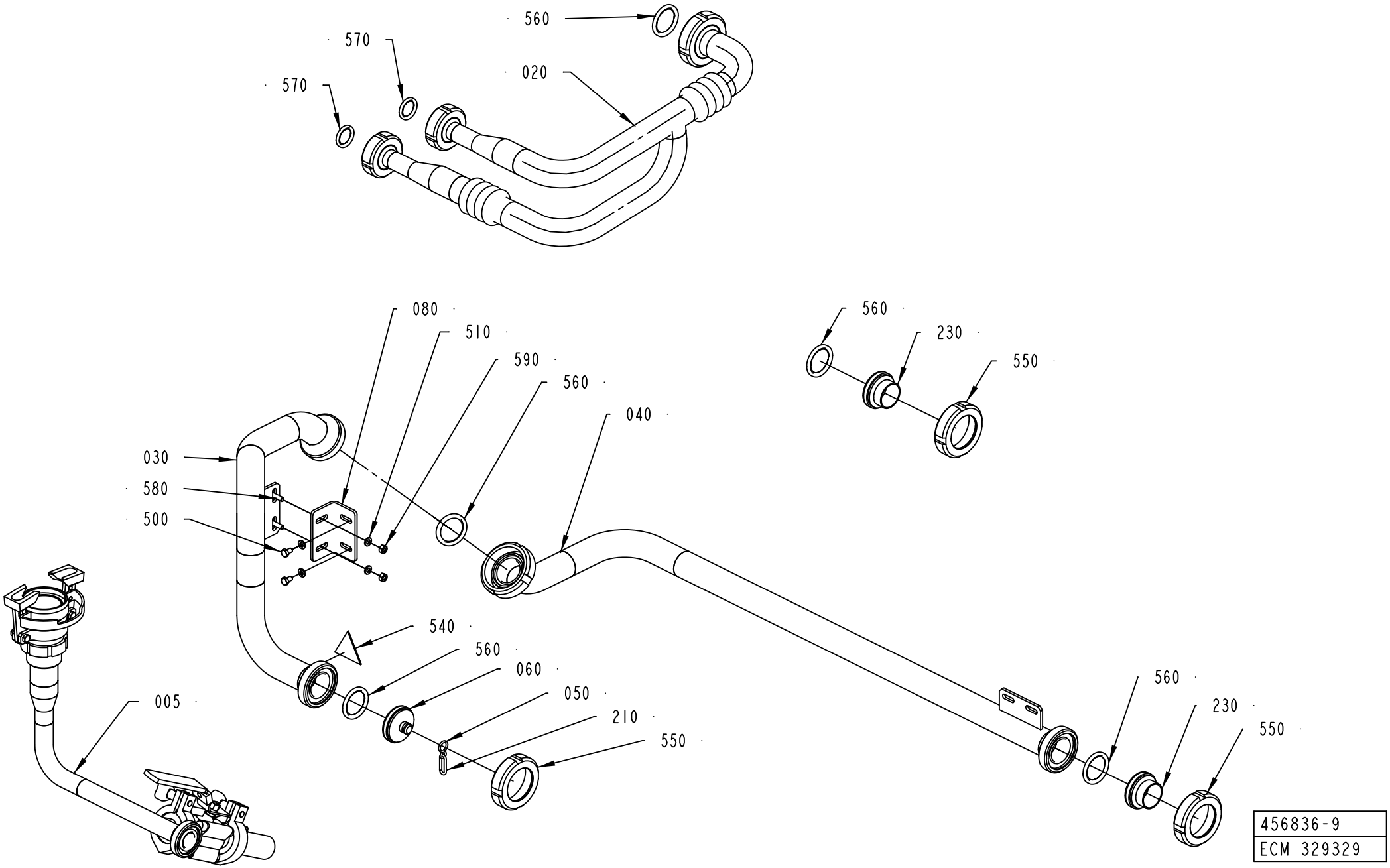
560
570
570
020
080
510
590
560
040
030
580
500
560
230
550
540
560
060
050
210
550
005
560
230
550
456836-9
ECM 329329

ECM: 408319 - 20090916
Group number: 456836-0800
Assembly Drawing: 456836-9_1_AA

This list covers pages from 1-158 to 1-161

Pos	Part No	UN	Qty	Description	Page No
HVA (See drawing on page: 1-158)					
030	2905938-0000		1	CLEANING PIPE	
040	2905939-0000		1	CLEANING PIPE	
560	90217-0348		1	GASKET 35,4X46,8X4 MM	
NOHVA (See drawing on page: 1-160)					
010	1523365-0000		1	PIPE	
Common Parts					
005	752495-0400		1	ATTACHMENT	**1-163**
020	1523366-0000		1	PIPE	
050	209183-0000		1	RING	
060	1523364-0000		1	LID	
070	2982067-0000		1	PROTECTIVE CAP	
080	1548833-0000		1	BRACKET	
210	90155-0016	MM	300	CHAIN LONG LINK, LLB-3-R	
220	90155-0016	MM	300	CHAIN LONG LINK, LLB-3-R	
230	90217-0204		2	ASEPT. MALE FITTING ISO, 03-32-406/42	
500	312105-0364		2	SCREW, M6S ISO 4017 M6X10 A4 80	
510	315105-0153		6	WASHER PLAIN, 6,4X12X1,5 A4 BRB	
540	359705-0003		1	WARNING SIGN ISO, DANGEROUS CHEMICALS	
550	90217-0206		3	UNION NUT, 1 1/2 APV, 07-01-376/17	
560	90217-0348		4	GASKET 35,4X46,8X4 MM	
570	90217-0347		2	GASKET 32X22,6X3,6 MM	
580	312105-0370		2	SCREW, M6S ISO 4017 M6X20 A4 80	
590	312605-0316		2	HEXAGON NUT, M6M M6 A280	

Pos	Part No	UN	Qty	Description	Page No

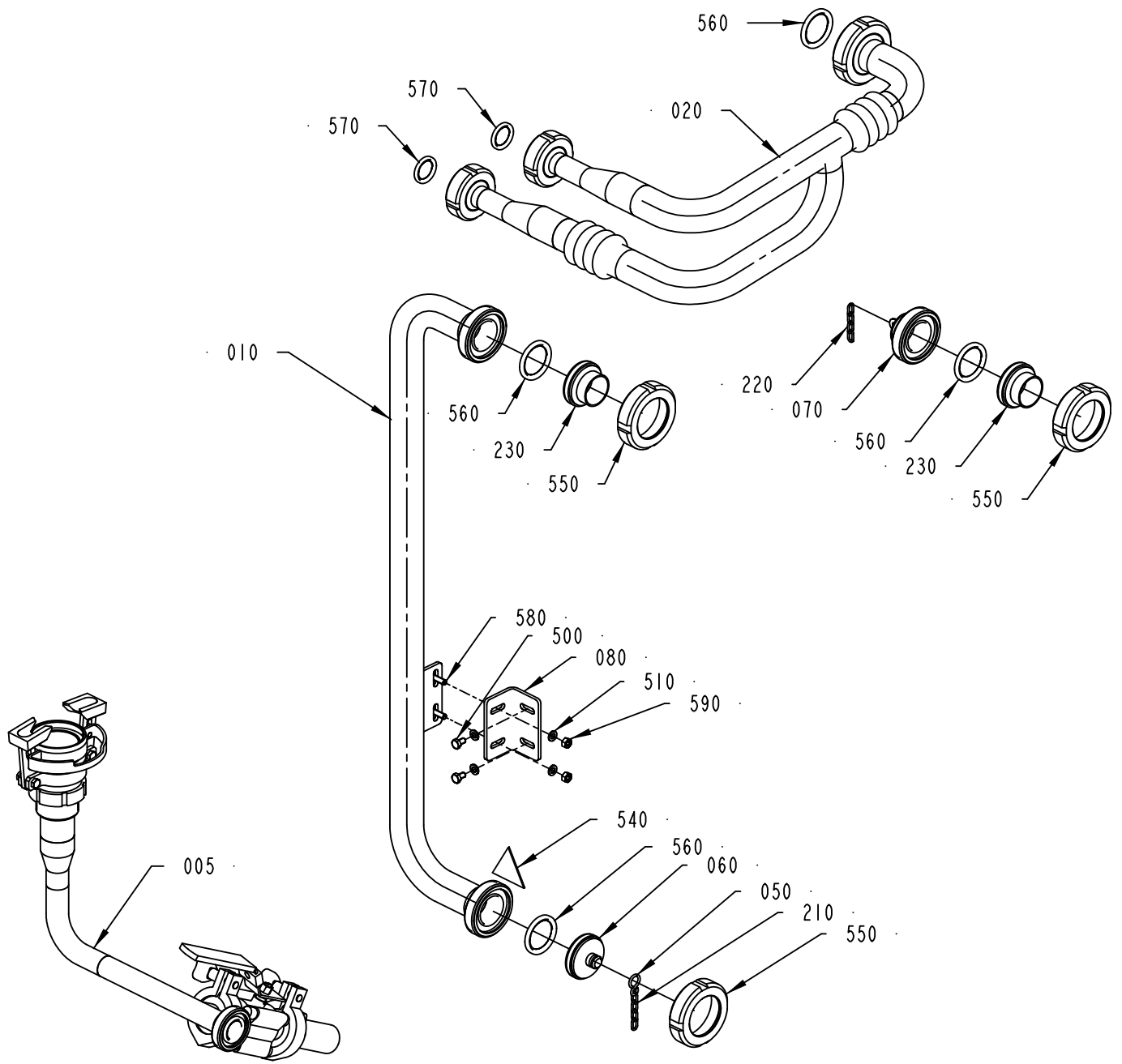

456836-10
ECM 407433

ECM: 408319 - 20090916
Group number: 456836-0800
Assembly Drawing: 456836-10_1_AA

This list covers pages from 1-158 to 1-161

Pos	Part No	UN	Qty	Description	Page No
HVA (See drawing on page: 1-158)					
030	2905938-0000		1	CLEANING PIPE	
040	2905939-0000		1	CLEANING PIPE	
560	90217-0348		1	GASKET 35,4X46,8X4 MM	
NOHVA (See drawing on page: 1-160)					
010	1523365-0000		1	PIPE	
Common Parts					
005	752495-0400		1	ATTACHMENT	**1-163**
020	1523366-0000		1	PIPE	
050	209183-0000		1	RING	
060	1523364-0000		1	LID	
070	2982067-0000		1	PROTECTIVE CAP	
080	1548833-0000		1	BRACKET	
210	90155-0016	MM	300	CHAIN LONG LINK, LLB-3-R	
220	90155-0016	MM	300	CHAIN LONG LINK, LLB-3-R	
230	90217-0204		2	ASEPT. MALE FITTING ISO, 03-32-406/42	
500	312105-0364		2	SCREW, M6S ISO 4017 M6X10 A4 80	
510	315105-0153		6	WASHER PLAIN, 6,4X12X1,5 A4 BRB	
540	359705-0003		1	WARNING SIGN ISO, DANGEROUS CHEMICALS	
550	90217-0206		3	UNION NUT, 1 1/2 APV, 07-01-376/17	
560	90217-0348		4	GASKET 35,4X46,8X4 MM	
570	90217-0347		2	GASKET 32X22,6X3,6 MM	
580	312105-0370		2	SCREW, M6S ISO 4017 M6X20 A4 80	
590	312605-0316		2	HEXAGON NUT, M6M M6 A280	

Pos	Part No	UN	Qty	Description	Page No

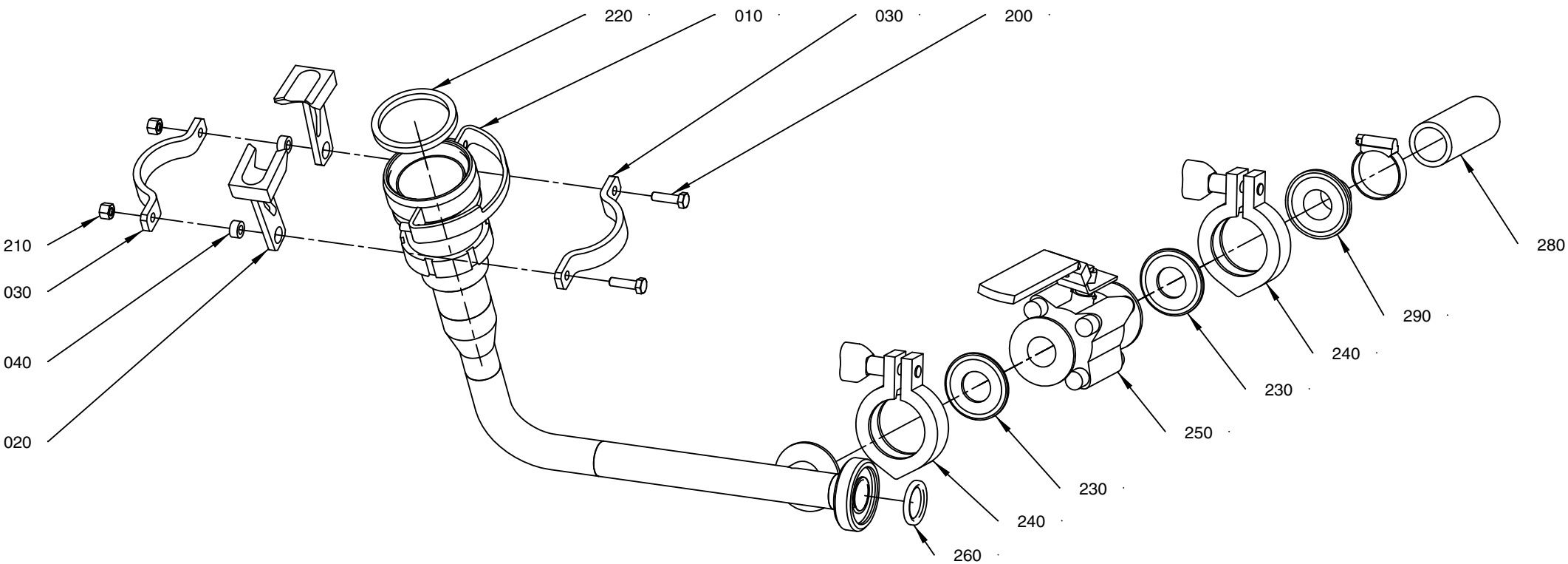

7524 95-4
2193 92

ECM: 290293 - 20070126
Group number: 752495-0400
Assembly Drawing: 752495-4_1_AA

Pos	Part No	UN	Qty	Description	Page No
TBA 0100B, TBA 0125S, TBA 0160S, TBA 0200S, TPA 0250SQ, TWA 0125S, TWA 0200S, TPA 0200SQ					
010	2781223-0000		1	CLEANING PIPE	
020	979728-0000		2	CATCH	
220	315229-0104		1	SQUARE RING, 35,8X42,8X3,7 MM 1"1/2 FD	
TBA 0200B, TBA 0284B, TBA 0250B, TBA 0300S, TBA 0330S, TPA 0330SQ					
010	2781221-0000		1	CLEANING PIPE	
020	579637-0000		2	CATCH	
220	12242-0005		1	GASKET 61X51X5,5	
TBA 0200M, TBA 0250S					
010	2781222-0000		1	CLEANING PIPE	
020	579771-0000		2	CATCH	
220	12242-0003		1	GASKET 48X38X5,5	
Common Parts					
030	752499-0000		2	RING	
040	553586-0000		2	SPACER	
200	312105-0371		2	SCREW, M6S ISO 4017 M6X22 A4 80	
210	312811-0316		2	NUT HEX.LOCK HELI COIL MID GRIP M6 SS	
230	342850-0203		2	GASKET 22,7X49,1X5,2 MM 1" FDA 3-A	
240	342840-0103		2	CLAMPING PIECE DN 1-11/2, GH13LAH112304N	
250	90458-2601		1	BALL VALVE 3A DAIRY CLAMP, EG90CC-61.0	
260	90217-0347		1	GASKET 32X22,6X3,6 MM	
270	342991-0106		1	HOSE CLIP,WORM DRIVE TYPE (26)-38	
280	90166-0049	MM	1500	HOSE PVC 25/33-34	
290	342841-0103		1	FERRULE, 3-A, GC-CLAMP 25,4 MM (1")	

Pos	Part No	UN	Qty	Description	Page No

HEAT EXCHANGER

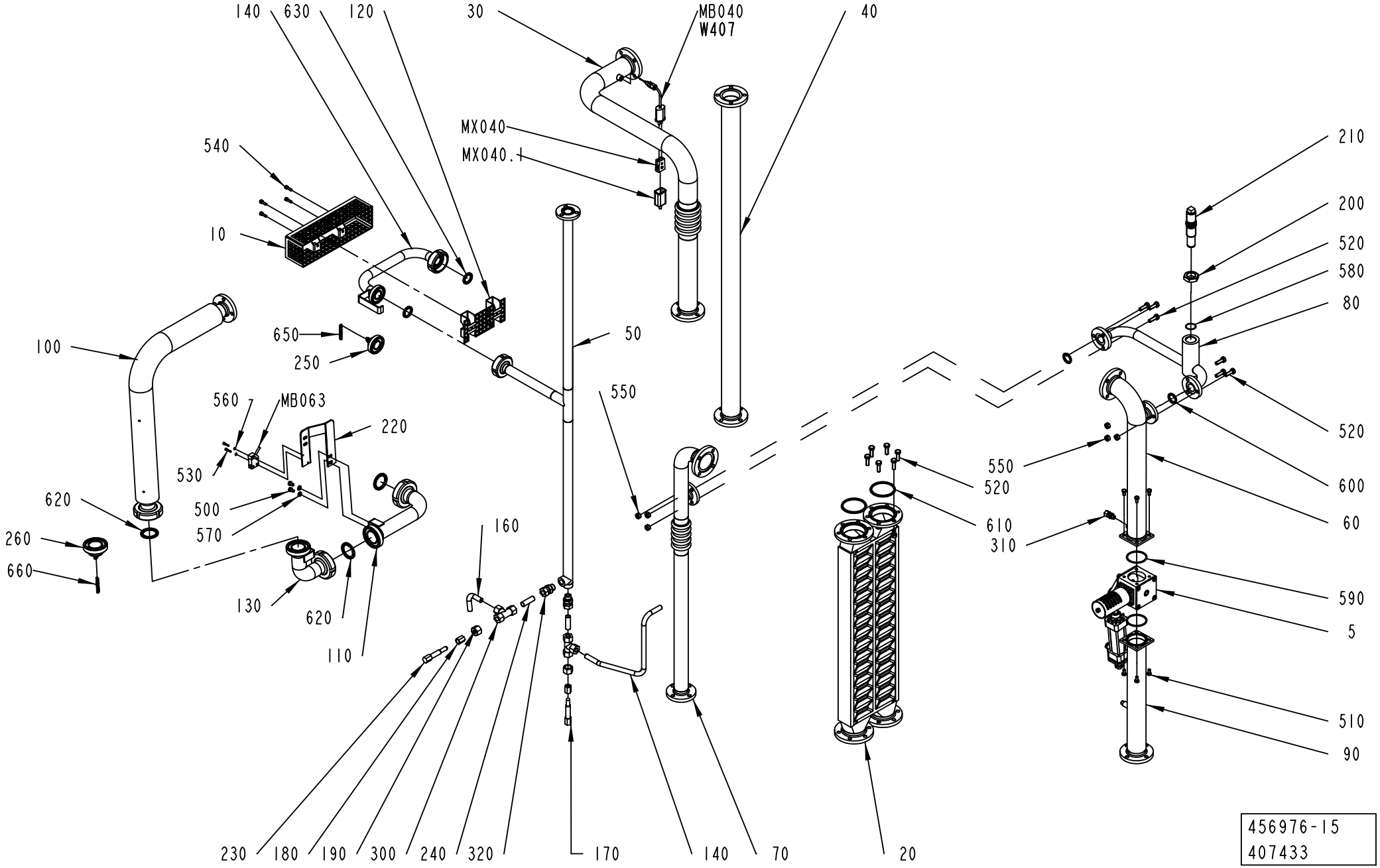

ECM: 430639 - 20091221
Group number: 456976-0800
Assembly Drawing: 456976-15_1_AA

This list covers pages from 1-164 to 1-167

Pos	Part No	UN	Qty	Description	Page No
HVA (See drawing on page: 1-166)					
100	2898196-0000		1	PIPE	
NOHVA (See drawing on page: 1-164)					
100	1519385-0000		1	PIPE	
110	1519386-0000		1	PIPE	
130	1519387-0000		1	PIPE	
220	2640472-0000		1	HOLDER	
260	2982067-0000		1	PROTECTIVE CAP	
500	312105-0364		2	SCREW, M6S ISO 4017 M6X10 A4 80	
530	312115-0228		2	SCREW ISO4762 M3X16 A4 80	
560	315105-0124		2	WASHER PLAIN, 3,2X6X0,5 A4 BRB	
570	315105-0153		2	WASHER PLAIN, 6,4X12X1,5 A4 BRB	
620	90217-0348		3	GASKET 35,4X46,8X4 MM	
660	90155-0016	MM	300	CHAIN LONG LINK, LLB-3-R	
M.B063	90044-0194		1	INDUCTIVE SENSOR, IN 5329	
Common Parts					
005	476859-0300		1	WEAC-VALVE	**1-169**
010	1348477-0000		1	TOUCH GUARD	
020	978838-0000		1	HEAT EXCHANGER	
030	1519380-0000		1	PIPE	
040	1519381-0000		1	PIPE	
050	1519382-0000		1	PIPE	
060	1519383-0000		1	PIPE	
070	979028-0000		1	PIPE	
080	979031-0000		1	PIPE	
090	1519384-0000		1	PIPE	
120	1348637-0000		1	TOUCH GUARD	
140	1260481-0000		1	PIPE	
150	1519388-0000		1	PIPE	
160	1260480-0000		1	PIPE	
170	209145-0000		1	THROTTLE SCREW	
180	209146-0000		2	BARRIER NUT	
190	279589-0000		2	NUT	
200	442237-0000		1	NUT	
210	490998-0000		1	THROTTLE SCREW	
230	2832785-0000		1	THROTTLE SCREW	
240	1260489-0000		2	PIPE	
250	2982066-0000		1	PROTECTIC CAP	
300	90030-0058		2	CONN. T-PIPE T12L71	
310	90030-0184		1	CONN. STR., GE06LRED71	
320	90030-0187		2	CONN. STR. GE12LRED71	
510	312105-0366		8	SCREW, M6S ISO 4017 M6X12 A4 80	
520	312105-0453		12	SCREW, M6S ISO 4017 M8X25 A4 80	
540	312115-0329		4	SCREW ISO4762 M5X16 A4 80	
550	312605-0318		12	HEXAGON NUT, M6M M8 A280	
580	315204-0119		1	O-RING 25,1X1,6 MM	
590	315204-0301		2	O-RING 49,5X3 MM	
600	315229-0203		2	GASKET 22,1X30,1X3,7 MM 1"	
610	315229-0206		2	GASKET 60,2X68,2X3,7 MM 2"1/2	
630	90217-0347		2	GASKET 32X22,6X3,6 MM	
650	90155-0016	MM	230	CHAIN LONG LINK, LLB-3-R	
M.X040.1	90326-0012		1	PROTECTIVE COVER, 03-001 10	
M.X040	90326-0020		1	SOCKET, FEMALE YELLOW CR-AL, 03-22000A	
M.B040	90326-0051		1	THERMOCOUPLE, 5110 051-000	
W407	90220-0059	M	5	THERMOCOUPLE CABLE, P/PTW-20F-K 2X0,5MM2	

Machine Type | Group Description | Used-In | Group Number | Page No

HEAT EXCHANGER

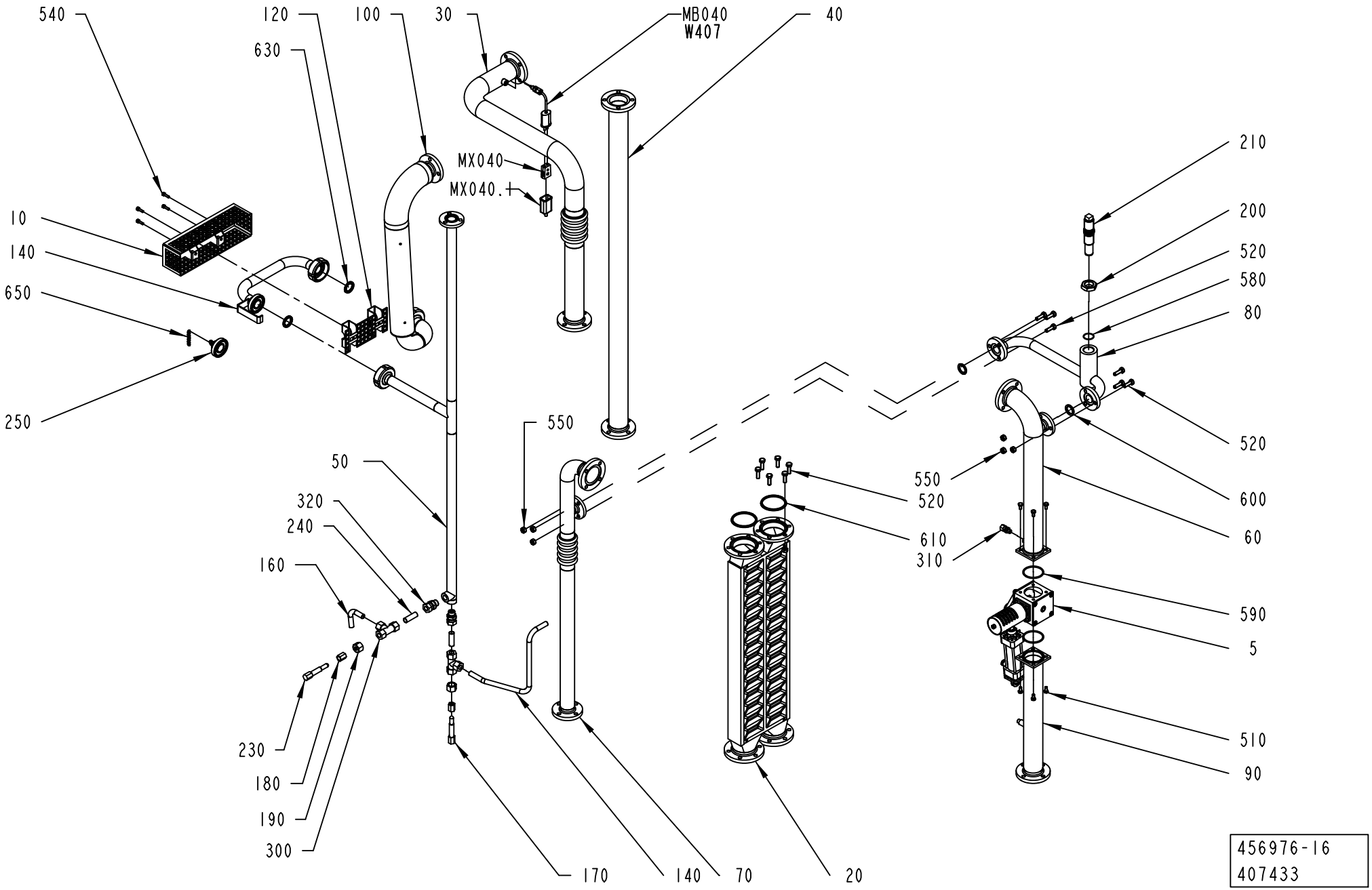

ECM: 430639 - 20091221
Group number: 456976-0800
Assembly Drawing: 456976-16_1_AA

This list covers pages from 1-164 to 1-167

Pos	Part No	UN	Qty	Description	Page No
HVA (See drawing on page: 1-166)					
100	2898196-0000		1	PIPE	
NOHVA (See drawing on page: 1-164)					
100	1519385-0000		1	PIPE	
110	1519386-0000		1	PIPE	
130	1519387-0000		1	PIPE	
220	2640472-0000		1	HOLDER	
260	2982067-0000		1	PROTECTIVE CAP	
500	312105-0364		2	SCREW, M6S ISO 4017 M6X10 A4 80	
530	312115-0228		2	SCREW ISO4762 M3X16 A4 80	
560	315105-0124		2	WASHER PLAIN, 3,2X6X0,5 A4 BRB	
570	315105-0153		2	WASHER PLAIN, 6,4X12X1,5 A4 BRB	
620	90217-0348		3	GASKET 35,4X46,8X4 MM	
660	90155-0016	MM	300	CHAIN LONG LINK, LLB-3-R	
M.B063	90044-0194		1	INDUCTIVE SENSOR, IN 5329	
Common Parts					
005	476859-0300		1	WEAC-VALVE	**1-169**
010	1348477-0000		1	TOUCH GUARD	
020	978838-0000		1	HEAT EXCHANGER	
030	1519380-0000		1	PIPE	
040	1519381-0000		1	PIPE	
050	1519382-0000		1	PIPE	
060	1519383-0000		1	PIPE	
070	979028-0000		1	PIPE	
080	979031-0000		1	PIPE	
090	1519384-0000		1	PIPE	
120	1348637-0000		1	TOUCH GUARD	
140	1260481-0000		1	PIPE	
150	1519388-0000		1	PIPE	
160	1260480-0000		1	PIPE	
170	209145-0000		1	THROTTLE SCREW	
180	209146-0000		2	BARRIER NUT	
190	279589-0000		2	NUT	
200	442237-0000		1	NUT	
210	490998-0000		1	THROTTLE SCREW	
230	2832785-0000		1	THROTTLE SCREW	
240	1260489-0000		2	PIPE	
250	2982066-0000		1	PROTECTIC CAP	
300	90030-0058		2	CONN. T-PIPE T12L71	
310	90030-0184		1	CONN. STR., GE06LRED71	
320	90030-0187		2	CONN. STR. GE12LRED71	
510	312105-0366		8	SCREW, M6S ISO 4017 M6X12 A4 80	
520	312105-0453		12	SCREW, M6S ISO 4017 M8X25 A4 80	
540	312115-0329		4	SCREW ISO4762 M5X16 A4 80	
550	312605-0318		12	HEXAGON NUT, M6M M8 A280	
580	315204-0119		1	O-RING 25,1X1,6 MM	
590	315204-0301		2	O-RING 49,5X3 MM	
600	315229-0203		2	GASKET 22,1X30,1X3,7 MM 1"	
610	315229-0206		2	GASKET 60,2X68,2X3,7 MM 2"1/2	
630	90217-0347		2	GASKET 32X22,6X3,6 MM	
650	90155-0016	MM	230	CHAIN LONG LINK, LLB-3-R	
M.X040.1	90326-0012		1	PROTECTIVE COVER, 03-001 10	
M.X040	90326-0020		1	SOCKET, FEMALE YELLOW CR-AL, 03-22000A	
M.B040	90326-0051		1	THERMOCOUPLE, 5110 051-000	
W407	90220-0059	M	5	THERMOCOUPLE CABLE, P/PTW-20F-K 2X0,5MM2	

Machine Type | Group Description | Used-In | Group Number | Page No

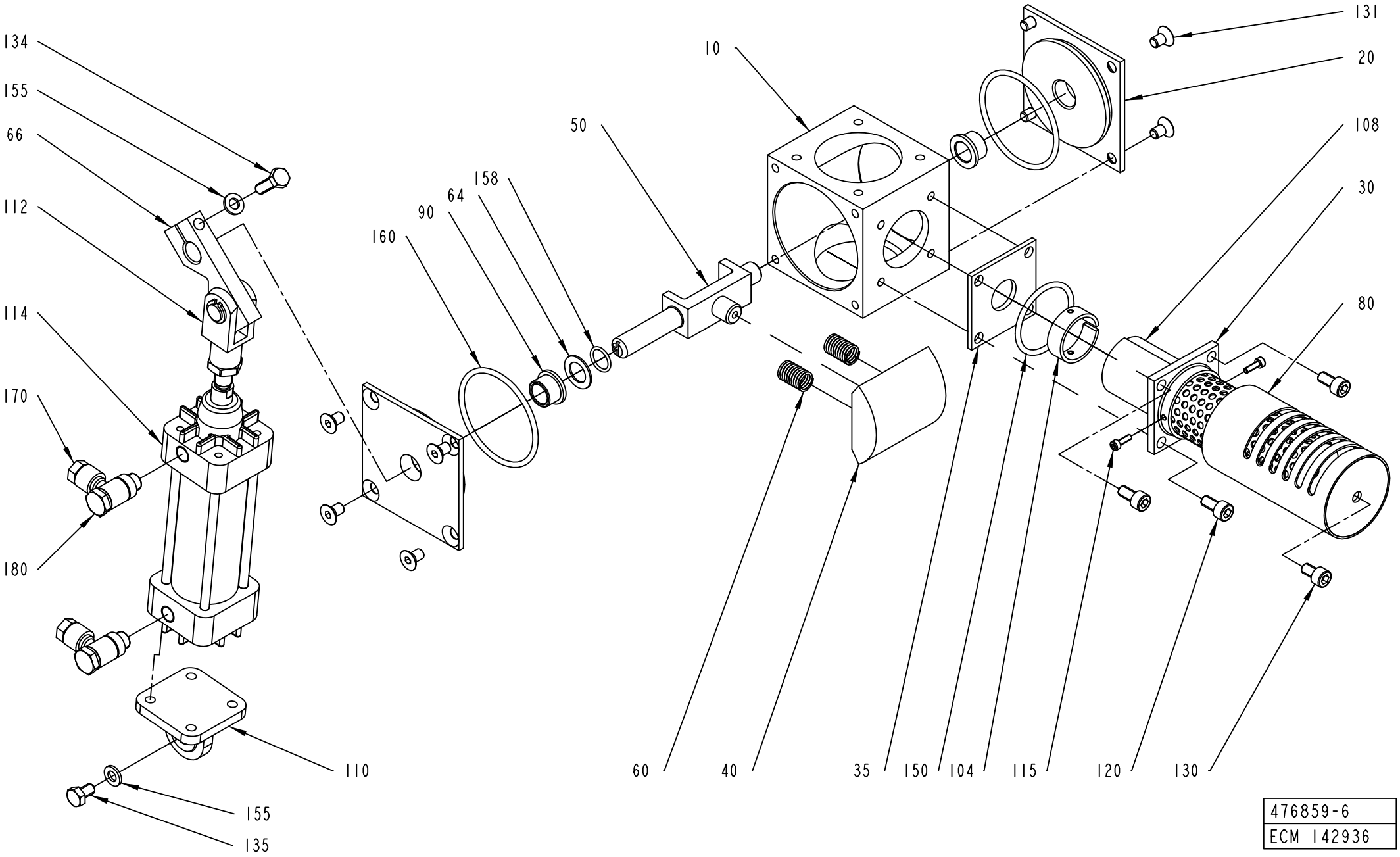

476859-6
ECM 142936

ECM: 178606 - 20040910
Group number: 476859-0300
Assembly Drawing: 476859-6_1_AD

Pos	Part No	UN	Qty	Description	Page No
-					
010	578031-0000		1	VALVE HOUSING	
020	255874-0000		2	BEARING COVER	
030	466477-0000		1	INNER PIPE	
035	979953-0000		1	WASHER	
040	466479-0000		1	PIECE	
050	555541-0000		1	BRACKET	
060	21521-0000		2	COMPRESSION SPRING	
064	266737-0000		1	WASHER	
066	441483-0000		1	CYLINDER BRACKET	
080	466478-0000		1	OUTER PIPE	
090	255875-0000		2	BUSHING	
104	466483-0000		1	CLAMPING PIECE	
108	466484-0000		1	NET	
110	90239-0453		1	BRACKET	
112	90239-0516		1	ROD END, CLEVIS WITH AXLE M10X1,25	
114	90239-0779		1	CYLINDER	
	90239-0442		*1*	*SEAL KIT*	
115	312115-0224		2	SCREW ISO4762 M3X10 A4 80	
120	312115-0366		4	SCREW ISO4762 M6X12 A4 80	
130	312115-0364		1	SCREW ISO4762 M6X10 A4 80	
131	312155-0364		8	SCREW DIN 7991 MF6S M6X10 A4 70	
134	312105-0370		1	SCREW, M6S ISO 4017 M6X20 A4 80	
135	312105-0364		1	SCREW, M6S ISO 4017 M6X10 A4 80	
150	315204-0222		1	O-RING 36,2X3 MM	
155	315105-0153		2	WASHER PLAIN, 6,4X12X1,5 A4 BRB	
158	315204-0110		1	O-RING 12,1X1,6 MM	
160	315204-0302		2	O-RING 54,5X3 MM	
170	342797-0121		2	BANJO CONN., RINGPIECE 6-1/8	
180	342980-0303		2	BANJO-HOLLOW BOLT COUPL,EXT.THR.01-G1/8	

Pos	Part No	UN	Qty	Description	Page No

Machine Type | Group Description | Used-In | Group Number | Page No

FILLER TUBE

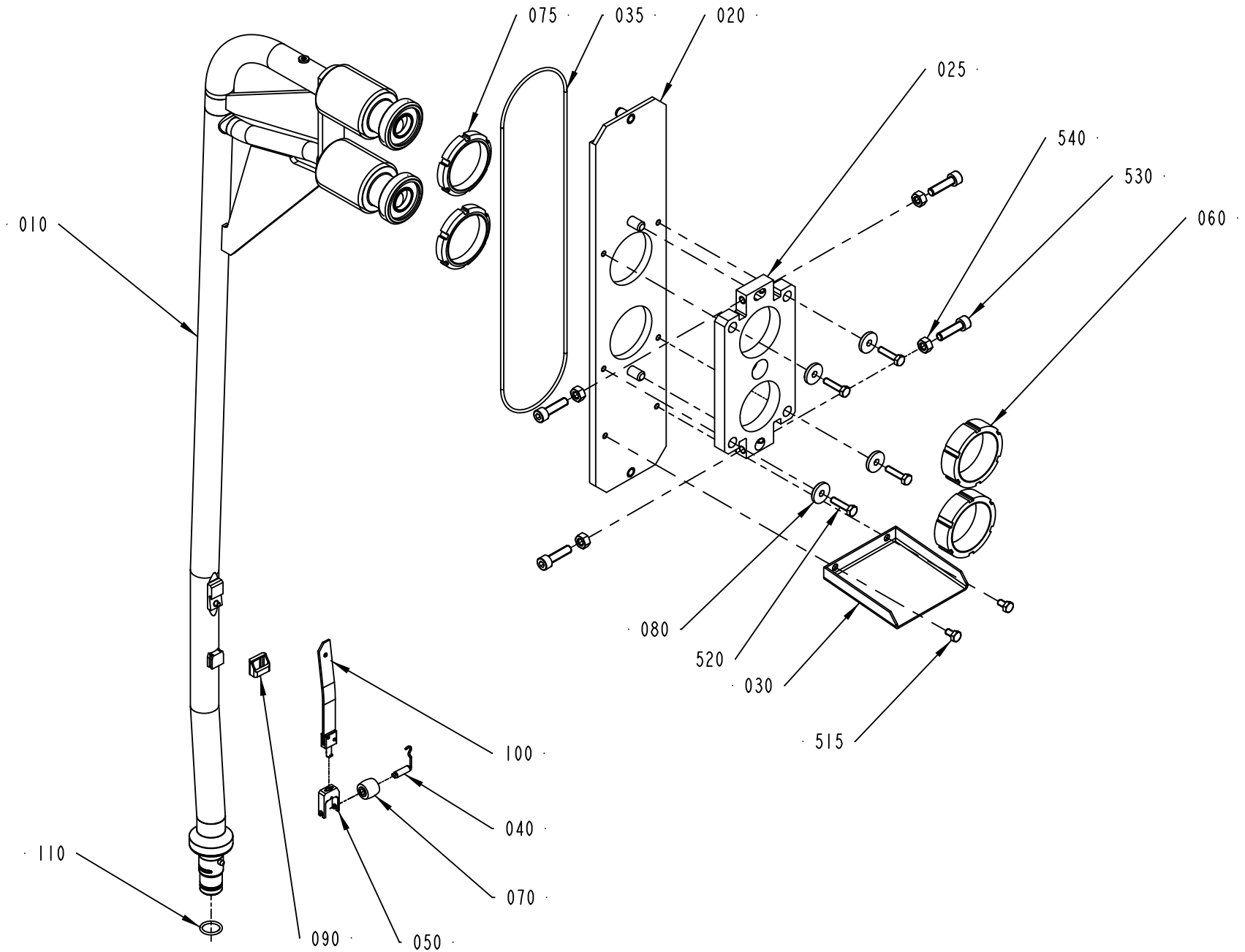

469091-10
ECM 386245

ECM: 386245 - 20111122
Group number: 469091-0600
Assembly Drawing: 469091-10_1_AA

Pos	Part No	UN	Qty	Description	Page No
TBA 0100B, TBA 0125S, TWA 0125S					
010	2826636-0001		1	UPPER FILLING PIPE	
040	255977-0000		1	SHAFT	
050	255978-0000		1	FORK	
070	272479-0000		1	PRESSURE ROLLER (10PCS)	
090	491441-0000		1	HOOD	
100	2909523-0000		1	SPRING	
TBA 0160S, TBA 0200S, TPA 0250SQ, TWA 0200S, TPA 0200SQ					
010	2826636-0001		1	UPPER FILLING PIPE	
040	255977-0000		1	SHAFT	
050	255978-0000		1	FORK	
070	272479-0000		1	PRESSURE ROLLER (10PCS)	
090	295377-0001		1	HOOD	
100	2909523-0000		1	SPRING	
TBA 0200B, TBA 0200SQ, TBA 0284B, TBA 0250B, TBA 0300S, TBA 0330S, TPA 0330SQ					
010	2826640-0000		1	UPPER FILLING PIPE	
040	295376-0000		1	SHAFT	
050	568583-0000		1	FORK	
070	257330-0000		1	PRESSURE ROLLER (10 PCS)	
090	295377-0002		1	HOOD	
100	1317991-0000		1	SPRING	
TBA 0200M, TBA 0250S					
010	2826636-0002		1	UPPER FILLING PIPE	
040	255977-0000		1	SHAFT	
050	255978-0000		1	FORK	
070	272479-0000		1	PRESSURE ROLLER (10PCS)	
090	295377-0001		1	HOOD	
100	2909523-0000		1	SPRING	
Common Parts					
020	1523222-0000		1	PLATE	
025	1523225-0000		1	FASTENING PLATE	
030	295984-0000		1	DRIP GUARD	
035	491418-0001		1	O-RING 284X3 FPM	
060	1523223-0000		2	NUT	
075	1523224-0000		2	NUT	
080	315125-0153		4	WASHER HIGH, TBRSB 6,4X22X4 A4	
110	927421-0006		1	O-RING 17.3X2.4 SILICONE	
515	312105-0364		2	SCREW, M6S ISO 4017 M6X10 A4 80	
520	312105-0372		4	SCREW, M6S ISO 4017 M6X25 A4 80	
530	312115-0455		4	SCREW ISO4762 M8X30 A4 80	
540	312605-0318		4	HEXAGON NUT, M6M M8 A280	

Pos	Part No	UN	Qty	Description	Page No

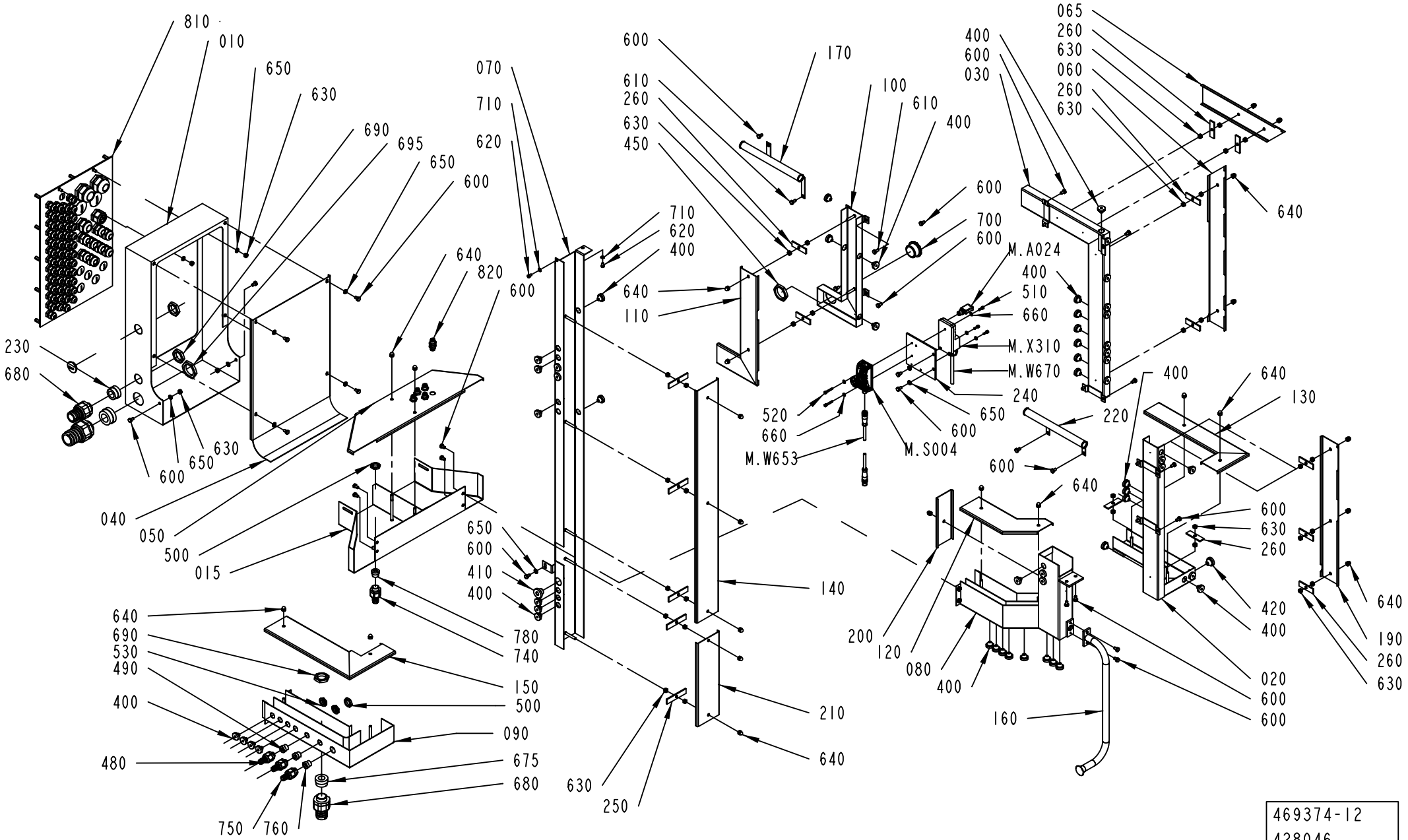

469374-12
428046

ECM: 430636 - 20091221
Group number: 469374-0800
Assembly Drawing: 469374-12_1_AB

This list covers pages from 1-172 to 1-183

Pos	Part No	UN	Qty	Description	Page No
NOHI (See drawing on pages: 1-172, 1-174, 1-176, 1-178, 1-180, 1-182)					
720	90002-0010		1	BLANK-OFF PLUG, PR 37 SKINDICHT-BLK29	
730	90002-0012		1	BLANK-OFF PLUG, PR 28,3 SKINDICHT-BLK21	
Common Parts					
010	1517268-0000		1	CABLE TRENCH	
015	1517269-0000		1	CABLE TRENCH	
020	577462-0000		1	CABLE TRENCH	
030	2773918-0000		1	CABLE TRENCH	
040	1517270-0000		1	LID	
050	3047671-0000		1	LID	
060	2773919-0000		1	LID	
065	1334769-0000		1	LID	
070	2781220-0000		1	CABLE TRENCH	
080	2526847-0000		1	CABLE TRENCH	
090	3047670-0000		1	CABLE TRENCH	
100	2526843-0000		1	CABLE TRENCH	
110	2526844-0000		1	LID	
120	577467-0000		1	LID	
130	577468-0000		1	LID	
140	578035-0000		1	LID	
150	2526846-0000		1	LID	
160	578500-0000		1	PIPE	
170	2914855-0000		1	CABLE DUCT	
190	577469-0000		1	LID	
200	577470-0000		1	LID	
210	578496-0000		1	LID	
220	2914854-0000		1	CABLE DUCT	
230	353249-0061		1	INSERT, SINGLE HOLE, EK155 20	
240	2914838-0000		1	PLATE	
250	272945-0000		5	LOCK	
260	295466-0000		11	LOCK	
390	90002-0004		1	BLANK-OFF PLUG, PR 22,5 SKINDICHT-BLK16	
400	90015-0020		54	LEAD-IN, TET5-7, E-1458016	
410	90015-0021		1	LEAD-IN, TET 10-14, E1458023	
420	90015-0023		1	LEAD-IN, TET 7-10, E1458019	
450	90099-0011		1	NUT PR 37 BRASS	
480	90458-0427		2	GLAND FITTING, VK 21652YUL11	
490	353249-0009		2	INSERT, SINGLE HOLE, EK152 9	
500	90099-0117		2	PLUG, PR 18,6 (PG11)	
510	312115-0291		3	SCREW ISO4762 M4X12 A4 80	
520	312115-0297		2	SCREW ISO4762 M4X25 A4 80	
530	90458-0322		2	NUT, M16X1,5	
600	312105-0364		32	SCREW, M6S ISO 4017 M6X10 A4 80	
610	312105-0366		2	SCREW, M6S ISO 4017 M6X12 A4 80	
620	312125-0323		2	SLOTTED HEAD SCREW, ISO1207 M5X8 A4	
630	312605-0316		36	HEXAGON NUT, M6M M6 A280	
640	312705-0316		23	HEX. DOMED CAP MHM-6 M6 A280	
650	315105-0153		11	WASHER PLAIN, 6,4X12X1,5 A4 BRB	
660	315106-0136		5	WASHER PLAIN, M4 ISO7089-4-200 HV A4	
675	353249-0016		1	INSERT, SINGLE HOLE, EK155 18	
680	353243-0007		2	GLAND FITTING, VK 15455YUL21	
690	90099-0119		3	PLUG, PR 28,3 (PG21)	
695	90099-0120		1	PLUG PR 37 (PG29)	
700	352101-0107		1	LEAD-IN, PR37/PG29, E1457555	
710	315105-0146		2	WASHER PLAIN, 5,3X10X1 A4 BRB	
740	353243-0003		1	GLAND FITTING, VK 15153YUL13	
750	353243-0002		1	GLAND FITTING, VK 15152YUL11	
760	353249-0010		1	INSERT, SINGLE HOLE, EK152 11	
780	353249-0011		1	INSERT, SINGLE HOLE, EK153 11	
810	1511786-0200		1	TOWER CABLE INLETS	**1-185, 1-187, 1-189, 1-191**
820	350010-0002		5	PUSH-IN BULKHEAD FITTING QSS-F-6	
M.X310	90459-4254		1	CONNECTION BLOCK TINA 4A, 20-054-03	
M.W670	90600-5930	M	6	CABLE C9, 20-057-15	
M.W653	90459-4876		1	FOCUS JUMPER CABLE M12 5P 3M, 20-056-21	
M.S004	90600-6048		1	EMERG. STOP SMILE 11 EA TINA, 30-050-00	
M.A024	90459-5627		1	CONNECTION, TINA 1-A	

Machine Type | Group Description | Used-In | Group Number | Page No

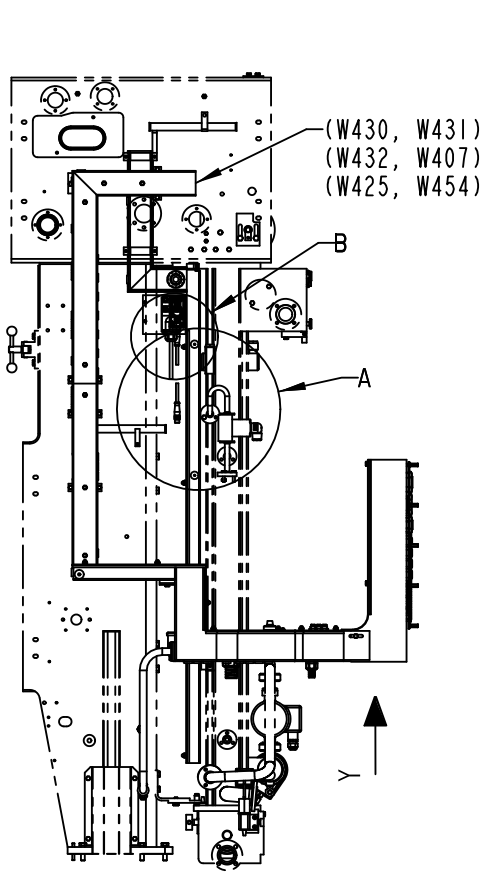

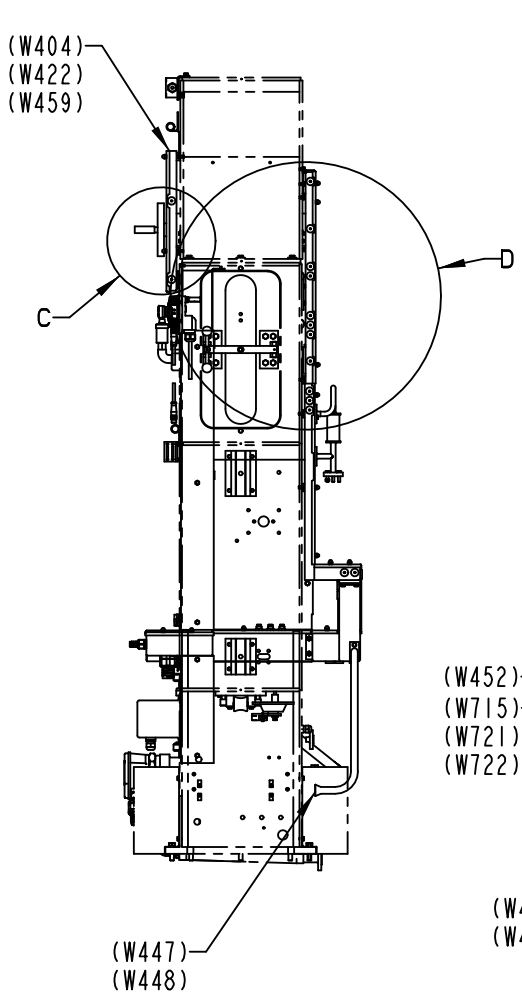

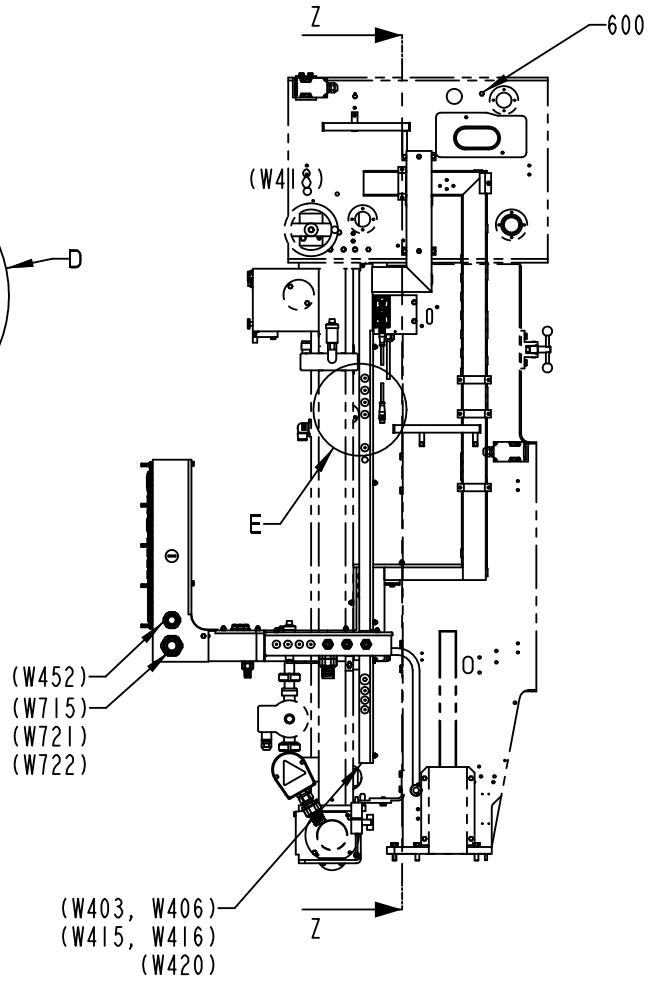

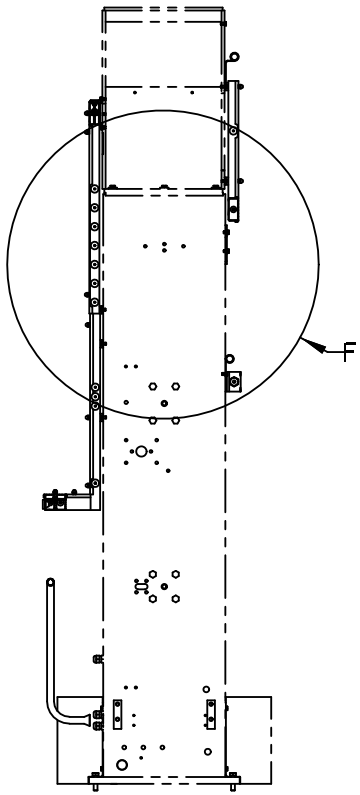

Z-Z

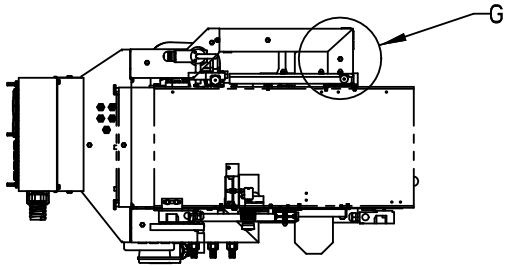

469374-12
428046

ECM: 430636 - 20091221
Group number: 469374-0800
Assembly Drawing: 469374-12_2_AB

This list covers pages from 1-172 to 1-183

Pos	Part No	UN	Qty	Description	Page No
NOHI (See drawing on pages: 1-172, 1-174, 1-176, 1-178, 1-180, 1-182)					
720	90002-0010		1	BLANK-OFF PLUG, PR 37 SKINDICHT-BLK29	
730	90002-0012		1	BLANK-OFF PLUG, PR 28,3 SKINDICHT-BLK21	
Common Parts					
010	1517268-0000		1	CABLE TRENCH	
015	1517269-0000		1	CABLE TRENCH	
020	577462-0000		1	CABLE TRENCH	
030	2773918-0000		1	CABLE TRENCH	
040	1517270-0000		1	LID	
050	3047671-0000		1	LID	
060	2773919-0000		1	LID	
065	1334769-0000		1	LID	
070	2781220-0000		1	CABLE TRENCH	
080	2526847-0000		1	CABLE TRENCH	
090	3047670-0000		1	CABLE TRENCH	
100	2526843-0000		1	CABLE TRENCH	
110	2526844-0000		1	LID	
120	577467-0000		1	LID	
130	577468-0000		1	LID	
140	578035-0000		1	LID	
150	2526846-0000		1	LID	
160	578500-0000		1	PIPE	
170	2914855-0000		1	CABLE DUCT	
190	577469-0000		1	LID	
200	577470-0000		1	LID	
210	578496-0000		1	LID	
220	2914854-0000		1	CABLE DUCT	
230	353249-0061		1	INSERT, SINGLE HOLE, EK155 20	
240	2914838-0000		1	PLATE	
250	272945-0000		5	LOCK	
260	295466-0000		11	LOCK	
390	90002-0004		1	BLANK-OFF PLUG, PR 22,5 SKINDICHT-BLK16	
400	90015-0020		54	LEAD-IN, TET5-7, E-1458016	
410	90015-0021		1	LEAD-IN, TET 10-14, E1458023	
420	90015-0023		1	LEAD-IN, TET 7-10, E1458019	
450	90099-0011		1	NUT PR 37 BRASS	
480	90458-0427		2	GLAND FITTING, VK 21652YUL11	
490	353249-0009		2	INSERT, SINGLE HOLE, EK152 9	
500	90099-0117		2	PLUG, PR 18,6 (PG11)	
510	312115-0291		3	SCREW ISO4762 M4X12 A4 80	
520	312115-0297		2	SCREW ISO4762 M4X25 A4 80	
530	90458-0322		2	NUT, M16X1,5	
600	312105-0364		32	SCREW, M6S ISO 4017 M6X10 A4 80	
610	312105-0366		2	SCREW, M6S ISO 4017 M6X12 A4 80	
620	312125-0323		2	SLOTTED HEAD SCREW, ISO1207 M5X8 A4	
630	312605-0316		36	HEXAGON NUT, M6M M6 A280	
640	312705-0316		23	HEX. DOMED CAP MHM-6 M6 A280	
650	315105-0153		11	WASHER PLAIN, 6,4X12X1,5 A4 BRB	
660	315106-0136		5	WASHER PLAIN, M4 ISO7089-4-200 HV A4	
675	353249-0016		1	INSERT, SINGLE HOLE, EK155 18	
680	353243-0007		2	GLAND FITTING, VK 15455YUL21	
690	90099-0119		3	PLUG, PR 28,3 (PG21)	
695	90099-0120		1	PLUG PR 37 (PG29)	
700	352101-0107		1	LEAD-IN, PR37/PG29, E1457555	
710	315105-0146		2	WASHER PLAIN, 5,3X10X1 A4 BRB	
740	353243-0003		1	GLAND FITTING, VK 15153YUL13	
750	353243-0002		1	GLAND FITTING, VK 15152YUL11	
760	353249-0010		1	INSERT, SINGLE HOLE, EK152 11	
780	353249-0011		1	INSERT, SINGLE HOLE, EK153 11	
810	1511786-0200		1	TOWER CABLE INLETS	**1-185, 1-187, 1-189, 1-191**
820	350010-0002		5	PUSH-IN BULKHEAD FITTING QSS-F-6	
M.X310	90459-4254		1	CONNECTION BLOCK TINA 4A, 20-054-03	
M.W670	90600-5930	M	6	CABLE C9, 20-057-15	
M.W653	90459-4876		1	FOCUS JUMPER CABLE M12 5P 3M, 20-056-21	
M.S004	90600-6048		1	EMERG. STOP SMILE 11 EA TINA, 30-050-00	
M.A024	90459-5627		1	CONNECTION, TINA 1-A	

CABLE TRENCH

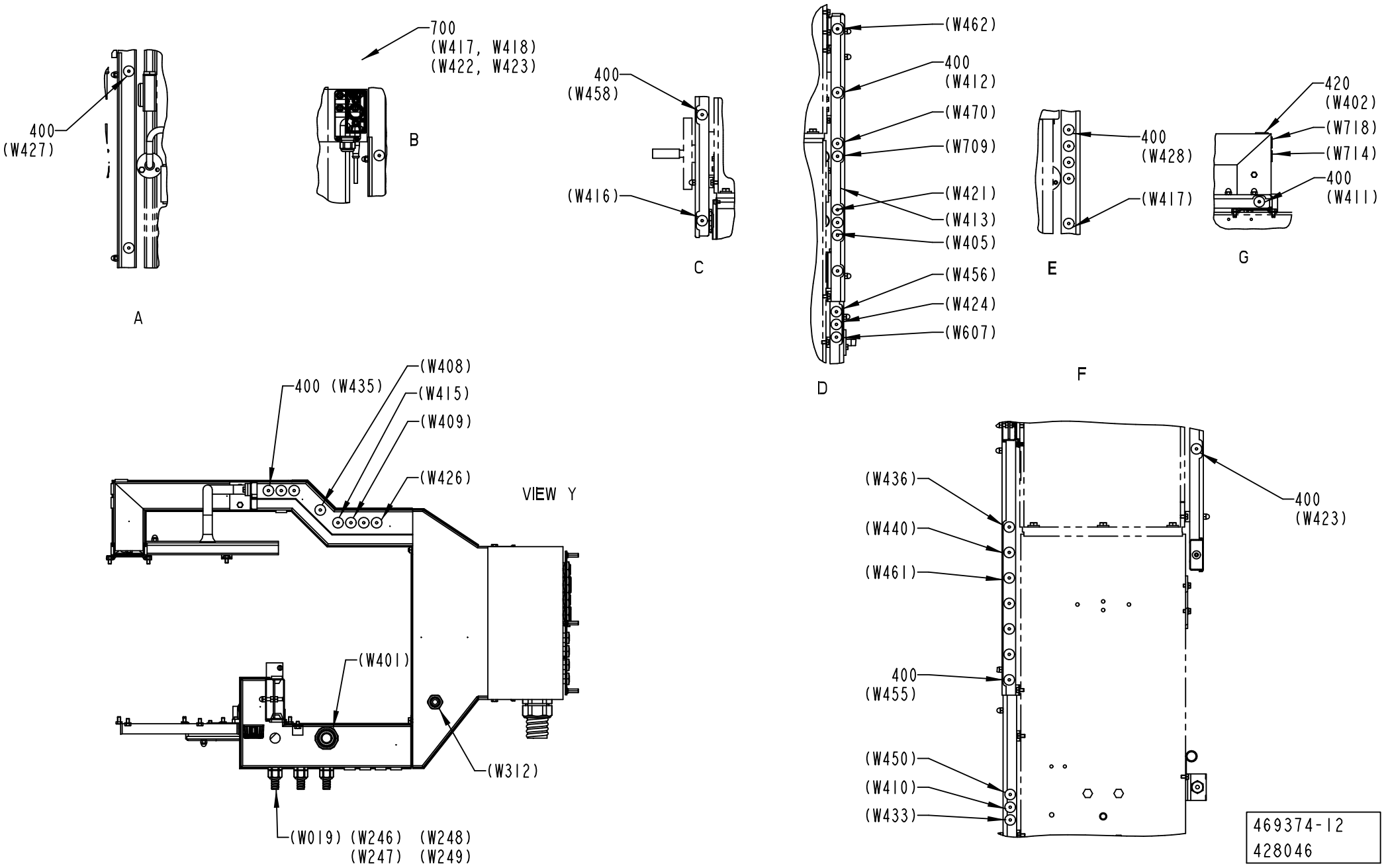

469374-12
428046

ECM: 430636 - 20091221
Group number: 469374-0800
Assembly Drawing: 469374-12_3_AB

This list covers pages from 1-172 to 1-183

Pos	Part No	UN	Qty	Description	Page No
NOHI (See drawing on pages: 1-172, 1-174, 1-176, 1-178, 1-180, 1-182)					
720	90002-0010		1	BLANK-OFF PLUG, PR 37 SKINDICHT-BLK29	
730	90002-0012		1	BLANK-OFF PLUG, PR 28,3 SKINDICHT-BLK21	
Common Parts					
010	1517268-0000		1	CABLE TRENCH	
015	1517269-0000		1	CABLE TRENCH	
020	577462-0000		1	CABLE TRENCH	
030	2773918-0000		1	CABLE TRENCH	
040	1517270-0000		1	LID	
050	3047671-0000		1	LID	
060	2773919-0000		1	LID	
065	1334769-0000		1	LID	
070	2781220-0000		1	CABLE TRENCH	
080	2526847-0000		1	CABLE TRENCH	
090	3047670-0000		1	CABLE TRENCH	
100	2526843-0000		1	CABLE TRENCH	
110	2526844-0000		1	LID	
120	577467-0000		1	LID	
130	577468-0000		1	LID	
140	578035-0000		1	LID	
150	2526846-0000		1	LID	
160	578500-0000		1	PIPE	
170	2914855-0000		1	CABLE DUCT	
190	577469-0000		1	LID	
200	577470-0000		1	LID	
210	578496-0000		1	LID	
220	2914854-0000		1	CABLE DUCT	
230	353249-0061		1	INSERT, SINGLE HOLE, EK155 20	
240	2914838-0000		1	PLATE	
250	272945-0000		5	LOCK	
260	295466-0000		11	LOCK	
390	90002-0004		1	BLANK-OFF PLUG, PR 22,5 SKINDICHT-BLK16	
400	90015-0020		54	LEAD-IN, TET5-7, E-1458016	
410	90015-0021		1	LEAD-IN, TET 10-14, E1458023	
420	90015-0023		1	LEAD-IN, TET 7-10, E1458019	
450	90099-0011		1	NUT PR 37 BRASS	
480	90458-0427		2	GLAND FITTING, VK 21652YUL11	
490	353249-0009		2	INSERT, SINGLE HOLE, EK152 9	
500	90099-0117		2	PLUG, PR 18,6 (PG11)	
510	312115-0291		3	SCREW ISO4762 M4X12 A4 80	
520	312115-0297		2	SCREW ISO4762 M4X25 A4 80	
530	90458-0322		2	NUT, M16X1,5	
600	312105-0364		32	SCREW, M6S ISO 4017 M6X10 A4 80	
610	312105-0366		2	SCREW, M6S ISO 4017 M6X12 A4 80	
620	312125-0323		2	SLOTTED HEAD SCREW, ISO1207 M5X8 A4	
630	312605-0316		36	HEXAGON NUT, M6M M6 A280	
640	312705-0316		23	HEX. DOMED CAP MHM-6 M6 A280	
650	315105-0153		11	WASHER PLAIN, 6,4X12X1,5 A4 BRB	
660	315106-0136		5	WASHER PLAIN, M4 ISO7089-4-200 HV A4	
675	353249-0016		1	INSERT, SINGLE HOLE, EK155 18	
680	353243-0007		2	GLAND FITTING, VK 15455YUL21	
690	90099-0119		3	PLUG, PR 28,3 (PG21)	
695	90099-0120		1	PLUG PR 37 (PG29)	
700	352101-0107		1	LEAD-IN, PR37/PG29, E1457555	
710	315105-0146		2	WASHER PLAIN, 5,3X10X1 A4 BRB	
740	353243-0003		1	GLAND FITTING, VK 15153YUL13	
750	353243-0002		1	GLAND FITTING, VK 15152YUL11	
760	353249-0010		1	INSERT, SINGLE HOLE, EK152 11	
780	353249-0011		1	INSERT, SINGLE HOLE, EK153 11	
810	1511786-0200		1	TOWER CABLE INLETS	**1-185, 1-187, 1-189, 1-191**
820	350010-0002		5	PUSH-IN BULKHEAD FITTING QSS-F-6	
M.X310	90459-4254		1	CONNECTION BLOCK TINA 4A, 20-054-03	
M.W670	90600-5930	M	6	CABLE C9, 20-057-15	
M.W653	90459-4876		1	FOCUS JUMPER CABLE M12 5P 3M, 20-056-21	
M.S004	90600-6048		1	EMERG. STOP SMILE 11 EA TINA, 30-050-00	
M.A024	90459-5627		1	CONNECTION, TINA 1-A	

Machine Type | Group Description | Used-In | Group Number | Page No

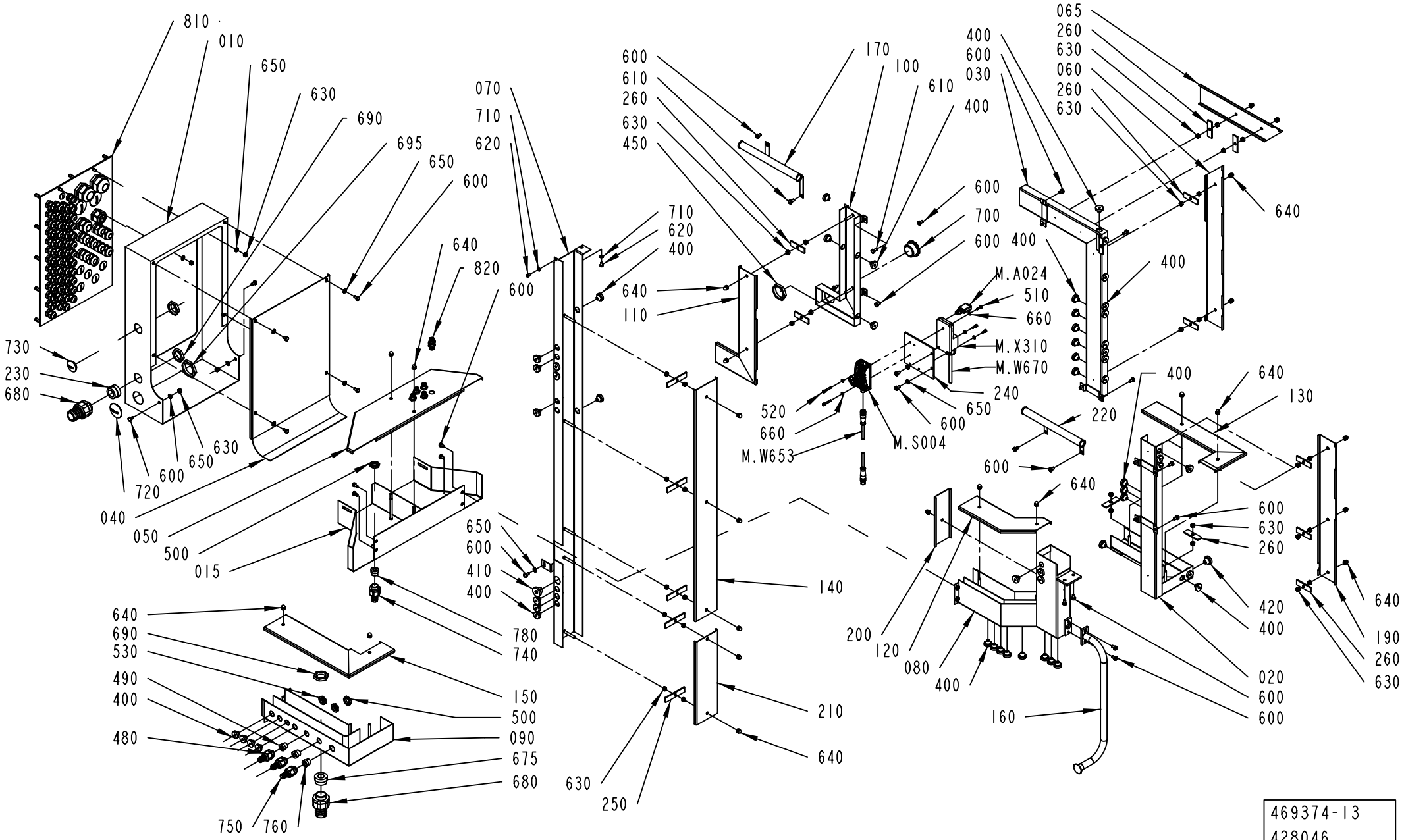

469374-13
428046

ECM: 430636 - 20091221
Group number: 469374-0800
Assembly Drawing: 469374-13_1_AB

This list covers pages from 1-172 to 1-183

Pos	Part No	UN	Qty	Description	Page No
NOHI (See drawing on pages: 1-172, 1-174, 1-176, 1-178, 1-180, 1-182)					
720	90002-0010		1	BLANK-OFF PLUG, PR 37 SKINDICHT-BLK29	
730	90002-0012		1	BLANK-OFF PLUG, PR 28,3 SKINDICHT-BLK21	
Common Parts					
010	1517268-0000		1	CABLE TRENCH	
015	1517269-0000		1	CABLE TRENCH	
020	577462-0000		1	CABLE TRENCH	
030	2773918-0000		1	CABLE TRENCH	
040	1517270-0000		1	LID	
050	3047671-0000		1	LID	
060	2773919-0000		1	LID	
065	1334769-0000		1	LID	
070	2781220-0000		1	CABLE TRENCH	
080	2526847-0000		1	CABLE TRENCH	
090	3047670-0000		1	CABLE TRENCH	
100	2526843-0000		1	CABLE TRENCH	
110	2526844-0000		1	LID	
120	577467-0000		1	LID	
130	577468-0000		1	LID	
140	578035-0000		1	LID	
150	2526846-0000		1	LID	
160	578500-0000		1	PIPE	
170	2914855-0000		1	CABLE DUCT	
190	577469-0000		1	LID	
200	577470-0000		1	LID	
210	578496-0000		1	LID	
220	2914854-0000		1	CABLE DUCT	
230	353249-0061		1	INSERT, SINGLE HOLE, EK155 20	
240	2914838-0000		1	PLATE	
250	272945-0000		5	LOCK	
260	295466-0000		11	LOCK	
390	90002-0004		1	BLANK-OFF PLUG, PR 22,5 SKINDICHT-BLK16	
400	90015-0020		54	LEAD-IN, TET5-7, E-1458016	
410	90015-0021		1	LEAD-IN, TET 10-14, E1458023	
420	90015-0023		1	LEAD-IN, TET 7-10, E1458019	
450	90099-0011		1	NUT PR 37 BRASS	
480	90458-0427		2	GLAND FITTING, VK 21652YUL11	
490	353249-0009		2	INSERT, SINGLE HOLE, EK152 9	
500	90099-0117		2	PLUG, PR 18,6 (PG11)	
510	312115-0291		3	SCREW ISO4762 M4X12 A4 80	
520	312115-0297		2	SCREW ISO4762 M4X25 A4 80	
530	90458-0322		2	NUT, M16X1,5	
600	312105-0364		32	SCREW, M6S ISO 4017 M6X10 A4 80	
610	312105-0366		2	SCREW, M6S ISO 4017 M6X12 A4 80	
620	312125-0323		2	SLOTTED HEAD SCREW, ISO1207 M5X8 A4	
630	312605-0316		36	HEXAGON NUT, M6M M6 A280	
640	312705-0316		23	HEX. DOMED CAP MHM-6 M6 A280	
650	315105-0153		11	WASHER PLAIN, 6,4X12X1,5 A4 BRB	
660	315106-0136		5	WASHER PLAIN, M4 ISO7089-4-200 HV A4	
675	353249-0016		1	INSERT, SINGLE HOLE, EK155 18	
680	353243-0007		2	GLAND FITTING, VK 15455YUL21	
690	90099-0119		3	PLUG, PR 28,3 (PG21)	
695	90099-0120		1	PLUG PR 37 (PG29)	
700	352101-0107		1	LEAD-IN, PR37/PG29, E1457555	
710	315105-0146		2	WASHER PLAIN, 5,3X10X1 A4 BRB	
740	353243-0003		1	GLAND FITTING, VK 15153YUL13	
750	353243-0002		1	GLAND FITTING, VK 15152YUL11	
760	353249-0010		1	INSERT, SINGLE HOLE, EK152 11	
780	353249-0011		1	INSERT, SINGLE HOLE, EK153 11	
810	1511786-0200		1	TOWER CABLE INLETS	**1-185, 1-187, 1-189, 1-191**
820	350010-0002		5	PUSH-IN BULKHEAD FITTING QSS-F-6	
M.X310	90459-4254		1	CONNECTION BLOCK TINA 4A, 20-054-03	
M.W670	90600-5930	M	6	CABLE C9, 20-057-15	
M.W653	90459-4876		1	FOCUS JUMPER CABLE M12 5P 3M, 20-056-21	
M.S004	90600-6048		1	EMERG. STOP SMILE 11 EA TINA, 30-050-00	
M.A024	90459-5627		1	CONNECTION, TINA 1-A	

Machine Type | Group Description | Used-In | Group Number | Page No

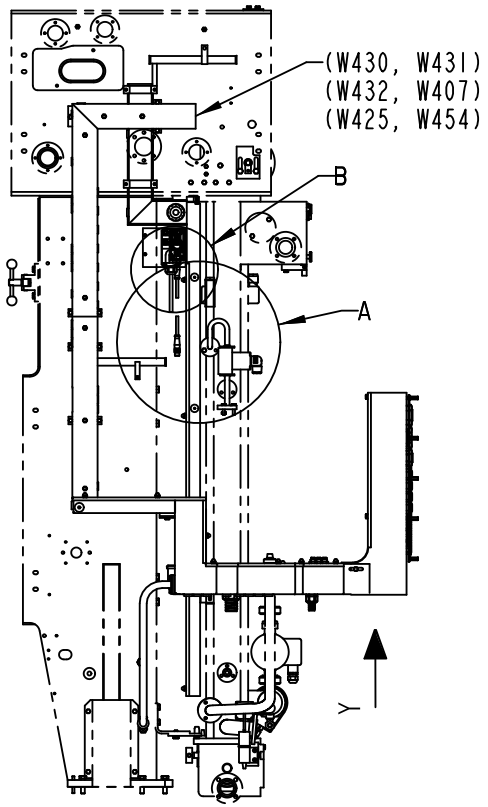

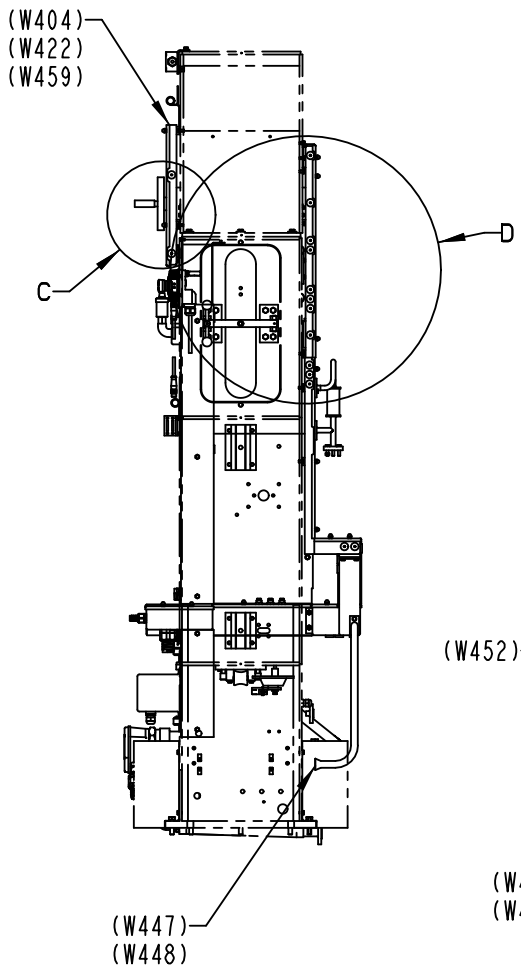

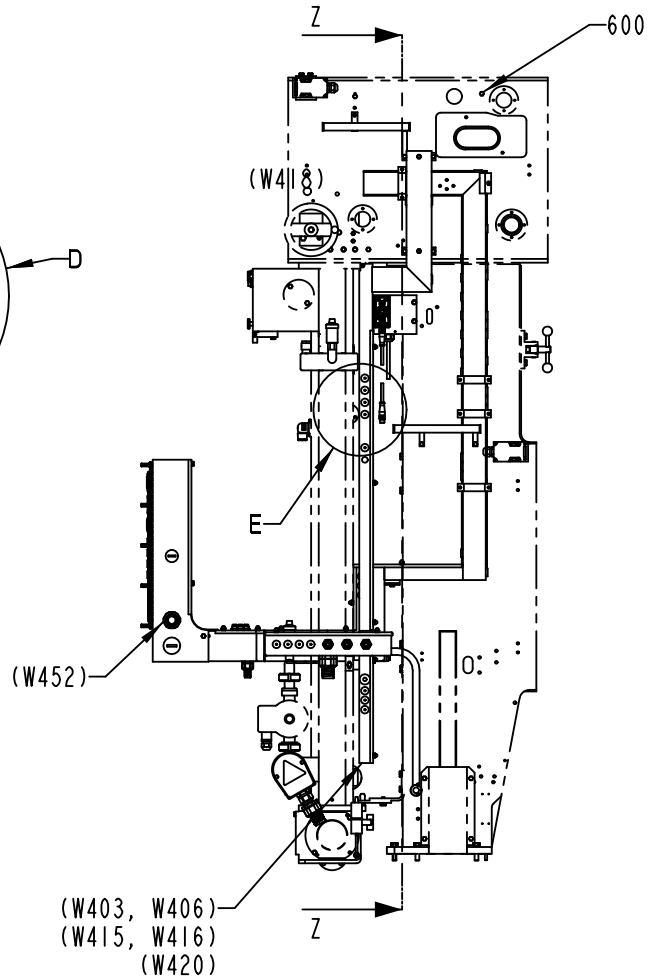

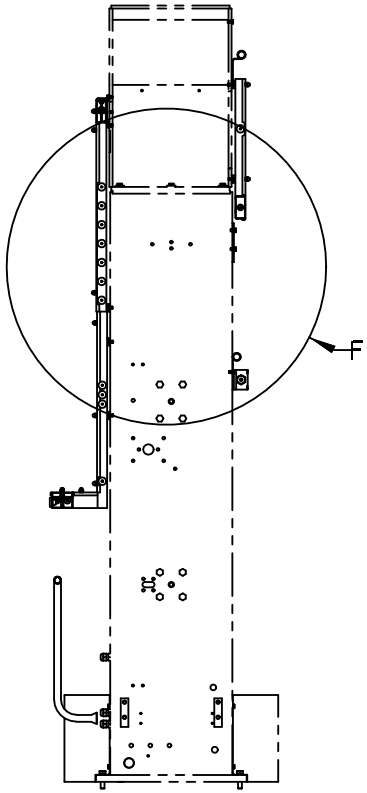

Z-Z

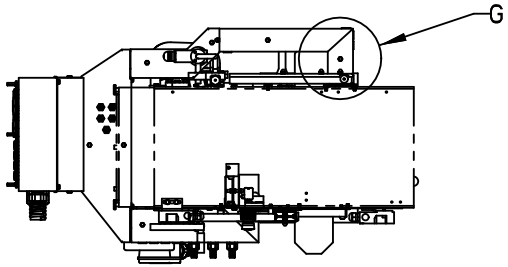

469374-13
428046

ECM: 430636 - 20091221
Group number: 469374-0800
Assembly Drawing: 469374-13_2_AB

This list covers pages from 1-172 to 1-183

Pos	Part No	UN	Qty	Description	Page No
NOHI (See drawing on pages: 1-172, 1-174, 1-176, 1-178, 1-180, 1-182)					
720	90002-0010		1	BLANK-OFF PLUG, PR 37 SKINDICHT-BLK29	
730	90002-0012		1	BLANK-OFF PLUG, PR 28,3 SKINDICHT-BLK21	
Common Parts					
010	1517268-0000		1	CABLE TRENCH	
015	1517269-0000		1	CABLE TRENCH	
020	577462-0000		1	CABLE TRENCH	
030	2773918-0000		1	CABLE TRENCH	
040	1517270-0000		1	LID	
050	3047671-0000		1	LID	
060	2773919-0000		1	LID	
065	1334769-0000		1	LID	
070	2781220-0000		1	CABLE TRENCH	
080	2526847-0000		1	CABLE TRENCH	
090	3047670-0000		1	CABLE TRENCH	
100	2526843-0000		1	CABLE TRENCH	
110	2526844-0000		1	LID	
120	577467-0000		1	LID	
130	577468-0000		1	LID	
140	578035-0000		1	LID	
150	2526846-0000		1	LID	
160	578500-0000		1	PIPE	
170	2914855-0000		1	CABLE DUCT	
190	577469-0000		1	LID	
200	577470-0000		1	LID	
210	578496-0000		1	LID	
220	2914854-0000		1	CABLE DUCT	
230	353249-0061		1	INSERT, SINGLE HOLE, EK155 20	
240	2914838-0000		1	PLATE	
250	272945-0000		5	LOCK	
260	295466-0000		11	LOCK	
390	90002-0004		1	BLANK-OFF PLUG, PR 22,5 SKINDICHT-BLK16	
400	90015-0020		54	LEAD-IN, TET5-7, E-1458016	
410	90015-0021		1	LEAD-IN, TET 10-14, E1458023	
420	90015-0023		1	LEAD-IN, TET 7-10, E1458019	
450	90099-0011		1	NUT PR 37 BRASS	
480	90458-0427		2	GLAND FITTING, VK 21652YUL11	
490	353249-0009		2	INSERT, SINGLE HOLE, EK152 9	
500	90099-0117		2	PLUG, PR 18,6 (PG11)	
510	312115-0291		3	SCREW ISO4762 M4X12 A4 80	
520	312115-0297		2	SCREW ISO4762 M4X25 A4 80	
530	90458-0322		2	NUT, M16X1,5	
600	312105-0364		32	SCREW, M6S ISO 4017 M6X10 A4 80	
610	312105-0366		2	SCREW, M6S ISO 4017 M6X12 A4 80	
620	312125-0323		2	SLOTTED HEAD SCREW, ISO1207 M5X8 A4	
630	312605-0316		36	HEXAGON NUT, M6M M6 A280	
640	312705-0316		23	HEX. DOMED CAP MHM-6 M6 A280	
650	315105-0153		11	WASHER PLAIN, 6,4X12X1,5 A4 BRB	
660	315106-0136		5	WASHER PLAIN, M4 ISO7089-4-200 HV A4	
675	353249-0016		1	INSERT, SINGLE HOLE, EK155 18	
680	353243-0007		2	GLAND FITTING, VK 15455YUL21	
690	90099-0119		3	PLUG, PR 28,3 (PG21)	
695	90099-0120		1	PLUG PR 37 (PG29)	
700	352101-0107		1	LEAD-IN, PR37/PG29, E1457555	
710	315105-0146		2	WASHER PLAIN, 5,3X10X1 A4 BRB	
740	353243-0003		1	GLAND FITTING, VK 15153YUL13	
750	353243-0002		1	GLAND FITTING, VK 15152YUL11	
760	353249-0010		1	INSERT, SINGLE HOLE, EK152 11	
780	353249-0011		1	INSERT, SINGLE HOLE, EK153 11	
810	1511786-0200		1	TOWER CABLE INLETS	**1-185, 1-187, 1-189, 1-191**
820	350010-0002		5	PUSH-IN BULKHEAD FITTING QSS-F-6	
M.X310	90459-4254		1	CONNECTION BLOCK TINA 4A, 20-054-03	
M.W670	90600-5930	M	6	CABLE C9, 20-057-15	
M.W653	90459-4876		1	FOCUS JUMPER CABLE M12 5P 3M, 20-056-21	
M.S004	90600-6048		1	EMERG. STOP SMILE 11 EA TINA, 30-050-00	
M.A024	90459-5627		1	CONNECTION, TINA 1-A	

Machine Type | Group Description | Used-In | Group Number | Page No

CABLE TRENCH

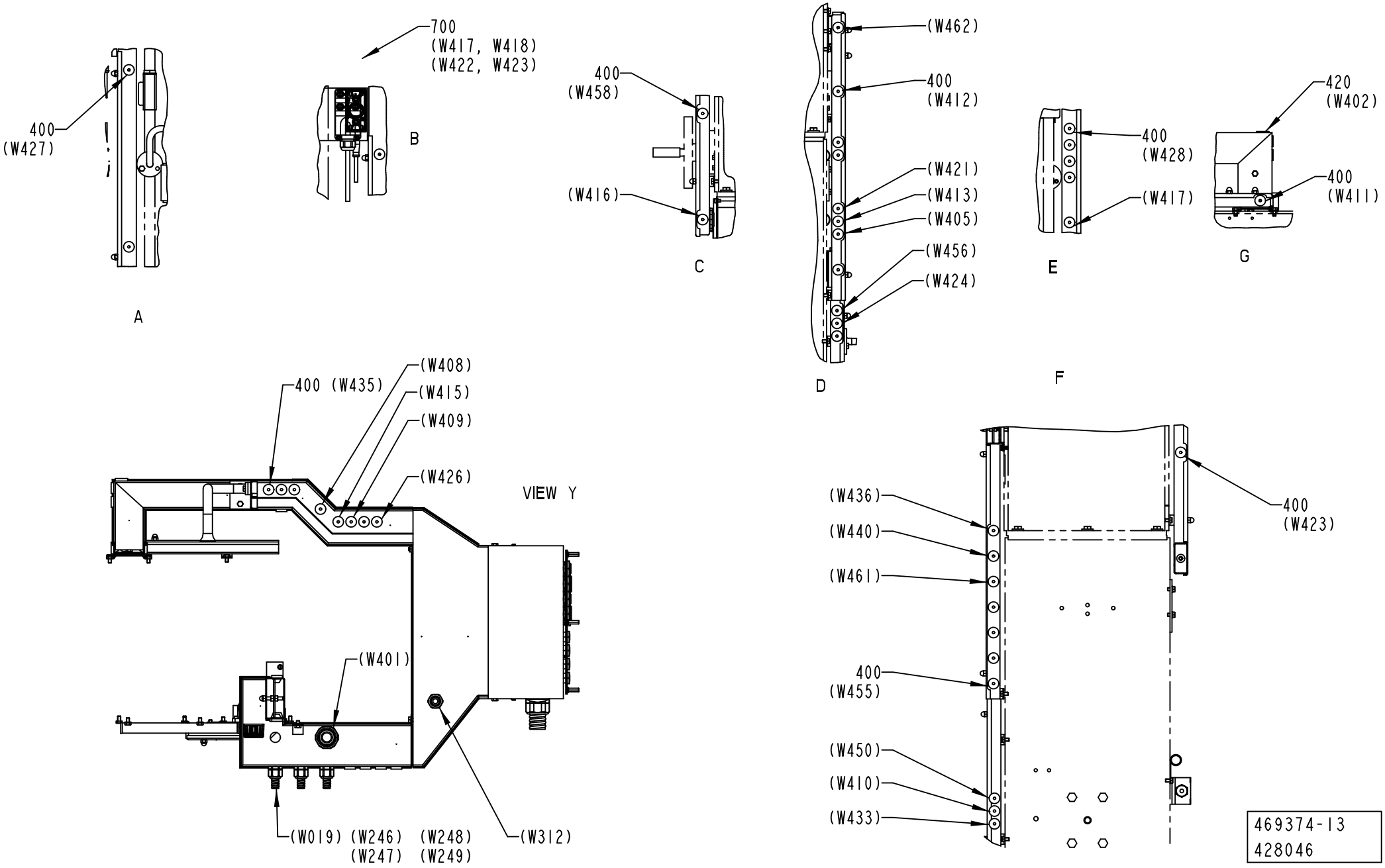

469374-13
428046

ECM: 430636 - 20091221
Group number: 469374-0800
Assembly Drawing: 469374-13_3_AB

This list covers pages from 1-172 to 1-183

Pos	Part No	UN	Qty	Description	Page No
NOHI (See drawing on pages: 1-172, 1-174, 1-176, 1-178, 1-180, 1-182)					
720	90002-0010		1	BLANK-OFF PLUG, PR 37 SKINDICHT-BLK29	
730	90002-0012		1	BLANK-OFF PLUG, PR 28,3 SKINDICHT-BLK21	
Common Parts					
010	1517268-0000		1	CABLE TRENCH	
015	1517269-0000		1	CABLE TRENCH	
020	577462-0000		1	CABLE TRENCH	
030	2773918-0000		1	CABLE TRENCH	
040	1517270-0000		1	LID	
050	3047671-0000		1	LID	
060	2773919-0000		1	LID	
065	1334769-0000		1	LID	
070	2781220-0000		1	CABLE TRENCH	
080	2526847-0000		1	CABLE TRENCH	
090	3047670-0000		1	CABLE TRENCH	
100	2526843-0000		1	CABLE TRENCH	
110	2526844-0000		1	LID	
120	577467-0000		1	LID	
130	577468-0000		1	LID	
140	578035-0000		1	LID	
150	2526846-0000		1	LID	
160	578500-0000		1	PIPE	
170	2914855-0000		1	CABLE DUCT	
190	577469-0000		1	LID	
200	577470-0000		1	LID	
210	578496-0000		1	LID	
220	2914854-0000		1	CABLE DUCT	
230	353249-0061		1	INSERT, SINGLE HOLE, EK155 20	
240	2914838-0000		1	PLATE	
250	272945-0000		5	LOCK	
260	295466-0000		11	LOCK	
390	90002-0004		1	BLANK-OFF PLUG, PR 22,5 SKINDICHT-BLK16	
400	90015-0020		54	LEAD-IN, TET5-7, E-1458016	
410	90015-0021		1	LEAD-IN, TET 10-14, E1458023	
420	90015-0023		1	LEAD-IN, TET 7-10, E1458019	
450	90099-0011		1	NUT PR 37 BRASS	
480	90458-0427		2	GLAND FITTING, VK 21652YUL11	
490	353249-0009		2	INSERT, SINGLE HOLE, EK152 9	
500	90099-0117		2	PLUG, PR 18,6 (PG11)	
510	312115-0291		3	SCREW ISO4762 M4X12 A4 80	
520	312115-0297		2	SCREW ISO4762 M4X25 A4 80	
530	90458-0322		2	NUT, M16X1,5	
600	312105-0364		32	SCREW, M6S ISO 4017 M6X10 A4 80	
610	312105-0366		2	SCREW, M6S ISO 4017 M6X12 A4 80	
620	312125-0323		2	SLOTTED HEAD SCREW, ISO1207 M5X8 A4	
630	312605-0316		36	HEXAGON NUT, M6M M6 A280	
640	312705-0316		23	HEX. DOMED CAP MHM-6 M6 A280	
650	315105-0153		11	WASHER PLAIN, 6,4X12X1,5 A4 BRB	
660	315106-0136		5	WASHER PLAIN, M4 ISO7089-4-200 HV A4	
675	353249-0016		1	INSERT, SINGLE HOLE, EK155 18	
680	353243-0007		2	GLAND FITTING, VK 15455YUL21	
690	90099-0119		3	PLUG, PR 28,3 (PG21)	
695	90099-0120		1	PLUG PR 37 (PG29)	
700	352101-0107		1	LEAD-IN, PR37/PG29, E1457555	
710	315105-0146		2	WASHER PLAIN, 5,3X10X1 A4 BRB	
740	353243-0003		1	GLAND FITTING, VK 15153YUL13	
750	353243-0002		1	GLAND FITTING, VK 15152YUL11	
760	353249-0010		1	INSERT, SINGLE HOLE, EK152 11	
780	353249-0011		1	INSERT, SINGLE HOLE, EK153 11	
810	1511786-0200		1	TOWER CABLE INLETS	**1-185, 1-187, 1-189, 1-191**
820	350010-0002		5	PUSH-IN BULKHEAD FITTING QSS-F-6	
M.X310	90459-4254		1	CONNECTION BLOCK TINA 4A, 20-054-03	
M.W670	90600-5930	M	6	CABLE C9, 20-057-15	
M.W653	90459-4876		1	FOCUS JUMPER CABLE M12 5P 3M, 20-056-21	
M.S004	90600-6048		1	EMERG. STOP SMILE 11 EA TINA, 30-050-00	
M.A024	90459-5627		1	CONNECTION, TINA 1-A	

Machine Type | Group Description | Used-In | Group Number | Page No

TOWER CABLE INLETS

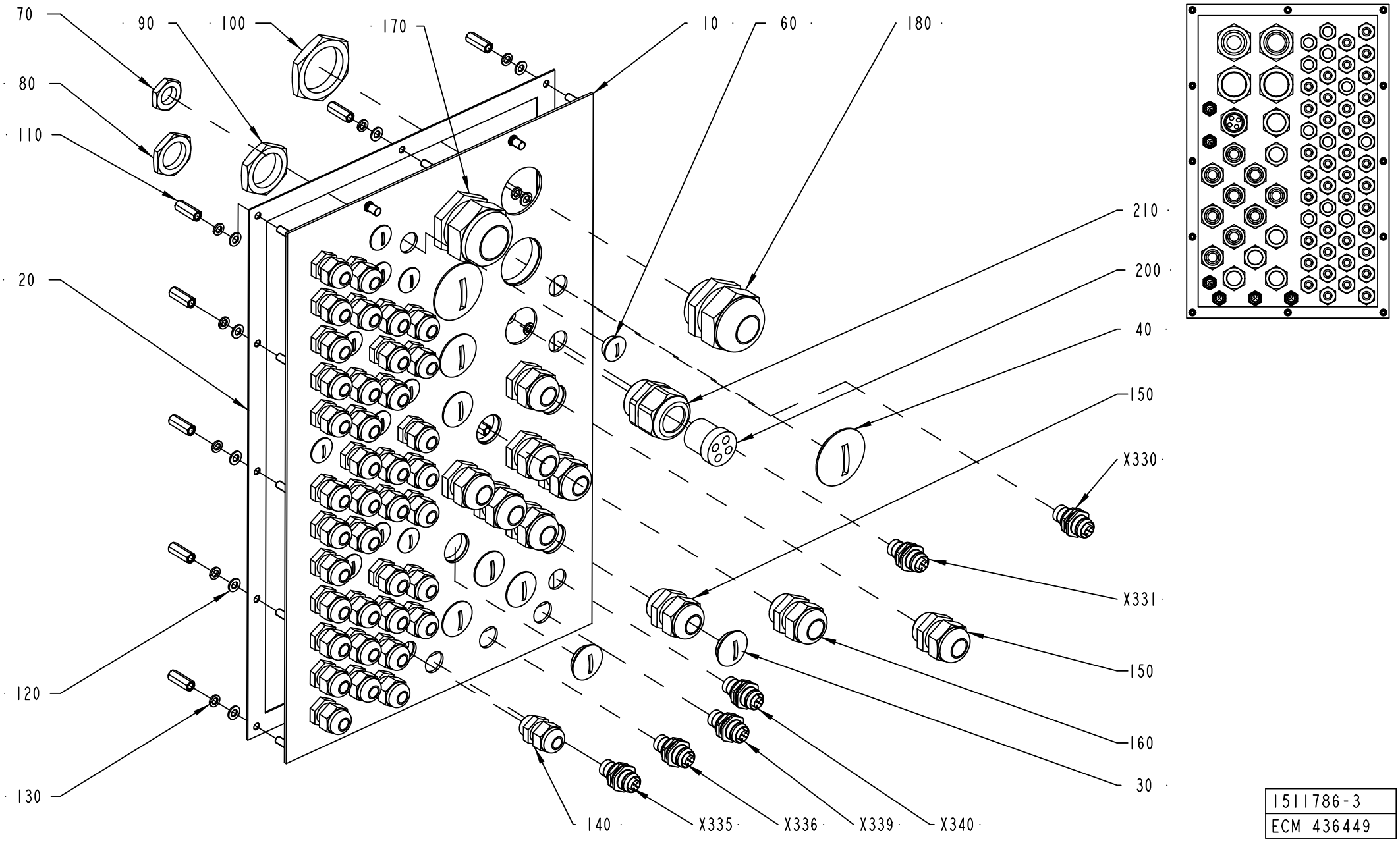

1511786-3
ECM 436449

ECM: 438714 - 20100222
Group number: 1511786-0200
Assembly Drawing: 1511786-3_1_AC

This list covers pages from 1-184 to 1-191

Pos	Part No	UN	Qty	Description	Page No
HI (See drawing on pages: 1-188, 1-190)					
060	90002-0013		8	BLANK-OFF PLUG, PR 15,2 SKINDICHT-BLK9	
140	352103-0101		42	CABLE GLAND, ST 9, PR15,2/PG9	
190	352103-0116		1	CABLE GLAND, ST 21, PR28,3/PG21	
NOHI (See drawing on pages: 1-184, 1-186)					
050	90002-0012		1	BLANK-OFF PLUG, PR 28,3 SKINDICHT-BLK21	
060	90002-0013		11	BLANK-OFF PLUG, PR 15,2 SKINDICHT-BLK9	
140	352103-0101		39	CABLE GLAND, ST 9, PR15,2/PG9	
Common Parts					
010	3040328-0000		1	PLATE	
020	1511836-0000		1	GASKET	
030	90002-0004		6	BLANK-OFF PLUG, PR 22,5 SKINDICHT-BLK16	
040	90002-0010		2	BLANK-OFF PLUG, PR 37 SKINDICHT-BLK29	
070	90099-0104		50	PLUG, PR 15,2 (PG9)	
080	90099-0110		14	PLUG, PR 22,5 (PG16)	
090	90099-0119		2	PLUG, PR 28,3 (PG21)	
100	90099-0120		4	PLUG PR 37 (PG29)	
110	1517676-0000		12	SPACER	
120	315105-0146		12	WASHER PLAIN, 5,3X10X1 A4 BRB	
130	315402-0146		12	LOCK WASHER, DIN127B 5,1 A4, M5-3/16	
150	352103-0110		7	CABLE GLAND, STR 16, PR22,5/PG16	
160	352103-0111		2	CABLE GLAND, ST 16, PR22,5/PG16	
170	352103-0121		1	CABLE GLAND, ST 29, PR37,0/PG29	
180	352103-0120		1	CABLE GLAND, STR 29, PR37,0/PG29	
200	353249-0051		1	INSERT, MULTI HOLE, E154M 4X6	
210	353240-0005		1	COMPRESSION GLAND, VK 154Y	
X330	90600-1559		1	PANEL FEED THROUGH, FWD5 54218	
X331	90600-1559		1	PANEL FEED THROUGH, FWD5 54218	
X335	90600-1559		1	PANEL FEED THROUGH, FWD5 54218	
X336	90600-1559		1	PANEL FEED THROUGH, FWD5 54218	
X339	90600-1559		1	PANEL FEED THROUGH, FWD5 54218	
X340	90600-1559		1	PANEL FEED THROUGH, FWD5 54218	

Pos	Part No	UN	Qty	Description	Page No

Machine Type | Group Description | Used-In | Group Number | Page No

TOWER CABLE INLETS

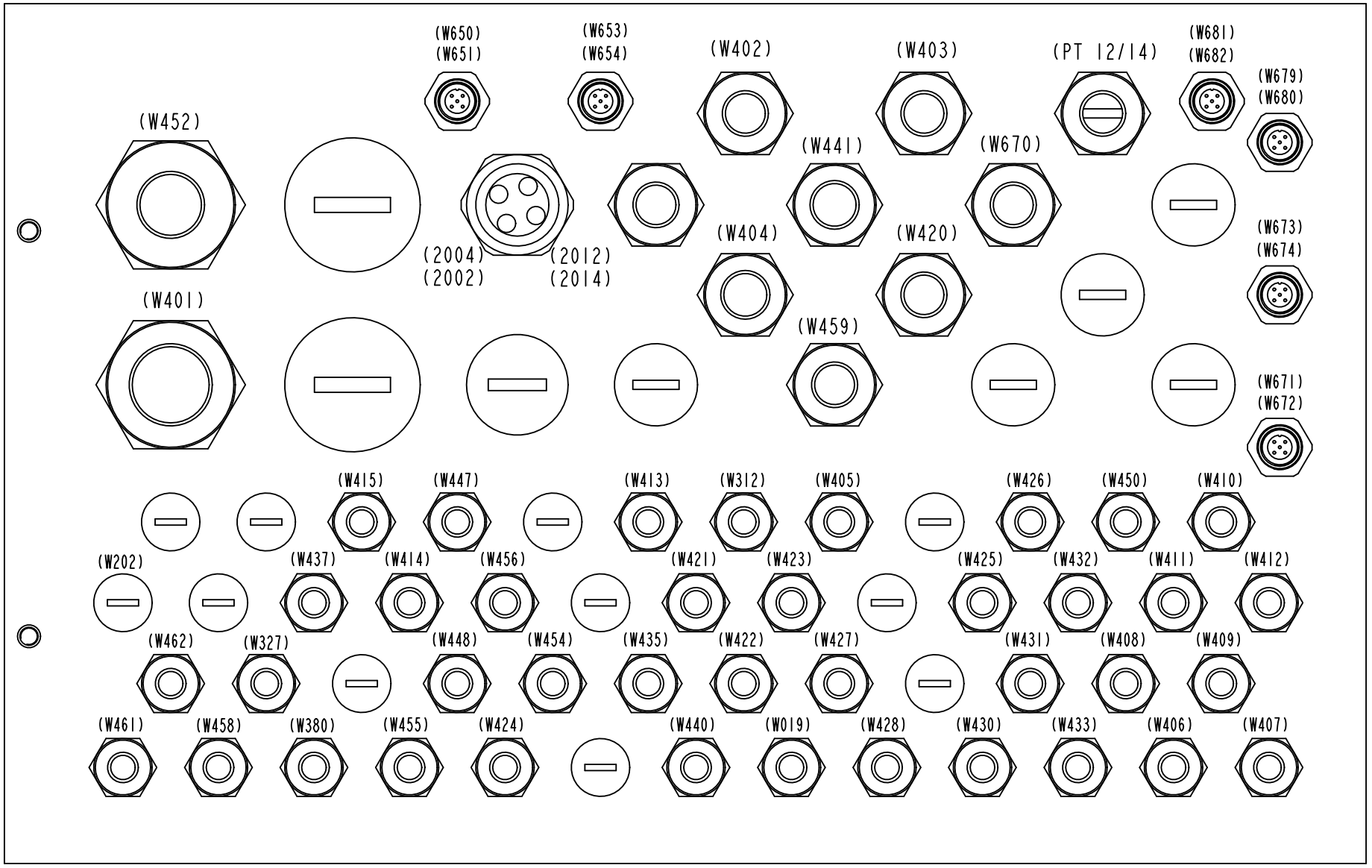

1511786-3
ECM 436449

ECM: 438714 - 20100222
Group number: 1511786-0200
Assembly Drawing: 1511786-3_2_AC

This list covers pages from 1-184 to 1-191

Pos	Part No	UN	Qty	Description	Page No
HI (See drawing on pages: 1-188, 1-190)					
060	90002-0013		8	BLANK-OFF PLUG, PR 15,2 SKINDICHT-BLK9	
140	352103-0101		42	CABLE GLAND, ST 9, PR15,2/PG9	
190	352103-0116		1	CABLE GLAND, ST 21, PR28,3/PG21	
NOHI (See drawing on pages: 1-184, 1-186)					
050	90002-0012		1	BLANK-OFF PLUG, PR 28,3 SKINDICHT-BLK21	
060	90002-0013		11	BLANK-OFF PLUG, PR 15,2 SKINDICHT-BLK9	
140	352103-0101		39	CABLE GLAND, ST 9, PR15,2/PG9	
Common Parts					
010	3040328-0000		1	PLATE	
020	1511836-0000		1	GASKET	
030	90002-0004		6	BLANK-OFF PLUG, PR 22,5 SKINDICHT-BLK16	
040	90002-0010		2	BLANK-OFF PLUG, PR 37 SKINDICHT-BLK29	
070	90099-0104		50	PLUG, PR 15,2 (PG9)	
080	90099-0110		14	PLUG, PR 22,5 (PG16)	
090	90099-0119		2	PLUG, PR 28,3 (PG21)	
100	90099-0120		4	PLUG PR 37 (PG29)	
110	1517676-0000		12	SPACER	
120	315105-0146		12	WASHER PLAIN, 5,3X10X1 A4 BRB	
130	315402-0146		12	LOCK WASHER, DIN127B 5,1 A4, M5-3/16	
150	352103-0110		7	CABLE GLAND, STR 16, PR22,5/PG16	
160	352103-0111		2	CABLE GLAND, ST 16, PR22,5/PG16	
170	352103-0121		1	CABLE GLAND, ST 29, PR37,0/PG29	
180	352103-0120		1	CABLE GLAND, STR 29, PR37,0/PG29	
200	353249-0051		1	INSERT, MULTI HOLE, E154M 4X6	
210	353240-0005		1	COMPRESSION GLAND, VK 154Y	
X330	90600-1559		1	PANEL FEED THROUGH, FWD5 54218	
X331	90600-1559		1	PANEL FEED THROUGH, FWD5 54218	
X335	90600-1559		1	PANEL FEED THROUGH, FWD5 54218	
X336	90600-1559		1	PANEL FEED THROUGH, FWD5 54218	
X339	90600-1559		1	PANEL FEED THROUGH, FWD5 54218	
X340	90600-1559		1	PANEL FEED THROUGH, FWD5 54218	

Pos	Part No	UN	Qty	Description	Page No

Machine Type | Group Description | Used-In | Group Number | Page No

TOWER CABLE INLETS

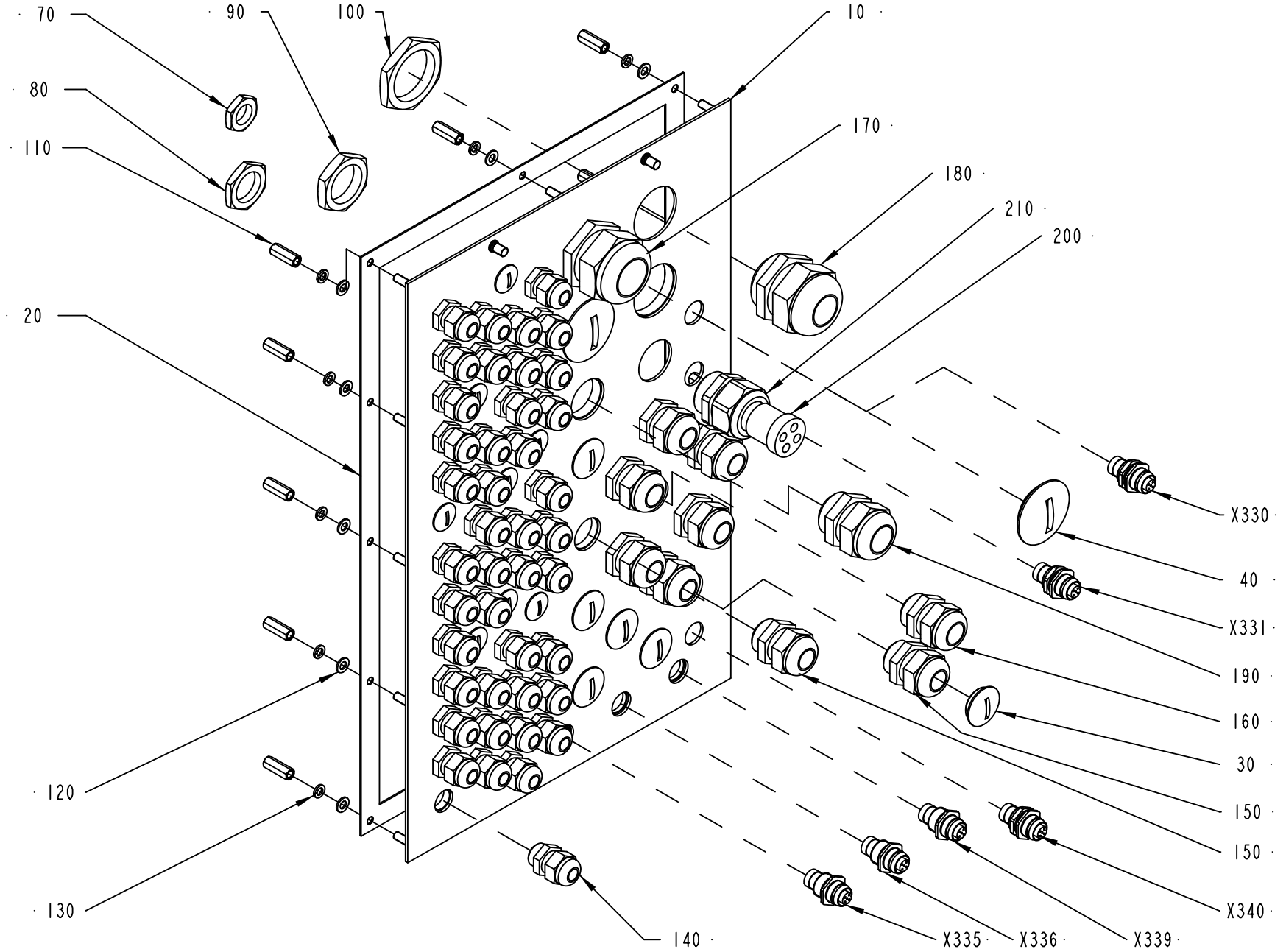

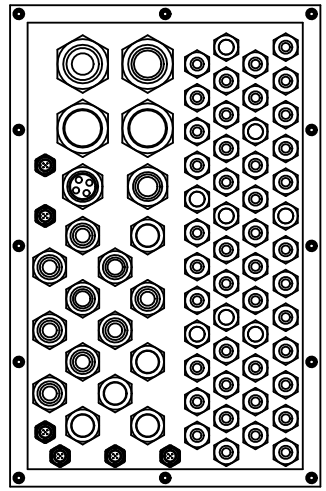

1511786-4
ECM 436449

ECM: 438714 - 20100222
Group number: 1511786-0200
Assembly Drawing: 1511786-4_1_AC

This list covers pages from 1-184 to 1-191

Pos	Part No	UN	Qty	Description	Page No
HI (See drawing on pages: 1-188, 1-190)					
060	90002-0013		8	BLANK-OFF PLUG, PR 15,2 SKINDICHT-BLK9	
140	352103-0101		42	CABLE GLAND, ST 9, PR15,2/PG9	
190	352103-0116		1	CABLE GLAND, ST 21, PR28,3/PG21	
NOHI (See drawing on pages: 1-184, 1-186)					
050	90002-0012		1	BLANK-OFF PLUG, PR 28,3 SKINDICHT-BLK21	
060	90002-0013		11	BLANK-OFF PLUG, PR 15,2 SKINDICHT-BLK9	
140	352103-0101		39	CABLE GLAND, ST 9, PR15,2/PG9	
Common Parts					
010	3040328-0000		1	PLATE	
020	1511836-0000		1	GASKET	
030	90002-0004		6	BLANK-OFF PLUG, PR 22,5 SKINDICHT-BLK16	
040	90002-0010		2	BLANK-OFF PLUG, PR 37 SKINDICHT-BLK29	
070	90099-0104		50	PLUG, PR 15,2 (PG9)	
080	90099-0110		14	PLUG, PR 22,5 (PG16)	
090	90099-0119		2	PLUG, PR 28,3 (PG21)	
100	90099-0120		4	PLUG PR 37 (PG29)	
110	1517676-0000		12	SPACER	
120	315105-0146		12	WASHER PLAIN, 5,3X10X1 A4 BRB	
130	315402-0146		12	LOCK WASHER, DIN127B 5,1 A4, M5-3/16	
150	352103-0110		7	CABLE GLAND, STR 16, PR22,5/PG16	
160	352103-0111		2	CABLE GLAND, ST 16, PR22,5/PG16	
170	352103-0121		1	CABLE GLAND, ST 29, PR37,0/PG29	
180	352103-0120		1	CABLE GLAND, STR 29, PR37,0/PG29	
200	353249-0051		1	INSERT, MULTI HOLE, E154M 4X6	
210	353240-0005		1	COMPRESSION GLAND, VK 154Y	
X330	90600-1559		1	PANEL FEED THROUGH, FWD5 54218	
X331	90600-1559		1	PANEL FEED THROUGH, FWD5 54218	
X335	90600-1559		1	PANEL FEED THROUGH, FWD5 54218	
X336	90600-1559		1	PANEL FEED THROUGH, FWD5 54218	
X339	90600-1559		1	PANEL FEED THROUGH, FWD5 54218	
X340	90600-1559		1	PANEL FEED THROUGH, FWD5 54218	

Pos	Part No	UN	Qty	Description	Page No

Machine Type | Group Description | Used-In | Group Number | Page No

TOWER CABLE INLETS

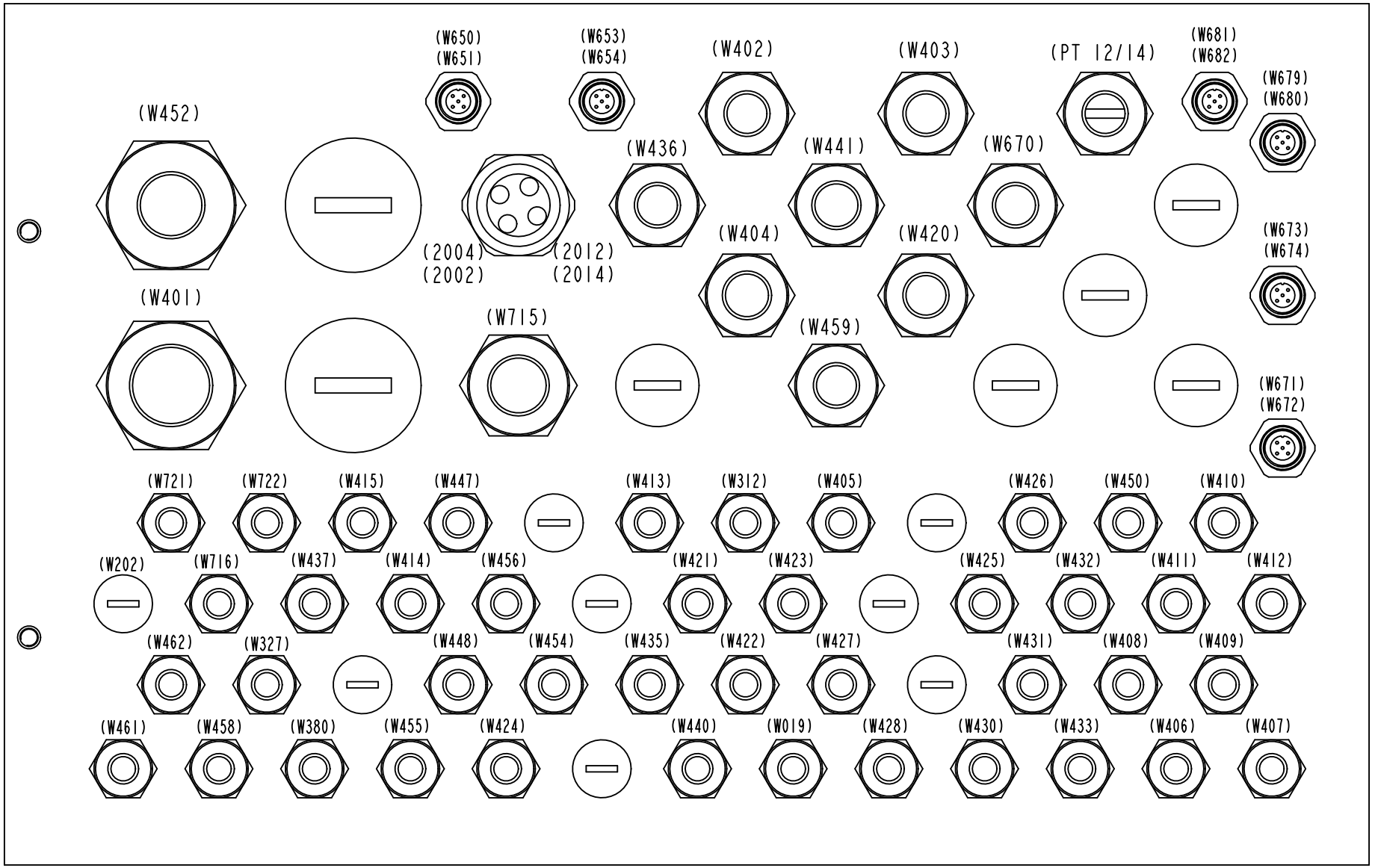

1511786-4
ECM 436449

ECM: 438714 - 20100222
Group number: 1511786-0200
Assembly Drawing: 1511786-4_2_AC

This list covers pages from 1-184 to 1-191

Pos	Part No	UN	Qty	Description	Page No
HI (See drawing on pages: 1-188, 1-190)					
060	90002-0013		8	BLANK-OFF PLUG, PR 15,2 SKINDICHT-BLK9	
140	352103-0101		42	CABLE GLAND, ST 9, PR15,2/PG9	
190	352103-0116		1	CABLE GLAND, ST 21, PR28,3/PG21	
NOHI (See drawing on pages: 1-184, 1-186)					
050	90002-0012		1	BLANK-OFF PLUG, PR 28,3 SKINDICHT-BLK21	
060	90002-0013		11	BLANK-OFF PLUG, PR 15,2 SKINDICHT-BLK9	
140	352103-0101		39	CABLE GLAND, ST 9, PR15,2/PG9	
Common Parts					
010	3040328-0000		1	PLATE	
020	1511836-0000		1	GASKET	
030	90002-0004		6	BLANK-OFF PLUG, PR 22,5 SKINDICHT-BLK16	
040	90002-0010		2	BLANK-OFF PLUG, PR 37 SKINDICHT-BLK29	
070	90099-0104		50	PLUG, PR 15,2 (PG9)	
080	90099-0110		14	PLUG, PR 22,5 (PG16)	
090	90099-0119		2	PLUG, PR 28,3 (PG21)	
100	90099-0120		4	PLUG PR 37 (PG29)	
110	1517676-0000		12	SPACER	
120	315105-0146		12	WASHER PLAIN, 5,3X10X1 A4 BRB	
130	315402-0146		12	LOCK WASHER, DIN127B 5,1 A4, M5-3/16	
150	352103-0110		7	CABLE GLAND, STR 16, PR22,5/PG16	
160	352103-0111		2	CABLE GLAND, ST 16, PR22,5/PG16	
170	352103-0121		1	CABLE GLAND, ST 29, PR37,0/PG29	
180	352103-0120		1	CABLE GLAND, STR 29, PR37,0/PG29	
200	353249-0051		1	INSERT, MULTI HOLE, E154M 4X6	
210	353240-0005		1	COMPRESSION GLAND, VK 154Y	
X330	90600-1559		1	PANEL FEED THROUGH, FWD5 54218	
X331	90600-1559		1	PANEL FEED THROUGH, FWD5 54218	
X335	90600-1559		1	PANEL FEED THROUGH, FWD5 54218	
X336	90600-1559		1	PANEL FEED THROUGH, FWD5 54218	
X339	90600-1559		1	PANEL FEED THROUGH, FWD5 54218	
X340	90600-1559		1	PANEL FEED THROUGH, FWD5 54218	

Pos	Part No	UN	Qty	Description	Page No

Machine Type | Group Description | Used-In | Group Number | Page No

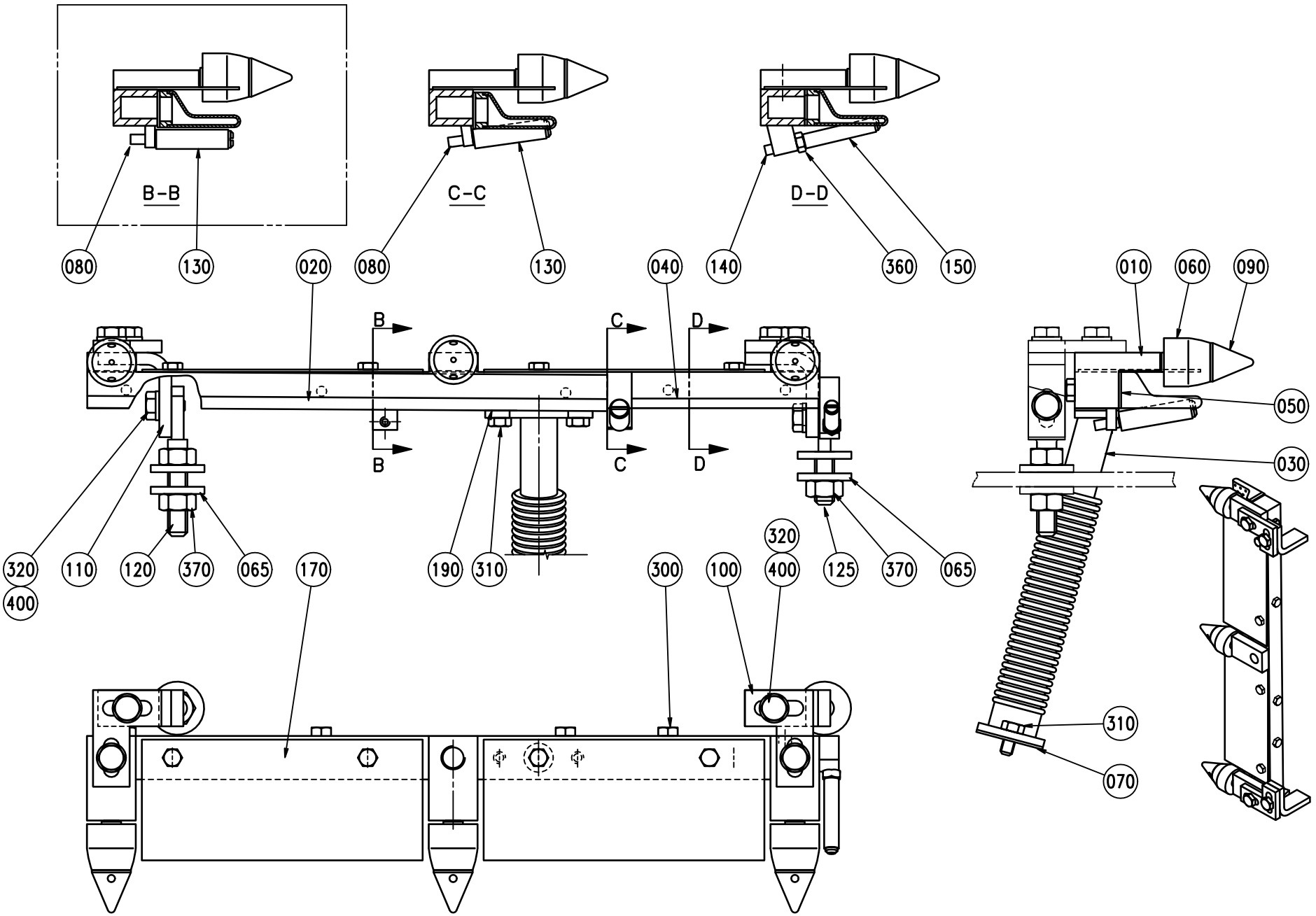
B-B
C-C
D-D
080
130
020
080
130
040
140
360
150
010
060
090
050
030
B
C
D
B
C
D
320
400
110
120
370
065
170
190
310
300
100
320
400
125
370
065
310
070

ECM: 240681 - 20051209
Group number: 469501-0400
Assembly Drawing: 469501-4_1_AA

This list covers pages from 1-192 to 1-195

Pos	Part No	UN	Qty	Description	Page No
TBA 0100B, TBA 0125S, TBA 0160S, TBA 0200M, TBA 0200S, TBA 0250S, TPA 0250SQ, TWA 0125S, TPA 0200SQ, TWA 0180S, TWA 0200S NOCLEAR (See drawing on page: 1-192)					
020	568577-0000		1	AIR NOZZLE	
040	568578-0000		1	AIR NOZZLE	
080	256899-0000		2	SHAFT	
090	272095-0000		3	SHAFT	
130	469461-0000		2	ROLL	
TBA 0200B, TBA 0200SQ, TBA 0284B, TBA 0250B, TBA 0300S, TBA 0330S, TPA 0330SQ (See drawing on page: 1-192)					
020	568577-0000		1	AIR NOZZLE	
040	568578-0000		1	AIR NOZZLE	
080	256899-0000		1	SHAFT	
090	272095-0000		3	SHAFT	
130	469461-0000		1	ROLL	
TWA 0200S CLEAR (See drawing on page: 1-194)					
020	2763797-0000		1	AIR NOZZLE	
040	2763796-0000		1	AIR NOZZLE	
080	256899-0000		2	SHAFT	
090	265957-0000		3	SHAFT	
130	469461-0000		2	ROLL	
Common Parts					
010	752218-0000		1	ATTACHMENT	
030	751722-0000		1	PIPE-LINE	
050	568581-0000		1	DISTRIBUTOR WING	
060	6161-0000		3	ROLL	
065	28036-0000		4	WASHER	
070	751010-0000		1	GASKET	
100	469458-0000		2	BRACKET	
110	469459-0000		2	BRACKET	
120	469460-0000		1	BRACKET	
125	491143-0000		1	BRACKET	
140	469463-0000		1	SHAFT	
150	469464-0000		1	ROLL	
170	469466-0000		2	PLATE	
190	751024-0000		1	GASKET	
300	312105-0287		4	SCREW, M6S ISO 4017 M4X8 A4 70	
310	312105-0325		4	SCREW, M6S ISO 4017 M5X10 A4 80	
315	312105-0333		5	SCREW, M6S ISO 4017 M5X25 A4 80	
320	312105-0366		6	SCREW, M6S ISO 4017 M6X12 A4 80	
360	312605-0312		1	HEXAGON NUT, M6M M4 A280	
370	312605-0318		3	HEXAGON NUT, M6M M8 A280	
400	315105-0153		6	WASHER PLAIN, 6,4X12X1,5 A4 BRB	

Pos	Part No	UN	Qty	Description	Page No

AIR NOZZLE

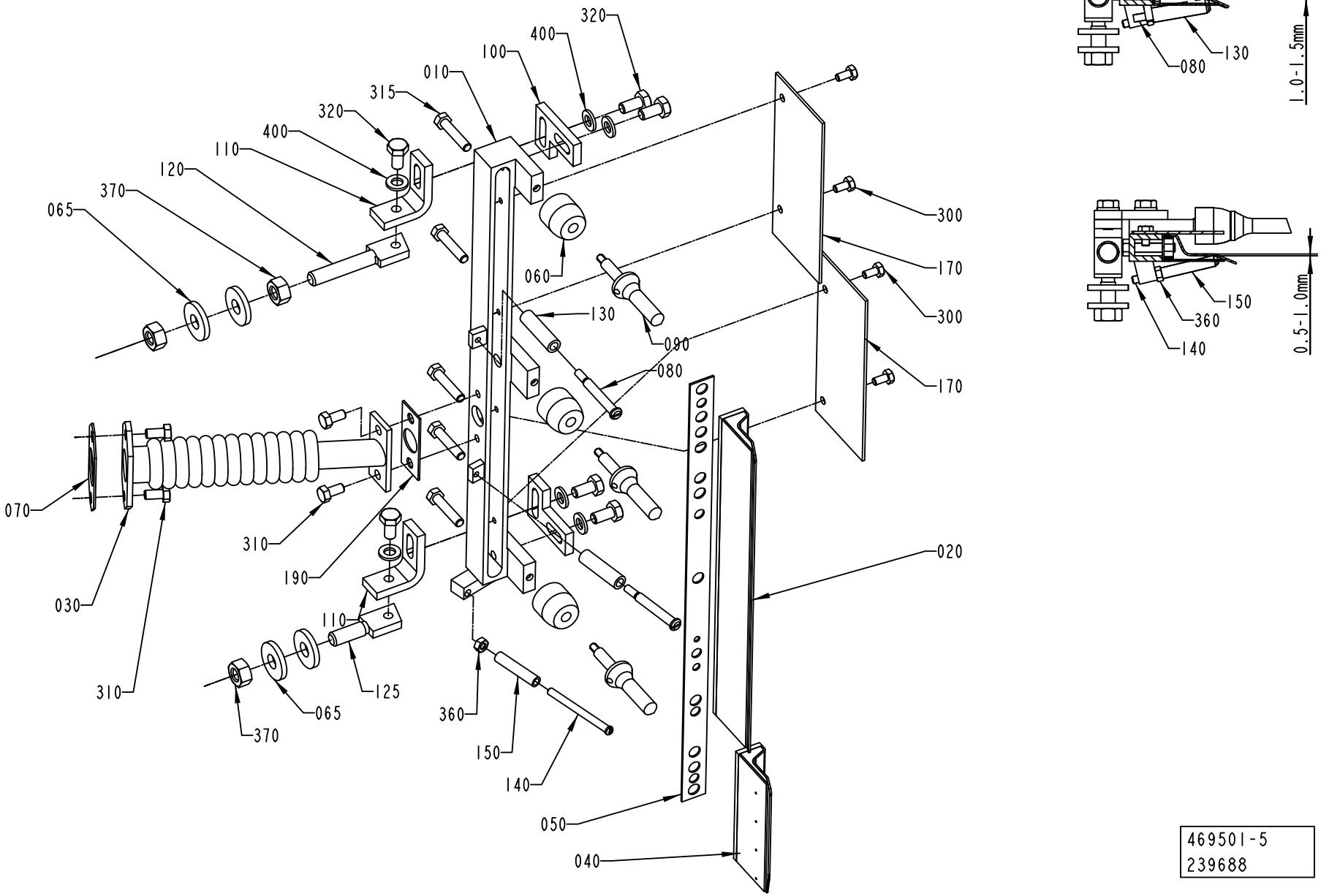

469501-5
239688

ECM: 240681 - 20051209
Group number: 469501-0400
Assembly Drawing: 469501-5_1_AC

This list covers pages from 1-192 to 1-195

Pos	Part No	UN	Qty	Description	Page No
TBA 0100B, TBA 0125S, TBA 0160S, TBA 0200M, TBA 0200S, TBA 0250S, TPA 0250SQ, TWA 0125S, TPA 0200SQ, TWA 0180S, TWA 0200S NOCLEAR (See drawing on page: 1-192)					
020	568577-0000		1	AIR NOZZLE	
040	568578-0000		1	AIR NOZZLE	
080	256899-0000		2	SHAFT	
090	272095-0000		3	SHAFT	
130	469461-0000		2	ROLL	
TBA 0200B, TBA 0200SQ, TBA 0284B, TBA 0250B, TBA 0300S, TBA 0330S, TPA 0330SQ (See drawing on page: 1-192)					
020	568577-0000		1	AIR NOZZLE	
040	568578-0000		1	AIR NOZZLE	
080	256899-0000		1	SHAFT	
090	272095-0000		3	SHAFT	
130	469461-0000		1	ROLL	
TWA 0200S CLEAR (See drawing on page: 1-194)					
020	2763797-0000		1	AIR NOZZLE	
040	2763796-0000		1	AIR NOZZLE	
080	256899-0000		2	SHAFT	
090	265957-0000		3	SHAFT	
130	469461-0000		2	ROLL	
Common Parts					
010	752218-0000		1	ATTACHMENT	
030	751722-0000		1	PIPE-LINE	
050	568581-0000		1	DISTRIBUTOR WING	
060	6161-0000		3	ROLL	
065	28036-0000		4	WASHER	
070	751010-0000		1	GASKET	
100	469458-0000		2	BRACKET	
110	469459-0000		2	BRACKET	
120	469460-0000		1	BRACKET	
125	491143-0000		1	BRACKET	
140	469463-0000		1	SHAFT	
150	469464-0000		1	ROLL	
170	469466-0000		2	PLATE	
190	751024-0000		1	GASKET	
300	312105-0287		4	SCREW, M6S ISO 4017 M4X8 A4 70	
310	312105-0325		4	SCREW, M6S ISO 4017 M5X10 A4 80	
315	312105-0333		5	SCREW, M6S ISO 4017 M5X25 A4 80	
320	312105-0366		6	SCREW, M6S ISO 4017 M6X12 A4 80	
360	312605-0312		1	HEXAGON NUT, M6M M4 A280	
370	312605-0318		3	HEXAGON NUT, M6M M8 A280	
400	315105-0153		6	WASHER PLAIN, 6,4X12X1,5 A4 BRB	

Pos	Part No	UN	Qty	Description	Page No

TUBE FLUSHING DEVICE

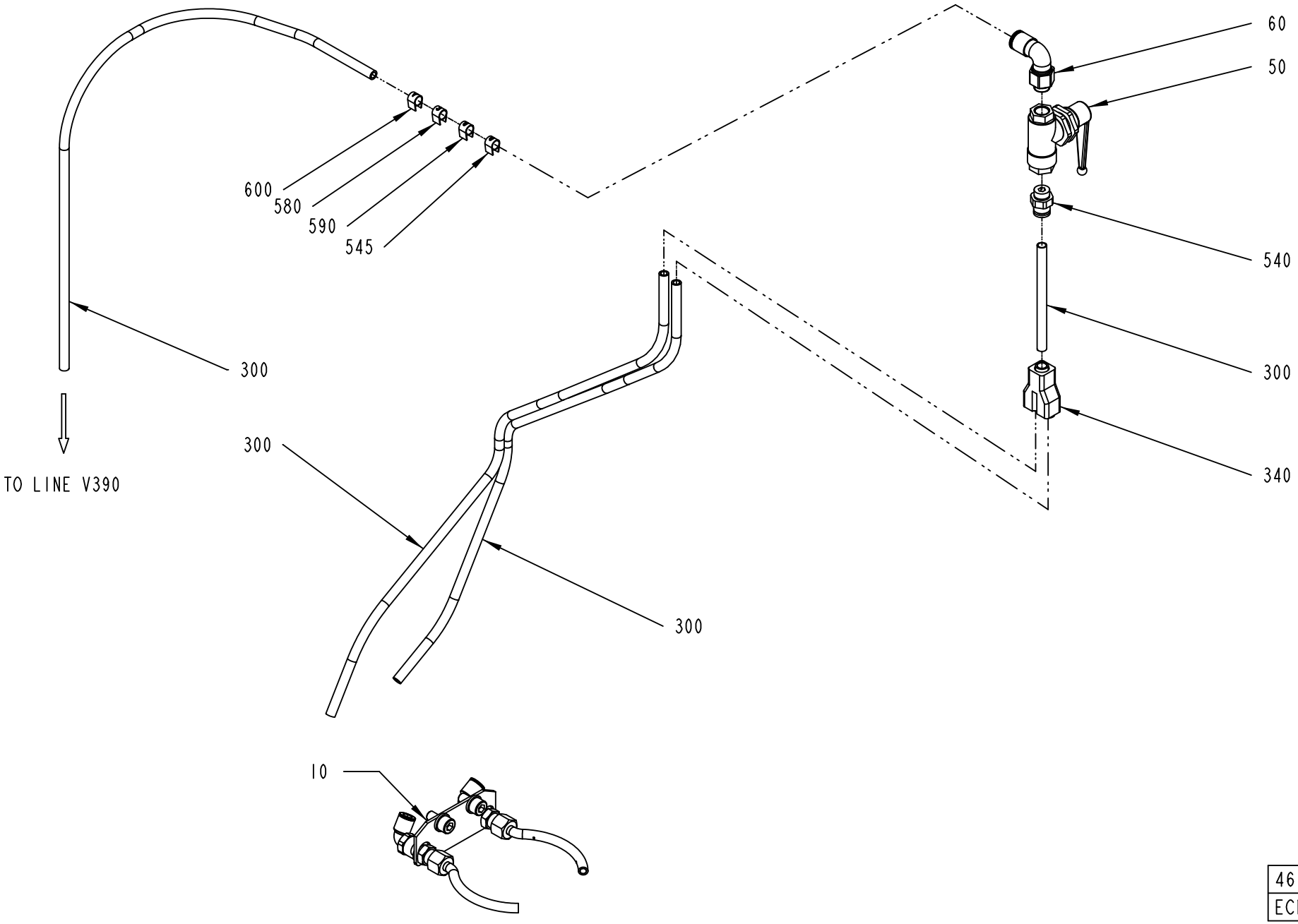

469781-9
ECM 436449

Pos	Part No	UN	Qty	Description	Page No
PT19 TBA 0125S, PT19 TBA 0100B, PT19 TBA 0330S, PT19 TBA 0300S, PT19 TBA 0284B, PT19 TBA 0250S, PT19 TBA 0200M, PT19 TBA 0200B, PT19 TBA 0160S, PT19 TBA 0250B, PT19 TBA 0200S (See drawing on page: 1-200)					
030	589449-0000		1	NOZZLE	
040	342946-0112		1	T-COUPLING,UNION 6/4	
300	90166-0119	MM	1650	TUBE 6 MM PA BLACK	
310	90166-0132	MM	250	TUBE 6 MM PA,TRANSP.	
330	90235-0280		1	THROTTLE CHECK VALVE,M5	
545	359000-0400		2	WIRE MARKING, YELLOW, PA2/4"0"	
550	342980-0113		2	HOSE FITTING, BANJO RING L PO G1/8 6/4	
555	342980-0303		1	BANJO-HOLLOW BOLT COUPL,EXT.THR.01-G1/8	
560	359000-0401		1	WIRE MARKING, YELLOW, PA2/4"1"	
570	359000-0402		1	WIRE MARKING, YELLOW, PA2/4"2"	
610	2640155-0000		1	BRACKET	
620	312105-0328		4	SCREW M6S ISO 4017 M5X14 A4 80	
630	315105-0146		4	WASHER PLAIN, 5,3X10X1 A4 BRB	
PT19 TPA 0330SQ, PT19 TPA 0250SQ, NOPT TBA 0200B, NOPT TBA 0200S, NOPT TBA 0200M, NOPT TBA 0160S, NOPT TBA 0125S, NOPT TBA 0100B, NOPT TBA 0330S, NOPT TBA 0300S, NOPT TWA 0125S, NOPT TWA 0200S, NOPT TBA 0250B, NOPT TBA 0284B, NOPT TBA 0250S, PT19 TPA 0200SQ (See drawing on pages: 1-196, 1-198)					
300	90166-0119	MM	1400	TUBE 6 MM PA BLACK	
545	359000-0400		1	WIRE MARKING, YELLOW, PA2/4"0"	
Common Parts					
010	1558128-0200		1	NOZZLE	**1-203**
050	90459-0486		1	BALL VALVE PANEL MOUNTED G1/8	
060	90459-0487		1	ELBOW PIPE JOINT, EXT.THREAD, D=6MM G1/8	
340	90055-0100		1	Y-CONNECTION, 6-6	
540	342722-0202		1	PIPE COUPLING 1/8" D=6MM	
580	359000-0403		1	WIRE MARKING, YELLOW, PA2/4"3"	
590	359000-0409		1	WIRE MARKING, YELLOW, PA2/4"9"	
600	359000-0771		1	WIRE MARKING, YELLOW, PA2/4"V"	

Pos	Part No	UN	Qty	Description	Page No

TUBE FLUSHING DEVICE

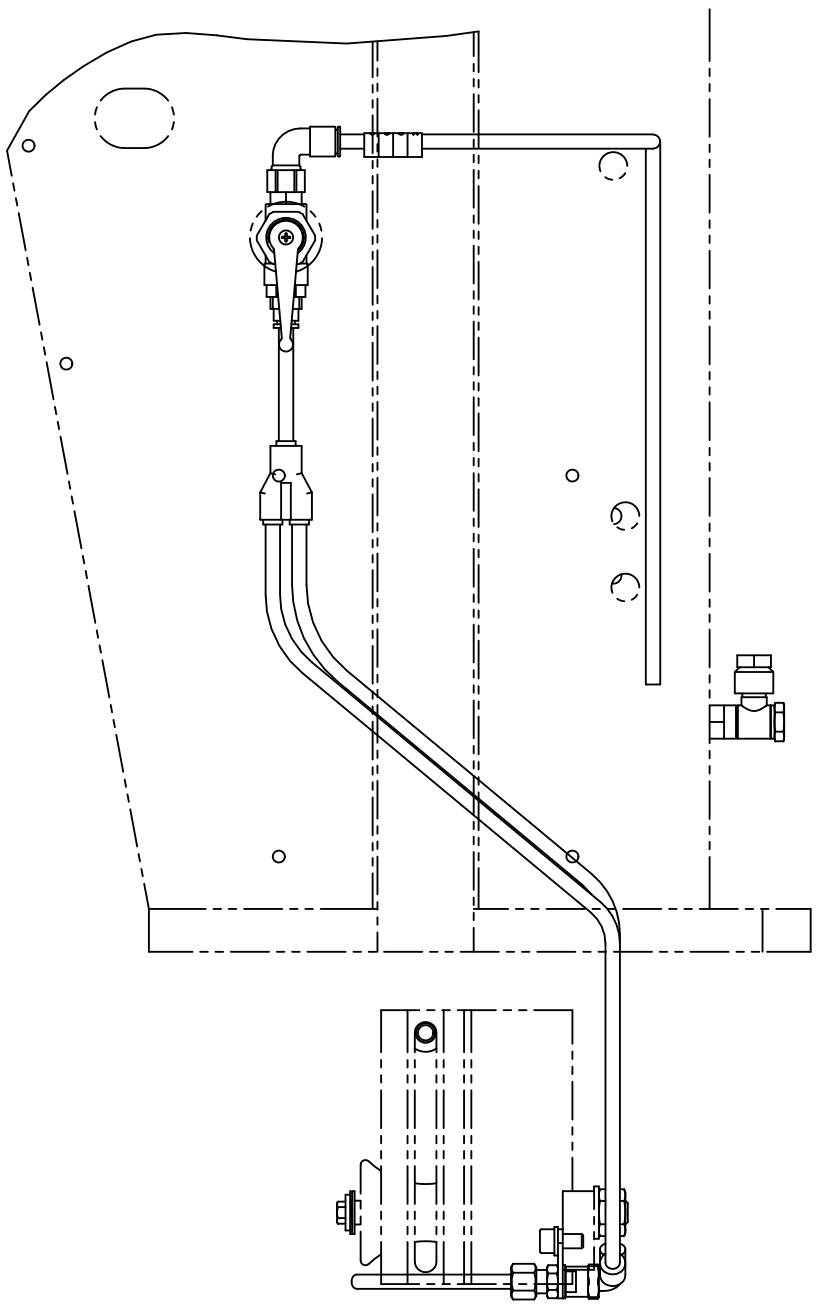

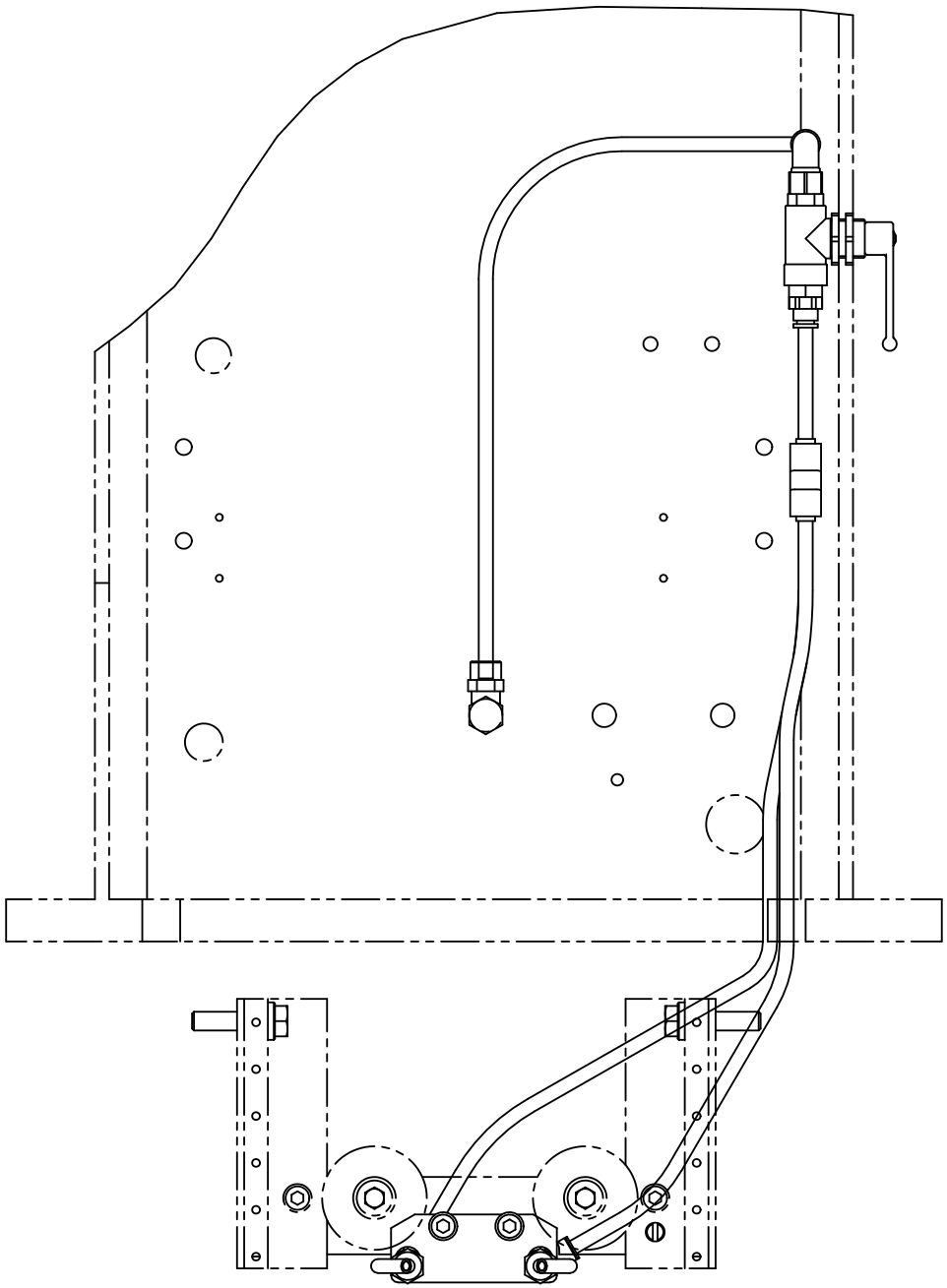

Pos	Part No	UN	Qty	Description	Page No
PT19 TBA 0125S, PT19 TBA 0100B, PT19 TBA 0330S, PT19 TBA 0300S, PT19 TBA 0284B, PT19 TBA 0250S, PT19 TBA 0200M, PT19 TBA 0200B, PT19 TBA 0160S, PT19 TBA 0250B, PT19 TBA 0200S (See drawing on page: 1-200)					
030	589449-0000		1	NOZZLE	
040	342946-0112		1	T-COUPLING,UNION 6/4	
300	90166-0119	MM	1650	TUBE 6 MM PA BLACK	
310	90166-0132	MM	250	TUBE 6 MM PA,TRANSP.	
330	90235-0280		1	THROTTLE CHECK VALVE,M5	
545	359000-0400		2	WIRE MARKING, YELLOW, PA2/4"0"	
550	342980-0113		2	HOSE FITTING, BANJO RING L PO G1/8 6/4	
555	342980-0303		1	BANJO-HOLLOW BOLT COUPL,EXT.THR.01-G1/8	
560	359000-0401		1	WIRE MARKING, YELLOW, PA2/4"1"	
570	359000-0402		1	WIRE MARKING, YELLOW, PA2/4"2"	
610	2640155-0000		1	BRACKET	
620	312105-0328		4	SCREW M6S ISO 4017 M5X14 A4 80	
630	315105-0146		4	WASHER PLAIN, 5,3X10X1 A4 BRB	
PT19 TPA 0330SQ, PT19 TPA 0250SQ, NOPT TBA 0200B, NOPT TBA 0200S, NOPT TBA 0200M, NOPT TBA 0160S, NOPT TBA 0125S, NOPT TBA 0100B, NOPT TBA 0330S, NOPT TBA 0300S, NOPT TWA 0125S, NOPT TWA 0200S, NOPT TBA 0250B, NOPT TBA 0284B, NOPT TBA 0250S, PT19 TPA 0200SQ (See drawing on pages: 1-196, 1-198)					
300	90166-0119	MM	1400	TUBE 6 MM PA BLACK	
545	359000-0400		1	WIRE MARKING, YELLOW, PA2/4"0"	
Common Parts					
010	1558128-0200		1	NOZZLE	**1-203**
050	90459-0486		1	BALL VALVE PANEL MOUNTED G1/8	
060	90459-0487		1	ELBOW PIPE JOINT, EXT.THREAD, D=6MM G1/8	
340	90055-0100		1	Y-CONNECTION, 6-6	
540	342722-0202		1	PIPE COUPLING 1/8" D=6MM	
580	359000-0403		1	WIRE MARKING, YELLOW, PA2/4"3"	
590	359000-0409		1	WIRE MARKING, YELLOW, PA2/4"9"	
600	359000-0771		1	WIRE MARKING, YELLOW, PA2/4"V"	

Pos	Part No	UN	Qty	Description	Page No

TUBE FLUSHING DEVICE

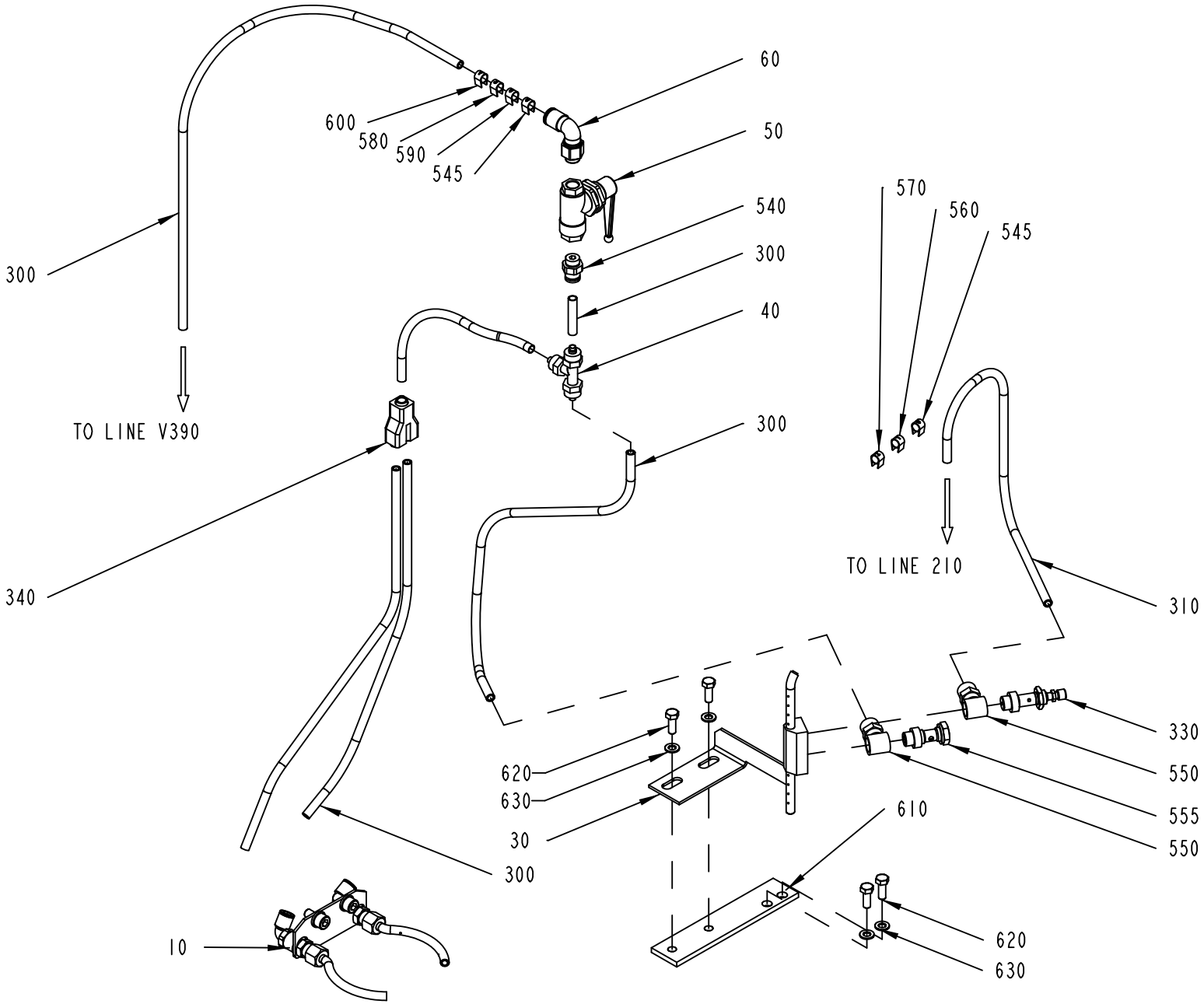

469781-10
ECM 436449

Pos	Part No	UN	Qty	Description	Page No
PT19 TBA 0125S, PT19 TBA 0100B, PT19 TBA 0330S, PT19 TBA 0300S, PT19 TBA 0284B, PT19 TBA 0250S, PT19 TBA 0200M, PT19 TBA 0200B, PT19 TBA 0160S, PT19 TBA 0250B, PT19 TBA 0200S (See drawing on page: 1-200)					
030	589449-0000		1	NOZZLE	
040	342946-0112		1	T-COUPLING,UNION 6/4	
300	90166-0119	MM	1650	TUBE 6 MM PA BLACK	
310	90166-0132	MM	250	TUBE 6 MM PA,TRANSP.	
330	90235-0280		1	THROTTLE CHECK VALVE,M5	
545	359000-0400		2	WIRE MARKING, YELLOW, PA2/4"0"	
550	342980-0113		2	HOSE FITTING, BANJO RING L PO G1/8 6/4	
555	342980-0303		1	BANJO-HOLLOW BOLT COUPL,EXT.THR.01-G1/8	
560	359000-0401		1	WIRE MARKING, YELLOW, PA2/4"1"	
570	359000-0402		1	WIRE MARKING, YELLOW, PA2/4"2"	
610	2640155-0000		1	BRACKET	
620	312105-0328		4	SCREW M6S ISO 4017 M5X14 A4 80	
630	315105-0146		4	WASHER PLAIN, 5,3X10X1 A4 BRB	
PT19 TPA 0330SQ, PT19 TPA 0250SQ, NOPT TBA 0200B, NOPT TBA 0200S, NOPT TBA 0200M, NOPT TBA 0160S, NOPT TBA 0125S, NOPT TBA 0100B, NOPT TBA 0330S, NOPT TBA 0300S, NOPT TWA 0125S, NOPT TWA 0200S, NOPT TBA 0250B, NOPT TBA 0284B, NOPT TBA 0250S, PT19 TPA 0200SQ (See drawing on pages: 1-196, 1-198)					
300	90166-0119	MM	1400	TUBE 6 MM PA BLACK	
545	359000-0400		1	WIRE MARKING, YELLOW, PA2/4"0"	
Common Parts					
010	1558128-0200		1	NOZZLE	**1-203**
050	90459-0486		1	BALL VALVE PANEL MOUNTED G1/8	
060	90459-0487		1	ELBOW PIPE JOINT, EXT.THREAD, D=6MM G1/8	
340	90055-0100		1	Y-CONNECTION, 6-6	
540	342722-0202		1	PIPE COUPLING 1/8" D=6MM	
580	359000-0403		1	WIRE MARKING, YELLOW, PA2/4"3"	
590	359000-0409		1	WIRE MARKING, YELLOW, PA2/4"9"	
600	359000-0771		1	WIRE MARKING, YELLOW, PA2/4"V"	

Pos	Part No	UN	Qty	Description	Page No

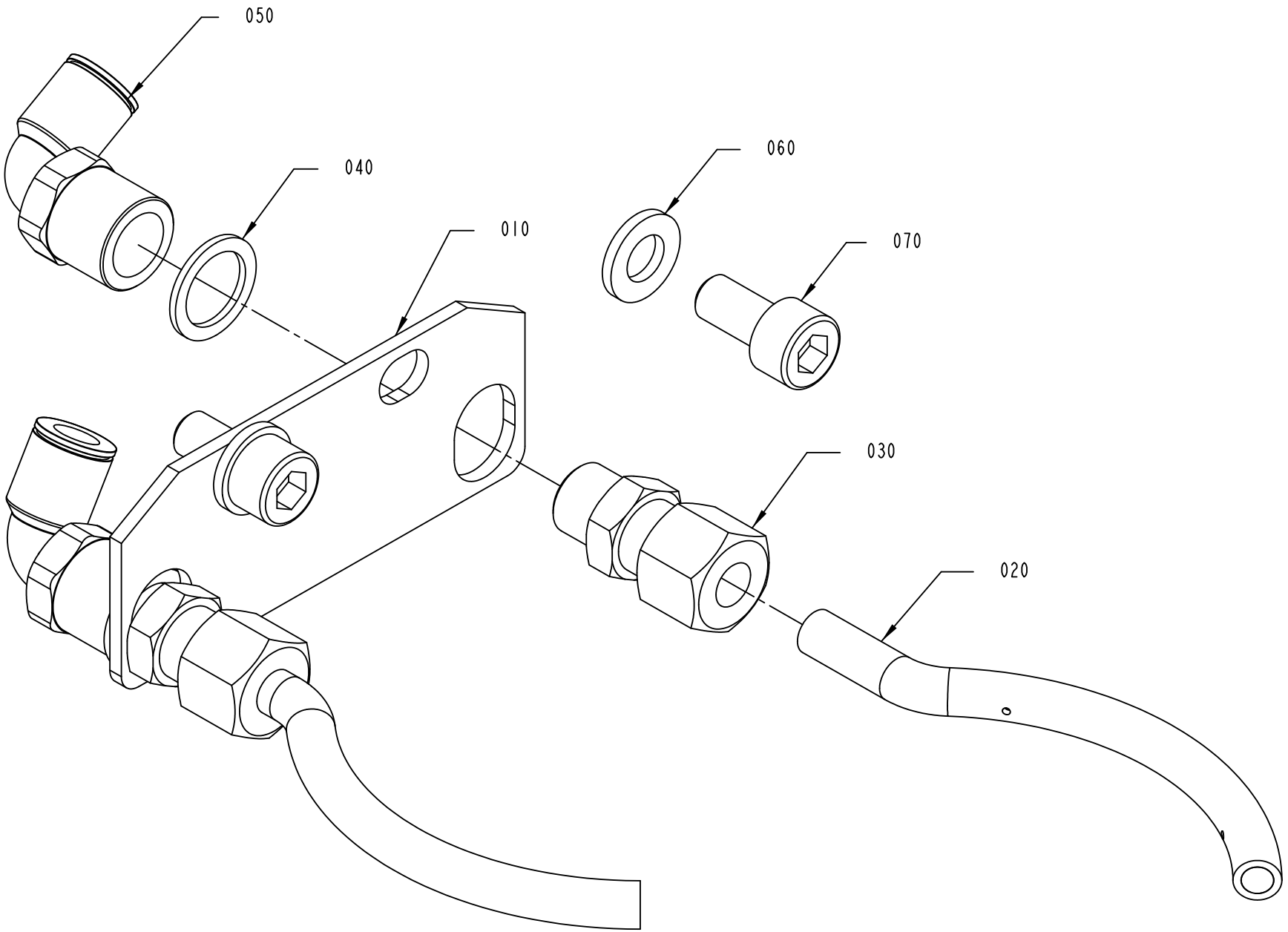

1558128-2
436449

ECM: 438711 - 20100222
Group number: 1558128-0200
Assembly Drawing: 1558128-2_1_AA

Pos	Part No	UN	Qty	Description	Page No
-					
010	3081140-0000		1	PLATE	
020	2500294-0000		2	PIPE	
030	90458-2039		2	CONN. STR., 6-R1/8, EXT. THREAD	
040	315239-0109		2	NYLON WASHER G1/8, 1/8RRP	
050	90458-2040		2	ELBOW PIPE JOINT, INT. THREAD, G1/8" D=6	
060	315105-0153		2	WASHER PLAIN, 6,4X12X1,5 A4 BRB	
070	312115-0366		2	SCREW ISO4762 M6X12 A4 80	
080	90157-0016	ML	1	THREAD LOCKING, LOCTITE 242 50 ML	

Pos	Part No	UN	Qty	Description	Page No

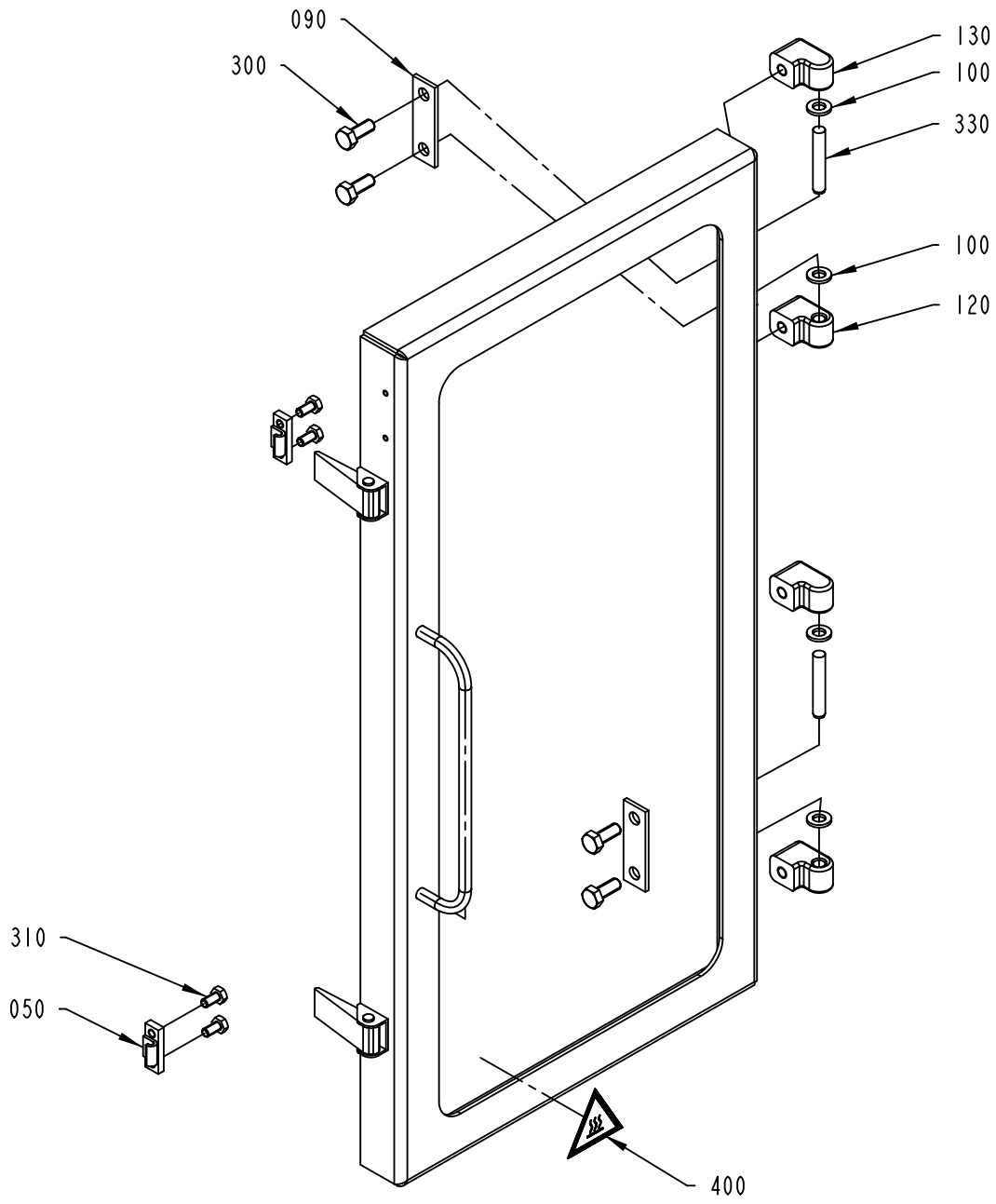

2914827-1
ECM 387112

ECM: 403270 - 20090709
Group number: 2914827-0100
Assembly Drawing: 2914827-1_1_AA

Pos	Part No	UN	Qty	Description	Page No
-					
010	2914833-0000		1	DOOR	
050	271860-0000		2	CLAMP BLOCK	
090	441737-0000		2	WASHER	
100	441739-0000		4	WASHER	
120	441740-0000		2	HINGE FLANGE	
130	441741-0000		2	HINGE FLANGE	
300	312105-0451		4	SCREW, M6S ISO 4017 M8X20 A4 80	
310	312105-0366		4	SCREW, M6S ISO 4017 M6X12 A4 80	
330	311103-0413		2	PARALLEL PIN ISO 2338 8M6X50 A1	
400	359710-0001		1	WARNING SIGN ISO, HOT SURFACE	

Pos	Part No	UN	Qty	Description	Page No

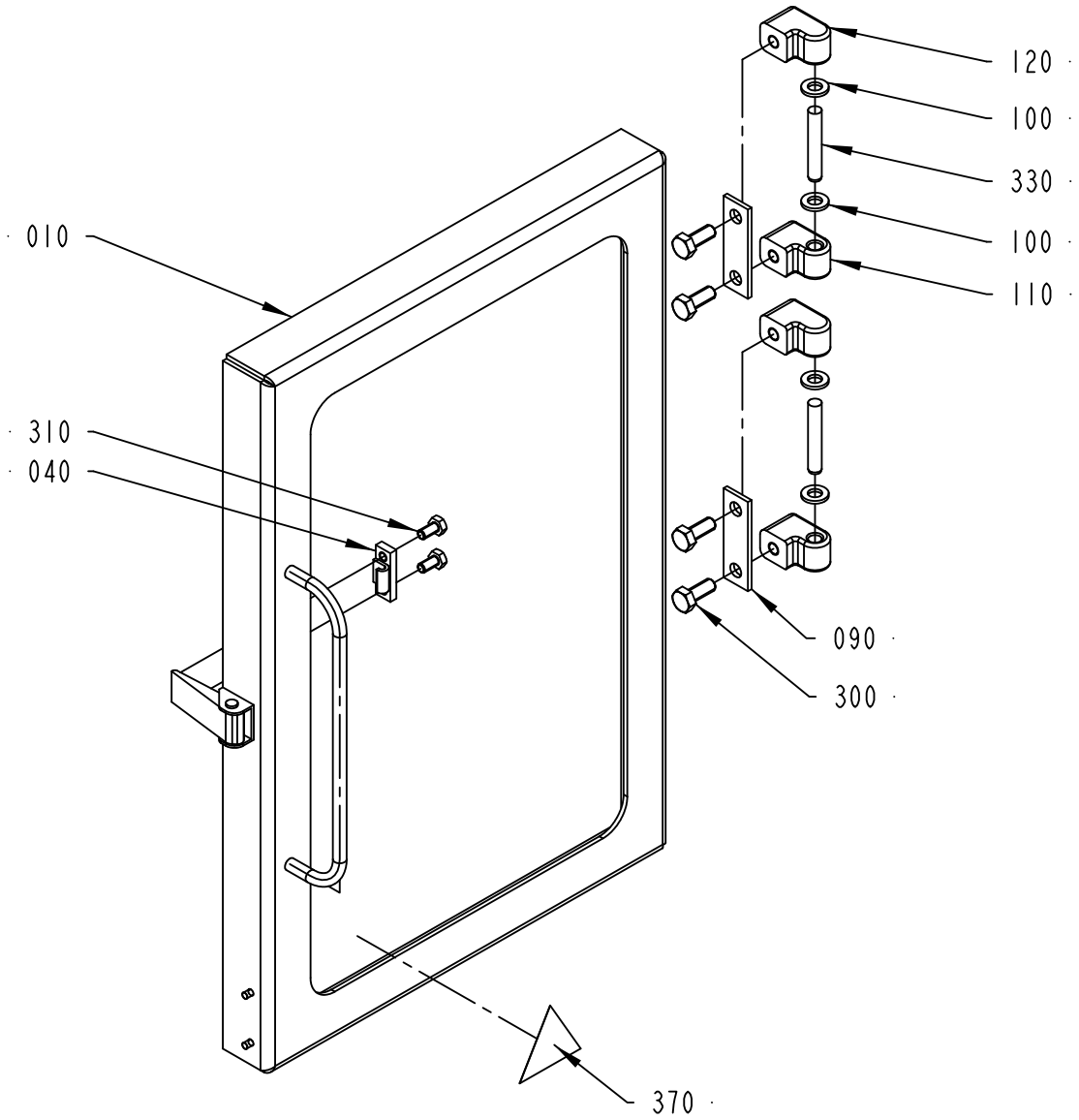

2914826-1
ECM 387112

ECM: 403413 - 20090709
Group number: 2914826-0100
Assembly Drawing: 2914826-1_1_AA

Pos	Part No	UN	Qty	Description	Page No
-					
010	2914832-0000		1	DOOR	
040	271860-0000		1	CLAMP BLOCK	
090	441737-0000		2	WASHER	
100	441739-0000		4	WASHER	
110	441740-0000		2	HINGE FLANGE	
120	441741-0000		2	HINGE FLANGE	
300	312105-0451		4	SCREW, M6S ISO 4017 M8X20 A4 80	
310	312105-0366		2	SCREW, M6S ISO 4017 M6X12 A4 80	
330	311103-0413		2	PARALLEL PIN ISO 2338 8M6X50 A1	
370	359710-0001		1	WARNING SIGN ISO, HOT SURFACE	

Pos	Part No	UN	Qty	Description	Page No

PHOTOCELL UNIT

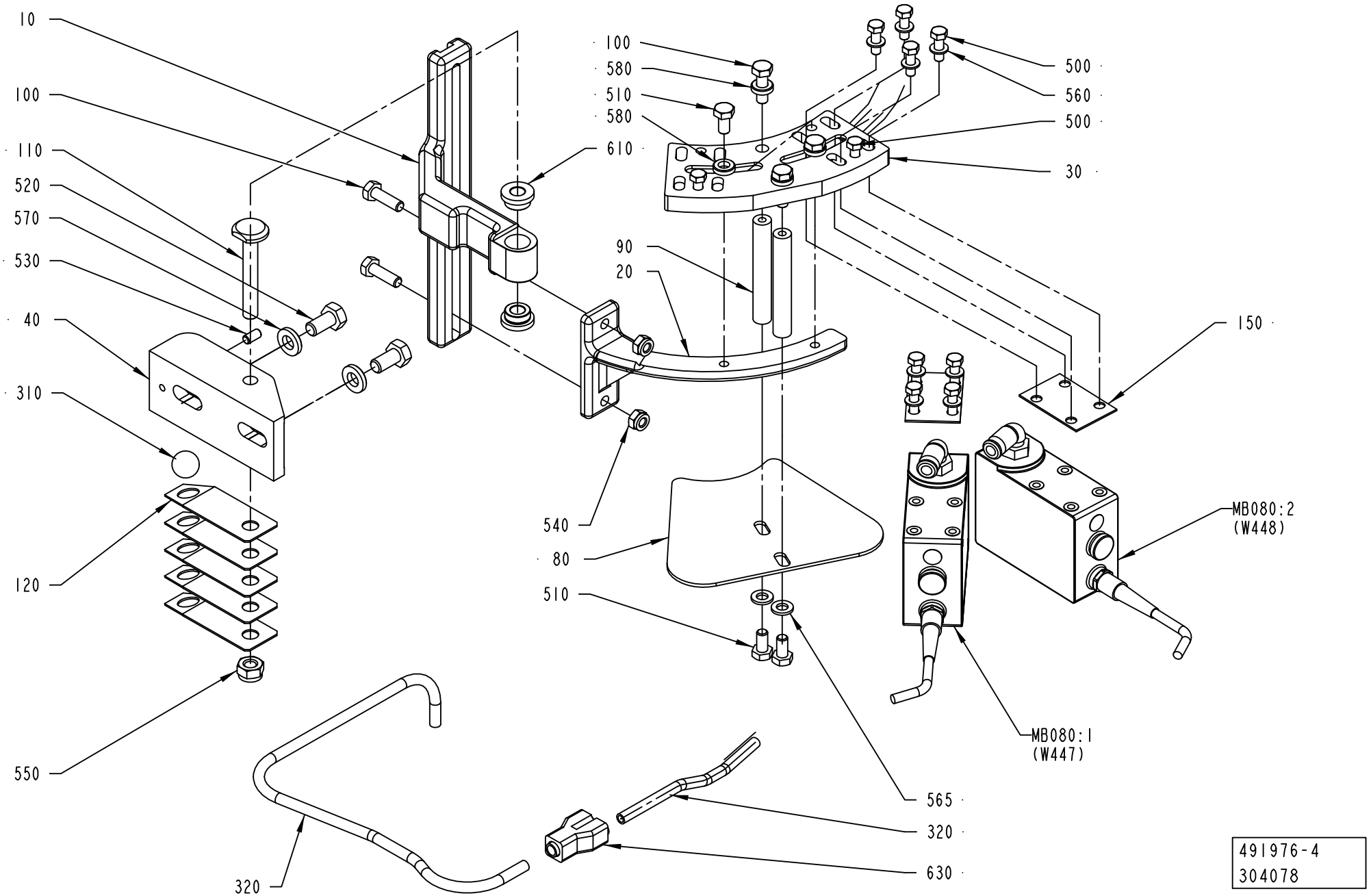

ECM: 326037 - 20071113
Group number: 491976-0400
Assembly Drawing: 491976-4_1_AE

This list covers pages from 1-208 to 1-211

Pos	Part No	UN	Qty	Description	Page No
TBA 0100B, TBA 0125S, TBA 0160S, TBA 0200M, TBA 0200S, TBA 0250S, TPA 0330SQ, TPA 0250SQ, TWA 0125S, TWA 0200S, TPA 0200SQ (See drawing on page: 1-210)					
020	751476-0000		1	CANTILEVER	
030	491880-0000		1	FASTENING PLATE	
060	752554-0000		4	SPACER	
080	1260487-0000		1	PLATE	
090	1260491-0000		2	NUT	
130	2927578-0000		8	WASHER	
170	312109-0335		8	SCREW, M6S ISO 4017 M5X30 A4 80	
500	312105-0329		2	SCREW, M6S ISO 4017 M5X16 A4 80	
TBA 0200B, TBA 0200SQ, TBA 0284B, TBA 0250B, TBA 0300S, TBA 0330S (See drawing on page: 1-208)					
020	751457-0000		1	CANTILEVER	
030	978735-0000		1	FASTENING PLATE	
080	1260486-0000		1	PLATE	
090	1260490-0000		2	NUT	
150	536374-0000		2	WASHER	
500	312105-0329		10	SCREW, M6S ISO 4017 M5X16 A4 80	
560	315105-0146		8	WASHER PLAIN, 5,3X10X1 A4 BRB	
Common Parts					
010	2815756-0000		1	HOLDER	
040	490876-0000		1	BRACKET	
100	312105-0370		4	SCREW, M6S ISO 4017 M6X20 A4 80	
110	457367-0000		1	SHAFT	
120	457368-0000		5	SPRING	
300	90074-0001		1	CABLE CLIPS, D=10 MM	
310	90090-0016		1	STEEL BALL 15MM, RB-15 RS	
320	90166-0132	MM	750	TUBE 6 MM PA,TRANSP.	
490	312105-0287		1	SCREW, M6S ISO 4017 M4X8 A4 70	
510	312105-0366		4	SCREW, M6S ISO 4017 M6X12 A4 80	
520	312105-0449		2	SCREW, M6S ISO 4017 M8X16 A4 80	
530	312318-0325		1	SET SCREW, CUP END ISO4029 M5X10 A4	
540	312812-0316		2	HEXAGON NUT, NY-LOCK M6 A4 80	
550	312812-0318		1	HEXAGON NUT, NY-LOCK M8 A4 80	
565	315105-0153		2	WASHER PLAIN, 6,4X12X1,5 A4 BRB	
570	315115-0165		2	WASHER PLAIN, TBRB 8,4/16 H=3	
580	315115-0153		4	WASHER PLAIN, TBRB 6,4/12 H=3	
610	321101-0143		2	FLANGE BUSHING, 8/14X8-18X3 MM	
630	90055-0100		1	Y-CONNECTION, 6-6	
MB080:2	90458-0601		1	CONTRAST SCANNER, KT15W-P2110S01	
	342732-0102		*1*	*ELBOW PIPE JOINT, EXT.THREAD, D=6MM-G1/8*	
MB080:1	90458-0601		1	CONTRAST SCANNER, KT15W-P2110S01	
	342732-0102		*1*	*ELBOW PIPE JOINT, EXT.THREAD, D=6MM-G1/8*	

Machine Type	Group Description	Used-In	Group Number	Page No

PHOTOCELL UNIT

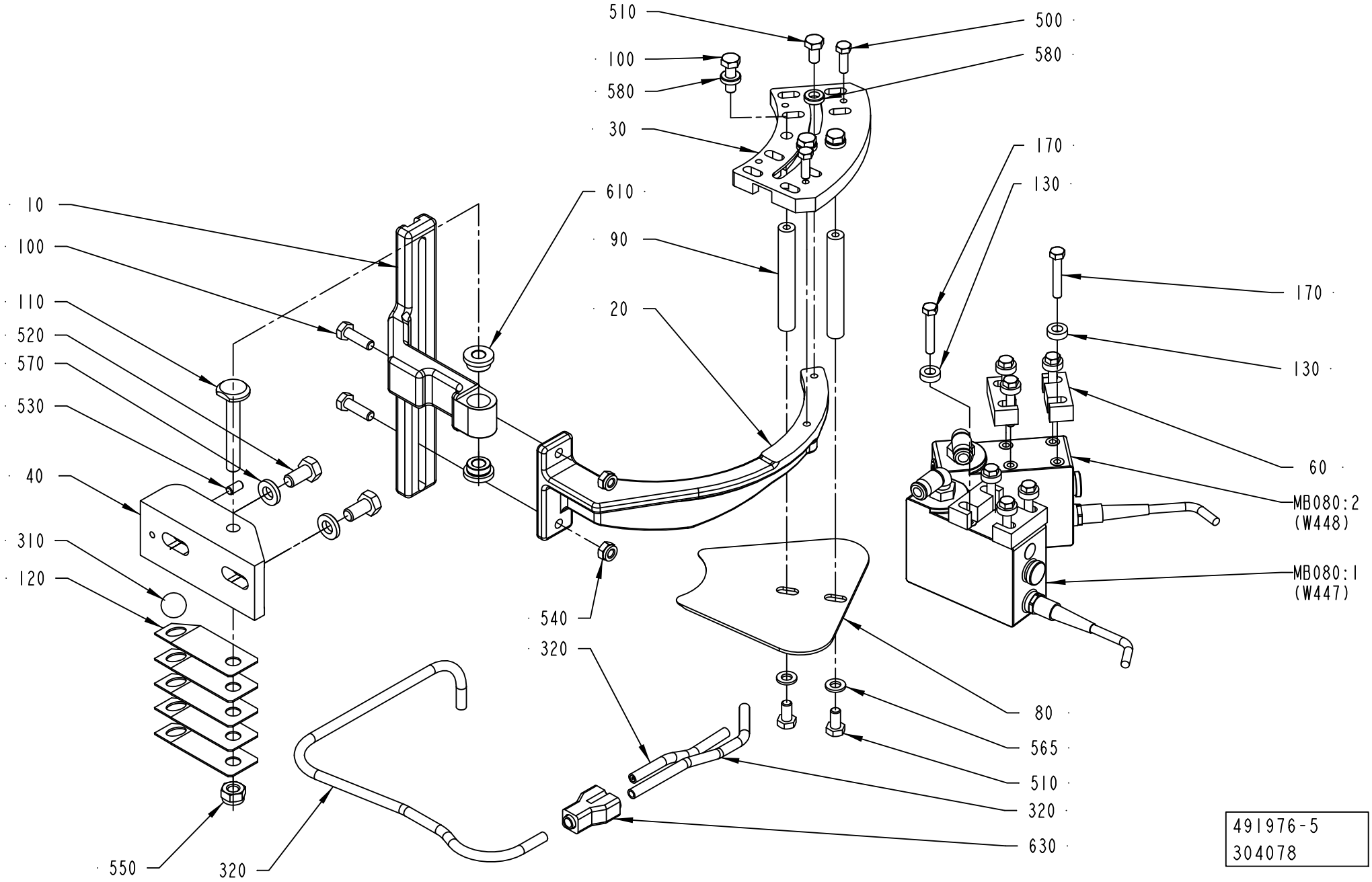

Pos	Part No	UN	Qty	Description	Page No
TBA 0100B, TBA 0125S, TBA 0160S, TBA 0200M, TBA 0200S, TBA 0250S, TPA 0330SQ, TPA 0250SQ, TWA 0125S, TWA 0200S, TPA 0200SQ (See drawing on page: 1-210)					
020	751476-0000		1	CANTILEVER	
030	491880-0000		1	FASTENING PLATE	
060	752554-0000		4	SPACER	
080	1260487-0000		1	PLATE	
090	1260491-0000		2	NUT	
130	2927578-0000		8	WASHER	
170	312109-0335		8	SCREW, M6S ISO 4017 M5X30 A4 80	
500	312105-0329		2	SCREW, M6S ISO 4017 M5X16 A4 80	
TBA 0200B, TBA 0200SQ, TBA 0284B, TBA 0250B, TBA 0300S, TBA 0330S (See drawing on page: 1-208)					
020	751457-0000		1	CANTILEVER	
030	978735-0000		1	FASTENING PLATE	
080	1260486-0000		1	PLATE	
090	1260490-0000		2	NUT	
150	536374-0000		2	WASHER	
500	312105-0329		10	SCREW, M6S ISO 4017 M5X16 A4 80	
560	315105-0146		8	WASHER PLAIN, 5,3X10X1 A4 BRB	
Common Parts					
010	2815756-0000		1	HOLDER	
040	490876-0000		1	BRACKET	
100	312105-0370		4	SCREW, M6S ISO 4017 M6X20 A4 80	
110	457367-0000		1	SHAFT	
120	457368-0000		5	SPRING	
300	90074-0001		1	CABLE CLIPS, D=10 MM	
310	90090-0016		1	STEEL BALL 15MM, RB-15 RS	
320	90166-0132	MM	750	TUBE 6 MM PA,TRANSP.	
490	312105-0287		1	SCREW, M6S ISO 4017 M4X8 A4 70	
510	312105-0366		4	SCREW, M6S ISO 4017 M6X12 A4 80	
520	312105-0449		2	SCREW, M6S ISO 4017 M8X16 A4 80	
530	312318-0325		1	SET SCREW, CUP END ISO4029 M5X10 A4	
540	312812-0316		2	HEXAGON NUT, NY-LOCK M6 A4 80	
550	312812-0318		1	HEXAGON NUT, NY-LOCK M8 A4 80	
565	315105-0153		2	WASHER PLAIN, 6,4X12X1,5 A4 BRB	
570	315115-0165		2	WASHER PLAIN, TBRB 8,4/16 H=3	
580	315115-0153		4	WASHER PLAIN, TBRB 6,4/12 H=3	
610	321101-0143		2	FLANGE BUSHING, 8/14X8-18X3 MM	
630	90055-0100		1	Y-CONNECTION, 6-6	
MB080:2	90458-0601		1	CONTRAST SCANNER, KT15W-P2110S01	
	342732-0102		*1*	*ELBOW PIPE JOINT, EXT.THREAD, D=6MM-G1/8*	
MB080:1	90458-0601		1	CONTRAST SCANNER, KT15W-P2110S01	
	342732-0102		*1*	*ELBOW PIPE JOINT, EXT.THREAD, D=6MM-G1/8*	

Pos	Part No	UN	Qty	Description	Page No

Machine Type	Group Description	Used-In	Group Number	Page No

PROTECTIVE COVER

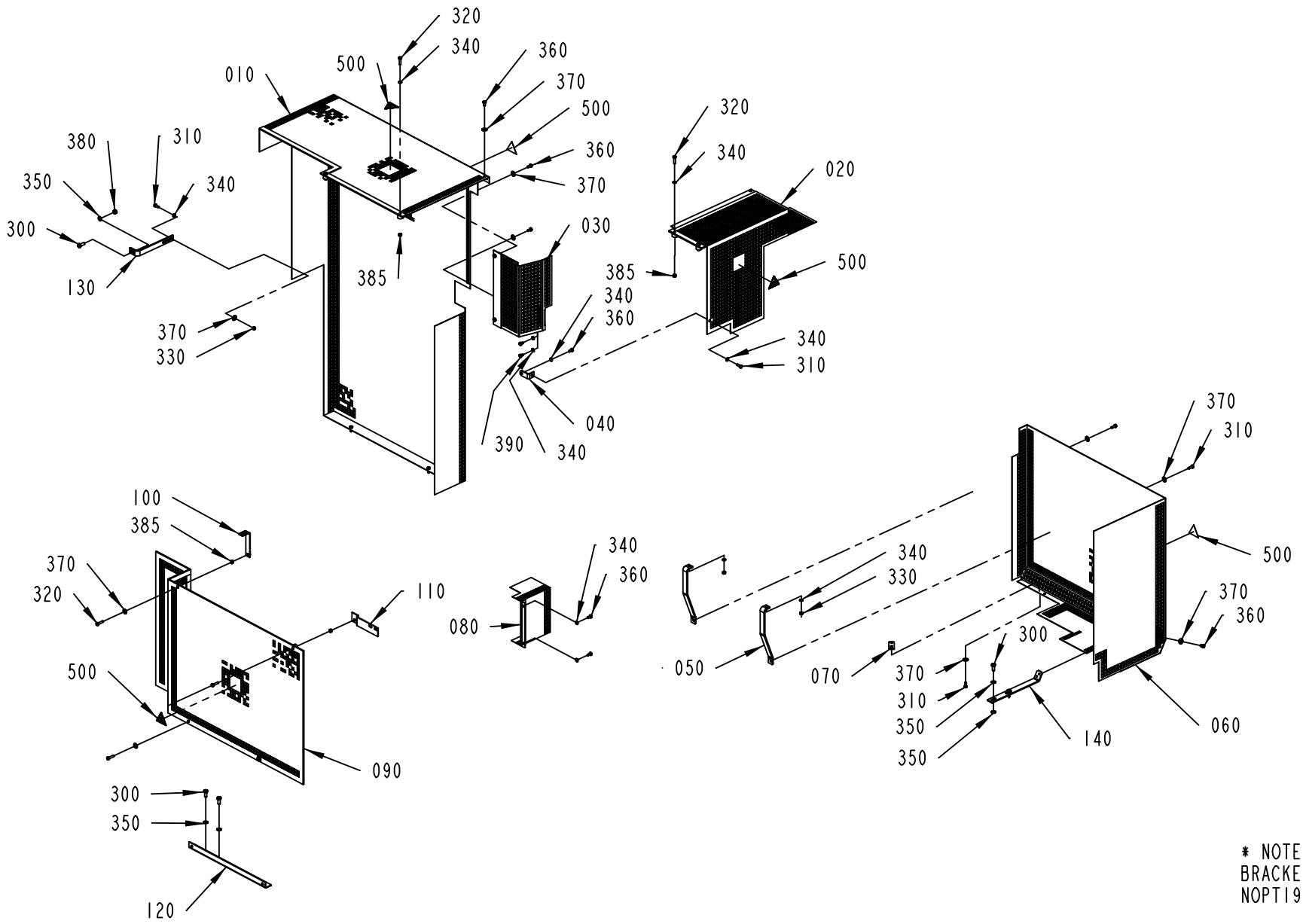

* NOTE:
BRACKET POS. 130 VALID FOR
NOPT19 VERSION ONLY

579625-5
428046

ECM: 430640 - 20091221
Group number: 579625-0400
Assembly Drawing: 579625-5_1_AB

This list covers pages from 1-212 to 1-217

Pos	Part No	UN	Qty	Description	Page No
HVA					
010	2927584-0000		1	TOUCH GUARD	
NOHVA					
010	2565515-0000		1	TOUCH GUARD	
020	2781214-0000		1	TOUCH GUARD	
030	2781215-0000		1	TOUCH GUARD	
Common Parts					
040	579633-0000		1	BRACKET	
050	2914819-0000		2	BRACKET	
060	2914846-0000		1	TOUCH GUARD	
070	2611008-0000		1	BRACKET	
080	579629-0000		1	TOUCH GUARD	
090	2914845-0000		1	TOUCH GUARD	
100	2914849-0000		1	BRACKET	
110	2914847-0000		1	BRACKET	
120	2914848-0000		1	BRACKET	
130	579630-0000		1	BRACKET	
140	2914850-0000		1	BRACKET	
300	312105-0451		5	SCREW, M6S ISO 4017 M8X20 A4 80	
310	312105-0368		5	SCREW, M6S ISO 4017 M6X16 A4 80	
320	312105-0372		8	SCREW, M6S ISO 4017 M6X25 A4 80	
330	312605-0316		5	HEXAGON NUT, M6M M6 A280	
340	315105-0153		13	WASHER PLAIN, 6,4X12X1,5 A4 BRB	
350	315105-0165		7	WASHER PLAIN, 8,4X16X1,6 A4 BRB	
360	312105-0366		7	SCREW, M6S ISO 4017 M6X12 A4 80	
370	90005-0060		12	WASHER PLAIN, RBS 6,4/M6)/18,H=1,5	
380	312605-0318		1	HEXAGON NUT, M6M M8 A280	
385	312812-0316		8	HEXAGON NUT, NY-LOCK M6 A4 80	
390	312105-0364		2	SCREW, M6S ISO 4017 M6X10 A4 80	
500	359710-0001		5	WARNING SIGN ISO, HOT SURFACE	

Pos	Part No	UN	Qty	Description	Page No

PROTECTIVE COVER

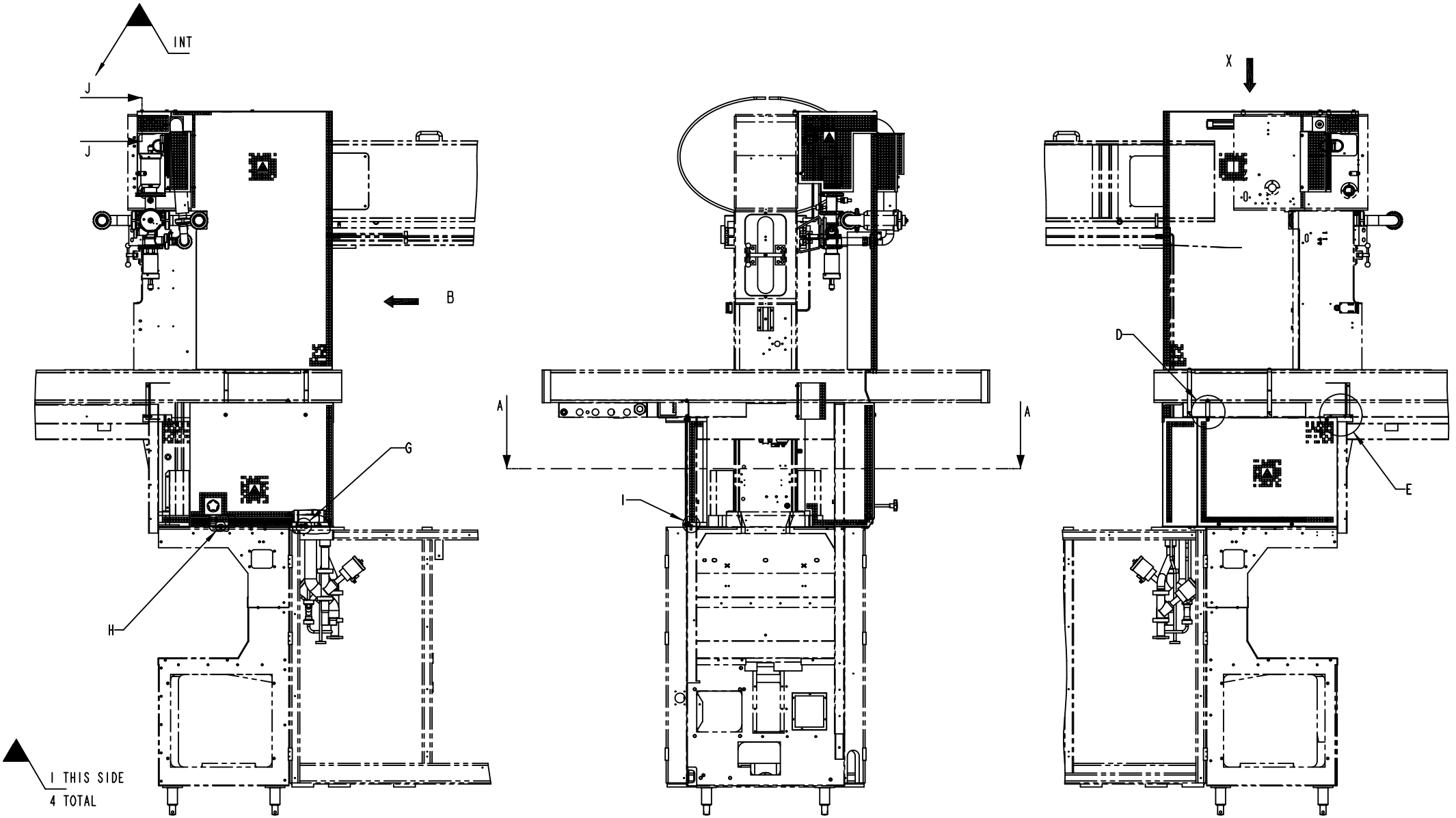

ECM: 430640 - 20091221
Group number: 579625-0400
Assembly Drawing: 579625-5_2_AB

This list covers pages from 1-212 to 1-217

Pos	Part No	UN	Qty	Description	Page No
HVA					
010	2927584-0000		1	TOUCH GUARD	
NOHVA					
010	2565515-0000		1	TOUCH GUARD	
020	2781214-0000		1	TOUCH GUARD	
030	2781215-0000		1	TOUCH GUARD	
Common Parts					
040	579633-0000		1	BRACKET	
050	2914819-0000		2	BRACKET	
060	2914846-0000		1	TOUCH GUARD	
070	2611008-0000		1	BRACKET	
080	579629-0000		1	TOUCH GUARD	
090	2914845-0000		1	TOUCH GUARD	
100	2914849-0000		1	BRACKET	
110	2914847-0000		1	BRACKET	
120	2914848-0000		1	BRACKET	
130	579630-0000		1	BRACKET	
140	2914850-0000		1	BRACKET	
300	312105-0451		5	SCREW, M6S ISO 4017 M8X20 A4 80	
310	312105-0368		5	SCREW, M6S ISO 4017 M6X16 A4 80	
320	312105-0372		8	SCREW, M6S ISO 4017 M6X25 A4 80	
330	312605-0316		5	HEXAGON NUT, M6M M6 A280	
340	315105-0153		13	WASHER PLAIN, 6,4X12X1,5 A4 BRB	
350	315105-0165		7	WASHER PLAIN, 8,4X16X1,6 A4 BRB	
360	312105-0366		7	SCREW, M6S ISO 4017 M6X12 A4 80	
370	90005-0060		12	WASHER PLAIN, RBS 6,4/M6)/18,H=1,5	
380	312605-0318		1	HEXAGON NUT, M6M M8 A280	
385	312812-0316		8	HEXAGON NUT, NY-LOCK M6 A4 80	
390	312105-0364		2	SCREW, M6S ISO 4017 M6X10 A4 80	
500	359710-0001		5	WARNING SIGN ISO, HOT SURFACE	

Pos	Part No	UN	Qty	Description	Page No

VIEW B

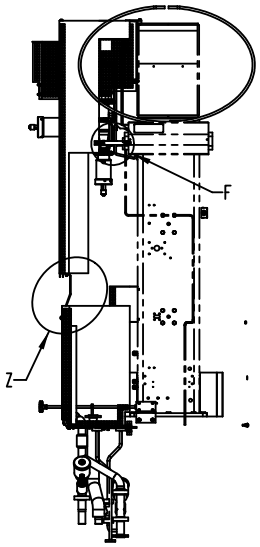

DETAIL H

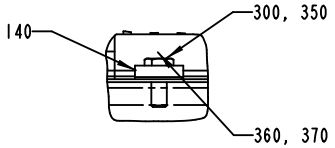

DETAIL G

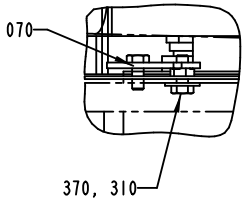

A-A

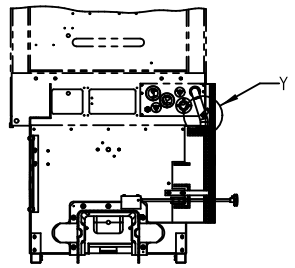

DETAIL F

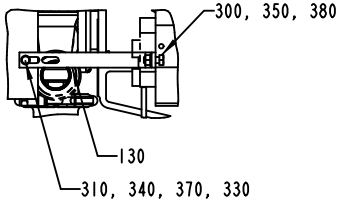

DETAIL Y

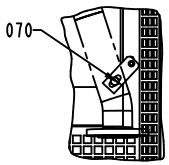

VIEW X

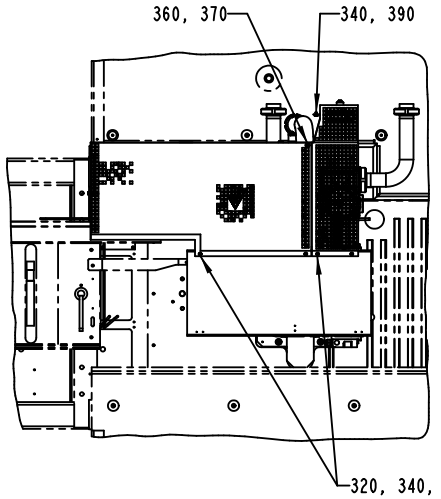

DETAIL D

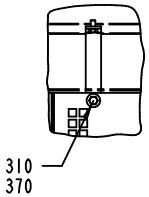

DETAIL E

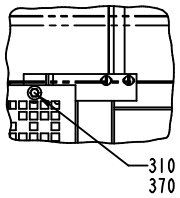

DETAIL I

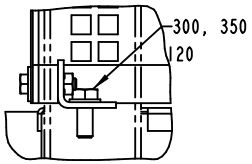

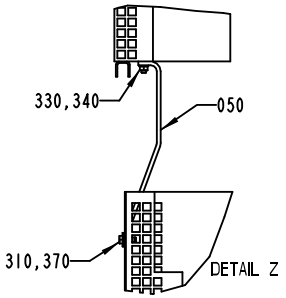

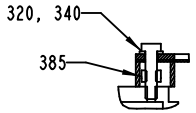

VIEW J-J

579625-5
387112

ECM: 430640 - 20091221
Group number: 579625-0400
Assembly Drawing: 579625-5_3_AB

This list covers pages from 1-212 to 1-217

Pos	Part No	UN	Qty	Description	Page No
HVA					
010	2927584-0000		1	TOUCH GUARD	
NOHVA					
010	2565515-0000		1	TOUCH GUARD	
020	2781214-0000		1	TOUCH GUARD	
030	2781215-0000		1	TOUCH GUARD	
Common Parts					
040	579633-0000		1	BRACKET	
050	2914819-0000		2	BRACKET	
060	2914846-0000		1	TOUCH GUARD	
070	2611008-0000		1	BRACKET	
080	579629-0000		1	TOUCH GUARD	
090	2914845-0000		1	TOUCH GUARD	
100	2914849-0000		1	BRACKET	
110	2914847-0000		1	BRACKET	
120	2914848-0000		1	BRACKET	
130	579630-0000		1	BRACKET	
140	2914850-0000		1	BRACKET	
300	312105-0451		5	SCREW, M6S ISO 4017 M8X20 A4 80	
310	312105-0368		5	SCREW, M6S ISO 4017 M6X16 A4 80	
320	312105-0372		8	SCREW, M6S ISO 4017 M6X25 A4 80	
330	312605-0316		5	HEXAGON NUT, M6M M6 A280	
340	315105-0153		13	WASHER PLAIN, 6,4X12X1,5 A4 BRB	
350	315105-0165		7	WASHER PLAIN, 8,4X16X1,6 A4 BRB	
360	312105-0366		7	SCREW, M6S ISO 4017 M6X12 A4 80	
370	90005-0060		12	WASHER PLAIN, RBS 6,4/M6)/18,H=1,5	
380	312605-0318		1	HEXAGON NUT, M6M M8 A280	
385	312812-0316		8	HEXAGON NUT, NY-LOCK M6 A4 80	
390	312105-0364		2	SCREW, M6S ISO 4017 M6X10 A4 80	
500	359710-0001		5	WARNING SIGN ISO, HOT SURFACE	

Pos	Part No	UN	Qty	Description	Page No

PENDULUM

Drawing file: 1539920-2_1_AA.hpgl

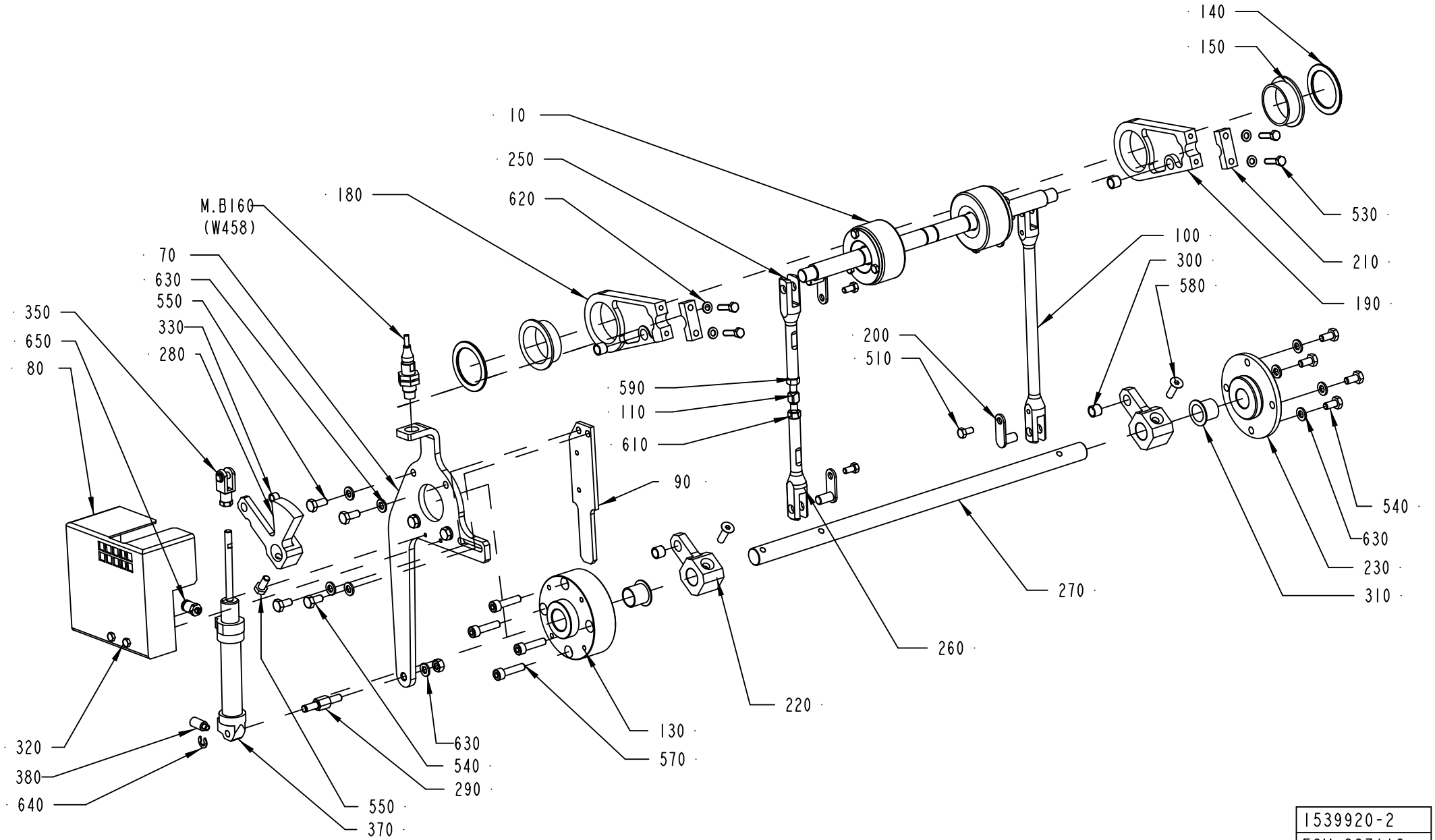

1539920-2
ECM 387112

ECM: 403271 - 20090709
Group number: 1539920-0300
Assembly Drawing: 1539920-2_1_AA

Pos	Part No	UN	Qty	Description	Page No
-					
010	1548010-0200		1	PENDULUM ROLLER	**1-221**
070	1524829-0000		1	PLATE	
080	2510532-0000		1	PROTECTION	
090	2914828-0000		1	BRACKET	
100	1548003-0000		1	LINK	
110	1548006-0000		1	ADJUSTING SCREW	
130	1548059-0000		1	AXLE SUPPORT	
140	1548141-0000		2	WASHER	
150	1548142-0000		2	BUSHING	
180	1548147-0000		1	PLATE	
190	1548148-0000		1	PLATE	
200	1548152-0000		4	PIN	
210	1548225-0000		2	CLAMP	
220	1548276-0000		2	LEVER	
230	1548277-0000		1	FLANGE	
250	1548004-0001		1	LINK	
260	1548004-0002		1	LINK	
270	1548005-0000		1	SHAFT	
280	1548532-0000		1	LEVER	
290	1524830-0000		1	SHAFT	
300	90458-0824		4	BUSHING, IGLIDUR Z 8X10X8	
310	90458-0825		2	FLANGE BUSHING, IGLIDUR Z 16X18X17	
320	312105-0301		2	SCREW, M6S ISO 4017 M4X35 A4 70	
330	90458-1790		1	BUSHING, IGLIDUR Z 6X8X6	
350	90239-0489		1	ROD END, CLEVIS WITH AXLE M6X1,25	
360	90296-0091		1	LUBRICATION GREASE, FLUOLUB 210	
370	90239-0817		1	DOUBLE ACTING, MINI-ISO, CYL.16-50	
380	90328-0020		1	SILENCER, U-M5	
510	312105-0325		4	SCREW, M6S ISO 4017 M5X10 A4 80	
530	312105-0331		4	SCREW, M6S ISO 4017 M5X20 A4 80	
540	312105-0366		6	SCREW, M6S ISO 4017 M6X12 A4 80	
550	312105-0367		5	SCREW, M6S ISO 4017 M6X14 A4 80	
570	312115-0372		4	SCREW ISO4762 M6X25 A4 80	
580	312155-0370		2	SCREW DIN 7991 MF6S M6X20 A4 70	
590	312605-0316		2	HEXAGON NUT, M6M M6 A280	
610	312902-0316		1	NUT HEX. LEFT THREAD, M6 A280	
620	315105-0146		4	WASHER PLAIN, 5,3X10X1 A4 BRB	
630	315105-0153		11	WASHER PLAIN, 6,4X12X1,5 A4 BRB	
640	315755-0107		1	RETAINING RING SHAFT DIN 6799 5 SS	
650	342722-0197		2	STRAIGHT COUPLING	
M.B160	90600-0459		1	INDUCTIVE SWITCH, E2A-M12KN05-WP-B1 5M	

Machine Type	Group Description	Used-In	Group Number	Page No

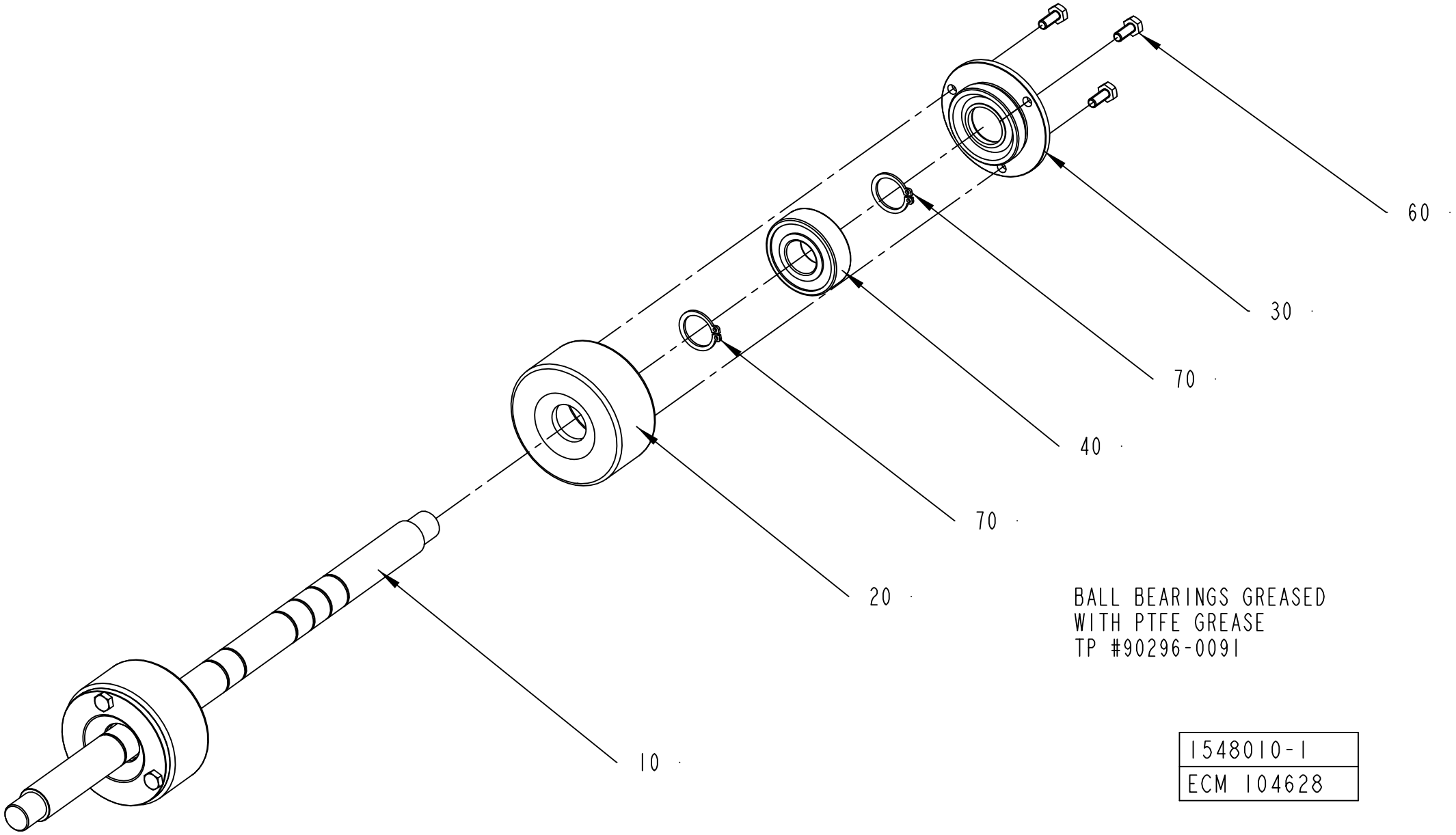
60
30
70
40
70
20
10
BALL BEARINGS GREASED
WITH PTFE GREASE
TP #90296-0091
1548010-1
ECM 104628

ECM: 178347 - 20040910
Group number: 1548010-0200
Assembly Drawing: 1548010-1_1_AB

Pos	Part No	UN	Qty	Description	Page No
-					
010	1539996-0000		1	SHAFT	
020	1548052-0000		2	ROLLER	
030	1548053-0000		2	COVER	
040	90458-1704		2	BALL BEARING 15/35X11	
050	90296-0091		1	LUBRICATION GREASE, FLUOLUB 210	
060	312105-0289		6	SCREW, M6S ISO 4017 M4X10 A4 70	
070	315751-0112		4	RETAINING RING FOR SHAFT DIN 471 15 SS	

Pos	Part No	UN	Qty	Description	Page No

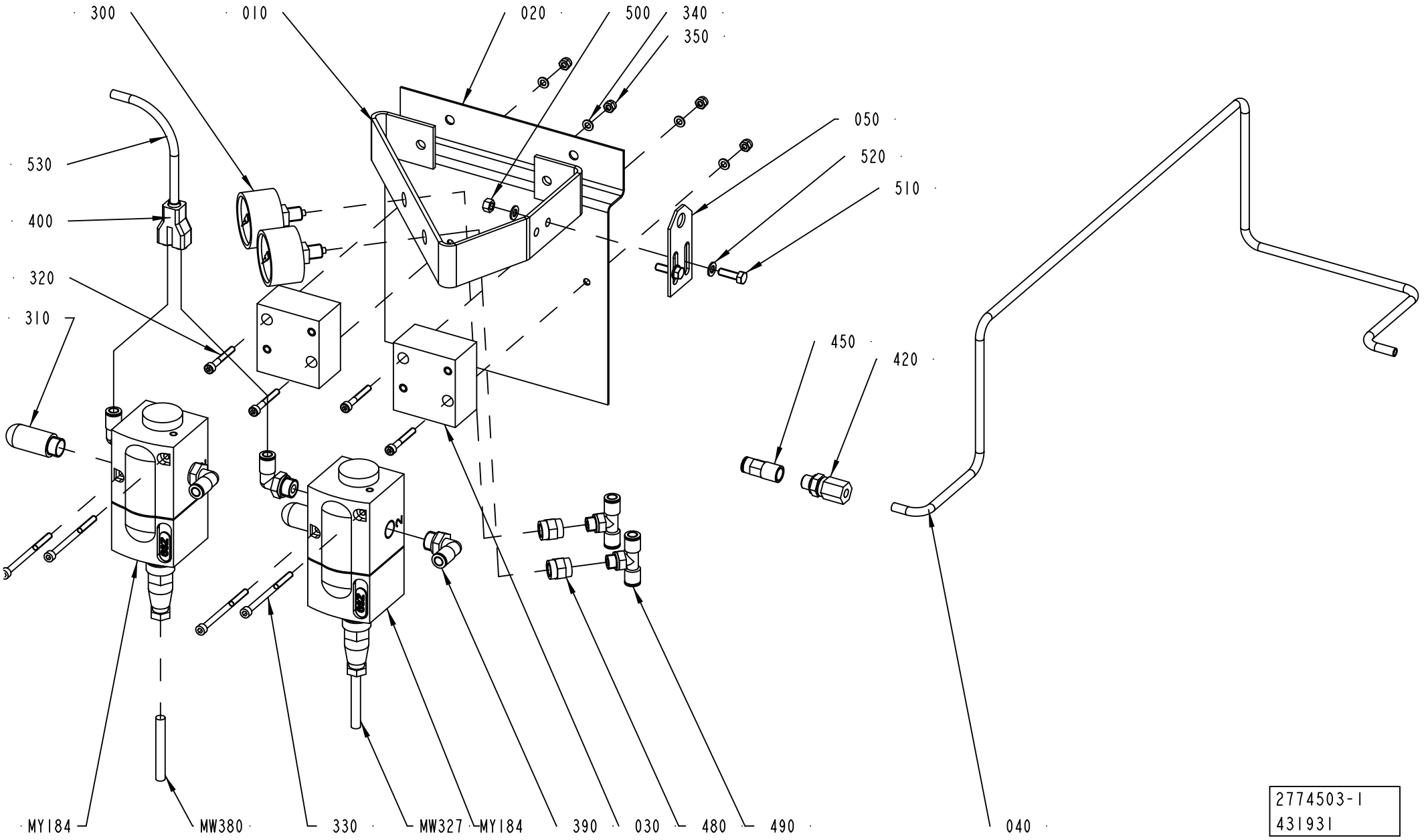
300
010
020
500
340
350
050
520
510
530
400
320
310
450
420
MY184
MW380
330
MW327
MY184
390
030
480
490
040
2774503-1
431931

ECM: 431936 - 20091222
Group number: 2774503-0100
Assembly Drawing: 2774503-1_1_AE

Pos	Part No	UN	Qty	Description	Page No
-					
010	2500207-0000		1	BRACKET	
020	2774504-0000		1	BRACKET	
030	1538758-0000		2	SPACER	
040	2788118-0000		1	PIPE	
050	2832789-0000		1	PLATE	
300	90043-0069		2	PRESSURE GAUGE 0-4BAR WIEGAND 2040	
310	90328-0026		2	SILENCER, G1/4"	
320	312115-0299		4	SCREW ISO4762 M4X30 A4 80	
330	90287-0314		4	SCREW MC6S M4X60 A470	
340	315105-0136		4	WASHER PLAIN, 4,3X9X0,8 A4 BRB	
350	312812-0312		4	HEXAGON NUT, NY-LOCK M4 A4 80	
390	350002-0008		4	PUSH-IN L-FITTING QSL-F-G1/4-6	
400	90055-0100		1	Y-CONNECTION, 6-6	
420	90030-0089		1	STRAIGHT CONNECTION	
450	350008-0003		1	PUSH-IN FITTING QSF-F-G1/8-6	
470	315105-0146		2	WASHER PLAIN, 5,3X10X1 A4 BRB	
480	342707-0109		2	SLEEVE, INT. THREAD, NO. 2543-1/8	
490	350007-0006		2	PUSH-IN T-FITTING QST-F-G1/8-6	
500	312607-0314		2	HEXAGON NUT, EN 24032 M6M M5 A480	
510	312105-0329		2	SCREW, M6S ISO 4017 M5X16 A4 80	
520	315105-0146		2	WASHER PLAIN, 5,3X10X1 A4 BRB	
530	315400-0001	MM	7100	TUBE PUN-H-6X1-BL	
MY184	90458-1092		1	PROPORTIONAL VALVE, 0-10V/0-6 BAR	
	90458-1262		*1*	*CONNECTOR, FOR PROP.VALVE, 131028001*	
MY107	90458-1092		1	PROPORTIONAL VALVE, 0-10V/0-6 BAR	
	90458-1262		*1*	*CONNECTOR, FOR PROP.VALVE, 131028001*	
MW380	90220-0091	MM	5500	CABLE, PAIR TWISTED 2X2X0,25MM2	
MW327	90220-0091	MM	5500	CABLE, PAIR TWISTED 2X2X0,25MM2	

Pos	Part No	UN	Qty	Description	Page No

LEVEL PROBE

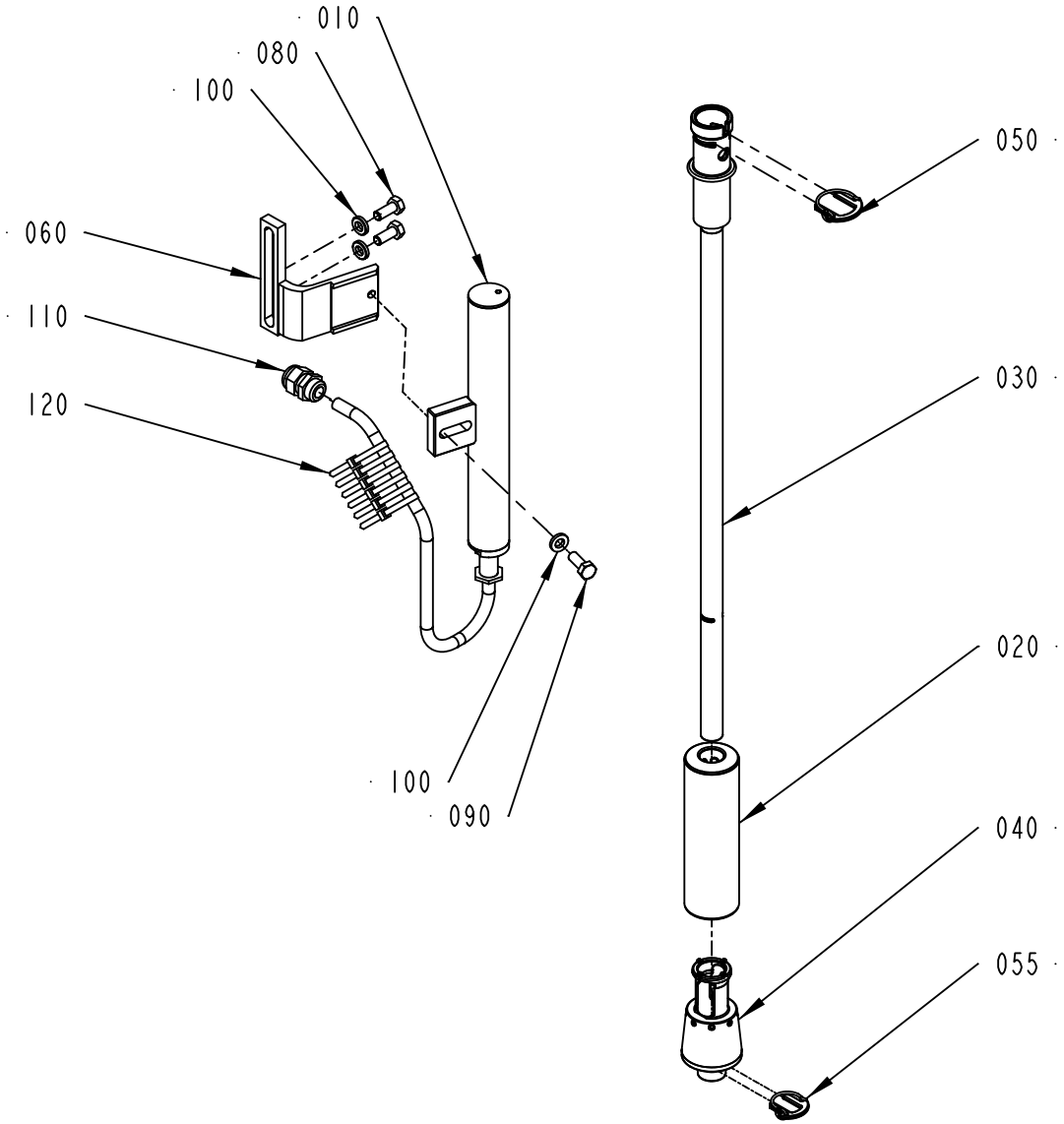

925991-2
386245

ECM: 386245 - 20111122
Group number: 925991-0300
Assembly Drawing: 925991-2_1_AB

Pos	Part No	UN	Qty	Description	Page No
TBA 0100B, TBA 0125S					
020	2921890-0000		1	FLOAT	
030	2826637-0001		1	LOWER FILLING PIPE	
040	2914808-0001		1	PRESSURE FLANGE	
055	2796072-0002		1	LOCKING FORK	
TBA 0160S, TBA 0200S, TWA 0200S					
020	2921890-0000		1	FLOAT	
030	2826637-0002		1	LOWER FILLING PIPE	
040	2914808-0002		1	PRESSURE FLANGE	
055	2796072-0002		1	LOCKING FORK	
TBA 0200B					
020	2921880-0000		1	FLOAT	
030	2826638-0001		1	LOWER FILLING PIPE	
040	2914808-0005		1	PRESSURE FLANGE	
055	2796072-0001		1	LOCKING FORK	
TBA 0200M					
020	2921890-0000		1	FLOAT	
030	2826637-0003		1	LOWER FILLING PIPE	
040	2914808-0003		1	PRESSURE FLANGE	
055	2796072-0002		1	LOCKING FORK	
TBA 0200SQ					
020	2921880-0000		1	FLOAT	
030	2826638-0002		1	LOWER FILLING PIPE	
040	2914809-0000		1	PRESSURE FLANGE	
055	2796072-0001		1	LOCKING FORK	
TBA 0284B, TBA 0300S					
020	2921880-0000		1	FLOAT	
030	2826638-0003		1	LOWER FILLING PIPE	
040	2914808-0006		1	PRESSURE FLANGE	
055	2796072-0001		1	LOCKING FORK	
TBA 0250B					
020	2921880-0000		1	FLOAT	
030	2826638-0004		1	LOWER FILLING PIPE	
040	2914808-0007		1	PRESSURE FLANGE	
055	2796072-0001		1	LOCKING FORK	
TBA 0250S					
020	2921890-0000		1	FLOAT	
030	2826637-0004		1	LOWER FILLING PIPE	
040	2914808-0003		1	PRESSURE FLANGE	
055	2796072-0002		1	LOCKING FORK	
TBA 0330S					
020	2921880-0000		1	FLOAT	
030	2826638-0005		1	LOWER FILLING PIPE	
040	2914808-0008		1	PRESSURE FLANGE	
055	2796072-0001		1	LOCKING FORK	
TPA 0200SQ					
020	2921890-0000		1	FLOAT	
030	2826637-0007		1	LOWER FILLING PIPE	
040	2914808-0002		1	PRESSURE FLANGE	
055	2796072-0002		1	LOCKING FORK	
TPA 0250SQ					
020	2921890-0000		1	FLOAT	
030	2826637-0006		1	LOWER FILLING PIPE	
040	2914808-0002		1	PRESSURE FLANGE	
055	2796072-0002		1	LOCKING FORK	
TPA 0330SQ					
020	929276-0000		1	FLOAT	
030	2826638-0005		1	LOWER FILLING PIPE	
040	2914808-0004		1	PRESSURE FLANGE	
055	2796072-0001		1	LOCKING FORK	
TWA 0125S					
020	2921890-0000		1	FLOAT	
030	2826637-0005		1	LOWER FILLING PIPE	
040	2914808-0001		1	PRESSURE FLANGE	
055	2796072-0002		1	LOCKING FORK	
Common Parts					
010	42062-0200		1	LEVEL PROBE	**1-227**
050	2796072-0001		1	LOCKING FORK	
060	979368-0000		1	HOLDER	
080	312105-0451		2	SCREW, M6S ISO 4017 M8X20 A4 80	
090	312105-0452		1	SCREW, M6S ISO 4017 M8X22 A4 80	
100	315115-0165		3	WASHER PLAIN, TBRB 8,4/16 H=3	
110	352103-0106		1	CABLE GLAND, ST 11, PR18,6/PG11	
120	352113-0102		6	CABLE TIE, BLACK 188X4,8 MM	

Machine Type | Group Description | Used-In | Group Number | Page No

LEVEL PROBE

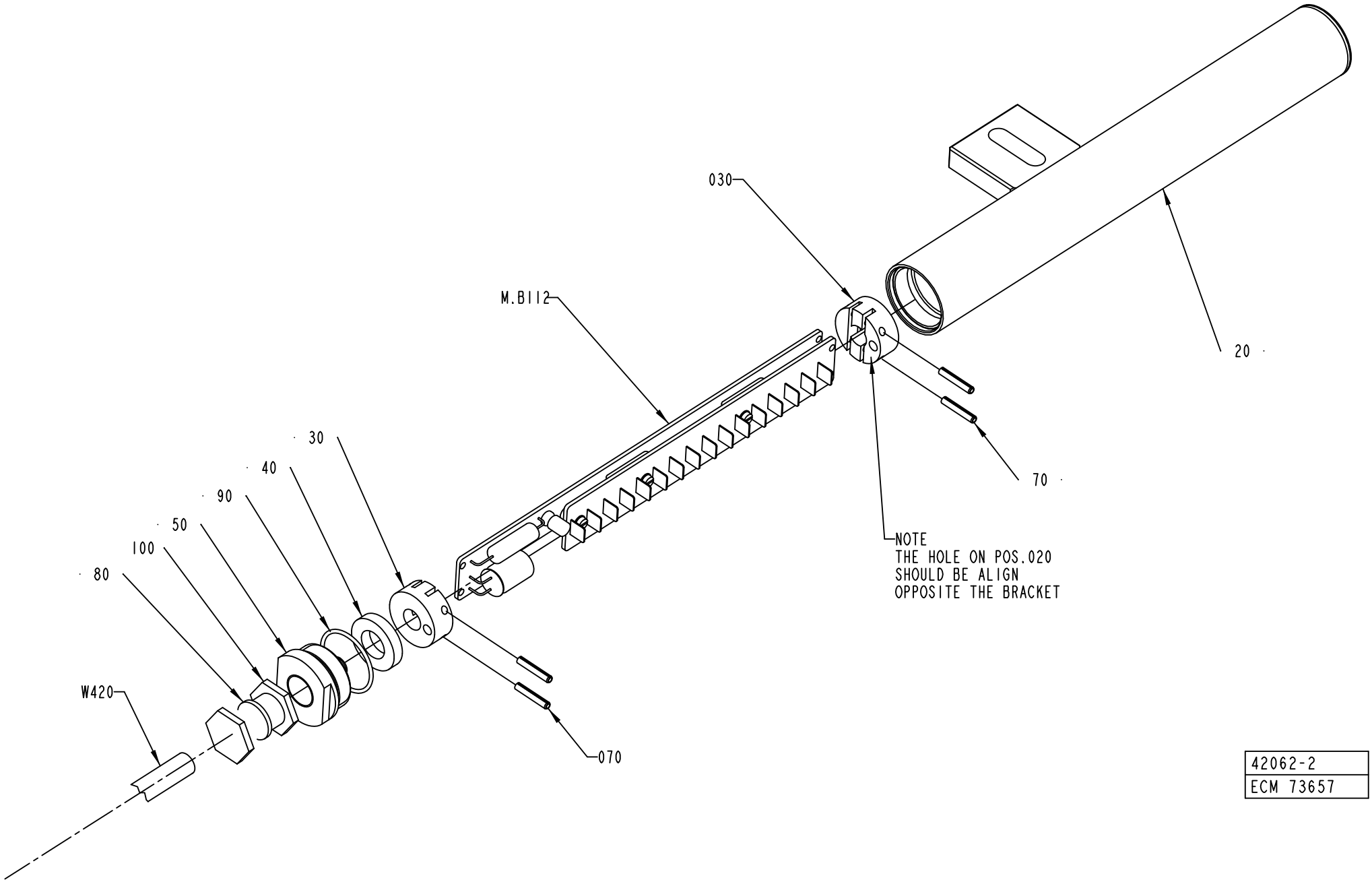

42062-2
ECM 73657

ECM: 178238 - 20040910
Group number: 42062-0200
Assembly Drawing: 42062-2_1_AA

Pos	Part No	UN	Qty	Description	Page No
TBA/19					
020	925999-0000		1	PROTECTION PIPE	
Common Parts					
030	925877-0000		2	SUPPORT	
040	736514-0000		1	SHOCK ABSORBER	
050	926820-0000		1	PLUG	
070	311111-0209		4	SPRING PIN ISO 8752 3X18-ST	
080	315105-0171		1	WASHER PLAIN, 10X18X2 A4 BRB	
090	315202-0120		1	O-RING 27,1X1,6 MM	
100	90012-0119		1	GLAND, EXTENDED WITH INSERT, PG9	
MB112	42063-0100		1	LEVEL DETECTOR	**1-229**
W420	90220-0085	M	6	CABLE, MULTI-CONDUCTOR SCREENED	

Pos	Part No	UN	Qty	Description	Page No

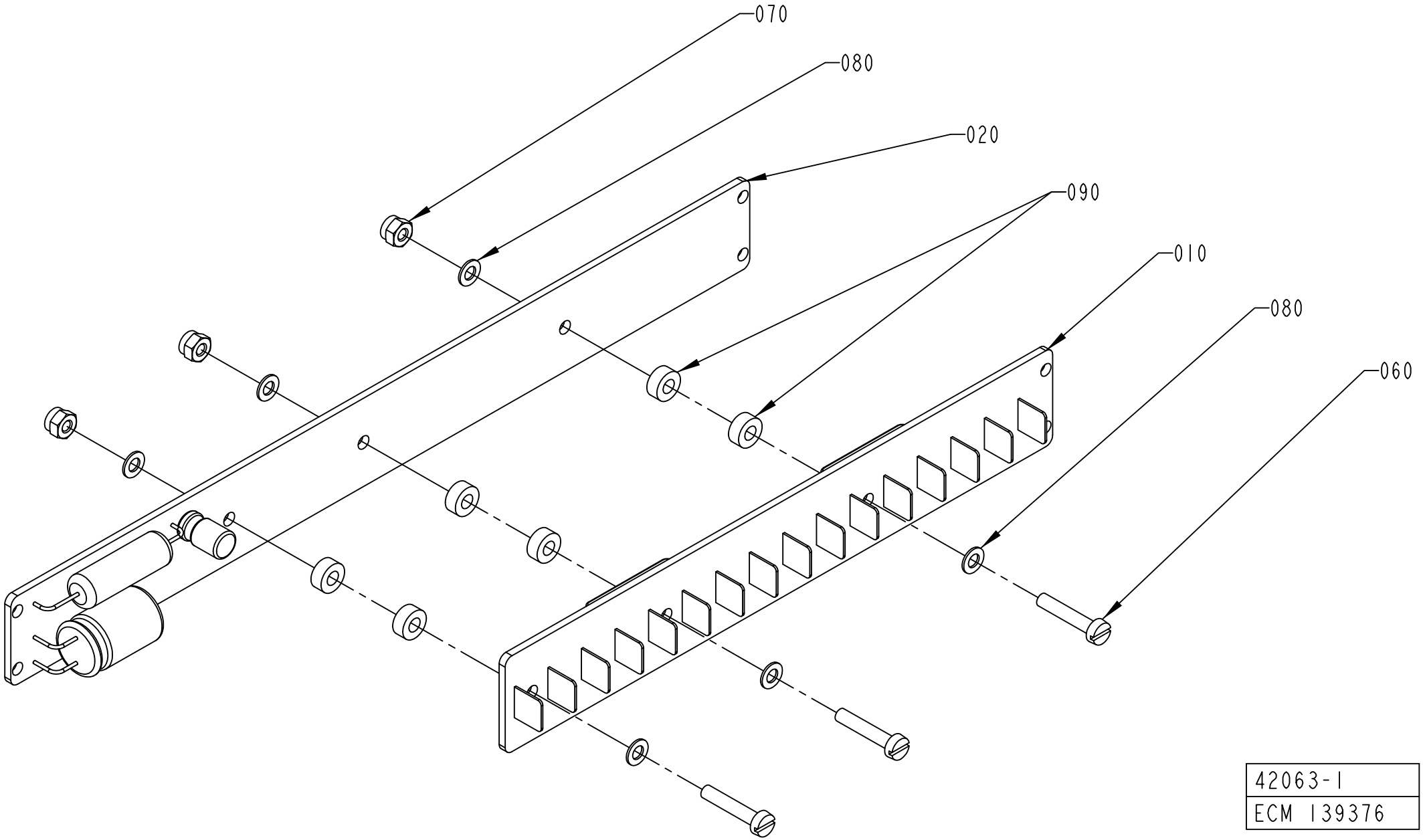

42063-1
ECM 139376

ECM: 190580 - 20041104
Group number: 42063-0100
Assembly Drawing: 42063-1_1_AB

Pos	Part No	UN	Qty	Description	Page No
-					
010	42067-0100		1	SENSOR BOARD	
020	42068-0100		1	CONVERTER BOARD	
060	312125-0228		3	SLOTTED HEAD SCREW, ISO1207 M3X16 A4	
070	312812-0310		3	HEXAGON NUT, NY-LOCK M3 A4 80	
080	315105-0124		6	WASHER PLAIN, 3,2X6X0,5 A4 BRB	
090	90005-0143		6	SPACER 3,3/7, H=3	

Pos	Part No	UN	Qty	Description	Page No

Tetra Pak

SPC
Spare Parts Catalogue

MACHINE BODY

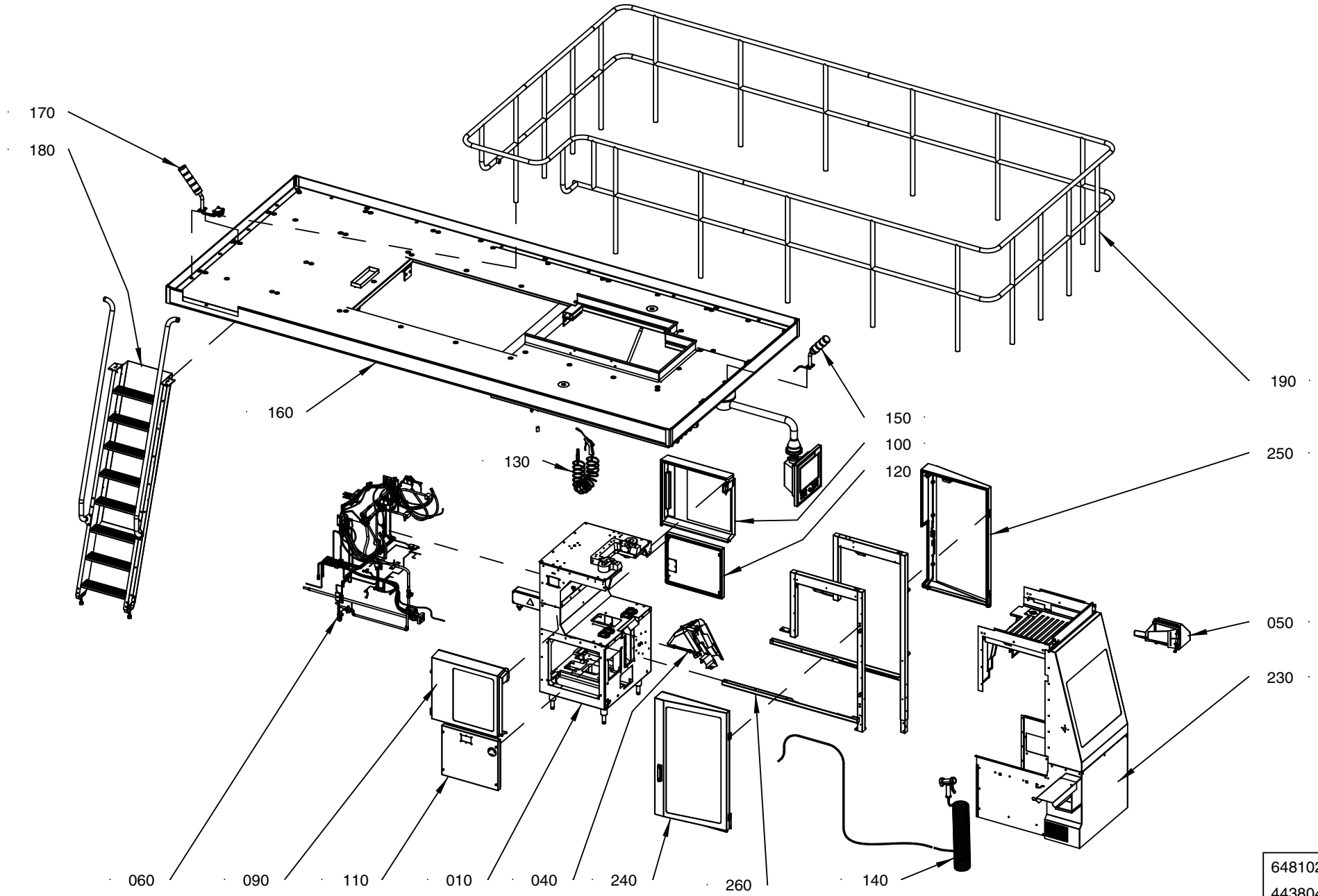

648102-2	5
443804	

ECM: 448780 - 20100524
Group number: 648102-1400
Assembly Drawing: 648102-25_1_AB

This list covers pages from 2-2 to 2-7

Pos	Part No	UN	Qty	Description	Page No
TBA (See drawing on page: 2-2)					
040	2526338-0100		1	DROP CHUTE	**2-9, 2-11**
230	2552700-0200		1	COVER PLATES	**2-13, 2-15**
TPA (See drawing on page: 2-4)					
040	1195424-0100		1	DROP CHUTE	**2-25, 2-27**
230	2810440-0200		1	COVER PLATES	**2-29, 2-31**
TWA (See drawing on page: 2-6)					
040	2733920-0100		1	TURNING DEVICE	**2-33**
230	2552700-0200		1	COVER PLATES	**2-13, 2-15**
Common Parts					
010	1532584-0200		1	MACHINE BODY	**2-37**
050	2552699-0200		1	DISCHARGE CHUTE	**2-47, 2-49**
060	1548576-0100		1	PIPE WORK	**2-51, 2-53, 2-55**
090	2552694-0300		1	DOOR LEFT	**2-65, 2-67**
100	2552695-0300		1	DOOR RIGHT	**2-69, 2-71**
110	256665-0300		1	HATCH	**2-73**
120	1296815-0200		1	HATCH	**2-75**
130	271414-0300		1	AIR JET GUN	**2-77**
140	271387-0400		1	SPRAY GUN	**2-79**
150	1519086-0100		1	LAMP	**2-81**
160	1512660-0300		1	PLATFORM	**2-83, 2-85**
170	1549603-0100		1	LAMP	**2-95**
180	598762-0400		1	LADDER	**2-97**
190	1519602-0200		1	RAILING	**2-99**
240	2552680-0300		1	DOOR LEFT	**2-101**
250	2552681-0300		1	DOOR RIGHT	**2-103**
260	2553830-0200		1	FRAME	**2-105**

Pos	Part No	UN	Qty	Description	Page No

MACHINE BODY

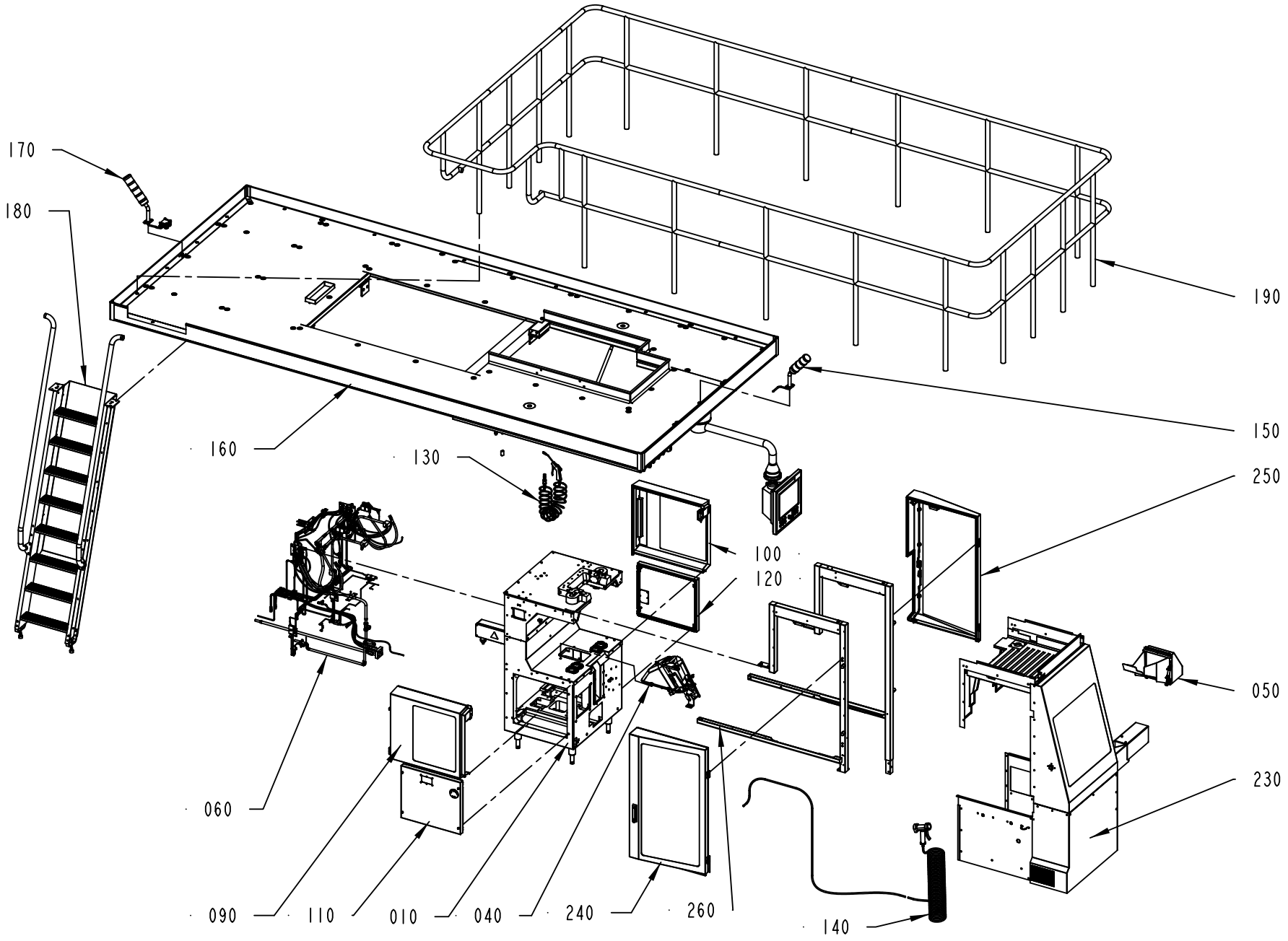

ECM: 448780 - 20100524
Group number: 648102-1400
Assembly Drawing: 648102-26_1_AA

This list covers pages from 2-2 to 2-7

Pos	Part No	UN	Qty	Description	Page No
TBA (See drawing on page: 2-2)					
040	2526338-0100		1	DROP CHUTE	**2-9, 2-11**
230	2552700-0200		1	COVER PLATES	**2-13, 2-15**
TPA (See drawing on page: 2-4)					
040	1195424-0100		1	DROP CHUTE	**2-25, 2-27**
230	2810440-0200		1	COVER PLATES	**2-29, 2-31**
TWA (See drawing on page: 2-6)					
040	2733920-0100		1	TURNING DEVICE	**2-33**
230	2552700-0200		1	COVER PLATES	**2-13, 2-15**
Common Parts					
010	1532584-0200		1	MACHINE BODY	**2-37**
050	2552699-0200		1	DISCHARGE CHUTE	**2-47, 2-49**
060	1548576-0100		1	PIPE WORK	**2-51, 2-53, 2-55**
090	2552694-0300		1	DOOR LEFT	**2-65, 2-67**
100	2552695-0300		1	DOOR RIGHT	**2-69, 2-71**
110	256665-0300		1	HATCH	**2-73**
120	1296815-0200		1	HATCH	**2-75**
130	271414-0300		1	AIR JET GUN	**2-77**
140	271387-0400		1	SPRAY GUN	**2-79**
150	1519086-0100		1	LAMP	**2-81**
160	1512660-0300		1	PLATFORM	**2-83, 2-85**
170	1549603-0100		1	LAMP	**2-95**
180	598762-0400		1	LADDER	**2-97**
190	1519602-0200		1	RAILING	**2-99**
240	2552680-0300		1	DOOR LEFT	**2-101**
250	2552681-0300		1	DOOR RIGHT	**2-103**
260	2553830-0200		1	FRAME	**2-105**

Pos	Part No	UN	Qty	Description	Page No

MACHINE BODY

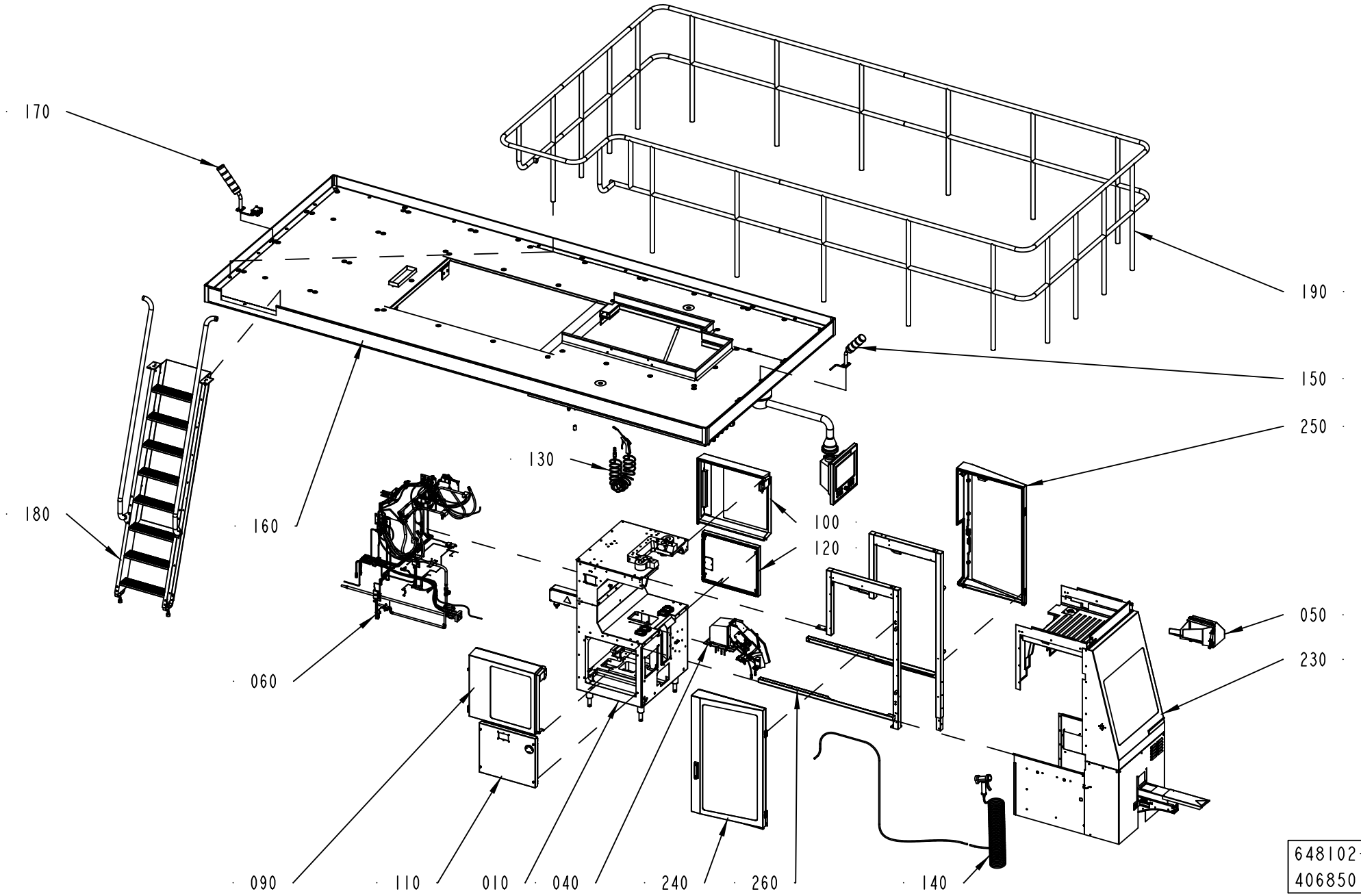

ECM: 448780 - 20100524
Group number: 648102-1400
Assembly Drawing: 648102-27_1_AA

This list covers pages from 2-2 to 2-7

Pos	Part No	UN	Qty	Description	Page No
TBA (See drawing on page: 2-2)					
040	2526338-0100		1	DROP CHUTE	**2-9, 2-11**
230	2552700-0200		1	COVER PLATES	**2-13, 2-15**
TPA (See drawing on page: 2-4)					
040	1195424-0100		1	DROP CHUTE	**2-25, 2-27**
230	2810440-0200		1	COVER PLATES	**2-29, 2-31**
TWA (See drawing on page: 2-6)					
040	2733920-0100		1	TURNING DEVICE	**2-33**
230	2552700-0200		1	COVER PLATES	**2-13, 2-15**
Common Parts					
010	1532584-0200		1	MACHINE BODY	**2-37**
050	2552699-0200		1	DISCHARGE CHUTE	**2-47, 2-49**
060	1548576-0100		1	PIPE WORK	**2-51, 2-53, 2-55**
090	2552694-0300		1	DOOR LEFT	**2-65, 2-67**
100	2552695-0300		1	DOOR RIGHT	**2-69, 2-71**
110	256665-0300		1	HATCH	**2-73**
120	1296815-0200		1	HATCH	**2-75**
130	271414-0300		1	AIR JET GUN	**2-77**
140	271387-0400		1	SPRAY GUN	**2-79**
150	1519086-0100		1	LAMP	**2-81**
160	1512660-0300		1	PLATFORM	**2-83, 2-85**
170	1549603-0100		1	LAMP	**2-95**
180	598762-0400		1	LADDER	**2-97**
190	1519602-0200		1	RAILING	**2-99**
240	2552680-0300		1	DOOR LEFT	**2-101**
250	2552681-0300		1	DOOR RIGHT	**2-103**
260	2553830-0200		1	FRAME	**2-105**

Pos	Part No	UN	Qty	Description	Page No

DROP CHUTE

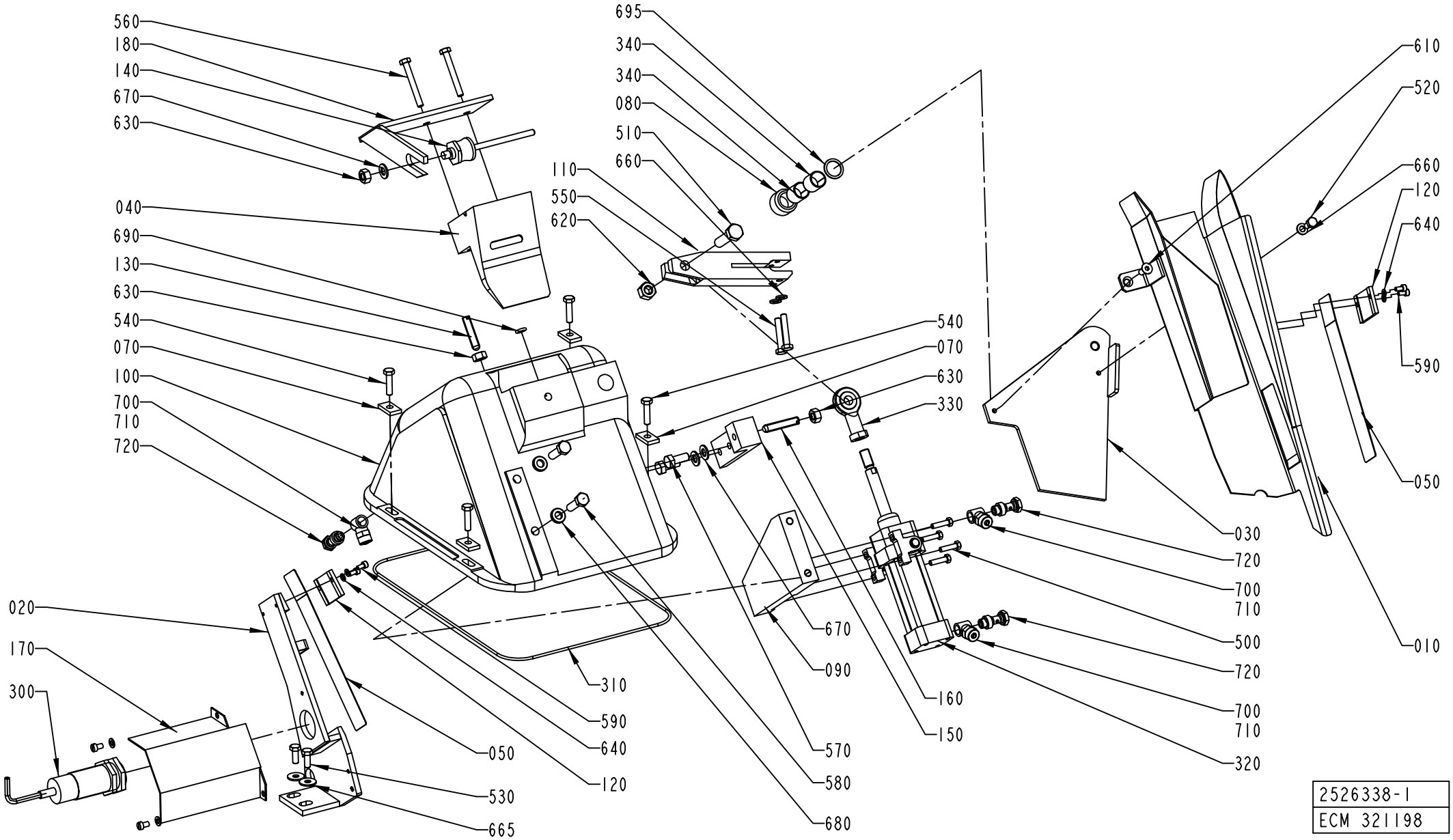

2526338-1
ECM 321198

ECM: 321208 - 20071113
Group number: 2526338-0100
Assembly Drawing: 2526338-1_1_AD

This list covers pages from 2-8 to 2-11

Pos	Part No	UN	Qty	Description	Page No
TBA 0100B					
010	2526310-0000		1	DROP CHUTE	
020	2522107-0000		1	HEAD PLATE	
040	255942-0000		1	SLIDER	
050	2526326-0000		2	LEAF SPRING	
170	295075-0000		1	PROTECTION	
560	312105-0380		2	SCREW, M6S ISO 4014 M6X50 A4 80	
TBA 0125S					
010	2526300-0000		1	DROP CHUTE	
020	2506323-0000		1	HEAD PLATE	
040	255942-0000		1	SLIDER	
050	2526323-0000		2	LEAF SPRING	
170	295075-0000		1	PROTECTION	
560	312105-0380		2	SCREW, M6S ISO 4014 M6X50 A4 80	
TBA 0160S					
010	2526303-0000		1	DROP CHUTE	
020	2522109-0000		1	HEAD PLATE	
040	469502-0000		1	SLIDER	
050	2526325-0000		2	LEAF SPRING	
170	295075-0000		1	PROTECTION	
560	312105-0380		2	SCREW, M6S ISO 4014 M6X50 A4 80	
TBA 0200B					
010	2526306-0000		1	DROP CHUTE	
020	2506321-0000		1	HEAD PLATE	
040	295097-0000		1	SLIDER	
050	2526324-0000		2	LEAF SPRING	
170	295075-0000		1	PROTECTION	
560	312105-0380		2	SCREW, M6S ISO 4014 M6X50 A4 80	
TBA 0200M					
010	2526311-0000		1	DROP CHUTE	
020	2522105-0000		1	HEAD PLATE	
040	574449-0000		1	SLIDER	
050	2526328-0000		2	LEAF SPRING	
170	574452-0000		1	PROTECTION	
560	312105-0380		2	SCREW, M6S ISO 4014 M6X50 A4 80	
TBA 0200S					
010	2526301-0000		1	DROP CHUTE	
020	2504445-0000		1	PLATE	
040	469502-0000		1	SLIDER	
050	2526323-0000		2	LEAF SPRING	
170	295075-0000		1	PROTECTION	
560	312105-0380		2	SCREW, M6S ISO 4014 M6X50 A4 80	
TBA 0250B					
010	2526308-0000		1	DROP CHUTE	
020	2506319-0000		1	HEAD PLATE	
040	295097-0000		1	SLIDER	
050	2526324-0000		2	LEAF SPRING	
170	295075-0000		1	PROTECTION	
560	312105-0380		2	SCREW, M6S ISO 4014 M6X50 A4 80	
TBA 0250S					
010	2526302-0000		1	DROP CHUTE	
020	2522106-0000		1	HEAD PLATE	
040	574449-0000		1	SLIDER	
050	2526325-0000		2	LEAF SPRING	
170	574452-0000		1	PROTECTION	
560	312105-0380		2	SCREW, M6S ISO 4014 M6X50 A4 80	
TBA 0284B, TBA 0300S					
010	2526309-0000		1	DROP CHUTE	
020	2506324-0000		1	HEAD PLATE	
040	295097-0000		1	SLIDER	
050	2526326-0000		2	LEAF SPRING	
170	295075-0000		1	PROTECTION	
560	312105-0380		2	SCREW, M6S ISO 4014 M6X50 A4 80	
TBA 0330S					
010	2526304-0000		1	DROP CHUTE	
020	2522108-0000		1	HEAD PLATE	
040	979938-0000		1	SLIDER	
050	2526329-0000		2	LEAF SPRING	
170	574452-0000		1	PROTECTION	
560	312109-0378		2	SCREW, M6S ISO 4017 M6X40 A4 80	
Common Parts					
030	2547232-0000		1	PIVOT ARM	
070	255939-0000		4	WASHER	
080	255940-0000		1	SPACER	
090	255943-0000		1	HOLDER	
100	271163-0000		1	CANTILEVER	
110	272600-0000		1	ARM	
120	2522110-0000		2	PLATE	
130	272602-0000		1	SCREW	
140	272742-0000		1	FINGER	
150	272852-0000		1	HOLDER	
160	272853-0000		1	SCREW	
180	295399-0000		1	HOLDER	
300	90458-0256		1	PROX.SWITCH IIA 3010-BPKG/6M	

DROP CHUTE

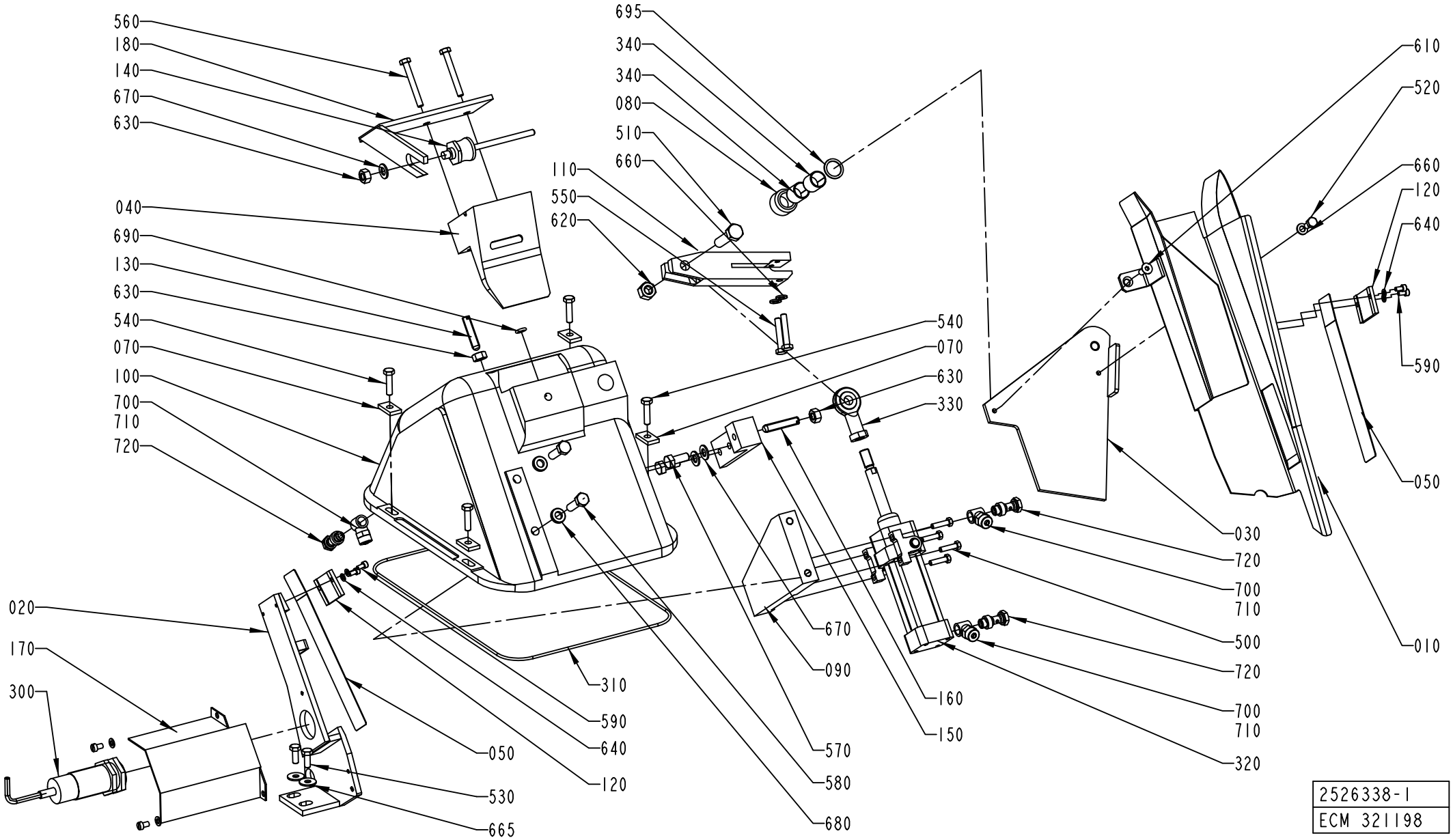
560
180
140
670
630
040
690
130
630
540
070
100
700
710
720
020
170
300
695
340
340
080
510
660
110
550
620
610
520
660
120
640
590
050
030
720
700
710
500
720
700
710
320
010
540
070
630
330
670
090
160
150
570
580
680
310
590
640
120
050
530
665
2526338-1
ECM 321198

Pos	Part No	UN	Qty	Description	Page No
Common Parts (Cont'd)					
310	90161-0001	MM	1500	O-RING MATERIAL 3 MM	
320	90450-0033		1	CYLINDER	
330	90239-0405		1	ROD END,BALL JOINT EYE M10X1,25	
340	321141-0224		2	BEARING BUSHING, 16X18X20 MM	
500	312101-0331		4	SCREW M6S M5X20 FZB	
510	312101-0499		1	SCREW M6S M10X40 FZB	
520	312105-0366		1	SCREW, M6S ISO 4017 M6X12 A4 80	
530	312105-0368		2	SCREW, M6S ISO 4017 M6X16 A4 80	
540	312105-0372		4	SCREW, M6S ISO 4017 M6X25 A4 80	
550	312105-0376		2	SCREW, M6S ISO 4014 M6X35 A4 80	
570	312105-0451		2	SCREW, M6S ISO 4017 M8X20 A4 80	
580	312105-0455		2	SCREW, M6S ISO 4017 M8X30 A4 80	
590	312115-0287		4	SCREW ISO4762 M4X8 A4 80	
600	312125-0323		2	SLOTTED HEAD SCREW, ISO1207 M5X8 A4	
610	312155-0368		1	SCREW DIN 7991 MF6S M6X16 A4 70	
620	312601-0320		1	HEXAGON NUT, M10 8 FZB, ISO 4032	
630	312605-0318		4	HEXAGON NUT, M6M M8 A280	
640	315105-0136		4	WASHER PLAIN, 4,3X9X0,8 A4 BRB	
650	315105-0146		2	WASHER PLAIN, 5,3X10X1 A4 BRB	
660	315105-0153		3	WASHER PLAIN, 6,4X12X1,5 A4 BRB	
665	90005-0060		2	WASHER PLAIN, RBS 6,4/M6)/18,H=1,5	
670	315105-0165		3	WASHER PLAIN, 8,4X16X1,6 A4 BRB	
680	315115-0165		2	WASHER PLAIN, TBRB 8,4/16 H=3	
690	315202-0206		1	O-RING 7,3X2,4 MM	
695	315239-0111		1	NYLON WASHER G3/8, 3/8RRP	
700	342903-0121		3	NUT WITH SPRING, 1723 8/6-M12X1	
710	342980-0121		3	HOSE FITTING, BANJO RING L PO G1/8 8/6	
720	342980-0303		3	BANJO-HOLLOW BOLT COUPL,EXT.THR.01-G1/8	

Pos	Part No	UN	Qty	Description	Page No

COVER PLATES

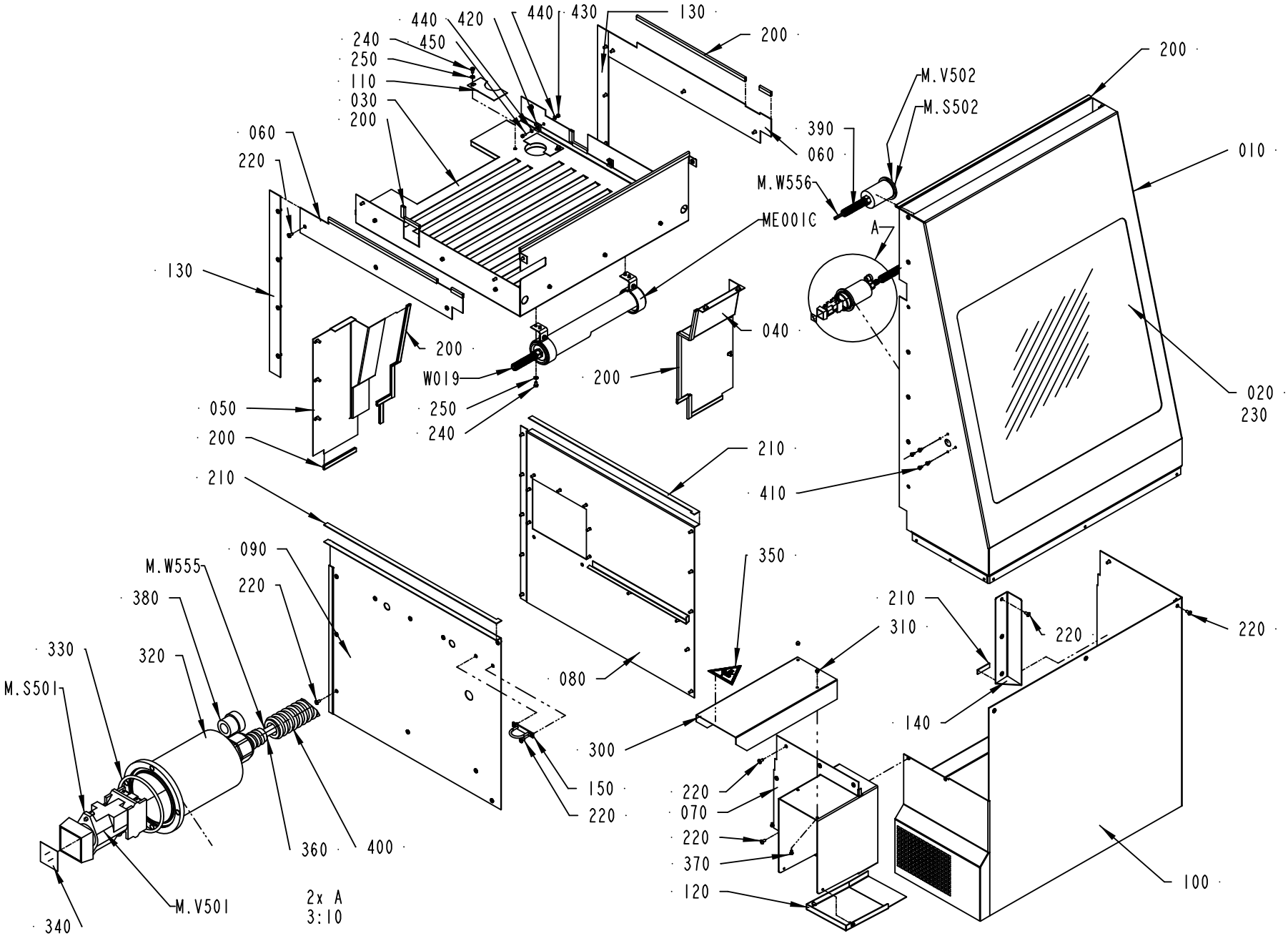

2552700-4
ECM 436065

ECM: 502068 - 20110609
Group number: 2552700-0200
Assembly Drawing: 2552700-4_1_AC

This list covers pages from 2-12 to 2-15

Pos	Part No	UN	Qty	Description	Page No
TBA HVA					
070	2927583-0000		1	COVER	
TBA NOHVA (See drawing on page: 2-12)					
070	2552710-0000		1	COVER	
080	2552708-0000		1	COVERING PLATE	
090	2552709-0000		1	COVERING PLATE	
100	2552706-0000		1	COVER	
140	2594128-0000		1	COVER	
200	90143-0097	MM	4500	SELF GRIPPING GASKET, 1011-24	
220	90287-0075		78	SCREW SLOT. PAN HEAD LKCS M6X12	
240	312105-0364		6	SCREW, M6S ISO 4017 M6X10 A4 80	
250	315105-0153		6	WASHER PLAIN, 6,4X12X1,5 A4 BRB	
300	3036088-0000		1	COVER	
TWA (See drawing on page: 2-14)					
070	2743338-0000		1	TUNNEL	
080	2685217-0000		1	COVERING PLATE	
090	2685218-0000		1	COVERING PLATE	
100	2685204-0000		1	COVER	
120	2775602-0202		1	END UNIT	**2-17**
160	2743336-0000		1	MOTOR COVER	
170	2743337-0000		1	COVER	
180	2761512-0000		2	GLASS PANE	
190	2829689-0000		2	BRACKET	
200	90143-0097	MM	6500	SELF GRIPPING GASKET, 1011-24	
220	90287-0075		77	SCREW SLOT. PAN HEAD LKCS M6X12	
240	312105-0364		10	SCREW, M6S ISO 4017 M6X10 A4 80	
250	312105-0153		10	SCREW EN 10642 MF6S M5X25 A480	
260	312105-0451		4	SCREW, M6S ISO 4017 M8X20 A4 80	
270	315105-0165		4	WASHER PLAIN, 8,4X16X1,6 A4 BRB	
300	3036090-0000		1	COVER	
Common Parts					
010	3036087-0000		1	FRONT COVER	
020	1549608-0000		1	GLASS PANE	
030	2552701-0000		1	TOP SECTION	
040	2552702-0000		1	COVER	
050	2552703-0000		1	COVER	
060	2552704-0000		2	COVER PLATE	
110	2552707-0000		2	COVER PLATE	
120	2552711-0000		1	COVER	
130	2553895-0000		2	COVER	
150	2594221-0000		1	BOW CLAMP	
210	90143-0073	MM	1400	FLAT GASKET TAPE W. ADHESIVE, 15X3.0	
230	90157-0041		1	SEALING COMPOUND, RHODORSEAL 5651	
310	312705-0314		2	NUT HEX. DOMED CAP MHM-6 M5 A280	
320	3036089-0000		2	COVER HOUSING	
330	315202-0736		2	O-RING 50,47X2,62 MM	
340	359301-0504		2	BUTTON SIGN, RESET	
350	359705-0006		1	WARNING SIGN ISO, MOVING PART	
360	90458-0427		2	GLAND FITTING, VK 21652YUL11	
370	90459-1333		2	SCREW ISO 7380 K6S M5X8 A2	
380	353249-0009		2	INSERT, SINGLE HOLE, EK152 9	
390	90152-0059	M	6	HOSE, SPIRAL CONDUIT, 18X12, UL 1211	
400	90152-0059	M	6	HOSE, SPIRAL CONDUIT, 18X12, UL 1211	
410	312132-0323		8	SLOTTED HEAD, PAN SCREW, MSCS M5X8	
420	352113-0204		9	ANCHOR PLATES FOR STRIPS, TM3S25-M	
430	312605-0314		9	HEXAGON NUT, M6M M5 A280	
440	315105-0146		18	WASHER PLAIN, 5,3X10X1 A4 BRB	
450	312125-0327		9	SLOTTED HEAD SCREW, ISO1207 M5X12 A4	
ME001C	595430-0200		1	LIGHT FIXTURE	**2-23**
M.S501	90064-0082		1	PUSH BUTTON, WHITE	
	90036-0057		*1*	*LIGHT BULB, BA9S 28V*	
M.S502	90064-0082		1	PUSH BUTTON, WHITE	
	90036-0057		*1*	*LIGHT BULB, BA9S 28V*	
M.V501	90038-0021		1	DIODE, 1A 800V	
M.V502	90038-0021		1	DIODE, 1A 800V	
M.W555	351150-0404	M	6	CABLE OLFLEX 4X0,75 MM2 LIGHT/GREY	
M.W556	351150-0404	M	6	CABLE OLFLEX 4X0,75 MM2 LIGHT/GREY	
W019	351150-0412	M	6	CABLE OLFLEX 3X1,5 MM2 LIGHT/GREY	

Machine Type | Group Description | Used-In | Group Number | Page No

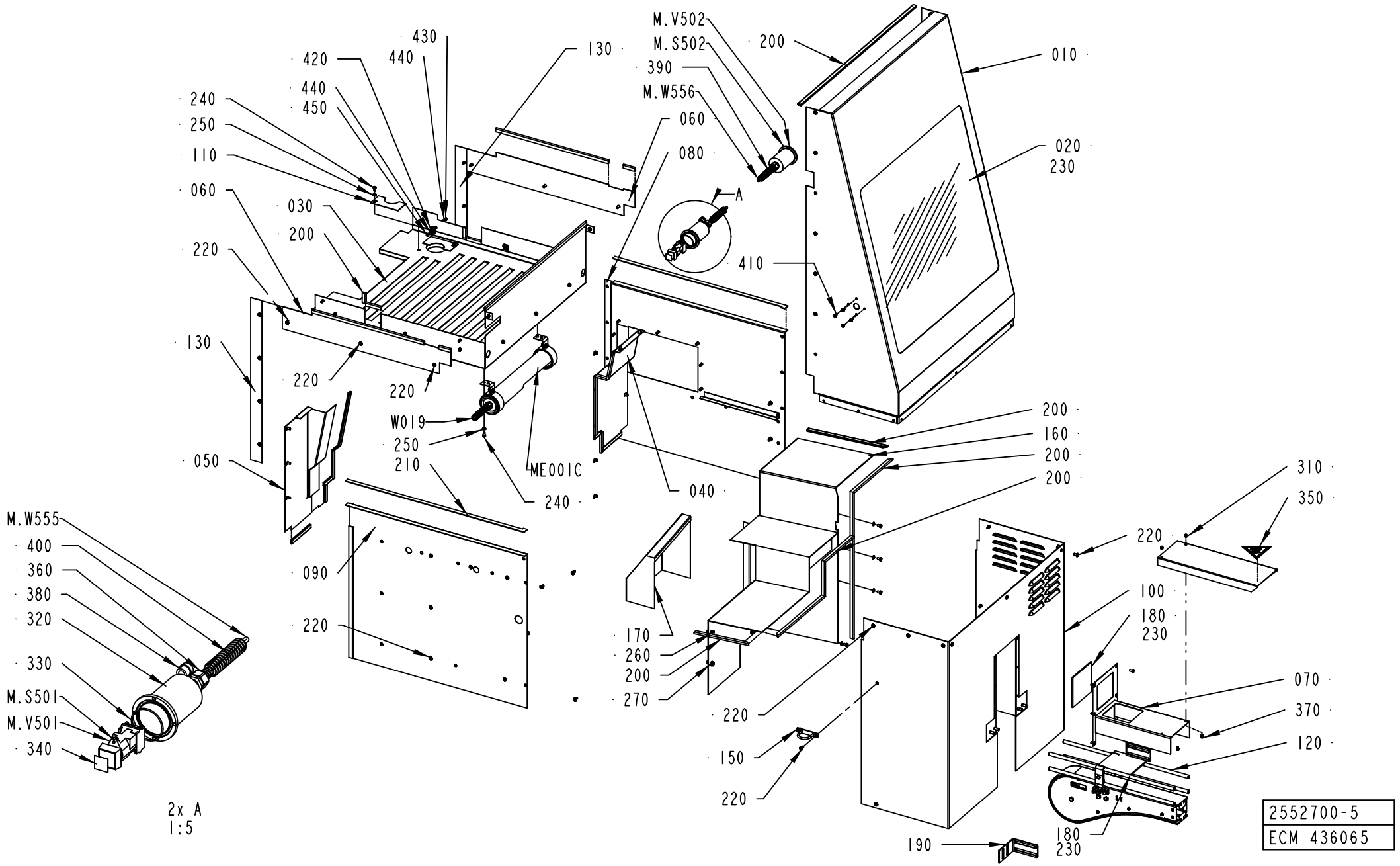
M.V502
M.S502
390
M.W556
200
010
020
230
060
080
A
410
430
440
420
440
450
240
250
110
060
030
200
220
130
220
220
W019
250
210
ME001C
240
040
050
090
220
200
160
200
200
310
350
220
100
180
230
070
370
120
170
260
200
270
220
150
220
190
180
230
M.W555
400
360
380
320
330
M.S501
M.V501
340
2x A
1:5
2552700-5
ECM 436065

ECM: 502068 - 20110609
Group number: 2552700-0200
Assembly Drawing: 2552700-5_1_AC

This list covers pages from 2-12 to 2-15

Pos	Part No	UN	Qty	Description	Page No
TBA HVA					
070	2927583-0000		1	COVER	
TBA NOHVA (See drawing on page: 2-12)					
070	2552710-0000		1	COVER	
080	2552708-0000		1	COVERING PLATE	
090	2552709-0000		1	COVERING PLATE	
100	2552706-0000		1	COVER	
140	2594128-0000		1	COVER	
200	90143-0097	MM	4500	SELF GRIPPING GASKET, 1011-24	
220	90287-0075		78	SCREW SLOT. PAN HEAD LKCS M6X12	
240	312105-0364		6	SCREW, M6S ISO 4017 M6X10 A4 80	
250	315105-0153		6	WASHER PLAIN, 6,4X12X1,5 A4 BRB	
300	3036088-0000		1	COVER	
TWA (See drawing on page: 2-14)					
070	2743338-0000		1	TUNNEL	
080	2685217-0000		1	COVERING PLATE	
090	2685218-0000		1	COVERING PLATE	
100	2685204-0000		1	COVER	
120	2775602-0202		1	END UNIT	**2-17**
160	2743336-0000		1	MOTOR COVER	
170	2743337-0000		1	COVER	
180	2761512-0000		2	GLASS PANE	
190	2829689-0000		2	BRACKET	
200	90143-0097	MM	6500	SELF GRIPPING GASKET, 1011-24	
220	90287-0075		77	SCREW SLOT. PAN HEAD LKCS M6X12	
240	312105-0364		10	SCREW, M6S ISO 4017 M6X10 A4 80	
250	312105-0153		10	SCREW EN 10642 MF6S M5X25 A480	
260	312105-0451		4	SCREW, M6S ISO 4017 M8X20 A4 80	
270	315105-0165		4	WASHER PLAIN, 8,4X16X1,6 A4 BRB	
300	3036090-0000		1	COVER	
Common Parts					
010	3036087-0000		1	FRONT COVER	
020	1549608-0000		1	GLASS PANE	
030	2552701-0000		1	TOP SECTION	
040	2552702-0000		1	COVER	
050	2552703-0000		1	COVER	
060	2552704-0000		2	COVER PLATE	
110	2552707-0000		2	COVER PLATE	
120	2552711-0000		1	COVER	
130	2553895-0000		2	COVER	
150	2594221-0000		1	BOW CLAMP	
210	90143-0073	MM	1400	FLAT GASKET TAPE W. ADHESIVE, 15X3.0	
230	90157-0041		1	SEALING COMPOUND, RHODORSEAL 5651	
310	312705-0314		2	NUT HEX. DOMED CAP MHM-6 M5 A280	
320	3036089-0000		2	COVER HOUSING	
330	315202-0736		2	O-RING 50,47X2,62 MM	
340	359301-0504		2	BUTTON SIGN, RESET	
350	359705-0006		1	WARNING SIGN ISO, MOVING PART	
360	90458-0427		2	GLAND FITTING, VK 21652YUL11	
370	90459-1333		2	SCREW ISO 7380 K6S M5X8 A2	
380	353249-0009		2	INSERT, SINGLE HOLE, EK152 9	
390	90152-0059	M	6	HOSE, SPIRAL CONDUIT, 18X12, UL 1211	
400	90152-0059	M	6	HOSE, SPIRAL CONDUIT, 18X12, UL 1211	
410	312132-0323		8	SLOTTED HEAD, PAN SCREW, MSCS M5X8	
420	352113-0204		9	ANCHOR PLATES FOR STRIPS, TM3S25-M	
430	312605-0314		9	HEXAGON NUT, M6M M5 A280	
440	315105-0146		18	WASHER PLAIN, 5,3X10X1 A4 BRB	
450	312125-0327		9	SLOTTED HEAD SCREW, ISO1207 M5X12 A4	
ME001C	595430-0200		1	LIGHT FIXTURE	**2-23**
M.S501	90064-0082		1	PUSH BUTTON, WHITE	
	90036-0057		*1*	*LIGHT BULB, BA9S 28V*	
M.S502	90064-0082		1	PUSH BUTTON, WHITE	
	90036-0057		*1*	*LIGHT BULB, BA9S 28V*	
M.V501	90038-0021		1	DIODE, 1A 800V	
M.V502	90038-0021		1	DIODE, 1A 800V	
M.W555	351150-0404	M	6	CABLE OLFLEX 4X0,75 MM2 LIGHT/GREY	
M.W556	351150-0404	M	6	CABLE OLFLEX 4X0,75 MM2 LIGHT/GREY	
W019	351150-0412	M	6	CABLE OLFLEX 3X1,5 MM2 LIGHT/GREY	

Machine Type | Group Description | Used-In | Group Number | Page No

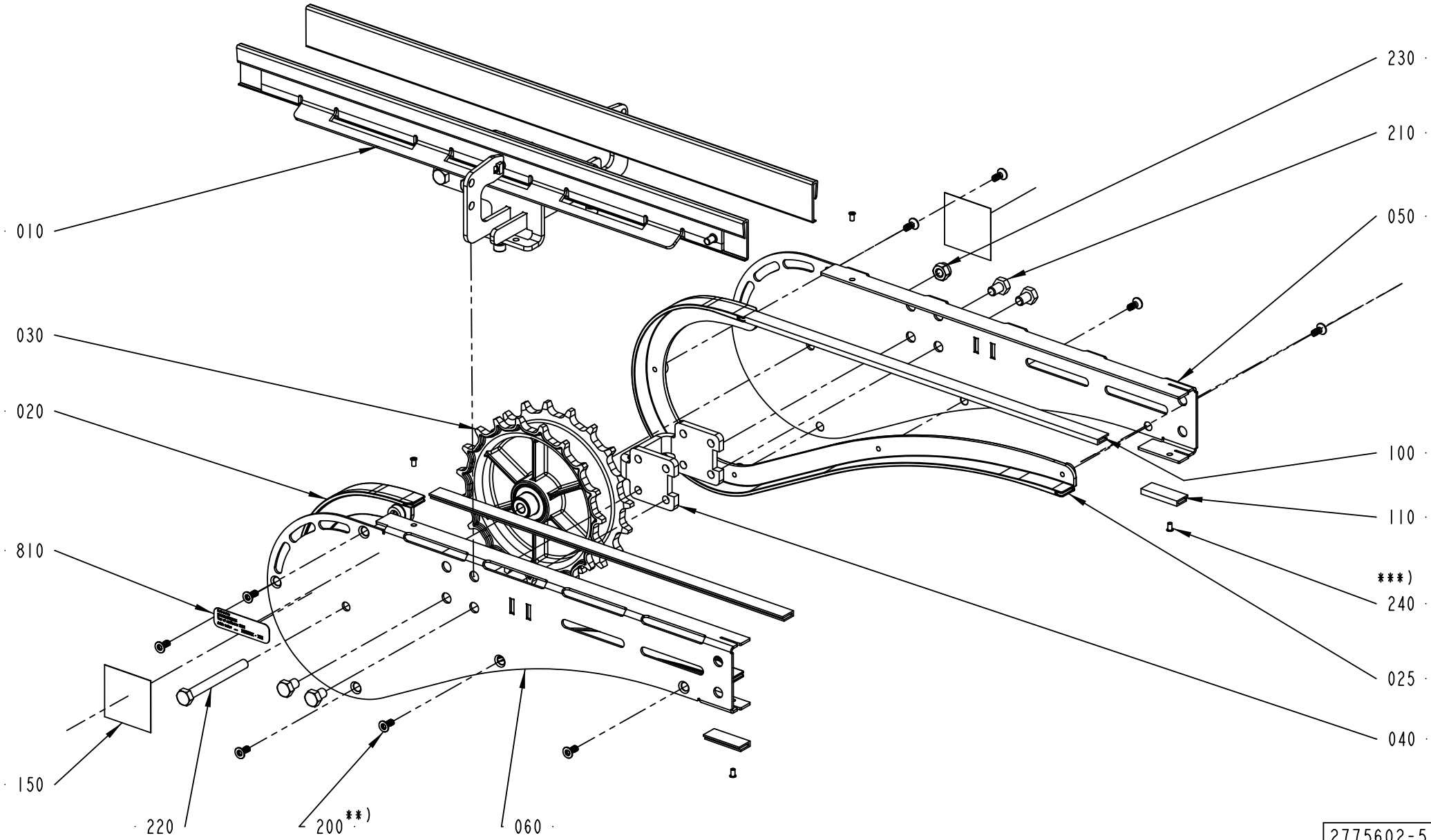

2775602-5
ECM 403051

ECM: 403051 -
Group number: 2775602-0202
Assembly Drawing: 2775602-5_1_AA

Pos	Part No	UN	Qty	Description	Page No
PC065-160					
010	2763430-0100		1	RAILING KIT	**2-19**
Common Parts					
020	2775930-0000		1	CHAIN SUPPORT	
025	2775931-0000		1	0HAIN SUPPORT	
030	2561244-0200		1	DRIVE WHEEL	**2-21, 5-73**
040	2561206-0000		1	SPACER	
050	2881033-0000		1	SIDE PLATE	
060	2881034-0000		1	SIDE PLATE	
100	1550595-3840		2	SLIDING STRIP	
110	1550595-0390		2	SLIDING STRIP	
150	90459-7584		2	PROHOBITION SIGN ISO, DO NOT REACH IN	
200	90600-1933		10	SCREW 5X12, DELTA PT 50X12 WN5454 A4	
210	312105-0447		4	SCREW, M6S ISO 4017 M8X12 A4 80	
220	312105-0467		1	SCREW, M6S ISO 4014 M8X80 A4 80	
230	312812-0318		1	HEXAGON NUT, NY-LOCK M8 A4 80	
240	90459-7293		4	SET SCREW DIN 551M5X8 PA66	
810	1086870-0000		1	SIGN	

Pos	Part No	UN	Qty	Description	Page No

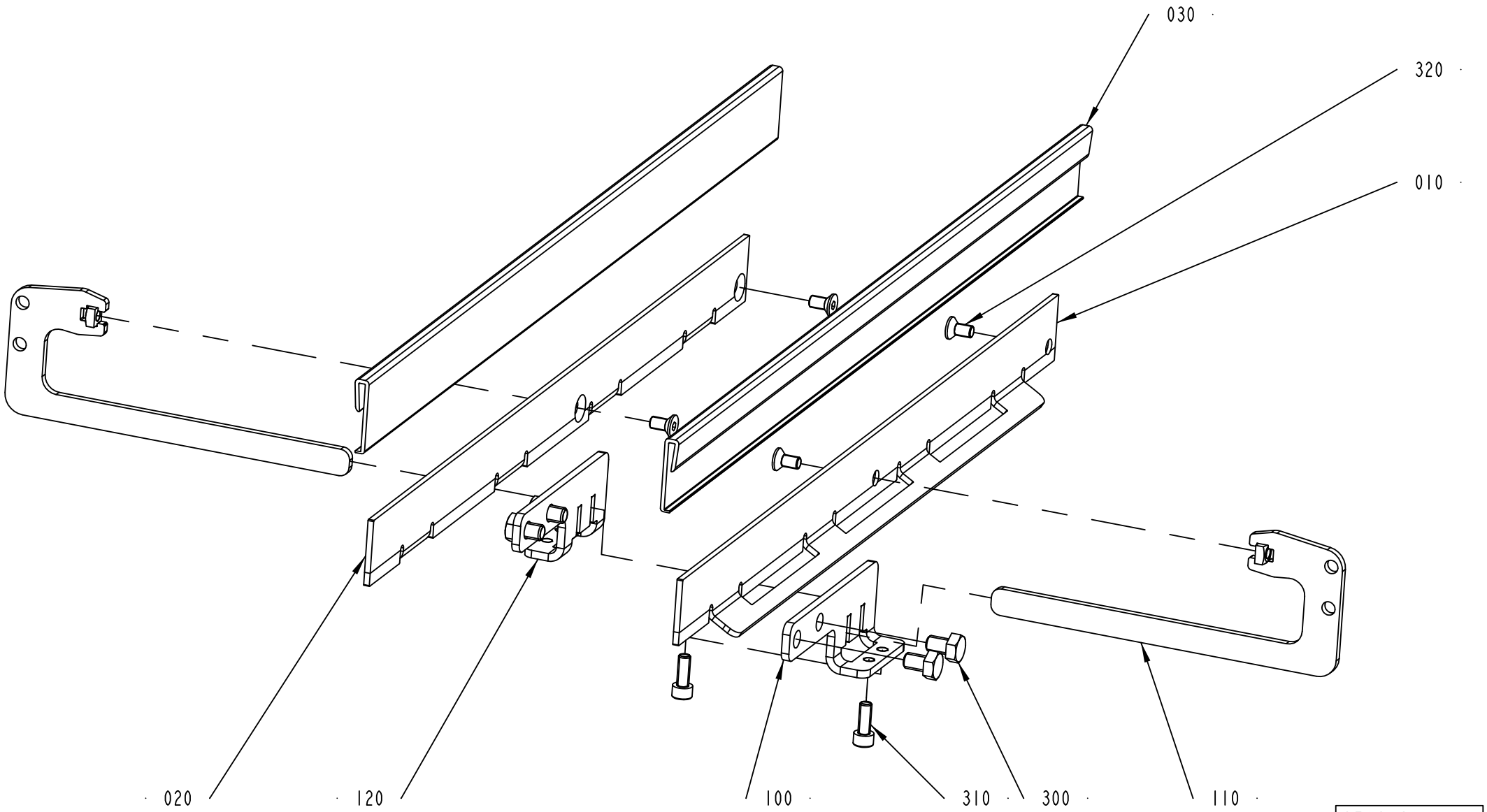

2763430-1
219247

ECM: 231697 - 20051212
Group number: 2763430-0100
Assembly Drawing: 2763430-1_1_AA

Pos	Part No	UN	Qty	Description	Page No
-					
010	2763553-0001		1	RAIL	
020	2763553-0002		1	RAIL	
030	2763303-0000	MM	550	STRIP	
031	2763303-0000	MM	550	STRIP	
100	2699621-0000		1	BRACKET	
110	2763373-0000		2	HOLDER	
120	2775693-0000		1	BRACKET	
300	312105-0447		4	SCREW, M6S ISO 4017 M8X12 A4 80	
310	312115-0368		2	SCREW ISO4762 M6X16 A4 80	
320	312155-0366		4	SCREW DIN 7991 MF6S M6X12 A4 70	

Pos	Part No	UN	Qty	Description	Page No

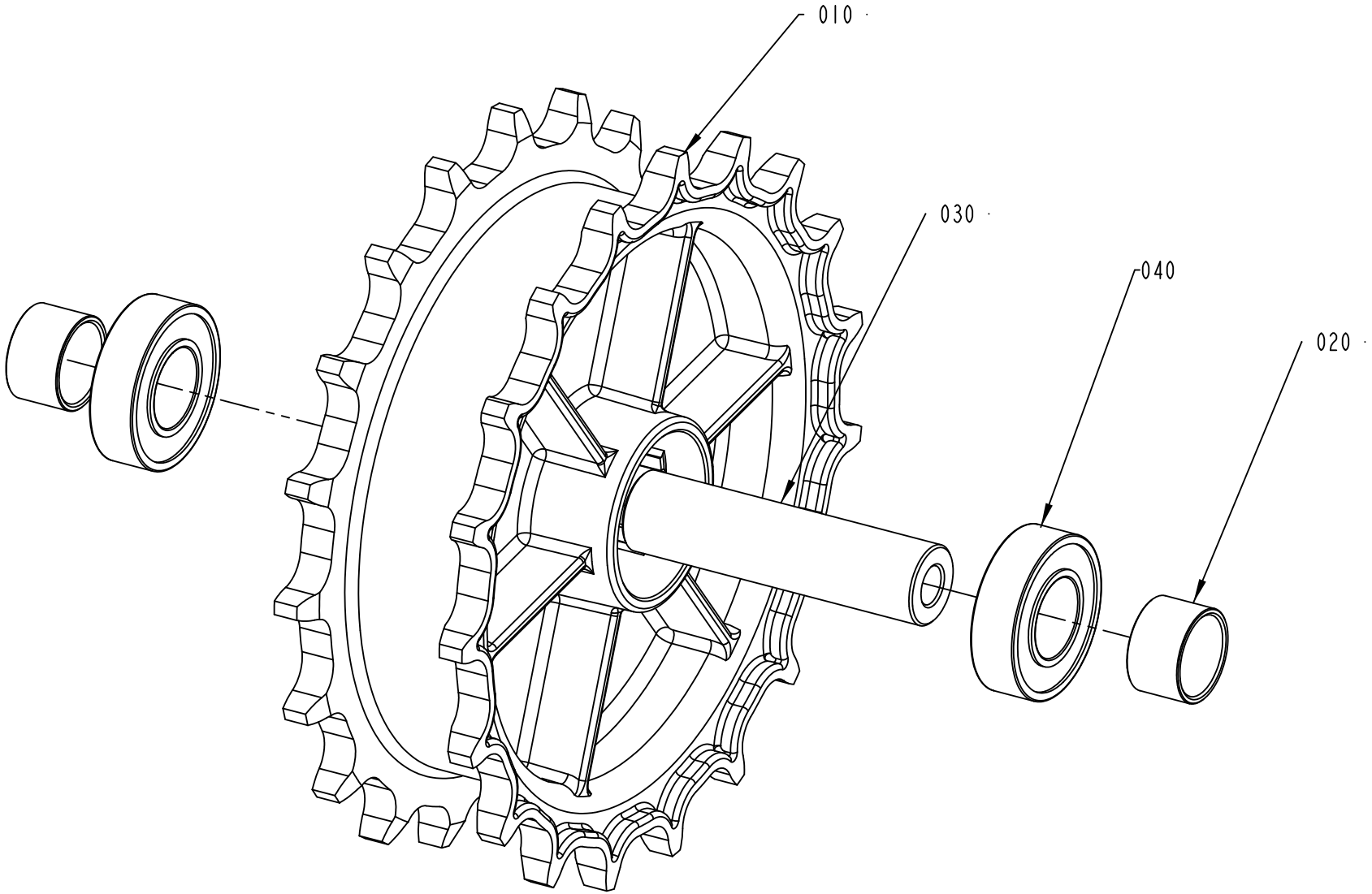

2561244-2
517993

ECM: 517993 - 20111102
Group number: 2561244-0200
Assembly Drawing: 2561244-2_1_AC

Pos	Part No	UN	Qty	Description	Page No
-					
010	2656672-0000		1	SPROCKET	
020	2656673-0000		2	SPACER	
030	2561267-0000		1	SHAFT	
040	90603-2325		2	BALL BEARING 17/35X10	

Pos	Part No	UN	Qty	Description	Page No

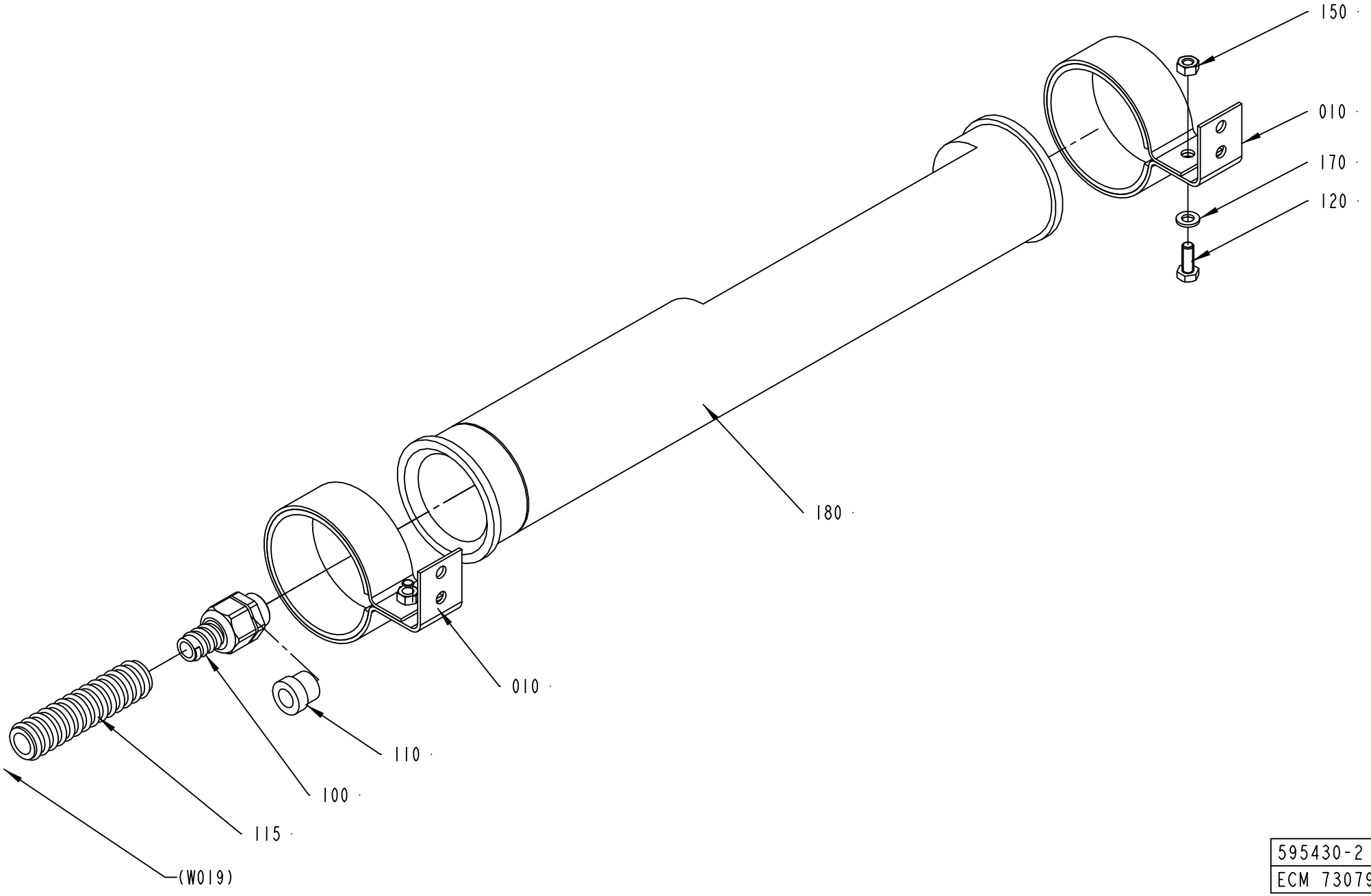

595430-2
ECM 73079

ECM: 178699 - 20040910
Group number: 595430-0200
Assembly Drawing: 595430-2_1_AA

Pos	Part No	UN	Qty	Description	Page No
-					
10	1140129-0000		2	HOLDER	
100	353243-0002		1	GLAND FITTING, VK 15152YUL11	
110	353249-0010		1	INSERT, SINGLE HOLE, EK152 11	
115	90152-0059	MM	2150	HOSE, SPIRAL CONDUIT, 18X12, UL 1211	
120	312105-0368		2	SCREW, M6S ISO 4017 M6X16 A4 80	
150	312605-0316		2	HEXAGON NUT, M6M M6 A280	
170	315105-0153		2	WASHER PLAIN, 6,4X12X1,5 A4 BRB	
180	90164-0015		1	LIGHT FIXTURE, RL70CV-111 / 230V 50HZ	
	90297-0007		*1*	*FLUORESCENT TUBE, PLS 11*	
	92297-0301		*1*	*GLOW IGNITER 4-65W S\10, E 8219023*	

Pos	Part No	UN	Qty	Description	Page No

DROP CHUTE

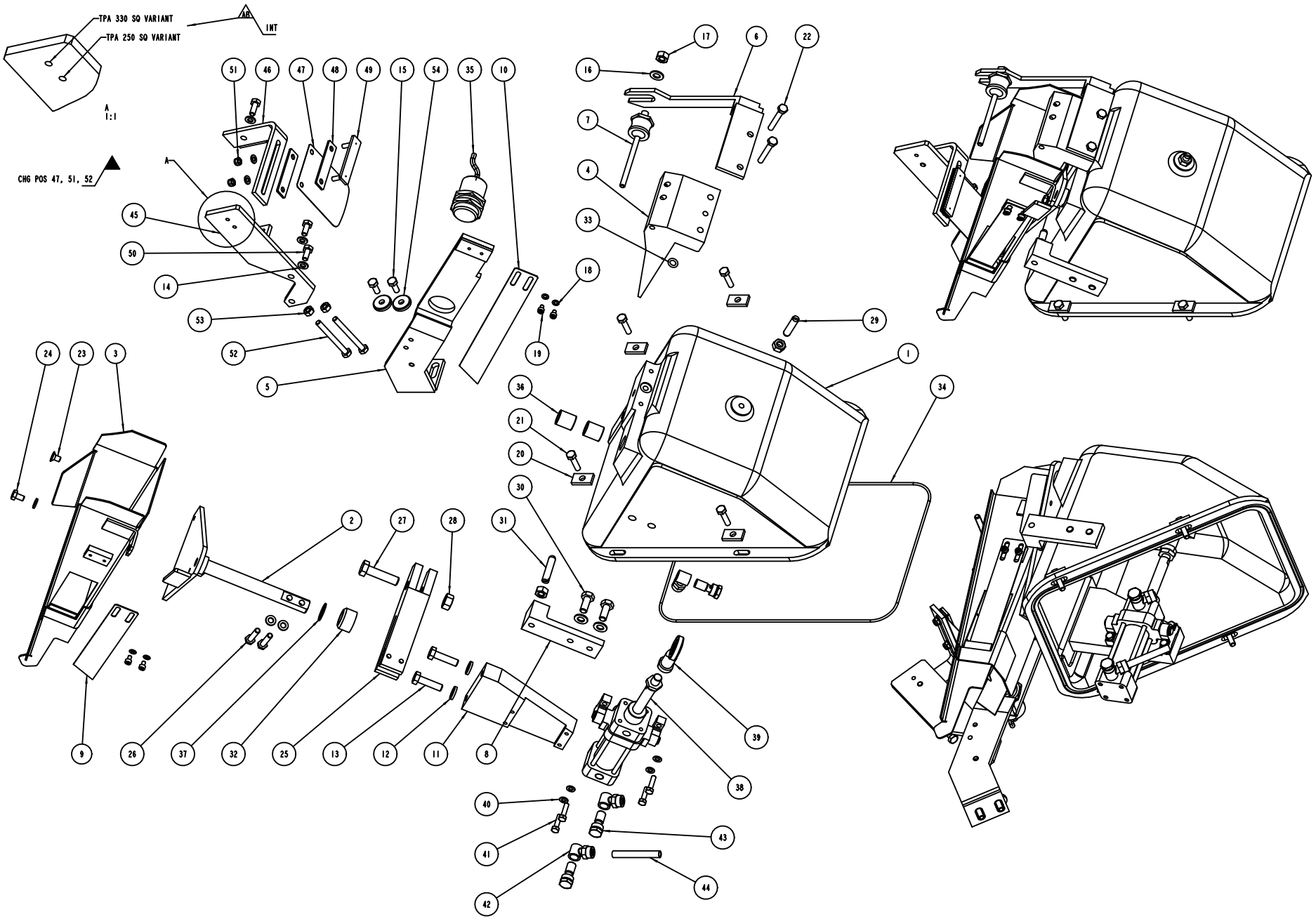
TPA 330 SQ VARIANT
TPA 250 SQ VARIANT
AR
INT
A
1:1
CHG POS 47, 51, 52
A
51
46
47
48
49
15
54
35
10
16
17
6
22
7
4
33
18
19
45
50
14
53
52
5
29
1
34
36
21
20
30
24
23
3
2
27
28
31
9
26
37
32
25
13
12
11
8
39
38
40
41
42
43
44

ECM: 149357 - 20040204
Group number: 1195424-0100
Assembly Drawing: 1195424-2_1_AC

This list covers pages from 2-24 to 2-27

Pos	Part No	UN	Qty	Description	Page No
TPA 0200SQ (See drawing on page: 2-26)					
03	1549944-0000		1	DROP CHUTE	
04	1317396-0000		1	SLIDER	
05	1549945-0000		1	PLATE	
06	1317398-0000		1	HOLDER	
09	1549386-0000		1	LEAF SPRING	
10	1549387-0000		1	LEAF SPRING	
52	1549968-0000		2	PLATE	
TPA 0250SQ (See drawing on page: 2-24)					
03	1317395-0000		1	DROP CHUTE	
04	1317396-0000		1	SLIDER	
05	1195421-0000		1	PLATE	
06	1317398-0000		1	HOLDER	
09	1334193-0000		1	LEAF SPRING	
10	1334194-0000		1	LEAF SPRING	
TPA 0330SQ (See drawing on page: 2-24)					
03	1195429-0000		1	DROP CHUTE	
04	1195420-0000		1	SLIDER	
05	1195421-0000		1	PLATE	
06	1350921-0000		1	HOLDER	
09	1296880-0000		1	LEAF SPRING	
10	1296881-0000		1	LEAF SPRING	
Common Parts					
01	1195423-0000		1	CANTILEVER	
02	491881-0003		1	PIVOT ARM	
07	272742-0000		1	FINGER	
08	272852-0000		1	HOLDER	
11	255943-0000		1	HOLDER	
12	315115-0165		2	WASHER PLAIN, TBRB 8,4/16 H=3	
13	312105-0455		2	SCREW, M6S ISO 4017 M8X30 A4 80	
14	315105-0153		5	WASHER PLAIN, 6,4X12X1,5 A4 BRB	
15	312105-0368		3	SCREW, M6S ISO 4017 M6X16 A4 80	
16	315105-0165		3	WASHER PLAIN, 8,4X16X1,6 A4 BRB	
17	312605-0318		3	HEXAGON NUT, M6M M8 A280	
18	315105-0136		4	WASHER PLAIN, 4,3X9X0,8 A4 BRB	
19	312105-0291		4	SCREW, M6S ISO 4017 M4X12 A4 70	
20	255939-0000		4	WASHER	
21	312105-0372		4	SCREW, M6S ISO 4017 M6X25 A4 80	
22	312105-0380		2	SCREW, M6S ISO 4014 M6X50 A4 80	
23	312155-0364		1	SCREW DIN 7991 MF6S M6X10 A4 70	
24	312105-0364		1	SCREW, M6S ISO 4017 M6X10 A4 80	
25	272600-0000		1	ARM	
26	312105-0376		2	SCREW, M6S ISO 4014 M6X35 A4 80	
27	312101-0499		1	SCREW M6S M10X40 FZB	
28	312601-0320		1	HEXAGON NUT, M10 8 FZB, ISO 4032	
29	272602-0000		1	SCREW	
30	312105-0451		2	SCREW, M6S ISO 4017 M8X20 A4 80	
31	272853-0000		1	SCREW	
32	255940-0000		1	SPACER	
33	315202-0206		1	O-RING 7,3X2,4 MM	
34	90161-0001	MM	1500	O-RING MATERIAL 3 MM	
35	90458-0256		1	PROX.SWITCH IIA 3010-BPKG/6M	
36	321141-0224		2	BEARING BUSHING, 16X18X20 MM	
37	315239-0111		1	NYLON WASHER G3/8, 3/8RRP	
38	90450-0033		1	CYLINDER	
39	90239-0405		1	ROD END,BALL JOINT EYE M10X1,25	
40	315105-0146		6	WASHER PLAIN, 5,3X10X1 A4 BRB	
41	312101-0331		4	SCREW M6S M5X20 FZB	
42	342980-0121		3	HOSE FITTING, BANJO RING L PO G1/8 8/6	
43	342980-0303		3	BANJO-HOLLOW BOLT COUPL,EXT.THR.01-G1/8	
45	1317016-0000		1	PLATE	
46	1317017-0000		1	BRACKET	
47	1317018-0000		1	LEAF SPRING	
48	1350493-0000		2	WASHER	
49	1350494-0000		1	PLATE	
50	312105-0367		2	SCREW, M6S ISO 4017 M6X14 A4 80	
51	312812-0314		2	HEXAGON NUT, NY-LOCK M5 A4 80	
53	315125-0153		3	WASHER HIGH, TBRSB 6,4X22X4 A4	
54	312631-0321		1	HEX.NUT FINE, EN 24032 M6M M10X1,25 FZB8	

Machine Type | Group Description | Used-In | Group Number | Page No

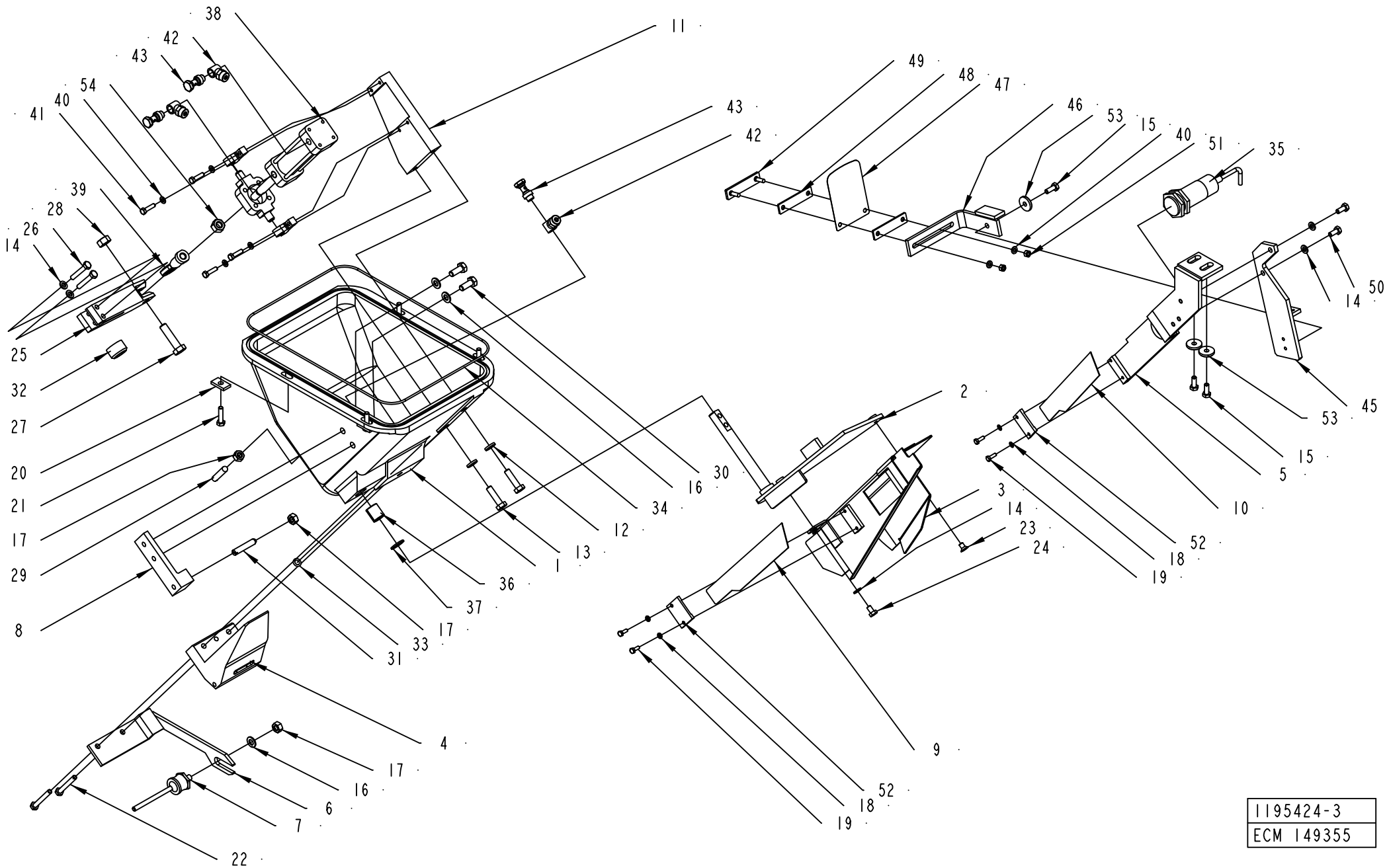

1195424-3
ECM 149355

ECM: 149357 - 20040204
Group number: 1195424-0100
Assembly Drawing: 1195424-3_1_AB

This list covers pages from 2-24 to 2-27

Pos	Part No	UN	Qty	Description	Page No
TPA 0200SQ (See drawing on page: 2-26)					
03	1549944-0000		1	DROP CHUTE	
04	1317396-0000		1	SLIDER	
05	1549945-0000		1	PLATE	
06	1317398-0000		1	HOLDER	
09	1549386-0000		1	LEAF SPRING	
10	1549387-0000		1	LEAF SPRING	
52	1549968-0000		2	PLATE	
TPA 0250SQ (See drawing on page: 2-24)					
03	1317395-0000		1	DROP CHUTE	
04	1317396-0000		1	SLIDER	
05	1195421-0000		1	PLATE	
06	1317398-0000		1	HOLDER	
09	1334193-0000		1	LEAF SPRING	
10	1334194-0000		1	LEAF SPRING	
TPA 0330SQ (See drawing on page: 2-24)					
03	1195429-0000		1	DROP CHUTE	
04	1195420-0000		1	SLIDER	
05	1195421-0000		1	PLATE	
06	1350921-0000		1	HOLDER	
09	1296880-0000		1	LEAF SPRING	
10	1296881-0000		1	LEAF SPRING	
Common Parts					
01	1195423-0000		1	CANTILEVER	
02	491881-0003		1	PIVOT ARM	
07	272742-0000		1	FINGER	
08	272852-0000		1	HOLDER	
11	255943-0000		1	HOLDER	
12	315115-0165		2	WASHER PLAIN, TBRB 8,4/16 H=3	
13	312105-0455		2	SCREW, M6S ISO 4017 M8X30 A4 80	
14	315105-0153		5	WASHER PLAIN, 6,4X12X1,5 A4 BRB	
15	312105-0368		3	SCREW, M6S ISO 4017 M6X16 A4 80	
16	315105-0165		3	WASHER PLAIN, 8,4X16X1,6 A4 BRB	
17	312605-0318		3	HEXAGON NUT, M6M M8 A280	
18	315105-0136		4	WASHER PLAIN, 4,3X9X0,8 A4 BRB	
19	312105-0291		4	SCREW, M6S ISO 4017 M4X12 A4 70	
20	255939-0000		4	WASHER	
21	312105-0372		4	SCREW, M6S ISO 4017 M6X25 A4 80	
22	312105-0380		2	SCREW, M6S ISO 4014 M6X50 A4 80	
23	312155-0364		1	SCREW DIN 7991 MF6S M6X10 A4 70	
24	312105-0364		1	SCREW, M6S ISO 4017 M6X10 A4 80	
25	272600-0000		1	ARM	
26	312105-0376		2	SCREW, M6S ISO 4014 M6X35 A4 80	
27	312101-0499		1	SCREW M6S M10X40 FZB	
28	312601-0320		1	HEXAGON NUT, M10 8 FZB, ISO 4032	
29	272602-0000		1	SCREW	
30	312105-0451		2	SCREW, M6S ISO 4017 M8X20 A4 80	
31	272853-0000		1	SCREW	
32	255940-0000		1	SPACER	
33	315202-0206		1	O-RING 7,3X2,4 MM	
34	90161-0001	MM	1500	O-RING MATERIAL 3 MM	
35	90458-0256		1	PROX.SWITCH IIA 3010-BPKG/6M	
36	321141-0224		2	BEARING BUSHING, 16X18X20 MM	
37	315239-0111		1	NYLON WASHER G3/8, 3/8RRP	
38	90450-0033		1	CYLINDER	
39	90239-0405		1	ROD END,BALL JOINT EYE M10X1,25	
40	315105-0146		6	WASHER PLAIN, 5,3X10X1 A4 BRB	
41	312101-0331		4	SCREW M6S M5X20 FZB	
42	342980-0121		3	HOSE FITTING, BANJO RING L PO G1/8 8/6	
43	342980-0303		3	BANJO-HOLLOW BOLT COUPL,EXT.THR.01-G1/8	
45	1317016-0000		1	PLATE	
46	1317017-0000		1	BRACKET	
47	1317018-0000		1	LEAF SPRING	
48	1350493-0000		2	WASHER	
49	1350494-0000		1	PLATE	
50	312105-0367		2	SCREW, M6S ISO 4017 M6X14 A4 80	
51	312812-0314		2	HEXAGON NUT, NY-LOCK M5 A4 80	
53	315125-0153		3	WASHER HIGH, TBRSB 6,4X22X4 A4	
54	312631-0321		1	HEX.NUT FINE, EN 24032 M6M M10X1,25 FZB8	

Machine Type | Group Description | Used-In | Group Number | Page No

COVER PLATES

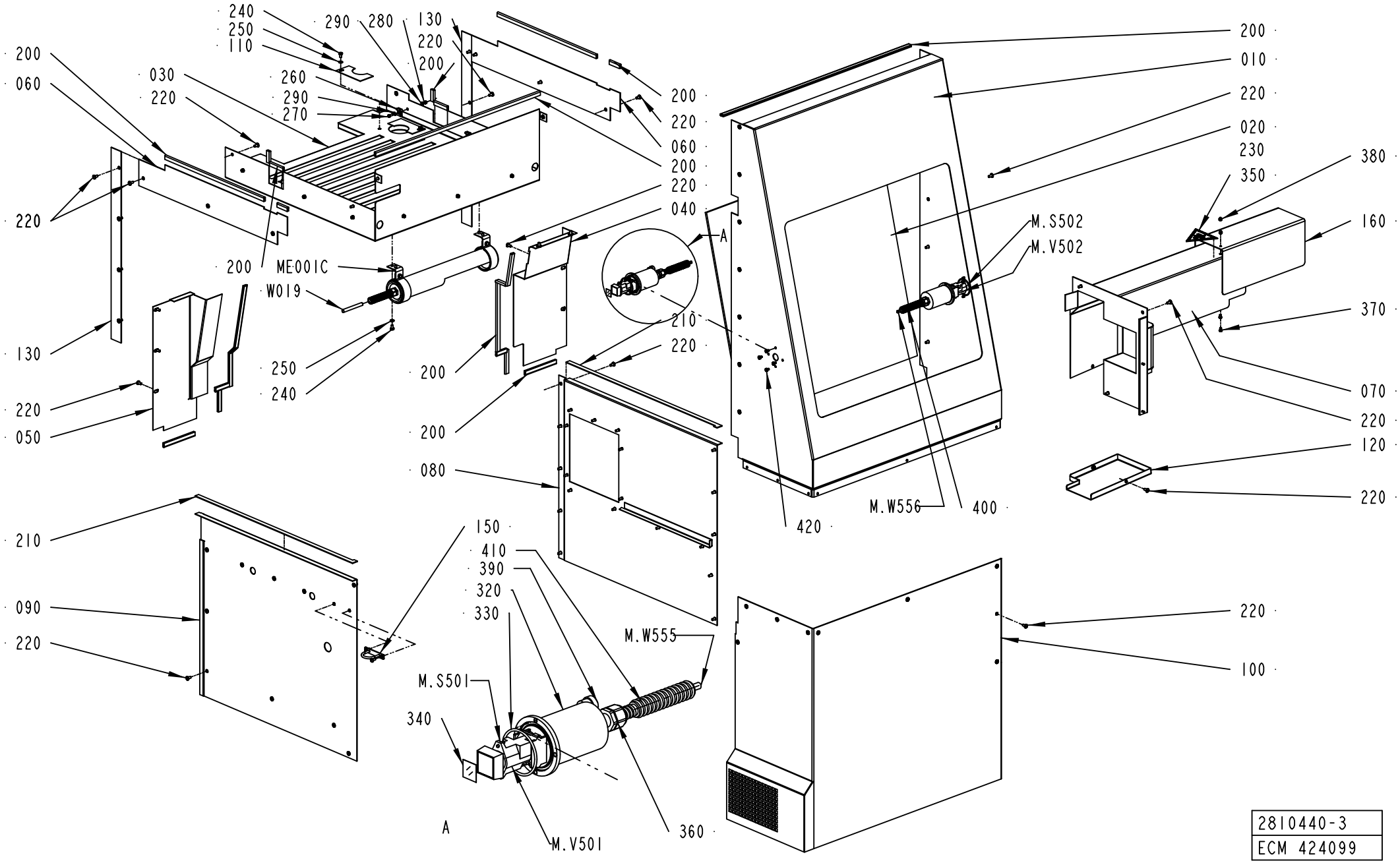

2810440-3
ECM 424099

ECM: 429880 - 20091221
Group number: 2810440-0200
Assembly Drawing: 2810440-3_1_AB

This list covers pages from 2-28 to 2-31

Pos	Part No	UN	Qty	Description	Page No
TPA 0250SQ, TPA 0200SQ, TPA 0330SQ NOSTREAMCAP (See drawing on page: 2-28)					
070	2810416-0000		1	TUNNEL	
100	2807016-0000		1	COVER	
120	2810418-0000		1	COVER	
160	3047665-0000		1	COVER	
TPA 0330SQ STREAMCAP (See drawing on page: 2-30)					
070	2854649-0000		1	TUNNEL	
100	2854648-0000		1	COVER	
120	2854651-0000		1	COVER	
160	3047666-0000		1	COVER	
Common Parts					
010	3036087-0000		1	FRONT COVER	
020	1549608-0000		1	GLASS PANE	
030	2552701-0000		1	TOP SECTION	
040	2552702-0000		1	COVER	
050	2552703-0000		1	COVER	
060	2552704-0000		2	COVER PLATE	
080	2810428-0000		1	COVERING PLATE	
090	2552709-0000		1	COVERING PLATE	
110	2552707-0000		2	COVER PLATE	
130	2553895-0000		2	COVER	
150	2594221-0000		1	BOW CLAMP	
200	90143-0097	MM	4700	SELF GRIPPING GASKET, 1011-24	
210	90143-0073	MM	1400	FLAT GASKET TAPE W. ADHESIVE, 15X3.0	
220	90287-0075		84	SCREW SLOT. PAN HEAD LKCS M6X12	
230	90157-0041	L	1	SEALING COMPOUND, RHODORSEAL 5651	
240	312105-0364		6	SCREW, M6S ISO 4017 M6X10 A4 80	
250	315105-0153		6	WASHER PLAIN, 6,4X12X1,5 A4 BRB	
260	352113-0204		9	ANCHOR PLATES FOR STRIPS, TM3S25-M	
270	312125-0327		9	SLOTTED HEAD SCREW, ISO1207 M5X12 A4	
280	312605-0314		9	HEXAGON NUT, M6M M5 A280	
290	315105-0146		18	WASHER PLAIN, 5,3X10X1 A4 BRB	
320	3036089-0000		2	COVER HOUSING	
330	315202-0736		2	O-RING 50,47X2,62 MM	
340	359301-0504		2	BUTTON SIGN, RESET	
350	359705-0006		1	WARNING SIGN ISO, MOVING PART	
360	90458-0427		2	GLAND FITTING, VK 21652YUL11	
370	90459-1333		10	SCREW ISO 7380 K6S M5X8 A2	
380	312705-0314		2	NUT HEX. DOMED CAP MHM-6 M5 A280	
390	353249-0009		2	INSERT, SINGLE HOLE, EK152 9	
400	90152-0059	M	6	HOSE, SPIRAL CONDUIT, 18X12, UL 1211	
410	90152-0059	M	6	HOSE, SPIRAL CONDUIT, 18X12, UL 1211	
420	312132-0323		8	SLOTTED HEAD, PAN SCREW, MSCS M5X8	
M.W556	351150-0404	M	6	CABLE OLFLEX 4X0,75 MM2 LIGHT/GREY	
M.W555	351150-0404	M	6	CABLE OLFLEX 4X0,75 MM2 LIGHT/GREY	
M.V502	90038-0021		1	DIODE, 1A 800V	
M.V501	90038-0021		1	DIODE, 1A 800V	
M.S502	90064-0082		1	PUSH BUTTON, WHITE	
	90036-0057		*1*	*LIGHT BULB, BA9S 28V*	
M.S501	90064-0082		1	PUSH BUTTON, WHITE	
	90036-0057		*1*	*LIGHT BULB, BA9S 28V*	
ME001C	595430-0200		1	LIGHT FIXTURE	**2-23**
W019	351150-0412	M	6	CABLE OLFLEX 3X1,5 MM2 LIGHT/GREY	

Machine Type | Group Description | Used-In | Group Number | Page No

COVER PLATES

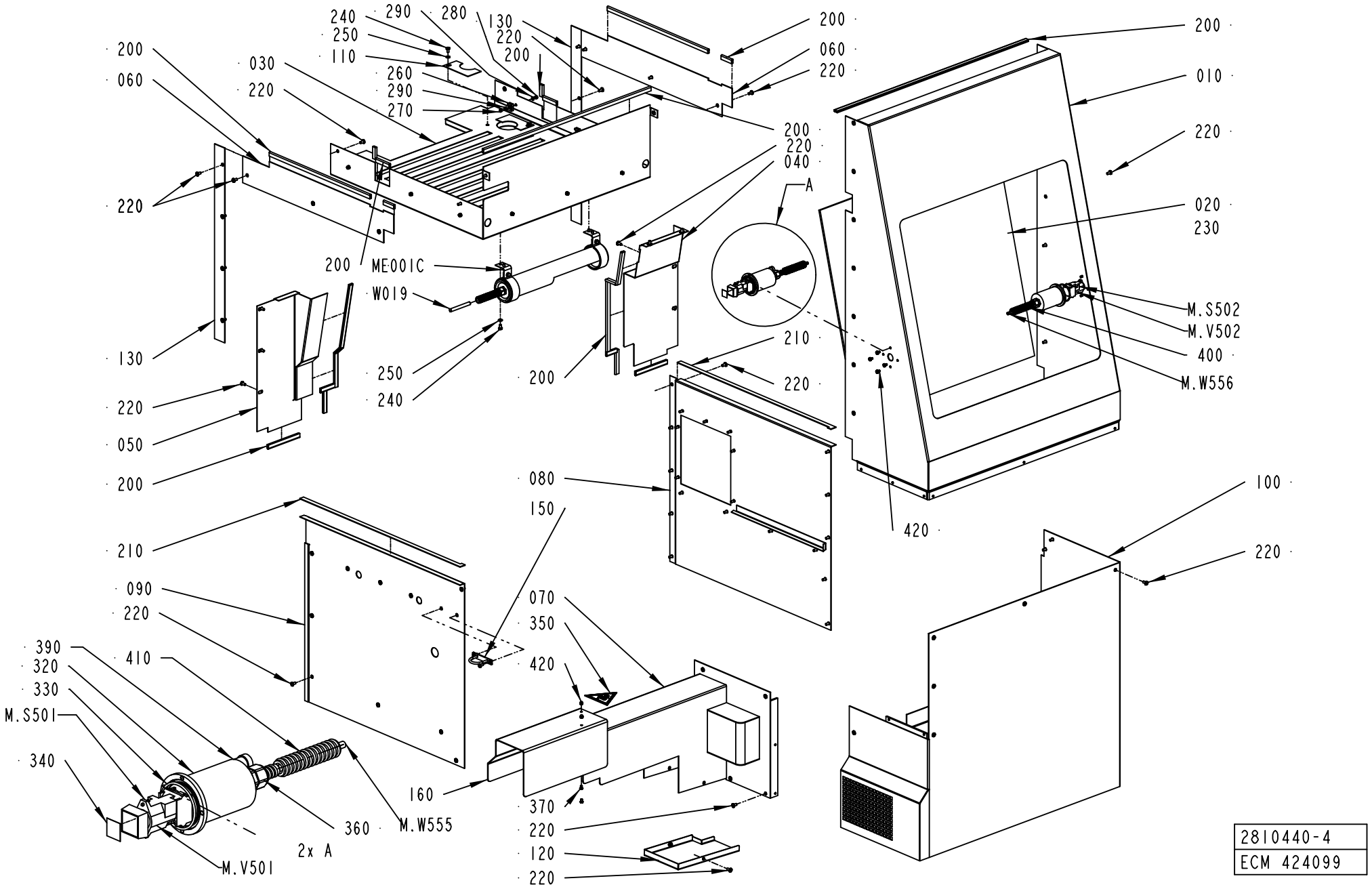

2810440-4
ECM 424099

ECM: 429880 - 20091221
Group number: 2810440-0200
Assembly Drawing: 2810440-4_1_AB

This list covers pages from 2-28 to 2-31

Pos	Part No	UN	Qty	Description	Page No
TPA 0250SQ, TPA 0200SQ, TPA 0330SQ NOSTREAMCAP (See drawing on page: 2-28)					
070	2810416-0000		1	TUNNEL	
100	2807016-0000		1	COVER	
120	2810418-0000		1	COVER	
160	3047665-0000		1	COVER	
TPA 0330SQ STREAMCAP (See drawing on page: 2-30)					
070	2854649-0000		1	TUNNEL	
100	2854648-0000		1	COVER	
120	2854651-0000		1	COVER	
160	3047666-0000		1	COVER	
Common Parts					
010	3036087-0000		1	FRONT COVER	
020	1549608-0000		1	GLASS PANE	
030	2552701-0000		1	TOP SECTION	
040	2552702-0000		1	COVER	
050	2552703-0000		1	COVER	
060	2552704-0000		2	COVER PLATE	
080	2810428-0000		1	COVERING PLATE	
090	2552709-0000		1	COVERING PLATE	
110	2552707-0000		2	COVER PLATE	
130	2553895-0000		2	COVER	
150	2594221-0000		1	BOW CLAMP	
200	90143-0097	MM	4700	SELF GRIPPING GASKET, 1011-24	
210	90143-0073	MM	1400	FLAT GASKET TAPE W. ADHESIVE, 15X3.0	
220	90287-0075		84	SCREW SLOT. PAN HEAD LKCS M6X12	
230	90157-0041	L	1	SEALING COMPOUND, RHODORSEAL 5651	
240	312105-0364		6	SCREW, M6S ISO 4017 M6X10 A4 80	
250	315105-0153		6	WASHER PLAIN, 6,4X12X1,5 A4 BRB	
260	352113-0204		9	ANCHOR PLATES FOR STRIPS, TM3S25-M	
270	312125-0327		9	SLOTTED HEAD SCREW, ISO1207 M5X12 A4	
280	312605-0314		9	HEXAGON NUT, M6M M5 A280	
290	315105-0146		18	WASHER PLAIN, 5,3X10X1 A4 BRB	
320	3036089-0000		2	COVER HOUSING	
330	315202-0736		2	O-RING 50,47X2,62 MM	
340	359301-0504		2	BUTTON SIGN, RESET	
350	359705-0006		1	WARNING SIGN ISO, MOVING PART	
360	90458-0427		2	GLAND FITTING, VK 21652YUL11	
370	90459-1333		10	SCREW ISO 7380 K6S M5X8 A2	
380	312705-0314		2	NUT HEX. DOMED CAP MHM-6 M5 A280	
390	353249-0009		2	INSERT, SINGLE HOLE, EK152 9	
400	90152-0059	M	6	HOSE, SPIRAL CONDUIT, 18X12, UL 1211	
410	90152-0059	M	6	HOSE, SPIRAL CONDUIT, 18X12, UL 1211	
420	312132-0323		8	SLOTTED HEAD, PAN SCREW, MSCS M5X8	
M.W556	351150-0404	M	6	CABLE OLFLEX 4X0,75 MM2 LIGHT/GREY	
M.W555	351150-0404	M	6	CABLE OLFLEX 4X0,75 MM2 LIGHT/GREY	
M.V502	90038-0021		1	DIODE, 1A 800V	
M.V501	90038-0021		1	DIODE, 1A 800V	
M.S502	90064-0082		1	PUSH BUTTON, WHITE	
	90036-0057		*1*	*LIGHT BULB, BA9S 28V*	
M.S501	90064-0082		1	PUSH BUTTON, WHITE	
	90036-0057		*1*	*LIGHT BULB, BA9S 28V*	
ME001C	595430-0200		1	LIGHT FIXTURE	**2-23**
W019	351150-0412	M	6	CABLE OLFLEX 3X1,5 MM2 LIGHT/GREY	

Machine Type | Group Description | Used-In | Group Number | Page No

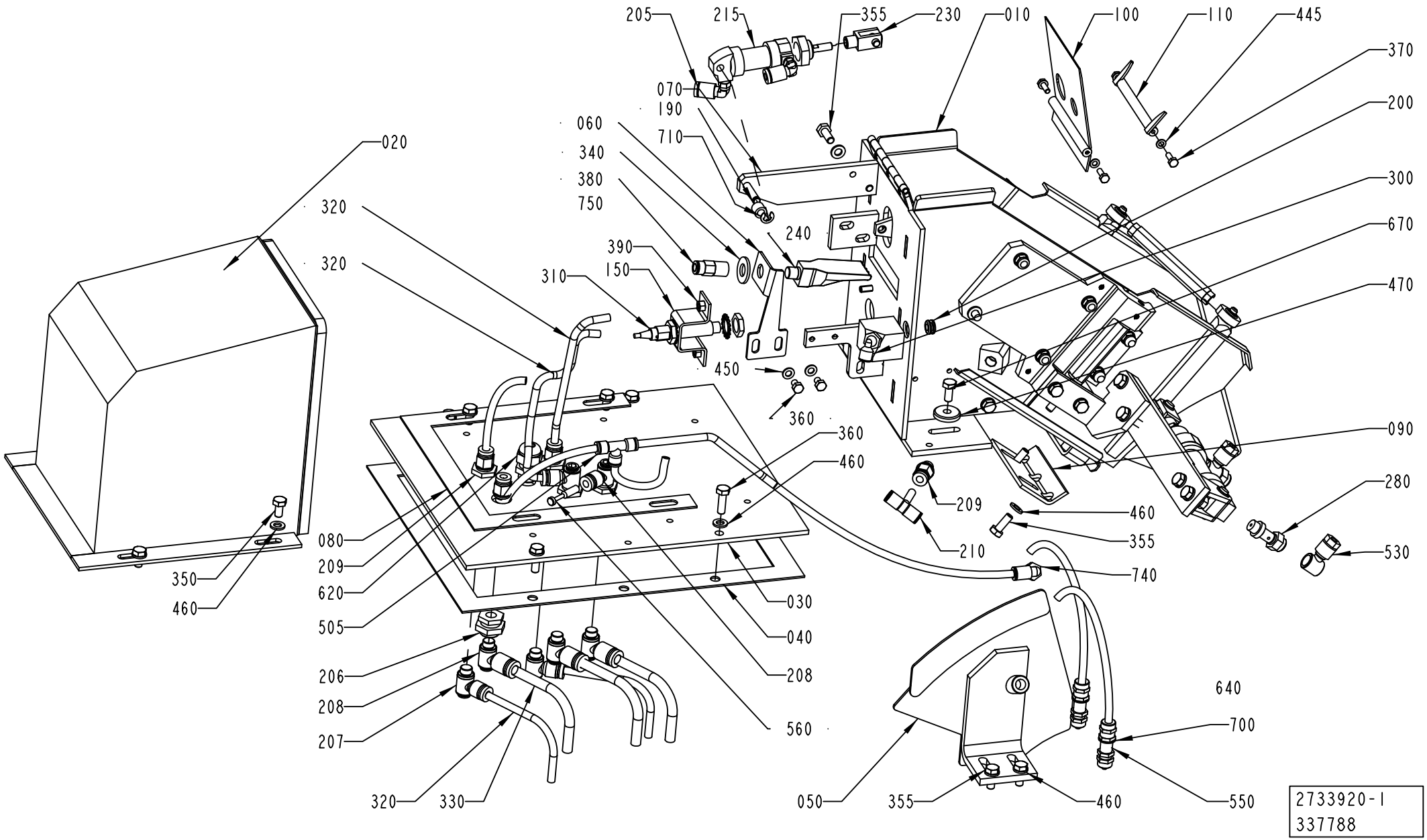
205
215
355
230
010
100
110
445
370
200
300
670
470
090
280
530
740
355
460
209
210
070
190
710
060
340
380
750
240
390
150
310
450
360
360
460
020
320
320
350
460
080
209
620
505
206
208
207
320
330
030
040
208
560
640
700
550
050
355
460
2733920-1
337788

ECM: 339772 - 20080121
Group number: 2733920-0100
Assembly Drawing: 2733920-1_1_AE

Pos	Part No	UN	Qty	Description	Page No
TWA 0125S					
050	2769655-0000		1	SIDE PLATE	
100	2745176-0000		1	GUIDE PLATE	
110	2745177-0000		1	GUIDE PLATE	
170	2769656-0000		1	BRACKET	
TWA 0200S					
050	2526381-0000		1	SIDE PLATE	
100	2709292-0000		1	GUIDE PLATE	
110	1360696-0000		1	GUIDE PLATE	
Common Parts					
010	2754791-0100		1	TURNING DEVICE	**2-35**
020	1549886-0000		1	PROTECTIVE COVER	
030	1549888-0000		1	COVERING PLATE	
040	591454-0000		1	GASKET	
060	2903599-0000		1	BRACKET	
070	1549885-0000		1	BRACKET	
080	1549889-0000		1	GASKET	
090	2526399-0000		1	STOP	
150	591457-0000		1	BRACKET	
190	2745184-0000		1	DISTANCE PIECE LOCK	
200	90015-0010		1	BUSHING	
205	90055-0207		2	ELBOW PIPE JOINT,EXT.THREAD,D=6 MM M5	
206	90055-0209		5	BULKHEAD LEAD-IN	
207	90055-0210		4	ELBOW PIPE JOINT,EXT.THREAD,D=6 MM G1/8	
208	90055-0211		3	ELBOW PIPE JOINT,EXT.THREAD,D=8 MM G1/8	
209	90055-0212		4	STRAIGHT COUPLING, D=6 MM - G1/8"	
210	90055-0229		1	T- WITH TAILPIECE 6 MM	
215	90239-0841		1	DOUBLE ACTING, MINI-ISO, CYL. 16-25	
230	90450-0725		1	ROD END, CLEVIS WITH AXLE M6	
240	90600-4047		1	AIR NOZZLE FLAT, 971	
280	90235-0274		2	THROTTLE CHECK VALVE, G1/8", SCU-604-1/8	
300	90458-2956		1	ELBOW PIPE JOINT, EXT.THREAD, D=6MM-G1/8	
310	90458-0672		1	INDICTIVE SENSOR, E2E2-X5MB1-5M	
320	315400-0001	M	15	TUBE PUN-H-6X1-BL	
330	315400-0004	M	15	TUBE PUN-H-8X1,25-BL	
340	315103-0173		1	WASHER PLAIN, 10,5X22X2 BR NI PL	
350	312105-0366		4	SCREW, M6S ISO 4017 M6X12 A4 80	
355	312105-0368		8	SCREW, M6S ISO 4017 M6X16 A4 80	
360	312105-0370		6	SCREW, M6S ISO 4017 M6X20 A4 80	
370	312105-0291		4	SCREW, M6S ISO 4017 M4X12 A4 70	
380	350008-0003		1	PUSH-IN FITTING QSF-F-G1/8-6	
390	312605-0314		4	HEXAGON NUT, M6M M5 A280	
400	312605-0316		2	HEXAGON NUT, M6M M6 A280	
420	312812-0316		1	HEXAGON NUT, NY-LOCK M6 A4 80	
445	315105-0136		4	WASHER PLAIN, 4,3X9X0,8 A4 BRB	
450	315105-0146		2	WASHER PLAIN, 5,3X10X1 A4 BRB	
460	315105-0153		20	WASHER PLAIN, 6,4X12X1,5 A4 BRB	
470	315125-0153		2	WASHER HIGH, TBRSB 6,4X22X4 A4	
505	342748-0102		1	T-CONNECTION 6MM	
530	342797-0121		2	BANJO CONN., RINGPIECE 6-1/8	
550	342960-0112		2	BULKHEAD COUPLING 6/4	
620	352103-0100		1	CABLE GLAND, STR 9, PR15,2/PG9	
640	359000-0403		1	WIRE MARKING, YELLOW, PA2/4"3"	
660	312105-0323		2	SCREW, M6S ISO 4017 M5X8 A4 80	
670	312105-0367		2	SCREW, M6S ISO 4017 M6X14 A4 80	
680	312311-0370		1	SET SCREW, DOG PONT ISO4028 M6X20 FZB	
700	315233-0109		2	WASHER CAPTIVE SEALING G1/8	
710	315755-0107		1	RETAINING RING SHAFT DIN 6799 5 SS	
740	350002-0006		1	PUSH-IN L-FITTING QSL-F-G1/8-6	
750	90157-0034	ML	5	THREAD SEALANT LOCTITE 572 50 ML	

Machine Type	Group Description	Used-In	Group Number	Page No

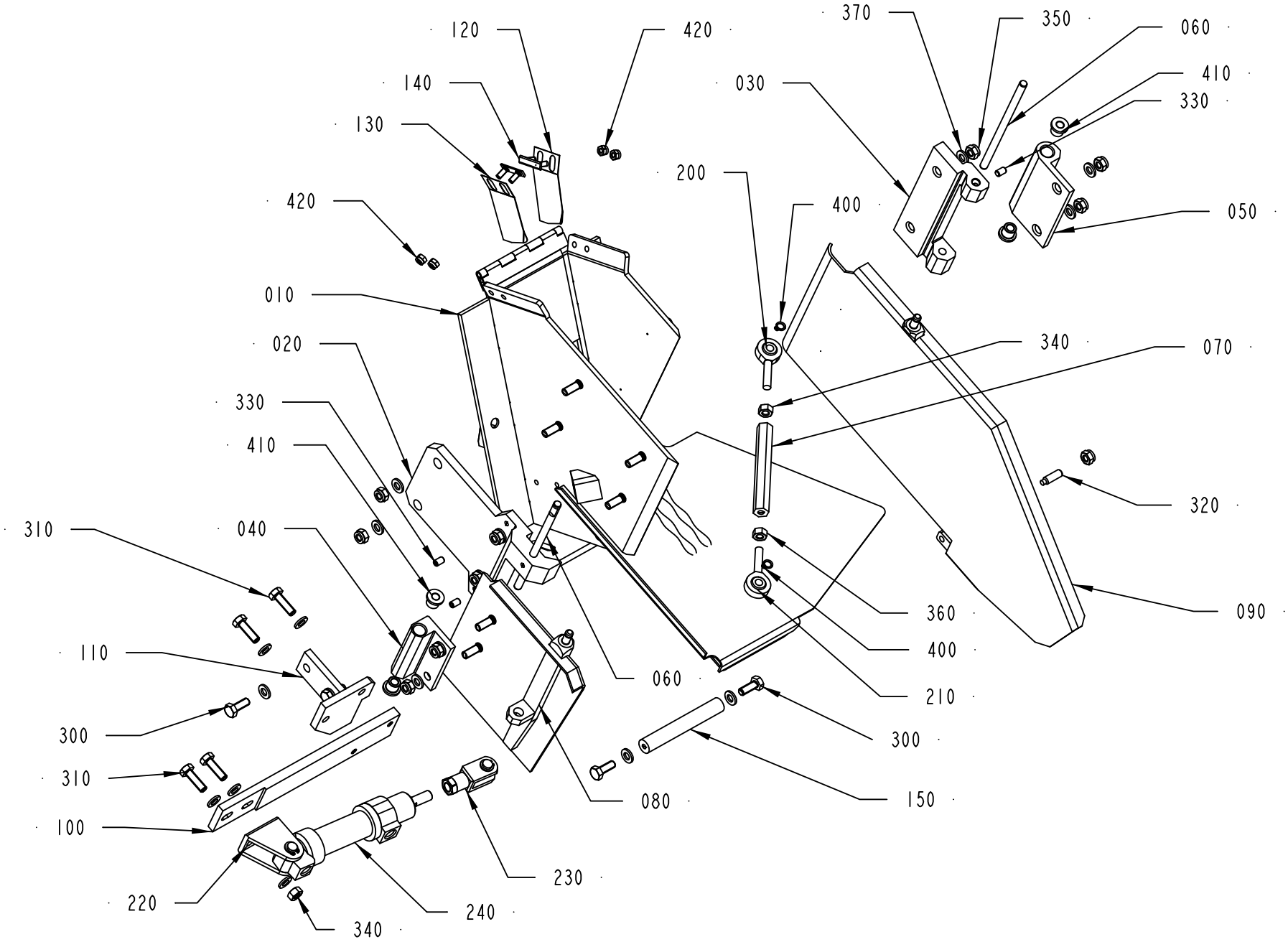

2754791-1
210776

ECM: 220559 - 20051227
Group number: 2754791-0100
Assembly Drawing: 2754791-1_1_AA

Pos	Part No	UN	Qty	Description	Page No
TWA 0125S					
010	2745175-0000		1	TURNING DEVICE	
080	2769654-0000		1	DOOR	
090	2761519-0000		1	DOOR	
120	2746796-0000		1	SPRING	
130	2746797-0000		1	SPRING	
140	2746798-0000		2	PLATE	
150	2761517-0000		1	BAR	
420	312812-0312		4	HEXAGON NUT, NY-LOCK M4 A4 80	
TWA 0200S					
010	2769657-0000		1	TURNING DEVICE	
080	2733917-0000		1	DOOR	
090	2743283-0000		1	DOOR	
150	2761518-0000		1	BAR	
Common Parts					
020	2754795-0000		1	HINGE	
030	2731184-0000		1	HINGE	
040	2754792-0000		1	HINGE	
050	2754793-0000		1	HINGE	
060	2754794-0000		2	AXLE PIN	
070	2738220-0000		1	RIGGING SCREW	
100	2738219-0000		1	BRACKET	
110	2754789-0000		1	BRACKET	
200	90115-0137		1	ROD END, ID=6 MM, M6X1	
210	90115-0138		1	ROD END, ID=6 MM, M6X1 LH	
220	90239-0487		1	REAR, CLEVIS, MINI-ISO 20-25	
230	90239-0532		1	ROD END, CLEVIS WITH AXLE M8X1,25	
240	90239-0847		1	DOUBLE ACTING, MINI-ISO, CYL.20-50	
300	312105-0368		4	SCREW, M6S ISO 4017 M6X16 A4 80	
310	312105-0370		4	SCREW, M6S ISO 4017 M6X20 A4 80	
320	312311-0370		1	SET SCREW, DOG PONT ISO4028 M6X20 FZB	
330	312318-0323		4	SET SCREW, CUP END ISO4029 M5X8 A4	
340	312605-0316		3	HEXAGON NUT, M6M M6 A280	
350	312812-0316		11	HEXAGON NUT, NY-LOCK M6 A4 80	
360	312902-0316		1	NUT HEX. LEFT THREAD, M6 A280	
370	315105-0153		20	WASHER PLAIN, 6,4X12X1,5 A4 BRB	
400	315751-0103		2	RETAINING RING FOR SHAFT DIN 471 6X 0.7C	
410	321111-0066		4	FLANGE BUSHING, 6/10X10-14X2 MM	

Pos	Part No	UN	Qty	Description	Page No

MACHINE BODY

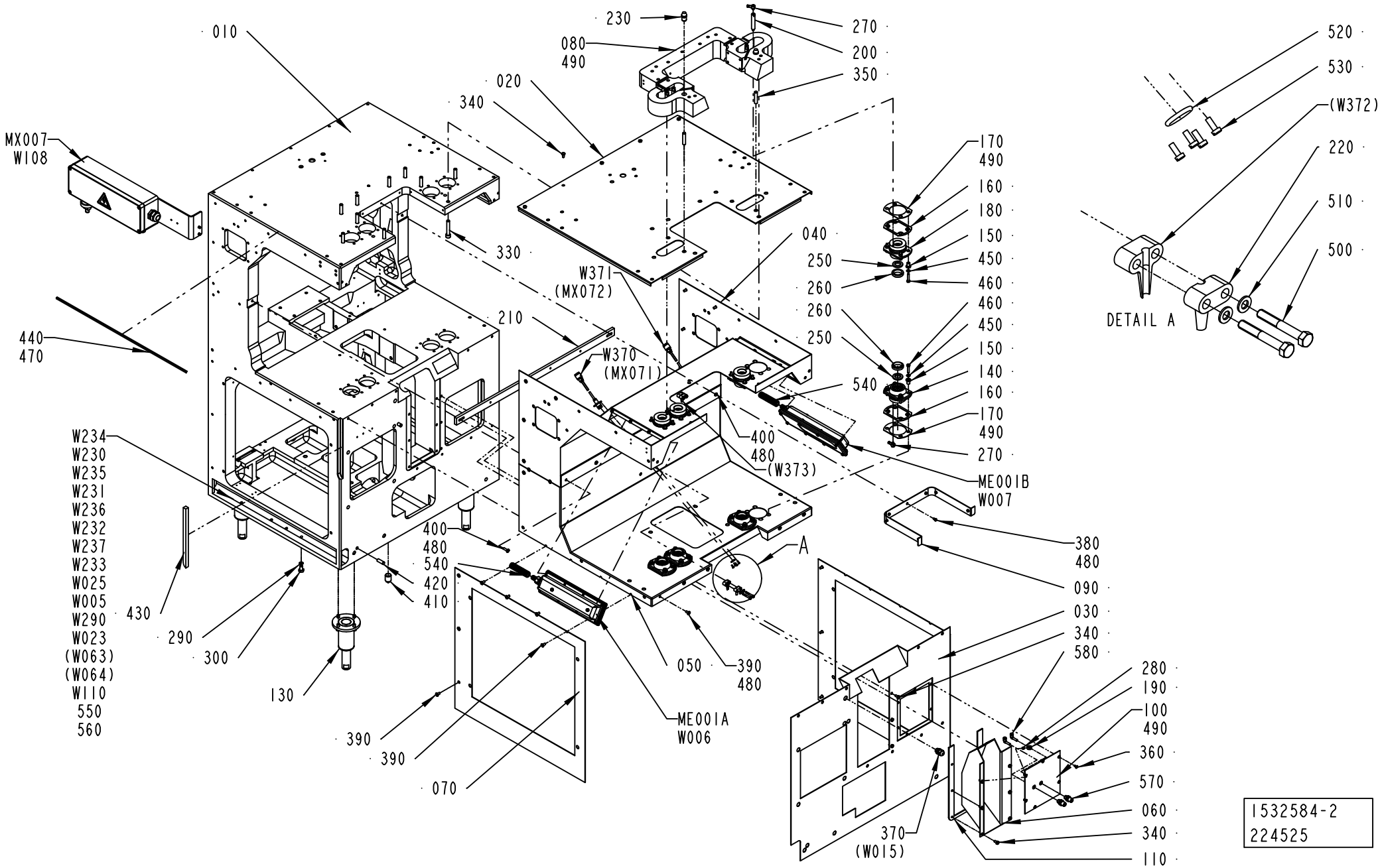

ECM: 323810 - 20071113
Group number: 1532584-0200
Assembly Drawing: 1532584-2_1_AA

Pos	Part No	UN	Qty	Description	Page No
TBA, TPA					
060	1523759-0000		1	COVER	
TWA					
060	2854951-0000		1	COVER	
Common Parts					
010	1523754-0000		1	MACHINE BODY	
020	1523755-0000		1	COVERING PLATE	
030	1523756-0000		1	COVER	
040	1523757-0000		1	PLATE	
050	1523758-0000		1	PLATE	
070	1523760-0000		1	FRONT PLATE	
080	2781218-0000		1	COLLAR	
090	441677-0000		1	FRONT PLATE	
100	2556246-0000		1	HATCH	
110	1195428-0000		1	GASKET	
130	2773926-0100		4	LEG	**2-39, 6-63, 8-9**
140	441217-0000		4	BUSHING LOWER	
150	751085-0000		32	BUSHING	
160	441593-0000		8	GASKET	
170	441221-0000		8	WASHER	
180	441218-0000		4	BUSHING UPPER	
190	441077-0000		1	NOZZLE BRACKET	
200	469937-0000		4	PIPE	
210	441212-0000		1	HOLDER	
220	1282426-0000		4	CLIP	
230	1037761-0000		2	PIN	
250	315259-0102		8	FELT SEAL 22-47 MM	
260	90091-0106		8	SCRAPER 30X40X7 MM	
270	90137-0010		8	BANJO CONN. M6, D=2,5 MM	
280	90424-0027		1	SPRAY NOZZLE TIP, 8613-8V-TC	
290	315239-0109		8	NYLON WASHER G1/8, 1/8RRP	
300	312105-0489		8	SCREW, M6S ISO 4017 M10X16 A4 80	
330	312115-0503		10	SCREW ISO4762 M10X60 A4 80	
340	312105-0366		14	SCREW, M6S ISO 4017 M6X12 A4 80	
350	311103-0466		2	PARALLEL PIN ISO 2338 10M6X50 A1	
360	312155-0325		6	SCREW DIN 7991 MF6S M5X10 A4 70	
370	352103-0100		1	CABLE GLAND, STR 9, PR15,2/PG9	
380	312125-0323		7	SLOTTED HEAD SCREW, ISO1207 M5X8 A4	
390	90287-0075		38	SCREW SLOT. PAN HEAD LKCS M6X12	
400	90287-0076		2	SCREW SLOT. PAN HEAD LKCS M6X20	
410	90087-0002		3	PIPE PLUG	
420	311103-0458		2	PARALLEL PIN ISO 2338 10M6X30 A1	
430	90143-0010	MM	260	STRIP	
440	90143-0012	MM	1900	STRIP	
450	315105-0153		32	WASHER PLAIN, 6,4X12X1,5 A4 BRB	
460	312105-0374		32	SCREW, M6S ISO 4014 M6X30 A4 80	
470	90153-0017	KG	1	ADHESIVE, 2963 TUBE 160G	
480	90157-0016	L	1	THREAD LOCKING, LOCTITE 242 50 ML	
490	90157-0022	ML	1	SEALING COMPOUND, SILICONE	
500	312105-0337		4	SCREW, M6S ISO 4014 M5X35 A4 80	
510	315105-0146		4	WASHER PLAIN, 5,3X10X1 A4 BRB	
520	315202-0211		2	O-RING 13,3X2,4 MM	
530	312125-0222		8	SLOTTED HEAD SCREW, ISO1207 M3X8 A4	
540	90152-0059	M	6	HOSE, SPIRAL CONDUIT, 18X12, UL 1211	
550	90152-0051	M	8.5	HOSE, SPIRAL CONDUIT, 25X18, UL 1816	
560	90152-0070	M	2.7	HOSE, SPIRAL CONDUIT, 32,5X26, UL 2621	
570	342768-0102		2	BULKHEAD CONNECTOR, 6 MM	
580	90055-0217		2	ELBOW PIPE JOINT	
ME001B	441534-0200		1	LIGHT FIXTURE	**2-41**
MX007	456827-0400		1	CONNECTION BOX	**2-43, 2-45**
ME001A	441534-0200		1	LIGHT FIXTURE	**2-41**
W005	351150-0418	M	7	CABLE OLFLEX 4X2,5 MM2 LIGHT/GREY	
W006	351150-0412	M	4	CABLE OLFLEX 3X1,5 MM2 LIGHT/GREY	
W007	351150-0412	M	3.5	CABLE OLFLEX 3X1,5 MM2 LIGHT/GREY	
W023	90220-0104	M	8.5	SCR. CABLE 4X1,5MM2	
W025	351150-0428	M	6	CABLE OLFLEX 41X0,75 MM2 LIGHT/GREY	
W108	351150-0425	M	4	CABLE OLFLEX 25X0,75 MM2 LIGHT/GREY	
W110	351150-0413	M	6	CABLE OLFLEX 4GX1,5 MM2 LIGHT/GREY	
W230	351150-0412	M	6.5	CABLE OLFLEX 3X1,5 MM2 LIGHT/GREY	
W231	351150-0412	M	6.5	CABLE OLFLEX 3X1,5 MM2 LIGHT/GREY	
W232	351150-0412	M	6.5	CABLE OLFLEX 3X1,5 MM2 LIGHT/GREY	
W233	351150-0412	M	6.5	CABLE OLFLEX 3X1,5 MM2 LIGHT/GREY	
W234	90220-0034	M	6	THERMOC.CABLE, TEX/SITW-20F-KX 2X0,5MM2	
W235	90220-0034	M	6	THERMOC.CABLE, TEX/SITW-20F-KX 2X0,5MM2	
W236	90220-0034	M	6	THERMOC.CABLE, TEX/SITW-20F-KX 2X0,5MM2	
W237	90220-0034	M	6	THERMOC.CABLE, TEX/SITW-20F-KX 2X0,5MM2	
W290	351162-0106	M	8	WIRE AWM 1X4 MM2 YELLOW-GREEN	
W370	551969-0006		1	COAXIAL CABLES	
W371	551969-0006		1	COAXIAL CABLES	

Machine Type | Group Description | Used-In | Group Number | Page No

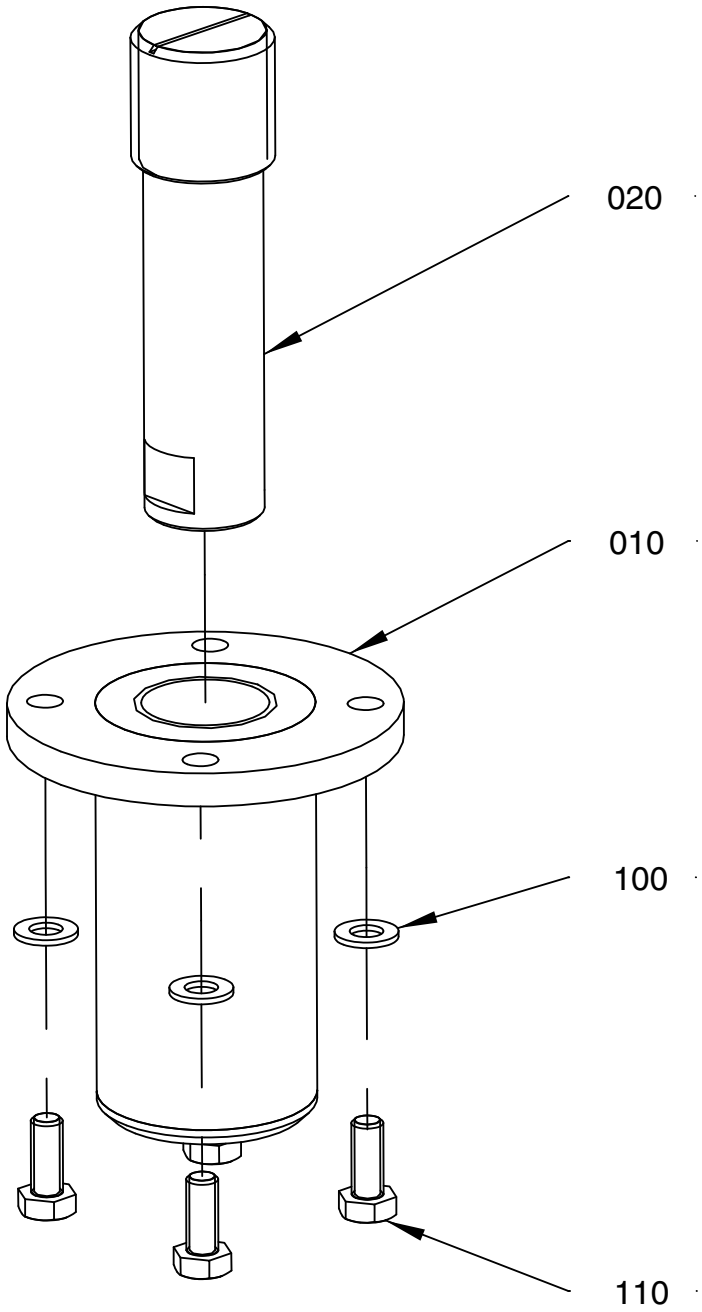

2773 926-1
224525

ECM: 224529 - 20051114
Group number: 2773926-0100
Assembly Drawing: 2773926-1_1_AA

Pos	Part No	UN	Qty	Description	Page No
-					
010	2773925-0000		1	LEG	
020	598148-0000		1	LEG	
100	315105-0165		4	WASHER PLAIN, 8,4X16X1,6 A4 BRB	
110	312105-0451		4	SCREW, M6S ISO 4017 M8X20 A4 80	

Pos	Part No	UN	Qty	Description	Page No

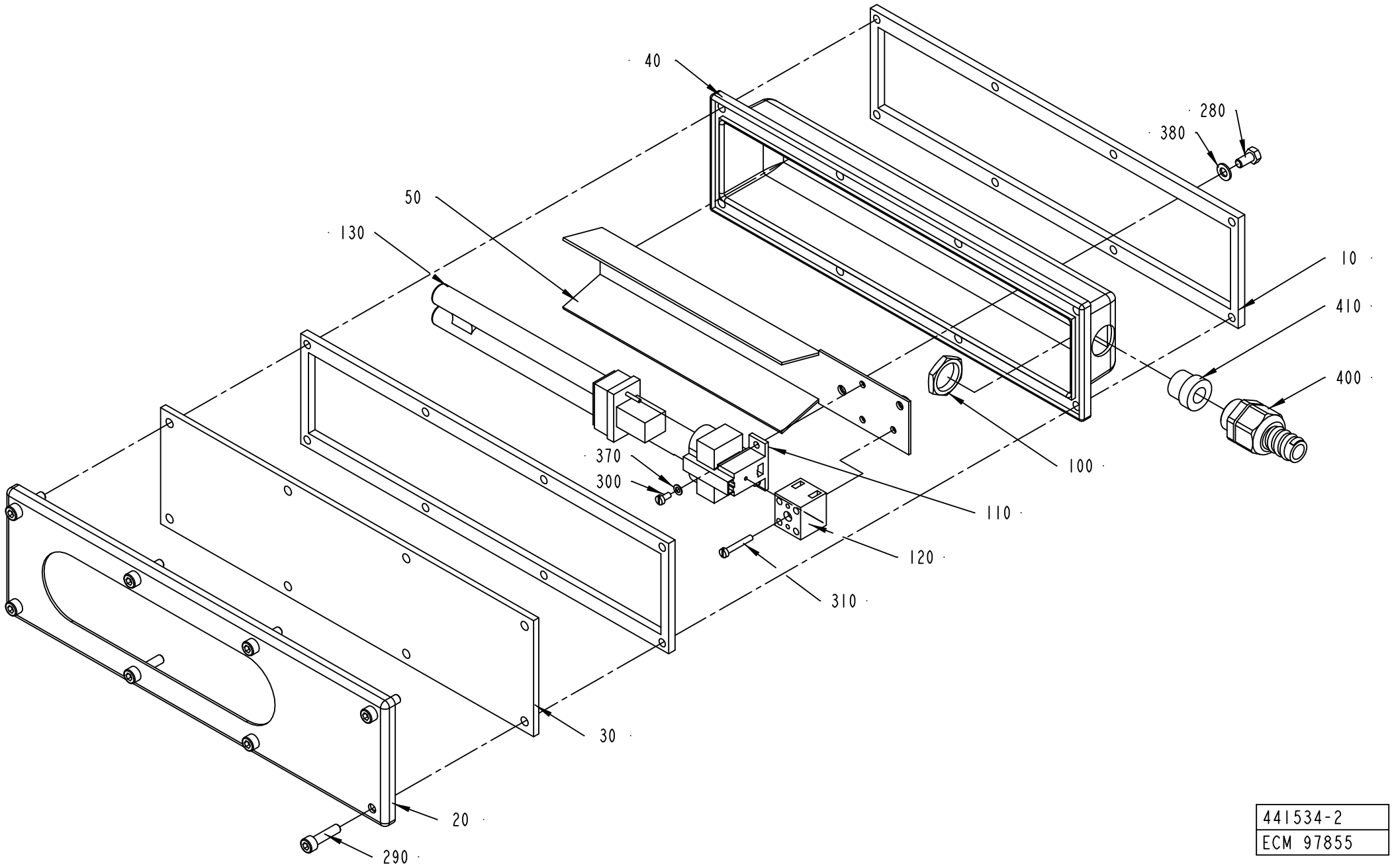

441534-2
ECM 97855

ECM: 178704 - 20040910
Group number: 441534-0200
Assembly Drawing: 441534-2_1_AA

Pos	Part No	UN	Qty	Description	Page No
-					
010	441536-0000		2	GASKET	
020	456263-0000		1	SHEET	
030	456264-0000		1	GLASS	
040	469336-0000		1	COVER	
050	469337-0000		1	REFLECTOR	
100	90099-0002		1	NUT PR 18,6 BRASS	
110	90164-0301		1	HOLDING FIXTURE	
120	90195-0020		1	TERMINAL BLOCK, BK 2CRN, 0624 7200 00	
130	90297-0006		1	FLUORESCENT TUBE, PL9	
280	312105-0325		2	SCREW, M6S ISO 4017 M5X10 A4 80	
290	312115-0331		8	SCREW ISO4762 M5X20 A4 80	
300	312125-0220		2	SCREW ISO 1207 M3X6 A4	
310	312125-0230		1	SLOTTED HEAD SCREW, ISO1207 M3X20 A4	
370	315105-0124		2	WASHER PLAIN, 3,2X6X0,5 A4 BRB	
380	315105-0146		2	WASHER PLAIN, 5,3X10X1 A4 BRB	
400	353243-0002		1	GLAND FITTING, VK 15152YUL11	
410	353249-0009		1	INSERT, SINGLE HOLE, EK152 9	

Pos	Part No	UN	Qty	Description	Page No

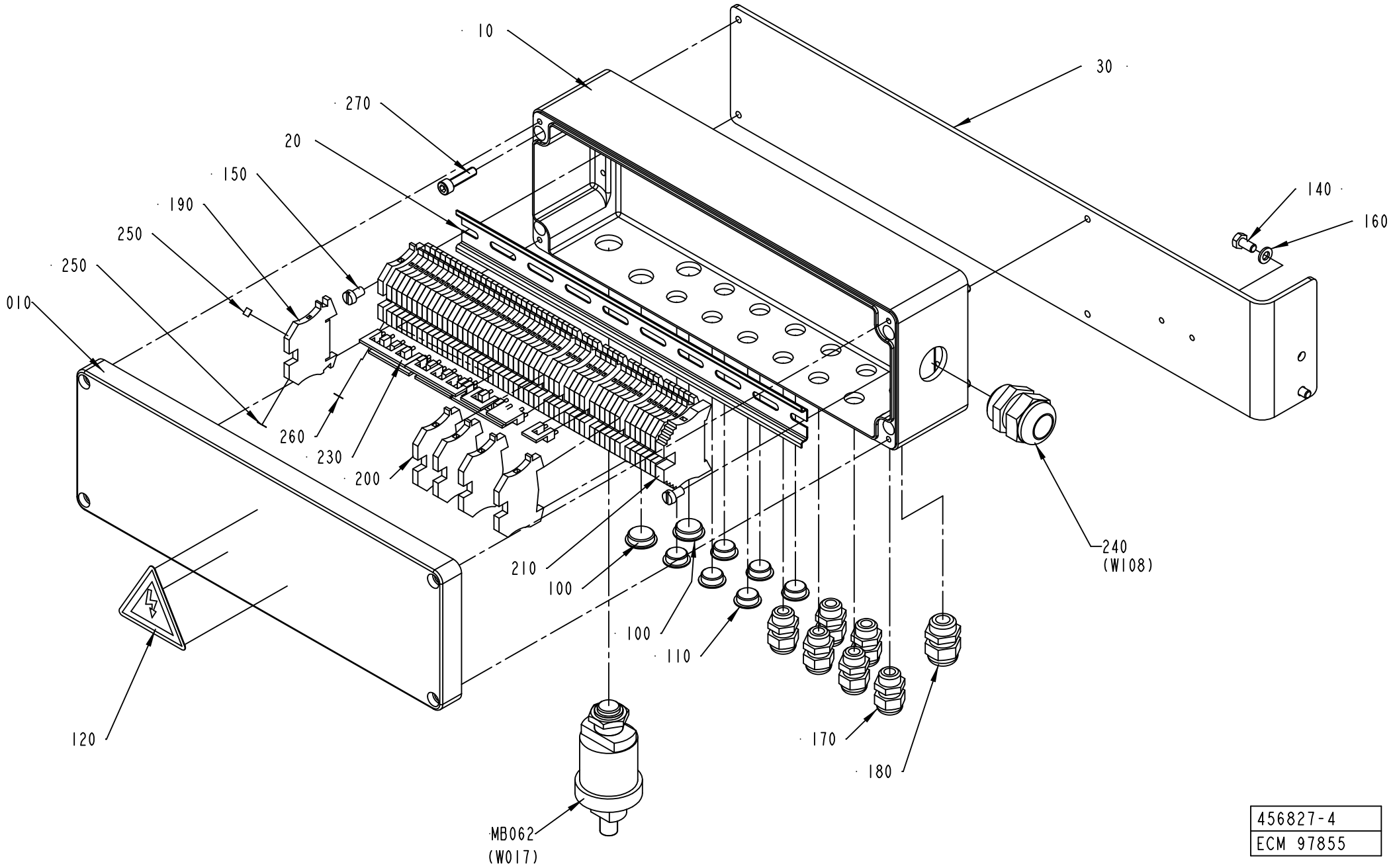

456827-4
ECM 97855

ECM: 178696 - 20040910
Group number: 456827-0400
Assembly Drawing: 456827-4_1_AA

This list covers pages from 2-42 to 2-45

Pos	Part No	UN	Qty	Description	Page No
-					
010	1512667-0000		1	CONNECTION BOX	
020	578676-0000		1	RAIL	
030	1512840-0000		1	BRACKET	
100	90002-0009		2	BLANK-OFF PLUG, PR 18.6 SKINDICHT-BLK11	
110	90002-0013		6	BLANK-OFF PLUG, PR 15,2 SKINDICHT-BLK9	
120	90194-0016		1	WARNING SIGN, RISK OF ELECTRIC SHOCK	
140	312105-0366		2	SCREW, M6S ISO 4017 M6X12 A4 80	
150	312125-0364		2	SCREW ISO 1207 M6X10 A4	
160	315105-0153		2	WASHER PLAIN, 6,4X12X1,5 A4 BRB	
170	352103-0101		6	CABLE GLAND, ST 9, PR15,2/PG9	
180	352103-0106		1	CABLE GLAND, ST 11, PR18,6/PG11	
190	353021-0212		50	FEED THROUGH TERMINAL, WDU 2,5	
200	353024-0204		5	EARTH TERMINAL WPE 2,5	
210	353031-0203		1	END BRACKET, WEW 35/2	
230	353034-0030		6	BRIDGE CONNECTOR WQV 2,5/10	
240	352103-0116		1	CABLE GLAND, ST 21, PR28,3/PG21	
250	359011-0807		2	MARKING, DEK 5 FW 1-50	
260	359011-0819		1	MARKING, EARTH, DEK 5 GW ERDE I.KR.	
270	312115-0372		4	SCREW ISO4762 M6X25 A4 80	
MB062	90274-0045		1	PRESSURE GUARD, 14 KPA	

Pos	Part No	UN	Qty	Description	Page No

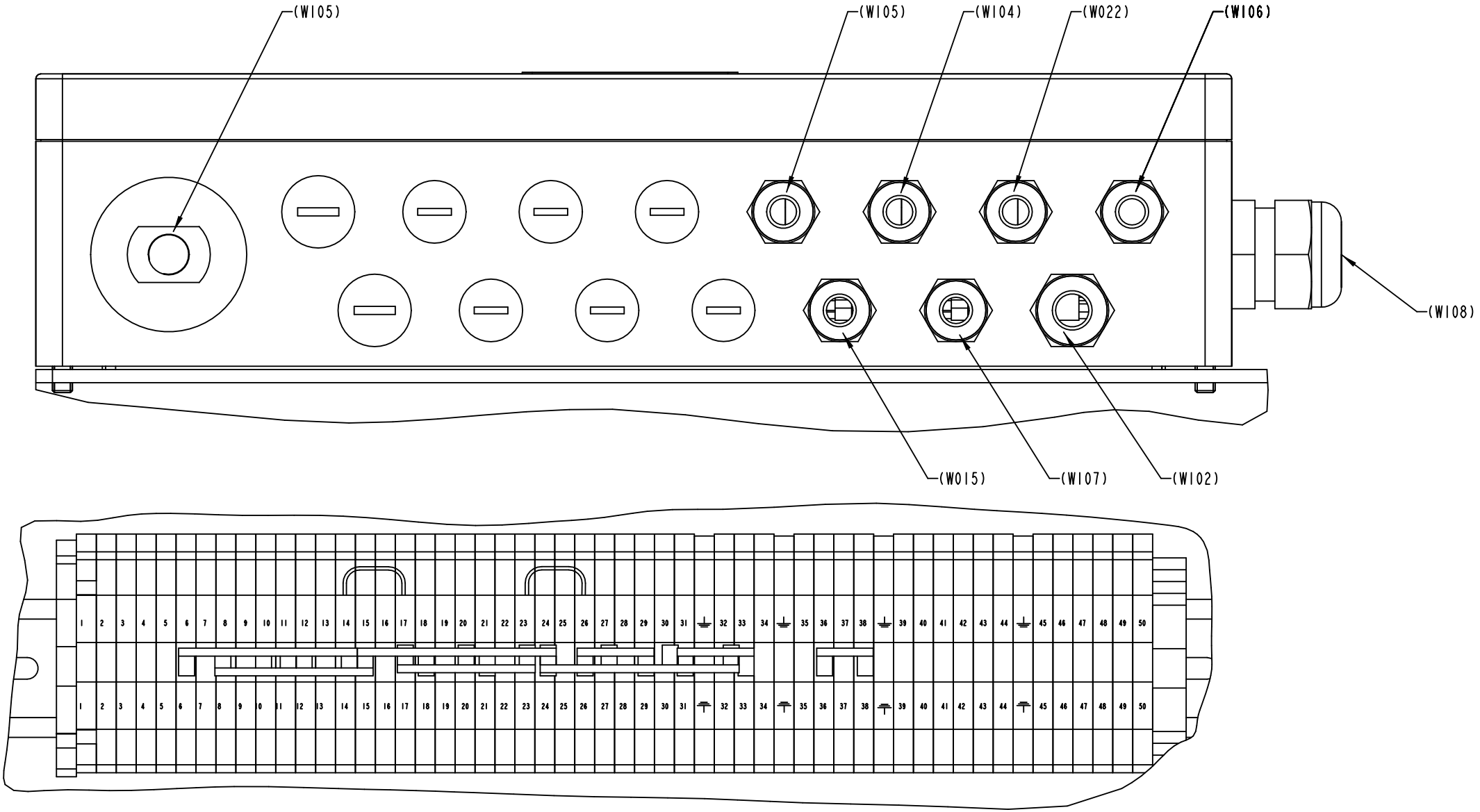
(W105)
(W105)
(W104)
(W022)
(W106)
(W108)
(W015)
(W107)
(W102)

ECM: 178696 - 20040910
Group number: 456827-0400
Assembly Drawing: 456827-4_2_AA

This list covers pages from 2-42 to 2-45

Pos	Part No	UN	Qty	Description	Page No
-					
010	1512667-0000		1	CONNECTION BOX	
020	578676-0000		1	RAIL	
030	1512840-0000		1	BRACKET	
100	90002-0009		2	BLANK-OFF PLUG, PR 18.6 SKINDICHT-BLK11	
110	90002-0013		6	BLANK-OFF PLUG, PR 15,2 SKINDICHT-BLK9	
120	90194-0016		1	WARNING SIGN, RISK OF ELECTRIC SHOCK	
140	312105-0366		2	SCREW, M6S ISO 4017 M6X12 A4 80	
150	312125-0364		2	SCREW ISO 1207 M6X10 A4	
160	315105-0153		2	WASHER PLAIN, 6,4X12X1,5 A4 BRB	
170	352103-0101		6	CABLE GLAND, ST 9, PR15,2/PG9	
180	352103-0106		1	CABLE GLAND, ST 11, PR18,6/PG11	
190	353021-0212		50	FEED THROUGH TERMINAL, WDU 2,5	
200	353024-0204		5	EARTH TERMINAL WPE 2,5	
210	353031-0203		1	END BRACKET, WEW 35/2	
230	353034-0030		6	BRIDGE CONNECTOR WQV 2,5/10	
240	352103-0116		1	CABLE GLAND, ST 21, PR28,3/PG21	
250	359011-0807		2	MARKING, DEK 5 FW 1-50	
260	359011-0819		1	MARKING, EARTH, DEK 5 GW ERDE I.KR.	
270	312115-0372		4	SCREW ISO4762 M6X25 A4 80	
MB062	90274-0045		1	PRESSURE GUARD, 14 KPA	

Pos	Part No	UN	Qty	Description	Page No

DISCHARGE CHUTE

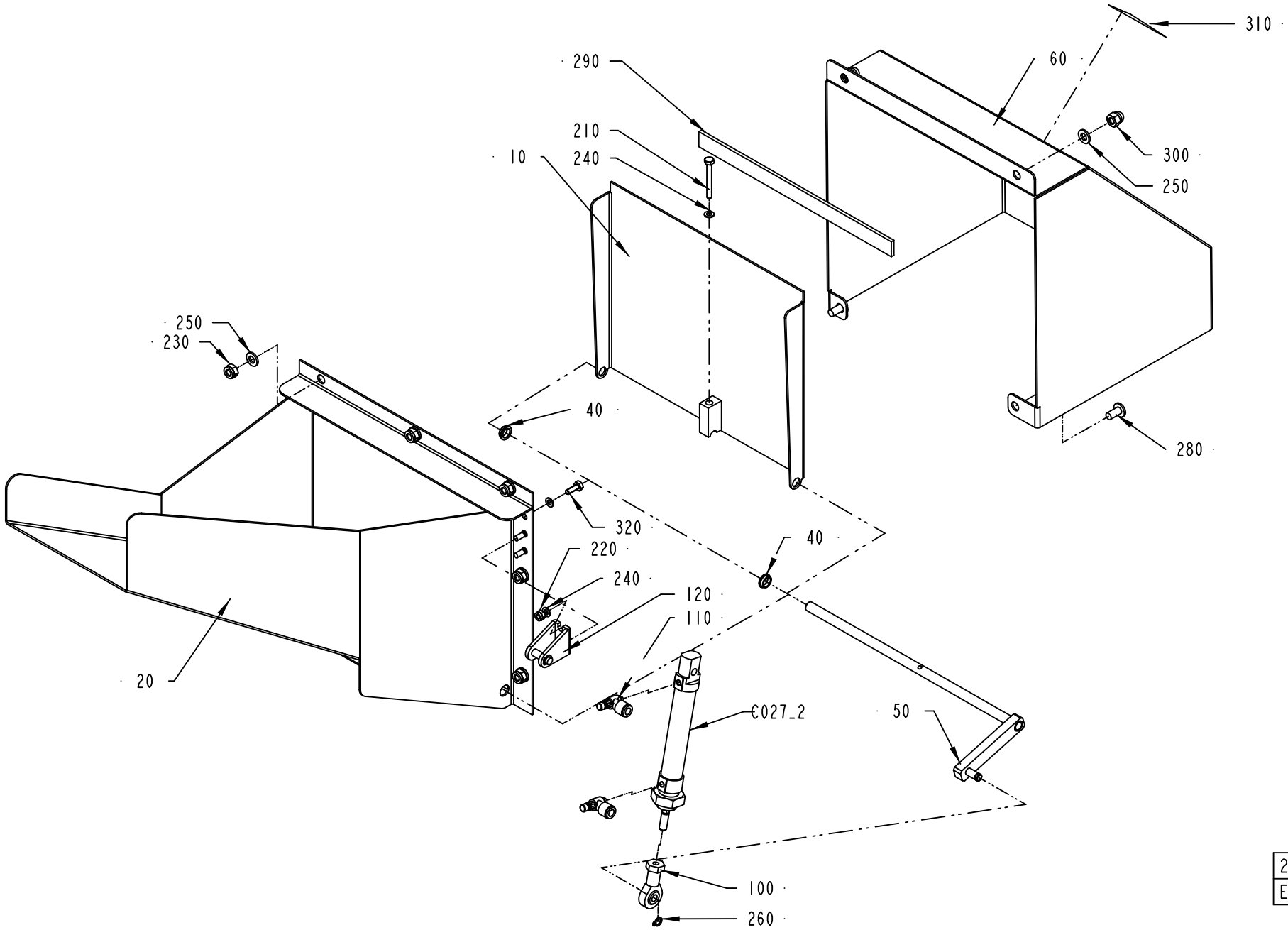

2552699-5
ECM 387163

ECM: 399999 - 20090630
Group number: 2552699-0200
Assembly Drawing: 2552699-5_1_AA

This list covers pages from 2-46 to 2-49

Pos	Part No	UN	Qty	Description	Page No
TBA (See drawing on page: 2-46)					
010	2552697-0000		1	LID	
020	2552698-0000		1	DISCHARGE CHUTE	
050	2552714-0000		1	BRACKET	
060	2554975-0000		1	COVER	
290	90143-0073	MM	220	FLAT GASKET TAPE W. ADHESIVE, 15X3.0	
TPA (See drawing on page: 2-48)					
010	2810433-0000		1	LID	
020	2810429-0000		1	DISCHARGE CHUTE	
050	2552714-0000		1	BRACKET	
060	2810432-0000		1	COVER	
290	90143-0073	MM	220	FLAT GASKET TAPE W. ADHESIVE, 15X3.0	
TWA (See drawing on page: 2-46)					
010	2743341-0000		1	LID	
020	2743342-0000		1	DISCHARGE CHUTE	
050	2743343-0000		1	BRACKET	
060	2743344-0000		1	COVER	
290	90143-0073	MM	320	FLAT GASKET TAPE W. ADHESIVE, 15X3.0	
Common Parts					
040	2552713-0000		2	BUSHING	
100	90115-0173		1	ROD END, ID=6 MM, M6X1	
110	90235-0844		2	THROTTLE CHECK VALVE M5, MANUAL, 6MM	
120	90239-0486		1	REAR, CLEVIS, MINI-ISO 16	
130	90600-2537		1	DOUBLE ACTING, MINI-ISO, CYL. 16-50	
210	312105-0301		1	SCREW, M6S ISO 4017 M4X35 A4 70	
220	312812-0312		2	HEXAGON NUT, NY-LOCK M4 A4 80	
230	312812-0316		7	HEXAGON NUT, NY-LOCK M6 A4 80	
240	315105-0136		4	WASHER PLAIN, 4,3X9X0,8 A4 BRB	
250	315105-0153		9	WASHER PLAIN, 6,4X12X1,5 A4 BRB	
260	315751-0103		1	RETAINING RING FOR SHAFT DIN 471 6X 0.7C	
280	90287-0075		2	SCREW SLOT. PAN HEAD LKCS M6X12	
300	312705-0316		2	HEX. DOMED CAP MHM-6 M6 A280	
310	359705-0006		1	WARNING SIGN ISO, MOVING PART	
320	312105-0291		1	SCREW, M6S ISO 4017 M4X12 A4 70	

Pos	Part No	UN	Qty	Description	Page No

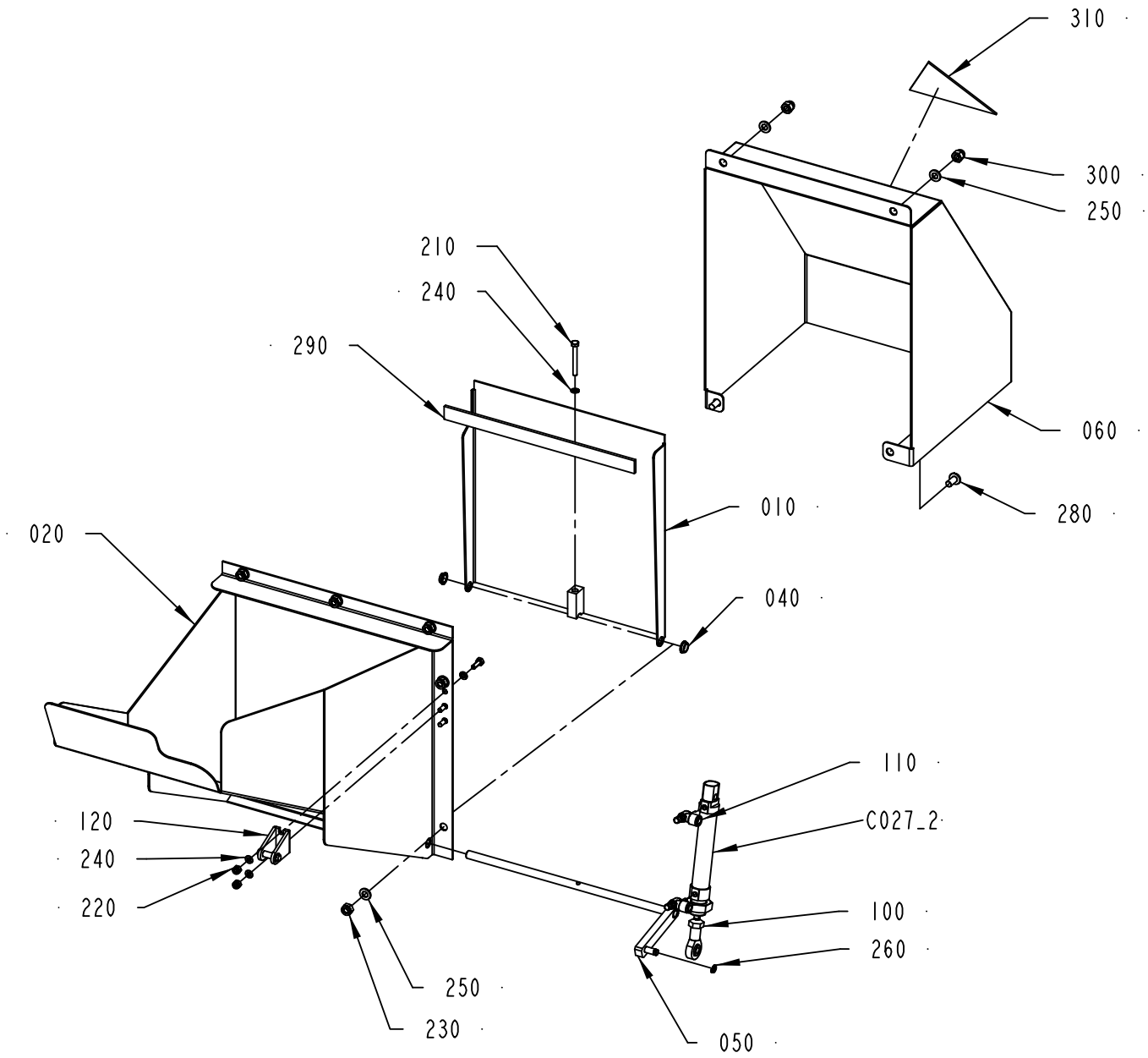

2552699-6
387163

ECM: 399999 - 20090630
Group number: 2552699-0200
Assembly Drawing: 2552699-6_1_AA

This list covers pages from 2-46 to 2-49

Pos	Part No	UN	Qty	Description	Page No
TBA (See drawing on page: 2-46)					
010	2552697-0000		1	LID	
020	2552698-0000		1	DISCHARGE CHUTE	
050	2552714-0000		1	BRACKET	
060	2554975-0000		1	COVER	
290	90143-0073	MM	220	FLAT GASKET TAPE W. ADHESIVE, 15X3.0	
TPA (See drawing on page: 2-48)					
010	2810433-0000		1	LID	
020	2810429-0000		1	DISCHARGE CHUTE	
050	2552714-0000		1	BRACKET	
060	2810432-0000		1	COVER	
290	90143-0073	MM	220	FLAT GASKET TAPE W. ADHESIVE, 15X3.0	
TWA (See drawing on page: 2-46)					
010	2743341-0000		1	LID	
020	2743342-0000		1	DISCHARGE CHUTE	
050	2743343-0000		1	BRACKET	
060	2743344-0000		1	COVER	
290	90143-0073	MM	320	FLAT GASKET TAPE W. ADHESIVE, 15X3.0	
Common Parts					
040	2552713-0000		2	BUSHING	
100	90115-0173		1	ROD END, ID=6 MM, M6X1	
110	90235-0844		2	THROTTLE CHECK VALVE M5, MANUAL, 6MM	
120	90239-0486		1	REAR, CLEVIS, MINI-ISO 16	
130	90600-2537		1	DOUBLE ACTING, MINI-ISO, CYL. 16-50	
210	312105-0301		1	SCREW, M6S ISO 4017 M4X35 A4 70	
220	312812-0312		2	HEXAGON NUT, NY-LOCK M4 A4 80	
230	312812-0316		7	HEXAGON NUT, NY-LOCK M6 A4 80	
240	315105-0136		4	WASHER PLAIN, 4,3X9X0,8 A4 BRB	
250	315105-0153		9	WASHER PLAIN, 6,4X12X1,5 A4 BRB	
260	315751-0103		1	RETAINING RING FOR SHAFT DIN 471 6X 0.7C	
280	90287-0075		2	SCREW SLOT. PAN HEAD LKCS M6X12	
300	312705-0316		2	HEX. DOMED CAP MHM-6 M6 A280	
310	359705-0006		1	WARNING SIGN ISO, MOVING PART	
320	312105-0291		1	SCREW, M6S ISO 4017 M4X12 A4 70	

Pos	Part No	UN	Qty	Description	Page No

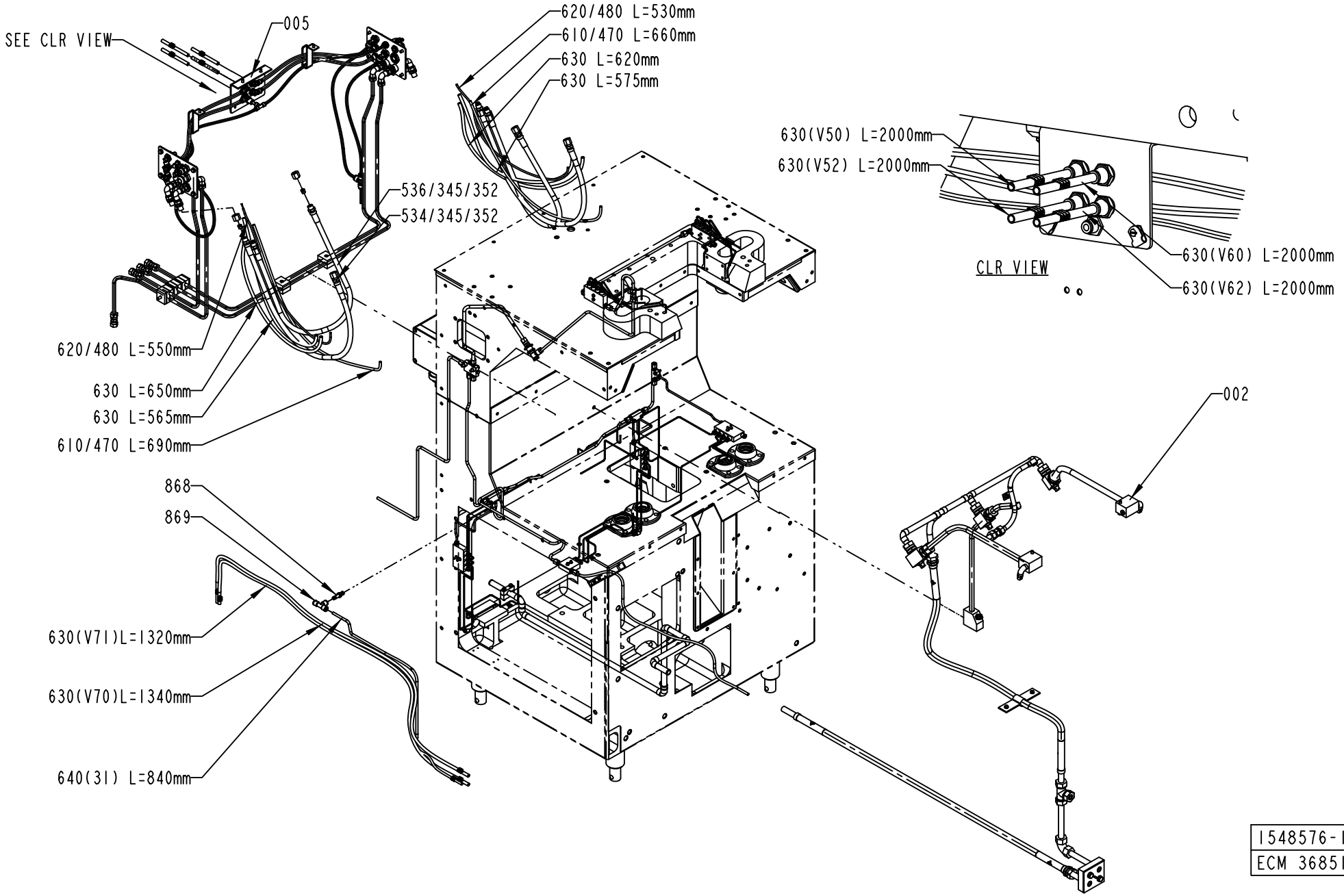

1548576-1
ECM 368517

ECM: 371154 - 20080930
Group number: 1548576-0100
Assembly Drawing: 1548576-1_1_AB

This list covers pages from 2-50 to 2-55

Pos	Part No	UN	Qty	Description	Page No
-					
002	271261-0700		1	CLEANING SYSTEM	**2-57**
005	1523829-0100		1	DISTRIBUTOR BLOCK	**2-59, 2-61**
010	491854-0000		1	PIPE WATER	
020	979486-0000		1	LUBRICATING PIPE	
060	469133-0000		1	PIPE	
070	469132-0000		1	PIPE	
075	469131-0000		2	LACE	
090	271622-0000		1	LACE	
100	271623-0000		1	LACE	
120	295986-0000		1	HOLDER	
130	456407-0000		1	LACE	
140	491390-0000		1	PIPE CENTRAL LUBRICATION	
150	491859-0000		1	HOLDER	
160	491860-0000		1	HOLDER	
310	90028-0001		5	CONE 5/32"	
320	90028-0020		22	CONE TUBE 2,5MM	
330	90028-0021		5	CONE TUBE 4 MM	
340	90030-0051		1	CONN. STR. GE06LR71	
345	90030-0098		8	PROGRESSIVE RING 8	
347	90136-0002		2	PLUG 5/1624	
350	90030-0162		3	CONN. STR. 6-M10X1, EXT. THREAD	
352	342703-0208		8	CONE NUT M8, NUT M-8 SS	
355	90030-0200		2	CONN. ELBOW, WE06LM71	
360	90032-0014		1	DISTR. BLOCK & DIST.5/16-24UNF X6	
370	90032-0026		1	DISTR. BLOCK, 5/16-24UNF X2	
390	90032-0030		1	DISTR. BLOCK, 5/16-24UNF X3	
391	90032-0031		1	DISTR. BLOCK, 5/16-24UNF X5	
400	90032-0038		1	BLOCK 2 WAYS	
410	90032-0039		5	BLOCK 4 WAYS	
420	90090-0008		2	STEEL BALL 7,1MM, RB-7.144/III	
430	90092-0052		10	METERING VALVE 10 MM3	
440	90092-0053		12	METERING VALVE 30 MM3	
450	90134-0003		5	BUSHING	
470	90134-0030		2	SLEEVE FOR PLASTIC TUBE	
480	90134-0031		6	SLEEVE FOR PLASTIC TUBE	
490	90134-0034		11	NIPPLE	
	90030-0101		*1*	*TAPER*	
500	90134-0038		7	BUSHING/NUT INLET/OUTLET 4 MM	
510	90134-0039		22	BUSHING VALVE CONNECTION 2,5 MM	
534	90148-0037		2	HYDRAULIC HOSE	
536	90148-0038		2	HYDRAULIC HOSE	
540	90151-0001	MM	2200	BRASS PIPE DI=2,6 MM	
550	90266-0019	MM	7000	PIPE	
560	90165-0002		2	PIPE CLIP FOR TUBE D=4 MM	
590	90165-0022		2	PIPE CLIP, FOR TUBE D=2,5 MM, B-3570	
600	90165-0023		2	CLIP	
605	90165-0039		1	PIPE CLAMP D=15 MM, GSK15/12	
610	90166-0108	MM	2100	TUBE 6 MM PA TRANSP.	
620	90166-0109	MM	1080	TUBE 4 MM PA TRANSP.	
630	90166-0118	M	13	TUBE 8 MM PA BLACK	
640	90166-0081	MM	840	TUBE 6 MM PA BLUE	
650	90266-0006	MM	3400	TUBE	
660	312101-0337		2	SCREW M6S M5X35 FZB	
790	312115-0289		2	SCREW ISO4762 M4X10 A4 80	
800	312105-0295		8	SCREW, M6S ISO 4017 M4X20 A4 70	
805	312121-0289		1	SCREW ISO 1207 M4X10 4.8-5.8 Z.PL.	
810	312105-0297		10	SCREW, M6S ISO 4017 M4X25 A4 70	
820	312105-0372		2	SCREW, M6S ISO 4017 M6X25 A4 80	
840	312125-0287		6	SLOTTED HEAD SCREW, ISO1207 M4X8 A4	
845	312125-0323		1	SLOTTED HEAD SCREW, ISO1207 M5X8 A4	
854	315101-0146		2	WASHER PLAIN, BRB, 5,3/10 H=1	
860	315234-0109		1	WASHER,PL.RND.CU.10,3/13,5 H=1,0	
865	342727-0102		1	PIPE CONNECTION G 6	
867	90165-0065		1	PIPE CLAMP D=8 MM, GSK08/12	
868	342716-0203		1	REDUCER 6-8	
869	342748-0103		1	T-CONNECTION 8MM	
870	342767-0100		1	BULKHEAD LEAD-IN, G1/8	
880	342797-0121		1	BANJO CONN., RINGPIECE 6-1/8	
890	342980-0303		1	BANJO-HOLLOW BOLT COUPL,EXT.THR.01-G1/8	
900	352113-0101		10	CABLE TIE, BLACK 92X2,5 MM	
910	359000-0400		5	WIRE MARKING, YELLOW, PA2/4"0"	
920	359000-0401		3	WIRE MARKING, YELLOW, PA2/4"1"	
930	359000-0402		2	WIRE MARKING, YELLOW, PA2/4"2"	
940	359000-0403		1	WIRE MARKING, YELLOW, PA2/4"3"	
951	359000-0405		2	WIRE MARKING, YELLOW, PA2/4"5"	
952	359000-0406		2	WIRE MARKING, YELLOW, PA2/4"6"	
965	359000-0407		4	WIRE MARKING, YELLOW, PA2/4"7"	
990	359000-0771		8	WIRE MARKING, YELLOW, PA2/4"V"	

Machine Type | Group Description | Used-In | Group Number | Page No

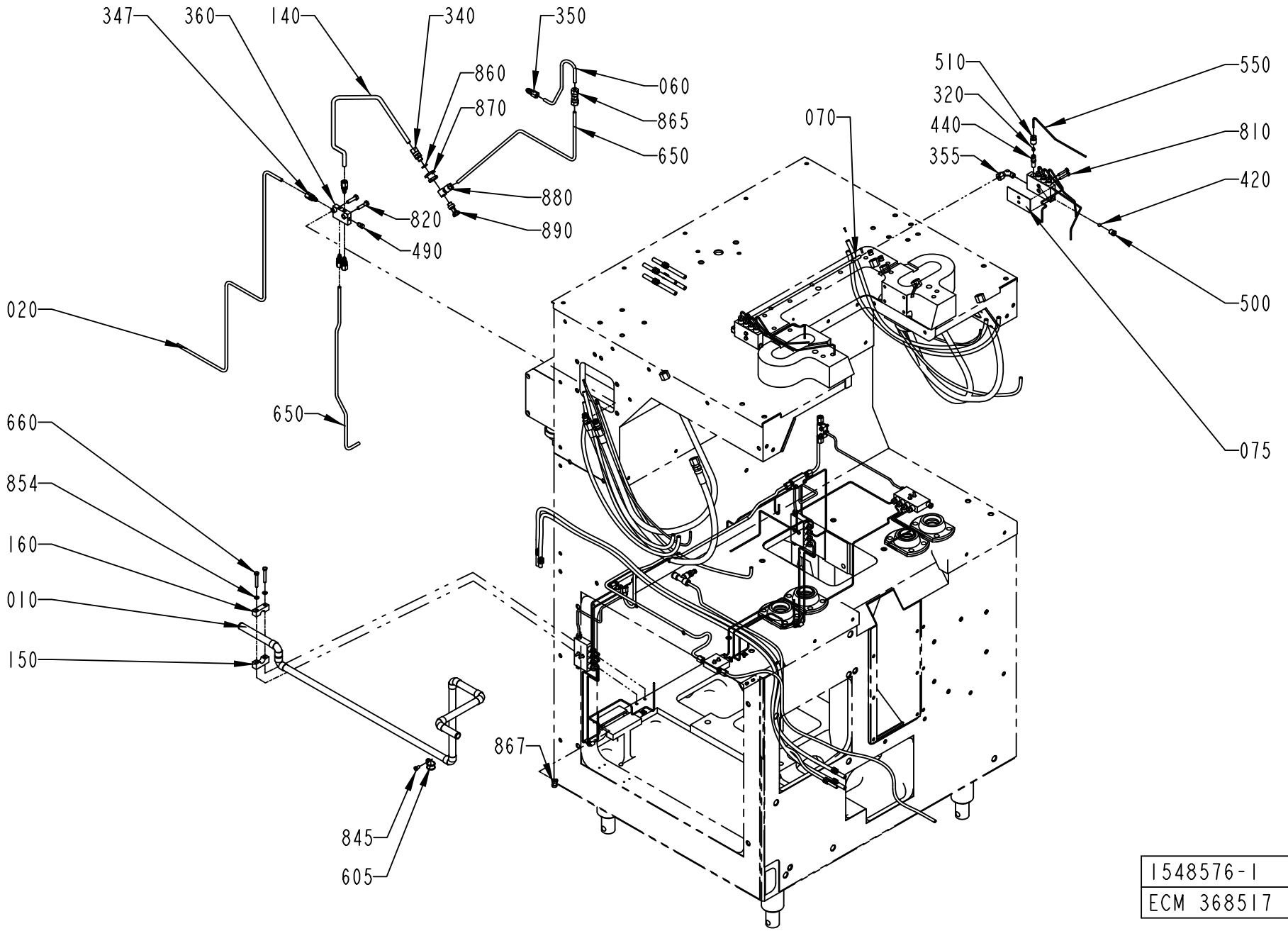

1548576-1
ECM 368517

ECM: 371154 - 20080930
Group number: 1548576-0100
Assembly Drawing: 1548576-1_2_AB

This list covers pages from 2-50 to 2-55

Pos	Part No	UN	Qty	Description	Page No
-					
002	271261-0700		1	CLEANING SYSTEM	**2-57**
005	1523829-0100		1	DISTRIBUTOR BLOCK	**2-59, 2-61**
010	491854-0000		1	PIPE WATER	
020	979486-0000		1	LUBRICATING PIPE	
060	469133-0000		1	PIPE	
070	469132-0000		1	PIPE	
075	469131-0000		2	LACE	
090	271622-0000		1	LACE	
100	271623-0000		1	LACE	
120	295986-0000		1	HOLDER	
130	456407-0000		1	LACE	
140	491390-0000		1	PIPE CENTRAL LUBRICATION	
150	491859-0000		1	HOLDER	
160	491860-0000		1	HOLDER	
310	90028-0001		5	CONE 5/32"	
320	90028-0020		22	CONE TUBE 2,5MM	
330	90028-0021		5	CONE TUBE 4 MM	
340	90030-0051		1	CONN. STR. GE06LR71	
345	90030-0098		8	PROGRESSIVE RING 8	
347	90136-0002		2	PLUG 5/1624	
350	90030-0162		3	CONN. STR. 6-M10X1, EXT. THREAD	
352	342703-0208		8	CONE NUT M8, NUT M-8 SS	
355	90030-0200		2	CONN. ELBOW, WE06LM71	
360	90032-0014		1	DISTR. BLOCK & DIST.5/16-24UNF X6	
370	90032-0026		1	DISTR. BLOCK, 5/16-24UNF X2	
390	90032-0030		1	DISTR. BLOCK, 5/16-24UNF X3	
391	90032-0031		1	DISTR. BLOCK, 5/16-24UNF X5	
400	90032-0038		1	BLOCK 2 WAYS	
410	90032-0039		5	BLOCK 4 WAYS	
420	90090-0008		2	STEEL BALL 7,1MM, RB-7.144/III	
430	90092-0052		10	METERING VALVE 10 MM3	
440	90092-0053		12	METERING VALVE 30 MM3	
450	90134-0003		5	BUSHING	
470	90134-0030		2	SLEEVE FOR PLASTIC TUBE	
480	90134-0031		6	SLEEVE FOR PLASTIC TUBE	
490	90134-0034		11	NIPPLE	
	90030-0101		*1*	*TAPER*	
500	90134-0038		7	BUSHING/NUT INLET/OUTLET 4 MM	
510	90134-0039		22	BUSHING VALVE CONNECTION 2,5 MM	
534	90148-0037		2	HYDRAULIC HOSE	
536	90148-0038		2	HYDRAULIC HOSE	
540	90151-0001	MM	2200	BRASS PIPE DI=2,6 MM	
550	90266-0019	MM	7000	PIPE	
560	90165-0002		2	PIPE CLIP FOR TUBE D=4 MM	
590	90165-0022		2	PIPE CLIP, FOR TUBE D=2,5 MM, B-3570	
600	90165-0023		2	CLIP	
605	90165-0039		1	PIPE CLAMP D=15 MM, GSK15/12	
610	90166-0108	MM	2100	TUBE 6 MM PA TRANSP.	
620	90166-0109	MM	1080	TUBE 4 MM PA TRANSP.	
630	90166-0118	M	13	TUBE 8 MM PA BLACK	
640	90166-0081	MM	840	TUBE 6 MM PA BLUE	
650	90266-0006	MM	3400	TUBE	
660	312101-0337		2	SCREW M6S M5X35 FZB	
790	312115-0289		2	SCREW ISO4762 M4X10 A4 80	
800	312105-0295		8	SCREW, M6S ISO 4017 M4X20 A4 70	
805	312121-0289		1	SCREW ISO 1207 M4X10 4.8-5.8 Z.PL.	
810	312105-0297		10	SCREW, M6S ISO 4017 M4X25 A4 70	
820	312105-0372		2	SCREW, M6S ISO 4017 M6X25 A4 80	
840	312125-0287		6	SLOTTED HEAD SCREW, ISO1207 M4X8 A4	
845	312125-0323		1	SLOTTED HEAD SCREW, ISO1207 M5X8 A4	
854	315101-0146		2	WASHER PLAIN, BRB, 5,3/10 H=1	
860	315234-0109		1	WASHER,PL.RND.CU.10,3/13,5 H=1,0	
865	342727-0102		1	PIPE CONNECTION G 6	
867	90165-0065		1	PIPE CLAMP D=8 MM, GSK08/12	
868	342716-0203		1	REDUCER 6-8	
869	342748-0103		1	T-CONNECTION 8MM	
870	342767-0100		1	BULKHEAD LEAD-IN, G1/8	
880	342797-0121		1	BANJO CONN., RINGPIECE 6-1/8	
890	342980-0303		1	BANJO-HOLLOW BOLT COUPL,EXT.THR.01-G1/8	
900	352113-0101		10	CABLE TIE, BLACK 92X2,5 MM	
910	359000-0400		5	WIRE MARKING, YELLOW, PA2/4"0"	
920	359000-0401		3	WIRE MARKING, YELLOW, PA2/4"1"	
930	359000-0402		2	WIRE MARKING, YELLOW, PA2/4"2"	
940	359000-0403		1	WIRE MARKING, YELLOW, PA2/4"3"	
951	359000-0405		2	WIRE MARKING, YELLOW, PA2/4"5"	
952	359000-0406		2	WIRE MARKING, YELLOW, PA2/4"6"	
965	359000-0407		4	WIRE MARKING, YELLOW, PA2/4"7"	
990	359000-0771		8	WIRE MARKING, YELLOW, PA2/4"V"	

Machine Type | Group Description | Used-In | Group Number | Page No

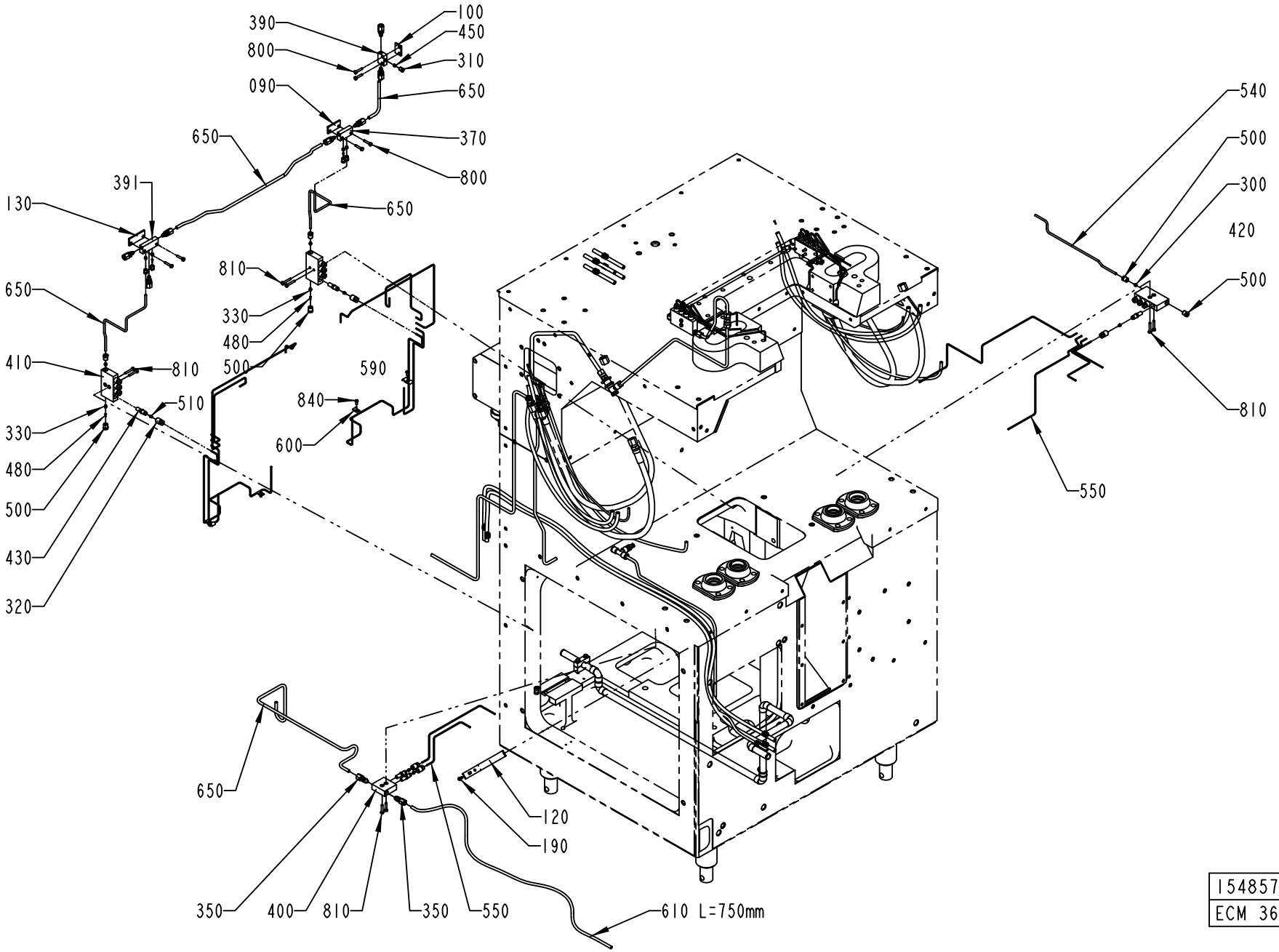

1548576-1
ECM 368517

ECM: 371154 - 20080930
Group number: 1548576-0100
Assembly Drawing: 1548576-1_3_AB

This list covers pages from 2-50 to 2-55

Pos	Part No	UN	Qty	Description	Page No
-					
002	271261-0700		1	CLEANING SYSTEM	**2-57**
005	1523829-0100		1	DISTRIBUTOR BLOCK	**2-59, 2-61**
010	491854-0000		1	PIPE WATER	
020	979486-0000		1	LUBRICATING PIPE	
060	469133-0000		1	PIPE	
070	469132-0000		1	PIPE	
075	469131-0000		2	LACE	
090	271622-0000		1	LACE	
100	271623-0000		1	LACE	
120	295986-0000		1	HOLDER	
130	456407-0000		1	LACE	
140	491390-0000		1	PIPE CENTRAL LUBRICATION	
150	491859-0000		1	HOLDER	
160	491860-0000		1	HOLDER	
310	90028-0001		5	CONE 5/32"	
320	90028-0020		22	CONE TUBE 2,5MM	
330	90028-0021		5	CONE TUBE 4 MM	
340	90030-0051		1	CONN. STR. GE06LR71	
345	90030-0098		8	PROGRESSIVE RING 8	
347	90136-0002		2	PLUG 5/1624	
350	90030-0162		3	CONN. STR. 6-M10X1, EXT. THREAD	
352	342703-0208		8	CONE NUT M8, NUT M-8 SS	
355	90030-0200		2	CONN. ELBOW, WE06LM71	
360	90032-0014		1	DISTR. BLOCK & DIST.5/16-24UNF X6	
370	90032-0026		1	DISTR. BLOCK, 5/16-24UNF X2	
390	90032-0030		1	DISTR. BLOCK, 5/16-24UNF X3	
391	90032-0031		1	DISTR. BLOCK, 5/16-24UNF X5	
400	90032-0038		1	BLOCK 2 WAYS	
410	90032-0039		5	BLOCK 4 WAYS	
420	90090-0008		2	STEEL BALL 7,1MM, RB-7.144/III	
430	90092-0052		10	METERING VALVE 10 MM3	
440	90092-0053		12	METERING VALVE 30 MM3	
450	90134-0003		5	BUSHING	
470	90134-0030		2	SLEEVE FOR PLASTIC TUBE	
480	90134-0031		6	SLEEVE FOR PLASTIC TUBE	
490	90134-0034		11	NIPPLE	
	90030-0101		*1*	*TAPER*	
500	90134-0038		7	BUSHING/NUT INLET/OUTLET 4 MM	
510	90134-0039		22	BUSHING VALVE CONNECTION 2,5 MM	
534	90148-0037		2	HYDRAULIC HOSE	
536	90148-0038		2	HYDRAULIC HOSE	
540	90151-0001	MM	2200	BRASS PIPE DI=2,6 MM	
550	90266-0019	MM	7000	PIPE	
560	90165-0002		2	PIPE CLIP FOR TUBE D=4 MM	
590	90165-0022		2	PIPE CLIP, FOR TUBE D=2,5 MM, B-3570	
600	90165-0023		2	CLIP	
605	90165-0039		1	PIPE CLAMP D=15 MM, GSK15/12	
610	90166-0108	MM	2100	TUBE 6 MM PA TRANSP.	
620	90166-0109	MM	1080	TUBE 4 MM PA TRANSP.	
630	90166-0118	M	13	TUBE 8 MM PA BLACK	
640	90166-0081	MM	840	TUBE 6 MM PA BLUE	
650	90266-0006	MM	3400	TUBE	
660	312101-0337		2	SCREW M6S M5X35 FZB	
790	312115-0289		2	SCREW ISO4762 M4X10 A4 80	
800	312105-0295		8	SCREW, M6S ISO 4017 M4X20 A4 70	
805	312121-0289		1	SCREW ISO 1207 M4X10 4.8-5.8 Z.PL.	
810	312105-0297		10	SCREW, M6S ISO 4017 M4X25 A4 70	
820	312105-0372		2	SCREW, M6S ISO 4017 M6X25 A4 80	
840	312125-0287		6	SLOTTED HEAD SCREW, ISO1207 M4X8 A4	
845	312125-0323		1	SLOTTED HEAD SCREW, ISO1207 M5X8 A4	
854	315101-0146		2	WASHER PLAIN, BRB, 5,3/10 H=1	
860	315234-0109		1	WASHER,PL.RND.CU.10,3/13,5 H=1,0	
865	342727-0102		1	PIPE CONNECTION G 6	
867	90165-0065		1	PIPE CLAMP D=8 MM, GSK08/12	
868	342716-0203		1	REDUCER 6-8	
869	342748-0103		1	T-CONNECTION 8MM	
870	342767-0100		1	BULKHEAD LEAD-IN, G1/8	
880	342797-0121		1	BANJO CONN., RINGPIECE 6-1/8	
890	342980-0303		1	BANJO-HOLLOW BOLT COUPL,EXT.THR.01-G1/8	
900	352113-0101		10	CABLE TIE, BLACK 92X2,5 MM	
910	359000-0400		5	WIRE MARKING, YELLOW, PA2/4"0"	
920	359000-0401		3	WIRE MARKING, YELLOW, PA2/4"1"	
930	359000-0402		2	WIRE MARKING, YELLOW, PA2/4"2"	
940	359000-0403		1	WIRE MARKING, YELLOW, PA2/4"3"	
951	359000-0405		2	WIRE MARKING, YELLOW, PA2/4"5"	
952	359000-0406		2	WIRE MARKING, YELLOW, PA2/4"6"	
965	359000-0407		4	WIRE MARKING, YELLOW, PA2/4"7"	
990	359000-0771		8	WIRE MARKING, YELLOW, PA2/4"V"	

Machine Type | Group Description | Used-In | Group Number | Page No

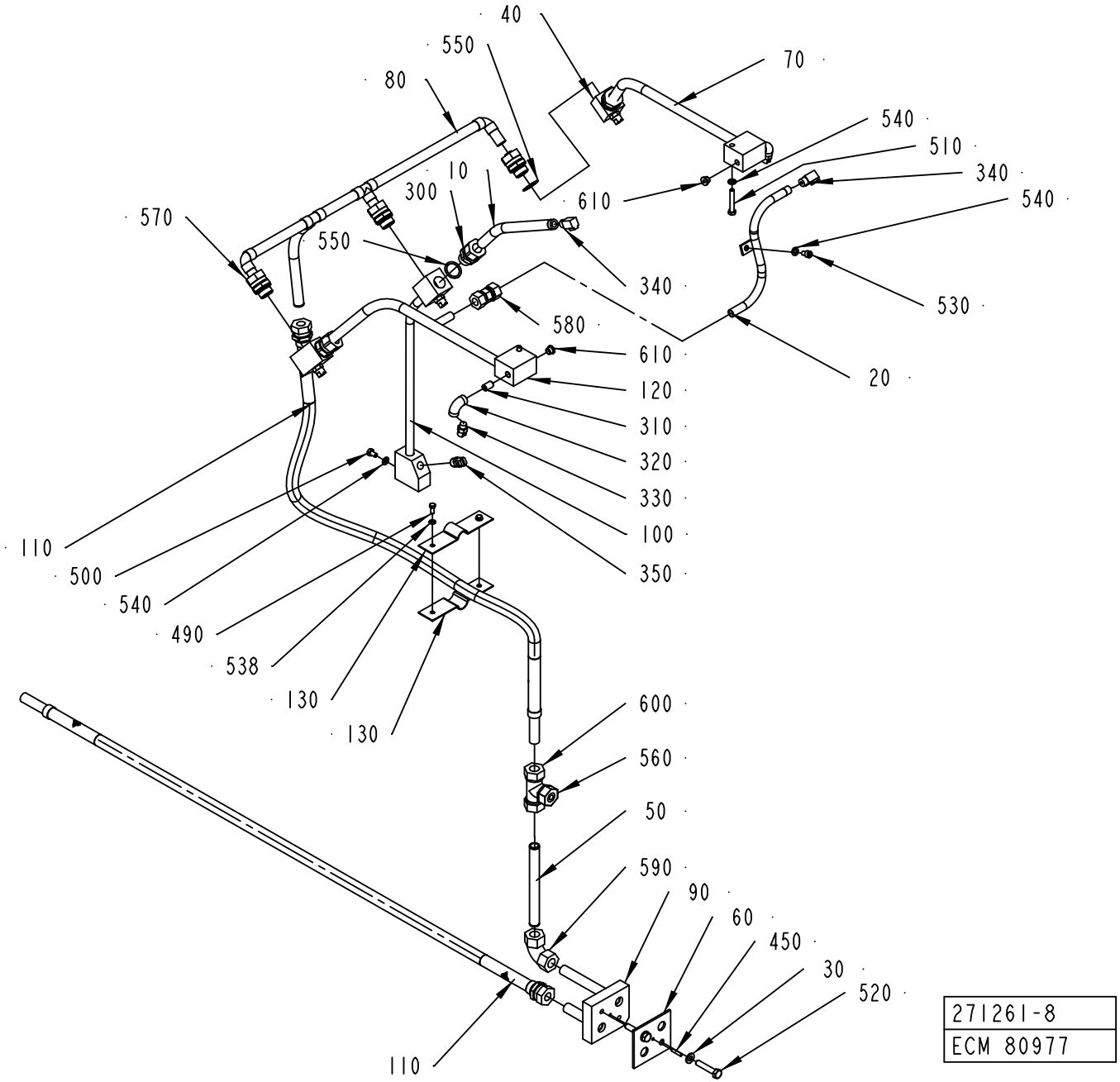
40
550
80
70
540
510
340
540
10
300
610
570
550
340
530
580
610
20
120
310
320
330
100
350
110
500
540
490
538
130
130
600
560
50
590
90
60
450
30
520
110
271261-8
ECM 80977

ECM: 276156 - 20070126
Group number: 271261-0700
Assembly Drawing: 271261-8_1_AA

Pos	Part No	UN	Qty	Description	Page No
TBA 0100B, TBA 0125S					
010	271121-0000		1	FORCE SPRING	
020	456129-0001		1	FORCE SPRING	
560	342710-0115		1	REDUCTION RBM 16/8	
600	342746-0114		1	CONN. T-PIPE T-15	
TBA 0160S, TBA 0200M, TBA 0200B, TBA 0200SQ, TBA 0200S, TBA 0250S, TBA 0284B, TBA 0250B, TBA 0300S, TBA 0330S, TPA 0330SQ, TPA 0250SQ, TPA 0200SQ					
010	295985-0000		1	FORCE SPRING	
020	456129-0002		1	FORCE SPRING	
560	342710-0115		1	REDUCTION RBM 16/8	
600	342746-0114		1	CONN. T-PIPE T-15	
TWA 0125S					
010	271121-0000		1	FORCE SPRING	
020	456129-0001		1	FORCE SPRING	
600	342726-0114		1	CONN. PIPE G-15	
TWA 0200S					
010	295985-0000		1	FORCE SPRING	
020	456129-0002		1	FORCE SPRING	
600	342726-0114		1	CONN. PIPE G-15	
Common Parts					
030	18542-0000		2	WASHER	
040	257190-0000		2	SEPARATION BLOCK	
050	272679-0000		1	PIPE	
060	295417-0000		1	GASKET	
070	295785-0000		1	FORCE SPRING	
080	295978-0000		1	PIPE	
090	578091-0000		1	BRANCH PIPE	
100	441665-0000		1	FORCE SPRING	
110	469146-0000		2	HOSE	
120	456128-0000		1	FORCE SPRING	
130	2516972-0000		2	HOSE HOLDER	
300	90030-0151		3	CONN. STR. GE15LR71	
310	90330-0097		2	NIPPLES, EXT. THREAD, G1/8	
320	90330-0099		2	ELBOW, 90 INT. THREAD, R-222R1/8	
330	90424-0032		2	SPRAY NOZZLE, 95 DEG H1/8 U-9515	
340	90424-0033		2	SPRAY NOZZLE, 76 DEG R1/8 B5	
350	90424-0035		4	SPRAY NOZZLE, 95 DEG HB1/4 U-9515 BSPT	
450	311103-0272		1	PARALLEL PIN ISO 2338 4M6X20 A1	
490	312105-0327		2	SCREW, M6S ISO 4017 M5X12 A4 80	
500	312105-0364		1	SCREW, M6S ISO 4017 M6X10 A4 80	
510	312105-0378		2	SCREW, M6S ISO 4014 M6X40 A4 80	
520	312105-0459		2	SCREW, M6S ISO 4014 M8X40 A4 80	
530	312115-0364		1	SCREW ISO4762 M6X10 A4 80	
538	315105-0146		2	WASHER PLAIN, 5,3X10X1 A4 BRB	
540	315105-0153		4	WASHER PLAIN, 6,4X12X1,5 A4 BRB	
550	315233-0113		6	WASHER CAPTIVE SEALING G1/2	
570	342720-0114		3	CONN. STR. GA-15-G1/2	
580	342726-0109		1	CONN. PIPE G-12	
590	342736-0114		1	CONN. ELBOW W-15	
610	342713-0209		2	PLUG, EXT THREAD HEX SOCKET 8638-00-180	

Machine Type	Group Description	Used-In	Group Number	Page No

DISTRIBUTOR BLOCK

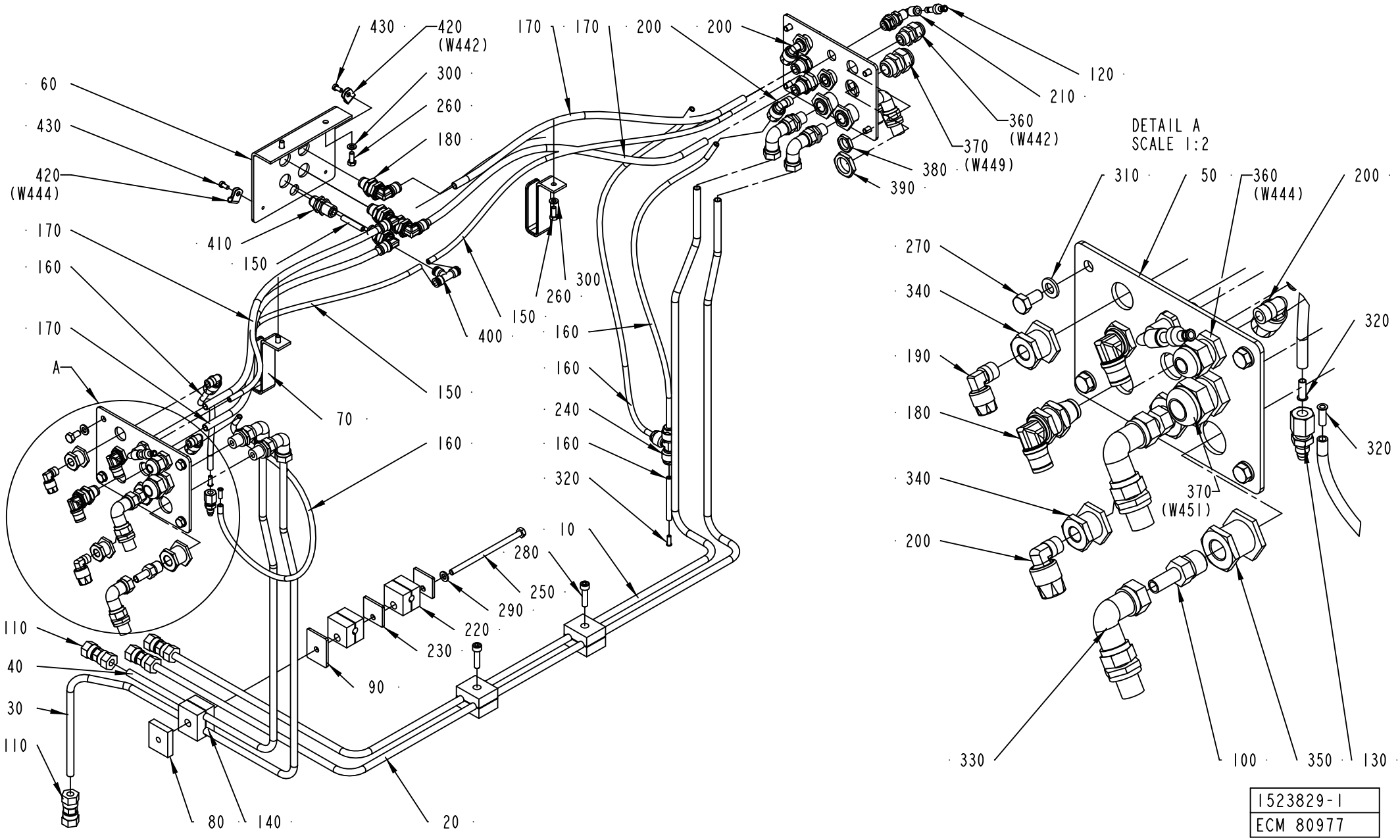

ECM: 178877 - 20040910
Group number: 1523829-0100
Assembly Drawing: 1523829-1_1_AA

This list covers pages from 2-58 to 2-61

Pos	Part No	UN	Qty	Description	Page No
-					
010	1523433-0000		1	PIPE	
020	1523434-0000		1	PIPE	
030	1523431-0000		1	PIPE	
040	1523432-0000		1	PIPE	
050	1523383-0000		2	CONNECTION PLATE	
060	1523384-0000		1	CONNECTION PLATE	
070	1523832-0000		2	HOSE HOLDER	
080	1523886-0000		1	SPACER PLATE	
090	1523887-0000		1	SPACER PLATE	
100	90030-0065		4	PIPE CONNECTION	
110	90030-0091		4	PIPE CONNECTION G 8	
120	342716-0202		2	REDUCER 4-6	
130	90134-0034		1	NIPPLE	
	90030-0101		*1*	*TAPER*	
140	90165-0099		3	PIPE CLAMP, DOUBLE, RBP-108, D=8 MM	
150	90166-0081	M	3	TUBE 6 MM PA BLUE	
160	90166-0108	M	2	TUBE 6 MM PA TRANSP.	
170	90166-0118	M	2	TUBE 8 MM PA BLACK	
180	90457-0178		8	EQUAL BULKHEAD ELBOW CONNECTOR 36390800	
190	90457-0179		2	ELBOW 90 COUPL., EXT. THREAD 4/2-G1/8"	
200	90457-0180		6	ELBOW 90 COUPL., EXT. THREAD 6/4-R1/8"	
210	90457-0181		2	EQUAL BULKHEAD ELBOW CONNECTOR 31390600	
220	90457-0182		2	PIPE CLAMP, D=8 MM, RAPOD8X	**2-63**
230	90457-0183		2	COVER PLATE, DPA0X, FOR 90457-0182	
240	90457-0184		1	T-CONNECTION 6 MM 6104 06 00	
250	312101-0392		1	SCREW M6S M6X110 FZB	
260	312105-0327		4	SCREW, M6S ISO 4017 M5X12 A4 80	
270	312105-0366		8	SCREW, M6S ISO 4017 M6X12 A4 80	
280	312115-0372		2	SCREW ISO4762 M6X25 A4 80	
290	315101-0153		1	WASHER PLAIN, BRB, 6,4/12 H=1,5	
300	315105-0146		4	WASHER PLAIN, 5,3X10X1 A4 BRB	
310	315105-0153		8	WASHER PLAIN, 6,4X12X1,5 A4 BRB	
320	342706-0130		3	STIFFNER SLEEVE FOR HOSE 6X1	
330	342738-0208		8	ADJUSTABLE ELBOW CONNECTION 8-G1/4	
340	342767-0100		4	BULKHEAD LEAD-IN, G1/8	
350	342767-0104		4	BULKHEAD LEAD-IN, G1/4	
360	352103-0101		2	CABLE GLAND, ST 9, PR15,2/PG9	
370	352103-0108		2	CABLE GLAND, ST 13,5 , PR20,4/PG13,5	
380	90099-0001		2	NUT PG 9/PR 15,2	
390	90099-0087		2	NUT PR=20,4	
400	342748-0102		1	T-CONNECTION 6MM	
410	342768-0102		1	BULKHEAD CONNECTOR, 6 MM	
420	90458-1489		2	CABLE CLIPS, D=4,75 MM	
430	312125-0287		2	SLOTTED HEAD SCREW, ISO1207 M4X8 A4	

Machine Type | Group Description | Used-In | Group Number | Page No

DISTRIBUTOR BLOCK

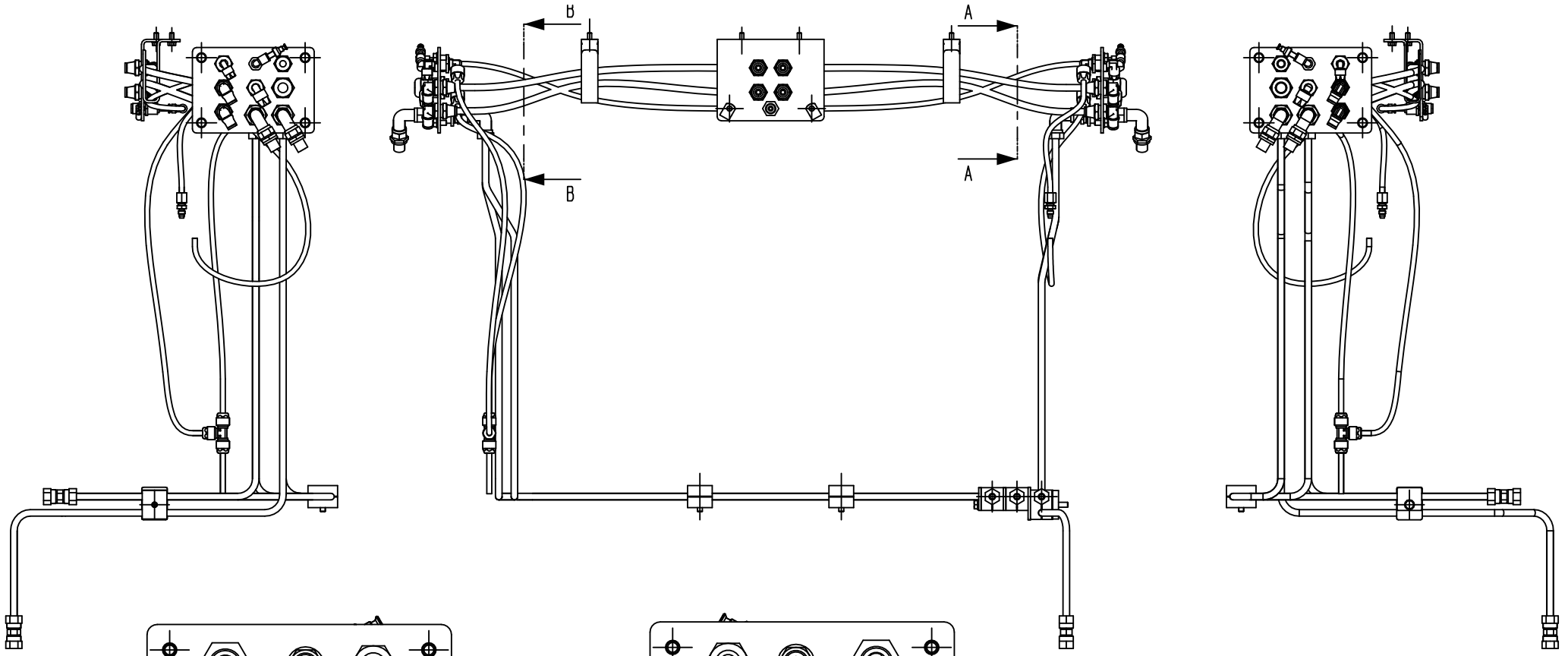

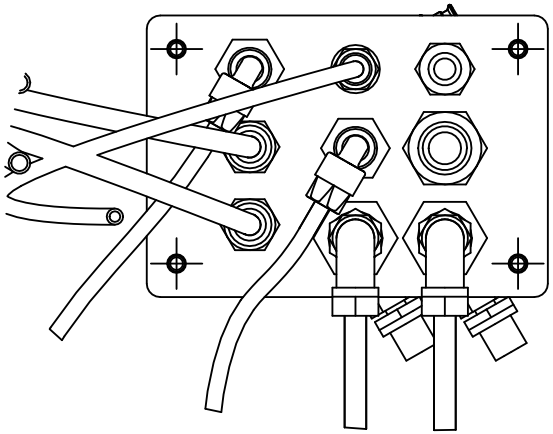

SECTION B-B
SCALE 1:2

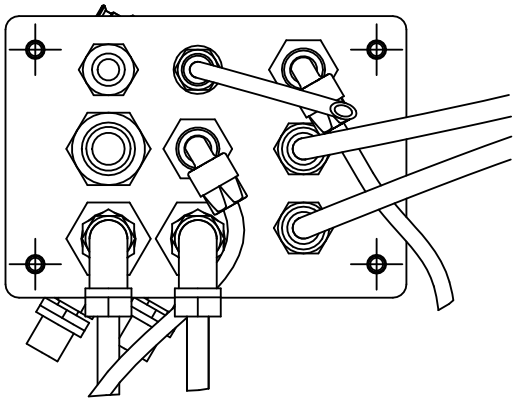

SECTION A-A
SCALE 1:2

1523829-1
ECM 80977

ECM: 178877 - 20040910
Group number: 1523829-0100
Assembly Drawing: 1523829-1_2_AA

This list covers pages from 2-58 to 2-61

Pos	Part No	UN	Qty	Description	Page No
-					
010	1523433-0000		1	PIPE	
020	1523434-0000		1	PIPE	
030	1523431-0000		1	PIPE	
040	1523432-0000		1	PIPE	
050	1523383-0000		2	CONNECTION PLATE	
060	1523384-0000		1	CONNECTION PLATE	
070	1523832-0000		2	HOSE HOLDER	
080	1523886-0000		1	SPACER PLATE	
090	1523887-0000		1	SPACER PLATE	
100	90030-0065		4	PIPE CONNECTION	
110	90030-0091		4	PIPE CONNECTION G 8	
120	342716-0202		2	REDUCER 4-6	
130	90134-0034		1	NIPPLE	
	90030-0101		*1*	*TAPER*	
140	90165-0099		3	PIPE CLAMP, DOUBLE, RBP-108, D=8 MM	
150	90166-0081	M	3	TUBE 6 MM PA BLUE	
160	90166-0108	M	2	TUBE 6 MM PA TRANSP.	
170	90166-0118	M	2	TUBE 8 MM PA BLACK	
180	90457-0178		8	EQUAL BULKHEAD ELBOW CONNECTOR 36390800	
190	90457-0179		2	ELBOW 90 COUPL., EXT. THREAD 4/2-G1/8"	
200	90457-0180		6	ELBOW 90 COUPL., EXT. THREAD 6/4-R1/8"	
210	90457-0181		2	EQUAL BULKHEAD ELBOW CONNECTOR 31390600	
220	90457-0182		2	PIPE CLAMP, D=8 MM, RAPOD8X	**2-63**
230	90457-0183		2	COVER PLATE, DPA0X, FOR 90457-0182	
240	90457-0184		1	T-CONNECTION 6 MM 6104 06 00	
250	312101-0392		1	SCREW M6S M6X110 FZB	
260	312105-0327		4	SCREW, M6S ISO 4017 M5X12 A4 80	
270	312105-0366		8	SCREW, M6S ISO 4017 M6X12 A4 80	
280	312115-0372		2	SCREW ISO4762 M6X25 A4 80	
290	315101-0153		1	WASHER PLAIN, BRB, 6,4/12 H=1,5	
300	315105-0146		4	WASHER PLAIN, 5,3X10X1 A4 BRB	
310	315105-0153		8	WASHER PLAIN, 6,4X12X1,5 A4 BRB	
320	342706-0130		3	STIFFNER SLEEVE FOR HOSE 6X1	
330	342738-0208		8	ADJUSTABLE ELBOW CONNECTION 8-G1/4	
340	342767-0100		4	BULKHEAD LEAD-IN, G1/8	
350	342767-0104		4	BULKHEAD LEAD-IN, G1/4	
360	352103-0101		2	CABLE GLAND, ST 9, PR15,2/PG9	
370	352103-0108		2	CABLE GLAND, ST 13,5 , PR20,4/PG13,5	
380	90099-0001		2	NUT PG 9/PR 15,2	
390	90099-0087		2	NUT PR=20,4	
400	342748-0102		1	T-CONNECTION 6MM	
410	342768-0102		1	BULKHEAD CONNECTOR, 6 MM	
420	90458-1489		2	CABLE CLIPS, D=4,75 MM	
430	312125-0287		2	SLOTTED HEAD SCREW, ISO1207 M4X8 A4	

Machine Type | Group Description | Used-In | Group Number | Page No

This page is intentionally left blank.

ECM: 81442 - 20000714
Group number: 90457-0182
Assembly Drawing:

Pos	Part No	UN	Qty	Description	Page No
-					
	90457-0183		1	COVER PLATE, DPA0X, FOR 90457-0182	

Pos	Part No	UN	Qty	Description	Page No

Machine Type	Group Description	Used-In	Group Number	Page No

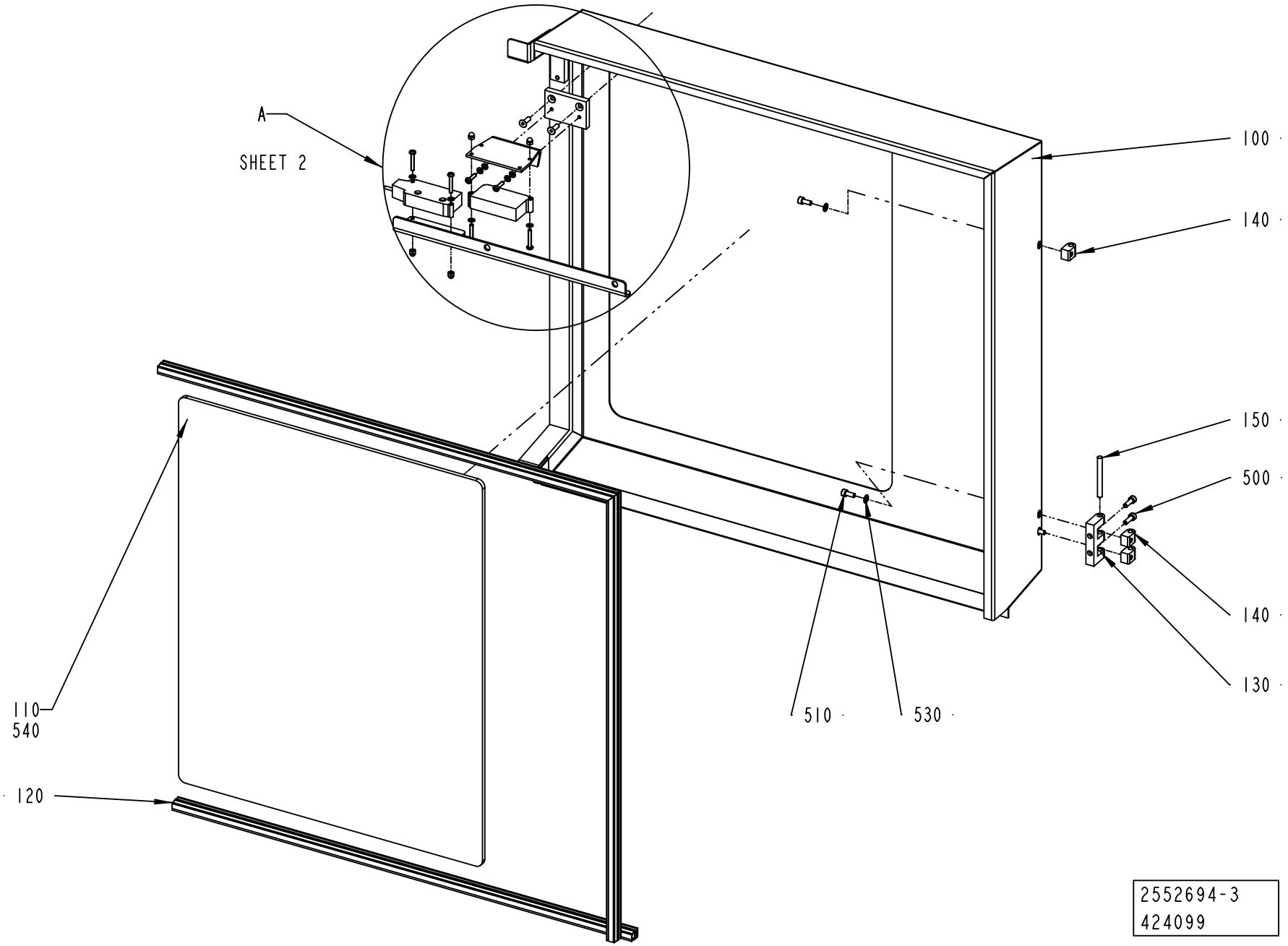
A
SHEET 2
100
140
150
500
140
130
110
540
120
510
530
2552694-3
424099

ECM: 429877 - 20091221
Group number: 2552694-0300
Assembly Drawing: 2552694-3_1_AB

This list covers pages from 2-64 to 2-67

Pos	Part No	UN	Qty	Description	Page No
-					
010	3047673-0000		1	BRACKET	
020	3047674-0000		1	BRACKET	
030	3019240-0000		1	FASTENING PLATE	
040	2872726-0000		2	SCREW	
100	2748677-0000		1	DOOR	
110	2748679-0000		1	GLASS	
120	90143-0068	M	2	RUBBER STRIP EMKA 1011-06	
130	1035792-0000		1	E-HINGE	
140	1035794-0000		3	BLOCKING PIECE	
150	988685-0000		1	PIN	
190	90459-4165		4	SAFETY SCREW, SM4X25	
500	312115-0329		2	SCREW ISO4762 M5X16 A4 80	
510	312115-0327		3	SCREW ISO4762 M5X12 A4 80	
520	315105-0136		6	WASHER PLAIN, 4,3X9X0,8 A4 BRB	
530	315105-0146		3	WASHER PLAIN, 5,3X10X1 A4 BRB	
540	90157-0041		1	SEALING COMPOUND, RHODORSEAL 5651	
560	312155-0329		2	SCREW DIN 7991 MF6S M5X16 A4 70	
580	312115-0366		2	SCREW ISO4762 M6X12 A4 80	
590	312705-0312		2	NUT HEX. DOMED CAP MHM-6 M4 A280	
M.B015;1	90459-4089		1	SAFETY SENSOR, EVA E, 20-046-06	
M.B015	90600-5926		1	SAFETY SENSOR, ADAM E M12 5M CABLE	

Pos	Part No	UN	Qty	Description	Page No

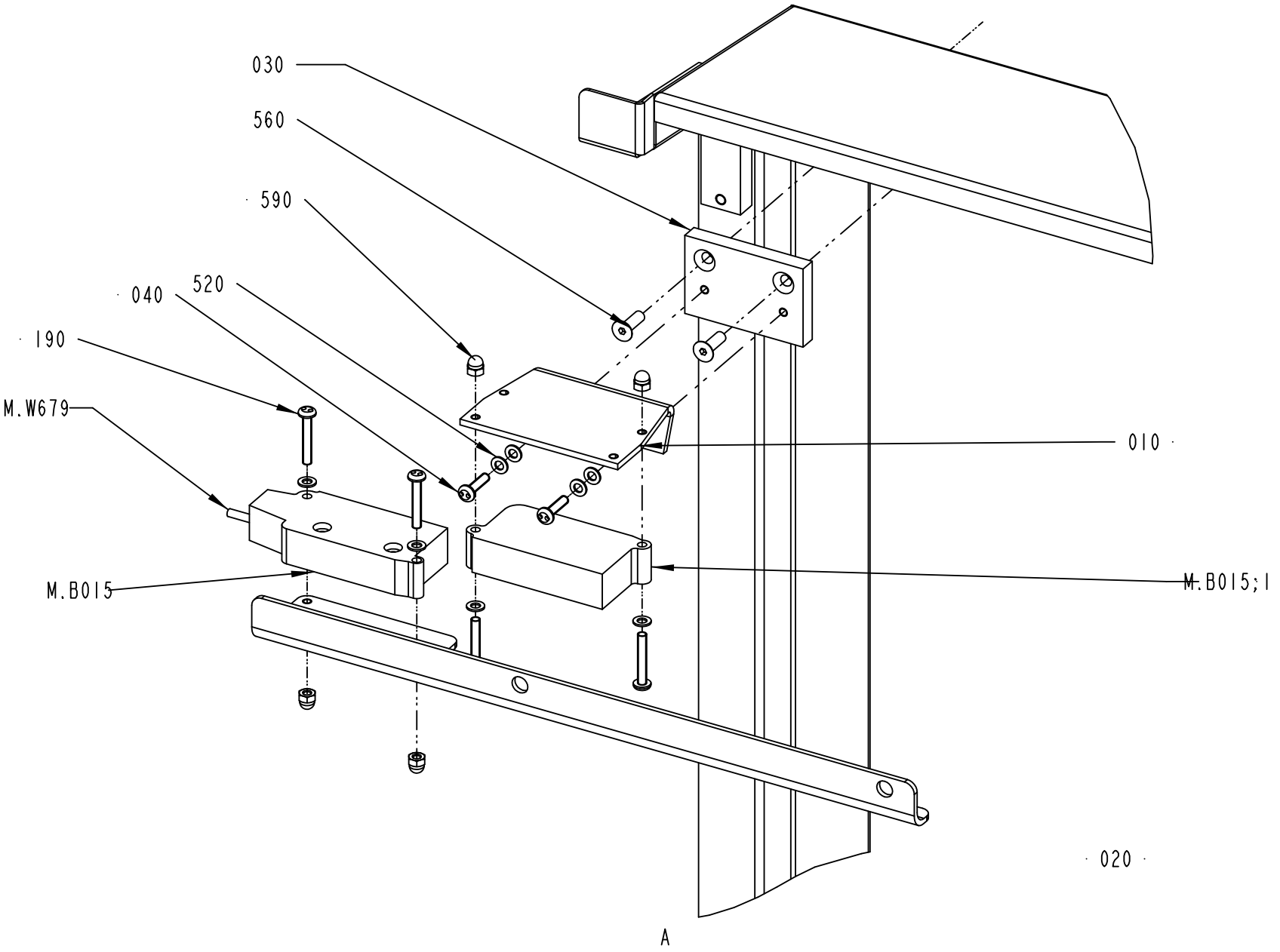

2552694-3
424099

ECM: 429877 - 20091221
Group number: 2552694-0300
Assembly Drawing: 2552694-3_2_AB

This list covers pages from 2-64 to 2-67

Pos	Part No	UN	Qty	Description	Page No
-					
010	3047673-0000		1	BRACKET	
020	3047674-0000		1	BRACKET	
030	3019240-0000		1	FASTENING PLATE	
040	2872726-0000		2	SCREW	
100	2748677-0000		1	DOOR	
110	2748679-0000		1	GLASS	
120	90143-0068	M	2	RUBBER STRIP EMKA 1011-06	
130	1035792-0000		1	E-HINGE	
140	1035794-0000		3	BLOCKING PIECE	
150	988685-0000		1	PIN	
190	90459-4165		4	SAFETY SCREW, SM4X25	
500	312115-0329		2	SCREW ISO4762 M5X16 A4 80	
510	312115-0327		3	SCREW ISO4762 M5X12 A4 80	
520	315105-0136		6	WASHER PLAIN, 4,3X9X0,8 A4 BRB	
530	315105-0146		3	WASHER PLAIN, 5,3X10X1 A4 BRB	
540	90157-0041		1	SEALING COMPOUND, RHODORSEAL 5651	
560	312155-0329		2	SCREW DIN 7991 MF6S M5X16 A4 70	
580	312115-0366		2	SCREW ISO4762 M6X12 A4 80	
590	312705-0312		2	NUT HEX. DOMED CAP MHM-6 M4 A280	
M.B015;1	90459-4089		1	SAFETY SENSOR, EVA E, 20-046-06	
M.B015	90600-5926		1	SAFETY SENSOR, ADAM E M12 5M CABLE	

Pos	Part No	UN	Qty	Description	Page No

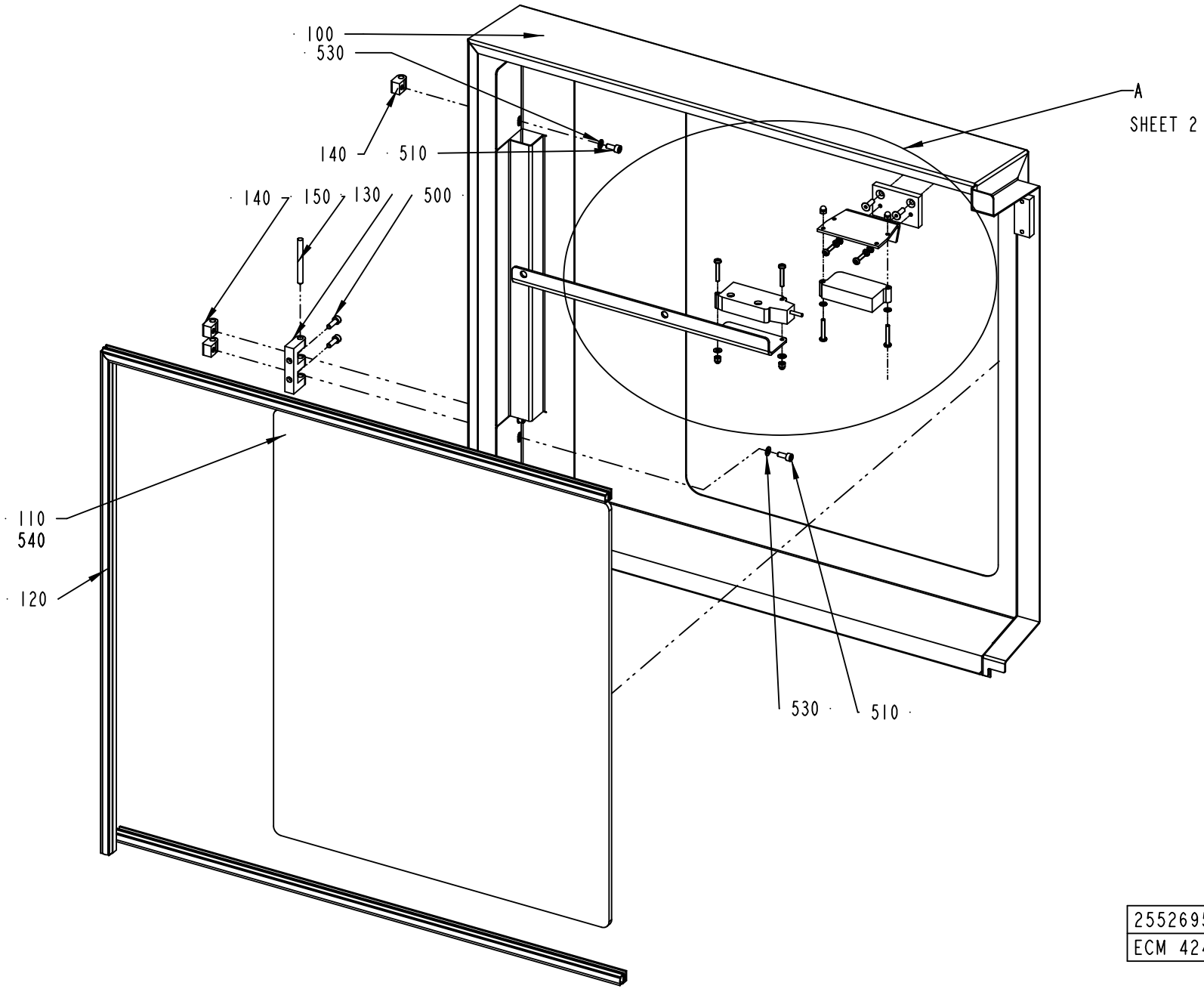

2552695-3
ECM 424099

ECM: 424875 - 20091221
Group number: 2552695-0300
Assembly Drawing: 2552695-3_1_AB

This list covers pages from 2-68 to 2-71

Pos	Part No	UN	Qty	Description	Page No
-					
010	3047673-0000		1	BRACKET	
020	3047675-0000		1	BRACKET	
030	3019240-0000		1	FASTENING PLATE	
040	2872726-0000		2	SCREW	
100	2748678-0000		1	DOOR	
110	2748679-0000		1	GLASS	
120	90143-0068	M	2	RUBBER STRIP EMKA 1011-06	
130	1035792-0000		1	E-HINGE	
140	1035794-0000		3	BLOCKING PIECE	
150	988685-0000		1	PIN	
190	90459-4165		4	SAFETY SCREW, SM4X25	
500	312115-0329		2	SCREW ISO4762 M5X16 A4 80	
510	312115-0327		3	SCREW ISO4762 M5X12 A4 80	
520	315105-0136		6	WASHER PLAIN, 4,3X9X0,8 A4 BRB	
530	315105-0146		3	WASHER PLAIN, 5,3X10X1 A4 BRB	
540	90157-0041		1	SEALING COMPOUND, RHODORSEAL 5651	
560	312155-0329		2	SCREW DIN 7991 MF6S M5X16 A4 70	
590	312705-0312		4	NUT HEX. DOMED CAP MHM-6 M4 A280	
M.B019;1	90459-4089		1	SAFETY SENSOR, EVA E, 20-046-06	
M.B019	90600-5926		1	SAFETY SENSOR, ADAM E M12 5M CABLE	

Pos	Part No	UN	Qty	Description	Page No

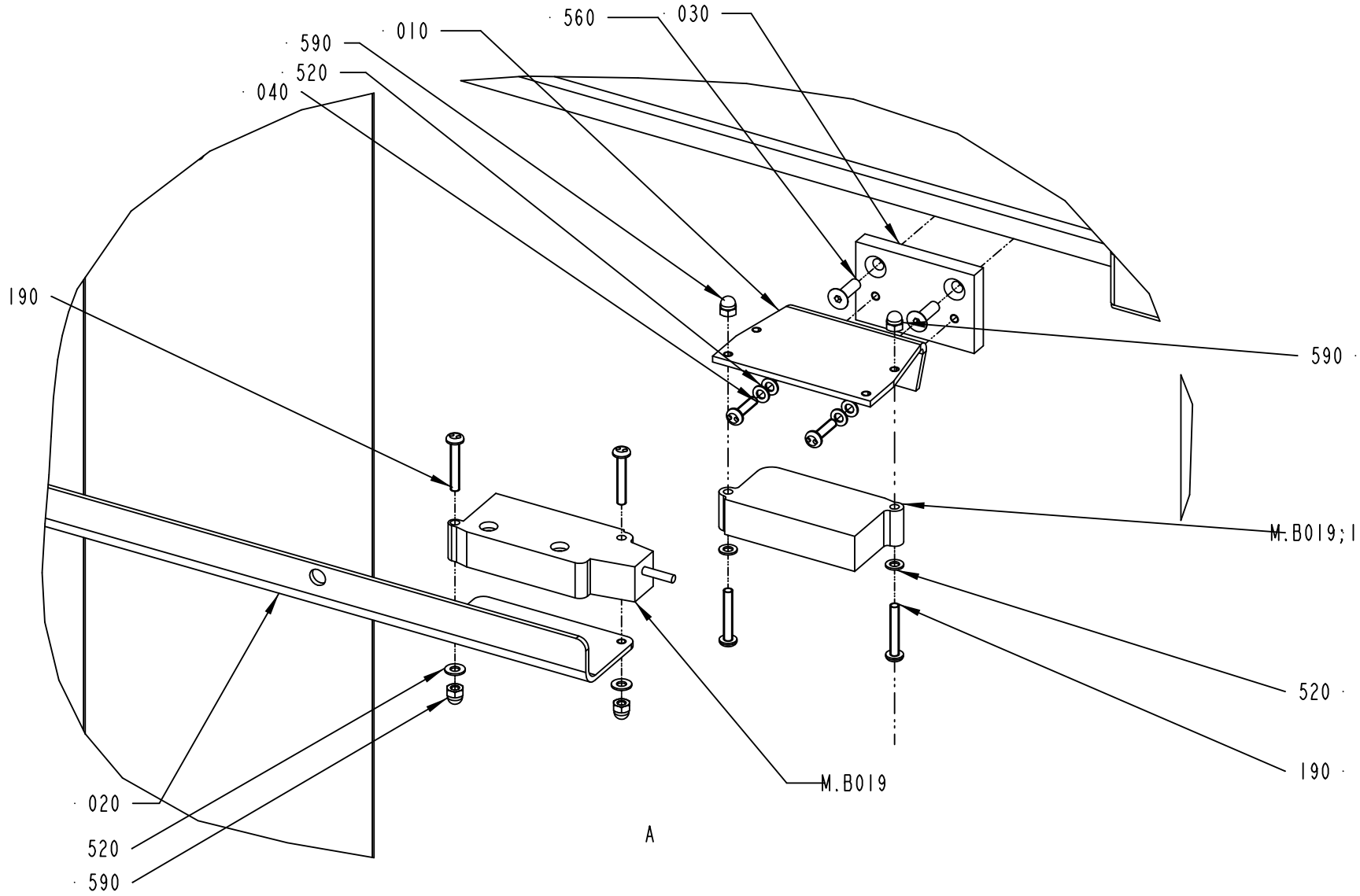

2552695-3
424099

ECM: 424875 - 20091221
Group number: 2552695-0300
Assembly Drawing: 2552695-3_2_AB

This list covers pages from 2-68 to 2-71

Pos	Part No	UN	Qty	Description	Page No
-					
010	3047673-0000		1	BRACKET	
020	3047675-0000		1	BRACKET	
030	3019240-0000		1	FASTENING PLATE	
040	2872726-0000		2	SCREW	
100	2748678-0000		1	DOOR	
110	2748679-0000		1	GLASS	
120	90143-0068	M	2	RUBBER STRIP EMKA 1011-06	
130	1035792-0000		1	E-HINGE	
140	1035794-0000		3	BLOCKING PIECE	
150	988685-0000		1	PIN	
190	90459-4165		4	SAFETY SCREW, SM4X25	
500	312115-0329		2	SCREW ISO4762 M5X16 A4 80	
510	312115-0327		3	SCREW ISO4762 M5X12 A4 80	
520	315105-0136		6	WASHER PLAIN, 4,3X9X0,8 A4 BRB	
530	315105-0146		3	WASHER PLAIN, 5,3X10X1 A4 BRB	
540	90157-0041		1	SEALING COMPOUND, RHODORSEAL 5651	
560	312155-0329		2	SCREW DIN 7991 MF6S M5X16 A4 70	
590	312705-0312		4	NUT HEX. DOMED CAP MHM-6 M4 A280	
M.B019;1	90459-4089		1	SAFETY SENSOR, EVA E, 20-046-06	
M.B019	90600-5926		1	SAFETY SENSOR, ADAM E M12 5M CABLE	

Pos	Part No	UN	Qty	Description	Page No

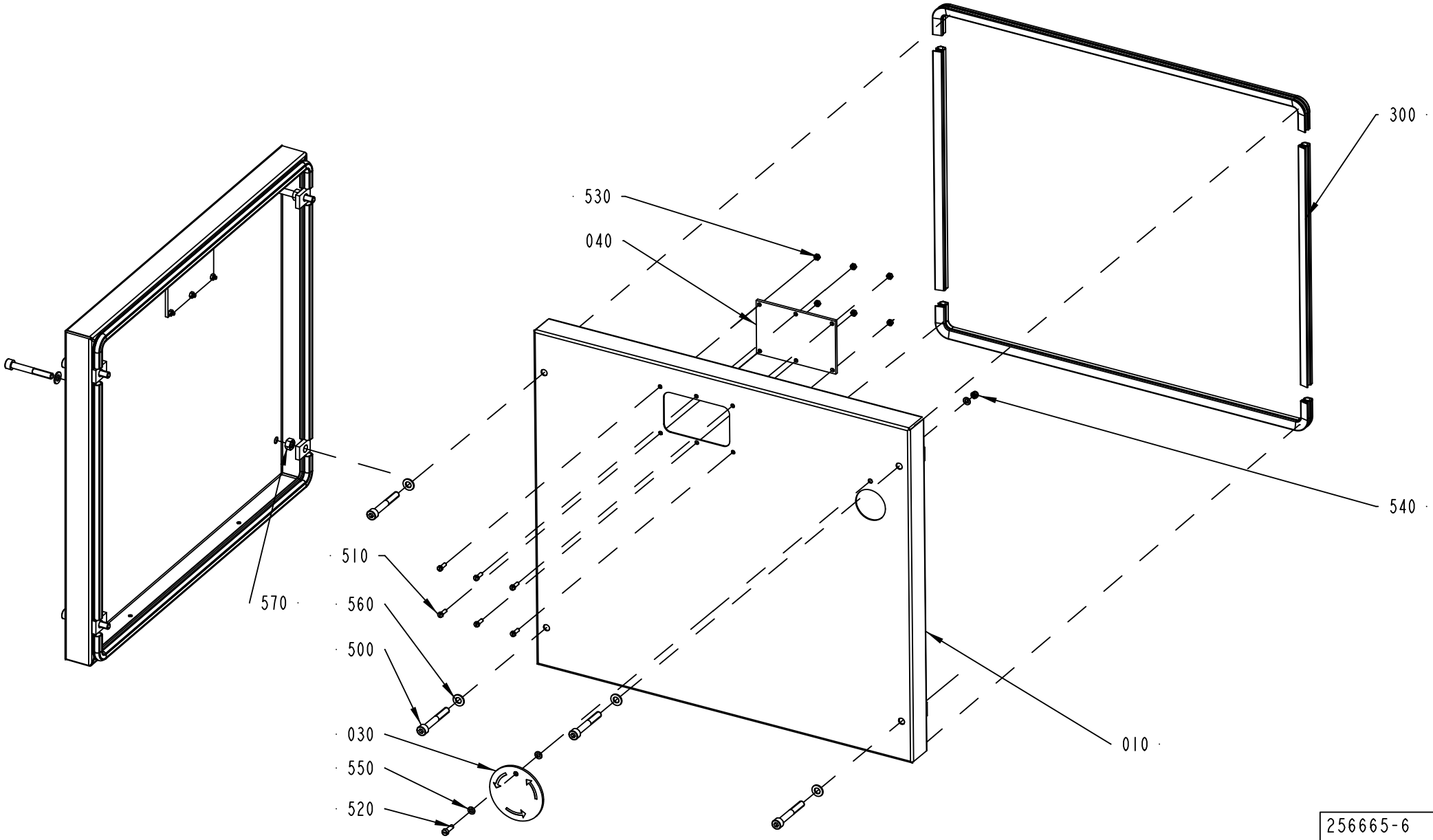
300
530
040
540
510
570
560
500
030
550
520
010
256665-6
387163

ECM: 398324 - 20090630
Group number: 256665-0300
Assembly Drawing: 256665-6_1_AA

Pos	Part No	UN	Qty	Description	Page No
-					
010	1279044-0000		1	HATCH	
030	469964-0000		1	LID	
040	257231-0000		1	WINDOW	
300	90143-0068	MM	2200	RUBBER STRIP EMKA 1011-06	
320	90157-0022	L	0.001	SEALING COMPOUND, SILICONE	
500	312115-0463		4	SCREW ISO4762 M8X60 A4 80	
510	312125-0291		6	SLOTTED HEAD SCREW, ISO1207 M4X12 A4	
520	312125-0329		1	SLOTTED HEAD SCREW, ISO1207 M5X16 A4	
530	312605-0312		6	HEXAGON NUT, M6M M4 A280	
540	312810-0314		1	HEXAGON NUT, NY-LOCK M5 FZB	
550	315105-0146		3	WASHER PLAIN, 5,3X10X1 A4 BRB	
560	315105-0165		4	WASHER PLAIN, 8,4X16X1,6 A4 BRB	
570	312605-0318		4	HEXAGON NUT, M6M M8 A280	

Pos	Part No	UN	Qty	Description	Page No

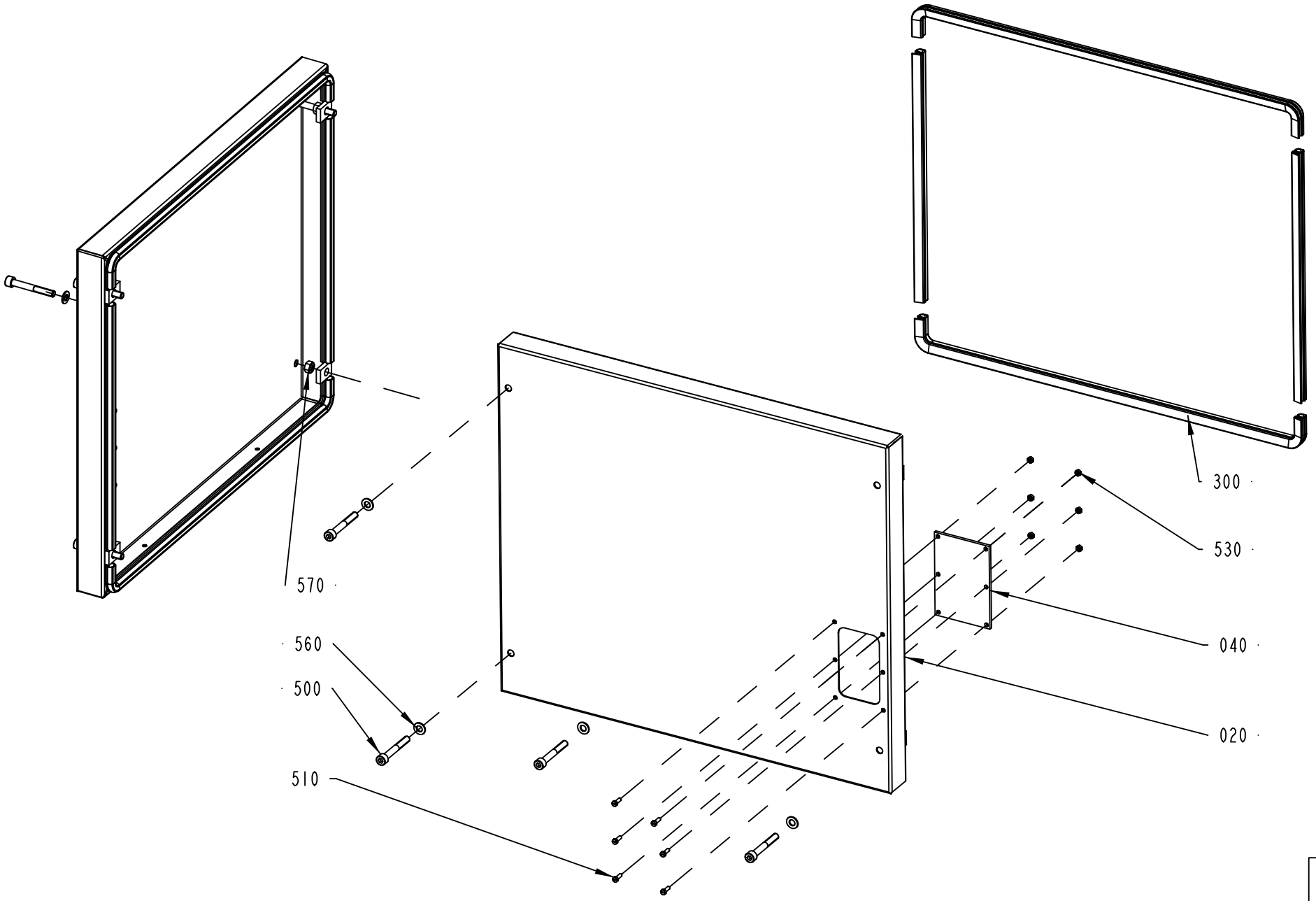

1296815-2
387163

ECM: 398323 - 20090630
Group number: 1296815-0200
Assembly Drawing: 1296815-2_1_AA

Pos	Part No	UN	Qty	Description	Page No
-					
020	1279045-0000		1	HATCH	
040	257231-0000		1	WINDOW	
300	90143-0068	MM	2200	RUBBER STRIP EMKA 1011-06	
320	90157-0022	L	0.001	SEALING COMPOUND, SILICONE	
500	312115-0463		4	SCREW ISO4762 M8X60 A4 80	
510	312125-0291		6	SLOTTED HEAD SCREW, ISO1207 M4X12 A4	
530	312605-0312		6	HEXAGON NUT, M6M M4 A280	
560	315105-0165		4	WASHER PLAIN, 8,4X16X1,6 A4 BRB	
570	312605-0318		4	HEXAGON NUT, M6M M8 A280	

Pos	Part No	UN	Qty	Description	Page No

AIR JET GUN

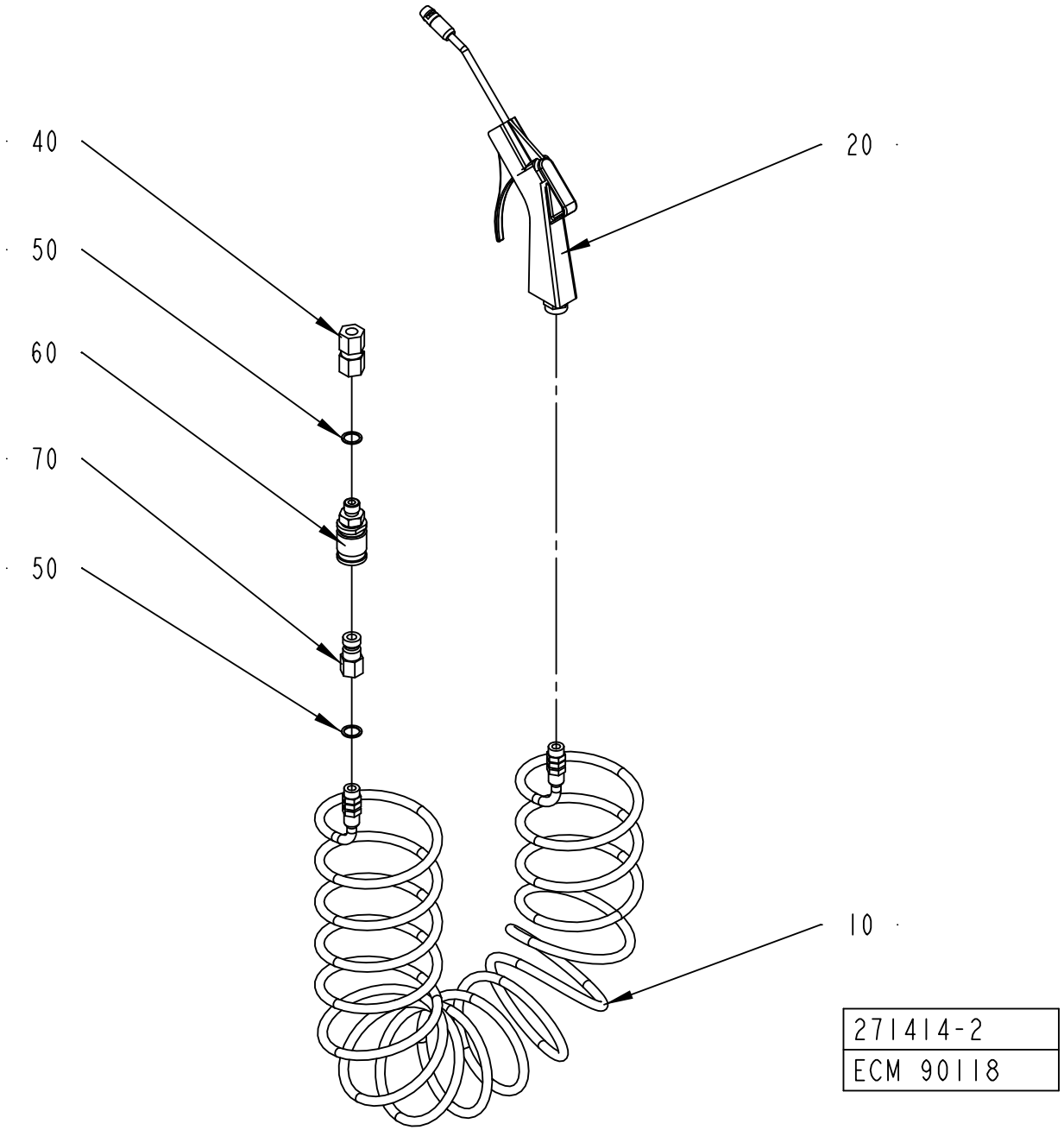

ECM: 178703 - 20040910
Group number: 271414-0300
Assembly Drawing: 271414-2_1_AA

Pos	Part No	UN	Qty	Description	Page No
-					
010	90152-0016		1	HOSE (SPIRAL)	
020	90243-0061		1	AIR GUN, CEJN SERIE 204 ED: 90459-0173	
040	342725-0108		1	CONN. STR. PIPE GAI10LR71	
050	315233-0110		2	WASHER CAPTIVE SEALING G1/4	
060	90163-0013		1	QUICK COUPLING, (F) LP 006-0-WR013-01-2	
	90163-0312		*1*	*GASKET KIT VITON/95 LP-006-0*	
070	90163-0015		1	QUICK COUPLING, (M) LP-006-1-WR513	

Pos	Part No	UN	Qty	Description	Page No

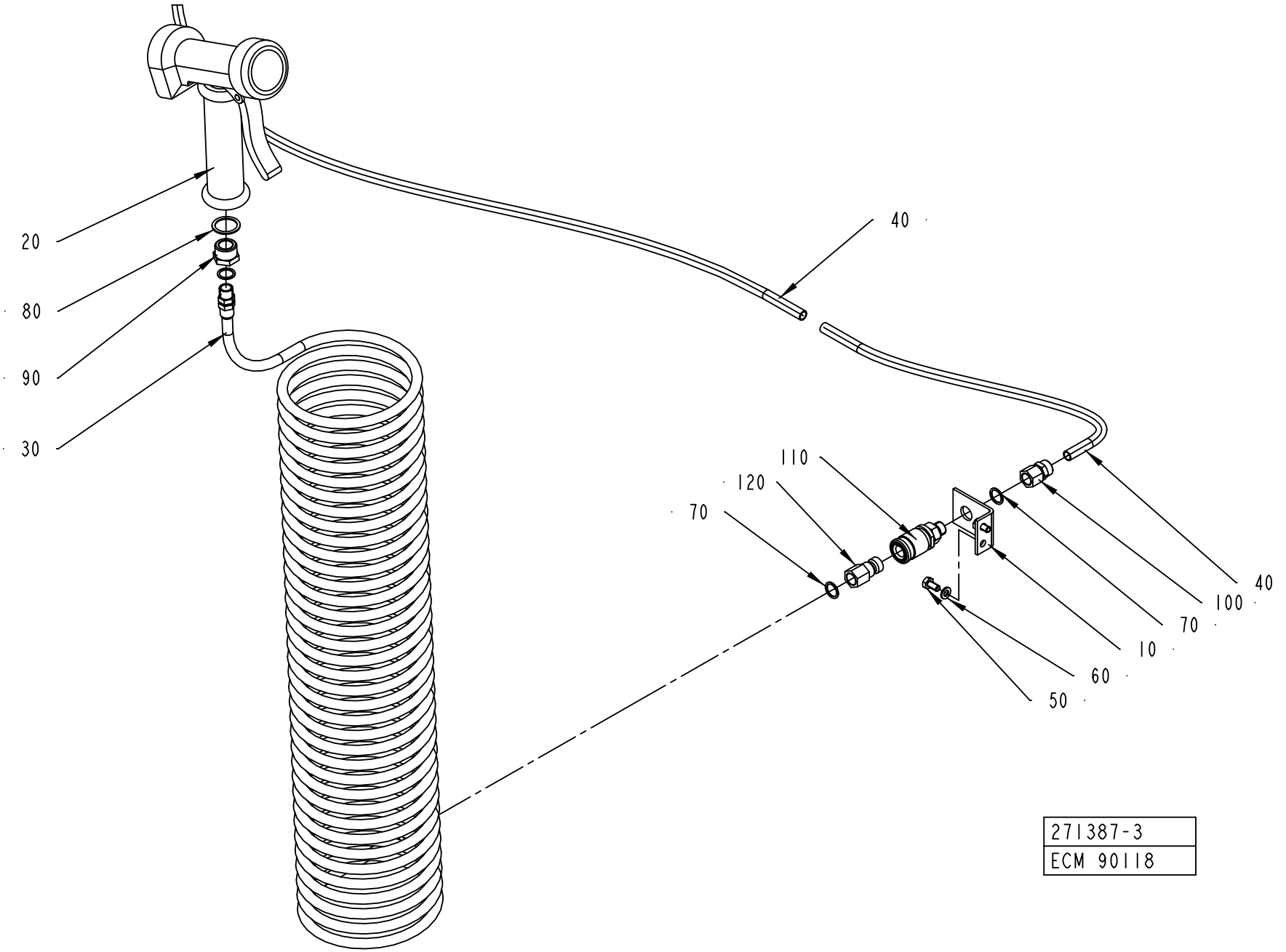
20
80
90
30
40
110
120
70
40
100
70
10
60
50
271387-3
ECM 90118

ECM: 178702 - 20040910
Group number: 271387-0400
Assembly Drawing: 271387-3_1_AA

Pos	Part No	UN	Qty	Description	Page No
-					
010	2524394-0000		1	BRACKET	
020	90426-0003		1	HAND SHOWER, 361100	
030	90152-0017		1	HOSE (SPIRAL)	
040	90166-0135	M	2.8	TUBE 10 MM PA BLACK	
050	312105-0366		2	SCREW, M6S ISO 4017 M6X12 A4 80	
060	315105-0153		2	WASHER PLAIN, 6,4X12X1,5 A4 BRB	
070	315233-0110		3	WASHER CAPTIVE SEALING G1/4	
080	315233-0113		1	WASHER CAPTIVE SEALING G1/2	
090	342701-0205		1	BUSHING, INT/EXT, G 1/2 - G1/4	
100	342923-0132		1	STRAIGHT COUPL.,INT.THREADED 10/8-G1/4"	
110	90163-0013		1	QUICK COUPLING, (F) LP 006-0-WR013-01-2	
	90163-0312		*1*	*GASKET KIT VITON/95 LP-006-0*	
120	90163-0015		1	QUICK COUPLING, (M) LP-006-1-WR513	

Pos	Part No	UN	Qty	Description	Page No

Machine Type	Group Description	Used-In	Group Number	Page No

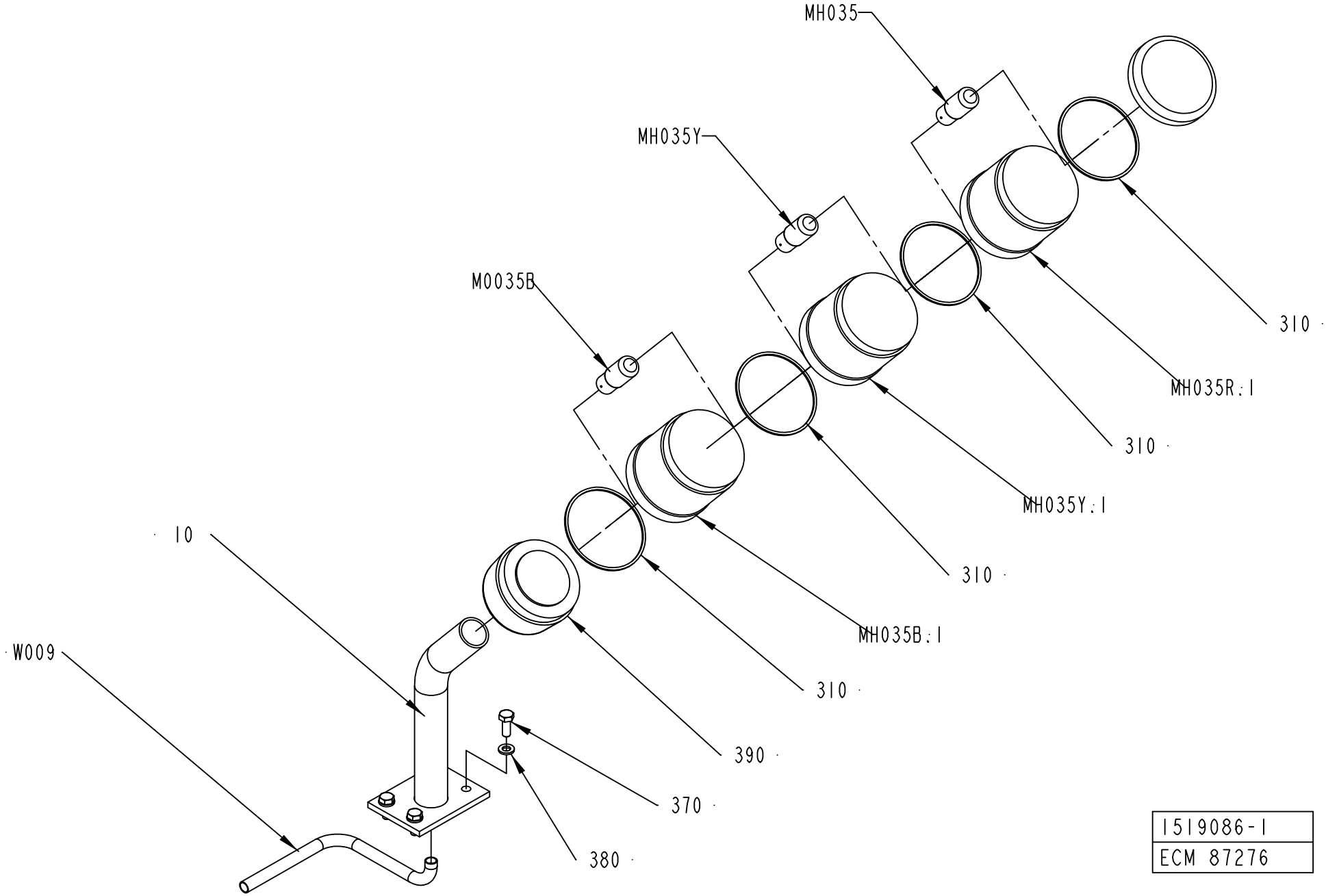

1519086-1
ECM 87276

ECM: 227590 - 20051011
Group number: 1519086-0100
Assembly Drawing: 1519086-1_1_AA

Pos	Part No	UN	Qty	Description	Page No
-					
010	1517248-0000		1	BRACKET	
310	90419-0307		4	GASKET, XVA-C09	
370	312105-0368		4	SCREW, M6S ISO 4017 M6X16 A4 80	
380	315105-0153		4	WASHER PLAIN, 6,4X12X1,5 A4 BRB	
390	90458-0292		1	TERMINAL ELEMENT, PSD-S CE-TM SCREW/W	
MH035Y	90036-0068		1	BULB 5W 24V, SL-L24 205348	
MH035R	90036-0068		1	BULB 5W 24V, SL-L24 205348	
MH035B	90036-0068		1	BULB 5W 24V, SL-L24 205348	
MH035Y.1	90458-0294		1	LIGHT ELEMENT, YELLOW, PSD-S OE YE/W	
MH035R.1	90458-0293		1	LIGHT ELEMENT, RED, PSD-S OE RD/W	
MH035B.1	90458-0295		1	LIGHT ELEMENT, BLUE, PSD-S OE BU/W	
W009	351150-0406	M	5	CABLE OLFLEX 7X0,75 MM2 LIGHT/GREY	

Pos	Part No	UN	Qty	Description	Page No

Machine Type | Group Description | Used-In | Group Number | Page No

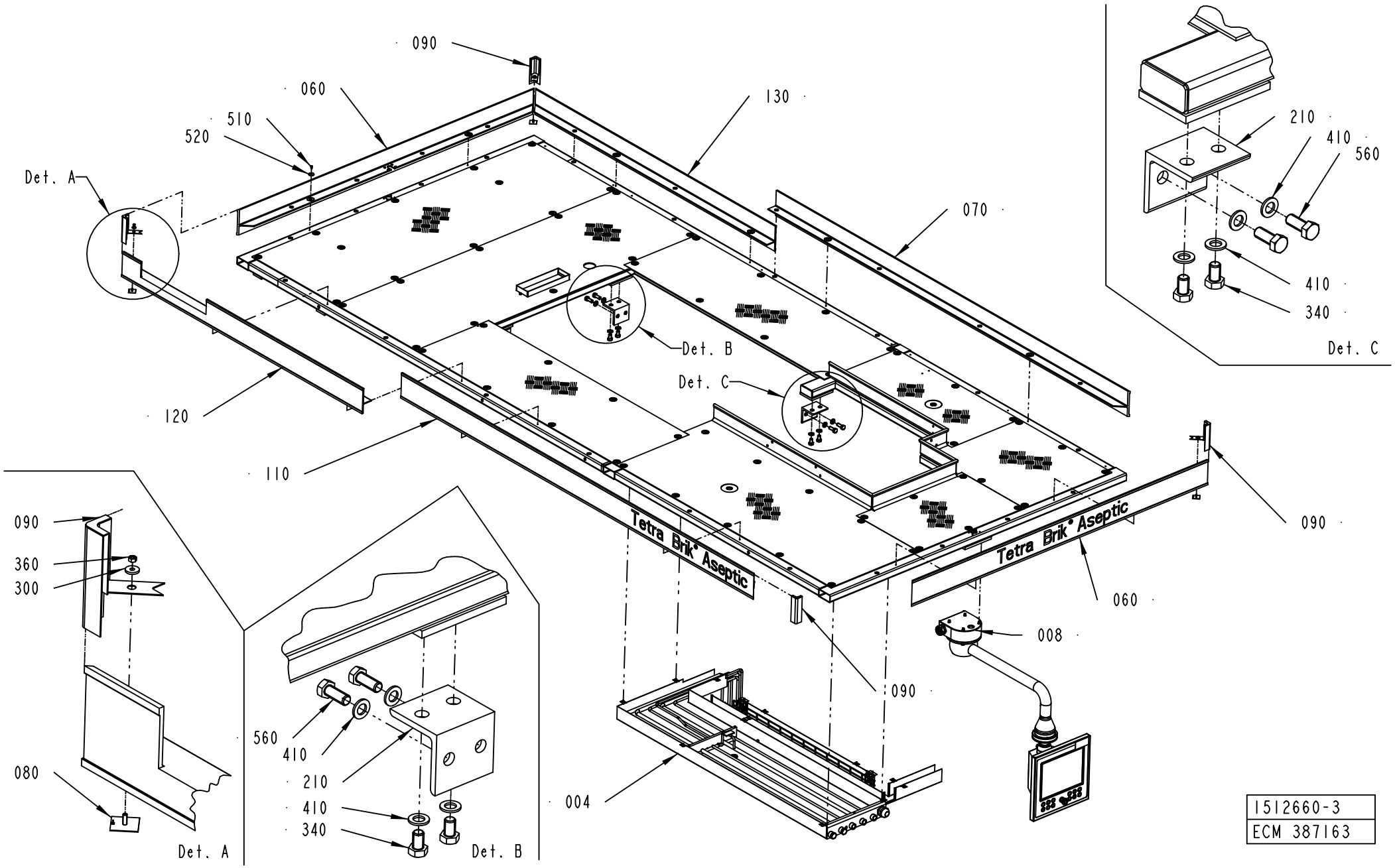

1512660-3
ECM 387163

ECM: 429875 - 20091221
Group number: 1512660-0300
Assembly Drawing: 1512660-3_1_AA

This list covers pages from 2-82 to 2-85

Pos	Part No	UN	Qty	Description	Page No
LEFTLADDER					
120	1512643-0000		1	TOE PLATE	
130	1512666-0000		1	TOE PLATE	
NOPT					
050	1512633-0000		1	CHECKER PLATE	
PT19					
050	2632603-0000		1	CHECKER PLATE	
RIGHTLADDER					
120	2514018-0000		1	TOP TIE PLATE	
130	2512805-0000		1	TOE PLATE	
Common Parts					
004	2500214-0200		1	PIPE WORK	**2-87, 2-89**
008	2500332-0200		1	PIVOT ARM	**2-91**
010	1512350-0000		1	PLATFORM	
020	1512351-0000		1	PLATFORM	
030	1512631-0000		2	CHECKER PLATE	
040	1512632-0000		1	CHECKER PLATE	
060	1512640-0000		2	TOE PLATE	
070	1512641-0000		1	TOE PLATE	
080	1254028-0000		4	FASTENING PLATE	
090	1254027-0000		4	CORNER STRIP	
110	1512642-0000		1	TOE PLATE	
140	1512845-0000		1	CHECKER PLATE	
150	1512846-0000		1	CHECKER PLATE	
160	1512847-0000		1	BRACKET	
180	2506608-0000		4	PLATE	
190	2506609-0000		4	PLATE	
200	1512851-0000		1	COVER	
210	1517249-0000		4	BRACKET	
220	2505282-0000		1	CHECKER PLATE	
230	2505236-0000		1	PLATFORM	
300	38087-0000		4	WASHER	
310	312105-0371		2	SCREW, M6S ISO 4017 M6X22 A4 80	
320	312105-0648		4	SCREW, M6S ISO 4014 M16X150 A4 80	
340	312105-0622		8	SCREW, M6S ISO 4017 M16X25 A4 80	
360	312605-0316		6	HEXAGON NUT, M6M M6 A280	
370	312812-0324		4	HEXAGON NUT, NY-LOCK M16 A4 80	
380	312105-0534		16	SCREW, M6S ISO 4017 M12X25 A4 80	
390	315105-0153		4	WASHER PLAIN, 6,4X12X1,5 A4 BRB	
410	315105-0186		24	WASHER PLAIN, 17X30X3 A4 BRB	
420	315105-0178		16	WASHER PLAIN, 13X24X2,5 A4 BRB	
510	90458-0072		78	SCREW ISO 7380 S M6X12 A2	
520	90458-0073		78	WASHER 6,4/30, H=1,5	
560	312105-0628		8	SCREW, M6S ISO 4017 M16X40 A4 80	
570	90143-0076	MM	7300	PROFILE	

Machine Type | Group Description | Used-In | Group Number | Page No

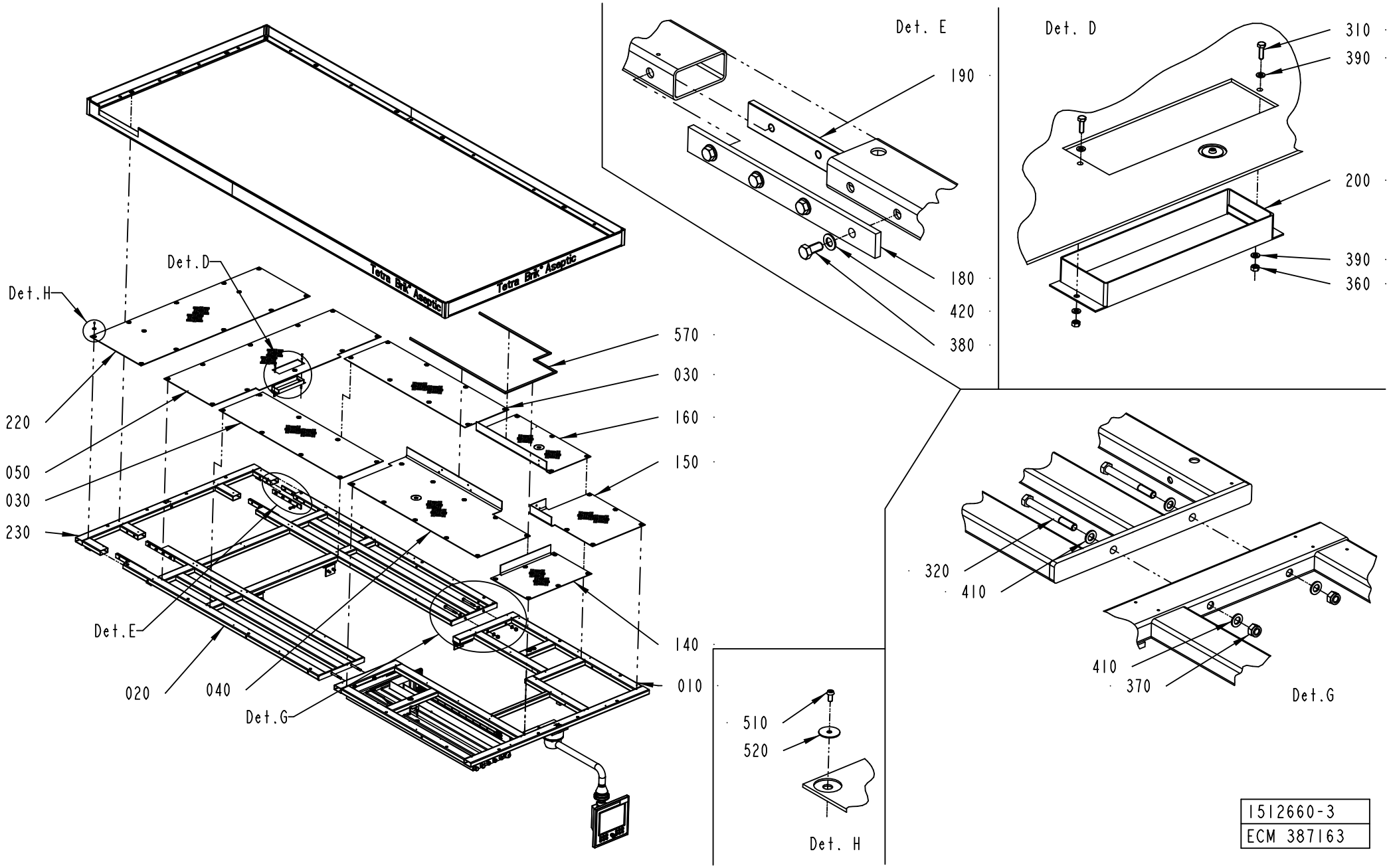
Det. E
190
180
420
380
Det. D
310
390
200
390
360
Det.H
Det.D
570
030
160
150
220
050
030
230
Det.E
020
040
Det.G
140
010
320
410
410
370
Det.G
510
520
Det. H
1512660-3
ECM 387163

ECM: 429875 - 20091221
Group number: 1512660-0300
Assembly Drawing: 1512660-3_2_AA

This list covers pages from 2-82 to 2-85

Pos	Part No	UN	Qty	Description	Page No
LEFTLADDER					
120	1512643-0000		1	TOE PLATE	
130	1512666-0000		1	TOE PLATE	
NOPT					
050	1512633-0000		1	CHECKER PLATE	
PT19					
050	2632603-0000		1	CHECKER PLATE	
RIGHTLADDER					
120	2514018-0000		1	TOP TIE PLATE	
130	2512805-0000		1	TOE PLATE	
Common Parts					
004	2500214-0200		1	PIPE WORK	**2-87, 2-89**
008	2500332-0200		1	PIVOT ARM	**2-91**
010	1512350-0000		1	PLATFORM	
020	1512351-0000		1	PLATFORM	
030	1512631-0000		2	CHECKER PLATE	
040	1512632-0000		1	CHECKER PLATE	
060	1512640-0000		2	TOE PLATE	
070	1512641-0000		1	TOE PLATE	
080	1254028-0000		4	FASTENING PLATE	
090	1254027-0000		4	CORNER STRIP	
110	1512642-0000		1	TOE PLATE	
140	1512845-0000		1	CHECKER PLATE	
150	1512846-0000		1	CHECKER PLATE	
160	1512847-0000		1	BRACKET	
180	2506608-0000		4	PLATE	
190	2506609-0000		4	PLATE	
200	1512851-0000		1	COVER	
210	1517249-0000		4	BRACKET	
220	2505282-0000		1	CHECKER PLATE	
230	2505236-0000		1	PLATFORM	
300	38087-0000		4	WASHER	
310	312105-0371		2	SCREW, M6S ISO 4017 M6X22 A4 80	
320	312105-0648		4	SCREW, M6S ISO 4014 M16X150 A4 80	
340	312105-0622		8	SCREW, M6S ISO 4017 M16X25 A4 80	
360	312605-0316		6	HEXAGON NUT, M6M M6 A280	
370	312812-0324		4	HEXAGON NUT, NY-LOCK M16 A4 80	
380	312105-0534		16	SCREW, M6S ISO 4017 M12X25 A4 80	
390	315105-0153		4	WASHER PLAIN, 6,4X12X1,5 A4 BRB	
410	315105-0186		24	WASHER PLAIN, 17X30X3 A4 BRB	
420	315105-0178		16	WASHER PLAIN, 13X24X2,5 A4 BRB	
510	90458-0072		78	SCREW ISO 7380 S M6X12 A2	
520	90458-0073		78	WASHER 6,4/30, H=1,5	
560	312105-0628		8	SCREW, M6S ISO 4017 M16X40 A4 80	
570	90143-0076	MM	7300	PROFILE	

Machine Type | Group Description | Used-In | Group Number | Page No

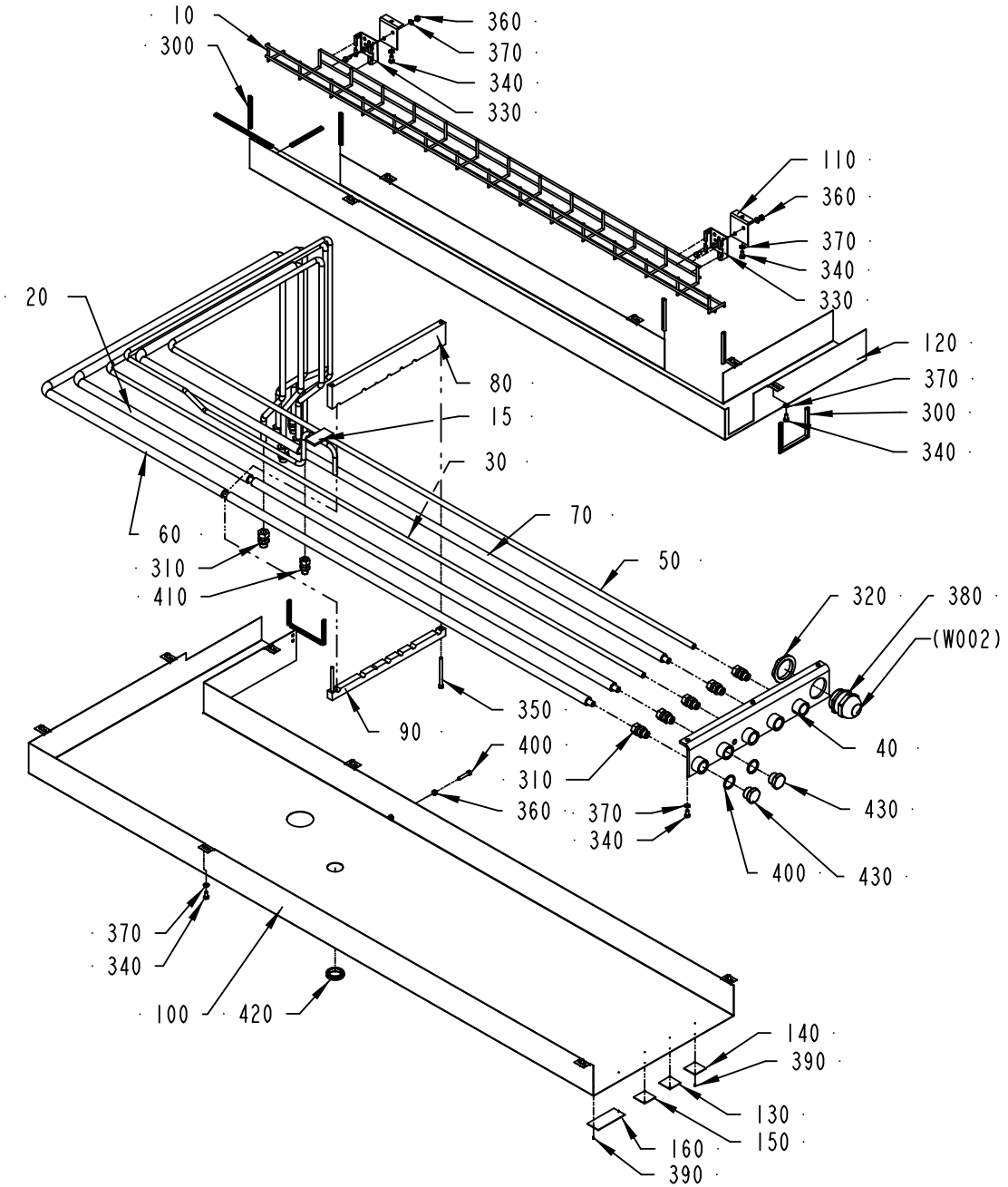

2500214-3
424099

ECM: 429876 - 20091221
Group number: 2500214-0200
Assembly Drawing: 2500214-3_1_AA

This list covers pages from 2-86 to 2-89

Pos	Part No	UN	Qty	Description	Page No
HI (See drawing on page: 2-88)					
170	2613035-0000		1	SUPPORT	
180	978010-0000		1	SIGN BOARD	
450	90030-0230		1	CONN. BULKHEAD BCM6-316	
460	90166-0132	CM	250	TUBE 6 MM PA,TRANSP.	
470	90457-0086		1	BULKHEAD CONNECTOR 6MM	
480	312115-0325		2	SCREW ISO4762 M5X10 A4 80	
490	312605-0314		2	HEXAGON NUT, M6M M5 A280	
500	315105-0146		2	WASHER PLAIN, 5,3X10X1 A4 BRB	
Common Parts					
010	2500218-0000		1	CABLE TRENCH	
015	2523703-0000		1	PIPE	
020	1286000-0000		1	PIPE	
030	1296854-0000		1	PIPE	
040	1334694-0000		1	CONNECTION PLATE	
050	1350307-0000		1	PIPE	
060	1350308-0000		1	PIPE	
070	1350309-0000		1	PIPE	
080	1350472-0000		1	HOLDER	
090	1350473-0000		1	HOLDER	
100	2500215-0000		1	CABLE DUCT	
110	2500217-0000		2	BRACKET	
120	3062131-0000		1	CABLE DUCT	
130	273455-0000		1	SIGN, COLD WATER	
140	273456-0000		1	SIGN, HOT WATER	
150	273458-0000		1	SIGN, AIR	
160	2555070-0000		1	SIGN	
300	90143-0060	M	2	EDGE STRIP 9,5X6,3MM BLACK PVC	
310	90030-0187		10	CONN. STR. GE12LRED71	
320	90458-0327		1	NUT, M50X1,5	
330	90181-0190		2	CABLE DUCT, WALL BRACKET, B4 MINI	
340	312105-0366		21	SCREW, M6S ISO 4017 M6X12 A4 80	
350	312115-0385		2	SCREW ISO4762 M6X75 A4 80	
360	312605-0316		5	HEXAGON NUT, M6M M6 A280	
370	315105-0153		21	WASHER PLAIN, 6,4X12X1,5 A4 BRB	
380	90458-0311		1	CABLE GLAND, M50X1,5, 5311 1060	
390	312502-0120		8	DRIVE SCREW ROUND HEAD KDS 0X5	
400	312115-0374		1	SCREW ISO4762 M6X30 A4 80	
410	90030-0186		1	CONN. STR. GE10LRED71	
420	90459-1066		1	LEAD-IN, BUSHING, DA 300/350/10	
430	90330-0046		2	PLUG, G3/4EXT, R-236G3/4	
440	315239-0115		2	NYLON WASHER G3/4, 3/4RRP	

Pos	Part No	UN	Qty	Description	Page No

Machine Type | Group Description | Used-In | Group Number | Page No

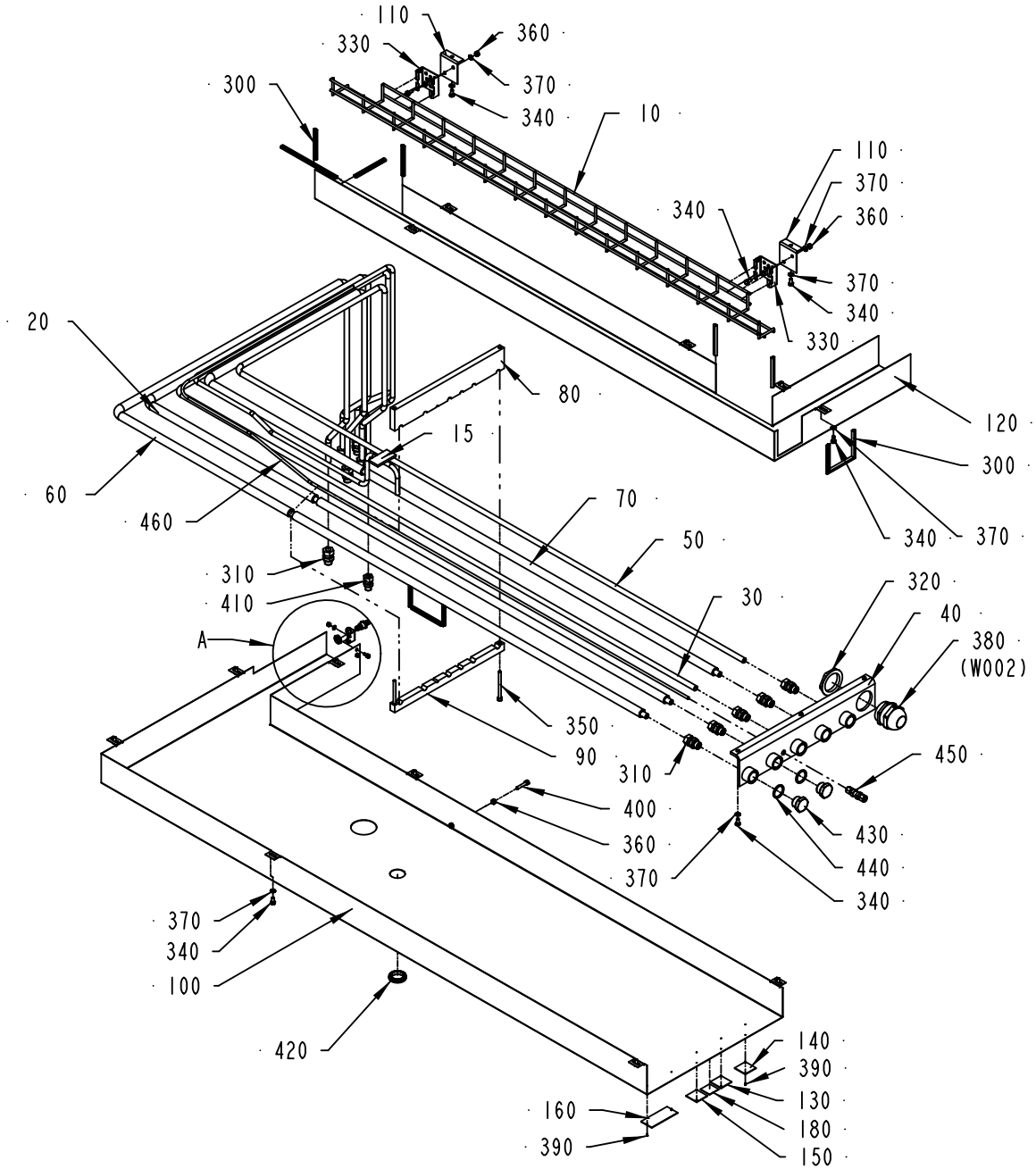

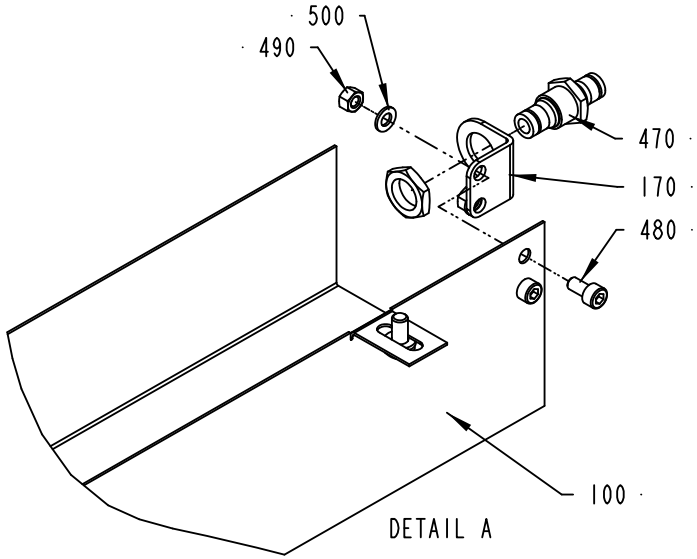

2500214-4
424099

ECM: 429876 - 20091221
Group number: 2500214-0200
Assembly Drawing: 2500214-4_1_AA

This list covers pages from 2-86 to 2-89

Pos	Part No	UN	Qty	Description	Page No
HI (See drawing on page: 2-88)					
170	2613035-0000		1	SUPPORT	
180	978010-0000		1	SIGN BOARD	
450	90030-0230		1	CONN. BULKHEAD BCM6-316	
460	90166-0132	CM	250	TUBE 6 MM PA,TRANSP.	
470	90457-0086		1	BULKHEAD CONNECTOR 6MM	
480	312115-0325		2	SCREW ISO4762 M5X10 A4 80	
490	312605-0314		2	HEXAGON NUT, M6M M5 A280	
500	315105-0146		2	WASHER PLAIN, 5,3X10X1 A4 BRB	
Common Parts					
010	2500218-0000		1	CABLE TRENCH	
015	2523703-0000		1	PIPE	
020	1286000-0000		1	PIPE	
030	1296854-0000		1	PIPE	
040	1334694-0000		1	CONNECTION PLATE	
050	1350307-0000		1	PIPE	
060	1350308-0000		1	PIPE	
070	1350309-0000		1	PIPE	
080	1350472-0000		1	HOLDER	
090	1350473-0000		1	HOLDER	
100	2500215-0000		1	CABLE DUCT	
110	2500217-0000		2	BRACKET	
120	3062131-0000		1	CABLE DUCT	
130	273455-0000		1	SIGN, COLD WATER	
140	273456-0000		1	SIGN, HOT WATER	
150	273458-0000		1	SIGN, AIR	
160	2555070-0000		1	SIGN	
300	90143-0060	M	2	EDGE STRIP 9,5X6,3MM BLACK PVC	
310	90030-0187		10	CONN. STR. GE12LRED71	
320	90458-0327		1	NUT, M50X1,5	
330	90181-0190		2	CABLE DUCT, WALL BRACKET, B4 MINI	
340	312105-0366		21	SCREW, M6S ISO 4017 M6X12 A4 80	
350	312115-0385		2	SCREW ISO4762 M6X75 A4 80	
360	312605-0316		5	HEXAGON NUT, M6M M6 A280	
370	315105-0153		21	WASHER PLAIN, 6,4X12X1,5 A4 BRB	
380	90458-0311		1	CABLE GLAND, M50X1,5, 5311 1060	
390	312502-0120		8	DRIVE SCREW ROUND HEAD KDS 0X5	
400	312115-0374		1	SCREW ISO4762 M6X30 A4 80	
410	90030-0186		1	CONN. STR. GE10LRED71	
420	90459-1066		1	LEAD-IN, BUSHING, DA 300/350/10	
430	90330-0046		2	PLUG, G3/4EXT, R-236G3/4	
440	315239-0115		2	NYLON WASHER G3/4, 3/4RRP	

Pos	Part No	UN	Qty	Description	Page No

Machine Type | Group Description | Used-In | Group Number | Page No

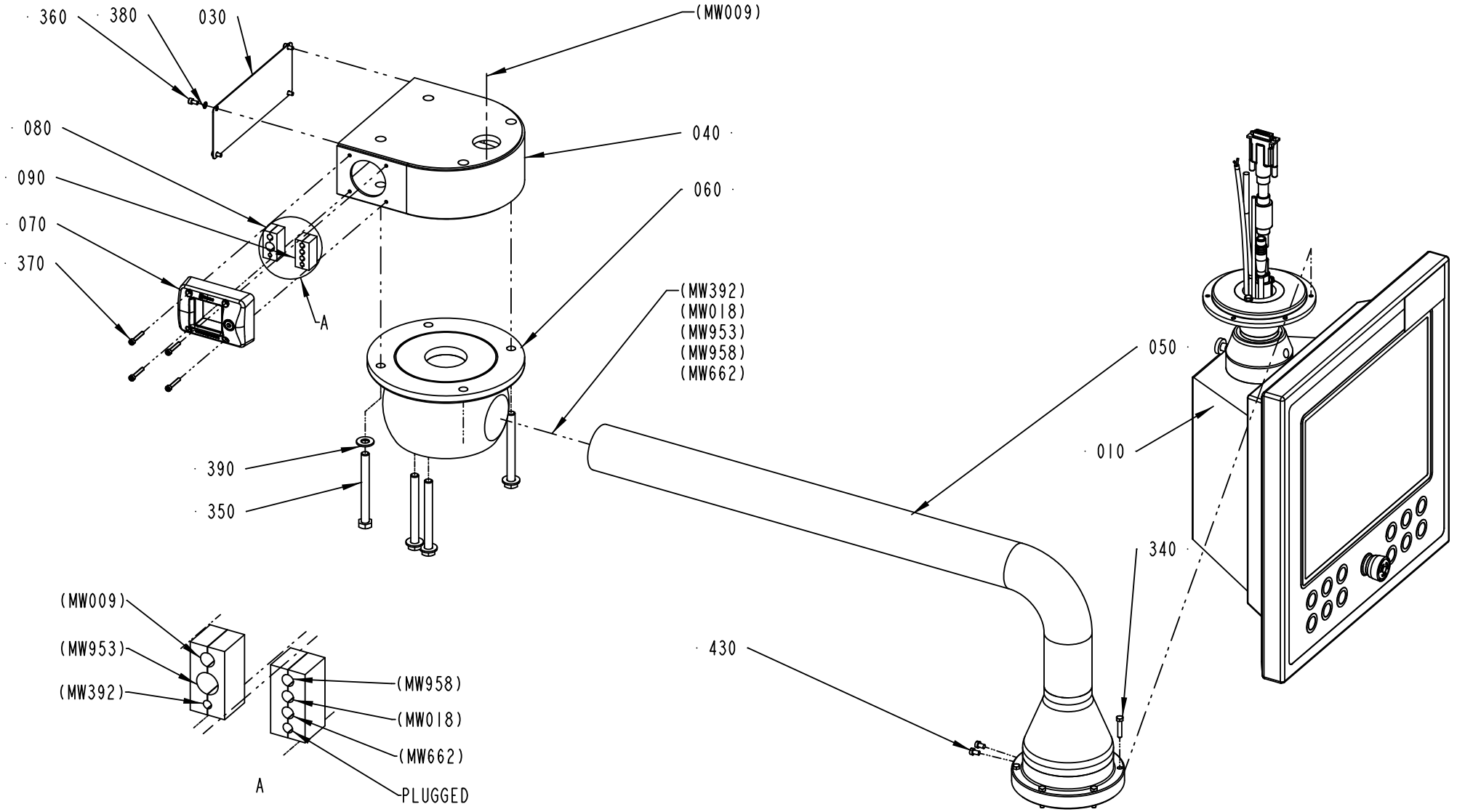

2500332-2
424099

ECM: 448779 - 20100524
Group number: 2500332-0200
Assembly Drawing: 2500332-2_1_AB

Pos	Part No	UN	Qty	Description	Page No
-					
010	3019241-0100		1	TPOP TBA/19	**2-93**
030	1539113-0000		1	COVER	
040	3062129-0000		1	BRACKET	
050	2500260-0000		1	ARM	
060	90458-1958		1	ARTICULATION, 300DEG WITH STOP	
070	90600-5579		1	CABLE ENTRY KIT, EZENTRY 4/4	
080	90602-3433		1	CABLE LEAD-IN, 5EM0000011991	
090	90602-3434		1	CABLE LEAD-IN, 5EM0000011992	
310	90099-0085		1	NUT	
320	3036085-0000		1	INSERT	
330	353240-0007		1	COMPRESSION GLAND, VK 156Y	
340	312105-0333		6	SCREW, M6S ISO 4017 M5X25 A4 80	
350	312105-0511		4	SCREW, M6S ISO 4014 M10X100 A4 80	
360	312115-0287		4	SCREW ISO4762 M4X8 A4 80	
370	312115-0297		4	SCREW ISO4762 M4X25 A4 80	
380	315105-0136		4	WASHER PLAIN, 4,3X9X0,8 A4 BRB	
390	315105-0173		4	WASHER PLAIN, 10,5X22X2 A4 BRB	
430	312125-0323		2	SLOTTED HEAD SCREW, ISO1207 M5X8 A4	

Pos	Part No	UN	Qty	Description	Page No

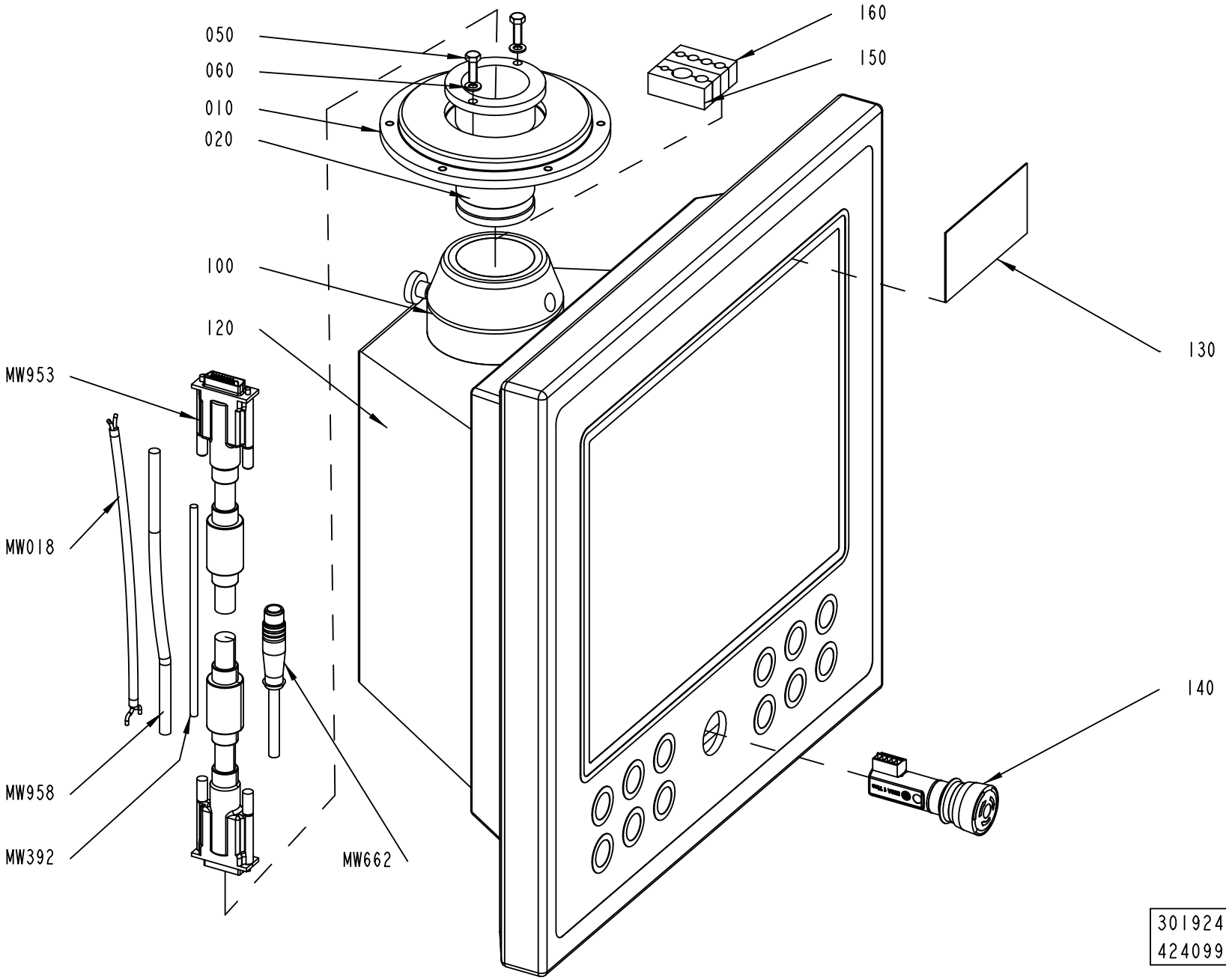
050
060
010
020
100
120
160
150
130
140
MW953
MW018
MW958
MW392
MW662
3019241-1
424099

ECM: 429873 - 20091221
Group number: 3019241-0100
Assembly Drawing: 3019241-1_1_AB

Pos	Part No	UN	Qty	Description	Page No
-					
010	3019247-0000		1	FLANGE	
020	3036083-0000		1	SLEEVE	
050	312105-0329		2	SCREW, M6S ISO 4017 M5X16 A4 80	
060	315105-0146		2	WASHER PLAIN, 5,3X10X1 A4 BRB	
100	90459-0306		1	CONNECTOR FOR OPERATOR PANEL, 6664.000	
120	90600-5002		1	OPERATOR PANEL, 5AP920_1505-K42-C0	
	90458-1150		*1*	*CABLE GLAND, RG M63/4*	
	90600-4778		*1*	*USB CABLE SET, 5A9000.54*	
	90600-4787		*1*	*USB CABLE SET, 5A9000.55*	
	90600-4980		*1*	*AP LINK SDL RECEIVER, 5DLSDL.1000-00*	
	90600-4981		*1*	*DEVICENET & ETHERN./IP MOD., 5E9000.44*	
	90600-4982		*1*	*PUSH BUTTON PCB, 4E0011.01-K17*	
	90600-5000		*1*	*INTERNAL PANEL CABLE SET, 5A9000.57*	
	90600-5003		*1*	*PANEL FRONT, 5AP920.1505-K64*	
	2872847-0000		*1*	*LABEL*	
130	90600-5235		1	MANDATORY ACTION SIGN ISO, READ MANUAL	
140	90600-6050		1	EMERGENCY STOP INCA 1 TINA, 30-054-00	
150	90602-0232		1	GLAND, 5GM0000011614	
160	90602-0233		1	GLAND, 5GM0000011615	
MW958	90459-2530	M	8	DEVICENET CABLE THIN	
MW953	90600-3697		1	SDL FLEX CABLE 10M, 5CASDL.0100-03	
MW662	90600-0934		1	CABLE M12-C62 5 POLE MALE, 20-056-02	
MW392	351162-0106	M	7.5	WIRE AWM 1X4 MM2 YELLOW-GREEN	
MW018	351150-0403	M	7	CABLE OLFLEX 3X0,75 MM2 LIGHT/GREY	

Pos	Part No	UN	Qty	Description	Page No

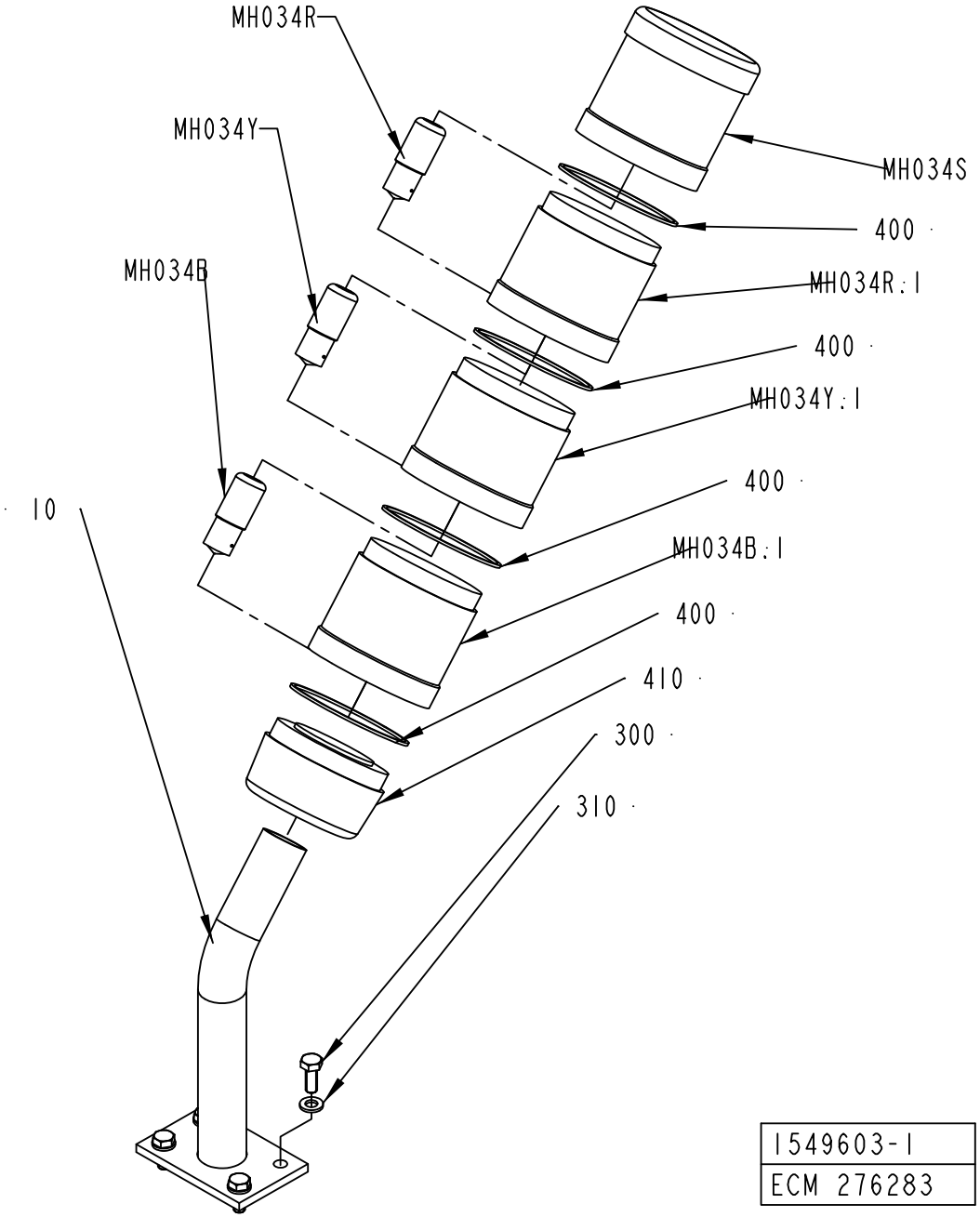

1549603-1
ECM 276283

ECM: 276283 - 20070126
Group number: 1549603-0100
Assembly Drawing: 1549603-1_1_AB

Pos	Part No	UN	Qty	Description	Page No
-					
10	1517248-0000		1	BRACKET	
300	312105-0368		4	SCREW, M6S ISO 4017 M6X16 A4 80	
310	315105-0153		4	WASHER PLAIN, 6,4X12X1,5 A4 BRB	
320	312125-0325		4	SCREW ISO 1207 M5X10 A4	
400	90419-0307		4	GASKET, XVA-C09	
410	90458-0292		1	TERMINAL ELEMENT, PSD-S CE-TM SCREW/W	
MH034Y	90036-0068		1	BULB 5W 24V, SL-L24 205348	
MH034S	90458-0302		1	SIREN ELEMENT, PSD-S AE SM8-5 100DB/1/W	
MH034R	90036-0068		1	BULB 5W 24V, SL-L24 205348	
MH034B	90036-0068		1	BULB 5W 24V, SL-L24 205348	
MH034Y.1	90458-0294		1	LIGHT ELEMENT, YELLOW, PSD-S OE YE/W	
MH034R.1	90458-0293		1	LIGHT ELEMENT, RED, PSD-S OE RD/W	
MH034B.1	90458-0295		1	LIGHT ELEMENT, BLUE, PSD-S OE BU/W	

Pos	Part No	UN	Qty	Description	Page No

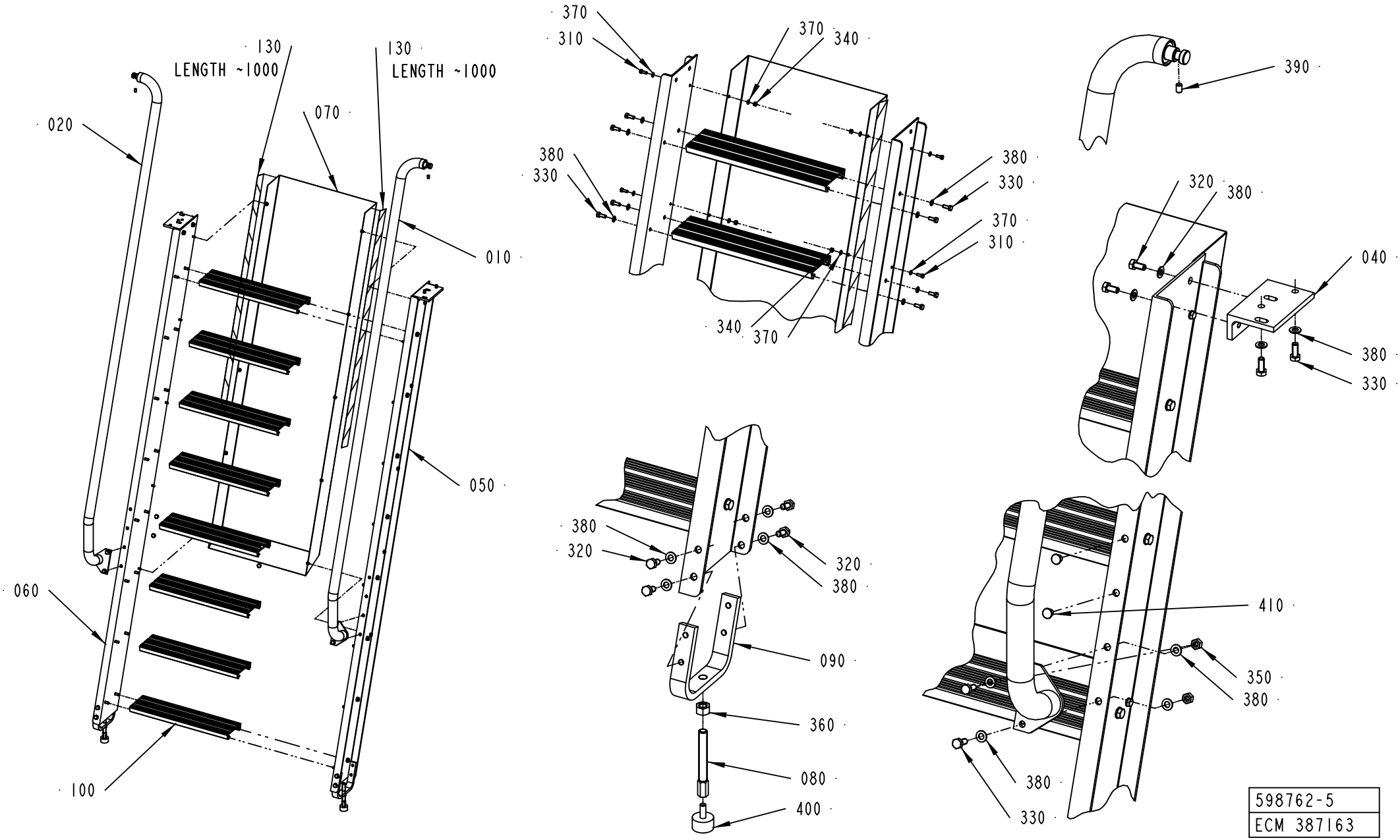
130
LENGTH ~1000
130
LENGTH ~1000
020
070
010
050
060
100
370
310
370
340
380
330
380
330
370
310
340
370
390
320
380
040
380
330
380
320
320
380
090
360
080
400
410
350
380
380
330
598762-5
ECM 387163

ECM: 400001 - 20090630
Group number: 598762-0400
Assembly Drawing: 598762-5_1_AA

Pos	Part No	UN	Qty	Description	Page No
-					
010	2769984-0000		1	RAIL	
020	2769985-0000		1	RAIL	
040	2769988-0000		1	BRACKET	
050	2527513-0000		1	SIDE PIECE	
060	2527514-0000		1	SIDE PIECE	
070	2514112-0000		1	COVER	
080	441905-0000		2	RETARD PIN	
090	979966-0000		2	BRACKET	
100	441679-0000		8	STAIR	
130	3036084-0000		2	WARNING TAPE	
310	312105-0368		10	SCREW, M6S ISO 4017 M6X16 A4 80	
320	312105-0449		12	SCREW, M6S ISO 4017 M8X16 A4 80	
330	312105-0451		40	SCREW, M6S ISO 4017 M8X20 A4 80	
340	312605-0316		10	HEXAGON NUT, M6M M6 A280	
350	312605-0318		4	HEXAGON NUT, M6M M8 A280	
360	312605-0322		2	HEXAGON NUT, M6M M12 A280	
370	315105-0153		20	WASHER PLAIN, 6,4X12X1,5 A4 BRB	
380	315105-0165		56	WASHER PLAIN, 8,4X16X1,6 A4 BRB	
390	312318-0447		2	SET SCREW, CUP END ISO4029 M8X12 A4	
400	90347-0004		2	VIBRATION DAMPER D=30 TH=M8 H=17 H2=21MM	
410	90459-5924		4	PLUG LD-PE, Ã¸10.7 NATUR	

Pos	Part No	UN	Qty	Description	Page No

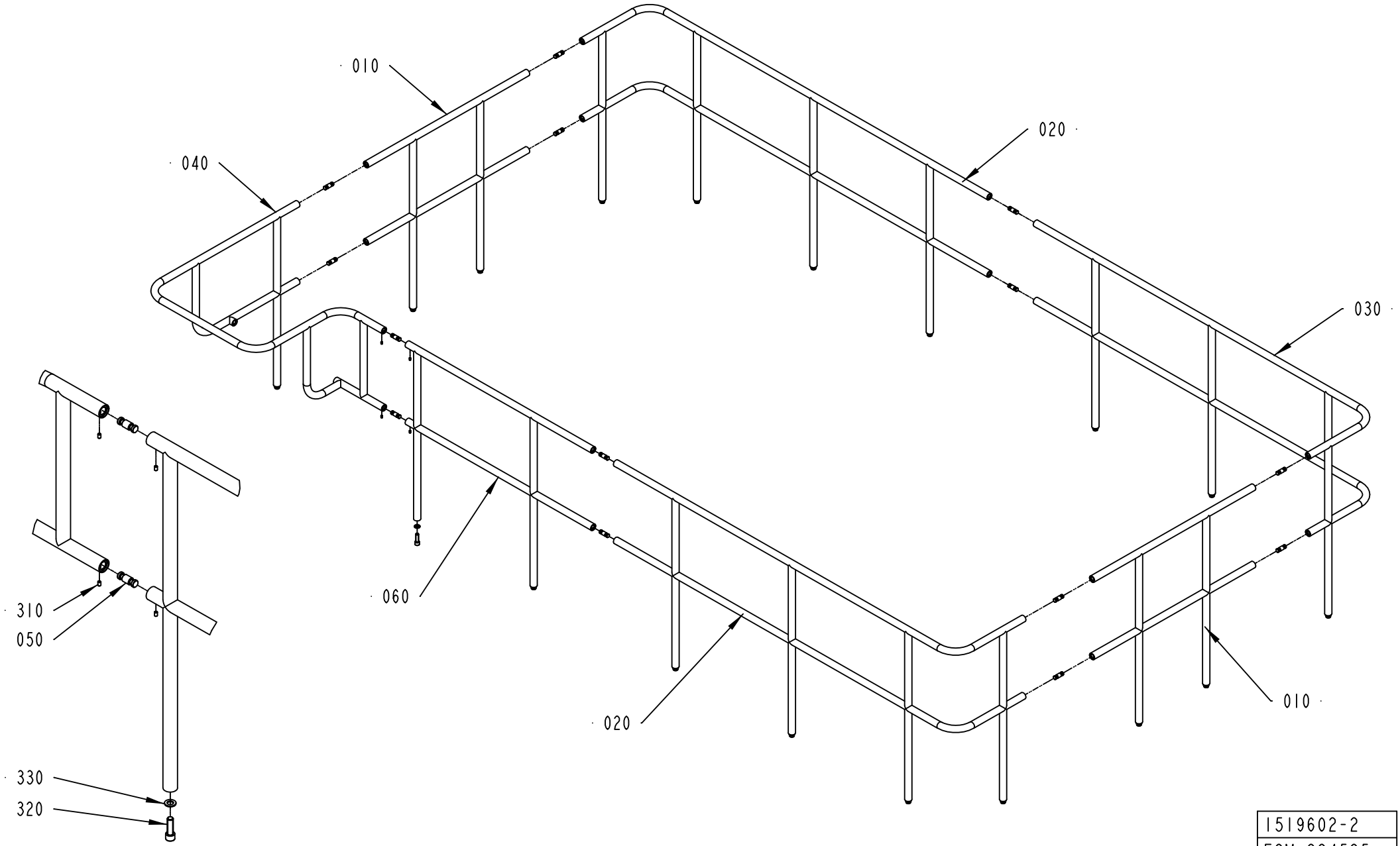

1519602-2
ECM 224525

ECM: 268007 - 20060516
Group number: 1519602-0200
Assembly Drawing: 1519602-2_1_AA

Pos	Part No	UN	Qty	Description	Page No
LEFTLADDER					
020	1512636-0000		2	RAILING	
030	1512637-0000		1	RAILING	
040	2769991-0000		1	RAILING	
RIGHTLADDER					
020	1512636-0000		1	RAILING	
030	1512637-0000		2	RAILING	
040	2769992-0000		1	RAILING	
Common Parts					
010	1512635-0000		2	RAILING	
050	2555063-0000		14	PIN	
060	1538924-0000		1	RAILING	
310	312318-0447		28	SET SCREW, CUP END ISO4029 M8X12 A4	
320	312115-0630		19	SCREW ISO4762 M16X50 A4 80	
330	315105-0186		19	WASHER PLAIN, 17X30X3 A4 BRB	

Pos	Part No	UN	Qty	Description	Page No

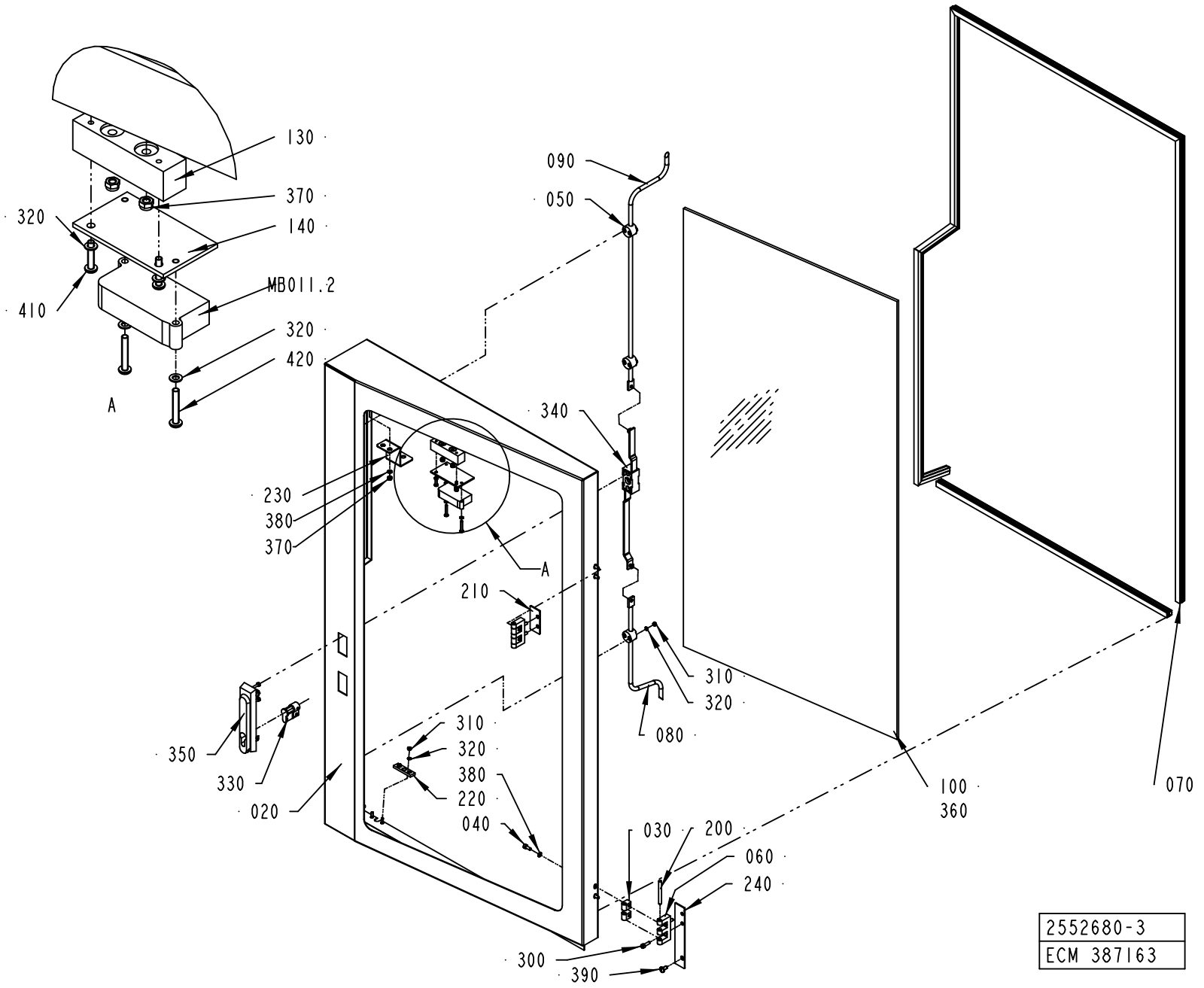
130
370
140
320
MB011.2
410
320
420
A
090
050
340
230
380
370
A
210
310
320
080
350
330
020
310
320
380
220
040
100
360
070
030
200
060
240
300
390
2552680-3
ECM 387163

ECM: 387163 - 20090630
Group number: 2552680-0300
Assembly Drawing: 2552680-3_1_AA

Pos	Part No	UN	Qty	Description	Page No
-					
020	2552691-0000		1	DOOR	
030	1035794-0000		4	BLOCKING PIECE	
040	312115-0327		4	SCREW ISO4762 M5X12 A4 80	
050	1129274-0000		3	GUIDE LUG	
060	1035792-0000		2	E-HINGE	
070	90143-0068	M	3.5	RUBBER STRIP EMKA 1011-06	
080	2552683-0000		1	LOCKING ARM	
090	2552682-0000		1	LOCKING ARM	
100	2552679-0000		1	GLASS PANE	
130	3019235-0000		1	FASTENING PLATE	
140	3019236-0000		1	PLATE	
200	988685-0000		2	PIN	
210	2552687-0000		1	SPACER	
220	2552688-0000		1	GUIDE BRACKET	
230	2554959-0000		1	GUIDE	
240	2556243-0000		1	SPACER	
300	312115-0329		4	SCREW ISO4762 M5X16 A4 80	
310	312605-0312		10	HEXAGON NUT, M6M M4 A280	
320	315105-0136		12	WASHER PLAIN, 4,3X9X0,8 A4 BRB	
330	90237-0128		1	LOCK CYLINDER, 1109-SU125	
340	90237-0153		1	LOCK HOUSING, 1121-U26-0B	
350	90237-0176		1	TURNING HANDLE, 1125-U190-A	
360	90157-0041		1	SEALING COMPOUND, RHODORSEAL 5651	
370	312812-0314		4	HEXAGON NUT, NY-LOCK M5 A4 80	
380	315105-0146		6	WASHER PLAIN, 5,3X10X1 A4 BRB	
390	90287-0075		1	SCREW SLOT. PAN HEAD LKCS M6X12	
410	90459-4164		2	SAFETY SCREW, SM4X20	
420	90459-4165		2	SAFETY SCREW, SM4X25	
M.B011;1	90459-4089		1	SAFETY SENSOR, EVA E, 20-046-06	

Pos	Part No	UN	Qty	Description	Page No

DOOR RIGHT

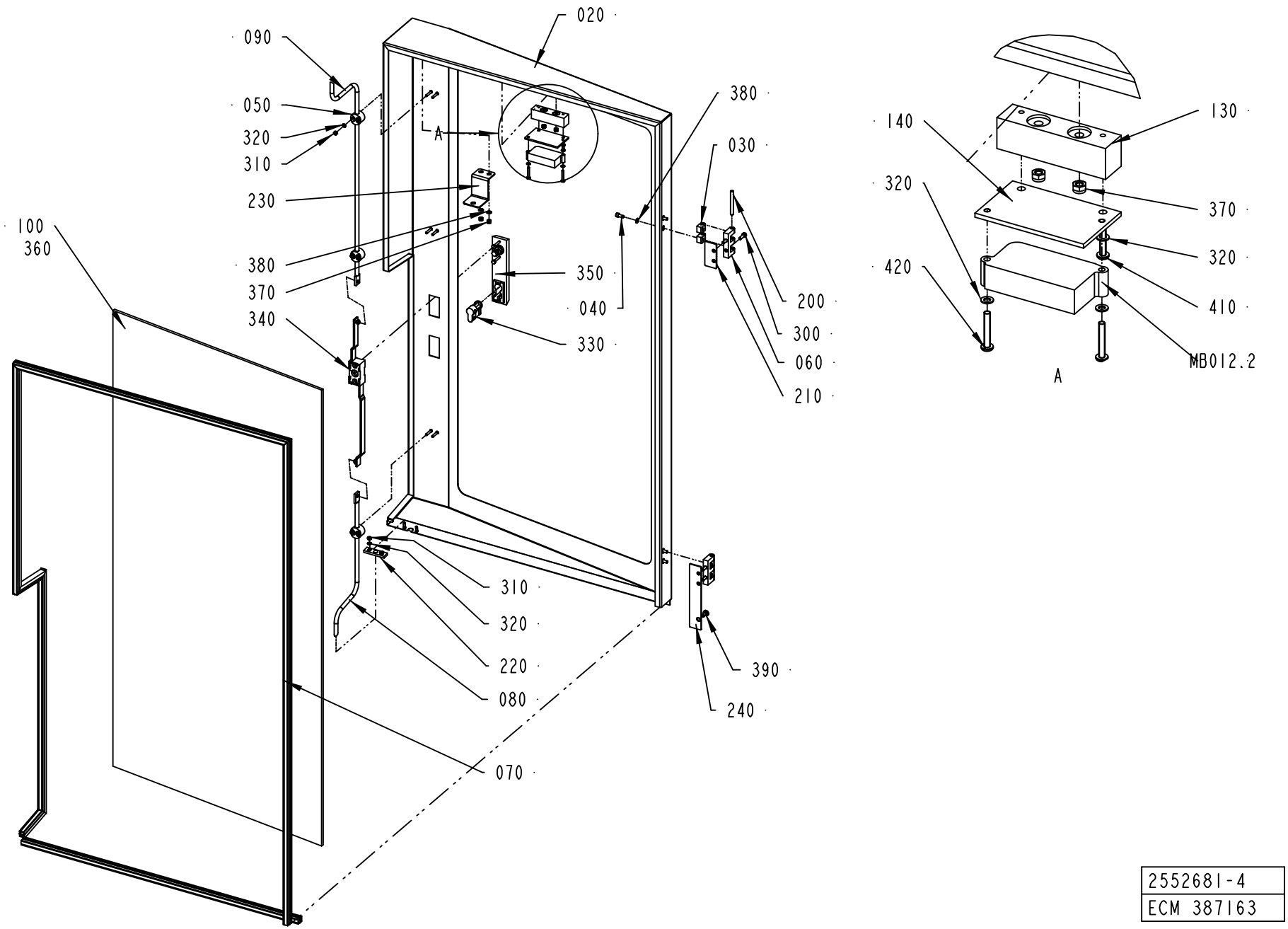

2552681-4
ECM 387163

ECM: 398319 - 20090630
Group number: 2552681-0300
Assembly Drawing: 2552681-4_1_AA

Pos	Part No	UN	Qty	Description	Page No
-					
020	2552692-0000		1	DOOR	
030	1035794-0000		4	BLOCKING PIECE	
040	312115-0327		4	SCREW ISO4762 M5X12 A4 80	
050	1129274-0000		3	GUIDE LUG	
060	1035792-0000		2	E-HINGE	
070	90143-0068	M	3.5	RUBBER STRIP EMKA 1011-06	
080	2552683-0000		1	LOCKING ARM	
090	2552682-0000		1	LOCKING ARM	
100	2552679-0000		1	GLASS PANE	
130	3019235-0000		1	FASTENING PLATE	
140	3019236-0000		1	PLATE	
200	988685-0000		2	PIN	
210	2552687-0000		1	SPACER	
220	2552688-0000		1	GUIDE BRACKET	
230	2554959-0000		1	GUIDE	
240	2556243-0000		1	SPACER	
300	312115-0329		4	SCREW ISO4762 M5X16 A4 80	
310	312605-0312		8	HEXAGON NUT, M6M M4 A280	
320	315105-0136		12	WASHER PLAIN, 4,3X9X0,8 A4 BRB	
330	90237-0128		1	LOCK CYLINDER, 1109-SU125	
340	90237-0153		1	LOCK HOUSING, 1121-U26-0B	
350	90237-0176		1	TURNING HANDLE, 1125-U190-A	
360	90157-0041		1	SEALING COMPOUND, RHODORSEAL 5651	
370	312812-0314		4	HEXAGON NUT, NY-LOCK M5 A4 80	
380	315105-0146		6	WASHER PLAIN, 5,3X10X1 A4 BRB	
390	90287-0075		1	SCREW SLOT. PAN HEAD LKCS M6X12	
410	90459-4164		2	SAFETY SCREW, SM4X20	
420	90459-4165		2	SAFETY SCREW, SM4X25	
M.B012;12	90459-4089		1	SAFETY SENSOR, EVA E, 20-046-06	

Pos	Part No	UN	Qty	Description	Page No

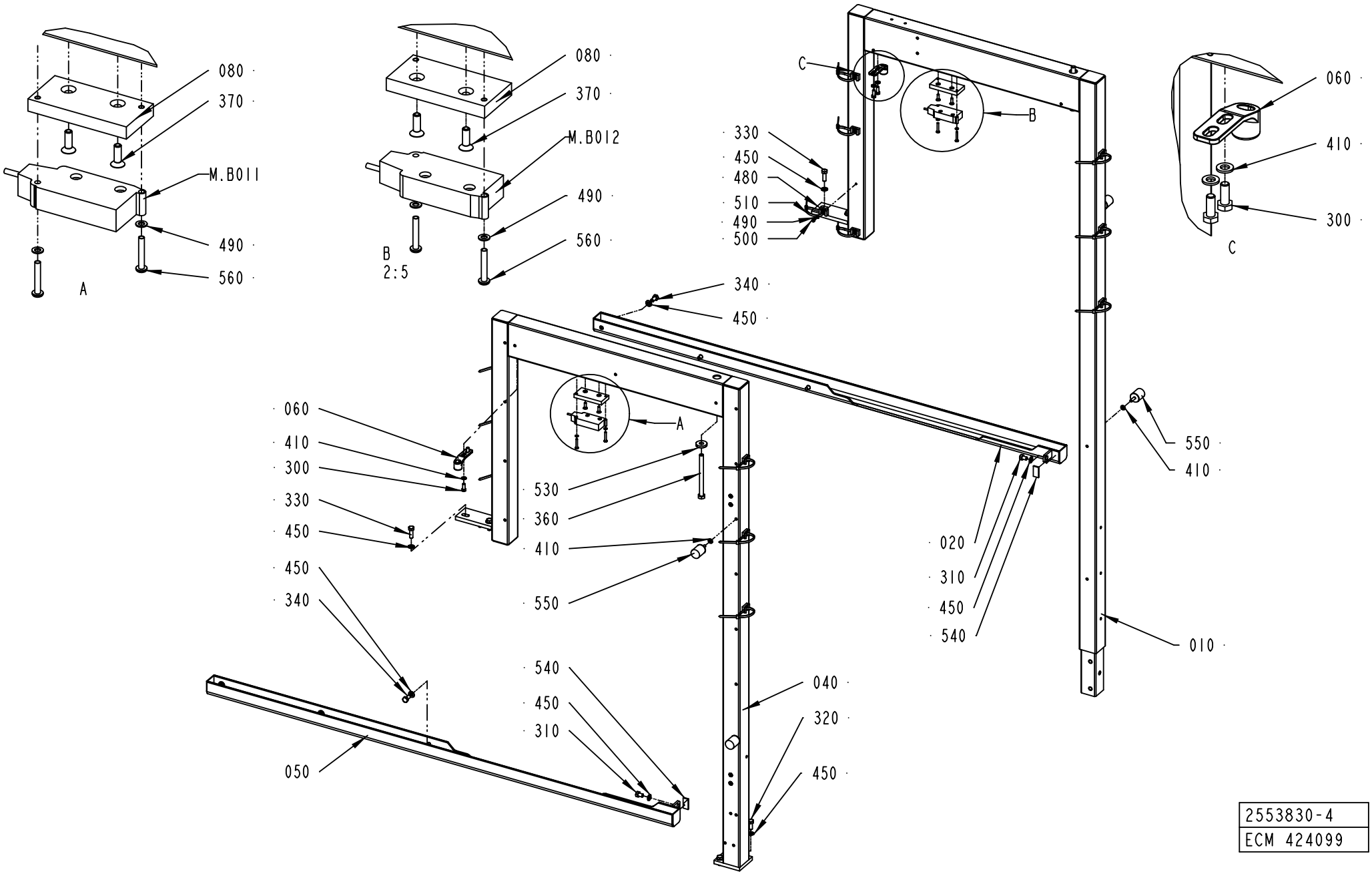
080
370
M.B011
490
560
A
080
370
M.B012
490
560
B
2:5
C
330
450
480
510
490
500
B
060
410
300
C
340
450
060
410
300
330
450
450
340
A
530
360
410
550
550
410
020
310
450
540
010
540
450
310
040
320
450
050
2553830-4
ECM 424099

ECM: 448778 - 20100524
Group number: 2553830-0200
Assembly Drawing: 2553830-4_1_AB

Pos	Part No	UN	Qty	Description	Page No
TBA					
010	2553831-0000		1	FRAME	
040	2553832-0000		1	FRAME	
TPA					
010	2810417-0000		1	FRAME	
040	2553832-0000		1	FRAME	
TWA					
010	2553831-0000		1	FRAME	
040	2685224-0000		1	FRAME	
Common Parts					
020	2552685-0000		1	CHUTE	
050	2552684-0000		1	CHUTE	
060	1538868-0000		2	BRACKET	
080	3019238-0000		2	PLATE	
300	312105-0368		4	SCREW, M6S ISO 4017 M6X16 A4 80	
310	312105-0447		2	SCREW, M6S ISO 4017 M8X12 A4 80	
320	312105-0451		2	SCREW, M6S ISO 4017 M8X20 A4 80	
330	312105-0453		4	SCREW, M6S ISO 4017 M8X25 A4 80	
340	312105-0449		6	SCREW, M6S ISO 4017 M8X16 A4 80	
360	312105-0515		2	SCREW, M6S ISO 4014 M10X120 A4 80	
370	312155-0329		2	SCREW DIN 7991 MF6S M5X16 A4 70	
410	315105-0153		8	WASHER PLAIN, 6,4X12X1,5 A4 BRB	
450	315105-0165		14	WASHER PLAIN, 8,4X16X1,6 A4 BRB	
480	352113-0204		14	ANCHOR PLATES FOR STRIPS, TM3S25-M	
490	315105-0136		18	WASHER PLAIN, 4,3X9X0,8 A4 BRB	
500	312125-0287		14	SLOTTED HEAD SCREW, ISO1207 M4X8 A4	
510	352113-0102		14	CABLE TIE, BLACK 188X4,8 MM	
530	315125-0173		2	WASHER HIGH, TBRSB 10,5X28X6 A4	
540	90143-0073	M	2	FLAT GASKET TAPE W. ADHESIVE, 15X3.0	
550	90459-1060		4	VIBRATION DAMPER, T15688	
560	90459-4165		4	SAFETY SCREW, SM4X25	
M.B012	90600-5926		1	SAFETY SENSOR, ADAM E M12 5M CABLE	
M.B011	90600-5926		1	SAFETY SENSOR, ADAM E M12 5M CABLE	

Pos	Part No	UN	Qty	Description	Page No

Machine Type | Group Description | Used-In | Group Number | Page No

Tetra Pak

SPC
Spare Parts Catalogue

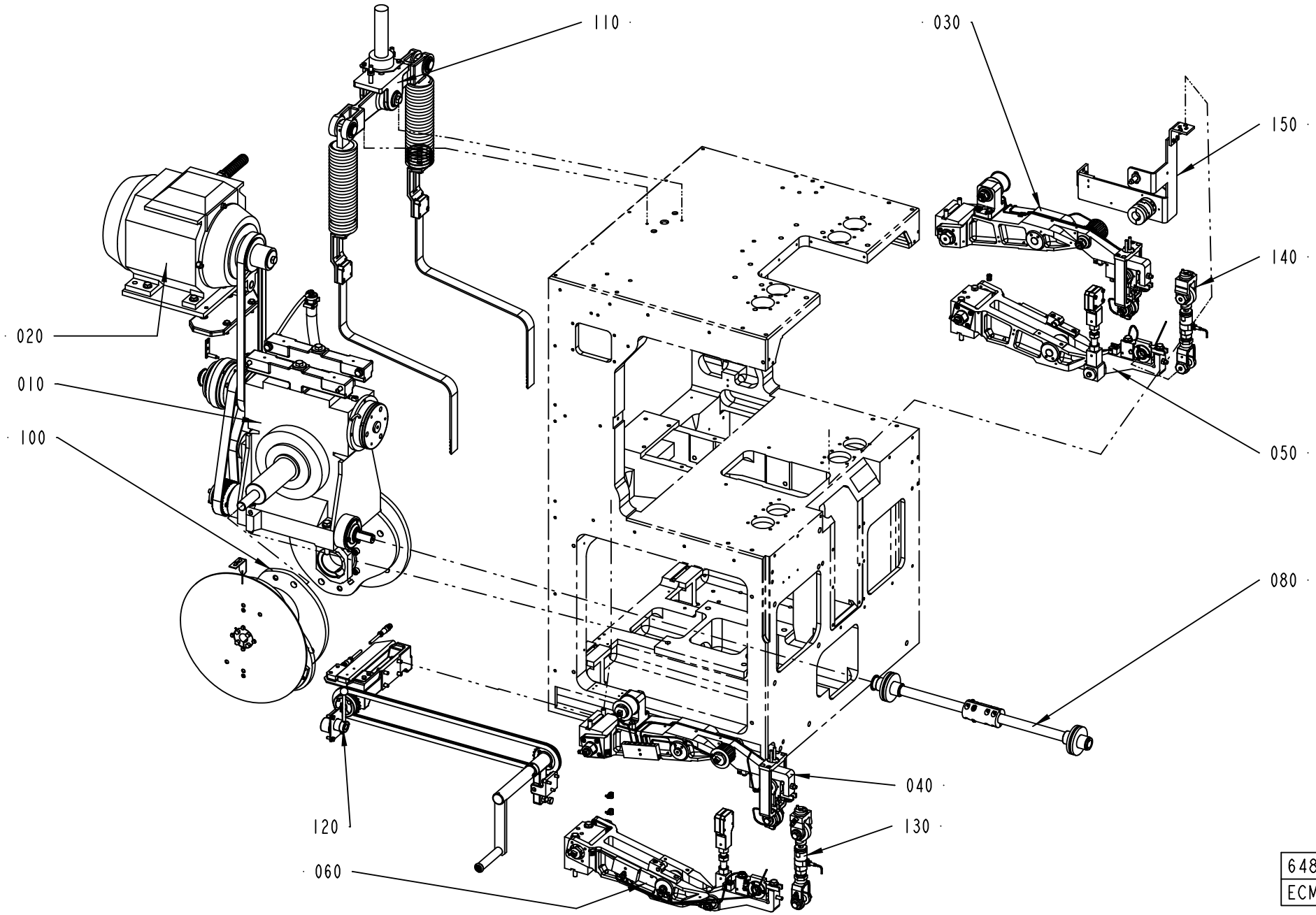

648103-9
ECM 380858

ECM: 387160 - 20090615
Group number: 648103-1300
Assembly Drawing: 648103-9_1_AA

Pos	Part No	UN	Qty	Description	Page No
-					
010	256173-0800		1	WORM GEAR	**3-5**
020	1523210-0200		1	MOTOR	**3-9**
030	256197-0500		1	ARM	**3-11**
040	929438-0100		1	ARM	**3-13**
050	491814-0300		1	SLEWING BRACKET RIGHT	**3-15**
060	491815-0300		1	SLEWING BRACKET LEFT	**3-17**
080	256200-0300		1	INTERMEDIARY SHAFT	**3-19, 3-21**
100	256202-0700		1	CURVE PACK	**3-23, 3-25**
110	2506790-0100		1	HOLD-DOWN DEVICE	**3-27**
120	1512286-0200		1	CRANK	**3-31**
130	1490120-0100		1	DISCONNECTION LINK LEFT	**3-33**
140	1539766-0100		1	DISCONNECTION LINK RIGHT	**3-35**
150	1512284-0100		1	ANGLE ENCODER	**3-37**

Pos	Part No	UN	Qty	Description	Page No

WORM GEAR

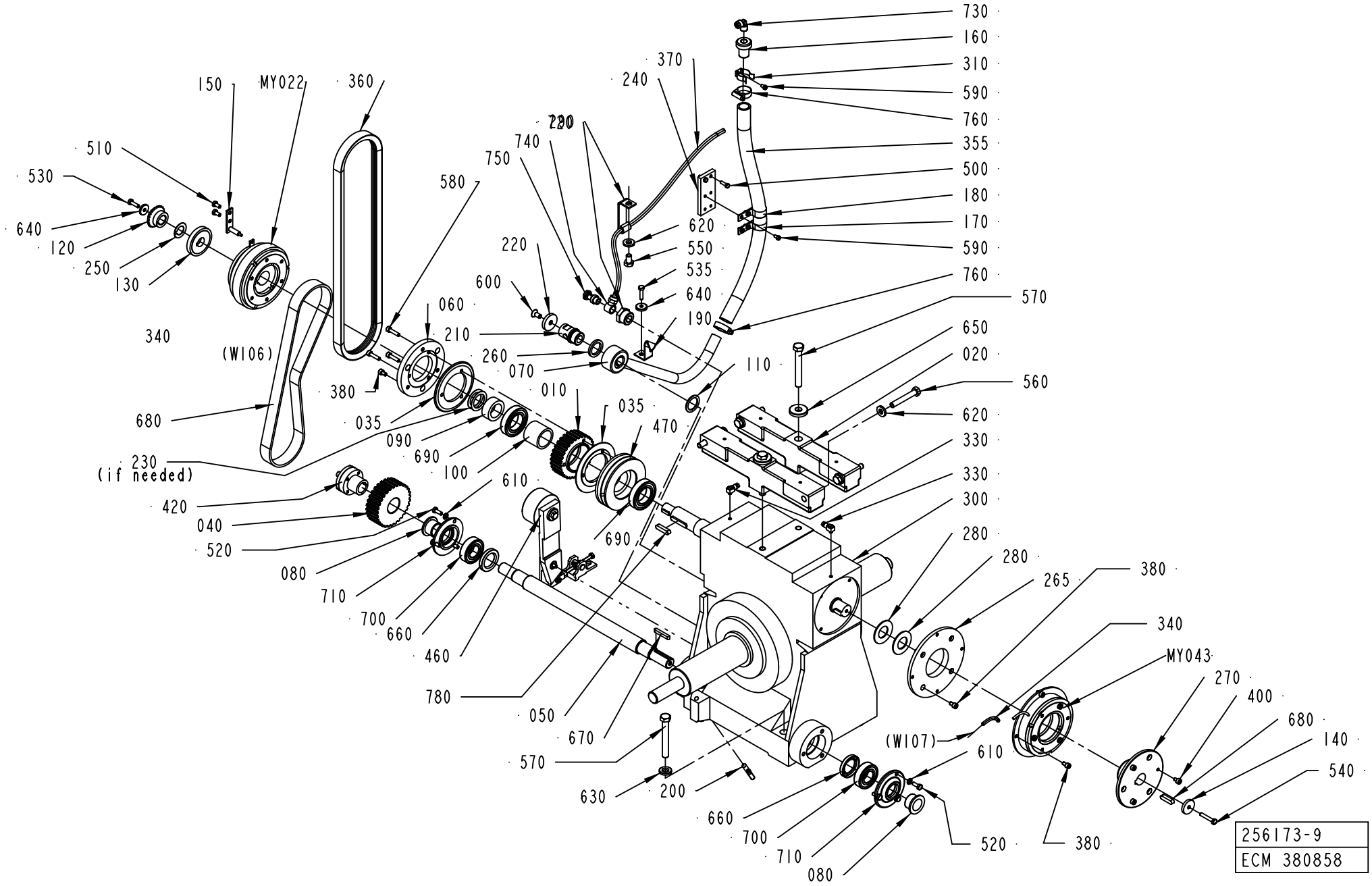
730
160
310
590
760
355
500
180
170
590
760
570
650
020
560
620
330
330
300
280
280
265
380
340
MY043
270
400
680
140
540
(W107)
610
520
380
370
240
220
740
750
580
620
550
535
640
190
600
220
060
210
260
070
110
010
035
470
690
100
610
690
150
MY022
360
510
530
640
120
250
130
340
(W106)
680
380
035
090
230
(if needed)
420
040
520
080
710
700
660
460
780
050
670
570
630
200
660
700
710
080
256173-9
ECM 380858

ECM: 426771 - 20091221
Group number: 256173-0800
Assembly Drawing: 256173-9_1_AA

Pos	Part No	UN	Qty	Description	Page No
-					
010	751243-0000		1	TOOTHED PULLEY	
020	441356-0000		2	BRACKET	
035	751245-0000		2	FLANGE	
040	256176-0000		1	TIMING BELT PULLEY	
050	256177-0000		1	SHAFT	
060	256178-0000		1	FIXING RING	
070	272372-0000		1	HOUSE	
080	256179-0000		2	SPACER SLEEVE	
090	256180-0000		1	SPACER	
100	256181-0000		1	SPACER PIPE	
110	257174-0000		1	SEALING WASHER	
120	257179-0000		1	GEAR WHEEL	
130	491409-0000		1	WASHER	
140	271689-0000		1	WASHER	
150	272374-0000		1	CARRIER	
160	272376-0000		1	SHUTTER	
170	272377-0001		1	CRAMP	
180	272377-0002		1	CRAMP	
190	272388-0000		1	CRAMP	
200	295140-0000		2	PIN	
210	295766-0000		1	SCREW	
220	295767-0000		1	SEALING WASHER	
230	441024-0000		2	LACE	
240	441360-0000		1	PLATE	
250	491410-0000		1	LACE	
260	456934-0000		1	SEALING WASHER	
265	469999-0000		1	FLANGE	
270	491274-0000		1	HUB	
280	90016-0010		2	DISC SPRING,50X25,4X2	
290	469867-0000		1	HOSE HOLDER	
300	90457-0151		1	WORM GEAR UCZ 151 SIZE 125 39:1	
310	90074-0026		1	PIPE CLIP FOR TUBE D=24-35 MM	
330	90134-0058		2	CONNECTION	
340	90142-0005	MM	1500	HOSE	
350	90144-0073	MM	1	TREBOFLON-TAPE W=13MM	
355	90166-0060	MM	530	HOSE 19/26-27 REINF.PVC	
360	90071-0027		1	V-BELT, 3VX450	
370	90166-0133	MM	500	TUBE 8 MM PA,TRANSP. (1 PACK=50 M)	
380	90287-0081		11	SCREW MC6S M6X10 129	
400	312115-0362		3	SCREW ISO4762 M6X8 A4 80	
410	90157-0016	ML	1	THREAD LOCKING, LOCTITE 242 50 ML	
420	90208-0120		1	CLAMPING ELEMENT, 22X32 L=25	
430	90296-0068	G	1	SHELL ALVANIA GREASE EP 2 (CARTR.400G)	
440	90296-0075	L	4	SHELL OMALA OIL 320 (1PC=20L)	
450	3036093-0000		1	ADAPTER	
460	2993304-0100		1	BELT TENSIONER	**3-7**
470	751742-0004		1	V-BELT PULLEY	
500	312101-0329		2	SCREW M6S M5X16 FZB	
510	312101-0366		2	SCREW M6S M6X12 FZB	
520	312101-0368		6	SCREW M6S M6X16 FZB	
530	312101-0370		1	SCREW M6S M6X20 FZB	
535	312105-0372		1	SCREW, M6S ISO 4017 M6X25 A4 80	
540	312101-0376		1	SCREW M6S M6X35 FZB	
550	312101-0489		1	SCREW M6S M10X16 FZB	
560	312101-0504		4	SCREW M6S M10X65 FZB	
570	312101-0550		6	SCREW M6S M12X90 FZB	
580	312111-0380		3	SCREW HEX.SOCK.HD.MC6S-TT 6X50 88 FZB	
590	312121-0323		5	SCREW ISO 1207 M5X8 4.8-5.8 Z.PL.	
600	312155-0449		1	SCREW DIN 7991 MF6S M8X16 A4 70	
610	315101-0153		6	WASHER PLAIN, BRB, 6,4/12 H=1,5	
620	315111-0173		5	WASHER PLAIN, TBRB 10,5/22 H=4	
630	315111-0178		4	WASHER PLAIN, TBRB 13/24 H=4	
640	315121-0153		2	WASHER PLAIN, TBRSB 6,4/22 H=4	
650	315121-0178		2	WASHER PLAIN, TBRSB 13/36 H=6	
660	315221-0169		2	RADIAL SEAL 30X47X7 MM	
670	315701-0239		1	PARALLEL KEY W. ROUND ENDS, 6X6X40 MM	
680	315701-0268		1	PARALLEL KEY W. ROUND ENDS, 8X7X32 MM	
685	90417-0076		1	TIMING BELT 25T10/920 PU	
690	90600-0352		2	BALL BEARING 35/62X14	
700	321313-0105		2	BALL BEARING 25/52X15	
710	321600-0114		2	SEAL COVER LL3052	
720	342701-0208		1	BUSHING, INT/EXT. G 3/4 - G1/4	
730	342930-0122		1	ELBOW 90 COUPL., EXT. THREAD 8/6-R1/4"	
740	342980-0122		1	HOSE FITTING, BANJO RING L PO G1/4 8/6	
750	342980-0304		1	BANJO-HOLLOW BOLT COUPL,EXT.THR.01-G1/4	
760	342991-0104		2	HOSE CLIP,WORM DRIVE TYPE (19)-28	
780	315705-0269		1	PARALLEL KEY W. ROUND ENDS, 8X7X35 MM	
MY043	90432-0023		1	BRAKE ORTLINGHAUS	
MY022	90355-0088		1	ELECTROMAGNETIC CLUTCH, 30 MM/24 VDC	
	90214-0113		*1*	*BALL BEARING 50/80X16*	

Machine Type	Group Description	Used-In	Group Number	Page No

BELT TENSIONER

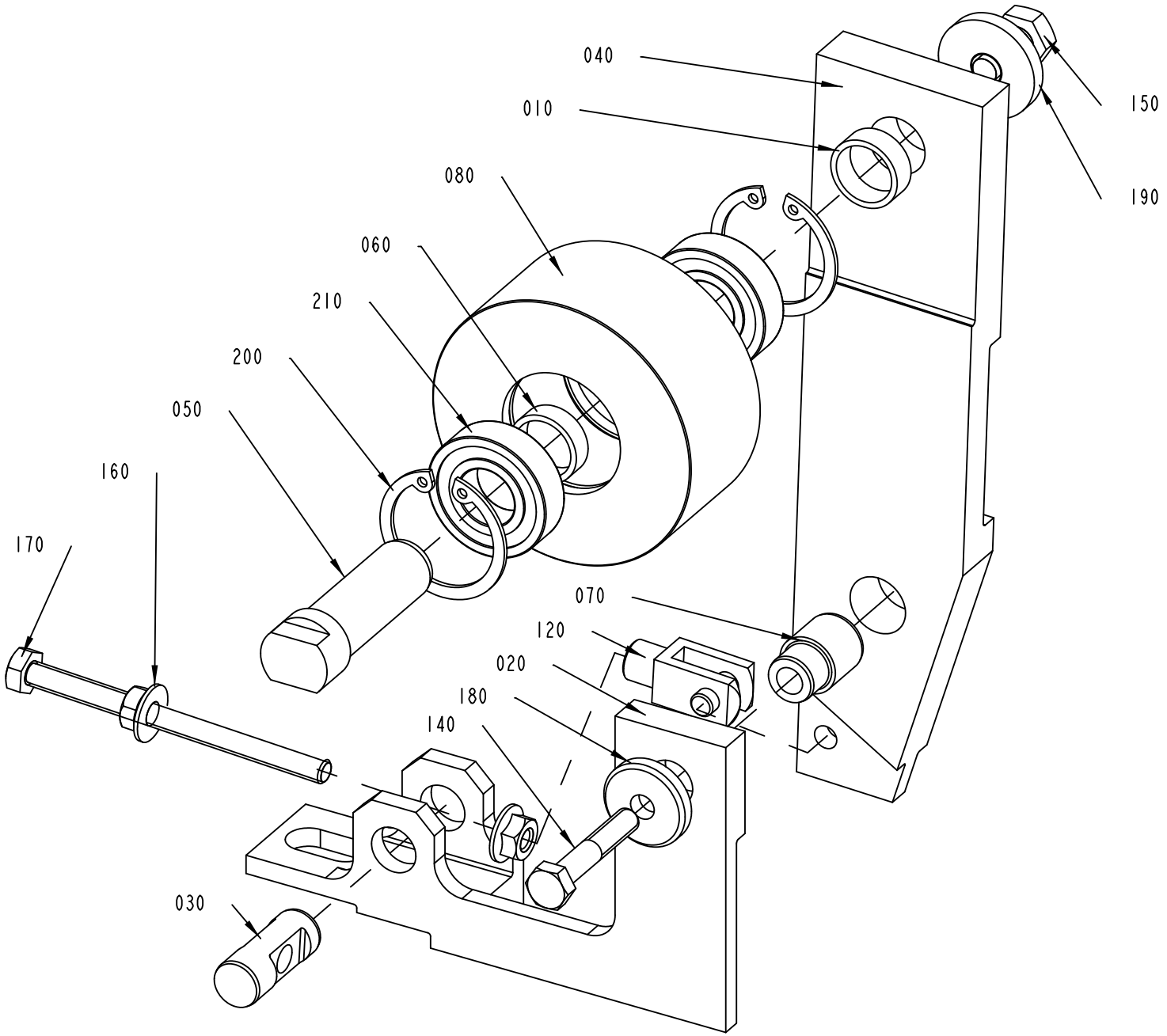

2993304-1
353958

ECM: 379853 - 20090409
Group number: 2993304-0100
Assembly Drawing: 2993304-1_1_AA

Pos	Part No	UN	Qty	Description	Page No
-					
010	256915-0000		1	SPACER RING	
020	2944332-0000		1	BRACKET	
030	2944333-0000		1	PIN	
040	2993294-0000		1	BRACKET	
050	2993295-0000		1	AXLE	
060	2993296-0000		1	SPACER RING	
070	2993297-0000		1	AXLE	
080	751254-0000		1	ROLL	
120	90450-0725		1	ROD END, CLEVIS WITH AXLE M6	
140	312105-0376		1	SCREW, M6S ISO 4014 M6X35 A4 80	
150	312105-0449		1	SCREW, M6S ISO 4017 M8X16 A4 80	
160	312107-0316		2	HEXAGON FLANGE NUT ISO 4161 M6 A2	
170	312109-0386		2	SCREW, M6S ISO 4017 M6X80 A4 80	
180	315125-0153		1	WASHER HIGH, TBRSB 6,4X22X4 A4	
190	315125-0165		1	WASHER HIGH, TBRSB 8,4X26X5 A4	
200	315753-0123		2	RETAINING RING FOR BORE DIN 472 32 SS	
210	321308-0202		2	BALL BEARING 15/32X9	

Pos	Part No	UN	Qty	Description	Page No

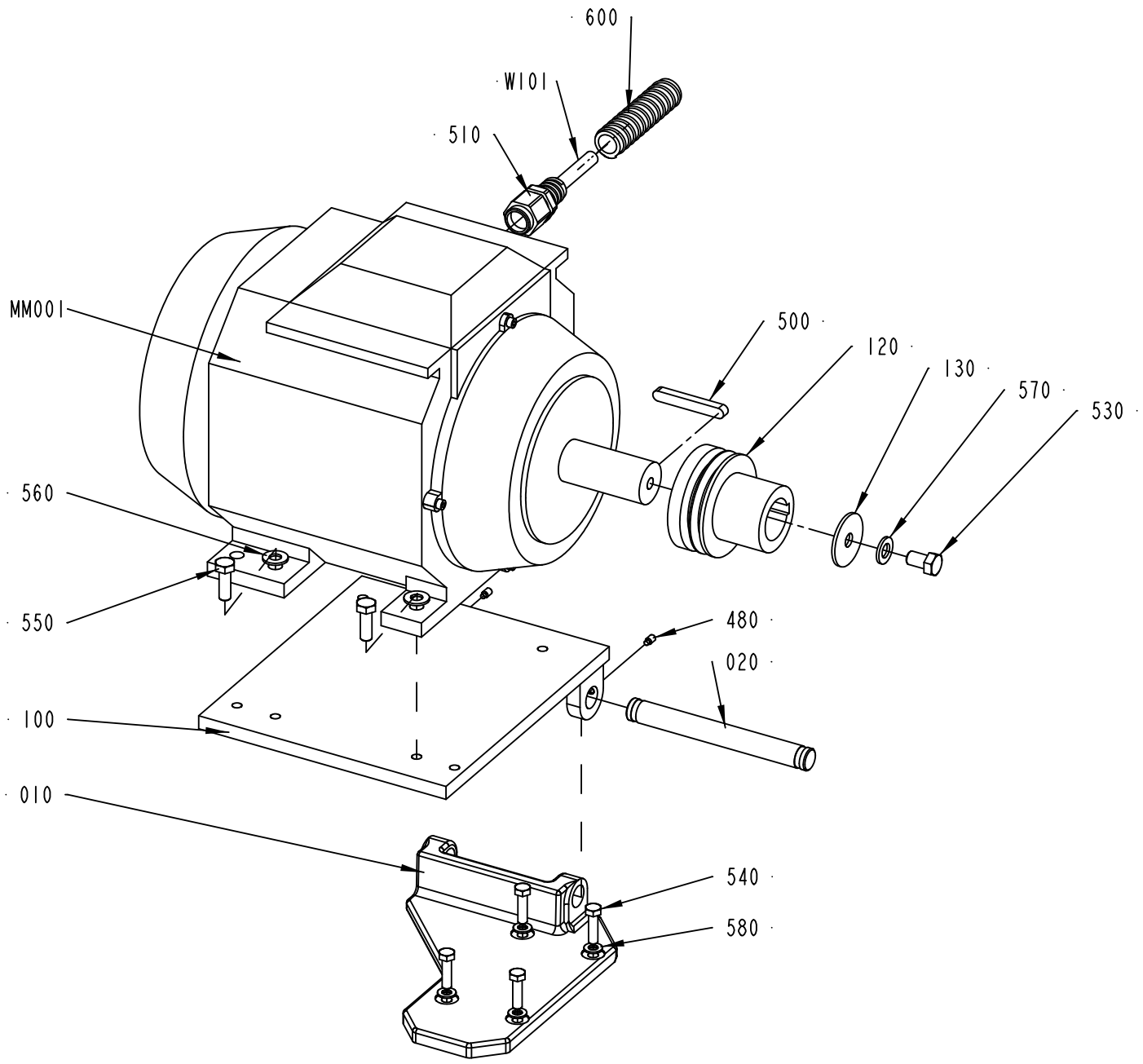

1523210-2
380858

ECM: 426770 - 20091221
Group number: 1523210-0200
Assembly Drawing: 1523210-2_1_AA

Pos	Part No	UN	Qty	Description	Page No
-					
010	272431-0000		1	BRACKET	
020	272434-0000		1	SHAFT	
100	441387-0000		1	MOTOR CRADLE	
120	598775-0000		1	V-BELT PULLEY	
130	1523211-0000		1	WASHER	
480	312311-0366		2	SET SCREW, DOG POINT ISO4028 M6X12 FZB	
500	315705-0307		1	PARALLEL KEY W. ROUND ENDS, 10X8X70 MM	
510	90458-0450		1	GLAND FITTING, 2205416S08 UL16	
530	312105-0532		1	SCREW, M6S ISO 4017 M12X20 A4 80	
540	312105-0455		4	SCREW, M6S ISO 4017 M8X30 A4 80	
550	312105-0495		4	SCREW, M6S ISO 4017 M10X30 A4 80	
560	312605-0320		1	HEXAGON NUT, M6M M10 A280	
570	315105-0173		4	WASHER PLAIN, 10,5X22X2 A4 BRB	
580	315103-0178		1	WASHER PLAIN, 13X24X2,5 BR NI PL	
590	315105-0165		4	WASHER PLAIN, 8,4X16X1,6 A4 BRB	
600	90152-0051	MM	2200	HOSE, SPIRAL CONDUIT, 25X18, UL 1816	
610	90287-0330		1	SCREW, M6S ISO 4017 M10X70 A4 80	
MM001	90457-0172		1	MOTOR 3GAA 131001-ASA	
W101	90220-0105	M	6	SCR. CABLE 4X2,5MM2	

Pos	Part No	UN	Qty	Description	Page No

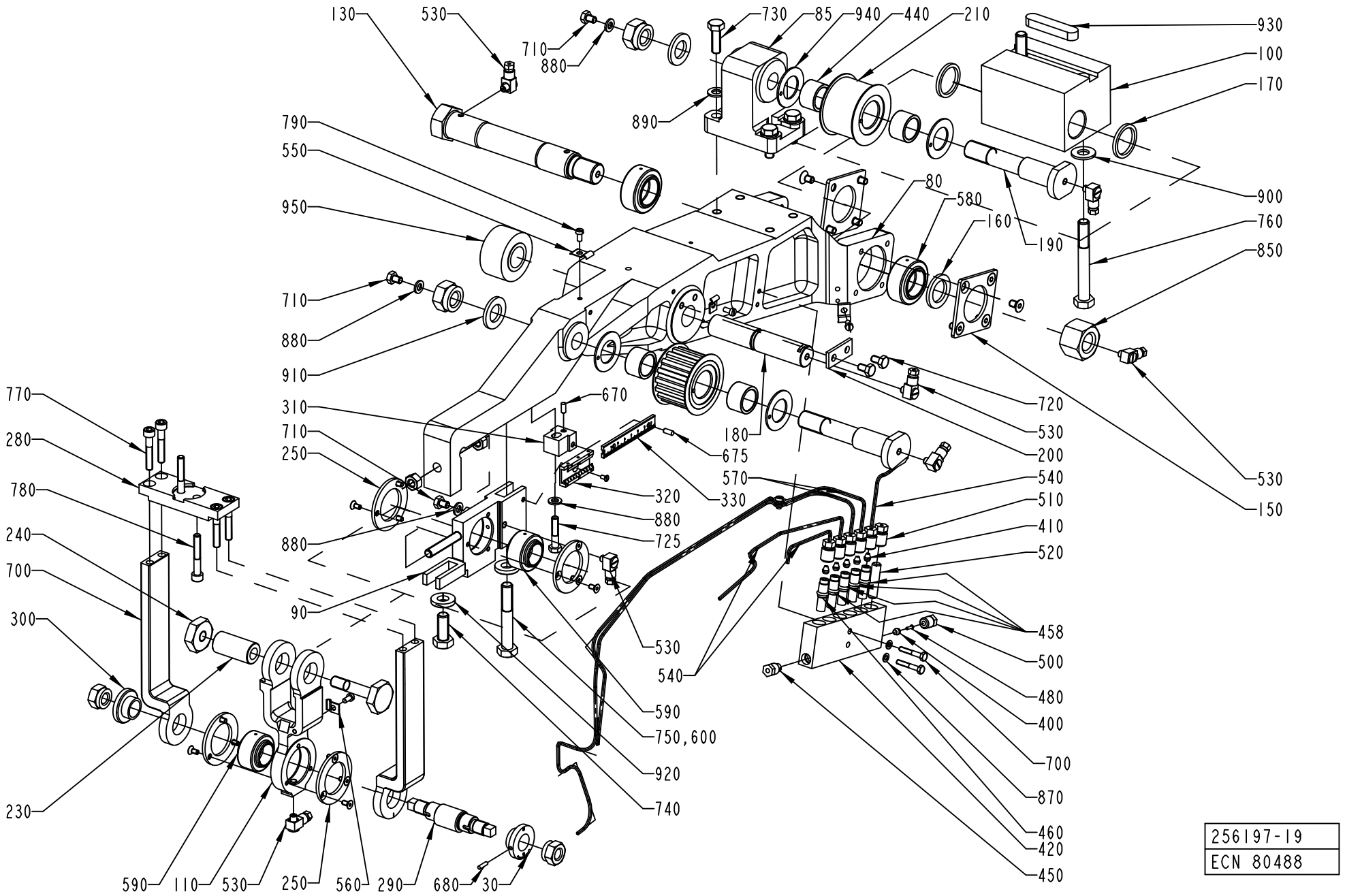

256197-19
ECN 80488

ECM: 178936 - 20040910
Group number: 256197-0500
Assembly Drawing: 256197-19_1_AA

Pos	Part No	UN	Qty	Description	Page No
-					
030	272459-0000		1	WASHER	
080	751212-0000		1	ARM	
085	272442-0000		1	CANTILEVER	
090	978275-0000		1	BEARING HOLDER	
100	272455-0000		1	BEARING BRACKET	
110	272456-0000		1	LINK	
120	272457-0000		2	BOW CLAMP	
130	295770-0000		1	AXLE BOLT	
140	256421-0000		1	PULLEY	
150	256422-0000		2	WASHER	
160	256426-0001		1	WASHER	
170	256426-0002		2	WASHER	
180	256427-0000		1	SHAFT	
190	490916-0000		2	AXLE PIN	
200	256472-0000		1	WASHER	
210	257306-0000		1	ROLL	
220	257308-0000		1	SCREW	
230	257309-0000		1	SHAFT	
240	257310-0000		1	NUT	
250	257311-0000		4	CAP	
280	272116-0000		1	CAP	
290	272458-0000		1	ECCENTRIC SHAFT	
300	272461-0000		1	WASHER	
310	978272-0000		1	BRACKET	
320	1484792-0000		1	SCALE	
330	1484791-0000		1	SCALE	
400	90028-0021		1	CONE TUBE 4 MM	
410	90028-0020		5	CONE TUBE 2,5MM	
420	90032-0040		1	BLOCK 6 WAYS	
440	321531-0248		4	NEEDLE SLEEVE W/O CONE, 20X26X16 MM	
450	90087-0019		1	PLUG M10X1 STAINLESS	
458	90092-0052		4	METERING VALVE 10 MM3	
460	90092-0053		1	METERING VALVE 30 MM3	
480	90134-0031		1	SLEEVE FOR PLASTIC TUBE	
500	90134-0038		1	BUSHING/NUT INLET/OUTLET 4 MM	
510	90134-0039		6	BUSHING VALVE CONNECTION 2,5 MM	
520	90134-0052		1	PLUG DOSING BLOCK	
530	90134-0058		7	CONNECTION	
540	90266-0019	MM	550	PIPE	
550	90165-0002		3	PIPE CLIP FOR TUBE D=4 MM	
560	90165-0022		2	PIPE CLIP, FOR TUBE D=2,5 MM, B-3570	
570	90166-0143	MM	1100	TUBE 2,5 MM PA TRANSP.	
580	90240-0048		2	PLAIN BEAR,SELF ADJ.SPHER. 25X42X20 MM	
590	90240-0050		2	PLAIN BEAR,SELF ADJ. 20X35X24	
600	90157-0016		1	THREAD LOCKING, LOCTITE 242 50 ML	
670	311101-0267		1	PARALLEL PIN ISO 2338 4H6X10 ST	
675	311103-0267		1	PARALLEL PIN ISO 2338 4M6X10 A1	
680	311303-0234		1	SLOTTED PIN RPB3X12FZB	
700	312101-0297		2	SCREW M6S M4X25 FZB	
710	312101-0362		3	SCREW M6S M6X8 FZB	
720	312101-0364		2	SCREW M6S M6X10 FZB	
725	312105-0374		1	SCREW, M6S ISO 4014 M6X30 A4 80	
730	312101-0453		4	SCREW M6S M8X25 FZB	
740	312101-0493		1	SCREW M6S M10X25 FZB	
750	312101-0504		1	SCREW M6S M10X65 FZB	
760	312101-0507		2	SCREW M6S M10X80 FZB	
770	312111-0376		4	SCREW HEX.SOCK.HD.MC6S-TT 6X35 88 FZB	
780	312111-0378		2	SCREW HEX.SOCK.HD.MC6S-TT 6X40 88 FZB	
790	312121-0287		5	SCREW ISO 1207 M4X8 4.8-5.8 Z.PL.	
795	312145-0220		1	SCREW ISO 2009 MFS M3X6 A4	
800	312151-0287		12	SCREW EN 10642 MF6S M4X8 10.9 EL.PL	
810	312151-0364		8	SCREW EN 10642 MF6S M6X10 10.9 EL.PL	
820	312601-0318		2	HEXAGON NUT, DIN 934 M8 8 FZB	
830	312811-0322		2	NUT HEX.LOCK HELI COIL MID GRIP M12 SS	
840	312811-0324		2	NUT HEX.LOCK HELI COIL MID GRIP M16 SS	
850	312811-0326		1	NUT HEX.LOCK HELI COIL MID GRIP M20 SS	
870	315101-0136		2	WASHER BRB, 4,3/8 H=0,8	
880	315101-0153		4	WASHER PLAIN, BRB, 6,4/12 H=1,5	
890	315101-0165		4	WASHER PLAIN, BRB, 8,4/16 H=1,5	
900	315101-0173		2	WASHER PLAIN, BRB, 10,5/22 H=2	
910	315101-0186		2	WASHER PLAIN, BRB, 17/30 H=3	
920	315111-0173		2	WASHER PLAIN, TBRB 10,5/22 H=4	
930	315701-0335		1	PARALLEL KEY W. ROUND ENDS, 12X8X56 MM	
940	321129-0137		4	THRUST WASHER, 22X38X1,5 MM	
950	321576-0260		1	CAM ROLLER, 20X47X25 MM	

Machine Type	Group Description	Used-In	Group Number	Page No

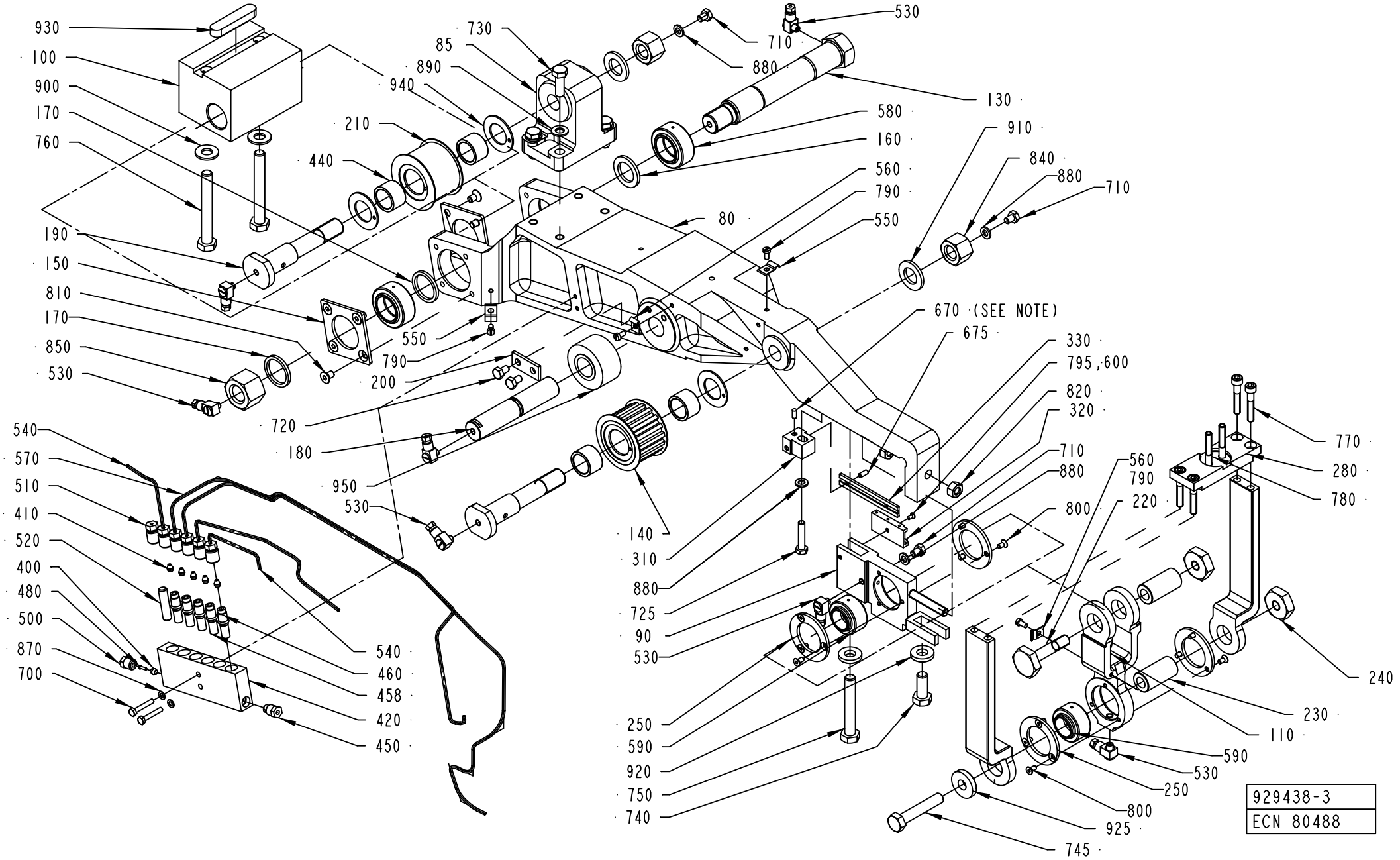

929438-3
ECN 80488

ECM: 179092 - 20040910
Group number: 929438-0100
Assembly Drawing: 929438-3_1_AA

Pos	Part No	UN	Qty	Description	Page No
-					
080	751212-0000		1	ARM	
085	272442-0000		1	CANTILEVER	
090	978275-0000		1	BEARING HOLDER	
100	272455-0000		1	BEARING BRACKET	
110	272456-0000		1	LINK	
120	272457-0000		2	BOW CLAMP	
130	295770-0000		1	AXLE BOLT	
140	256421-0000		1	PULLEY	
150	256422-0000		2	WASHER	
160	256426-0001		1	WASHER	
170	256426-0002		2	WASHER	
180	256427-0000		1	SHAFT	
190	490916-0000		2	AXLE PIN	
200	256472-0000		1	WASHER	
210	257306-0000		1	ROLL	
220	257308-0000		1	SCREW	
230	257309-0000		2	SHAFT	
240	257310-0000		2	NUT	
250	257311-0000		4	CAP	
280	272116-0000		1	CAP	
310	978272-0000		1	BRACKET	
320	1484792-0000		1	SCALE	
330	1484791-0000		1	SCALE	
400	90028-0021		1	CONE TUBE 4 MM	
410	90028-0020		5	CONE TUBE 2,5MM	
420	90032-0040		1	BLOCK 6 WAYS	
440	321531-0248		4	NEEDLE SLEEVE W/O CONE, 20X26X16 MM	
450	90087-0019		1	PLUG M10X1 STAINLESS	
458	90092-0052		4	METERING VALVE 10 MM3	
460	90092-0053		1	METERING VALVE 30 MM3	
480	90134-0031		1	SLEEVE FOR PLASTIC TUBE	
500	90134-0038		1	BUSHING/NUT INLET/OUTLET 4 MM	
510	90134-0039		6	BUSHING VALVE CONNECTION 2,5 MM	
520	90134-0052		1	PLUG DOSING BLOCK	
530	90134-0058		7	CONNECTION	
540	90266-0019	MM	550	PIPE	
550	90165-0002		3	PIPE CLIP FOR TUBE D=4 MM	
560	90165-0022		2	PIPE CLIP, FOR TUBE D=2,5 MM, B-3570	
570	90166-0143	MM	1100	TUBE 2,5 MM PA TRANSP.	
580	90240-0048		2	PLAIN BEAR,SELF ADJ.SPHER. 25X42X20 MM	
590	90240-0050		2	PLAIN BEAR,SELF ADJ. 20X35X24	
600	90157-0016		1	THREAD LOCKING, LOCTITE 242 50 ML	
670	311101-0267		1	PARALLEL PIN ISO 2338 4H6X10 ST	
675	311103-0267		1	PARALLEL PIN ISO 2338 4M6X10 A1	
700	312101-0297		2	SCREW M6S M4X25 FZB	
710	312101-0362		3	SCREW M6S M6X8 FZB	
720	312101-0364		2	SCREW M6S M6X10 FZB	
725	312105-0374		1	SCREW, M6S ISO 4014 M6X30 A4 80	
730	312101-0453		4	SCREW M6S M8X25 FZB	
740	312101-0493		1	SCREW M6S M10X25 FZB	
745	312101-0502		1	SCREW M6S M10X55 FZB	
750	312101-0504		1	SCREW M6S M10X65 FZB	
760	312101-0507		2	SCREW M6S M10X80 FZB	
770	312111-0376		4	SCREW HEX.SOCK.HD.MC6S-TT 6X35 88 FZB	
780	312111-0378		2	SCREW HEX.SOCK.HD.MC6S-TT 6X40 88 FZB	
790	312121-0287		5	SCREW ISO 1207 M4X8 4.8-5.8 Z.PL.	
795	312145-0220		1	SCREW ISO 2009 MFS M3X6 A4	
800	312151-0287		12	SCREW EN 10642 MF6S M4X8 10.9 EL.PL	
810	312151-0364		8	SCREW EN 10642 MF6S M6X10 10.9 EL.PL	
820	312601-0318		2	HEXAGON NUT, DIN 934 M8 8 FZB	
840	312811-0324		2	NUT HEX.LOCK HELI COIL MID GRIP M16 SS	
850	312811-0326		1	NUT HEX.LOCK HELI COIL MID GRIP M20 SS	
870	315101-0136		2	WASHER BRB, 4,3/8 H=0,8	
880	315101-0153		4	WASHER PLAIN, BRB, 6,4/12 H=1,5	
890	315101-0165		4	WASHER PLAIN, BRB, 8,4/16 H=1,5	
900	315101-0173		2	WASHER PLAIN, BRB, 10,5/22 H=2	
910	315101-0186		2	WASHER PLAIN, BRB, 17/30 H=3	
920	315111-0173		2	WASHER PLAIN, TBRB 10,5/22 H=4	
925	315121-0173		1	WASHER PLAIN, TBRSB 10,5/28 H=6	
930	315701-0335		1	PARALLEL KEY W. ROUND ENDS, 12X8X56 MM	
940	321129-0137		4	THRUST WASHER, 22X38X1,5 MM	
950	321576-0260		1	CAM ROLLER, 20X47X25 MM	

Machine Type	Group Description	Used-In	Group Number	Page No

SLEWING BRACKET RIGHT

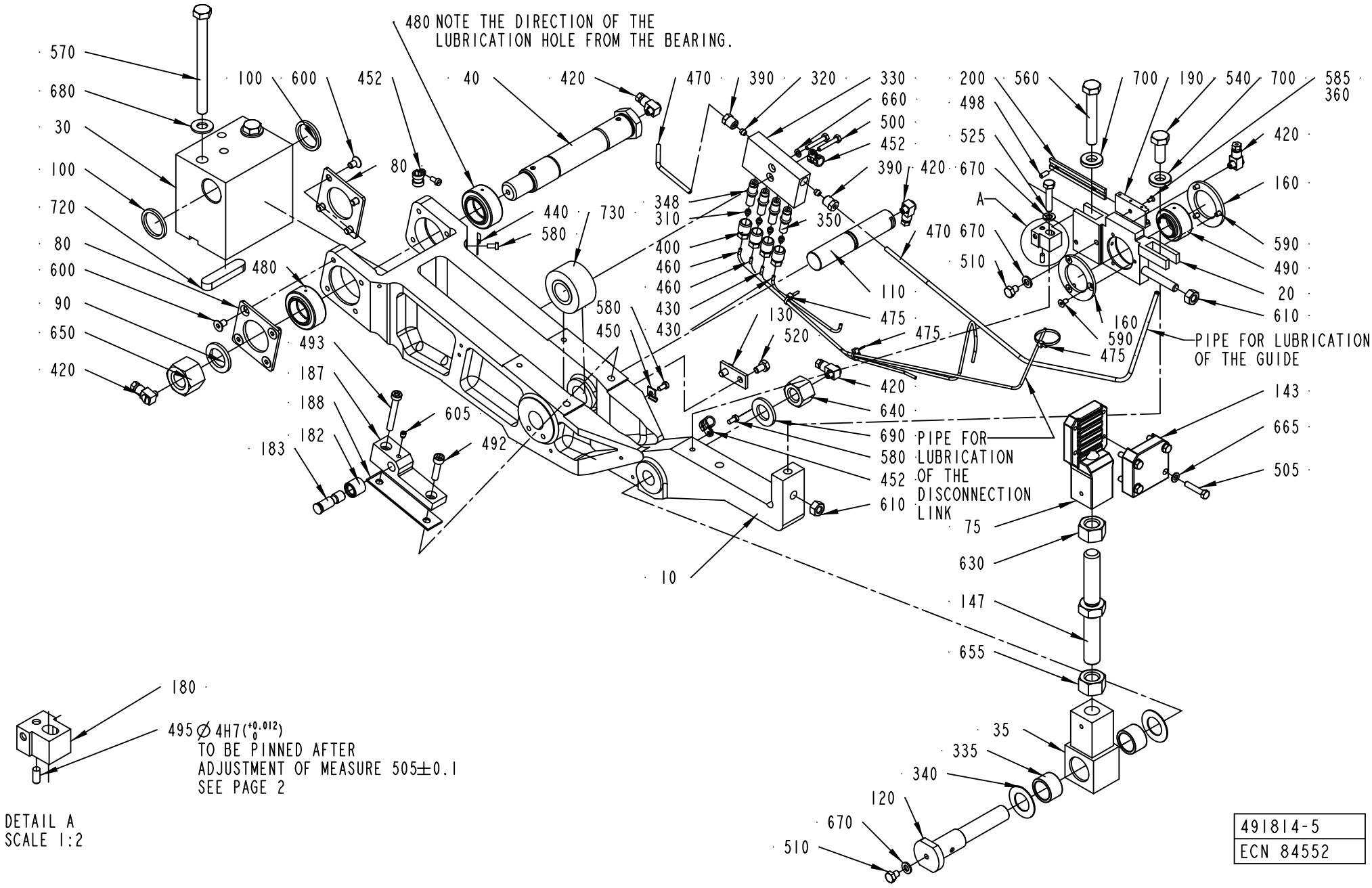

DETAIL A
SCALE 1:2

491814-5
ECN 84552

ECM: 179089 - 20040910
Group number: 491814-0300
Assembly Drawing: 491814-5_1_AA

Pos	Part No	UN	Qty	Description	Page No
-					
0010	751212-0000		1	ARM	
0020	978275-0000		1	BEARING HOLDER	
0030	256418-0000		1	BEARING BRACKET	
0035	256515-0000		1	END PIECE	
0040	272462-0000		1	AXLE BOLT	
0075	272607-0000		1	BELT HOLDER	
0080	256422-0000		2	WASHER	
0090	256426-0001		1	WASHER	
0100	256426-0002		2	WASHER	
0110	256427-0000		1	SHAFT	
0120	490916-0000		1	AXLE PIN	
0130	256472-0000		1	WASHER	
0143	256516-0000		1	CAP	
0147	256517-0000		1	SCREW	
0160	257311-0000		2	CAP	
0180	978272-0000		1	BRACKET	
0182	491165-0000		1	ROLL	
0183	491166-0000		1	SHAFT	
0187	751078-0000		1	BRACKET RIGHT	
0188	491319-0000		2	LACE	
0190	1484792-0000		1	SCALE	
0200	1484791-0000		1	SCALE	
0310	90028-0020		4	CONE TUBE 2,5MM	
0320	90028-0021		2	CONE TUBE 4 MM	
0330	90032-0039		1	BLOCK 4 WAYS	
0335	321531-0248		2	NEEDLE SLEEVE W/O CONE, 20X26X16 MM	
0340	90083-0016		2	AXIAL BEARING WASHER, AS2035	
0348	90092-0052		3	METERING VALVE 10 MM3	
0350	90092-0053		1	METERING VALVE 30 MM3	
0360	90157-0016	L	1	THREAD LOCKING, LOCTITE 242 50 ML	
0390	90134-0038		2	BUSHING/NUT INLET/OUTLET 4 MM	
0400	90134-0039		4	BUSHING VALVE CONNECTION 2,5 MM	
0420	90134-0058		5	CONNECTION	
0430	90266-0019	MM	350	PIPE	
0440	90165-0002		1	PIPE CLIP FOR TUBE D=4 MM	
0450	90165-0022		1	PIPE CLIP, FOR TUBE D=2,5 MM, B-3570	
0452	90165-0065		3	PIPE CLAMP D=8 MM, GSK08/12	
0460	90166-0143	MM	1100	TUBE 2,5 MM PA TRANSP.	
0470	90166-0109	MM	700	TUBE 4 MM PA TRANSP.	
0475	352113-0101		3	CABLE TIE, BLACK 92X2,5 MM	
0480	90240-0048		2	PLAIN BEAR,SELF ADJ.SPHER. 25X42X20 MM	
0490	90240-0050		1	PLAIN BEAR,SELF ADJ. 20X35X24	
0492	90287-0143		1	SCREW ISO4762 M6X25 12.9	
0493	90287-0144		1	SCREW ISO4762 M6X35 12.9	
0495	311101-0267		1	PARALLEL PIN ISO 2338 4H6X10 ST	
0498	311103-0267		1	PARALLEL PIN ISO 2338 4M6X10 A1	
0500	312101-0297		2	SCREW M6S M4X25 FZB	
0505	312101-0333		4	SCREW M6S M5X25 FZB	
0510	312101-0362		2	SCREW M6S M6X8 FZB	
0520	312101-0364		2	SCREW M6S M6X10 FZB	
0525	312105-0374		1	SCREW, M6S ISO 4014 M6X30 A4 80	
0540	312101-0493		1	SCREW M6S M10X25 FZB	
0560	312101-0504		1	SCREW M6S M10X65 FZB	
0570	312101-0515		2	SCREW M6S M10X120 FZB	
0580	312121-0287		4	SCREW ISO 1207 M4X8 4.8-5.8 Z.PL.	
0585	312145-0220		1	SCREW ISO 2009 MFS M3X6 A4	
0590	312151-0287		6	SCREW EN 10642 MF6S M4X8 10.9 EL.PL	
0600	312151-0364		8	SCREW EN 10642 MF6S M6X10 10.9 EL.PL	
0605	312311-0321		1	SET SCREW, DOG POINT ISO4028 M5X6 FZB	
0610	312601-0318		2	HEXAGON NUT, DIN 934 M8 8 FZB	
0630	312601-0324		1	HEXAGON NUT, DIN 934 M16 8 FZB	
0640	312811-0324		1	NUT HEX.LOCK HELI COIL MID GRIP M16 SS	
0650	312811-0326		1	NUT HEX.LOCK HELI COIL MID GRIP M20 SS	
0655	312901-0324		1	NUT M6M16VFZB	
0660	315101-0136		1	WASHER BRB, 4,3/8 H=0,8	
0665	315101-0146		4	WASHER PLAIN, BRB, 5,3/10 H=1	
0670	315101-0153		3	WASHER PLAIN, BRB, 6,4/12 H=1,5	
0680	315101-0173		2	WASHER PLAIN, BRB, 10,5/22 H=2	
0690	315101-0186		1	WASHER PLAIN, BRB, 17/30 H=3	
0700	315111-0173		2	WASHER PLAIN, TBRB 10,5/22 H=4	
0720	315701-0335		1	PARALLEL KEY W. ROUND ENDS, 12X8X56 MM	
0730	321576-0260		1	CAM ROLLER, 20X47X25 MM	

Machine Type	Group Description	Used-In	Group Number	Page No

SLEWING BRACKET LEFT

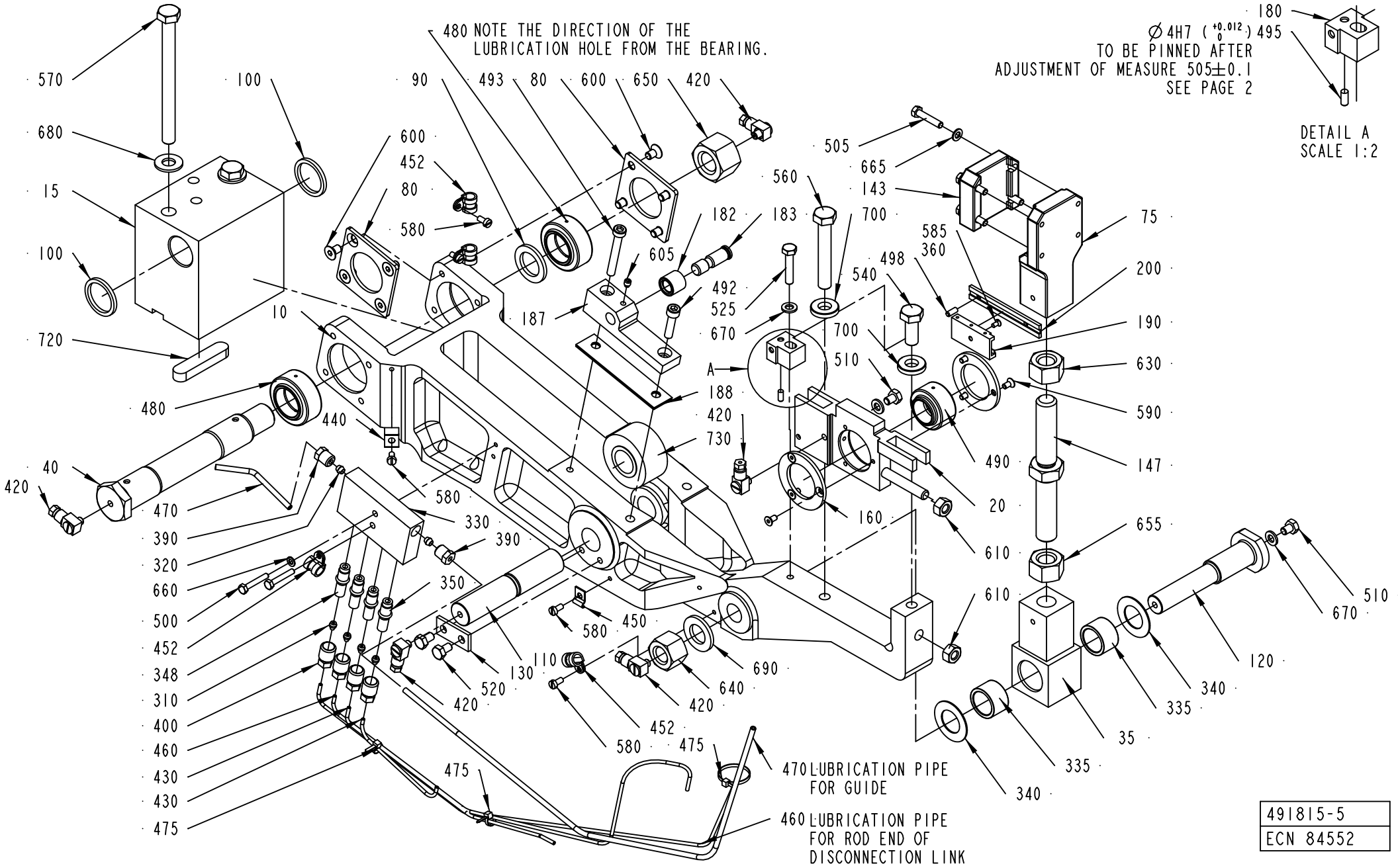

ECM: 216922 - 20050622
Group number: 491815-0300
Assembly Drawing: 491815-5_1_AA

Pos	Part No	UN	Qty	Description	Page No
-					
0010	751212-0000		1	ARM	
0015	256418-0000		1	BEARING BRACKET	
0020	978275-0000		1	BEARING HOLDER	
0035	256515-0000		1	END PIECE	
0040	272462-0000		1	AXLE BOLT	
0075	272607-0000		1	BELT HOLDER	
0080	256422-0000		2	WASHER	
0090	256426-0001		1	WASHER	
0100	256426-0002		2	WASHER	
0110	256427-0000		1	SHAFT	
0120	490916-0000		1	AXLE PIN	
0130	256472-0000		1	WASHER	
0143	256516-0000		1	CAP	
0147	256517-0000		1	SCREW	
0160	257311-0000		2	CAP	
0180	978272-0000		1	BRACKET	
0182	491165-0000		1	ROLL	
0183	491166-0000		1	SHAFT	
0187	751079-0000		1	BRACKET LEFT	
0188	491319-0000		2	LACE	
0190	1484792-0000		1	SCALE	
0200	1484791-0000		1	SCALE	
0310	90028-0020		4	CONE TUBE 2,5MM	
0320	90028-0021		2	CONE TUBE 4 MM	
0330	90032-0039		1	BLOCK 4 WAYS	
0335	321531-0248		2	NEEDLE SLEEVE W/O CONE, 20X26X16 MM	
0340	90083-0016		2	AXIAL BEARING WASHER, AS2035	
0348	90092-0052		3	METERING VALVE 10 MM3	
0350	90092-0053		1	METERING VALVE 30 MM3	
0360	90157-0016		1	THREAD LOCKING, LOCTITE 242 50 ML	
0390	90134-0038		2	BUSHING/NUT INLET/OUTLET 4 MM	
0400	90134-0039		4	BUSHING VALVE CONNECTION 2,5 MM	
0420	90134-0058		5	CONNECTION	
0430	90266-0019	MM	350	PIPE	
0440	90165-0002		1	PIPE CLIP FOR TUBE D=4 MM	
0450	90165-0022		1	PIPE CLIP, FOR TUBE D=2,5 MM, B-3570	
0452	90165-0065		4	PIPE CLAMP D=8 MM, GSK08/12	
0460	90166-0143	MM	1100	TUBE 2,5 MM PA TRANSP.	
0470	90166-0109	MM	700	TUBE 4 MM PA TRANSP.	
0475	352113-0101		3	CABLE TIE, BLACK 92X2,5 MM	
0480	90240-0048		2	PLAIN BEAR,SELF ADJ.SPHER. 25X42X20 MM	
0490	90240-0050		1	PLAIN BEAR,SELF ADJ. 20X35X24	
0492	90287-0143		1	SCREW ISO4762 M6X25 12.9	
0493	90287-0144		1	SCREW ISO4762 M6X35 12.9	
0495	311101-0267		1	PARALLEL PIN ISO 2338 4H6X10 ST	
0498	311103-0267		1	PARALLEL PIN ISO 2338 4M6X10 A1	
0500	312101-0297		2	SCREW M6S M4X25 FZB	
0505	312101-0333		4	SCREW M6S M5X25 FZB	
0510	312101-0362		2	SCREW M6S M6X8 FZB	
0520	312101-0364		2	SCREW M6S M6X10 FZB	
0525	312105-0374		1	SCREW, M6S ISO 4014 M6X30 A4 80	
0540	312101-0493		1	SCREW M6S M10X25 FZB	
0560	312101-0504		1	SCREW M6S M10X65 FZB	
0570	312101-0515		2	SCREW M6S M10X120 FZB	
0580	312121-0287		5	SCREW ISO 1207 M4X8 4.8-5.8 Z.PL.	
0585	312145-0220		1	SCREW ISO 2009 MFS M3X6 A4	
0590	312151-0287		6	SCREW EN 10642 MF6S M4X8 10.9 EL.PL	
0600	312151-0364		8	SCREW EN 10642 MF6S M6X10 10.9 EL.PL	
0605	312311-0321		1	SET SCREW, DOG POINT ISO4028 M5X6 FZB	
0610	312601-0318		2	HEXAGON NUT, DIN 934 M8 8 FZB	
0630	312601-0324		1	HEXAGON NUT, DIN 934 M16 8 FZB	
0640	312811-0324		1	NUT HEX.LOCK HELI COIL MID GRIP M16 SS	
0650	312811-0326		1	NUT HEX.LOCK HELI COIL MID GRIP M20 SS	
0655	312901-0324		1	NUT M6M16VFZB	
0660	315101-0136		1	WASHER BRB, 4,3/8 H=0,8	
0665	315101-0146		4	WASHER PLAIN, BRB, 5,3/10 H=1	
0670	315101-0153		3	WASHER PLAIN, BRB, 6,4/12 H=1,5	
0680	315101-0173		2	WASHER PLAIN, BRB, 10,5/22 H=2	
0690	315101-0186		1	WASHER PLAIN, BRB, 17/30 H=3	
0700	315111-0173		2	WASHER PLAIN, TBRB 10,5/22 H=4	
0720	315701-0335		1	PARALLEL KEY W. ROUND ENDS, 12X8X56 MM	
0730	321576-0260		1	CAM ROLLER, 20X47X25 MM	

Machine Type	Group Description	Used-In	Group Number	Page No

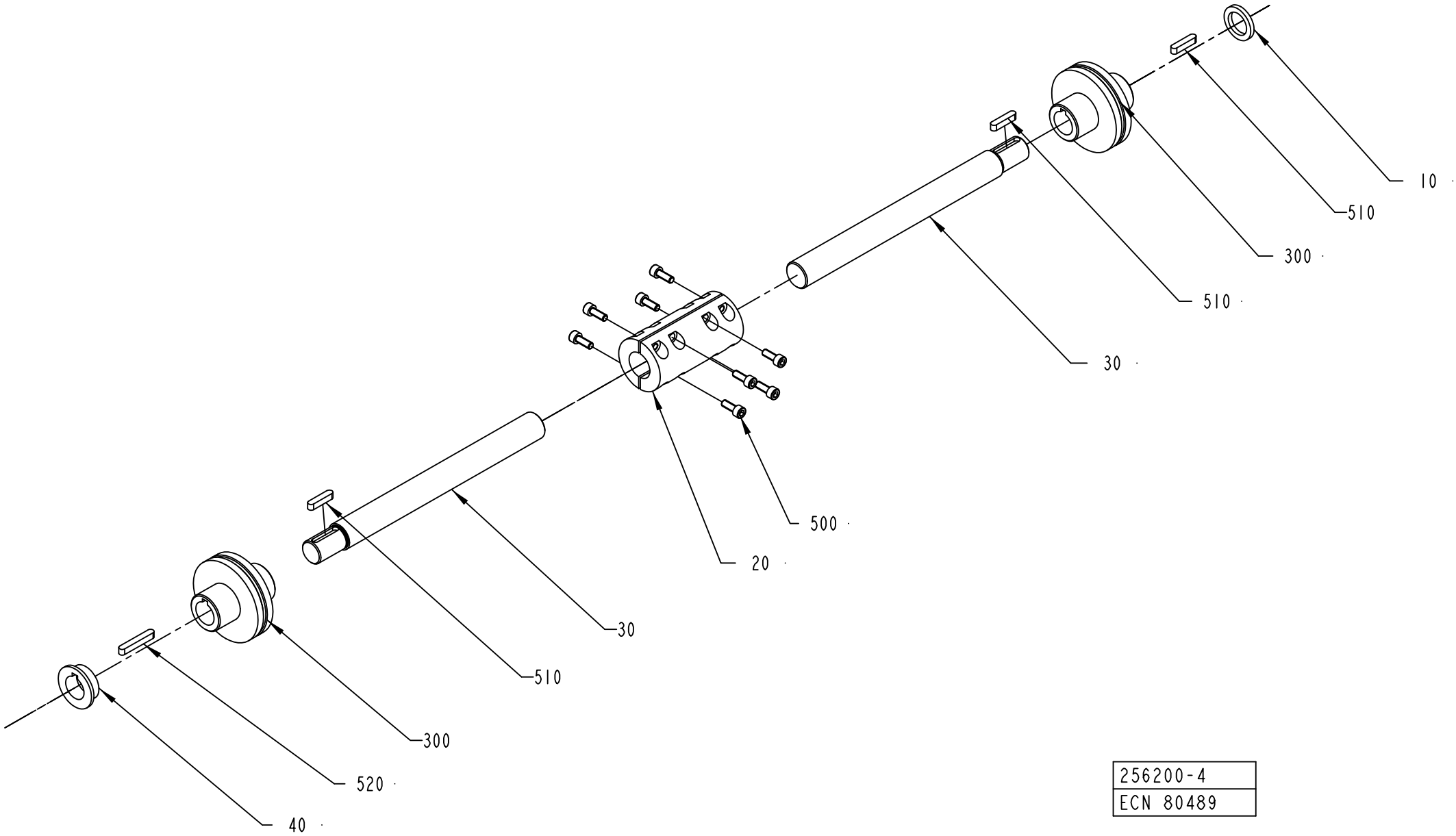

256200-4
ECN 80489

ECM: 178937 - 20040910
Group number: 256200-0300
Assembly Drawing: 256200-4_1_AB

This list covers pages from 3-18 to 3-21

Pos	Part No	UN	Qty	Description	Page No
TBA, TPA (See drawing on page: 3-18)					
030	441339-0000		2	SHAFT	
TWA (See drawing on page: 3-20)					
030	441339-0000		1	SHAFT	
050	591440-0000		1	SHAFT	
Common Parts					
010	272857-0000		1	RING	
020	295983-0000		1	CONNECTION	
040	441720-0000		1	SPACER	
300	90355-0048		2	TORQUE RIGID COUPLING, 22X22 MM	
500	312111-0368		8	SCREW HEX.SOCK.HD.MC6S-TT 6X16 88 FZB	
510	315701-0235		3	PARALLEL KEY W. ROUND ENDS, 6X6X28 MM	
520	315701-0239		1	PARALLEL KEY W. ROUND ENDS, 6X6X40 MM	

Pos	Part No	UN	Qty	Description	Page No

INTERMEDIARY SHAFT

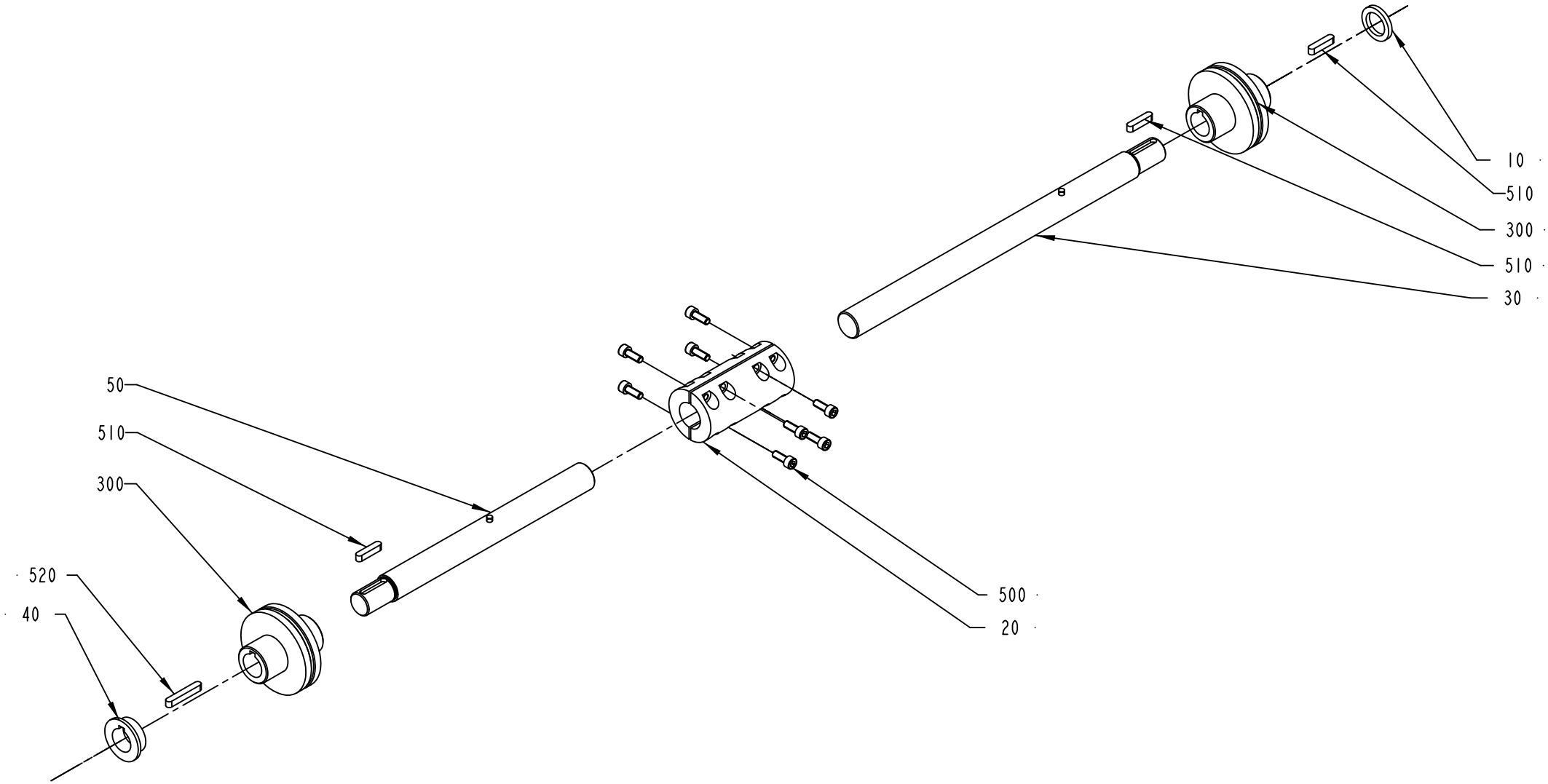

256200-5
ECN 87929

ECM: 178937 - 20040910
Group number: 256200-0300
Assembly Drawing: 256200-5_1_AA

This list covers pages from 3-18 to 3-21

Pos	Part No	UN	Qty	Description	Page No
TBA, TPA (See drawing on page: 3-18)					
030	441339-0000		2	SHAFT	
TWA (See drawing on page: 3-20)					
030	441339-0000		1	SHAFT	
050	591440-0000		1	SHAFT	
Common Parts					
010	272857-0000		1	RING	
020	295983-0000		1	CONNECTION	
040	441720-0000		1	SPACER	
300	90355-0048		2	TORQUE RIGID COUPLING, 22X22 MM	
500	312111-0368		8	SCREW HEX.SOCK.HD.MC6S-TT 6X16 88 FZB	
510	315701-0235		3	PARALLEL KEY W. ROUND ENDS, 6X6X28 MM	
520	315701-0239		1	PARALLEL KEY W. ROUND ENDS, 6X6X40 MM	

Pos	Part No	UN	Qty	Description	Page No

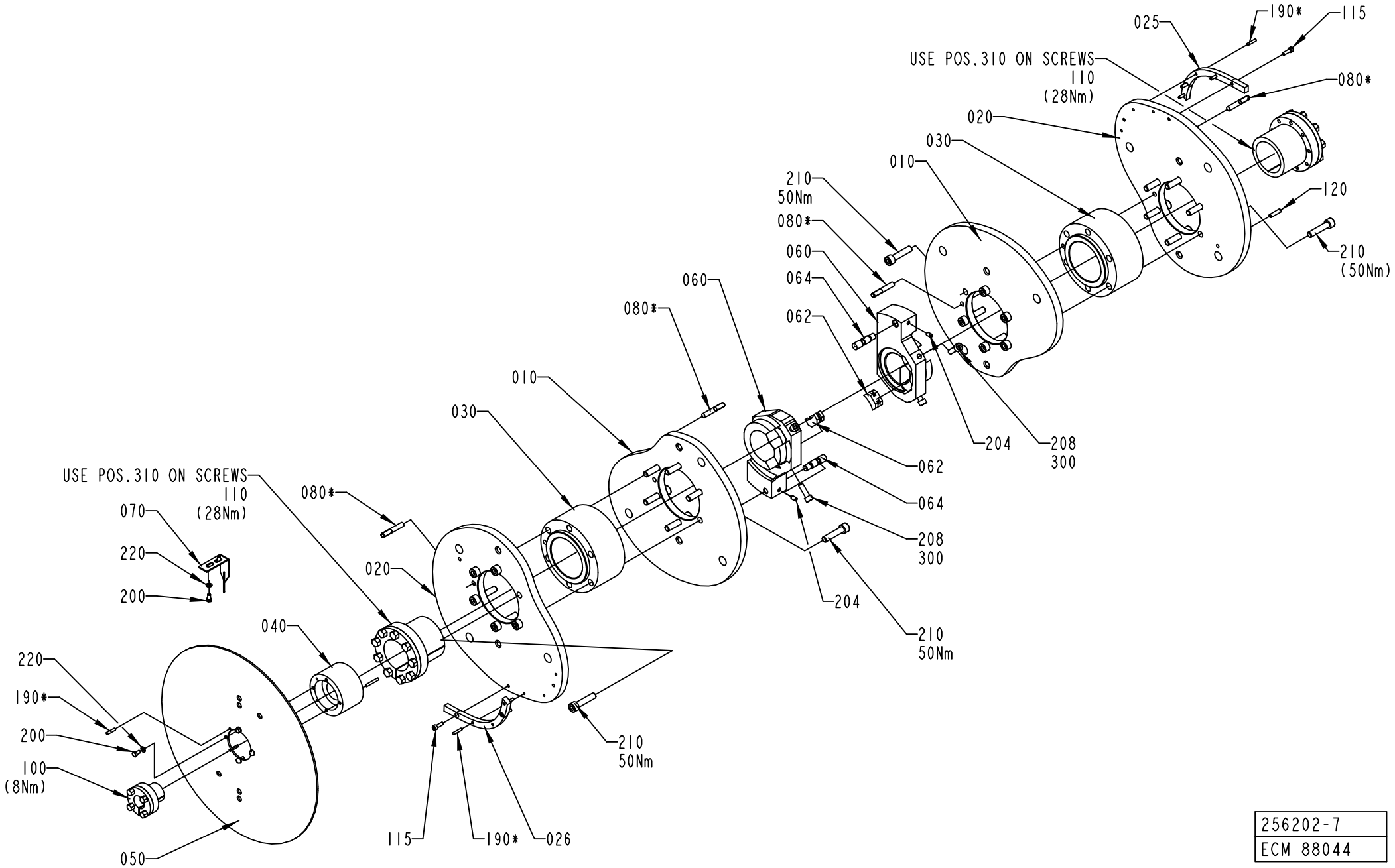

256202-7
ECM 88044

Pos	Part No	UN	Qty	Description	Page No
TWA 0125S					
010	2987285-0000		2	CURVE	
020	2987284-0000		2	CURVE	
025	2987287-0000		1	CAM	
026	2987286-0000		1	CAM	
030	456744-0000		2	HUB	
192	311103-0276		1	PARALLEL PIN ISO 2338 4M6X30 A1	
210	312115-0500		24	SCREW ISO4762 M10X45 A4 80	
230	315101-0173		24	WASHER PLAIN, BRB, 10,5/22 H=2	
300	90157-0016		1	THREAD LOCKING, LOCTITE 242 50 ML	
TWA 0200S					
010	2887706-0000		2	CURVE YOKE	
020	2887705-0000		2	CURVE ARM	
025	2887704-0000		1	CAM SEGMENT R	
026	2887703-0000		1	CAM SEGMENT L	
030	456744-0000		2	HUB	
192	311103-0276		1	PARALLEL PIN ISO 2338 4M6X30 A1	
210	312115-0500		22	SCREW ISO4762 M10X45 A4 80	
230	315101-0173		22	WASHER PLAIN, BRB, 10,5/22 H=2	
300	90157-0016		1	THREAD LOCKING, LOCTITE 242 50 ML	
TBA 0100B					
010	979778-0000		2	YOKE CAM 100	
020	979779-0000		2	ARM CAM 100	
025	979780-0000		1	CAM SEGMENT R 100	
026	979781-0000		1	CAM SEGMENT L 100	
030	456744-0000		2	HUB	
210	312115-0500		24	SCREW ISO4762 M10X45 A4 80	
230	315101-0173		24	WASHER PLAIN, BRB, 10,5/22 H=2	
TBA 0125S					
010	978793-0000		2	YOKECURVE 125ML	
020	978794-0000		2	ARMCURVE 125ML	
025	978795-0000		1	CAMSEGMENT R	
026	978796-0000		1	CAMSEGMENT L	
030	456744-0000		2	HUB	
192	311103-0276		1	PARALLEL PIN ISO 2338 4M6X30 A1	
210	312115-0500		24	SCREW ISO4762 M10X45 A4 80	
230	315101-0173		24	WASHER PLAIN, BRB, 10,5/22 H=2	
300	90157-0016		1	THREAD LOCKING, LOCTITE 242 50 ML	
TBA 0160S					
010	577217-0000		2	YOKECAM 160ML	
020	577218-0000		2	ARMCAM 160ML	
025	577219-0000		1	CAMSEGMENT R	
026	577220-0000		1	CAMSEGMENT L	
030	456744-0000		2	HUB	
210	312115-0500		24	SCREW ISO4762 M10X45 A4 80	
230	315101-0173		24	WASHER PLAIN, BRB, 10,5/22 H=2	
TBA 0200B					
010	978768-0000		2	YOKECURVE200ML	
020	978769-0000		2	ARMCURVE 200ML	
025	978770-0000		1	CAMSEGMENTL	
026	978771-0000		1	CAMSEGMENTL	
030	456744-0000		2	HUB	
192	311103-0276		1	PARALLEL PIN ISO 2338 4M6X30 A1	
210	312115-0500		24	SCREW ISO4762 M10X45 A4 80	
230	315101-0173		24	WASHER PLAIN, BRB, 10,5/22 H=2	
300	90157-0016		1	THREAD LOCKING, LOCTITE 242 50 ML	
TBA 0200M					
010	1282310-0000		2	YOKE CAM 200ML MID	
020	1282309-0000		2	ARM CAM 200 ML MID	
025	1282312-0000		1	CAM SEGMENT R	
026	1282311-0000		1	CAM SEGMENT L	
030	456744-0000		2	HUB	
210	312115-0500		22	SCREW ISO4762 M10X45 A4 80	
230	315101-0173		22	WASHER PLAIN, BRB, 10,5/22 H=2	
TBA 0200S					
010	978772-0000		2	YOKECURVE 200SL	
020	978773-0000		2	ARMCURVE 200SL	
025	978774-0000		1	CAMSEGMENT R	
026	978775-0000		1	CAMSEGMENT L	
030	456744-0000		2	HUB	
192	311103-0276		1	PARALLEL PIN ISO 2338 4M6X30 A1	
210	312115-0500		22	SCREW ISO4762 M10X45 A4 80	
230	315101-0173		22	WASHER PLAIN, BRB, 10,5/22 H=2	
300	90157-0016		1	THREAD LOCKING, LOCTITE 242 50 ML	
TBA 0200SQ					
030	456744-0000		2	HUB	
TBA 0250B					
010	978776-0000		2	YOKECURVE 250ML	
020	978777-0000		2	ARMCURVE 250ML	
025	978778-0000		1	CAMSEGMENT R	
026	978779-0000		1	CAMSEGMENT L	
030	456744-0000		2	HUB	
192	311103-0276		1	PARALLEL PIN ISO 2338 4M6X30 A1	
210	312115-0500		24	SCREW ISO4762 M10X45 A4 80	

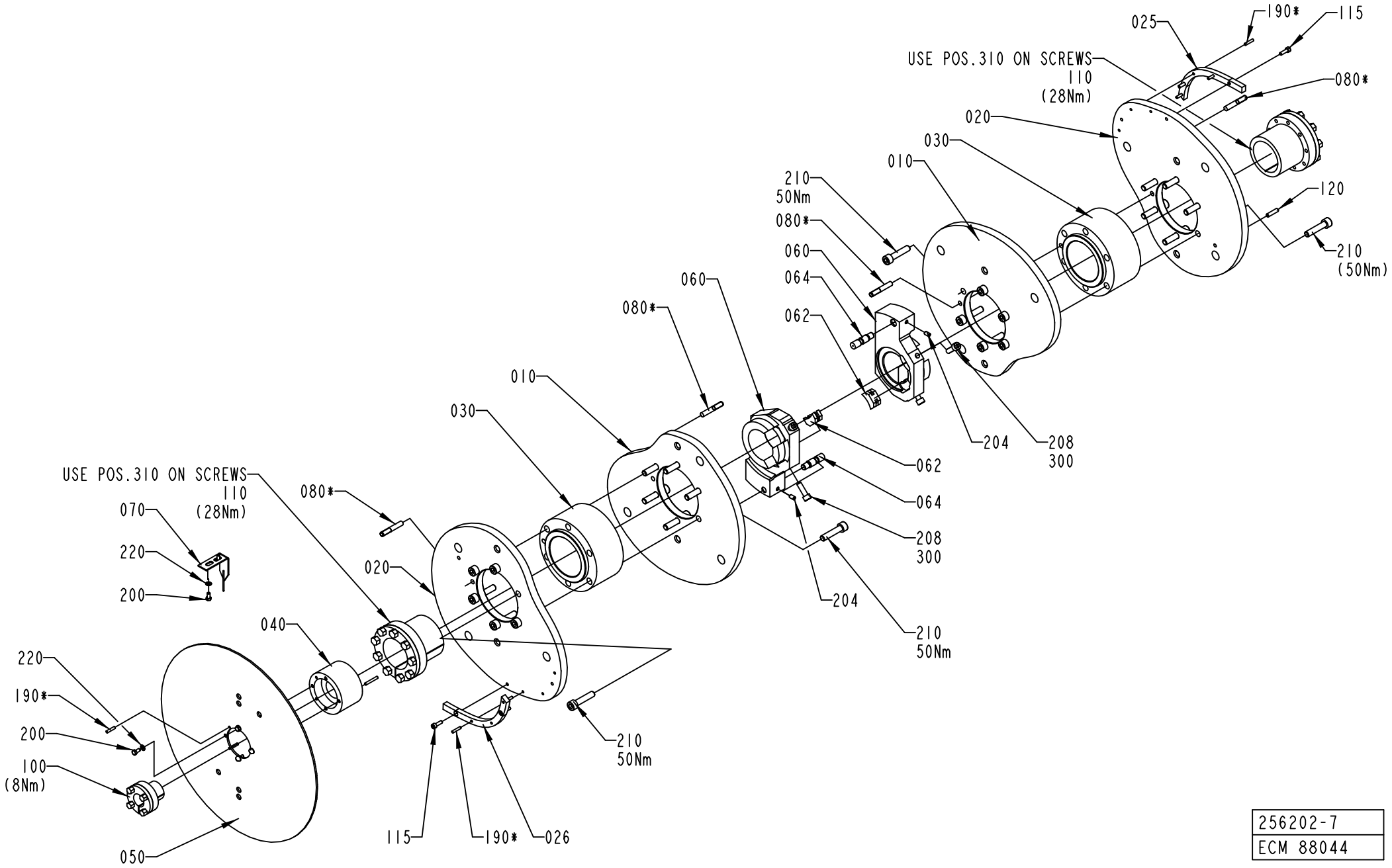

256202-7
ECM 88044

Pos	Part No	UN	Qty	Description	Page No
TBA 0250B (Cont'd)					
230	315101-0173		24	WASHER PLAIN, BRB, 10,5/22 H=2	
300	90157-0016		1	THREAD LOCKING, LOCTITE 242 50 ML	
TBA 0250S					
010	580356-0000		2	YOKECAM 250ML SLIM	
020	580357-0000		2	ARMCAM 250ML SLIM	
025	580359-0000		1	CAM SEGMENT R	
026	580358-0000		1	CAM SEGMENT L	
030	456744-0000		2	HUB	
210	312115-0500		22	SCREW ISO4762 M10X45 A4 80	
230	315101-0173		22	WASHER PLAIN, BRB, 10,5/22 H=2	
TBA 0284B, TBA 0300S					
010	581533-0000		2	YOKE CAM 284ML	
020	581534-0000		2	ARM CAM 284ML	
025	581535-0000		1	CAMSEGMENT R 284ML	
026	581536-0000		1	CAMSEGMENT L 284ML	
030	456744-0000		2	HUB	
192	311103-0276		1	PARALLEL PIN ISO 2338 4M6X30 A1	
210	312115-0500		22	SCREW ISO4762 M10X45 A4 80	
230	315101-0173		22	WASHER PLAIN, BRB, 10,5/22 H=2	
300	90157-0016		1	THREAD LOCKING, LOCTITE 242 50 ML	
TBA 0330S					
010	582197-0000		2	YOKE CAM 330S	
020	582195-0000		2	ARM CAM 330S	
025	582199-0000		1	CAM SEGMENT RIGHT	
026	582200-0000		1	CAM SEGMENT LEFT	
030	456744-0000		2	HUB	
210	312115-0500		24	SCREW ISO4762 M10X45 A4 80	
230	315101-0173		24	WASHER PLAIN, BRB, 10,5/22 H=2	
TPA 0200SQ					
010	2556349-0000		2	CAM	
020	1538471-0000		2	ARM CAM P48 200	
025	1538518-0000		1	CAM SEGMENT R P48 200SQ	
026	1538517-0000		1	CAM SEGMENT L P48 200SQ	
030	929396-0000		2	HUB	
210	312115-0500		20	SCREW ISO4762 M10X45 A4 80	
300	90157-0016		1	THREAD LOCKING, LOCTITE 242 50 ML	
TPA 0250SQ					
010	2556350-0000		2	CAM	
020	1350989-0000		2	ARM CAM P48 250	
025	1350990-0000		1	CAM SEGMENT R P48 250SQ	
026	1350991-0000		1	CAM SEGMENT L P48 250SQ	
030	929396-0000		2	HUB	
210	312115-0500		20	SCREW ISO4762 M10X45 A4 80	
300	90157-0016		1	THREAD LOCKING, LOCTITE 242 50 ML	
TPA 0330SQ					
010	2556351-0000		2	CAM	
020	929366-0000		2	ARM CAM P48 330	
025	929368-0000		1	CAM SEGMENT R P48 330SQ	
026	929367-0000		1	CAM SEGMENT L P48 330SQ	
030	929396-0000		2	HUB	
210	312115-0500		20	SCREW ISO4762 M10X45 A4 80	
300	90157-0016		1	THREAD LOCKING, LOCTITE 242 50 ML	
Common Parts					
040	1523828-0000		1	SPACER	
050	2504952-0000		1	PROTRACTOR	
060	978609-0000		2	ALIGNMENT TEMPLATE	
062	752774-0000		4	PLUNGER	
064	978262-0000		2	GUIDE PIN	
070	271007-0000		1	POINTER	
080	295140-0000		4	PIN	
090	978340-0000		1	SPACER	
100	90208-0080		1	CLAMPING ELEMENT, 25X34 L=25	
110	90208-0091		2	CLAMPING ELEMENT, 60X77 L=50	
115	90287-0145		4	SCREW ISO4762 M5X16 12.9	
120	929444-0000		1	PIN	
190	311103-0272		6	PARALLEL PIN ISO 2338 4M6X20 A1	
200	312101-0325		6	SCREW M6S M5X10 FZB	
204	312318-0364		2	SET SCREW, CUP END ISO4029 M6X10 A4	
208	312115-0453		4	SCREW ISO4762 M8X25 A4 80	
220	315101-0146		6	WASHER PLAIN, BRB, 5,3/10 H=1	

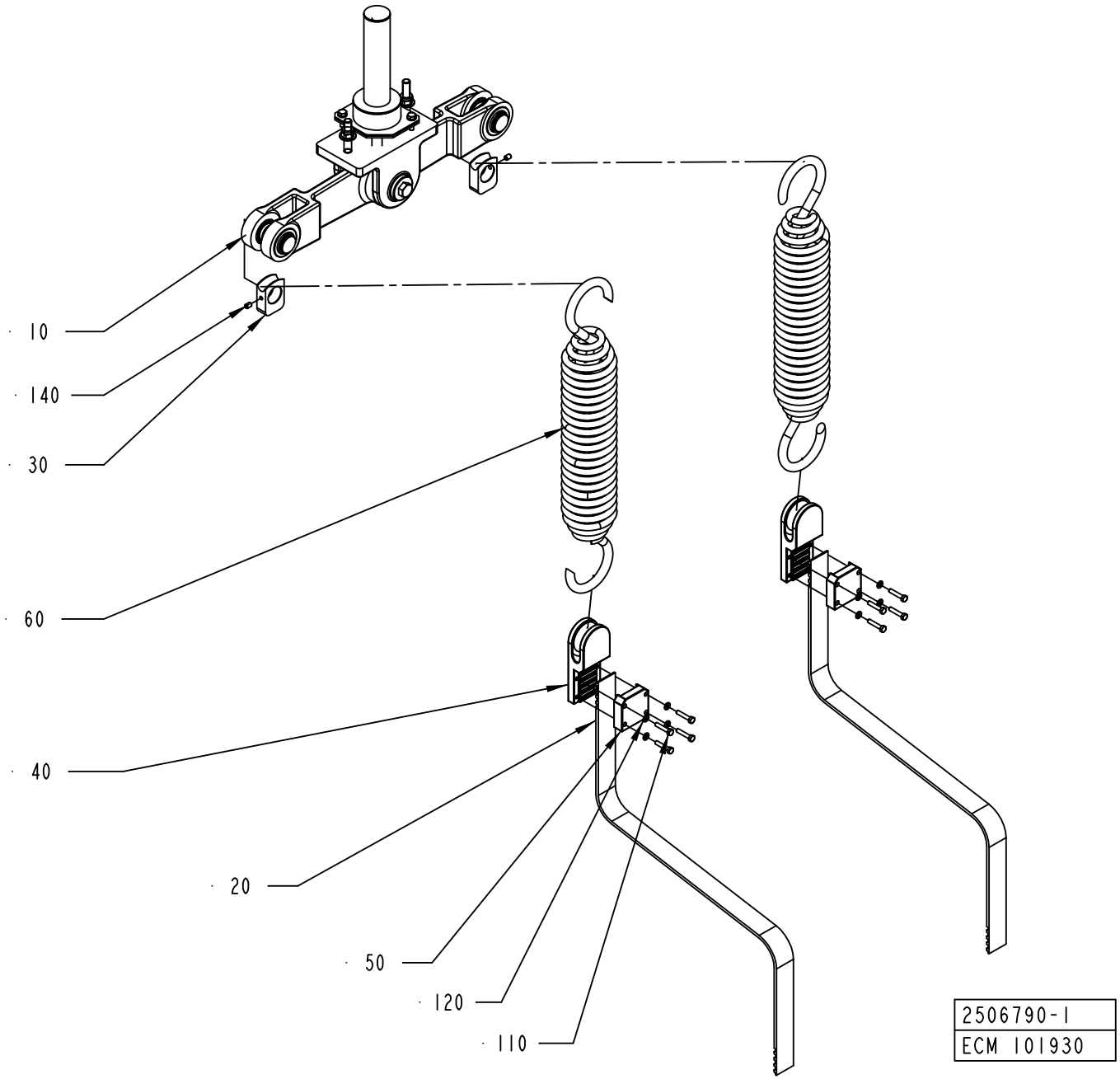
10
140
30
60
40
20
50
120
110
2506790-1
ECM 101930

ECM: 196422 - 20050309
Group number: 2506790-0100
Assembly Drawing: 2506790-1_1_AC

Pos	Part No	UN	Qty	Description	Page No
TBA 0100B, TBA 0125S, TBA 0160S, TBA 0200B, TBA 0200SQ, TPA 0200SQ					
020	566404-0001		2	TIMING BELT	
TBA 0200M, TBA 0250S					
020	566404-0003		2	TIMING BELT	
TBA 0200S, TBA 0284B, TBA 0250B, TBA 0300S					
020	566404-0002		2	TIMING BELT	
TBA 0330S, TPA 0330SQ, TPA 0250SQ					
020	566404-0005		2	TIMING BELT	
TWA 0125S					
020	566404-0004		2	TIMING BELT	
TWA 0200S					
020	566404-0005		2	TIMING BELT	
Common Parts					
010	2507014-0100		1	ROCKER ARM	**3-29**
030	2519460-0000		2	SPRING BRACKET	
040	272608-0000		2	BELT HOLDER	
050	256516-0000		2	CAP	
060	441353-0000		2	TENSION SPRING	
110	312101-0333		8	SCREW M6S M5X25 FZB	
120	315101-0146		8	WASHER PLAIN, BRB, 5,3/10 H=1	
140	312318-0362		2	SET SCREW, CUP END ISO4029 M6X8 A4	

Pos	Part No	UN	Qty	Description	Page No

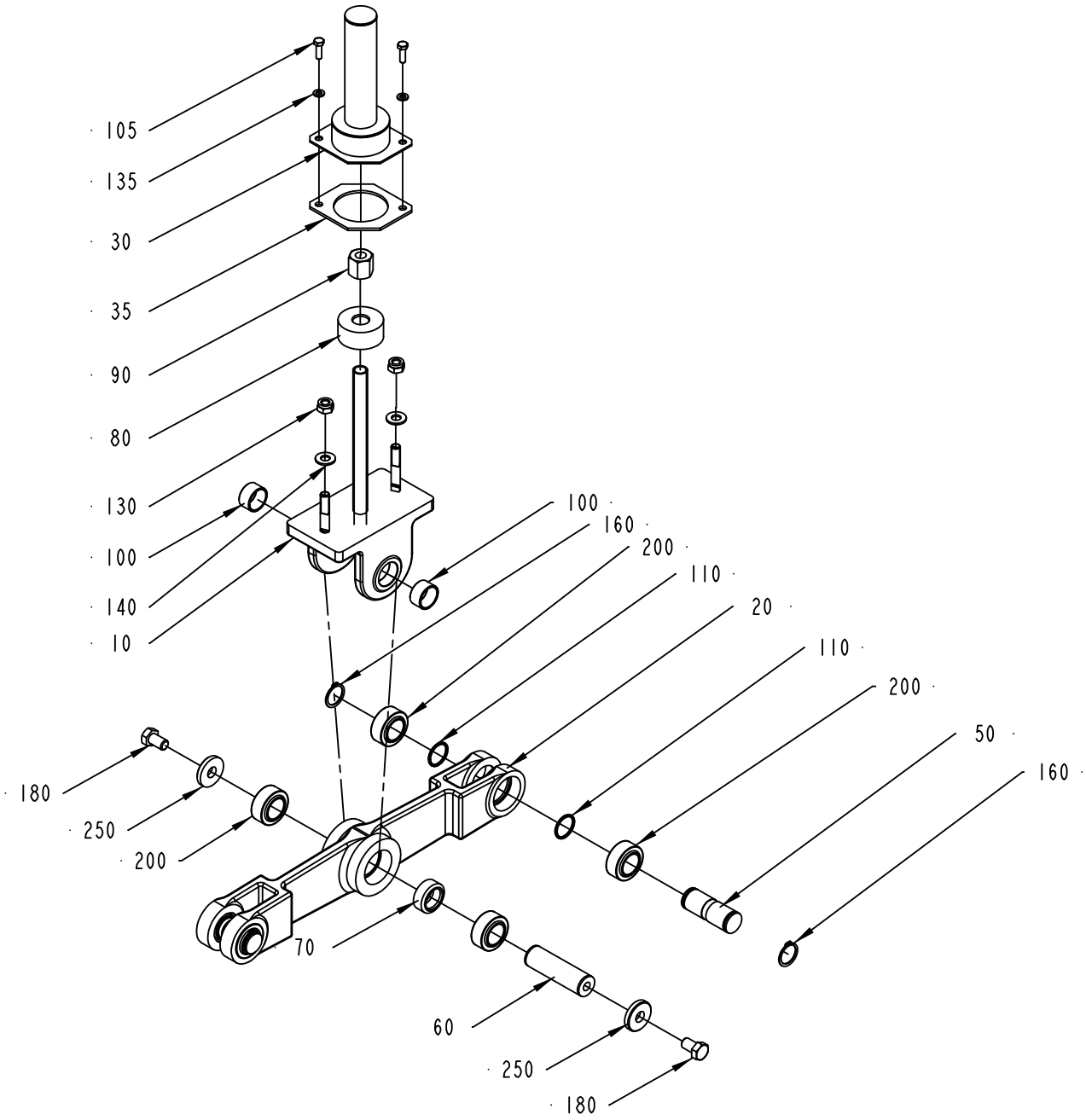

2507014-1
ECN 262864

ECM: 267223 - 20060707
Group number: 2507014-0100
Assembly Drawing: 2507014-1_1_AB

Pos	Part No	UN	Qty	Description	Page No
-					
010	1484457-0000		1	BRACKET	
020	1484454-0000		1	ROCKER ARM	
030	579623-0000		1	PROTECTIVE CASING	
035	579624-0000		1	GASKET	
050	1484456-0000		2	SHAFT	
060	1484452-0000		1	SHAFT	
070	1484453-0000		1	SPACER	
080	978207-0000		1	SPACER PIPE	
090	978209-0000		1	NUT	
100	1484455-0000		2	SPACER	
105	312105-0370		2	SCREW, M6S ISO 4017 M6X20 A4 80	
110	1484461-0000		4	SPACER	
130	312812-0320		2	HEXAGON NUT, NY-LOCK M10 A4 80	
135	315105-0153		2	WASHER PLAIN, 6,4X12X1,5 A4 BRB	
140	315105-0173		2	WASHER PLAIN, 10,5X22X2 A4 BRB	
160	315751-0119		4	RETAINING RING FOR SHAFT DIN 471 25 SS	
180	312105-0532		2	SCREW, M6S ISO 4017 M12X20 A4 80	
200	90459-6727		6	SPHERICAL BEARING, 25X42X20 MM	
250	315121-0178		2	WASHER PLAIN, TBRSB 13/36 H=6	

Pos	Part No	UN	Qty	Description	Page No

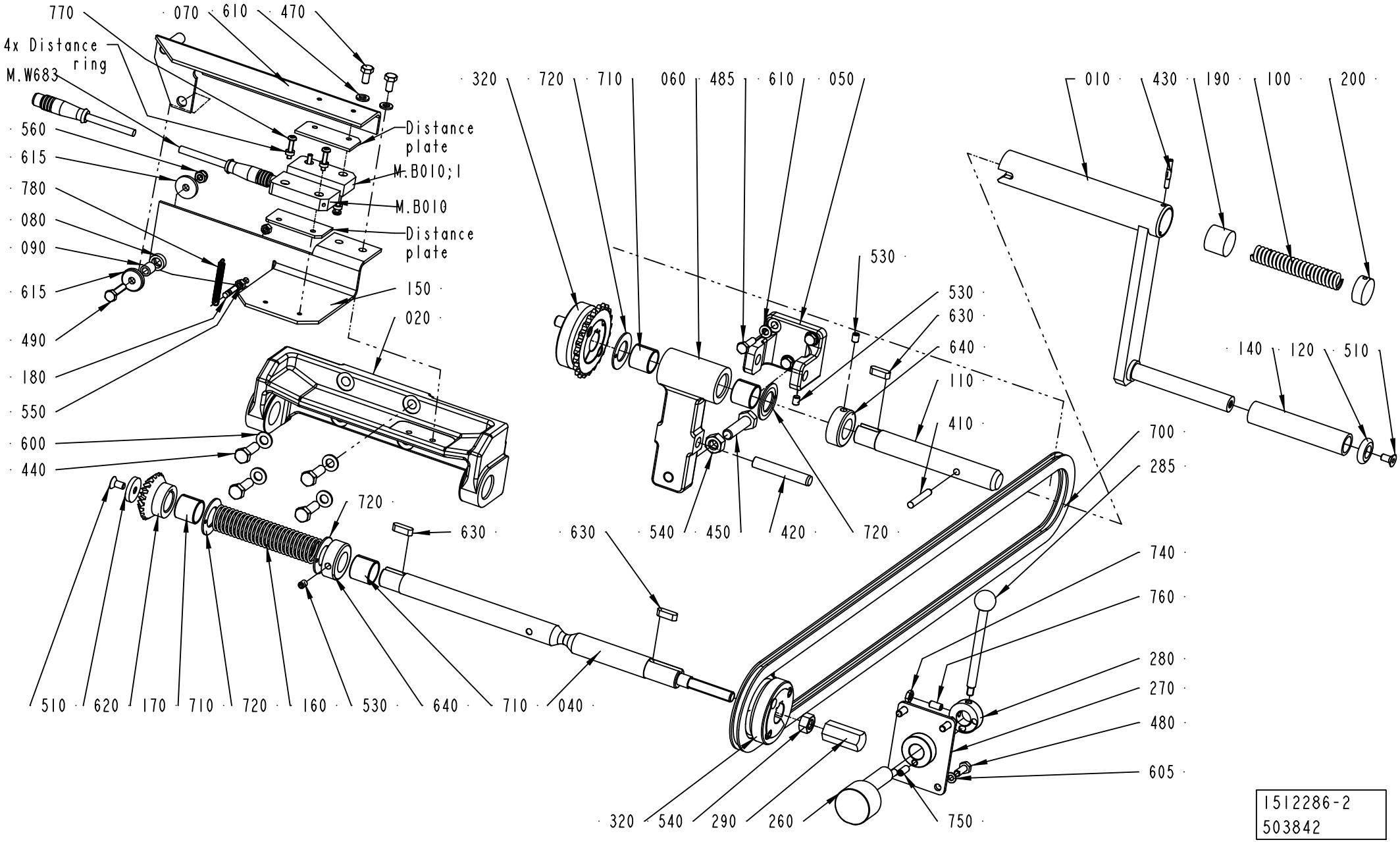

1512286-2
503842

ECM: 506292 - 20110609
Group number: 1512286-0200
Assembly Drawing: 1512286-2_1_AC

Pos	Part No	UN	Qty	Description	Page No
-					
010	257326-0000		1	CRANK	
020	272664-0000		1	CANTILEVER	
040	1517984-0000		1	SHAFT	
050	272736-0000		1	CANTILEVER	
060	272737-0000		1	BRACKET	
070	3019242-0000		1	ARM	
080	3019244-0000		1	DISTANCE	
090	3019245-0000		1	SLEEVE	
100	12228-0000		1	COMPRESSION SPRING	
110	256812-0000		1	SHAFT	
120	256814-0000		1	WASHER	
140	256816-0000		1	PIPE	
150	3019243-0000		1	BRACKET	
160	256828-0000		1	SPRING	
170	257179-0000		1	GEAR WHEEL	
180	3019234-0000		1	PIN	
190	257327-0000		1	SLIDER	
200	257328-0000		1	END PIECE	
260	1512355-0000		1	ECCENTRIC SHAFT	
270	1512354-0000		1	BRACKET	
280	1517985-0000		1	SETTING RING	
285	90458-1590		1	KNOB WITH SHAFT, M6	
290	1517986-0000		1	SCREW BUSHING	
320	90344-0022		2	SPROCKET	
410	311103-0361		1	PARALLEL PIN ISO 2338 6M6X40 A1	
420	311103-0470		1	PARALLEL PIN ISO 2338 10M6X60 A1	
430	311307-0275		1	SLOTTED PIN RPD4X28FZB	
440	312105-0453		4	SCREW, M6S ISO 4017 M8X25 A4 80	
450	312104-0499		1	SCREW M6S M10X40H FZB	
470	312105-0366		2	SCREW, M6S ISO 4017 M6X12 A4 80	
480	312105-0368		5	SCREW, M6S ISO 4017 M6X16 A4 80	
485	312105-0370		3	SCREW, M6S ISO 4017 M6X20 A4 80	
490	312105-0372		1	SCREW, M6S ISO 4017 M6X25 A4 80	
510	312155-0366		1	SCREW DIN 7991 MF6S M6X12 A4 70	
530	312318-0362		3	SET SCREW, CUP END ISO4029 M6X8 A4	
535	312605-0312		2	HEXAGON NUT, M6M M4 A280	
540	312605-0320		2	HEXAGON NUT, M6M M10 A280	
550	312605-0314		2	HEXAGON NUT, M6M M5 A280	
560	312812-0316		1	HEXAGON NUT, NY-LOCK M6 A4 80	
600	315105-0165		4	WASHER PLAIN, 8,4X16X1,6 A4 BRB	
605	315105-0146		4	WASHER PLAIN, 5,3X10X1 A4 BRB	
610	315105-0153		5	WASHER PLAIN, 6,4X12X1,5 A4 BRB	
615	315125-0153		2	WASHER HIGH, TBRSB 6,4X22X4 A4	
620	3019246-0000		1	WASHER	
630	315705-0232		3	PARALLEL KEY W. ROUND ENDS, 6X6X20 MM	
640	315742-0116		2	RETAINING RING, 20 SMS 199 RFR	
700	318201-0150		1	ROLLER CHAIN, SIMPLEX 3/8 -150	
710	321141-0260		4	BEARING BUSHING, 20X23X20 MM	
720	321130-0260		4	THRUST WASHER, 20X36X1,5 MM	
740	312625-0316		1	HEXAGON THIN NUT, EN 24035 ML6M M6 A4	
750	90287-0163		1	SCREW SPRINGLOAD. SLOTTED HEAD M6X14	
760	312318-0366		1	SET SCREW, CUP END ISO4029 M6X12 A4	
770	90459-4164		4	SAFETY SCREW, SM4X20	
780	90600-1202		1	TENSION SPRING, 3747, SF-DFR 0,75X6X30	
M.W683	90459-4876		1	FOCUS JUMPER CABLE M12 5P 3M, 20-056-21	
M.B010;1	90458-2794		1	SAFETY SENSOR, EVA 20-046-00	
M.B010	90459-4142		1	SAFETY SENSOR, ADAM M12, 20-051-00	

Machine Type | Group Description | Used-In | Group Number | Page No

DISCONNECTION LINK LEFT

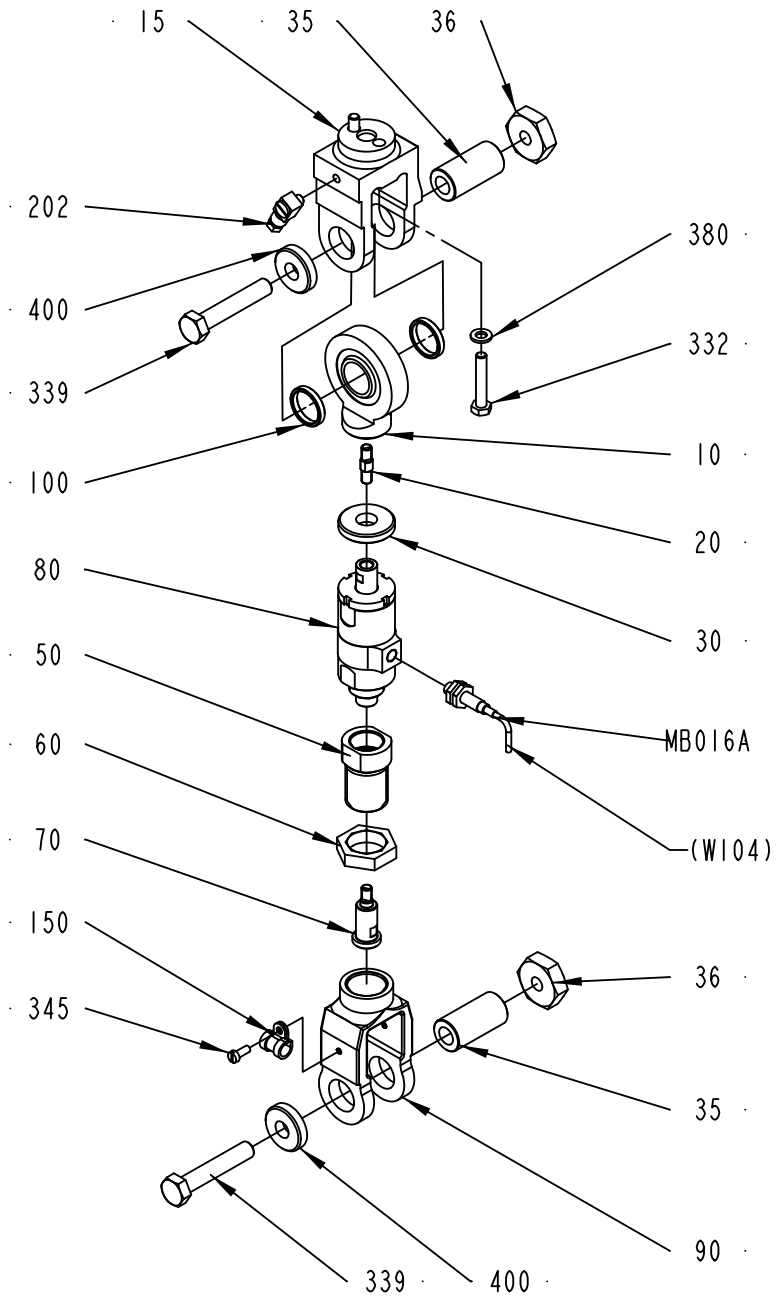

1490120-1
276014

ECM: 305630 - 20070330
Group number: 1490120-0100
Assembly Drawing: 1490120-1_1_AC

Pos	Part No	UN	Qty	Description	Page No
TBA 0100B, TBA 0125S, TBA 0200B, TBA 0284B, TBA 0250B, TBA 0300S, TBA 0330S, TWA 0125S (See drawing on page: 3-32)					
010	1490113-0000		1	LINK HEAD	
050	1490116-0000		1	SPACER	
060	1490117-0000		1	NUT	
070	1490119-0000		1	SHAFT	
090	1490118-0000		1	LINK	
TBA 0160S, TBA 0200M, TBA 0200S, TBA 0250S, TPA 0250SQ, TWA 0200S (See drawing on page: 3-32)					
010	1490113-0000		1	LINK HEAD	
050	1490116-0000		1	SPACER	
060	1490117-0000		1	NUT	
070	1490119-0000		1	SHAFT	
090	1490118-0000		1	LINK	
TPA 0200SQ (See drawing on page: 3-32)					
010	1490113-0000		1	LINK HEAD	
050	1490116-0000		1	SPACER	
060	1490117-0000		1	NUT	
070	1490119-0000		1	SHAFT	
090	1490118-0000		1	LINK	
TPA 0330SQ (See drawing on page: 3-32)					
010	2541112-0000		1	LINK HEAD	
050	2541113-0000		1	SPACER	
060	2541114-0000		1	NUT	
070	2541116-0000		1	SHAFT	
090	2541115-0000		1	LINK	
Common Parts					
015	272472-0000		1	END PIECE	
020	1490114-0000		1	PIN	
030	1498194-0000		1	SPACER	
035	257309-0000		2	SHAFT	
036	257310-0000		2	NUT	
080	1548313-0000		1	FORCE LIMITING DEVICE	
100	1490133-0000		2	SPACER	
150	90165-0065		1	PIPE CLAMP D=8 MM, GSK08/12	
202	90134-0068		1	CONNECTION	
332	312101-0376		2	SCREW M6S M6X35 FZB	
339	312101-0502		2	SCREW M6S M10X55 FZB	
345	312101-0289		1	SCREW M6S M4X10 FZB	
380	315101-0153		2	WASHER PLAIN, BRB, 6,4/12 H=1,5	
400	315121-0173		2	WASHER PLAIN, TBRSB 10,5/28 H=6	
MB016A	90458-0138		1	PROX.SWITCH E2EG-X1R5B1-5M	

Pos	Part No	UN	Qty	Description	Page No

DISCONNECTION LINK RIGHT

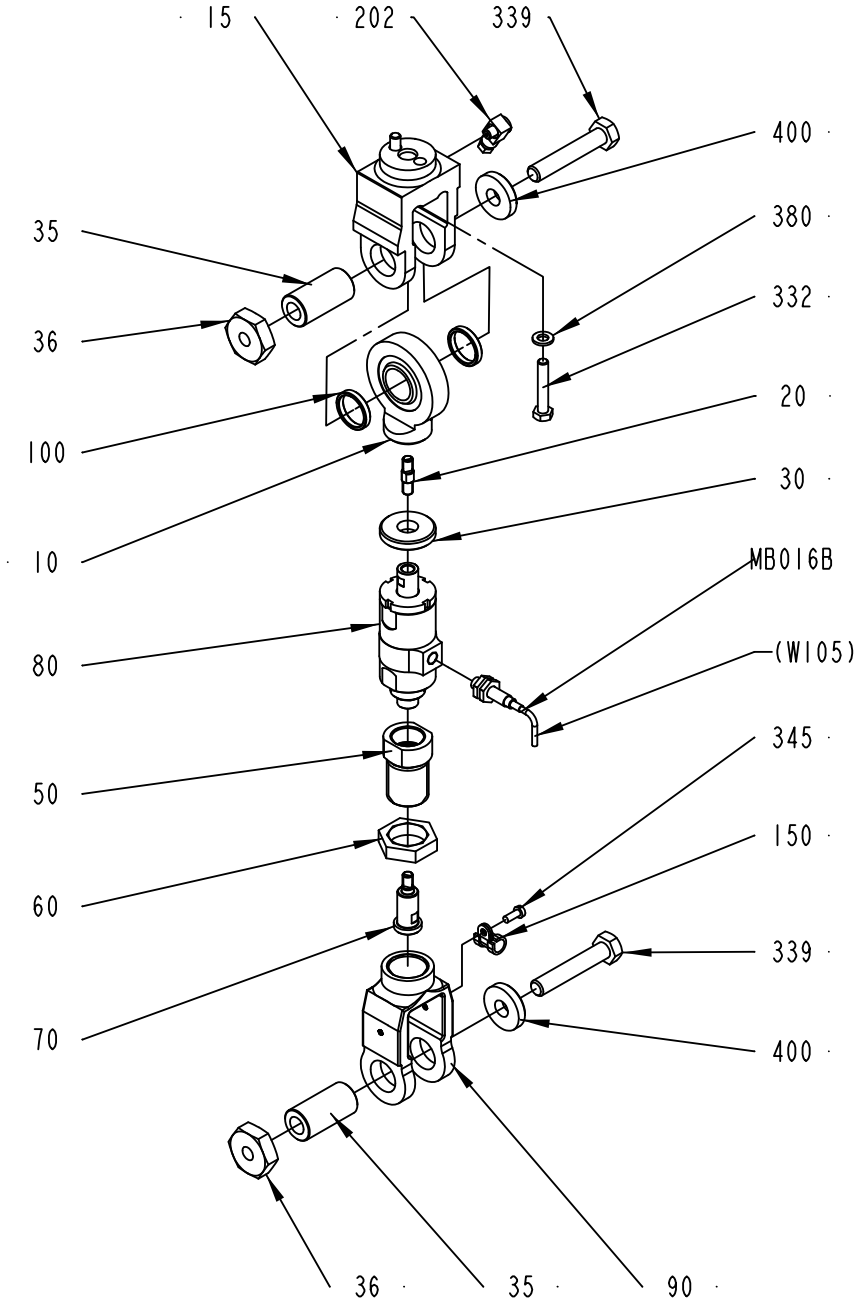

1539766-1
276014

ECM: 305631 - 20070330
Group number: 1539766-0100
Assembly Drawing: 1539766-1_1_AC

Pos	Part No	UN	Qty	Description	Page No
TBA 0100B, TBA 0125S, TBA 0200B, TBA 0284B, TBA 0250B, TBA 0300S, TBA 0330S, TWA 0125S (See drawing on page: 3-34)					
010	1490113-0000		1	LINK HEAD	
050	1490116-0000		1	SPACER	
060	1490117-0000		1	NUT	
070	1490119-0000		1	SHAFT	
090	1490118-0000		1	LINK	
TBA 0160S, TBA 0200M, TBA 0200S, TBA 0250S, TPA 0250SQ, TWA 0200S (See drawing on page: 3-34)					
010	1490113-0000		1	LINK HEAD	
050	1490116-0000		1	SPACER	
060	1490117-0000		1	NUT	
070	1490119-0000		1	SHAFT	
090	1490118-0000		1	LINK	
TPA 0200SQ (See drawing on page: 3-34)					
010	1490113-0000		1	LINK HEAD	
050	1490116-0000		1	SPACER	
060	1490117-0000		1	NUT	
070	1490119-0000		1	SHAFT	
090	1490118-0000		1	LINK	
TPA 0330SQ (See drawing on page: 3-34)					
010	2541112-0000		1	LINK HEAD	
050	2541113-0000		1	SPACER	
060	2541114-0000		1	NUT	
070	2541116-0000		1	SHAFT	
090	2541115-0000		1	LINK	
Common Parts					
015	272472-0000		1	END PIECE	
020	1490114-0000		1	PIN	
030	1498194-0000		1	SPACER	
035	257309-0000		2	SHAFT	
036	257310-0000		2	NUT	
080	1548313-0000		1	FORCE LIMITING DEVICE	
100	1490133-0000		2	SPACER	
150	90165-0065		1	PIPE CLAMP D=8 MM, GSK08/12	
202	90134-0068		1	CONNECTION	
332	312101-0376		2	SCREW M6S M6X35 FZB	
339	312101-0502		2	SCREW M6S M10X55 FZB	
345	312101-0289		1	SCREW M6S M4X10 FZB	
380	315101-0153		2	WASHER PLAIN, BRB, 6,4/12 H=1,5	
400	315121-0173		2	WASHER PLAIN, TBRSB 10,5/28 H=6	
MB016B	90458-0138		1	PROX.SWITCH E2EG-X1R5B1-5M	

Pos	Part No	UN	Qty	Description	Page No

ANGLE ENCODER

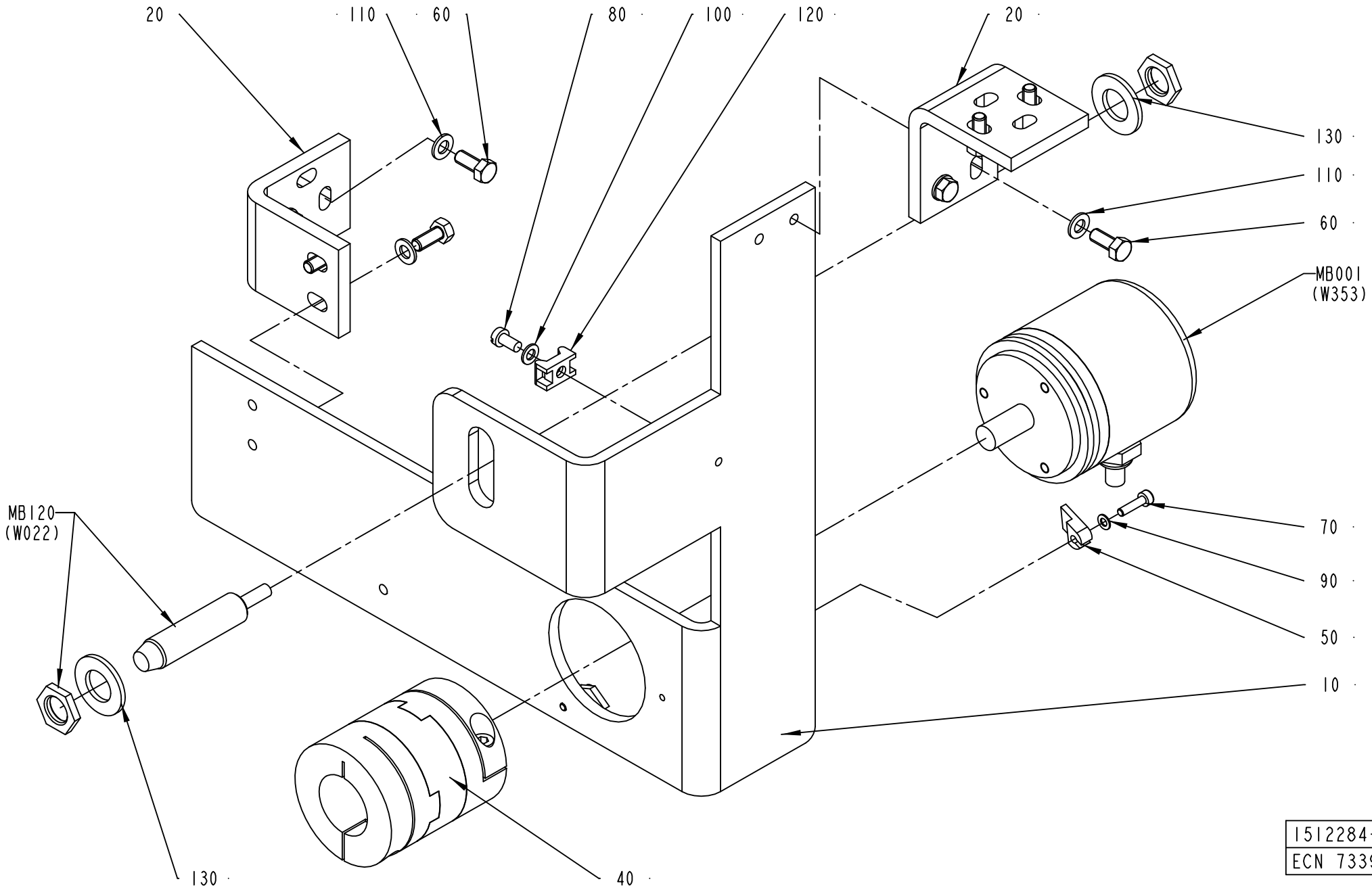

1512284-1
ECN 73395

ECM: 179094 - 20040910
Group number: 1512284-0100
Assembly Drawing: 1512284-1_1_AA

Pos	Part No	UN	Qty	Description	Page No
-					
010	1523151-0000		1	BRACKET	
020	1523152-0000		2	ANGLE ENCODER	
040	90457-0150		1	FLEXIBLE COUPLING, 10X25 MM	
050	90457-0162		1	CLAMPING ELEMENT, 00203005	
060	312105-0327		8	SCREW, M6S ISO 4017 M5X12 A4 80	
070	312115-0226		3	SCREW ISO4762 M3X12 A4 80	
080	312125-0287		2	SLOTTED HEAD SCREW, ISO1207 M4X8 A4	
090	315105-0124		3	WASHER PLAIN, 3,2X6X0,5 A4 BRB	
100	315105-0136		2	WASHER PLAIN, 4,3X9X0,8 A4 BRB	
110	315105-0146		8	WASHER PLAIN, 5,3X10X1 A4 BRB	
120	352113-0205		2	ANCHOR PLATES FOR STRIPS, TM2S8-C100	
130	315105-0178		2	WASHER PLAIN, 13X24X2,5 A4 BRB	
MB120	90044-0124		1	PROX.SWITCH 922AB2XM-A9P-050-LZ-876	
MB001	90061-0027		1	ANGLE ENCODER, 670900035	

Pos	Part No	UN	Qty	Description	Page No

Machine Type	Group Description	Used-In	Group Number	Page No

Tetra Pak

SPC
Spare Parts Catalogue

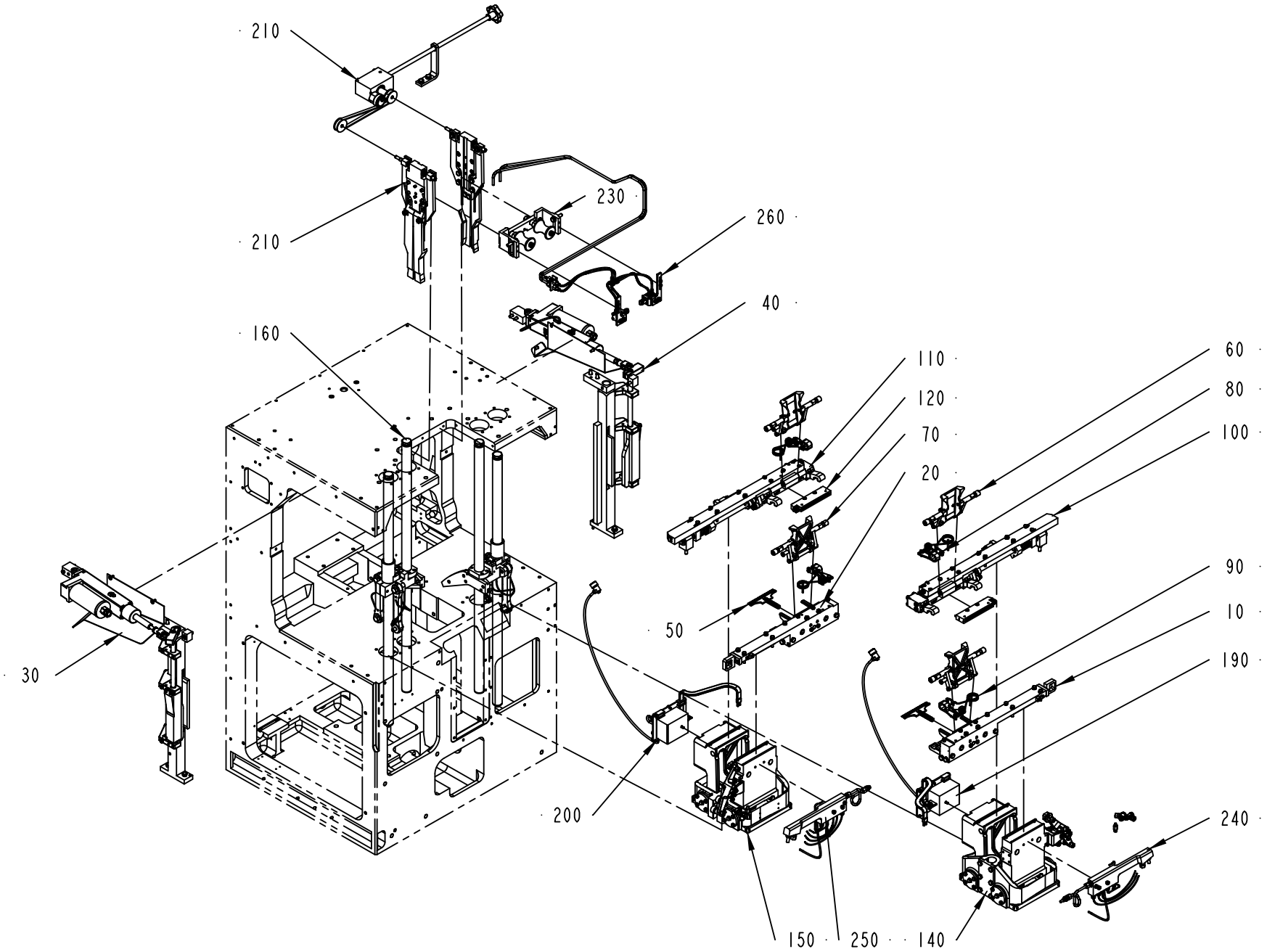

648104-11
ECM 387142

ECM: 469837 - 20100920
Group number: 648104-1300
Assembly Drawing: 648104-11_1_AA

This list covers pages from 4-2 to 4-5

Pos	Part No	UN	Qty	Description	Page No
TBA (See drawing on page: 4-2)					
010	256204-0700		1	CUTTING JAW	**4-7, 4-9, 4-11**
020	256205-0700		1	CUTTING JAW	**4-13, 4-15, 4-17**
060	1519427-0100		2	VOLUME FLAP	**4-19, 4-21, 4-23, 4-25**
070	1549581-0100		2	VOLUME FLAP	**4-27, 4-29, 4-31, 4-33**
100	256212-0600		1	PRESSURE JAW	**4-35, 4-37**
110	256213-0600		1	PRESSURE JAW	**4-39, 4-41**
260	1511069-0200		1	TUBE FOLDING DEVICE	**4-43**
TPA (See drawing on page: 4-4)					
010	929322-0300		1	CUTTING JAW	**4-45**
020	929323-0300		1	CUTTING JAW	**4-47**
060	2810430-0100		2	VOLUME FLAP	**4-49**
070	2810431-0100		2	VOLUME FLAP	**4-51**
100	929324-0200		1	PRESSURE JAW	**4-53**
110	929325-0200		1	PRESSURE JAW	**4-55**
TWA (See drawing on page: 4-2)					
010	256204-0700		1	CUTTING JAW	**4-7, 4-9, 4-11**
020	256205-0700		1	CUTTING JAW	**4-13, 4-15, 4-17**
060	1519427-0100		2	VOLUME FLAP	**4-19, 4-21, 4-23, 4-25**
070	1549581-0100		2	VOLUME FLAP	**4-27, 4-29, 4-31, 4-33**
100	256212-0600		1	PRESSURE JAW	**4-35, 4-37**
110	256213-0600		1	PRESSURE JAW	**4-39, 4-41**
Common Parts					
030	1512305-0100		1	MOTORIZED DESIGN CONTROL SYSTEM, LEFT	**4-57, 4-59**
040	1512306-0100		1	MOTORIZED DESIGN CONTROL SYSTEM, RIGHT	**4-61, 4-63**
050	256208-0400		2	KNIFE HOLDER	**4-65, 4-67, 4-69**
080	752671-0100		2	SHOCK ABSORBER	**4-71, 4-73, 4-75, 4-77**
090	752672-0100		2	SHOCK ABSORBER	**4-79, 4-81, 4-83, 4-85**
120	256214-0400		2	PRESSURE RAIL	**4-87, 4-89, 4-91**
140	256951-0500		1	YOKE RIGHT	**4-93**
150	256952-0500		1	YOKE LEFT	**4-95**
160	256217-0500		1	GUIDE	**4-97, 4-99**
190	572642-0200		1	TRANSFER	**4-101**
200	572643-0200		1	TRANSFER	**4-103**
210	1519117-0100		1	VOLUME ADJUSTER	**4-105**
230	1511403-0100		1	SUPPORT ROLLER	**4-111**
240	257381-0400		1	MANIFOLD RIGHT	**4-113**
250	257382-0400		1	MANIFOLD LEFT	**4-115**

Pos	Part No	UN	Qty	Description	Page No

Machine Type | Group Description | Used-In | Group Number | Page No

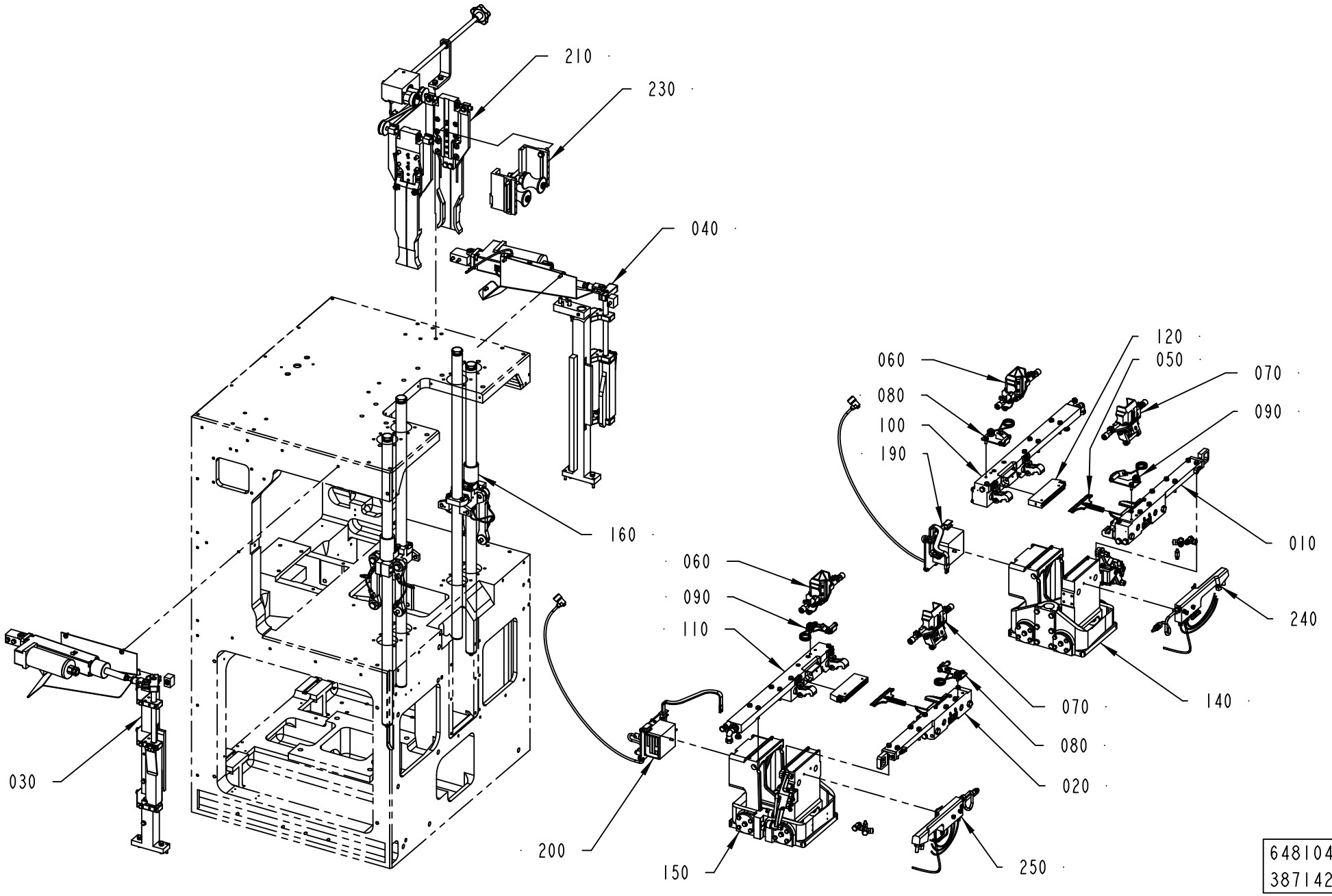
210
230
040
160
030
060
090
110
200
150
250
120
050
070
080
100
190
010
240
140
070
080
020
648104-12
387142

ECM: 469837 - 20100920
Group number: 648104-1300
Assembly Drawing: 648104-12_1_AA

This list covers pages from 4-2 to 4-5

Pos	Part No	UN	Qty	Description	Page No
TBA (See drawing on page: 4-2)					
010	256204-0700		1	CUTTING JAW	**4-7, 4-9, 4-11**
020	256205-0700		1	CUTTING JAW	**4-13, 4-15, 4-17**
060	1519427-0100		2	VOLUME FLAP	**4-19, 4-21, 4-23, 4-25**
070	1549581-0100		2	VOLUME FLAP	**4-27, 4-29, 4-31, 4-33**
100	256212-0600		1	PRESSURE JAW	**4-35, 4-37**
110	256213-0600		1	PRESSURE JAW	**4-39, 4-41**
260	1511069-0200		1	TUBE FOLDING DEVICE	**4-43**
TPA (See drawing on page: 4-4)					
010	929322-0300		1	CUTTING JAW	**4-45**
020	929323-0300		1	CUTTING JAW	**4-47**
060	2810430-0100		2	VOLUME FLAP	**4-49**
070	2810431-0100		2	VOLUME FLAP	**4-51**
100	929324-0200		1	PRESSURE JAW	**4-53**
110	929325-0200		1	PRESSURE JAW	**4-55**
TWA (See drawing on page: 4-2)					
010	256204-0700		1	CUTTING JAW	**4-7, 4-9, 4-11**
020	256205-0700		1	CUTTING JAW	**4-13, 4-15, 4-17**
060	1519427-0100		2	VOLUME FLAP	**4-19, 4-21, 4-23, 4-25**
070	1549581-0100		2	VOLUME FLAP	**4-27, 4-29, 4-31, 4-33**
100	256212-0600		1	PRESSURE JAW	**4-35, 4-37**
110	256213-0600		1	PRESSURE JAW	**4-39, 4-41**
Common Parts					
030	1512305-0100		1	MOTORIZED DESIGN CONTROL SYSTEM, LEFT	**4-57, 4-59**
040	1512306-0100		1	MOTORIZED DESIGN CONTROL SYSTEM, RIGHT	**4-61, 4-63**
050	256208-0400		2	KNIFE HOLDER	**4-65, 4-67, 4-69**
080	752671-0100		2	SHOCK ABSORBER	**4-71, 4-73, 4-75, 4-77**
090	752672-0100		2	SHOCK ABSORBER	**4-79, 4-81, 4-83, 4-85**
120	256214-0400		2	PRESSURE RAIL	**4-87, 4-89, 4-91**
140	256951-0500		1	YOKE RIGHT	**4-93**
150	256952-0500		1	YOKE LEFT	**4-95**
160	256217-0500		1	GUIDE	**4-97, 4-99**
190	572642-0200		1	TRANSFER	**4-101**
200	572643-0200		1	TRANSFER	**4-103**
210	1519117-0100		1	VOLUME ADJUSTER	**4-105**
230	1511403-0100		1	SUPPORT ROLLER	**4-111**
240	257381-0400		1	MANIFOLD RIGHT	**4-113**
250	257382-0400		1	MANIFOLD LEFT	**4-115**

Pos	Part No	UN	Qty	Description	Page No

Machine Type | Group Description | Used-In | Group Number | Page No

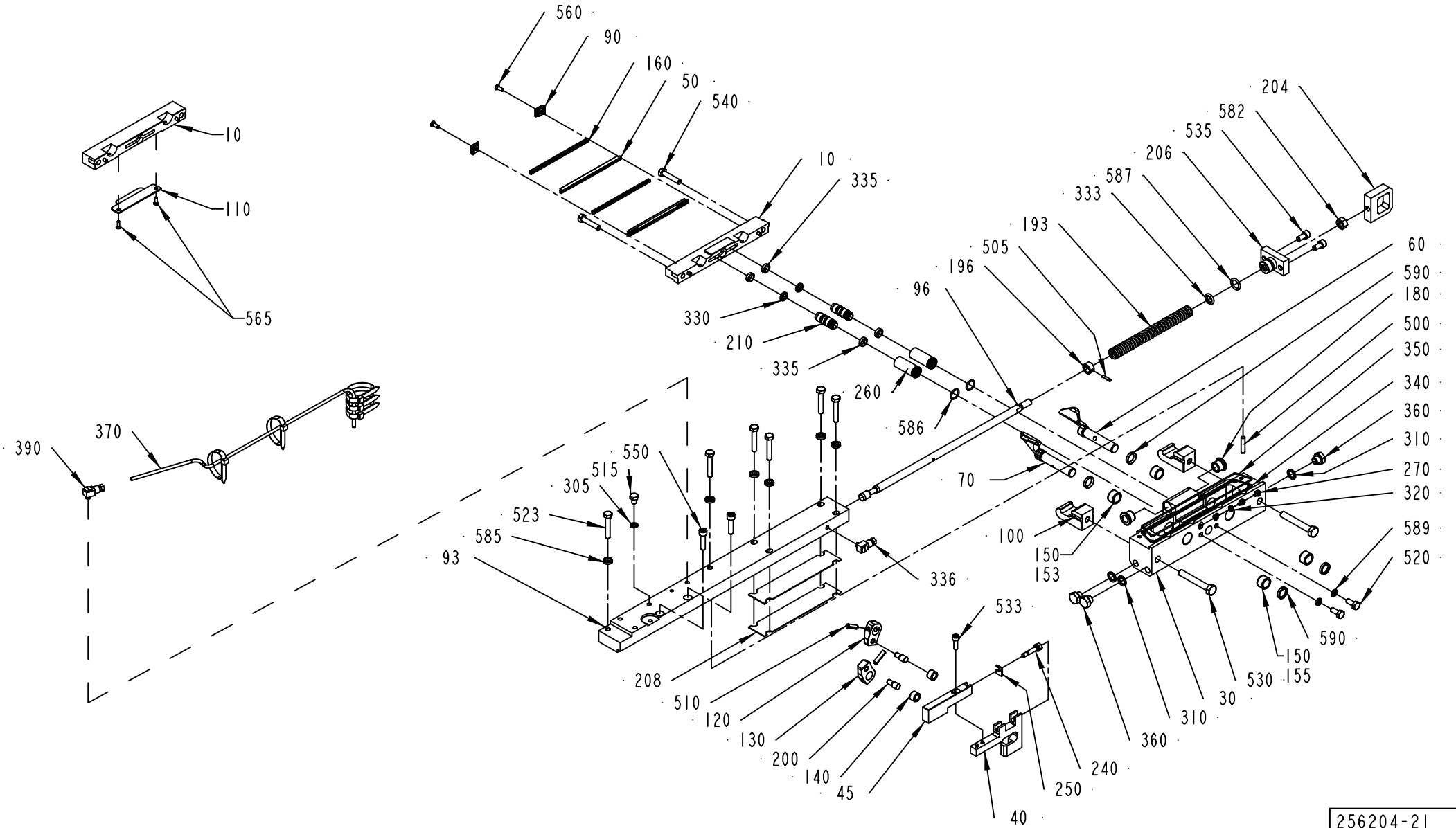

256204-21
ECM 428072

ECM: 431514 - 20091221
Group number: 256204-0700
Assembly Drawing: 256204-21_1_AA

This list covers pages from 4-6 to 4-11

Pos	Part No	UN	Qty	Description	Page No
TBA 0100B					
010	256487-0000		1	CUTTING JAW	
030	1478222-0000		1	BEARING HOUSING	
040	752014-0000		1	RULERPART R	
045	752015-0000		1	RULERPART R	
050	1110829-0000		2	CUTTING RAIL	
060	272420-0000		1	FOLDING FLAP	
070	272421-0000		1	FOLDING FLAP	
090	272427-0000		2	BRACKET	
093	979762-0000		1	CARRIER RIGHT	
100	978745-0000		2	CATCH	
120	2527724-0000		1	CARRIER	
130	2665718-0000		1	CARRIER	
150	33408-0000		4	BEARING	
160	1520577-0001		2	DOLLY	
180	2532544-0000		2	BUSHING	
540	312105-0374		2	SCREW, M6S ISO 4014 M6X30 A4 80	
550	312115-0372		2	SCREW ISO4762 M6X25 A4 80	
560	312145-0289		2	SCREW ISO 2009 MFS M4X10 A4	
585	315115-0153		6	WASHER PLAIN, TBRB 6,4/12 H=3	
TBA 0125S					
010	256487-0000		1	CUTTING JAW	
030	1478222-0000		1	BEARING HOUSING	
040	752014-0000		1	RULERPART R	
045	752015-0000		1	RULERPART R	
050	1110829-0000		2	CUTTING RAIL	
060	2597663-0000		1	FOLDING FLAP	
070	2532539-0000		1	FOLDING FLAP	
090	272427-0000		2	BRACKET	
093	979762-0000		1	CARRIER RIGHT	
100	978745-0000		2	CATCH	
120	2527724-0000		1	CARRIER	
130	2665718-0000		1	CARRIER	
150	33408-0000		4	BEARING	
160	1520577-0001		2	DOLLY	
180	2532544-0000		2	BUSHING	
540	312105-0374		2	SCREW, M6S ISO 4014 M6X30 A4 80	
550	312115-0372		2	SCREW ISO4762 M6X25 A4 80	
560	312145-0289		2	SCREW ISO 2009 MFS M4X10 A4	
585	315115-0153		6	WASHER PLAIN, TBRB 6,4/12 H=3	
TBA 0160S, TBA 0200S					
010	441727-0000		1	CUTTING JAW	
030	1478224-0000		1	BEARING HOUSING	
040	752009-0000		1	RULERPART R	
045	752010-0000		1	RULERPART R	
050	1110820-0000		2	CUTTING RAIL	
060	2532542-0000		1	FOLDING FLAP	
070	2532543-0000		1	FOLDING FLAP	
090	1348053-0000		2	BRACKET	
093	978715-0000		1	CARRIER RIGHT	
100	978745-0000		2	CATCH	
120	272419-0000		1	CARRIER	
130	272419-0000		1	CARRIER	
150	33408-0000		4	BEARING	
160	1110391-0000		2	DOLLY	
180	2532544-0000		2	BUSHING	
540	312115-0370		2	SCREW ISO4762 M6X20 A4 80	
550	312105-0376		2	SCREW, M6S ISO 4014 M6X35 A4 80	
560	312145-0291		2	SCREW ISO 2009 MFS M4X12 A4	
585	315115-0153		8	WASHER PLAIN, TBRB 6,4/12 H=3	
TBA 0300S, TBA 0330S					
010	256769-0000		1	CUTTING JAW	
030	1478223-0000		1	BEARING HOUSING	
040	751575-0000		1	RULERPART R	
045	751577-0000		1	RULERPART R	
050	1110820-0000		2	CUTTING RAIL	
060	272422-0000		1	FOLDING FLAP	
070	272423-0000		1	FOLDING FLAP	
090	1348053-0000		2	BRACKET	
093	978715-0000		1	CARRIER RIGHT	
100	978745-0000		2	CATCH	
120	272419-0000		1	CARRIER	
130	272419-0000		1	CARRIER	
150	33408-0000		4	BEARING	
160	1110391-0000		2	DOLLY	
180	2532544-0000		2	BUSHING	
540	312115-0370		2	SCREW ISO4762 M6X20 A4 80	
550	312105-0376		2	SCREW, M6S ISO 4014 M6X35 A4 80	
560	312145-0291		2	SCREW ISO 2009 MFS M4X12 A4	
585	315115-0153		8	WASHER PLAIN, TBRB 6,4/12 H=3	
TBA 0200B, TBA 0250B					
010	256769-0000		1	CUTTING JAW	
030	1478223-0000		1	BEARING HOUSING	
040	751575-0000		1	RULERPART R	

Machine Type | Group Description | Used-In | Group Number | Page No

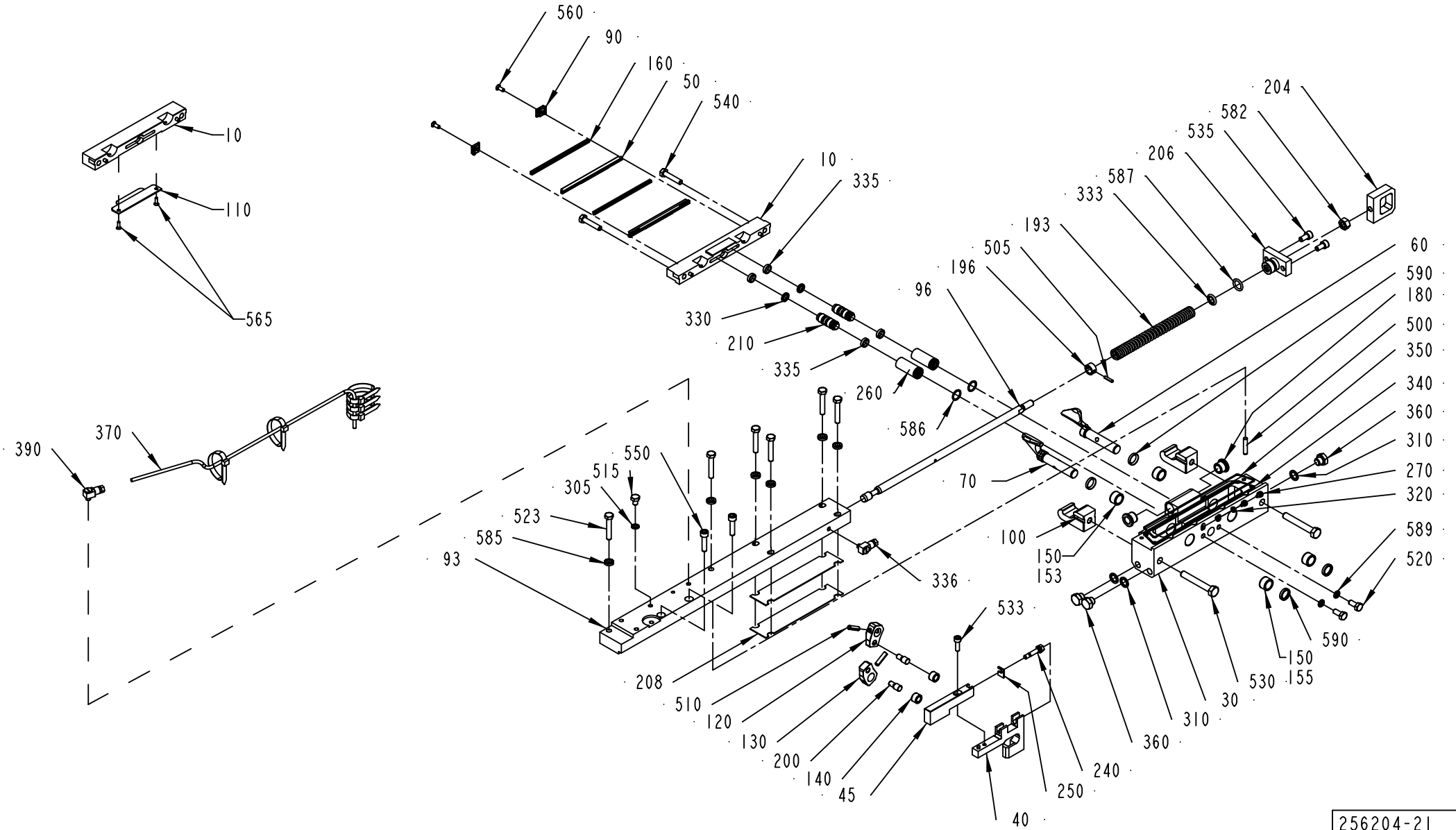

256204-21
ECM 428072

ECM: 431514 - 20091221
Group number: 256204-0700
Assembly Drawing: 256204-21_1_AA

This list covers pages from 4-6 to 4-11

Pos	Part No	UN	Qty	Description	Page No
TBA 0200B, TBA 0250B (Cont'd)					
045	751577-0000		1	RULERPART R	
050	1110820-0000		2	CUTTING RAIL	
060	2532540-0000		1	FOLDING FLAP	
070	2532541-0000		1	FOLDING FLAP	
090	1348053-0000		2	BRACKET	
093	978715-0000		1	CARRIER RIGHT	
100	978745-0000		2	CATCH	
120	272419-0000		1	CARRIER	
130	272419-0000		1	CARRIER	
150	33408-0000		4	BEARING	
160	1110391-0000		2	DOLLY	
180	2532544-0000		2	BUSHING	
540	312115-0370		2	SCREW ISO4762 M6X20 A4 80	
550	312105-0376		2	SCREW, M6S ISO 4014 M6X35 A4 80	
560	312145-0291		2	SCREW ISO 2009 MFS M4X12 A4	
585	315115-0153		8	WASHER PLAIN, TBRB 6,4/12 H=3	
TBA 0200M, TBA 0250S					
010	574386-0000		1	CUTTING JAW	
030	1478225-0000		1	BEARING HOUSING	
040	574369-0000		1	CARRIER RULER RIGHT	
045	574370-0000		1	CARRIER RULER RIGHT	
050	1110820-0000		2	CUTTING RAIL	
060	2532542-0000		1	FOLDING FLAP	
070	2532543-0000		1	FOLDING FLAP	
090	1348053-0000		2	BRACKET	
093	978715-0000		1	CARRIER RIGHT	
100	978745-0000		2	CATCH	
120	272419-0000		1	CARRIER	
130	272419-0000		1	CARRIER	
150	33408-0000		4	BEARING	
160	1110391-0000		2	DOLLY	
180	2532544-0000		2	BUSHING	
540	312115-0370		2	SCREW ISO4762 M6X20 A4 80	
550	312105-0376		2	SCREW, M6S ISO 4014 M6X35 A4 80	
560	312145-0291		2	SCREW ISO 2009 MFS M4X12 A4	
585	315115-0153		8	WASHER PLAIN, TBRB 6,4/12 H=3	
TBA 0200SQ					
010	1548942-0000		1	CUTTING JAW	
030	1519215-0000		1	BEARING HOUSING	
040	1519216-0000		1	CARRIER RULER	
045	751577-0000		1	RULERPART R	
050	1110820-0000		2	CUTTING RAIL	
060	1532440-0000		1	FOLDING FLAP	
070	1532441-0000		1	FOLDING FLAP	
090	1348053-0000		2	BRACKET	
093	1519219-0000		1	CARRIER	
100	1523924-0000		2	CATCH	
110	1538756-0000		1	VOLUME BULGE	
120	272419-0000		1	CARRIER	
130	272419-0000		1	CARRIER	
153	929316-0002		2	BEARING	
155	929316-0001		2	BEARING	
160	1110391-0000		2	DOLLY	
180	1255541-0000		2	BUSHING	
540	312115-0370		2	SCREW ISO4762 M6X20 A4 80	
550	312105-0376		2	SCREW, M6S ISO 4014 M6X35 A4 80	
560	312145-0291		2	SCREW ISO 2009 MFS M4X12 A4	
565	90287-0295		2	SCREW HEX.SOCK.COUNT.MF6S M3X8 A280	
585	315115-0153		8	WASHER PLAIN, TBRB 6,4/12 H=3	
TBA 0284B					
010	256769-0000		1	CUTTING JAW	
030	1478223-0000		1	BEARING HOUSING	
040	751575-0000		1	RULERPART R	
045	751577-0000		1	RULERPART R	
050	1110820-0000		2	CUTTING RAIL	
060	2532540-0000		1	FOLDING FLAP	
070	2532541-0000		1	FOLDING FLAP	
090	1348053-0000		2	BRACKET	
093	978715-0000		1	CARRIER RIGHT	
100	978745-0000		2	CATCH	
120	272419-0000		1	CARRIER	
130	272419-0000		1	CARRIER	
150	33408-0000		4	BEARING	
160	1110391-0000		2	DOLLY	
180	2532544-0000		2	BUSHING	
540	312115-0370		2	SCREW ISO4762 M6X20 A4 80	
550	312105-0376		2	SCREW, M6S ISO 4014 M6X35 A4 80	
560	312145-0291		2	SCREW ISO 2009 MFS M4X12 A4	
585	315115-0153		8	WASHER PLAIN, TBRB 6,4/12 H=3	
TWA 0125S					
010	256487-0000		1	CUTTING JAW	
030	1478222-0000		1	BEARING HOUSING	
040	752014-0000		1	RULERPART R	

Machine Type | Group Description | Used-In | Group Number | Page No

CUTTING JAW

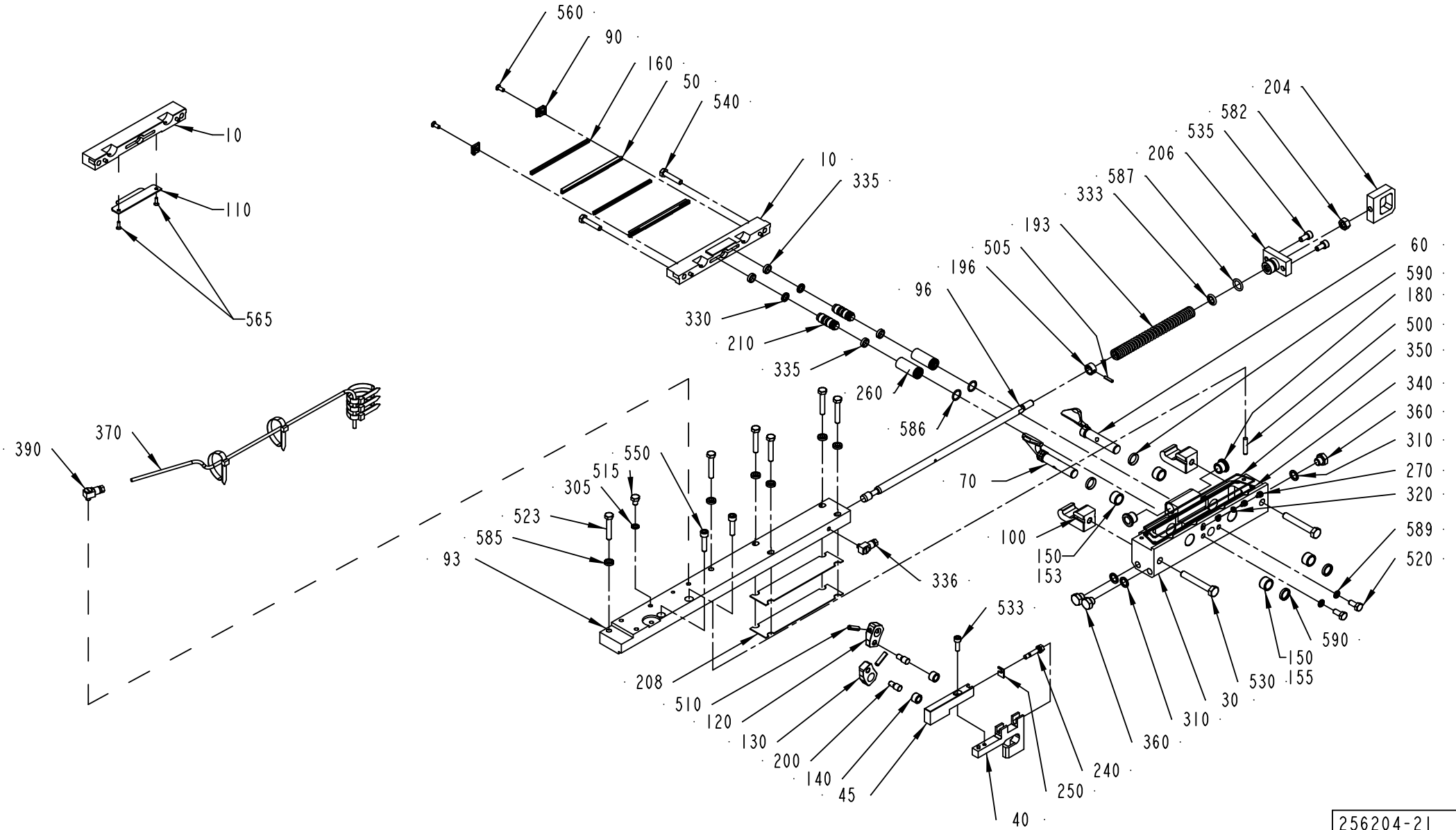

256204-21
ECM 428072

ECM: 431514 - 20091221
Group number: 256204-0700
Assembly Drawing: 256204-21_1_AA

This list covers pages from 4-6 to 4-11

Pos	Part No	UN	Qty	Description	Page No
TWA 0125S (Cont'd)					
045	752015-0000		1	RULERPART R	
050	2987326-0000		2	CUTTING RAIL	
060	597993-0000		1	FOLDING FLAP	
070	597994-0000		1	FOLDING FLAP	
090	272427-0000		2	BRACKET	
093	978715-0000		1	CARRIER RIGHT	
100	978745-0000		2	CATCH	
120	2527724-0000		1	CARRIER	
130	2665718-0000		1	CARRIER	
150	33408-0000		4	BEARING	
160	1566761-0000		2	DOLLY	
180	2532544-0000		2	BUSHING	
540	312105-0374		2	SCREW, M6S ISO 4014 M6X30 A4 80	
550	312105-0376		2	SCREW, M6S ISO 4014 M6X35 A4 80	
560	312145-0289		2	SCREW ISO 2009 MFS M4X10 A4	
585	315115-0153		8	WASHER PLAIN, TBRB 6,4/12 H=3	
TWA 0200S					
010	441727-0000		1	CUTTING JAW	
030	1478224-0000		1	BEARING HOUSING	
040	752009-0000		1	RULERPART R	
045	752010-0000		1	RULERPART R	
050	1566742-0000		2	CUTTING RAIL	
060	591445-0000		1	FOLDING FLAP RIGHT	
070	591446-0000		1	FOLDING FLAP LEFT	
090	1348053-0000		2	BRACKET	
093	978715-0000		1	CARRIER RIGHT	
100	978745-0000		2	CATCH	
120	272419-0000		1	CARRIER	
130	272419-0000		1	CARRIER	
150	33408-0000		4	BEARING	
160	1566802-0000		2	DOLLY	
180	2532544-0000		2	BUSHING	
540	312115-0370		2	SCREW ISO4762 M6X20 A4 80	
550	312105-0376		2	SCREW, M6S ISO 4014 M6X35 A4 80	
560	312145-0291		2	SCREW ISO 2009 MFS M4X12 A4	
585	315115-0153		8	WASHER PLAIN, TBRB 6,4/12 H=3	
Common Parts					
096	256659-0000		1	OPERATING ROD	
140	22463-0000		2	ROLL	
193	255742-0000		1	COMPRESSION SPRING	
196	255801-0000		1	RETAINING RING	
200	256607-0000		2	AXLE PIN	
204	256626-0000		1	EAR	
206	256706-0000		1	BEARING PLATE	
208	257362-0000		2	LACE	
210	752115-0000		2	PLUNGER	
240	751579-0000		1	ADJUSTING SCREW	
250	751580-0000		1	SHIM	
260	752288-0000		2	SLEEVE	
270	752476-0000		2	SCREW	
305	315237-0106		1	WASHER,PL.RND.AL.6/10,H=1	
310	315237-0109		3	WASHER,PL.RND.AL.10/14,H=1,5	
320	315211-0101		2	BONDED SEAL SS/NBR90 M4	
330	90091-0216		2	PISTON SEAL GLYD RING 7,1X12X2,2 MM	
333	90091-0091		1	ROD SEAL 10X14X1,7 MM	
335	90091-0169		4	WEAR RING 12X15X3,2 MM	
336	90134-0058		1	CONNECTION	
340	90153-0015	KG	1	ADHESIVE,LOCTITE IS 496/CYANOLOT 303	
350	90242-0093	MM	450	O-RING MATERIAL 1,5 MM	
360	90330-0066		3	PLUG, G1/8EXT, G1/8	
370	90166-0109	MM	750	TUBE 4 MM PA TRANSP.	
380	352113-0102		5	CABLE TIE, BLACK 188X4,8 MM	
390	90134-0068		1	CONNECTION	
500	311103-0312		1	PARALLEL PIN ISO 2338 5M6X25 A1	
505	311111-0207		1	SPRING PIN ISO 8752 3X14-ST	
510	311111-0308		2	SPRING PIN ISO 8752 5X20-ST	
515	312105-0362		1	SCREW, M6S ISO 4017 M6X8 A4 80	
520	312105-0367		2	SCREW, M6S ISO 4017 M6X14 A4 80	
523	312105-0376		6	SCREW, M6S ISO 4014 M6X35 A4 80	
530	312105-0462		2	SCREW, M6S ISO 4014 M8X55 A4 80	
533	312115-0329		1	SCREW ISO4762 M5X16 A4 80	
535	312115-0366		2	SCREW ISO4762 M6X12 A4 80	
582	312605-0318		1	HEXAGON NUT, M6M M8 A280	
586	315202-0110		2	O-RING 12,1X1,6 MM	
587	315202-0265		1	O-RING 12,3X2,4 MM	
589	315211-0103		2	BONDED SEAL SS/NBR90 M6	
590	90459-5936		4	BEARING SEAL 12X16X3 MM	

Machine Type	Group Description	Used-In	Group Number	Page No

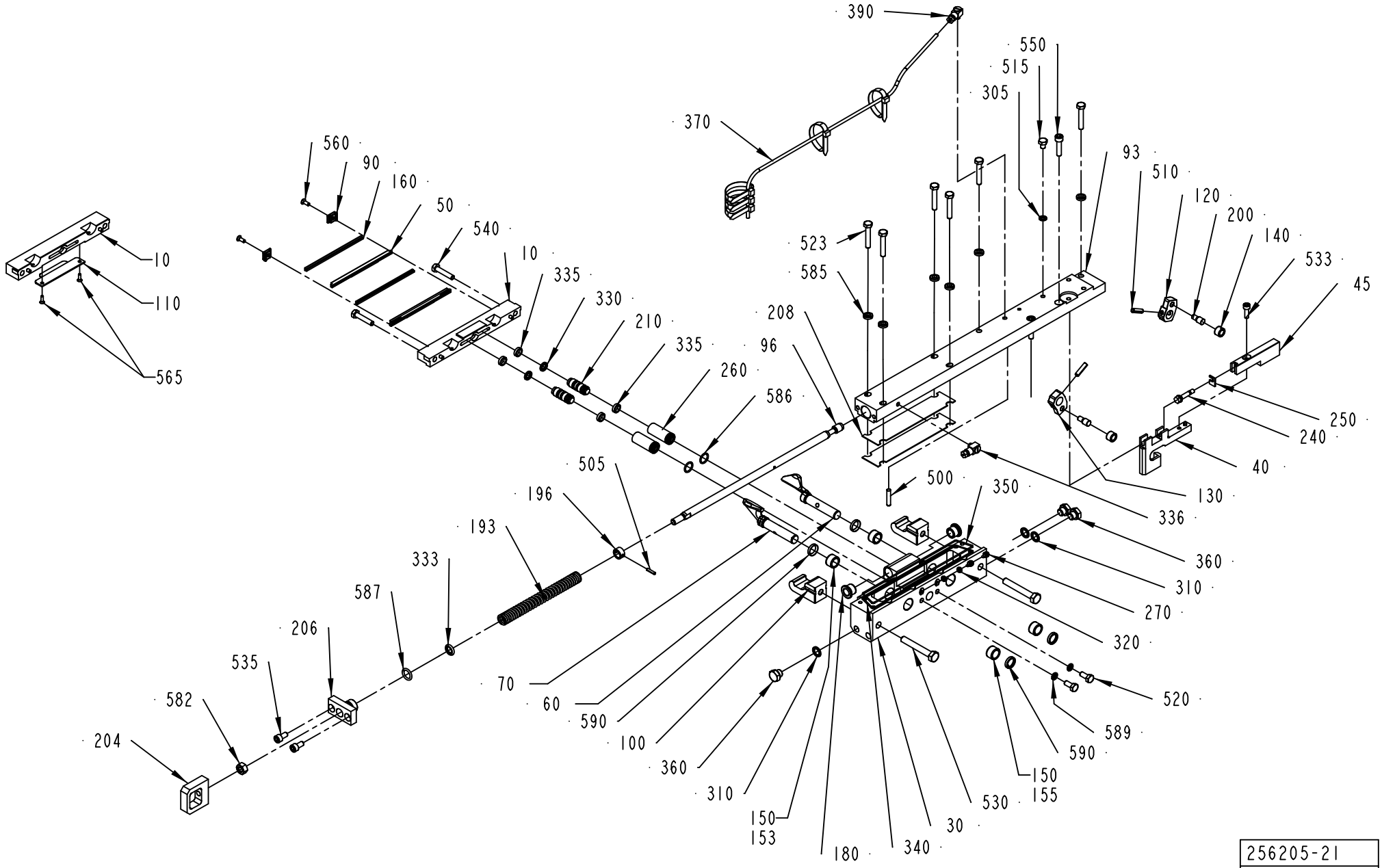

256205-21
ECM 428072

ECM: 431515 - 20091221
Group number: 256205-0700
Assembly Drawing: 256205-21_1_AA

This list covers pages from 4-12 to 4-17

Pos	Part No	UN	Qty	Description	Page No
TBA 0100B					
010	256487-0000		1	CUTTING JAW	
030	1478222-0000		1	BEARING HOUSING	
040	752016-0000		1	RULERPART L	
045	752017-0000		1	RULERPART L	
050	1110829-0000		2	CUTTING RAIL	
060	272420-0000		1	FOLDING FLAP	
070	272421-0000		1	FOLDING FLAP	
090	272427-0000		2	BRACKET	
093	979763-0000		1	CARRIER LEFT	
100	978745-0000		2	CATCH	
120	2527724-0000		1	CARRIER	
130	2665718-0000		1	CARRIER	
150	33408-0000		4	BEARING	
160	1520577-0001		2	DOLLY	
180	2532544-0000		2	BUSHING	
540	312105-0374		2	SCREW, M6S ISO 4014 M6X30 A4 80	
550	312115-0372		2	SCREW ISO4762 M6X25 A4 80	
560	312145-0289		2	SCREW ISO 2009 MFS M4X10 A4	
585	315115-0153		6	WASHER PLAIN, TBRB 6,4/12 H=3	
TBA 0125S					
010	256487-0000		1	CUTTING JAW	
030	1478222-0000		1	BEARING HOUSING	
040	752016-0000		1	RULERPART L	
045	752017-0000		1	RULERPART L	
050	1110829-0000		2	CUTTING RAIL	
060	2597663-0000		1	FOLDING FLAP	
070	2532539-0000		1	FOLDING FLAP	
090	272427-0000		2	BRACKET	
093	979763-0000		1	CARRIER LEFT	
100	978745-0000		2	CATCH	
120	2527724-0000		1	CARRIER	
130	2665718-0000		1	CARRIER	
150	33408-0000		4	BEARING	
160	1520577-0001		2	DOLLY	
180	2532544-0000		2	BUSHING	
540	312105-0374		2	SCREW, M6S ISO 4014 M6X30 A4 80	
550	312115-0372		2	SCREW ISO4762 M6X25 A4 80	
560	312145-0289		2	SCREW ISO 2009 MFS M4X10 A4	
585	315115-0153		6	WASHER PLAIN, TBRB 6,4/12 H=3	
TBA 0160S, TBA 0200S					
010	441727-0000		1	CUTTING JAW	
030	1478224-0000		1	BEARING HOUSING	
040	752011-0000		1	RULERPART L	
045	752012-0000		1	RULERPART L	
050	1110820-0000		2	CUTTING RAIL	
060	2532542-0000		1	FOLDING FLAP	
070	2532543-0000		1	FOLDING FLAP	
090	1348053-0000		2	BRACKET	
093	978714-0000		1	CARRIER LEFT	
100	978745-0000		2	CATCH	
120	272419-0000		1	CARRIER	
130	272419-0000		1	CARRIER	
150	33408-0000		4	BEARING	
160	1110391-0000		2	DOLLY	
180	2532544-0000		2	BUSHING	
540	312115-0370		2	SCREW ISO4762 M6X20 A4 80	
550	312105-0376		2	SCREW, M6S ISO 4014 M6X35 A4 80	
560	312145-0291		2	SCREW ISO 2009 MFS M4X12 A4	
585	315115-0153		8	WASHER PLAIN, TBRB 6,4/12 H=3	
TBA 0300S, TBA 0330S					
010	256769-0000		1	CUTTING JAW	
030	1478223-0000		1	BEARING HOUSING	
040	751576-0000		1	RULERPART L	
045	751578-0000		1	RULERPART L	
050	1110820-0000		2	CUTTING RAIL	
060	272422-0000		1	FOLDING FLAP	
070	272423-0000		1	FOLDING FLAP	
090	1348053-0000		2	BRACKET	
093	978714-0000		1	CARRIER LEFT	
100	978745-0000		2	CATCH	
120	272419-0000		1	CARRIER	
130	272419-0000		1	CARRIER	
150	33408-0000		4	BEARING	
160	1110391-0000		2	DOLLY	
180	2532544-0000		2	BUSHING	
540	312115-0370		2	SCREW ISO4762 M6X20 A4 80	
550	312105-0376		2	SCREW, M6S ISO 4014 M6X35 A4 80	
560	312145-0291		2	SCREW ISO 2009 MFS M4X12 A4	
585	315115-0153		8	WASHER PLAIN, TBRB 6,4/12 H=3	
TBA 0200B, TBA 0250B					
010	256769-0000		1	CUTTING JAW	
030	1478223-0000		1	BEARING HOUSING	
040	751576-0000		1	RULERPART L	

Machine Type | Group Description | Used-In | Group Number | Page No

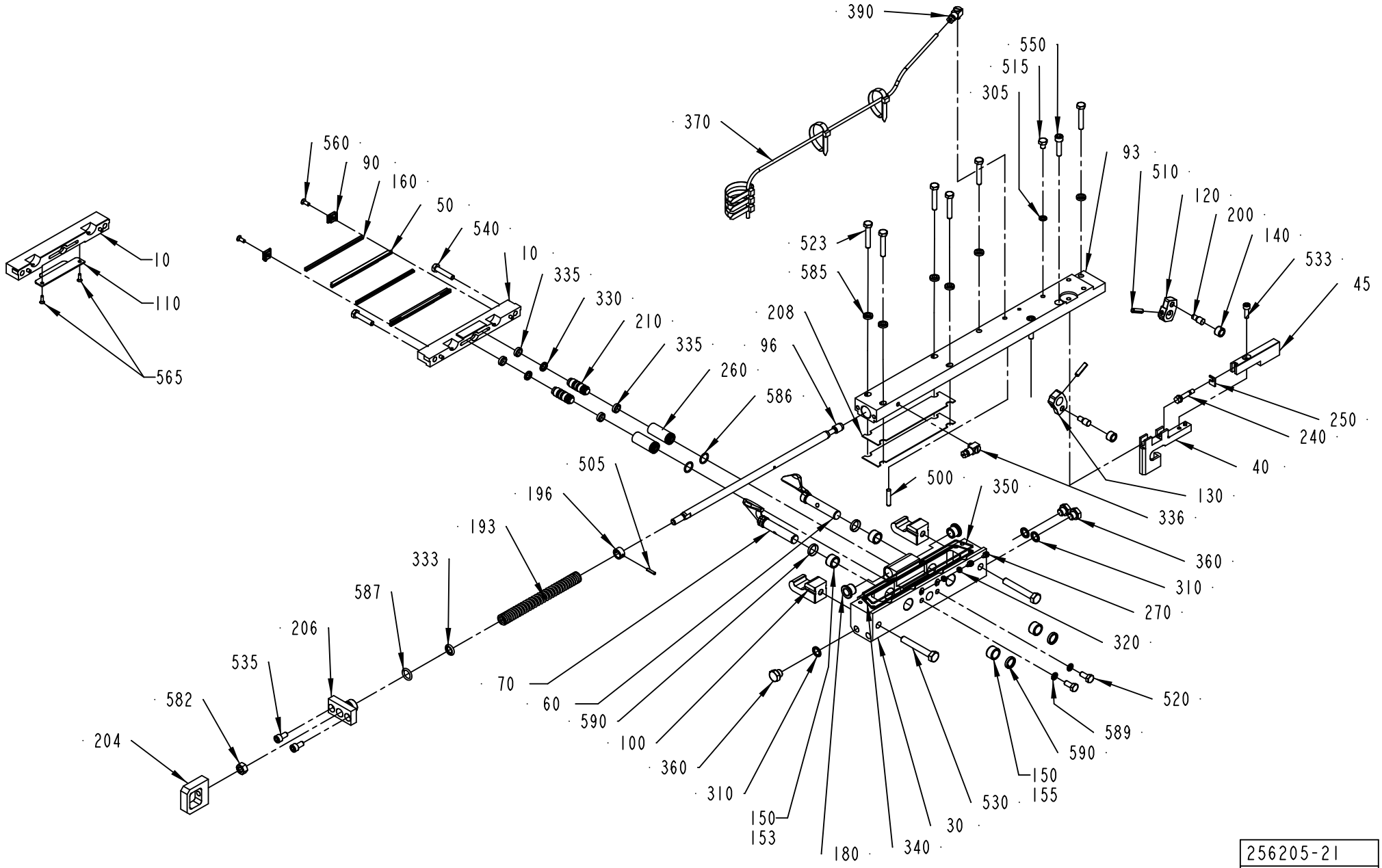

256205-21
ECM 428072

ECM: 431515 - 20091221
Group number: 256205-0700
Assembly Drawing: 256205-21_1_AA

This list covers pages from 4-12 to 4-17

Pos	Part No	UN	Qty	Description	Page No
TBA 0200B, TBA 0250B (Cont'd)					
045	751578-0000		1	RULERPART L	
050	1110820-0000		2	CUTTING RAIL	
060	2532540-0000		1	FOLDING FLAP	
070	2532541-0000		1	FOLDING FLAP	
090	1348053-0000		2	BRACKET	
093	978714-0000		1	CARRIER LEFT	
100	978745-0000		2	CATCH	
120	272419-0000		1	CARRIER	
130	272419-0000		1	CARRIER	
150	33408-0000		4	BEARING	
160	1110391-0000		2	DOLLY	
180	2532544-0000		2	BUSHING	
540	312115-0370		2	SCREW ISO4762 M6X20 A4 80	
550	312105-0376		2	SCREW, M6S ISO 4014 M6X35 A4 80	
560	312145-0291		2	SCREW ISO 2009 MFS M4X12 A4	
585	315115-0153		8	WASHER PLAIN, TBRB 6,4/12 H=3	
TBA 0200M, TBA 0250S					
010	574386-0000		1	CUTTING JAW	
030	1478225-0000		1	BEARING HOUSING	
040	574371-0000		1	CARRIER RULER LEFT	
045	574372-0000		1	CARRIER RULER LEFT	
050	1110820-0000		2	CUTTING RAIL	
060	2532542-0000		1	FOLDING FLAP	
070	2532543-0000		1	FOLDING FLAP	
090	1348053-0000		2	BRACKET	
093	978714-0000		1	CARRIER LEFT	
100	978745-0000		2	CATCH	
120	272419-0000		1	CARRIER	
130	272419-0000		1	CARRIER	
150	33408-0000		4	BEARING	
160	1110391-0000		2	DOLLY	
180	2532544-0000		2	BUSHING	
540	312115-0370		2	SCREW ISO4762 M6X20 A4 80	
550	312105-0376		2	SCREW, M6S ISO 4014 M6X35 A4 80	
560	312145-0291		2	SCREW ISO 2009 MFS M4X12 A4	
585	315115-0153		8	WASHER PLAIN, TBRB 6,4/12 H=3	
TBA 0200SQ					
010	1548942-0000		1	CUTTING JAW	
030	1519215-0000		1	BEARING HOUSING	
040	1519231-0000		1	CARRIER RULER	
045	751578-0000		1	RULERPART L	
050	1110820-0000		2	CUTTING RAIL	
060	1532440-0000		1	FOLDING FLAP	
070	1532441-0000		1	FOLDING FLAP	
090	1348053-0000		2	BRACKET	
093	1519536-0000		1	CARRIER	
100	1523924-0000		2	CATCH	
110	1538756-0000		1	VOLUME BULGE	
120	272419-0000		1	CARRIER	
130	272419-0000		1	CARRIER	
153	929316-0002		2	BEARING	
155	929316-0001		2	BEARING	
160	1110391-0000		2	DOLLY	
180	1255541-0000		2	BUSHING	
540	312115-0370		2	SCREW ISO4762 M6X20 A4 80	
550	312105-0376		2	SCREW, M6S ISO 4014 M6X35 A4 80	
560	312145-0291		2	SCREW ISO 2009 MFS M4X12 A4	
565	90287-0295		2	SCREW HEX.SOCK.COUNT.MF6S M3X8 A280	
585	315115-0153		8	WASHER PLAIN, TBRB 6,4/12 H=3	
TBA 0284B					
010	256769-0000		1	CUTTING JAW	
030	1478223-0000		1	BEARING HOUSING	
040	751576-0000		1	RULERPART L	
045	751578-0000		1	RULERPART L	
050	1110820-0000		2	CUTTING RAIL	
060	2532540-0000		1	FOLDING FLAP	
070	2532541-0000		1	FOLDING FLAP	
090	1348053-0000		2	BRACKET	
093	978714-0000		1	CARRIER LEFT	
100	978745-0000		2	CATCH	
120	272419-0000		1	CARRIER	
130	272419-0000		1	CARRIER	
150	33408-0000		4	BEARING	
160	1110391-0000		2	DOLLY	
180	2532544-0000		2	BUSHING	
540	312115-0370		2	SCREW ISO4762 M6X20 A4 80	
550	312105-0376		2	SCREW, M6S ISO 4014 M6X35 A4 80	
560	312145-0291		2	SCREW ISO 2009 MFS M4X12 A4	
585	315115-0153		8	WASHER PLAIN, TBRB 6,4/12 H=3	
TWA 0125S					
010	256487-0000		1	CUTTING JAW	
030	1478222-0000		1	BEARING HOUSING	
040	752016-0000		1	RULERPART L	

Machine Type | Group Description | Used-In | Group Number | Page No

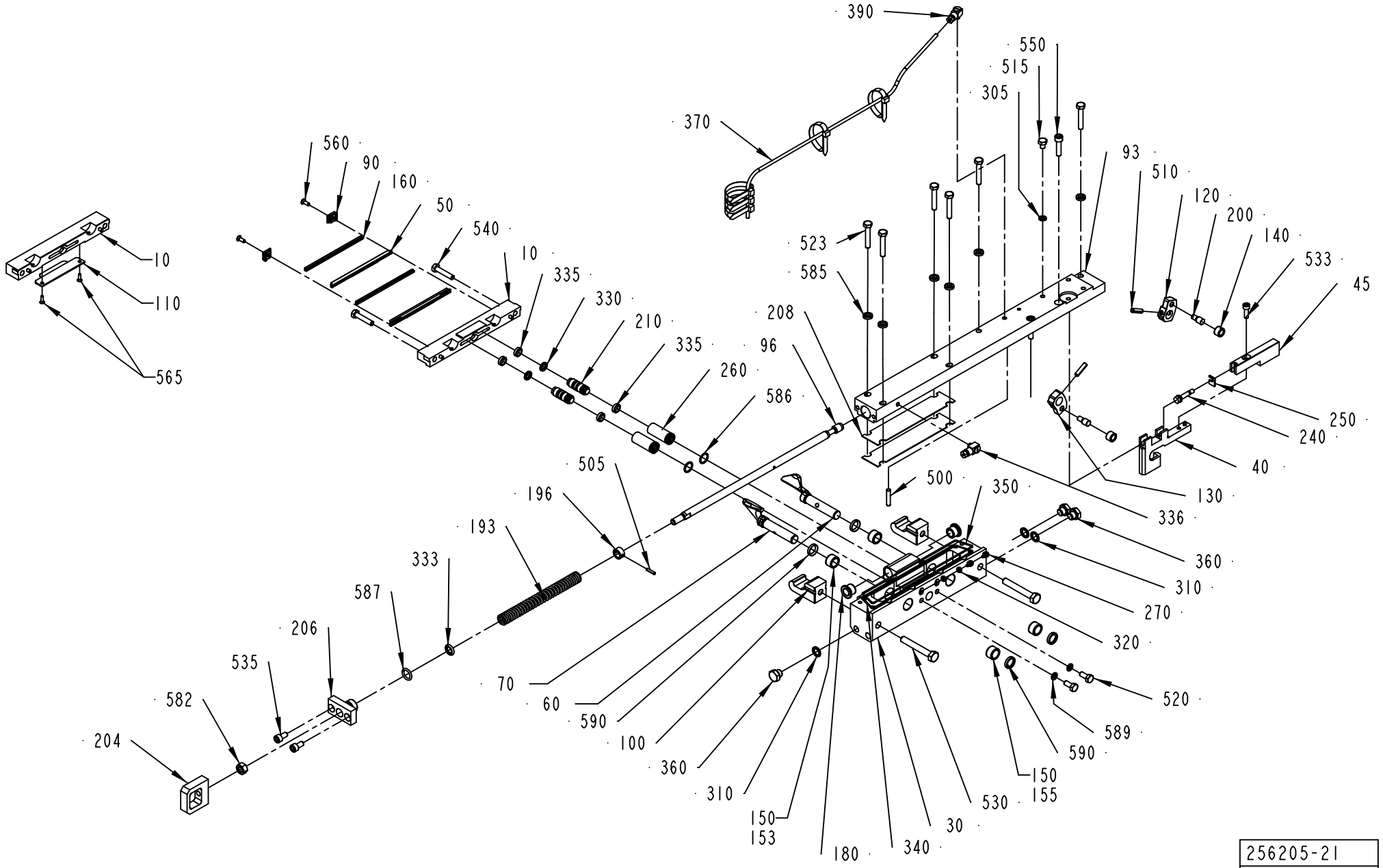

256205-21
ECM 428072

ECM: 431515 - 20091221
Group number: 256205-0700
Assembly Drawing: 256205-21_1_AA

This list covers pages from 4-12 to 4-17

Pos	Part No	UN	Qty	Description	Page No
TWA 0125S (Cont'd)					
045	752017-0000		1	RULERPART L	
050	2987326-0000		2	CUTTING RAIL	
060	597993-0000		1	FOLDING FLAP	
070	597994-0000		1	FOLDING FLAP	
090	272427-0000		2	BRACKET	
093	978714-0000		1	CARRIER LEFT	
100	978745-0000		2	CATCH	
120	2527724-0000		1	CARRIER	
130	2665718-0000		1	CARRIER	
150	33408-0000		4	BEARING	
160	1566761-0000		2	DOLLY	
180	2532544-0000		2	BUSHING	
540	312105-0374		2	SCREW, M6S ISO 4014 M6X30 A4 80	
550	312105-0376		2	SCREW, M6S ISO 4014 M6X35 A4 80	
560	312145-0289		2	SCREW ISO 2009 MFS M4X10 A4	
585	315115-0153		8	WASHER PLAIN, TBRB 6,4/12 H=3	
TWA 0200S					
010	441727-0000		1	CUTTING JAW	
030	1478224-0000		1	BEARING HOUSING	
040	752011-0000		1	RULERPART L	
045	752012-0000		1	RULERPART L	
050	1566742-0000		2	CUTTING RAIL	
060	591445-0000		1	FOLDING FLAP RIGHT	
070	591446-0000		1	FOLDING FLAP LEFT	
090	1348053-0000		2	BRACKET	
093	978714-0000		1	CARRIER LEFT	
100	978745-0000		2	CATCH	
120	272419-0000		1	CARRIER	
130	272419-0000		1	CARRIER	
150	33408-0000		4	BEARING	
160	1566802-0000		2	DOLLY	
180	2532544-0000		2	BUSHING	
540	312115-0370		2	SCREW ISO4762 M6X20 A4 80	
550	312105-0376		2	SCREW, M6S ISO 4014 M6X35 A4 80	
560	312145-0291		2	SCREW ISO 2009 MFS M4X12 A4	
585	315115-0153		8	WASHER PLAIN, TBRB 6,4/12 H=3	
Common Parts					
096	256659-0000		1	OPERATING ROD	
140	22463-0000		2	ROLL	
193	255742-0000		1	COMPRESSION SPRING	
196	255801-0000		1	RETAINING RING	
200	256607-0000		2	AXLE PIN	
204	256626-0000		1	EAR	
206	256706-0000		1	BEARING PLATE	
208	257362-0000		2	LACE	
210	752115-0000		2	PLUNGER	
240	751579-0000		1	ADJUSTING SCREW	
250	751580-0000		1	SHIM	
260	752288-0000		2	SLEEVE	
270	752476-0000		2	SCREW	
305	315237-0106		1	WASHER,PL.RND.AL.6/10,H=1	
310	315237-0109		3	WASHER,PL.RND.AL.10/14,H=1,5	
320	315211-0101		2	BONDED SEAL SS/NBR90 M4	
330	90091-0216		2	PISTON SEAL GLYD RING 7,1X12X2,2 MM	
333	90091-0091		1	ROD SEAL 10X14X1,7 MM	
335	90091-0169		4	WEAR RING 12X15X3,2 MM	
336	90134-0058		1	CONNECTION	
340	90153-0015	KG	1	ADHESIVE,LOCTITE IS 496/CYANOLOT 303	
350	90242-0093	MM	450	O-RING MATERIAL 1,5 MM	
360	90330-0066		3	PLUG, G1/8EXT, G1/8	
370	90166-0109	MM	750	TUBE 4 MM PA TRANSP.	
380	352113-0102		5	CABLE TIE, BLACK 188X4,8 MM	
390	90134-0068		1	CONNECTION	
500	311103-0312		1	PARALLEL PIN ISO 2338 5M6X25 A1	
505	311111-0207		1	SPRING PIN ISO 8752 3X14-ST	
510	311111-0308		2	SPRING PIN ISO 8752 5X20-ST	
515	312105-0362		1	SCREW, M6S ISO 4017 M6X8 A4 80	
520	312105-0367		2	SCREW, M6S ISO 4017 M6X14 A4 80	
523	312105-0376		6	SCREW, M6S ISO 4014 M6X35 A4 80	
530	312105-0462		2	SCREW, M6S ISO 4014 M8X55 A4 80	
533	312115-0329		1	SCREW ISO4762 M5X16 A4 80	
535	312115-0366		2	SCREW ISO4762 M6X12 A4 80	
582	312605-0318		1	HEXAGON NUT, M6M M8 A280	
586	315202-0110		2	O-RING 12,1X1,6 MM	
587	315202-0265		1	O-RING 12,3X2,4 MM	
589	315211-0103		2	BONDED SEAL SS/NBR90 M6	
590	90459-5936		4	BEARING SEAL 12X16X3 MM	

Machine Type	Group Description	Used-In	Group Number	Page No

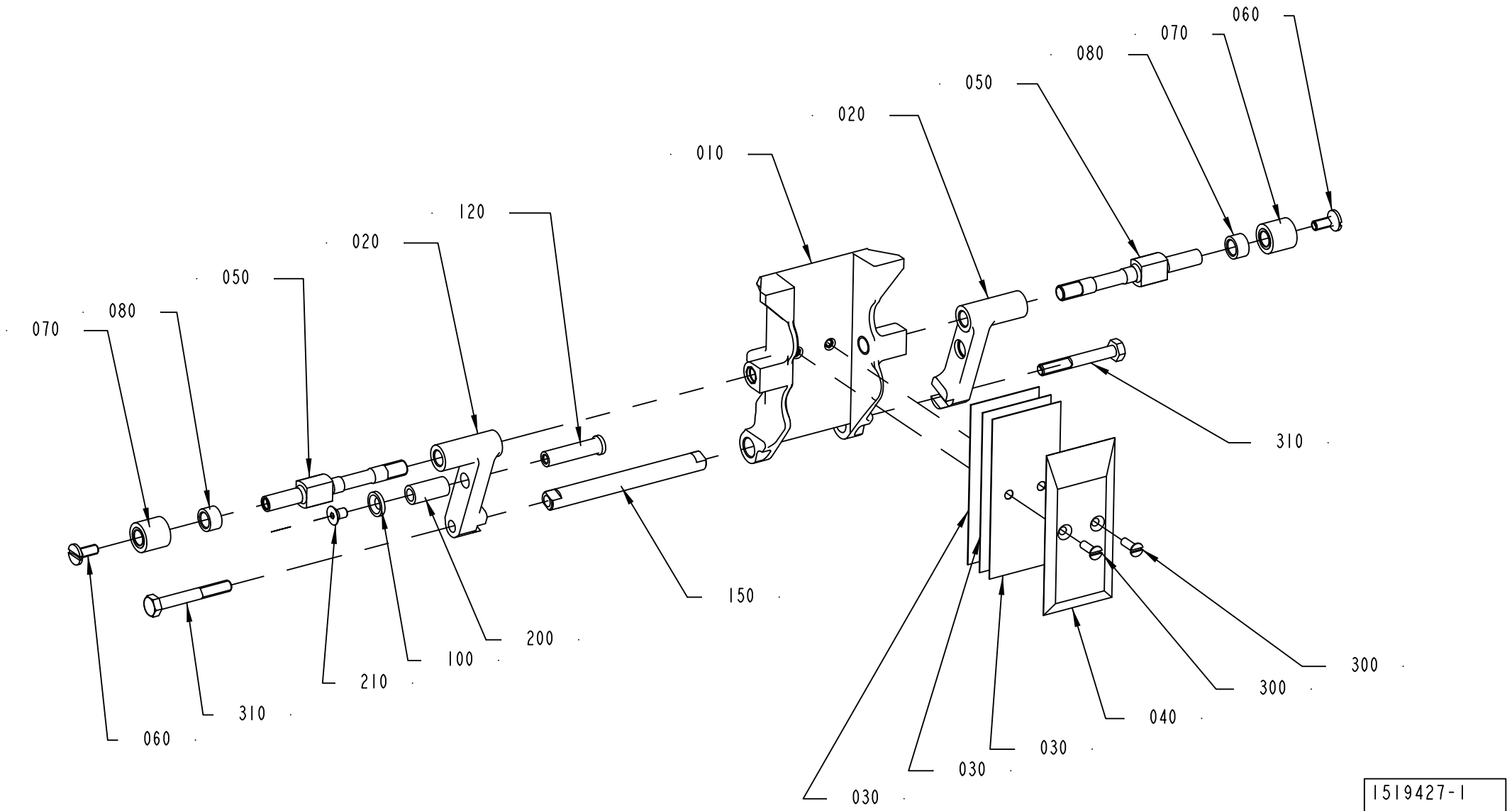
060
070
080
050
020
010
120
310
070
080
050
020
120
150
200
100
210
310
060
030
030
030
040
300
300
300
1519427-1
332989

ECM: 422689 - 20091125
Group number: 1519427-0100
Assembly Drawing: 1519427-1_1_AB

This list covers pages from 4-18 to 4-25

Pos	Part No	UN	Qty	Description	Page No
TBA 0100B (See drawing on page: 4-20)					
010	979751-0000		1	VOLUME FLAP 100	
020	1538942-0000		2	CARRIER	
030	979754-0000		3	VOLUME SHIM 100	
040	979755-0000		1	VOLUME BULGE 100	
050	979756-0000		2	SHAFT	
080	979757-0000		2	SPACER	
150	1519375-0001		1	SHAFT	
310	312105-0379		2	SCREW, M6S ISO 4014 M6X45 A4 80	
TBA 0125S (See drawing on page: 4-18)					
010	256849-0000		1	VOLUMEFLAP 125 ML	
020	1519374-0001		2	CARRIER	
030	272987-0000		3	VOLUME SHIM	
040	491868-0000		1	VOLUME BULGE	
050	752598-0000		2	SHAFT	
080	752615-0000		2	SPACER	
100	1519377-0000		1	WASHER	
120	1519376-0000		1	AXLE PIN	
150	1519375-0001		1	SHAFT	
210	312155-0323		1	SCREW DIN 7991 MF6S M5X8 A4 70	
310	312105-0379		2	SCREW, M6S ISO 4014 M6X45 A4 80	
TBA 0160S (See drawing on page: 4-18)					
010	577211-0000		1	VOLUMEFLAP 160 ML	
020	1519374-0001		2	CARRIER	
030	577212-0000		3	VOLUME SHIM	
040	577213-0000		1	VOLUME BULGE 160 ML	
050	752598-0000		2	SHAFT	
080	752615-0000		2	SPACER	
100	1519377-0000		1	WASHER	
120	1519376-0000		1	AXLE PIN	
150	1519375-0001		1	SHAFT	
210	312155-0323		1	SCREW DIN 7991 MF6S M5X8 A4 70	
310	312105-0379		2	SCREW, M6S ISO 4014 M6X45 A4 80	
TBA 0200B (See drawing on page: 4-18)					
010	752212-0000		1	VOLUME FLAP 200 ML	
020	1519374-0001		2	CARRIER	
030	272986-0003		3	VOLUME SHIM	
040	456005-0003		1	VOLUME BULGE	
050	752598-0000		2	SHAFT	
080	752615-0000		2	SPACER	
100	1519377-0000		1	WASHER	
120	1519376-0000		1	AXLE PIN	
150	1519375-0001		1	SHAFT	
210	312155-0323		1	SCREW DIN 7991 MF6S M5X8 A4 70	
310	312105-0379		2	SCREW, M6S ISO 4014 M6X45 A4 80	
TBA 0200M (See drawing on page: 4-18)					
010	979859-0000		1	VOLUME FLAP	
020	1519374-0001		2	CARRIER	
030	979861-0000		3	VOLUME SHIM	
040	979860-0000		1	VOLUME BULGE	
050	752598-0000		2	SHAFT	
080	752615-0000		2	SPACER	
100	1519377-0000		1	WASHER	
120	1519376-0000		1	AXLE PIN	
150	1519375-0001		1	SHAFT	
210	312155-0323		1	SCREW DIN 7991 MF6S M5X8 A4 70	
310	312105-0379		2	SCREW, M6S ISO 4014 M6X45 A4 80	
TBA 0200S (See drawing on page: 4-18)					
010	752999-0000		1	VOLUME FLAP 200S	
020	1519374-0001		2	CARRIER	
030	272991-0000		3	VOLUME SHIM	
040	272990-0000		1	VOLUME BULGE	
050	752598-0000		2	SHAFT	
080	752615-0000		2	SPACER	
100	1519377-0000		1	WASHER	
120	1519376-0000		1	AXLE PIN	
150	1519375-0001		1	SHAFT	
210	312155-0323		1	SCREW DIN 7991 MF6S M5X8 A4 70	
310	312105-0379		2	SCREW, M6S ISO 4014 M6X45 A4 80	
TBA 0250B (See drawing on page: 4-18)					
010	978366-0000		1	VOLUME FLAP 250 ML	
020	1519374-0001		2	CARRIER	
030	272986-0001		3	VOLUME SHIM	
040	456005-0001		1	VOLUME BULGE	
050	752598-0000		2	SHAFT	
080	752615-0000		2	SPACER	
100	1519377-0000		1	WASHER	
120	1519376-0000		1	AXLE PIN	
150	1519375-0001		1	SHAFT	
210	312155-0323		1	SCREW DIN 7991 MF6S M5X8 A4 70	
310	312105-0379		2	SCREW, M6S ISO 4014 M6X45 A4 80	
TBA 0250S (See drawing on page: 4-18)					
010	574365-0000		1	VOLUMEFLAP 250S	
020	1519374-0001		2	CARRIER	

Machine Type | Group Description | Used-In | Group Number | Page No

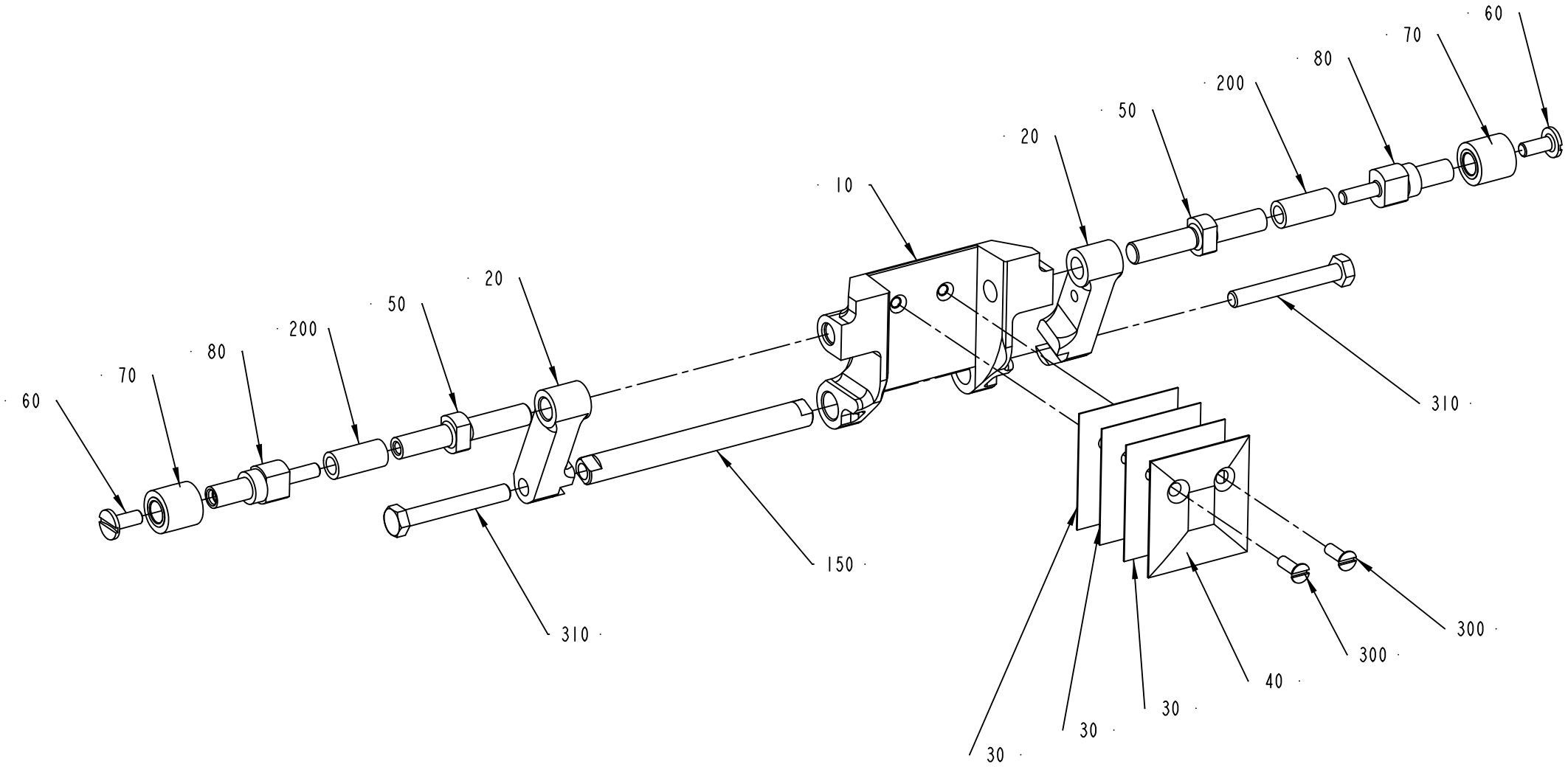

1519427-3
ECN 83326

ECM: 422689 - 20091125
Group number: 1519427-0100
Assembly Drawing: 1519427-3_1_AA

This list covers pages from 4-18 to 4-25

Pos	Part No	UN	Qty	Description	Page No
TBA 0250S (Cont'd) (See drawing on page: 4-18)					
030	574366-0000		3	VOLUME SHIM	
040	574367-0000		1	VOLUME BULGE	
050	752598-0000		2	SHAFT	
080	752615-0000		2	SPACER	
100	1519377-0000		1	WASHER	
120	1519376-0000		1	AXLE PIN	
150	1519375-0001		1	SHAFT	
210	312155-0323		1	SCREW DIN 7991 MF6S M5X8 A4 70	
310	312105-0379		2	SCREW, M6S ISO 4014 M6X45 A4 80	
TBA 0284B (See drawing on page: 4-18)					
010	978031-0000		1	VOLUMEFLAP 284 ML	
020	1519374-0001		2	CARRIER	
030	272986-0005		3	VOLUME SHIM	
040	752739-0000		1	VOLUME BULGE	
050	752598-0000		2	SHAFT	
080	752615-0000		2	SPACER	
100	1519377-0000		1	WASHER	
120	1519376-0000		1	AXLE PIN	
150	1519375-0001		1	SHAFT	
210	312155-0323		1	SCREW DIN 7991 MF6S M5X8 A4 70	
310	312105-0379		2	SCREW, M6S ISO 4014 M6X45 A4 80	
TBA 0300S (See drawing on page: 4-18)					
010	978031-0000		1	VOLUMEFLAP 284 ML	
020	1519374-0001		2	CARRIER	
030	272986-0003		3	VOLUME SHIM	
040	979792-0000		1	VOLUME BULGE	
050	752598-0000		2	SHAFT	
080	752615-0000		2	SPACER	
100	1519377-0000		1	WASHER	
120	1519376-0000		1	AXLE PIN	
150	1519375-0001		1	SHAFT	
210	312155-0323		1	SCREW DIN 7991 MF6S M5X8 A4 70	
310	312105-0379		2	SCREW, M6S ISO 4014 M6X45 A4 80	
TBA 0330S (See drawing on page: 4-18)					
010	582163-0000		1	VOLUME FLAP 330S	
020	1519374-0001		2	CARRIER	
030	272986-0006		3	VOLUME SHIM 330S	
040	979931-0000		1	VOLUME BULGE	
050	752598-0000		2	SHAFT	
080	752615-0000		2	SPACER	
100	1519377-0000		1	WASHER	
120	1519376-0000		1	AXLE PIN	
150	1519375-0001		1	SHAFT	
210	312155-0323		1	SCREW DIN 7991 MF6S M5X8 A4 70	
310	312105-0379		2	SCREW, M6S ISO 4014 M6X45 A4 80	
TWA 0125S NO UNDERFILL (See drawing on page: 4-22)					
010	597987-0000		1	VOLUME FLAP	
020	1519374-0003		1	CARRIER	
030	597989-0000		3	VOLUME SHIM	
040	597988-0000		1	VOLUME BULGE	
050	591438-0000		2	SHAFT	
080	752615-0000		2	SPACER	
095	1360618-0000		1	SPACER SLEEVE	
100	1519377-0000		1	WASHER	
110	2715303-0000		1	ARM	
120	1519376-0000		1	AXLE PIN	
150	1519375-0003		1	SHAFT	
210	312155-0323		1	SCREW DIN 7991 MF6S M5X8 A4 70	
310	312105-0379		1	SCREW, M6S ISO 4014 M6X45 A4 80	
340	312105-0376		1	SCREW, M6S ISO 4014 M6X35 A4 80	
TWA 0125S UNDERFILLED (See drawing on page: 4-24)					
010	597987-0000		1	VOLUME FLAP	
020	1519374-0003		1	CARRIER	
030	2987305-0000		3	VOLUME SHIM	
040	2987303-0000		1	VOLUME BULGE	
050	591438-0000		2	SHAFT	
080	752615-0000		2	SPACER	
095	1360618-0000		1	SPACER SLEEVE	
100	1519377-0000		1	WASHER	
110	2715303-0000		1	ARM	
120	1519376-0000		1	AXLE PIN	
150	1519375-0003		1	SHAFT	
210	312155-0323		1	SCREW DIN 7991 MF6S M5X8 A4 70	
310	312105-0379		1	SCREW, M6S ISO 4014 M6X45 A4 80	
340	312105-0376		1	SCREW, M6S ISO 4014 M6X35 A4 80	
TWA 0200S NO UNDERFILL (See drawing on page: 4-22)					
010	591439-0000		1	VOLUME FLAP	
020	1519374-0003		1	CARRIER	
030	2745192-0000		3	VOLUME SHIM	
040	2745194-0000		1	VOLUME BULGE	
050	591438-0000		2	SHAFT	
080	752615-0000		2	SPACER	
095	1360618-0000		1	SPACER SLEEVE	

Machine Type | Group Description | Used-In | Group Number | Page No

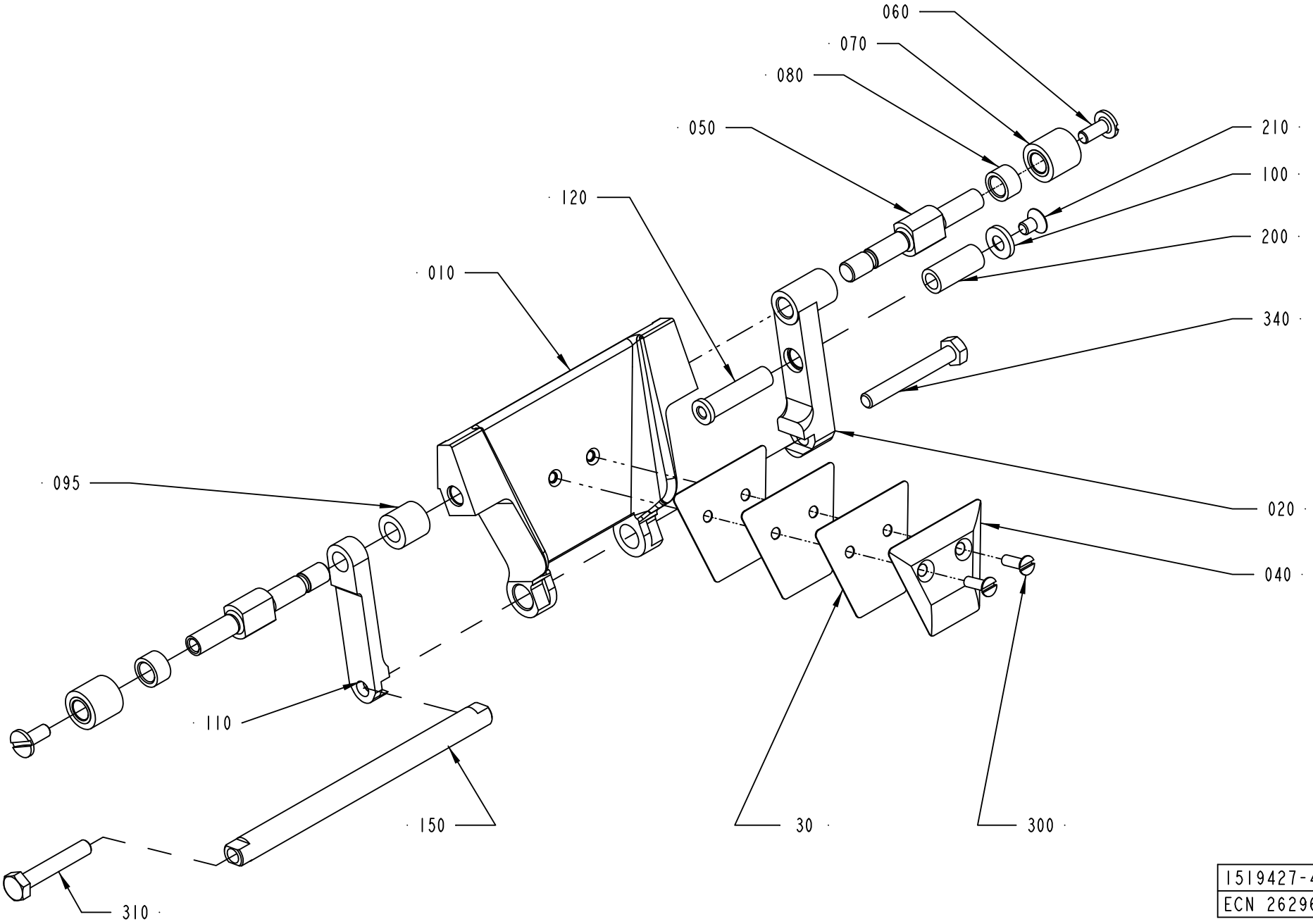

1519427-4
ECN 262966

Pos	Part No	UN	Qty	Description	Page No
TWA 0200S NO UNDERFILL (Cont'd) (See drawing on page: 4-22)					
100	1519377-0000		1	WASHER	
110	2715303-0000		1	ARM	
120	1519376-0000		1	AXLE PIN	
150	1519375-0002		1	SHAFT	
210	312155-0323		1	SCREW DIN 7991 MF6S M5X8 A4 70	
310	312105-0379		1	SCREW, M6S ISO 4014 M6X45 A4 80	
340	312105-0376		1	SCREW, M6S ISO 4014 M6X35 A4 80	
TWA 0200S UNDERFILLED (See drawing on page: 4-22)					
010	591439-0000		1	VOLUME FLAP	
020	1519374-0003		1	CARRIER	
030	2911353-0000		4	VOLUME SHIM	
040	2829701-0000		1	VOLUME BULGE	
050	591438-0000		2	SHAFT	
080	752615-0000		2	SPACER	
095	1360618-0000		1	SPACER SLEEVE	
100	1519377-0000		1	WASHER	
110	2715303-0000		1	ARM	
120	1519376-0000		1	AXLE PIN	
150	1519375-0002		1	SHAFT	
210	312155-0323		1	SCREW DIN 7991 MF6S M5X8 A4 70	
310	312105-0379		1	SCREW, M6S ISO 4014 M6X45 A4 80	
340	312105-0376		1	SCREW, M6S ISO 4014 M6X35 A4 80	
Common Parts					
060	256859-0000		2	SCREW	
070	256860-0000		2	ROLL	
200	90166-0159	MM	25	RUBBER HOSE	
300	312145-0291		2	SCREW ISO 2009 MFS M4X12 A4	

Pos	Part No	UN	Qty	Description	Page No

VOLUME FLAP

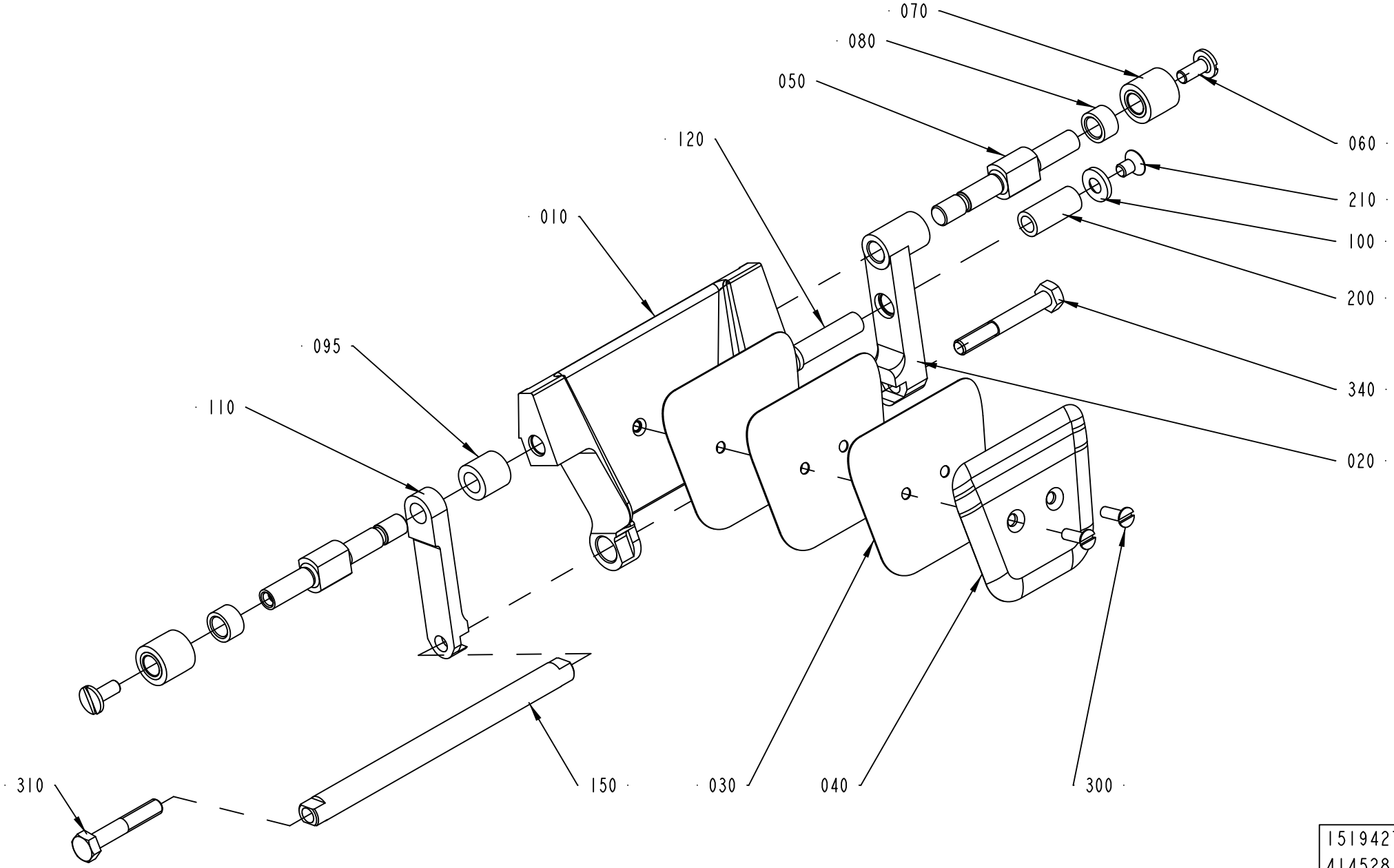

1519427-5
414528

ECM: 422689 - 20091125
Group number: 1519427-0100
Assembly Drawing: 1519427-5_1_AB

This list covers pages from 4-18 to 4-25

Pos	Part No	UN	Qty	Description	Page No
SEE PREVIOUS LISTS PAGES: 4-19, 4-21, 4-23.					

Pos	Part No	UN	Qty	Description	Page No

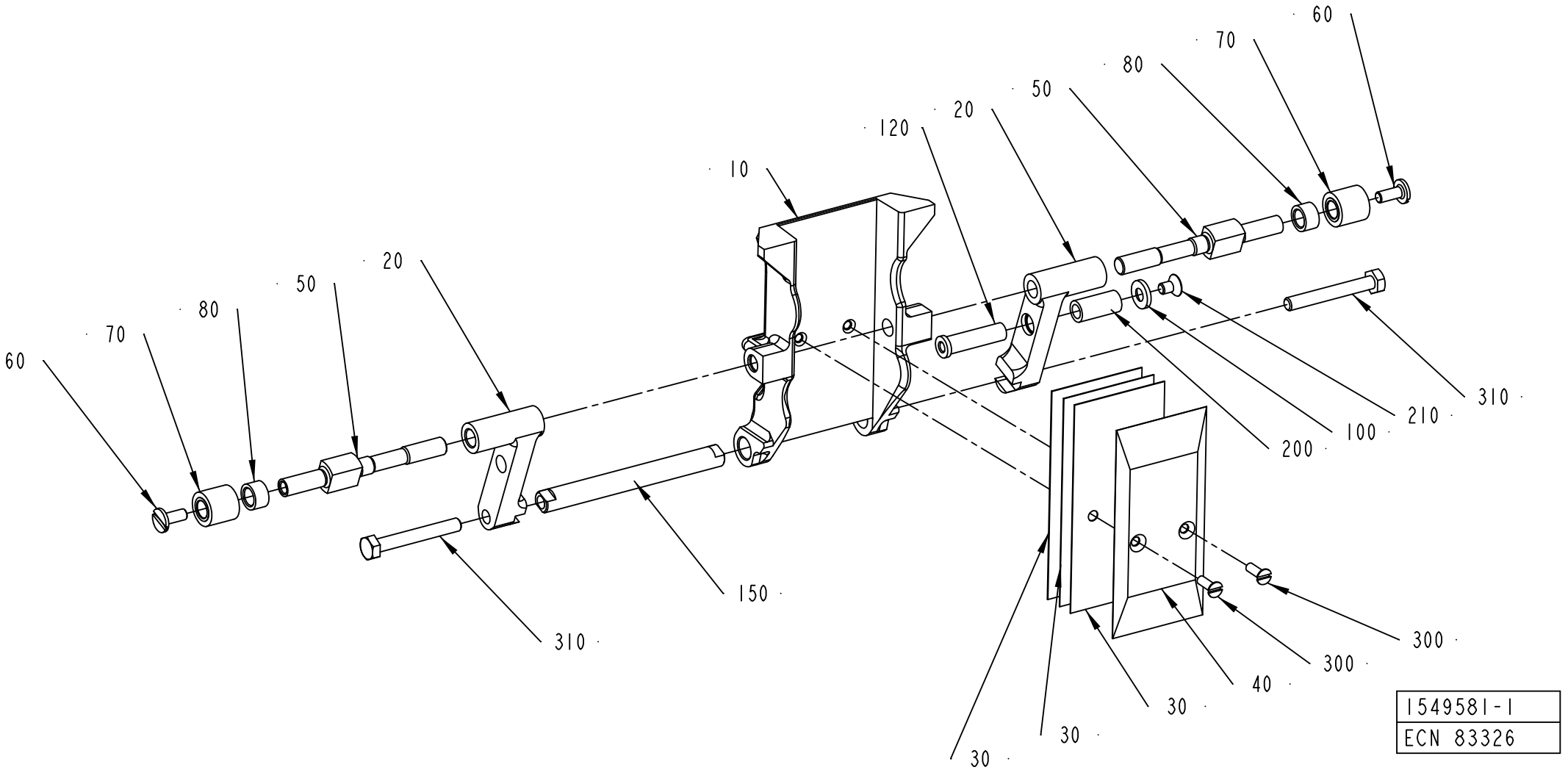
60
70
80
50
20
10
120
310
150
310
60
70
80
50
20
200
100
210
310
300
300
40
30
30
30
1549581-1
ECN 83326

ECM: 422690 - 20091125
Group number: 1549581-0100
Assembly Drawing: 1549581-1_1_AA

This list covers pages from 4-26 to 4-33

Pos	Part No	UN	Qty	Description	Page No
TBA 0100B (See drawing on page: 4-28)					
010	979751-0000		1	VOLUME FLAP 100	
020	1538942-0000		2	CARRIER	
030	979754-0000		3	VOLUME SHIM 100	
040	979755-0000		1	VOLUME BULGE 100	
050	979756-0000		2	SHAFT	
080	979757-0000		2	SPACER	
150	1519375-0001		1	SHAFT	
310	312105-0379		2	SCREW, M6S ISO 4014 M6X45 A4 80	
TBA 0125S (See drawing on page: 4-26)					
010	256849-0000		1	VOLUMEFLAP 125 ML	
020	1519374-0001		2	CARRIER	
030	272987-0000		3	VOLUME SHIM	
040	491868-0000		1	VOLUME BULGE	
050	752598-0000		2	SHAFT	
080	752615-0000		2	SPACER	
100	1519377-0000		1	WASHER	
120	1519376-0000		1	AXLE PIN	
150	1519375-0001		1	SHAFT	
210	312155-0323		1	SCREW DIN 7991 MF6S M5X8 A4 70	
310	312105-0379		2	SCREW, M6S ISO 4014 M6X45 A4 80	
TBA 0160S (See drawing on page: 4-26)					
010	577211-0000		1	VOLUMEFLAP 160 ML	
020	1519374-0001		2	CARRIER	
030	577212-0000		3	VOLUME SHIM	
040	577213-0000		1	VOLUME BULGE 160 ML	
050	752598-0000		2	SHAFT	
080	752615-0000		2	SPACER	
100	1519377-0000		1	WASHER	
120	1519376-0000		1	AXLE PIN	
150	1519375-0001		1	SHAFT	
210	312155-0323		1	SCREW DIN 7991 MF6S M5X8 A4 70	
310	312105-0379		2	SCREW, M6S ISO 4014 M6X45 A4 80	
TBA 0200B (See drawing on page: 4-26)					
010	752212-0000		1	VOLUME FLAP 200 ML	
020	1519374-0001		2	CARRIER	
030	272986-0003		3	VOLUME SHIM	
040	456005-0003		1	VOLUME BULGE	
050	752598-0000		2	SHAFT	
080	752615-0000		2	SPACER	
100	1519377-0000		1	WASHER	
120	1519376-0000		1	AXLE PIN	
150	1519375-0001		1	SHAFT	
210	312155-0323		1	SCREW DIN 7991 MF6S M5X8 A4 70	
310	312105-0379		2	SCREW, M6S ISO 4014 M6X45 A4 80	
TBA 0200M (See drawing on page: 4-26)					
010	979859-0000		1	VOLUME FLAP	
020	1519374-0001		2	CARRIER	
030	979861-0000		3	VOLUME SHIM	
040	979860-0000		1	VOLUME BULGE	
050	752598-0000		2	SHAFT	
080	752615-0000		2	SPACER	
100	1519377-0000		1	WASHER	
120	1519376-0000		1	AXLE PIN	
150	1519375-0001		1	SHAFT	
210	312155-0323		1	SCREW DIN 7991 MF6S M5X8 A4 70	
310	312105-0379		2	SCREW, M6S ISO 4014 M6X45 A4 80	
TBA 0200S (See drawing on page: 4-26)					
010	752999-0000		1	VOLUME FLAP 200S	
020	1519374-0001		2	CARRIER	
030	272991-0000		3	VOLUME SHIM	
040	272990-0000		1	VOLUME BULGE	
050	752598-0000		2	SHAFT	
080	752615-0000		2	SPACER	
100	1519377-0000		1	WASHER	
120	1519376-0000		1	AXLE PIN	
150	1519375-0001		1	SHAFT	
210	312155-0323		1	SCREW DIN 7991 MF6S M5X8 A4 70	
310	312105-0379		2	SCREW, M6S ISO 4014 M6X45 A4 80	
TBA 0250B (See drawing on page: 4-26)					
010	978366-0000		1	VOLUME FLAP 250 ML	
020	1519374-0001		2	CARRIER	
030	272986-0001		3	VOLUME SHIM	
040	456005-0001		1	VOLUME BULGE	
050	752598-0000		2	SHAFT	
080	752615-0000		2	SPACER	
100	1519377-0000		1	WASHER	
120	1519376-0000		1	AXLE PIN	
150	1519375-0001		1	SHAFT	
210	312155-0323		1	SCREW DIN 7991 MF6S M5X8 A4 70	
310	312105-0379		2	SCREW, M6S ISO 4014 M6X45 A4 80	
TBA 0250S (See drawing on page: 4-26)					
010	574365-0000		1	VOLUMEFLAP 250S	
020	1519374-0001		2	CARRIER	

Machine Type | Group Description | Used-In | Group Number | Page No

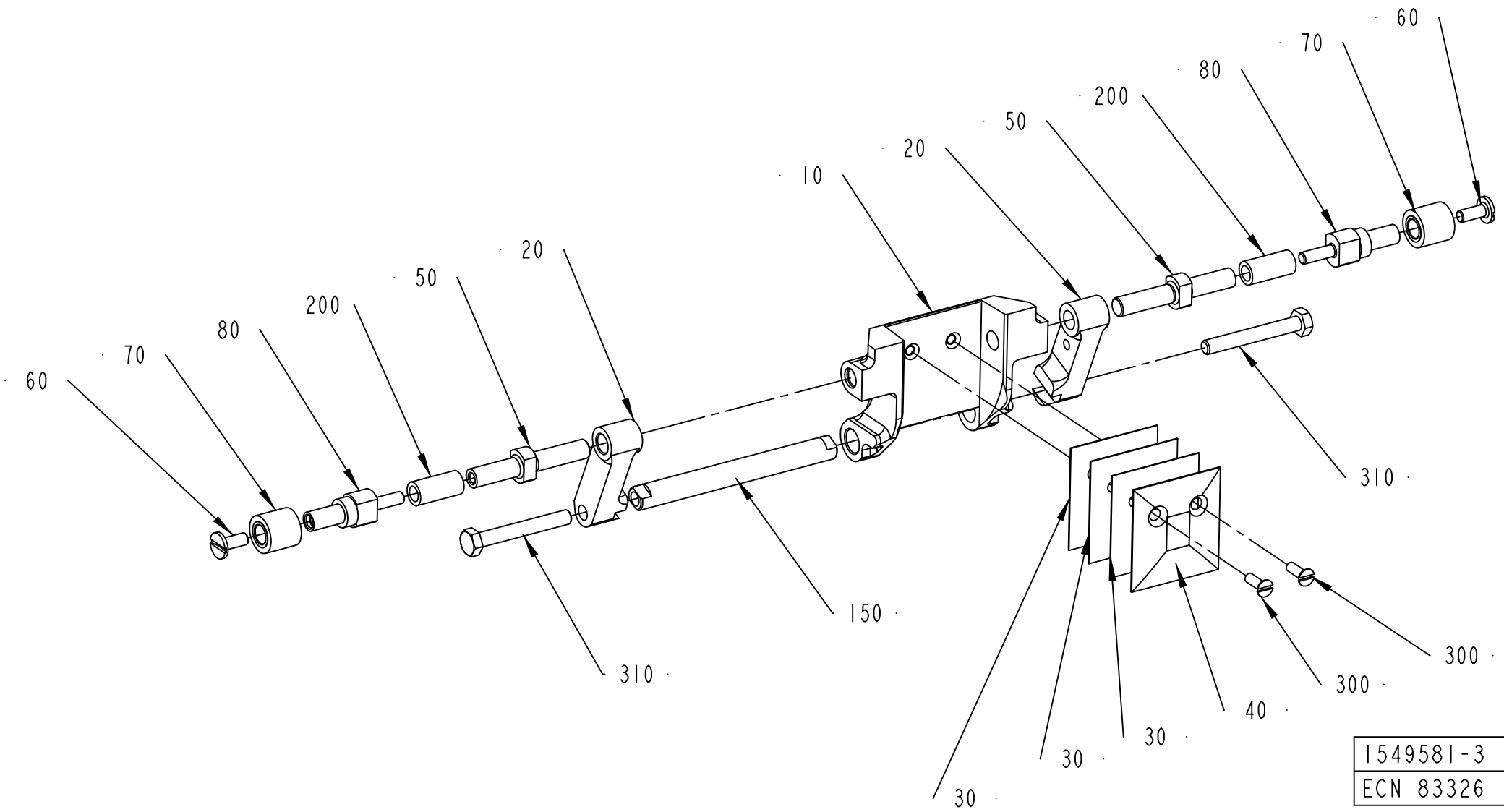
60
70
80
200
50
20
10
20
50
200
80
70
60
310
150
310
300
300
40
30
30
30
1549581-3
ECN 83326

ECM: 422690 - 20091125
Group number: 1549581-0100
Assembly Drawing: 1549581-3_1_AA

This list covers pages from 4-26 to 4-33

Pos	Part No	UN	Qty	Description	Page No
TBA 0250S (Cont'd) (See drawing on page: 4-26)					
030	574366-0000		3	VOLUME SHIM	
040	574367-0000		1	VOLUME BULGE	
050	752598-0000		2	SHAFT	
080	752615-0000		2	SPACER	
100	1519377-0000		1	WASHER	
120	1519376-0000		1	AXLE PIN	
150	1519375-0001		1	SHAFT	
210	312155-0323		1	SCREW DIN 7991 MF6S M5X8 A4 70	
310	312105-0379		2	SCREW, M6S ISO 4014 M6X45 A4 80	
TBA 0284B (See drawing on page: 4-26)					
010	978031-0000		1	VOLUMEFLAP 284 ML	
020	1519374-0001		2	CARRIER	
030	272986-0005		3	VOLUME SHIM	
040	752739-0000		1	VOLUME BULGE	
050	752598-0000		2	SHAFT	
080	752615-0000		2	SPACER	
100	1519377-0000		1	WASHER	
120	1519376-0000		1	AXLE PIN	
150	1519375-0001		1	SHAFT	
210	312155-0323		1	SCREW DIN 7991 MF6S M5X8 A4 70	
310	312105-0379		2	SCREW, M6S ISO 4014 M6X45 A4 80	
TBA 0300S (See drawing on page: 4-26)					
010	978031-0000		1	VOLUMEFLAP 284 ML	
020	1519374-0001		2	CARRIER	
030	272986-0003		3	VOLUME SHIM	
040	979792-0000		1	VOLUME BULGE	
050	752598-0000		2	SHAFT	
080	752615-0000		2	SPACER	
100	1519377-0000		1	WASHER	
120	1519376-0000		1	AXLE PIN	
150	1519375-0001		1	SHAFT	
210	312155-0323		1	SCREW DIN 7991 MF6S M5X8 A4 70	
310	312105-0379		2	SCREW, M6S ISO 4014 M6X45 A4 80	
TBA 0330S (See drawing on page: 4-26)					
010	582163-0000		1	VOLUME FLAP 330S	
020	1519374-0001		2	CARRIER	
030	272986-0006		3	VOLUME SHIM 330S	
040	979931-0000		1	VOLUME BULGE	
050	752598-0000		2	SHAFT	
080	752615-0000		2	SPACER	
100	1519377-0000		1	WASHER	
120	1519376-0000		1	AXLE PIN	
150	1519375-0001		1	SHAFT	
210	312155-0323		1	SCREW DIN 7991 MF6S M5X8 A4 70	
310	312105-0379		2	SCREW, M6S ISO 4014 M6X45 A4 80	
TWA 0125S NO UNDERFILL (See drawing on page: 4-30)					
010	597987-0000		1	VOLUME FLAP	
020	1519374-0003		1	CARRIER	
030	597989-0000		3	VOLUME SHIM	
040	597988-0000		1	VOLUME BULGE	
050	591438-0000		2	SHAFT	
080	752615-0000		2	SPACER	
095	1360618-0000		1	SPACER SLEEVE	
100	1519377-0000		1	WASHER	
110	2715303-0000		1	ARM	
120	1519376-0000		1	AXLE PIN	
150	1519375-0003		1	SHAFT	
210	312155-0323		1	SCREW DIN 7991 MF6S M5X8 A4 70	
310	312105-0379		1	SCREW, M6S ISO 4014 M6X45 A4 80	
340	312105-0376		1	SCREW, M6S ISO 4014 M6X35 A4 80	
TWA 0125S UNDERFILLED (See drawing on page: 4-32)					
010	597987-0000		1	VOLUME FLAP	
020	1519374-0003		1	CARRIER	
030	2987305-0000		3	VOLUME SHIM	
040	2987303-0000		1	VOLUME BULGE	
050	591438-0000		2	SHAFT	
080	752615-0000		2	SPACER	
095	1360618-0000		1	SPACER SLEEVE	
100	1519377-0000		1	WASHER	
110	2715303-0000		1	ARM	
120	1519376-0000		1	AXLE PIN	
150	1519375-0003		1	SHAFT	
210	312155-0323		1	SCREW DIN 7991 MF6S M5X8 A4 70	
310	312105-0379		1	SCREW, M6S ISO 4014 M6X45 A4 80	
340	312105-0376		1	SCREW, M6S ISO 4014 M6X35 A4 80	
TWA 0200S NO UNDERFILL (See drawing on page: 4-30)					
010	591439-0000		1	VOLUME FLAP	
020	1519374-0003		1	CARRIER	
030	2745192-0000		3	VOLUME SHIM	
040	2745194-0000		1	VOLUME BULGE	
050	591438-0000		2	SHAFT	
080	752615-0000		2	SPACER	
095	1360618-0000		1	SPACER SLEEVE	

Machine Type | Group Description | Used-In | Group Number | Page No

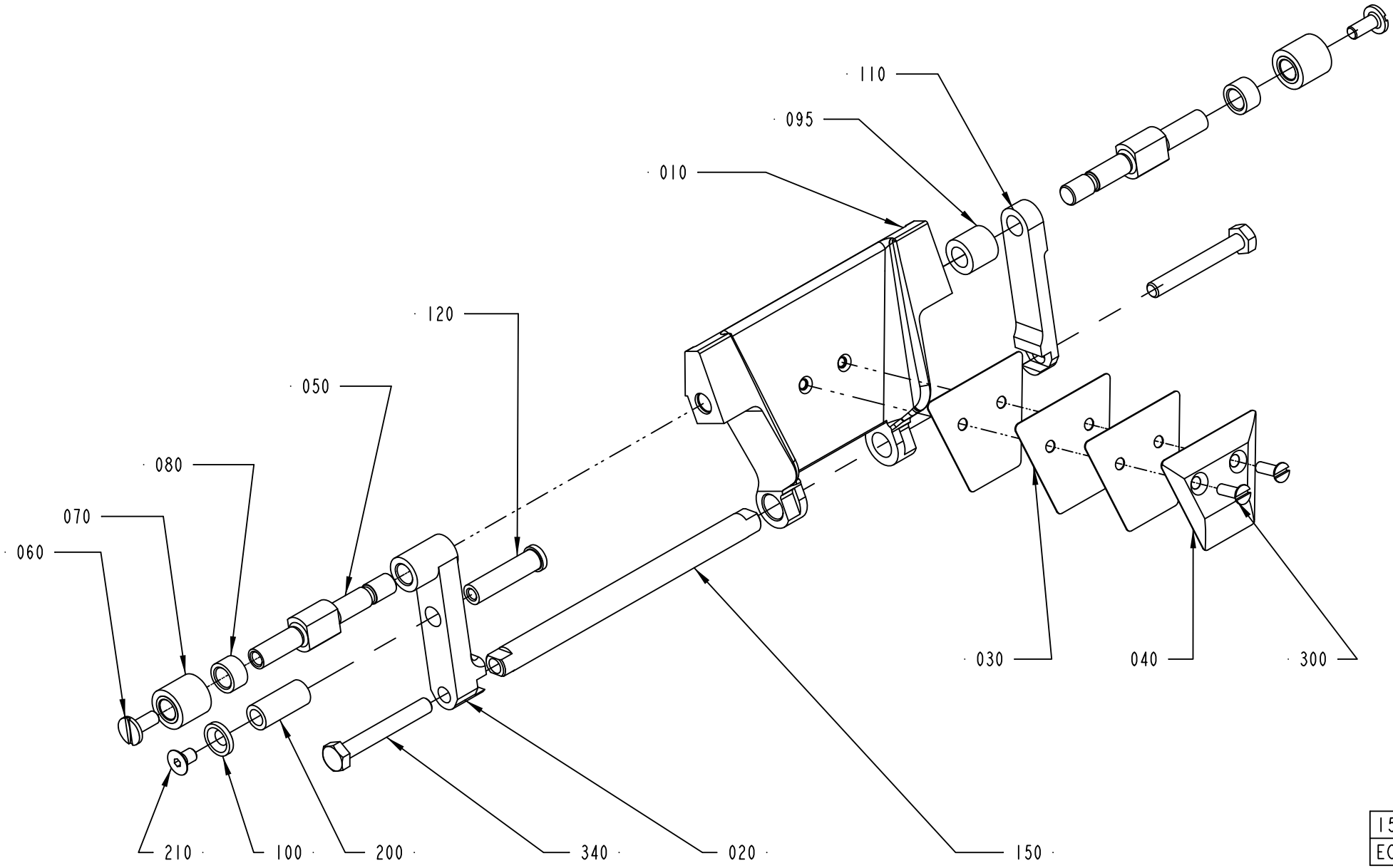

1549581-4
ECN 262966

Pos	Part No	UN	Qty	Description	Page No
TWA 0200S NO UNDERFILL (Cont'd) (See drawing on page: 4-30)					
100	1519377-0000		1	WASHER	
110	2715303-0000		1	ARM	
120	1519376-0000		1	AXLE PIN	
150	1519375-0002		1	SHAFT	
210	312155-0323		1	SCREW DIN 7991 MF6S M5X8 A4 70	
310	312105-0379		1	SCREW, M6S ISO 4014 M6X45 A4 80	
340	312105-0376		1	SCREW, M6S ISO 4014 M6X35 A4 80	
TWA 0200S UNDERFILLED (See drawing on page: 4-30)					
010	591439-0000		1	VOLUME FLAP	
020	1519374-0003		1	CARRIER	
030	2911353-0000		4	VOLUME SHIM	
040	2829701-0000		1	VOLUME BULGE	
050	591438-0000		2	SHAFT	
080	752615-0000		2	SPACER	
095	1360618-0000		1	SPACER SLEEVE	
100	1519377-0000		1	WASHER	
110	2715303-0000		1	ARM	
120	1519376-0000		1	AXLE PIN	
150	1519375-0002		1	SHAFT	
210	312155-0323		1	SCREW DIN 7991 MF6S M5X8 A4 70	
310	312105-0379		1	SCREW, M6S ISO 4014 M6X45 A4 80	
340	312105-0376		1	SCREW, M6S ISO 4014 M6X35 A4 80	
Common Parts					
060	256859-0000		2	SCREW	
070	256860-0000		2	ROLL	
200	90166-0159	MM	25	RUBBER HOSE	
300	312145-0291		2	SCREW ISO 2009 MFS M4X12 A4	

Pos	Part No	UN	Qty	Description	Page No

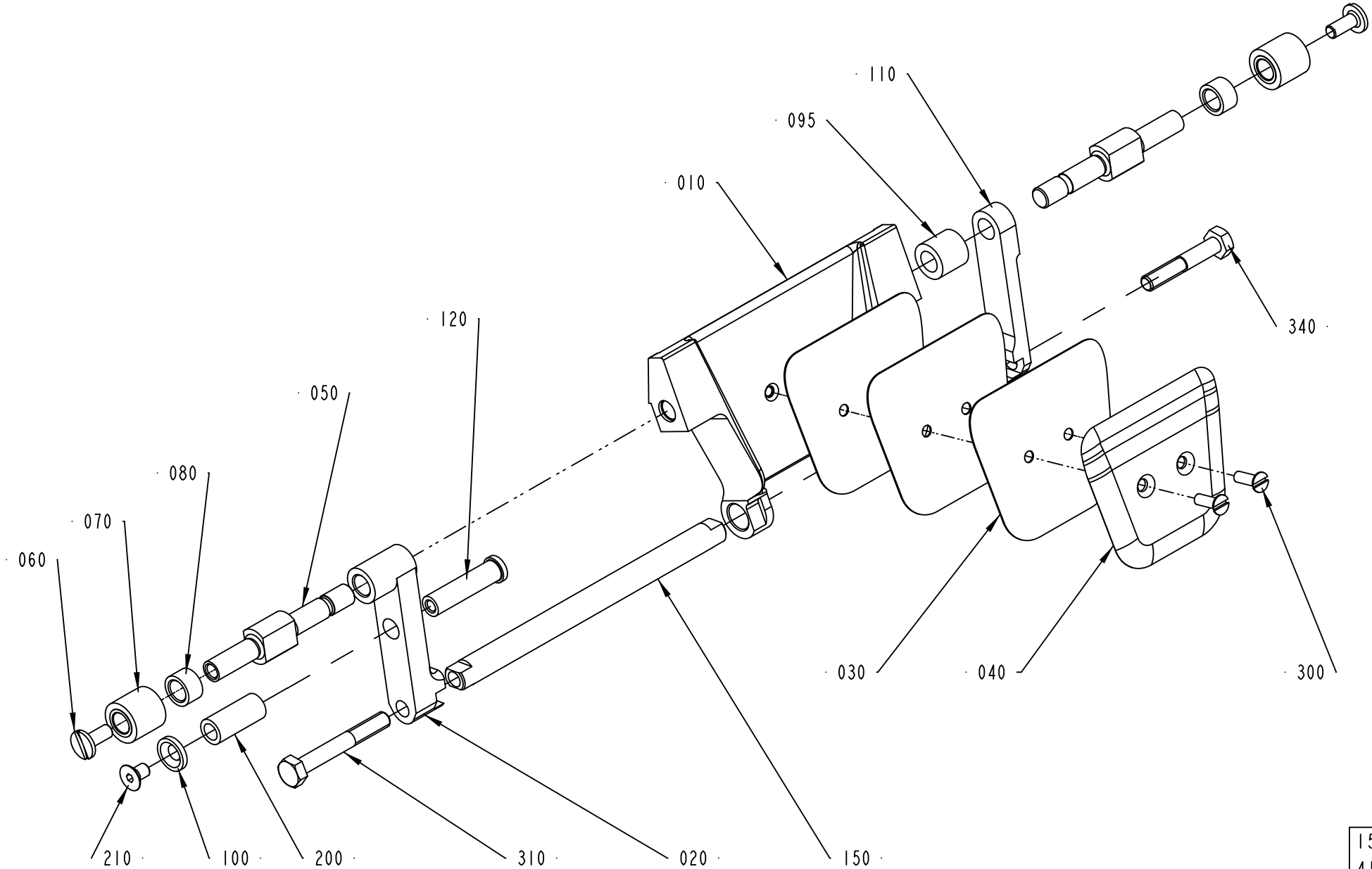

1549581-6
414528

ECM: 422690 - 20091125
Group number: 1549581-0100
Assembly Drawing: 1549581-6_1_AB

This list covers pages from 4-26 to 4-33

Pos	Part No	UN	Qty	Description	Page No
SEE PREVIOUS LISTS PAGES: 4-27, 4-29, 4-31.					

Pos	Part No	UN	Qty	Description	Page No

PRESSURE JAW

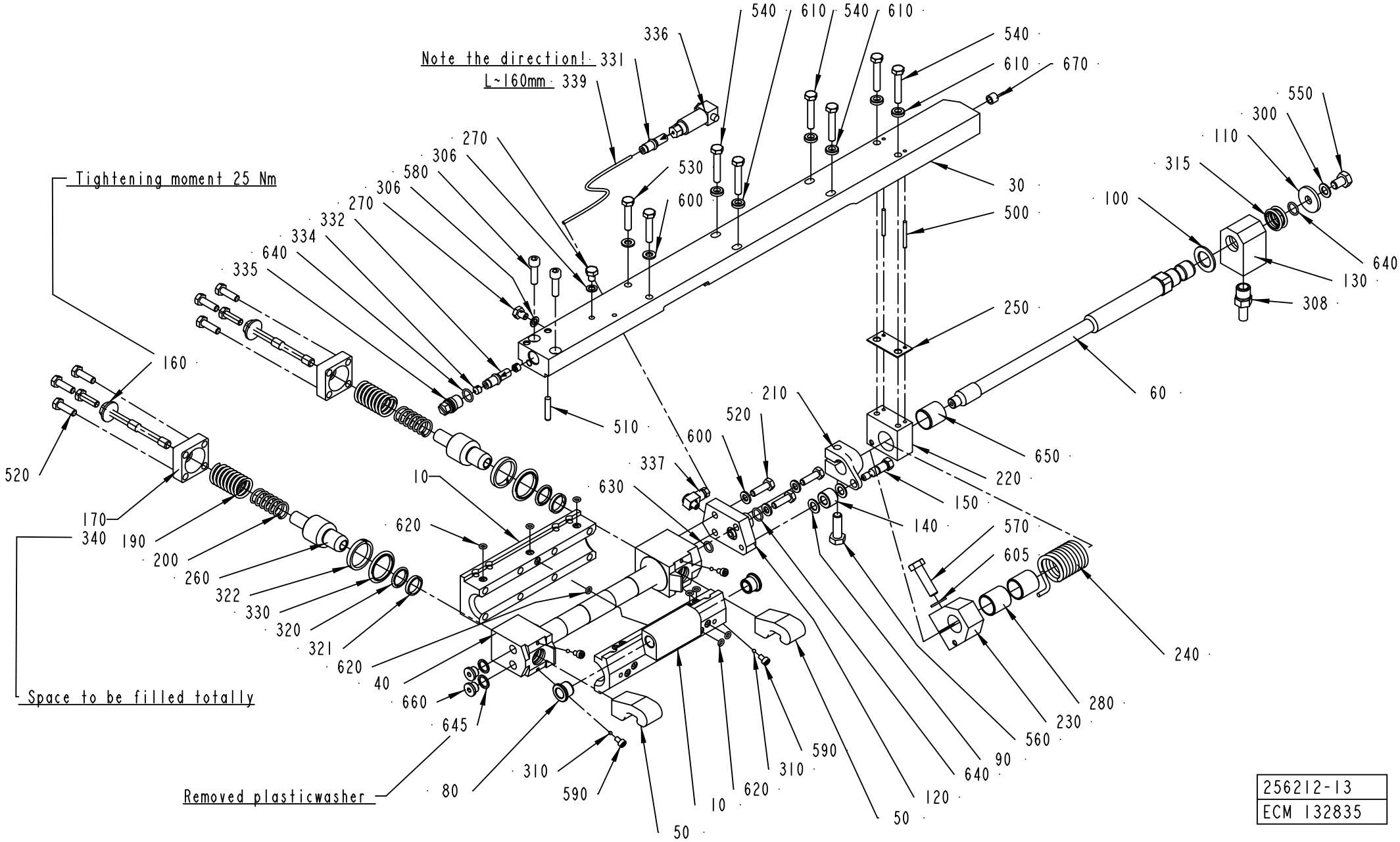

256212-13
ECM 132835

ECM: 215358 - 20050622
Group number: 256212-0600
Assembly Drawing: 256212-13_1_AE

This list covers pages from 4-34 to 4-37

Pos	Part No	UN	Qty	Description	Page No
TBA 0100B					
010	2552528-0000		1	BEARING HOUSING	
030	979764-0000		1	CARRIER RIGHT 100	
080	2532544-0000		2	BUSHING	
TBA 0125S, TWA 0125S					
010	2552528-0000		1	BEARING HOUSING	
030	979793-0000		1	CARRIER	
080	2532544-0000		2	BUSHING	
TBA 0160S, TBA 0200S, TWA 0200S					
010	2552530-0000		1	BEARING HOUSING	
030	979793-0000		1	CARRIER	
080	2532544-0000		2	BUSHING	
TBA 0200B, TBA 0284B, TBA 0250B, TBA 0300S, TBA 0330S					
010	2552529-0000		1	BEARING HOUSING	
030	979793-0000		1	CARRIER	
080	2532544-0000		2	BUSHING	
TBA 0200M, TBA 0250S					
010	2552527-0000		1	BEARING HOUSING	
030	979793-0000		1	CARRIER	
080	2532544-0000		2	BUSHING	
TBA 0200SQ					
010	2552531-0000		1	BEARING HOUSING	
030	1519214-0000		1	CARRIER	
080	1255541-0000		2	BUSHING	
Common Parts					
040	490940-0000		1	CYLINDER	
050	978746-0000		2	CATCH	
060	752284-0000		1	SHAFT	
090	256557-0001		2	WASHER	
100	256557-0002		1	WASHER	
110	256557-0003		1	WASHER	
120	752282-0000		1	CONNECTION RIGHT	
130	441385-0000		1	HUB	
140	256576-0000		1	ROLL	
150	441764-0000		1	SHAFT	
160	257249-0000		2	SCREW	
170	257250-0000		2	LID	
190	490942-0000		2	COMPRESSION SPRING	
200	490943-0000		2	COMPRESSION SPRING	
210	752289-0000		1	CLAMP RIGHT	
220	272501-0000		1	BRACKET RIGHT	
230	272503-0000		1	CLAMPING PIECE	
240	456311-0000		1	TORSION SPRING RIGHT	
250	272506-0000		1	LACE	
260	751743-0000		2	PISTON	
270	441355-0000		2	BLEEDING SCREW	
280	751769-0000		2	SLEEVE	
300	315237-0107		1	WASHER,PL.RND.AL.8/14,H=1	
306	315237-0106		2	WASHER,PL.RND.AL.6/10,H=1	
308	90030-0065		1	PIPE CONNECTION	
310	90090-0005		4	STEEL BALL 3MM, RB-3/G20W	
315	90091-0089		2	ROD SEAL 16X22X2,5 MM	
320	90091-0214		2	ROD SEAL GLYD RING 16X20,9X2,2 MM	
321	90091-0162		2	WEAR RING 16X19X3,2 MM	
322	90091-0170		2	WEAR RING 25X30X4,2 MM	
330	90091-0215		2	ROD SEAL GLYD RING 25X32,5X3,2 MM	
331	90092-0052		1	METERING VALVE 10 MM3	
332	90092-0053		1	METERING VALVE 30 MM3	
334	90134-0042		2	SPACER DOSING VALVE	
335	90134-0045		1	PLUG M12X1	
336	90134-0047		1	CONNECTION FOR DOSING VALVE	
337	90134-0058		1	CONNECTION	
339	90166-0143	MM	160	TUBE 2,5 MM PA TRANSP.	
340	90296-0068	G	25	SHELL ALVANIA GREASE EP 2 (CARTR.400G)	
500	311103-0242		2	PARALLEL PIN ISO 2338 3M6X30 A1	
510	311103-0312		1	PARALLEL PIN ISO 2338 5M6X25 A1	
520	312105-0370		11	SCREW, M6S ISO 4017 M6X20 A4 80	
530	312105-0374		2	SCREW, M6S ISO 4014 M6X30 A4 80	
540	312105-0376		6	SCREW, M6S ISO 4014 M6X35 A4 80	
550	312105-0447		1	SCREW, M6S ISO 4017 M8X12 A4 80	
560	312105-0453		1	SCREW, M6S ISO 4017 M8X25 A4 80	
570	312105-0455		1	SCREW, M6S ISO 4017 M8X30 A4 80	
580	312115-0371		2	SCREW ISO4762 M6X22 A4 70	
590	752476-0000		4	SCREW	
600	315105-0153		5	WASHER PLAIN, 6,4X12X1,5 A4 BRB	
605	315105-0165		1	WASHER PLAIN, 8,4X16X1,6 A4 BRB	
610	315115-0153		6	WASHER PLAIN, TBRB 6,4/12 H=3	
620	315202-0102		8	O-RING 4,1X1,6 MM	
630	315202-0106		1	O-RING 8,1X1,6 MM	
640	315202-0108		3	O-RING 10,1X1,6 MM	
645	315234-0109		2	WASHER,PL.RND.CU.10,3/13,5 H=1,0	
650	321120-0132		1	BEARING BUSH W/O FLANGE, 18X20X20 MM	
660	342713-0209		2	PLUG, EXT THREAD HEX SOCKET 8638-00-180	
670	2545249-0000		1	TEFLON HOSE	

Machine Type | Group Description | Used-In | Group Number | Page No

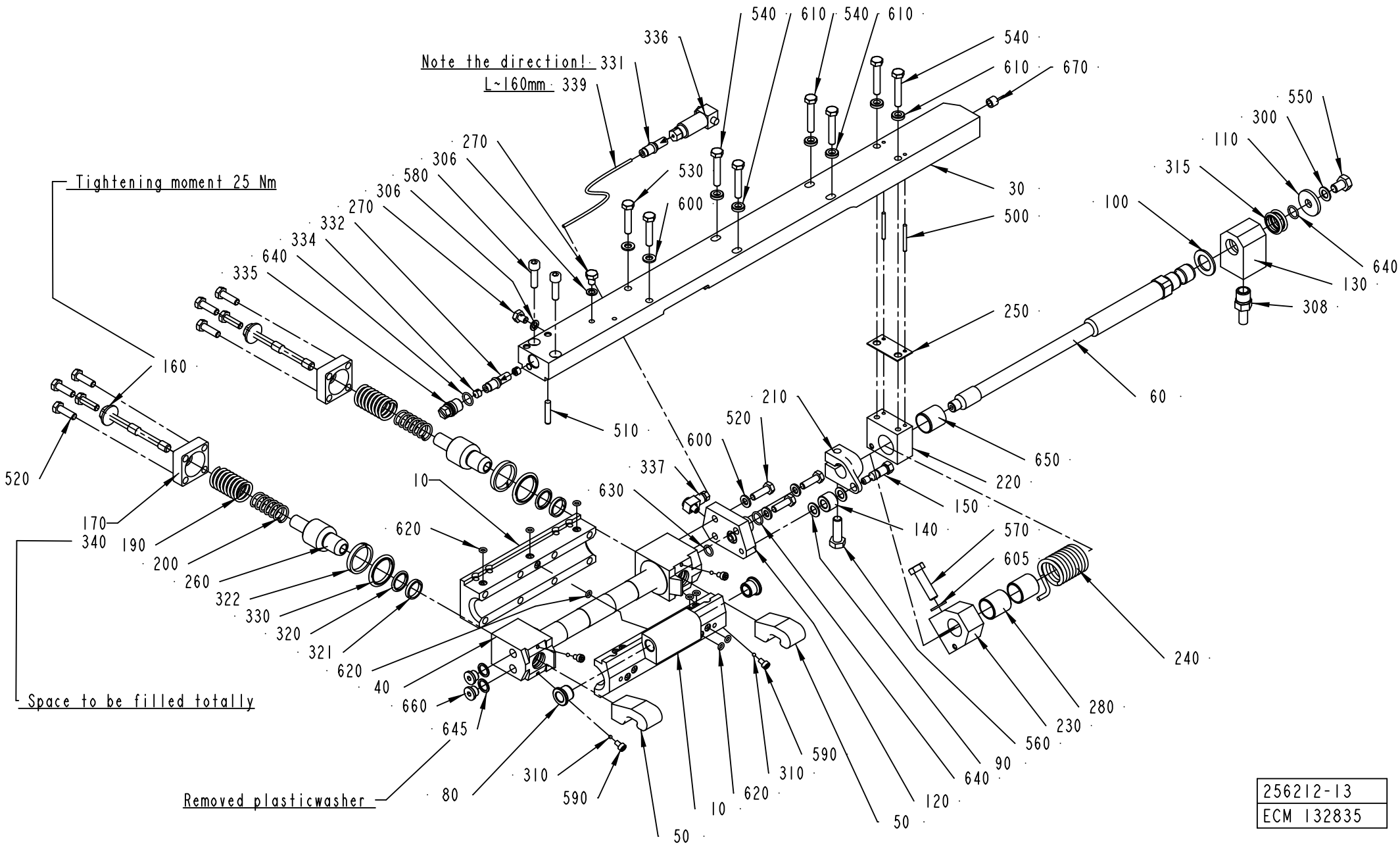

256212-13
ECM 132835

Pos	Part No	UN	Qty	Description	Page No
Common Parts (Cont'd)					
670	2545249-0000		1	TEFLON HOSE	

Pos	Part No	UN	Qty	Description	Page No

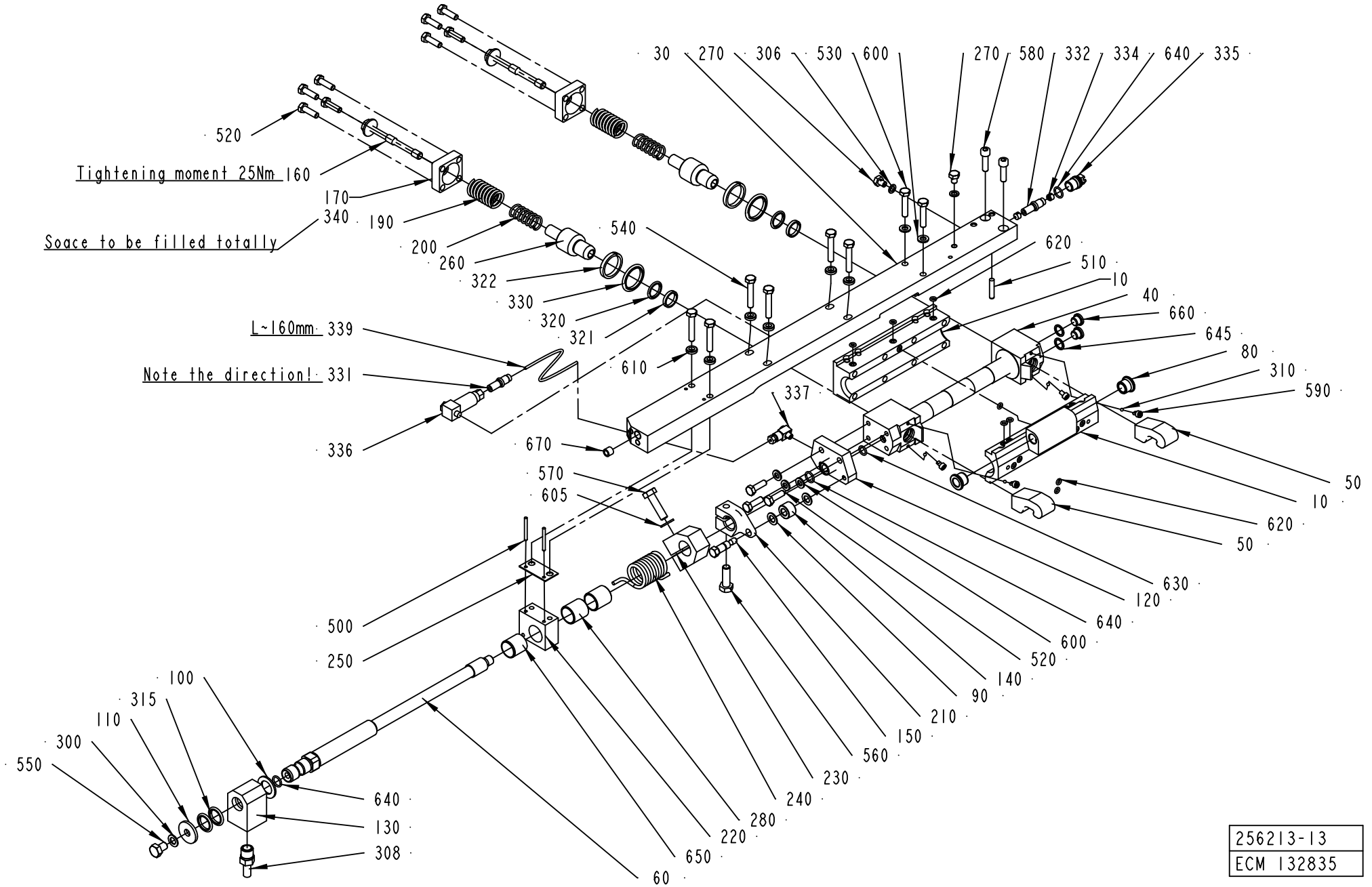
30
270
306
530
600
270
580
332
334
640
335
520
Tightening moment 25Nm
160
170
340
190
Soace to be filled totally
200
260
322
330
320
321
540
620
510
10
40
660
645
80
310
590
L~160mm
339
Note the direction!
331
336
610
337
670
570
605
50
10
620
50
630
120
640
600
520
140
90
210
150
560
230
240
280
220
650
60
500
250
100
315
110
300
550
640
130
308
256213-13
ECM 132835

ECM: 216906 - 20050622
Group number: 256213-0600
Assembly Drawing: 256213-13_1_AE

This list covers pages from 4-38 to 4-41

Pos	Part No	UN	Qty	Description	Page No
TBA 0100B					
010	2552528-0000		1	BEARING HOUSING	
030	979765-0000		1	CARRIER LEFT 100	
080	2532544-0000		2	BUSHING	
TBA 0125S, TWA 0125S					
010	2552528-0000		1	BEARING HOUSING	
030	979794-0000		1	CARRIER	
080	2532544-0000		2	BUSHING	
TBA 0160S, TBA 0200S, TWA 0200S					
010	2552530-0000		1	BEARING HOUSING	
030	979794-0000		1	CARRIER	
080	2532544-0000		2	BUSHING	
TBA 0200B, TBA 0284B, TBA 0250B, TBA 0300S, TBA 0330S					
010	2552529-0000		1	BEARING HOUSING	
030	979794-0000		1	CARRIER	
080	2532544-0000		2	BUSHING	
TBA 0200M, TBA 0250S					
010	2552527-0000		1	BEARING HOUSING	
030	979794-0000		1	CARRIER	
080	2532544-0000		2	BUSHING	
TBA 0200SQ					
010	2552531-0000		1	BEARING HOUSING	
030	1519230-0000		1	CARRIER	
080	1255541-0000		2	BUSHING	
Common Parts					
040	490940-0000		1	CYLINDER	
050	978746-0000		2	CATCH	
060	752284-0000		1	SHAFT	
090	256557-0001		2	WASHER	
100	256557-0002		1	WASHER	
110	256557-0003		1	WASHER	
120	752283-0000		1	CONNECTION LEFT	
130	441385-0000		1	HUB	
140	256576-0000		1	ROLL	
150	441764-0000		1	SHAFT	
160	257249-0000		2	SCREW	
170	257250-0000		2	LID	
190	490942-0000		2	COMPRESSION SPRING	
200	490943-0000		2	COMPRESSION SPRING	
210	752290-0000		1	CLAMP LEFT	
220	272502-0000		1	BRACKET LEFT	
230	272503-0000		1	CLAMPING PIECE	
240	456312-0000		1	TORSION SPRING LEFT	
250	272506-0000		1	LACE	
260	751743-0000		2	PISTON	
270	441355-0000		2	BLEEDING SCREW	
280	751769-0000		2	SLEEVE	
300	315237-0107		1	WASHER,PL.RND.AL.8/14,H=1	
306	315237-0106		2	WASHER,PL.RND.AL.6/10,H=1	
308	90030-0065		1	PIPE CONNECTION	
310	90090-0005		4	STEEL BALL 3MM, RB-3/G20W	
315	90091-0089		2	ROD SEAL 16X22X2,5 MM	
320	90091-0214		2	ROD SEAL GLYD RING 16X20,9X2,2 MM	
321	90091-0162		2	WEAR RING 16X19X3,2 MM	
322	90091-0170		2	WEAR RING 25X30X4,2 MM	
330	90091-0215		2	ROD SEAL GLYD RING 25X32,5X3,2 MM	
331	90092-0052		1	METERING VALVE 10 MM3	
332	90092-0053		1	METERING VALVE 30 MM3	
334	90134-0042		2	SPACER DOSING VALVE	
335	90134-0045		1	PLUG M12X1	
336	90134-0047		1	CONNECTION FOR DOSING VALVE	
337	90134-0058		1	CONNECTION	
339	90166-0143	MM	160	TUBE 2,5 MM PA TRANSP.	
340	90296-0068	G	25	SHELL ALVANIA GREASE EP 2 (CARTR.400G)	
500	311103-0242		2	PARALLEL PIN ISO 2338 3M6X30 A1	
510	311103-0312		1	PARALLEL PIN ISO 2338 5M6X25 A1	
520	312105-0370		11	SCREW, M6S ISO 4017 M6X20 A4 80	
530	312105-0374		2	SCREW, M6S ISO 4014 M6X30 A4 80	
540	312105-0376		6	SCREW, M6S ISO 4014 M6X35 A4 80	
550	312105-0447		1	SCREW, M6S ISO 4017 M8X12 A4 80	
560	312105-0453		1	SCREW, M6S ISO 4017 M8X25 A4 80	
570	312105-0455		1	SCREW, M6S ISO 4017 M8X30 A4 80	
580	312115-0371		2	SCREW ISO4762 M6X22 A4 70	
590	752476-0000		4	SCREW	
600	315105-0153		5	WASHER PLAIN, 6,4X12X1,5 A4 BRB	
605	315105-0165		1	WASHER PLAIN, 8,4X16X1,6 A4 BRB	
610	315115-0153		6	WASHER PLAIN, TBRB 6,4/12 H=3	
620	315202-0102		8	O-RING 4,1X1,6 MM	
630	315202-0106		1	O-RING 8,1X1,6 MM	
640	315202-0108		3	O-RING 10,1X1,6 MM	
645	315234-0109		2	WASHER,PL.RND.CU.10,3/13,5 H=1,0	
650	321120-0132		1	BEARING BUSH W/O FLANGE, 18X20X20 MM	
660	342713-0209		2	PLUG, EXT THREAD HEX SOCKET 8638-00-180	
670	2545249-0000		1	TEFLON HOSE	

Machine Type | Group Description | Used-In | Group Number | Page No

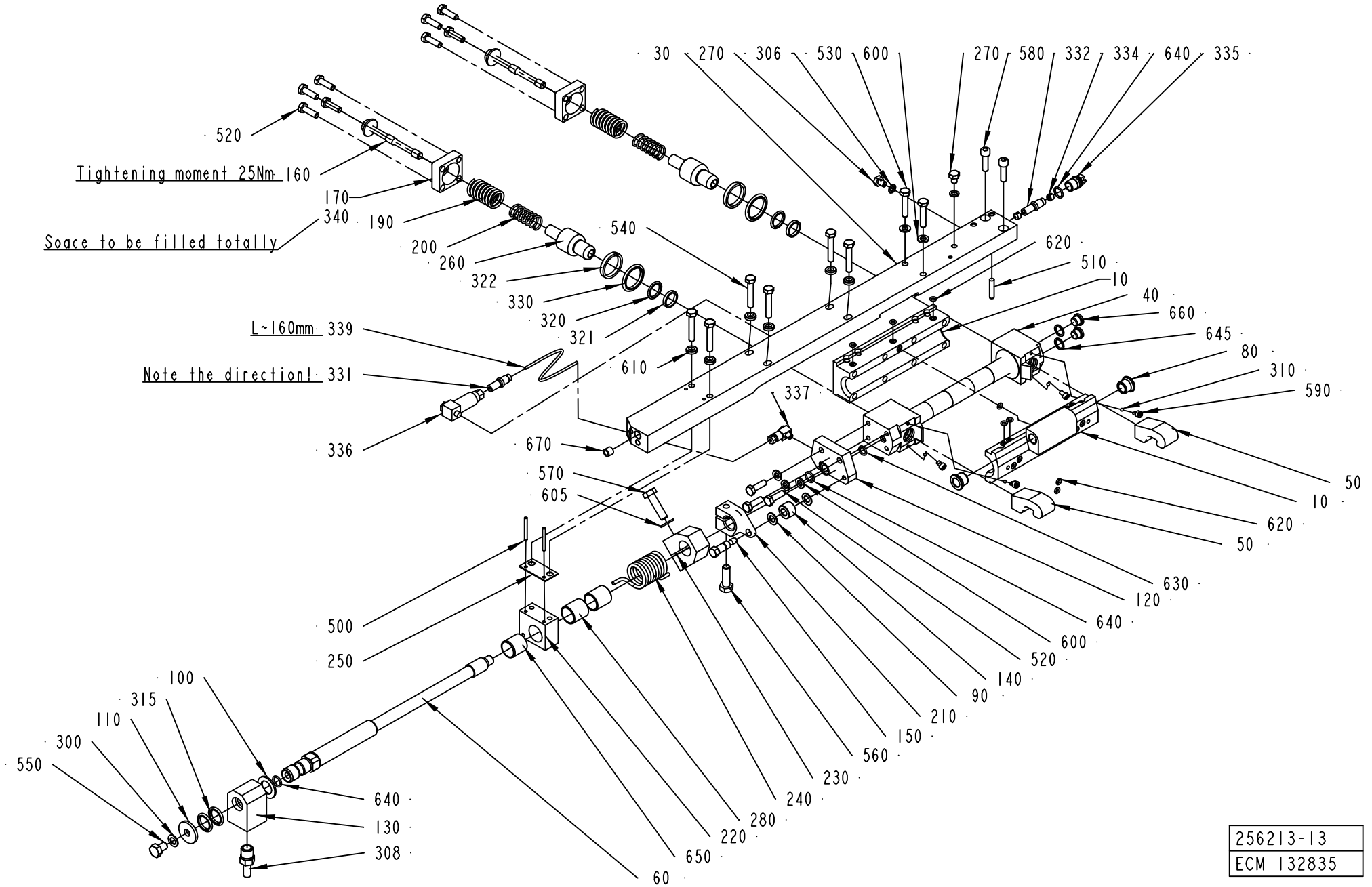
30
270
306
530
600
270
580
332
334
640
335
520
Tightening moment 25Nm
160
170
340
190
Soace to be filled totally
200
260
322
330
320
321
540
620
510
10
40
660
645
80
310
590
L~160mm
339
Note the direction!
331
336
610
337
670
570
605
50
10
620
50
630
120
640
600
520
140
90
210
150
560
230
240
280
220
650
60
500
250
100
315
110
300
550
640
130
308
256213-13
ECM 132835

Pos	Part No	UN	Qty	Description	Page No
Common Parts (Cont'd)					
670	2545249-0000		1	TEFLON HOSE	

Pos	Part No	UN	Qty	Description	Page No

TUBE FOLDING DEVICE

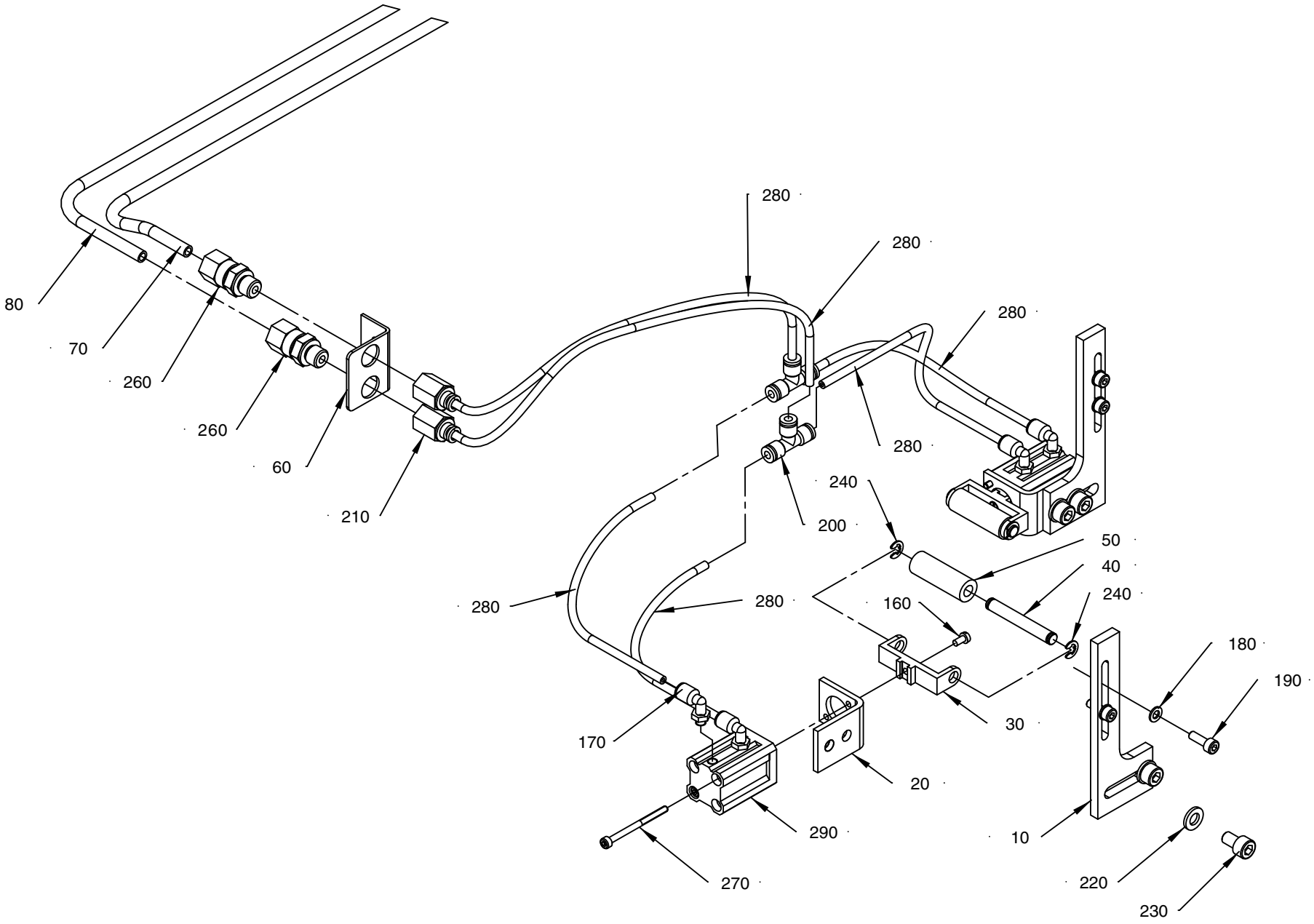

15110 69-2
ECM 469831

ECM: 469836 - 20100920
Group number: 1511069-0200
Assembly Drawing: 1511069-2_1_AA

Pos	Part No	UN	Qty	Description	Page No
0100B, 0125S, 0160S, 0200S					
270	90457-0937		4	SCREW MC6S M3X40 A480	
290	90459-0251		2	DOUBLE ACTING, COMPACT, CYL 12-15	
0200B, 0200M, 0250B, 0250S, 0284B, 0300S					
270	90457-0167		4	SCREW MC6S M3X35 A480	
290	90457-0166		2	DOUBLE ACTING, COMPACT, 12-10	
Common Parts					
010	1549540-0000		2	BRACKET	
020	3070154-0000		2	BRACKET	
030	3070148-0000		2	FORK HEAD	
040	3070149-0000		2	SHAFT	
050	3070151-0000		2	ROLL	
060	1558129-0000		1	BRACKET	
070	1558127-0000		1	PIPE	
080	1558126-0000		1	PIPE	
160	312125-0220		2	SCREW ISO 1207 M3X6 A4	
170	90458-2954		4	ELBOW PIPE JOINT, EXT.THREAD, D=4MM M5	
180	315105-0136		4	WASHER PLAIN, 4,3X9X0,8 A4 BRB	
190	312115-0291		4	SCREW ISO4762 M4X12 A4 80	
200	342748-0100		2	T-CONNECTION 4MM	
210	342770-0101		2	RAIGHT COUPLING INT, D=4 MM - G1/8	
220	315105-0153		4	WASHER PLAIN, 6,4X12X1,5 A4 BRB	
230	312115-0364		4	SCREW ISO4762 M6X10 A4 80	
240	315755-0106		4	RETAINING RING SHAFT DIN 6799 4 SS	
260	90030-0184		2	CONN. STR., GE06LRED71	
280	90166-0095	M	1.5	TUBE 4 MM PA BLUE (50M)	

Pos	Part No	UN	Qty	Description	Page No

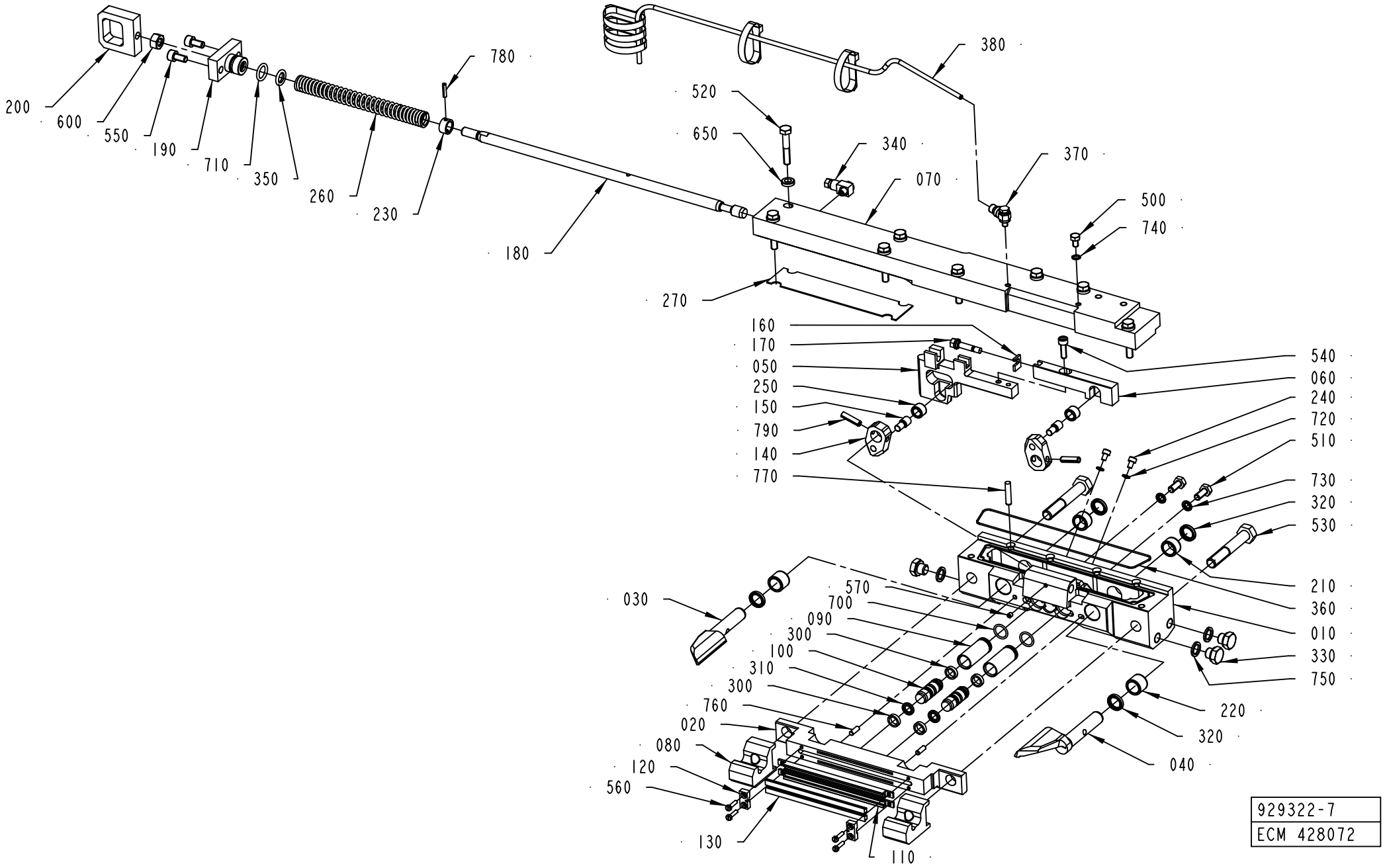
200
600
550
190
710
350
260
230
780
180
380
520
650
340
370
070
500
740
270
160
170
050
250
150
790
140
770
540
060
240
720
510
730
320
530
210
360
010
330
750
220
320
040
030
570
700
090
300
100
310
300
760
020
080
120
560
130
110
929322-7
ECM 428072

ECM: 431349 - 20091221
Group number: 929322-0300
Assembly Drawing: 929322-7_1_AA

Pos	Part No	UN	Qty	Description	Page No
TPA 0200SQ					
010	2810391-0000		1	BEARING HOUSING	
020	1350994-0000		1	CUTTING JAW	
030	1350985-0000		1	FOLDING FLAP RIGHT	
040	1350986-0000		1	FOLDING FLAP LEFT	
050	1350995-0000		1	CARRIER RULER RIGHT	
060	1350996-0000		1	CARRIER RULER RIGHT	
TPA 0250SQ					
010	2810392-0000		1	BEARING HOUSING	
020	1350994-0000		1	CUTTING JAW	
030	1350985-0000		1	FOLDING FLAP RIGHT	
040	1350986-0000		1	FOLDING FLAP LEFT	
050	1350995-0000		1	CARRIER RULER RIGHT	
060	1350996-0000		1	CARRIER RULER RIGHT	
TPA 0330SQ					
010	2810393-0000		1	BEARING HOUSING	
020	929308-0000		1	CUTTING JAW	
030	929314-0000		1	FOLDING FLAP RIGHT	
040	929315-0000		1	FOLDING FLAP LEFT	
050	929310-0000		1	CARRIER RULER RIGHT	
060	929312-0000		1	CARRIER RULER RIGHT	
Common Parts					
070	929305-0000		1	CARRIER RIGHT	
080	929309-0000		2	CATCH	
090	752288-0000		2	SLEEVE	
100	752115-0000		2	PLUNGER	
110	1110211-0000		2	CUTTING RAIL	
120	1110871-0000		2	BRACKET	
130	1110391-0000		2	DOLLY	
140	272419-0000		2	CARRIER	
150	256607-0000		2	AXLE PIN	
160	751580-0000		1	SHIM	
170	751579-0000		1	ADJUSTING SCREW	
180	256659-0000		1	OPERATING ROD	
190	256706-0000		1	BEARING PLATE	
200	256626-0000		1	EAR	
210	929316-0001		2	BEARING	
220	929316-0002		2	BEARING	
230	255801-0000		1	RETAINING RING	
240	752476-0000		2	SCREW	
250	22463-0000		2	ROLL	
260	255742-0000		1	COMPRESSION SPRING	
270	257362-0000		1	LACE	
300	90091-0169		4	WEAR RING 12X15X3,2 MM	
310	90091-0216		2	PISTON SEAL GLYD RING 7,1X12X2,2 MM	
320	90459-5936		4	BEARING SEAL 12X16X3 MM	
330	90330-0066		3	PLUG, G1/8EXT, G1/8	
340	90134-0058		1	CONNECTION	
350	90091-0091		1	ROD SEAL 10X14X1,7 MM	
360	90242-0093	M	1	O-RING MATERIAL 1,5 MM	
370	90600-0332		1	ELBOW PIPE JOINT, EXT.THREAD, D=4MM M5	
380	90166-0109	MM	750	TUBE 4 MM PA TRANSP.	
390	352113-0102		5	CABLE TIE, BLACK 188X4,8 MM	
500	312105-0323		1	SCREW, M6S ISO 4017 M5X8 A4 80	
510	312105-0367		2	SCREW, M6S ISO 4017 M6X14 A4 80	
520	312105-0376		8	SCREW, M6S ISO 4014 M6X35 A4 80	
530	312105-0503		2	SCREW, M6S ISO 4014 M10X60 A4 80	
540	312115-0329		1	SCREW ISO4762 M5X16 A4 80	
550	312115-0366		2	SCREW ISO4762 M6X12 A4 80	
560	312125-0226		4	SLOTTED HEAD SCREW, ISO1207 M3X12 A4	
570	312318-0283		1	SET SCREW, CUP END ISO4029 M4X4 A4	
600	312605-0318		1	HEXAGON NUT, M6M M8 A280	
650	315115-0153		8	WASHER PLAIN, TBRB 6,4/12 H=3	
700	315202-0110		2	O-RING 12,1X1,6 MM	
710	315202-0265		1	O-RING 12,3X2,4 MM	
720	315211-0101		2	BONDED SEAL SS/NBR90 M4	
730	315211-0103		2	BONDED SEAL SS/NBR90 M6	
740	315237-0108		1	WASHER,PL.RND.AL.5,2/8,H=0,5	
750	315237-0109		3	WASHER,PL.RND.AL.10/14,H=1,5	
760	311103-0268		2	PARALLEL PIN ISO 2338 4M6X12 A1	
770	311103-1312		1	PARALLEL PIN ISO 2338 5M6X24 A1	
780	311111-0207		1	SPRING PIN ISO 8752 3X14-ST	
790	311111-0308		2	SPRING PIN ISO 8752 5X20-ST	

Machine Type | Group Description | Used-In | Group Number | Page No

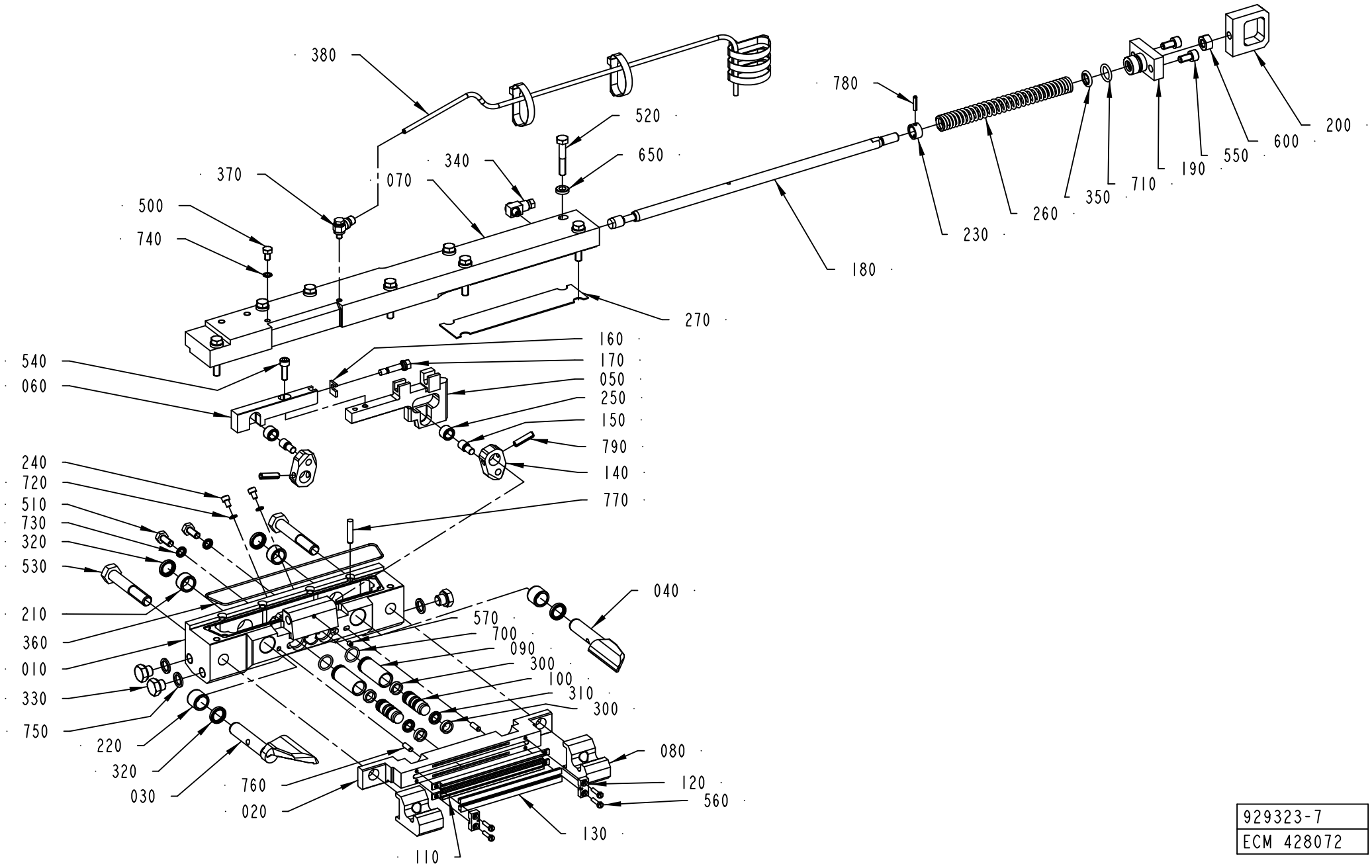

929323-7
ECM 428072

ECM: 431350 - 20091221
Group number: 929323-0300
Assembly Drawing: 929323-7_1_AA

Pos	Part No	UN	Qty	Description	Page No
TPA 0200SQ					
010	2810391-0000		1	BEARING HOUSING	
020	1350994-0000		1	CUTTING JAW	
030	1350985-0000		1	FOLDING FLAP RIGHT	
040	1350986-0000		1	FOLDING FLAP LEFT	
050	1350998-0000		1	CARRIER RULER LEFT	
060	1350997-0000		1	CARRIER RULER LEFT	
TPA 0250SQ					
010	2810392-0000		1	BEARING HOUSING	
020	1350994-0000		1	CUTTING JAW	
030	1350985-0000		1	FOLDING FLAP RIGHT	
040	1350986-0000		1	FOLDING FLAP LEFT	
050	1350998-0000		1	CARRIER RULER LEFT	
060	1350997-0000		1	CARRIER RULER LEFT	
TPA 0330SQ					
010	2810393-0000		1	BEARING HOUSING	
020	929308-0000		1	CUTTING JAW	
030	929314-0000		1	FOLDING FLAP RIGHT	
040	929315-0000		1	FOLDING FLAP LEFT	
050	929311-0000		1	CARRIER RULER LEFT	
060	929313-0000		1	CARRIER RULER LEFT	
Common Parts					
070	929306-0000		1	CARRIER LEFT	
080	929309-0000		2	CATCH	
090	752288-0000		2	SLEEVE	
100	752115-0000		2	PLUNGER	
110	1110211-0000		2	CUTTING RAIL	
120	1110871-0000		2	BRACKET	
130	1110391-0000		2	DOLLY	
140	272419-0000		2	CARRIER	
150	256607-0000		2	AXLE PIN	
160	751580-0000		1	SHIM	
170	751579-0000		1	ADJUSTING SCREW	
180	256659-0000		1	OPERATING ROD	
190	256706-0000		1	BEARING PLATE	
200	256626-0000		1	EAR	
210	929316-0001		2	BEARING	
220	929316-0002		2	BEARING	
230	255801-0000		1	RETAINING RING	
240	752476-0000		2	SCREW	
250	22463-0000		2	ROLL	
260	255742-0000		1	COMPRESSION SPRING	
270	257362-0000		1	LACE	
300	90091-0169		4	WEAR RING 12X15X3,2 MM	
310	90091-0216		2	PISTON SEAL GLYD RING 7,1X12X2,2 MM	
320	90459-5936		4	BEARING SEAL 12X16X3 MM	
330	90330-0066		3	PLUG, G1/8EXT, G1/8	
340	90134-0058		1	CONNECTION	
350	90091-0091		1	ROD SEAL 10X14X1,7 MM	
360	90242-0093	M	1	O-RING MATERIAL 1,5 MM	
370	90600-0332		1	ELBOW PIPE JOINT, EXT.THREAD, D=4MM M5	
380	90166-0109	MM	750	TUBE 4 MM PA TRANSP.	
390	352113-0102		5	CABLE TIE, BLACK 188X4,8 MM	
500	312105-0323		1	SCREW, M6S ISO 4017 M5X8 A4 80	
510	312105-0367		2	SCREW, M6S ISO 4017 M6X14 A4 80	
520	312105-0376		8	SCREW, M6S ISO 4014 M6X35 A4 80	
530	312105-0503		2	SCREW, M6S ISO 4014 M10X60 A4 80	
540	312115-0329		1	SCREW ISO4762 M5X16 A4 80	
550	312115-0366		2	SCREW ISO4762 M6X12 A4 80	
560	312125-0226		4	SLOTTED HEAD SCREW, ISO1207 M3X12 A4	
570	312318-0283		1	SET SCREW, CUP END ISO4029 M4X4 A4	
600	312605-0318		1	HEXAGON NUT, M6M M8 A280	
650	315115-0153		8	WASHER PLAIN, TBRB 6,4/12 H=3	
700	315202-0110		2	O-RING 12,1X1,6 MM	
710	315202-0265		1	O-RING 12,3X2,4 MM	
720	315211-0101		2	BONDED SEAL SS/NBR90 M4	
730	315211-0103		2	BONDED SEAL SS/NBR90 M6	
740	315237-0108		1	WASHER,PL.RND.AL.5,2/8,H=0,5	
750	315237-0109		3	WASHER,PL.RND.AL.10/14,H=1,5	
760	311103-0268		2	PARALLEL PIN ISO 2338 4M6X12 A1	
770	311103-1312		1	PARALLEL PIN ISO 2338 5M6X24 A1	
780	311111-0207		1	SPRING PIN ISO 8752 3X14-ST	
790	311111-0308		2	SPRING PIN ISO 8752 5X20-ST	

Machine Type | Group Description | Used-In | Group Number | Page No

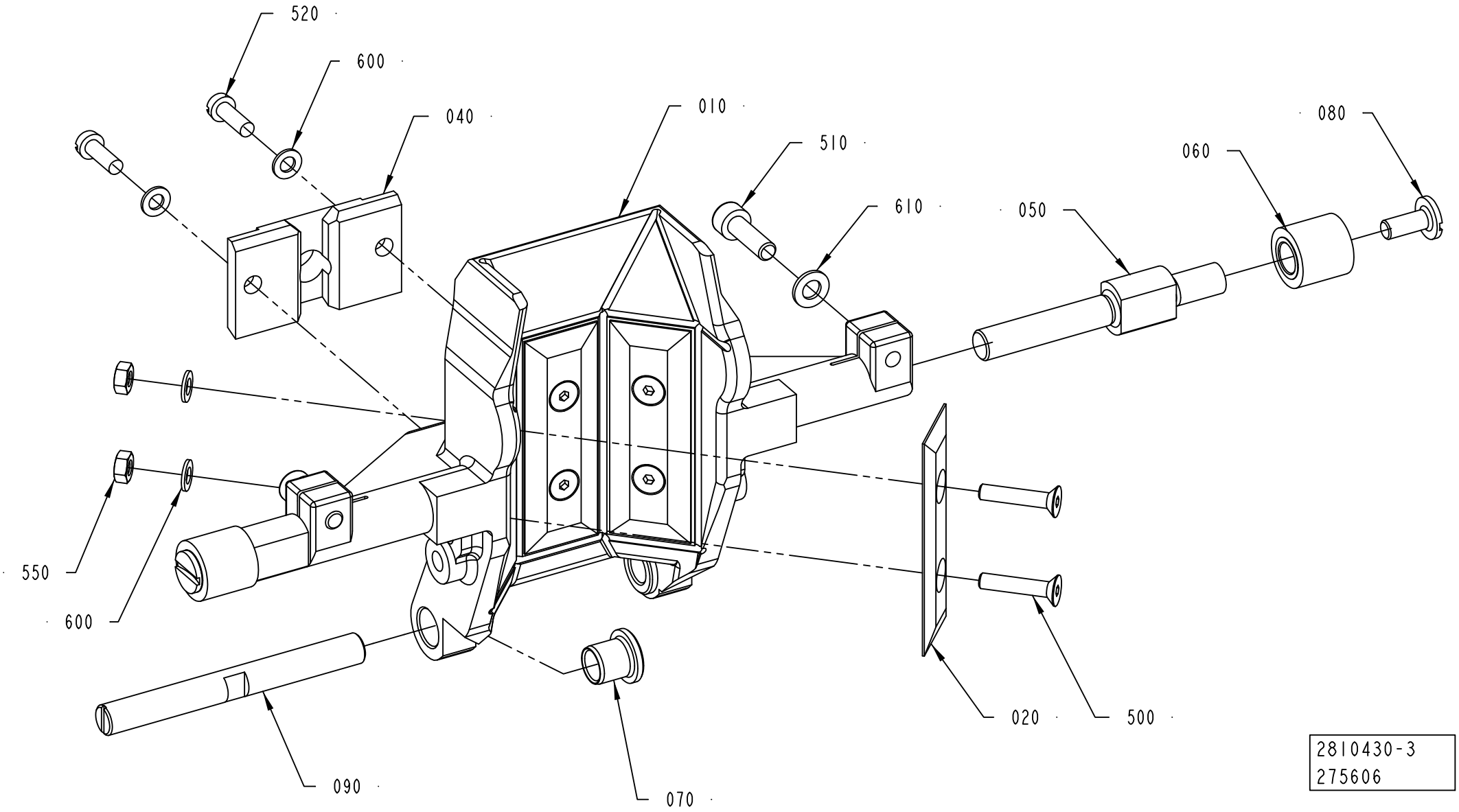
520
600
040
010
510
610
080
060
050
550
600
020
500
090
070
2810430-3
275606

ECM: 292924 - 20070126
Group number: 2810430-0100
Assembly Drawing: 2810430-3_1_AA

Pos	Part No	UN	Qty	Description	Page No
TPA 0200SQ					
010	1532981-0000		1	VOLUME FLAP	
020	1538782-0000		3	VOLUME BULGE P48 200	
040	1350957-0000		1	STOP	
090	2810395-0000		1	SHAFT	
500	312155-0287		6	SCREW DIN 7991 MF6S M4X8 A4 70	
600	315105-0136		2	WASHER PLAIN, 4,3X9X0,8 A4 BRB	
TPA 0250SQ					
010	1350961-0000		1	VOLUME FLAP	
020	1350959-0000		3	VOLUME BULGE P48 250	
040	1350957-0000		1	STOP	
090	2810395-0000		1	SHAFT	
500	312155-0295		6	SCREW DIN 7991 MF6S M4X20 A4 70	
550	312605-0312		6	HEXAGON NUT, M6M M4 A280	
600	315105-0136		8	WASHER PLAIN, 4,3X9X0,8 A4 BRB	
TPA 0330SQ					
010	929354-0000		1	VOLUME FLAP	
020	929374-0000		3	VOLUME BULGE P48 330	
040	929319-0000		1	STOP	
090	2810396-0000		1	SHAFT	
500	312155-0295		6	SCREW DIN 7991 MF6S M4X20 A4 70	
550	312605-0312		6	HEXAGON NUT, M6M M4 A280	
600	315105-0136		8	WASHER PLAIN, 4,3X9X0,8 A4 BRB	
Common Parts					
050	2810402-0000		2	SHAFT	
060	256860-0000		2	ROLL	
070	2810394-0000		2	BUSHING	
080	256859-0000		2	SCREW	
510	312115-0329		2	SCREW ISO4762 M5X16 A4 80	
520	312125-0291		2	SLOTTED HEAD SCREW, ISO1207 M4X12 A4	
610	315105-0146		2	WASHER PLAIN, 5,3X10X1 A4 BRB	

Pos	Part No	UN	Qty	Description	Page No

Machine Type | Group Description | Used-In | Group Number | Page No

VOLUME FLAP

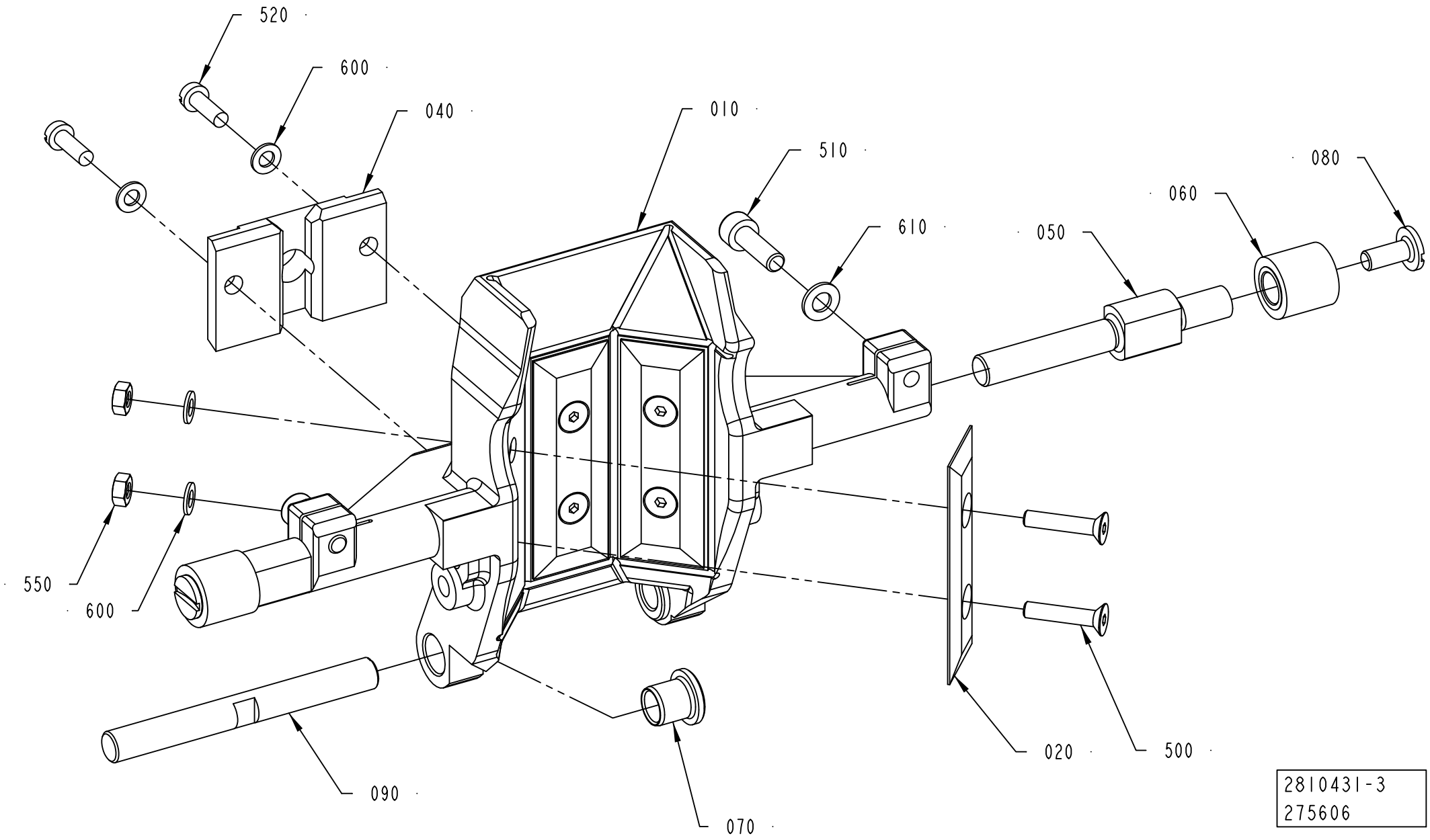
520
600
040
010
510
080
060
610
050
550
600
090
070
020
500
2810431-3
275606

ECM: 292925 - 20070126
Group number: 2810431-0100
Assembly Drawing: 2810431-3_1_AA

Pos	Part No	UN	Qty	Description	Page No
TPA 0200SQ					
010	2506673-0000		1	VOLUME FLAP	
020	1538782-0000		3	VOLUME BULGE P48 200	
040	1350958-0000		1	STOP	
090	2810395-0000		1	SHAFT	
500	312155-0287		6	SCREW DIN 7991 MF6S M4X8 A4 70	
600	315105-0136		2	WASHER PLAIN, 4,3X9X0,8 A4 BRB	
TPA 0250SQ					
010	1350960-0000		1	VOLUME FLAP	
020	1350959-0000		3	VOLUME BULGE P48 250	
040	1350958-0000		1	STOP	
090	2810395-0000		1	SHAFT	
500	312155-0295		6	SCREW DIN 7991 MF6S M4X20 A4 70	
550	312605-0312		6	HEXAGON NUT, M6M M4 A280	
600	315105-0136		8	WASHER PLAIN, 4,3X9X0,8 A4 BRB	
TPA 0330SQ					
010	929334-0000		1	VOLUME FLAP	
020	929374-0000		3	VOLUME BULGE P48 330	
040	929320-0000		1	STOP	
090	2810396-0000		1	SHAFT	
500	312155-0295		6	SCREW DIN 7991 MF6S M4X20 A4 70	
550	312605-0312		6	HEXAGON NUT, M6M M4 A280	
600	315105-0136		8	WASHER PLAIN, 4,3X9X0,8 A4 BRB	
Common Parts					
050	2810402-0000		2	SHAFT	
060	256860-0000		2	ROLL	
070	2810394-0000		2	BUSHING	
080	256859-0000		2	SCREW	
510	312115-0329		2	SCREW ISO4762 M5X16 A4 80	
520	312125-0291		2	SLOTTED HEAD SCREW, ISO1207 M4X12 A4	
610	315105-0146		2	WASHER PLAIN, 5,3X10X1 A4 BRB	

Pos	Part No	UN	Qty	Description	Page No

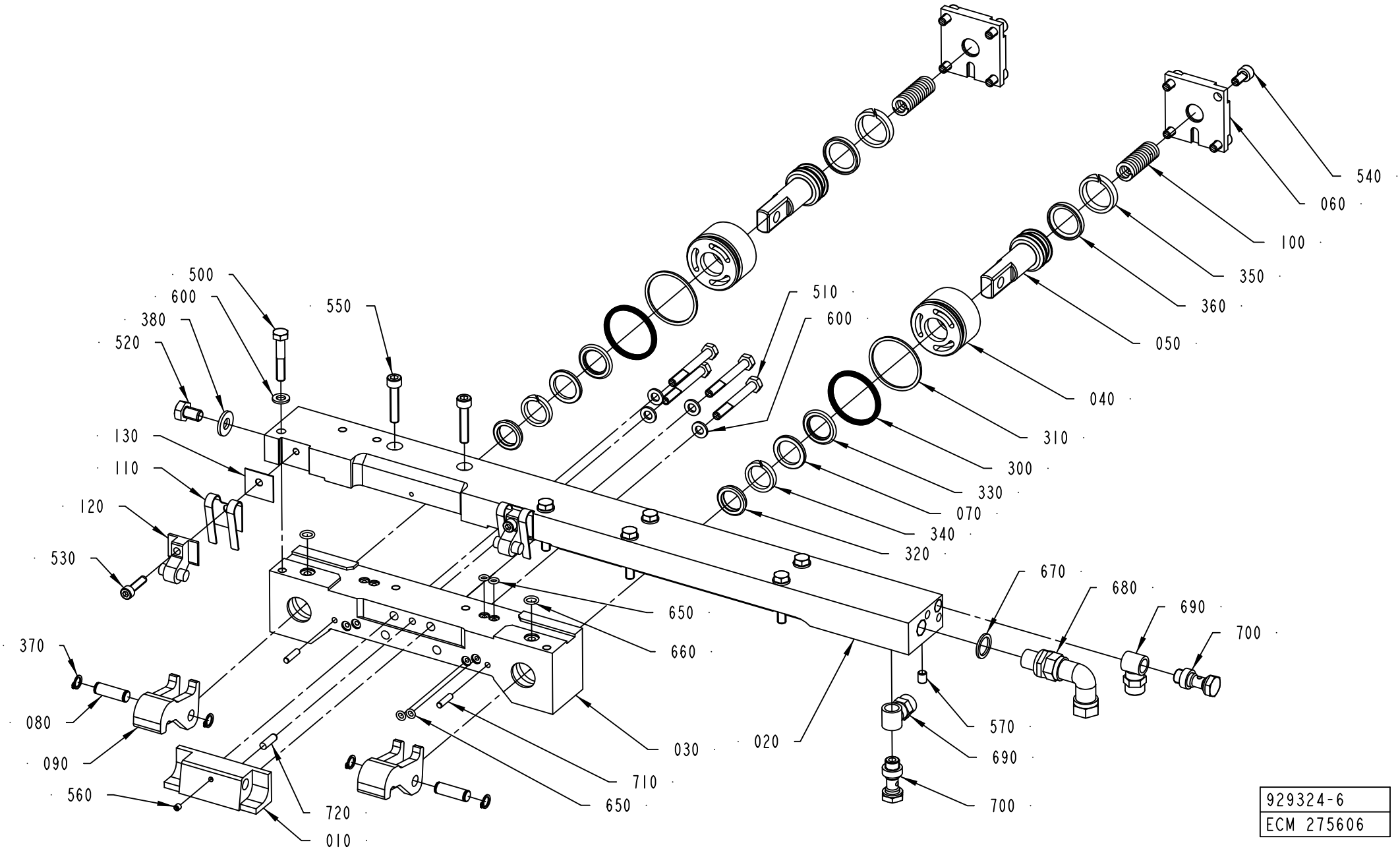

929324-6
ECM 275606

ECM: 292912 - 20070126
Group number: 929324-0200
Assembly Drawing: 929324-6_1_AA

Pos	Part No	UN	Qty	Description	Page No
TPA 0200SQ					
010	2810397-0000		1	AXLE SUPPORT	
TPA 0250SQ					
010	2810398-0000		1	AXLE SUPPORT	
TPA 0330SQ					
010	2810399-0000		1	AXLE SUPPORT	
Common Parts					
020	929335-0000		1	CARRIER RIGHT	
030	2526914-0000		1	BEARING HOUSING	
040	929371-0000		2	SLEEVE	
050	929372-0000		2	PISTON	
060	929346-0000		2	LID	
070	1038240-0000		2	SPACER	
080	950351-0000		2	SHAFT	
090	929344-0000		2	CATCH	
100	590369-0000		2	COMPRESSION SPRING	
110	929391-0000		2	SPRING	
120	929375-0000		2	SUPPORT	
130	1487987-0000		2	SHIM	
300	90091-0359		2	X-SEAL 36,17X2,62 MM	
310	90091-0360		2	BACK-UP RING 37,5X1,4 MM	
320	90091-0362		2	SCRAPER, EXCLUDER 18X22,8X3,7 MM	
330	90091-0364		2	ROD SEAL, STEPSEAL 18X25,3X3,2 MM	
340	90091-0366		2	WEAR RING 18X23X3,9 MM	
350	90091-0391		2	SEAL SLYDRING	
360	90091-0398		2	PISTON SEAL GLIDE RING T 20,5X28X3,2 MM	
370	90141-0015		4	RETAINING RING FOR SHAFT DIN 471 8 SS	
380	90005-0052		1	WASHER,PL.RND.CU.8/18 H=2	
500	312105-0376		6	SCREW, M6S ISO 4014 M6X35 A4 80	
510	312105-0380		4	SCREW, M6S ISO 4014 M6X50 A4 80	
520	312105-0447		1	SCREW, M6S ISO 4017 M8X12 A4 80	
530	312115-0331		2	SCREW ISO4762 M5X20 A4 80	
540	312115-0366		8	SCREW ISO4762 M6X12 A4 80	
550	312115-0374		2	SCREW ISO4762 M6X30 A4 80	
560	312318-0283		1	SET SCREW, CUP END ISO4029 M4X4 A4	
570	312318-0362		1	SET SCREW, CUP END ISO4029 M6X8 A4	
600	315105-0153		10	WASHER PLAIN, 6,4X12X1,5 A4 BRB	
650	315202-0102		4	O-RING 4,1X1,6 MM	
660	315202-0105		2	O-RING 7,1X1,6 MM	
670	315237-0110		1	WASHER,PL.RND.AL.13,5/18,H=1,5	
680	342738-0108		1	ADJUSTABLE ELBOW CONNECTION 8-G1/4	
690	342980-0121		2	HOSE FITTING, BANJO RING L PO G1/8 8/6	
700	342980-0303		2	BANJO-HOLLOW BOLT COUPL,EXT.THR.01-G1/8	
710	311103-0270		2	PARALLEL PIN ISO 2338 4M6X16 A1	
720	311103-0308		1	PARALLEL PIN ISO 2338 5M6X16 A1	

Machine Type | Group Description | Used-In | Group Number | Page No

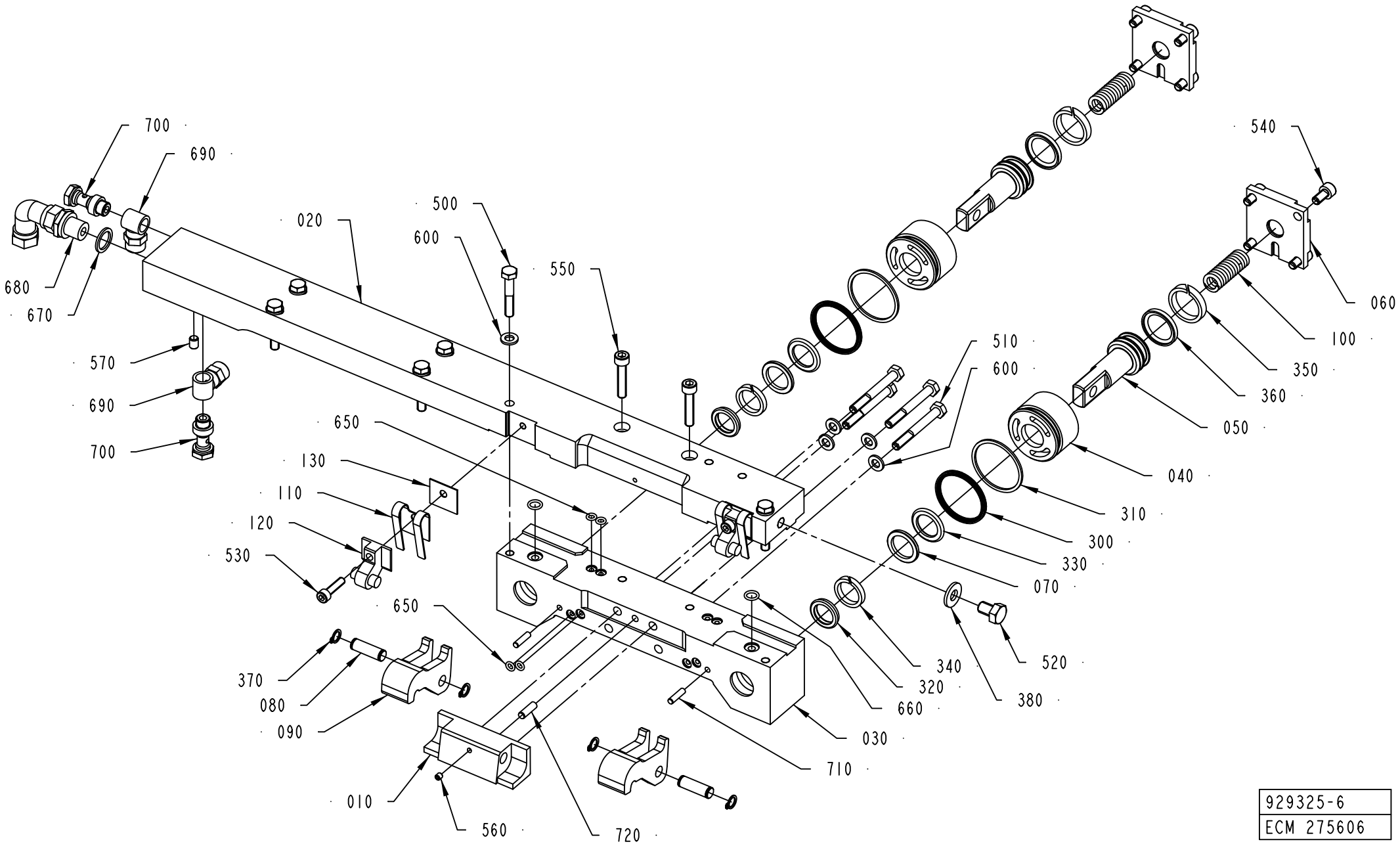

929325-6
ECM 275606

ECM: 292913 - 20070126
Group number: 929325-0200
Assembly Drawing: 929325-6_1_AA

Pos	Part No	UN	Qty	Description	Page No
TPA 0200SQ					
010	2810397-0000		1	AXLE SUPPORT	
TPA 0250SQ					
010	2810398-0000		1	AXLE SUPPORT	
TPA 0330SQ					
010	2810399-0000		1	AXLE SUPPORT	
Common Parts					
020	929336-0000		1	CARRIER LEFT	
030	2526914-0000		1	BEARING HOUSING	
040	929371-0000		2	SLEEVE	
050	929372-0000		2	PISTON	
060	929346-0000		2	LID	
070	1038240-0000		2	SPACER	
080	950351-0000		2	SHAFT	
090	929344-0000		2	CATCH	
100	590369-0000		2	COMPRESSION SPRING	
110	929391-0000		2	SPRING	
120	929375-0000		2	SUPPORT	
130	1487987-0000		2	SHIM	
300	90091-0359		2	X-SEAL 36,17X2,62 MM	
310	90091-0360		2	BACK-UP RING 37,5X1,4 MM	
320	90091-0362		2	SCRAPER, EXCLUDER 18X22,8X3,7 MM	
330	90091-0364		2	ROD SEAL, STEPSEAL 18X25,3X3,2 MM	
340	90091-0366		2	WEAR RING 18X23X3,9 MM	
350	90091-0391		2	SEAL SLYDRING	
360	90091-0398		2	PISTON SEAL GLIDE RING T 20,5X28X3,2 MM	
370	90141-0015		4	RETAINING RING FOR SHAFT DIN 471 8 SS	
380	90005-0052		1	WASHER,PL.RND.CU.8/18 H=2	
500	312105-0376		6	SCREW, M6S ISO 4014 M6X35 A4 80	
510	312105-0380		4	SCREW, M6S ISO 4014 M6X50 A4 80	
520	312105-0447		1	SCREW, M6S ISO 4017 M8X12 A4 80	
530	312115-0331		2	SCREW ISO4762 M5X20 A4 80	
540	312115-0366		8	SCREW ISO4762 M6X12 A4 80	
550	312115-0374		2	SCREW ISO4762 M6X30 A4 80	
560	312318-0283		1	SET SCREW, CUP END ISO4029 M4X4 A4	
570	312318-0362		1	SET SCREW, CUP END ISO4029 M6X8 A4	
600	315105-0153		10	WASHER PLAIN, 6,4X12X1,5 A4 BRB	
650	315202-0102		4	O-RING 4,1X1,6 MM	
660	315202-0105		2	O-RING 7,1X1,6 MM	
670	315237-0110		1	WASHER,PL.RND.AL.13,5/18,H=1,5	
680	342738-0108		1	ADJUSTABLE ELBOW CONNECTION 8-G1/4	
690	342980-0121		2	HOSE FITTING, BANJO RING L PO G1/8 8/6	
700	342980-0303		2	BANJO-HOLLOW BOLT COUPL,EXT.THR.01-G1/8	
710	311103-0270		2	PARALLEL PIN ISO 2338 4M6X16 A1	
720	311103-0308		1	PARALLEL PIN ISO 2338 5M6X16 A1	

Machine Type | Group Description | Used-In | Group Number | Page No

MOTORIZED DESIGN CONTROL SYSTEM, LEFT

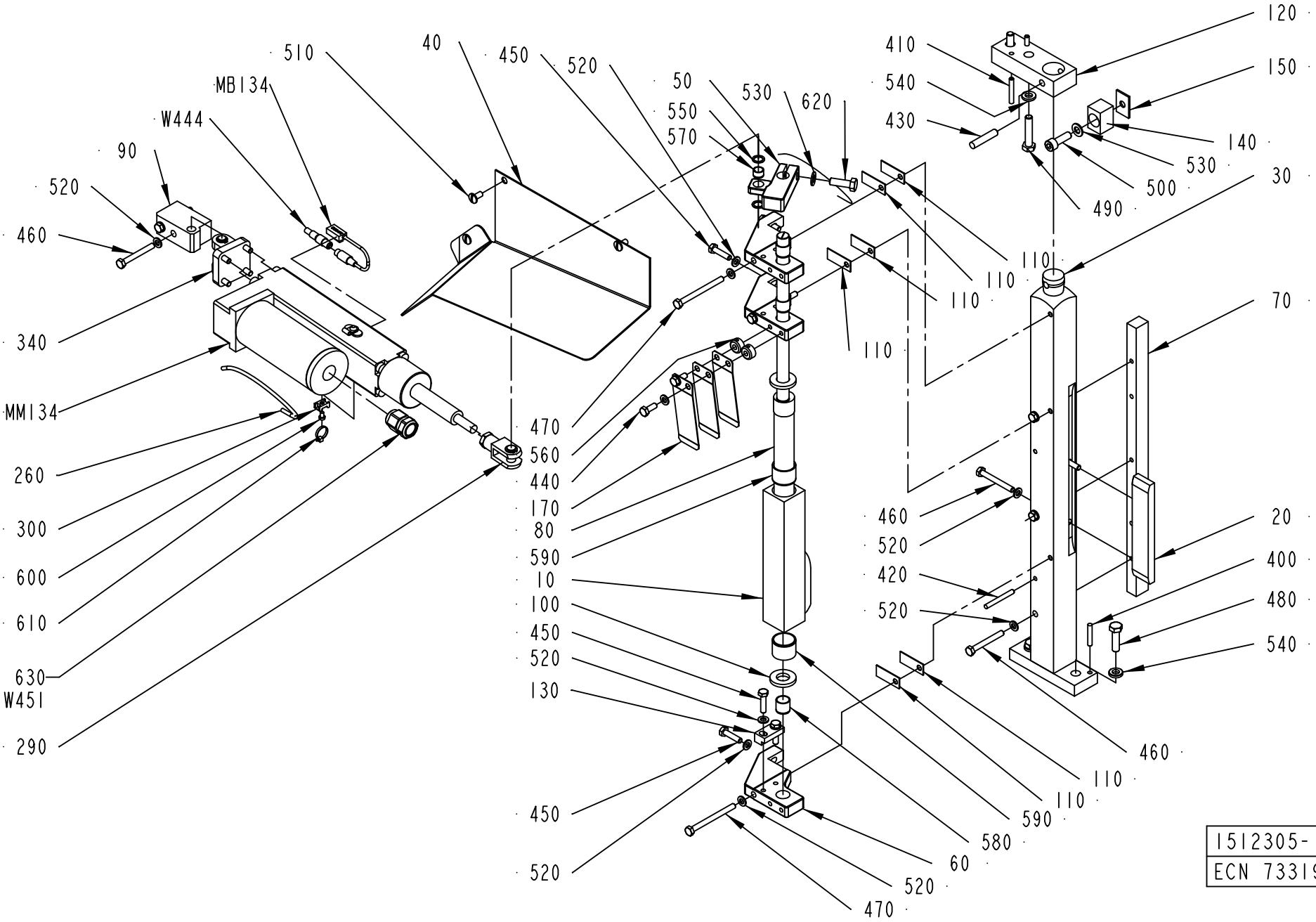

1512305-1
ECN 73319

ECM: 431081 - 20100222
Group number: 1512305-0100
Assembly Drawing: 1512305-1_1_AA

This list covers pages from 4-56 to 4-59

Pos	Part No	UN	Qty	Description	Page No
TBA 0100B					
010	979770-0000		1	FOLDING FLAP CAM 100	
020	979771-0000		1	COUNTER CAM 100	
TBA 0125S, TBA 0200B					
010	456760-0010		1	FOLDING FLAP CAM 200B & 125S	
020	272640-0005		1	COUNTER CAM	
TBA 0160S					
010	577225-0000		1	FOLDING FLAP CAM	
020	272640-0006		1	COUNTER CAM	
TBA 0200M					
010	456760-0011		1	FOLDING FLAP CAM 250B	
020	272640-0009		1	COUNTER CAM	
TBA 0200S					
010	456760-0003		1	FOLDING FLAP CAM 200S	
020	272640-0009		1	COUNTER CAM	
TBA 0250B					
010	456760-0011		1	FOLDING FLAP CAM 250B	
020	272640-0002		1	COUNTER CAM	
TBA 0250S					
010	574494-0000		1	FOLDING FLAP CAM	
020	272640-0009		1	COUNTER CAM	
TBA 0284B, TBA 0300S					
010	456760-0012		1	FOLDING FLAP CAM	
020	272640-0002		1	COUNTER CAM	
TBA 0330S					
010	582162-0000		1	FOLDING FLAP CAM	
020	272640-0001		1	COUNTER CAM	
TPA 0200SQ					
010	1539357-0000		1	FOLDING FLAP CAM P48 200	
020	929440-0000		1	COUNTER CAM	
TPA 0250SQ					
010	1350992-0000		1	FOLDING FLAP CAM P48 250	
020	929440-0000		1	COUNTER CAM	
TPA 0330SQ					
010	929356-0000		1	FOLDING FLAP CAM P48 330	
020	929440-0000		1	COUNTER CAM	
TWA 0125S					
010	2987296-0000		1	FOLDING FLAP CAM	
020	1360638-0000		1	COUNTER CAM	
TWA 0200S					
010	1360633-0000		1	FOLDING FLAP CAM 200S	
020	1360634-0000		1	COUNTER CAM	

Pos	Part No	UN	Qty	Description	Page No
Common Parts					
030	272642-0000		1	PILLAR	
040	2514041-0000		1	PROTECTION	
050	929402-0000		1	ARM	
060	272491-0000		3	BRACKET	
070	272645-0000		1	RAIL	
080	272654-0000		1	ECCENTRIC SHAFT	
090	2512787-0000		1	HOLDER	
100	256621-0000		2	WASHER	
110	256705-0000		6	LACE	
120	256707-0000		1	BRACKET	
130	271284-0000		1	BLOCKING PIECE	
140	978184-0000		1	STOPPER	
150	978185-0000		1	SHIM	
170	257334-0000		3	LEAF SPRING	
260	90166-0095	MM	250	TUBE 4 MM PA BLUE (50M)	
290	90239-0357		1	ROD END, CLEVIS WITH AXLE M10X1,25	
300	352113-0205		1	ANCHOR PLATES FOR STRIPS, TM2S8-C100	
340	90450-0654		1	BRACKET,REAR,EYE WITH AXLE 32	
400	311103-0314		2	PARALLEL PIN ISO 2338 5M6X30 A1	
410	311103-0316		2	PARALLEL PIN ISO 2338 5M6X35 A1	
420	311103-0320		2	PARALLEL PIN ISO 2338 5M6X45 A1	
430	311103-0409		1	PARALLEL PIN ISO 2338 8M6X40 A1	
440	312105-0368		2	SCREW, M6S ISO 4017 M6X16 A4 80	
450	312105-0372		5	SCREW, M6S ISO 4017 M6X25 A4 80	
460	312105-0380		7	SCREW, M6S ISO 4014 M6X50 A4 80	
470	312105-0384		3	SCREW, M6S ISO 4014 M6X70 A4 80	
480	312105-0455		2	SCREW, M6S ISO 4017 M8X30 A4 80	
490	312105-0459		2	SCREW, M6S ISO 4014 M8X40 A4 80	
500	312115-0453		1	SCREW ISO4762 M8X25 A4 80	
510	90287-0075		3	SCREW SLOT. PAN HEAD LKCS M6X12	
520	315105-0153		17	WASHER PLAIN, 6,4X12X1,5 A4 BRB	
530	315105-0165		2	WASHER PLAIN, 8,4X16X1,6 A4 BRB	
540	315115-0165		4	WASHER PLAIN, TBRB 8,4/16 H=3	
550	315239-0109		2	NYLON WASHER G1/8, 1/8RRP	
560	315742-0102		2	RETAINING RING, 6 SMS 199 RFR	
570	90600-4687		1	BEARING BUSH W/O FLANGE, 10X12X8 MM	
580	90600-4289		3	BEAR. BUSH. WITHOUT FL, 14X16X15 MM	
590	90600-4688		2	BEARING BUSH W/O FLANGE, 24X27X20 MM	
600	312125-0285		1	SLOTTED HEAD SCREW, ISO1207 M4X6 A4	
610	352113-0101		1	CABLE TIE, BLACK 92X2,5 MM	
620	312105-0453		1	SCREW, M6S ISO 4017 M8X25 A4 80	

Machine Type | Group Description | Used-In | Group Number | Page No

MOTORIZED DESIGN CONTROL SYSTEM, LEFT

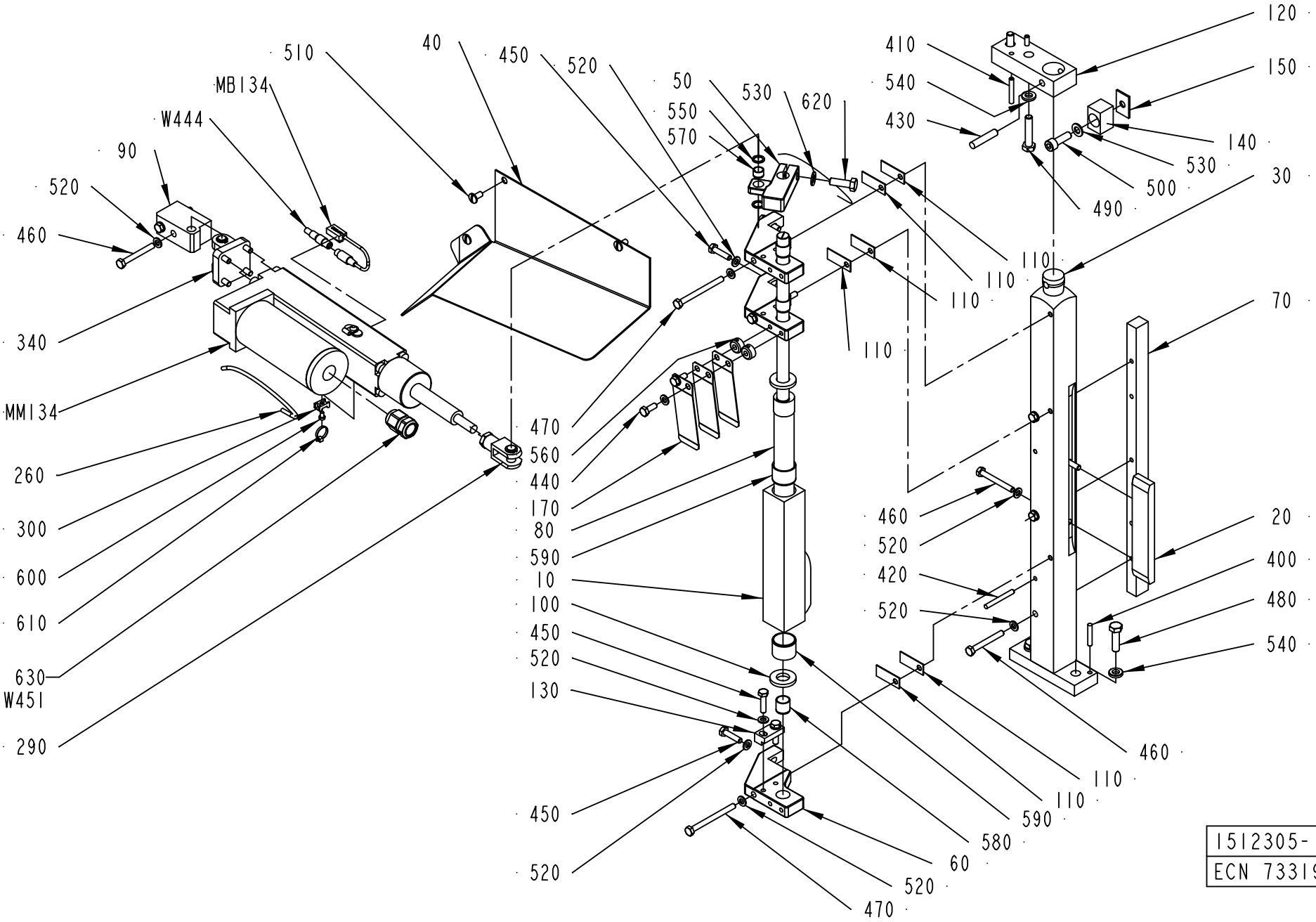

1512305-1
ECN 73319

ECM: 431081 - 20100222
Group number: 1512305-0100
Assembly Drawing: 1512305-1_1_AA

This list covers pages from 4-56 to 4-59

Pos	Part No	UN	Qty	Description	Page No
Common Parts (Cont'd)					
630	90458-0438		1	GLAND, EXTENDED WITH INSERT, M20X1,5	
MB134	90458-0747		1	SENSOR FOR CYLINDER, SMH-1PC	
MM134	90458-1301		1	LINEAR ACTUATOR, ETS32-M10NA2X-FM50-...	
W444	90458-1298		1	CONNECTOR, AND CABLE 403000E 18M 080	
W451	90220-0107	M	3.5	SCR. CABLE 5X0,75MM2	

Pos	Part No	UN	Qty	Description	Page No

Machine Type	Group Description	Used-In	Group Number	Page No

MOTORIZED DESIGN CONTROL SYSTEM, RIGHT

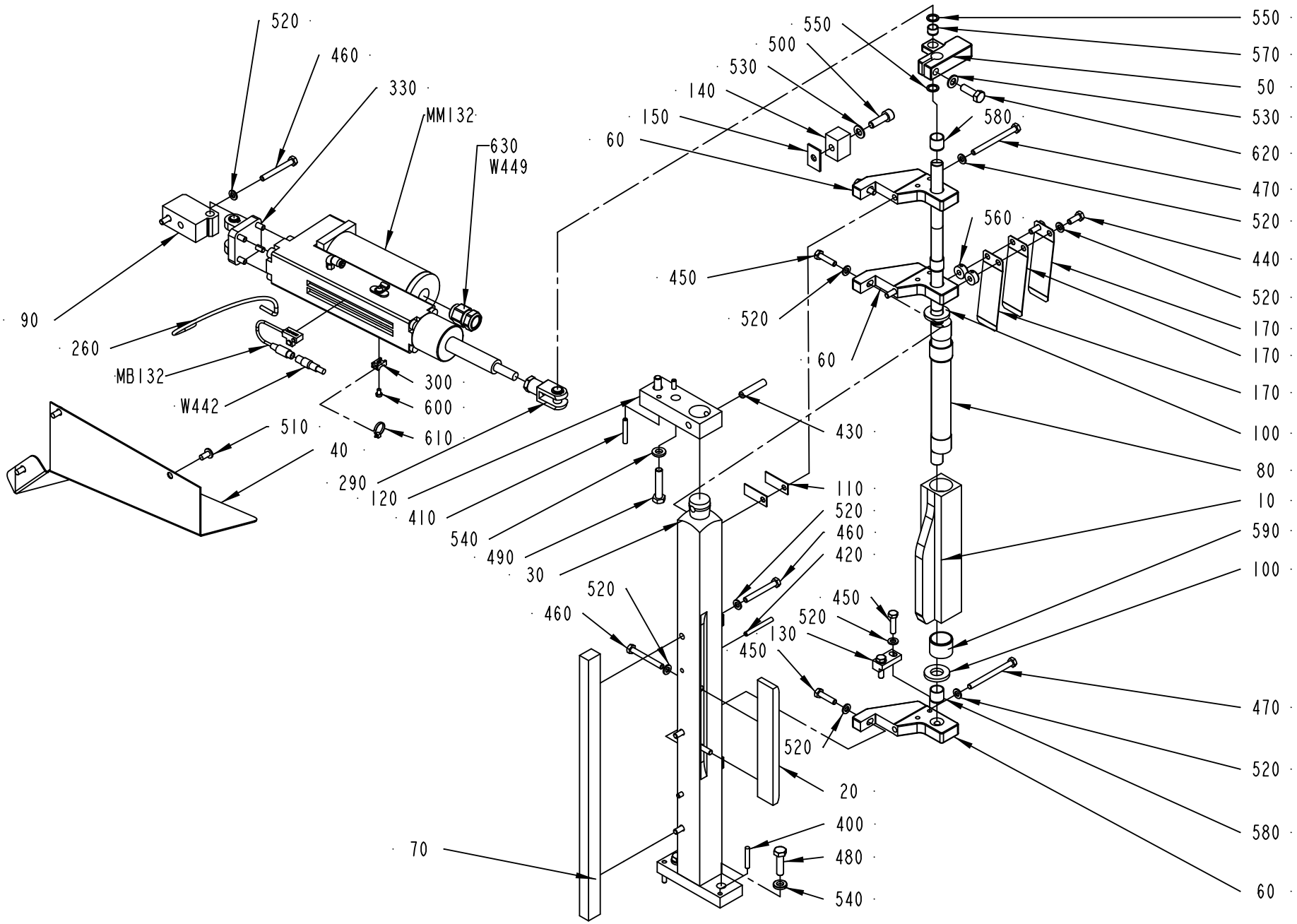

1512306-1
ECN 73319

ECM: 431084 - 20100222
Group number: 1512306-0100
Assembly Drawing: 1512306-1_1_AA

This list covers pages from 4-60 to 4-63

Pos	Part No	UN	Qty	Description	Page No
TBA 0100B					
010	979770-0000		1	FOLDING FLAP CAM 100	
020	979771-0000		1	COUNTER CAM 100	
TBA 0125S, TBA 0200B					
010	456760-0010		1	FOLDING FLAP CAM 200B & 125S	
020	272640-0005		1	COUNTER CAM	
TBA 0160S					
010	577225-0000		1	FOLDING FLAP CAM	
020	272640-0006		1	COUNTER CAM	
TBA 0200M					
010	456760-0011		1	FOLDING FLAP CAM 250B	
020	272640-0009		1	COUNTER CAM	
TBA 0200S					
010	456760-0003		1	FOLDING FLAP CAM 200S	
020	272640-0009		1	COUNTER CAM	
TBA 0250B					
010	456760-0011		1	FOLDING FLAP CAM 250B	
020	272640-0002		1	COUNTER CAM	
TBA 0250S					
010	574494-0000		1	FOLDING FLAP CAM	
020	272640-0009		1	COUNTER CAM	
TBA 0284B, TBA 0300S					
010	456760-0012		1	FOLDING FLAP CAM	
020	272640-0002		1	COUNTER CAM	
TBA 0330S					
010	582162-0000		1	FOLDING FLAP CAM	
020	272640-0001		1	COUNTER CAM	
TPA 0200SQ					
010	1539357-0000		1	FOLDING FLAP CAM P48 200	
020	929440-0000		1	COUNTER CAM	
TPA 0250SQ					
010	1350992-0000		1	FOLDING FLAP CAM P48 250	
020	929440-0000		1	COUNTER CAM	
TPA 0330SQ					
010	929356-0000		1	FOLDING FLAP CAM P48 330	
020	929440-0000		1	COUNTER CAM	
TWA 0125S					
010	2987296-0000		1	FOLDING FLAP CAM	
020	1360638-0000		1	COUNTER CAM	
TWA 0200S					
010	1360633-0000		1	FOLDING FLAP CAM 200S	
020	1360634-0000		1	COUNTER CAM	

Pos	Part No	UN	Qty	Description	Page No
Common Parts					
030	272641-0000		1	PILLAR	
040	2514042-0000		1	PROTECTION	
050	929402-0000		1	ARM	
060	272491-0000		3	BRACKET	
070	272645-0000		1	RAIL	
080	272654-0000		1	ECCENTRIC SHAFT	
090	2512787-0000		1	HOLDER	
100	256621-0000		2	WASHER	
110	256705-0000		6	LACE	
120	256707-0000		1	BRACKET	
130	271284-0000		1	BLOCKING PIECE	
140	978184-0000		1	STOPPER	
150	978185-0000		1	SHIM	
170	257334-0000		3	LEAF SPRING	
260	90166-0095	MM	250	TUBE 4 MM PA BLUE (50M)	
290	90239-0357		1	ROD END, CLEVIS WITH AXLE M10X1,25	
300	352113-0205		1	ANCHOR PLATES FOR STRIPS, TM2S8-C100	
340	90450-0654		1	BRACKET,REAR,EYE WITH AXLE 32	
400	311103-0314		2	PARALLEL PIN ISO 2338 5M6X30 A1	
410	311103-0316		2	PARALLEL PIN ISO 2338 5M6X35 A1	
420	311103-0320		2	PARALLEL PIN ISO 2338 5M6X45 A1	
430	311103-0409		1	PARALLEL PIN ISO 2338 8M6X40 A1	
440	312105-0368		2	SCREW, M6S ISO 4017 M6X16 A4 80	
450	312105-0372		5	SCREW, M6S ISO 4017 M6X25 A4 80	
460	312105-0380		7	SCREW, M6S ISO 4014 M6X50 A4 80	
470	312105-0384		3	SCREW, M6S ISO 4014 M6X70 A4 80	
480	312105-0455		2	SCREW, M6S ISO 4017 M8X30 A4 80	
490	312105-0459		2	SCREW, M6S ISO 4014 M8X40 A4 80	
500	312115-0453		1	SCREW ISO4762 M8X25 A4 80	
510	90287-0075		3	SCREW SLOT. PAN HEAD LKCS M6X12	
520	315105-0153		17	WASHER PLAIN, 6,4X12X1,5 A4 BRB	
530	315105-0165		2	WASHER PLAIN, 8,4X16X1,6 A4 BRB	
540	315115-0165		4	WASHER PLAIN, TBRB 8,4/16 H=3	
550	315239-0109		2	NYLON WASHER G1/8, 1/8RRP	
560	315742-0102		2	RETAINING RING, 6 SMS 199 RFR	
570	90600-4687		1	BEARING BUSH W/O FLANGE, 10X12X8 MM	
580	90600-4289		3	BEAR. BUSH. WITHOUT FL, 14X16X15 MM	
590	90600-4688		2	BEARING BUSH W/O FLANGE, 24X27X20 MM	
600	312125-0285		1	SLOTTED HEAD SCREW, ISO1207 M4X6 A4	
610	352113-0101		1	CABLE TIE, BLACK 92X2,5 MM	
620	312105-0453		1	SCREW, M6S ISO 4017 M8X25 A4 80	

Machine Type | Group Description | Used-In | Group Number | Page No

MOTORIZED DESIGN CONTROL SYSTEM, RIGHT

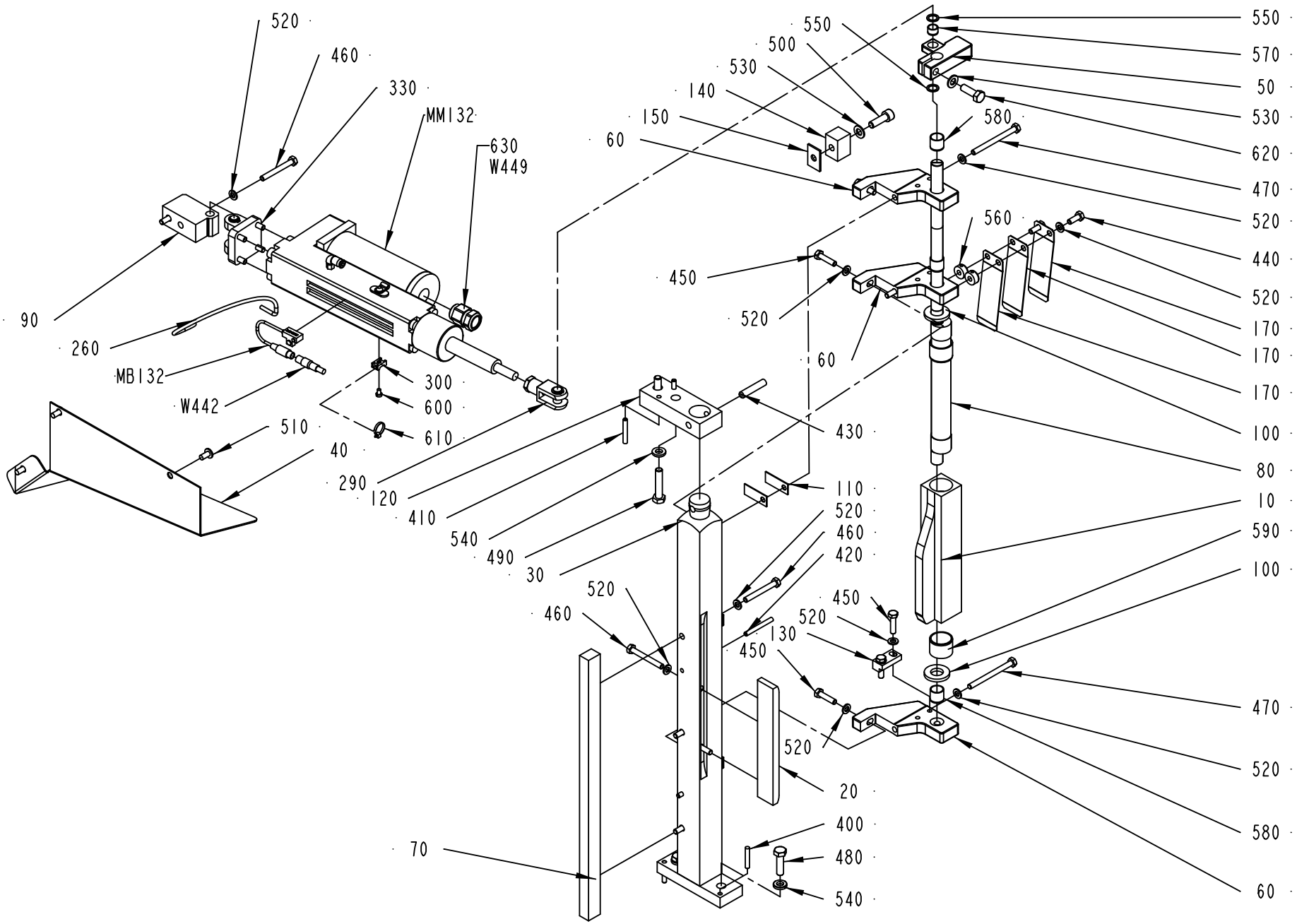

1512306-1
ECN 73319

ECM: 431084 - 20100222
Group number: 1512306-0100
Assembly Drawing: 1512306-1_1_AA

This list covers pages from 4-60 to 4-63

Pos	Part No	UN	Qty	Description	Page No
Common Parts (Cont'd)					
630	90458-0438		1	GLAND, EXTENDED WITH INSERT, M20X1,5	
MB132	90458-0747		1	SENSOR FOR CYLINDER, SMH-1PC	
MM132	90458-1301		1	LINEAR ACTUATOR, ETS32-M10NA2X-FM50-...	
W442	90458-1298		1	CONNECTOR, AND CABLE 403000E 18M 080	
W449	90220-0107	M	4.5	SCR. CABLE 5X0,75MM2	

Pos	Part No	UN	Qty	Description	Page No

Machine Type | Group Description | Used-In | Group Number | Page No

KNIFE HOLDER

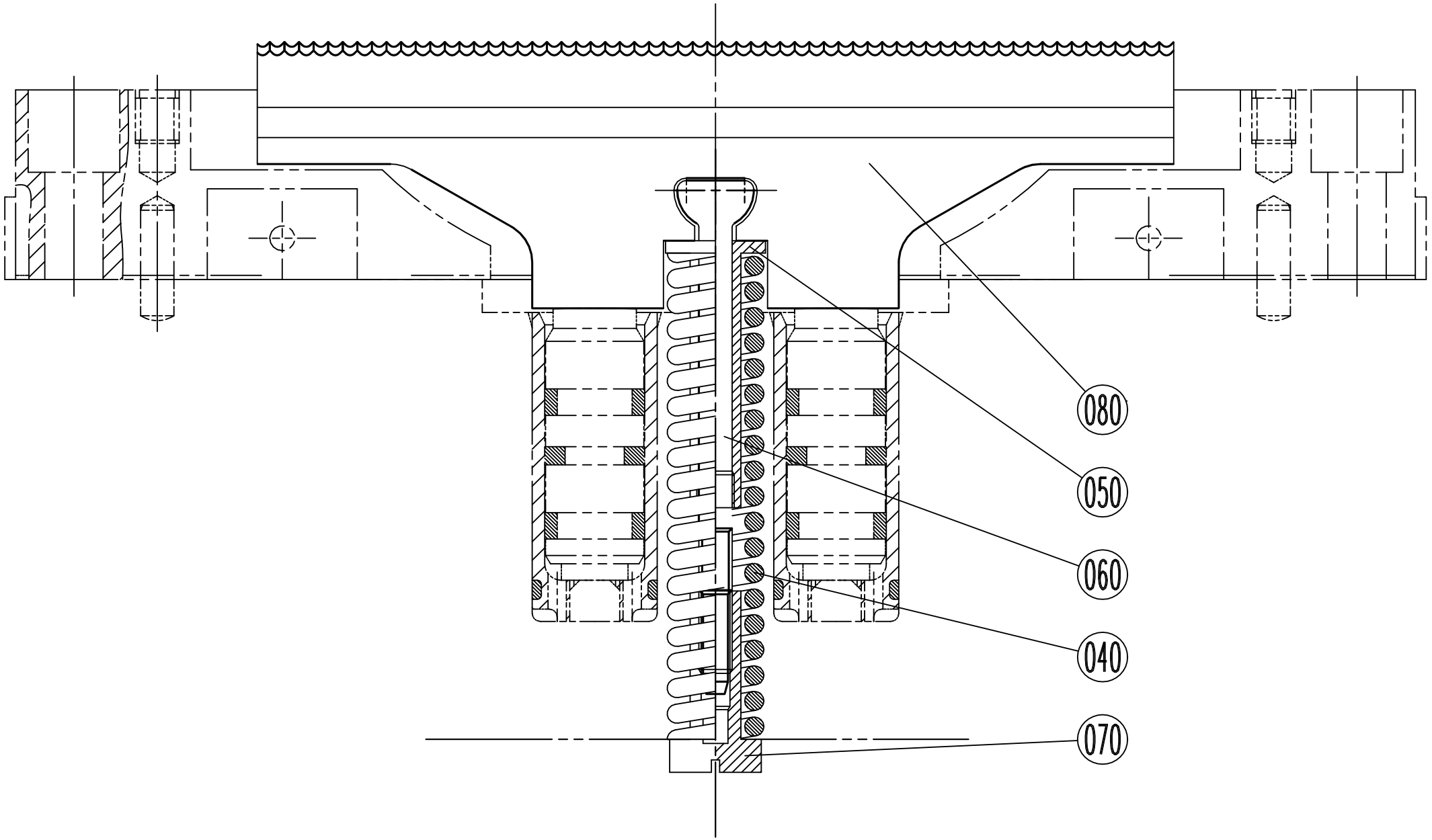

Pos	Part No	UN	Qty	Description	Page No
TBA 0100B IH, TBA 0125S IH, TWA 0125S IH, TPA 0125SQ, TBA 0080S (See drawing on page: 4-66)					
040	1538109-0000		1	COMPRESSION SPRING	
080	1282645-0000		1	KNIFE	
TBA 0160S IH, TBA 0200M IH, TBA 0200S IH, TBA 0250S IH, TWA 0200S IH, TBA 0200E (See drawing on page: 4-68)					
040	1538109-0000		1	COMPRESSION SPRING	
080	1282647-0000		1	KNIFE	
TBA 0200B IH, TBA 0200SQ IH, TBA 0250B IH, TBA 0300S IH, TBA 0284B IH, TBA 0330S IH, TPA 0250SQ IH, TPA 0330SQ IH, TPA 0200SQ IH, TBA 0250SQ IH (See drawing on page: 4-64)					
040	1538109-0000		1	COMPRESSION SPRING	
080	1282646-0000		1	KNIFE	
Common Parts					
050	272753-0000		1	STEERING	
060	456009-0000		1	LINK	
070	272755-0000		1	NUT	

Pos	Part No	UN	Qty	Description	Page No

KNIFE HOLDER

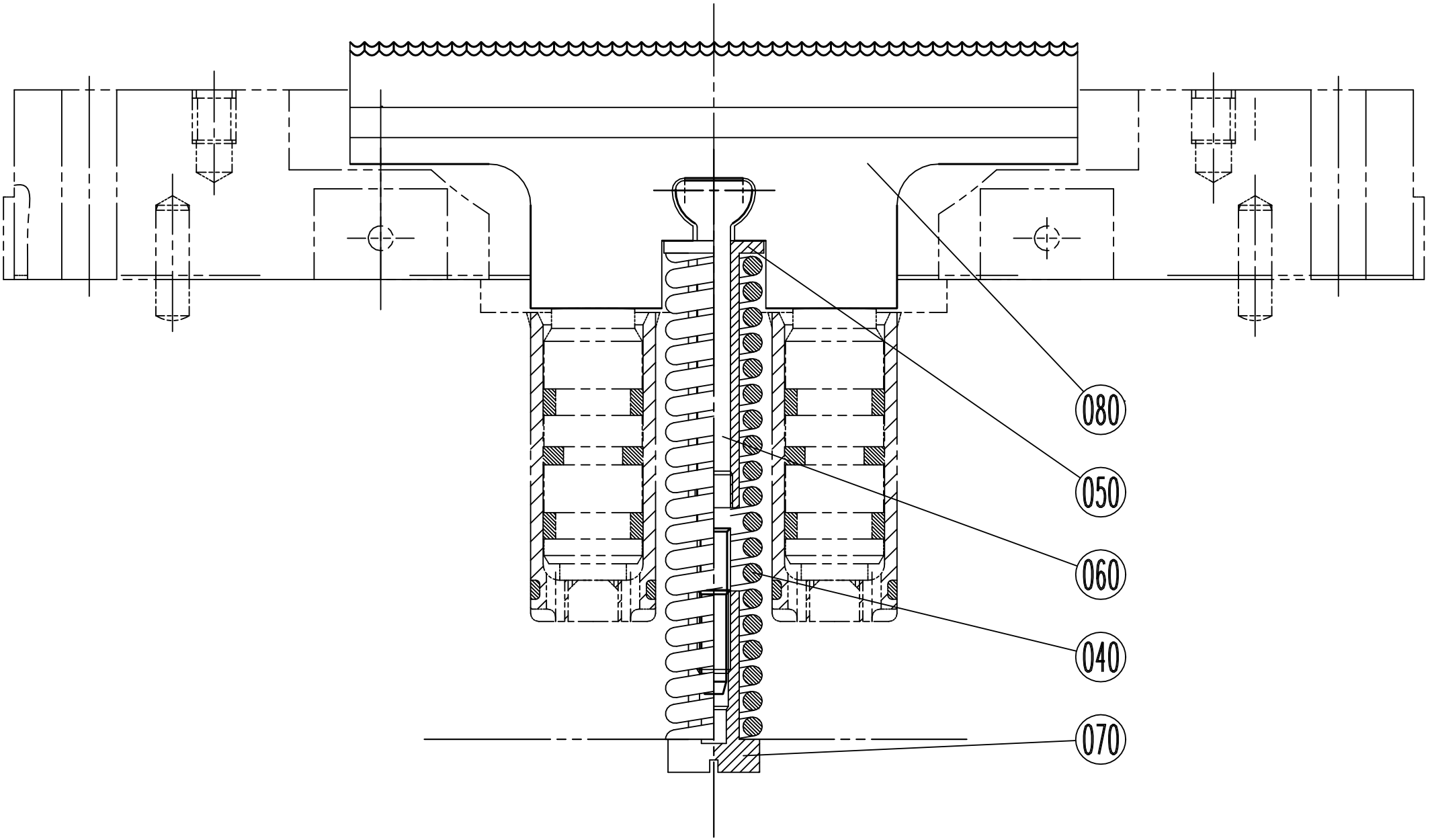

Pos	Part No	UN	Qty	Description	Page No
TBA 0100B IH, TBA 0125S IH, TWA 0125S IH, TPA 0125SQ, TBA 0080S (See drawing on page: 4-66)					
040	1538109-0000		1	COMPRESSION SPRING	
080	1282645-0000		1	KNIFE	
TBA 0160S IH, TBA 0200M IH, TBA 0200S IH, TBA 0250S IH, TWA 0200S IH, TBA 0200E (See drawing on page: 4-68)					
040	1538109-0000		1	COMPRESSION SPRING	
080	1282647-0000		1	KNIFE	
TBA 0200B IH, TBA 0200SQ IH, TBA 0250B IH, TBA 0300S IH, TBA 0284B IH, TBA 0330S IH, TPA 0250SQ IH, TPA 0330SQ IH, TPA 0200SQ IH, TBA 0250SQ IH (See drawing on page: 4-64)					
040	1538109-0000		1	COMPRESSION SPRING	
080	1282646-0000		1	KNIFE	
Common Parts					
050	272753-0000		1	STEERING	
060	456009-0000		1	LINK	
070	272755-0000		1	NUT	

Pos	Part No	UN	Qty	Description	Page No

KNIFE HOLDER

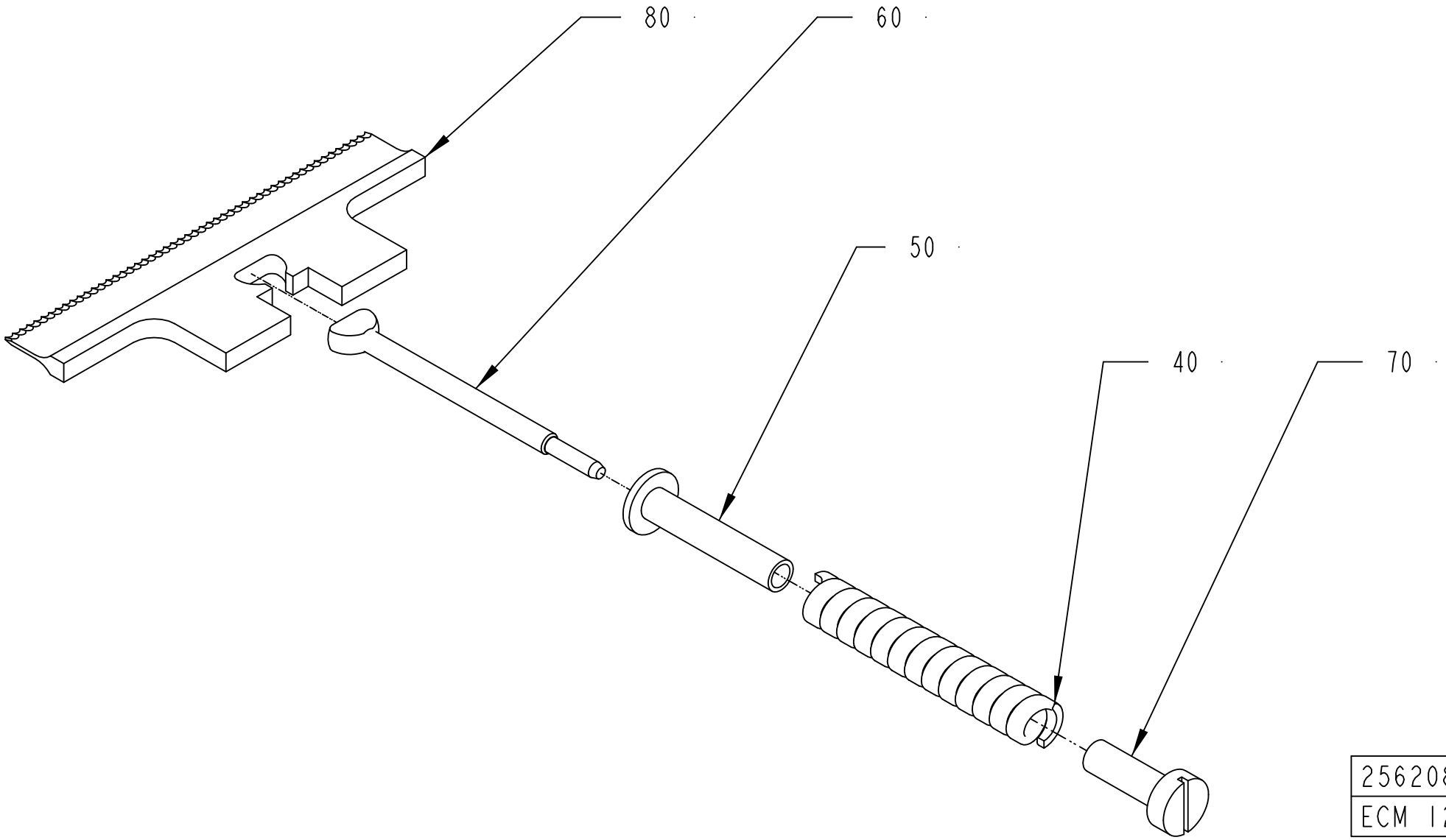

256208-14
ECM 126095

Pos	Part No	UN	Qty	Description	Page No
TBA 0100B IH, TBA 0125S IH, TWA 0125S IH, TPA 0125SQ, TBA 0080S (See drawing on page: 4-66)					
040	1538109-0000		1	COMPRESSION SPRING	
080	1282645-0000		1	KNIFE	
TBA 0160S IH, TBA 0200M IH, TBA 0200S IH, TBA 0250S IH, TWA 0200S IH, TBA 0200E (See drawing on page: 4-68)					
040	1538109-0000		1	COMPRESSION SPRING	
080	1282647-0000		1	KNIFE	
TBA 0200B IH, TBA 0200SQ IH, TBA 0250B IH, TBA 0300S IH, TBA 0284B IH, TBA 0330S IH, TPA 0250SQ IH, TPA 0330SQ IH, TPA 0200SQ IH, TBA 0250SQ IH (See drawing on page: 4-64)					
040	1538109-0000		1	COMPRESSION SPRING	
080	1282646-0000		1	KNIFE	
Common Parts					
050	272753-0000		1	STEERING	
060	456009-0000		1	LINK	
070	272755-0000		1	NUT	

Pos	Part No	UN	Qty	Description	Page No

SHOCK ABSORBER

Drawing file: 752671-1_1_AC.hpgl

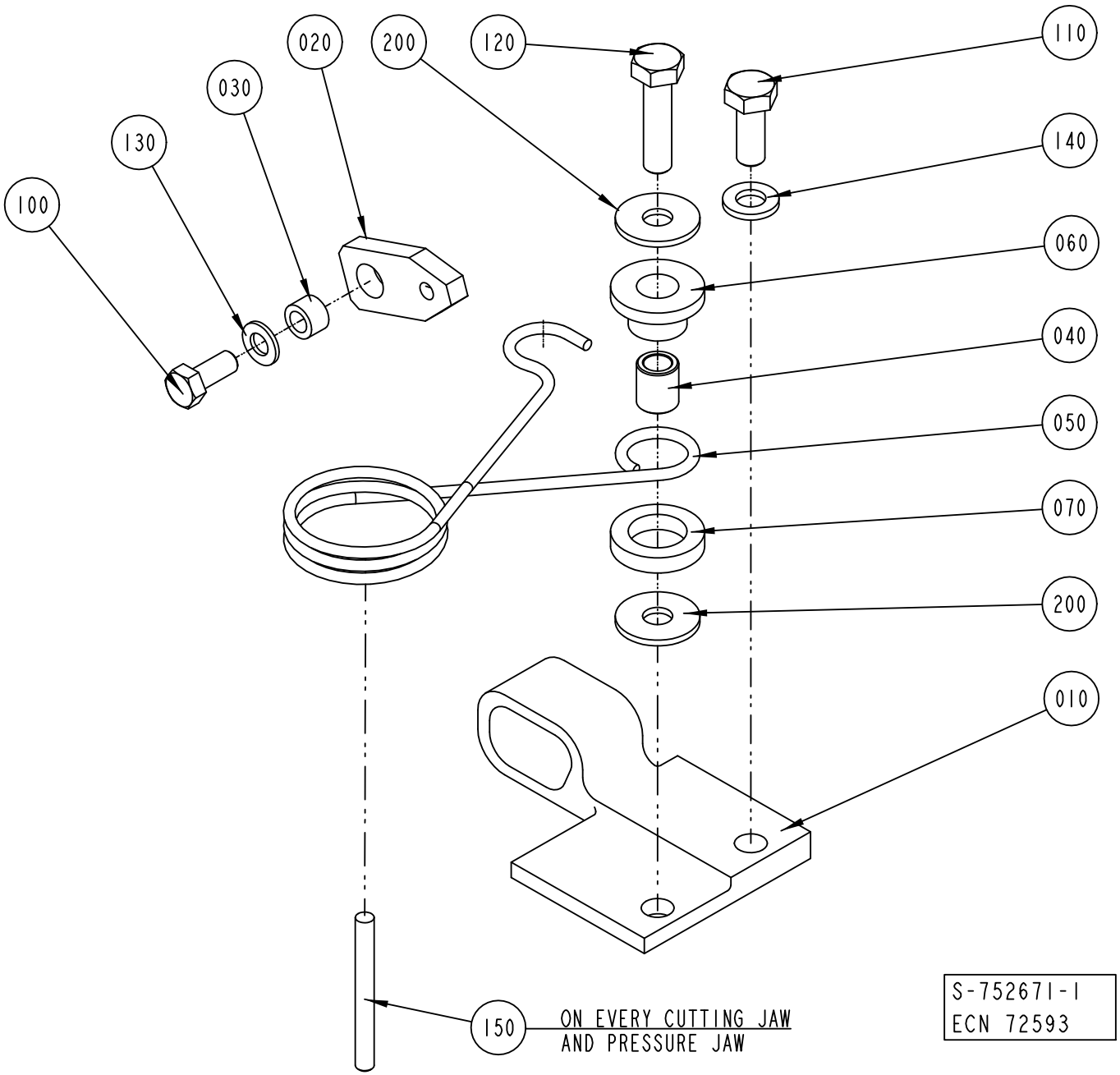

ECM: 292921 - 20070126
Group number: 752671-0100
Assembly Drawing: 752671-1_1_AC

This list covers pages from 4-70 to 4-77

Pos	Part No	UN	Qty	Description	Page No
TBA 0100B (See drawing on page: 4-72)					
010	979758-0000		1	STOP PERF 1	
020	752425-0000		1	LINK	
030	752556-0000		1	SPACER	
040	979760-0000		1	SPACER	
050	752678-0000		1	SPRING PERF 1	
060	979761-0000		1	SLEEVE	
070	752681-0000		1	WASHER	
100	312105-0327		1	SCREW, M6S ISO 4017 M5X12 A4 80	
110	312155-0368		2	SCREW DIN 7991 MF6S M6X16 A4 70	
130	315105-0146		1	WASHER PLAIN, 5,3X10X1 A4 BRB	
150	311103-0278		1	PARALLEL PIN ISO 2338 4M6X35 A1	
TBA 0125S (See drawing on page: 4-70)					
010	752563-0000		1	STOP PERF 1	
020	752425-0000		1	LINK	
030	752556-0000		1	SPACER	
040	752673-0000		1	SPACER	
050	752678-0000		1	SPRING PERF 1	
060	752680-0000		1	SLEEVE	
070	752681-0000		1	WASHER	
100	312105-0327		1	SCREW, M6S ISO 4017 M5X12 A4 80	
110	312105-0368		1	SCREW, M6S ISO 4017 M6X16 A4 80	
120	312105-0372		1	SCREW, M6S ISO 4017 M6X25 A4 80	
130	315105-0146		1	WASHER PLAIN, 5,3X10X1 A4 BRB	
140	315105-0153		1	WASHER PLAIN, 6,4X12X1,5 A4 BRB	
150	311103-0280		1	PARALLEL PIN ISO 2338 4M6X40 A1	
200	90005-0060		2	WASHER PLAIN, RBS 6,4/M6)/18,H=1,5	
TBA 0160S, TBA 0200M, TBA 0200B, TBA 0200S, TBA 0250S, TBA 0284B, TBA 0250B, TBA 0300S, TBA 0330S (See drawing on page: 4-70)					
010	752559-0000		1	STOP PERF 1	
020	752425-0000		1	LINK	
030	752556-0000		1	SPACER	
040	752673-0000		1	SPACER	
050	752678-0000		1	SPRING PERF 1	
060	752680-0000		1	SLEEVE	
070	752681-0000		1	WASHER	
100	312105-0327		1	SCREW, M6S ISO 4017 M5X12 A4 80	
110	312105-0368		1	SCREW, M6S ISO 4017 M6X16 A4 80	
120	312105-0372		1	SCREW, M6S ISO 4017 M6X25 A4 80	
130	315105-0146		1	WASHER PLAIN, 5,3X10X1 A4 BRB	
140	315115-0153		1	WASHER PLAIN, TBRB 6,4/12 H=3	
150	311103-0280		1	PARALLEL PIN ISO 2338 4M6X40 A1	
200	90005-0060		2	WASHER PLAIN, RBS 6,4/M6)/18,H=1,5	
TBA 0200SQ (See drawing on page: 4-70)					
010	1519227-0000		1	STOP	
020	752425-0000		1	LINK	
030	752556-0000		1	SPACER	
040	752673-0000		1	SPACER	
050	752678-0000		1	SPRING PERF 1	
060	752680-0000		1	SLEEVE	
070	752681-0000		1	WASHER	
100	312105-0327		1	SCREW, M6S ISO 4017 M5X12 A4 80	
110	312105-0368		1	SCREW, M6S ISO 4017 M6X16 A4 80	
120	312105-0372		1	SCREW, M6S ISO 4017 M6X25 A4 80	
130	315105-0146		1	WASHER PLAIN, 5,3X10X1 A4 BRB	
140	315115-0153		1	WASHER PLAIN, TBRB 6,4/12 H=3	
150	311103-0280		1	PARALLEL PIN ISO 2338 4M6X40 A1	
200	90005-0060		2	WASHER PLAIN, RBS 6,4/M6)/18,H=1,5	
TPA 0330SQ, TPA 0250SQ, TPA 0200SQ (See drawing on page: 4-76)					
010	929408-0000		1	STOP	
020	929412-0000		1	LINK	
030	929407-0000		1	SPACER	
040	752673-0000		1	SPACER	
050	752678-0000		1	SPRING PERF 1	
060	752680-0000		1	SLEEVE	
070	752681-0000		1	WASHER	
100	929352-0000		1	STOP	
110	312105-0368		1	SCREW, M6S ISO 4017 M6X16 A4 80	
120	312105-0372		1	SCREW, M6S ISO 4017 M6X25 A4 80	
140	315105-0153		2	WASHER PLAIN, 6,4X12X1,5 A4 BRB	
200	90005-0060		2	WASHER PLAIN, RBS 6,4/M6)/18,H=1,5	
TWA 0125S (See drawing on page: 4-74)					
010	591427-0000		1	STOPPER	
020	752425-0000		1	LINK	
030	752556-0000		1	SPACER	
040	591432-0000		1	SPACER	
050	591429-0000		1	SPRING	
060	591433-0000		1	SLEEVE	
070	591434-0000		1	WASHER	
100	312105-0327		1	SCREW, M6S ISO 4017 M5X12 A4 80	
110	312105-0368		2	SCREW, M6S ISO 4017 M6X16 A4 80	
130	315105-0146		1	WASHER PLAIN, 5,3X10X1 A4 BRB	
140	315115-0153		1	WASHER PLAIN, TBRB 6,4/12 H=3	
150	311103-0280		1	PARALLEL PIN ISO 2338 4M6X40 A1	

SHOCK ABSORBER

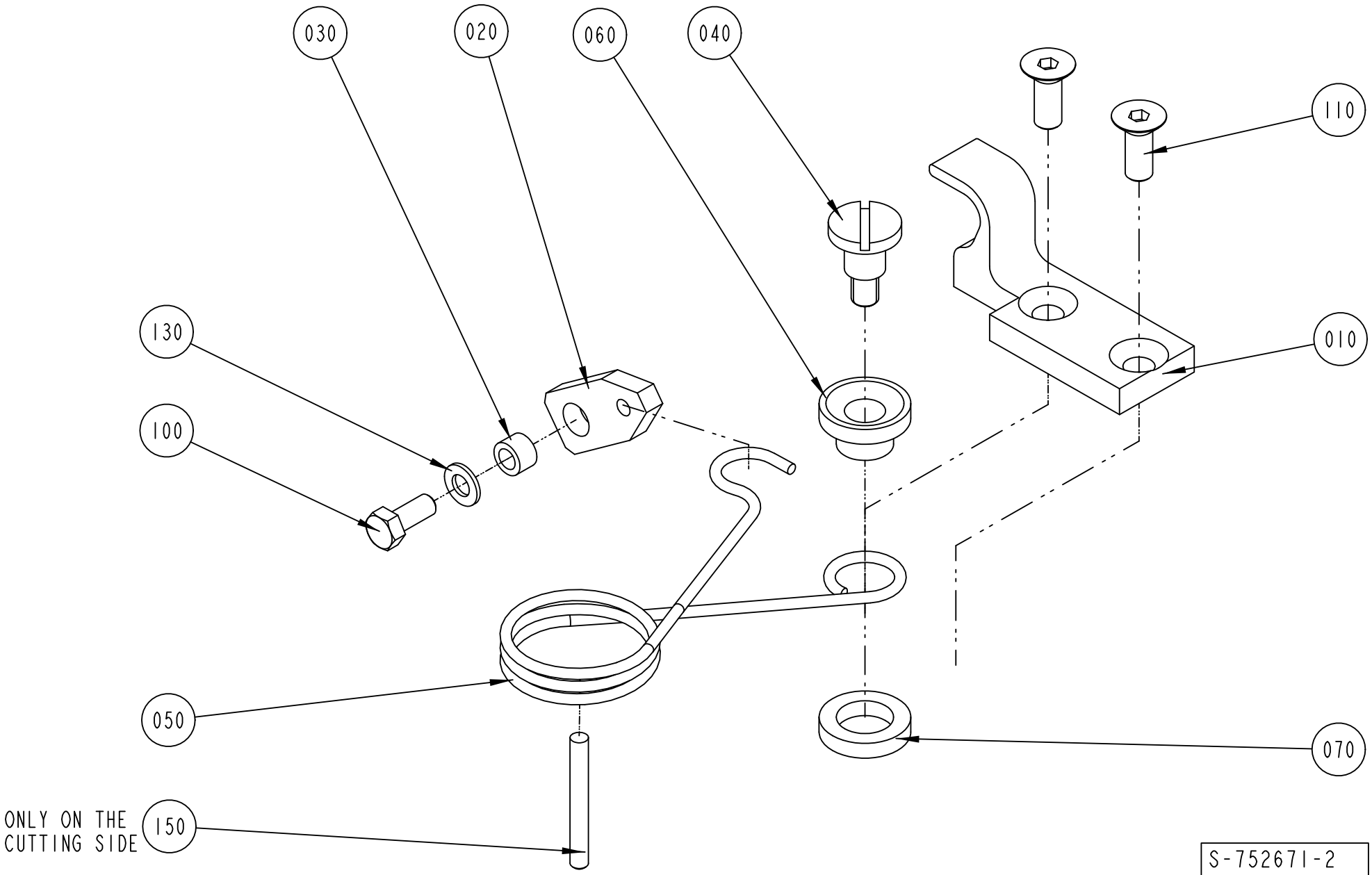

Pos	Part No	UN	Qty	Description	Page No
TWA 0125S (Cont'd) (See drawing on page: 4-74)					
160	312155-0366		1	SCREW DIN 7991 MF6S M6X12 A4 70	
200	90005-0060		1	WASHER PLAIN, RBS 6,4/M6)/18,H=1,5	
220	90157-0016	ML	1	THREAD LOCKING, LOCTITE 242 50 ML	
TWA 0200S (See drawing on page: 4-74)					
010	591427-0000		1	STOPPER	
020	752425-0000		1	LINK	
030	752556-0000		1	SPACER	
040	591432-0000		1	SPACER	
050	591429-0000		1	SPRING	
060	591433-0000		1	SLEEVE	
070	591434-0000		1	WASHER	
100	312105-0327		1	SCREW, M6S ISO 4017 M5X12 A4 80	
110	312105-0368		2	SCREW, M6S ISO 4017 M6X16 A4 80	
130	315105-0146		1	WASHER PLAIN, 5,3X10X1 A4 BRB	
140	315115-0153		1	WASHER PLAIN, TBRB 6,4/12 H=3	
150	311103-0280		1	PARALLEL PIN ISO 2338 4M6X40 A1	
160	312155-0366		1	SCREW DIN 7991 MF6S M6X12 A4 70	
200	90005-0060		1	WASHER PLAIN, RBS 6,4/M6)/18,H=1,5	
220	90157-0016	ML	1	THREAD LOCKING, LOCTITE 242 50 ML	

Pos	Part No	UN	Qty	Description	Page No

SHOCK ABSORBER

Drawing file: 752671-3_1_AB.hpgl

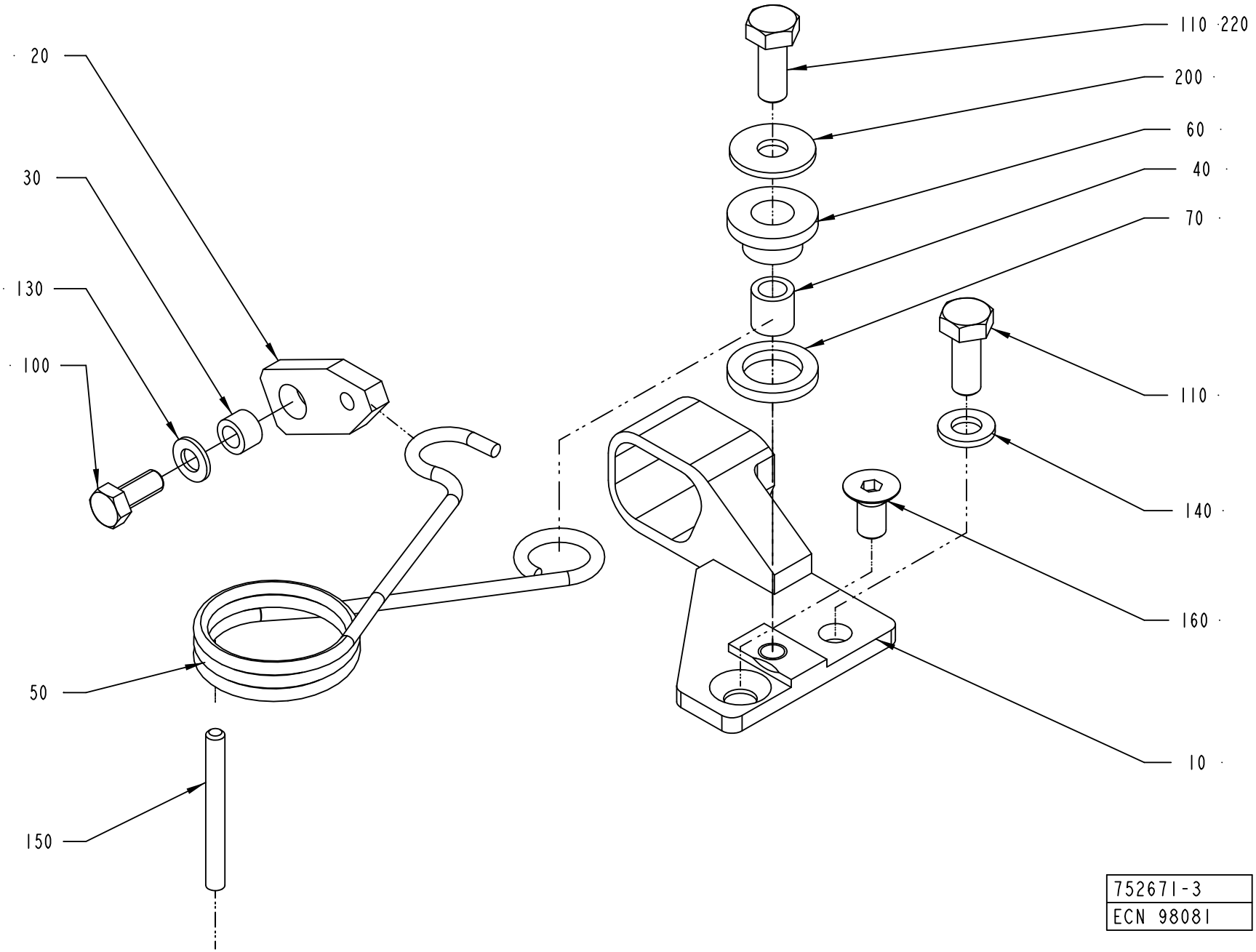

Pos	Part No	UN	Qty	Description	Page No	Pos	Part No	UN	Qty	Description	Page No

SEE PREVIOUS LISTS PAGES: 4-71, 4-73.

SHOCK ABSORBER

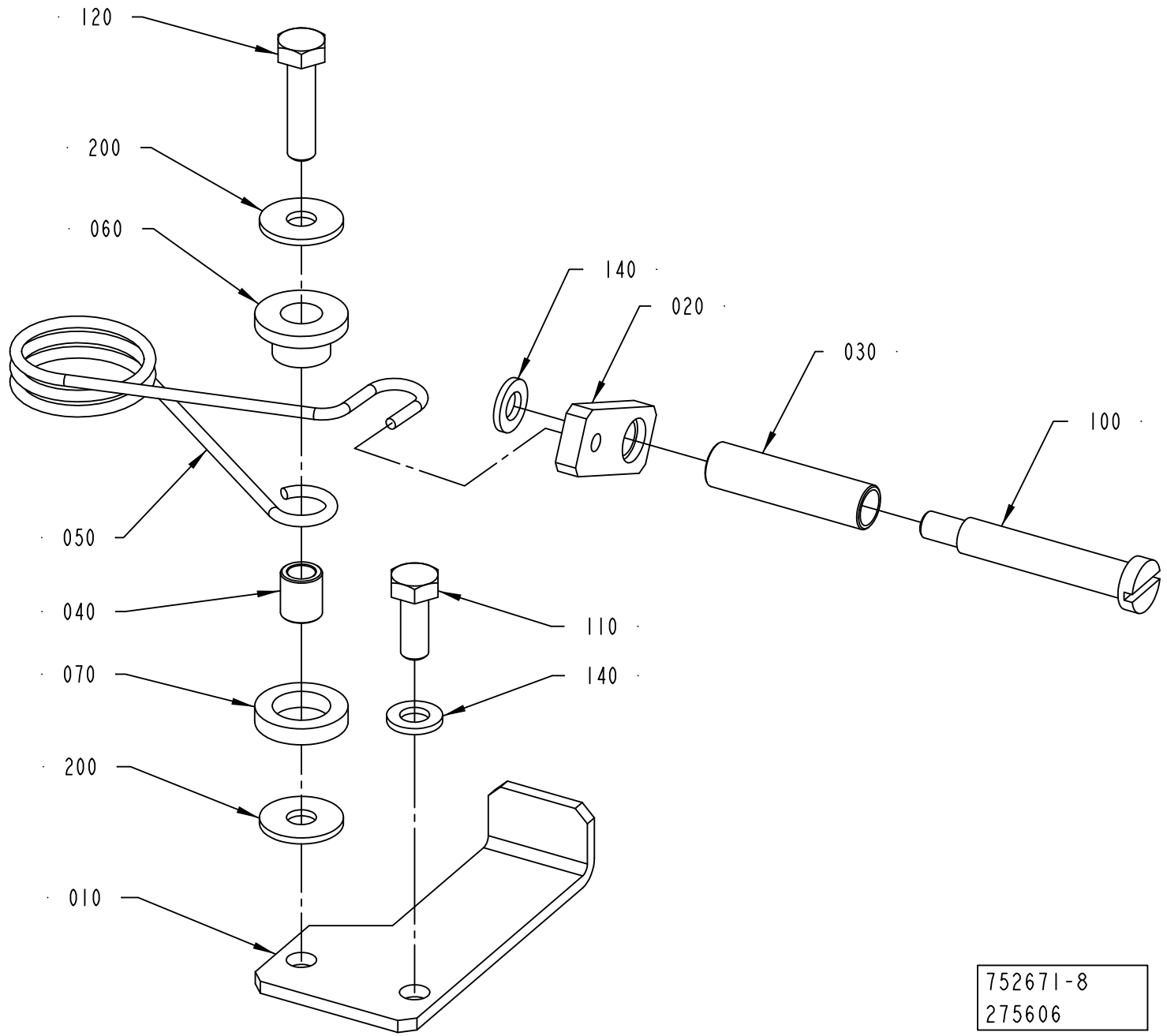

ECM: 292921 - 20070126
Group number: 752671-0100
Assembly Drawing: 752671-8_1_AA

This list covers pages from 4-70 to 4-77

Pos	Part No	UN	Qty	Description	Page No
SEE PREVIOUS LISTS PAGES: 4-71, 4-73.					

Pos	Part No	UN	Qty	Description	Page No

Machine Type | Group Description | Used-In | Group Number | Page No

SHOCK ABSORBER

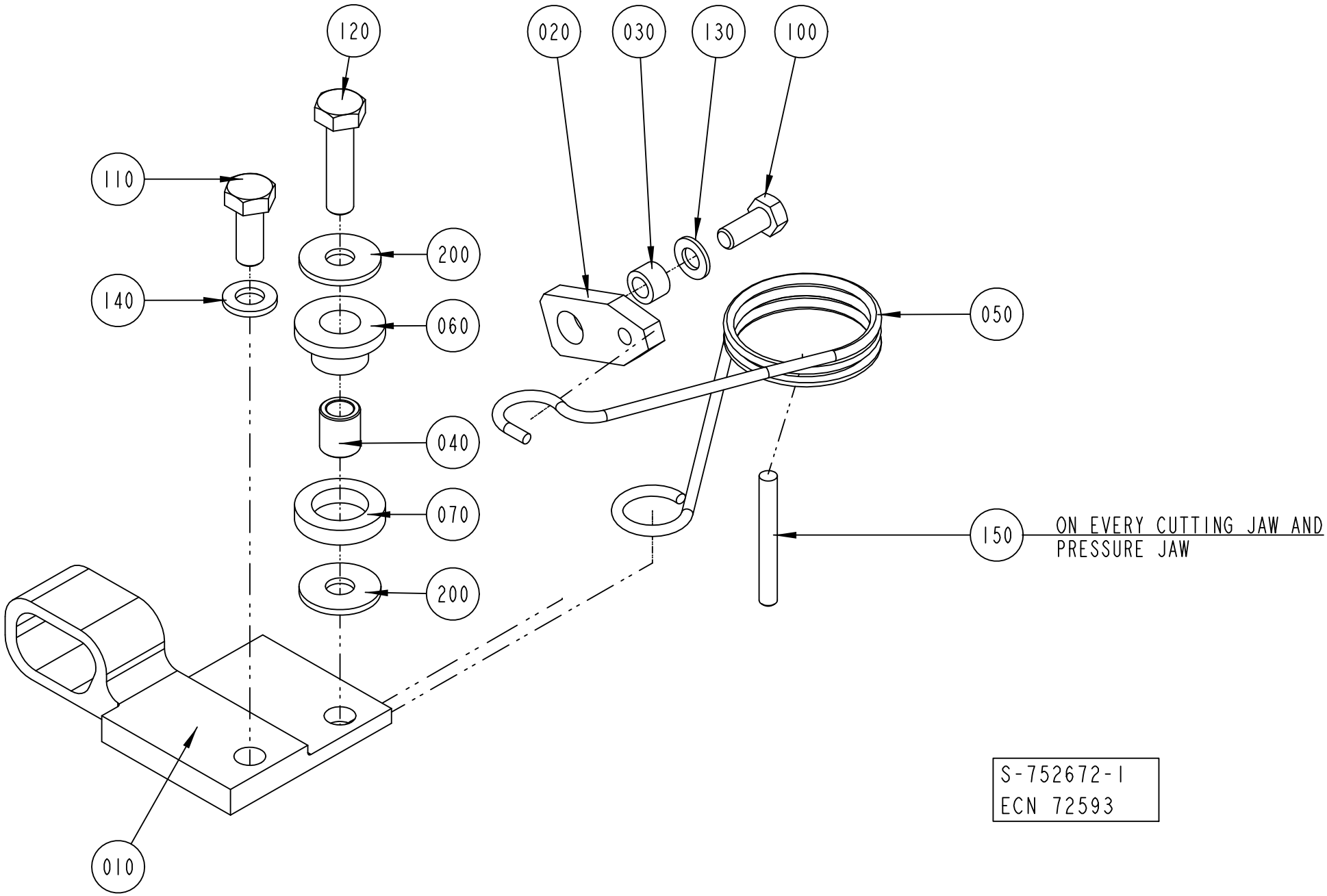

ECM: 371301 - 20080930
Group number: 752672-0100
Assembly Drawing: 752672-1_1_AC

This list covers pages from 4-78 to 4-85

Pos	Part No	UN	Qty	Description	Page No
TBA 0100B (See drawing on page: 4-80)					
010	979759-0000		1	STOP PERF 2	
020	752425-0000		1	LINK	
030	752556-0000		1	SPACER	
040	979760-0000		1	SPACER	
050	752679-0000		1	SPRING PERF 2	
060	979761-0000		1	SLEEVE	
070	752681-0000		1	WASHER	
100	312105-0327		1	SCREW, M6S ISO 4017 M5X12 A4 80	
110	312155-0368		2	SCREW DIN 7991 MF6S M6X16 A4 70	
130	315105-0146		1	WASHER PLAIN, 5,3X10X1 A4 BRB	
150	311103-1274		1	PARALLEL PIN ISO 2338 4M6X24 A1	
TBA 0125S (See drawing on page: 4-78)					
010	752564-0000		1	STOP PERF 2	
020	752425-0000		1	LINK	
030	752556-0000		1	SPACER	
040	752673-0000		1	SPACER	
050	752679-0000		1	SPRING PERF 2	
060	752680-0000		1	SLEEVE	
070	752681-0000		1	WASHER	
100	312105-0327		1	SCREW, M6S ISO 4017 M5X12 A4 80	
110	312105-0368		1	SCREW, M6S ISO 4017 M6X16 A4 80	
120	312105-0372		1	SCREW, M6S ISO 4017 M6X25 A4 80	
130	315105-0146		1	WASHER PLAIN, 5,3X10X1 A4 BRB	
140	315105-0153		1	WASHER PLAIN, 6,4X12X1,5 A4 BRB	
150	311103-0280		1	PARALLEL PIN ISO 2338 4M6X40 A1	
200	90005-0060		2	WASHER PLAIN, RBS 6,4/M6)/18,H=1,5	
TBA 0160S, TBA 0200M, TBA 0200B, TBA 0200S, TBA 0250S, TBA 0284B, TBA 0250B, TBA 0300S, TBA 0330S (See drawing on page: 4-78)					
010	752560-0000		1	STOP PERF 2	
020	752425-0000		1	LINK	
030	752556-0000		1	SPACER	
040	752673-0000		1	SPACER	
050	752679-0000		1	SPRING PERF 2	
060	752680-0000		1	SLEEVE	
070	752681-0000		1	WASHER	
100	312105-0327		1	SCREW, M6S ISO 4017 M5X12 A4 80	
110	312105-0368		1	SCREW, M6S ISO 4017 M6X16 A4 80	
120	312105-0372		1	SCREW, M6S ISO 4017 M6X25 A4 80	
130	315105-0146		1	WASHER PLAIN, 5,3X10X1 A4 BRB	
140	315115-0153		1	WASHER PLAIN, TBRB 6,4/12 H=3	
150	311103-0280		1	PARALLEL PIN ISO 2338 4M6X40 A1	
200	90005-0060		2	WASHER PLAIN, RBS 6,4/M6)/18,H=1,5	
TBA 0200SQ (See drawing on page: 4-78)					
010	1519228-0000		1	STOP	
020	752425-0000		1	LINK	
030	752556-0000		1	SPACER	
040	752673-0000		1	SPACER	
050	752679-0000		1	SPRING PERF 2	
060	752680-0000		1	SLEEVE	
070	752681-0000		1	WASHER	
100	312105-0327		1	SCREW, M6S ISO 4017 M5X12 A4 80	
110	312105-0368		1	SCREW, M6S ISO 4017 M6X16 A4 80	
120	312105-0372		1	SCREW, M6S ISO 4017 M6X25 A4 80	
130	315105-0146		1	WASHER PLAIN, 5,3X10X1 A4 BRB	
140	315115-0153		1	WASHER PLAIN, TBRB 6,4/12 H=3	
150	311103-0280		1	PARALLEL PIN ISO 2338 4M6X40 A1	
200	90005-0060		2	WASHER PLAIN, RBS 6,4/M6)/18,H=1,5	
TPA 0330SQ, TPA 0250SQ, TPA 0200SQ (See drawing on page: 4-84)					
010	929409-0000		1	STOP	
020	929412-0000		1	LINK	
030	929407-0000		1	SPACER	
040	752673-0000		1	SPACER	
050	752679-0000		1	SPRING PERF 2	
060	752680-0000		1	SLEEVE	
070	752681-0000		1	WASHER	
100	929352-0000		1	STOP	
110	312105-0368		1	SCREW, M6S ISO 4017 M6X16 A4 80	
120	312105-0372		1	SCREW, M6S ISO 4017 M6X25 A4 80	
140	315105-0153		2	WASHER PLAIN, 6,4X12X1,5 A4 BRB	
200	90005-0060		2	WASHER PLAIN, RBS 6,4/M6)/18,H=1,5	
TWA 0125S (See drawing on page: 4-82)					
010	591428-0000		1	STOPPER	
020	752425-0000		1	LINK	
030	752556-0000		1	SPACER	
040	591432-0000		1	SPACER	
050	591430-0000		1	SPRING	
060	591433-0000		1	SLEEVE	
070	591434-0000		1	WASHER	
100	312105-0327		1	SCREW, M6S ISO 4017 M5X12 A4 80	
110	312105-0368		2	SCREW, M6S ISO 4017 M6X16 A4 80	
130	315105-0146		1	WASHER PLAIN, 5,3X10X1 A4 BRB	
140	315115-0153		1	WASHER PLAIN, TBRB 6,4/12 H=3	
150	311103-0280		1	PARALLEL PIN ISO 2338 4M6X40 A1	

SHOCK ABSORBER

Drawing file: 752672-2_1_AC.hpgl

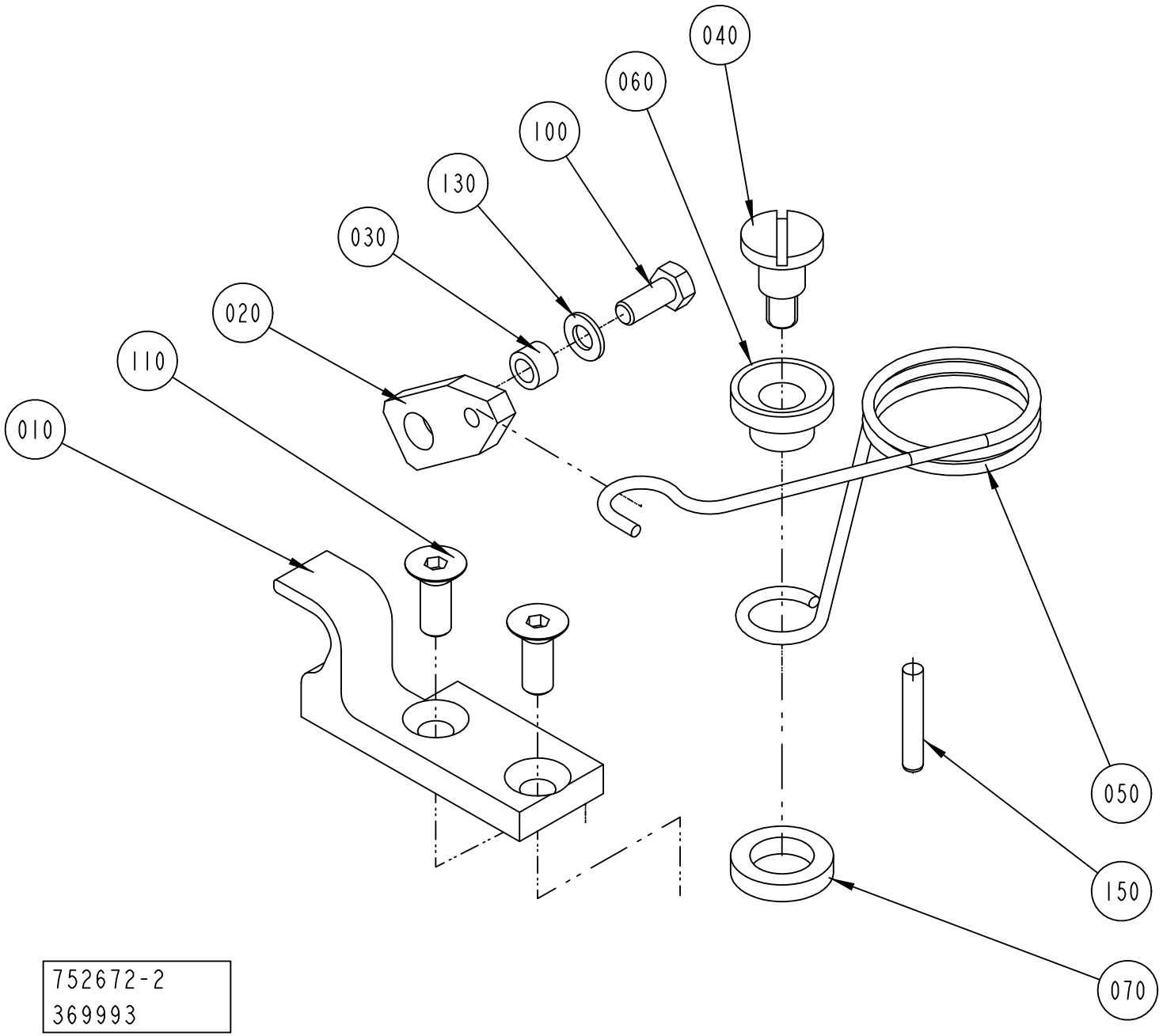

Pos	Part No	UN	Qty	Description	Page No
TWA 0125S (Cont'd) (See drawing on page: 4-82)					
160	312155-0366		1	SCREW DIN 7991 MF6S M6X12 A4 70	
200	90005-0060		1	WASHER PLAIN, RBS 6,4/M6)/18,H=1,5	
220	90157-0016	ML	1	THREAD LOCKING, LOCTITE 242 50 ML	
TWA 0200S (See drawing on page: 4-82)					
010	591428-0000		1	STOPPER	
020	752425-0000		1	LINK	
030	752556-0000		1	SPACER	
040	591432-0000		1	SPACER	
050	591430-0000		1	SPRING	
060	591433-0000		1	SLEEVE	
070	591434-0000		1	WASHER	
100	312105-0327		1	SCREW, M6S ISO 4017 M5X12 A4 80	
110	312105-0368		2	SCREW, M6S ISO 4017 M6X16 A4 80	
130	315105-0146		1	WASHER PLAIN, 5,3X10X1 A4 BRB	
140	315115-0153		1	WASHER PLAIN, TBRB 6,4/12 H=3	
150	311103-0280		1	PARALLEL PIN ISO 2338 4M6X40 A1	
160	312155-0366		1	SCREW DIN 7991 MF6S M6X12 A4 70	
200	90005-0060		1	WASHER PLAIN, RBS 6,4/M6)/18,H=1,5	
220	90157-0016	ML	1	THREAD LOCKING, LOCTITE 242 50 ML	

Pos	Part No	UN	Qty	Description	Page No

SHOCK ABSORBER

Drawing file: 752672-3_1_AB.hpgl

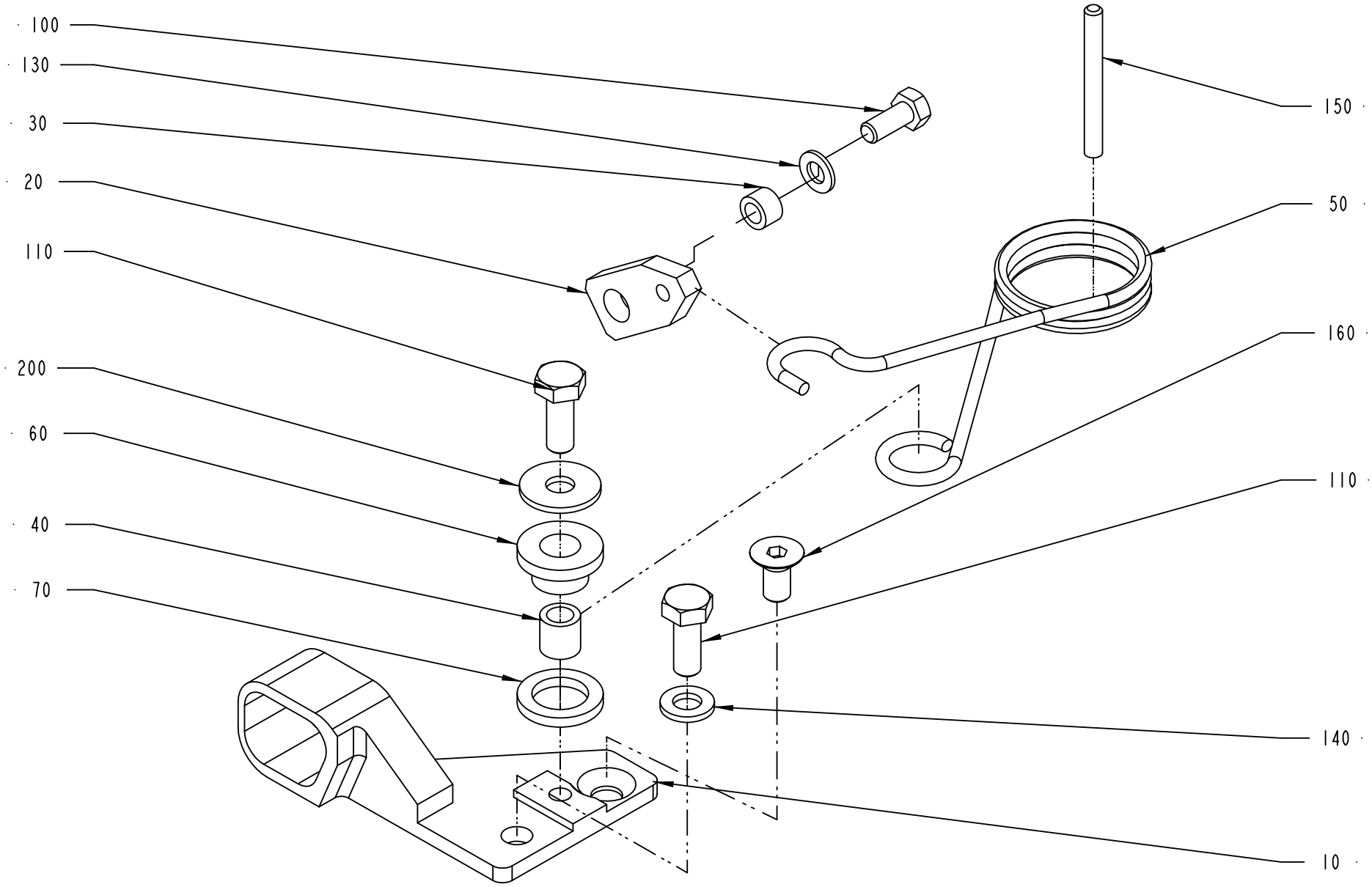

752672-3
ECN 98081

Pos	Part No	UN	Qty	Description	Page No	Pos	Part No	UN	Qty	Description	Page No

SEE PREVIOUS LISTS PAGES: 4-79, 4-81.

SHOCK ABSORBER

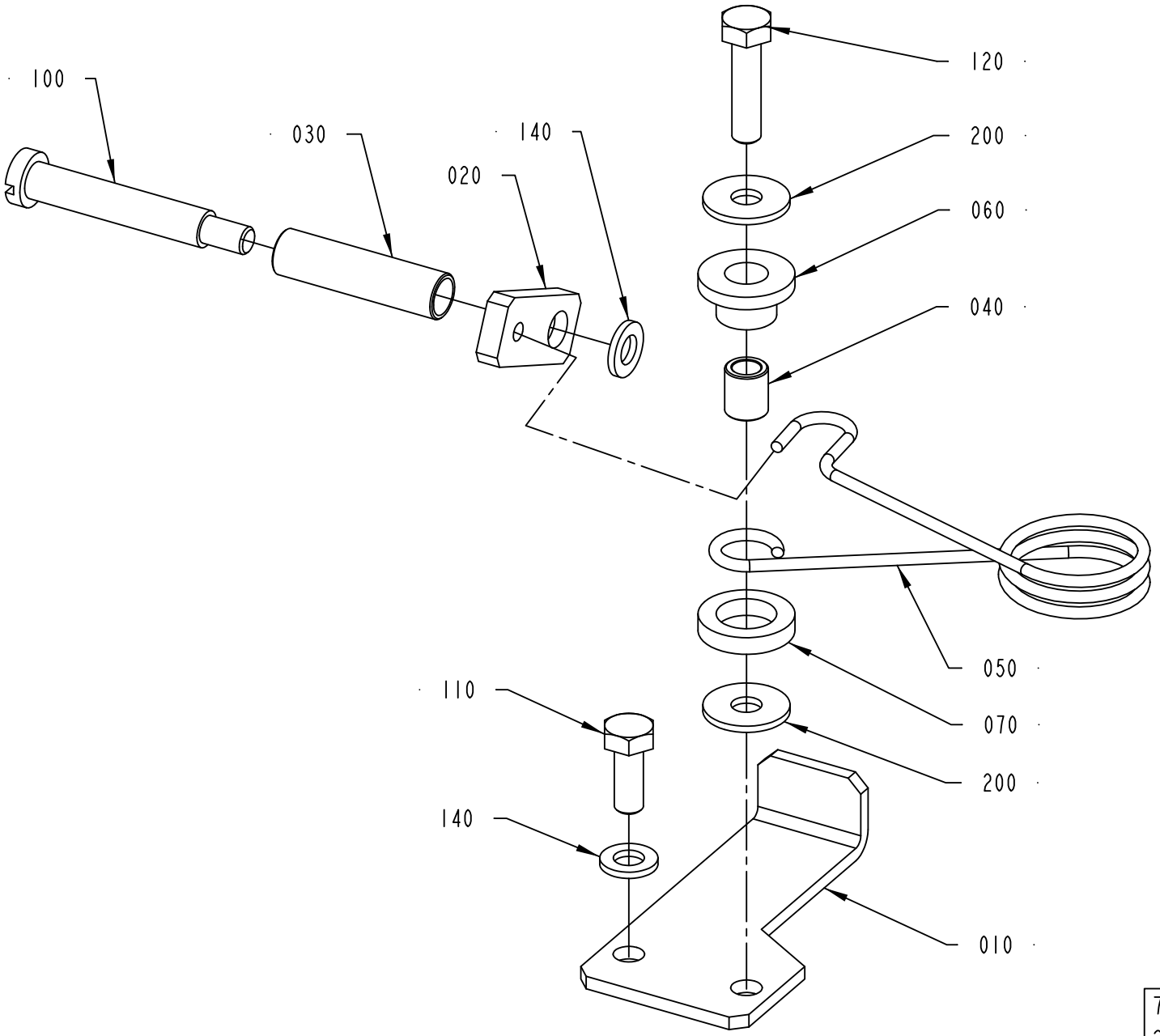

752672-8
275606

Pos	Part No	UN	Qty	Description	Page No
SEE PREVIOUS LISTS PAGES: 4-79, 4-81.					

Pos	Part No	UN	Qty	Description	Page No

PRESSURE RAIL

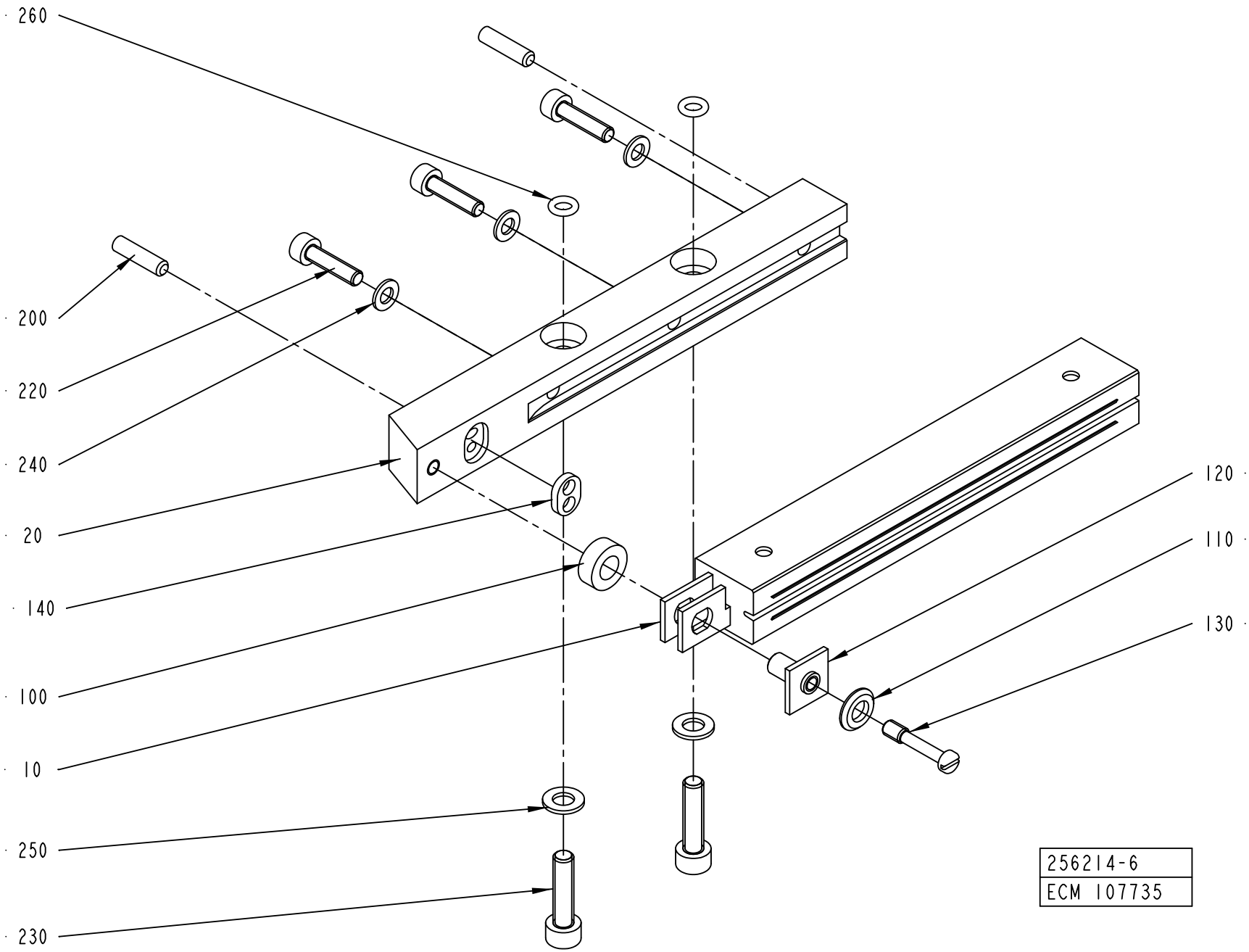

ECM: 422685 - 20091125
Group number: 256214-0400
Assembly Drawing: 256214-6_1_AD

This list covers pages from 4-86 to 4-91

Pos	Part No	UN	Qty	Description	Page No
TBA 0100B, TBA 0125S (See drawing on page: 4-86)					
010	1110530-0000		1	INDUCTOR	
020	2527135-0000		1	RAIL (TITANIUM)	
200	311103-0270		2	PARALLEL PIN ISO 2338 4M6X16 A1	
220	312115-0293		3	SCREW ISO4762 M4X16 A4 80	
230	312105-0329		2	SCREW, M6S ISO 4017 M5X16 A4 80	
240	315105-0136		3	WASHER PLAIN, 4,3X9X0,8 A4 BRB	
250	315105-0146		2	WASHER PLAIN, 5,3X10X1 A4 BRB	
TBA 0160S, TBA 0200S, TWA 0200S, TWA 0180S (See drawing on page: 4-86)					
010	1110532-0000		1	INDUCTOR	
020	2527137-0000		1	RAIL (TITANIUM)	
200	311103-0270		2	PARALLEL PIN ISO 2338 4M6X16 A1	
220	312115-0293		2	SCREW ISO4762 M4X16 A4 80	
230	312115-0331		2	SCREW ISO4762 M5X20 A4 80	
240	315105-0136		2	WASHER PLAIN, 4,3X9X0,8 A4 BRB	
250	315105-0146		2	WASHER PLAIN, 5,3X10X1 A4 BRB	
260	315202-0102		2	O-RING 4,1X1,6 MM	
TBA 0200B, TBA 0284B, TBA 0250B, TBA 0300S, TBA 0330S (See drawing on page: 4-86)					
010	1110534-0000		1	INDUCTOR	
020	2527136-0000		1	RAIL	
200	311103-0270		2	PARALLEL PIN ISO 2338 4M6X16 A1	
220	312115-0293		3	SCREW ISO4762 M4X16 A4 80	
230	312115-0331		2	SCREW ISO4762 M5X20 A4 80	
240	315105-0136		3	WASHER PLAIN, 4,3X9X0,8 A4 BRB	
250	315105-0146		2	WASHER PLAIN, 5,3X10X1 A4 BRB	
260	315202-0102		2	O-RING 4,1X1,6 MM	
TBA 0200M, TBA 0250S (See drawing on page: 4-86)					
010	1110535-0000		1	INDUCTOR	
020	2527137-0000		1	RAIL (TITANIUM)	
200	311103-0270		2	PARALLEL PIN ISO 2338 4M6X16 A1	
220	312115-0293		2	SCREW ISO4762 M4X16 A4 80	
230	312115-0331		2	SCREW ISO4762 M5X20 A4 80	
240	315105-0136		2	WASHER PLAIN, 4,3X9X0,8 A4 BRB	
250	315105-0146		2	WASHER PLAIN, 5,3X10X1 A4 BRB	
260	315202-0102		2	O-RING 4,1X1,6 MM	
TBA 0200SQ (See drawing on page: 4-88)					
010	1520078-0000		1	INDUCTOR	
020	2529075-0000		1	RAIL	
030	1539120-0000		1	VOLUME BULGE	
040	1539593-0000		1	COVER	
200	311103-0270		2	PARALLEL PIN ISO 2338 4M6X16 A1	
220	312115-0293		3	SCREW ISO4762 M4X16 A4 80	
230	312115-0331		2	SCREW ISO4762 M5X20 A4 80	
240	315105-0136		3	WASHER PLAIN, 4,3X9X0,8 A4 BRB	
270	312155-0285		2	SCREW DIN 7991 MF6S M4X6 A4 70	
280	312155-0287		2	SCREW DIN 7991 MF6S M4X8 A4 70	
TPA 0250SQ, TPA 0200SQ (See drawing on page: 4-90)					
010	1110706-0000		1	INDUCTOR	
020	2526915-0000		1	RAIL	
220	312115-0297		3	SCREW ISO4762 M4X25 A4 80	
240	315105-0136		3	WASHER PLAIN, 4,3X9X0,8 A4 BRB	
TPA 0330SQ (See drawing on page: 4-90)					
010	1110556-0000		1	INDUCTOR	
020	2526915-0000		1	RAIL	
220	312115-0297		3	SCREW ISO4762 M4X25 A4 80	
240	315105-0136		3	WASHER PLAIN, 4,3X9X0,8 A4 BRB	
TWA 0125S (See drawing on page: 4-86)					
010	2987327-0000		1	INDUCTOR	
020	2527135-0000		1	RAIL (TITANIUM)	
200	311103-0270		2	PARALLEL PIN ISO 2338 4M6X16 A1	
220	312115-0293		3	SCREW ISO4762 M4X16 A4 80	
230	312105-0329		2	SCREW, M6S ISO 4017 M5X16 A4 80	
240	315105-0136		3	WASHER PLAIN, 4,3X9X0,8 A4 BRB	
250	315105-0146		2	WASHER PLAIN, 5,3X10X1 A4 BRB	
Common Parts					
100	32644-0000		1	WASHER	
110	256882-0000		1	WASHER	
120	271846-0000		1	INSULATION NUT	
130	271848-0000		1	SCREW	
140	491681-0000		1	GASKET	

Machine Type | Group Description | Used-In | Group Number | Page No

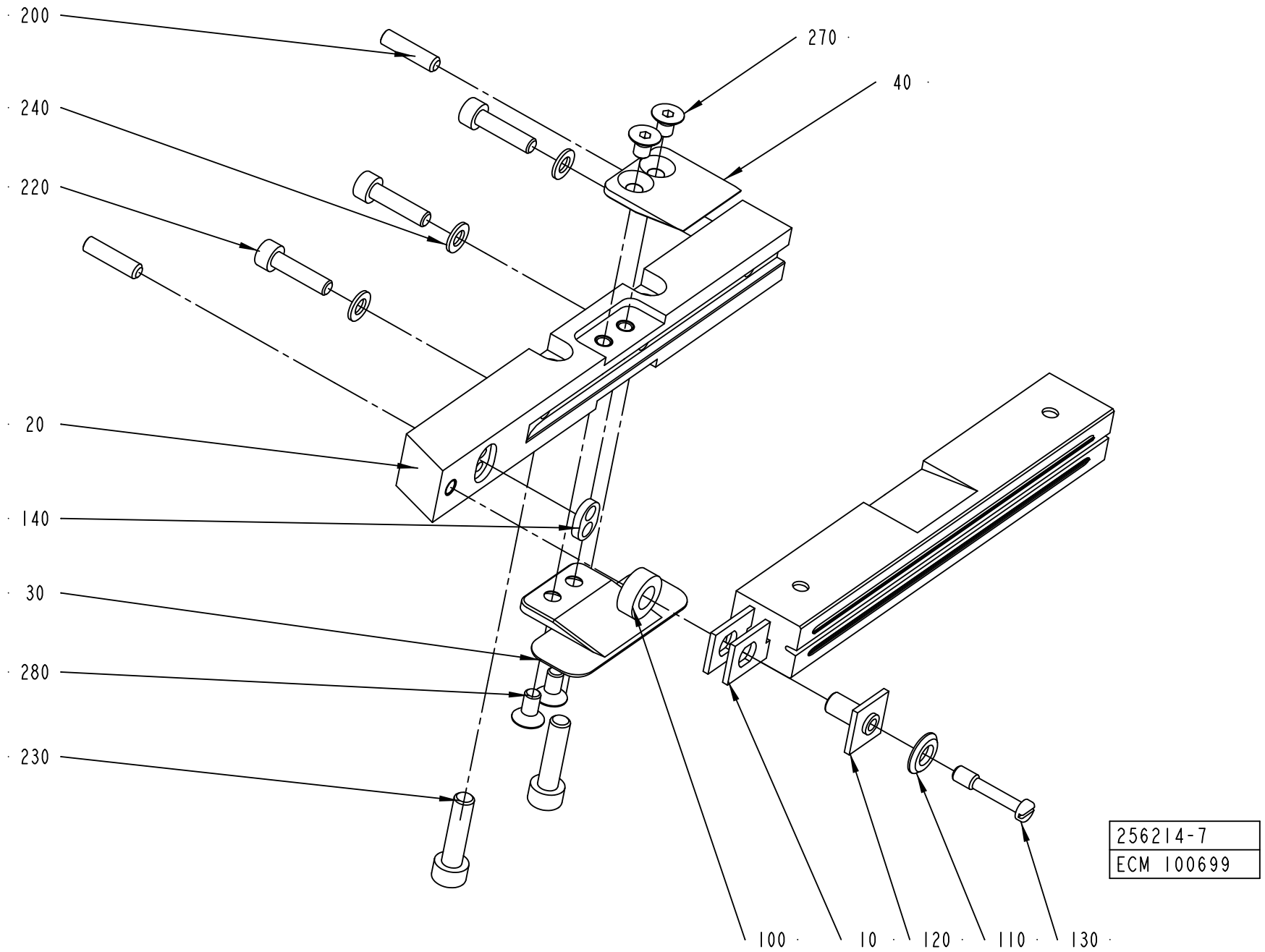
200
240
220
20
140
30
280
230
270
40
100
10
120
110
130
256214-7
ECM 100699

ECM: 422685 - 20091125
Group number: 256214-0400
Assembly Drawing: 256214-7_1_AB

This list covers pages from 4-86 to 4-91

Pos	Part No	UN	Qty	Description	Page No
TBA 0100B, TBA 0125S (See drawing on page: 4-86)					
010	1110530-0000		1	INDUCTOR	
020	2527135-0000		1	RAIL (TITANIUM)	
200	311103-0270		2	PARALLEL PIN ISO 2338 4M6X16 A1	
220	312115-0293		3	SCREW ISO4762 M4X16 A4 80	
230	312105-0329		2	SCREW, M6S ISO 4017 M5X16 A4 80	
240	315105-0136		3	WASHER PLAIN, 4,3X9X0,8 A4 BRB	
250	315105-0146		2	WASHER PLAIN, 5,3X10X1 A4 BRB	
TBA 0160S, TBA 0200S, TWA 0200S, TWA 0180S (See drawing on page: 4-86)					
010	1110532-0000		1	INDUCTOR	
020	2527137-0000		1	RAIL (TITANIUM)	
200	311103-0270		2	PARALLEL PIN ISO 2338 4M6X16 A1	
220	312115-0293		2	SCREW ISO4762 M4X16 A4 80	
230	312115-0331		2	SCREW ISO4762 M5X20 A4 80	
240	315105-0136		2	WASHER PLAIN, 4,3X9X0,8 A4 BRB	
250	315105-0146		2	WASHER PLAIN, 5,3X10X1 A4 BRB	
260	315202-0102		2	O-RING 4,1X1,6 MM	
TBA 0200B, TBA 0284B, TBA 0250B, TBA 0300S, TBA 0330S (See drawing on page: 4-86)					
010	1110534-0000		1	INDUCTOR	
020	2527136-0000		1	RAIL	
200	311103-0270		2	PARALLEL PIN ISO 2338 4M6X16 A1	
220	312115-0293		3	SCREW ISO4762 M4X16 A4 80	
230	312115-0331		2	SCREW ISO4762 M5X20 A4 80	
240	315105-0136		3	WASHER PLAIN, 4,3X9X0,8 A4 BRB	
250	315105-0146		2	WASHER PLAIN, 5,3X10X1 A4 BRB	
260	315202-0102		2	O-RING 4,1X1,6 MM	
TBA 0200M, TBA 0250S (See drawing on page: 4-86)					
010	1110535-0000		1	INDUCTOR	
020	2527137-0000		1	RAIL (TITANIUM)	
200	311103-0270		2	PARALLEL PIN ISO 2338 4M6X16 A1	
220	312115-0293		2	SCREW ISO4762 M4X16 A4 80	
230	312115-0331		2	SCREW ISO4762 M5X20 A4 80	
240	315105-0136		2	WASHER PLAIN, 4,3X9X0,8 A4 BRB	
250	315105-0146		2	WASHER PLAIN, 5,3X10X1 A4 BRB	
260	315202-0102		2	O-RING 4,1X1,6 MM	
TBA 0200SQ (See drawing on page: 4-88)					
010	1520078-0000		1	INDUCTOR	
020	2529075-0000		1	RAIL	
030	1539120-0000		1	VOLUME BULGE	
040	1539593-0000		1	COVER	
200	311103-0270		2	PARALLEL PIN ISO 2338 4M6X16 A1	
220	312115-0293		3	SCREW ISO4762 M4X16 A4 80	
230	312115-0331		2	SCREW ISO4762 M5X20 A4 80	
240	315105-0136		3	WASHER PLAIN, 4,3X9X0,8 A4 BRB	
270	312155-0285		2	SCREW DIN 7991 MF6S M4X6 A4 70	
280	312155-0287		2	SCREW DIN 7991 MF6S M4X8 A4 70	
TPA 0250SQ, TPA 0200SQ (See drawing on page: 4-90)					
010	1110706-0000		1	INDUCTOR	
020	2526915-0000		1	RAIL	
220	312115-0297		3	SCREW ISO4762 M4X25 A4 80	
240	315105-0136		3	WASHER PLAIN, 4,3X9X0,8 A4 BRB	
TPA 0330SQ (See drawing on page: 4-90)					
010	1110556-0000		1	INDUCTOR	
020	2526915-0000		1	RAIL	
220	312115-0297		3	SCREW ISO4762 M4X25 A4 80	
240	315105-0136		3	WASHER PLAIN, 4,3X9X0,8 A4 BRB	
TWA 0125S (See drawing on page: 4-86)					
010	2987327-0000		1	INDUCTOR	
020	2527135-0000		1	RAIL (TITANIUM)	
200	311103-0270		2	PARALLEL PIN ISO 2338 4M6X16 A1	
220	312115-0293		3	SCREW ISO4762 M4X16 A4 80	
230	312105-0329		2	SCREW, M6S ISO 4017 M5X16 A4 80	
240	315105-0136		3	WASHER PLAIN, 4,3X9X0,8 A4 BRB	
250	315105-0146		2	WASHER PLAIN, 5,3X10X1 A4 BRB	
Common Parts					
100	32644-0000		1	WASHER	
110	256882-0000		1	WASHER	
120	271846-0000		1	INSULATION NUT	
130	271848-0000		1	SCREW	
140	491681-0000		1	GASKET	

Machine Type | Group Description | Used-In | Group Number | Page No

PRESSURE RAIL

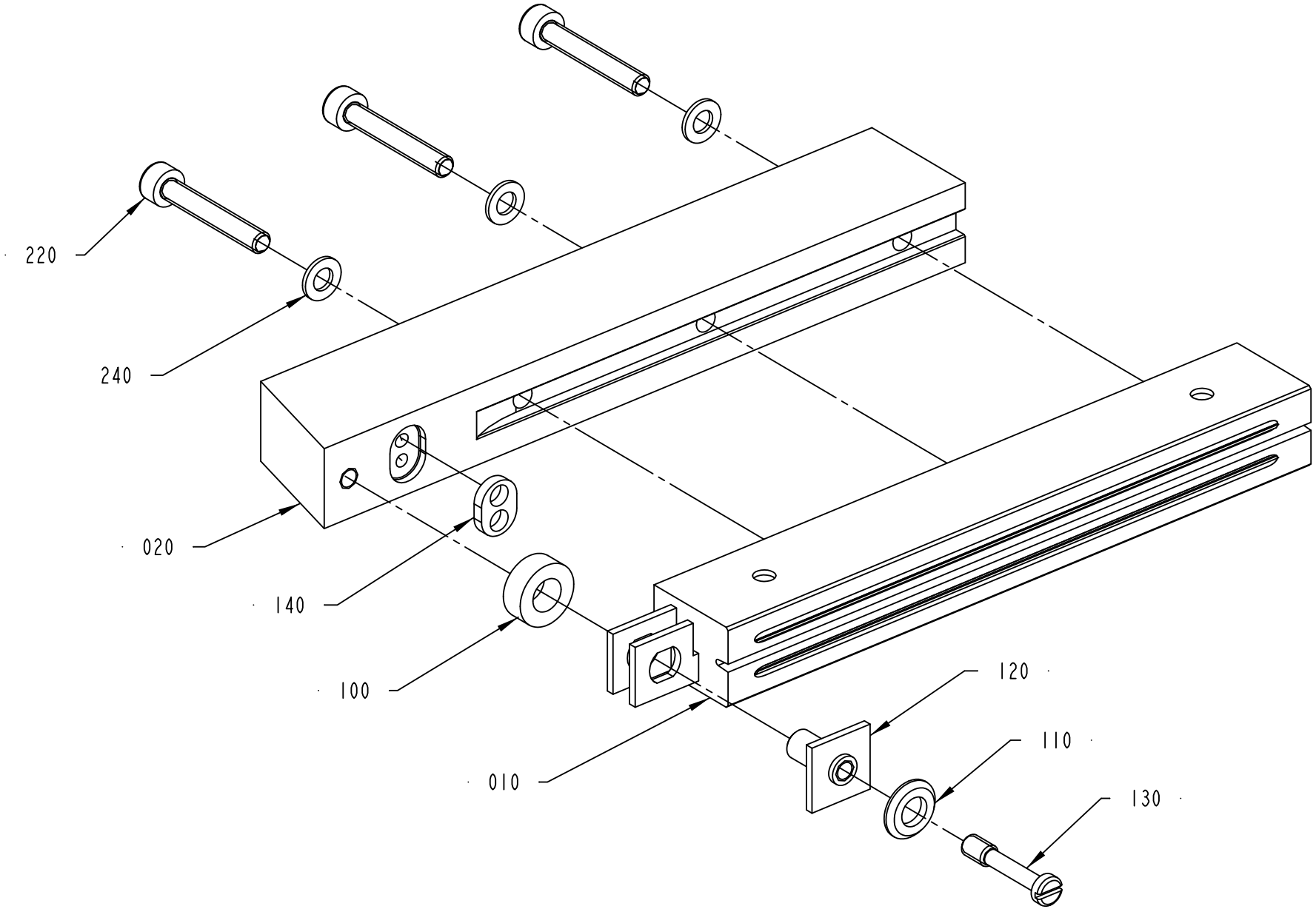

256214-8
ECM 275606

ECM: 422685 - 20091125
Group number: 256214-0400
Assembly Drawing: 256214-8_1_AA

This list covers pages from 4-86 to 4-91

Pos	Part No	UN	Qty	Description	Page No
TBA 0100B, TBA 0125S (See drawing on page: 4-86)					
010	1110530-0000		1	INDUCTOR	
020	2527135-0000		1	RAIL (TITANIUM)	
200	311103-0270		2	PARALLEL PIN ISO 2338 4M6X16 A1	
220	312115-0293		3	SCREW ISO4762 M4X16 A4 80	
230	312105-0329		2	SCREW, M6S ISO 4017 M5X16 A4 80	
240	315105-0136		3	WASHER PLAIN, 4,3X9X0,8 A4 BRB	
250	315105-0146		2	WASHER PLAIN, 5,3X10X1 A4 BRB	
TBA 0160S, TBA 0200S, TWA 0200S, TWA 0180S (See drawing on page: 4-86)					
010	1110532-0000		1	INDUCTOR	
020	2527137-0000		1	RAIL (TITANIUM)	
200	311103-0270		2	PARALLEL PIN ISO 2338 4M6X16 A1	
220	312115-0293		2	SCREW ISO4762 M4X16 A4 80	
230	312115-0331		2	SCREW ISO4762 M5X20 A4 80	
240	315105-0136		2	WASHER PLAIN, 4,3X9X0,8 A4 BRB	
250	315105-0146		2	WASHER PLAIN, 5,3X10X1 A4 BRB	
260	315202-0102		2	O-RING 4,1X1,6 MM	
TBA 0200B, TBA 0284B, TBA 0250B, TBA 0300S, TBA 0330S (See drawing on page: 4-86)					
010	1110534-0000		1	INDUCTOR	
020	2527136-0000		1	RAIL	
200	311103-0270		2	PARALLEL PIN ISO 2338 4M6X16 A1	
220	312115-0293		3	SCREW ISO4762 M4X16 A4 80	
230	312115-0331		2	SCREW ISO4762 M5X20 A4 80	
240	315105-0136		3	WASHER PLAIN, 4,3X9X0,8 A4 BRB	
250	315105-0146		2	WASHER PLAIN, 5,3X10X1 A4 BRB	
260	315202-0102		2	O-RING 4,1X1,6 MM	
TBA 0200M, TBA 0250S (See drawing on page: 4-86)					
010	1110535-0000		1	INDUCTOR	
020	2527137-0000		1	RAIL (TITANIUM)	
200	311103-0270		2	PARALLEL PIN ISO 2338 4M6X16 A1	
220	312115-0293		2	SCREW ISO4762 M4X16 A4 80	
230	312115-0331		2	SCREW ISO4762 M5X20 A4 80	
240	315105-0136		2	WASHER PLAIN, 4,3X9X0,8 A4 BRB	
250	315105-0146		2	WASHER PLAIN, 5,3X10X1 A4 BRB	
260	315202-0102		2	O-RING 4,1X1,6 MM	
TBA 0200SQ (See drawing on page: 4-88)					
010	1520078-0000		1	INDUCTOR	
020	2529075-0000		1	RAIL	
030	1539120-0000		1	VOLUME BULGE	
040	1539593-0000		1	COVER	
200	311103-0270		2	PARALLEL PIN ISO 2338 4M6X16 A1	
220	312115-0293		3	SCREW ISO4762 M4X16 A4 80	
230	312115-0331		2	SCREW ISO4762 M5X20 A4 80	
240	315105-0136		3	WASHER PLAIN, 4,3X9X0,8 A4 BRB	
270	312155-0285		2	SCREW DIN 7991 MF6S M4X6 A4 70	
280	312155-0287		2	SCREW DIN 7991 MF6S M4X8 A4 70	
TPA 0250SQ, TPA 0200SQ (See drawing on page: 4-90)					
010	1110706-0000		1	INDUCTOR	
020	2526915-0000		1	RAIL	
220	312115-0297		3	SCREW ISO4762 M4X25 A4 80	
240	315105-0136		3	WASHER PLAIN, 4,3X9X0,8 A4 BRB	
TPA 0330SQ (See drawing on page: 4-90)					
010	1110556-0000		1	INDUCTOR	
020	2526915-0000		1	RAIL	
220	312115-0297		3	SCREW ISO4762 M4X25 A4 80	
240	315105-0136		3	WASHER PLAIN, 4,3X9X0,8 A4 BRB	
TWA 0125S (See drawing on page: 4-86)					
010	2987327-0000		1	INDUCTOR	
020	2527135-0000		1	RAIL (TITANIUM)	
200	311103-0270		2	PARALLEL PIN ISO 2338 4M6X16 A1	
220	312115-0293		3	SCREW ISO4762 M4X16 A4 80	
230	312105-0329		2	SCREW, M6S ISO 4017 M5X16 A4 80	
240	315105-0136		3	WASHER PLAIN, 4,3X9X0,8 A4 BRB	
250	315105-0146		2	WASHER PLAIN, 5,3X10X1 A4 BRB	
Common Parts					
100	32644-0000		1	WASHER	
110	256882-0000		1	WASHER	
120	271846-0000		1	INSULATION NUT	
130	271848-0000		1	SCREW	
140	491681-0000		1	GASKET	

Machine Type | Group Description | Used-In | Group Number | Page No

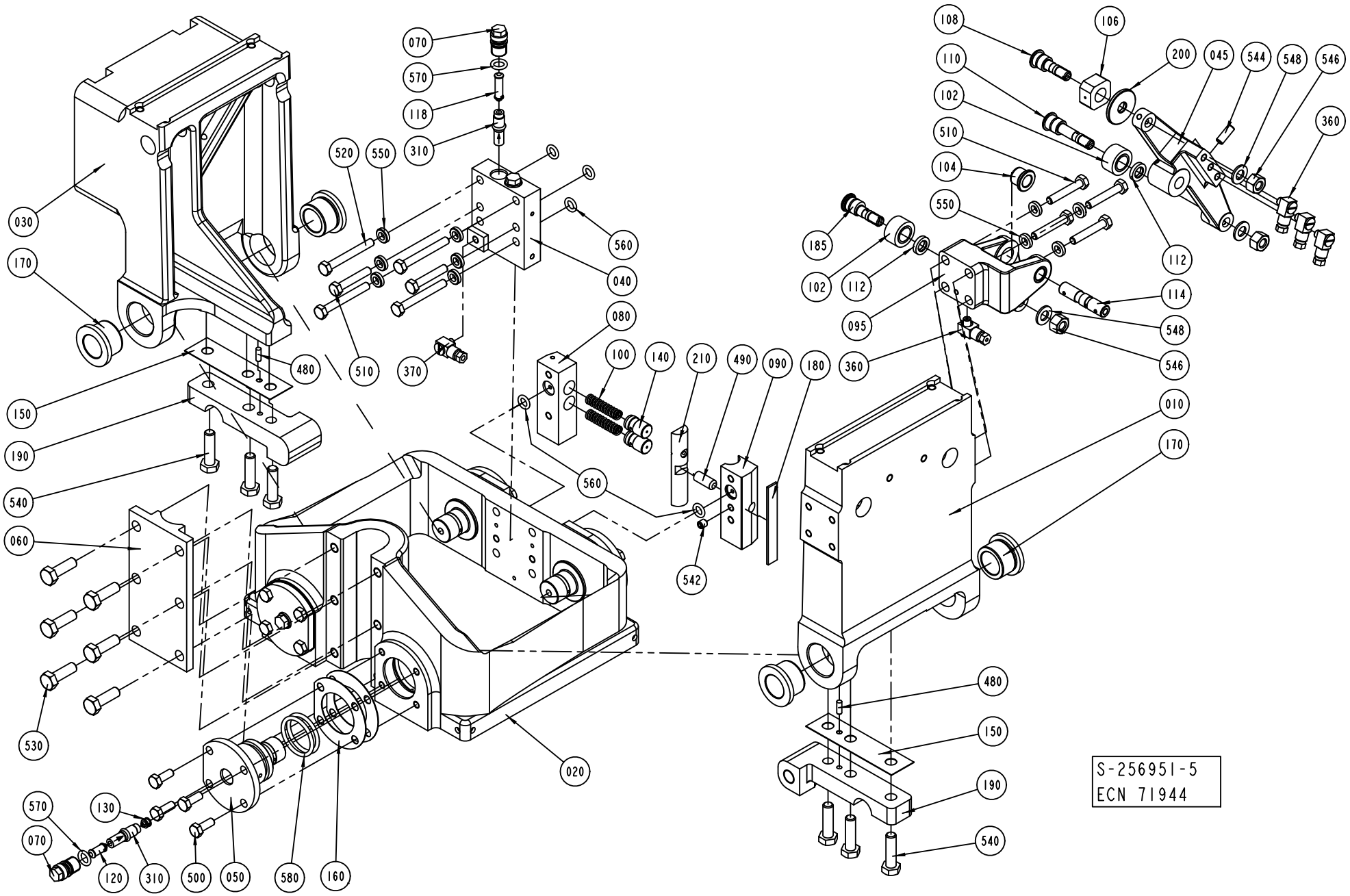
070
570
118
310
520
550
560
040
080
030
170
480
510
370
100
140
210
490
090
180
360
150
190
540
060
530
020
542
185
102
112
095
108
106
110
200
045
544
548
546
102
510
104
550
360
112
114
548
546
010
170
480
150
190
540
570
130
070
120
310
500
050
580
160
S-256951-5
ECN 71944

ECM: 242564 - 20071113
Group number: 256951-0500
Assembly Drawing: 256951-5_1_AC

Pos	Part No	UN	Qty	Description	Page No
TBA IH, TPA IH, TWA IH					
030	562120-0000		1	ARM PRESSURE JAW	
Common Parts					
010	255609-0000		1	ARM CUTTING JAW	
020	256834-0000		1	YOKE	
040	256953-0000		1	BLOCK RIGHT	
045	272492-0000		1	ARM RIGHT	
050	272454-0000		4	PIVOT PIN	
060	256082-0000		1	CAP	
070	256829-0000		6	SCREW	
080	256870-0000		1	BRACKET	
090	491349-0000		1	BEARING SEAT	
095	272496-0000		1	BRACKET RIGHT	
100	20239-0000		2	COMPRESSION SPRING	
102	22475-0000		2	CURVE ROLLER	
104	255653-0000		2	FLANGE BUSHING	
106	256628-0000		1	PIECE	
108	256629-0001		1	AXLE PIN	
110	256629-0003		1	AXLE PIN	
112	256704-0000		2	WASHER	
114	256710-0000		1	SHAFT	
118	256831-0001		2	SPACER	
120	256831-0002		4	SPACER	
130	256831-0003		4	SPACER	
140	256889-0000		2	PLUNGER	
150	256890-0000		2	LACE	
160	256891-0000		6	LACE	
170	257213-0000		4	BUSHING	
180	257317-0000		1	LACE	
185	271100-0000		1	DOWEL	
190	272415-0000		2	ARM	
200	441706-0000		1	WASHER	
210	491350-0000		1	SLIDER	
310	90092-0052		6	METERING VALVE 10 MM3	
360	90134-0058		4	CONNECTION	
370	90134-0068		1	CONNECTION	
480	311103-0268		2	PARALLEL PIN ISO 2338 4M6X12 A1	
490	311103-0401		1	PARALLEL PIN ISO 2338 8M6X20 A1	
500	312105-0368		16	SCREW, M6S ISO 4017 M6X16 A4 80	
510	312105-0376		6	SCREW, M6S ISO 4014 M6X35 A4 80	
520	312105-0380		4	SCREW, M6S ISO 4014 M6X50 A4 80	
530	312105-0453		6	SCREW, M6S ISO 4017 M8X25 A4 80	
540	312105-0455		6	SCREW, M6S ISO 4017 M8X30 A4 80	
542	312318-0360		1	SET SCREW, CUP END ISO4029 M6X6 A4	
544	312318-0368		1	SET SCREW, CUP END ISO4029 M6X16 A4	
546	312811-0318		3	NUT HEX.LOCK HELI COIL M8 SS	
548	315105-0165		3	WASHER PLAIN, 8,4X16X1,6 A4 BRB	
550	315115-0153		10	WASHER PLAIN, TBRB 6,4/12 H=3	
560	315202-0206		5	O-RING 7,3X2,4 MM	
570	315202-0207		6	O-RING 8,3X2,4 MM	
580	315202-0219		8	O-RING 29,2X3 MM	

YOKE LEFT

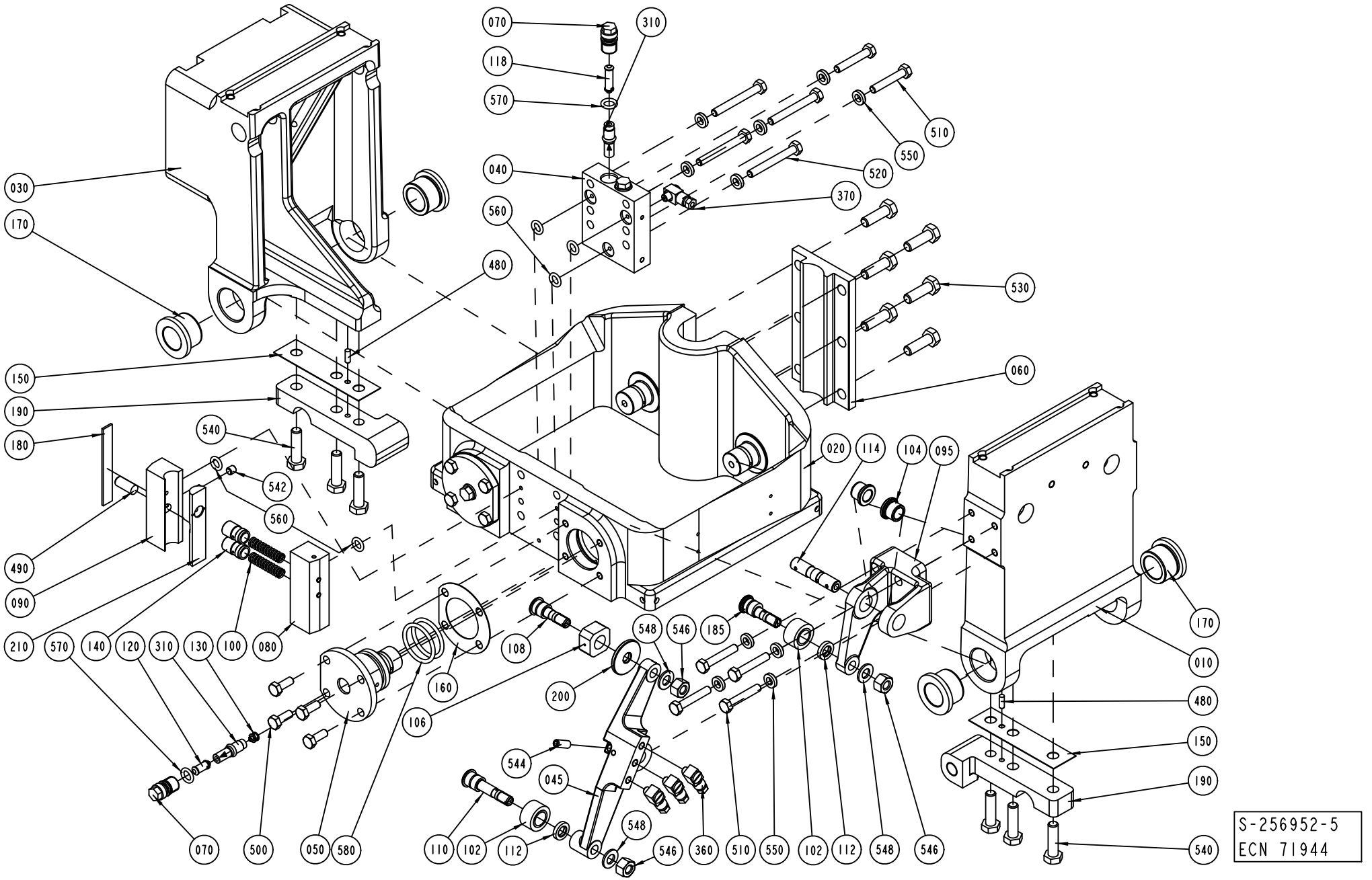
070
310
118
570
510
550
040
520
370
560
480
530
030
170
060
150
190
180
540
542
560
020
114
104
095
490
090
210
570
140
120
310
130
100
080
108
548
546
185
170
010
160
200
106
480
150
190
544
045
548
070
500
050
580
110
102
112
546
360
510
550
102
112
548
546
540
S-256952-5
ECN 71944

ECM: 242563 - 20071113
Group number: 256952-0500
Assembly Drawing: 256952-5_1_AC

Pos	Part No	UN	Qty	Description	Page No
TBA IH, TPA IH, TWA IH					
030	562120-0000		1	ARM PRESSURE JAW	
Common Parts					
010	255609-0000		1	ARM CUTTING JAW	
020	256834-0000		1	YOKE	
040	256954-0000		1	BLOCK LEFT	
045	272493-0000		1	ARM LEFT	
050	272454-0000		4	PIVOT PIN	
060	256082-0000		1	CAP	
070	256829-0000		6	SCREW	
080	256870-0000		1	BRACKET	
090	491349-0000		1	BEARING SEAT	
095	272497-0000		1	BRACKET LEFT	
100	20239-0000		2	COMPRESSION SPRING	
102	22475-0000		2	CURVE ROLLER	
104	255653-0000		2	FLANGE BUSHING	
106	256628-0000		1	PIECE	
108	256629-0001		1	AXLE PIN	
110	256629-0003		1	AXLE PIN	
112	256704-0000		2	WASHER	
114	256710-0000		1	SHAFT	
118	256831-0001		2	SPACER	
120	256831-0002		4	SPACER	
130	256831-0003		4	SPACER	
140	256889-0000		2	PLUNGER	
150	256890-0000		2	LACE	
160	256891-0000		6	LACE	
170	257213-0000		4	BUSHING	
180	257317-0000		1	LACE	
185	271100-0000		1	DOWEL	
190	272415-0000		2	ARM	
200	441706-0000		1	WASHER	
210	491350-0000		1	SLIDER	
310	90092-0052		6	METERING VALVE 10 MM3	
360	90134-0058		4	CONNECTION	
370	90134-0068		1	CONNECTION	
480	311103-0268		2	PARALLEL PIN ISO 2338 4M6X12 A1	
490	311103-0401		1	PARALLEL PIN ISO 2338 8M6X20 A1	
500	312105-0368		16	SCREW, M6S ISO 4017 M6X16 A4 80	
510	312105-0376		6	SCREW, M6S ISO 4014 M6X35 A4 80	
520	312105-0380		4	SCREW, M6S ISO 4014 M6X50 A4 80	
530	312105-0453		6	SCREW, M6S ISO 4017 M8X25 A4 80	
540	312105-0455		6	SCREW, M6S ISO 4017 M8X30 A4 80	
542	312318-0360		1	SET SCREW, CUP END ISO4029 M6X6 A4	
544	312318-0368		1	SET SCREW, CUP END ISO4029 M6X16 A4	
546	312811-0318		3	NUT HEX.LOCK HELI COIL M8 SS	
548	315105-0165		3	WASHER PLAIN, 8,4X16X1,6 A4 BRB	
550	315115-0153		10	WASHER PLAIN, TBRB 6,4/12 H=3	
560	315202-0206		5	O-RING 7,3X2,4 MM	
570	315202-0207		6	O-RING 8,3X2,4 MM	
580	315202-0219		8	O-RING 29,2X3 MM	

Machine Type | Group Description | Used-In | Group Number | Page No

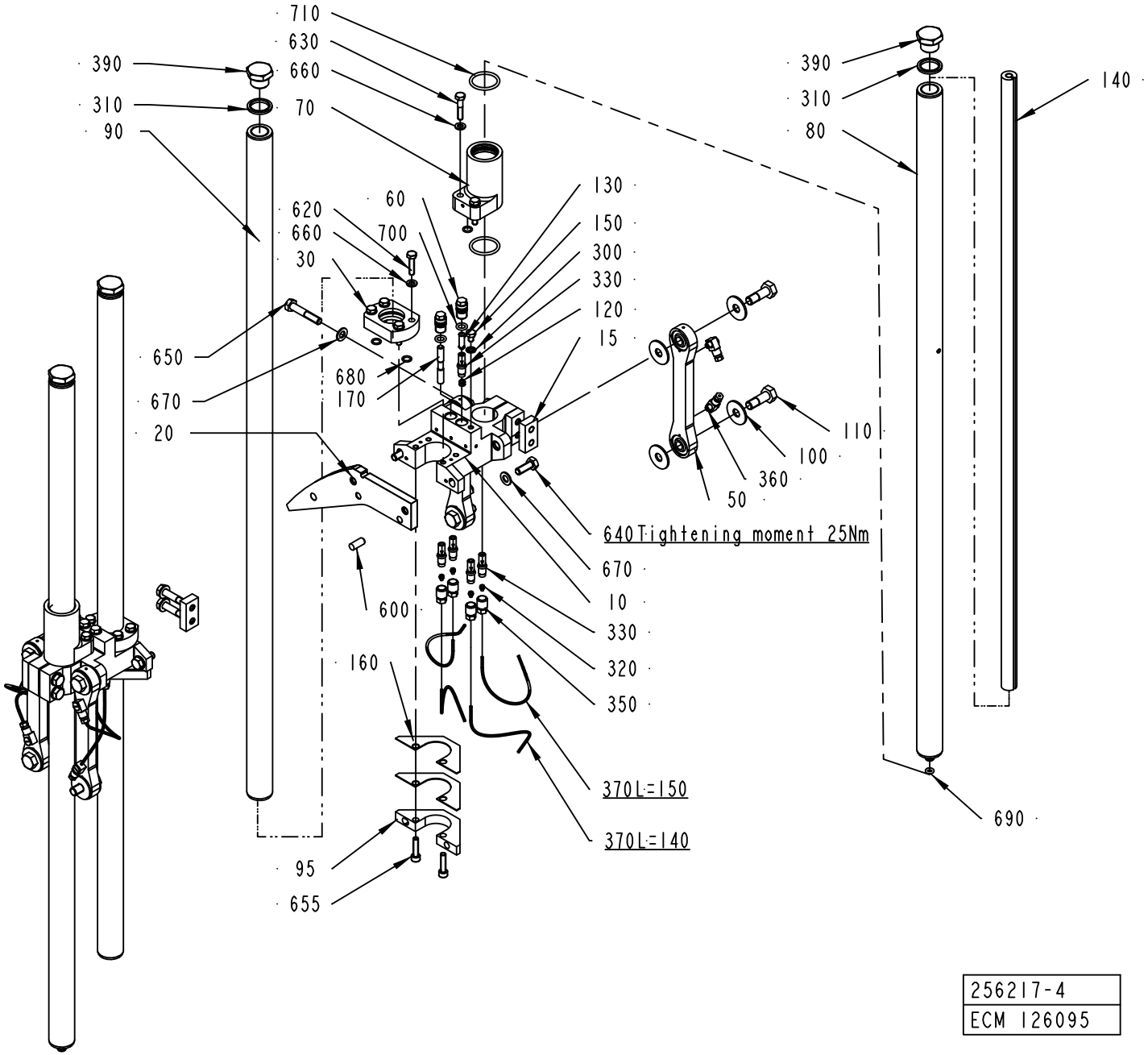
710
630
660
70
390
310
90
620
660
30
650
670
20
680
170
60
700
130
150
300
330
120
15
640 Tightening moment 25Nm
670
10
330
320
350
370 L=150
370 L=140
600
160
95
655
390
310
80
140
690
110
100
360
50
256217-4
ECM 126095

ECM: 431080 - 20100222
Group number: 256217-0500
Assembly Drawing: 256217-4_1_AG

This list covers pages from 4-96 to 4-99

Pos	Part No	UN	Qty	Description	Page No
TBA 0100B, TBA 0125S, TBA 0160S, TBA 0200M, TBA 0200B, TBA 0200SQ, TBA 0200S, TBA 0250S, TBA 0250B, TBA 0300S, TWA 0125S, TWA 0200S (See drawing on page: 4-96)					
020	1538039-0000		2	CURVE	
095	441750-0000		2	YOKE	
160	441751-0000		4	LACE	
600	311103-0401		4	PARALLEL PIN ISO 2338 8M6X20 A1	
640	312105-0452		4	SCREW, M6S ISO 4017 M8X22 A4 80	
655	312115-0372		4	SCREW ISO4762 M6X25 A4 80	
670	315105-0165		8	WASHER PLAIN, 8,4X16X1,6 A4 BRB	
TBA 0284B, TBA 0330S (See drawing on page: 4-96)					
020	1538039-0000		2	CURVE	
095	441750-0000		2	YOKE	
160	441751-0000		4	LACE	
600	311103-0401		4	PARALLEL PIN ISO 2338 8M6X20 A1	
640	312105-0452		4	SCREW, M6S ISO 4017 M8X22 A4 80	
655	312115-0372		4	SCREW ISO4762 M6X25 A4 80	
670	315105-0165		8	WASHER PLAIN, 8,4X16X1,6 A4 BRB	
TPA 0200SQ, TPA 0330SQ, TPA 0250SQ (See drawing on page: 4-98)					
670	315105-0165		4	WASHER PLAIN, 8,4X16X1,6 A4 BRB	
Common Parts					
010	2514091-0000		2	BRACKET	
015	2514090-0000		2	FORCE PLATE	
030	456002-0000		2	BEARING	
050	441031-0000		4	LINK BEARING	
060	256829-0000		4	SCREW	
070	272490-0000		2	SLEEVE	
080	441269-0000		2	GUIDE	
090	441268-0000		2	GUIDE	
100	256738-0000		16	WASHER	
110	256739-0000		8	SCREW	
120	256831-0003		2	SPACER	
130	256831-0004		2	SPACER	
140	272840-0000		2	ROD	
150	441355-0000		2	BLEEDING SCREW	
170	456004-0000		2	SPACER	
300	315211-0103		2	BONDED SEAL SS/NBR90 M6	
310	315211-0111		4	BONDED SEAL SS/NBR90 G1/2	
320	90028-0020		8	CONE TUBE 2,5MM	
330	90092-0052		10	METERING VALVE 10 MM3	
350	90134-0039		8	BUSHING VALVE CONNECTION 2,5 MM	
360	90134-0058		8	CONNECTION	
370	90166-0143	MM	1160	TUBE 2,5 MM PA TRANSP.	
390	90330-0037		4	PLUG, G1/2EXT, G1/2	
620	312105-0372		8	SCREW, M6S ISO 4017 M6X25 A4 80	
630	312105-0374		4	SCREW, M6S ISO 4014 M6X30 A4 80	
650	312105-0460		4	SCREW, M6S ISO 4014 M8X45 A4 80	
660	315105-0153		12	WASHER PLAIN, 6,4X12X1,5 A4 BRB	
680	315202-0106		6	O-RING 8,1X1,6 MM	
690	315202-0204		2	O-RING 5,3X2,4 MM	
700	315202-0207		4	O-RING 8,3X2,4 MM	
710	315202-0219		4	O-RING 29,2X3 MM	

Machine Type | Group Description | Used-In | Group Number | Page No

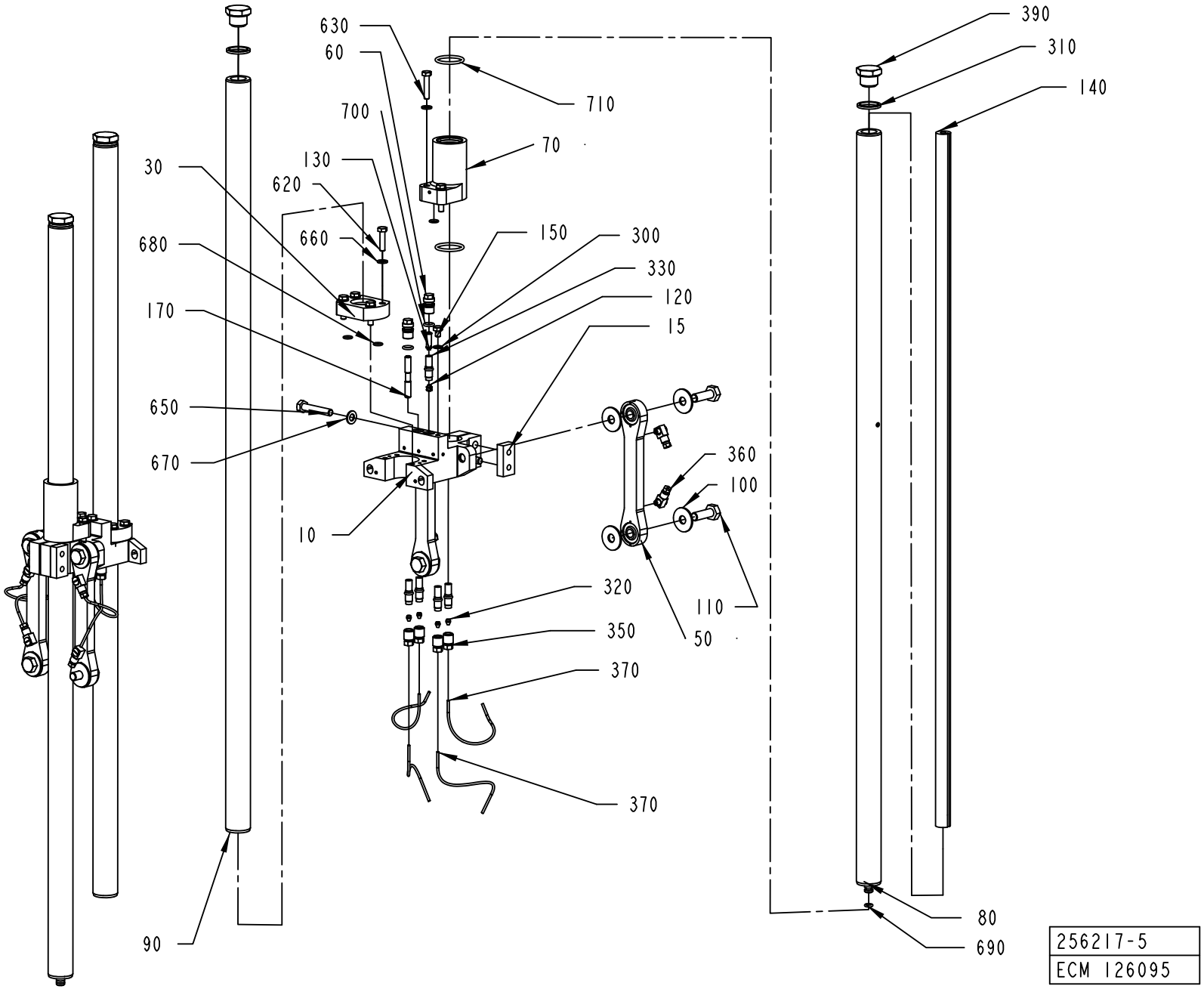
630
60
700
130
620
660
680
170
650
670
10
90
710
70
150
300
330
120
15
360
100
110
50
320
350
370
370
390
310
140
80
690
256217-5
ECM 126095

ECM: 431080 - 20100222
Group number: 256217-0500
Assembly Drawing: 256217-5_1_AA

This list covers pages from 4-96 to 4-99

Pos	Part No	UN	Qty	Description	Page No
TBA 0100B, TBA 0125S, TBA 0160S, TBA 0200M, TBA 0200B, TBA 0200SQ, TBA 0200S, TBA 0250S, TBA 0250B, TBA 0300S, TWA 0125S, TWA 0200S (See drawing on page: 4-96)					
020	1538039-0000		2	CURVE	
095	441750-0000		2	YOKE	
160	441751-0000		4	LACE	
600	311103-0401		4	PARALLEL PIN ISO 2338 8M6X20 A1	
640	312105-0452		4	SCREW, M6S ISO 4017 M8X22 A4 80	
655	312115-0372		4	SCREW ISO4762 M6X25 A4 80	
670	315105-0165		8	WASHER PLAIN, 8,4X16X1,6 A4 BRB	
TBA 0284B, TBA 0330S (See drawing on page: 4-96)					
020	1538039-0000		2	CURVE	
095	441750-0000		2	YOKE	
160	441751-0000		4	LACE	
600	311103-0401		4	PARALLEL PIN ISO 2338 8M6X20 A1	
640	312105-0452		4	SCREW, M6S ISO 4017 M8X22 A4 80	
655	312115-0372		4	SCREW ISO4762 M6X25 A4 80	
670	315105-0165		8	WASHER PLAIN, 8,4X16X1,6 A4 BRB	
TPA 0200SQ, TPA 0330SQ, TPA 0250SQ (See drawing on page: 4-98)					
670	315105-0165		4	WASHER PLAIN, 8,4X16X1,6 A4 BRB	
Common Parts					
010	2514091-0000		2	BRACKET	
015	2514090-0000		2	FORCE PLATE	
030	456002-0000		2	BEARING	
050	441031-0000		4	LINK BEARING	
060	256829-0000		4	SCREW	
070	272490-0000		2	SLEEVE	
080	441269-0000		2	GUIDE	
090	441268-0000		2	GUIDE	
100	256738-0000		16	WASHER	
110	256739-0000		8	SCREW	
120	256831-0003		2	SPACER	
130	256831-0004		2	SPACER	
140	272840-0000		2	ROD	
150	441355-0000		2	BLEEDING SCREW	
170	456004-0000		2	SPACER	
300	315211-0103		2	BONDED SEAL SS/NBR90 M6	
310	315211-0111		4	BONDED SEAL SS/NBR90 G1/2	
320	90028-0020		8	CONE TUBE 2,5MM	
330	90092-0052		10	METERING VALVE 10 MM3	
350	90134-0039		8	BUSHING VALVE CONNECTION 2,5 MM	
360	90134-0058		8	CONNECTION	
370	90166-0143	MM	1160	TUBE 2,5 MM PA TRANSP.	
390	90330-0037		4	PLUG, G1/2EXT, G1/2	
620	312105-0372		8	SCREW, M6S ISO 4017 M6X25 A4 80	
630	312105-0374		4	SCREW, M6S ISO 4014 M6X30 A4 80	
650	312105-0460		4	SCREW, M6S ISO 4014 M8X45 A4 80	
660	315105-0153		12	WASHER PLAIN, 6,4X12X1,5 A4 BRB	
680	315202-0106		6	O-RING 8,1X1,6 MM	
690	315202-0204		2	O-RING 5,3X2,4 MM	
700	315202-0207		4	O-RING 8,3X2,4 MM	
710	315202-0219		4	O-RING 29,2X3 MM	

Machine Type | Group Description | Used-In | Group Number | Page No

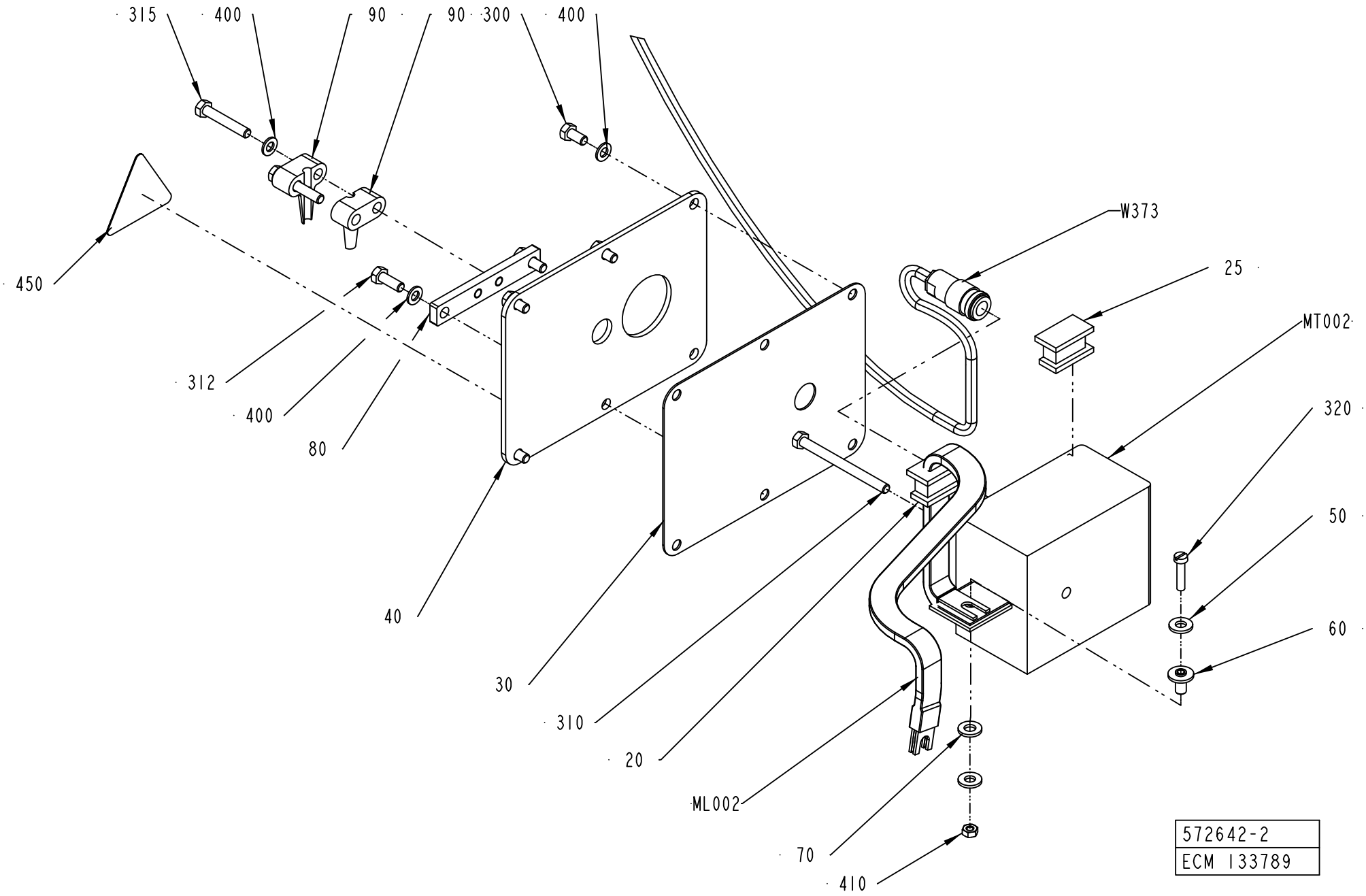
315
400
90
90
300
400
450
312
400
80
40
30
310
20
ML002
70
410
W373
25
MT002
320
50
60
572642-2
ECM 133789

ECM: 404206 - 20090824
Group number: 572642-0200
Assembly Drawing: 572642-2_1_AC

Pos	Part No	UN	Qty	Description	Page No
TBA 0100B, TBA 0125S					
MT002	67379-0114		1	TRANSFORMER	
ML002	2554961-0000		1	BUSBAR RIGHT	
TBA 0160S, TBA 0200S, TWA 0200S					
MT002	67379-0202		1	TRANSFORMER	
ML002	571871-0000		1	BUSBAR,RIGHT	
TBA 0200B, TBA 0284B, TBA 0250B, TBA 0300S, TBA 0330S					
MT002	67379-0264		1	TRANSFORMER	
ML002	571871-0000		1	BUSBAR,RIGHT	
TBA 0200M, TBA 0250S					
MT002	67379-0265		1	TRANSFORMER	
ML002	571871-0000		1	BUSBAR,RIGHT	
TPA 0250SQ, TPA 0200SQ					
MT002	67379-0204		1	TRANSFORMER	
ML002	929436-0000		1	BUSBAR RIGHT	
TPA 0330SQ					
MT002	67379-0265		1	TRANSFORMER	
ML002	929436-0000		1	BUSBAR RIGHT	
TWA 0125S					
MT002	67379-0114		1	TRANSFORMER	
ML002	571869-0000		1	BUSBAR,RIGHT	
Common Parts					
020	571873-0000		1	SEAL	
025	571874-0000		1	SEALING PLUG	
030	562119-0000		1	GASKET	
040	562118-0000		1	LID	
050	28509-0000		2	WASHER	
060	32544-0000		1	INSULATION NUT	
070	32079-0000		1	WASHER	
080	578104-0000		1	SHEET	
090	1282426-0000		2	CLIP	
300	312105-0325		4	SCREW, M6S ISO 4017 M5X10 A4 80	
310	312101-0343		1	SCREW M6S M5X60 FZB	
312	312105-0328		2	SCREW M6S ISO 4017 M5X14 A4 80	
315	312105-0335		2	SCREW, M6S ISO 4014 M5X30 A4 80	
320	312122-0294		1	SCREW ISO 1207 M4X18 NI PL BRASS	
400	315105-0146		8	WASHER PLAIN, 5,3X10X1 A4 BRB	
410	312602-0312		1	HEXAGON NUT, EN 24032 M6M M4 NIPLBR	
450	359705-0015		1	WARNING SIGN ISO, RISK OF ELECTRIC SHOCK	
W373	1548155-0000		1	COAXIAL CABLE	

Pos	Part No	UN	Qty	Description	Page No

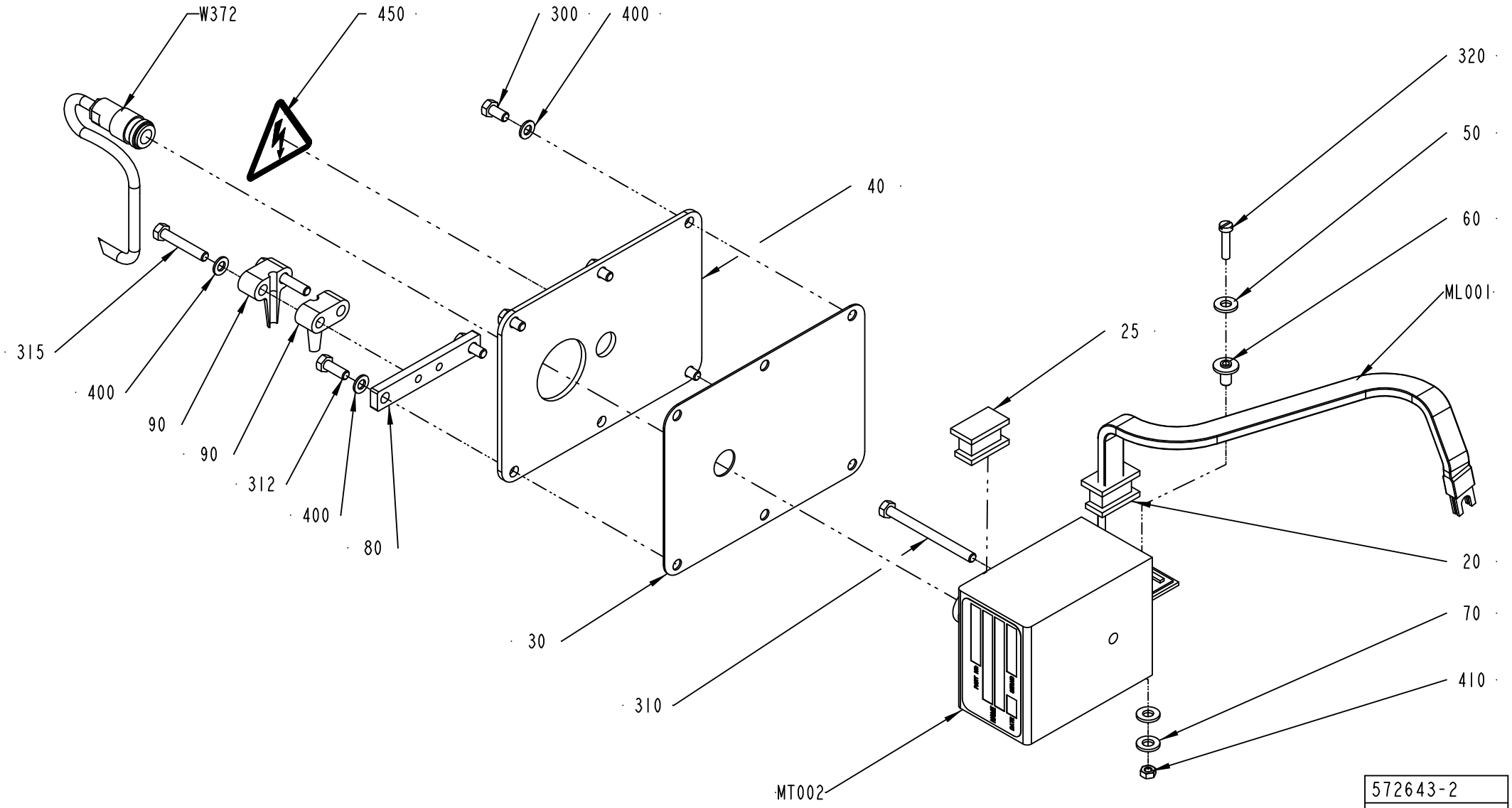
W372
450
300
400
320
50
60
ML001
40
315
400
90
90
312
400
80
25
20
70
410
30
310
MT002
572643-2
ECM 133789

ECM: 404207 - 20090824
Group number: 572643-0200
Assembly Drawing: 572643-2_1_AC

Pos	Part No	UN	Qty	Description	Page No
TBA 0125S, TBA 0100B					
MT001	67379-0114		1	TRANSFORMER	
ML001	2554960-0000		1	BUSBAR LEFT	
TBA 0160S, TBA 0200S, TWA 0200S					
MT001	67379-0202		1	TRANSFORMER	
ML001	571872-0000		1	BUSBAR,LEFT	
TBA 0200B, TBA 0284B, TBA 0250B, TBA 0300S, TBA 0330S					
MT001	67379-0264		1	TRANSFORMER	
ML001	571872-0000		1	BUSBAR,LEFT	
TBA 0200M, TBA 0250S					
MT001	67379-0265		1	TRANSFORMER	
ML001	571872-0000		1	BUSBAR,LEFT	
TPA 0250SQ, TPA 0200SQ					
MT001	67379-0204		1	TRANSFORMER	
ML001	929437-0000		1	BUSBAR LEFT	
TPA 0330SQ					
MT001	67379-0265		1	TRANSFORMER	
ML001	929437-0000		1	BUSBAR LEFT	
TWA 0125S					
MT001	67379-0114		1	TRANSFORMER	
ML001	571870-0000		1	BUSBAR,LEFT	
Common Parts					
020	571873-0000		1	SEAL	
025	571874-0000		1	SEALING PLUG	
030	562119-0000		1	GASKET	
040	562118-0000		1	LID	
050	28509-0000		2	WASHER	
060	32544-0000		1	INSULATION NUT	
070	32079-0000		1	WASHER	
080	578104-0000		1	SHEET	
090	1282426-0000		2	CLIP	
300	312105-0325		4	SCREW, M6S ISO 4017 M5X10 A4 80	
310	312101-0343		1	SCREW M6S M5X60 FZB	
312	312105-0328		2	SCREW M6S ISO 4017 M5X14 A4 80	
315	312105-0335		2	SCREW, M6S ISO 4014 M5X30 A4 80	
320	312122-0294		1	SCREW ISO 1207 M4X18 NI PL BRASS	
400	315105-0146		8	WASHER PLAIN, 5,3X10X1 A4 BRB	
410	312602-0312		1	HEXAGON NUT, EN 24032 M6M M4 NIPLBR	
450	359705-0015		1	WARNING SIGN ISO, RISK OF ELECTRIC SHOCK	
W372	1548155-0000		1	COAXIAL CABLE	

Pos	Part No	UN	Qty	Description	Page No

VOLUME ADJUSTER

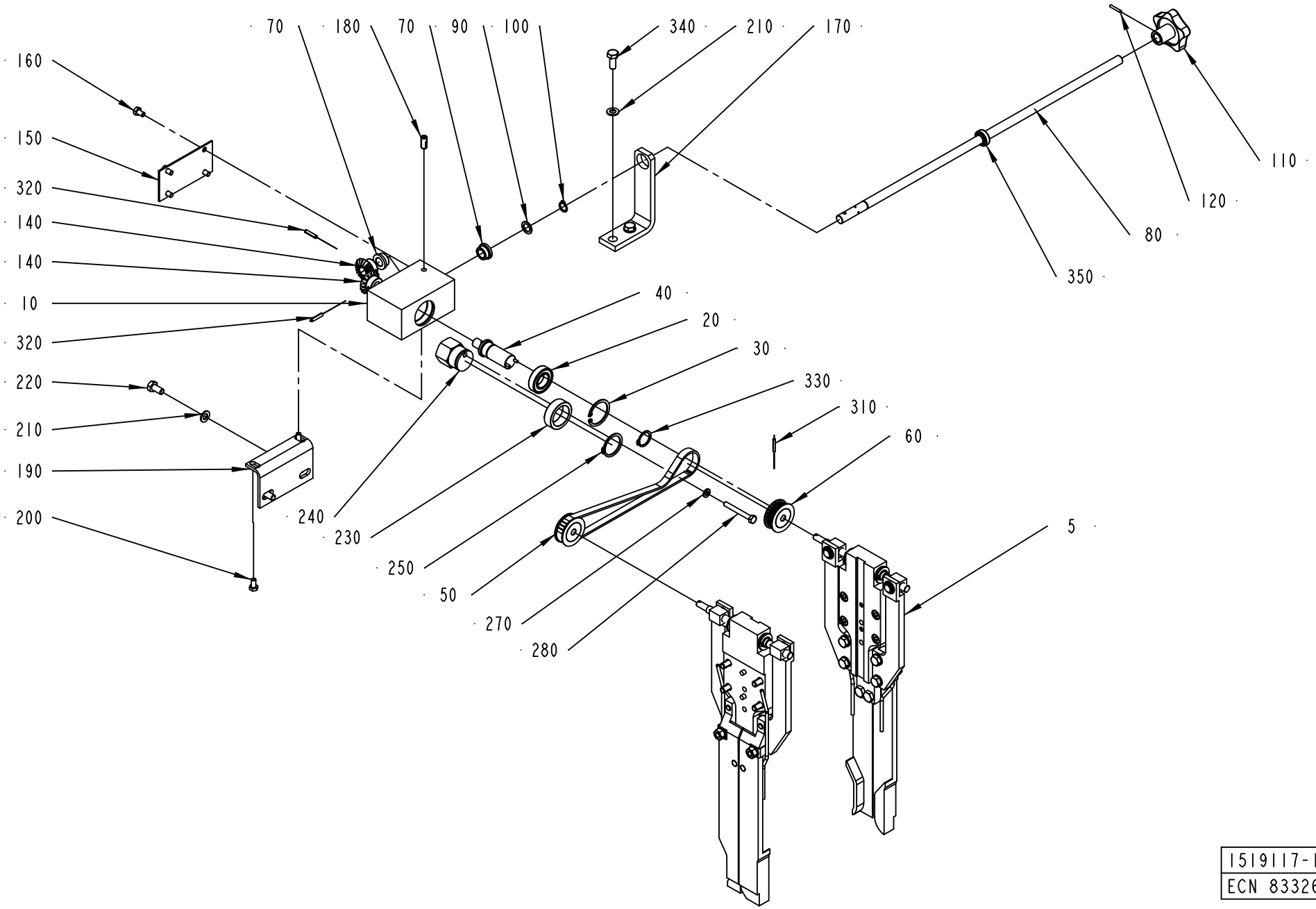

1519117-1
ECN 83326

ECM: 292918 - 20070126
Group number: 1519117-0100
Assembly Drawing: 1519117-1_1_AA

Pos	Part No	UN	Qty	Description	Page No
-					
005	1519118-0100		1	VOLUM CURVE PIECE	**4-107, 4-109**
010	1539105-0000		1	BOX	
020	90214-0166		1	BALL BEARING 20/37X9	
030	315752-0125		1	RETAINING RING FOR BORE DIN 472 37	
040	1539106-0000		1	SHAFT	
050	1539107-0000		1	TIMING BELT	
060	1539108-0000		2	TIMING BELT PULLEY	
070	321101-0172		2	FLANGE BUSHING, 12X18X10 MM	
080	1539109-0000		1	SHAFT	
090	90005-0047		1	WASHER,PL.RND.CU.12,2/ H=1,5	
100	315751-0109		1	RETAINING RING FOR SHAFT DIN 471 12 SS	
110	240797-0000		1	HANDLE	
120	311103-0238		1	PARALLEL PIN ISO 2338 3M6X20 A1	
140	293610-0000		2	GEAR WHEEL	
150	1539110-0000		1	LID	
160	312105-0364		4	SCREW, M6S ISO 4017 M6X10 A4 80	
170	1539111-0000		1	SUPPORT	
180	90458-1517		1	SCREW SPRINGLOAD. SOCK. HEX HEAD M8X18	
190	1539112-0000		1	SUPPORT	
200	312105-0366		2	SCREW, M6S ISO 4017 M6X12 A4 80	
210	315105-0165		4	WASHER PLAIN, 8,4X16X1,6 A4 BRB	
220	312105-0449		2	SCREW, M6S ISO 4017 M8X16 A4 80	
230	1538948-0000		1	ROLLER	
240	1538949-0000		1	ECCENTRIC	
250	315751-0122		1	RETAINING RING FOR SHAFT DIN 471 30 SS	
270	315105-0153		1	WASHER PLAIN, 6,4X12X1,5 A4 BRB	
280	312105-0380		1	SCREW, M6S ISO 4014 M6X50 A4 80	
310	90258-0031		1	PIN, STRAIGHT SLOTTED SPRING FRP 3X20	
320	311112-0256		2	SPRING PIN, ISO 8752 4X20 A2	
330	315751-0116		1	RETAINING RING FOR SHAFT DIN 471 20 SS	
340	312105-0451		2	SCREW, M6S ISO 4017 M8X20 A4 80	
350	90240-0152		1	PLAIN BEAR,SELF ADJ.SPHER.12X22X10 MM	

Pos	Part No	UN	Qty	Description	Page No

Machine Type	Group Description	Used-In	Group Number	Page No

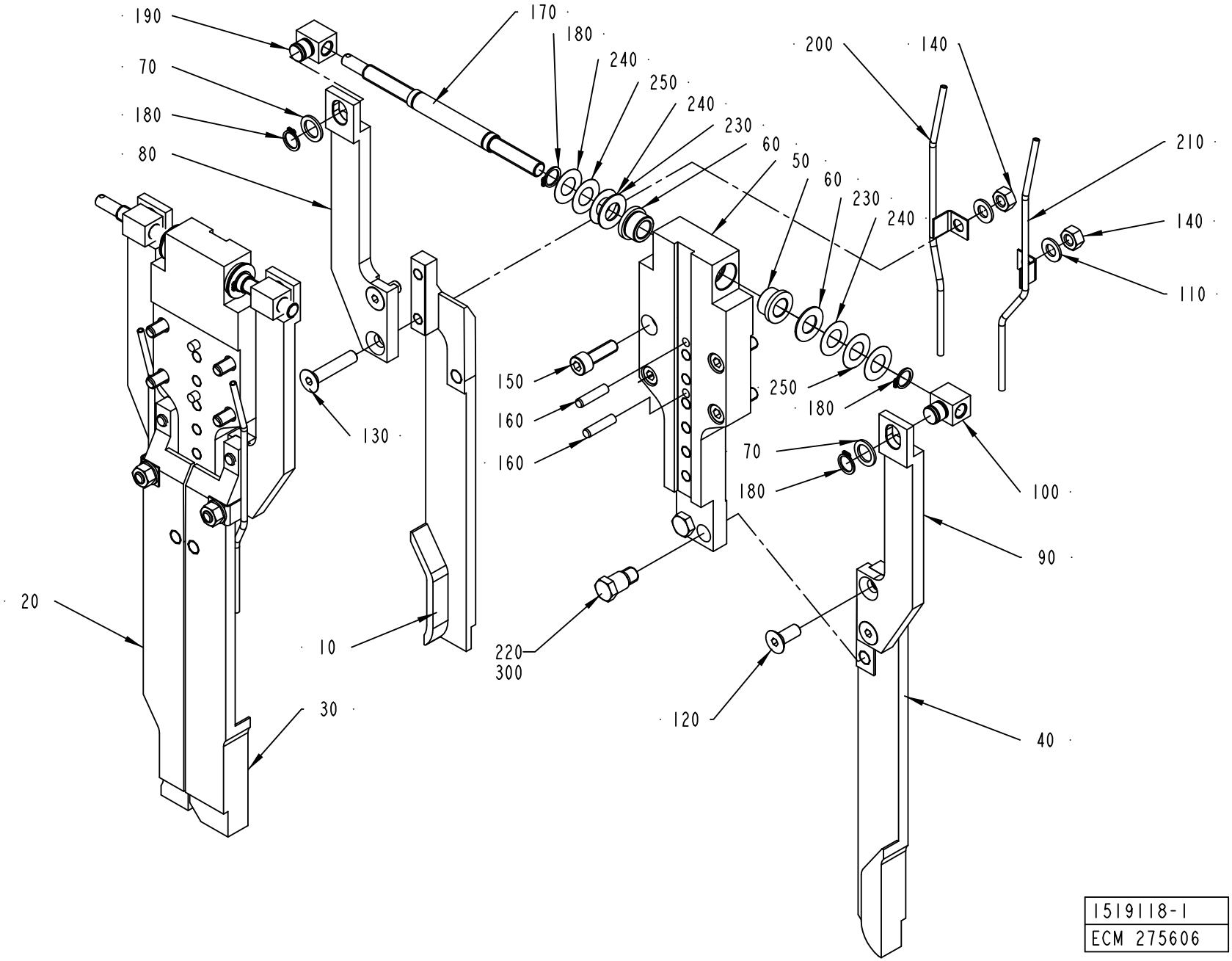
190
70
180
80
170
180
240
250
240
230
60
50
60
230
240
200
140
210
140
110
150
160
160
130
250
180
70
180
100
90
20
10
220
300
120
30
40
1519118-1
ECM 275606

ECM: 422688 - 20091125
Group number: 1519118-0100
Assembly Drawing: 1519118-1_1_AC

This list covers pages from 4-106 to 4-109

Pos	Part No	UN	Qty	Description	Page No
TWA 0200S					
010	2829713-0000		2	VOLUME CAM L	
020	2829714-0000		2	VOLUME CAM R	
050	2829688-0000		2	BRACKET	
200	594970-0000		2	PIPE LEFT	
210	594969-0000		2	PIPE RIGHT	
TBA 0100B					
010	979772-0000		1	VOLUME CAM L 100	
020	979774-0000		1	VOLUME CAM R 100	
030	979773-0000		1	VOLUME CAM L WIDE 100	
040	979775-0000		1	VOLUME CAM R WIDE 100	
050	1539101-0000		2	BRACKET	
200	441759-0000		2	PIPE LEFT	
210	441758-0000		2	PIPE RIGHT	
TBA 0125S					
010	1490235-0000		1	VOLUME CAM	
020	1490236-0000		1	VOLUME CAM	
030	1490237-0000		1	VOLUME CAM, WIDE	
040	1490238-0000		1	VOLUME CAM, WIDE	
050	1539101-0000		2	BRACKET	
200	441759-0000		2	PIPE LEFT	
210	441758-0000		2	PIPE RIGHT	
TBA 0160S					
010	2506638-0000		1	VOLUME CAM	
020	2506639-0000		1	VOLUME CAM	
030	2506640-0000		1	VOLUME CAM	
040	2506641-0000		1	VOLUME CAM	
050	1539101-0000		2	BRACKET	
200	441759-0000		2	PIPE LEFT	
210	441758-0000		2	PIPE RIGHT	
TBA 0200B					
010	1490239-0000		1	VOLUME CAM	
020	1490240-0000		1	VOLUME CAM	
030	1490239-0000		1	VOLUME CAM	
040	1490240-0000		1	VOLUME CAM	
050	1539101-0000		2	BRACKET	
200	441759-0000		2	PIPE LEFT	
210	441758-0000		2	PIPE RIGHT	
TBA 0200M, TBA 0250B					
010	1282315-0000		1	VOLUME CAM LEFT	
020	1282316-0000		1	VOLUME CAM RIGHT	
030	1282315-0000		1	VOLUME CAM LEFT	
040	1282316-0000		1	VOLUME CAM RIGHT	
050	1539101-0000		2	BRACKET	
200	441759-0000		2	PIPE LEFT	
210	441758-0000		2	PIPE RIGHT	
TBA 0200S					
010	2506645-0000		1	VOLUME CAM	
020	2506643-0000		1	VOLUME CAM	
030	2506642-0000		1	VOLUME CAM	
040	2506644-0000		1	VOLUME CAM	
050	1539101-0000		2	BRACKET	
200	441759-0000		2	PIPE LEFT	
210	441758-0000		2	PIPE RIGHT	
TBA 0250S					
010	2553111-0000		1	CAM	
020	2553110-0000		1	CAM	
030	2553111-0000		1	CAM	
040	2553110-0000		1	CAM	
050	1539101-0000		2	BRACKET	
200	441759-0000		2	PIPE LEFT	
210	441758-0000		2	PIPE RIGHT	
TBA 0284B					
010	491436-0000		1	VOLUME CAM LEFT	
020	491434-0000		1	VOLUME CAM RIGHT	
030	491436-0000		1	VOLUME CAM LEFT	
040	491434-0000		1	VOLUME CAM RIGHT	
050	1539101-0000		2	BRACKET	
200	441759-0000		2	PIPE LEFT	
210	441758-0000		2	PIPE RIGHT	
TBA 0300S					
010	272949-0000		1	VOLUME CAM LEFT	
020	272957-0000		1	VOLUME CAM RIGHT	
030	272949-0000		1	VOLUME CAM LEFT	
040	272957-0000		1	VOLUME CAM RIGHT	
050	1539101-0000		2	BRACKET	
200	441759-0000		2	PIPE LEFT	
210	441758-0000		2	PIPE RIGHT	
TBA 0330S					
010	582166-0000		1	VOLUME CAM L 330S	
020	582164-0000		1	VOLUME CAM R 330S	
030	582167-0000		1	VOLUME CAM L WIDE 330S	
040	582165-0000		1	VOLUME CAM R WIDE 330S	
050	1539101-0000		2	BRACKET	

Machine Type	Group Description	Used-In	Group Number	Page No

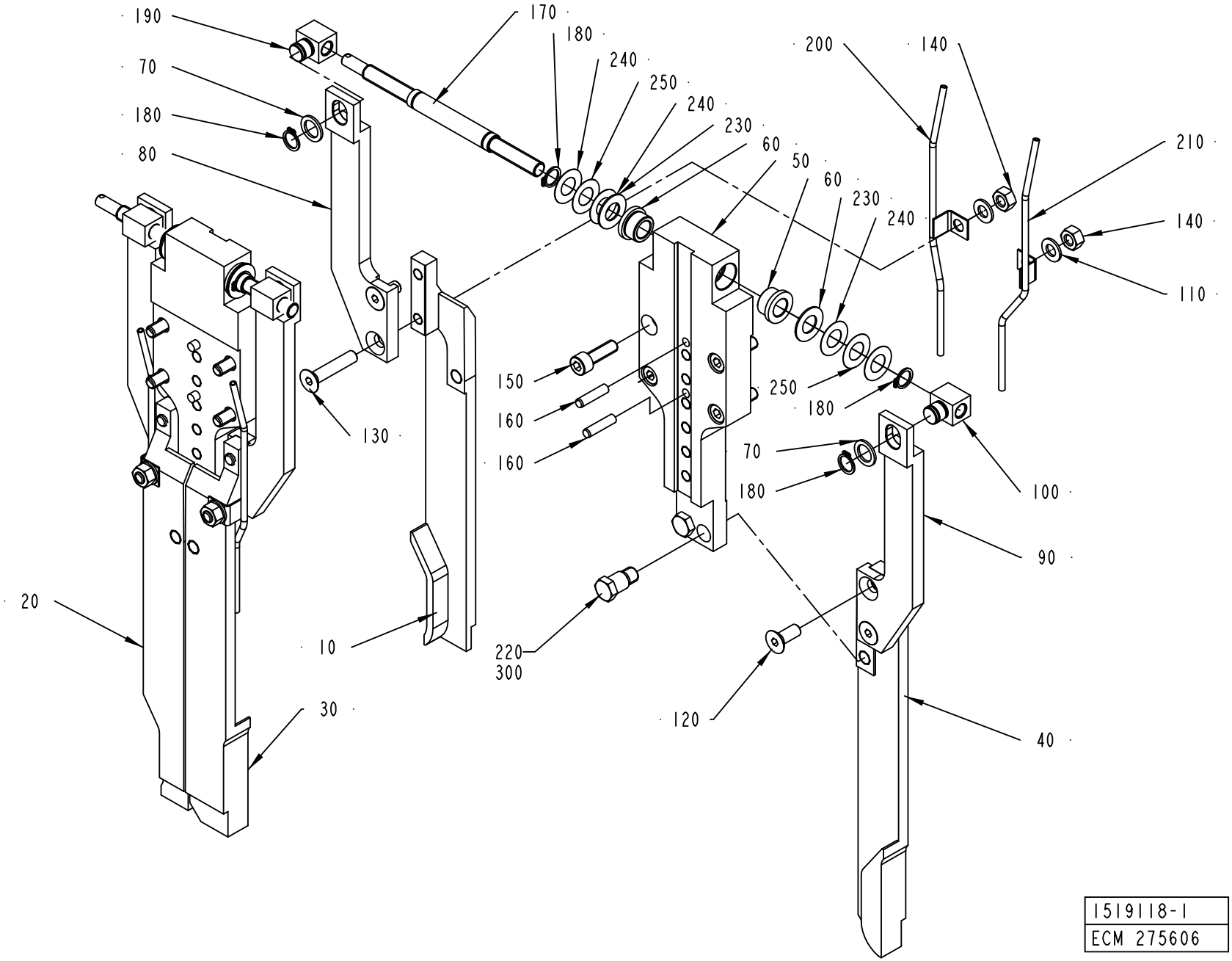

1519118-1
ECM 275606

ECM: 422688 - 20091125
Group number: 1519118-0100
Assembly Drawing: 1519118-1_1_AC

This list covers pages from 4-106 to 4-109

Pos	Part No	UN	Qty	Description	Page No
TBA 0330S (Cont'd)					
200	441759-0000		2	PIPE LEFT	
210	441758-0000		2	PIPE RIGHT	
TPA 0200SQ					
010	2810410-0000		1	VOLUME CAM	
020	2810411-0000		1	VOLUME CAM	
030	2810410-0000		1	VOLUME CAM	
040	2810411-0000		1	VOLUME CAM	
050	1539101-0000		2	BRACKET	
200	441759-0000		2	PIPE LEFT	
210	441758-0000		2	PIPE RIGHT	
TPA 0250SQ					
010	2810412-0000		1	VOLUME CAM	
020	2810413-0000		1	VOLUME CAM	
030	2810412-0000		1	VOLUME CAM	
040	2810413-0000		1	VOLUME CAM	
050	1539101-0000		2	BRACKET	
200	441759-0000		2	PIPE LEFT	
210	441758-0000		2	PIPE RIGHT	
TPA 0330SQ					
010	2810414-0000		1	VOLUME CAM	
020	2810415-0000		1	VOLUME CAM	
030	2810414-0000		1	VOLUME CAM	
040	2810415-0000		1	VOLUME CAM	
050	1539101-0000		2	BRACKET	
200	441759-0000		2	PIPE LEFT	
210	441758-0000		2	PIPE RIGHT	
TWA 0125S					
010	2987315-0000		2	VOLUME CAM	
020	2987316-0000		2	VOLUME CAM	
050	1539101-0000		2	BRACKET	
200	594970-0000		2	PIPE LEFT	
210	594969-0000		2	PIPE RIGHT	
Common Parts					
060	321101-0173		4	FLANGE BUSHING, 12X18X12 MM	
070	90005-0047		4	WASHER,PL.RND.CU.12,2/ H=1,5	
080	1539102-0000		2	ARM	
090	1539103-0000		2	ARM	
100	1519134-0000		2	JOINT	
110	315105-0165		12	WASHER PLAIN, 8,4X16X1,6 A4 BRB	
120	312155-0451		4	SCREW DIN 7991 MF6S M8X20 A4 70	
130	312155-0459		4	SCREW DIN 7991 MF6S M8X40 A4 70	
140	312605-0318		4	HEXAGON NUT, M6M M8 A280	
150	312115-0453		8	SCREW ISO4762 M8X25 A4 80	
160	311103-0355		4	PARALLEL PIN ISO 2338 6M6X25 A1	
170	1539104-0000		2	SPINDLE	
180	315751-0109		8	RETAINING RING FOR SHAFT DIN 471 12 SS	
190	1519133-0000		2	JOINT	
220	272973-0000		4	DOWEL	
230	1755-0001		4	WASHER	
240	1755-0002		8	WASHER	
250	1755-0003		4	WASHER	
300	90157-0021	KG	0.02	LOCKING FLUID LOCTITE 270	

SUPPORT ROLLER

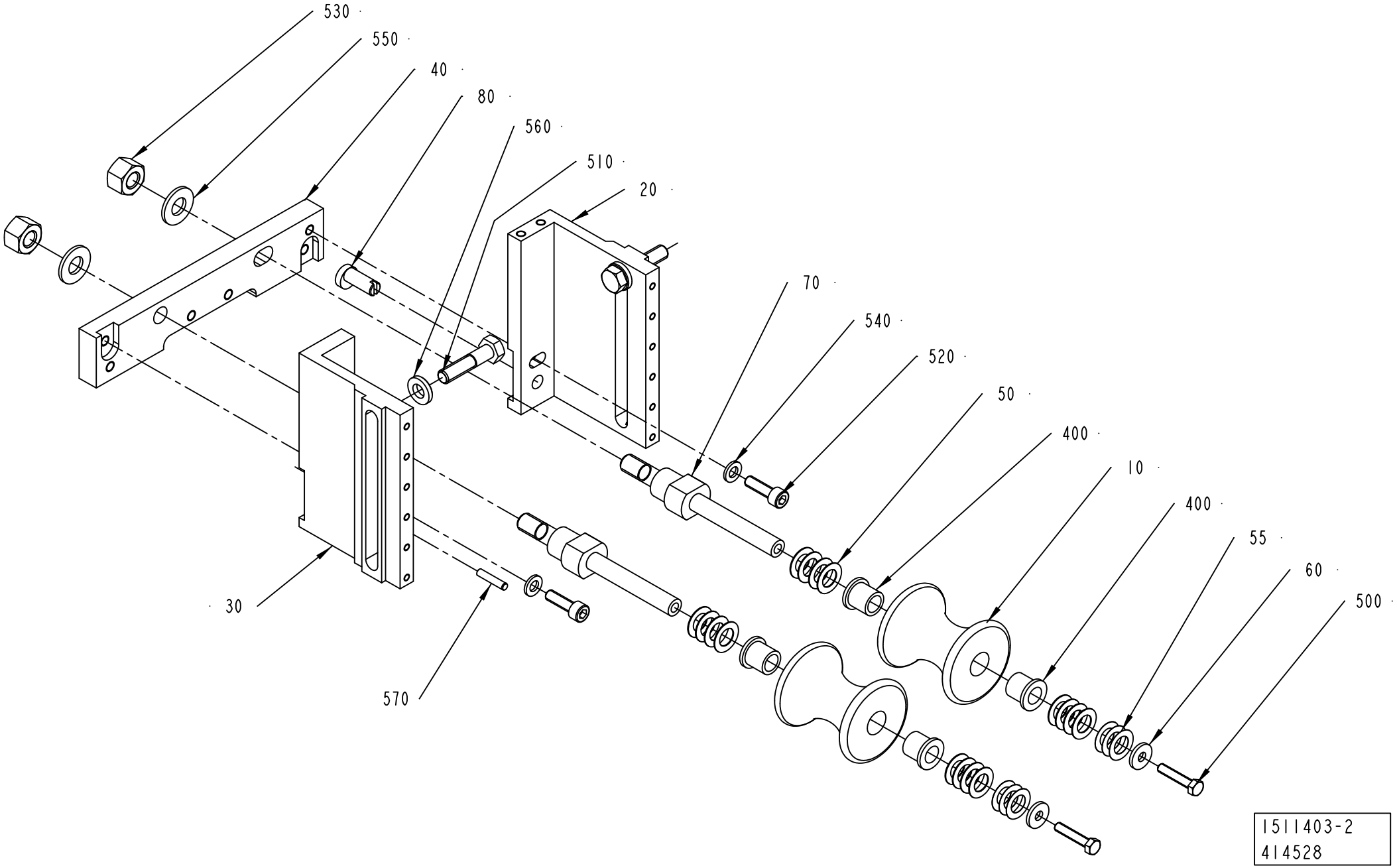

ECM: 422691 - 20091125
Group number: 1511403-0100
Assembly Drawing: 1511403-2_1_AB

Pos	Part No	UN	Qty	Description	Page No
TBA 0100B, TBA 0125S, TWA 0125S					
010	978758-0000		2	ROLLER 125ML	
040	1511405-0003		1	BRACKET	
TBA 0160S, TBA 0200S, TPA 0250SQ, TWA 0200S, TPA 0200SQ					
010	978760-0000		2	ROLLER TBA200SL	
040	1511405-0004		1	BRACKET	
TBA 0200B, TBA 0284B, TBA 0250B, TBA 0300S, TBA 0330S					
010	978757-0000		2	ROLLER 180-284ML	
040	1511405-0002		1	BRACKET	
TBA 0200M, TBA 0250S					
010	574385-0000		2	ROLLER TBA250SL	
040	1511405-0001		1	BRACKET	
TBA 0200SQ					
010	1532526-0000		2	ROLLER	
040	1511405-0002		1	BRACKET	
TPA 0330SQ					
010	929355-0000		2	ROLLER TPA 330	
040	1511405-0002		1	BRACKET	
Common Parts					
020	1511406-0000		1	BRACKET	
030	1511407-0000		1	BRACKET	
050	2033-0009		16	WASHER	
055	2033-0014		6	WASHER	
060	27815-0000		2	WASHER	
070	978756-0000		2	PIN	
080	1511404-0000		1	ECCENTRIC SHAFT	
400	90240-0180		4	FLANGE BUSHING 10X14X15MM	
500	312105-0333		2	SCREW, M6S ISO 4017 M5X25 A4 80	
510	312105-0457		2	SCREW, M6S ISO 4014 M8X35 A4 80	
520	312115-0370		2	SCREW ISO4762 M6X20 A4 80	
530	312811-0320		2	NUT HEX.LOCK HELI COIL MID GRIP M10 SS	
540	315105-0153		2	WASHER PLAIN, 6,4X12X1,5 A4 BRB	
550	315105-0173		2	WASHER PLAIN, 10,5X22X2 A4 BRB	
560	315115-0165		2	WASHER PLAIN, TBRB 8,4/16 H=3	
570	311103-0272		1	PARALLEL PIN ISO 2338 4M6X20 A1	

Pos	Part No	UN	Qty	Description	Page No

Machine Type | Group Description | Used-In | Group Number | Page No

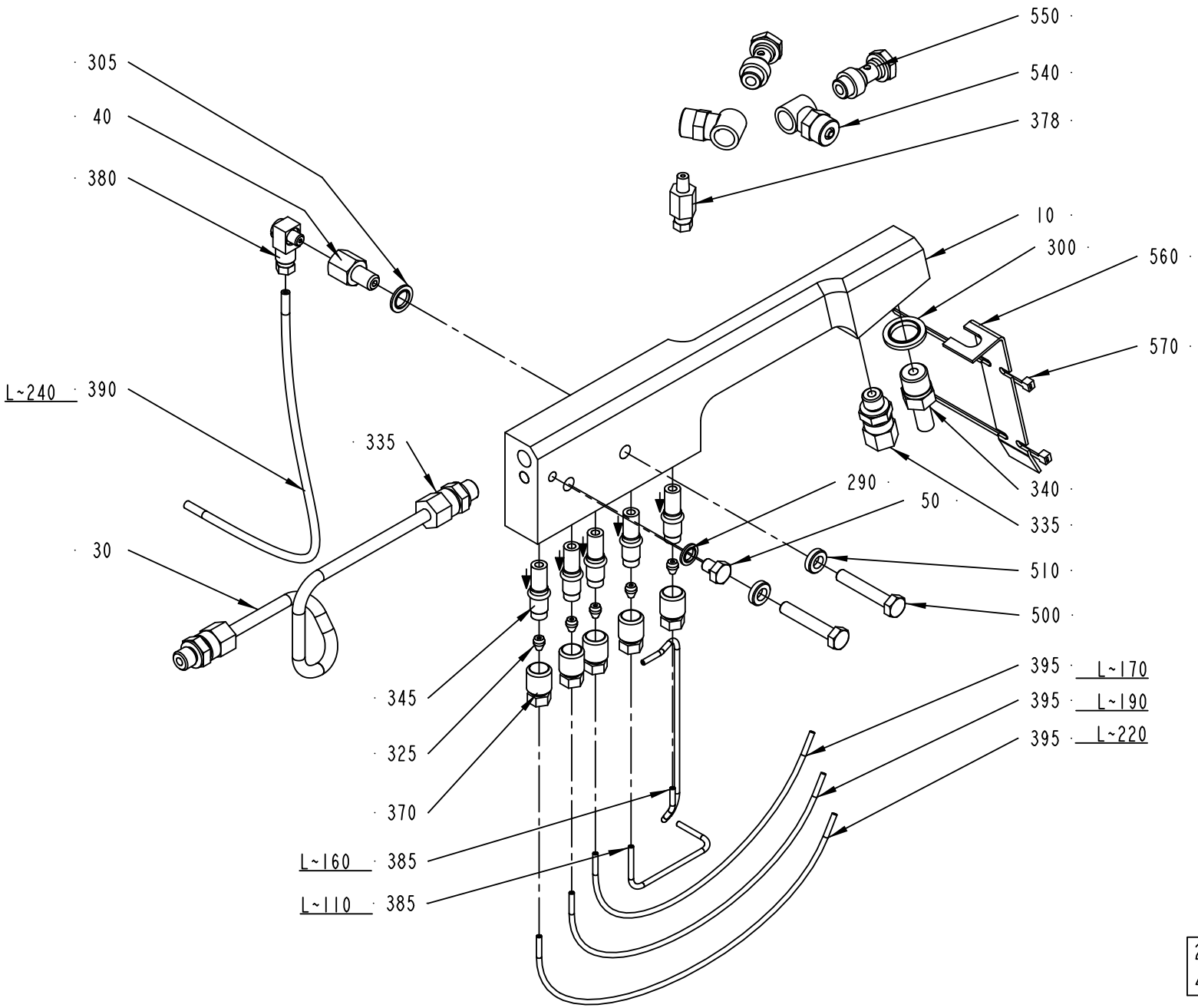
550
540
378
305
40
380
10
300
560
570
L~240 390
335
290
50
340
335
30
510
500
345
325
370
395 L~170
395 L~190
395 L~220
L~160 385
L~110 385
257381-5
428072

ECM: 429789 - 20091221
Group number: 257381-0400
Assembly Drawing: 257381-5_1_AB

Pos	Part No	UN	Qty	Description	Page No
-					
010	456017-0000		1	HOSE HOLDER RIGHT	
030	257379-0000		1	HYDRAULIC PIPE RIGHT	
040	257000-0000		1	NIPPLE	
050	441355-0000		1	BLEEDING SCREW	
290	315211-0103		1	BONDED SEAL SS/NBR90 M6	
300	315211-0108		1	BONDED SEAL SS/NBR90 G1/4	
305	315211-0104		1	BONDED SEAL SS/NBR90 M8	
325	90028-0020		5	CONE TUBE 2,5MM	
335	90030-0184		3	CONN. STR., GE06LRED71	
340	90030-0065		1	PIPE CONNECTION	
345	90092-0052		5	METERING VALVE 10 MM3	
370	90134-0039		5	BUSHING VALVE CONNECTION 2,5 MM	
378	90134-0066		1	CONNECTION M6 TUBE 4 MM	
380	90134-0068		1	CONNECTION	
385	90266-0019	MM	270	PIPE	
390	90166-0109	MM	240	TUBE 4 MM PA TRANSP.	
395	90166-0143	MM	580	TUBE 2,5 MM PA TRANSP.	
500	312105-0376		2	SCREW, M6S ISO 4014 M6X35 A4 80	
510	315115-0153		2	WASHER PLAIN, TBRB 6,4/12 H=3	
540	342980-0121		2	HOSE FITTING, BANJO RING L PO G1/8 8/6	
550	342980-0303		2	BANJO-HOLLOW BOLT COUPL,EXT.THR.01-G1/8	
560	3017420-0000		1	PLATE	
570	352113-0101		2	CABLE TIE, BLACK 92X2,5 MM	

Pos	Part No	UN	Qty	Description	Page No

MANIFOLD LEFT

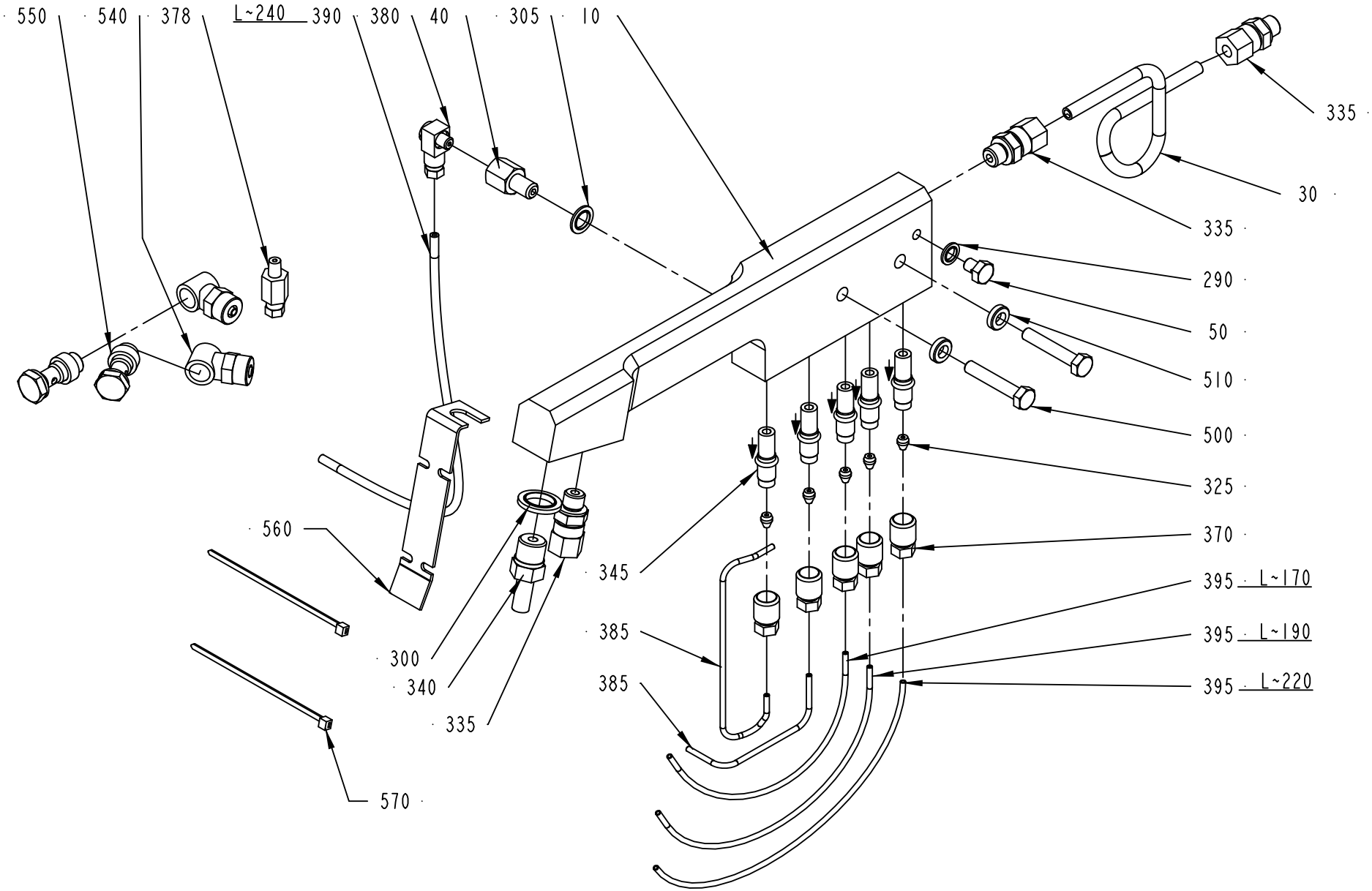

257382-5
428072

ECM: 429788 - 20091221
Group number: 257382-0400
Assembly Drawing: 257382-5_1_AB

Pos	Part No	UN	Qty	Description	Page No
-					
010	456018-0000		1	HOSE HOLDER LEFT	
030	257380-0000		1	HYDRAULIC PIPE LEFT	
040	257000-0000		1	NIPPLE	
050	441355-0000		1	BLEEDING SCREW	
290	315211-0103		1	BONDED SEAL SS/NBR90 M6	
300	315211-0108		1	BONDED SEAL SS/NBR90 G1/4	
305	315211-0104		1	BONDED SEAL SS/NBR90 M8	
325	90028-0020		5	CONE TUBE 2,5MM	
335	90030-0184		3	CONN. STR., GE06LRED71	
340	90030-0065		1	PIPE CONNECTION	
345	90092-0052		5	METERING VALVE 10 MM3	
370	90134-0039		5	BUSHING VALVE CONNECTION 2,5 MM	
378	90134-0066		1	CONNECTION M6 TUBE 4 MM	
380	90134-0068		1	CONNECTION	
385	90266-0019	MM	270	PIPE	
390	90166-0109	MM	240	TUBE 4 MM PA TRANSP.	
395	90166-0143	MM	580	TUBE 2,5 MM PA TRANSP.	
500	312105-0376		2	SCREW, M6S ISO 4014 M6X35 A4 80	
510	315115-0153		2	WASHER PLAIN, TBRB 6,4/12 H=3	
540	342980-0121		2	HOSE FITTING, BANJO RING L PO G1/8 8/6	
550	342980-0303		2	BANJO-HOLLOW BOLT COUPL,EXT.THR.01-G1/8	
560	3017420-0000		1	PLATE	
570	352113-0101		2	CABLE TIE, BLACK 92X2,5 MM	

Pos	Part No	UN	Qty	Description	Page No

Tetra Pak

SPC
Spare Parts Catalogue

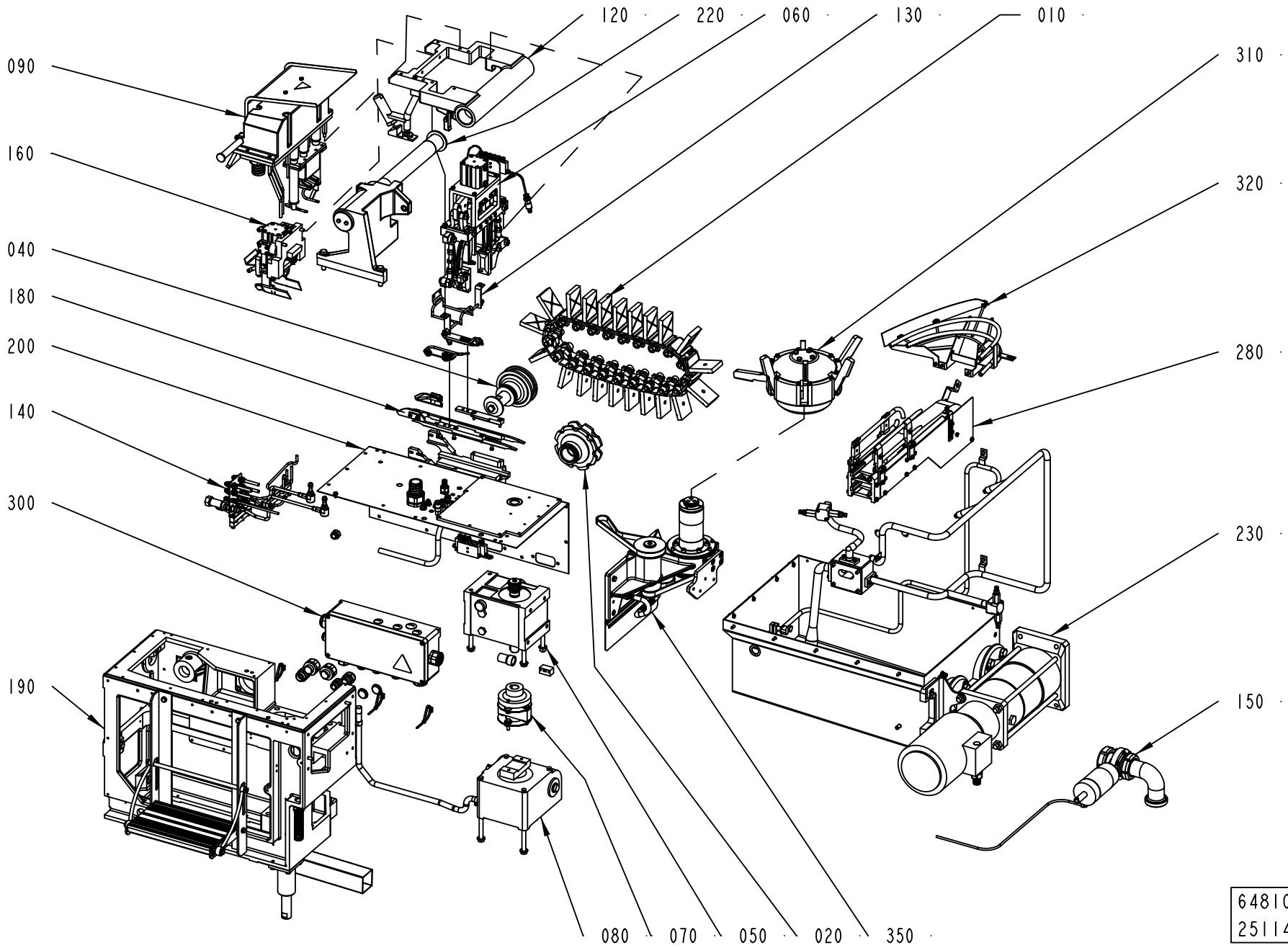
120
220
060
130
010
090
310
160
320
040
180
200
280
140
300
230
190
150
080
070
050
020
350
648105-8
251145

ECM: 438812 - 20100222
Group number: 648105-1300
Assembly Drawing: 648105-8_1_AA

This list covers pages from 5-2 to 5-7

Pos	Part No	UN	Qty	Description	Page No
TBA 0100B, TBA 0125S, TBA 0160S, TBA 0200M, TBA 0200B, TBA 0200S, TBA 0250S, TBA 0284B, TBA 0250B, TBA 0300S, TBA 0330S (See drawing on page: 5-2)					
010	1317526-0200		1	STATION CHAIN	**5-9**
060	2523725-0200		1	PRESSURE DEVICE	**5-11, 5-13, 5-15**
090	1539968-0200		1	FLAP HEATER	**5-19, 5-21, 5-23, 5-25, 5-27**
120	1548000-0200		1	FRAME	**5-29**
130	1539970-0200		1	FOLDING BAR	**5-31, 5-33**
160	2764344-0100		1	PULL-DOWN DEVICE	**5-35, 5-37, 5-39, 5-41, 5-43**
180	1539969-0200		1	GUIDE	**5-45, 5-47**
200	1539995-0200		1	CANTILEVER	**5-49, 5-51**
220	1539949-0100		1	FIXING UNIT	**5-57**
280	2854809-0100		1	END UNIT	**5-59, 5-61**
300	441850-0700		1	CABLE	**5-75**
310	1539265-0100		1	OUTFEED UNIT	**5-81**
320	2544961-0100		1	RAIL	**5-83**
350	2530400-0100		1	TRANSMISSION UNIT	**5-85**
TPA 0330SQ, TPA 0250SQ, TPA 0200SQ (See drawing on page: 5-6)					
010	1255535-0200		1	STATION CHAIN	**5-87**
060	1143980-0100		1	PRESSURE DEVICE	**5-89**
090	1195039-0100		1	FLAP HEATER	**5-91**
120	1195023-0200		1	FRAME	**5-93**
130	1195056-0100		1	FOLDING BAR	**5-95, 5-97, 5-99**
160	1285484-0100		1	FORMING UNIT	**5-101**
180	1143978-0100		1	GUIDE	**5-103, 5-105, 5-107**
200	1195009-0300		1	CANTILEVER	**5-109**
280	2854630-0100		1	CONVEYOR	**5-115, 5-117**
300	2816487-0100		1	CABLE	**5-121**
350	578703-0100		1	DISCHARGER	**5-123, 5-125, 5-127**
370	1549370-0100		1	DISCHARGE CHUTE	**5-129**
380	2807003-0100		1	DISCHARGE SUPPORT	**5-131**
390	2854660-0100		1	SIDE FEEDER	**5-133**
TWA 0125S, TWA 0200S (See drawing on page: 5-4)					
010	591634-0100		1	STATION CHAIN	**5-141, 5-143**
060	2523725-0200		1	PRESSURE DEVICE	**5-11, 5-13, 5-15**
090	1539968-0200		1	FLAP HEATER	**5-19, 5-21, 5-23, 5-25, 5-27**
120	1548000-0200		1	FRAME	**5-29**
130	1539970-0200		1	FOLDING BAR	**5-31, 5-33**
160	591677-0200		1	PULL-DOWN DEVICE	**5-145**
180	1539969-0200		1	GUIDE	**5-45, 5-47**
200	1539995-0200		1	CANTILEVER	**5-49, 5-51**
220	1539949-0100		1	FIXING UNIT	**5-57**
240	2987302-0100		1	FINGER	**5-147**
250	1511443-0400		1	GUIDE RAIL	**5-149, 5-151**
300	441850-0700		1	CABLE	**5-75**
360	2547177-0100		2	CLAMPING ELEMENT	**5-153**
Common Parts					
020	491850-0100		1	DRIVE WHEEL	**5-155, 5-157**
040	491846-0300		1	TENSION SPROCKET	**5-159, 5-161**
050	256410-0900		1	INDEXING UNIT	**5-163, 5-165, 5-167, 5-169, 5-171, 5-173, 5-175, 5-177**
070	256437-0200		1	DISC COUPLING	**5-179**
080	256438-0300		1	WORM GEAR	**5-181**
140	456455-0700		1	PIPE WORK	**5-183, 5-185, 5-187**
150	256674-0500		1	BOTTOM VALVE	**5-189**
190	441695-0600		1	MACHINE BODY	**5-191, 5-193, 5-195**
230	2544980-0200		1	CLEANING SYSTEM	**5-201, 5-203, 5-205**

Machine Type | Group Description | Used-In | Group Number | Page No

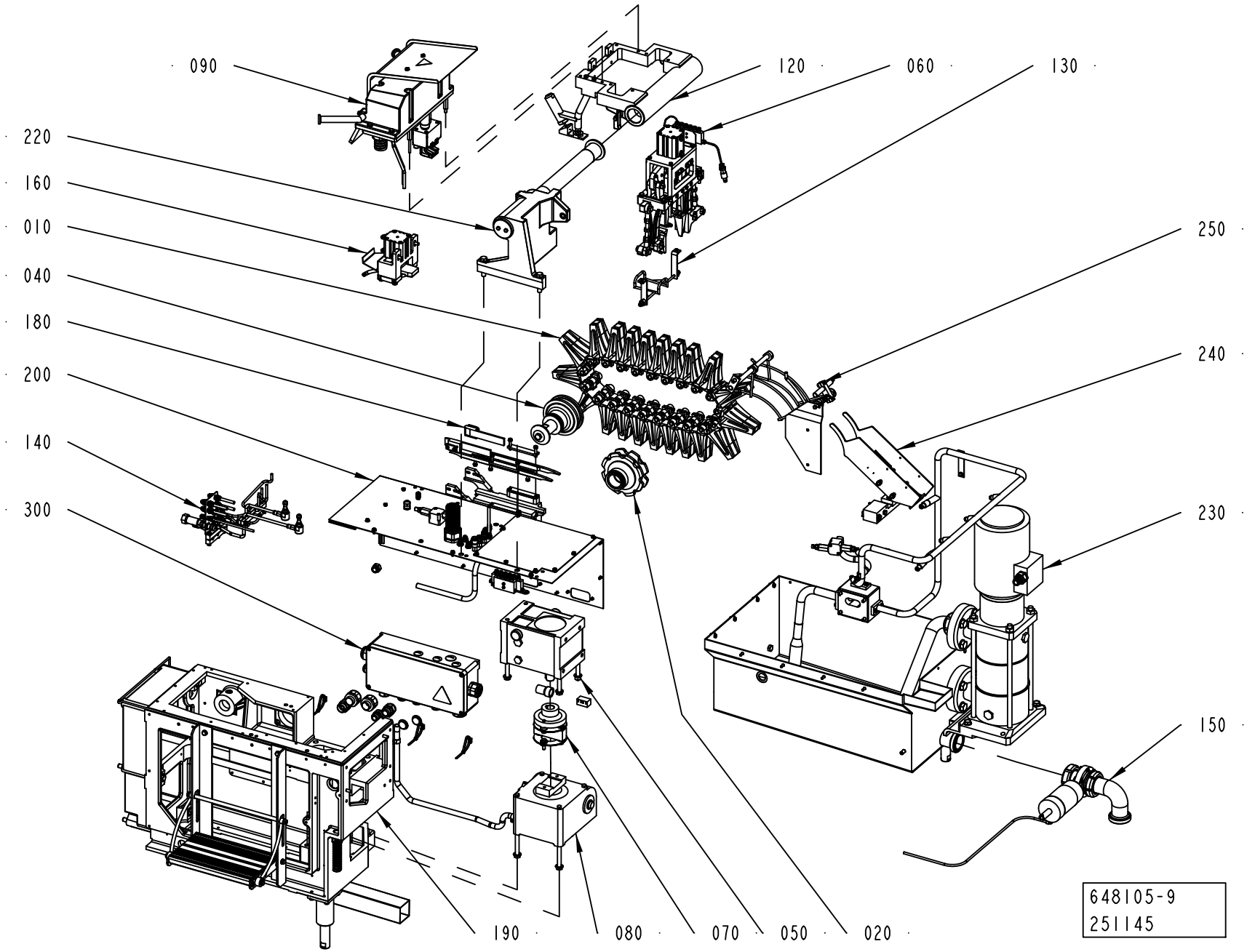
090
120
060
130
220
160
010
040
180
200
140
300
250
240
230
150
190
080
070
050
020
648105-9
251145

ECM: 438812 - 20100222
Group number: 648105-1300
Assembly Drawing: 648105-9_1_AA

This list covers pages from 5-2 to 5-7

Pos	Part No	UN	Qty	Description	Page No
TBA 0100B, TBA 0125S, TBA 0160S, TBA 0200M, TBA 0200B, TBA 0200S, TBA 0250S, TBA 0284B, TBA 0250B, TBA 0300S, TBA 0330S (See drawing on page: 5-2)					
010	1317526-0200		1	STATION CHAIN	**5-9**
060	2523725-0200		1	PRESSURE DEVICE	**5-11, 5-13, 5-15**
090	1539968-0200		1	FLAP HEATER	**5-19, 5-21, 5-23, 5-25, 5-27**
120	1548000-0200		1	FRAME	**5-29**
130	1539970-0200		1	FOLDING BAR	**5-31, 5-33**
160	2764344-0100		1	PULL-DOWN DEVICE	**5-35, 5-37, 5-39, 5-41, 5-43**
180	1539969-0200		1	GUIDE	**5-45, 5-47**
200	1539995-0200		1	CANTILEVER	**5-49, 5-51**
220	1539949-0100		1	FIXING UNIT	**5-57**
280	2854809-0100		1	END UNIT	**5-59, 5-61**
300	441850-0700		1	CABLE	**5-75**
310	1539265-0100		1	OUTFEED UNIT	**5-81**
320	2544961-0100		1	RAIL	**5-83**
350	2530400-0100		1	TRANSMISSION UNIT	**5-85**
TPA 0330SQ, TPA 0250SQ, TPA 0200SQ (See drawing on page: 5-6)					
010	1255535-0200		1	STATION CHAIN	**5-87**
060	1143980-0100		1	PRESSURE DEVICE	**5-89**
090	1195039-0100		1	FLAP HEATER	**5-91**
120	1195023-0200		1	FRAME	**5-93**
130	1195056-0100		1	FOLDING BAR	**5-95, 5-97, 5-99**
160	1285484-0100		1	FORMING UNIT	**5-101**
180	1143978-0100		1	GUIDE	**5-103, 5-105, 5-107**
200	1195009-0300		1	CANTILEVER	**5-109**
280	2854630-0100		1	CONVEYOR	**5-115, 5-117**
300	2816487-0100		1	CABLE	**5-121**
350	578703-0100		1	DISCHARGER	**5-123, 5-125, 5-127**
370	1549370-0100		1	DISCHARGE CHUTE	**5-129**
380	2807003-0100		1	DISCHARGE SUPPORT	**5-131**
390	2854660-0100		1	SIDE FEEDER	**5-133**
TWA 0125S, TWA 0200S (See drawing on page: 5-4)					
010	591634-0100		1	STATION CHAIN	**5-141, 5-143**
060	2523725-0200		1	PRESSURE DEVICE	**5-11, 5-13, 5-15**
090	1539968-0200		1	FLAP HEATER	**5-19, 5-21, 5-23, 5-25, 5-27**
120	1548000-0200		1	FRAME	**5-29**
130	1539970-0200		1	FOLDING BAR	**5-31, 5-33**
160	591677-0200		1	PULL-DOWN DEVICE	**5-145**
180	1539969-0200		1	GUIDE	**5-45, 5-47**
200	1539995-0200		1	CANTILEVER	**5-49, 5-51**
220	1539949-0100		1	FIXING UNIT	**5-57**
240	2987302-0100		1	FINGER	**5-147**
250	1511443-0400		1	GUIDE RAIL	**5-149, 5-151**
300	441850-0700		1	CABLE	**5-75**
360	2547177-0100		2	CLAMPING ELEMENT	**5-153**
Common Parts					
020	491850-0100		1	DRIVE WHEEL	**5-155, 5-157**
040	491846-0300		1	TENSION SPROCKET	**5-159, 5-161**
050	256410-0900		1	INDEXING UNIT	**5-163, 5-165, 5-167, 5-169, 5-171, 5-173, 5-175, 5-177**
070	256437-0200		1	DISC COUPLING	**5-179**
080	256438-0300		1	WORM GEAR	**5-181**
140	456455-0700		1	PIPE WORK	**5-183, 5-185, 5-187**
150	256674-0500		1	BOTTOM VALVE	**5-189**
190	441695-0600		1	MACHINE BODY	**5-191, 5-193, 5-195**
230	2544980-0200		1	CLEANING SYSTEM	**5-201, 5-203, 5-205**

Machine Type | Group Description | Used-In | Group Number | Page No

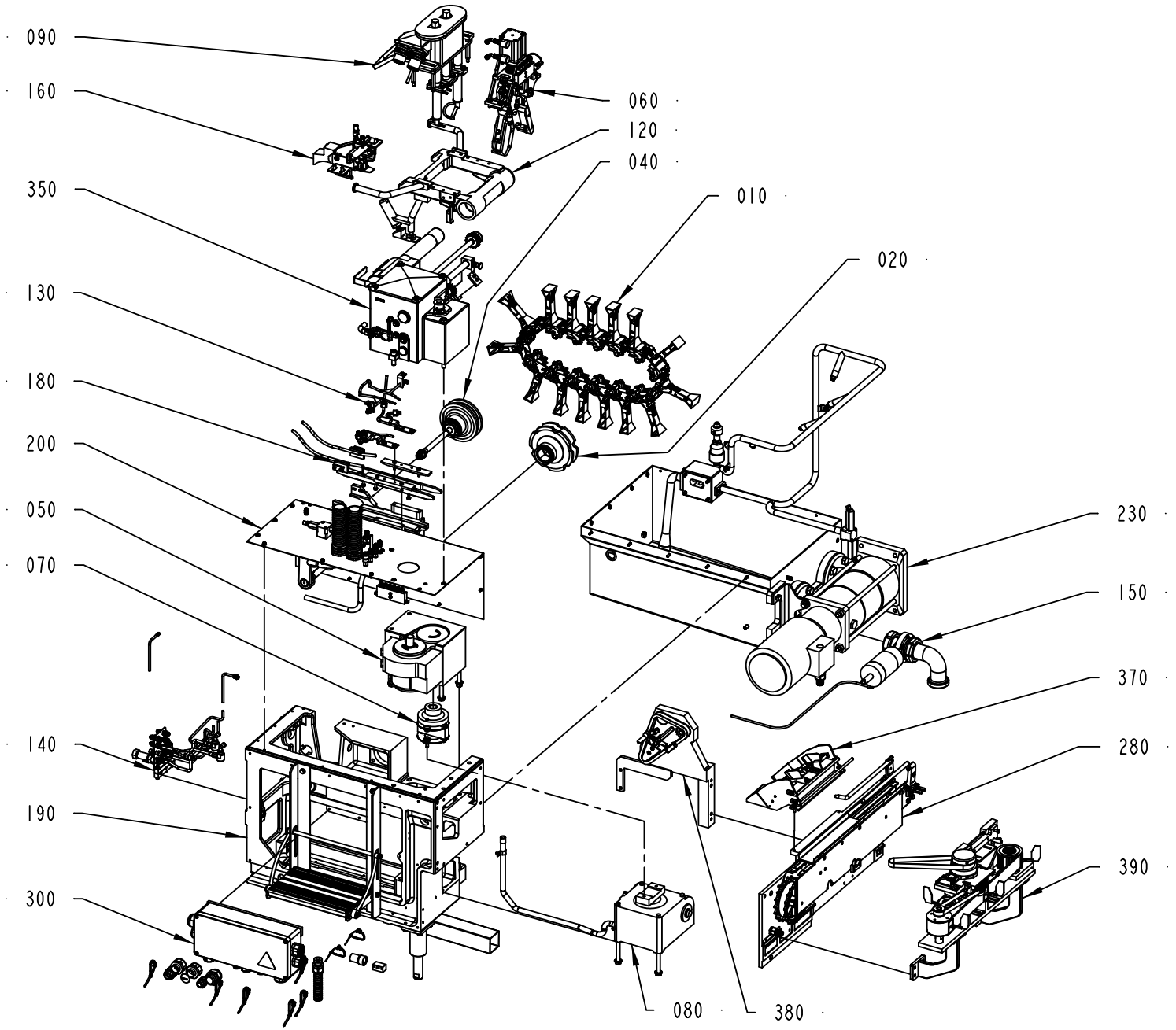

648105-10
276017

ECM: 438812 - 20100222
Group number: 648105-1300
Assembly Drawing: 648105-10_1_AA

This list covers pages from 5-2 to 5-7

Pos	Part No	UN	Qty	Description	Page No
TBA 0100B, TBA 0125S, TBA 0160S, TBA 0200M, TBA 0200B, TBA 0200S, TBA 0250S, TBA 0284B, TBA 0250B, TBA 0300S, TBA 0330S (See drawing on page: 5-2)					
010	1317526-0200		1	STATION CHAIN	**5-9**
060	2523725-0200		1	PRESSURE DEVICE	**5-11, 5-13, 5-15**
090	1539968-0200		1	FLAP HEATER	**5-19, 5-21, 5-23, 5-25, 5-27**
120	1548000-0200		1	FRAME	**5-29**
130	1539970-0200		1	FOLDING BAR	**5-31, 5-33**
160	2764344-0100		1	PULL-DOWN DEVICE	**5-35, 5-37, 5-39, 5-41, 5-43**
180	1539969-0200		1	GUIDE	**5-45, 5-47**
200	1539995-0200		1	CANTILEVER	**5-49, 5-51**
220	1539949-0100		1	FIXING UNIT	**5-57**
280	2854809-0100		1	END UNIT	**5-59, 5-61**
300	441850-0700		1	CABLE	**5-75**
310	1539265-0100		1	OUTFEED UNIT	**5-81**
320	2544961-0100		1	RAIL	**5-83**
350	2530400-0100		1	TRANSMISSION UNIT	**5-85**
TPA 0330SQ, TPA 0250SQ, TPA 0200SQ (See drawing on page: 5-6)					
010	1255535-0200		1	STATION CHAIN	**5-87**
060	1143980-0100		1	PRESSURE DEVICE	**5-89**
090	1195039-0100		1	FLAP HEATER	**5-91**
120	1195023-0200		1	FRAME	**5-93**
130	1195056-0100		1	FOLDING BAR	**5-95, 5-97, 5-99**
160	1285484-0100		1	FORMING UNIT	**5-101**
180	1143978-0100		1	GUIDE	**5-103, 5-105, 5-107**
200	1195009-0300		1	CANTILEVER	**5-109**
280	2854630-0100		1	CONVEYOR	**5-115, 5-117**
300	2816487-0100		1	CABLE	**5-121**
350	578703-0100		1	DISCHARGER	**5-123, 5-125, 5-127**
370	1549370-0100		1	DISCHARGE CHUTE	**5-129**
380	2807003-0100		1	DISCHARGE SUPPORT	**5-131**
390	2854660-0100		1	SIDE FEEDER	**5-133**
TWA 0125S, TWA 0200S (See drawing on page: 5-4)					
010	591634-0100		1	STATION CHAIN	**5-141, 5-143**
060	2523725-0200		1	PRESSURE DEVICE	**5-11, 5-13, 5-15**
090	1539968-0200		1	FLAP HEATER	**5-19, 5-21, 5-23, 5-25, 5-27**
120	1548000-0200		1	FRAME	**5-29**
130	1539970-0200		1	FOLDING BAR	**5-31, 5-33**
160	591677-0200		1	PULL-DOWN DEVICE	**5-145**
180	1539969-0200		1	GUIDE	**5-45, 5-47**
200	1539995-0200		1	CANTILEVER	**5-49, 5-51**
220	1539949-0100		1	FIXING UNIT	**5-57**
240	2987302-0100		1	FINGER	**5-147**
250	1511443-0400		1	GUIDE RAIL	**5-149, 5-151**
300	441850-0700		1	CABLE	**5-75**
360	2547177-0100		2	CLAMPING ELEMENT	**5-153**
Common Parts					
020	491850-0100		1	DRIVE WHEEL	**5-155, 5-157**
040	491846-0300		1	TENSION SPROCKET	**5-159, 5-161**
050	256410-0900		1	INDEXING UNIT	**5-163, 5-165, 5-167, 5-169, 5-171, 5-173, 5-175, 5-177**
070	256437-0200		1	DISC COUPLING	**5-179**
080	256438-0300		1	WORM GEAR	**5-181**
140	456455-0700		1	PIPE WORK	**5-183, 5-185, 5-187**
150	256674-0500		1	BOTTOM VALVE	**5-189**
190	441695-0600		1	MACHINE BODY	**5-191, 5-193, 5-195**
230	2544980-0200		1	CLEANING SYSTEM	**5-201, 5-203, 5-205**

Machine Type | Group Description | Used-In | Group Number | Page No

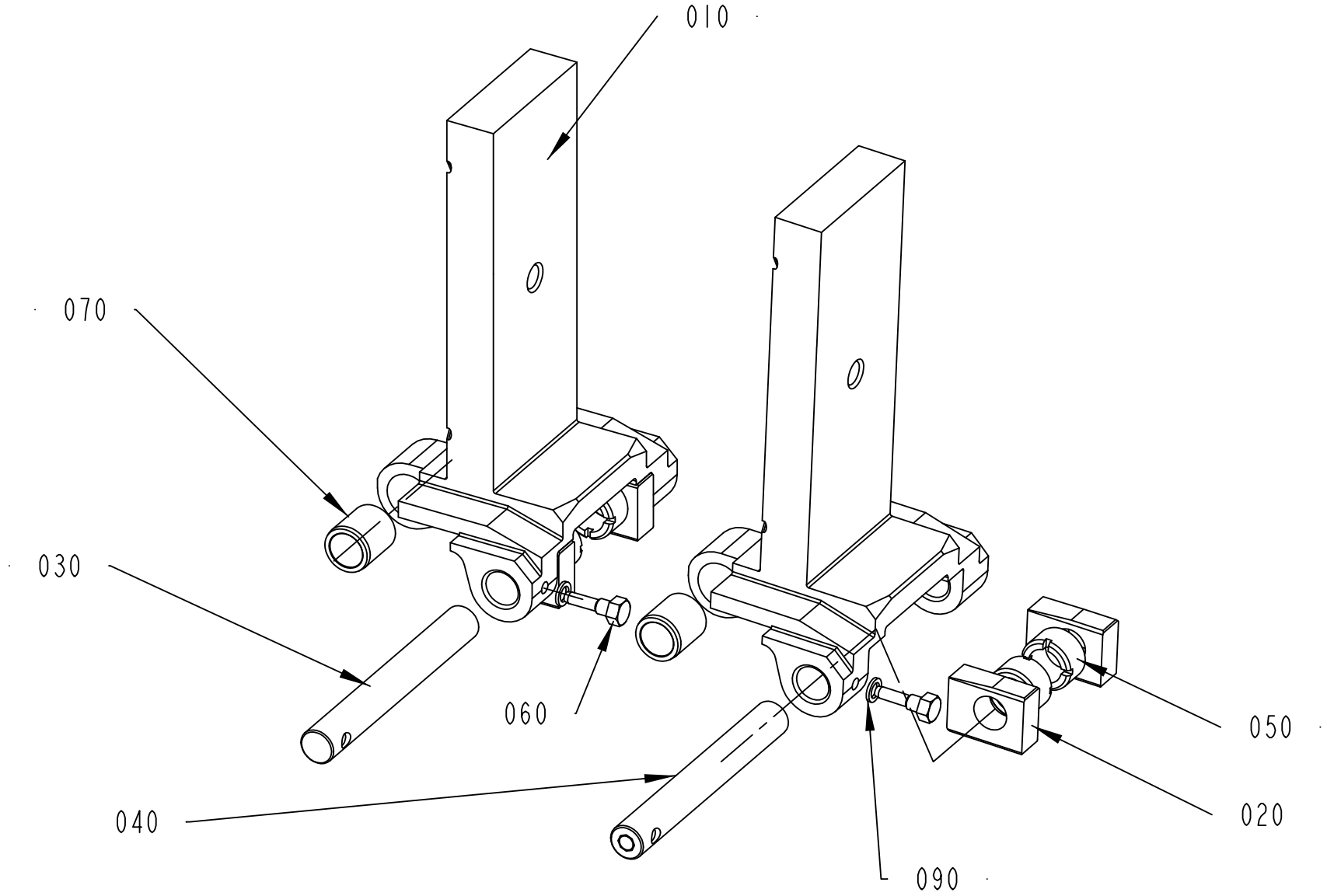
010
070
030
060
050
040
020
090
1317526-2
246719

ECM: 246727 - 20060131
Group number: 1317526-0200
Assembly Drawing: 1317526-2_1_AA

Pos	Part No	UN	Qty	Description	Page No
TBA 0100B					
010	2800336-0004		21	CARTON STATION	
TBA 0125S					
010	2800336-0003		21	CARTON STATION	
TBA 0160S					
010	2800336-0002		21	CARTON STATION	
TBA 0200B					
010	2800334-0004		21	CARTON STATION	
TBA 0200M					
010	2800335-0002		21	CARTON STATION	
TBA 0200S					
010	2800336-0001		21	CARTON STATION	
TBA 0250B					
010	2800334-0002		21	CARTON STATION	
TBA 0250S					
010	2800335-0001		21	CARTON STATION	
TBA 0284B, TBA 0300S					
010	2800334-0001		21	CARTON STATION	
TBA 0330S					
010	2800334-0007		21	CARTON STATION	
Common Parts					
020	491227-0000		42	SLIDER	
030	491228-0001		18	SHAFT	
040	491228-0002		3	SHAFT	
050	491229-0000		42	BUSHING	
060	491230-0000		21	GRUB SCREW(LI - CHINE)	
070	491231-0000		21	BUSHING	
090	315239-0101		21	NYLON WASHER M5, M5RRP	

Pos	Part No	UN	Qty	Description	Page No

PRESSURE DEVICE

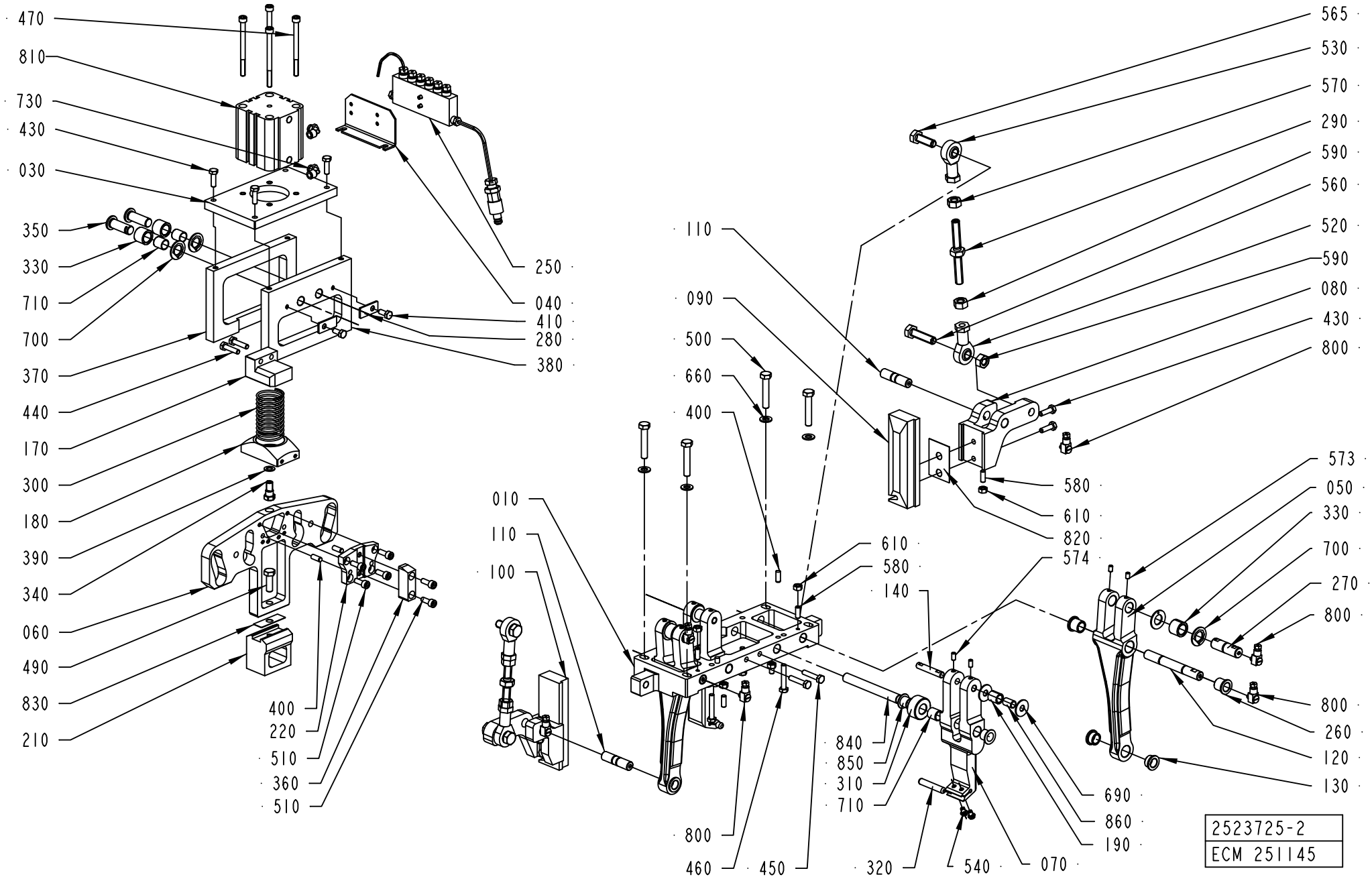

ECM: 412185 - 20091125
Group number: 2523725-0200
Assembly Drawing: 2523725-2_1_AC

This list covers pages from 5-10 to 5-15

Pos	Part No	UN	Qty	Description	Page No
TBA 0100B (See drawing on page: 5-10)					
070	2685677-0001		2	LEVER	
080	2606880-0000		2	HOLDER	
090	2575624-0001		1	BLOCK	
100	2575625-0001		1	BLOCK	
180	2552732-0000		1	SPRING BRACKET	
210	2552734-0001		1	BLOCK	
430	312105-0370		8	SCREW, M6S ISO 4017 M6X20 A4 80	
660	315105-0165		4	WASHER PLAIN, 8,4X16X1,6 A4 BRB	
820	2527454-0000		6	SHIM	
830	2530401-0000		3	SHIM	
TBA 0125S (See drawing on page: 5-10)					
070	2685677-0002		2	LEVER	
080	2606880-0000		2	HOLDER	
090	2575624-0002		1	BLOCK	
100	2575625-0002		1	BLOCK	
180	2552732-0000		1	SPRING BRACKET	
210	2552734-0002		1	BLOCK	
430	312105-0370		8	SCREW, M6S ISO 4017 M6X20 A4 80	
660	315105-0165		4	WASHER PLAIN, 8,4X16X1,6 A4 BRB	
820	2527454-0000		6	SHIM	
830	2530401-0000		3	SHIM	
TBA 0160S (See drawing on page: 5-10)					
070	2685677-0003		2	LEVER	
080	2606880-0000		2	HOLDER	
090	2575624-0003		1	BLOCK	
100	2575625-0003		1	BLOCK	
180	2552732-0000		1	SPRING BRACKET	
210	2554977-0001		1	BLOCK	
430	312105-0370		8	SCREW, M6S ISO 4017 M6X20 A4 80	
660	315105-0165		4	WASHER PLAIN, 8,4X16X1,6 A4 BRB	
820	2527454-0000		6	SHIM	
830	2530401-0000		3	SHIM	
TBA 0200B (See drawing on page: 5-10)					
070	2685677-0005		2	LEVER	
080	2606880-0000		2	HOLDER	
090	2575624-0005		1	BLOCK	
100	2575625-0005		1	BLOCK	
180	2552732-0000		1	SPRING BRACKET	
210	2524579-0005		1	BLOCK	
430	312105-0370		8	SCREW, M6S ISO 4017 M6X20 A4 80	
660	315105-0165		4	WASHER PLAIN, 8,4X16X1,6 A4 BRB	
820	2527454-0000		6	SHIM	
830	2530401-0000		3	SHIM	
TBA 0200M (See drawing on page: 5-10)					
070	2685677-0006		2	LEVER	
080	2606880-0000		2	HOLDER	
090	2575624-0006		1	BLOCK	
100	2575625-0006		1	BLOCK	
180	2552732-0000		1	SPRING BRACKET	
210	2554977-0002		1	BLOCK	
430	312105-0370		8	SCREW, M6S ISO 4017 M6X20 A4 80	
660	315105-0165		4	WASHER PLAIN, 8,4X16X1,6 A4 BRB	
820	2527454-0000		6	SHIM	
830	2530401-0000		3	SHIM	
TBA 0200S (See drawing on page: 5-10)					
070	2685677-0007		2	LEVER	
080	2606880-0000		2	HOLDER	
090	2575624-0007		1	BLOCK	
100	2575625-0007		1	BLOCK	
180	2552732-0000		1	SPRING BRACKET	
210	2554977-0003		1	BLOCK	
430	312105-0370		8	SCREW, M6S ISO 4017 M6X20 A4 80	
660	315105-0165		4	WASHER PLAIN, 8,4X16X1,6 A4 BRB	
820	2527454-0000		6	SHIM	
830	2530401-0000		3	SHIM	
TBA 0250B (See drawing on page: 5-10)					
070	2685677-0008		2	LEVER	
080	2606880-0000		2	HOLDER	
090	2575624-0008		1	BLOCK	
100	2575625-0008		1	BLOCK	
180	2552732-0000		1	SPRING BRACKET	
210	2524579-0008		1	BLOCK	
430	312105-0370		8	SCREW, M6S ISO 4017 M6X20 A4 80	
660	315105-0165		4	WASHER PLAIN, 8,4X16X1,6 A4 BRB	
820	2527454-0000		6	SHIM	
830	2530401-0000		3	SHIM	
TBA 0250S (See drawing on page: 5-10)					
070	2685677-0009		2	LEVER	
080	2606880-0000		2	HOLDER	
090	2575624-0009		1	BLOCK	
100	2575625-0009		1	BLOCK	
180	2552732-0000		1	SPRING BRACKET	
210	2554977-0004		1	BLOCK	

Machine Type | Group Description | Used-In | Group Number | Page No

PRESSURE DEVICE

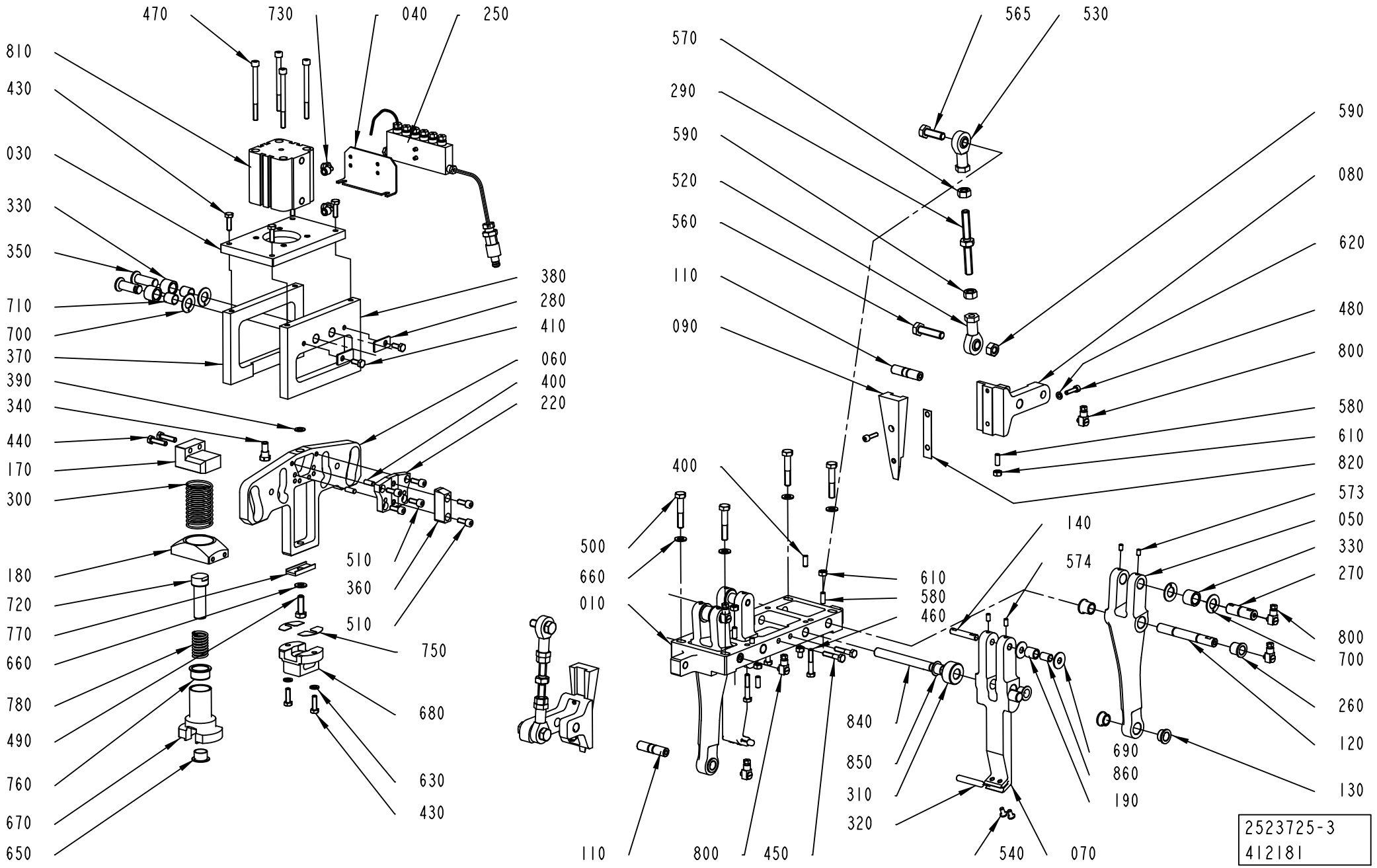

Pos	Part No	UN	Qty	Description	Page No
TBA 0250S (Cont'd) (See drawing on page: 5-10)					
430	312105-0370		8	SCREW, M6S ISO 4017 M6X20 A4 80	
660	315105-0165		4	WASHER PLAIN, 8,4X16X1,6 A4 BRB	
820	2527454-0000		6	SHIM	
830	2530401-0000		3	SHIM	
TBA 0284B, TBA 0300S (See drawing on page: 5-10)					
070	2685677-0010		2	LEVER	
080	2606880-0000		2	HOLDER	
090	2575624-0010		1	BLOCK	
100	2575625-0010		1	BLOCK	
180	2552732-0000		1	SPRING BRACKET	
210	2524579-0010		1	BLOCK	
430	312105-0370		8	SCREW, M6S ISO 4017 M6X20 A4 80	
660	315105-0165		4	WASHER PLAIN, 8,4X16X1,6 A4 BRB	
820	2527454-0000		6	SHIM	
830	2530401-0000		3	SHIM	
TBA 0330S (See drawing on page: 5-10)					
070	2685677-0011		2	LEVER	
080	2606880-0000		2	HOLDER	
090	2575624-0011		1	BLOCK	
100	2575625-0011		1	BLOCK	
180	2552732-0000		1	SPRING BRACKET	
210	2524579-0011		1	BLOCK	
430	312105-0370		8	SCREW, M6S ISO 4017 M6X20 A4 80	
660	315105-0165		4	WASHER PLAIN, 8,4X16X1,6 A4 BRB	
820	2527454-0000		6	SHIM	
830	2530401-0000		3	SHIM	
TWA 0125S (See drawing on page: 5-12)					
070	2685677-0012		2	LEVER	
080	2701883-0000		2	HOLDER	
090	2701872-0000		2	BLOCK	
180	2964525-0000		1	SPRING BRACKET	
430	312115-0331		4	SCREW ISO4762 M5X20 A4 80	
480	312115-0331		4	SCREW ISO4762 M5X20 A4 80	
620	315105-0146		2	WASHER PLAIN, 5,3X10X1 A4 BRB	
630	315105-0153		2	WASHER PLAIN, 6,4X12X1,5 A4 BRB	
650	90240-0325		1	FLANGE BUSHING, IGLIDUR X 16X18X12	
670	2944323-0000		1	SPRING HOUSING	
680	2944324-0000		1	BLOCK	
720	2944325-0000		1	AXLE	
750	2964526-0000		2	SHIM	
760	2964527-0000		1	BUSHING	
770	2964528-0000		1	LOCATING PIECE	
780	490942-0000		1	COMPRESSION SPRING	
820	2702030-0000		8	SHIM	
TWA 0200S (See drawing on page: 5-12)					
070	2685677-0013		2	LEVER	
080	2701883-0000		2	HOLDER	
090	2745183-0000		2	BLOCK	
180	2964525-0000		1	SPRING BRACKET	
430	312115-0331		4	SCREW ISO4762 M5X20 A4 80	
480	312115-0331		4	SCREW ISO4762 M5X20 A4 80	
620	315105-0146		2	WASHER PLAIN, 5,3X10X1 A4 BRB	
630	315105-0153		2	WASHER PLAIN, 6,4X12X1,5 A4 BRB	
650	90240-0325		1	FLANGE BUSHING, IGLIDUR X 16X18X12	
670	2944323-0000		1	SPRING HOUSING	
680	2944329-0000		1	BLOCK	
720	2944325-0000		1	AXLE	
750	2964526-0000		2	SHIM	
760	2964527-0000		1	BUSHING	
770	2964528-0000		1	LOCATING PIECE	
780	490942-0000		1	COMPRESSION SPRING	
820	2702030-0000		8	SHIM	
Common Parts					
010	2606879-0000		1	PLATE	
030	2652212-0000		1	PLATE	
040	2576353-0000		1	SUPPORT	
050	2594658-0000		2	LEVER	
060	2552721-0000		1	CAM	
110	2523736-0000		2	SHAFT	
120	2523737-0000		2	SHAFT	
130	2523738-0000		4	BUSHING	
140	2594657-0000		2	AXLE PIN	
170	2552723-0000		1	SPRING BRACKET	
190	2576349-0000		2	ROLLER	
220	2552724-0000		1	SUPPORT	
250	2502424-0200		1	LUBRICATION	**5-17**
260	1144507-0000		4	BUSHING	
270	2594659-0000		2	AXLE PIN	
280	1144521-0000		2	CLAMP	
290	2606881-0000		2	ADJUSTING SCREW	
300	1195044-0000		1	SPRING	
310	2576346-0000		2	ROLLER	
320	1511021-0000		2	SHAFT	

Machine Type | Group Description | Used-In | Group Number | Page No

See previous drawings pages: 5-10, 5-12.

ECM: 412185 - 20091125
Group number: 2523725-0200
Assembly Drawing: 2523725-3_1_AA

This list covers pages from 5-10 to 5-15

Pos	Part No	UN	Qty	Description	Page No
Common Parts (Cont'd)					
330	2576350-0000		4	ROLLER	
340	2552722-0000		1	AXLE PIN	
350	2576351-0000		2	AXLE PIN	
360	2552726-0000		1	GUIDE	
370	2552727-0000		1	PLATE	
380	2576352-0000		1	PLATE	
390	2552731-0000		1	WASHER	
400	311103-0351		4	PARALLEL PIN ISO 2338 6M6X16 A1	
410	312105-0367		2	SCREW, M6S ISO 4017 M6X14 A4 80	
440	312105-0372		2	SCREW, M6S ISO 4017 M6X25 A4 80	
450	312105-0374		2	SCREW, M6S ISO 4014 M6X30 A4 80	
460	312105-0376		4	SCREW, M6S ISO 4014 M6X35 A4 80	
470	312115-0386		4	SCREW ISO4762 M6X80 A4 80	
490	312105-0453		1	SCREW, M6S ISO 4017 M8X25 A4 80	
500	312105-0460		4	SCREW, M6S ISO 4014 M8X45 A4 80	
510	312115-0368		6	SCREW ISO4762 M6X16 A4 80	
520	90115-0181		2	ROD END, ID=10 MM M10X1,5	
530	90115-0182		2	ROD END, ID=10 MM M10X1,5LH	
540	90459-6738		4	SCREW ISO 7380 88-MKT M5X10 A4	
560	312109-0499		2	SCREW, M6S ISO 4017 M10X40 A4 80	
565	312105-0495		2	SCREW, M6S ISO 4017 M10X30 A4 80	
570	312902-0320		2	NUT HEX. LEFT THREAD, M10 A280	
573	312318-0323		4	SET SCREW, CUP END ISO4029 M5X8 A4	
574	312318-0325		4	SET SCREW, CUP END ISO4029 M5X10 A4	
580	312318-0368		6	SET SCREW, CUP END ISO4029 M6X16 A4	
590	312605-0320		4	HEXAGON NUT, M6M M10 A280	
610	312605-0316		6	HEXAGON NUT, M6M M6 A280	
660	315105-0165		5	WASHER PLAIN, 8,4X16X1,6 A4 BRB	
690	2652213-0000		4	THRUST WASHER	
700	321130-0200		6	THRUST WASHER, 14X26X1,5 MM	
710	321135-0183		4	BUSHING, IGLIDUR X 12X14X15	
730	90458-2956		2	ELBOW PIPE JOINT, EXT.THREAD, D=6MM-G1/8	
800	90134-0058		6	CONNECTION	
810	90459-1845		1	DOUBLE ACTING, COMPACT, 50-30	
840	2576347-0000		2	SHAFT	
850	90240-0262		4	FLANGE BUSHING, IGLIDUR X 12X14X12	
860	90459-5626		2	BUSHING, IGLIDUR W300 8X10X15	

Pos	Part No	UN	Qty	Description	Page No

Machine Type | Group Description | Used-In | Group Number | Page No

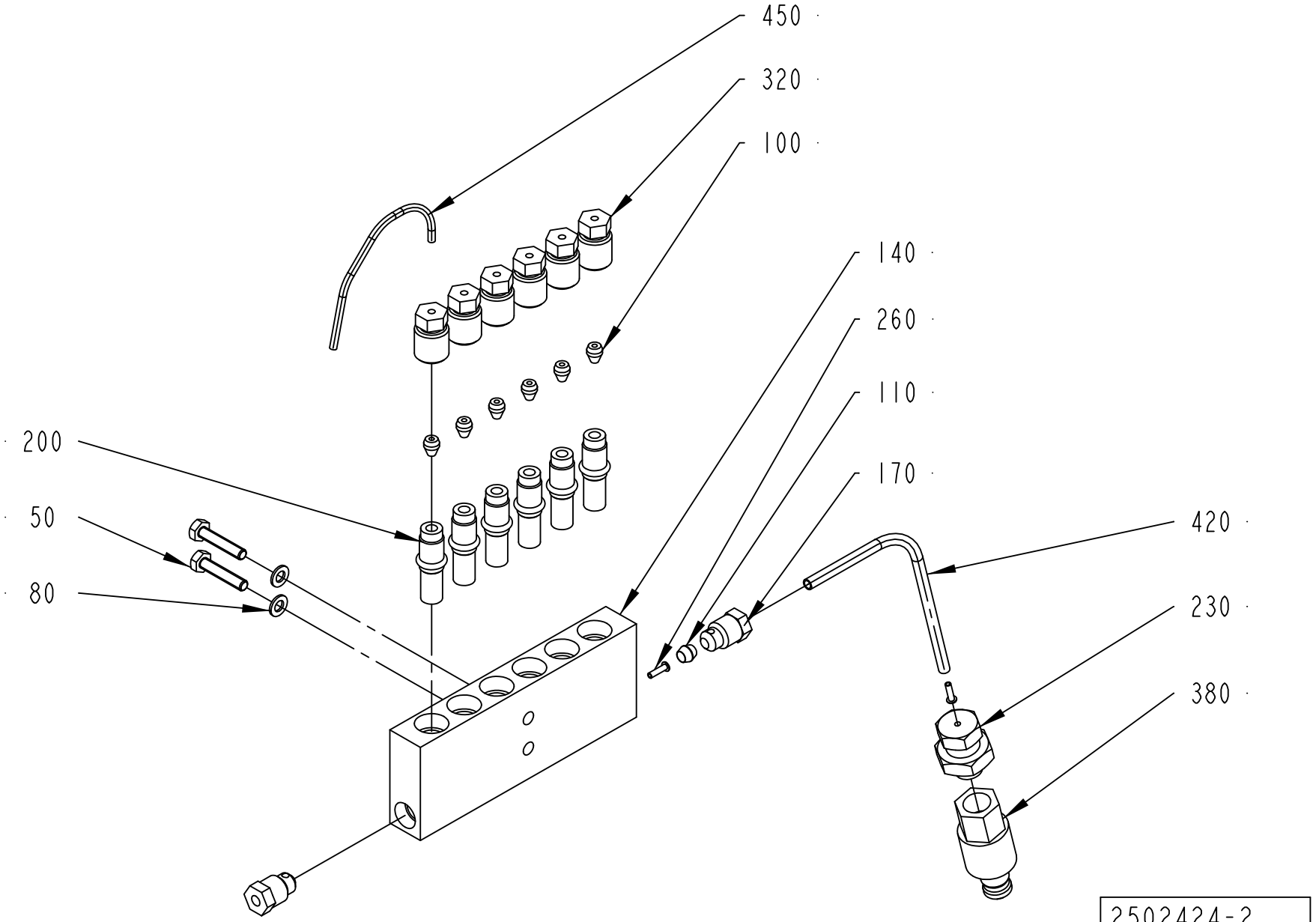
450
320
100
140
260
110
170
200
50
80
420
230
380
2502424-2
ECM 109684

ECM: 211573 - 20050621
Group number: 2502424-0200
Assembly Drawing: 2502424-2_1_AA

Pos	Part No	UN	Qty	Description	Page No
-					
050	312101-0295		2	SCREW M6S M4X20 FZB	
080	315105-0136		2	WASHER PLAIN, 4,3X9X0,8 A4 BRB	
100	90028-0020		6	CONE TUBE 2,5MM	
110	90028-0021		1	CONE TUBE 4 MM	
140	90032-0040		1	BLOCK 6 WAYS	
170	90087-0019		2	PLUG M10X1 STAINLESS	
200	90092-0052		6	METERING VALVE 10 MM3	
230	90134-0004		1	PIPE CONNECTION R1/8	
260	90134-0031		2	SLEEVE FOR PLASTIC TUBE	
320	90134-0039		6	BUSHING VALVE CONNECTION 2,5 MM	
380	90163-0048		1	NIPPLE LP-004-2-WR 510-23-1	
420	90166-0109	M	1	TUBE 4 MM PA TRANSP.	
450	90166-0143	M	2	TUBE 2,5 MM PA TRANSP.	

Pos	Part No	UN	Qty	Description	Page No

FLAP HEATER

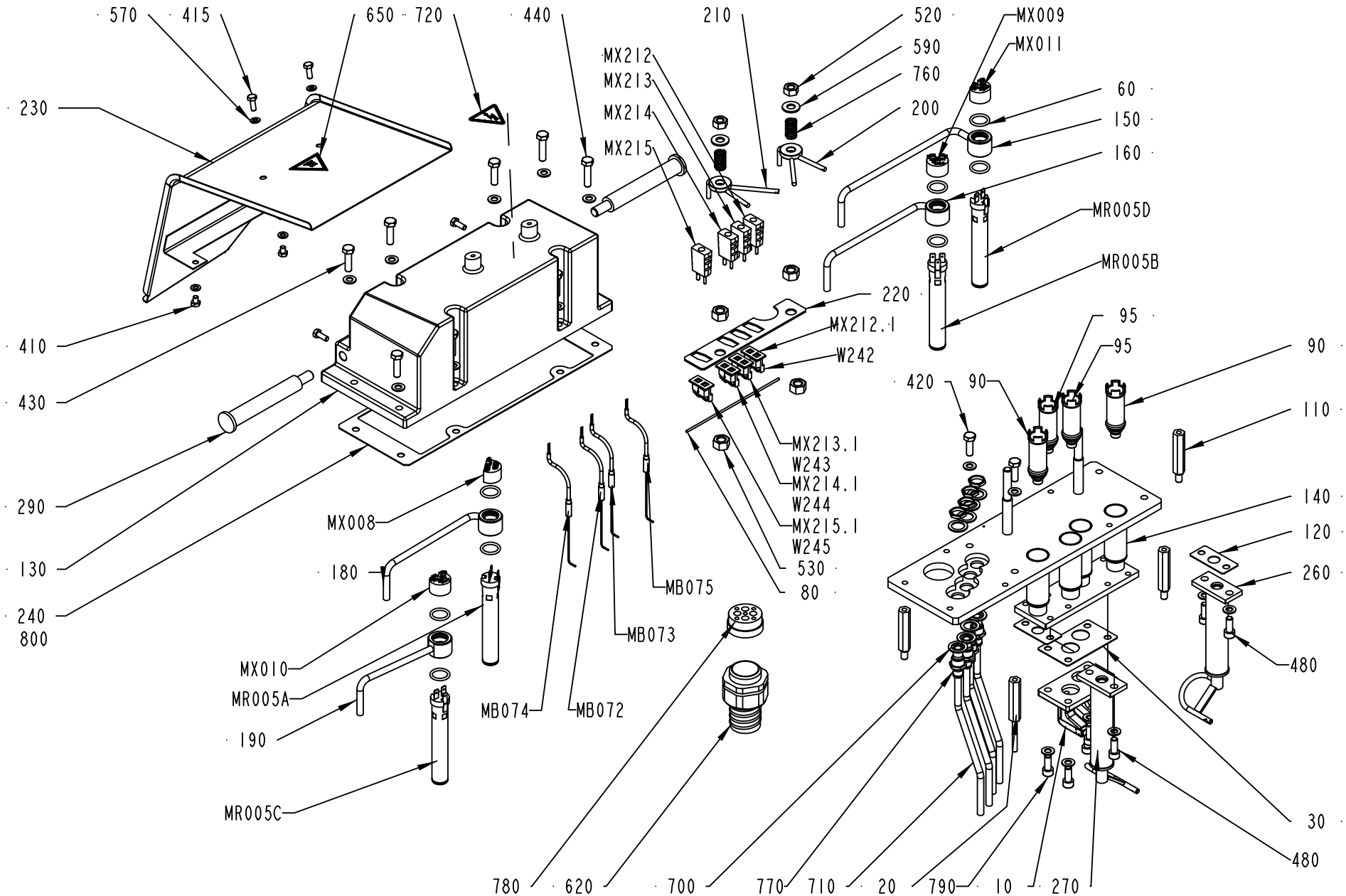

1539968-3
337790

ECM: 340055 - 20080121
Group number: 1539968-0200
Assembly Drawing: 1539968-3_1_AC

This list covers pages from 5-18 to 5-27

Pos	Part No	UN	Qty	Description	Page No
TBA 0100B (See drawing on page: 5-18)					
010	2611151-0004		1	AIR NOZZLE	
015	2611190-0018		1	SPACER	
030	1539967-0000		4	GASKET	
060	927422-0001		8	O-RING 19.2X3 SILICONE	
090	1144122-0000		2	REDUCTION	
120	1296415-0000		2	GASKET	
140	1498217-0000		1	HEATING CHAMBER	
150	1498218-0000		1	PIPE	
190	1498221-0000		1	PIPE	
260	1519307-0000		1	AIR NOZZLE	
270	1519308-0000		1	AIR NOZZLE	
290	2528199-0000		2	HANDLE	
480	312115-0451		4	SCREW ISO4762 M8X20 A4 80	
770	90457-0141		4	BULKHEAD CONNECTOR, 8MM	
790	90287-0335		4	SCREW MC6S M8X90 A280	
MB074	90326-0080		1	THERMOCOUPLE, 5110 080-000	
MB075	90326-0080		1	THERMOCOUPLE, 5110 080-000	
MR005C	90459-1382		1	HEATING ELEMENT 1100W 220V	
MR005D	90459-1382		1	HEATING ELEMENT 1100W 220V	
MX010	1036443-0000		1	CONTACT UNIT	
MX011	1036443-0000		1	CONTACT UNIT	
MX212	90326-0022		1	PLUG, MALE YELLOW CR-AL, 03-21000A	
MX212,1	90326-0077		1	CONTACT, 5100 004-001	
MX215	90326-0022		1	PLUG, MALE YELLOW CR-AL, 03-21000A	
MX215,1	90326-0077		1	CONTACT, 5100 004-001	
W242	351120-0144	MM	2500	CABLE Ã–LFLEX HEAT 180 SIHF 3X1,5	
W245	351120-0144	MM	2500	CABLE Ã–LFLEX HEAT 180 SIHF 3X1,5	
TBA 0125S (See drawing on page: 5-18)					
010	2611151-0004		1	AIR NOZZLE	
015	2611190-0019		1	SPACER	
030	1539967-0000		4	GASKET	
060	927422-0001		8	O-RING 19.2X3 SILICONE	
090	1144122-0000		2	REDUCTION	
120	1296415-0000		2	GASKET	
140	1498217-0000		1	HEATING CHAMBER	
150	1498218-0000		1	PIPE	
190	1498221-0000		1	PIPE	
260	1519307-0000		1	AIR NOZZLE	
270	1519308-0000		1	AIR NOZZLE	
290	2528199-0000		2	HANDLE	
480	312115-0451		4	SCREW ISO4762 M8X20 A4 80	
770	90457-0141		4	BULKHEAD CONNECTOR, 8MM	
790	312115-0465		4	SCREW ISO4762 M8X70 A4 80	
MB074	90326-0080		1	THERMOCOUPLE, 5110 080-000	
MB075	90326-0080		1	THERMOCOUPLE, 5110 080-000	
MR005C	90459-1382		1	HEATING ELEMENT 1100W 220V	
MR005D	90459-1382		1	HEATING ELEMENT 1100W 220V	
MX010	1036443-0000		1	CONTACT UNIT	
MX011	1036443-0000		1	CONTACT UNIT	
MX212	90326-0022		1	PLUG, MALE YELLOW CR-AL, 03-21000A	
MX212,1	90326-0077		1	CONTACT, 5100 004-001	
MX215	90326-0022		1	PLUG, MALE YELLOW CR-AL, 03-21000A	
MX215,1	90326-0077		1	CONTACT, 5100 004-001	
W242	351120-0144	MM	2500	CABLE Ã–LFLEX HEAT 180 SIHF 3X1,5	
W245	351120-0144	MM	2500	CABLE Ã–LFLEX HEAT 180 SIHF 3X1,5	
TBA 0160S (See drawing on page: 5-18)					
010	2611151-0003		1	AIR NOZZLE	
015	2611190-0013		1	SPACER	
030	1539967-0000		4	GASKET	
060	927422-0001		8	O-RING 19.2X3 SILICONE	
090	1144122-0000		2	REDUCTION	
120	1296415-0000		2	GASKET	
140	1498217-0000		1	HEATING CHAMBER	
150	1498218-0000		1	PIPE	
190	1498221-0000		1	PIPE	
260	1519318-0000		1	AIR NOZZLE	
270	1519319-0000		1	AIR NOZZLE	
290	2528199-0000		2	HANDLE	
480	312115-0451		4	SCREW ISO4762 M8X20 A4 80	
770	90457-0141		4	BULKHEAD CONNECTOR, 8MM	
790	312115-0463		4	SCREW ISO4762 M8X60 A4 80	
MB074	90326-0080		1	THERMOCOUPLE, 5110 080-000	
MB075	90326-0080		1	THERMOCOUPLE, 5110 080-000	
MR005C	90459-1382		1	HEATING ELEMENT 1100W 220V	
MR005D	90459-1382		1	HEATING ELEMENT 1100W 220V	
MX010	1036443-0000		1	CONTACT UNIT	
MX011	1036443-0000		1	CONTACT UNIT	
MX212	90326-0022		1	PLUG, MALE YELLOW CR-AL, 03-21000A	
MX212,1	90326-0077		1	CONTACT, 5100 004-001	
MX215	90326-0022		1	PLUG, MALE YELLOW CR-AL, 03-21000A	
MX215,1	90326-0077		1	CONTACT, 5100 004-001	
W242	351120-0144	MM	2500	CABLE Ã–LFLEX HEAT 180 SIHF 3X1,5	
W245	351120-0144	MM	2500	CABLE Ã–LFLEX HEAT 180 SIHF 3X1,5	

Machine Type | Group Description | Used-In | Group Number | Page No

FLAP HEATER

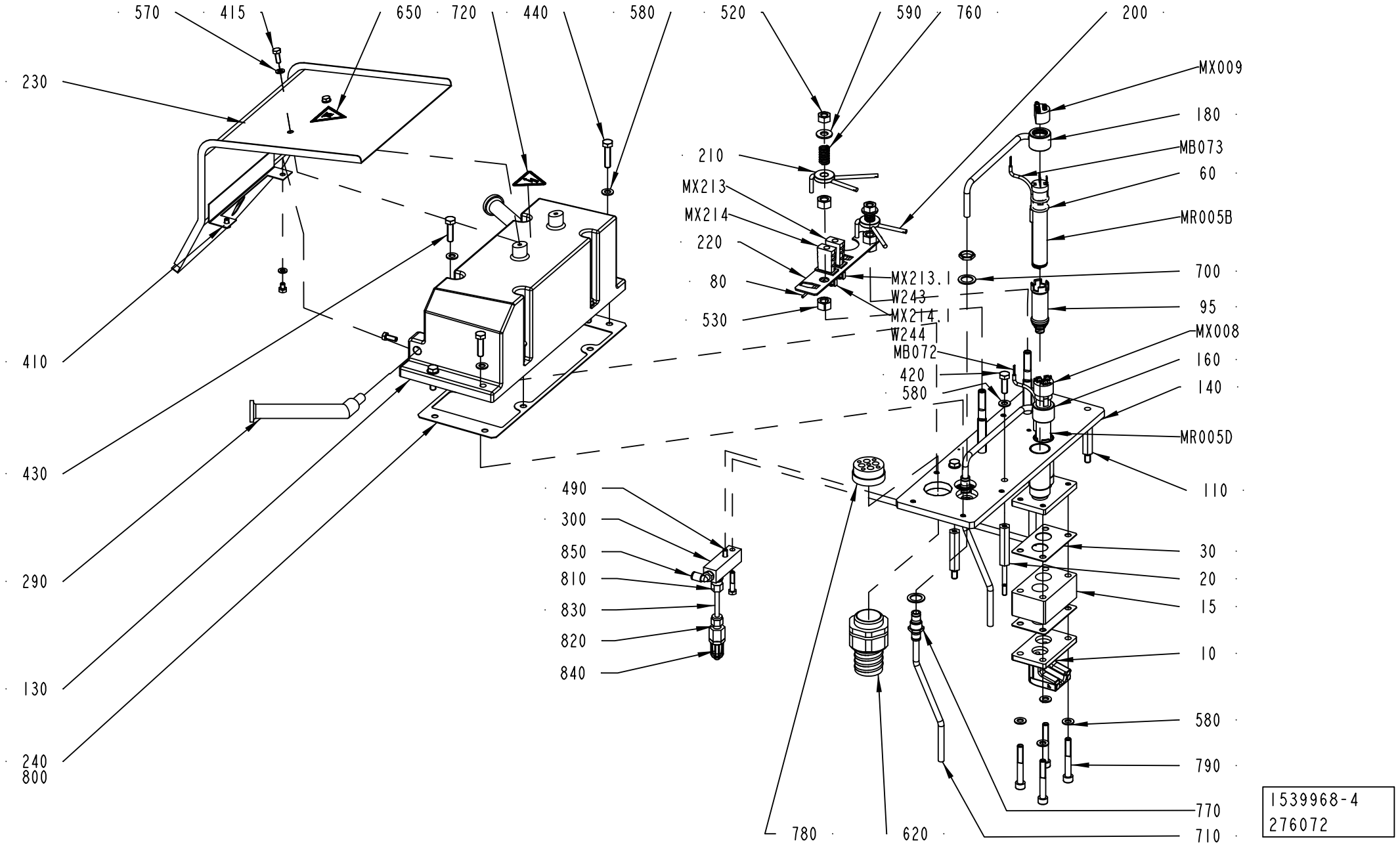
570
415
650
720
440
580
520
590
760
200
230
MX009
180
210
MB073
60
MX213
MX214
MR005B
220
700
80
MX213.1
W243
95
530
MX214.1
W244
MX008
MB072
160
420
140
580
410
MR005D
490
110
300
850
30
810
20
430
830
15
820
10
290
840
580
130
790
770
240
800
780
620
710
1539968-4
276072

ECM: 340055 - 20080121
Group number: 1539968-0200
Assembly Drawing: 1539968-4_1_AD

This list covers pages from 5-18 to 5-27

Pos	Part No	UN	Qty	Description	Page No
TBA 0200B (Cont'd) (See drawing on page: 5-18)					
010	2701083-0000		1	AIR NOZZLE	
015	2611190-0015		1	SPACER	
030	1539967-0000		4	GASKET	
060	927422-0001		8	O-RING 19.2X3 SILICONE	
090	1144122-0000		2	REDUCTION	
120	1296415-0000		2	GASKET	
140	1498217-0000		1	HEATING CHAMBER	
150	1498218-0000		1	PIPE	
190	1498221-0000		1	PIPE	
260	1519313-0000		1	AIR NOZZLE	
270	1519314-0000		1	AIR NOZZLE	
290	2528199-0000		2	HANDLE	
480	312115-0451		4	SCREW ISO4762 M8X20 A4 80	
770	90457-0141		4	BULKHEAD CONNECTOR, 8MM	
790	312115-0467		4	SCREW ISO4762 M8X80 A4 80	
MB074	90326-0080		1	THERMOCOUPLE, 5110 080-000	
MB075	90326-0080		1	THERMOCOUPLE, 5110 080-000	
MR005C	90459-1382		1	HEATING ELEMENT 1100W 220V	
MR005D	90459-1382		1	HEATING ELEMENT 1100W 220V	
MX010	1036443-0000		1	CONTACT UNIT	
MX011	1036443-0000		1	CONTACT UNIT	
MX212	90326-0022		1	PLUG, MALE YELLOW CR-AL, 03-21000A	
MX212,1	90326-0077		1	CONTACT, 5100 004-001	
MX215	90326-0022		1	PLUG, MALE YELLOW CR-AL, 03-21000A	
MX215,1	90326-0077		1	CONTACT, 5100 004-001	
W242	351120-0144	MM	2500	CABLE Ã–LFLEX HEAT 180 SIHF 3X1,5	
W245	351120-0144	MM	2500	CABLE Ã–LFLEX HEAT 180 SIHF 3X1,5	
TBA 0200M (See drawing on page: 5-18)					
010	2701082-0000		1	AIR NOZZLE	
015	2611190-0012		1	SPACER	
030	1539967-0000		4	GASKET	
060	927422-0001		8	O-RING 19.2X3 SILICONE	
090	1144122-0000		2	REDUCTION	
120	1296415-0000		2	GASKET	
140	1498217-0000		1	HEATING CHAMBER	
150	1498218-0000		1	PIPE	
190	1498221-0000		1	PIPE	
260	1517504-0000		1	AIR NOZZLE	
270	1517505-0000		1	AIR NOZZLE	
290	2528199-0000		2	HANDLE	
480	312115-0451		4	SCREW ISO4762 M8X20 A4 80	
770	90457-0141		4	BULKHEAD CONNECTOR, 8MM	
790	312115-0460		4	SCREW ISO4762 M8X45 A4 80	
MB074	90326-0080		1	THERMOCOUPLE, 5110 080-000	
MB075	90326-0080		1	THERMOCOUPLE, 5110 080-000	
MR005C	90459-1382		1	HEATING ELEMENT 1100W 220V	
MR005D	90459-1382		1	HEATING ELEMENT 1100W 220V	
MX010	1036443-0000		1	CONTACT UNIT	
MX011	1036443-0000		1	CONTACT UNIT	
MX212	90326-0022		1	PLUG, MALE YELLOW CR-AL, 03-21000A	
MX212,1	90326-0077		1	CONTACT, 5100 004-001	
MX215	90326-0022		1	PLUG, MALE YELLOW CR-AL, 03-21000A	
MX215,1	90326-0077		1	CONTACT, 5100 004-001	
W242	351120-0144	MM	2500	CABLE Ã–LFLEX HEAT 180 SIHF 3X1,5	
W245	351120-0144	MM	2500	CABLE Ã–LFLEX HEAT 180 SIHF 3X1,5	
TBA 0200S (See drawing on page: 5-18)					
010	2611151-0003		1	AIR NOZZLE	
015	2611190-0017		1	SPACER	
030	1539967-0000		4	GASKET	
060	927422-0001		8	O-RING 19.2X3 SILICONE	
090	1144122-0000		2	REDUCTION	
120	1296415-0000		2	GASKET	
140	1498217-0000		1	HEATING CHAMBER	
150	1498218-0000		1	PIPE	
190	1498221-0000		1	PIPE	
260	1519318-0000		1	AIR NOZZLE	
270	1519319-0000		1	AIR NOZZLE	
290	2528199-0000		2	HANDLE	
480	312115-0451		4	SCREW ISO4762 M8X20 A4 80	
770	90457-0141		4	BULKHEAD CONNECTOR, 8MM	
790	312115-0457		4	SCREW ISO4762 M8X35 A4 80	
MB074	90326-0080		1	THERMOCOUPLE, 5110 080-000	
MB075	90326-0080		1	THERMOCOUPLE, 5110 080-000	
MR005C	90459-1382		1	HEATING ELEMENT 1100W 220V	
MR005D	90459-1382		1	HEATING ELEMENT 1100W 220V	
MX010	1036443-0000		1	CONTACT UNIT	
MX011	1036443-0000		1	CONTACT UNIT	
MX212	90326-0022		1	PLUG, MALE YELLOW CR-AL, 03-21000A	
MX212,1	90326-0077		1	CONTACT, 5100 004-001	
MX215	90326-0022		1	PLUG, MALE YELLOW CR-AL, 03-21000A	
MX215,1	90326-0077		1	CONTACT, 5100 004-001	
W242	351120-0144	MM	2500	CABLE Ã–LFLEX HEAT 180 SIHF 3X1,5	
W245	351120-0144	MM	2500	CABLE Ã–LFLEX HEAT 180 SIHF 3X1,5	

Machine Type | Group Description | Used-In | Group Number | Page No

See previous drawings pages: 5-18, 5-20.

ECM: 340055 - 20080121
Group number: 1539968-0200
Assembly Drawing: 1539968-4_1_AD

This list covers pages from 5-18 to 5-27

Pos	Part No	UN	Qty	Description	Page No
TBA 0250B (Cont'd) (See drawing on page: 5-18)					
010	2701083-0000		1	AIR NOZZLE	
015	2611190-0014		1	SPACER	
030	1539967-0000		4	GASKET	
060	927422-0001		8	O-RING 19.2X3 SILICONE	
090	1144122-0000		2	REDUCTION	
120	1296415-0000		2	GASKET	
140	1498217-0000		1	HEATING CHAMBER	
150	1498218-0000		1	PIPE	
190	1498221-0000		1	PIPE	
260	1519313-0000		1	AIR NOZZLE	
270	1519314-0000		1	AIR NOZZLE	
290	2528199-0000		2	HANDLE	
480	312115-0451		4	SCREW ISO4762 M8X20 A4 80	
770	90457-0141		4	BULKHEAD CONNECTOR, 8MM	
790	312115-0461		4	SCREW ISO4762 M8X50 A4 80	
MB074	90326-0080		1	THERMOCOUPLE, 5110 080-000	
MB075	90326-0080		1	THERMOCOUPLE, 5110 080-000	
MR005C	90459-1382		1	HEATING ELEMENT 1100W 220V	
MR005D	90459-1382		1	HEATING ELEMENT 1100W 220V	
MX010	1036443-0000		1	CONTACT UNIT	
MX011	1036443-0000		1	CONTACT UNIT	
MX212	90326-0022		1	PLUG, MALE YELLOW CR-AL, 03-21000A	
MX212,1	90326-0077		1	CONTACT, 5100 004-001	
MX215	90326-0022		1	PLUG, MALE YELLOW CR-AL, 03-21000A	
MX215,1	90326-0077		1	CONTACT, 5100 004-001	
W242	351120-0144	MM	2500	CABLE Ã–LFLEX HEAT 180 SIHF 3X1,5	
W245	351120-0144	MM	2500	CABLE Ã–LFLEX HEAT 180 SIHF 3X1,5	
TBA 0250S (See drawing on page: 5-18)					
010	2701082-0000		1	AIR NOZZLE	
030	1539967-0000		3	GASKET	
060	927422-0001		8	O-RING 19.2X3 SILICONE	
090	1144122-0000		2	REDUCTION	
120	1296415-0000		2	GASKET	
140	1498217-0000		1	HEATING CHAMBER	
150	1498218-0000		1	PIPE	
190	1498221-0000		1	PIPE	
260	1517504-0000		1	AIR NOZZLE	
270	1517505-0000		1	AIR NOZZLE	
290	2528199-0000		2	HANDLE	
480	312115-0451		4	SCREW ISO4762 M8X20 A4 80	
770	90457-0141		4	BULKHEAD CONNECTOR, 8MM	
790	312115-0451		4	SCREW ISO4762 M8X20 A4 80	
MB074	90326-0080		1	THERMOCOUPLE, 5110 080-000	
MB075	90326-0080		1	THERMOCOUPLE, 5110 080-000	
MR005C	90459-1382		1	HEATING ELEMENT 1100W 220V	
MR005D	90459-1382		1	HEATING ELEMENT 1100W 220V	
MX010	1036443-0000		1	CONTACT UNIT	
MX011	1036443-0000		1	CONTACT UNIT	
MX212	90326-0022		1	PLUG, MALE YELLOW CR-AL, 03-21000A	
MX212,1	90326-0077		1	CONTACT, 5100 004-001	
MX215	90326-0022		1	PLUG, MALE YELLOW CR-AL, 03-21000A	
MX215,1	90326-0077		1	CONTACT, 5100 004-001	
W242	351120-0144	MM	2500	CABLE Ã–LFLEX HEAT 180 SIHF 3X1,5	
W245	351120-0144	MM	2500	CABLE Ã–LFLEX HEAT 180 SIHF 3X1,5	
TBA 0284B, TBA 0300S (See drawing on page: 5-18)					
010	2701083-0000		1	AIR NOZZLE	
015	2611190-0011		1	SPACER	
030	1539967-0000		4	GASKET	
060	927422-0001		8	O-RING 19.2X3 SILICONE	
090	1144122-0000		2	REDUCTION	
120	1296415-0000		2	GASKET	
140	1498217-0000		1	HEATING CHAMBER	
150	1498218-0000		1	PIPE	
190	1498221-0000		1	PIPE	
260	1519313-0000		1	AIR NOZZLE	
270	1519314-0000		1	AIR NOZZLE	
290	2528199-0000		2	HANDLE	
480	312115-0451		4	SCREW ISO4762 M8X20 A4 80	
770	90457-0141		4	BULKHEAD CONNECTOR, 8MM	
790	312115-0459		4	SCREW ISO4762 M8X40 A4 80	
MB074	90326-0080		1	THERMOCOUPLE, 5110 080-000	
MB075	90326-0080		1	THERMOCOUPLE, 5110 080-000	
MR005C	90459-1382		1	HEATING ELEMENT 1100W 220V	
MR005D	90459-1382		1	HEATING ELEMENT 1100W 220V	
MX010	1036443-0000		1	CONTACT UNIT	
MX011	1036443-0000		1	CONTACT UNIT	
MX212	90326-0022		1	PLUG, MALE YELLOW CR-AL, 03-21000A	
MX212,1	90326-0077		1	CONTACT, 5100 004-001	
MX215	90326-0022		1	PLUG, MALE YELLOW CR-AL, 03-21000A	
MX215,1	90326-0077		1	CONTACT, 5100 004-001	
W242	351120-0144	MM	2500	CABLE Ã–LFLEX HEAT 180 SIHF 3X1,5	
W245	351120-0144	MM	2500	CABLE Ã–LFLEX HEAT 180 SIHF 3X1,5	
TBA 0330S (See drawing on page: 5-18)					

Machine Type | Group Description | Used-In | Group Number | Page No

See previous drawings pages: 5-18, 5-20.

ECM: 340055 - 20080121
Group number: 1539968-0200
Assembly Drawing: 1539968-4_1_AD

This list covers pages from 5-18 to 5-27

Pos	Part No	UN	Qty	Description	Page No
TBA 0330S (Cont'd) (See drawing on page: 5-18)					
010	2701083-0000		1	AIR NOZZLE	
030	1539967-0000		3	GASKET	
060	927422-0001		8	O-RING 19.2X3 SILICONE	
090	1144122-0000		2	REDUCTION	
120	1296415-0000		2	GASKET	
140	1498217-0000		1	HEATING CHAMBER	
150	1498218-0000		1	PIPE	
190	1498221-0000		1	PIPE	
260	1519313-0000		1	AIR NOZZLE	
270	1519314-0000		1	AIR NOZZLE	
290	2528199-0000		2	HANDLE	
480	312115-0451		4	SCREW ISO4762 M8X20 A4 80	
770	90457-0141		4	BULKHEAD CONNECTOR, 8MM	
790	312115-0451		4	SCREW ISO4762 M8X20 A4 80	
MB074	90326-0080		1	THERMOCOUPLE, 5110 080-000	
MB075	90326-0080		1	THERMOCOUPLE, 5110 080-000	
MR005C	90459-1382		1	HEATING ELEMENT 1100W 220V	
MR005D	90459-1382		1	HEATING ELEMENT 1100W 220V	
MX010	1036443-0000		1	CONTACT UNIT	
MX011	1036443-0000		1	CONTACT UNIT	
MX212	90326-0022		1	PLUG, MALE YELLOW CR-AL, 03-21000A	
MX212,1	90326-0077		1	CONTACT, 5100 004-001	
MX215	90326-0022		1	PLUG, MALE YELLOW CR-AL, 03-21000A	
MX215,1	90326-0077		1	CONTACT, 5100 004-001	
W242	351120-0144	MM	2500	CABLE Ã–LFLEX HEAT 180 SIHF 3X1,5	
W245	351120-0144	MM	2500	CABLE Ã–LFLEX HEAT 180 SIHF 3X1,5	
TWA 0125S (See drawing on page: 5-20)					
010	2697306-0001		1	AIR NOZZLE	
015	2611190-0020		1	SPACER	
030	1539967-0000		4	GASKET	
060	927422-0001		4	O-RING 19.2X3 SILICONE	
140	2696960-0000		1	HEATING CHAMBER	
290	2787346-0000		2	HANDLE	
300	2845921-0000		1	734013 NORDSON	
490	312105-0374		2	SCREW, M6S ISO 4014 M6X30 A4 80	
770	90457-0141		2	BULKHEAD CONNECTOR, 8MM	
790	312115-0463		4	SCREW ISO4762 M8X60 A4 80	
810	90030-0184		1	CONN. STR., GE06LRED71	
820	90030-0479		1	CONN. STR., M6FSC1/4N-316	
830	90266-0166	MM	73	PIPE	
840	90424-0068		1	AIR NOZZLE, G1/4, MOD. 216 BSP	
850	350002-0006		1	PUSH-IN L-FITTING QSL-F-G1/8-6	
TWA 0200S (See drawing on page: 5-20)					
010	2697306-0002		1	AIR NOZZLE	
030	1539967-0000		3	GASKET	
060	927422-0001		4	O-RING 19.2X3 SILICONE	
140	2696960-0000		1	HEATING CHAMBER	
290	2787346-0000		2	HANDLE	
300	2845921-0000		1	734013 NORDSON	
490	312105-0374		2	SCREW, M6S ISO 4014 M6X30 A4 80	
770	90457-0141		2	BULKHEAD CONNECTOR, 8MM	
790	312115-0451		4	SCREW ISO4762 M8X20 A4 80	
810	90030-0184		1	CONN. STR., GE06LRED71	
820	90030-0479		1	CONN. STR., M6FSC1/4N-316	
830	90266-0166	MM	36	PIPE	
840	90424-0068		1	AIR NOZZLE, G1/4, MOD. 216 BSP	
850	350002-0006		1	PUSH-IN L-FITTING QSL-F-G1/8-6	
Common Parts					
020	1539966-0000		1	BRACKET	
080	1144059-0000		1	WIRE	
095	2552081-0000		2	REDUCTION	
110	1279702-0000		3	BRACKET	
130	1498216-0000		1	LID	
160	1498219-0000		1	PIPE	
180	1498220-0000		1	PIPE	
200	1498222-0000		1	PLATE	
210	1498223-0000		1	PLATE	
220	1498224-0000		1	PLATE	
230	2921894-0000		1	PLATE	
240	1498233-0000		1	GASKET	
400	312105-0368		2	SCREW, M6S ISO 4017 M6X16 A4 80	
410	312105-0362		2	SCREW, M6S ISO 4017 M6X8 A4 80	
420	312105-0453		2	SCREW, M6S ISO 4017 M8X25 A4 80	
430	312105-0455		6	SCREW, M6S ISO 4017 M8X30 A4 80	
440	312109-0457		2	SCREW, M6S ISO 4017 M8X35 A4 80	
520	312605-0320		2	HEXAGON NUT, M6M M10 A280	
530	312605-0322		4	HEXAGON NUT, M6M M12 A280	
570	315105-0153		4	WASHER PLAIN, 6,4X12X1,5 A4 BRB	
580	315105-0165		17	WASHER PLAIN, 8,4X16X1,6 A4 BRB	
590	315105-0173		2	WASHER PLAIN, 10,5X22X2 A4 BRB	
620	90458-0459		1	GLAND FITTING, VK 24056 D UL21	
650	359705-0007		1	WARNING SIGN ISO, HOT SURFACE	
700	2552073-0000		8	SEAL	

Machine Type | Group Description | Used-In | Group Number | Page No

See previous drawings pages: 5-18, 5-20.

Pos	Part No	UN	Qty	Description	Page No
Common Parts (Cont'd)					
710	315400-0004	M	2	TUBE PUN-H-8X1,25-BL	
720	359705-0015		1	WARNING SIGN ISO, RISK OF ELECTRIC SHOCK	
760	90335-0036		2	COMP. SPRING, 22450, 1,6X14,1X24	
780	90457-0199		1	INSERT EK 156M 5X5/4X9	
800	90153-0023		1	ADHESIVE, SILICON 251470 TUB 90CC(UN1993	
MB072	90326-0080		1	THERMOCOUPLE, 5110 080-000	
MB073	90326-0080		1	THERMOCOUPLE, 5110 080-000	
MR005A	90459-1382		1	HEATING ELEMENT 1100W 220V	
MR005B	90459-1382		1	HEATING ELEMENT 1100W 220V	
MX008	1036443-0000		1	CONTACT UNIT	
MX009	1036443-0000		1	CONTACT UNIT	
MX213	90326-0022		1	PLUG, MALE YELLOW CR-AL, 03-21000A	
MX213,1	90326-0077		1	CONTACT, 5100 004-001	
MX214	90326-0022		1	PLUG, MALE YELLOW CR-AL, 03-21000A	
MX214,1	90326-0077		1	CONTACT, 5100 004-001	
W238	90220-0034	MM	2500	THERMOC.CABLE, TEX/SITW-20F-KX 2X0,5MM2	
W239	90220-0034	MM	2500	THERMOC.CABLE, TEX/SITW-20F-KX 2X0,5MM2	
W240	90220-0034	MM	2500	THERMOC.CABLE, TEX/SITW-20F-KX 2X0,5MM2	
W241	90220-0034	MM	2500	THERMOC.CABLE, TEX/SITW-20F-KX 2X0,5MM2	
W243	351120-0144	MM	2500	CABLE Ã–LFLEX HEAT 180 SIHF 3X1,5	
W244	351120-0144	MM	2500	CABLE Ã–LFLEX HEAT 180 SIHF 3X1,5	

Pos	Part No	UN	Qty	Description	Page No

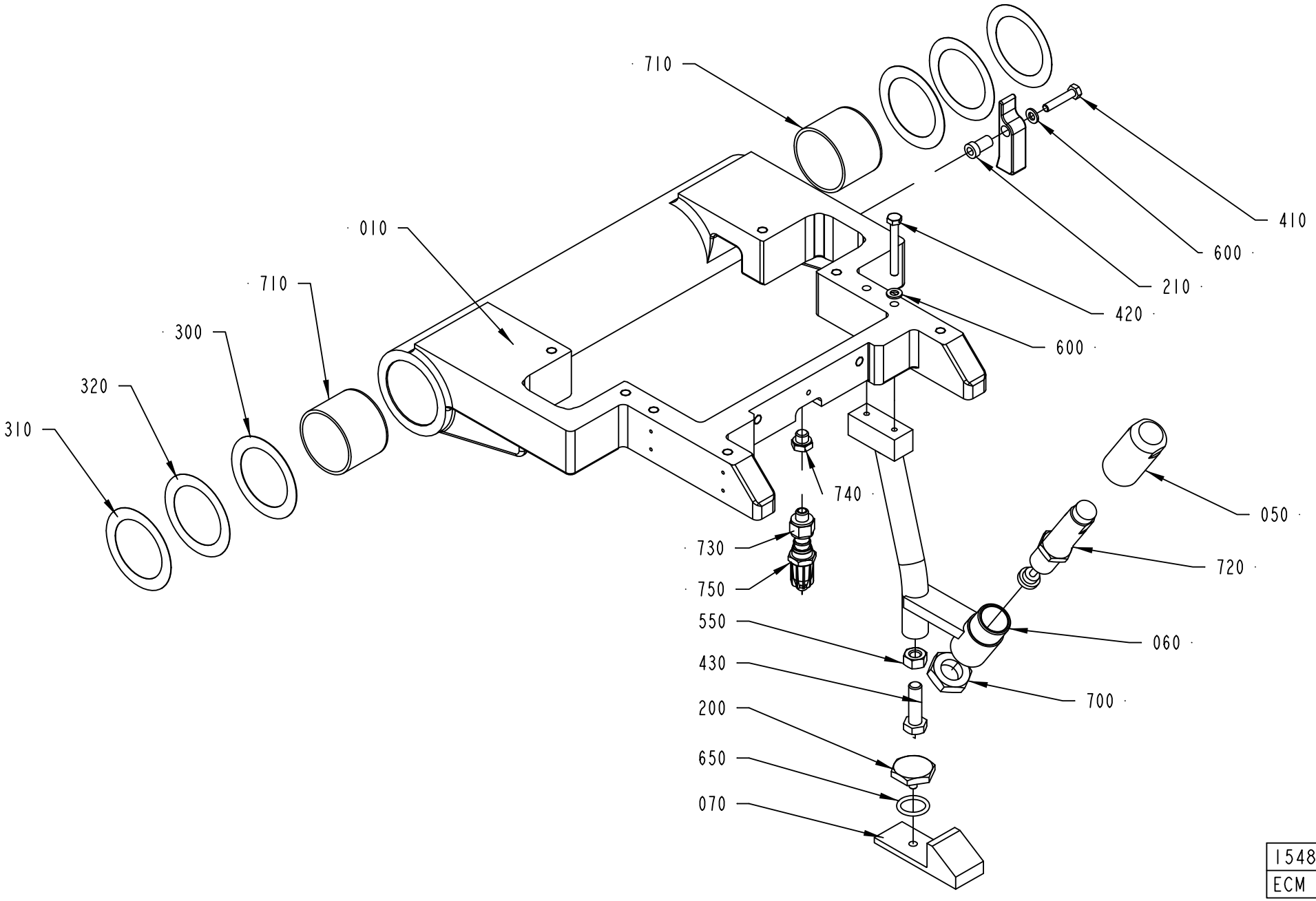

1548000-3
ECM 254643

ECM: 256754 - 20060303
Group number: 1548000-0200
Assembly Drawing: 1548000-3_1_AA

Pos	Part No	UN	Qty	Description	Page No
TBA 0100B, TBA 0125S, TBA 0160S, TBA 0200M, TBA 0200B, TBA 0200S, TBA 0284B, TBA 0250B					
010	2814875-0000		1	PIVOT ARM	
740	90330-0066		1	PLUG, G1/8EXT, G1/8	
TBA 0250S, TBA 0300S, TBA 0330S					
010	2814875-0000		1	PIVOT ARM	
730	90030-0116		1	NIPPLES, REDUCING, EXT. THR. NO. 2520	
750	90424-0068		1	AIR NOZZLE, G1/4, MOD. 216 BSP	
TWA 0125S, TWA 0200S					
010	2696621-0000		1	PIVOT ARM	
Common Parts					
050	1512128-0000		1	PLUG	
060	1512129-0000		1	BRACKET	
070	1512133-0000		1	STOP	
200	272997-0000		1	STOPPER	
210	295205-0000		1	SPACER SLEEVE	
220	295206-0000		1	FLAP	
300	295204-0001		2	SHIM	
310	295204-0002		2	SHIM	
320	295204-0003		2	SHIM	
410	312105-0374		1	SCREW, M6S ISO 4014 M6X30 A4 80	
420	312105-0380		1	SCREW, M6S ISO 4014 M6X50 A4 80	
430	312105-0497		1	SCREW, M6S ISO 4017 M10X35 A4 80	
550	312605-0320		1	HEXAGON NUT, M6M M10 A280	
600	315105-0153		2	WASHER PLAIN, 6,4X12X1,5 A4 BRB	
650	315202-0215		1	O-RING 19,2X3 MM	
700	90099-0057		1	NUT HEX. M20X1,5	
710	90240-0094		2	BEARING BUSHING W/O FL, 50X55X40 MM	
720	90347-0189		1	SHOCK ABSORBER, 370-050-400	

Pos	Part No	UN	Qty	Description	Page No

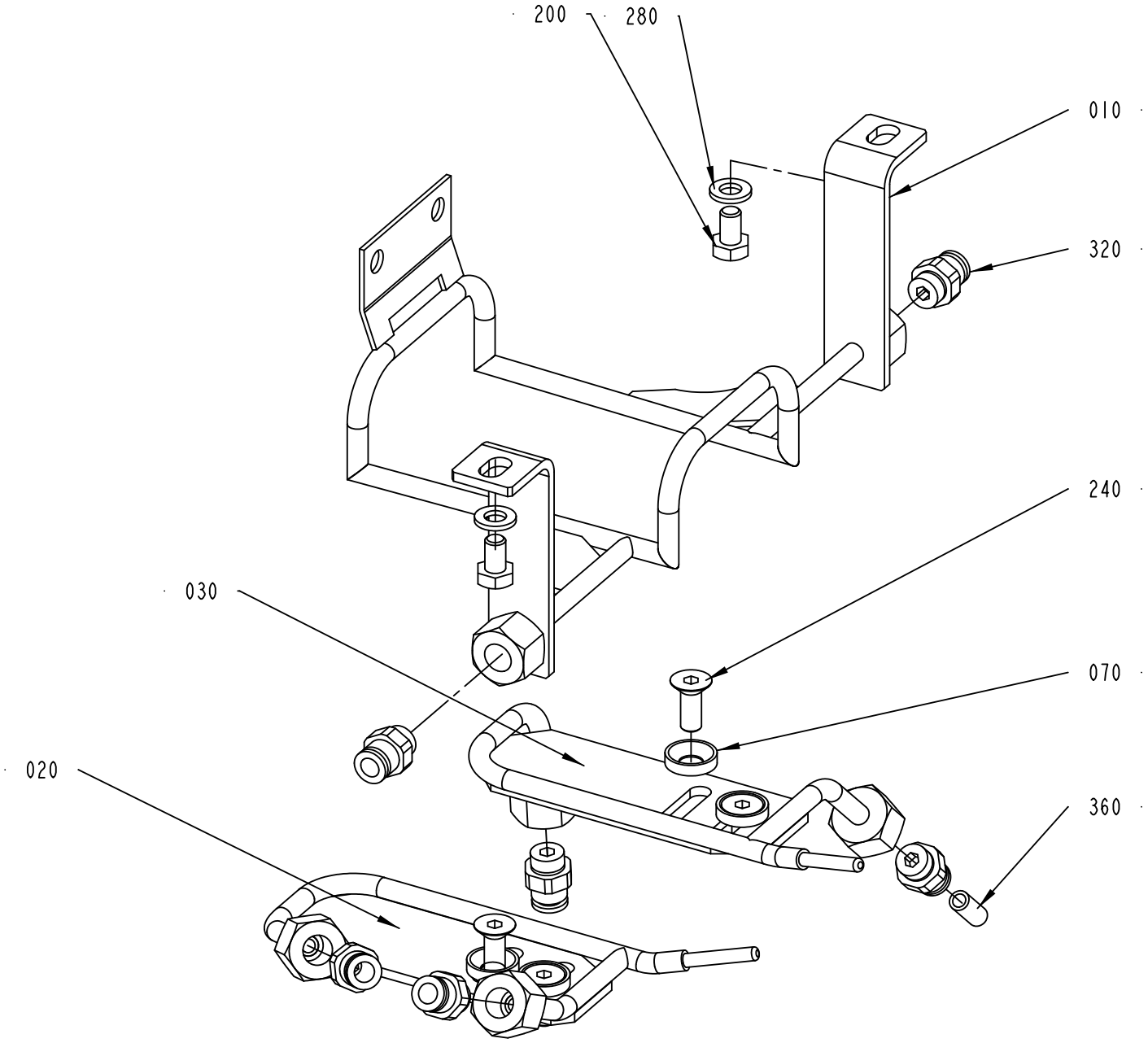

1539970-3
412181

ECM: 412184 - 20091125
Group number: 1539970-0200
Assembly Drawing: 1539970-3_1_AB

This list covers pages from 5-30 to 5-33

Pos	Part No	UN	Qty	Description	Page No
TBA 0100B					
010	2814883-0000		1	PIPE	
020	2776744-0000		1	SIDE PIPE	
030	2776743-0000		1	SIDE PIPE	
070	1317228-0000		4	WASHER	
240	312155-0368		4	SCREW DIN 7991 MF6S M6X16 A4 70	
320	342722-0202		6	PIPE COUPLING 1/8" D=6MM	
360	90166-0108	MM	3500	TUBE 6 MM PA TRANSP.	
TBA 0125S					
010	2764346-0000		1	PIPE	
020	2776744-0000		1	SIDE PIPE	
030	2776743-0000		1	SIDE PIPE	
070	1317228-0000		4	WASHER	
240	312155-0368		4	SCREW DIN 7991 MF6S M6X16 A4 70	
320	342722-0202		6	PIPE COUPLING 1/8" D=6MM	
360	90166-0108	MM	3500	TUBE 6 MM PA TRANSP.	
TBA 0160S					
010	2830507-0000		1	PIPE	
020	2776744-0000		1	SIDE PIPE	
030	2776743-0000		1	SIDE PIPE	
070	1317228-0000		4	WASHER	
240	312155-0368		4	SCREW DIN 7991 MF6S M6X16 A4 70	
320	342722-0202		6	PIPE COUPLING 1/8" D=6MM	
360	90166-0108	MM	3500	TUBE 6 MM PA TRANSP.	
TBA 0200B					
010	2776732-0000		1	PIPE	
020	2776744-0000		1	SIDE PIPE	
030	2776743-0000		1	SIDE PIPE	
070	1317228-0000		4	WASHER	
240	312155-0368		4	SCREW DIN 7991 MF6S M6X16 A4 70	
320	342722-0202		6	PIPE COUPLING 1/8" D=6MM	
360	90166-0108	MM	3500	TUBE 6 MM PA TRANSP.	
TBA 0200M					
010	2830499-0000		1	PIPE	
020	2776744-0000		1	SIDE PIPE	
030	2776743-0000		1	SIDE PIPE	
070	1317228-0000		4	WASHER	
240	312155-0368		4	SCREW DIN 7991 MF6S M6X16 A4 70	
320	342722-0202		6	PIPE COUPLING 1/8" D=6MM	
360	90166-0108	MM	3500	TUBE 6 MM PA TRANSP.	
TBA 0200S					
010	2776738-0000		1	PIPE	
020	2776744-0000		1	SIDE PIPE	
030	2776743-0000		1	SIDE PIPE	
070	1317228-0000		4	WASHER	
240	312155-0368		4	SCREW DIN 7991 MF6S M6X16 A4 70	
320	342722-0202		6	PIPE COUPLING 1/8" D=6MM	
360	90166-0108	MM	3500	TUBE 6 MM PA TRANSP.	
TBA 0250B					
010	2751445-0000		1	PIPE	
020	2776744-0000		1	SIDE PIPE	
030	2776743-0000		1	SIDE PIPE	
070	1317228-0000		4	WASHER	
240	312155-0368		4	SCREW DIN 7991 MF6S M6X16 A4 70	
320	342722-0202		6	PIPE COUPLING 1/8" D=6MM	
360	90166-0108	MM	3500	TUBE 6 MM PA TRANSP.	
TBA 0250S					
010	2800348-0000		1	PIPE	
020	2776744-0000		1	SIDE PIPE	
030	2776743-0000		1	SIDE PIPE	
070	1317228-0000		4	WASHER	
240	312155-0368		4	SCREW DIN 7991 MF6S M6X16 A4 70	
320	342722-0202		6	PIPE COUPLING 1/8" D=6MM	
360	90166-0108	MM	3500	TUBE 6 MM PA TRANSP.	
TBA 0284B, TBA 0300S					
010	2814879-0000		1	PIPE	
020	2776744-0000		1	SIDE PIPE	
030	2776743-0000		1	SIDE PIPE	
070	1317228-0000		4	WASHER	
240	312155-0368		4	SCREW DIN 7991 MF6S M6X16 A4 70	
320	342722-0202		6	PIPE COUPLING 1/8" D=6MM	
360	90166-0108	MM	3500	TUBE 6 MM PA TRANSP.	
TBA 0330S					
010	2814890-0000		1	PIPE	
020	2776744-0000		1	SIDE PIPE	
030	2776743-0000		1	SIDE PIPE	
070	1317228-0000		4	WASHER	
240	312155-0368		4	SCREW DIN 7991 MF6S M6X16 A4 70	
320	342722-0202		6	PIPE COUPLING 1/8" D=6MM	
360	90166-0108	MM	3500	TUBE 6 MM PA TRANSP.	
TWA 0125S					
010	2787350-0000		1	PIPE	
360	90166-0108	MM	2000	TUBE 6 MM PA TRANSP.	
TWA 0200S					

Machine Type	Group Description	Used-In	Group Number	Page No

FOLDING BAR

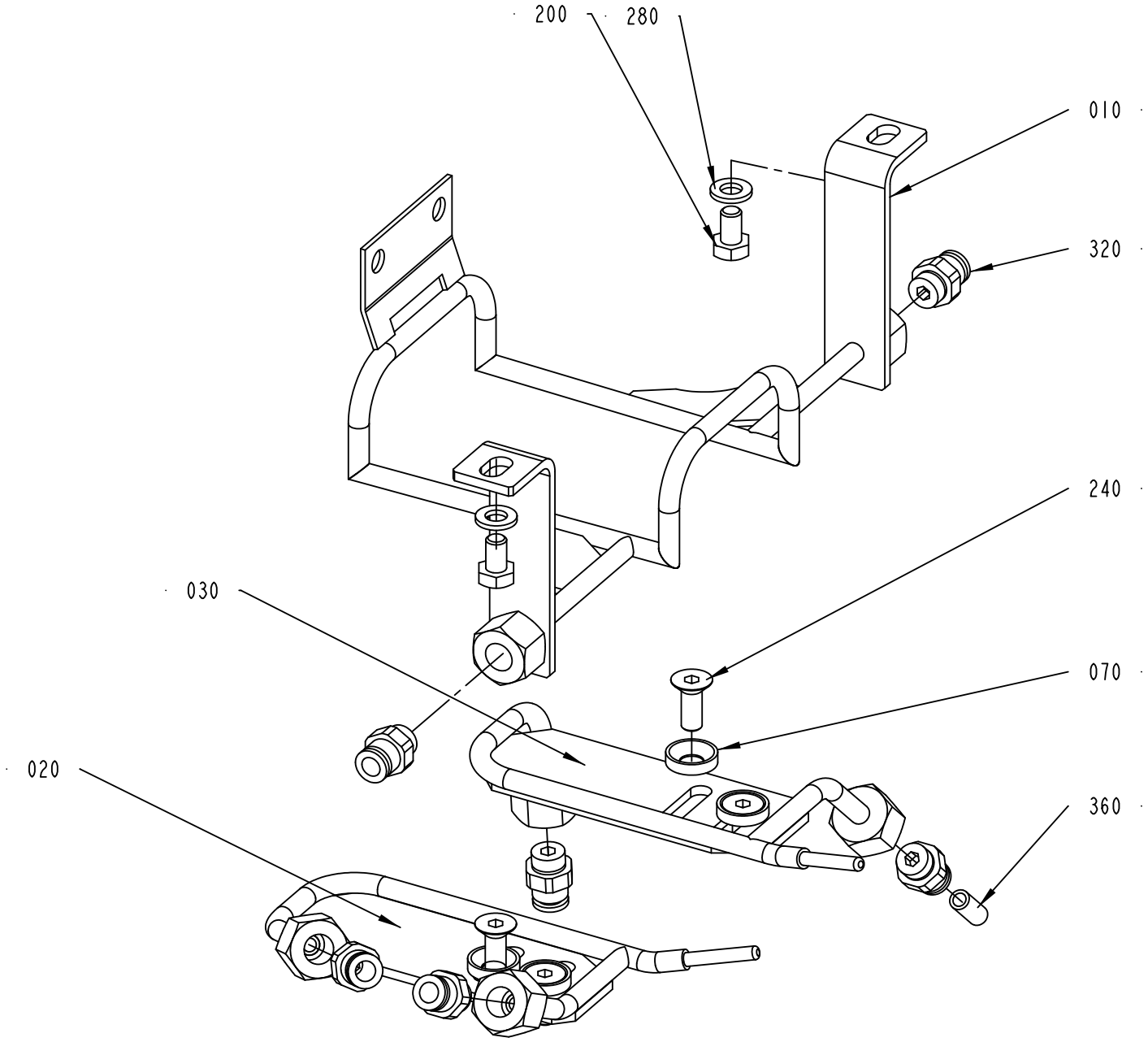

1539970-3
412181

ECM: 412184 - 20091125
Group number: 1539970-0200
Assembly Drawing: 1539970-3_1_AB

This list covers pages from 5-30 to 5-33

Pos	Part No	UN	Qty	Description	Page No
TWA 0200S (Cont'd)					
010	2944330-0000		1	FOLDING BAR	
360	90166-0108	MM	2000	TUBE 6 MM PA TRANSP.	
Common Parts					
200	312105-0364		2	SCREW, M6S ISO 4017 M6X10 A4 80	
280	315105-0153		2	WASHER PLAIN, 6,4X12X1,5 A4 BRB	
320	342722-0202		2	PIPE COUPLING 1/8" D=6MM	

Pos	Part No	UN	Qty	Description	Page No

PULL-DOWN DEVICE

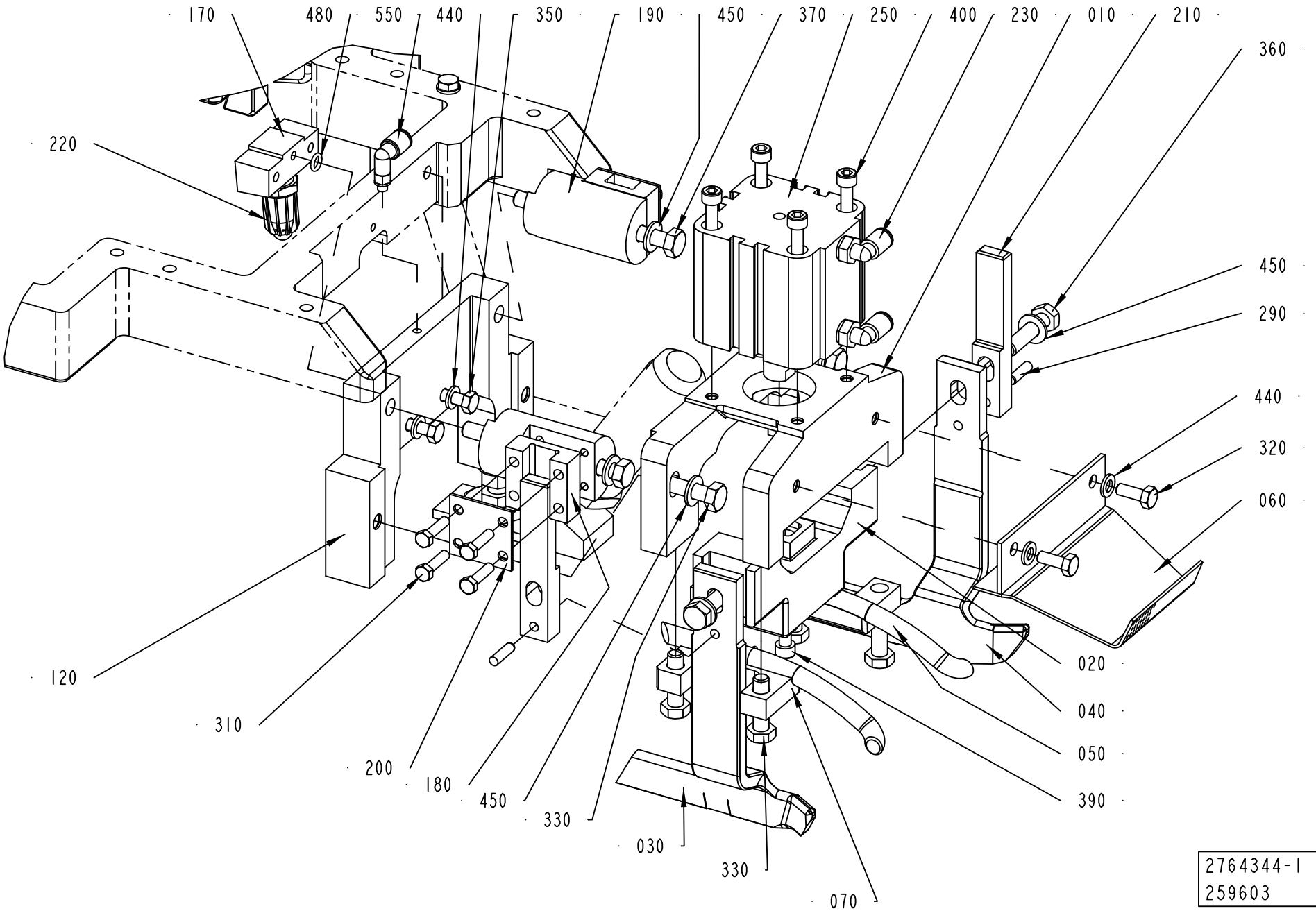

ECM: 334022 - 20071204
Group number: 2764344-0100
Assembly Drawing: 2764344-1_1_AB

This list covers pages from 5-34 to 5-43

Pos	Part No	UN	Qty	Description	Page No
0250S HVA (See drawing on page: 5-38)					
020	2800344-0000		1	BLOCKING PIECE	
030	2800342-0000		1	ARM	
040	2800343-0000		1	ARM	
050	574348-0000		1	RAIL LEFT	
060	736730-0005		1	LEAD PLATE	
070	574349-0000		1	RAIL RIGHT	
120	2800346-0000		1	FASTENING PLATE	
205	2800347-0000		2	SPACER	
230	350002-0006		3	PUSH-IN L-FITTING QSL-F-G1/8-6	
290	311103-0313		2	PARALLEL PIN ISO 2338 5M6X28 A1	
350	312105-0362		2	SCREW, M6S ISO 4017 M6X8 A4 80	
360	312105-0457		2	SCREW, M6S ISO 4014 M8X35 A4 80	
370	312105-0464		2	SCREW, M6S ISO 4014 M8X65 A4 80	
410	312115-0453		2	SCREW ISO4762 M8X25 A4 80	
0250S NOHVA (See drawing on page: 5-36)					
020	2800344-0000		1	BLOCKING PIECE	
030	2800342-0000		1	ARM	
040	2800343-0000		1	ARM	
050	574348-0000		1	RAIL LEFT	
060	2776734-0000		1	SLIDE SHEET	
070	574349-0000		1	RAIL RIGHT	
120	2800346-0000		1	FASTENING PLATE	
205	2800347-0000		2	SPACER	
230	350002-0006		2	PUSH-IN L-FITTING QSL-F-G1/8-6	
290	311103-0313		2	PARALLEL PIN ISO 2338 5M6X28 A1	
350	312105-0362		2	SCREW, M6S ISO 4017 M6X8 A4 80	
360	312105-0457		2	SCREW, M6S ISO 4014 M8X35 A4 80	
370	312105-0464		2	SCREW, M6S ISO 4014 M8X65 A4 80	
410	312115-0453		2	SCREW ISO4762 M8X25 A4 80	
0300S HVA, 0284B HVA (See drawing on page: 5-38)					
020	2751448-0000		1	BLOCKING PIECE	
030	2776736-0000		1	ARM	
040	2776737-0000		1	ARM	
050	295057-0001		1	RAIL	
060	736730-0001		1	LEAD PLATE	
070	295058-0001		1	RAIL	
120	2776735-0000		1	FASTENING PLATE	
170	2764343-0000		1	AIR CONNECTION	
220	90424-0068		1	AIR NOZZLE, G1/4, MOD. 216 BSP	
230	350002-0006		3	PUSH-IN L-FITTING QSL-F-G1/8-6	
290	311103-0309		2	PARALLEL PIN ISO 2338 5M6X18 A1	
350	312105-0370		2	SCREW, M6S ISO 4017 M6X20 A4 80	
360	312105-0457		2	SCREW, M6S ISO 4014 M8X35 A4 80	
370	312105-0464		2	SCREW, M6S ISO 4014 M8X65 A4 80	
410	312115-0453		2	SCREW ISO4762 M8X25 A4 80	
0300S NOHVA, 0284B NOHVA (See drawing on page: 5-36)					
020	2751448-0000		1	BLOCKING PIECE	
030	2776736-0000		1	ARM	
040	2776737-0000		1	ARM	
050	295057-0001		1	RAIL	
060	272045-0001		1	SLIDE SHEET	
070	295058-0001		1	RAIL	
120	2776735-0000		1	FASTENING PLATE	
170	2764343-0000		1	AIR CONNECTION	
220	90424-0068		1	AIR NOZZLE, G1/4, MOD. 216 BSP	
230	350002-0006		2	PUSH-IN L-FITTING QSL-F-G1/8-6	
290	311103-0309		2	PARALLEL PIN ISO 2338 5M6X18 A1	
350	312105-0370		2	SCREW, M6S ISO 4017 M6X20 A4 80	
360	312105-0457		2	SCREW, M6S ISO 4014 M8X35 A4 80	
370	312105-0464		2	SCREW, M6S ISO 4014 M8X65 A4 80	
410	312115-0453		2	SCREW ISO4762 M8X25 A4 80	
0330S HVA (See drawing on page: 5-38)					
020	2751448-0000		1	BLOCKING PIECE	
030	2814885-0000		1	ARM	
040	2814886-0000		1	ARM	
050	295057-0004		1	RAIL	
060	736730-0005		1	LEAD PLATE	
070	295058-0004		1	RAIL	
120	2814887-0000		1	FASTENING PLATE	
230	350002-0006		3	PUSH-IN L-FITTING QSL-F-G1/8-6	
290	311103-0309		2	PARALLEL PIN ISO 2338 5M6X18 A1	
350	312105-0362		2	SCREW, M6S ISO 4017 M6X8 A4 80	
370	312105-0464		2	SCREW, M6S ISO 4014 M8X65 A4 80	
410	312115-0453		2	SCREW ISO4762 M8X25 A4 80	
0330S NOHVA (See drawing on page: 5-36)					
020	2751448-0000		1	BLOCKING PIECE	
030	2814885-0000		1	ARM	
040	2814886-0000		1	ARM	
050	295057-0004		1	RAIL	
060	272045-0001		1	SLIDE SHEET	
070	295058-0004		1	RAIL	
120	2814887-0000		1	FASTENING PLATE	
230	350002-0006		2	PUSH-IN L-FITTING QSL-F-G1/8-6	

PULL-DOWN DEVICE

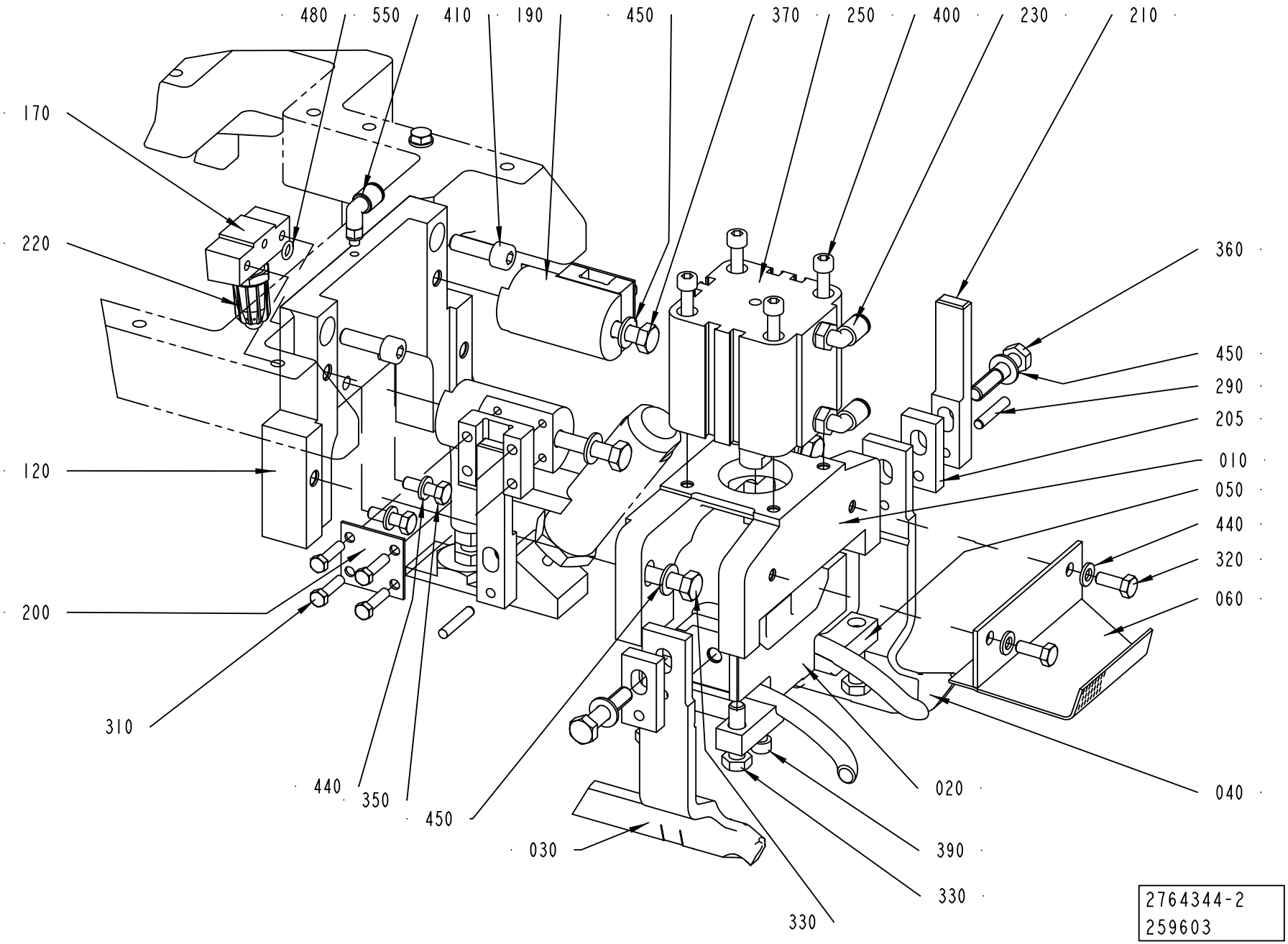

ECM: 334022 - 20071204
Group number: 2764344-0100
Assembly Drawing: 2764344-2_1_AB

This list covers pages from 5-34 to 5-43

Pos	Part No	UN	Qty	Description	Page No
0330S NOHVA (Cont'd) (See drawing on page: 5-36)					
290	311103-0309		2	PARALLEL PIN ISO 2338 5M6X18 A1	
350	312105-0362		2	SCREW, M6S ISO 4017 M6X8 A4 80	
370	312105-0464		2	SCREW, M6S ISO 4014 M8X65 A4 80	
410	312115-0453		2	SCREW ISO4762 M8X25 A4 80	
0100B HVA (See drawing on page: 5-38)					
020	2764345-0000		1	BLOCKING PIECE	
030	2814881-0000		1	ARM	
040	2814882-0000		1	ARM	
050	979737-0000		1	RAIL LEFT	
060	736730-0003		1	LEAD PLATE	
070	979738-0000		1	RAIL RIGHT	
120	2814880-0000		1	FASTENING PLATE	
170	2764343-0000		1	AIR CONNECTION	
205	2776727-0000		2	SPACER	
220	90424-0068		1	AIR NOZZLE, G1/4, MOD. 216 BSP	
230	350002-0006		3	PUSH-IN L-FITTING QSL-F-G1/8-6	
290	311103-0313		2	PARALLEL PIN ISO 2338 5M6X28 A1	
350	312105-0370		2	SCREW, M6S ISO 4017 M6X20 A4 80	
360	312105-0459		2	SCREW, M6S ISO 4014 M8X40 A4 80	
370	312105-0464		2	SCREW, M6S ISO 4014 M8X65 A4 80	
410	312115-0453		2	SCREW ISO4762 M8X25 A4 80	
0100B NOHVA (See drawing on page: 5-36)					
020	2764345-0000		1	BLOCKING PIECE	
030	2814881-0000		1	ARM	
040	2814882-0000		1	ARM	
050	979737-0000		1	RAIL LEFT	
060	271939-0003		1	SLIDE SHEET	
070	979738-0000		1	RAIL RIGHT	
120	2814880-0000		1	FASTENING PLATE	
170	2764343-0000		1	AIR CONNECTION	
205	2776727-0000		2	SPACER	
220	90424-0068		1	AIR NOZZLE, G1/4, MOD. 216 BSP	
230	350002-0006		2	PUSH-IN L-FITTING QSL-F-G1/8-6	
290	311103-0313		2	PARALLEL PIN ISO 2338 5M6X28 A1	
350	312105-0370		2	SCREW, M6S ISO 4017 M6X20 A4 80	
360	312105-0459		2	SCREW, M6S ISO 4014 M8X40 A4 80	
370	312105-0464		2	SCREW, M6S ISO 4014 M8X65 A4 80	
410	312115-0453		2	SCREW ISO4762 M8X25 A4 80	
0125S HVA (See drawing on page: 5-38)					
020	2764345-0000		1	BLOCKING PIECE	
030	2764347-0000		1	ARM	
040	2764348-0000		1	ARM	
050	295059-0000		1	RAIL LEFT	
060	736730-0006		1	LEAD PLATE	
070	295060-0000		1	RAIL	
120	2764349-0000		1	FASTENING PLATE	
170	2764343-0000		1	AIR CONNECTION	
205	2776727-0000		2	SPACER	
220	90424-0068		1	AIR NOZZLE, G1/4, MOD. 216 BSP	
230	350002-0006		3	PUSH-IN L-FITTING QSL-F-G1/8-6	
290	311103-0313		2	PARALLEL PIN ISO 2338 5M6X28 A1	
350	312105-0370		2	SCREW, M6S ISO 4017 M6X20 A4 80	
360	312105-0459		2	SCREW, M6S ISO 4014 M8X40 A4 80	
370	312105-0464		2	SCREW, M6S ISO 4014 M8X65 A4 80	
410	312115-0453		2	SCREW ISO4762 M8X25 A4 80	
0125S NOHVA (See drawing on page: 5-36)					
020	2764345-0000		1	BLOCKING PIECE	
030	2764347-0000		1	ARM	
040	2764348-0000		1	ARM	
050	295059-0000		1	RAIL LEFT	
060	271939-0001		1	SLIDE SHEET	
070	295060-0000		1	RAIL	
120	2764349-0000		1	FASTENING PLATE	
170	2764343-0000		1	AIR CONNECTION	
205	2776727-0000		2	SPACER	
220	90424-0068		1	AIR NOZZLE, G1/4, MOD. 216 BSP	
230	350002-0006		2	PUSH-IN L-FITTING QSL-F-G1/8-6	
290	311103-0313		2	PARALLEL PIN ISO 2338 5M6X28 A1	
350	312105-0370		2	SCREW, M6S ISO 4017 M6X20 A4 80	
360	312105-0459		2	SCREW, M6S ISO 4014 M8X40 A4 80	
370	312105-0464		2	SCREW, M6S ISO 4014 M8X65 A4 80	
410	312115-0453		2	SCREW ISO4762 M8X25 A4 80	
0160S HVA (See drawing on page: 5-38)					
020	2776733-0000		1	BLOCKING PIECE	
030	2830506-0000		1	ARM	
040	2830505-0000		1	ARM	
050	295059-0000		1	RAIL LEFT	
060	736730-0002		1	LEAD PLATE	
070	295060-0000		1	RAIL	
120	2830504-0000		1	FASTENING PLATE	
170	2764343-0000		1	AIR CONNECTION	
205	2776727-0000		2	SPACER	
220	90424-0068		1	AIR NOZZLE, G1/4, MOD. 216 BSP	

Machine Type | Group Description | Used-In | Group Number | Page No

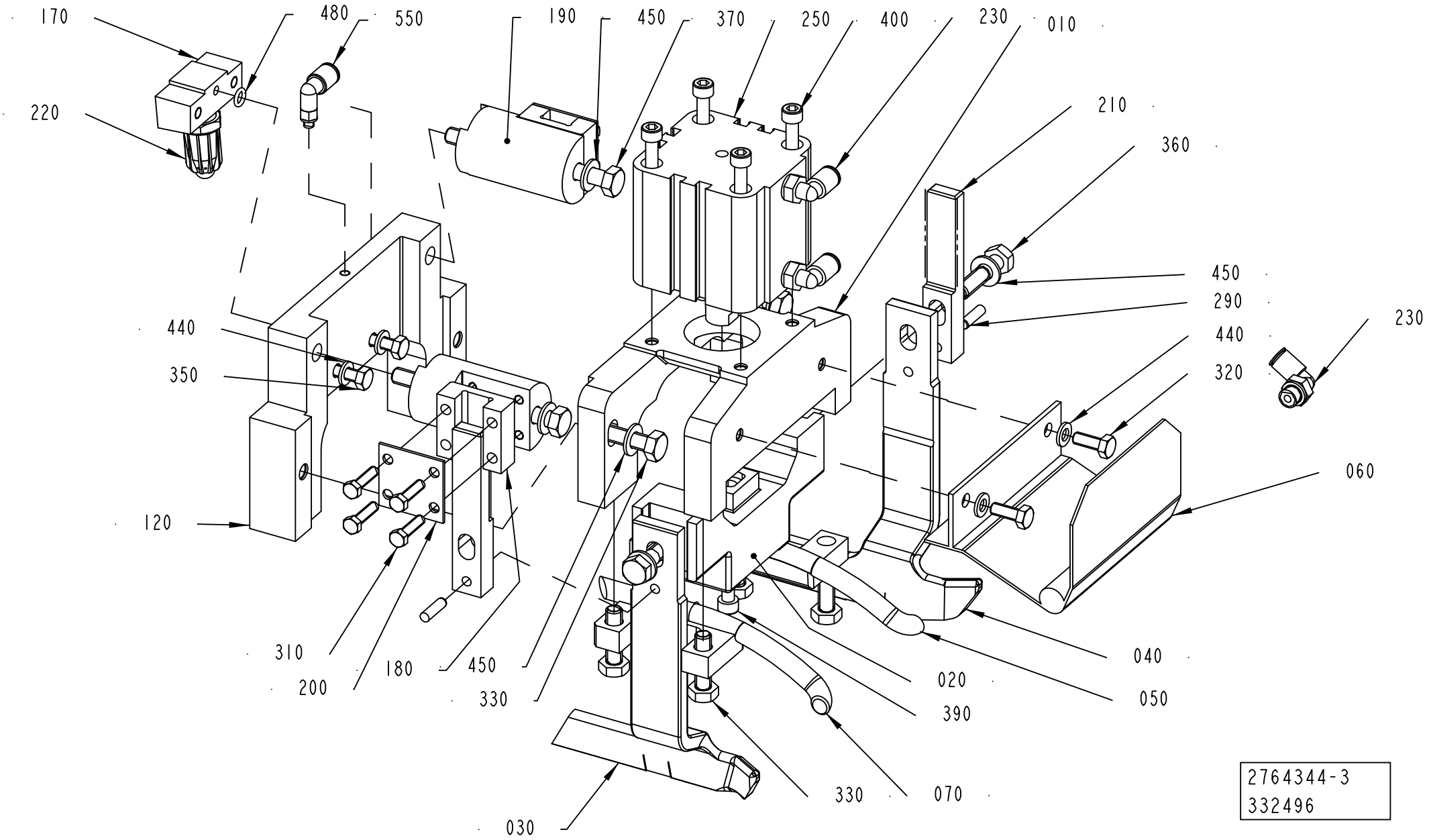
170
480
550
190
450
370
250
400
230
010
220
210
360
450
290
440
320
230
440
350
060
120
040
020
390
050
310
200
180
450
330
330
070
030
2764344-3
332496

ECM: 334022 - 20071204
Group number: 2764344-0100
Assembly Drawing: 2764344-3_1_AA

This list covers pages from 5-34 to 5-43

Pos	Part No	UN	Qty	Description	Page No
0160S HVA (Cont'd) (See drawing on page: 5-38)					
230	350002-0006		3	PUSH-IN L-FITTING QSL-F-G1/8-6	
290	311103-0313		2	PARALLEL PIN ISO 2338 5M6X28 A1	
350	312105-0370		2	SCREW, M6S ISO 4017 M6X20 A4 80	
360	312105-0459		2	SCREW, M6S ISO 4014 M8X40 A4 80	
370	312105-0464		2	SCREW, M6S ISO 4014 M8X65 A4 80	
410	312115-0453		2	SCREW ISO4762 M8X25 A4 80	
0160S NOHVA (See drawing on page: 5-36)					
020	2776733-0000		1	BLOCKING PIECE	
030	2830506-0000		1	ARM	
040	2830505-0000		1	ARM	
050	295059-0000		1	RAIL LEFT	
060	271939-0001		1	SLIDE SHEET	
070	295060-0000		1	RAIL	
120	2830504-0000		1	FASTENING PLATE	
170	2764343-0000		1	AIR CONNECTION	
205	2776727-0000		2	SPACER	
220	90424-0068		1	AIR NOZZLE, G1/4, MOD. 216 BSP	
230	350002-0006		2	PUSH-IN L-FITTING QSL-F-G1/8-6	
290	311103-0313		2	PARALLEL PIN ISO 2338 5M6X28 A1	
350	312105-0370		2	SCREW, M6S ISO 4017 M6X20 A4 80	
360	312105-0459		2	SCREW, M6S ISO 4014 M8X40 A4 80	
370	312105-0464		2	SCREW, M6S ISO 4014 M8X65 A4 80	
410	312115-0453		2	SCREW ISO4762 M8X25 A4 80	
0200B HVA (See drawing on page: 5-38)					
020	2751448-0000		1	BLOCKING PIECE	
030	2776729-0000		1	ARM	
040	2776730-0000		1	ARM	
050	295057-0002		1	RAIL	
060	736730-0004		1	LEAD PLATE	
070	295058-0002		1	RAIL	
120	2776731-0000		1	FASTENING PLATE	
170	2764343-0000		1	AIR CONNECTION	
220	90424-0068		1	AIR NOZZLE, G1/4, MOD. 216 BSP	
230	350002-0006		3	PUSH-IN L-FITTING QSL-F-G1/8-6	
290	311103-0309		2	PARALLEL PIN ISO 2338 5M6X18 A1	
350	312105-0370		2	SCREW, M6S ISO 4017 M6X20 A4 80	
360	312105-0457		2	SCREW, M6S ISO 4014 M8X35 A4 80	
370	312105-0464		2	SCREW, M6S ISO 4014 M8X65 A4 80	
410	312115-0453		2	SCREW ISO4762 M8X25 A4 80	
0200B NOHVA (See drawing on page: 5-36)					
020	2751448-0000		1	BLOCKING PIECE	
030	2776729-0000		1	ARM	
040	2776730-0000		1	ARM	
050	295057-0002		1	RAIL	
060	272045-0003		1	SLIDE SHEET	
070	295058-0002		1	RAIL	
120	2776731-0000		1	FASTENING PLATE	
170	2764343-0000		1	AIR CONNECTION	
220	90424-0068		1	AIR NOZZLE, G1/4, MOD. 216 BSP	
230	350002-0006		2	PUSH-IN L-FITTING QSL-F-G1/8-6	
290	311103-0309		2	PARALLEL PIN ISO 2338 5M6X18 A1	
350	312105-0370		2	SCREW, M6S ISO 4017 M6X20 A4 80	
360	312105-0457		2	SCREW, M6S ISO 4014 M8X35 A4 80	
370	312105-0464		2	SCREW, M6S ISO 4014 M8X65 A4 80	
410	312115-0453		2	SCREW ISO4762 M8X25 A4 80	
0200M HVA (See drawing on page: 5-38)					
020	2800344-0000		1	BLOCKING PIECE	
030	2814892-0000		1	ARM	
040	2814891-0000		1	ARM	
050	979864-0000		1	RAIL LEFT	
060	736730-0002		1	LEAD PLATE	
070	979865-0000		1	RAIL RIGHT	
120	2751450-0000		1	FASTENING PLATE	
170	2764343-0000		1	AIR CONNECTION	
205	2800347-0000		2	SPACER	
220	90424-0068		1	AIR NOZZLE, G1/4, MOD. 216 BSP	
230	350002-0006		3	PUSH-IN L-FITTING QSL-F-G1/8-6	
290	311103-0313		2	PARALLEL PIN ISO 2338 5M6X28 A1	
350	312105-0370		2	SCREW, M6S ISO 4017 M6X20 A4 80	
360	312105-0457		2	SCREW, M6S ISO 4014 M8X35 A4 80	
370	312105-0469		2	SCREW, M6S ISO 4014 M8X90 A4 80	
0200M NOHVA (See drawing on page: 5-34)					
020	2800344-0000		1	BLOCKING PIECE	
030	2814892-0000		1	ARM	
040	2814891-0000		1	ARM	
050	979864-0000		1	RAIL LEFT	
060	2776734-0000		1	SLIDE SHEET	
070	979865-0000		1	RAIL RIGHT	
120	2751450-0000		1	FASTENING PLATE	
170	2764343-0000		1	AIR CONNECTION	
205	2800347-0000		2	SPACER	
220	90424-0068		1	AIR NOZZLE, G1/4, MOD. 216 BSP	
230	350002-0006		2	PUSH-IN L-FITTING QSL-F-G1/8-6	

Machine Type | Group Description | Used-In | Group Number | Page No

See previous drawings pages: 5-34, 5-36, 5-38.

ECM: 334022 - 20071204
Group number: 2764344-0100
Assembly Drawing: 2764344-3_1_AA

This list covers pages from 5-34 to 5-43

Pos	Part No	UN	Qty	Description	Page No
0200M NOHVA (Cont'd) (See drawing on page: 5-34)					
290	311103-0313		2	PARALLEL PIN ISO 2338 5M6X28 A1	
350	312105-0370		2	SCREW, M6S ISO 4017 M6X20 A4 80	
360	312105-0457		2	SCREW, M6S ISO 4014 M8X35 A4 80	
370	312105-0469		2	SCREW, M6S ISO 4014 M8X90 A4 80	
0200S HVA (See drawing on page: 5-38)					
020	2776733-0000		1	BLOCKING PIECE	
030	2776736-0000		1	ARM	
040	2776737-0000		1	ARM	
050	295061-0000		1	RAIL	
060	736730-0001		1	LEAD PLATE	
070	295062-0000		1	RAIL	
120	2776735-0000		1	FASTENING PLATE	
170	2764343-0000		1	AIR CONNECTION	
205	2776727-0000		2	SPACER	
220	90424-0068		1	AIR NOZZLE, G1/4, MOD. 216 BSP	
230	350002-0006		3	PUSH-IN L-FITTING QSL-F-G1/8-6	
290	311103-0313		2	PARALLEL PIN ISO 2338 5M6X28 A1	
350	312105-0370		2	SCREW, M6S ISO 4017 M6X20 A4 80	
360	312105-0459		2	SCREW, M6S ISO 4014 M8X40 A4 80	
370	312105-0464		2	SCREW, M6S ISO 4014 M8X65 A4 80	
410	312115-0453		2	SCREW ISO4762 M8X25 A4 80	
0200S NOHVA (See drawing on page: 5-36)					
020	2776733-0000		1	BLOCKING PIECE	
030	2776736-0000		1	ARM	
040	2776737-0000		1	ARM	
050	295061-0000		1	RAIL	
060	2776734-0000		1	SLIDE SHEET	
070	295062-0000		1	RAIL	
120	2776735-0000		1	FASTENING PLATE	
170	2764343-0000		1	AIR CONNECTION	
205	2776727-0000		2	SPACER	
220	90424-0068		1	AIR NOZZLE, G1/4, MOD. 216 BSP	
230	350002-0006		2	PUSH-IN L-FITTING QSL-F-G1/8-6	
290	311103-0313		2	PARALLEL PIN ISO 2338 5M6X28 A1	
350	312105-0370		2	SCREW, M6S ISO 4017 M6X20 A4 80	
360	312105-0459		2	SCREW, M6S ISO 4014 M8X40 A4 80	
370	312105-0464		2	SCREW, M6S ISO 4014 M8X65 A4 80	
410	312115-0453		2	SCREW ISO4762 M8X25 A4 80	
0250B HVA (See drawing on page: 5-38)					
020	2751448-0000		1	BLOCKING PIECE	
030	2751451-0000		1	ARM	
040	2751446-0000		1	ARM	
050	295057-0001		1	RAIL	
060	736730-0002		1	LEAD PLATE	
070	295058-0001		1	RAIL	
120	2751450-0000		1	FASTENING PLATE	
170	2764343-0000		1	AIR CONNECTION	
220	90424-0068		1	AIR NOZZLE, G1/4, MOD. 216 BSP	
230	350002-0006		3	PUSH-IN L-FITTING QSL-F-G1/8-6	
290	311103-0309		2	PARALLEL PIN ISO 2338 5M6X18 A1	
350	312105-0370		2	SCREW, M6S ISO 4017 M6X20 A4 80	
360	312105-0457		2	SCREW, M6S ISO 4014 M8X35 A4 80	
370	312105-0469		2	SCREW, M6S ISO 4014 M8X90 A4 80	
0250B NOHVA (See drawing on page: 5-34)					
020	2751448-0000		1	BLOCKING PIECE	
030	2751451-0000		1	ARM	
040	2751446-0000		1	ARM	
050	295057-0001		1	RAIL	
060	272045-0002		1	SLIDE SHEET	
070	295058-0001		1	RAIL	
120	2751450-0000		1	FASTENING PLATE	
170	2764343-0000		1	AIR CONNECTION	
220	90424-0068		1	AIR NOZZLE, G1/4, MOD. 216 BSP	
230	350002-0006		2	PUSH-IN L-FITTING QSL-F-G1/8-6	
290	311103-0309		2	PARALLEL PIN ISO 2338 5M6X18 A1	
350	312105-0370		2	SCREW, M6S ISO 4017 M6X20 A4 80	
360	312105-0457		2	SCREW, M6S ISO 4014 M8X35 A4 80	
370	312105-0469		2	SCREW, M6S ISO 4014 M8X90 A4 80	
Common Parts					
010	2751447-0000		1	BRACKET	
180	2776725-0000		2	GUIDE	
190	2776726-0000		2	GUIDE BRACKET	
200	2685679-0000		2	LID	
210	752655-0000		2	GUIDE PIN	
250	90459-4968		1	DOUBLE ACTING, COMPACT, 50-20	
310	312105-0331		8	SCREW, M6S ISO 4017 M5X20 A4 80	
320	312105-0368		2	SCREW, M6S ISO 4017 M6X16 A4 80	
330	312105-0455		6	SCREW, M6S ISO 4017 M8X30 A4 80	
390	312115-0376		1	SCREW ISO4762 M6X35 A4 80	
400	312115-0384		4	SCREW ISO4762 M6X70 A4 80	
440	315105-0153		4	WASHER PLAIN, 6,4X12X1,5 A4 BRB	
450	315105-0165		6	WASHER PLAIN, 8,4X16X1,6 A4 BRB	
480	315202-0505		1	O-RING 6,07X1,78 MM	

Machine Type | Group Description | Used-In | Group Number | Page No

See previous drawings pages: 5-34, 5-36, 5-38.

ECM: 334022 - 20071204
Group number: 2764344-0100
Assembly Drawing: 2764344-3_1_AA

This list covers pages from 5-34 to 5-43

Pos	Part No	UN	Qty	Description	Page No
Common Parts (Cont'd)					
550	350002-0002		1	PUSH-IN L-FITTING QSL-F-M5-6	

Pos	Part No	UN	Qty	Description	Page No

Machine Type	Group Description	Used-In	Group Number	Page No

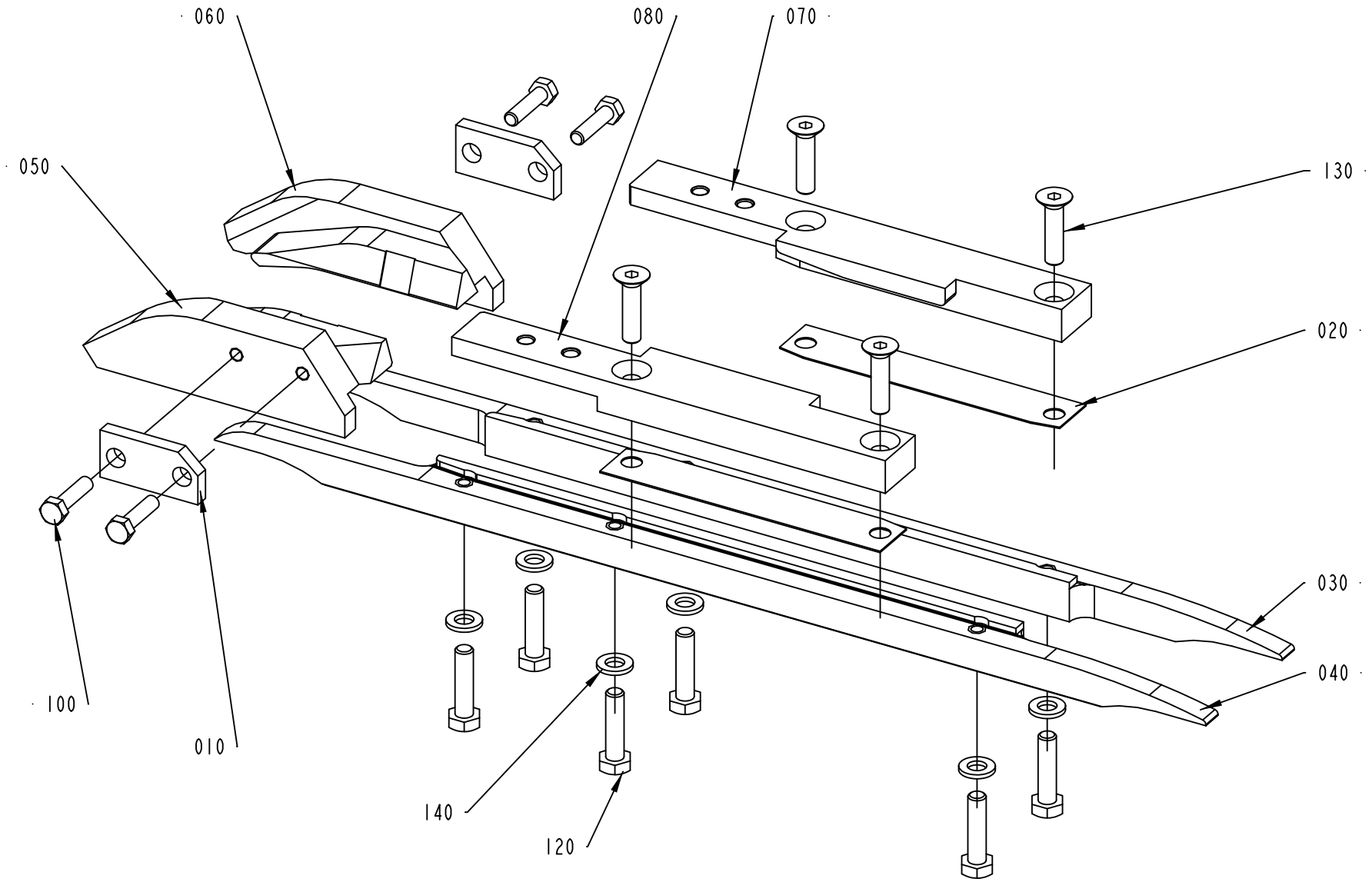

1539969-3
ECM 251145

ECM: 264418 - 20060616
Group number: 1539969-0200
Assembly Drawing: 1539969-3_1_AA

This list covers pages from 5-44 to 5-47

Pos	Part No	UN	Qty	Description	Page No
TBA 0100B, TBA 0125S (See drawing on page: 5-44)					
050	2776742-0000		1	FOLDING BAR LEFT	
060	2776741-0000		1	FOLDING BAR RIGHT	
070	2526343-0000		1	PLATE	
080	2526344-0000		1	PLATE	
TBA 0160S, TBA 0200S (See drawing on page: 5-44)					
050	2800340-0000		1	FOLDING BAR	
060	2800341-0000		1	FOLDING BAR	
070	2526343-0000		1	PLATE	
080	2526344-0000		1	PLATE	
TBA 0200B, TBA 0284B, TBA 0250B, TBA 0300S (See drawing on page: 5-44)					
050	2800339-0000		1	FOLDING BAR	
060	2800338-0000		1	FOLDING BAR	
070	2526343-0000		1	PLATE	
080	2526344-0000		1	PLATE	
TBA 0200M, TBA 0250S (See drawing on page: 5-44)					
050	2800350-0000		1	FOLDING BAR	
060	2800351-0000		1	FOLDING BAR	
070	2526343-0000		1	PLATE	
080	2526344-0000		1	PLATE	
TBA 0330S (See drawing on page: 5-44)					
050	2800339-0000		1	FOLDING BAR	
050	2814889-0000		1	FOLDING BAR	
060	2814888-0000		1	FOLDING BAR	
060	2800338-0000		1	FOLDING BAR	
070	2526343-0000		1	PLATE	
080	2526344-0000		1	PLATE	
TWA 0125S (See drawing on page: 5-46)					
050	1360692-0000		1	STEERING RAIL	
060	1360691-0000		1	STEERING RAIL	
070	2699670-0000		1	PLATE	
080	2699670-0000		1	PLATE	
TWA 0200S (See drawing on page: 5-46)					
050	1538917-0000		1	STEERING RAIL	
060	1538918-0000		1	STEERING RAIL	
070	2699670-0000		1	PLATE	
080	2699670-0000		1	PLATE	
Common Parts					
010	295729-0000		2	WASHER	
020	491266-0000		4	SHIM	
030	751109-0000		1	RAIL RIGHT	
040	751110-0000		1	RAIL LEFT	
100	312105-0331		4	SCREW, M6S ISO 4017 M5X20 A4 80	
120	312105-0372		6	SCREW, M6S ISO 4017 M6X25 A4 80	
130	312155-0372		4	SCREW DIN 7991 MF6S M6X25 A4 70	
140	315105-0153		6	WASHER PLAIN, 6,4X12X1,5 A4 BRB	

Machine Type | Group Description | Used-In | Group Number | Page No

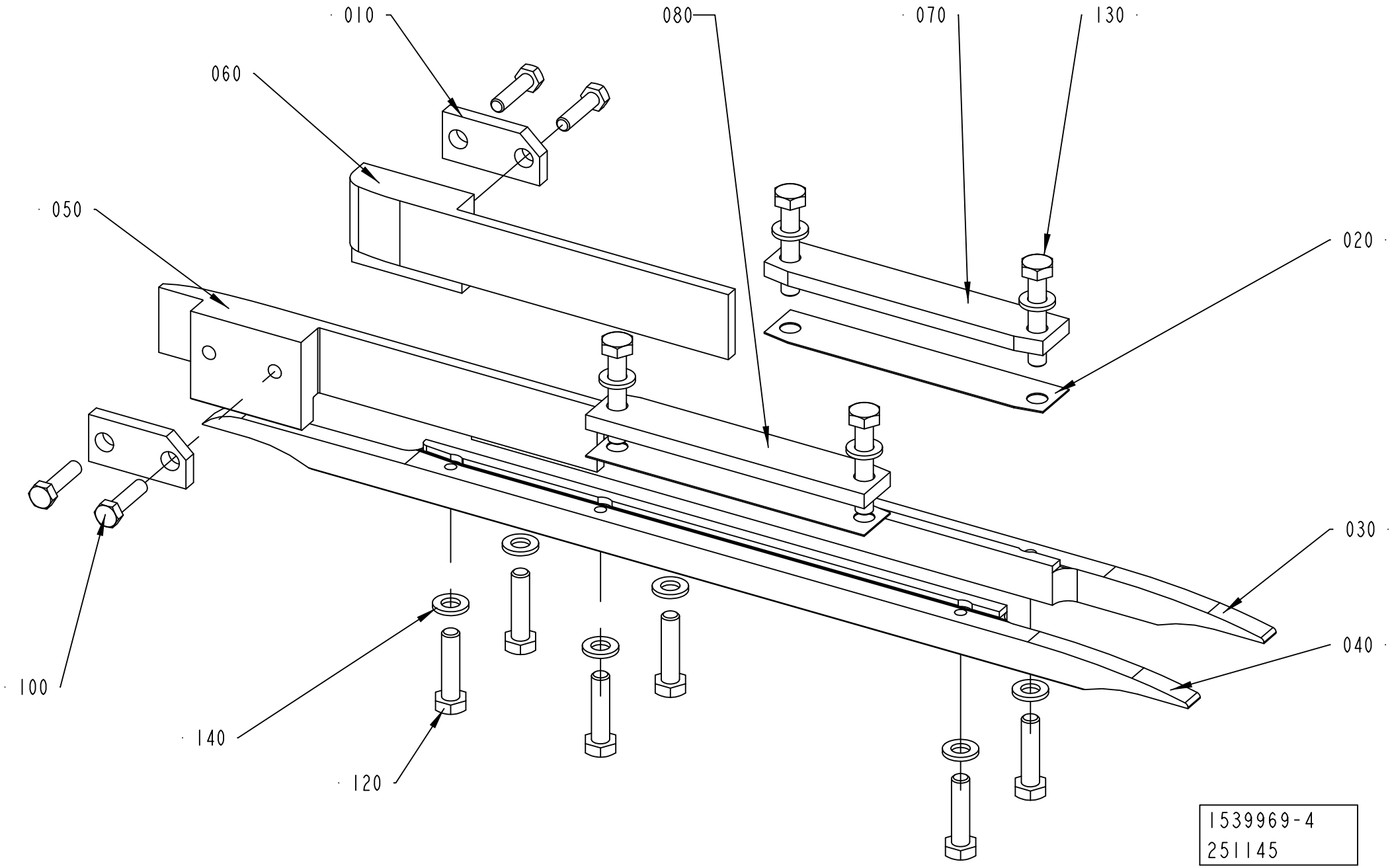
010
060
080
070
130
050
020
030
040
100
140
120
1539969-4
251145

ECM: 264418 - 20060616
Group number: 1539969-0200
Assembly Drawing: 1539969-4_1_AA

This list covers pages from 5-44 to 5-47

Pos	Part No	UN	Qty	Description	Page No
TBA 0100B, TBA 0125S (See drawing on page: 5-44)					
050	2776742-0000		1	FOLDING BAR LEFT	
060	2776741-0000		1	FOLDING BAR RIGHT	
070	2526343-0000		1	PLATE	
080	2526344-0000		1	PLATE	
TBA 0160S, TBA 0200S (See drawing on page: 5-44)					
050	2800340-0000		1	FOLDING BAR	
060	2800341-0000		1	FOLDING BAR	
070	2526343-0000		1	PLATE	
080	2526344-0000		1	PLATE	
TBA 0200B, TBA 0284B, TBA 0250B, TBA 0300S (See drawing on page: 5-44)					
050	2800339-0000		1	FOLDING BAR	
060	2800338-0000		1	FOLDING BAR	
070	2526343-0000		1	PLATE	
080	2526344-0000		1	PLATE	
TBA 0200M, TBA 0250S (See drawing on page: 5-44)					
050	2800350-0000		1	FOLDING BAR	
060	2800351-0000		1	FOLDING BAR	
070	2526343-0000		1	PLATE	
080	2526344-0000		1	PLATE	
TBA 0330S (See drawing on page: 5-44)					
050	2800339-0000		1	FOLDING BAR	
050	2814889-0000		1	FOLDING BAR	
060	2814888-0000		1	FOLDING BAR	
060	2800338-0000		1	FOLDING BAR	
070	2526343-0000		1	PLATE	
080	2526344-0000		1	PLATE	
TWA 0125S (See drawing on page: 5-46)					
050	1360692-0000		1	STEERING RAIL	
060	1360691-0000		1	STEERING RAIL	
070	2699670-0000		1	PLATE	
080	2699670-0000		1	PLATE	
TWA 0200S (See drawing on page: 5-46)					
050	1538917-0000		1	STEERING RAIL	
060	1538918-0000		1	STEERING RAIL	
070	2699670-0000		1	PLATE	
080	2699670-0000		1	PLATE	
Common Parts					
010	295729-0000		2	WASHER	
020	491266-0000		4	SHIM	
030	751109-0000		1	RAIL RIGHT	
040	751110-0000		1	RAIL LEFT	
100	312105-0331		4	SCREW, M6S ISO 4017 M5X20 A4 80	
120	312105-0372		6	SCREW, M6S ISO 4017 M6X25 A4 80	
130	312155-0372		4	SCREW DIN 7991 MF6S M6X25 A4 70	
140	315105-0153		6	WASHER PLAIN, 6,4X12X1,5 A4 BRB	

Machine Type | Group Description | Used-In | Group Number | Page No

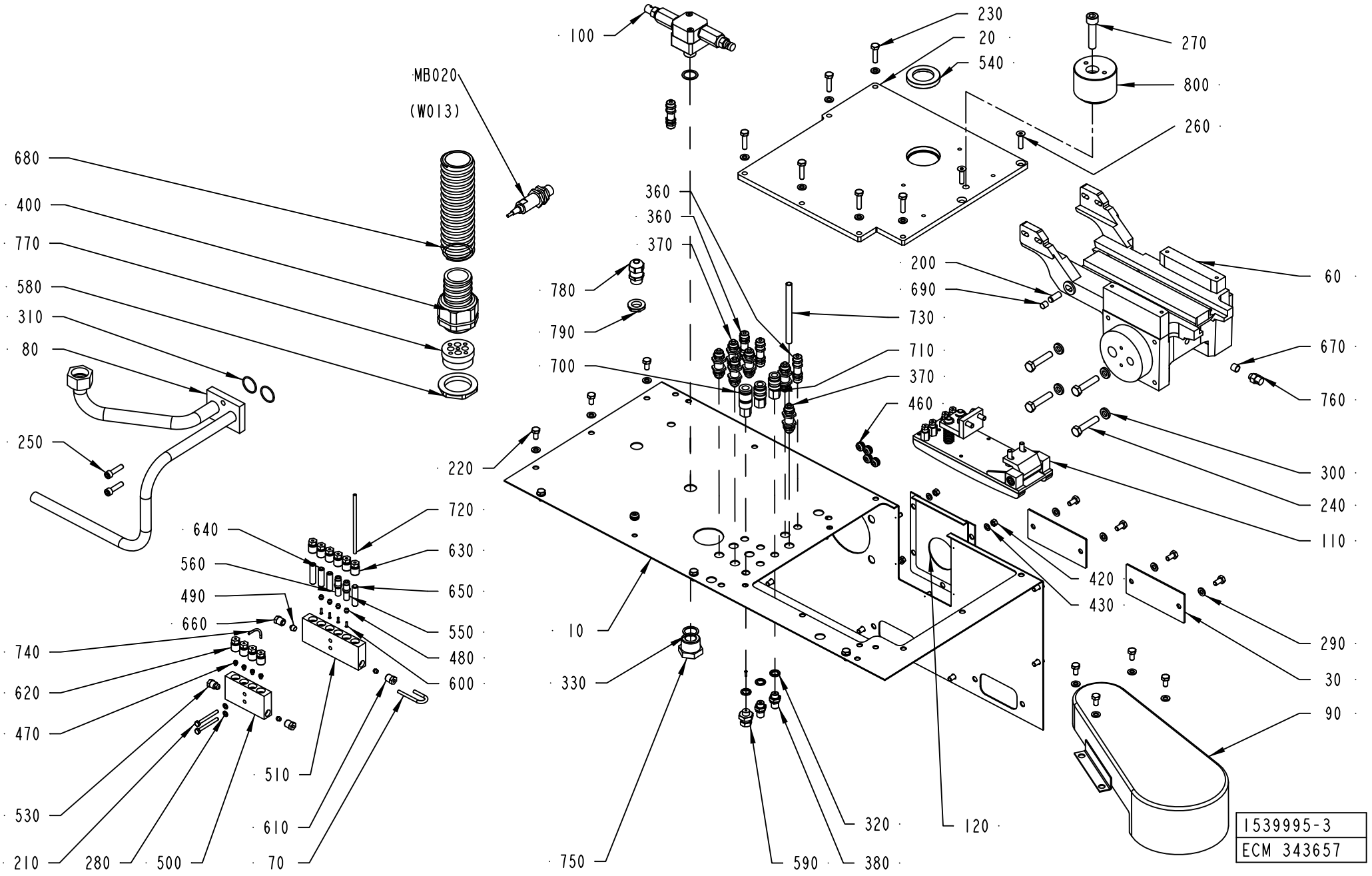
100
MB020
(W013)
680
400
770
580
310
80
250
220
780
790
700
360
360
370
230
20
540
270
800
260
200
690
730
710
370
460
60
670
760
300
240
110
420
430
290
30
90
640
560
490
660
740
620
470
530
210
280
500
720
630
650
550
480
600
510
610
70
10
330
750
590
320
380
120
690
1539995-3
ECM 343657

ECM: 357583 - 20080603
Group number: 1539995-0200
Assembly Drawing: 1539995-3_1_AB

This list covers pages from 5-48 to 5-51

Pos	Part No	UN	Qty	Description	Page No
HVA					
010	2927587-0000		1	SHIELD PLATE	
NOHVA					
010	2814876-0000		1	SHIELD PLATE	
TBA 0100B, TBA 0125S, TBA 0160S, TBA 0200M, TBA 0200B, TBA 0200S, TBA 0250S, TBA 0284B, TBA 0250B, TBA 0300S, TBA 0330S (See drawing on page: 5-48)					
010	2814876-0000		1	SHIELD PLATE	
020	2544966-0000		1	PLATE	
TWA 0125S, TWA 0200S (See drawing on page: 5-50)					
010	2699713-0000		1	SHIELD PLATE	
020	2715383-0000		1	PLATE	
130	491266-0000		4	SHIM	
140	2745181-0000		2	BRACKET	
830	90235-0832		1	QUICK EXHAUST VALVE, SE-1/8-B	
840	90328-0047		1	SILENCER, G1/8"	
850	350008-0003		1	PUSH-IN FITTING QSF-F-G1/8-6	
860	350001-0006		1	PUSH-IN FITTING QS-F-G1/8-6	
870	350001-0002		1	PUSH-IN FITTING QS-F-M5-6	
880	350012-0002		1	SLEEVE QSH-F-6	
Common Parts					
030	1539957-0000		2	PLATE	
060	1498245-0000		1	SUPPORTING ARM	
070	1512442-0000		1	CONNECTING PIPE	
080	1512448-0000		1	PIPE CONNECTION	
090	1539953-0000		1	PROTECTIVE COVER	
100	441811-0100		1	ROTOR	**5-53**
110	1255876-0200		1	CHAIN TENSIONER	**5-55**
120	2633435-0000		1	PLATE	
200	311103-0401		1	PARALLEL PIN ISO 2338 8M6X20 A1	
210	312105-0303		2	SCREW, M6S ISO 4017 M4X40 A4 70	
220	312105-0366		24	SCREW, M6S ISO 4017 M6X12 A4 80	
230	312105-0372		6	SCREW, M6S ISO 4017 M6X25 A4 80	
240	312105-0459		4	SCREW, M6S ISO 4014 M8X40 A4 80	
250	312115-0372		4	SCREW ISO4762 M6X25 A4 80	
260	312155-0372		2	SCREW DIN 7991 MF6S M6X25 A4 70	
270	312115-0500		1	SCREW ISO4762 M10X45 A4 80	
280	315105-0136		2	WASHER PLAIN, 4,3X9X0,8 A4 BRB	
290	315105-0153		32	WASHER PLAIN, 6,4X12X1,5 A4 BRB	
300	315111-0165		4	WASHER PLAIN, TBRB 8,4/16 H=3	
310	315202-0118		2	O-RING 22,1X1,6 MM	
320	315239-0109		3	NYLON WASHER G1/8, 1/8RRP	
330	315239-0111		2	NYLON WASHER G3/8, 3/8RRP	
360	342960-0112		4	BULKHEAD COUPLING 6/4	
370	342960-0122		6	BULKHEAD COUPLING 8/6	
380	342921-0113		2	STRAIGHT COUPLING, EXT.THREAD 6/4-G1/8	
400	90458-0459		1	GLAND FITTING, VK 24056 D UL21	
420	312605-0314		5	HEXAGON NUT, M6M M5 A280	
430	315105-0146		5	WASHER PLAIN, 5,3X10X1 A4 BRB	
460	90015-0028		5	LEAD-IN BUSHING	
470	90028-0020		4	CONE TUBE 2,5MM	
480	90028-0021		6	CONE TUBE 4 MM	
490	90028-0025		1	CONE TUBE 6 MM	
500	90032-0039		1	BLOCK 4 WAYS	
510	90032-0040		1	BLOCK 6 WAYS	
530	90087-0019		1	PLUG M10X1 STAINLESS	
540	90091-0306		1	RADIAL SEAL 30X47X7 MM DUST LIP	
550	90092-0053		1	METERING VALVE 30 MM3	
560	90092-0054		1	METERING VALVE 50 MM3	
580	90458-0326		1	NUT, M40X1,5	
590	90134-0004		1	PIPE CONNECTION R1/8	
600	90134-0031		5	SLEEVE FOR PLASTIC TUBE	
610	90134-0038		2	BUSHING/NUT INLET/OUTLET 4 MM	
620	90134-0039		4	BUSHING VALVE CONNECTION 2,5 MM	
630	90134-0040		6	BUSHING VALVE CONNECTION 4 MM	
640	90134-0051		2	SPACING COLLAR DOSING BLOCK	
650	90134-0052		2	PLUG DOSING BLOCK	
660	90134-0055		1	BUSHING/NUT INLET/OUTLET 6 MM	
670	90144-0073	MM	1	TREBOFLON-TAPE W=13MM	
680	90152-0060	M	1	HOSE, SPIRAL CONDUIT, 42X35, UL3529	
690	90157-0022		1	SEALING COMPOUND, SILICONE	
700	90163-0046		1	SLEEVE LP-004-0-WR 0510-21-1 BRASS	
710	90163-0062		2	QUICK COUPLING, (F) 5053-1/8	
720	90166-0109	M	2	TUBE 4 MM PA TRANSP.	
730	90166-0013	M	2	TUBE 8 MM PA BLUE	
740	90166-0143	M	2	TUBE 2,5 MM PA TRANSP.	
750	90330-0078		1	BUSHING, INT.EXT. THR. R3/4-G3/8	
760	90424-0010		1	SPRAY NOZZLE, 142 DEG R1/4, K5	
770	90457-0199		1	INSERT EK 156M 5X5/4X9	
780	90458-0314		1	CABLE GLAND, M16X1,5, 5311 1110	
790	90458-0322		1	NUT, M16X1,5	
800	90458-0220		1	TENSION ROLLER, M40/60-0-M EXCENTRIC	
810	90099-0117		1	PLUG, PR 18,6 (PG11)	
820	90002-0009		1	BLANK-OFF PLUG, PR 18.6 SKINDICHT-BLK11	
MB020	90458-0894		1	PROX.SENSOR E2E2-X10MB1-5M	

Machine Type | Group Description | Used-In | Group Number | Page No

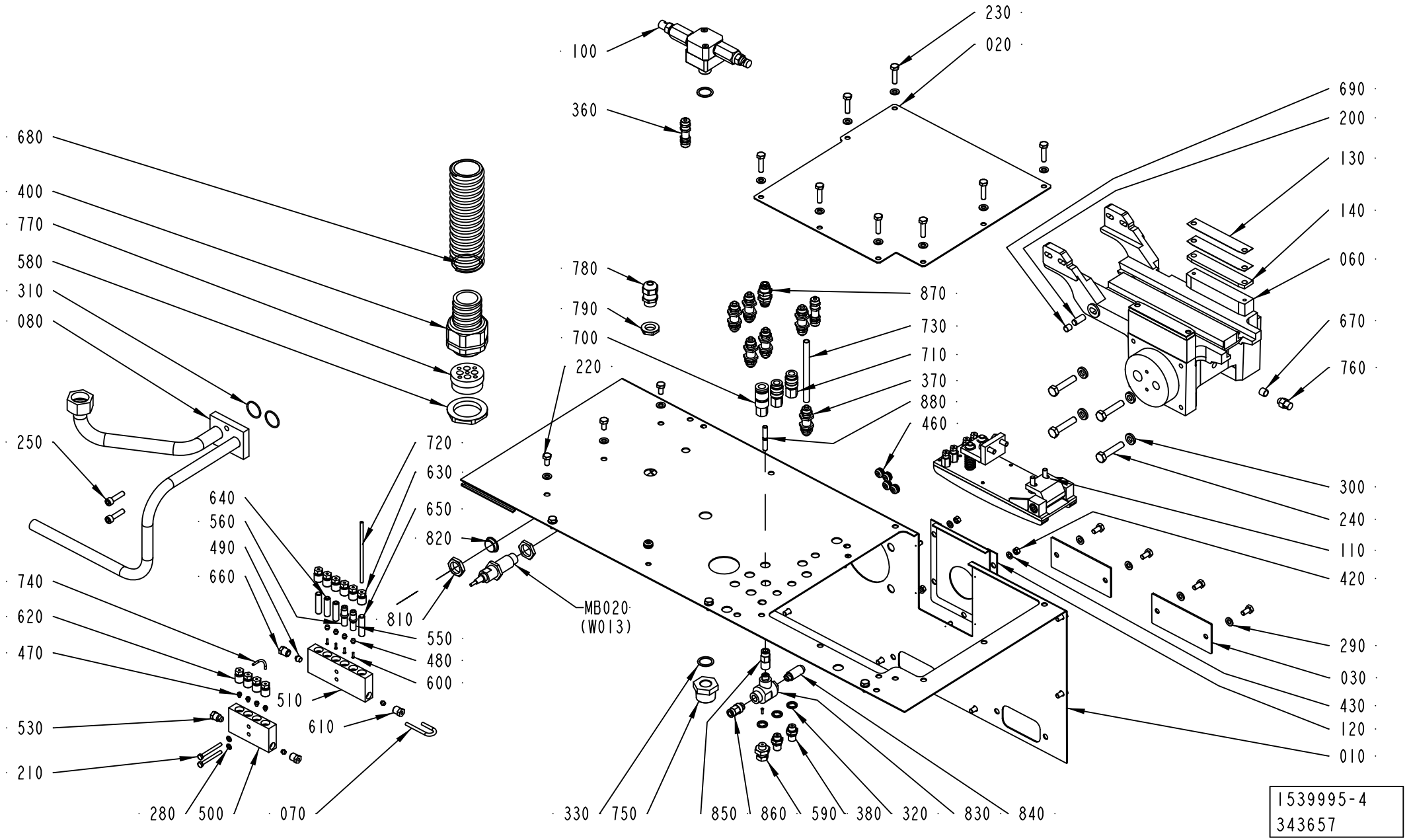
100
360
230
020
690
200
130
140
060
670
760
680
400
770
580
310
080
780
790
700
220
870
730
710
370
880
460
250
720
630
650
820
640
560
490
660
740
620
470
530
210
810
550
480
600
510
610
280
500
070
MB020
(W013)
330
750
850
860
590
380
320
830
840
300
240
110
420
290
030
430
120
010
1539995-4
343657

ECM: 357583 - 20080603
Group number: 1539995-0200
Assembly Drawing: 1539995-4_1_AC

This list covers pages from 5-48 to 5-51

Pos	Part No	UN	Qty	Description	Page No
Common Parts (Cont'd)					
MB020	90458-0894		1	PROX.SENSOR E2E2-X10MB1-5M	

Pos	Part No	UN	Qty	Description	Page No

Machine Type | Group Description | Used-In | Group Number | Page No

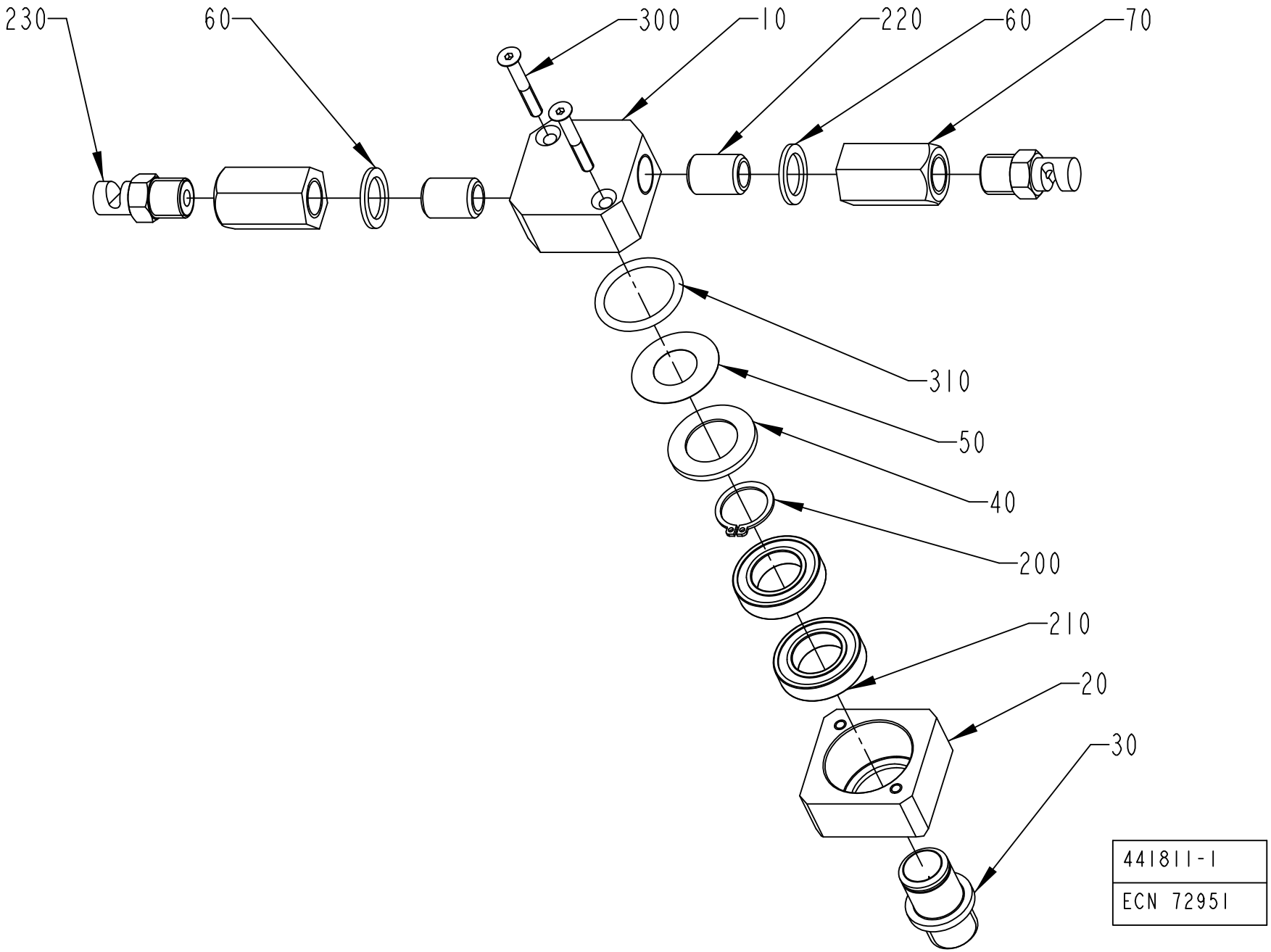
230
60
300
10
220
60
70
310
50
40
200
210
20
30
441811-1
ECN 72951

ECM: 205730 - 20050621
Group number: 441811-0100
Assembly Drawing: 441811-1_1_AB

Pos	Part No	UN	Qty	Description	Page No
-					
010	441792-0000		1	HEAD	
020	441793-0000		1	BEARING HOUSING	
030	441794-0000		1	PIVOT PIN	
040	441795-0000		1	WASHER	
050	441796-0000		1	SEAL	
060	441797-0000		2	SHIM	
070	441800-0000		2	STRAIGHT FITTING	
200	90141-0017		1	RETAINING RING FOR SHAFT DIN 471 17 SS	
210	90214-0092		2	BALL BEARING 17/30X7	
220	90330-0101		2	NIPPLES, EXT. THREAD, G1/4	
230	90424-0025		2	SPRAY NOZZLE, 145 DEG K1/4 10	
300	312155-0299		2	SCREW DIN 7991 MF6S M4X30 A4 70	
310	315202-0217		1	O-RING 24,2X3 MM	

Pos	Part No	UN	Qty	Description	Page No

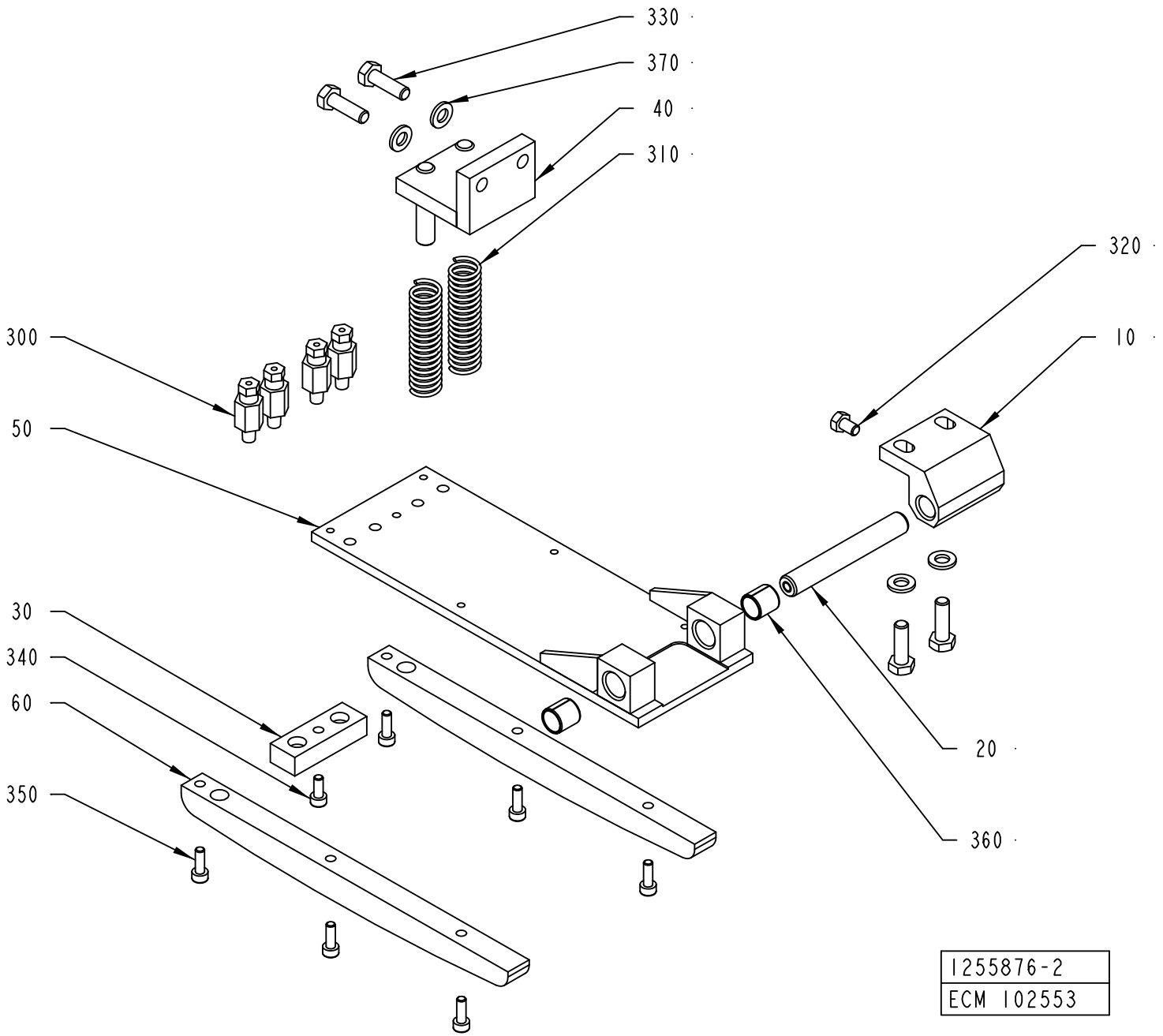
330
370
40
310
320
10
300
50
30
340
60
350
20
360
1255876-2
ECM 102553

ECM: 290172 - 20070126
Group number: 1255876-0200
Assembly Drawing: 1255876-2_1_AA

Pos	Part No	UN	Qty	Description	Page No
TBA					
060	1512444-0000		2	GUIDE RAIL	
TWA					
060	2594661-0000		2	GUIDE RAIL	
Common Parts					
010	1195454-0000		1	BRACKET	
020	1195456-0000		1	SHAFT	
030	1334721-0000		1	BLOCK	
040	1346933-0000		1	BRACKET	
050	1512443-0000		1	PLATE CHOKE	
300	90134-0065		4	CONNECTION M6 TUBE 2,5 MM	
310	90335-0152		2	COMP. SPRING, 22300, 1,25X17,25X40,5	
320	312105-0323		1	SCREW, M6S ISO 4017 M5X8 A4 80	
330	312105-0370		4	SCREW, M6S ISO 4017 M6X20 A4 80	
340	312115-0289		1	SCREW ISO4762 M4X10 A4 80	
350	312115-0291		6	SCREW ISO4762 M4X12 A4 80	
360	321141-0142		2	BEARING BUSHING, 10X12X12 MM	
370	315105-0153		4	WASHER PLAIN, 6,4X12X1,5 A4 BRB	

Pos	Part No	UN	Qty	Description	Page No

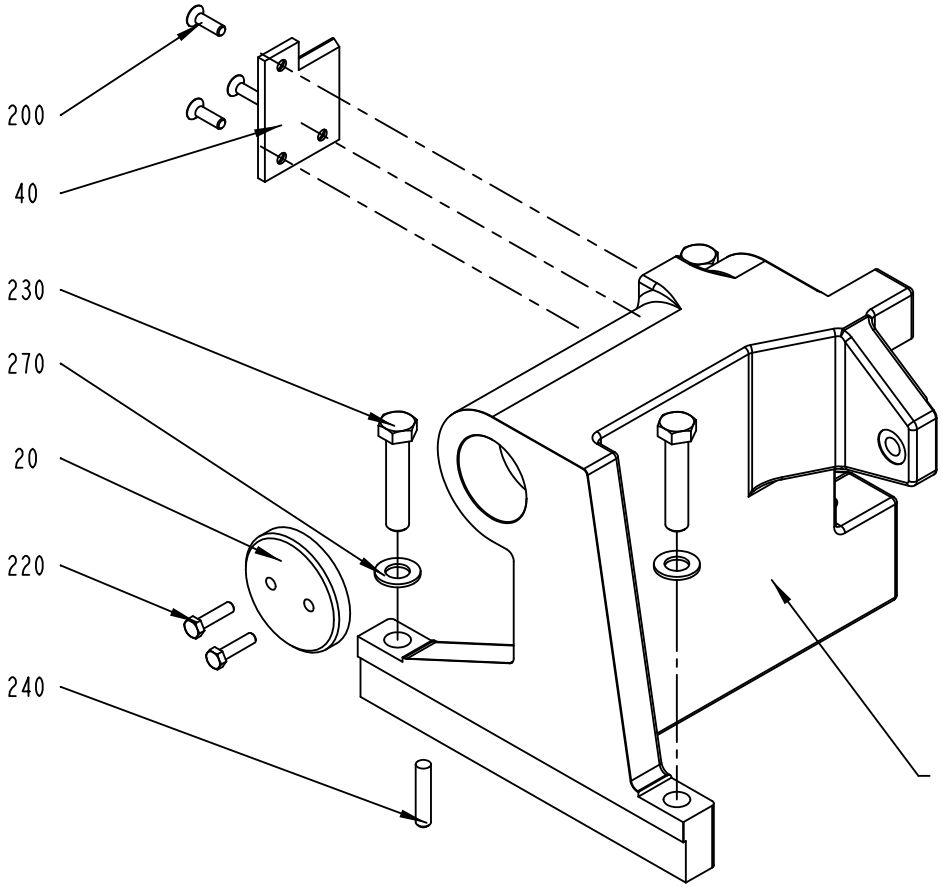

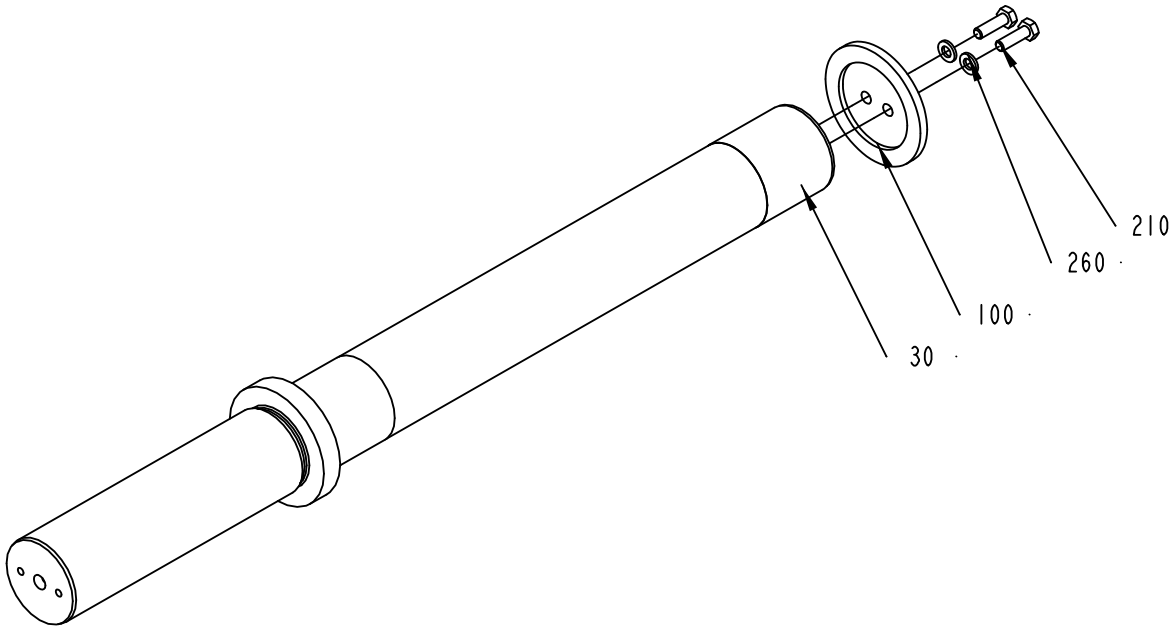

1539949-1
ECM 103407

ECM: 205736 - 20050621
Group number: 1539949-0100
Assembly Drawing: 1539949-1_1_AB

Pos	Part No	UN	Qty	Description	Page No
-					
010	1539951-0000		1	HOUSE	
020	1539950-0000		1	WASHER	
030	1539948-0000		1	SHAFT	
040	1539965-0000		1	PLATE	
100	295203-0000		1	LID	
200	312155-0370		3	SCREW DIN 7991 MF6S M6X20 A4 70	
210	312105-0370		2	SCREW, M6S ISO 4017 M6X20 A4 80	
220	312105-0372		2	SCREW, M6S ISO 4017 M6X25 A4 80	
230	312105-0544		3	SCREW, M6S ISO 4014 M12X60 A4 80	
240	311103-0409		2	PARALLEL PIN ISO 2338 8M6X40 A1	
260	315105-0153		2	WASHER PLAIN, 6,4X12X1,5 A4 BRB	
270	315105-0178		3	WASHER PLAIN, 13X24X2,5 A4 BRB	

Pos	Part No	UN	Qty	Description	Page No

Machine Type | Group Description | Used-In | Group Number | Page No

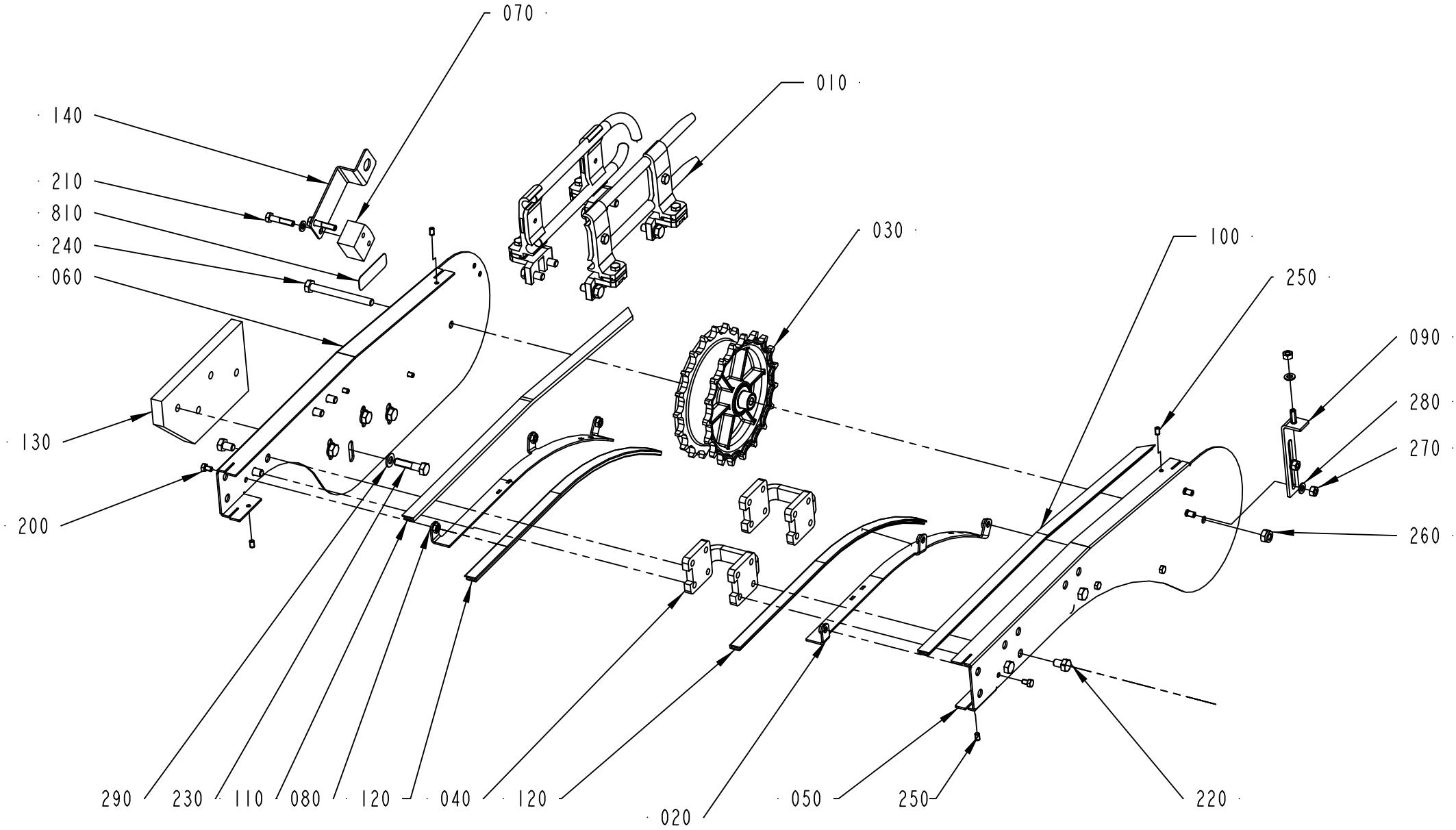

2854809-1
ECM 288950

ECM: 334383 - 20071204
Group number: 2854809-0100
Assembly Drawing: 2854809-1_1_AA

This list covers pages from 5-58 to 5-61

Pos	Part No	UN	Qty	Description	Page No
HVA (See drawing on page: 5-60)					
150	2913560-0100		1	SEPARATION BLOCK	**5-63**
160	2915994-0100		1	EXTERNAL CLEANING UNIT	**5-65**
Common Parts					
010	2854821-0100		1	RAILING	**5-67**
020	2854816-0000		1	SLIDE RAIL	
030	2561244-0200		1	DRIVE WHEEL	**2-21, 5-73**
040	2561206-0000		2	SPACER	
050	2854810-0000		1	SIDE PLATE	
060	2854811-0000		1	SIDE PLATE	
070	2854823-0000		1	SIDE PLATE	
080	2854817-0000		1	SLIDE RAIL	
090	2546226-0000		1	SUPPORT	
100	1550595-4903		1	SLIDING STRIP	
110	1550595-4904		1	SLIDING STRIP	
120	2589960-4200		2	SLIDING STRIP	
130	2854824-0000		1	SIDE PLATE	
140	2511668-0000		1	SUPPORT	
200	312105-0323		6	SCREW, M6S ISO 4017 M5X8 A4 80	
210	312101-0374		2	SCREW M6S M6X30 FZB	
220	312105-0447		8	SCREW, M6S ISO 4017 M8X12 A4 80	
230	312105-0457		4	SCREW, M6S ISO 4014 M8X35 A4 80	
240	312105-0467		1	SCREW, M6S ISO 4014 M8X80 A4 80	
250	90459-7293		4	SET SCREW DIN 551M5X8 PA66	
260	312812-0318		1	HEXAGON NUT, NY-LOCK M8 A4 80	
270	312605-0316		3	HEXAGON NUT, M6M M6 A280	
280	315105-0153		5	WASHER PLAIN, 6,4X12X1,5 A4 BRB	
290	315105-0165		4	WASHER PLAIN, 8,4X16X1,6 A4 BRB	
810	1086870-0000		1	SIGN	

Pos	Part No	UN	Qty	Description	Page No

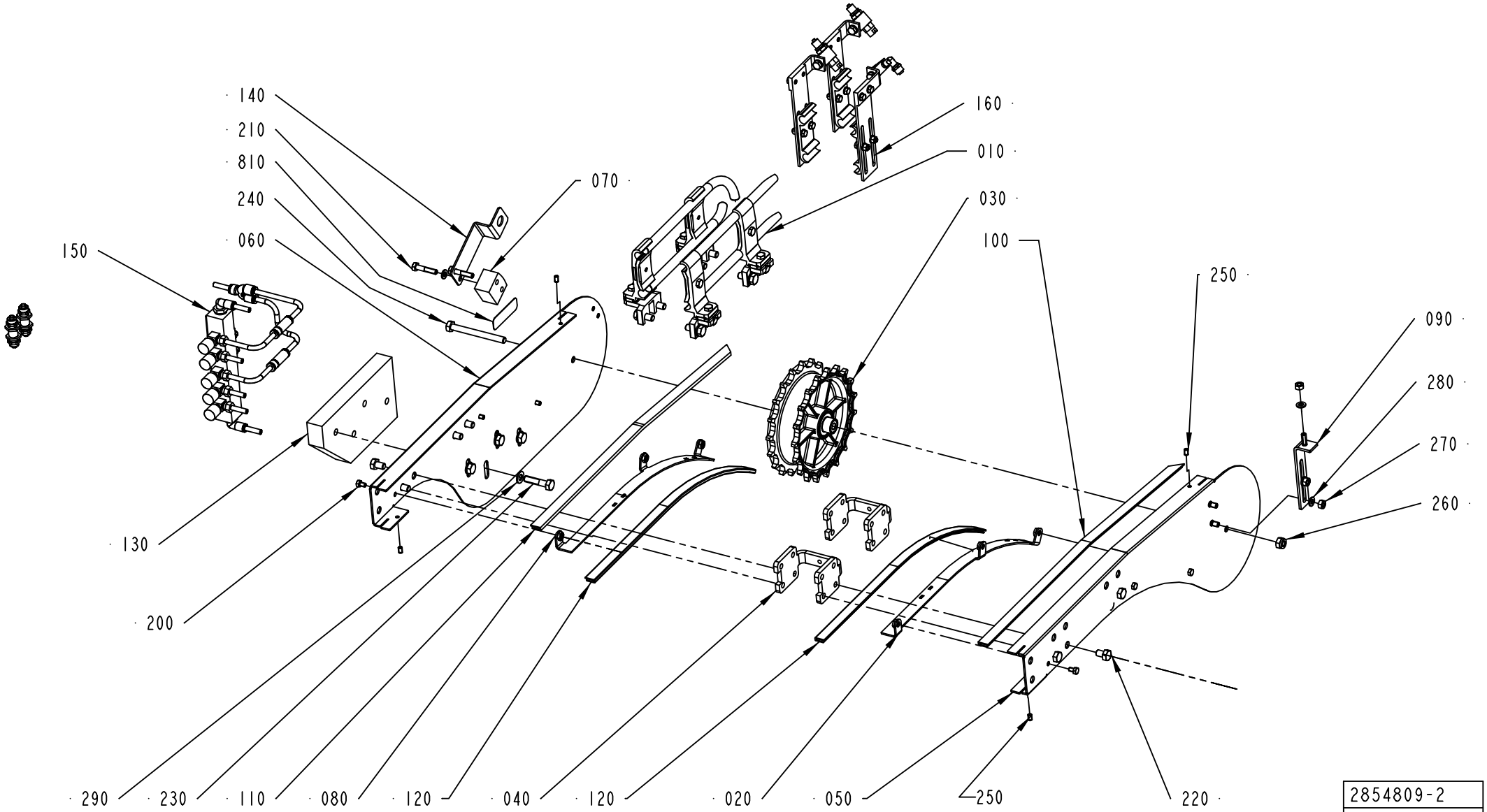

2854809-2
ECM 332496

ECM: 334383 - 20071204
Group number: 2854809-0100
Assembly Drawing: 2854809-2_1_AA

This list covers pages from 5-58 to 5-61

Pos	Part No	UN	Qty	Description	Page No
HVA (See drawing on page: 5-60)					
150	2913560-0100		1	SEPARATION BLOCK	**5-63**
160	2915994-0100		1	EXTERNAL CLEANING UNIT	**5-65**
Common Parts					
010	2854821-0100		1	RAILING	**5-67**
020	2854816-0000		1	SLIDE RAIL	
030	2561244-0200		1	DRIVE WHEEL	**2-21, 5-73**
040	2561206-0000		2	SPACER	
050	2854810-0000		1	SIDE PLATE	
060	2854811-0000		1	SIDE PLATE	
070	2854823-0000		1	SIDE PLATE	
080	2854817-0000		1	SLIDE RAIL	
090	2546226-0000		1	SUPPORT	
100	1550595-4903		1	SLIDING STRIP	
110	1550595-4904		1	SLIDING STRIP	
120	2589960-4200		2	SLIDING STRIP	
130	2854824-0000		1	SIDE PLATE	
140	2511668-0000		1	SUPPORT	
200	312105-0323		6	SCREW, M6S ISO 4017 M5X8 A4 80	
210	312101-0374		2	SCREW M6S M6X30 FZB	
220	312105-0447		8	SCREW, M6S ISO 4017 M8X12 A4 80	
230	312105-0457		4	SCREW, M6S ISO 4014 M8X35 A4 80	
240	312105-0467		1	SCREW, M6S ISO 4014 M8X80 A4 80	
250	90459-7293		4	SET SCREW DIN 551M5X8 PA66	
260	312812-0318		1	HEXAGON NUT, NY-LOCK M8 A4 80	
270	312605-0316		3	HEXAGON NUT, M6M M6 A280	
280	315105-0153		5	WASHER PLAIN, 6,4X12X1,5 A4 BRB	
290	315105-0165		4	WASHER PLAIN, 8,4X16X1,6 A4 BRB	
810	1086870-0000		1	SIGN	

Pos	Part No	UN	Qty	Description	Page No

SEPARATION BLOCK

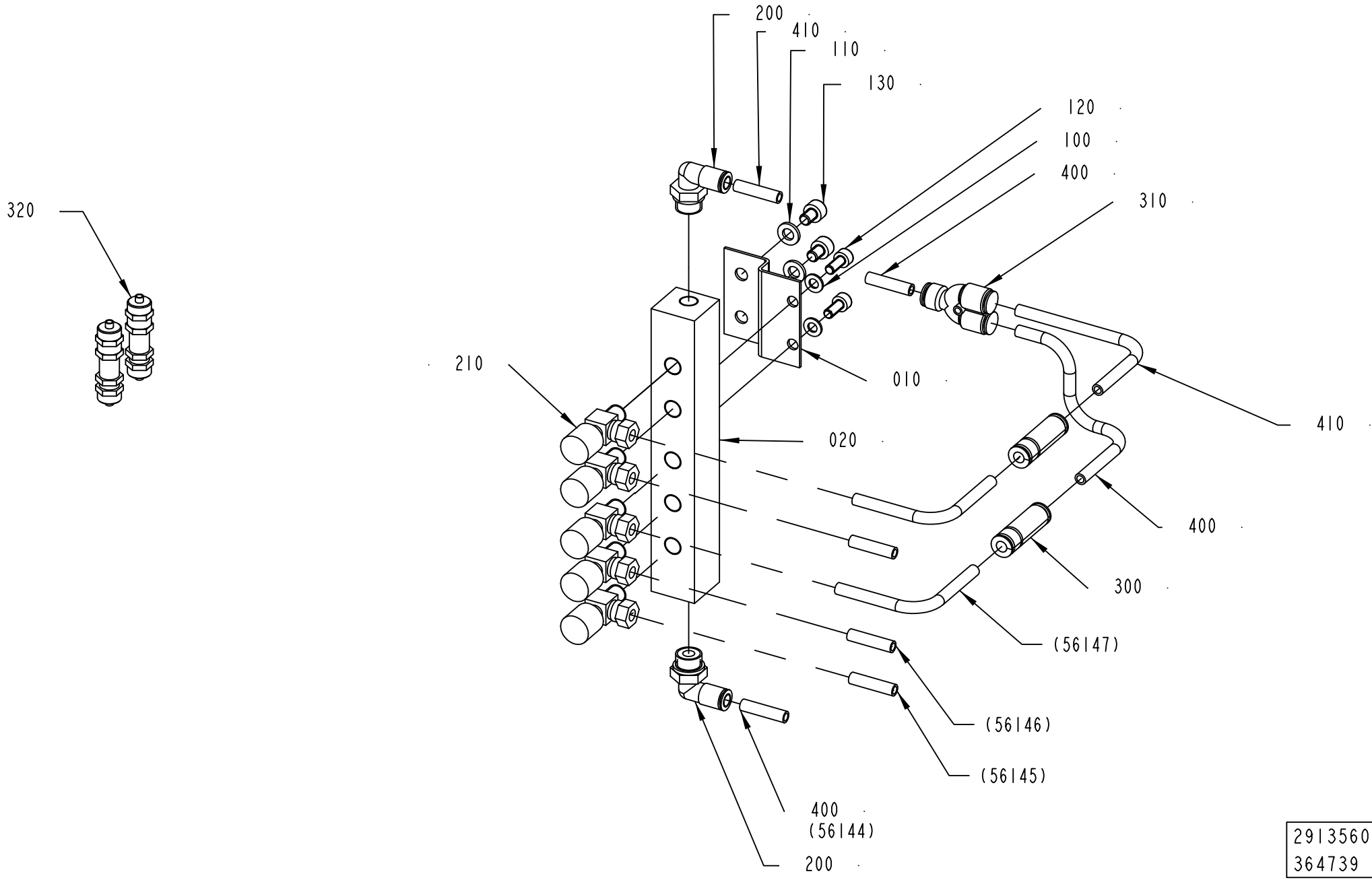

2913560-1
364739

ECM: 364741 - 20080924
Group number: 2913560-0100
Assembly Drawing: 2913560-1_1_AB

Pos	Part No	UN	Qty	Description	Page No
-					
010	2921881-0000		1	PLATE	
020	2921874-0000		1	SEPARATION BLOCK	
100	315103-0146		2	WASHER PLAIN, 5,3X10X1 BR NI PL	
110	315106-0153		2	WASHER PLAIN, M6 ISO7089-6-200 HV A4	
120	312115-0327		2	SCREW ISO4762 M5X12 A4 80	
130	312115-0362		2	SCREW ISO4762 M6X8 A4 80	
200	350002-0008		2	PUSH-IN L-FITTING QSL-F-G1/4-6	
210	90187-0028		5	INSTRUM. VALVE, R1/8, 1/4 TUBE CONN.	
300	90459-0290		2	NON-RETURN VALVE, H-QS-6	
310	90055-0257		1	PUSH-IN Y-CONNECTOR QSY-6	
320	342960-0112		2	BULKHEAD COUPLING 6/4	
400	315400-0001	M	8	TUBE PUN-H-6X1-BL	
410	315400-0003	M	5	TUBE PUN-H-6X1-SW	

Pos	Part No	UN	Qty	Description	Page No

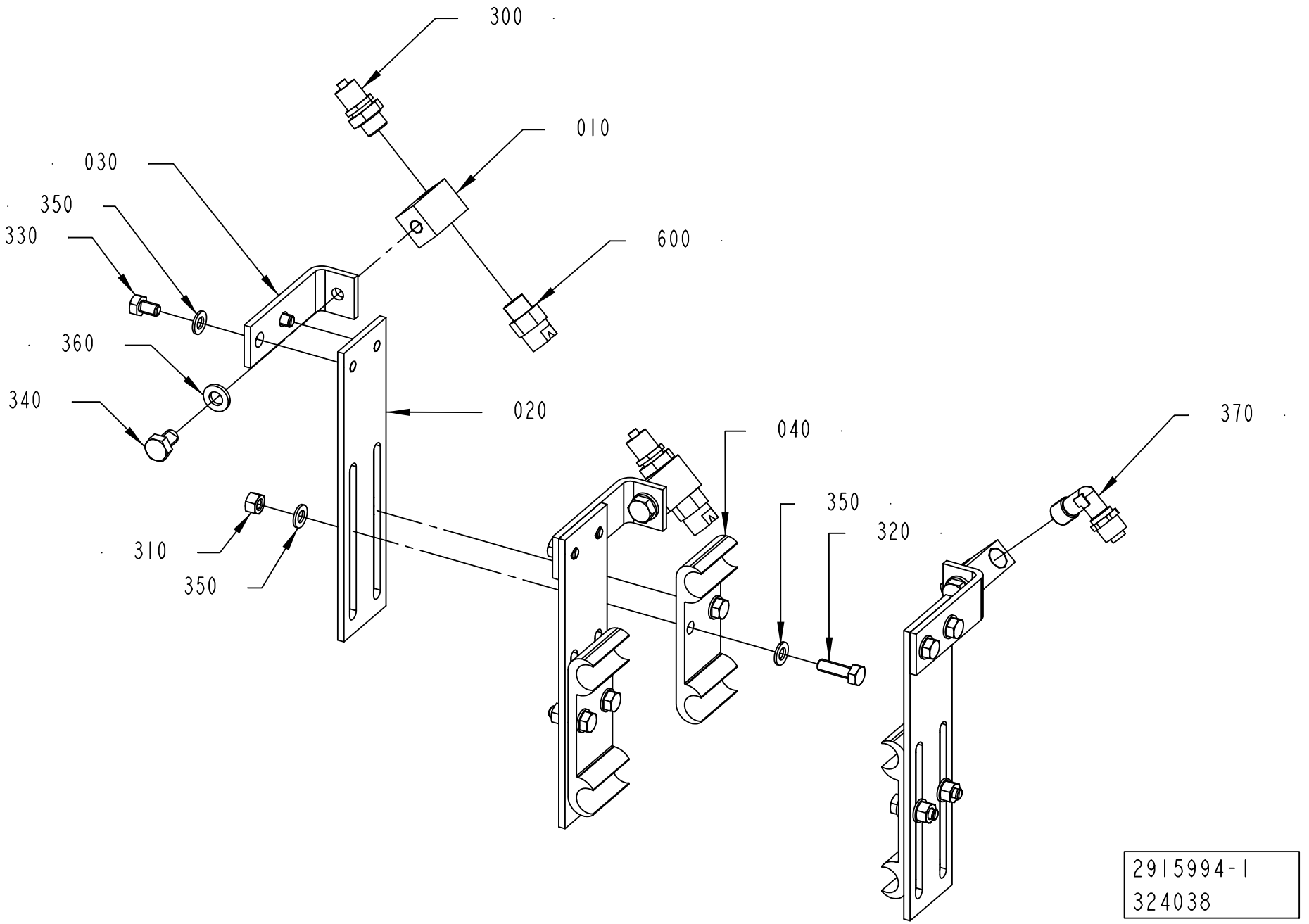
300
010
030
350
330
600
360
340
020
040
370
350
320
310
350
2915994-1
324038

ECM: 326851 - 20071102
Group number: 2915994-0100
Assembly Drawing: 2915994-1_1_AA

Pos	Part No	UN	Qty	Description	Page No
-					
010	736168-0000		3	SEPARATION BLOCK	
020	2915995-0000		3	BRACKET	
030	2915996-0000		3	HOLDER	
040	1020637-0000		3	HOLDER	
300	342921-0113		2	STRAIGHT COUPLING, EXT.THREAD 6/4-G1/8	
310	312605-0314		6	HEXAGON NUT, M6M M5 A280	
320	312105-0329		6	SCREW, M6S ISO 4017 M5X16 A4 80	
330	312105-0323		6	SCREW, M6S ISO 4017 M5X8 A4 80	
340	312105-0364		3	SCREW, M6S ISO 4017 M6X10 A4 80	
350	315106-0146		18	WASHER PLAIN, M5 ISO7089-5-200 HV A4	
360	315106-0153		3	WASHER PLAIN, M6 ISO7089-6-200 HV A4	
370	342930-0113		1	ELBOW 90COUPL., EXT. THREAD 6/4-R1/8"	
600	90424-0032		3	SPRAY NOZZLE, 95 DEG H1/8 U-9515	

Pos	Part No	UN	Qty	Description	Page No

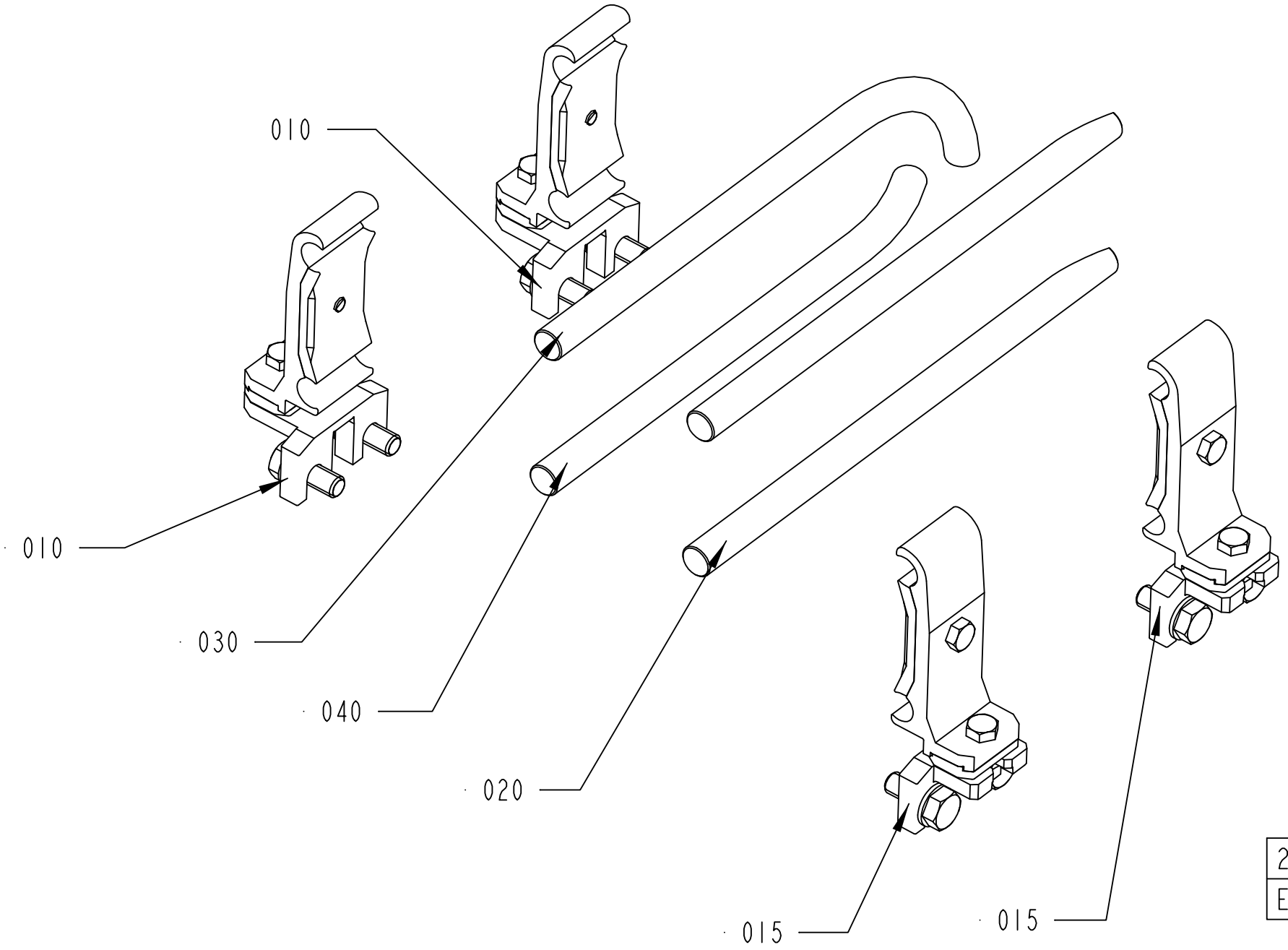

2854821-1
ECM 331797

ECM: 331800 - 20071113
Group number: 2854821-0100
Assembly Drawing: 2854821-1_1_AB

Pos	Part No	UN	Qty	Description	Page No
-					
010	2854820-0100		2	RAIL HOLDER	**5-69**
015	2930298-0100		2	RAIL HOLDER	**5-71**
020	2854812-0000		1	RAIL	
030	2854813-0000		1	RAIL	
040	2854814-0000		1	RAIL	

Pos	Part No	UN	Qty	Description	Page No

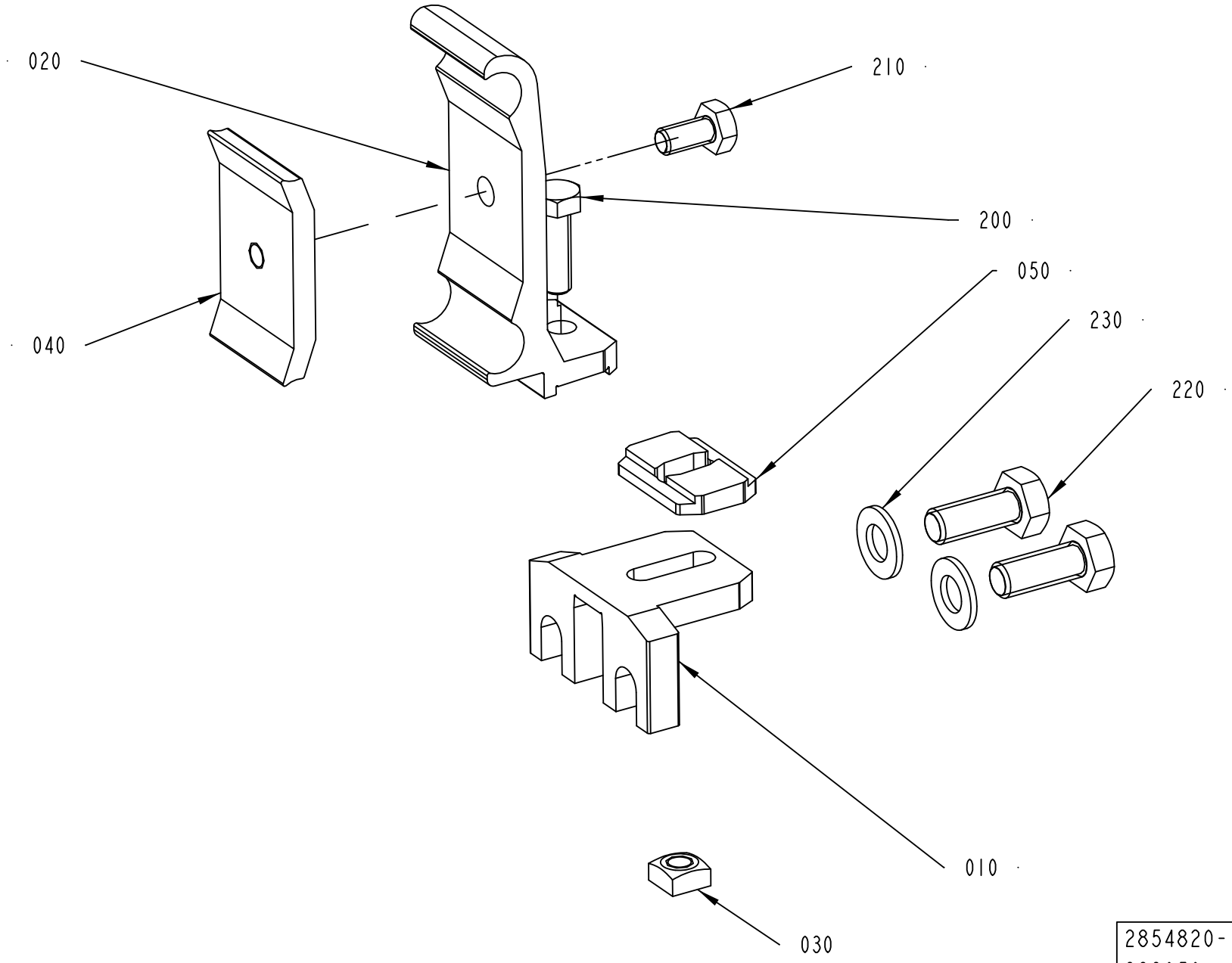
020
210
200
050
230
220
040
010
030
2854820-1
288950

ECM: 288954 - 20070126
Group number: 2854820-0100
Assembly Drawing: 2854820-1_1_AA

Pos	Part No	UN	Qty	Description	Page No
-					
010	2854822-0000		1	HOLDER	
020	2699437-0000		1	RAIL HOLDER	
030	1359565-0000		1	NUT	
040	1366727-0000		1	CLAMP	
050	2699436-0000		1	SPACER	
200	312105-0370		1	SCREW, M6S ISO 4017 M6X20 A4 80	
210	312105-0366		1	SCREW, M6S ISO 4017 M6X12 A4 80	
220	312105-0451		2	SCREW, M6S ISO 4017 M8X20 A4 80	
230	315105-0165		2	WASHER PLAIN, 8,4X16X1,6 A4 BRB	

Pos	Part No	UN	Qty	Description	Page No

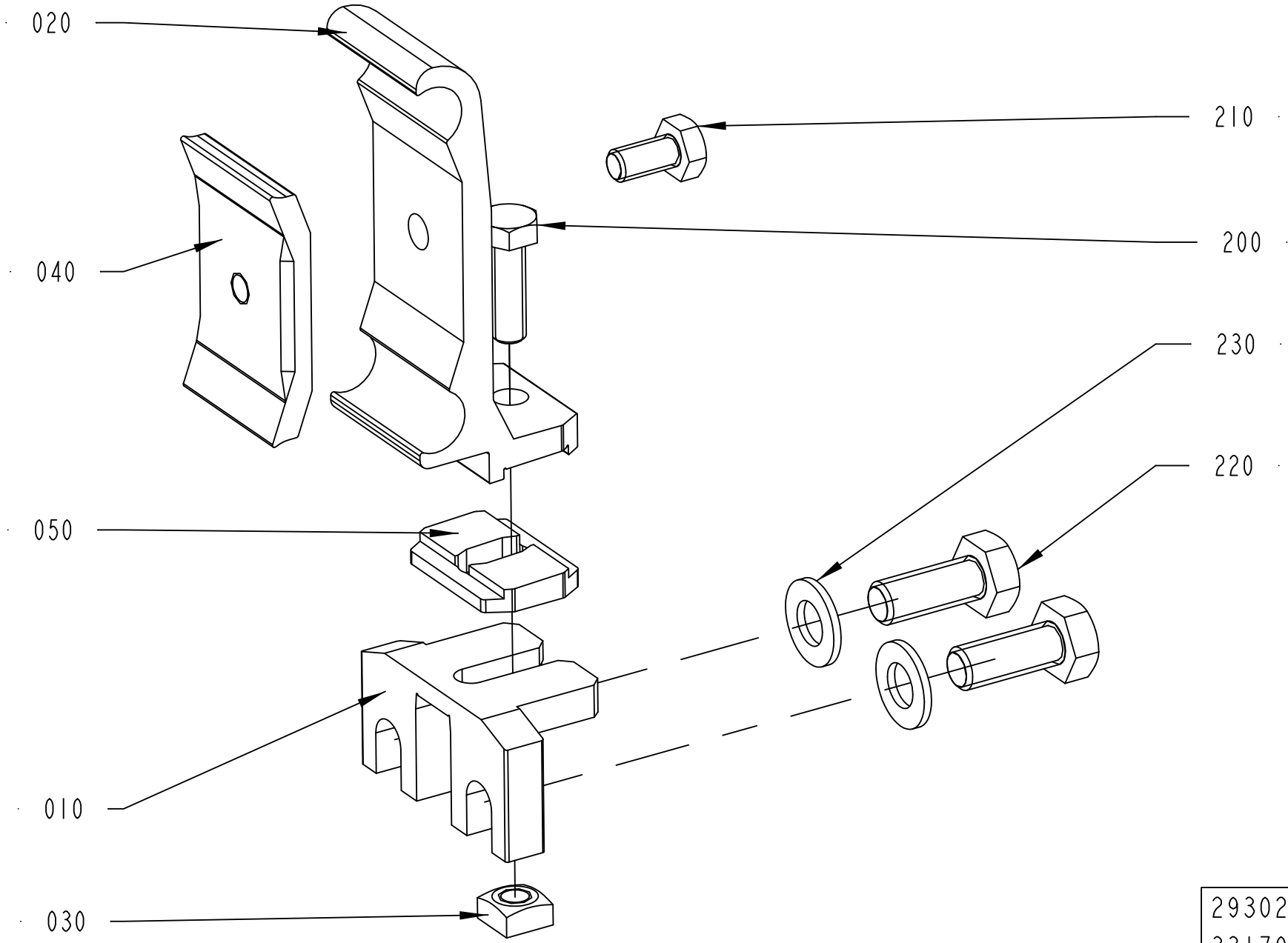

2930298-1
331797

ECM: 331799 - 20071113
Group number: 2930298-0100
Assembly Drawing: 2930298-1_1_AA

Pos	Part No	UN	Qty	Description	Page No
-					
010	2930296-0000		1	HOLDER	
020	2699437-0000		1	RAIL HOLDER	
030	1359565-0000		1	NUT	
040	1366727-0000		1	CLAMP	
050	2699436-0000		1	SPACER	
200	312105-0370		1	SCREW, M6S ISO 4017 M6X20 A4 80	
210	312105-0366		1	SCREW, M6S ISO 4017 M6X12 A4 80	
220	312105-0451		2	SCREW, M6S ISO 4017 M8X20 A4 80	
230	315105-0165		2	WASHER PLAIN, 8,4X16X1,6 A4 BRB	

Pos	Part No	UN	Qty	Description	Page No

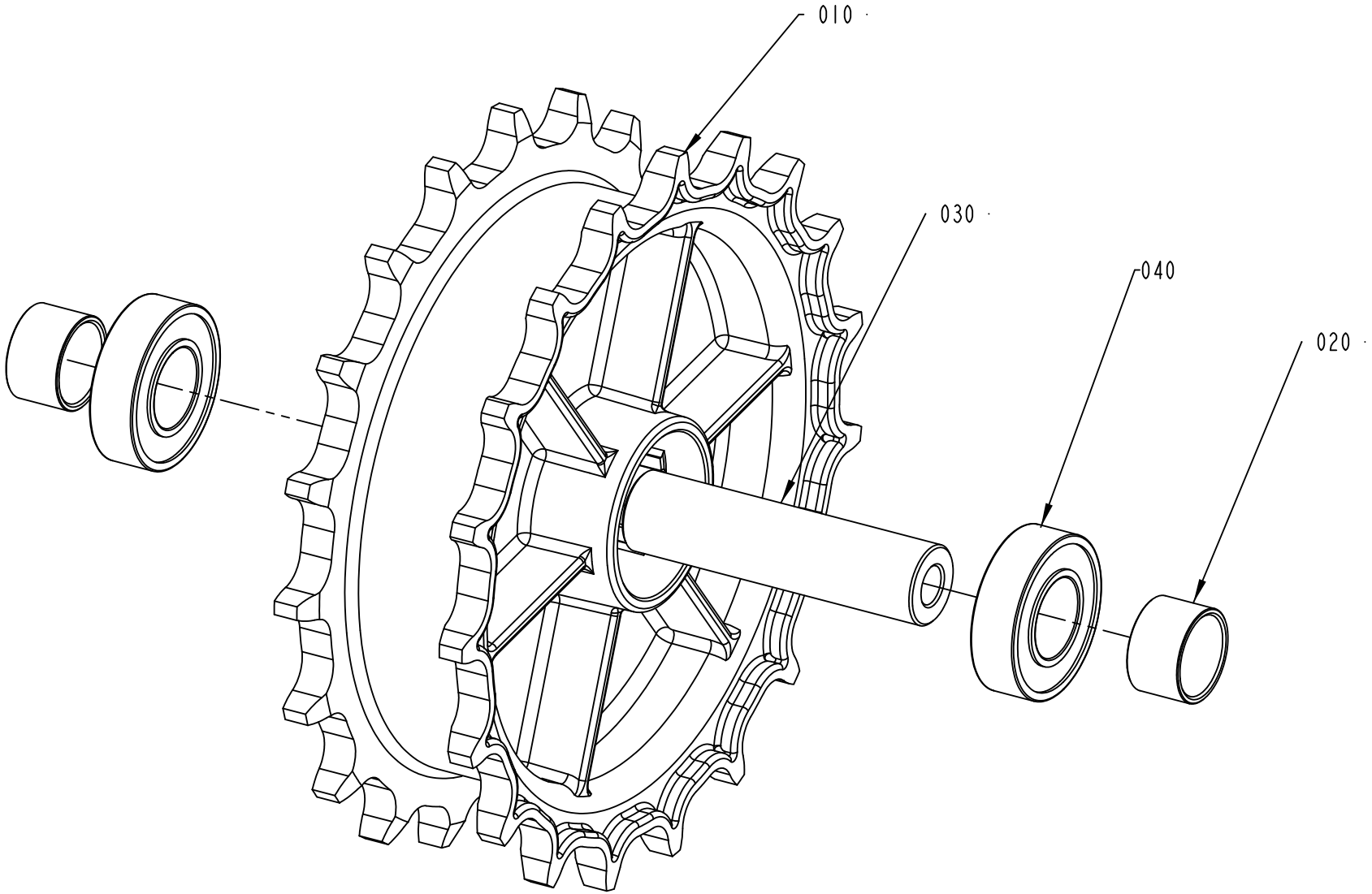

2561244-2
517993

ECM: 517993 - 20111102
Group number: 2561244-0200
Assembly Drawing: 2561244-2_1_AC

Pos	Part No	UN	Qty	Description	Page No
-					
010	2656672-0000		1	SPROCKET	
020	2656673-0000		2	SPACER	
030	2561267-0000		1	SHAFT	
040	90603-2325		2	BALL BEARING 17/35X10	

Pos	Part No	UN	Qty	Description	Page No

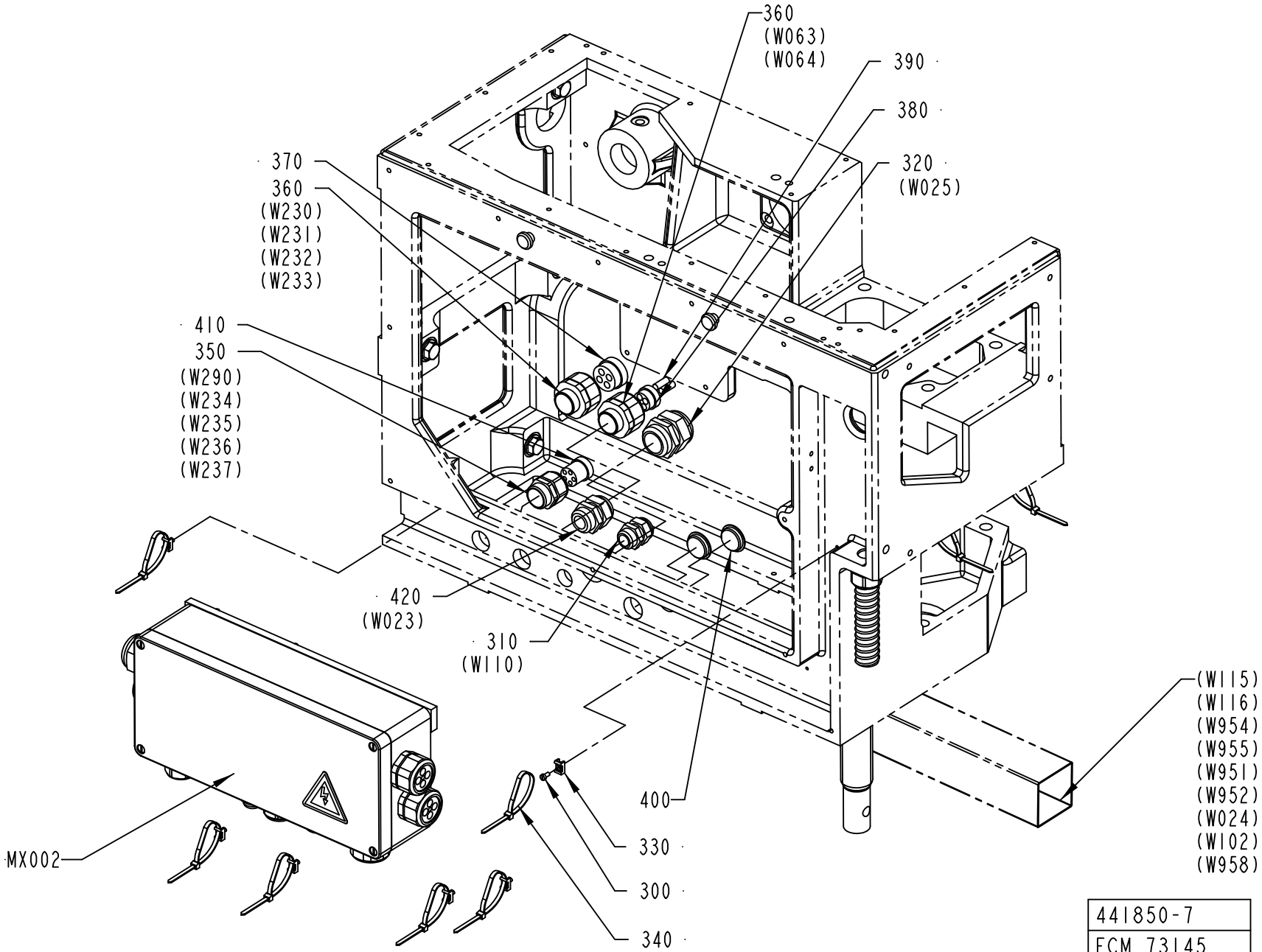

441850-7
ECM 73145

ECM: 119545 - 20050621
Group number: 441850-0700
Assembly Drawing: 441850-7_1_AA

Pos	Part No	UN	Qty	Description	Page No
-					
300	312125-0287		8	SLOTTED HEAD SCREW, ISO1207 M4X8 A4	
310	90458-0316		2	CABLE GLAND, M25X1,5, 5311 1130	
320	90458-0310		1	CABLE GLAND, M40X1,5, 5311 1050	
330	352113-0205		8	ANCHOR PLATES FOR STRIPS, TM2S8-C100	
340	352113-0102		8	CABLE TIE, BLACK 188X4,8 MM	
350	90458-0408		1	CABLE GLAND, VK 23254Y	
360	90458-0423		2	CABLE GLAND, VK 23255Y	
370	353249-0037		1	INSERT, MULTI HOLE, EK155M 4X8	
380	353249-0084		1	INSERT, MULTI HOLE, EK154M 4X7,5	
390	353249-0307		2	SEALING PIN, 7,5X20	
400	90458-1310		2	BLIND PLUG CIRCULAR, M32X1,5 514GFK/232	
410	90457-0028		1	INSERT, MULTI HOLE, E154M5X5	
MX002	2506331-0200		1	CONNECTION BOX	**5-77, 5-79**

Pos	Part No	UN	Qty	Description	Page No

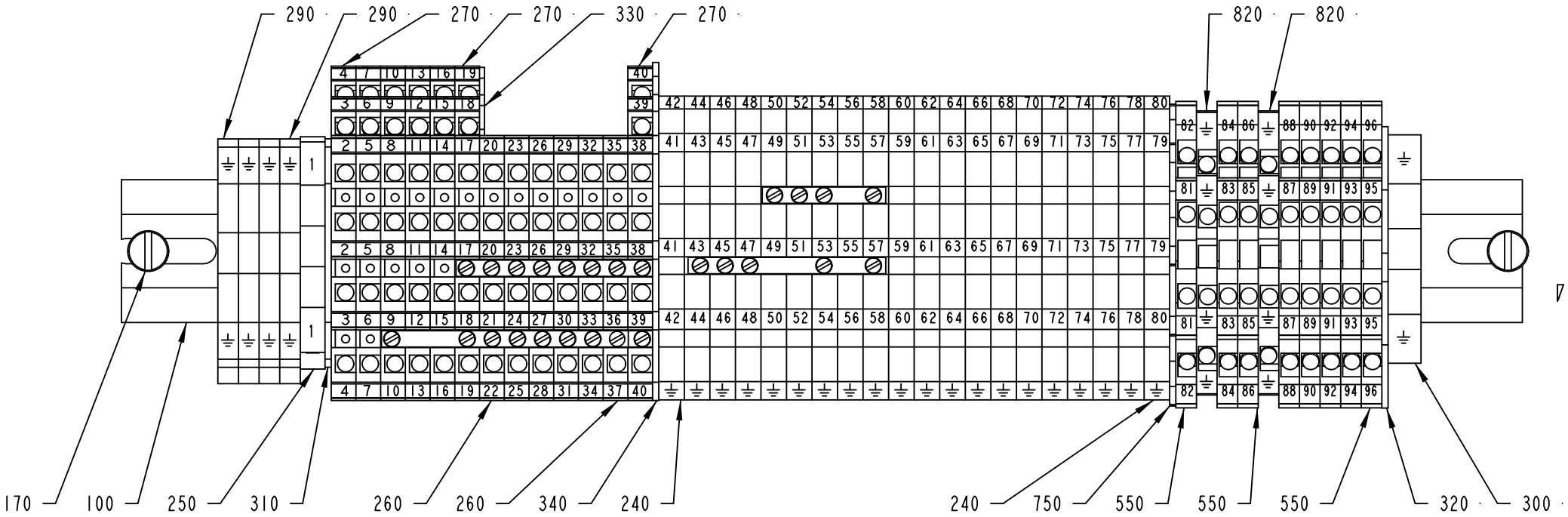

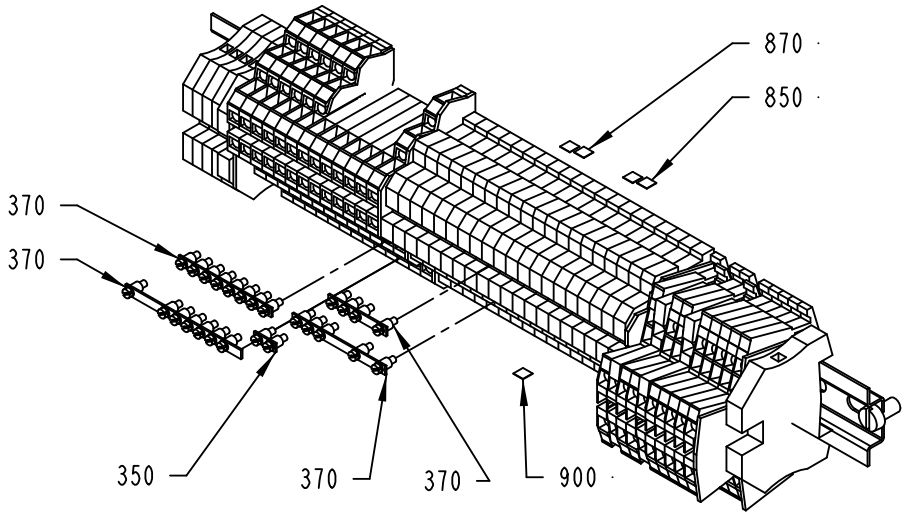

MX002

2506331-1
526668

ECM: 541956 - 20120217
Group number: 2506331-0200
Assembly Drawing: 2506331-1_1_AB

This list covers pages from 5-76 to 5-79

Pos	Part No	UN	Qty	Description	Page No
-					
0010	1255874-0000		1	SPACER	
0030	2506332-0000		1	BOX	
0100	353042-0005	MM	340	RAIL, TS 35/7.5 NO HOLE	
0130	312115-0366		2	SCREW ISO4762 M6X12 A4 80	
0140	312115-0372		2	SCREW ISO4762 M6X25 A4 80	
0170	312125-0364		2	SCREW ISO 1207 M6X10 A4	
0200	352103-0106		1	CABLE GLAND, ST 11, PR18,6/PG11	
0210	352103-0121		1	CABLE GLAND, ST 29, PR37,0/PG29	
0240	353021-0132		20	TERMINAL, DLD 2,5/PE	
0250	353021-0213		1	FEED THROUGH TERMINAL, WDU 4	
0260	353021-0301		6	TERMINAL, DLI 2,5/35	
0270	353021-0302		7	TERMINAL, DLD 2,5/35	
0290	353024-0204		4	EARTH TERMINAL WPE 2,5	
0300	353024-0206		1	EARTH TERMINAL WPE 6	
0310	353032-0004		1	END PLATE, WAP 2,5-10, BEIGE	
0320	353032-0009		1	END PLATE, WAP WDK 2,5	
0330	353032-0013		1	END PLATE, AP, 138 186	
0340	353032-0302		1	END PLATE, AP DLD2,5 DB	
0350	353034-0401		1	BRIDGE CONNECTOR Q 2 DLI	
0370	353034-0404		4	BRIDGE CONNECTOR Q 10 DLI	
0385	353240-0004		2	COMPRESSION GLAND, VK 153Y	
0390	353240-0005		3	COMPRESSION GLAND, VK 154Y	
0400	353240-0006		4	COMPRESSION GLAND, VK 155Y	
0420	353241-0005		1	COMPRESSION GLAND, VK 15253Y	
0430	353241-0007		1	CABLE GLAND, VK 15354Y	
0460	90458-0147		1	INSERT, MULTI HOLE, EK153M 2X6,5	
0470	353249-0051		1	INSERT, MULTI HOLE, E154M 4X6	
0480	353249-0059		1	INSERT, MULTI HOLE, E154M 4X8	
0490	353249-0060		1	INSERT, MULTI HOLE, E155M 2X13	
0500	353249-0084		1	INSERT, MULTI HOLE, EK154M 4X7,5	
0550	90077-0113		8	TERMINAL BLOCK WDK 2.5	
0600	359705-0015		1	WARNING SIGN ISO, RISK OF ELECTRIC SHOCK	
0650	90457-0027		2	INSERT, MULTI HOLE, E155M1X5/4X9	
0700	90457-0030		1	INSERT, MULTI HOLE, EK155M4X9	
0750	90457-0051		1	END PLATE, AP DLD2,5/PE DB	
0820	90458-1136		2	EARTH TERMINAL WDK 2,5 PE	
0830	90458-1906		2	INSERT, MULTI HOLE, E153M 4X5	
0850	359011-0807		2	MARKING, DEK 5 FW 1-50	
0870	359011-0808		2	MARKING, DEK 5FW 51-100	
0900	359011-0818		1	MARKING, DEK 5GW (-)	
1000	353249-0304		3	SEALING PIN, 6,0X25	
1010	353249-0308		2	SEALING PIN, 8,0X20	
1020	353249-0309		1	SEALING PIN, 9,3X20	
1070	90002-0004		1	BLANK-OFF PLUG, PR 22,5 SKINDICHT-BLK16	
1080	90002-0009		1	BLANK-OFF PLUG, PR 18.6 SKINDICHT-BLK11	
1090	90002-0010		1	BLANK-OFF PLUG, PR 37 SKINDICHT-BLK29	

Machine Type	Group Description	Used-In	Group Number	Page No

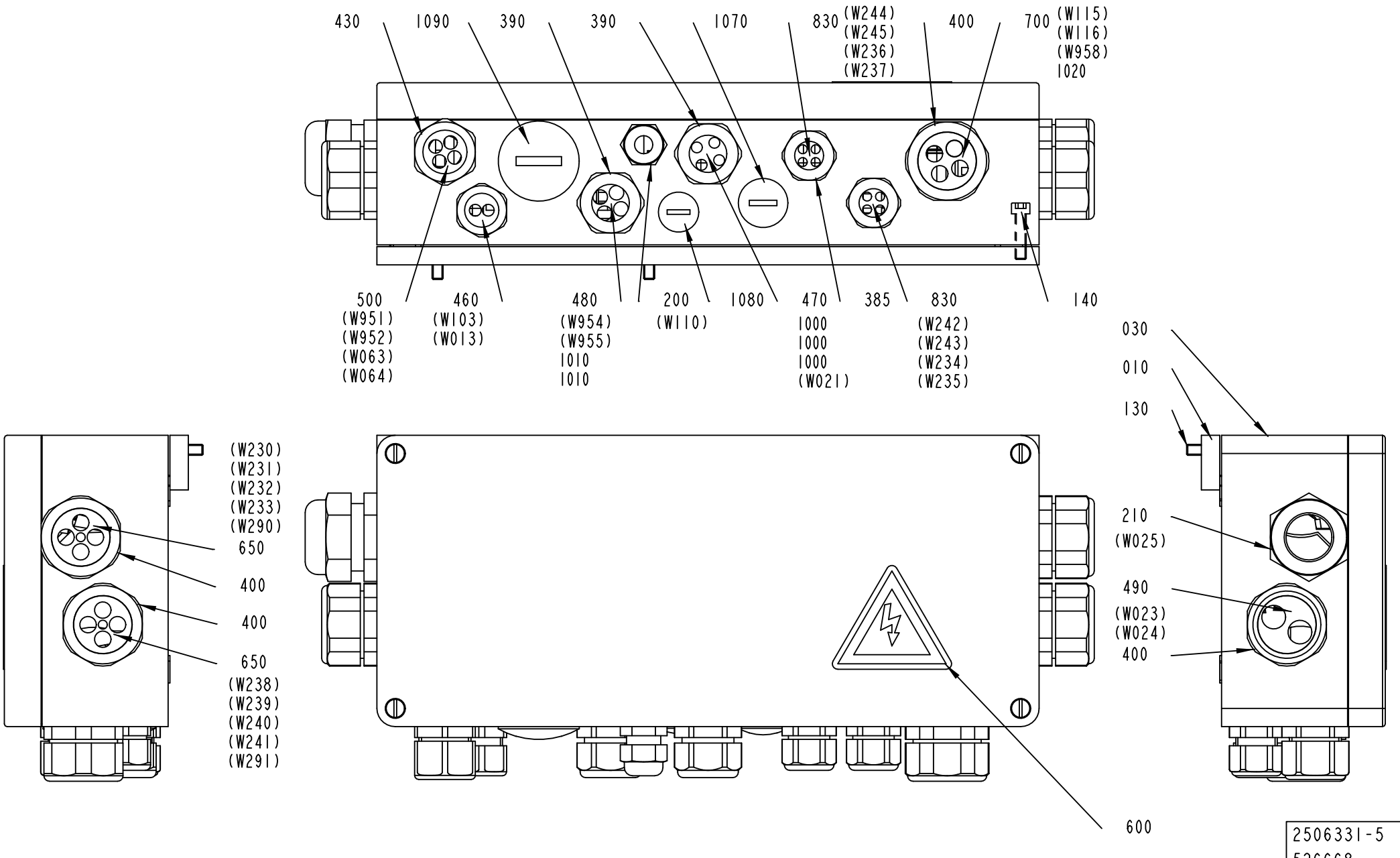
430
1090
390
390
1070
830
(W244)
(W245)
(W236)
(W237)
400
700
(W115)
(W116)
(W958)
1020
500
(W951)
(W952)
(W063)
(W064)
460
(W103)
(W013)
480
(W954)
(W955)
1010
1010
200
(W110)
1080
470
1000
1000
1000
(W021)
385
830
(W242)
(W243)
(W234)
(W235)
140
030
010
130
(W230)
(W231)
(W232)
(W233)
(W290)
650
400
400
650
(W238)
(W239)
(W240)
(W241)
(W291)
210
(W025)
490
(W023)
(W024)
400
600
2506331-5
526668

ECM: 541956 - 20120217
Group number: 2506331-0200
Assembly Drawing: 2506331-5_1_AB

This list covers pages from 5-76 to 5-79

Pos	Part No	UN	Qty	Description	Page No
-					
0010	1255874-0000		1	SPACER	
0030	2506332-0000		1	BOX	
0100	353042-0005	MM	340	RAIL, TS 35/7.5 NO HOLE	
0130	312115-0366		2	SCREW ISO4762 M6X12 A4 80	
0140	312115-0372		2	SCREW ISO4762 M6X25 A4 80	
0170	312125-0364		2	SCREW ISO 1207 M6X10 A4	
0200	352103-0106		1	CABLE GLAND, ST 11, PR18,6/PG11	
0210	352103-0121		1	CABLE GLAND, ST 29, PR37,0/PG29	
0240	353021-0132		20	TERMINAL, DLD 2,5/PE	
0250	353021-0213		1	FEED THROUGH TERMINAL, WDU 4	
0260	353021-0301		6	TERMINAL, DLI 2,5/35	
0270	353021-0302		7	TERMINAL, DLD 2,5/35	
0290	353024-0204		4	EARTH TERMINAL WPE 2,5	
0300	353024-0206		1	EARTH TERMINAL WPE 6	
0310	353032-0004		1	END PLATE, WAP 2,5-10, BEIGE	
0320	353032-0009		1	END PLATE, WAP WDK 2,5	
0330	353032-0013		1	END PLATE, AP, 138 186	
0340	353032-0302		1	END PLATE, AP DLD2,5 DB	
0350	353034-0401		1	BRIDGE CONNECTOR Q 2 DLI	
0370	353034-0404		4	BRIDGE CONNECTOR Q 10 DLI	
0385	353240-0004		2	COMPRESSION GLAND, VK 153Y	
0390	353240-0005		3	COMPRESSION GLAND, VK 154Y	
0400	353240-0006		4	COMPRESSION GLAND, VK 155Y	
0420	353241-0005		1	COMPRESSION GLAND, VK 15253Y	
0430	353241-0007		1	CABLE GLAND, VK 15354Y	
0460	90458-0147		1	INSERT, MULTI HOLE, EK153M 2X6,5	
0470	353249-0051		1	INSERT, MULTI HOLE, E154M 4X6	
0480	353249-0059		1	INSERT, MULTI HOLE, E154M 4X8	
0490	353249-0060		1	INSERT, MULTI HOLE, E155M 2X13	
0500	353249-0084		1	INSERT, MULTI HOLE, EK154M 4X7,5	
0550	90077-0113		8	TERMINAL BLOCK WDK 2.5	
0600	359705-0015		1	WARNING SIGN ISO, RISK OF ELECTRIC SHOCK	
0650	90457-0027		2	INSERT, MULTI HOLE, E155M1X5/4X9	
0700	90457-0030		1	INSERT, MULTI HOLE, EK155M4X9	
0750	90457-0051		1	END PLATE, AP DLD2,5/PE DB	
0820	90458-1136		2	EARTH TERMINAL WDK 2,5 PE	
0830	90458-1906		2	INSERT, MULTI HOLE, E153M 4X5	
0850	359011-0807		2	MARKING, DEK 5 FW 1-50	
0870	359011-0808		2	MARKING, DEK 5FW 51-100	
0900	359011-0818		1	MARKING, DEK 5GW (-)	
1000	353249-0304		3	SEALING PIN, 6,0X25	
1010	353249-0308		2	SEALING PIN, 8,0X20	
1020	353249-0309		1	SEALING PIN, 9,3X20	
1070	90002-0004		1	BLANK-OFF PLUG, PR 22,5 SKINDICHT-BLK16	
1080	90002-0009		1	BLANK-OFF PLUG, PR 18.6 SKINDICHT-BLK11	
1090	90002-0010		1	BLANK-OFF PLUG, PR 37 SKINDICHT-BLK29	

Machine Type	Group Description	Used-In	Group Number	Page No

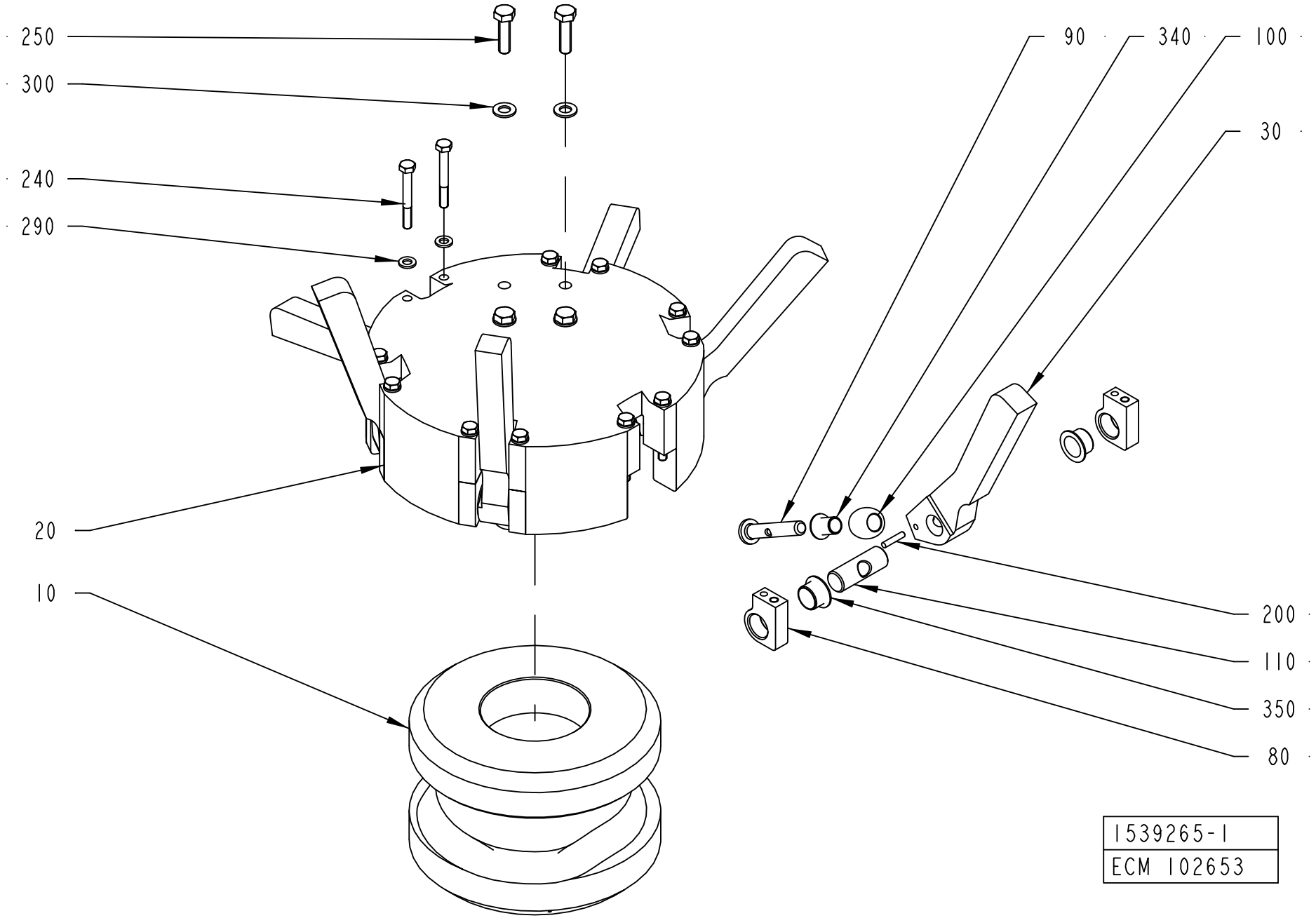
250
300
240
290
20
10
90
340
100
30
200
110
350
80
1539265-1
ECM 102653

ECM: 205735 - 20050621
Group number: 1539265-0100
Assembly Drawing: 1539265-1_1_AA

Pos	Part No	UN	Qty	Description	Page No
TBA 0100B					
030	1549186-0000		6	CARRIER	
TBA 0125S					
030	1549184-0000		6	CARRIER	
TBA 0160S					
030	2502192-0000		6	CARRIER	
TBA 0200B					
030	1549183-0000		6	CARRIER	
TBA 0200M					
030	1549190-0000		6	CARRIER	
TBA 0200S					
030	1549182-0000		6	CARRIER	
TBA 0250B					
030	1549187-0000		6	CARRIER	
TBA 0250S					
030	1539268-0000		6	CARRIER	
TBA 0284B, TBA 0300S					
030	2502194-0000		6	CARRIER	
TBA 0330S					
030	1549191-0000		6	CARRIER	
Common Parts					
010	1539266-0000		1	CAM	
020	1539267-0000		1	DRUM	
080	1260065-0000		12	BRACKET	
090	1260068-0000		6	SHAFT	
100	1260069-0000		6	ROLLER	
110	1260070-0000		6	SHAFT	
200	311103-0272		6	PARALLEL PIN ISO 2338 4M6X20 A1	
240	312105-0380		12	SCREW, M6S ISO 4014 M6X50 A4 80	
250	312105-0455		4	SCREW, M6S ISO 4017 M8X30 A4 80	
290	315105-0153		12	WASHER PLAIN, 6,4X12X1,5 A4 BRB	
300	315105-0165		4	WASHER PLAIN, 8,4X16X1,6 A4 BRB	
340	90240-0331		6	FLANGE BUSHING, IGLIDUR G 10X12X17	
350	90240-0332		12	FLANGE BUSHING, IGLIDUR G 16X18X12	

Pos	Part No	UN	Qty	Description	Page No

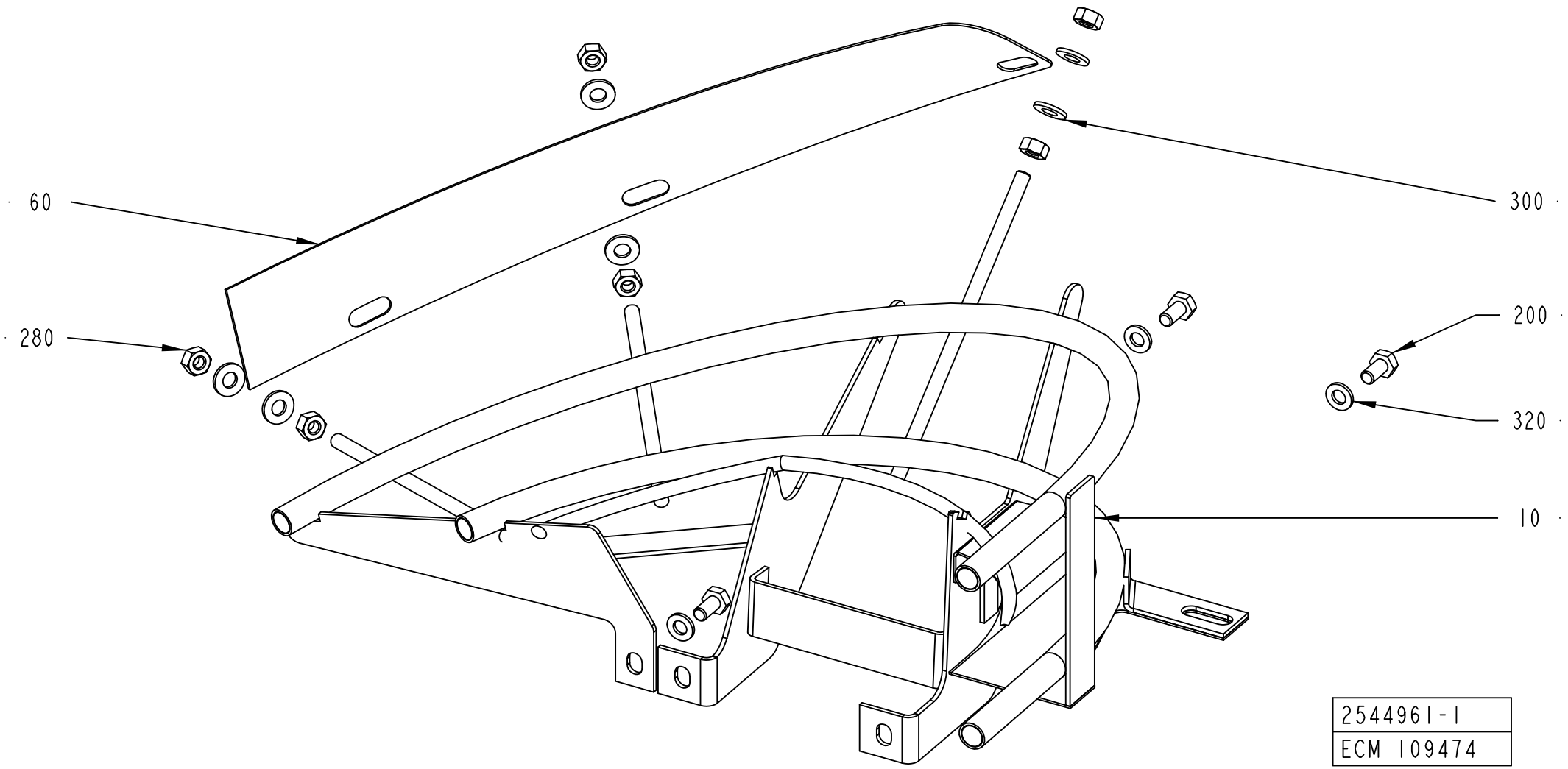
60
280
300
200
320
10
2544961-1
ECM 109474

ECM: 211574 - 20050621
Group number: 2544961-0100
Assembly Drawing: 2544961-1_1_AA

Pos	Part No	UN	Qty	Description	Page No
TBA 0100B					
010	2555564-0000		1	GUIDE	
TBA 0125S					
010	2555563-0000		1	GUIDE	
TBA 0160S					
010	2555568-0000		1	GUIDE	
TBA 0200B					
010	2555562-0000		1	GUIDE	
TBA 0200M					
010	2555571-0000		1	GUIDE	
TBA 0200S					
010	2545667-0000		1	GUIDE	
TBA 0250B					
010	2555565-0000		1	GUIDE	
TBA 0250S, TBA 0330S					
010	2555566-0000		1	GUIDE	
TBA 0284B, TBA 0300S					
010	2555569-0000		1	GUIDE	
Common Parts					
060	1539956-0000		1	PLATE	
200	312105-0366		3	SCREW, M6S ISO 4017 M6X12 A4 80	
280	312605-0316		6	HEXAGON NUT, M6M M6 A280	
300	315105-0156		6	WASHER PLAIN, 6,7X14X1,5 A4 BRB	
320	315105-0153		3	WASHER PLAIN, 6,4X12X1,5 A4 BRB	

Pos	Part No	UN	Qty	Description	Page No

TRANSMISSION UNIT

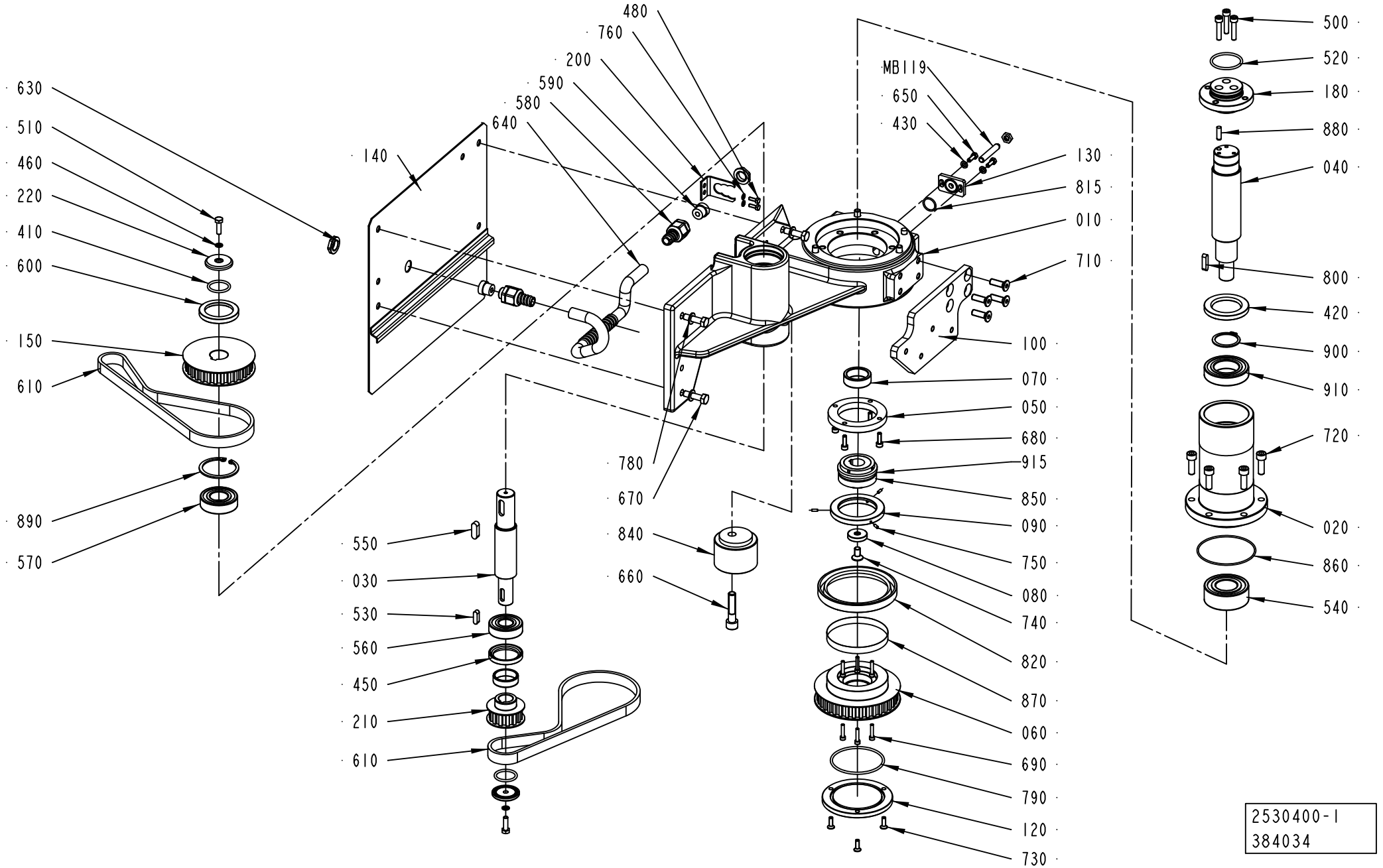

2530400-1
384034

ECM: 384034 - 20090424
Group number: 2530400-0100
Assembly Drawing: 2530400-1_1_AD

Pos	Part No	UN	Qty	Description	Page No
-					
010	2544957-0000		1	AXLE SUPPORT	
020	2544958-0000		1	BEARING FLANGE	
030	2544962-0000		1	SHAFT	
040	2544963-0000		1	SHAFT	
050	2544964-0000		1	FLANGE	
060	2544965-0000		1	TOOTHED PULLEY	
070	2544968-0000		1	INNER RING	
080	2544969-0000		1	SPACER	
090	2544970-0000		1	FLANGE	
100	2544971-0000		1	BRACKET	
120	2544973-0000		1	CUP	
130	2544974-0000		1	BLANK PLUG	
140	2544975-0000		1	SHEET	
150	1539260-0000		1	TOOTHED PULLEY	
180	2559122-0000		1	FLANGE	
200	977527-0000		1	BRACKET	
210	1539256-0000		1	TOOTHED PULLEY	
220	1539261-0000		3	WASHER	
410	315202-0218		3	O-RING 26,2X3 MM	
420	315221-0185		1	RADIAL SEAL 40X62X7 MM	
430	315105-0146		2	WASHER PLAIN, 5,3X10X1 A4 BRB	
450	315221-0175		1	RADIAL SEAL 35X47X7 MM	
460	315211-0103		2	BONDED SEAL SS/NBR90 M6	
480	312105-0291		2	SCREW, M6S ISO 4017 M4X12 A4 70	
500	312115-0374		1	SCREW ISO4762 M6X30 A4 80	
510	312105-0370		2	SCREW, M6S ISO 4017 M6X20 A4 80	
520	315202-0223		1	O-RING 39,2X3 MM	
530	315705-0232		1	PARALLEL KEY W. ROUND ENDS, 6X6X20 MM	
540	321330-0106		1	ANG. BALL BEAR 30/62X23,8	
550	315705-0265		1	PARALLEL KEY W. ROUND ENDS, 8X7X25 MM	
560	321309-0104		1	BALL BEARING 20/47X14	
570	321309-0105		1	BALL BEARING 25/52X15	
580	90458-0427		2	GLAND FITTING, VK 21652YUL11	
590	353249-0008		2	INSERT, SINGLE HOLE, EK152 7	
600	90091-0305		1	RADIAL SEAL 40X55X7 MM DUST LIP	
610	90459-6812		2	TIMING BELT T10X690X16 POLYURETHANE	
630	90458-0322		2	NUT, M16X1,5	
640	90152-0058	M	1	HOSE, SPIRAL CONDUIT, 15X9, UL 0909	
650	312105-0328		2	SCREW M6S ISO 4017 M5X14 A4 80	
660	312115-0500		1	SCREW ISO4762 M10X45 A4 80	
670	312105-0455		4	SCREW, M6S ISO 4017 M8X30 A4 80	
680	312115-0329		4	SCREW ISO4762 M5X16 A4 80	
690	312115-0295		6	SCREW ISO4762 M4X20 A4 80	
700	312115-0374		2	SCREW ISO4762 M6X30 A4 80	
710	312156-0453		4	SCREW EN 10642 MF6S M8X25 A470	
720	312115-0453		9	SCREW ISO4762 M8X25 A4 80	
730	312156-0329		3	SCREW EN 10642 MF6S M5X16 A470	
740	312156-0449		1	SCREW EN 10642 MF6S M8X16 A470	
750	312318-0222		3	SET SCREW, CUP END ISO4029 M3X8 A4	
760	315101-0136		2	WASHER BRB, 4,3/8 H=0,8	
780	315105-0165		4	WASHER PLAIN, 8,4X16X1,6 A4 BRB	
790	315202-0305		1	O-RING 69,5X3 MM	
800	315701-0234		1	PARALLEL KEY W. ROUND ENDS, 6X6X25 MM	
815	315205-0705		1	O-RING 17,17X1,78 MM	
820	90091-0233		1	RADIAL SEAL 85X110X12 MM DUST LIP	
840	90458-0220		1	TENSION ROLLER, M40/60-0-M EXCENTRIC	
850	90459-0737		1	SAFETY CLUTCH, SK1 15/D/20/5-20	
860	90459-0765		1	O-RING 78X2 MM	
870	90459-0766		1	SLEEVE, CR 99334	
880	311103-0353		1	PARALLEL PIN ISO 2338 6M6X20 A1	
890	315753-0132		1	RETAINING RING FOR BORE DIN 472 52 SS	
900	315751-0124		1	RETAINING RING FOR SHAFT DIN 471 35 SS	
910	321306-0107		1	BALL BEARING 35/62X14	
915	90296-0070	KG	0.1	SHELL ALVANIA GREASE EP 1	
MB119	90044-0117		1	PROX.SWITCH IX 0208	

Machine Type	Group Description	Used-In	Group Number	Page No

STATION CHAIN

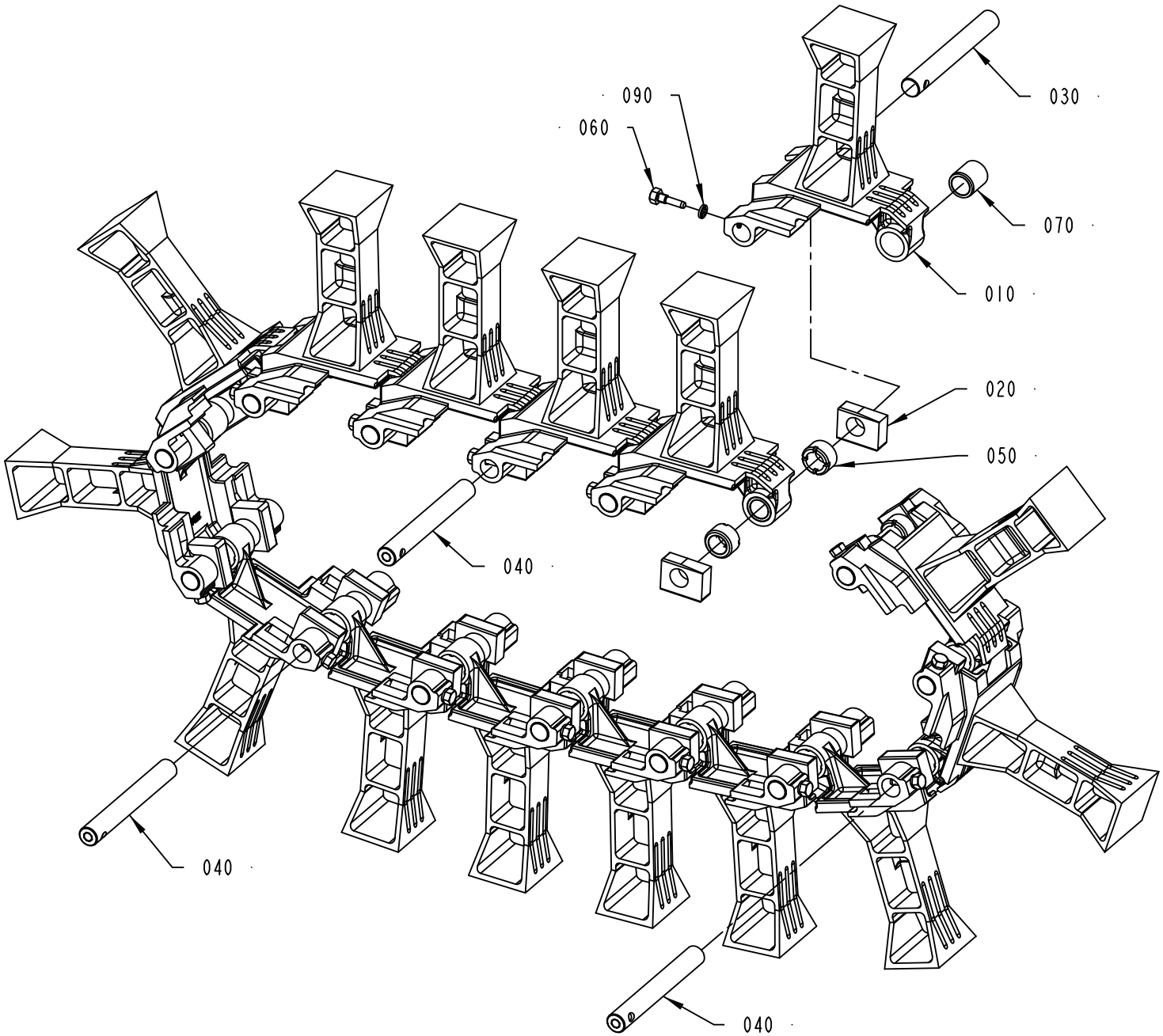

1255535-2
276017

ECM: 293449 - 20070126
Group number: 1255535-0200
Assembly Drawing: 1255535-2_1_AA

Pos	Part No	UN	Qty	Description	Page No
TPA 0200SQ					
010	2564687-0000		15	CARTON STATION	
TPA 0250SQ					
010	2564686-0000		15	CARTON STATION	
TPA 0330SQ					
010	2500331-0000		15	CARTON STATION	
Common Parts					
020	491227-0000		30	SLIDER	
030	491228-0001		12	SHAFT	
040	491228-0002		3	SHAFT	
050	491229-0000		30	BUSHING	
060	491230-0000		15	GRUB SCREW(LI - CHINE)	
070	491231-0000		15	BUSHING	
090	315239-0101		15	NYLON WASHER M5, M5RRP	

Pos	Part No	UN	Qty	Description	Page No

PRESSURE DEVICE

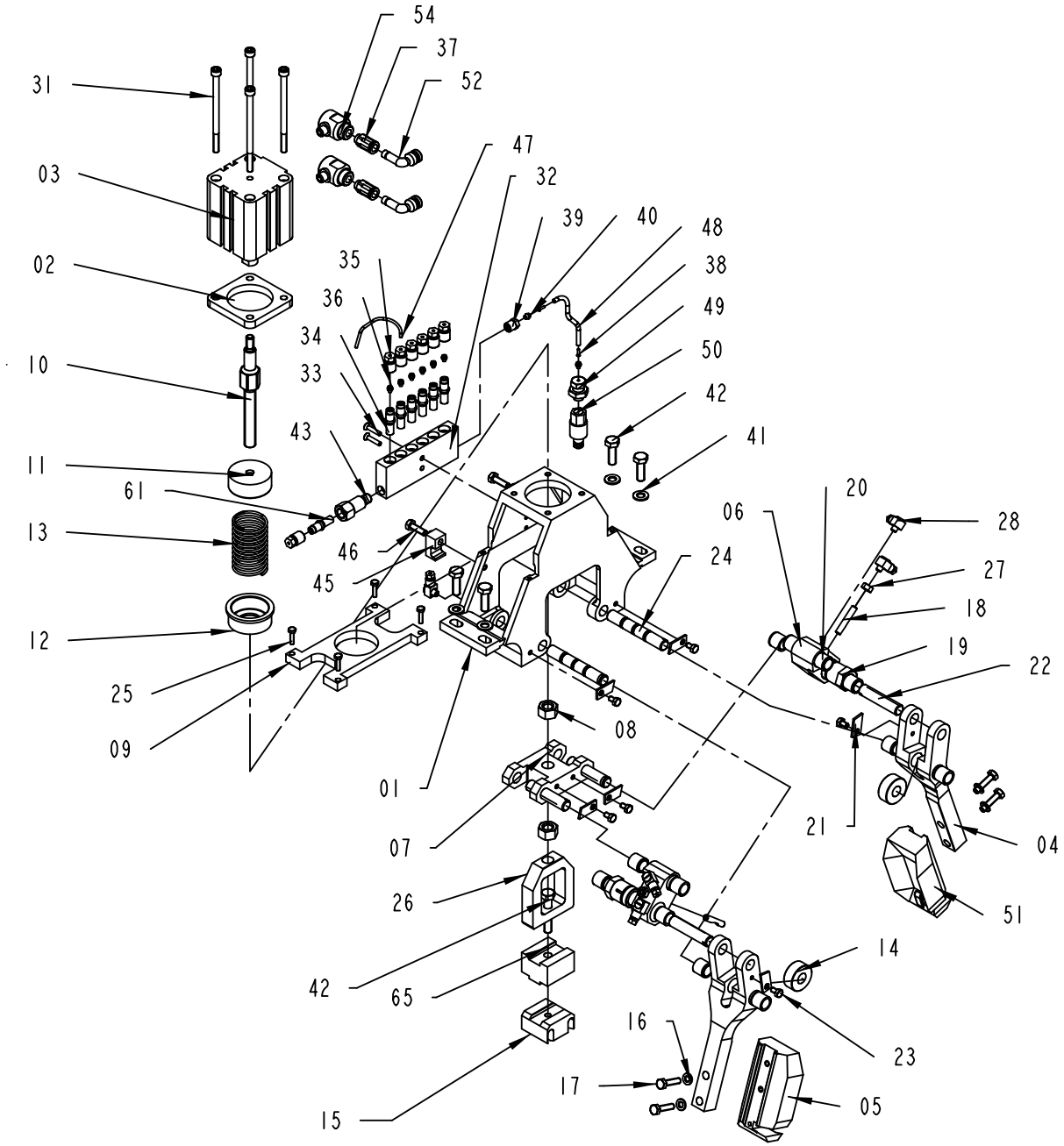

1143980-1
ECM 384034

ECM: 394160 - 20090424
Group number: 1143980-0100
Assembly Drawing: 1143980-1_1_AG

Pos	Part No	UN	Qty	Description	Page No
TPA 0200SQ					
05	1558009-0000		1	BLOCK	
15	1549266-0000		1	BLOCK	
42	312105-0453		4	SCREW, M6S ISO 4017 M8X25 A4 80	
42	312105-0460		1	SCREW, M6S ISO 4014 M8X45 A4 80	
51	1558010-0000		1	BLOCK	
65	1349415-0000		1	SPACER	
TPA 0250SQ					
05	2501848-0000		1	BLOCK	
15	1549266-0000		1	BLOCK	
42	312105-0453		5	SCREW, M6S ISO 4017 M8X25 A4 80	
51	2501847-0000		1	BLOCK	
TPA 0330SQ					
05	1523919-0000		1	BLOCK	
15	2691760-0000		1	BLOCK	
42	312105-0453		5	SCREW, M6S ISO 4017 M8X25 A4 80	
51	1523920-0000		1	BLOCK	
Common Parts					
01	1195035-0000		1	BRACKET	
02	2566131-0000		1	PLATE	
03	90459-1845		1	DOUBLE ACTING, COMPACT, 50-30	
04	1195419-0000		2	ARM	
06	751553-0000		2	ARM	
07	1195037-0000		1	BLOCK	
08	312605-0322		2	HEXAGON NUT, M6M M12 A280	
09	1195047-0000		1	PLATE	
10	1195048-0000		1	AXLE PIN	
11	1195043-0000		1	FLANGE	
12	1195046-0000		1	FLANGE	
13	1195044-0000		1	SPRING	
14	1195054-0000		2	ROLLER	
16	315105-0153		6	WASHER PLAIN, 6,4X12X1,5 A4 BRB	
17	312105-0372		4	SCREW, M6S ISO 4017 M6X25 A4 80	
18	256462-0000		2	SCREW	
19	751557-0000		2	SLEEVE	
20	751555-0000		12	BUSHING	
21	21047-0000		6	LOCK WASHER	
22	751554-0002		4	SHAFT	
23	312105-0323		6	SCREW, M6S ISO 4017 M5X8 A4 80	
24	1195418-0000		2	AXLE PIN	
25	312105-0293		4	SCREW, M6S ISO 4017 M4X16 A4 70	
26	1195411-0000		1	BRACKET	
27	312605-0316		2	HEXAGON NUT, M6M M6 A280	
28	90134-0058		6	CONNECTION	
31	312111-0390		4	SCREW HEX.SOCK.HD.MC6S-TT 6X100 88 FZB	
32	90032-0040		1	BLOCK 6 WAYS	
33	312155-0295		2	SCREW DIN 7991 MF6S M4X20 A4 70	
34	90092-0052		6	METERING VALVE 10 MM3	
35	90134-0039		7	BUSHING VALVE CONNECTION 2,5 MM	
36	90028-0020		7	CONE TUBE 2,5MM	
37	342722-0204		2	PIPE COUPLING	
38	90134-0031		2	SLEEVE FOR PLASTIC TUBE	
39	90134-0038		1	BUSHING/NUT INLET/OUTLET 4 MM	
40	90028-0021		2	CONE TUBE 4 MM	
41	315105-0165		4	WASHER PLAIN, 8,4X16X1,6 A4 BRB	
43	929420-0000		1	CONNECTION	
45	1260656-0000		2	BLOCK	
46	312105-0370		2	SCREW, M6S ISO 4017 M6X20 A4 80	
47	90166-0143	MM	1520	TUBE 2,5 MM PA TRANSP.	
48	90166-0109	MM	500	TUBE 4 MM PA TRANSP.	
49	90134-0004		1	PIPE CONNECTION R1/8	
50	90163-0048		1	NIPPLE LP-004-2-WR 510-23-1	
52	90055-0172		2	ELBOW WITH TAILPIECE 8/8 MM	
54	90235-0206		2	QUICK EXHAUST VALVE, SEU-1/8	
61	90092-0054		1	METERING VALVE 50 MM3	

Machine Type | Group Description | Used-In | Group Number | Page No

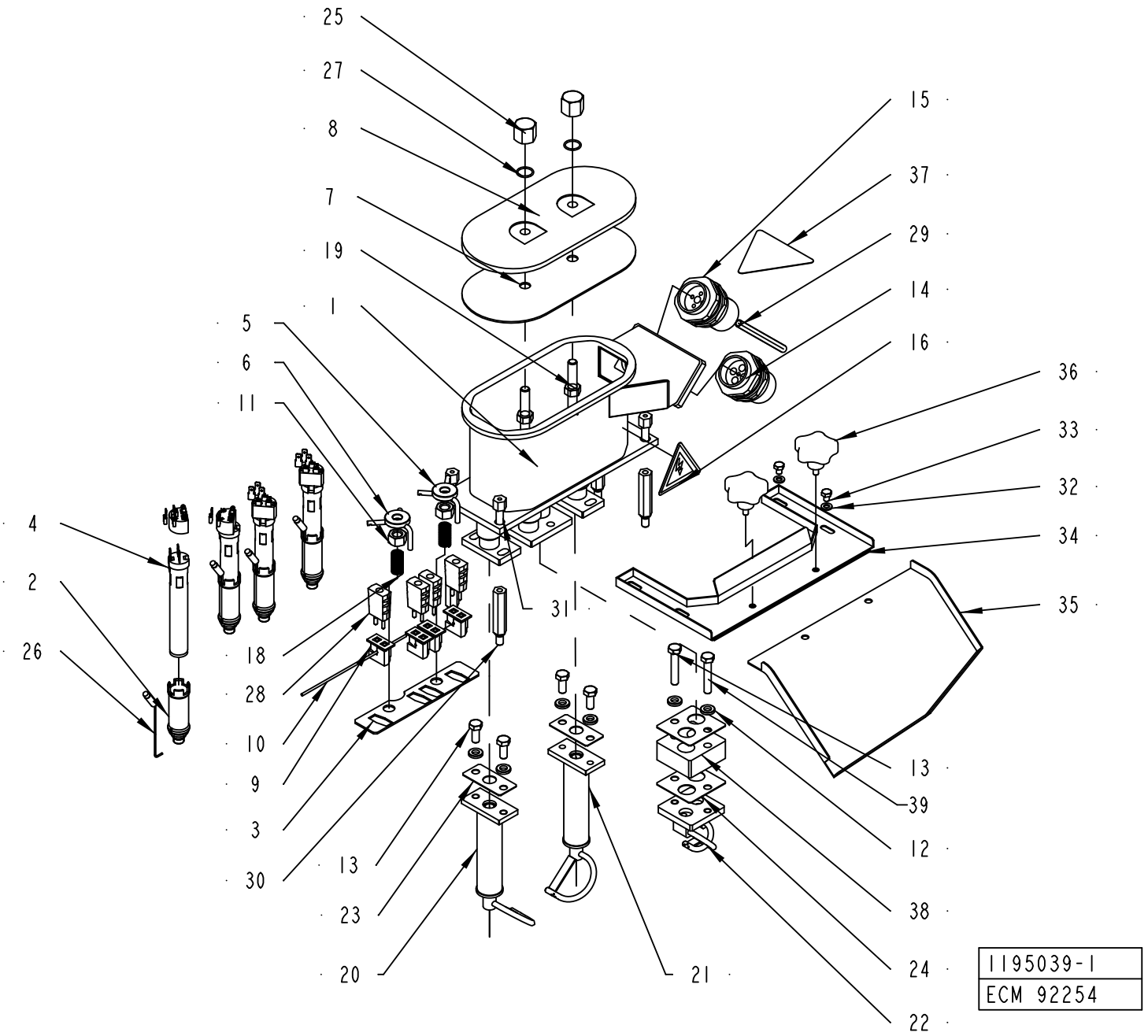
25
27
8
7
19
1
5
6
11
4
2
26
18
28
10
9
3
30
13
23
20
31
21
15
37
29
14
16
36
33
32
34
35
13
39
12
38
24
22
1195039-1
ECM 92254

ECM: 140062 - 20040715
Group number: 1195039-0100
Assembly Drawing: 1195039-1_1_AG

Pos	Part No	UN	Qty	Description	Page No
TPA 0200SQ					
20	1350975-0000		1	AIR NOZZLE	
21	1350976-0000		1	AIR NOZZLE	
22	2509555-0000		1	AIR NOZZLE	
24	1296416-0000		2	GASKET	
38	1349413-0000		1	SPACER	
39	312105-0460		2	SCREW, M6S ISO 4014 M8X45 A4 80	
TPA 0250SQ					
20	1350975-0000		1	AIR NOZZLE	
21	1350976-0000		1	AIR NOZZLE	
22	2509555-0000		1	AIR NOZZLE	
24	1296416-0000		1	GASKET	
39	312105-0451		2	SCREW, M6S ISO 4017 M8X20 A4 80	
TPA 0330SQ					
20	1195408-0000		1	AIR NOZZLE	
21	1195409-0000		1	AIR NOZZLE	
22	2509554-0000		1	AIR NOZZLE	
24	1296416-0000		1	GASKET	
39	312105-0451		2	SCREW, M6S ISO 4017 M8X20 A4 80	
Common Parts					
01	1195040-0000		1	HEATING CHAMBER	
02	1144122-0000		4	REDUCTION	
03	928139-0000		1	PLATE	
04	90459-1382		4	HEATING ELEMENT 1100W 220V	
05	929037-0000		1	PLATE	
06	929036-0000		1	PLATE	
07	1144050-0000		1	GASKET	
08	1279479-0000		1	LID	
09	90326-0077		4	CONTACT, 5100 004-001	
10	1144059-0000		1	WIRE	
11	312605-0322		2	HEXAGON NUT, M6M M12 A280	
12	315115-0165		6	WASHER PLAIN, TBRB 8,4/16 H=3	
13	312105-0451		4	SCREW, M6S ISO 4017 M8X20 A4 80	
14	1144150-0000		1	GLAND FITTING	
15	1260316-0000		1	LAND FITTING	
16	359705-0007		1	WARNING SIGN ISO, HOT SURFACE	
17	1036443-0000		4	CONTACT UNIT	
18	90335-0055		2	COMP. SPRING, 22470, 1,6X14,1X53,5	
19	312605-0320		2	HEXAGON NUT, M6M M10 A280	
23	1296415-0000		2	GASKET	
25	1144140-0000		2	NUT	
26	90326-0080		4	THERMOCOUPLE, 5110 080-000	
27	315204-0114		2	O-RING 16,1X1,6 MM	
28	90326-0022		4	PLUG, MALE YELLOW CR-AL, 03-21000A	
29	90166-0013	M	4	TUBE 8 MM PA BLUE	
30	1195410-0000		4	BRACKET	
31	1279469-0000		4	SCREW	
32	315105-0153		4	WASHER PLAIN, 6,4X12X1,5 A4 BRB	
33	312105-0362		4	SCREW, M6S ISO 4017 M6X8 A4 80	
34	1285920-0000		1	PLATE	
35	1317996-0000		1	COVER	
36	1285922-0000		2	HANDLE	
37	90194-0075		1	WARNING SIGN ISO, HOT SURFACE	

Machine Type | Group Description | Used-In | Group Number | Page No

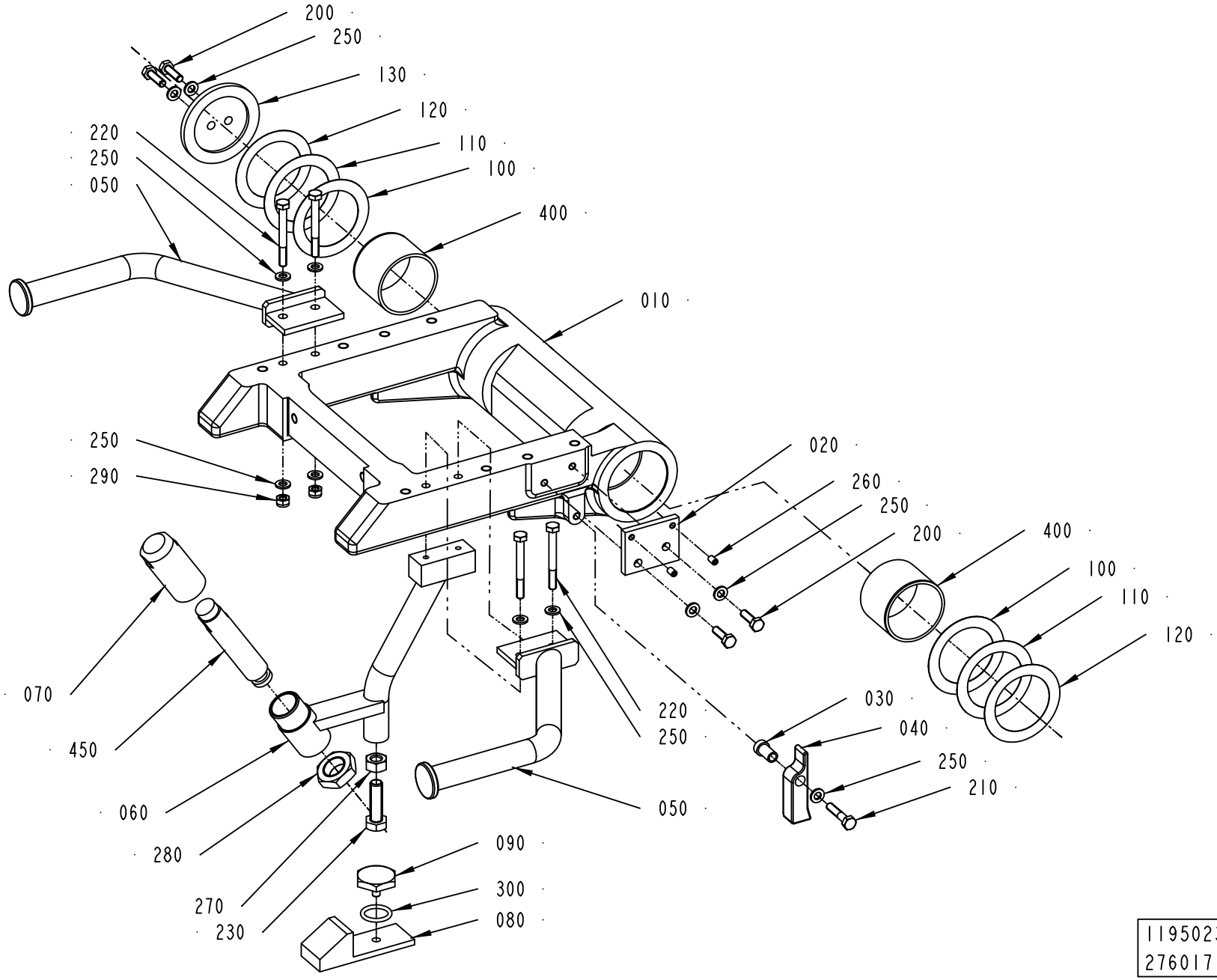
200
250
130
120
110
100
400
220
250
050
010
250
290
020
260
250
200
400
100
110
120
070
450
060
280
270
230
090
300
080
220
250
050
030
040
250
210
1195023-4
276017

ECM: 293458 - 20070126
Group number: 1195023-0200
Assembly Drawing: 1195023-4_1_AA

Pos	Part No	UN	Qty	Description	Page No
-					
010	1260645-0000		1	PIVOT ARM	
020	469527-0000		1	SETTING PLATE	
030	295205-0000		1	SPACER SLEEVE	
040	295206-0000		1	FLAP	
050	2854652-0000		2	HANDLE	
060	1512129-0000		1	BRACKET	
070	1512128-0000		1	PLUG	
080	1512133-0000		1	STOP	
090	272997-0000		1	STOPPER	
100	295204-0001		2	SHIM	
110	295204-0002		2	SHIM	
120	295204-0003		2	SHIM	
130	295203-0000		1	LID	
200	312105-0370		4	SCREW, M6S ISO 4017 M6X20 A4 80	
210	312105-0374		1	SCREW, M6S ISO 4014 M6X30 A4 80	
220	312105-0381		4	SCREW, M6S ISO 4014 M6X55 A4 80	
230	312105-0497		1	SCREW, M6S ISO 4017 M10X35 A4 80	
250	315105-0153		11	WASHER PLAIN, 6,4X12X1,5 A4 BRB	
260	312318-0323		2	SET SCREW, CUP END ISO4029 M5X8 A4	
270	312605-0320		1	HEXAGON NUT, M6M M10 A280	
280	90099-0057		1	NUT HEX. M20X1,5	
290	312812-0316		2	HEXAGON NUT, NY-LOCK M6 A4 80	
300	315202-0215		1	O-RING 19,2X3 MM	
400	90240-0094		2	BEARING BUSHING W/O FL, 50X55X40 MM	
450	90347-0189		1	SHOCK ABSORBER, 370-050-400	

Pos	Part No	UN	Qty	Description	Page No

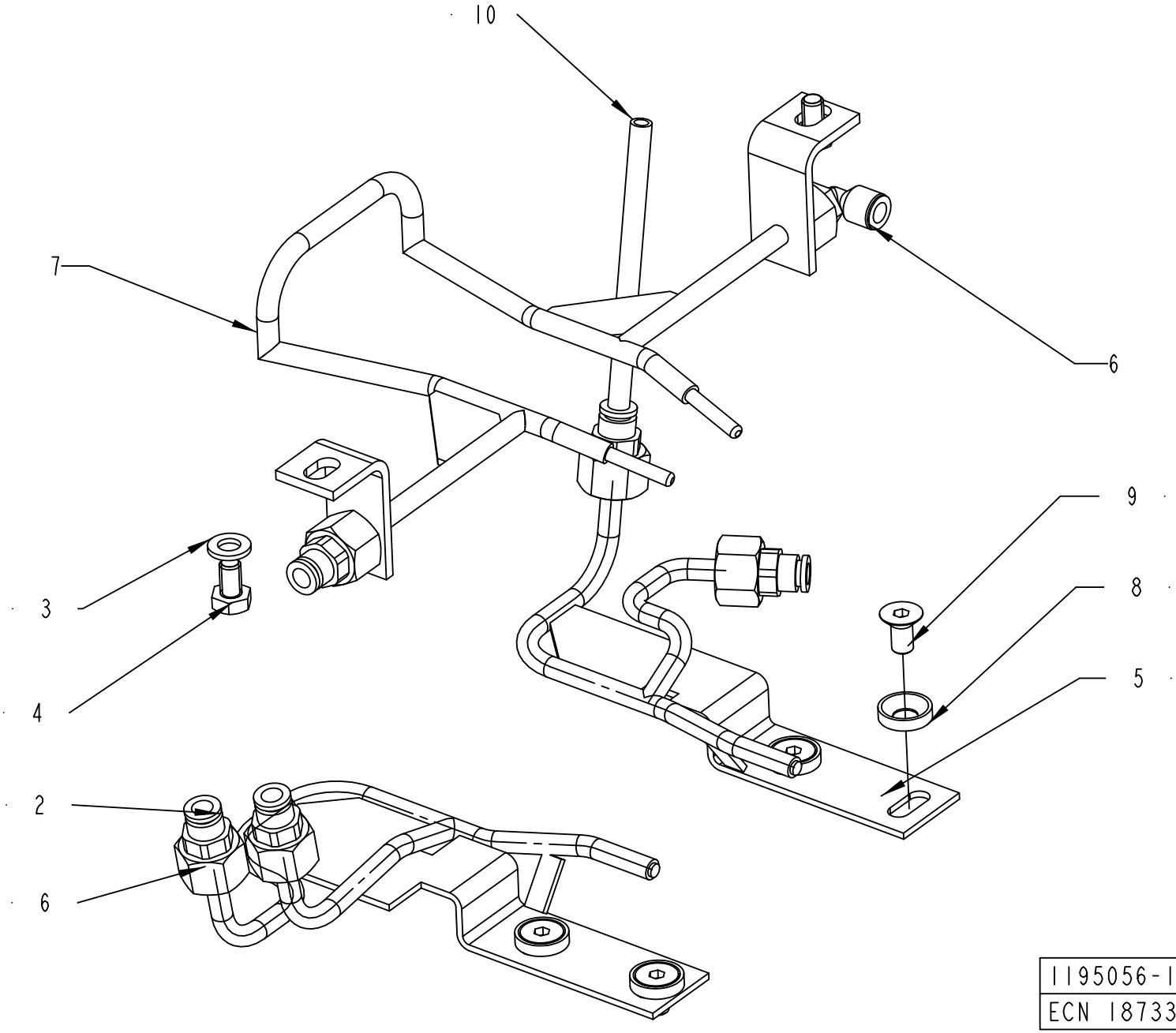
10
7
6
9
8
5
3
4
2
6
1195056-1
ECN 187331

ECM: 187333 - 20050708
Group number: 1195056-0100
Assembly Drawing: 1195056-1_1_AF

This list covers pages from 5-94 to 5-99

Pos	Part No	UN	Qty	Description	Page No
TBA 0200SQ (See drawing on page: 5-96)					
01	1519563-0000		1	PIPE	
02	342722-0202		1	PIPE COUPLING 1/8" D=6MM	
04	312105-0374		2	SCREW, M6S ISO 4014 M6X30 A4 80	
05	1519562-0000		1	PIPE	
06	90458-2956		5	ELBOW PIPE JOINT, EXT.THREAD, D=6MM-G1/8	
07	1519561-0000		1	PIPE	
11	1519564-0000		2	SPACER	
12	315105-0165		2	WASHER PLAIN, 8,4X16X1,6 A4 BRB	
TPA 0200SQ (See drawing on page: 5-98)					
01	1549937-0000		1	PIPE	
02	342722-0202		5	PIPE COUPLING 1/8" D=6MM	
04	312105-0378		2	SCREW, M6S ISO 4014 M6X40 A4 80	
05	1549938-0000		1	PIPE	
06	90458-2956		1	ELBOW PIPE JOINT, EXT.THREAD, D=6MM-G1/8	
07	1549267-0000		1	PIPE	
13	1349414-0000		2	SPACER	
TPA 0250SQ (See drawing on page: 5-94)					
01	1549937-0000		1	PIPE	
02	342722-0202		5	PIPE COUPLING 1/8" D=6MM	
04	312105-0364		2	SCREW, M6S ISO 4017 M6X10 A4 80	
05	1549938-0000		1	PIPE	
06	90458-2956		1	ELBOW PIPE JOINT, EXT.THREAD, D=6MM-G1/8	
07	2651347-0000		1	PIPE	
TPA 0330SQ (See drawing on page: 5-94)					
01	1523922-0000		1	PIPE	
02	342722-0202		5	PIPE COUPLING 1/8" D=6MM	
04	312105-0364		2	SCREW, M6S ISO 4017 M6X10 A4 80	
05	1523923-0000		1	PIPE	
06	90458-2956		1	ELBOW PIPE JOINT, EXT.THREAD, D=6MM-G1/8	
07	2677789-0000		1	PIPE	
Common Parts					
03	315105-0153		2	WASHER PLAIN, 6,4X12X1,5 A4 BRB	
08	1317228-0000		4	WASHER	
09	312155-0366		4	SCREW DIN 7991 MF6S M6X12 A4 70	
10	90166-0108	MM	3500	TUBE 6 MM PA TRANSP.	

Pos	Part No	UN	Qty	Description	Page No

Machine Type | Group Description | Used-In | Group Number | Page No

FOLDING BAR

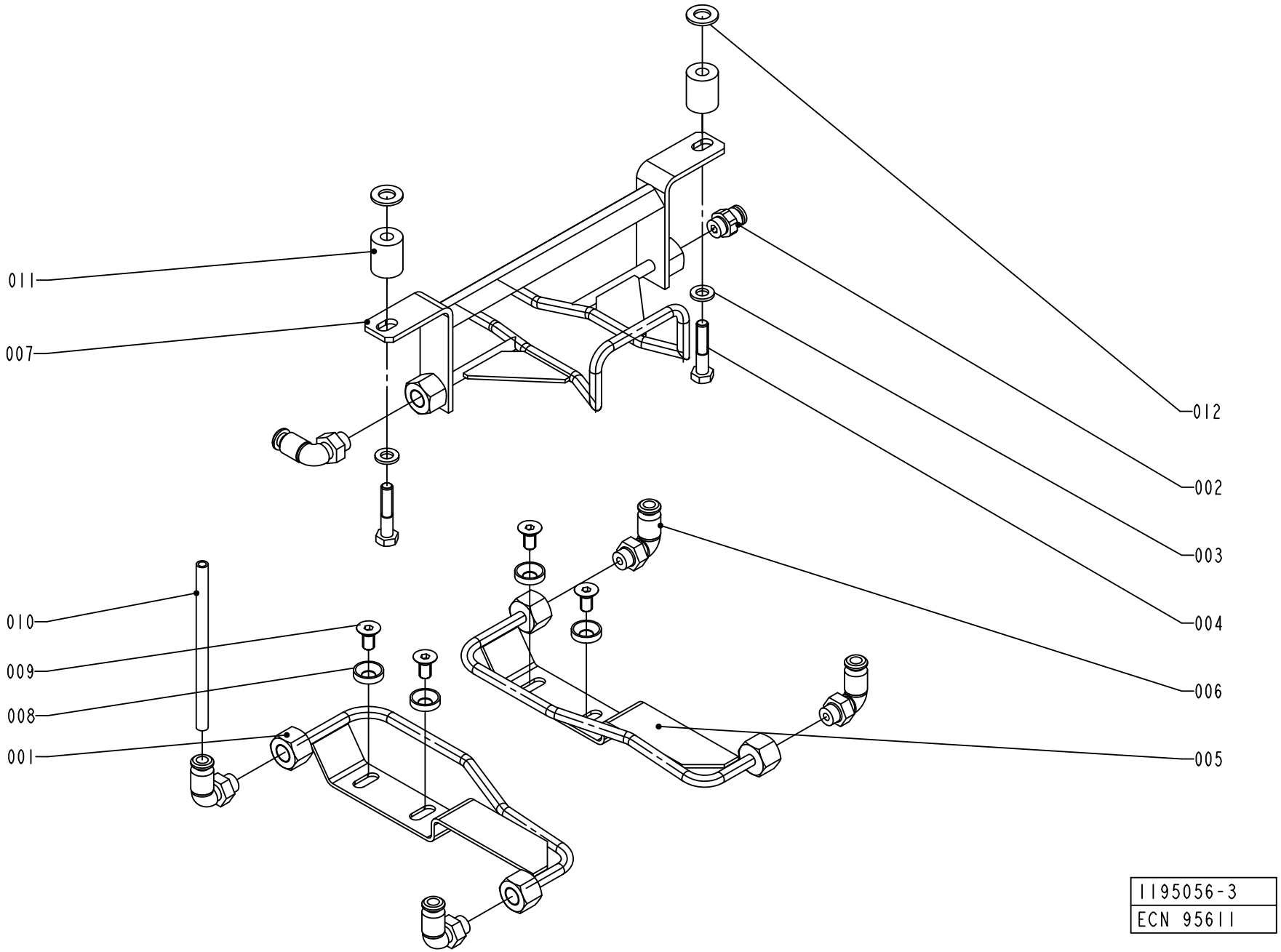
011
007
010
009
008
001
012
002
003
004
006
005
1195056-3
ECN 95611

ECM: 187333 - 20050708
Group number: 1195056-0100
Assembly Drawing: 1195056-3_1_AB

This list covers pages from 5-94 to 5-99

Pos	Part No	UN	Qty	Description	Page No
TBA 0200SQ (See drawing on page: 5-96)					
01	1519563-0000		1	PIPE	
02	342722-0202		1	PIPE COUPLING 1/8" D=6MM	
04	312105-0374		2	SCREW, M6S ISO 4014 M6X30 A4 80	
05	1519562-0000		1	PIPE	
06	90458-2956		5	ELBOW PIPE JOINT, EXT.THREAD, D=6MM-G1/8	
07	1519561-0000		1	PIPE	
11	1519564-0000		2	SPACER	
12	315105-0165		2	WASHER PLAIN, 8,4X16X1,6 A4 BRB	
TPA 0200SQ (See drawing on page: 5-98)					
01	1549937-0000		1	PIPE	
02	342722-0202		5	PIPE COUPLING 1/8" D=6MM	
04	312105-0378		2	SCREW, M6S ISO 4014 M6X40 A4 80	
05	1549938-0000		1	PIPE	
06	90458-2956		1	ELBOW PIPE JOINT, EXT.THREAD, D=6MM-G1/8	
07	1549267-0000		1	PIPE	
13	1349414-0000		2	SPACER	
TPA 0250SQ (See drawing on page: 5-94)					
01	1549937-0000		1	PIPE	
02	342722-0202		5	PIPE COUPLING 1/8" D=6MM	
04	312105-0364		2	SCREW, M6S ISO 4017 M6X10 A4 80	
05	1549938-0000		1	PIPE	
06	90458-2956		1	ELBOW PIPE JOINT, EXT.THREAD, D=6MM-G1/8	
07	2651347-0000		1	PIPE	
TPA 0330SQ (See drawing on page: 5-94)					
01	1523922-0000		1	PIPE	
02	342722-0202		5	PIPE COUPLING 1/8" D=6MM	
04	312105-0364		2	SCREW, M6S ISO 4017 M6X10 A4 80	
05	1523923-0000		1	PIPE	
06	90458-2956		1	ELBOW PIPE JOINT, EXT.THREAD, D=6MM-G1/8	
07	2677789-0000		1	PIPE	
Common Parts					
03	315105-0153		2	WASHER PLAIN, 6,4X12X1,5 A4 BRB	
08	1317228-0000		4	WASHER	
09	312155-0366		4	SCREW DIN 7991 MF6S M6X12 A4 70	
10	90166-0108	MM	3500	TUBE 6 MM PA TRANSP.	

Pos	Part No	UN	Qty	Description	Page No

Machine Type | Group Description | Used-In | Group Number | Page No

FOLDING BAR

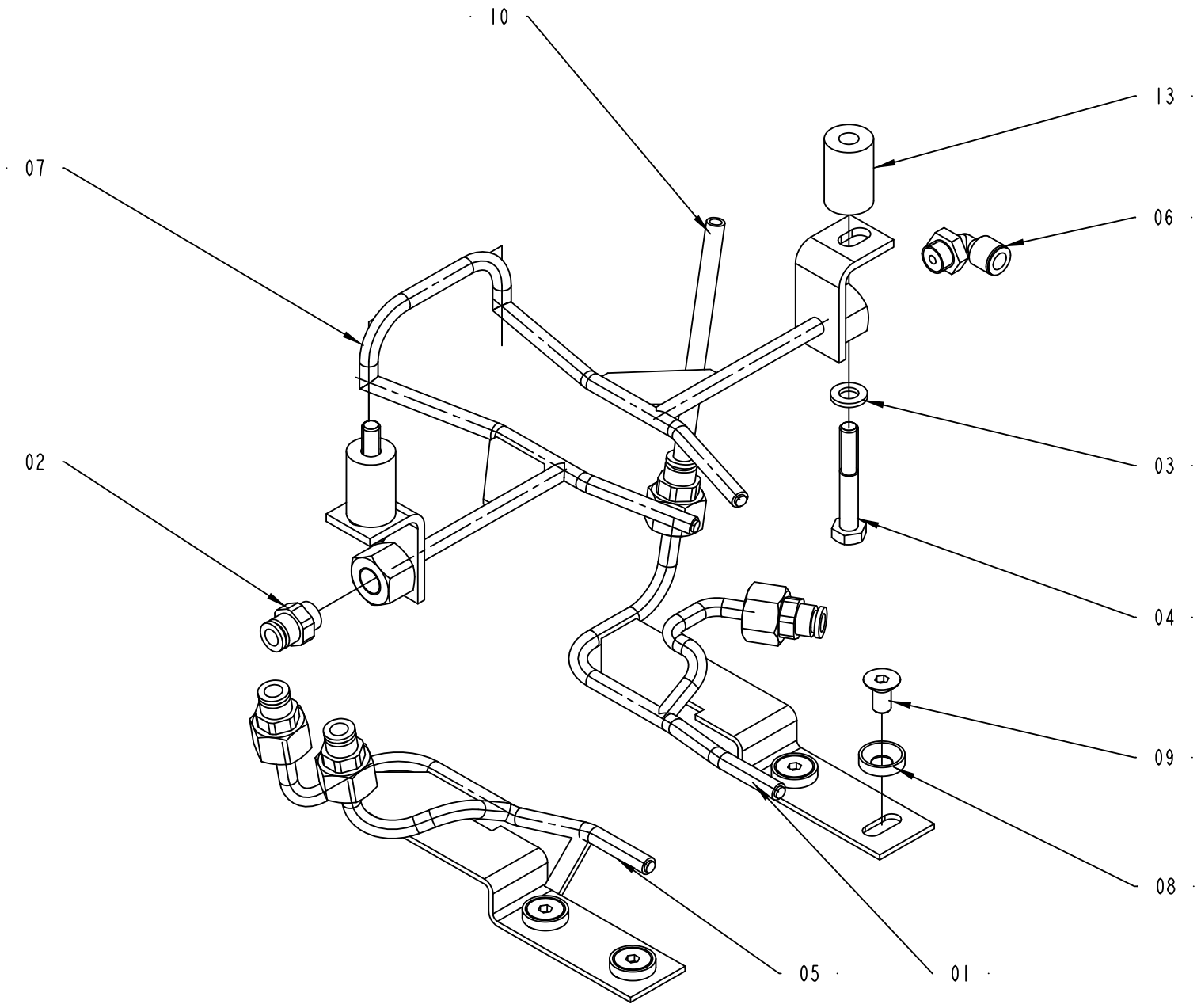

1195056-4
187331

Pos	Part No	UN	Qty	Description	Page No
TBA 0200SQ (See drawing on page: 5-96)					
01	1519563-0000		1	PIPE	
02	342722-0202		1	PIPE COUPLING 1/8" D=6MM	
04	312105-0374		2	SCREW, M6S ISO 4014 M6X30 A4 80	
05	1519562-0000		1	PIPE	
06	90458-2956		5	ELBOW PIPE JOINT, EXT.THREAD, D=6MM-G1/8	
07	1519561-0000		1	PIPE	
11	1519564-0000		2	SPACER	
12	315105-0165		2	WASHER PLAIN, 8,4X16X1,6 A4 BRB	
TPA 0200SQ (See drawing on page: 5-98)					
01	1549937-0000		1	PIPE	
02	342722-0202		5	PIPE COUPLING 1/8" D=6MM	
04	312105-0378		2	SCREW, M6S ISO 4014 M6X40 A4 80	
05	1549938-0000		1	PIPE	
06	90458-2956		1	ELBOW PIPE JOINT, EXT.THREAD, D=6MM-G1/8	
07	1549267-0000		1	PIPE	
13	1349414-0000		2	SPACER	
TPA 0250SQ (See drawing on page: 5-94)					
01	1549937-0000		1	PIPE	
02	342722-0202		5	PIPE COUPLING 1/8" D=6MM	
04	312105-0364		2	SCREW, M6S ISO 4017 M6X10 A4 80	
05	1549938-0000		1	PIPE	
06	90458-2956		1	ELBOW PIPE JOINT, EXT.THREAD, D=6MM-G1/8	
07	2651347-0000		1	PIPE	
TPA 0330SQ (See drawing on page: 5-94)					
01	1523922-0000		1	PIPE	
02	342722-0202		5	PIPE COUPLING 1/8" D=6MM	
04	312105-0364		2	SCREW, M6S ISO 4017 M6X10 A4 80	
05	1523923-0000		1	PIPE	
06	90458-2956		1	ELBOW PIPE JOINT, EXT.THREAD, D=6MM-G1/8	
07	2677789-0000		1	PIPE	
Common Parts					
03	315105-0153		2	WASHER PLAIN, 6,4X12X1,5 A4 BRB	
08	1317228-0000		4	WASHER	
09	312155-0366		4	SCREW DIN 7991 MF6S M6X12 A4 70	
10	90166-0108	MM	3500	TUBE 6 MM PA TRANSP.	

Pos	Part No	UN	Qty	Description	Page No

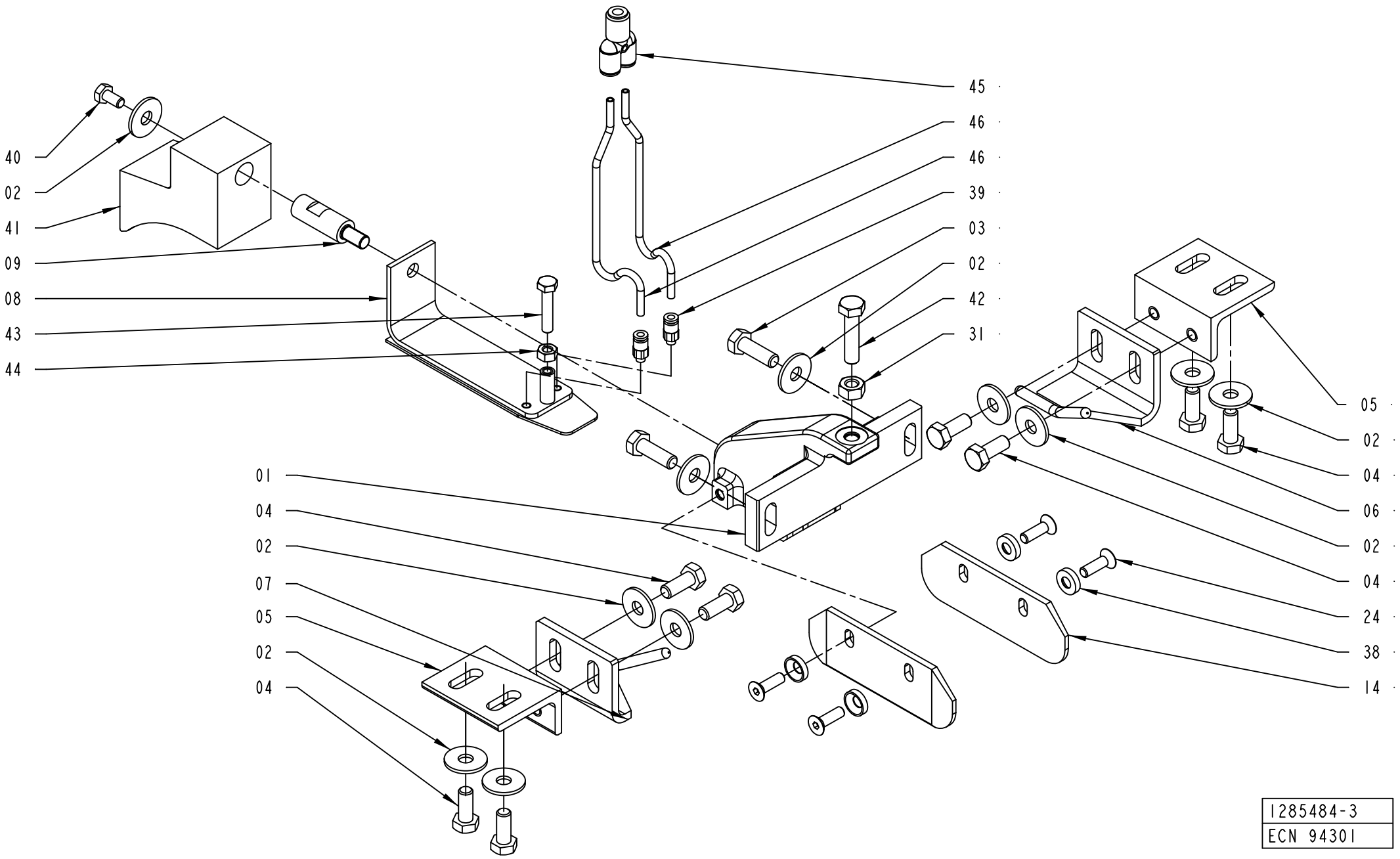

1285484-3
ECN 94301

ECM: 140024 - 20040715
Group number: 1285484-0100
Assembly Drawing: 1285484-3_1_AC

Pos	Part No	UN	Qty	Description	Page No
TPA 0200SQ					
01	1558190-0014		1	HOLDER	
06	2511725-0000		1	GUIDE	
07	2511726-0000		1	GUIDE	
08	2509560-0000		1	PRESSURE PLATE	
41	2504468-0000		1	BLOCK	
50	312105-0380		1	SCREW, M6S ISO 4014 M6X50 A4 80	
TPA 0250SQ					
01	1558190-0013		1	HOLDER	
06	2509558-0000		1	GUIDE	
07	2509559-0000		1	GUIDE	
08	2509560-0000		1	PRESSURE PLATE	
41	2509561-0000		1	BLOCK	
TPA 0330SQ					
01	1558190-0012		1	HOLDER	
06	2509558-0000		1	GUIDE	
07	2509559-0000		1	GUIDE	
08	2509556-0000		1	PRESSURE PLATE	
41	2509557-0000		1	BLOCK	
Common Parts					
02	90005-0116		11	WASHER PLAIN ROUND 8,4(M8)/24, H=2	
03	312105-0453		2	SCREW, M6S ISO 4017 M8X25 A4 80	
04	312105-0451		8	SCREW, M6S ISO 4017 M8X20 A4 80	
05	1260694-0000		2	BRACKET	
09	1539792-0000		1	PIN	
14	1558191-0000		2	PLATE	
24	312155-0370		4	SCREW DIN 7991 MF6S M6X20 A4 70	
31	312605-0318		1	HEXAGON NUT, M6M M8 A280	
38	1317228-0000		4	WASHER	
39	342722-0198		2	STRAIGHT COUPLING	
40	312105-0366		1	SCREW, M6S ISO 4017 M6X12 A4 80	
42	312105-0457		1	SCREW, M6S ISO 4014 M8X35 A4 80	
43	312109-0374		1	SCREW, M6S ISO 4017 M6X30 A4 80	
44	312605-0316		1	HEXAGON NUT, M6M M6 A280	
45	90055-0154		1	HOSE COUPLING	
46	90166-0095	MM	500	TUBE 4 MM PA BLUE (50M)	

Pos	Part No	UN	Qty	Description	Page No

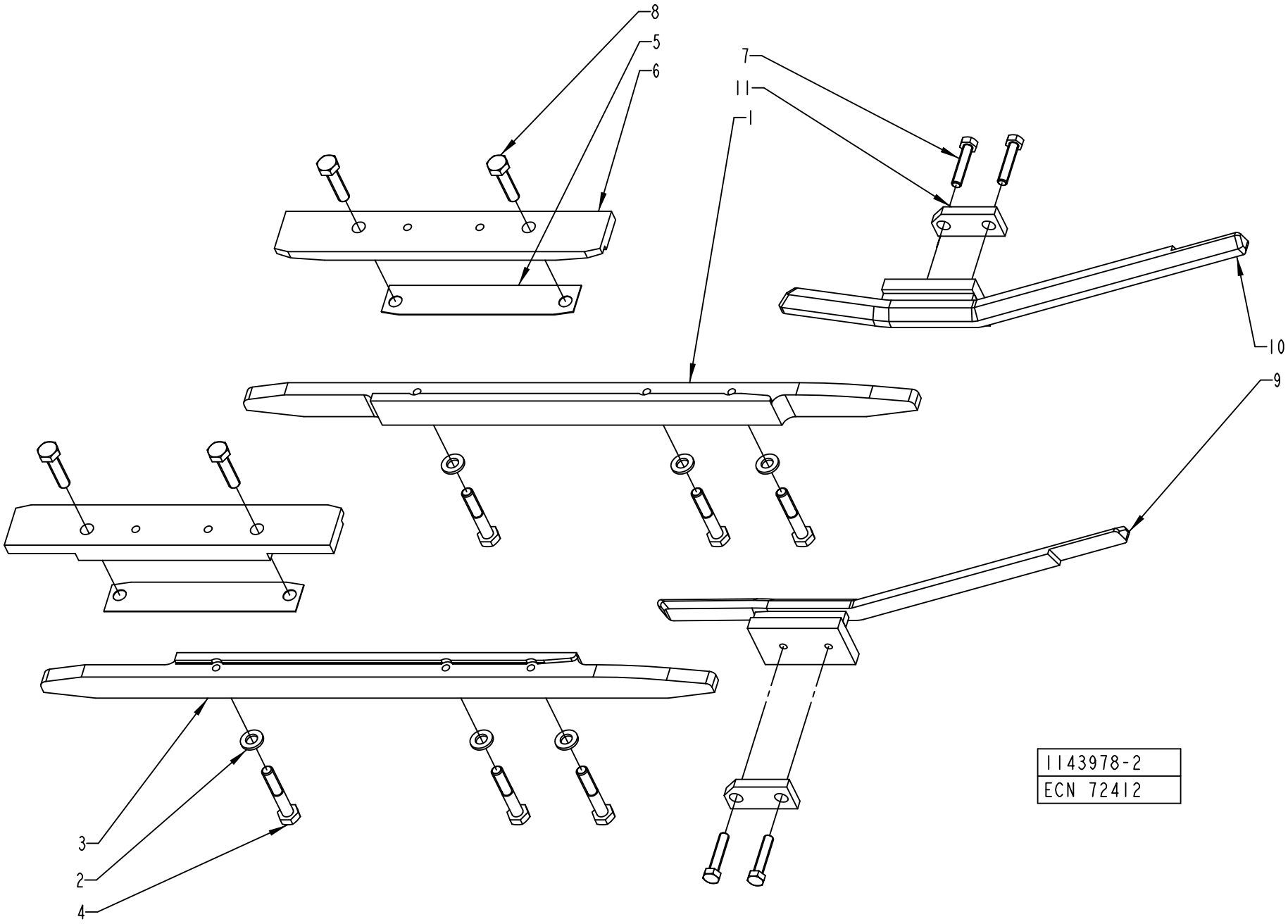
8
5
6
7
11
1
10
9
3
2
4
1143978-2
ECN 72412

ECM: 140022 - 20040715
Group number: 1143978-0100
Assembly Drawing: 1143978-2_1_AB

This list covers pages from 5-102 to 5-107

Pos	Part No	UN	Qty	Description	Page No
TBA 0200SQ (See drawing on page: 5-106)					
09	1538027-0000		1	GUIDE	
10	1538026-0000		1	GUIDE	
TPA 0200SQ (See drawing on page: 5-102)					
09	1549909-0000		1	GUIDE	
10	1549910-0000		1	GUIDE	
TPA 0250SQ (See drawing on page: 5-104)					
09	1350977-0000		1	GUIDE R	
10	1350978-0000		1	GUIDE L	
TPA 0330SQ (See drawing on page: 5-102)					
09	1498156-0000		1	GUIDE R	
10	1498155-0000		1	GUIDE L	
Common Parts					
01	1195034-0000		1	RAIL LEFT	
02	315105-0153		6	WASHER PLAIN, 6,4X12X1,5 A4 BRB	
03	1195033-0000		1	RAIL RIGHT	
04	312105-0376		6	SCREW, M6S ISO 4014 M6X35 A4 80	
05	491266-0000		4	SHIM	
06	1195059-0000		2	PLATE	
07	312105-0333		4	SCREW, M6S ISO 4017 M5X25 A4 80	
08	312105-0372		4	SCREW, M6S ISO 4017 M6X25 A4 80	
11	295729-0000		2	WASHER	

Pos	Part No	UN	Qty	Description	Page No

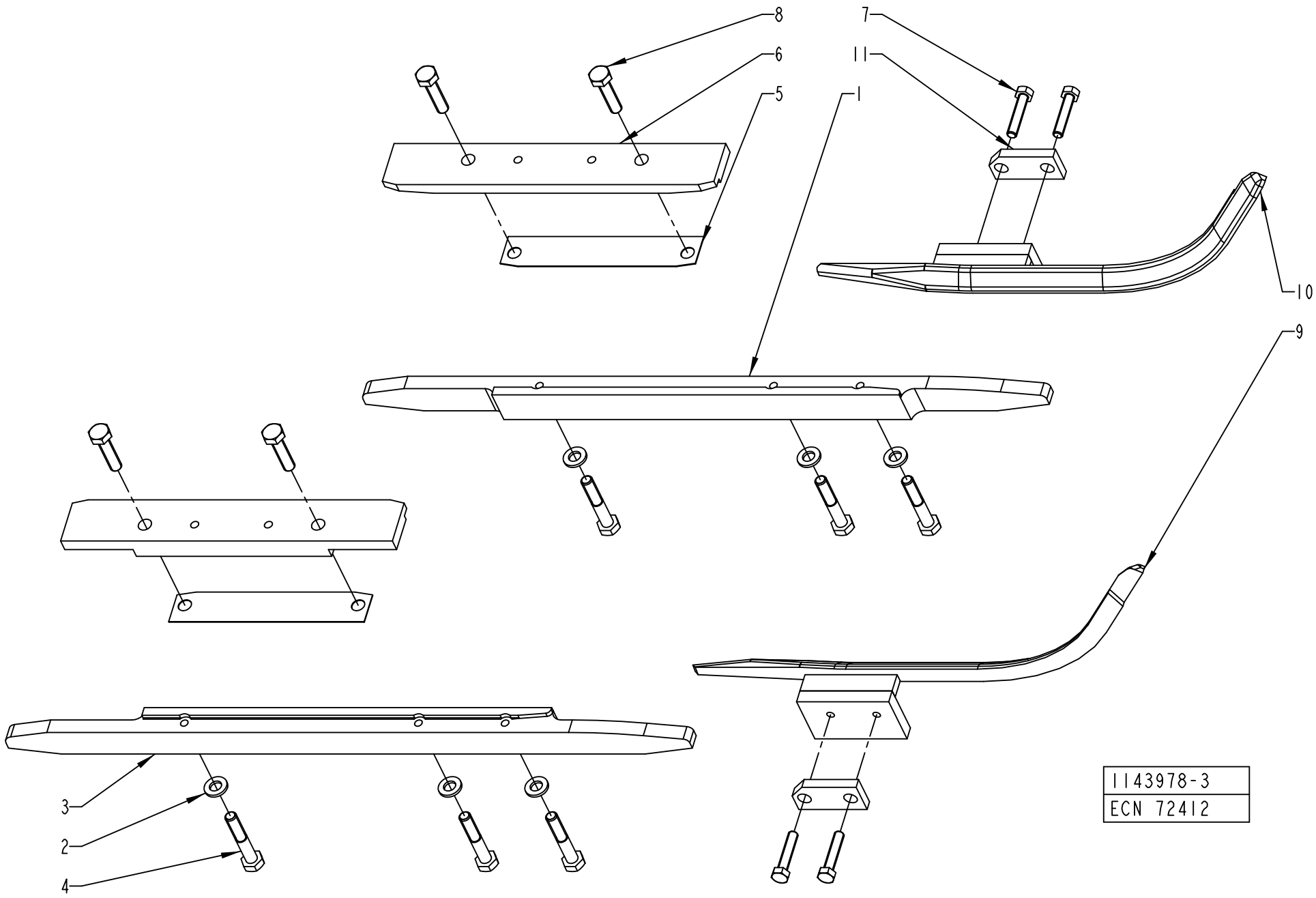
8
6
5
7
11
1
10
9
3
2
4
1143978-3
ECN 72412

ECM: 140022 - 20040715
Group number: 1143978-0100
Assembly Drawing: 1143978-3_1_AA

This list covers pages from 5-102 to 5-107

Pos	Part No	UN	Qty	Description	Page No
TBA 0200SQ (See drawing on page: 5-106)					
09	1538027-0000		1	GUIDE	
10	1538026-0000		1	GUIDE	
TPA 0200SQ (See drawing on page: 5-102)					
09	1549909-0000		1	GUIDE	
10	1549910-0000		1	GUIDE	
TPA 0250SQ (See drawing on page: 5-104)					
09	1350977-0000		1	GUIDE R	
10	1350978-0000		1	GUIDE L	
TPA 0330SQ (See drawing on page: 5-102)					
09	1498156-0000		1	GUIDE R	
10	1498155-0000		1	GUIDE L	
Common Parts					
01	1195034-0000		1	RAIL LEFT	
02	315105-0153		6	WASHER PLAIN, 6,4X12X1,5 A4 BRB	
03	1195033-0000		1	RAIL RIGHT	
04	312105-0376		6	SCREW, M6S ISO 4014 M6X35 A4 80	
05	491266-0000		4	SHIM	
06	1195059-0000		2	PLATE	
07	312105-0333		4	SCREW, M6S ISO 4017 M5X25 A4 80	
08	312105-0372		4	SCREW, M6S ISO 4017 M6X25 A4 80	
11	295729-0000		2	WASHER	

Pos	Part No	UN	Qty	Description	Page No

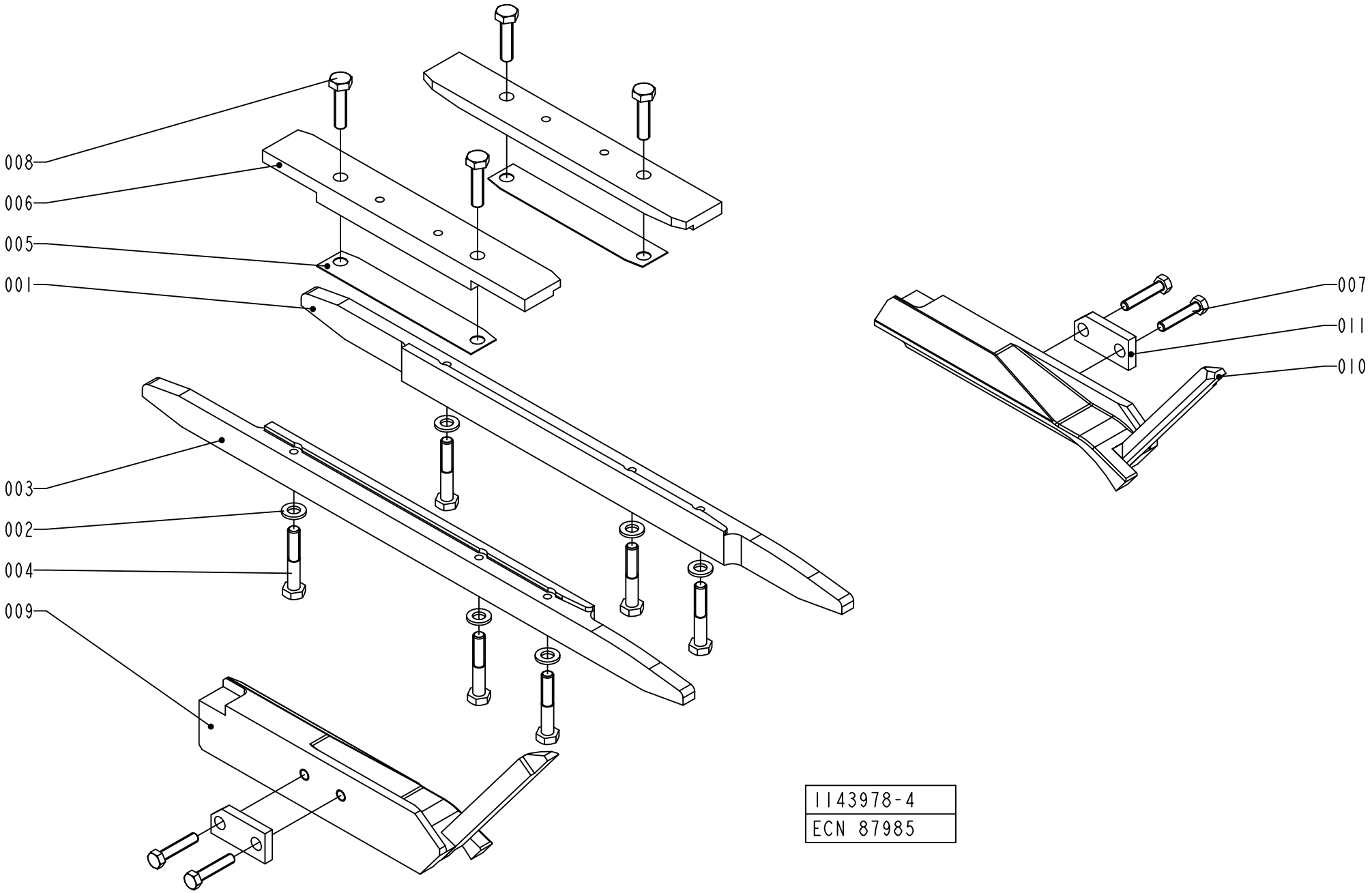
008
006
005
001
003
002
004
009
007
011
010
1143978-4
ECN 87985

ECM: 140022 - 20040715
Group number: 1143978-0100
Assembly Drawing: 1143978-4_1_AA

This list covers pages from 5-102 to 5-107

Pos	Part No	UN	Qty	Description	Page No
TBA 0200SQ (See drawing on page: 5-106)					
09	1538027-0000		1	GUIDE	
10	1538026-0000		1	GUIDE	
TPA 0200SQ (See drawing on page: 5-102)					
09	1549909-0000		1	GUIDE	
10	1549910-0000		1	GUIDE	
TPA 0250SQ (See drawing on page: 5-104)					
09	1350977-0000		1	GUIDE R	
10	1350978-0000		1	GUIDE L	
TPA 0330SQ (See drawing on page: 5-102)					
09	1498156-0000		1	GUIDE R	
10	1498155-0000		1	GUIDE L	
Common Parts					
01	1195034-0000		1	RAIL LEFT	
02	315105-0153		6	WASHER PLAIN, 6,4X12X1,5 A4 BRB	
03	1195033-0000		1	RAIL RIGHT	
04	312105-0376		6	SCREW, M6S ISO 4014 M6X35 A4 80	
05	491266-0000		4	SHIM	
06	1195059-0000		2	PLATE	
07	312105-0333		4	SCREW, M6S ISO 4017 M5X25 A4 80	
08	312105-0372		4	SCREW, M6S ISO 4017 M6X25 A4 80	
11	295729-0000		2	WASHER	

Pos	Part No	UN	Qty	Description	Page No

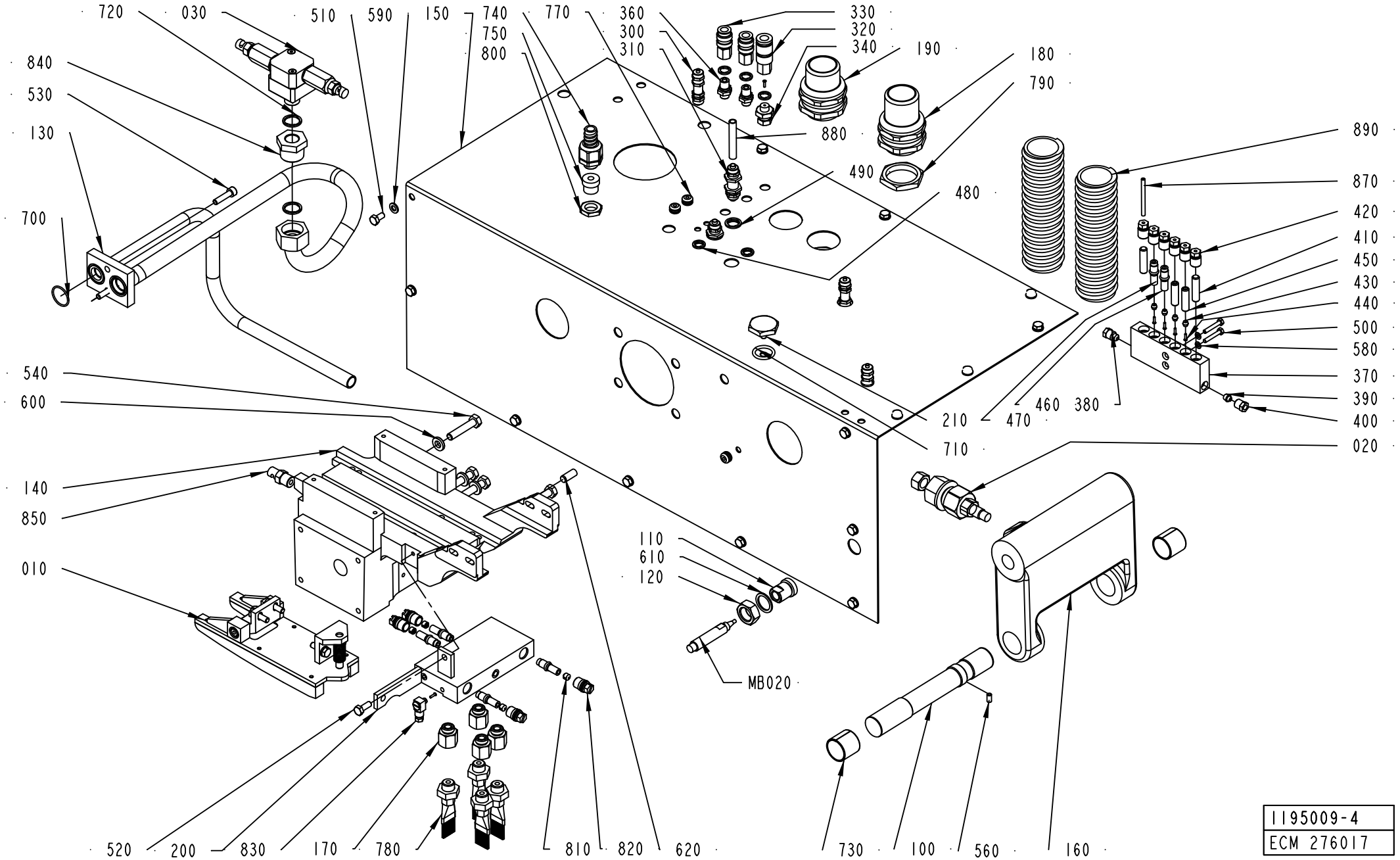

1195009-4
ECM 276017

ECM: 292530 - 20070126
Group number: 1195009-0300
Assembly Drawing: 1195009-4_1_AA

Pos	Part No	UN	Qty	Description	Page No
-					
010	1255876-0100		1	CHAIN TENSIONER	**5-111**
020	1255877-0100		1	CLAMPING ELEMENT	**5-113**
030	441811-0100		1	ROTOR	**5-53**
100	256276-0000		1	3HAFT	
110	490932-0000		1	SLEEVE	
120	490933-0000		1	NUT	
130	979458-0000		1	PIPE CONNECTION	
140	1143977-0000		1	SUPPORTING ARM	
150	2816495-0000		1	SHIELD PLATE	
160	1255614-0000		1	LINK	
170	1260205-0000		4	SPACER	
180	1260316-0000		1	LAND FITTING	
190	1144150-0000		1	GLAND FITTING	
200	751070-0000		1	DISTRIBUTOR BLOCK	
210	272997-0000		1	STOPPER	
300	342960-0112		3	BULKHEAD COUPLING 6/4	
310	342960-0122		2	BULKHEAD COUPLING 8/6	
320	90163-0046		1	SLEEVE LP-004-0-WR 0510-21-1 BRASS	
330	90163-0062		2	QUICK COUPLING, (F) 5053-1/8	
340	90134-0004		1	PIPE CONNECTION R1/8	
360	342921-0113		2	STRAIGHT COUPLING, EXT.THREAD 6/4-G1/8	
370	90032-0040		1	BLOCK 6 WAYS	
380	90087-0019		1	PLUG M10X1 STAINLESS	
390	90028-0025		1	CONE TUBE 6 MM	
400	90134-0055		1	BUSHING/NUT INLET/OUTLET 6 MM	
410	90134-0052		2	PLUG DOSING BLOCK	
420	90134-0040		6	BUSHING VALVE CONNECTION 4 MM	
430	90028-0021		4	CONE TUBE 4 MM	
440	90134-0031		11	SLEEVE FOR PLASTIC TUBE	
450	90134-0051		2	SPACING COLLAR DOSING BLOCK	
460	90092-0054		5	METERING VALVE 50 MM3	
470	90092-0053		1	METERING VALVE 30 MM3	
480	315239-0109		6	NYLON WASHER G1/8, 1/8RRP	
490	315239-0110		2	NYLON WASHER G1/4, 1/4RRP	
500	312105-0297		2	SCREW, M6S ISO 4017 M4X25 A4 70	
510	312105-0366		14	SCREW, M6S ISO 4017 M6X12 A4 80	
520	312105-0368		1	SCREW, M6S ISO 4017 M6X16 A4 80	
530	312115-0372		2	SCREW ISO4762 M6X25 A4 80	
540	312105-0459		4	SCREW, M6S ISO 4014 M8X40 A4 80	
560	312318-0325		1	SET SCREW, CUP END ISO4029 M5X10 A4	
580	315105-0136		2	WASHER PLAIN, 4,3X9X0,8 A4 BRB	
590	315105-0153		14	WASHER PLAIN, 6,4X12X1,5 A4 BRB	
600	315111-0165		4	WASHER PLAIN, TBRB 8,4/16 H=3	
610	90005-0048		1	WASHER,PL.RND.CU.18,2/23,9 H=1,5	
620	311103-0401		1	PARALLEL PIN ISO 2338 8M6X20 A1	
700	315202-0118		2	O-RING 22,1X1,6 MM	
710	315202-0215		1	O-RING 19,2X3 MM	
720	315239-0111		2	NYLON WASHER G3/8, 3/8RRP	
730	321141-0300		2	BEARING BUSHING, 25X28X25 MM	
740	353243-0001		1	GLAND FITTING, VK 15052YUL11	
750	353249-0008		1	INSERT, SINGLE HOLE, EK152 7	
770	90015-0028		3	LEAD-IN BUSHING	
780	90092-0048		4	OIL BRUSH, FLAT, 5/16-24 UNF	
790	90099-0011		2	NUT PR 37 BRASS	
800	90099-0104		1	PLUG, PR 15,2 (PG9)	
810	90134-0042		4	SPACER DOSING VALVE	
820	90134-0045		4	PLUG M12X1	
830	90134-0068		1	CONNECTION	
840	90330-0078		1	BUSHING, INT.EXT. THR. R3/4-G3/8	
850	90424-0010		1	SPRAY NOZZLE, 142 DEG R1/4, K5	
870	90166-0109	M	2	TUBE 4 MM PA TRANSP.	
880	90166-0013	M	4	TUBE 8 MM PA BLUE	
890	90152-0060	M	2	HOSE, SPIRAL CONDUIT, 42X35, UL3529	
900	90157-0022		1	SEALING COMPOUND, SILICONE	
910	90144-0073		1	TREBOFLON-TAPE W=13MM	
MB020	90600-0463		1	INDUCTIVE SWITCH,E2A-M12LN05-WP-B1-TP 5M	

Machine Type	Group Description	Used-In	Group Number	Page No

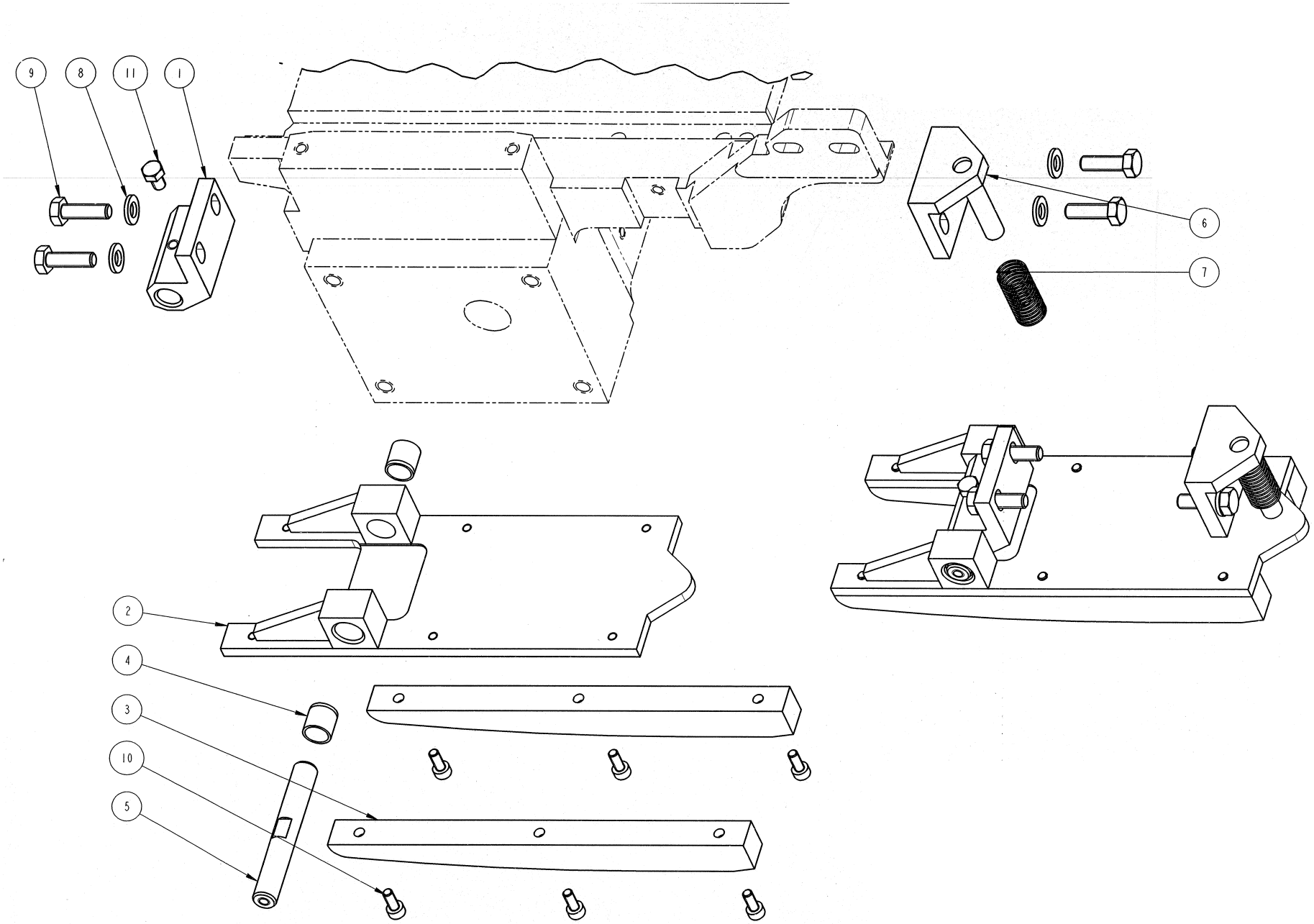
9
8
11
1
6
7
2
4
3
10
5

ECM: 140029 - 20040715
Group number: 1255876-0100
Assembly Drawing: 1255876-1_1_AA

Pos	Part No	UN	Qty	Description	Page No
-					
01	1195454-0000		1	BRACKET	
02	1255391-0000		1	PLATE	
03	1255392-0000		2	GUIDE	
04	321141-0142		2	BEARING BUSHING, 10X12X12 MM	
05	1195456-0000		1	SHAFT	
06	1195455-0000		1	BRACKET	
07	90335-0055		1	COMP. SPRING, 22470, 1,6X14,1X53,5	
08	315105-0153		4	WASHER PLAIN, 6,4X12X1,5 A4 BRB	
09	312105-0370		4	SCREW, M6S ISO 4017 M6X20 A4 80	
10	312115-0289		6	SCREW ISO4762 M4X10 A4 80	
11	312105-0323		1	SCREW, M6S ISO 4017 M5X8 A4 80	

Pos	Part No	UN	Qty	Description	Page No

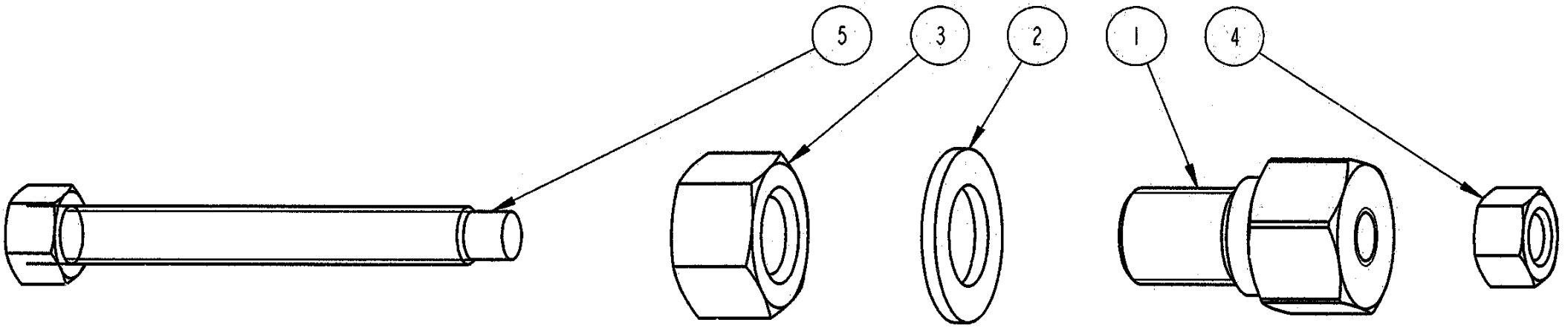
5
3
2
1
4

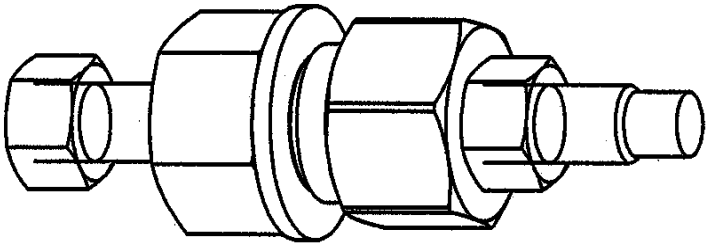

ECM: 140028 - 20040715
Group number: 1255877-0100
Assembly Drawing: 1255877-1_1_AA

Pos	Part No	UN	Qty	Description	Page No
-					
1	1255933-0000		1	NUT	
2	315105-0192		1	WASHER PLAIN, 21X36X3 A4 BRB	
3	312605-0326		1	HEXAGON NUT, M6M M20 A280	
4	312605-0322		1	HEXAGON NUT, M6M M12 A280	
5	1255932-0000		1	AXLE PIN	

Pos	Part No	UN	Qty	Description	Page No

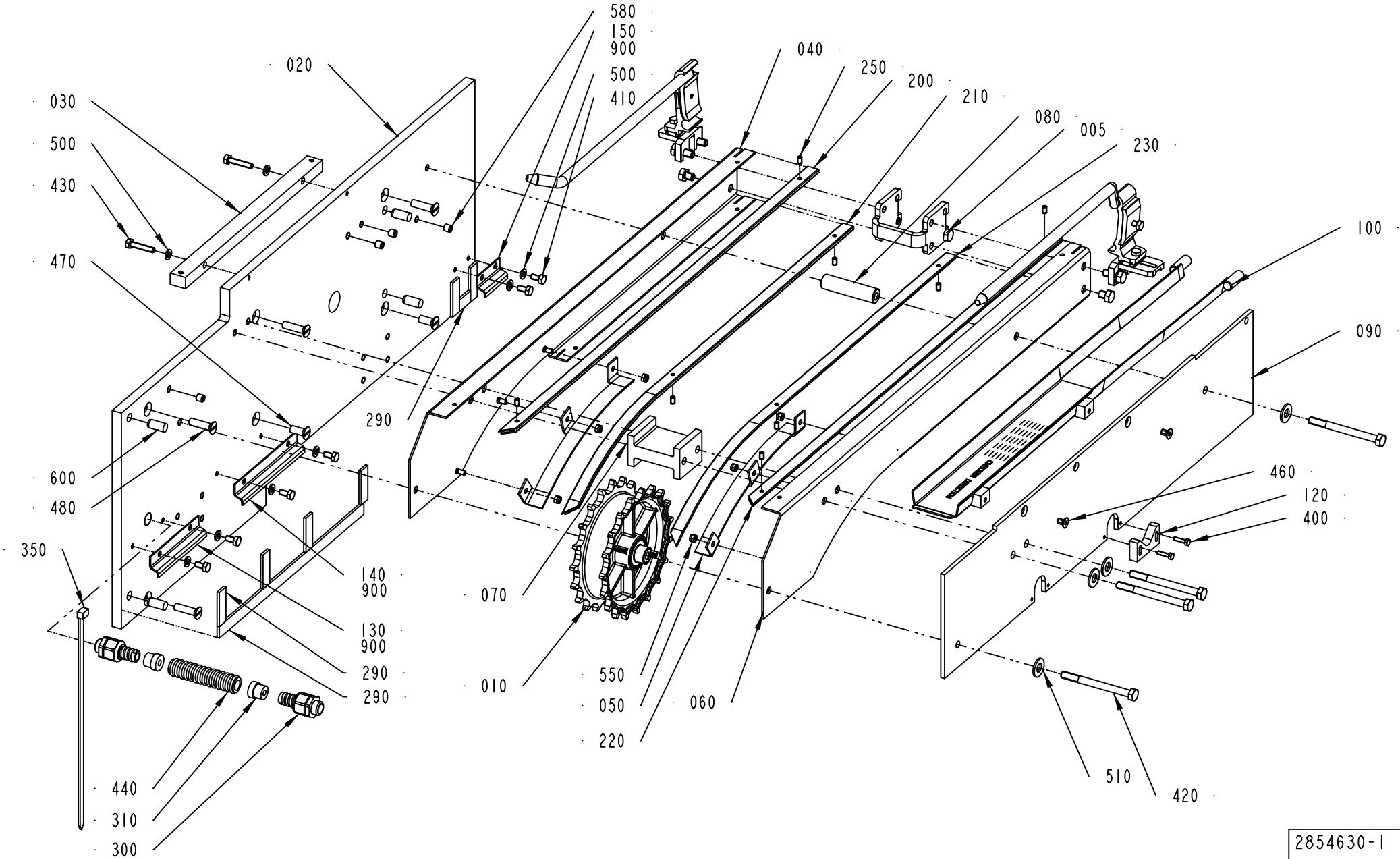

2854630-1
998641

ECM: 998641 - 20070126
Group number: 2854630-0100
Assembly Drawing: 2854630-1_1_AA

This list covers pages from 5-114 to 5-117

Pos	Part No	UN	Qty	Description	Page No
TPA 0250SQ, TPA 0200SQ (See drawing on page: 5-114)					
100	2854656-0000		1	SLIDE PLATE	
TPA 0330SQ NOSTREAMCAP (See drawing on page: 5-114)					
100	2854624-0000		1	SLIDE PLATE	
TPA 0330SQ STREAMCAP (See drawing on page: 5-116)					
100	2854628-0000		1	SLIDE RAIL	
Common Parts					
005	2854635-0100		1	CONVEYOR JOINT	**5-119**
010	2561244-0200		1	DRIVE WHEEL	**2-21, 5-73**
020	2854615-0000		1	PLATE	
030	1195019-0000		1	BLOCK	
040	2854619-0000		1	SIDE PLATE	
050	2854618-0000		2	SLIDE PLANE	
060	2854621-0000		1	SIDE PLATE	
070	2839449-0000		1	SPACER	
080	2561267-0000		1	SHAFT	
090	2854622-0000		1	PLATE	
120	979529-0000		1	TUBE SUPPORT	
130	2810419-0000		1	DRIP GUARD	
140	2810420-0000		1	DRIP GUARD	
150	2810421-0000		1	DRIP GUARD	
200	1550595-6993		1	SLIDING STRIP	
210	1550595-6493		1	STRIP	
220	1550595-6994		1	SLIDING STRIP	
230	1550595-6494		1	SLIDING STRIP	
250	90459-7293		8	SET SCREW DIN 551M5X8 PA66	
290	90143-0073	MM	630	FLAT GASKET TAPE W. ADHESIVE, 15X3.0	
300	90458-0427		2	GLAND FITTING, VK 21652YUL11	
310	353249-0008		2	INSERT, SINGLE HOLE, EK152 7	
350	352113-0103		1	CABLE TIE, BLACK 290X7,6 MM	
400	312105-0293		2	SCREW, M6S ISO 4017 M4X16 A4 70	
410	312105-0366		6	SCREW, M6S ISO 4017 M6X12 A4 80	
420	312105-0469		4	SCREW, M6S ISO 4014 M8X90 A4 80	
430	312109-0374		2	SCREW, M6S ISO 4017 M6X30 A4 80	
440	90152-0059	MM	800	HOSE, SPIRAL CONDUIT, 18X12, UL 1211	
460	312155-0364		2	SCREW DIN 7991 MF6S M6X10 A4 70	
470	312145-0451		2	SCREW ISO 2009 MFS M8X20 A4	
480	312145-0455		4	SCREW ISO 2009 MFS M8X30 A4	
500	315105-0153		8	WASHER PLAIN, 6,4X12X1,5 A4 BRB	
510	315105-0173		4	WASHER PLAIN, 10,5X22X2 A4 BRB	
550	312812-0314		6	HEXAGON NUT, NY-LOCK M5 A4 80	
580	312318-0443		4	SET SCREW, CUP END ISO4029 M8X8 A4	
600	311103-0455		4	PARALLEL PIN ISO 2338 10M6X22 A1	
900	90157-0022	L	1	SEALING COMPOUND, SILICONE	

Machine Type | Group Description | Used-In | Group Number | Page No

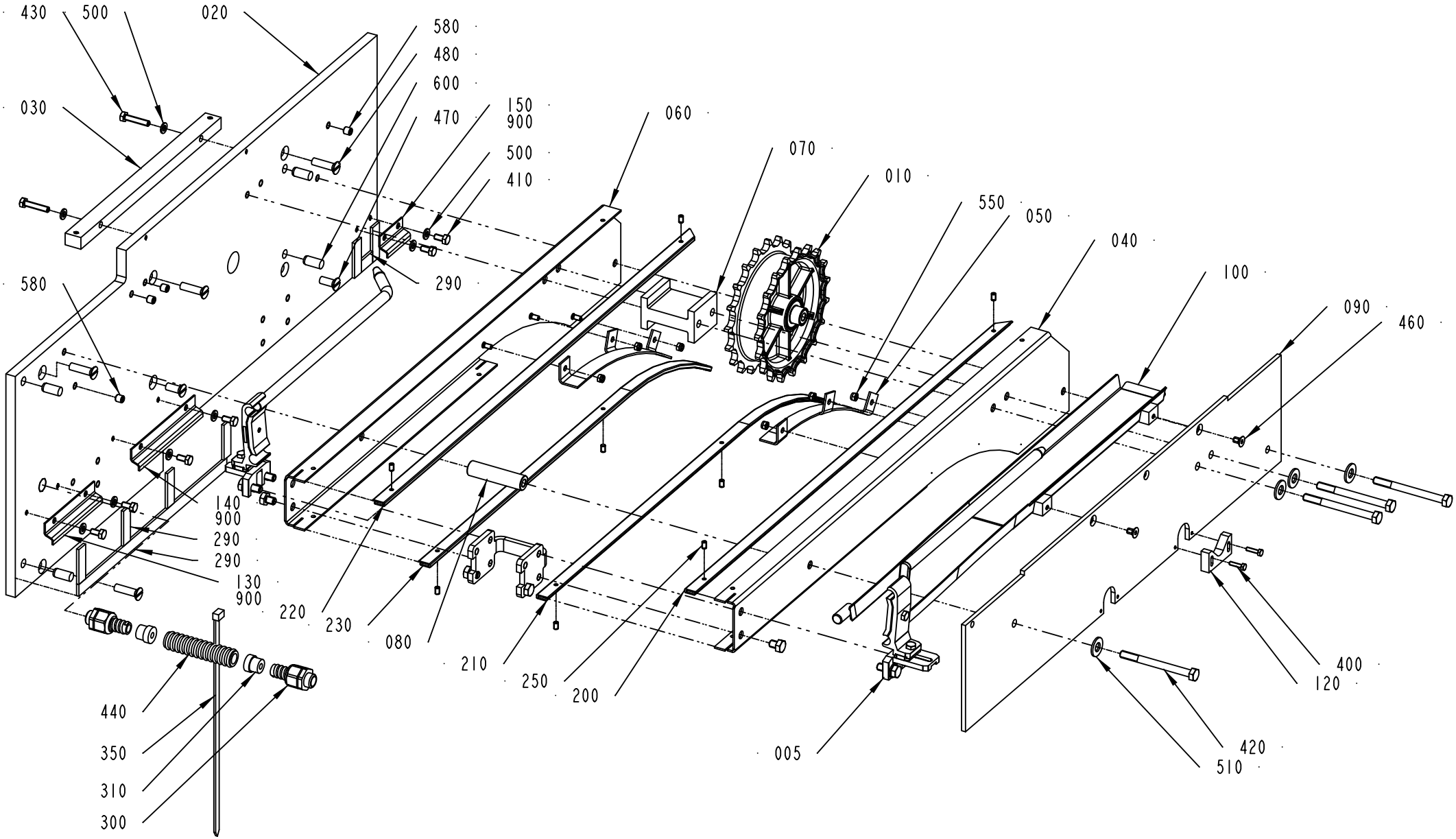

2854630-2
998641

Pos	Part No	UN	Qty	Description	Page No
TPA 0250SQ, TPA 0200SQ (See drawing on page: 5-114)					
100	2854656-0000		1	SLIDE PLATE	
TPA 0330SQ NOSTREAMCAP (See drawing on page: 5-114)					
100	2854624-0000		1	SLIDE PLATE	
TPA 0330SQ STREAMCAP (See drawing on page: 5-116)					
100	2854628-0000		1	SLIDE RAIL	
Common Parts					
005	2854635-0100		1	CONVEYOR JOINT	**5-119**
010	2561244-0200		1	DRIVE WHEEL	**2-21, 5-73**
020	2854615-0000		1	PLATE	
030	1195019-0000		1	BLOCK	
040	2854619-0000		1	SIDE PLATE	
050	2854618-0000		2	SLIDE PLANE	
060	2854621-0000		1	SIDE PLATE	
070	2839449-0000		1	SPACER	
080	2561267-0000		1	SHAFT	
090	2854622-0000		1	PLATE	
120	979529-0000		1	TUBE SUPPORT	
130	2810419-0000		1	DRIP GUARD	
140	2810420-0000		1	DRIP GUARD	
150	2810421-0000		1	DRIP GUARD	
200	1550595-6993		1	SLIDING STRIP	
210	1550595-6493		1	STRIP	
220	1550595-6994		1	SLIDING STRIP	
230	1550595-6494		1	SLIDING STRIP	
250	90459-7293		8	SET SCREW DIN 551M5X8 PA66	
290	90143-0073	MM	630	FLAT GASKET TAPE W. ADHESIVE, 15X3.0	
300	90458-0427		2	GLAND FITTING, VK 21652YUL11	
310	353249-0008		2	INSERT, SINGLE HOLE, EK152 7	
350	352113-0103		1	CABLE TIE, BLACK 290X7,6 MM	
400	312105-0293		2	SCREW, M6S ISO 4017 M4X16 A4 70	
410	312105-0366		6	SCREW, M6S ISO 4017 M6X12 A4 80	
420	312105-0469		4	SCREW, M6S ISO 4014 M8X90 A4 80	
430	312109-0374		2	SCREW, M6S ISO 4017 M6X30 A4 80	
440	90152-0059	MM	800	HOSE, SPIRAL CONDUIT, 18X12, UL 1211	
460	312155-0364		2	SCREW DIN 7991 MF6S M6X10 A4 70	
470	312145-0451		2	SCREW ISO 2009 MFS M8X20 A4	
480	312145-0455		4	SCREW ISO 2009 MFS M8X30 A4	
500	315105-0153		8	WASHER PLAIN, 6,4X12X1,5 A4 BRB	
510	315105-0173		4	WASHER PLAIN, 10,5X22X2 A4 BRB	
550	312812-0314		6	HEXAGON NUT, NY-LOCK M5 A4 80	
580	312318-0443		4	SET SCREW, CUP END ISO4029 M8X8 A4	
600	311103-0455		4	PARALLEL PIN ISO 2338 10M6X22 A1	
900	90157-0022	L	1	SEALING COMPOUND, SILICONE	

Machine Type | Group Description | Used-In | Group Number | Page No

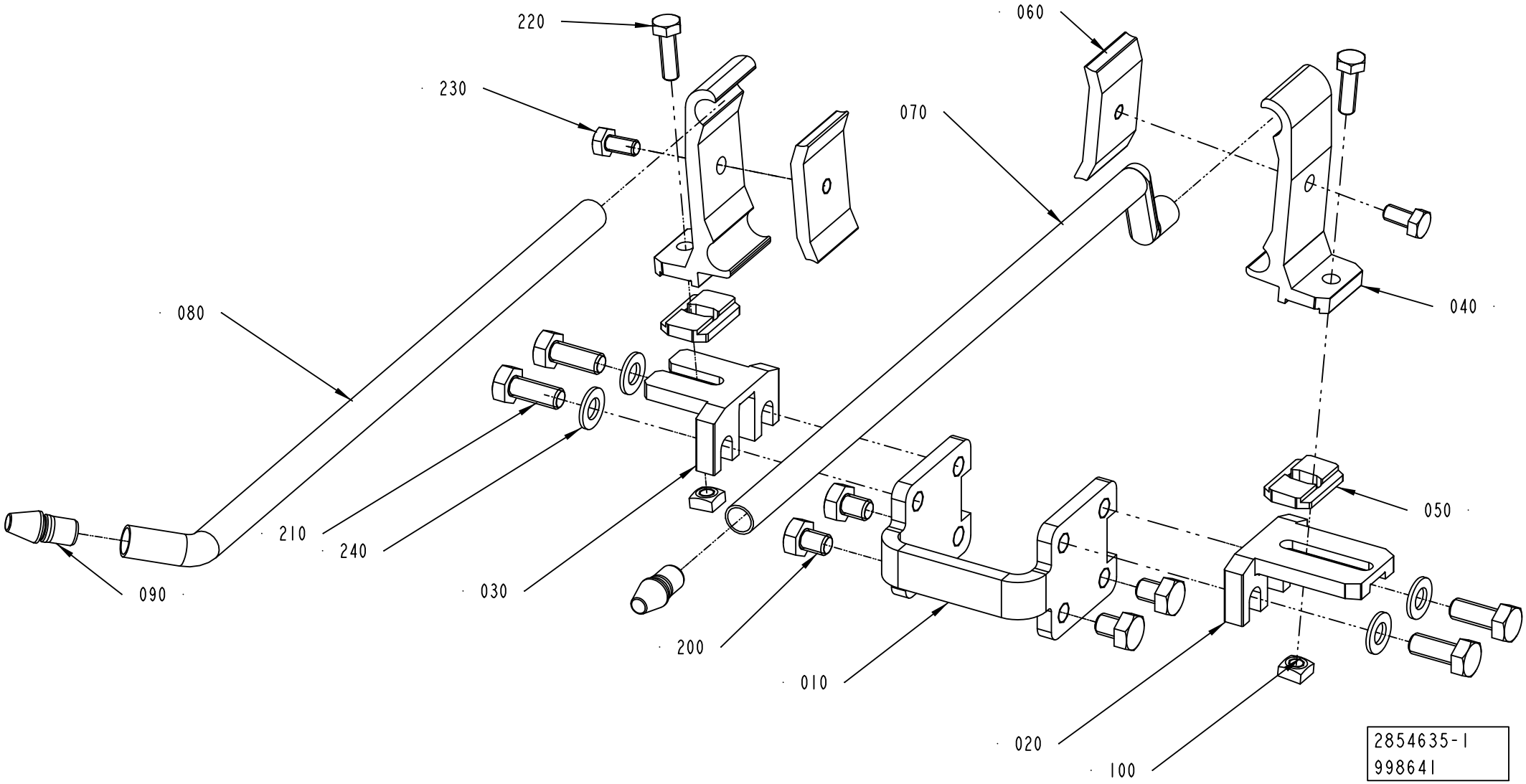
220
230
060
070
080
040
050
210
240
030
090
200
010
020
100
2854635-1
998641

ECM: 998641 - 20070126
Group number: 2854635-0100
Assembly Drawing: 2854635-1_1_AA

Pos	Part No	UN	Qty	Description	Page No
-					
010	2561206-0000		1	SPACER	
020	1550772-0000		1	HOLDER	
030	2854627-0000		1	HOLDER	
040	2699437-0000		2	RAIL HOLDER	
050	2699436-0000		2	SPACER	
060	1366727-0000		2	CLAMP	
070	2854626-0000		1	SLIDE RAIL	
080	2854623-0000		1	SLIDE RAIL	
090	540169-0000		2	DOWEL	
100	1359565-0000		2	NUT	
200	90459-4735		4	SCREW, M6S ISO 4017 M8X10 A4 80	
210	312105-0451		4	SCREW, M6S ISO 4017 M8X20 A4 80	
220	312105-0370		2	SCREW, M6S ISO 4017 M6X20 A4 80	
230	312105-0366		2	SCREW, M6S ISO 4017 M6X12 A4 80	
240	315105-0165		4	WASHER PLAIN, 8,4X16X1,6 A4 BRB	

Pos	Part No	UN	Qty	Description	Page No

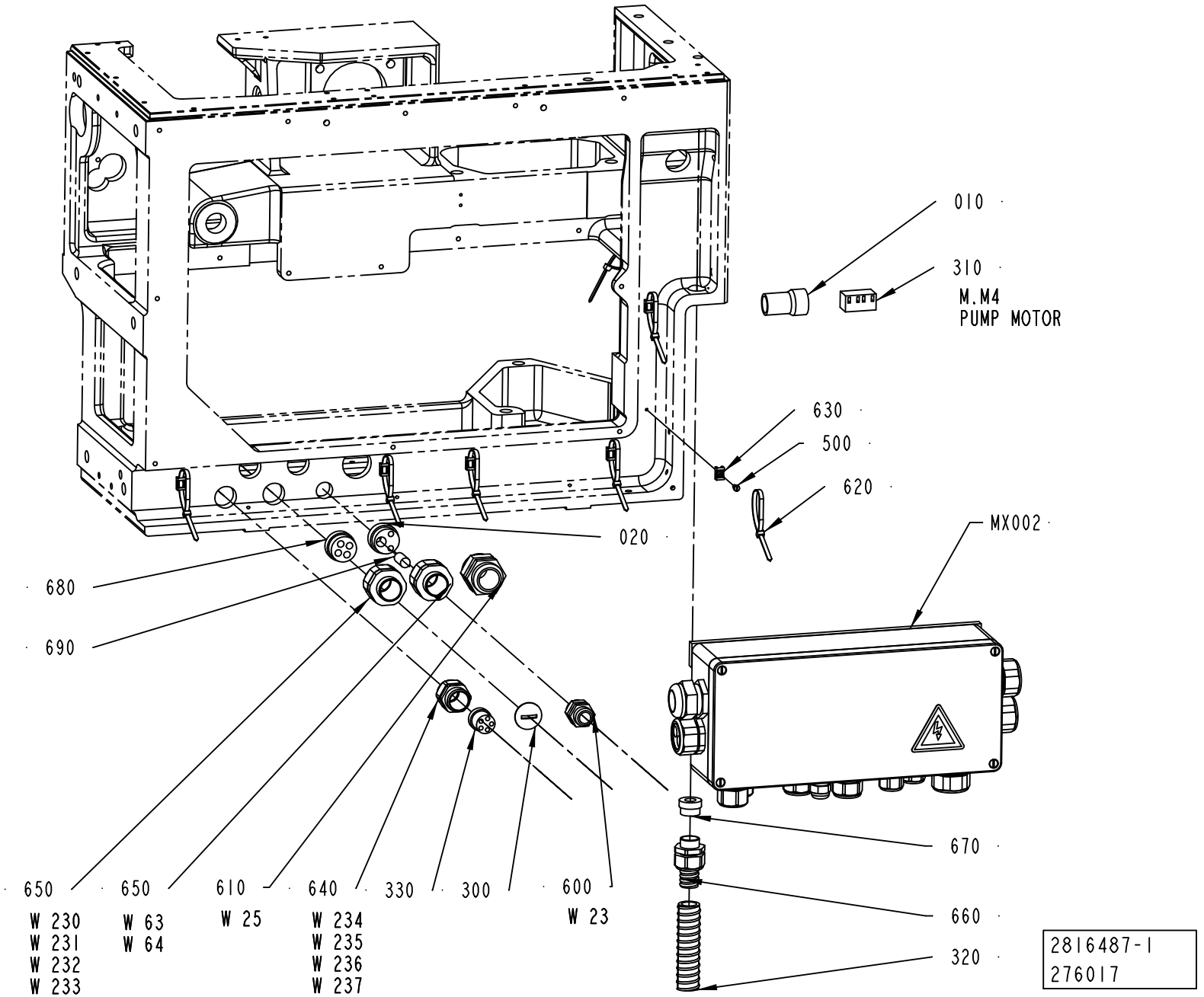
010
310
M.M4
PUMP MOTOR
630
500
620
020
MX002
680
690
650
W 230
W 231
W 232
W 233
650
W 63
W 64
610
W 25
640
W 234
W 235
W 236
W 237
330
300
600
W 23
670
660
320
2816487-1
276017

ECM: 293444 - 20070126
Group number: 2816487-0100
Assembly Drawing: 2816487-1_1_AA

Pos	Part No	UN	Qty	Description	Page No
-					
010	456249-0000		1	PROTECTIVE COVER	
020	1478653-0000		1	INSERT	
300	90002-0012		1	BLANK-OFF PLUG, PR 28,3 SKINDICHT-BLK21	
310	90077-0102		1	TERMINAL BLOCK, 1952.2	
320	90152-0051	MM	500	HOSE, SPIRAL CONDUIT, 25X18, UL 1816	
330	90457-0028		1	INSERT, MULTI HOLE, E154M5X5	
500	312125-0287		8	SLOTTED HEAD SCREW, ISO1207 M4X8 A4	
600	352103-0111		1	CABLE GLAND, ST 16, PR22,5/PG16	
610	352103-0121		1	CABLE GLAND, ST 29, PR37,0/PG29	
620	352113-0102		8	CABLE TIE, BLACK 188X4,8 MM	
630	352113-0205		8	ANCHOR PLATES FOR STRIPS, TM2S8-C100	
640	353240-0005		1	COMPRESSION GLAND, VK 154Y	
650	353241-0003		1	COMPRESSION GLAND, VK 15455Y	
660	353243-0005		1	GLAND FITTING, VK 15354YUL16	
670	353249-0013		1	INSERT, SINGLE HOLE, EK154 13	
680	353249-0037		1	INSERT, MULTI HOLE, EK155M 4X8	
690	353249-0311		1	SEALING PIN, 12,0X25	
MX002	2506331-0200		1	CONNECTION BOX	**5-77, 5-79**

Pos	Part No	UN	Qty	Description	Page No

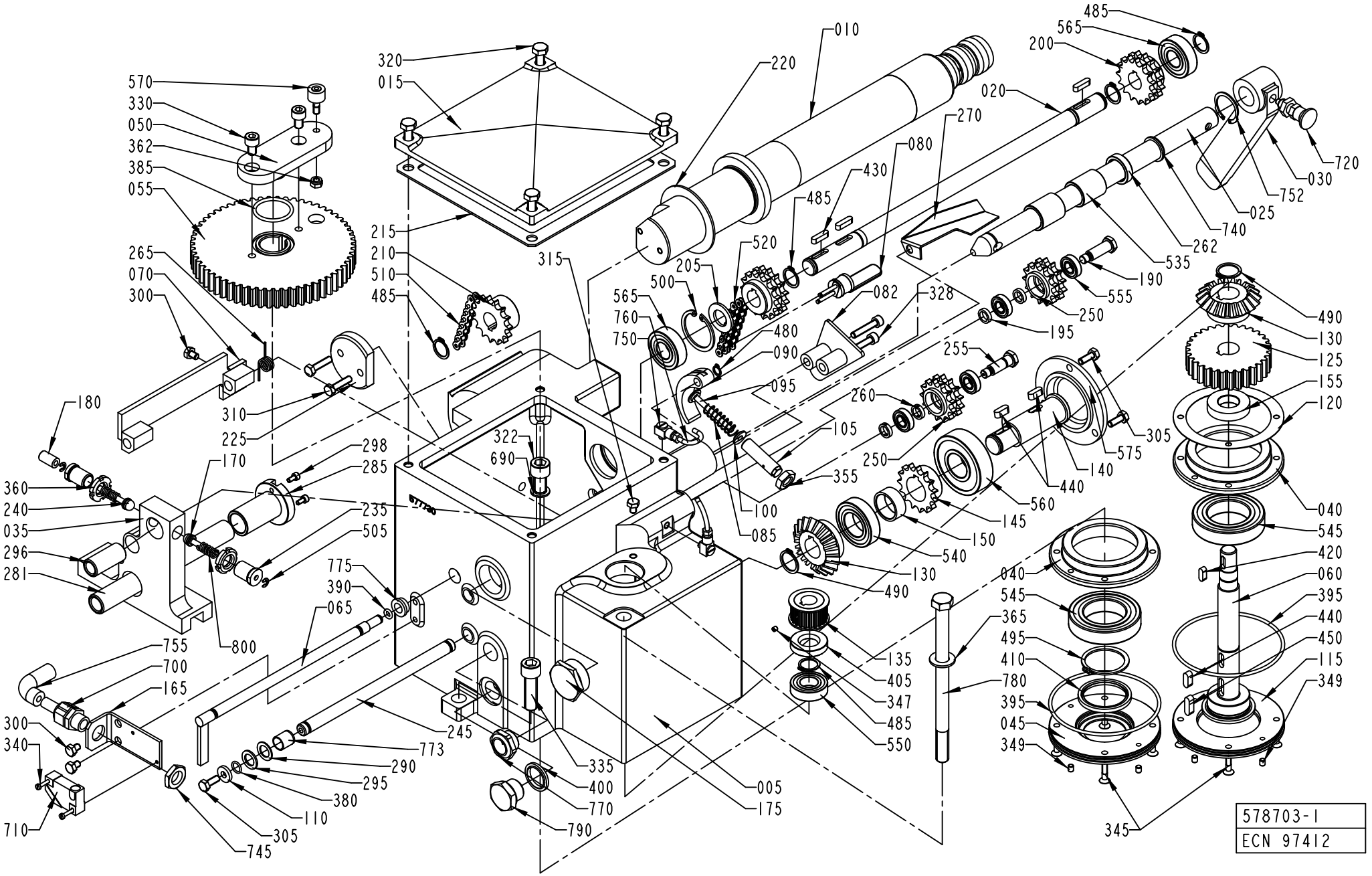
570
330
050
362
385
055
265
070
300
180
310
225
360
240
035
296
281
170
298
285
235
505
800
755
700
165
300
340
710
745
305
110
380
295
290
773
245
775
390
065
320
015
215
210
510
485
315
322
690
220
010
205
520
500
565
760
750
480
090
095
105
100
085
355
130
490
135
405
347
485
550
335
400
770
790
005
175
485
565
200
020
270
080
430
485
720
030
752
025
740
262
535
190
555
250
195
328
082
255
260
250
305
575
140
440
560
145
150
540
490
130
545
420
060
395
440
450
115
349
040
545
365
495
410
780
395
045
349
345
578703-1
ECN 97412

ECM: 387092 - 20110224
Group number: 578703-0100
Assembly Drawing: 578703-1_1_AJ

This list covers pages from 5-122 to 5-127

Pos	Part No	UN	Qty	Description	Page No
TBA 0100B, TBA 0125S (See drawing on page: 5-122)					
010	295313-0000		1	SHAFT	
030	979749-0000		1	PUSHER	
080	979304-0000		2	CARRIER	
135	577741-0000		1	TOOTHED PULLEY	
220	751567-0000		1	SPACER RING	
225	578105-0000		1	WASHER	
TBA 0160S, TBA 0200M, TBA 0200B, TBA 0250S, TBA 0284B, TBA 0250B, TBA 0300S, TBA 0330S (See drawing on page: 5-122)					
010	295313-0000		1	SHAFT	
030	578096-0000		1	PUSHER	
080	979304-0000		2	CARRIER	
135	577741-0000		1	TOOTHED PULLEY	
220	751567-0000		1	SPACER RING	
225	578105-0000		1	WASHER	
TBA 0200S (See drawing on page: 5-122)					
010	295313-0000		1	SHAFT	
030	979881-0000		1	PUSHER	
080	979304-0000		2	CARRIER	
135	577741-0000		1	TOOTHED PULLEY	
220	751567-0000		1	SPACER RING	
225	578105-0000		1	WASHER	
TBA 0200SQ (See drawing on page: 5-126)					
010	1260687-0000		1	SHAFT	
030	1519572-0000		1	PUSHER	
080	2598932-0000		2	CARRIER	
135	577741-0000		1	TOOTHED PULLEY	
225	1282800-0000		1	WASHER	
TPA 0200SQ (See drawing on page: 5-124)					
010	1260687-0000		1	SHAFT	
030	1349420-0000		1	PUSHER	
031	1519620-0000		1	PLATE	
032	1519621-0000		1	PLATE	
080	979304-0000		2	CARRIER	
135	1260318-0000		1	TOOTHED PULLEY	
225	1282800-0000		1	WASHER	
280	1279106-0000		1	BRACKET	
315	312105-0329		2	SCREW, M6S ISO 4017 M5X16 A4 80	
665	312115-0329		2	SCREW ISO4762 M5X16 A4 80	
715	315105-0146		2	WASHER PLAIN, 5,3X10X1 A4 BRB	
TPA 0250SQ (See drawing on page: 5-124)					
010	1260687-0000		1	SHAFT	
030	1519619-0000		1	PUSHER	
031	1519620-0000		1	PLATE	
032	1519621-0000		1	PLATE	
080	2598932-0000		2	CARRIER	
135	1260318-0000		1	TOOTHED PULLEY	
225	1282800-0000		1	WASHER	
280	1279106-0000		1	BRACKET	
315	312105-0329		2	SCREW, M6S ISO 4017 M5X16 A4 80	
665	312115-0329		2	SCREW ISO4762 M5X16 A4 80	
715	315105-0146		2	WASHER PLAIN, 5,3X10X1 A4 BRB	
TPA 0330SQ (See drawing on page: 5-124)					
010	1260687-0000		1	SHAFT	
030	1519619-0000		1	PUSHER	
031	1519622-0000		1	PLATE	
032	1519623-0000		1	PLATE	
080	979304-0000		2	CARRIER	
135	1260318-0000		1	TOOTHED PULLEY	
225	1282800-0000		1	WASHER	
280	1279106-0000		1	BRACKET	
315	312105-0329		2	SCREW, M6S ISO 4017 M5X16 A4 80	
665	312115-0329		2	SCREW ISO4762 M5X16 A4 80	
715	315105-0146		2	WASHER PLAIN, 5,3X10X1 A4 BRB	
Common Parts					
005	577730-0000		1	HOUSE	
015	577731-0000		1	LID	
020	2509548-0000		1	SHAFT	
025	578092-0000		1	ROD	
035	1350195-0000		1	CURVE ARM GUIDE	
040	577732-0000		2	SHOULDER RING	
045	577733-0000		1	LID	
050	979978-0000		1	DRIVE DISC	
055	979979-0000		1	GEAR WHEEL	
060	577739-0000		1	SHAFT	
065	577750-0000		1	SHAFT	
070	577751-0000		1	ARM	
082	979556-0000		1	GUARD PLATE	
085	118582-0000		1	COMPRESSION SPRING	
090	272546-0000		1	SLIDER	
095	272547-0000		1	TACK	
100	272549-0000		1	WASHER	
105	272550-0000		1	ADJUSTING SCREW	
110	440880-0000		4	WASHER	

Machine Type | Group Description | Used-In | Group Number | Page No

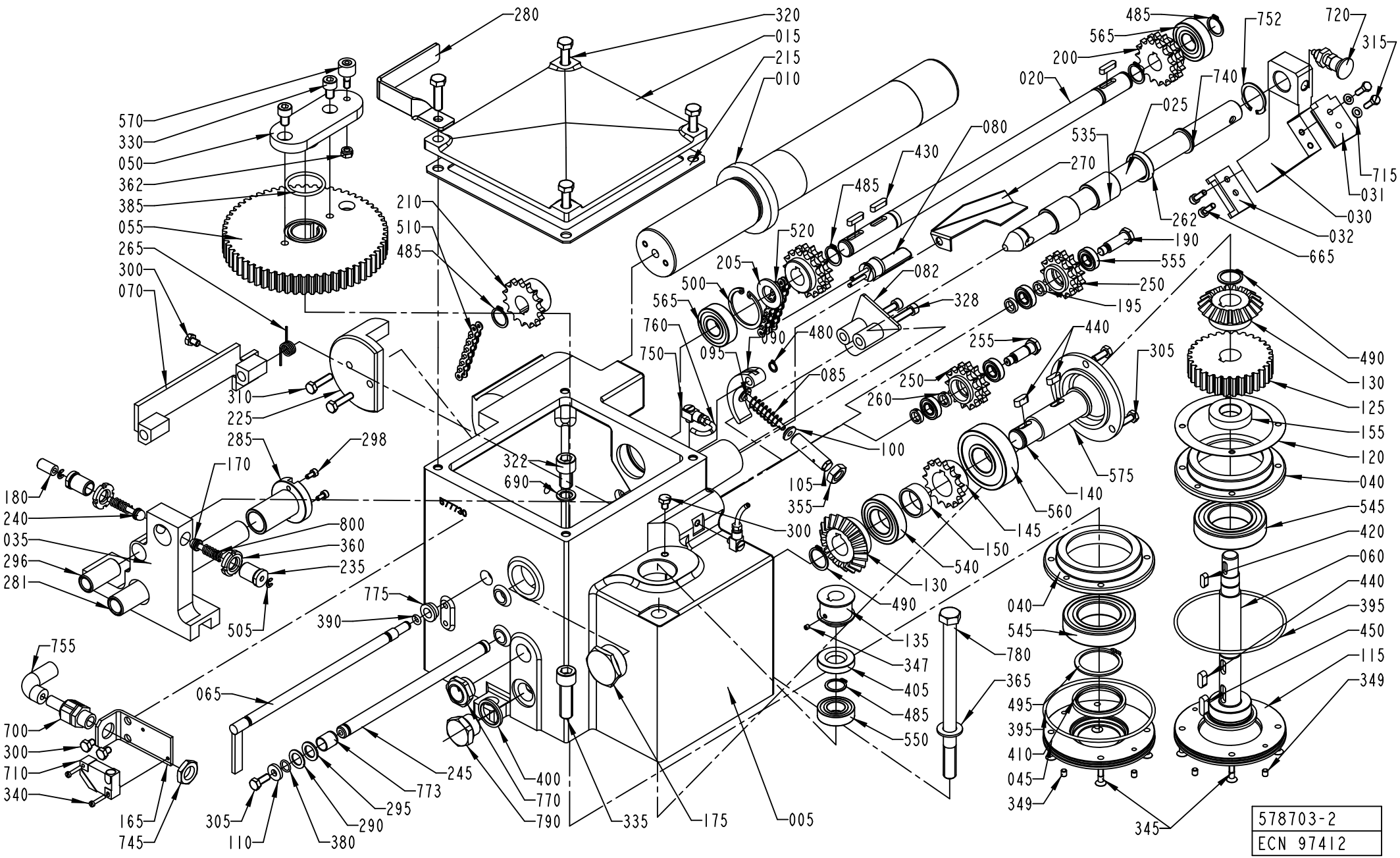
280
320
015
215
010
570
330
050
362
385
055
265
300
070
210
510
485
310
225
285
298
170
180
240
035
296
281
800
360
235
505
322
690
775
390
065
755
700
300
710
340
165
745
305
110
380
290
295
773
245
400
770
790
335
175
005
080
430
485
520
205
500
565
760
750
095
090
480
085
100
105
355
300
130
490
135
347
405
485
550
780
365
082
328
255
250
260
440
575
140
560
145
150
540
485
565
200
020
752
720
315
740
025
535
270
715
031
030
032
262
665
190
555
250
195
305
490
130
125
155
120
040
545
420
060
440
395
450
115
349
040
545
495
395
410
045
349
345
578703-2
ECN 97412

ECM: 387092 - 20110224
Group number: 578703-0100
Assembly Drawing: 578703-2_1_AF

This list covers pages from 5-122 to 5-127

Pos	Part No	UN	Qty	Description	Page No
Common Parts (Cont'd)					
115	577734-0000		1	LID	
120	577735-0000		1	SHIM	
125	577738-0000		1	GEAR WHEEL	
130	577740-0000		2	GEAR WHEEL	
140	577742-0000		1	SHAFT	
145	577743-0000		1	SPROCKET	
150	577744-0000		1	SPACER	
155	577745-0000		1	SPACER	
165	577752-0000		1	SHEET	
170	577754-0000		1	BALL PIN	
175	577755-0000		1	PLUG	
180	577756-0000		1	DOWEL	
190	577758-0000		1	AXLE BOLT	
195	577759-0000		2	SPACER	
200	577761-0000		2	SPROCKET	
205	577762-0000		1	SPACER	
210	577763-0000		1	SPROCKET	
215	577767-0000		1	FLANGE SEAL	
235	979308-0000		2	SEAT	
240	979309-0000		1	BALL PIN	
245	979312-0000		2	SHAFT	
250	979461-0000		2	SPROCKET	
255	979462-0000		1	AXLE BOLT	
260	979472-0000		2	SPACER	
262	979702-0000		1	SEAL HOLDER (OLD 578107 BEARING HOUSING)	
265	1036713-0000		1	TURN SPRING	
270	1282733-0000		1	SHEET	
281	1350196-0000		1	SHAFT	
285	1350197-0000		1	GUIDE BUSHING	
290	1350198-0000		1	SHIM	
295	1350199-0000		1	SHIM	
296	1350200-0000		1	BUSHING	
298	312115-0287		2	SCREW ISO4762 M4X8 A4 80	
300	312105-0362		4	SCREW, M6S ISO 4017 M6X8 A4 80	
305	312105-0368		7	SCREW, M6S ISO 4017 M6X16 A4 80	
310	312105-0372		2	SCREW, M6S ISO 4017 M6X25 A4 80	
320	312105-0455		4	SCREW, M6S ISO 4017 M8X30 A4 80	
322	312115-0532		2	SCREW ISO4762 M12X20 A4 80	
328	312115-0374		2	SCREW ISO4762 M6X30 A4 80	
330	312115-0447		2	SCREW ISO4762 M8X12 A4 80	
335	312115-0540		2	SCREW ISO4762 M12X40 A4 80	
340	312125-0228		2	SLOTTED HEAD SCREW, ISO1207 M3X16 A4	
345	312155-0333		8	SCREW DIN 7991 MF6S M5X25 A4 70	
347	312318-0283		1	SET SCREW, CUP END ISO4029 M4X4 A4	
349	312318-0321		4	SET SCREW, CUP END ISO4029 M5X6 A4	
355	312625-0322		1	HEXAGON THIN NUT, EN 24035 ML6M M12 A4	
360	312805-0102		2	NUT ROUND WITH SLOTS M15X1 FE	
362	312812-0316		1	HEXAGON NUT, NY-LOCK M6 A4 80	
365	315105-0178		1	WASHER PLAIN, 13X24X2,5 A4 BRB	
380	315202-0107		4	O-RING 9,1X1,6 MM	
385	315202-0220		1	O-RING 32,2X3 MM	
390	315202-0204		2	O-RING 5,3X2,4 MM	
395	315202-0311		2	O-RING 99,5X3 MM	
400	315211-0111		1	BONDED SEAL SS/NBR90 G1/2	
405	315221-0137		1	RADIAL SEAL 17X35X7 MM	
410	315230-0422		1	BEARING SEAL G40X50X4 MM	
420	315705-0198		1	PARALLEL KEY W. ROUND ENDS, 5X5X14 MM	
430	315705-0201		3	PARALLEL KEY W. ROUND ENDS, 5X5X20 MM	
440	315705-0230		3	PARALLEL KEY W. ROUND ENDS, 6X6X16 MM	
450	315705-0232		1	PARALLEL KEY W. ROUND ENDS, 6X6X20 MM	
480	90141-0015		1	RETAINING RING FOR SHAFT DIN 471 8 SS	
485	90141-0017		5	RETAINING RING FOR SHAFT DIN 471 17 SS	
490	315751-0116		2	RETAINING RING FOR SHAFT DIN 471 20 SS	
495	315751-0127		1	RETAINING RING FOR SHAFT DIN 471 40 SS	
500	315753-0127		1	RETAINING RING FOR BORE DIN 472 40X1.75C	
505	315755-0106		2	RETAINING RING SHAFT DIN 6799 4 SS	
510	318201-0047		1	ROLLER CHAIN, SIMPLEX 3/8 -47	
520	318241-0030		2	ROLLER CHAIN, DUPLEX 3/8" -30, SS	
535	321116-0307		2	BUSHING W/O FLANGE, 20/26X30 MM	
540	321306-0105		1	BALL BEARING 25/47X12	
545	321308-0108		2	BALL BEARING 40/68X15	
550	321308-0203		1	BALL BEARING 17/35X10	
555	90214-0167		4	BALL BEAR. 10/22X6 SOLID OIL	
560	321316-0205		1	BALL BEARING 25/62X17	
565	90214-0189		2	BALL BEARING, 17X40X12 MM	
570	321580-0116		1	CAM ROLLER, 6X16X28 MM	
575	321601-0118		1	SEAL COVER LL62	
690	90005-0047		2	WASHER,PL.RND.CU.12,2/ H=1,5	
700	353249-0008		1	INSERT, SINGLE HOLE, EK152 7	
700	353243-0001		1	GLAND FITTING, VK 15052YUL11	
710	90044-0104		1	INDUCTIVE SENSOR IN5227S	
720	90051-0112		1	LOCK KNOB, NO. GN 617 NIK5	
740	90091-0380		1	SCRAPER, EXCLUDER 20X24,8X3,7 MM	

Machine Type | Group Description | Used-In | Group Number | Page No

DISCHARGER

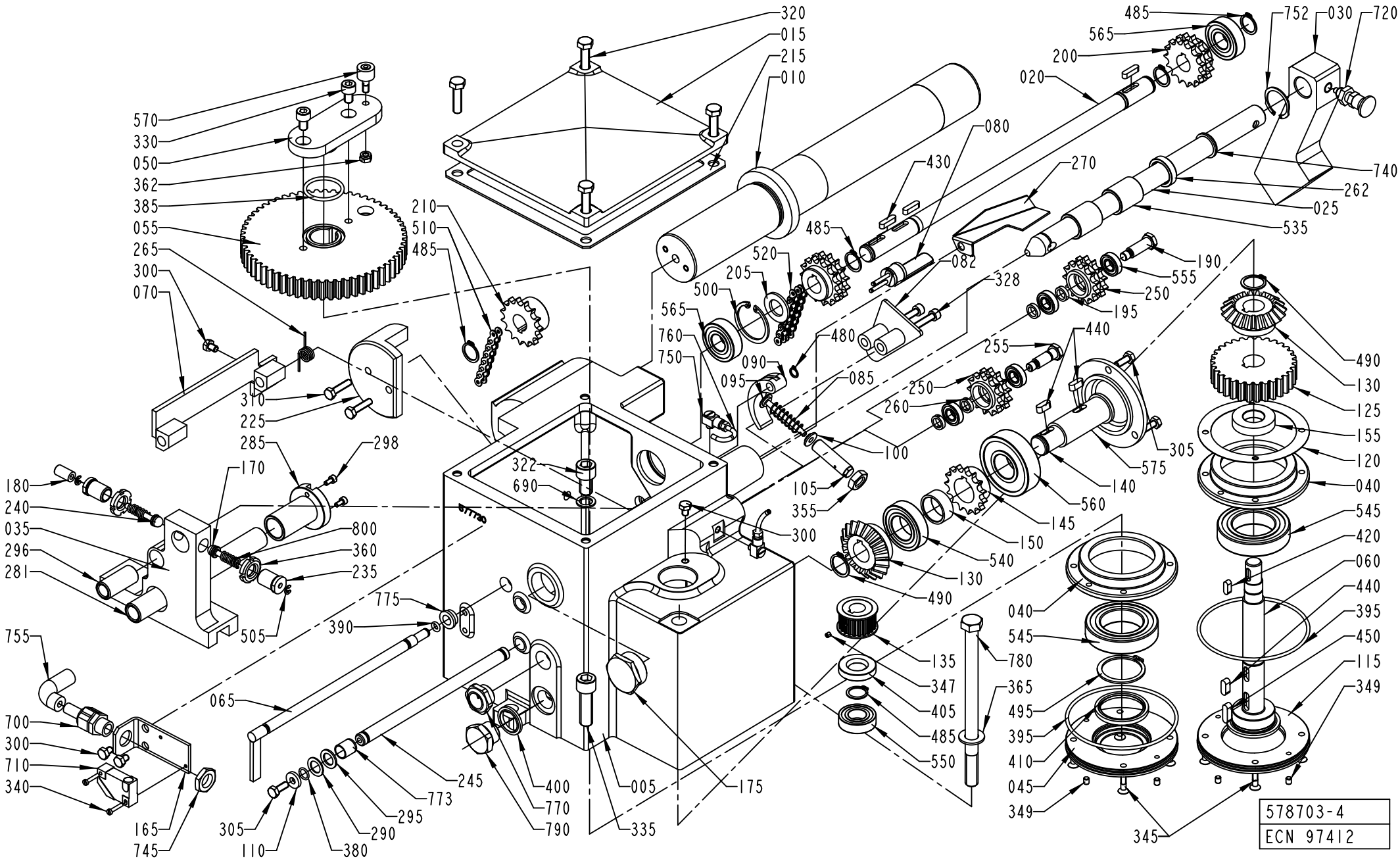
320
015
215
010
570
330
050
362
385
055
265
300
070
210
510
485
310
225
285
298
170
180
240
035
296
281
800
360
235
505
322
690
775
390
065
755
700
300
710
340
165
745
305
110
380
290
295
773
245
400
770
790
005
335
175
080
430
270
485
520
205
500
565
760
750
082
328
480
090
095
085
100
105
355
300
190
555
250
195
440
255
250
260
305
575
140
560
145
150
540
130
490
135
347
405
485
550
780
365
040
545
495
395
410
045
349
345
752
030
720
485
565
200
020
740
262
025
535
490
130
125
155
120
040
545
420
060
440
395
450
115
349
578703-4
ECN 97412

Pos	Part No	UN	Qty	Description	Page No
Common Parts (Cont'd)					
745	90099-0104		1	PLUG, PR 15,2 (PG9)	
750	90134-0068		2	CONNECTION	
752	90141-0030		1	CIRCLIP	
755	90152-0058	MM	500	HOSE, SPIRAL CONDUIT, 15X9, UL 0909	
760	90166-0109	MM	600	TUBE 4 MM PA TRANSP.	
770	90199-0022		1	LEVEL GLAS	
773	321141-0183		2	BEARING BUSHING, 12X14X15 MM	
775	90240-0254		2	FLANGE BUSHING, 10X15X7 MM	
780	90287-0125		1	SCREW M6S M12X180 A4	
785	90296-0075	L	2	SHELL OMALA OIL 320 (1PC=20L)	
790	90330-0037		1	PLUG, G1/2EXT, G1/2	
800	979858-0000		2	COMPRESSION SPRING	

Pos	Part No	UN	Qty	Description	Page No

DISCHARGE CHUTE

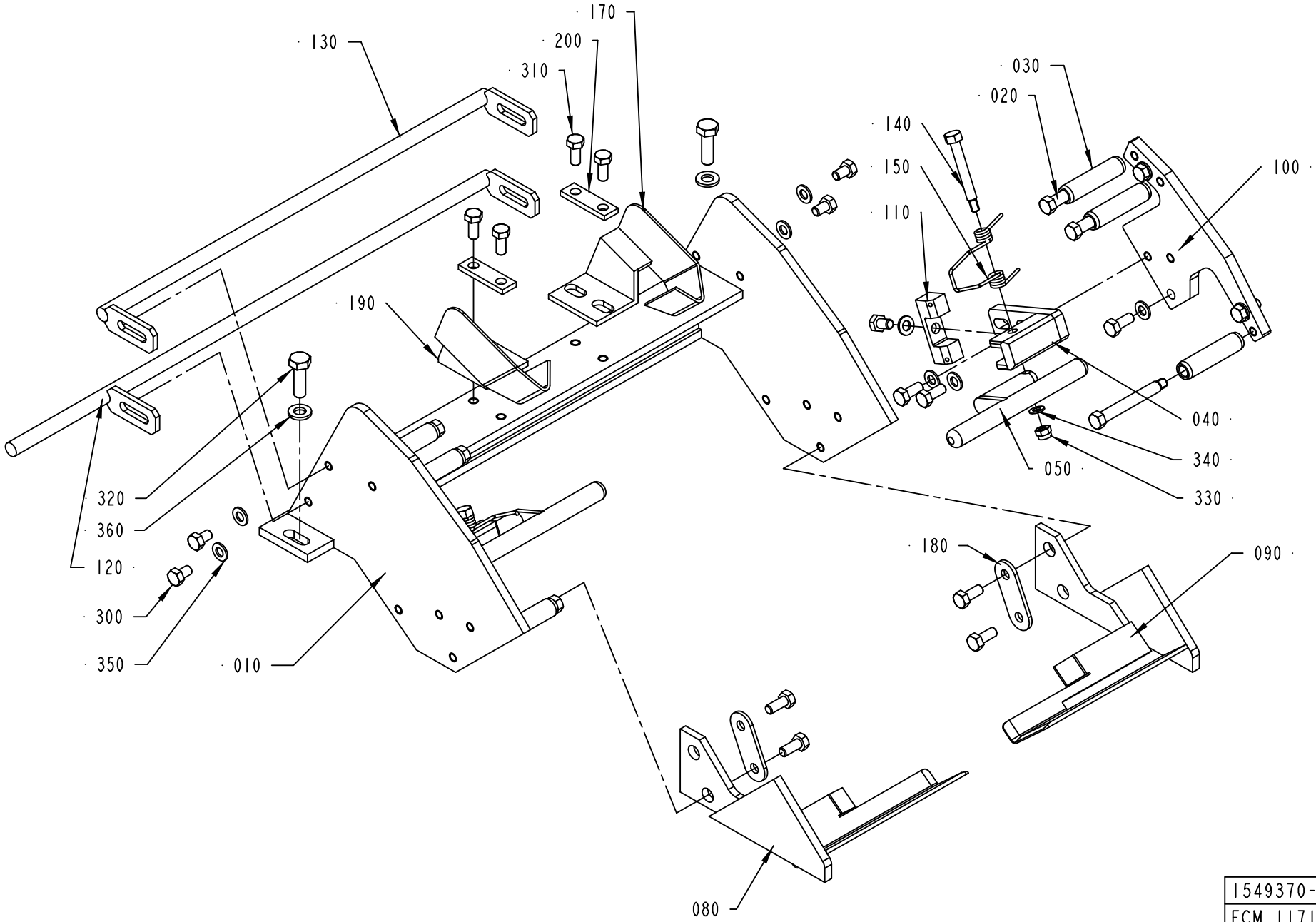

1549370-1
ECM 117105

ECM: 117116 - 20030107
Group number: 1549370-0100
Assembly Drawing: 1549370-1_1_AC

Pos	Part No	UN	Qty	Description	Page No
TPA 0200SQ (See drawing on page: 5-128)					
020	1519625-0000		8	SCREW	
030	1519626-0000		8	ROLLER	
080	1519628-0000		1	SIDE PLATE	
090	1519627-0000		1	SIDE PLATE	
100	2502423-0000		2	PLATE	
170	1558043-0000		1	SIDE PLATE	
190	1558044-0000		1	SIDE PLATE	
TPA 0250SQ (See drawing on page: 5-128)					
020	1519625-0000		6	SCREW	
030	1519626-0000		6	ROLLER	
080	1519628-0000		1	SIDE PLATE	
090	1519627-0000		1	SIDE PLATE	
100	1519629-0000		2	PLATE	
170	1350970-0000		1	SIDE PLATE	
190	1350971-0000		1	SIDE PLATE	
TPA 0330SQ (See drawing on page: 5-128)					
020	1519625-0000		6	SCREW	
030	1519626-0000		6	ROLLER	
080	1519635-0000		1	BRACKET	
090	1519636-0000		1	BRACKET	
100	1519637-0000		2	PLATE	
170	1296777-0000		1	SIDE PLATE	
190	1296778-0000		1	SIDE PLATE	
Common Parts					
010	1519624-0000		1	FRAME	
040	1519630-0000		2	BRACKET	
050	1519632-0000		2	SUPPORT	
110	1519638-0000		2	PLATE	
120	1524646-0000		1	GUIDE	
130	1524648-0000		1	SUPPORT TUBE	
140	1549365-0000		2	AXLE PIN	
150	1549366-0000		2	TORSION SPRING	
180	1296779-0000		2	WASHER	
200	1350712-0000		2	WASHER	
300	312105-0323		6	SCREW, M6S ISO 4017 M5X8 A4 80	
310	312105-0327		18	SCREW, M6S ISO 4017 M5X12 A4 80	
320	312105-0370		2	SCREW, M6S ISO 4017 M6X20 A4 80	
330	312812-0312		2	HEXAGON NUT, NY-LOCK M4 A4 80	
340	315105-0136		2	WASHER PLAIN, 4,3X9X0,8 A4 BRB	
350	315105-0146		16	WASHER PLAIN, 5,3X10X1 A4 BRB	
360	315105-0153		2	WASHER PLAIN, 6,4X12X1,5 A4 BRB	

Pos	Part No	UN	Qty	Description	Page No

Machine Type | Group Description | Used-In | Group Number | Page No

DISCHARGE SUPPORT

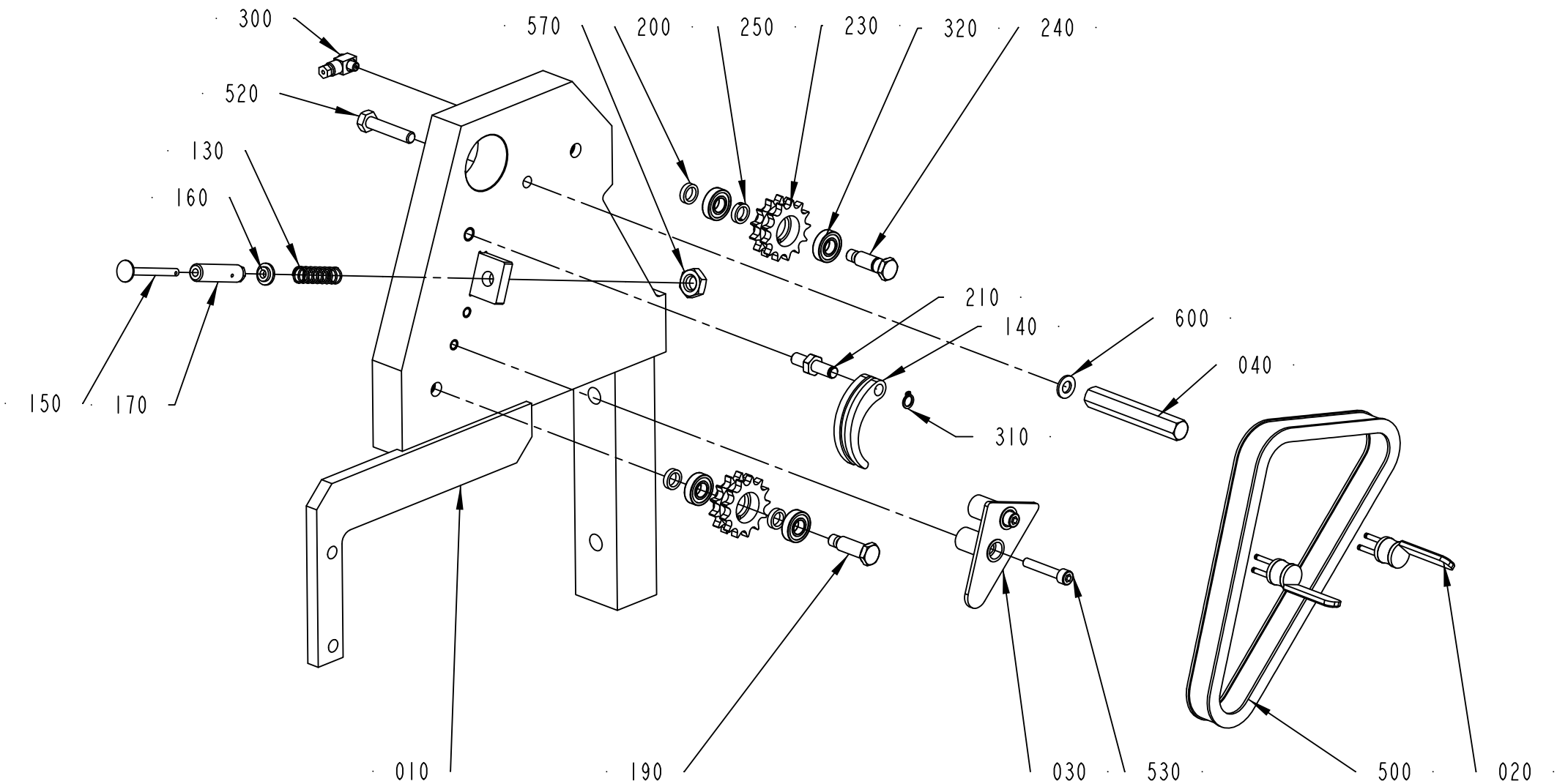

2807003-1
276017

ECM: 293445 - 20070126
Group number: 2807003-0100
Assembly Drawing: 2807003-1_1_AA

Pos	Part No	UN	Qty	Description	Page No
-					
010	2807004-0000		1	BRACKET	
020	979304-0000		2	CARRIER	
030	979550-0000		1	GUARD PLATE	
040	1349801-0000		1	PIN	
130	118582-0000		1	COMPRESSION SPRING	
140	272546-0000		1	SLIDER	
150	272547-0000		1	TACK	
160	272549-0000		1	WASHER	
170	272550-0000		1	ADJUSTING SCREW	
190	577758-0000		1	AXLE BOLT	
200	577759-0000		3	SPACER	
210	577766-0000		1	SHAFT	
230	979461-0000		2	SPROCKET	
240	979462-0000		1	AXLE BOLT	
250	979472-0000		1	SPACER	
300	90134-0058		1	CONNECTION	
310	90141-0015		1	RETAINING RING FOR SHAFT DIN 471 8 SS	
320	90214-0167		4	BALL BEAR. 10/22X6 SOLID OIL	
500	318241-0030		1	ROLLER CHAIN, DUPLEX 3/8" -30, SS	
520	312115-0459		4	SCREW ISO4762 M8X40 A4 80	
530	312115-0376		2	SCREW ISO4762 M6X35 A4 80	
570	312625-0322		1	HEXAGON THIN NUT, EN 24035 ML6M M12 A4	
600	315105-0165		16	WASHER PLAIN, 8,4X16X1,6 A4 BRB	

Pos	Part No	UN	Qty	Description	Page No

This page is intentionally left blank.

ECM: 293457 - 20070126
Group number: 2854660-0100
Assembly Drawing:

Pos	Part No	UN	Qty	Description	Page No
TPA 0250SQ, TPA 0200SQ, TPA 0330SQ NOSTREAMCAP					
010	1296120-0200		1	SIDE FEEDER	**5-135**
TPA 0330SQ STREAMCAP					
020	2854620-0100		1	SIDE FEEDER	**5-139**

Pos	Part No	UN	Qty	Description	Page No

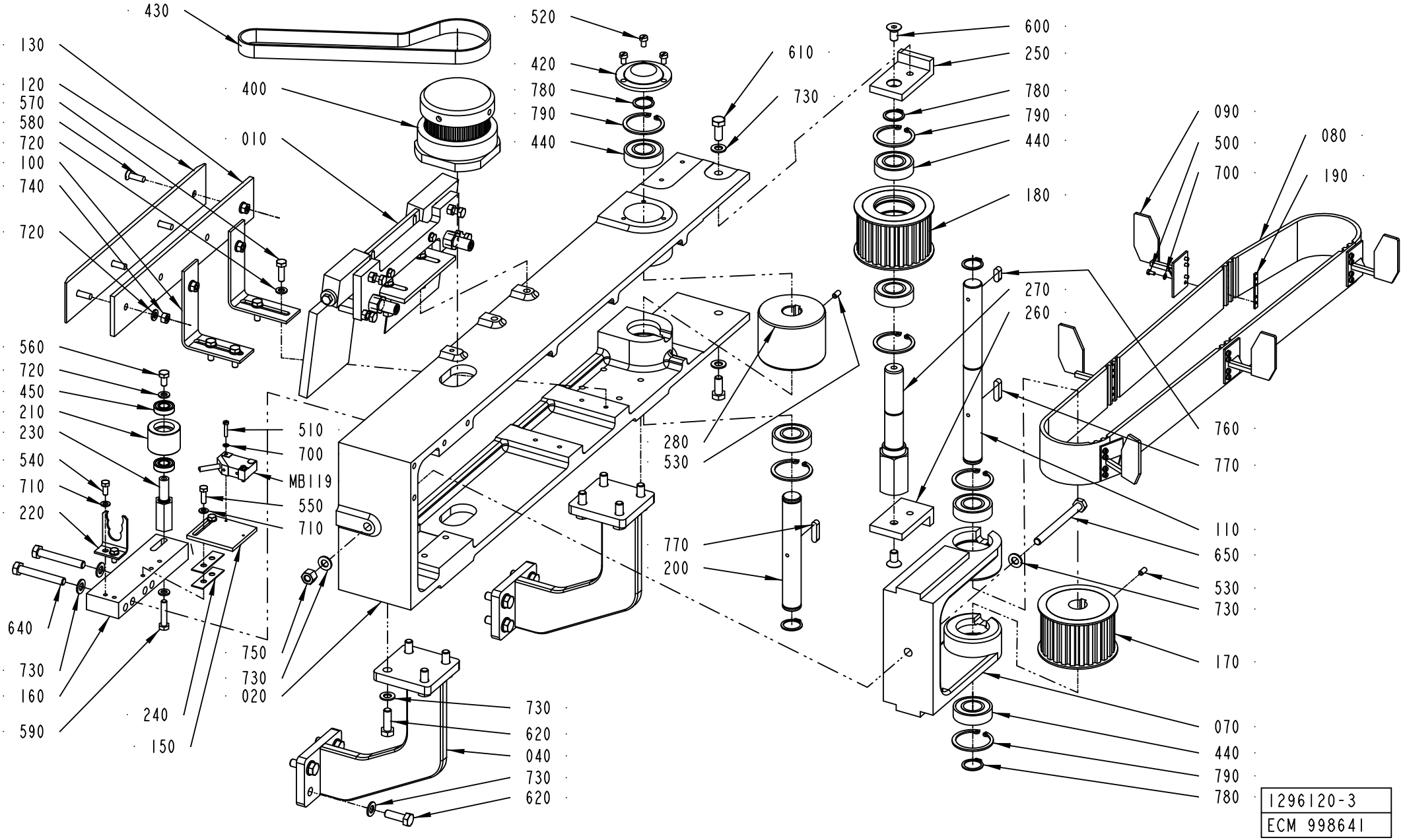
430
130
120
570
580
720
100
740
720
400
010
520
420
780
790
440
610
730
600
250
780
790
440
180
090
500
700
080
190
270
260
760
770
110
650
530
730
170
070
440
790
780
560
720
450
210
230
540
710
220
640
730
160
590
240
150
510
700
MB119
550
710
750
730
020
280
530
770
200
730
620
040
730
620
1296120-3
ECM 998641

ECM: 998641 - 20070126
Group number: 1296120-0200
Assembly Drawing: 1296120-3_1_AA

Pos	Part No	UN	Qty	Description	Page No
-					
010	2816486-0100		1	PACKAGE STOP	5-137
020	1255537-0000		1	BRACKET	
040	2807008-0000		2	BRACKET	
070	979111-0000		1	BELT TIGHTENER	
080	1260548-0000		1	TIMING BELT	
090	1484558-0000		5	FEEDER	
100	1484557-0000		2	BRACKET	
110	577439-0000		1	SHAFT	
120	978631-0000		1	SLIDING STRIP	
130	978636-0000		1	RIM	
150	1346599-0000		1	BRACKET	
160	1346600-0000		1	PLATE	
170	1478553-0000		1	TOOTHED PULLEY	
180	1478552-0000		1	TOOTHED PULLEY	
190	297495-0001		5	WEDGE	
200	577440-0000		1	SHAFT	
210	577747-0000		1	ROLLER	
220	977527-0000		1	BRACKET	
230	1334973-0000		1	AXLE PIN	
240	1346598-0000		2	SPACER	
250	1478549-0000		1	BRACKET	
260	1478550-0000		1	BRACKET	
270	1478551-0000		1	SHAFT	
280	1478554-0000		1	ROLLER	
400	90355-0205		1	CLUTCH 2,6 NM	
420	321601-0106		1	SEAL COVER LL42	
430	90458-2640		1	TIMING BELT T5X630X16 POLYURETHANE	
440	90214-0095		6	BALL BEARING 20/42X12	
450	90214-0167		2	BALL BEAR. 10/22X6 SOLID OIL	
500	312125-0220		20	SCREW ISO 1207 M3X6 A4	
510	312125-0228		2	SLOTTED HEAD SCREW, ISO1207 M3X16 A4	
520	312125-0323		3	SLOTTED HEAD SCREW, ISO1207 M5X8 A4	
530	312318-0325		2	SET SCREW, CUP END ISO4029 M5X10 A4	
540	312105-0327		2	SCREW, M6S ISO 4017 M5X12 A4 80	
550	312105-0329		2	SCREW, M6S ISO 4017 M5X16 A4 80	
560	312105-0366		1	SCREW, M6S ISO 4017 M6X12 A4 80	
570	312105-0370		4	SCREW, M6S ISO 4017 M6X20 A4 80	
580	312145-0370		4	SCREW ISO 2009 MFS M6X20 A4	
590	312109-0374		1	SCREW, M6S ISO 4017 M6X30 A4 80	
600	312155-0449		2	SCREW DIN 7991 MF6S M8X16 A4 70	
610	312105-0451		2	SCREW, M6S ISO 4017 M8X20 A4 80	
620	312105-0453		16	SCREW, M6S ISO 4017 M8X25 A4 80	
640	312105-0462		2	SCREW, M6S ISO 4014 M8X55 A4 80	
650	312105-0469		1	SCREW, M6S ISO 4014 M8X90 A4 80	
700	315105-0124		22	WASHER PLAIN, 3,2X6X0,5 A4 BRB	
710	315105-0146		4	WASHER PLAIN, 5,3X10X1 A4 BRB	
720	315105-0153		10	WASHER PLAIN, 6,4X12X1,5 A4 BRB	
730	315105-0165		22	WASHER PLAIN, 8,4X16X1,6 A4 BRB	
740	312605-0316		4	HEXAGON NUT, M6M M6 A280	
750	312811-0318		1	NUT HEX.LOCK HELI COIL M8 SS	
760	315705-0230		1	PARALLEL KEY W. ROUND ENDS, 6X6X16 MM	
770	315705-0234		2	PARALLEL KEY W. ROUND ENDS, 6X6X25 MM	
780	315751-0116		5	RETAINING RING FOR SHAFT DIN 471 20 SS	
790	90141-0020		6	RETAINING RING FOR BORE DIN 472 42 SS	
MB119	90044-0194		1	INDUCTIVE SENSOR, IN 5329	

Machine Type	Group Description	Used-In	Group Number	Page No

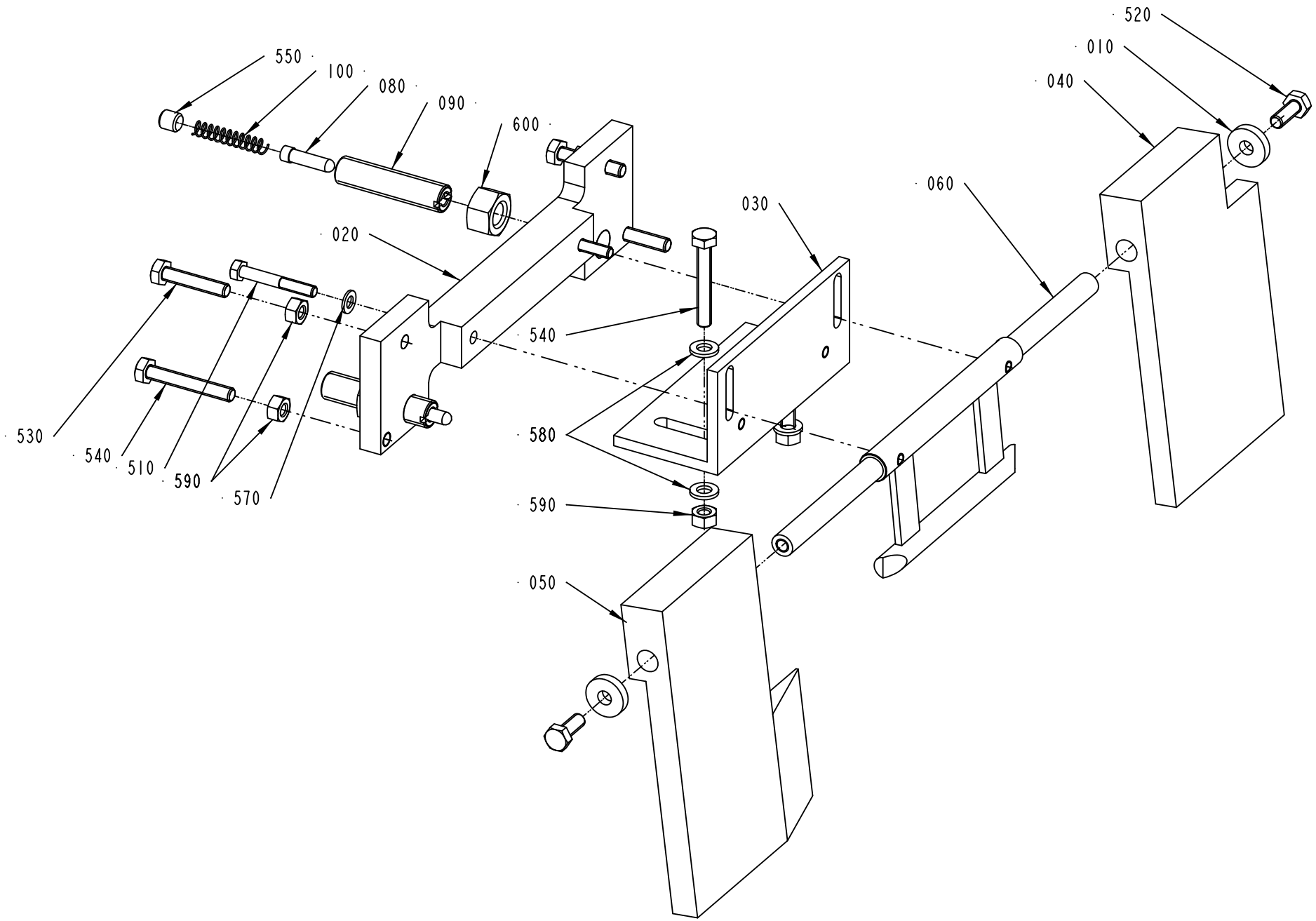

2816486-1
ECM 276017

ECM: 293456 - 20070126
Group number: 2816486-0100
Assembly Drawing: 2816486-1_1_AA

Pos	Part No	UN	Qty	Description	Page No
TPA 0250SQ, TPA 0200SQ, TPA 0330SQ NOSTREAMCAP					
040	1524637-0000		1	PLATE	
050	1524638-0000		1	PLATE	
TPA 0330SQ STREAMCAP					
040	2854643-0000		1	PLATE	
050	2854644-0000		1	PLATE	
Common Parts					
010	256312-0000		2	WASHER	
020	1524630-0000		1	STOPPER	
030	1524631-0000		1	BRACKET	
060	2854645-0000		1	SHAFT	
080	2527526-0000		2	PIN	
090	2527527-0000		2	PIN	
100	2527528-0000		2	SPRING	
510	312105-0337		2	SCREW, M6S ISO 4014 M5X35 A4 80	
520	312105-0368		2	SCREW, M6S ISO 4017 M6X16 A4 80	
530	312109-0374		2	SCREW, M6S ISO 4017 M6X30 A4 80	
540	312109-0378		4	SCREW, M6S ISO 4017 M6X40 A4 80	
550	312318-0443		2	SET SCREW, CUP END ISO4029 M8X8 A4	
570	315105-0146		2	WASHER PLAIN, 5,3X10X1 A4 BRB	
580	315105-0153		4	WASHER PLAIN, 6,4X12X1,5 A4 BRB	
590	312605-0316		6	HEXAGON NUT, M6M M6 A280	
600	312605-0322		2	HEXAGON NUT, M6M M12 A280	

Pos	Part No	UN	Qty	Description	Page No

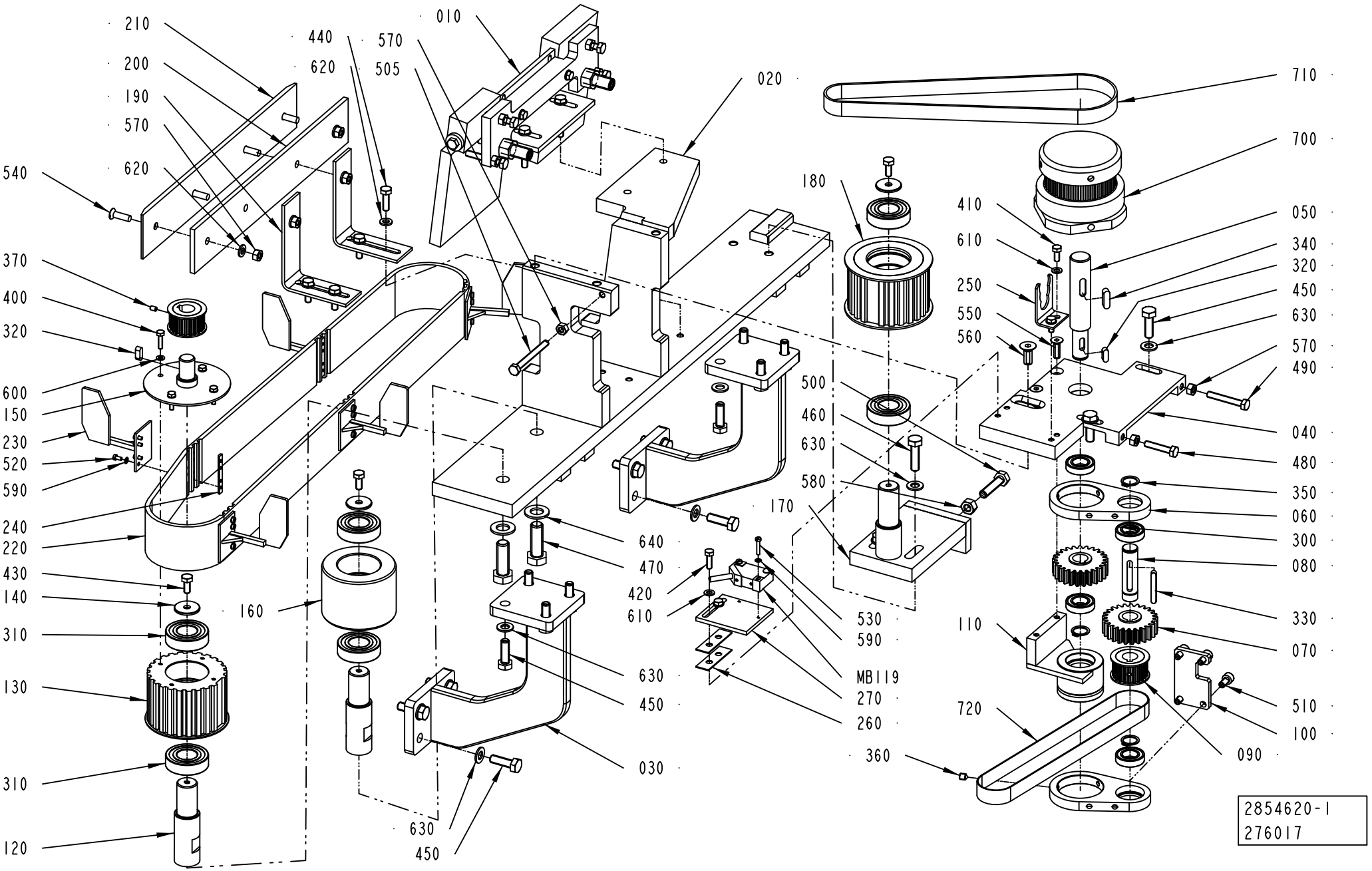
210
200
190
570
620
540
370
400
320
600
150
230
520
590
240
220
430
140
310
130
310
120
440
620
570
505
010
020
160
640
470
420
610
630
450
030
630
450
180
410
610
250
550
560
500
460
630
580
170
530
590
MB119
270
260
360
710
700
050
340
320
450
630
570
490
040
480
350
060
300
080
330
070
110
720
510
100
090
2854620-1
276017

ECM: 293454 - 20070126
Group number: 2854620-0100
Assembly Drawing: 2854620-1_1_AA

Pos	Part No	UN	Qty	Description	Page No
-					
010	2816486-0100		1	PACKAGE STOP	5-137
020	2854616-0000		1	CANTILEVER	
030	2807008-0000		2	BRACKET	
040	2854637-0000		1	ADJUSTMENT PLATE	
050	2854639-0000		1	SHAFT	
060	2854633-0000		2	TENSION ARM	
070	2854617-0000		2	GEAR WHEEL	
080	2854629-0000		1	SHAFT	
090	577741-0000		2	TOOTHED PULLEY	
100	2854642-0000		1	PLATE	
110	2854641-0000		1	BEARING CONSOLE	
120	2854634-0000		2	SHAFT	
130	1523324-0000		1	TOOTHED PULLEY	
140	1334971-0000		3	WASHER	
150	2854638-0000		1	AXLE LINK	
160	2854632-0000		1	ROLLER	
170	2854631-0000		1	TENSION ARM	
180	1478552-0000		1	TOOTHED PULLEY	
190	1484557-0000		2	BRACKET	
200	978636-0000		1	RIM	
210	978631-0000		1	SLIDING STRIP	
220	1260548-0000		1	TIMING BELT	
230	2517179-0000		5	FEEDER	
240	297495-0001		5	WEDGE	
250	977527-0000		1	BRACKET	
260	1346598-0000		2	SPACER	
270	1346599-0000		1	BRACKET	
300	321317-0109		4	BALL BEARING 15/28X7	
310	90214-0225		6	BALL BEARING, 20/42X12 SOLID OIL	
320	315705-0198		2	PARALLEL KEY W. ROUND ENDS, 5X5X14 MM	
330	90458-2242		1	PARALLEL KEY W. ROUND ENDS 5X5X35 MM	
340	315705-0232		1	PARALLEL KEY W. ROUND ENDS, 6X6X20 MM	
350	315751-0112		3	RETAINING RING FOR SHAFT DIN 471 15 SS	
360	90287-0022		1	SCREW HEX.SOCK.SET CONEPT. MS6SS M6X8	
370	312318-0285		1	SET SCREW, CUP END ISO4029 M4X6 A4	
400	312105-0293		4	SCREW, M6S ISO 4017 M4X16 A4 70	
410	312105-0327		2	SCREW, M6S ISO 4017 M5X12 A4 80	
420	312105-0329		2	SCREW, M6S ISO 4017 M5X16 A4 80	
430	312105-0367		3	SCREW, M6S ISO 4017 M6X14 A4 80	
440	312105-0370		4	SCREW, M6S ISO 4017 M6X20 A4 80	
450	312105-0453		18	SCREW, M6S ISO 4017 M8X25 A4 80	
460	312105-0455		2	SCREW, M6S ISO 4017 M8X30 A4 80	
470	312105-0538		2	SCREW, M6S ISO 4017 M12X35 A4 80	
480	312109-0374		1	SCREW, M6S ISO 4017 M6X30 A4 80	
490	312109-0378		1	SCREW, M6S ISO 4017 M6X40 A4 80	
500	312109-0457		1	SCREW, M6S ISO 4017 M8X35 A4 80	
505	312109-0382		1	SCREW, M6S ISO 4017 M6X60 A4 80	
510	312115-0366		4	SCREW ISO4762 M6X12 A4 80	
520	312125-0220		20	SCREW ISO 1207 M3X6 A4	
530	312125-0228		2	SLOTTED HEAD SCREW, ISO1207 M3X16 A4	
540	312145-0370		4	SCREW ISO 2009 MFS M6X20 A4	
550	312155-0370		2	SCREW DIN 7991 MF6S M6X20 A4 70	
560	312155-0451		1	SCREW DIN 7991 MF6S M8X20 A4 70	
570	312605-0316		7	HEXAGON NUT, M6M M6 A280	
580	312605-0318		1	HEXAGON NUT, M6M M8 A280	
590	315105-0124		22	WASHER PLAIN, 3,2X6X0,5 A4 BRB	
600	315105-0136		4	WASHER PLAIN, 4,3X9X0,8 A4 BRB	
610	315105-0146		4	WASHER PLAIN, 5,3X10X1 A4 BRB	
620	315105-0153		8	WASHER PLAIN, 6,4X12X1,5 A4 BRB	
630	315105-0165		20	WASHER PLAIN, 8,4X16X1,6 A4 BRB	
640	315105-0178		2	WASHER PLAIN, 13X24X2,5 A4 BRB	
700	90355-0205		1	CLUTCH 2,6 NM	
710	90458-2640		1	TIMING BELT T5X630X16 POLYURETHANE	
720	318163-0128		1	TIMING BELT 16T5/525 PU	
MB119	90044-0194		1	INDUCTIVE SENSOR, IN 5329	

Machine Type	Group Description	Used-In	Group Number	Page No

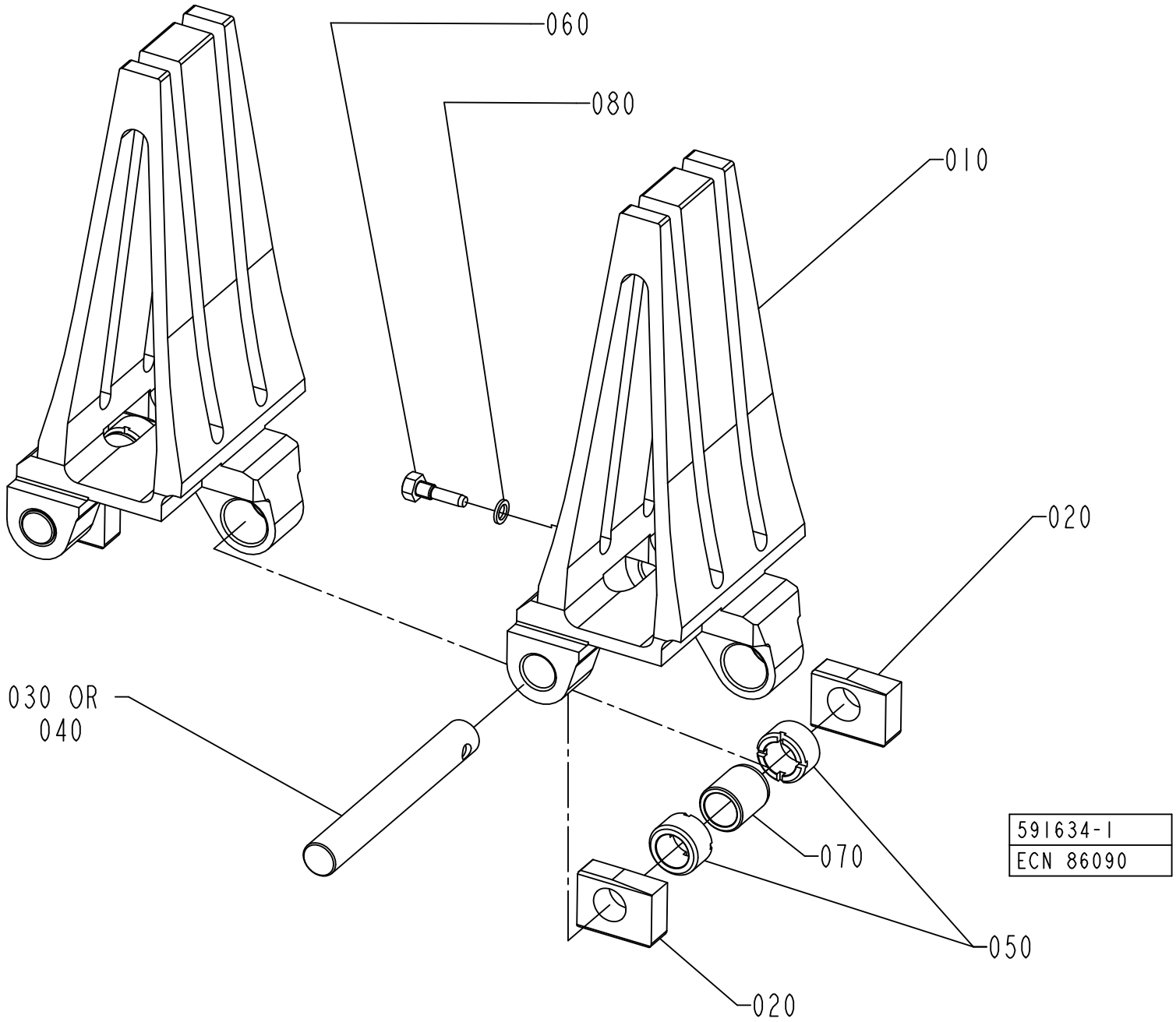
060
080
010
020
030 OR
040
070
050
020
591634-1
ECN 86090

ECM: 422896 - 20091125
Group number: 591634-0100
Assembly Drawing: 591634-1_1_AB

This list covers pages from 5-140 to 5-143

Pos	Part No	UN	Qty	Description	Page No
TWA 0125S NO UNDERFILL (See drawing on page: 5-140)					
010	1360663-0000		21	CARTON STATION	
TWA 0125S UNDERFILLED (See drawing on page: 5-142)					
010	2887617-0000		21	CARTON STATION	
090	2746794-0000		42	SHIM	
100	2746795-0000		42	SHIM	
110	2746799-0000		42	SHIM	
TWA 0200S NO UNDERFILL (See drawing on page: 5-140)					
010	2665284-0000		21	CARTON STATION	
TWA 0200S UNDERFILLED (See drawing on page: 5-142)					
010	2944318-0000		21	CARTON STATION	
090	2547487-0000		42	SHIM	
100	2547485-0000		42	SHIM	
110	2547486-0000		42	SHIM	
Common Parts					
020	491227-0000		42	SLIDER	
030	491228-0001		18	SHAFT	
040	491228-0002		3	SHAFT	
050	491229-0000		42	BUSHING	
060	491230-0000		21	GRUB SCREW(LI - CHINE)	
070	491231-0000		21	BUSHING	
080	315239-0101		21	NYLON WASHER M5, M5RRP	
150	312812-0312		252	HEXAGON NUT, NY-LOCK M4 A4 80	

Pos	Part No	UN	Qty	Description	Page No

STATION CHAIN

Drawing file: 591634-2_1_AA.hpgl

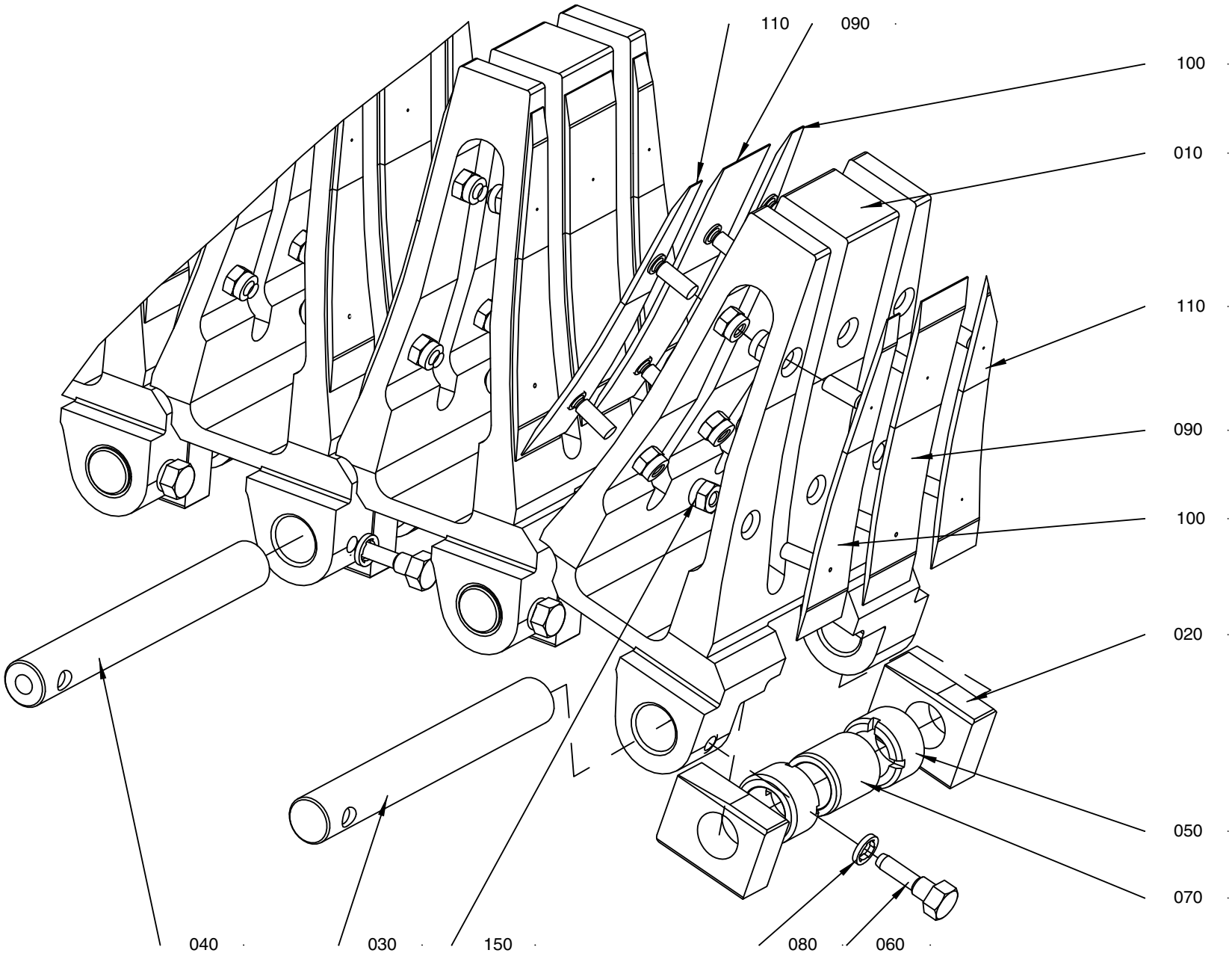

591634-2
334154

ECM: 422896 - 20091125
Group number: 591634-0100
Assembly Drawing: 591634-2_1_AA

This list covers pages from 5-140 to 5-143

Pos	Part No	UN	Qty	Description	Page No
TWA 0125S NO UNDERFILL (See drawing on page: 5-140)					
010	1360663-0000		21	CARTON STATION	
TWA 0125S UNDERFILLED (See drawing on page: 5-142)					
010	2887617-0000		21	CARTON STATION	
090	2746794-0000		42	SHIM	
100	2746795-0000		42	SHIM	
110	2746799-0000		42	SHIM	
TWA 0200S NO UNDERFILL (See drawing on page: 5-140)					
010	2665284-0000		21	CARTON STATION	
TWA 0200S UNDERFILLED (See drawing on page: 5-142)					
010	2944318-0000		21	CARTON STATION	
090	2547487-0000		42	SHIM	
100	2547485-0000		42	SHIM	
110	2547486-0000		42	SHIM	
Common Parts					
020	491227-0000		42	SLIDER	
030	491228-0001		18	SHAFT	
040	491228-0002		3	SHAFT	
050	491229-0000		42	BUSHING	
060	491230-0000		21	GRUB SCREW(LI - CHINE)	
070	491231-0000		21	BUSHING	
080	315239-0101		21	NYLON WASHER M5, M5RRP	
150	312812-0312		252	HEXAGON NUT, NY-LOCK M4 A4 80	

Pos	Part No	UN	Qty	Description	Page No

PULL-DOWN DEVICE

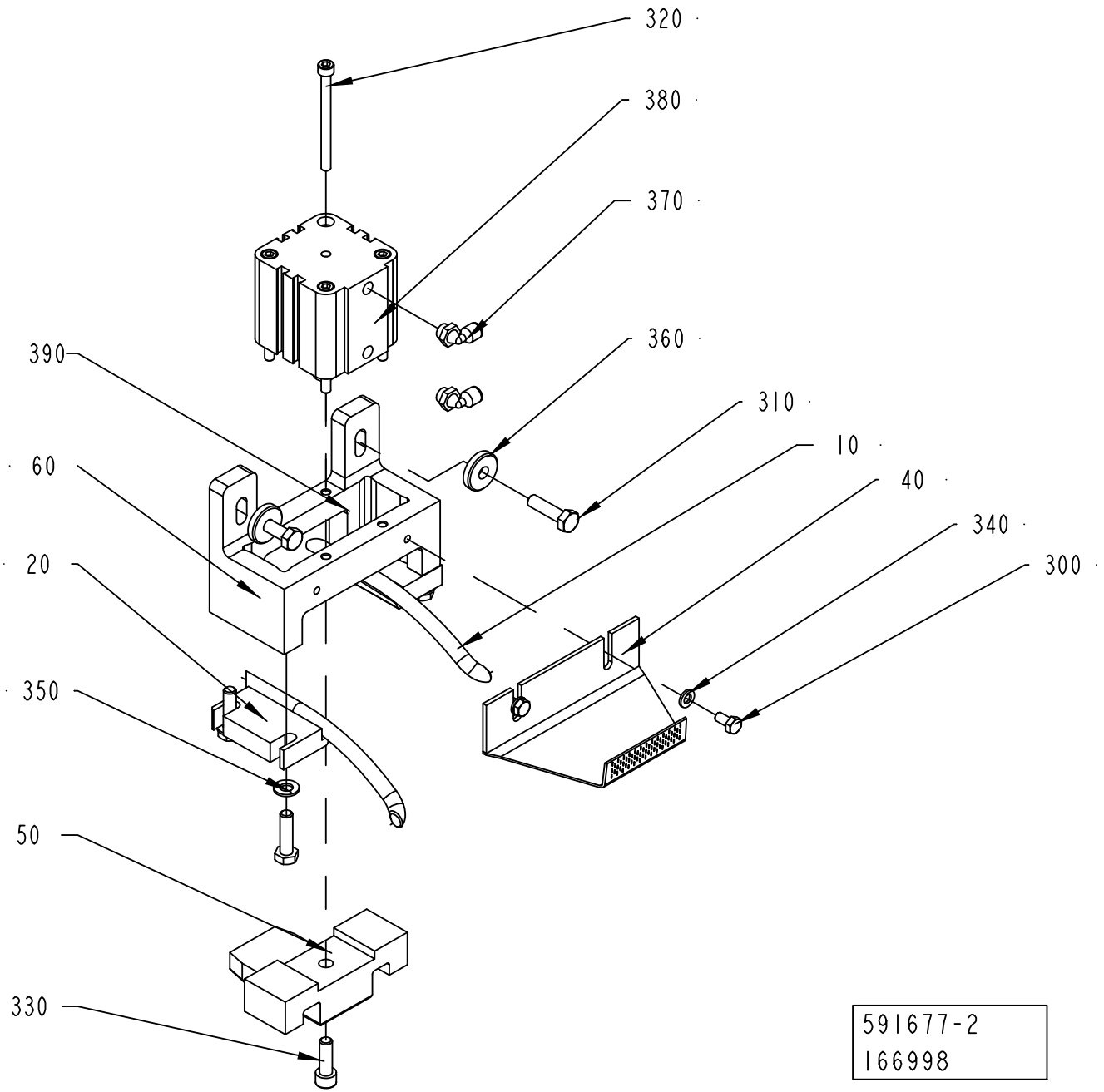

ECM: 412183 - 20091125
Group number: 591677-0200
Assembly Drawing: 591677-2_1_AA

Pos	Part No	UN	Qty	Description	Page No
TWA 0125S					
050	2987317-0000		1	BLOCKING PIECE	
TWA 0200S					
050	2681269-0000		1	BLOCKING PIECE	
Common Parts					
010	591443-0000		1	RAIL LEFT	
020	591444-0000		1	RAIL RIGHT	
040	594977-0000		1	SPLASH PLATE	
060	2696573-0000		1	BRACKET	
300	312105-0366		3	SCREW, M6S ISO 4017 M6X12 A4 80	
310	312105-0455		6	SCREW, M6S ISO 4017 M8X30 A4 80	
320	312111-0385		4	SCREW HEX.SOCK.HD.MC6S-TT 6X75 88 FZB	
330	312115-0453		1	SCREW ISO4762 M8X25 A4 80	
340	315105-0153		3	WASHER PLAIN, 6,4X12X1,5 A4 BRB	
350	315105-0165		4	WASHER PLAIN, 8,4X16X1,6 A4 BRB	
360	315125-0165		2	WASHER HIGH, TBRSB 8,4X26X5 A4	
370	90458-2956		2	ELBOW PIPE JOINT, EXT.THREAD, D=6MM-G1/8	
380	90459-4968		1	DOUBLE ACTING, COMPACT, 50-20	
390	90296-0070	KG	0.1	SHELL ALVANIA GREASE EP 1	

Pos	Part No	UN	Qty	Description	Page No

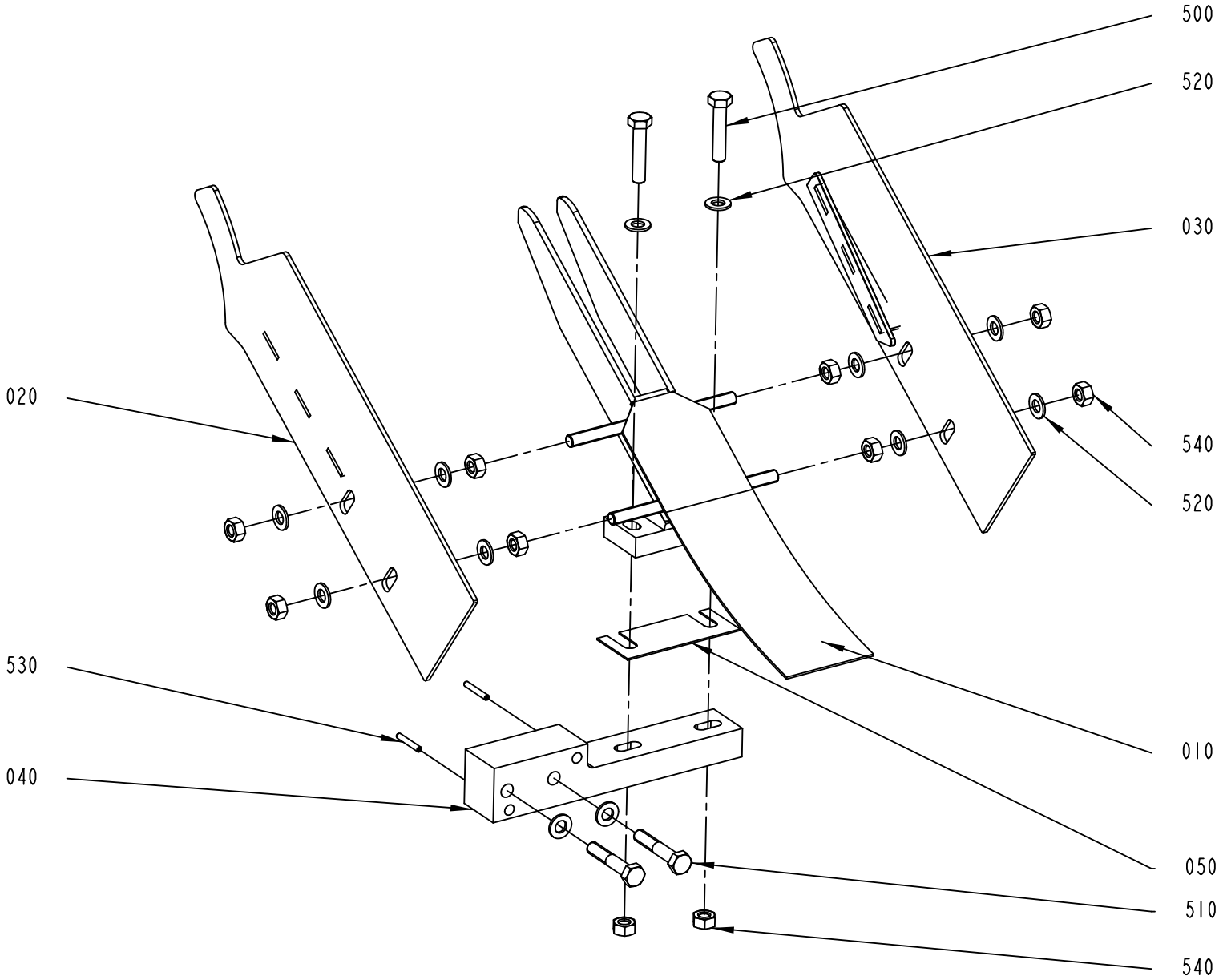

2987302-1
506333

ECM: 506700 - 20110609
Group number: 2987302-0100
Assembly Drawing: 2987302-1_1_AB

Pos	Part No	UN	Qty	Description	Page No
TWA 0125S					
020	2987295-0000		1	SIDE PLATE LEFT	
030	2987281-0000		1	SIDE PLATE RIGHT	
040	591586-0000		1	HOLDER	
TWA 0200S					
020	2987294-0000		1	SIDE PLATE LEFT	
030	2964524-0000		1	SIDE PLATE	
040	2743350-0000		1	HOLDER	
Common Parts					
010	2964518-0000		1	GUIDE	
050	594933-0000		3	SHIM	
500	312105-0459		2	SCREW, M6S ISO 4014 M8X40 A4 80	
510	312105-0460		2	SCREW, M6S ISO 4014 M8X45 A4 80	
520	315105-0165		12	WASHER PLAIN, 8,4X16X1,6 A4 BRB	
530	311112-0258		2	SPRING PIN, ISO 8752 4X24 A2	
540	312605-0318		10	HEXAGON NUT, M6M M8 A280	

Pos	Part No	UN	Qty	Description	Page No

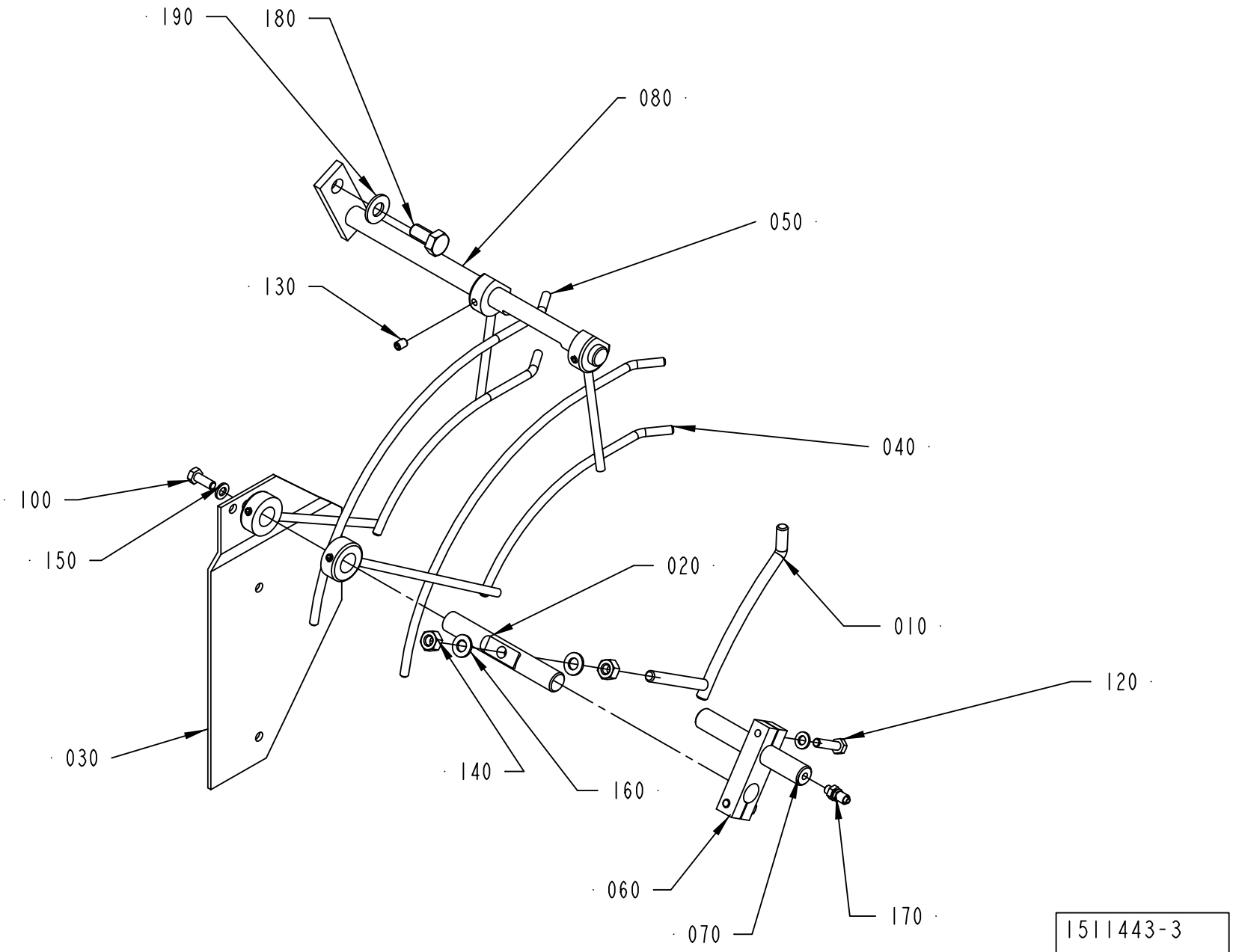
190
180
080
050
130
040
100
150
020
010
120
030
140
160
060
070
170
1511443-3
213107

ECM: 213107 - 20050426
Group number: 1511443-0400
Assembly Drawing: 1511443-3_1_AA

This list covers pages from 5-148 to 5-151

Pos	Part No	UN	Qty	Description	Page No
TWA 0125S (See drawing on page: 5-148)					
040	598049-0000		1	GUIDE RAIL	
050	598050-0000		1	GUIDE RAIL	
080	2685221-0000		1	BRACKET	
180	312105-0491		1	SCREW, M6S ISO 4017 M10X20 A4 80	
TWA 0200S (See drawing on page: 5-150)					
040	1538933-0000		1	GUIDE RAIL	
050	1538934-0000		1	GUIDE RAIL	
080	2743349-0000		1	BRACKET	
180	312109-0499		1	SCREW, M6S ISO 4017 M10X40 A4 80	
210	312605-0320		1	HEXAGON NUT, M6M M10 A280	
Common Parts					
010	1538935-0000		1	GUIDE	
020	2743347-0000		1	SHAFT	
030	2743348-0000		1	BRACKET	
060	1511409-0000		1	CLAMPING PIECE	
070	1511410-0000		1	NOZZLE	
100	312105-0368		1	SCREW, M6S ISO 4017 M6X16 A4 80	
120	312105-0372		2	SCREW, M6S ISO 4017 M6X25 A4 80	
130	312318-0362		4	SET SCREW, CUP END ISO4029 M6X8 A4	
140	312605-0318		2	HEXAGON NUT, M6M M8 A280	
150	315105-0153		3	WASHER PLAIN, 6,4X12X1,5 A4 BRB	
160	315105-0165		2	WASHER PLAIN, 8,4X16X1,6 A4 BRB	
170	342921-0112		1	STRAIGHT COUPLING, EXT.THREAD 6/4-6M	
190	315105-0173		2	WASHER PLAIN, 10,5X22X2 A4 BRB	

Pos	Part No	UN	Qty	Description	Page No

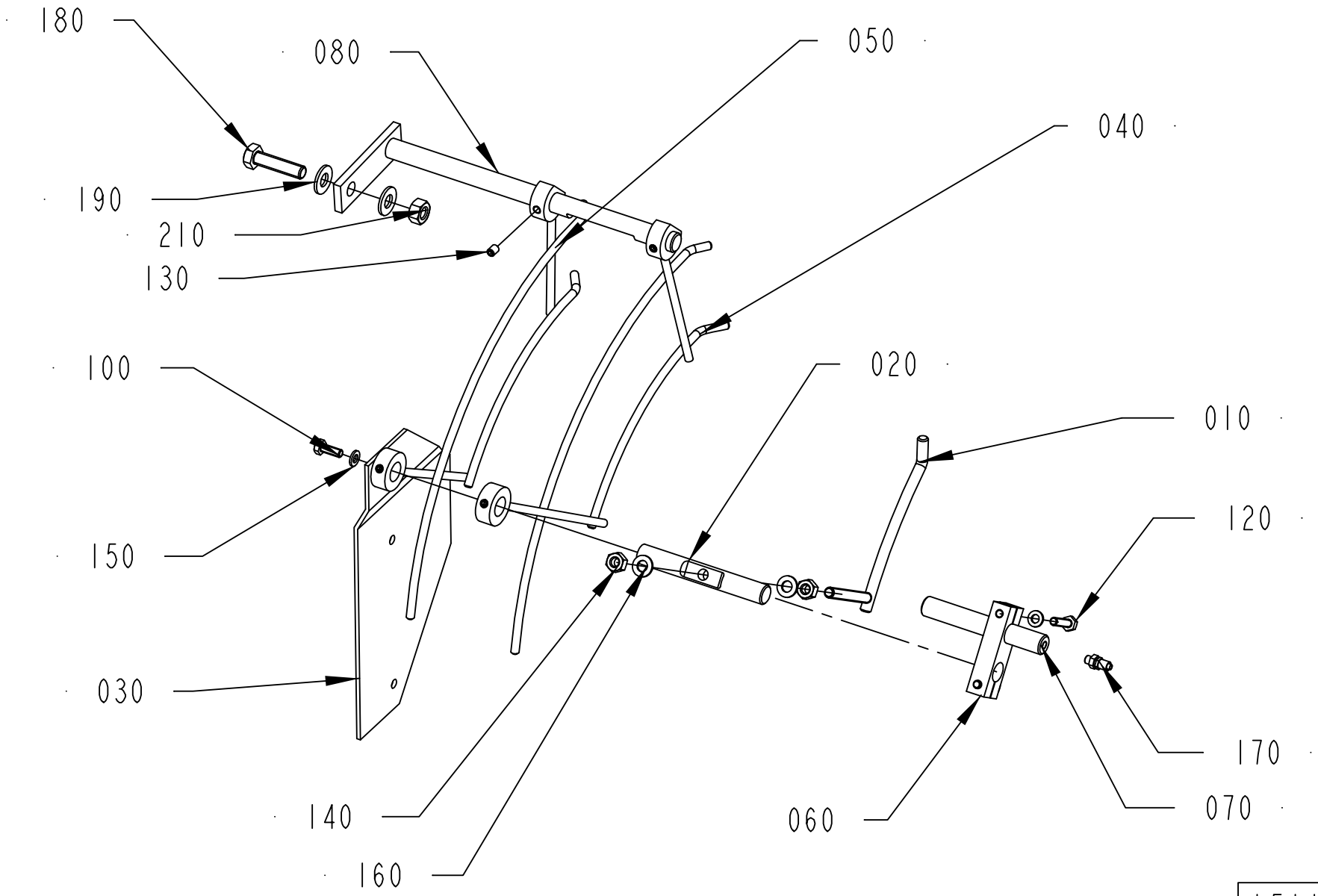
180
080
050
040
190
210
130
100
020
010
120
150
030
170
140
070
060
160
1511443-4
213107

ECM: 213107 - 20050426
Group number: 1511443-0400
Assembly Drawing: 1511443-4_1_AA

This list covers pages from 5-148 to 5-151

Pos	Part No	UN	Qty	Description	Page No
TWA 0125S (See drawing on page: 5-148)					
040	598049-0000		1	GUIDE RAIL	
050	598050-0000		1	GUIDE RAIL	
080	2685221-0000		1	BRACKET	
180	312105-0491		1	SCREW, M6S ISO 4017 M10X20 A4 80	
TWA 0200S (See drawing on page: 5-150)					
040	1538933-0000		1	GUIDE RAIL	
050	1538934-0000		1	GUIDE RAIL	
080	2743349-0000		1	BRACKET	
180	312109-0499		1	SCREW, M6S ISO 4017 M10X40 A4 80	
210	312605-0320		1	HEXAGON NUT, M6M M10 A280	
Common Parts					
010	1538935-0000		1	GUIDE	
020	2743347-0000		1	SHAFT	
030	2743348-0000		1	BRACKET	
060	1511409-0000		1	CLAMPING PIECE	
070	1511410-0000		1	NOZZLE	
100	312105-0368		1	SCREW, M6S ISO 4017 M6X16 A4 80	
120	312105-0372		2	SCREW, M6S ISO 4017 M6X25 A4 80	
130	312318-0362		4	SET SCREW, CUP END ISO4029 M6X8 A4	
140	312605-0318		2	HEXAGON NUT, M6M M8 A280	
150	315105-0153		3	WASHER PLAIN, 6,4X12X1,5 A4 BRB	
160	315105-0165		2	WASHER PLAIN, 8,4X16X1,6 A4 BRB	
170	342921-0112		1	STRAIGHT COUPLING, EXT.THREAD 6/4-6M	
190	315105-0173		2	WASHER PLAIN, 10,5X22X2 A4 BRB	

Pos	Part No	UN	Qty	Description	Page No

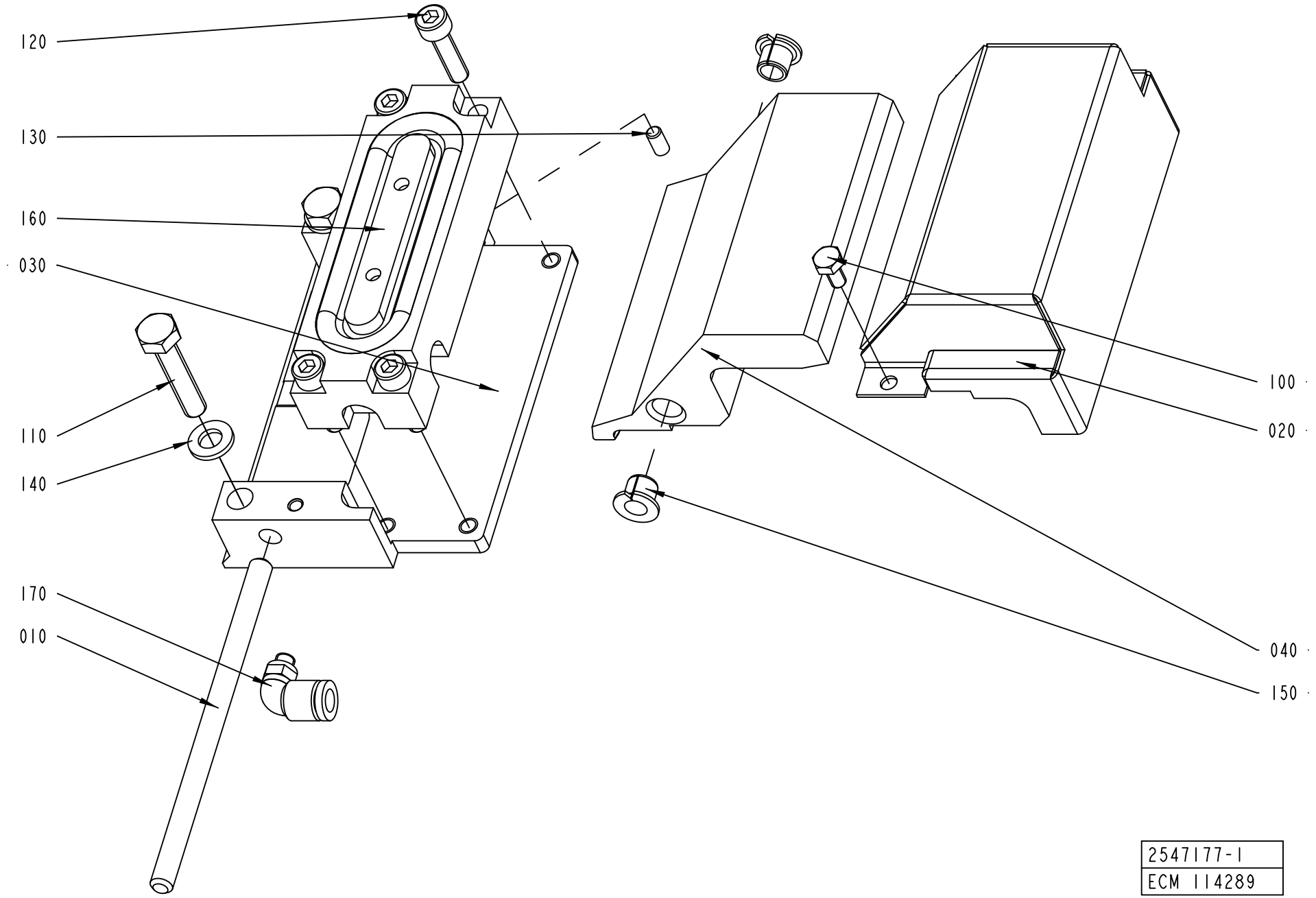
120
130
160
030
110
140
170
010
100
020
040
150
2547177-1
ECM 114289

ECM: 114292 - 20031017
Group number: 2547177-0100
Assembly Drawing: 2547177-1_1_AA

Pos	Part No	UN	Qty	Description	Page No
-					
010	2543227-0000		1	SHAFT	
020	2628609-0000		1	PROTECTION	
030	2628631-0000		1	BRACKET	
040	2628632-0000		1	CLAMPING PIECE	
100	312105-0287		2	SCREW, M6S ISO 4017 M4X8 A4 70	
110	312109-0374		2	SCREW, M6S ISO 4017 M6X30 A4 80	
120	312115-0331		4	SCREW ISO4762 M5X20 A4 80	
130	312318-0287		1	SET SCREW, CUP END ISO4029 M4X8 A4	
140	315105-0153		2	WASHER PLAIN, 6,4X12X1,5 A4 BRB	
150	321161-0062		2	FLANGE BEARING, 6X8X8 MM	
160	90450-0380		1	SINGLE ACTING, PANCAKE EV-20/75-5	
170	90457-0922		1	ELBOW PIPE JOINT, EXT.THREAD, D=6MM M5	

Pos	Part No	UN	Qty	Description	Page No

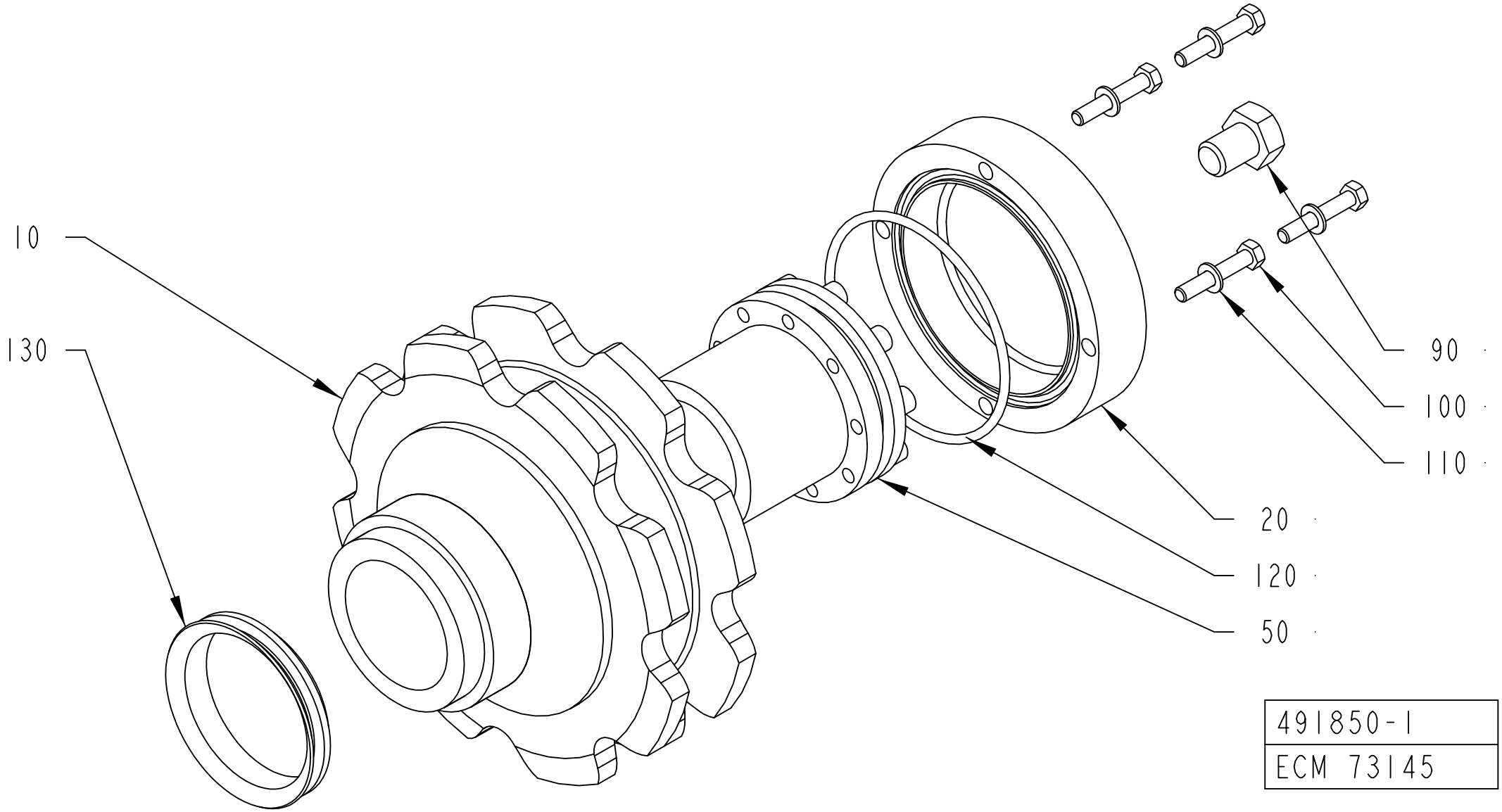

491850-1
ECM 73145

ECM: 190643 - 20050713
Group number: 491850-0100
Assembly Drawing: 491850-1_1_AC

This list covers pages from 5-154 to 5-157

Pos	Part No	UN	Qty	Description	Page No
TBA 0100B, TBA 0125S, TBA 0160S, TBA 0200M, TBA 0200B, TBA 0200S, TBA 0250S, TBA 0284B, TBA 0250B, TBA 0300S, TBA 0330S, TWA 0125S, TWA 0200S NOCLEAR (See drawing on page: 5-154)					
010	491258-0000		1	DRIVE WHEEL	
TBA 0200SQ, TPA 0330SQ, TPA 0250SQ, TPA 0200SQ (See drawing on page: 5-156)					
010	1143975-0000		1	DRIVE WHEEL	
TWA 0200S CLEAR (See drawing on page: 5-154)					
010	2691825-0000		1	DRIVE WHEEL	
Common Parts					
020	491851-0000		1	LID	
050	90208-0031		1	BUSHING	
090	312101-0530		1	SCREW M6S M12X16 FZB	
100	312105-0335		4	SCREW, M6S ISO 4014 M5X30 A4 80	
110	315105-0146		4	WASHER PLAIN, 5,3X10X1 A4 BRB	
120	315202-0306		1	O-RING 74,5X3 MM	
130	315220-0210		1	V-RING 54X64X13 MM V-60S	

Pos	Part No	UN	Qty	Description	Page No

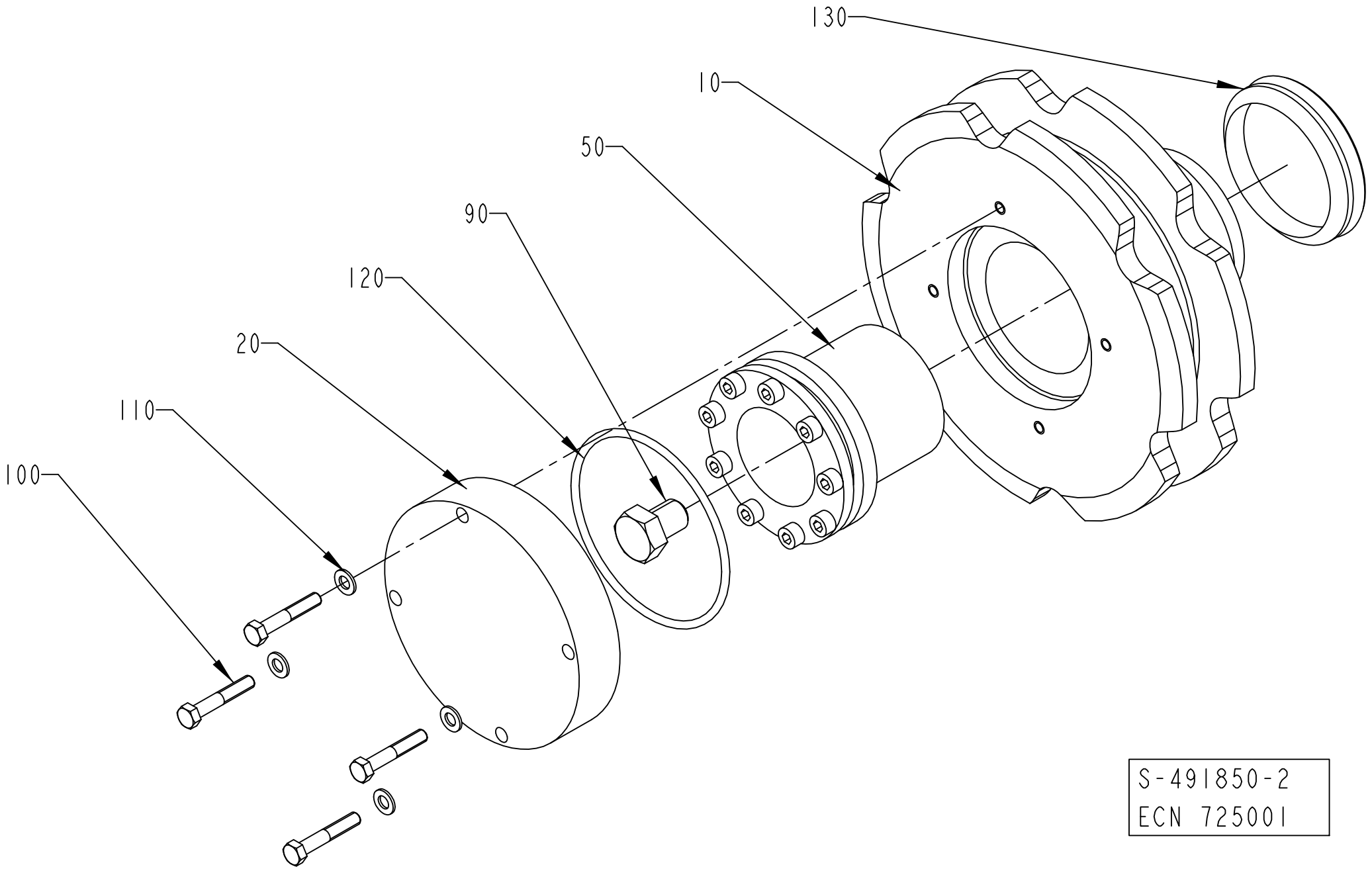
130
10
50
90
120
20
110
100
S-491850-2
ECN 725001

ECM: 190643 - 20050713
Group number: 491850-0100
Assembly Drawing: 491850-2_1_AC

This list covers pages from 5-154 to 5-157

Pos	Part No	UN	Qty	Description	Page No
TBA 0100B, TBA 0125S, TBA 0160S, TBA 0200M, TBA 0200B, TBA 0200S, TBA 0250S, TBA 0284B, TBA 0250B, TBA 0300S, TBA 0330S, TWA 0125S, TWA 0200S NOCLEAR (See drawing on page: 5-154)					
010	491258-0000		1	DRIVE WHEEL	
TBA 0200SQ, TPA 0330SQ, TPA 0250SQ, TPA 0200SQ (See drawing on page: 5-156)					
010	1143975-0000		1	DRIVE WHEEL	
TWA 0200S CLEAR (See drawing on page: 5-154)					
010	2691825-0000		1	DRIVE WHEEL	
Common Parts					
020	491851-0000		1	LID	
050	90208-0031		1	BUSHING	
090	312101-0530		1	SCREW M6S M12X16 FZB	
100	312105-0335		4	SCREW, M6S ISO 4014 M5X30 A4 80	
110	315105-0146		4	WASHER PLAIN, 5,3X10X1 A4 BRB	
120	315202-0306		1	O-RING 74,5X3 MM	
130	315220-0210		1	V-RING 54X64X13 MM V-60S	

Pos	Part No	UN	Qty	Description	Page No

TENSION SPROCKET

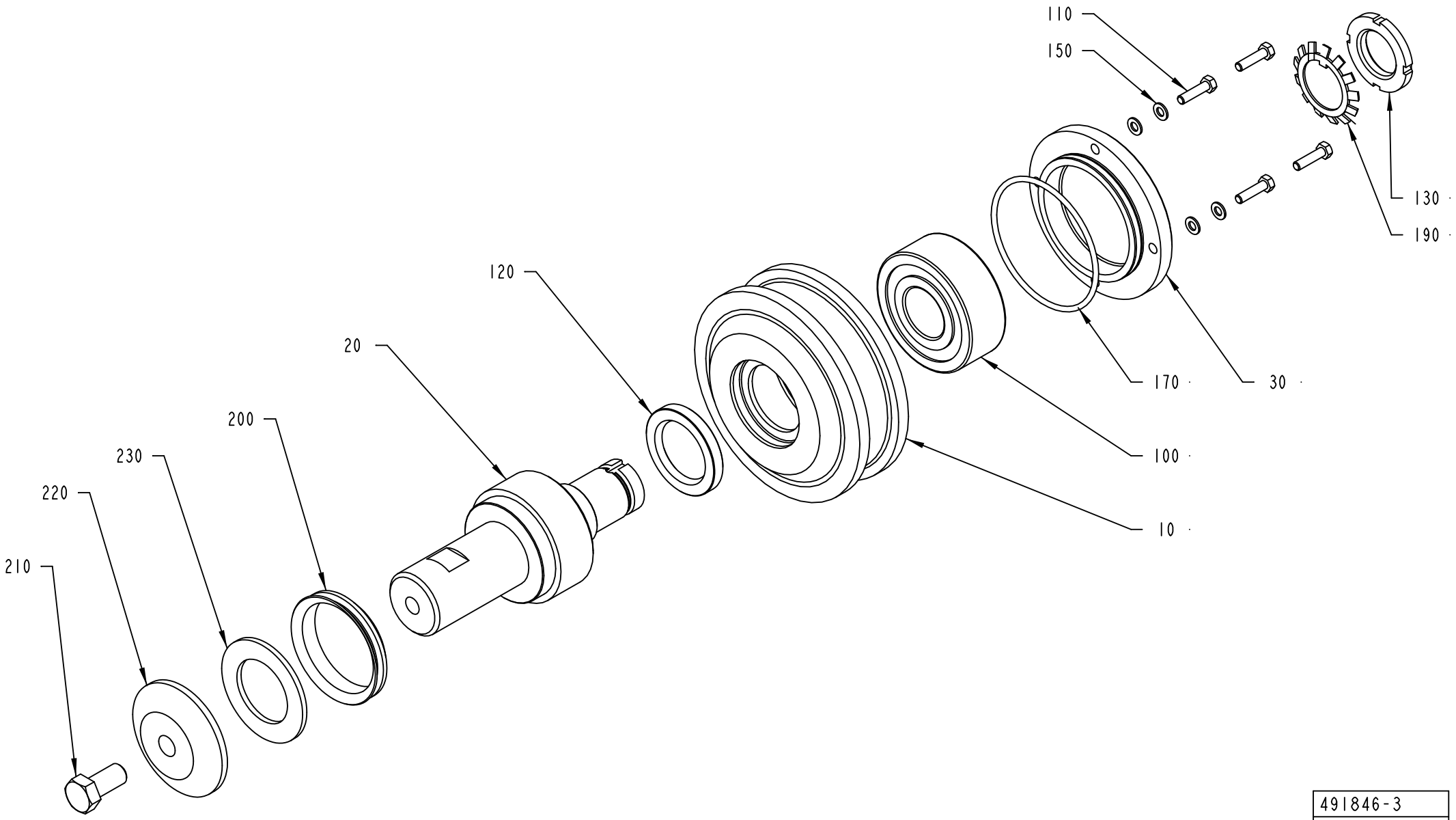

491846-3
ECM 73145

ECM: 293452 - 20070126
Group number: 491846-0300
Assembly Drawing: 491846-3_1_AA

This list covers pages from 5-158 to 5-161

Pos	Part No	UN	Qty	Description	Page No
TBA, TWA (See drawing on page: 5-158)					
010	2569884-0000		1	TENSION SPROCKET	
020	1490928-0000		1	SHAFT	
210	312105-0534		1	SCREW, M6S ISO 4017 M12X25 A4 80	
220	1279701-0000		1	WASHER	
230	1517506-0000		1	SHIM	
TPA (See drawing on page: 5-160)					
010	1195432-0000		1	TENSION SPROCKET	
020	491848-0000		1	SHAFT	
135	312810-0324		1	HEXAGON NUT, NY-LOCK M16 FZB	
160	315111-0186		1	WASHER PLAIN, TBRB 17/30 H=6	
230	441589-0000		1	SHIM	
Common Parts					
030	491291-0000		1	LID	
100	90214-0122		1	BALL BEARING 30/72X27	
105	90296-0070		1	SHELL ALVANIA GREASE EP 1	
110	312105-0331		4	SCREW, M6S ISO 4017 M5X20 A4 80	
120	315221-0177		1	RADIAL SEAL 35X52X7 MM	
130	312805-0106		1	NUT ROUND WITH SLOTS M30X1,5 FE	
150	315105-0146		4	WASHER PLAIN, 5,3X10X1 A4 BRB	
170	315202-0306		1	O-RING 74,5X3 MM	
190	315410-0106		1	LOCK WASHER MB 6 D=30 H=1,25	
200	315220-0210		1	V-RING 54X64X13 MM V-60S	

Pos	Part No	UN	Qty	Description	Page No

TENSION SPROCKET

Drawing file: 491846-6_1_AA.hpgl

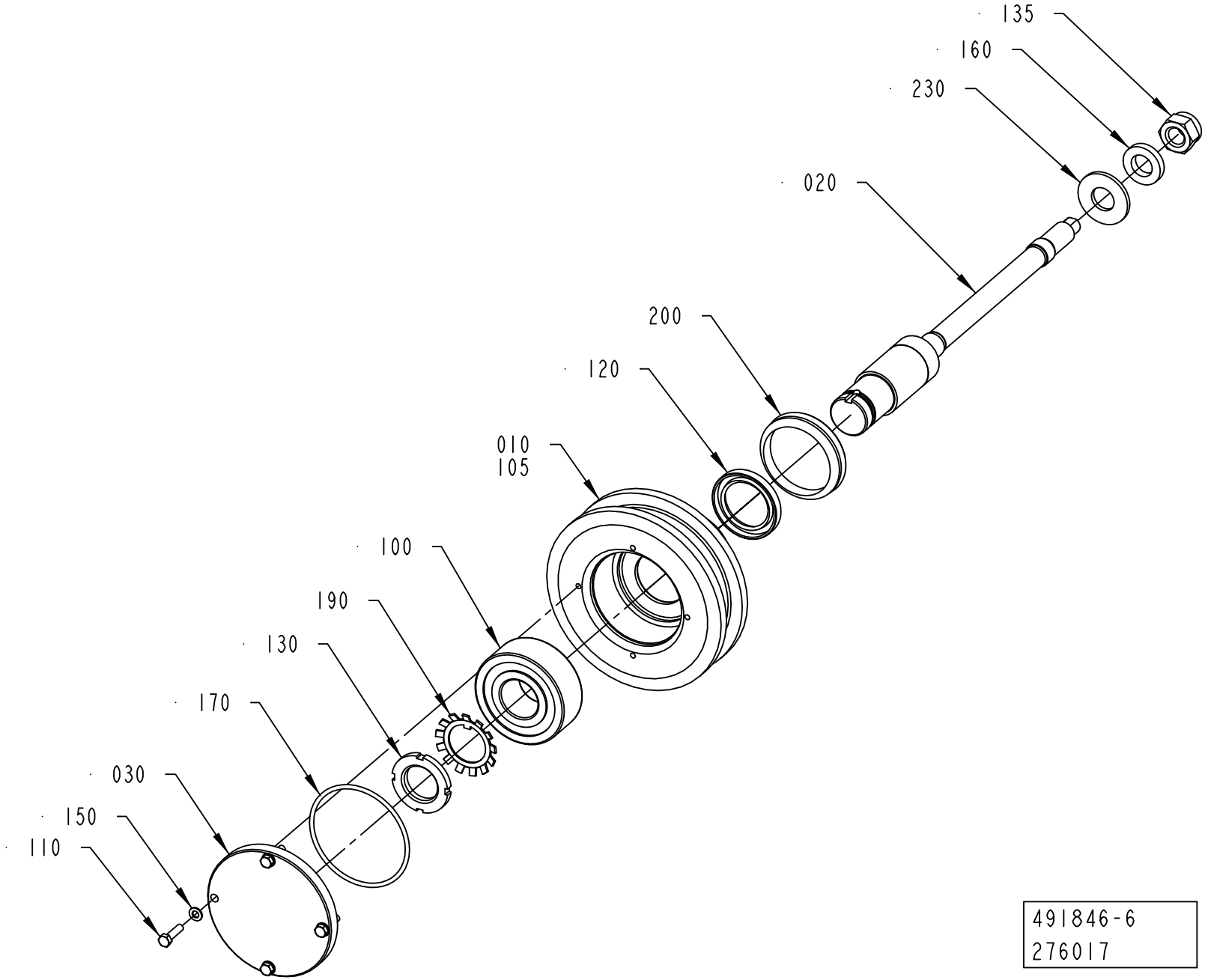

491846-6
276017

ECM: 293452 - 20070126
Group number: 491846-0300
Assembly Drawing: 491846-6_1_AA

This list covers pages from 5-158 to 5-161

Pos	Part No	UN	Qty	Description	Page No
TBA, TWA (See drawing on page: 5-158)					
010	2569884-0000		1	TENSION SPROCKET	
020	1490928-0000		1	SHAFT	
210	312105-0534		1	SCREW, M6S ISO 4017 M12X25 A4 80	
220	1279701-0000		1	WASHER	
230	1517506-0000		1	SHIM	
TPA (See drawing on page: 5-160)					
010	1195432-0000		1	TENSION SPROCKET	
020	491848-0000		1	SHAFT	
135	312810-0324		1	HEXAGON NUT, NY-LOCK M16 FZB	
160	315111-0186		1	WASHER PLAIN, TBRB 17/30 H=6	
230	441589-0000		1	SHIM	
Common Parts					
030	491291-0000		1	LID	
100	90214-0122		1	BALL BEARING 30/72X27	
105	90296-0070		1	SHELL ALVANIA GREASE EP 1	
110	312105-0331		4	SCREW, M6S ISO 4017 M5X20 A4 80	
120	315221-0177		1	RADIAL SEAL 35X52X7 MM	
130	312805-0106		1	NUT ROUND WITH SLOTS M30X1,5 FE	
150	315105-0146		4	WASHER PLAIN, 5,3X10X1 A4 BRB	
170	315202-0306		1	O-RING 74,5X3 MM	
190	315410-0106		1	LOCK WASHER MB 6 D=30 H=1,25	
200	315220-0210		1	V-RING 54X64X13 MM V-60S	

Pos	Part No	UN	Qty	Description	Page No

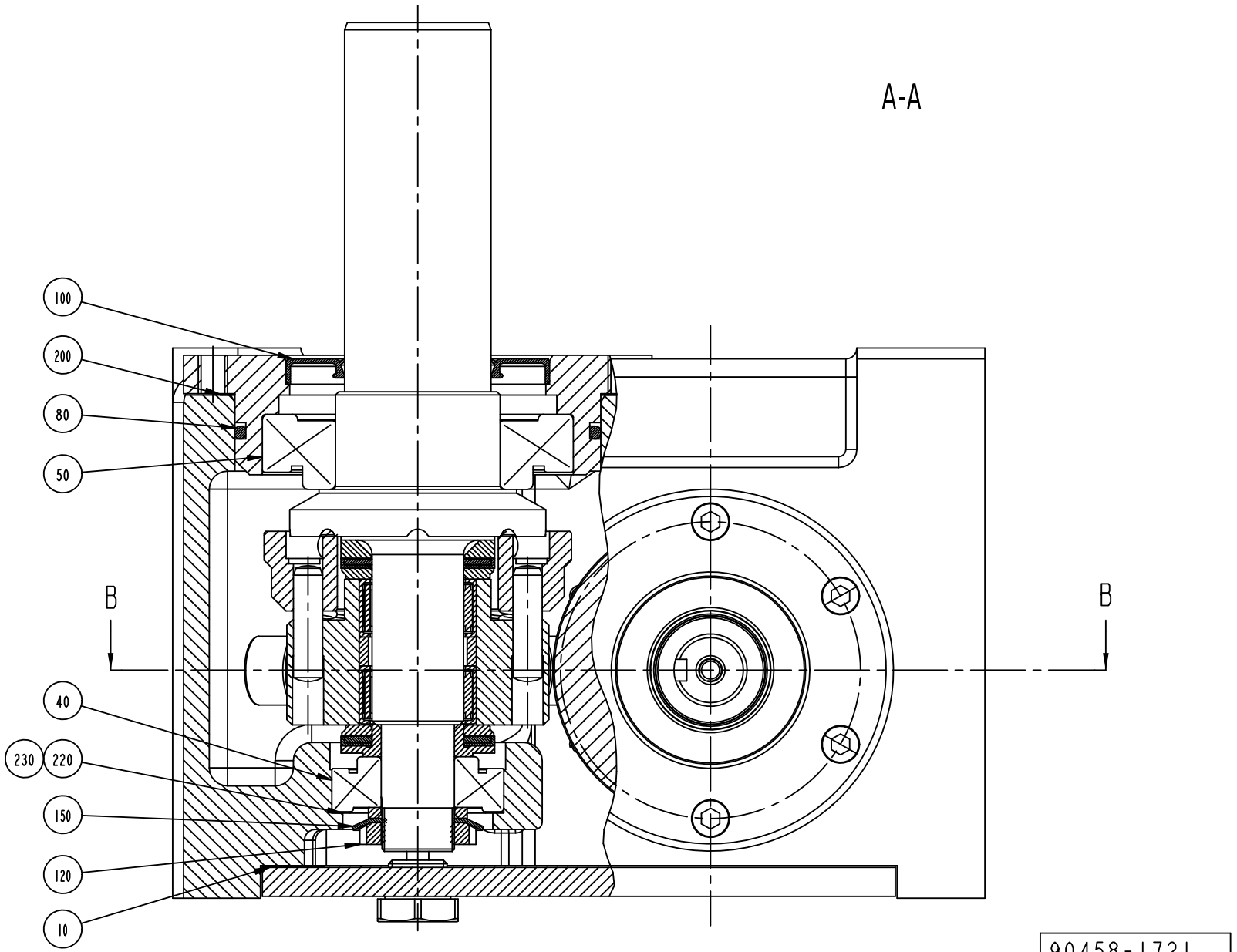
A-A
B
B
100
200
80
50
40
230
220
150
120
10
90458-1721
ECM 32221

ECM: 293453 - 20070126
Group number: 256410-0900
Assembly Drawing: 90458-1721_3_AC

This list covers pages from 5-162 to 5-177

Pos	Part No	UN	Qty	Description	Page No
TBA (See drawing on page: 5-174)					
020	1539261-0000		1	WASHER	
030	1539301-0000		1	TOOTHED PULLEY	
040	1539302-0000		1	SPACER	
320	90458-1721		1	INDEXING GEAR, 10.707.207	
010	*90459-2632*		*1*	*GASKET, 15.609.003*	
030	*90416-0373*		*8*	*CAM ROLLER, 83.041.901*	
040	*321361-0104*		*1*	*TAPER ROLLER BEARING, 20X47X15,25 MM*	
050	*321361-0109*		*1*	*TAPER ROLLER BEARING, 45X85X20,75 MM*	
060	*90214-0083*		*1*	*TAPER ROLLER BEARING, 30X55X17 MM*	
070	*90416-0362*		*2*	*RING*	
080	*90416-0359*		*1*	*RING*	
090	*90416-0363*		*2*	*RING*	
100	*90416-0374*		*1*	*PROTECTIVE RING FOR90416-21*	
110	*90214-0314*		*1*	*SEALING RING, 30X54,5X4,5 MM*	
120	*312805-0104*		*1*	*NUT ROUND WITH SLOTS M20X1 FE*	
130	*312805-0107*		*1*	*NUT ROUND WITH SLOTS M35X1,5 FE*	
140	*312805-0108*		*1*	*NUT ROUND WITH SLOTS M40X1,5 FE*	
150	*315410-0104*		*1*	*LOCK WASHER MB 4 D=20 H=1*	
160	*315410-0107*		*1*	*LOCK WASHER MB 7 D=35 H=1,25*	
170	*315410-0108*		*1*	*LOCK WASHER MB 8 D=40 H=1,25*	
200	*90459-3205*		*1*	*SHIM SET, 10.707.116*	
330	315202-0215		1	O-RING 19,2X3 MM	
340	315202-0218		1	O-RING 26,2X3 MM	
500	312105-0370		1	SCREW, M6S ISO 4017 M6X20 A4 80	
550	315705-0232		1	PARALLEL KEY W. ROUND ENDS, 6X6X20 MM	
TPA (See drawing on page: 5-176)					
320	90459-1337		1	INDEXING GEAR, 180X6, 10.734.213	
010	*90416-0363*		*2*	*RING*	
020	*321313-0105*		*1*	*BALL BEARING 25/52X15*	
030	*90416-0362*		*4*	*RING*	
040	*315752-0132*		*1*	*RETAINING RING FOR BORE DIN 472 52*	
050	*321314-0104*		*1*	*BALL BEARING 20/52X15*	
060	*90459-1150*		*1*	*CAP 85.510.470*	
080	*90214-0135*		*1*	*TAPER ROLLER BEARING, 25X47X15 MM*	
090	*90214-0083*		*1*	*TAPER ROLLER BEARING, 30X55X17 MM*	
110	*312805-0107*		*1*	*NUT ROUND WITH SLOTS M35X1,5 FE*	
120	*315410-0107*		*1*	*LOCK WASHER MB 7 D=35 H=1,25*	
130	*312805-0108*		*1*	*NUT ROUND WITH SLOTS M40X1,5 FE*	
140	*315410-0108*		*1*	*LOCK WASHER MB 8 D=40 H=1,25*	
150	*90459-1154*		*1*	*COVER GASKET 14.734.005*	
160	*90416-0359*		*1*	*RING*	
170	*321361-0109*		*1*	*TAPER ROLLER BEARING, 45X85X20,75 MM*	
180	*90416-0374*		*1*	*PROTECTIVE RING FOR90416-21*	
200	*90459-3205*		*1*	*SHIM SET, 10.707.116*	
220	*321361-0104*		*1*	*TAPER ROLLER BEARING, 20X47X15,25 MM*	
230	*315410-0104*		*1*	*LOCK WASHER MB 4 D=20 H=1*	
240	*312805-0104*		*1*	*NUT ROUND WITH SLOTS M20X1 FE*	
270	*90459-1242*		*6*	*CAM ROLLER 83.042.209*	
550	315705-0263		1	PARALLEL KEY W. ROUND ENDS, 8X7X20 MM	
TWA					
020	1539261-0000		1	WASHER	
320	90459-6072		1	INDEXING GEAR, 10.707.210	
010	*90459-2632*		*1*	*GASKET, 15.609.003*	
030	*90416-0373*		*8*	*CAM ROLLER, 83.041.901*	
040	*321361-0104*		*1*	*TAPER ROLLER BEARING, 20X47X15,25 MM*	
050	*321361-0109*		*1*	*TAPER ROLLER BEARING, 45X85X20,75 MM*	
060	*90214-0083*		*1*	*TAPER ROLLER BEARING, 30X55X17 MM*	
070	*90416-0362*		*2*	*RING*	
080	*90416-0359*		*1*	*RING*	
090	*90416-0363*		*1*	*RING*	
100	*90416-0374*		*1*	*PROTECTIVE RING FOR90416-21*	
110	*90214-0314*		*1*	*SEALING RING, 30X54,5X4,5 MM*	
120	*312805-0104*		*1*	*NUT ROUND WITH SLOTS M20X1 FE*	
130	*312805-0107*		*1*	*NUT ROUND WITH SLOTS M35X1,5 FE*	
140	*312805-0108*		*1*	*NUT ROUND WITH SLOTS M40X1,5 FE*	
150	*315410-0104*		*1*	*LOCK WASHER MB 4 D=20 H=1*	
160	*315410-0107*		*1*	*LOCK WASHER MB 7 D=35 H=1,25*	
170	*315410-0108*		*1*	*LOCK WASHER MB 8 D=40 H=1,25*	
200	*90459-3205*		*1*	*SHIM SET, 10.707.116*	
240	*90459-6137*		*1*	*CAP 85.510.520*	
550	315705-0232		1	PARALLEL KEY W. ROUND ENDS, 6X6X20 MM	
Common Parts					
010	1511487-0000		2	STUD SCREW	
310	90296-0073	L	2	OIL	
510	312605-0322		2	HEXAGON NUT, M6M M12 A280	
520	312105-0547		2	SCREW, M6S ISO 4014 M12X75 A4 80	
530	315105-0178		4	WASHER PLAIN, 13X24X2,5 A4 BRB	
560	315705-0271		1	PARALLEL KEY W. ROUND ENDS, 8X7X45 MM	

Machine Type | Group Description | Used-In | Group Number | Page No

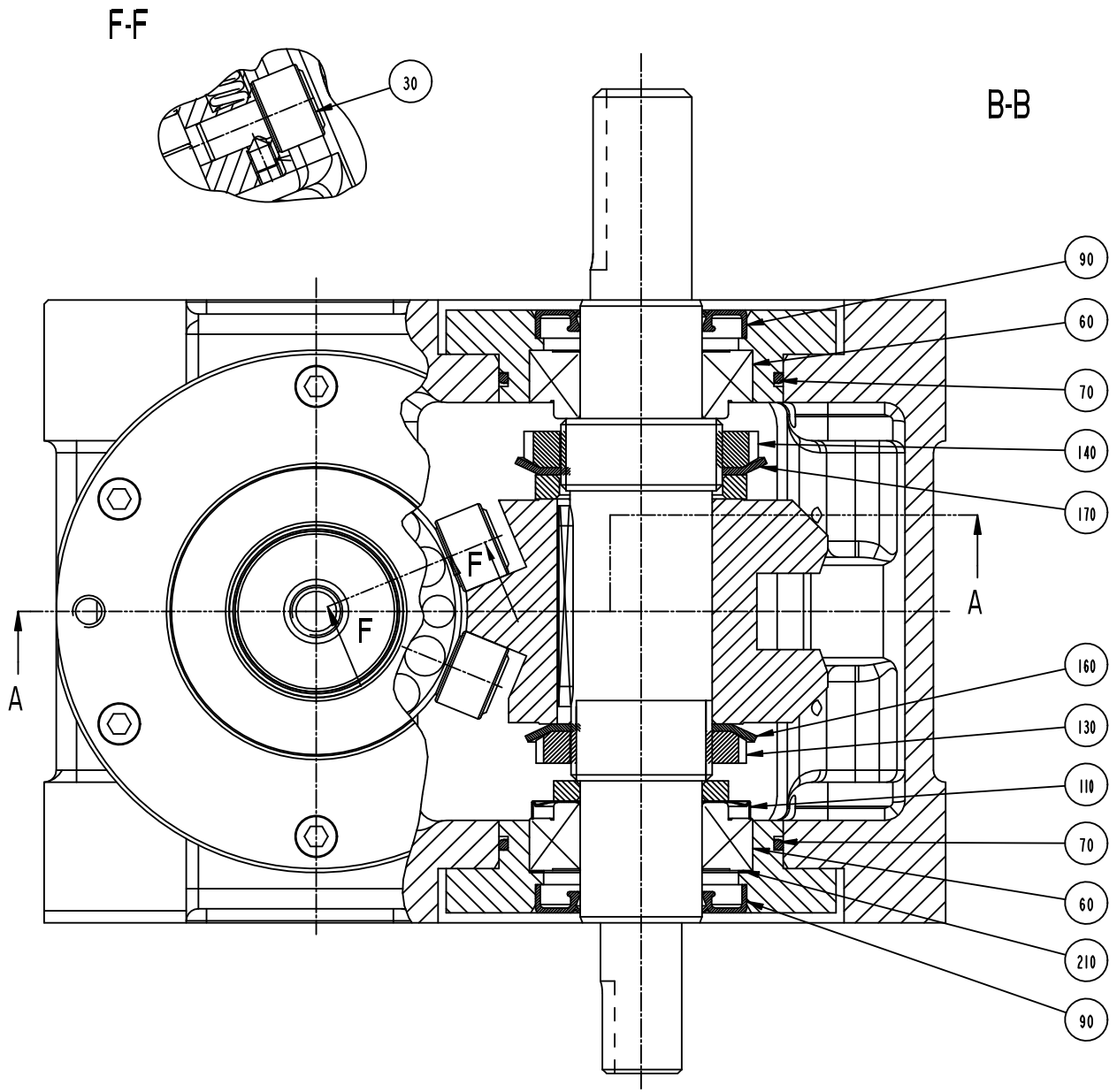

90458-1721
ECM 32221

ECM: 293453 - 20070126
Group number: 256410-0900
Assembly Drawing: 90458-1721_4_AC

This list covers pages from 5-162 to 5-177

Pos	Part No	UN	Qty	Description	Page No
TBA (See drawing on page: 5-174)					
020	1539261-0000		1	WASHER	
030	1539301-0000		1	TOOTHED PULLEY	
040	1539302-0000		1	SPACER	
320	90458-1721		1	INDEXING GEAR, 10.707.207	
010	*90459-2632*		*1*	*GASKET, 15.609.003*	
030	*90416-0373*		*8*	*CAM ROLLER, 83.041.901*	
040	*321361-0104*		*1*	*TAPER ROLLER BEARING, 20X47X15,25 MM*	
050	*321361-0109*		*1*	*TAPER ROLLER BEARING, 45X85X20,75 MM*	
060	*90214-0083*		*1*	*TAPER ROLLER BEARING, 30X55X17 MM*	
070	*90416-0362*		*2*	*RING*	
080	*90416-0359*		*1*	*RING*	
090	*90416-0363*		*2*	*RING*	
100	*90416-0374*		*1*	*PROTECTIVE RING FOR90416-21*	
110	*90214-0314*		*1*	*SEALING RING, 30X54,5X4,5 MM*	
120	*312805-0104*		*1*	*NUT ROUND WITH SLOTS M20X1 FE*	
130	*312805-0107*		*1*	*NUT ROUND WITH SLOTS M35X1,5 FE*	
140	*312805-0108*		*1*	*NUT ROUND WITH SLOTS M40X1,5 FE*	
150	*315410-0104*		*1*	*LOCK WASHER MB 4 D=20 H=1*	
160	*315410-0107*		*1*	*LOCK WASHER MB 7 D=35 H=1,25*	
170	*315410-0108*		*1*	*LOCK WASHER MB 8 D=40 H=1,25*	
200	*90459-3205*		*1*	*SHIM SET, 10.707.116*	
330	315202-0215		1	O-RING 19,2X3 MM	
340	315202-0218		1	O-RING 26,2X3 MM	
500	312105-0370		1	SCREW, M6S ISO 4017 M6X20 A4 80	
550	315705-0232		1	PARALLEL KEY W. ROUND ENDS, 6X6X20 MM	
TPA (See drawing on page: 5-176)					
320	90459-1337		1	INDEXING GEAR, 180X6, 10.734.213	
010	*90416-0363*		*2*	*RING*	
020	*321313-0105*		*1*	*BALL BEARING 25/52X15*	
030	*90416-0362*		*4*	*RING*	
040	*315752-0132*		*1*	*RETAINING RING FOR BORE DIN 472 52*	
050	*321314-0104*		*1*	*BALL BEARING 20/52X15*	
060	*90459-1150*		*1*	*CAP 85.510.470*	
080	*90214-0135*		*1*	*TAPER ROLLER BEARING, 25X47X15 MM*	
090	*90214-0083*		*1*	*TAPER ROLLER BEARING, 30X55X17 MM*	
110	*312805-0107*		*1*	*NUT ROUND WITH SLOTS M35X1,5 FE*	
120	*315410-0107*		*1*	*LOCK WASHER MB 7 D=35 H=1,25*	
130	*312805-0108*		*1*	*NUT ROUND WITH SLOTS M40X1,5 FE*	
140	*315410-0108*		*1*	*LOCK WASHER MB 8 D=40 H=1,25*	
150	*90459-1154*		*1*	*COVER GASKET 14.734.005*	
160	*90416-0359*		*1*	*RING*	
170	*321361-0109*		*1*	*TAPER ROLLER BEARING, 45X85X20,75 MM*	
180	*90416-0374*		*1*	*PROTECTIVE RING FOR90416-21*	
200	*90459-3205*		*1*	*SHIM SET, 10.707.116*	
220	*321361-0104*		*1*	*TAPER ROLLER BEARING, 20X47X15,25 MM*	
230	*315410-0104*		*1*	*LOCK WASHER MB 4 D=20 H=1*	
240	*312805-0104*		*1*	*NUT ROUND WITH SLOTS M20X1 FE*	
270	*90459-1242*		*6*	*CAM ROLLER 83.042.209*	
550	315705-0263		1	PARALLEL KEY W. ROUND ENDS, 8X7X20 MM	
TWA					
020	1539261-0000		1	WASHER	
320	90459-6072		1	INDEXING GEAR, 10.707.210	
010	*90459-2632*		*1*	*GASKET, 15.609.003*	
030	*90416-0373*		*8*	*CAM ROLLER, 83.041.901*	
040	*321361-0104*		*1*	*TAPER ROLLER BEARING, 20X47X15,25 MM*	
050	*321361-0109*		*1*	*TAPER ROLLER BEARING, 45X85X20,75 MM*	
060	*90214-0083*		*1*	*TAPER ROLLER BEARING, 30X55X17 MM*	
070	*90416-0362*		*2*	*RING*	
080	*90416-0359*		*1*	*RING*	
090	*90416-0363*		*1*	*RING*	
100	*90416-0374*		*1*	*PROTECTIVE RING FOR90416-21*	
110	*90214-0314*		*1*	*SEALING RING, 30X54,5X4,5 MM*	
120	*312805-0104*		*1*	*NUT ROUND WITH SLOTS M20X1 FE*	
130	*312805-0107*		*1*	*NUT ROUND WITH SLOTS M35X1,5 FE*	
140	*312805-0108*		*1*	*NUT ROUND WITH SLOTS M40X1,5 FE*	
150	*315410-0104*		*1*	*LOCK WASHER MB 4 D=20 H=1*	
160	*315410-0107*		*1*	*LOCK WASHER MB 7 D=35 H=1,25*	
170	*315410-0108*		*1*	*LOCK WASHER MB 8 D=40 H=1,25*	
200	*90459-3205*		*1*	*SHIM SET, 10.707.116*	
240	*90459-6137*		*1*	*CAP 85.510.520*	
550	315705-0232		1	PARALLEL KEY W. ROUND ENDS, 6X6X20 MM	
Common Parts					
010	1511487-0000		2	STUD SCREW	
310	90296-0073	L	2	OIL	
510	312605-0322		2	HEXAGON NUT, M6M M12 A280	
520	312105-0547		2	SCREW, M6S ISO 4014 M12X75 A4 80	
530	315105-0178		4	WASHER PLAIN, 13X24X2,5 A4 BRB	
560	315705-0271		1	PARALLEL KEY W. ROUND ENDS, 8X7X45 MM	

Machine Type | Group Description | Used-In | Group Number | Page No

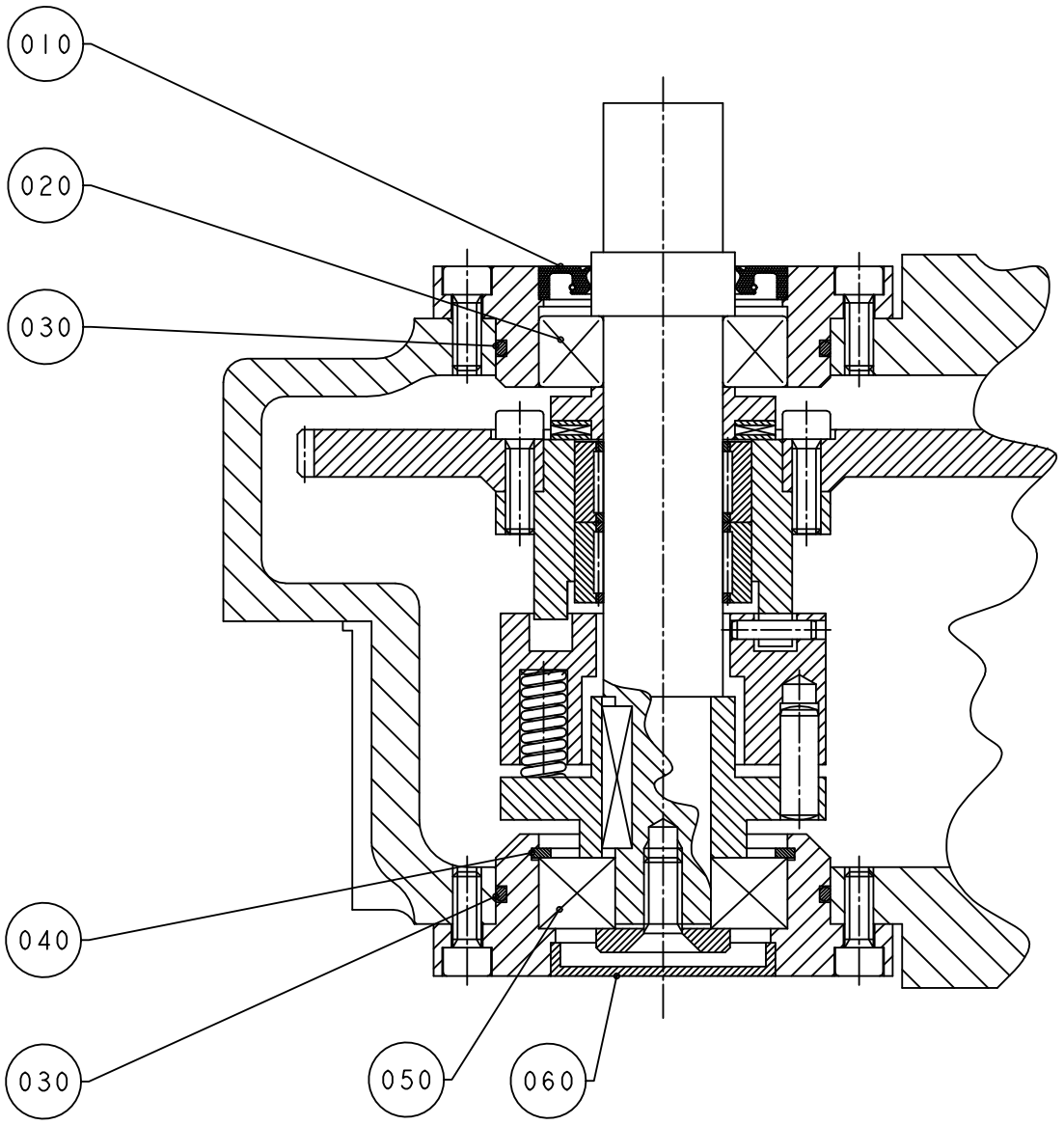

B-B

90459-1337
ECM 32221

ECM: 293453 - 20070126
Group number: 256410-0900
Assembly Drawing: 90459-1337_3_AB

This list covers pages from 5-162 to 5-177

Pos	Part No	UN	Qty	Description	Page No
TBA (See drawing on page: 5-174)					
020	1539261-0000		1	WASHER	
030	1539301-0000		1	TOOTHED PULLEY	
040	1539302-0000		1	SPACER	
320	90458-1721		1	INDEXING GEAR, 10.707.207	
010	*90459-2632*		*1*	*GASKET, 15.609.003*	
030	*90416-0373*		*8*	*CAM ROLLER, 83.041.901*	
040	*321361-0104*		*1*	*TAPER ROLLER BEARING, 20X47X15,25 MM*	
050	*321361-0109*		*1*	*TAPER ROLLER BEARING, 45X85X20,75 MM*	
060	*90214-0083*		*1*	*TAPER ROLLER BEARING, 30X55X17 MM*	
070	*90416-0362*		*2*	*RING*	
080	*90416-0359*		*1*	*RING*	
090	*90416-0363*		*2*	*RING*	
100	*90416-0374*		*1*	*PROTECTIVE RING FOR90416-21*	
110	*90214-0314*		*1*	*SEALING RING, 30X54,5X4,5 MM*	
120	*312805-0104*		*1*	*NUT ROUND WITH SLOTS M20X1 FE*	
130	*312805-0107*		*1*	*NUT ROUND WITH SLOTS M35X1,5 FE*	
140	*312805-0108*		*1*	*NUT ROUND WITH SLOTS M40X1,5 FE*	
150	*315410-0104*		*1*	*LOCK WASHER MB 4 D=20 H=1*	
160	*315410-0107*		*1*	*LOCK WASHER MB 7 D=35 H=1,25*	
170	*315410-0108*		*1*	*LOCK WASHER MB 8 D=40 H=1,25*	
200	*90459-3205*		*1*	*SHIM SET, 10.707.116*	
330	315202-0215		1	O-RING 19,2X3 MM	
340	315202-0218		1	O-RING 26,2X3 MM	
500	312105-0370		1	SCREW, M6S ISO 4017 M6X20 A4 80	
550	315705-0232		1	PARALLEL KEY W. ROUND ENDS, 6X6X20 MM	
TPA (See drawing on page: 5-176)					
320	90459-1337		1	INDEXING GEAR, 180X6, 10.734.213	
010	*90416-0363*		*2*	*RING*	
020	*321313-0105*		*1*	*BALL BEARING 25/52X15*	
030	*90416-0362*		*4*	*RING*	
040	*315752-0132*		*1*	*RETAINING RING FOR BORE DIN 472 52*	
050	*321314-0104*		*1*	*BALL BEARING 20/52X15*	
060	*90459-1150*		*1*	*CAP 85.510.470*	
080	*90214-0135*		*1*	*TAPER ROLLER BEARING, 25X47X15 MM*	
090	*90214-0083*		*1*	*TAPER ROLLER BEARING, 30X55X17 MM*	
110	*312805-0107*		*1*	*NUT ROUND WITH SLOTS M35X1,5 FE*	
120	*315410-0107*		*1*	*LOCK WASHER MB 7 D=35 H=1,25*	
130	*312805-0108*		*1*	*NUT ROUND WITH SLOTS M40X1,5 FE*	
140	*315410-0108*		*1*	*LOCK WASHER MB 8 D=40 H=1,25*	
150	*90459-1154*		*1*	*COVER GASKET 14.734.005*	
160	*90416-0359*		*1*	*RING*	
170	*321361-0109*		*1*	*TAPER ROLLER BEARING, 45X85X20,75 MM*	
180	*90416-0374*		*1*	*PROTECTIVE RING FOR90416-21*	
200	*90459-3205*		*1*	*SHIM SET, 10.707.116*	
220	*321361-0104*		*1*	*TAPER ROLLER BEARING, 20X47X15,25 MM*	
230	*315410-0104*		*1*	*LOCK WASHER MB 4 D=20 H=1*	
240	*312805-0104*		*1*	*NUT ROUND WITH SLOTS M20X1 FE*	
270	*90459-1242*		*6*	*CAM ROLLER 83.042.209*	
550	315705-0263		1	PARALLEL KEY W. ROUND ENDS, 8X7X20 MM	
TWA					
020	1539261-0000		1	WASHER	
320	90459-6072		1	INDEXING GEAR, 10.707.210	
010	*90459-2632*		*1*	*GASKET, 15.609.003*	
030	*90416-0373*		*8*	*CAM ROLLER, 83.041.901*	
040	*321361-0104*		*1*	*TAPER ROLLER BEARING, 20X47X15,25 MM*	
050	*321361-0109*		*1*	*TAPER ROLLER BEARING, 45X85X20,75 MM*	
060	*90214-0083*		*1*	*TAPER ROLLER BEARING, 30X55X17 MM*	
070	*90416-0362*		*2*	*RING*	
080	*90416-0359*		*1*	*RING*	
090	*90416-0363*		*1*	*RING*	
100	*90416-0374*		*1*	*PROTECTIVE RING FOR90416-21*	
110	*90214-0314*		*1*	*SEALING RING, 30X54,5X4,5 MM*	
120	*312805-0104*		*1*	*NUT ROUND WITH SLOTS M20X1 FE*	
130	*312805-0107*		*1*	*NUT ROUND WITH SLOTS M35X1,5 FE*	
140	*312805-0108*		*1*	*NUT ROUND WITH SLOTS M40X1,5 FE*	
150	*315410-0104*		*1*	*LOCK WASHER MB 4 D=20 H=1*	
160	*315410-0107*		*1*	*LOCK WASHER MB 7 D=35 H=1,25*	
170	*315410-0108*		*1*	*LOCK WASHER MB 8 D=40 H=1,25*	
200	*90459-3205*		*1*	*SHIM SET, 10.707.116*	
240	*90459-6137*		*1*	*CAP 85.510.520*	
550	315705-0232		1	PARALLEL KEY W. ROUND ENDS, 6X6X20 MM	
Common Parts					
010	1511487-0000		2	STUD SCREW	
310	90296-0073	L	2	OIL	
510	312605-0322		2	HEXAGON NUT, M6M M12 A280	
520	312105-0547		2	SCREW, M6S ISO 4014 M12X75 A4 80	
530	315105-0178		4	WASHER PLAIN, 13X24X2,5 A4 BRB	
560	315705-0271		1	PARALLEL KEY W. ROUND ENDS, 8X7X45 MM	

Machine Type | Group Description | Used-In | Group Number | Page No

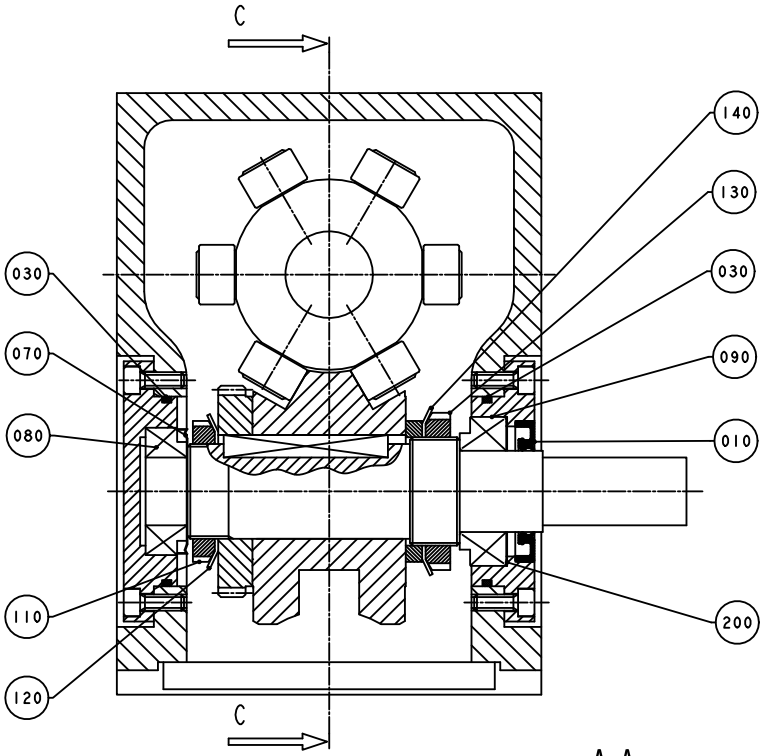

A-A

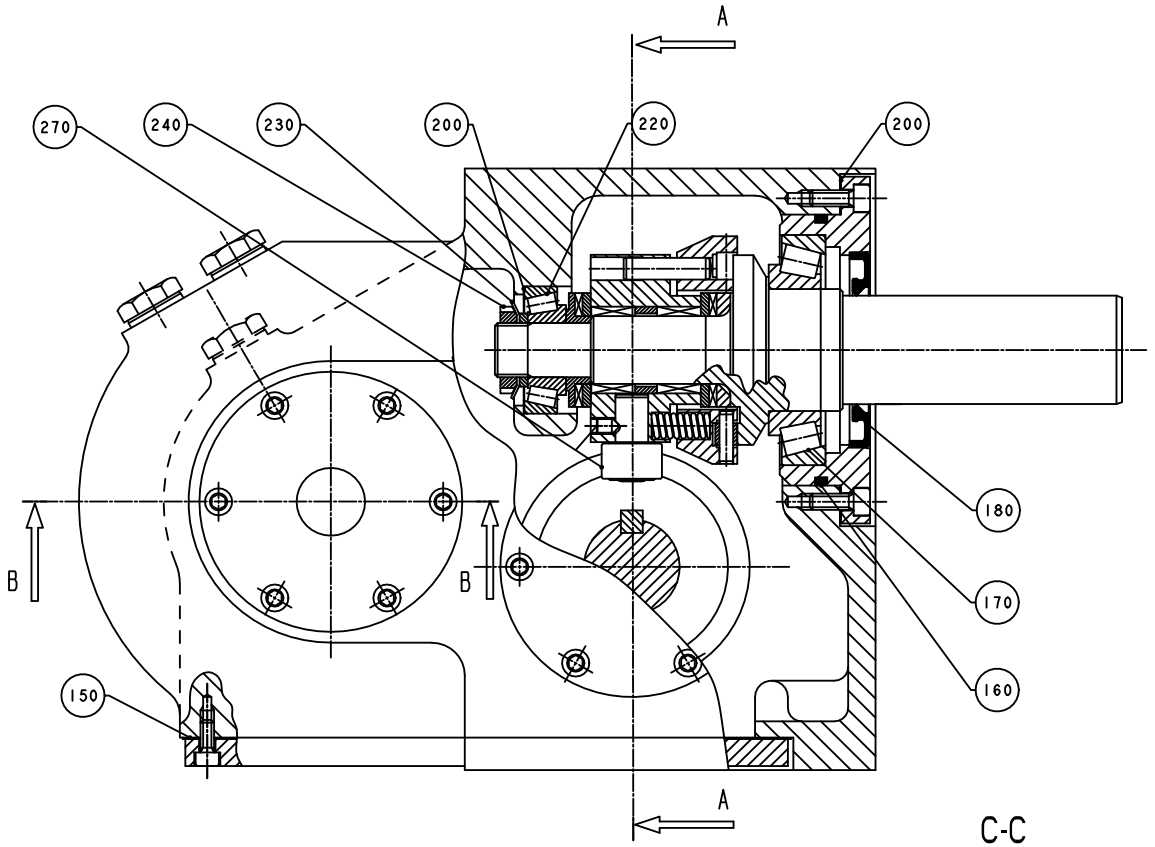

C-C

90459-1337
ECM 32221

ECM: 293453 - 20070126
Group number: 256410-0900
Assembly Drawing: 90459-1337_4_AB

This list covers pages from 5-162 to 5-177

Pos	Part No	UN	Qty	Description	Page No
TBA (See drawing on page: 5-174)					
020	1539261-0000		1	WASHER	
030	1539301-0000		1	TOOTHED PULLEY	
040	1539302-0000		1	SPACER	
320	90458-1721		1	INDEXING GEAR, 10.707.207	
010	*90459-2632*		*1*	*GASKET, 15.609.003*	
030	*90416-0373*		*8*	*CAM ROLLER, 83.041.901*	
040	*321361-0104*		*1*	*TAPER ROLLER BEARING, 20X47X15,25 MM*	
050	*321361-0109*		*1*	*TAPER ROLLER BEARING, 45X85X20,75 MM*	
060	*90214-0083*		*1*	*TAPER ROLLER BEARING, 30X55X17 MM*	
070	*90416-0362*		*2*	*RING*	
080	*90416-0359*		*1*	*RING*	
090	*90416-0363*		*2*	*RING*	
100	*90416-0374*		*1*	*PROTECTIVE RING FOR90416-21*	
110	*90214-0314*		*1*	*SEALING RING, 30X54,5X4,5 MM*	
120	*312805-0104*		*1*	*NUT ROUND WITH SLOTS M20X1 FE*	
130	*312805-0107*		*1*	*NUT ROUND WITH SLOTS M35X1,5 FE*	
140	*312805-0108*		*1*	*NUT ROUND WITH SLOTS M40X1,5 FE*	
150	*315410-0104*		*1*	*LOCK WASHER MB 4 D=20 H=1*	
160	*315410-0107*		*1*	*LOCK WASHER MB 7 D=35 H=1,25*	
170	*315410-0108*		*1*	*LOCK WASHER MB 8 D=40 H=1,25*	
200	*90459-3205*		*1*	*SHIM SET, 10.707.116*	
330	315202-0215		1	O-RING 19,2X3 MM	
340	315202-0218		1	O-RING 26,2X3 MM	
500	312105-0370		1	SCREW, M6S ISO 4017 M6X20 A4 80	
550	315705-0232		1	PARALLEL KEY W. ROUND ENDS, 6X6X20 MM	
TPA (See drawing on page: 5-176)					
320	90459-1337		1	INDEXING GEAR, 180X6, 10.734.213	
010	*90416-0363*		*2*	*RING*	
020	*321313-0105*		*1*	*BALL BEARING 25/52X15*	
030	*90416-0362*		*4*	*RING*	
040	*315752-0132*		*1*	*RETAINING RING FOR BORE DIN 472 52*	
050	*321314-0104*		*1*	*BALL BEARING 20/52X15*	
060	*90459-1150*		*1*	*CAP 85.510.470*	
080	*90214-0135*		*1*	*TAPER ROLLER BEARING, 25X47X15 MM*	
090	*90214-0083*		*1*	*TAPER ROLLER BEARING, 30X55X17 MM*	
110	*312805-0107*		*1*	*NUT ROUND WITH SLOTS M35X1,5 FE*	
120	*315410-0107*		*1*	*LOCK WASHER MB 7 D=35 H=1,25*	
130	*312805-0108*		*1*	*NUT ROUND WITH SLOTS M40X1,5 FE*	
140	*315410-0108*		*1*	*LOCK WASHER MB 8 D=40 H=1,25*	
150	*90459-1154*		*1*	*COVER GASKET 14.734.005*	
160	*90416-0359*		*1*	*RING*	
170	*321361-0109*		*1*	*TAPER ROLLER BEARING, 45X85X20,75 MM*	
180	*90416-0374*		*1*	*PROTECTIVE RING FOR90416-21*	
200	*90459-3205*		*1*	*SHIM SET, 10.707.116*	
220	*321361-0104*		*1*	*TAPER ROLLER BEARING, 20X47X15,25 MM*	
230	*315410-0104*		*1*	*LOCK WASHER MB 4 D=20 H=1*	
240	*312805-0104*		*1*	*NUT ROUND WITH SLOTS M20X1 FE*	
270	*90459-1242*		*6*	*CAM ROLLER 83.042.209*	
550	315705-0263		1	PARALLEL KEY W. ROUND ENDS, 8X7X20 MM	
TWA					
020	1539261-0000		1	WASHER	
320	90459-6072		1	INDEXING GEAR, 10.707.210	
010	*90459-2632*		*1*	*GASKET, 15.609.003*	
030	*90416-0373*		*8*	*CAM ROLLER, 83.041.901*	
040	*321361-0104*		*1*	*TAPER ROLLER BEARING, 20X47X15,25 MM*	
050	*321361-0109*		*1*	*TAPER ROLLER BEARING, 45X85X20,75 MM*	
060	*90214-0083*		*1*	*TAPER ROLLER BEARING, 30X55X17 MM*	
070	*90416-0362*		*2*	*RING*	
080	*90416-0359*		*1*	*RING*	
090	*90416-0363*		*1*	*RING*	
100	*90416-0374*		*1*	*PROTECTIVE RING FOR90416-21*	
110	*90214-0314*		*1*	*SEALING RING, 30X54,5X4,5 MM*	
120	*312805-0104*		*1*	*NUT ROUND WITH SLOTS M20X1 FE*	
130	*312805-0107*		*1*	*NUT ROUND WITH SLOTS M35X1,5 FE*	
140	*312805-0108*		*1*	*NUT ROUND WITH SLOTS M40X1,5 FE*	
150	*315410-0104*		*1*	*LOCK WASHER MB 4 D=20 H=1*	
160	*315410-0107*		*1*	*LOCK WASHER MB 7 D=35 H=1,25*	
170	*315410-0108*		*1*	*LOCK WASHER MB 8 D=40 H=1,25*	
200	*90459-3205*		*1*	*SHIM SET, 10.707.116*	
240	*90459-6137*		*1*	*CAP 85.510.520*	
550	315705-0232		1	PARALLEL KEY W. ROUND ENDS, 6X6X20 MM	
Common Parts					
010	1511487-0000		2	STUD SCREW	
310	90296-0073	L	2	OIL	
510	312605-0322		2	HEXAGON NUT, M6M M12 A280	
520	312105-0547		2	SCREW, M6S ISO 4014 M12X75 A4 80	
530	315105-0178		4	WASHER PLAIN, 13X24X2,5 A4 BRB	
560	315705-0271		1	PARALLEL KEY W. ROUND ENDS, 8X7X45 MM	

Machine Type | Group Description | Used-In | Group Number | Page No

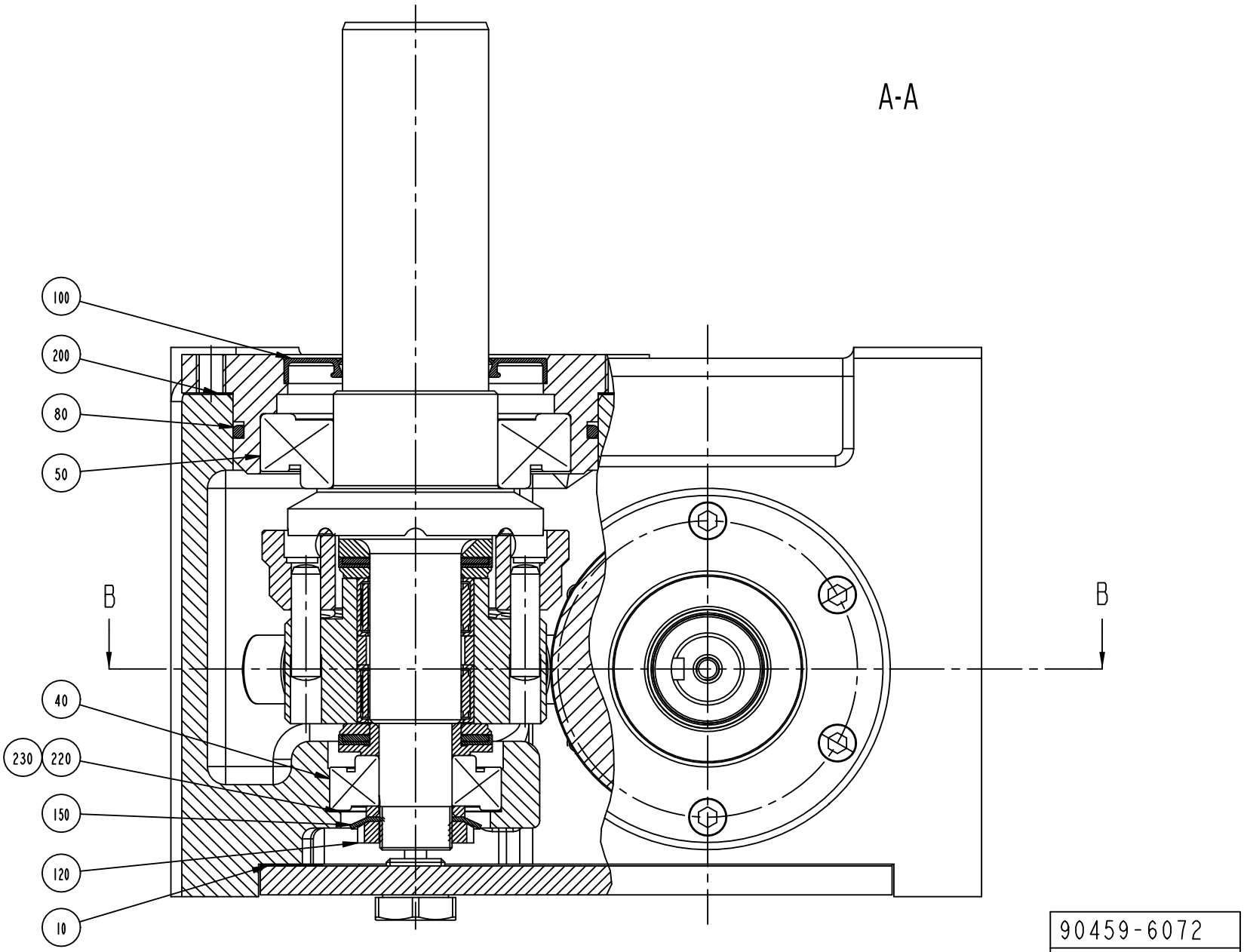
A-A
B
B
100
200
80
50
40
230
220
150
120
10
90459-6072
ECM 211078

ECM: 293453 - 20070126
Group number: 256410-0900
Assembly Drawing: 90459-6072_3_AA

This list covers pages from 5-162 to 5-177

Pos	Part No	UN	Qty	Description	Page No
TBA (See drawing on page: 5-174)					
020	1539261-0000		1	WASHER	
030	1539301-0000		1	TOOTHED PULLEY	
040	1539302-0000		1	SPACER	
320	90458-1721		1	INDEXING GEAR, 10.707.207	
010	*90459-2632*		*1*	*GASKET, 15.609.003*	
030	*90416-0373*		*8*	*CAM ROLLER, 83.041.901*	
040	*321361-0104*		*1*	*TAPER ROLLER BEARING, 20X47X15,25 MM*	
050	*321361-0109*		*1*	*TAPER ROLLER BEARING, 45X85X20,75 MM*	
060	*90214-0083*		*1*	*TAPER ROLLER BEARING, 30X55X17 MM*	
070	*90416-0362*		*2*	*RING*	
080	*90416-0359*		*1*	*RING*	
090	*90416-0363*		*2*	*RING*	
100	*90416-0374*		*1*	*PROTECTIVE RING FOR90416-21*	
110	*90214-0314*		*1*	*SEALING RING, 30X54,5X4,5 MM*	
120	*312805-0104*		*1*	*NUT ROUND WITH SLOTS M20X1 FE*	
130	*312805-0107*		*1*	*NUT ROUND WITH SLOTS M35X1,5 FE*	
140	*312805-0108*		*1*	*NUT ROUND WITH SLOTS M40X1,5 FE*	
150	*315410-0104*		*1*	*LOCK WASHER MB 4 D=20 H=1*	
160	*315410-0107*		*1*	*LOCK WASHER MB 7 D=35 H=1,25*	
170	*315410-0108*		*1*	*LOCK WASHER MB 8 D=40 H=1,25*	
200	*90459-3205*		*1*	*SHIM SET, 10.707.116*	
330	315202-0215		1	O-RING 19,2X3 MM	
340	315202-0218		1	O-RING 26,2X3 MM	
500	312105-0370		1	SCREW, M6S ISO 4017 M6X20 A4 80	
550	315705-0232		1	PARALLEL KEY W. ROUND ENDS, 6X6X20 MM	
TPA (See drawing on page: 5-176)					
320	90459-1337		1	INDEXING GEAR, 180X6, 10.734.213	
010	*90416-0363*		*2*	*RING*	
020	*321313-0105*		*1*	*BALL BEARING 25/52X15*	
030	*90416-0362*		*4*	*RING*	
040	*315752-0132*		*1*	*RETAINING RING FOR BORE DIN 472 52*	
050	*321314-0104*		*1*	*BALL BEARING 20/52X15*	
060	*90459-1150*		*1*	*CAP 85.510.470*	
080	*90214-0135*		*1*	*TAPER ROLLER BEARING, 25X47X15 MM*	
090	*90214-0083*		*1*	*TAPER ROLLER BEARING, 30X55X17 MM*	
110	*312805-0107*		*1*	*NUT ROUND WITH SLOTS M35X1,5 FE*	
120	*315410-0107*		*1*	*LOCK WASHER MB 7 D=35 H=1,25*	
130	*312805-0108*		*1*	*NUT ROUND WITH SLOTS M40X1,5 FE*	
140	*315410-0108*		*1*	*LOCK WASHER MB 8 D=40 H=1,25*	
150	*90459-1154*		*1*	*COVER GASKET 14.734.005*	
160	*90416-0359*		*1*	*RING*	
170	*321361-0109*		*1*	*TAPER ROLLER BEARING, 45X85X20,75 MM*	
180	*90416-0374*		*1*	*PROTECTIVE RING FOR90416-21*	
200	*90459-3205*		*1*	*SHIM SET, 10.707.116*	
220	*321361-0104*		*1*	*TAPER ROLLER BEARING, 20X47X15,25 MM*	
230	*315410-0104*		*1*	*LOCK WASHER MB 4 D=20 H=1*	
240	*312805-0104*		*1*	*NUT ROUND WITH SLOTS M20X1 FE*	
270	*90459-1242*		*6*	*CAM ROLLER 83.042.209*	
550	315705-0263		1	PARALLEL KEY W. ROUND ENDS, 8X7X20 MM	
TWA					
020	1539261-0000		1	WASHER	
320	90459-6072		1	INDEXING GEAR, 10.707.210	
010	*90459-2632*		*1*	*GASKET, 15.609.003*	
030	*90416-0373*		*8*	*CAM ROLLER, 83.041.901*	
040	*321361-0104*		*1*	*TAPER ROLLER BEARING, 20X47X15,25 MM*	
050	*321361-0109*		*1*	*TAPER ROLLER BEARING, 45X85X20,75 MM*	
060	*90214-0083*		*1*	*TAPER ROLLER BEARING, 30X55X17 MM*	
070	*90416-0362*		*2*	*RING*	
080	*90416-0359*		*1*	*RING*	
090	*90416-0363*		*1*	*RING*	
100	*90416-0374*		*1*	*PROTECTIVE RING FOR90416-21*	
110	*90214-0314*		*1*	*SEALING RING, 30X54,5X4,5 MM*	
120	*312805-0104*		*1*	*NUT ROUND WITH SLOTS M20X1 FE*	
130	*312805-0107*		*1*	*NUT ROUND WITH SLOTS M35X1,5 FE*	
140	*312805-0108*		*1*	*NUT ROUND WITH SLOTS M40X1,5 FE*	
150	*315410-0104*		*1*	*LOCK WASHER MB 4 D=20 H=1*	
160	*315410-0107*		*1*	*LOCK WASHER MB 7 D=35 H=1,25*	
170	*315410-0108*		*1*	*LOCK WASHER MB 8 D=40 H=1,25*	
200	*90459-3205*		*1*	*SHIM SET, 10.707.116*	
240	*90459-6137*		*1*	*CAP 85.510.520*	
550	315705-0232		1	PARALLEL KEY W. ROUND ENDS, 6X6X20 MM	
Common Parts					
010	1511487-0000		2	STUD SCREW	
310	90296-0073	L	2	OIL	
510	312605-0322		2	HEXAGON NUT, M6M M12 A280	
520	312105-0547		2	SCREW, M6S ISO 4014 M12X75 A4 80	
530	315105-0178		4	WASHER PLAIN, 13X24X2,5 A4 BRB	
560	315705-0271		1	PARALLEL KEY W. ROUND ENDS, 8X7X45 MM	

Machine Type | Group Description | Used-In | Group Number | Page No

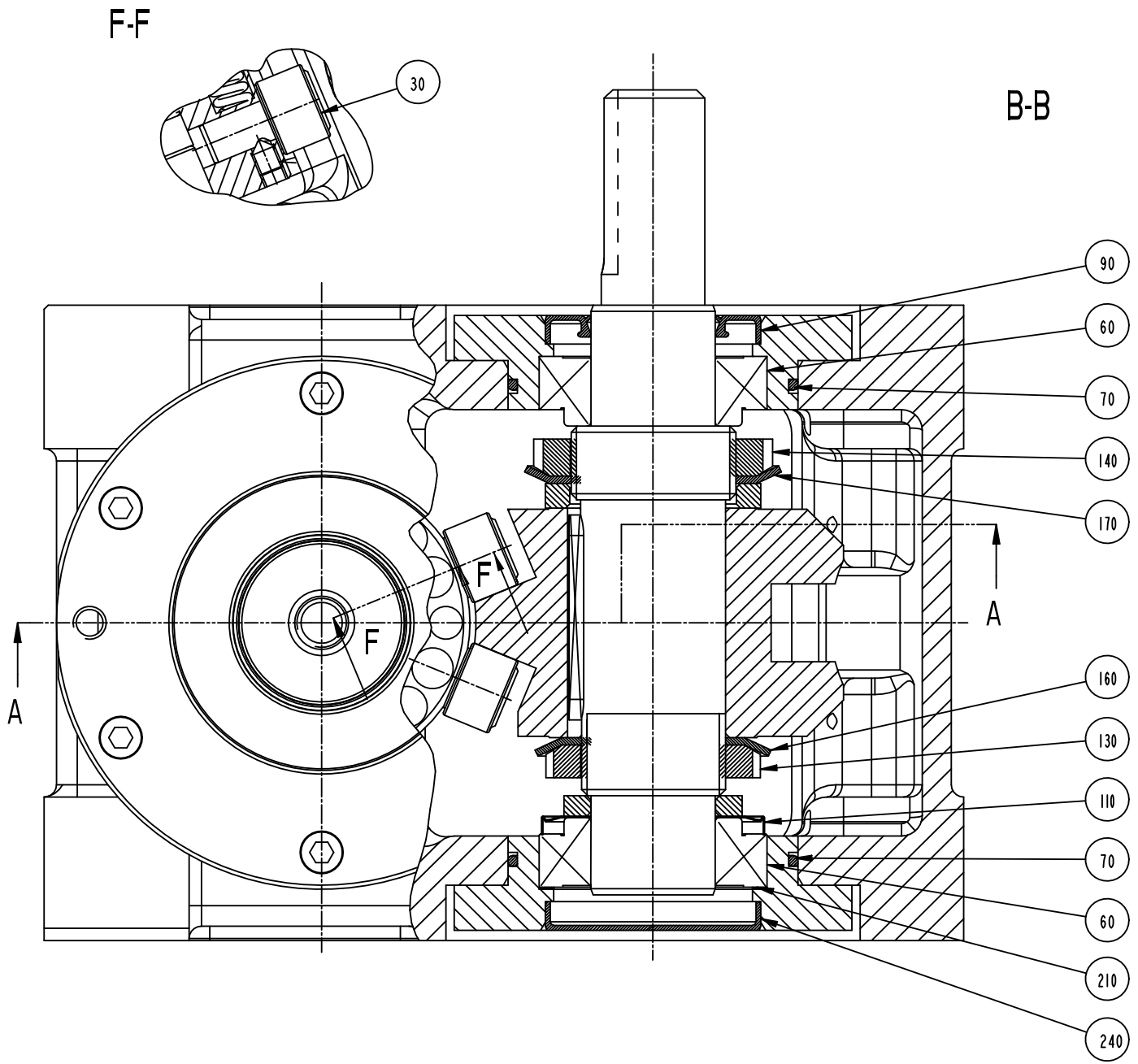

90459-6072
ECM 211078

ECM: 293453 - 20070126
Group number: 256410-0900
Assembly Drawing: 90459-6072_4_AA

This list covers pages from 5-162 to 5-177

Pos	Part No	UN	Qty	Description	Page No
TBA (See drawing on page: 5-174)					
020	1539261-0000		1	WASHER	
030	1539301-0000		1	TOOTHED PULLEY	
040	1539302-0000		1	SPACER	
320	90458-1721		1	INDEXING GEAR, 10.707.207	
010	*90459-2632*		*1*	*GASKET, 15.609.003*	
030	*90416-0373*		*8*	*CAM ROLLER, 83.041.901*	
040	*321361-0104*		*1*	*TAPER ROLLER BEARING, 20X47X15,25 MM*	
050	*321361-0109*		*1*	*TAPER ROLLER BEARING, 45X85X20,75 MM*	
060	*90214-0083*		*1*	*TAPER ROLLER BEARING, 30X55X17 MM*	
070	*90416-0362*		*2*	*RING*	
080	*90416-0359*		*1*	*RING*	
090	*90416-0363*		*2*	*RING*	
100	*90416-0374*		*1*	*PROTECTIVE RING FOR90416-21*	
110	*90214-0314*		*1*	*SEALING RING, 30X54,5X4,5 MM*	
120	*312805-0104*		*1*	*NUT ROUND WITH SLOTS M20X1 FE*	
130	*312805-0107*		*1*	*NUT ROUND WITH SLOTS M35X1,5 FE*	
140	*312805-0108*		*1*	*NUT ROUND WITH SLOTS M40X1,5 FE*	
150	*315410-0104*		*1*	*LOCK WASHER MB 4 D=20 H=1*	
160	*315410-0107*		*1*	*LOCK WASHER MB 7 D=35 H=1,25*	
170	*315410-0108*		*1*	*LOCK WASHER MB 8 D=40 H=1,25*	
200	*90459-3205*		*1*	*SHIM SET, 10.707.116*	
330	315202-0215		1	O-RING 19,2X3 MM	
340	315202-0218		1	O-RING 26,2X3 MM	
500	312105-0370		1	SCREW, M6S ISO 4017 M6X20 A4 80	
550	315705-0232		1	PARALLEL KEY W. ROUND ENDS, 6X6X20 MM	
TPA (See drawing on page: 5-176)					
320	90459-1337		1	INDEXING GEAR, 180X6, 10.734.213	
010	*90416-0363*		*2*	*RING*	
020	*321313-0105*		*1*	*BALL BEARING 25/52X15*	
030	*90416-0362*		*4*	*RING*	
040	*315752-0132*		*1*	*RETAINING RING FOR BORE DIN 472 52*	
050	*321314-0104*		*1*	*BALL BEARING 20/52X15*	
060	*90459-1150*		*1*	*CAP 85.510.470*	
080	*90214-0135*		*1*	*TAPER ROLLER BEARING, 25X47X15 MM*	
090	*90214-0083*		*1*	*TAPER ROLLER BEARING, 30X55X17 MM*	
110	*312805-0107*		*1*	*NUT ROUND WITH SLOTS M35X1,5 FE*	
120	*315410-0107*		*1*	*LOCK WASHER MB 7 D=35 H=1,25*	
130	*312805-0108*		*1*	*NUT ROUND WITH SLOTS M40X1,5 FE*	
140	*315410-0108*		*1*	*LOCK WASHER MB 8 D=40 H=1,25*	
150	*90459-1154*		*1*	*COVER GASKET 14.734.005*	
160	*90416-0359*		*1*	*RING*	
170	*321361-0109*		*1*	*TAPER ROLLER BEARING, 45X85X20,75 MM*	
180	*90416-0374*		*1*	*PROTECTIVE RING FOR90416-21*	
200	*90459-3205*		*1*	*SHIM SET, 10.707.116*	
220	*321361-0104*		*1*	*TAPER ROLLER BEARING, 20X47X15,25 MM*	
230	*315410-0104*		*1*	*LOCK WASHER MB 4 D=20 H=1*	
240	*312805-0104*		*1*	*NUT ROUND WITH SLOTS M20X1 FE*	
270	*90459-1242*		*6*	*CAM ROLLER 83.042.209*	
550	315705-0263		1	PARALLEL KEY W. ROUND ENDS, 8X7X20 MM	
TWA					
020	1539261-0000		1	WASHER	
320	90459-6072		1	INDEXING GEAR, 10.707.210	
010	*90459-2632*		*1*	*GASKET, 15.609.003*	
030	*90416-0373*		*8*	*CAM ROLLER, 83.041.901*	
040	*321361-0104*		*1*	*TAPER ROLLER BEARING, 20X47X15,25 MM*	
050	*321361-0109*		*1*	*TAPER ROLLER BEARING, 45X85X20,75 MM*	
060	*90214-0083*		*1*	*TAPER ROLLER BEARING, 30X55X17 MM*	
070	*90416-0362*		*2*	*RING*	
080	*90416-0359*		*1*	*RING*	
090	*90416-0363*		*1*	*RING*	
100	*90416-0374*		*1*	*PROTECTIVE RING FOR90416-21*	
110	*90214-0314*		*1*	*SEALING RING, 30X54,5X4,5 MM*	
120	*312805-0104*		*1*	*NUT ROUND WITH SLOTS M20X1 FE*	
130	*312805-0107*		*1*	*NUT ROUND WITH SLOTS M35X1,5 FE*	
140	*312805-0108*		*1*	*NUT ROUND WITH SLOTS M40X1,5 FE*	
150	*315410-0104*		*1*	*LOCK WASHER MB 4 D=20 H=1*	
160	*315410-0107*		*1*	*LOCK WASHER MB 7 D=35 H=1,25*	
170	*315410-0108*		*1*	*LOCK WASHER MB 8 D=40 H=1,25*	
200	*90459-3205*		*1*	*SHIM SET, 10.707.116*	
240	*90459-6137*		*1*	*CAP 85.510.520*	
550	315705-0232		1	PARALLEL KEY W. ROUND ENDS, 6X6X20 MM	
Common Parts					
010	1511487-0000		2	STUD SCREW	
310	90296-0073	L	2	OIL	
510	312605-0322		2	HEXAGON NUT, M6M M12 A280	
520	312105-0547		2	SCREW, M6S ISO 4014 M12X75 A4 80	
530	315105-0178		4	WASHER PLAIN, 13X24X2,5 A4 BRB	
560	315705-0271		1	PARALLEL KEY W. ROUND ENDS, 8X7X45 MM	

Machine Type | Group Description | Used-In | Group Number | Page No

INDEXING UNIT

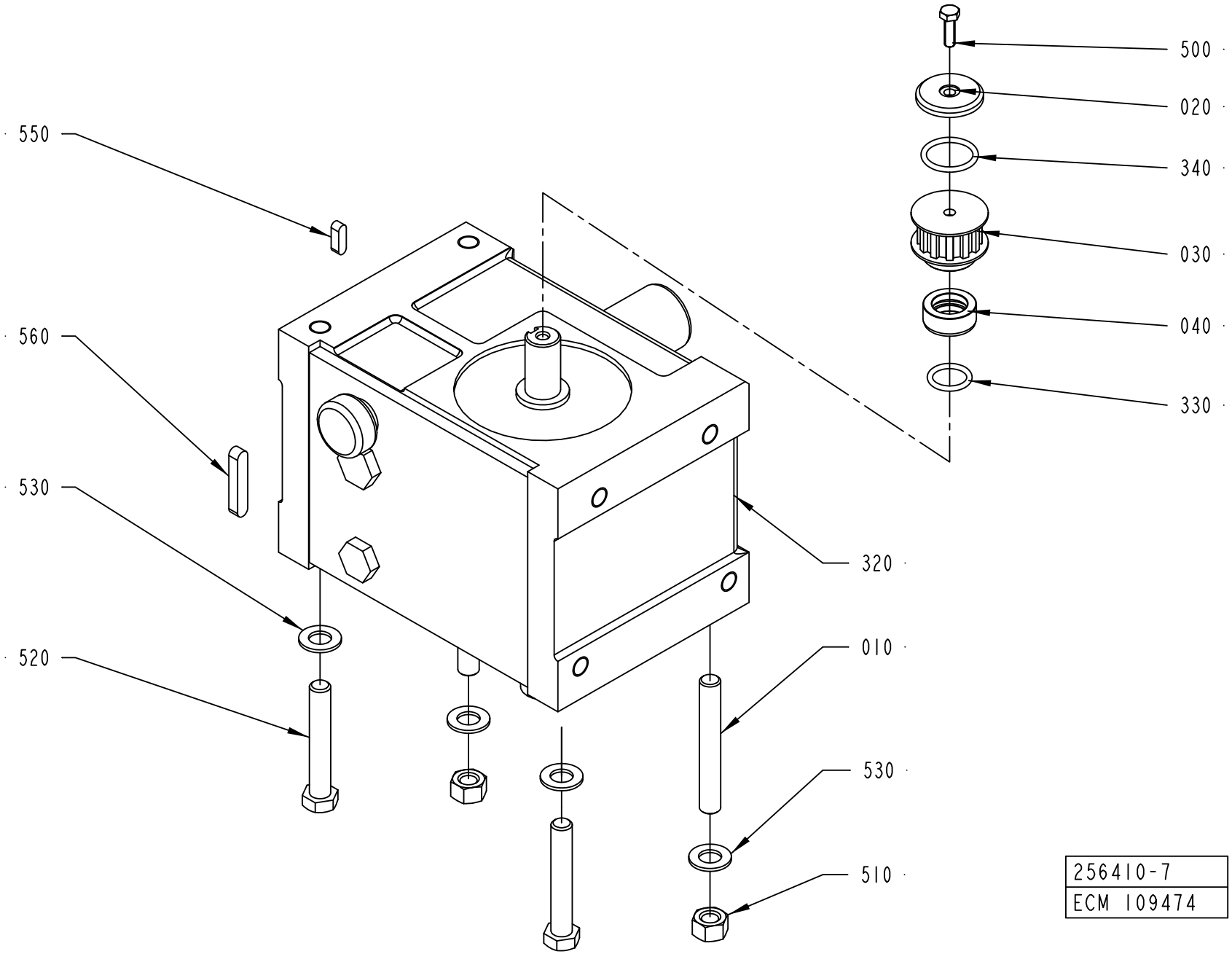

ECM: 293453 - 20070126
Group number: 256410-0900
Assembly Drawing: 256410-7_1_AB

This list covers pages from 5-162 to 5-177

Pos	Part No	UN	Qty	Description	Page No
TBA (See drawing on page: 5-174)					
020	1539261-0000		1	WASHER	
030	1539301-0000		1	TOOTHED PULLEY	
040	1539302-0000		1	SPACER	
320	90458-1721		1	INDEXING GEAR, 10.707.207	
010	*90459-2632*		*1*	*GASKET, 15.609.003*	
030	*90416-0373*		*8*	*CAM ROLLER, 83.041.901*	
040	*321361-0104*		*1*	*TAPER ROLLER BEARING, 20X47X15,25 MM*	
050	*321361-0109*		*1*	*TAPER ROLLER BEARING, 45X85X20,75 MM*	
060	*90214-0083*		*1*	*TAPER ROLLER BEARING, 30X55X17 MM*	
070	*90416-0362*		*2*	*RING*	
080	*90416-0359*		*1*	*RING*	
090	*90416-0363*		*2*	*RING*	
100	*90416-0374*		*1*	*PROTECTIVE RING FOR90416-21*	
110	*90214-0314*		*1*	*SEALING RING, 30X54,5X4,5 MM*	
120	*312805-0104*		*1*	*NUT ROUND WITH SLOTS M20X1 FE*	
130	*312805-0107*		*1*	*NUT ROUND WITH SLOTS M35X1,5 FE*	
140	*312805-0108*		*1*	*NUT ROUND WITH SLOTS M40X1,5 FE*	
150	*315410-0104*		*1*	*LOCK WASHER MB 4 D=20 H=1*	
160	*315410-0107*		*1*	*LOCK WASHER MB 7 D=35 H=1,25*	
170	*315410-0108*		*1*	*LOCK WASHER MB 8 D=40 H=1,25*	
200	*90459-3205*		*1*	*SHIM SET, 10.707.116*	
330	315202-0215		1	O-RING 19,2X3 MM	
340	315202-0218		1	O-RING 26,2X3 MM	
500	312105-0370		1	SCREW, M6S ISO 4017 M6X20 A4 80	
550	315705-0232		1	PARALLEL KEY W. ROUND ENDS, 6X6X20 MM	
TPA (See drawing on page: 5-176)					
320	90459-1337		1	INDEXING GEAR, 180X6, 10.734.213	
010	*90416-0363*		*2*	*RING*	
020	*321313-0105*		*1*	*BALL BEARING 25/52X15*	
030	*90416-0362*		*4*	*RING*	
040	*315752-0132*		*1*	*RETAINING RING FOR BORE DIN 472 52*	
050	*321314-0104*		*1*	*BALL BEARING 20/52X15*	
060	*90459-1150*		*1*	*CAP 85.510.470*	
080	*90214-0135*		*1*	*TAPER ROLLER BEARING, 25X47X15 MM*	
090	*90214-0083*		*1*	*TAPER ROLLER BEARING, 30X55X17 MM*	
110	*312805-0107*		*1*	*NUT ROUND WITH SLOTS M35X1,5 FE*	
120	*315410-0107*		*1*	*LOCK WASHER MB 7 D=35 H=1,25*	
130	*312805-0108*		*1*	*NUT ROUND WITH SLOTS M40X1,5 FE*	
140	*315410-0108*		*1*	*LOCK WASHER MB 8 D=40 H=1,25*	
150	*90459-1154*		*1*	*COVER GASKET 14.734.005*	
160	*90416-0359*		*1*	*RING*	
170	*321361-0109*		*1*	*TAPER ROLLER BEARING, 45X85X20,75 MM*	
180	*90416-0374*		*1*	*PROTECTIVE RING FOR90416-21*	
200	*90459-3205*		*1*	*SHIM SET, 10.707.116*	
220	*321361-0104*		*1*	*TAPER ROLLER BEARING, 20X47X15,25 MM*	
230	*315410-0104*		*1*	*LOCK WASHER MB 4 D=20 H=1*	
240	*312805-0104*		*1*	*NUT ROUND WITH SLOTS M20X1 FE*	
270	*90459-1242*		*6*	*CAM ROLLER 83.042.209*	
550	315705-0263		1	PARALLEL KEY W. ROUND ENDS, 8X7X20 MM	
TWA					
020	1539261-0000		1	WASHER	
320	90459-6072		1	INDEXING GEAR, 10.707.210	
010	*90459-2632*		*1*	*GASKET, 15.609.003*	
030	*90416-0373*		*8*	*CAM ROLLER, 83.041.901*	
040	*321361-0104*		*1*	*TAPER ROLLER BEARING, 20X47X15,25 MM*	
050	*321361-0109*		*1*	*TAPER ROLLER BEARING, 45X85X20,75 MM*	
060	*90214-0083*		*1*	*TAPER ROLLER BEARING, 30X55X17 MM*	
070	*90416-0362*		*2*	*RING*	
080	*90416-0359*		*1*	*RING*	
090	*90416-0363*		*1*	*RING*	
100	*90416-0374*		*1*	*PROTECTIVE RING FOR90416-21*	
110	*90214-0314*		*1*	*SEALING RING, 30X54,5X4,5 MM*	
120	*312805-0104*		*1*	*NUT ROUND WITH SLOTS M20X1 FE*	
130	*312805-0107*		*1*	*NUT ROUND WITH SLOTS M35X1,5 FE*	
140	*312805-0108*		*1*	*NUT ROUND WITH SLOTS M40X1,5 FE*	
150	*315410-0104*		*1*	*LOCK WASHER MB 4 D=20 H=1*	
160	*315410-0107*		*1*	*LOCK WASHER MB 7 D=35 H=1,25*	
170	*315410-0108*		*1*	*LOCK WASHER MB 8 D=40 H=1,25*	
200	*90459-3205*		*1*	*SHIM SET, 10.707.116*	
240	*90459-6137*		*1*	*CAP 85.510.520*	
550	315705-0232		1	PARALLEL KEY W. ROUND ENDS, 6X6X20 MM	
Common Parts					
010	1511487-0000		2	STUD SCREW	
310	90296-0073	L	2	OIL	
510	312605-0322		2	HEXAGON NUT, M6M M12 A280	
520	312105-0547		2	SCREW, M6S ISO 4014 M12X75 A4 80	
530	315105-0178		4	WASHER PLAIN, 13X24X2,5 A4 BRB	
560	315705-0271		1	PARALLEL KEY W. ROUND ENDS, 8X7X45 MM	

Machine Type | Group Description | Used-In | Group Number | Page No

INDEXING UNIT

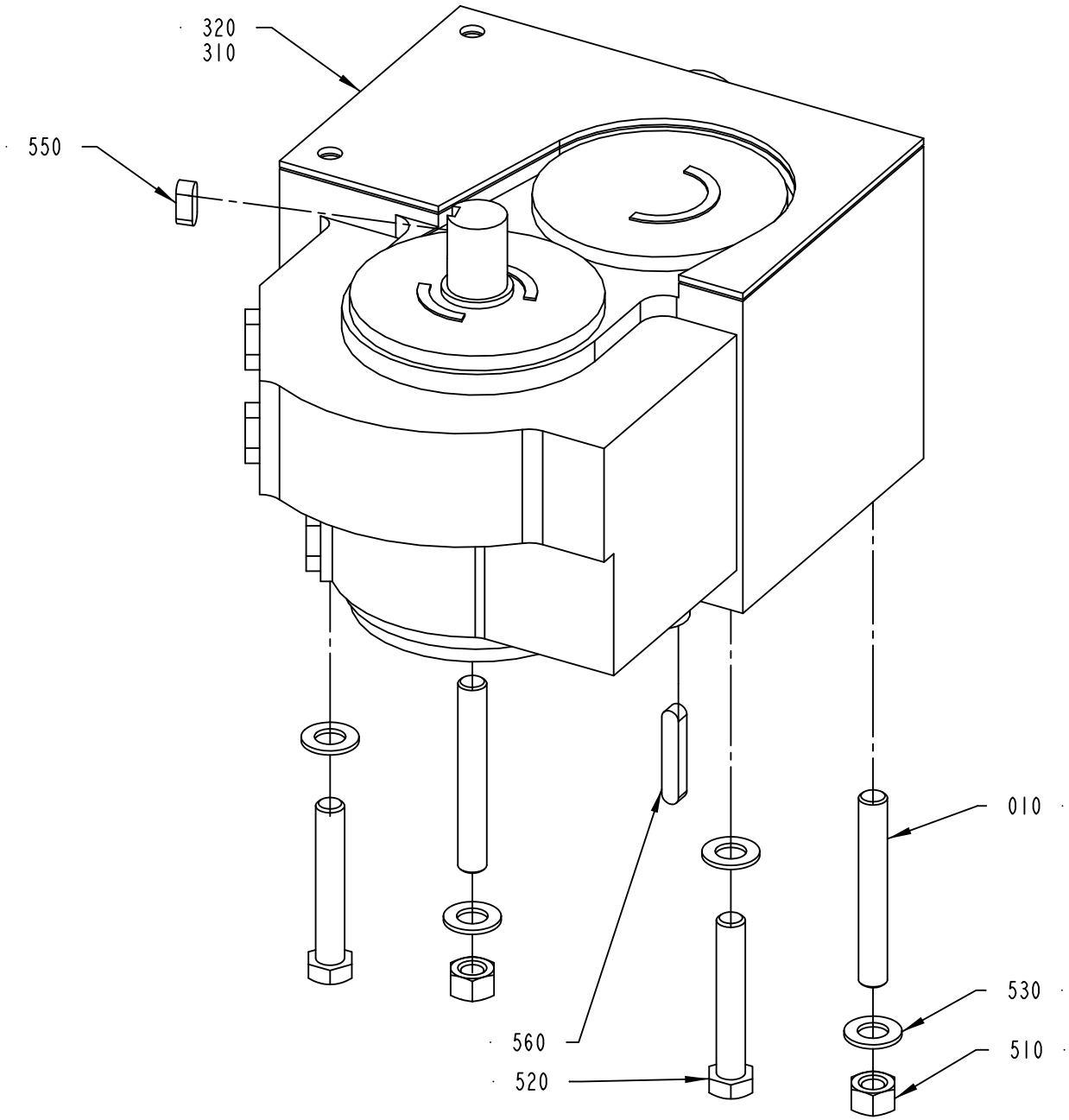

256410-9
276017

ECM: 293453 - 20070126
Group number: 256410-0900
Assembly Drawing: 256410-9_1_AA

This list covers pages from 5-162 to 5-177

Pos	Part No	UN	Qty	Description	Page No
TBA (See drawing on page: 5-174)					
020	1539261-0000		1	WASHER	
030	1539301-0000		1	TOOTHED PULLEY	
040	1539302-0000		1	SPACER	
320	90458-1721		1	INDEXING GEAR, 10.707.207	
010	*90459-2632*		*1*	*GASKET, 15.609.003*	
030	*90416-0373*		*8*	*CAM ROLLER, 83.041.901*	
040	*321361-0104*		*1*	*TAPER ROLLER BEARING, 20X47X15,25 MM*	
050	*321361-0109*		*1*	*TAPER ROLLER BEARING, 45X85X20,75 MM*	
060	*90214-0083*		*1*	*TAPER ROLLER BEARING, 30X55X17 MM*	
070	*90416-0362*		*2*	*RING*	
080	*90416-0359*		*1*	*RING*	
090	*90416-0363*		*2*	*RING*	
100	*90416-0374*		*1*	*PROTECTIVE RING FOR90416-21*	
110	*90214-0314*		*1*	*SEALING RING, 30X54,5X4,5 MM*	
120	*312805-0104*		*1*	*NUT ROUND WITH SLOTS M20X1 FE*	
130	*312805-0107*		*1*	*NUT ROUND WITH SLOTS M35X1,5 FE*	
140	*312805-0108*		*1*	*NUT ROUND WITH SLOTS M40X1,5 FE*	
150	*315410-0104*		*1*	*LOCK WASHER MB 4 D=20 H=1*	
160	*315410-0107*		*1*	*LOCK WASHER MB 7 D=35 H=1,25*	
170	*315410-0108*		*1*	*LOCK WASHER MB 8 D=40 H=1,25*	
200	*90459-3205*		*1*	*SHIM SET, 10.707.116*	
330	315202-0215		1	O-RING 19,2X3 MM	
340	315202-0218		1	O-RING 26,2X3 MM	
500	312105-0370		1	SCREW, M6S ISO 4017 M6X20 A4 80	
550	315705-0232		1	PARALLEL KEY W. ROUND ENDS, 6X6X20 MM	
TPA (See drawing on page: 5-176)					
320	90459-1337		1	INDEXING GEAR, 180X6, 10.734.213	
010	*90416-0363*		*2*	*RING*	
020	*321313-0105*		*1*	*BALL BEARING 25/52X15*	
030	*90416-0362*		*4*	*RING*	
040	*315752-0132*		*1*	*RETAINING RING FOR BORE DIN 472 52*	
050	*321314-0104*		*1*	*BALL BEARING 20/52X15*	
060	*90459-1150*		*1*	*CAP 85.510.470*	
080	*90214-0135*		*1*	*TAPER ROLLER BEARING, 25X47X15 MM*	
090	*90214-0083*		*1*	*TAPER ROLLER BEARING, 30X55X17 MM*	
110	*312805-0107*		*1*	*NUT ROUND WITH SLOTS M35X1,5 FE*	
120	*315410-0107*		*1*	*LOCK WASHER MB 7 D=35 H=1,25*	
130	*312805-0108*		*1*	*NUT ROUND WITH SLOTS M40X1,5 FE*	
140	*315410-0108*		*1*	*LOCK WASHER MB 8 D=40 H=1,25*	
150	*90459-1154*		*1*	*COVER GASKET 14.734.005*	
160	*90416-0359*		*1*	*RING*	
170	*321361-0109*		*1*	*TAPER ROLLER BEARING, 45X85X20,75 MM*	
180	*90416-0374*		*1*	*PROTECTIVE RING FOR90416-21*	
200	*90459-3205*		*1*	*SHIM SET, 10.707.116*	
220	*321361-0104*		*1*	*TAPER ROLLER BEARING, 20X47X15,25 MM*	
230	*315410-0104*		*1*	*LOCK WASHER MB 4 D=20 H=1*	
240	*312805-0104*		*1*	*NUT ROUND WITH SLOTS M20X1 FE*	
270	*90459-1242*		*6*	*CAM ROLLER 83.042.209*	
550	315705-0263		1	PARALLEL KEY W. ROUND ENDS, 8X7X20 MM	
TWA					
020	1539261-0000		1	WASHER	
320	90459-6072		1	INDEXING GEAR, 10.707.210	
010	*90459-2632*		*1*	*GASKET, 15.609.003*	
030	*90416-0373*		*8*	*CAM ROLLER, 83.041.901*	
040	*321361-0104*		*1*	*TAPER ROLLER BEARING, 20X47X15,25 MM*	
050	*321361-0109*		*1*	*TAPER ROLLER BEARING, 45X85X20,75 MM*	
060	*90214-0083*		*1*	*TAPER ROLLER BEARING, 30X55X17 MM*	
070	*90416-0362*		*2*	*RING*	
080	*90416-0359*		*1*	*RING*	
090	*90416-0363*		*1*	*RING*	
100	*90416-0374*		*1*	*PROTECTIVE RING FOR90416-21*	
110	*90214-0314*		*1*	*SEALING RING, 30X54,5X4,5 MM*	
120	*312805-0104*		*1*	*NUT ROUND WITH SLOTS M20X1 FE*	
130	*312805-0107*		*1*	*NUT ROUND WITH SLOTS M35X1,5 FE*	
140	*312805-0108*		*1*	*NUT ROUND WITH SLOTS M40X1,5 FE*	
150	*315410-0104*		*1*	*LOCK WASHER MB 4 D=20 H=1*	
160	*315410-0107*		*1*	*LOCK WASHER MB 7 D=35 H=1,25*	
170	*315410-0108*		*1*	*LOCK WASHER MB 8 D=40 H=1,25*	
200	*90459-3205*		*1*	*SHIM SET, 10.707.116*	
240	*90459-6137*		*1*	*CAP 85.510.520*	
550	315705-0232		1	PARALLEL KEY W. ROUND ENDS, 6X6X20 MM	
Common Parts					
010	1511487-0000		2	STUD SCREW	
310	90296-0073	L	2	OIL	
510	312605-0322		2	HEXAGON NUT, M6M M12 A280	
520	312105-0547		2	SCREW, M6S ISO 4014 M12X75 A4 80	
530	315105-0178		4	WASHER PLAIN, 13X24X2,5 A4 BRB	
560	315705-0271		1	PARALLEL KEY W. ROUND ENDS, 8X7X45 MM	

Machine Type | Group Description | Used-In | Group Number | Page No

DISC COUPLING

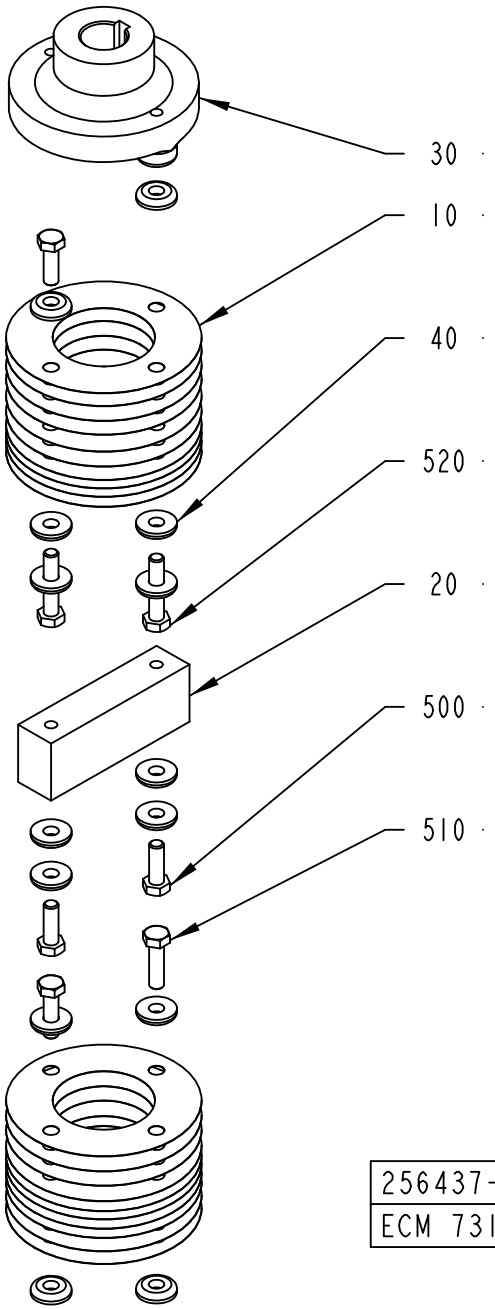

256437-2
ECM 73145

ECM: 205727 - 20050621
Group number: 256437-0200
Assembly Drawing: 256437-2_1_AC

Pos	Part No	UN	Qty	Description	Page No
-					
010	31559-0000		20	SPRING PLATE	
020	272746-0000		1	ROD	
030	272747-0000		1	CONNECTION	
040	31553-0001		14	WASHER	
500	312101-0453		4	SCREW M6S M8X25 FZB	
510	312101-0455		2	SCREW M6S M8X30 FZB	
520	312101-0459		2	SCREW M6S M8X40 FZB	

Pos	Part No	UN	Qty	Description	Page No

WORM GEAR

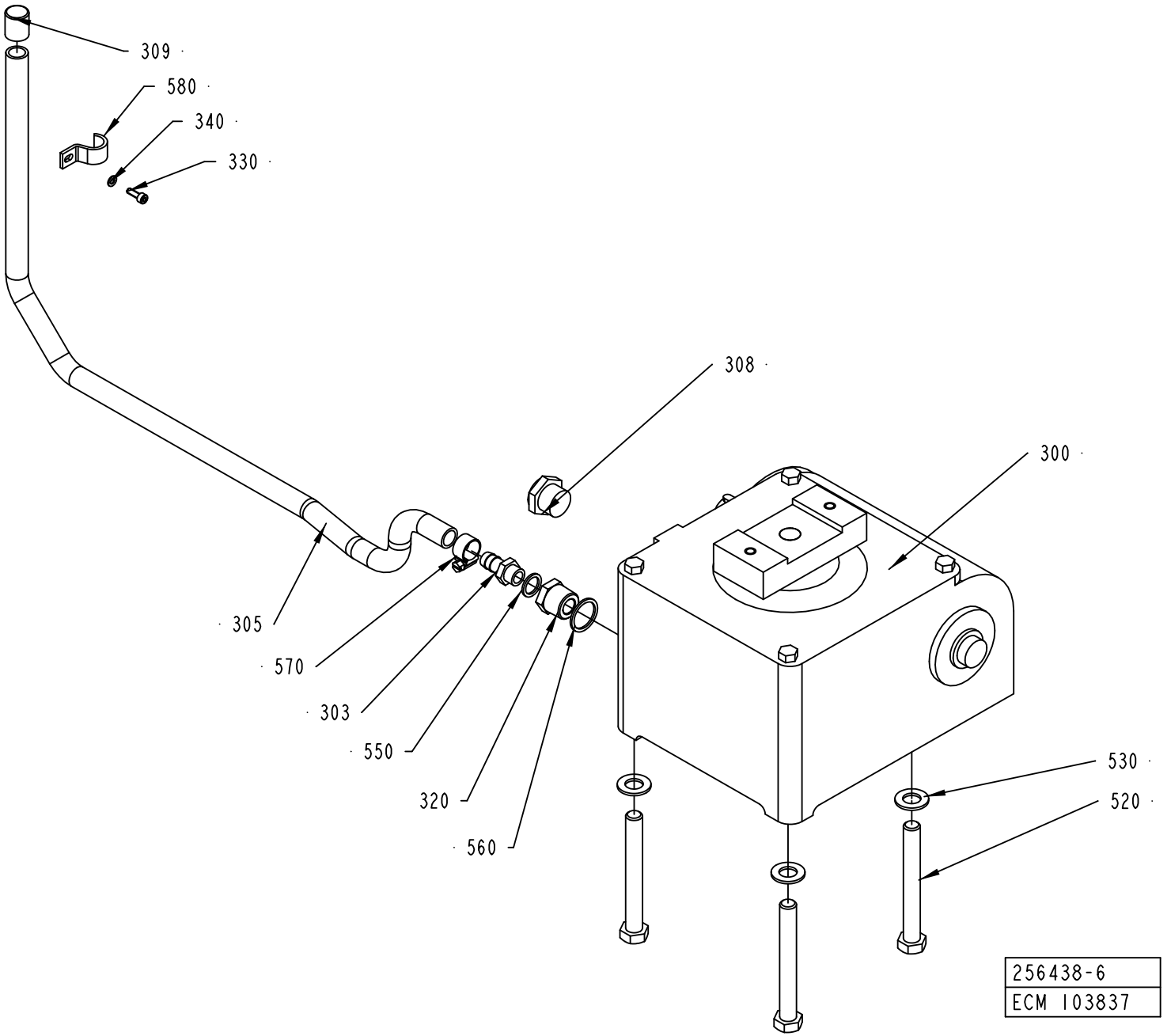
309
580
340
330
308
300
305
570
303
550
320
560
530
520
256438-6
ECM 103837

ECM: 203547 - 20051207
Group number: 256438-0300
Assembly Drawing: 256438-6_1_AD

Pos	Part No	UN	Qty	Description	Page No
TBA/19					
303	90163-0052		1	HOSE NIPPLE, EXT.THR. G1/4-12 MM	
305	90166-0113	MM	800	HOSE	
308	90257-0002		1	FILTER PLUG, NO. 8145-00-120 TYPE F12	
309	90261-0073		1	PLUG, BLIND, PLASTIC, NO. GPN250/15	
330	312115-0291		1	SCREW ISO4762 M4X12 A4 80	
340	315105-0136		1	WASHER PLAIN, 4,3X9X0,8 A4 BRB	
550	315234-0110		1	WASHER,PL.RND.CU.13,5/18 H=1,5	
560	315234-0113		1	WASHER PL.RND.CU.21,3//26 H=1,5	
570	342991-0101		1	HOSE CLIP,WORM DRIVE TYPE (11)-17	
580	352110-0103		1	CABLE CLIPS, D=14-20 MM	
Common Parts					
300	90056-0071		1	WORM GEAR	
310	90296-0073	L	2	OIL	
320	90330-0085		1	BUSHING, INT.EXT. THR. R1/2-G1/4	
520	312101-0552		3	SCREW M6S M12X100 FZB	
530	315101-0178		3	WASHER PLAIN, BRB, 13/24 H=2	

Pos	Part No	UN	Qty	Description	Page No

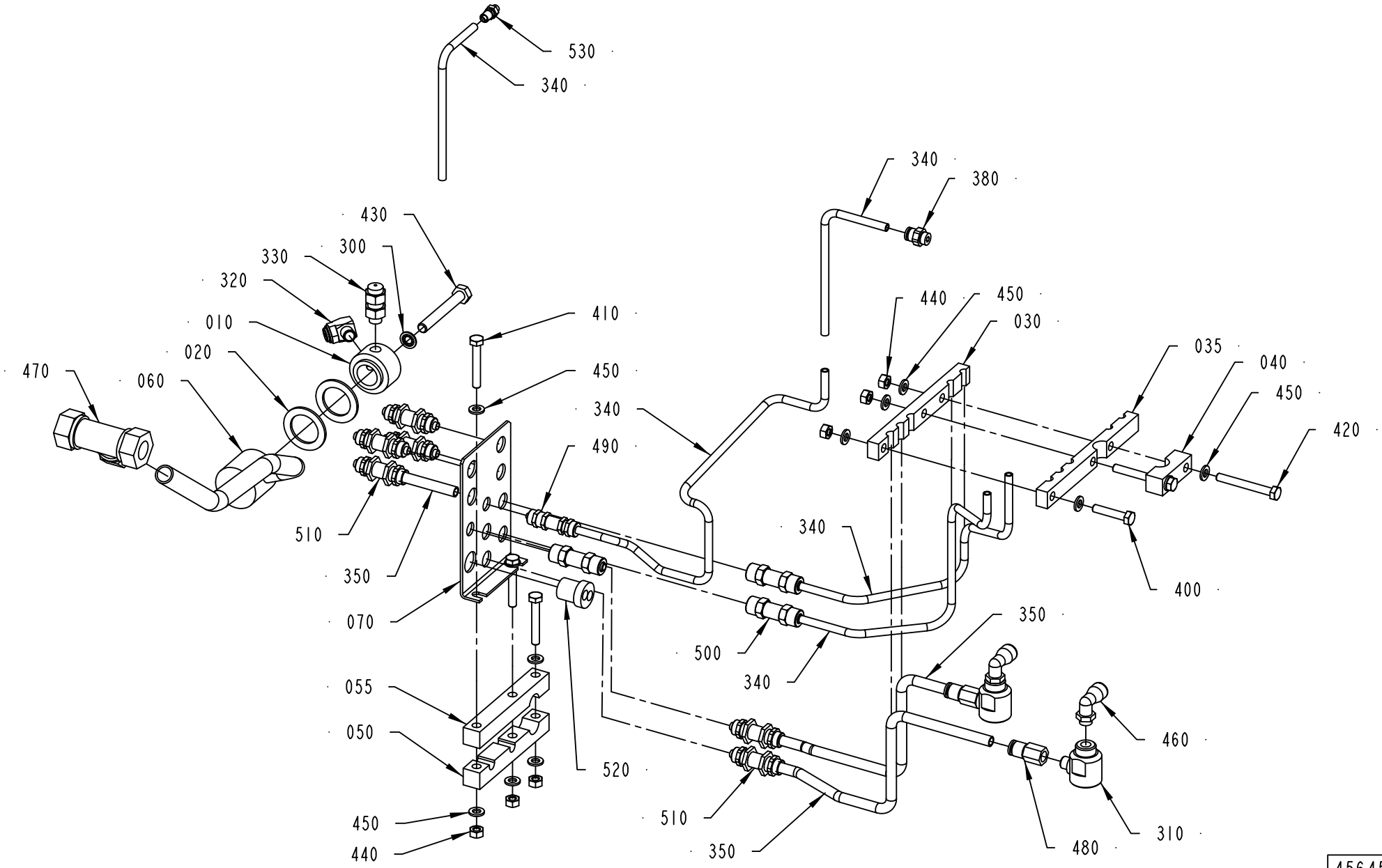

456455-7
276017

ECM: 305499 - 20071113
Group number: 456455-0700
Assembly Drawing: 456455-7_1_AA

This list covers pages from 5-182 to 5-187

Pos	Part No	UN	Qty	Description	Page No
TBA (See drawing on page: 5-184)					
360	315400-0004	M	2	TUBE PUN-H-8X1,25-BL	
370	350015-0003		2	PUSH-IN Y-CONNECTOR QSY-F-8	
440	312605-0316		7	HEXAGON NUT, M6M M6 A280	
450	315105-0153		13	WASHER PLAIN, 6,4X12X1,5 A4 BRB	
490	342960-0112		2	BULKHEAD COUPLING 6/4	
500	342960-0121		2	BULKHEAD COUPLING 8/6-6/4	
510	342960-0122		4	BULKHEAD COUPLING 8/6	
TPA (See drawing on page: 5-182)					
310	90235-0206		2	QUICK EXHAUST VALVE, SEU-1/8	
380	342722-0202		1	PIPE COUPLING 1/8" D=6MM	
440	312605-0316		6	HEXAGON NUT, M6M M6 A280	
450	315105-0153		12	WASHER PLAIN, 6,4X12X1,5 A4 BRB	
460	90458-2964		2	ELBOW PIPE JOINT, EXT.THREAD, D=8MM-G1/8	
480	342770-0107		2	STRAIGHT COUPLING INT, D=8 MM - G1/8	
490	342960-0112		1	BULKHEAD COUPLING 6/4	
500	342960-0121		3	BULKHEAD COUPLING 8/6-6/4	
510	342960-0122		6	BULKHEAD COUPLING 8/6	
530	342921-0112		1	STRAIGHT COUPLING, EXT.THREAD 6/4-6M	
TWA (See drawing on page: 5-186)					
360	315400-0004	M	2	TUBE PUN-H-8X1,25-BL	
370	350015-0003		1	PUSH-IN Y-CONNECTOR QSY-F-8	
440	312605-0316		7	HEXAGON NUT, M6M M6 A280	
450	315105-0153		13	WASHER PLAIN, 6,4X12X1,5 A4 BRB	
490	342960-0112		2	BULKHEAD COUPLING 6/4	
500	342960-0121		2	BULKHEAD COUPLING 8/6-6/4	
510	342960-0122		2	BULKHEAD COUPLING 8/6	
540	350010-0002		1	PUSH-IN BULKHEAD FITTING QSS-F-6	
Common Parts					
010	272191-0000		1	DISTRIBUTOR	
020	256907-0000		2	WASHER	
030	456853-0001		1	PIPE CLAMP	
035	456853-0002		1	PIPE CLAMP	
040	456853-0003		1	PIPE CLAMP	
050	456854-0001		1	CRAMP	
055	456854-0002		1	CRAMP	
060	1511887-0000		1	DISTRIBUTOR	
070	1517519-0000		1	PLATE	
300	315211-0104		1	BONDED SEAL SS/NBR90 M8	
320	90424-0009		1	SPRAY NOZZLE, 103 DEG R1/8, GGA 8W	
330	90424-0016		1	SPRAY NOZZLE, 103 DEG R1/8 BSPT GG8W	
340	90166-0089	M	12	TUBE, 6,2 MM PE BLUE	
350	90166-0090	M	2	TUBE, 8,4 MM PE BLUE	
400	312105-0374		1	SCREW, M6S ISO 4014 M6X30 A4 80	
410	312105-0378		3	SCREW, M6S ISO 4014 M6X40 A4 80	
420	312105-0380		2	SCREW, M6S ISO 4014 M6X50 A4 80	
430	312105-0463		1	SCREW, M6S ISO 4014 M8X60 A4 80	
470	342746-0114		1	CONN. T-PIPE T-15	
520	353249-0028		1	INSERT, MULTI HOLE, E153M 2X8	
900	359000-0400		3	WIRE MARKING, YELLOW, PA2/4"0"	
910	359000-0401		9	WIRE MARKING, YELLOW, PA2/4"1"	
920	359000-0402		5	WIRE MARKING, YELLOW, PA2/4"2"	
930	359000-0403		3	WIRE MARKING, YELLOW, PA2/4"3"	
940	359000-0404		3	WIRE MARKING, YELLOW, PA2/4"4"	
950	359000-0407		2	WIRE MARKING, YELLOW, PA2/4"7"	
960	359000-0409		1	WIRE MARKING, YELLOW, PA2/4"9"	
970	359000-0771		2	WIRE MARKING, YELLOW, PA2/4"V"	

Machine Type	Group Description	Used-In	Group Number	Page No

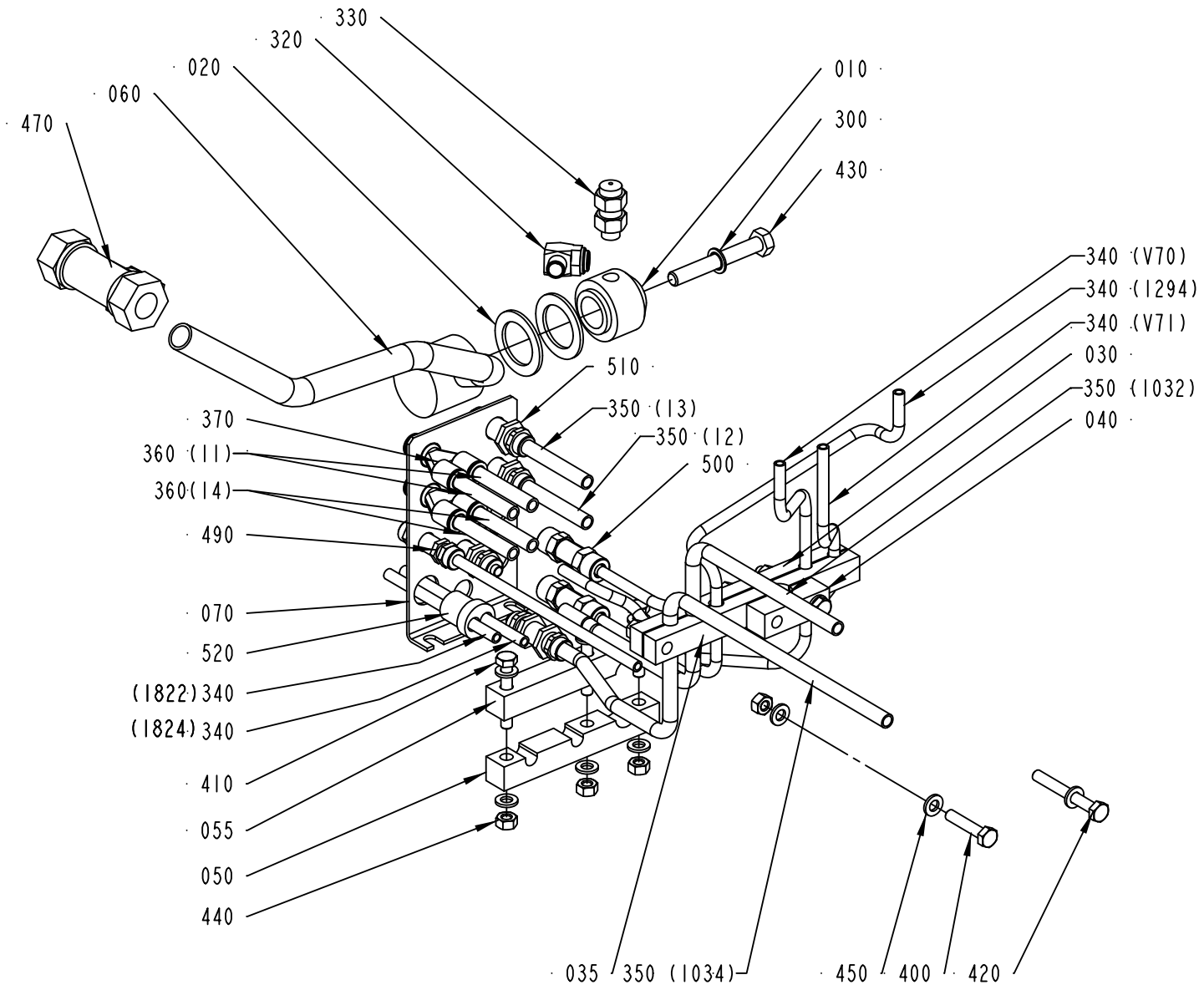

456455-8
257878

ECM: 305499 - 20071113
Group number: 456455-0700
Assembly Drawing: 456455-8_1_AB

This list covers pages from 5-182 to 5-187

Pos	Part No	UN	Qty	Description	Page No
TBA (See drawing on page: 5-184)					
360	315400-0004	M	2	TUBE PUN-H-8X1,25-BL	
370	350015-0003		2	PUSH-IN Y-CONNECTOR QSY-F-8	
440	312605-0316		7	HEXAGON NUT, M6M M6 A280	
450	315105-0153		13	WASHER PLAIN, 6,4X12X1,5 A4 BRB	
490	342960-0112		2	BULKHEAD COUPLING 6/4	
500	342960-0121		2	BULKHEAD COUPLING 8/6-6/4	
510	342960-0122		4	BULKHEAD COUPLING 8/6	
TPA (See drawing on page: 5-182)					
310	90235-0206		2	QUICK EXHAUST VALVE, SEU-1/8	
380	342722-0202		1	PIPE COUPLING 1/8" D=6MM	
440	312605-0316		6	HEXAGON NUT, M6M M6 A280	
450	315105-0153		12	WASHER PLAIN, 6,4X12X1,5 A4 BRB	
460	90458-2964		2	ELBOW PIPE JOINT, EXT.THREAD, D=8MM-G1/8	
480	342770-0107		2	STRAIGHT COUPLING INT, D=8 MM - G1/8	
490	342960-0112		1	BULKHEAD COUPLING 6/4	
500	342960-0121		3	BULKHEAD COUPLING 8/6-6/4	
510	342960-0122		6	BULKHEAD COUPLING 8/6	
530	342921-0112		1	STRAIGHT COUPLING, EXT.THREAD 6/4-6M	
TWA (See drawing on page: 5-186)					
360	315400-0004	M	2	TUBE PUN-H-8X1,25-BL	
370	350015-0003		1	PUSH-IN Y-CONNECTOR QSY-F-8	
440	312605-0316		7	HEXAGON NUT, M6M M6 A280	
450	315105-0153		13	WASHER PLAIN, 6,4X12X1,5 A4 BRB	
490	342960-0112		2	BULKHEAD COUPLING 6/4	
500	342960-0121		2	BULKHEAD COUPLING 8/6-6/4	
510	342960-0122		2	BULKHEAD COUPLING 8/6	
540	350010-0002		1	PUSH-IN BULKHEAD FITTING QSS-F-6	
Common Parts					
010	272191-0000		1	DISTRIBUTOR	
020	256907-0000		2	WASHER	
030	456853-0001		1	PIPE CLAMP	
035	456853-0002		1	PIPE CLAMP	
040	456853-0003		1	PIPE CLAMP	
050	456854-0001		1	CRAMP	
055	456854-0002		1	CRAMP	
060	1511887-0000		1	DISTRIBUTOR	
070	1517519-0000		1	PLATE	
300	315211-0104		1	BONDED SEAL SS/NBR90 M8	
320	90424-0009		1	SPRAY NOZZLE, 103 DEG R1/8, GGA 8W	
330	90424-0016		1	SPRAY NOZZLE, 103 DEG R1/8 BSPT GG8W	
340	90166-0089	M	12	TUBE, 6,2 MM PE BLUE	
350	90166-0090	M	2	TUBE, 8,4 MM PE BLUE	
400	312105-0374		1	SCREW, M6S ISO 4014 M6X30 A4 80	
410	312105-0378		3	SCREW, M6S ISO 4014 M6X40 A4 80	
420	312105-0380		2	SCREW, M6S ISO 4014 M6X50 A4 80	
430	312105-0463		1	SCREW, M6S ISO 4014 M8X60 A4 80	
470	342746-0114		1	CONN. T-PIPE T-15	
520	353249-0028		1	INSERT, MULTI HOLE, E153M 2X8	
900	359000-0400		3	WIRE MARKING, YELLOW, PA2/4"0"	
910	359000-0401		9	WIRE MARKING, YELLOW, PA2/4"1"	
920	359000-0402		5	WIRE MARKING, YELLOW, PA2/4"2"	
930	359000-0403		3	WIRE MARKING, YELLOW, PA2/4"3"	
940	359000-0404		3	WIRE MARKING, YELLOW, PA2/4"4"	
950	359000-0407		2	WIRE MARKING, YELLOW, PA2/4"7"	
960	359000-0409		1	WIRE MARKING, YELLOW, PA2/4"9"	
970	359000-0771		2	WIRE MARKING, YELLOW, PA2/4"V"	

Machine Type	Group Description	Used-In	Group Number	Page No

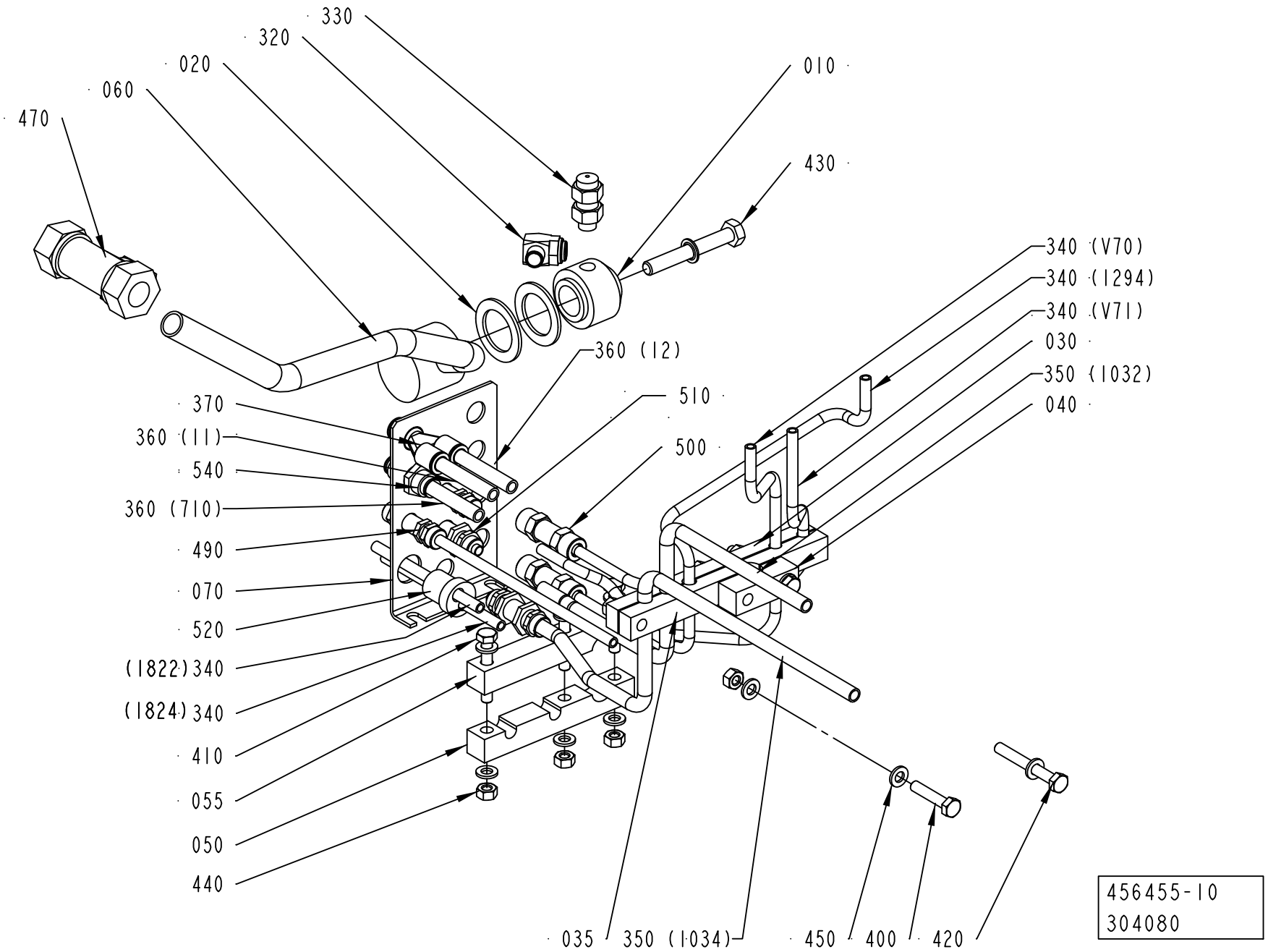
330
320
020
060
470
010
430
340 (V70)
340 (1294)
340 (V71)
030
350 (1032)
040
360 (12)
510
500
370
360 (11)
540
360 (710)
490
070
520
(1822) 340
(1824) 340
410
055
050
440
035
350 (1034)
450
400
420
456455-10
304080

ECM: 305499 - 20071113
Group number: 456455-0700
Assembly Drawing: 456455-10_1_AA

This list covers pages from 5-182 to 5-187

Pos	Part No	UN	Qty	Description	Page No
TBA (See drawing on page: 5-184)					
360	315400-0004	M	2	TUBE PUN-H-8X1,25-BL	
370	350015-0003		2	PUSH-IN Y-CONNECTOR QSY-F-8	
440	312605-0316		7	HEXAGON NUT, M6M M6 A280	
450	315105-0153		13	WASHER PLAIN, 6,4X12X1,5 A4 BRB	
490	342960-0112		2	BULKHEAD COUPLING 6/4	
500	342960-0121		2	BULKHEAD COUPLING 8/6-6/4	
510	342960-0122		4	BULKHEAD COUPLING 8/6	
TPA (See drawing on page: 5-182)					
310	90235-0206		2	QUICK EXHAUST VALVE, SEU-1/8	
380	342722-0202		1	PIPE COUPLING 1/8" D=6MM	
440	312605-0316		6	HEXAGON NUT, M6M M6 A280	
450	315105-0153		12	WASHER PLAIN, 6,4X12X1,5 A4 BRB	
460	90458-2964		2	ELBOW PIPE JOINT, EXT.THREAD, D=8MM-G1/8	
480	342770-0107		2	STRAIGHT COUPLING INT, D=8 MM - G1/8	
490	342960-0112		1	BULKHEAD COUPLING 6/4	
500	342960-0121		3	BULKHEAD COUPLING 8/6-6/4	
510	342960-0122		6	BULKHEAD COUPLING 8/6	
530	342921-0112		1	STRAIGHT COUPLING, EXT.THREAD 6/4-6M	
TWA (See drawing on page: 5-186)					
360	315400-0004	M	2	TUBE PUN-H-8X1,25-BL	
370	350015-0003		1	PUSH-IN Y-CONNECTOR QSY-F-8	
440	312605-0316		7	HEXAGON NUT, M6M M6 A280	
450	315105-0153		13	WASHER PLAIN, 6,4X12X1,5 A4 BRB	
490	342960-0112		2	BULKHEAD COUPLING 6/4	
500	342960-0121		2	BULKHEAD COUPLING 8/6-6/4	
510	342960-0122		2	BULKHEAD COUPLING 8/6	
540	350010-0002		1	PUSH-IN BULKHEAD FITTING QSS-F-6	
Common Parts					
010	272191-0000		1	DISTRIBUTOR	
020	256907-0000		2	WASHER	
030	456853-0001		1	PIPE CLAMP	
035	456853-0002		1	PIPE CLAMP	
040	456853-0003		1	PIPE CLAMP	
050	456854-0001		1	CRAMP	
055	456854-0002		1	CRAMP	
060	1511887-0000		1	DISTRIBUTOR	
070	1517519-0000		1	PLATE	
300	315211-0104		1	BONDED SEAL SS/NBR90 M8	
320	90424-0009		1	SPRAY NOZZLE, 103 DEG R1/8, GGA 8W	
330	90424-0016		1	SPRAY NOZZLE, 103 DEG R1/8 BSPT GG8W	
340	90166-0089	M	12	TUBE, 6,2 MM PE BLUE	
350	90166-0090	M	2	TUBE, 8,4 MM PE BLUE	
400	312105-0374		1	SCREW, M6S ISO 4014 M6X30 A4 80	
410	312105-0378		3	SCREW, M6S ISO 4014 M6X40 A4 80	
420	312105-0380		2	SCREW, M6S ISO 4014 M6X50 A4 80	
430	312105-0463		1	SCREW, M6S ISO 4014 M8X60 A4 80	
470	342746-0114		1	CONN. T-PIPE T-15	
520	353249-0028		1	INSERT, MULTI HOLE, E153M 2X8	
900	359000-0400		3	WIRE MARKING, YELLOW, PA2/4"0"	
910	359000-0401		9	WIRE MARKING, YELLOW, PA2/4"1"	
920	359000-0402		5	WIRE MARKING, YELLOW, PA2/4"2"	
930	359000-0403		3	WIRE MARKING, YELLOW, PA2/4"3"	
940	359000-0404		3	WIRE MARKING, YELLOW, PA2/4"4"	
950	359000-0407		2	WIRE MARKING, YELLOW, PA2/4"7"	
960	359000-0409		1	WIRE MARKING, YELLOW, PA2/4"9"	
970	359000-0771		2	WIRE MARKING, YELLOW, PA2/4"V"	

Machine Type	Group Description	Used-In	Group Number	Page No

BOTTOM VALVE

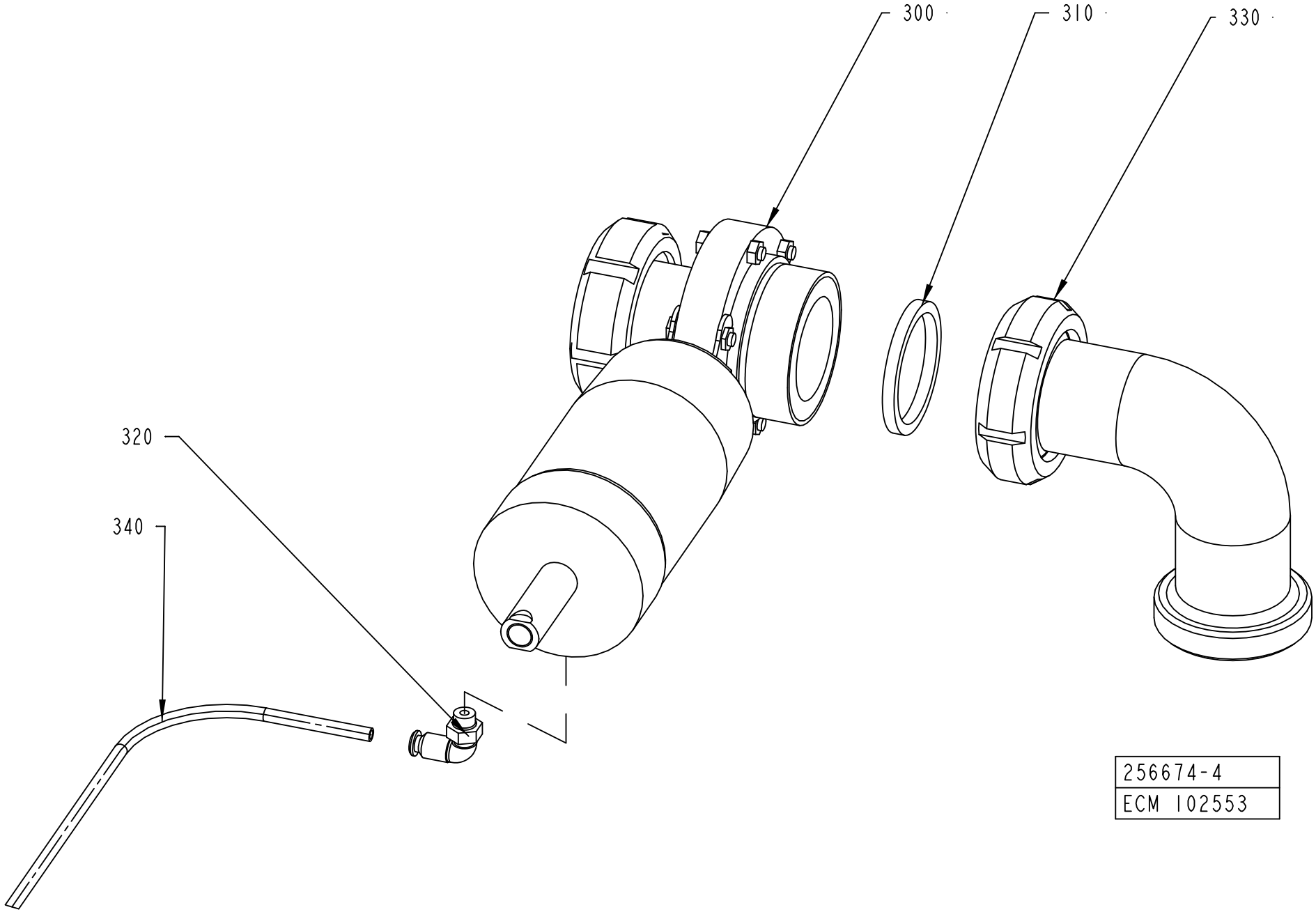

ECM: 205729 - 20050621
Group number: 256674-0500
Assembly Drawing: 256674-4_1_AA

Pos	Part No	UN	Qty	Description	Page No
-					
300	90457-0132		1	VALVE, BUTTERFLY, ZVF1200BSAAOCSF INOX	
310	315250-0104		1	GASKET 61X51X5,5 MM	
320	90458-2956		1	ELBOW PIPE JOINT, EXT.THREAD, D=6MM-G1/8	
330	342807-0104		1	PIPE ELBOW 90 DEGR. SMS1220, D=51 MM	
340	90166-0089	M	1	TUBE, 6,2 MM PE BLUE	

Pos	Part No	UN	Qty	Description	Page No

MACHINE BODY

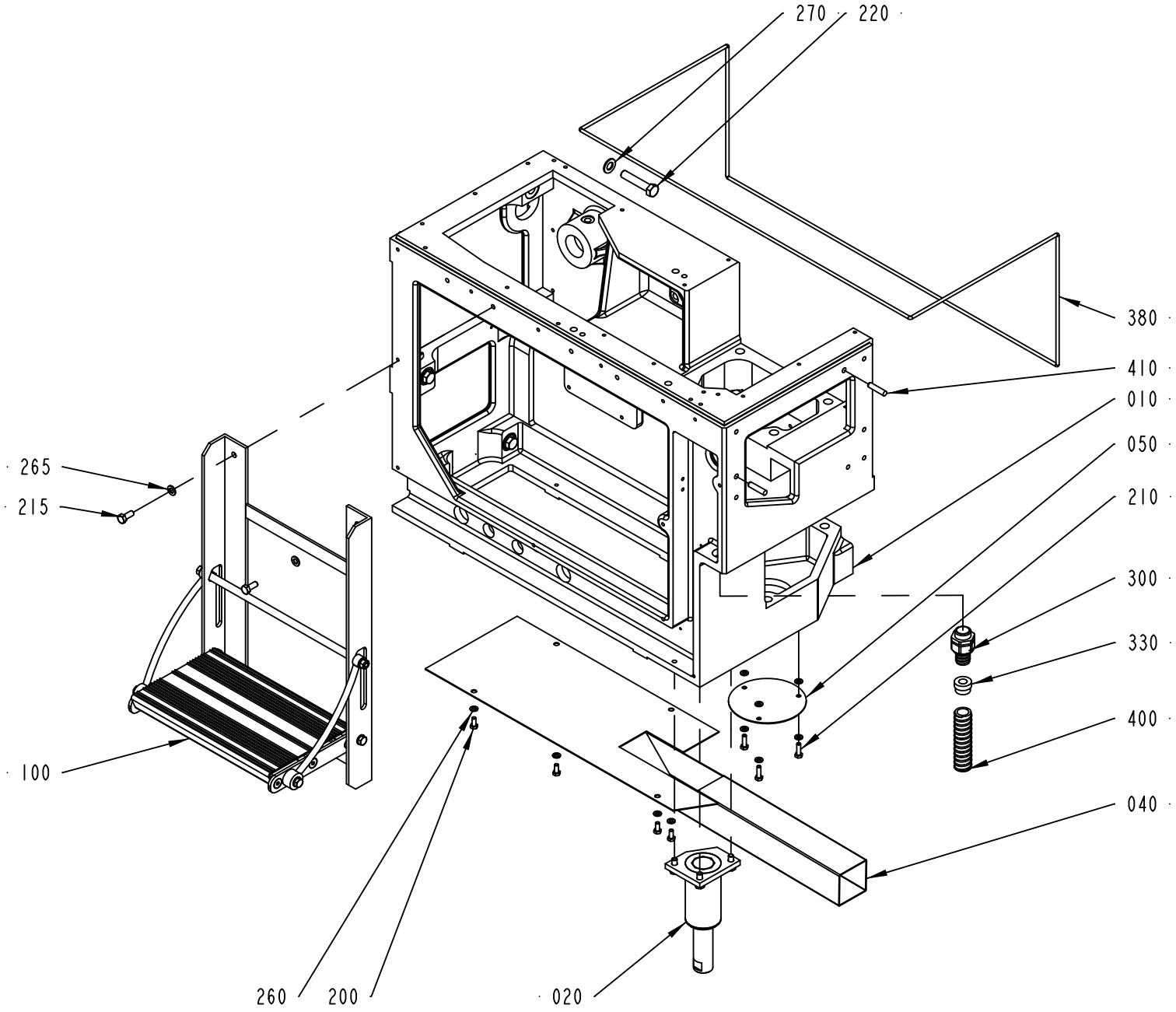

441695-7
224060

Pos	Part No	UN	Qty	Description	Page No
TBA 0100B, TBA 0125S, TBA 0160S, TBA 0200M, TBA 0200B, TBA 0200S, TBA 0250S, TBA 0284B, TBA 0250B, TBA 0300S, TBA 0330S (See drawing on page: 5-190)					
010	1539960-0000		1	MACHINE BODY	
220	312105-0544		6	SCREW, M6S ISO 4014 M12X60 A4 80	
265	315105-0165		2	WASHER PLAIN, 8,4X16X1,6 A4 BRB	
300	90458-0431		1	GLAND FITTING, VK 22554YUL16	
330	353249-0013		1	INSERT, SINGLE HOLE, EK154 13	
400	90152-0051	M	1	HOSE, SPIRAL CONDUIT, 25X18, UL 1816	
410	311103-0407		2	PARALLEL PIN ISO 2338 8M6X35 A1	
TPA 0330SQ, TPA 0250SQ, TPA 0200SQ (See drawing on page: 5-194)					
010	2807005-0000		1	MACHINE BODY	
220	312105-0544		6	SCREW, M6S ISO 4014 M12X60 A4 80	
265	315105-0165		2	WASHER PLAIN, 8,4X16X1,6 A4 BRB	
TWA 0125S, TWA 0200S (See drawing on page: 5-192)					
010	2506601-0000		1	SPACER FRAME	
010	1539960-0000		1	MACHINE BODY	
220	90287-0328		6	SCREW, M6S ISO 4014 M12X160 A4 80	
265	315105-0165		6	WASHER PLAIN, 8,4X16X1,6 A4 BRB	
300	90458-0431		1	GLAND FITTING, VK 22554YUL16	
330	353249-0013		1	INSERT, SINGLE HOLE, EK154 13	
400	90152-0051	M	1	HOSE, SPIRAL CONDUIT, 25X18, UL 1816	
410	311103-0407		2	PARALLEL PIN ISO 2338 8M6X35 A1	
430	312105-0453		4	SCREW, M6S ISO 4017 M8X25 A4 80	
Common Parts					
020	2773924-0100		1	LEG	**5-197**
040	2773922-0000		1	BOTTOM PLATE	
050	272743-0000		1	LID	
100	1519426-0100		1	STAIR	**5-199**
200	312105-0366		4	SCREW, M6S ISO 4017 M6X12 A4 80	
210	312105-0370		3	SCREW, M6S ISO 4017 M6X20 A4 80	
215	312105-0451		2	SCREW, M6S ISO 4017 M8X20 A4 80	
260	315105-0153		7	WASHER PLAIN, 6,4X12X1,5 A4 BRB	
270	315105-0178		6	WASHER PLAIN, 13X24X2,5 A4 BRB	
380	90143-0028	M	2.6	STRIP	
420	311103-0458		2	PARALLEL PIN ISO 2338 10M6X30 A1	

Pos	Part No	UN	Qty	Description	Page No

MACHINE BODY

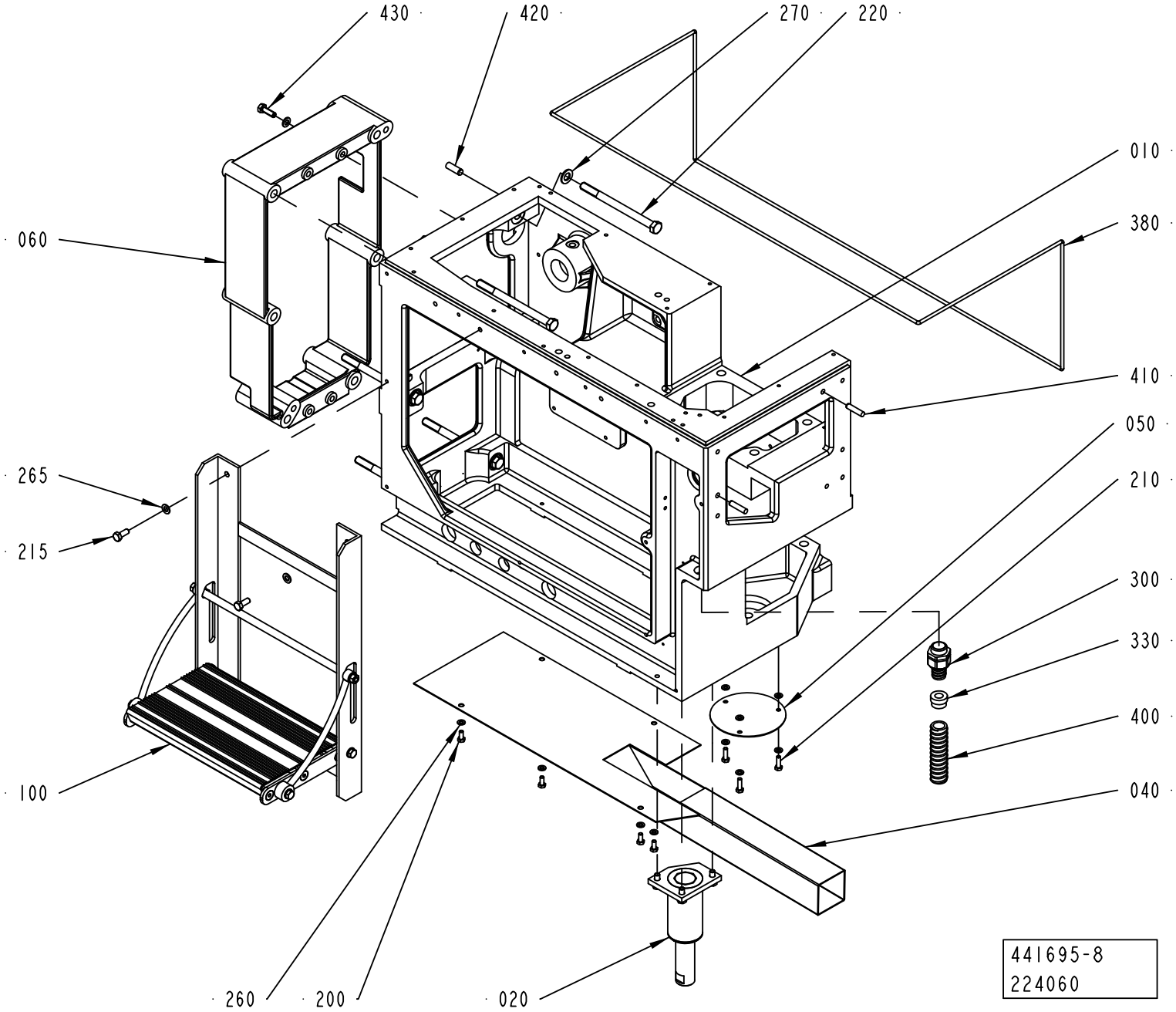

Pos	Part No	UN	Qty	Description	Page No
TBA 0100B, TBA 0125S, TBA 0160S, TBA 0200M, TBA 0200B, TBA 0200S, TBA 0250S, TBA 0284B, TBA 0250B, TBA 0300S, TBA 0330S (See drawing on page: 5-190)					
010	1539960-0000		1	MACHINE BODY	
220	312105-0544		6	SCREW, M6S ISO 4014 M12X60 A4 80	
265	315105-0165		2	WASHER PLAIN, 8,4X16X1,6 A4 BRB	
300	90458-0431		1	GLAND FITTING, VK 22554YUL16	
330	353249-0013		1	INSERT, SINGLE HOLE, EK154 13	
400	90152-0051	M	1	HOSE, SPIRAL CONDUIT, 25X18, UL 1816	
410	311103-0407		2	PARALLEL PIN ISO 2338 8M6X35 A1	
TPA 0330SQ, TPA 0250SQ, TPA 0200SQ (See drawing on page: 5-194)					
010	2807005-0000		1	MACHINE BODY	
220	312105-0544		6	SCREW, M6S ISO 4014 M12X60 A4 80	
265	315105-0165		2	WASHER PLAIN, 8,4X16X1,6 A4 BRB	
TWA 0125S, TWA 0200S (See drawing on page: 5-192)					
010	2506601-0000		1	SPACER FRAME	
010	1539960-0000		1	MACHINE BODY	
220	90287-0328		6	SCREW, M6S ISO 4014 M12X160 A4 80	
265	315105-0165		6	WASHER PLAIN, 8,4X16X1,6 A4 BRB	
300	90458-0431		1	GLAND FITTING, VK 22554YUL16	
330	353249-0013		1	INSERT, SINGLE HOLE, EK154 13	
400	90152-0051	M	1	HOSE, SPIRAL CONDUIT, 25X18, UL 1816	
410	311103-0407		2	PARALLEL PIN ISO 2338 8M6X35 A1	
430	312105-0453		4	SCREW, M6S ISO 4017 M8X25 A4 80	
Common Parts					
020	2773924-0100		1	LEG	**5-197**
040	2773922-0000		1	BOTTOM PLATE	
050	272743-0000		1	LID	
100	1519426-0100		1	STAIR	**5-199**
200	312105-0366		4	SCREW, M6S ISO 4017 M6X12 A4 80	
210	312105-0370		3	SCREW, M6S ISO 4017 M6X20 A4 80	
215	312105-0451		2	SCREW, M6S ISO 4017 M8X20 A4 80	
260	315105-0153		7	WASHER PLAIN, 6,4X12X1,5 A4 BRB	
270	315105-0178		6	WASHER PLAIN, 13X24X2,5 A4 BRB	
380	90143-0028	M	2.6	STRIP	
420	311103-0458		2	PARALLEL PIN ISO 2338 10M6X30 A1	

Pos	Part No	UN	Qty	Description	Page No

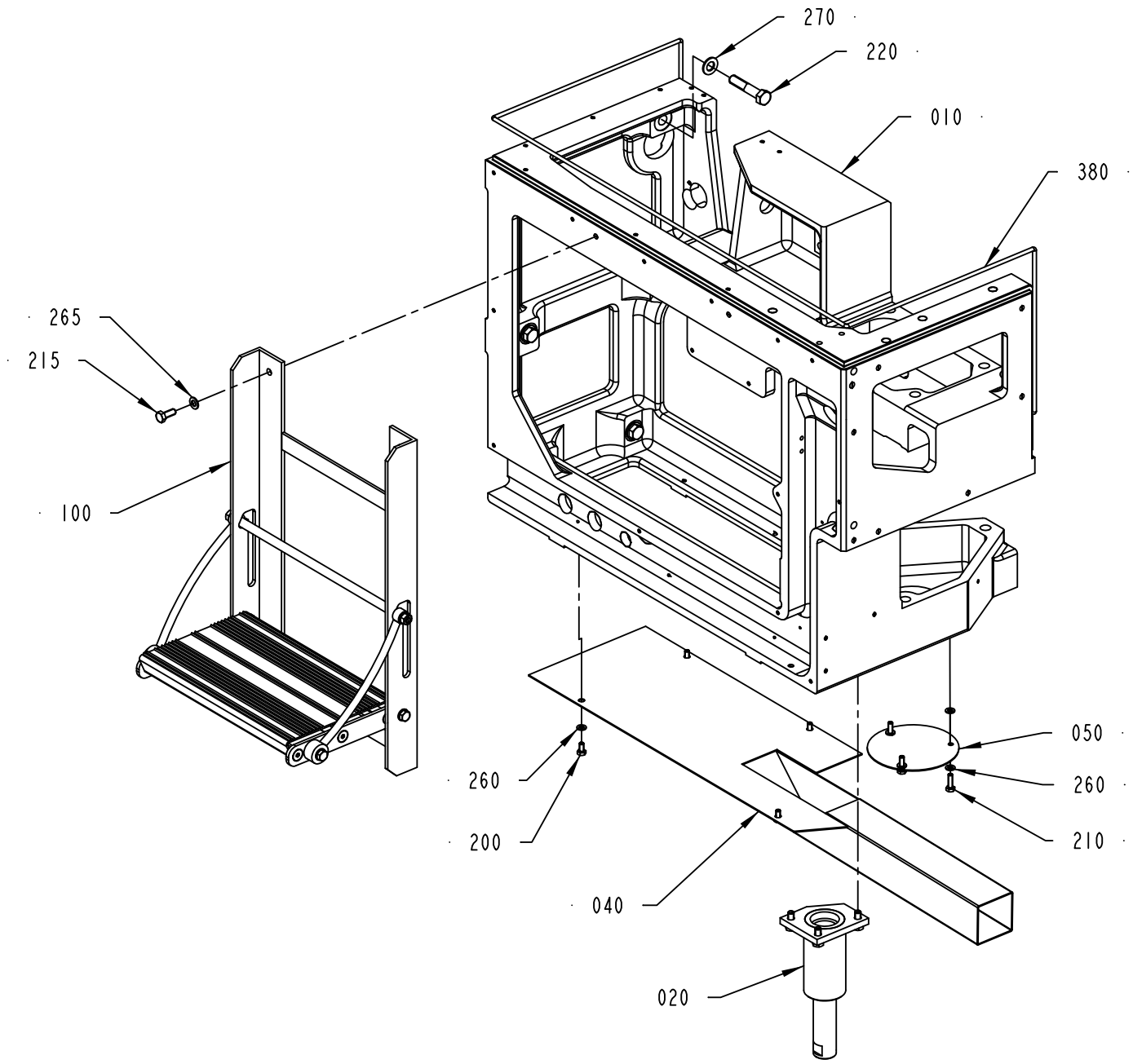

441695-9
276017

Pos	Part No	UN	Qty	Description	Page No
TBA 0100B, TBA 0125S, TBA 0160S, TBA 0200M, TBA 0200B, TBA 0200S, TBA 0250S, TBA 0284B, TBA 0250B, TBA 0300S, TBA 0330S (See drawing on page: 5-190)					
010	1539960-0000		1	MACHINE BODY	
220	312105-0544		6	SCREW, M6S ISO 4014 M12X60 A4 80	
265	315105-0165		2	WASHER PLAIN, 8,4X16X1,6 A4 BRB	
300	90458-0431		1	GLAND FITTING, VK 22554YUL16	
330	353249-0013		1	INSERT, SINGLE HOLE, EK154 13	
400	90152-0051	M	1	HOSE, SPIRAL CONDUIT, 25X18, UL 1816	
410	311103-0407		2	PARALLEL PIN ISO 2338 8M6X35 A1	
TPA 0330SQ, TPA 0250SQ, TPA 0200SQ (See drawing on page: 5-194)					
010	2807005-0000		1	MACHINE BODY	
220	312105-0544		6	SCREW, M6S ISO 4014 M12X60 A4 80	
265	315105-0165		2	WASHER PLAIN, 8,4X16X1,6 A4 BRB	
TWA 0125S, TWA 0200S (See drawing on page: 5-192)					
010	2506601-0000		1	SPACER FRAME	
010	1539960-0000		1	MACHINE BODY	
220	90287-0328		6	SCREW, M6S ISO 4014 M12X160 A4 80	
265	315105-0165		6	WASHER PLAIN, 8,4X16X1,6 A4 BRB	
300	90458-0431		1	GLAND FITTING, VK 22554YUL16	
330	353249-0013		1	INSERT, SINGLE HOLE, EK154 13	
400	90152-0051	M	1	HOSE, SPIRAL CONDUIT, 25X18, UL 1816	
410	311103-0407		2	PARALLEL PIN ISO 2338 8M6X35 A1	
430	312105-0453		4	SCREW, M6S ISO 4017 M8X25 A4 80	
Common Parts					
020	2773924-0100		1	LEG	**5-197**
040	2773922-0000		1	BOTTOM PLATE	
050	272743-0000		1	LID	
100	1519426-0100		1	STAIR	**5-199**
200	312105-0366		4	SCREW, M6S ISO 4017 M6X12 A4 80	
210	312105-0370		3	SCREW, M6S ISO 4017 M6X20 A4 80	
215	312105-0451		2	SCREW, M6S ISO 4017 M8X20 A4 80	
260	315105-0153		7	WASHER PLAIN, 6,4X12X1,5 A4 BRB	
270	315105-0178		6	WASHER PLAIN, 13X24X2,5 A4 BRB	
380	90143-0028	M	2.6	STRIP	
420	311103-0458		2	PARALLEL PIN ISO 2338 10M6X30 A1	

Pos	Part No	UN	Qty	Description	Page No

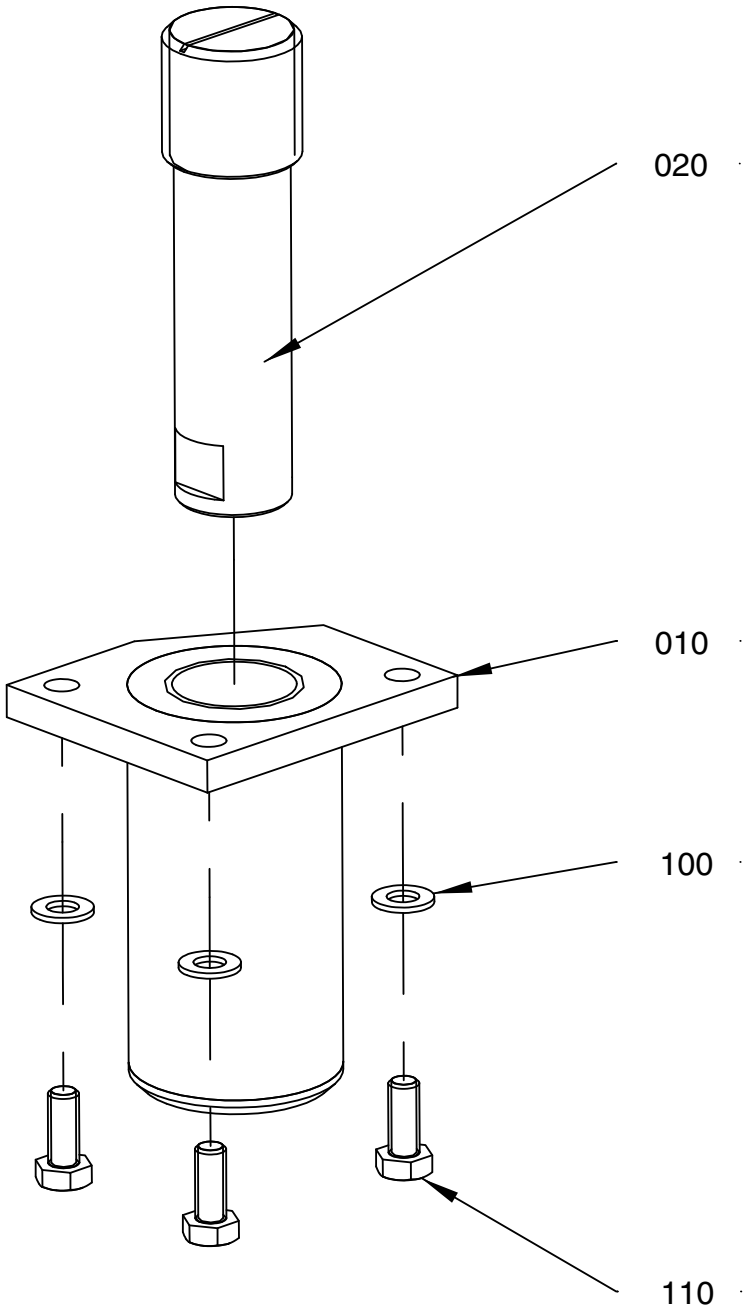

2773 924-1
224060

ECM: 224537 - 20051114
Group number: 2773924-0100
Assembly Drawing: 2773924-1_1_AA

Pos	Part No	UN	Qty	Description	Page No
-					
010	2773923-0000		1	LEG	
020	598148-0000		1	LEG	
100	315105-0165		3	WASHER PLAIN, 8,4X16X1,6 A4 BRB	
110	312105-0451		3	SCREW, M6S ISO 4017 M8X20 A4 80	

Pos	Part No	UN	Qty	Description	Page No

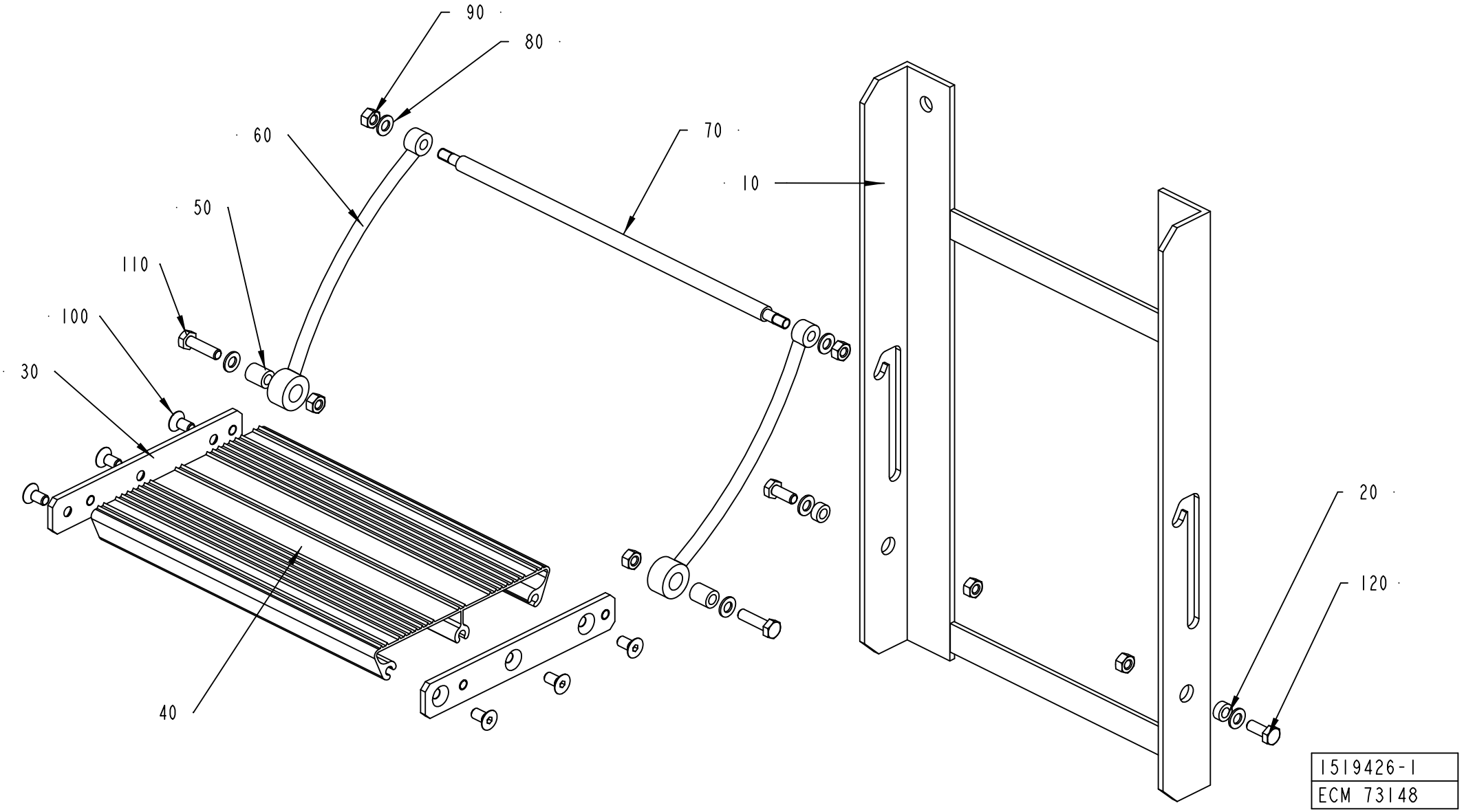
90
80
60
70
10
50
110
100
30
20
120
40
1519426-1
ECM 73148

ECM: 205734 - 20050621
Group number: 1519426-0100
Assembly Drawing: 1519426-1_1_AA

Pos	Part No	UN	Qty	Description	Page No
-					
010	1519423-0000		1	SUPPORT	
020	1519421-0000		2	BUSHING	
030	1519418-0000		2	PLATE	
040	1519417-0000		1	STAIR	
050	1519422-0000		2	BUSHING	
060	1519424-0000		2	SUPPORT	
070	1519425-0000		1	SPACER	
080	315105-0165		6	WASHER PLAIN, 8,4X16X1,6 A4 BRB	
090	312605-0318		6	HEXAGON NUT, M6M M8 A280	
100	312155-0449		6	SCREW DIN 7991 MF6S M8X16 A4 70	
110	312105-0455		2	SCREW, M6S ISO 4017 M8X30 A4 80	
120	312105-0451		2	SCREW, M6S ISO 4017 M8X20 A4 80	

Pos	Part No	UN	Qty	Description	Page No

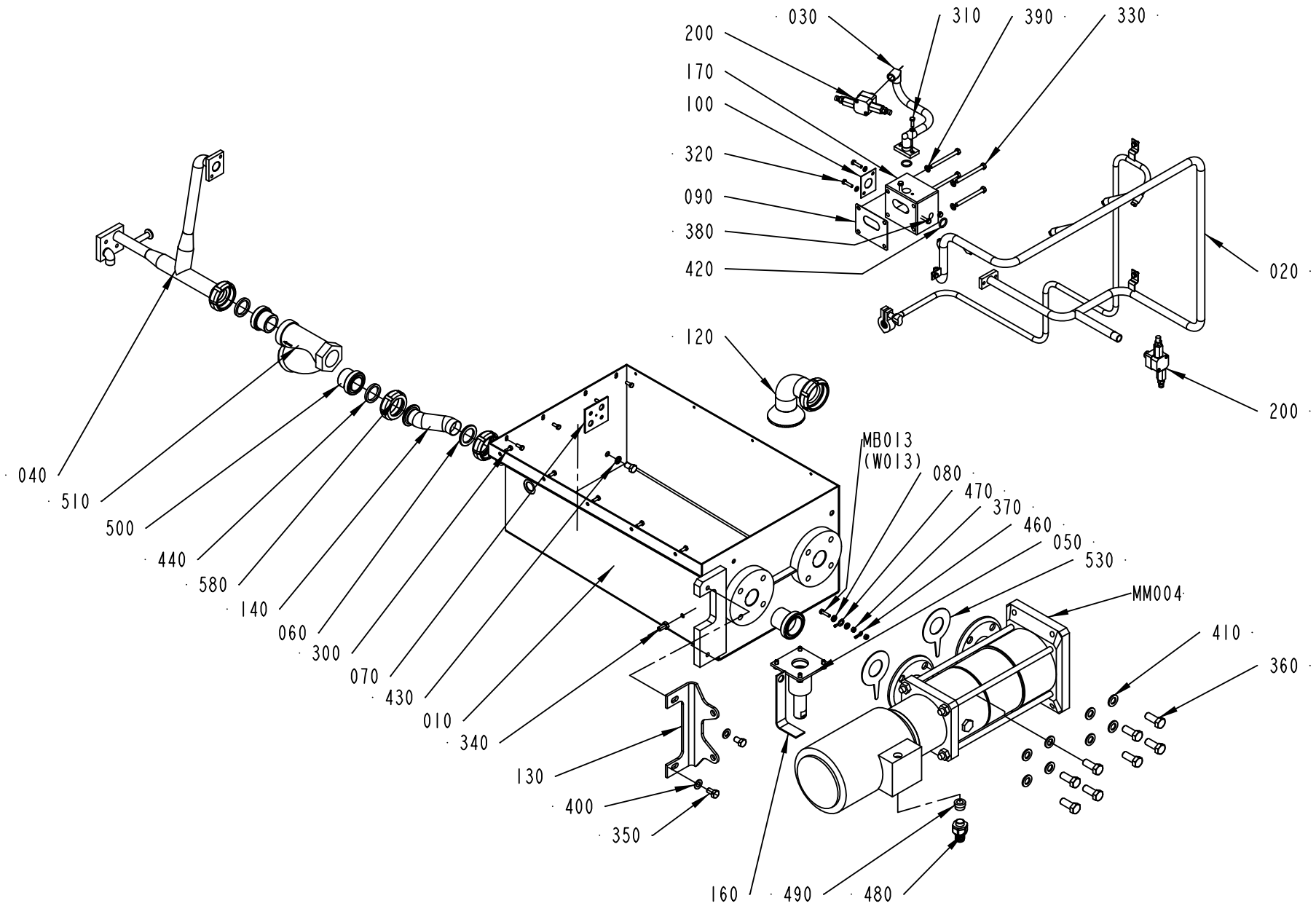

2544980-3
288950

ECM: 289854 - 20070126
Group number: 2544980-0200
Assembly Drawing: 2544980-3_1_AB

This list covers pages from 5-200 to 5-205

Pos	Part No	UN	Qty	Description	Page No
50HZ					
310	312105-0370		2	SCREW, M6S ISO 4017 M6X20 A4 80	
320	312105-0372		4	SCREW, M6S ISO 4017 M6X25 A4 80	
330	312105-0469		4	SCREW, M6S ISO 4014 M8X90 A4 80	
380	315105-0153		6	WASHER PLAIN, 6,4X12X1,5 A4 BRB	
420	315202-0215		2	O-RING 19,2X3 MM	
MM004	90457-0131		1	PUMP SV805 R22T 50HZ	
60HZ					
310	312105-0370		2	SCREW, M6S ISO 4017 M6X20 A4 80	
320	312105-0372		4	SCREW, M6S ISO 4017 M6X25 A4 80	
330	312105-0469		4	SCREW, M6S ISO 4014 M8X90 A4 80	
380	315105-0153		6	WASHER PLAIN, 6,4X12X1,5 A4 BRB	
420	315202-0215		2	O-RING 19,2X3 MM	
MM004	90458-2762		1	PUMP SV805 R406T 60HZ	
TBA (See drawing on page: 5-200)					
010	2773920-0000		1	CLEANING TANK	
020	2544981-0100		1	CLEANING CIRCUIT	**5-207**
030	1539947-0000		1	PIPE	
040	2544959-0000		1	PIPE	
120	1511291-0000		1	CURVE	
130	1511293-0000		1	BRACKET	
140	1511294-0000		1	CLEANING PIPE	
170	1517523-0000		1	BLOCK	
200	441811-0100		2	ROTOR	**5-53**
310	312105-0370		2	SCREW, M6S ISO 4017 M6X20 A4 80	
320	312105-0372		4	SCREW, M6S ISO 4017 M6X25 A4 80	
330	312105-0469		4	SCREW, M6S ISO 4014 M8X90 A4 80	
380	315105-0153		6	WASHER PLAIN, 6,4X12X1,5 A4 BRB	
420	315202-0215		2	O-RING 19,2X3 MM	
TPA (See drawing on page: 5-204)					
010	2773920-0000		1	CLEANING TANK	
020	2816485-0100		1	CLEANING CIRCUIT	**5-209**
040	2807015-0000		1	PIPE	
120	1511291-0000		1	CURVE	
130	1511293-0000		1	BRACKET	
140	1511294-0000		1	CLEANING PIPE	
170	2807026-0000		1	BLOCK	
320	312105-0372		2	SCREW, M6S ISO 4017 M6X25 A4 80	
325	312105-0374		1	SCREW, M6S ISO 4014 M6X30 A4 80	
330	312105-0469		2	SCREW, M6S ISO 4014 M8X90 A4 80	
335	312105-0471		2	SCREW, M6S ISO 4014 M8X100 A4 80	
380	315105-0153		2	WASHER PLAIN, 6,4X12X1,5 A4 BRB	
450	315250-0104		1	GASKET 61X51X5,5 MM	
TWA (See drawing on page: 5-202)					
010	2773921-0000		1	CLEANING TANK	
020	2685216-0100		1	CLEANING CIRCUIT	**5-213**
030	2743345-0000		1	PIPE	
040	2685213-0000		1	PIPE	
120	2685207-0000		1	CURVE	
130	2707867-0000		1	BRACKET	
140	2745180-0000		1	CLEANING PIPE	
170	2685206-0000		1	BLOCK	
180	2743339-0000		1	PIPE CONNECTION	
190	2829703-0000		1	PIPE	
200	441811-0100		1	ROTOR	**5-53**
310	312105-0370		2	SCREW, M6S ISO 4017 M6X20 A4 80	
320	312105-0372		4	SCREW, M6S ISO 4017 M6X25 A4 80	
330	312105-0469		4	SCREW, M6S ISO 4014 M8X90 A4 80	
380	315105-0153		6	WASHER PLAIN, 6,4X12X1,5 A4 BRB	
420	315202-0215		2	O-RING 19,2X3 MM	
590	312105-0325		1	SCREW, M6S ISO 4017 M5X10 A4 80	
600	312605-0314		1	HEXAGON NUT, M6M M5 A280	
610	315103-0146		1	WASHER PLAIN, 5,3X10X1 BR NI PL	
620	90030-0171		1	ADJUSTABLE ELBOW CONNECTION 6-G1/8	
630	90165-0057		1	PIPE CLIP FOR TUBE D=6 MM	
640	90330-0079		1	BUSHING, INT/EXT. THREAD NO. R-2113/8X1/	
Common Parts					
050	2854818-0100		1	LEG	**5-215**
060	271435-0000		1	WASHER	
070	295417-0000		1	GASKET	
080	295434-0000		2	BUSHING	
090	456395-0000		1	GASKET	
100	456396-0000		1	GASKET	
160	1512440-0000		1	BRACKET	
300	312105-0368		9	SCREW, M6S ISO 4017 M6X16 A4 80	
340	312105-0491		1	SCREW, M6S ISO 4017 M10X20 A4 80	
350	312105-0532		3	SCREW, M6S ISO 4017 M12X20 A4 80	
360	312105-0628		8	SCREW, M6S ISO 4017 M16X40 A4 80	
370	312605-0316		2	HEXAGON NUT, M6M M6 A280	
390	315105-0165		4	WASHER PLAIN, 8,4X16X1,6 A4 BRB	
400	315105-0178		2	WASHER PLAIN, 13X24X2,5 A4 BRB	
410	315105-0186		8	WASHER PLAIN, 17X30X3 A4 BRB	
430	315211-0107		1	BONDED SEAL SS/NBR90 M12	
440	315250-0103		3	GASKET 48X38X5,5 MM	

Machine Type | Group Description | Used-In | Group Number | Page No

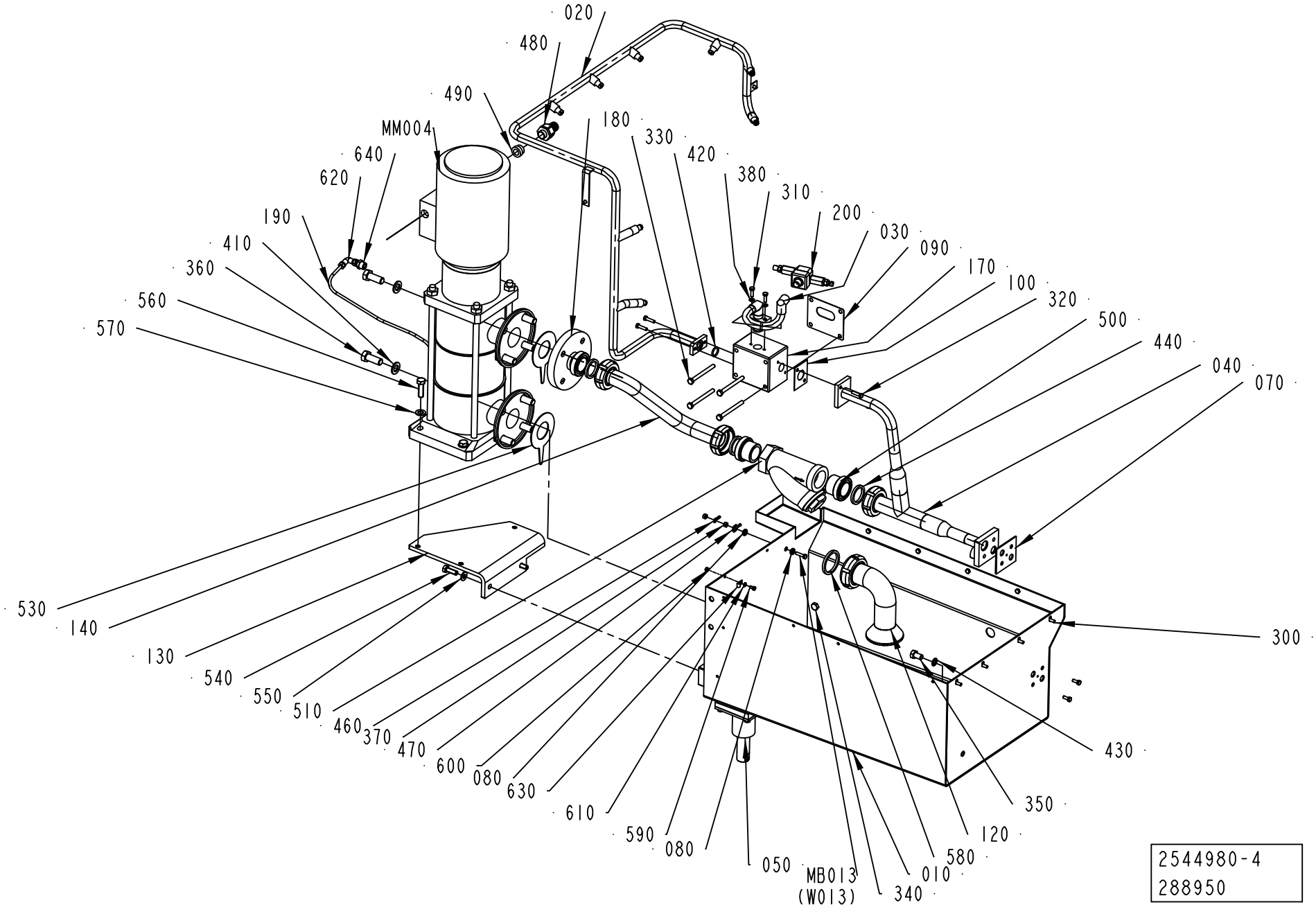
020
480
490
MM004
180
330
420
640
620
380
310
200
190
030
090
410
170
360
100
320
560
500
570
440
040
070
530
140
130
540
550
510
460
370
470
600
080
630
610
590
080
050
MB013
(W013)
340
010
580
120
350
430
300
2544980-4
288950

Pos	Part No	UN	Qty	Description	Page No
Common Parts (Cont'd)					
460	353101-0123		1	CABLE SHOE 0,5-1,5MM2 M6 RED	
470	353101-0126		1	CABLE SHOE	
480	90458-0430		1	GLAND FITTING, VK 22054YUL16	
490	353249-0014		1	INSERT, SINGLE HOLE, EK154 16	
500	90217-0041		2	NIPPLE LKBN, RD 60-6 - R1 1/2 M	
510	90415-0022		1	FILTER / R1 1/2" TYP. 1012	
	90415-0320		*1*	*FILTER FOR ECON R1 1/2"*	
530	90458-2199		2	GASKET, LOWARA 168061340	
580	342803-0103		2	UNION NUT, RD 60-6 (SMS 38)	
MB013	312105-0372		1	SCREW, M6S ISO 4017 M6X25 A4 80	
W013	351150-0431	M	1.5	CABLE OLFLEX 2X0,75 MM2 LIGHT/GREY	

Pos	Part No	UN	Qty	Description	Page No

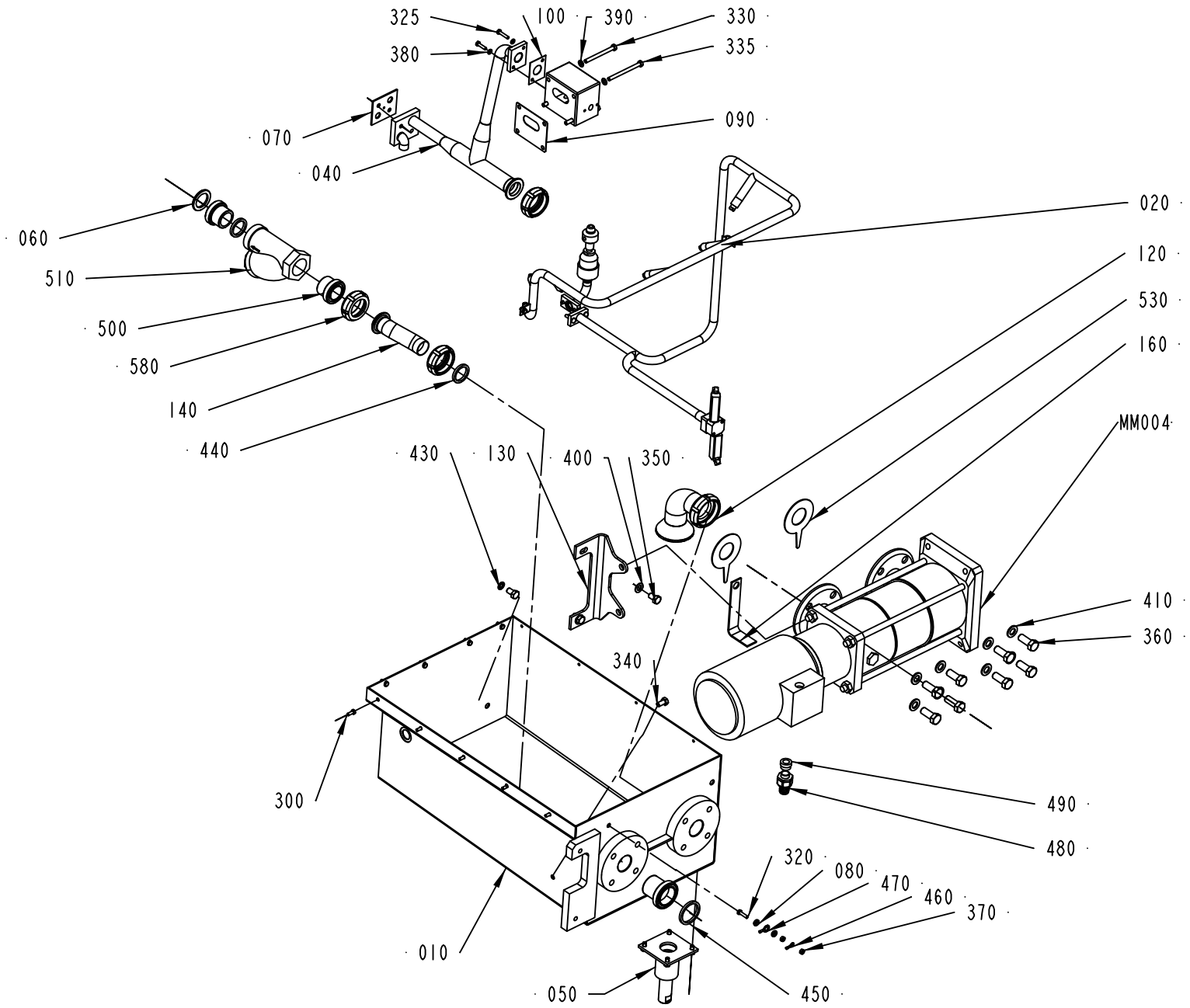

2544980-5
276017

Pos	Part No	UN	Qty	Description	Page No
SEE PREVIOUS LISTS PAGES: 5-201, 5-203.					

Pos	Part No	UN	Qty	Description	Page No

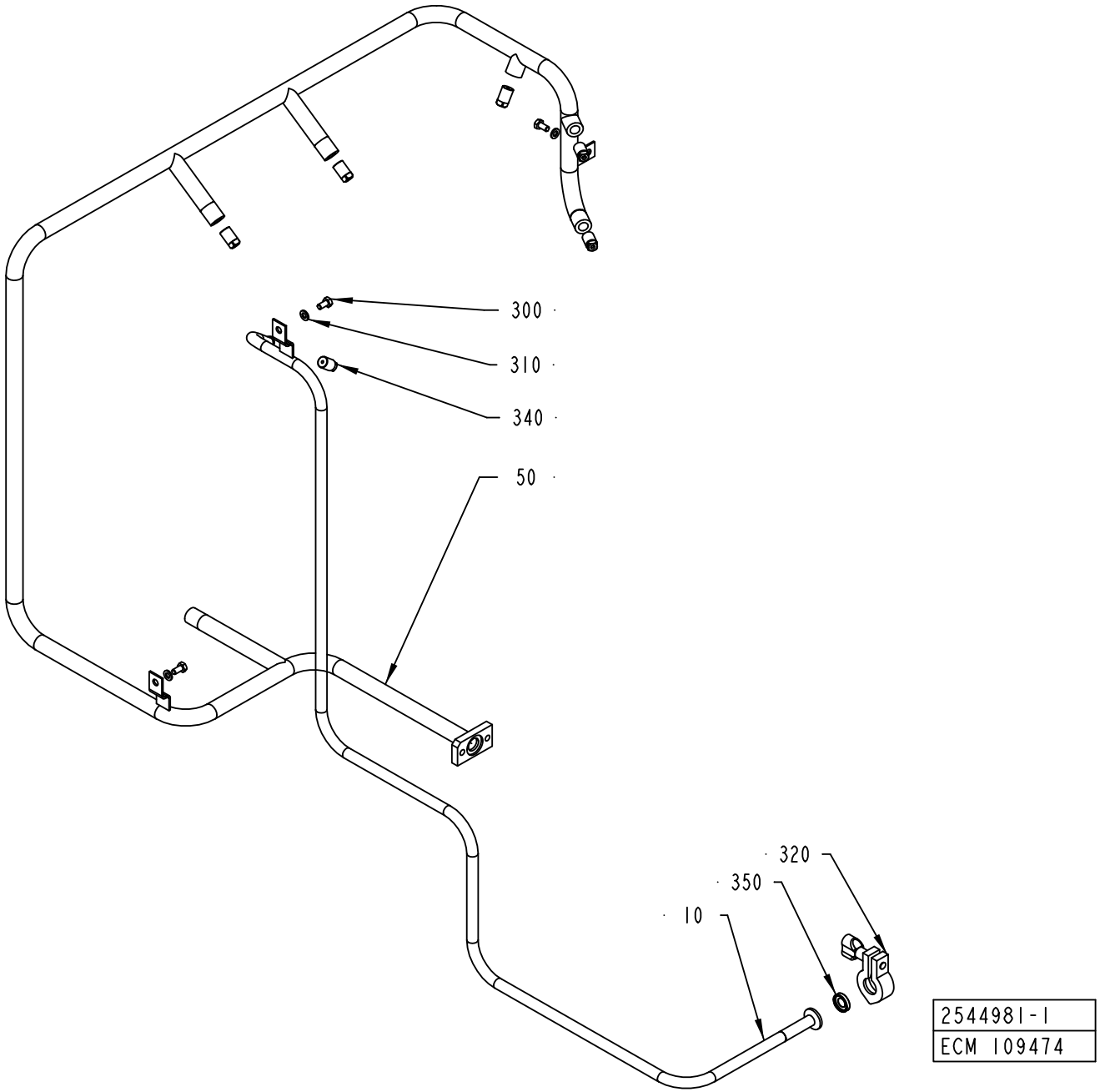
300
310
340
50
320
350
10
2544981-1
ECM 109474

ECM: 179445 - 20040910
Group number: 2544981-0100
Assembly Drawing: 2544981-1_1_AA

Pos	Part No	UN	Qty	Description	Page No
-					
010	1517510-0000		1	PIPE	
050	2544979-0000		1	PIPE	
300	312105-0366		3	SCREW, M6S ISO 4017 M6X12 A4 80	
310	315105-0153		3	WASHER PLAIN, 6,4X12X1,5 A4 BRB	
320	342840-0101		1	CLAMP, 12,7 AND 19,1 MM 3-A PCS+PMCS	
340	90424-0070		6	SPRAY NOZZLE, 61 DEG 1/4 HH 10	
350	342850-0101		1	GASKET 11,1X21,8X4,45 MM 1/2" FDA 3-A	

Pos	Part No	UN	Qty	Description	Page No

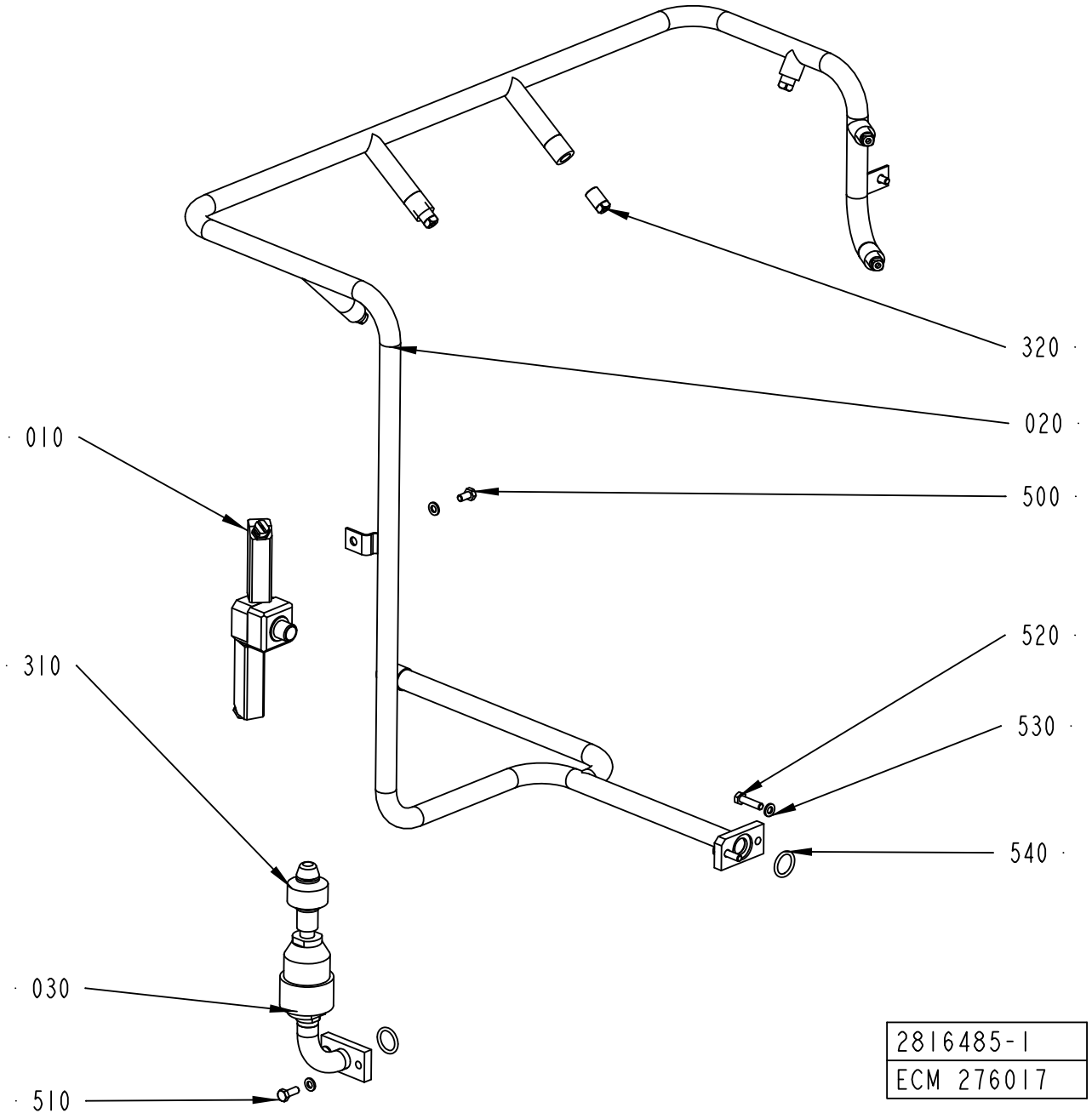
320
020
010
500
520
310
530
540
030
510
2816485-1
ECM 276017

ECM: 293448 - 20070126
Group number: 2816485-0100
Assembly Drawing: 2816485-1_1_AA

Pos	Part No	UN	Qty	Description	Page No
-					
010	441798-0100		1	ROTOR	**5-211**
020	2807010-0000		1	PIPE	
030	2807012-0000		1	PIPE	
310	90424-0066		1	ROT.SPRAY NOZZLE, D26984-R3/8"-PVDF...	
320	90424-0070		6	SPRAY NOZZLE, 61 DEG 1/4 HH 10	
500	312105-0366		2	SCREW, M6S ISO 4017 M6X12 A4 80	
510	312105-0368		2	SCREW, M6S ISO 4017 M6X16 A4 80	
520	312105-0372		2	SCREW, M6S ISO 4017 M6X25 A4 80	
530	315105-0153		6	WASHER PLAIN, 6,4X12X1,5 A4 BRB	
540	315202-0215		2	O-RING 19,2X3 MM	

Pos	Part No	UN	Qty	Description	Page No

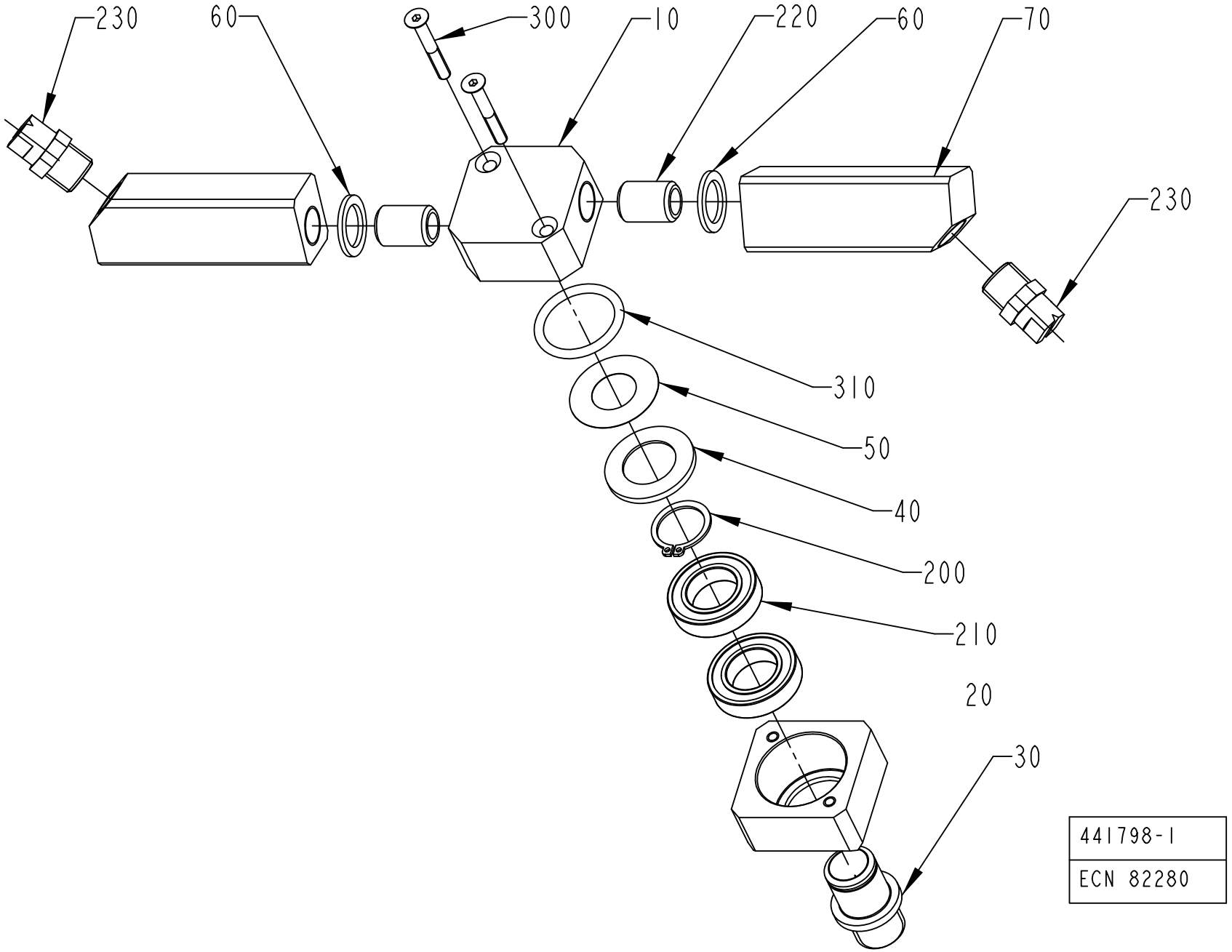
230
60
300
10
220
60
70
230
310
50
40
200
210
20
30
441798-1
ECN 82280

ECM: 140034 - 20040715
Group number: 441798-0100
Assembly Drawing: 441798-1_1_AB

Pos	Part No	UN	Qty	Description	Page No
-					
010	441792-0000		1	HEAD	
020	441793-0000		1	BEARING HOUSING	
030	441794-0000		1	PIVOT PIN	
040	441795-0000		1	WASHER	
050	441796-0000		1	SEAL	
060	441797-0000		2	SHIM	
070	441799-0000		2	ATTACHMENT	
200	90141-0017		1	RETAINING RING FOR SHAFT DIN 471 17 SS	
210	90214-0092		2	BALL BEARING 17/30X7	
220	90330-0101		2	NIPPLES, EXT. THREAD, G1/4	
230	90424-0035		2	SPRAY NOZZLE, 95 DEG HB1/4 U-9515 BSPT	
300	312155-0299		2	SCREW DIN 7991 MF6S M4X30 A4 70	
310	315202-0217		1	O-RING 24,2X3 MM	

Pos	Part No	UN	Qty	Description	Page No

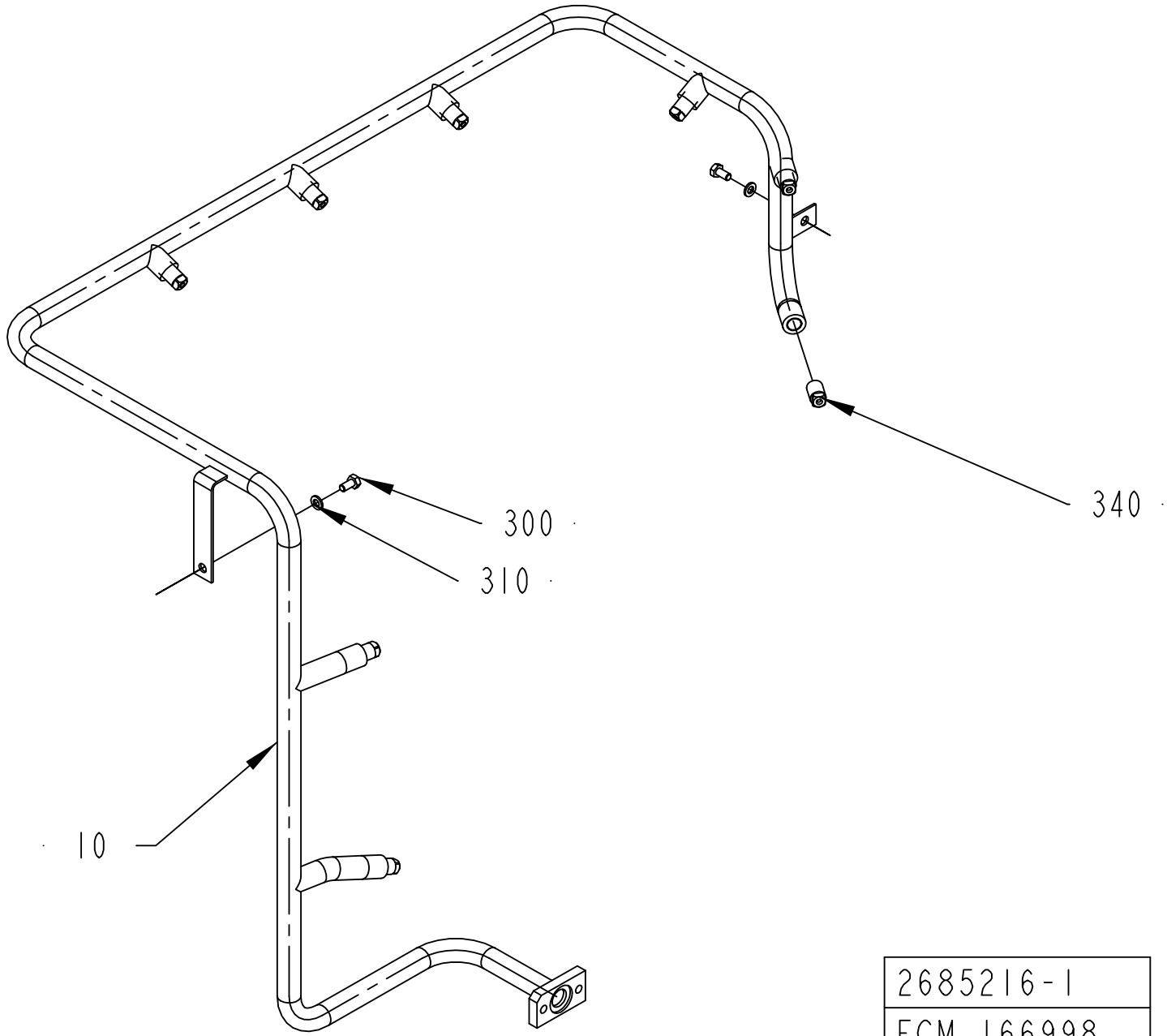

2685216-1
ECM 166998

ECM: 167264 - 20050426
Group number: 2685216-0100
Assembly Drawing: 2685216-1_1_AA

Pos	Part No	UN	Qty	Description	Page No
-					
010	2685203-0000		1	PIPE	
300	312105-0366		2	SCREW, M6S ISO 4017 M6X12 A4 80	
310	315105-0153		2	WASHER PLAIN, 6,4X12X1,5 A4 BRB	
340	90424-0070		8	SPRAY NOZZLE, 61 DEG 1/4 HH 10	

Pos	Part No	UN	Qty	Description	Page No

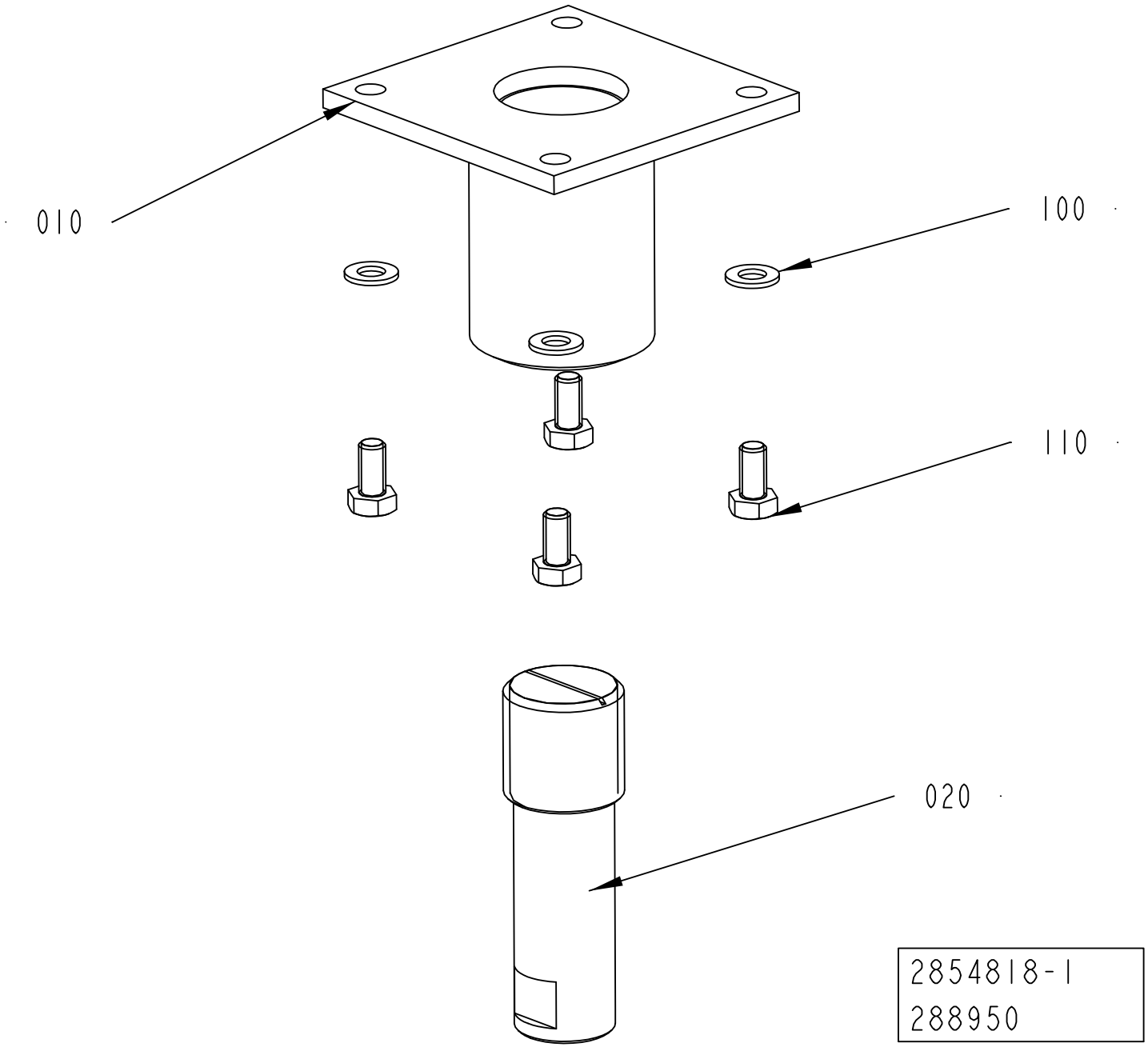
010
100
110
020
2854818-1
288950

ECM: 289853 - 20070126
Group number: 2854818-0100
Assembly Drawing: 2854818-1_1_AA

Pos	Part No	UN	Qty	Description	Page No
-					
010	2854819-0000		1	LEG	
020	2781021-0000		1	LEG	
100	315105-0165		4	WASHER PLAIN, 8,4X16X1,6 A4 BRB	
110	312105-0449		4	SCREW, M6S ISO 4017 M8X16 A4 80	

Pos	Part No	UN	Qty	Description	Page No

Tetra Pak

SPC
Spare Parts Catalogue

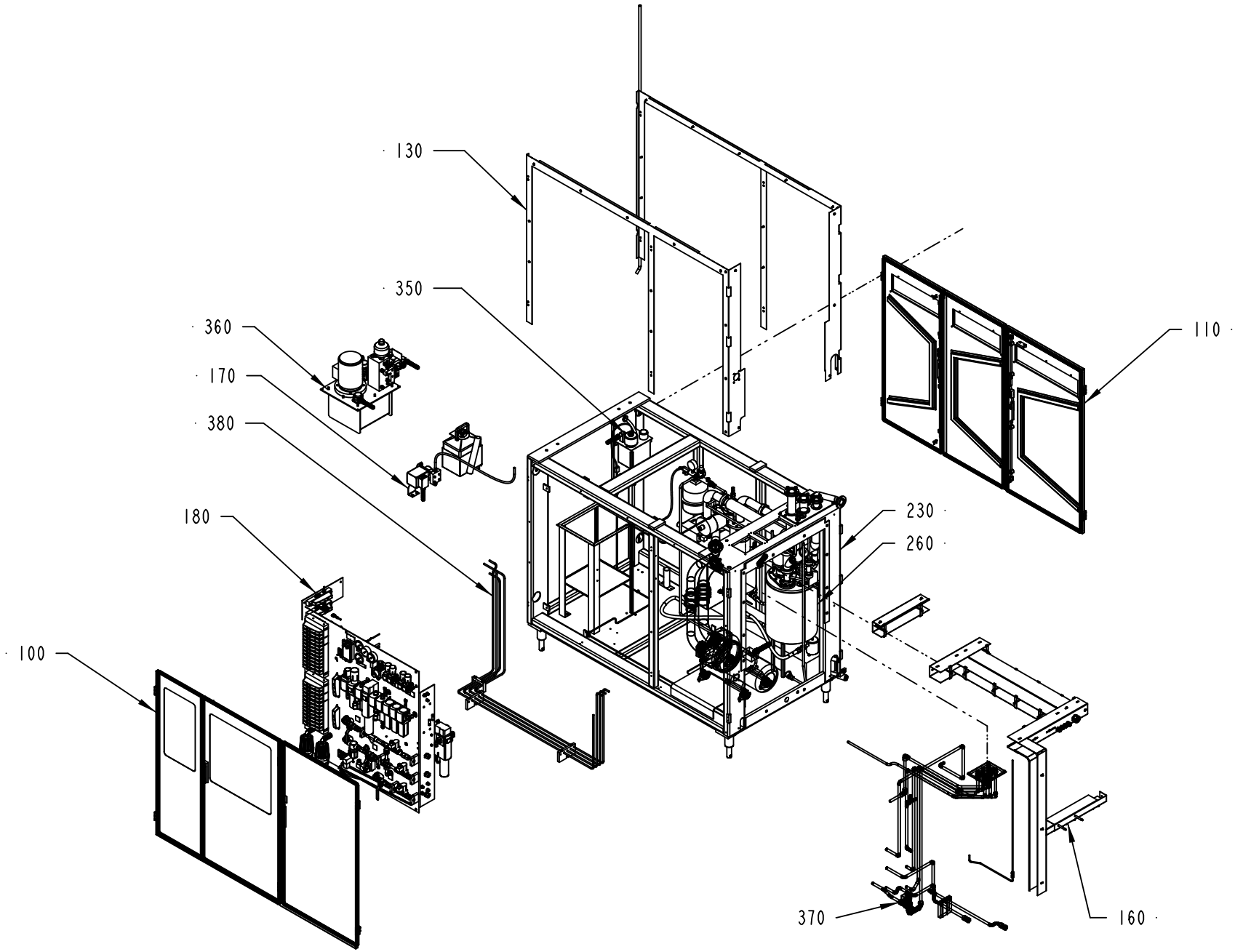

648106-49
387131

ECM: 400423 - 20090707
Group number: 648106-1400
Assembly Drawing: 648106-49_1_AA

Pos	Part No	UN	Qty	Description	Page No
-					
100	1350529-0300		1	DOORS LEFT SIDE	**6-5**
110	1350531-0200		1	DOORS RIGHT SIDE	**6-7**
130	979215-0200		1	COVER PLATE	**6-9**
160	1524319-0100		1	CABLE DUCT	**6-11**
170	490761-0200		1	DETERGENT PUMP	**6-13**
180	1349029-0300		1	VALVE PANEL	**6-15, 6-17, 6-19, 6-21**
230	979216-0400		1	MACHINE BODY	**6-61**
260	978834-0400		1	PEROXIDE AND STERILSYSTEM	**6-65**
350	978823-0300		1	CENTRAL LUBRICATION	**6-95**
360	1512304-0300		1	HYDRAULIC SYSTEM	**6-97, 6-99**
370	1350184-0200		1	PIPE WORK, AIR WATER	**6-101, 6-103**
380	1519663-0200		1	PIPE WORK-HYDRAULIC	**6-105**
600	469384-0100		1	START-UP KIT	**6-107**

Pos	Part No	UN	Qty	Description	Page No

DOORS LEFT SIDE

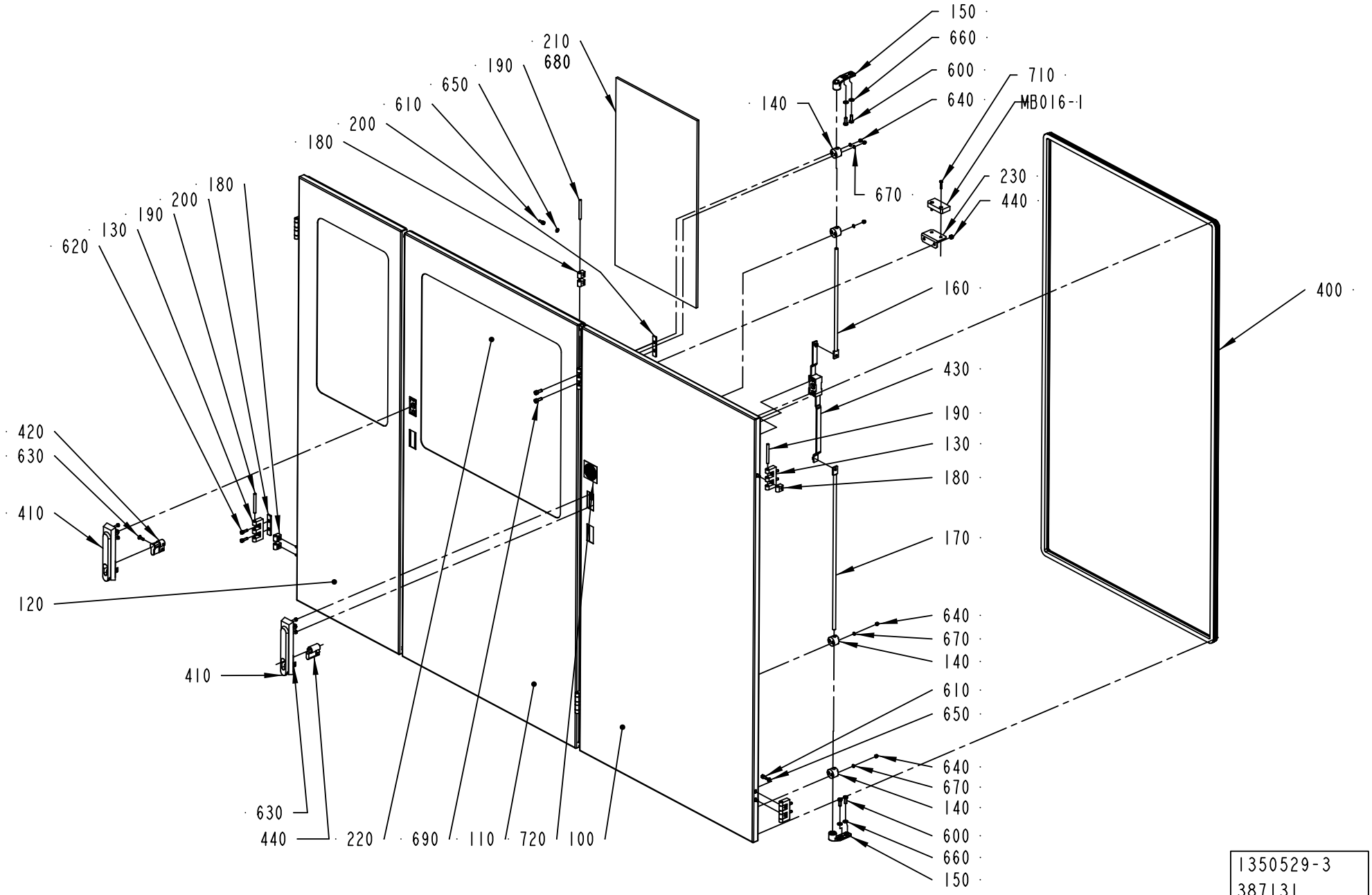

1350529-3
387131

ECM: 400431 - 20090707
Group number: 1350529-0300
Assembly Drawing: 1350529-3_1_AA

Pos	Part No	UN	Qty	Description	Page No
-					
100	1512826-0000		1	DOOR	
110	2788122-0000		1	DOOR	
120	2788123-0000		1	DOOR	
130	1035792-0000		6	E-HINGE	
140	1129274-0000		8	GUIDE LUG	
150	1538868-0000		4	BRACKET	
160	1511613-0000		2	LOCKING ARM	
170	1511614-0000		2	LOCKING ARM	
180	1035794-0000		11	BLOCKING PIECE	
190	988685-0000		6	PIN	
200	1517182-0000		4	SPACER	
210	2788117-0000		1	GLASS PANE	
220	2788121-0000		1	GLASS PANE	
230	3024350-0000		1	BRACKET	
400	90143-0068	M	9.8	RUBBER STRIP EMKA 1011-06	
410	90237-0175		2	TURNING HANDLE, 1125-U185-0A	
420	90237-0128		1	LOCK CYLINDER, 1109-SU125	
430	90237-0153		2	LOCK HOUSING, 1121-U26-0B	
440	575034-0000		2	ROUND NUT	
600	312105-0368		8	SCREW, M6S ISO 4017 M6X16 A4 80	
610	312115-0327		11	SCREW ISO4762 M5X12 A4 80	
620	312115-0329		8	SCREW ISO4762 M5X16 A4 80	
630	312155-0329		2	SCREW DIN 7991 MF6S M5X16 A4 70	
640	312705-0312		16	NUT HEX. DOMED CAP MHM-6 M4 A280	
650	315105-0146		11	WASHER PLAIN, 5,3X10X1 A4 BRB	
660	315105-0153		8	WASHER PLAIN, 6,4X12X1,5 A4 BRB	
670	315105-0136		16	WASHER PLAIN, 4,3X9X0,8 A4 BRB	
680	90157-0041	ML	50	SEALING COMPOUND, RHODORSEAL 5651	
690	312115-0368		4	SCREW ISO4762 M6X16 A4 80	
710	90459-4164		2	SAFETY SCREW, SM4X20	
720	90458-1253		1	MANDATORY ACTION SIGN CONSULT OM ISO	
M.B016:1	90458-2794		1	SAFETY SENSOR, EVA 20-046-00	

Pos	Part No	UN	Qty	Description	Page No

Machine Type | Group Description | Used-In | Group Number | Page No

DOORS RIGHT SIDE

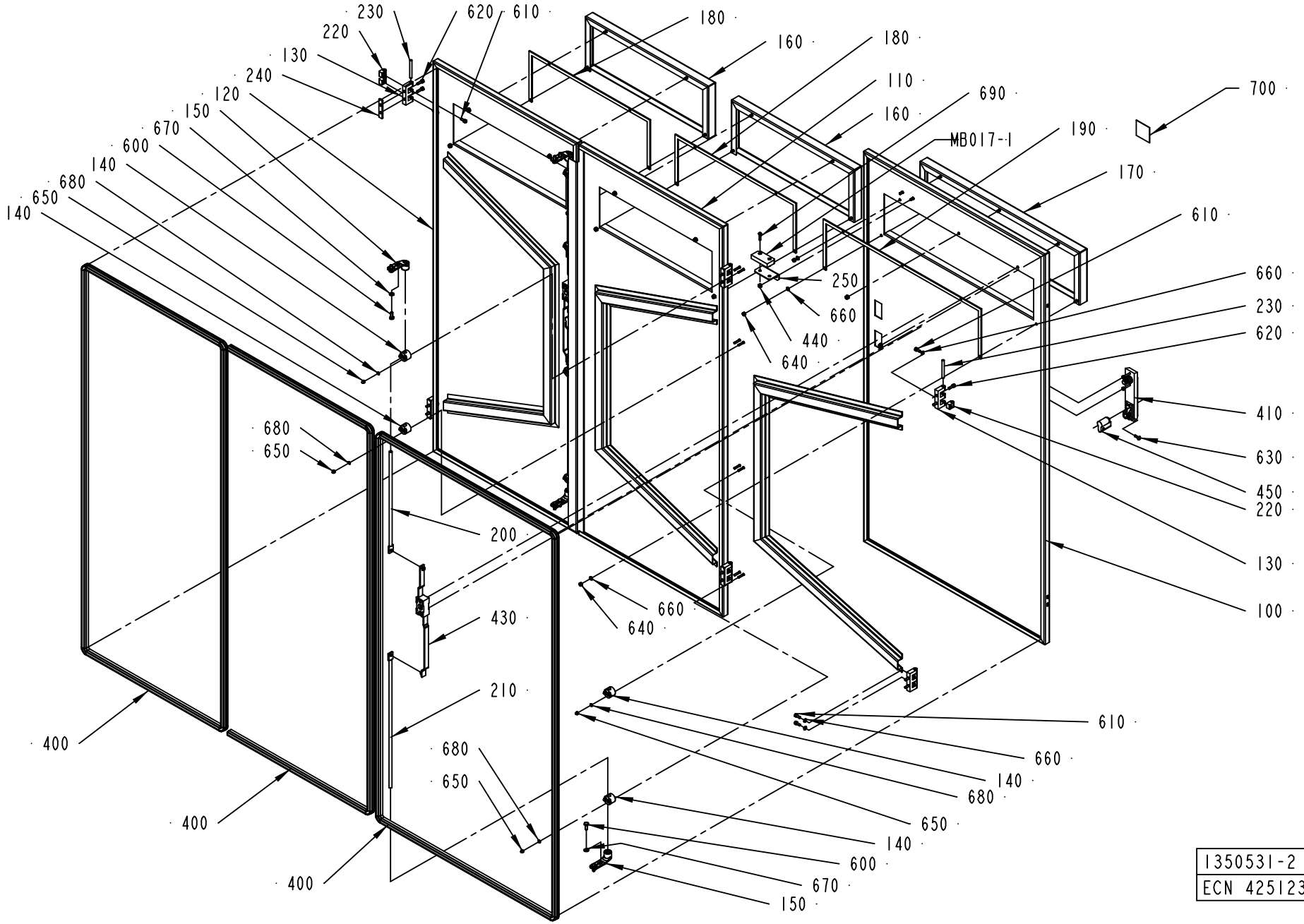

1350531-2
ECN 425123

ECM: 430277 - 20091221
Group number: 1350531-0200
Assembly Drawing: 1350531-2_1_AB

Pos	Part No	UN	Qty	Description	Page No
-					
100	1512829-0000		1	DOOR	
110	1512830-0000		1	DOOR	
120	1512831-0000		1	DOOR	
130	1035792-0000		6	E-HINGE	
140	1129274-0000		8	GUIDE LUG	
150	1538868-0000		4	BRACKET	
160	1511609-0000		2	COVER	
170	1511610-0000		1	COVER	
180	1511611-0000		2	GASKET	
190	1511612-0000		1	GASKET	
200	1511613-0000		2	LOCKING ARM	
210	1511681-0000		2	LOCKING ARM	
220	1035794-0000		11	BLOCKING PIECE	
230	988685-0000		6	PIN	
240	1517182-0000		4	SPACER	
250	3024350-0000		1	BRACKET	
400	90143-0068	M	9.8	RUBBER STRIP EMKA 1011-06	
410	90237-0175		2	TURNING HANDLE, 1125-U185-0A	
420	90237-0128		1	LOCK CYLINDER, 1109-SU125	
430	90237-0153		2	LOCK HOUSING, 1121-U26-0B	
440	575034-0000		2	ROUND NUT	
450	90237-0129		1	LOCK CYLINDER, 1109-U6	
600	312105-0368		8	SCREW, M6S ISO 4017 M6X16 A4 80	
610	312115-0327		11	SCREW ISO4762 M5X12 A4 80	
620	312115-0329		12	SCREW ISO4762 M5X16 A4 80	
630	312155-0329		2	SCREW DIN 7991 MF6S M5X16 A4 70	
640	312605-0314		13	HEXAGON NUT, M6M M5 A280	
650	312705-0312		16	NUT HEX. DOMED CAP MHM-6 M4 A280	
660	315105-0146		24	WASHER PLAIN, 5,3X10X1 A4 BRB	
670	315105-0153		8	WASHER PLAIN, 6,4X12X1,5 A4 BRB	
680	315105-0136		16	WASHER PLAIN, 4,3X9X0,8 A4 BRB	
690	90459-4164		2	SAFETY SCREW, SM4X20	
700	90458-1253		1	MANDATORY ACTION SIGN CONSULT OM ISO	
M.B017:1	90458-2794		1	SAFETY SENSOR, EVA 20-046-00	

Pos	Part No	UN	Qty	Description	Page No

Machine Type | Group Description | Used-In | Group Number | Page No

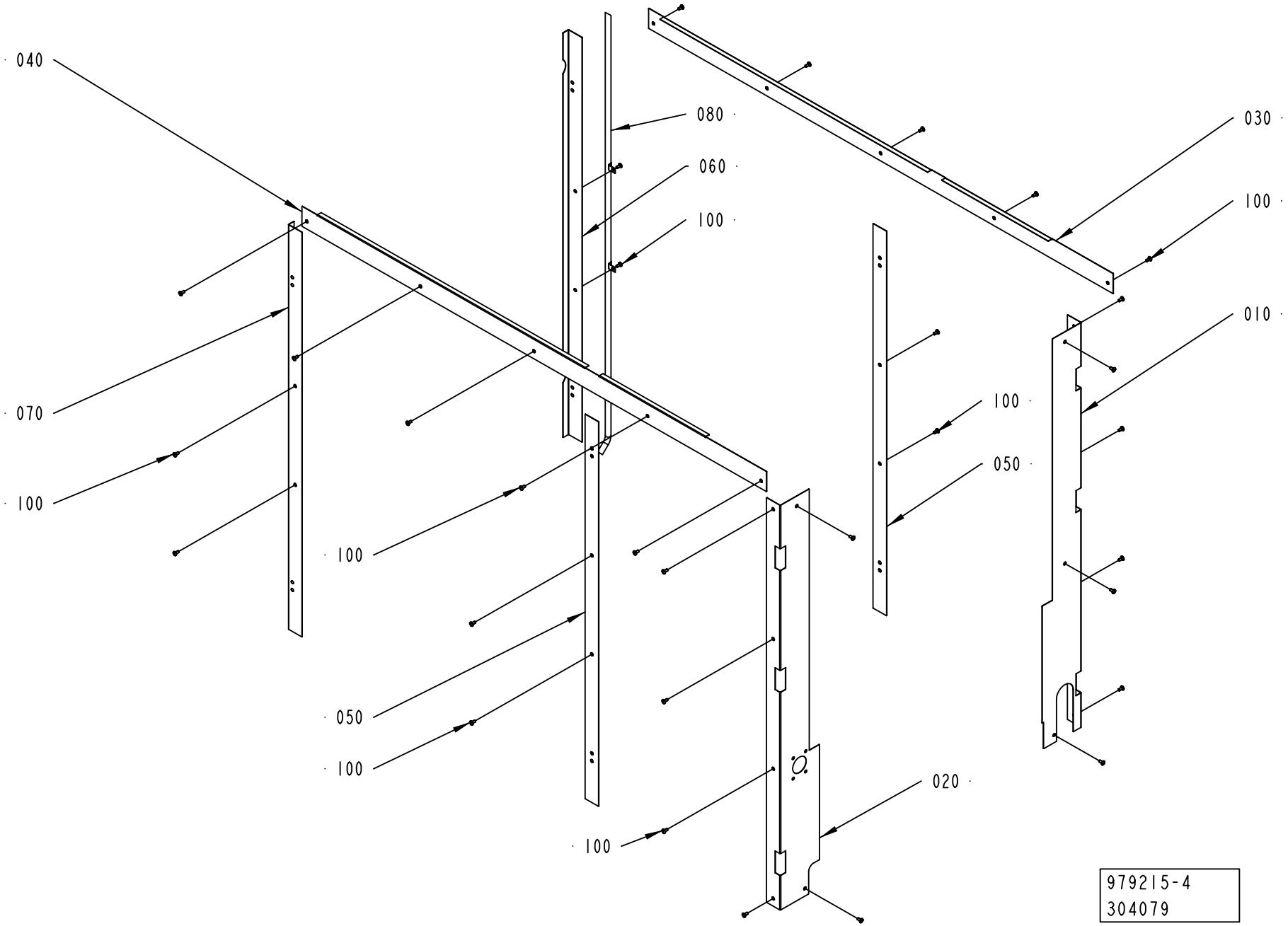
040
080
060
100
030
100
010
070
100
100
100
050
050
100
020
100
979215-4
304079

ECM: 327257 - 20071113
Group number: 979215-0200
Assembly Drawing: 979215-4_1_AB

Pos	Part No	UN	Qty	Description	Page No
-					
010	1538089-0000		1	PLATE	
020	1517072-0000		1	PLATE	
030	1517073-0000		1	PLATE	
040	1517074-0000		1	PLATE	
050	1517075-0000		2	PLATE	
060	1517076-0000		1	PLATE	
070	1517077-0000		1	PLATE	
080	2887612-0000		1	DRAIN PIPE	
100	90287-0075		31	SCREW SLOT. PAN HEAD LKCS M6X12	

Pos	Part No	UN	Qty	Description	Page No

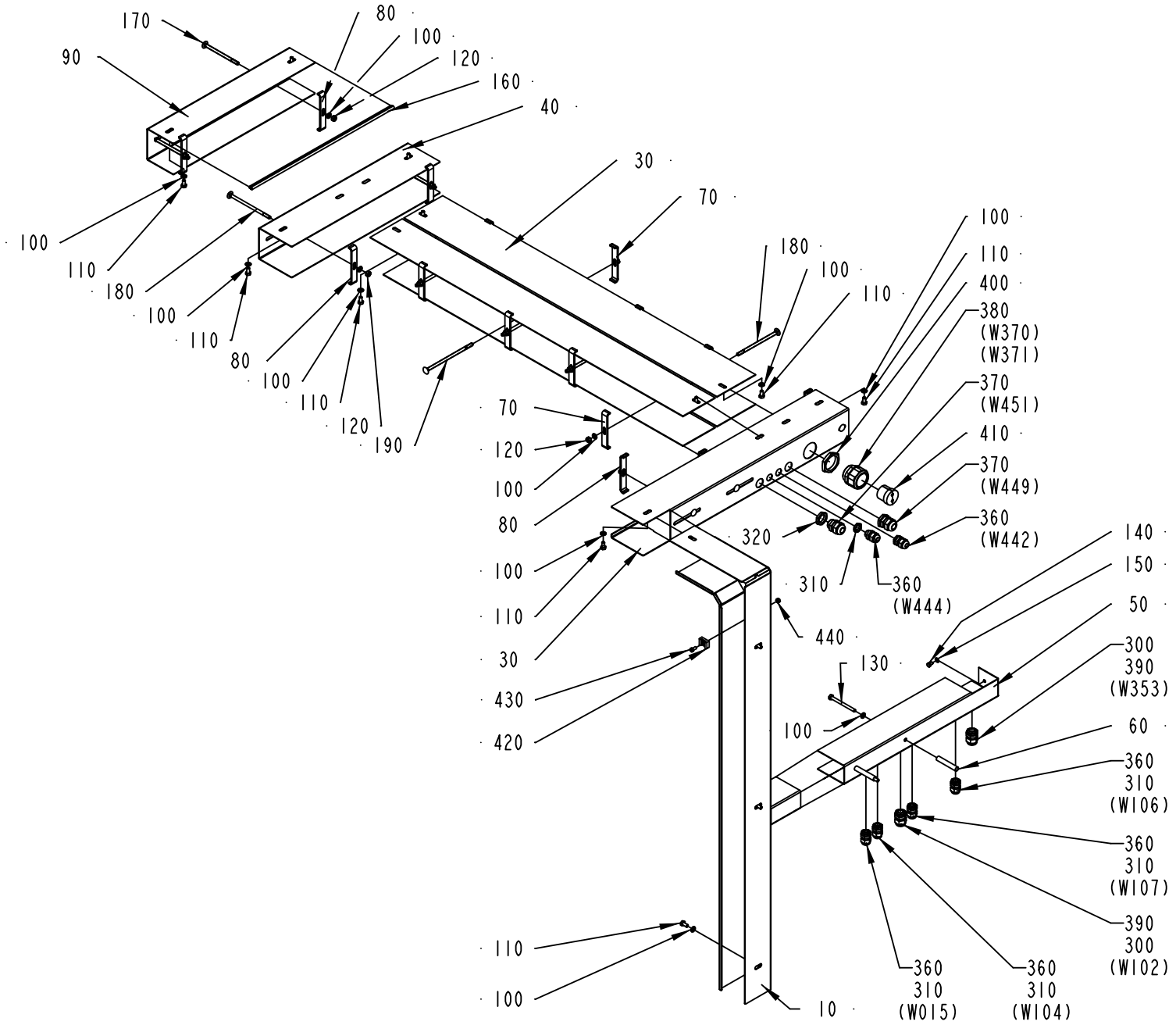

1524319-1
ECM 73260

ECM: 179711 - 20040910
Group number: 1524319-0100
Assembly Drawing: 1524319-1_1_AA

Pos	Part No	UN	Qty	Description	Page No
-					
010	1519758-0000		1	CABLE DUCT	
020	1519760-0000		1	CABLE DUCT	
030	1519761-0000		1	CABLE DUCT	
040	1519762-0000		1	CABLE DUCT	
050	1519759-0000		1	CABLE DUCT	
060	1519764-0000		2	SPACER	
070	1519765-0001		8	SUPPORT	
080	1519765-0002		7	SUPPORT	
090	1519763-0000		1	CABLE DUCT	
100	315105-0153		30	WASHER PLAIN, 6,4X12X1,5 A4 BRB	
110	312105-0366		13	SCREW, M6S ISO 4017 M6X12 A4 80	
120	312605-0316		15	HEXAGON NUT, M6M M6 A280	
130	312105-0384		2	SCREW, M6S ISO 4014 M6X70 A4 80	
140	312105-0323		2	SCREW, M6S ISO 4017 M5X8 A4 80	
150	315105-0146		2	WASHER PLAIN, 5,3X10X1 A4 BRB	
160	90143-0060	M	12	EDGE STRIP 9,5X6,3MM BLACK PVC	
170	90457-0148		2	SCREW CAP HEAD SQ. NECK M6X100 SS	
180	90458-1612		9	SCREW CAP HEAD SQ. NECK M6X120 SS	
190	90458-1613		4	SCREW CAP HEAD SQ. NECK M6X140 SS	
300	90099-0002		2	NUT PR 18,6 BRASS	
310	90099-0001		6	NUT PG 9/PR 15,2	
320	90099-0087		2	NUT PR=20,4	
360	352103-0101		6	CABLE GLAND, ST 9, PR15,2/PG9	
370	352103-0108		2	CABLE GLAND, ST 13,5 , PR20,4/PG13,5	
380	353240-0006		1	COMPRESSION GLAND, VK 155Y	
390	352103-0106		2	CABLE GLAND, ST 11, PR18,6/PG11	
400	90099-0011		1	NUT PR 37 BRASS	
410	2504449-0000		1	INSERT	
420	352113-0204		5	ANCHOR PLATES FOR STRIPS, TM3S25-M	
430	312125-0325		5	SCREW ISO 1207 M5X10 A4	
440	312605-0314		5	HEXAGON NUT, M6M M5 A280	

Pos	Part No	UN	Qty	Description	Page No

Machine Type	Group Description	Used-In	Group Number	Page No

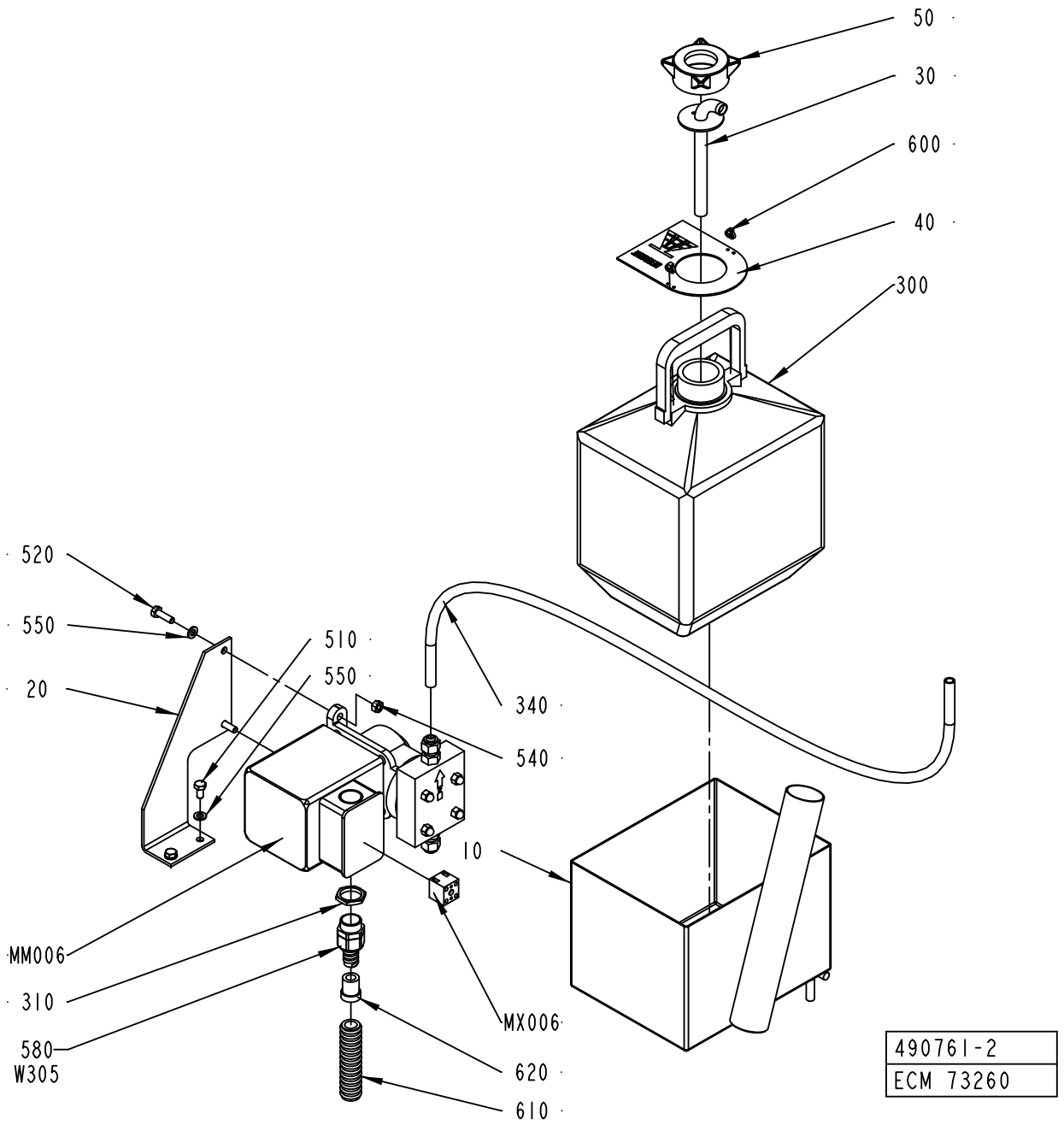
50
30
600
40
300
520
550
20
510
550
340
540
10
MM006
310
580
W305
MX006
620
610
490761-2
ECM 73260

ECM: 211351 - 20050621
Group number: 490761-0200
Assembly Drawing: 490761-2_1_AA

Pos	Part No	UN	Qty	Description	Page No
-					
010	490768-0000		1	BOX	
020	490769-0000		1	BRACKET	
030	979217-0000		1	PIPE	
040	295387-0000		1	SIGN BOARD	
050	35962-0000		1	LID	
300	90050-0011		1	BOTTLE	
310	90099-0003		1	NUT PR 22,5	
340	90166-0008	CM	200	HOSE 7/10 PVC TRANSP.	
510	312105-0366		2	SCREW, M6S ISO 4017 M6X12 A4 80	
520	312105-0370		2	SCREW, M6S ISO 4017 M6X20 A4 80	
540	312605-0316		2	HEXAGON NUT, M6M M6 A280	
550	315105-0153		4	WASHER PLAIN, 6,4X12X1,5 A4 BRB	
580	353242-0001		1	COMPRESSION GLAND, VK 152YUL11	
	353249-0065		*1*	*INSERT, SINGLE HOLE, E152 9*	
600	352113-0101		2	CABLE TIE, BLACK 92X2,5 MM	
610	90152-0059	MM	2500	HOSE, SPIRAL CONDUIT, 18X12, UL 1211	
620	353249-0065		1	INSERT, SINGLE HOLE, E152 9	
MX006	90195-0020		1	TERMINAL BLOCK, BK 2CRN, 0624 7200 00	
MM006	90321-0037		1	PUMP C-6125P EP 220V, 50HZ	
	90321-0396		*1*	*FILTER, C-340-6*	
	90321-0380		*1*	*DIAPHRAGM*	
	90166-0008	*MM*	*1500*	*HOSE 7/10 PVC TRANSP.*	
W305	351150-0412	M	4	CABLE OLFLEX 3X1,5 MM2 LIGHT/GREY	

Pos	Part No	UN	Qty	Description	Page No

VALVE PANEL

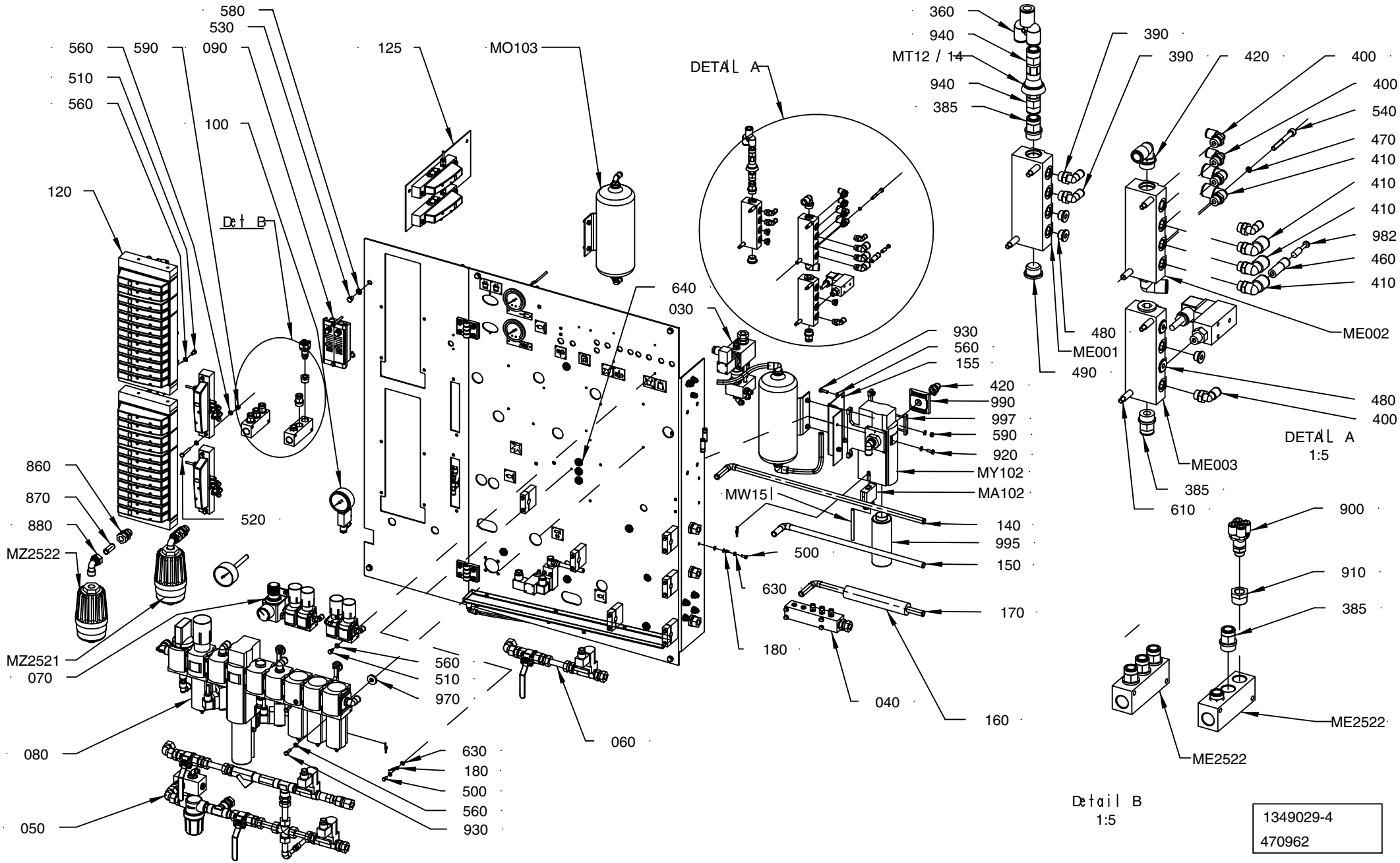
580
530
560
590
090
125
MO103
DETAIL A
360
940
MT12 / 14
940
385
390
390
420
400
400
540
470
410
410
410
410
982
460
410
510
560
100
120
Det B
640
030
930
560
155
420
990
997
590
920
MY102
MA102
MW15
140
995
150
500
630
170
180
040
160
480
ME001
490
ME002
480
400
DETAIL A
1:5
ME003
385
610
900
910
385
ME2522
ME2522
860
870
880
MZ2522
520
MZ2521
070
080
050
560
510
970
060
630
180
500
560
930
Detail B
1:5
1349029-4
470962

ECM: 471744 - 20100930
Group number: 1349029-0300
Assembly Drawing: 1349029-4_1_AE

This list covers pages from 6-14 to 6-21

Pos	Part No	UN	Qty	Description	Page No
TBA					
020	3038090-0000		1	PNEUMATIC DIAGRAM TBA	
TPA					
020	3038092-0000		1	PNEUMATIC DIAGRAM TPA	
TWA					
020	3038091-0000		1	PNEUMATIC DIAGRAM TWA	
Common Parts					
001	3072720-0000		1	MARKING	
010	580993-0000		1	WATER DIAGRAM	
030	456757-0300		1	AIR INJECTOR	**6-23**
040	469121-0400		1	JUNCTION BLOCK	**6-27**
050	577824-0300		1	COOL WATER VALVE	**6-29, 6-31**
060	577825-0300		1	HOT WATER VALVE	**6-35**
070	577822-0300		1	PRESSURE REGULATOR GROUP	**6-37**
080	2500200-0200		1	AIR INLET GROUP	**6-39**
090	1349090-0200		1	FLOW METER	**6-41**
100	1349091-0100		1	GAUGE GROUP	**6-43**
110	1349094-0300		1	VALVE PLATE	**6-45, 6-47**
120	1478717-0300		1	VALVE GROUP	**6-49, 6-51**
125	2995654-0100		1	VALVE GROUP	**6-53**
130	3096154-0100		1	BALANCE TANK	**6-55**
135	3096176-0100		1	PRESSURE SENSOR	**6-57**
140	3024353-0000		1	TUBE	
150	577832-0000		1	PIPE	
155	3024351-0000		1	PLATE	
160	456137-0000		1	HOSE	
170	3024352-0000		1	PIPE	
180	3072114-0000		2	EARTH WIRE	
310	90459-0290		2	NON-RETURN VALVE, H-QS-6	
320	342946-0112		2	T-COUPLING,UNION 6/4	
330	342946-0122		1	T-COUPLING,UNION 8/6	
335	350007-0009		1	PUSH-IN T-FITTING QST-F-G1/4-8	
340	350015-0001		1	PUSH-IN Y-CONNECTOR QSY-F-6	
350	350015-0003		1	PUSH-IN Y-CONNECTOR QSY-F-8	
360	90055-0147		1	PUSH-IN Y-CONNECTOR QSY-12	
380	350001-0009		1	PUSH-IN FITTING QS-F-G1/4-8	
385	350001-0016		5	PUSH-IN FITTING QS-F-G1/2-12	
390	350002-0008		7	PUSH-IN L-FITTING QSL-F-G1/4-6	
400	350002-0009		4	PUSH-IN L-FITTING QSL-F-G1/4-8	
410	350002-0011		6	PUSH-IN L-FITTING QSL-F-G1/4-12	
420	350002-0016		4	PUSH-IN L-FITTING QSL-F-G1/2-12	
440	350005-0002		2	PUSH-IN T-FITTING QST-F-6	
460	350006-0008		3	PUSH-IN FITTING QS-F-12H-8	
470	315239-0101		4	NYLON WASHER M5, M5RRP	
480	342713-0210		6	PLUG, EXT THREAD HEX SOCKET	
490	342713-0213		2	PLUG, EXT THREAD HEX SOCKET 8638-00-120	
500	312105-0327		2	SCREW, M6S ISO 4017 M5X12 A4 80	
510	312105-0366		12	SCREW, M6S ISO 4017 M6X12 A4 80	
520	312105-0378		4	SCREW, M6S ISO 4014 M6X40 A4 80	
530	312105-0447		6	SCREW, M6S ISO 4017 M8X12 A4 80	
540	312115-0380		6	SCREW ISO4762 M6X50 A4 80	
560	315105-0153		38	WASHER PLAIN, 6,4X12X1,5 A4 BRB	
580	315105-0165		6	WASHER PLAIN, 8,4X16X1,6 A4 BRB	
590	312605-0316		10	HEXAGON NUT, M6M M6 A280	
600	312605-0314		1	HEXAGON NUT, M6M M5 A280	
610	3072884-0000		6	COPPER TUBE	
620	315105-0146		1	WASHER PLAIN, 5,3X10X1 A4 BRB	
630	90062-0040		4	LOCK WASHER SERRAT.INT.GEAR,5,3/10 H=0,6	
640	352101-0103		4	LEAD-IN, PR18,6/PG11, E-1457518	
650	352113-0104		15	CABLE TIE, BLACK 300X4,8 MM	
700	359000-0400		105	WIRE MARKING, YELLOW, PA2/4"0"	
710	359000-0401		74	WIRE MARKING, YELLOW, PA2/4"1"	
720	359000-0402		68	WIRE MARKING, YELLOW, PA2/4"2"	
730	359000-0403		13	WIRE MARKING, YELLOW, PA2/4"3"	
740	359000-0404		28	WIRE MARKING, YELLOW, PA2/4"4"	
750	359000-0405		24	WIRE MARKING, YELLOW, PA2/4"5"	
760	359000-0406		20	WIRE MARKING, YELLOW, PA2/4"6"	
770	359000-0407		16	WIRE MARKING, YELLOW, PA2/4"7"	
780	359000-0408		6	WIRE MARKING, YELLOW, PA2/4"8"	
790	359000-0409		13	WIRE MARKING, YELLOW, PA2/4"9"	
800	359000-0771		27	WIRE MARKING, YELLOW, PA2/4"V"	
805	359000-0722		2	WIRE MARKING, YELLOW, PA1/3"W"	
810	315400-0004	M	38	TUBE PUN-H-8X1,25-BL	
820	315400-0010	M	13	TUBE PUN-H-12X2-BL	
830	315400-0001	M	157	TUBE PUN-H-6X1-BL	
840	90166-0118	M	9	TUBE 8 MM PA BLACK	
850	90166-0119	M	3	TUBE 6 MM PA BLACK	
860	90030-0188		2	CONN. STR. GE15LRED71	
870	341001-0228	MM	80	COPPER TUBE	
880	342731-0221		2	CONN. ELBOW, WE15LR71	
900	90600-0913		1	PUSH-IN FITTING QSQ-G1/4-6	
910	342701-0205		1	BUSHING, INT/EXT, G 1/2 - G1/4	
920	312105-0368		2	SCREW, M6S ISO 4017 M6X16 A4 80	
930	312105-0370		10	SCREW, M6S ISO 4017 M6X20 A4 80	

Machine Type | Group Description | Used-In | Group Number | Page No

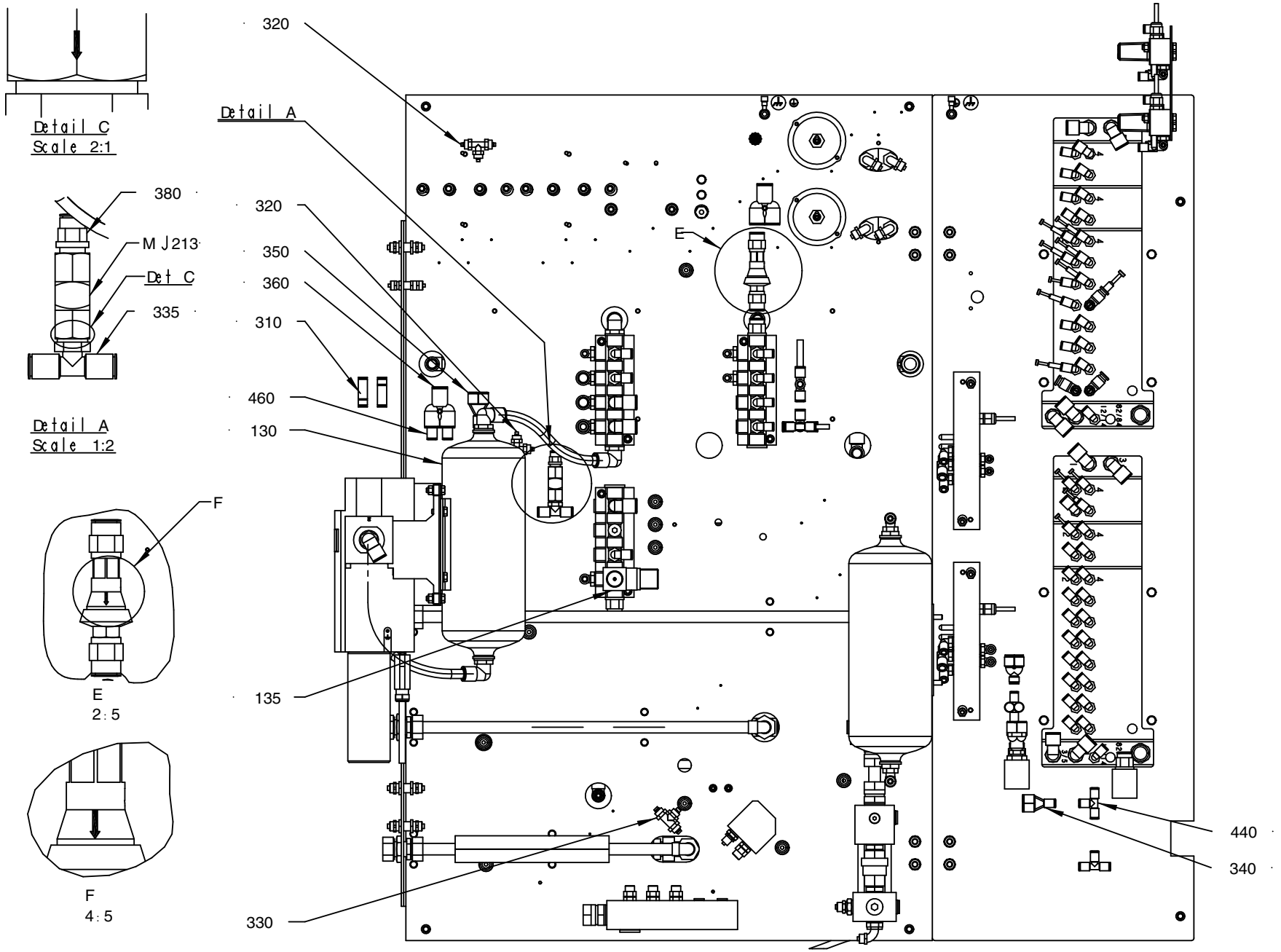

1349029-4
470962

Pos	Part No	UN	Qty	Description	Page No
Common Parts (Cont'd)					
940	350001-0011		2	PUSH-IN FITTING QS-F-G1/4-12	
950	350001-0016		2	PUSH-IN FITTING QS-F-G1/2-12	
960	90055-0147		1	PUSH-IN Y-CONNECTOR QSY-12	
970	315125-0173		6	WASHER HIGH, TBRSB 10,5X28X6 A4	
980	350013-0005		2	PLUG QSC-12H	
981	350013-0002		1	PLUG QSC-6H	
982	350013-0003		2	PLUG QSC-8H	
990	90459-2617		1	END PLATE, MS6-AGD	
995	90601-1586		1	SILENCER, G1"	
997	90601-1587		2	BRACKET, MS6-WPB	
M.Z2522	90459-5786		1	FILTERED SILENCER, 10494 LFU-1/2	
	90459-7294		*1*	*FILTER CARTRIDGE, 10496 LFPU-1/2*	
M.Z2521	90459-5786		1	FILTERED SILENCER, 10494 LFU-1/2	
	90459-7294		*1*	*FILTER CARTRIDGE, 10496 LFPU-1/2*	
M.Y102	90601-1126		1	SAFETY VALVE, MS6-SV-1/2-E-10V24-AG	
M.W151	90600-5930	M	4	CABLE C9, 20-057-15	
M.T12/14	90459-2425		1	PRESSURE REGULATOR IN-LINE, BSP-1/4	
M.J213	90235-0151		1	NON-RETURN VALVE, 534 098 110 0	
M.E2522	90042-0602		1	DISTRIBUTOR BLOCK, FR-4-1/2-B	
M.E2521	90042-0602		1	DISTRIBUTOR BLOCK, FR-4-1/2-B	
M.E003	90458-1921		1	DISTRIBUTOR BLOCK, FR-8-1/4	
M.E002	90458-1921		1	DISTRIBUTOR BLOCK, FR-8-1/4	
M.E001	90458-1921		1	DISTRIBUTOR BLOCK, FR-8-1/4	
M.A102	90601-1168		1	SOCKET CONNECTOR, NECA-S1G9-P9-MP3	
M.O103	929415-0100		1	BALANCE TANK	**6-59**

Pos	Part No	UN	Qty	Description	Page No

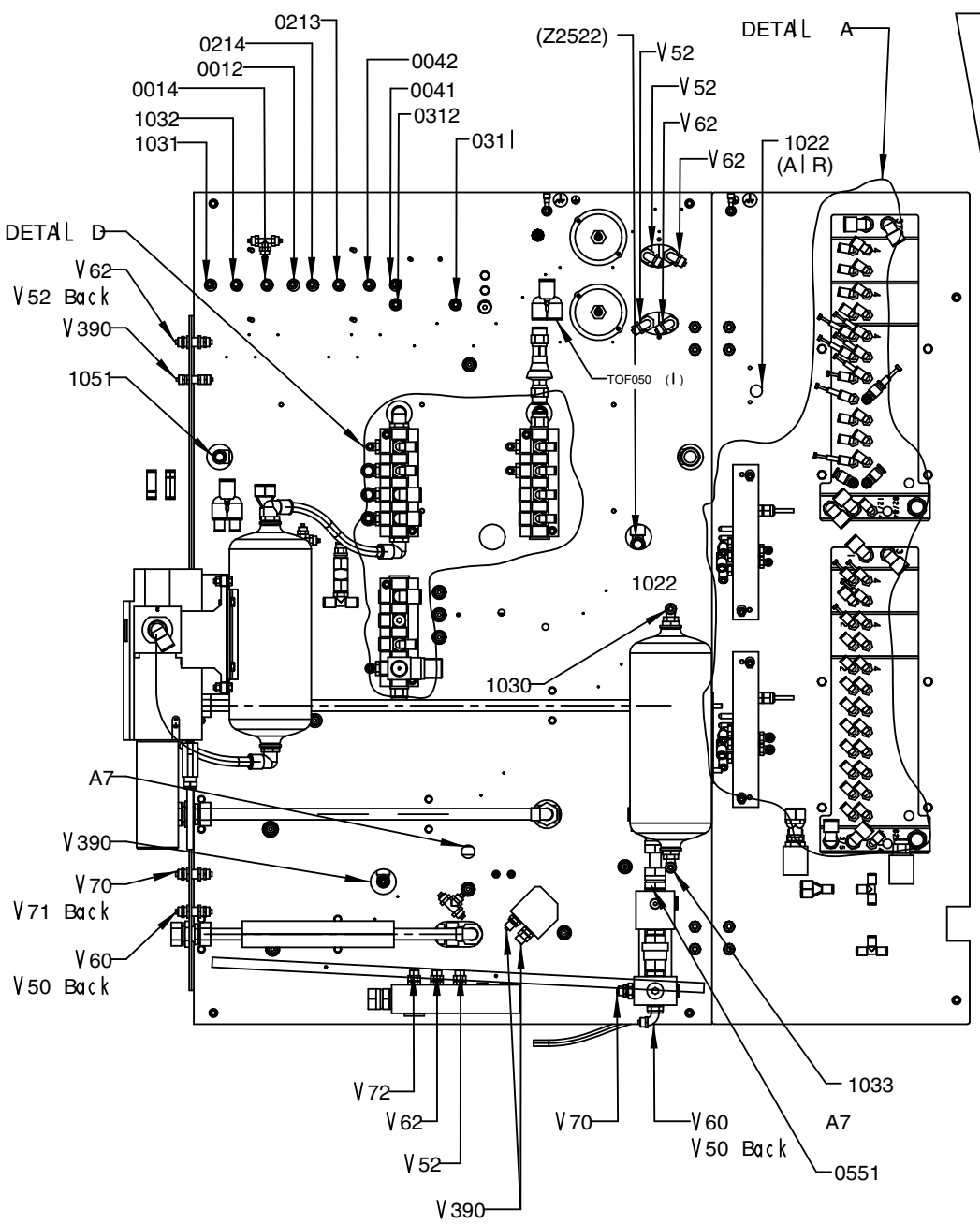
0213
0214
0012
0042
0014
0041
0312
1032
1031
0311
(Z2522)
V52
V52
V62
V62
1022
(AIR)
DETAIL A
DETAIL D
V62
V52 Back
V390
1051
TOF050 (I)
1022
1030
A7
V390
V70
V71 Back
V60
V50 Back
V72
V62
V52
V390
V70
V60
V50 Back
A7
1033
0551

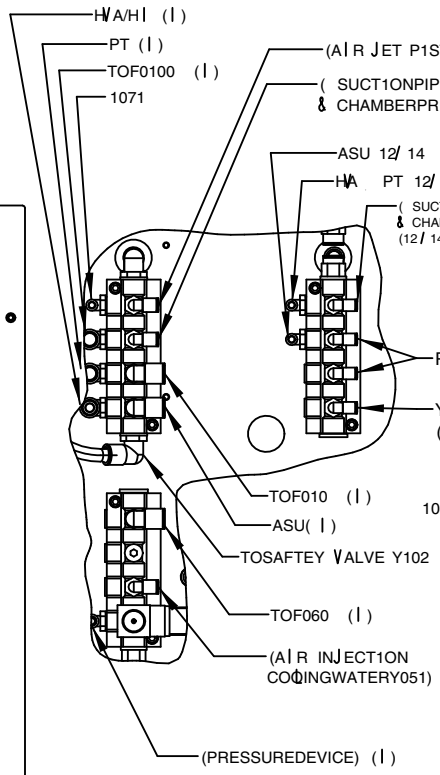
HWA/HI (I)
PT (I)
TOF0100 (I)
1071
(AIR JET P1STOL X069)
(SUCT1ONPIPE
& CHAMBERPRESSURVALVE) (I)
ASU 12/14
HWA PT 12/14
(SUCT1ONPIPE
& CHAMBERPRESSURVALVE)
(12/14)I
Panel (12/14)
Y103 Y105
(12/14)
TOF010 (I)
ASU(I)
TOSAFTEY VALVE Y102
TOF060 (I)
(AIR INJECT1ON
COOLINGWATERY051)
(PRESSUREDEVICE) (I)
1031
DETAIL D
1:5

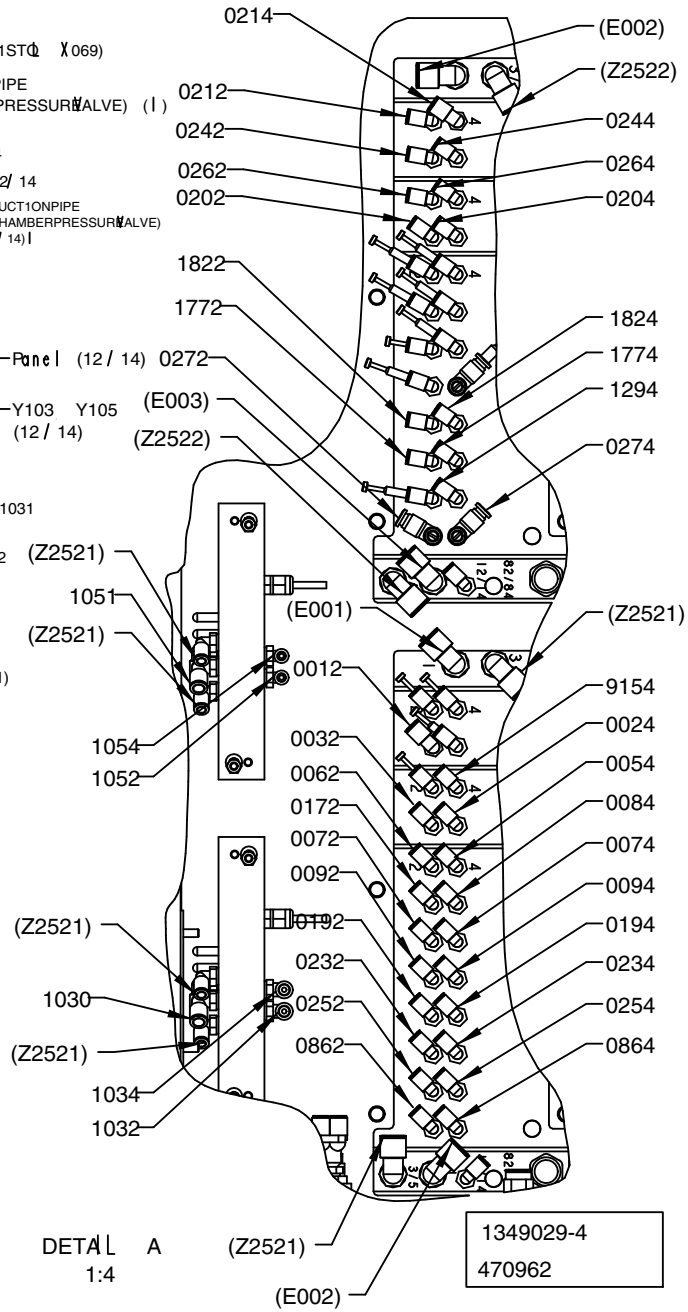
0214
(E002)
(Z2522)
0212
0244
0242
0264
0262
0204
0202
1822
1824
1772
1774
1294
0272
(E003)
(Z2522)
0274
(Z2521)
1051
(Z2521)
(E001)
(Z2521)
0012
9154
1054
1052
0032
0024
0062
0054
0172
0084
0072
0074
0092
0094
(Z2521)
0192
0194
0232
0234
1030
0252
0254
(Z2521)
0862
0864
1034
1032
DETAIL A
1:4
(Z2521)
(E002)
1349029-4
470962

Pos	Part No	UN	Qty	Description	Page No	Pos	Part No	UN	Qty	Description	Page No

SEE PREVIOUS LISTS PAGES: 6-15, 6-17.

Machine Type	Group Description	Used-In	Group Number	Page No

VALVE PANEL

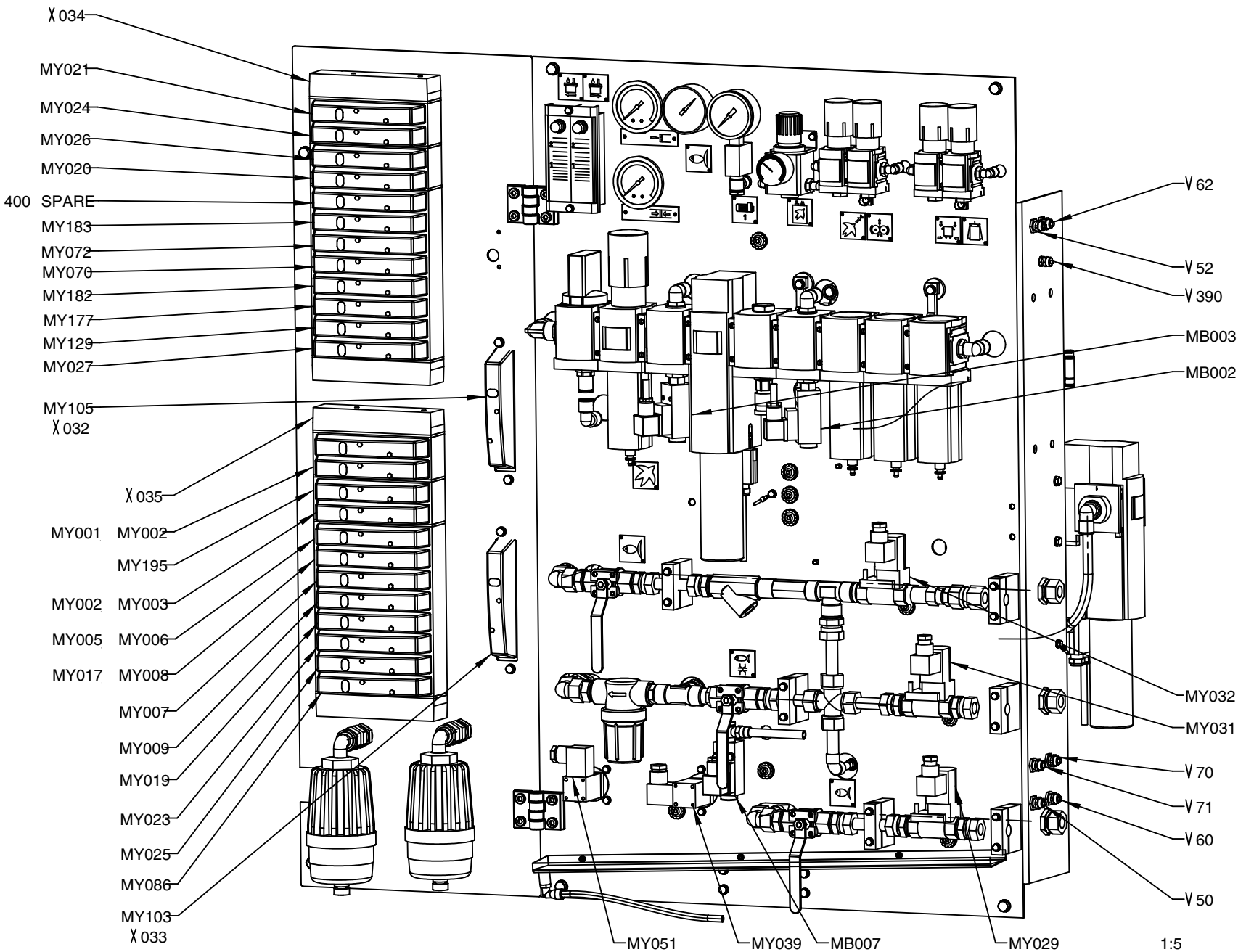

1349029-4
470962

Pos	Part No	UN	Qty	Description	Page No	Pos	Part No	UN	Qty	Description	Page No

SEE PREVIOUS LISTS PAGES: 6-15, 6-17.

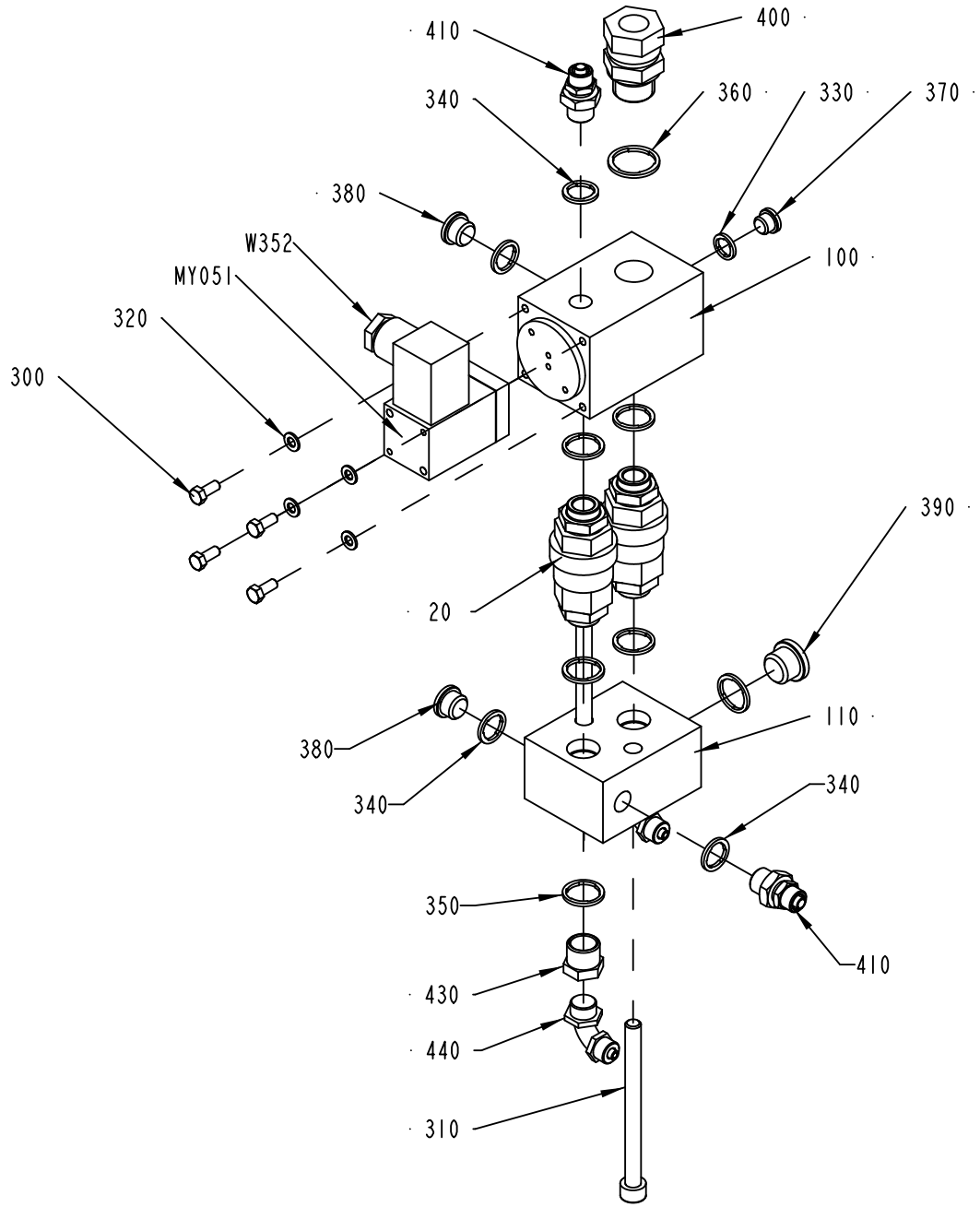

456757-2
ECM 401084

ECM: 401084 - 20090707
Group number: 456757-0300
Assembly Drawing: 456757-2_1_AD

Pos	Part No	UN	Qty	Description	Page No
-					
020	491536-0200		2	NON-RETURN VALVE	**6-25**
100	456756-0000		1	BLOCK	
110	456755-0000		1	BLOCK	
300	312105-0327		4	SCREW, M6S ISO 4017 M5X12 A4 80	
310	312111-0471		2	SCREW HEX.SOCK.HD.MC6S-TT 8X100 88 FZB	
320	315105-0146		4	WASHER PLAIN, 5,3X10X1 A4 BRB	
330	315239-0109		1	NYLON WASHER G1/8, 1/8RRP	
340	315239-0110		4	NYLON WASHER G1/4, 1/4RRP	
350	315233-0111		7	WASHER CAPTIVE SEALING G3/8	
360	315239-0113		1	NYLON WASHER G1/2, 1/2RRP	
370	342713-0209		1	PLUG, EXT THREAD HEX SOCKET 8638-00-180	
380	342713-0210		2	PLUG, EXT THREAD HEX SOCKET	
390	342713-0211		1	PLUG, EXT THREAD HEX SOCKET 8638-00-380	
400	90030-0188		1	CONN. STR. GE15LRED71	
410	342921-0122		2	STRAIGHT COUPLING, EXT.THREAD 8/6-G1/4	
420	342921-0123		2	STRAIGHT COUPLING, EXT.THREAD 8/6-G3/8	
430	342701-0203		2	BUSHING, INT/EXT. G 3/8 - G 1/4	
440	342931-0122		2	ELBOW 90 COUPL., EXT. THREAD 8/6-G1/4"	
MY051	90042-0173		1	SOLENOID VALVE, 6013 2/2 NC	
W352	351150-0431	M	3	CABLE OLFLEX 2X0,75 MM2 LIGHT/GREY	

Pos	Part No	UN	Qty	Description	Page No

Machine Type | Group Description | Used-In | Group Number | Page No

NON-RETURN VALVE

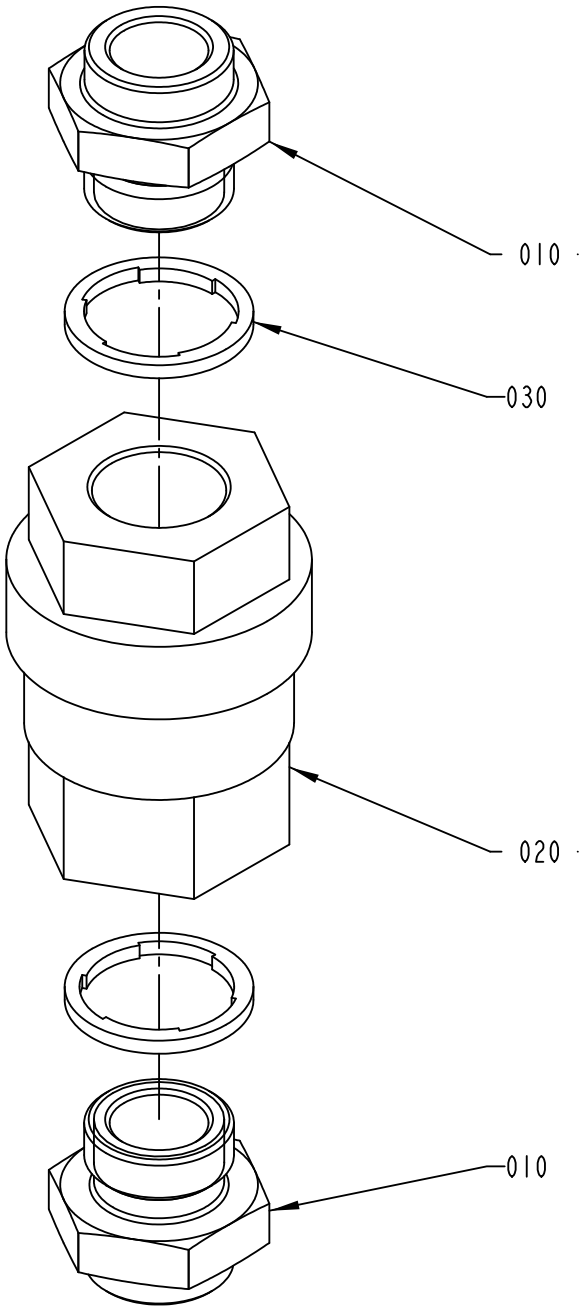

491536-2
ECM 401084

ECM: 401084 - 20090707
Group number: 491536-0200
Assembly Drawing: 491536-2_1_AC

Pos	Part No	UN	Qty	Description	Page No
-					
010	751086-0000		2	NIPPLE	
020	90230-0028		1	NON-RETURN VALVE H 151 R 3/8"	
030	315239-0111		2	NYLON WASHER G3/8, 3/8RRP	

Pos	Part No	UN	Qty	Description	Page No

JUNCTION BLOCK

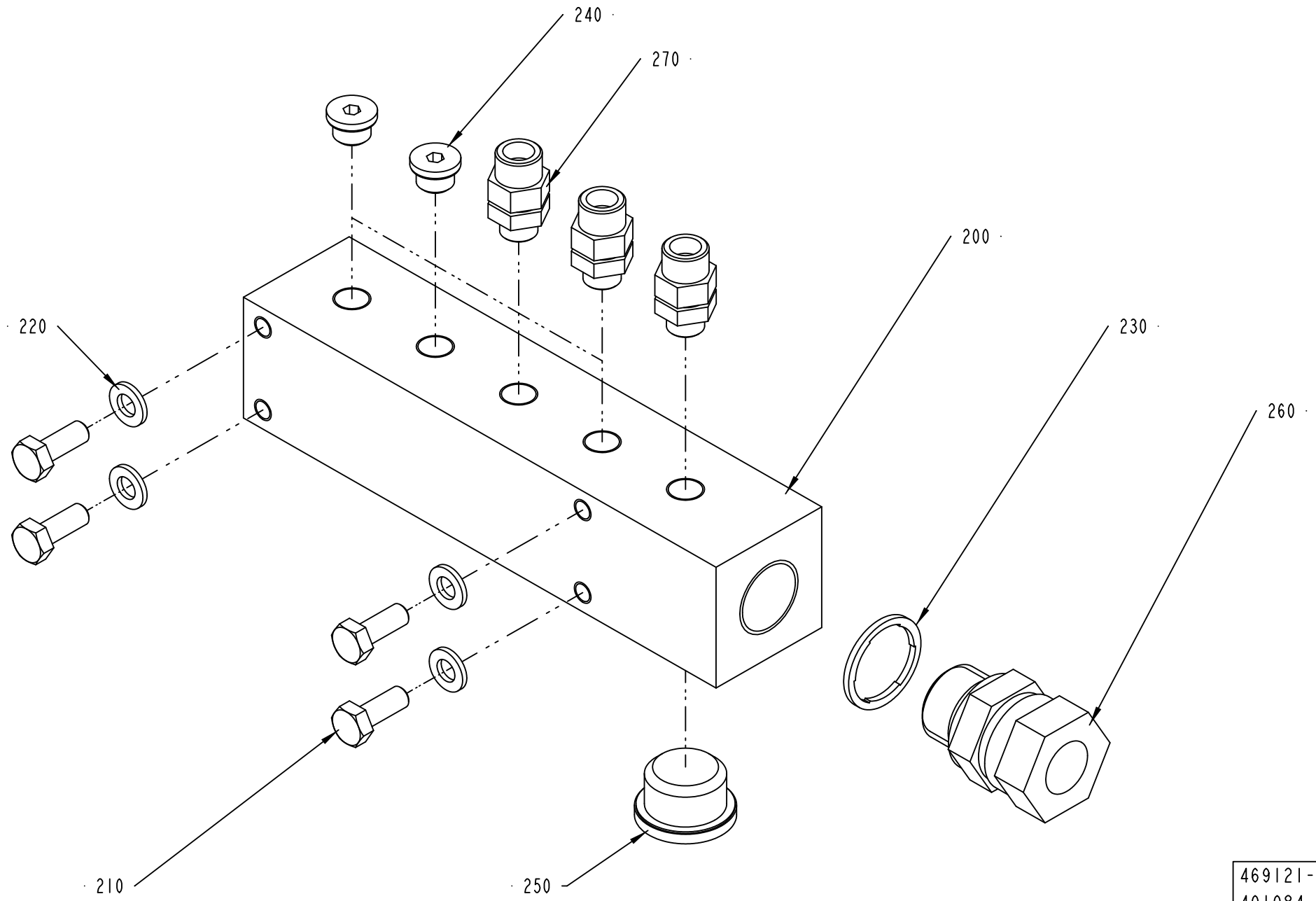

ECM: 401084 - 20090707
Group number: 469121-0400
Assembly Drawing: 469121-5_1_AB

Pos	Part No	UN	Qty	Description	Page No
-					
200	469122-0000		1	BLOCK	
210	312105-0368		4	SCREW, M6S ISO 4017 M6X16 A4 80	
220	315105-0153		4	WASHER PLAIN, 6,4X12X1,5 A4 BRB	
230	315239-0113		1	NYLON WASHER G1/2, 1/2RRP	
240	342713-0209		2	PLUG, EXT THREAD HEX SOCKET 8638-00-180	
250	342713-0213		1	PLUG, EXT THREAD HEX SOCKET 8638-00-120	
260	90030-0188		1	CONN. STR. GE15LRED71	
270	342921-0121		3	STRAIGHT COUPLING, EXT.THREAD 8/6-G1/8	

Pos	Part No	UN	Qty	Description	Page No

COOL WATER VALVE

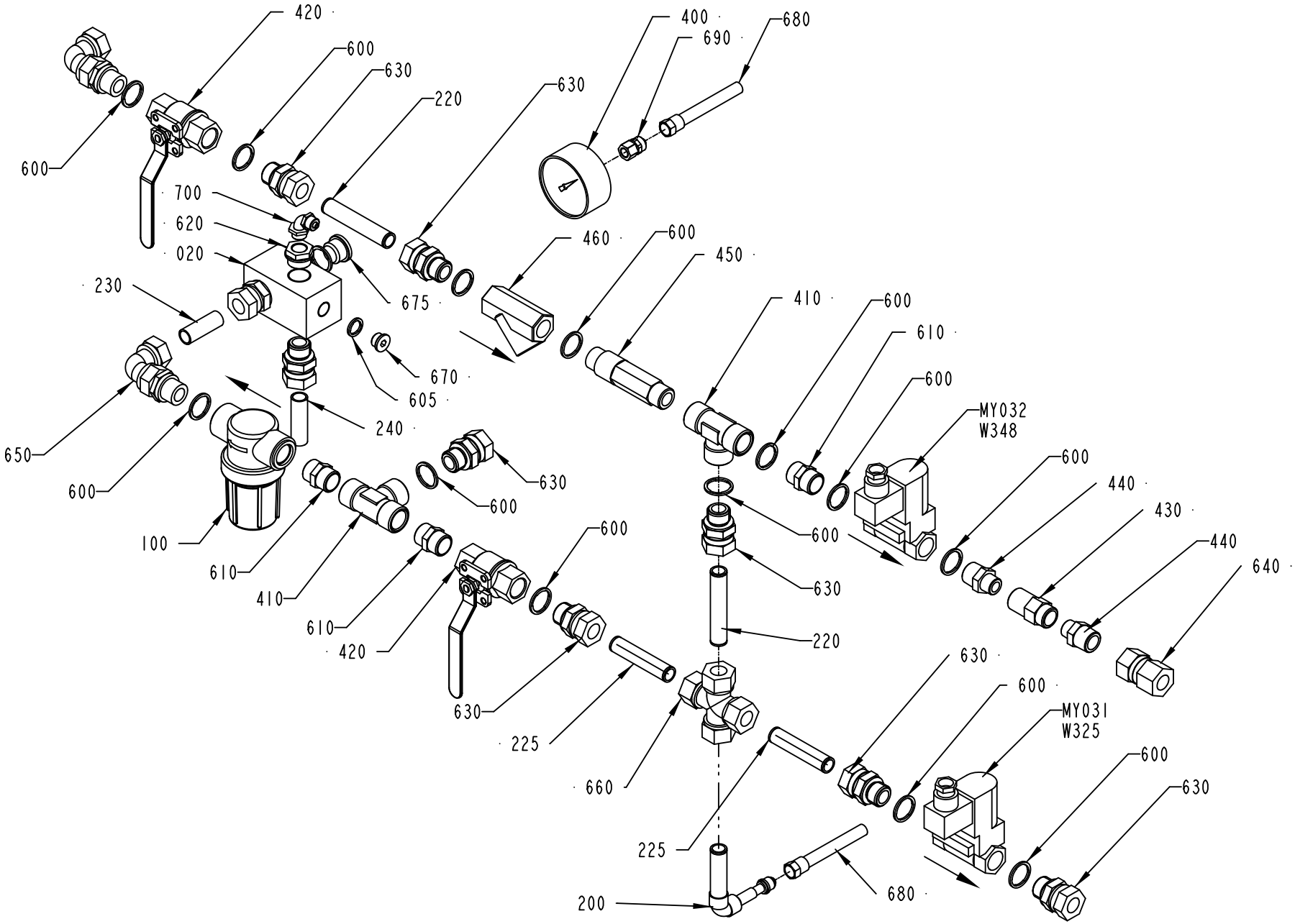

577824-4
425123

Pos	Part No	UN	Qty	Description	Page No
HVA (See drawing on page: 6-30)					
010	2913550-0100		1	VALVE PANEL	**6-33**
225	3072883-0000		1	PIPE	
NOHVA (See drawing on page: 6-28)					
225	3072883-0000		2	PIPE	
Common Parts					
020	3072096-0000		1	JUNCTION BLOCK	
100	90458-0921		1	FILTER SP 122-200	
	90458-2541		*1*	*FILTER, CP23174-7-304SS*	
200	1512806-0000		1	PIPE	
220	576287-0000		2	PIPE	
230	3072097-0000		1	PIPE	
240	3072098-0000		1	PIPE	
400	90043-0006		1	PRESSURE GAUGE, 2041 D=63 MM	
410	90140-0010		2	T-PIPE, INT. THREAD, 20031/2	
420	90600-3779		2	BALL VALVE, 700000 F-F-G1/2	
430	90270-0347		1	VALVE	
440	90330-0019		2	NIPPLE, EXT.THREAD, HEXAGON, R1/2-R3/8	
450	90415-0018		1	FILTER FOR LIME SEPARATING / D MOD.AD	
460	90415-0019		1	FILTER / ART.NO. HH-M15-RG	
600	315239-0113		14	NYLON WASHER G1/2, 1/2RRP	
605	315239-0110		1	NYLON WASHER G1/4, 1/4RRP	
610	342700-0113		3	NIPPLE, EXT.THREAD, HEXAGON, G1/2-G1/2	
620	342701-0205		1	BUSHING, INT/EXT, G 1/2 - G1/4	
630	90030-0188		9	CONN. STR. GE15LRED71	
640	342725-0114		1	CONN. STR. PIPE GAI15LR71	
650	342738-0221		2	ADJUSTABLE ELBOW CONNECTION 15-G1/2	
660	90600-0916		1	CROSS CONNECTION, 15 UNION	
670	342713-0210		1	PLUG, EXT THREAD HEX SOCKET	
675	342713-0213		1	PLUG, EXT THREAD HEX SOCKET 8638-00-120	
680	342903-0121		2	NUT WITH SPRING, 1723 8/6-M12X1	
690	342923-0121		1	STRAIGHT COUPL.,INT.THREADED 8/6-G1/8"	
700	342931-0122		1	ELBOW 90 COUPL., EXT. THREAD 8/6-G1/4"	
MY032	90042-0172		1	SOLENOID VALVE, 4023/1005/1032 24VDC	
	90042-0467		*1*	*COIL 24VDC GSR*	
MY031	90042-0172		1	SOLENOID VALVE, 4023/1005/1032 24VDC	
	90042-0467		*1*	*COIL 24VDC GSR*	
W325	351150-0403	M	3	CABLE OLFLEX 3X0,75 MM2 LIGHT/GREY	
W348	351150-0403	M	3	CABLE OLFLEX 3X0,75 MM2 LIGHT/GREY	

Pos	Part No	UN	Qty	Description	Page No

COOL WATER VALVE

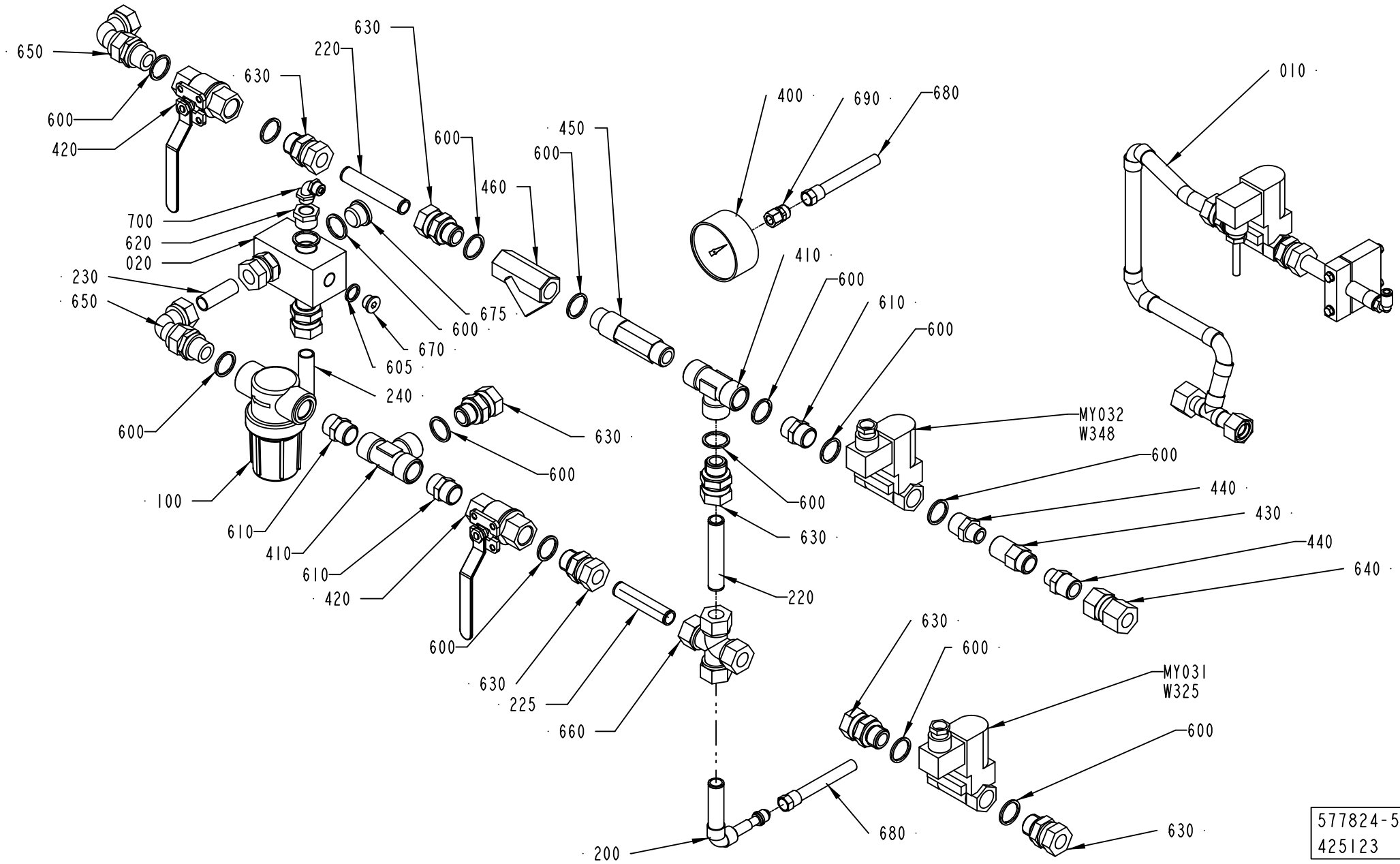

577824-5
425123

ECM: 438700 - 20100222
Group number: 577824-0300
Assembly Drawing: 577824-5_1_AB

This list covers pages from 6-28 to 6-31

Pos	Part No	UN	Qty	Description	Page No
HVA (See drawing on page: 6-30)					
010	2913550-0100		1	VALVE PANEL	**6-33**
225	3072883-0000		1	PIPE	
NOHVA (See drawing on page: 6-28)					
225	3072883-0000		2	PIPE	
Common Parts					
020	3072096-0000		1	JUNCTION BLOCK	
100	90458-0921		1	FILTER SP 122-200	
	90458-2541		*1*	*FILTER, CP23174-7-304SS*	
200	1512806-0000		1	PIPE	
220	576287-0000		2	PIPE	
230	3072097-0000		1	PIPE	
240	3072098-0000		1	PIPE	
400	90043-0006		1	PRESSURE GAUGE, 2041 D=63 MM	
410	90140-0010		2	T-PIPE, INT. THREAD, 20031/2	
420	90600-3779		2	BALL VALVE, 700000 F-F-G1/2	
430	90270-0347		1	VALVE	
440	90330-0019		2	NIPPLE, EXT.THREAD, HEXAGON, R1/2-R3/8	
450	90415-0018		1	FILTER FOR LIME SEPARATING / D MOD.AD	
460	90415-0019		1	FILTER / ART.NO. HH-M15-RG	
600	315239-0113		14	NYLON WASHER G1/2, 1/2RRP	
605	315239-0110		1	NYLON WASHER G1/4, 1/4RRP	
610	342700-0113		3	NIPPLE, EXT.THREAD, HEXAGON, G1/2-G1/2	
620	342701-0205		1	BUSHING, INT/EXT, G 1/2 - G1/4	
630	90030-0188		9	CONN. STR. GE15LRED71	
640	342725-0114		1	CONN. STR. PIPE GAI15LR71	
650	342738-0221		2	ADJUSTABLE ELBOW CONNECTION 15-G1/2	
660	90600-0916		1	CROSS CONNECTION, 15 UNION	
670	342713-0210		1	PLUG, EXT THREAD HEX SOCKET	
675	342713-0213		1	PLUG, EXT THREAD HEX SOCKET 8638-00-120	
680	342903-0121		2	NUT WITH SPRING, 1723 8/6-M12X1	
690	342923-0121		1	STRAIGHT COUPL.,INT.THREADED 8/6-G1/8"	
700	342931-0122		1	ELBOW 90 COUPL., EXT. THREAD 8/6-G1/4"	
MY032	90042-0172		1	SOLENOID VALVE, 4023/1005/1032 24VDC	
	90042-0467		*1*	*COIL 24VDC GSR*	
MY031	90042-0172		1	SOLENOID VALVE, 4023/1005/1032 24VDC	
	90042-0467		*1*	*COIL 24VDC GSR*	
W325	351150-0403	M	3	CABLE OLFLEX 3X0,75 MM2 LIGHT/GREY	
W348	351150-0403	M	3	CABLE OLFLEX 3X0,75 MM2 LIGHT/GREY	

Pos	Part No	UN	Qty	Description	Page No

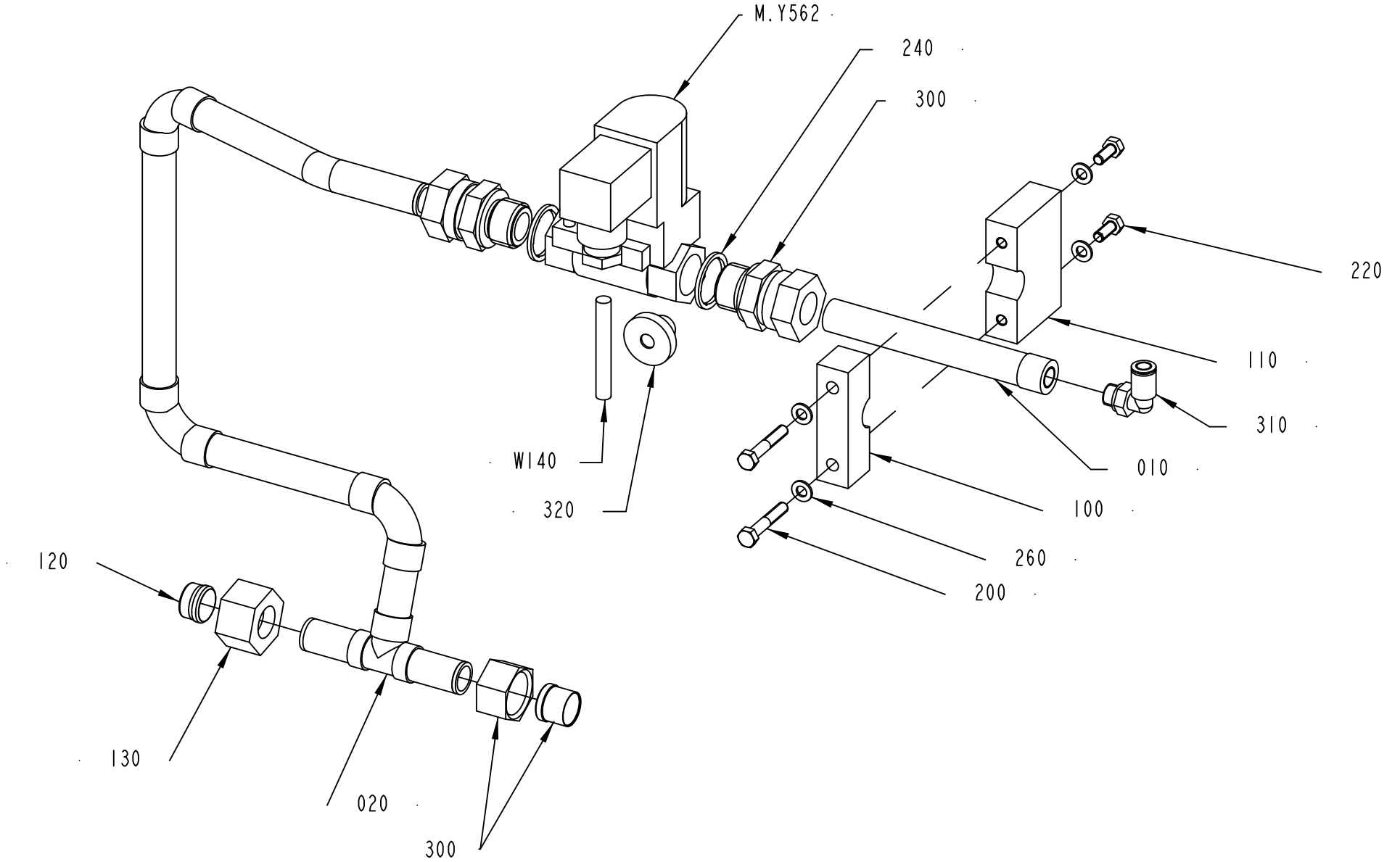

2913550-2
425123

ECM: 437394 - 20100222
Group number: 2913550-0100
Assembly Drawing: 2913550-2_1_AD

Pos	Part No	UN	Qty	Description	Page No
TBA/19-0400					
010	2921879-0000		1	PIPE	
020	2921878-0000		1	PIPE	
Common Parts					
100	979446-0000		1	HOLDER	
110	576286-0000		1	HOLDER	
120	90028-0017		1	PROGRESSIVE RING 15	
130	90030-0133		1	CONE NUT M15, NUT M-15 SS	
200	312105-0335		2	SCREW, M6S ISO 4014 M5X30 A4 80	
220	312105-0327		2	SCREW, M6S ISO 4017 M5X12 A4 80	
240	315239-0113		2	NYLON WASHER G1/2, 1/2RRP	
260	315105-0146		4	WASHER PLAIN, 5,3X10X1 A4 BRB	
300	90030-0188		3	CONN. STR. GE15LRED71	
310	350002-0006		1	PUSH-IN L-FITTING QSL-F-G1/8-6	
320	90015-0023		1	LEAD-IN, TET 7-10, E1458019	
M.Y562	90042-0172		1	SOLENOID VALVE, 4023/1005/1032 24VDC	
	90042-0467		*1*	*COIL 24VDC GSR*	
W140	351150-0403	M	5	CABLE OLFLEX 3X0,75 MM2 LIGHT/GREY	

Pos	Part No	UN	Qty	Description	Page No

HOT WATER VALVE

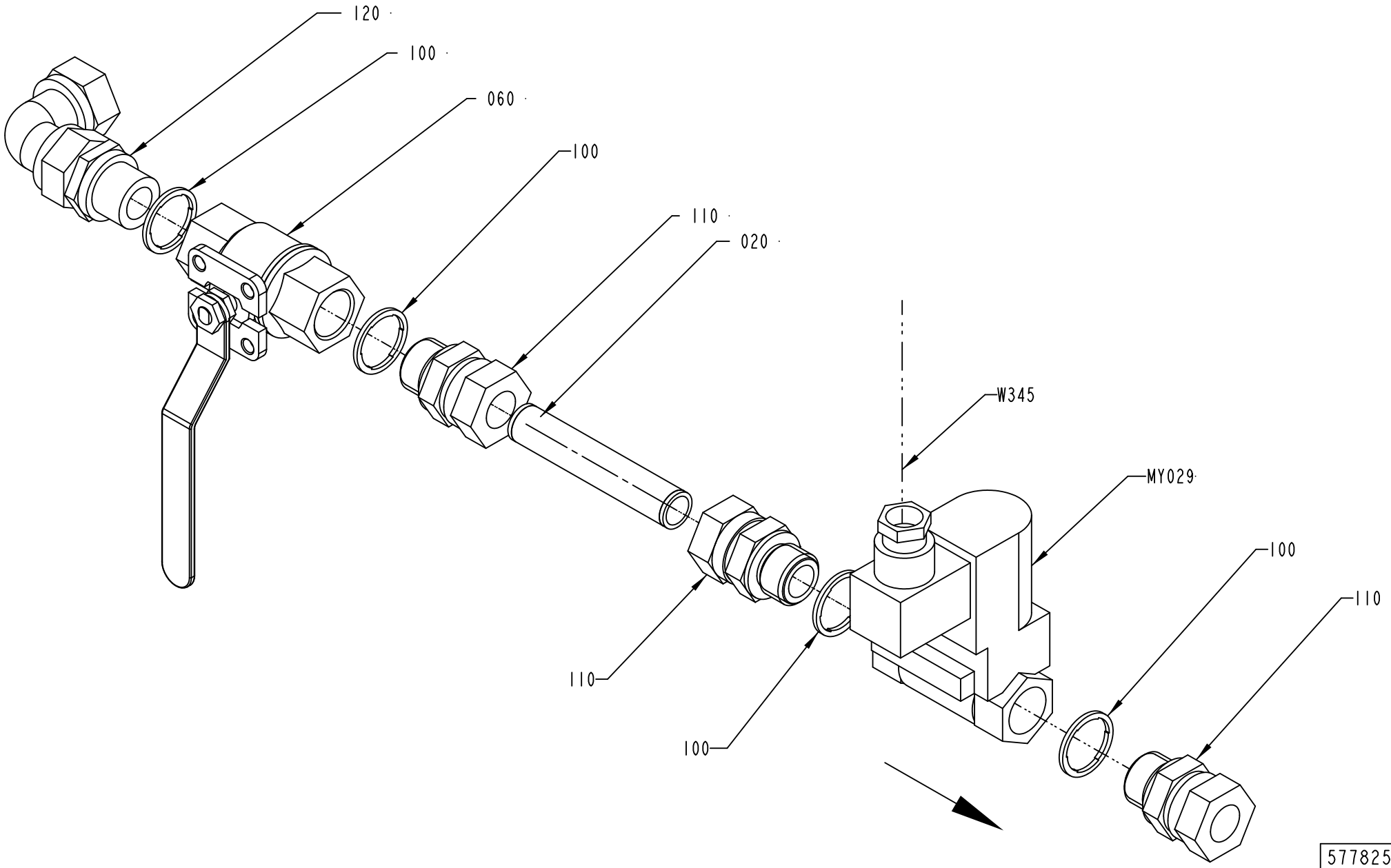

577825-3
ECM 387131

ECM: 400426 - 20090707
Group number: 577825-0300
Assembly Drawing: 577825-3_1_AA

Pos	Part No	UN	Qty	Description	Page No
-					
20	576287-0000		1	PIPE	
60	90600-3779		1	BALL VALVE, 700000 F-F-G1/2	
100	315239-0113		4	NYLON WASHER G1/2, 1/2RRP	
110	90030-0188		3	CONN. STR. GE15LRED71	
120	342738-0221		1	ADJUSTABLE ELBOW CONNECTION 15-G1/2	
MY029	90042-0172		1	SOLENOID VALVE, 4023/1005/1032 24VDC	
	90042-0467		*1*	*COIL 24VDC GSR*	
W345	351150-0431	M	1	CABLE OLFLEX 2X0,75 MM2 LIGHT/GREY	

Pos	Part No	UN	Qty	Description	Page No

PRESSURE REGULATOR GROUP

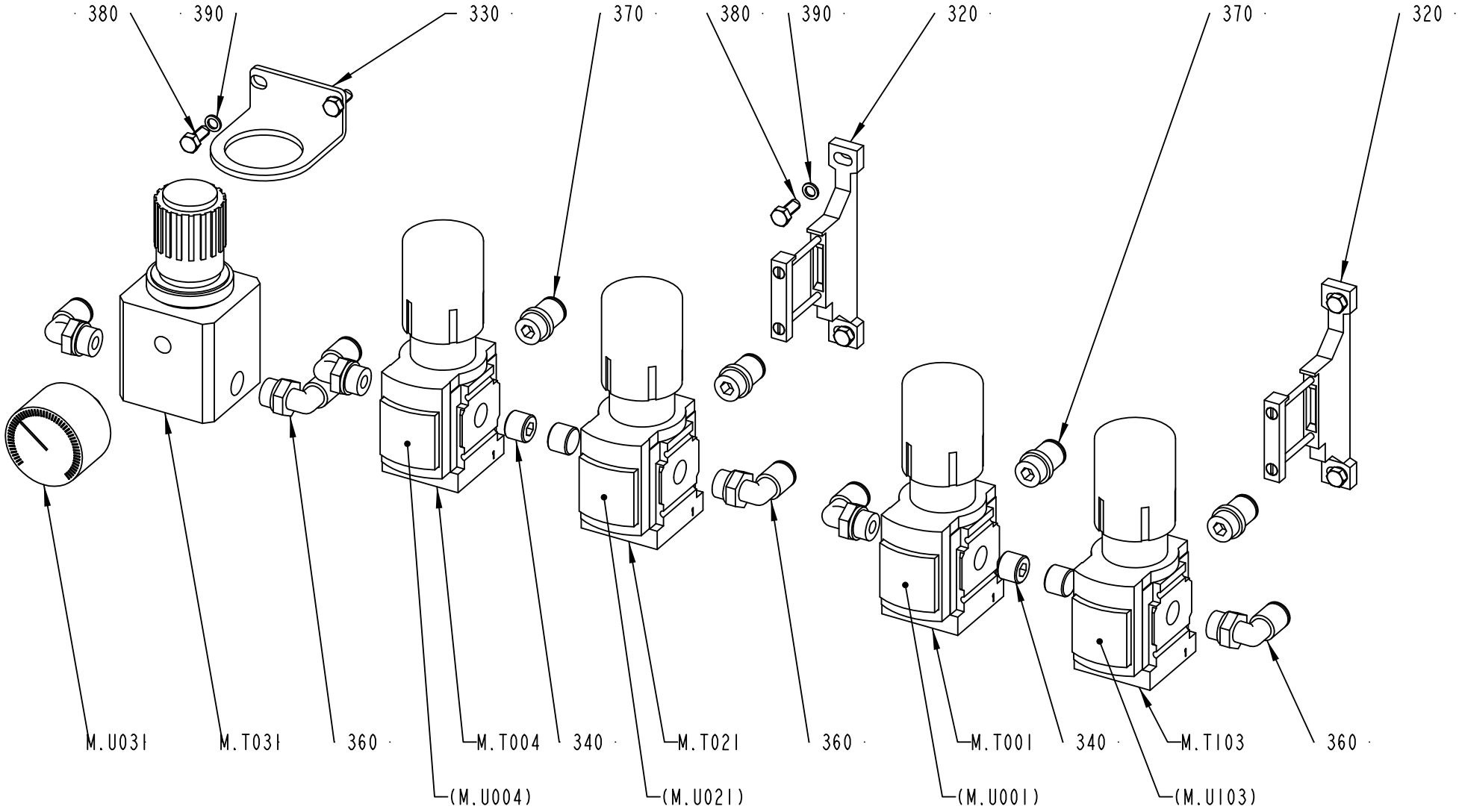

577822-3
260425

ECM: 273382 - 20060707
Group number: 577822-0300
Assembly Drawing: 577822-3_1_AB

Pos	Part No	UN	Qty	Description	Page No
-					
320	90459-2247		2	BRACKET, MS4-WP	
330	90458-2971		1	BRACKET, HR-1/4-P FOR LRP-1/4-0,7	
340	90087-0036		4	PLUG, KR 1/4	
360	350002-0009		6	PUSH-IN L-FITTING QSL-F-G1/4-8	
370	350003-0007		4	USH-IN FITTING QS-F-G1/4-8-I	
380	312105-0327		6	SCREW, M6S ISO 4017 M5X12 A4 80	
390	315105-0146		6	WASHER PLAIN, 5,3X10X1 A4 BRB	
M.U031	90458-2969		1	PRESSURE GAUGE, MAP-40-1-1/8-EN	
M.T103	90459-2242		1	REGULATOR, MS4-LRB-1/4-D7-AS	
M.T031	90458-0254		1	PRECISION PRESSURE REGULATOR,LRP-1/4-0,7	
M.T021	90459-2241		1	REGULATOR, MS4-LRB-1/4-D5-AS	
M.T004	90459-2241		1	REGULATOR, MS4-LRB-1/4-D5-AS	
M.T001	90459-2241		1	REGULATOR, MS4-LRB-1/4-D5-AS	

Pos	Part No	UN	Qty	Description	Page No

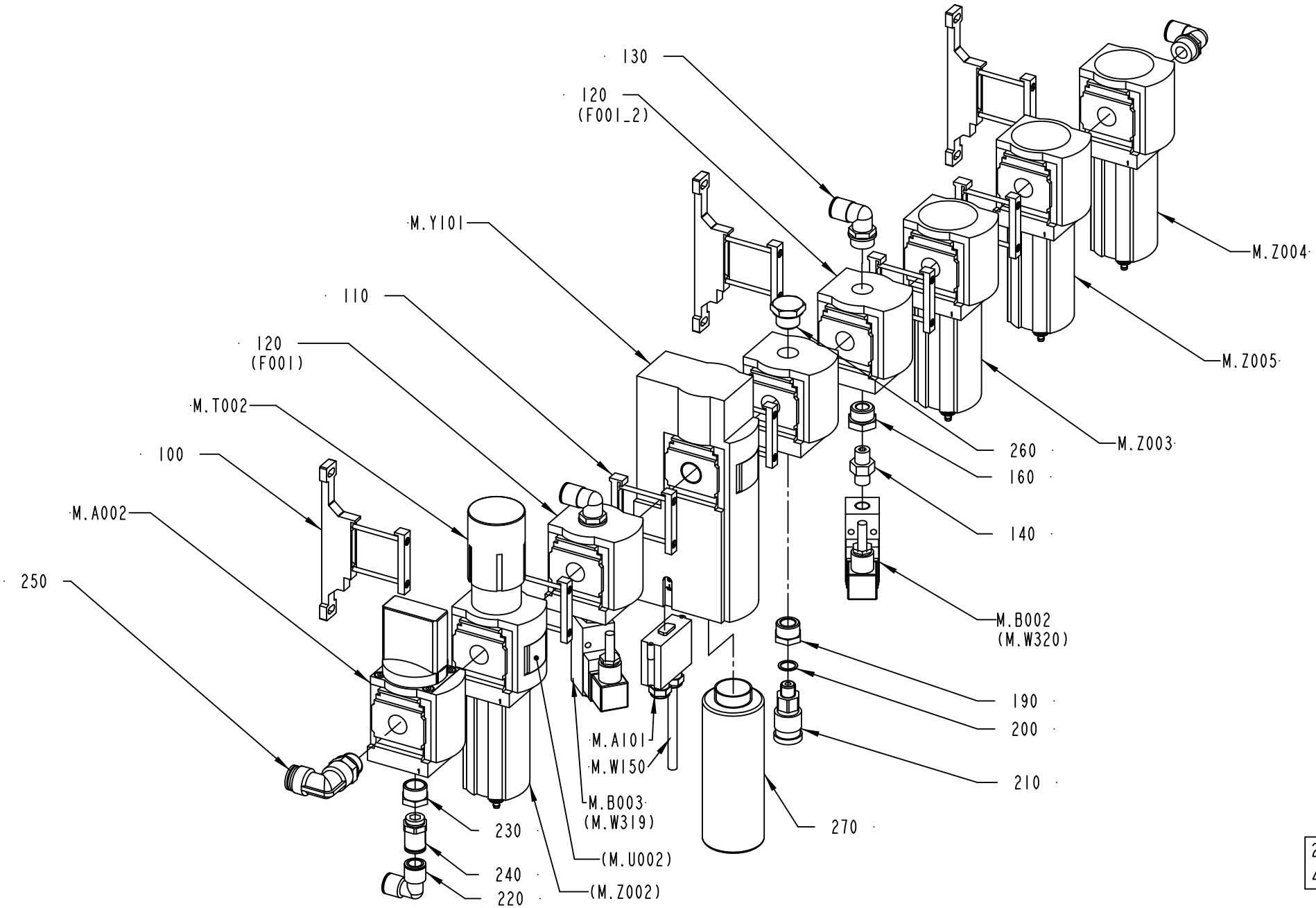

2500200-2
425123

ECM: 430275 - 20091221
Group number: 2500200-0200
Assembly Drawing: 2500200-2_1_AB

Pos	Part No	UN	Qty	Description	Page No
-					
100	90459-1858		3	BRACKET, MS6-WP	
110	90459-1859		5	BRACKET, MS6-MV	
	90459-4787		*1*	*SENSOR BRACKET, WSM-12-J-M5*	
120	90459-1856		3	DISTRIBUTOR, MS6-FRM-1/2	
130	350002-0016		4	PUSH-IN L-FITTING QSL-F-G1/2-12	
140	90224-0372		2	NIPPLE, EXT.THREAD, HEXAGON, R1/4-R1/4	
160	90459-2216		2	BUSHING, INT/EXT, G1/4-G1/2	
190	342701-0205		1	BUSHING, INT/EXT, G 1/2 - G1/4	
200	315239-0110		1	NYLON WASHER G1/4, 1/4RRP	
210	90163-0016		1	QUICK COUPLING, (F) LP 006-0-WR013	
220	350004-0005		1	PUSH-IN L-FITTING QSL-F-12	
230	342701-0206		1	BUSHING, INT/EXT, G 1/2 - G3/8	
240	342722-0210		1	STRAIGHT COUPLING, D=12 MM - G3/8"	
250	90459-1826		1	ELBOW PIPE JOINT, EXT.THREAD,D=16MM-G1/2	
260	90330-0037		1	PLUG, G1/2EXT, G1/2	
270	90601-1586		1	SILENCER, G1"	
M.Z005	90459-2773		1	FILTER, MS6-LFM-1/2-BRV	
	90459-3812		*1*	*FILTER CARTRIDGE, MS6-LFM-B*	
M.Z004	90459-2772		1	FILTER, MS6-LFM-1/2-ARV	
	90459-3811		*1*	*FILTER CARTRIDGE MS6-LFM-A*	
M.Z003	90459-1857		1	FILTER, MS6-LF-1/2-CRV	
	90459-3813		*1*	*FILTER CARTRIDGE, MS6-LFP-C*	
M.Y101	90601-1126		1	SAFETY VALVE, MS6-SV-1/2-E-10V24-AG	
M.W320	351150-0403	M	2	CABLE OLFLEX 3X0,75 MM2 LIGHT/GREY	
M.W319	351150-0403	M	2	CABLE OLFLEX 3X0,75 MM2 LIGHT/GREY	
M.W150	90600-5930	M	3	CABLE C9, 20-057-15	
M.T002	90459-5804		1	FILTER REGULATOR, MS6-LFR-1/2-D6-ERV-AS	
	90459-3809		*1*	*FILTER CARTRIDGE, MS6-LFP-E*	
M.B003	90600-1385		1	PRESSURE GUARD, PEV-1/4-B SA234332	
M.B002	90600-1385		1	PRESSURE GUARD, PEV-1/4-B SA234332	
M.A101	90601-1168		1	SOCKET CONNECTOR, NECA-S1G9-P9-MP3	
M.A002	90459-1852		1	SHUT OFF VALVE, MS6-EM1-1/2	

Pos	Part No	UN	Qty	Description	Page No

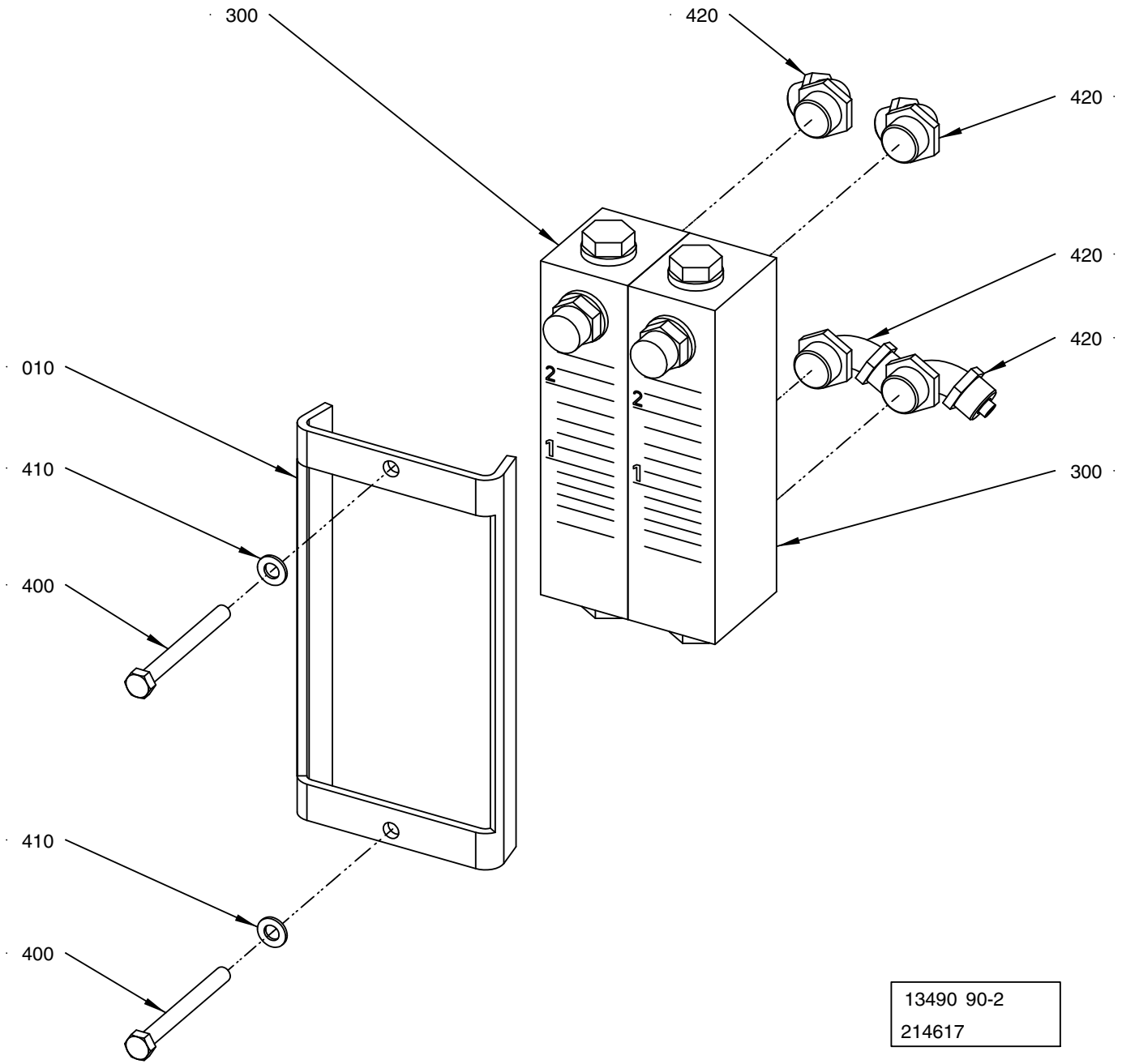

13490 90-2
214617

ECM: 249053 - 20060123
Group number: 1349090-0200
Assembly Drawing: 1349090-2_1_AA

Pos	Part No	UN	Qty	Description	Page No
-					
010	2500203-0000		1	HOLDER	
300	90243-0134		2	FLOW METER, EK-4244	
400	312105-0341		2	SCREW, M6S ISO 4014 M5X50 A4 80	
410	315105-0146		2	WASHER PLAIN, 5,3X10X1 A4 BRB	
420	342931-0122		4	ELBOW 90 COUPL., EXT. THREAD 8/6-G1/4"	

Pos	Part No	UN	Qty	Description	Page No

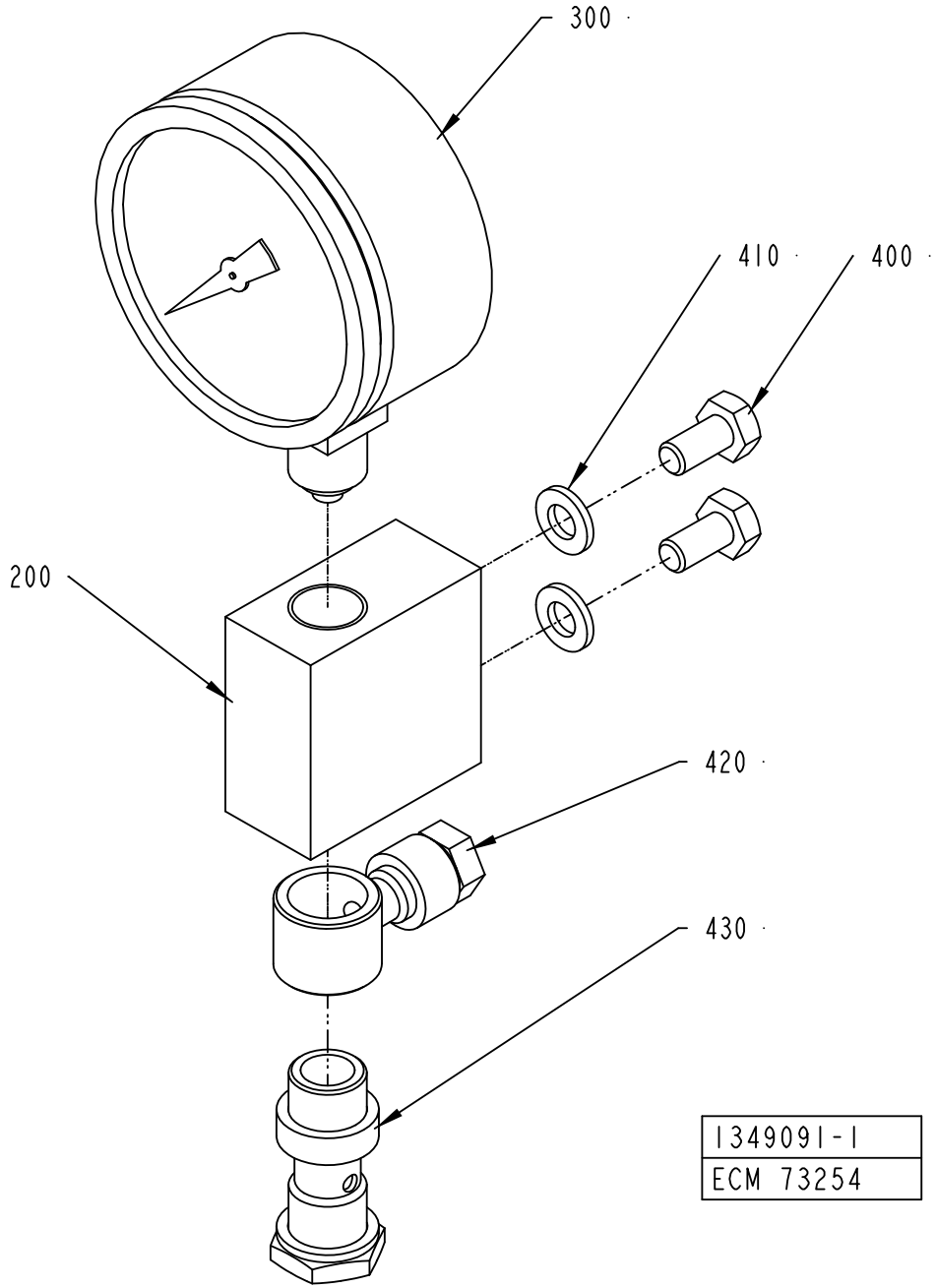
300
410
400
200
420
430
1349091-1
ECM 73254

ECM: 179450 - 20040910
Group number: 1349091-0100
Assembly Drawing: 1349091-1_1_AA

Pos	Part No	UN	Qty	Description	Page No
-					
200	1349092-0000		1	SUPPORT	
300	90043-0095		1	PRESSURE GAUGE, 2750, D=63 MM, GLYC.	
400	312105-0366		2	SCREW, M6S ISO 4017 M6X12 A4 80	
410	315105-0153		2	WASHER PLAIN, 6,4X12X1,5 A4 BRB	
420	342797-0122		1	BANJO CONN., RINGPIECE 6-1/4	
430	342980-0304		1	BANJO-HOLLOW BOLT COUPL,EXT.THR.01-G1/4	

Pos	Part No	UN	Qty	Description	Page No

VALVE PLATE

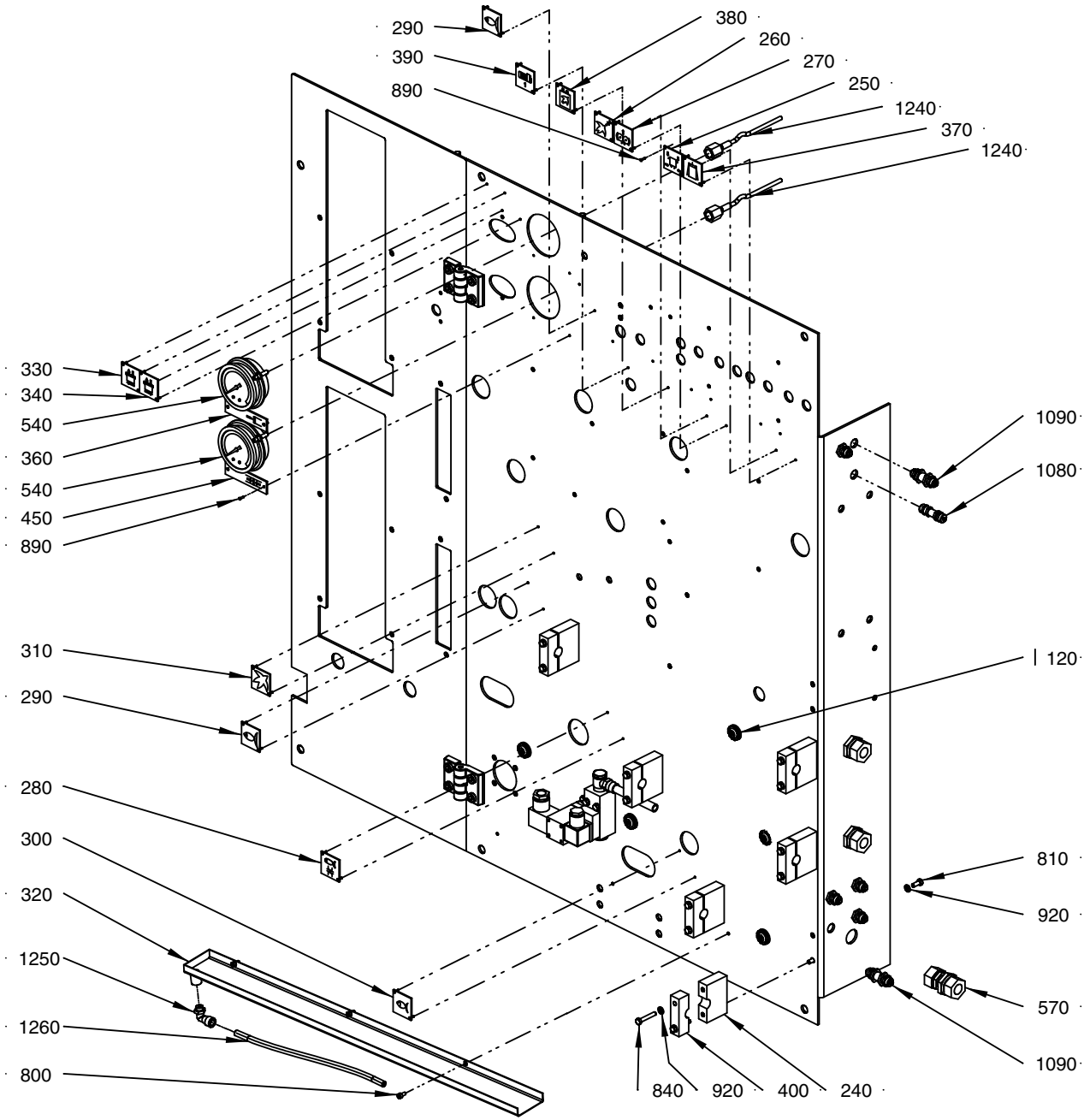

13490 94-4
443805

ECM: 448841 - 20100524
Group number: 1349094-0300
Assembly Drawing: 1349094-4_1_AC

This list covers pages from 6-44 to 6-47

Pos	Part No	UN	Qty	Description	Page No
-					
0200	2500202-0000		1	PLATE	
0220	2500201-0000		1	VALVE PLATE	
0230	295496-0000		1	BLOCKING PIECE	
0240	576286-0000		6	HOLDER	
0250	273449-0000		1	SIGN, FLAP SEALING	
0260	273450-0000		1	SIGN, AIR SPRAY	
0270	273452-0000		1	SIGN, ROLLING MACHINE FOR FABRICS	
0280	273454-0000		1	SIGN, COOLING JAWS	
0290	273455-0000		2	SIGN, COLD WATER	
0300	273456-0000		1	SIGN, HOT WATER	
0310	273458-0000		1	SIGN, AIR	
0320	1346061-0000		1	DRAIN CHUTE	
0330	445533-0000		1	SIGN, COLD WATER FLOW TS-LEFT	
0340	445534-0000		1	SIGN, COLD WATER FLOW TS-RIGHT	
0360	247385-0000		1	SIGN	
0370	929413-0000		1	SIGN	
0380	978603-0000		1	SIGN	
0390	979421-0000		1	SIGN	
0400	979446-0000		6	HOLDER	
0450	247386-0000		1	SIGN	
0540	90458-2421		2	PRESSURE GAUGE, 1453 W. BRACKET	
0570	90224-0296		3	BULKHEAD LEAD-IN 15 MM	
0600	90248-0034		2	HINGE, 66073	
0800	312115-0287		3	SCREW ISO4762 M4X8 A4 80	
0810	312105-0327		14	SCREW, M6S ISO 4017 M5X12 A4 80	
0830	312115-0451		8	SCREW ISO4762 M8X20 A4 80	
0840	312105-0335		12	SCREW, M6S ISO 4014 M5X30 A4 80	
0850	312105-0339		2	SCREW, M6S ISO 4014 M5X40 A4 80	
0890	90457-0104		30	BLANK RIVET 2X7,4	
0900	312605-0314		2	HEXAGON NUT, M6M M5 A280	
0920	315105-0146		30	WASHER PLAIN, 5,3X10X1 A4 BRB	
0930	315105-0153		2	WASHER PLAIN, 6,4X12X1,5 A4 BRB	
0940	315239-0109		2	NYLON WASHER G1/8, 1/8RRP	
1060	342921-0113		1	STRAIGHT COUPLING, EXT.THREAD 6/4-G1/8	
1070	342921-0121		1	STRAIGHT COUPLING, EXT.THREAD 8/6-G1/8	
1080	342960-0112		1	BULKHEAD COUPLING 6/4	
1090	342960-0122		6	BULKHEAD COUPLING 8/6	
1100	342980-0122		1	HOSE FITTING, BANJO RING L PO G1/4 8/6	
1110	342980-0304		1	BANJO-HOLLOW BOLT COUPL,EXT.THR.01-G1/4	
1120	352101-0103		6	LEAD-IN, PR18,6/PG11, E-1457518	
1130	312605-0316		2	HEXAGON NUT, M6M M6 A280	
1140	312602-0316		8	NUT, EN 24032 M6M M6 NIPLBR	
1150	342903-0121		1	NUT WITH SPRING, 1723 8/6-M12X1	
1160	315402-0165		8	LOCK WASHER, DIN127B 8,2 A4, M8-5/16	
1240	90458-2488		2	MEASURING HOSE DN2 L=1500MM, MAX 400BAR	
1250	90458-2964		1	ELBOW PIPE JOINT, EXT.THREAD, D=8MM-G1/8	
1260	90166-0061	M	1.5	HOSE 4/8 PVC TRANSP.	
1270	353101-0153		2	CABLE SHOE 4,0-6,0MM2 M6 YELLOW	
1280	90194-0163		2	SIGN, EARTH WITHIN CIRCLE / SHEET 48 PCS	
1290	90194-0164		2	SIGN, FRAME/CHASSIS WITHIN CIRCLE	
M.Y039	90042-0173		1	SOLENOID VALVE, 6013 2/2 NC	
M.W391	351162-0106	M	4	WIRE AWM 1X4 MM2 YELLOW-GREEN	
M.W342	351150-0403	M	3	CABLE OLFLEX 3X0,75 MM2 LIGHT/GREY	
M.W321	351150-0403	M	3	CABLE OLFLEX 3X0,75 MM2 LIGHT/GREY	
M.W132	351162-0106	M	5	WIRE AWM 1X4 MM2 YELLOW-GREEN	
M.B007	90459-6716		1	PRESSURE SWITCH, PEV-1/4-B-SA	

Machine Type	Group Description	Used-In	Group Number	Page No

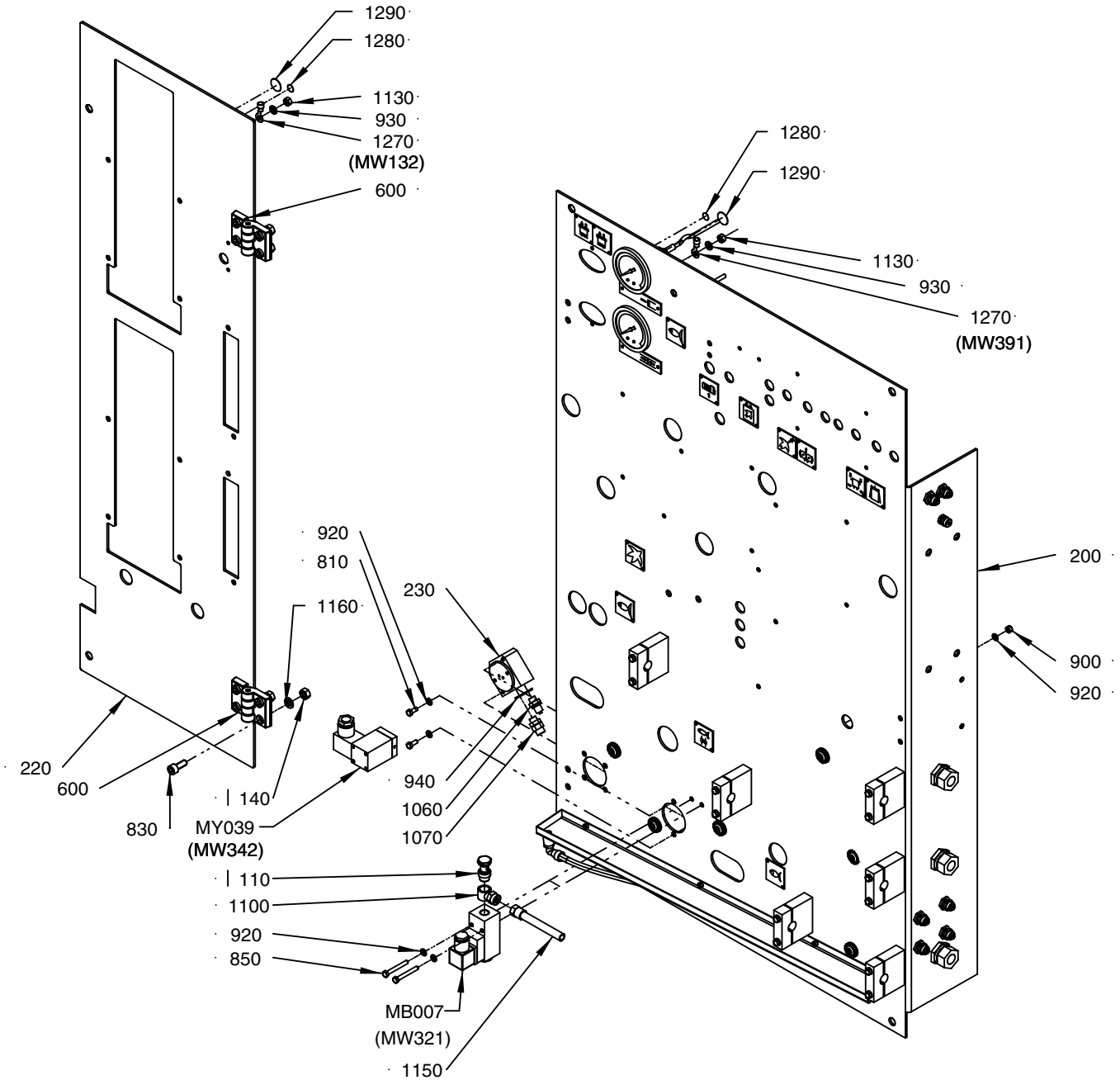

13490 94-4
443805

ECM: 448841 - 20100524
Group number: 1349094-0300
Assembly Drawing: 1349094-4_2_AC

This list covers pages from 6-44 to 6-47

Pos	Part No	UN	Qty	Description	Page No
-					
0200	2500202-0000		1	PLATE	
0220	2500201-0000		1	VALVE PLATE	
0230	295496-0000		1	BLOCKING PIECE	
0240	576286-0000		6	HOLDER	
0250	273449-0000		1	SIGN, FLAP SEALING	
0260	273450-0000		1	SIGN, AIR SPRAY	
0270	273452-0000		1	SIGN, ROLLING MACHINE FOR FABRICS	
0280	273454-0000		1	SIGN, COOLING JAWS	
0290	273455-0000		2	SIGN, COLD WATER	
0300	273456-0000		1	SIGN, HOT WATER	
0310	273458-0000		1	SIGN, AIR	
0320	1346061-0000		1	DRAIN CHUTE	
0330	445533-0000		1	SIGN, COLD WATER FLOW TS-LEFT	
0340	445534-0000		1	SIGN, COLD WATER FLOW TS-RIGHT	
0360	247385-0000		1	SIGN	
0370	929413-0000		1	SIGN	
0380	978603-0000		1	SIGN	
0390	979421-0000		1	SIGN	
0400	979446-0000		6	HOLDER	
0450	247386-0000		1	SIGN	
0540	90458-2421		2	PRESSURE GAUGE, 1453 W. BRACKET	
0570	90224-0296		3	BULKHEAD LEAD-IN 15 MM	
0600	90248-0034		2	HINGE, 66073	
0800	312115-0287		3	SCREW ISO4762 M4X8 A4 80	
0810	312105-0327		14	SCREW, M6S ISO 4017 M5X12 A4 80	
0830	312115-0451		8	SCREW ISO4762 M8X20 A4 80	
0840	312105-0335		12	SCREW, M6S ISO 4014 M5X30 A4 80	
0850	312105-0339		2	SCREW, M6S ISO 4014 M5X40 A4 80	
0890	90457-0104		30	BLANK RIVET 2X7,4	
0900	312605-0314		2	HEXAGON NUT, M6M M5 A280	
0920	315105-0146		30	WASHER PLAIN, 5,3X10X1 A4 BRB	
0930	315105-0153		2	WASHER PLAIN, 6,4X12X1,5 A4 BRB	
0940	315239-0109		2	NYLON WASHER G1/8, 1/8RRP	
1060	342921-0113		1	STRAIGHT COUPLING, EXT.THREAD 6/4-G1/8	
1070	342921-0121		1	STRAIGHT COUPLING, EXT.THREAD 8/6-G1/8	
1080	342960-0112		1	BULKHEAD COUPLING 6/4	
1090	342960-0122		6	BULKHEAD COUPLING 8/6	
1100	342980-0122		1	HOSE FITTING, BANJO RING L PO G1/4 8/6	
1110	342980-0304		1	BANJO-HOLLOW BOLT COUPL,EXT.THR.01-G1/4	
1120	352101-0103		6	LEAD-IN, PR18,6/PG11, E-1457518	
1130	312605-0316		2	HEXAGON NUT, M6M M6 A280	
1140	312602-0316		8	NUT, EN 24032 M6M M6 NIPLBR	
1150	342903-0121		1	NUT WITH SPRING, 1723 8/6-M12X1	
1160	315402-0165		8	LOCK WASHER, DIN127B 8,2 A4, M8-5/16	
1240	90458-2488		2	MEASURING HOSE DN2 L=1500MM, MAX 400BAR	
1250	90458-2964		1	ELBOW PIPE JOINT, EXT.THREAD, D=8MM-G1/8	
1260	90166-0061	M	1.5	HOSE 4/8 PVC TRANSP.	
1270	353101-0153		2	CABLE SHOE 4,0-6,0MM2 M6 YELLOW	
1280	90194-0163		2	SIGN, EARTH WITHIN CIRCLE / SHEET 48 PCS	
1290	90194-0164		2	SIGN, FRAME/CHASSIS WITHIN CIRCLE	
M.Y039	90042-0173		1	SOLENOID VALVE, 6013 2/2 NC	
M.W391	351162-0106	M	4	WIRE AWM 1X4 MM2 YELLOW-GREEN	
M.W342	351150-0403	M	3	CABLE OLFLEX 3X0,75 MM2 LIGHT/GREY	
M.W321	351150-0403	M	3	CABLE OLFLEX 3X0,75 MM2 LIGHT/GREY	
M.W132	351162-0106	M	5	WIRE AWM 1X4 MM2 YELLOW-GREEN	
M.B007	90459-6716		1	PRESSURE SWITCH, PEV-1/4-B-SA	

Machine Type	Group Description	Used-In	Group Number	Page No

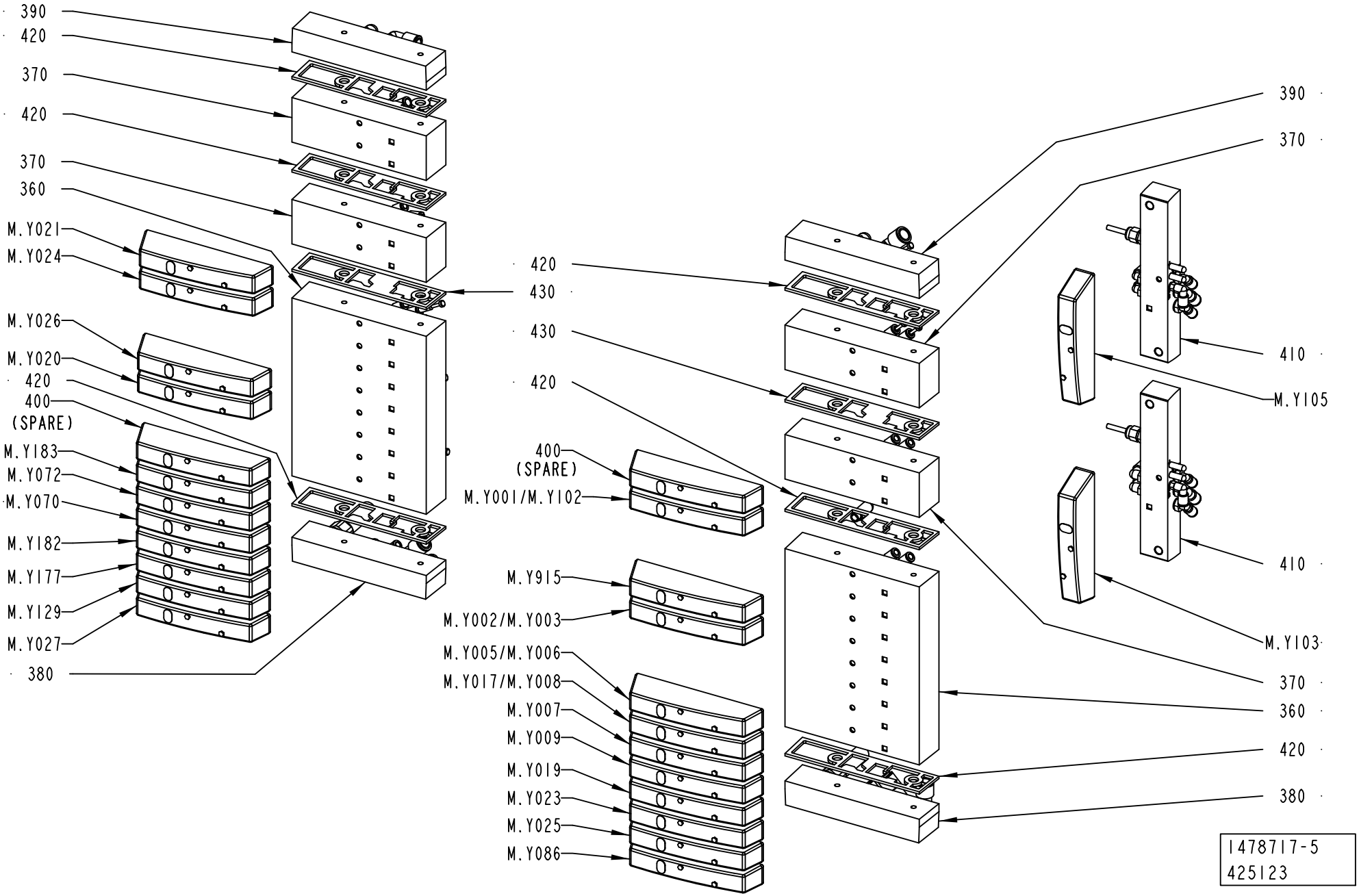
390
420
370
420
370
360
M.Y021
M.Y024
M.Y026
M.Y020
420
400
(SPARE)
M.Y183
M.Y072
M.Y070
M.Y182
M.Y177
M.Y129
M.Y027
380
420
430
430
420
400
(SPARE)
M.Y001/M.Y102
M.Y915
M.Y002/M.Y003
M.Y005/M.Y006
M.Y017/M.Y008
M.Y007
M.Y009
M.Y019
M.Y023
M.Y025
M.Y086
390
370
410
M.Y105
410
M.Y103
370
360
420
380
1478717-5
425123

ECM: 430276 - 20091221
Group number: 1478717-0300
Assembly Drawing: 1478717-5_1_AB

This list covers pages from 6-48 to 6-51

Pos	Part No	UN	Qty	Description	Page No
TBA HVA					
350	350013-0002		11	PLUG QSC-6H	
480	350013-0003		1	PLUG QSC-8H	
M.Y183	90458-1215		1	COVER PLATE, EMPTY VALVE POSITION	
M.Y182	90458-1194		1	VALVE, 5/2 MONOSTABLE	
M.Y177	90458-1194		1	VALVE, 5/2 MONOSTABLE	
M.Y072	90458-1215		1	COVER PLATE, EMPTY VALVE POSITION	
M.Y070	90458-1215		1	COVER PLATE, EMPTY VALVE POSITION	
M.Y027	90458-1194		1	VALVE, 5/2 MONOSTABLE	
TBA NOHVA					
350	350013-0002		11	PLUG QSC-6H	
480	350013-0003		1	PLUG QSC-8H	
M.Y183	90458-1215		1	COVER PLATE, EMPTY VALVE POSITION	
M.Y182	90458-1194		1	VALVE, 5/2 MONOSTABLE	
M.Y177	90458-1194		1	VALVE, 5/2 MONOSTABLE	
M.Y072	90458-1215		1	COVER PLATE, EMPTY VALVE POSITION	
M.Y070	90458-1215		1	COVER PLATE, EMPTY VALVE POSITION	
M.Y027	90458-1194		1	VALVE, 5/2 MONOSTABLE	
M.Y009	90458-1194		1	VALVE, 5/2 MONOSTABLE	
M.Y007	90458-1194		1	VALVE, 5/2 MONOSTABLE	
TPA					
350	350013-0002		16	PLUG QSC-6H	
480	350013-0003		1	PLUG QSC-8H	
M.Y183	90458-1215		1	COVER PLATE, EMPTY VALVE POSITION	
M.Y182	90458-1215		1	COVER PLATE, EMPTY VALVE POSITION	
M.Y177	90458-1215		1	COVER PLATE, EMPTY VALVE POSITION	
M.Y072	90458-1215		1	COVER PLATE, EMPTY VALVE POSITION	
M.Y070	90458-1215		1	COVER PLATE, EMPTY VALVE POSITION	
M.Y027	90458-1194		1	VALVE, 5/2 MONOSTABLE	
M.Y009	90458-1194		1	VALVE, 5/2 MONOSTABLE	
M.Y007	90458-1194		1	VALVE, 5/2 MONOSTABLE	
TWA					
350	350013-0002		9	PLUG QSC-6H	
M.Y183	90458-1194		1	VALVE, 5/2 MONOSTABLE	
M.Y182	90458-1194		1	VALVE, 5/2 MONOSTABLE	
M.Y177	90458-1215		1	COVER PLATE, EMPTY VALVE POSITION	
M.Y072	90458-1194		1	VALVE, 5/2 MONOSTABLE	
M.Y070	90458-1197		1	VALVE, 5/2 BISTABLE	
M.Y027	90458-1197		1	VALVE, 5/2 BISTABLE	
M.Y009	90458-1194		1	VALVE, 5/2 MONOSTABLE	
M.Y007	90458-1194		1	VALVE, 5/2 MONOSTABLE	
Common Parts					
300	350002-0006		51	PUSH-IN L-FITTING QSL-F-G1/8-6	
305	350002-0002		2	PUSH-IN L-FITTING QSL-F-M5-6	
310	350002-0007		6	PUSH-IN L-FITTING QSL-F-G1/8-8	
320	350002-0014		8	PUSH-IN L-FITTING QSL-F-G3/8-12	
330	90459-7549		2	FLOW CONTROL VALVE, GRLZ-1/8-QS-8-D	
360	90458-1205		2	BASIC SUB-BASE 8 VALVES, CDVI5.0-GB8-MP	
370	90458-1206		4	EXP. SUB-BASE 2 VALVES, CDVI5.0-EB	
380	90458-1212		2	LEFT ENDPLATE INCL. 10M CABLE	
390	90458-1214		2	RIGHT ENDPL EXT. PILOT AIR,CDVI5.0-EPR-S	
400	90458-1215		2	COVER PLATE, EMPTY VALVE POSITION	
410	90459-2591		2	SINGLE VALVE SUB-BASE CDSV5.0-AS-1/8	
420	90458-1207		6	SEALING, STANDARD	
430	90458-1208		2	SEALING, CHANNEL 1 BLOCKED	
440	90328-0047		4	SILENCER, G1/8"	
460	90328-0029		4	SILENCER, M5	
470	90600-4585		1	ONE WAY FLOW CONTROL, G1/8", MANUAL	
M.Y915	90458-1194		1	VALVE, 5/2 MONOSTABLE	
M.Y129	90458-1194		1	VALVE, 5/2 MONOSTABLE	
M.Y105	90458-1194		1	VALVE, 5/2 MONOSTABLE	
M.Y103	90458-1200		1	VALVE OPEN IN MID-POSITION 5/3	
M.Y086	90458-1194		1	VALVE, 5/2 MONOSTABLE	
M.Y026	90458-1194		1	VALVE, 5/2 MONOSTABLE	
M.Y025	90458-1194		1	VALVE, 5/2 MONOSTABLE	
M.Y024	90458-1194		1	VALVE, 5/2 MONOSTABLE	
M.Y023	90458-1194		1	VALVE, 5/2 MONOSTABLE	
M.Y021	90458-1194		1	VALVE, 5/2 MONOSTABLE	
M.Y020	90458-1194		1	VALVE, 5/2 MONOSTABLE	
M.Y019	90458-1194		1	VALVE, 5/2 MONOSTABLE	
M.Y017/008	90458-1202		1	VALVES 2X3/2, CLOSED	
M.Y005/006	90458-1202		1	VALVES 2X3/2, CLOSED	
M.Y002/003	90458-1202		1	VALVES 2X3/2, CLOSED	
M.Y001/102	90458-1203		1	VALVE 2X3/2 1X OPEN 1X CLOSED	

Machine Type | Group Description | Used-In | Group Number | Page No

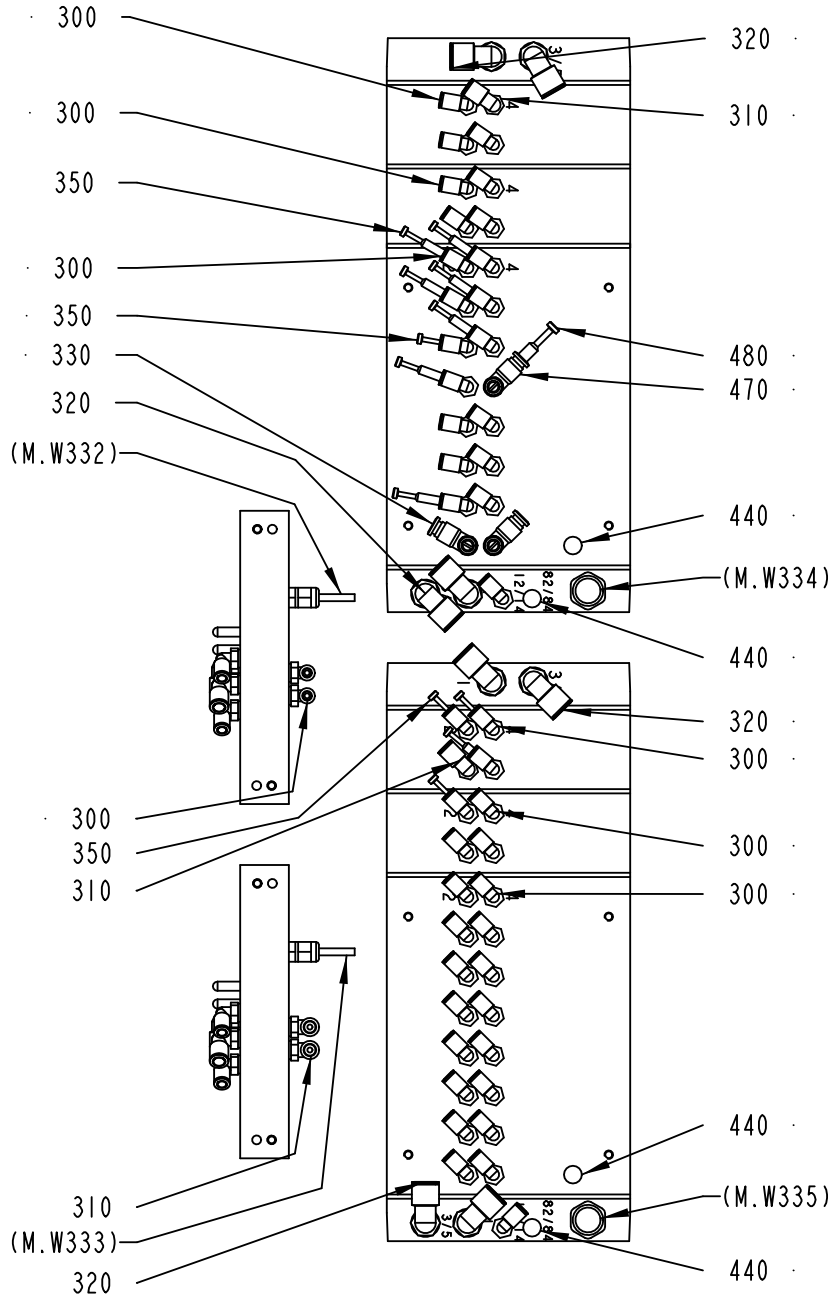

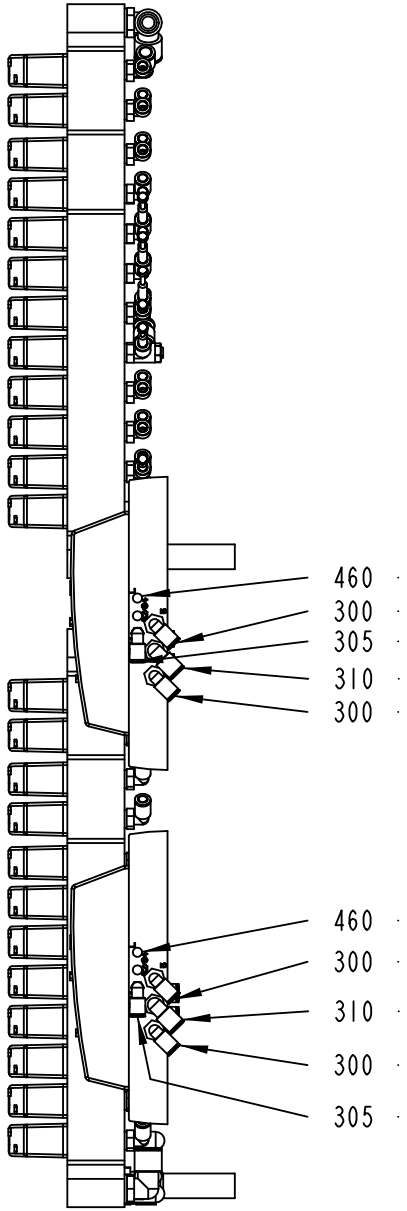

1478717-5
425123

ECM: 430276 - 20091221
Group number: 1478717-0300
Assembly Drawing: 1478717-5_2_AB

This list covers pages from 6-48 to 6-51

Pos	Part No	UN	Qty	Description	Page No
TBA HVA					
350	350013-0002		11	PLUG QSC-6H	
480	350013-0003		1	PLUG QSC-8H	
M.Y183	90458-1215		1	COVER PLATE, EMPTY VALVE POSITION	
M.Y182	90458-1194		1	VALVE, 5/2 MONOSTABLE	
M.Y177	90458-1194		1	VALVE, 5/2 MONOSTABLE	
M.Y072	90458-1215		1	COVER PLATE, EMPTY VALVE POSITION	
M.Y070	90458-1215		1	COVER PLATE, EMPTY VALVE POSITION	
M.Y027	90458-1194		1	VALVE, 5/2 MONOSTABLE	
TBA NOHVA					
350	350013-0002		11	PLUG QSC-6H	
480	350013-0003		1	PLUG QSC-8H	
M.Y183	90458-1215		1	COVER PLATE, EMPTY VALVE POSITION	
M.Y182	90458-1194		1	VALVE, 5/2 MONOSTABLE	
M.Y177	90458-1194		1	VALVE, 5/2 MONOSTABLE	
M.Y072	90458-1215		1	COVER PLATE, EMPTY VALVE POSITION	
M.Y070	90458-1215		1	COVER PLATE, EMPTY VALVE POSITION	
M.Y027	90458-1194		1	VALVE, 5/2 MONOSTABLE	
M.Y009	90458-1194		1	VALVE, 5/2 MONOSTABLE	
M.Y007	90458-1194		1	VALVE, 5/2 MONOSTABLE	
TPA					
350	350013-0002		16	PLUG QSC-6H	
480	350013-0003		1	PLUG QSC-8H	
M.Y183	90458-1215		1	COVER PLATE, EMPTY VALVE POSITION	
M.Y182	90458-1215		1	COVER PLATE, EMPTY VALVE POSITION	
M.Y177	90458-1215		1	COVER PLATE, EMPTY VALVE POSITION	
M.Y072	90458-1215		1	COVER PLATE, EMPTY VALVE POSITION	
M.Y070	90458-1215		1	COVER PLATE, EMPTY VALVE POSITION	
M.Y027	90458-1194		1	VALVE, 5/2 MONOSTABLE	
M.Y009	90458-1194		1	VALVE, 5/2 MONOSTABLE	
M.Y007	90458-1194		1	VALVE, 5/2 MONOSTABLE	
TWA					
350	350013-0002		9	PLUG QSC-6H	
M.Y183	90458-1194		1	VALVE, 5/2 MONOSTABLE	
M.Y182	90458-1194		1	VALVE, 5/2 MONOSTABLE	
M.Y177	90458-1215		1	COVER PLATE, EMPTY VALVE POSITION	
M.Y072	90458-1194		1	VALVE, 5/2 MONOSTABLE	
M.Y070	90458-1197		1	VALVE, 5/2 BISTABLE	
M.Y027	90458-1197		1	VALVE, 5/2 BISTABLE	
M.Y009	90458-1194		1	VALVE, 5/2 MONOSTABLE	
M.Y007	90458-1194		1	VALVE, 5/2 MONOSTABLE	
Common Parts					
300	350002-0006		51	PUSH-IN L-FITTING QSL-F-G1/8-6	
305	350002-0002		2	PUSH-IN L-FITTING QSL-F-M5-6	
310	350002-0007		6	PUSH-IN L-FITTING QSL-F-G1/8-8	
320	350002-0014		8	PUSH-IN L-FITTING QSL-F-G3/8-12	
330	90459-7549		2	FLOW CONTROL VALVE, GRLZ-1/8-QS-8-D	
360	90458-1205		2	BASIC SUB-BASE 8 VALVES, CDVI5.0-GB8-MP	
370	90458-1206		4	EXP. SUB-BASE 2 VALVES, CDVI5.0-EB	
380	90458-1212		2	LEFT ENDPLATE INCL. 10M CABLE	
390	90458-1214		2	RIGHT ENDPL EXT. PILOT AIR,CDVI5.0-EPR-S	
400	90458-1215		2	COVER PLATE, EMPTY VALVE POSITION	
410	90459-2591		2	SINGLE VALVE SUB-BASE CDSV5.0-AS-1/8	
420	90458-1207		6	SEALING, STANDARD	
430	90458-1208		2	SEALING, CHANNEL 1 BLOCKED	
440	90328-0047		4	SILENCER, G1/8"	
460	90328-0029		4	SILENCER, M5	
470	90600-4585		1	ONE WAY FLOW CONTROL, G1/8", MANUAL	
M.Y915	90458-1194		1	VALVE, 5/2 MONOSTABLE	
M.Y129	90458-1194		1	VALVE, 5/2 MONOSTABLE	
M.Y105	90458-1194		1	VALVE, 5/2 MONOSTABLE	
M.Y103	90458-1200		1	VALVE OPEN IN MID-POSITION 5/3	
M.Y086	90458-1194		1	VALVE, 5/2 MONOSTABLE	
M.Y026	90458-1194		1	VALVE, 5/2 MONOSTABLE	
M.Y025	90458-1194		1	VALVE, 5/2 MONOSTABLE	
M.Y024	90458-1194		1	VALVE, 5/2 MONOSTABLE	
M.Y023	90458-1194		1	VALVE, 5/2 MONOSTABLE	
M.Y021	90458-1194		1	VALVE, 5/2 MONOSTABLE	
M.Y020	90458-1194		1	VALVE, 5/2 MONOSTABLE	
M.Y019	90458-1194		1	VALVE, 5/2 MONOSTABLE	
M.Y017/008	90458-1202		1	VALVES 2X3/2, CLOSED	
M.Y005/006	90458-1202		1	VALVES 2X3/2, CLOSED	
M.Y002/003	90458-1202		1	VALVES 2X3/2, CLOSED	
M.Y001/102	90458-1203		1	VALVE 2X3/2 1X OPEN 1X CLOSED	

Machine Type | Group Description | Used-In | Group Number | Page No

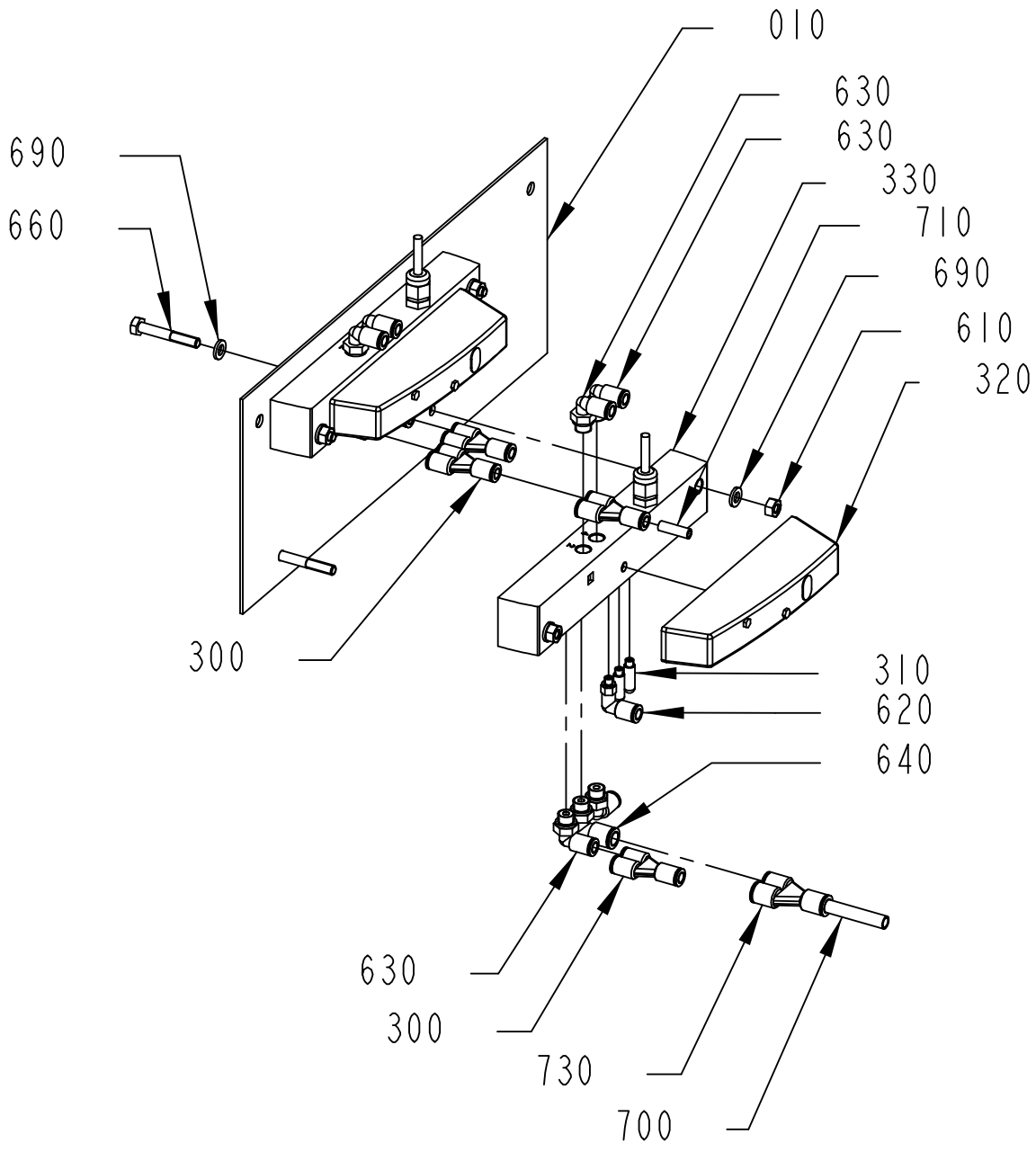

2995654-2
401084

ECM: 400442 - 20090707
Group number: 2995654-0100
Assembly Drawing: 2995654-2_1_AA

Pos	Part No	UN	Qty	Description	Page No
-					
010	2974217-0000		1	PLATE	
300	350015-0001		4	PUSH-IN Y-CONNECTOR QSY-F-6	
310	90328-0029		4	SILENCER, M5	
320	90458-1194		2	VALVE, 5/2 MONOSTABLE	
330	90459-2591		2	SINGLE VALVE SUB-BASE CDSV5.0-AS-1/8	
610	312605-0316		4	HEXAGON NUT, M6M M6 A280	
620	350002-0002		2	PUSH-IN L-FITTING QSL-F-M5-6	
630	350002-0006		8	PUSH-IN L-FITTING QSL-F-G1/8-6	
640	350002-0007		2	PUSH-IN L-FITTING QSL-F-G1/8-8	
660	312105-0378		4	SCREW, M6S ISO 4014 M6X40 A4 80	
690	315106-0153		8	WASHER PLAIN, M6 ISO7089-6-200 HV A4	
700	315400-0004	MM	5000	TUBE PUN-H-8X1,25-BL	
710	315400-0001	M	35	TUBE PUN-H-6X1-BL	
720	352113-0204		1	ANCHOR PLATES FOR STRIPS, TM3S25-M	
730	350015-0003		1	PUSH-IN Y-CONNECTOR QSY-F-8	

Pos	Part No	UN	Qty	Description	Page No

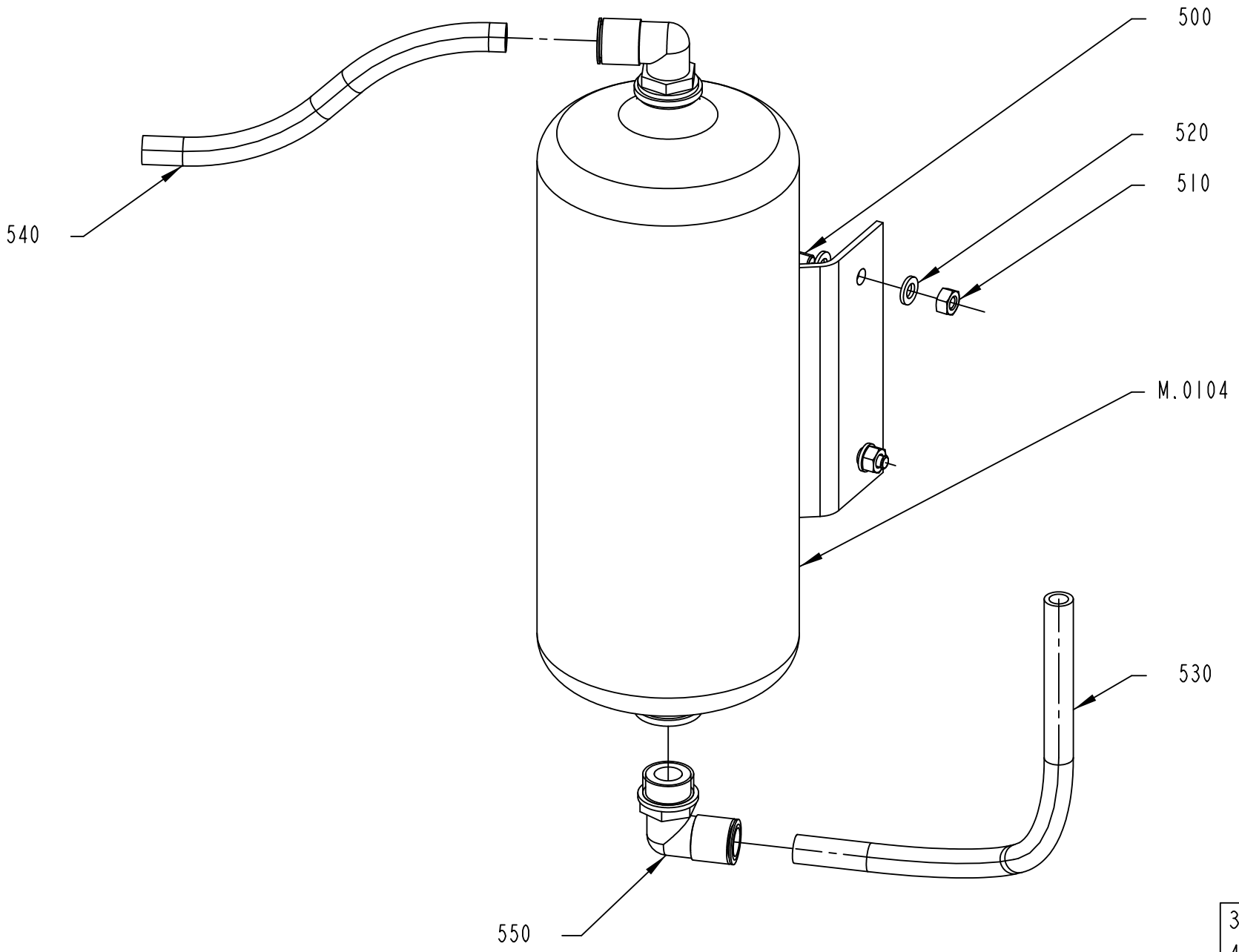
500
520
510
540
M.0104
530
550
3096154-1
443805

ECM: 482117 - 20101210
Group number: 3096154-0100
Assembly Drawing: 3096154-1_1_AA

Pos	Part No	UN	Qty	Description	Page No
-					
500	312105-0368		2	SCREW, M6S ISO 4017 M6X16 A4 80	
510	312605-0316		2	HEXAGON NUT, M6M M6 A280	
520	315105-0153		4	WASHER PLAIN, 6,4X12X1,5 A4 BRB	
530	315400-0010	MM	0.01	TUBE PUN-H-12X2-BL	
540	315400-0010	MM	0.01	TUBE PUN-H-12X2-BL	
550	350002-0016		2	PUSH-IN L-FITTING QSL-F-G1/2-12	
M.0104	90457-0100		1	ACCUMULATOR CRVZS-2	

Pos	Part No	UN	Qty	Description	Page No

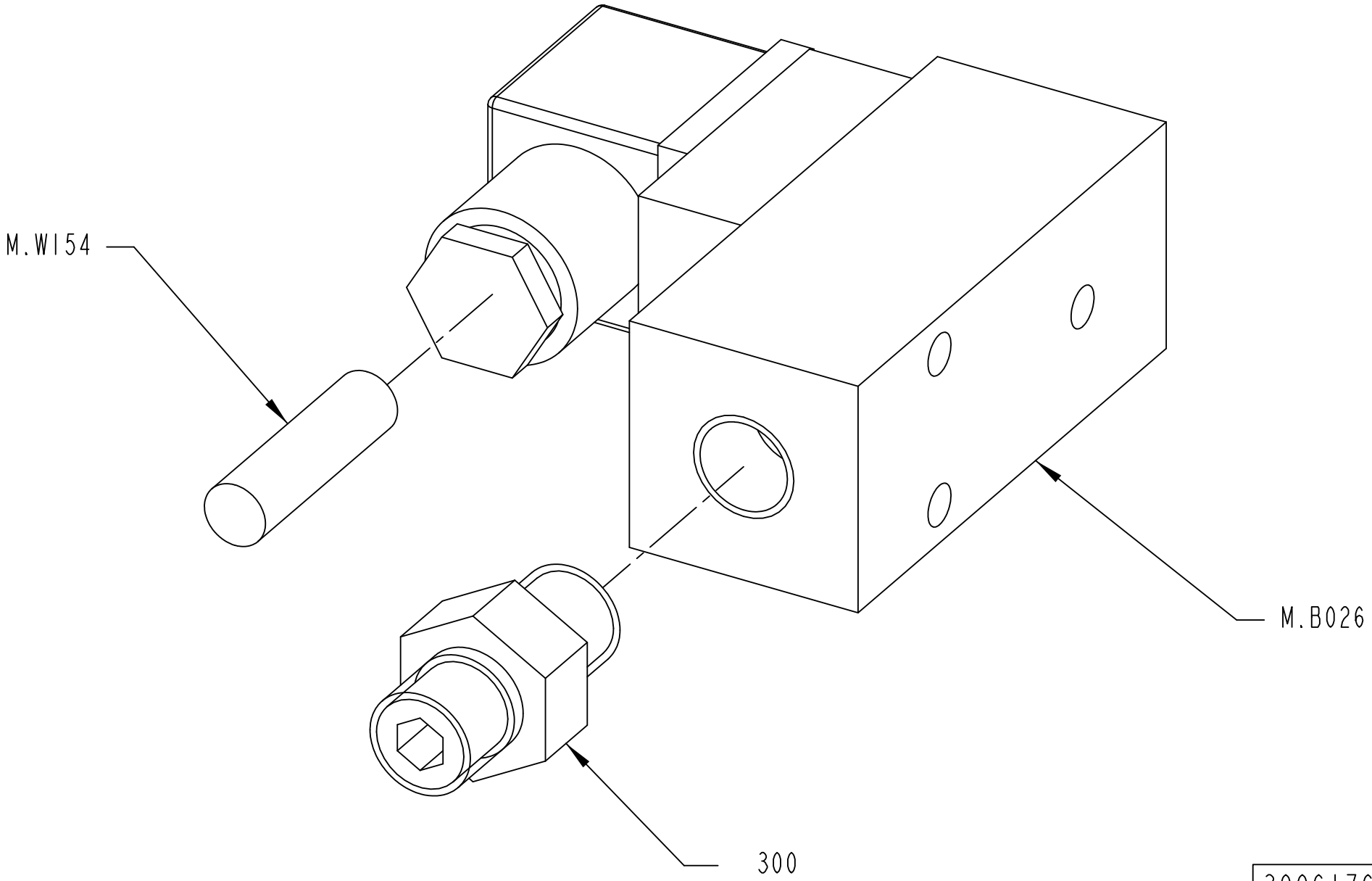

3096176-1
443805

ECM: 482118 - 20101210
Group number: 3096176-0100
Assembly Drawing: 3096176-1_1_AA

Pos	Part No	UN	Qty	Description	Page No
-					
300	90224-0372		1	NIPPLE, EXT.THREAD, HEXAGON, R1/4-R1/4	
M.W154	351150-0403	MM	3000	CABLE OLFLEX 3X0,75 MM2 LIGHT/GREY	
M.B026	90600-1385		1	PRESSURE GUARD, PEV-1/4-B SA234332	

Pos	Part No	UN	Qty	Description	Page No

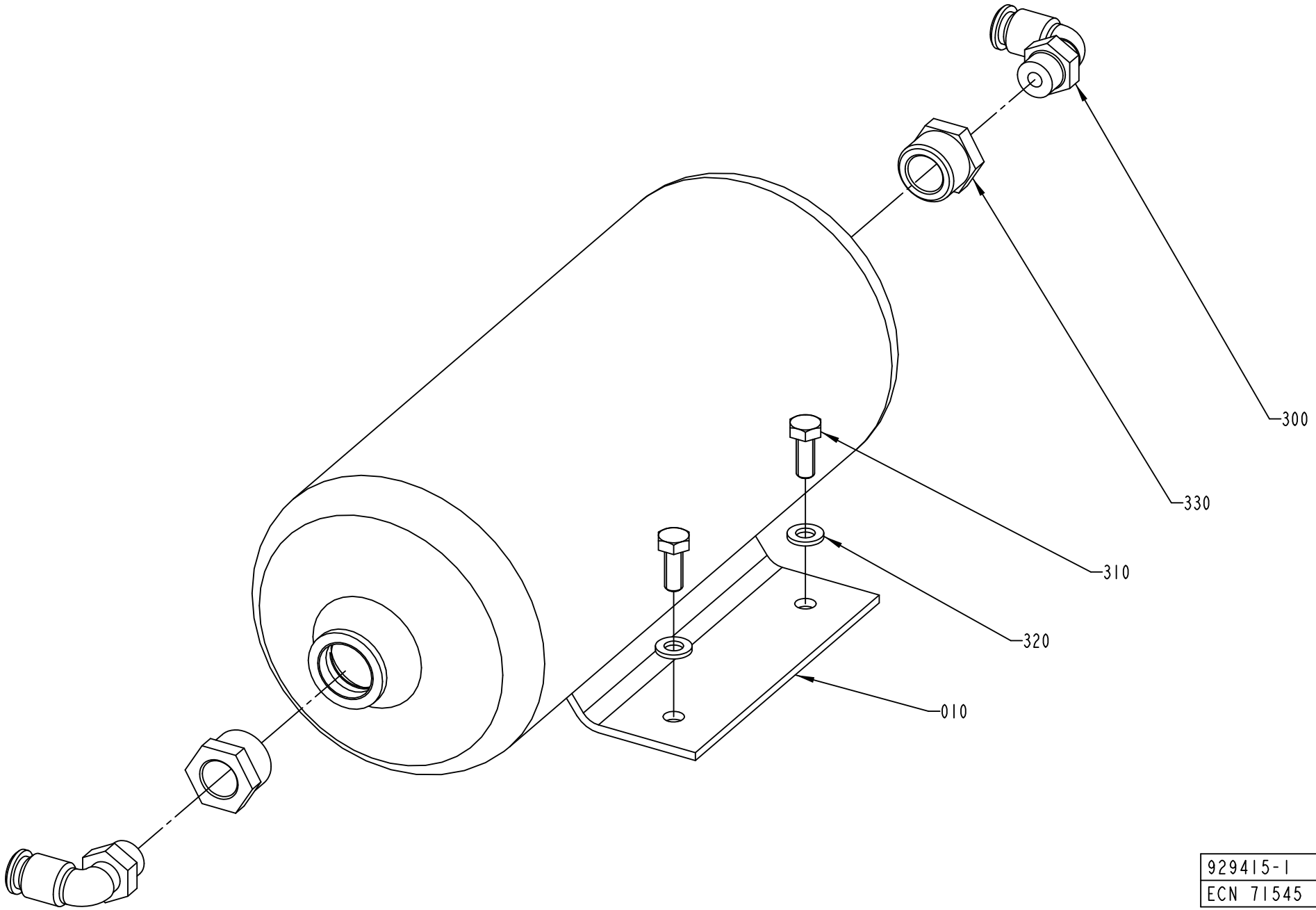

929415-1
ECN 71545

ECM: 211570 - 20050621
Group number: 929415-0100
Assembly Drawing: 929415-1_1_AC

Pos	Part No	UN	Qty	Description	Page No
-					
010	90457-0100		1	ACCUMULATOR CRVZS-2	
300	342732-0104		2	ELBOW PIPE JOINT, EXT.THREAD, D=8MM-G1/4	
310	312105-0368		2	SCREW, M6S ISO 4017 M6X16 A4 80	
320	315105-0153		2	WASHER PLAIN, 6,4X12X1,5 A4 BRB	
330	342701-0205		2	BUSHING, INT/EXT, G 1/2 - G1/4	

Pos	Part No	UN	Qty	Description	Page No

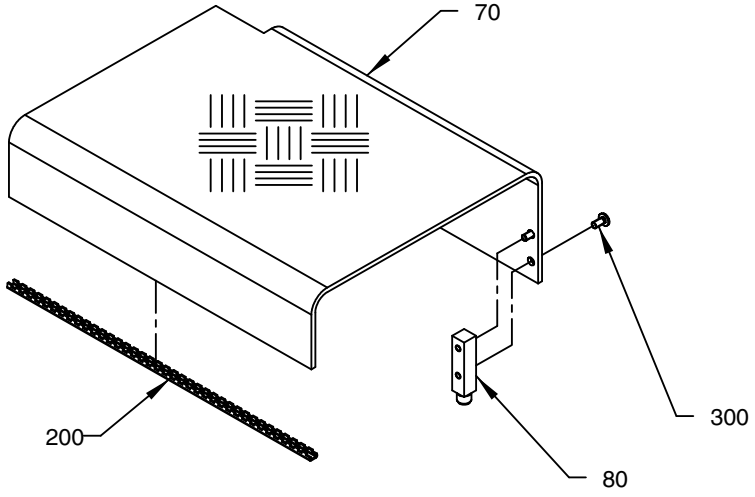

DETAIL A
SCALE 1:5

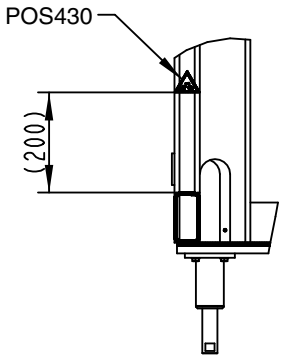

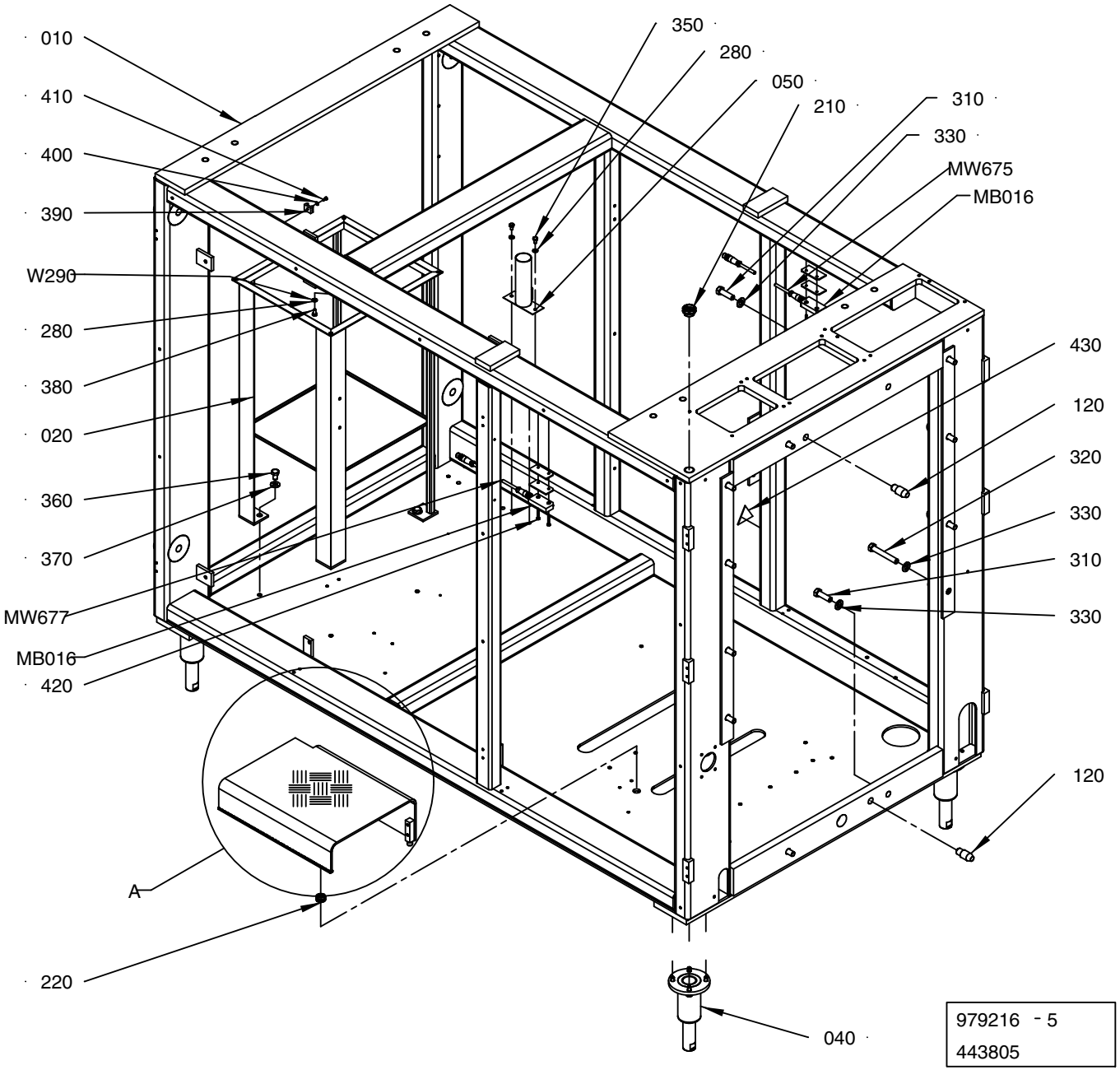

979216 - 5
443805

ECM: 448842 - 20100524
Group number: 979216-0400
Assembly Drawing: 979216-5_1_AB

Pos	Part No	UN	Qty	Description	Page No
-					
010	1512486-0000		1	MACHINE BODY	
020	2613754-0000		1	FRAME	
040	2773926-0100		4	LEG	**2-39, 6-63, 8-9**
050	295259-0000		1	HOLDER	
070	2518415-0000		1	COVER PLATE	
080	2518416-0000		2	JOINT BOLT	
120	1517252-0000		2	BOLT Ã˜20H7	
200	90143-0062	MM	380	STRIP	
210	90458-2487		1	SCREW PLUG HD-PE, M24	
220	90458-1227		2	LEAD-IN, BUSHING, DA 130/170/50	
280	315105-0153		3	WASHER PLAIN, 6,4X12X1,5 A4 BRB	
300	90287-0075		4	SCREW SLOT. PAN HEAD LKCS M6X12	
310	312105-0540		4	SCREW, M6S ISO 4017 M12X40 A4 80	
320	312105-0548		8	SCREW, M6S ISO 4014 M12X80 A4 80	
330	315105-0178		12	WASHER PLAIN, 13X24X2,5 A4 BRB	
350	312105-0364		2	SCREW, M6S ISO 4017 M6X10 A4 80	
360	312105-0489		4	SCREW, M6S ISO 4017 M10X16 A4 80	
370	315105-0173		4	WASHER PLAIN, 10,5X22X2 A4 BRB	
380	312105-0366		1	SCREW, M6S ISO 4017 M6X12 A4 80	
390	352113-0203		2	ANCHOR PLATES FOR STRIPS, TM3S8-M0	
400	315105-0136		2	WASHER PLAIN, 4,3X9X0,8 A4 BRB	
410	312125-0287		2	SLOTTED HEAD SCREW, ISO1207 M4X8 A4	
420	90459-4165		4	SAFETY SCREW, SM4X25	
430	359705-0003		1	WARNING SIGN ISO, DANGEROUS CHEMICALS	
M.W677	90459-4876		1	FOCUS JUMPER CABLE M12 5P 3M, 20-056-21	
M.W675	90459-7095		1	FOCUS JUMPER CABLE M12 5P 1M, 20-056-20	
M.B017	90459-4142		1	SAFETY SENSOR, ADAM M12, 20-051-00	
M.B016	90459-4142		1	SAFETY SENSOR, ADAM M12, 20-051-00	
W390	351162-0109	M	4	WIRE AWM 1X16 MM2 YELLOW-GREEN	

Pos	Part No	UN	Qty	Description	Page No

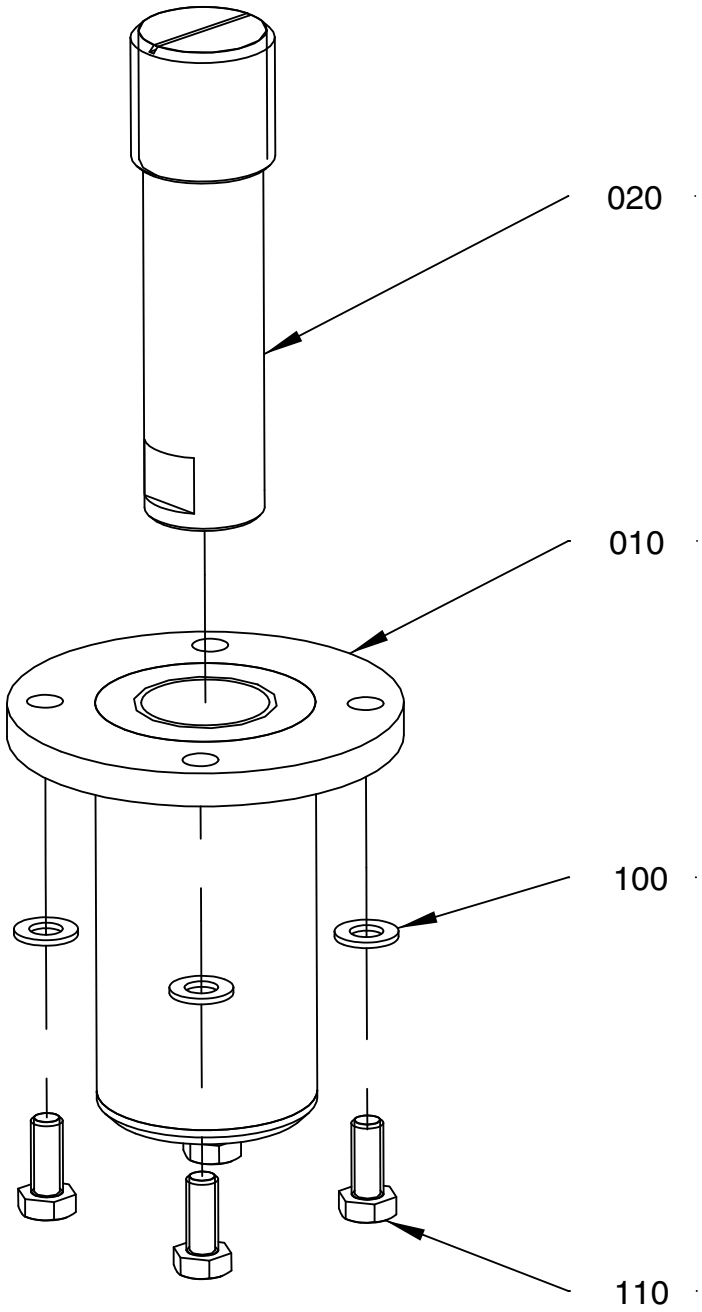

2773 926-1
224525

ECM: 224529 - 20051114
Group number: 2773926-0100
Assembly Drawing: 2773926-1_1_AA

Pos	Part No	UN	Qty	Description	Page No
-					
010	2773925-0000		1	LEG	
020	598148-0000		1	LEG	
100	315105-0165		4	WASHER PLAIN, 8,4X16X1,6 A4 BRB	
110	312105-0451		4	SCREW, M6S ISO 4017 M8X20 A4 80	

Pos	Part No	UN	Qty	Description	Page No

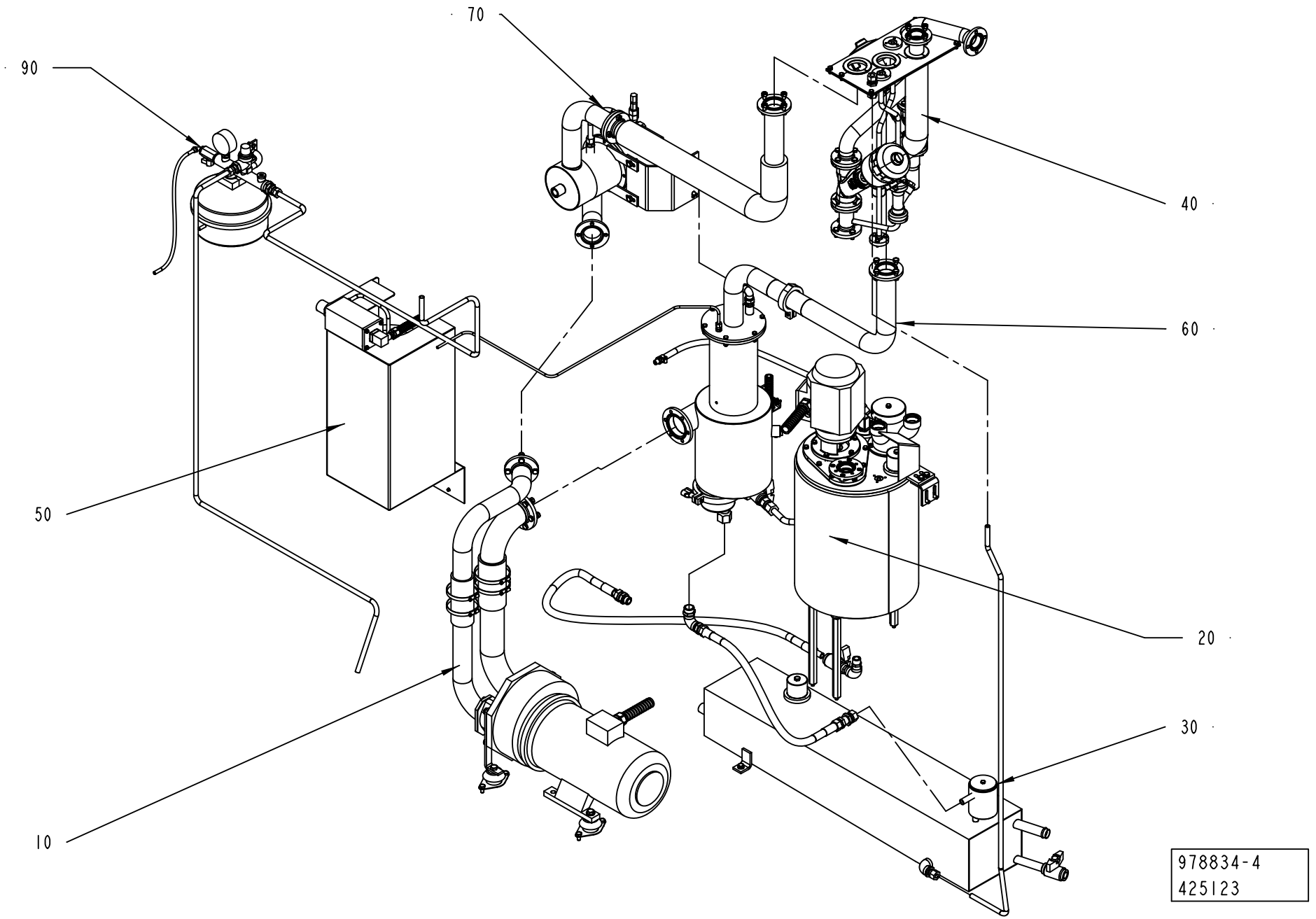
70
90
40
60
50
20
30
10
978834-4
425123

ECM: 430888 - 20091221
Group number: 978834-0400
Assembly Drawing: 978834-4_1_AB

Pos	Part No	UN	Qty	Description	Page No
-					
010	469452-0500		1	COMPRESSOR UNIT	**6-67**
020	751373-0400		1	PEROXIDE TANK	**6-69**
030	751398-0400		1	TANK	**6-75**
040	978835-0200		1	PIPE WORK	**6-77**
050	979328-0200		1	CABINET	**6-79**
060	978988-0300		1	SEPARATOR	**6-85, 6-87**
070	978989-0200		1	SCRUBBER	**6-89, 6-91**
090	979026-0300		1	WATER CIRCULATION	**6-93**

Pos	Part No	UN	Qty	Description	Page No

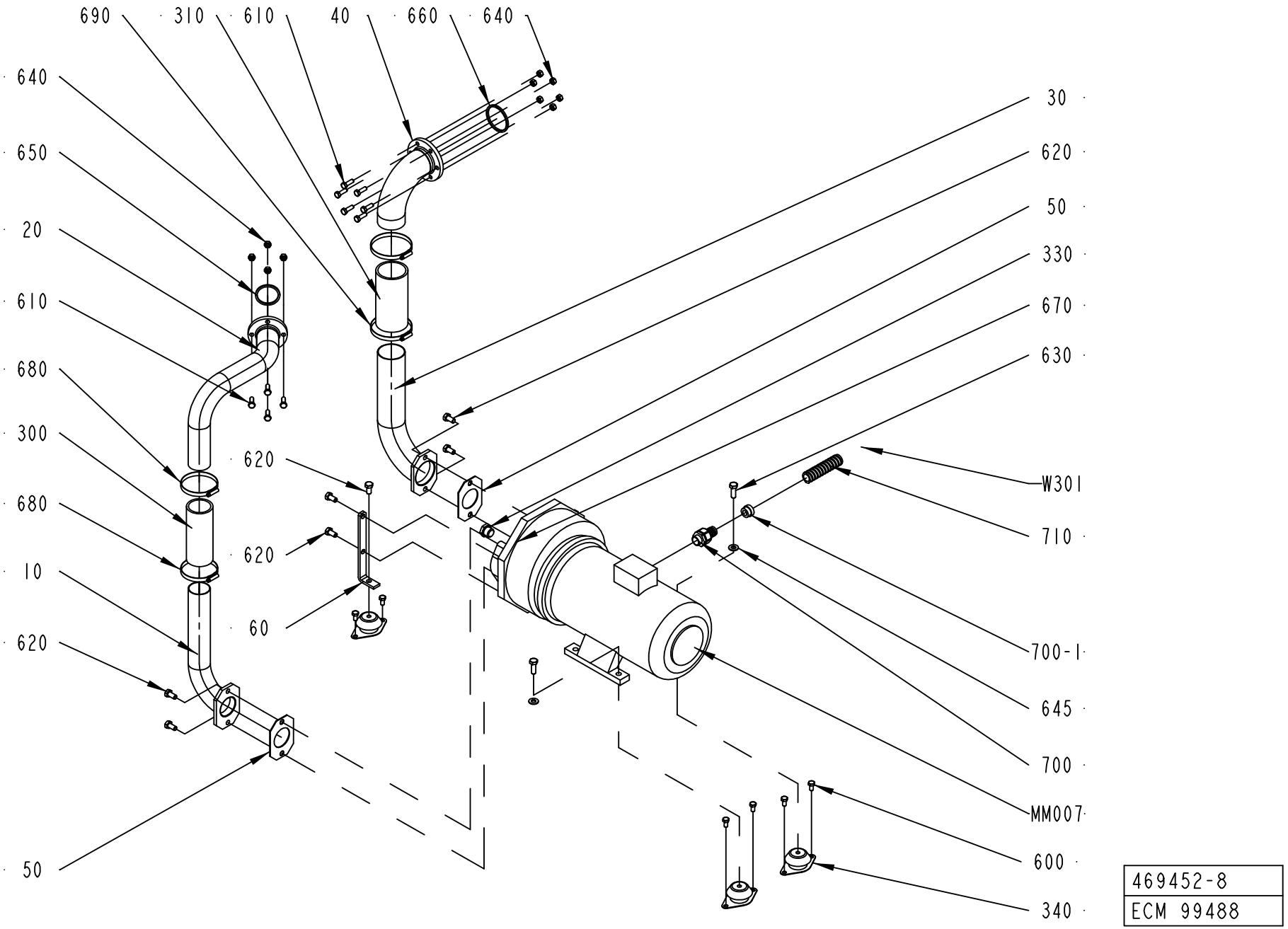
690
310
610
40
660
640
640
650
20
610
680
300
680
10
620
50
620
620
60
30
620
50
330
670
630
W301
710
700-1
645
700
MM007
600
340
469452-8
ECM 99488

ECM: 211350 - 20050621
Group number: 469452-0500
Assembly Drawing: 469452-8_1_AC

Pos	Part No	UN	Qty	Description	Page No
-					
010	978963-0000		1	PIPE	
020	1511774-0000		1	PIPE	
030	979069-0000		1	PIPE	
040	2514391-0000		1	PIPE	
050	230551-0000		2	GASKET	
060	269859-0000		2	BRACKET	
300	90166-0244	MM	200	RUBBER HOSE	
310	90166-0245	MM	200	RUBBER HOSE	
330	90330-0037		1	PLUG, G1/2EXT, G1/2	
340	90347-0144		4	VIBRATION DAMPER, NO. RA 40EM-A	
600	312105-0449		8	SCREW, M6S ISO 4017 M8X16 A4 80	
610	312105-0453		10	SCREW, M6S ISO 4017 M8X25 A4 80	
620	312105-0491		10	SCREW, M6S ISO 4017 M10X20 A4 80	
630	312105-0495		2	SCREW, M6S ISO 4017 M10X30 A4 80	
640	312605-0318		10	HEXAGON NUT, M6M M8 A280	
645	315105-0173		2	WASHER PLAIN, 10,5X22X2 A4 BRB	
650	315229-0105		1	SQUARE RING, 48,5X55,5X3,7 MM 2" FDA	
660	315229-0106		1	SQUARE RING, 61,2X68,2X3,7 MM 2"1/2 FDA	
670	315234-0113		1	WASHER PL.RND.CU.21,3//26 H=1,5	
680	342991-0112		2	HOSE CLIP,WORM DRIVE TYPE (68)-85	
690	342991-0113		2	HOSE CLIP,WORM DRIVE TYPE (77)-95	
700-1	353249-0013		1	INSERT, SINGLE HOLE, EK154 13	
700	353243-0005		1	GLAND FITTING, VK 15354YUL16	
710	90152-0051	M	2.5	HOSE, SPIRAL CONDUIT, 25X18, UL 1816	
MM007	90270-0017		1	COMPRESSOR NASH/ELMO 112 MB/4-2083	
W301	351150-0418	M	4	CABLE OLFLEX 4X2,5 MM2 LIGHT/GREY	

Pos	Part No	UN	Qty	Description	Page No

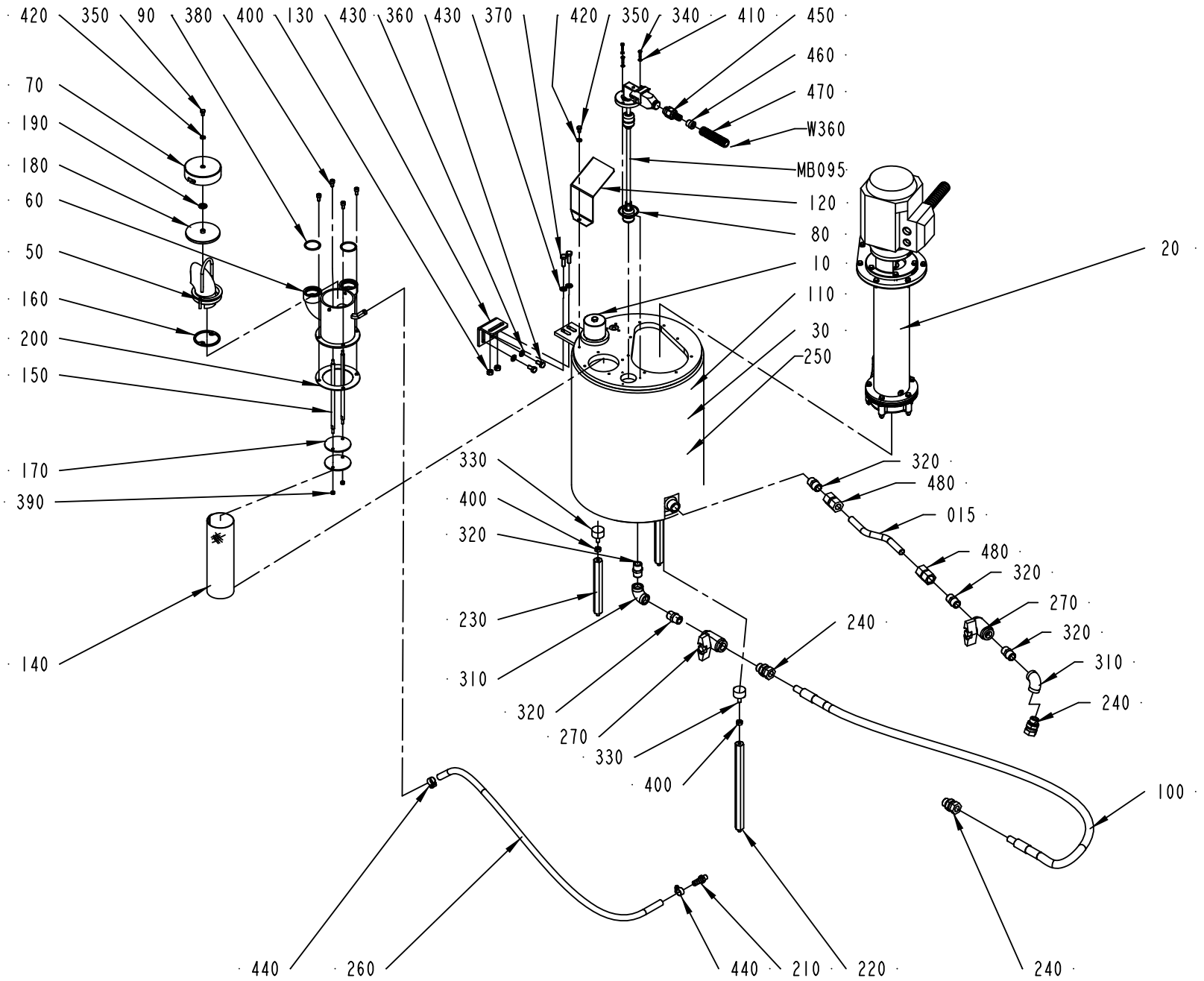

751373-5
387131

ECM: 400427 - 20090707
Group number: 751373-0400
Assembly Drawing: 751373-5_1_AA

Pos	Part No	UN	Qty	Description	Page No
-					
010	493652-0100		1	LID	6-71
015	3024349-0000		1	PIPE	
020	751393-0300		1	PEROXIDE PUMP	6-73
030	1523058-0000		1	TANK	
050	1523059-0000		1	HOLDER	
060	1523060-0000		1	FILLER TUBE	
070	751220-0000		1	FILLER CAP	
080	927422-0007		1	O-RING 44.2X3 SILICONE	
090	927422-0014		2	O-RING 34.2X3 SILICONE	
100	978973-0001		1	HOSE	
110	1499899-0000		1	INSULATION CLOTH	
120	1296118-0000		1	PROTECTION	
130	1499060-0000		1	HOLDER	
140	257202-0000		1	STRAINER	
150	491203-0000		2	STRUT	
160	491303-0000		1	WASHER	
170	491304-0000		2	WASHER	
180	563286-0000		1	GASKET	
190	563287-0000		1	WASHER	
200	577773-0000		1	GASKET	
210	979336-0000		1	HOSE NIPPLE	
220	1499061-0000		2	PILLAR	
230	1499062-0000		1	PILLAR	
240	90030-0188		3	CONN. STR. GE15LRED71	
250	90153-0048		1	ADHESIVE, LOCTITE HYSOL 3430 A&B	
260	90166-0138	MM	1300	HOSE	
270	90187-0059		2	BALL VALVE, FOR HYDR.PER. G1/2 3MM HOLE	
310	90330-0020		2	ELBOW, 90 INT. THREAD, R-2221/2	
320	90330-0021		5	NIPPLE, EXT.THREAD, HEXAGON, R1/2-R1/2	
330	90347-0004		3	VIBRATION DAMPER D=30 TH=M8 H=17 H2=21MM	
340	312105-0293		3	SCREW, M6S ISO 4017 M4X16 A4 70	
350	312105-0364		2	SCREW, M6S ISO 4017 M6X10 A4 80	
360	312105-0449		2	SCREW, M6S ISO 4017 M8X16 A4 80	
370	312105-0453		2	SCREW, M6S ISO 4017 M8X25 A4 80	
380	312115-0366		4	SCREW ISO4762 M6X12 A4 80	
390	312605-0314		2	HEXAGON NUT, M6M M5 A280	
400	312605-0318		5	HEXAGON NUT, M6M M8 A280	
410	315105-0136		3	WASHER PLAIN, 4,3X9X0,8 A4 BRB	
420	315105-0153		2	WASHER PLAIN, 6,4X12X1,5 A4 BRB	
430	315105-0165		4	WASHER PLAIN, 8,4X16X1,6 A4 BRB	
440	342991-0101		2	HOSE CLIP,WORM DRIVE TYPE (11)-17	
450	353243-0002		1	GLAND FITTING, VK 15152YUL11	
460	353249-0009		1	INSERT, SINGLE HOLE, EK152 9	
470	90152-0059	M	2.5	HOSE, SPIRAL CONDUIT, 18X12, UL 1211	
480	342725-0114		2	CONN. STR. PIPE GAI15LR71	
MB095	1282411-0000		1	FLOAT	
W360	351150-0405	M	3.5	CABLE OLFLEX 5X0,75 MM2 LIGHT/GREY	

Machine Type	Group Description	Used-In	Group Number	Page No

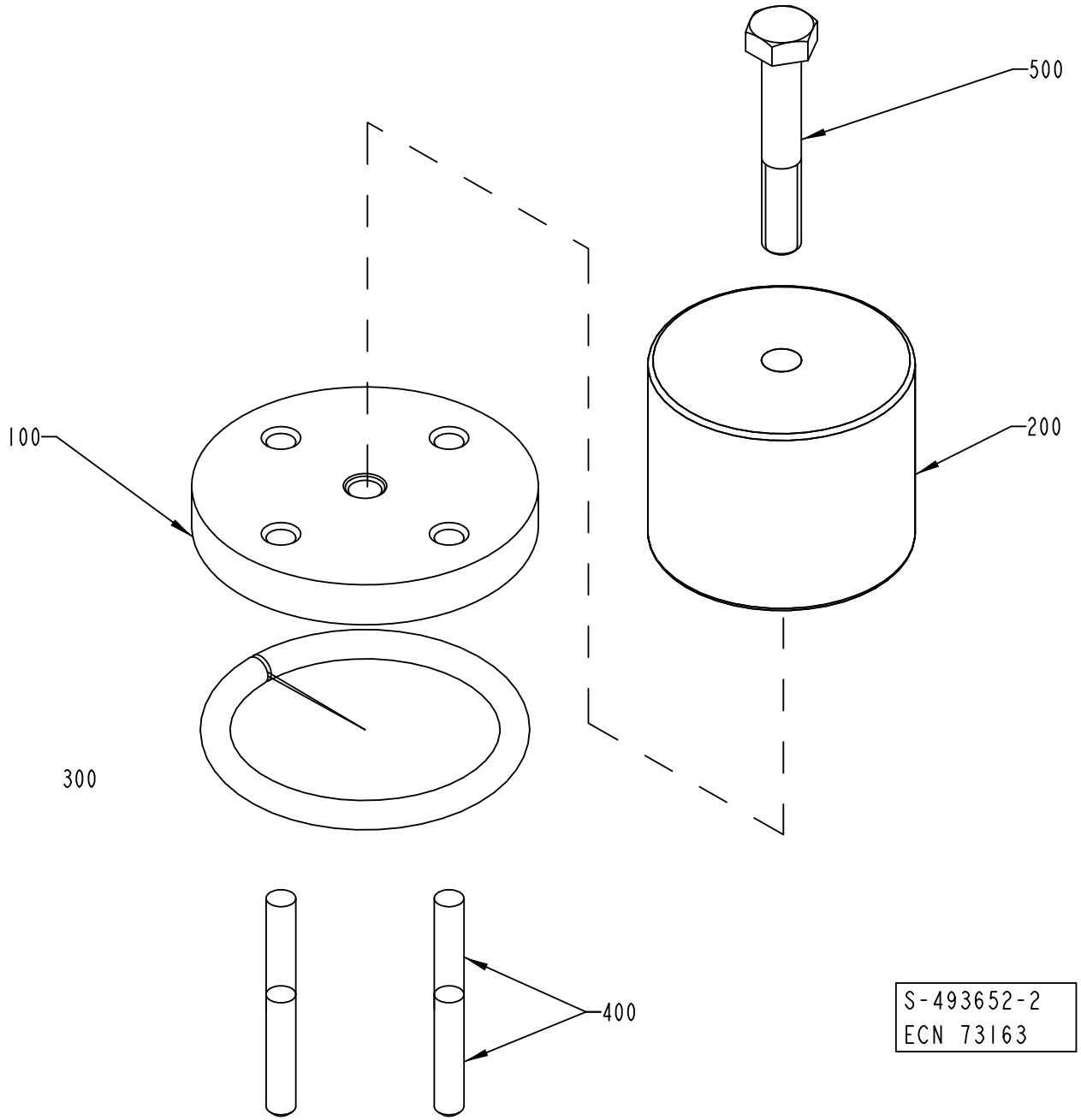
500
100
200
300
400
S-493652-2
ECN 73163

ECM: 73163 - 20000421
Group number: 493652-0100
Assembly Drawing: 493652-2_1_AB

Pos	Part No	UN	Qty	Description	Page No
-					
100	273964-0000		1	LID	
200	273965-0001		1	WEIGHT	
300	90143-0020	MM	190	STRIP	
400	311103-0357		4	PARALLEL PIN ISO 2338 6M6X30 A1	
500	312105-0461		1	SCREW, M6S ISO 4014 M8X50 A4 80	

Pos	Part No	UN	Qty	Description	Page No

Machine Type	Group Description	Used-In	Group Number	Page No

PEROXIDE PUMP

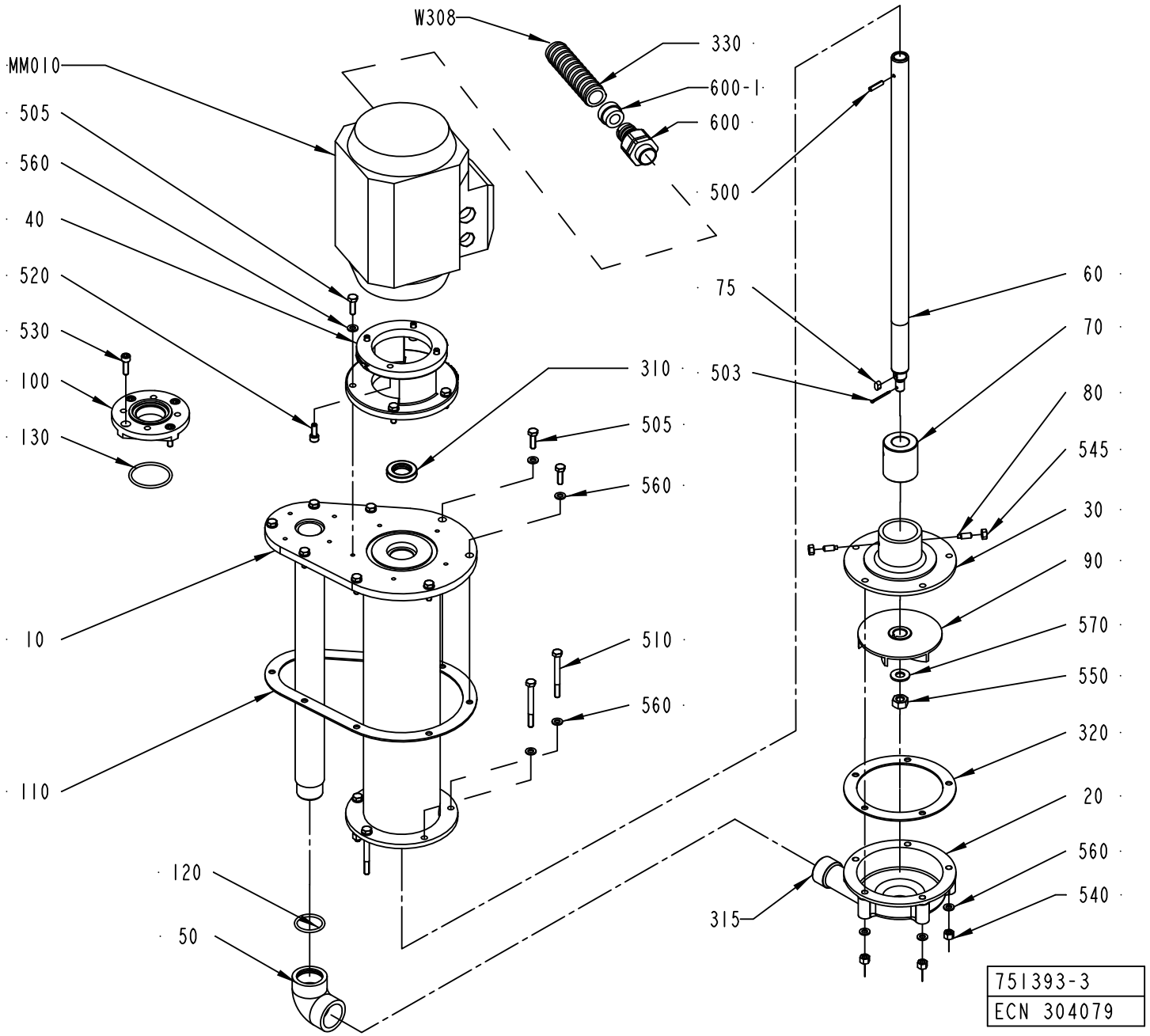

ECM: 343626 - 20080603
Group number: 751393-0300
Assembly Drawing: 751393-3_1_AD

Pos	Part No	UN	Qty	Description	Page No
-					
010	577769-0000		1	EXTENSION PIPE	
020	292449-0000		1	PUMP HOUSING	
030	292456-0000		1	BEARING COVER	
040	751395-0000		1	FLANGE	
050	751316-0000		1	ELBOW PIPE	
060	577771-0000		1	SHAFT	
070	2510372-0000		1	BUSHING	
075	315705-0196		1	PARALLEL KEY W. ROUND ENDS, 5X5X10 MM	
080	90287-0159		2	SET SCREW, DOGPOINT M6X16 A4	
090	491929-0000		1	IMPELLER WHEEL	
100	1523061-0000		1	FLANGE	
110	577770-0000		1	GASKET	
120	927422-0004		1	O-RING 29.2X3 SILICONE	
130	927422-0007		1	O-RING 44.2X3 SILICONE	
310	90459-5018		1	SEALING RING, VARILIP 20X35X7 MM	
315	90144-0073	MM	1	TREBOFLON-TAPE W=13MM	
320	1349920-0000		1	GASKET	
330	90152-0051	M	2.5	HOSE, SPIRAL CONDUIT, 25X18, UL 1816	
500	311112-0256		1	SPRING PIN, ISO 8752 4X20 A2	
503	311411-0169		1	SPLIT PIN SP2,5X25RFR	
505	312105-0370		14	SCREW, M6S ISO 4017 M6X20 A4 80	
510	312105-0382		5	SCREW, M6S ISO 4014 M6X60 A4 80	
520	312115-0368		4	SCREW ISO4762 M6X16 A4 80	
530	312115-0370		4	SCREW ISO4762 M6X20 A4 80	
540	312811-0316		5	NUT HEX.LOCK HELI COIL MID GRIP M6 SS	
545	312605-0316		2	HEXAGON NUT, M6M M6 A280	
550	312605-0320		1	HEXAGON NUT, M6M M10 A280	
560	315105-0153		24	WASHER PLAIN, 6,4X12X1,5 A4 BRB	
570	315105-0173		1	WASHER PLAIN, 10,5X22X2 A4 BRB	
600-1	353249-0013		1	INSERT, SINGLE HOLE, EK154 13	
600	353243-0005		1	GLAND FITTING, VK 15354YUL16	
MM010	90458-2466		1	MOTOR 3GVA071002-CSC-M2VA71B2	
W308	351150-0418	M	3.5	CABLE OLFLEX 4X2,5 MM2 LIGHT/GREY	

Pos	Part No	UN	Qty	Description	Page No

Machine Type | Group Description | Used-In | Group Number | Page No

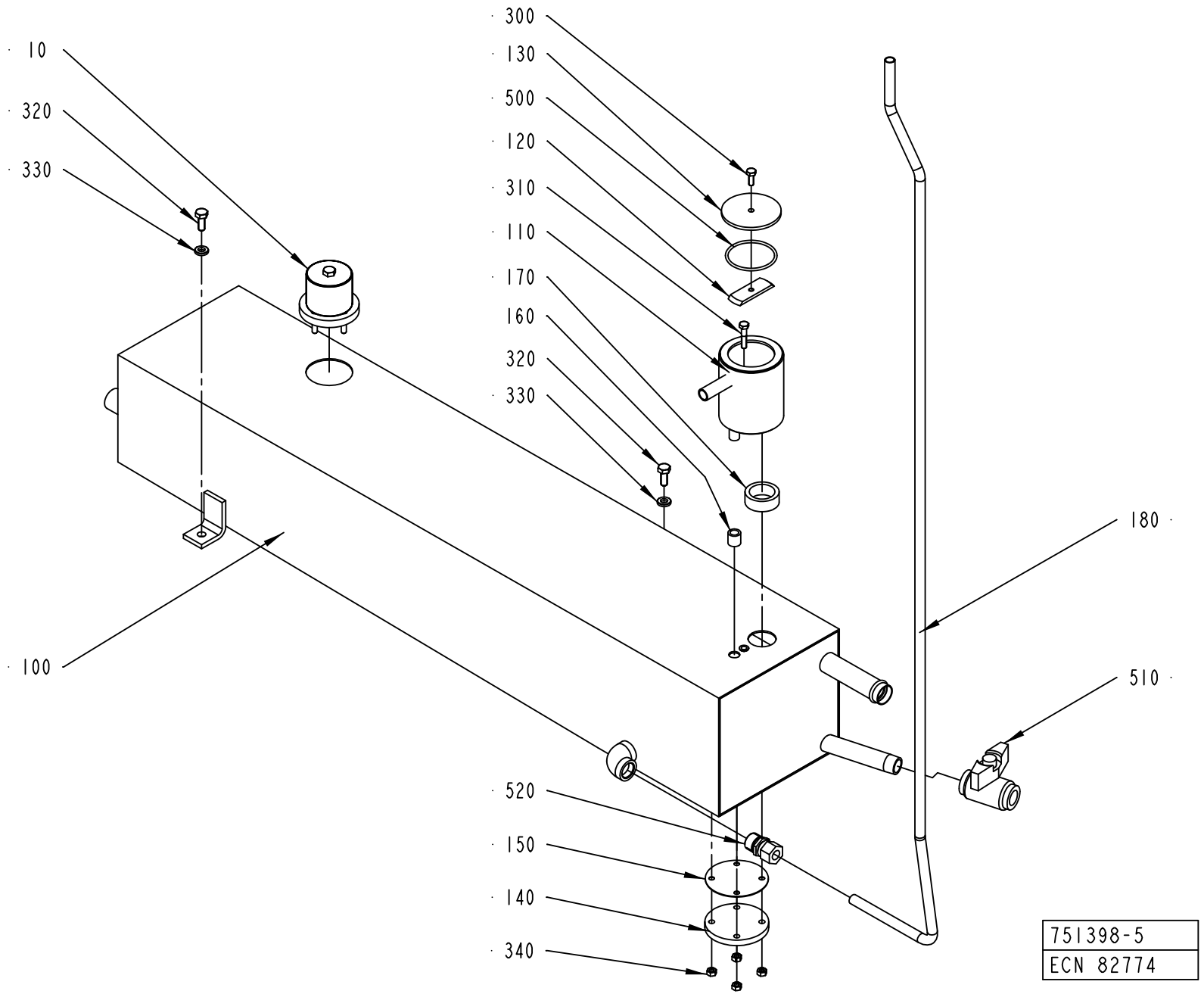
10
320
330
100
300
130
500
120
310
110
170
160
320
330
180
510
520
150
140
340
751398-5
ECN 82774

ECM: 211358 - 20050621
Group number: 751398-0400
Assembly Drawing: 751398-5_1_AB

Pos	Part No	UN	Qty	Description	Page No
-					
010	493652-0100		1	LID	6-71
100	1519389-0000		1	TANK	
110	978970-0000		1	METERING DEVICE	
120	751403-0000		1	BRACKET	
130	751223-0000		1	LID	
140	532205-0000		1	LID	
150	532206-0000		1	GASKET	
160	527906-0000		1	GASKET	
170	2514491-0000		1	METERING DEVICE	
180	1511683-0000		1	PIPE	
300	312105-0368		1	SCREW, M6S ISO 4017 M6X16 A4 80	
310	312105-0374		1	SCREW, M6S ISO 4014 M6X30 A4 80	
320	312105-0451		2	SCREW, M6S ISO 4017 M8X20 A4 80	
330	315115-0165		2	WASHER PLAIN, TBRB 8,4/16 H=3	
340	312605-0316		4	HEXAGON NUT, M6M M6 A280	
500	927422-0009		1	O-RING 54.5X3 SILICONE	
510	90187-0059		1	BALL VALVE, FOR HYDR.PER. G1/2 3MM HOLE	
520	90030-0109		1	STRAIGHT PIPE CONN. GE12LR1/271	

Pos	Part No	UN	Qty	Description	Page No

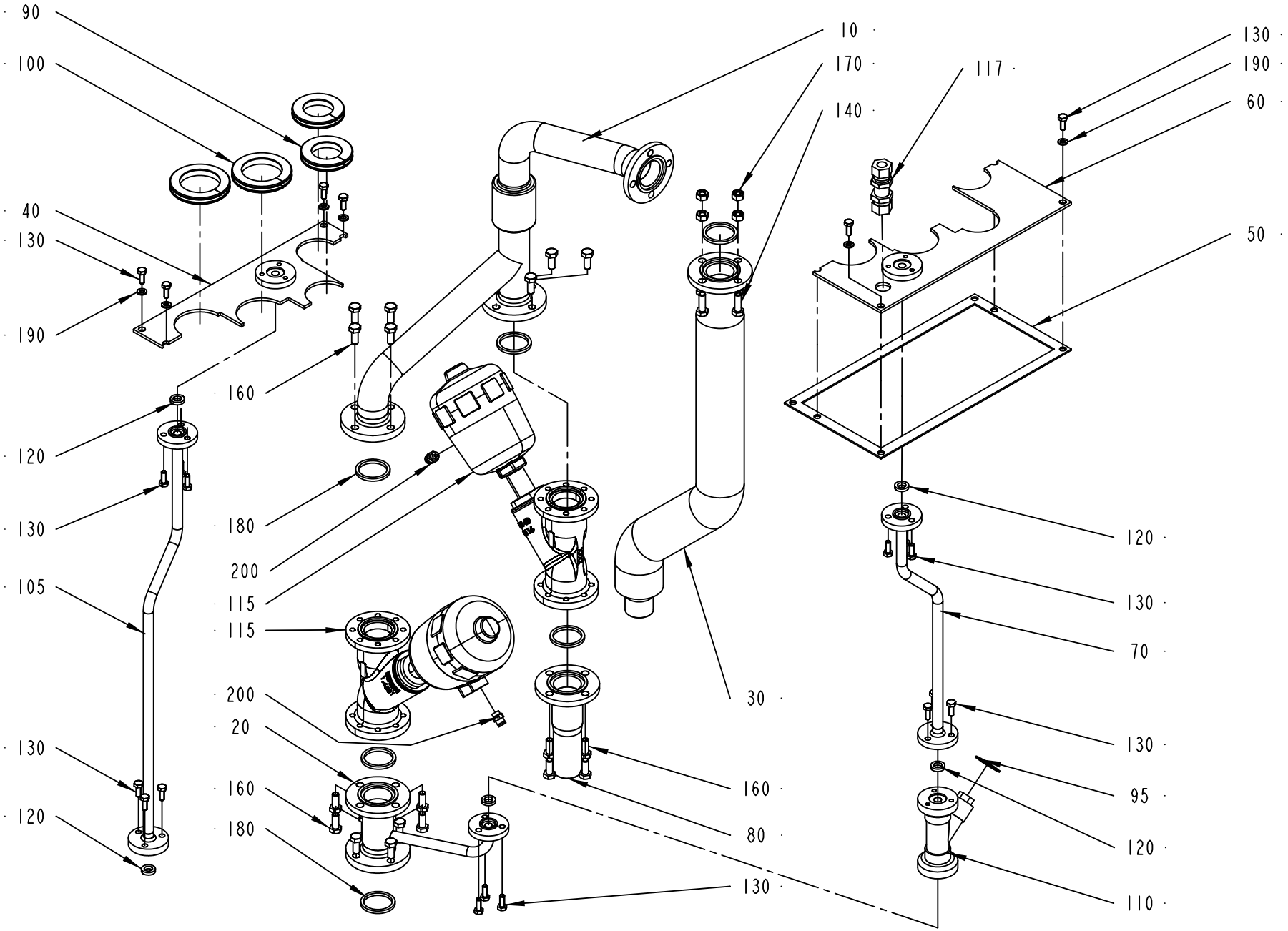

978835-2
ECM 401084

ECM: 401084 - 20090707
Group number: 978835-0200
Assembly Drawing: 978835-2_1_AF

Pos	Part No	UN	Qty	Description	Page No
-					
010	1523062-0000		1	FILLING PIPE	
020	1523063-0000		1	TUBE	
030	1523064-0000		1	RETURN PIPE	
040	1523065-0000		1	PLATE	
050	1523066-0000		1	GASKET	
060	1523067-0000		1	PLATE	
070	1523068-0000		1	PIPE	
080	1523069-0000		1	PIPE CONNECTION	
090	1517492-0000		2	GASKET	
095	2550181-0000		1	GASKET	
100	1517058-0000		2	GASKET	
105	1548316-0000		1	PIPE	
110	1511701-0000		1	FILTER	
115	90459-7440		2	ANGLE SEAT VALVE, W. FLANGES, N.O. DN40	
117	90030-0030		1	CONN. BULKHEAD SV12L71	
120	315229-0101		5	SQUARE RING, 10,4X17,4X3,7 MM 1/2" FDA	
130	312105-0368		21	SCREW, M6S ISO 4017 M6X16 A4 80	
140	312105-0453		4	SCREW, M6S ISO 4017 M8X25 A4 80	
160	312105-0451		20	SCREW, M6S ISO 4017 M8X20 A4 80	
170	312605-0318		4	HEXAGON NUT, M6M M8 A280	
180	315229-0104		6	SQUARE RING, 35,8X42,8X3,7 MM 1"1/2 FD	
190	315105-0153		6	WASHER PLAIN, 6,4X12X1,5 A4 BRB	
200	342722-0202		2	PIPE COUPLING 1/8" D=6MM	

Pos	Part No	UN	Qty	Description	Page No

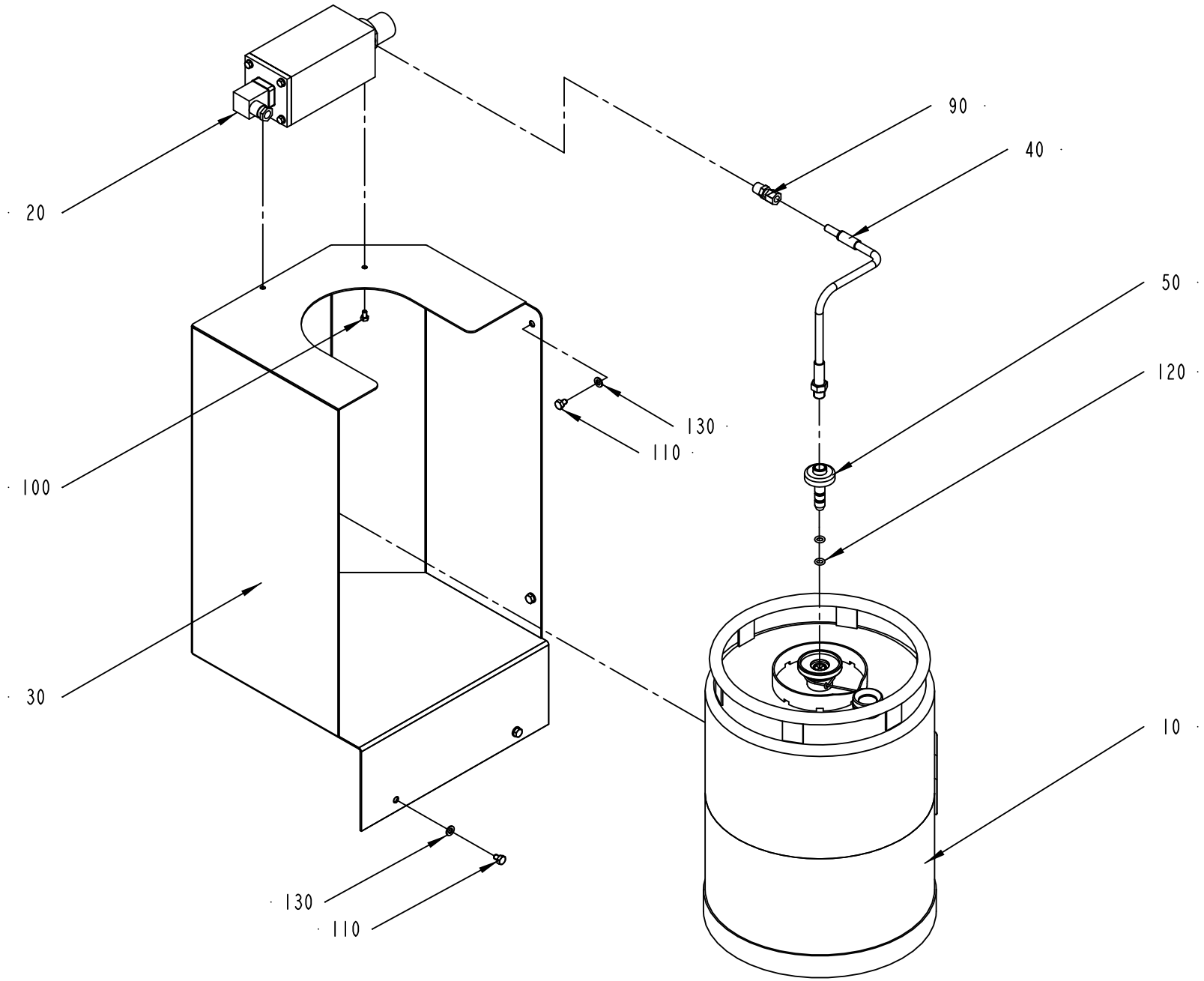

979328-2
ECN 82774

ECM: 211354 - 20050621
Group number: 979328-0200
Assembly Drawing: 979328-2_1_AB

Pos	Part No	UN	Qty	Description	Page No
-					
010	527898-0100		1	CONTAINER H2O2	**6-81**
020	979329-0200		1	FILLING UNIT	**6-83**
030	1512805-0000		1	CABINET (SMALL)	
040	979300-0000		1	PIPE	
050	1511773-0000		1	CONNECTOR	
090	90030-0086		1	CONN. STR. GE08LLR1/471	
100	312105-0323		2	SCREW, M6S ISO 4017 M5X8 A4 80	
110	312105-0362		4	SCREW, M6S ISO 4017 M6X8 A4 80	
120	927421-0005		2	O-RING 7.3X2.4 SILICONE	
130	315105-0153		4	WASHER PLAIN, 6,4X12X1,5 A4 BRB	

Pos	Part No	UN	Qty	Description	Page No

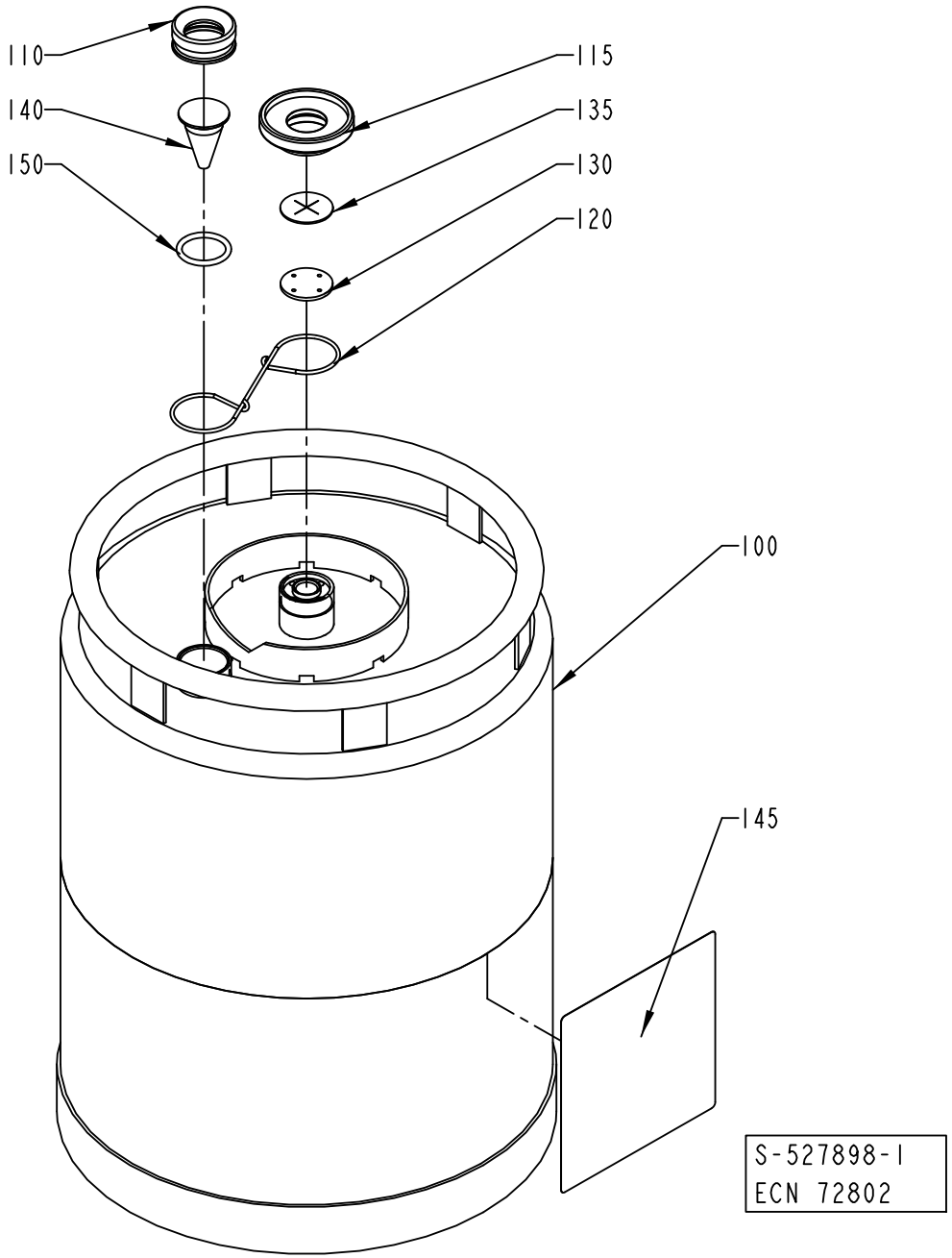
110
140
150
115
135
130
120
100
145
S-527898-I
ECN 72802

ECM: 224840 - 20050831
Group number: 527898-0100
Assembly Drawing: 527898-1_1_AB

Pos	Part No	UN	Qty	Description	Page No
-					
100	561427-0000		1	CONTAINER	
110	273977-0000		1	NUT	
115	273996-0000		1	NUT	
120	273980-0000		1	SPRING	
130	565250-0000		1	WASHER	
135	565251-0000		1	VALVE	
140	273978-0000		1	LEVEL GLAS	
145	532655-0000		1	CAUTION SIGN	
150	927422-0003		1	O.RING 24.2X3 SILICONE	

Pos	Part No	UN	Qty	Description	Page No

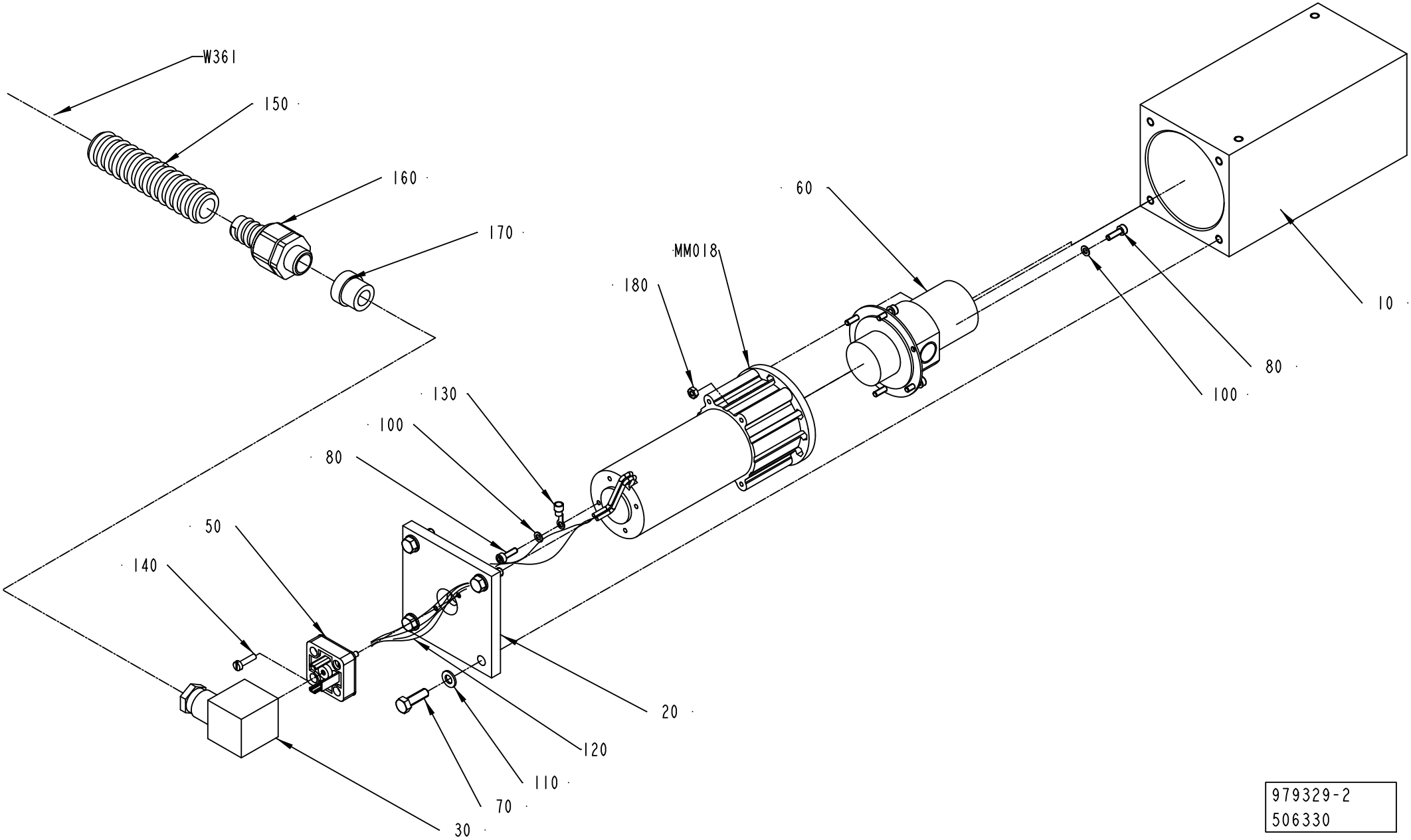

979329-2
506330

ECM: 507275 - 20111001
Group number: 979329-0200
Assembly Drawing: 979329-2_1_AC

Pos	Part No	UN	Qty	Description	Page No
-					
010	979279-0000		1	COVER HOUSING	
020	979280-0000		1	COVER	
030	90110-0095		1	CONNECTOR, PLUG SOCKET, MSSD-C-4P	
050	90110-0207		1	SOCKET	
060	90321-0101		1	PUMP, 4TP213A	
070	312105-0329		4	SCREW, M6S ISO 4017 M5X16 A4 80	
080	312115-0224		7	SCREW ISO4762 M3X10 A4 80	
100	315105-0124		7	WASHER PLAIN, 3,2X6X0,5 A4 BRB	
110	315105-0146		4	WASHER PLAIN, 5,3X10X1 A4 BRB	
120	351162-0102	CM	15	WIRE AWM 1X0,75 MM2 YELLOW-GREEN	
130	353101-0118		1	CABLE SHOE 0,5-1,5MM2 M3 RED	
140	312125-0226		2	SLOTTED HEAD SCREW, ISO1207 M3X12 A4	
150	90152-0059	M	1.6	HOSE, SPIRAL CONDUIT, 18X12, UL 1211	
160	353243-0001		1	GLAND FITTING, VK 15052YUL11	
170	353249-0009		1	INSERT, SINGLE HOLE, EK152 9	
180	312605-0310		2	HEXAGON NUT, M6M M3 A280	
MM018	90045-0161		1	MOTOR 4MGC11	
W361	351150-0403	M	3	CABLE OLFLEX 3X0,75 MM2 LIGHT/GREY	

Pos	Part No	UN	Qty	Description	Page No

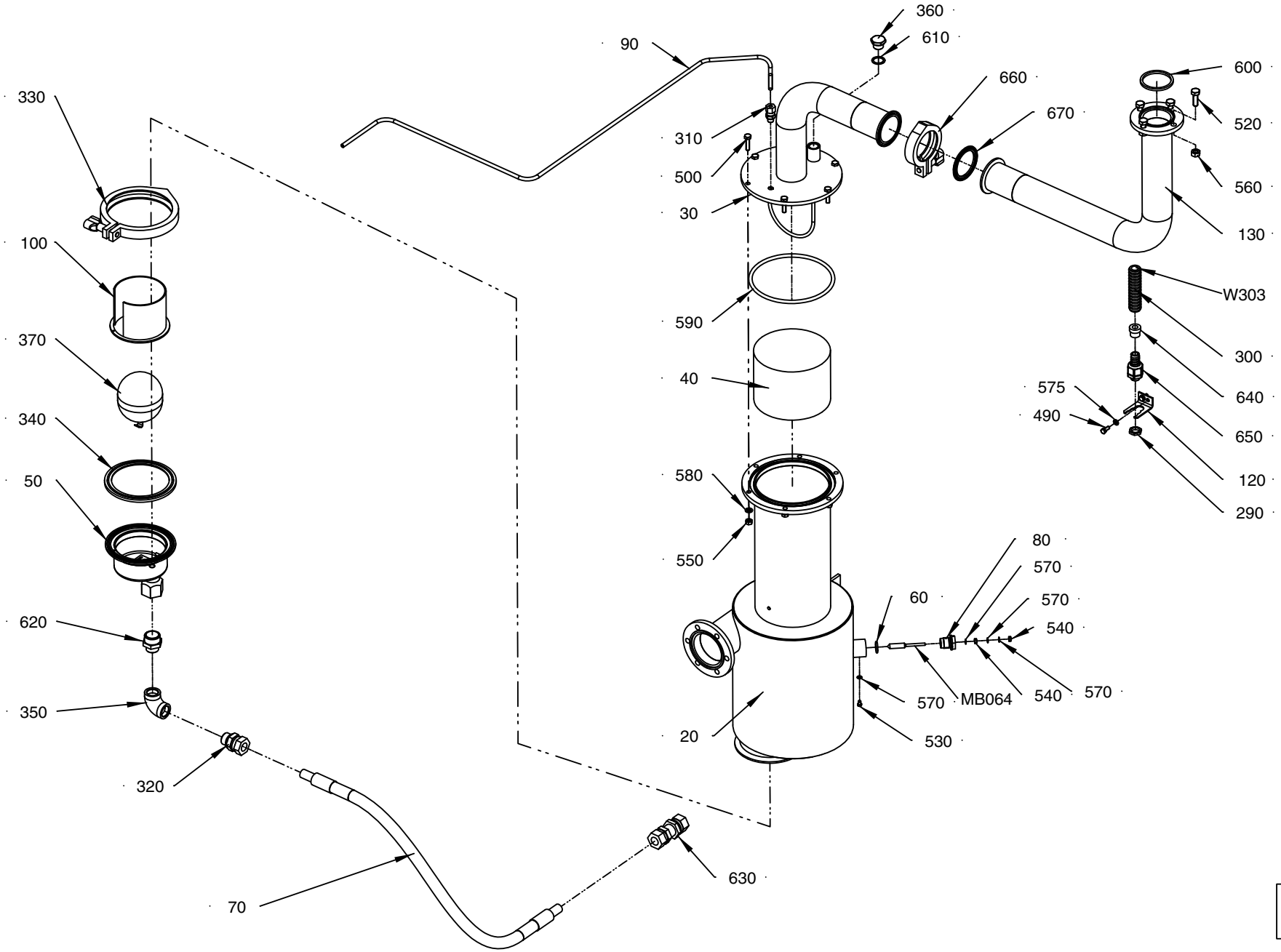

978988-4
214617

ECM: 251391 - 20060123
Group number: 978988-0300
Assembly Drawing: 978988-4_1_AA

This list covers pages from 6-84 to 6-87

Pos	Part No	UN	Qty	Description	Page No
50HZ (See drawing on page: 6-84)					
360	90330-0029		1	PLUG, G3/8EXT, R-236R3/8	
60HZ (See drawing on page: 6-86)					
110	90030-0136		1	ADJUSTABLE ELBOW CONNECTION 12-G3/8	
Common Parts					
020	1511775-0000		1	SEPARATOR	
030	2563209-0000		1	LID	
040	546929-0000		1	FILTER	
050	571088-0000		1	DRAINING	
	90360-0304		*1*	*SPARE PART KIT*	
060	927421-0004		1	O-RING 15.3X2.4 SILICONE	
070	978973-0003		1	HOSE	
080	560931-0000		1	BRACKET	
090	2790835-0000		1	PIPE	
100	568828-0000		1	FLOAT GUARD	
120	977527-0000		1	BRACKET	
130	2563210-0000		1	PIPE	
290	90099-0001		1	NUT PG 9/PR 15,2	
300	90152-0059	M	2.5	HOSE, SPIRAL CONDUIT, 18X12, UL 1211	
310	90030-0184		1	CONN. STR., GE06LRED71	
320	90030-0188		1	CONN. STR. GE15LRED71	
330	90217-0312		1	CLAMP, ISO2852 FOR PIPE 101,6 MM	
340	90217-0313		1	GASKET 97,8X121,2X5,5 MM	
350	90330-0020		1	ELBOW, 90 INT. THREAD, R-2221/2	
370	90360-0305		1	FLOAT, ART NO 10739920	
490	312105-0327		2	SCREW, M6S ISO 4017 M5X12 A4 80	
500	312105-0372		6	SCREW, M6S ISO 4017 M6X25 A4 80	
520	312105-0453		4	SCREW, M6S ISO 4017 M8X25 A4 80	
530	312125-0285		1	SLOTTED HEAD SCREW, ISO1207 M4X6 A4	
540	312605-0312		2	HEXAGON NUT, M6M M4 A280	
550	312605-0318		6	HEXAGON NUT, M6M M8 A280	
560	312605-0318		4	HEXAGON NUT, M6M M8 A280	
570	315105-0136		4	WASHER PLAIN, 4,3X9X0,8 A4 BRB	
575	315105-0146		2	WASHER PLAIN, 5,3X10X1 A4 BRB	
580	315105-0153		6	WASHER PLAIN, 6,4X12X1,5 A4 BRB	
590	315202-0244		1	O-RING 134,3X5,7 MM	
600	315229-0105		1	SQUARE RING, 48,5X55,5X3,7 MM 2" FDA	
610	315233-0111		1	WASHER CAPTIVE SEALING G3/8	
620	342700-0210		1	NIPPLE, EXT.THREAD, HEXAGON, G3/4-G1/2	
630	342762-0114		1	CONN. BULKHEAD SV15LCF	
640	353249-0009		1	INSERT, SINGLE HOLE, EK152 9	
650	353243-0001		1	GLAND FITTING, VK 15052YUL11	
660	342840-0105		1	CLAMPING PIECE, GH13LAH2304NO79612011202	
670	342850-0305		1	GASKET 47,8X62,6X5,2 MM 2" FDA 3-A	
MB064	567070-0012		1	ELECTRODE	
W303	351150-0431	M	3.5	CABLE OLFLEX 2X0,75 MM2 LIGHT/GREY	

Machine Type | Group Description | Used-In | Group Number | Page No

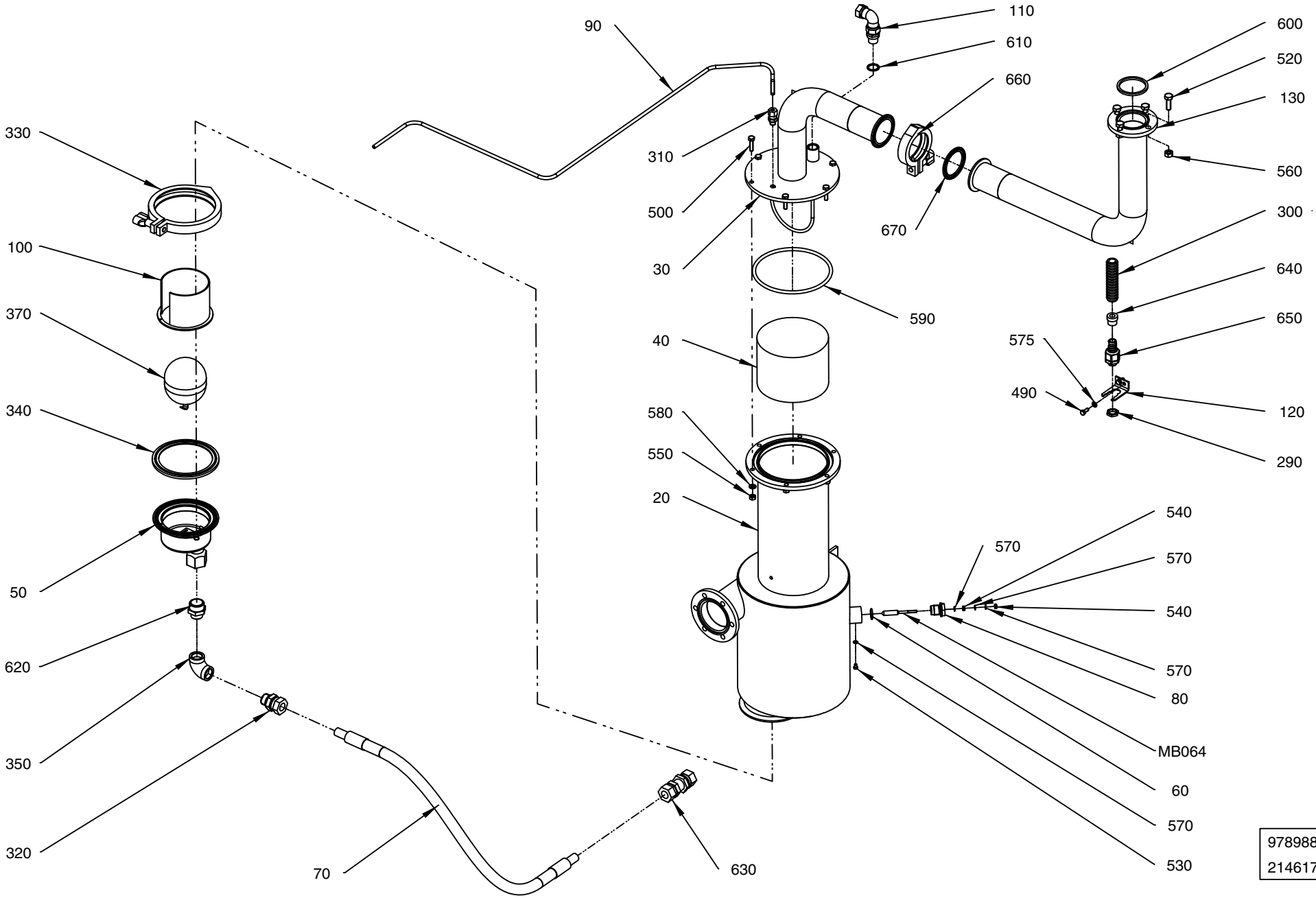

978988 - 5
214617

ECM: 251391 - 20060123
Group number: 978988-0300
Assembly Drawing: 978988-5_1_AA

This list covers pages from 6-84 to 6-87

Pos	Part No	UN	Qty	Description	Page No
50HZ (See drawing on page: 6-84)					
360	90330-0029		1	PLUG, G3/8EXT, R-236R3/8	
60HZ (See drawing on page: 6-86)					
110	90030-0136		1	ADJUSTABLE ELBOW CONNECTION 12-G3/8	
Common Parts					
020	1511775-0000		1	SEPARATOR	
030	2563209-0000		1	LID	
040	546929-0000		1	FILTER	
050	571088-0000		1	DRAINING	
	90360-0304		*1*	*SPARE PART KIT*	
060	927421-0004		1	O-RING 15.3X2.4 SILICONE	
070	978973-0003		1	HOSE	
080	560931-0000		1	BRACKET	
090	2790835-0000		1	PIPE	
100	568828-0000		1	FLOAT GUARD	
120	977527-0000		1	BRACKET	
130	2563210-0000		1	PIPE	
290	90099-0001		1	NUT PG 9/PR 15,2	
300	90152-0059	M	2.5	HOSE, SPIRAL CONDUIT, 18X12, UL 1211	
310	90030-0184		1	CONN. STR., GE06LRED71	
320	90030-0188		1	CONN. STR. GE15LRED71	
330	90217-0312		1	CLAMP, ISO2852 FOR PIPE 101,6 MM	
340	90217-0313		1	GASKET 97,8X121,2X5,5 MM	
350	90330-0020		1	ELBOW, 90 INT. THREAD, R-2221/2	
370	90360-0305		1	FLOAT, ART NO 10739920	
490	312105-0327		2	SCREW, M6S ISO 4017 M5X12 A4 80	
500	312105-0372		6	SCREW, M6S ISO 4017 M6X25 A4 80	
520	312105-0453		4	SCREW, M6S ISO 4017 M8X25 A4 80	
530	312125-0285		1	SLOTTED HEAD SCREW, ISO1207 M4X6 A4	
540	312605-0312		2	HEXAGON NUT, M6M M4 A280	
550	312605-0318		6	HEXAGON NUT, M6M M8 A280	
560	312605-0318		4	HEXAGON NUT, M6M M8 A280	
570	315105-0136		4	WASHER PLAIN, 4,3X9X0,8 A4 BRB	
575	315105-0146		2	WASHER PLAIN, 5,3X10X1 A4 BRB	
580	315105-0153		6	WASHER PLAIN, 6,4X12X1,5 A4 BRB	
590	315202-0244		1	O-RING 134,3X5,7 MM	
600	315229-0105		1	SQUARE RING, 48,5X55,5X3,7 MM 2" FDA	
610	315233-0111		1	WASHER CAPTIVE SEALING G3/8	
620	342700-0210		1	NIPPLE, EXT.THREAD, HEXAGON, G3/4-G1/2	
630	342762-0114		1	CONN. BULKHEAD SV15LCF	
640	353249-0009		1	INSERT, SINGLE HOLE, EK152 9	
650	353243-0001		1	GLAND FITTING, VK 15052YUL11	
660	342840-0105		1	CLAMPING PIECE, GH13LAH2304NO79612011202	
670	342850-0305		1	GASKET 47,8X62,6X5,2 MM 2" FDA 3-A	
MB064	567070-0012		1	ELECTRODE	
W303	351150-0431	M	3.5	CABLE OLFLEX 2X0,75 MM2 LIGHT/GREY	

Machine Type | Group Description | Used-In | Group Number | Page No

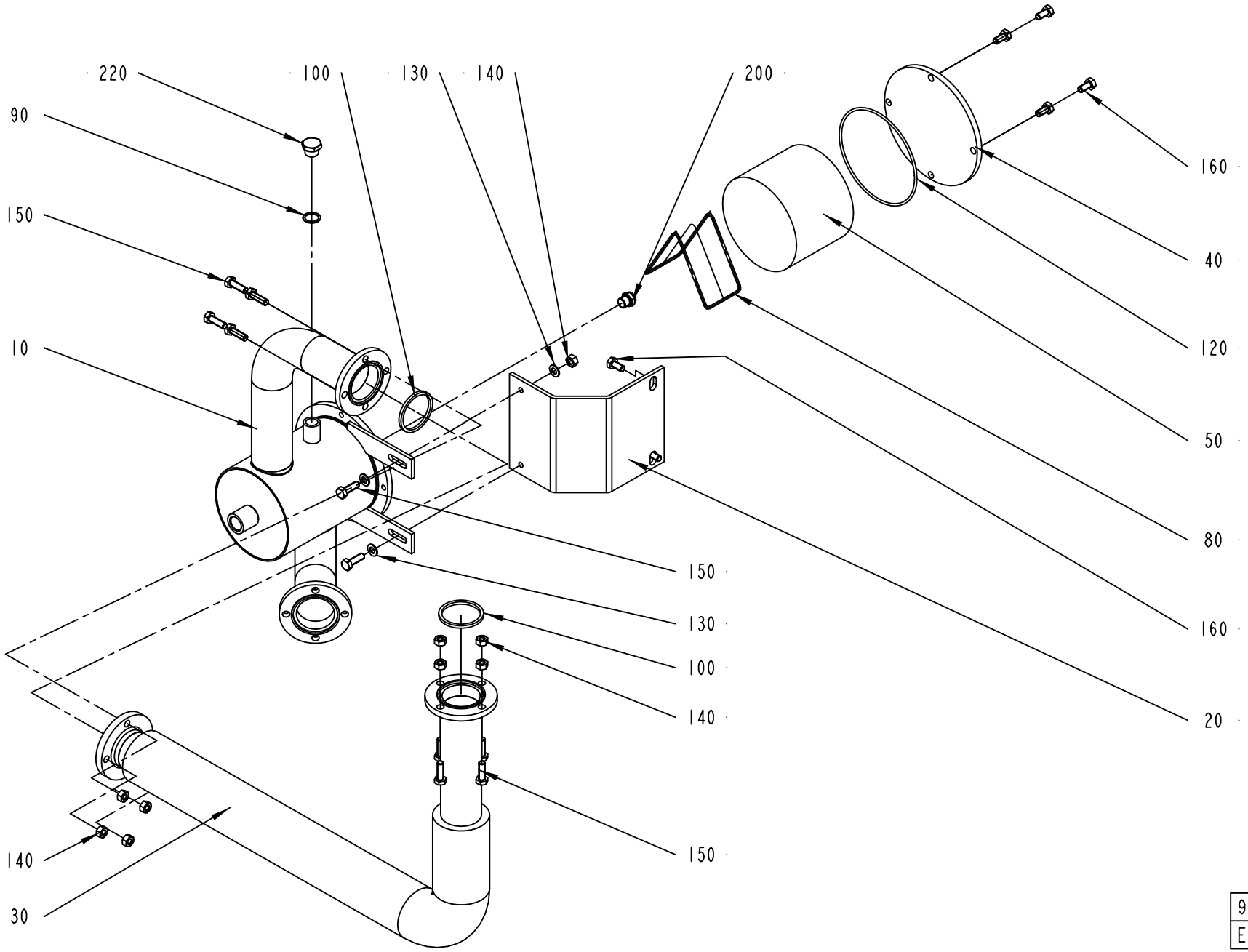

978989-2
ECN 82774

ECM: 211569 - 20050621
Group number: 978989-0200
Assembly Drawing: 978989-2_1_AB

This list covers pages from 6-88 to 6-91

Pos	Part No	UN	Qty	Description	Page No
50HZ (See drawing on page: 6-88)					
220	90330-0029		1	PLUG, G3/8EXT, R-236R3/8	
60HZ (See drawing on page: 6-90)					
060	1519390-0000		1	PIPE(FOR 60HZ)	
070	1519391-0000		1	PIPE BEND	
170	279589-0000		1	NUT	
180	209146-0000		1	BARRIER NUT	
190	209145-0000		1	THROTTLE SCREW	
210	90030-0058		1	CONN. T-PIPE T12L71	
230	90030-0181		1	CONN. STR. GE12L3/8NPT71	
Common Parts					
010	1519392-0000		1	SCRUBBER	
020	1519393-0000		1	PLATE	
030	1519394-0000		1	PIPE	
040	568806-0000		1	LID	
050	546929-0000		1	FILTER	
080	571087-0000		1	RETAINING RING	
090	315233-0111		1	WASHER CAPTIVE SEALING G3/8	
100	315229-0105		2	SQUARE RING, 48,5X55,5X3,7 MM 2" FDA	
120	315202-0317		1	O-RING 129,5X3 MM	
130	315105-0165		4	WASHER PLAIN, 8,4X16X1,6 A4 BRB	
140	312605-0318		10	HEXAGON NUT, M6M M8 A280	
150	312105-0453		10	SCREW, M6S ISO 4017 M8X25 A4 80	
160	312105-0449		6	SCREW, M6S ISO 4017 M8X16 A4 80	
200	90424-0054		1	SPRAY NOZZLE 120 DEG	

Pos	Part No	UN	Qty	Description	Page No

Machine Type | Group Description | Used-In | Group Number | Page No

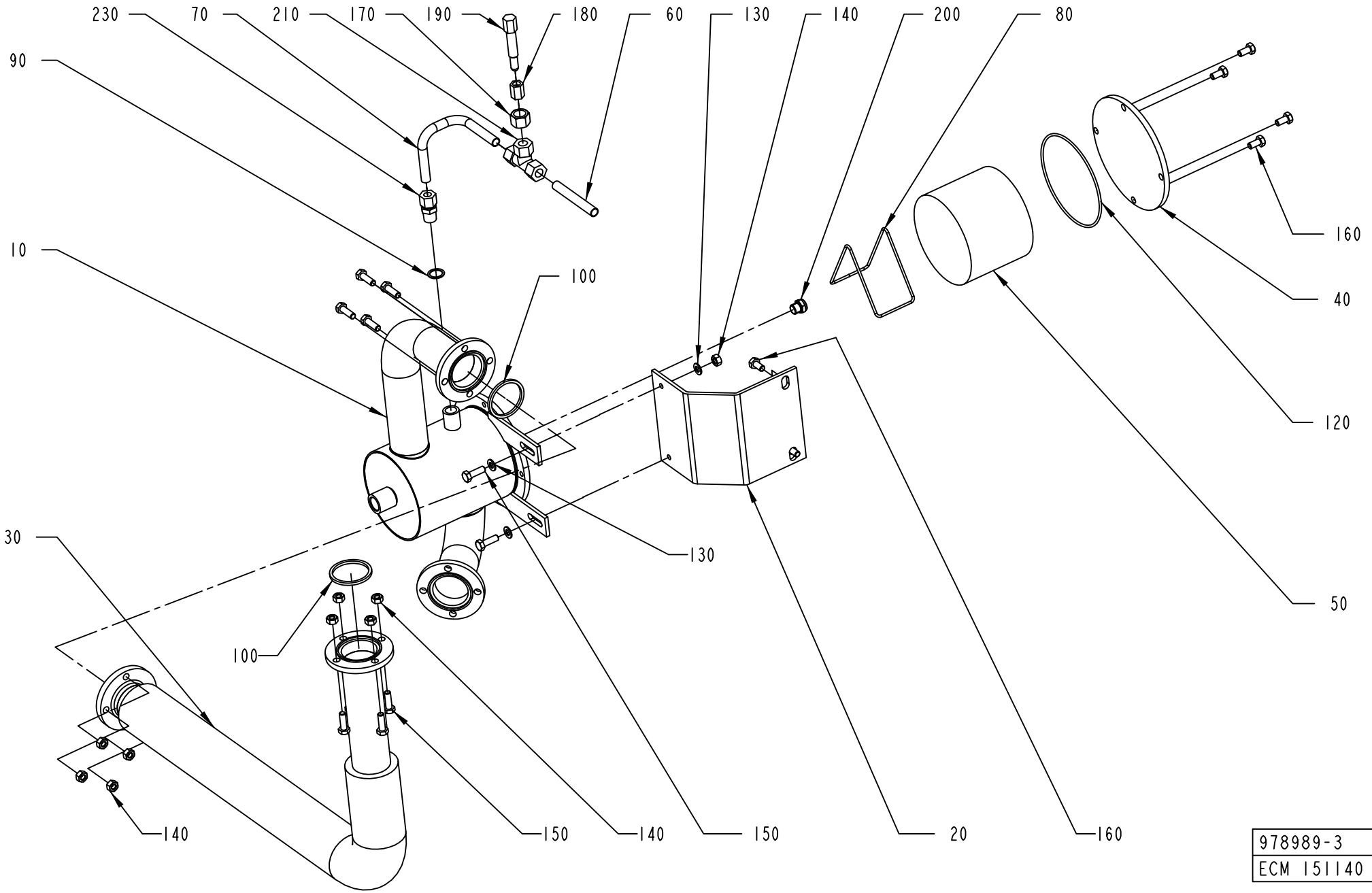

978989-3
ECM 151140

ECM: 211569 - 20050621
Group number: 978989-0200
Assembly Drawing: 978989-3_1_AA

This list covers pages from 6-88 to 6-91

Pos	Part No	UN	Qty	Description	Page No
50HZ (See drawing on page: 6-88)					
220	90330-0029		1	PLUG, G3/8EXT, R-236R3/8	
60HZ (See drawing on page: 6-90)					
060	1519390-0000		1	PIPE(FOR 60HZ)	
070	1519391-0000		1	PIPE BEND	
170	279589-0000		1	NUT	
180	209146-0000		1	BARRIER NUT	
190	209145-0000		1	THROTTLE SCREW	
210	90030-0058		1	CONN. T-PIPE T12L71	
230	90030-0181		1	CONN. STR. GE12L3/8NPT71	
Common Parts					
010	1519392-0000		1	SCRUBBER	
020	1519393-0000		1	PLATE	
030	1519394-0000		1	PIPE	
040	568806-0000		1	LID	
050	546929-0000		1	FILTER	
080	571087-0000		1	RETAINING RING	
090	315233-0111		1	WASHER CAPTIVE SEALING G3/8	
100	315229-0105		2	SQUARE RING, 48,5X55,5X3,7 MM 2" FDA	
120	315202-0317		1	O-RING 129,5X3 MM	
130	315105-0165		4	WASHER PLAIN, 8,4X16X1,6 A4 BRB	
140	312605-0318		10	HEXAGON NUT, M6M M8 A280	
150	312105-0453		10	SCREW, M6S ISO 4017 M8X25 A4 80	
160	312105-0449		6	SCREW, M6S ISO 4017 M8X16 A4 80	
200	90424-0054		1	SPRAY NOZZLE 120 DEG	

Pos	Part No	UN	Qty	Description	Page No

WATER CIRCULATION

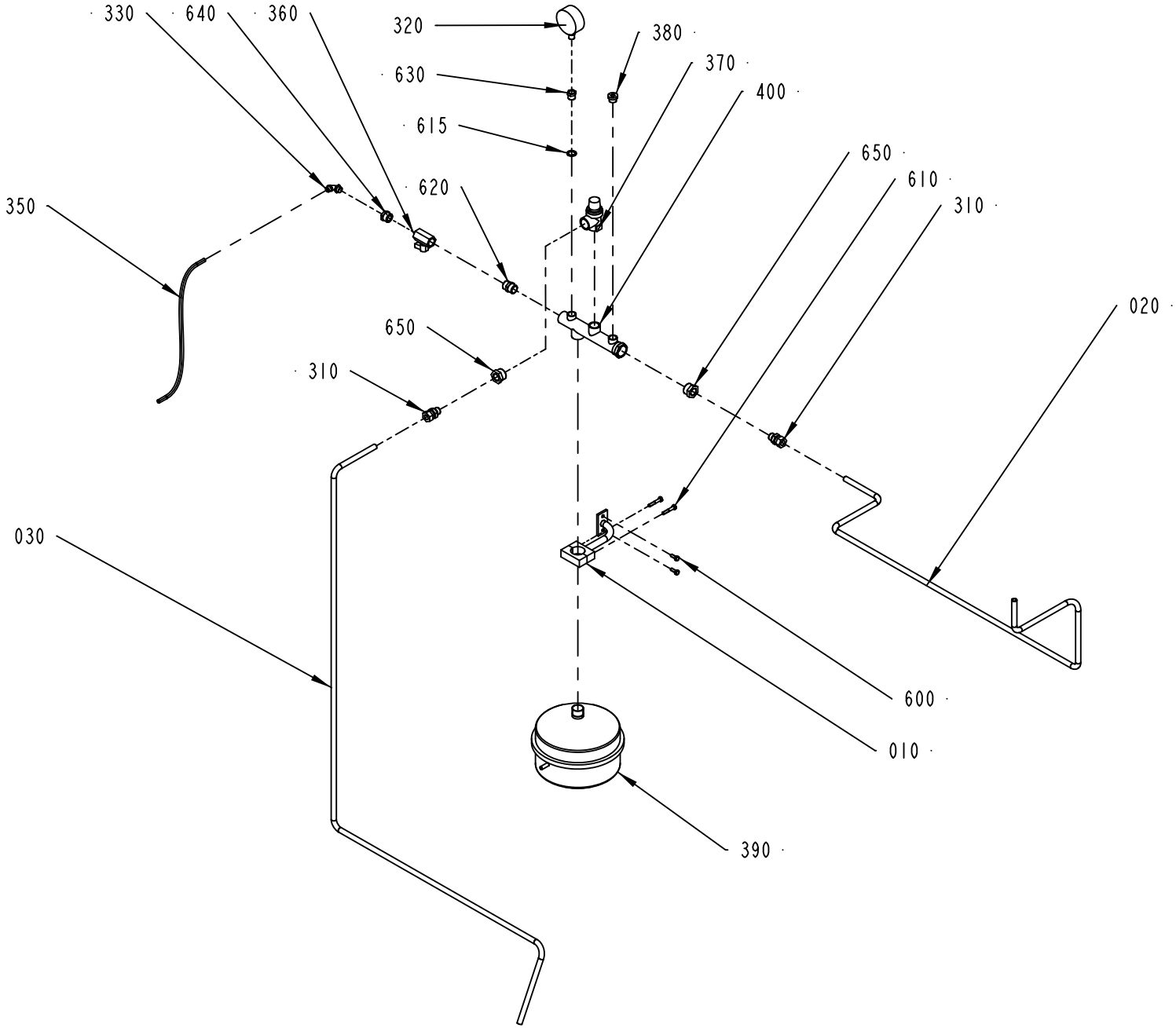

979026-3
ECN 425123

ECM: 430889 - 20091221
Group number: 979026-0300
Assembly Drawing: 979026-3_1_AA

Pos	Part No	UN	Qty	Description	Page No
-					
010	3072100-0000		1	BRACKET	
020	3072125-0000		1	PIPE	
030	1350186-0000		1	PIPE	
310	342752-0110		2	CONN. STR. GE12LREDCF	
320	90043-0002		1	PRESSURE GAUGE, 2040 D=63 MM	
330	342931-0122		1	ELBOW 90 COUPL., EXT. THREAD 8/6-G1/4"	
350	90166-0118	MM	1800	TUBE 8 MM PA BLACK	
360	90187-0062		1	BALL VALVE, G1/2, NPBR	
370	90187-0104		1	MKS SAFETY VALVE, PRESCOR DN20/1,5BAR	
380	90600-6055		1	PLUG, EXT THREAD HEX SOCKET B-3/8	
390	90602-3531		1	PRESSURE EXPANSION VESSEL, 13424	
400	90304-0307		1	ATTACHMENT PIPE	
600	312105-0368		2	SCREW, M6S ISO 4017 M6X16 A4 80	
610	312105-0376		2	SCREW, M6S ISO 4014 M6X35 A4 80	
615	315239-0111		1	NYLON WASHER G3/8, 3/8RRP	
620	342700-0113		1	NIPPLE, EXT.THREAD, HEXAGON, G1/2-G1/2	
630	342701-0203		1	BUSHING, INT/EXT. G 3/8 - G 1/4	
640	342701-0205		1	BUSHING, INT/EXT, G 1/2 - G1/4	
650	342701-0209		2	BUSHING, INT/EXT, G 3/4 - G 3/8	

Pos	Part No	UN	Qty	Description	Page No

CENTRAL LUBRICATION

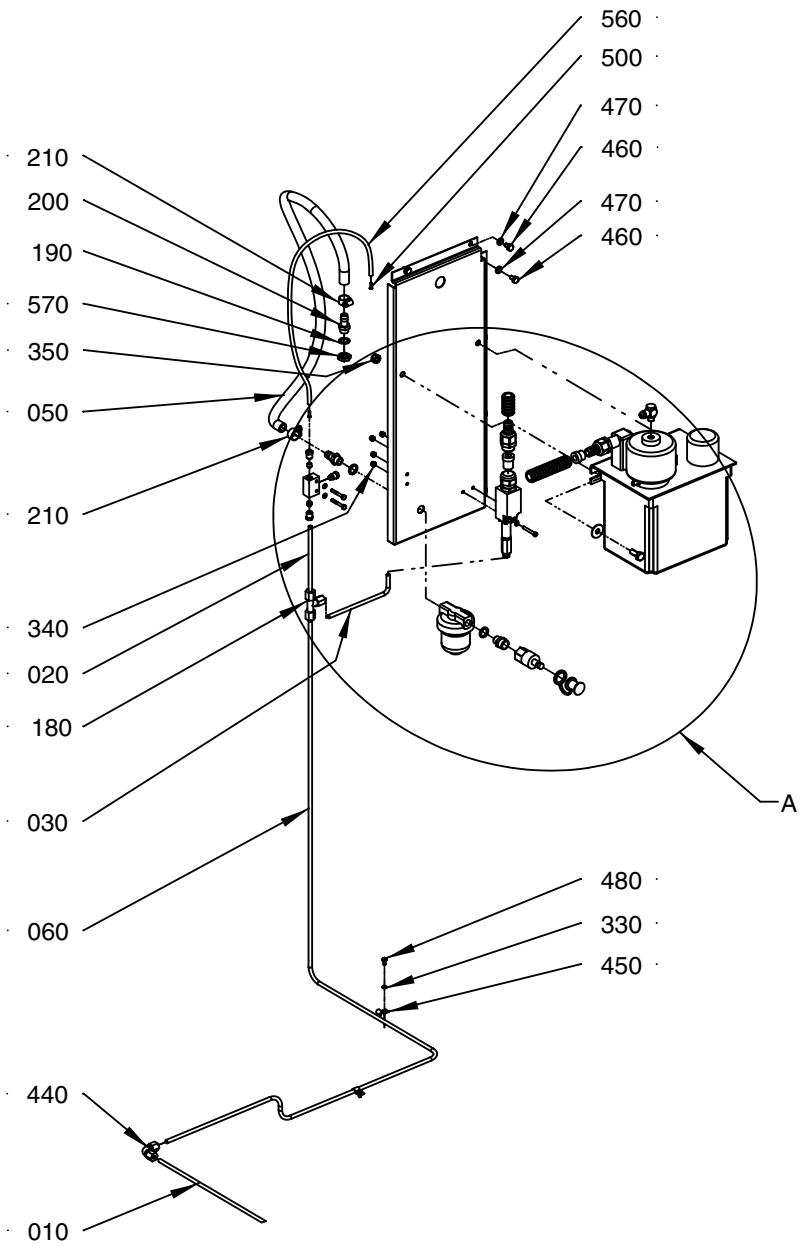

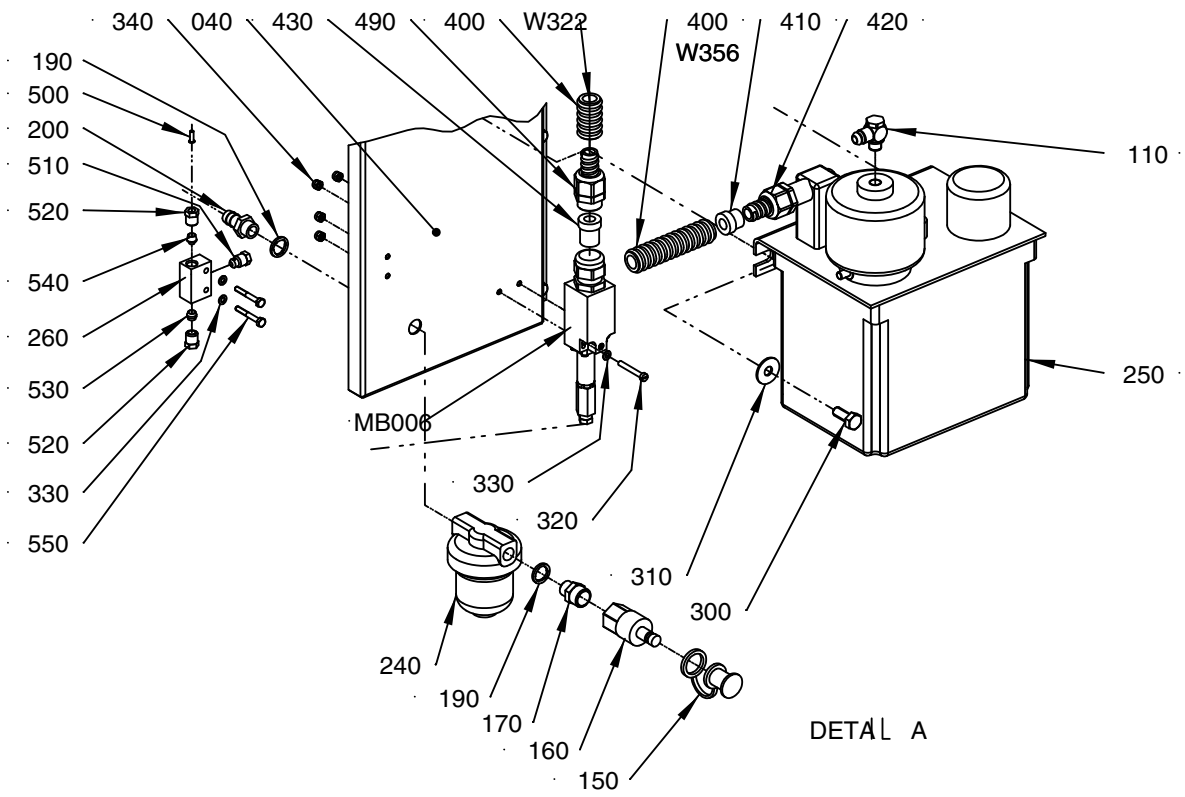

978823-3
214617

ECM: 265563 - 20060509
Group number: 978823-0300
Assembly Drawing: 978823-3_1_AA

Pos	Part No	UN	Qty	Description	Page No
-					
010	1538908-0000		1	PIPE	
020	2790834-0000		1	PIPE	
030	1538906-0000		1	PIPE	
040	2790833-0000		1	MOUNTING SHEET	
050	90166-0113	M	0.75	HOSE	
060	1539332-0000		1	PIPE	
110	90459-5522		1	CONN. BANJO, COR8PB6M10	
150	90163-0304		1	QUICK COUPLING, LP-006-5-74-KU (DUST CAP	
160	90163-0064		1	QUICK COUPLING, (M) LP-006-2-WR517	
170	342700-0203		1	NIPPLE, EXT.THREAD, HEXAGON, G3/8-G1/4	
180	90030-0076		1	CONN. T-PIPE T06L71	
190	315239-0110		3	NYLON WASHER G1/4, 1/4RRP	
200	90163-0052		2	HOSE NIPPLE, EXT.THR. G1/4-12 MM	
210	342991-0101		2	HOSE CLIP,WORM DRIVE TYPE (11)-17	
240	90415-0033		1	OIL FILTER REFILLING UC-HP-1229-25	
	90415-0330		*1*	*FILTER INSERT ART.NO. HR-1229-25UCC*	
250	90459-5481		1	OIL PUMP 3L, 10P-P3	
	90274-0052		*1*	*LEVEL GUARD, 2.855432.1*	
	90048-0450		*1*	*SPARE PARTS KIT*	
260	90032-0043		1	DISTRIBUTION BLOCK 3 WAYS	
300	312101-0451		2	SCREW M6S M8X20 FZB	
310	90005-0105		2	WASHER PLAIN ROUND 8,4(M8)/24, H=1,5	
320	312125-0299		2	SLOTTED HEAD SCREW, ISO1207 M4X30 A4	
330	315105-0136		6	WASHER PLAIN, 4,3X9X0,8 A4 BRB	
340	312812-0312		4	HEXAGON NUT, NY-LOCK M4 A4 80	
350	312812-0318		2	HEXAGON NUT, NY-LOCK M8 A4 80	
400	90152-0059	M	5	HOSE, SPIRAL CONDUIT, 18X12, UL 1211	
410	353249-0009		1	INSERT, SINGLE HOLE, EK152 9	
420	353243-0001		1	GLAND FITTING, VK 15052YUL11	
430	353249-0065		1	INSERT, SINGLE HOLE, E152 9	
440	342737-0204		1	ELBOW CONNECTION 6, W06L71	
450	90165-0057		2	PIPE CLIP FOR TUBE D=6 MM	
460	312105-0364		6	SCREW, M6S ISO 4017 M6X10 A4 80	
470	315105-0153		6	WASHER PLAIN, 6,4X12X1,5 A4 BRB	
480	312105-0287		2	SCREW, M6S ISO 4017 M4X8 A4 70	
490	353242-0001		1	COMPRESSION GLAND, VK 152YUL11	
	353249-0065		*1*	*INSERT, SINGLE HOLE, E152 9*	
500	90134-0030		1	SLEEVE FOR PLASTIC TUBE	
510	90087-0019		1	PLUG M10X1 STAINLESS	
520	90134-0055		2	BUSHING/NUT INLET/OUTLET 6 MM	
530	90028-0022		1	CONE TUBE 6 MM	
540	90028-0025		1	CONE TUBE 6 MM	
550	312105-0299		2	SCREW, M6S ISO 4017 M4X30 A4 70	
560	90166-0108	M	0.55	TUBE 6 MM PA TRANSP.	
570	90330-0120		1	NUT, HEXAGON SS, G1/4	
MB006	90274-0084		1	PRESSURE GUARD, 1800 KPA	
W322	351150-0403	M	4	CABLE OLFLEX 3X0,75 MM2 LIGHT/GREY	
W356	351150-0404	MM	3500	CABLE OLFLEX 4X0,75 MM2 LIGHT/GREY	

Machine Type	Group Description	Used-In	Group Number	Page No

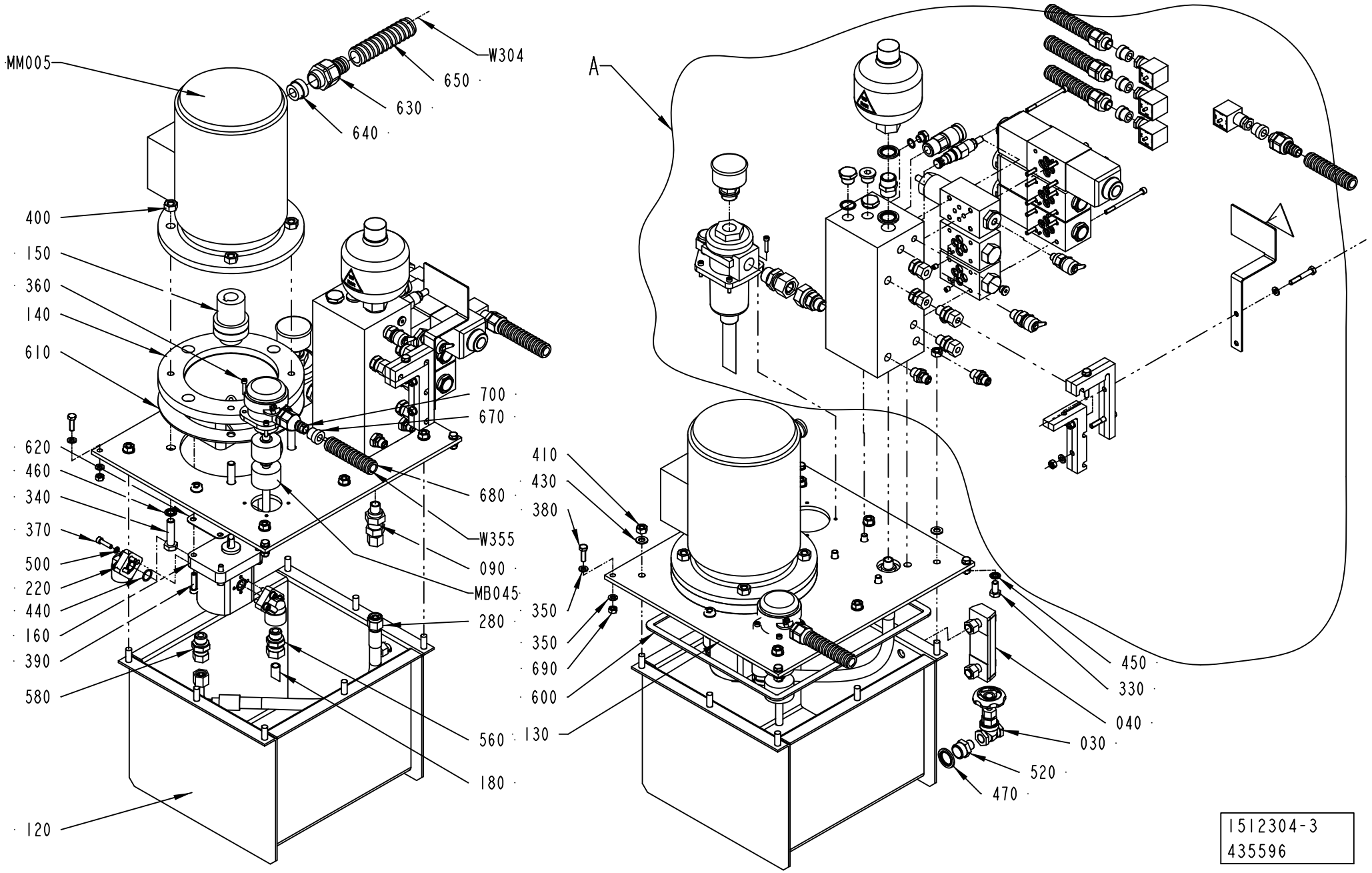
MM005
W304
650
630
640
400
150
360
140
610
700
670
620
460
340
370
500
220
440
160
390
580
680
W355
090
MB045
280
560
180
120
A
410
430
380
350
350
690
600
130
450
330
040
030
520
470
1512304-3
435596

ECM: 438702 - 20100222
Group number: 1512304-0300
Assembly Drawing: 1512304-3_1_AB

This list covers pages from 6-96 to 6-99

Pos	Part No	UN	Qty	Description	Page No
-					
005	2941706-0000		1	PIPE HOLDER	
010	2941707-0000		1	PIPE HOLDER	
015	2964511-0000		1	LABEL HOLDER	
020	90163-0076		1	QUICK COUPLING, (F) LP-006-0-WR021	
030	90459-4816		1	FLAP VALVE, G1/4, L=33	
040	90199-0020		1	LEVEL GLASS/THERMOM. FSA 76.1.1./T/12	
050	90201-0136		2	DIRECT CHECK VALVE, NO. DGMDC-3-Y-PK-41	
060	90201-0014		1	VALVE	
080	90201-0407		3	BOLT KIT, NO. BK 464125M	
090	90230-0026		1	NON-RETURN VALVE RHZ 10-PLR-ED	
100	90330-0029		2	PLUG, G3/8EXT, R-236R3/8	
110	90330-0066		1	PLUG, G1/8EXT, G1/8	
120	90459-2707		1	TANK-12L, A2-18076	
130	90459-2708		1	LID, A2-18077	
140	90457-0013		1	PUMP-MOTOR BRACKET, LS-211, NO 1711121	
150	90457-0014		1	FLEXIBLE COUPLING, ND5-A, CON.10X19 MM	
160	90457-0015		1	HYDR.PUMP, TFP100/2,2-S-C001, NO 1111250	
170	90457-0016		1	HYDR. VALVE MANIFOLD BLOCK, NO A1-17253	
180	90457-0017		1	TANK RET. OUTLET PIPE, NO 8185-0187	
190	90457-0018		1	HYDR.ACCU, SBO210-0,32E1/112U-210AK55	
220	90457-0039		2	PUMP CONN. ELBOW FLANGE T-26/12-3/8	
240	90030-0630		2	REDUCER, 1,5MM, M6, NO. 815406	
250	90201-0133		1	VALVE	
260	90201-0132		1	VALVE	
270	90201-0131		1	VALVE	
280	90457-0022		1	HYDR. HOSE, 6,4 & M16X1,5 STR+90DEGR.CON	
290	90458-0726		1	PRESSURE GAUGE, D=50 MM WITH FILTER	
300	90457-0024		1	RETURNFILTER UNIT, RF-P/30-BB-010E1.0/-T	
	90459-7433		*1*	*FILTER INSERT, 0030-R-010-P*	
320	90457-0023		1	CONN.STRAIGHTG1/2-M22X1,5, VADKO15-RL/WD	
330	312101-0449		4	SCREW M6S M8X16 FZB	
340	312104-0499		4	SCREW M6S M10X40H FZB	
350	315105-0153		8	WASHER PLAIN, 6,4X12X1,5 A4 BRB	
360	312111-0295		8	SCREW HEX.SOCK.HD.MC6S-TT 4X20 88 FZB	
370	312111-0331		6	SCREW HEX.SOCK.HD.MC6S-TT 5X20 88 FZB	
380	312105-0370		4	SCREW, M6S ISO 4017 M6X20 A4 80	
390	312111-0372		4	SCREW HEX.SOCK.HD.MC6S-TT 6X25 88 FZB	
400	312601-0320		4	HEXAGON NUT, M10 8 FZB, ISO 4032	
410	312605-0318		8	HEXAGON NUT, M6M M8 A280	
430	315105-0165		8	WASHER PLAIN, 8,4X16X1,6 A4 BRB	
440	315202-0112		2	O-RING 14,1X1,6 MM	
450	315211-0104		4	BONDED SEAL SS/NBR90 M8	
460	315211-0106		4	BONDED SEAL SS/NBR90 M10	
470	315211-0111		3	BONDED SEAL SS/NBR90 G1/2	
480	315234-0109		1	WASHER,PL.RND.CU.10,3/13,5 H=1,0	
490	315234-0111		2	WASHER,PL.RND.CU.17,5//21 H=1,5	
500	315402-0146		6	LOCK WASHER, DIN127B 5,1 A4, M5-3/16	
510	342700-0113		1	NIPPLE, EXT.THREAD, HEXAGON, G1/2-G1/2	
520	342700-0205		1	NIPPLE, EXT.THREAD, HEXAGON, G1/2-G1/4	
530	342713-0209		1	PLUG, EXT THREAD HEX SOCKET 8638-00-180	
540	342713-0211		1	PLUG, EXT THREAD HEX SOCKET 8638-00-380	
550	342752-0103		4	CONN. STR. GE08LREDCF	
560	342752-0110		1	CONN. STR. GE12LREDCF	
570	342921-0122		2	STRAIGHT COUPLING, EXT.THREAD 8/6-G1/4	
580	90457-0139		1	CONN.STRAIGHT G3/8-10 MM, A 10-L/R3/8/WD	
590	90201-0457		1	VALVE CONNECTION, NO. A15-L/R 3/8"/WD	
600	90457-0136		1	FLAT GASKET TAPE W. ADHESIVE, 10X3.0	
610	90457-0138		1	GASKET, DP-200	
620	90457-0137		1	GASKET, GP IP	
630	90458-0431		1	GLAND FITTING, VK 22554YUL16	
640	353249-0013		1	INSERT, SINGLE HOLE, EK154 13	
650	90152-0051	M	1.7	HOSE, SPIRAL CONDUIT, 25X18, UL 1816	
660	353243-0001		4	GLAND FITTING, VK 15052YUL11	
670	353249-0009		5	INSERT, SINGLE HOLE, EK152 9	
680	90152-0059	M	8.5	HOSE, SPIRAL CONDUIT, 18X12, UL 1211	
690	312605-0316		7	HEXAGON NUT, M6M M6 A280	
700	353243-0002		1	GLAND FITTING, VK 15152YUL11	
700	312105-0378		3	SCREW, M6S ISO 4014 M6X40 A4 80	
710	315105-0153		6	WASHER PLAIN, 6,4X12X1,5 A4 BRB	
720	90458-0742		1	GENERAL WARNING SIGN ISO,	
MY132	90201-0058		1	SOLENOID VALVE DC 24V	
	90201-0334		*1*	*SOL. COIL, 24VDC,NO 507848, F.90201-0058*	
MY131	90201-0058		1	SOLENOID VALVE DC 24V	
	90201-0334		*1*	*SOL. COIL, 24VDC,NO 507848, F.90201-0058*	
MY052	90459-1690		1	DIRECTIONAL VALVE, DG4V-3-6C-MUH-7-60-EN	
MM005	90045-0228		1	MOTOR 7AA80M4-B5	
MB045	90457-0019		1	LEVEL PROBE, HMFB-S=45-0=80-0=90-T70	
MY132.1	90110-0095		1	CONNECTOR, PLUG SOCKET, MSSD-C-4P	
MY131.1	90110-0095		1	CONNECTOR, PLUG SOCKET, MSSD-C-4P	
MY052B.1	90110-0095		1	CONNECTOR, PLUG SOCKET, MSSD-C-4P	
MY052A.1	90110-0095		1	CONNECTOR, PLUG SOCKET, MSSD-C-4P	
W304	351150-0418	M	3.5	CABLE OLFLEX 4X2,5 MM2 LIGHT/GREY	
W316	351150-0403	M	3	CABLE OLFLEX 3X0,75 MM2 LIGHT/GREY	

Machine Type | Group Description | Used-In | Group Number | Page No

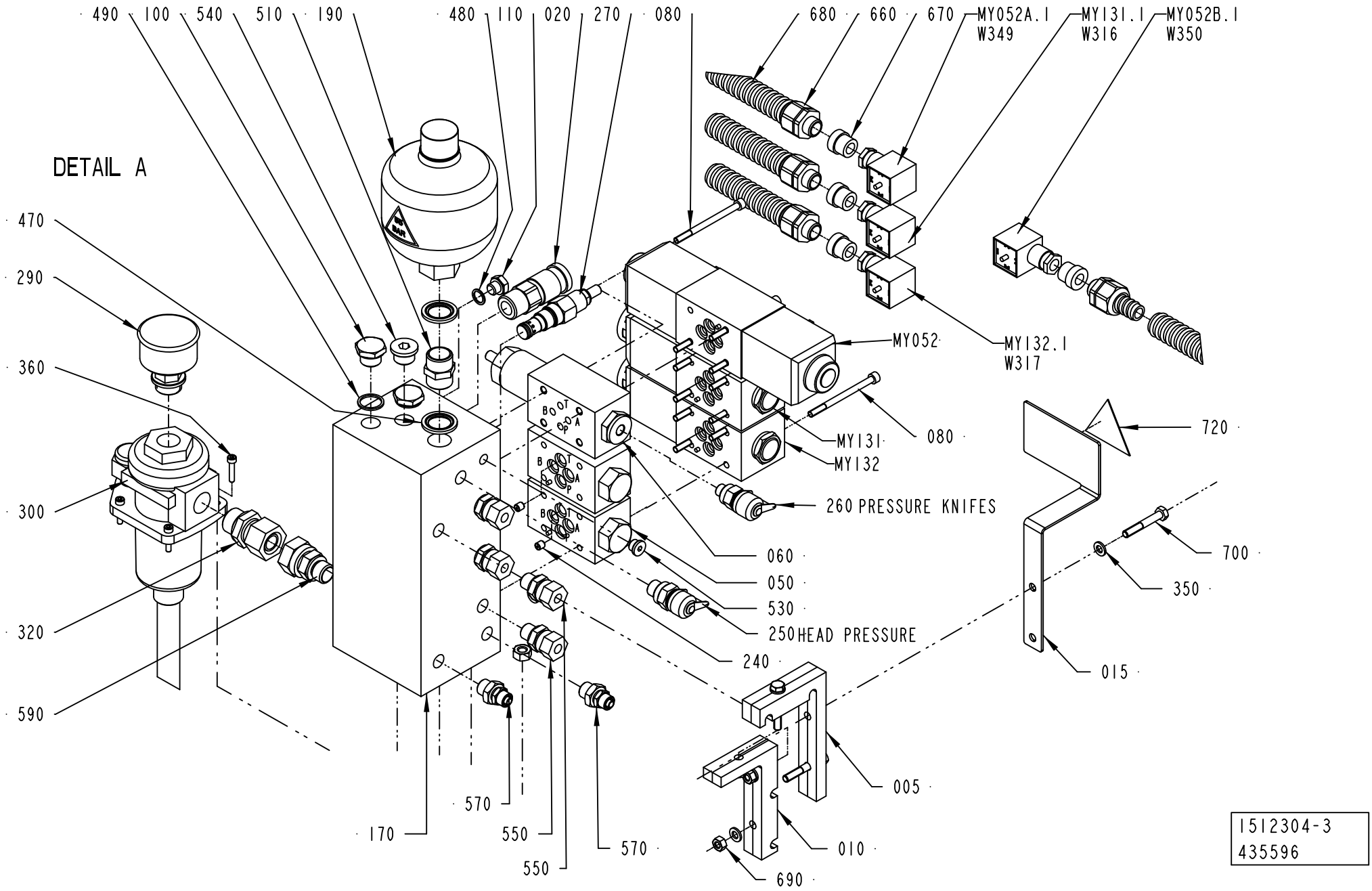
490
100
540
510
190
480
110
020
270
080
680
660
670
MY052A.I
W349
MY131.I
W316
MY052B.I
W350
DETAIL A
470
290
360
300
320
590
MY052
MY132.I
W317
MY131
MY132
080
720
260 PRESSURE KNIFES
060
050
530
250 HEAD PRESSURE
240
700
350
015
005
010
690
570
170
550
550
570
1512304-3
435596

Pos	Part No	UN	Qty	Description	Page No
- (Cont'd)					
W317	351150-0403	M	3	CABLE OLFLEX 3X0,75 MM2 LIGHT/GREY	
W349	351150-0403	M	3	CABLE OLFLEX 3X0,75 MM2 LIGHT/GREY	
W350	351150-0403	M	3	CABLE OLFLEX 3X0,75 MM2 LIGHT/GREY	
W355	351150-0404	M	3	CABLE OLFLEX 4X0,75 MM2 LIGHT/GREY	

Pos	Part No	UN	Qty	Description	Page No

PIPE WORK, AIR WATER

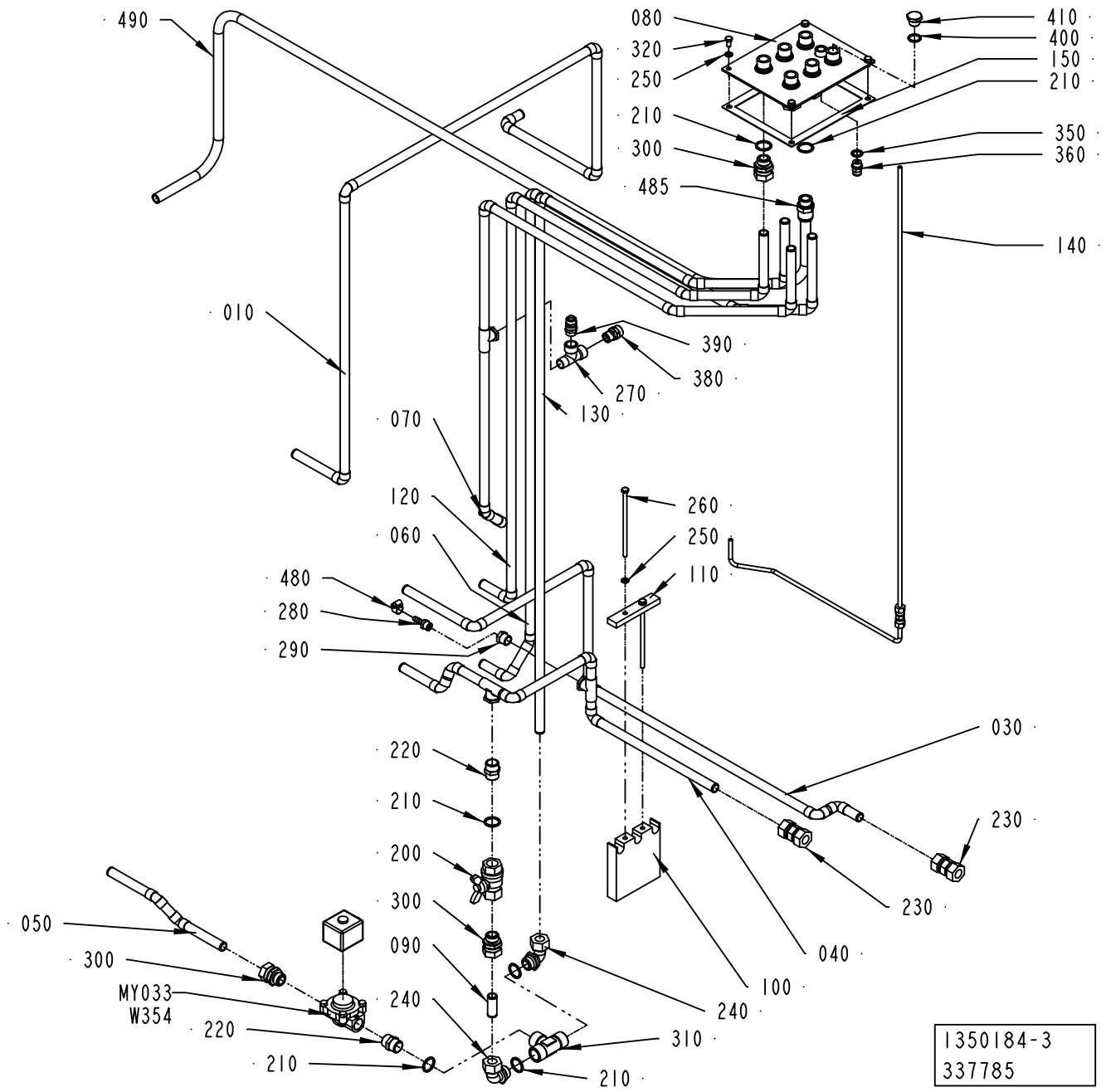

ECM: 430274 - 20091221
Group number: 1350184-0200
Assembly Drawing: 1350184-3_1_AD

This list covers pages from 6-100 to 6-103

Pos	Part No	UN	Qty	Description	Page No
040V					
010	3072885-0000		1	PIPE	
NOPT (See drawing on page: 6-100)					
210	315239-0113		9	NYLON WASHER G1/2, 1/2RRP	
400	315239-0111		1	NYLON WASHER G3/8, 3/8RRP	
410	90330-0029		1	PLUG, G3/8EXT, R-236R3/8	
PT19 (See drawing on page: 6-102)					
210	315239-0113		10	NYLON WASHER G1/2, 1/2RRP	
440	315239-0113		1	NYLON WASHER G1/2, 1/2RRP	
450	350001-0016		1	PUSH-IN FITTING QS-F-G1/2-12	
495	315400-0010	M	3	TUBE PUN-H-12X2-BL	
Common Parts					
030	2788109-0000		1	PIPE	
040	1517487-0000		1	PIPE	
050	1517488-0000		1	PIPE	
060	1517489-0000		1	PIPE	
070	2788107-0000		1	PIPE	
080	2788111-0000		1	CONNECTION PLATE	
090	1548156-0000		1	PIPE	
100	1517490-0000		1	INFERIOR HOLDER	
110	1517491-0000		1	INFERIOR HOLDER	
120	2788110-0000		1	PIPE	
130	1519576-0000		1	PIPE	
140	1512353-0000		1	PIPE	
150	1517181-0000		1	GASKET	
200	90187-0029		1	BALL VALVE, G1/2, NPBR	
220	342700-0113		2	NIPPLE, EXT.THREAD, HEXAGON, G1/2-G1/2	
230	342727-0214		2	PIPE CONNECTION G 15	
240	342731-0221		2	CONN. ELBOW, WE15LR71	
250	315105-0153		6	WASHER PLAIN, 6,4X12X1,5 A4 BRB	
260	90457-0143		2	SCREW, M6S ISO 4014 M6X130 A4 80	
270	90140-0023		1	T-PIPE, INT. THREAD, NO. 2070-3/8-3/8	
280	90055-0132		1	HOSE NIPPLE, EXT.THR. R1/4X7,8 MM	
290	342701-0203		1	BUSHING, INT/EXT. G 3/8 - G 1/4	
300	90030-0188		6	CONN. STR. GE15LRED71	
310	90140-0010		1	T-PIPE, INT. THREAD, 20031/2	
320	312105-0366		4	SCREW, M6S ISO 4017 M6X12 A4 80	
350	315239-0110		1	NYLON WASHER G1/4, 1/4RRP	
360	350001-0009		1	PUSH-IN FITTING QS-F-G1/4-8	
380	342920-0123		1	STRAIHGT COUPLING, EXT.THREAD 8/6-R3/8	
390	342920-0133		1	STRAIGHT COUPLING, EXT.THREAD 10/8-R3/8	
460	90030-0184		1	CONN. STR., GE06LRED71	
470	90330-0012		1	SLEEVE, REDUCTION, INT, R-2021/4X1/8	
480	342991-0100		1	HOSE CLIP,WORM DRIVE TYPE (8)-14	
485	90459-2215		1	STRAIGHT COUPLING, D=16 MM - G1/2"	
490	315400-0013	M	3	TUBE PUN-H-16-2,5-BL	
MY033	90042-0134		1	SOLENOID VALVE ASCO SCE 210 802 24VDC	
	90042-0428		*1*	*COIL ASCO 24VDC*	
W354	351150-0403	MM	3500	CABLE OLFLEX 3X0,75 MM2 LIGHT/GREY	

Machine Type	Group Description	Used-In	Group Number	Page No

PIPE WORK, AIR WATER

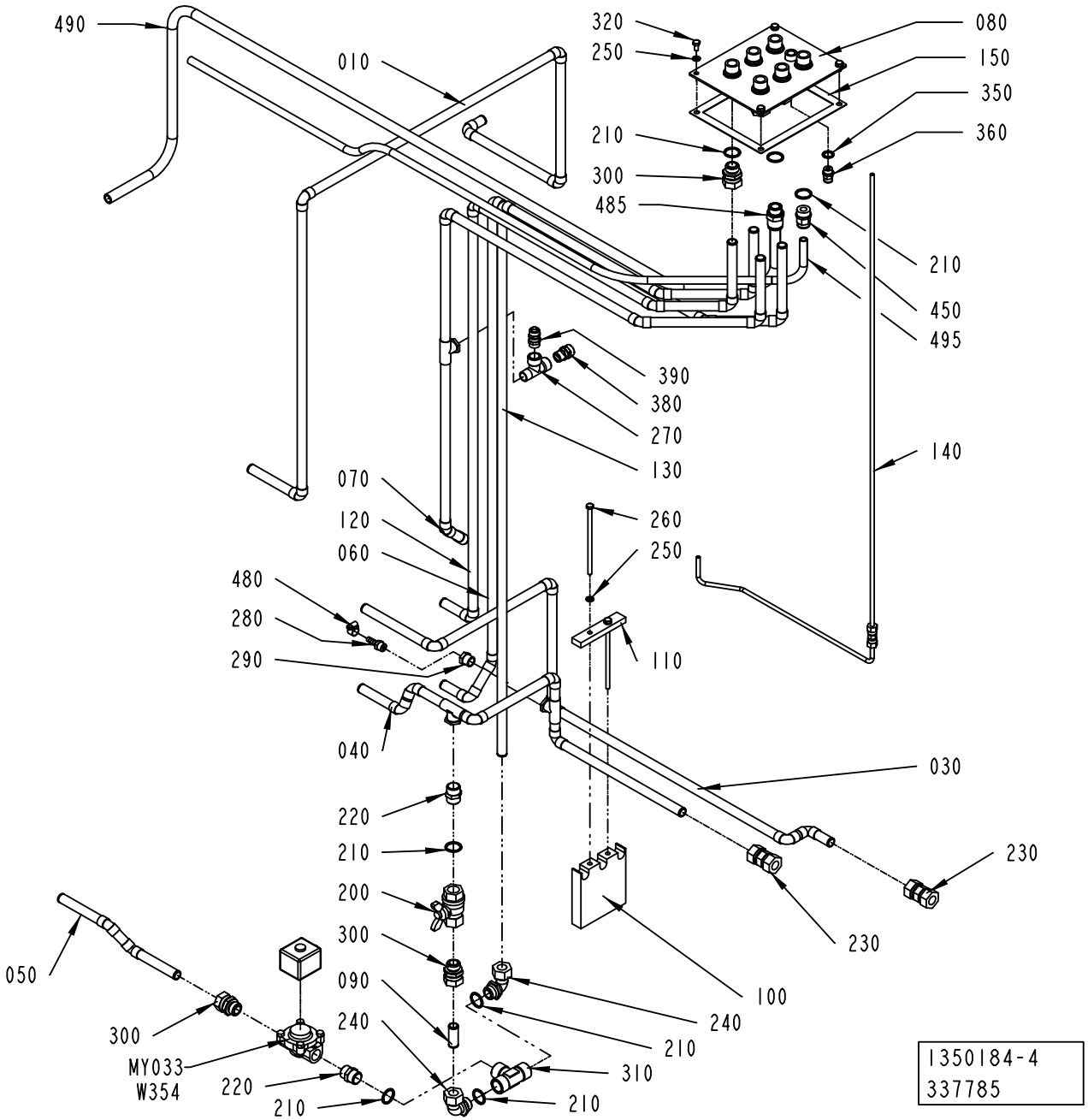

ECM: 430274 - 20091221
Group number: 1350184-0200
Assembly Drawing: 1350184-4_1_AD

This list covers pages from 6-100 to 6-103

Pos	Part No	UN	Qty	Description	Page No
040V					
010	3072885-0000		1	PIPE	
NOPT (See drawing on page: 6-100)					
210	315239-0113		9	NYLON WASHER G1/2, 1/2RRP	
400	315239-0111		1	NYLON WASHER G3/8, 3/8RRP	
410	90330-0029		1	PLUG, G3/8EXT, R-236R3/8	
PT19 (See drawing on page: 6-102)					
210	315239-0113		10	NYLON WASHER G1/2, 1/2RRP	
440	315239-0113		1	NYLON WASHER G1/2, 1/2RRP	
450	350001-0016		1	PUSH-IN FITTING QS-F-G1/2-12	
495	315400-0010	M	3	TUBE PUN-H-12X2-BL	
Common Parts					
030	2788109-0000		1	PIPE	
040	1517487-0000		1	PIPE	
050	1517488-0000		1	PIPE	
060	1517489-0000		1	PIPE	
070	2788107-0000		1	PIPE	
080	2788111-0000		1	CONNECTION PLATE	
090	1548156-0000		1	PIPE	
100	1517490-0000		1	INFERIOR HOLDER	
110	1517491-0000		1	INFERIOR HOLDER	
120	2788110-0000		1	PIPE	
130	1519576-0000		1	PIPE	
140	1512353-0000		1	PIPE	
150	1517181-0000		1	GASKET	
200	90187-0029		1	BALL VALVE, G1/2, NPBR	
220	342700-0113		2	NIPPLE, EXT.THREAD, HEXAGON, G1/2-G1/2	
230	342727-0214		2	PIPE CONNECTION G 15	
240	342731-0221		2	CONN. ELBOW, WE15LR71	
250	315105-0153		6	WASHER PLAIN, 6,4X12X1,5 A4 BRB	
260	90457-0143		2	SCREW, M6S ISO 4014 M6X130 A4 80	
270	90140-0023		1	T-PIPE, INT. THREAD, NO. 2070-3/8-3/8	
280	90055-0132		1	HOSE NIPPLE, EXT.THR. R1/4X7,8 MM	
290	342701-0203		1	BUSHING, INT/EXT. G 3/8 - G 1/4	
300	90030-0188		6	CONN. STR. GE15LRED71	
310	90140-0010		1	T-PIPE, INT. THREAD, 20031/2	
320	312105-0366		4	SCREW, M6S ISO 4017 M6X12 A4 80	
350	315239-0110		1	NYLON WASHER G1/4, 1/4RRP	
360	350001-0009		1	PUSH-IN FITTING QS-F-G1/4-8	
380	342920-0123		1	STRAIHGT COUPLING, EXT.THREAD 8/6-R3/8	
390	342920-0133		1	STRAIGHT COUPLING, EXT.THREAD 10/8-R3/8	
460	90030-0184		1	CONN. STR., GE06LRED71	
470	90330-0012		1	SLEEVE, REDUCTION, INT, R-2021/4X1/8	
480	342991-0100		1	HOSE CLIP,WORM DRIVE TYPE (8)-14	
485	90459-2215		1	STRAIGHT COUPLING, D=16 MM - G1/2"	
490	315400-0013	M	3	TUBE PUN-H-16-2,5-BL	
MY033	90042-0134		1	SOLENOID VALVE ASCO SCE 210 802 24VDC	
	90042-0428		*1*	*COIL ASCO 24VDC*	
W354	351150-0403	MM	3500	CABLE OLFLEX 3X0,75 MM2 LIGHT/GREY	

Machine Type	Group Description	Used-In	Group Number	Page No

PIPE WORK-HYDRAULIC

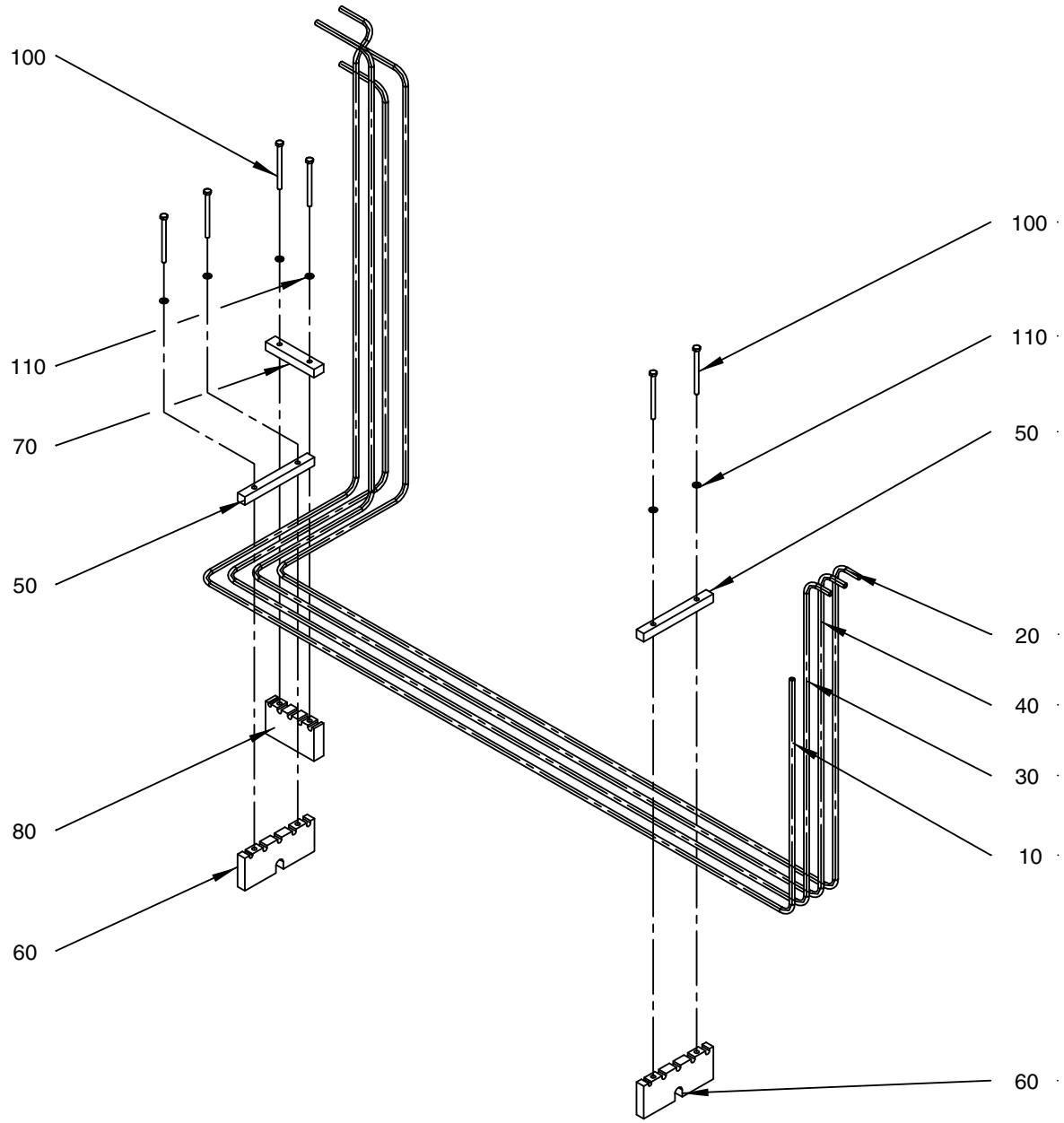

151966 3-2
214617

ECM: 215166 - 20060123
Group number: 1519663-0200
Assembly Drawing: 1519663-2_1_AA

Pos	Part No	UN	Qty	Description	Page No
-					
010	2761751-0000		1	PIPE	
020	2761752-0000		1	PIPE	
030	2761753-0000		1	PIPE	
040	2761754-0000		1	PIPE	
050	1519668-0000		2	PIPE HOLDER	
060	1519669-0000		2	PIPE HOLDER	
070	1519670-0000		1	PIPE HOLDER	
080	1519671-0000		1	PIPE HOLDER	
100	312105-0386		6	SCREW, M6S ISO 4014 M6X80 A4 80	
110	315105-0153		6	WASHER PLAIN, 6,4X12X1,5 A4 BRB	

Pos	Part No	UN	Qty	Description	Page No

This page is intentionally left blank.

ECM: 70475 - 19961031
Group number: 469384-0100
Assembly Drawing:

Pos	Part No	UN	Qty	Description	Page No
-					
010	90296-0053	L	10	SHELL TELLUS OIL T 32 (1PC=20L)	
020	90296-0075	ML	2500	SHELL OMALA OIL 320 (1PC=20L)	
030	90298-0019		1	DETERGENT, SU 118, 20 LITRES	
040	90144-0003		1	TAPE	

Pos	Part No	UN	Qty	Description	Page No

Tetra Pak

SPC
Spare Parts Catalogue

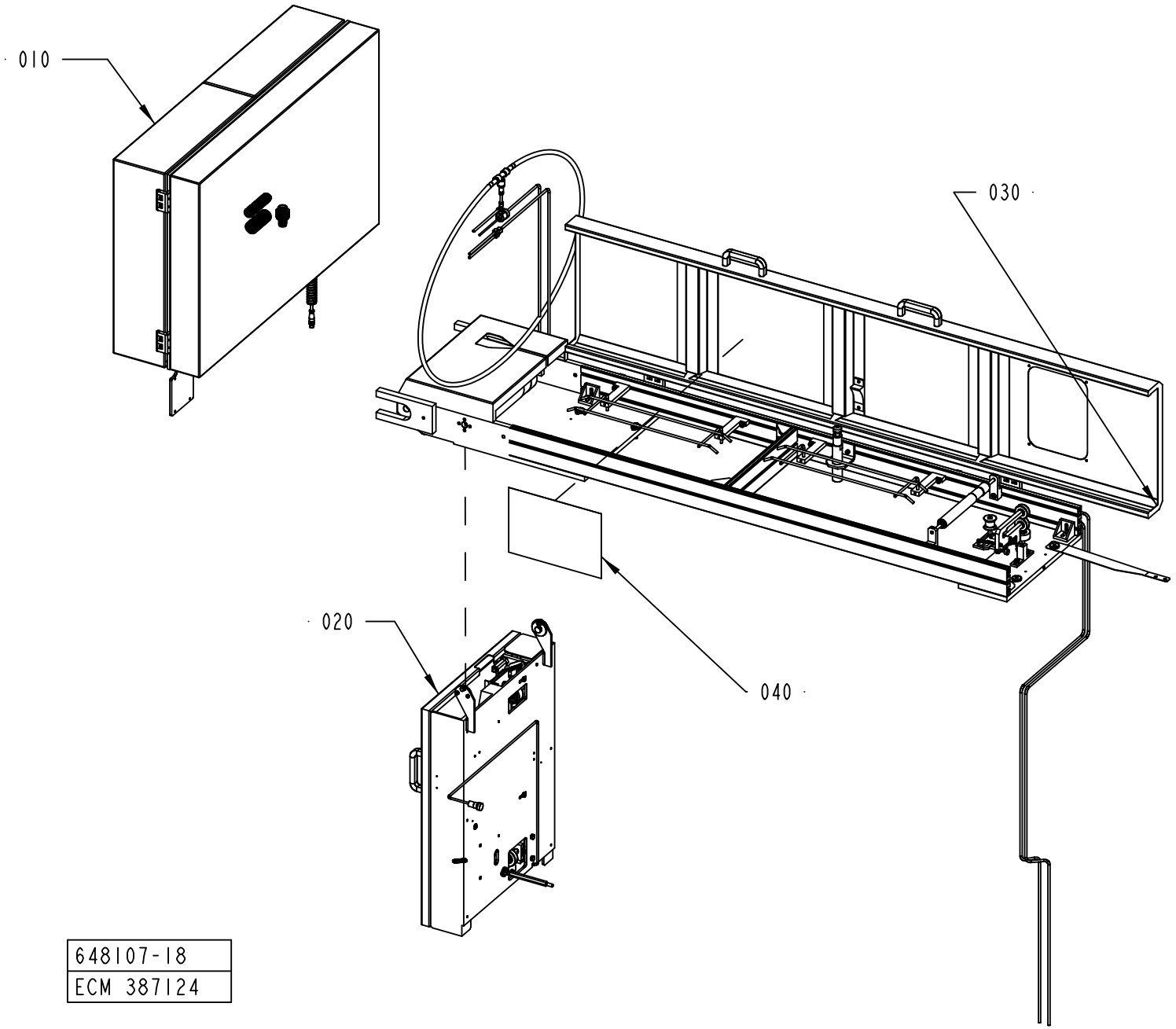

648107-18
ECM 387124

ECM: 404986 - 20090706
Group number: 648107-1400
Assembly Drawing: 648107-18_1_AA

Pos	Part No	UN	Qty	Description	Page No
-					
010	580037-0400		1	STRIP MAGAZINE	**7-5, 7-7**
020	580036-0200		1	STRIP APPLICATOR	**7-35, 7-37**
030	1499477-0100		1	WEB TUNNEL	**7-55**
040	2540724-0000		1	HOSE INSTALLATION	

Pos	Part No	UN	Qty	Description	Page No

Machine Type | Group Description | Used-In | Group Number | Page No

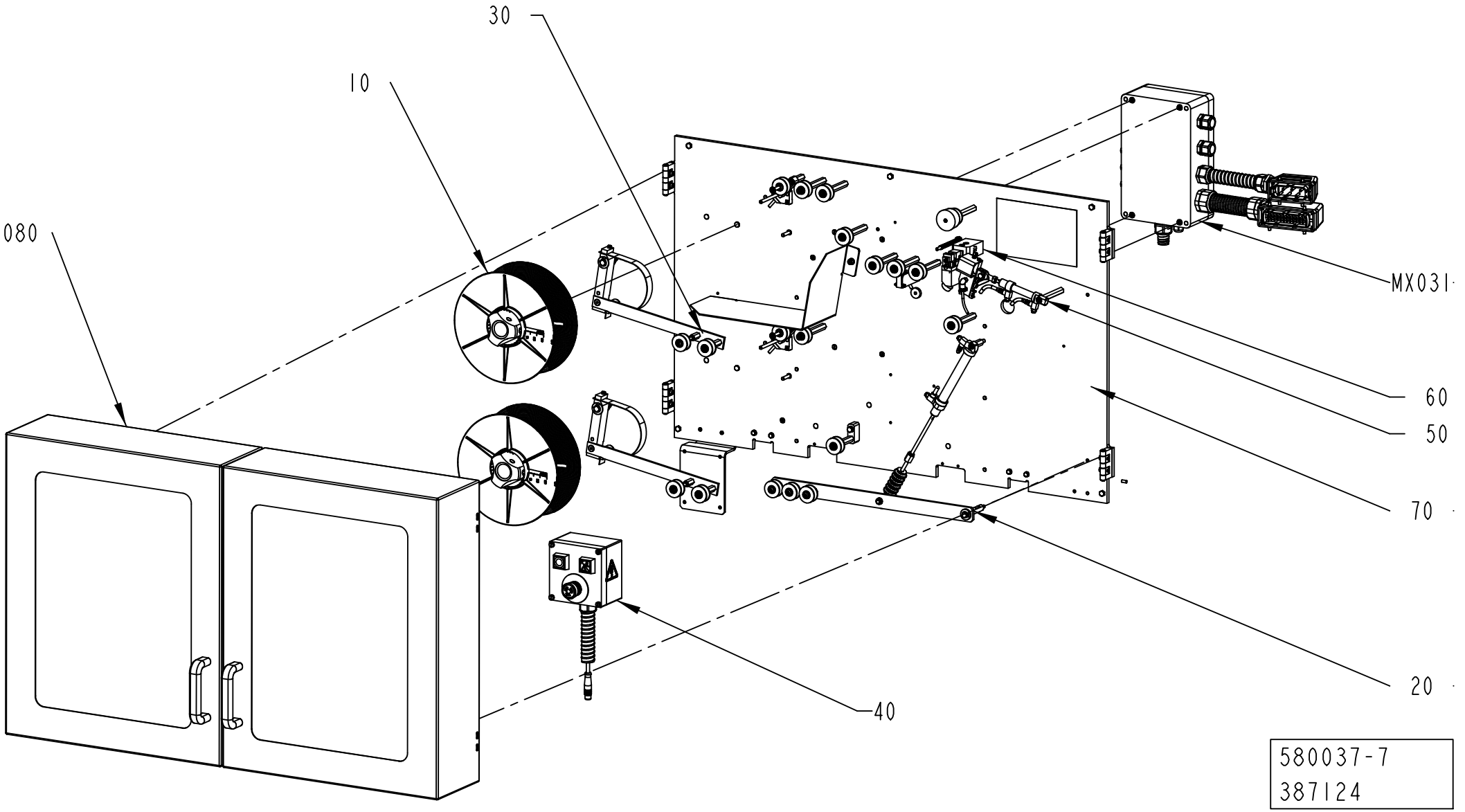
30
10
080
MX031
60
50
70
20
40
580037-7
387124

ECM: 415985 - 20090916
Group number: 580037-0400
Assembly Drawing: 580037-7_1_AA

This list covers pages from 7-4 to 7-7

Pos	Part No	UN	Qty	Description	Page No
NOPT (See drawing on page: 7-6)					
090	1498753-0100		1	MAGAZINE HOLDER	**7-9**
Common Parts					
010	580042-0100		2	HUB JUMBO	**7-11**
020	580044-0200		1	SPLICING MAGAZINE	**7-13**
030	580060-0200		2	BRAKE ARM	**7-15**
040	580329-0300		1	PUSH BUTTON BOX	**7-17**
050	1558897-0100		1	HEATING DEVICE	**7-19**
060	1524477-0100		1	CUTTING TABLE	**7-21**
070	1499480-0200		1	MOUNTING PLATE	**7-23, 7-25, 7-27, 7-29**
080	1498751-0300		1	DOORS	**7-31**
MX031	580064-0200		1	CONNECTION BOX	**7-33**

Pos	Part No	UN	Qty	Description	Page No

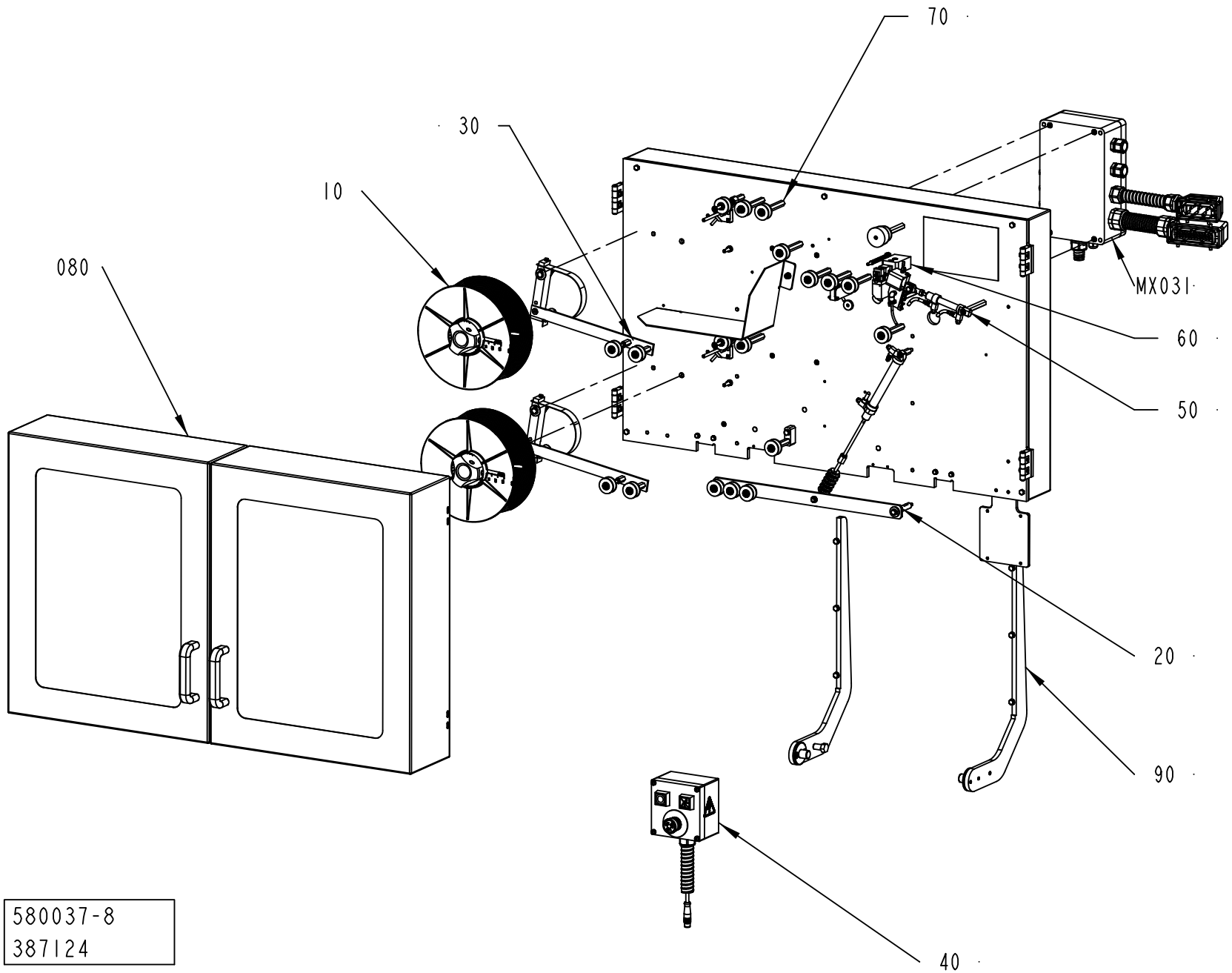
70
30
10
080
MX031
60
50
20
90
40
580037-8
387124

ECM: 415985 - 20090916
Group number: 580037-0400
Assembly Drawing: 580037-8_1_AA

This list covers pages from 7-4 to 7-7

Pos	Part No	UN	Qty	Description	Page No
NOPT (See drawing on page: 7-6)					
090	1498753-0100		1	MAGAZINE HOLDER	**7-9**
Common Parts					
010	580042-0100		2	HUB JUMBO	**7-11**
020	580044-0200		1	SPLICING MAGAZINE	**7-13**
030	580060-0200		2	BRAKE ARM	**7-15**
040	580329-0300		1	PUSH BUTTON BOX	**7-17**
050	1558897-0100		1	HEATING DEVICE	**7-19**
060	1524477-0100		1	CUTTING TABLE	**7-21**
070	1499480-0200		1	MOUNTING PLATE	**7-23, 7-25, 7-27, 7-29**
080	1498751-0300		1	DOORS	**7-31**
MX031	580064-0200		1	CONNECTION BOX	**7-33**

Pos	Part No	UN	Qty	Description	Page No

Machine Type | Group Description | Used-In | Group Number | Page No

MAGAZINE HOLDER

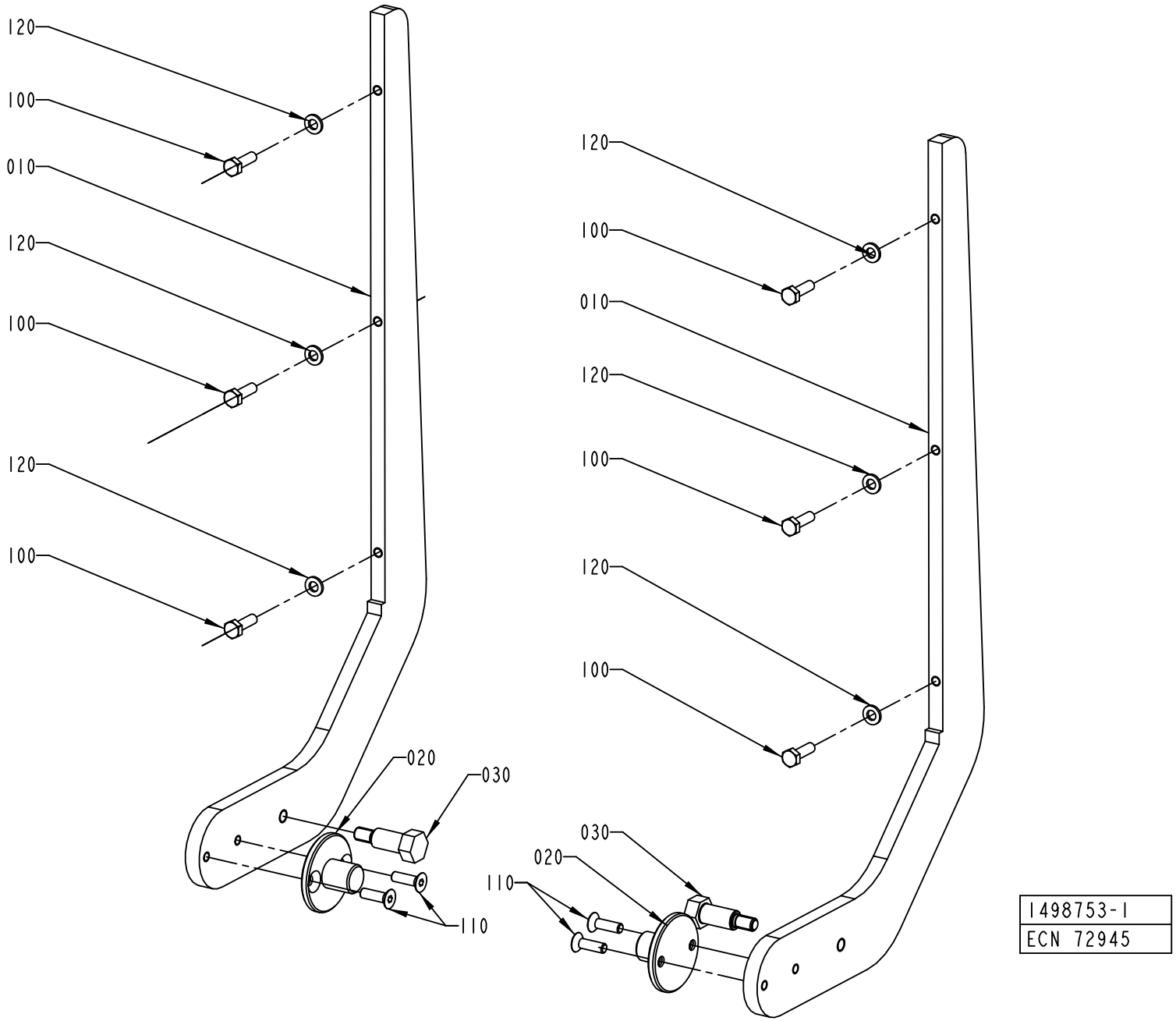

1498753-1
ECN 72945

ECM: 180865 - 20040910
Group number: 1498753-0100
Assembly Drawing: 1498753-1_1_AA

Pos	Part No	UN	Qty	Description	Page No
-					
010	1498761-0000		2	MAGAZINE HOLDER	
020	1498757-0000		2	FLANGE	
030	1498758-0000		2	AXLE PIN	
100	312105-0370		6	SCREW, M6S ISO 4017 M6X20 A4 80	
110	312155-0368		4	SCREW DIN 7991 MF6S M6X16 A4 70	
120	315105-0153		6	WASHER PLAIN, 6,4X12X1,5 A4 BRB	

Pos	Part No	UN	Qty	Description	Page No

HUB JUMBO

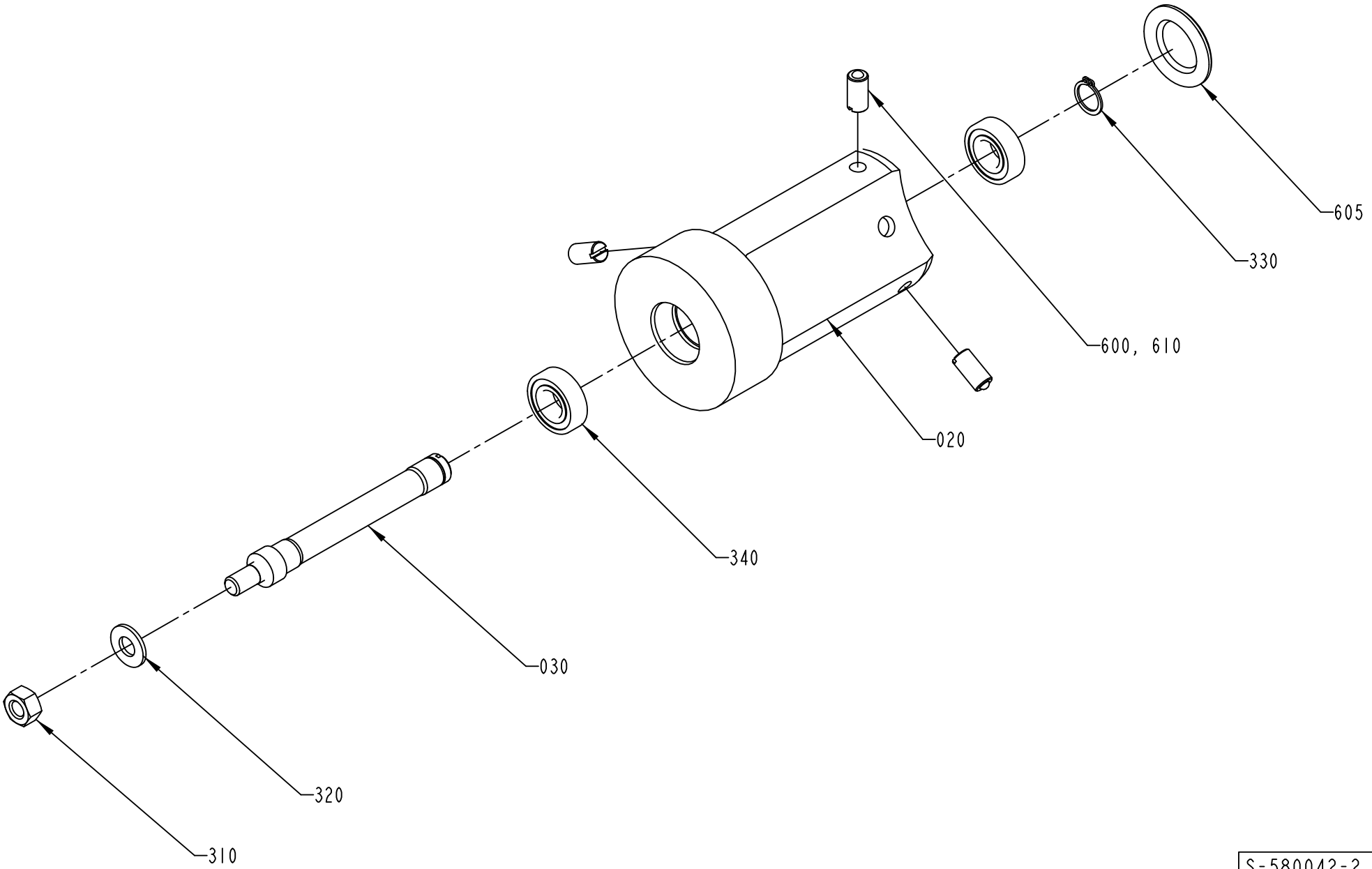

S-580042-2
ECN 72517

ECM: 501145 - 20111001
Group number: 580042-0100
Assembly Drawing: 580042-2_1_AB

Pos	Part No	UN	Qty	Description	Page No
TBA/19					
340	90214-0207		2	BALL BEARING 15/32X9	
Common Parts					
010	541751-0000		1	CONICAL BOBBIN	
020	536913-0000		1	HUB	
030	537327-0000		1	SHAFT	
310	312605-0320		1	HEXAGON NUT, M6M M10 A280	
320	315105-0173		1	WASHER PLAIN, 10,5X22X2 A4 BRB	
330	315751-0112		1	RETAINING RING FOR SHAFT DIN 471 15 SS	
600	90602-4847		1	THREAD LOCKING, LOCTITE 243 50 ML	
605	90261-0049		1	PLUG, BLIND, PLASTIC, NO. SR1750	
610	90287-0106		3	SCREW SPRINGLOAD. SLOTTED HEAD M10X21	

Pos	Part No	UN	Qty	Description	Page No

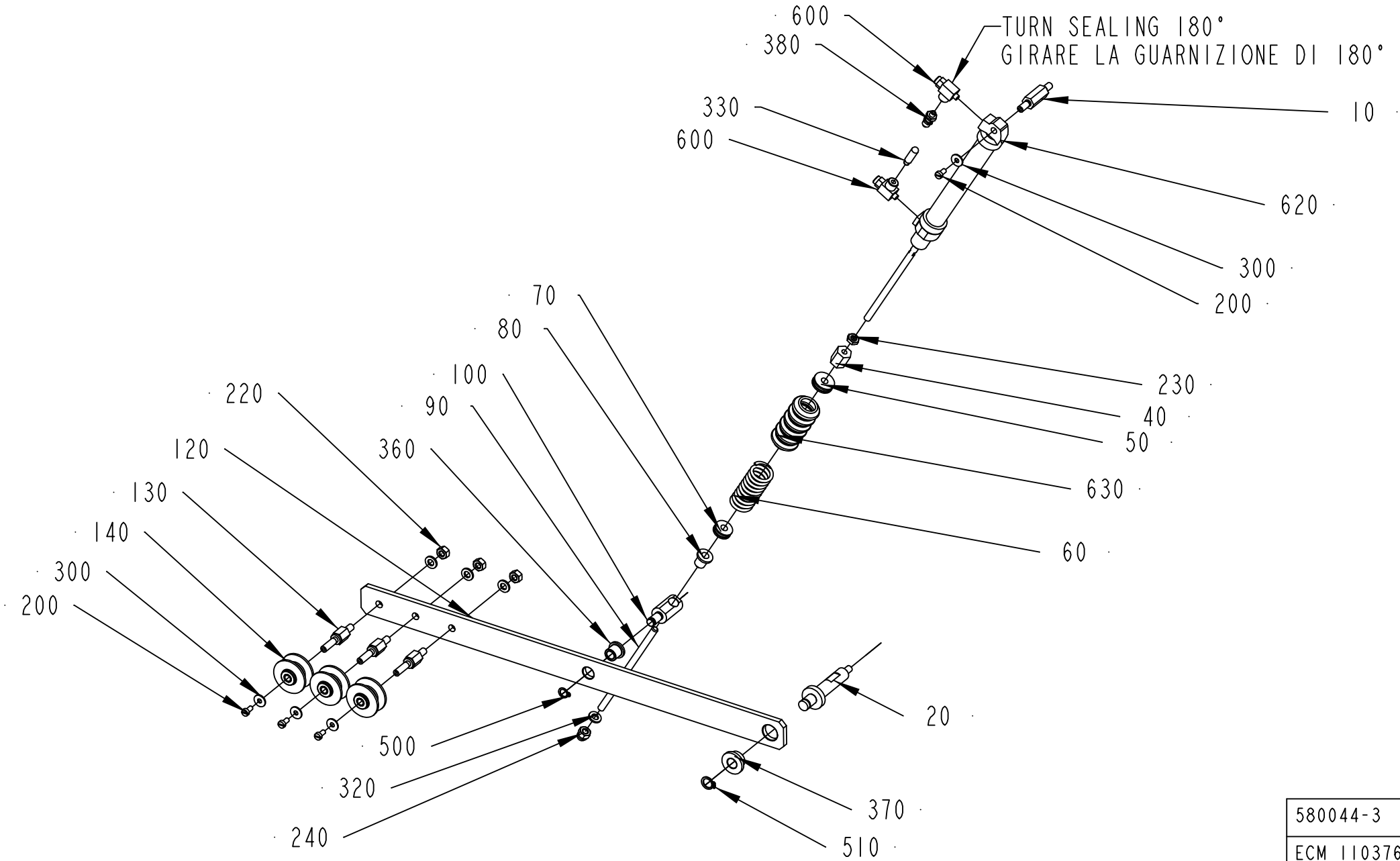

580044-3
ECM 110376

ECM: 485991 - 20101221
Group number: 580044-0200
Assembly Drawing: 580044-3_1_AD

Pos	Part No	UN	Qty	Description	Page No
-					
010	979576-0000		1	AXLE PIN	
020	979578-0000		1	AXLE PIN	
040	401186-0000		1	HEX NUT	
050	401371-0000		1	BUSHING	
060	400800-0000		1	SPRING	
070	401372-0000		1	BUSHING	
080	401370-0000		1	BUSHING	
090	1499515-0000		1	SHAFT	
100	401183-0000		1	GUIDE AXLE	
120	580055-0000		1	ARM	
130	579553-0000		3	SHAFT	
140	1512583-0000		3	ROLLER	
	321120-0101		*2*	*BEARING BUSH W/O FLANGE, 6X8X6 MM*	
200	312125-0287		4	SLOTTED HEAD SCREW, ISO1207 M4X8 A4	
220	312605-0316		3	HEXAGON NUT, M6M M6 A280	
230	312625-0316		1	HEXAGON THIN NUT, EN 24035 ML6M M6 A4	
240	312705-0316		1	HEX. DOMED CAP MHM-6 M6 A280	
300	90005-0082		4	WASHER PLAIN ROUND 4,3(M4)/12,H=1	
320	315105-0153		4	WASHER PLAIN, 6,4X12X1,5 A4 BRB	
330	90328-0029		1	SILENCER, M5	
360	321111-0097		1	FLANGE BUSHING, 8/12X12-16X2 MM	
370	321111-0135		1	FLANGE BUSHING, 10/16X10-22X3 MM	
380	342921-0111		1	STRAIGHT COUPLING,EXT.THREAD 6/4-M5	
500	90141-0015		1	RETAINING RING FOR SHAFT DIN 471 8 SS	
510	90141-0016		1	RETAINING RING FOR SHAFT DIN 471 10 SS	
600	90235-0289		2	FLOW CONTROL VALVE, GRLA-M5	
620	90239-0819		1	DOUBLE ACTING, MINI-ISO, CYL.16-100	
630	90342-0013		1	BELLOWS	

Pos	Part No	UN	Qty	Description	Page No

Machine Type	Group Description	Used-In	Group Number	Page No

BRAKE ARM

Drawing file: 580060-3_1_AB.hpgl

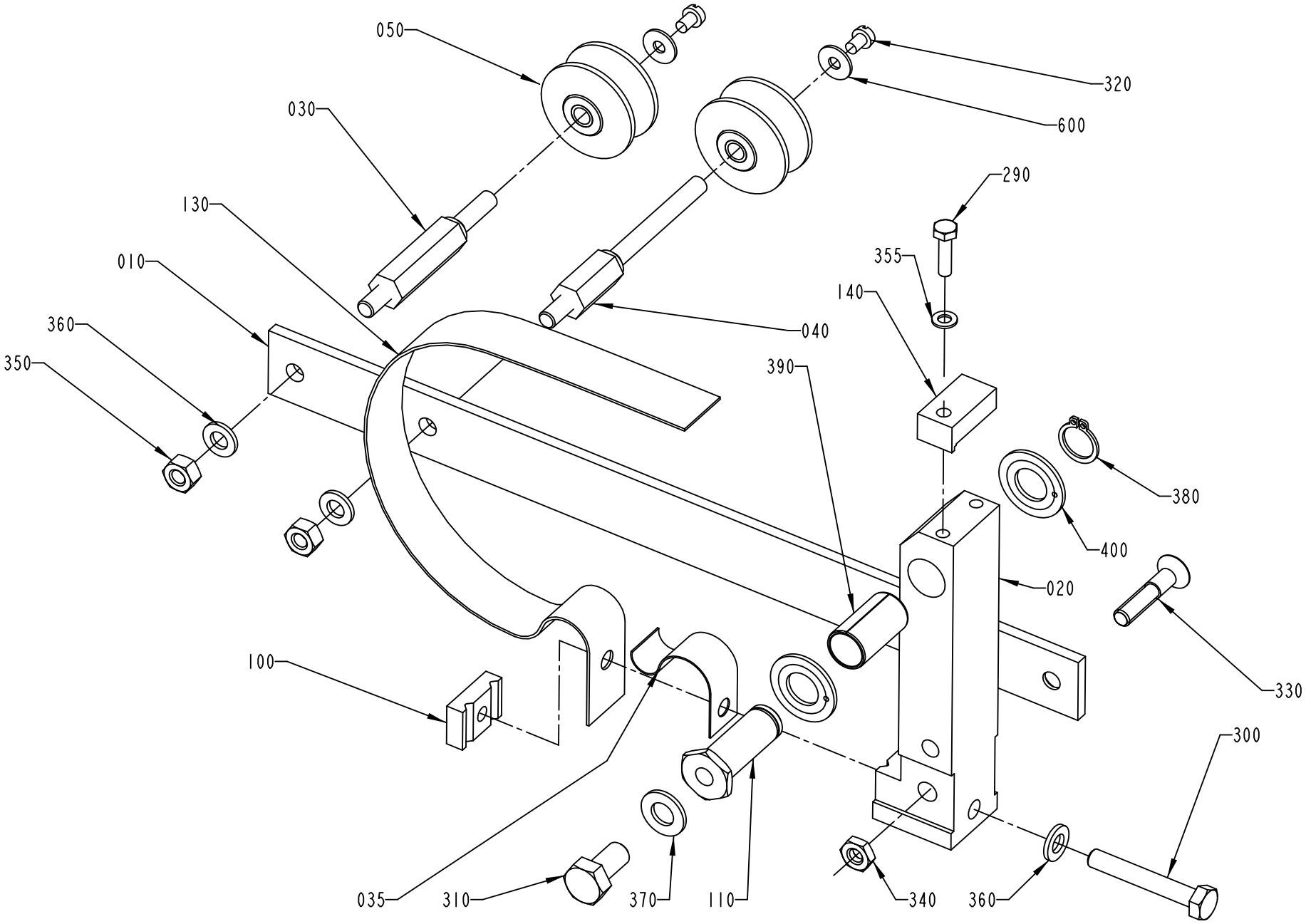

580060-3
ECM 98331

ECM: 107790 - 20051011
Group number: 580060-0200
Assembly Drawing: 580060-3_1_AB

Pos	Part No	UN	Qty	Description	Page No
-					
010	979994-0000		1	ARM	
020	1260678-0000		1	ARM	
030	536917-0000		1	AXLE PIN	
035	1484486-0000		1	SPRING	
040	544726-0000		1	AXLE PIN	
050	1512583-0000		2	ROLLER	
	321120-0101		*2*	*BEARING BUSH W/O FLANGE, 6X8X6 MM*	
100	583878-0000		1	SPRING BRACKET	
110	541070-0000		1	SHAFT	
130	979990-0000		1	BELT BRAKE	
140	979991-0000		1	BLOCK	
290	312105-0293		1	SCREW, M6S ISO 4017 M4X16 A4 70	
300	312105-0378		1	SCREW, M6S ISO 4014 M6X40 A4 80	
310	312105-0449		1	SCREW, M6S ISO 4017 M8X16 A4 80	
320	312125-0285		2	SLOTTED HEAD SCREW, ISO1207 M4X6 A4	
330	312155-0374		1	SCREW DIN 7991 MF6S M6X30 A4 70	
340	312625-0316		1	HEXAGON THIN NUT, EN 24035 ML6M M6 A4	
350	312605-0316		2	HEXAGON NUT, M6M M6 A280	
355	315105-0136		1	WASHER PLAIN, 4,3X9X0,8 A4 BRB	
360	315105-0153		3	WASHER PLAIN, 6,4X12X1,5 A4 BRB	
370	315105-0165		1	WASHER PLAIN, 8,4X16X1,6 A4 BRB	
380	315751-0109		1	RETAINING RING FOR SHAFT DIN 471 12 SS	
390	321141-0193		1	BEARING BUSHING, 12X14X25 MM	
400	321130-0180		2	THRUST WASHER, 12X24X1,5 MM	
600	90005-0082		2	WASHER PLAIN ROUND 4,3(M4)/12,H=1	

Pos	Part No	UN	Qty	Description	Page No

PUSH BUTTON BOX

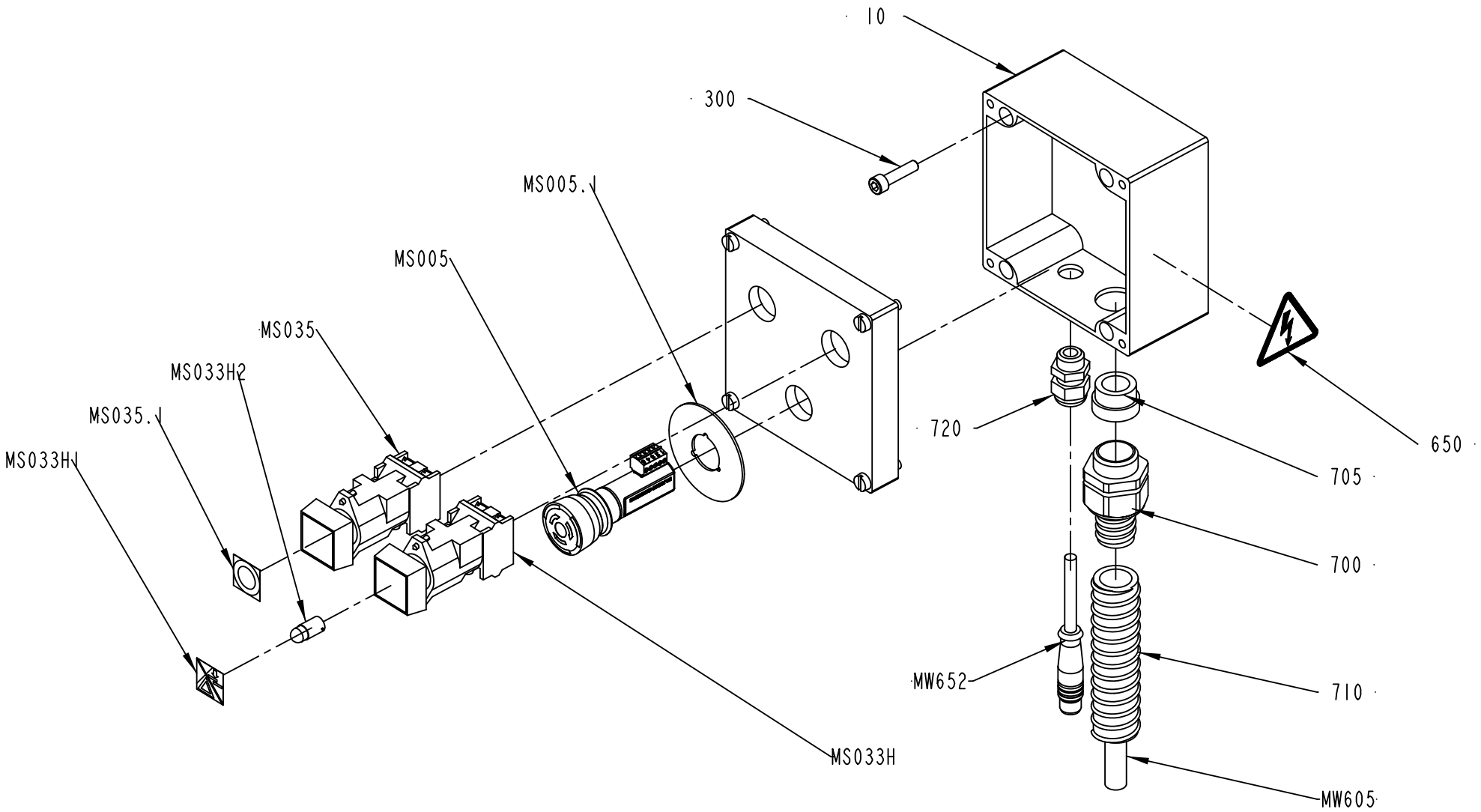

580329-4
428870

ECM: 430686 - 20091221
Group number: 580329-0300
Assembly Drawing: 580329-4_1_AB

Pos	Part No	UN	Qty	Description	Page No
-					
010	3040340-0000		1	CONNECTION BOX	
300	312115-0372		4	SCREW ISO4762 M6X25 A4 80	
650	359705-0015		1	WARNING SIGN ISO, RISK OF ELECTRIC SHOCK	
700	90458-0431		1	GLAND FITTING, VK 22554YUL16	
705	353249-0014		1	INSERT, SINGLE HOLE, EK154 16	
710	90152-0051	MM	1600	HOSE, SPIRAL CONDUIT, 25X18, UL 1816	
720	352103-0101		1	CABLE GLAND, ST 9, PR15,2/PG9	
M.W652	90600-0934		1	CABLE M12-C62 5 POLE MALE, 20-056-02	
M.W605	351150-0407	MM	1900	CABLE OLFLEX 12X0,75 MM2 LIGHT/GREY	
M.S035:1	359301-0110		1	BUTTON SIGN, SHORT STOP	
M.S035	90064-0085		1	PUSH BUTTON, RED	
M.S033H2	90036-0057		1	LIGHT BULB, BA9S 28V	
M.S033H1	90459-0691		1	SIGN, STRIP SPLICE/ RESET ALARM	
M.S033H	90064-0098		1	PUSH BUTTON, WHITE	
M.S005:1	90600-9809		1	ES SIGN, FOR INCA	
M.S005	90600-6050		1	EMERGENCY STOP INCA 1 TINA, 30-054-00	

Pos	Part No	UN	Qty	Description	Page No

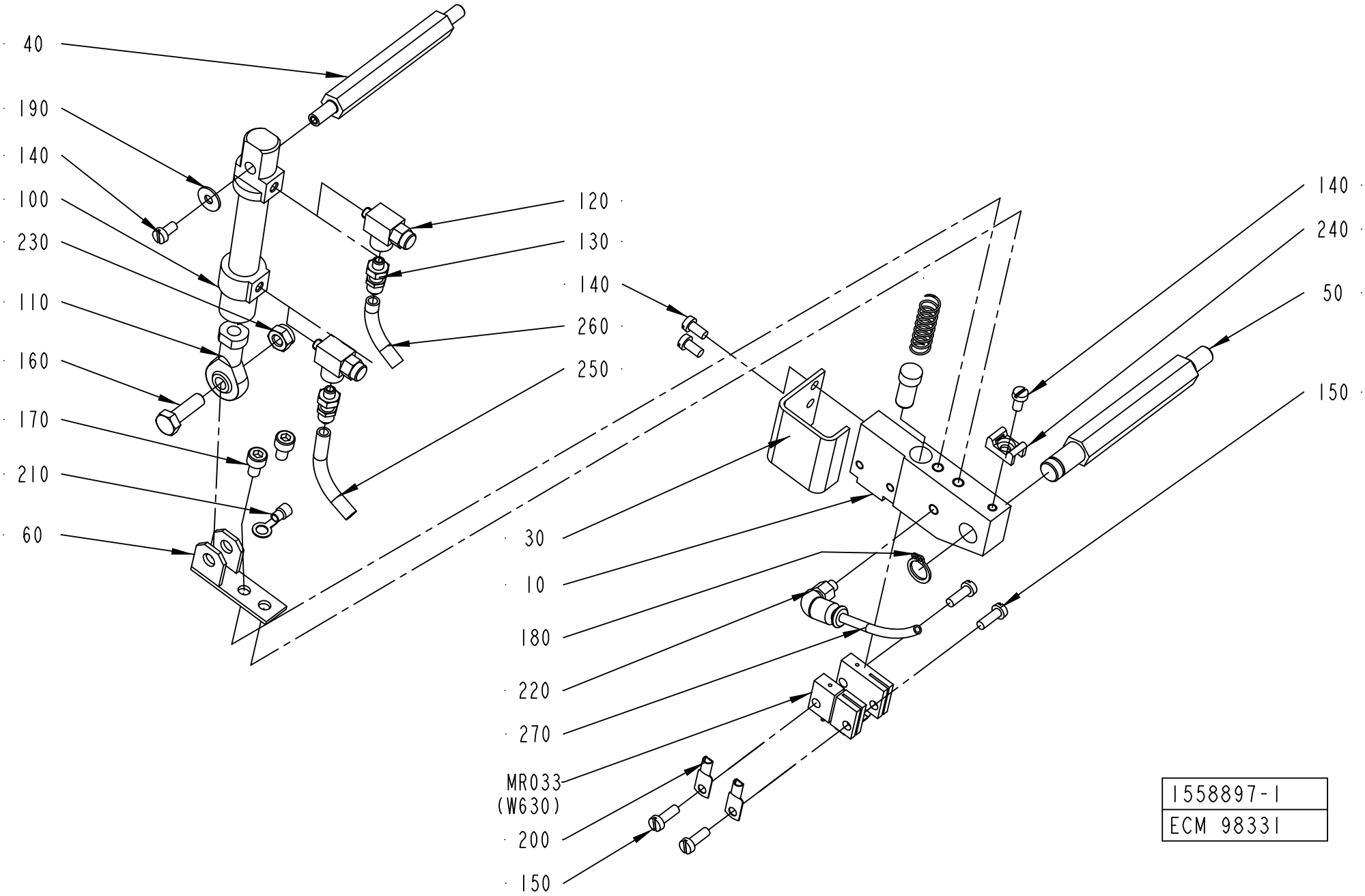
40
190
140
100
230
110
160
170
210
60
120
130
140
260
250
140
240
50
150
30
10
180
220
270
MR033
(W630)
200
150
1558897-1
ECM 98331

ECM: 180907 - 20040910
Group number: 1558897-0100
Assembly Drawing: 1558897-1_1_AA

Pos	Part No	UN	Qty	Description	Page No
-					
010	1490804-0000		1	HOLDER	
020	400833-0000		1	PLUNGER	
030	2523596-0000		1	COVER	
040	1037121-0000		1	SHAFT	
050	1037120-0000		1	SHAFT	
060	1037124-0000		1	HOLDER	
070	400828-0000		1	SPRING	
100	90450-0306		1	DOUBLE ACTING, MINI-ISO, CYL. 12-25	
110	90239-0491		1	ROD END, BALL JOINT EYE, MINI-ISO M6	
120	90235-0289		2	FLOW CONTROL VALVE, GRLA-M5	
130	342921-0111		2	STRAIGHT COUPLING,EXT.THREAD 6/4-M5	
140	312125-0287		4	SLOTTED HEAD SCREW, ISO1207 M4X8 A4	
150	312125-0291		4	SLOTTED HEAD SCREW, ISO1207 M4X12 A4	
160	312105-0370		1	SCREW, M6S ISO 4017 M6X20 A4 80	
170	312115-0323		2	SCREW ISO4762 M5X8 A4 80	
180	90141-0016		1	RETAINING RING FOR SHAFT DIN 471 10 SS	
190	90005-0082		1	WASHER PLAIN ROUND 4,3(M4)/12,H=1	
200	353104-0140		2	CABLE SHOE, RING UNINS., YAV 06 M 4	
210	353101-0132		1	CABLE SHOE 1,5-2,5MM2 M5 BLUE	
220	342732-0099		1	ELBOW PIPE JOINT, (REEMP. 90458-2954)	
230	312812-0316		1	HEXAGON NUT, NY-LOCK M6 A4 80	
240	352113-0205		1	ANCHOR PLATES FOR STRIPS, TM2S8-C100	
250	90166-0193	MM	1000	TUBE 6 MM PUR BLUE	
260	90166-0193	MM	1000	TUBE 6 MM PUR BLUE	
270	90166-0095	MM	500	TUBE 4 MM PA BLUE (50M)	
MR033	1538473-0000		1	SEALING BLOCK	
W630	351120-0146	MM	1000	CABLE Ã–LFLEX HEAT 180 SIHF 3X4	

Pos	Part No	UN	Qty	Description	Page No

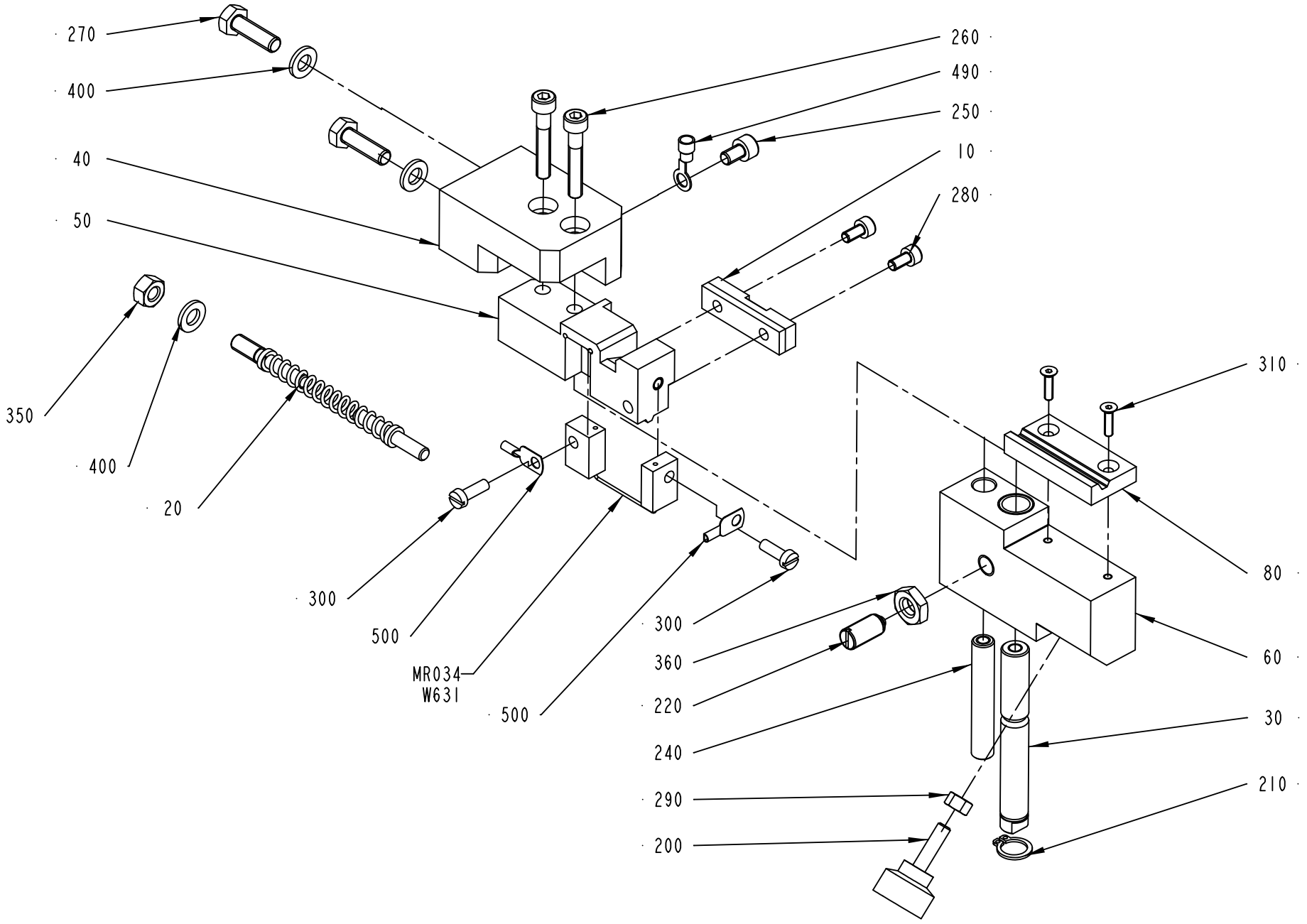

1524477-1
ECM 98331

ECM: 180906 - 20040910
Group number: 1524477-0100
Assembly Drawing: 1524477-1_1_AC

Pos	Part No	UN	Qty	Description	Page No
-					
010	1349014-0000		1	PAD	
020	2540726-0000		1	FINGER	
030	1517751-0000		1	SHAFT	
040	2523599-0000		1	SUPPORT	
050	2523598-0000		1	SPLICING TABLE	
060	2523597-0000		1	SLIDER	
080	2523601-0000		1	PAD	
090	2523600-0000		1	PIN	
200	90051-0035		1	KNOB, EXTERNAL THREAD. NO. 8308-1135	
210	90141-0016		1	RETAINING RING FOR SHAFT DIN 471 10 SS	
220	90287-0112		1	SCREW SPRINGLOAD. SLOTTED HEAD M8X16	
250	312115-0323		1	SCREW ISO4762 M5X8 A4 80	
260	312115-0335		2	SCREW ISO4762 M5X30 A4 80	
270	312105-0370		2	SCREW, M6S ISO 4017 M6X20 A4 80	
280	312115-0287		2	SCREW ISO4762 M4X8 A4 80	
290	312605-0314		1	HEXAGON NUT, M6M M5 A280	
300	312125-0291		1	SLOTTED HEAD SCREW, ISO1207 M4X12 A4	
305	312125-0293		1	SLOTTED HEAD SCREW, ISO1207 M4X16 A4	
310	312155-0226		2	SCREW DIN 7991 MF6S M3X12 A4 70	
350	312605-0316		1	HEXAGON NUT, M6M M6 A280	
360	312625-0318		1	HEXAGON THIN NUT, EN 24035 ML6M M8 A4	
400	315101-0153		3	WASHER PLAIN, BRB, 6,4/12 H=1,5	
490	353101-0132		1	CABLE SHOE 1,5-2,5MM2 M5 BLUE	
500	353101-0130		2	CABLE SHOE 1,5-2,5MM2 M4 BLUE	
MR034	1524481-0000		1	SEALING BLOCK	
W631	351120-0145	MM	1000	CABLE Ã–LFLEX HEAT 180 SIHF 3X2,5	

Pos	Part No	UN	Qty	Description	Page No

MOUNTING PLATE

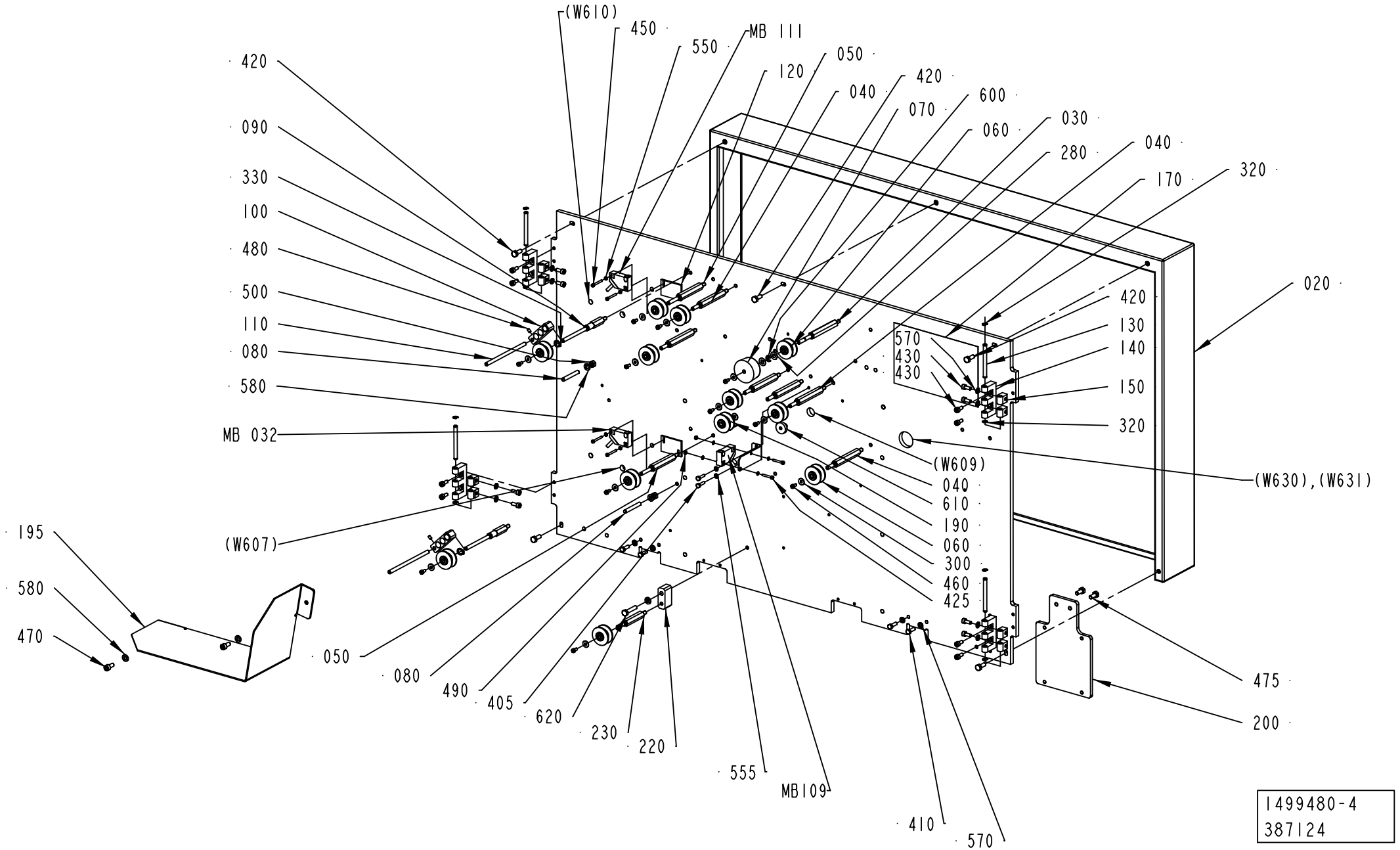

1499480-4
387124

ECM: 404989 - 20090706
Group number: 1499480-0200
Assembly Drawing: 1499480-4_1_AA

This list covers pages from 7-22 to 7-29

Pos	Part No	UN	Qty	Description	Page No
NOPT (See drawing on pages: 7-22, 7-24)					
020	1498764-0000		1	COVER	
200	1498775-0000		1	BOX BRACKET	
PT19 (See drawing on pages: 7-26, 7-28)					
200	2552624-0000		1	BOX BRACKET	
Common Parts					
010	3017352-0000		1	MOUNTING PLATE	
030	1498762-0000		1	AXLE PIN	
040	2547218-0000		7	AXLE PIN	
050	2547219-0000		2	AXLE PIN	
060	1512583-0000		11	ROLLER	
	321120-0101		*2*	*BEARING BUSH W/O FLANGE, 6X8X6 MM*	
070	1499481-0000		1	ROLLER	
080	469159-0000		2	PIN	
090	2547217-0000		2	AXLE PIN	
100	979667-0000		2	ARM	
110	979668-0000		2	FINGER	
120	979669-0000		2	FORCE PLATE	
130	1499512-0000		4	PIN	
140	1499514-0000		4	E-HINGE	
150	1035794-0000		8	BLOCKING PIECE	
160	2519644-0000		2	BRACKET	
170	1517464-0000		1	SIGN	
180	1538219-0000		1	SWITCH BRACKET	
190	1517293-0000		1	ROLLER	
	1512583-0000		*1*	*ROLLER*	
	321120-0101		*2*	*BEARING BUSH W/O FLANGE, 6X8X6 MM*	
195	2506478-0000		1	COVER	
220	2588000-0000		1	BRACKET	
230	2588001-0000		1	AXLE PIN	
280	2033-0013		2	WASHER	
290	352113-0206		9	ANCHOR PLATES FOR STRIPS, ABM100-AT	
300	90005-0082		12	WASHER PLAIN ROUND 4,3(M4)/12,H=1	
320	315755-0106		8	RETAINING RING SHAFT DIN 6799 4 SS	
330	90141-0016		2	RETAINING RING FOR SHAFT DIN 471 10 SS	
400	312155-0287		9	SCREW DIN 7991 MF6S M4X8 A4 70	
405	312105-0293		2	SCREW, M6S ISO 4017 M4X16 A4 70	
410	312105-0329		4	SCREW, M6S ISO 4017 M5X16 A4 80	
420	312105-0368		5	SCREW, M6S ISO 4017 M6X16 A4 80	
425	312115-0230		2	SCREW ISO4762 M3X20 A4 80	
430	312115-0327		16	SCREW ISO4762 M5X12 A4 80	
450	312125-0232		4	SLOTTED HEAD SCREW, ISO1207 M3X25 A4	
460	312125-0287		12	SLOTTED HEAD SCREW, ISO1207 M4X8 A4	
470	312115-0367		2	SCREW ISO4762 M6X14 A4 80	
475	312105-0367		2	SCREW, M6S ISO 4017 M6X14 A4 80	
480	312318-0285		2	SET SCREW, CUP END ISO4029 M4X6 A4	
490	312605-0310		2	HEXAGON NUT, M6M M3 A280	
500	312605-0316		2	HEXAGON NUT, M6M M6 A280	
550	315105-0124		8	WASHER PLAIN, 3,2X6X0,5 A4 BRB	
555	315105-0136		2	WASHER PLAIN, 4,3X9X0,8 A4 BRB	
570	315105-0146		12	WASHER PLAIN, 5,3X10X1 A4 BRB	
580	315105-0153		4	WASHER PLAIN, 6,4X12X1,5 A4 BRB	
600	315755-0107		1	RETAINING RING SHAFT DIN 6799 5 SS	
610	90015-0020		1	LEAD-IN, TET5-7, E-1458016	
620	312105-0374		1	SCREW, M6S ISO 4014 M6X30 A4 80	
MB111	90044-0194		1	INDUCTIVE SENSOR, IN 5329	
MB109	90044-0194		1	INDUCTIVE SENSOR, IN 5329	
MB032	90044-0194		1	INDUCTIVE SENSOR, IN 5329	

Machine Type | Group Description | Used-In | Group Number | Page No

MOUNTING PLATE

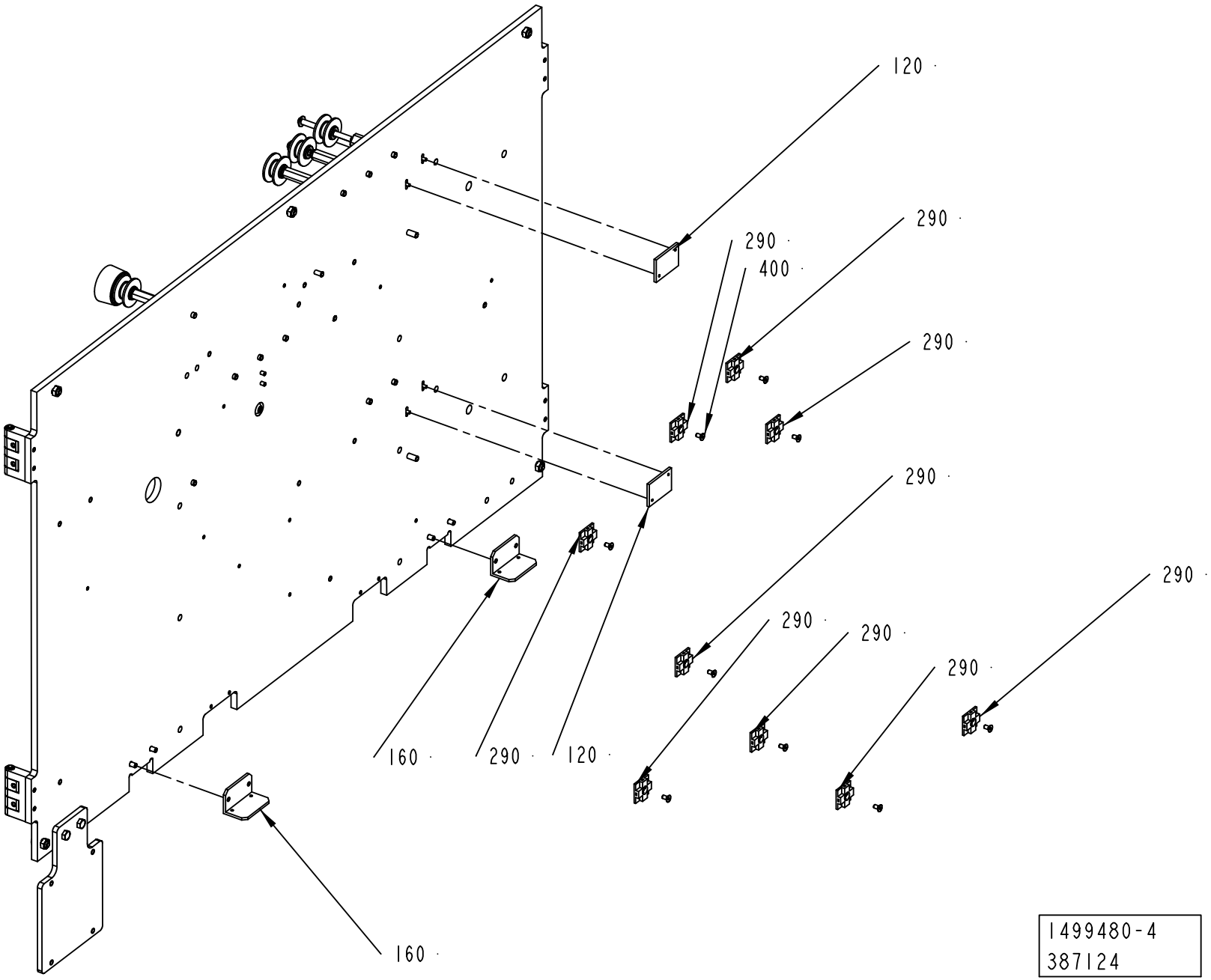

1499480-4
387124

ECM: 404989 - 20090706
Group number: 1499480-0200
Assembly Drawing: 1499480-4_2_AA

This list covers pages from 7-22 to 7-29

Pos	Part No	UN	Qty	Description	Page No
NOPT (See drawing on pages: 7-22, 7-24)					
020	1498764-0000		1	COVER	
200	1498775-0000		1	BOX BRACKET	
PT19 (See drawing on pages: 7-26, 7-28)					
200	2552624-0000		1	BOX BRACKET	
Common Parts					
010	3017352-0000		1	MOUNTING PLATE	
030	1498762-0000		1	AXLE PIN	
040	2547218-0000		7	AXLE PIN	
050	2547219-0000		2	AXLE PIN	
060	1512583-0000		11	ROLLER	
	321120-0101		*2*	*BEARING BUSH W/O FLANGE, 6X8X6 MM*	
070	1499481-0000		1	ROLLER	
080	469159-0000		2	PIN	
090	2547217-0000		2	AXLE PIN	
100	979667-0000		2	ARM	
110	979668-0000		2	FINGER	
120	979669-0000		2	FORCE PLATE	
130	1499512-0000		4	PIN	
140	1499514-0000		4	E-HINGE	
150	1035794-0000		8	BLOCKING PIECE	
160	2519644-0000		2	BRACKET	
170	1517464-0000		1	SIGN	
180	1538219-0000		1	SWITCH BRACKET	
190	1517293-0000		1	ROLLER	
	1512583-0000		*1*	*ROLLER*	
	321120-0101		*2*	*BEARING BUSH W/O FLANGE, 6X8X6 MM*	
195	2506478-0000		1	COVER	
220	2588000-0000		1	BRACKET	
230	2588001-0000		1	AXLE PIN	
280	2033-0013		2	WASHER	
290	352113-0206		9	ANCHOR PLATES FOR STRIPS, ABM100-AT	
300	90005-0082		12	WASHER PLAIN ROUND 4,3(M4)/12,H=1	
320	315755-0106		8	RETAINING RING SHAFT DIN 6799 4 SS	
330	90141-0016		2	RETAINING RING FOR SHAFT DIN 471 10 SS	
400	312155-0287		9	SCREW DIN 7991 MF6S M4X8 A4 70	
405	312105-0293		2	SCREW, M6S ISO 4017 M4X16 A4 70	
410	312105-0329		4	SCREW, M6S ISO 4017 M5X16 A4 80	
420	312105-0368		5	SCREW, M6S ISO 4017 M6X16 A4 80	
425	312115-0230		2	SCREW ISO4762 M3X20 A4 80	
430	312115-0327		16	SCREW ISO4762 M5X12 A4 80	
450	312125-0232		4	SLOTTED HEAD SCREW, ISO1207 M3X25 A4	
460	312125-0287		12	SLOTTED HEAD SCREW, ISO1207 M4X8 A4	
470	312115-0367		2	SCREW ISO4762 M6X14 A4 80	
475	312105-0367		2	SCREW, M6S ISO 4017 M6X14 A4 80	
480	312318-0285		2	SET SCREW, CUP END ISO4029 M4X6 A4	
490	312605-0310		2	HEXAGON NUT, M6M M3 A280	
500	312605-0316		2	HEXAGON NUT, M6M M6 A280	
550	315105-0124		8	WASHER PLAIN, 3,2X6X0,5 A4 BRB	
555	315105-0136		2	WASHER PLAIN, 4,3X9X0,8 A4 BRB	
570	315105-0146		12	WASHER PLAIN, 5,3X10X1 A4 BRB	
580	315105-0153		4	WASHER PLAIN, 6,4X12X1,5 A4 BRB	
600	315755-0107		1	RETAINING RING SHAFT DIN 6799 5 SS	
610	90015-0020		1	LEAD-IN, TET5-7, E-1458016	
620	312105-0374		1	SCREW, M6S ISO 4014 M6X30 A4 80	
MB111	90044-0194		1	INDUCTIVE SENSOR, IN 5329	
MB109	90044-0194		1	INDUCTIVE SENSOR, IN 5329	
MB032	90044-0194		1	INDUCTIVE SENSOR, IN 5329	

Machine Type	Group Description	Used-In	Group Number	Page No

MOUNTING PLATE

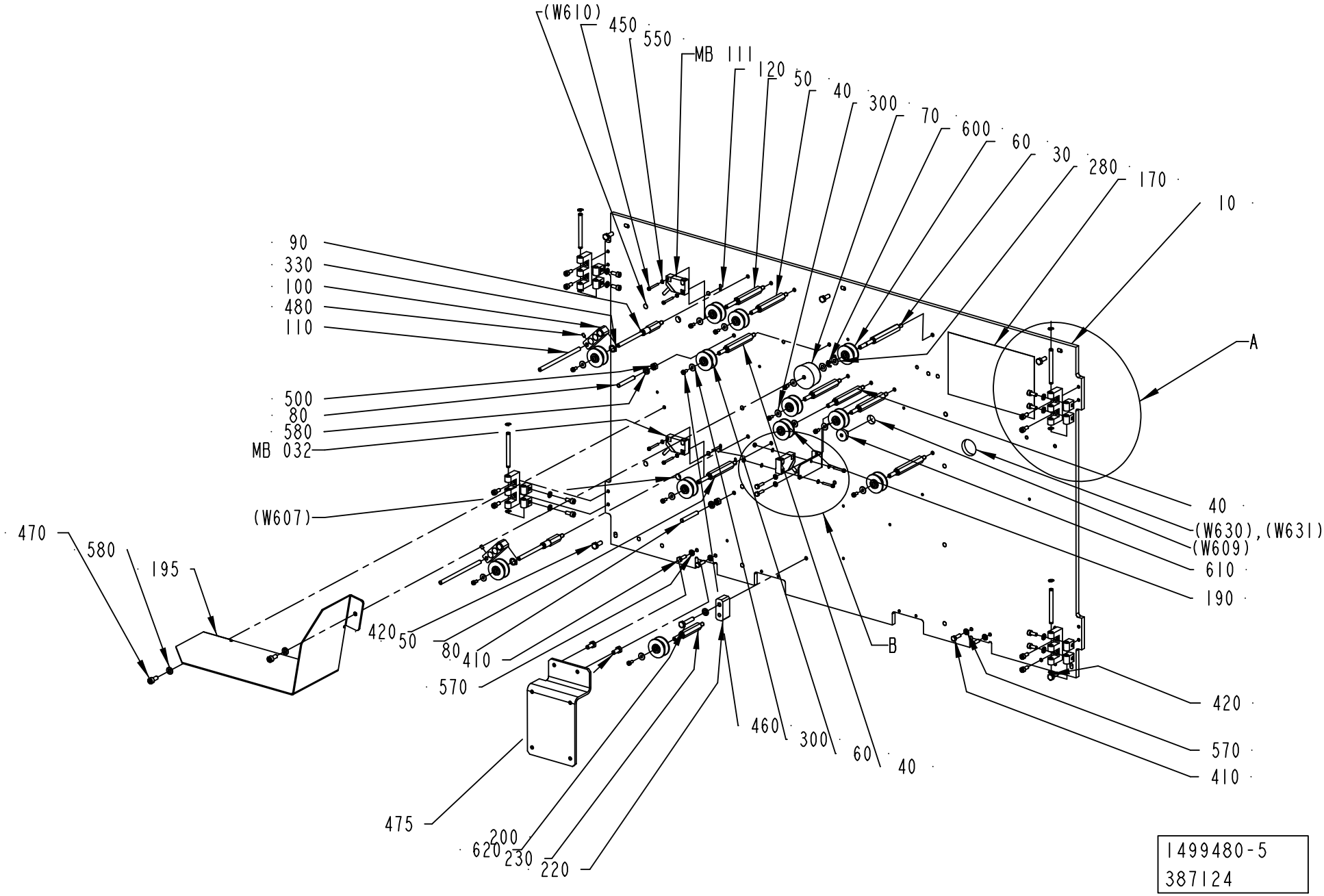

ECM: 404989 - 20090706
Group number: 1499480-0200
Assembly Drawing: 1499480-5_1_AA

This list covers pages from 7-22 to 7-29

Pos	Part No	UN	Qty	Description	Page No
NOPT (See drawing on pages: 7-22, 7-24)					
020	1498764-0000		1	COVER	
200	1498775-0000		1	BOX BRACKET	
PT19 (See drawing on pages: 7-26, 7-28)					
200	2552624-0000		1	BOX BRACKET	
Common Parts					
010	3017352-0000		1	MOUNTING PLATE	
030	1498762-0000		1	AXLE PIN	
040	2547218-0000		7	AXLE PIN	
050	2547219-0000		2	AXLE PIN	
060	1512583-0000		11	ROLLER	
	321120-0101		*2*	*BEARING BUSH W/O FLANGE, 6X8X6 MM*	
070	1499481-0000		1	ROLLER	
080	469159-0000		2	PIN	
090	2547217-0000		2	AXLE PIN	
100	979667-0000		2	ARM	
110	979668-0000		2	FINGER	
120	979669-0000		2	FORCE PLATE	
130	1499512-0000		4	PIN	
140	1499514-0000		4	E-HINGE	
150	1035794-0000		8	BLOCKING PIECE	
160	2519644-0000		2	BRACKET	
170	1517464-0000		1	SIGN	
180	1538219-0000		1	SWITCH BRACKET	
190	1517293-0000		1	ROLLER	
	1512583-0000		*1*	*ROLLER*	
	321120-0101		*2*	*BEARING BUSH W/O FLANGE, 6X8X6 MM*	
195	2506478-0000		1	COVER	
220	2588000-0000		1	BRACKET	
230	2588001-0000		1	AXLE PIN	
280	2033-0013		2	WASHER	
290	352113-0206		9	ANCHOR PLATES FOR STRIPS, ABM100-AT	
300	90005-0082		12	WASHER PLAIN ROUND 4,3(M4)/12,H=1	
320	315755-0106		8	RETAINING RING SHAFT DIN 6799 4 SS	
330	90141-0016		2	RETAINING RING FOR SHAFT DIN 471 10 SS	
400	312155-0287		9	SCREW DIN 7991 MF6S M4X8 A4 70	
405	312105-0293		2	SCREW, M6S ISO 4017 M4X16 A4 70	
410	312105-0329		4	SCREW, M6S ISO 4017 M5X16 A4 80	
420	312105-0368		5	SCREW, M6S ISO 4017 M6X16 A4 80	
425	312115-0230		2	SCREW ISO4762 M3X20 A4 80	
430	312115-0327		16	SCREW ISO4762 M5X12 A4 80	
450	312125-0232		4	SLOTTED HEAD SCREW, ISO1207 M3X25 A4	
460	312125-0287		12	SLOTTED HEAD SCREW, ISO1207 M4X8 A4	
470	312115-0367		2	SCREW ISO4762 M6X14 A4 80	
475	312105-0367		2	SCREW, M6S ISO 4017 M6X14 A4 80	
480	312318-0285		2	SET SCREW, CUP END ISO4029 M4X6 A4	
490	312605-0310		2	HEXAGON NUT, M6M M3 A280	
500	312605-0316		2	HEXAGON NUT, M6M M6 A280	
550	315105-0124		8	WASHER PLAIN, 3,2X6X0,5 A4 BRB	
555	315105-0136		2	WASHER PLAIN, 4,3X9X0,8 A4 BRB	
570	315105-0146		12	WASHER PLAIN, 5,3X10X1 A4 BRB	
580	315105-0153		4	WASHER PLAIN, 6,4X12X1,5 A4 BRB	
600	315755-0107		1	RETAINING RING SHAFT DIN 6799 5 SS	
610	90015-0020		1	LEAD-IN, TET5-7, E-1458016	
620	312105-0374		1	SCREW, M6S ISO 4014 M6X30 A4 80	
MB111	90044-0194		1	INDUCTIVE SENSOR, IN 5329	
MB109	90044-0194		1	INDUCTIVE SENSOR, IN 5329	
MB032	90044-0194		1	INDUCTIVE SENSOR, IN 5329	

Machine Type	Group Description	Used-In	Group Number	Page No

MOUNTING PLATE

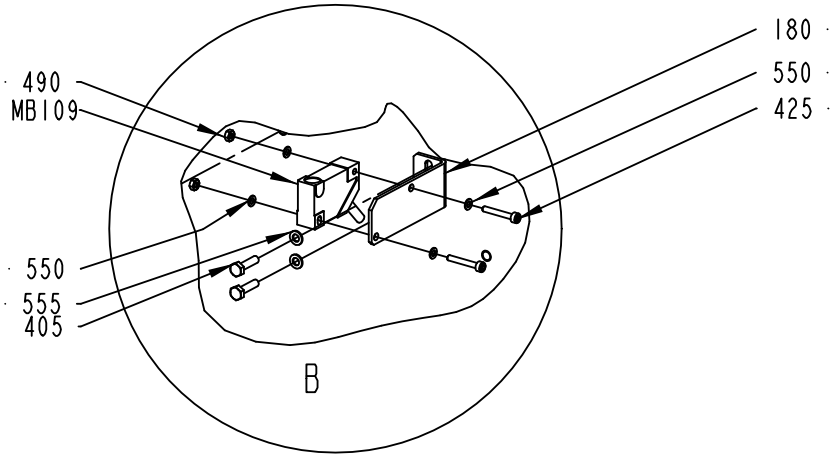

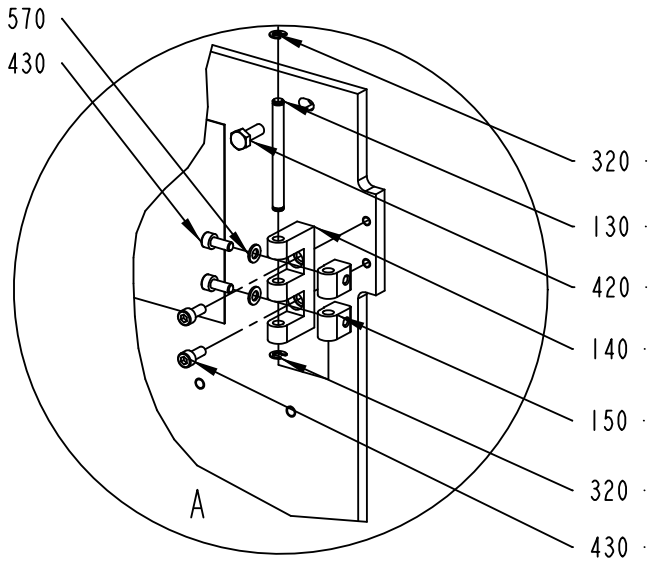

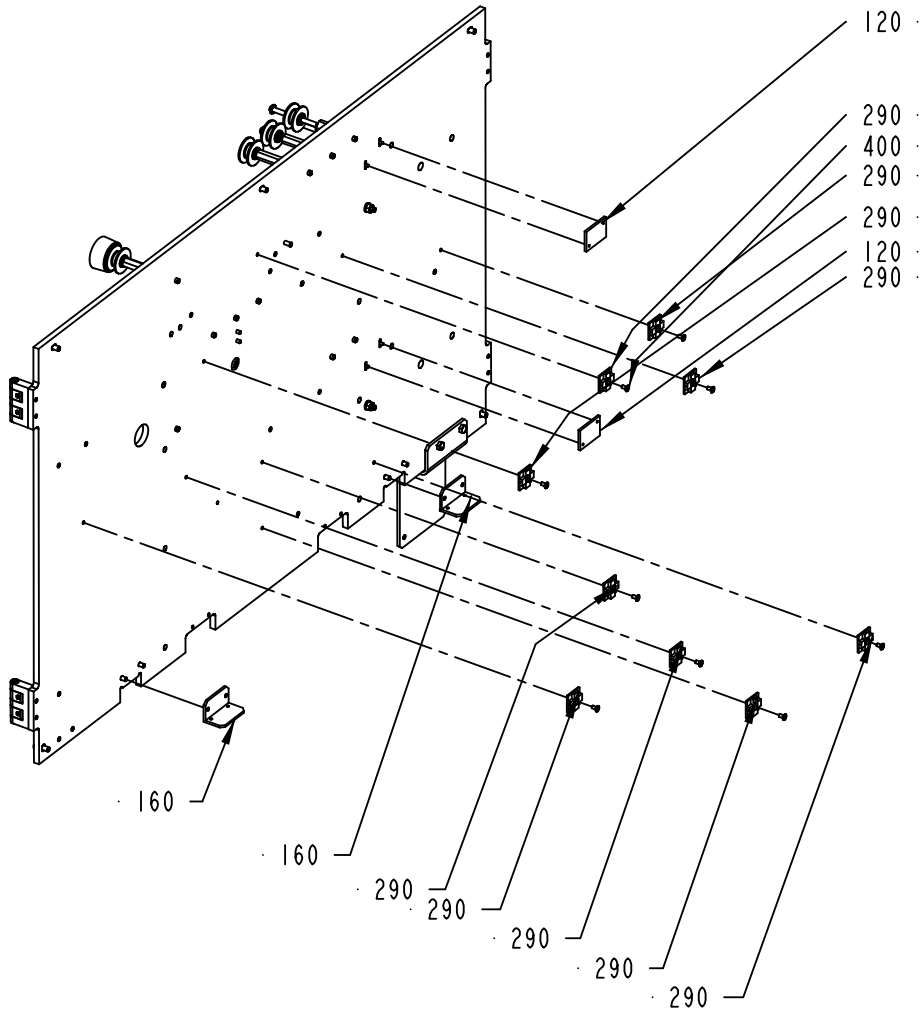

1499480-5
387124

ECM: 404989 - 20090706
Group number: 1499480-0200
Assembly Drawing: 1499480-5_2_AA

This list covers pages from 7-22 to 7-29

Pos	Part No	UN	Qty	Description	Page No
NOPT (See drawing on pages: 7-22, 7-24)					
020	1498764-0000		1	COVER	
200	1498775-0000		1	BOX BRACKET	
PT19 (See drawing on pages: 7-26, 7-28)					
200	2552624-0000		1	BOX BRACKET	
Common Parts					
010	3017352-0000		1	MOUNTING PLATE	
030	1498762-0000		1	AXLE PIN	
040	2547218-0000		7	AXLE PIN	
050	2547219-0000		2	AXLE PIN	
060	1512583-0000		11	ROLLER	
	321120-0101		*2*	*BEARING BUSH W/O FLANGE, 6X8X6 MM*	
070	1499481-0000		1	ROLLER	
080	469159-0000		2	PIN	
090	2547217-0000		2	AXLE PIN	
100	979667-0000		2	ARM	
110	979668-0000		2	FINGER	
120	979669-0000		2	FORCE PLATE	
130	1499512-0000		4	PIN	
140	1499514-0000		4	E-HINGE	
150	1035794-0000		8	BLOCKING PIECE	
160	2519644-0000		2	BRACKET	
170	1517464-0000		1	SIGN	
180	1538219-0000		1	SWITCH BRACKET	
190	1517293-0000		1	ROLLER	
	1512583-0000		*1*	*ROLLER*	
	321120-0101		*2*	*BEARING BUSH W/O FLANGE, 6X8X6 MM*	
195	2506478-0000		1	COVER	
220	2588000-0000		1	BRACKET	
230	2588001-0000		1	AXLE PIN	
280	2033-0013		2	WASHER	
290	352113-0206		9	ANCHOR PLATES FOR STRIPS, ABM100-AT	
300	90005-0082		12	WASHER PLAIN ROUND 4,3(M4)/12,H=1	
320	315755-0106		8	RETAINING RING SHAFT DIN 6799 4 SS	
330	90141-0016		2	RETAINING RING FOR SHAFT DIN 471 10 SS	
400	312155-0287		9	SCREW DIN 7991 MF6S M4X8 A4 70	
405	312105-0293		2	SCREW, M6S ISO 4017 M4X16 A4 70	
410	312105-0329		4	SCREW, M6S ISO 4017 M5X16 A4 80	
420	312105-0368		5	SCREW, M6S ISO 4017 M6X16 A4 80	
425	312115-0230		2	SCREW ISO4762 M3X20 A4 80	
430	312115-0327		16	SCREW ISO4762 M5X12 A4 80	
450	312125-0232		4	SLOTTED HEAD SCREW, ISO1207 M3X25 A4	
460	312125-0287		12	SLOTTED HEAD SCREW, ISO1207 M4X8 A4	
470	312115-0367		2	SCREW ISO4762 M6X14 A4 80	
475	312105-0367		2	SCREW, M6S ISO 4017 M6X14 A4 80	
480	312318-0285		2	SET SCREW, CUP END ISO4029 M4X6 A4	
490	312605-0310		2	HEXAGON NUT, M6M M3 A280	
500	312605-0316		2	HEXAGON NUT, M6M M6 A280	
550	315105-0124		8	WASHER PLAIN, 3,2X6X0,5 A4 BRB	
555	315105-0136		2	WASHER PLAIN, 4,3X9X0,8 A4 BRB	
570	315105-0146		12	WASHER PLAIN, 5,3X10X1 A4 BRB	
580	315105-0153		4	WASHER PLAIN, 6,4X12X1,5 A4 BRB	
600	315755-0107		1	RETAINING RING SHAFT DIN 6799 5 SS	
610	90015-0020		1	LEAD-IN, TET5-7, E-1458016	
620	312105-0374		1	SCREW, M6S ISO 4014 M6X30 A4 80	
MB111	90044-0194		1	INDUCTIVE SENSOR, IN 5329	
MB109	90044-0194		1	INDUCTIVE SENSOR, IN 5329	
MB032	90044-0194		1	INDUCTIVE SENSOR, IN 5329	

Machine Type | Group Description | Used-In | Group Number | Page No

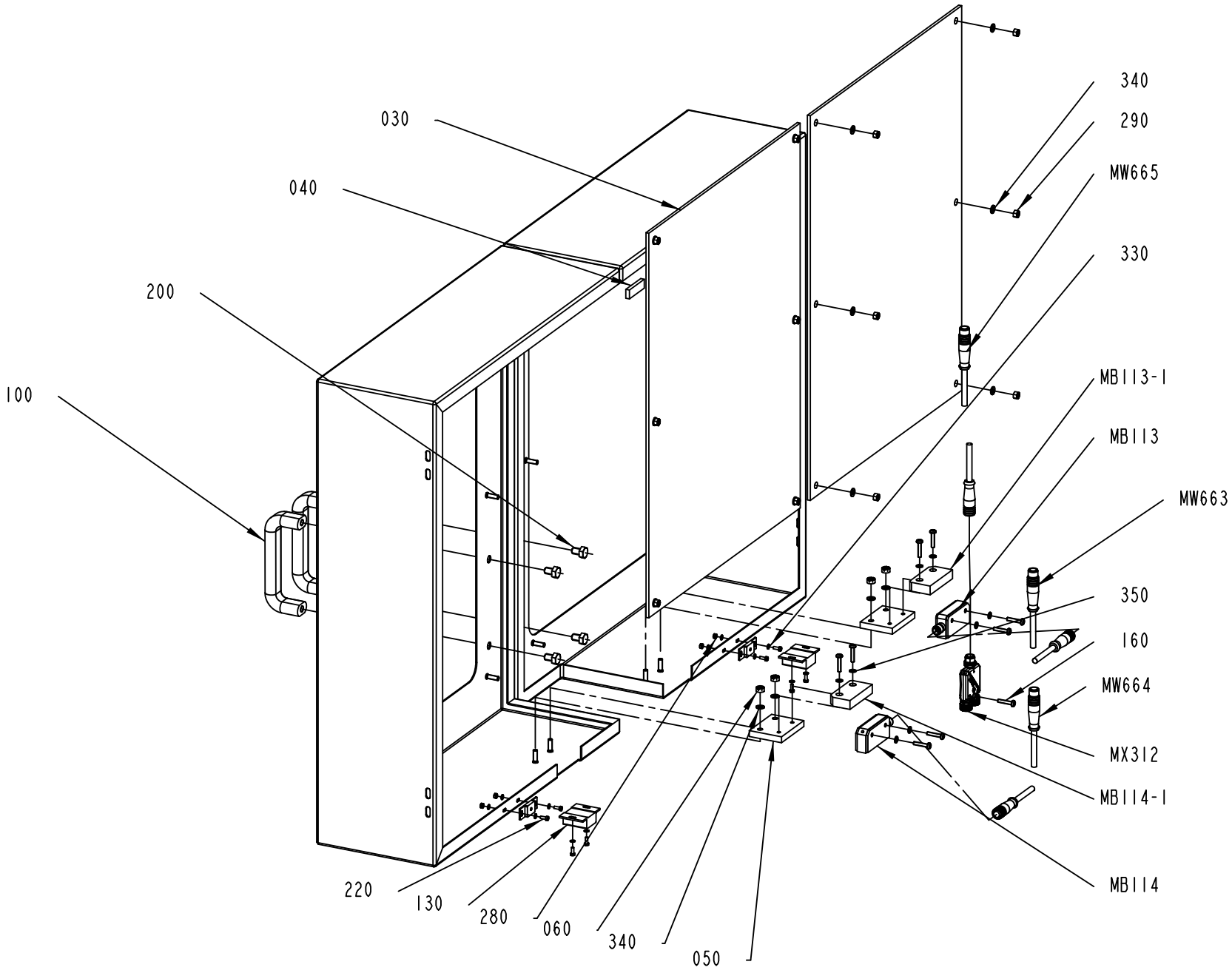

1498751-3
387124

ECM: 404988 - 20090706
Group number: 1498751-0300
Assembly Drawing: 1498751-3_1_AA

Pos	Part No	UN	Qty	Description	Page No
-					
030	1499511-0000		2	PANEL	
040	1511323-0000		2	STRIP ADHESIVE	
050	3017351-0000		2	BRACKET	
060	575034-0000		4	ROUND NUT	
070	3017353-0000		1	DOOR	
080	3017354-0000		1	DOOR	
100	90017-0022		2	HANDLE, NO. EL-037311	
130	90237-0046		2	MAGNETIC LOCK, 46X33X15 MM	
160	90459-4164		9	SAFETY SCREW, SM4X20	
200	312105-0447		4	SCREW, M6S ISO 4017 M8X12 A4 80	
220	312125-0222		8	SLOTTED HEAD SCREW, ISO1207 M3X8 A4	
280	312605-0310		4	HEXAGON NUT, M6M M3 A280	
290	312605-0314		12	HEXAGON NUT, M6M M5 A280	
330	315105-0124		12	WASHER PLAIN, 3,2X6X0,5 A4 BRB	
340	315105-0146		10	WASHER PLAIN, 5,3X10X1 A4 BRB	
350	315105-0136		8	WASHER PLAIN, 4,3X9X0,8 A4 BRB	
M.X312	90601-0026		1	JUNCTION BLOCK,TINA 11-A	
M.W665	90459-4876		1	FOCUS JUMPER CABLE M12 5P 3M, 20-056-21	
M.W664	90459-7095		1	FOCUS JUMPER CABLE M12 5P 1M, 20-056-20	
M.W663	90459-7095		1	FOCUS JUMPER CABLE M12 5P 1M, 20-056-20	
M.B114:1	90458-2794		1	SAFETY SENSOR, EVA 20-046-00	
M.B114	90459-4142		1	SAFETY SENSOR, ADAM M12, 20-051-00	
M.B113:1	90458-2794		1	SAFETY SENSOR, EVA 20-046-00	
M.B113	90459-4142		1	SAFETY SENSOR, ADAM M12, 20-051-00	

Pos	Part No	UN	Qty	Description	Page No

CONNECTION BOX

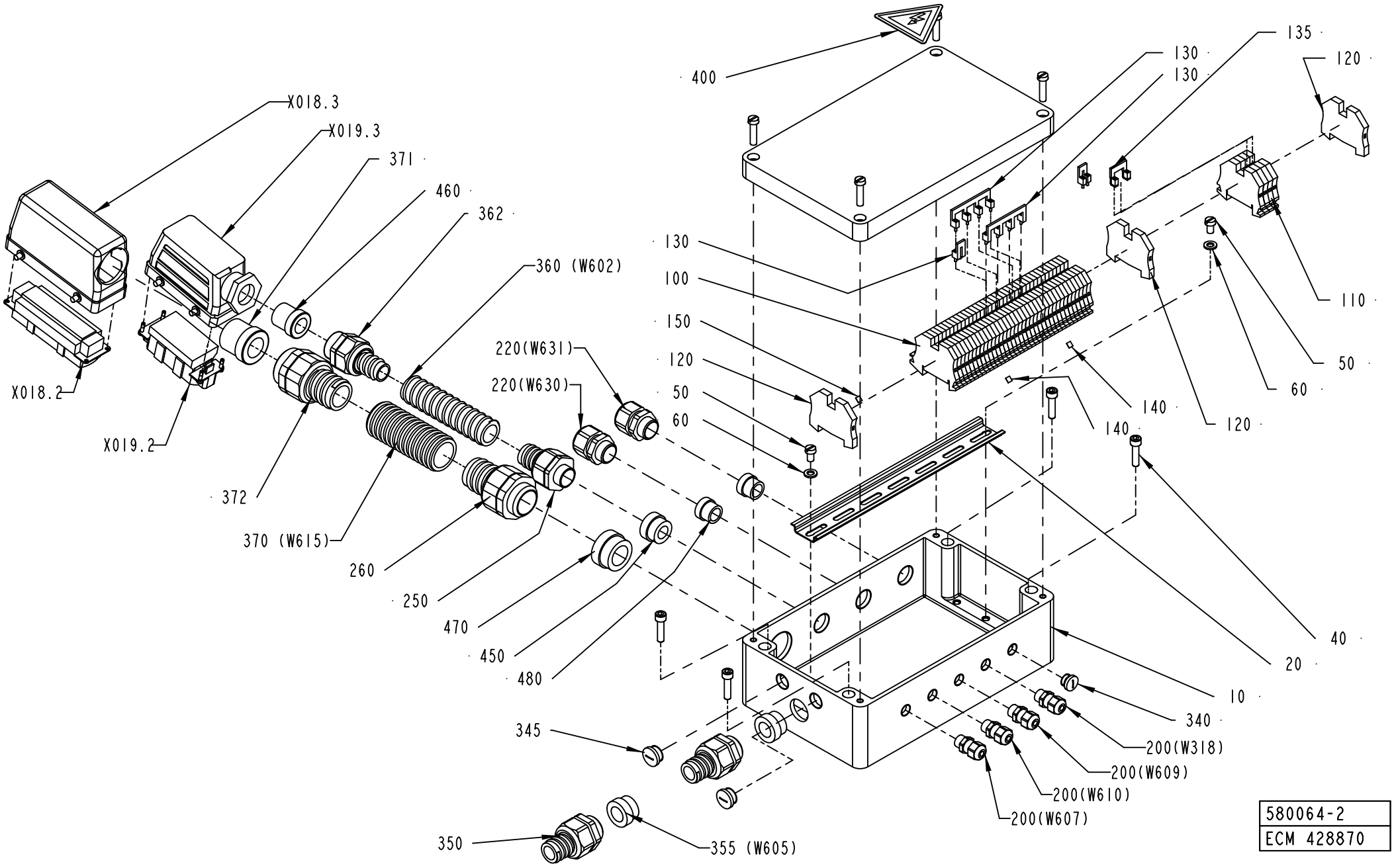

580064-2
ECM 428870

ECM: 430685 - 20091221
Group number: 580064-0200
Assembly Drawing: 580064-2_1_AF

Pos	Part No	UN	Qty	Description	Page No
-					
010	1512283-0000		1	CONNECTION BOX	
020	1512352-0000		1	RAIL	
040	312115-0372		4	SCREW ISO4762 M6X25 A4 80	
050	312125-0364		2	SCREW ISO 1207 M6X10 A4	
060	315105-0153		2	WASHER PLAIN, 6,4X12X1,5 A4 BRB	
100	353021-0212		36	FEED THROUGH TERMINAL, WDU 2,5	
110	353021-0213		4	FEED THROUGH TERMINAL, WDU 4	
120	353024-0205		3	EARTH TERMINAL WPE 4	
130	353034-0030		3	BRIDGE CONNECTOR WQV 2,5/10	
135	353034-0039		1	BRIDGE CONNECTOR WQV 4/4	
140	359011-0807		2	MARKING, DEK 5 FW 1-50	
150	359011-0819		1	MARKING, EARTH, DEK 5 GW ERDE I.KR.	
200	90458-0305		4	CABLE GLAND, M12X1,5, 5311 1000	
220	90458-0422		2	CABLE GLAND, VK 22053Y	
250	90458-0430		1	GLAND FITTING, VK 22054YUL16	
260	90458-0433		1	GLAND FITTING, VK 23255YUL21	
340	90458-1306		1	BLIND PLUG CIRCULAR, M12X1,5 514GFK/212	
345	90458-1307		2	BLIND PLUG CIRCULAR, M16X1,5 514GFK/216	
350	90458-0431		1	GLAND FITTING, VK 22554YUL16	
355	353249-0014		1	INSERT, SINGLE HOLE, EK154 16	
360	90152-0051	MM	1800	HOSE, SPIRAL CONDUIT, 25X18, UL 1816	
362	90458-0146		1	GLAND FITTING, VK 154YUL16	
370	90152-0070	MM	2100	HOSE, SPIRAL CONDUIT, 32,5X26, UL 2621	
371	353249-0072		1	INSERT, SINGLE HOLE, E155 20	
372	353242-0003		1	COMPRESSION GLAND, VK 155YUL21	
400	359705-0015		1	WARNING SIGN ISO, RISK OF ELECTRIC SHOCK	
450	353249-0013		1	INSERT, SINGLE HOLE, EK154 13	
460	353249-0070		1	INSERT, SINGLE HOLE, E154 16	
470	353249-0061		1	INSERT, SINGLE HOLE, EK155 20	
480	353249-0075		2	INSERT, SINGLE HOLE, EK153 13	
W602	351150-0422	MM	2300	CABLE OLFLEX 3X4 MM2 LIGHT/GREY	
W605	351150-0407	MM	1900	CABLE OLFLEX 12X0,75 MM2 LIGHT/GREY	
W615	351150-0425	MM	2600	CABLE OLFLEX 25X0,75 MM2 LIGHT/GREY	
X018.2	90110-0150		1	MALE INSERT, HDC HE 24 MS, 1211 1000 00	
X018.3	90110-0346		1	HOOD, SIDE ENTRY, 12 11220 00 00	
X019.2	90110-0156		1	MALE INSERT 70.210.0653.0	
X019.3	90110-0244		1	CABLE HOOD 6-POL 70.350.1628.0	

Pos	Part No	UN	Qty	Description	Page No

STRIP APPLICATOR

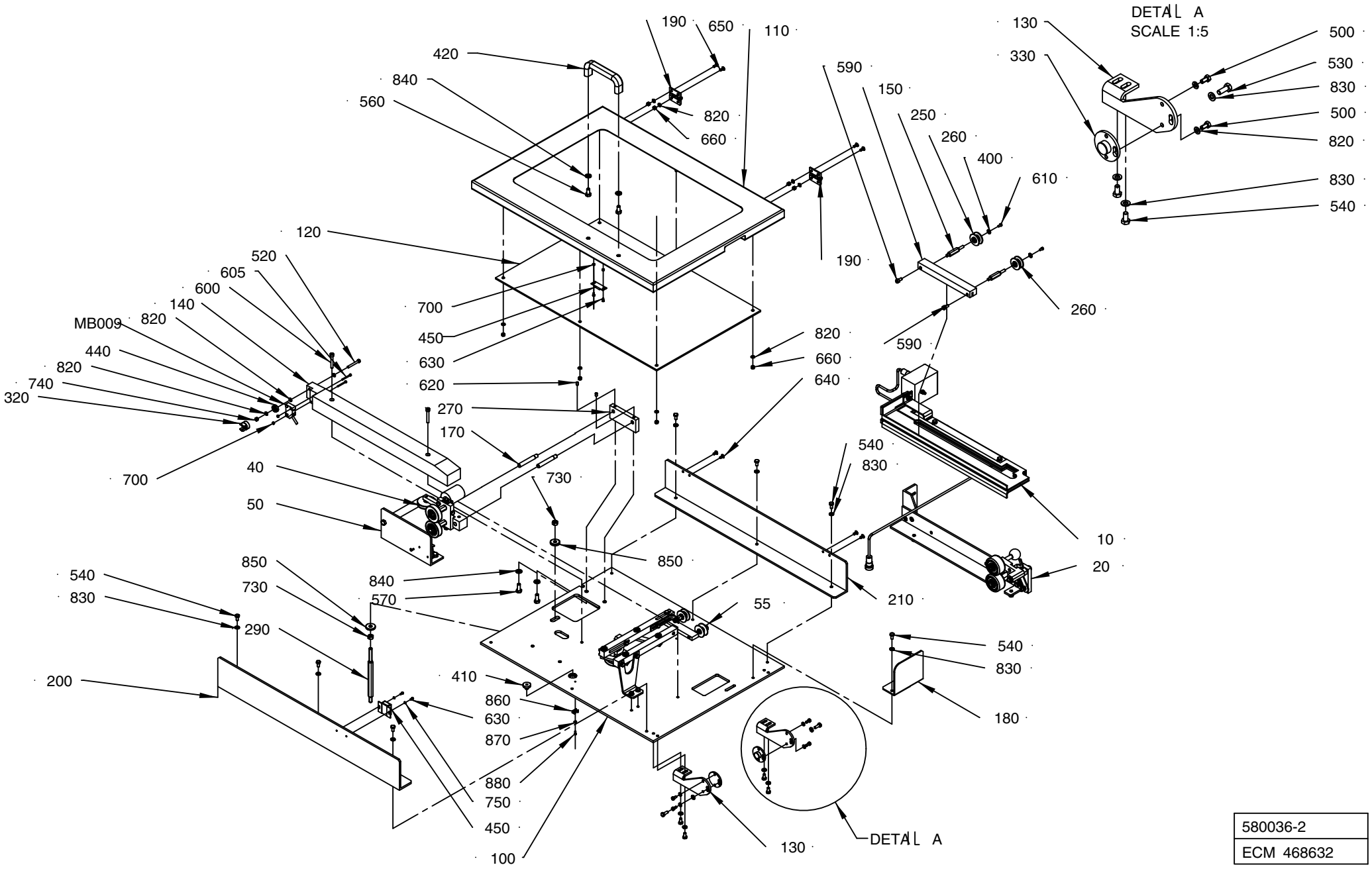

580036-2
ECM 468632

ECM: 469801 - 20100930
Group number: 580036-0200
Assembly Drawing: 580036-2_1_AG

This list covers pages from 7-34 to 7-37

Pos	Part No	UN	Qty	Description	Page No
NOPT (See drawing on page: 7-34)					
050	1279624-0200		1	SPLICE DETECTOR	**7-39, 7-41**
110	2552620-0000		1	DOOR	
120	1499483-0000		1	PANE	
180	2552619-0000		1	COVER	
190	90459-0075		2	HINGE, 1056-U30	
200	2552622-0000		1	HOLDER	
210	2552621-0000		1	HOLDER	
420	90017-0022		1	HANDLE, NO. EL-037311	
450	90237-0046		1	MAGNETIC LOCK, 46X33X15 MM	
540	312105-0366		11	SCREW, M6S ISO 4017 M6X12 A4 80	
560	312105-0449		2	SCREW, M6S ISO 4017 M8X16 A4 80	
630	312115-0220		4	SCREW ISO4762 M3X6 A4 80	
640	312155-0325		4	SCREW DIN 7991 MF6S M5X10 A4 70	
650	312155-0327		4	SCREW DIN 7991 MF6S M5X12 A4 70	
660	312605-0314		10	HEXAGON NUT, M6M M5 A280	
700	312605-0310		4	HEXAGON NUT, M6M M3 A280	
750	315105-0124		2	WASHER PLAIN, 3,2X6X0,5 A4 BRB	
820	315105-0146		17	WASHER PLAIN, 5,3X10X1 A4 BRB	
830	315105-0153		13	WASHER PLAIN, 6,4X12X1,5 A4 BRB	
840	315105-0165		4	WASHER PLAIN, 8,4X16X1,6 A4 BRB	
860	352113-0205		2	ANCHOR PLATES FOR STRIPS, TM2S8-C100	
870	315106-0124		2	WASHER PLAIN, M3 ISO7089-3-200 HV A4	
880	312125-0222		2	SLOTTED HEAD SCREW, ISO1207 M3X8 A4	
PT19 (See drawing on page: 7-36)					
030	2576243-0100		1	STRIP GUIDE	**7-43**
540	312105-0366		6	SCREW, M6S ISO 4017 M6X12 A4 80	
560	312105-0449		3	SCREW, M6S ISO 4017 M8X16 A4 80	
700	312605-0310		3	HEXAGON NUT, M6M M3 A280	
820	315105-0146		9	WASHER PLAIN, 5,3X10X1 A4 BRB	
830	315105-0153		8	WASHER PLAIN, 6,4X12X1,5 A4 BRB	
840	315105-0165		4	WASHER PLAIN, 8,4X16X1,6 A4 BRB	
860	266737-0000		2	WASHER	
870	979899-0000		1	BRACKET	
880	1035897-0000		1	SHAFT	
890	2524478-0000		1	BRACKET	
900	312115-0228		1	SCREW ISO4762 M3X16 A4 80	
910	315751-0109		1	RETAINING RING FOR SHAFT DIN 471 12 SS	
920	321141-0183		2	BEARING BUSHING, 12X14X15 MM	
930	90335-0216		1	TENSION SPRING, 40910, 0,5X5,5X27,7	
940	312105-0328		1	SCREW M6S ISO 4017 M5X14 A4 80	
Common Parts					
010	580038-0200		1	INDUCTOR	**7-45**
020	2506475-0100		1	PRESSURE ROLLER	**7-47**
040	2524476-0100		1	WEB GUIDE	**7-49**
055	2576240-0100		1	STRIP GUIDE	**7-51, 7-53**
100	2552630-0000		1	MOUNTING PLATE	
130	1498773-0000		2	CANTILEVER	
140	1517535-0000		1	STEERING	
150	1282988-0000		1	RAIL	
170	1498778-0000		2	SHAFT	
250	1282989-0000		2	AXLE PIN	
260	1512583-0000		2	ROLLER	
	321120-0101		*2*	*BEARING BUSH W/O FLANGE, 6X8X6 MM*	
270	1498777-0000		1	GUIDE HOLDER	
290	1498765-0000		1	AXLE PIN	
320	1517534-0000		1	RUNNER RING	
330	1334331-0000		2	FLANGE	
400	90005-0082		2	WASHER PLAIN ROUND 4,3(M4)/12,H=1	
410	90015-0020		1	LEAD-IN, TET5-7, E-1458016	
440	90214-0138		1	BALL BEARING 5/19X6	
500	312105-0325		4	SCREW, M6S ISO 4017 M5X10 A4 80	
520	312105-0339		1	SCREW, M6S ISO 4014 M5X40 A4 80	
530	312105-0368		2	SCREW, M6S ISO 4017 M6X16 A4 80	
570	312105-0451		2	SCREW, M6S ISO 4017 M8X20 A4 80	
590	312115-0366		2	SCREW ISO4762 M6X12 A4 80	
600	312115-0378		2	SCREW ISO4762 M6X40 A4 80	
605	312125-0234		2	SLOTTED HEAD SCREW, ISO1207 M3X30 A4	
610	312125-0287		2	SLOTTED HEAD SCREW, ISO1207 M4X8 A4	
620	312318-0362		2	SET SCREW, CUP END ISO4029 M6X8 A4	
730	312605-0318		2	HEXAGON NUT, M6M M8 A280	
740	312812-0314		1	HEXAGON NUT, NY-LOCK M5 A4 80	
850	315125-0165		2	WASHER HIGH, TBRSB 8,4X26X5 A4	
MB009	90044-0194		1	INDUCTIVE SENSOR, IN 5329	

Machine Type	Group Description	Used-In	Group Number	Page No

STRIP APPLICATOR

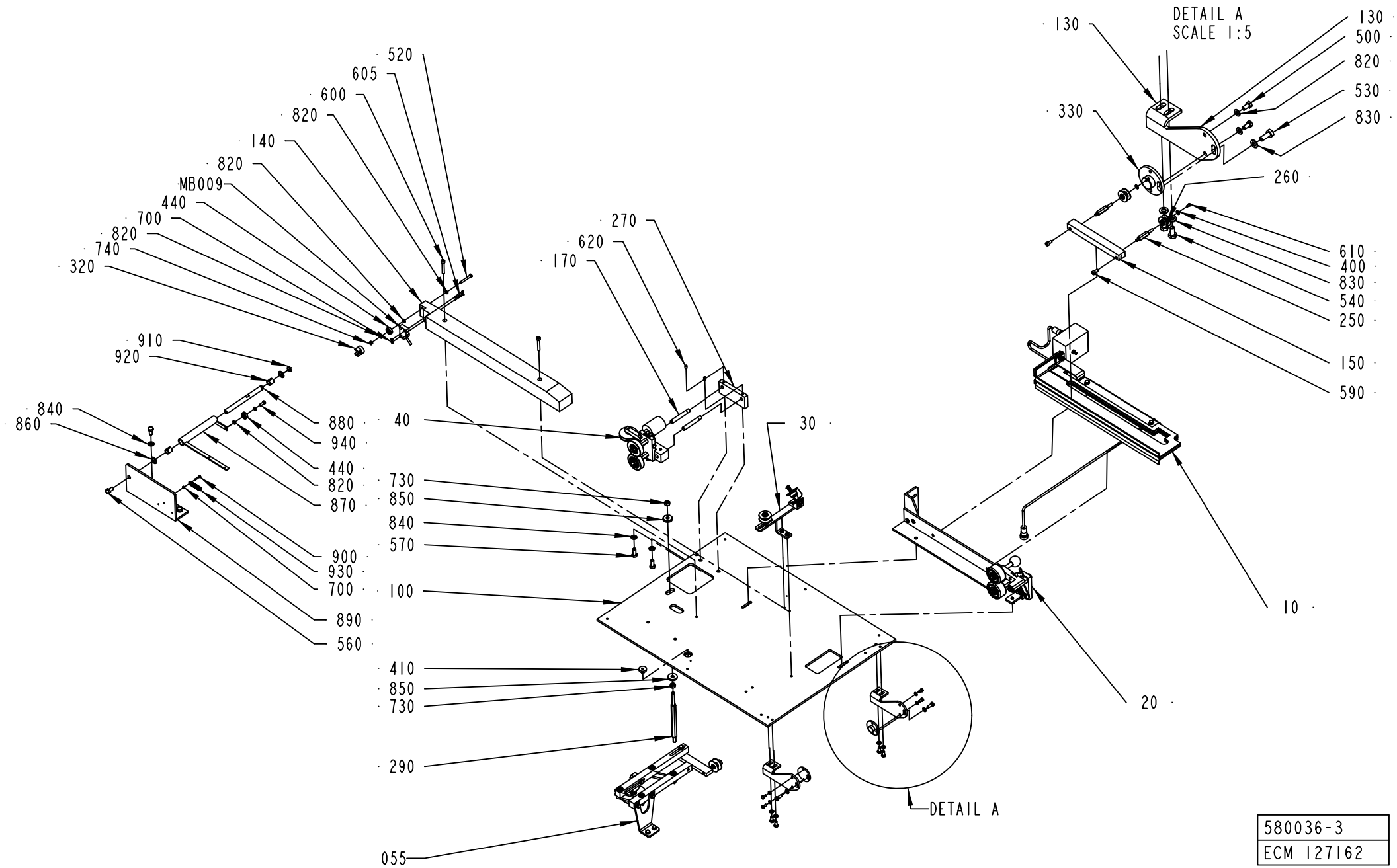

580036-3
ECM 127162

ECM: 469801 - 20100930
Group number: 580036-0200
Assembly Drawing: 580036-3_1_AB

This list covers pages from 7-34 to 7-37

Pos	Part No	UN	Qty	Description	Page No
NOPT (See drawing on page: 7-34)					
050	1279624-0200		1	SPLICE DETECTOR	**7-39, 7-41**
110	2552620-0000		1	DOOR	
120	1499483-0000		1	PANE	
180	2552619-0000		1	COVER	
190	90459-0075		2	HINGE, 1056-U30	
200	2552622-0000		1	HOLDER	
210	2552621-0000		1	HOLDER	
420	90017-0022		1	HANDLE, NO. EL-037311	
450	90237-0046		1	MAGNETIC LOCK, 46X33X15 MM	
540	312105-0366		11	SCREW, M6S ISO 4017 M6X12 A4 80	
560	312105-0449		2	SCREW, M6S ISO 4017 M8X16 A4 80	
630	312115-0220		4	SCREW ISO4762 M3X6 A4 80	
640	312155-0325		4	SCREW DIN 7991 MF6S M5X10 A4 70	
650	312155-0327		4	SCREW DIN 7991 MF6S M5X12 A4 70	
660	312605-0314		10	HEXAGON NUT, M6M M5 A280	
700	312605-0310		4	HEXAGON NUT, M6M M3 A280	
750	315105-0124		2	WASHER PLAIN, 3,2X6X0,5 A4 BRB	
820	315105-0146		17	WASHER PLAIN, 5,3X10X1 A4 BRB	
830	315105-0153		13	WASHER PLAIN, 6,4X12X1,5 A4 BRB	
840	315105-0165		4	WASHER PLAIN, 8,4X16X1,6 A4 BRB	
860	352113-0205		2	ANCHOR PLATES FOR STRIPS, TM2S8-C100	
870	315106-0124		2	WASHER PLAIN, M3 ISO7089-3-200 HV A4	
880	312125-0222		2	SLOTTED HEAD SCREW, ISO1207 M3X8 A4	
PT19 (See drawing on page: 7-36)					
030	2576243-0100		1	STRIP GUIDE	**7-43**
540	312105-0366		6	SCREW, M6S ISO 4017 M6X12 A4 80	
560	312105-0449		3	SCREW, M6S ISO 4017 M8X16 A4 80	
700	312605-0310		3	HEXAGON NUT, M6M M3 A280	
820	315105-0146		9	WASHER PLAIN, 5,3X10X1 A4 BRB	
830	315105-0153		8	WASHER PLAIN, 6,4X12X1,5 A4 BRB	
840	315105-0165		4	WASHER PLAIN, 8,4X16X1,6 A4 BRB	
860	266737-0000		2	WASHER	
870	979899-0000		1	BRACKET	
880	1035897-0000		1	SHAFT	
890	2524478-0000		1	BRACKET	
900	312115-0228		1	SCREW ISO4762 M3X16 A4 80	
910	315751-0109		1	RETAINING RING FOR SHAFT DIN 471 12 SS	
920	321141-0183		2	BEARING BUSHING, 12X14X15 MM	
930	90335-0216		1	TENSION SPRING, 40910, 0,5X5,5X27,7	
940	312105-0328		1	SCREW M6S ISO 4017 M5X14 A4 80	
Common Parts					
010	580038-0200		1	INDUCTOR	**7-45**
020	2506475-0100		1	PRESSURE ROLLER	**7-47**
040	2524476-0100		1	WEB GUIDE	**7-49**
055	2576240-0100		1	STRIP GUIDE	**7-51, 7-53**
100	2552630-0000		1	MOUNTING PLATE	
130	1498773-0000		2	CANTILEVER	
140	1517535-0000		1	STEERING	
150	1282988-0000		1	RAIL	
170	1498778-0000		2	SHAFT	
250	1282989-0000		2	AXLE PIN	
260	1512583-0000		2	ROLLER	
	321120-0101		*2*	*BEARING BUSH W/O FLANGE, 6X8X6 MM*	
270	1498777-0000		1	GUIDE HOLDER	
290	1498765-0000		1	AXLE PIN	
320	1517534-0000		1	RUNNER RING	
330	1334331-0000		2	FLANGE	
400	90005-0082		2	WASHER PLAIN ROUND 4,3(M4)/12,H=1	
410	90015-0020		1	LEAD-IN, TET5-7, E-1458016	
440	90214-0138		1	BALL BEARING 5/19X6	
500	312105-0325		4	SCREW, M6S ISO 4017 M5X10 A4 80	
520	312105-0339		1	SCREW, M6S ISO 4014 M5X40 A4 80	
530	312105-0368		2	SCREW, M6S ISO 4017 M6X16 A4 80	
570	312105-0451		2	SCREW, M6S ISO 4017 M8X20 A4 80	
590	312115-0366		2	SCREW ISO4762 M6X12 A4 80	
600	312115-0378		2	SCREW ISO4762 M6X40 A4 80	
605	312125-0234		2	SLOTTED HEAD SCREW, ISO1207 M3X30 A4	
610	312125-0287		2	SLOTTED HEAD SCREW, ISO1207 M4X8 A4	
620	312318-0362		2	SET SCREW, CUP END ISO4029 M6X8 A4	
730	312605-0318		2	HEXAGON NUT, M6M M8 A280	
740	312812-0314		1	HEXAGON NUT, NY-LOCK M5 A4 80	
850	315125-0165		2	WASHER HIGH, TBRSB 8,4X26X5 A4	
MB009	90044-0194		1	INDUCTIVE SENSOR, IN 5329	

Machine Type | Group Description | Used-In | Group Number | Page No

SPLICE DETECTOR

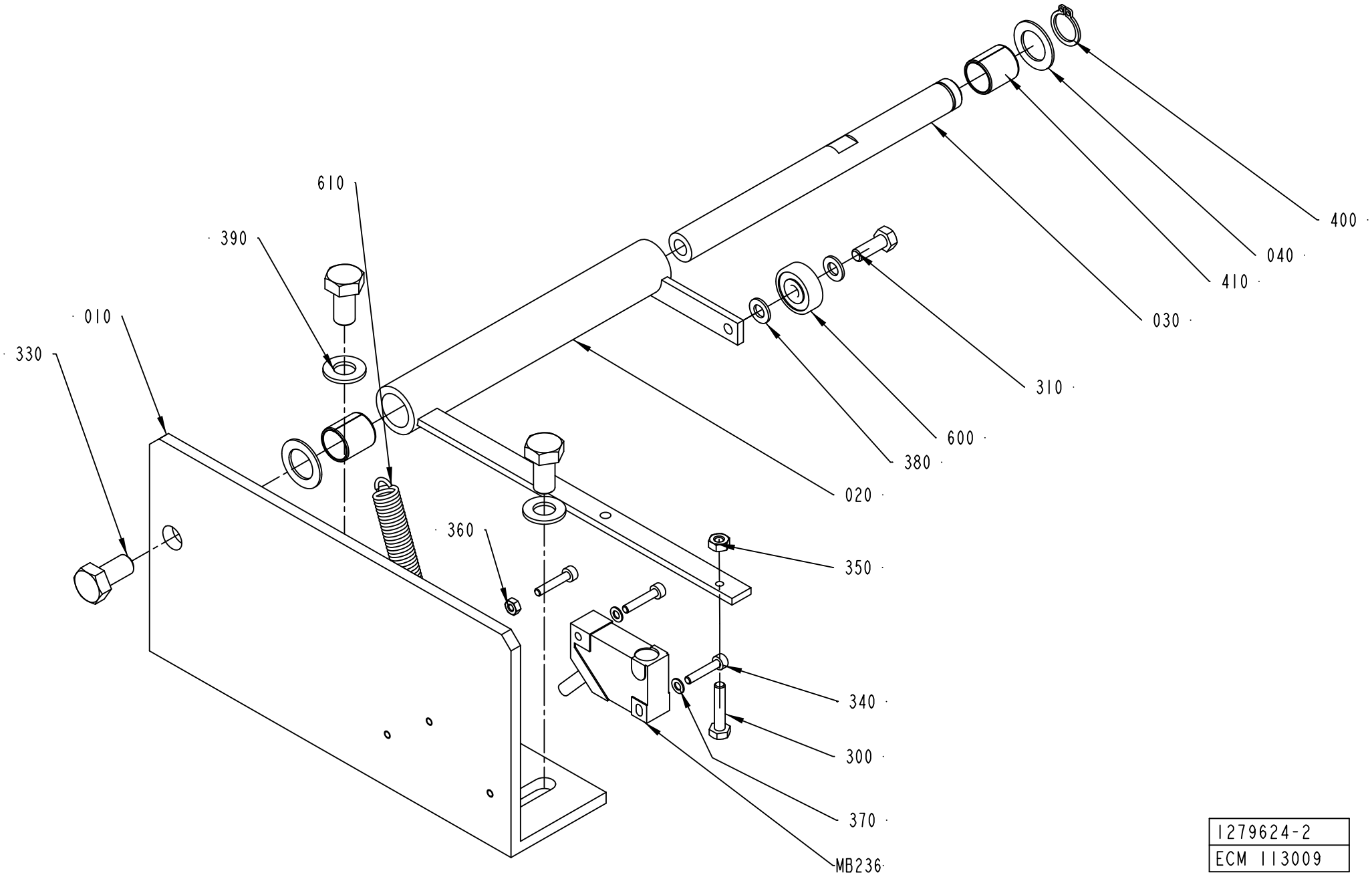

1279624-2
ECM 113009

ECM: 180857 - 20040910
Group number: 1279624-0200
Assembly Drawing: 1279624-2_1_AC

This list covers pages from 7-38 to 7-41

Pos	Part No	UN	Qty	Description	Page No
-					
010	2524478-0000		1	BRACKET	
020	979899-0000		1	BRACKET	
030	1035897-0000		1	SHAFT	
040	266737-0000		2	WASHER	
300	312105-0295		1	SCREW, M6S ISO 4017 M4X20 A4 70	
310	312105-0328		1	SCREW M6S ISO 4017 M5X14 A4 80	
330	312105-0449		3	SCREW, M6S ISO 4017 M8X16 A4 80	
340	312115-0228		3	SCREW ISO4762 M3X16 A4 80	
350	312605-0312		1	HEXAGON NUT, M6M M4 A280	
360	312605-0310		1	HEXAGON NUT, M6M M3 A280	
370	315105-0124		2	WASHER PLAIN, 3,2X6X0,5 A4 BRB	
380	315105-0146		2	WASHER PLAIN, 5,3X10X1 A4 BRB	
390	315105-0165		2	WASHER PLAIN, 8,4X16X1,6 A4 BRB	
400	315751-0109		1	RETAINING RING FOR SHAFT DIN 471 12 SS	
410	321141-0183		2	BEARING BUSHING, 12X14X15 MM	
600	90214-0138		1	BALL BEARING 5/19X6	
610	90335-0216		1	TENSION SPRING, 40910, 0,5X5,5X27,7	
MB236	90044-0194		1	INDUCTIVE SENSOR, IN 5329	

Pos	Part No	UN	Qty	Description	Page No

SPLICE DETECTOR

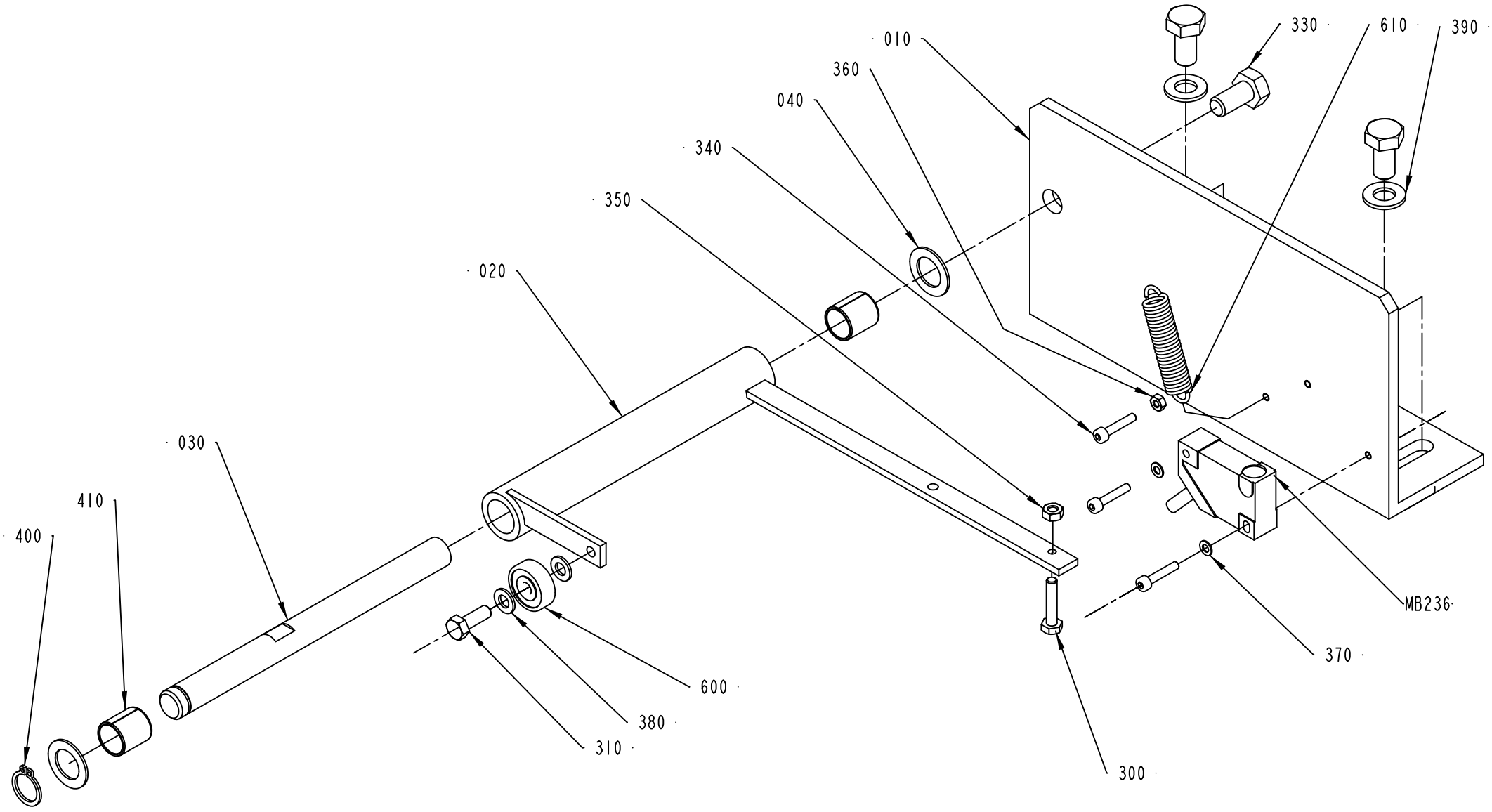

1279624-3
ECM 113009

ECM: 180857 - 20040910
Group number: 1279624-0200
Assembly Drawing: 1279624-3_1_AA

This list covers pages from 7-38 to 7-41

Pos	Part No	UN	Qty	Description	Page No
-					
010	2524478-0000		1	BRACKET	
020	979899-0000		1	BRACKET	
030	1035897-0000		1	SHAFT	
040	266737-0000		2	WASHER	
300	312105-0295		1	SCREW, M6S ISO 4017 M4X20 A4 70	
310	312105-0328		1	SCREW M6S ISO 4017 M5X14 A4 80	
330	312105-0449		3	SCREW, M6S ISO 4017 M8X16 A4 80	
340	312115-0228		3	SCREW ISO4762 M3X16 A4 80	
350	312605-0312		1	HEXAGON NUT, M6M M4 A280	
360	312605-0310		1	HEXAGON NUT, M6M M3 A280	
370	315105-0124		2	WASHER PLAIN, 3,2X6X0,5 A4 BRB	
380	315105-0146		2	WASHER PLAIN, 5,3X10X1 A4 BRB	
390	315105-0165		2	WASHER PLAIN, 8,4X16X1,6 A4 BRB	
400	315751-0109		1	RETAINING RING FOR SHAFT DIN 471 12 SS	
410	321141-0183		2	BEARING BUSHING, 12X14X15 MM	
600	90214-0138		1	BALL BEARING 5/19X6	
610	90335-0216		1	TENSION SPRING, 40910, 0,5X5,5X27,7	
MB236	90044-0194		1	INDUCTIVE SENSOR, IN 5329	

Pos	Part No	UN	Qty	Description	Page No

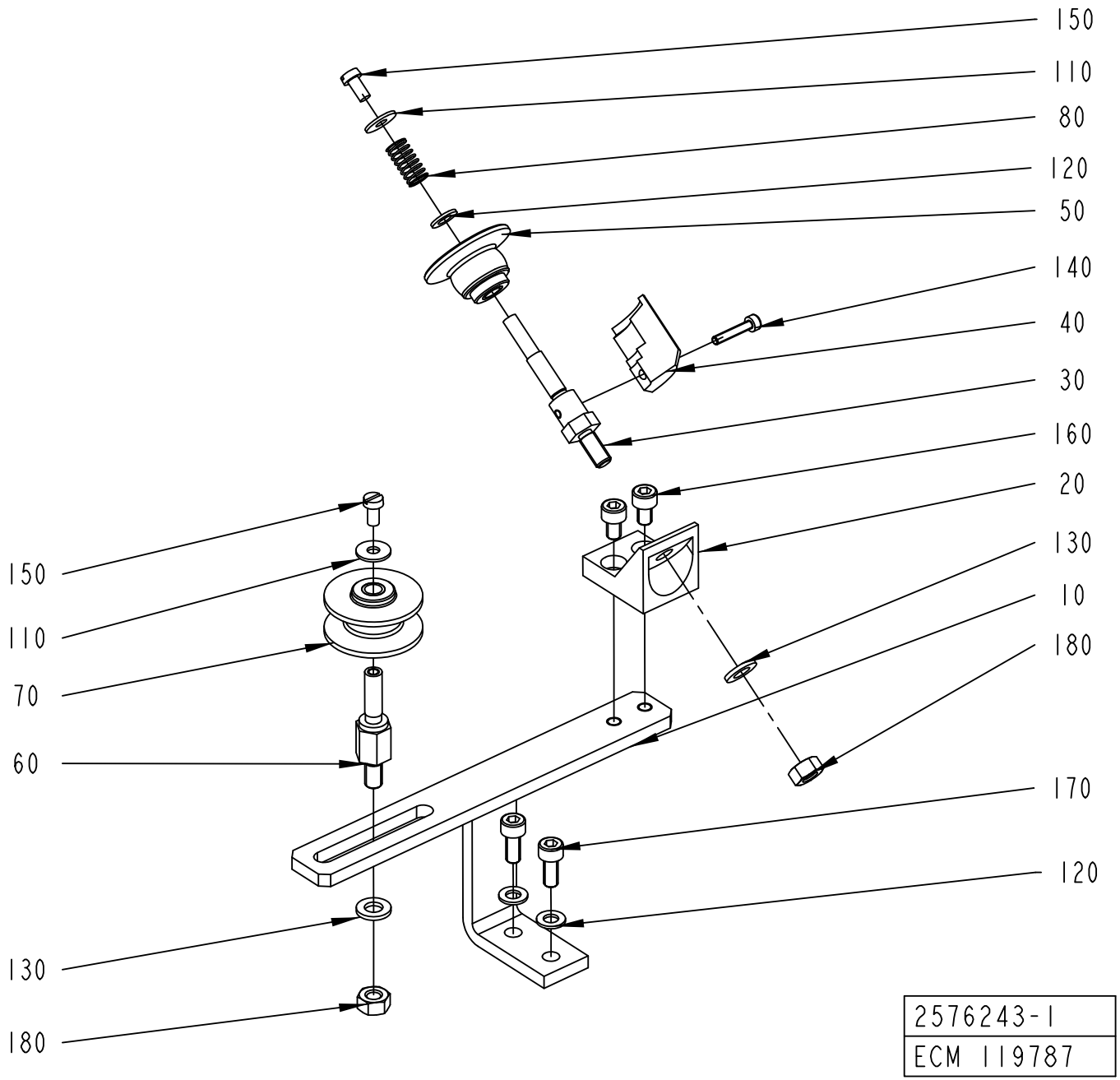
150
110
80
120
50
140
40
30
160
20
130
10
180
170
120
150
110
70
60
130
180
2576243-1
ECM 119787

ECM: 243217 - 20060127
Group number: 2576243-0100
Assembly Drawing: 2576243-1_1_AA

Pos	Part No	UN	Qty	Description	Page No
-					
010	2603016-0000		1	BRACKET	
020	979575-0000		1	ROLLER PLATE	
030	2552631-0000		1	AXLE PIN	
040	2552633-0000		1	ROLLER	
050	2552632-0000		1	ROLLER	
060	579553-0000		1	SHAFT	
070	1512583-0000		1	ROLLER	
	321120-0101		*2*	*BEARING BUSH W/O FLANGE, 6X8X6 MM*	
080	90335-0146		1	COMP. SPRING, 0,6X7,2X20	
110	90005-0082		2	WASHER PLAIN ROUND 4,3(M4)/12,H=1	
120	315105-0146		3	WASHER PLAIN, 5,3X10X1 A4 BRB	
130	315105-0153		2	WASHER PLAIN, 6,4X12X1,5 A4 BRB	
140	312115-0228		1	SCREW ISO4762 M3X16 A4 80	
150	312125-0287		2	SLOTTED HEAD SCREW, ISO1207 M4X8 A4	
160	312115-0323		2	SCREW ISO4762 M5X8 A4 80	
170	312115-0327		2	SCREW ISO4762 M5X12 A4 80	
180	312605-0316		2	HEXAGON NUT, M6M M6 A280	

Pos	Part No	UN	Qty	Description	Page No

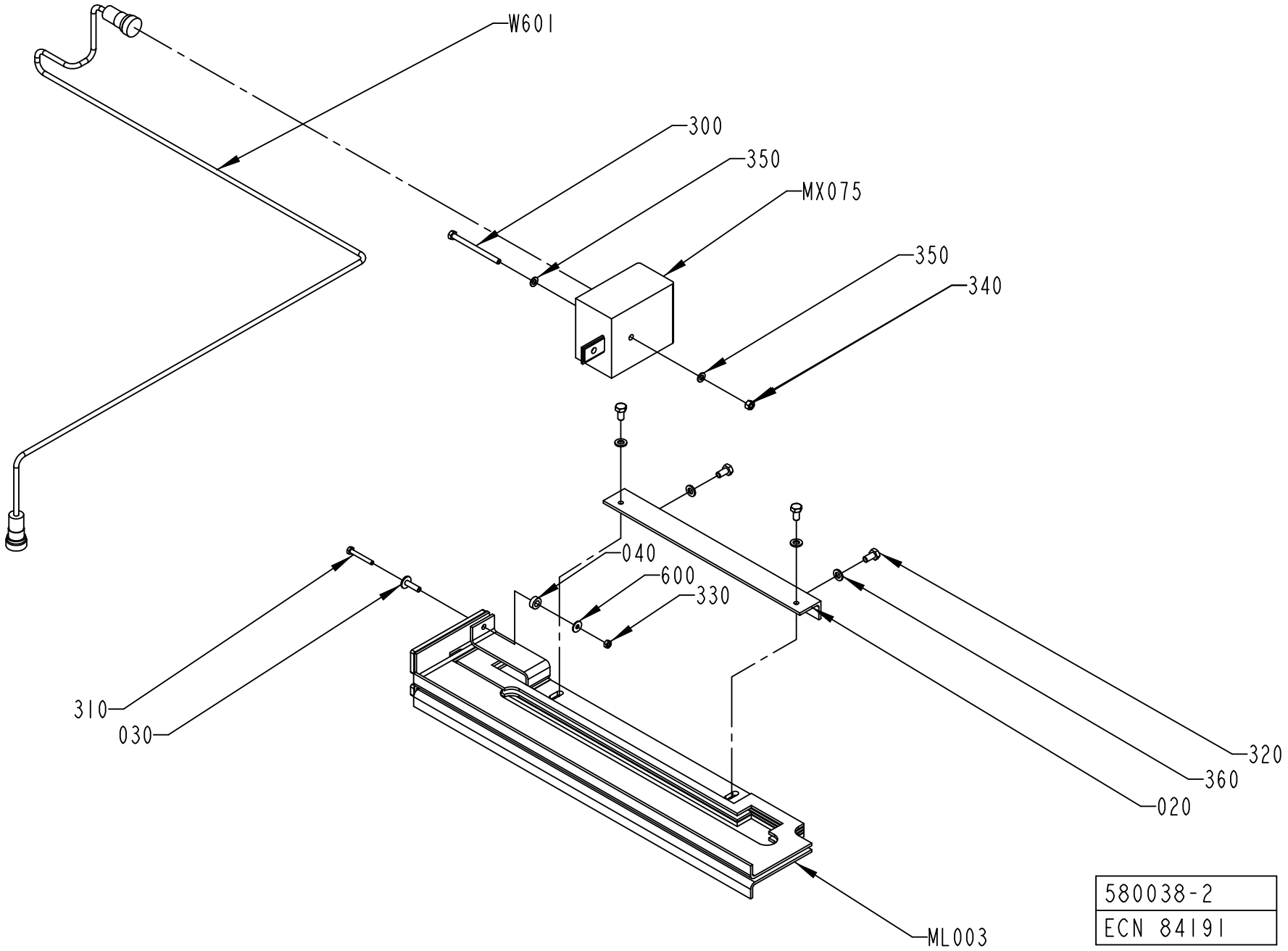

580038-2
ECN 84191

ECM: 180858 - 20040910
Group number: 580038-0200
Assembly Drawing: 580038-2_1_AB

Pos	Part No	UN	Qty	Description	Page No
-					
020	1036588-0000		1	BRACKET	
030	1038016-0000		1	SPACER	
040	32644-0000		1	WASHER	
300	312101-0344		1	SCREW M6S M5X65 FZB	
310	312105-0299		1	SCREW, M6S ISO 4017 M4X30 A4 70	
320	312105-0366		4	SCREW, M6S ISO 4017 M6X12 A4 80	
330	312605-0312		1	HEXAGON NUT, M6M M4 A280	
340	312605-0314		1	HEXAGON NUT, M6M M5 A280	
350	315105-0146		2	WASHER PLAIN, 5,3X10X1 A4 BRB	
360	315105-0153		4	WASHER PLAIN, 6,4X12X1,5 A4 BRB	
600	90005-0082		1	WASHER PLAIN ROUND 4,3(M4)/12,H=1	
MX075	67380-0208		1	TRANSFORMER	
ML003	1035587-0000		1	INDUCTOR	
W601	548770-0006		1	COAXIAL CABLE L=1200 MM	

Pos	Part No	UN	Qty	Description	Page No

PRESSURE ROLLER

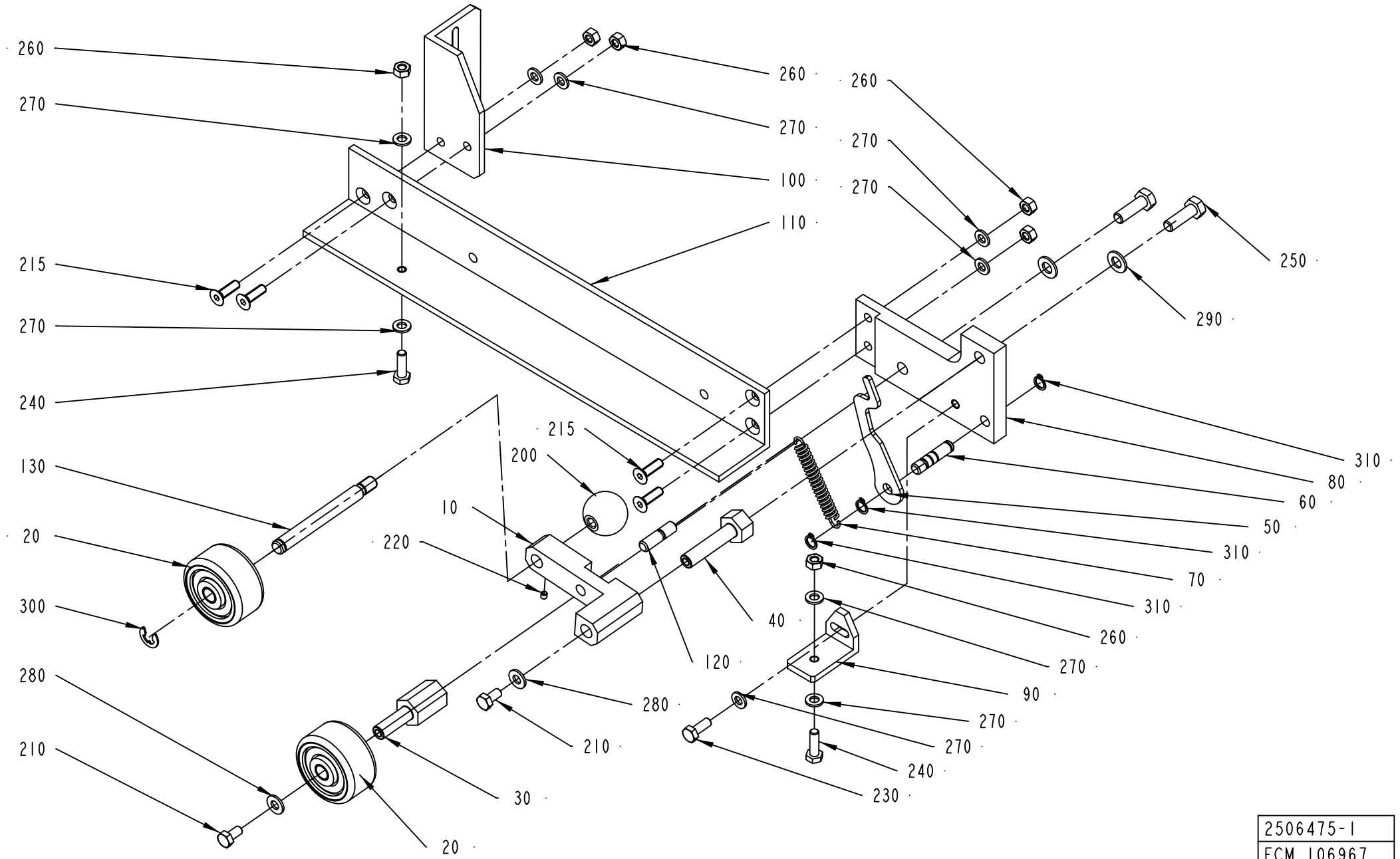

2506475-1
ECM 106967

ECM: 180899 - 20040910
Group number: 2506475-0100
Assembly Drawing: 2506475-1_1_AA

Pos	Part No	UN	Qty	Description	Page No
-					
010	2524482-0000		1	BRACKET	
020	1346988-0000		2	ROLL	
010	*90166-0053*	*MM*	*40*	*SHRINKABLE HOSE (2,5")*	
020	*321120-0104*		*2*	*BEARING BUSH W/O FLANGE, 10X12X10 MM*	
030	1035895-0000		1	SHAFT	
040	2529646-0000		1	SHAFT	
050	2524479-0000		1	PLATE	
060	2524480-0000		1	PIN	
070	1478303-0000		1	TENSION SPRING	
080	2506471-0000		1	BRACKET	
090	2506472-0000		1	HOLDER	
100	2506473-0000		1	BRACKET	
110	2506474-0000		1	FASTENING BRACKET	
120	2524484-0000		1	PIN	
130	2524485-0000		1	PIN	
200	318800-0104		1	HANDLE,SPHERICAL KNOB,INT.THRE.,D.30-M8	
210	312105-0366		2	SCREW, M6S ISO 4017 M6X12 A4 80	
215	312155-0370		4	SCREW DIN 7991 MF6S M6X20 A4 70	
220	312318-0283		1	SET SCREW, CUP END ISO4029 M4X4 A4	
230	312105-0368		1	SCREW, M6S ISO 4017 M6X16 A4 80	
240	312105-0367		2	SCREW, M6S ISO 4017 M6X14 A4 80	
250	312105-0453		2	SCREW, M6S ISO 4017 M8X25 A4 80	
260	312605-0316		4	HEXAGON NUT, M6M M6 A280	
270	315105-0153		7	WASHER PLAIN, 6,4X12X1,5 A4 BRB	
280	315105-0156		2	WASHER PLAIN, 6,7X14X1,5 A4 BRB	
290	315105-0165		2	WASHER PLAIN, 8,4X16X1,6 A4 BRB	
300	315755-0801		1	RETAINING RING SHAFT DIN 6799 8 SS	
310	90141-0015		3	RETAINING RING FOR SHAFT DIN 471 8 SS	

Pos	Part No	UN	Qty	Description	Page No

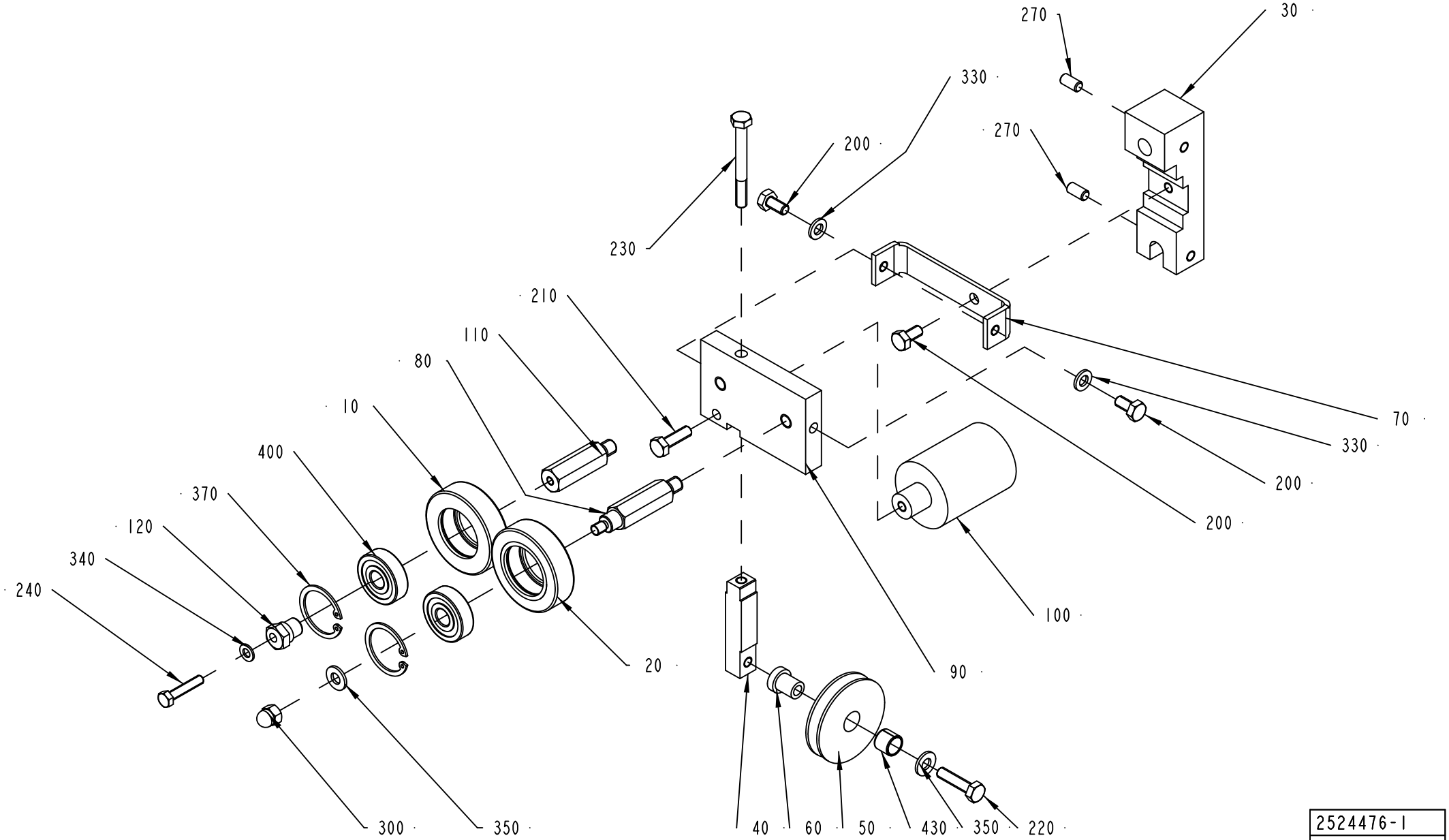

2524476-1
ECN 437380

ECM: 437380 - 20100222
Group number: 2524476-0100
Assembly Drawing: 2524476-1_1_AD

Pos	Part No	UN	Qty	Description	Page No
-					
010	1036622-0000		1	GUIDE ROLLER	
020	1036623-0000		1	GUIDE ROLLER	
030	1511002-0000		1	HOLDER	
040	1499024-0000		1	BAR	
050	2524477-0000		1	ROLLER	
060	1499026-0000		1	SHAFT	
070	1499027-0000		1	BRACKET	
080	1511001-0000		1	SHAFT	
090	1511000-0000		1	PLATE	
100	1511003-0000		1	WEIGHT	
110	2552628-0000		1	PIN	
120	1346612-0000		1	SHAFT	
200	312105-0366		3	SCREW, M6S ISO 4017 M6X12 A4 80	
210	312105-0370		1	SCREW, M6S ISO 4017 M6X20 A4 80	
220	312105-0372		1	SCREW, M6S ISO 4017 M6X25 A4 80	
230	312105-0381		1	SCREW, M6S ISO 4014 M6X55 A4 80	
240	312105-0333		1	SCREW, M6S ISO 4017 M5X25 A4 80	
270	312318-0366		2	SET SCREW, CUP END ISO4029 M6X12 A4	
300	312705-0316		2	HEX. DOMED CAP MHM-6 M6 A280	
330	315105-0153		2	WASHER PLAIN, 6,4X12X1,5 A4 BRB	
340	315105-0146		1	WASHER PLAIN, 5,3X10X1 A4 BRB	
350	315105-0156		2	WASHER PLAIN, 6,7X14X1,5 A4 BRB	
370	315753-0122		2	RETAINING RING FOR BORE DIN 472 30 SS	
400	321313-0100		2	BALL BEARING 10/30X9	
430	321141-0140		1	BEARING BUSHING, 10X12X10 MM	

Pos	Part No	UN	Qty	Description	Page No

Machine Type	Group Description	Used-In	Group Number	Page No

STRIP GUIDE

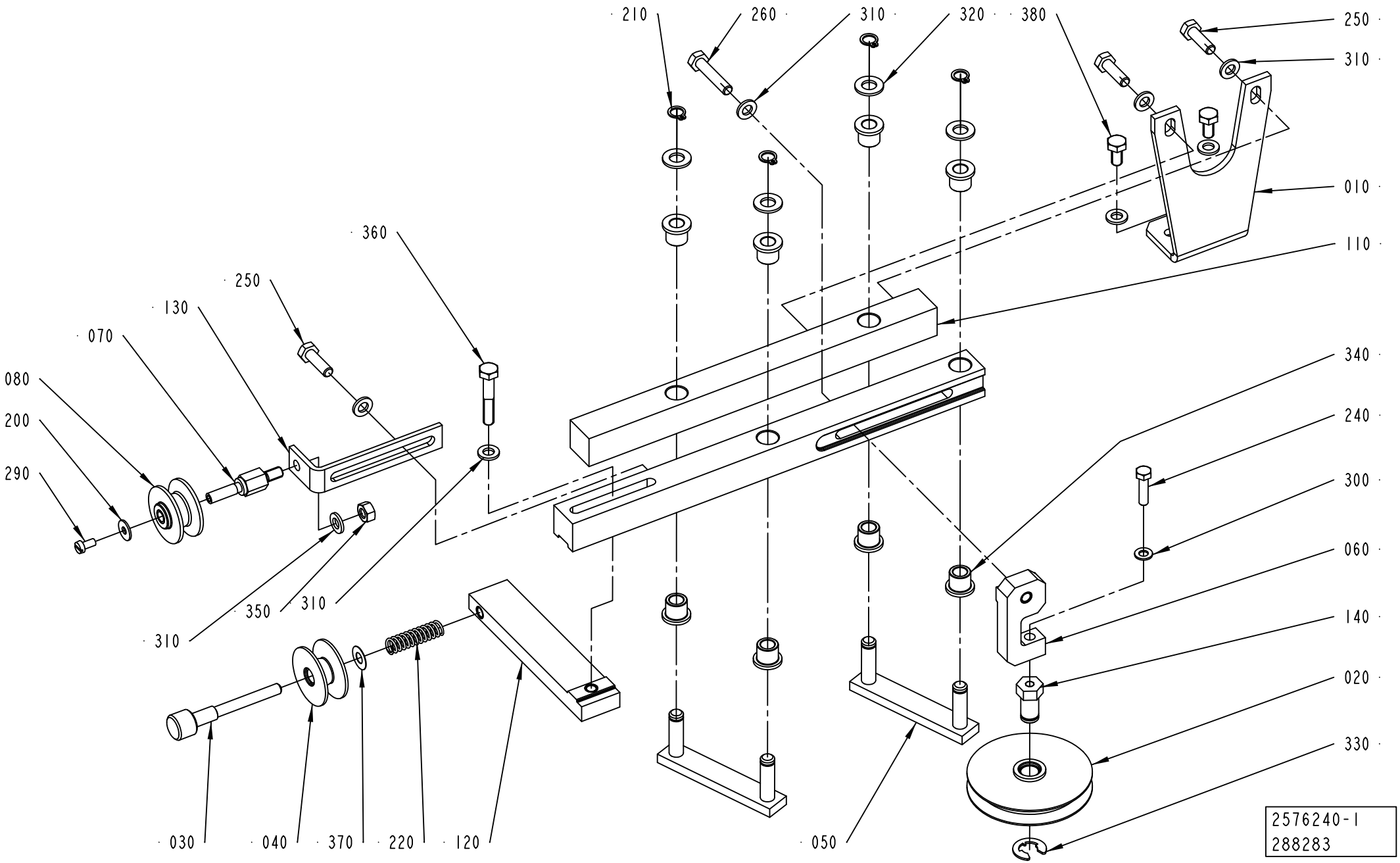
210
260
310
320
380
250
310
010
110
360
250
130
070
080
200
290
340
240
300
060
140
020
330
310
350
310
310
030
040
370
220
120
050
2576240-1
288283

ECM: 293072 - 20070126
Group number: 2576240-0100
Assembly Drawing: 2576240-1_1_AB

This list covers pages from 7-50 to 7-53

Pos	Part No	UN	Qty	Description	Page No
NOPT (See drawing on page: 7-50)					
070	579553-0000		1	SHAFT	
080	1512583-0000		1	ROLLER	
	321120-0101		*2*	*BEARING BUSH W/O FLANGE, 6X8X6 MM*	
130	2839810-0000		1	BRACKET	
200	90005-0082		1	WASHER PLAIN ROUND 4,3(M4)/12,H=1	
290	312125-0287		1	SLOTTED HEAD SCREW, ISO1207 M4X8 A4	
350	312605-0316		1	HEXAGON NUT, M6M M6 A280	
Common Parts					
010	2576239-0000		1	HOLDER	
020	2850445-0000		1	GUIDE WHEEL	
	321141-0142		*1*	*BEARING BUSHING, 10X12X12 MM*	
030	1035893-0000		1	ADJUSTING SCREW	
040	1285546-0000		1	ROLL	
050	1346746-0000		2	LEVER	
060	2575480-0000		1	HOLDER	
100	2570400-0000		1	ROD	
110	2570401-0000		1	ROD	
120	2575484-0000		1	HOLDER	
140	2575482-0000		1	PIN	
210	90141-0015		4	RETAINING RING FOR SHAFT DIN 471 8 SS	
220	90335-0027		1	COMP. SPRING, 22170, 1,25X9,25X33	
240	312105-0331		1	SCREW, M6S ISO 4017 M5X20 A4 80	
250	312105-0370		3	SCREW, M6S ISO 4017 M6X20 A4 80	
260	312105-0374		1	SCREW, M6S ISO 4014 M6X30 A4 80	
300	315105-0146		1	WASHER PLAIN, 5,3X10X1 A4 BRB	
310	315105-0153		8	WASHER PLAIN, 6,4X12X1,5 A4 BRB	
320	315105-0165		4	WASHER PLAIN, 8,4X16X1,6 A4 BRB	
330	315755-0110		1	RETAINING RING SHAFT DIN 6799 9 SS	
340	321111-0097		8	FLANGE BUSHING, 8/12X12-16X2 MM	
360	312105-0376		1	SCREW, M6S ISO 4014 M6X35 A4 80	
370	2033-0013		1	WASHER	
380	312105-0366		2	SCREW, M6S ISO 4017 M6X12 A4 80	

Pos	Part No	UN	Qty	Description	Page No

STRIP GUIDE

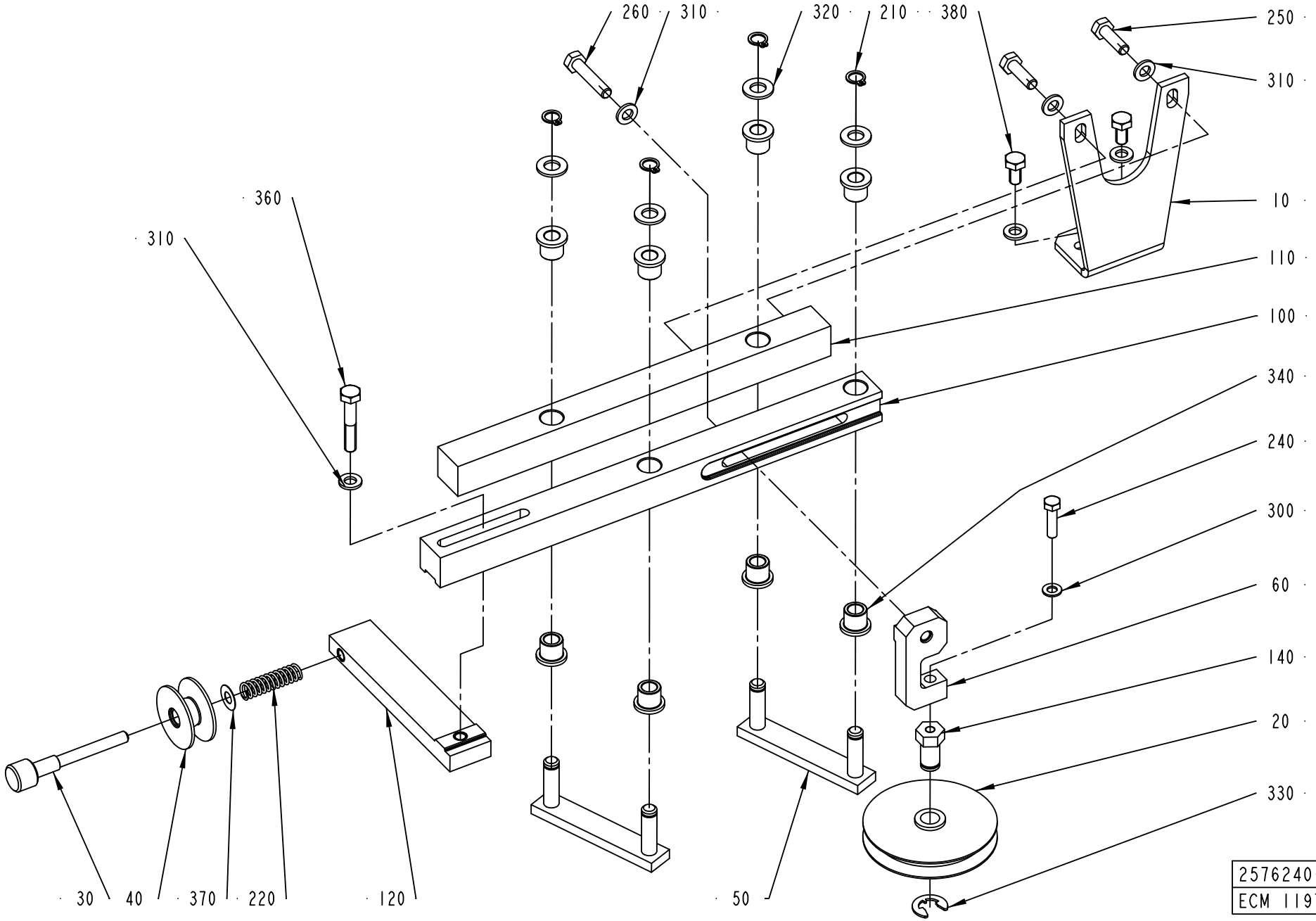
260
310
320
210
380
250
310
360
310
10
110
100
340
240
300
60
140
20
330
30
40
370
220
120
50
2576240-2
ECM 119787

ECM: 293072 - 20070126
Group number: 2576240-0100
Assembly Drawing: 2576240-2_1_AA

This list covers pages from 7-50 to 7-53

Pos	Part No	UN	Qty	Description	Page No
NOPT (See drawing on page: 7-50)					
070	579553-0000		1	SHAFT	
080	1512583-0000		1	ROLLER	
	321120-0101		*2*	*BEARING BUSH W/O FLANGE, 6X8X6 MM*	
130	2839810-0000		1	BRACKET	
200	90005-0082		1	WASHER PLAIN ROUND 4,3(M4)/12,H=1	
290	312125-0287		1	SLOTTED HEAD SCREW, ISO1207 M4X8 A4	
350	312605-0316		1	HEXAGON NUT, M6M M6 A280	
Common Parts					
010	2576239-0000		1	HOLDER	
020	2850445-0000		1	GUIDE WHEEL	
	321141-0142		*1*	*BEARING BUSHING, 10X12X12 MM*	
030	1035893-0000		1	ADJUSTING SCREW	
040	1285546-0000		1	ROLL	
050	1346746-0000		2	LEVER	
060	2575480-0000		1	HOLDER	
100	2570400-0000		1	ROD	
110	2570401-0000		1	ROD	
120	2575484-0000		1	HOLDER	
140	2575482-0000		1	PIN	
210	90141-0015		4	RETAINING RING FOR SHAFT DIN 471 8 SS	
220	90335-0027		1	COMP. SPRING, 22170, 1,25X9,25X33	
240	312105-0331		1	SCREW, M6S ISO 4017 M5X20 A4 80	
250	312105-0370		3	SCREW, M6S ISO 4017 M6X20 A4 80	
260	312105-0374		1	SCREW, M6S ISO 4014 M6X30 A4 80	
300	315105-0146		1	WASHER PLAIN, 5,3X10X1 A4 BRB	
310	315105-0153		8	WASHER PLAIN, 6,4X12X1,5 A4 BRB	
320	315105-0165		4	WASHER PLAIN, 8,4X16X1,6 A4 BRB	
330	315755-0110		1	RETAINING RING SHAFT DIN 6799 9 SS	
340	321111-0097		8	FLANGE BUSHING, 8/12X12-16X2 MM	
360	312105-0376		1	SCREW, M6S ISO 4014 M6X35 A4 80	
370	2033-0013		1	WASHER	
380	312105-0366		2	SCREW, M6S ISO 4017 M6X12 A4 80	

Pos	Part No	UN	Qty	Description	Page No

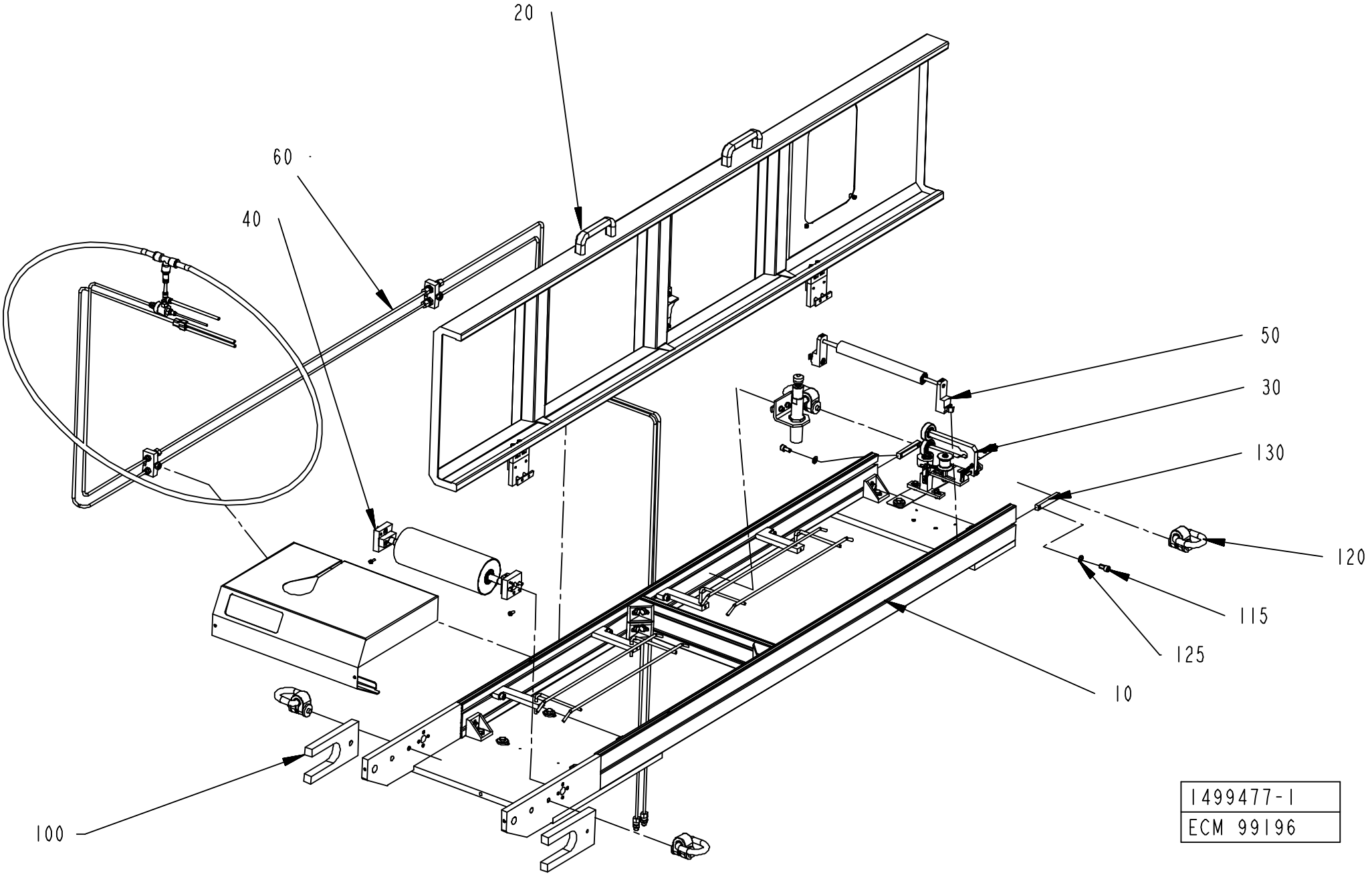
20
60
40
50
30
130
120
115
125
10
100
1499477-1
ECM 99196

ECM: 116565 - 20030113
Group number: 1499477-0100
Assembly Drawing: 1499477-1_1_AB

Pos	Part No	UN	Qty	Description	Page No
-					
010	1499484-0100		1	TUNNEL FRAME	7-57
020	1511319-0100		1	TUNNEL COVER	7-59
030	1517065-0100		1	WEB GUIDE	7-61
040	2570394-0100		1	BENDING ROLLER	7-63
050	1498756-0100		1	BENDING ROLLER	7-65
060	580335-0200		1	PIPE WORK-PNEUMATIC	7-67
100	1499485-0000		2	TRANSPORT BRACKET	

Pos	Part No	UN	Qty	Description	Page No

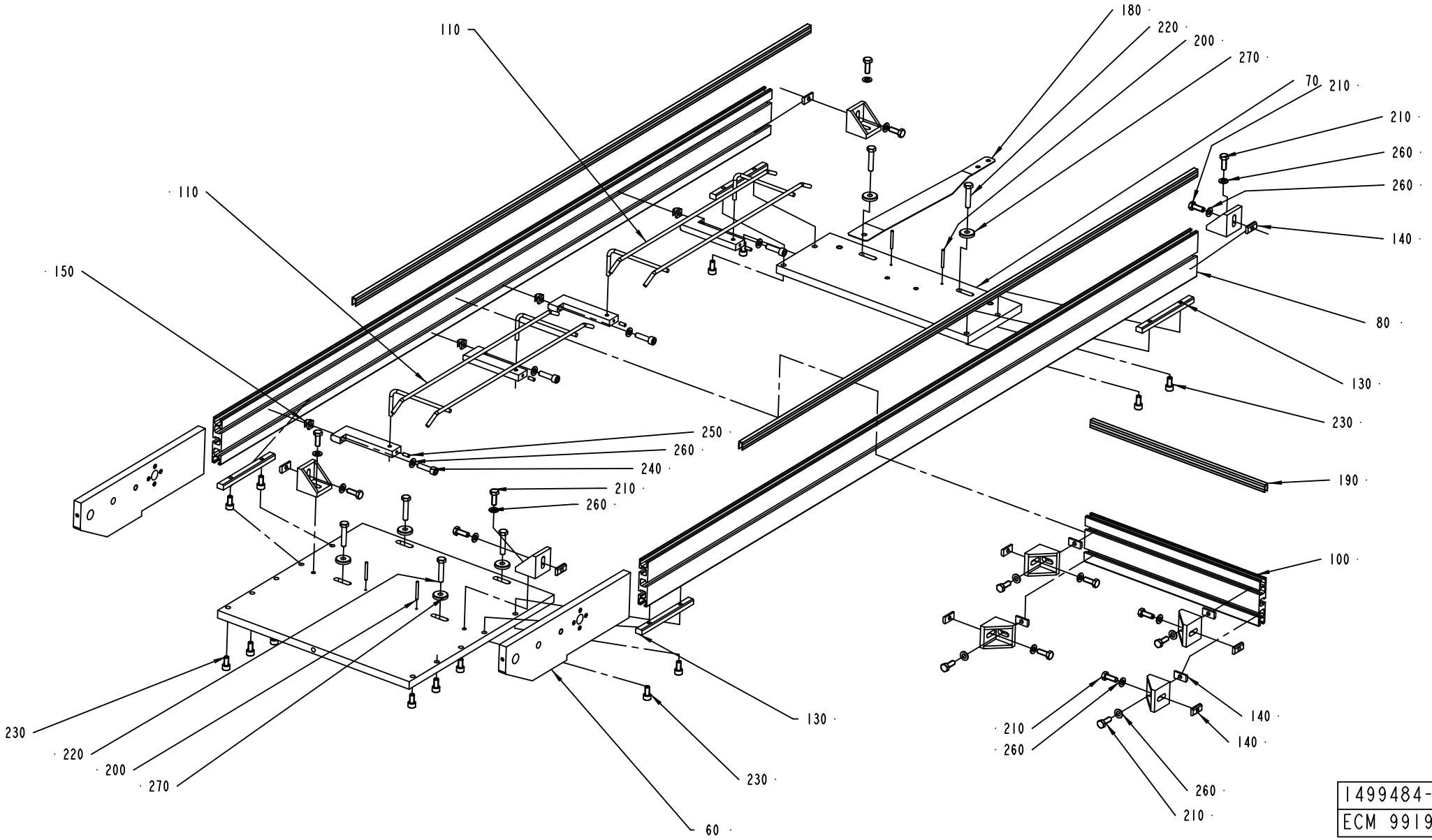

1499484-1
ECM 99196

ECM: 180901 - 20040910
Group number: 1499484-0100
Assembly Drawing: 1499484-1_1_AB

Pos	Part No	UN	Qty	Description	Page No
-					
050	1498766-0000		1	LOWER PLATE	
060	1498767-0000		2	SIDE PIECE	
070	1498768-0000		1	LOWER PLATE	
080	1498769-0000		2	WALL	
090	1498771-0000		4	HOLDER	
100	2540729-0000		1	WALL	
110	36316-0000		2	PAPER SUPPORT	
120	1498759-0000		8	ANGLE HOLDER	
130	1498763-0000		4	JOINT PIECE	
140	1511308-0000		12	NUT PLATE	
150	1511310-0000		4	NUT	
160	1511320-0000		2	STRIP	
180	1499371-0000		1	JOINT PLATE	
190	2540730-0000		1	STRIP	
200	311103-0278		4	PARALLEL PIN ISO 2338 4M6X35 A1	
210	312105-0452		16	SCREW, M6S ISO 4017 M8X22 A4 80	
220	312109-0459		6	SCREW, M6S ISO 4017 M8X40 A4 80	
230	312115-0449		14	SCREW ISO4762 M8X16 A4 80	
240	312115-0455		4	SCREW ISO4762 M8X30 A4 80	
250	312318-0327		4	SET SCREW, CUP END ISO4029 M5X12 A4	
260	315105-0165		20	WASHER PLAIN, 8,4X16X1,6 A4 BRB	
270	315125-0165		6	WASHER HIGH, TBRSB 8,4X26X5 A4	

Pos	Part No	UN	Qty	Description	Page No

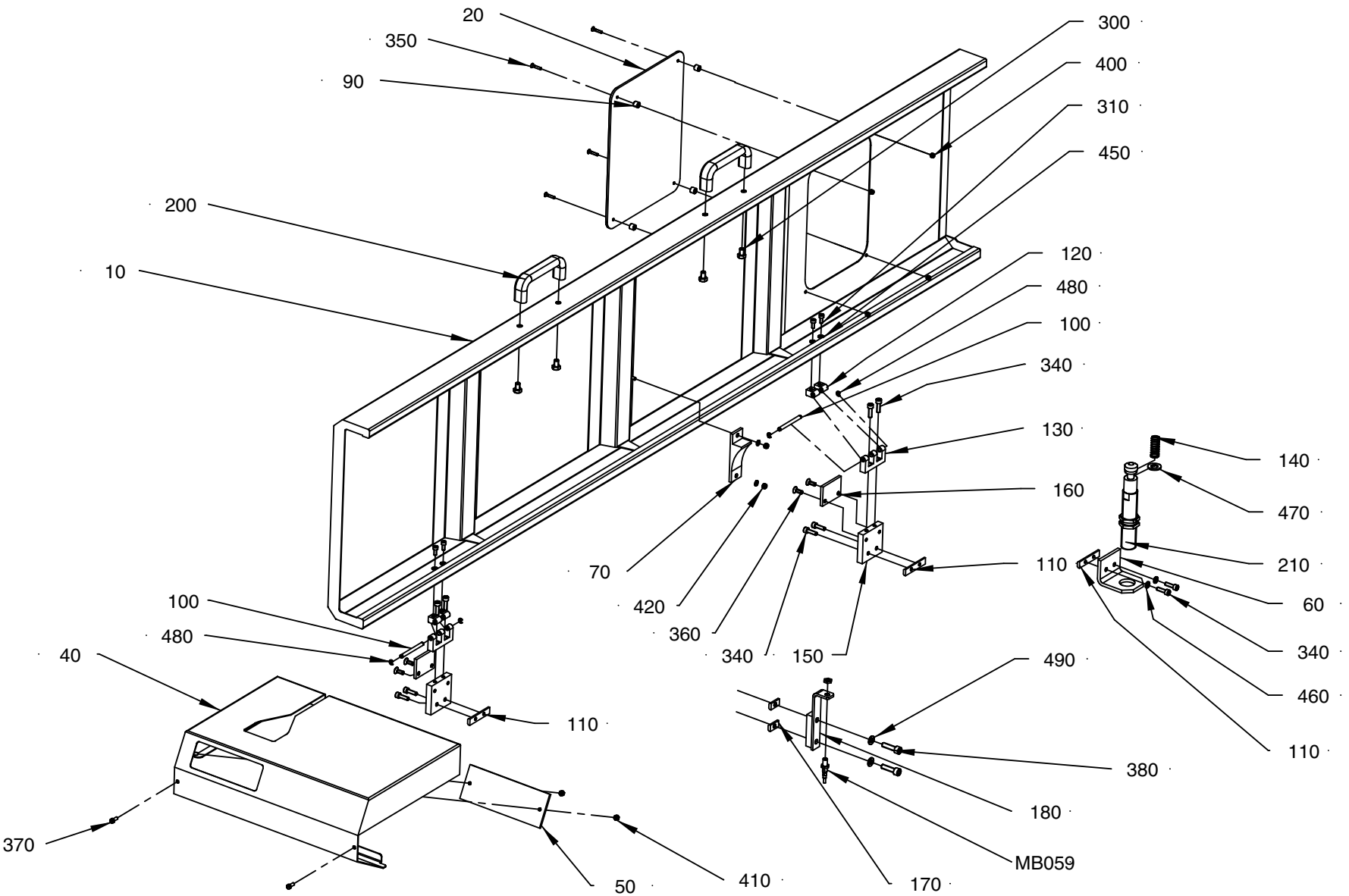
20
350
90
200
10
300
400
310
450
120
480
100
340
130
140
160
470
210
110
60
70
420
360
340
150
340
460
110
100
480
40
110
490
380
180
MB059
170
370
50
410

ECM: 448872 - 20100524
Group number: 1511319-0100
Assembly Drawing: 1511319-1_1_AE

Pos	Part No	UN	Qty	Description	Page No
-					
010	1499486-0000		1	TOP COVER	
020	1511317-0000		1	PANE	
040	1498780-0000		1	BACK COVER	
050	1511311-0000		1	GLASS PANE	
060	1511314-0000		1	DAMPER BRACKET	
070	1511315-0000		1	SLIDE BLOCK	
090	1511318-0000		4	SPACER	
100	1499512-0000		2	PIN	
110	1499513-0000		3	NUT PLATE	
120	1035794-0000		4	BLOCKING PIECE	
130	1499514-0000		2	E-HINGE	
140	1511324-0000		1	SPRING	
150	2519647-0000		2	BRACKET	
160	2519646-0000		2	PLATE	
170	1511308-0000		2	NUT PLATE	
180	3017373-0000		1	FASTENING BRACKET	
200	90017-0022		2	HANDLE, NO. EL-037311	
210	90347-0024		1	SHOCK ABSORBER, 370-120-400	
300	312105-0447		4	SCREW, M6S ISO 4017 M8X12 A4 80	
310	312115-0327		4	SCREW ISO4762 M5X12 A4 80	
340	312115-0370		10	SCREW ISO4762 M6X20 A4 80	
350	312155-0295		4	SCREW DIN 7991 MF6S M4X20 A4 70	
360	312155-0368		4	SCREW DIN 7991 MF6S M6X16 A4 70	
370	312125-0327		2	SLOTTED HEAD SCREW, ISO1207 M5X12 A4	
380	312115-0455		2	SCREW ISO4762 M8X30 A4 80	
400	312605-0312		4	HEXAGON NUT, M6M M4 A280	
410	312605-0314		2	HEXAGON NUT, M6M M5 A280	
420	312812-0314		2	HEXAGON NUT, NY-LOCK M5 A4 80	
450	315105-0146		6	WASHER PLAIN, 5,3X10X1 A4 BRB	
460	315105-0153		2	WASHER PLAIN, 6,4X12X1,5 A4 BRB	
470	315105-0178		1	WASHER PLAIN, 13X24X2,5 A4 BRB	
480	315755-0106		4	RETAINING RING SHAFT DIN 6799 4 SS	
490	315105-0165		2	WASHER PLAIN, 8,4X16X1,6 A4 BRB	
M.B059	90600-0473		1	INDUCTIVE SWITCH E2A-S08KS01-WP-B1-TP 5M	

Pos	Part No	UN	Qty	Description	Page No

Machine Type	Group Description	Used-In	Group Number	Page No

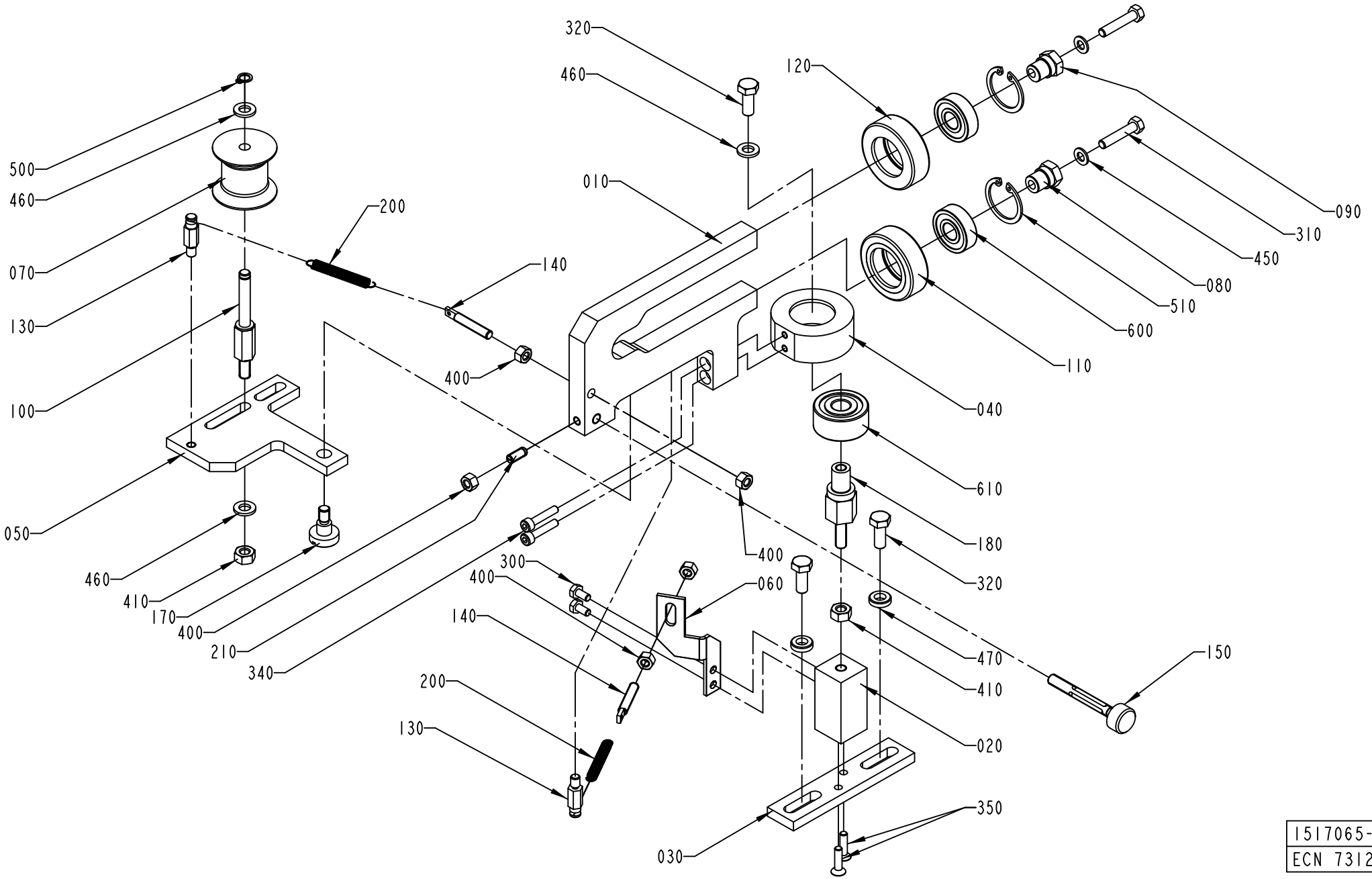

1517065-1
ECN 73123

ECM: 180904 - 20040910
Group number: 1517065-0100
Assembly Drawing: 1517065-1_1_AA

Pos	Part No	UN	Qty	Description	Page No
-					
010	1517071-0000		1	BOW CLAMP	
020	1517068-0000		1	PILLAR	
030	1517069-0000		1	CLAMP PLATE	
040	1517070-0000		1	BEARING SEAT	
050	1517066-0000		1	PIVOT ARM	
060	1517067-0000		1	SPRING HOLDER	
070	979582-0000		1	ROLLER	
080	1334256-0000		1	SHAFT	
090	1346612-0000		1	SHAFT	
100	1538107-0000		1	SHAFT	
110	583737-0000		1	ROLLER	
120	583738-0000		1	ROLLER	
130	583735-0000		2	PIN	
140	583749-0000		2	PIN	
150	589432-0000		1	SCREW	
170	556541-0000		1	SCREW	
180	1517753-0000		1	ADJUSTING NUT	
200	90335-0216		2	TENSION SPRING, 40910, 0,5X5,5X27,7	
210	90287-0148		1	SCREW SPRINGLOAD. SLOTTED HEAD M5X12	
300	312105-0287		2	SCREW, M6S ISO 4017 M4X8 A4 70	
310	312105-0333		2	SCREW, M6S ISO 4017 M5X25 A4 80	
320	312105-0368		3	SCREW, M6S ISO 4017 M6X16 A4 80	
340	312115-0295		2	SCREW ISO4762 M4X20 A4 80	
350	312155-0293		2	SCREW DIN 7991 MF6S M4X16 A4 70	
400	312605-0314		5	HEXAGON NUT, M6M M5 A280	
410	312605-0316		2	HEXAGON NUT, M6M M6 A280	
450	315105-0146		2	WASHER PLAIN, 5,3X10X1 A4 BRB	
460	315105-0153		3	WASHER PLAIN, 6,4X12X1,5 A4 BRB	
470	315115-0153		2	WASHER PLAIN, TBRB 6,4/12 H=3	
500	315751-0103		1	RETAINING RING FOR SHAFT DIN 471 6X 0.7C	
510	315752-0120		2	RETAINING RING FOR BORE DIN 472 26	
600	321308-0200		2	BALL BEARING 10/26X8	
610	321330-0100		1	ANG. BALL BEAR 10/30X14	

Pos	Part No	UN	Qty	Description	Page No

Machine Type | Group Description | Used-In | Group Number | Page No

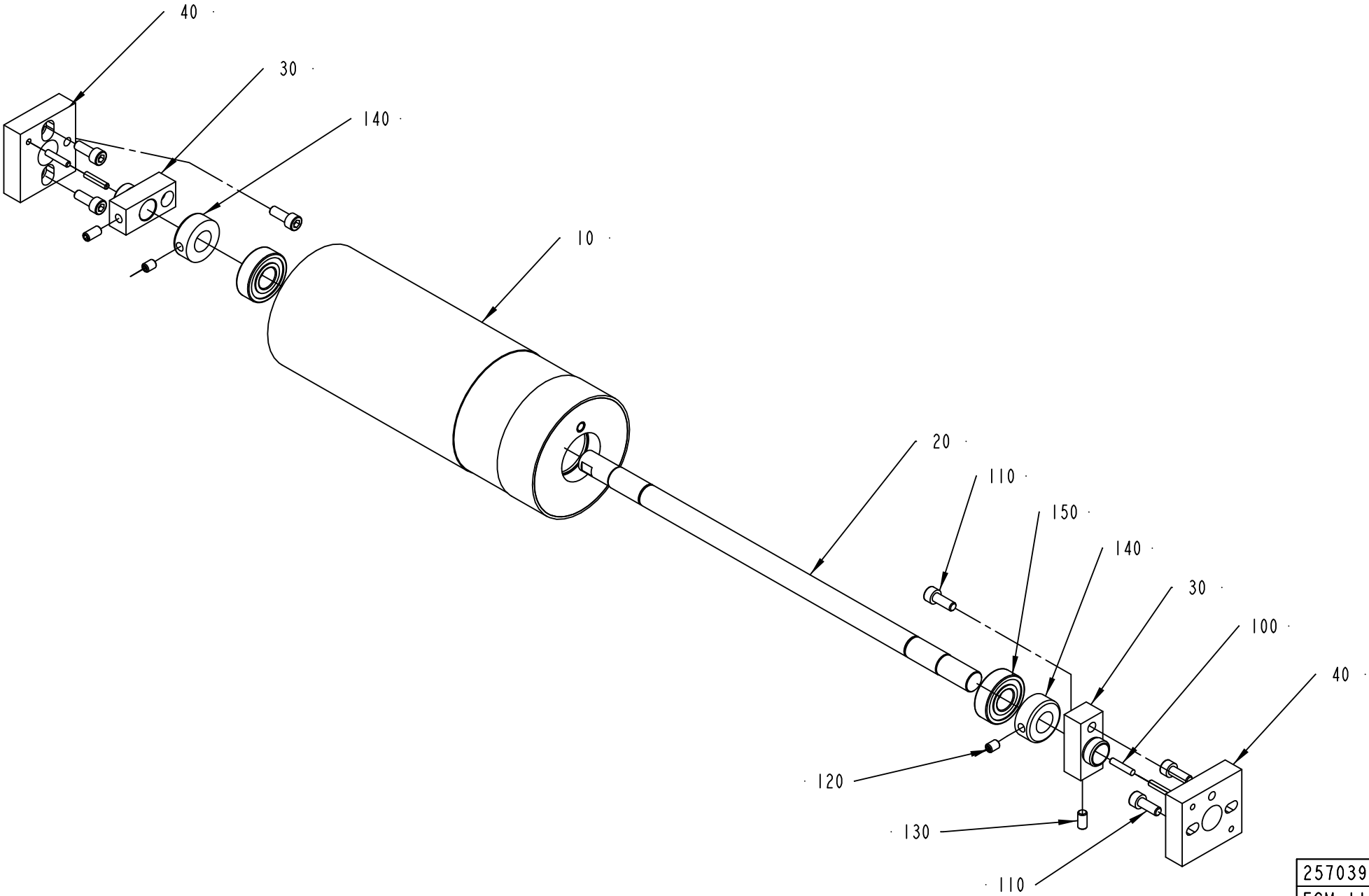
40
30
140
10
20
110
150
140
30
100
40
120
130
110
2570394-1
ECM 110376

ECM: 180905 - 20040910
Group number: 2570394-0100
Assembly Drawing: 2570394-1_1_AA

Pos	Part No	UN	Qty	Description	Page No
-					
010	2570393-0000		1	BENDING ROLLER	
020	583683-0000		1	SHAFT	
030	583684-0000		2	AXLE SUPPORT	
040	583685-0000		2	BEARING SEAT	
100	311103-0272		4	PARALLEL PIN ISO 2338 4M6X20 A1	
110	312115-0368		6	SCREW ISO4762 M6X16 A4 80	
120	312318-0362		2	SET SCREW, CUP END ISO4029 M6X8 A4	
130	312318-0366		2	SET SCREW, CUP END ISO4029 M6X12 A4	
140	315742-0111		2	RETAINING RING, 15 SMS 199 RFR	
150	321313-0102		2	BALL BEARING 15/35X11	

Pos	Part No	UN	Qty	Description	Page No

BENDING ROLLER

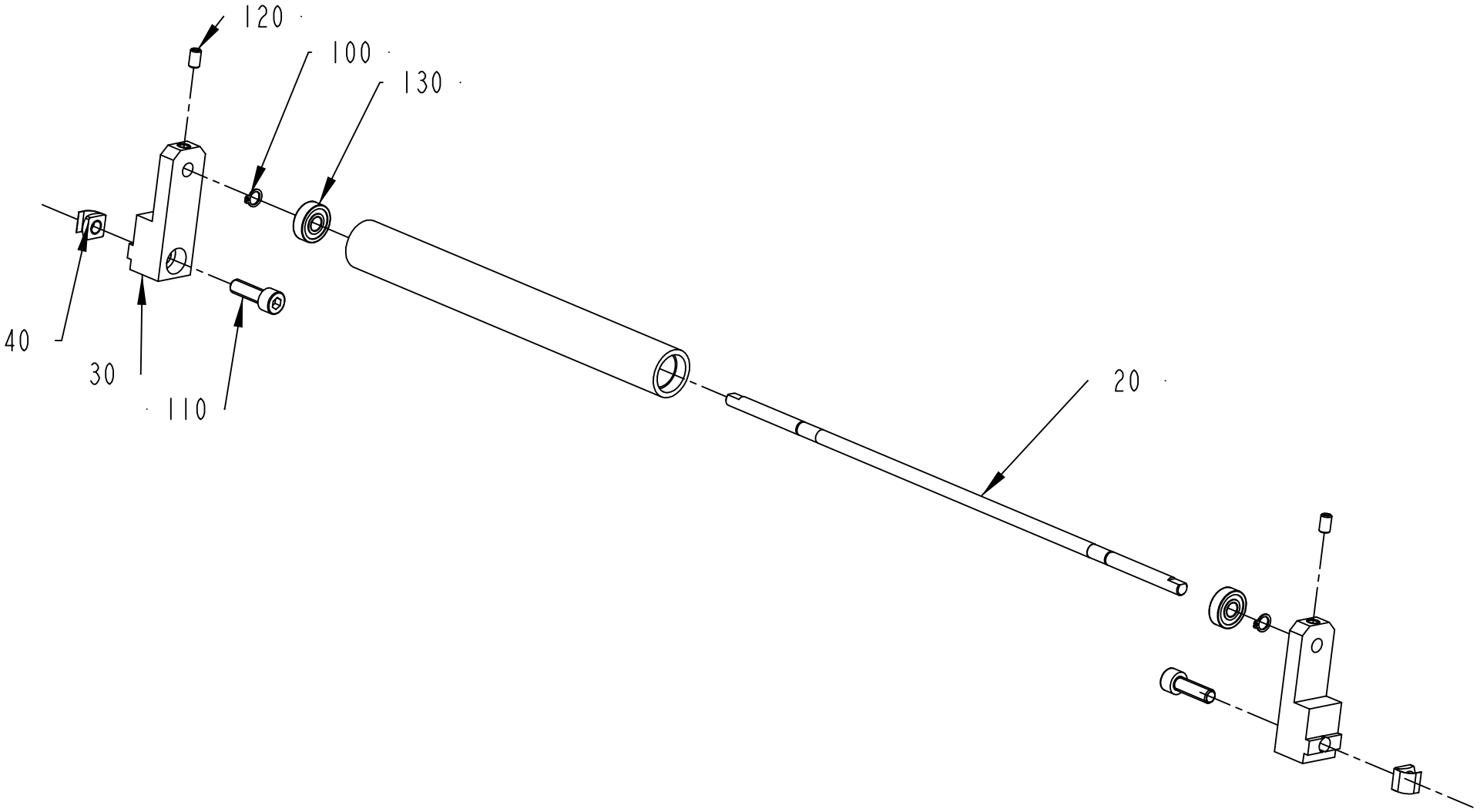

1498756-1
ECM 99196

ECM: 180898 - 20040910
Group number: 1498756-0100
Assembly Drawing: 1498756-1_1_AB

Pos	Part No	UN	Qty	Description	Page No
-					
010	1511307-0000		1	ROLLER	
020	1499517-0000		1	SHAFT	
030	2506480-0000		2	HOLDER	
040	1511310-0000		2	NUT	
050	2570392-0000		2	RETAINING RING	
110	312115-0453		2	SCREW ISO4762 M8X25 A4 80	
120	312318-0364		2	SET SCREW, CUP END ISO4029 M6X10 A4	
130	321302-0298		2	BALL BEARING 8/22X7	
140	312311-0285		2	SET SCREW, DOG POINT ISO4028 M4X6 FZB	

Pos	Part No	UN	Qty	Description	Page No

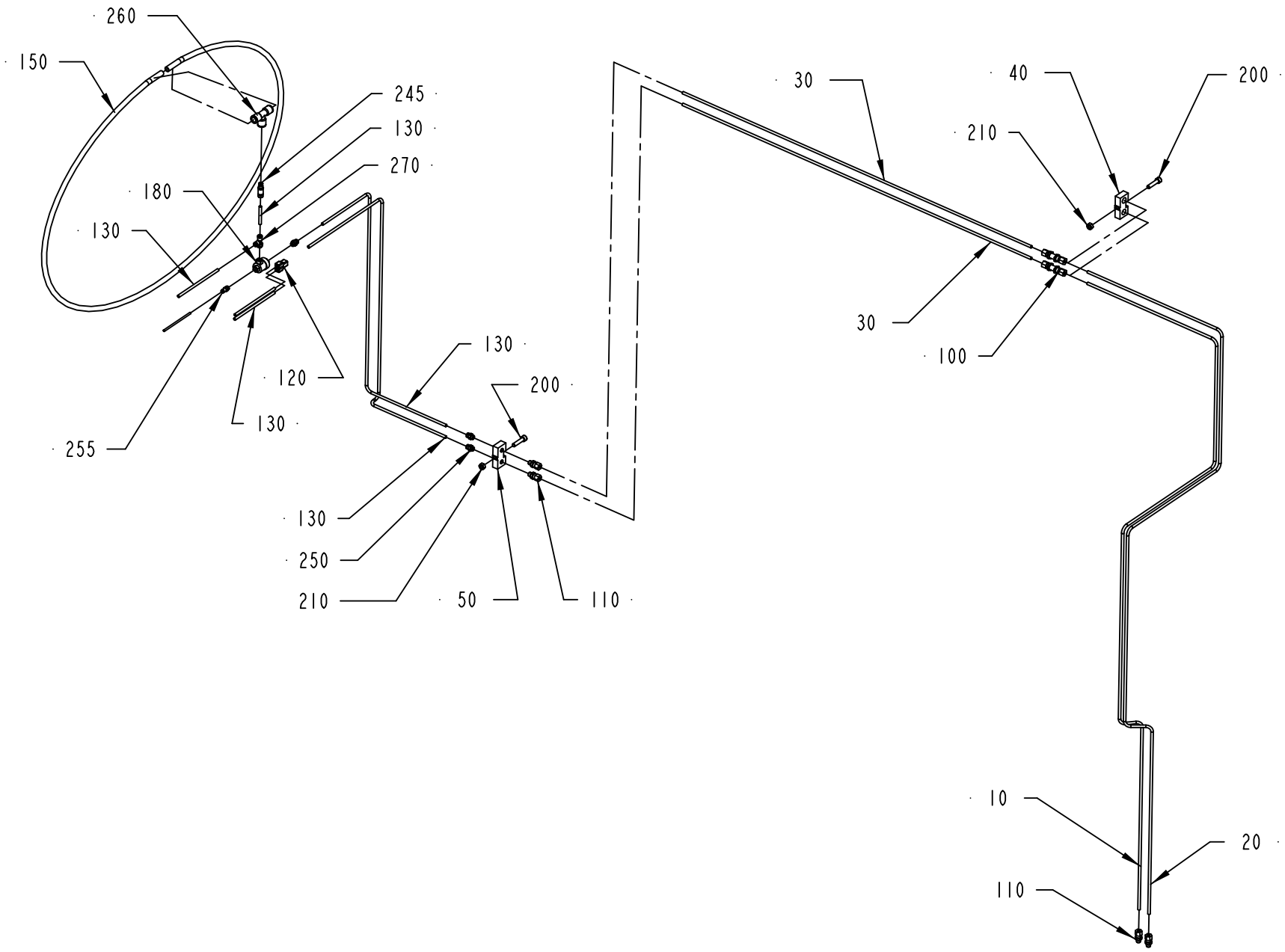

580335-2
ECM 99196

ECM: 180864 - 20040910
Group number: 580335-0200
Assembly Drawing: 580335-2_1_AB

Pos	Part No	UN	Qty	Description	Page No
-					
010	1511460-0000		1	PIPE 1050	
020	1511461-0000		1	PIPE 1051	
030	1511462-0000		2	STRAIGHT PIPE	
040	1511463-0000		1	PIPE HOLDER	
050	1511464-0000		1	PIPE HOLDER	
100	90030-0066		2	CONN. BULKHEAD SV06L71	
110	90030-0184		2	CONN. STR., GE06LRED71	
120	90055-0100		1	Y-CONNECTION, 6-6	
130	90166-0081	M	4	TUBE 6 MM PA BLUE	
140	90166-0095	M	1	TUBE 4 MM PA BLUE (50M)	
150	90166-0068	MM	2500	TUBE 12 MM PA BLUE	
180	90235-0259		1	VALVE	
200	312115-0457		2	SCREW ISO4762 M8X35 A4 80	
210	312605-0318		2	HEXAGON NUT, M6M M8 A280	
245	342716-0210		1	REDUCER 6-12	
250	342722-0202		3	PIPE COUPLING 1/8" D=6MM	
255	342722-0199		1	STRAIGHT COUPLING	
260	342748-0109		1	T-CONNECTION 12MM	
270	342772-0113		1	ELBOW FITTING, 6 - G1/8	
300	359000-0400		14	WIRE MARKING, YELLOW, PA2/4"0"	
310	359000-0401		14	WIRE MARKING, YELLOW, PA2/4"1"	
320	359000-0405		14	WIRE MARKING, YELLOW, PA2/4"5"	
330	359000-0404		7	WIRE MARKING, YELLOW, PA2/4"4"	
340	359000-0402		7	WIRE MARKING, YELLOW, PA2/4"2"	

Pos	Part No	UN	Qty	Description	Page No

Machine Type	Group Description	Used-In	Group Number	Page No

Tetra Pak

SPC
Spare Parts Catalogue

PACKAGING MATERIAL INFEED

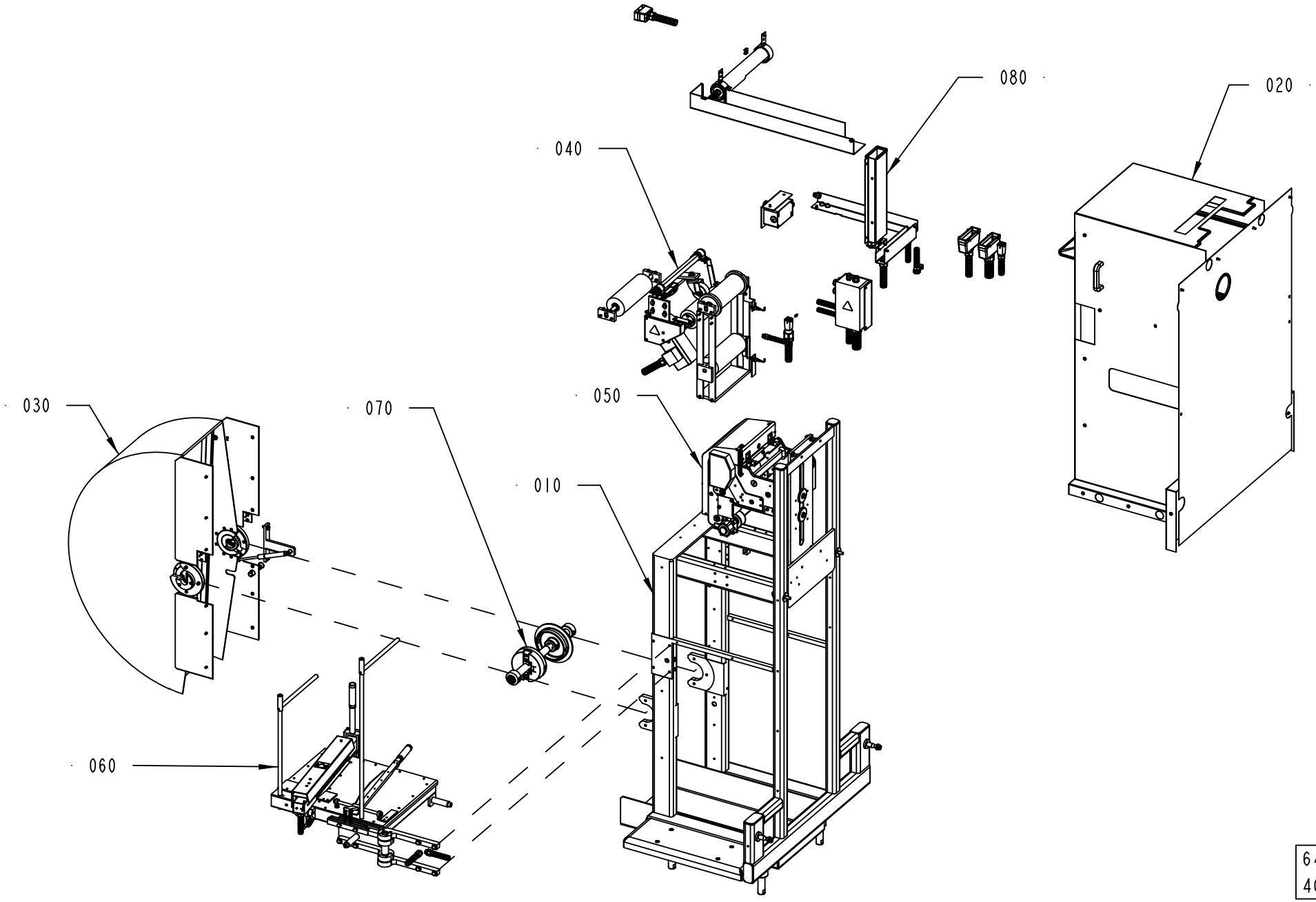

648156-4
408111

ECM: 408147 - 20090916
Group number: 648156-0300
Assembly Drawing: 648156-4_1_AB

Pos	Part No	UN	Qty	Description	Page No
-					
010	1549295-0200		1	MACHINE BODY	**8-5**
020	1549296-0300		1	COVER PLATE	**8-11, 8-13**
030	1549305-0100		1	COVER	**8-15**
040	1549300-0100		1	PAPER MAGAZINE	**8-17, 8-19**
050	3017335-0100		1	INFEED UNIT	**8-23, 8-25**
060	2501836-0100		1	SPLICING DEVICE	**8-31**
070	1296814-0100		2	PAPER REEL HOLDER,JUMBO REEL	**8-43**
080	1549480-0200		1	ELECTRIC EQUIPMENT	**8-45**

Pos	Part No	UN	Qty	Description	Page No

MACHINE BODY

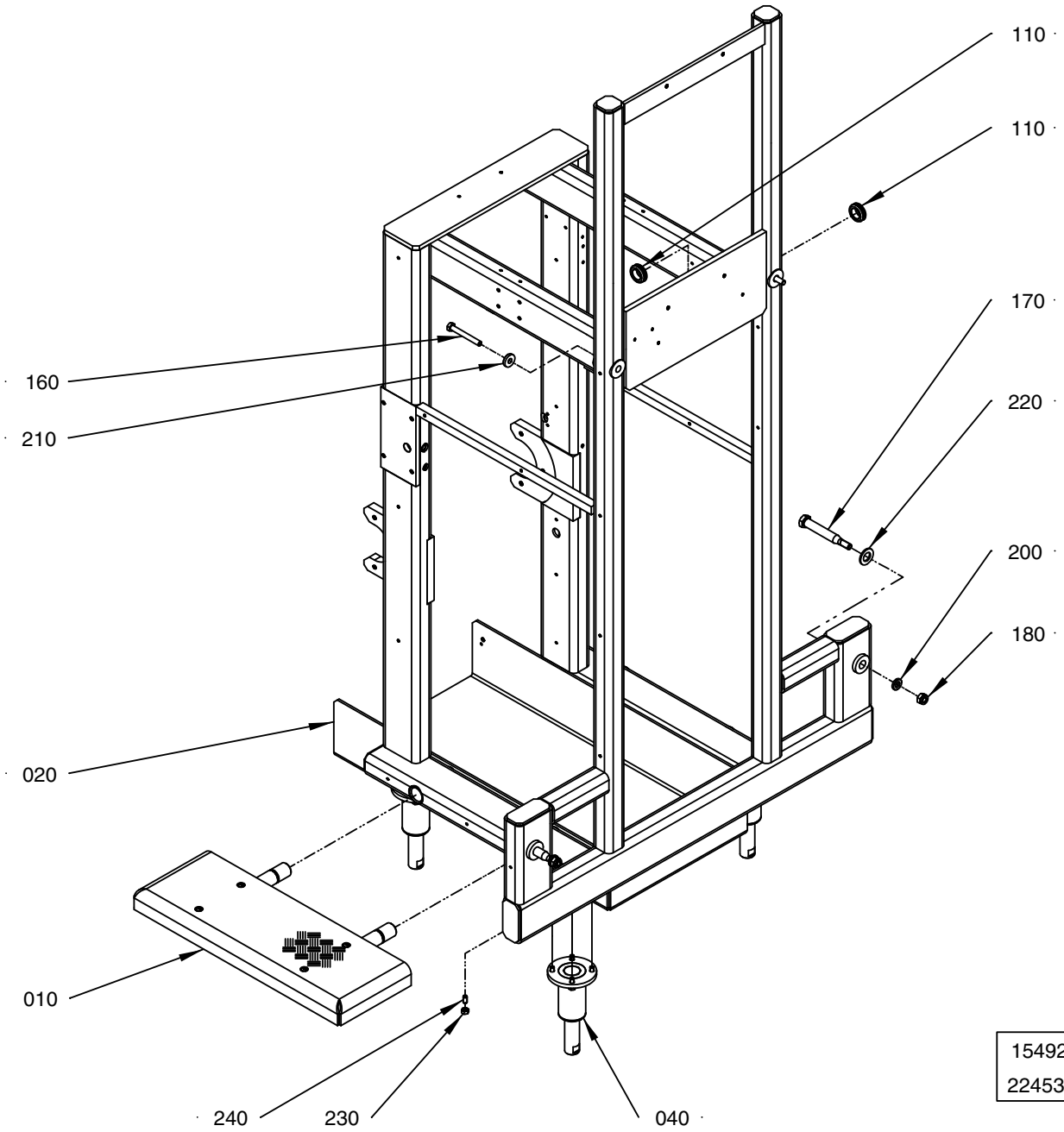

15492 95-2
224530

ECM: 224533 - 20051114
Group number: 1549295-0200
Assembly Drawing: 1549295-2_1_AA

Pos	Part No	UN	Qty	Description	Page No
-					
010	1558320-0100		1	PLATFORM	**8-7**
020	1549294-0000		1	MACHINE BODY	
040	2773926-0100		4	LEG	**2-39, 6-63, 8-9**
110	90458-1228		2	LEAD-IN, BUSHING, DA 230/300/60	
160	312105-0507		2	SCREW, M6S ISO 4014 M10X80 A4 80	
170	1367022-0000		2	ALIGNMENT SCREW	
180	312812-0322		2	HEXAGON NUT, NY-LOCK M12 A4 80	
200	315115-0178		2	WASHER PLAIN, TBRB 13/24 H=4	
210	315125-0173		2	WASHER HIGH, TBRSB 10,5X28X6 A4	
220	315105-0191		2	WASHER PLAIN, 20X36X3 A4 BRB	
230	312605-0318		2	HEXAGON NUT, M6M M8 A280	
240	90287-0112		2	SCREW SPRINGLOAD. SLOTTED HEAD M8X16	

Pos	Part No	UN	Qty	Description	Page No

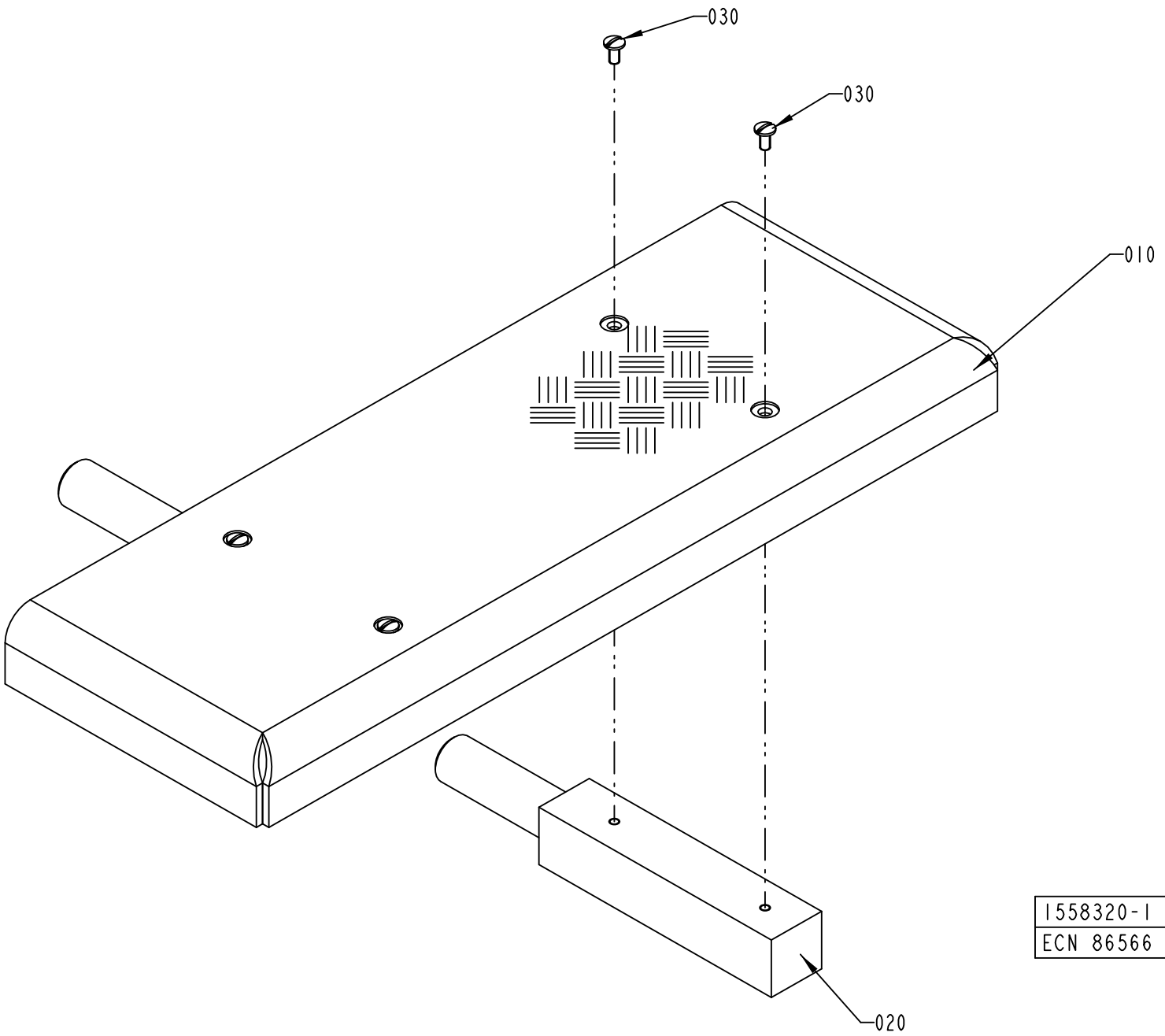

1558320-1
ECN 86566

ECM: 180788 - 20040911
Group number: 1558320-0100
Assembly Drawing: 1558320-1_1_AA

Pos	Part No	UN	Qty	Description	Page No
-					
010	1558321-0000		1	COVER PLATE	
020	1558322-0000		2	JOINT BOLT	
030	90287-0075		4	SCREW SLOT. PAN HEAD LKCS M6X12	

Pos	Part No	UN	Qty	Description	Page No

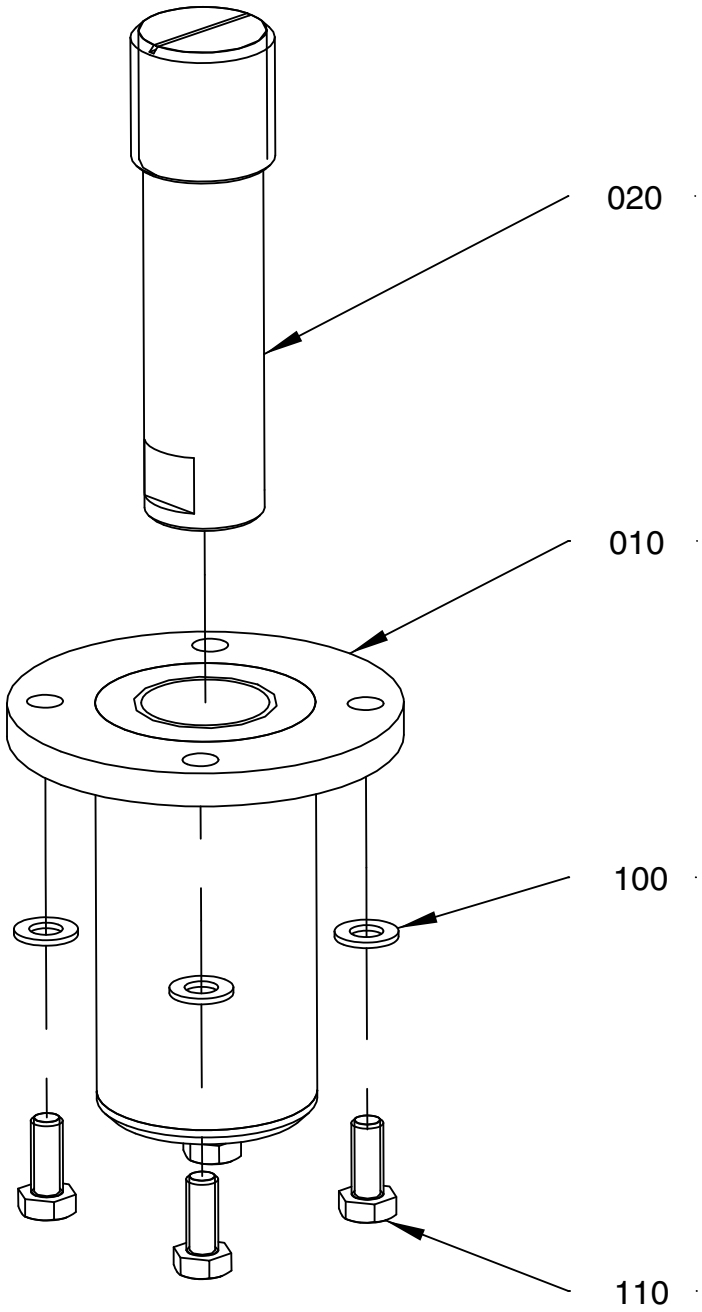

2773 926-1
224525

ECM: 224529 - 20051114
Group number: 2773926-0100
Assembly Drawing: 2773926-1_1_AA

Pos	Part No	UN	Qty	Description	Page No
-					
010	2773925-0000		1	LEG	
020	598148-0000		1	LEG	
100	315105-0165		4	WASHER PLAIN, 8,4X16X1,6 A4 BRB	
110	312105-0451		4	SCREW, M6S ISO 4017 M8X20 A4 80	

Pos	Part No	UN	Qty	Description	Page No

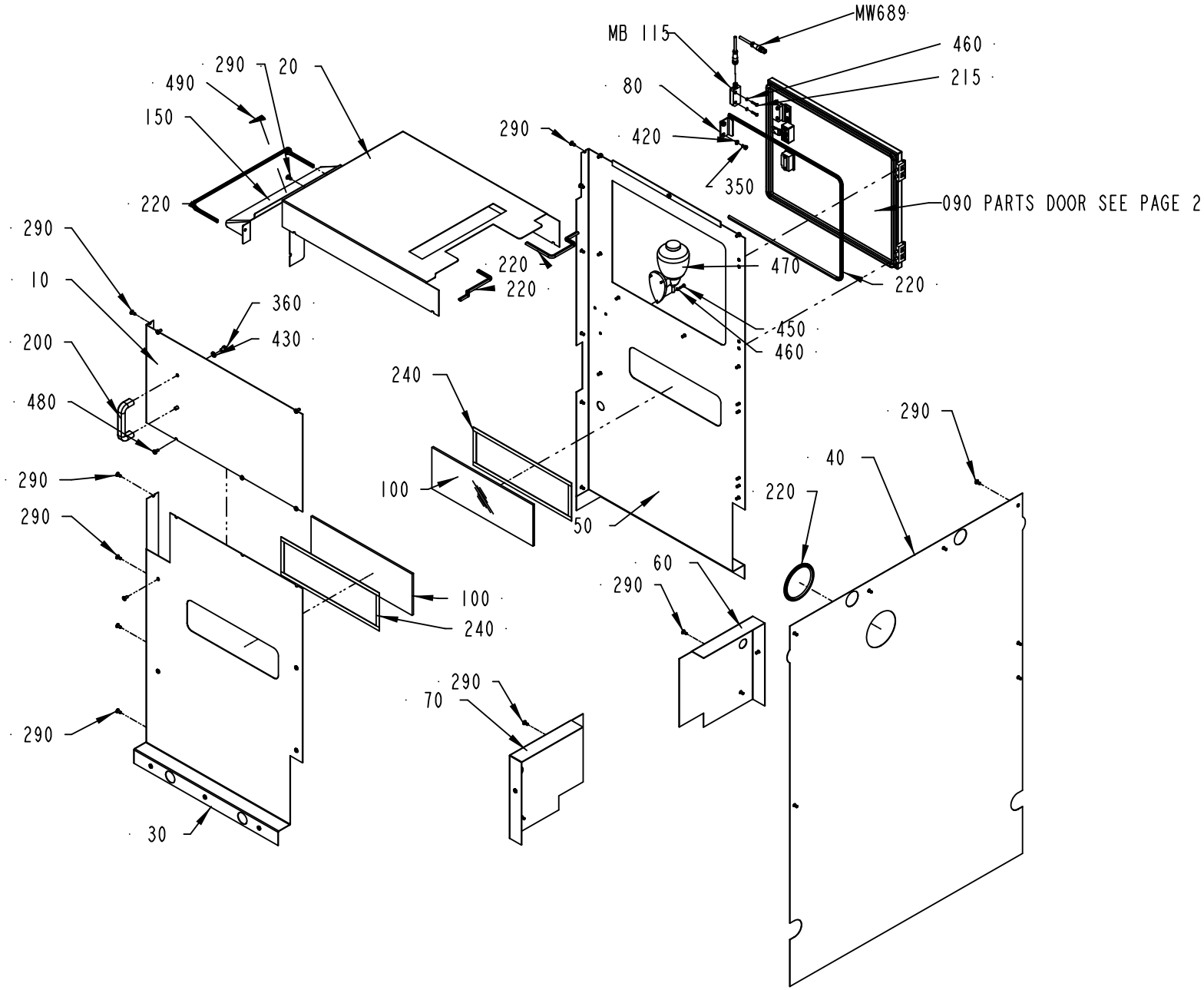

1549296-3
425520

ECM: 507518 - 20110609
Group number: 1549296-0300
Assembly Drawing: 1549296-3_1_AC

This list covers pages from 8-10 to 8-13

Pos	Part No	UN	Qty	Description	Page No
NOPT					
290	90287-0075		50	SCREW SLOT. PAN HEAD LKCS M6X12	
PT19					
290	90287-0075		45	SCREW SLOT. PAN HEAD LKCS M6X12	
Common Parts					
010	1549299-0000		1	PLATE	
020	2748682-0000		1	PLATE	
030	1549484-0000		1	PLATE	
040	3017412-0000		1	PLATE	
050	3017413-0000		1	COVER	
060	1549487-0000		1	PLATE	
070	1549488-0000		1	PLATE	
080	1549489-0000		1	BRACKET	
090	2748676-0000		1	DOOR	
100	2500050-0000		2	GLASS	
110	3017371-0000		1	BRACKET	
120	988685-0000		2	PIN	
130	1035792-0000		2	E-HINGE	
140	1035794-0000		4	BLOCKING PIECE	
150	2748683-0000		1	COVER	
200	90017-0022		1	HANDLE, NO. EL-037311	
215	90459-4146		4	RELAY G2R-1-T 24VDC	
220	90143-0060	MM	7000	EDGE STRIP 9,5X6,3MM BLACK PVC	
230	90143-0068	M	1.6	RUBBER STRIP EMKA 1011-06	
240	90144-0072	M	2.1	TAPE SCOTCH VHBS 4945 W=12,7MM	
250	90237-0128		1	LOCK CYLINDER, 1109-SU125	
260	90237-0150		1	TURNING HANDLE, NO. 1125-U190-0A	
270	90237-0214		1	LOCK ADAPTER, 1121-U40	
280	90237-0156		1	LOCK BOLT, 1000-16	
300	90237-0154		1	LOCK HOUSING, 1121-U60-0C	
350	312105-0366		2	SCREW, M6S ISO 4017 M6X12 A4 80	
360	312105-0447		2	SCREW, M6S ISO 4017 M8X12 A4 80	
370	312115-0327		4	SCREW ISO4762 M5X12 A4 80	
390	312115-0368		4	SCREW ISO4762 M6X16 A4 80	
400	575034-0000		2	ROUND NUT	
405	975924-0000		1	WASHER	
410	315105-0146		4	WASHER PLAIN, 5,3X10X1 A4 BRB	
420	315105-0153		2	WASHER PLAIN, 6,4X12X1,5 A4 BRB	
430	315105-0165		2	WASHER PLAIN, 8,4X16X1,6 A4 BRB	
450	312105-0293		3	SCREW, M6S ISO 4017 M4X16 A4 70	
460	315105-0136		7	WASHER PLAIN, 4,3X9X0,8 A4 BRB	
470	90243-0133		1	LIQUID SOAP DISPENSER 0,4L, 742634	
480	90287-0316		5	SCREW	
490	359705-0005		1	WARNING SIGN ISO, MOVING PART	
M.W689	90459-4876		1	FOCUS JUMPER CABLE M12 5P 3M, 20-056-21	
M.B115:1	90458-2794		1	SAFETY SENSOR, EVA 20-046-00	
M.B115	90459-4142		1	SAFETY SENSOR, ADAM M12, 20-051-00	

Machine Type	Group Description	Used-In	Group Number	Page No

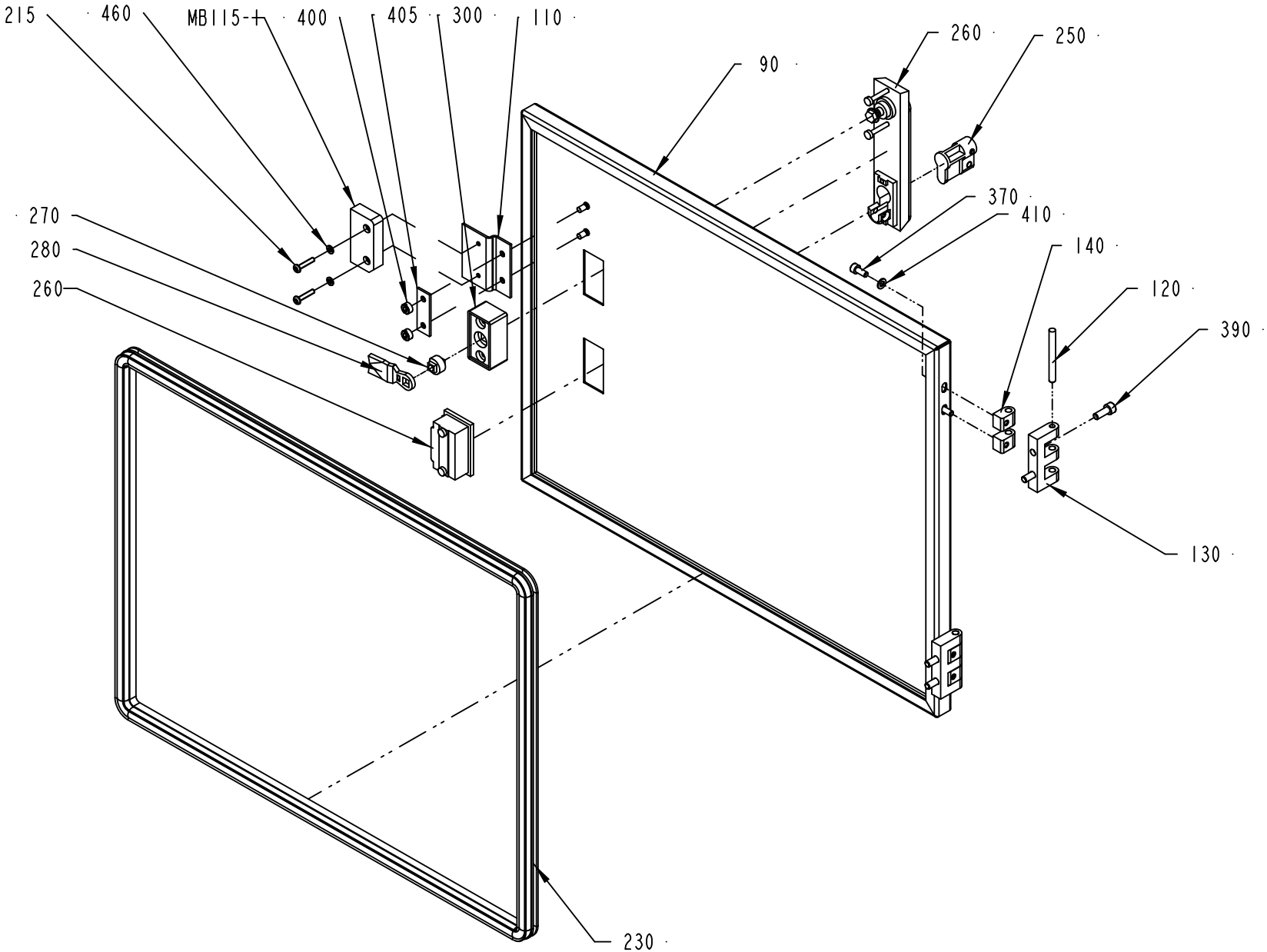

1549296-3
425520

ECM: 507518 - 20110609
Group number: 1549296-0300
Assembly Drawing: 1549296-3_2_AC

This list covers pages from 8-10 to 8-13

Pos	Part No	UN	Qty	Description	Page No
NOPT					
290	90287-0075		50	SCREW SLOT. PAN HEAD LKCS M6X12	
PT19					
290	90287-0075		45	SCREW SLOT. PAN HEAD LKCS M6X12	
Common Parts					
010	1549299-0000		1	PLATE	
020	2748682-0000		1	PLATE	
030	1549484-0000		1	PLATE	
040	3017412-0000		1	PLATE	
050	3017413-0000		1	COVER	
060	1549487-0000		1	PLATE	
070	1549488-0000		1	PLATE	
080	1549489-0000		1	BRACKET	
090	2748676-0000		1	DOOR	
100	2500050-0000		2	GLASS	
110	3017371-0000		1	BRACKET	
120	988685-0000		2	PIN	
130	1035792-0000		2	E-HINGE	
140	1035794-0000		4	BLOCKING PIECE	
150	2748683-0000		1	COVER	
200	90017-0022		1	HANDLE, NO. EL-037311	
215	90459-4146		4	RELAY G2R-1-T 24VDC	
220	90143-0060	MM	7000	EDGE STRIP 9,5X6,3MM BLACK PVC	
230	90143-0068	M	1.6	RUBBER STRIP EMKA 1011-06	
240	90144-0072	M	2.1	TAPE SCOTCH VHBS 4945 W=12,7MM	
250	90237-0128		1	LOCK CYLINDER, 1109-SU125	
260	90237-0150		1	TURNING HANDLE, NO. 1125-U190-0A	
270	90237-0214		1	LOCK ADAPTER, 1121-U40	
280	90237-0156		1	LOCK BOLT, 1000-16	
300	90237-0154		1	LOCK HOUSING, 1121-U60-0C	
350	312105-0366		2	SCREW, M6S ISO 4017 M6X12 A4 80	
360	312105-0447		2	SCREW, M6S ISO 4017 M8X12 A4 80	
370	312115-0327		4	SCREW ISO4762 M5X12 A4 80	
390	312115-0368		4	SCREW ISO4762 M6X16 A4 80	
400	575034-0000		2	ROUND NUT	
405	975924-0000		1	WASHER	
410	315105-0146		4	WASHER PLAIN, 5,3X10X1 A4 BRB	
420	315105-0153		2	WASHER PLAIN, 6,4X12X1,5 A4 BRB	
430	315105-0165		2	WASHER PLAIN, 8,4X16X1,6 A4 BRB	
450	312105-0293		3	SCREW, M6S ISO 4017 M4X16 A4 70	
460	315105-0136		7	WASHER PLAIN, 4,3X9X0,8 A4 BRB	
470	90243-0133		1	LIQUID SOAP DISPENSER 0,4L, 742634	
480	90287-0316		5	SCREW	
490	359705-0005		1	WARNING SIGN ISO, MOVING PART	
M.W689	90459-4876		1	FOCUS JUMPER CABLE M12 5P 3M, 20-056-21	
M.B115:1	90458-2794		1	SAFETY SENSOR, EVA 20-046-00	
M.B115	90459-4142		1	SAFETY SENSOR, ADAM M12, 20-051-00	

Machine Type	Group Description	Used-In	Group Number	Page No

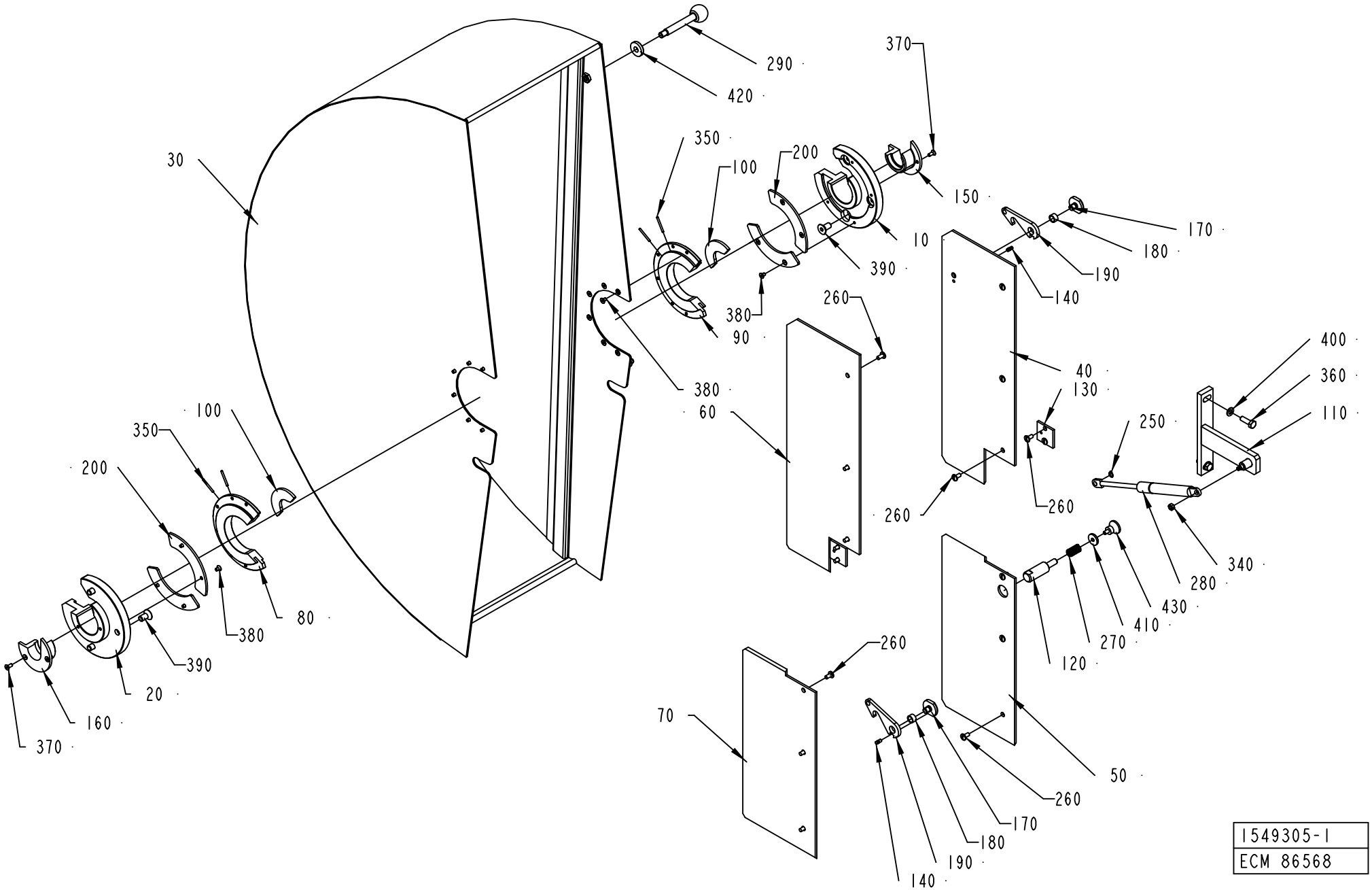

1549305-1
ECM 86568

ECM: 180783 - 20040911
Group number: 1549305-0100
Assembly Drawing: 1549305-1_1_AA

Pos	Part No	UN	Qty	Description	Page No
-					
010	1549297-0000		1	REEL HOLDER	
020	1549298-0000		1	REEL HOLDER	
030	1549306-0000		1	COVER	
040	1549476-0000		1	PLATE	
050	1549477-0000		1	PLATE	
060	1549478-0000		1	PLATE	
070	1549479-0000		1	PLATE	
080	1549481-0000		1	REEL HOLDER	
090	1549482-0000		1	REEL HOLDER	
100	1549491-0000		2	REEL HOLDER	
110	1549492-0000		1	HOLDER	
120	1558313-0000		1	SHAFT	
130	1558314-0000		2	BRACKET	
140	1013-0000		2	SHAFT	
150	440252-0000		1	SLEEVE	
160	440253-0000		1	SLEEVE	
170	440271-0000		2	SCREW	
180	457358-0000		2	SLEEVE	
190	476117-0000		2	CATCH	
200	2508118-0000		4	FIXING RING	
250	90141-0015		1	RETAINING RING FOR SHAFT DIN 471 8 SS	
260	90287-0075		16	SCREW SLOT. PAN HEAD LKCS M6X12	
270	90335-0036		1	COMP. SPRING, 22450, 1,6X14,1X24	
280	90347-0108		1	GAS SPRING NO. 03-08-100-084174	
290	90458-1226		1	HANDLE, NO. GN 310-12-100-A-NI	
340	312605-0316		8	HEXAGON NUT, M6M M6 A280	
350	311103-0242		4	PARALLEL PIN ISO 2338 3M6X30 A1	
360	312105-0453		4	SCREW, M6S ISO 4017 M8X25 A4 80	
370	312155-0327		4	SCREW DIN 7991 MF6S M5X12 A4 70	
380	312155-0323		20	SCREW DIN 7991 MF6S M5X8 A4 70	
390	312155-0491		6	SCREW DIN 7991 MF6S M10X20 A4 70	
400	315105-0165		2	WASHER PLAIN, 8,4X16X1,6 A4 BRB	
410	315125-0153		1	WASHER HIGH, TBRSB 6,4X22X4 A4	
420	315125-0173		1	WASHER HIGH, TBRSB 10,5X28X6 A4	
430	318871-0104		1	KNOB CIRCULAR, EXT THREAD, NO. 8302-6118	

Pos	Part No	UN	Qty	Description	Page No

Machine Type | Group Description | Used-In | Group Number | Page No

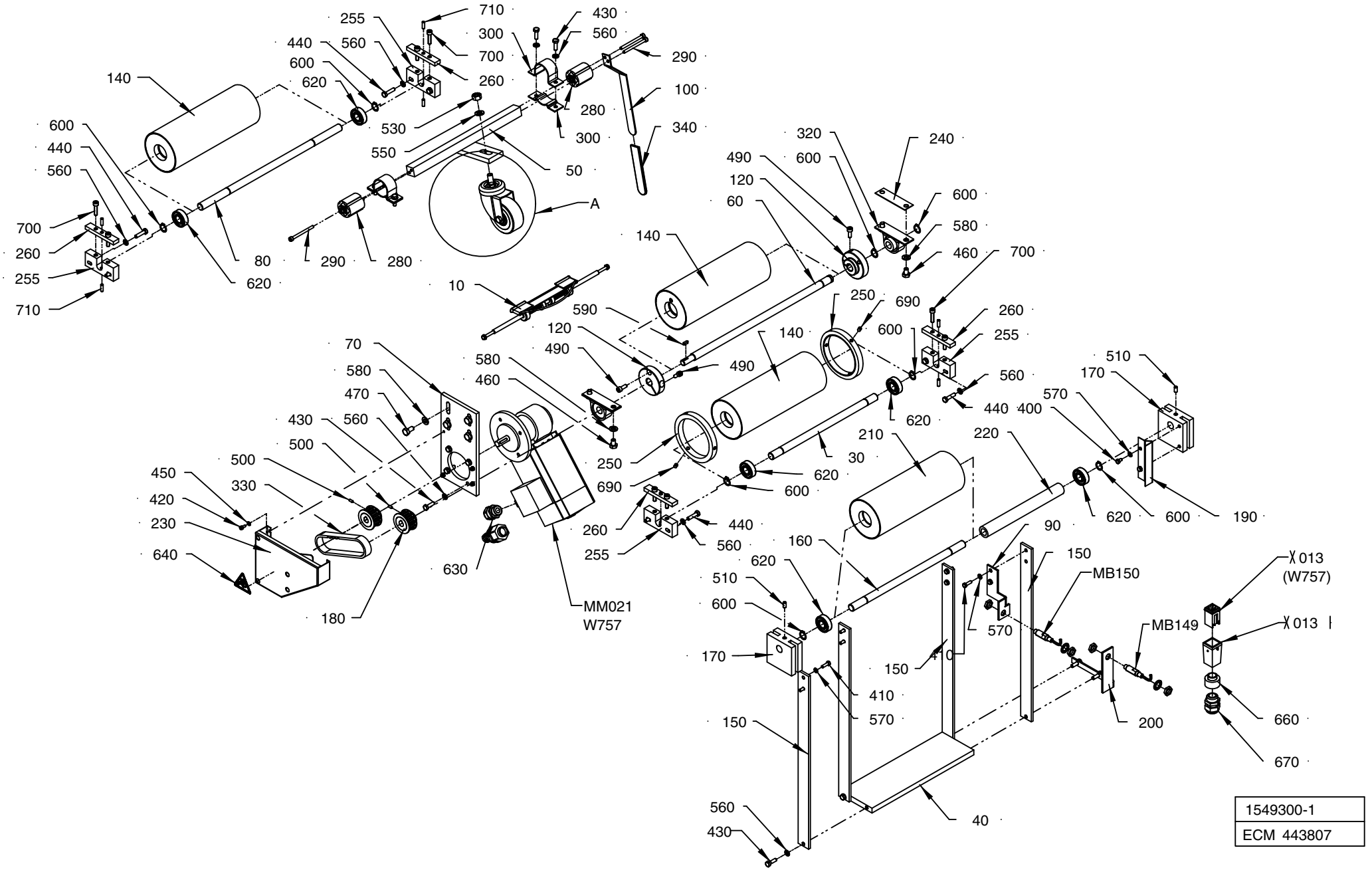
255
710
300
700
260
430
560
290
100
340
280
300
440
560
600
620
140
530
550
50
A
600
440
560
700
260
255
710
80
620
290
280
10
590
120
490
140
320
240
490
600
120
60
600
580
460
700
250
690
260
255
600
140
490
560
510
170
570
440
400
620
70
580
470
430
560
500
500
450
330
420
230
640
180
630
580
460
MM021
W757
250
690
260
255
440
560
620
210
30
620
600
220
620
600
190
90
160
620
510
600
150
MB150
013
(W757)
013
570
MB149
170
150
40
410
570
150
200
660
670
560
430
40
1549300-1
ECM 443807

ECM: 448891 - 20100524
Group number: 1549300-0100
Assembly Drawing: 1549300-1_1_AF

This list covers pages from 8-16 to 8-19

Pos	Part No	UN	Qty	Description	Page No
-					
010	577800-0200		1	PAPER GUIDE	8-21
030	1549302-0000		1	SHAFT	
040	1549303-0000		1	PLATE	
050	1549304-0000		1	ARM	
060	2501613-0000		1	SHAFT	
070	1549307-0000		1	BRACKET	
080	1549474-0000		1	SHAFT	
090	1549475-0000		1	BRACKET	
100	1549493-0000		1	HANDSPIKE	
110	1558319-0000		2	BUSHING	
120	2501362-0000		2	CLAMP RING	
130	2555116-0000		1	WHEEL	
140	574932-0000		3	BENDING ROLLER	
150	2525340-0000		4	BRACKET	
160	574937-0000		1	SHAFT	
170	574940-0000		2	BLOCKING PIECE	
180	574945-0000		2	TOOTHED PULLEY	
190	574946-0000		1	FLAG	
200	576274-0000		1	BRACKET	
210	979555-0000		1	WEB TENSION ROLLER	
220	979946-0000		1	STEEL TUBE	
230	2509543-0000		1	PROTECTION	
240	2547005-0000		2	LACE	
250	1140996-0000		2	FLANGE	
255	2610111-0000		4	BEARING BRACKET	
260	2610112-0000		4	BEARING BRACKET	
280	90458-1240		2	RUBBERSPRING DK-A 15X40	
290	90458-0058		4	SCREW M5X60 A280	
300	90458-1230		2	CLAMPING ELEMENT, DI=36 MM	
310	90458-1231		1	FORK W. BACKHOLE, 913588/04	
320	90458-1232		2	BEARING BRACKET AY15	
330	90458-1233		1	TIMING BELT 16T10/340 PU	
340	90458-1234		1	PROTECTIVE CAP 2X20X1.2X100	
400	312101-0323		2	SCREW M6S M5X8 FZB	
410	312105-0329		8	SCREW, M6S ISO 4017 M5X16 A4 80	
420	312115-0287		4	SCREW ISO4762 M4X8 A4 80	
430	312105-0370		12	SCREW, M6S ISO 4017 M6X20 A4 80	
440	312105-0372		8	SCREW, M6S ISO 4017 M6X25 A4 80	
450	315105-0136		4	WASHER PLAIN, 4,3X9X0,8 A4 BRB	
460	312105-0447		4	SCREW, M6S ISO 4017 M8X12 A4 80	
470	312105-0449		4	SCREW, M6S ISO 4017 M8X16 A4 80	
480	312115-0495		1	SCREW ISO4762 M10X30 A4 80	
490	312115-0368		3	SCREW ISO4762 M6X16 A4 80	
500	312318-0287		2	SET SCREW, CUP END ISO4029 M4X8 A4	
510	312318-0366		2	SET SCREW, CUP END ISO4029 M6X12 A4	
530	312605-0320		1	HEXAGON NUT, M6M M10 A280	
540	312625-0320		1	HEXAGON THIN NUT, EN 24035 ML6M M10 A4	
550	315105-0171		1	WASHER PLAIN, 10X18X2 A4 BRB	
560	315105-0153		20	WASHER PLAIN, 6,4X12X1,5 A4 BRB	
570	315105-0146		10	WASHER PLAIN, 5,3X10X1 A4 BRB	
580	315105-0165		8	WASHER PLAIN, 8,4X16X1,6 A4 BRB	
590	315705-0166		1	PARALLEL KEY W. ROUND ENDS, 4X4X12 MM	
600	315751-0112		8	RETAINING RING FOR SHAFT DIN 471 15 SS	
610	321308-0202		2	BALL BEARING 15/32X9	
620	321313-0102		6	BALL BEARING 15/35X11	
630	90458-0307		1	CABLE GLAND, M20X1,5, 5311 1020	
640	359705-0001		1	WARNING SIGN ISO, ENTANGLEMENT	
660	90089-0007		1	REDUCING SLEEVE, PR18,6/PR22,5	
670	352103-0111		1	CABLE GLAND, ST 16, PR22,5/PG16	
690	312318-0362		6	SET SCREW, CUP END ISO4029 M6X8 A4	
700	312115-0372		8	SCREW ISO4762 M6X25 A4 80	
710	312318-0329		8	SET SCREW, CUP END ISO4029 M5X16 A4	
MB150	90458-0675		1	PROX.SENSOR, E2EG-X5MB1-5M	
MB149	90458-0675		1	PROX.SENSOR, E2EG-X5MB1-5M	
M.M021	90459-2327		1	GEARS, WORM MOTOR IGL 80-60 + VE 31GR5	
W757	90220-0104	M	3	SCR. CABLE 4X1,5MM2	
X013	90459-2412		1	CONNECTOR, HDC-KITS, HDC-HA-4SS	
X013.1	90110-0371		1	HOOD, TOP ENTRY, HDC-HA-3-TOVL1/11	

Machine Type	Group Description	Used-In	Group Number	Page No

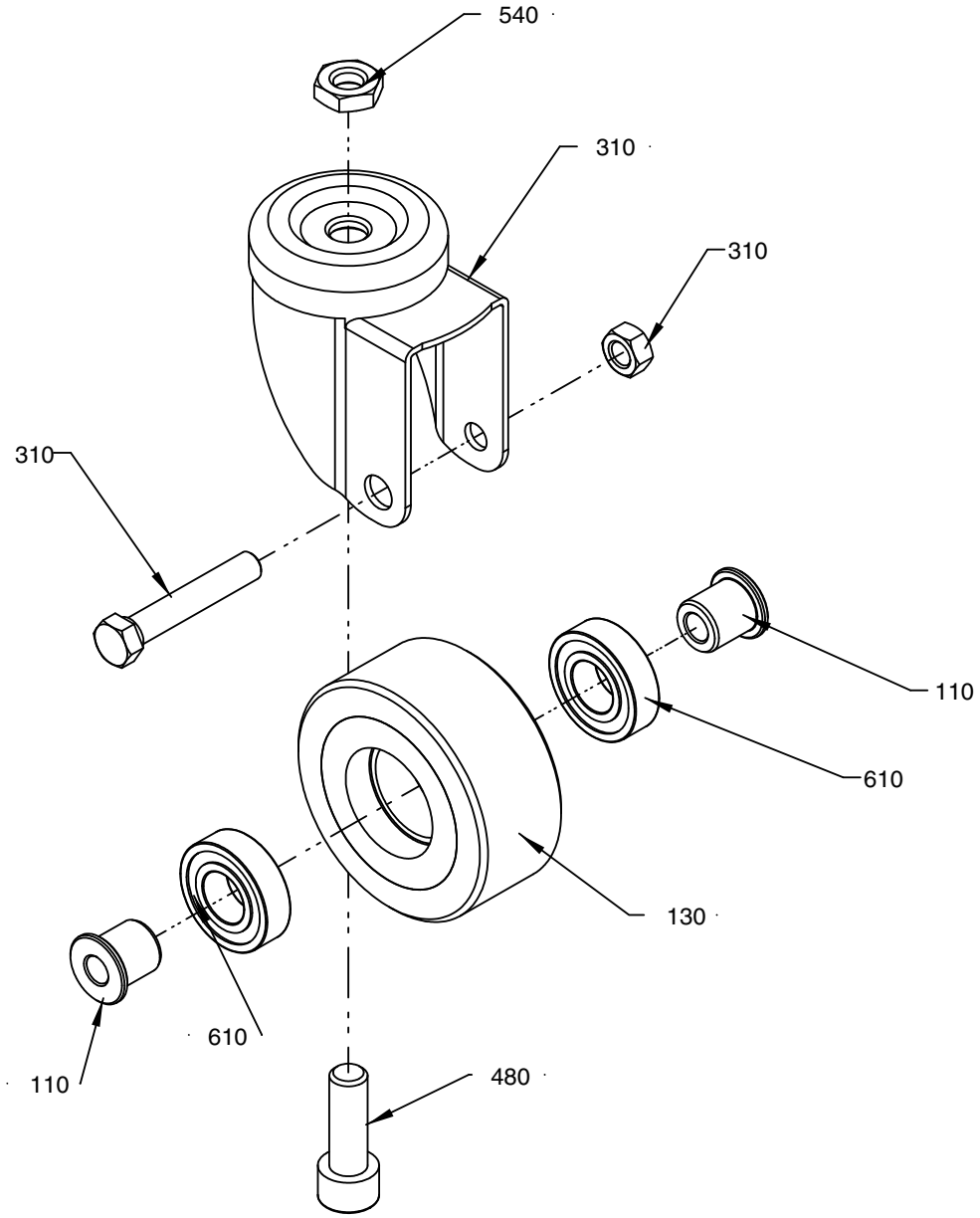

DETAIL A

1549300-1
ECM 443807

ECM: 448891 - 20100524
Group number: 1549300-0100
Assembly Drawing: 1549300-1_2_AF

This list covers pages from 8-16 to 8-19

Pos	Part No	UN	Qty	Description	Page No
-					
010	577800-0200		1	PAPER GUIDE	8-21
030	1549302-0000		1	SHAFT	
040	1549303-0000		1	PLATE	
050	1549304-0000		1	ARM	
060	2501613-0000		1	SHAFT	
070	1549307-0000		1	BRACKET	
080	1549474-0000		1	SHAFT	
090	1549475-0000		1	BRACKET	
100	1549493-0000		1	HANDSPIKE	
110	1558319-0000		2	BUSHING	
120	2501362-0000		2	CLAMP RING	
130	2555116-0000		1	WHEEL	
140	574932-0000		3	BENDING ROLLER	
150	2525340-0000		4	BRACKET	
160	574937-0000		1	SHAFT	
170	574940-0000		2	BLOCKING PIECE	
180	574945-0000		2	TOOTHED PULLEY	
190	574946-0000		1	FLAG	
200	576274-0000		1	BRACKET	
210	979555-0000		1	WEB TENSION ROLLER	
220	979946-0000		1	STEEL TUBE	
230	2509543-0000		1	PROTECTION	
240	2547005-0000		2	LACE	
250	1140996-0000		2	FLANGE	
255	2610111-0000		4	BEARING BRACKET	
260	2610112-0000		4	BEARING BRACKET	
280	90458-1240		2	RUBBERSPRING DK-A 15X40	
290	90458-0058		4	SCREW M5X60 A280	
300	90458-1230		2	CLAMPING ELEMENT, DI=36 MM	
310	90458-1231		1	FORK W. BACKHOLE, 913588/04	
320	90458-1232		2	BEARING BRACKET AY15	
330	90458-1233		1	TIMING BELT 16T10/340 PU	
340	90458-1234		1	PROTECTIVE CAP 2X20X1.2X100	
400	312101-0323		2	SCREW M6S M5X8 FZB	
410	312105-0329		8	SCREW, M6S ISO 4017 M5X16 A4 80	
420	312115-0287		4	SCREW ISO4762 M4X8 A4 80	
430	312105-0370		12	SCREW, M6S ISO 4017 M6X20 A4 80	
440	312105-0372		8	SCREW, M6S ISO 4017 M6X25 A4 80	
450	315105-0136		4	WASHER PLAIN, 4,3X9X0,8 A4 BRB	
460	312105-0447		4	SCREW, M6S ISO 4017 M8X12 A4 80	
470	312105-0449		4	SCREW, M6S ISO 4017 M8X16 A4 80	
480	312115-0495		1	SCREW ISO4762 M10X30 A4 80	
490	312115-0368		3	SCREW ISO4762 M6X16 A4 80	
500	312318-0287		2	SET SCREW, CUP END ISO4029 M4X8 A4	
510	312318-0366		2	SET SCREW, CUP END ISO4029 M6X12 A4	
530	312605-0320		1	HEXAGON NUT, M6M M10 A280	
540	312625-0320		1	HEXAGON THIN NUT, EN 24035 ML6M M10 A4	
550	315105-0171		1	WASHER PLAIN, 10X18X2 A4 BRB	
560	315105-0153		20	WASHER PLAIN, 6,4X12X1,5 A4 BRB	
570	315105-0146		10	WASHER PLAIN, 5,3X10X1 A4 BRB	
580	315105-0165		8	WASHER PLAIN, 8,4X16X1,6 A4 BRB	
590	315705-0166		1	PARALLEL KEY W. ROUND ENDS, 4X4X12 MM	
600	315751-0112		8	RETAINING RING FOR SHAFT DIN 471 15 SS	
610	321308-0202		2	BALL BEARING 15/32X9	
620	321313-0102		6	BALL BEARING 15/35X11	
630	90458-0307		1	CABLE GLAND, M20X1,5, 5311 1020	
640	359705-0001		1	WARNING SIGN ISO, ENTANGLEMENT	
660	90089-0007		1	REDUCING SLEEVE, PR18,6/PR22,5	
670	352103-0111		1	CABLE GLAND, ST 16, PR22,5/PG16	
690	312318-0362		6	SET SCREW, CUP END ISO4029 M6X8 A4	
700	312115-0372		8	SCREW ISO4762 M6X25 A4 80	
710	312318-0329		8	SET SCREW, CUP END ISO4029 M5X16 A4	
MB150	90458-0675		1	PROX.SENSOR, E2EG-X5MB1-5M	
MB149	90458-0675		1	PROX.SENSOR, E2EG-X5MB1-5M	
M.M021	90459-2327		1	GEARS, WORM MOTOR IGL 80-60 + VE 31GR5	
W757	90220-0104	M	3	SCR. CABLE 4X1,5MM2	
X013	90459-2412		1	CONNECTOR, HDC-KITS, HDC-HA-4SS	
X013.1	90110-0371		1	HOOD, TOP ENTRY, HDC-HA-3-TOVL1/11	

Machine Type	Group Description	Used-In	Group Number	Page No

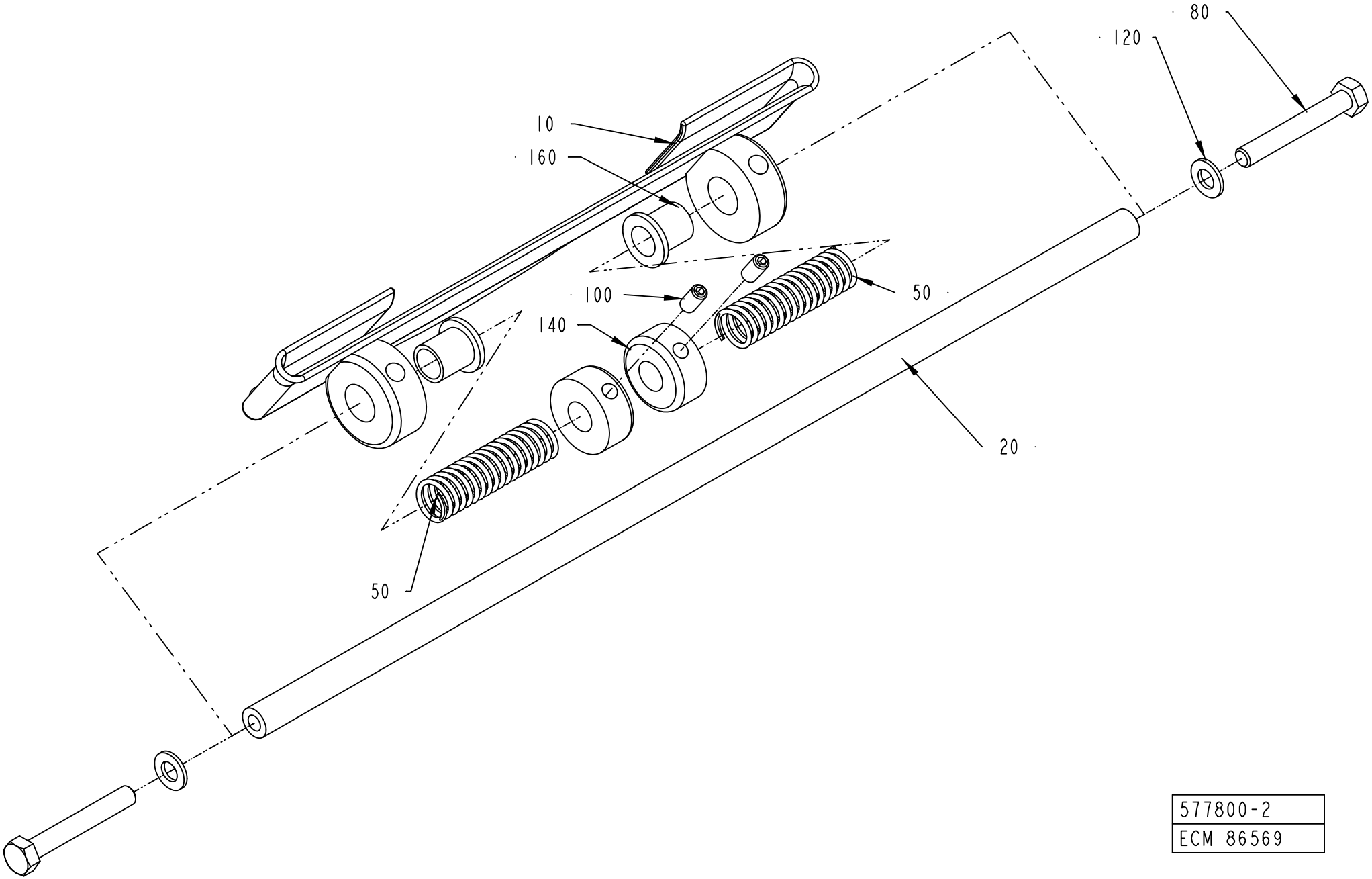

577800-2
ECM 86569

ECM: 276149 - 20070126
Group number: 577800-0200
Assembly Drawing: 577800-2_1_AA

Pos	Part No	UN	Qty	Description	Page No
TBA 0100B, TBA 0125S, TWA 0125S					
010	578685-0000		1	GUIDING ARBOR	
TBA 0160S, TBA 0200S, TPA 0250SQ, TWA 0200S, TPA 0200SQ					
010	577798-0000		1	GUIDING ARBOR	
TBA 0200B, TBA 0284B, TBA 0250B, TBA 0300S, TBA 0330S					
010	578686-0000		1	GUIDING ARBOR	
TBA 0200M, TBA 0250S					
010	578687-0000		1	GUIDING ARBOR	
TPA 0330SQ					
010	2810406-0000		1	GUIDING ARBOR	
Common Parts					
020	577799-0000		1	SHAFT	
050	752085-0000		2	SPRING	
080	312105-0337		2	SCREW, M6S ISO 4014 M5X35 A4 80	
100	312318-0287		2	SET SCREW, CUP END ISO4029 M4X8 A4	
120	315105-0146		2	WASHER PLAIN, 5,3X10X1 A4 BRB	
140	315742-0104		2	RETAINING RING, 8 SMS 199 RFR	
160	90240-0121		2	FLANGE BUSHING, 8X10X12 MM	

Pos	Part No	UN	Qty	Description	Page No

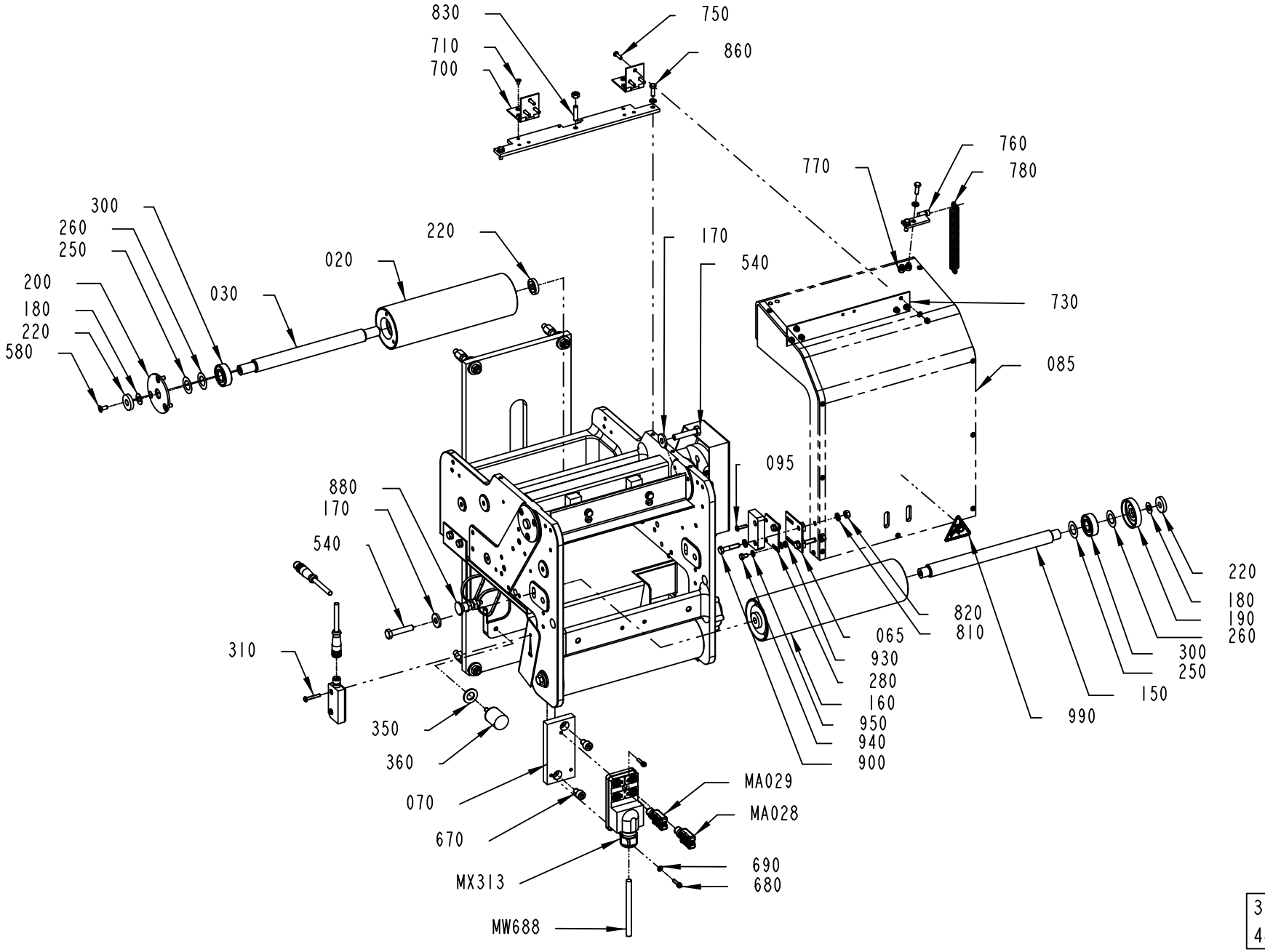

3017335-1
489598

ECM: 509768 - 20110627
Group number: 3017335-0100
Assembly Drawing: 3017335-1_1_AE

This list covers pages from 8-22 to 8-25

Pos	Part No	UN	Qty	Description	Page No
-					
010	1549584-0100		1	PAPER BRAKE	8-27
020	752542-0001		1	BENDING ROLLER	
030	752543-0001		1	SHAFT	
040	2815754-0200		1	CREASE UNIT	8-29
045	3046066-0000		1	COVER	
050	572252-0000		1	BRACKET	
055	3046767-0000		1	COVER	
065	3046766-0000		1	BRACKET	
070	3017372-0000		1	FASTENING PLATE	
080	3017333-0000		1	SPACER	
085	979790-0000		1	COVER	
090	752240-0000		2	LID	
095	2872726-0000		2	SCREW	
100	752200-0000		1	CANTILEVER	
110	491965-0000		1	CAM	
120	556422-0000		1	PROTECTION	
130	2531115-0000		4	SCREW	
150	752538-0000		2	SHAFT	
160	979709-0000		2	BENDING ROLLER	
170	28036-0000		12	WASHER	
180	2033-0011		6	WASHER	
190	265568-0000		4	DUST COVER	
200	256248-0001		2	LID	
220	256409-0000		6	WASHER	
230	752534-0000		1	PLATE	
240	253107-0000		2	WASHER	
250	752544-0001		6	SHIM	
260	752544-0002		6	SHIM	
270	752539-0000		1	PLATE	
280	3052461-0000		1	BRACKET	
300	90458-1704		8	BALL BEARING 15/35X11	
310	90459-4165		2	SAFETY SCREW, SM4X25	
350	315105-0178		2	WASHER PLAIN, 13X24X2,5 A4 BRB	
360	90459-1060		2	VIBRATION DAMPER, T15688	
500	312115-0333		2	SCREW ISO4762 M5X25 A4 80	
510	312105-0329		1	SCREW, M6S ISO 4017 M5X16 A4 80	
530	312105-0372		2	SCREW, M6S ISO 4017 M6X25 A4 80	
540	312105-0459		4	SCREW, M6S ISO 4014 M8X40 A4 80	
550	312105-0493		2	SCREW, M6S ISO 4017 M10X25 A4 80	
560	312125-0230		2	SLOTTED HEAD SCREW, ISO1207 M3X20 A4	
570	312125-0325		2	SCREW ISO 1207 M5X10 A4	
580	312155-0327		12	SCREW DIN 7991 MF6S M5X12 A4 70	
590	312155-0457		2	SCREW DIN 7991 MF6S M8X35 A4 70	
600	315105-0124		2	WASHER PLAIN, 3,2X6X0,5 A4 BRB	
610	315105-0146		10	WASHER PLAIN, 5,3X10X1 A4 BRB	
620	315105-0153		2	WASHER PLAIN, 6,4X12X1,5 A4 BRB	
630	315105-0173		2	WASHER PLAIN, 10,5X22X2 A4 BRB	
640	312812-0318		4	HEXAGON NUT, NY-LOCK M8 A4 80	
650	312605-0318		4	HEXAGON NUT, M6M M8 A280	
670	312115-0447		2	SCREW ISO4762 M8X12 A4 80	
680	312115-0293		3	SCREW ISO4762 M4X16 A4 80	
690	315105-0136		8	WASHER PLAIN, 4,3X9X0,8 A4 BRB	
700	90248-0026		2	HINGE, 1703-80X32	
710	312145-0285		6	SCREW ISO 2009 MFS M4X6 A4	
730	572253-0000		1	SHEET	
740	312812-0312		6	HEXAGON NUT, NY-LOCK M4 A4 80	
750	312145-0293		6	SCREW ISO 2009 MFS M4X16 A4	
760	979789-0000		1	SPRING HOLDER	
770	312605-0314		2	HEXAGON NUT, M6M M5 A280	
780	90335-0041		1	TENSION SPRING, 42350, 2X14X68	
790	979788-0000		1	SPRING HOLDER	
810	315106-0153		12	WASHER PLAIN, M6 ISO7089-6-200 HV A4	
820	312605-0316		3	HEXAGON NUT, M6M M6 A280	
830	312318-0372		1	SET SCREW, CUP END ISO4029 M6X25 A4	
840	3046769-0000		1	BLOCK	
860	312115-0329		4	SCREW ISO4762 M5X16 A4 80	
880	90051-0112		1	LOCK KNOB, NO. GN 617 NIK5	
890	312605-0312		2	HEXAGON NUT, M6M M4 A280	
900	312105-0374		2	SCREW, M6S ISO 4014 M6X30 A4 80	
910	312105-0327		2	SCREW, M6S ISO 4017 M5X12 A4 80	
920	312105-0370		6	SCREW, M6S ISO 4017 M6X20 A4 80	
930	312605-0314		2	HEXAGON NUT, M6M M5 A280	
940	312105-0323		2	SCREW, M6S ISO 4017 M5X8 A4 80	
950	315106-0146		4	WASHER PLAIN, M5 ISO7089-5-200 HV A4	
960	352113-0205		2	ANCHOR PLATES FOR STRIPS, TM2S8-C100	
970	352113-0102		2	CABLE TIE, BLACK 188X4,8 MM	
980	312122-0285		2	SCREW ISO 1207 M4X6 NI PL BRASS	
990	359705-0001		1	WARNING SIGN ISO, ENTANGLEMENT	
M.X313	90459-4254		1	CONNECTION BLOCK TINA 4A, 20-054-03	
M.W688	90600-5930	M	3	CABLE C9, 20-057-15	
M.W687	90459-7095		1	FOCUS JUMPER CABLE M12 5P 1M, 20-056-20	
M.B157	90044-0194		1	INDUCTIVE SENSOR, IN 5329	
M.B108:1	90458-2794		1	SAFETY SENSOR, EVA 20-046-00	

Machine Type | Group Description | Used-In | Group Number | Page No

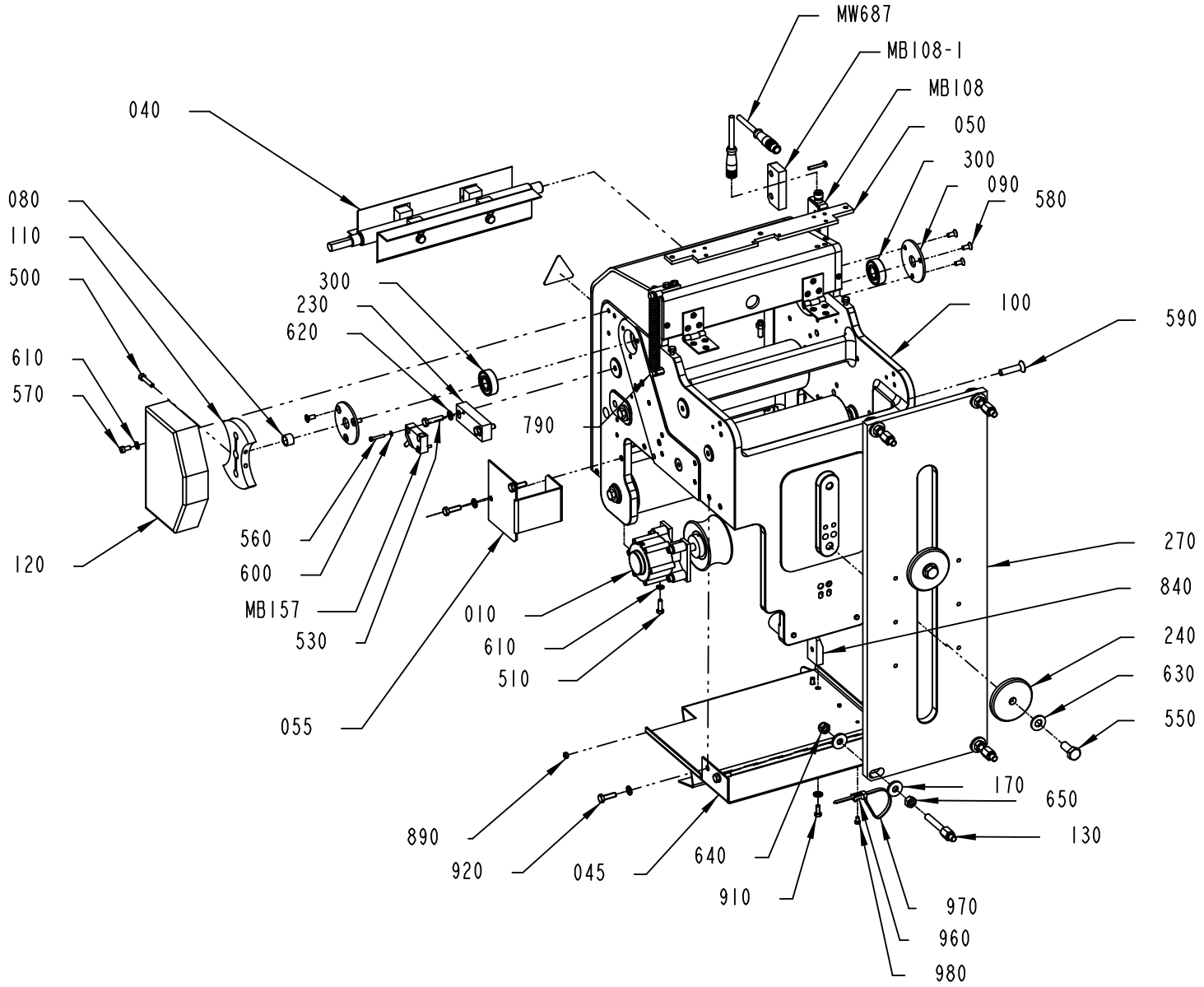

3017335-1
489598

Pos	Part No	UN	Qty	Description	Page No
- (Cont'd)					
M.B108	90459-4142		1	SAFETY SENSOR, ADAM M12, 20-051-00	
M.A029	90459-5627		1	CONNECTION, TINA 1-A	
M.A028	90459-5627		1	CONNECTION, TINA 1-A	

Pos	Part No	UN	Qty	Description	Page No

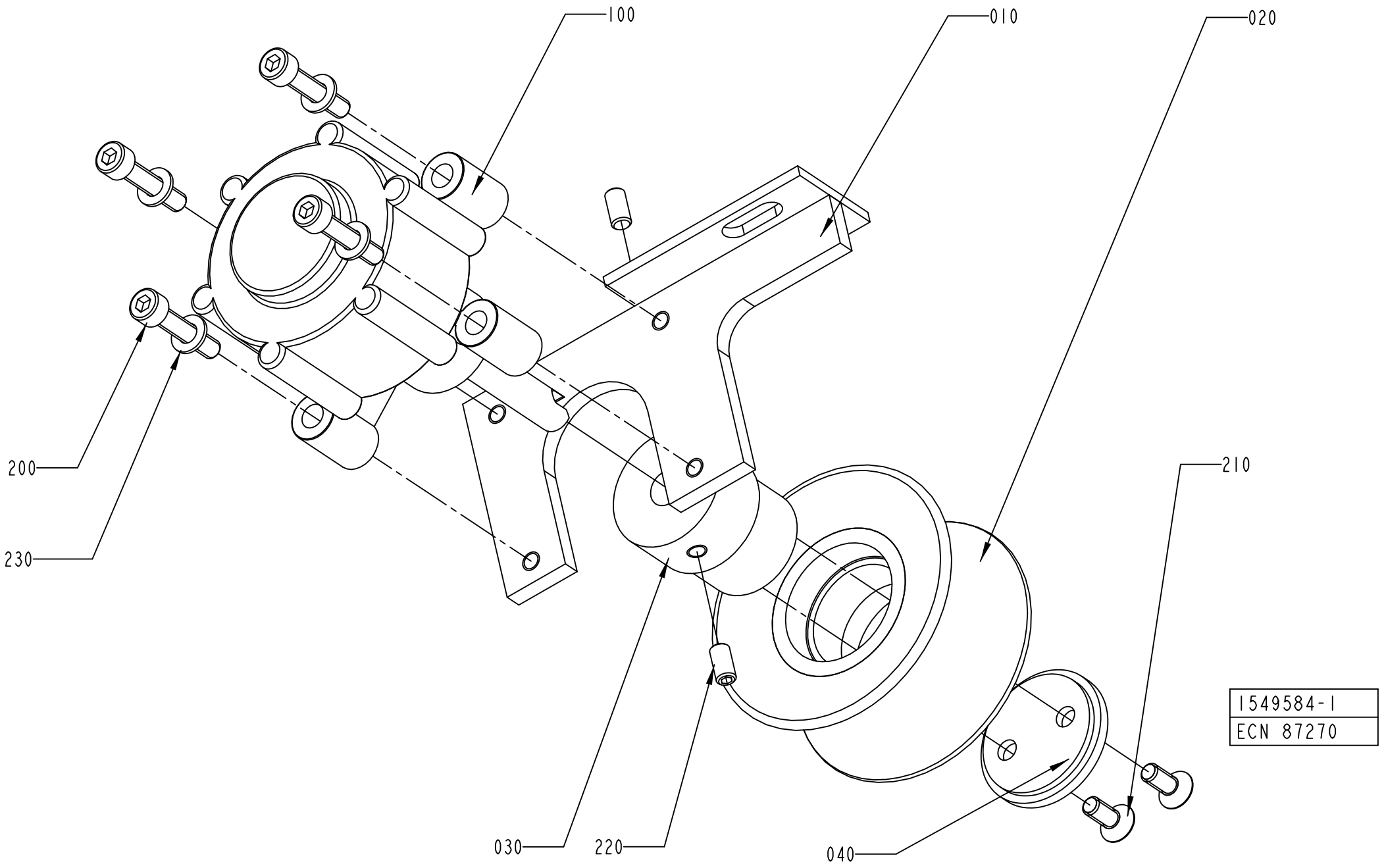
100
010
020
200
230
210
030
220
040
1549584-1
ECN 87270

ECM: 180720 - 20040911
Group number: 1549584-0100
Assembly Drawing: 1549584-1_1_AA

Pos	Part No	UN	Qty	Description	Page No
-					
010	980002-0000		1	BRACKET	
020	540719-0000		1	WHEEL	
030	980003-0000		1	SHAFT	
040	980004-0000		1	PLUG	
100	90347-0054		1	ROTARY DASHPOT, S-CRD-P277	
200	312115-0333		4	SCREW ISO4762 M5X25 A4 80	
210	312155-0327		2	SCREW DIN 7991 MF6S M5X12 A4 70	
220	312318-0325		2	SET SCREW, CUP END ISO4029 M5X10 A4	
230	315105-0146		4	WASHER PLAIN, 5,3X10X1 A4 BRB	

Pos	Part No	UN	Qty	Description	Page No

Machine Type | Group Description | Used-In | Group Number | Page No

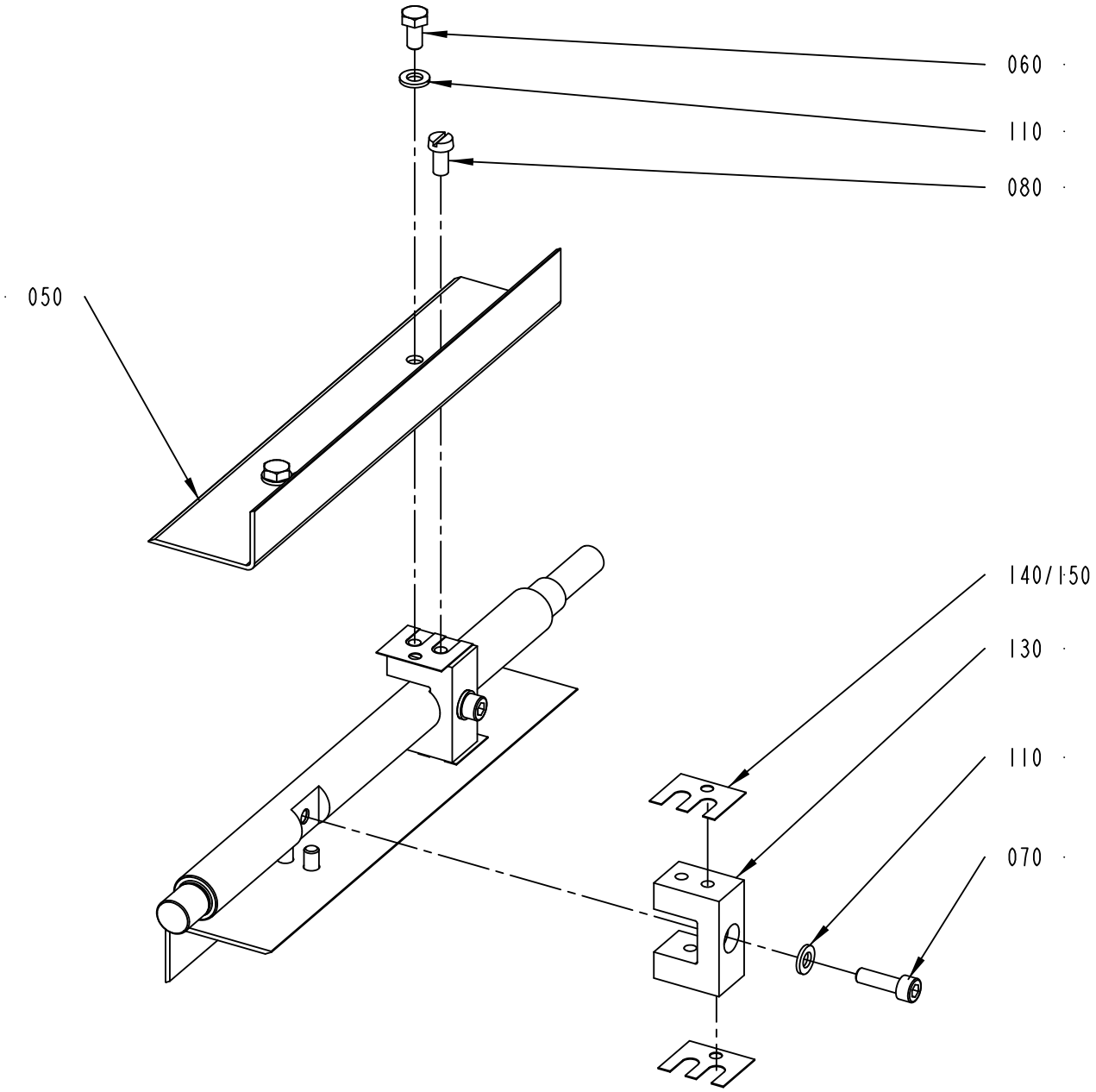

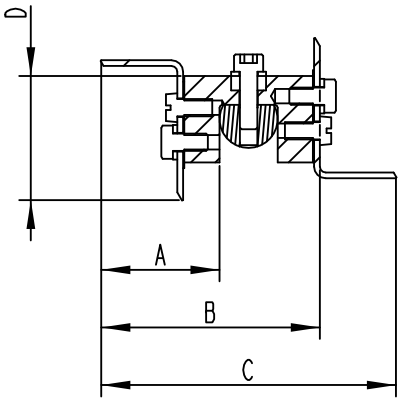

2815754-2
489598

ECM: 509769 - 20110627
Group number: 2815754-0200
Assembly Drawing: 2815754-2_1_AC

Pos	Part No	UN	Qty	Description	Page No
TBA 0200B					
040	3017332-0000		1	SHAFT	
050	1512264-0002		2	CREASE BAR	
060	312105-0366		4	SCREW, M6S ISO 4017 M6X12 A4 80	
080	312125-0366		4	SLOTTED HEAD SCREW, ISO1207 M6X12 A4	
110	315105-0153		6	WASHER PLAIN, 6,4X12X1,5 A4 BRB	
130	441556-0004		2	SPACER	
140	456817-0002		8	SHIM	
150	456817-0001		6	SHIM	
TBA 0250B					
040	3017332-0000		1	SHAFT	
050	1512264-0002		2	CREASE BAR	
060	312105-0366		4	SCREW, M6S ISO 4017 M6X12 A4 80	
080	312125-0366		4	SLOTTED HEAD SCREW, ISO1207 M6X12 A4	
110	315105-0153		6	WASHER PLAIN, 6,4X12X1,5 A4 BRB	
130	441556-0002		2	SPACER	
140	456817-0002		8	SHIM	
150	456817-0001		6	SHIM	
TBA 0284B, TBA 0300S					
040	3017332-0000		1	SHAFT	
050	1512264-0002		2	CREASE BAR	
060	312105-0366		4	SCREW, M6S ISO 4017 M6X12 A4 80	
080	312125-0366		4	SLOTTED HEAD SCREW, ISO1207 M6X12 A4	
110	315105-0153		6	WASHER PLAIN, 6,4X12X1,5 A4 BRB	
130	441556-0001		2	SPACER	
140	456817-0002		8	SHIM	
150	456817-0001		6	SHIM	
TBA 0330S					
040	3017332-0000		1	SHAFT	
050	1512264-0002		2	CREASE BAR	
060	312105-0366		4	SCREW, M6S ISO 4017 M6X12 A4 80	
080	312125-0366		4	SLOTTED HEAD SCREW, ISO1207 M6X12 A4	
110	315105-0153		6	WASHER PLAIN, 6,4X12X1,5 A4 BRB	
130	441556-0012		2	SPACER	
140	456817-0002		8	SHIM	
150	456817-0001		6	SHIM	
TWA 0125S					
040	3017419-0000		1	SHAFT	
050	1360583-0000		2	CREASE UNIT	
060	90287-0331		4	SCREW, BUTTON HEAD ISO7380 K6S M5X12 A4	
110	315105-0153		2	WASHER PLAIN, 6,4X12X1,5 A4 BRB	
130	441556-0002		2	SPACER	
130	1360582-0000		2	SPACER	
150	591567-0000		12	LACE	
TWA 0200S					
040	3017419-0000		1	SHAFT	
050	594952-0000		2	CREASE BAR	
060	90287-0331		4	SCREW, BUTTON HEAD ISO7380 K6S M5X12 A4	
110	315105-0153		2	WASHER PLAIN, 6,4X12X1,5 A4 BRB	
130	594953-0000		2	SPACER	
150	591567-0000		12	LACE	
Common Parts					
070	312115-0370		2	SCREW ISO4762 M6X20 A4 80	
100	312318-0287		1	SET SCREW, CUP END ISO4029 M4X8 A4	
120	315701-0169		1	PARALLEL KEY W. ROUND ENDS, 4X4X18 MM	

Machine Type | Group Description | Used-In | Group Number | Page No

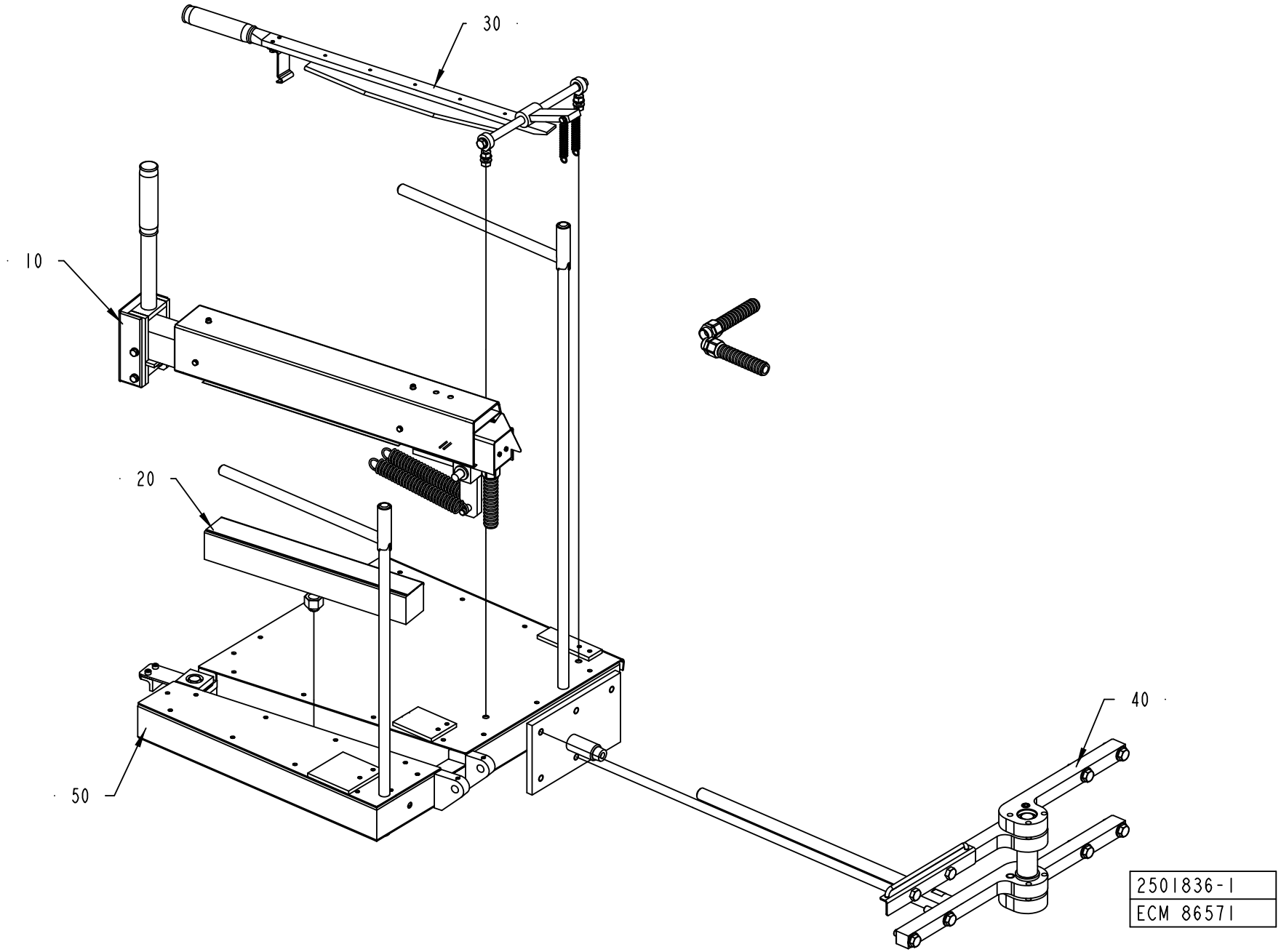
30
10
20
50
40
2501836-1
ECM 86571

ECM: 91613 - 20020111
Group number: 2501836-0100
Assembly Drawing: 2501836-1_1_AA

Pos	Part No	UN	Qty	Description	Page No
-					
010	37877-0400		1	HEATING BLOCK	**8-33**
020	37894-0100		1	COUNTER RAIL	**8-35**
030	450101-0300		1	TEARING DEVICE	**8-37**
040	2500587-0100		1	SUSPENSION ARM	**8-39**
050	271641-0500		1	SPLICING TABLE	**8-41**

Pos	Part No	UN	Qty	Description	Page No

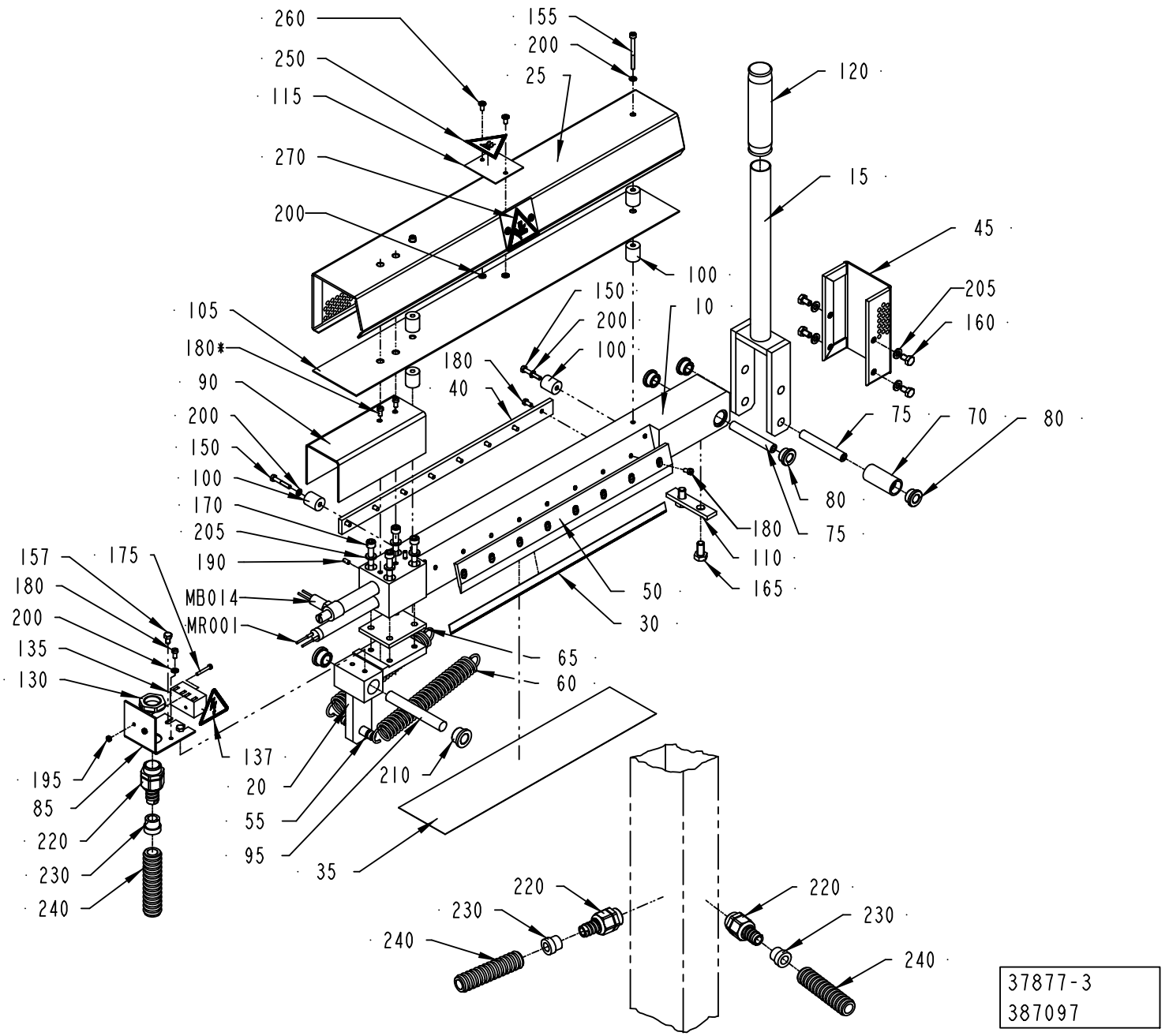
260
250
115
270
200
155
200
25
120
15
45
205
160
100
150
200
100
10
105
180*
90
200
150
100
170
205
190
MB014
MR001
180
40
75
70
80
80
75
180
110
165
50
30
65
60
157
175
180
200
135
130
195
85
220
230
240
137
20
55
95
210
35
220
230
240
220
230
240
37877-3
387097

ECM: 406011 - 20090707
Group number: 37877-0400
Assembly Drawing: 37877-3_1_AC

Pos	Part No	UN	Qty	Description	Page No
-					
010	255301-0000		1	HEATING RAIL	
015	37879-0000		1	LOCKING ARM	
020	37880-0000		1	HINGE	
025	243132-0000		1	PROTECTION PLATE	
030	31017-0000		1	KNIFE	
035	31723-0000		1	TEFLON STRIP	
040	31724-0000		1	LOCK BAR	
045	37882-0000		1	PROTECTION PLATE	
050	37883-0000		1	LOCK BAR	
055	37884-0000		1	SHAFT	
060	37885-0000		2	TENSION SPRING	
065	37886-0000		1	INSULATING DISK	
070	37888-0000		1	ROLL	
075	37889-0000		2	SHAFT	
080	37890-0000		4	FLANGE ROLLER	
085	2616035-0000		1	CONNECTION BOX	
090	37893-0000		1	LID	
095	208173-0000		1	SHAFT	
100	229775-0000		6	SPACER	
105	243133-0000		1	SHIELD PLATE	
110	245221-0000		1	STOP	
115	2641397-0000		3	PLATE	
120	90017-0001		1	BIKE HANDLE	
130	90458-0323		1	NUT, M20X1,5	
135	90077-0102		1	TERMINAL BLOCK, 1952.2	
137	359705-0015		1	WARNING SIGN ISO, RISK OF ELECTRIC SHOCK	
150	312105-0297		2	SCREW, M6S ISO 4017 M4X25 A4 70	
155	312115-0304		2	SCREW ISO4762 M4X45 A4 80	
157	312105-0323		2	SCREW, M6S ISO 4017 M5X8 A4 80	
160	312105-0364		4	SCREW, M6S ISO 4017 M6X10 A4 80	
165	312105-0449		2	SCREW, M6S ISO 4017 M8X16 A4 80	
170	312115-0380		4	SCREW ISO4762 M6X50 A4 80	
175	312125-0230		2	SLOTTED HEAD SCREW, ISO1207 M3X20 A4	
180	312125-0287		19	SLOTTED HEAD SCREW, ISO1207 M4X8 A4	
190	312318-0287		2	SET SCREW, CUP END ISO4029 M4X8 A4	
195	312605-0310		2	HEXAGON NUT, M6M M3 A280	
200	315105-0136		11	WASHER PLAIN, 4,3X9X0,8 A4 BRB	
205	315105-0153		8	WASHER PLAIN, 6,4X12X1,5 A4 BRB	
210	321101-0173		2	FLANGE BUSHING, 12X18X12 MM	
220	90458-0428		3	GLAND FITTING, VK 22052YUL11	
230	353249-0010		3	INSERT, SINGLE HOLE, EK152 11	
240	90152-0059	M	2	HOSE, SPIRAL CONDUIT, 18X12, UL 1211	
250	359710-0001		1	WARNING SIGN ISO, HOT SURFACE	
260	311521-0152		6	RIVET, BLANK 4,0X8	
270	359705-0005		2	WARNING SIGN ISO, MOVING PART	
M.R001	90206-0053		1	HEATING ELEMENT 230V 1200W	
M.B014	90059-0001		1	THERMOSTAT	

Machine Type	Group Description	Used-In	Group Number	Page No

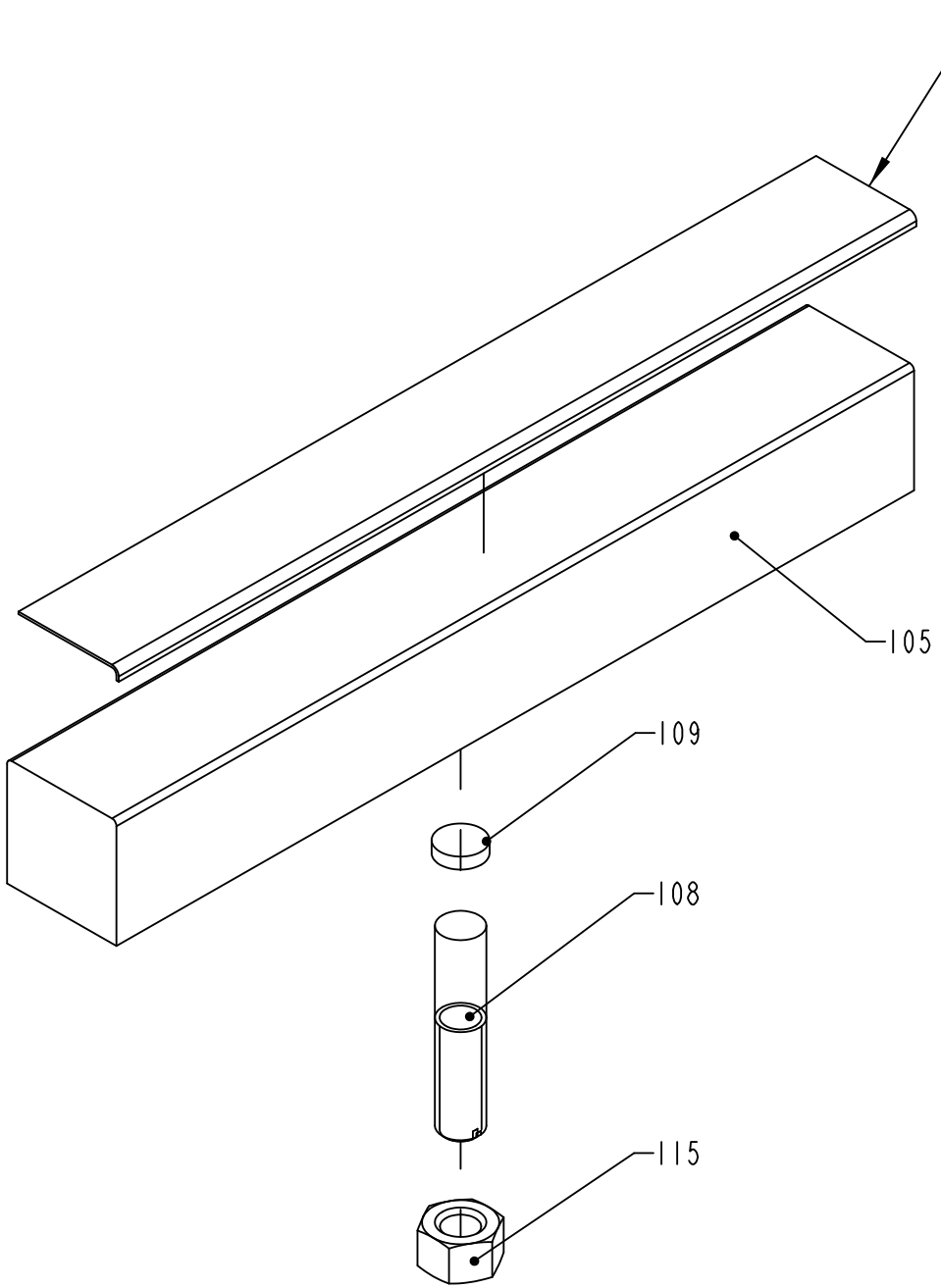

37894-1
ECN 89888

ECM: 180714 - 20040911
Group number: 37894-0100
Assembly Drawing: 37894-1_1_AB

Pos	Part No	UN	Qty	Description	Page No
-					
105	37895-0000		1	RAIL	
108	37896-0000		1	DOWEL	
109	37897-0000		1	WASHER	
112	90144-0030	MM	360	TAPE	
115	312605-0324		1	HEXAGON NUT, M6M M16 A280	

Pos	Part No	UN	Qty	Description	Page No

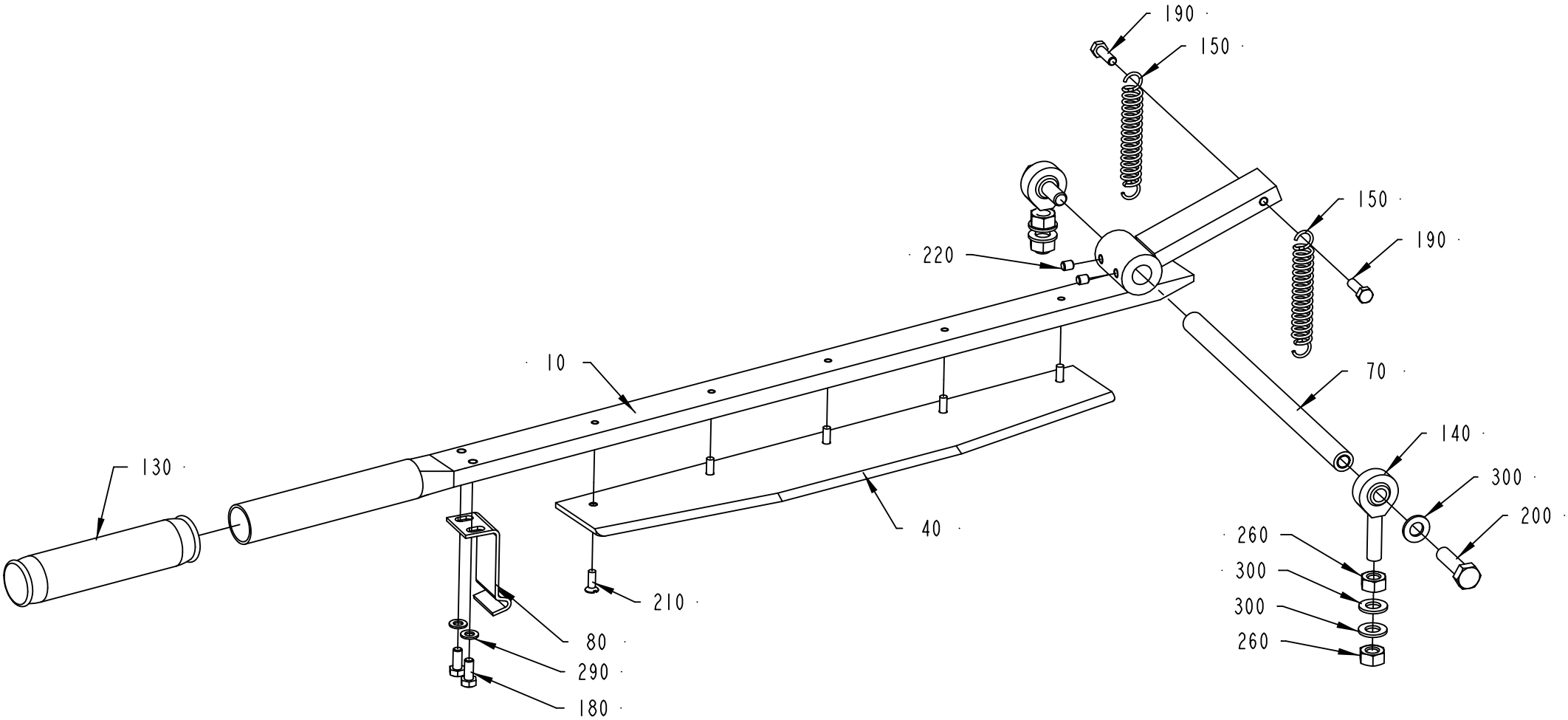

450101-3
ECM 86571

ECM: 180722 - 20040911
Group number: 450101-0300
Assembly Drawing: 450101-3_1_AA

Pos	Part No	UN	Qty	Description	Page No
-					
010	571920-0000		1	PRESSURE ARM	
040	37900-0000		1	KNIFE	
070	979784-0000		1	SHAFT	
080	206913-0000		1	LOCKING LOOP	
130	90017-0001		1	BIKE HANDLE	
140	90115-0054		2	ROD END, ID=8 MM, M8X1,25	
150	90458-1241		2	TENSION SPRING RZ-1221	
180	312101-0327		2	SCREW M6S M5X12 FZB	
190	312101-0329		2	SCREW M6S M5X16 FZB	
200	312105-0455		2	SCREW, M6S ISO 4017 M8X30 A4 80	
210	312145-0291		5	SCREW ISO 2009 MFS M4X12 A4	
220	312316-0321		2	SET SCREW, CUP END ISO4029 M5X6 FZB	
260	312605-0318		4	HEXAGON NUT, M6M M8 A280	
290	315101-0146		2	WASHER PLAIN, BRB, 5,3/10 H=1	
300	315105-0165		6	WASHER PLAIN, 8,4X16X1,6 A4 BRB	

Pos	Part No	UN	Qty	Description	Page No

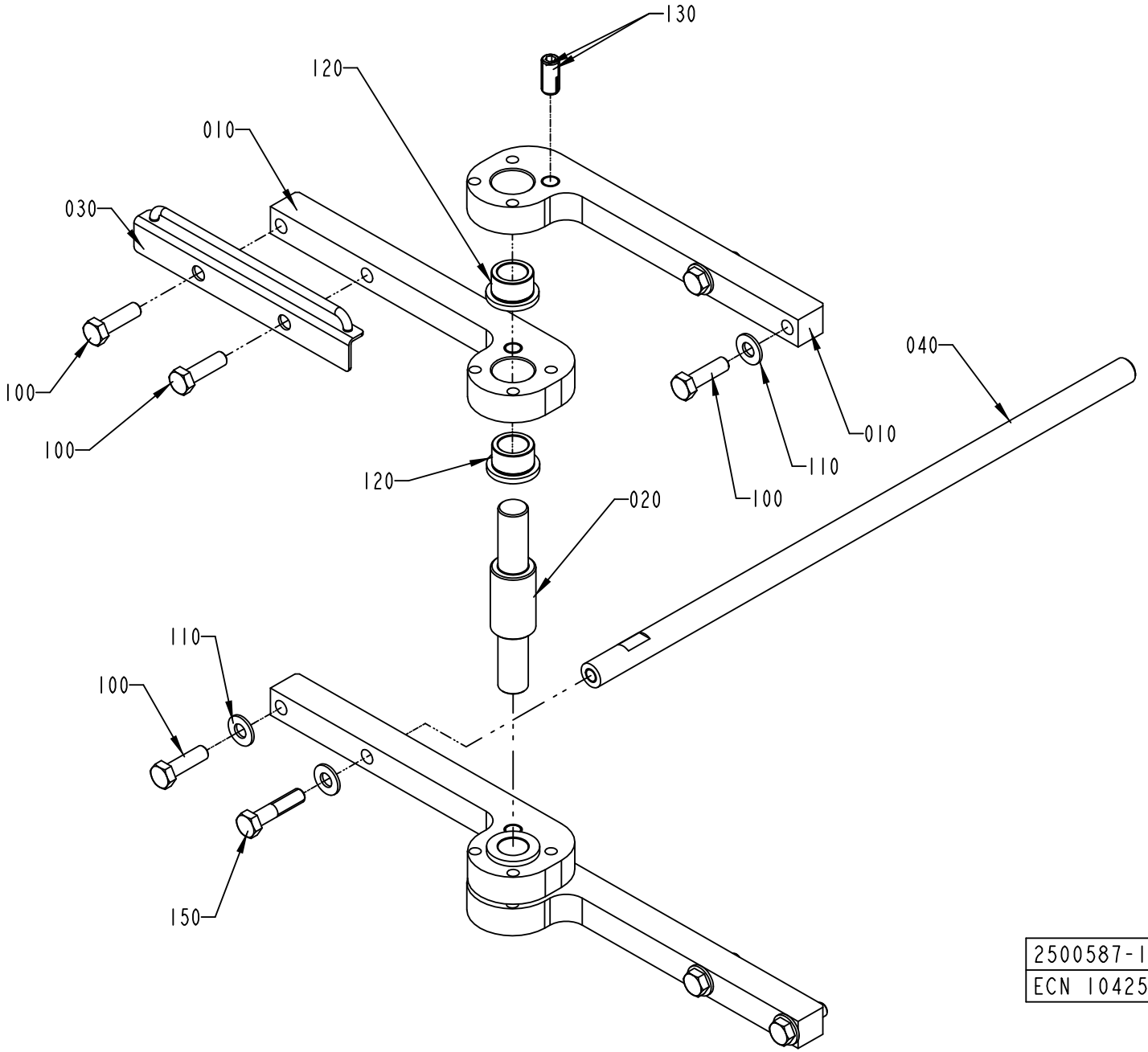

2500587-1
ECN 104253

ECM: 180677 - 20040911
Group number: 2500587-0100
Assembly Drawing: 2500587-1_1_AB

Pos	Part No	UN	Qty	Description	Page No
-					
010	1558317-0000		4	BRACKET	
020	2501385-0000		1	SHAFT	
030	2500593-0000		1	BOW CLAMP	
040	272862-0000		1	HOLDER	
100	312105-0497		7	SCREW, M6S ISO 4017 M10X35 A4 80	
110	315105-0173		6	WASHER PLAIN, 10,5X22X2 A4 BRB	
120	321101-0233		4	FLANGE BUSHING, 20/28X20-35X4 MM	
130	90458-2078		2	SCREW SPRINGLOAD. SOCK. HEX HEAD M12X26	
150	312105-0500		1	SCREW, M6S ISO 4014 M10X45 A4 80	

Pos	Part No	UN	Qty	Description	Page No

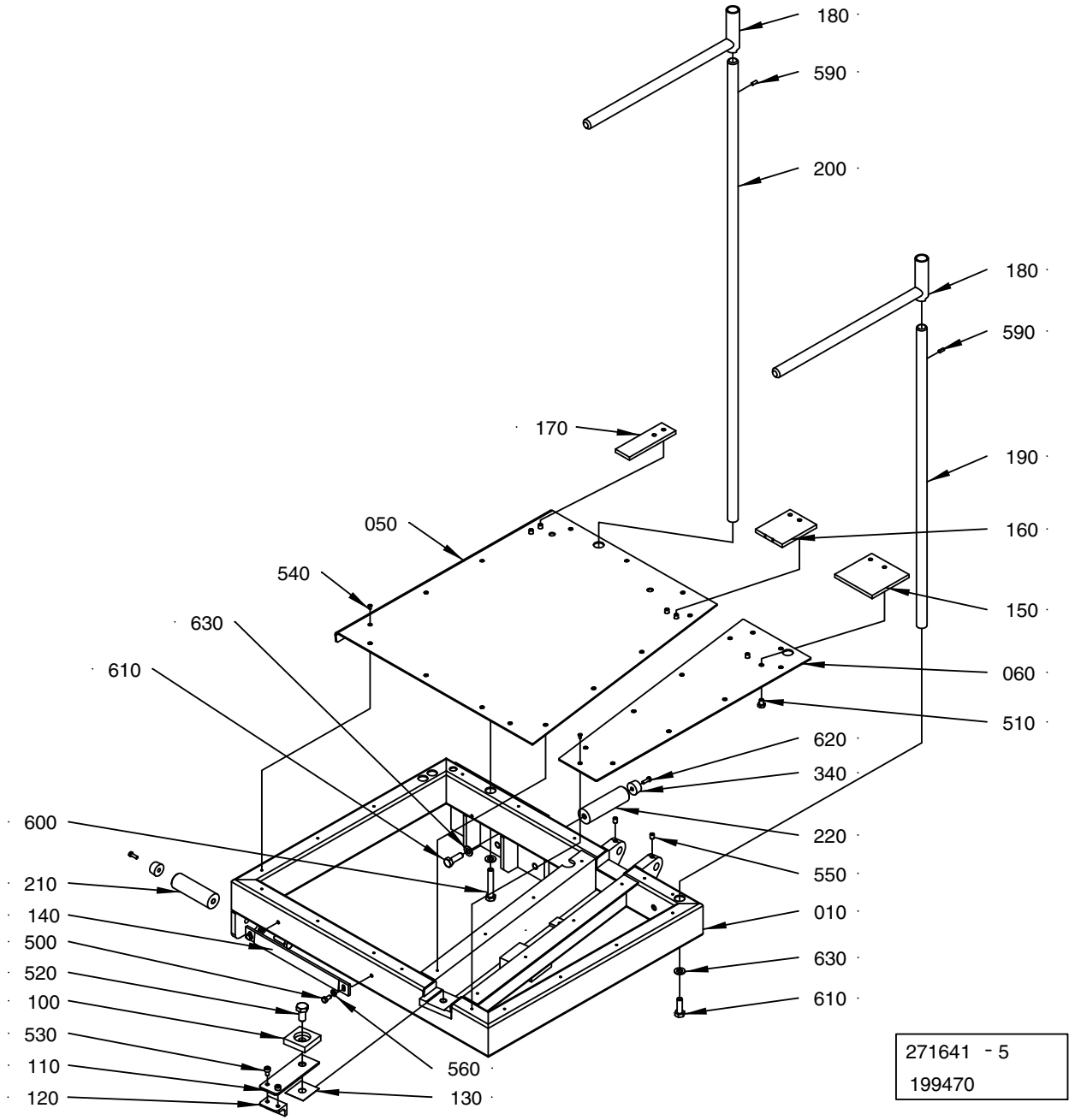
180
590
200
180
590
170
190
050
160
540
150
630
060
610
510
620
340
600
220
550
210
010
140
630
500
610
520
100
530
560
110
130
120
271641 - 5
199470

ECM: 317703 - 20071113
Group number: 271641-0500
Assembly Drawing: 271641-5_1_AC

Pos	Part No	UN	Qty	Description	Page No
TBA 0100B, TBA 0125S, TWA 0125S					
150	271642-0000		1	RULER	
160	271643-0000		1	RULER	
170	271644-0000		1	RULER	
TBA 0160S, TBA 0200S, TPA 0330SQ, TPA 0250SQ, TWA 0200S, TPA 0200SQ					
150	272886-0000		1	RULER	
160	272887-0000		1	RULER	
170	272888-0000		1	RULER	
TBA 0200B, TBA 0284B, TBA 0250B, TBA 0300S, TBA 0330S					
150	37913-0000		1	RULER	
160	37916-0000		1	RULER	
170	37917-0000		1	RULER	
TBA 0200M, TBA 0250S					
150	574426-0000		1	RULER	
160	574427-0000		1	RULER	
170	574428-0000		1	RULER	
Common Parts					
010	37905-0000		1	FRAME	
050	979783-0000		1	PLATE	
060	979204-0000		1	PLATE	
100	37908-0000		1	PLATE	
110	37909-0000		1	SPRING	
120	37910-0000		1	LOCK	
130	37911-0000		1	LACE	
140	37912-0000		1	LOCK PLATE	
180	469141-0000		2	HOLDER	
190	978876-0000		1	SHAFT	
200	978877-0000		1	SHAFT	
210	2501835-0000		1	SHAFT	
220	2732557-0000		1	SHAFT	
340	90347-0005		2	DAMPER, NO. F 1006 B	
500	312105-0325		2	SCREW, M6S ISO 4017 M5X10 A4 80	
510	312105-0362		6	SCREW, M6S ISO 4017 M6X8 A4 80	
520	312105-0491		1	SCREW, M6S ISO 4017 M10X20 A4 80	
530	312115-0323		2	SCREW ISO4762 M5X8 A4 80	
540	312145-0220		25	SCREW ISO 2009 MFS M3X6 A4	
550	312318-0362		2	SET SCREW, CUP END ISO4029 M6X8 A4	
560	315105-0146		2	WASHER PLAIN, 5,3X10X1 A4 BRB	
590	311103-0267		2	PARALLEL PIN ISO 2338 4M6X10 A1	
600	312105-0461		1	SCREW, M6S ISO 4014 M8X50 A4 80	
610	312105-0453		3	SCREW, M6S ISO 4017 M8X25 A4 80	
620	312125-0291		2	SLOTTED HEAD SCREW, ISO1207 M4X12 A4	
630	315105-0165		4	WASHER PLAIN, 8,4X16X1,6 A4 BRB	

Machine Type	Group Description	Used-In	Group Number	Page No

PAPER REEL HOLDER,JUMBO REEL

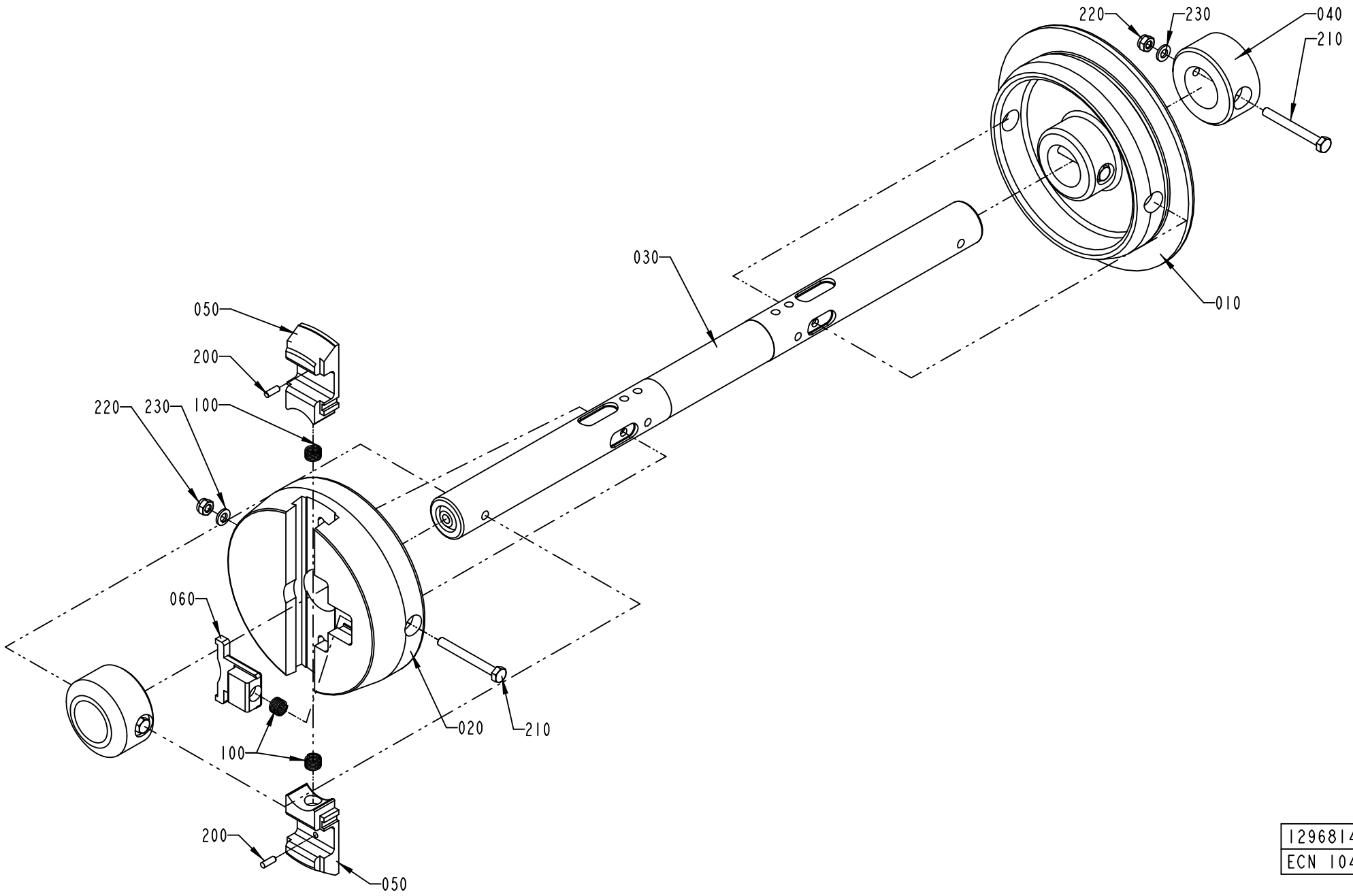

1296814-1
ECN 104253

ECM: 227533 - 20051011
Group number: 1296814-0100
Assembly Drawing: 1296814-1_1_AC

Pos	Part No	UN	Qty	Description	Page No
-					
010	979384-0000		1	SLEEVE	
020	979385-0000		1	SLEEVE	
030	979382-0000		1	SHAFT	
040	440259-0000		2	RETAINING RING	
050	979383-0000		2	PLUNGER	
060	272728-0000		1	BARRIER	
100	90335-0025		3	COMP. SPRING, 22010, 1X11X26	
200	311103-0268		2	PARALLEL PIN ISO 2338 4M6X12 A1	
210	312101-0381		4	SCREW M6S M6X55 FZB	
220	312812-0316		4	HEXAGON NUT, NY-LOCK M6 A4 80	
230	315101-0153		4	WASHER PLAIN, BRB, 6,4/12 H=1,5	

Pos	Part No	UN	Qty	Description	Page No

Machine Type	Group Description	Used-In	Group Number	Page No

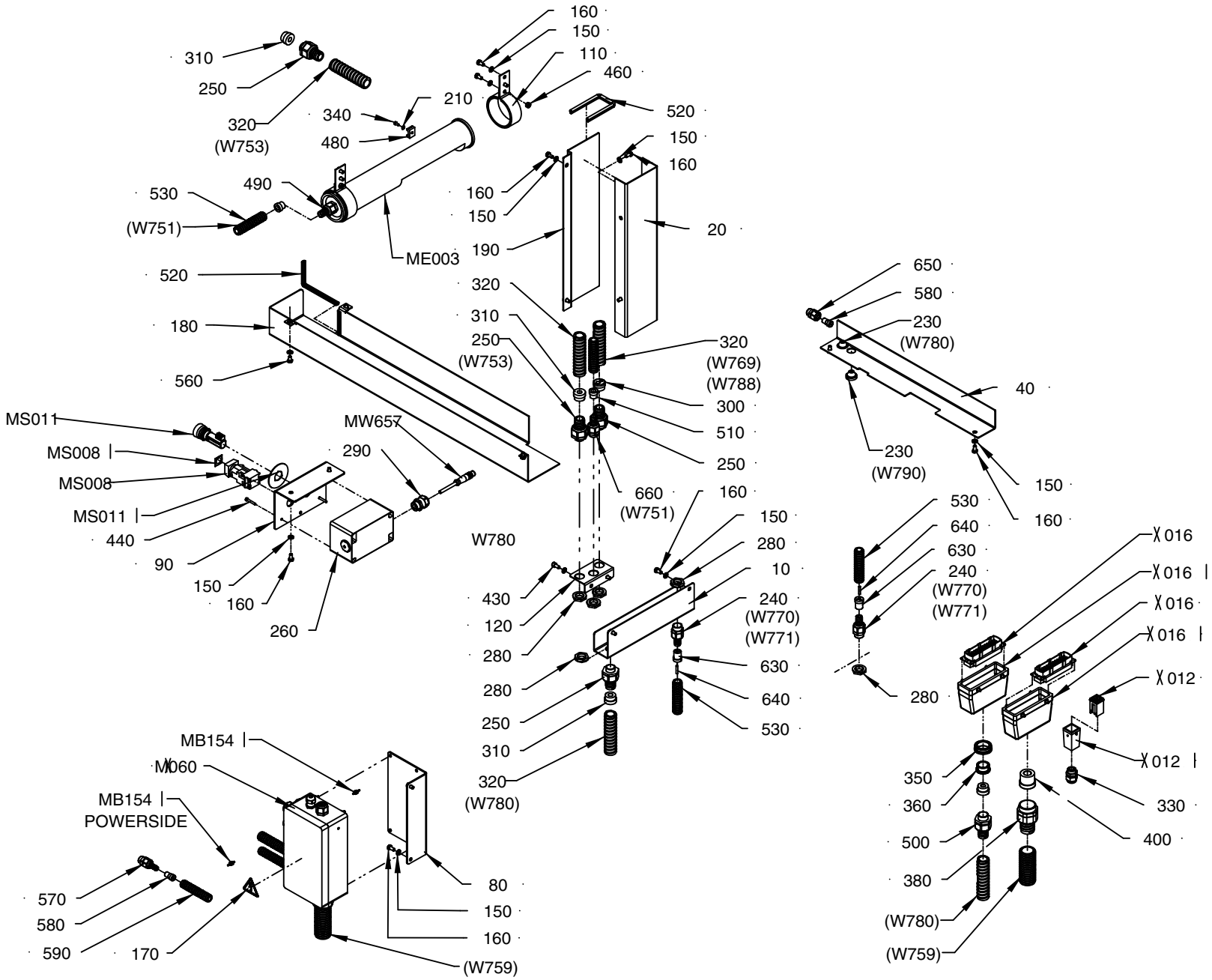

1549480-2
443807

ECM: 448890 - 20100524
Group number: 1549480-0200
Assembly Drawing: 1549480-2_1_AB

Pos	Part No	UN	Qty	Description	Page No
-					
010	2614227-0000		1	CABLE TRACK	
020	2614225-0000		1	CABLE TRACK	
040	2614228-0000		1	CABLE TRACK	
080	1558315-0000		1	BRACKET	
090	1558316-0000		1	BRACKET	
110	2526341-0000		2	LAMP HOLDER	
120	2526342-0000		1	BRACKET	
150	315105-0153		23	WASHER PLAIN, 6,4X12X1,5 A4 BRB	
160	312105-0366		18	SCREW, M6S ISO 4017 M6X12 A4 80	
170	359705-0015		1	WARNING SIGN ISO, RISK OF ELECTRIC SHOCK	
180	2529564-0000		1	COVER	
190	2614226-0000		1	CABLE TRACK	
210	315105-0136		1	WASHER PLAIN, 4,3X9X0,8 A4 BRB	
230	90015-0023		2	LEAD-IN, TET 7-10, E1458019	
240	90458-0413		2	CABLE FITTING, VK 22052YUL11	
250	90458-0430		4	GLAND FITTING, VK 22054YUL16	
260	2564115-0000		1	PUSH BUTTON BOX	
280	90458-0323		6	NUT, M20X1,5	
290	90458-0315		1	CABLE GLAND, M20X1,5, 5311 1120	
300	90458-1239		1	INSERT, MULTI HOLE, EK154M 1X9, 1X5,5	
310	353249-0012		4	INSERT, SINGLE HOLE, EK154 11	
320	90152-0051	M	4	HOSE, SPIRAL CONDUIT, 25X18, UL 1816	
330	352103-0106		1	CABLE GLAND, ST 11, PR18,6/PG11	
340	312125-0287		1	SLOTTED HEAD SCREW, ISO1207 M4X8 A4	
350	90089-0005		1	REDUCING SLEEVE, PR37/PR28,3	
360	90089-0004		1	REDUCING SLEEVE, PR28,3/PR22,5	
380	353242-0003		1	COMPRESSION GLAND, VK 155YUL21	
400	353249-0072		1	INSERT, SINGLE HOLE, E155 20	
430	312115-0366		2	SCREW ISO4762 M6X12 A4 80	
440	312125-0297		4	SLOTTED HEAD SCREW, ISO1207 M4X25 A4	
460	312605-0316		2	HEXAGON NUT, M6M M6 A280	
480	352113-0203		1	ANCHOR PLATES FOR STRIPS, TM3S8-M0	
490	353243-0002		2	GLAND FITTING, VK 15152YUL11	
510	353249-0010		2	INSERT, SINGLE HOLE, EK152 11	
520	90143-0060	MM	850	EDGE STRIP 9,5X6,3MM BLACK PVC	
530	90152-0059	M	2.5	HOSE, SPIRAL CONDUIT, 18X12, UL 1211	
560	312105-0364		3	SCREW, M6S ISO 4017 M6X10 A4 80	
570	90458-0417		1	GLAND FITTING, VK 21650YUL9	
580	90458-1238		2	INSERT, SINGLE HOLE, 150M 1X3	
590	90152-0058	M	0.5	HOSE, SPIRAL CONDUIT, 15X9, UL 0909	
630	353249-0025		2	INSERT, MULTI HOLE, E152M 3X4	
640	353249-0301		2	SEALING PIN, 4,0X20	
650	90458-0404		1	CABLE GLAND, VK 21650Y	
660	90458-0428		1	GLAND FITTING, VK 22052YUL11	
MS011	90600-6050		1	EMERGENCY STOP INCA 1 TINA, 30-054-00	
MS008	90064-0085		1	PUSH BUTTON, RED	
ME003	90164-0015		1	LIGHT FIXTURE, RL70CV-111 / 230V 50HZ	
	90297-0007		*1*	*FLUORESCENT TUBE, PLS 11*	
	92297-0301		*1*	*GLOW IGNITER 4-65W S\10, E 8219023*	
M.W657	90600-0934		1	CABLE M12-C62 5 POLE MALE, 20-056-02	
MX060	1558318-0100		1	CONNECTION BOX	**8-47, 8-49**
MS011.1	90600-9809		1	ES SIGN, FOR INCA	
MS008.1	359301-0110		1	BUTTON SIGN, SHORT STOP	
MB154.1	90232-0347		1	FIBRE, LL3-TB01, 5308 050	
W753	351150-0404	M	45	CABLE OLFLEX 4X0,75 MM2 LIGHT/GREY	
W780	351150-0406	M	4	CABLE OLFLEX 7X0,75 MM2 LIGHT/GREY	
X012	90459-2412		1	CONNECTOR, HDC-KITS, HDC-HA-4SS	
X012.1	90110-0371		1	HOOD, TOP ENTRY, HDC-HA-3-TOVL1/11	
X015	90110-0150		1	MALE INSERT, HDC HE 24 MS, 1211 1000 00	
X015.1	90110-0152		1	CABLE HOOD 24-POL 70.352.2428.1	
X016	90110-0150		1	MALE INSERT, HDC HE 24 MS, 1211 1000 00	
X016.1	90110-0152		1	CABLE HOOD 24-POL 70.352.2428.1	

Machine Type	Group Description	Used-In	Group Number	Page No

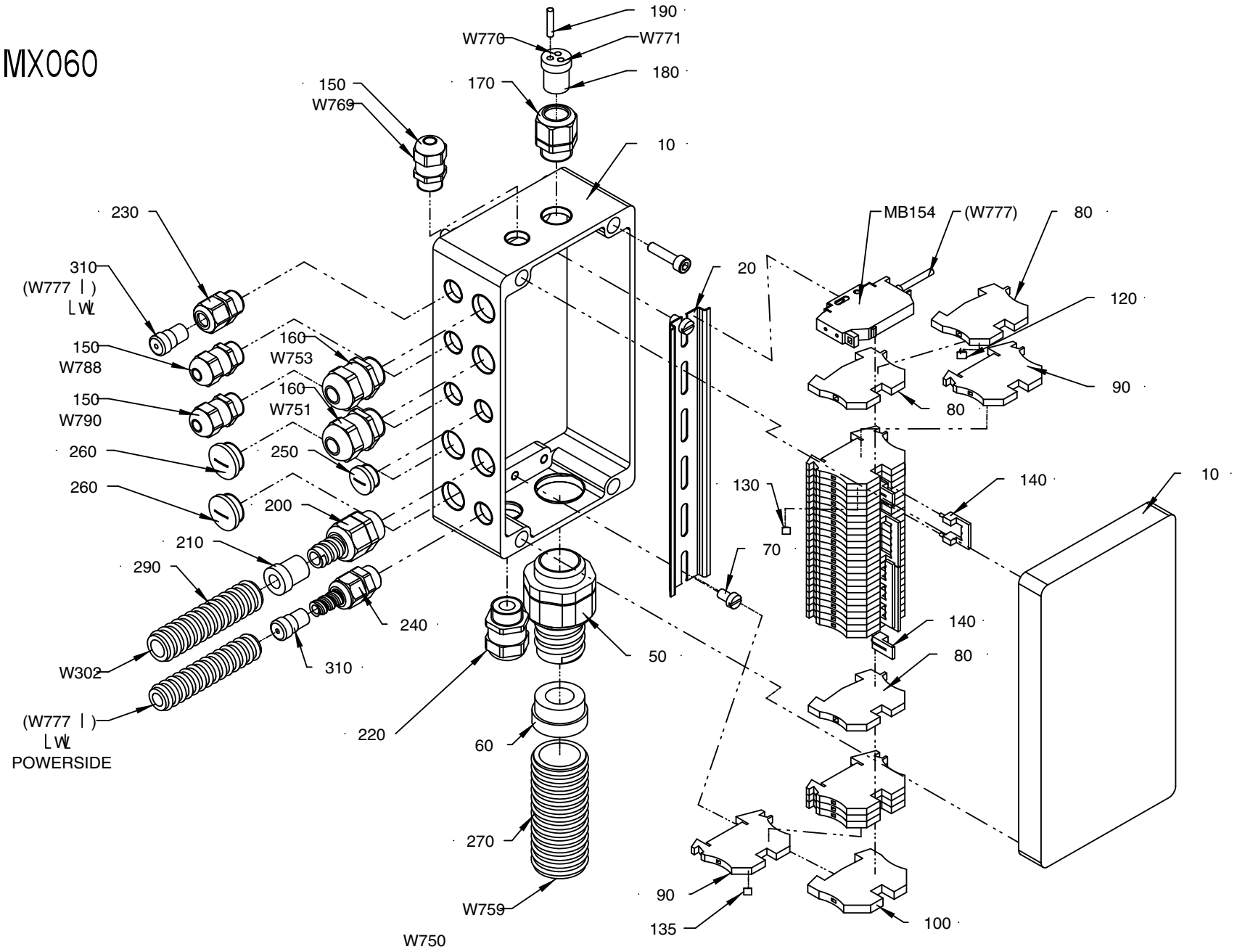

1558318-1
ECM 443807

ECM: 448889 - 20100524
Group number: 1558318-0100
Assembly Drawing: 1558318-1_1_AD

This list covers pages from 8-46 to 8-49

Pos	Part No	UN	Qty	Description	Page No
-					
010	2501265-0000		1	CONNECTION BOX	
020	2501266-0000		1	RAIL	
050	90458-0433		1	GLAND FITTING, VK 23255YUL21	
060	353249-0016		1	INSERT, SINGLE HOLE, EK155 18	
070	312125-0364		2	SCREW ISO 1207 M6X10 A4	
080	353024-0204		3	EARTH TERMINAL WPE 2,5	
090	353021-0212		30	FEED THROUGH TERMINAL, WDU 2,5	
100	353024-0205		1	EARTH TERMINAL WPE 4	
120	359011-0818		1	MARKING, DEK 5GW (-)	
130	359011-0807		2	MARKING, DEK 5 FW 1-50	
135	359011-0809		2	MARKING, DEK 5 FW 101-150	
140	353034-0030		4	BRIDGE CONNECTOR WQV 2,5/10	
150	90458-0306		3	CABLE GLAND, M16X1,5, 5311 1010	
160	90458-0315		2	CABLE GLAND, M20X1,5, 5311 1120	
170	90458-0406		1	CABLE GLAND, VK 22052Y	
180	353249-0025		1	INSERT, MULTI HOLE, E152M 3X4	
190	353249-0301		1	SEALING PIN, 4,0X20	
200	90458-0413		1	CABLE FITTING, VK 22052YUL11	
210	353249-0065		1	INSERT, SINGLE HOLE, E152 9	
220	90458-0307		1	CABLE GLAND, M20X1,5, 5311 1020	
230	90458-0404		1	CABLE GLAND, VK 21650Y	
240	90458-0417		1	GLAND FITTING, VK 21650YUL9	
250	90458-1307		1	BLIND PLUG CIRCULAR, M16X1,5 514GFK/216	
260	90458-1308		2	BLIND PLUG CIRCULAR, M20X1,5 514GFK/220	
270	90152-0070	M	1.5	HOSE, SPIRAL CONDUIT, 32,5X26, UL 2621	
290	90152-0059	MM	500	HOSE, SPIRAL CONDUIT, 18X12, UL 1211	
310	90458-1238		2	INSERT, SINGLE HOLE, 150M 1X3	
330	312115-0372		4	SCREW ISO4762 M6X25 A4 80	
MB154	90232-0123		1	PH.CELL WLL170-P135-6011723	
W302	351120-0144	M	4	CABLE Ã–LFLEX HEAT 180 SIHF 3X1,5	
W750	351150-0414	M	2.5	CABLE OLFLEX 5X1,5 MM2 LIGHT/GREY	
W751	351150-0412	M	2.5	CABLE OLFLEX 3X1,5 MM2 LIGHT/GREY	
W753	351150-0406	M	4	CABLE OLFLEX 7X0,75 MM2 LIGHT/GREY	
W759	351150-0425	M	2.5	CABLE OLFLEX 25X0,75 MM2 LIGHT/GREY	
W788	351150-0405	M	4	CABLE OLFLEX 5X0,75 MM2 LIGHT/GREY	
W790	351150-0405	M	4	CABLE OLFLEX 5X0,75 MM2 LIGHT/GREY	

Pos	Part No	UN	Qty	Description	Page No

Machine Type	Group Description	Used-In	Group Number	Page No

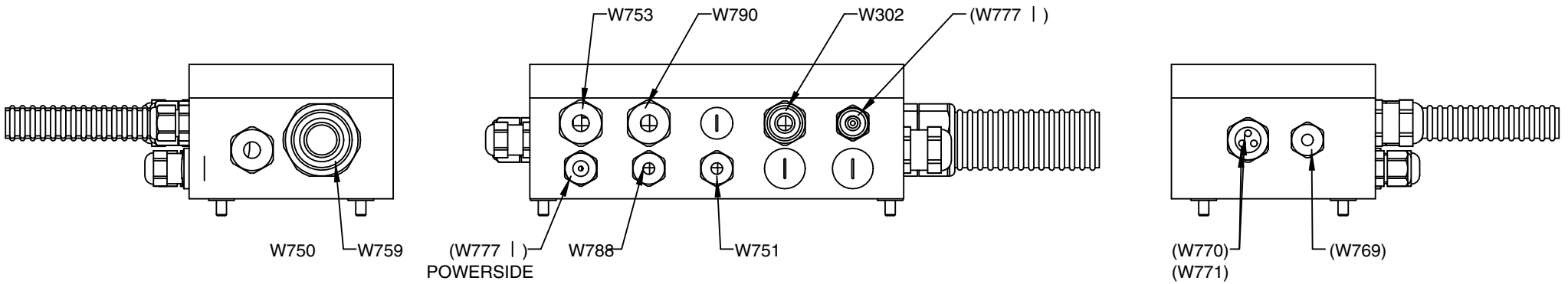

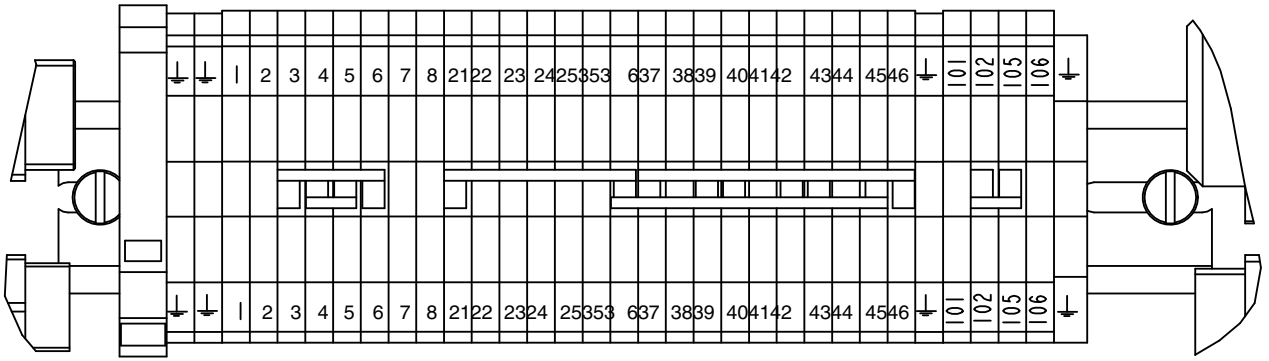

1558318-1
ECM 443807

ECM: 448889 - 20100524
Group number: 1558318-0100
Assembly Drawing: 1558318-1_2_AD

This list covers pages from 8-46 to 8-49

Pos	Part No	UN	Qty	Description	Page No
-					
010	2501265-0000		1	CONNECTION BOX	
020	2501266-0000		1	RAIL	
050	90458-0433		1	GLAND FITTING, VK 23255YUL21	
060	353249-0016		1	INSERT, SINGLE HOLE, EK155 18	
070	312125-0364		2	SCREW ISO 1207 M6X10 A4	
080	353024-0204		3	EARTH TERMINAL WPE 2,5	
090	353021-0212		30	FEED THROUGH TERMINAL, WDU 2,5	
100	353024-0205		1	EARTH TERMINAL WPE 4	
120	359011-0818		1	MARKING, DEK 5GW (-)	
130	359011-0807		2	MARKING, DEK 5 FW 1-50	
135	359011-0809		2	MARKING, DEK 5 FW 101-150	
140	353034-0030		4	BRIDGE CONNECTOR WQV 2,5/10	
150	90458-0306		3	CABLE GLAND, M16X1,5, 5311 1010	
160	90458-0315		2	CABLE GLAND, M20X1,5, 5311 1120	
170	90458-0406		1	CABLE GLAND, VK 22052Y	
180	353249-0025		1	INSERT, MULTI HOLE, E152M 3X4	
190	353249-0301		1	SEALING PIN, 4,0X20	
200	90458-0413		1	CABLE FITTING, VK 22052YUL11	
210	353249-0065		1	INSERT, SINGLE HOLE, E152 9	
220	90458-0307		1	CABLE GLAND, M20X1,5, 5311 1020	
230	90458-0404		1	CABLE GLAND, VK 21650Y	
240	90458-0417		1	GLAND FITTING, VK 21650YUL9	
250	90458-1307		1	BLIND PLUG CIRCULAR, M16X1,5 514GFK/216	
260	90458-1308		2	BLIND PLUG CIRCULAR, M20X1,5 514GFK/220	
270	90152-0070	M	1.5	HOSE, SPIRAL CONDUIT, 32,5X26, UL 2621	
290	90152-0059	MM	500	HOSE, SPIRAL CONDUIT, 18X12, UL 1211	
310	90458-1238		2	INSERT, SINGLE HOLE, 150M 1X3	
330	312115-0372		4	SCREW ISO4762 M6X25 A4 80	
MB154	90232-0123		1	PH.CELL WLL170-P135-6011723	
W302	351120-0144	M	4	CABLE Ã–LFLEX HEAT 180 SIHF 3X1,5	
W750	351150-0414	M	2.5	CABLE OLFLEX 5X1,5 MM2 LIGHT/GREY	
W751	351150-0412	M	2.5	CABLE OLFLEX 3X1,5 MM2 LIGHT/GREY	
W753	351150-0406	M	4	CABLE OLFLEX 7X0,75 MM2 LIGHT/GREY	
W759	351150-0425	M	2.5	CABLE OLFLEX 25X0,75 MM2 LIGHT/GREY	
W788	351150-0405	M	4	CABLE OLFLEX 5X0,75 MM2 LIGHT/GREY	
W790	351150-0405	M	4	CABLE OLFLEX 5X0,75 MM2 LIGHT/GREY	

Pos	Part No	UN	Qty	Description	Page No

Machine Type	Group Description	Used-In	Group Number	Page No

Tetra Pak

SPC
Spare Parts Catalogue

ELECTRICAL CABINET

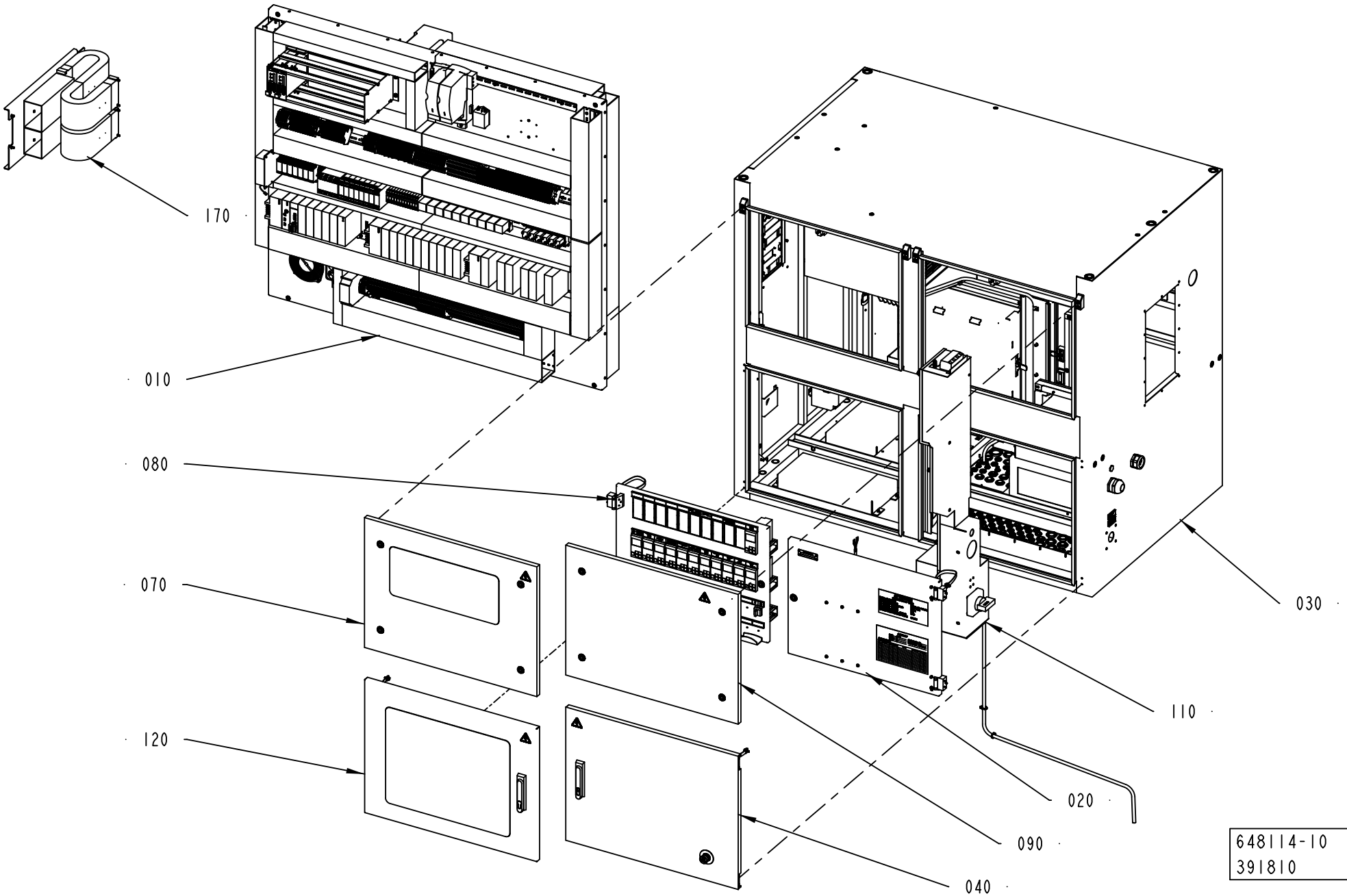

ECM: 405142 - 20090710
Group number: 648114-0300
Assembly Drawing: 648114-10_1_AA

This list covers pages from 9-2 to 9-5

Pos	Part No	UN	Qty	Description	Page No
-					
	1523972-0100		1	ELECTRICAL MATERIALS	**9-7, 9-9, 9-11**
010	1511779-0300		1	COMPONENT PLATES	**9-13, 9-15, 9-17, 9-19, 9-21**
020	3024839-0100		1	SWING FRAME APC	**9-83**
030	1511795-0300		1	CABINET	**9-87, 9-89**
040	1511796-0300		1	DOOR	**9-131**
050	1511799-0300		1	DOOR	**9-133**
060	1511810-0300		1	DOOR	**9-135, 9-137**
070	1511811-0200		1	DOOR	**9-147**
080	1511814-0300		1	DOOR	**9-149, 9-151, 9-153**
090	1511819-0200		1	DOOR	**9-155**
100	1511820-0200		1	DOOR	**9-157**
110	1511821-0300		1	BOX	**9-159**
120	1511830-0100		1	EXTERNAL DOOR TERMOREGULATORS	**9-163**
130	1517653-0200		1	EXTERNAL DOOR FUSES	**9-165**
140	1517677-0100		1	COOLER	**9-167**
150	1517678-0200		1	TPIH GENERATOR	**9-173**
170	2598113-0100		1	CABLE LEAD-IN PLATE	**9-175**

Pos	Part No	UN	Qty	Description	Page No

ELECTRICAL CABINET

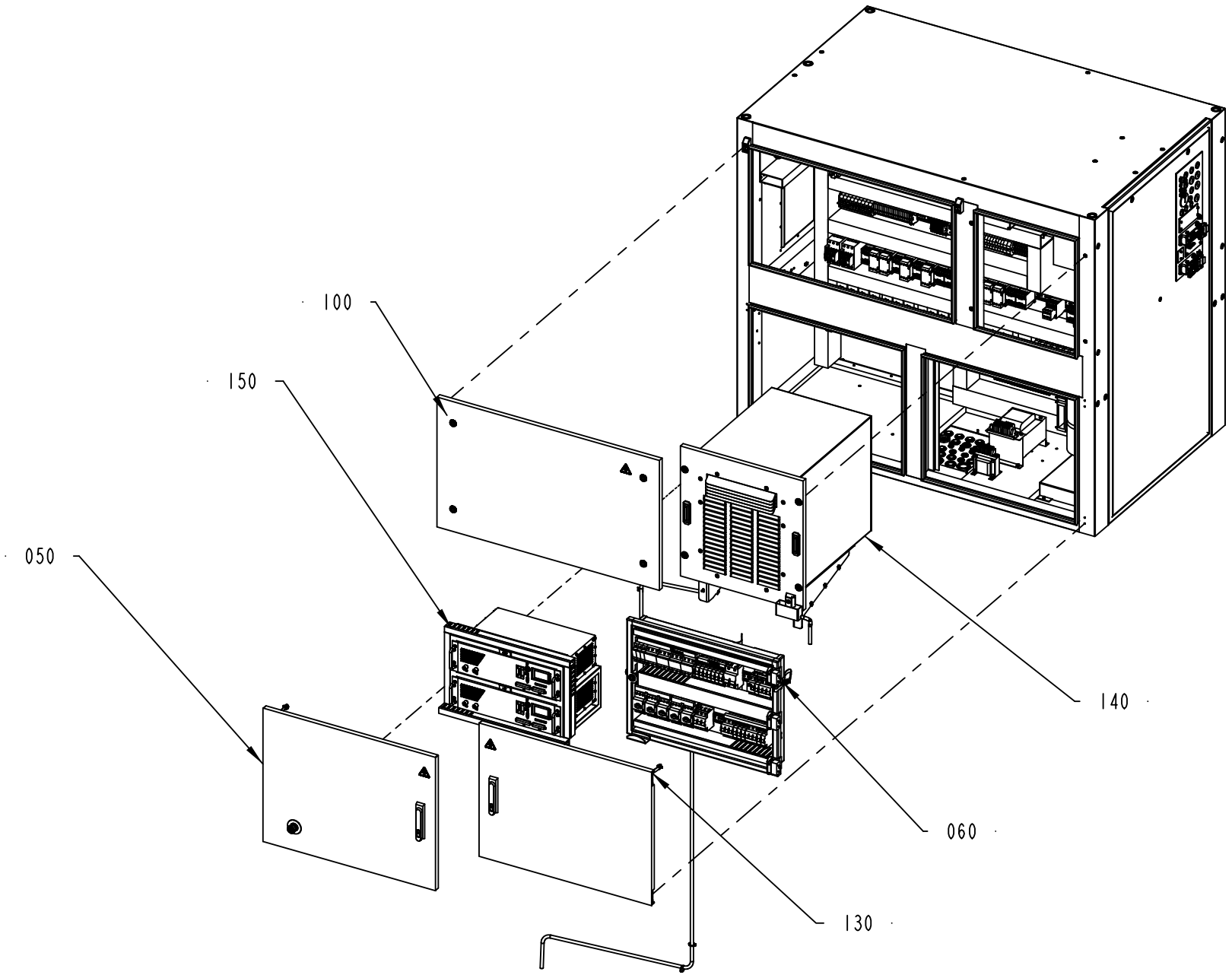

648114-10
391810

ECM: 405142 - 20090710
Group number: 648114-0300
Assembly Drawing: 648114-10_2_AA

This list covers pages from 9-2 to 9-5

Pos	Part No	UN	Qty	Description	Page No
-					
	1523972-0100		1	ELECTRICAL MATERIALS	**9-7, 9-9, 9-11**
010	1511779-0300		1	COMPONENT PLATES	**9-13, 9-15, 9-17, 9-19, 9-21**
020	3024839-0100		1	SWING FRAME APC	**9-83**
030	1511795-0300		1	CABINET	**9-87, 9-89**
040	1511796-0300		1	DOOR	**9-131**
050	1511799-0300		1	DOOR	**9-133**
060	1511810-0300		1	DOOR	**9-135, 9-137**
070	1511811-0200		1	DOOR	**9-147**
080	1511814-0300		1	DOOR	**9-149, 9-151, 9-153**
090	1511819-0200		1	DOOR	**9-155**
100	1511820-0200		1	DOOR	**9-157**
110	1511821-0300		1	BOX	**9-159**
120	1511830-0100		1	EXTERNAL DOOR TERMOREGULATORS	**9-163**
130	1517653-0200		1	EXTERNAL DOOR FUSES	**9-165**
140	1517677-0100		1	COOLER	**9-167**
150	1517678-0200		1	TPIH GENERATOR	**9-173**
170	2598113-0100		1	CABLE LEAD-IN PLATE	**9-175**

Pos	Part No	UN	Qty	Description	Page No

This page is intentionally left blank.

ECM: 379170 - 20081219
Group number: 1523972-0100
Assembly Drawing:

This list covers pages from 9-6 to 9-11

Pos	Part No	UN	Qty	Description	Page No
TBA NOPT ASU HI					
010	351160-0102	M	155	WIRE AWM 1X0,75 MM2 DARKBLUE	
030	351161-0104	M	4	WIRE AWM 1X1,5 MM2 LIGHTBLUE	
050	351164-0104	M	4	WIRE AWM 1X1,5 MM2 BLACK	
070	351161-0105	M	1.9	WIRE AWM 1X2,5 MM2 LIGHTBLUE	
080	351162-0105	M	2.3	WIRE AWM 1X2,5 MM2 YELLOW-GREEN	
090	351164-0105	M	6	WIRE AWM 1X2,5 MM2 BLACK	
100	351162-0106	M	2.7	WIRE AWM 1X4 MM2 YELLOW-GREEN	
110	351164-0106	M	6.3	WIRE AWM 1X4 MM2 BLACK	
120	351161-0106	M	2.9	WIRE AWM 1X4 MM2 LIGHTBLUE	
210	351164-0111	M	11.2	WIRE AWM 1X35 MM2 BLACK	
220	353001-0102		29	END SLEEVE 0,75 MM2	
250	353001-0115		7	END SLEEVE 2,5/14	
260	353001-0117		8	END SLEEVE H4.0/20 GREY	
280	353001-0119		72	END SLEEVE H 1.0/14 YELLOW	
290	353001-0120		6	END SLEEVE H 10/28	
320	353101-0130		1	CABLE SHOE 1,5-2,5MM2 M4 BLUE	
370	353103-0120		3	CABLE SHOE 1,25 MMÂ² RED	
390	353103-0138		2	CABLE SHOE	
TBA NOPT ASU NOHI					
010	351160-0102	M	105	WIRE AWM 1X0,75 MM2 DARKBLUE	
070	351161-0105	M	1.9	WIRE AWM 1X2,5 MM2 LIGHTBLUE	
080	351162-0105	M	2.3	WIRE AWM 1X2,5 MM2 YELLOW-GREEN	
090	351164-0105	M	6	WIRE AWM 1X2,5 MM2 BLACK	
100	351162-0106	M	2.7	WIRE AWM 1X4 MM2 YELLOW-GREEN	
110	351164-0106	M	6.3	WIRE AWM 1X4 MM2 BLACK	
120	351161-0106	M	2.9	WIRE AWM 1X4 MM2 LIGHTBLUE	
210	351164-0111	M	11.2	WIRE AWM 1X35 MM2 BLACK	
220	353001-0102		29	END SLEEVE 0,75 MM2	
250	353001-0115		7	END SLEEVE 2,5/14	
260	353001-0117		8	END SLEEVE H4.0/20 GREY	
280	353001-0119		72	END SLEEVE H 1.0/14 YELLOW	
290	353001-0120		6	END SLEEVE H 10/28	
320	353101-0130		1	CABLE SHOE 1,5-2,5MM2 M4 BLUE	
370	353103-0120		3	CABLE SHOE 1,25 MMÂ² RED	
390	353103-0138		2	CABLE SHOE	
TBA NOPT NOASU HI					
010	351160-0102	M	50	WIRE AWM 1X0,75 MM2 DARKBLUE	
030	351161-0104	M	4	WIRE AWM 1X1,5 MM2 LIGHTBLUE	
050	351164-0104	M	4	WIRE AWM 1X1,5 MM2 BLACK	
TBA PT19 ASU HI					
010	351160-0102	M	383	WIRE AWM 1X0,75 MM2 DARKBLUE	
030	351161-0104	M	9.5	WIRE AWM 1X1,5 MM2 LIGHTBLUE	
040	351162-0104	M	6.8	WIRE AWM 1X1,5 MM2 YELLOW-GREEN	
050	351164-0104	M	25.5	WIRE AWM 1X1,5 MM2 BLACK	
070	351161-0105	M	4	WIRE AWM 1X2,5 MM2 LIGHTBLUE	
080	351162-0105	M	2.3	WIRE AWM 1X2,5 MM2 YELLOW-GREEN	
090	351164-0105	M	23.3	WIRE AWM 1X2,5 MM2 BLACK	
100	351162-0106	M	2.7	WIRE AWM 1X4 MM2 YELLOW-GREEN	
110	351164-0106	M	6.3	WIRE AWM 1X4 MM2 BLACK	
120	351161-0106	M	2.9	WIRE AWM 1X4 MM2 LIGHTBLUE	
130	351160-0107	M	4.6	WIRE AWM 1X6 MM2 DARKBLUE	
140	351162-0107	M	5.1	WIRE AWM 1X6 MM2 YELLOW-GREEN	
150	351164-0107	M	6.6	WIRE AWM 1X6 MM2 BLACK	
210	351164-0111	M	11.2	WIRE AWM 1X35 MM2 BLACK	
220	353001-0102		76	END SLEEVE 0,75 MM2	
230	353001-0113		6	END SLEEVE 0,75MM2	
240	353001-0114		18	END SLEEVE 1,50 MM2	
250	353001-0115		25	END SLEEVE 2,5/14	
260	353001-0117		8	END SLEEVE H4.0/20 GREY	
270	353001-0118		5	END SLEEVE 6MM2 BLACK	
280	353001-0119		243	END SLEEVE H 1.0/14 YELLOW	
290	353001-0120		6	END SLEEVE H 10/28	
300	353101-0120		1	CABLE SHOE 0,5-1,5MM2 M4 RED	
330	353101-0132		2	CABLE SHOE 1,5-2,5MM2 M5 BLUE	
340	353101-0150		2	CABLE SHOE 4,0-6,0MM2 M4 YELLOW	
350	353101-0152		1	CABLE SHOE 4,0-6,0MM2 M5 YELLOW	
370	353103-0120		19	CABLE SHOE 1,25 MMÂ² RED	
390	353103-0138		9	CABLE SHOE	
470	90097-0017		5	FLAT PIN PLUG 6,3MM	
480	90097-0019		20	FLAT PIN PLUG 2,8MM	
TBA PT19 ASU NOHI					
010	351160-0102	M	333	WIRE AWM 1X0,75 MM2 DARKBLUE	
030	351161-0104	M	5.5	WIRE AWM 1X1,5 MM2 LIGHTBLUE	
040	351162-0104	M	6.8	WIRE AWM 1X1,5 MM2 YELLOW-GREEN	
050	351164-0104	M	21.5	WIRE AWM 1X1,5 MM2 BLACK	
070	351161-0105	M	4	WIRE AWM 1X2,5 MM2 LIGHTBLUE	
080	351162-0105	M	2.3	WIRE AWM 1X2,5 MM2 YELLOW-GREEN	
090	351164-0105	M	23.3	WIRE AWM 1X2,5 MM2 BLACK	
100	351162-0106	M	2.7	WIRE AWM 1X4 MM2 YELLOW-GREEN	
110	351164-0106	M	6.3	WIRE AWM 1X4 MM2 BLACK	
120	351161-0106	M	2.9	WIRE AWM 1X4 MM2 LIGHTBLUE	
130	351160-0107	M	4.6	WIRE AWM 1X6 MM2 DARKBLUE	
140	351162-0107	M	5.1	WIRE AWM 1X6 MM2 YELLOW-GREEN	

Machine Type | Group Description | Used-In | Group Number | Page No

This page is intentionally left blank.

Pos	Part No	UN	Qty	Description	Page No
TBA PT19 ASU NOHI (Cont'd)					
150	351164-0107	M	6.6	WIRE AWM 1X6 MM2 BLACK	
210	351164-0111	M	11.2	WIRE AWM 1X35 MM2 BLACK	
220	353001-0102		76	END SLEEVE 0,75 MM2	
230	353001-0113		6	END SLEEVE 0,75MM2	
240	353001-0114		18	END SLEEVE 1,50 MM2	
250	353001-0115		25	END SLEEVE 2,5/14	
260	353001-0117		8	END SLEEVE H4.0/20 GREY	
270	353001-0118		5	END SLEEVE 6MM2 BLACK	
280	353001-0119		243	END SLEEVE H 1.0/14 YELLOW	
290	353001-0120		6	END SLEEVE H 10/28	
300	353101-0120		1	CABLE SHOE 0,5-1,5MM2 M4 RED	
330	353101-0132		2	CABLE SHOE 1,5-2,5MM2 M5 BLUE	
340	353101-0150		2	CABLE SHOE 4,0-6,0MM2 M4 YELLOW	
350	353101-0152		1	CABLE SHOE 4,0-6,0MM2 M5 YELLOW	
370	353103-0120		19	CABLE SHOE 1,25 MMÂ² RED	
390	353103-0138		9	CABLE SHOE	
470	90097-0017		5	FLAT PIN PLUG 6,3MM	
480	90097-0019		20	FLAT PIN PLUG 2,8MM	
TBA PT19 NOASU HI					
010	351160-0102	M	278	WIRE AWM 1X0,75 MM2 DARKBLUE	
030	351161-0104	M	9.5	WIRE AWM 1X1,5 MM2 LIGHTBLUE	
040	351162-0104	M	6.8	WIRE AWM 1X1,5 MM2 YELLOW-GREEN	
050	351164-0104	M	25.5	WIRE AWM 1X1,5 MM2 BLACK	
070	351161-0105	M	2.1	WIRE AWM 1X2,5 MM2 LIGHTBLUE	
090	351164-0105	M	17.3	WIRE AWM 1X2,5 MM2 BLACK	
130	351160-0107	M	4.6	WIRE AWM 1X6 MM2 DARKBLUE	
140	351162-0107	M	5.1	WIRE AWM 1X6 MM2 YELLOW-GREEN	
150	351164-0107	M	6.6	WIRE AWM 1X6 MM2 BLACK	
220	353001-0102		47	END SLEEVE 0,75 MM2	
230	353001-0113		6	END SLEEVE 0,75MM2	
240	353001-0114		18	END SLEEVE 1,50 MM2	
250	353001-0115		18	END SLEEVE 2,5/14	
270	353001-0118		5	END SLEEVE 6MM2 BLACK	
280	353001-0119		171	END SLEEVE H 1.0/14 YELLOW	
300	353101-0120		1	CABLE SHOE 0,5-1,5MM2 M4 RED	
320	353101-0130		1	CABLE SHOE 1,5-2,5MM2 M4 BLUE	
330	353101-0132		2	CABLE SHOE 1,5-2,5MM2 M5 BLUE	
340	353101-0150		2	CABLE SHOE 4,0-6,0MM2 M4 YELLOW	
350	353101-0152		1	CABLE SHOE 4,0-6,0MM2 M5 YELLOW	
370	353103-0120		16	CABLE SHOE 1,25 MMÂ² RED	
390	353103-0138		7	CABLE SHOE	
470	90097-0017		5	FLAT PIN PLUG 6,3MM	
480	90097-0019		20	FLAT PIN PLUG 2,8MM	
TBA PT19 NOASU NOHI					
010	351160-0102	M	228	WIRE AWM 1X0,75 MM2 DARKBLUE	
030	351161-0104	M	5.5	WIRE AWM 1X1,5 MM2 LIGHTBLUE	
040	351162-0104	M	6.8	WIRE AWM 1X1,5 MM2 YELLOW-GREEN	
050	351164-0104	M	21.5	WIRE AWM 1X1,5 MM2 BLACK	
070	351161-0105	M	2.1	WIRE AWM 1X2,5 MM2 LIGHTBLUE	
090	351164-0105	M	17.3	WIRE AWM 1X2,5 MM2 BLACK	
130	351160-0107	M	4.6	WIRE AWM 1X6 MM2 DARKBLUE	
140	351162-0107	M	5.1	WIRE AWM 1X6 MM2 YELLOW-GREEN	
150	351164-0107	M	6.6	WIRE AWM 1X6 MM2 BLACK	
220	353001-0102		47	END SLEEVE 0,75 MM2	
230	353001-0113		6	END SLEEVE 0,75MM2	
240	353001-0114		18	END SLEEVE 1,50 MM2	
250	353001-0115		18	END SLEEVE 2,5/14	
270	353001-0118		5	END SLEEVE 6MM2 BLACK	
280	353001-0119		171	END SLEEVE H 1.0/14 YELLOW	
300	353101-0120		1	CABLE SHOE 0,5-1,5MM2 M4 RED	
320	353101-0130		1	CABLE SHOE 1,5-2,5MM2 M4 BLUE	
330	353101-0132		2	CABLE SHOE 1,5-2,5MM2 M5 BLUE	
340	353101-0150		2	CABLE SHOE 4,0-6,0MM2 M4 YELLOW	
350	353101-0152		1	CABLE SHOE 4,0-6,0MM2 M5 YELLOW	
370	353103-0120		16	CABLE SHOE 1,25 MMÂ² RED	
390	353103-0138		7	CABLE SHOE	
470	90097-0017		5	FLAT PIN PLUG 6,3MM	
480	90097-0019		20	FLAT PIN PLUG 2,8MM	
Common Parts					
010	351160-0102	M	1174	WIRE AWM 1X0,75 MM2 DARKBLUE	
020	351166-0102	M	28	WIRE AWM 1X0,75 MM2 ORANGE	
030	351161-0104	M	80	WIRE AWM 1X1,5 MM2 LIGHTBLUE	
040	351162-0104	M	41	WIRE AWM 1X1,5 MM2 YELLOW-GREEN	
050	351164-0104	M	153	WIRE AWM 1X1,5 MM2 BLACK	
060	351160-0105	M	7.5	WIRE AWM 1X2,5 MM2 DARKBLUE	
070	351161-0105	M	7.5	WIRE AWM 1X2,5 MM2 LIGHTBLUE	
080	351162-0105	M	15.7	WIRE AWM 1X2,5 MM2 YELLOW-GREEN	
090	351164-0105	M	158	WIRE AWM 1X2,5 MM2 BLACK	
110	351164-0106	M	5	WIRE AWM 1X4 MM2 BLACK	
120	351161-0106	M	2.8	WIRE AWM 1X4 MM2 LIGHTBLUE	
130	351160-0107	M	6.8	WIRE AWM 1X6 MM2 DARKBLUE	
140	351162-0107	M	31	WIRE AWM 1X6 MM2 YELLOW-GREEN	
150	351164-0107	M	55	WIRE AWM 1X6 MM2 BLACK	

Machine Type | Group Description | Used-In | Group Number | Page No

This page is intentionally left blank.

Pos	Part No	UN	Qty	Description	Page No
Common Parts (Cont'd)					
160	351163-0107	M	1.5	WIRE AWM 1X6 MM2 RED	
170	351162-0109	M	8.2	WIRE AWM 1X16 MM2 YELLOW-GREEN	
180	351161-0109	M	1.7	WIRE AWM 1X16 MM2 LIGHTBLUE	
190	351164-0110	M	55	WIRE AWM 1X25 MM2 BLACK	
200	351161-0110	M	2.1	WIRE AWM 1X25 MM2 LIGHTBLUE	
210	351164-0111	M	11.2	WIRE AWM 1X35 MM2 BLACK	
220	353001-0102		337	END SLEEVE 0,75 MM2	
230	353001-0113		44	END SLEEVE 0,75MM2	
240	353001-0114		191	END SLEEVE 1,50 MM2	
250	353001-0115		155	END SLEEVE 2,5/14	
260	353001-0117		16	END SLEEVE H4.0/20 GREY	
270	353001-0118		47	END SLEEVE 6MM2 BLACK	
280	353001-0119		893	END SLEEVE H 1.0/14 YELLOW	
290	353001-0120		3	END SLEEVE H 10/28	
300	353101-0120		1	CABLE SHOE 0,5-1,5MM2 M4 RED	
310	353101-0129		1	CABLE SHOE 1,5-2,5MM2 M3 BLUE	
320	353101-0130		70	CABLE SHOE 1,5-2,5MM2 M4 BLUE	
340	353101-0150		2	CABLE SHOE 4,0-6,0MM2 M4 YELLOW	
350	353101-0152		11	CABLE SHOE 4,0-6,0MM2 M5 YELLOW	
360	353101-0153		7	CABLE SHOE 4,0-6,0MM2 M6 YELLOW	
370	353103-0120		36	CABLE SHOE 1,25 MMÂ² RED	
380	353103-0130		2	CABLE SHOE	
390	353103-0138		16	CABLE SHOE	
400	353104-0164		2	CABLE SHOE, RING UNINS., YAV 10 M 10	
410	353104-0168		3	CABLE SHOE, RING UNINS., YAV 16 M 6	
420	353104-0175		15	CABLE SHOE, RING UNINS., YAV 25 M 6	
430	352113-0101		100	CABLE TIE, BLACK 92X2,5 MM	
440	352113-0102		30	CABLE TIE, BLACK 188X4,8 MM	
450	90024-0062	MM	600	CABLE PROTECTION, 40MM	
460	90024-0063	M	6	CABLE PROTECTION, 25MM	
470	90097-0017		35	FLAT PIN PLUG 6,3MM	
480	90097-0019		68	FLAT PIN PLUG 2,8MM	
490	90459-2912		46	BAR, TR1	
500	90459-3092	M	17	CABLE PROTECTION, CP10	

Pos	Part No	UN	Qty	Description	Page No

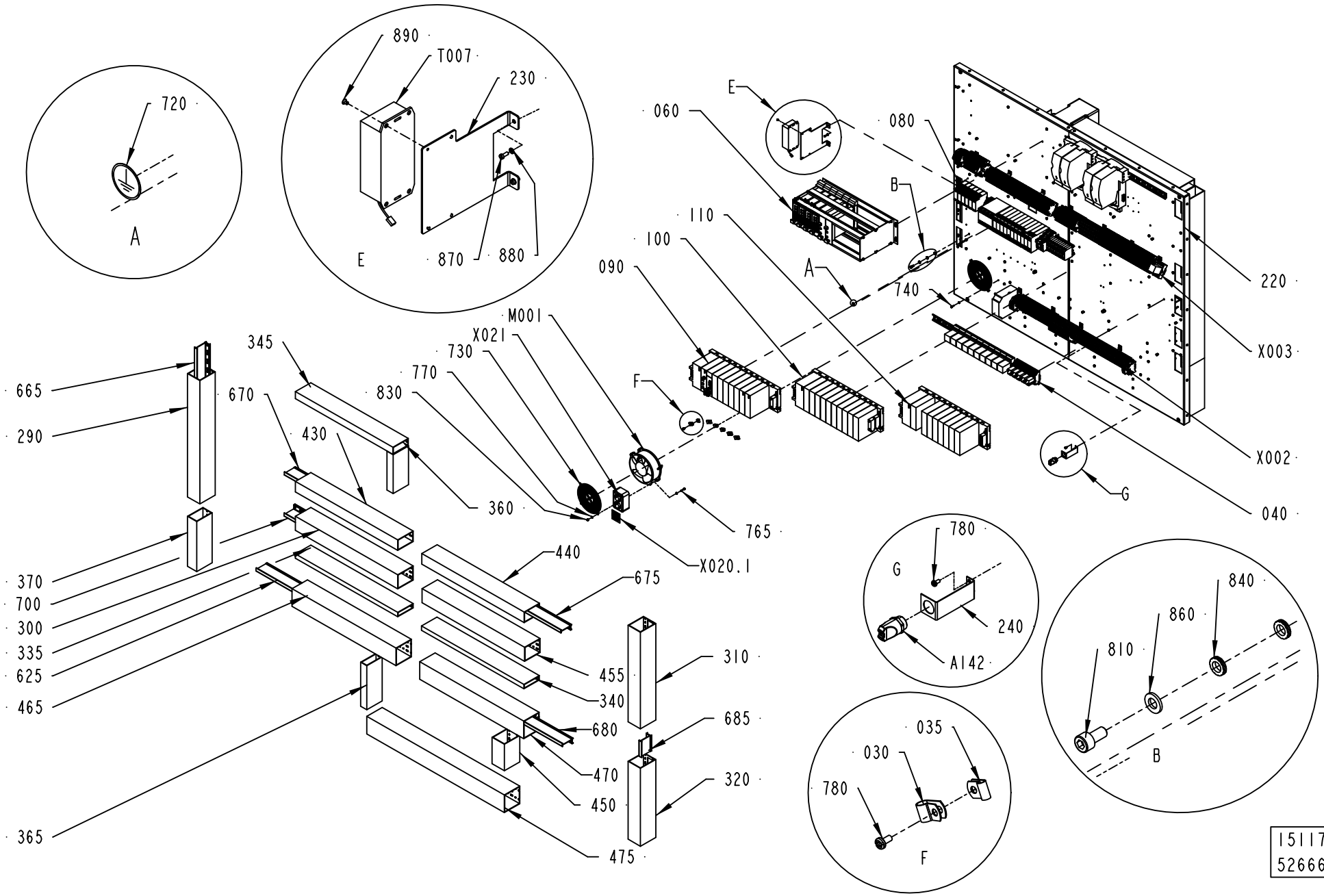
720
A
890
T007
230
E
870
880
E
060
080
B
110
100
090
A
740
220
X003
X002
040
G
M001
X021
730
770
830
F
345
665
670
290
430
360
765
X020.1
370
700
300
335
625
465
365
440
675
455
340
680
470
450
475
310
685
320
780
G
240
A142
840
860
810
B
035
030
780
F
1511779-16
526668

ECM: 541775 - 20120217
Group number: 1511779-0300
Assembly Drawing: 1511779-16_1_AE

This list covers pages from 9-12 to 9-21

Pos	Part No	UN	Qty	Description	Page No
HVA					
031	90602-4126		4	CABLE CLIPS, D=9,5 MM	
W001	351150-0407	M	4.1	CABLE OLFLEX 12X0,75 MM2 LIGHT/GREY	
W003	90220-0091	M	4.1	CABLE, PAIR TWISTED 2X2X0,25MM2	
W008	351150-0414	M	4.1	CABLE OLFLEX 5X1,5 MM2 LIGHT/GREY	
W012	351150-0187	M	5	CABLE OLFLEX 5X6 MM2 LIGHT/GREY	
W091	90220-0059	M	4.5	THERMOCOUPLE CABLE, P/PTW-20F-K 2X0,5MM2	
W092	90220-0091	M	4.5	CABLE, PAIR TWISTED 2X2X0,25MM2	
W096	90220-0091	M	4.1	CABLE, PAIR TWISTED 2X2X0,25MM2	
TBA NOPT ASU					
031	90602-4126		5	CABLE CLIPS, D=9,5 MM	
740	312115-0291		24	SCREW ISO4762 M4X12 A4 80	
750	312115-0325		20	SCREW ISO4762 M5X10 A4 80	
770	315105-0136		36	WASHER PLAIN, 4,3X9X0,8 A4 BRB	
780	312113-0287		43	SCREW, SERRATED COMBI TORX M4X8 A2	
790	315402-0146		20	LOCK WASHER, DIN127B 5,1 A4, M5-3/16	
810	312115-0366		4	SCREW ISO4762 M6X12 A4 80	
G002	90459-3450		1	FREQ. CONV., 22A-A4P5N104	
W069	90220-0183	M	3	SCR. CABLE 2X0,34MM2	
Z006	90600-5249		1	FERRITE, B64290L616X38	
Z007	90600-5249		1	FERRITE, B64290L616X38	
Z009	90459-3460		1	FOOTPRINT FILTER 1 PHASE 10A	
TBA NOPT NOASU					
030	90458-1490		9	CABLE CLIPS, D=7,9 MM	
031	90602-4126		4	CABLE CLIPS, D=9,5 MM	
035	90458-1489		6	CABLE CLIPS, D=4,75 MM	
740	312115-0291		36	SCREW ISO4762 M4X12 A4 80	
750	312115-0325		16	SCREW ISO4762 M5X10 A4 80	
755	312115-0289		4	SCREW ISO4762 M4X10 A4 80	
770	315105-0136		34	WASHER PLAIN, 4,3X9X0,8 A4 BRB	
775	312115-0333		8	SCREW ISO4762 M5X25 A4 80	
780	312113-0287		37	SCREW, SERRATED COMBI TORX M4X8 A2	
790	315402-0146		16	LOCK WASHER, DIN127B 5,1 A4, M5-3/16	
810	312115-0366		4	SCREW ISO4762 M6X12 A4 80	
850	315105-0146		3	WASHER PLAIN, 5,3X10X1 A4 BRB	
TBA PT19 ASU					
030	90458-1490		13	CABLE CLIPS, D=7,9 MM	
031	90602-4126		6	CABLE CLIPS, D=9,5 MM	
035	90458-1489		8	CABLE CLIPS, D=4,75 MM	
130	3040326-0100		1	CONTACTOR RAIL PT	**9-23**
740	312115-0291		26	SCREW ISO4762 M4X12 A4 80	
750	312115-0325		20	SCREW ISO4762 M5X10 A4 80	
755	312115-0291		8	SCREW ISO4762 M4X12 A4 80	
770	315105-0136		42	WASHER PLAIN, 4,3X9X0,8 A4 BRB	
775	312122-0366		9	SCREW ISO 1207 M6X12 NI PL BRASS	
780	312113-0287		55	SCREW, SERRATED COMBI TORX M4X8 A2	
785	312113-0323		6	SCREW, SERRATED COMBI TORX M5X8 A2	
790	315402-0146		20	LOCK WASHER, DIN127B 5,1 A4, M5-3/16	
810	312115-0366		4	SCREW ISO4762 M6X12 A4 80	
850	315105-0146		5	WASHER PLAIN, 5,3X10X1 A4 BRB	
A002	90459-2562		1	SERVO AMP. ULTRA 5000, 2098-IPD-020	
A015	90458-1300		1	2 AXIS DOCKING STATION, D2/PLC	**9-25**
A016	90458-0746		1	STEP MOTOR DRIVE, L50	
A017	90458-0746		1	STEP MOTOR DRIVE, L50	
G002	90459-3450		1	FREQ. CONV., 22A-A4P5N104	
G006	90459-3450		1	FREQ. CONV., 22A-A4P5N104	
W069	90220-0183	M	3	SCR. CABLE 2X0,34MM2	
W129	90220-0092	M	1.5	CABLE, PAIR TWISTED 3X2X0,25MM2	
X023	90458-1279		1	PLUG CONNECTOR, DP1	
Z009	90459-3460		1	FOOTPRINT FILTER 1 PHASE 10A	
Z023	90600-5253		1	LINE FILTER, B84113HB60	
Z024	90600-5249		1	FERRITE, B64290L616X38	
Z025	90600-5249		1	FERRITE, B64290L616X38	
Z033	90459-3460		1	FOOTPRINT FILTER 1 PHASE 10A	
Z034	90600-5249		1	FERRITE, B64290L616X38	
Z035	90600-5249		1	FERRITE, B64290L616X38	
Z036	90600-5255		1	LINE FILTER, B84113HB116	
TBA PT19 NOASU					
030	90458-1490		13	CABLE CLIPS, D=7,9 MM	
031	90602-4126		5	CABLE CLIPS, D=9,5 MM	
035	90458-1489		7	CABLE CLIPS, D=4,75 MM	
130	3040326-0100		1	CONTACTOR RAIL PT	**9-23**
740	312115-0291		39	SCREW ISO4762 M4X12 A4 80	
750	312115-0325		16	SCREW ISO4762 M5X10 A4 80	
755	312115-0291		8	SCREW ISO4762 M4X12 A4 80	
770	315105-0136		40	WASHER PLAIN, 4,3X9X0,8 A4 BRB	
775	312122-0366		9	SCREW ISO 1207 M6X12 NI PL BRASS	
780	312113-0287		49	SCREW, SERRATED COMBI TORX M4X8 A2	
785	312113-0323		6	SCREW, SERRATED COMBI TORX M5X8 A2	
790	315402-0146		16	LOCK WASHER, DIN127B 5,1 A4, M5-3/16	
810	312115-0366		4	SCREW ISO4762 M6X12 A4 80	
850	315105-0146		5	WASHER PLAIN, 5,3X10X1 A4 BRB	
A002	90459-2562		1	SERVO AMP. ULTRA 5000, 2098-IPD-020	
A015	90458-1300		1	2 AXIS DOCKING STATION, D2/PLC	**9-25**

Machine Type | Group Description | Used-In | Group Number | Page No

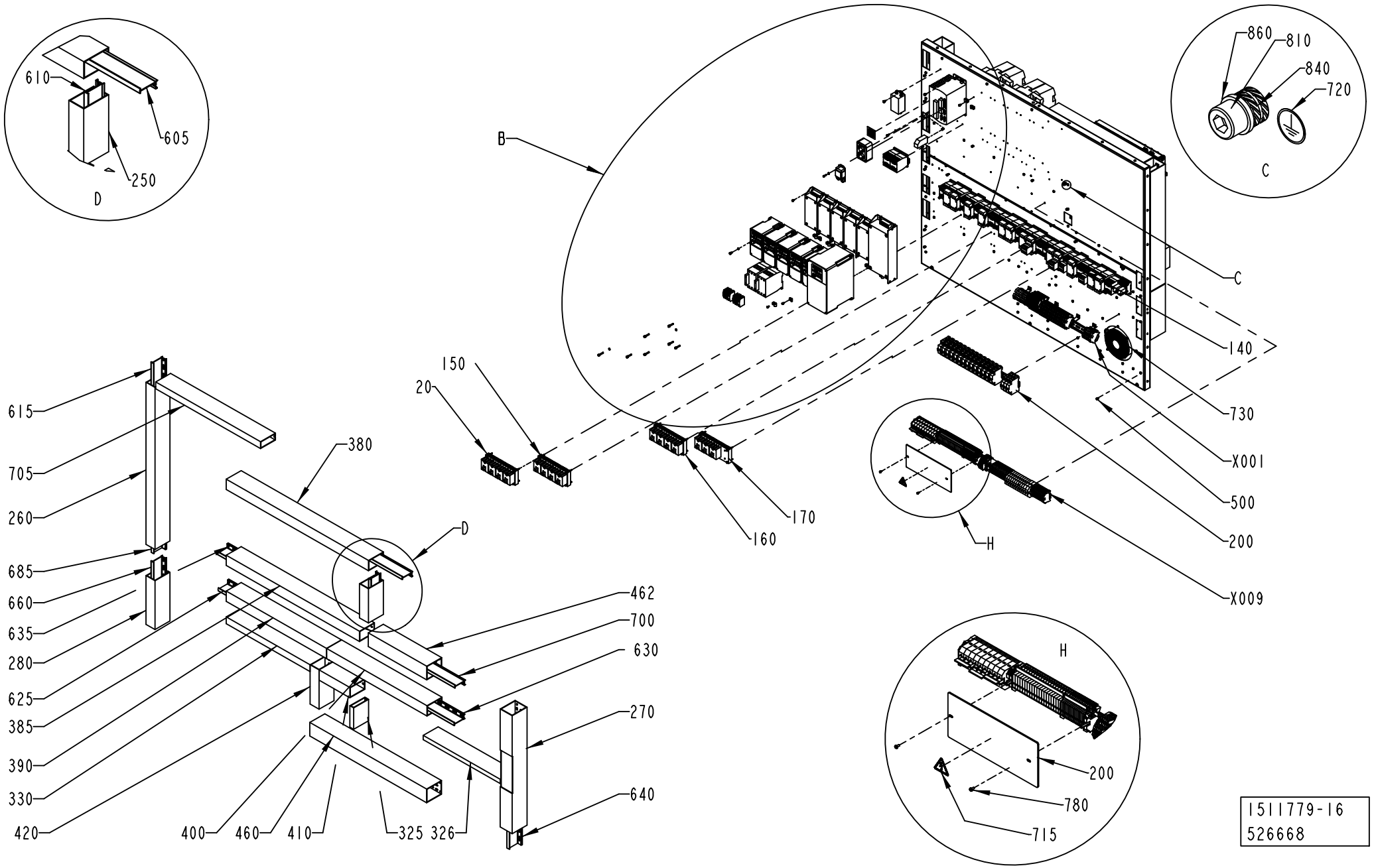

1511779-16
526668

Pos	Part No	UN	Qty	Description	Page No
TBA PT19 NOASU (Cont'd)					
A016	90458-0746		1	STEP MOTOR DRIVE, L50	
A017	90458-0746		1	STEP MOTOR DRIVE, L50	
G006	90459-3450		1	FREQ. CONV., 22A-A4P5N104	
W129	90220-0092	M	1.5	CABLE, PAIR TWISTED 3X2X0,25MM2	
X023	90458-1279		1	PLUG CONNECTOR, DP1	
Z023	90600-5253		1	LINE FILTER, B84113HB60	
Z024	90600-5249		1	FERRITE, B64290L616X38	
Z025	90600-5249		1	FERRITE, B64290L616X38	
Z033	90459-3460		1	FOOTPRINT FILTER 1 PHASE 10A	
Z034	90600-5249		1	FERRITE, B64290L616X38	
Z035	90600-5249		1	FERRITE, B64290L616X38	
Z036	90600-5255		1	LINE FILTER, B84113HB116	
TPA PT19 ASU					
030	90458-1490		13	CABLE CLIPS, D=7,9 MM	
031	90602-4126		6	CABLE CLIPS, D=9,5 MM	
035	90458-1489		8	CABLE CLIPS, D=4,75 MM	
130	3040326-0100		1	CONTACTOR RAIL PT	**9-23**
740	312115-0291		26	SCREW ISO4762 M4X12 A4 80	
750	312115-0325		20	SCREW ISO4762 M5X10 A4 80	
755	312115-0289		6	SCREW ISO4762 M4X10 A4 80	
770	315105-0136		44	WASHER PLAIN, 4,3X9X0,8 A4 BRB	
775	312122-0366		9	SCREW ISO 1207 M6X12 NI PL BRASS	
780	312113-0287		55	SCREW, SERRATED COMBI TORX M4X8 A2	
785	312113-0323		6	SCREW, SERRATED COMBI TORX M5X8 A2	
790	315402-0146		20	LOCK WASHER, DIN127B 5,1 A4, M5-3/16	
810	312115-0366		6	SCREW ISO4762 M6X12 A4 80	
850	315105-0146		5	WASHER PLAIN, 5,3X10X1 A4 BRB	
A002	90459-2562		1	SERVO AMP. ULTRA 5000, 2098-IPD-020	
A015	90458-1300		1	2 AXIS DOCKING STATION, D2/PLC	**9-25**
A016	90458-0746		1	STEP MOTOR DRIVE, L50	
A017	90458-0746		1	STEP MOTOR DRIVE, L50	
A018	90458-1300		1	2 AXIS DOCKING STATION, D2/PLC	**9-25**
A019	90458-0746		1	STEP MOTOR DRIVE, L50	
G002	90459-3450		1	FREQ. CONV., 22A-A4P5N104	
G006	90459-3450		1	FREQ. CONV., 22A-A4P5N104	
W069	90220-0183	M	3	SCR. CABLE 2X0,34MM2	
W129	90220-0092	M	1.5	CABLE, PAIR TWISTED 3X2X0,25MM2	
X023	90458-1279		1	PLUG CONNECTOR, DP1	
Z009	90459-3460		1	FOOTPRINT FILTER 1 PHASE 10A	
Z023	90600-5253		1	LINE FILTER, B84113HB60	
Z024	90600-5249		1	FERRITE, B64290L616X38	
Z025	90600-5249		1	FERRITE, B64290L616X38	
Z026	90600-5253		1	LINE FILTER, B84113HB60	
Z033	90459-3460		1	FOOTPRINT FILTER 1 PHASE 10A	
Z034	90600-5249		1	FERRITE, B64290L616X38	
Z035	90600-5249		1	FERRITE, B64290L616X38	
Z036	90600-5255		1	LINE FILTER, B84113HB116	
TPA PT19 NOASU					
030	90458-1490		13	CABLE CLIPS, D=7,9 MM	
031	90602-4126		5	CABLE CLIPS, D=9,5 MM	
035	90458-1489		7	CABLE CLIPS, D=4,75 MM	
130	3040326-0100		1	CONTACTOR RAIL PT	**9-23**
740	312115-0291		39	SCREW ISO4762 M4X12 A4 80	
750	312115-0325		16	SCREW ISO4762 M5X10 A4 80	
755	312115-0289		6	SCREW ISO4762 M4X10 A4 80	
770	315105-0136		42	WASHER PLAIN, 4,3X9X0,8 A4 BRB	
775	312122-0366		9	SCREW ISO 1207 M6X12 NI PL BRASS	
780	312113-0287		51	SCREW, SERRATED COMBI TORX M4X8 A2	
785	312113-0323		6	SCREW, SERRATED COMBI TORX M5X8 A2	
790	315402-0146		16	LOCK WASHER, DIN127B 5,1 A4, M5-3/16	
810	312115-0366		6	SCREW ISO4762 M6X12 A4 80	
850	315105-0146		5	WASHER PLAIN, 5,3X10X1 A4 BRB	
A002	90459-2562		1	SERVO AMP. ULTRA 5000, 2098-IPD-020	
A015	90458-1300		1	2 AXIS DOCKING STATION, D2/PLC	**9-25**
A016	90458-0746		1	STEP MOTOR DRIVE, L50	
A017	90458-0746		1	STEP MOTOR DRIVE, L50	
A018	90458-1300		1	2 AXIS DOCKING STATION, D2/PLC	**9-25**
A019	90458-0746		1	STEP MOTOR DRIVE, L50	
G006	90459-3450		1	FREQ. CONV., 22A-A4P5N104	
W129	90220-0092	M	1.5	CABLE, PAIR TWISTED 3X2X0,25MM2	
X023	90458-1279		1	PLUG CONNECTOR, DP1	
Z023	90600-5253		1	LINE FILTER, B84113HB60	
Z024	90600-5249		1	FERRITE, B64290L616X38	
Z025	90600-5249		1	FERRITE, B64290L616X38	
Z026	90600-5253		1	LINE FILTER, B84113HB60	
Z033	90459-3460		1	FOOTPRINT FILTER 1 PHASE 10A	
Z034	90600-5249		1	FERRITE, B64290L616X38	
Z035	90600-5249		1	FERRITE, B64290L616X38	
Z036	90600-5255		1	LINE FILTER, B84113HB116	
Common Parts					
020	1511801-0200		1	SOLID STATE RELAY RAIL 1	**9-27**
040	1511803-0200		1	RELAYS RAIL	**9-29**
060	1511805-0100		1	RACK	**9-31**

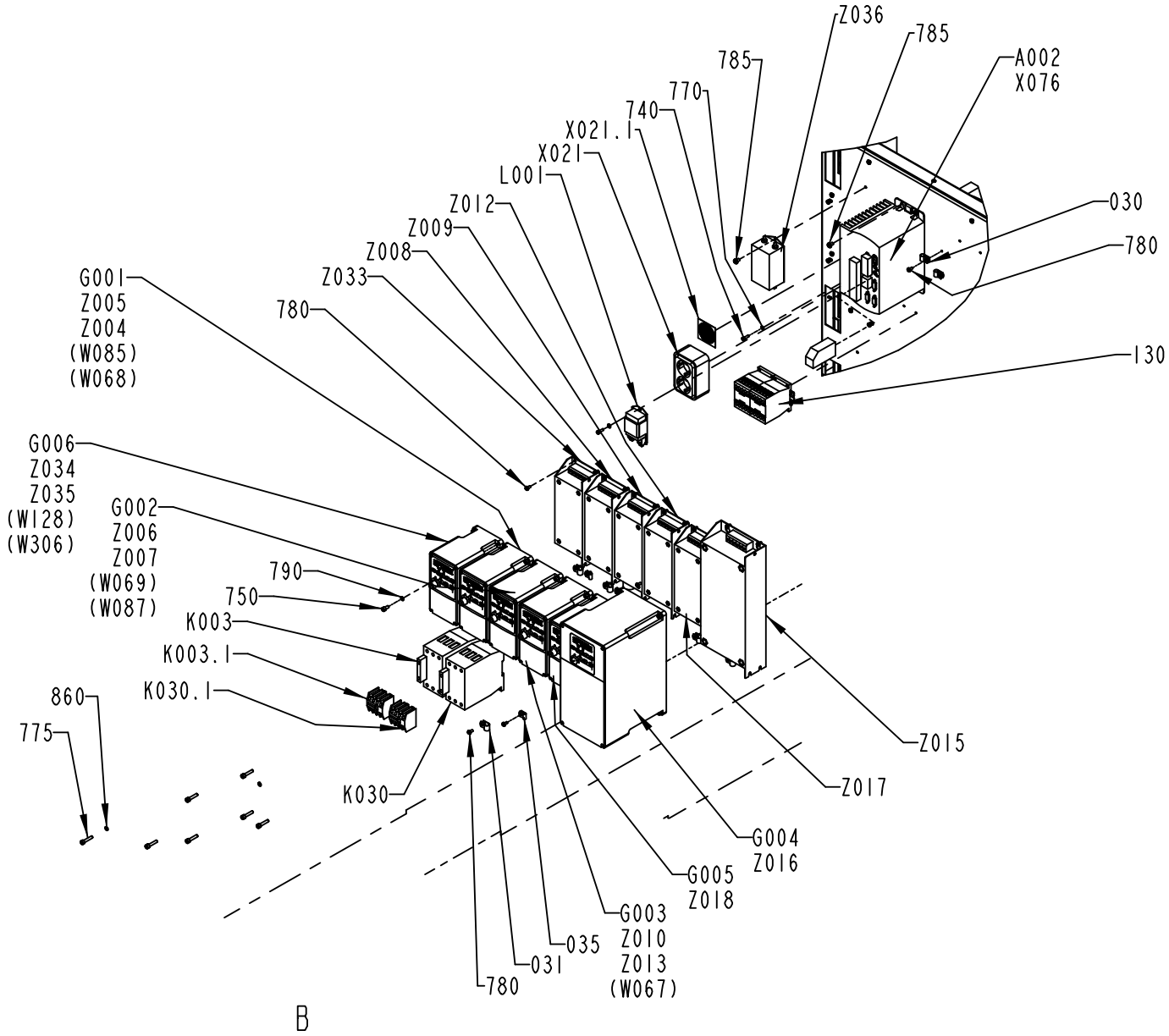

1511779-16
526668

ECM: 541775 - 20120217
Group number: 1511779-0300
Assembly Drawing: 1511779-16_3_AE

This list covers pages from 9-12 to 9-21

Pos	Part No	UN	Qty	Description	Page No
Common Parts (Cont'd)					
080	1511824-0300		1	RAIL	**9-37, 9-39**
090	1511825-0300		1	PLC RACK 1	**9-41**
100	1511826-0100		1	PLC RACK 2	**9-43**
110	1511827-0100		1	PLC RACK 3	**9-45**
140	1511834-0300		1	RAIL	**9-47**
150	1517651-0200		1	SOLID STATE RELAY RAIL 2	**9-49, 9-51**
160	1517652-0200		1	SOLID STATE RELAY RAIL 3	**9-53**
170	1523445-0200		1	SOLID STATE RELAY RAIL 4	**9-55, 9-57, 9-59**
200	3024838-0100		1	RAIL	**9-61**
210	3072110-0000		1	COVER PLATE	
220	2962076-0000		1	COMPONENT PLATES	
230	2826649-0000		1	BRACKET	
240	2685652-0000		1	BRACKET	
250	2604462-0000		1	CABLE DUCT	
260	2604461-0000		1	CABLE DUCT	
270	2604468-0000		1	CABLE DUCT	
280	2604463-0000		1	CABLE DUCT	
290	2604464-0000		1	CABLE DUCT	
300	2604466-0000		1	CABLE DUCT	
310	2604465-0000		1	CABLE DUCT	
320	2604467-0000		1	CABLE DUCT	
325	90459-2452	MM	125	CABLE DUCT, PLASTIC, 25X100	
326	90459-2452	MM	514	CABLE DUCT, PLASTIC, 25X100	
330	90181-0060	MM	560	CABLE DUCT, PLASTIC, 40X100	
335	90459-2452	MM	663	CABLE DUCT, PLASTIC, 25X100	
340	90459-2452	MM	663	CABLE DUCT, PLASTIC, 25X100	
345	90181-0060	MM	632	CABLE DUCT, PLASTIC, 40X100	
360	90181-0060	MM	220	CABLE DUCT, PLASTIC, 40X100	
365	90181-0060	MM	250	CABLE DUCT, PLASTIC, 40X100	
370	2604460-0000		1	CABLE DUCT	
380	90181-0061	MM	950	CABLE DUCT, PLASTIC, 60X100	
385	90181-0061	MM	890	CABLE DUCT, PLASTIC, 60X100	
390	90181-0061	MM	670	CABLE DUCT, PLASTIC, 60X100	
400	90181-0061	MM	670	CABLE DUCT, PLASTIC, 60X100	
410	90181-0061	MM	206	CABLE DUCT, PLASTIC, 60X100	
420	90181-0061	MM	230	CABLE DUCT, PLASTIC, 60X100	
430	90181-0061	MM	663	CABLE DUCT, PLASTIC, 60X100	
440	90181-0061	MM	663	CABLE DUCT, PLASTIC, 60X100	
450	90181-0174	MM	150	CABLE DUCT	
455	90181-0174	MM	665	CABLE DUCT	
460	90181-0174	MM	780	CABLE DUCT	
462	90181-0174	MM	390	CABLE DUCT	
465	90181-0062	MM	674	CABLE DUCT, PLASTIC, 100X100	
470	90181-0062	MM	674	CABLE DUCT, PLASTIC, 100X100	
475	90181-0062	MM	1100	CABLE DUCT, PLASTIC, 100X100	
500	90181-0064		42	LOCK ZP1 FOR CHANNEL T1	
605	90181-0067	MM	946	DIVIDING PLATE SEP80	
610	90181-0067	MM	61	DIVIDING PLATE SEP80	
615	90181-0067	MM	279	DIVIDING PLATE SEP80	
620	90181-0067	MM	660	DIVIDING PLATE SEP80	
625	90181-0067	MM	660	DIVIDING PLATE SEP80	
630	90181-0067	MM	660	DIVIDING PLATE SEP80	
635	90181-0067	MM	880	DIVIDING PLATE SEP80	
640	90181-0067	MM	233	DIVIDING PLATE SEP80	
660	90181-0067	MM	260	DIVIDING PLATE SEP80	
665	90181-0067	MM	586	DIVIDING PLATE SEP80	
670	90181-0067	MM	650	DIVIDING PLATE SEP80	
675	90181-0067	MM	650	DIVIDING PLATE SEP80	
680	90181-0067	MM	660	DIVIDING PLATE SEP80	
685	90181-0067	MM	89	DIVIDING PLATE SEP80	
690	90181-0067	MM	89	DIVIDING PLATE SEP80	
695	90181-0067	MM	386	DIVIDING PLATE SEP80	
700	90181-0067	MM	386	DIVIDING PLATE SEP80	
705	90181-0060	MM	700	CABLE DUCT, PLASTIC, 40X100	
710	90181-0313		137	RIVET, DUCTAFIX R4	
715	359705-0015		1	WARNING SIGN ISO, RISK OF ELECTRIC SHOCK	
720	90194-0163		2	SIGN, EARTH WITHIN CIRCLE / SHEET 48 PCS	
725	90194-0164		1	SIGN, FRAME/CHASSIS WITHIN CIRCLE	
730	90457-0057		2	GRID, LZ36	
735	312115-0323		3	SCREW ISO4762 M5X8 A4 80	
765	312115-0295		4	SCREW ISO4762 M4X20 A4 80	
820	353042-0004	MM	650	RAIL, TS 35/7,5	
830	312812-0312		4	HEXAGON NUT, NY-LOCK M4 A4 80	
840	90062-0061		8	LOCK WASHER NORD-LOCK,6,5/10,8, T=2,2	
860	315105-0153		4	WASHER PLAIN, 6,4X12X1,5 A4 BRB	
870	312121-0289		2	SCREW ISO 1207 M4X10 4.8-5.8 Z.PL.	
880	315101-0136		2	WASHER BRB, 4,3/8 H=0,8	
890	312145-0285		4	SCREW ISO 2009 MFS M4X6 A4	
A012	90458-1300		1	2 AXIS DOCKING STATION, D2/PLC	**9-25**
A013	90458-0746		1	STEP MOTOR DRIVE, L50	
A014	90458-0746		1	STEP MOTOR DRIVE, L50	
A142	90459-5628		1	CONNECTION, TINA 2-A	
G001	90459-3450		1	FREQ. CONV., 22A-A4P5N104	

Machine Type | Group Description | Used-In | Group Number | Page No

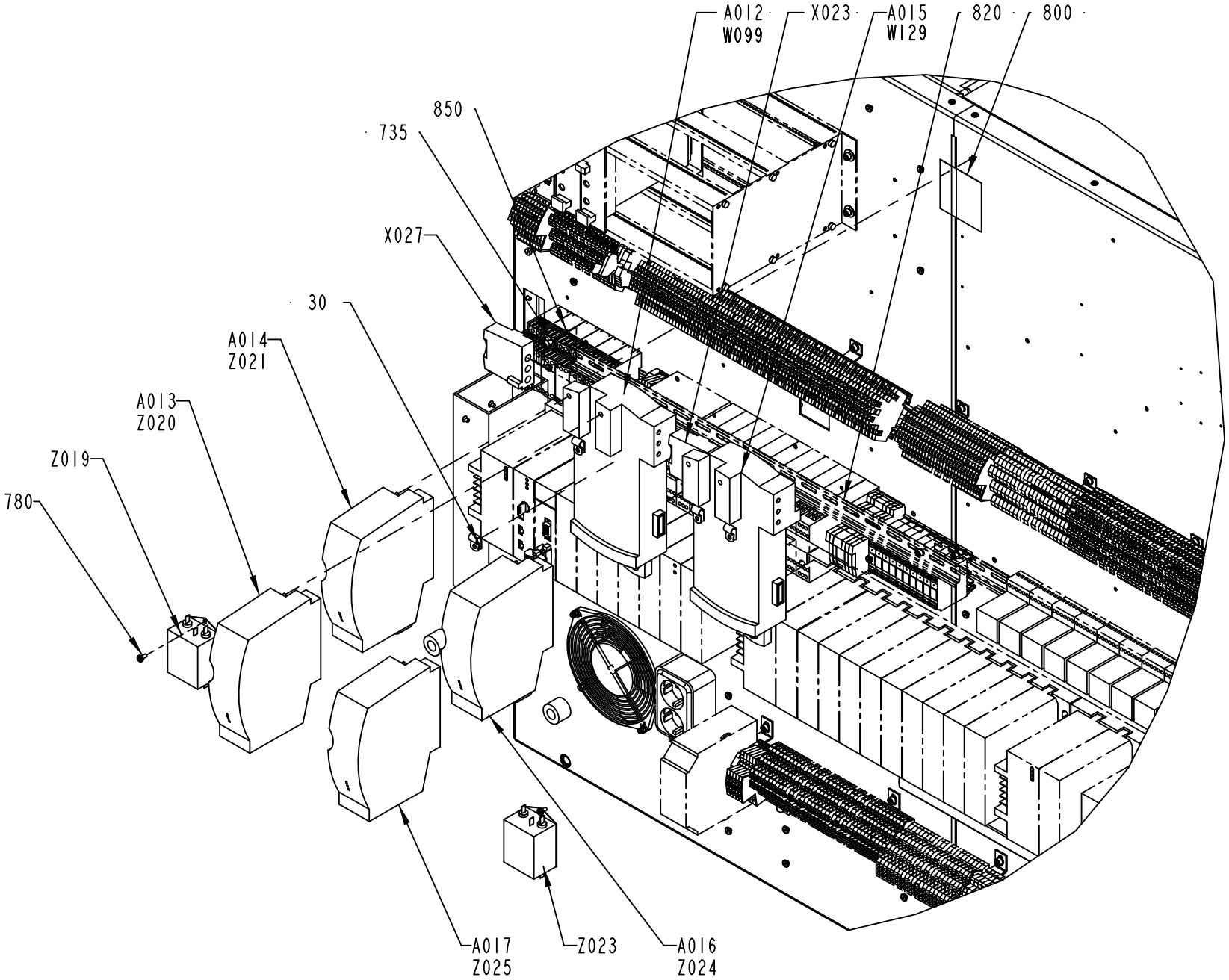

1511779-16
526668

Pos	Part No	UN	Qty	Description	Page No
Common Parts (Cont'd)					
G003	90459-3450		1	FREQ. CONV., 22A-A4P5N104	
G004	90459-3446		1	FREQ. CONV., 22B-D012N104	
G005	90459-3450		1	FREQ. CONV., 22A-A4P5N104	
K003	90600-1758		1	CONTACTOR 30KW 24VDC,DILM65 +DILM65-XIP2	
K003.1	90459-5418		1	AUXILIARY CONTACTS, DILM150-XHI22	
K030	90600-1758		1	CONTACTOR 30KW 24VDC,DILM65 +DILM65-XIP2	
K030.1	90459-5418		1	AUXILIARY CONTACTS, DILM150-XHI22	
L001	90297-0306		1	BALLAST COIL 230V 50/60 HZ, L11D E790011	
M001	90457-0056		1	FAN 7450 ES	
T007	90459-7198		1	AUXILIARY BATTERY MODULE, IC693ACC302	
W067	90220-0183	M	3	SCR. CABLE 2X0,34MM2	
W068	90220-0183	M	3	SCR. CABLE 2X0,34MM2	
W099	90220-0092	M	1.5	CABLE, PAIR TWISTED 3X2X0,25MM2	
W0127	90220-0183	M	3	SCR. CABLE 2X0,34MM2	
X001	1511800-0100		1	POWER SIDE,BOTTOM TERMINAL BLOCK	**9-63, 9-65, 9-67, 9-69**
X002	1511802-0300		1	TERMINAL BLOCK	**9-71, 9-73**
X003	1511804-0200		1	LOGIC SIDE TOP TERMINAL BLOCK	**9-75, 9-77**
X009	1511829-0200		1	POWER SIDE, TOP TERMINAL BLOCK	**9-79, 9-81**
X020	90001-0033		1	WALL SOCKET, E1834666	
X020.1	90459-1738		1	MANDATORY ACTION SIGN ISO, READ MAINTENA	
X021	90001-0033		1	WALL SOCKET, E1834666	
X021.1	90459-1738		1	MANDATORY ACTION SIGN ISO, READ MAINTENA	
X027	90458-1279		1	PLUG CONNECTOR, DP1	
Z004	90600-5249		1	FERRITE, B64290L616X38	
Z005	90600-5249		1	FERRITE, B64290L616X38	
Z008	90459-3460		1	FOOTPRINT FILTER 1 PHASE 10A	
Z010	90600-5249		1	FERRITE, B64290L616X38	
Z012	90459-3460		1	FOOTPRINT FILTER 1 PHASE 10A	
Z013	90600-5249		1	FERRITE, B64290L616X38	
Z015	90459-3459		1	FOOTPRINT FILTER 3 PHASE 18A	
Z016	90600-5249		1	FERRITE, B64290L616X38	
Z017	90459-3460		1	FOOTPRINT FILTER 1 PHASE 10A	
Z018	90600-5249		1	FERRITE, B64290L616X38	
Z019	90600-5253		1	LINE FILTER, B84113HB60	
Z020	90600-5249		1	FERRITE, B64290L616X38	
Z021	90600-5249		1	FERRITE, B64290L616X38	

Pos	Part No	UN	Qty	Description	Page No

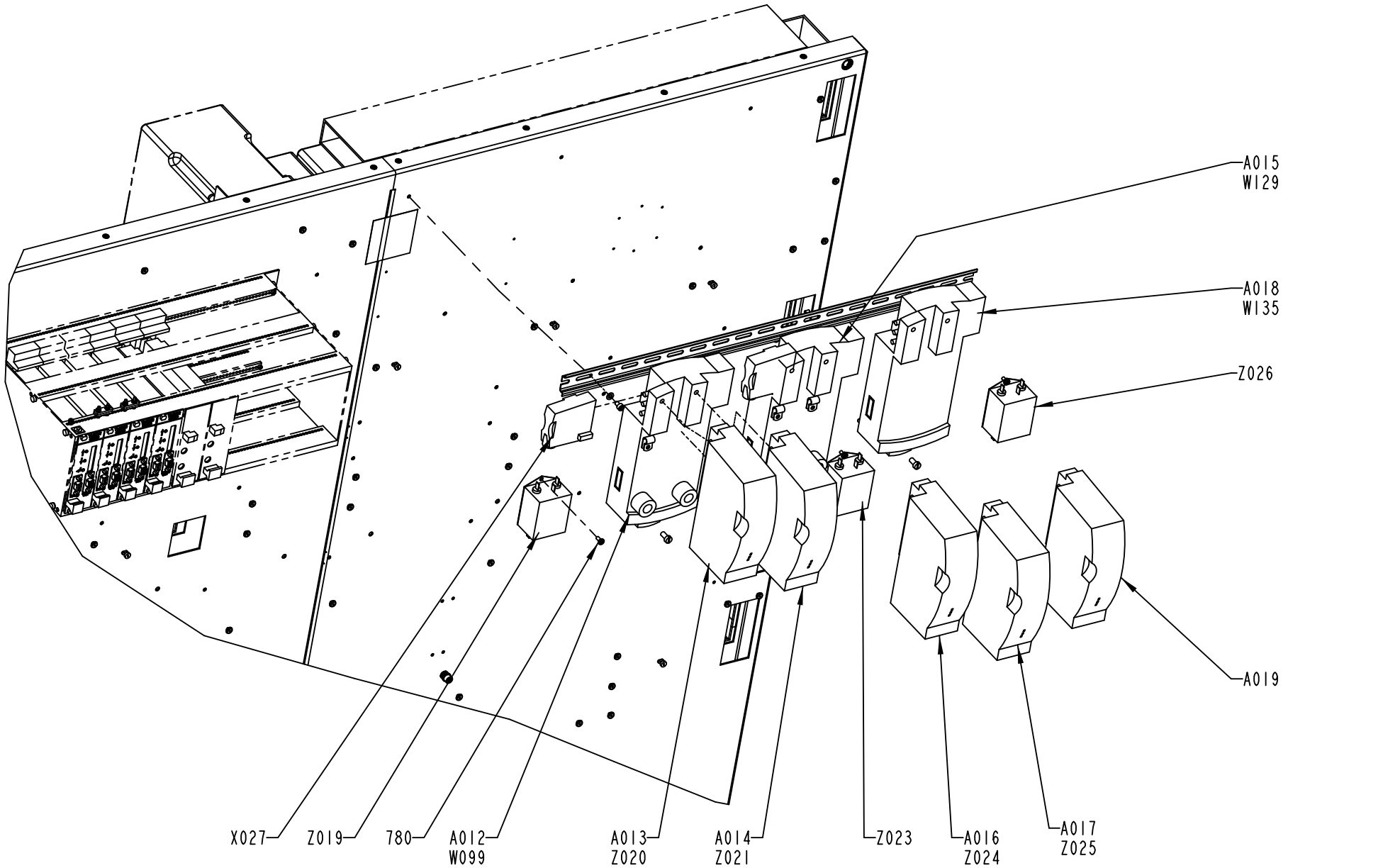
A015
W129
A018
W135
Z026
A019
X027
Z019
780
A012
W099
A013
Z020
A014
Z021
Z023
A016
Z024
A017
Z025
TPA PT-19
1511779-16
526668

ECM: 541775 - 20120217
Group number: 1511779-0300
Assembly Drawing: 1511779-16_6_AE

This list covers pages from 9-12 to 9-21

Pos	Part No	UN	Qty	Description	Page No
SEE PREVIOUS LISTS PAGES: 9-13, 9-15, 9-17, 9-19.					

Pos	Part No	UN	Qty	Description	Page No

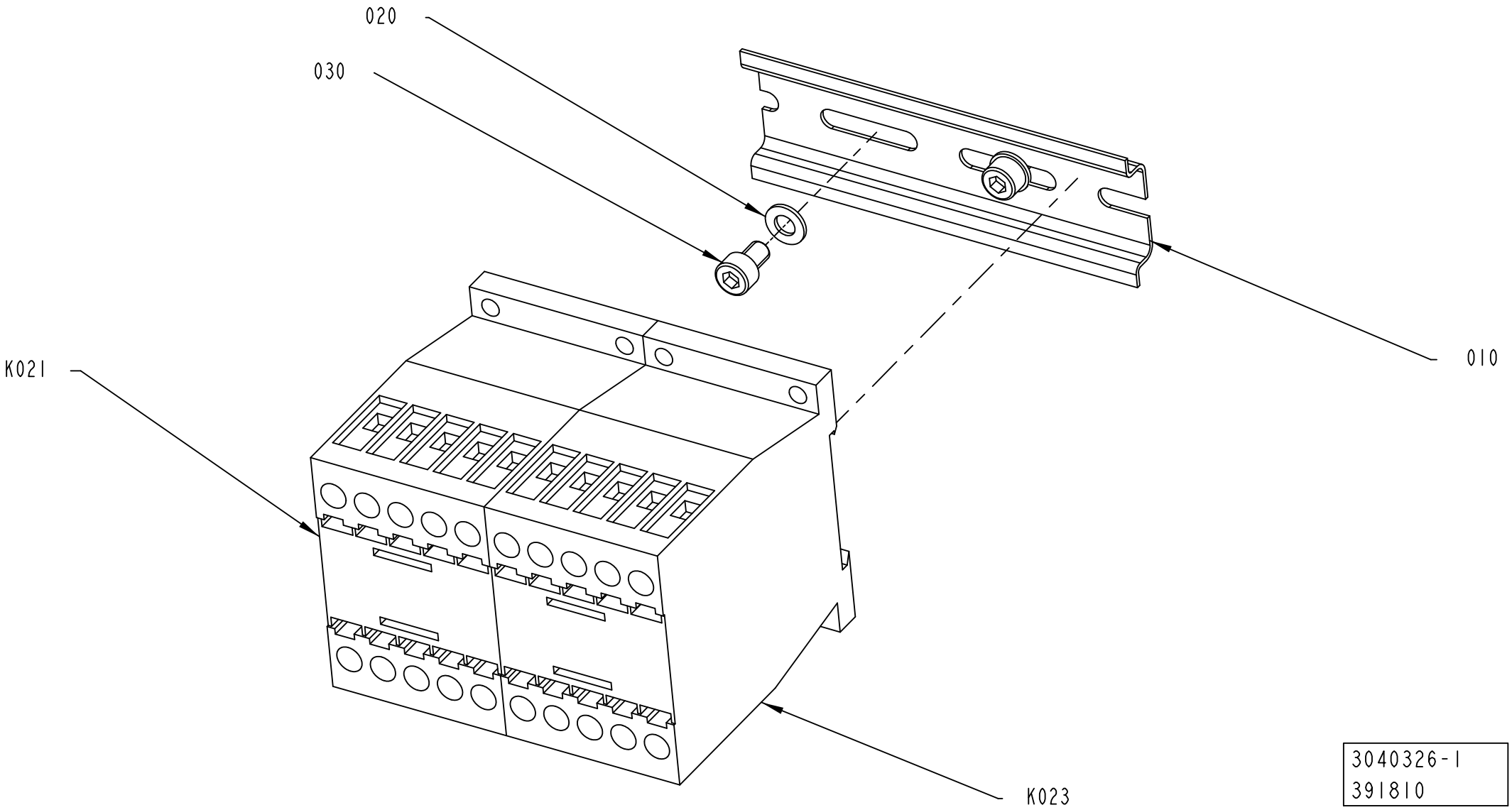
020
030
010
K021
K023
3040326-1
391810

ECM: 405156 - 20090710
Group number: 3040326-0100
Assembly Drawing: 3040326-1_1_AA

Pos	Part No	UN	Qty	Description	Page No
-					
010	353042-0004	M	100	RAIL, TS 35/7,5	
020	315105-0146		2	WASHER PLAIN, 5,3X10X1 A4 BRB	
021	90459-5440		1	CONTACTOR 4KW 24VDC, DILM9-01	
023	90459-5440		1	CONTACTOR 4KW 24VDC, DILM9-01	
030	312115-0323		2	SCREW ISO4762 M5X8 A4 80	

Pos	Part No	UN	Qty	Description	Page No

This page is intentionally left blank.

ECM: 185654 - 20041104
Group number: 90458-1300
Assembly Drawing:

Pos	Part No	UN	Qty	Description	Page No
-					
	90458-1856		1	ADHESIVE LABEL, CONNECTION DIAGRAM	

Pos	Part No	UN	Qty	Description	Page No

Machine Type	Group Description	Used-In	Group Number	Page No

SOLID STATE RELAY RAIL 1

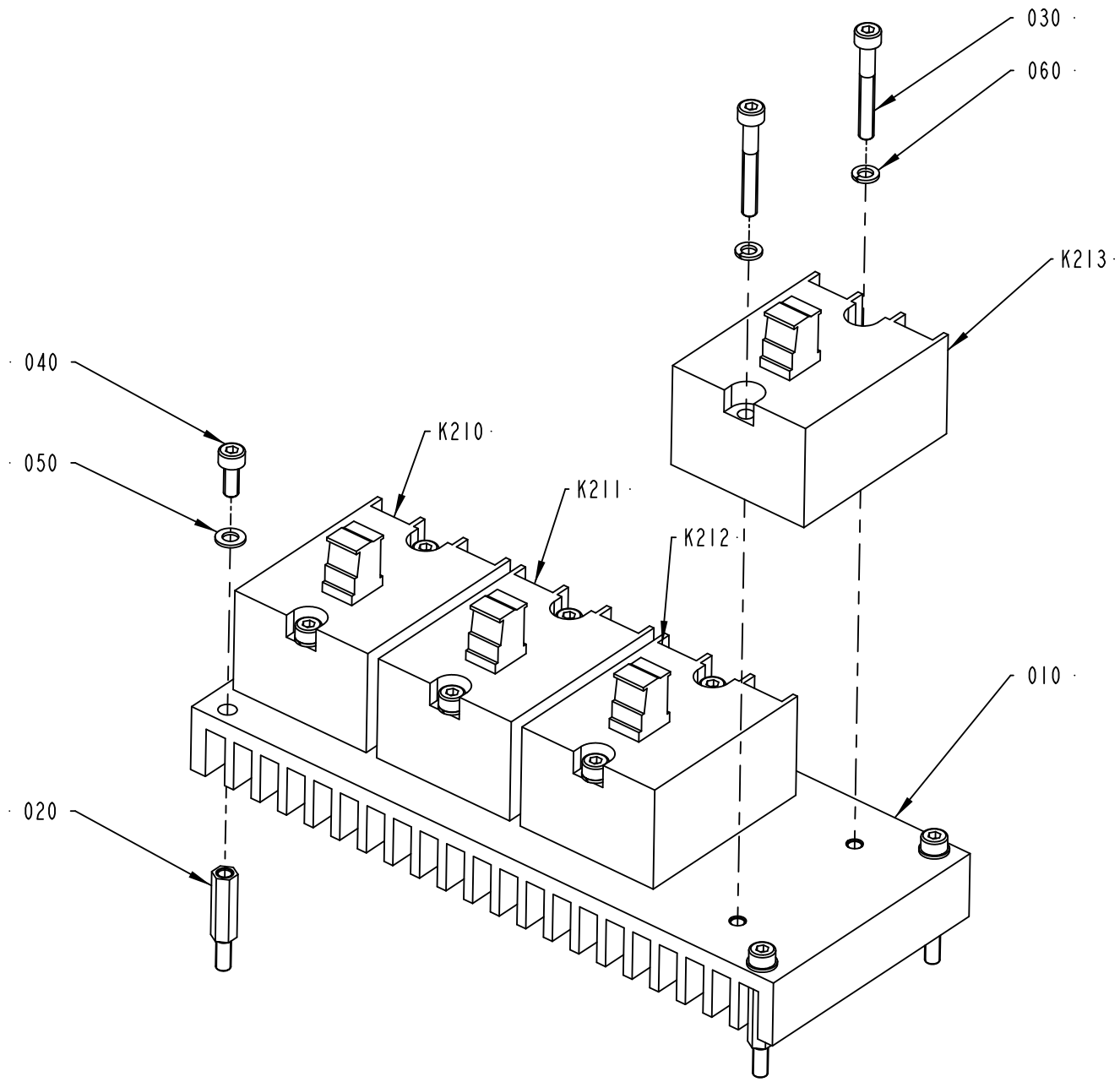

1511801-2
422317

ECM: 431010 - 20091228
Group number: 1511801-0200
Assembly Drawing: 1511801-2_1_AB

Pos	Part No	UN	Qty	Description	Page No
-					
010	1498819-0000		1	COOLING PLATE	
020	1517675-0000		4	SPACER	
030	312115-0299		8	SCREW ISO4762 M4X30 A4 80	
040	312115-0289		4	SCREW ISO4762 M4X10 A4 80	
050	315105-0136		4	WASHER PLAIN, 4,3X9X0,8 A4 BRB	
060	315402-0136		12	LOCK WASHER, DIN127B 4,1 A4, M4-5/32	
K210	90600-0946		1	SOLID STATE RELAY, 3RF2050-1AA04	
K211	90600-0946		1	SOLID STATE RELAY, 3RF2050-1AA04	
K212	90600-0946		1	SOLID STATE RELAY, 3RF2050-1AA04	
K213	90600-0946		1	SOLID STATE RELAY, 3RF2050-1AA04	

Pos	Part No	UN	Qty	Description	Page No

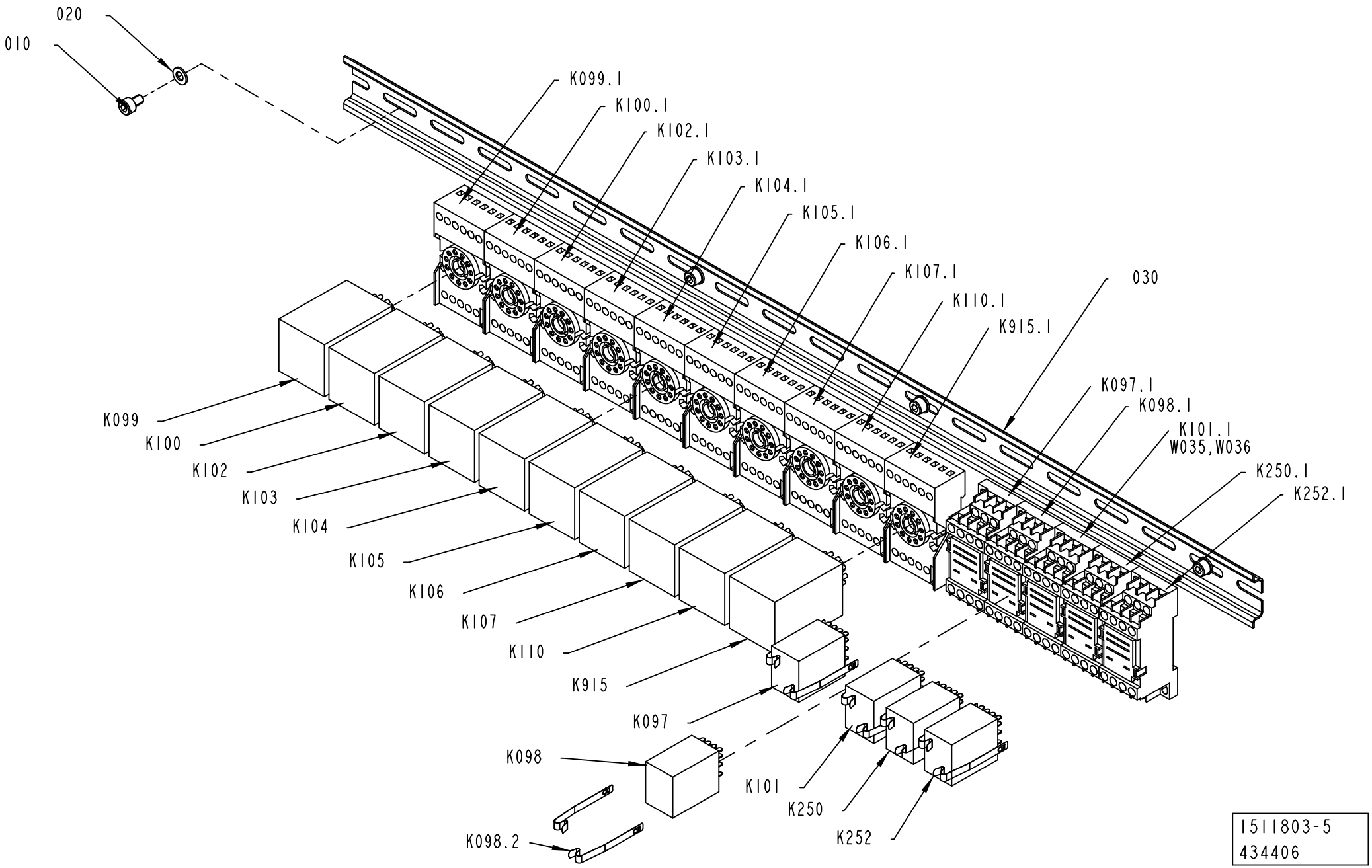

1511803-5
434406

ECM: 438644 - 20100222
Group number: 1511803-0200
Assembly Drawing: 1511803-5_1_AD

Pos	Part No	UN	Qty	Description	Page No
-					
010	312115-0323		4	SCREW ISO4762 M5X8 A4 80	
020	315105-0146		4	WASHER PLAIN, 5,3X10X1 A4 BRB	
030	353042-0004	MM	690	RAIL, TS 35/7,5	
K097	90119-0086		1	RELAY, AUXILIARY MY4IN4 24VDC	
K097.1	90119-0309		1	SOCKET, PYF14A-E	
K097.2	90119-0310		1	CLAMP, TYPE PYC-A1	
K098	90119-0086		1	RELAY, AUXILIARY MY4IN4 24VDC	
K098.1	90119-0309		1	SOCKET, PYF14A-E	
K098.2	90119-0310		1	CLAMP, TYPE PYC-A1	
K099	90600-6446		1	RELAY, MKS3PI-5 24VDC	
K099.1	90129-0006		1	BASE, S3-B	
K100	90600-6446		1	RELAY, MKS3PI-5 24VDC	
K100.1	90129-0006		1	BASE, S3-B	
K101	90119-0109		1	RELAY OMRON 24VDC MY4H	
K101.1	90119-0309		1	SOCKET, PYF14A-E	
K101.2	90119-0310		1	CLAMP, TYPE PYC-A1	
K102	90600-6446		1	RELAY, MKS3PI-5 24VDC	
K102.1	90129-0006		1	BASE, S3-B	
K103	90600-6446		1	RELAY, MKS3PI-5 24VDC	
K103.1	90129-0006		1	BASE, S3-B	
K104	90600-6446		1	RELAY, MKS3PI-5 24VDC	
K104.1	90129-0006		1	BASE, S3-B	
K105	90600-6446		1	RELAY, MKS3PI-5 24VDC	
K105.1	90129-0006		1	BASE, S3-B	
K106	90600-6446		1	RELAY, MKS3PI-5 24VDC	
K106.1	90129-0006		1	BASE, S3-B	
K107	90600-6446		1	RELAY, MKS3PI-5 24VDC	
K107.1	90129-0006		1	BASE, S3-B	
K110	90600-6446		1	RELAY, MKS3PI-5 24VDC	
K110.1	90129-0006		1	BASE, S3-B	
K250	90119-0086		1	RELAY, AUXILIARY MY4IN4 24VDC	
K250.1	90119-0309		1	SOCKET, PYF14A-E	
K250.2	90119-0310		1	CLAMP, TYPE PYC-A1	
K252	90119-0086		1	RELAY, AUXILIARY MY4IN4 24VDC	
K252.1	90119-0309		1	SOCKET, PYF14A-E	
K252.2	90119-0310		1	CLAMP, TYPE PYC-A1	
K915	90600-6446		1	RELAY, MKS3PI-5 24VDC	
K915.1	90129-0006		1	BASE, S3-B	
W035	90220-0059	MM	2000	THERMOCOUPLE CABLE, P/PTW-20F-K 2X0,5MM2	
W036	90220-0059	MM	2000	THERMOCOUPLE CABLE, P/PTW-20F-K 2X0,5MM2	

Pos	Part No	UN	Qty	Description	Page No

Machine Type	Group Description	Used-In	Group Number	Page No

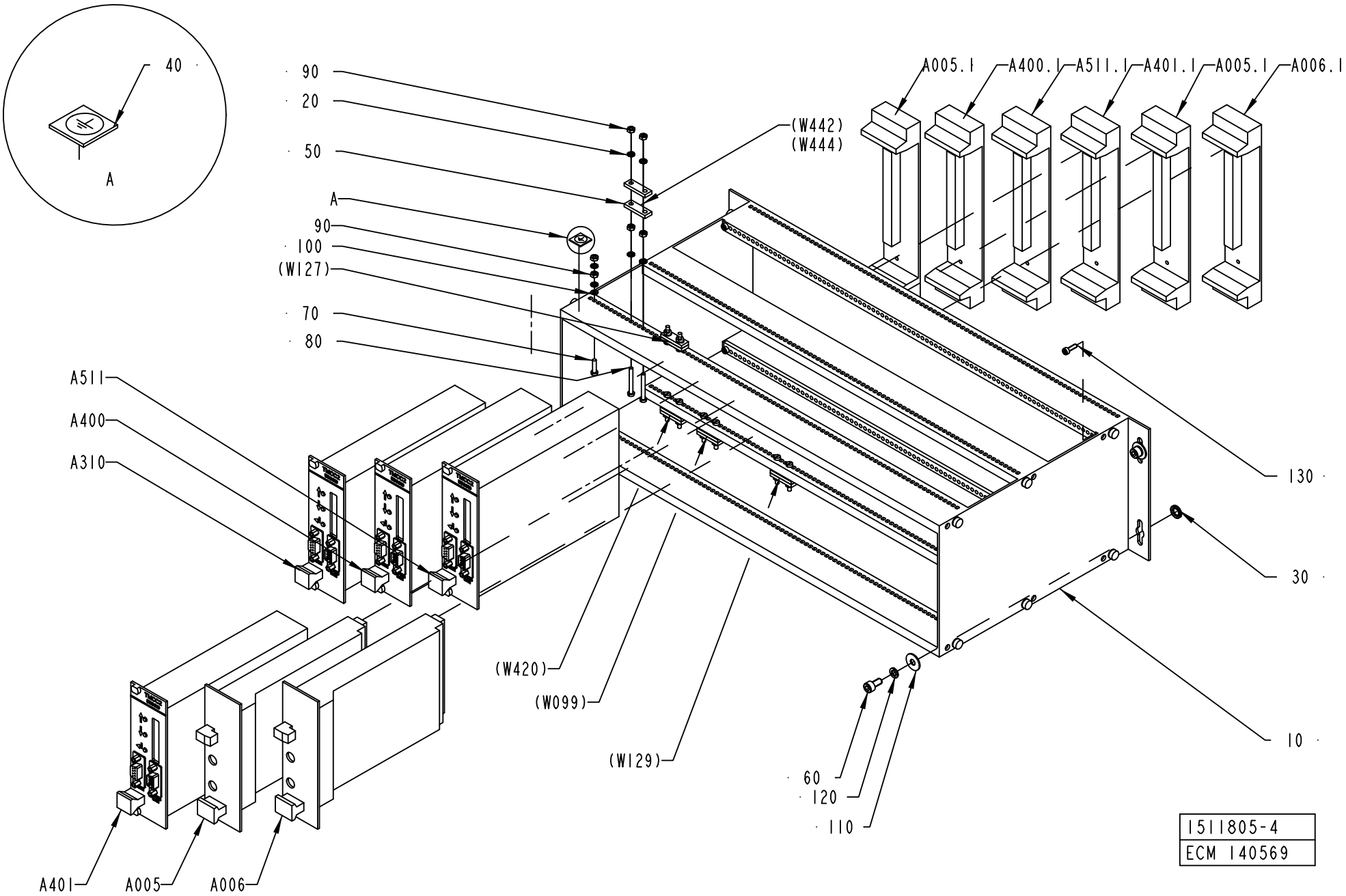
40
A
90
20
50
A
90
100
(W127)
70
80
A511
A400
A310
A401
A005
A006
(W442)
(W444)
A005.1
A400.1
A511.1
A401.1
A005.1
A006.1
130
30
10
(W420)
(W099)
(W129)
60
120
110
1511805-4
ECM 140569

ECM: 180217 - 20040910
Group number: 1511805-0100
Assembly Drawing: 1511805-4_1_AB

Pos	Part No	UN	Qty	Description	Page No
TBA NOPT ASU					
020	90062-0058		14	LOCK WASHER SERRAT.EXT.GEAR,3,2/6 H=0,4	
050	90220-0305		6	CLAMP FOR SCR.CABLE, 16MM,	
080	312125-0232		8	SLOTTED HEAD SCREW, ISO1207 M3X25 A4	
090	312605-0310		14	HEXAGON NUT, M6M M3 A280	
A511	559810-0101		1	TMCC2 CONTROLLER	
A511.1	67372-0101		1	BACKPLANE 8TE(32 POLE)	**9-33**
TBA NOPT NOASU					
020	90062-0058		14	LOCK WASHER SERRAT.EXT.GEAR,3,2/6 H=0,4	
050	90220-0305		6	CLAMP FOR SCR.CABLE, 16MM,	
080	312125-0232		8	SLOTTED HEAD SCREW, ISO1207 M3X25 A4	
090	312605-0310		14	HEXAGON NUT, M6M M3 A280	
TBA PT19 ASU					
020	90062-0058		22	LOCK WASHER SERRAT.EXT.GEAR,3,2/6 H=0,4	
050	90220-0305		10	CLAMP FOR SCR.CABLE, 16MM,	
080	312125-0232		10	SLOTTED HEAD SCREW, ISO1207 M3X25 A4	
090	312605-0310		22	HEXAGON NUT, M6M M3 A280	
A005	67347-0101		1	CARD BRAKEREG.MAGN.POWDER BRAKE	
A005:1	67372-0101		1	BACKPLANE 8TE(32 POLE)	**9-33**
A006	67347-0101		1	CARD BRAKEREG.MAGN.POWDER BRAKE	
A006.1	67372-0101		1	BACKPLANE 8TE(32 POLE)	**9-33**
A401	559810-0101		1	TMCC2 CONTROLLER	
A401.1	67372-0101		1	BACKPLANE 8TE(32 POLE)	**9-33**
A511	559810-0101		1	TMCC2 CONTROLLER	
A511.1	67372-0101		1	BACKPLANE 8TE(32 POLE)	**9-33**
TBA PT19 NOASU					
020	90062-0058		22	LOCK WASHER SERRAT.EXT.GEAR,3,2/6 H=0,4	
050	90220-0305		10	CLAMP FOR SCR.CABLE, 16MM,	
080	312125-0232		10	SLOTTED HEAD SCREW, ISO1207 M3X25 A4	
090	312605-0310		22	HEXAGON NUT, M6M M3 A280	
A005	67347-0101		1	CARD BRAKEREG.MAGN.POWDER BRAKE	
A005:1	67372-0101		1	BACKPLANE 8TE(32 POLE)	**9-33**
A006	67347-0101		1	CARD BRAKEREG.MAGN.POWDER BRAKE	
A006.1	67372-0101		1	BACKPLANE 8TE(32 POLE)	**9-33**
A401	559810-0101		1	TMCC2 CONTROLLER	
A401.1	67372-0101		1	BACKPLANE 8TE(32 POLE)	**9-33**
Common Parts					
010	67369-0102		1	RACK WALLMOUNTED 84TE	**9-35**
030	90062-0061		4	LOCK WASHER NORD-LOCK,6,5/10,8, T=2,2	
040	90194-0152		1	SIGN, EARTH	
060	312115-0325		4	SCREW ISO4762 M5X10 A4 80	
070	312125-0226		1	SLOTTED HEAD SCREW, ISO1207 M3X12 A4	
110	315105-0124		1	WASHER PLAIN, 3,2X6X0,5 A4 BRB	
110	315125-0146		4	WASHER HIGH, TBRSB 5.3X15X1 A4	
120	315402-0146		4	LOCK WASHER, DIN127B 5,1 A4, M5-3/16	
130	312115-0224		4	SCREW ISO4762 M3X10 A4 80	
A310	559810-0101		1	TMCC2 CONTROLLER	
A310.1	67372-0101		1	BACKPLANE 8TE(32 POLE)	**9-33**
A400	559810-0101		1	TMCC2 CONTROLLER	
A400.1	67372-0101		1	BACKPLANE 8TE(32 POLE)	**9-33**

Machine Type | Group Description | Used-In | Group Number | Page No

This page is intentionally left blank.

ECM: - -
Group number: 67372-0101
Assembly Drawing:

Pos	Part No	UN	Qty	Description	Page No
-					
0010	543336-0001		1	COMPONENTS WITHOUT TP-NO	
0020	543319-0000		1	PRINTED CIRCUIT BOARD	
0030	543337-0000		1	TERMINAL LABELS 1-4	

Pos	Part No	UN	Qty	Description	Page No

This page is intentionally left blank.

ECM: - -
Group number: 67369-0102
Assembly Drawing:

Pos	Part No	UN	Qty	Description	Page No	Pos	Part No	UN	Qty	Description	Page No
-											
030 2	540282-0002		1	COMPONENTS WITHOUT TP-NO							

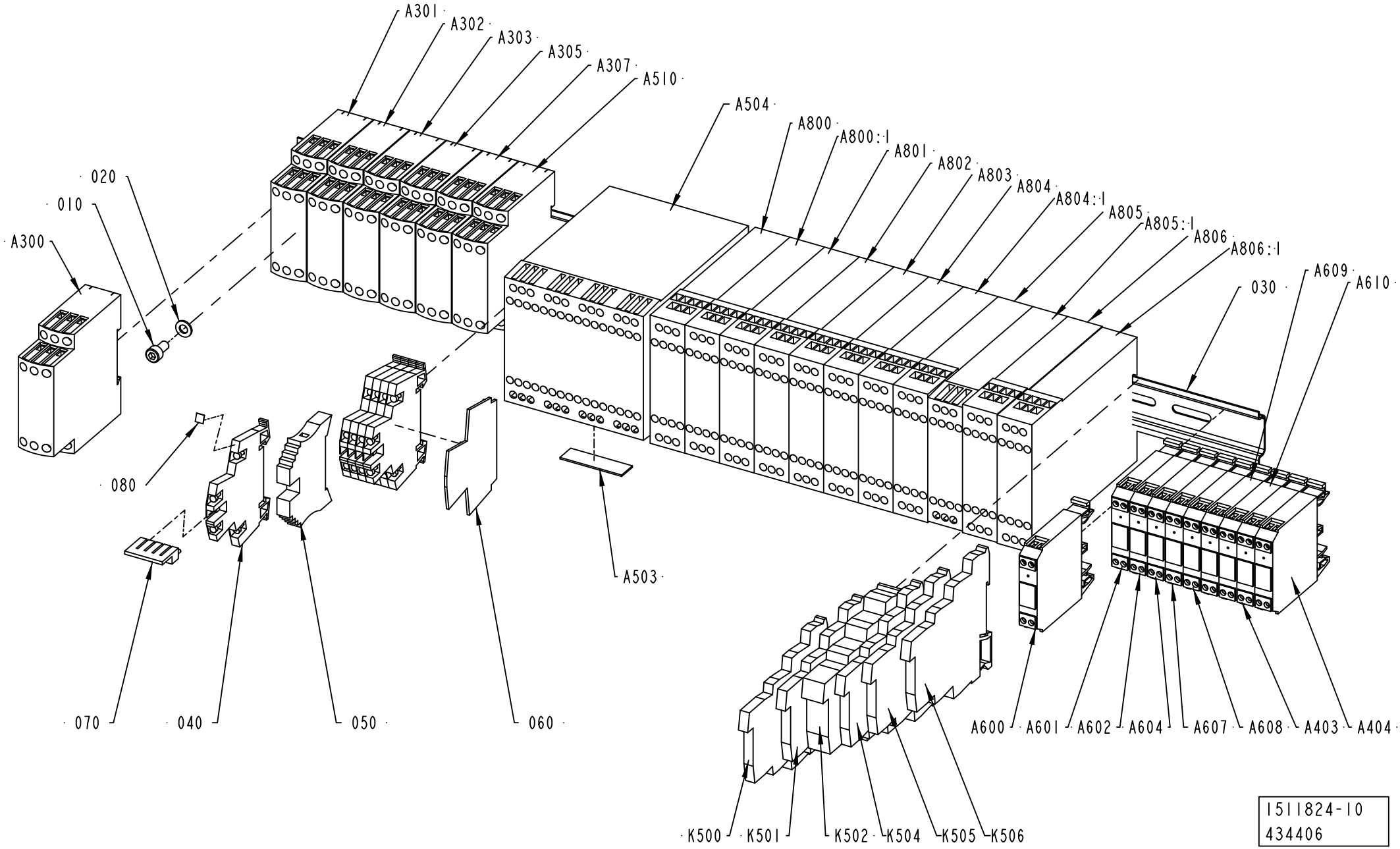
A301
A302
A303
A305
A307
A510
A504
A800
A800:1
A801
A802
A803
A804
A804:1
A805
A805:1
A806
A806:1
A609
A610
030
020
010
A300
080
070
040
050
060
A503
A600
A601
A602
A604
A607
A608
A403
A404
K500
K501
K502
K504
K505
K506
1511824-10
434406

ECM: 438633 - 20100222
Group number: 1511824-0300
Assembly Drawing: 1511824-10_1_AD

This list covers pages from 9-36 to 9-39

Pos	Part No	UN	Qty	Description	Page No
TBA NOPT ASU HI					
A510	90458-2580		1	LEVEL CONTROL RELAY, RM4-LA32M	
A801	90459-1131		1	SAFETY RELAY, E1T	
K505	90601-6650		1	RELAY, PLC-RSC-24DC/21	
TBA NOPT ASU NOHI					
A801	90459-1131		1	SAFETY RELAY, E1T	
K505	90601-6650		1	RELAY, PLC-RSC-24DC/21	
TBA NOPT NOASU HI					
A510	90458-2580		1	LEVEL CONTROL RELAY, RM4-LA32M	
TBA PT19 ASU HI					
A403	90119-0104		1	OPTO COUPLER AMMS 50070	
A404	90119-0104		1	OPTO COUPLER AMMS 50070	
A510	90458-2580		1	LEVEL CONTROL RELAY, RM4-LA32M	
A801	90459-1131		1	SAFETY RELAY, E1T	
A802	90459-1131		1	SAFETY RELAY, E1T	
A805	90459-1131		1	SAFETY RELAY, E1T	
A805.1	90459-2291		1	SAFETY RELAY, E1T	
K505	90601-6650		1	RELAY, PLC-RSC-24DC/21	
K506	90601-6650		1	RELAY, PLC-RSC-24DC/21	
TBA PT19 ASU NOHI					
A403	90119-0104		1	OPTO COUPLER AMMS 50070	
A404	90119-0104		1	OPTO COUPLER AMMS 50070	
A801	90459-1131		1	SAFETY RELAY, E1T	
A802	90459-1131		1	SAFETY RELAY, E1T	
A805	90459-1131		1	SAFETY RELAY, E1T	
A805.1	90459-2291		1	SAFETY RELAY, E1T	
K505	90601-6650		1	RELAY, PLC-RSC-24DC/21	
K506	90601-6650		1	RELAY, PLC-RSC-24DC/21	
TBA PT19 NOASU HI					
A403	90119-0104		1	OPTO COUPLER AMMS 50070	
A404	90119-0104		1	OPTO COUPLER AMMS 50070	
A510	90458-2580		1	LEVEL CONTROL RELAY, RM4-LA32M	
A802	90459-1131		1	SAFETY RELAY, E1T	
A805	90459-1131		1	SAFETY RELAY, E1T	
A805.1	90459-2291		1	SAFETY RELAY, E1T	
K506	90601-6650		1	RELAY, PLC-RSC-24DC/21	
TBA PT19 NOASU NOHI					
A403	90119-0104		1	OPTO COUPLER AMMS 50070	
A404	90119-0104		1	OPTO COUPLER AMMS 50070	
A802	90459-1131		1	SAFETY RELAY, E1T	
A805	90459-1131		1	SAFETY RELAY, E1T	
A805.1	90459-2291		1	SAFETY RELAY, E1T	
K506	90601-6650		1	RELAY, PLC-RSC-24DC/21	
TPA					
A403	90119-0104		1	OPTO COUPLER AMMS 50070	
A404	90119-0104		1	OPTO COUPLER AMMS 50070	
K506	90601-6650		1	RELAY, PLC-RSC-24DC/21	
Common Parts					
010	312115-0325		3	SCREW ISO4762 M5X10 A4 80	
020	315105-0146		3	WASHER PLAIN, 5,3X10X1 A4 BRB	
030	353042-0004	MM	623	RAIL, TS 35/7,5	
040	90459-5253		5	TERMINAL BLOCK WDK 2,5 V	
050	353031-0203		1	END BRACKET, WEW 35/2	
060	353032-0009		1	END PLATE, WAP WDK 2,5	
070	353034-0030		1	BRIDGE CONNECTOR WQV 2,5/10	
080	359011-0807		1	MARKING, DEK 5 FW 1-50	
A300	90458-2580		1	LEVEL CONTROL RELAY, RM4-LA32M	
A301	90458-2580		1	LEVEL CONTROL RELAY, RM4-LA32M	
A302	90458-2580		1	LEVEL CONTROL RELAY, RM4-LA32M	
A303	90458-2580		1	LEVEL CONTROL RELAY, RM4-LA32M	
A305	90458-2580		1	LEVEL CONTROL RELAY, RM4-LA32M	
A307	90458-2580		1	LEVEL CONTROL RELAY, RM4-LA32M	
A503	90459-4891		1	IDENTIFIER, ID-FIX RW	
A504	90601-7290		1	SAFETY PLC, PLUTO B46 20-070-17	
A600	90119-0104		1	OPTO COUPLER AMMS 50070	
A601	90119-0104		1	OPTO COUPLER AMMS 50070	
A602	90119-0104		1	OPTO COUPLER AMMS 50070	
A604	90119-0104		1	OPTO COUPLER AMMS 50070	
A605	90119-0104		1	OPTO COUPLER AMMS 50070	
A606	90119-0104		1	OPTO COUPLER AMMS 50070	
A607	90119-0104		1	OPTO COUPLER AMMS 50070	
A608	90119-0104		1	OPTO COUPLER AMMS 50070	
A609	90119-0104		1	OPTO COUPLER AMMS 50070	
A610	90119-0104		1	OPTO COUPLER AMMS 50070	
A800	90459-1131		1	SAFETY RELAY, E1T	
A800.1	90459-1131		1	SAFETY RELAY, E1T	
A803	90459-1131		1	SAFETY RELAY, E1T	
A804	90459-1131		1	SAFETY RELAY, E1T	
A804.1	90459-1131		1	SAFETY RELAY, E1T	
A806	90459-1131		1	SAFETY RELAY, E1T	
A806.1	90459-1131		1	SAFETY RELAY, E1T	
K500	90601-6650		1	RELAY, PLC-RSC-24DC/21	
K501	90601-6650		1	RELAY, PLC-RSC-24DC/21	
K502	90601-6651		1	RELAY, PLC-RSC-24DC/21-21	

Machine Type | Group Description | Used-In | Group Number | Page No

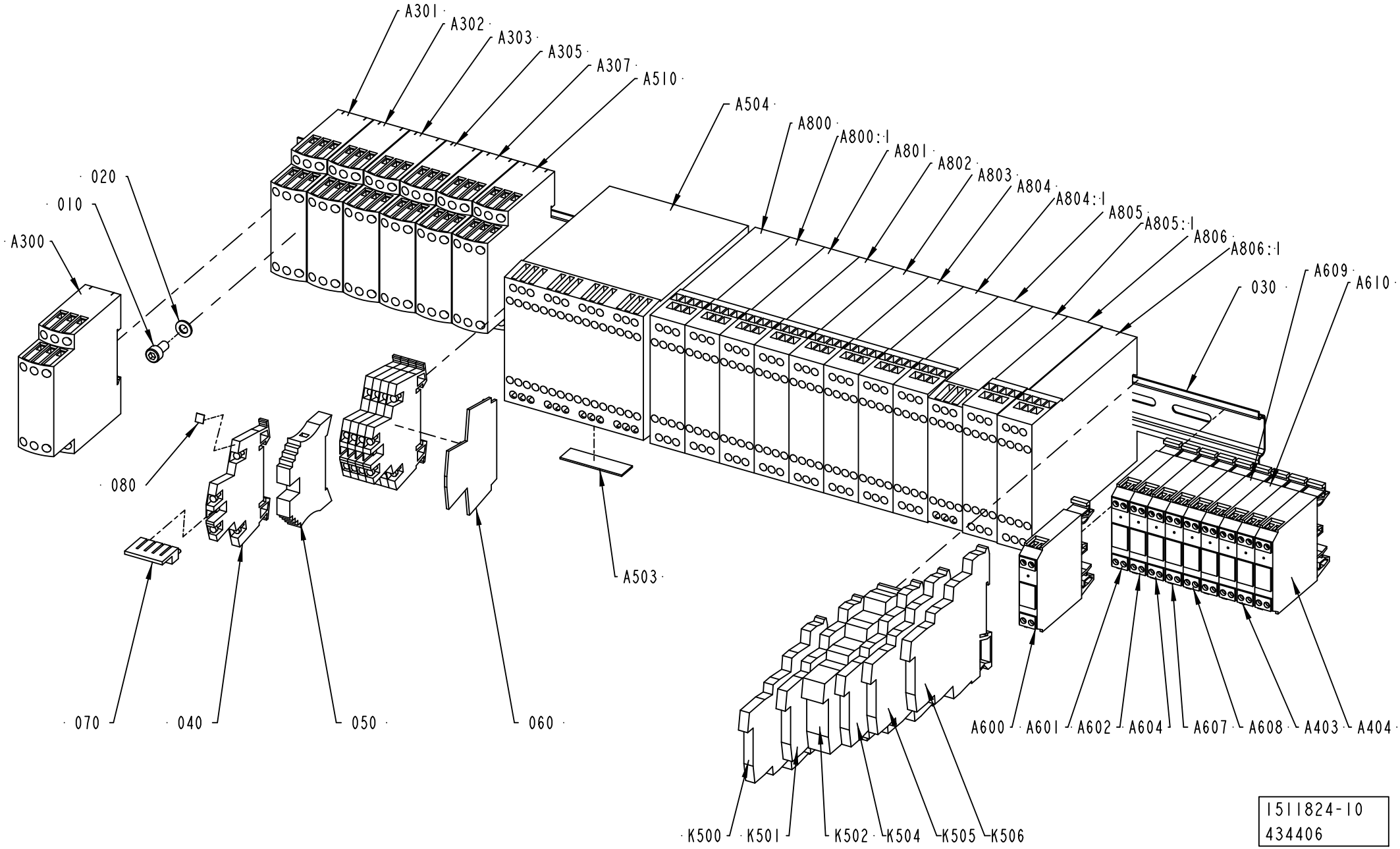
A301
A302
A303
A305
A307
A510
A504
A800
A800:1
A801
A802
A803
A804
A804:1
A805
A805:1
A806
A806:1
A609
A610
030
020
010
A300
080
070
040
050
060
A503
A600
A601
A602
A604
A607
A608
A403
A404
K500
K501
K502
K504
K505
K506
1511824-10
434406

Pos	Part No	UN	Qty	Description	Page No
Common Parts (Cont'd)					
K504	90601-6650		1	RELAY, PLC-RSC-24DC/21	

Pos	Part No	UN	Qty	Description	Page No

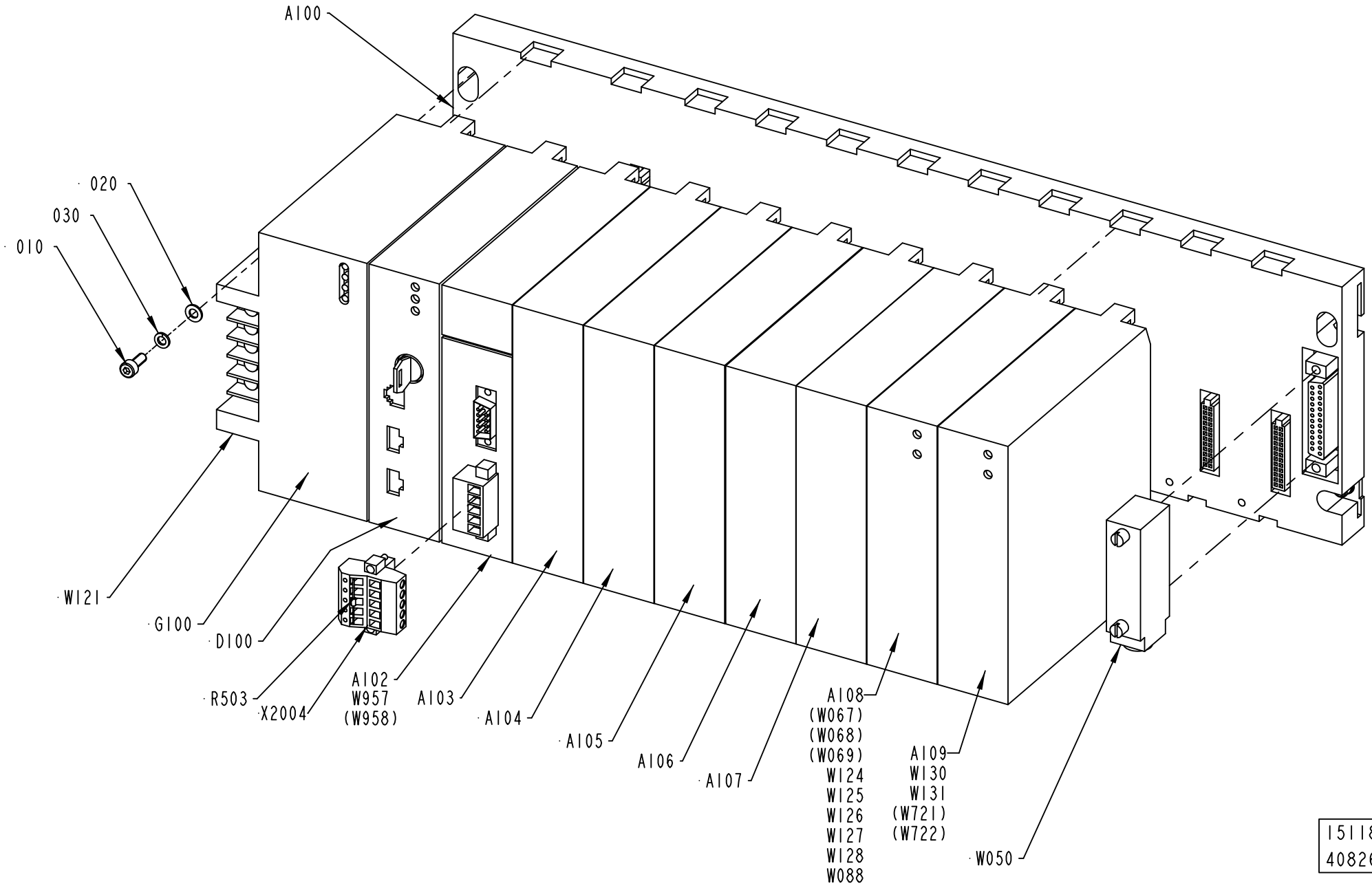

1511825-4
408265

ECM: 451658 - 20100524
Group number: 1511825-0300
Assembly Drawing: 1511825-4_1_AB

Pos	Part No	UN	Qty	Description	Page No
TBA NOPT ASU HI, TBA NOPT NOASU HI					
A109	90031-0063		1	PLC,ANALOG COMBO MODULE,IN-4PT/OUT-2PT	
W131	1512322-0000		1	COPPER BRAID	
TBA PT19 ASU HI, TBA PT19 ASU NOHI, TBA PT19 NOASU HI, TBA PT19 NOASU NOHI					
A109	90031-0063		1	PLC,ANALOG COMBO MODULE,IN-4PT/OUT-2PT	
W128	90220-0183	M	3.3	SCR. CABLE 2X0,34MM2	
W130	90220-0183	M	3	SCR. CABLE 2X0,34MM2	
W131	1512322-0000		1	COPPER BRAID	
Common Parts					
010	312115-0289		4	SCREW ISO4762 M4X10 A4 80	
020	315105-0136		4	WASHER PLAIN, 4,3X9X0,8 A4 BRB	
030	315402-0136		4	LOCK WASHER, DIN127B 4,1 A4, M4-5/32	
A100	90031-0051		1	BASEPLATE, 10-SLOT	
A102	90459-4233		1	DEVICENET MASTER MODULE	
A103	90031-0057		1	PLC, DIGITAL INPUT MODULE	
A104	90031-0057		1	PLC, DIGITAL INPUT MODULE	
A105	90031-0057		1	PLC, DIGITAL INPUT MODULE	
A106	90031-0058		1	PLC, DIGITAL INPUT MODULE	
A107	90031-0059		1	PLC, DIGITAL OUTPUT MODULE	
A108	90031-0062		1	PLC, ANALOG OUTPUT MODULE 8PT/CURR/VOLT	
D100	90600-1223		1	CPU374, ETHERNET COMMUNICATION	
G100	90031-0068		1	PLC, POWER SUPPLY	
	352551-0134		*1*	*FINE-WIRE FUSE 2 A SLOW,5X20MM*	
	90031-0301		*1*	*SPARE BATTERY CPU PCM 2PCS*	
R503	90459-6797		1	RESISTANCE FIXED, 120 OHM, 0,40 W	
W050	90031-0308		1	PLC,CABLES, I/O EXPANSION CABLE	
W088	1512322-0000		1	COPPER BRAID	
W121	1512322-0000		1	COPPER BRAID	
W124	90220-0183	M	3.5	SCR. CABLE 2X0,34MM2	
W125	90220-0183	M	3.5	SCR. CABLE 2X0,34MM2	
W126	90220-0183	M	3.5	SCR. CABLE 2X0,34MM2	
W127	90220-0183	M	2	SCR. CABLE 2X0,34MM2	
W957	90459-2530	M	3	DEVICENET CABLE THIN	
X2004	90459-5574		1	CONNECTOR, 1787-PLUG10R	

Pos	Part No	UN	Qty	Description	Page No

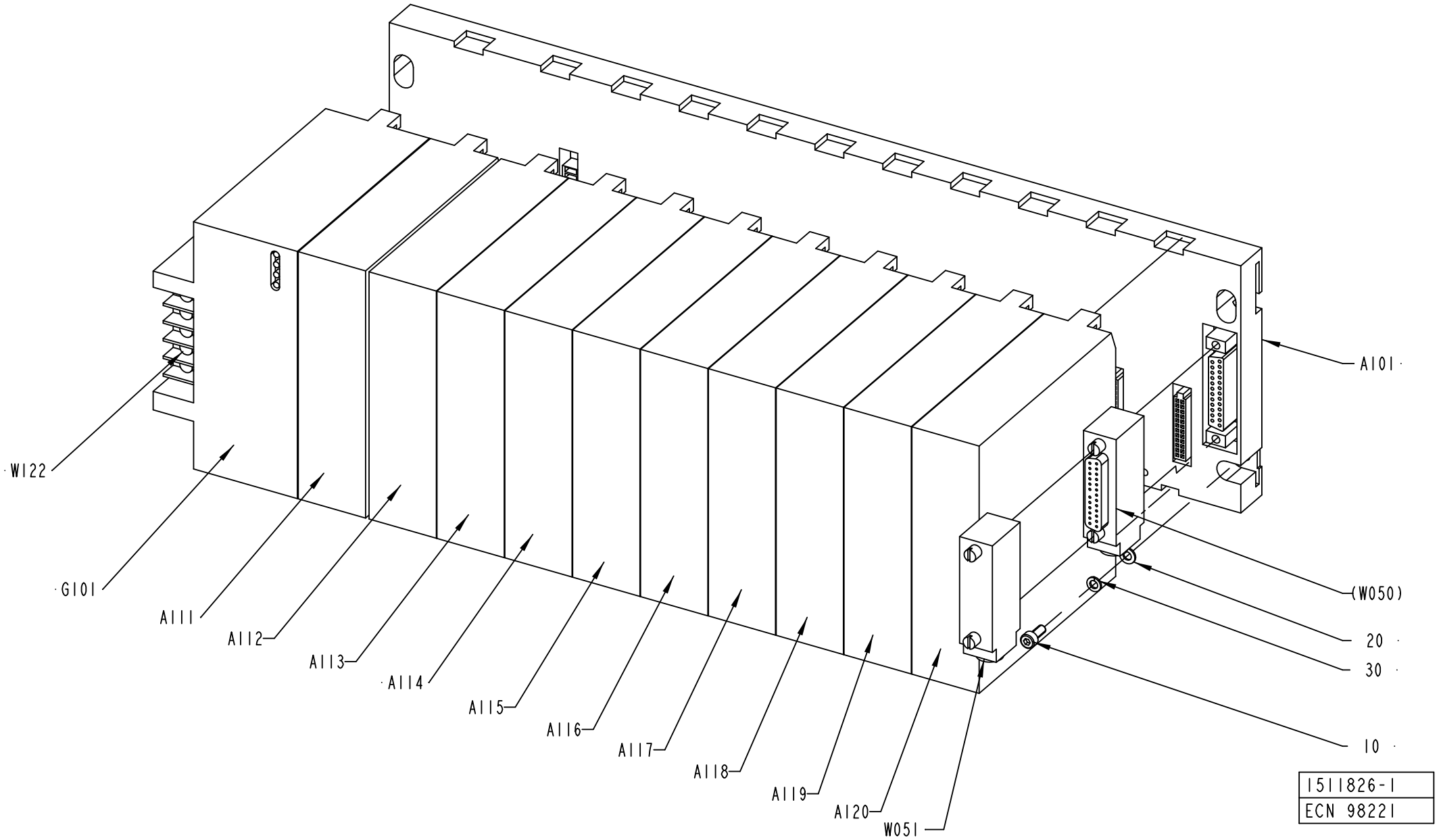
A101
W122
G101
A111
A112
A113
A114
A115
A116
A117
A118
A119
A120
W051
(W050)
20
30
10
1511826-1
ECN 98221

ECM: 451659 - 20100524
Group number: 1511826-0100
Assembly Drawing: 1511826-1_1_AB

Pos	Part No	UN	Qty	Description	Page No
-					
010	312115-0289		4	SCREW ISO4762 M4X10 A4 80	
020	315105-0136		4	WASHER PLAIN, 4,3X9X0,8 A4 BRB	
030	315402-0136		4	LOCK WASHER, DIN127B 4,1 A4, M4-5/32	
A101	90031-0053		1	BASEPLATE 10 SLOT EXP.	
	90031-0302		*1*	*I/O BUS TERMINATION PLUG*	
A111	90031-0057		1	PLC, DIGITAL INPUT MODULE	
A112	90031-0057		1	PLC, DIGITAL INPUT MODULE	
A113	90031-0057		1	PLC, DIGITAL INPUT MODULE	
A114	90031-0059		1	PLC, DIGITAL OUTPUT MODULE	
A115	90031-0059		1	PLC, DIGITAL OUTPUT MODULE	
A116	90031-0059		1	PLC, DIGITAL OUTPUT MODULE	
A117	90031-0059		1	PLC, DIGITAL OUTPUT MODULE	
A118	90031-0059		1	PLC, DIGITAL OUTPUT MODULE	
A119	90031-0059		1	PLC, DIGITAL OUTPUT MODULE	
A120	90031-0059		1	PLC, DIGITAL OUTPUT MODULE	
G101	90031-0068		1	PLC, POWER SUPPLY	
	352551-0134		*1*	*FINE-WIRE FUSE 2 A SLOW,5X20MM*	
	90031-0301		*1*	*SPARE BATTERY CPU PCM 2PCS*	
W050	90031-0308		1	PLC,CABLES, I/O EXPANSION CABLE	
W122	1512322-0000		1	COPPER BRAID	

Pos	Part No	UN	Qty	Description	Page No

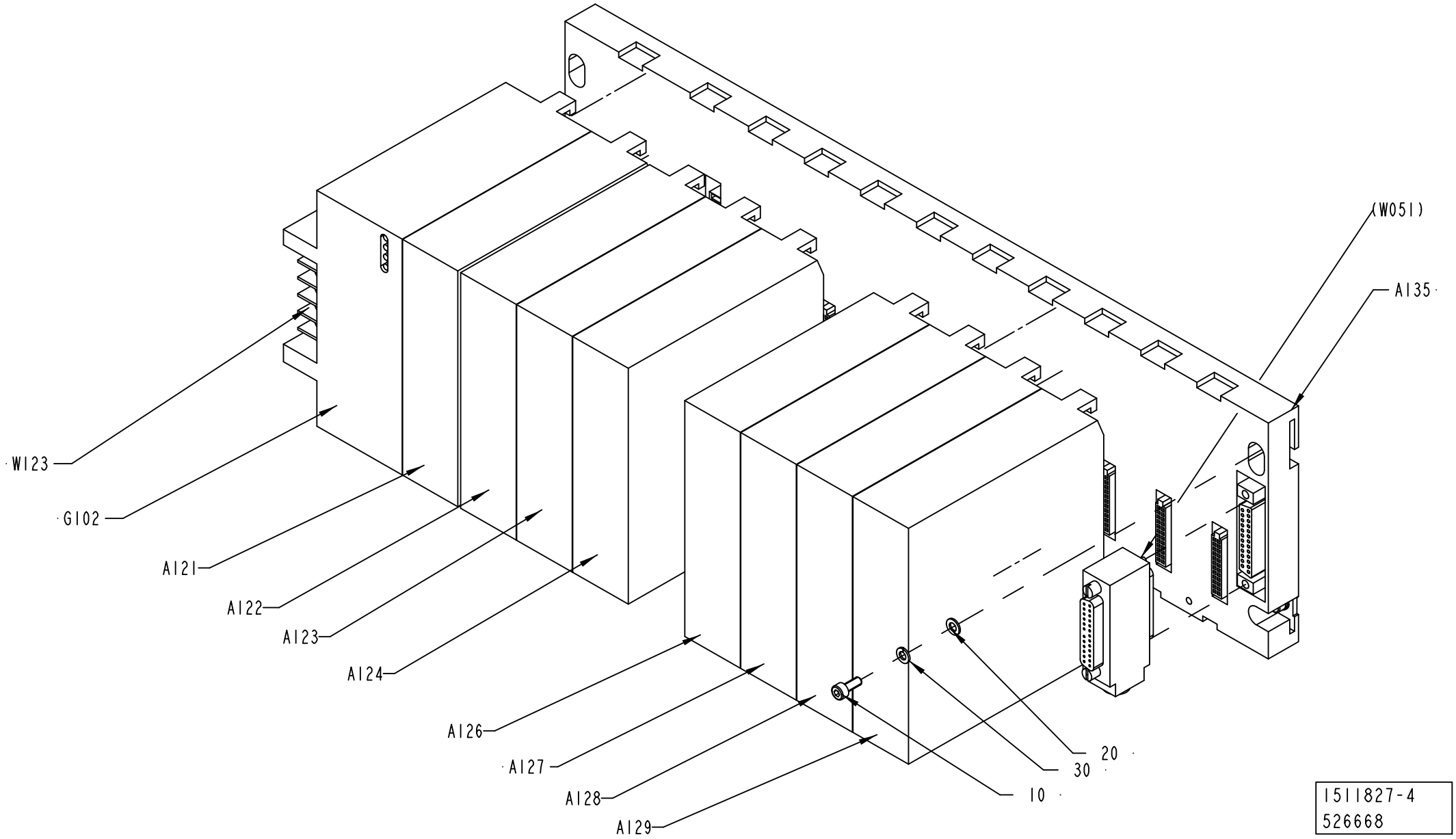
(W051)
A135
W123
G102
A121
A122
A123
A124
A126
A127
A128
A129
20
30
10
1511827-4
526668

ECM: 541780 - 20120217
Group number: 1511827-0100
Assembly Drawing: 1511827-4_1_AB

Pos	Part No	UN	Qty	Description	Page No
TBA NOPT HI					
A122	90031-0059		1	PLC, DIGITAL OUTPUT MODULE	
TBA PT19 HI					
A122	90031-0059		1	PLC, DIGITAL OUTPUT MODULE	
A125	90031-0057		1	PLC, DIGITAL INPUT MODULE	
A128	90031-0057		1	PLC, DIGITAL INPUT MODULE	
TBA PT19 NOHI					
A125	90031-0057		1	PLC, DIGITAL INPUT MODULE	
A128	90031-0057		1	PLC, DIGITAL INPUT MODULE	
Common Parts					
0010	312115-0289		4	SCREW ISO4762 M4X10 A4 80	
0020	315105-0136		4	WASHER PLAIN, 4,3X9X0,8 A4 BRB	
030	315402-0136		4	LOCK WASHER, DIN127B 4,1 A4, M4-5/32	
A121	90031-0059		1	PLC, DIGITAL OUTPUT MODULE	
A123	90031-0059		1	PLC, DIGITAL OUTPUT MODULE	
A124	90031-0059		1	PLC, DIGITAL OUTPUT MODULE	
A126	90031-0057		1	PLC, DIGITAL INPUT MODULE	
A127	90031-0057		1	PLC, DIGITAL INPUT MODULE	
A135	90031-0053		1	BASEPLATE 10 SLOT EXP.	
	90031-0302		*1*	*I/O BUS TERMINATION PLUG*	
G102	90031-0068		1	PLC, POWER SUPPLY	
	352551-0134		*1*	*FINE-WIRE FUSE 2 A SLOW,5X20MM*	
	90031-0301		*1*	*SPARE BATTERY CPU PCM 2PCS*	
W123	1512322-0000		1	COPPER BRAID	

Pos	Part No	UN	Qty	Description	Page No

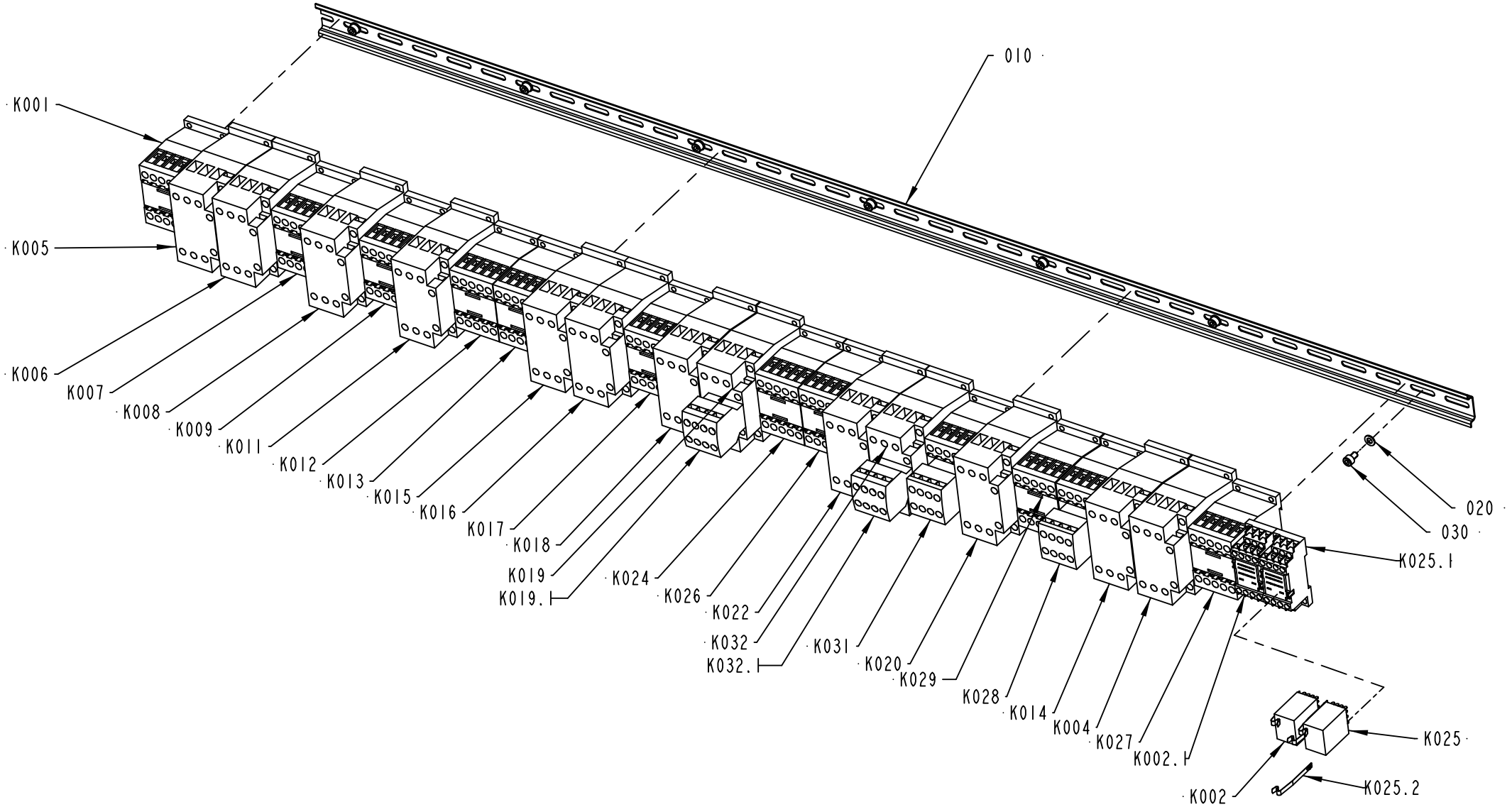

1511834-9
422317

ECM: 431002 - 20091228
Group number: 1511834-0300
Assembly Drawing: 1511834-9_1_AC

Pos	Part No	UN	Qty	Description	Page No
TBA NOPT ASU					
K022	90459-5441		1	CONTACTOR 7,5KW 24VDC, DILM17-01	
TBA PT19 ASU					
K020	90459-5441		1	CONTACTOR 7,5KW 24VDC, DILM17-01	
K022	90459-5441		1	CONTACTOR 7,5KW 24VDC, DILM17-01	
K031	90600-1643		1	CONTACTOR, DILK12-11	
K032	90459-5441		1	CONTACTOR 7,5KW 24VDC, DILM17-01	
K032.1	90459-6852		1	AUXILIARY CONTACT, DILA-XHI22	
TBA PT19 NOASU					
K020	90459-5441		1	CONTACTOR 7,5KW 24VDC, DILM17-01	
K031	90600-1643		1	CONTACTOR, DILK12-11	
K032	90459-5441		1	CONTACTOR 7,5KW 24VDC, DILM17-01	
K032.1	90459-6852		1	AUXILIARY CONTACT, DILA-XHI22	
Common Parts					
010	353042-0004	MM	1205	RAIL, TS 35/7,5	
020	315105-0146		7	WASHER PLAIN, 5,3X10X1 A4 BRB	
030	312115-0323		1	SCREW ISO4762 M5X8 A4 80	
K001	90459-5440		1	CONTACTOR 4KW 24VDC, DILM9-01	
K002	90119-0086		1	RELAY, AUXILIARY MY4IN4 24VDC	
K002.1	90119-0309		1	SOCKET, PYF14A-E	
K002.2	90119-0310		1	CLAMP, TYPE PYC-A1	
K004	90459-5441		1	CONTACTOR 7,5KW 24VDC, DILM17-01	
K005	90459-5441		1	CONTACTOR 7,5KW 24VDC, DILM17-01	
K006	90459-5441		1	CONTACTOR 7,5KW 24VDC, DILM17-01	
K007	90459-5440		1	CONTACTOR 4KW 24VDC, DILM9-01	
K008	90459-5441		1	CONTACTOR 7,5KW 24VDC, DILM17-01	
K009	90459-5440		1	CONTACTOR 4KW 24VDC, DILM9-01	
K011	90459-5441		1	CONTACTOR 7,5KW 24VDC, DILM17-01	
K012	90459-5440		1	CONTACTOR 4KW 24VDC, DILM9-01	
K013	90459-5440		1	CONTACTOR 4KW 24VDC, DILM9-01	
K014	90459-5441		1	CONTACTOR 7,5KW 24VDC, DILM17-01	
K015	90459-5441		1	CONTACTOR 7,5KW 24VDC, DILM17-01	
K016	90459-5441		1	CONTACTOR 7,5KW 24VDC, DILM17-01	
K017	90459-5440		1	CONTACTOR 4KW 24VDC, DILM9-01	
K018	90459-5441		1	CONTACTOR 7,5KW 24VDC, DILM17-01	
K019	90459-5441		1	CONTACTOR 7,5KW 24VDC, DILM17-01	
K019.1	90459-6852		1	AUXILIARY CONTACT, DILA-XHI22	
K024	90459-5440		1	CONTACTOR 4KW 24VDC, DILM9-01	
K025	90119-0086		1	RELAY, AUXILIARY MY4IN4 24VDC	
K025.1	90119-0309		1	SOCKET, PYF14A-E	
K025.2	90119-0310		1	CLAMP, TYPE PYC-A1	
K026	90459-5440		1	CONTACTOR 4KW 24VDC, DILM9-01	
K027	90459-5440		1	CONTACTOR 4KW 24VDC, DILM9-01	
K028	90600-1643		1	CONTACTOR, DILK12-11	
K029	90459-5440		1	CONTACTOR 4KW 24VDC, DILM9-01	

Machine Type | Group Description | Used-In | Group Number | Page No

SOLID STATE RELAY RAIL 2

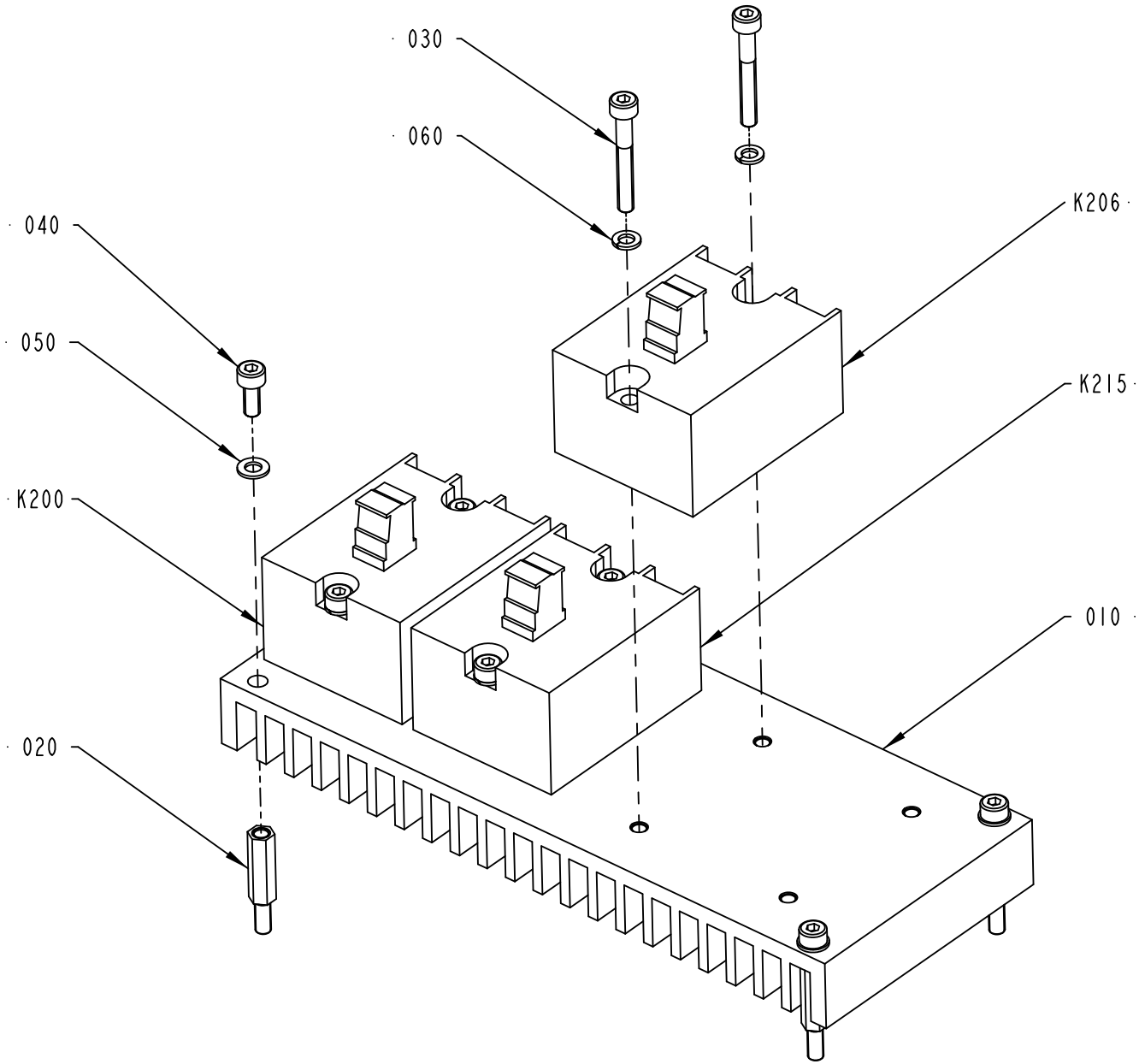

1517651-3
422317

ECM: 431011 - 20091228
Group number: 1517651-0200
Assembly Drawing: 1517651-3_1_AB

This list covers pages from 9-48 to 9-51

Pos	Part No	UN	Qty	Description	Page No
TBA NOPT ASU (See drawing on page: 9-50)					
030	312115-0299		8	SCREW ISO4762 M4X30 A4 80	
060	315402-0136		12	LOCK WASHER, DIN127B 4,1 A4, M4-5/32	
K205	90600-0946		1	SOLID STATE RELAY, 3RF2050-1AA04	
TBA NOPT NOASU (See drawing on page: 9-48)					
030	312115-0299		6	SCREW ISO4762 M4X30 A4 80	
060	315402-0136		10	LOCK WASHER, DIN127B 4,1 A4, M4-5/32	
Common Parts					
010	1498819-0000		1	COOLING PLATE	
020	1517675-0000		4	SPACER	
040	312115-0289		4	SCREW ISO4762 M4X10 A4 80	
050	315105-0136		4	WASHER PLAIN, 4,3X9X0,8 A4 BRB	
K200	90600-0946		1	SOLID STATE RELAY, 3RF2050-1AA04	
K206	90600-0946		1	SOLID STATE RELAY, 3RF2050-1AA04	
K215	90600-0946		1	SOLID STATE RELAY, 3RF2050-1AA04	

Pos	Part No	UN	Qty	Description	Page No

SOLID STATE RELAY RAIL 2

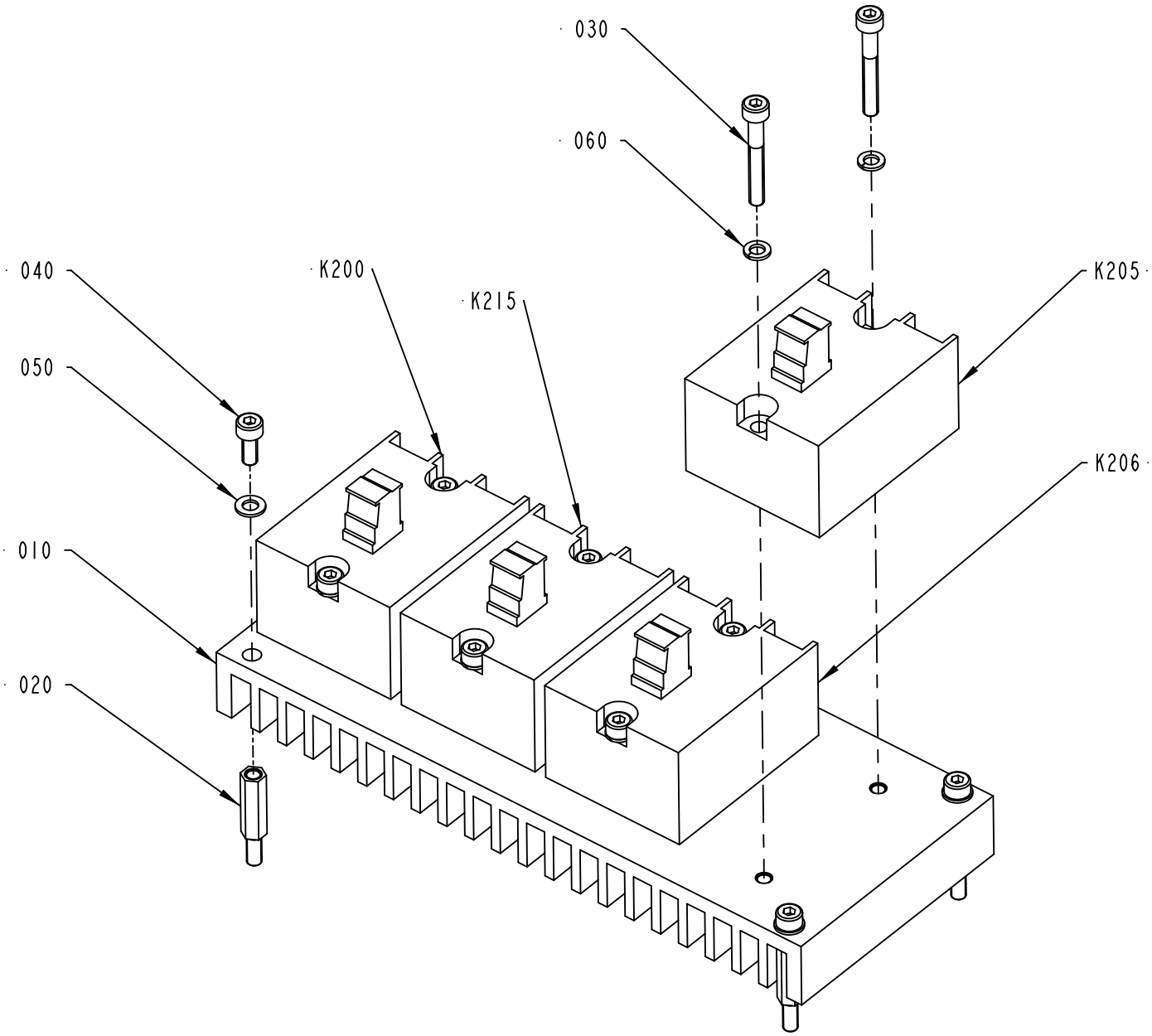

1517651-4
422317

ECM: 431011 - 20091228
Group number: 1517651-0200
Assembly Drawing: 1517651-4_1_AB

This list covers pages from 9-48 to 9-51

Pos	Part No	UN	Qty	Description	Page No
TBA NOPT ASU (See drawing on page: 9-50)					
030	312115-0299		8	SCREW ISO4762 M4X30 A4 80	
060	315402-0136		12	LOCK WASHER, DIN127B 4,1 A4, M4-5/32	
K205	90600-0946		1	SOLID STATE RELAY, 3RF2050-1AA04	
TBA NOPT NOASU (See drawing on page: 9-48)					
030	312115-0299		6	SCREW ISO4762 M4X30 A4 80	
060	315402-0136		10	LOCK WASHER, DIN127B 4,1 A4, M4-5/32	
Common Parts					
010	1498819-0000		1	COOLING PLATE	
020	1517675-0000		4	SPACER	
040	312115-0289		4	SCREW ISO4762 M4X10 A4 80	
050	315105-0136		4	WASHER PLAIN, 4,3X9X0,8 A4 BRB	
K200	90600-0946		1	SOLID STATE RELAY, 3RF2050-1AA04	
K206	90600-0946		1	SOLID STATE RELAY, 3RF2050-1AA04	
K215	90600-0946		1	SOLID STATE RELAY, 3RF2050-1AA04	

Pos	Part No	UN	Qty	Description	Page No

SOLID STATE RELAY RAIL 3

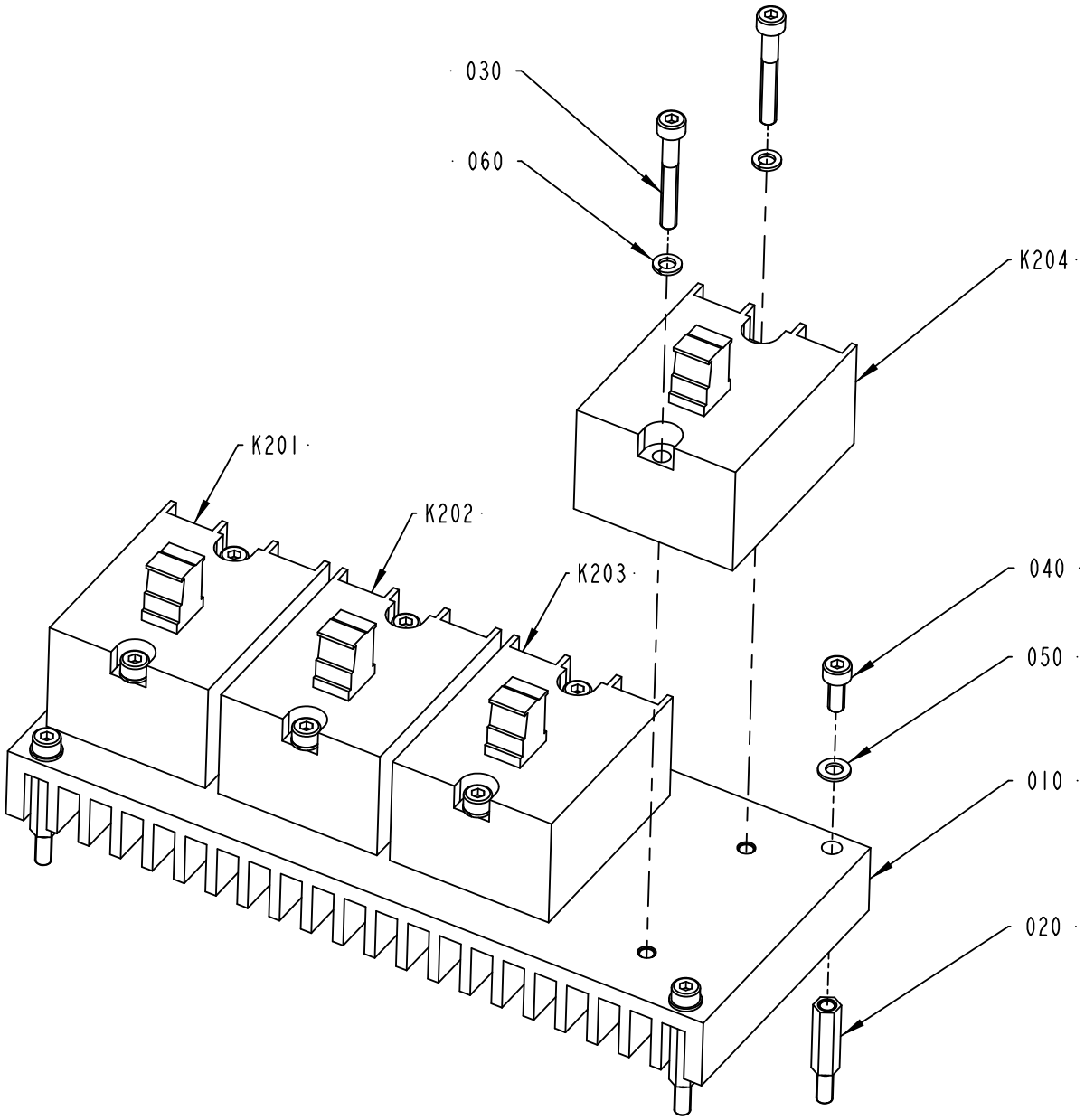

1517652-2
422317

ECM: 431014 - 20091228
Group number: 1517652-0200
Assembly Drawing: 1517652-2_1_AB

Pos	Part No	UN	Qty	Description	Page No
-					
010	1498819-0000		2	COOLING PLATE	
020	1517675-0000		4	SPACER	
030	312115-0299		8	SCREW ISO4762 M4X30 A4 80	
040	312115-0289		4	SCREW ISO4762 M4X10 A4 80	
050	315105-0136		12	WASHER PLAIN, 4,3X9X0,8 A4 BRB	
060	315402-0136		12	LOCK WASHER, DIN127B 4,1 A4, M4-5/32	
K201	90600-0946		1	SOLID STATE RELAY, 3RF2050-1AA04	
K202	90600-0946		1	SOLID STATE RELAY, 3RF2050-1AA04	
K203	90600-0946		1	SOLID STATE RELAY, 3RF2050-1AA04	
K204	90600-0946		1	SOLID STATE RELAY, 3RF2050-1AA04	

Pos	Part No	UN	Qty	Description	Page No

SOLID STATE RELAY RAIL 4

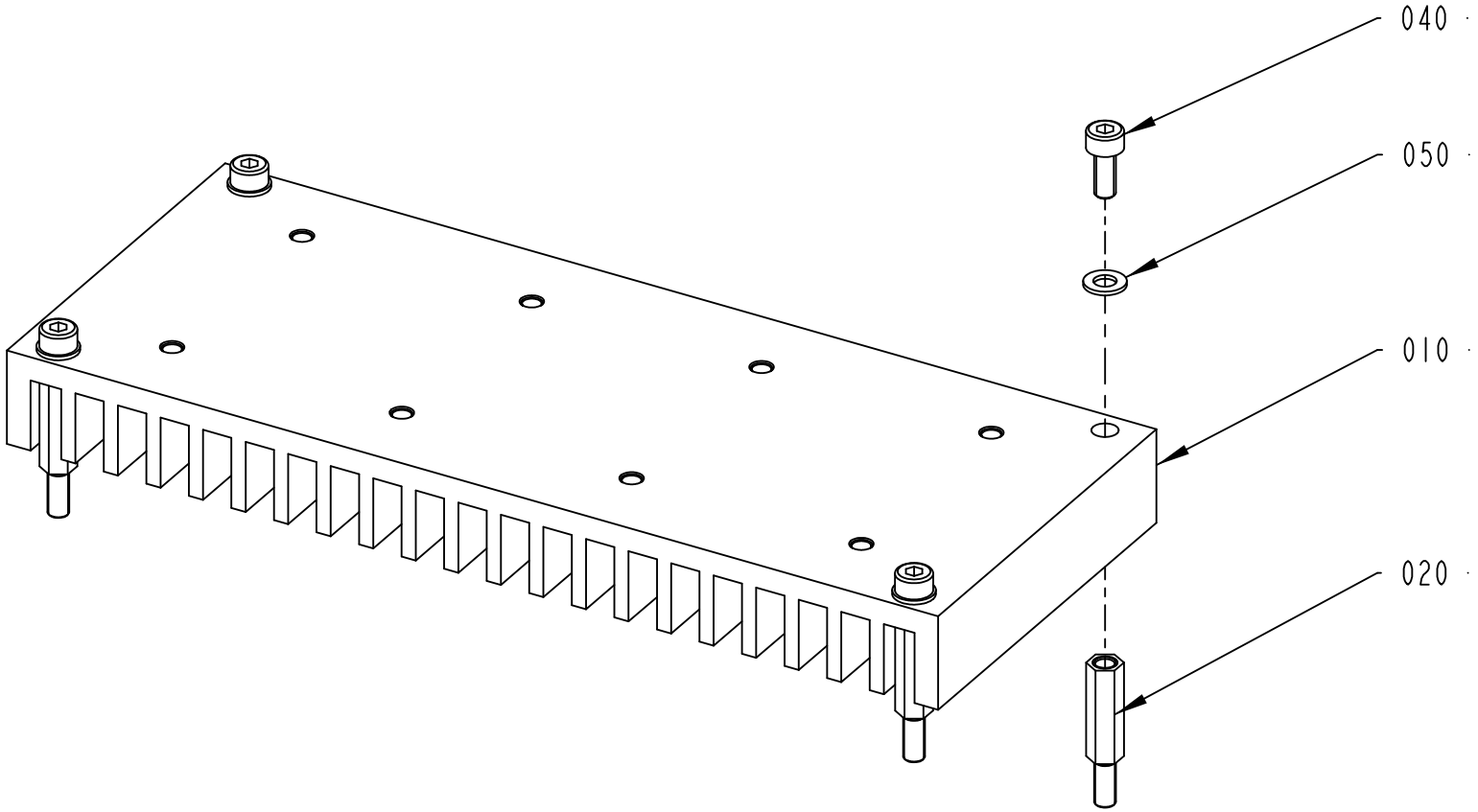

1523445-3
ECM 422317

Pos	Part No	UN	Qty	Description	Page No
TBA NOPT (See drawing on page: 9-54)					
060	315402-0136		4	LOCK WASHER, DIN127B 4,1 A4, M4-5/32	
TBA PT19 (See drawing on page: 9-56)					
060	315402-0136		10	LOCK WASHER, DIN127B 4,1 A4, M4-5/32	
070	312115-0299		6	SCREW ISO4762 M4X30 A4 80	
K207	90600-0946		1	SOLID STATE RELAY, 3RF2050-1AA04	
K208	90600-0946		1	SOLID STATE RELAY, 3RF2050-1AA04	
K209	90600-0946		1	SOLID STATE RELAY, 3RF2050-1AA04	
TPA (See drawing on page: 9-58)					
060	315402-0136		12	LOCK WASHER, DIN127B 4,1 A4, M4-5/32	
070	312115-0299		8	SCREW ISO4762 M4X30 A4 80	
K207	90600-0946		1	SOLID STATE RELAY, 3RF2050-1AA04	
K208	90600-0946		1	SOLID STATE RELAY, 3RF2050-1AA04	
K209	90600-0946		1	SOLID STATE RELAY, 3RF2050-1AA04	
K214	90600-0946		1	SOLID STATE RELAY, 3RF2050-1AA04	
Common Parts					
010	1498819-0000		1	COOLING PLATE	
020	1517675-0000		4	SPACER	
040	312115-0289		4	SCREW ISO4762 M4X10 A4 80	
050	315105-0136		4	WASHER PLAIN, 4,3X9X0,8 A4 BRB	

Pos	Part No	UN	Qty	Description	Page No

SOLID STATE RELAY RAIL 4

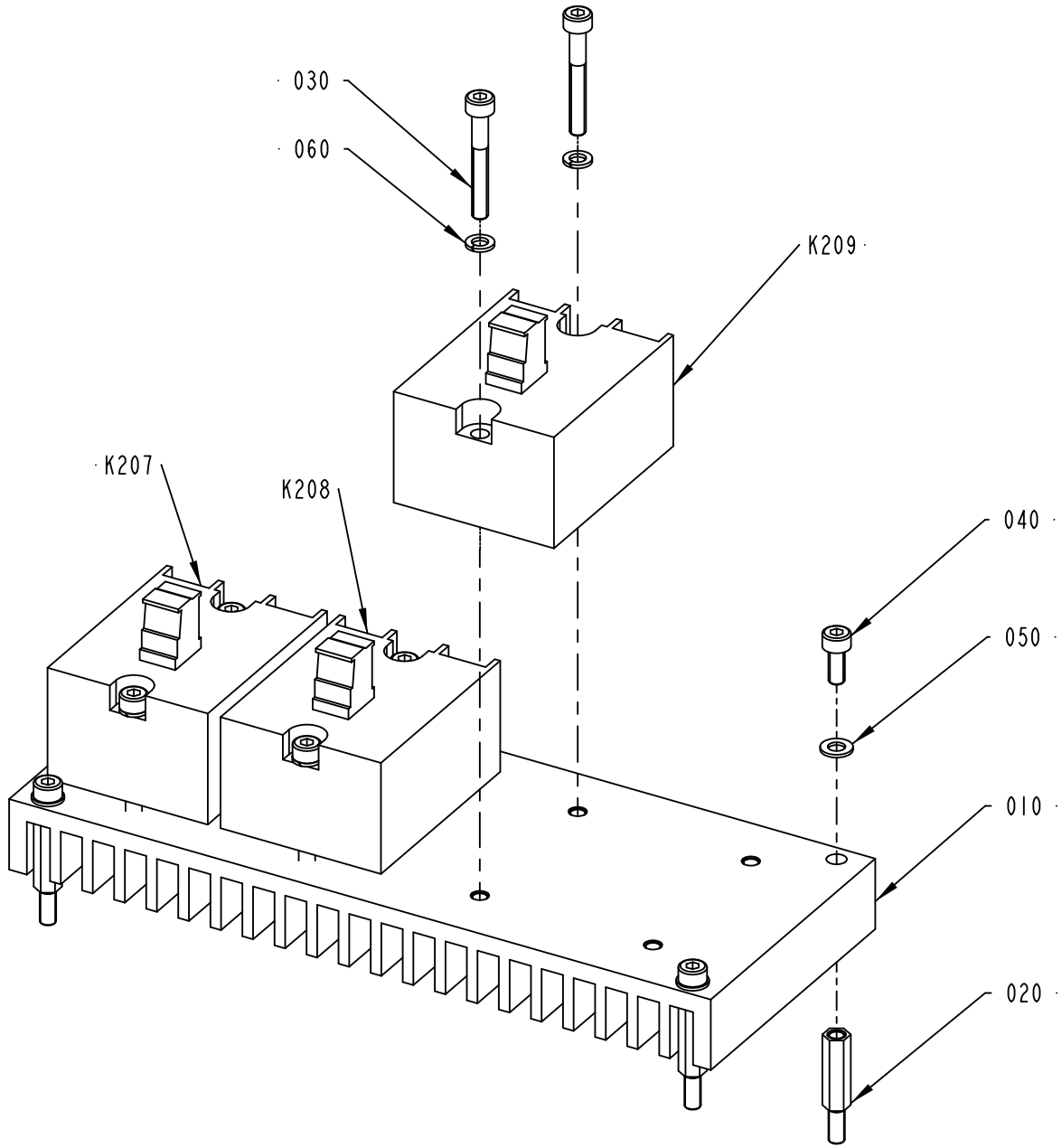

1523445-4
422317

Pos	Part No	UN	Qty	Description	Page No
TBA NOPT (See drawing on page: 9-54)					
060	315402-0136		4	LOCK WASHER, DIN127B 4,1 A4, M4-5/32	
TBA PT19 (See drawing on page: 9-56)					
060	315402-0136		10	LOCK WASHER, DIN127B 4,1 A4, M4-5/32	
070	312115-0299		6	SCREW ISO4762 M4X30 A4 80	
K207	90600-0946		1	SOLID STATE RELAY, 3RF2050-1AA04	
K208	90600-0946		1	SOLID STATE RELAY, 3RF2050-1AA04	
K209	90600-0946		1	SOLID STATE RELAY, 3RF2050-1AA04	
TPA (See drawing on page: 9-58)					
060	315402-0136		12	LOCK WASHER, DIN127B 4,1 A4, M4-5/32	
070	312115-0299		8	SCREW ISO4762 M4X30 A4 80	
K207	90600-0946		1	SOLID STATE RELAY, 3RF2050-1AA04	
K208	90600-0946		1	SOLID STATE RELAY, 3RF2050-1AA04	
K209	90600-0946		1	SOLID STATE RELAY, 3RF2050-1AA04	
K214	90600-0946		1	SOLID STATE RELAY, 3RF2050-1AA04	
Common Parts					
010	1498819-0000		1	COOLING PLATE	
020	1517675-0000		4	SPACER	
040	312115-0289		4	SCREW ISO4762 M4X10 A4 80	
050	315105-0136		4	WASHER PLAIN, 4,3X9X0,8 A4 BRB	

Pos	Part No	UN	Qty	Description	Page No

SOLID STATE RELAY RAIL 4

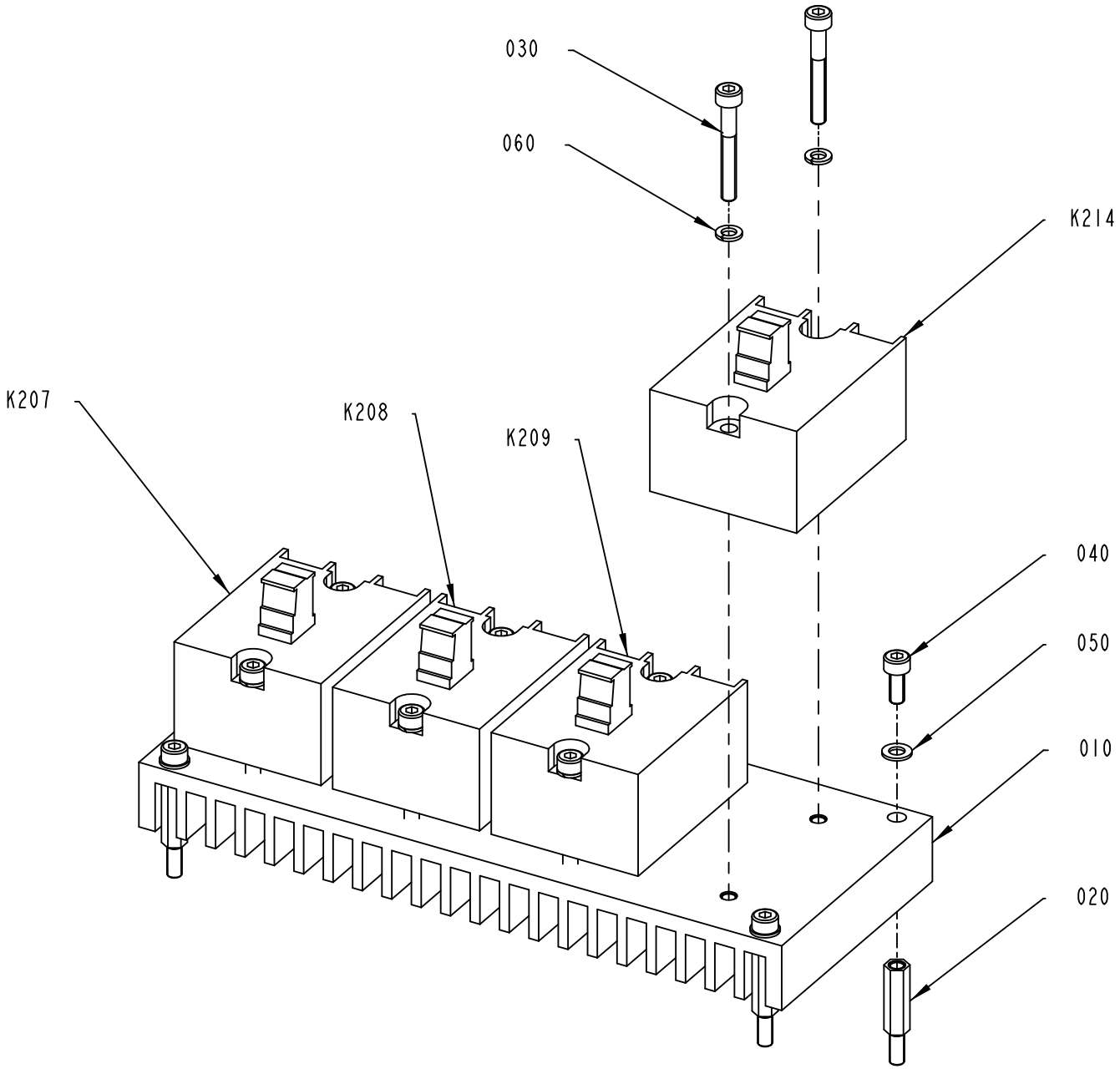

1523445-5
422317

Pos	Part No	UN	Qty	Description	Page No
TBA NOPT (See drawing on page: 9-54)					
060	315402-0136		4	LOCK WASHER, DIN127B 4,1 A4, M4-5/32	
TBA PT19 (See drawing on page: 9-56)					
060	315402-0136		10	LOCK WASHER, DIN127B 4,1 A4, M4-5/32	
070	312115-0299		6	SCREW ISO4762 M4X30 A4 80	
K207	90600-0946		1	SOLID STATE RELAY, 3RF2050-1AA04	
K208	90600-0946		1	SOLID STATE RELAY, 3RF2050-1AA04	
K209	90600-0946		1	SOLID STATE RELAY, 3RF2050-1AA04	
TPA (See drawing on page: 9-58)					
060	315402-0136		12	LOCK WASHER, DIN127B 4,1 A4, M4-5/32	
070	312115-0299		8	SCREW ISO4762 M4X30 A4 80	
K207	90600-0946		1	SOLID STATE RELAY, 3RF2050-1AA04	
K208	90600-0946		1	SOLID STATE RELAY, 3RF2050-1AA04	
K209	90600-0946		1	SOLID STATE RELAY, 3RF2050-1AA04	
K214	90600-0946		1	SOLID STATE RELAY, 3RF2050-1AA04	
Common Parts					
010	1498819-0000		1	COOLING PLATE	
020	1517675-0000		4	SPACER	
040	312115-0289		4	SCREW ISO4762 M4X10 A4 80	
050	315105-0136		4	WASHER PLAIN, 4,3X9X0,8 A4 BRB	

Pos	Part No	UN	Qty	Description	Page No

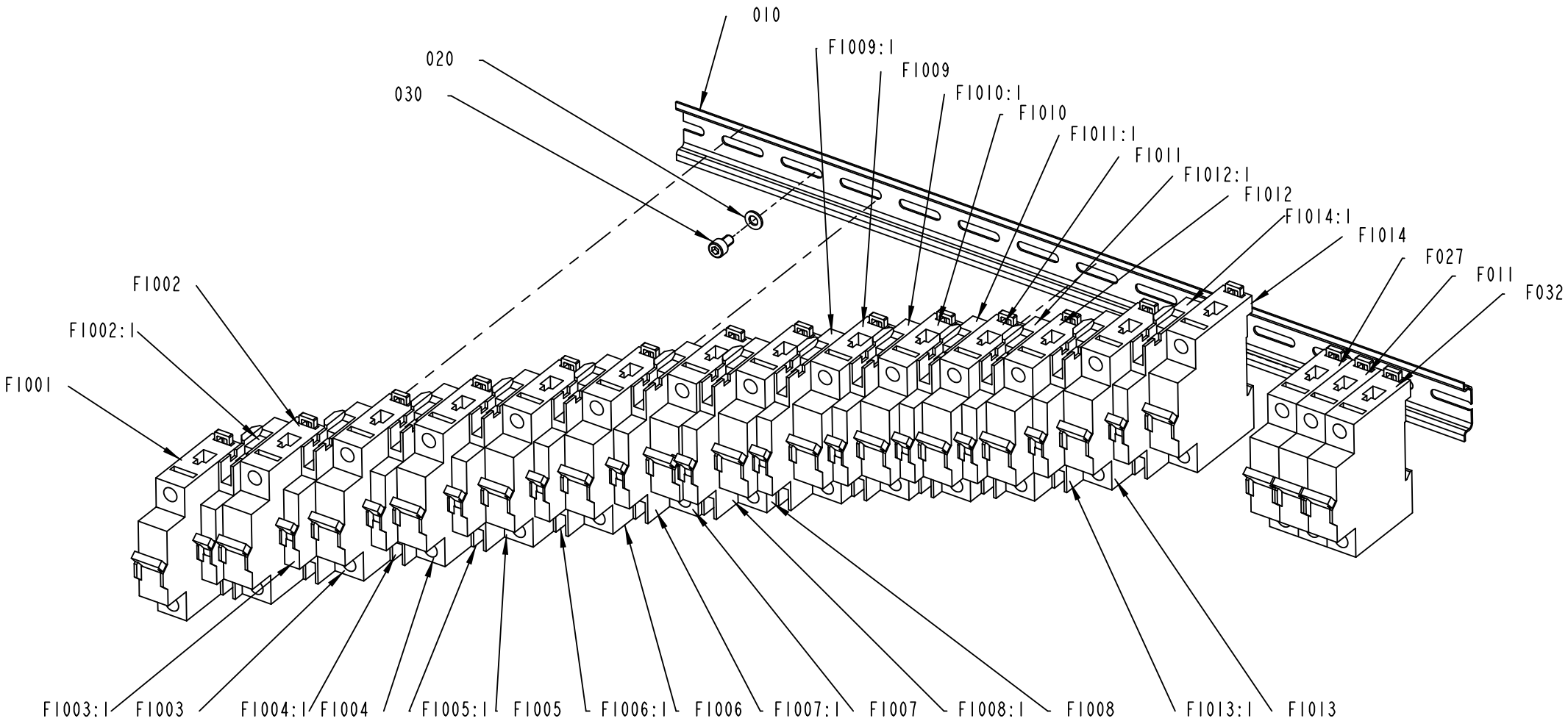

3024838-1
526668

ECM: 541955 - 20120217
Group number: 3024838-0100
Assembly Drawing: 3024838-1_1_AC

Pos	Part No	UN	Qty	Description	Page No
TBA PT19 ASU, TBA PT19 NOASU					
F011	354000-0100		1	MINIATURE CIRCUIT BREAKER, FAZ-C10/1	
F032	351416-0060		1	MINIATURE CIRC. BREAK., FAZ -D6 1-POLE	
TPA					
F032	351416-0100		1	MINIATURE CIRC. BREAK., FAZ -D10 1-POLE	
Common Parts					
010	353042-0004	MM	480	RAIL, TS 35/7,5	
020	315105-0146		2	WASHER PLAIN, 5,3X10X1 A4 BRB	
030	312115-0323		2	SCREW ISO4762 M5X8 A4 80	
F027	351416-0100		1	MINIATURE CIRC. BREAK., FAZ -D10 1-POLE	
F1001	354000-0030		1	MINIATURE CIRCUIT BREAKER, FAZ-C3/1	
F1002	354000-0030		1	MINIATURE CIRCUIT BREAKER, FAZ-C3/1	
F1002.1	90459-5813		1	AUXILIARY CONTACT, FAZ-XHIN11	
F1003	354000-0030		1	MINIATURE CIRCUIT BREAKER, FAZ-C3/1	
F1003.1	90459-5813		1	AUXILIARY CONTACT, FAZ-XHIN11	
F1004	354000-0030		1	MINIATURE CIRCUIT BREAKER, FAZ-C3/1	
F1004.1	90459-5813		1	AUXILIARY CONTACT, FAZ-XHIN11	
F1005	354000-0030		1	MINIATURE CIRCUIT BREAKER, FAZ-C3/1	
F1005.1	90459-5813		1	AUXILIARY CONTACT, FAZ-XHIN11	
F1006	354000-0030		1	MINIATURE CIRCUIT BREAKER, FAZ-C3/1	
F1006.1	90459-5813		1	AUXILIARY CONTACT, FAZ-XHIN11	
F1007	354000-0030		1	MINIATURE CIRCUIT BREAKER, FAZ-C3/1	
F1007.1	90459-5813		1	AUXILIARY CONTACT, FAZ-XHIN11	
F1008	354000-0030		1	MINIATURE CIRCUIT BREAKER, FAZ-C3/1	
F1008.1	90459-5813		1	AUXILIARY CONTACT, FAZ-XHIN11	
F1009	354000-0030		1	MINIATURE CIRCUIT BREAKER, FAZ-C3/1	
F1009.1	90459-5813		1	AUXILIARY CONTACT, FAZ-XHIN11	
F1010	354000-0030		1	MINIATURE CIRCUIT BREAKER, FAZ-C3/1	
F1010.1	90459-5813		1	AUXILIARY CONTACT, FAZ-XHIN11	
F1011	354000-0030		1	MINIATURE CIRCUIT BREAKER, FAZ-C3/1	
F1011.1	90459-5813		1	AUXILIARY CONTACT, FAZ-XHIN11	
F1012	354000-0030		1	MINIATURE CIRCUIT BREAKER, FAZ-C3/1	
F1012.1	90459-5813		1	AUXILIARY CONTACT, FAZ-XHIN11	
F1013	354000-0030		1	MINIATURE CIRCUIT BREAKER, FAZ-C3/1	
F1013.1	90459-5813		1	AUXILIARY CONTACT, FAZ-XHIN11	
F1014	354000-0030		1	MINIATURE CIRCUIT BREAKER, FAZ-C3/1	
F1014.1	90459-5813		1	AUXILIARY CONTACT, FAZ-XHIN11	

Pos	Part No	UN	Qty	Description	Page No

POWER SIDE,BOTTOM TERMINAL BLOCK

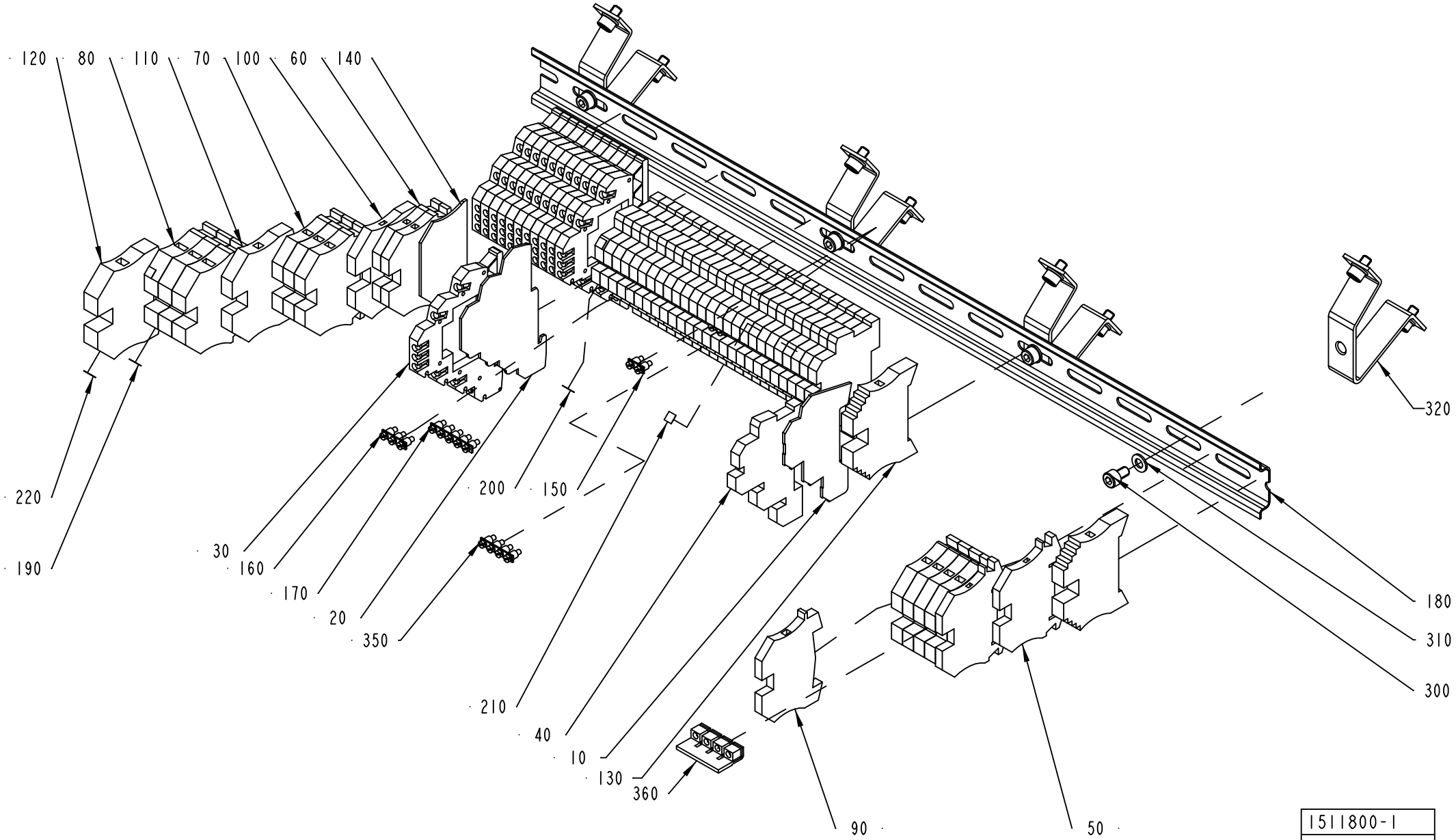

1511800-1
ECN 73191

ECM: 365041 - 20080924
Group number: 1511800-0100
Assembly Drawing: 1511800-1_1_AA

This list covers pages from 9-62 to 9-69

Pos	Part No	UN	Qty	Description	Page No
HVA (See drawing on pages: 9-66, 9-68)					
070	353021-0214		7	FEED THROUGH TERMINAL, WDU 6	
110	353024-0206		2	EARTH TERMINAL WPE 6	
190	359011-0807		4	MARKING, DEK 5 FW 1-50	
220	359011-0819		2	MARKING, EARTH, DEK 5 GW ERDE I.KR.	
NOHVA (See drawing on pages: 9-62, 9-64)					
070	353021-0214		3	FEED THROUGH TERMINAL, WDU 6	
110	353024-0206		1	EARTH TERMINAL WPE 6	
190	359011-0807		4	MARKING, DEK 5 FW 1-50	
220	359011-0819		1	MARKING, EARTH, DEK 5 GW ERDE I.KR.	
Common Parts					
010	90457-0051		1	END PLATE, AP DLD2,5/PE DB	
020	90457-0052		1	END PLATE	
030	90457-0054		12	FEED THROUGH TERMINAL, 161527	
040	353021-0132		27	TERMINAL, DLD 2,5/PE	
050	353021-0212		2	FEED THROUGH TERMINAL, WDU 2,5	
060	353021-0213		2	FEED THROUGH TERMINAL, WDU 4	
080	353021-0215		3	FEED THROUGH TERMINAL, WDU 10	
090	353024-0204		1	EARTH TERMINAL WPE 2,5	
100	353024-0205		1	EARTH TERMINAL WPE 4	
120	353024-0207		1	EARTH TERMINAL WPE 10	
130	353031-0203		2	END BRACKET, WEW 35/2	
140	353032-0004		1	END PLATE, WAP 2,5-10, BEIGE	
150	353034-0401		3	BRIDGE CONNECTOR Q 2 DLI	
160	353034-0402		1	BRIDGE CONNECTOR Q 3 DLI	
170	353034-0404		1	BRIDGE CONNECTOR Q 10 DLI	
180	353042-0004	MM	530	RAIL, TS 35/7,5	
200	359011-0808		2	MARKING, DEK 5FW 51-100	
210	359011-0809		2	MARKING, DEK 5 FW 101-150	
300	312115-0323		4	SCREW ISO4762 M5X8 A4 80	
310	315105-0146		4	WASHER PLAIN, 5,3X10X1 A4 BRB	
320	90094-0005		4	RAIL BRACKET, TSTW 5/5M	
330	312125-0327		4	SLOTTED HEAD SCREW, ISO1207 M5X12 A4	
340	90458-1447		4	MOUNTING RAIL SUPPORT, TST 128660	
350	353034-0403		1	BRIDGE CONNECTOR Q 4 DLI	
360	353034-0032		1	BRIDGE CONNECTOR WQV 6/10	

Pos	Part No	UN	Qty	Description	Page No

Machine Type | Group Description | Used-In | Group Number | Page No

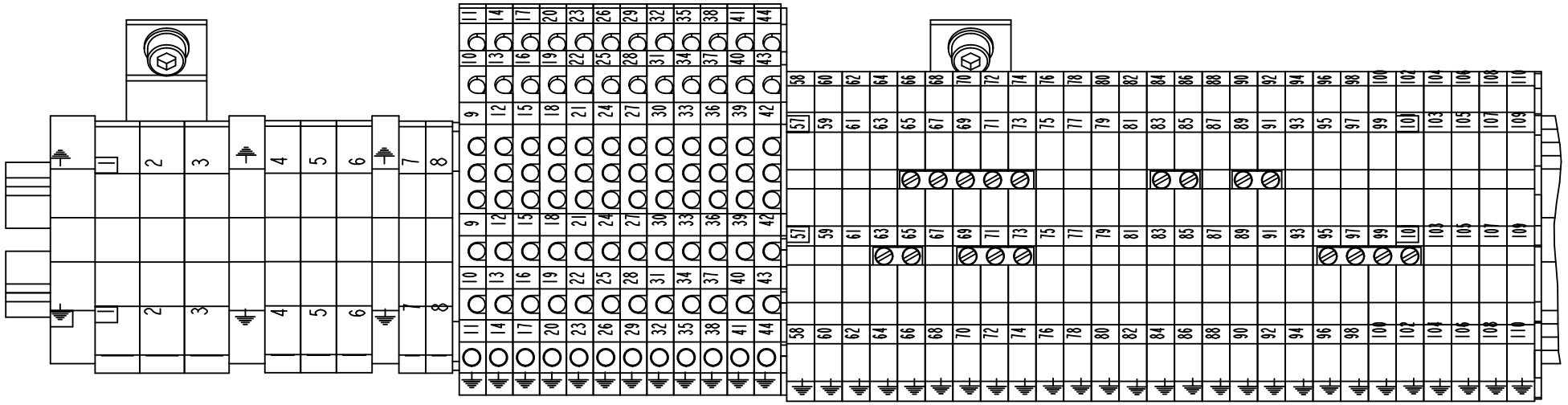

X001

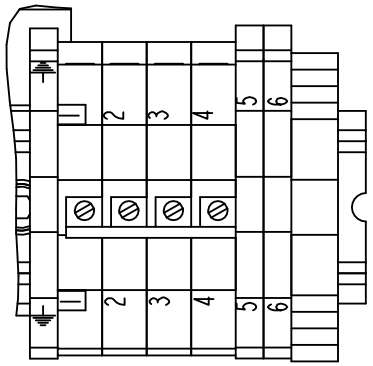

X006

1511800-1
ECN 73191

ECM: 365041 - 20080924
Group number: 1511800-0100
Assembly Drawing: 1511800-1_2_AA

This list covers pages from 9-62 to 9-69

Pos	Part No	UN	Qty	Description	Page No
HVA (See drawing on pages: 9-66, 9-68)					
070	353021-0214		7	FEED THROUGH TERMINAL, WDU 6	
110	353024-0206		2	EARTH TERMINAL WPE 6	
190	359011-0807		4	MARKING, DEK 5 FW 1-50	
220	359011-0819		2	MARKING, EARTH, DEK 5 GW ERDE I.KR.	
NOHVA (See drawing on pages: 9-62, 9-64)					
070	353021-0214		3	FEED THROUGH TERMINAL, WDU 6	
110	353024-0206		1	EARTH TERMINAL WPE 6	
190	359011-0807		4	MARKING, DEK 5 FW 1-50	
220	359011-0819		1	MARKING, EARTH, DEK 5 GW ERDE I.KR.	
Common Parts					
010	90457-0051		1	END PLATE, AP DLD2,5/PE DB	
020	90457-0052		1	END PLATE	
030	90457-0054		12	FEED THROUGH TERMINAL, 161527	
040	353021-0132		27	TERMINAL, DLD 2,5/PE	
050	353021-0212		2	FEED THROUGH TERMINAL, WDU 2,5	
060	353021-0213		2	FEED THROUGH TERMINAL, WDU 4	
080	353021-0215		3	FEED THROUGH TERMINAL, WDU 10	
090	353024-0204		1	EARTH TERMINAL WPE 2,5	
100	353024-0205		1	EARTH TERMINAL WPE 4	
120	353024-0207		1	EARTH TERMINAL WPE 10	
130	353031-0203		2	END BRACKET, WEW 35/2	
140	353032-0004		1	END PLATE, WAP 2,5-10, BEIGE	
150	353034-0401		3	BRIDGE CONNECTOR Q 2 DLI	
160	353034-0402		1	BRIDGE CONNECTOR Q 3 DLI	
170	353034-0404		1	BRIDGE CONNECTOR Q 10 DLI	
180	353042-0004	MM	530	RAIL, TS 35/7,5	
200	359011-0808		2	MARKING, DEK 5FW 51-100	
210	359011-0809		2	MARKING, DEK 5 FW 101-150	
300	312115-0323		4	SCREW ISO4762 M5X8 A4 80	
310	315105-0146		4	WASHER PLAIN, 5,3X10X1 A4 BRB	
320	90094-0005		4	RAIL BRACKET, TSTW 5/5M	
330	312125-0327		4	SLOTTED HEAD SCREW, ISO1207 M5X12 A4	
340	90458-1447		4	MOUNTING RAIL SUPPORT, TST 128660	
350	353034-0403		1	BRIDGE CONNECTOR Q 4 DLI	
360	353034-0032		1	BRIDGE CONNECTOR WQV 6/10	

Pos	Part No	UN	Qty	Description	Page No

Machine Type | Group Description | Used-In | Group Number | Page No

POWER SIDE,BOTTOM TERMINAL BLOCK

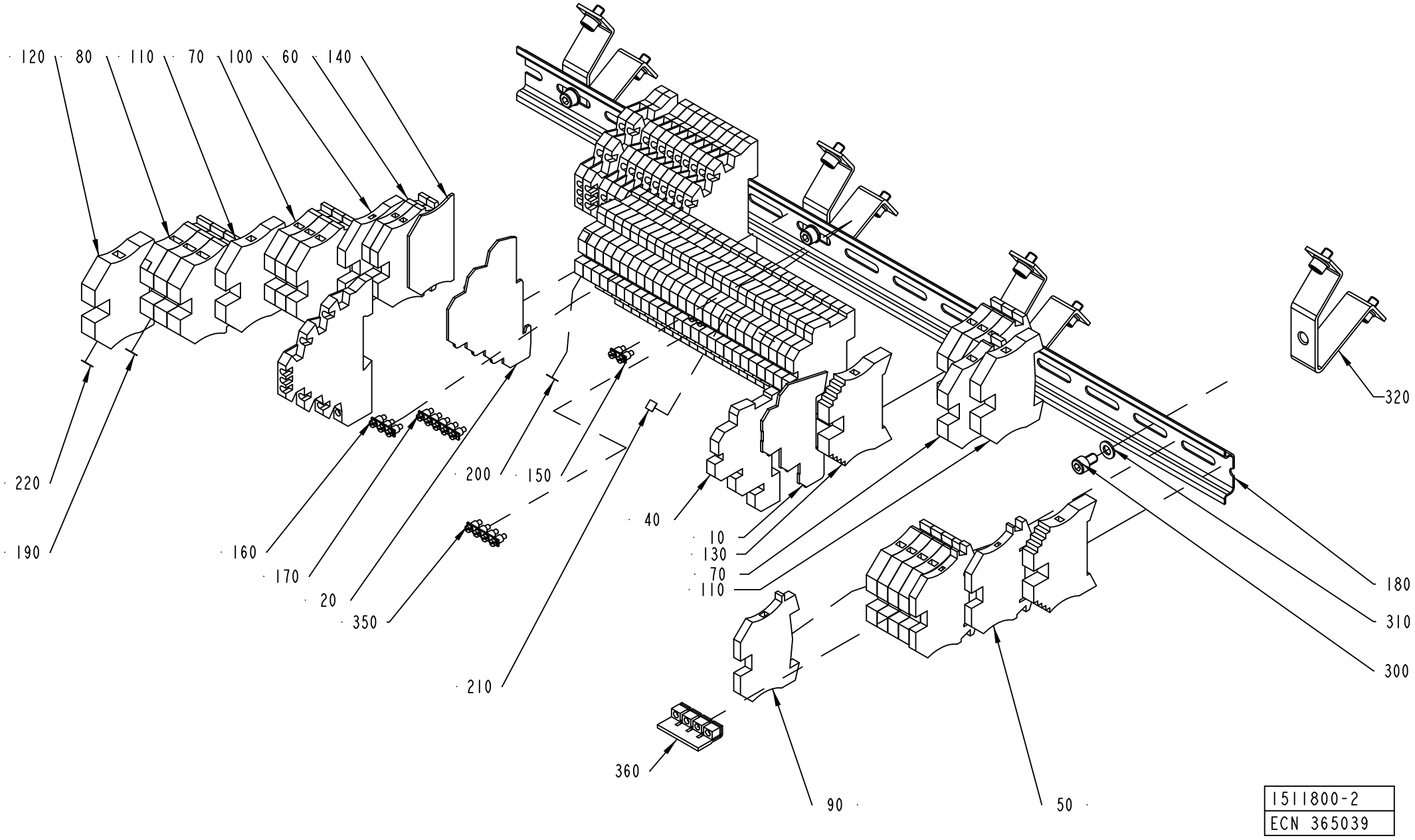

1511800-2
ECN 365039

ECM: 365041 - 20080924
Group number: 1511800-0100
Assembly Drawing: 1511800-2_1_AB

This list covers pages from 9-62 to 9-69

Pos	Part No	UN	Qty	Description	Page No
HVA (See drawing on pages: 9-66, 9-68)					
070	353021-0214		7	FEED THROUGH TERMINAL, WDU 6	
110	353024-0206		2	EARTH TERMINAL WPE 6	
190	359011-0807		4	MARKING, DEK 5 FW 1-50	
220	359011-0819		2	MARKING, EARTH, DEK 5 GW ERDE I.KR.	
NOHVA (See drawing on pages: 9-62, 9-64)					
070	353021-0214		3	FEED THROUGH TERMINAL, WDU 6	
110	353024-0206		1	EARTH TERMINAL WPE 6	
190	359011-0807		4	MARKING, DEK 5 FW 1-50	
220	359011-0819		1	MARKING, EARTH, DEK 5 GW ERDE I.KR.	
Common Parts					
010	90457-0051		1	END PLATE, AP DLD2,5/PE DB	
020	90457-0052		1	END PLATE	
030	90457-0054		12	FEED THROUGH TERMINAL, 161527	
040	353021-0132		27	TERMINAL, DLD 2,5/PE	
050	353021-0212		2	FEED THROUGH TERMINAL, WDU 2,5	
060	353021-0213		2	FEED THROUGH TERMINAL, WDU 4	
080	353021-0215		3	FEED THROUGH TERMINAL, WDU 10	
090	353024-0204		1	EARTH TERMINAL WPE 2,5	
100	353024-0205		1	EARTH TERMINAL WPE 4	
120	353024-0207		1	EARTH TERMINAL WPE 10	
130	353031-0203		2	END BRACKET, WEW 35/2	
140	353032-0004		1	END PLATE, WAP 2,5-10, BEIGE	
150	353034-0401		3	BRIDGE CONNECTOR Q 2 DLI	
160	353034-0402		1	BRIDGE CONNECTOR Q 3 DLI	
170	353034-0404		1	BRIDGE CONNECTOR Q 10 DLI	
180	353042-0004	MM	530	RAIL, TS 35/7,5	
200	359011-0808		2	MARKING, DEK 5FW 51-100	
210	359011-0809		2	MARKING, DEK 5 FW 101-150	
300	312115-0323		4	SCREW ISO4762 M5X8 A4 80	
310	315105-0146		4	WASHER PLAIN, 5,3X10X1 A4 BRB	
320	90094-0005		4	RAIL BRACKET, TSTW 5/5M	
330	312125-0327		4	SLOTTED HEAD SCREW, ISO1207 M5X12 A4	
340	90458-1447		4	MOUNTING RAIL SUPPORT, TST 128660	
350	353034-0403		1	BRIDGE CONNECTOR Q 4 DLI	
360	353034-0032		1	BRIDGE CONNECTOR WQV 6/10	

Pos	Part No	UN	Qty	Description	Page No

Machine Type | Group Description | Used-In | Group Number | Page No

POWER SIDE,BOTTOM TERMINAL BLOCK

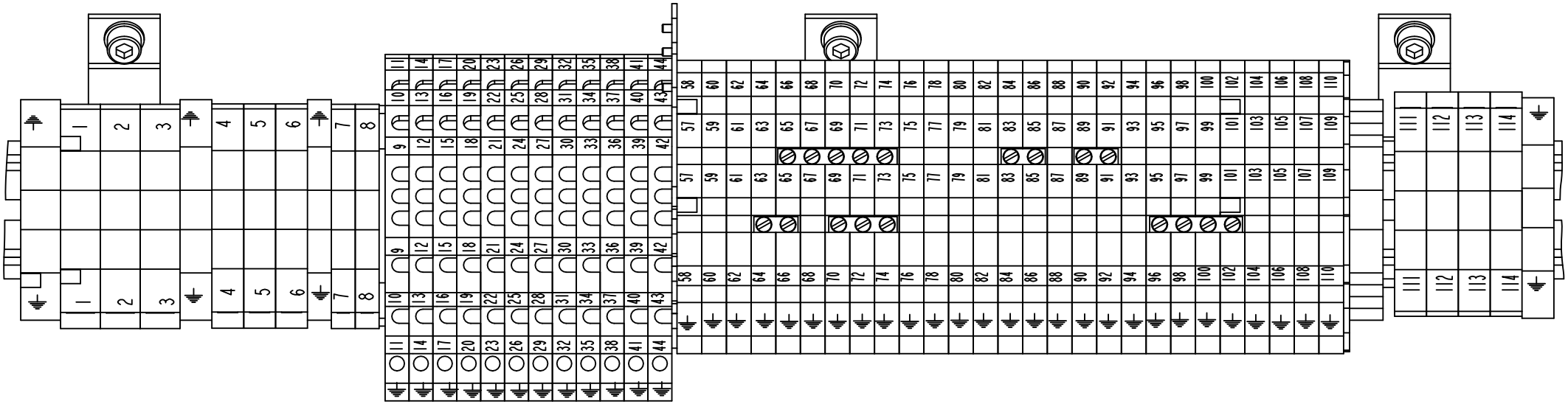

X001

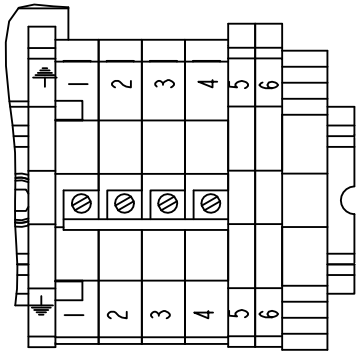

X006

1511800-2
ECN 365039

ECM: 365041 - 20080924
Group number: 1511800-0100
Assembly Drawing: 1511800-2_2_AB

This list covers pages from 9-62 to 9-69

Pos	Part No	UN	Qty	Description	Page No
HVA (See drawing on pages: 9-66, 9-68)					
070	353021-0214		7	FEED THROUGH TERMINAL, WDU 6	
110	353024-0206		2	EARTH TERMINAL WPE 6	
190	359011-0807		4	MARKING, DEK 5 FW 1-50	
220	359011-0819		2	MARKING, EARTH, DEK 5 GW ERDE I.KR.	
NOHVA (See drawing on pages: 9-62, 9-64)					
070	353021-0214		3	FEED THROUGH TERMINAL, WDU 6	
110	353024-0206		1	EARTH TERMINAL WPE 6	
190	359011-0807		4	MARKING, DEK 5 FW 1-50	
220	359011-0819		1	MARKING, EARTH, DEK 5 GW ERDE I.KR.	
Common Parts					
010	90457-0051		1	END PLATE, AP DLD2,5/PE DB	
020	90457-0052		1	END PLATE	
030	90457-0054		12	FEED THROUGH TERMINAL, 161527	
040	353021-0132		27	TERMINAL, DLD 2,5/PE	
050	353021-0212		2	FEED THROUGH TERMINAL, WDU 2,5	
060	353021-0213		2	FEED THROUGH TERMINAL, WDU 4	
080	353021-0215		3	FEED THROUGH TERMINAL, WDU 10	
090	353024-0204		1	EARTH TERMINAL WPE 2,5	
100	353024-0205		1	EARTH TERMINAL WPE 4	
120	353024-0207		1	EARTH TERMINAL WPE 10	
130	353031-0203		2	END BRACKET, WEW 35/2	
140	353032-0004		1	END PLATE, WAP 2,5-10, BEIGE	
150	353034-0401		3	BRIDGE CONNECTOR Q 2 DLI	
160	353034-0402		1	BRIDGE CONNECTOR Q 3 DLI	
170	353034-0404		1	BRIDGE CONNECTOR Q 10 DLI	
180	353042-0004	MM	530	RAIL, TS 35/7,5	
200	359011-0808		2	MARKING, DEK 5FW 51-100	
210	359011-0809		2	MARKING, DEK 5 FW 101-150	
300	312115-0323		4	SCREW ISO4762 M5X8 A4 80	
310	315105-0146		4	WASHER PLAIN, 5,3X10X1 A4 BRB	
320	90094-0005		4	RAIL BRACKET, TSTW 5/5M	
330	312125-0327		4	SLOTTED HEAD SCREW, ISO1207 M5X12 A4	
340	90458-1447		4	MOUNTING RAIL SUPPORT, TST 128660	
350	353034-0403		1	BRIDGE CONNECTOR Q 4 DLI	
360	353034-0032		1	BRIDGE CONNECTOR WQV 6/10	

Pos	Part No	UN	Qty	Description	Page No

Machine Type | Group Description | Used-In | Group Number | Page No

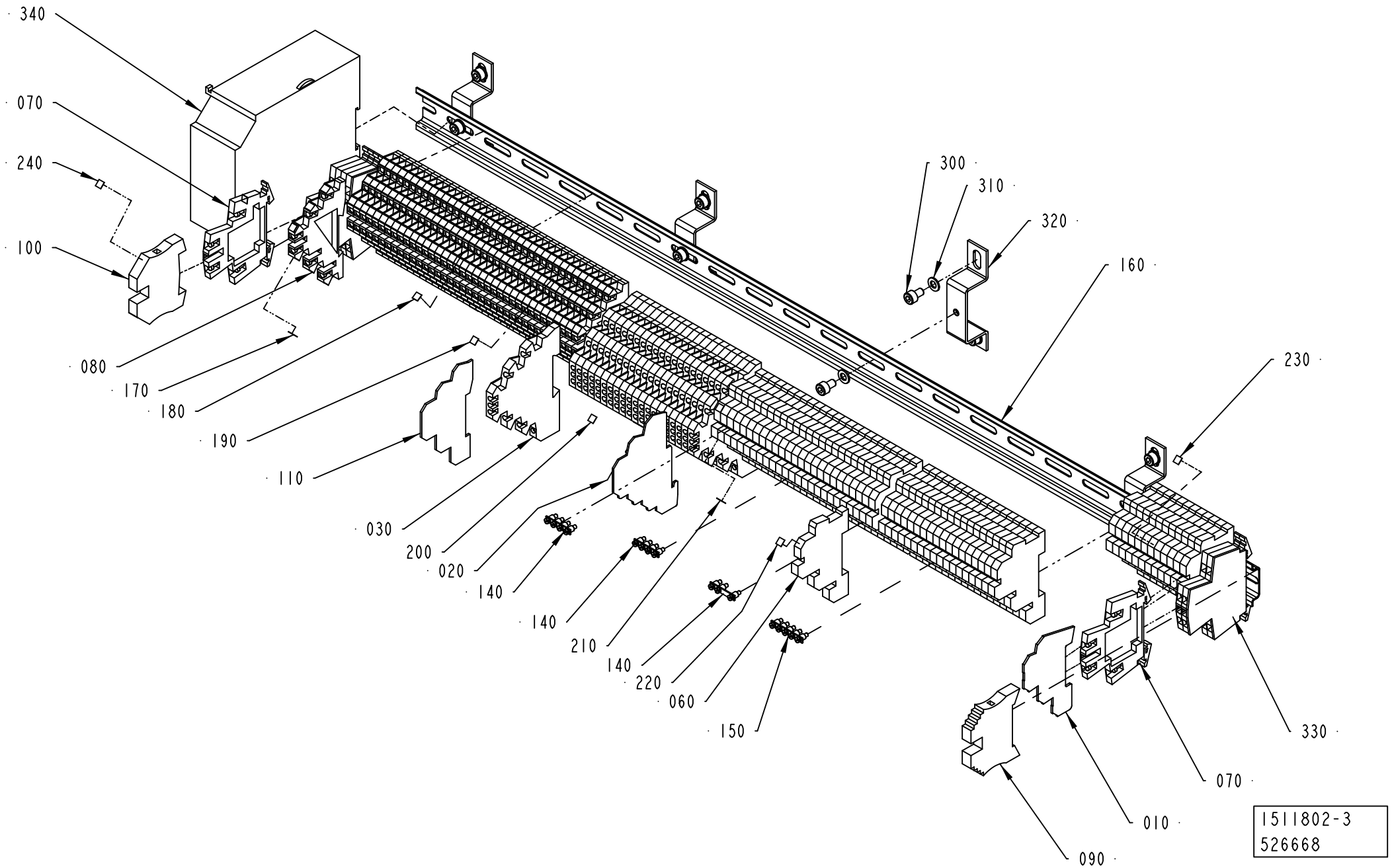
340
070
240
100
080
170
180
190
110
030
200
020
140
140
210
140
220
060
150
300
310
320
160
230
330
070
010
090
1511802-3
526668

ECM: 541777 - 20120217
Group number: 1511802-0300
Assembly Drawing: 1511802-3_1_AC

This list covers pages from 9-70 to 9-73

Pos	Part No	UN	Qty	Description	Page No
-					
010	90457-0051		1	END PLATE, AP DLD2,5/PE DB	
020	90457-0052		1	END PLATE	
030	353021-0133		21	TERMINAL, MAK 2,5	
060	353021-0132		56	TERMINAL, DLD 2,5/PE	
070	90458-1136		8	EARTH TERMINAL WDK 2,5 PE	
080	353021-0302		38	TERMINAL, DLD 2,5/35	
090	353031-0203		1	END BRACKET, WEW 35/2	
100	353024-0206		1	EARTH TERMINAL WPE 6	
110	353032-0302		1	END PLATE, AP DLD2,5 DB	
140	353034-0403		3	BRIDGE CONNECTOR Q 4 DLI	
150	353034-0404		1	BRIDGE CONNECTOR Q 10 DLI	
160	353042-0004	MM	805	RAIL, TS 35/7,5	
170	359011-0807		2	MARKING, DEK 5 FW 1-50	
180	359011-0808		2	MARKING, DEK 5FW 51-100	
190	359011-0809		2	MARKING, DEK 5 FW 101-150	
200	359011-0810		2	MARKING, DEK 5 FW 151-200	
210	359011-0811		2	MARKING, DEK 5 FW 201-250	
220	359011-0812		2	MARKING, DEK 5FW 251-300	
230	359011-0813		2	MARKING, DEK 5 FW 301-350	
240	359011-0819		2	MARKING, EARTH, DEK 5 GW ERDE I.KR.	
300	312115-0323		12	SCREW ISO4762 M5X8 A4 80	
310	315105-0146		12	WASHER PLAIN, 5,3X10X1 A4 BRB	
320	90458-1447		4	MOUNTING RAIL SUPPORT, TST 128660	
330	353032-0009		2	END PLATE, WAP WDK 2,5	
340	90459-5632		1	POWER SUPPLY UNIT, S8TS-06024_1	

Pos	Part No	UN	Qty	Description	Page No

Machine Type	Group Description	Used-In	Group Number	Page No

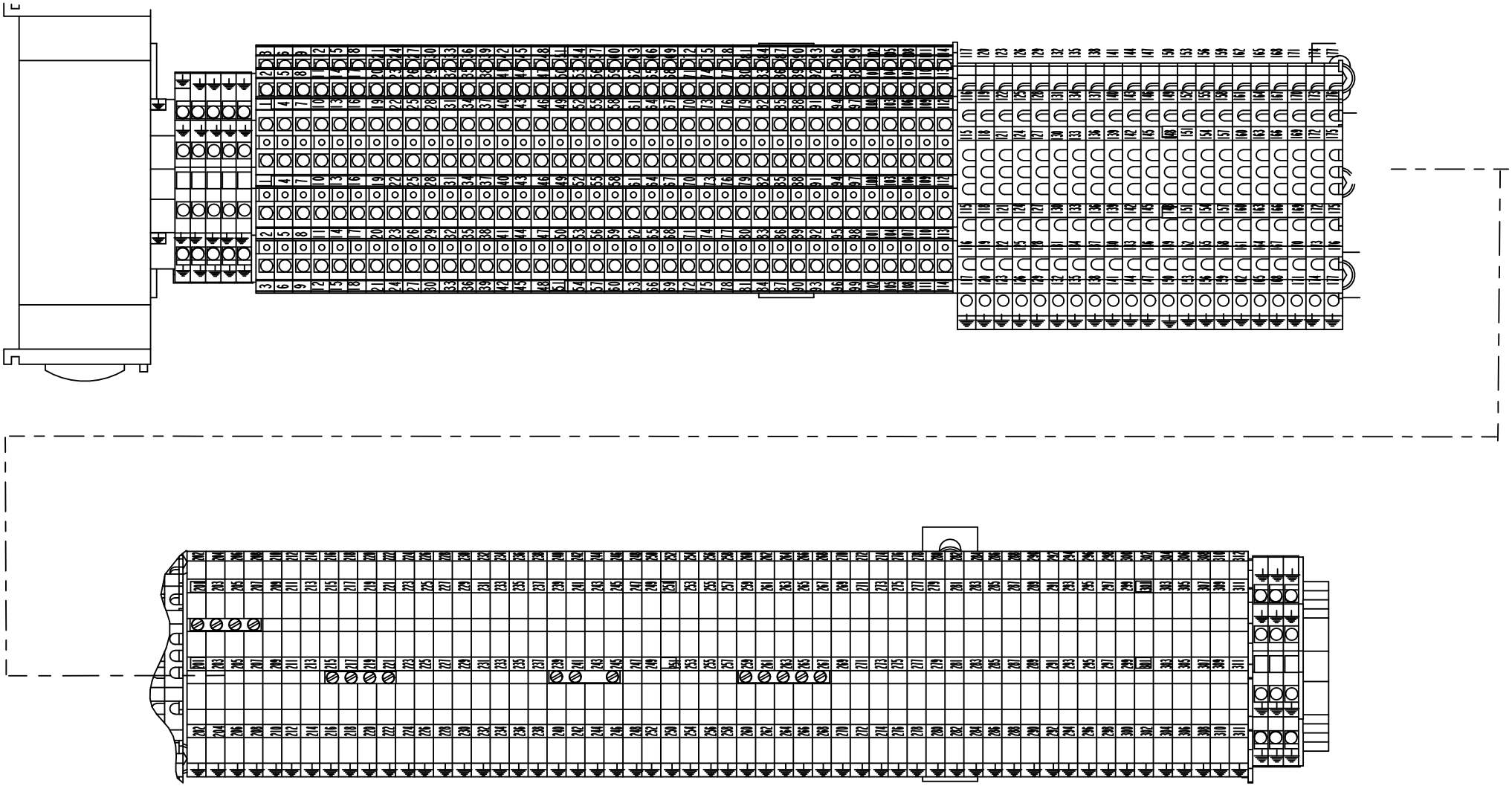

X002

1511802-3
526668

ECM: 541777 - 20120217
Group number: 1511802-0300
Assembly Drawing: 1511802-3_2_AC

This list covers pages from 9-70 to 9-73

Pos	Part No	UN	Qty	Description	Page No
-					
010	90457-0051		1	END PLATE, AP DLD2,5/PE DB	
020	90457-0052		1	END PLATE	
030	353021-0133		21	TERMINAL, MAK 2,5	
060	353021-0132		56	TERMINAL, DLD 2,5/PE	
070	90458-1136		8	EARTH TERMINAL WDK 2,5 PE	
080	353021-0302		38	TERMINAL, DLD 2,5/35	
090	353031-0203		1	END BRACKET, WEW 35/2	
100	353024-0206		1	EARTH TERMINAL WPE 6	
110	353032-0302		1	END PLATE, AP DLD2,5 DB	
140	353034-0403		3	BRIDGE CONNECTOR Q 4 DLI	
150	353034-0404		1	BRIDGE CONNECTOR Q 10 DLI	
160	353042-0004	MM	805	RAIL, TS 35/7,5	
170	359011-0807		2	MARKING, DEK 5 FW 1-50	
180	359011-0808		2	MARKING, DEK 5FW 51-100	
190	359011-0809		2	MARKING, DEK 5 FW 101-150	
200	359011-0810		2	MARKING, DEK 5 FW 151-200	
210	359011-0811		2	MARKING, DEK 5 FW 201-250	
220	359011-0812		2	MARKING, DEK 5FW 251-300	
230	359011-0813		2	MARKING, DEK 5 FW 301-350	
240	359011-0819		2	MARKING, EARTH, DEK 5 GW ERDE I.KR.	
300	312115-0323		12	SCREW ISO4762 M5X8 A4 80	
310	315105-0146		12	WASHER PLAIN, 5,3X10X1 A4 BRB	
320	90458-1447		4	MOUNTING RAIL SUPPORT, TST 128660	
330	353032-0009		2	END PLATE, WAP WDK 2,5	
340	90459-5632		1	POWER SUPPLY UNIT, S8TS-06024_1	

Pos	Part No	UN	Qty	Description	Page No

Machine Type | Group Description | Used-In | Group Number | Page No

LOGIC SIDE TOP TERMINAL BLOCK

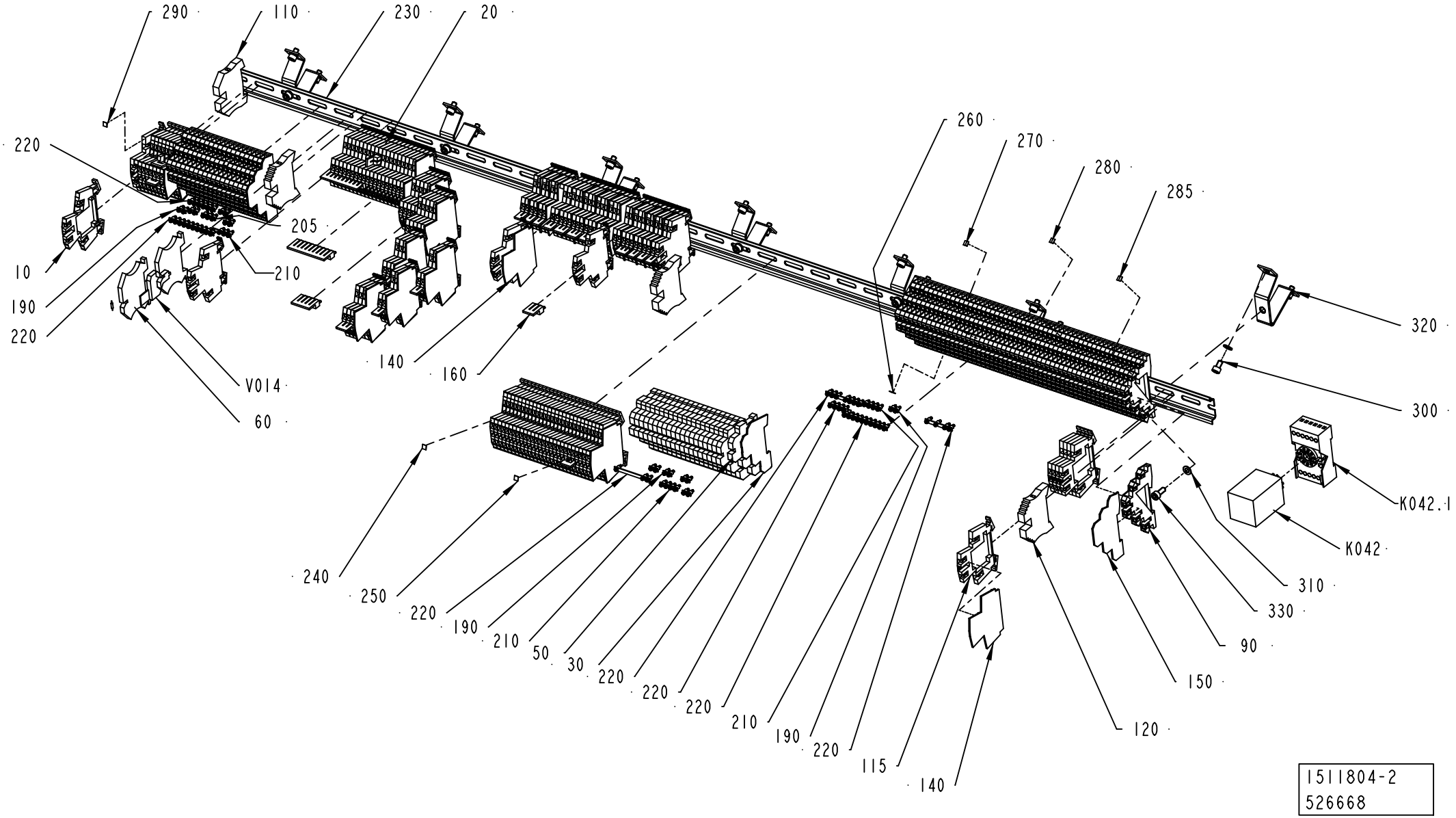

ECM: 541778 - 20120217
Group number: 1511804-0200
Assembly Drawing: 1511804-2_1_AD

This list covers pages from 9-74 to 9-77

Pos	Part No	UN	Qty	Description	Page No
-					
010	90077-0113		35	TERMINAL BLOCK WDK 2.5	
020	90459-5253		74	TERMINAL BLOCK WDK 2,5 V	
030	90457-0051		1	END PLATE, AP DLD2,5/PE DB	
050	353021-0132		21	TERMINAL, DLD 2,5/PE	
060	90600-2134		2	TERMINAL DISCONNECATBLE, WTR 2,5/O.TNHE	
090	353021-0302		71	TERMINAL, DLD 2,5/35	
110	353024-0206		1	EARTH TERMINAL WPE 6	
115	90458-1136		6	EARTH TERMINAL WDK 2,5 PE	
120	353031-0203		3	END BRACKET, WEW 35/2	
140	90077-0114		22	END PLATE, WAP WDK 2.5 1059100000	
150	353032-0302		2	END PLATE, AP DLD2,5 DB	
160	353034-0030		20	BRIDGE CONNECTOR WQV 2,5/10	
190	353034-0401		9	BRIDGE CONNECTOR Q 2 DLI	
205	353034-0402		1	BRIDGE CONNECTOR Q 3 DLI	
210	353034-0403		3	BRIDGE CONNECTOR Q 4 DLI	
220	353034-0404		7	BRIDGE CONNECTOR Q 10 DLI	
230	353042-0004	MM	1328	RAIL, TS 35/7,5	
240	359011-0807		18	MARKING, DEK 5 FW 1-50	
250	359011-0808		6	MARKING, DEK 5FW 51-100	
260	359011-0809		3	MARKING, DEK 5 FW 101-150	
270	359011-0810		2	MARKING, DEK 5 FW 151-200	
280	359011-0811		2	MARKING, DEK 5 FW 201-250	
285	359011-0812		2	MARKING, DEK 5FW 251-300	
290	359011-0819		2	MARKING, EARTH, DEK 5 GW ERDE I.KR.	
300	312115-0323		14	SCREW ISO4762 M5X8 A4 80	
310	315105-0146		21	WASHER PLAIN, 5,3X10X1 A4 BRB	
320	90094-0005		7	RAIL BRACKET, TSTW 5/5M	
330	312115-0327		7	SCREW ISO4762 M5X12 A4 80	
K042	90600-6446		1	RELAY, MKS3PI-5 24VDC	
K042.1	90129-0006		1	BASE, S3-B	
R007	90121-0132		1	RESISTANCE FIXED, 0,51 KOHM, 0,25 W	
V014	90600-2135		1	MODULE CONNECTOR 250V, BEST/D 1878560000	

Pos	Part No	UN	Qty	Description	Page No

Machine Type	Group Description	Used-In	Group Number	Page No

LOGIC SIDE TOP TERMINAL BLOCK

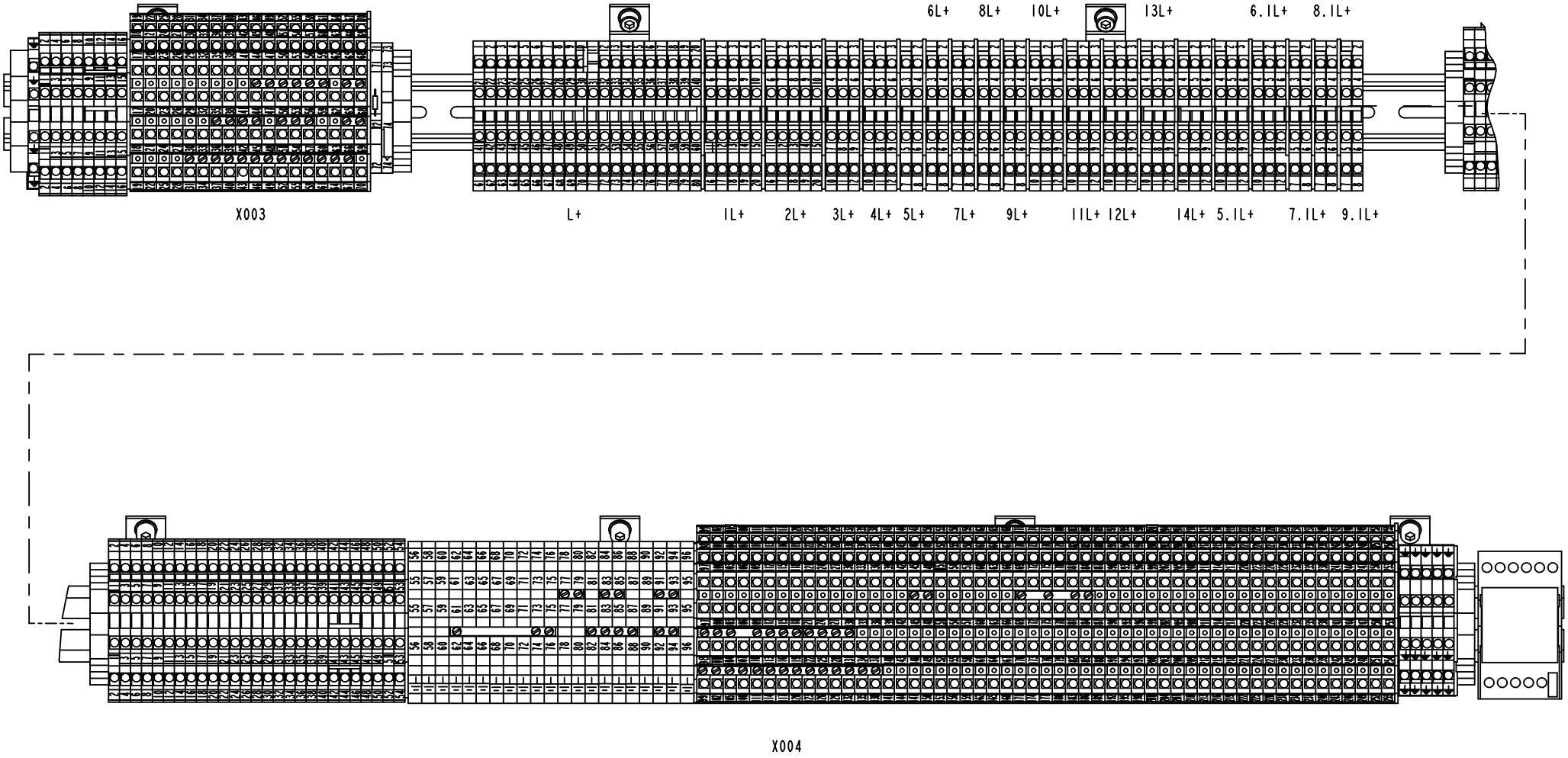

1511804-2
526668

ECM: 541778 - 20120217
Group number: 1511804-0200
Assembly Drawing: 1511804-2_2_AD

This list covers pages from 9-74 to 9-77

Pos	Part No	UN	Qty	Description	Page No
-					
010	90077-0113		35	TERMINAL BLOCK WDK 2.5	
020	90459-5253		74	TERMINAL BLOCK WDK 2,5 V	
030	90457-0051		1	END PLATE, AP DLD2,5/PE DB	
050	353021-0132		21	TERMINAL, DLD 2,5/PE	
060	90600-2134		2	TERMINAL DISCONNECATBLE, WTR 2,5/O.TNHE	
090	353021-0302		71	TERMINAL, DLD 2,5/35	
110	353024-0206		1	EARTH TERMINAL WPE 6	
115	90458-1136		6	EARTH TERMINAL WDK 2,5 PE	
120	353031-0203		3	END BRACKET, WEW 35/2	
140	90077-0114		22	END PLATE, WAP WDK 2.5 1059100000	
150	353032-0302		2	END PLATE, AP DLD2,5 DB	
160	353034-0030		20	BRIDGE CONNECTOR WQV 2,5/10	
190	353034-0401		9	BRIDGE CONNECTOR Q 2 DLI	
205	353034-0402		1	BRIDGE CONNECTOR Q 3 DLI	
210	353034-0403		3	BRIDGE CONNECTOR Q 4 DLI	
220	353034-0404		7	BRIDGE CONNECTOR Q 10 DLI	
230	353042-0004	MM	1328	RAIL, TS 35/7,5	
240	359011-0807		18	MARKING, DEK 5 FW 1-50	
250	359011-0808		6	MARKING, DEK 5FW 51-100	
260	359011-0809		3	MARKING, DEK 5 FW 101-150	
270	359011-0810		2	MARKING, DEK 5 FW 151-200	
280	359011-0811		2	MARKING, DEK 5 FW 201-250	
285	359011-0812		2	MARKING, DEK 5FW 251-300	
290	359011-0819		2	MARKING, EARTH, DEK 5 GW ERDE I.KR.	
300	312115-0323		14	SCREW ISO4762 M5X8 A4 80	
310	315105-0146		21	WASHER PLAIN, 5,3X10X1 A4 BRB	
320	90094-0005		7	RAIL BRACKET, TSTW 5/5M	
330	312115-0327		7	SCREW ISO4762 M5X12 A4 80	
K042	90600-6446		1	RELAY, MKS3PI-5 24VDC	
K042.1	90129-0006		1	BASE, S3-B	
R007	90121-0132		1	RESISTANCE FIXED, 0,51 KOHM, 0,25 W	
V014	90600-2135		1	MODULE CONNECTOR 250V, BEST/D 1878560000	

Pos	Part No	UN	Qty	Description	Page No

Machine Type	Group Description	Used-In	Group Number	Page No

POWER SIDE, TOP TERMINAL BLOCK

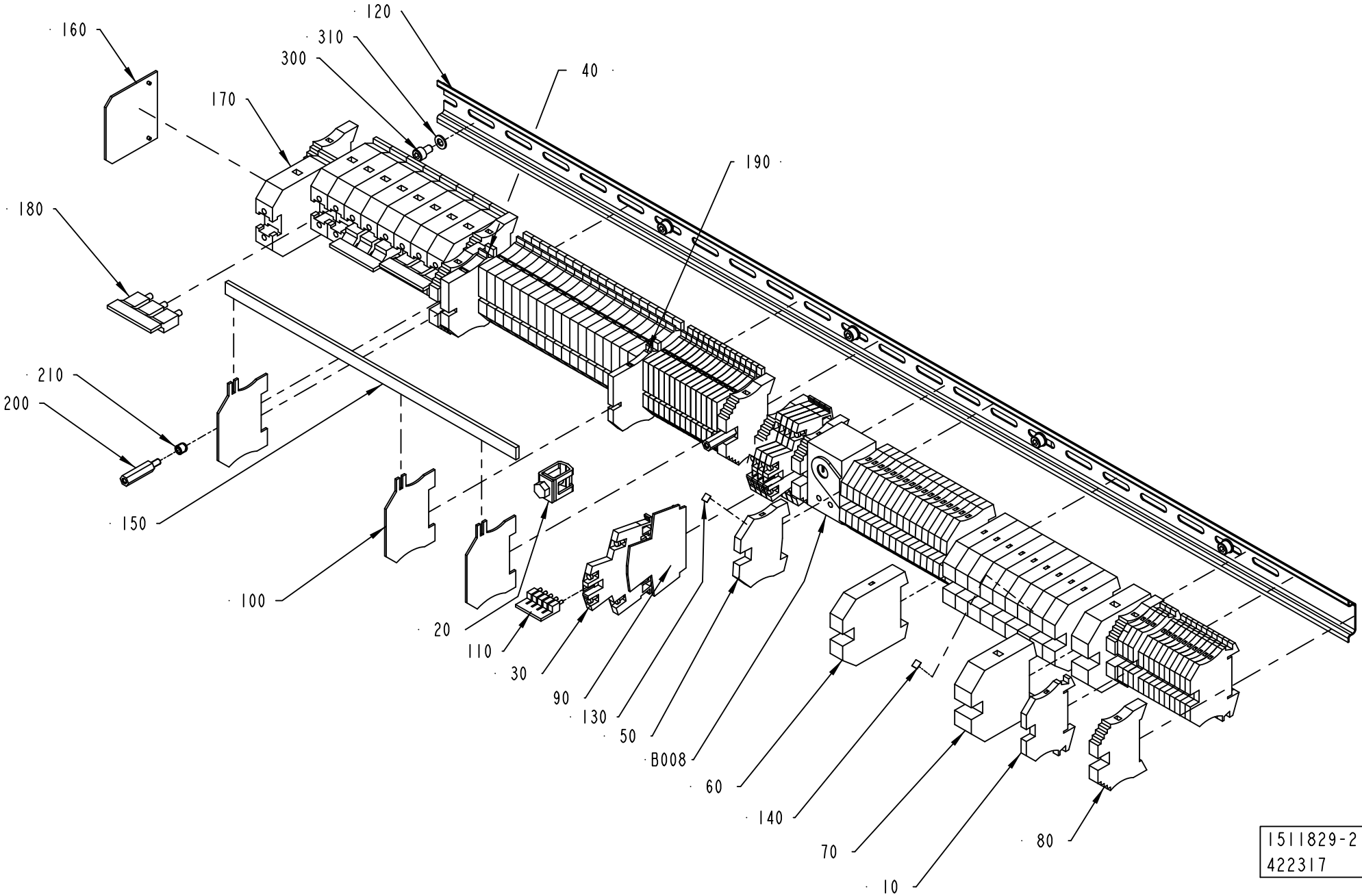

ECM: 431012 - 20091228
Group number: 1511829-0200
Assembly Drawing: 1511829-2_1_AC

This list covers pages from 9-78 to 9-81

Pos	Part No	UN	Qty	Description	Page No
-					
010	353021-0212		14	FEED THROUGH TERMINAL, WDU 2,5	
020	90135-0019		1	CLAMP ZB 35	
030	90459-5253		5	TERMINAL BLOCK WDK 2,5 V	
040	353022-0003		20	TERMINAL WNT 6 10X3	
050	353024-0205		18	EARTH TERMINAL WPE 4	
060	353024-0208		10	EARTH TERMINAL WPE 16	
070	353024-0209		2	EARTH TERMINAL WPE 35	
080	353031-0203		7	END BRACKET, WEW 35/2	
090	353032-0009		1	END PLATE, WAP WDK 2,5	
100	353033-0104		3	END PLATE, WHP2,5-35N/10X3 BL	
110	353034-0030		1	BRIDGE CONNECTOR WQV 2,5/10	
120	353042-0004	MM	880	RAIL, TS 35/7,5	
130	359011-0807		7	MARKING, DEK 5 FW 1-50	
140	359011-0808		1	MARKING, DEK 5FW 51-100	
150	495498-0028		1	CU-RAIL L=280MM	
160	353033-0105		1	END PLATE, WAP 16+35 WTW 2,5-10	
170	353021-0219		9	FEED THROUGH TERMINAL, WDU 35	
180	353034-0035		1	BRIDGE CONNECTOR WQV 35/10	
190	353022-0006		15	TERMINAL WNT 2.5 10X3	
200	570482-0000		2	SPACER	
210	90459-6477		2	THREADED INSERTS, BUSHING, M4	
300	312115-0323		5	SCREW ISO4762 M5X8 A4 80	
310	315105-0146		5	WASHER PLAIN, 5,3X10X1 A4 BRB	
B008	90458-1114		1	BIMET. ELECTROMECH. THERMOSTAT K7H.020	

Pos	Part No	UN	Qty	Description	Page No

Machine Type | Group Description | Used-In | Group Number | Page No

POWER SIDE, TOP TERMINAL BLOCK

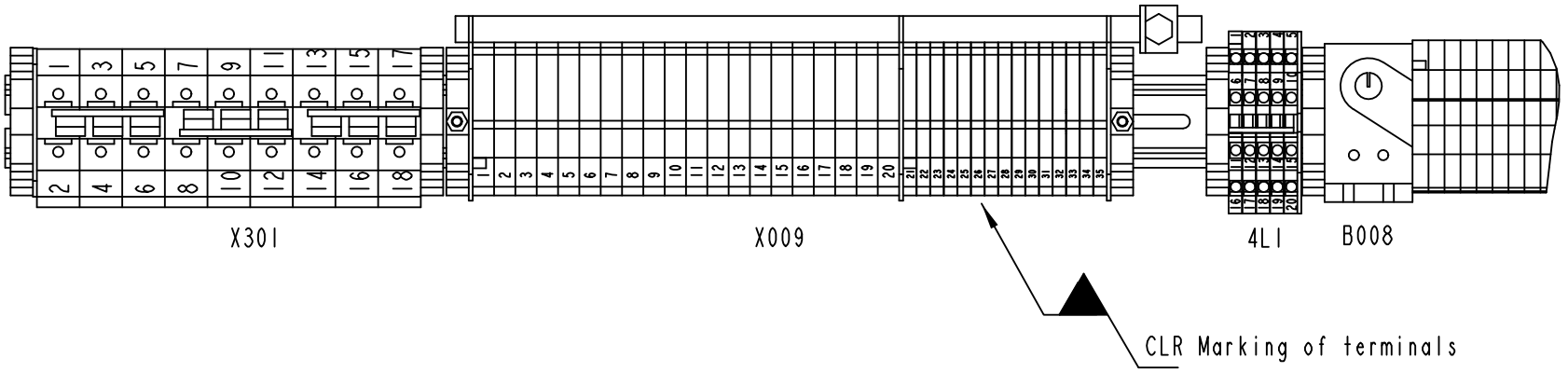

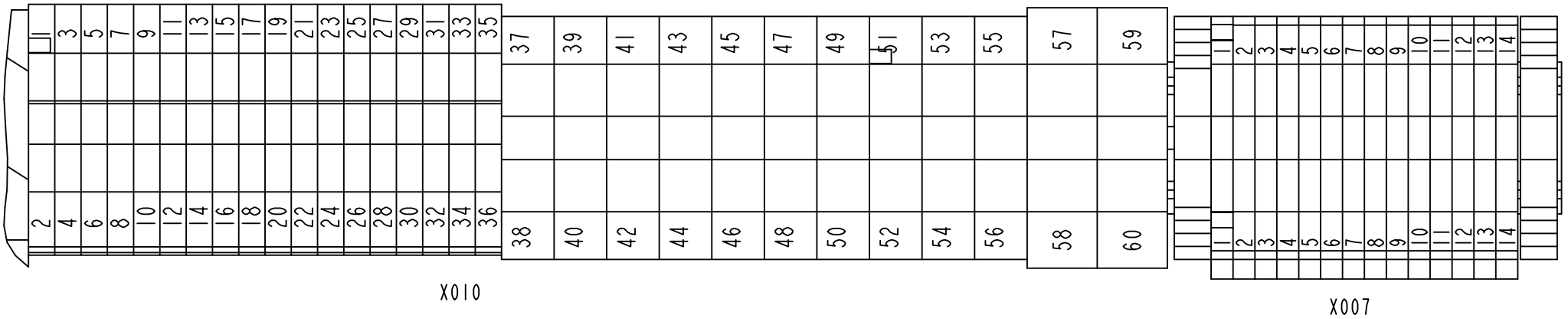

1511829-2
422317

ECM: 431012 - 20091228
Group number: 1511829-0200
Assembly Drawing: 1511829-2_2_AC

This list covers pages from 9-78 to 9-81

Pos	Part No	UN	Qty	Description	Page No
-					
010	353021-0212		14	FEED THROUGH TERMINAL, WDU 2,5	
020	90135-0019		1	CLAMP ZB 35	
030	90459-5253		5	TERMINAL BLOCK WDK 2,5 V	
040	353022-0003		20	TERMINAL WNT 6 10X3	
050	353024-0205		18	EARTH TERMINAL WPE 4	
060	353024-0208		10	EARTH TERMINAL WPE 16	
070	353024-0209		2	EARTH TERMINAL WPE 35	
080	353031-0203		7	END BRACKET, WEW 35/2	
090	353032-0009		1	END PLATE, WAP WDK 2,5	
100	353033-0104		3	END PLATE, WHP2,5-35N/10X3 BL	
110	353034-0030		1	BRIDGE CONNECTOR WQV 2,5/10	
120	353042-0004	MM	880	RAIL, TS 35/7,5	
130	359011-0807		7	MARKING, DEK 5 FW 1-50	
140	359011-0808		1	MARKING, DEK 5FW 51-100	
150	495498-0028		1	CU-RAIL L=280MM	
160	353033-0105		1	END PLATE, WAP 16+35 WTW 2,5-10	
170	353021-0219		9	FEED THROUGH TERMINAL, WDU 35	
180	353034-0035		1	BRIDGE CONNECTOR WQV 35/10	
190	353022-0006		15	TERMINAL WNT 2.5 10X3	
200	570482-0000		2	SPACER	
210	90459-6477		2	THREADED INSERTS, BUSHING, M4	
300	312115-0323		5	SCREW ISO4762 M5X8 A4 80	
310	315105-0146		5	WASHER PLAIN, 5,3X10X1 A4 BRB	
B008	90458-1114		1	BIMET. ELECTROMECH. THERMOSTAT K7H.020	

Pos	Part No	UN	Qty	Description	Page No

Machine Type | Group Description | Used-In | Group Number | Page No

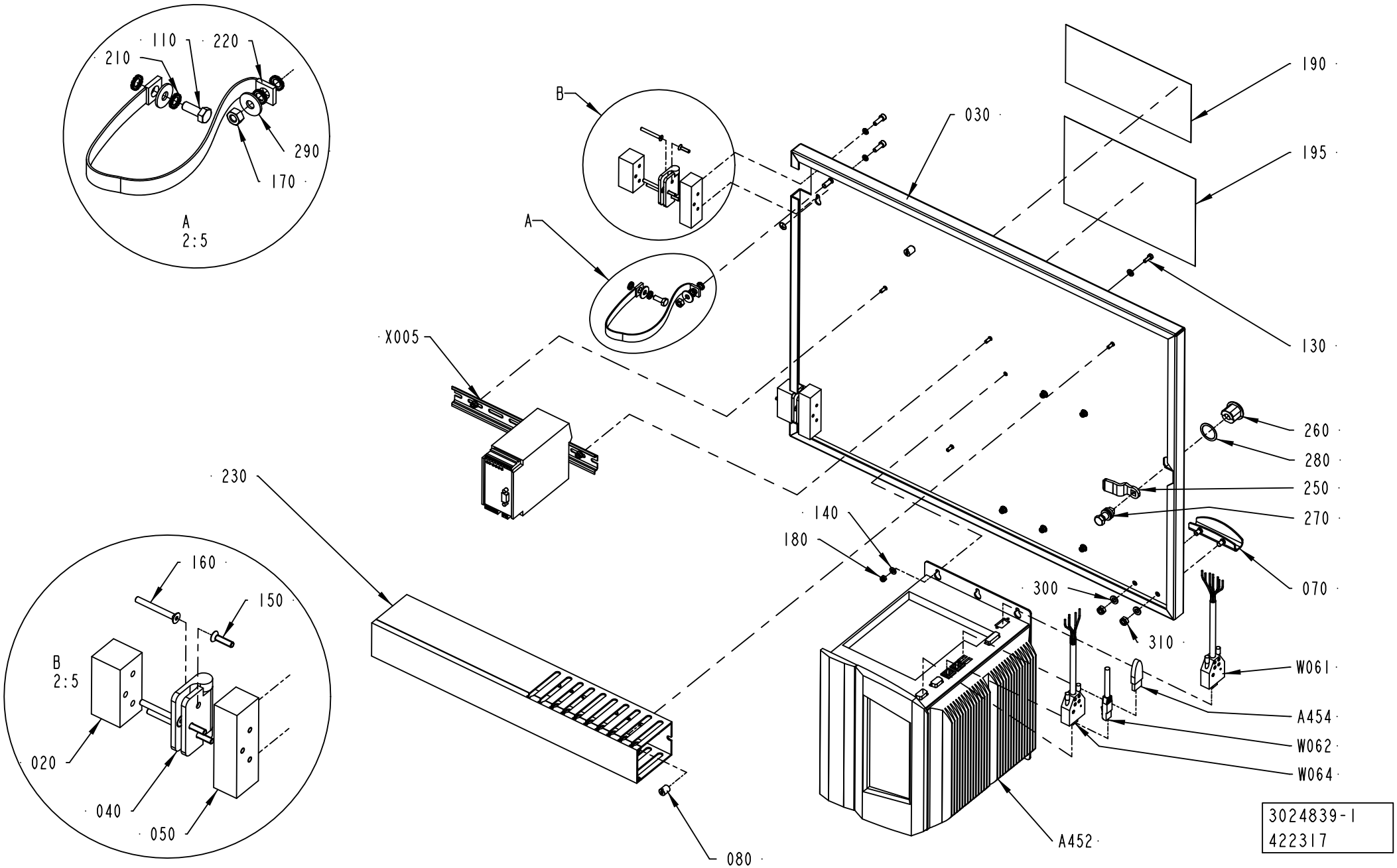
210
110
220
290
170
A
2:5
B
A
X005
190
195
030
130
260
280
250
270
070
230
140
180
300
310
W061
A454
W062
W064
160
150
B
2:5
020
040
050
080
A452
3024839-1
422317

ECM: 431004 - 20091228
Group number: 3024839-0100
Assembly Drawing: 3024839-1_1_AC

Pos	Part No	UN	Qty	Description	Page No
-					
030	3024840-0000		1	DOOR	
040	1523437-0000		2	HINGE	
050	3024827-0000		2	SPACER	
060	1523440-0000		2	SPACER	
070	3072122-0000		1	HANDLE	
080	1285109-0000		2	NUT	
110	312105-0368		1	SCREW, M6S ISO 4017 M6X16 A4 80	
120	312115-0329		4	SCREW ISO4762 M5X16 A4 80	
130	312105-0291		6	SCREW, M6S ISO 4017 M4X12 A4 70	
140	315105-0146		12	WASHER PLAIN, 5,3X10X1 A4 BRB	
150	312155-0293		6	SCREW DIN 7991 MF6S M4X16 A4 70	
160	312155-0301		6	SCREW DIN 7991 MF6S M4X35 A4 70	
170	312605-0316		2	HEXAGON NUT, M6M M6 A280	
180	312812-0312		6	HEXAGON NUT, NY-LOCK M4 A4 80	
190	90194-0080		1	SIGN, IDENTIFICATION OF WIRING	
195	1517654-0000		1	DELIVERED DESIGN	
200	315402-0146		4	LOCK WASHER, DIN127B 5,1 A4, M5-3/16	
210	90062-0015		4	LOCK WASHER SERRAT.EXT.GEAR,6,4/11 H=0,7	
220	90135-0044		1	EARTH WIRE, L=320 MM 16 MM2	
230	90181-0054	MM	465	CABLE DUCT, PLASTIC, 60X80	
240	90194-0163		1	SIGN, EARTH WITHIN CIRCLE / SHEET 48 PCS	
250	90237-0157		1	LOCK BOLT, 1000-230	
260	90237-0319		1	LOCK HOUSING, 1000-U134	
270	90237-0320		1	LOCK HOUSING, 1000-U136	
280	90237-0322		1	LOCK GASKET, 1000-U137	
290	90457-0192		2	WASHER PLAIN ROUND, 6,5/18, H=1,5	
300	315105-0153		2	WASHER PLAIN, 6,4X12X1,5 A4 BRB	
310	312812-0316		2	HEXAGON NUT, NY-LOCK M6 A4 80	
A452	90601-1326		1	COMPUTER APC620, 5S62:400547.000-00	
A454	90600-2132		1	INTOUCH OEM 2000 V.9,5 HW KEY USB	
W061	1254442-0000		1	CABLE SERIAL	
W062	351501-0030		1	ETHERNET PATCH CABLE, FL CAT5 PATCH 3,0	
W064	3024833-0000		1	CABLE SERIAL	
X005	1517659-0200		1	MODEM	**9-85**
X452	90110-0028		1	CONTACT STAK 3 N GREY, 932140-106	

Pos	Part No	UN	Qty	Description	Page No

Machine Type	Group Description	Used-In	Group Number	Page No

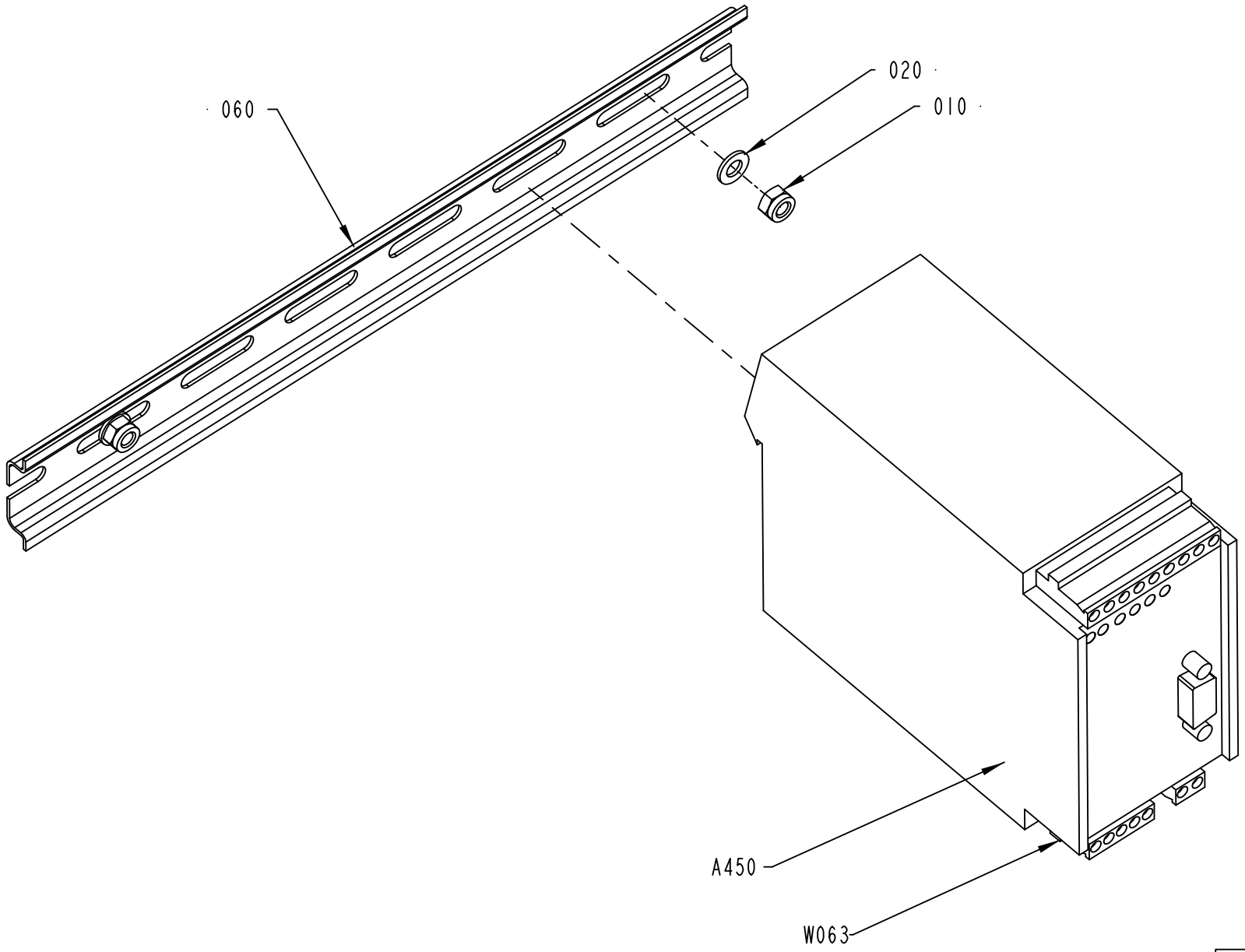

1517659-2
434406

ECM: 438639 - 20100222
Group number: 1517659-0200
Assembly Drawing: 1517659-2_1_AC

Pos	Part No	UN	Qty	Description	Page No
-					
010	312812-0314		2	HEXAGON NUT, NY-LOCK M5 A4 80	
020	315105-0146		2	WASHER PLAIN, 5,3X10X1 A4 BRB	
060	353042-0004	MM	250	RAIL, TS 35/7,5	
A450	90453-0002		1	MODEM MD-12 DC	
W063	90220-0091	M	10	CABLE, PAIR TWISTED 2X2X0,25MM2	

Pos	Part No	UN	Qty	Description	Page No

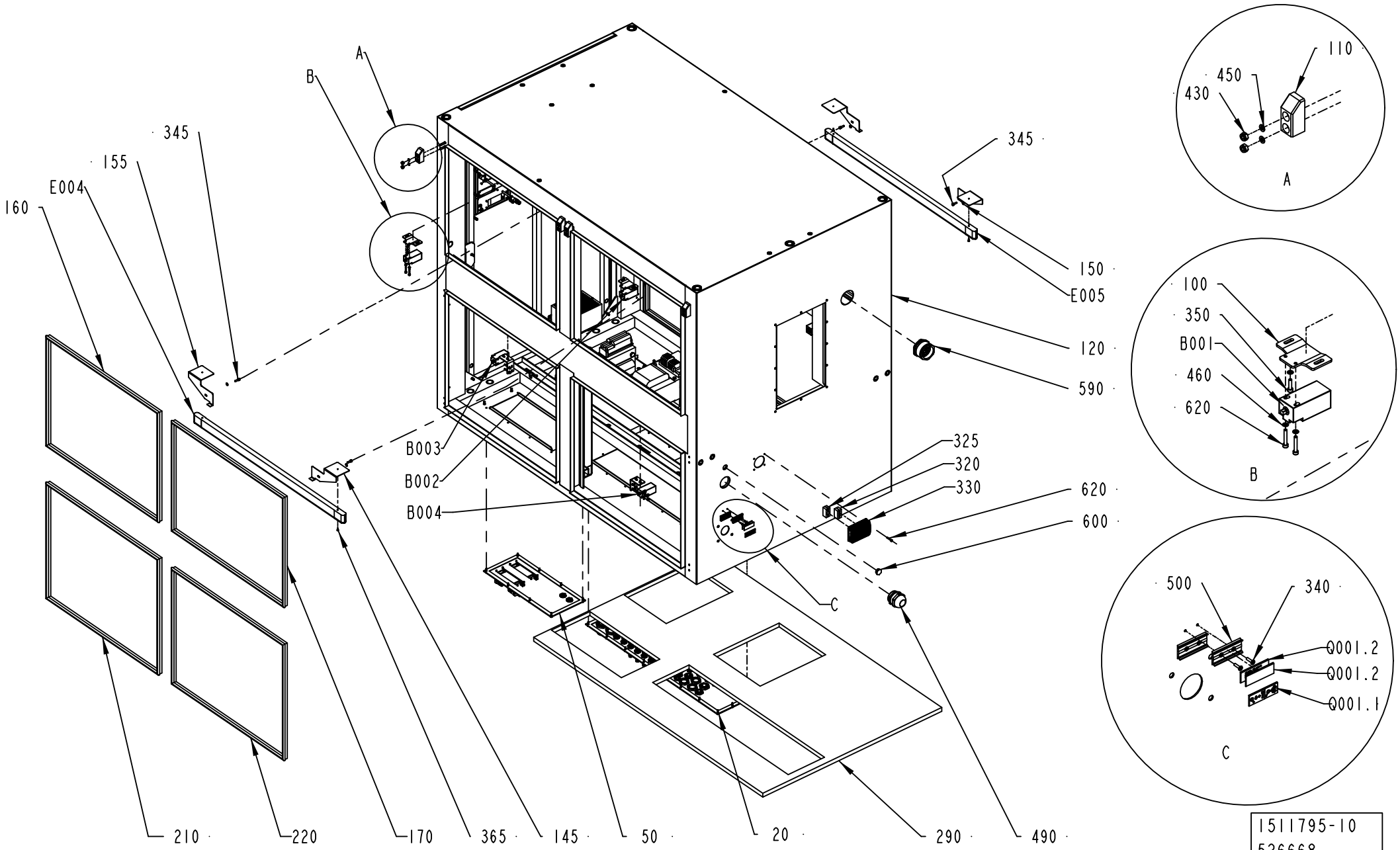

1511795-10
526668

ECM: 541776 - 20120217
Group number: 1511795-0300
Assembly Drawing: 1511795-10_1_AD

This list covers pages from 9-86 to 9-89

Pos	Part No	UN	Qty	Description	Page No
HVA					
120	3040331-0000		1	WELDED CABINET	
NOHVA					
120	3024825-0000		1	WELDED CABINET	
TBA NOPT ASU					
400	312115-0368		6	SCREW ISO4762 M6X16 A4 80	
520	90457-0192		4	WASHER PLAIN ROUND, 6,5/18, H=1,5	
580	315401-0153		4	WASHER FBH6, 1FZB	
630	90458-1313		1	BLIND PLUG CIRCULAR, M63X1,5 514GFK/263	
640	90458-0328		1	NUT, M63X1,5	
T005	90245-0029		1	TRANSFORMER, 1-PH 6500 VA SEC 130A	
TBA NOPT NOASU					
400	312115-0368		2	SCREW ISO4762 M6X16 A4 80	
630	90458-1313		1	BLIND PLUG CIRCULAR, M63X1,5 514GFK/263	
640	90458-0328		1	NUT, M63X1,5	
TBA PT19 ASU, TBA PT19 NOASU					
590	90458-1150		1	CABLE GLAND, RG M63/4	
Common Parts					
010	1511784-0200		1	POWER CABLE INLETS	**9-91, 9-93**
020	1511785-0200		1	CONTROL CABLE INLETS	**9-95, 9-97**
030	3040333-0100		1	TINA GROUP	**9-99, 9-101**
040	1511788-0200		1	POWER CONNECTOR PLATE	**9-103, 9-105**
050	1511789-0200		1	CONTROL CONNECTOR PLATE	**9-107**
060	1511791-0300		1	DOOR	**9-109**
070	1517694-0000		1	END BLOCK	
075	2962080-0000		1	ENDING DOOR	
100	1517699-0000		3	SUPPORT	
110	1517700-0000		6	EDGE GUIDE	
130	3159164-0000		4	SUPPORT	
135	3055883-0000		2	BRACKET	
140	1523960-0000		1	SPACER	
145	2921884-0000		1	SUPPORT	
155	2921885-0000		1	SUPPORT	
160	90143-0057	MM	2430	STRIP EMKA 1011-05 21X11MM	
170	90143-0057	MM	2430	STRIP EMKA 1011-05 21X11MM	
180	90143-0057	MM	2872	STRIP EMKA 1011-05 21X11MM	
190	90143-0057	MM	1960	STRIP EMKA 1011-05 21X11MM	
200	90143-0057	MM	4116	STRIP EMKA 1011-05 21X11MM	
210	90143-0057	MM	2850	STRIP EMKA 1011-05 21X11MM	
220	90143-0057	MM	2850	STRIP EMKA 1011-05 21X11MM	
230	90143-0057	MM	2850	STRIP EMKA 1011-05 21X11MM	
240	90143-0057	MM	2850	STRIP EMKA 1011-05 21X11MM	
250	90143-0073	MM	585	FLAT GASKET TAPE W. ADHESIVE, 15X3.0	
260	90143-0073	MM	585	FLAT GASKET TAPE W. ADHESIVE, 15X3.0	
270	90143-0073	MM	585	FLAT GASKET TAPE W. ADHESIVE, 15X3.0	
280	90143-0073	MM	585	FLAT GASKET TAPE W. ADHESIVE, 15X3.0	
290	1523464-0000		1	GASKET	
300	90181-0060	MM	460	CABLE DUCT, PLASTIC, 40X100	
305	1285109-0000		2	NUT	
310	90194-0163		1	SIGN, EARTH WITHIN CIRCLE / SHEET 48 PCS	
320	90602-3434		1	CABLE LEAD-IN, 5EM0000011992	
325	90602-3433		1	CABLE LEAD-IN, 5EM0000011991	
330	90600-5579		1	CABLE ENTRY KIT, EZENTRY 4/4	
340	311521-0146		4	RIVET, BLANK 3,2X12	
345	312105-0329		2	SCREW, M6S ISO 4017 M5X16 A4 80	
350	312115-0293		6	SCREW ISO4762 M4X16 A4 80	
355	312125-0226		2	SLOTTED HEAD SCREW, ISO1207 M3X12 A4	
360	312115-0299		8	SCREW ISO4762 M4X30 A4 80	
365	312125-0222		4	SLOTTED HEAD SCREW, ISO1207 M3X8 A4	
370	312115-0297		6	SCREW ISO4762 M4X25 A4 80	
380	312115-0329		8	SCREW ISO4762 M5X16 A4 80	
390	312115-0366		10	SCREW ISO4762 M6X12 A4 80	
410	312155-0291		33	SCREW DIN 7991 MF6S M4X12 A4 70	
420	312812-0312		8	HEXAGON NUT, NY-LOCK M4 A4 80	
430	312812-0316		12	HEXAGON NUT, NY-LOCK M6 A4 80	
440	315105-0136		35	WASHER PLAIN, 4,3X9X0,8 A4 BRB	
450	315105-0146		14	WASHER PLAIN, 5,3X10X1 A4 BRB	
460	315402-0136		12	LOCK WASHER, DIN127B 4,1 A4, M4-5/32	
470	315402-0146		8	LOCK WASHER, DIN127B 5,1 A4, M5-3/16	
480	315402-0156		8	LOCK WASHER, DIN127B 6,5 A4, 1/4	
490	90458-0311		1	CABLE GLAND, M50X1,5, 5311 1060	
500	359240-0100		2	SIGN HOLDER FOR 359240-0001	
510	90458-0327		1	NUT, M50X1,5	
530	315105-0153		4	WASHER PLAIN, 6,4X12X1,5 A4 BRB	
540	312115-0289		4	SCREW ISO4762 M4X10 A4 80	
550	352113-0205		25	ANCHOR PLATES FOR STRIPS, TM2S8-C100	
560	312115-0325		2	SCREW ISO4762 M5X10 A4 80	
600	90459-1172		1	BLIND PLUG HEXAGONAL, M20X1,5	
610	353250-0020		1	GLAND LOCK NUT, M20X1,5	
620	312115-0297		4	SCREW ISO4762 M4X25 A4 80	
B001	90602-8807		1	LIMIT SW. SZ 2586.010	
B002	90602-8807		1	LIMIT SW. SZ 2586.010	
B003	90602-8807		1	LIMIT SW. SZ 2586.010	
B004	90602-8807		1	LIMIT SW. SZ 2586.010	

Machine Type | Group Description | Used-In | Group Number | Page No

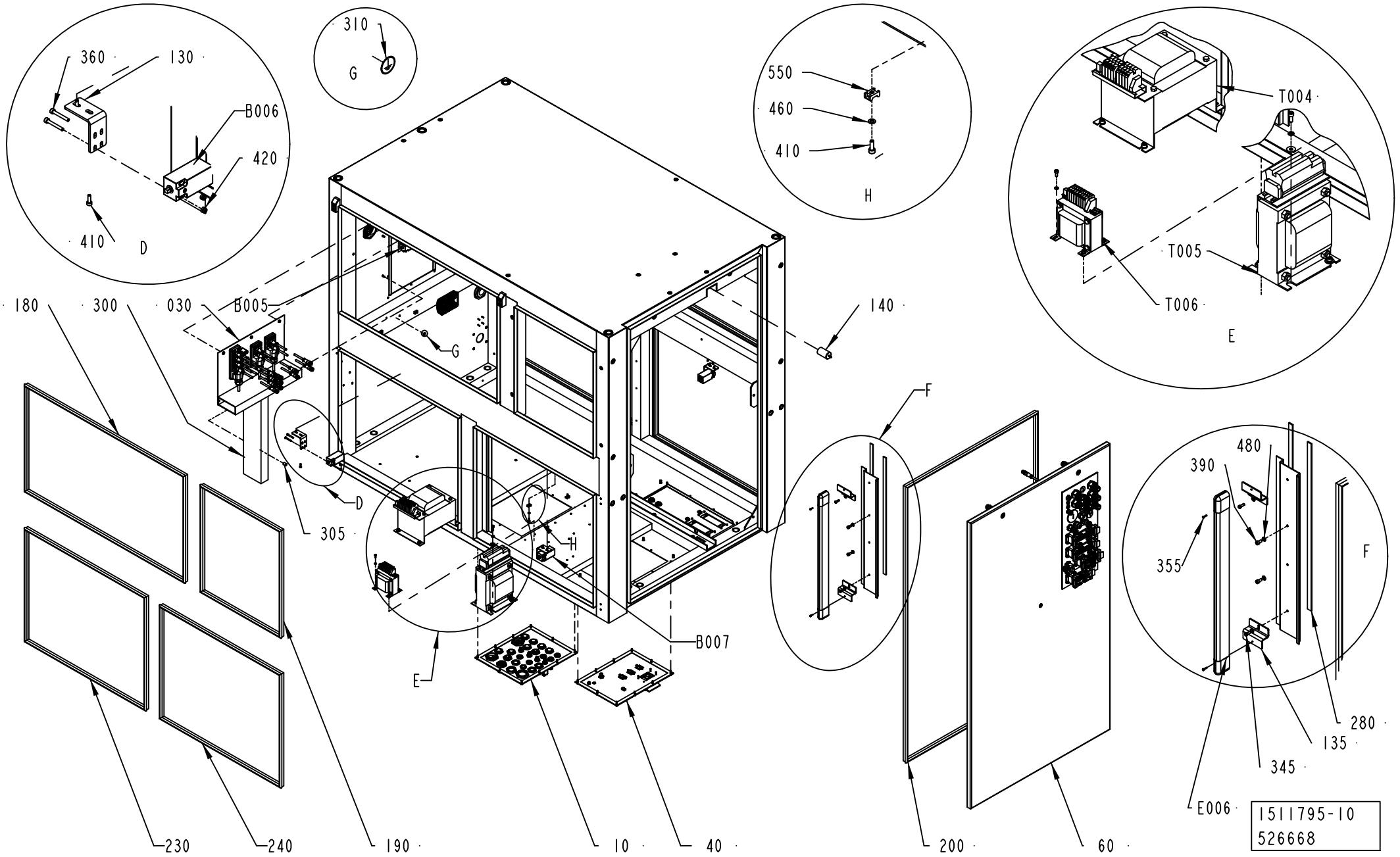
360
130
B006
420
410
D
310
G
550
460
410
H
T004
T005
T006
E
180
300
030
B005
140
G
D
305
F
B007
E
F
480
390
355
F
280
135
345
E006
230
240
190
10
40
200
60
1511795-10
526668

Pos	Part No	UN	Qty	Description	Page No
Common Parts (Cont'd)					
B005	90602-8807		1	LIMIT SW. SZ 2586.010	
B006	90602-8807		1	LIMIT SW. SZ 2586.010	
B007	90602-8807		1	LIMIT SW. SZ 2586.010	
E004	90600-4049		1	LIGHT FIXTURE, TCH128 1XTL5-21W/830 HF	
	90600-4239		*1*	*FLUORESCENT TUBE, MASTER TL5 HE 21W/830.*	
E005	90600-4049		1	LIGHT FIXTURE, TCH128 1XTL5-21W/830 HF	
	90600-4239		*1*	*FLUORESCENT TUBE, MASTER TL5 HE 21W/830.*	
E006	90600-4048		1	LIGHT FIXTURE, TCH128 1XTL5-14W/830 HF	
	90600-4238		*1*	*FLUORESCENT TUBE, MASTER TL5 HE 14W/830.*	
Q001.1	90457-0123		1	SIGN, MAIN SWITCH	
Q001.2	359241-0297		1	SIGN: 50 HZ	
T004	90458-1273		1	TRANSFORMER, OFL-1350	
T006	90458-0258		1	TRANSFORMER, 1-PH 100VA SEC 8,3A	

Pos	Part No	UN	Qty	Description	Page No

POWER CABLE INLETS

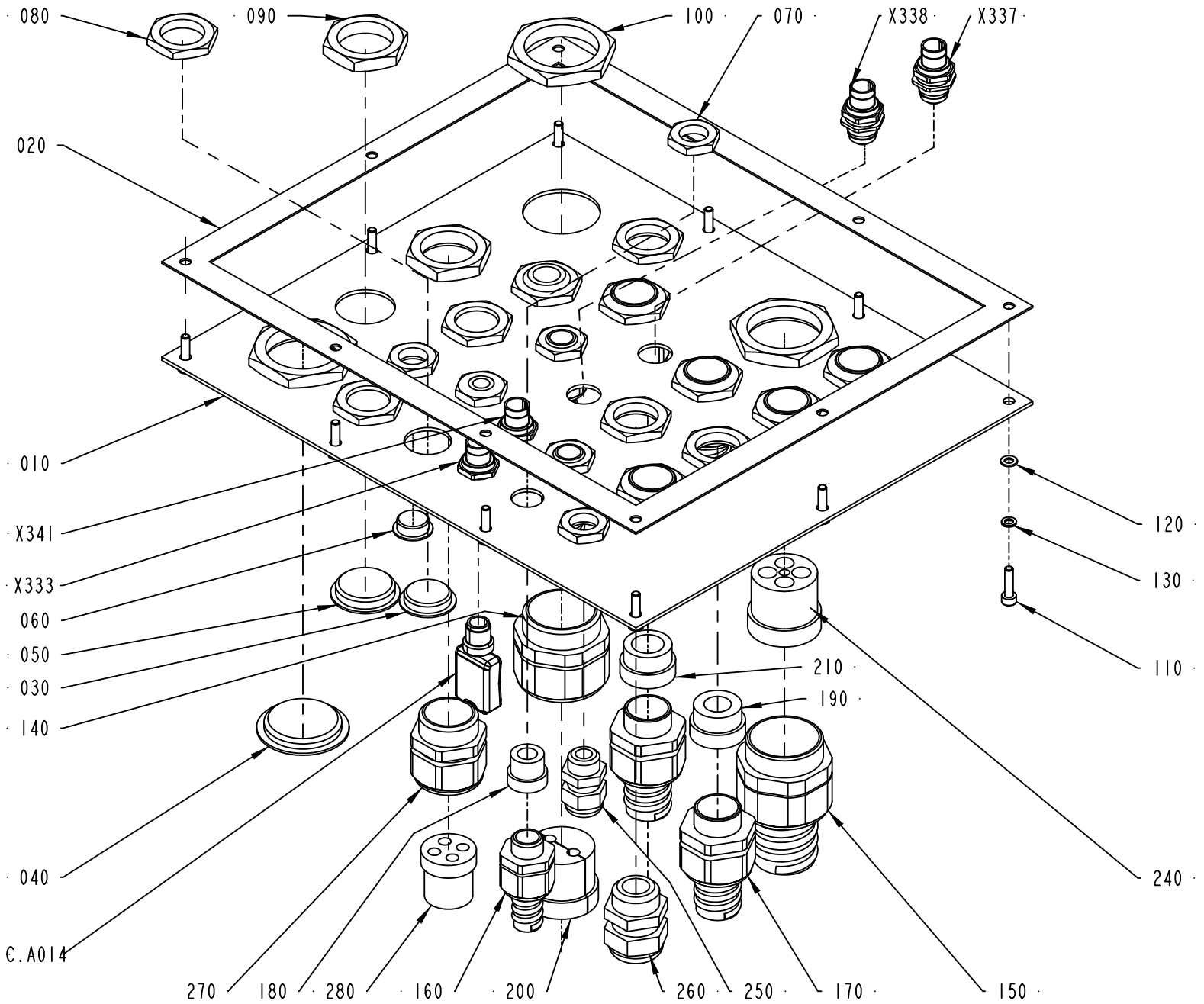

1511784-2
ECM 422317

ECM: 430994 - 20091228
Group number: 1511784-0200
Assembly Drawing: 1511784-2_1_AC

This list covers pages from 9-90 to 9-93

Pos	Part No	UN	Qty	Description	Page No
-					
010	3040327-0000		1	PLATE	
020	1511841-0000		1	GASKET	
030	90002-0004		4	BLANK-OFF PLUG, PR 22,5 SKINDICHT-BLK16	
040	90002-0010		1	BLANK-OFF PLUG, PR 37 SKINDICHT-BLK29	
050	90002-0012		1	BLANK-OFF PLUG, PR 28,3 SKINDICHT-BLK21	
060	90002-0013		1	BLANK-OFF PLUG, PR 15,2 SKINDICHT-BLK9	
070	90099-0104		7	PLUG, PR 15,2 (PG9)	
080	90099-0110		12	PLUG, PR 22,5 (PG16)	
090	90099-0119		2	PLUG, PR 28,3 (PG21)	
100	90099-0120		3	PLUG PR 37 (PG29)	
110	312115-0293		10	SCREW ISO4762 M4X16 A4 80	
120	315105-0136		10	WASHER PLAIN, 4,3X9X0,8 A4 BRB	
130	315402-0136		10	LOCK WASHER, DIN127B 4,1 A4, M4-5/32	
140	353240-0006		1	COMPRESSION GLAND, VK 155Y	
150	353242-0003		1	COMPRESSION GLAND, VK 155YUL21	
160	353243-0001		3	GLAND FITTING, VK 15052YUL11	
170	353243-0005		7	GLAND FITTING, VK 15354YUL16	
180	353249-0009		3	INSERT, SINGLE HOLE, EK152 9	
190	353249-0013		5	INSERT, SINGLE HOLE, EK154 13	
200	2504449-0000		1	INSERT	
210	353249-0014		2	INSERT, SINGLE HOLE, EK154 16	
240	90457-0027		1	INSERT, MULTI HOLE, E155M1X5/4X9	
250	352103-0101		2	CABLE GLAND, ST 9, PR15,2/PG9	
260	352103-0110		2	CABLE GLAND, STR 16, PR22,5/PG16	
270	353240-0005		1	COMPRESSION GLAND, VK 154Y	
280	353249-0051		1	INSERT, MULTI HOLE, E154M 4X6	
C.A014	90459-5627		1	CONNECTION, TINA 1-A	
X333	90600-1559		1	PANEL FEED THROUGH, FWD5 54218	
X337	90600-1559		1	PANEL FEED THROUGH, FWD5 54218	
X338	90600-1559		1	PANEL FEED THROUGH, FWD5 54218	
X341	90600-1559		1	PANEL FEED THROUGH, FWD5 54218	

Pos	Part No	UN	Qty	Description	Page No

Machine Type	Group Description	Used-In	Group Number	Page No

POWER CABLE INLETS

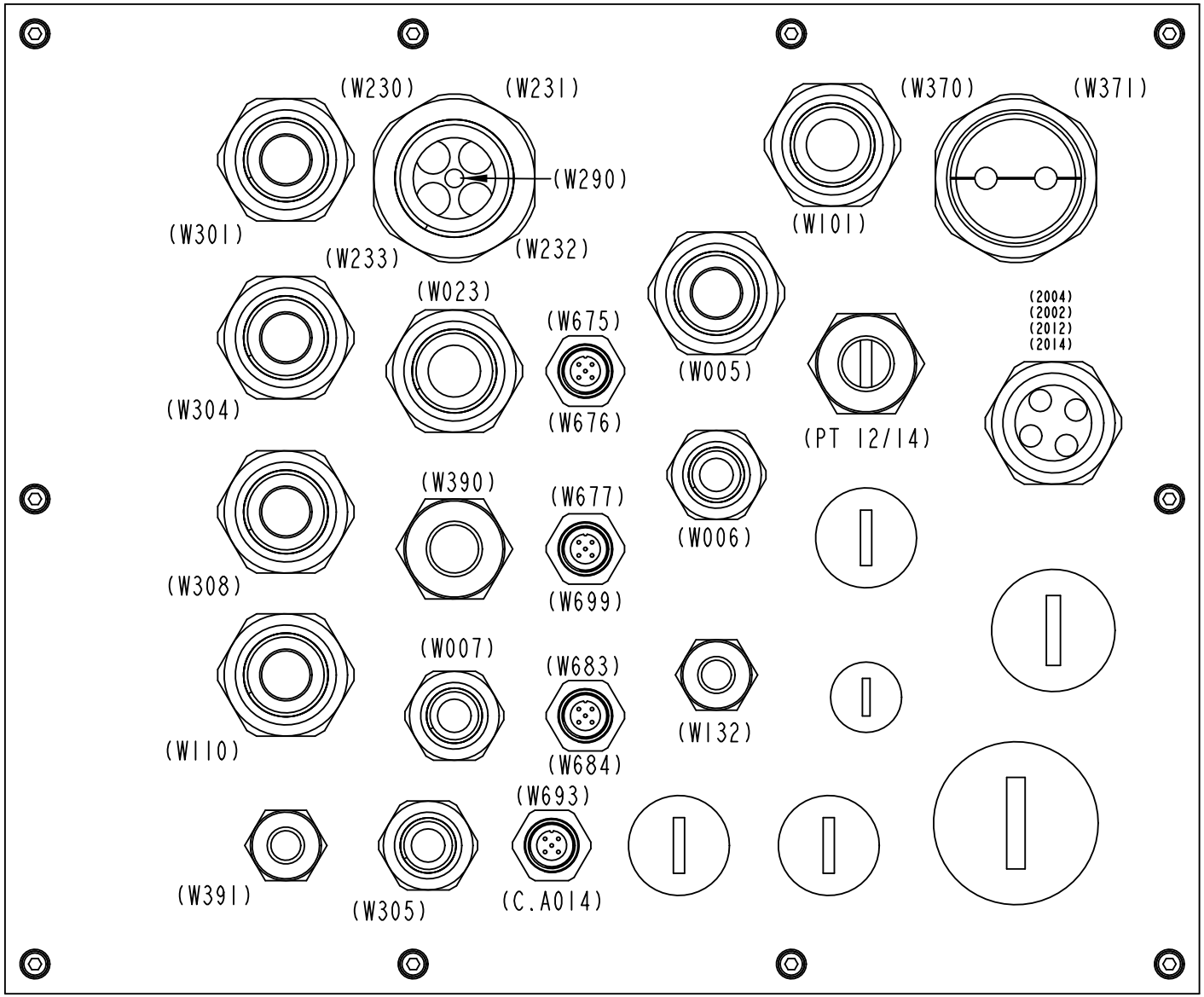

1511784-2
ECM 422317

ECM: 430994 - 20091228
Group number: 1511784-0200
Assembly Drawing: 1511784-2_2_AC

This list covers pages from 9-90 to 9-93

Pos	Part No	UN	Qty	Description	Page No
-					
010	3040327-0000		1	PLATE	
020	1511841-0000		1	GASKET	
030	90002-0004		4	BLANK-OFF PLUG, PR 22,5 SKINDICHT-BLK16	
040	90002-0010		1	BLANK-OFF PLUG, PR 37 SKINDICHT-BLK29	
050	90002-0012		1	BLANK-OFF PLUG, PR 28,3 SKINDICHT-BLK21	
060	90002-0013		1	BLANK-OFF PLUG, PR 15,2 SKINDICHT-BLK9	
070	90099-0104		7	PLUG, PR 15,2 (PG9)	
080	90099-0110		12	PLUG, PR 22,5 (PG16)	
090	90099-0119		2	PLUG, PR 28,3 (PG21)	
100	90099-0120		3	PLUG PR 37 (PG29)	
110	312115-0293		10	SCREW ISO4762 M4X16 A4 80	
120	315105-0136		10	WASHER PLAIN, 4,3X9X0,8 A4 BRB	
130	315402-0136		10	LOCK WASHER, DIN127B 4,1 A4, M4-5/32	
140	353240-0006		1	COMPRESSION GLAND, VK 155Y	
150	353242-0003		1	COMPRESSION GLAND, VK 155YUL21	
160	353243-0001		3	GLAND FITTING, VK 15052YUL11	
170	353243-0005		7	GLAND FITTING, VK 15354YUL16	
180	353249-0009		3	INSERT, SINGLE HOLE, EK152 9	
190	353249-0013		5	INSERT, SINGLE HOLE, EK154 13	
200	2504449-0000		1	INSERT	
210	353249-0014		2	INSERT, SINGLE HOLE, EK154 16	
240	90457-0027		1	INSERT, MULTI HOLE, E155M1X5/4X9	
250	352103-0101		2	CABLE GLAND, ST 9, PR15,2/PG9	
260	352103-0110		2	CABLE GLAND, STR 16, PR22,5/PG16	
270	353240-0005		1	COMPRESSION GLAND, VK 154Y	
280	353249-0051		1	INSERT, MULTI HOLE, E154M 4X6	
C.A014	90459-5627		1	CONNECTION, TINA 1-A	
X333	90600-1559		1	PANEL FEED THROUGH, FWD5 54218	
X337	90600-1559		1	PANEL FEED THROUGH, FWD5 54218	
X338	90600-1559		1	PANEL FEED THROUGH, FWD5 54218	
X341	90600-1559		1	PANEL FEED THROUGH, FWD5 54218	

Pos	Part No	UN	Qty	Description	Page No

Machine Type	Group Description	Used-In	Group Number	Page No

CONTROL CABLE INLETS

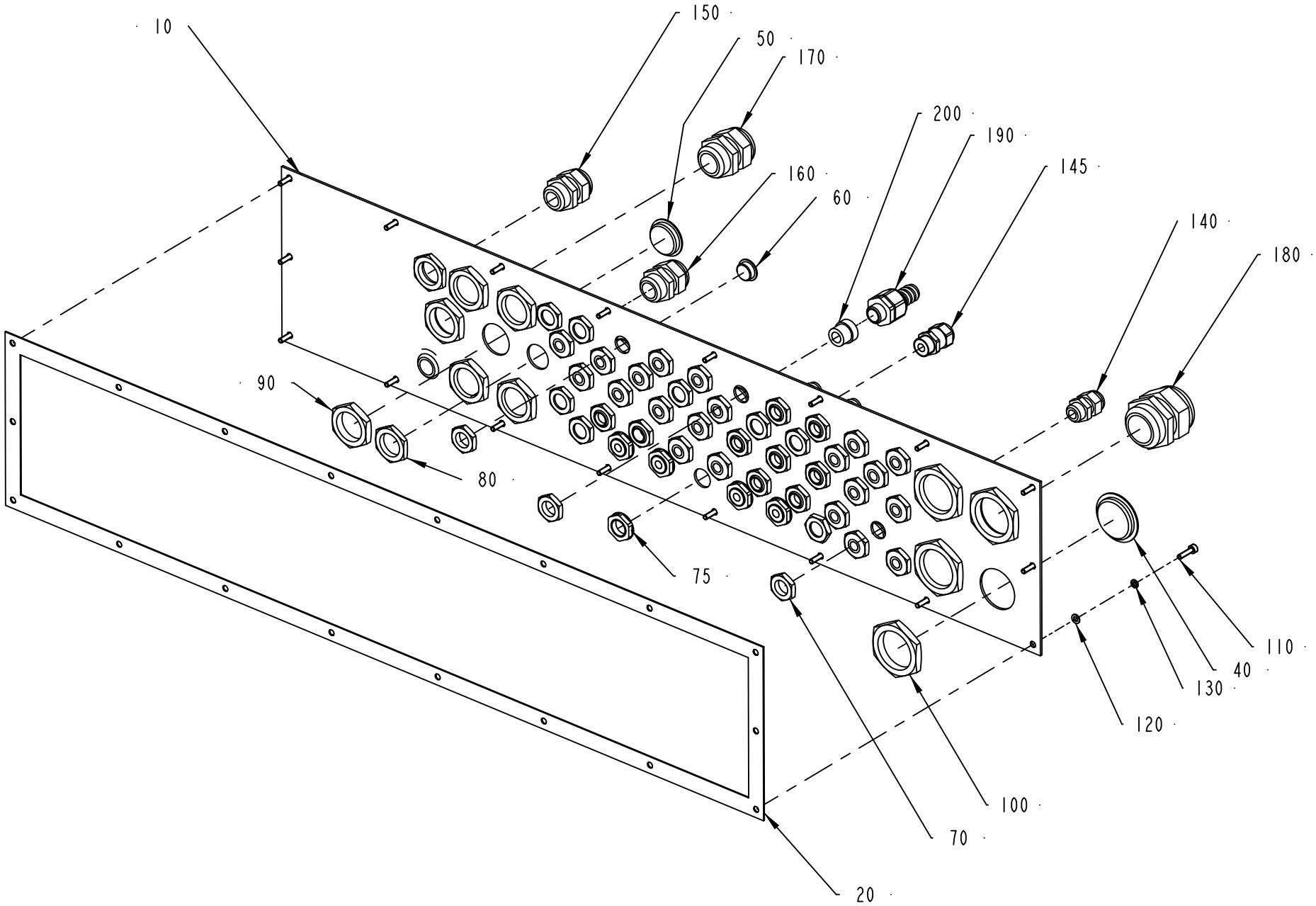

1511785-2
422317

ECM: 430998 - 20091228
Group number: 1511785-0200
Assembly Drawing: 1511785-2_1_AB

This list covers pages from 9-94 to 9-97

Pos	Part No	UN	Qty	Description	Page No
-					
010	3040342-0000		1	PLATE	
020	1511843-0000		1	GASKET	
040	90002-0010		3	BLANK-OFF PLUG, PR 37 SKINDICHT-BLK29	
050	90002-0012		5	BLANK-OFF PLUG, PR 28,3 SKINDICHT-BLK21	
060	90002-0013		9	BLANK-OFF PLUG, PR 15,2 SKINDICHT-BLK9	
070	90099-0104		41	PLUG, PR 15,2 (PG9)	
075	90458-0322		5	NUT, M16X1,5	
080	90099-0110		3	PLUG, PR 22,5 (PG16)	
090	90099-0119		6	PLUG, PR 28,3 (PG21)	
100	90099-0120		4	PLUG PR 37 (PG29)	
110	312115-0293		18	SCREW ISO4762 M4X16 A4 80	
120	315105-0136		18	WASHER PLAIN, 4,3X9X0,8 A4 BRB	
130	315402-0136		18	LOCK WASHER, DIN127B 4,1 A4, M4-5/32	
140	352103-0101		22	CABLE GLAND, ST 9, PR15,2/PG9	
145	90458-0306		5	CABLE GLAND, M16X1,5, 5311 1010	
150	352103-0110		1	CABLE GLAND, STR 16, PR22,5/PG16	
160	352103-0111		2	CABLE GLAND, ST 16, PR22,5/PG16	
170	352103-0116		1	CABLE GLAND, ST 21, PR28,3/PG21	
180	352103-0121		1	CABLE GLAND, ST 29, PR37,0/PG29	
190	353243-0001		10	GLAND FITTING, VK 15052YUL11	
200	353249-0009		10	INSERT, SINGLE HOLE, EK152 9	

Pos	Part No	UN	Qty	Description	Page No

Machine Type	Group Description	Used-In	Group Number	Page No

CONTROL CABLE INLETS

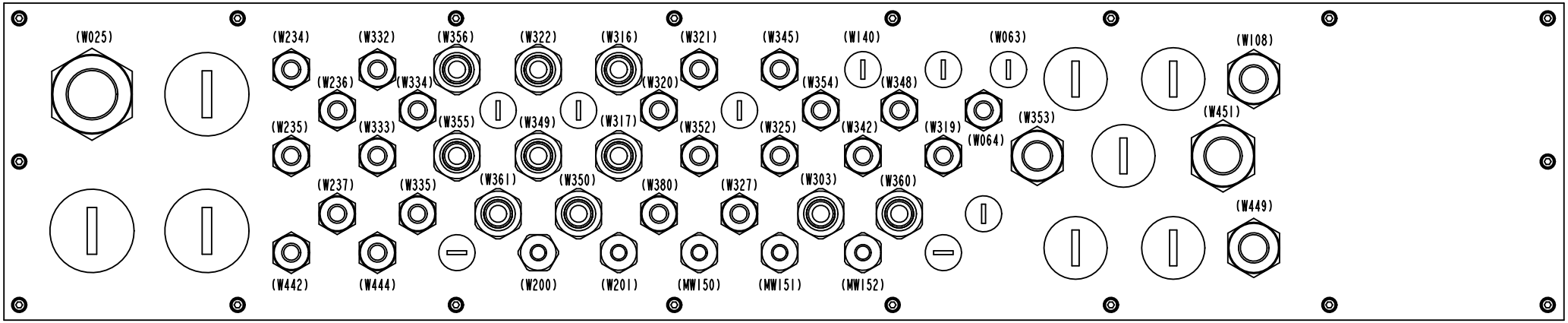

1511785-2
422317

ECM: 430998 - 20091228
Group number: 1511785-0200
Assembly Drawing: 1511785-2_2_AB

This list covers pages from 9-94 to 9-97

Pos	Part No	UN	Qty	Description	Page No
-					
010	3040342-0000		1	PLATE	
020	1511843-0000		1	GASKET	
040	90002-0010		3	BLANK-OFF PLUG, PR 37 SKINDICHT-BLK29	
050	90002-0012		5	BLANK-OFF PLUG, PR 28,3 SKINDICHT-BLK21	
060	90002-0013		9	BLANK-OFF PLUG, PR 15,2 SKINDICHT-BLK9	
070	90099-0104		41	PLUG, PR 15,2 (PG9)	
075	90458-0322		5	NUT, M16X1,5	
080	90099-0110		3	PLUG, PR 22,5 (PG16)	
090	90099-0119		6	PLUG, PR 28,3 (PG21)	
100	90099-0120		4	PLUG PR 37 (PG29)	
110	312115-0293		18	SCREW ISO4762 M4X16 A4 80	
120	315105-0136		18	WASHER PLAIN, 4,3X9X0,8 A4 BRB	
130	315402-0136		18	LOCK WASHER, DIN127B 4,1 A4, M4-5/32	
140	352103-0101		22	CABLE GLAND, ST 9, PR15,2/PG9	
145	90458-0306		5	CABLE GLAND, M16X1,5, 5311 1010	
150	352103-0110		1	CABLE GLAND, STR 16, PR22,5/PG16	
160	352103-0111		2	CABLE GLAND, ST 16, PR22,5/PG16	
170	352103-0116		1	CABLE GLAND, ST 21, PR28,3/PG21	
180	352103-0121		1	CABLE GLAND, ST 29, PR37,0/PG29	
190	353243-0001		10	GLAND FITTING, VK 15052YUL11	
200	353249-0009		10	INSERT, SINGLE HOLE, EK152 9	

Pos	Part No	UN	Qty	Description	Page No

Machine Type	Group Description	Used-In	Group Number	Page No

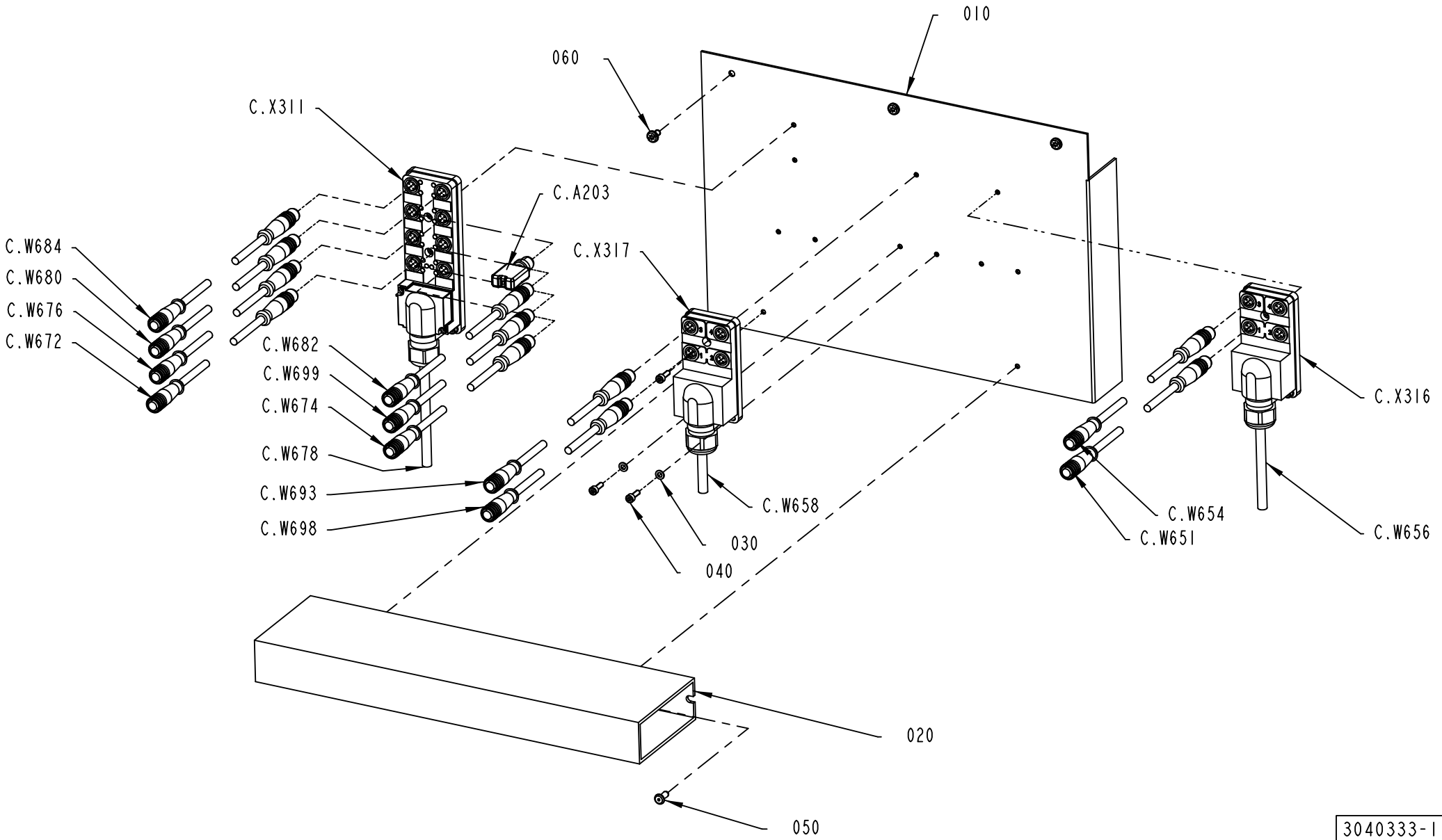

3040333-1
422317

ECM: 431000 - 20091228
Group number: 3040333-0100
Assembly Drawing: 3040333-1_1_AB

This list covers pages from 9-98 to 9-101

Pos	Part No	UN	Qty	Description	Page No
-					
010	3040334-0000		1	MOUNTING PLATE	
020	90181-0060	MM	380	CABLE DUCT, PLASTIC, 40X100	
030	315101-0136		6	WASHER BRB, 4,3/8 H=0,8	
040	312115-0291		10	SCREW ISO4762 M4X12 A4 80	
050	90181-0313		2	RIVET, DUCTAFIX R4	
060	312113-0323		3	SCREW, SERRATED COMBI TORX M5X8 A2	
C.X317	90459-4254		1	CONNECTION BLOCK TINA 4A, 20-054-03	
C.X316	90459-4254		1	CONNECTION BLOCK TINA 4A, 20-054-03	
C.X311	90600-4876		1	CONNECTION BOX TINA 8A , 20-054-05	
C.W699	90459-4876		1	FOCUS JUMPER CABLE M12 5P 3M, 20-056-21	
C.W698	90459-4876		1	FOCUS JUMPER CABLE M12 5P 3M, 20-056-21	
C.W693	90459-4876		1	FOCUS JUMPER CABLE M12 5P 3M, 20-056-21	
C.W684	90459-4876		1	FOCUS JUMPER CABLE M12 5P 3M, 20-056-21	
C.W682	90459-7095		1	FOCUS JUMPER CABLE M12 5P 1M, 20-056-20	
C.W680	90459-7095		1	FOCUS JUMPER CABLE M12 5P 1M, 20-056-20	
C.W678	90600-5930	M	2	CABLE C9, 20-057-15	
C.W676	90459-4876		1	FOCUS JUMPER CABLE M12 5P 3M, 20-056-21	
C.W674	90459-7095		1	FOCUS JUMPER CABLE M12 5P 1M, 20-056-20	
C.W672	90459-7095		1	FOCUS JUMPER CABLE M12 5P 1M, 20-056-20	
C.W658	90600-5930	M	1	CABLE C9, 20-057-15	
C.W656	90600-5930	M	2	CABLE C9, 20-057-15	
C.W654	90459-7095		1	FOCUS JUMPER CABLE M12 5P 1M, 20-056-20	
C.W651	90459-7095		1	FOCUS JUMPER CABLE M12 5P 1M, 20-056-20	
C.A203	90459-5627		1	CONNECTION, TINA 1-A	

Pos	Part No	UN	Qty	Description	Page No

Machine Type	Group Description	Used-In	Group Number	Page No

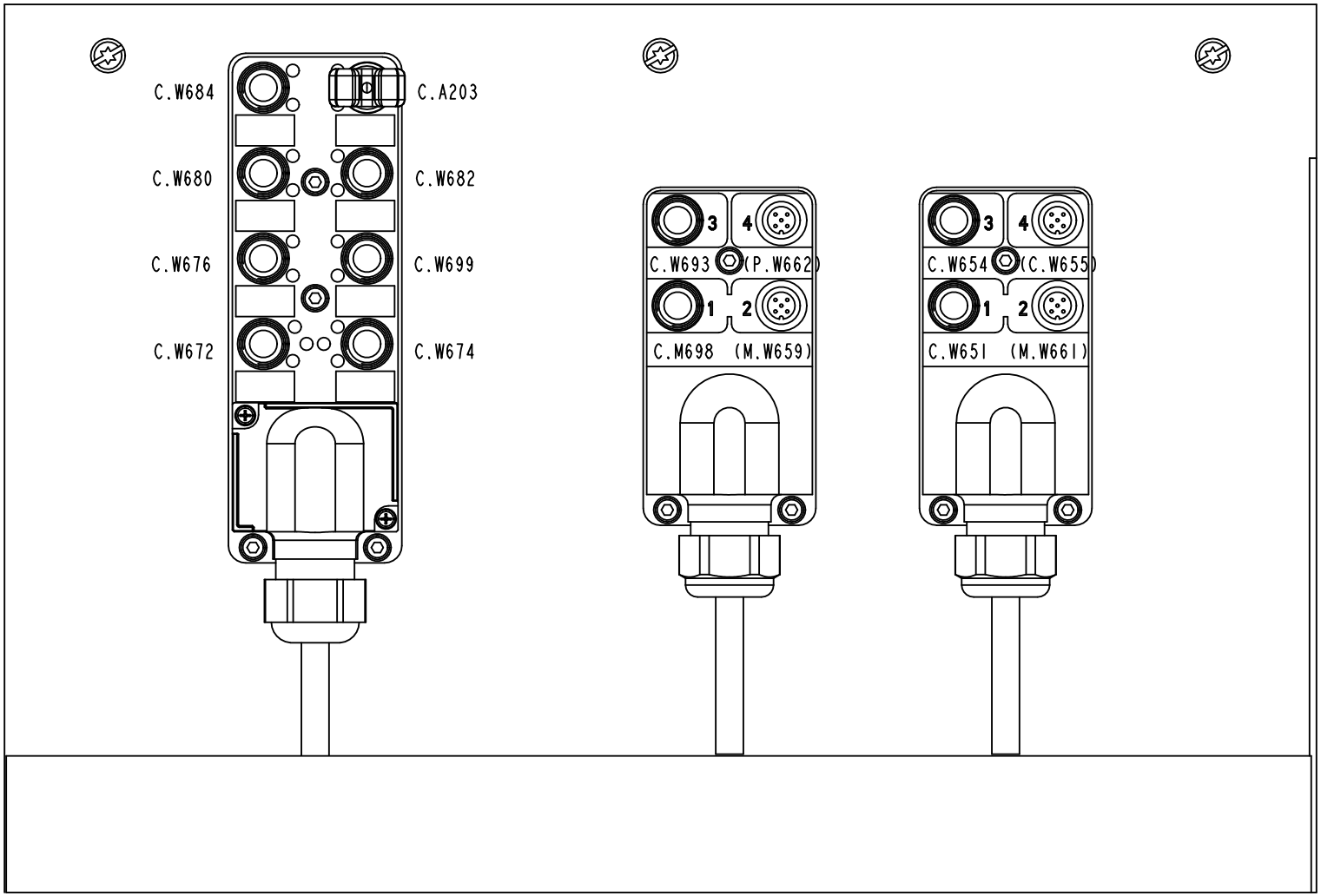

3040333-1
422317

ECM: 431000 - 20091228
Group number: 3040333-0100
Assembly Drawing: 3040333-1_2_AB

This list covers pages from 9-98 to 9-101

Pos	Part No	UN	Qty	Description	Page No
-					
010	3040334-0000		1	MOUNTING PLATE	
020	90181-0060	MM	380	CABLE DUCT, PLASTIC, 40X100	
030	315101-0136		6	WASHER BRB, 4,3/8 H=0,8	
040	312115-0291		10	SCREW ISO4762 M4X12 A4 80	
050	90181-0313		2	RIVET, DUCTAFIX R4	
060	312113-0323		3	SCREW, SERRATED COMBI TORX M5X8 A2	
C.X317	90459-4254		1	CONNECTION BLOCK TINA 4A, 20-054-03	
C.X316	90459-4254		1	CONNECTION BLOCK TINA 4A, 20-054-03	
C.X311	90600-4876		1	CONNECTION BOX TINA 8A , 20-054-05	
C.W699	90459-4876		1	FOCUS JUMPER CABLE M12 5P 3M, 20-056-21	
C.W698	90459-4876		1	FOCUS JUMPER CABLE M12 5P 3M, 20-056-21	
C.W693	90459-4876		1	FOCUS JUMPER CABLE M12 5P 3M, 20-056-21	
C.W684	90459-4876		1	FOCUS JUMPER CABLE M12 5P 3M, 20-056-21	
C.W682	90459-7095		1	FOCUS JUMPER CABLE M12 5P 1M, 20-056-20	
C.W680	90459-7095		1	FOCUS JUMPER CABLE M12 5P 1M, 20-056-20	
C.W678	90600-5930	M	2	CABLE C9, 20-057-15	
C.W676	90459-4876		1	FOCUS JUMPER CABLE M12 5P 3M, 20-056-21	
C.W674	90459-7095		1	FOCUS JUMPER CABLE M12 5P 1M, 20-056-20	
C.W672	90459-7095		1	FOCUS JUMPER CABLE M12 5P 1M, 20-056-20	
C.W658	90600-5930	M	1	CABLE C9, 20-057-15	
C.W656	90600-5930	M	2	CABLE C9, 20-057-15	
C.W654	90459-7095		1	FOCUS JUMPER CABLE M12 5P 1M, 20-056-20	
C.W651	90459-7095		1	FOCUS JUMPER CABLE M12 5P 1M, 20-056-20	
C.A203	90459-5627		1	CONNECTION, TINA 1-A	

Pos	Part No	UN	Qty	Description	Page No

Machine Type	Group Description	Used-In	Group Number	Page No

POWER CONNECTOR PLATE

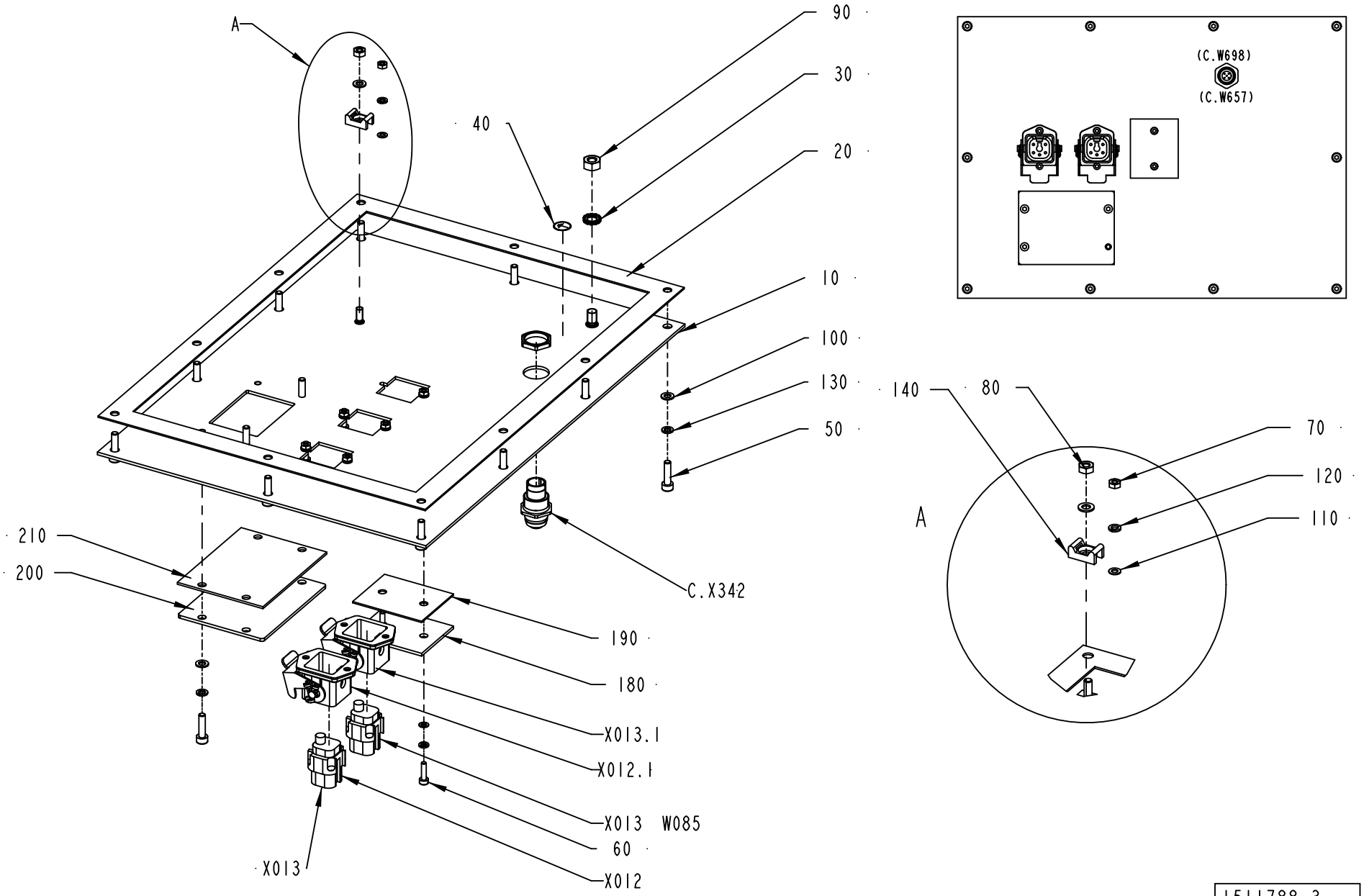

1511788-3
ECM 443808

ECM: 449056 - 20100524
Group number: 1511788-0200
Assembly Drawing: 1511788-3_1_AB

This list covers pages from 9-102 to 9-105

Pos	Part No	UN	Qty	Description	Page No
TBA NOPT ASU (See drawing on page: 9-104)					
X011	90458-0876		1	FEMALE INSERT, HAN 6B 09 14 002 2751	
X011.1	90110-0123		1	HOUSING, 09 30 006 0301	
X011.2	90458-0875		1	HINGED FRAME, 09 14 006 0313	
X014	90110-0296		1	FEMALE INSERT, HDC-HA-4BS 149840-B/2	
X014.1	90457-0050		1	BULKHEAD HOUSING, HDC 04A ALU	
TBA NOPT NOASU (See drawing on page: 9-102)					
180	1487430-0000		1	COVER	
190	1487431-0000		1	GASKET	
200	1037572-0000		1	COVER PLATE	
210	1037573-0000		1	GASKET	
Common Parts					
010	3072121-0000		1	PLATE	
020	1511838-0000		1	GASKET	
030	90062-0015		1	LOCK WASHER SERRAT.EXT.GEAR,6,4/11 H=0,7	
040	90194-0163		1	SIGN, EARTH WITHIN CIRCLE / SHEET 48 PCS	
050	312115-0293		14	SCREW ISO4762 M4X16 A4 80	
060	312115-0226		6	SCREW ISO4762 M3X12 A4 80	
070	312605-0310		6	HEXAGON NUT, M6M M3 A280	
080	312605-0312		1	HEXAGON NUT, M6M M4 A280	
090	312605-0316		1	HEXAGON NUT, M6M M6 A280	
100	315105-0136		15	WASHER PLAIN, 4,3X9X0,8 A4 BRB	
110	315105-0124		12	WASHER PLAIN, 3,2X6X0,5 A4 BRB	
120	315402-0128		12	LOCK WASHER, DIN127B 3,6 A4, M3,5	
130	315402-0136		14	LOCK WASHER, DIN127B 4,1 A4, M4-5/32	
140	352113-0205		1	ANCHOR PLATES FOR STRIPS, TM2S8-C100	
C.X342	90600-1559		1	PANEL FEED THROUGH, FWD5 54218	
W085	90220-0104	M	4	SCR. CABLE 4X1,5MM2	
X012	90110-0296		1	FEMALE INSERT, HDC-HA-4BS 149840-B/2	
X012.1	90457-0050		1	BULKHEAD HOUSING, HDC 04A ALU	
X013	90110-0296		1	FEMALE INSERT, HDC-HA-4BS 149840-B/2	
X013.1	90457-0050		1	BULKHEAD HOUSING, HDC 04A ALU	

Pos	Part No	UN	Qty	Description	Page No

Machine Type | Group Description | Used-In | Group Number | Page No

POWER CONNECTOR PLATE

Drawing file: 1511788-4_1_AB.hpgl

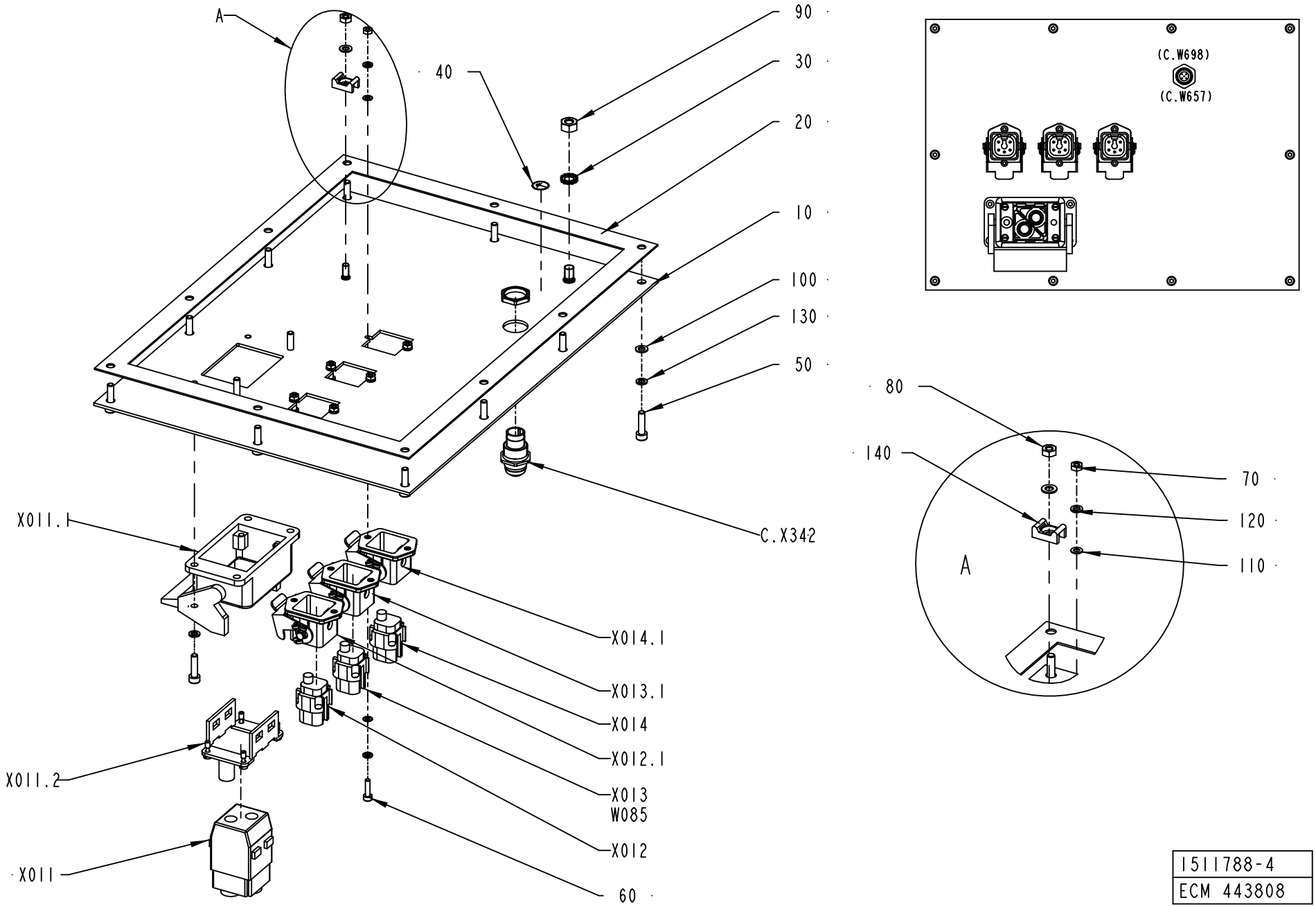

1511788-4
ECM 443808

ECM: 449056 - 20100524
Group number: 1511788-0200
Assembly Drawing: 1511788-4_1_AB

This list covers pages from 9-102 to 9-105

Pos	Part No	UN	Qty	Description	Page No
TBA NOPT ASU (See drawing on page: 9-104)					
X011	90458-0876		1	FEMALE INSERT, HAN 6B 09 14 002 2751	
X011.1	90110-0123		1	HOUSING, 09 30 006 0301	
X011.2	90458-0875		1	HINGED FRAME, 09 14 006 0313	
X014	90110-0296		1	FEMALE INSERT, HDC-HA-4BS 149840-B/2	
X014.1	90457-0050		1	BULKHEAD HOUSING, HDC 04A ALU	
TBA NOPT NOASU (See drawing on page: 9-102)					
180	1487430-0000		1	COVER	
190	1487431-0000		1	GASKET	
200	1037572-0000		1	COVER PLATE	
210	1037573-0000		1	GASKET	
Common Parts					
010	3072121-0000		1	PLATE	
020	1511838-0000		1	GASKET	
030	90062-0015		1	LOCK WASHER SERRAT.EXT.GEAR,6,4/11 H=0,7	
040	90194-0163		1	SIGN, EARTH WITHIN CIRCLE / SHEET 48 PCS	
050	312115-0293		14	SCREW ISO4762 M4X16 A4 80	
060	312115-0226		6	SCREW ISO4762 M3X12 A4 80	
070	312605-0310		6	HEXAGON NUT, M6M M3 A280	
080	312605-0312		1	HEXAGON NUT, M6M M4 A280	
090	312605-0316		1	HEXAGON NUT, M6M M6 A280	
100	315105-0136		15	WASHER PLAIN, 4,3X9X0,8 A4 BRB	
110	315105-0124		12	WASHER PLAIN, 3,2X6X0,5 A4 BRB	
120	315402-0128		12	LOCK WASHER, DIN127B 3,6 A4, M3,5	
130	315402-0136		14	LOCK WASHER, DIN127B 4,1 A4, M4-5/32	
140	352113-0205		1	ANCHOR PLATES FOR STRIPS, TM2S8-C100	
C.X342	90600-1559		1	PANEL FEED THROUGH, FWD5 54218	
W085	90220-0104	M	4	SCR. CABLE 4X1,5MM2	
X012	90110-0296		1	FEMALE INSERT, HDC-HA-4BS 149840-B/2	
X012.1	90457-0050		1	BULKHEAD HOUSING, HDC 04A ALU	
X013	90110-0296		1	FEMALE INSERT, HDC-HA-4BS 149840-B/2	
X013.1	90457-0050		1	BULKHEAD HOUSING, HDC 04A ALU	

Pos	Part No	UN	Qty	Description	Page No

Machine Type | Group Description | Used-In | Group Number | Page No

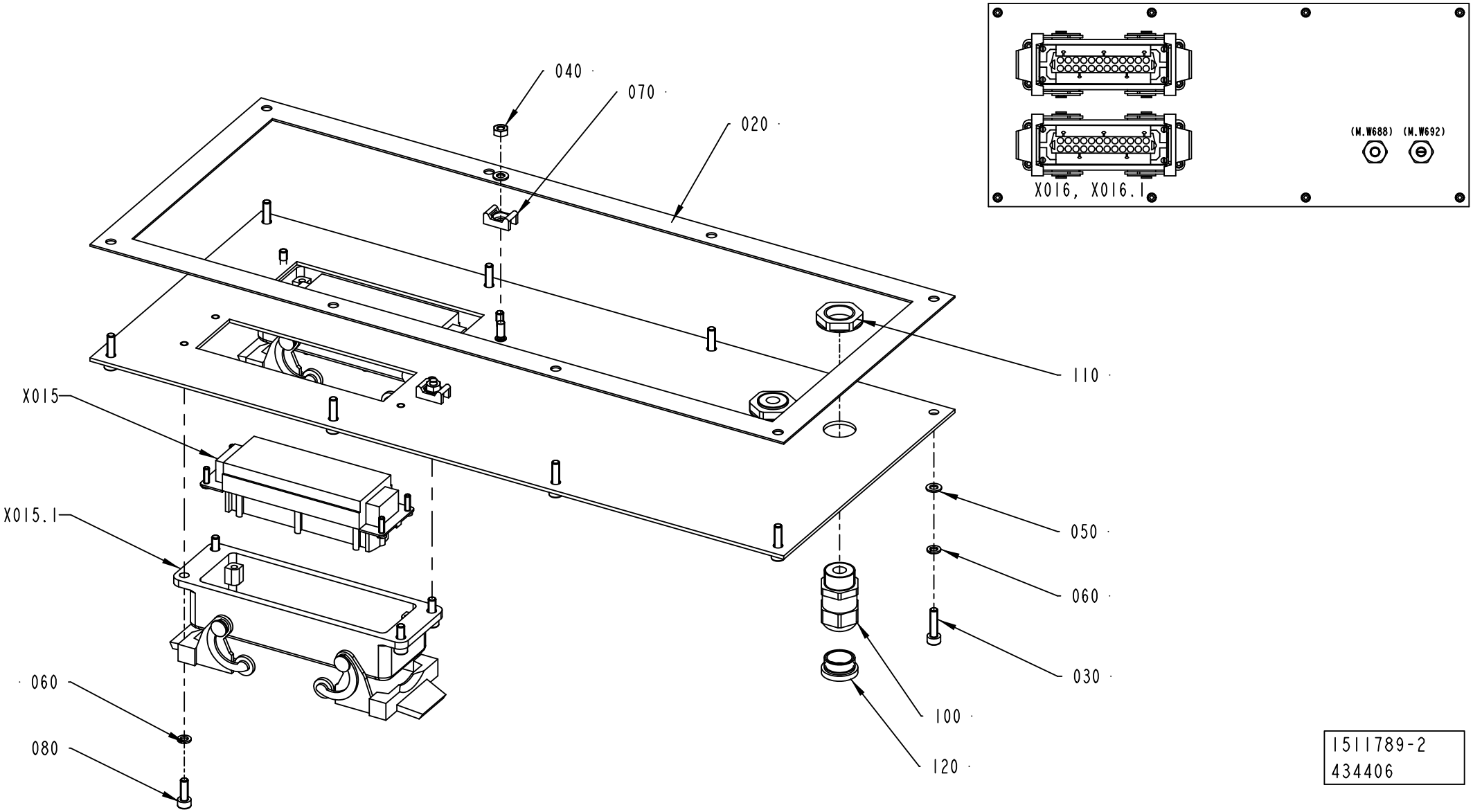

1511789-2
434406

ECM: 438637 - 20100222
Group number: 1511789-0200
Assembly Drawing: 1511789-2_1_AB

Pos	Part No	UN	Qty	Description	Page No
-					
010	3072120-0000		1	PLATE	
020	1511840-0000		1	GASKET	
030	312115-0293		8	SCREW ISO4762 M4X16 A4 80	
040	312605-0312		2	HEXAGON NUT, M6M M4 A280	
050	315105-0136		10	WASHER PLAIN, 4,3X9X0,8 A4 BRB	
060	315402-0136		8	LOCK WASHER, DIN127B 4,1 A4, M4-5/32	
070	352113-0205		2	ANCHOR PLATES FOR STRIPS, TM2S8-C100	
080	312115-0291		8	SCREW ISO4762 M4X12 A4 80	
100	90458-0306		2	CABLE GLAND, M16X1,5, 5311 1010	
110	90458-0322		2	NUT, M16X1,5	
120	90458-1307		1	BLIND PLUG CIRCULAR, M16X1,5 514GFK/216	
X015	90110-0151		1	FEMALE INSERT, 24-POL 121130 0000	
X015.1	90110-0153		1	CHASSIS HOUSING, HDC 24B ABU	
X016	90110-0151		1	FEMALE INSERT, 24-POL 121130 0000	
X016.1	90110-0153		1	CHASSIS HOUSING, HDC 24B ABU	

Pos	Part No	UN	Qty	Description	Page No

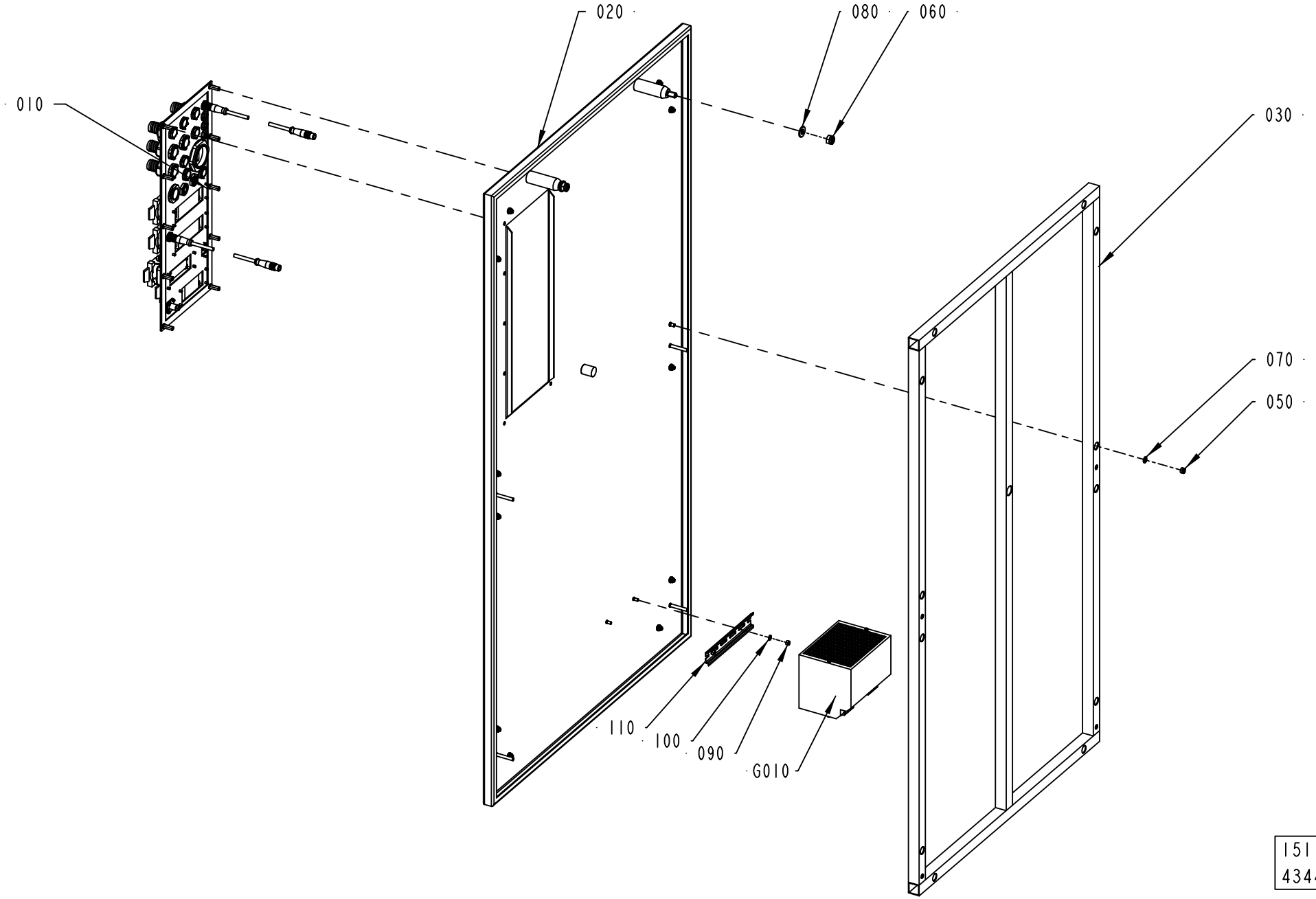
020
080
060
010
030
070
050
110
100
090
G010
1511791-4
434406

ECM: 438640 - 20100222
Group number: 1511791-0300
Assembly Drawing: 1511791-4_1_AB

Pos	Part No	UN	Qty	Description	Page No
-					
010	1511787-0200		1	STRIP APPLICATOR CABLE INLETS	**9-111, 9-113, 9-115, 9-117 9-119, 9-121, 9-123, 9-125, 9-127, 9-129**
020	2798052-0000		1	DOOR	
030	1511798-0000		1	FRAME	
050	312812-0316		12	HEXAGON NUT, NY-LOCK M6 A4 80	
060	312812-0320		2	HEXAGON NUT, NY-LOCK M10 A4 80	
070	315105-0153		12	WASHER PLAIN, 6,4X12X1,5 A4 BRB	
080	315105-0173		2	WASHER PLAIN, 10,5X22X2 A4 BRB	
90	312605-0314		2	HEXAGON NUT, M6M M5 A280	
100	315105-0146		2	WASHER PLAIN, 5,3X10X1 A4 BRB	
110	353042-0004	MM	200	RAIL, TS 35/7,5	
G010	90459-4133		1	POWER SUPPLY UNIT 6EP1 436-3BA00	

Pos	Part No	UN	Qty	Description	Page No

STRIP APPLICATOR CABLE INLETS

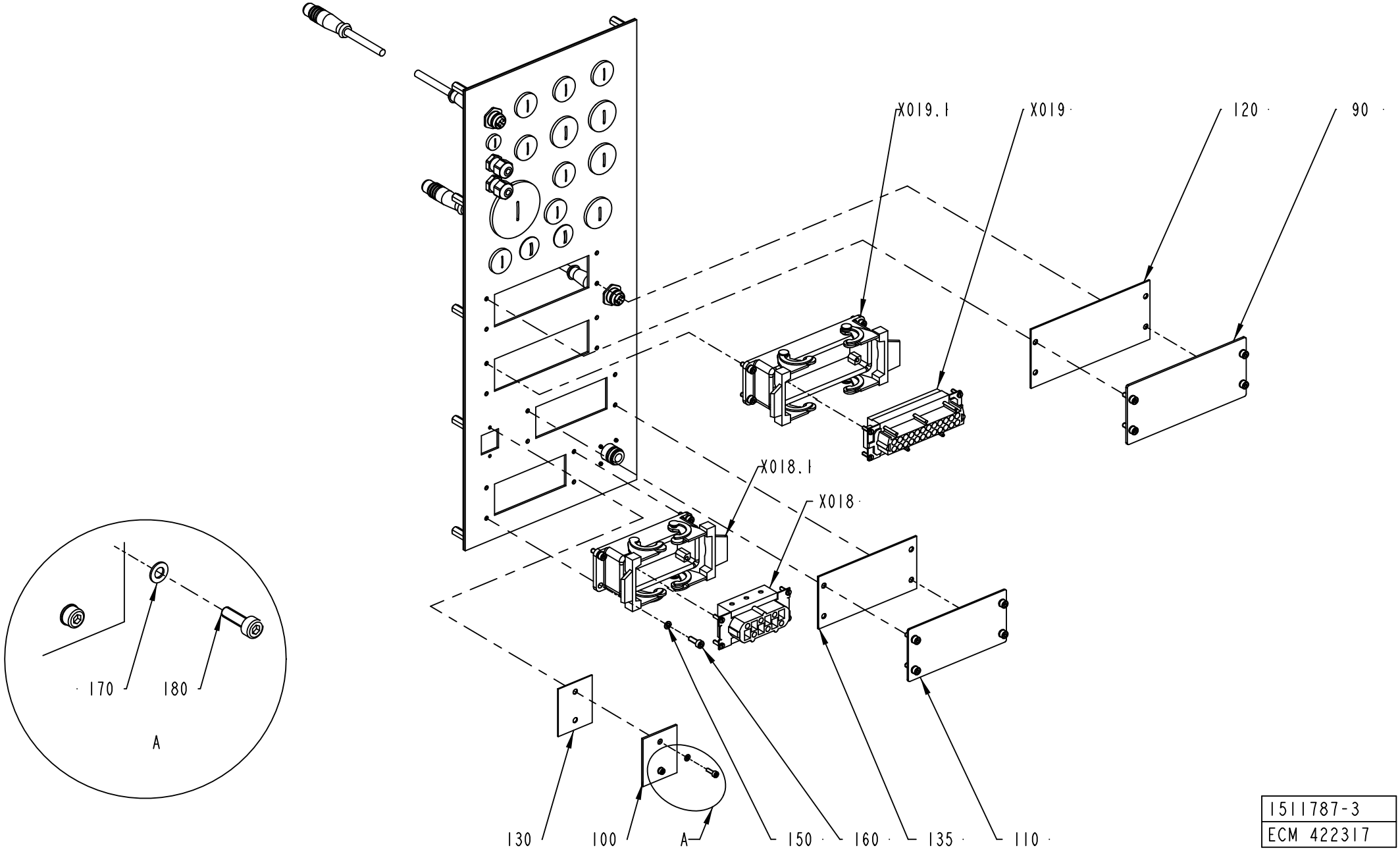

1511787-3
ECM 422317

ECM: 430996 - 20091228
Group number: 1511787-0200
Assembly Drawing: 1511787-3_1_AB

This list covers pages from 9-110 to 9-129

Pos	Part No	UN	Qty	Description	Page No
TBA NOPT (See drawing on pages: 9-110, 9-112, 9-114, 9-116)					
090	1037574-0000		1	COVER PLATE	
100	1487430-0000		1	COVER	
110	1129481-0000		1	COVERING PLATE	
120	1037575-0000		1	GASKET	
130	1487431-0000		1	GASKET	
135	1129478-0000		1	GASKET	
210	90458-0305		2	CABLE GLAND, M12X1,5, 5311 1000	
220	90458-1306		1	BLIND PLUG CIRCULAR, M12X1,5 514GFK/212	
240	90458-1308		7	BLIND PLUG CIRCULAR, M20X1,5 514GFK/220	
260	90458-1309		4	BLIND PLUG CIRCULAR, M25X1,5 514GFK/225	
310	90099-0104		1	PLUG, PR 15,2 (PG9)	
470	90002-0009		2	BLANK-OFF PLUG, PR 18.6 SKINDICHT-BLK11	
TBA PT19 (See drawing on pages: 9-118, 9-120, 9-122, 9-124, 9-126, 9-128)					
210	90458-0305		1	CABLE GLAND, M12X1,5, 5311 1000	
220	90458-1306		2	BLIND PLUG CIRCULAR, M12X1,5 514GFK/212	
240	90458-1308		1	BLIND PLUG CIRCULAR, M20X1,5 514GFK/220	
260	90458-1309		2	BLIND PLUG CIRCULAR, M25X1,5 514GFK/225	
310	90099-0104		1	PLUG, PR 15,2 (PG9)	
320	90458-0422		1	CABLE GLAND, VK 22053Y	
330	90458-0428		1	GLAND FITTING, VK 22052YUL11	
340	90458-0430		4	GLAND FITTING, VK 22054YUL16	
350	90458-0188		3	INSERT, MULTI HOLE, EK154M 1X7, 1X10,5	
360	90457-0147		1	INSERT, MULTI HOLE, EK154M 2X7	
410	353249-0075		1	INSERT, SINGLE HOLE, EK153 13	
420	90458-0431		2	GLAND FITTING, VK 22554YUL16	
430	353249-0013		2	INSERT, SINGLE HOLE, EK154 13	
450	352103-0106		2	CABLE GLAND, ST 11, PR18,6/PG11	
460	90099-0104		2	PLUG, PR 15,2 (PG9)	
X022	90110-0296		1	FEMALE INSERT, HDC-HA-4BS 149840-B/2	
X022.1	90458-1181		1	BULKHEAD HOUSING, HDC-HA-3-AWVL1/11	
X025	90110-0151		1	FEMALE INSERT, 24-POL 121130 0000	
X025.1	90110-0153		1	CHASSIS HOUSING, HDC 24B ABU	
X026	90458-1406		1	FEMALE INSERT, 1207700000	
X026.1	90110-0243		1	CONTACT HOUSING 16-POL 70.320.1628.0	
TPA					
210	90458-0305		1	CABLE GLAND, M12X1,5, 5311 1000	
220	90458-1306		2	BLIND PLUG CIRCULAR, M12X1,5 514GFK/212	
260	90458-1309		1	BLIND PLUG CIRCULAR, M25X1,5 514GFK/225	
320	90458-0422		1	CABLE GLAND, VK 22053Y	
330	90458-0428		1	GLAND FITTING, VK 22052YUL11	
340	90458-0430		5	GLAND FITTING, VK 22054YUL16	
350	90458-0188		4	INSERT, MULTI HOLE, EK154M 1X7, 1X10,5	
360	90457-0147		1	INSERT, MULTI HOLE, EK154M 2X7	
410	353249-0075		1	INSERT, SINGLE HOLE, EK153 13	
420	90458-0431		3	GLAND FITTING, VK 22554YUL16	
430	353249-0013		3	INSERT, SINGLE HOLE, EK154 13	
450	352103-0106		2	CABLE GLAND, ST 11, PR18,6/PG11	
460	90099-0104		2	PLUG, PR 15,2 (PG9)	
X022	90110-0296		1	FEMALE INSERT, HDC-HA-4BS 149840-B/2	
X022.1	90458-1181		1	BULKHEAD HOUSING, HDC-HA-3-AWVL1/11	
X025	90110-0151		1	FEMALE INSERT, 24-POL 121130 0000	
X026	90458-1406		1	FEMALE INSERT, 1207700000	
X026.1	90110-0243		1	CONTACT HOUSING 16-POL 70.320.1628.0	
Common Parts					
010	3040341-0000		1	PLATE	
020	1511833-0000		1	GASKET	
030	1517676-0000		10	SPACER	
140	315105-0146		10	WASHER PLAIN, 5,3X10X1 A4 BRB	
150	315402-0136		16	LOCK WASHER, DIN127B 4,1 A4, M4-5/32	
160	312115-0291		16	SCREW ISO4762 M4X12 A4 80	
170	315105-0124		2	WASHER PLAIN, 3,2X6X0,5 A4 BRB	
180	312115-0224		2	SCREW ISO4762 M3X10 A4 80	
190	90110-0127		1	COAXIAL CONNECTOR, GE 15057C10HBNT-2PT	
200	312115-0220		4	SCREW ISO4762 M3X6 A4 80	
230	90458-0321		3	NUT, M12X1,5	
250	90458-0461		7	GLAND, LOCK NUT, M20X1,5	
270	90458-0462		3	GLAND, LOCK NUT, M25X1,5	
280	90458-1312		1	BLIND PLUG CIRCULAR, M50X1,5 514GFK/250	
290	90458-0327		1	NUT, M50X1,5	
290	90458-0465		1	GLAND, LOCK NUT, M50X1,5	
300	352103-0101		1	CABLE GLAND, ST 9, PR15,2/PG9	
380	90458-0324		1	NUT, M25X1,5	
440	353249-0036		1	INSERT, MULTI HOLE, EK152M 2X4	
C.X334	90600-1559		1	PANEL FEED THROUGH, FWD5 54218	
C.X332	90600-1559		1	PANEL FEED THROUGH, FWD5 54218	
C.W666	90459-4876		1	FOCUS JUMPER CABLE M12 5P 3M, 20-056-21	
C.W661	90459-4876		1	FOCUS JUMPER CABLE M12 5P 3M, 20-056-21	
X018	90110-0247		1	EMALE INSERT 70.200.0653.0	
X018.1	90110-0243		1	CONTACT HOUSING 16-POL 70.320.1628.0	
X019	90110-0151		1	FEMALE INSERT, 24-POL 121130 0000	
X019.1	90110-0153		1	CHASSIS HOUSING, HDC 24B ABU	

Machine Type | Group Description | Used-In | Group Number | Page No

STRIP APPLICATOR CABLE INLETS

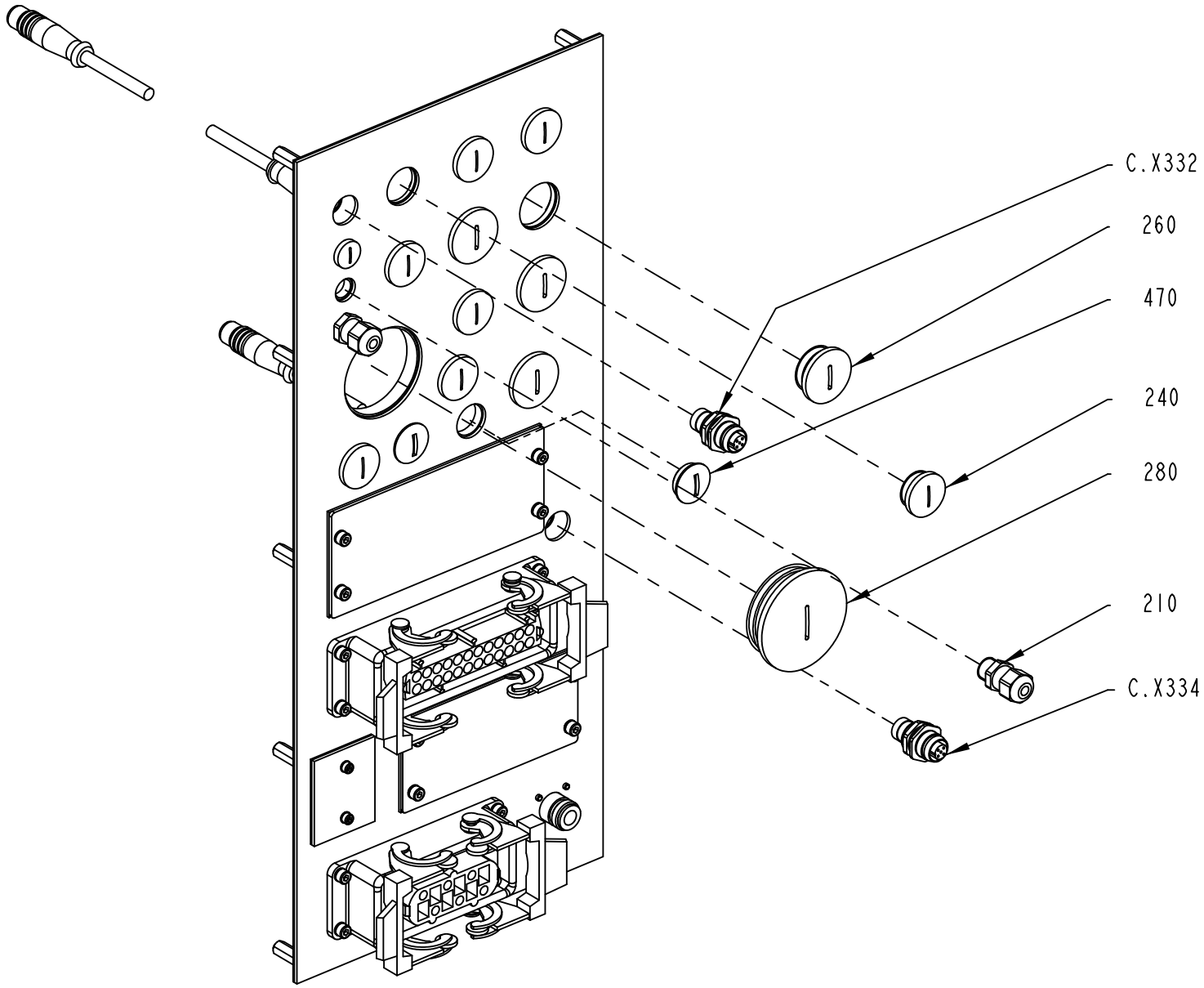

1511787-3
ECM 422317

ECM: 430996 - 20091228
Group number: 1511787-0200
Assembly Drawing: 1511787-3_2_AB

This list covers pages from 9-110 to 9-129

Pos	Part No	UN	Qty	Description	Page No
TBA NOPT (See drawing on pages: 9-110, 9-112, 9-114, 9-116)					
090	1037574-0000		1	COVER PLATE	
100	1487430-0000		1	COVER	
110	1129481-0000		1	COVERING PLATE	
120	1037575-0000		1	GASKET	
130	1487431-0000		1	GASKET	
135	1129478-0000		1	GASKET	
210	90458-0305		2	CABLE GLAND, M12X1,5, 5311 1000	
220	90458-1306		1	BLIND PLUG CIRCULAR, M12X1,5 514GFK/212	
240	90458-1308		7	BLIND PLUG CIRCULAR, M20X1,5 514GFK/220	
260	90458-1309		4	BLIND PLUG CIRCULAR, M25X1,5 514GFK/225	
310	90099-0104		1	PLUG, PR 15,2 (PG9)	
470	90002-0009		2	BLANK-OFF PLUG, PR 18.6 SKINDICHT-BLK11	
TBA PT19 (See drawing on pages: 9-118, 9-120, 9-122, 9-124, 9-126, 9-128)					
210	90458-0305		1	CABLE GLAND, M12X1,5, 5311 1000	
220	90458-1306		2	BLIND PLUG CIRCULAR, M12X1,5 514GFK/212	
240	90458-1308		1	BLIND PLUG CIRCULAR, M20X1,5 514GFK/220	
260	90458-1309		2	BLIND PLUG CIRCULAR, M25X1,5 514GFK/225	
310	90099-0104		1	PLUG, PR 15,2 (PG9)	
320	90458-0422		1	CABLE GLAND, VK 22053Y	
330	90458-0428		1	GLAND FITTING, VK 22052YUL11	
340	90458-0430		4	GLAND FITTING, VK 22054YUL16	
350	90458-0188		3	INSERT, MULTI HOLE, EK154M 1X7, 1X10,5	
360	90457-0147		1	INSERT, MULTI HOLE, EK154M 2X7	
410	353249-0075		1	INSERT, SINGLE HOLE, EK153 13	
420	90458-0431		2	GLAND FITTING, VK 22554YUL16	
430	353249-0013		2	INSERT, SINGLE HOLE, EK154 13	
450	352103-0106		2	CABLE GLAND, ST 11, PR18,6/PG11	
460	90099-0104		2	PLUG, PR 15,2 (PG9)	
X022	90110-0296		1	FEMALE INSERT, HDC-HA-4BS 149840-B/2	
X022.1	90458-1181		1	BULKHEAD HOUSING, HDC-HA-3-AWVL1/11	
X025	90110-0151		1	FEMALE INSERT, 24-POL 121130 0000	
X025.1	90110-0153		1	CHASSIS HOUSING, HDC 24B ABU	
X026	90458-1406		1	FEMALE INSERT, 1207700000	
X026.1	90110-0243		1	CONTACT HOUSING 16-POL 70.320.1628.0	
TPA					
210	90458-0305		1	CABLE GLAND, M12X1,5, 5311 1000	
220	90458-1306		2	BLIND PLUG CIRCULAR, M12X1,5 514GFK/212	
260	90458-1309		1	BLIND PLUG CIRCULAR, M25X1,5 514GFK/225	
320	90458-0422		1	CABLE GLAND, VK 22053Y	
330	90458-0428		1	GLAND FITTING, VK 22052YUL11	
340	90458-0430		5	GLAND FITTING, VK 22054YUL16	
350	90458-0188		4	INSERT, MULTI HOLE, EK154M 1X7, 1X10,5	
360	90457-0147		1	INSERT, MULTI HOLE, EK154M 2X7	
410	353249-0075		1	INSERT, SINGLE HOLE, EK153 13	
420	90458-0431		3	GLAND FITTING, VK 22554YUL16	
430	353249-0013		3	INSERT, SINGLE HOLE, EK154 13	
450	352103-0106		2	CABLE GLAND, ST 11, PR18,6/PG11	
460	90099-0104		2	PLUG, PR 15,2 (PG9)	
X022	90110-0296		1	FEMALE INSERT, HDC-HA-4BS 149840-B/2	
X022.1	90458-1181		1	BULKHEAD HOUSING, HDC-HA-3-AWVL1/11	
X025	90110-0151		1	FEMALE INSERT, 24-POL 121130 0000	
X026	90458-1406		1	FEMALE INSERT, 1207700000	
X026.1	90110-0243		1	CONTACT HOUSING 16-POL 70.320.1628.0	
Common Parts					
010	3040341-0000		1	PLATE	
020	1511833-0000		1	GASKET	
030	1517676-0000		10	SPACER	
140	315105-0146		10	WASHER PLAIN, 5,3X10X1 A4 BRB	
150	315402-0136		16	LOCK WASHER, DIN127B 4,1 A4, M4-5/32	
160	312115-0291		16	SCREW ISO4762 M4X12 A4 80	
170	315105-0124		2	WASHER PLAIN, 3,2X6X0,5 A4 BRB	
180	312115-0224		2	SCREW ISO4762 M3X10 A4 80	
190	90110-0127		1	COAXIAL CONNECTOR, GE 15057C10HBNT-2PT	
200	312115-0220		4	SCREW ISO4762 M3X6 A4 80	
230	90458-0321		3	NUT, M12X1,5	
250	90458-0461		7	GLAND, LOCK NUT, M20X1,5	
270	90458-0462		3	GLAND, LOCK NUT, M25X1,5	
280	90458-1312		1	BLIND PLUG CIRCULAR, M50X1,5 514GFK/250	
290	90458-0327		1	NUT, M50X1,5	
290	90458-0465		1	GLAND, LOCK NUT, M50X1,5	
300	352103-0101		1	CABLE GLAND, ST 9, PR15,2/PG9	
380	90458-0324		1	NUT, M25X1,5	
440	353249-0036		1	INSERT, MULTI HOLE, EK152M 2X4	
C.X334	90600-1559		1	PANEL FEED THROUGH, FWD5 54218	
C.X332	90600-1559		1	PANEL FEED THROUGH, FWD5 54218	
C.W666	90459-4876		1	FOCUS JUMPER CABLE M12 5P 3M, 20-056-21	
C.W661	90459-4876		1	FOCUS JUMPER CABLE M12 5P 3M, 20-056-21	
X018	90110-0247		1	EMALE INSERT 70.200.0653.0	
X018.1	90110-0243		1	CONTACT HOUSING 16-POL 70.320.1628.0	
X019	90110-0151		1	FEMALE INSERT, 24-POL 121130 0000	
X019.1	90110-0153		1	CHASSIS HOUSING, HDC 24B ABU	

Machine Type | Group Description | Used-In | Group Number | Page No

STRIP APPLICATOR CABLE INLETS

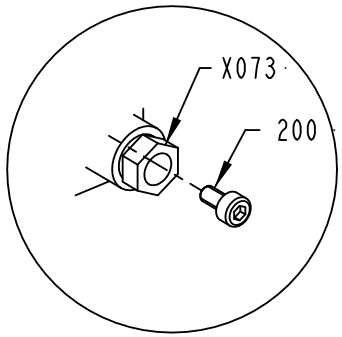

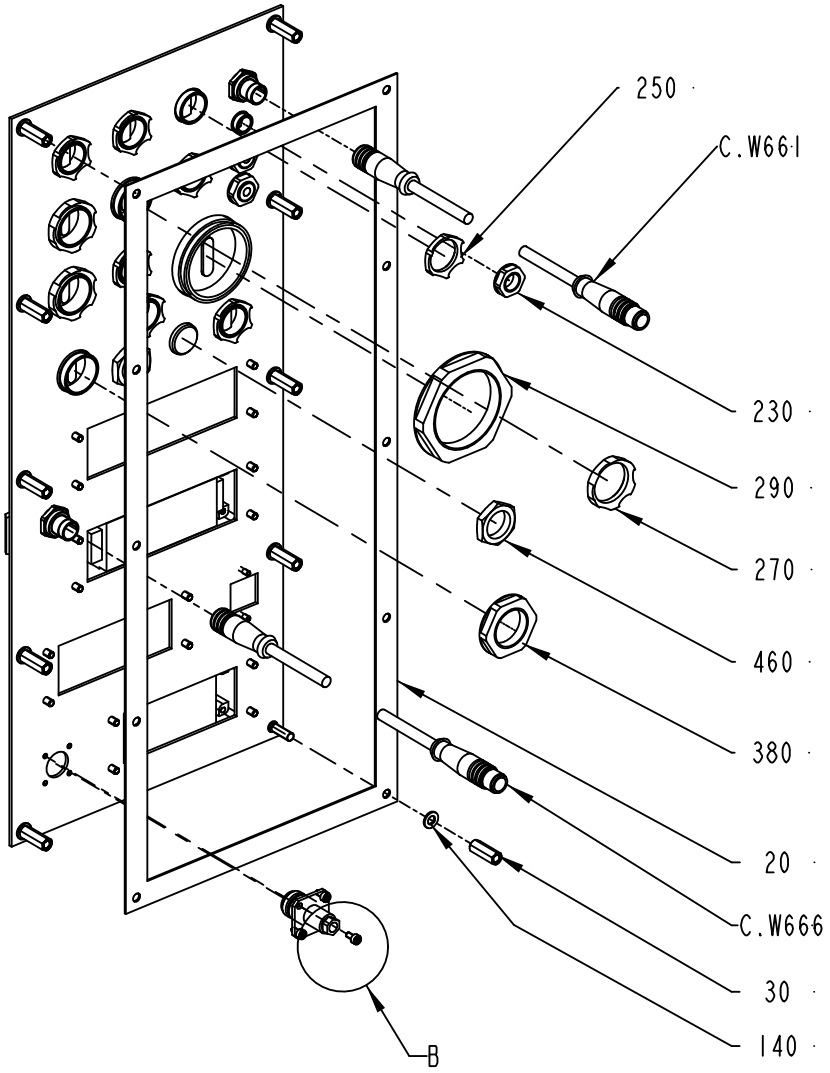

1511787-3
ECM 422317

ECM: 430996 - 20091228
Group number: 1511787-0200
Assembly Drawing: 1511787-3_3_AB

This list covers pages from 9-110 to 9-129

Pos	Part No	UN	Qty	Description	Page No
TBA NOPT (See drawing on pages: 9-110, 9-112, 9-114, 9-116)					
090	1037574-0000		1	COVER PLATE	
100	1487430-0000		1	COVER	
110	1129481-0000		1	COVERING PLATE	
120	1037575-0000		1	GASKET	
130	1487431-0000		1	GASKET	
135	1129478-0000		1	GASKET	
210	90458-0305		2	CABLE GLAND, M12X1,5, 5311 1000	
220	90458-1306		1	BLIND PLUG CIRCULAR, M12X1,5 514GFK/212	
240	90458-1308		7	BLIND PLUG CIRCULAR, M20X1,5 514GFK/220	
260	90458-1309		4	BLIND PLUG CIRCULAR, M25X1,5 514GFK/225	
310	90099-0104		1	PLUG, PR 15,2 (PG9)	
470	90002-0009		2	BLANK-OFF PLUG, PR 18.6 SKINDICHT-BLK11	
TBA PT19 (See drawing on pages: 9-118, 9-120, 9-122, 9-124, 9-126, 9-128)					
210	90458-0305		1	CABLE GLAND, M12X1,5, 5311 1000	
220	90458-1306		2	BLIND PLUG CIRCULAR, M12X1,5 514GFK/212	
240	90458-1308		1	BLIND PLUG CIRCULAR, M20X1,5 514GFK/220	
260	90458-1309		2	BLIND PLUG CIRCULAR, M25X1,5 514GFK/225	
310	90099-0104		1	PLUG, PR 15,2 (PG9)	
320	90458-0422		1	CABLE GLAND, VK 22053Y	
330	90458-0428		1	GLAND FITTING, VK 22052YUL11	
340	90458-0430		4	GLAND FITTING, VK 22054YUL16	
350	90458-0188		3	INSERT, MULTI HOLE, EK154M 1X7, 1X10,5	
360	90457-0147		1	INSERT, MULTI HOLE, EK154M 2X7	
410	353249-0075		1	INSERT, SINGLE HOLE, EK153 13	
420	90458-0431		2	GLAND FITTING, VK 22554YUL16	
430	353249-0013		2	INSERT, SINGLE HOLE, EK154 13	
450	352103-0106		2	CABLE GLAND, ST 11, PR18,6/PG11	
460	90099-0104		2	PLUG, PR 15,2 (PG9)	
X022	90110-0296		1	FEMALE INSERT, HDC-HA-4BS 149840-B/2	
X022.1	90458-1181		1	BULKHEAD HOUSING, HDC-HA-3-AWVL1/11	
X025	90110-0151		1	FEMALE INSERT, 24-POL 121130 0000	
X025.1	90110-0153		1	CHASSIS HOUSING, HDC 24B ABU	
X026	90458-1406		1	FEMALE INSERT, 1207700000	
X026.1	90110-0243		1	CONTACT HOUSING 16-POL 70.320.1628.0	
TPA					
210	90458-0305		1	CABLE GLAND, M12X1,5, 5311 1000	
220	90458-1306		2	BLIND PLUG CIRCULAR, M12X1,5 514GFK/212	
260	90458-1309		1	BLIND PLUG CIRCULAR, M25X1,5 514GFK/225	
320	90458-0422		1	CABLE GLAND, VK 22053Y	
330	90458-0428		1	GLAND FITTING, VK 22052YUL11	
340	90458-0430		5	GLAND FITTING, VK 22054YUL16	
350	90458-0188		4	INSERT, MULTI HOLE, EK154M 1X7, 1X10,5	
360	90457-0147		1	INSERT, MULTI HOLE, EK154M 2X7	
410	353249-0075		1	INSERT, SINGLE HOLE, EK153 13	
420	90458-0431		3	GLAND FITTING, VK 22554YUL16	
430	353249-0013		3	INSERT, SINGLE HOLE, EK154 13	
450	352103-0106		2	CABLE GLAND, ST 11, PR18,6/PG11	
460	90099-0104		2	PLUG, PR 15,2 (PG9)	
X022	90110-0296		1	FEMALE INSERT, HDC-HA-4BS 149840-B/2	
X022.1	90458-1181		1	BULKHEAD HOUSING, HDC-HA-3-AWVL1/11	
X025	90110-0151		1	FEMALE INSERT, 24-POL 121130 0000	
X026	90458-1406		1	FEMALE INSERT, 1207700000	
X026.1	90110-0243		1	CONTACT HOUSING 16-POL 70.320.1628.0	
Common Parts					
010	3040341-0000		1	PLATE	
020	1511833-0000		1	GASKET	
030	1517676-0000		10	SPACER	
140	315105-0146		10	WASHER PLAIN, 5,3X10X1 A4 BRB	
150	315402-0136		16	LOCK WASHER, DIN127B 4,1 A4, M4-5/32	
160	312115-0291		16	SCREW ISO4762 M4X12 A4 80	
170	315105-0124		2	WASHER PLAIN, 3,2X6X0,5 A4 BRB	
180	312115-0224		2	SCREW ISO4762 M3X10 A4 80	
190	90110-0127		1	COAXIAL CONNECTOR, GE 15057C10HBNT-2PT	
200	312115-0220		4	SCREW ISO4762 M3X6 A4 80	
230	90458-0321		3	NUT, M12X1,5	
250	90458-0461		7	GLAND, LOCK NUT, M20X1,5	
270	90458-0462		3	GLAND, LOCK NUT, M25X1,5	
280	90458-1312		1	BLIND PLUG CIRCULAR, M50X1,5 514GFK/250	
290	90458-0327		1	NUT, M50X1,5	
290	90458-0465		1	GLAND, LOCK NUT, M50X1,5	
300	352103-0101		1	CABLE GLAND, ST 9, PR15,2/PG9	
380	90458-0324		1	NUT, M25X1,5	
440	353249-0036		1	INSERT, MULTI HOLE, EK152M 2X4	
C.X334	90600-1559		1	PANEL FEED THROUGH, FWD5 54218	
C.X332	90600-1559		1	PANEL FEED THROUGH, FWD5 54218	
C.W666	90459-4876		1	FOCUS JUMPER CABLE M12 5P 3M, 20-056-21	
C.W661	90459-4876		1	FOCUS JUMPER CABLE M12 5P 3M, 20-056-21	
X018	90110-0247		1	EMALE INSERT 70.200.0653.0	
X018.1	90110-0243		1	CONTACT HOUSING 16-POL 70.320.1628.0	
X019	90110-0151		1	FEMALE INSERT, 24-POL 121130 0000	
X019.1	90110-0153		1	CHASSIS HOUSING, HDC 24B ABU	

Machine Type	Group Description	Used-In	Group Number	Page No

STRIP APPLICATOR CABLE INLETS

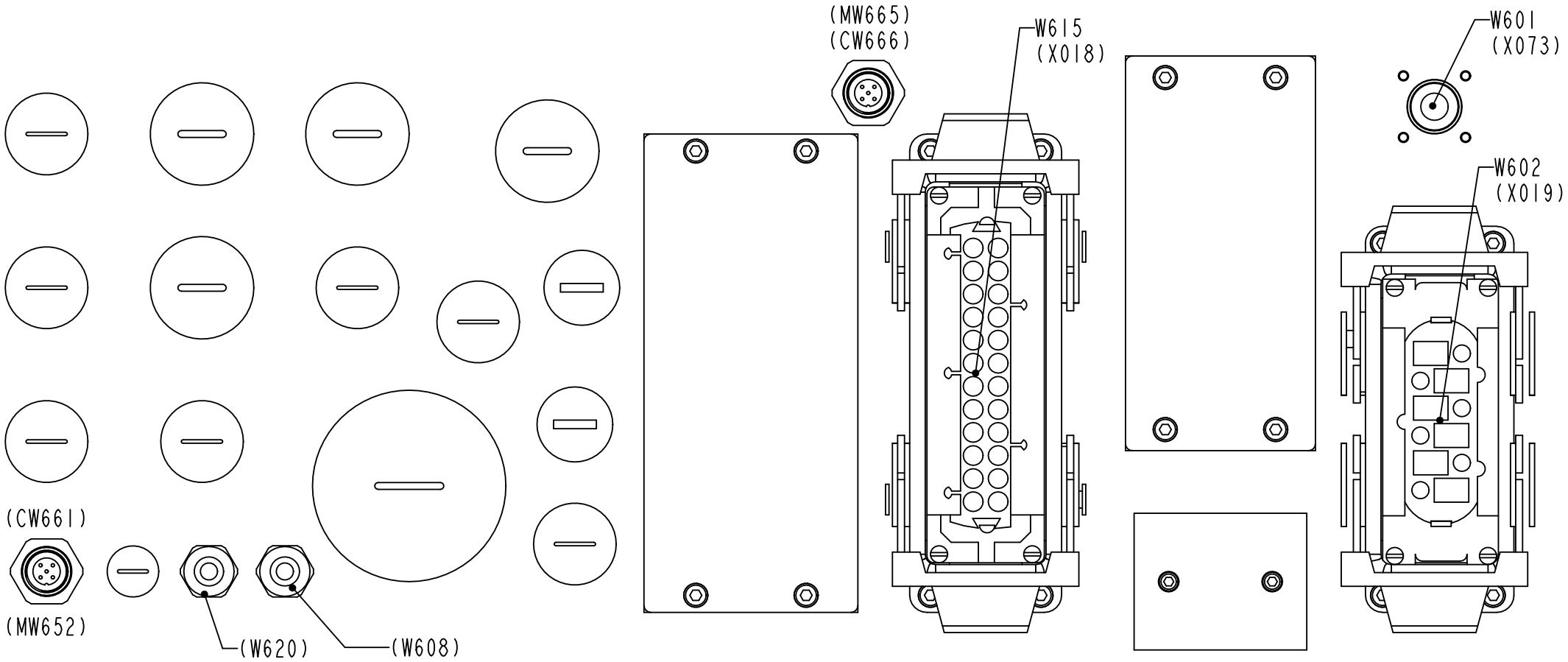

1511787-3
ECM 422317

ECM: 430996 - 20091228
Group number: 1511787-0200
Assembly Drawing: 1511787-3_4_AB

This list covers pages from 9-110 to 9-129

Pos	Part No	UN	Qty	Description	Page No
TBA NOPT (See drawing on pages: 9-110, 9-112, 9-114, 9-116)					
090	1037574-0000		1	COVER PLATE	
100	1487430-0000		1	COVER	
110	1129481-0000		1	COVERING PLATE	
120	1037575-0000		1	GASKET	
130	1487431-0000		1	GASKET	
135	1129478-0000		1	GASKET	
210	90458-0305		2	CABLE GLAND, M12X1,5, 5311 1000	
220	90458-1306		1	BLIND PLUG CIRCULAR, M12X1,5 514GFK/212	
240	90458-1308		7	BLIND PLUG CIRCULAR, M20X1,5 514GFK/220	
260	90458-1309		4	BLIND PLUG CIRCULAR, M25X1,5 514GFK/225	
310	90099-0104		1	PLUG, PR 15,2 (PG9)	
470	90002-0009		2	BLANK-OFF PLUG, PR 18.6 SKINDICHT-BLK11	
TBA PT19 (See drawing on pages: 9-118, 9-120, 9-122, 9-124, 9-126, 9-128)					
210	90458-0305		1	CABLE GLAND, M12X1,5, 5311 1000	
220	90458-1306		2	BLIND PLUG CIRCULAR, M12X1,5 514GFK/212	
240	90458-1308		1	BLIND PLUG CIRCULAR, M20X1,5 514GFK/220	
260	90458-1309		2	BLIND PLUG CIRCULAR, M25X1,5 514GFK/225	
310	90099-0104		1	PLUG, PR 15,2 (PG9)	
320	90458-0422		1	CABLE GLAND, VK 22053Y	
330	90458-0428		1	GLAND FITTING, VK 22052YUL11	
340	90458-0430		4	GLAND FITTING, VK 22054YUL16	
350	90458-0188		3	INSERT, MULTI HOLE, EK154M 1X7, 1X10,5	
360	90457-0147		1	INSERT, MULTI HOLE, EK154M 2X7	
410	353249-0075		1	INSERT, SINGLE HOLE, EK153 13	
420	90458-0431		2	GLAND FITTING, VK 22554YUL16	
430	353249-0013		2	INSERT, SINGLE HOLE, EK154 13	
450	352103-0106		2	CABLE GLAND, ST 11, PR18,6/PG11	
460	90099-0104		2	PLUG, PR 15,2 (PG9)	
X022	90110-0296		1	FEMALE INSERT, HDC-HA-4BS 149840-B/2	
X022.1	90458-1181		1	BULKHEAD HOUSING, HDC-HA-3-AWVL1/11	
X025	90110-0151		1	FEMALE INSERT, 24-POL 121130 0000	
X025.1	90110-0153		1	CHASSIS HOUSING, HDC 24B ABU	
X026	90458-1406		1	FEMALE INSERT, 1207700000	
X026.1	90110-0243		1	CONTACT HOUSING 16-POL 70.320.1628.0	
TPA					
210	90458-0305		1	CABLE GLAND, M12X1,5, 5311 1000	
220	90458-1306		2	BLIND PLUG CIRCULAR, M12X1,5 514GFK/212	
260	90458-1309		1	BLIND PLUG CIRCULAR, M25X1,5 514GFK/225	
320	90458-0422		1	CABLE GLAND, VK 22053Y	
330	90458-0428		1	GLAND FITTING, VK 22052YUL11	
340	90458-0430		5	GLAND FITTING, VK 22054YUL16	
350	90458-0188		4	INSERT, MULTI HOLE, EK154M 1X7, 1X10,5	
360	90457-0147		1	INSERT, MULTI HOLE, EK154M 2X7	
410	353249-0075		1	INSERT, SINGLE HOLE, EK153 13	
420	90458-0431		3	GLAND FITTING, VK 22554YUL16	
430	353249-0013		3	INSERT, SINGLE HOLE, EK154 13	
450	352103-0106		2	CABLE GLAND, ST 11, PR18,6/PG11	
460	90099-0104		2	PLUG, PR 15,2 (PG9)	
X022	90110-0296		1	FEMALE INSERT, HDC-HA-4BS 149840-B/2	
X022.1	90458-1181		1	BULKHEAD HOUSING, HDC-HA-3-AWVL1/11	
X025	90110-0151		1	FEMALE INSERT, 24-POL 121130 0000	
X026	90458-1406		1	FEMALE INSERT, 1207700000	
X026.1	90110-0243		1	CONTACT HOUSING 16-POL 70.320.1628.0	
Common Parts					
010	3040341-0000		1	PLATE	
020	1511833-0000		1	GASKET	
030	1517676-0000		10	SPACER	
140	315105-0146		10	WASHER PLAIN, 5,3X10X1 A4 BRB	
150	315402-0136		16	LOCK WASHER, DIN127B 4,1 A4, M4-5/32	
160	312115-0291		16	SCREW ISO4762 M4X12 A4 80	
170	315105-0124		2	WASHER PLAIN, 3,2X6X0,5 A4 BRB	
180	312115-0224		2	SCREW ISO4762 M3X10 A4 80	
190	90110-0127		1	COAXIAL CONNECTOR, GE 15057C10HBNT-2PT	
200	312115-0220		4	SCREW ISO4762 M3X6 A4 80	
230	90458-0321		3	NUT, M12X1,5	
250	90458-0461		7	GLAND, LOCK NUT, M20X1,5	
270	90458-0462		3	GLAND, LOCK NUT, M25X1,5	
280	90458-1312		1	BLIND PLUG CIRCULAR, M50X1,5 514GFK/250	
290	90458-0327		1	NUT, M50X1,5	
290	90458-0465		1	GLAND, LOCK NUT, M50X1,5	
300	352103-0101		1	CABLE GLAND, ST 9, PR15,2/PG9	
380	90458-0324		1	NUT, M25X1,5	
440	353249-0036		1	INSERT, MULTI HOLE, EK152M 2X4	
C.X334	90600-1559		1	PANEL FEED THROUGH, FWD5 54218	
C.X332	90600-1559		1	PANEL FEED THROUGH, FWD5 54218	
C.W666	90459-4876		1	FOCUS JUMPER CABLE M12 5P 3M, 20-056-21	
C.W661	90459-4876		1	FOCUS JUMPER CABLE M12 5P 3M, 20-056-21	
X018	90110-0247		1	EMALE INSERT 70.200.0653.0	
X018.1	90110-0243		1	CONTACT HOUSING 16-POL 70.320.1628.0	
X019	90110-0151		1	FEMALE INSERT, 24-POL 121130 0000	
X019.1	90110-0153		1	CHASSIS HOUSING, HDC 24B ABU	

Machine Type | Group Description | Used-In | Group Number | Page No

STRIP APPLICATOR CABLE INLETS

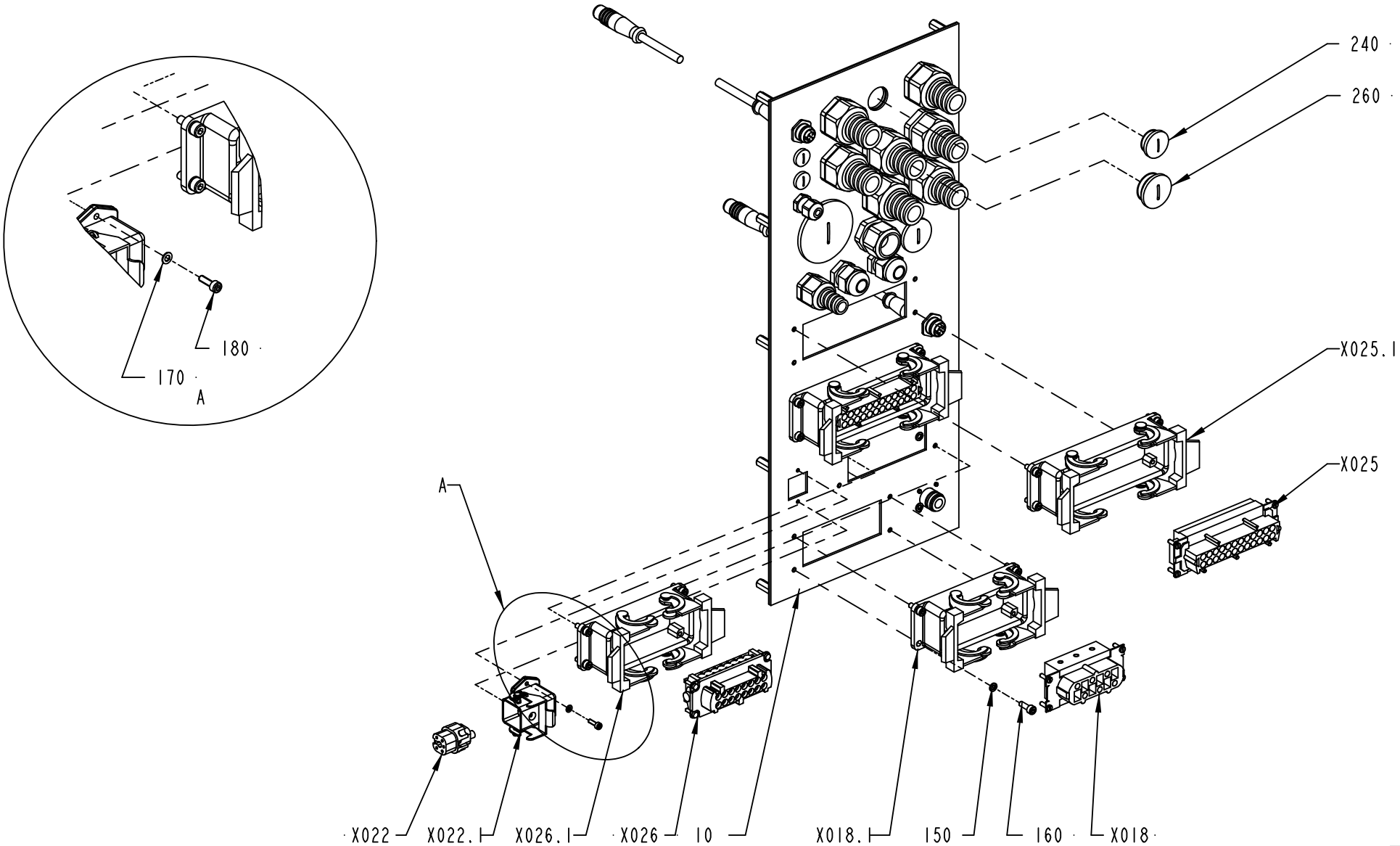

1511787-4
422317

ECM: 430996 - 20091228
Group number: 1511787-0200
Assembly Drawing: 1511787-4_1_AB

This list covers pages from 9-110 to 9-129

Pos	Part No	UN	Qty	Description	Page No
TBA NOPT (See drawing on pages: 9-110, 9-112, 9-114, 9-116)					
090	1037574-0000		1	COVER PLATE	
100	1487430-0000		1	COVER	
110	1129481-0000		1	COVERING PLATE	
120	1037575-0000		1	GASKET	
130	1487431-0000		1	GASKET	
135	1129478-0000		1	GASKET	
210	90458-0305		2	CABLE GLAND, M12X1,5, 5311 1000	
220	90458-1306		1	BLIND PLUG CIRCULAR, M12X1,5 514GFK/212	
240	90458-1308		7	BLIND PLUG CIRCULAR, M20X1,5 514GFK/220	
260	90458-1309		4	BLIND PLUG CIRCULAR, M25X1,5 514GFK/225	
310	90099-0104		1	PLUG, PR 15,2 (PG9)	
470	90002-0009		2	BLANK-OFF PLUG, PR 18.6 SKINDICHT-BLK11	
TBA PT19 (See drawing on pages: 9-118, 9-120, 9-122, 9-124, 9-126, 9-128)					
210	90458-0305		1	CABLE GLAND, M12X1,5, 5311 1000	
220	90458-1306		2	BLIND PLUG CIRCULAR, M12X1,5 514GFK/212	
240	90458-1308		1	BLIND PLUG CIRCULAR, M20X1,5 514GFK/220	
260	90458-1309		2	BLIND PLUG CIRCULAR, M25X1,5 514GFK/225	
310	90099-0104		1	PLUG, PR 15,2 (PG9)	
320	90458-0422		1	CABLE GLAND, VK 22053Y	
330	90458-0428		1	GLAND FITTING, VK 22052YUL11	
340	90458-0430		4	GLAND FITTING, VK 22054YUL16	
350	90458-0188		3	INSERT, MULTI HOLE, EK154M 1X7, 1X10,5	
360	90457-0147		1	INSERT, MULTI HOLE, EK154M 2X7	
410	353249-0075		1	INSERT, SINGLE HOLE, EK153 13	
420	90458-0431		2	GLAND FITTING, VK 22554YUL16	
430	353249-0013		2	INSERT, SINGLE HOLE, EK154 13	
450	352103-0106		2	CABLE GLAND, ST 11, PR18,6/PG11	
460	90099-0104		2	PLUG, PR 15,2 (PG9)	
X022	90110-0296		1	FEMALE INSERT, HDC-HA-4BS 149840-B/2	
X022.1	90458-1181		1	BULKHEAD HOUSING, HDC-HA-3-AWVL1/11	
X025	90110-0151		1	FEMALE INSERT, 24-POL 121130 0000	
X025.1	90110-0153		1	CHASSIS HOUSING, HDC 24B ABU	
X026	90458-1406		1	FEMALE INSERT, 1207700000	
X026.1	90110-0243		1	CONTACT HOUSING 16-POL 70.320.1628.0	
TPA					
210	90458-0305		1	CABLE GLAND, M12X1,5, 5311 1000	
220	90458-1306		2	BLIND PLUG CIRCULAR, M12X1,5 514GFK/212	
260	90458-1309		1	BLIND PLUG CIRCULAR, M25X1,5 514GFK/225	
320	90458-0422		1	CABLE GLAND, VK 22053Y	
330	90458-0428		1	GLAND FITTING, VK 22052YUL11	
340	90458-0430		5	GLAND FITTING, VK 22054YUL16	
350	90458-0188		4	INSERT, MULTI HOLE, EK154M 1X7, 1X10,5	
360	90457-0147		1	INSERT, MULTI HOLE, EK154M 2X7	
410	353249-0075		1	INSERT, SINGLE HOLE, EK153 13	
420	90458-0431		3	GLAND FITTING, VK 22554YUL16	
430	353249-0013		3	INSERT, SINGLE HOLE, EK154 13	
450	352103-0106		2	CABLE GLAND, ST 11, PR18,6/PG11	
460	90099-0104		2	PLUG, PR 15,2 (PG9)	
X022	90110-0296		1	FEMALE INSERT, HDC-HA-4BS 149840-B/2	
X022.1	90458-1181		1	BULKHEAD HOUSING, HDC-HA-3-AWVL1/11	
X025	90110-0151		1	FEMALE INSERT, 24-POL 121130 0000	
X026	90458-1406		1	FEMALE INSERT, 1207700000	
X026.1	90110-0243		1	CONTACT HOUSING 16-POL 70.320.1628.0	
Common Parts					
010	3040341-0000		1	PLATE	
020	1511833-0000		1	GASKET	
030	1517676-0000		10	SPACER	
140	315105-0146		10	WASHER PLAIN, 5,3X10X1 A4 BRB	
150	315402-0136		16	LOCK WASHER, DIN127B 4,1 A4, M4-5/32	
160	312115-0291		16	SCREW ISO4762 M4X12 A4 80	
170	315105-0124		2	WASHER PLAIN, 3,2X6X0,5 A4 BRB	
180	312115-0224		2	SCREW ISO4762 M3X10 A4 80	
190	90110-0127		1	COAXIAL CONNECTOR, GE 15057C10HBNT-2PT	
200	312115-0220		4	SCREW ISO4762 M3X6 A4 80	
230	90458-0321		3	NUT, M12X1,5	
250	90458-0461		7	GLAND, LOCK NUT, M20X1,5	
270	90458-0462		3	GLAND, LOCK NUT, M25X1,5	
280	90458-1312		1	BLIND PLUG CIRCULAR, M50X1,5 514GFK/250	
290	90458-0327		1	NUT, M50X1,5	
290	90458-0465		1	GLAND, LOCK NUT, M50X1,5	
300	352103-0101		1	CABLE GLAND, ST 9, PR15,2/PG9	
380	90458-0324		1	NUT, M25X1,5	
440	353249-0036		1	INSERT, MULTI HOLE, EK152M 2X4	
C.X334	90600-1559		1	PANEL FEED THROUGH, FWD5 54218	
C.X332	90600-1559		1	PANEL FEED THROUGH, FWD5 54218	
C.W666	90459-4876		1	FOCUS JUMPER CABLE M12 5P 3M, 20-056-21	
C.W661	90459-4876		1	FOCUS JUMPER CABLE M12 5P 3M, 20-056-21	
X018	90110-0247		1	EMALE INSERT 70.200.0653.0	
X018.1	90110-0243		1	CONTACT HOUSING 16-POL 70.320.1628.0	
X019	90110-0151		1	FEMALE INSERT, 24-POL 121130 0000	
X019.1	90110-0153		1	CHASSIS HOUSING, HDC 24B ABU	

Machine Type	Group Description	Used-In	Group Number	Page No

STRIP APPLICATOR CABLE INLETS

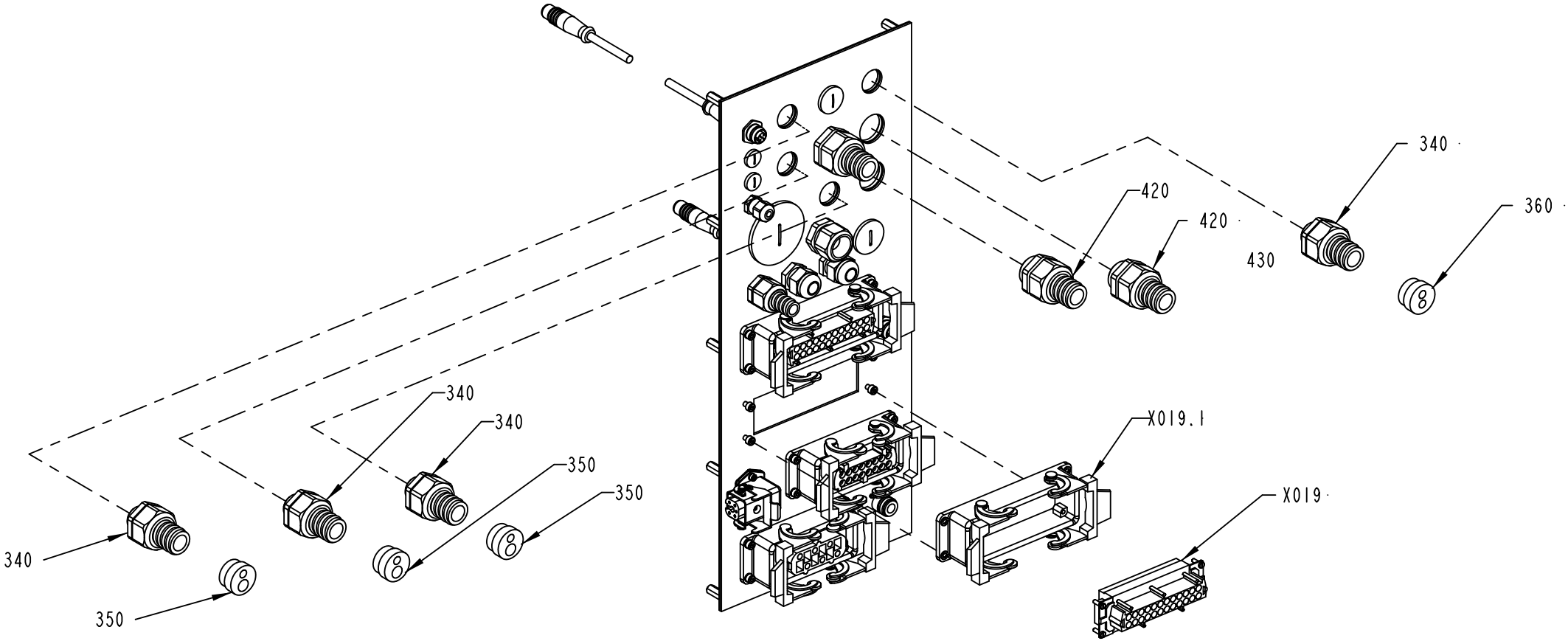

1511787-4
422317

ECM: 430996 - 20091228
Group number: 1511787-0200
Assembly Drawing: 1511787-4_2_AB

This list covers pages from 9-110 to 9-129

Pos	Part No	UN	Qty	Description	Page No
TBA NOPT (See drawing on pages: 9-110, 9-112, 9-114, 9-116)					
090	1037574-0000		1	COVER PLATE	
100	1487430-0000		1	COVER	
110	1129481-0000		1	COVERING PLATE	
120	1037575-0000		1	GASKET	
130	1487431-0000		1	GASKET	
135	1129478-0000		1	GASKET	
210	90458-0305		2	CABLE GLAND, M12X1,5, 5311 1000	
220	90458-1306		1	BLIND PLUG CIRCULAR, M12X1,5 514GFK/212	
240	90458-1308		7	BLIND PLUG CIRCULAR, M20X1,5 514GFK/220	
260	90458-1309		4	BLIND PLUG CIRCULAR, M25X1,5 514GFK/225	
310	90099-0104		1	PLUG, PR 15,2 (PG9)	
470	90002-0009		2	BLANK-OFF PLUG, PR 18.6 SKINDICHT-BLK11	
TBA PT19 (See drawing on pages: 9-118, 9-120, 9-122, 9-124, 9-126, 9-128)					
210	90458-0305		1	CABLE GLAND, M12X1,5, 5311 1000	
220	90458-1306		2	BLIND PLUG CIRCULAR, M12X1,5 514GFK/212	
240	90458-1308		1	BLIND PLUG CIRCULAR, M20X1,5 514GFK/220	
260	90458-1309		2	BLIND PLUG CIRCULAR, M25X1,5 514GFK/225	
310	90099-0104		1	PLUG, PR 15,2 (PG9)	
320	90458-0422		1	CABLE GLAND, VK 22053Y	
330	90458-0428		1	GLAND FITTING, VK 22052YUL11	
340	90458-0430		4	GLAND FITTING, VK 22054YUL16	
350	90458-0188		3	INSERT, MULTI HOLE, EK154M 1X7, 1X10,5	
360	90457-0147		1	INSERT, MULTI HOLE, EK154M 2X7	
410	353249-0075		1	INSERT, SINGLE HOLE, EK153 13	
420	90458-0431		2	GLAND FITTING, VK 22554YUL16	
430	353249-0013		2	INSERT, SINGLE HOLE, EK154 13	
450	352103-0106		2	CABLE GLAND, ST 11, PR18,6/PG11	
460	90099-0104		2	PLUG, PR 15,2 (PG9)	
X022	90110-0296		1	FEMALE INSERT, HDC-HA-4BS 149840-B/2	
X022.1	90458-1181		1	BULKHEAD HOUSING, HDC-HA-3-AWVL1/11	
X025	90110-0151		1	FEMALE INSERT, 24-POL 121130 0000	
X025.1	90110-0153		1	CHASSIS HOUSING, HDC 24B ABU	
X026	90458-1406		1	FEMALE INSERT, 1207700000	
X026.1	90110-0243		1	CONTACT HOUSING 16-POL 70.320.1628.0	
TPA					
210	90458-0305		1	CABLE GLAND, M12X1,5, 5311 1000	
220	90458-1306		2	BLIND PLUG CIRCULAR, M12X1,5 514GFK/212	
260	90458-1309		1	BLIND PLUG CIRCULAR, M25X1,5 514GFK/225	
320	90458-0422		1	CABLE GLAND, VK 22053Y	
330	90458-0428		1	GLAND FITTING, VK 22052YUL11	
340	90458-0430		5	GLAND FITTING, VK 22054YUL16	
350	90458-0188		4	INSERT, MULTI HOLE, EK154M 1X7, 1X10,5	
360	90457-0147		1	INSERT, MULTI HOLE, EK154M 2X7	
410	353249-0075		1	INSERT, SINGLE HOLE, EK153 13	
420	90458-0431		3	GLAND FITTING, VK 22554YUL16	
430	353249-0013		3	INSERT, SINGLE HOLE, EK154 13	
450	352103-0106		2	CABLE GLAND, ST 11, PR18,6/PG11	
460	90099-0104		2	PLUG, PR 15,2 (PG9)	
X022	90110-0296		1	FEMALE INSERT, HDC-HA-4BS 149840-B/2	
X022.1	90458-1181		1	BULKHEAD HOUSING, HDC-HA-3-AWVL1/11	
X025	90110-0151		1	FEMALE INSERT, 24-POL 121130 0000	
X026	90458-1406		1	FEMALE INSERT, 1207700000	
X026.1	90110-0243		1	CONTACT HOUSING 16-POL 70.320.1628.0	
Common Parts					
010	3040341-0000		1	PLATE	
020	1511833-0000		1	GASKET	
030	1517676-0000		10	SPACER	
140	315105-0146		10	WASHER PLAIN, 5,3X10X1 A4 BRB	
150	315402-0136		16	LOCK WASHER, DIN127B 4,1 A4, M4-5/32	
160	312115-0291		16	SCREW ISO4762 M4X12 A4 80	
170	315105-0124		2	WASHER PLAIN, 3,2X6X0,5 A4 BRB	
180	312115-0224		2	SCREW ISO4762 M3X10 A4 80	
190	90110-0127		1	COAXIAL CONNECTOR, GE 15057C10HBNT-2PT	
200	312115-0220		4	SCREW ISO4762 M3X6 A4 80	
230	90458-0321		3	NUT, M12X1,5	
250	90458-0461		7	GLAND, LOCK NUT, M20X1,5	
270	90458-0462		3	GLAND, LOCK NUT, M25X1,5	
280	90458-1312		1	BLIND PLUG CIRCULAR, M50X1,5 514GFK/250	
290	90458-0327		1	NUT, M50X1,5	
290	90458-0465		1	GLAND, LOCK NUT, M50X1,5	
300	352103-0101		1	CABLE GLAND, ST 9, PR15,2/PG9	
380	90458-0324		1	NUT, M25X1,5	
440	353249-0036		1	INSERT, MULTI HOLE, EK152M 2X4	
C.X334	90600-1559		1	PANEL FEED THROUGH, FWD5 54218	
C.X332	90600-1559		1	PANEL FEED THROUGH, FWD5 54218	
C.W666	90459-4876		1	FOCUS JUMPER CABLE M12 5P 3M, 20-056-21	
C.W661	90459-4876		1	FOCUS JUMPER CABLE M12 5P 3M, 20-056-21	
X018	90110-0247		1	EMALE INSERT 70.200.0653.0	
X018.1	90110-0243		1	CONTACT HOUSING 16-POL 70.320.1628.0	
X019	90110-0151		1	FEMALE INSERT, 24-POL 121130 0000	
X019.1	90110-0153		1	CHASSIS HOUSING, HDC 24B ABU	

Machine Type | Group Description | Used-In | Group Number | Page No

STRIP APPLICATOR CABLE INLETS

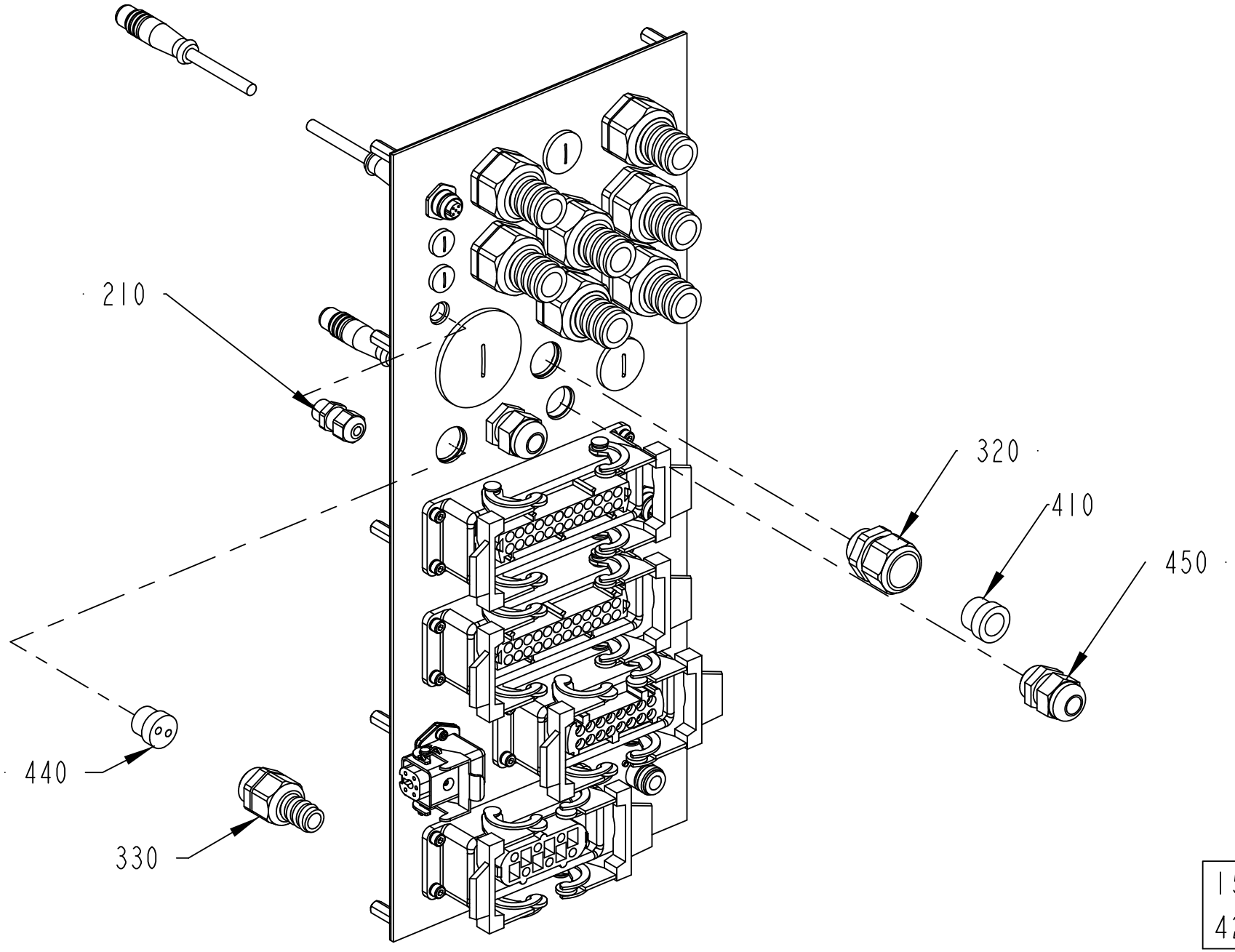

1511787-4
422317

ECM: 430996 - 20091228
Group number: 1511787-0200
Assembly Drawing: 1511787-4_3_AB

This list covers pages from 9-110 to 9-129

Pos	Part No	UN	Qty	Description	Page No
TBA NOPT (See drawing on pages: 9-110, 9-112, 9-114, 9-116)					
090	1037574-0000		1	COVER PLATE	
100	1487430-0000		1	COVER	
110	1129481-0000		1	COVERING PLATE	
120	1037575-0000		1	GASKET	
130	1487431-0000		1	GASKET	
135	1129478-0000		1	GASKET	
210	90458-0305		2	CABLE GLAND, M12X1,5, 5311 1000	
220	90458-1306		1	BLIND PLUG CIRCULAR, M12X1,5 514GFK/212	
240	90458-1308		7	BLIND PLUG CIRCULAR, M20X1,5 514GFK/220	
260	90458-1309		4	BLIND PLUG CIRCULAR, M25X1,5 514GFK/225	
310	90099-0104		1	PLUG, PR 15,2 (PG9)	
470	90002-0009		2	BLANK-OFF PLUG, PR 18.6 SKINDICHT-BLK11	
TBA PT19 (See drawing on pages: 9-118, 9-120, 9-122, 9-124, 9-126, 9-128)					
210	90458-0305		1	CABLE GLAND, M12X1,5, 5311 1000	
220	90458-1306		2	BLIND PLUG CIRCULAR, M12X1,5 514GFK/212	
240	90458-1308		1	BLIND PLUG CIRCULAR, M20X1,5 514GFK/220	
260	90458-1309		2	BLIND PLUG CIRCULAR, M25X1,5 514GFK/225	
310	90099-0104		1	PLUG, PR 15,2 (PG9)	
320	90458-0422		1	CABLE GLAND, VK 22053Y	
330	90458-0428		1	GLAND FITTING, VK 22052YUL11	
340	90458-0430		4	GLAND FITTING, VK 22054YUL16	
350	90458-0188		3	INSERT, MULTI HOLE, EK154M 1X7, 1X10,5	
360	90457-0147		1	INSERT, MULTI HOLE, EK154M 2X7	
410	353249-0075		1	INSERT, SINGLE HOLE, EK153 13	
420	90458-0431		2	GLAND FITTING, VK 22554YUL16	
430	353249-0013		2	INSERT, SINGLE HOLE, EK154 13	
450	352103-0106		2	CABLE GLAND, ST 11, PR18,6/PG11	
460	90099-0104		2	PLUG, PR 15,2 (PG9)	
X022	90110-0296		1	FEMALE INSERT, HDC-HA-4BS 149840-B/2	
X022.1	90458-1181		1	BULKHEAD HOUSING, HDC-HA-3-AWVL1/11	
X025	90110-0151		1	FEMALE INSERT, 24-POL 121130 0000	
X025.1	90110-0153		1	CHASSIS HOUSING, HDC 24B ABU	
X026	90458-1406		1	FEMALE INSERT, 1207700000	
X026.1	90110-0243		1	CONTACT HOUSING 16-POL 70.320.1628.0	
TPA					
210	90458-0305		1	CABLE GLAND, M12X1,5, 5311 1000	
220	90458-1306		2	BLIND PLUG CIRCULAR, M12X1,5 514GFK/212	
260	90458-1309		1	BLIND PLUG CIRCULAR, M25X1,5 514GFK/225	
320	90458-0422		1	CABLE GLAND, VK 22053Y	
330	90458-0428		1	GLAND FITTING, VK 22052YUL11	
340	90458-0430		5	GLAND FITTING, VK 22054YUL16	
350	90458-0188		4	INSERT, MULTI HOLE, EK154M 1X7, 1X10,5	
360	90457-0147		1	INSERT, MULTI HOLE, EK154M 2X7	
410	353249-0075		1	INSERT, SINGLE HOLE, EK153 13	
420	90458-0431		3	GLAND FITTING, VK 22554YUL16	
430	353249-0013		3	INSERT, SINGLE HOLE, EK154 13	
450	352103-0106		2	CABLE GLAND, ST 11, PR18,6/PG11	
460	90099-0104		2	PLUG, PR 15,2 (PG9)	
X022	90110-0296		1	FEMALE INSERT, HDC-HA-4BS 149840-B/2	
X022.1	90458-1181		1	BULKHEAD HOUSING, HDC-HA-3-AWVL1/11	
X025	90110-0151		1	FEMALE INSERT, 24-POL 121130 0000	
X026	90458-1406		1	FEMALE INSERT, 1207700000	
X026.1	90110-0243		1	CONTACT HOUSING 16-POL 70.320.1628.0	
Common Parts					
010	3040341-0000		1	PLATE	
020	1511833-0000		1	GASKET	
030	1517676-0000		10	SPACER	
140	315105-0146		10	WASHER PLAIN, 5,3X10X1 A4 BRB	
150	315402-0136		16	LOCK WASHER, DIN127B 4,1 A4, M4-5/32	
160	312115-0291		16	SCREW ISO4762 M4X12 A4 80	
170	315105-0124		2	WASHER PLAIN, 3,2X6X0,5 A4 BRB	
180	312115-0224		2	SCREW ISO4762 M3X10 A4 80	
190	90110-0127		1	COAXIAL CONNECTOR, GE 15057C10HBNT-2PT	
200	312115-0220		4	SCREW ISO4762 M3X6 A4 80	
230	90458-0321		3	NUT, M12X1,5	
250	90458-0461		7	GLAND, LOCK NUT, M20X1,5	
270	90458-0462		3	GLAND, LOCK NUT, M25X1,5	
280	90458-1312		1	BLIND PLUG CIRCULAR, M50X1,5 514GFK/250	
290	90458-0327		1	NUT, M50X1,5	
290	90458-0465		1	GLAND, LOCK NUT, M50X1,5	
300	352103-0101		1	CABLE GLAND, ST 9, PR15,2/PG9	
380	90458-0324		1	NUT, M25X1,5	
440	353249-0036		1	INSERT, MULTI HOLE, EK152M 2X4	
C.X334	90600-1559		1	PANEL FEED THROUGH, FWD5 54218	
C.X332	90600-1559		1	PANEL FEED THROUGH, FWD5 54218	
C.W666	90459-4876		1	FOCUS JUMPER CABLE M12 5P 3M, 20-056-21	
C.W661	90459-4876		1	FOCUS JUMPER CABLE M12 5P 3M, 20-056-21	
X018	90110-0247		1	EMALE INSERT 70.200.0653.0	
X018.1	90110-0243		1	CONTACT HOUSING 16-POL 70.320.1628.0	
X019	90110-0151		1	FEMALE INSERT, 24-POL 121130 0000	
X019.1	90110-0153		1	CHASSIS HOUSING, HDC 24B ABU	

Machine Type	Group Description	Used-In	Group Number	Page No

STRIP APPLICATOR CABLE INLETS

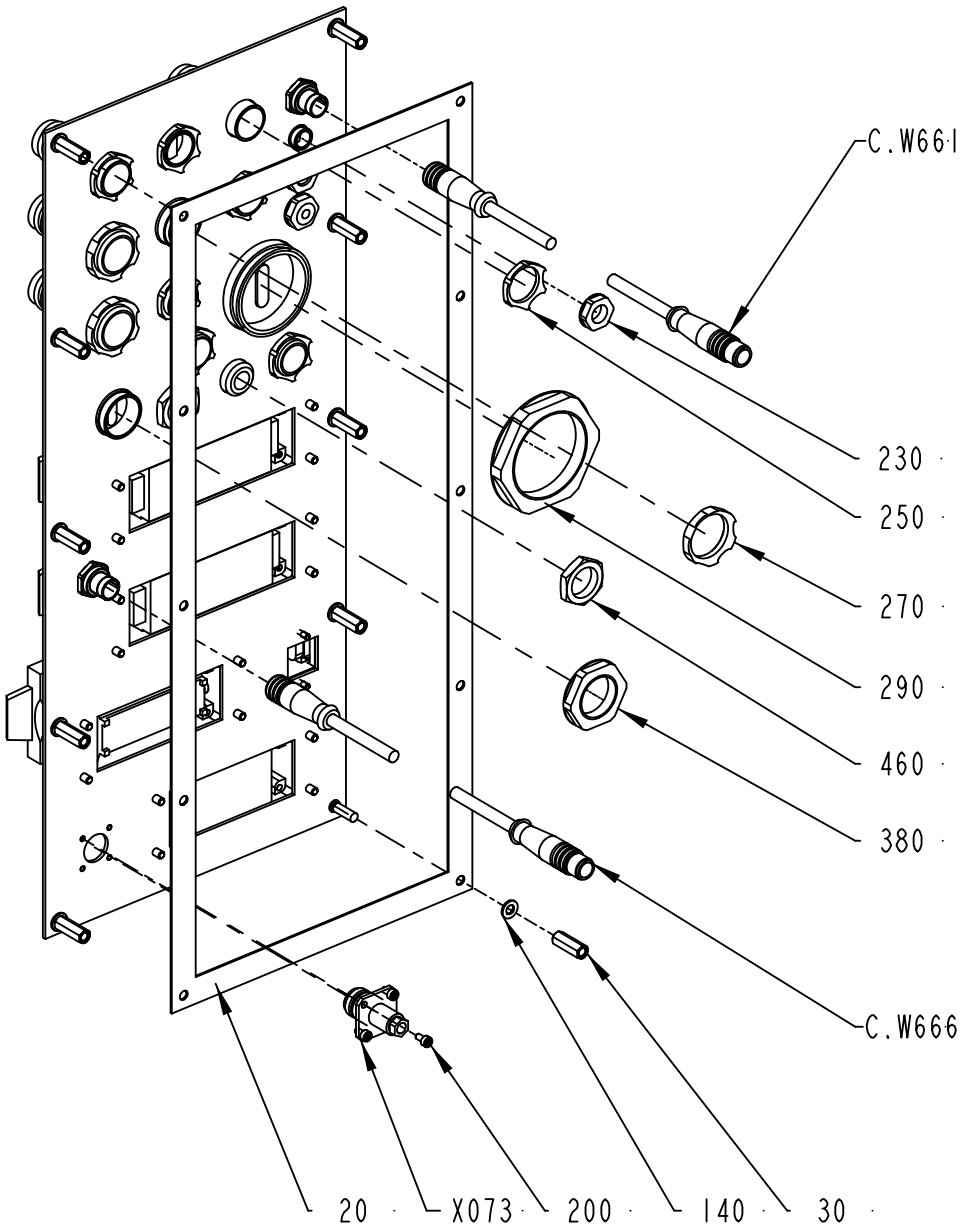

1511787-4
ECM 422317

ECM: 430996 - 20091228
Group number: 1511787-0200
Assembly Drawing: 1511787-4_4_AB

This list covers pages from 9-110 to 9-129

Pos	Part No	UN	Qty	Description	Page No
TBA NOPT (See drawing on pages: 9-110, 9-112, 9-114, 9-116)					
090	1037574-0000		1	COVER PLATE	
100	1487430-0000		1	COVER	
110	1129481-0000		1	COVERING PLATE	
120	1037575-0000		1	GASKET	
130	1487431-0000		1	GASKET	
135	1129478-0000		1	GASKET	
210	90458-0305		2	CABLE GLAND, M12X1,5, 5311 1000	
220	90458-1306		1	BLIND PLUG CIRCULAR, M12X1,5 514GFK/212	
240	90458-1308		7	BLIND PLUG CIRCULAR, M20X1,5 514GFK/220	
260	90458-1309		4	BLIND PLUG CIRCULAR, M25X1,5 514GFK/225	
310	90099-0104		1	PLUG, PR 15,2 (PG9)	
470	90002-0009		2	BLANK-OFF PLUG, PR 18.6 SKINDICHT-BLK11	
TBA PT19 (See drawing on pages: 9-118, 9-120, 9-122, 9-124, 9-126, 9-128)					
210	90458-0305		1	CABLE GLAND, M12X1,5, 5311 1000	
220	90458-1306		2	BLIND PLUG CIRCULAR, M12X1,5 514GFK/212	
240	90458-1308		1	BLIND PLUG CIRCULAR, M20X1,5 514GFK/220	
260	90458-1309		2	BLIND PLUG CIRCULAR, M25X1,5 514GFK/225	
310	90099-0104		1	PLUG, PR 15,2 (PG9)	
320	90458-0422		1	CABLE GLAND, VK 22053Y	
330	90458-0428		1	GLAND FITTING, VK 22052YUL11	
340	90458-0430		4	GLAND FITTING, VK 22054YUL16	
350	90458-0188		3	INSERT, MULTI HOLE, EK154M 1X7, 1X10,5	
360	90457-0147		1	INSERT, MULTI HOLE, EK154M 2X7	
410	353249-0075		1	INSERT, SINGLE HOLE, EK153 13	
420	90458-0431		2	GLAND FITTING, VK 22554YUL16	
430	353249-0013		2	INSERT, SINGLE HOLE, EK154 13	
450	352103-0106		2	CABLE GLAND, ST 11, PR18,6/PG11	
460	90099-0104		2	PLUG, PR 15,2 (PG9)	
X022	90110-0296		1	FEMALE INSERT, HDC-HA-4BS 149840-B/2	
X022.1	90458-1181		1	BULKHEAD HOUSING, HDC-HA-3-AWVL1/11	
X025	90110-0151		1	FEMALE INSERT, 24-POL 121130 0000	
X025.1	90110-0153		1	CHASSIS HOUSING, HDC 24B ABU	
X026	90458-1406		1	FEMALE INSERT, 1207700000	
X026.1	90110-0243		1	CONTACT HOUSING 16-POL 70.320.1628.0	
TPA					
210	90458-0305		1	CABLE GLAND, M12X1,5, 5311 1000	
220	90458-1306		2	BLIND PLUG CIRCULAR, M12X1,5 514GFK/212	
260	90458-1309		1	BLIND PLUG CIRCULAR, M25X1,5 514GFK/225	
320	90458-0422		1	CABLE GLAND, VK 22053Y	
330	90458-0428		1	GLAND FITTING, VK 22052YUL11	
340	90458-0430		5	GLAND FITTING, VK 22054YUL16	
350	90458-0188		4	INSERT, MULTI HOLE, EK154M 1X7, 1X10,5	
360	90457-0147		1	INSERT, MULTI HOLE, EK154M 2X7	
410	353249-0075		1	INSERT, SINGLE HOLE, EK153 13	
420	90458-0431		3	GLAND FITTING, VK 22554YUL16	
430	353249-0013		3	INSERT, SINGLE HOLE, EK154 13	
450	352103-0106		2	CABLE GLAND, ST 11, PR18,6/PG11	
460	90099-0104		2	PLUG, PR 15,2 (PG9)	
X022	90110-0296		1	FEMALE INSERT, HDC-HA-4BS 149840-B/2	
X022.1	90458-1181		1	BULKHEAD HOUSING, HDC-HA-3-AWVL1/11	
X025	90110-0151		1	FEMALE INSERT, 24-POL 121130 0000	
X026	90458-1406		1	FEMALE INSERT, 1207700000	
X026.1	90110-0243		1	CONTACT HOUSING 16-POL 70.320.1628.0	
Common Parts					
010	3040341-0000		1	PLATE	
020	1511833-0000		1	GASKET	
030	1517676-0000		10	SPACER	
140	315105-0146		10	WASHER PLAIN, 5,3X10X1 A4 BRB	
150	315402-0136		16	LOCK WASHER, DIN127B 4,1 A4, M4-5/32	
160	312115-0291		16	SCREW ISO4762 M4X12 A4 80	
170	315105-0124		2	WASHER PLAIN, 3,2X6X0,5 A4 BRB	
180	312115-0224		2	SCREW ISO4762 M3X10 A4 80	
190	90110-0127		1	COAXIAL CONNECTOR, GE 15057C10HBNT-2PT	
200	312115-0220		4	SCREW ISO4762 M3X6 A4 80	
230	90458-0321		3	NUT, M12X1,5	
250	90458-0461		7	GLAND, LOCK NUT, M20X1,5	
270	90458-0462		3	GLAND, LOCK NUT, M25X1,5	
280	90458-1312		1	BLIND PLUG CIRCULAR, M50X1,5 514GFK/250	
290	90458-0327		1	NUT, M50X1,5	
290	90458-0465		1	GLAND, LOCK NUT, M50X1,5	
300	352103-0101		1	CABLE GLAND, ST 9, PR15,2/PG9	
380	90458-0324		1	NUT, M25X1,5	
440	353249-0036		1	INSERT, MULTI HOLE, EK152M 2X4	
C.X334	90600-1559		1	PANEL FEED THROUGH, FWD5 54218	
C.X332	90600-1559		1	PANEL FEED THROUGH, FWD5 54218	
C.W666	90459-4876		1	FOCUS JUMPER CABLE M12 5P 3M, 20-056-21	
C.W661	90459-4876		1	FOCUS JUMPER CABLE M12 5P 3M, 20-056-21	
X018	90110-0247		1	EMALE INSERT 70.200.0653.0	
X018.1	90110-0243		1	CONTACT HOUSING 16-POL 70.320.1628.0	
X019	90110-0151		1	FEMALE INSERT, 24-POL 121130 0000	
X019.1	90110-0153		1	CHASSIS HOUSING, HDC 24B ABU	

Machine Type | Group Description | Used-In | Group Number | Page No

STRIP APPLICATOR CABLE INLETS

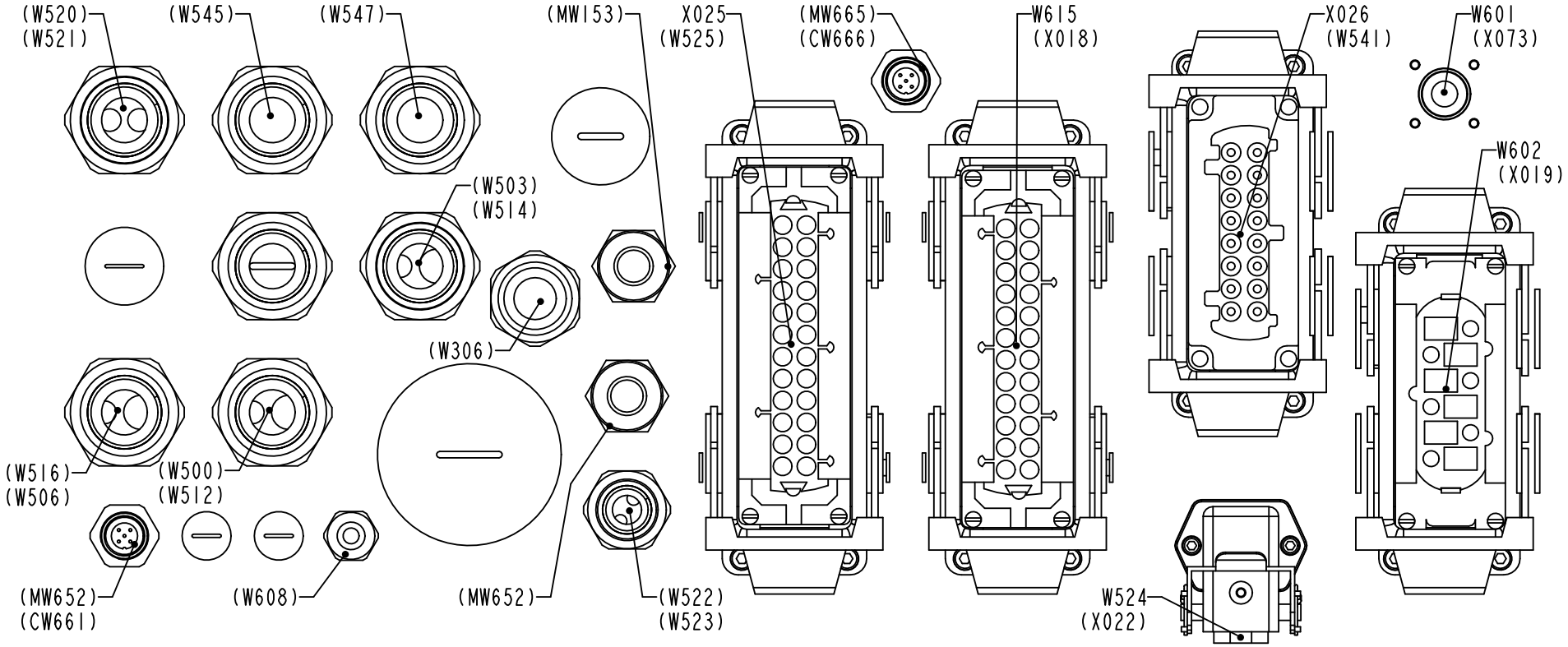

1511787-4
ECM 422317

ECM: 430996 - 20091228
Group number: 1511787-0200
Assembly Drawing: 1511787-4_5_AB

This list covers pages from 9-110 to 9-129

Pos	Part No	UN	Qty	Description	Page No
TBA NOPT (See drawing on pages: 9-110, 9-112, 9-114, 9-116)					
090	1037574-0000		1	COVER PLATE	
100	1487430-0000		1	COVER	
110	1129481-0000		1	COVERING PLATE	
120	1037575-0000		1	GASKET	
130	1487431-0000		1	GASKET	
135	1129478-0000		1	GASKET	
210	90458-0305		2	CABLE GLAND, M12X1,5, 5311 1000	
220	90458-1306		1	BLIND PLUG CIRCULAR, M12X1,5 514GFK/212	
240	90458-1308		7	BLIND PLUG CIRCULAR, M20X1,5 514GFK/220	
260	90458-1309		4	BLIND PLUG CIRCULAR, M25X1,5 514GFK/225	
310	90099-0104		1	PLUG, PR 15,2 (PG9)	
470	90002-0009		2	BLANK-OFF PLUG, PR 18.6 SKINDICHT-BLK11	
TBA PT19 (See drawing on pages: 9-118, 9-120, 9-122, 9-124, 9-126, 9-128)					
210	90458-0305		1	CABLE GLAND, M12X1,5, 5311 1000	
220	90458-1306		2	BLIND PLUG CIRCULAR, M12X1,5 514GFK/212	
240	90458-1308		1	BLIND PLUG CIRCULAR, M20X1,5 514GFK/220	
260	90458-1309		2	BLIND PLUG CIRCULAR, M25X1,5 514GFK/225	
310	90099-0104		1	PLUG, PR 15,2 (PG9)	
320	90458-0422		1	CABLE GLAND, VK 22053Y	
330	90458-0428		1	GLAND FITTING, VK 22052YUL11	
340	90458-0430		4	GLAND FITTING, VK 22054YUL16	
350	90458-0188		3	INSERT, MULTI HOLE, EK154M 1X7, 1X10,5	
360	90457-0147		1	INSERT, MULTI HOLE, EK154M 2X7	
410	353249-0075		1	INSERT, SINGLE HOLE, EK153 13	
420	90458-0431		2	GLAND FITTING, VK 22554YUL16	
430	353249-0013		2	INSERT, SINGLE HOLE, EK154 13	
450	352103-0106		2	CABLE GLAND, ST 11, PR18,6/PG11	
460	90099-0104		2	PLUG, PR 15,2 (PG9)	
X022	90110-0296		1	FEMALE INSERT, HDC-HA-4BS 149840-B/2	
X022.1	90458-1181		1	BULKHEAD HOUSING, HDC-HA-3-AWVL1/11	
X025	90110-0151		1	FEMALE INSERT, 24-POL 121130 0000	
X025.1	90110-0153		1	CHASSIS HOUSING, HDC 24B ABU	
X026	90458-1406		1	FEMALE INSERT, 1207700000	
X026.1	90110-0243		1	CONTACT HOUSING 16-POL 70.320.1628.0	
TPA					
210	90458-0305		1	CABLE GLAND, M12X1,5, 5311 1000	
220	90458-1306		2	BLIND PLUG CIRCULAR, M12X1,5 514GFK/212	
260	90458-1309		1	BLIND PLUG CIRCULAR, M25X1,5 514GFK/225	
320	90458-0422		1	CABLE GLAND, VK 22053Y	
330	90458-0428		1	GLAND FITTING, VK 22052YUL11	
340	90458-0430		5	GLAND FITTING, VK 22054YUL16	
350	90458-0188		4	INSERT, MULTI HOLE, EK154M 1X7, 1X10,5	
360	90457-0147		1	INSERT, MULTI HOLE, EK154M 2X7	
410	353249-0075		1	INSERT, SINGLE HOLE, EK153 13	
420	90458-0431		3	GLAND FITTING, VK 22554YUL16	
430	353249-0013		3	INSERT, SINGLE HOLE, EK154 13	
450	352103-0106		2	CABLE GLAND, ST 11, PR18,6/PG11	
460	90099-0104		2	PLUG, PR 15,2 (PG9)	
X022	90110-0296		1	FEMALE INSERT, HDC-HA-4BS 149840-B/2	
X022.1	90458-1181		1	BULKHEAD HOUSING, HDC-HA-3-AWVL1/11	
X025	90110-0151		1	FEMALE INSERT, 24-POL 121130 0000	
X026	90458-1406		1	FEMALE INSERT, 1207700000	
X026.1	90110-0243		1	CONTACT HOUSING 16-POL 70.320.1628.0	
Common Parts					
010	3040341-0000		1	PLATE	
020	1511833-0000		1	GASKET	
030	1517676-0000		10	SPACER	
140	315105-0146		10	WASHER PLAIN, 5,3X10X1 A4 BRB	
150	315402-0136		16	LOCK WASHER, DIN127B 4,1 A4, M4-5/32	
160	312115-0291		16	SCREW ISO4762 M4X12 A4 80	
170	315105-0124		2	WASHER PLAIN, 3,2X6X0,5 A4 BRB	
180	312115-0224		2	SCREW ISO4762 M3X10 A4 80	
190	90110-0127		1	COAXIAL CONNECTOR, GE 15057C10HBNT-2PT	
200	312115-0220		4	SCREW ISO4762 M3X6 A4 80	
230	90458-0321		3	NUT, M12X1,5	
250	90458-0461		7	GLAND, LOCK NUT, M20X1,5	
270	90458-0462		3	GLAND, LOCK NUT, M25X1,5	
280	90458-1312		1	BLIND PLUG CIRCULAR, M50X1,5 514GFK/250	
290	90458-0327		1	NUT, M50X1,5	
290	90458-0465		1	GLAND, LOCK NUT, M50X1,5	
300	352103-0101		1	CABLE GLAND, ST 9, PR15,2/PG9	
380	90458-0324		1	NUT, M25X1,5	
440	353249-0036		1	INSERT, MULTI HOLE, EK152M 2X4	
C.X334	90600-1559		1	PANEL FEED THROUGH, FWD5 54218	
C.X332	90600-1559		1	PANEL FEED THROUGH, FWD5 54218	
C.W666	90459-4876		1	FOCUS JUMPER CABLE M12 5P 3M, 20-056-21	
C.W661	90459-4876		1	FOCUS JUMPER CABLE M12 5P 3M, 20-056-21	
X018	90110-0247		1	EMALE INSERT 70.200.0653.0	
X018.1	90110-0243		1	CONTACT HOUSING 16-POL 70.320.1628.0	
X019	90110-0151		1	FEMALE INSERT, 24-POL 121130 0000	
X019.1	90110-0153		1	CHASSIS HOUSING, HDC 24B ABU	

Machine Type | Group Description | Used-In | Group Number | Page No

STRIP APPLICATOR CABLE INLETS

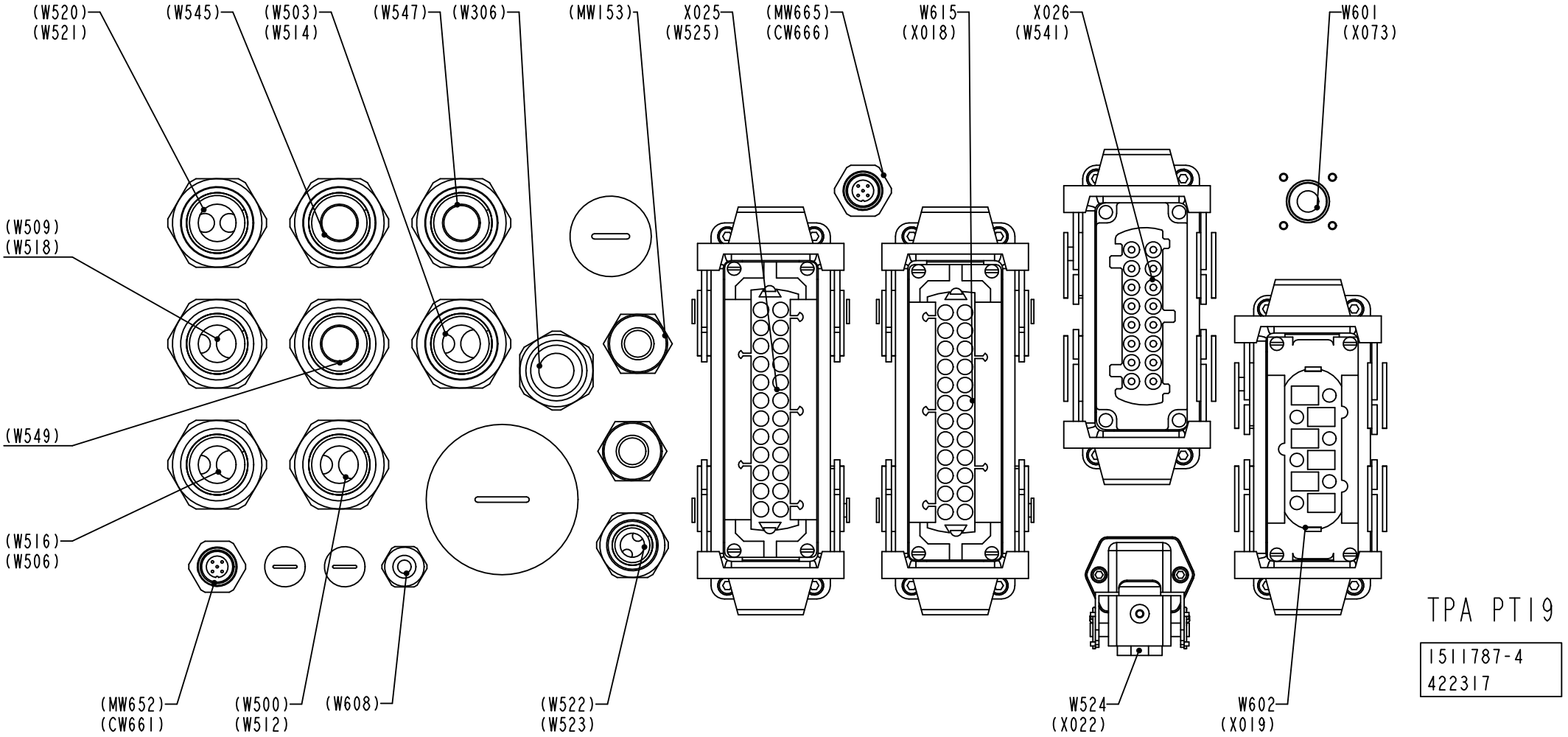

ECM: 430996 - 20091228
Group number: 1511787-0200
Assembly Drawing: 1511787-4_6_AB

This list covers pages from 9-110 to 9-129

Pos	Part No	UN	Qty	Description	Page No
TBA NOPT (See drawing on pages: 9-110, 9-112, 9-114, 9-116)					
090	1037574-0000		1	COVER PLATE	
100	1487430-0000		1	COVER	
110	1129481-0000		1	COVERING PLATE	
120	1037575-0000		1	GASKET	
130	1487431-0000		1	GASKET	
135	1129478-0000		1	GASKET	
210	90458-0305		2	CABLE GLAND, M12X1,5, 5311 1000	
220	90458-1306		1	BLIND PLUG CIRCULAR, M12X1,5 514GFK/212	
240	90458-1308		7	BLIND PLUG CIRCULAR, M20X1,5 514GFK/220	
260	90458-1309		4	BLIND PLUG CIRCULAR, M25X1,5 514GFK/225	
310	90099-0104		1	PLUG, PR 15,2 (PG9)	
470	90002-0009		2	BLANK-OFF PLUG, PR 18.6 SKINDICHT-BLK11	
TBA PT19 (See drawing on pages: 9-118, 9-120, 9-122, 9-124, 9-126, 9-128)					
210	90458-0305		1	CABLE GLAND, M12X1,5, 5311 1000	
220	90458-1306		2	BLIND PLUG CIRCULAR, M12X1,5 514GFK/212	
240	90458-1308		1	BLIND PLUG CIRCULAR, M20X1,5 514GFK/220	
260	90458-1309		2	BLIND PLUG CIRCULAR, M25X1,5 514GFK/225	
310	90099-0104		1	PLUG, PR 15,2 (PG9)	
320	90458-0422		1	CABLE GLAND, VK 22053Y	
330	90458-0428		1	GLAND FITTING, VK 22052YUL11	
340	90458-0430		4	GLAND FITTING, VK 22054YUL16	
350	90458-0188		3	INSERT, MULTI HOLE, EK154M 1X7, 1X10,5	
360	90457-0147		1	INSERT, MULTI HOLE, EK154M 2X7	
410	353249-0075		1	INSERT, SINGLE HOLE, EK153 13	
420	90458-0431		2	GLAND FITTING, VK 22554YUL16	
430	353249-0013		2	INSERT, SINGLE HOLE, EK154 13	
450	352103-0106		2	CABLE GLAND, ST 11, PR18,6/PG11	
460	90099-0104		2	PLUG, PR 15,2 (PG9)	
X022	90110-0296		1	FEMALE INSERT, HDC-HA-4BS 149840-B/2	
X022.1	90458-1181		1	BULKHEAD HOUSING, HDC-HA-3-AWVL1/11	
X025	90110-0151		1	FEMALE INSERT, 24-POL 121130 0000	
X025.1	90110-0153		1	CHASSIS HOUSING, HDC 24B ABU	
X026	90458-1406		1	FEMALE INSERT, 1207700000	
X026.1	90110-0243		1	CONTACT HOUSING 16-POL 70.320.1628.0	
TPA					
210	90458-0305		1	CABLE GLAND, M12X1,5, 5311 1000	
220	90458-1306		2	BLIND PLUG CIRCULAR, M12X1,5 514GFK/212	
260	90458-1309		1	BLIND PLUG CIRCULAR, M25X1,5 514GFK/225	
320	90458-0422		1	CABLE GLAND, VK 22053Y	
330	90458-0428		1	GLAND FITTING, VK 22052YUL11	
340	90458-0430		5	GLAND FITTING, VK 22054YUL16	
350	90458-0188		4	INSERT, MULTI HOLE, EK154M 1X7, 1X10,5	
360	90457-0147		1	INSERT, MULTI HOLE, EK154M 2X7	
410	353249-0075		1	INSERT, SINGLE HOLE, EK153 13	
420	90458-0431		3	GLAND FITTING, VK 22554YUL16	
430	353249-0013		3	INSERT, SINGLE HOLE, EK154 13	
450	352103-0106		2	CABLE GLAND, ST 11, PR18,6/PG11	
460	90099-0104		2	PLUG, PR 15,2 (PG9)	
X022	90110-0296		1	FEMALE INSERT, HDC-HA-4BS 149840-B/2	
X022.1	90458-1181		1	BULKHEAD HOUSING, HDC-HA-3-AWVL1/11	
X025	90110-0151		1	FEMALE INSERT, 24-POL 121130 0000	
X026	90458-1406		1	FEMALE INSERT, 1207700000	
X026.1	90110-0243		1	CONTACT HOUSING 16-POL 70.320.1628.0	
Common Parts					
010	3040341-0000		1	PLATE	
020	1511833-0000		1	GASKET	
030	1517676-0000		10	SPACER	
140	315105-0146		10	WASHER PLAIN, 5,3X10X1 A4 BRB	
150	315402-0136		16	LOCK WASHER, DIN127B 4,1 A4, M4-5/32	
160	312115-0291		16	SCREW ISO4762 M4X12 A4 80	
170	315105-0124		2	WASHER PLAIN, 3,2X6X0,5 A4 BRB	
180	312115-0224		2	SCREW ISO4762 M3X10 A4 80	
190	90110-0127		1	COAXIAL CONNECTOR, GE 15057C10HBNT-2PT	
200	312115-0220		4	SCREW ISO4762 M3X6 A4 80	
230	90458-0321		3	NUT, M12X1,5	
250	90458-0461		7	GLAND, LOCK NUT, M20X1,5	
270	90458-0462		3	GLAND, LOCK NUT, M25X1,5	
280	90458-1312		1	BLIND PLUG CIRCULAR, M50X1,5 514GFK/250	
290	90458-0327		1	NUT, M50X1,5	
290	90458-0465		1	GLAND, LOCK NUT, M50X1,5	
300	352103-0101		1	CABLE GLAND, ST 9, PR15,2/PG9	
380	90458-0324		1	NUT, M25X1,5	
440	353249-0036		1	INSERT, MULTI HOLE, EK152M 2X4	
C.X334	90600-1559		1	PANEL FEED THROUGH, FWD5 54218	
C.X332	90600-1559		1	PANEL FEED THROUGH, FWD5 54218	
C.W666	90459-4876		1	FOCUS JUMPER CABLE M12 5P 3M, 20-056-21	
C.W661	90459-4876		1	FOCUS JUMPER CABLE M12 5P 3M, 20-056-21	
X018	90110-0247		1	EMALE INSERT 70.200.0653.0	
X018.1	90110-0243		1	CONTACT HOUSING 16-POL 70.320.1628.0	
X019	90110-0151		1	FEMALE INSERT, 24-POL 121130 0000	
X019.1	90110-0153		1	CHASSIS HOUSING, HDC 24B ABU	

Machine Type | Group Description | Used-In | Group Number | Page No

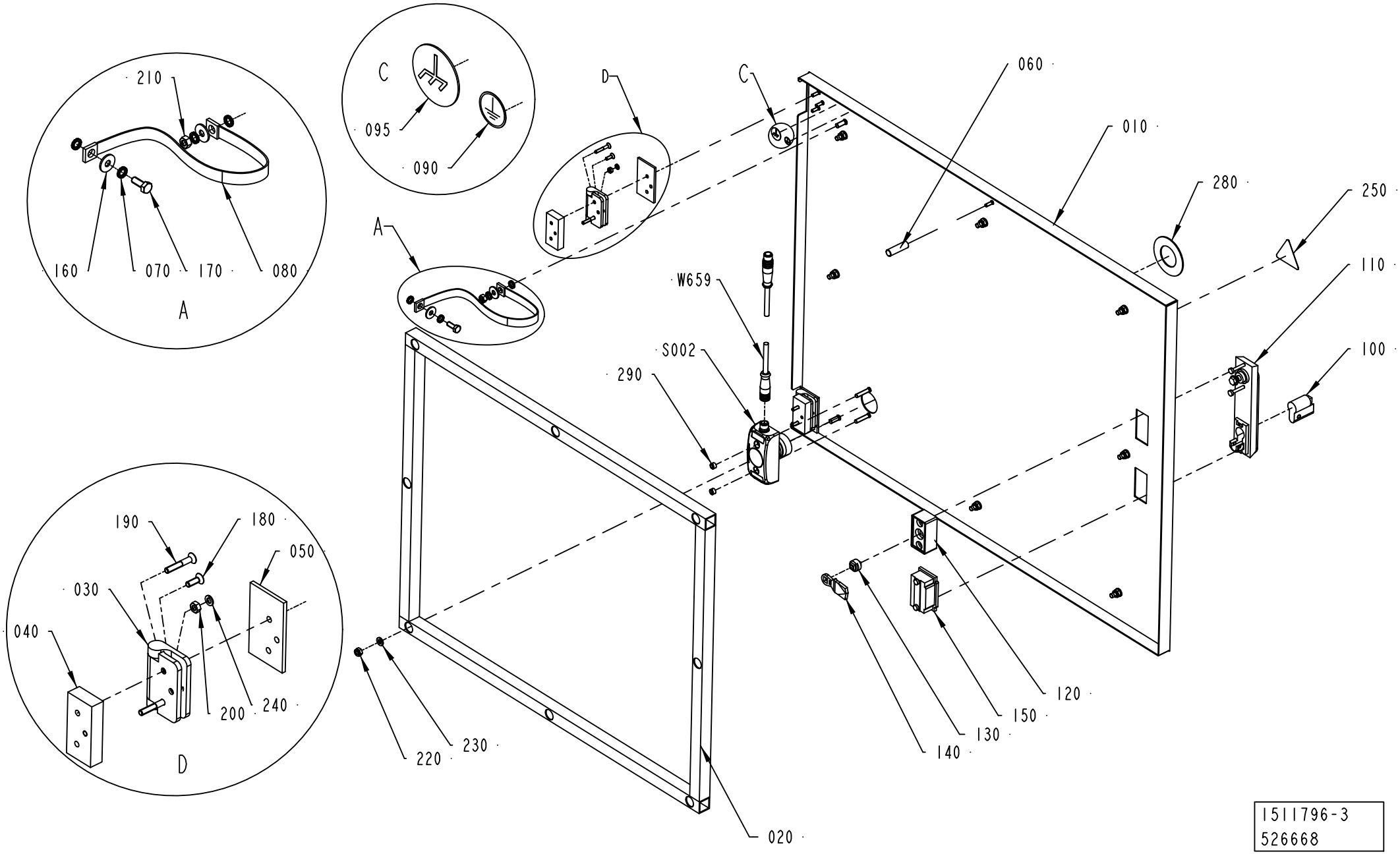

1511796-3
526668

ECM: 541773 - 20120217
Group number: 1511796-0300
Assembly Drawing: 1511796-3_1_AB

Pos	Part No	UN	Qty	Description	Page No
-					
010	3024823-0000		1	DOOR	
020	1517664-0000		1	FRAME	
030	1523438-0000		2	HINGE	
040	1523441-0000		2	SPACER SHEET	
050	1523442-0000		2	SPACER SHEET	
060	3159165-0000		2	SPACER	
070	90062-0015		4	LOCK WASHER SERRAT.EXT.GEAR,6,4/11 H=0,7	
080	90135-0044		1	EARTH WIRE, L=320 MM 16 MM2	
090	90194-0163		1	SIGN, EARTH WITHIN CIRCLE / SHEET 48 PCS	
095	90194-0164		1	SIGN, FRAME/CHASSIS WITHIN CIRCLE	
100	90237-0129		1	LOCK CYLINDER, 1109-U6	
110	90237-0150		1	TURNING HANDLE, NO. 1125-U190-0A	
120	90237-0154		1	LOCK HOUSING, 1121-U60-0C	
130	90237-0214		1	LOCK ADAPTER, 1121-U40	
140	90237-0156		1	LOCK BOLT, 1000-16	
150	90237-0176		1	TURNING HANDLE, 1125-U190-A	
160	90457-0192		2	WASHER PLAIN ROUND, 6,5/18, H=1,5	
170	312105-0368		1	SCREW, M6S ISO 4017 M6X16 A4 80	
180	312155-0291		2	SCREW DIN 7991 MF6S M4X12 A4 70	
190	312155-0297		4	SCREW DIN 7991 MF6S M4X25 A4 70	
200	312605-0312		6	HEXAGON NUT, M6M M4 A280	
210	312605-0316		1	HEXAGON NUT, M6M M6 A280	
220	312812-0316		8	HEXAGON NUT, NY-LOCK M6 A4 80	
230	315105-0153		8	WASHER PLAIN, 6,4X12X1,5 A4 BRB	
240	315402-0136		6	LOCK WASHER, DIN127B 4,1 A4, M4-5/32	
250	359705-0015		1	WARNING SIGN ISO, RISK OF ELECTRIC SHOCK	
280	90600-9527		1	ES SIGN, FOR SMILE EAR	
290	3040345-0000		2	ROUND NUT	
S002	90600-6049		1	EMERG. STOP SMILE 11 EAR TINA, 30-050-01	
W657	90459-4786		1	CYLINDER, WITH INT. GUIDING BORE 16	

Pos	Part No	UN	Qty	Description	Page No

Machine Type	Group Description	Used-In	Group Number	Page No

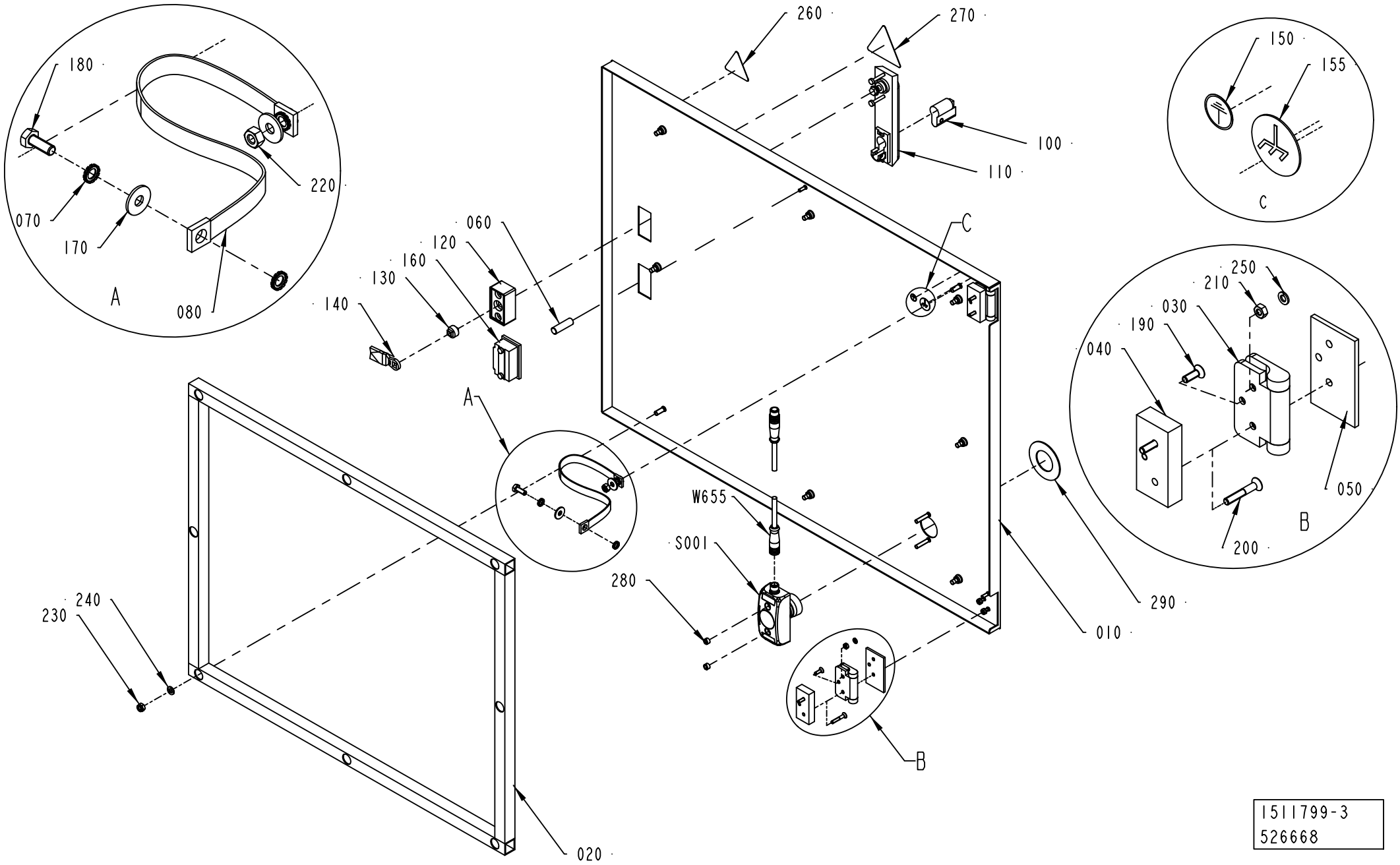

1511799-3
526668

ECM: 541774 - 20120217
Group number: 1511799-0300
Assembly Drawing: 1511799-3_1_AC

Pos	Part No	UN	Qty	Description	Page No
-					
020	1517664-0000		1	FRAME	
030	1523438-0000		2	HINGE	
040	1523441-0000		2	SPACER SHEET	
050	1523442-0000		2	SPACER SHEET	
060	3159165-0000		1	SPACER	
070	90062-0015		4	LOCK WASHER SERRAT.EXT.GEAR,6,4/11 H=0,7	
080	90135-0044		1	EARTH WIRE, L=320 MM 16 MM2	
090	3024835-0000		1	DOOR	
100	90237-0129		1	LOCK CYLINDER, 1109-U6	
110	90237-0150		1	TURNING HANDLE, NO. 1125-U190-0A	
120	90237-0154		1	LOCK HOUSING, 1121-U60-0C	
130	90237-0214		1	LOCK ADAPTER, 1121-U40	
140	90237-0156		1	LOCK BOLT, 1000-16	
150	90194-0163		1	SIGN, EARTH WITHIN CIRCLE / SHEET 48 PCS	
155	90194-0164		1	SIGN, FRAME/CHASSIS WITHIN CIRCLE	
160	90237-0176		1	TURNING HANDLE, 1125-U190-A	
170	90457-0192		2	WASHER PLAIN ROUND, 6,5/18, H=1,5	
180	312105-0368		1	SCREW, M6S ISO 4017 M6X16 A4 80	
190	312155-0291		2	SCREW DIN 7991 MF6S M4X12 A4 70	
200	312155-0297		4	SCREW DIN 7991 MF6S M4X25 A4 70	
210	312605-0312		6	HEXAGON NUT, M6M M4 A280	
220	312605-0316		1	HEXAGON NUT, M6M M6 A280	
230	312812-0316		8	HEXAGON NUT, NY-LOCK M6 A4 80	
240	315105-0153		8	WASHER PLAIN, 6,4X12X1,5 A4 BRB	
250	315402-0136		6	LOCK WASHER, DIN127B 4,1 A4, M4-5/32	
260	359705-0015		1	WARNING SIGN ISO, RISK OF ELECTRIC SHOCK	
270	90194-0118		1	SIGN, RESIDUAL VOLTAGE, WAIT 5 MIN.	
280	3040345-0000		2	ROUND NUT	
290	90600-9527		1	ES SIGN, FOR SMILE EAR	
S001	90600-6049		1	EMERG. STOP SMILE 11 EAR TINA, 30-050-01	
W655	90459-4876		1	FOCUS JUMPER CABLE M12 5P 3M, 20-056-21	

Pos	Part No	UN	Qty	Description	Page No

Machine Type	Group Description	Used-In	Group Number	Page No

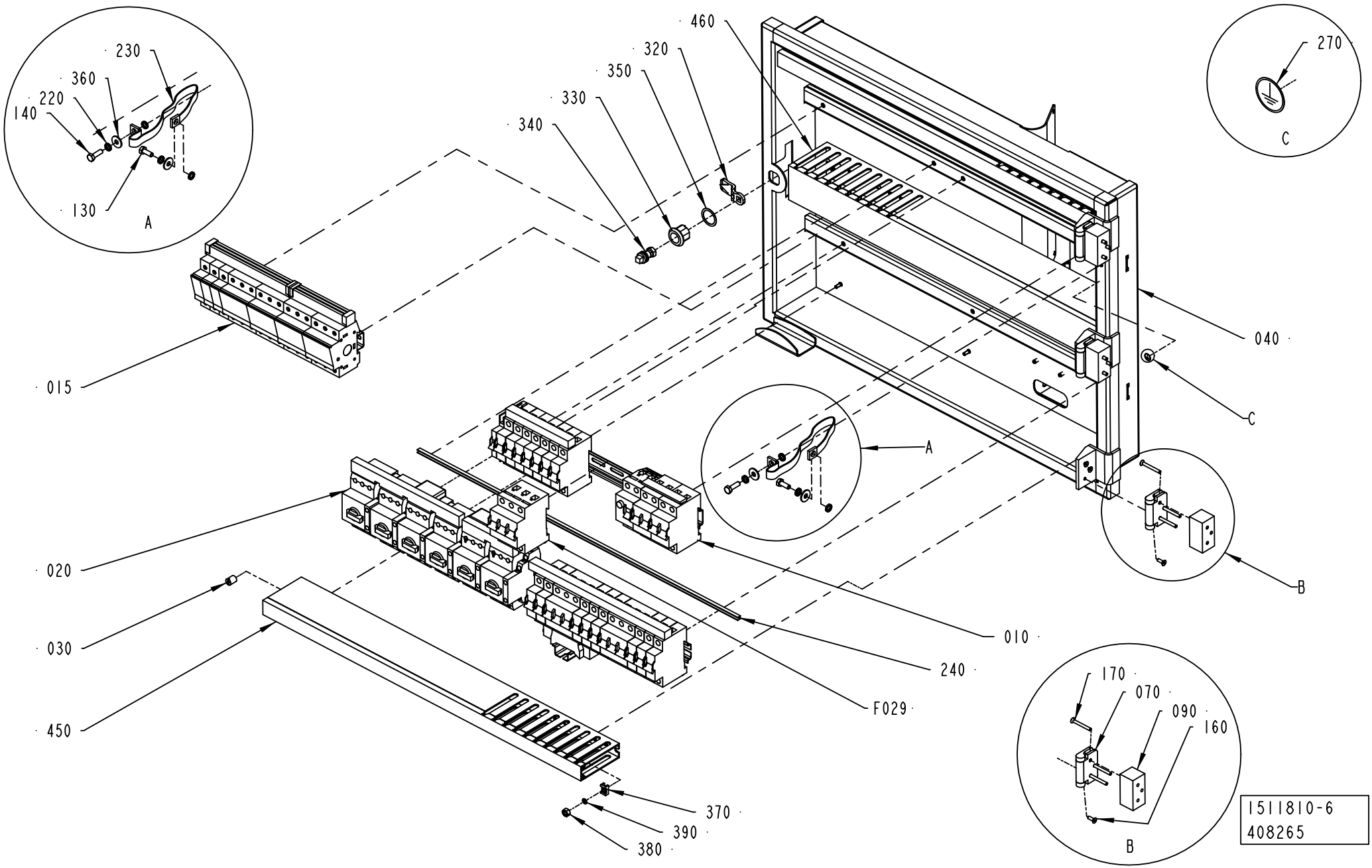
230
360
220
140
130
A
460
320
350
330
340
270
C
040
015
020
030
450
010
240
F029
370
390
380
B
170
070
090
160
1511810-6
408265

ECM: 414825 - 20090916
Group number: 1511810-0300
Assembly Drawing: 1511810-6_1_AB

This list covers pages from 9-134 to 9-137

Pos	Part No	UN	Qty	Description	Page No
HVA					
F029	351418-0250		1	MINIATURE CIRC. BREAK.,FAZ-D25/3 3-POLE	
Common Parts					
010	1511822-0300		1	RAIL	**9-139, 9-141**
015	1487447-0200		1	FUSE	**9-143**
020	1511823-0300		1	RAIL	**9-145**
030	1285109-0000		6	NUT	
040	3019605-0000		1	DOOR	
070	1523437-0000		2	HINGE	
090	1523440-0000		2	SPACER	
100	1523968-0000		1	HANDLE	
120	312105-0327		8	SCREW, M6S ISO 4017 M5X12 A4 80	
130	312105-0368		1	SCREW, M6S ISO 4017 M6X16 A4 80	
140	312105-0370		1	SCREW, M6S ISO 4017 M6X20 A4 80	
160	312155-0291		6	SCREW DIN 7991 MF6S M4X12 A4 70	
170	312155-0301		6	SCREW DIN 7991 MF6S M4X35 A4 70	
180	312812-0316		2	HEXAGON NUT, NY-LOCK M6 A4 80	
190	315101-0146		10	WASHER PLAIN, BRB, 5,3/10 H=1	
200	315105-0153		2	WASHER PLAIN, 6,4X12X1,5 A4 BRB	
220	90062-0015		4	LOCK WASHER SERRAT.EXT.GEAR,6,4/11 H=0,7	
230	90135-0044		1	EARTH WIRE, L=320 MM 16 MM2	
240	90143-0094	MM	2330	SEAL	
270	90194-0163		1	SIGN, EARTH WITHIN CIRCLE / SHEET 48 PCS	
320	90237-0157		1	LOCK BOLT, 1000-230	
330	90237-0319		1	LOCK HOUSING, 1000-U134	
340	90237-0320		1	LOCK HOUSING, 1000-U136	
350	90237-0322		1	LOCK GASKET, 1000-U137	
360	90457-0192		2	WASHER PLAIN ROUND, 6,5/18, H=1,5	
370	352113-0205		3	ANCHOR PLATES FOR STRIPS, TM2S8-C100	
380	312605-0316		3	HEXAGON NUT, M6M M6 A280	
390	315105-0136		3	WASHER PLAIN, 4,3X9X0,8 A4 BRB	
450	2598375-0000		2	CABLE DUCT	
460	2598376-0000		1	CABLE DUCT	
470	2598377-0000		1	CABLE DUCT	
480	90181-0313		4	RIVET, DUCTAFIX R4	

Pos	Part No	UN	Qty	Description	Page No

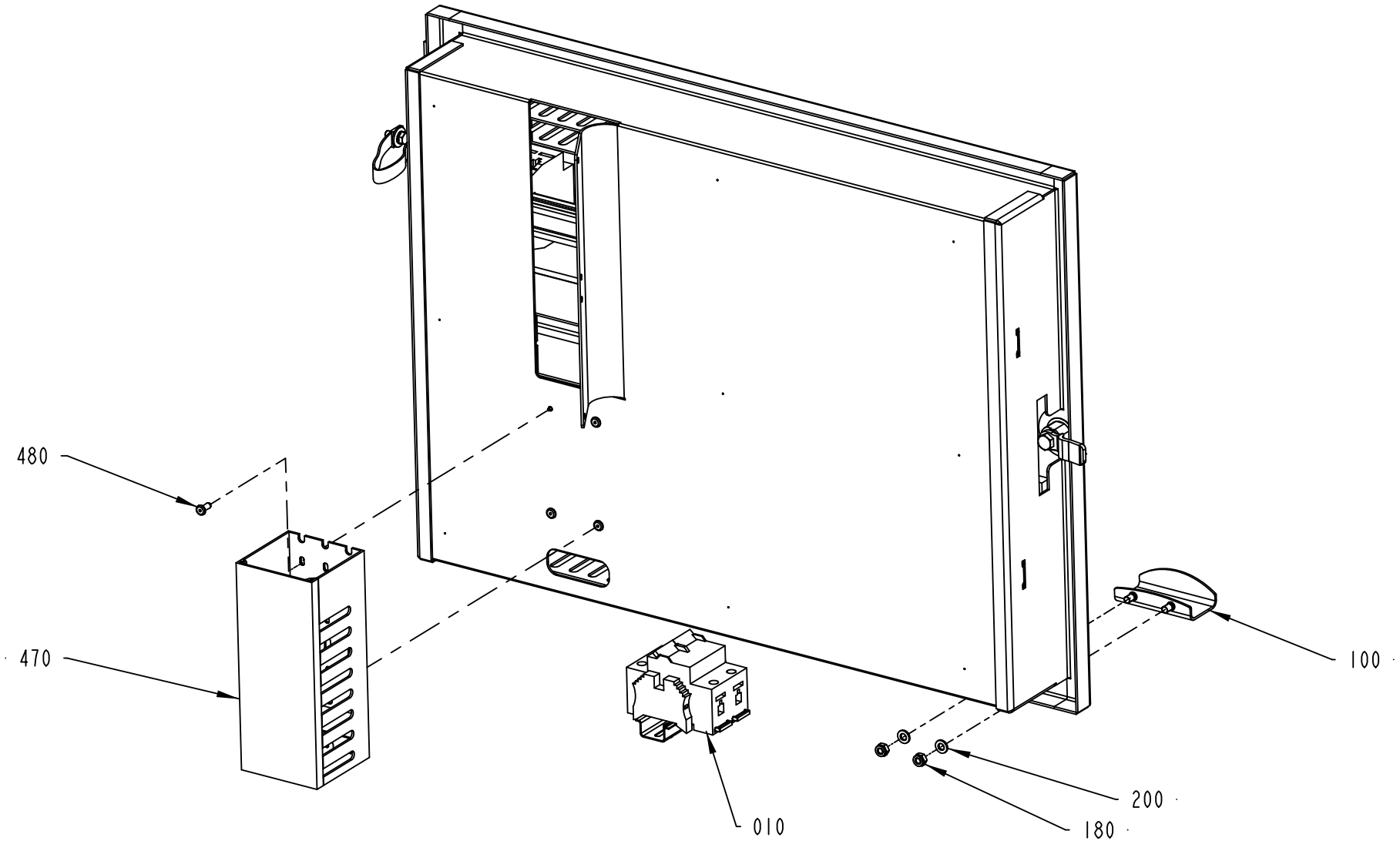

1511810-6
408265

Pos	Part No	UN	Qty	Description	Page No
HVA					
F029	351418-0250		1	MINIATURE CIRC. BREAK.,FAZ-D25/3 3-POLE	
Common Parts					
010	1511822-0300		1	RAIL	**9-139, 9-141**
015	1487447-0200		1	FUSE	**9-143**
020	1511823-0300		1	RAIL	**9-145**
030	1285109-0000		6	NUT	
040	3019605-0000		1	DOOR	
070	1523437-0000		2	HINGE	
090	1523440-0000		2	SPACER	
100	1523968-0000		1	HANDLE	
120	312105-0327		8	SCREW, M6S ISO 4017 M5X12 A4 80	
130	312105-0368		1	SCREW, M6S ISO 4017 M6X16 A4 80	
140	312105-0370		1	SCREW, M6S ISO 4017 M6X20 A4 80	
160	312155-0291		6	SCREW DIN 7991 MF6S M4X12 A4 70	
170	312155-0301		6	SCREW DIN 7991 MF6S M4X35 A4 70	
180	312812-0316		2	HEXAGON NUT, NY-LOCK M6 A4 80	
190	315101-0146		10	WASHER PLAIN, BRB, 5,3/10 H=1	
200	315105-0153		2	WASHER PLAIN, 6,4X12X1,5 A4 BRB	
220	90062-0015		4	LOCK WASHER SERRAT.EXT.GEAR,6,4/11 H=0,7	
230	90135-0044		1	EARTH WIRE, L=320 MM 16 MM2	
240	90143-0094	MM	2330	SEAL	
270	90194-0163		1	SIGN, EARTH WITHIN CIRCLE / SHEET 48 PCS	
320	90237-0157		1	LOCK BOLT, 1000-230	
330	90237-0319		1	LOCK HOUSING, 1000-U134	
340	90237-0320		1	LOCK HOUSING, 1000-U136	
350	90237-0322		1	LOCK GASKET, 1000-U137	
360	90457-0192		2	WASHER PLAIN ROUND, 6,5/18, H=1,5	
370	352113-0205		3	ANCHOR PLATES FOR STRIPS, TM2S8-C100	
380	312605-0316		3	HEXAGON NUT, M6M M6 A280	
390	315105-0136		3	WASHER PLAIN, 4,3X9X0,8 A4 BRB	
450	2598375-0000		2	CABLE DUCT	
460	2598376-0000		1	CABLE DUCT	
470	2598377-0000		1	CABLE DUCT	
480	90181-0313		4	RIVET, DUCTAFIX R4	

Pos	Part No	UN	Qty	Description	Page No

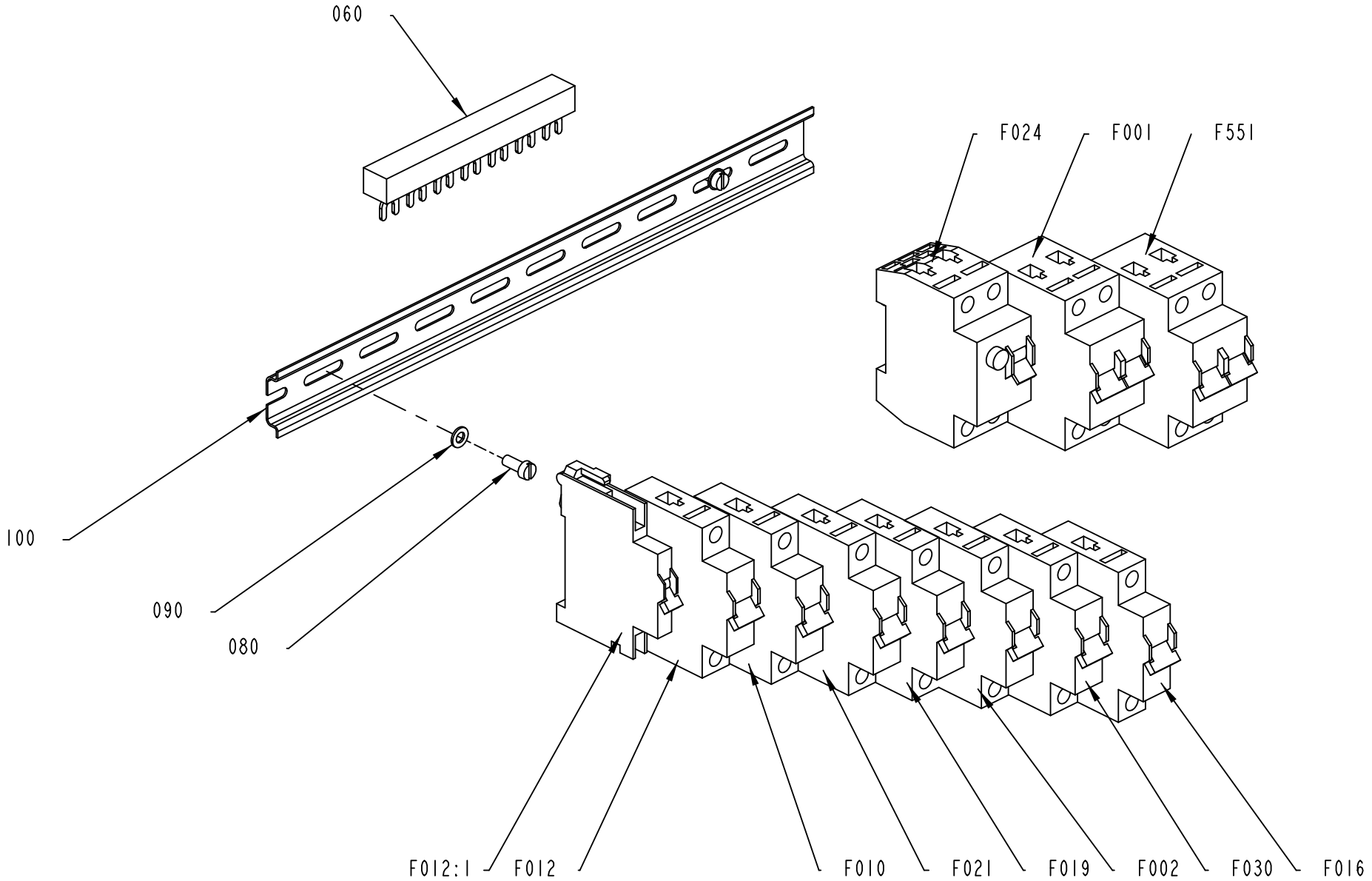

1511822-6
422317

ECM: 430997 - 20091228
Group number: 1511822-0300
Assembly Drawing: 1511822-6_1_AC

This list covers pages from 9-138 to 9-141

Pos	Part No	UN	Qty	Description	Page No
TBA NOPT ASU, TBA PT19 ASU					
110	353042-0003	MM	150	RAIL, TS35/15/2.3	
120	353031-0203		2	END BRACKET, WEW 35/2	
130	312113-0323		2	SCREW, SERRATED COMBI TORX M5X8 A2	
F016	351416-0160		1	MINIATURE CIRC. BREAK., FAZ -D16 1-POLE	
F025	90602-2970		1	MINIATURE CIRCUIT BREAKER, AZ-2-C63	
Common Parts					
050	90457-0126		2	FLOW RESTRICTOR M6, 2,2	
060	90459-5884		1	COMMONING BUSBAR, 3-P 3-PH 3X19 MOD 63A	
080	312125-0327		3	SLOTTED HEAD SCREW, ISO1207 M5X12 A4	
090	315105-0146		3	WASHER PLAIN, 5,3X10X1 A4 BRB	
100	353042-0004	MM	347	RAIL, TS 35/7,5	
F001	354001-0100		1	MINIATURE CIRCUIT BREAKER, FAZ-C10/2	
F002	354000-0100		1	MINIATURE CIRCUIT BREAKER, FAZ-C10/1	
F006	354002-0060		1	MINIATURE CIRCUIT BREAKER, FAZ-C6/3	
F010	351416-0100		1	MINIATURE CIRC. BREAK., FAZ -D10 1-POLE	
F012	354000-0010		1	MINIATURE CIRCUIT BREAKER, FAZ-C1/1	
F012.1	90459-5813		1	AUXILIARY CONTACT, FAZ-XHIN11	
F019	354000-0100		1	MINIATURE CIRCUIT BREAKER, FAZ-C10/1	
F021	354000-0030		1	MINIATURE CIRCUIT BREAKER, FAZ-C3/1	
F024	90459-5811		1	RESIDUAL CURRENT DEVICE, FI-25/2/003-A	
F030	354000-0005		1	MINIATURE CIRCUIT BREAKER, FAZ-C0,5/1	
F551	354001-0100		1	MINIATURE CIRCUIT BREAKER, FAZ-C10/2	

Pos	Part No	UN	Qty	Description	Page No

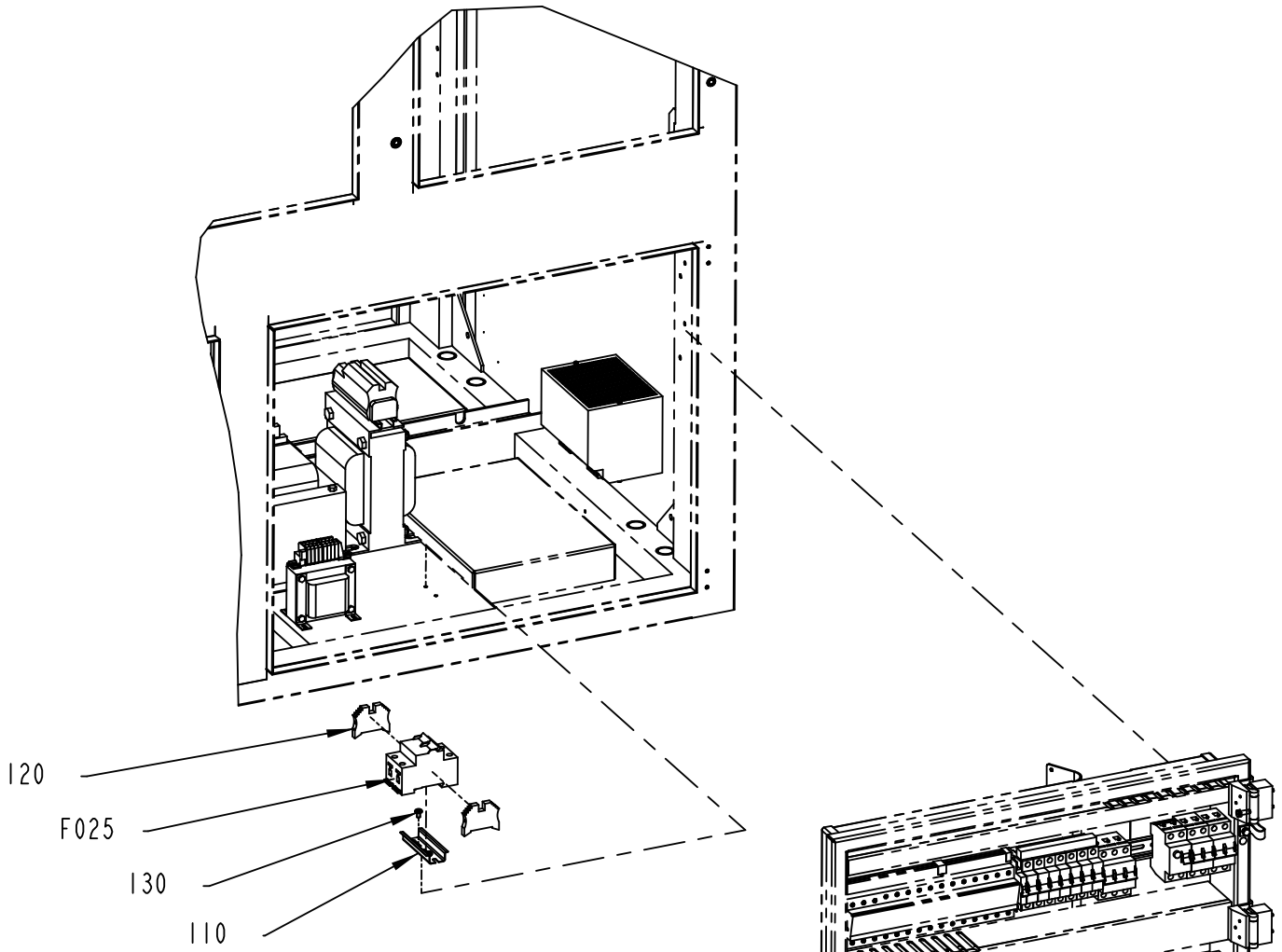

1511822-6
422317

ECM: 430997 - 20091228
Group number: 1511822-0300
Assembly Drawing: 1511822-6_2_AC

This list covers pages from 9-138 to 9-141

Pos	Part No	UN	Qty	Description	Page No
TBA NOPT ASU, TBA PT19 ASU					
110	353042-0003	MM	150	RAIL, TS35/15/2.3	
120	353031-0203		2	END BRACKET, WEW 35/2	
130	312113-0323		2	SCREW, SERRATED COMBI TORX M5X8 A2	
F016	351416-0160		1	MINIATURE CIRC. BREAK., FAZ -D16 1-POLE	
F025	90602-2970		1	MINIATURE CIRCUIT BREAKER, AZ-2-C63	
Common Parts					
050	90457-0126		2	FLOW RESTRICTOR M6, 2,2	
060	90459-5884		1	COMMONING BUSBAR, 3-P 3-PH 3X19 MOD 63A	
080	312125-0327		3	SLOTTED HEAD SCREW, ISO1207 M5X12 A4	
090	315105-0146		3	WASHER PLAIN, 5,3X10X1 A4 BRB	
100	353042-0004	MM	347	RAIL, TS 35/7,5	
F001	354001-0100		1	MINIATURE CIRCUIT BREAKER, FAZ-C10/2	
F002	354000-0100		1	MINIATURE CIRCUIT BREAKER, FAZ-C10/1	
F006	354002-0060		1	MINIATURE CIRCUIT BREAKER, FAZ-C6/3	
F010	351416-0100		1	MINIATURE CIRC. BREAK., FAZ -D10 1-POLE	
F012	354000-0010		1	MINIATURE CIRCUIT BREAKER, FAZ-C1/1	
F012.1	90459-5813		1	AUXILIARY CONTACT, FAZ-XHIN11	
F019	354000-0100		1	MINIATURE CIRCUIT BREAKER, FAZ-C10/1	
F021	354000-0030		1	MINIATURE CIRCUIT BREAKER, FAZ-C3/1	
F024	90459-5811		1	RESIDUAL CURRENT DEVICE, FI-25/2/003-A	
F030	354000-0005		1	MINIATURE CIRCUIT BREAKER, FAZ-C0,5/1	
F551	354001-0100		1	MINIATURE CIRCUIT BREAKER, FAZ-C10/2	

Pos	Part No	UN	Qty	Description	Page No

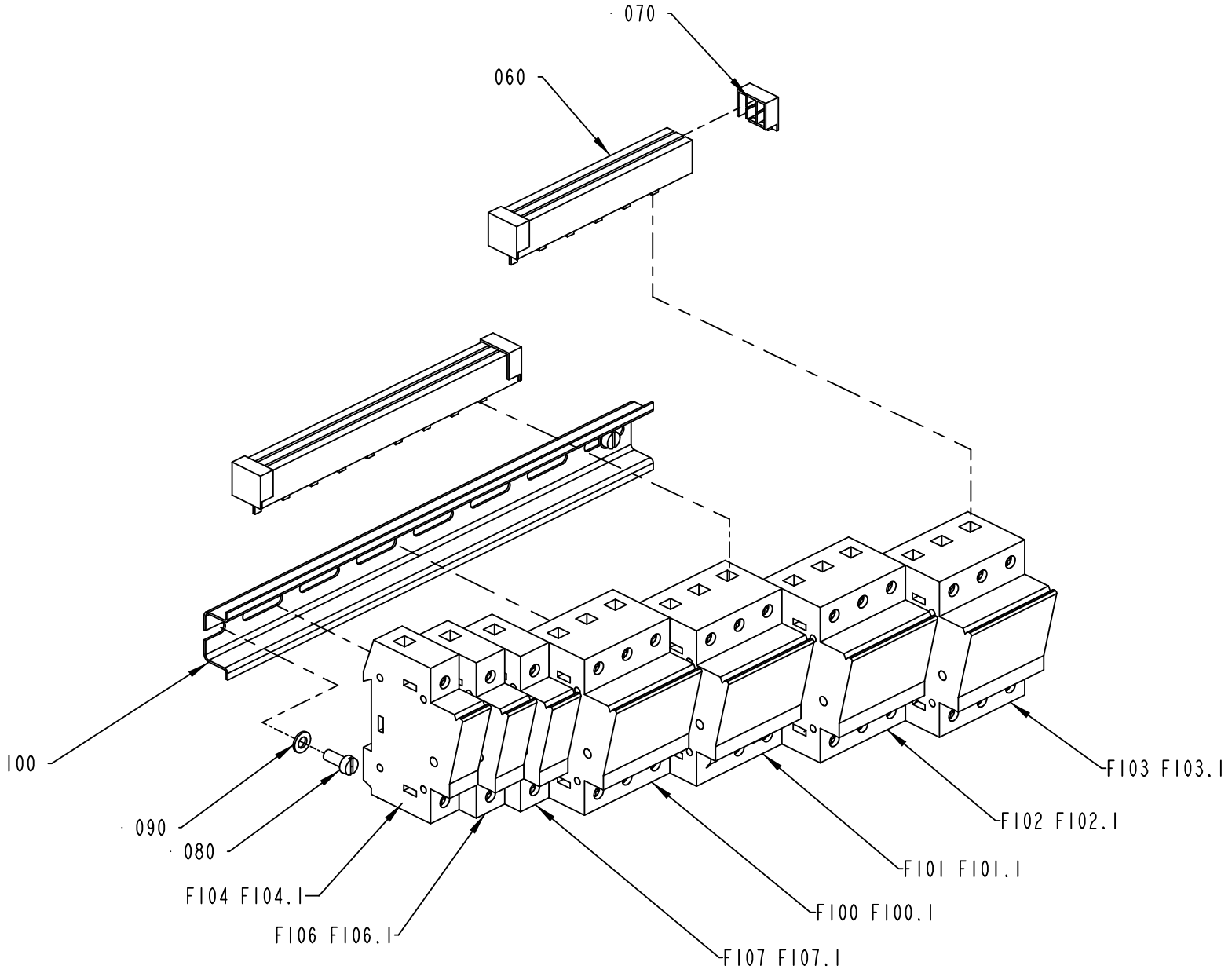

1487447-2
391810

ECM: 405167 - 20090710
Group number: 1487447-0200
Assembly Drawing: 1487447-2_1_AA

Pos	Part No	UN	Qty	Description	Page No
-					
080	312125-0327		2	SLOTTED HEAD SCREW, ISO1207 M5X12 A4	
090	315105-0146		2	WASHER PLAIN, 5,3X10X1 A4 BRB	
100	353042-0003	MM	269	RAIL, TS35/15/2.3	
110	90600-4662		4	END COVER 3-P, 5ST3750	
120	90600-4656		2	BUSBAR 3-P 120A, 5ST3708	
F100	352553-0160		3	CYLINDRICAL FUSE 16A, 3NC1016	
F100.1	90600-3840		1	FUSE HOLDER CYLINDRICAL FUSE, 3NC1 093	
F101	352553-0250		3	CYLINDRICAL FUSE 25A, 3NC1025	
F101.1	90600-3840		1	FUSE HOLDER CYLINDRICAL FUSE, 3NC1 093	
F102	352554-0040		3	CYLINDRICAL FUSE 4A, 3NC1404	
F102.1	90600-3840		1	FUSE HOLDER CYLINDRICAL FUSE, 3NC1 093	
F103	352554-0040		3	CYLINDRICAL FUSE 4A, 3NC1404	
F103.1	90600-3840		1	FUSE HOLDER CYLINDRICAL FUSE, 3NC1 093	
F104	352553-0160		1	CYLINDRICAL FUSE 16A, 3NC1016	
F104.1	90600-3838		1	FUSE HOLDER CYLINDRICAL FUSE, 3NC1 091	
F106	352553-0100		1	CYLINDRICAL FUSE 10A, 3NC1010	
F106.1	90600-3838		1	FUSE HOLDER CYLINDRICAL FUSE, 3NC1 091	
F107	352553-0100		1	CYLINDRICAL FUSE 10A, 3NC1010	
F107.1	90600-3838		1	FUSE HOLDER CYLINDRICAL FUSE, 3NC1 091	

Pos	Part No	UN	Qty	Description	Page No

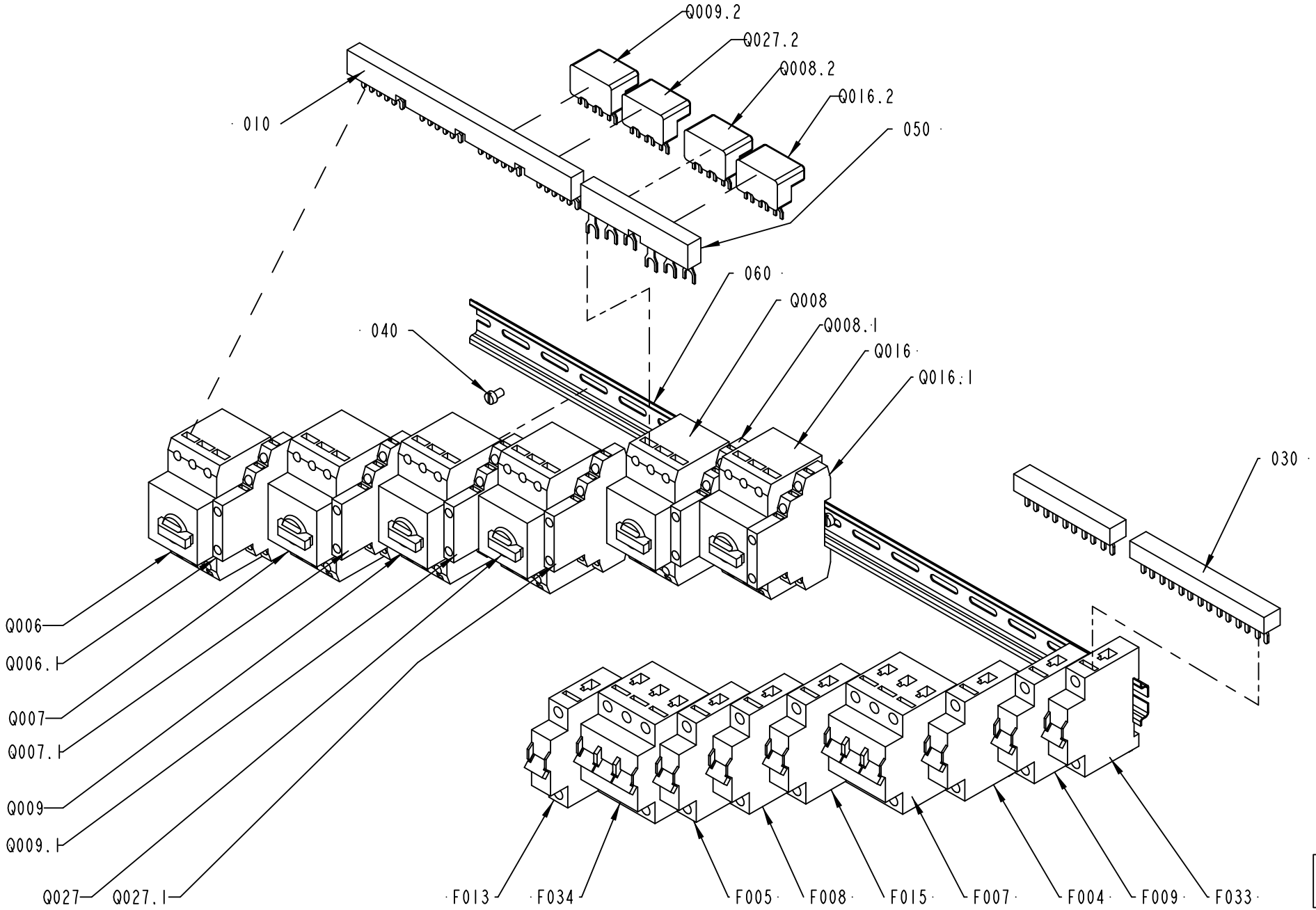

1511823-6
526668

ECM: 541779 - 20120217
Group number: 1511823-0300
Assembly Drawing: 1511823-6_1_AE

Pos	Part No	UN	Qty	Description	Page No
TBA NOPT ASU					
030	90458-0576		1	CIRCUIT BREAKER, B3.1/5-PKZ0	
F015	354000-0100		1	MINIATURE CIRCUIT BREAKER, FAZ-C10/1	
TBA NOPT NOASU					
030	90458-0576		1	CIRCUIT BREAKER, B3.1/5-PKZ0	
TBA PT19 ASU					
030	90458-0576		2	CIRCUIT BREAKER, B3.1/5-PKZ0	
F013	354000-0200		1	MINIATURE CIRCUIT BREAKER, FAZ-C20/1	
F015	354000-0100		1	MINIATURE CIRCUIT BREAKER, FAZ-C10/1	
F033	354000-0100		1	MINIATURE CIRCUIT BREAKER, FAZ-C10/1	
TBA PT19 NOASU					
030	90458-0576		2	CIRCUIT BREAKER, B3.1/5-PKZ0	
F013	354000-0200		1	MINIATURE CIRCUIT BREAKER, FAZ-C20/1	
F033	354000-0100		1	MINIATURE CIRCUIT BREAKER, FAZ-C10/1	
Common Parts					
010	90259-0309		1	CIRCUIT BREAKER, B3.1/4-PKZ0	
020	90457-0126		2	FLOW RESTRICTOR M6, 2,2	
040	312125-0323		3	SLOTTED HEAD SCREW, ISO1207 M5X8 A4	
050	90259-0315		1	CIRCUIT BREAKER , B3.1/2-PKZ0	
060	353042-0004	MM	620	RAIL, TS 35/7,5	
F004	354000-0100		1	MINIATURE CIRCUIT BREAKER, FAZ-C10/1	
F005	351416-0060		1	MINIATURE CIRC. BREAK., FAZ -D6 1-POLE	
F007	354002-0200		1	MINIATURE CIRCUIT BREAKER, FAZ-C20/3	
F008	354000-0100		1	MINIATURE CIRCUIT BREAKER, FAZ-C10/1	
F009	354000-0100		1	MINIATURE CIRCUIT BREAKER, FAZ-C10/1	
F034	354002-0020		1	MINIATURE CIRCUIT BREAKER, FAZ-C2/3	
Q006	90459-5328		1	OVERLOAD PROTECTION, PKZM0-10	
Q006.1	90259-0313		1	AUXILIARY SWITCH, NHI21-PKZ0	
Q007	90459-5326		1	OVERLOAD PROTECTION, PKZM0-4	
Q007.1	90259-0313		1	AUXILIARY SWITCH, NHI21-PKZ0	
Q008	90459-5328		1	OVERLOAD PROTECTION, PKZM0-10	
Q008.1	90259-0313		1	AUXILIARY SWITCH, NHI21-PKZ0	
Q008.2	90259-0308		1	INCOMING TERMINAL, BK25/3-PKZ0	
Q009	90459-5324		1	OVERLOAD PROTECTION, PKZM0-1,6	
Q009.1	90259-0313		1	AUXILIARY SWITCH, NHI21-PKZ0	
Q009.2	90259-0308		1	INCOMING TERMINAL, BK25/3-PKZ0	
Q016	90459-5320		1	OVERLOAD PROTECTION, PKZM0-0,25	
Q016.1	90259-0313		1	AUXILIARY SWITCH, NHI21-PKZ0	
Q016.2	90259-0308		1	INCOMING TERMINAL, BK25/3-PKZ0	
Q027	90459-5324		1	OVERLOAD PROTECTION, PKZM0-1,6	
Q027.1	90259-0313		1	AUXILIARY SWITCH, NHI21-PKZ0	
Q027.2	90259-0308		1	INCOMING TERMINAL, BK25/3-PKZ0	

Pos	Part No	UN	Qty	Description	Page No

Machine Type | Group Description | Used-In | Group Number | Page No

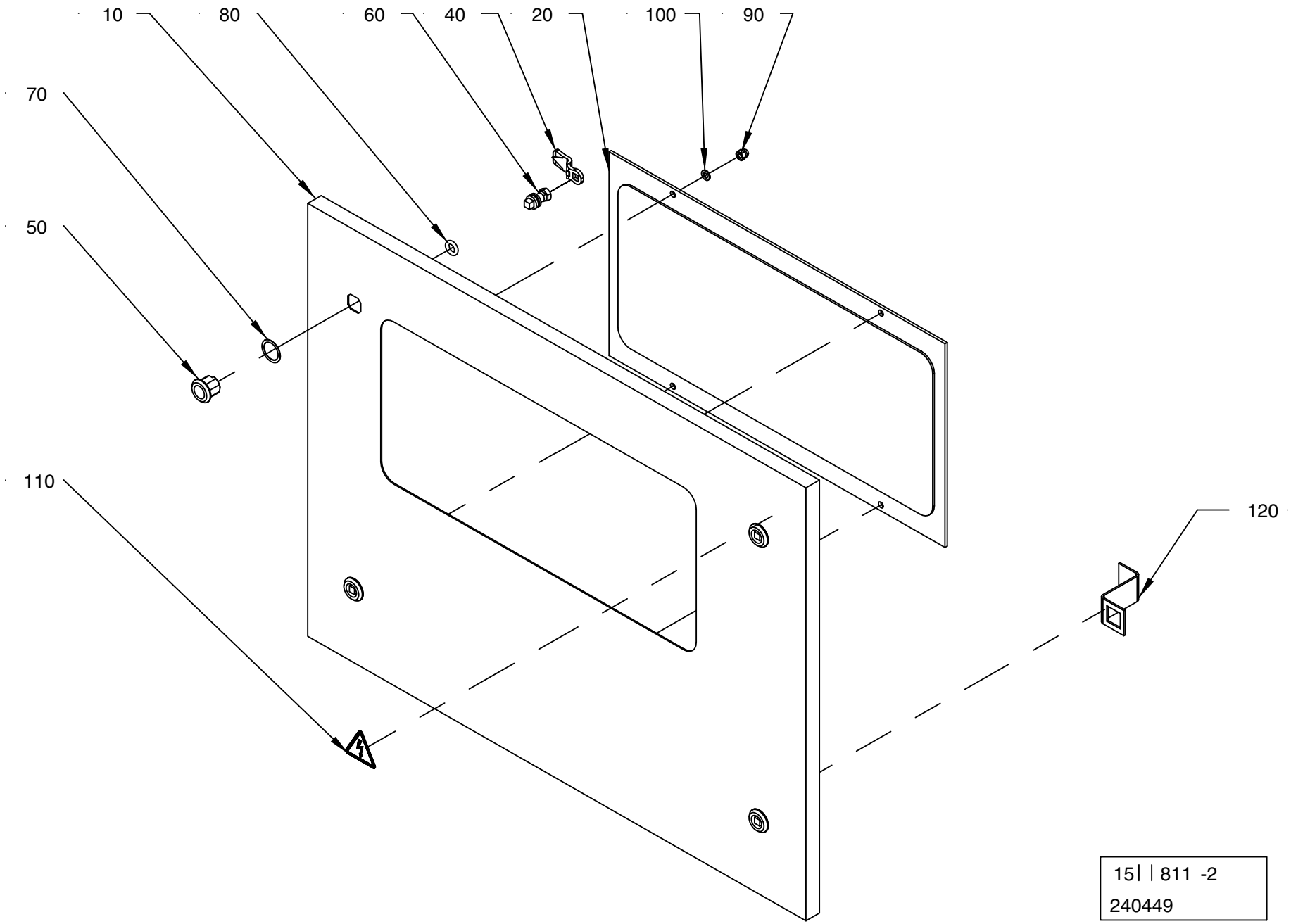

15| |811 -2
240449

ECM: 240716 - 20051215
Group number: 1511811-0200
Assembly Drawing: 1511811-2_1_AA

Pos	Part No	UN	Qty	Description	Page No
-					
010	2798073-0000		1	DOOR	
020	1511813-0000		1	WINDOW	
030	90144-0072	MM	1500	TAPE SCOTCH VHBS 4945 W=12,7MM	
040	90237-0157		4	LOCK BOLT, 1000-230	
050	90237-0319		4	LOCK HOUSING, 1000-U134	
060	90237-0320		4	LOCK HOUSING, 1000-U136	
070	90237-0322		4	LOCK GASKET, 1000-U137	
080	90237-0323		4	LOCK O-RING, 1000-24	
090	312705-0316		4	HEX. DOMED CAP MHM-6 M6 A280	
100	315105-0153		4	WASHER PLAIN, 6,4X12X1,5 A4 BRB	
110	359705-0015		1	WARNING SIGN ISO, RISK OF ELECTRIC SHOCK	
120	2685647-0000		2	PROFILE	

Pos	Part No	UN	Qty	Description	Page No

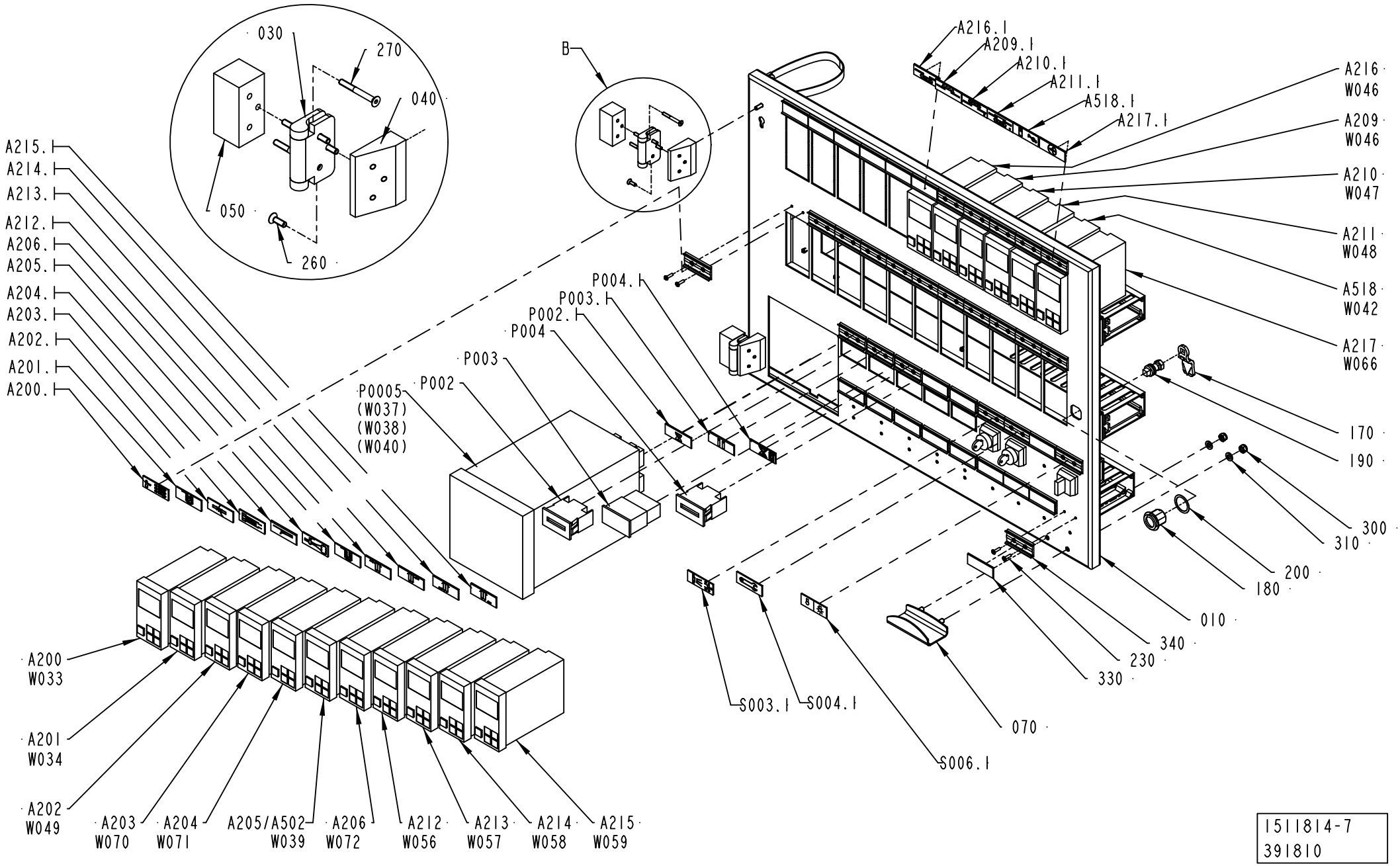

1511814-7
391810

ECM: 405149 - 20090710
Group number: 1511814-0300
Assembly Drawing: 1511814-7_1_AA

This list covers pages from 9-148 to 9-153

Pos	Part No	UN	Qty	Description	Page No
TBA NOPT HI					
090	90062-0022		13	LOCK WASHER D=6,4/11	
290	312605-0316		13	HEXAGON NUT, M6M M6 A280	
330	359240-0001		22	SIGN, NOT ENGRAVED	
A212	90600-6032		1	TEMPERATURE CONTROLLER, KS50	
A212.1	359241-0338		1	SIGN: " FLAP HEATING TOP LEFT"	
A213	90600-6032		1	TEMPERATURE CONTROLLER, KS50	
A213.1	359241-0337		1	SIGN: " FLAP HEATING TOP RIGHT"	
A518	90600-6032		1	TEMPERATURE CONTROLLER, KS50	
A518.1	359241-0268		1	SIGN: SPRAYING, HEAD SPACE	
W042	90220-0059	M	3.5	THERMOCOUPLE CABLE, P/PTW-20F-K 2X0,5MM2	
TBA NOPT NOHI					
090	90062-0022		12	LOCK WASHER D=6,4/11	
290	312605-0316		12	HEXAGON NUT, M6M M6 A280	
330	359240-0001		23	SIGN, NOT ENGRAVED	
A212	90600-6032		1	TEMPERATURE CONTROLLER, KS50	
A212.1	359241-0338		1	SIGN: " FLAP HEATING TOP LEFT"	
A213	90600-6032		1	TEMPERATURE CONTROLLER, KS50	
A213.1	359241-0337		1	SIGN: " FLAP HEATING TOP RIGHT"	
TBA NOPT NOHI HVA					
090	90062-0022		12	LOCK WASHER D=6,4/11	
290	312605-0316		12	HEXAGON NUT, M6M M6 A280	
330	359240-0001		23	SIGN, NOT ENGRAVED	
A212	90600-6032		1	TEMPERATURE CONTROLLER, KS50	
A212.1	359241-0338		1	SIGN: " FLAP HEATING TOP LEFT"	
A213	90600-6032		1	TEMPERATURE CONTROLLER, KS50	
A213.1	359241-0337		1	SIGN: " FLAP HEATING TOP RIGHT"	
A502	90600-3678		1	TEMP. CONTROLLER, KS40-102-00090-049	
TBA PT19 HI					
090	90062-0022		16	LOCK WASHER D=6,4/11	
290	312605-0316		16	HEXAGON NUT, M6M M6 A280	
330	359240-0001		19	SIGN, NOT ENGRAVED	
A209	90600-6032		1	TEMPERATURE CONTROLLER, KS50	
A209.1	359241-0439		1	SIGN"PATCH SEALER"	
A210	90600-6032		1	TEMPERATURE CONTROLLER, KS50	
A210.1	359241-0460		1	SIGN "PATCH SEALER 2"	
A211	90600-6032		1	TEMPERATURE CONTROLLER, KS50	
A211.1	359241-0444		1	SIGN"TAB RESEAL"	
A212	90600-6032		1	TEMPERATURE CONTROLLER, KS50	
A212.1	359241-0338		1	SIGN: " FLAP HEATING TOP LEFT"	
A213	90600-6032		1	TEMPERATURE CONTROLLER, KS50	
A213.1	359241-0337		1	SIGN: " FLAP HEATING TOP RIGHT"	
A518	90600-6032		1	TEMPERATURE CONTROLLER, KS50	
A518.1	359241-0268		1	SIGN: SPRAYING, HEAD SPACE	
P004	90053-0031		1	HOUR COUNTER, B 609.10 10-50VDC	
P004.1	359241-0459		1	SIGN "PT HOUR METER"	
W042	90220-0059	M	3.5	THERMOCOUPLE CABLE, P/PTW-20F-K 2X0,5MM2	
W046	90220-0059	M	5	THERMOCOUPLE CABLE, P/PTW-20F-K 2X0,5MM2	
W047	90220-0059	M	5	THERMOCOUPLE CABLE, P/PTW-20F-K 2X0,5MM2	
W048	90220-0059	M	5	THERMOCOUPLE CABLE, P/PTW-20F-K 2X0,5MM2	
TBA PT19 NOHI					
090	90062-0022		15	LOCK WASHER D=6,4/11	
290	312605-0316		15	HEXAGON NUT, M6M M6 A280	
330	359240-0001		20	SIGN, NOT ENGRAVED	
A209	90600-6032		1	TEMPERATURE CONTROLLER, KS50	
A209.1	359241-0439		1	SIGN"PATCH SEALER"	
A210	90600-6032		1	TEMPERATURE CONTROLLER, KS50	
A210.1	359241-0460		1	SIGN "PATCH SEALER 2"	
A211	90600-6032		1	TEMPERATURE CONTROLLER, KS50	
A211.1	359241-0444		1	SIGN"TAB RESEAL"	
A212	90600-6032		1	TEMPERATURE CONTROLLER, KS50	
A212.1	359241-0338		1	SIGN: " FLAP HEATING TOP LEFT"	
A213	90600-6032		1	TEMPERATURE CONTROLLER, KS50	
A213.1	359241-0337		1	SIGN: " FLAP HEATING TOP RIGHT"	
A502	90600-3678		1	TEMP. CONTROLLER, KS40-102-00090-049	
P004	90053-0031		1	HOUR COUNTER, B 609.10 10-50VDC	
P004.1	359241-0459		1	SIGN "PT HOUR METER"	
W046	90220-0059	M	5	THERMOCOUPLE CABLE, P/PTW-20F-K 2X0,5MM2	
W047	90220-0059	M	5	THERMOCOUPLE CABLE, P/PTW-20F-K 2X0,5MM2	
W048	90220-0059	M	5	THERMOCOUPLE CABLE, P/PTW-20F-K 2X0,5MM2	
TBA PT19 NOHI HVA					
090	90062-0022		15	LOCK WASHER D=6,4/11	
290	312605-0316		15	HEXAGON NUT, M6M M6 A280	
330	359240-0001		20	SIGN, NOT ENGRAVED	
A209	90600-6032		1	TEMPERATURE CONTROLLER, KS50	
A209.1	359241-0439		1	SIGN"PATCH SEALER"	
A210	90600-6032		1	TEMPERATURE CONTROLLER, KS50	
A210.1	359241-0460		1	SIGN "PATCH SEALER 2"	
A211	90600-6032		1	TEMPERATURE CONTROLLER, KS50	
A211.1	359241-0444		1	SIGN"TAB RESEAL"	
A212	90600-6032		1	TEMPERATURE CONTROLLER, KS50	
A212.1	359241-0338		1	SIGN: " FLAP HEATING TOP LEFT"	
A213	90600-6032		1	TEMPERATURE CONTROLLER, KS50	
A213.1	359241-0337		1	SIGN: " FLAP HEATING TOP RIGHT"	
A502	90600-3678		1	TEMP. CONTROLLER, KS40-102-00090-049	

Machine Type | Group Description | Used-In | Group Number | Page No

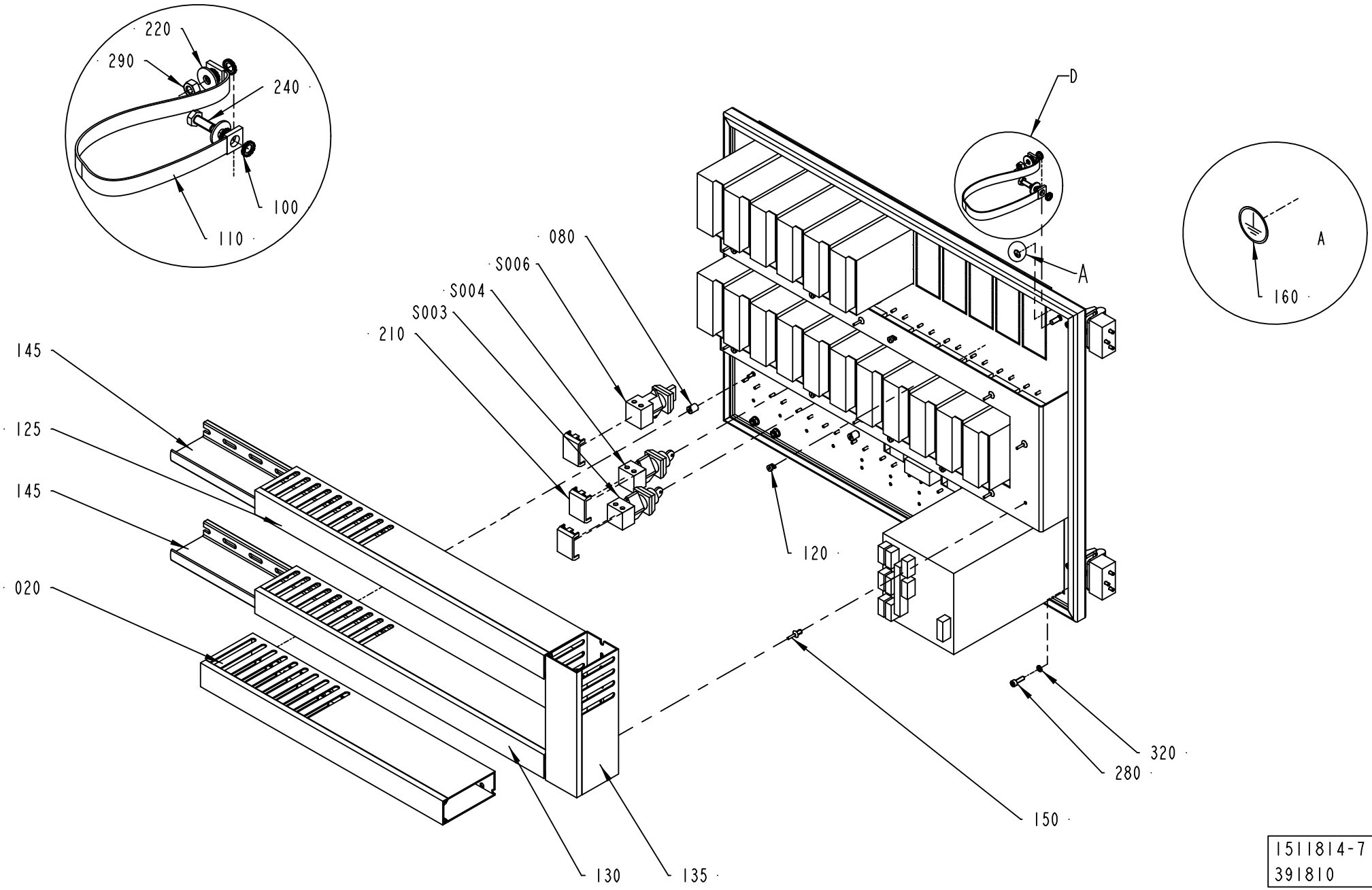

1511814-7
391810

ECM: 405149 - 20090710
Group number: 1511814-0300
Assembly Drawing: 1511814-7_2_AA

This list covers pages from 9-148 to 9-153

Pos	Part No	UN	Qty	Description	Page No
TBA PT19 NOHI HVA (Cont'd)					
P004	90053-0031		1	HOUR COUNTER, B 609.10 10-50VDC	
P004.1	359241-0459		1	SIGN "PT HOUR METER"	
W046	90220-0059	M	5	THERMOCOUPLE CABLE, P/PTW-20F-K 2X0,5MM2	
W047	90220-0059	M	5	THERMOCOUPLE CABLE, P/PTW-20F-K 2X0,5MM2	
W048	90220-0059	M	5	THERMOCOUPLE CABLE, P/PTW-20F-K 2X0,5MM2	
TPA					
090	90062-0022		17	LOCK WASHER D=6,4/11	
290	312605-0316		18	HEXAGON NUT, M6M M6 A280	
330	359240-0001		17	SIGN, NOT ENGRAVED	
A209	90600-6032		1	TEMPERATURE CONTROLLER, KS50	
A209.1	359241-0439		1	SIGN"PATCH SEALER"	
A210	90600-6032		1	TEMPERATURE CONTROLLER, KS50	
A210.1	359241-0460		1	SIGN "PATCH SEALER 2"	
A211	90600-6032		1	TEMPERATURE CONTROLLER, KS50	
A211.1	359241-0444		1	SIGN"TAB RESEAL"	
A212	90600-6032		1	TEMPERATURE CONTROLLER, KS50	
A212.1	359241-0338		1	SIGN: " FLAP HEATING TOP LEFT"	
A213	90600-6032		1	TEMPERATURE CONTROLLER, KS50	
A213.1	359241-0337		1	SIGN: " FLAP HEATING TOP RIGHT"	
A518	90600-6032		1	TEMPERATURE CONTROLLER, KS50	
A518.1	359241-0268		1	SIGN: SPRAYING, HEAD SPACE	
P004	90053-0031		1	HOUR COUNTER, B 609.10 10-50VDC	
P004.1	359241-0459		1	SIGN "PT HOUR METER"	
W042	90220-0059	M	3.5	THERMOCOUPLE CABLE, P/PTW-20F-K 2X0,5MM2	
W046	90220-0059	M	5	THERMOCOUPLE CABLE, P/PTW-20F-K 2X0,5MM2	
W047	90220-0059	M	5	THERMOCOUPLE CABLE, P/PTW-20F-K 2X0,5MM2	
W048	90220-0059	M	5	THERMOCOUPLE CABLE, P/PTW-20F-K 2X0,5MM2	
TWA NOPT HI					
A212	90410-0341		1	CASSETTE FOR TEMP. REGULATOR 90410-0044	
A212.1	359240-0001		1	SIGN, NOT ENGRAVED	
A213	90410-0341		1	CASSETTE FOR TEMP. REGULATOR 90410-0044	
A213.1	359240-0001		1	SIGN, NOT ENGRAVED	
Common Parts					
010	3019603-0000		1	FRAME	
020	1511817-0000		1	CABLE DUCT	
030	1523437-0000		2	HINGE	
040	1523439-0000		2	SPACER	
050	1523440-0000		2	SPACER	
060	1523444-0000		3	SPACER	
065	1523443-0000		1	COVER	
070	1523968-0000		1	HANDLE	
080	1285109-0000		3	NUT	
100	90062-0015		4	LOCK WASHER SERRAT.EXT.GEAR,6,4/11 H=0,7	
110	90135-0044		1	EARTH WIRE, L=320 MM 16 MM2	
120	90181-0064		8	LOCK ZP1 FOR CHANNEL T1	
125	90181-0054	MM	555	CABLE DUCT, PLASTIC, 60X80	
130	90181-0054	MM	555	CABLE DUCT, PLASTIC, 60X80	
135	90181-0054	MM	210	CABLE DUCT, PLASTIC, 60X80	
140	90181-0067	MM	555	DIVIDING PLATE SEP80	
145	90181-0067	MM	555	DIVIDING PLATE SEP80	
150	90181-0088		8	PLASTIC RIVET, PR 52314	
160	90194-0163		1	SIGN, EARTH WITHIN CIRCLE / SHEET 48 PCS	
170	90237-0157		1	LOCK BOLT, 1000-230	
180	90237-0319		1	LOCK HOUSING, 1000-U134	
190	90237-0320		1	LOCK HOUSING, 1000-U136	
200	90237-0322		1	LOCK GASKET, 1000-U137	
210	90064-0335		3	TOUCH GUARD, 704.964.5	
220	90457-0192		2	WASHER PLAIN ROUND, 6,5/18, H=1,5	
230	311521-0146		80	RIVET, BLANK 3,2X12	
240	312105-0368		1	SCREW, M6S ISO 4017 M6X16 A4 80	
250	312115-0222		3	SCREW ISO4762 M3X8 A4 80	
260	312155-0291		6	SCREW DIN 7991 MF6S M4X12 A4 70	
270	312155-0301		6	SCREW DIN 7991 MF6S M4X35 A4 70	
280	312115-0329		4	SCREW ISO4762 M5X16 A4 80	
300	312812-0316		2	HEXAGON NUT, NY-LOCK M6 A4 80	
310	315105-0153		2	WASHER PLAIN, 6,4X12X1,5 A4 BRB	
320	315402-0146		4	LOCK WASHER, DIN127B 5,1 A4, M5-3/16	
340	359240-0100		40	SIGN HOLDER FOR 359240-0001	
350	90457-0948		1	ADAPTER CABLE KS 800-PC	
A200	90600-6032		1	TEMPERATURE CONTROLLER, KS50	
A200.1	359241-0123		1	SIGN: " TEMP. PRESTERILIZATION VALVE"	
A201	90600-6032		1	TEMPERATURE CONTROLLER, KS50	
A201.1	359241-0141		1	SIGN: WATER BATH	
A202	90600-6032		1	TEMPERATURE CONTROLLER, KS50	
A202.1	359241-0131		1	SIGN: TEMP. LS	
A203	90600-6032		1	TEMPERATURE CONTROLLER, KS50	
A203.1	359241-0130		1	SIGN: TEMP. AIR SUPER HEATER	
A204	90600-6032		1	TEMPERATURE CONTROLLER, KS50	
A204.1	359241-0126		1	SIGN: " TEMP. AIR KNIFE"	
A205	90600-6032		1	TEMPERATURE CONTROLLER, KS50	
A205.1	359241-0121		1	SIGN: " STEAM"	
A206	90600-6032		1	TEMPERATURE CONTROLLER, KS50	
A206.1	359241-0125		1	SIGN: " TEMP. PEROXIDE BATH"	

Machine Type | Group Description | Used-In | Group Number | Page No

See previous drawings pages: 9-148, 9-150.

Pos	Part No	UN	Qty	Description	Page No
Common Parts (Cont'd)					
A214	90600-6032		1	TEMPERATURE CONTROLLER, KS50	
A214.1	359241-0340		1	SIGN: " FLAP HEATING BOTTOM LEFT"	
A215	90600-6032		1	TEMPERATURE CONTROLLER, KS50	
A215.1	359241-0339		1	SIGN: " FLAP HEATING BOTTOM RIGHT"	
A216	90600-6032		1	TEMPERATURE CONTROLLER, KS50	
A216.1	359241-0465		1	SIGN"PRE-PATCH SEALER"	
A217	90600-6032		1	TEMPERATURE CONTROLLER, KS50	
A217.1	90457-0058		1	SIGN, LS SHORT STOP	
P002	90053-0031		1	HOUR COUNTER, B 609.10 10-50VDC	
P002.1	359241-0201		1	SIGN: " HOUR METER"	
P003	90053-0029		1	COUNTER, F524.800FA3C 24VDC	
P003.1	359241-0180		1	SIGN: PRODUCTION	
P005	90459-0080		1	RECORDER 6-CHANNEL, LOGOPRINT 500	
	90459-0084		*5*	*FOLDED PAPER, 0-100*	
	90459-0085		*5*	*ROLL CHART PAPER, 00331497*	
	90459-0087		*2*	*PRINT WHEEL, 6-COLOURS*	
	90459-3881		*1*	*FOLDED PAPER, 420840*	
S003	90111-0124		1	KEY SWITCH, 1NO, 1NC CONTACT	
S003.1	359241-0122		1	SIGN: " CLEANING STEAM BARRIER SPACE"	
S004	90111-0122		1	KEY SWITCH, 2 NO CONTACTS	
S004.1	359241-0133		1	SIGN: SERVICE SWITCH	
S006	90111-0120		1	ROTARY SWITCH, 704.510 .0A+704.901.5/A	
S006.1	359241-0140		1	SIGN: LIGHT OFF/ON	
W033	90220-0059	M	4.6	THERMOCOUPLE CABLE, P/PTW-20F-K 2X0,5MM2	
W034	90220-0059	M	4.6	THERMOCOUPLE CABLE, P/PTW-20F-K 2X0,5MM2	
W037	90220-0059	M	5	THERMOCOUPLE CABLE, P/PTW-20F-K 2X0,5MM2	
W038	90220-0059	M	5	THERMOCOUPLE CABLE, P/PTW-20F-K 2X0,5MM2	
W039	90220-0059	M	4.6	THERMOCOUPLE CABLE, P/PTW-20F-K 2X0,5MM2	
W040	90220-0059	M	5	THERMOCOUPLE CABLE, P/PTW-20F-K 2X0,5MM2	
W049	90220-0059	M	3.55	THERMOCOUPLE CABLE, P/PTW-20F-K 2X0,5MM2	
W056	90220-0059	M	3.65	THERMOCOUPLE CABLE, P/PTW-20F-K 2X0,5MM2	
W057	90220-0059	M	3.65	THERMOCOUPLE CABLE, P/PTW-20F-K 2X0,5MM2	
W058	90220-0059	M	3.65	THERMOCOUPLE CABLE, P/PTW-20F-K 2X0,5MM2	
W059	90220-0059	M	3.65	THERMOCOUPLE CABLE, P/PTW-20F-K 2X0,5MM2	
W066	90220-0059	M	4.6	THERMOCOUPLE CABLE, P/PTW-20F-K 2X0,5MM2	
W070	90220-0059	MM	500	THERMOCOUPLE CABLE, P/PTW-20F-K 2X0,5MM2	
W071	90220-0059	MM	500	THERMOCOUPLE CABLE, P/PTW-20F-K 2X0,5MM2	
W072	90220-0059	MM	500	THERMOCOUPLE CABLE, P/PTW-20F-K 2X0,5MM2	

Pos	Part No	UN	Qty	Description	Page No

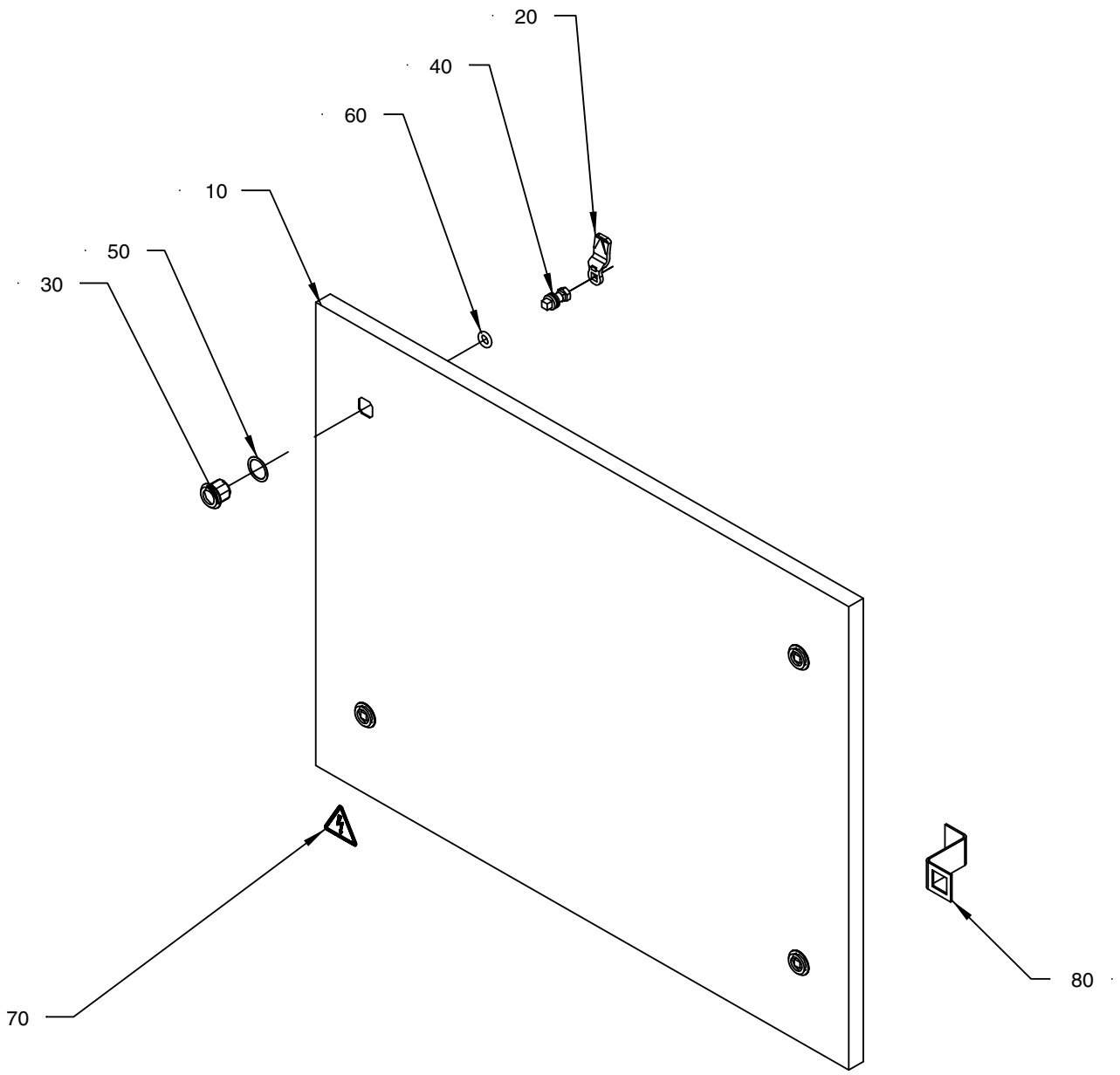

15| 1819-2
240449

ECM: 240718 - 20051215
Group number: 1511819-0200
Assembly Drawing: 1511819-2_1_AA

Pos	Part No	UN	Qty	Description	Page No
-					
010	2798074-0000		1	DOOR	
020	90237-0157		4	LOCK BOLT, 1000-230	
030	90237-0319		4	LOCK HOUSING, 1000-U134	
040	90237-0320		4	LOCK HOUSING, 1000-U136	
050	90237-0322		4	LOCK GASKET, 1000-U137	
060	90237-0323		4	LOCK O-RING, 1000-24	
070	359705-0015		1	WARNING SIGN ISO, RISK OF ELECTRIC SHOCK	
80	2685647-0000		2	PROFILE	

Pos	Part No	UN	Qty	Description	Page No

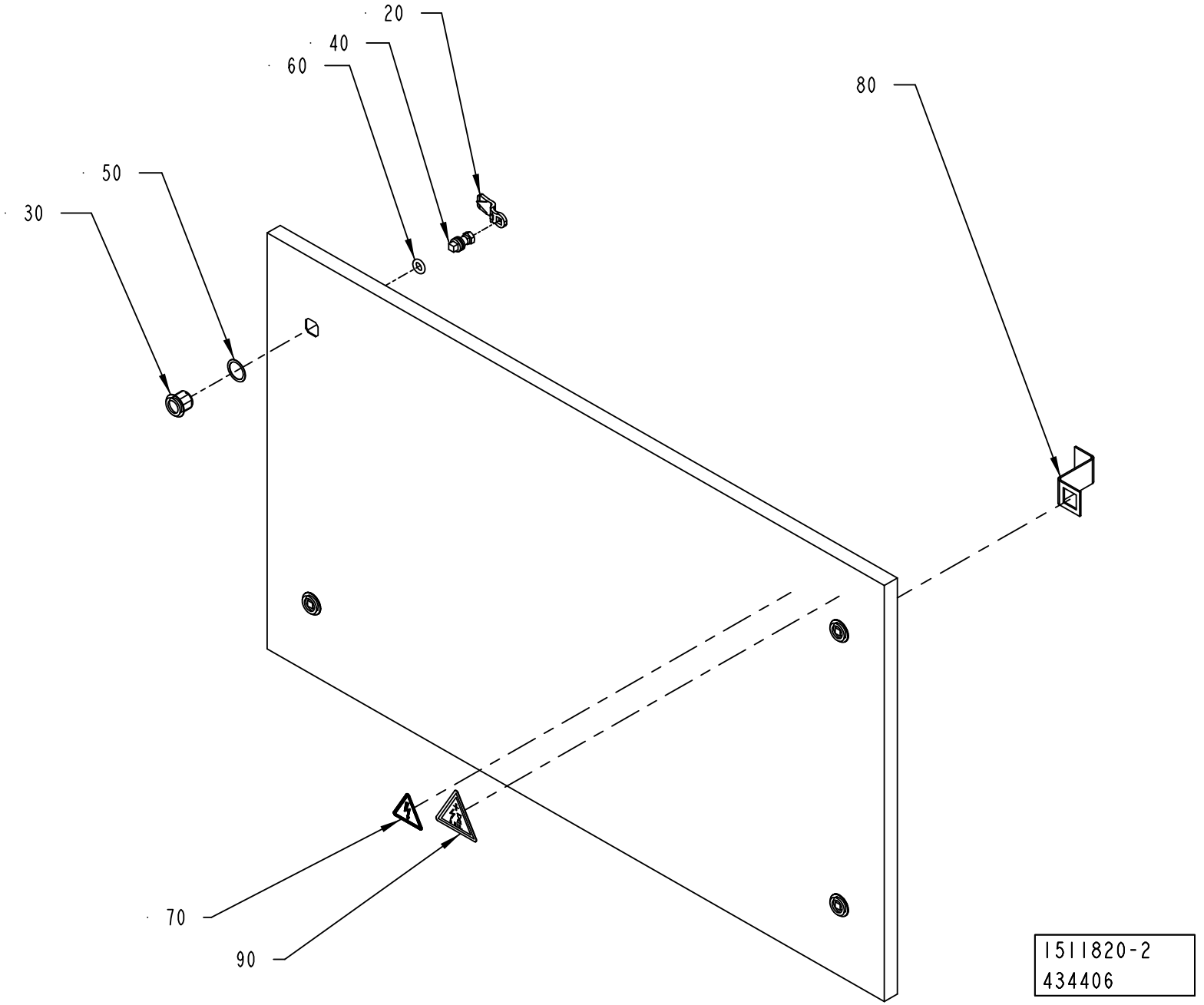
20
40
60
80
50
30
70
90
1511820-2
434406

ECM: 438636 - 20100222
Group number: 1511820-0200
Assembly Drawing: 1511820-2_1_AB

Pos	Part No	UN	Qty	Description	Page No
-					
010	2798075-0000		1	DOOR	
020	90237-0157		4	LOCK BOLT, 1000-230	
030	90237-0319		4	LOCK HOUSING, 1000-U134	
040	90237-0320		4	LOCK HOUSING, 1000-U136	
050	90237-0322		4	LOCK GASKET, 1000-U137	
060	90237-0323		4	LOCK O-RING, 1000-24	
070	359705-0015		1	WARNING SIGN ISO, RISK OF ELECTRIC SHOCK	
080	2685647-0000		2	PROFILE	
090	90194-0118		1	SIGN, RESIDUAL VOLTAGE, WAIT 5 MIN.	

Pos	Part No	UN	Qty	Description	Page No

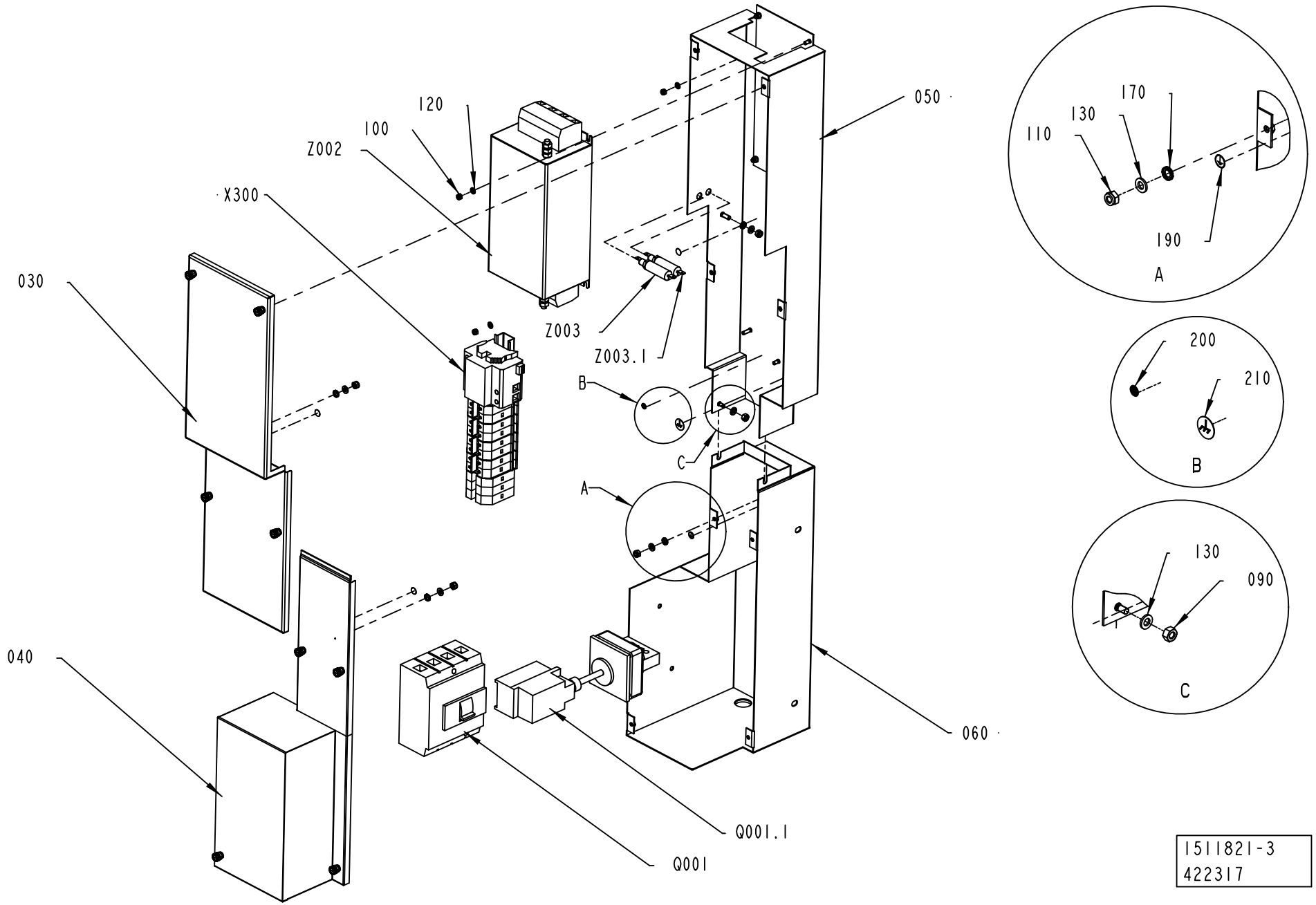

1511821-3
422317

ECM: 430991 - 20091228
Group number: 1511821-0300
Assembly Drawing: 1511821-3_1_AB

Pos	Part No	UN	Qty	Description	Page No
-					
030	3024832-0000		1	COVER	
040	3024822-0000		1	COVER	
050	3024821-0000		1	BOX	
060	3024830-0000		1	BOX	
090	312605-0316		2	HEXAGON NUT, M6M M6 A280	
110	312812-0316		5	HEXAGON NUT, NY-LOCK M6 A4 80	
120	315105-0146		4	WASHER PLAIN, 5,3X10X1 A4 BRB	
130	315105-0153		6	WASHER PLAIN, 6,4X12X1,5 A4 BRB	
170	90062-0015		4	LOCK WASHER SERRAT.EXT.GEAR,6,4/11 H=0,7	
180	90143-0094	MM	100	SEAL	
190	90194-0163		4	SIGN, EARTH WITHIN CIRCLE / SHEET 48 PCS	
200	90111-0344		1	SIGN, PE, GREEN/YELLOW	
210	90194-0164		1	SIGN, FRAME/CHASSIS WITHIN CIRCLE	
Q001	90459-5518		1	CIRCUIT BREAKER, NZMB1-4-A63	
Q001.1	90459-4182		1	MAIN SWITCH, NZM1-XS-R	
X300	1511806-0200		1	X300	**9-161**
Z002	90600-5263		1	LINE FILTER, B84144A90R120	
Z003	90600-5266		1	FEED THROUGH FILTER, B85321A2502W160	
Z003.1	90600-5266		1	FEED THROUGH FILTER, B85321A2502W160	

Pos	Part No	UN	Qty	Description	Page No

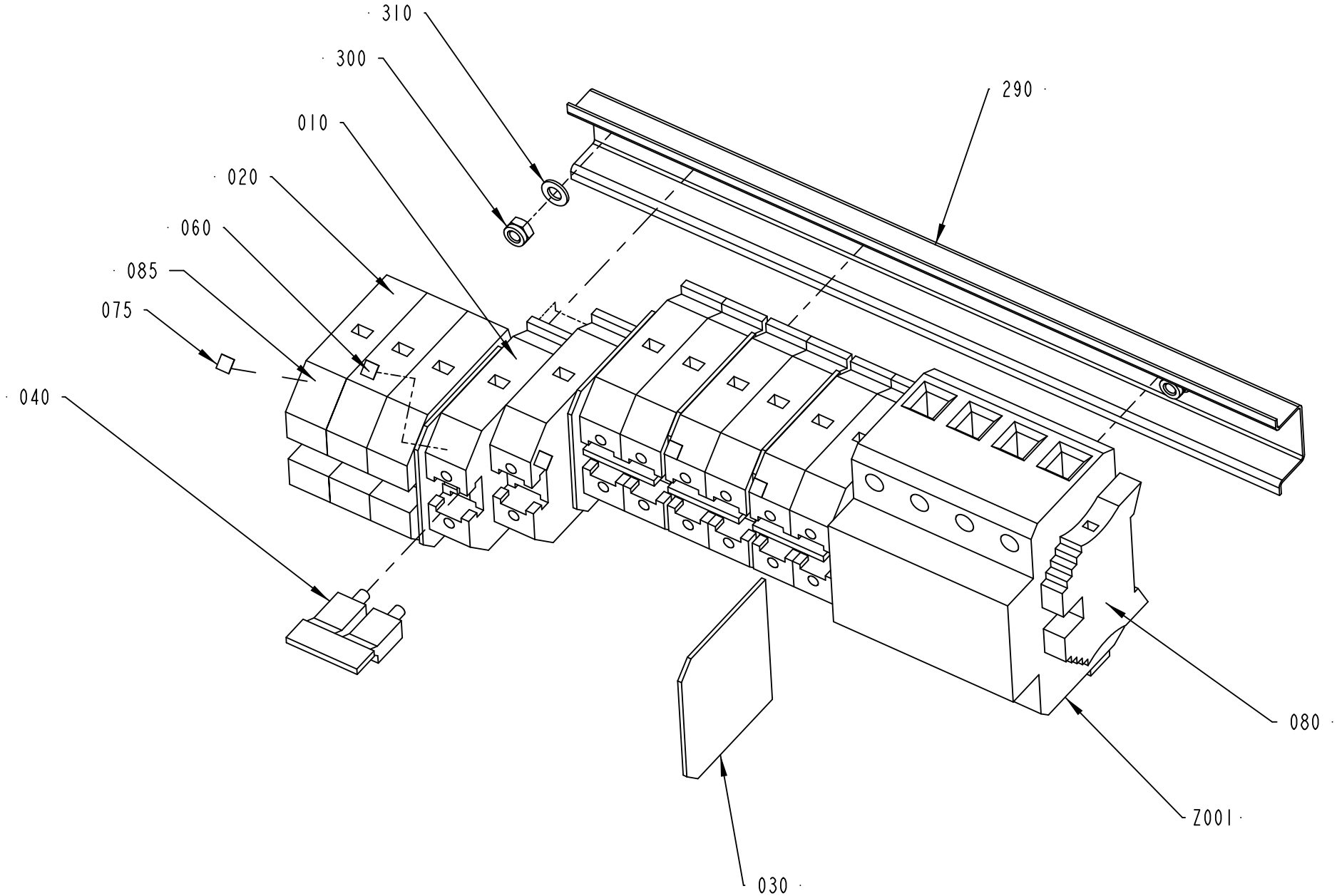

1511806-2
422317

ECM: 431008 - 20091228
Group number: 1511806-0200
Assembly Drawing: 1511806-2_1_AC

Pos	Part No	UN	Qty	Description	Page No
-					
010	353021-0219		8	FEED THROUGH TERMINAL, WDU 35	
020	353024-0209		3	EARTH TERMINAL WPE 35	
030	353033-0105		1	END PLATE, WAP 16+35 WTW 2,5-10	
040	353034-0026		4	BRIDGE CONNECTOR WQV 35/2	
050	353042-0006	MM	290	RAIL, TS 35/155/15/2,3	
060	359011-0807		4	MARKING, DEK 5 FW 1-50	
070	359011-0819		1	MARKING, EARTH, DEK 5 GW ERDE I.KR.	
075	90459-0606		1	MARKING, DKE 5 MARKED E1-E50	
080	353031-0203		1	END BRACKET, WEW 35/2	
085	90601-6250		1	MARKING, DEK 5 GW PE	
300	312812-0314		2	HEXAGON NUT, NY-LOCK M5 A4 80	
310	315105-0146		2	WASHER PLAIN, 5,3X10X1 A4 BRB	
Z001	90600-7487		1	SURGE PROTECTION DEV., VAL-MS 230/3+1 FM	
	90600-7488		*1*	*SURGE PROTECTION DEV., SP, VAL-MS 230 ST*	
	90600-7489		*1*	*SURGE PROTECTION DEV., SP, F-MS 12 ST*	

Pos	Part No	UN	Qty	Description	Page No

EXTERNAL DOOR TERMOREGULATORS

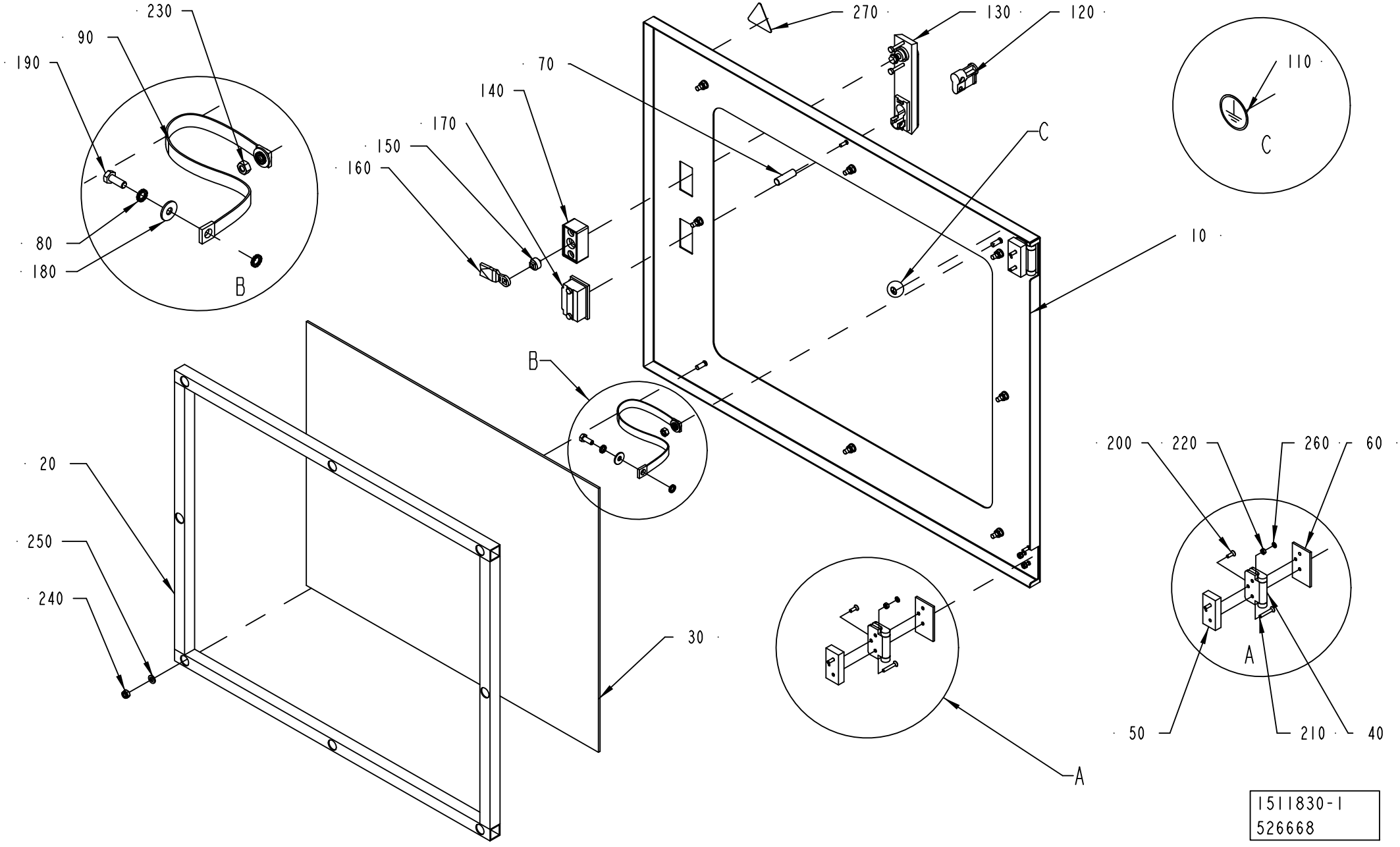

1511830-1
526668

ECM: 542538 - 20120217
Group number: 1511830-0100
Assembly Drawing: 1511830-1_1_AB

Pos	Part No	UN	Qty	Description	Page No
-					
010	1517663-0000		1	DOOR	
020	1517664-0000		1	FRAME	
030	1517665-0000		1	WINDOW	
040	1523438-0000		2	HINGE	
050	1523441-0000		2	SPACER SHEET	
060	1523442-0000		2	SPACER SHEET	
070	3159165-0000		1	SPACER	
080	90062-0015		4	LOCK WASHER SERRAT.EXT.GEAR,6,4/11 H=0,7	
090	90135-0044		1	EARTH WIRE, L=320 MM 16 MM2	
100	90144-0072	MM	2060	TAPE SCOTCH VHBS 4945 W=12,7MM	
110	90194-0163		1	SIGN, EARTH WITHIN CIRCLE / SHEET 48 PCS	
120	90237-0128		1	LOCK CYLINDER, 1109-SU125	
130	90237-0150		1	TURNING HANDLE, NO. 1125-U190-0A	
140	90237-0154		1	LOCK HOUSING, 1121-U60-0C	
150	90237-0155		1	LOCK ADAPTER, 1121-U40	
160	90237-0156		1	LOCK BOLT, 1000-16	
170	90237-0176		1	TURNING HANDLE, 1125-U190-A	
180	90457-0192		2	WASHER PLAIN ROUND, 6,5/18, H=1,5	
190	312105-0368		1	SCREW, M6S ISO 4017 M6X16 A4 80	
200	312155-0291		2	SCREW DIN 7991 MF6S M4X12 A4 70	
210	312155-0297		4	SCREW DIN 7991 MF6S M4X25 A4 70	
220	312605-0312		6	HEXAGON NUT, M6M M4 A280	
230	312605-0316		1	HEXAGON NUT, M6M M6 A280	
240	312812-0316		8	HEXAGON NUT, NY-LOCK M6 A4 80	
250	315105-0153		8	WASHER PLAIN, 6,4X12X1,5 A4 BRB	
260	315402-0136		6	LOCK WASHER, DIN127B 4,1 A4, M4-5/32	
270	359705-0015		1	WARNING SIGN ISO, RISK OF ELECTRIC SHOCK	

Pos	Part No	UN	Qty	Description	Page No

Machine Type | Group Description | Used-In | Group Number | Page No

EXTERNAL DOOR FUSES

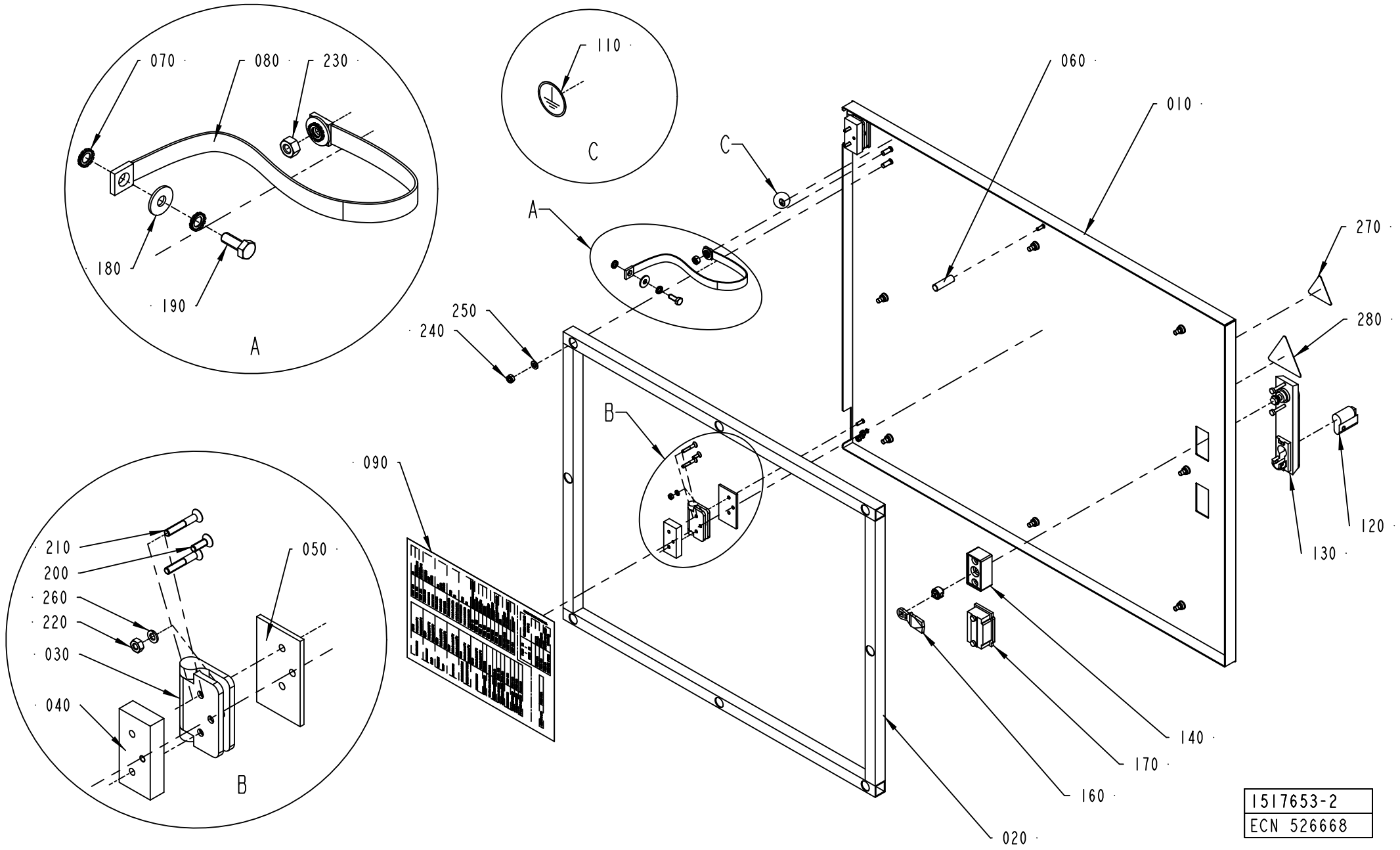

ECM: 541954 - 20120217
Group number: 1517653-0200
Assembly Drawing: 1517653-2_1_AD

Pos	Part No	UN	Qty	Description	Page No
-					
010	1517667-0000		1	DOOR	
020	1517664-0000		1	FRAME	
030	1523438-0000		2	HINGE	
040	1523441-0000		2	SPACER SHEET	
050	1523442-0000		2	SPACER SHEET	
060	3159165-0000		1	SPACER	
070	90062-0015		4	LOCK WASHER SERRAT.EXT.GEAR,6,4/11 H=0,7	
080	90135-0044		1	EARTH WIRE, L=320 MM 16 MM2	
090	3040336-0000		1	FUSE PANEL LABEL	
110	90194-0163		1	SIGN, EARTH WITHIN CIRCLE / SHEET 48 PCS	
120	90237-0129		1	LOCK CYLINDER, 1109-U6	
130	90237-0150		1	TURNING HANDLE, NO. 1125-U190-0A	
140	90237-0154		1	LOCK HOUSING, 1121-U60-0C	
150	90237-0214		1	LOCK ADAPTER, 1121-U40	
160	90237-0156		1	LOCK BOLT, 1000-16	
170	90237-0176		1	TURNING HANDLE, 1125-U190-A	
180	90457-0192		2	WASHER PLAIN ROUND, 6,5/18, H=1,5	
190	312105-0368		1	SCREW, M6S ISO 4017 M6X16 A4 80	
200	312155-0291		2	SCREW DIN 7991 MF6S M4X12 A4 70	
210	312155-0297		4	SCREW DIN 7991 MF6S M4X25 A4 70	
220	312605-0312		6	HEXAGON NUT, M6M M4 A280	
230	312605-0316		1	HEXAGON NUT, M6M M6 A280	
240	312812-0316		8	HEXAGON NUT, NY-LOCK M6 A4 80	
250	315105-0153		8	WASHER PLAIN, 6,4X12X1,5 A4 BRB	
260	315402-0136		6	LOCK WASHER, DIN127B 4,1 A4, M4-5/32	
270	359705-0015		1	WARNING SIGN ISO, RISK OF ELECTRIC SHOCK	
280	90194-0118		1	SIGN, RESIDUAL VOLTAGE, WAIT 5 MIN.	

Pos	Part No	UN	Qty	Description	Page No

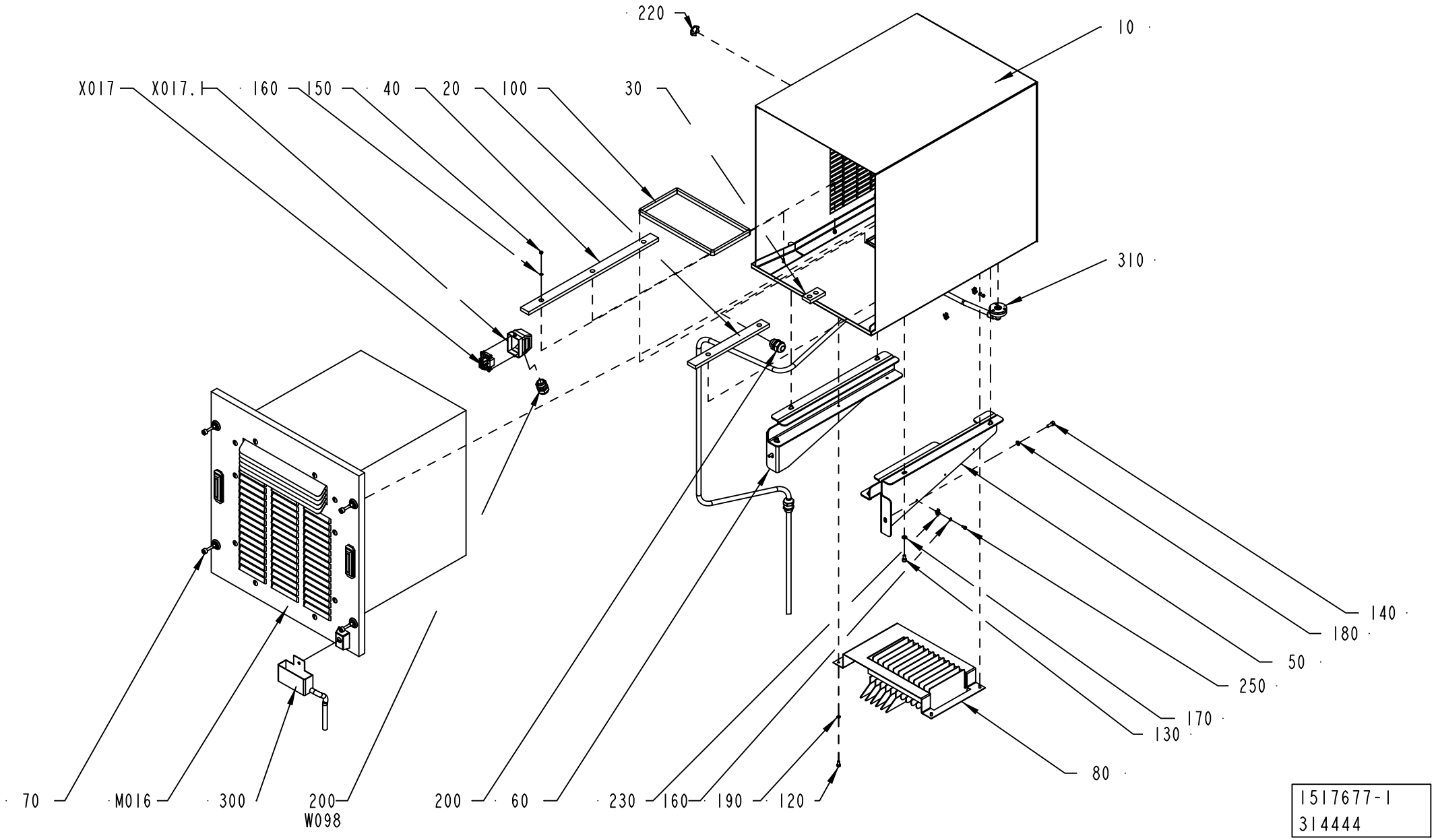
220
10
X017
X017.1
160
150
40
20
100
30
310
140
180
50
250
170
130
80
70
M016
300
200
W098
200
60
230
160
190
120
1517677-1
314444

ECM: 314446 - 20071113
Group number: 1517677-0100
Assembly Drawing: 1517677-1_1_AC

Pos	Part No	UN	Qty	Description	Page No
-					
010	1523448-0000		1	FRAME	
020	1523449-0000		1	SLIDE	
030	1523450-0000		1	SLIDE	
040	1523451-0000		1	SLIDE	
050	1523452-0000		1	SUPPORT	
060	1523453-0000		1	SUPPORT	
070	1523454-0000		4	SCREW	
080	1523973-0000		1	FRAME	
100	90143-0097	MM	830	SELF GRIPPING GASKET, 1011-24	
120	312115-0325		4	SCREW ISO4762 M5X10 A4 80	
130	312115-0366		4	SCREW ISO4762 M6X12 A4 80	
140	312115-0368		4	SCREW ISO4762 M6X16 A4 80	
150	312605-0312		7	HEXAGON NUT, M6M M4 A280	
160	315105-0136		7	WASHER PLAIN, 4,3X9X0,8 A4 BRB	
170	315105-0153		4	WASHER PLAIN, 6,4X12X1,5 A4 BRB	
180	315401-0153		4	WASHER FBH6, 1FZB	
190	315402-0146		4	LOCK WASHER, DIN127B 5,1 A4, M5-3/16	
200	352103-0111		2	CABLE GLAND, ST 16, PR22,5/PG16	
220	90099-0110		1	PLUG, PR 22,5 (PG16)	
300	2887605-0100		1	COLLECTION TRAY	**9-169**
310	2887608-0100		1	DRAINING	**9-171**
M016	90600-3772		1	COOLING UNIT, KB17TB.01.CB	
W098	351150-0415	MM	3000	CABLE OLFLEX 7X1,5 MM2 LIGHT/GREY	
X017	90110-0163		1	FEMALE INSERT 70 300 0640 0	
X017.1	90110-0226		1	CABLE HOOD 6-POL 70.350.0628.0	

Pos	Part No	UN	Qty	Description	Page No

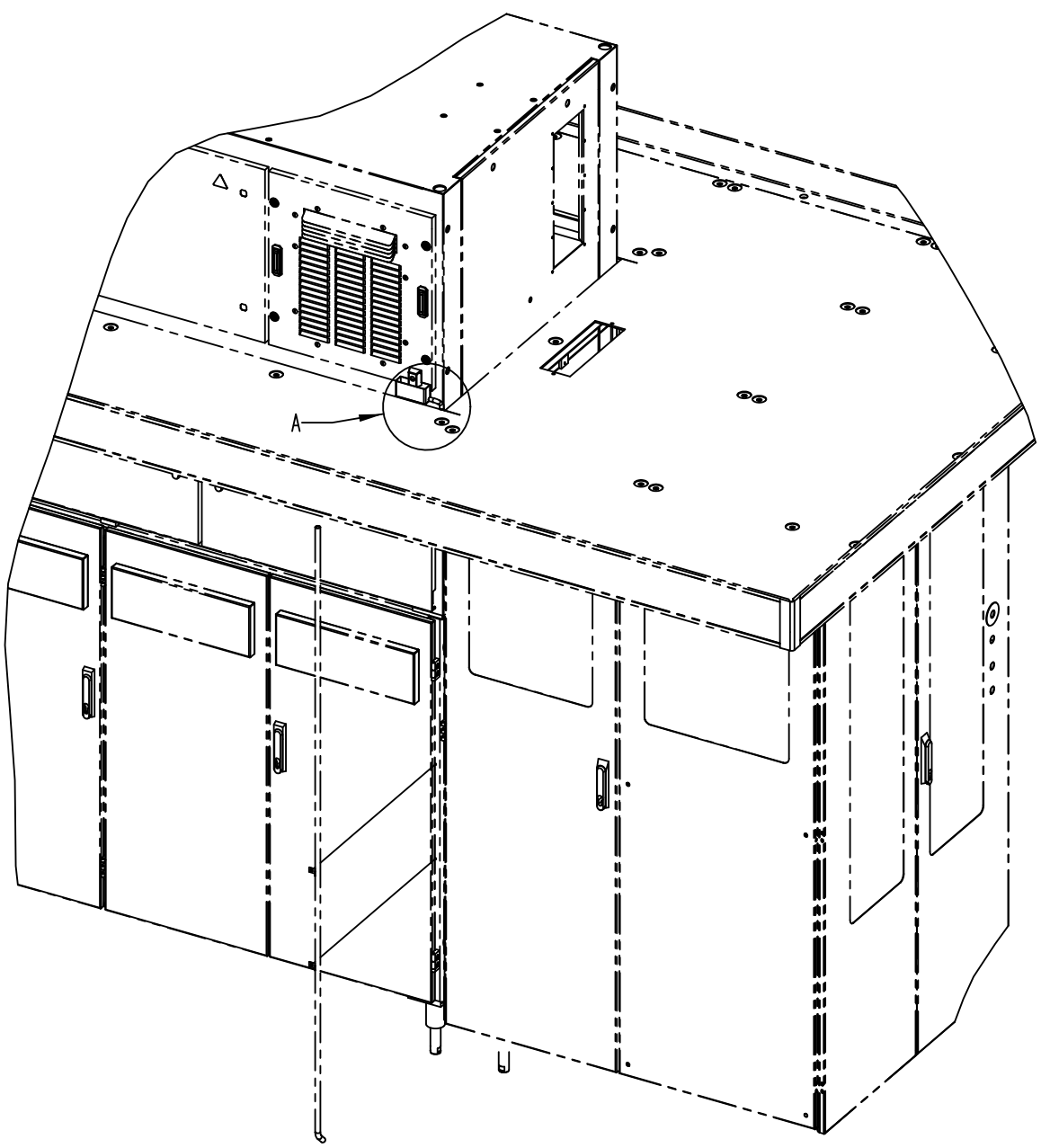
A

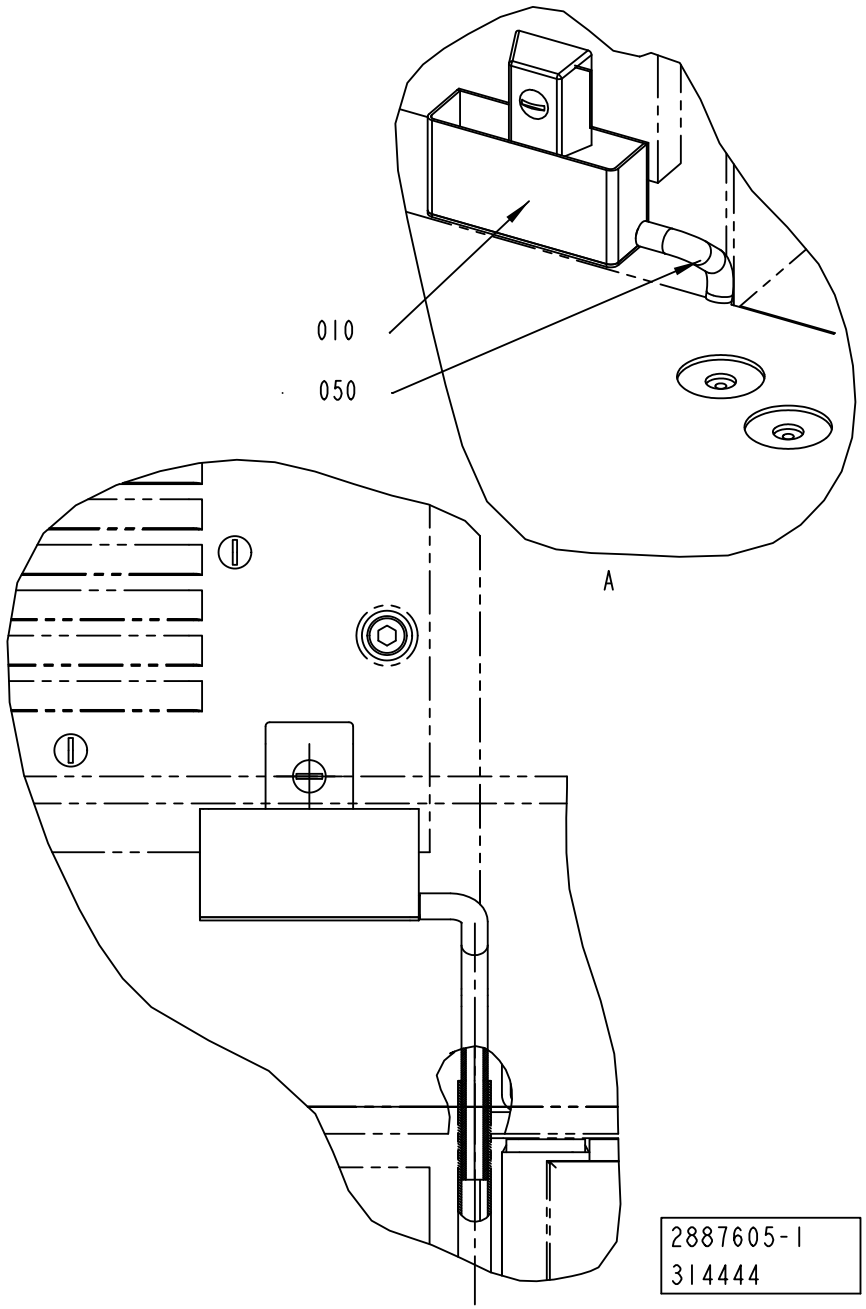
010
050
A
2887605-1
314444

ECM: 314447 - 20071113
Group number: 2887605-0100
Assembly Drawing: 2887605-1_1_AA

Pos	Part No	UN	Qty	Description	Page No
-					
010	2845922-0000		1	DRAIN CHUTE	
050	315400-0011	MM	180	TUBE PUN-H-12X2-NT	

Pos	Part No	UN	Qty	Description	Page No

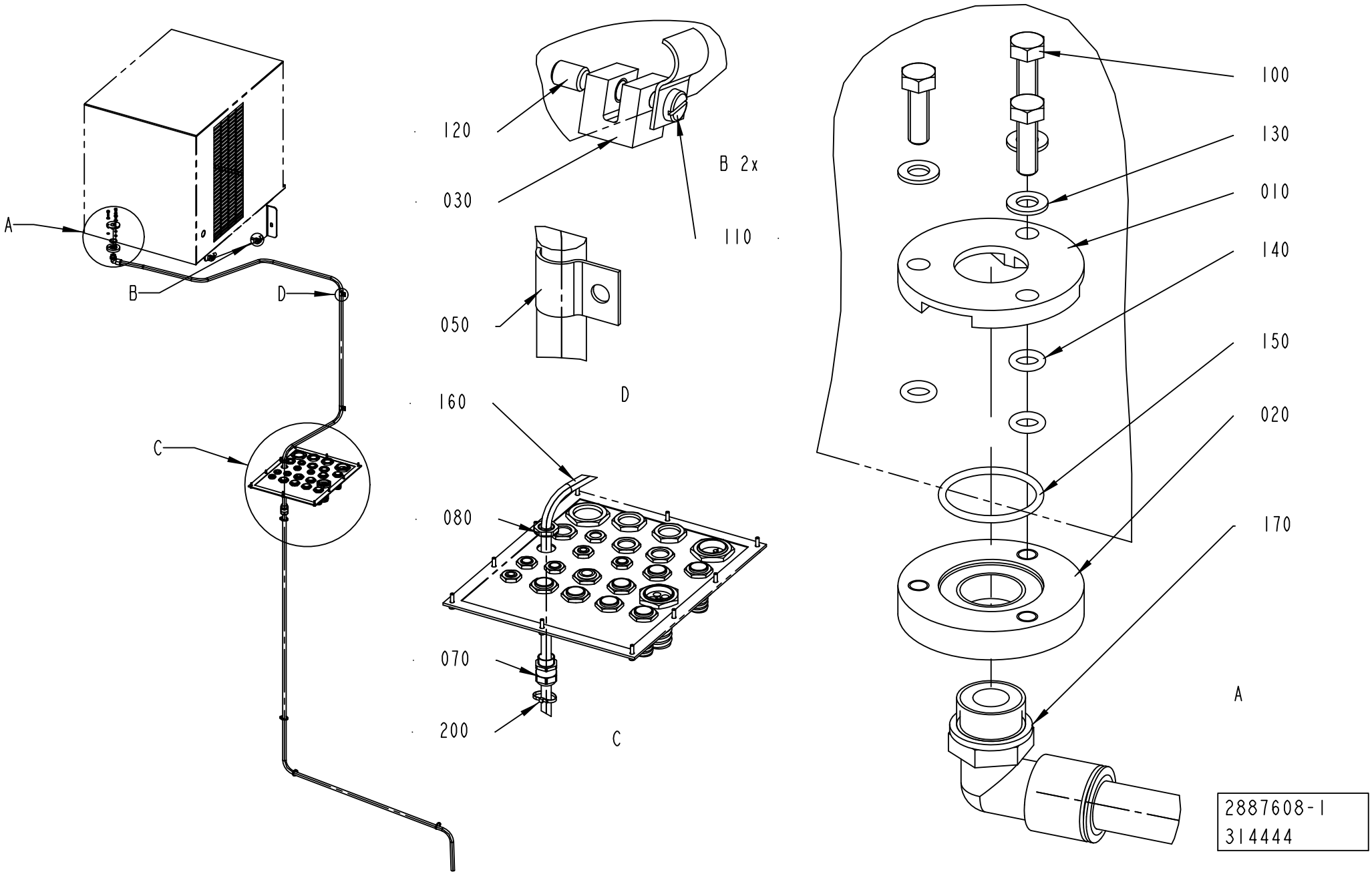
A
B
D
C
120
030
B 2x
110
050
D
160
080
070
200
C
100
130
010
140
150
020
170
A
2887608-1
314444

ECM: 327692 - 20071113
Group number: 2887608-0100
Assembly Drawing: 2887608-1_1_AA

Pos	Part No	UN	Qty	Description	Page No
-					
010	2887606-0000		1	FLANGE	
020	2887607-0000		1	FLANGE	
030	2887613-0000		2	HOSE HOLDER	
050	90074-0003		4	CABLE CLIPS, D=12 MM	
070	90458-0307		1	CABLE GLAND, M20X1,5, 5311 1020	
080	90458-0323		1	NUT, M20X1,5	
100	312105-0329		3	SCREW, M6S ISO 4017 M5X16 A4 80	
110	312132-0284		2	SLOTTED HEAD, PAN SCREW, MSCS M4X5	
120	312318-0362		2	SET SCREW, CUP END ISO4029 M6X8 A4	
130	315105-0146		3	WASHER PLAIN, 5,3X10X1 A4 BRB	
140	315202-0504		3	O-RING 5,28X1,78 MM	
150	315202-0708		1	O-RING 21,95X1,78 MM	
160	315400-0011	MM	4200	TUBE PUN-H-12X2-NT	
170	350002-0014		1	PUSH-IN L-FITTING QSL-F-G3/8-12	
200	352113-0102		4	CABLE TIE, BLACK 188X4,8 MM	

Pos	Part No	UN	Qty	Description	Page No

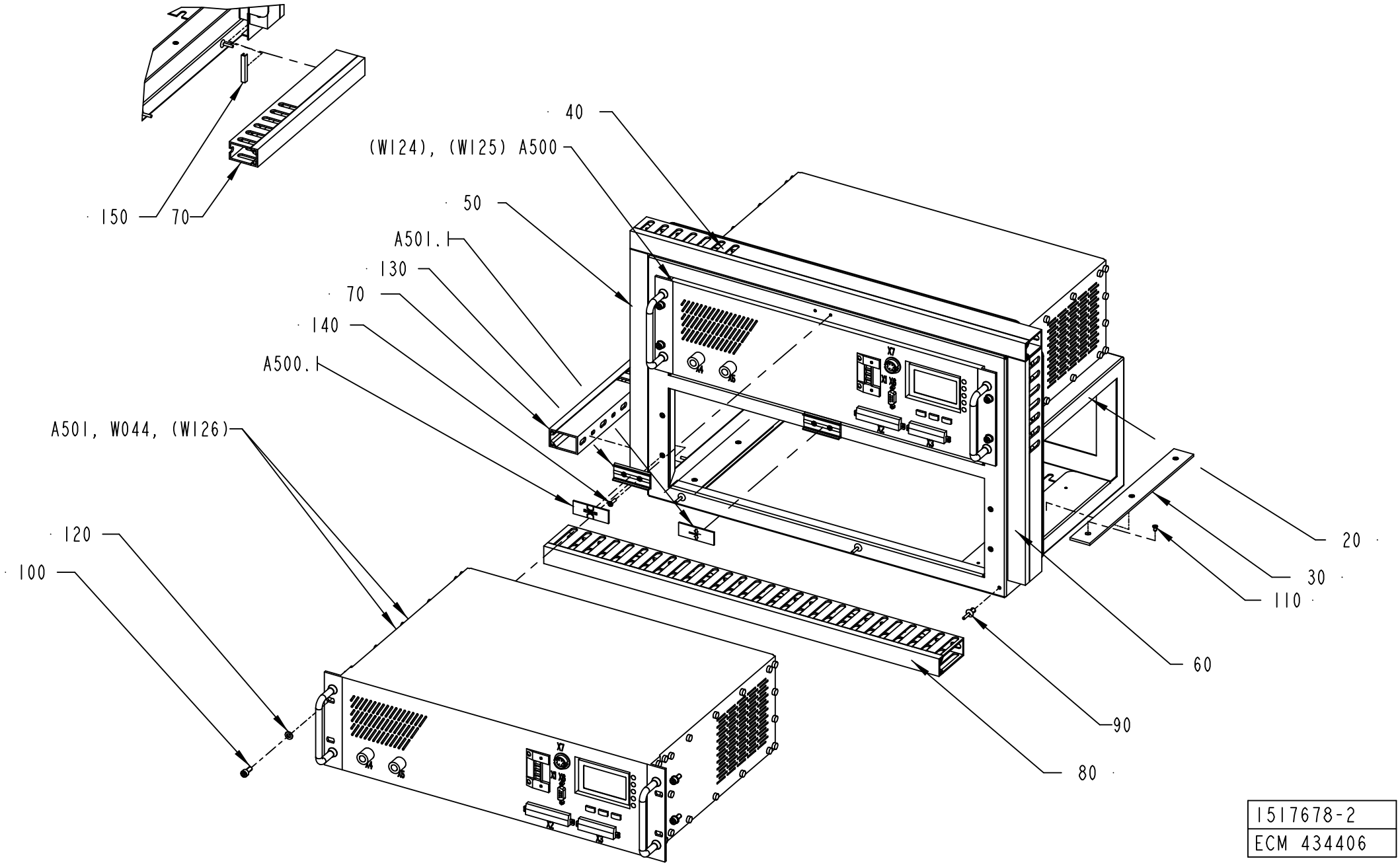

1517678-2
ECM 434406

ECM: 438641 - 20100222
Group number: 1517678-0200
Assembly Drawing: 1517678-2_1_AB

Pos	Part No	UN	Qty	Description	Page No
-					
020	1523455-0000		1	FRAME	
030	1523456-0000		4	SLIDE	
040	90181-0037	MM	560	CABLE DUCT, PLASTIC, 25X40	
050	90181-0037	MM	320	CABLE DUCT, PLASTIC, 25X40	
060	90181-0037	MM	320	CABLE DUCT, PLASTIC, 25X40	
070	90181-0037	MM	263	CABLE DUCT, PLASTIC, 25X40	
080	90181-0044	MM	560	CABLE DUCT, PLASTIC, 25X60	
090	90181-0088		14	PLASTIC RIVET, PR 52314	
100	312115-0327		8	SCREW ISO4762 M5X12 A4 80	
110	312155-0220		12	SCREW DIN 7991 MF6S M3X6 A4 70	
120	315105-0146		8	WASHER PLAIN, 5,3X10X1 A4 BRB	
130	359240-0100		2	SIGN HOLDER FOR 359240-0001	
140	311521-0146		4	RIVET, BLANK 3,2X12	
150	90143-0094	MM	38	SEAL	
A500	1499642-0301		1	TPIH GENERATOR	
A500.1	90458-1423		1	CONNECTOR, PC 4/4-STF-7.62	
A500.2	90458-1424		1	CONNECTOR, MSTB 2.5/10-STF-5.08	
A500.3	359241-0135		1	SIGN: " TRANSVERSAL SEALING"	
A501	1499642-0301		1	TPIH GENERATOR	
A501.1	90458-1423		1	CONNECTOR, PC 4/4-STF-7.62	
A501.2	90458-1424		1	CONNECTOR, MSTB 2.5/10-STF-5.08	
A501.3	359241-0132		1	SIGN: " TEMP. SA"	
W044	551969-0012		1	COAXIAL CABLE	
W102	351423-0004	M	4	CABLE UNITRONIC LICY 2X0,34	
W103	351423-0004	M	4	CABLE UNITRONIC LICY 2X0,34	
W104	351423-0004	M	4	CABLE UNITRONIC LICY 2X0,34	

Pos	Part No	UN	Qty	Description	Page No

Machine Type | Group Description | Used-In | Group Number | Page No

CABLE LEAD-IN PLATE

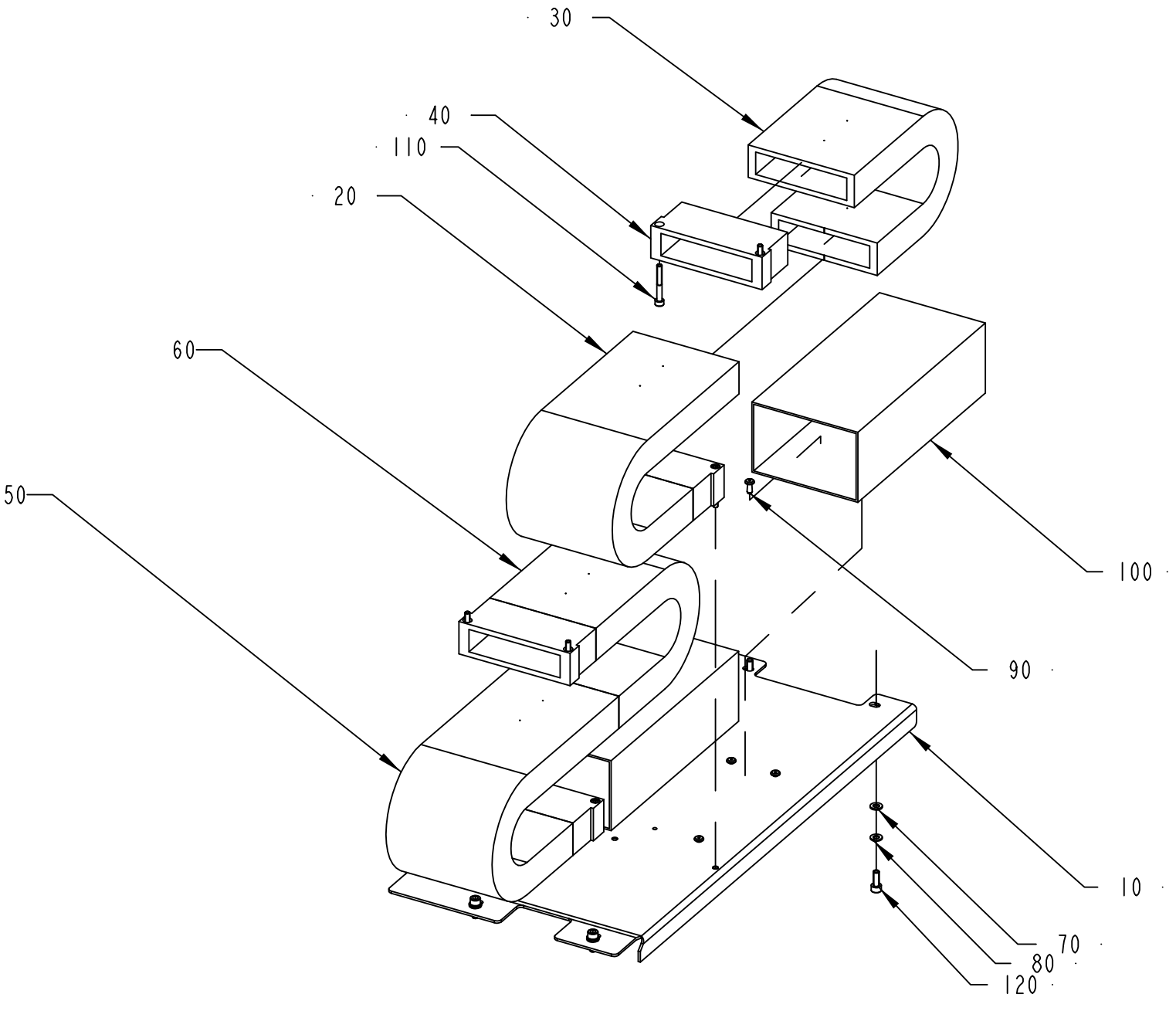

2598113-1
ECM 119568

ECM: 180363 - 20040910
Group number: 2598113-0100
Assembly Drawing: 2598113-1_1_AA

Pos	Part No	UN	Qty	Description	Page No
-					
010	2598430-0000		1	SUPPORT	
020	90459-2309	MM	405	FLEXIBLE CHAIN, A325A103KM	
030	90459-2309	MM	360	FLEXIBLE CHAIN, A325A103KM	
040	90459-2350		4	END BRACKET, A325A103KM	
050	90459-2309	MM	405	FLEXIBLE CHAIN, A325A103KM	
060	90459-2309	MM	360	FLEXIBLE CHAIN, A325A103KM	
070	315101-0153		4	WASHER PLAIN, BRB, 6,4/12 H=1,5	
080	315401-0153		4	WASHER FBH6, 1FZB	
090	90181-0313		8	RIVET, DUCTAFIX R4	
100	90181-0057	MM	500	CABLE DUCT, PLASTIC, 120X80	
110	312115-0339		8	SCREW ISO4762 M5X40 A4 80	
120	312115-0368		4	SCREW ISO4762 M6X16 A4 80	

Pos	Part No	UN	Qty	Description	Page No

Tetra Pak

SPC
Spare Parts Catalogue

This page is intentionally left blank.

ECM: 406450 - 20090706
Group number: 649452-0400
Assembly Drawing:

Pos	Part No	UN	Qty	Description	Page No
-					
0010	42413-0400		1	SOFTWARE	10-5
0020	42416-0400		1	ELECTRICAL DOCUMENT	

Pos	Part No	UN	Qty	Description	Page No

This page is intentionally left blank.

ECM: 492401 - 20110303
Group number: 42413-0400
Assembly Drawing:

Pos	Part No	UN	Qty	Description	Page No
-					
	3022601-0005		1	SOFTWARE CD	
0040	2776750-0400		1	SOFTWARE TPOP	**10-7**

Pos	Part No	UN	Qty	Description	Page No

This page is intentionally left blank.

ECM: 406614 - 20090706
Group number: 2776750-0400
Assembly Drawing:

Pos	Part No	UN	Qty	Description	Page No
-					
0010	1369439-0302		1	PLMS ON-LINE PROGRAM	**10-9**
0020	1254471-0411		1	PLMS OFF-LINE	
0010	*47937-0411*		*1*	*PLMS OFF-LINE PROGRAM*	
0020	*2710271-0000*		*1*	*DOCUMENTATION DISKETTE*	
0030	*2710272-0000*		*1*	*LABELS, DISKETTE*	
0040	*2710273-0000*		*1*	*LABELS, CD*	
0050	*2710274-0000*		*1*	*SHORT FORM INSTRUCTIONS*	
0060	*47937-1411*		*1*	*SOFTWARE PLMS OFF-LINE*	
0070	*47937-2411*		*1*	*SOFTWARE 47937-1411 (PART 1)*	
0080	*47937-3411*		*1*	*SOFTWARE 47937-1411 (PART 2)*	
0020	*82351-0106*		*1*	*USER MANUAL PLMS OFF-LINE*	
0030	1190007-0402		1	PLMS RECEIVE	
A452.1	2912228-0003		1	TPOP BASIC V 3.2	

Pos	Part No	UN	Qty	Description	Page No

This page is intentionally left blank.

ECM: 187353 - 20041018
Group number: 1369439-0302
Assembly Drawing:

Pos	Part No	UN	Qty	Description	Page No
-					
0010	48633-0302		1	PLMS ON-LINE CLIENT PROGRAM	
0020	48635-0302		1	PLMS ON-LINE SERVER PROGRAM	
0030	81595-0103		1	USER MANUAL PLMS ON-LINE	
0040	81596-0103		1	INSTALLATION MANUAL PLMS ON-LINE	

Pos	Part No	UN	Qty	Description	Page No

Machine Type | Group Description | Used-In | Group Number | Page No

Tetra Pak

SPC
Spare Parts Catalogue

This page is intentionally left blank.

ECM: 449020 - 20100524
Group number: 648109-1400
Assembly Drawing:

Pos	Part No	UN	Qty	Description	Page No
ASU					
140	1520972-0000		2	TPO-BAR	
150	2517066-0000		5	DOLLY	
HVA					
170	925419-0100		1	BED	**11-5**
620	2805942-0000		1	MACHINE SIGN	
630	311521-0143		4	RIVET, BLANK 3,2X8	
Common Parts					
010	1350086-0500		1	INSTALLATION DRAWING	**11-7**
020	1350087-0400		1	DIAGRAM	**11-9**
050	2543594-0300		1	ELECTRICAL COMPONENTS	**11-11**
060	90603-3401		1	PAPER REEL TROLLEY, 32.04.250.9	**11-13**
090	531345-0200		1	PERSONAL PROTECT. EQ H2O2	**11-15**
100	77099-0300		1	TOOL KIT	**11-17**
110	2541126-0100		1	INSTALLATION ACCESSORIES	**11-19**
120	2501528-0200		1	PLMS KIT	**11-21**
130	2541886-0100		1	START-UP KIT	**11-35**
160	3036086-0000		1	TRANSPORT COVER	
310	579899-0000		1	LIFTING UNIT	**11-47**
320	441725-0000		1	COVERING PLATE	
325	3058552-0000		1	SUPPORT	
330	90220-0104	M	20	SCR. CABLE 4X1,5MM2	
340	351150-0405	M	100	CABLE OLFLEX 5X0,75 MM2 LIGHT/GREY	
350	90153-0015		1	ADHESIVE,LOCTITE IS 496/CYANOLOT 303	
360	3081141-0000		1	FUNCTION DESCRIPTION	
600	2968251-0000		1	MACHINE SIGN	
900	90003-0422		1	CORRUGATED CARDBOARD BOX	
910	90347-0175		14	MACHINE SHOE BRIK T 125	

Pos	Part No	UN	Qty	Description	Page No

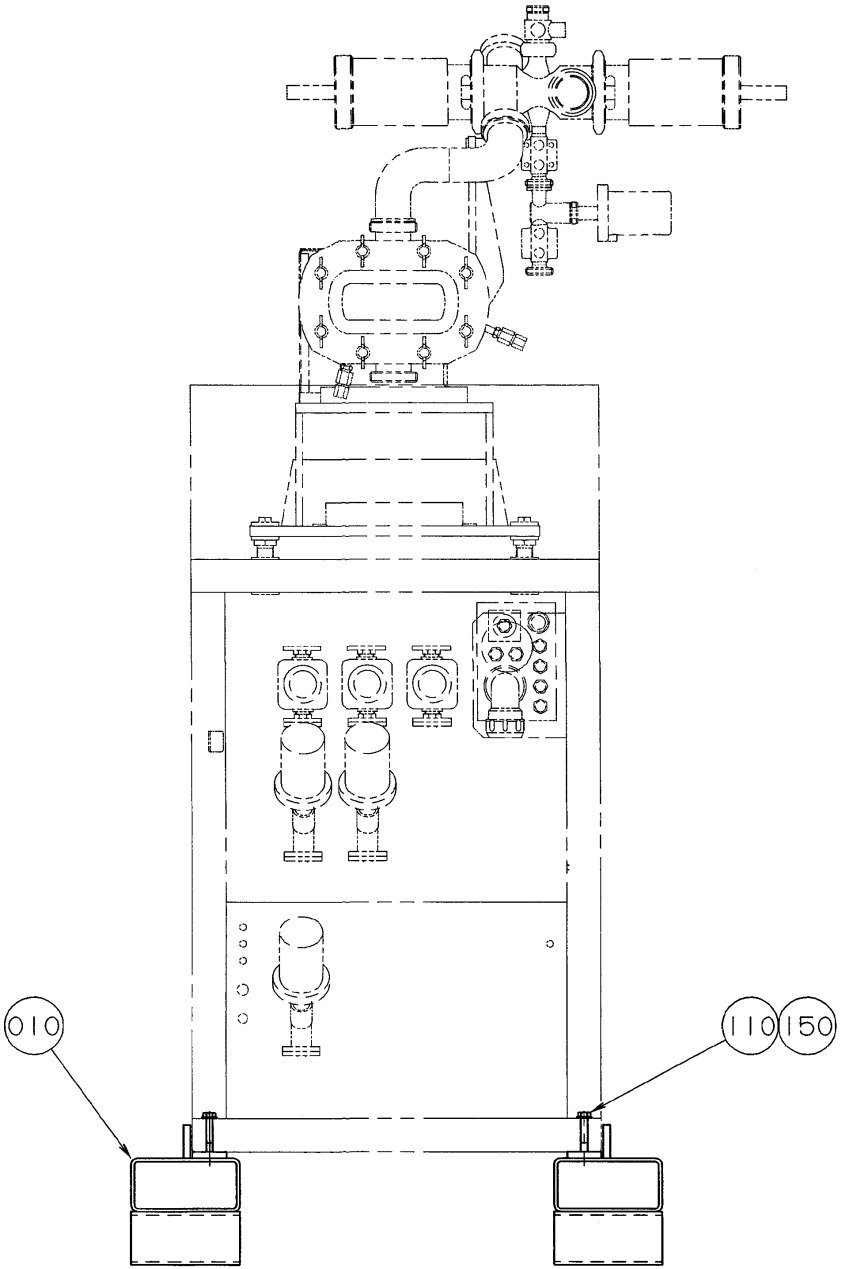
010
110
150

ECM: - -
Group number: 925419-0100
Assembly Drawing: 925419-1_1_AA

Pos	Part No	UN	Qty	Description	Page No
-					
010	925765-0000		2	BED	
110	312101-0504		2	SCREW M6S M10X65 FZB	
150	315101-0173		2	WASHER PLAIN, BRB, 10,5/22 H=2	

Pos	Part No	UN	Qty	Description	Page No

This page is intentionally left blank.

ECM: 420175 - 20100524
Group number: 1350086-0500
Assembly Drawing:

Pos	Part No	UN	Qty	Description	Page No	Pos	Part No	UN	Qty	Description	Page No

THIS GROUP HAS NO LIST.

Machine Type	Group Description	Used-In	Group Number	Page No

This page is intentionally left blank.

ECM: 402938 - 20090707
Group number: 1350087-0400
Assembly Drawing:

Pos	Part No	UN	Qty	Description	Page No
ASU					
020	3038094-0000		1	PNEUMATIC DIAGRAM	
HVA					
025	2879201-0000		1	DIAGRAM AIR/WATER	
040	2905947-0000		1	STERILE SYSTEM TBA/19 HVA	
NOHVA					
040	3004053-0000		1	ASEPTIC DIAGRAM	
PT19					
010	3038093-0000		1	PNEUMATIC DIAGRAM	
TBA					
080	3038090-0000		1	PNEUMATIC DIAGRAM TBA	
TBA HVA					
090	2831057-0000		1	VALVE PANEL	
TBA NOHVA					
090	2831058-0000		1	VALVE PANEL	
TPA					
080	3038092-0000		1	PNEUMATIC DIAGRAM TPA	
090	2831063-0000		1	VALVE PANEL	
TWA					
080	3038091-0000		1	PNEUMATIC DIAGRAM TWA	
090	2831064-0000		1	VALVE PANEL	
Common Parts					
030	2569978-0000		1	WATER DIAGRAM	
060	2569980-0000		1	LUBRIFICATION DIAGRAM	
070	2569979-0000		1	HYDRAULIC SYSTEM	

Pos	Part No	UN	Qty	Description	Page No

This page is intentionally left blank.

ECM: 406286 - 20090707
Group number: 2543594-0300
Assembly Drawing:

Pos	Part No	UN	Qty	Description	Page No
-					
010	90082-0301		3	OVER VOLT. PROTECT. PU 0 C 833951	
020	90064-0315		1	LAMP REMOVER, 700.004.0	
030	90459-3881		1	FOLDED PAPER, 420840	
040	90459-0087		1	PRINT WHEEL, 6-COLOURS	
060	352553-0160		5	CYLINDRICAL FUSE 16A, 3NC1016	
070	352553-0160		5	CYLINDRICAL FUSE 16A, 3NC1016	
080	352553-0250		5	CYLINDRICAL FUSE 25A, 3NC1025	

Pos	Part No	UN	Qty	Description	Page No

PAPER REEL TROLLEY, 32.04.250.9

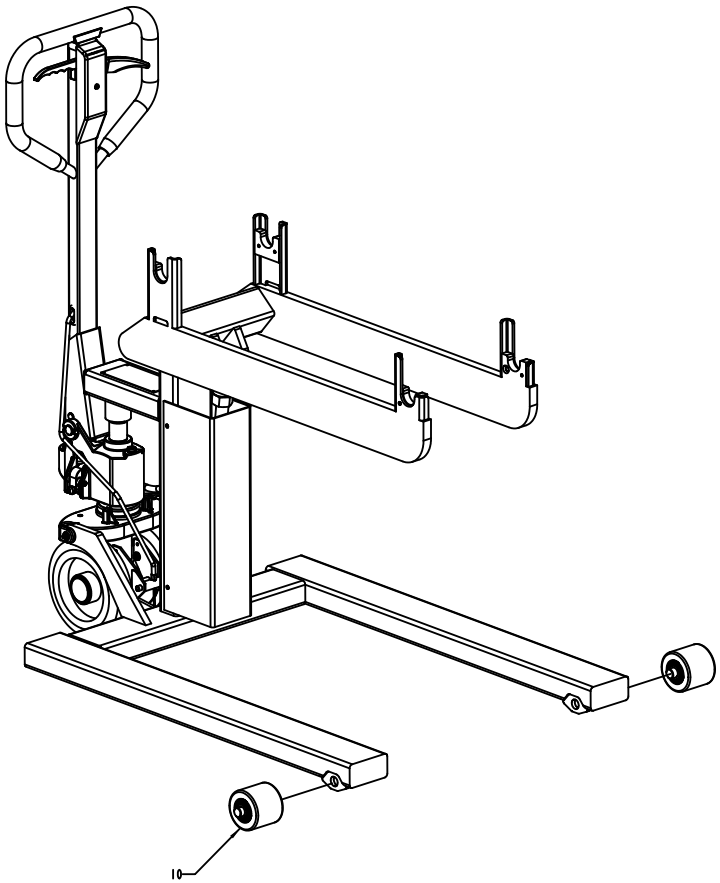

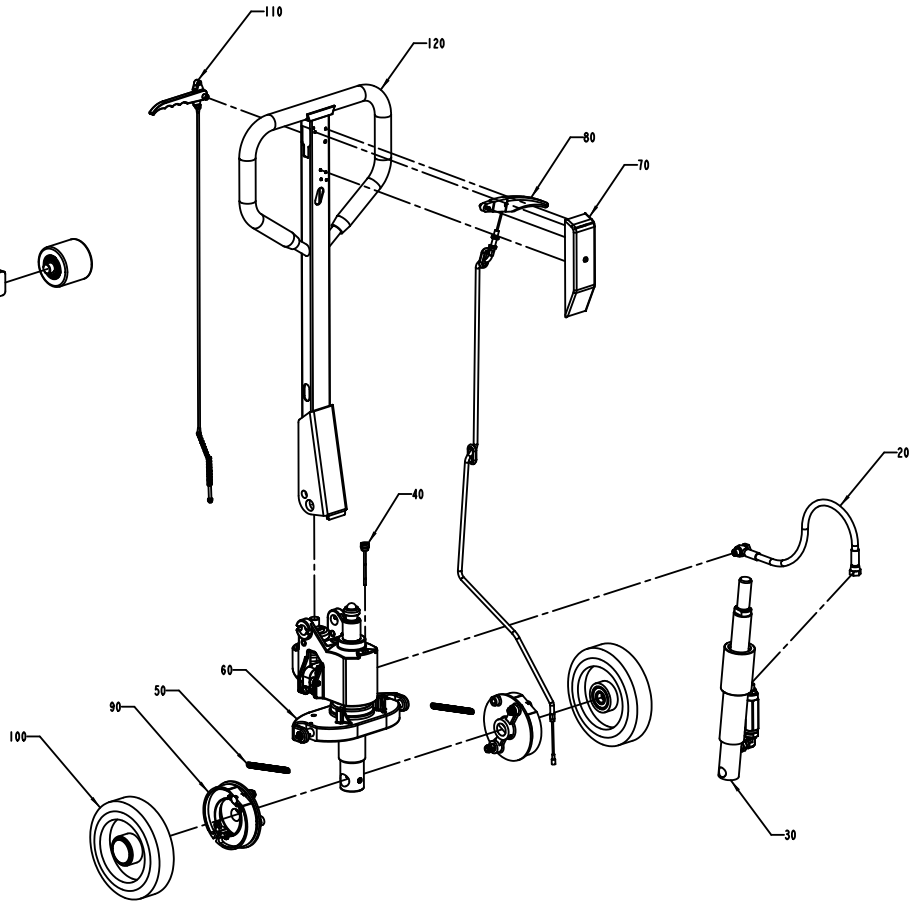

Bill of Material for 90603-3401					
Pos No	Model Name	Identity	Description	Qty.	Units
10	90603-9953	90603-9953	WHEEL	2	
20	90604-0333	90604-0333	HYDRAULIC HOSE	1	
30	90604-0373	90604-0373	CYLINDER	1	
40	90604-0393	90604-0393	OIL SEAL	1	
50	90604-0413	90604-0413	SPRING	2	
60	90604-0453	90604-0453	PUMP GROUP	1	
70	90604-1373	90604-1373	COVER	1	
80	90604-1395	90604-1395	HANDLE	1	
90	90604-1414	90604-1414	BRAKE UNIT	2	
100	90604-1453	90604-1453	WHEEL	2	
110	90604-1654	90604-1654	LEVER MECHANISM	1	
120	90604-1827	90604-1827	HANDLE	1	
	90603-3401_01	90603-3401_01	PAPER TROLLEY	1	

ECM: 526336 - 20111019
Group number: 90603-3401
Assembly Drawing: 90603-3401_2_AB

Pos	Part No	UN	Qty	Description	Page No
-					
	90603-3401_01		1	PAPER TROLLEY	
010	90603-9953		2	WHEEL	
020	90604-0333		1	HYDRAULIC HOSE	
030	90604-0373		1	CYLINDER	
040	90604-0393		1	OIL SEAL	
050	90604-0413		1	SPRING	
060	90604-0453		1	PUMP GROUP	
070	90604-1373		1	COVER	
080	90604-1395		1	HANDLE	
090	90604-1414		1	BRAKE UNIT	
100	90604-1453		1	WHEEL	
110	90604-1654		1	LEVER MECHANISM	
120	90604-1827		1	HANDLE	

Pos	Part No	UN	Qty	Description	Page No

This page is intentionally left blank.

ECM: 72190 - 19990628
Group number: 531345-0200
Assembly Drawing:

Pos	Part No	UN	Qty	Description	Page No	Pos	Part No	UN	Qty	Description	Page No
-											
	90303-0013		1	APRON							
	90303-0012		1	PROTECTIVE GLOVES							
	90303-0011		1	PROTECTIVE GOGGLES							

Machine Type | Group Description | Used-In | Group Number | Page No

This page is intentionally left blank.

ECM: 103434 - 20020514
Group number: 77099-0300
Assembly Drawing:

Pos	Part No	UN	Qty	Description	Page No
TBA, TWA					
020	72947-0000		1	HOOK SPANNER	
040	76131-0000		1	ASSEMBLY CONE	
050	76132-0000		1	ASSEMBLY TOOL	
060	78801-0000		1	CALIBRATION TOOL	
130	777150-0801		2	SET OF SPANNERS, HEXAGONAL	
TPA					
020	72947-0000		1	HOOK SPANNER	
040	76131-0000		1	ASSEMBLY CONE	
050	76132-0000		1	ASSEMBLY TOOL	
060	78801-0000		1	CALIBRATION TOOL	
070	90091-0387		1	ASSEMBLY TOOL	
130	777150-0801		2	SET OF SPANNERS, HEXAGONAL	

Pos	Part No	UN	Qty	Description	Page No

This page is intentionally left blank.

ECM: 103435 - 20020514
Group number: 2541126-0100
Assembly Drawing:

Pos	Part No	UN	Qty	Description	Page No
-					
010	1512848-0000		1	BRACKET	
300	90458-1960		2	STRETCHING SCREW, 468-697MM MAX2950KG	
310	90458-1959		8	LIFTING EYE BOLT, LGB (3) 3T M24	
320	312105-0463		4	SCREW, M6S ISO 4014 M8X60 A4 80	

Pos	Part No	UN	Qty	Description	Page No

This page is intentionally left blank.

ECM: 247457 - 20060111
Group number: 2501528-0200
Assembly Drawing:

Pos	Part No	UN	Qty	Description	Page No
TBA, TPA					
	359000-0109		10	WIRE MARKING, YELLOW, PY01/3"9"	
	90110-0518		5	CONNECTOR D-SUB, SUBCON 15/M-SH	
	359000-0108		10	WIRE MARKING, YELLOW, PY01/3"8"	
	353001-0101		50	END SLEEVE 0,5 MM2	
	359000-0104		10	WIRE MARKING, YELLOW, PY01/3"4"	
	359000-0105		10	WIRE MARKING, YELLOW, PY01/3"5"	
	359000-0103		10	WIRE MARKING, YELLOW, PY01/3"3"	
	359000-0102		10	WIRE MARKING, YELLOW, PY01/3"2"	
	359000-0106		10	WIRE MARKING, YELLOW, PY01/3"6"	
	359000-0101		10	WIRE MARKING, YELLOW, PY01/3"1"	
	359000-0100		10	WIRE MARKING, YELLOW, PY01/3"0"	
	359000-0107		10	WIRE MARKING, YELLOW, PY01/3"7"	
	353001-0102		50	END SLEEVE 0,75 MM2	
	2501547-0100		1	QUEUE GUARD	**11-23**
MA451	90453-0001		1	MODEM MA-12	
MX022	2510844-0100		1	CONNECTION BOX	**11-25**
TWA					
	90110-0518		5	CONNECTOR D-SUB, SUBCON 15/M-SH	
	353001-0101		50	END SLEEVE 0,5 MM2	
	353001-0102		50	END SLEEVE 0,75 MM2	
	359000-0100		10	WIRE MARKING, YELLOW, PY01/3"0"	
	359000-0101		10	WIRE MARKING, YELLOW, PY01/3"1"	
	359000-0102		10	WIRE MARKING, YELLOW, PY01/3"2"	
	359000-0103		10	WIRE MARKING, YELLOW, PY01/3"3"	
	359000-0104		10	WIRE MARKING, YELLOW, PY01/3"4"	
	359000-0107		10	WIRE MARKING, YELLOW, PY01/3"7"	
	359000-0106		10	WIRE MARKING, YELLOW, PY01/3"6"	
	359000-0108		10	WIRE MARKING, YELLOW, PY01/3"8"	
	359000-0109		10	WIRE MARKING, YELLOW, PY01/3"9"	
	359000-0105		10	WIRE MARKING, YELLOW, PY01/3"5"	
MA451	90453-0001		1	MODEM MA-12	
Common Parts					
	82197-0104		1	USER MANUAL	
	2501471-0100		1	COUNTER	**11-27**
	2501472-0100		1	COUNTER	**11-29**
MX020	2501466-0100		1	CONNECTION BOX	**11-31**
MX021	2501465-0100		1	CONNECTION BOX	**11-33**
W951	90220-0091	M	200	CABLE, PAIR TWISTED 2X2X0,25MM2	
W952	90220-0091	M	200	CABLE, PAIR TWISTED 2X2X0,25MM2	
W956	90041-0068		1	DATACABLE MODEM-PC, 25-113-93	

Pos	Part No	UN	Qty	Description	Page No

Machine Type | Group Description | Used-In | Group Number | Page No

QUEUE GUARD

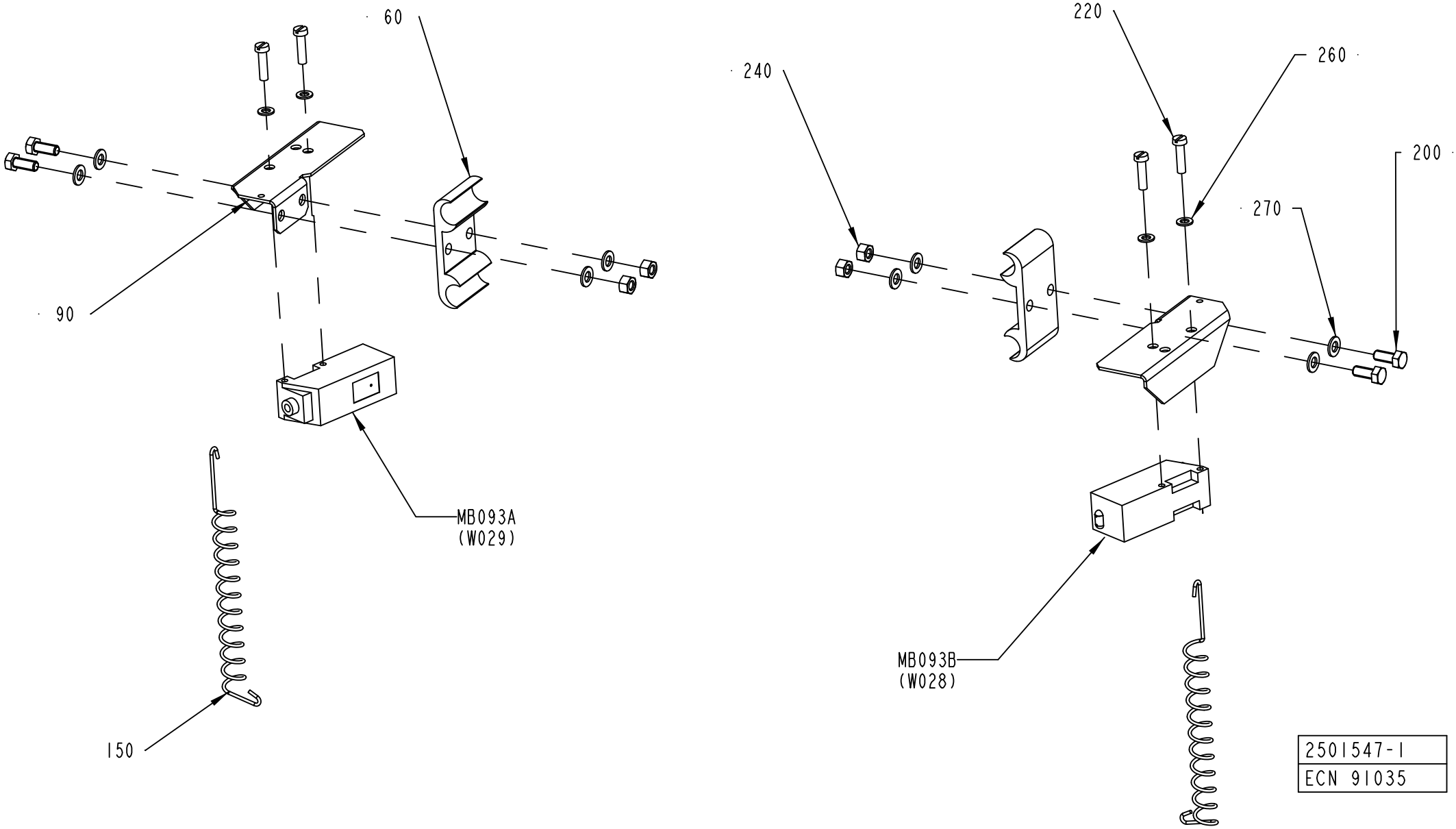

2501547-1
ECN 91035

ECM: 252130 - 20060127
Group number: 2501547-0100
Assembly Drawing: 2501547-1_1_AA

Pos	Part No	UN	Qty	Description	Page No
TBA 0100B, TBA 0125S					
060	1020638-0000		2	HOLDER	
TBA 0160S, TBA 0200M, TBA 0200B, TBA 0200S, TBA 0250S, TBA 0284B, TBA 0250B, TBA 0300S, TBA 0330S, TPA 0330SQ, TPA 0250SQ, TPA 0200SQ					
060	1020637-0000		2	HOLDER	
Common Parts					
090	1086888-0000		2	COVER	
150	532412-0000		2	SPRING	
200	312105-0327		4	SCREW, M6S ISO 4017 M5X12 A4 80	
220	312125-0293		4	SLOTTED HEAD SCREW, ISO1207 M4X16 A4	
240	312605-0314		4	HEXAGON NUT, M6M M5 A280	
260	315105-0136		4	WASHER PLAIN, 4,3X9X0,8 A4 BRB	
270	315105-0146		8	WASHER PLAIN, 5,3X10X1 A4 BRB	
MB093B	90232-0104		1	PH.CELL E3S-CT61-D-5M	
MB093A	90232-0103		1	PH.CELL E3S-CT61-L-5M	

Pos	Part No	UN	Qty	Description	Page No

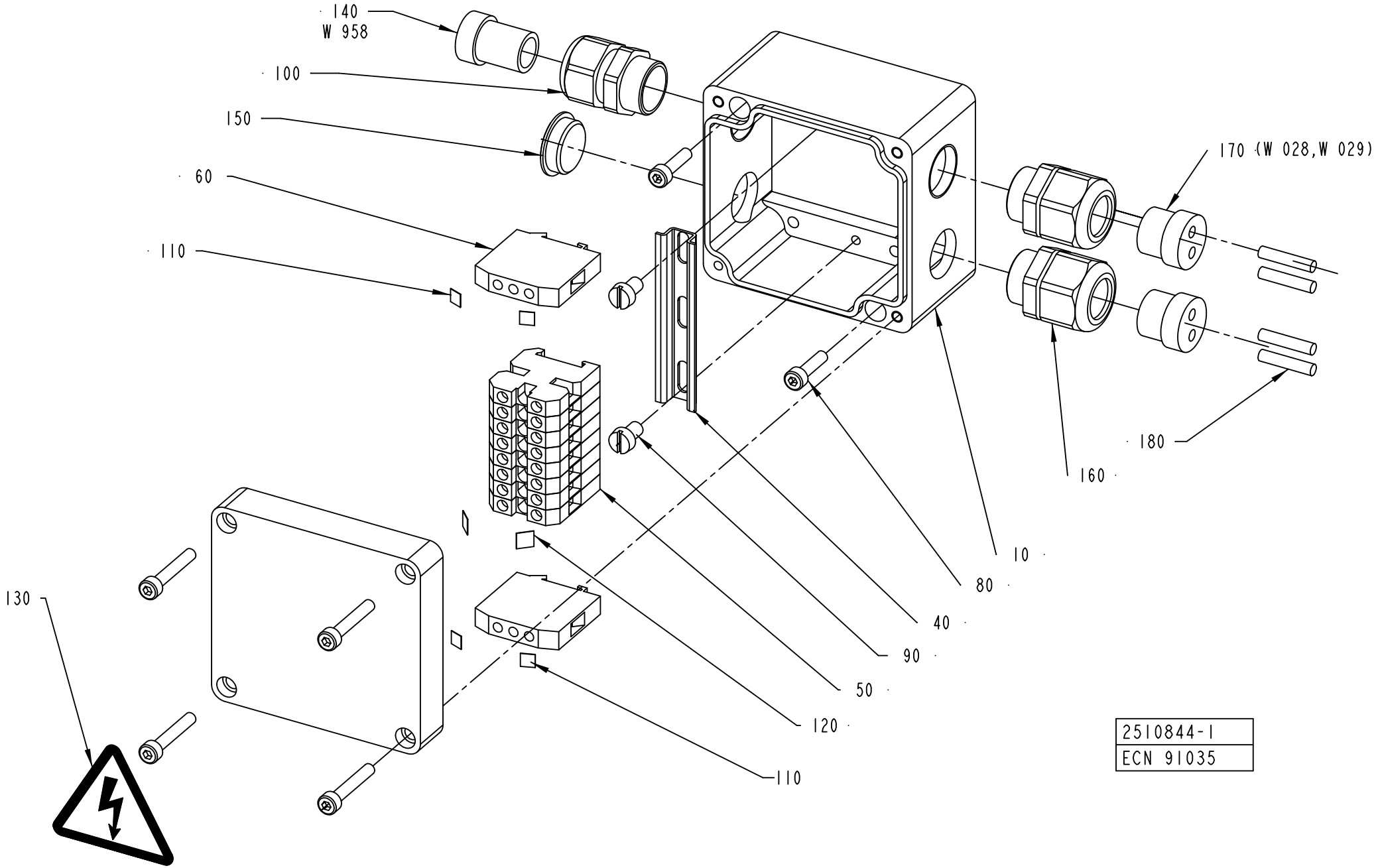
140
W 958
100
150
60
110
170 (W 028,W 029)
180
160
10
80
40
90
50
120
110
130
2510844-1
ECN 91035

ECM: 95640 - 20020514
Group number: 2510844-0100
Assembly Drawing: 2510844-1_1_AA

Pos	Part No	UN	Qty	Description	Page No
-					
010	1349568-0000		1	CONNECTION BOX	
040	90077-0328	M	65	RAIL, TS15/5	
050	90077-0079		8	TERMINAL PLINTH, AKZ 4	
060	90135-0026		2	EARTH TERMINAL AKE 4	
080	312115-0293		2	SCREW ISO4762 M4X16 A4 80	
090	312125-0323		2	SLOTTED HEAD SCREW, ISO1207 M5X8 A4	
100	353240-0002		1	COMPRESSION GLAND, VK 150Y	
110	359011-0819		4	MARKING, EARTH, DEK 5 GW ERDE I.KR.	
120	359011-0821		2	MARKING, DEK 6 FW 1-50	
130	359705-0015		1	WARNING SIGN ISO, RISK OF ELECTRIC SHOCK	
140	353249-0003		1	INSERT, SINGLE HOLE, E151 11	
150	90002-0009		1	BLANK-OFF PLUG, PR 18.6 SKINDICHT-BLK11	
160	353249-0036		2	INSERT, MULTI HOLE, EK152M 2X4	
160	353241-0002		2	COMPRESSION GLAND, VK 15152Y	
180	353249-0301		4	SEALING PIN, 4,0X20	
200	353001-0113		2	END SLEEVE 0,75MM2	
210	359000-0201		1	WIRE MARKING, YELLOW, PA02/3"1"	
220	359000-0204		1	WIRE MARKING, YELLOW, PA02/3"4"	
W958	351150-0405	M	40	CABLE OLFLEX 5X0,75 MM2 LIGHT/GREY	

Pos	Part No	UN	Qty	Description	Page No

Machine Type	Group Description	Used-In	Group Number	Page No

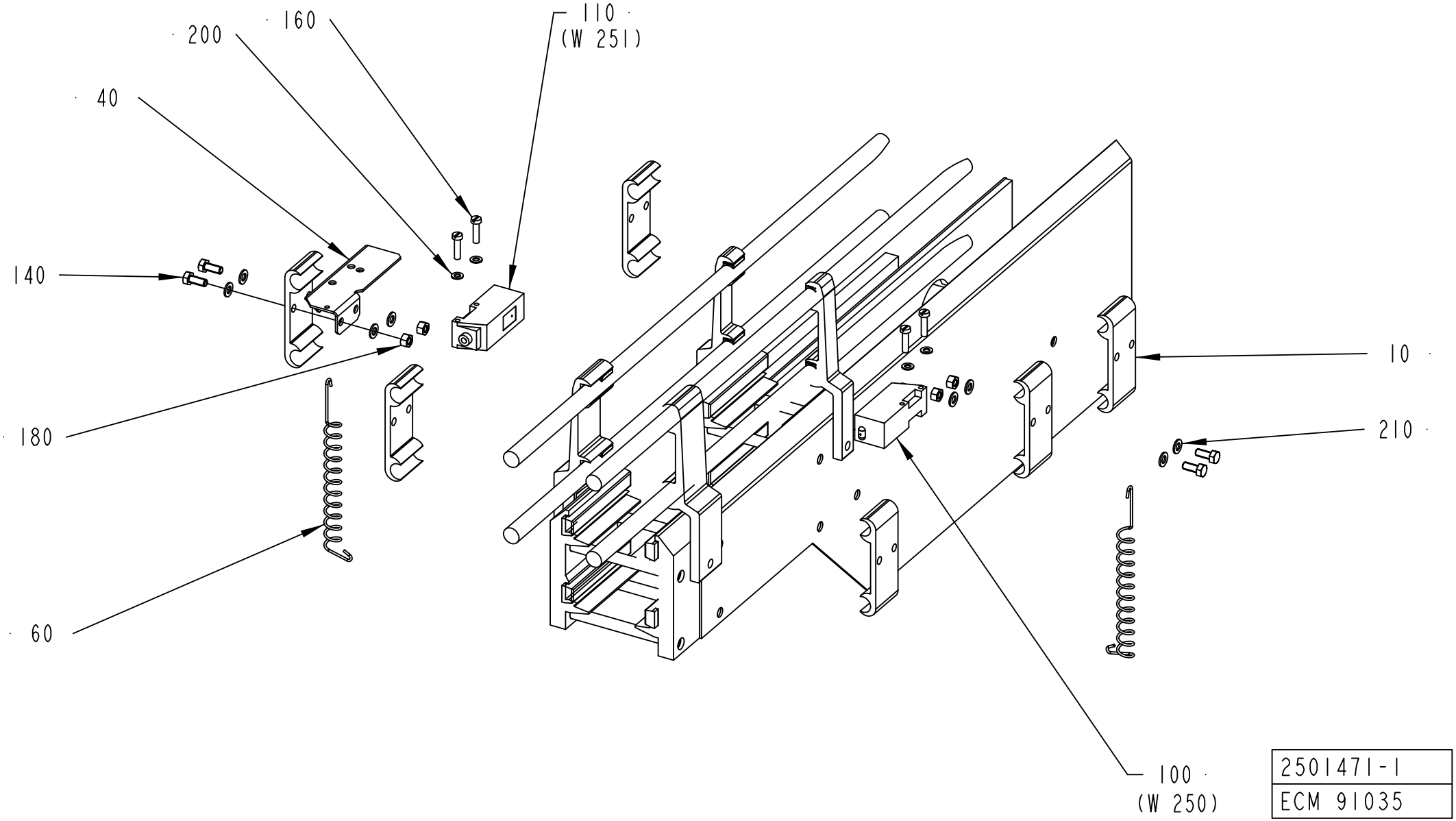

2501471-1
ECM 91035

ECM: 91092 - 20020514
Group number: 2501471-0100
Assembly Drawing: 2501471-1_1_AA

Pos	Part No	UN	Qty	Description	Page No
-					
010	1020637-0000		6	HOLDER	
030	1020638-0000		6	HOLDER	
040	1086888-0000		2	COVER	
060	532412-0000		2	SPRING	
070	1478659-0000		4	BRACKET	
140	312105-0327		16	SCREW, M6S ISO 4017 M5X12 A4 80	
150	312105-0323		2	SCREW, M6S ISO 4017 M5X8 A4 80	
160	312125-0293		4	SLOTTED HEAD SCREW, ISO1207 M4X16 A4	
180	312605-0314		16	HEXAGON NUT, M6M M5 A280	
190	312705-0314		2	NUT HEX. DOMED CAP MHM-6 M5 A280	
200	315105-0136		8	WASHER PLAIN, 4,3X9X0,8 A4 BRB	
210	315105-0146		12	WASHER PLAIN, 5,3X10X1 A4 BRB	
MB091B	90232-0104		1	PH.CELL E3S-CT61-D-5M	
MB091A	90232-0103		1	PH.CELL E3S-CT61-L-5M	

Pos	Part No	UN	Qty	Description	Page No

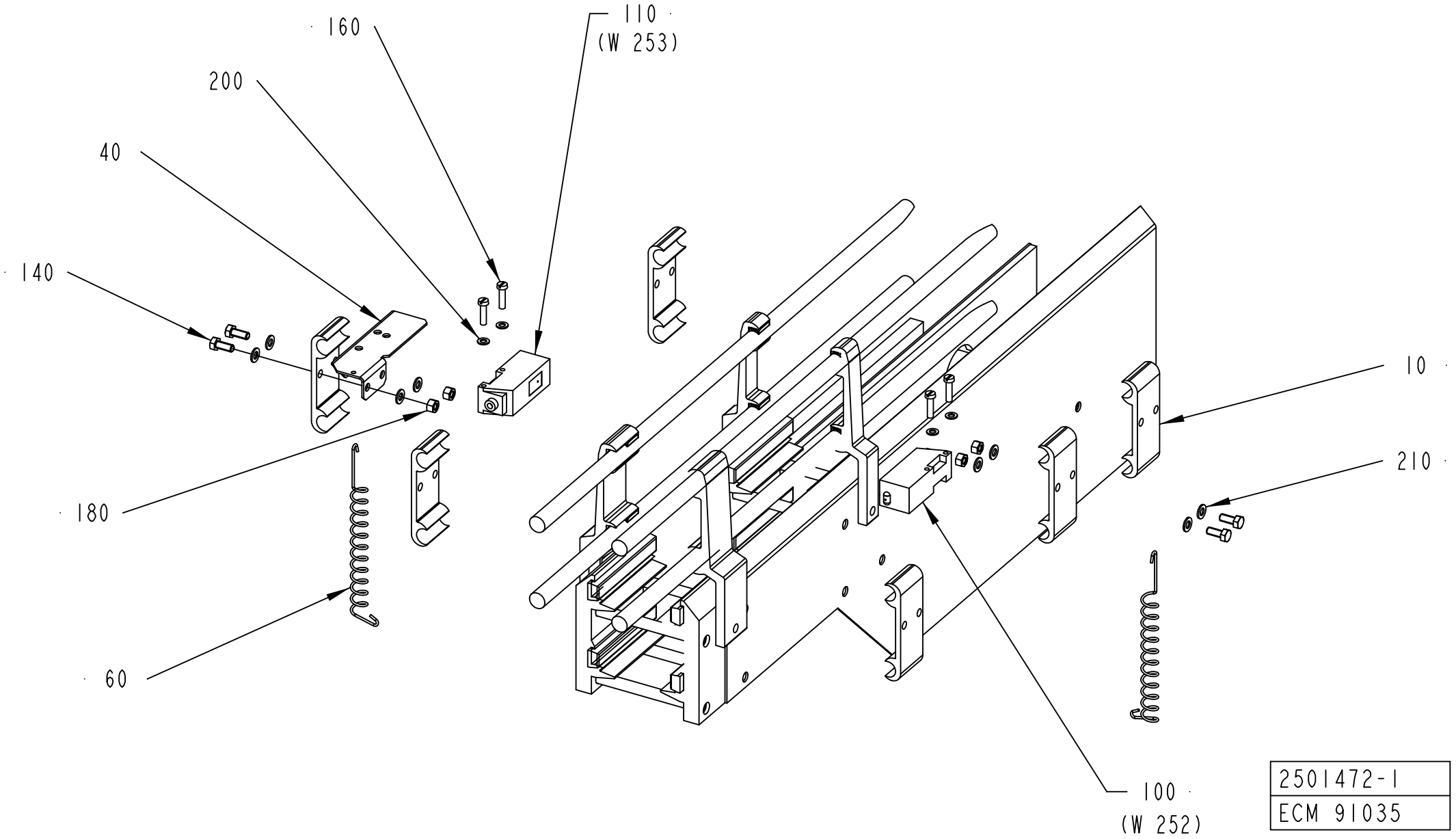

2501472-1
ECM 91035

ECM: 91093 - 20020514
Group number: 2501472-0100
Assembly Drawing: 2501472-1_1_AA

Pos	Part No	UN	Qty	Description	Page No
-					
010	1020637-0000		6	HOLDER	
030	1020638-0000		6	HOLDER	
040	1086888-0000		2	COVER	
060	532412-0000		2	SPRING	
070	1478659-0000		4	BRACKET	
140	312105-0327		16	SCREW, M6S ISO 4017 M5X12 A4 80	
150	312105-0323		2	SCREW, M6S ISO 4017 M5X8 A4 80	
160	312125-0293		4	SLOTTED HEAD SCREW, ISO1207 M4X16 A4	
180	312605-0314		16	HEXAGON NUT, M6M M5 A280	
190	312705-0314		2	NUT HEX. DOMED CAP MHM-6 M5 A280	
200	315105-0136		8	WASHER PLAIN, 4,3X9X0,8 A4 BRB	
210	315105-0146		12	WASHER PLAIN, 5,3X10X1 A4 BRB	
MB092B	90232-0104		1	PH.CELL E3S-CT61-D-5M	
MB092A	90232-0103		1	PH.CELL E3S-CT61-L-5M	

Pos	Part No	UN	Qty	Description	Page No

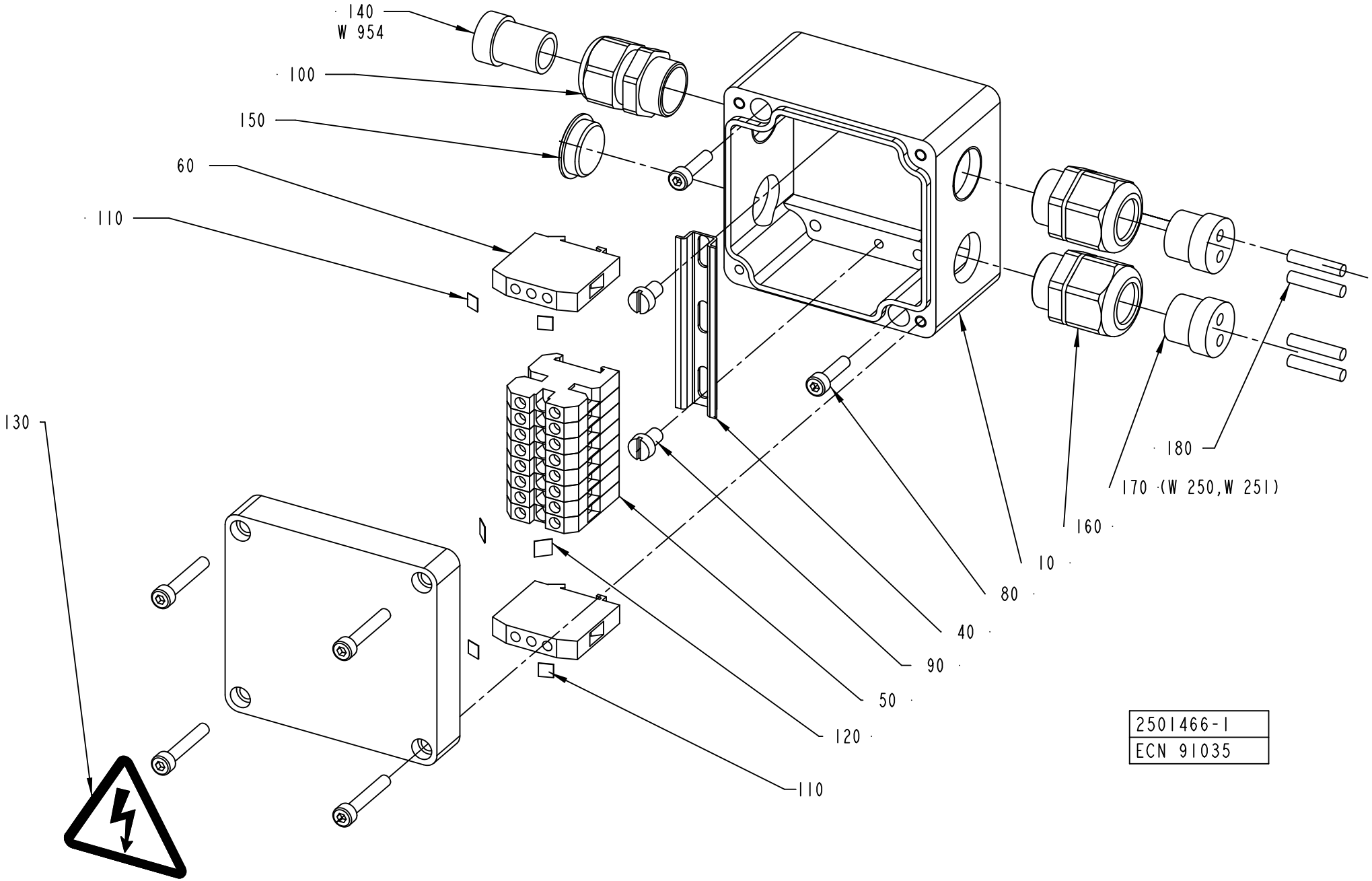
140
W 954
100
150
60
110
130
180
170 (W 250,W 251)
160
10
80
40
90
50
120
110
2501466-1
ECN 91035

ECM: 91048 - 20020514
Group number: 2501466-0100
Assembly Drawing: 2501466-1_1_AA

Pos	Part No	UN	Qty	Description	Page No
-					
010	1349568-0000		1	CONNECTION BOX	
040	90077-0328	M	65	RAIL, TS15/5	
050	90077-0079		8	TERMINAL PLINTH, AKZ 4	
060	90135-0026		2	EARTH TERMINAL AKE 4	
080	312115-0293		2	SCREW ISO4762 M4X16 A4 80	
090	312125-0323		2	SLOTTED HEAD SCREW, ISO1207 M5X8 A4	
100	353240-0002		1	COMPRESSION GLAND, VK 150Y	
110	359011-0819		4	MARKING, EARTH, DEK 5 GW ERDE I.KR.	
120	359011-0821		2	MARKING, DEK 6 FW 1-50	
130	359705-0015		1	WARNING SIGN ISO, RISK OF ELECTRIC SHOCK	
140	353249-0003		1	INSERT, SINGLE HOLE, E151 11	
150	90002-0009		1	BLANK-OFF PLUG, PR 18.6 SKINDICHT-BLK11	
160	353249-0036		2	INSERT, MULTI HOLE, EK152M 2X4	
160	353241-0002		2	COMPRESSION GLAND, VK 15152Y	
180	353249-0301		4	SEALING PIN, 4,0X20	
200	353001-0113		2	END SLEEVE 0,75MM2	
210	359000-0201		1	WIRE MARKING, YELLOW, PA02/3"1"	
220	359000-0204		1	WIRE MARKING, YELLOW, PA02/3"4"	
W954	351150-0405	M	20	CABLE OLFLEX 5X0,75 MM2 LIGHT/GREY	

Pos	Part No	UN	Qty	Description	Page No

Machine Type	Group Description	Used-In	Group Number	Page No

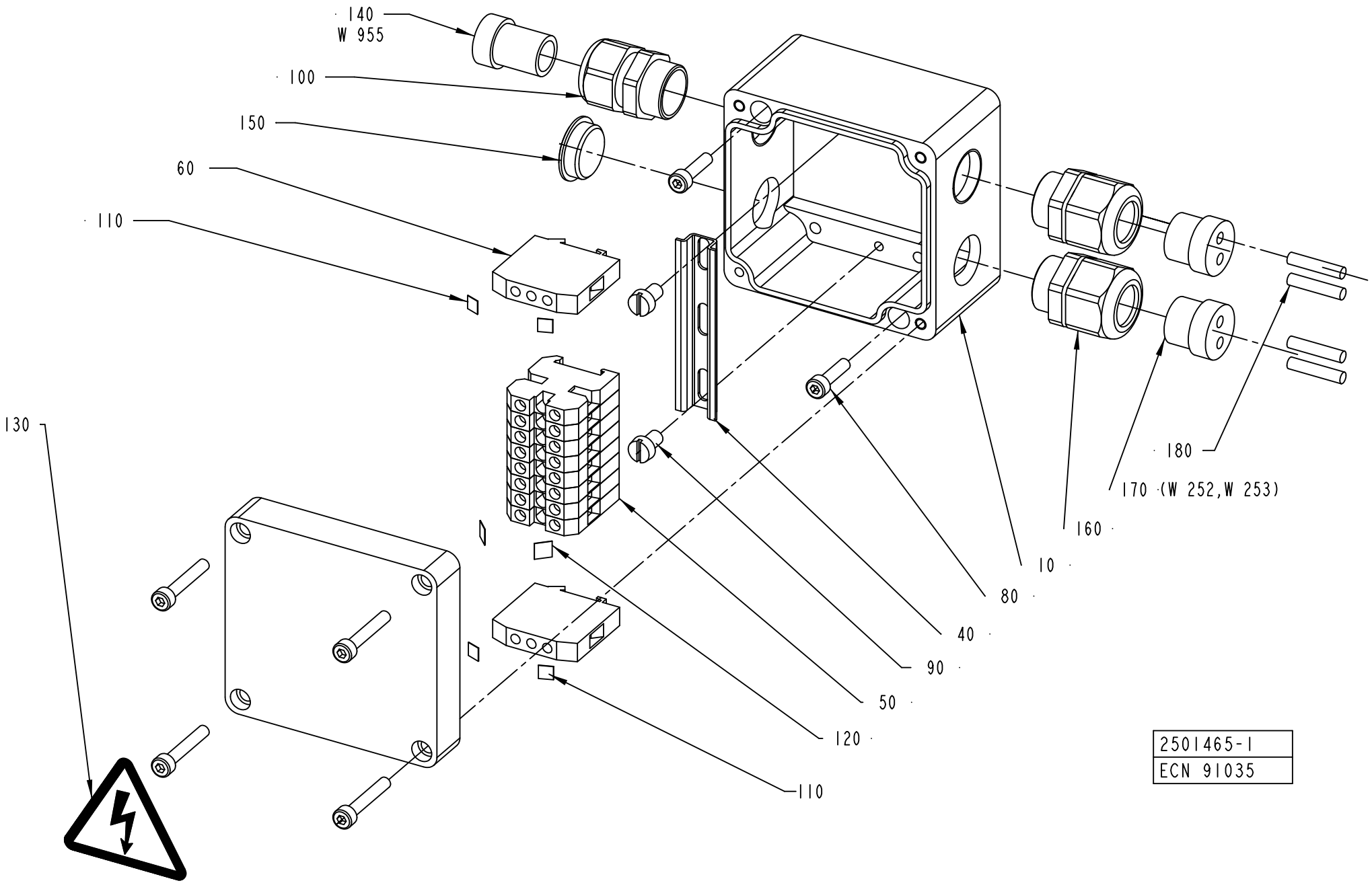
140
W 955
100
150
60
110
130
180
170 (W 252,W 253)
160
10
80
40
90
50
120
110
2501465-1
ECN 91035

ECM: 91047 - 20020514
Group number: 2501465-0100
Assembly Drawing: 2501465-1_1_AA

Pos	Part No	UN	Qty	Description	Page No
-					
010	1349568-0000		1	CONNECTION BOX	
040	90077-0328	MM	65	RAIL, TS15/5	
050	90077-0079		8	TERMINAL PLINTH, AKZ 4	
060	90135-0026		2	EARTH TERMINAL AKE 4	
080	312115-0293		2	SCREW ISO4762 M4X16 A4 80	
090	312125-0323		2	SLOTTED HEAD SCREW, ISO1207 M5X8 A4	
100	353240-0002		1	COMPRESSION GLAND, VK 150Y	
110	359011-0819		4	MARKING, EARTH, DEK 5 GW ERDE I.KR.	
120	359011-0821		2	MARKING, DEK 6 FW 1-50	
130	359705-0015		1	WARNING SIGN ISO, RISK OF ELECTRIC SHOCK	
140	353249-0003		1	INSERT, SINGLE HOLE, E151 11	
150	90002-0009		1	BLANK-OFF PLUG, PR 18.6 SKINDICHT-BLK11	
160	353241-0002		2	COMPRESSION GLAND, VK 15152Y	
170	353249-0036		2	INSERT, MULTI HOLE, EK152M 2X4	
180	353249-0301		4	SEALING PIN, 4,0X20	
200	353001-0113		2	END SLEEVE 0,75MM2	
210	359000-0201		1	WIRE MARKING, YELLOW, PA02/3"1"	
220	359000-0204		1	WIRE MARKING, YELLOW, PA02/3"4"	
W955	351150-0405	M	130	CABLE OLFLEX 5X0,75 MM2 LIGHT/GREY	

Pos	Part No	UN	Qty	Description	Page No

This page is intentionally left blank.

ECM: 335116 - 20071204
Group number: 2541886-0100
Assembly Drawing:

Pos	Part No	UN	Qty	Description	Page No
HVA					
040	1317640-0200		1	START-UP KIT	**11-37**
Common Parts					
010	295778-0600		1	START-UP KIT	**11-39**
020	469384-0200		1	START-UP KIT	**11-43**
030	295523-0500		1	START-UP KIT	**11-45**

Pos	Part No	UN	Qty	Description	Page No

This page is intentionally left blank.

ECM: 481483 - 20110401
Group number: 1317640-0200
Assembly Drawing:

Pos	Part No	UN	Qty	Description	Page No
-					
	90091-0266		5	SEAL RING 10,4X16,3X2,5 MM	
	90207-0363		2	GASKET 75X85X1,8 MM 3" FDA 3-A	
	90277-0333		1	GASKET KIT / ART.NO ACS 0325 EH	
	90321-0490		2	O-RING	
	90321-0491		1	O-RING, NAKAMURA A/CMXT 2500,3500 POS35	
	90321-0492		2	O-RING	
	90321-0493		2	O-RING	
	90321-0496		2	O-RING	
	90321-0498		1	O-RING	
	90321-0500		1	O-RING	
	90321-0504		2	O-RING, NAKAMURA AMXT 2500,3500 POS59	
	342800-1102		2	DIAPHRAGM, FDA PTFE/EPDM 5E, SEAT S. 10	
	3024322-0000		3	GASKET	
	3092163-0000		3	GASKET	
	3092164-0000		3	GASKET	

Pos	Part No	UN	Qty	Description	Page No

Machine Type | Group Description | Used-In | Group Number | Page No

This page is intentionally left blank.

ECM: 106020 - 20020514
Group number: 295778-0600
Assembly Drawing:

Pos	Part No	UN	Qty	Description	Page No
TBA 0100B, TBA 0125S, TBA 0160S, TBA 0200M, TBA 0200S, TBA 0250S, TPA 0250SQ, TWA 0125S, TWA 0200S, TPA 0200SQ					
030	272479-0000		1	PRESSURE ROLLER (10PCS)	
TBA 0200B, TBA 0200SQ, TBA 0284B, TBA 0250B, TBA 0300S, TBA 0330S, TPA 0330SQ					
020	257330-0000		1	PRESSURE ROLLER (10 PCS)	
Common Parts					
010	1296877-0100		1	SEAL KIT	**11-41**
040	441804-0000		1	COIL HEATER	
050	484197-0000		1	FILTER	
060	491418-0001		1	O-RING 284X3 FPM	
070	578494-0000		1	O-RING 226X5,7 FPM	
080	578495-0000		1	O-RING	
100	90206-0031		1	HEATING ELEMENT 700+1200W, 220V	
110	90206-0070		1	HEATING ELEMENT 6000W 380/220V	
	90269-0308		*1*	*GASKET 59X68X3 MM*	
	90206-0326		*1*	*CONNECTION BOX K2 FOR 90206-56 AND -70*	
120	90424-0304		1	GASKET	
130	927421-0006		1	O-RING 17.3X2.4 SILICONE	
140	927422-0003		1	O.RING 24.2X3 SILICONE	
150	927422-0008		1	O-RING 49.5X3 SILICONE	
160	925998-0000		6	DIAPHRAGM	
170	736514-0000		1	SHOCK ABSORBER	
180	90328-0026		3	SILENCER, G1/4"	
190	342850-0303		6	GASKET 22,7X49,1X5,2 MM 1" FDA, 3-A	
200	342850-0304		6	GASKET 35,4X49,1X5,2 1"1/2 FDA, 3-A	
210	342850-0305		2	GASKET 47,8X62,6X5,2 MM 2" FDA 3-A	
220	926822-0000		6	GASKET	
230	90458-0138		1	PROX.SWITCH E2EG-X1R5B1-5M	

Pos	Part No	UN	Qty	Description	Page No

This page is intentionally left blank.

ECM: 348443 - 20091001
Group number: 1296877-0100
Assembly Drawing:

Pos	Part No	UN	Qty	Description	Page No
-					
010	2826441-0000		4	SEAL RING	
020	2826440-0000		1	SEAL RING	
030	2826443-0000		1	DIAPHRAGM	
040	539212-0000		1	GASKET	
050	90091-0266		2	SEAL RING 10,4X16,3X2,5 MM	
060	90207-0363		1	GASKET 75X85X1,8 MM 3" FDA 3-A	
070	90207-0365		1	GASKET 53X63X1,8 MM 2,5" FDA 3-A	
100	315204-0215		1	O-RING 19,2X3 MM	
110	315204-0301		1	O-RING 49,5X3 MM	

Pos	Part No	UN	Qty	Description	Page No

This page is intentionally left blank.

ECM: 106107 - 20020514
Group number: 469384-0200
Assembly Drawing:

Pos	Part No	UN	Qty	Description	Page No
-					
010	90298-0019		1	DETERGENT, SU 118, 20 LITRES	
020	90144-0003	MM	1	TAPE	

Pos	Part No	UN	Qty	Description	Page No

Machine Type | Group Description | Used-In | Group Number | Page No

This page is intentionally left blank.

ECM: 428893 - 20091201
Group number: 295523-0500
Assembly Drawing:

Pos	Part No	UN	Qty	Description	Page No
TBA 0100B, TBA 0125S					
020	1110530-0000		2	INDUCTOR	
040	1520577-0001		20	DOLLY	
TBA 0160S, TBA 0200S					
020	1110532-0000		2	INDUCTOR	
055	1110391-0000		20	DOLLY	
TBA 0200B, TBA 0284B, TBA 0250B, TBA 0300S, TBA 0330S					
010	1110534-0000		2	INDUCTOR	
055	1110391-0000		20	DOLLY	
TBA 0200M, TBA 0250S					
028	1110535-0000		2	INDUCTOR	
055	1110391-0000		20	DOLLY	
TBA 0200SQ					
010	1520078-0000		2	INDUCTOR	
055	1110391-0000		20	DOLLY	
TPA 0250SQ, TPA 0200SQ					
025	1110706-0000		2	INDUCTOR	
055	1110391-0000		20	DOLLY	
TPA 0330SQ					
010	1110556-0000		2	INDUCTOR	
055	1110391-0000		20	DOLLY	
TWA 0125S					
020	1566762-0000		2	INDUCTOR	
040	1566761-0000		20	DOLLY	
TWA 0200S					
020	1110532-0000		2	INDUCTOR	
060	1566802-0000		20	DOLLY	

Pos	Part No	UN	Qty	Description	Page No

This page is intentionally left blank.

ECM: 341766 - 20080603
Group number: 579899-0000
Assembly Drawing:

Pos	Part No	UN	Qty	Description	Page No
-					
	311521-0144		4	RIVET, BLANK 3,2X10	
	593684-0000		1	LIFTING DEVICE SIGN EEA(CE-MARK)	

Pos	Part No	UN	Qty	Description	Page No

Tetra Pak

SPC
Spare Parts Catalogue

This page is intentionally left blank.

ECM: 420401 - 20100222
Group number: 648119-1400
Assembly Drawing:

Pos	Part No	UN	Qty	Description	Page No
-					
	3027749-0100		1	TRANSPORT BOX	12-5
	77093-0200		1	TRIMMING PARTS	12-7
	77091-0700		1	OPTIONAL PARTS	12-9
	77092-0700		1	SERVICE PARTS	12-27
	77094-0400		1	PRODUCTION PARTS	12-159

Pos	Part No	UN	Qty	Description	Page No

This page is intentionally left blank.

ECM: 439235 - 20100222
Group number: 3027749-0100
Assembly Drawing:

Pos	Part No	UN	Qty	Description	Page No
-					
	3019228-0000		1	TRANSPORT BOX TBA/19	
	3019229-0000		1	TRANSPORT BOX PT/19	
	3019230-0000		1	TRANSPORT BOX ASU	
	3019231-0000		1	TRANSPORT BOX FLIGHT	
	3019232-0000		1	TRANSPORT BOX FLIGHT	

Pos	Part No	UN	Qty	Description	Page No

This page is intentionally left blank.

ECM: 70639 - 19970624
Group number: 77093-0200
Assembly Drawing:

Pos	Part No	UN	Qty	Description	Page No
TBA 0100B, TBA 0125S					
180	752466-0000		3	TRIMMING ROLLER PLUS	
190	752467-0000		3	TRIMMING ROLLER MINUS	
TBA 0160S, TBA 0200S					
160	752464-0000		3	TRIMMING ROLLER PLUS	
170	752465-0000		3	TRIMMING ROLLER MINUS	
TBA 0200B, TBA 0284B, TBA 0250B, TBA 0300S, TBA 0330S					
140	752462-0000		3	TRIMMING ROLLER PLUS	
150	752463-0000		3	TRIMMING ROLLER MINUS	
TBA 0200M, TBA 0250S					
200	574446-0000		3	TRIMMING ROLLER PLUS	
210	574447-0000		3	TRIMMING ROLLER MINUS	
TPA 0330SQ					
220	929282-0000		3	TRIMMING ROLLER PLUS	
230	929283-0000		3	TRIMMING ROLLER MINUS	

Pos	Part No	UN	Qty	Description	Page No

Machine Type | Group Description | Used-In | Group Number | Page No

This page is intentionally left blank.

ECM: 420402 - 20100222
Group number: 77091-0700
Assembly Drawing:

Pos	Part No	UN	Qty	Description	Page No
-					
0220	90245-0024		1	MATCHING TRANSF. 65 KVA SEC 93,4A	
0240	90048-0022		1	MANUAL PUMP INCL. BARROW 50-60 L	
	90048-0448		*1*	*REPAIR KIT, 1115487*	
0260	2538621-0100		1	ROUNDED DOLLY	**12-11**
0280	90600-5337		1	HARDDISK COPY TOOL, 03607-001	
F005	456975-0200		1	TOOL CABINET	**12-13**
F040	1350148-0100		1	MACHINE CARRIAGE	**12-15**
F070	533014-0100		1	LEAK FINDING EQUIPMENT (SUPERSTRUCTURE)	**12-17, 12-19**
F155	529345-0100		1	FILLING STATION H2O2	**12-23**
F160	532210-0100		1	PEROXIDE CONTAINER TROLLEY	**12-25**

Pos	Part No	UN	Qty	Description	Page No

This page is intentionally left blank.

ECM: 92422 - 20020417
Group number: 2538621-0100
Assembly Drawing:

Pos	Part No	UN	Qty	Description	Page No
TBA 0160S, TBA 0200M, TBA 0200B, TBA 0200SQ, TBA 0200S, TBA 0250S, TBA 0284B, TBA 0250B, TBA 0300S, TBA 0330S, TPA 0330SQ, TPA 0250SQ, TWA 0200S, TPA 0200SQ					
	1110378-0001		4	DOLLY	
Common Parts					
	1110378-0001		4	DOLLY	

Pos	Part No	UN	Qty	Description	Page No

This page is intentionally left blank.

ECM: - -
Group number: 456975-0200
Assembly Drawing:

Pos	Part No	UN	Qty	Description	Page No
-					
035	36489-0000		1	ASSEMBLY TOOL	
040	77221-0000		1	TIGHTENING TOOL	
080	90226-0004		1	CABINET	
100	90278-0001		1	PUMP	
110	90279-0001		1	OIL CAN 0,4L, 42AM FLEX	
115	90243-0136		1	SPIRIT LEVEL	
125	315202-0224		1	O-RING 42,2X3 MM	
150	776422-0101		2	BRASS WIRE BRUSH	
160	777100-0113		1	SCREW DRIVER	
170	777100-0184		1	SCREW DRIVER	
330	777510-0101		1	SCISSORS	
400	772220-0100		1	ASSEMBLY T VOMO 6-L	
410	772220-0101		1	ASSEMBLY T VOMO 8-L	
420	772220-0103		1	ASSEMBLY T VOMO 12-L	
430	772220-0104		1	ASSEMBLY T VOMO 15-L	

Pos	Part No	UN	Qty	Description	Page No

MACHINE CARRIAGE

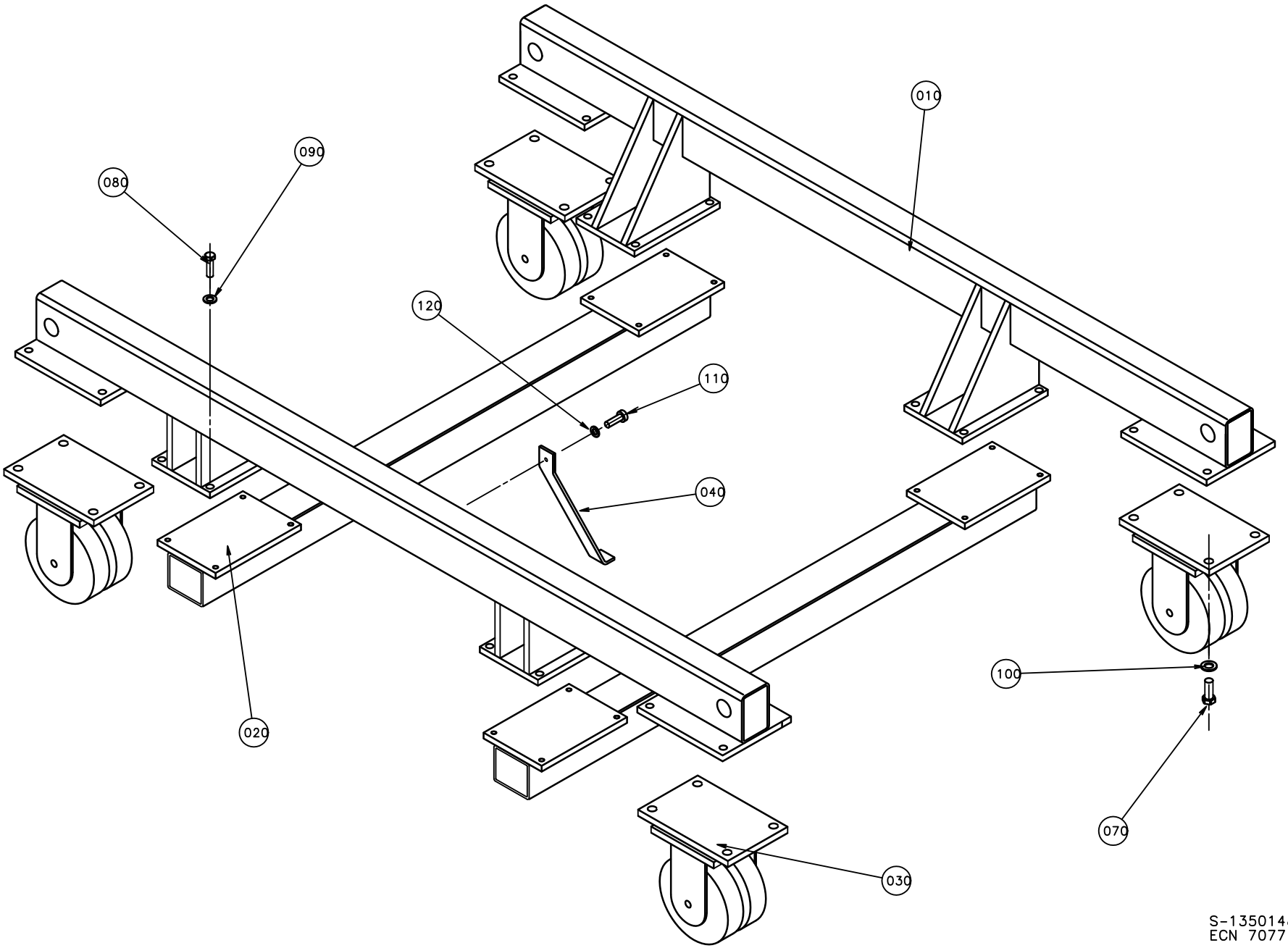

ECM: 70771 - 19971217
Group number: 1350148-0100
Assembly Drawing: 1350148-1_1_AA

Pos	Part No	UN	Qty	Description	Page No
-					
010	1350149-0000		2	BEAM	
020	1350150-0000		2	BEAM	
030	1140840-0000		4	WHEEL	
040	1334184-0000		4	BRACKET	
070	312105-0538		16	SCREW, M6S ISO 4017 M12X35 A4 80	
080	312105-0630		16	SCREW, M6S ISO 4017 M16X50 A4 80	
090	315105-0178		16	WASHER PLAIN, 13X24X2,5 A4 BRB	
100	315105-0186		16	WASHER PLAIN, 17X30X3 A4 BRB	
110	312105-0451		4	SCREW, M6S ISO 4017 M8X20 A4 80	
120	315105-0165		4	WASHER PLAIN, 8,4X16X1,6 A4 BRB	

Pos	Part No	UN	Qty	Description	Page No

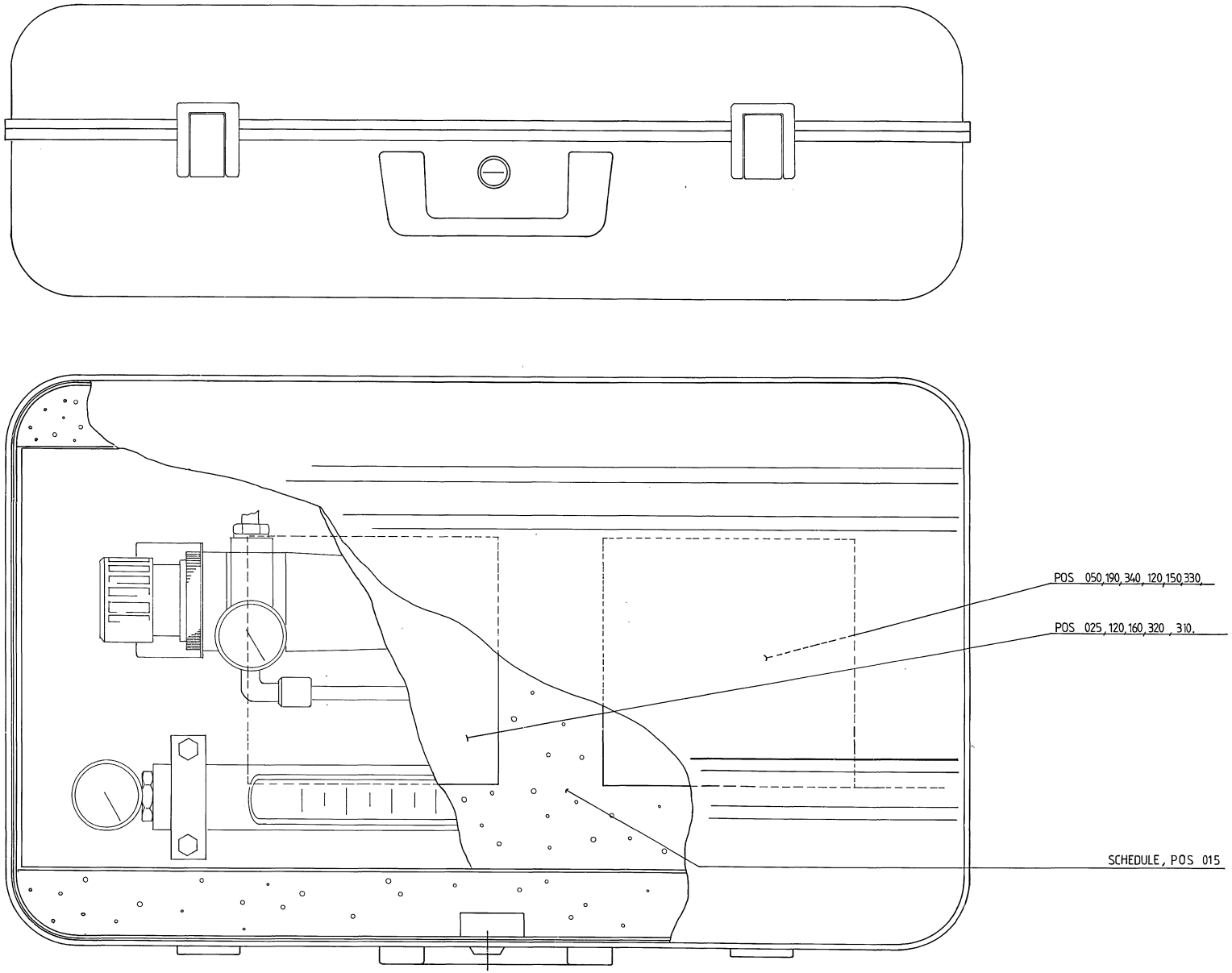
POS 050,190,340, 120,150,330,
POS 025, 120, 160, 320 , 310,
SCHEDULE, POS 015

ECM: 401587 - 20090601
Group number: 533014-0100
Assembly Drawing: 533014-1_1_AA

This list covers pages from 12-16 to 12-19

Pos	Part No	UN	Qty	Description	Page No
-					
010	532676-0000		1	SHEET	
010	533905-0100		1	PONCH	**12-21**
015	533015-0000		1	WIRING DIAGRAM	
020	1360399-0000		4	PIPE HOLDER	
025	493735-0000		1	NIPPLE	
030	532677-0000		1	PIPE	
040	532678-0000		1	DOWEL	
050	532679-0000		1	PLATE	
060	90030-0223		1	BUSHING, INT.EXT. R1/2-R1/4	
070	90030-0224		1	NIPPLES, EXT. THREAD, HEXAGON, NO. 2511	
075	90030-0225		2	BUSHING, INT/EXT. R-THREAD 1/4X3/8	
080	90043-0021		1	PRESSURE GAUGE, 2041 D=40 MM	
090	90043-0043		1	PRESSURE GAUGE, 2041D=40 MM	
100	90113-0059		1	FILTER REGULATOR 50UM, B08-396-A3MG	
110	90140-0015		1	T-PIPE, INT. THREAD, 2003-1/8	
120	90163-0056		2	QUICK COUPLING, (F) 5054-6/4	
130	90163-0057		1	QUICK COUPLING, (M) 5150-1/8	
140	90163-0087		1	QUICK COUPLING, (M) 5150-1/4	
150	90166-0124	MM	1250	TUBE 6 MM PA,TRANSP.	
160	90166-0124	MM	1250	TUBE 6 MM PA,TRANSP.	
170	90224-0303		2	CONN. ELBOW 1020-8-1/4	
172	90113-0384		1	BRACKET FOR R11, 5203-06	
175	90243-0137		1	PRESSURE GAUGE KIT 0-50 MM WC, 229900	
180	90243-0147		1	FLOW METER	
190	90330-0029		1	PLUG, G3/8EXT, R-236R3/8	
200	312105-0325		2	SCREW, M6S ISO 4017 M5X10 A4 80	
210	312105-0383		4	SCREW, M6S ISO 4014 M6X65 A4 80	
220	312602-0312		1	HEXAGON NUT, EN 24032 M6M M4 NIPLBR	
230	312605-0314		2	HEXAGON NUT, M6M M5 A280	
240	312605-0316		4	HEXAGON NUT, M6M M6 A280	
250	315103-0136		1	WASHER PLAIN, 4,3X8X0,8 BR NI PL	
260	315105-0146		4	WASHER PLAIN, 5,3X10X1 A4 BRB	
270	315105-0153		8	WASHER PLAIN, 6,4X12X1,5 A4 BRB	
280	315233-0109		2	WASHER CAPTIVE SEALING G1/8	
290	315233-0110		1	WASHER CAPTIVE SEALING G1/4	
295	315233-0111		2	WASHER CAPTIVE SEALING G3/8	
300	315233-0113		2	WASHER CAPTIVE SEALING G1/2	
310	342921-0113		1	STRAIGHT COUPLING, EXT.THREAD 6/4-G1/8	
320	342921-0114		1	STRAIGHT COUPLING, EXT.THREAD 6/4-G1/4	
330	342980-0114		1	HOSE FITTING, BANJO RING L PO G1/4 6/4	
340	342980-0314		1	BANJO-HOLLOW BOLT COUPL,EXT.THR.02-G1/4	
350	342701-0201		1	BUSHING, INT/EXT, G1/4-G1/8	

Machine Type | Group Description | Used-In | Group Number | Page No

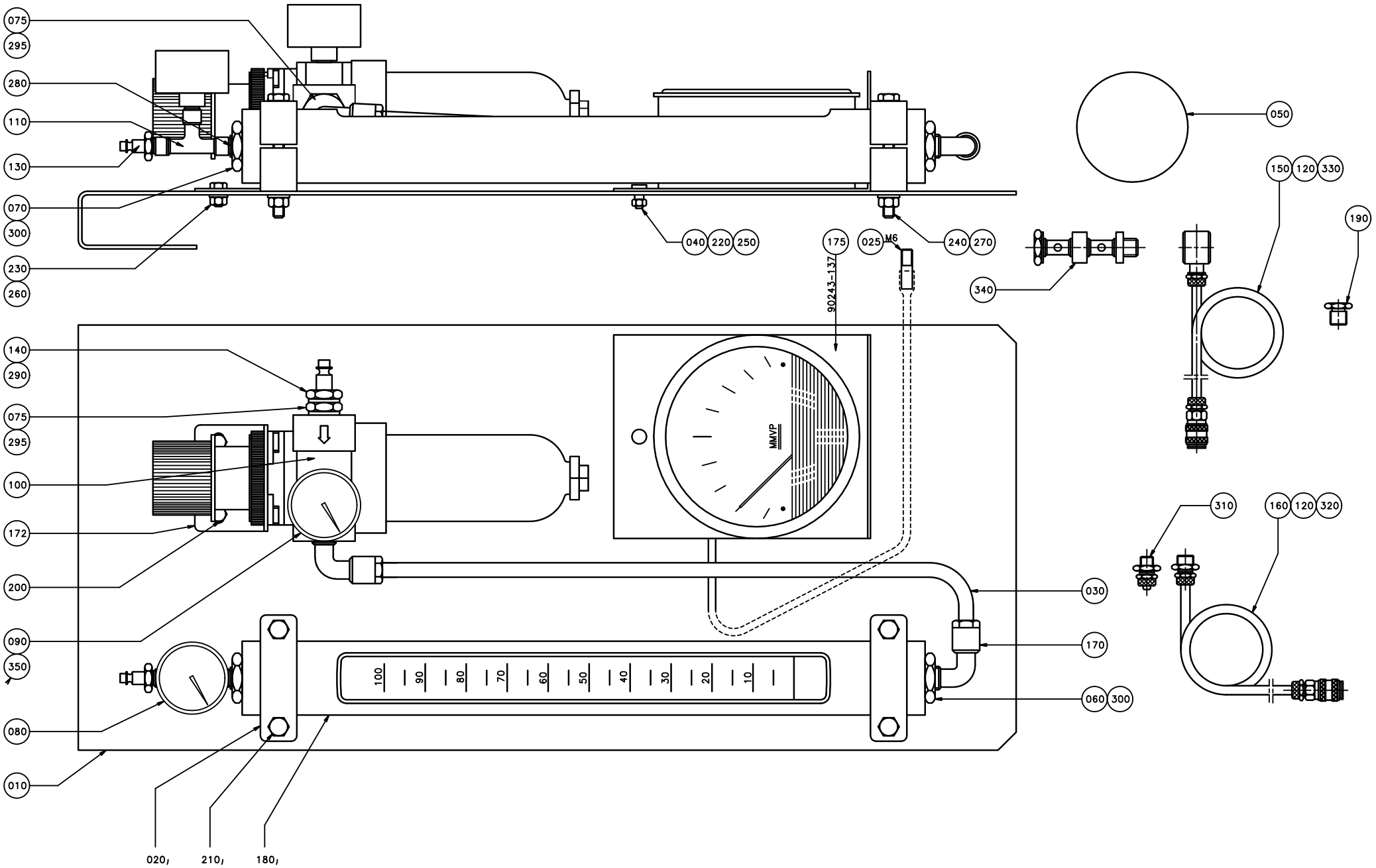
075
295
280
110
130
070
300
230
260
040
220
250
175
025
M6
240
270
90243-137
050
150
120
330
190
340
140
290
075
295
100
172
200
090
350
080
010
020
210
180
MMVP
030
170
060
300
310
160
120
320
100
90
80
70
60
50
40
30
20
10

ECM: 401587 - 20090601
Group number: 533014-0100
Assembly Drawing: 533014-2_1_AB

This list covers pages from 12-16 to 12-19

Pos	Part No	UN	Qty	Description	Page No
-					
010	532676-0000		1	SHEET	
010	533905-0100		1	PONCH	**12-21**
015	533015-0000		1	WIRING DIAGRAM	
020	1360399-0000		4	PIPE HOLDER	
025	493735-0000		1	NIPPLE	
030	532677-0000		1	PIPE	
040	532678-0000		1	DOWEL	
050	532679-0000		1	PLATE	
060	90030-0223		1	BUSHING, INT.EXT. R1/2-R1/4	
070	90030-0224		1	NIPPLES, EXT. THREAD, HEXAGON, NO. 2511	
075	90030-0225		2	BUSHING, INT/EXT. R-THREAD 1/4X3/8	
080	90043-0021		1	PRESSURE GAUGE, 2041 D=40 MM	
090	90043-0043		1	PRESSURE GAUGE, 2041D=40 MM	
100	90113-0059		1	FILTER REGULATOR 50UM, B08-396-A3MG	
110	90140-0015		1	T-PIPE, INT. THREAD, 2003-1/8	
120	90163-0056		2	QUICK COUPLING, (F) 5054-6/4	
130	90163-0057		1	QUICK COUPLING, (M) 5150-1/8	
140	90163-0087		1	QUICK COUPLING, (M) 5150-1/4	
150	90166-0124	MM	1250	TUBE 6 MM PA,TRANSP.	
160	90166-0124	MM	1250	TUBE 6 MM PA,TRANSP.	
170	90224-0303		2	CONN. ELBOW 1020-8-1/4	
172	90113-0384		1	BRACKET FOR R11, 5203-06	
175	90243-0137		1	PRESSURE GAUGE KIT 0-50 MM WC, 229900	
180	90243-0147		1	FLOW METER	
190	90330-0029		1	PLUG, G3/8EXT, R-236R3/8	
200	312105-0325		2	SCREW, M6S ISO 4017 M5X10 A4 80	
210	312105-0383		4	SCREW, M6S ISO 4014 M6X65 A4 80	
220	312602-0312		1	HEXAGON NUT, EN 24032 M6M M4 NIPLBR	
230	312605-0314		2	HEXAGON NUT, M6M M5 A280	
240	312605-0316		4	HEXAGON NUT, M6M M6 A280	
250	315103-0136		1	WASHER PLAIN, 4,3X8X0,8 BR NI PL	
260	315105-0146		4	WASHER PLAIN, 5,3X10X1 A4 BRB	
270	315105-0153		8	WASHER PLAIN, 6,4X12X1,5 A4 BRB	
280	315233-0109		2	WASHER CAPTIVE SEALING G1/8	
290	315233-0110		1	WASHER CAPTIVE SEALING G1/4	
295	315233-0111		2	WASHER CAPTIVE SEALING G3/8	
300	315233-0113		2	WASHER CAPTIVE SEALING G1/2	
310	342921-0113		1	STRAIGHT COUPLING, EXT.THREAD 6/4-G1/8	
320	342921-0114		1	STRAIGHT COUPLING, EXT.THREAD 6/4-G1/4	
330	342980-0114		1	HOSE FITTING, BANJO RING L PO G1/4 6/4	
340	342980-0314		1	BANJO-HOLLOW BOLT COUPL,EXT.THR.02-G1/4	
350	342701-0201		1	BUSHING, INT/EXT, G1/4-G1/8	

Machine Type | Group Description | Used-In | Group Number | Page No

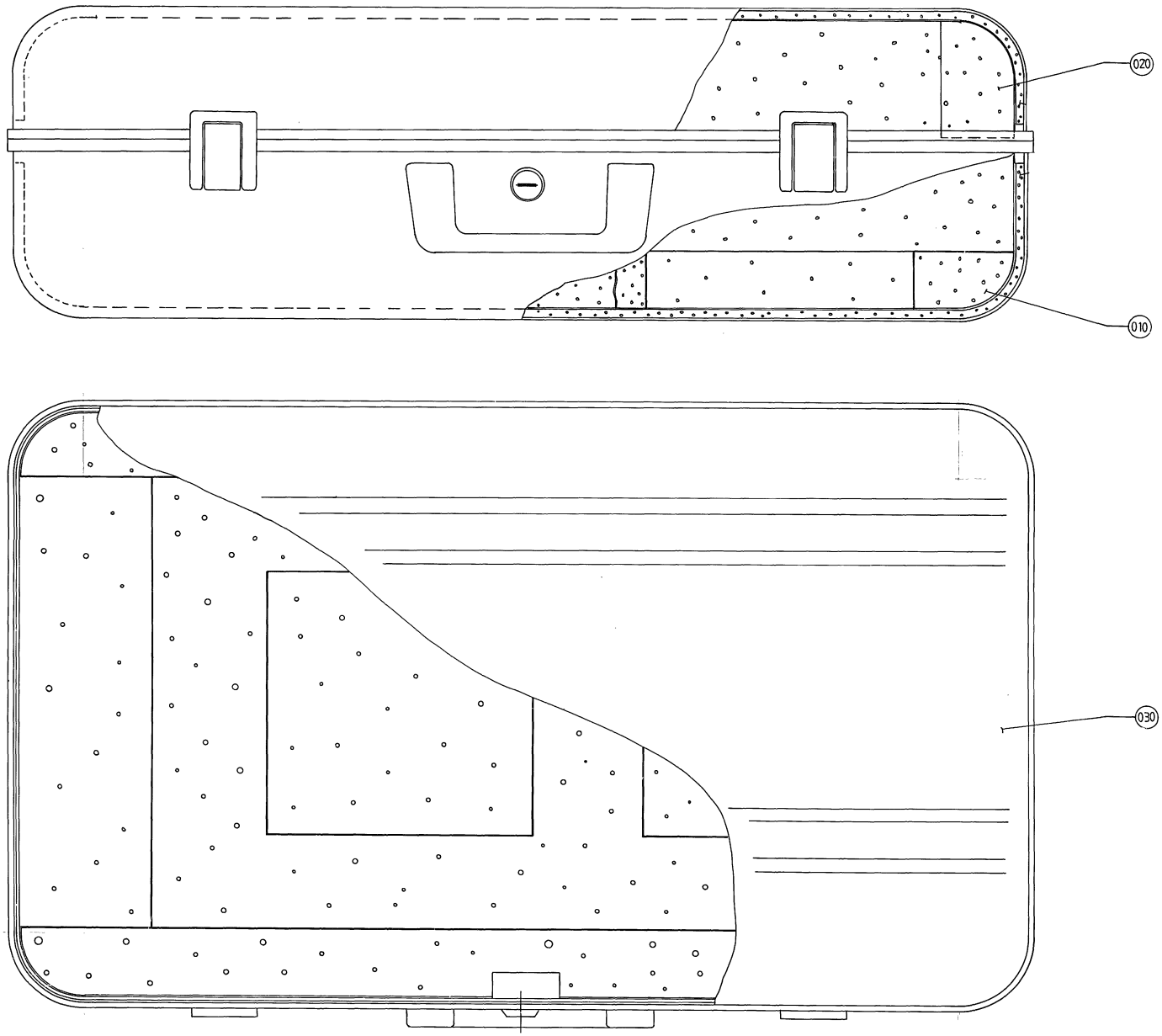
020
010
030

ECM: - -
Group number: 533905-0100
Assembly Drawing: 533905-1_1_AA

Pos	Part No	UN	Qty	Description	Page No
-					
010	533374-0000		1	FITMENT BOTTOM	
020	533906-0000		1	FITMENT COVER	
030	90243-0118		1	TOOL BOX, NO. ZERO 105X-SI	

Pos	Part No	UN	Qty	Description	Page No

FILLING STATION H2O2

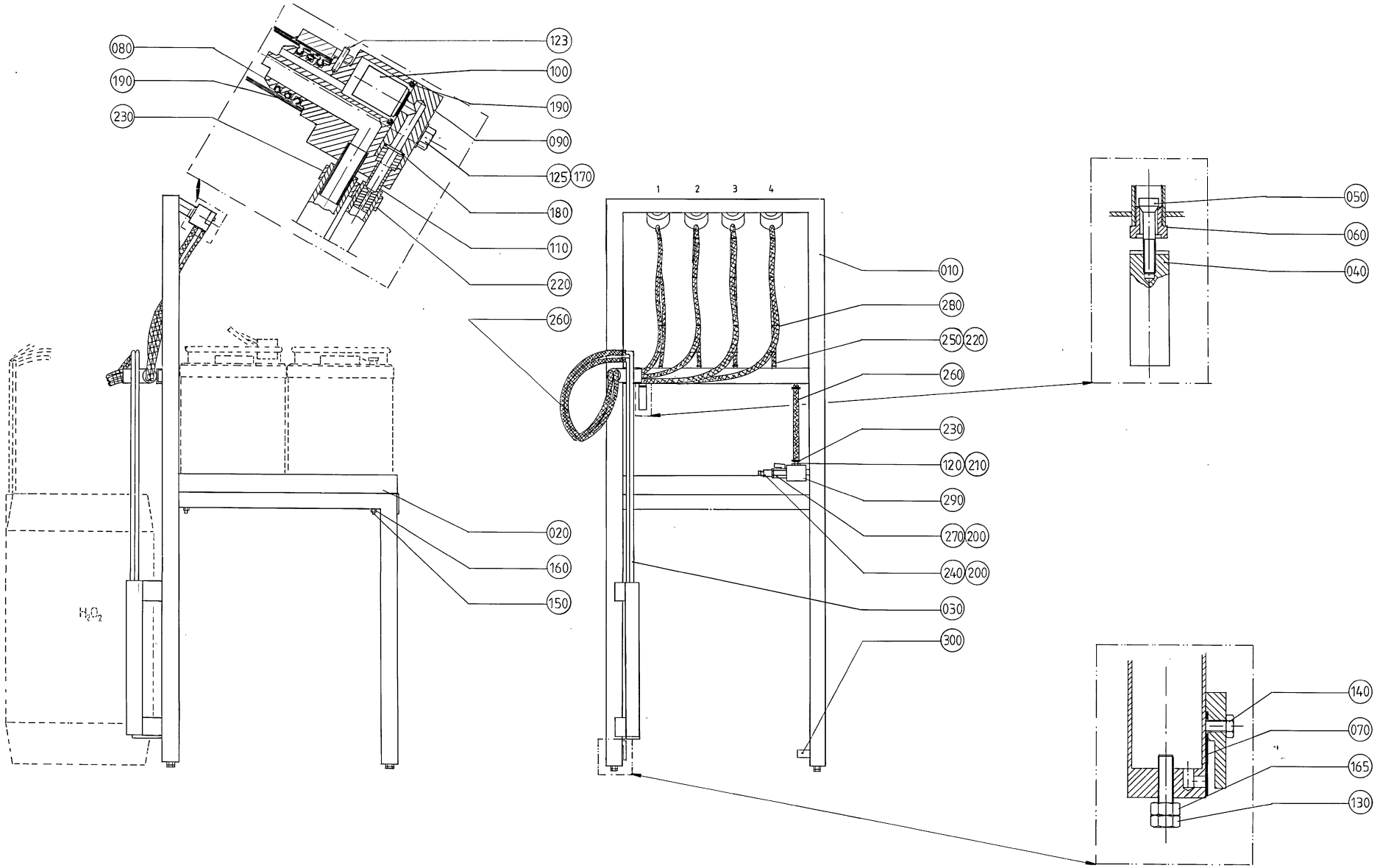

ECM: 384880 - 20090126
Group number: 529345-0100
Assembly Drawing: 529345-1_1_AA

Pos	Part No	UN	Qty	Description	Page No
-					
010	534692-0000		1	FRAME SECTION	
020	534693-0000		1	PLATE	
030	534694-0000		1	SUCTIONPIPE	
040	534695-0000		1	WEIGHT	
050	534696-0000		1	VALVE	
060	534697-0000		1	VALVE HOUSING	
070	534691-0000		1	DIAPHRAGM	
080	534637-0000		4	ATTACHMENT	
090	534636-0000		4	LEVEL GLAS	
100	534635-0000		4	VALVE	
110	534634-0000		4	PIPE	
120	534698-0000		1	NIPPLE	
123	311103-0235		1	PARALLEL PIN ISO 2338 3M6X14 A1	
125	312105-0374		8	SCREW, M6S ISO 4014 M6X30 A4 80	
130	312105-0455		4	SCREW, M6S ISO 4017 M8X30 A4 80	
140	312125-0327		1	SLOTTED HEAD SCREW, ISO1207 M5X12 A4	
150	312145-0380		4	SCREW ISO 2009 MFS M6X50 A4	
160	312812-0316		4	HEXAGON NUT, NY-LOCK M6 A4 80	
165	312605-0318		4	HEXAGON NUT, M6M M8 A280	
170	315105-0153		8	WASHER PLAIN, 6,4X12X1,5 A4 BRB	
180	927421-0005		4	O-RING 7.3X2.4 SILICONE	
190	927422-0001		16	O-RING 19.2X3 SILICONE	
200	315233-0110		2	WASHER CAPTIVE SEALING G1/4	
210	315233-0113		2	WASHER CAPTIVE SEALING G1/2	
220	342991-0100		8	HOSE CLIP,WORM DRIVE TYPE (8)-14	
230	342991-0101		10	HOSE CLIP,WORM DRIVE TYPE (11)-17	
240	90163-0007		1	CONNECTION	
250	90166-0045	MM	3500	HOSE PVC TRANSP. 6/12	
260	90166-0113	MM	7500	HOSE	
270	90187-0045		1	BALL VALVE, G1/4 CR PL	
280	352113-0102		30	CABLE TIE, BLACK 188X4,8 MM	
290	90425-0016		1	MECMAN TYPE E120 735-120-000	
300	90328-0025		1	SILENCER G1/2"	

Pos	Part No	UN	Qty	Description	Page No

Machine Type | Group Description | Used-In | Group Number | Page No

PEROXIDE CONTAINER TROLLEY

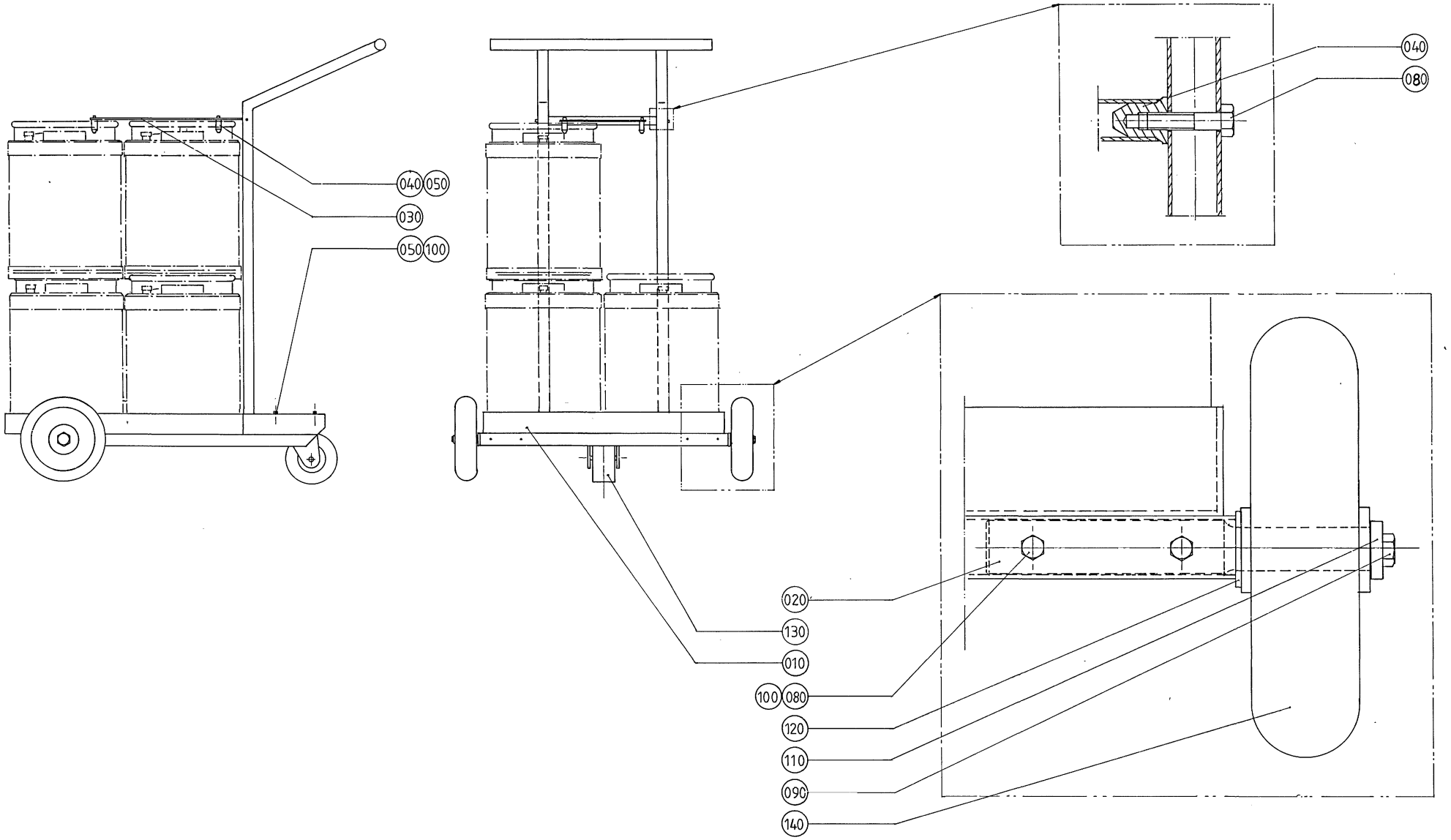

ECM: 384881 - 20090126
Group number: 532210-0100
Assembly Drawing: 532210-1_1_AA

Pos	Part No	UN	Qty	Description	Page No
-					
010	273985-0000		1	CARRIAGE	
020	532208-0000		2	SHAFT	
030	532209-0000		1	SHEET	
040	532211-0000		6	DOWEL	
050	312105-0449		8	SCREW, M6S ISO 4017 M8X16 A4 80	
080	312105-0459		6	SCREW, M6S ISO 4014 M8X40 A4 80	
090	312105-0491		2	SCREW, M6S ISO 4017 M10X20 A4 80	
100	312605-0318		4	HEXAGON NUT, M6M M8 A280	
110	315115-0173		2	WASHER PLAIN, TBRB 10,5/22 H=4	
120	315105-0192		2	WASHER PLAIN, 21X36X3 A4 BRB	
130	90191-0060		1	CASTOR WHEEL, NO. 1599PRT	
140	90191-0047		2	WHEEL, NO.798 821	

Pos	Part No	UN	Qty	Description	Page No

This page is intentionally left blank.

ECM: 486283 - 20110110
Group number: 77092-0700
Assembly Drawing:

Pos	Part No	UN	Qty	Description	Page No
TBA 0100B, TBA 0125S					
030	75525-0400		1	TEMPLATE	**12-29, 12-31**
080	76133-0100		1	TEMPLATE LS-ELEMENT	**12-39**
230	76187-0000		1	TEMPLATE FILLING TUBE	
TBA 0160S, TBA 0200S					
030	75525-0400		1	TEMPLATE	**12-29, 12-31**
080	76606-0100		1	TEMPLATE LS-ELEMENT	**12-41**
230	76188-0000		1	TEMPLATE FILLING TUBE	
TBA 0200B, TBA 0284B, TBA 0250B, TBA 0300S, TBA 0330S					
030	75525-0400		1	TEMPLATE	**12-29, 12-31**
080	76595-0100		1	TEMPLATE LS-ELEMENT	**12-43**
230	76398-0000		1	TEMPLATE	
240	76467-0000		1	TEMPLATE	
TBA 0200M, TBA 0250S					
030	75525-0400		1	TEMPLATE	**12-29, 12-31**
080	590222-0200		1	TEMPLATE LS-ELEMENT	**12-45**
230	574453-0000		1	TEMPLATE	
TPA 0250SQ, TPA 0200SQ					
030	1348383-0100		1	TEMPLATE	**12-47, 12-49, 12-51, 12-53, 12-55, 12-57**
080	76606-0100		1	TEMPLATE LS-ELEMENT	**12-41**
TPA 0330SQ					
030	1348383-0100		1	TEMPLATE	**12-47, 12-49, 12-51, 12-53, 12-55, 12-57**
080	76595-0100		1	TEMPLATE LS-ELEMENT	**12-43**
230	929278-0000		1	TEMPLATE	
Common Parts					
010	76600-0200		1	SETTING TOOL	**12-71**
015	577427-0100		1	MACH.ALIG.TOOLS+LASER EQ.	**12-103**
020	76350-0200		1	SETTING TOOL	**12-105**
040	74767-0102		1	DYNAMOMETER	**12-119**
050	75466-0300		1	SETTING TOOL	**12-121**
060	75467-0200		1	SETTING TOOL CURVES	**12-123**
070	76416-0100		1	CLAMPING PIECE	**12-125**
090	76175-0100		1	PULLER	**12-127**
100	77165-0100		1	EXTRACTOR	**12-129**
110	449969-0100		1	TOOL DISMOUNTING	**12-131**
120	565536-0100		1	PRESSURE TEST EQUIPMENT	**12-133**
130	2949471-0100		1	TOOL FOR JAW OVERLOAD	**12-135**
180	590509-0100		1	RING	**12-137**
190	74305-0100		1	PULLER	**12-139**
255	79003-0000		1	PROTECTION PLATE	
260	76128-0000		1	TEMPLATE	
270	752099-0000		1	PASSIVATINGSEAL	
280	76602-0000		1	GAUGE	
290	79201-0000		2	EXTRACTOR BOLT	
300	1348968-0000		1	PLUG	
310	434448-0000		1	TOOL	
320	1517059-0000		1	SCREW	
330	1517060-0000		1	TOOL	
350	2614370-0200		1	SERVICE PARTS	**12-141**
360	90457-0948		1	ADAPTER CABLE KS 800-PC	
370	3137656-0100		1	PRESSURE GAUGE	**12-157**

Machine Type | Group Description | Used-In | Group Number | Page No

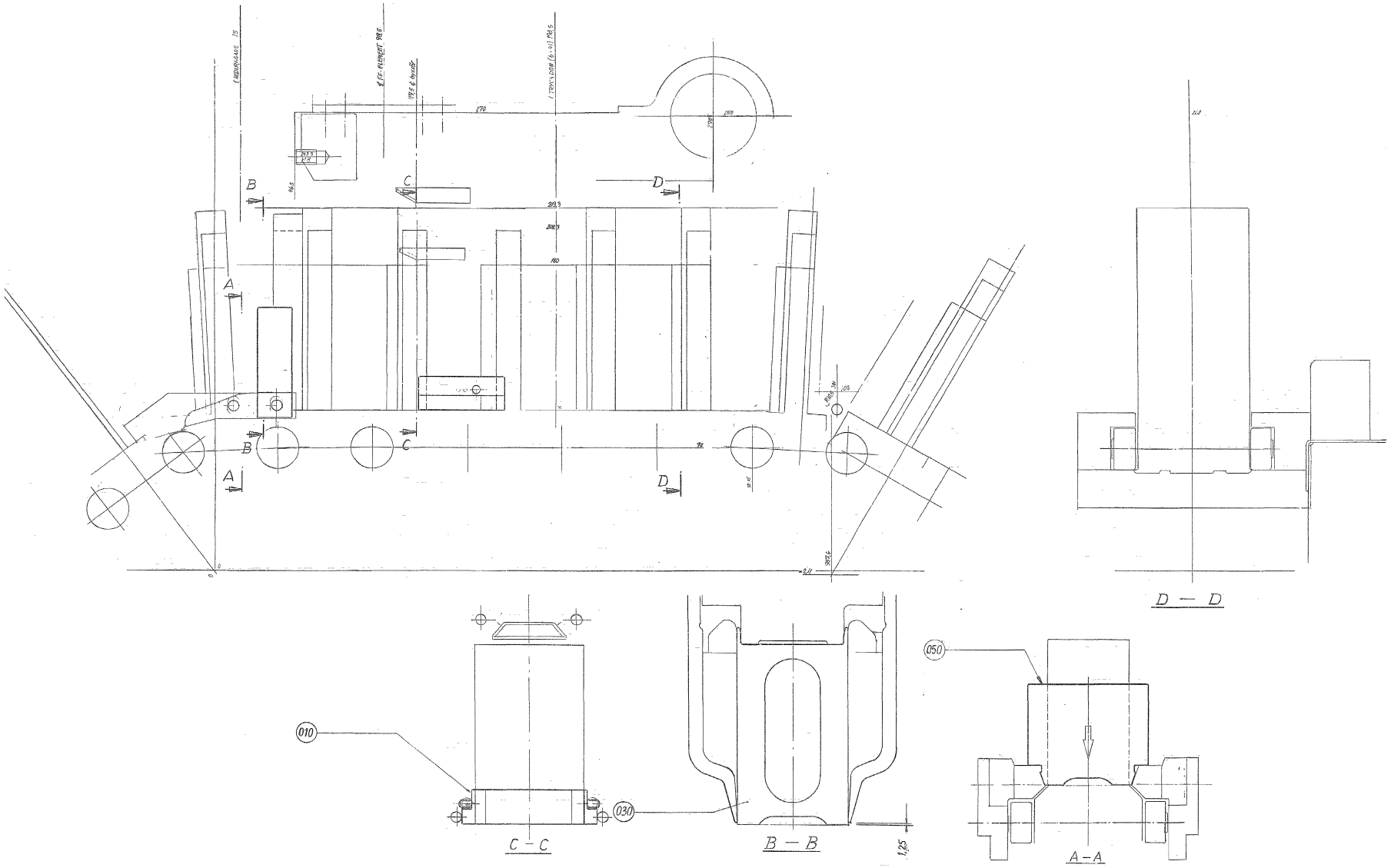
A
B
C
D
D — D
C — C
B — B
A–A
010
030
050

ECM: 186188 - 20040928
Group number: 75525-0400
Assembly Drawing: 75525-2_1_AA

This list covers pages from 12-28 to 12-31

Pos	Part No	UN	Qty	Description	Page No
0100B					
010	590247-0000		1	SETTING TEMPLATE	
020	590223-0000		1	SETTING TEMPLATE	
030	76307-0011		1	TEMPLATE	
050	75545-0000		1	TEMPLATE	
0125S					
010	590247-0000		1	SETTING TEMPLATE	
020	590223-0000		1	SETTING TEMPLATE	
030	76307-0005		1	TEMPLATE	
050	75545-0000		1	TEMPLATE	
0160S					
010	590249-0000		1	SETTING TEMPLATE	
020	590245-0000		1	SETTING TEMPLATE	
030	76307-0010		1	TEMPLATE	
050	75545-0000		1	TEMPLATE	
0200B					
010	590248-0000		1	SETTING TEMPLATE	
020	590224-0000		1	SETTING TEMPLATE	
030	76307-0003		1	TEMPLATE	
050	76308-0000		1	TEMPLATE	
0200M					
010	590250-0000		1	SETTING TEMPLATE	
020	590246-0000		1	SETTING TEMPLATE	
030	76307-0013		1	TEMPLATE	
050	574442-0000		1	TEMPLATE	
0200S					
010	590249-0000		1	SETTING TEMPLATE	
020	590245-0000		1	SETTING TEMPLATE	
030	76307-0006		1	TEMPLATE	
050	75545-0000		1	TEMPLATE	
0200SQ					
	2501740-0100		1	TEMPLATE	**12-33, 12-35, 12-37**
010	2588207-0000		1	TEMPLATE TOP NOZZLE	
020	2588208-0000		1	TEMPLATE BOTTOM NOZZLE	
030	76307-0014		1	TEMPLATE	
0250B					
010	590248-0000		1	SETTING TEMPLATE	
020	590224-0000		1	SETTING TEMPLATE	
030	76307-0001		1	TEMPLATE	
050	76308-0000		1	TEMPLATE	
0250S					
010	590250-0000		1	SETTING TEMPLATE	
020	590246-0000		1	SETTING TEMPLATE	
030	76307-0009		1	TEMPLATE	
050	574442-0000		1	TEMPLATE	
0284B, 0300S					
010	590248-0000		1	SETTING TEMPLATE	
020	590224-0000		1	SETTING TEMPLATE	
030	76307-0008		1	TEMPLATE	
050	76308-0000		1	TEMPLATE	
0330S					
010	590248-0000		1	SETTING TEMPLATE	
020	590224-0000		1	SETTING TEMPLATE	
030	76307-0012		1	TEMPLATE	
050	76308-0000		1	TEMPLATE	

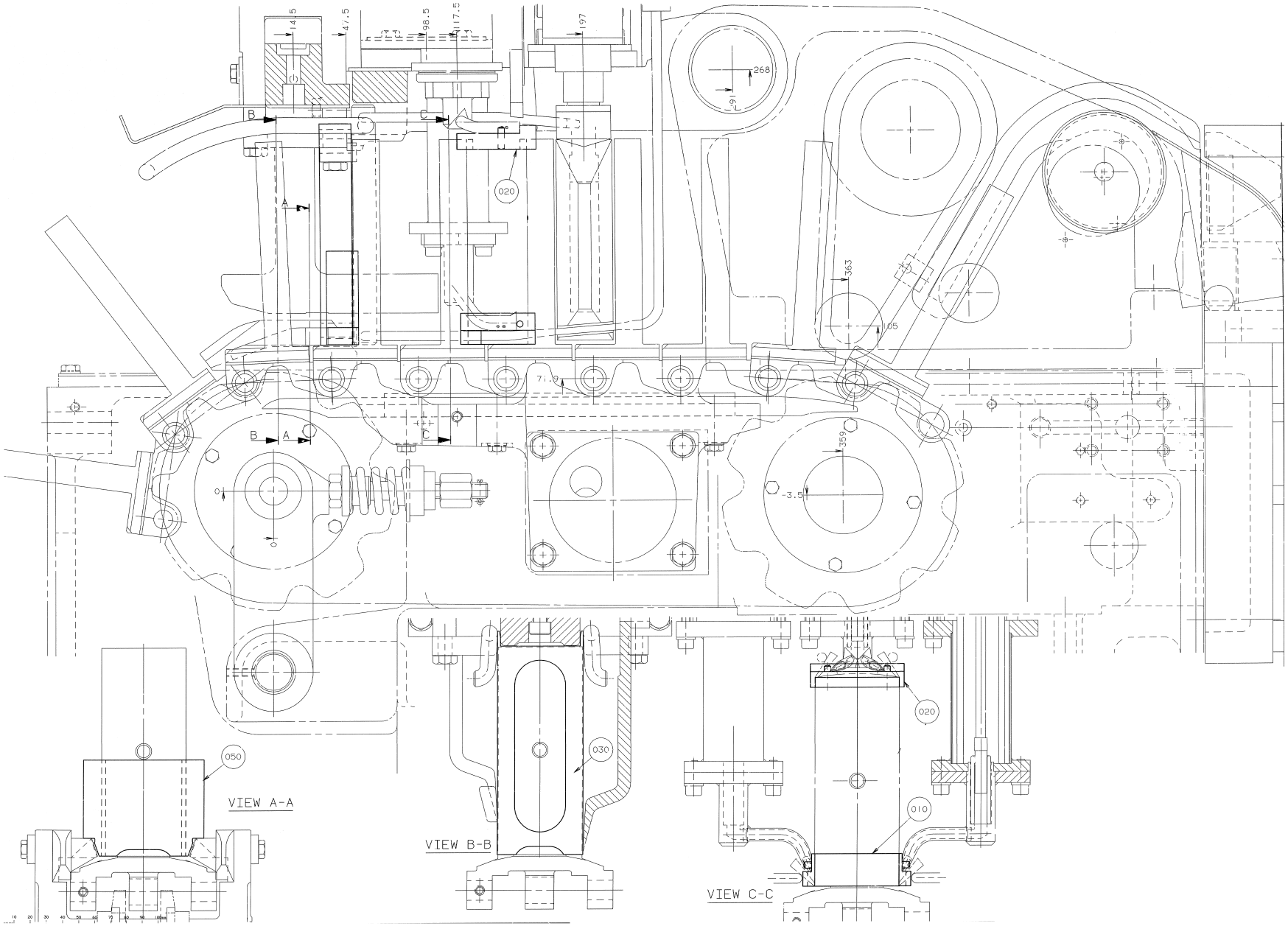
VIEW A-A
VIEW B-B
VIEW C-C
020
030
050
010
268
363
359
71.9
-3.5
14.5
47.5
98.5
117.5
197

Pos	Part No	UN	Qty	Description	Page No
0100B					
010	590247-0000		1	SETTING TEMPLATE	
020	590223-0000		1	SETTING TEMPLATE	
030	76307-0011		1	TEMPLATE	
050	75545-0000		1	TEMPLATE	
0125S					
010	590247-0000		1	SETTING TEMPLATE	
020	590223-0000		1	SETTING TEMPLATE	
030	76307-0005		1	TEMPLATE	
050	75545-0000		1	TEMPLATE	
0160S					
010	590249-0000		1	SETTING TEMPLATE	
020	590245-0000		1	SETTING TEMPLATE	
030	76307-0010		1	TEMPLATE	
050	75545-0000		1	TEMPLATE	
0200B					
010	590248-0000		1	SETTING TEMPLATE	
020	590224-0000		1	SETTING TEMPLATE	
030	76307-0003		1	TEMPLATE	
050	76308-0000		1	TEMPLATE	
0200M					
010	590250-0000		1	SETTING TEMPLATE	
020	590246-0000		1	SETTING TEMPLATE	
030	76307-0013		1	TEMPLATE	
050	574442-0000		1	TEMPLATE	
0200S					
010	590249-0000		1	SETTING TEMPLATE	
020	590245-0000		1	SETTING TEMPLATE	
030	76307-0006		1	TEMPLATE	
050	75545-0000		1	TEMPLATE	
0200SQ					
	2501740-0100		1	TEMPLATE	**12-33, 12-35, 12-37**
010	2588207-0000		1	TEMPLATE TOP NOZZLE	
020	2588208-0000		1	TEMPLATE BOTTOM NOZZLE	
030	76307-0014		1	TEMPLATE	
0250B					
010	590248-0000		1	SETTING TEMPLATE	
020	590224-0000		1	SETTING TEMPLATE	
030	76307-0001		1	TEMPLATE	
050	76308-0000		1	TEMPLATE	
0250S					
010	590250-0000		1	SETTING TEMPLATE	
020	590246-0000		1	SETTING TEMPLATE	
030	76307-0009		1	TEMPLATE	
050	574442-0000		1	TEMPLATE	
0284B, 0300S					
010	590248-0000		1	SETTING TEMPLATE	
020	590224-0000		1	SETTING TEMPLATE	
030	76307-0008		1	TEMPLATE	
050	76308-0000		1	TEMPLATE	
0330S					
010	590248-0000		1	SETTING TEMPLATE	
020	590224-0000		1	SETTING TEMPLATE	
030	76307-0012		1	TEMPLATE	
050	76308-0000		1	TEMPLATE	

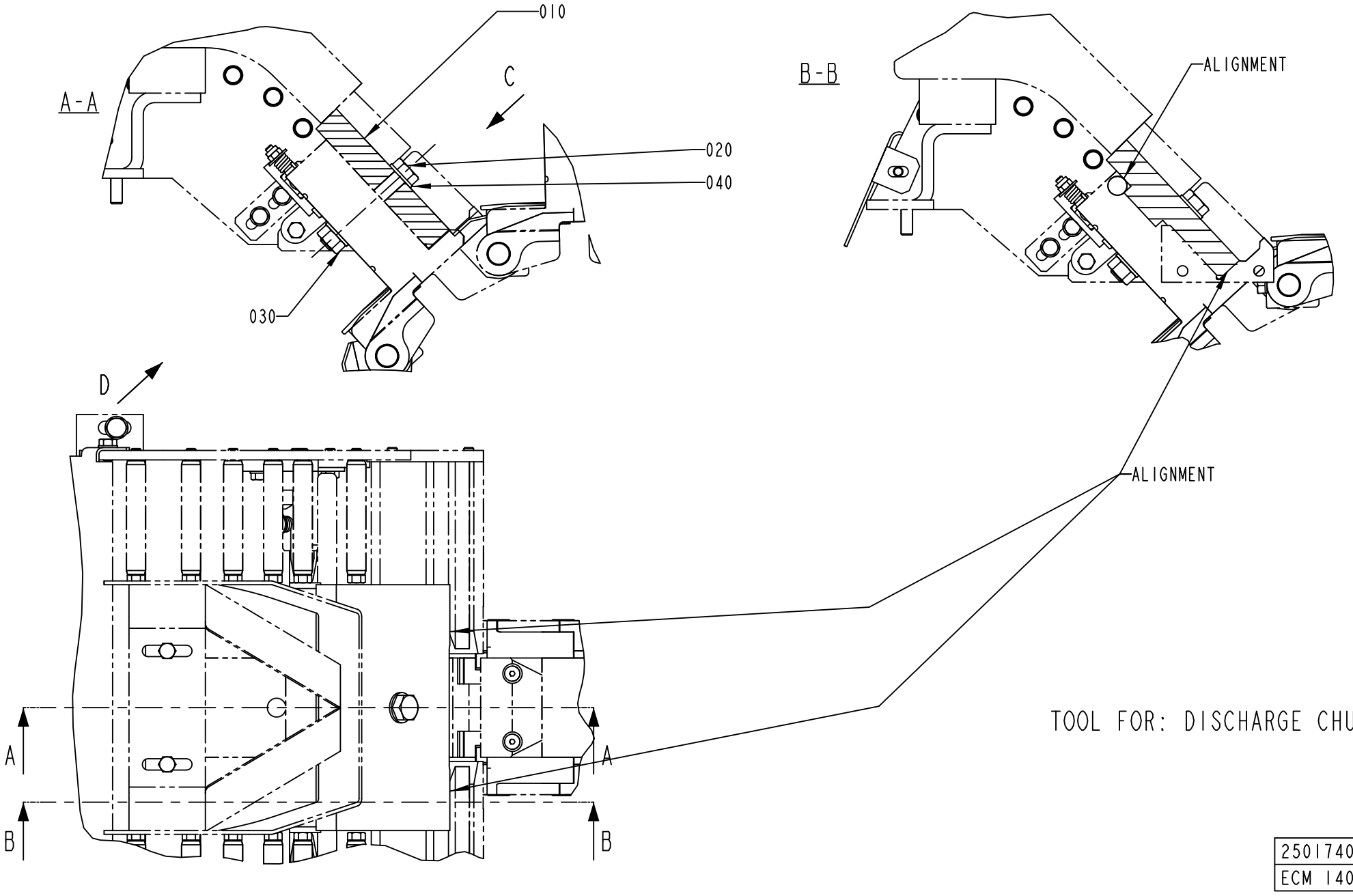
010
A-A
C
020
040
030
B-B
ALIGNMENT
D
ALIGNMENT
A
A
B
B
TOOL FOR: DISCHARGE CHUTE
2501740-1
ECM 140461

ECM: 151466 - 20040316
Group number: 2501740-0100
Assembly Drawing: 2501740-1_1_AB

This list covers pages from 12-32 to 12-37

Pos	Part No	UN	Qty	Description	Page No
-					
010	1549930-0000		1	TOOL	
020	312105-0462		1	SCREW, M6S ISO 4014 M8X55 A4 80	
030	312605-0318		1	HEXAGON NUT, M6M M8 A280	
040	315105-0165		2	WASHER PLAIN, 8,4X16X1,6 A4 BRB	
050	2517796-0000		1	TOOL	

Pos	Part No	UN	Qty	Description	Page No

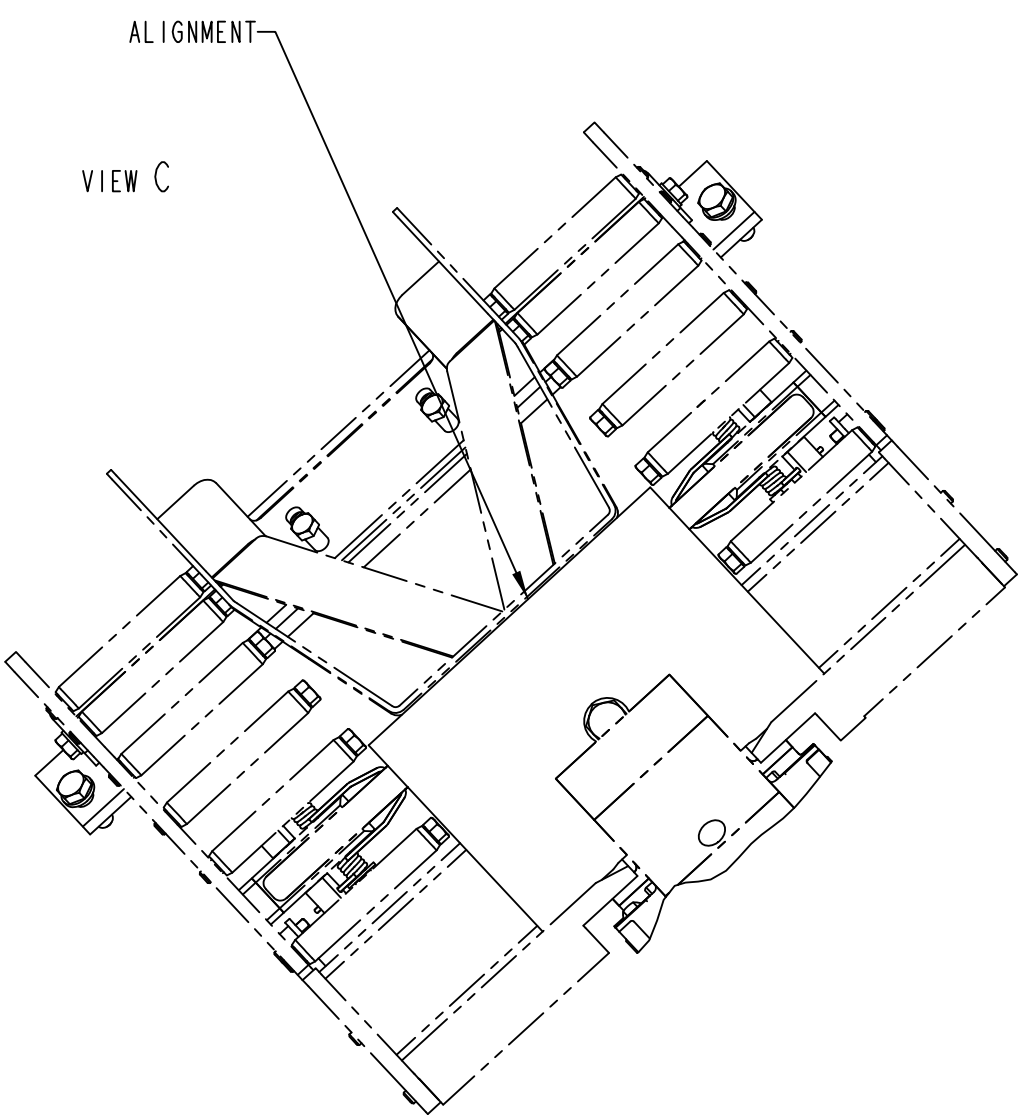

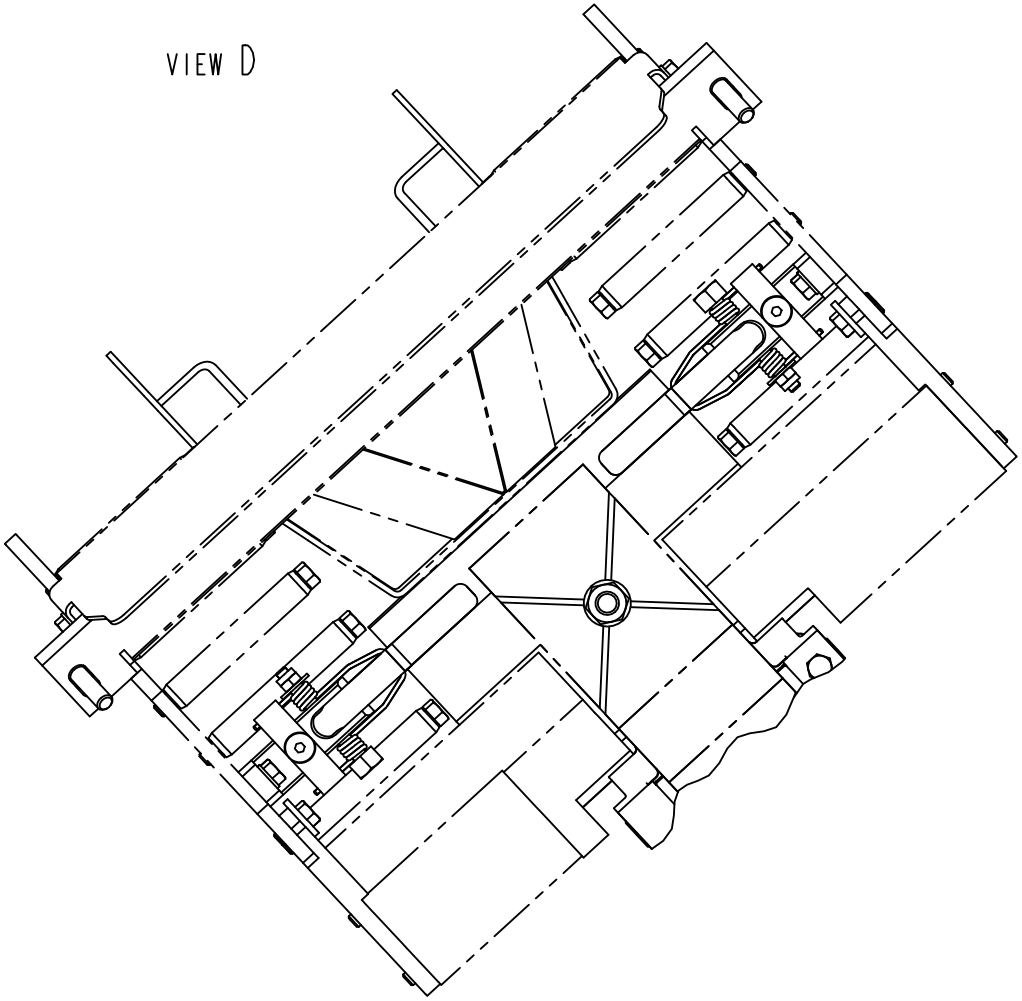

TOOL FOR: DISCHARGE CHUTE

2501740-1
ECM 140461

ECM: 151466 - 20040316
Group number: 2501740-0100
Assembly Drawing: 2501740-1_2_AB

This list covers pages from 12-32 to 12-37

Pos	Part No	UN	Qty	Description	Page No
-					
010	1549930-0000		1	TOOL	
020	312105-0462		1	SCREW, M6S ISO 4014 M8X55 A4 80	
030	312605-0318		1	HEXAGON NUT, M6M M8 A280	
040	315105-0165		2	WASHER PLAIN, 8,4X16X1,6 A4 BRB	
050	2517796-0000		1	TOOL	

Pos	Part No	UN	Qty	Description	Page No

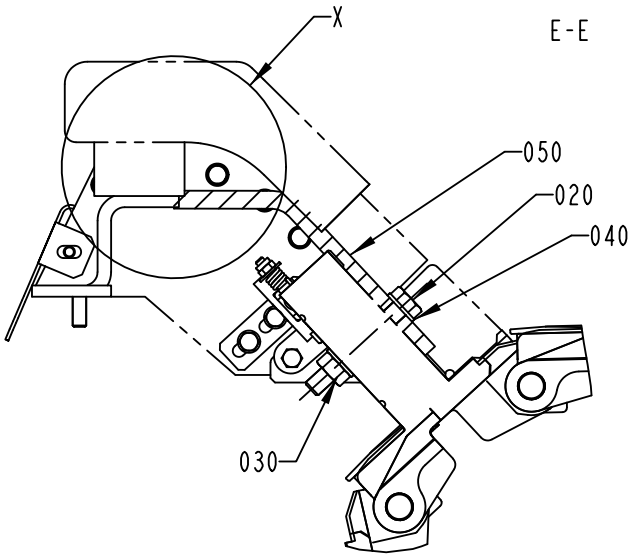

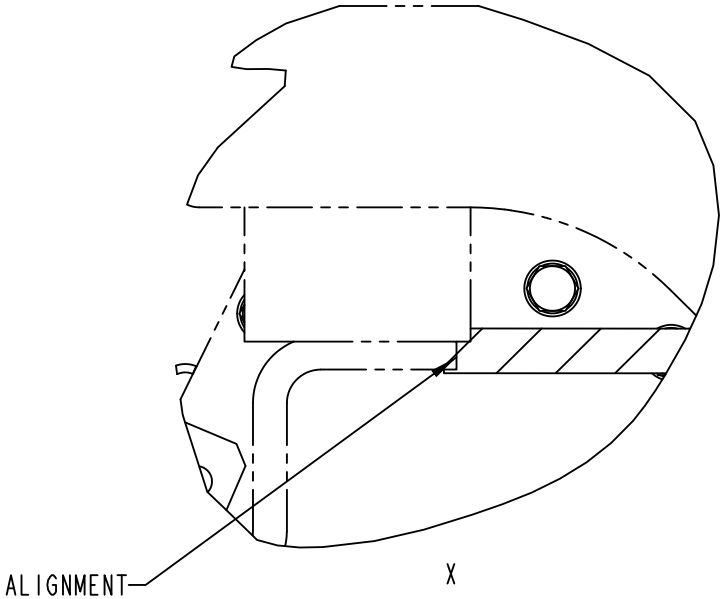

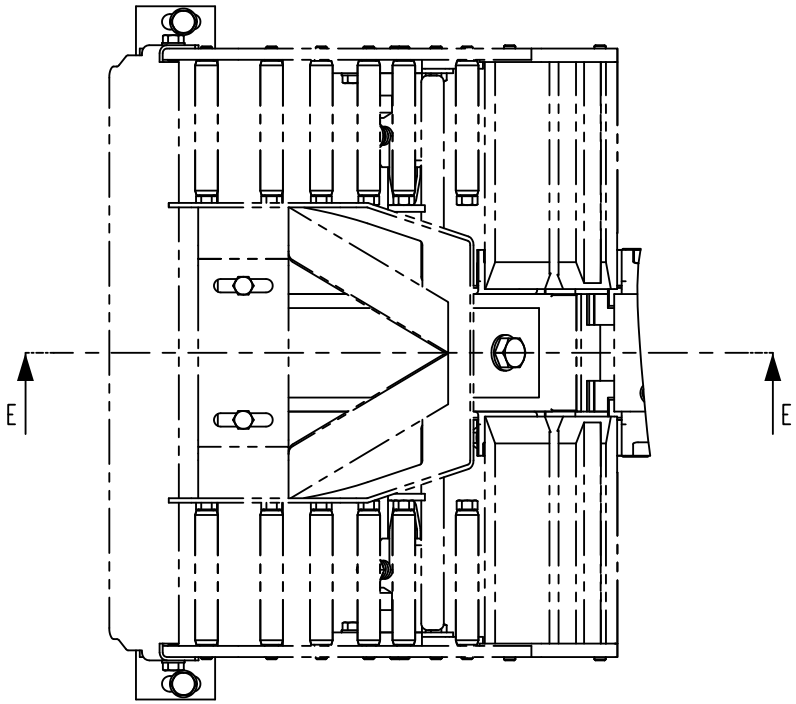

TOOL FOR : DISCHARGE CHUTE FRAME

2501740-1
ECM 140461

ECM: 151466 - 20040316
Group number: 2501740-0100
Assembly Drawing: 2501740-1_3_AB

This list covers pages from 12-32 to 12-37

Pos	Part No	UN	Qty	Description	Page No
-					
010	1549930-0000		1	TOOL	
020	312105-0462		1	SCREW, M6S ISO 4014 M8X55 A4 80	
030	312605-0318		1	HEXAGON NUT, M6M M8 A280	
040	315105-0165		2	WASHER PLAIN, 8,4X16X1,6 A4 BRB	
050	2517796-0000		1	TOOL	

Pos	Part No	UN	Qty	Description	Page No

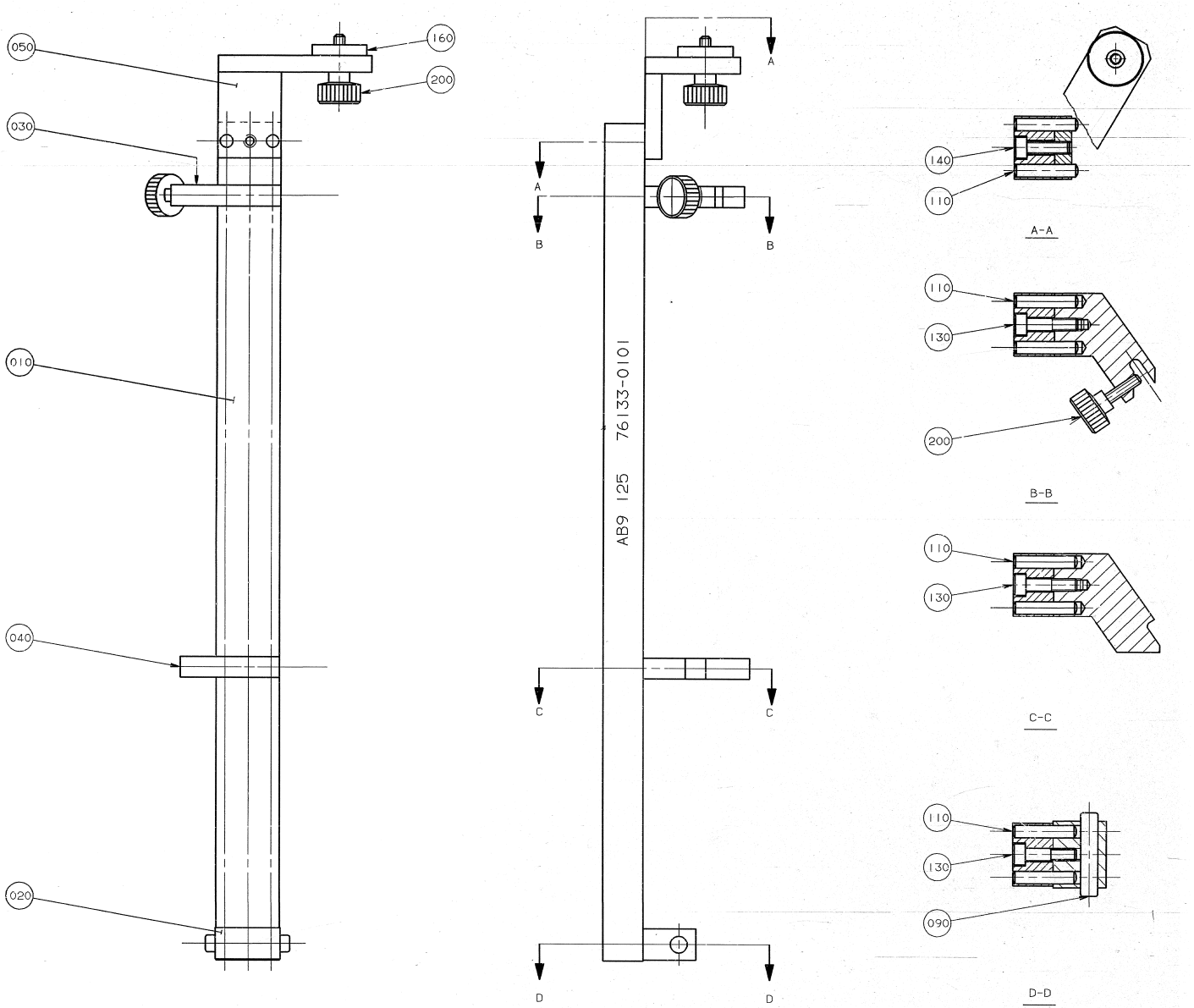
050
160
200
030
010
040
020
A
B
C
D
AB9 125 76133-0101
140
110
A-A
130
B-B
C-C
090
D-D

ECM: - -
Group number: 76133-0100
Assembly Drawing: 76133-1_1_AA

Pos	Part No	UN	Qty	Description	Page No
-					
010	76607-0000		1	RULER	
020	76605-0000		1	BRACKET	
030	76178-0000		1	STOPPER	
040	76179-0000		2	STOPPER	
050	76610-0000		1	BRACKET	
090	2873-0000		1	SHAFT	
110	311103-0357		8	PARALLEL PIN ISO 2338 6M6X30 A1	
130	312115-0372		3	SCREW ISO4762 M6X25 A4 80	
140	312115-0370		1	SCREW ISO4762 M6X20 A4 80	
160	315121-0165		1	WASHER PLAIN, TBRSB 8,4/26 H=5	
200	90051-0035		2	KNOB, EXTERNAL THREAD. NO. 8308-1135	

Pos	Part No	UN	Qty	Description	Page No

TEMPLATE LS-ELEMENT

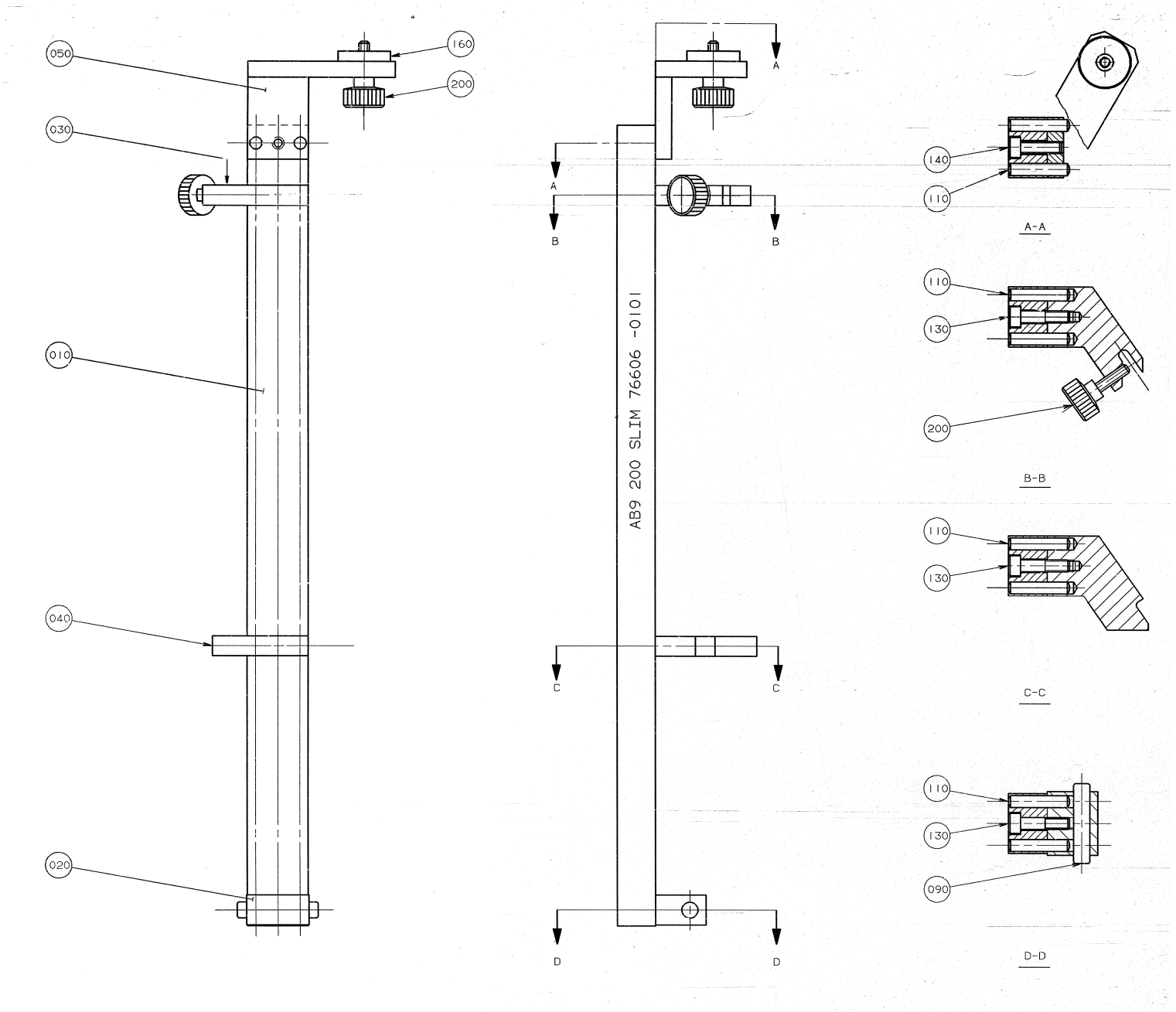

ECM: - -
Group number: 76606-0100
Assembly Drawing: 76606-1_1_AA

Pos	Part No	UN	Qty	Description	Page No
-					
010	76607-0000		1	RULER	
020	76605-0000		1	BRACKET	
030	76185-0000		1	STOPPER	
040	76186-0000		1	STOPPER	
050	76184-0000		1	BRACKET	
090	2873-0000		1	SHAFT	
110	311103-0357		8	PARALLEL PIN ISO 2338 6M6X30 A1	
130	312115-0372		3	SCREW ISO4762 M6X25 A4 80	
140	312115-0370		1	SCREW ISO4762 M6X20 A4 80	
160	315121-0165		1	WASHER PLAIN, TBRSB 8,4/26 H=5	
200	90051-0053		2	KNOB, INTERNAL THREAD, M6 24X17	

Pos	Part No	UN	Qty	Description	Page No

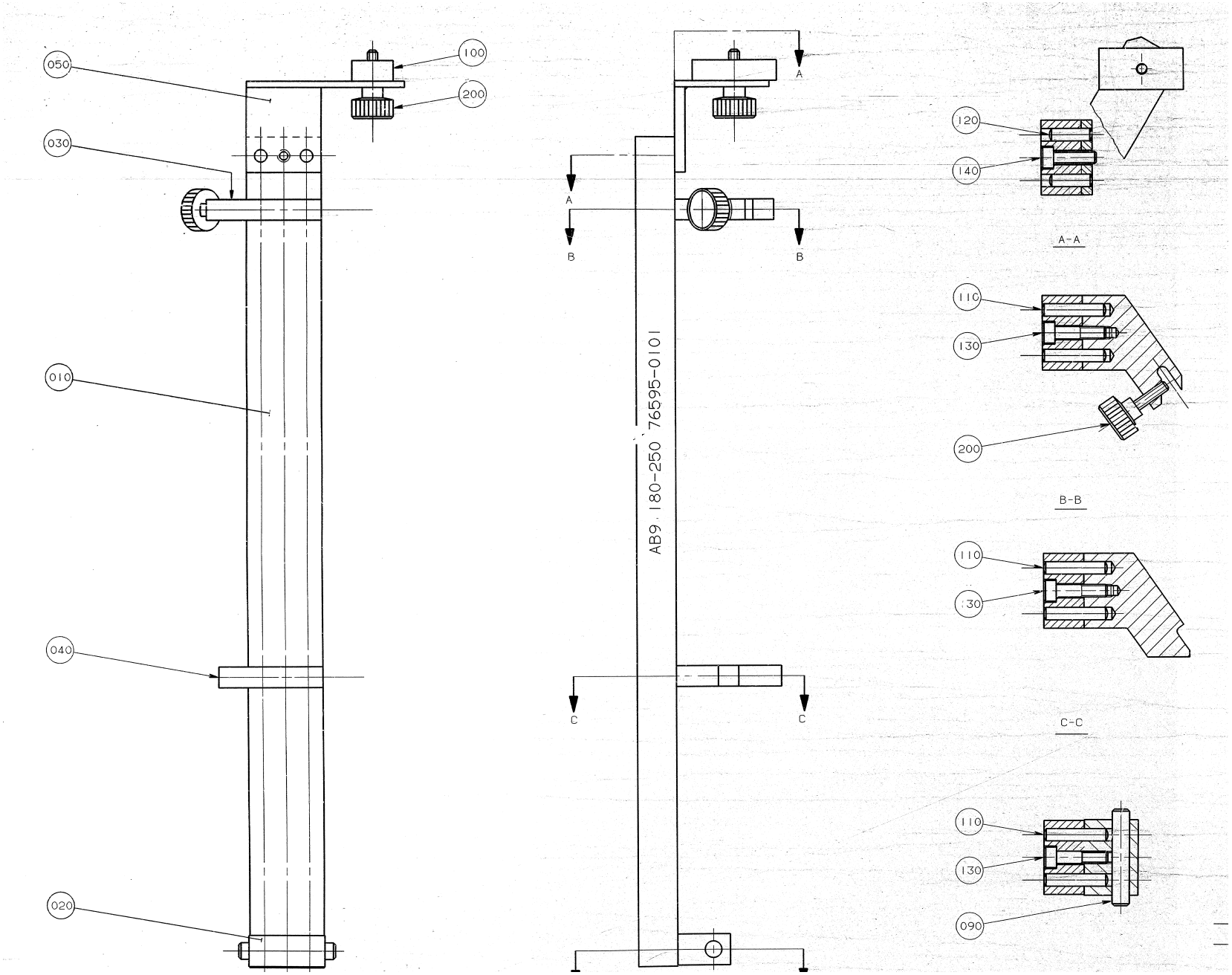
050
100
200
030
010
040
020
A
B
C
AB9.180-250 76595-0101
120
140
A-A
110
130
200
B-B
110
130
C-C
110
130
090

ECM: - -
Group number: 76595-0100
Assembly Drawing: 76595-1_1_AA

Pos	Part No	UN	Qty	Description	Page No
-					
010	76601-0000		1	RULER	
020	76164-0000		1	BRACKET	
030	76139-0000		1	STOPPER	
040	76597-0000		1	STOPPER	
050	76163-0000		1	BRACKET	
090	263655-0006		1	SHAFT	
100	76290-0000		1	SPACER	
110	311103-0357		6	PARALLEL PIN ISO 2338 6M6X30 A1	
120	311103-0353		2	PARALLEL PIN ISO 2338 6M6X20 A1	
130	312115-0372		3	SCREW ISO4762 M6X25 A4 80	
140	312115-0370		1	SCREW ISO4762 M6X20 A4 80	
200	90051-0035		2	KNOB, EXTERNAL THREAD. NO. 8308-1135	

Pos	Part No	UN	Qty	Description	Page No

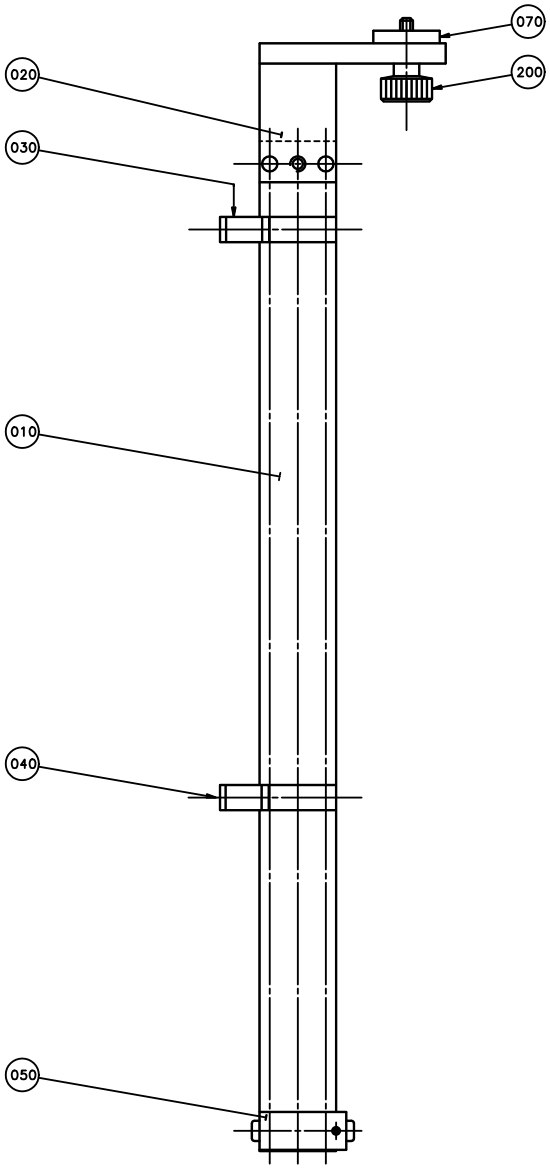
070
200
020
030
010
040
050

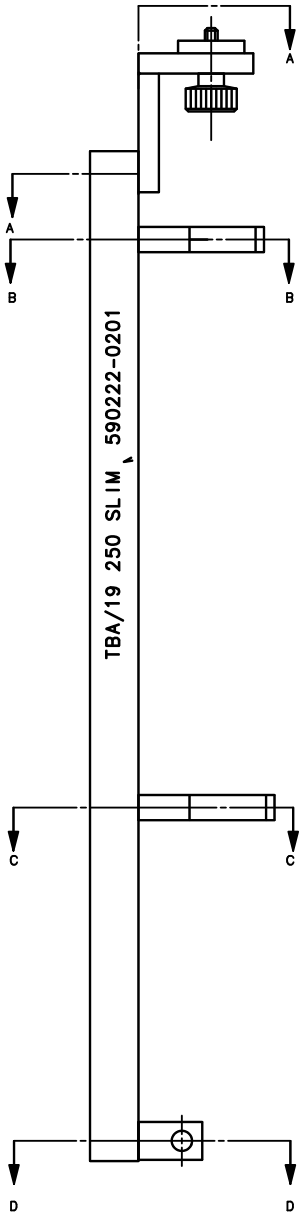
A
A
B
B
TBA/19 250 SLIM 590222-0201
C
C
D
D

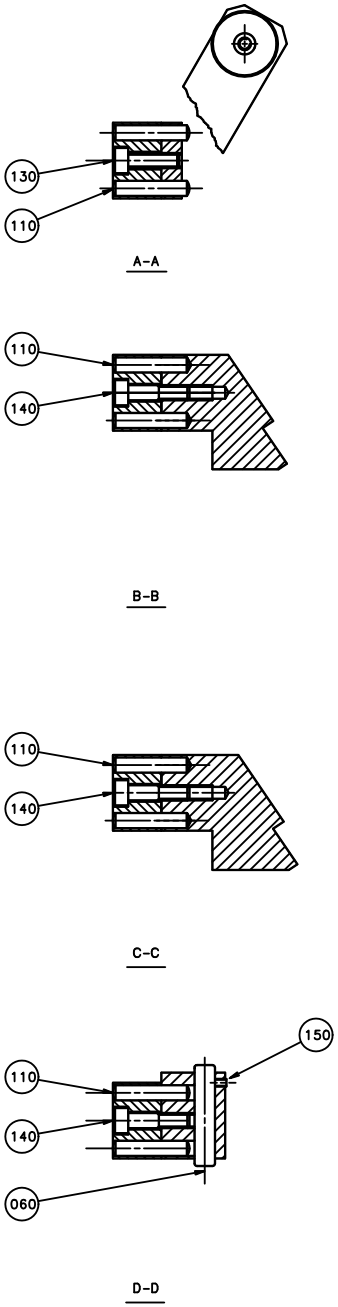
130
110
A-A
110
140
B-B
110
140
C-C
150
110
140
060
D-D

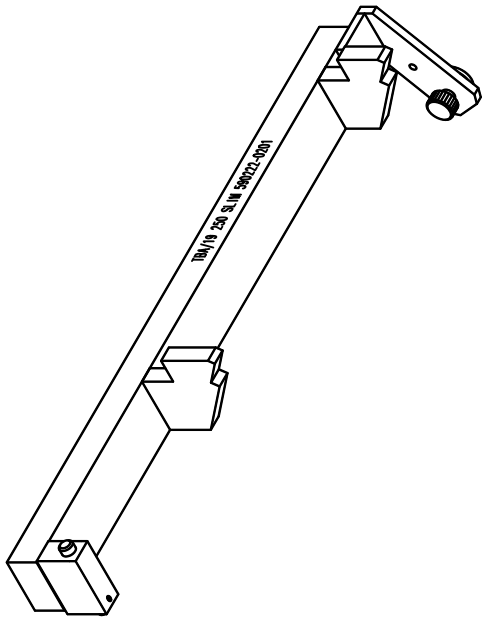
TBA/19 250 SLIM 590222-0201

ECM: 71280 - 19980112
Group number: 590222-0200
Assembly Drawing: 590222-2_1_AA

Pos	Part No	UN	Qty	Description	Page No
-					
010	76607-0000		1	RULER	
020	77245-0000		1	BRACKET	
030	1334570-0000		1	STOPPER	
040	1334571-0000		1	STOPPER	
050	1334572-0000		1	BRACKET	
060	1334573-0000		1	SHAFT	
070	1334631-0000		1	WASHER	
110	311103-0357		8	PARALLEL PIN ISO 2338 6M6X30 A1	
130	312115-0370		1	SCREW ISO4762 M6X20 A4 80	
140	312115-0372		3	SCREW ISO4762 M6X25 A4 80	
150	312318-0220		1	SET SCREW, CUP END ISO4029 M3X6 A4	
200	90051-0053		1	KNOB, INTERNAL THREAD, M6 24X17	

Pos	Part No	UN	Qty	Description	Page No

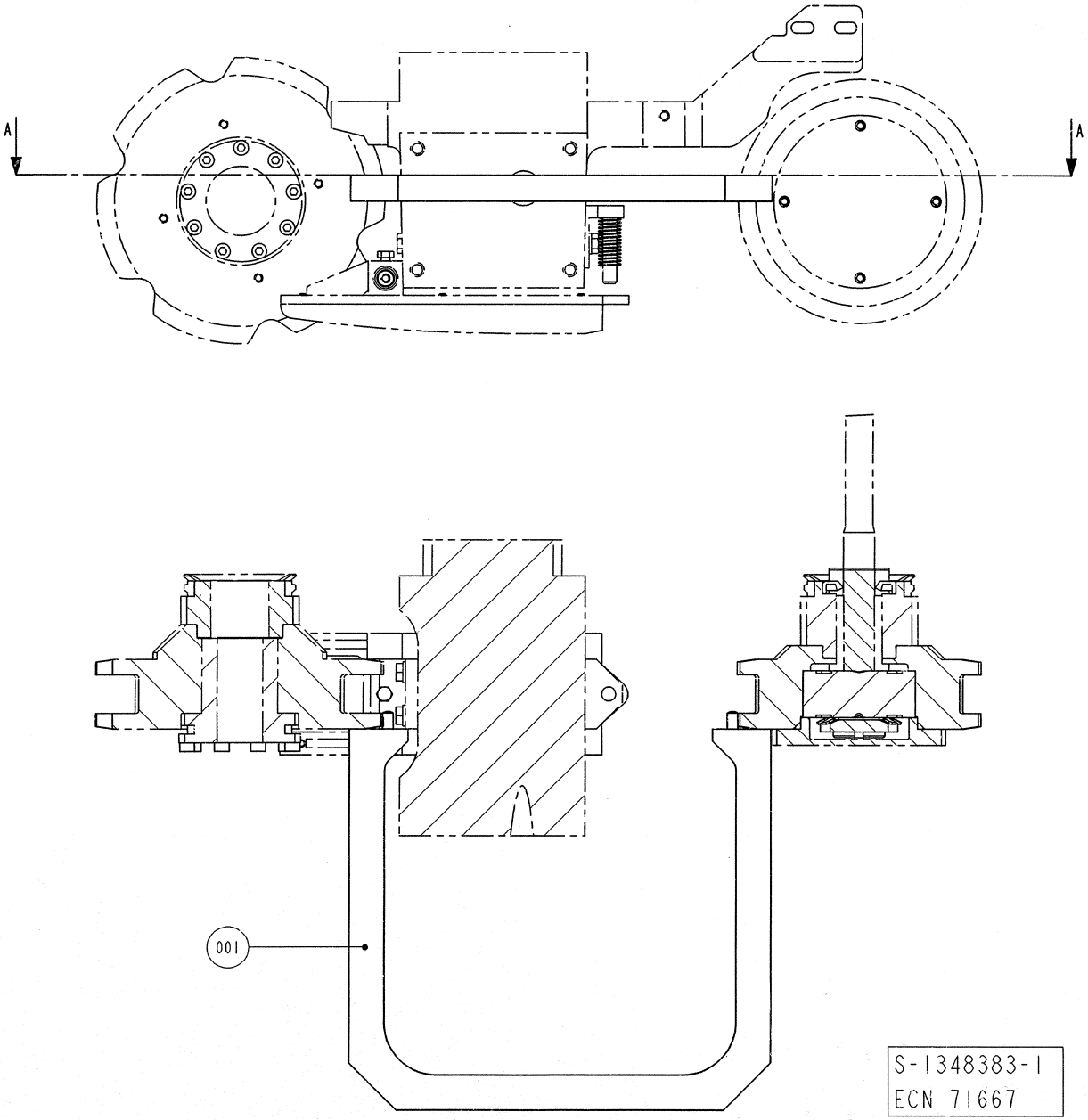
A
A
001
S-1348383-1
ECN 71667

ECM: 103999 - 20030513
Group number: 1348383-0100
Assembly Drawing: 1348383-1_1_AA

This list covers pages from 12-46 to 12-57

Pos	Part No	UN	Qty	Description	Page No
TPA 0200SQ					
001	2532588-0000		1	TEMPLATE	
003	1348378-0000		1	TEMPLATE	
004	1348380-0000		1	TEMPLATE	
TPA 0250SQ					
002	1255929-0000		1	TEMPLATE	
003	1348378-0000		1	TEMPLATE	
004	1348380-0000		1	TEMPLATE	
005	1348373-0000		1	TEMPLATE	
TPA 0330SQ					
002	1255929-0000		1	TEMPLATE	
003	1346329-0000		1	TEMPLATE	
004	1346330-0000		1	TEMPLATE	
005	1346666-0000		1	TEMPLATE	
Common Parts					
001	1255890-0000		1	TEMPLATE	
006	1348607-0100		1	TEMPLATE	**12-59, 12-61**
007	1348608-0100		1	TEMPLATE	**12-63**
008	1348609-0100		1	TEMPLATE	**12-65**
009	1348610-0100		1	TEMPLATE	**12-67**
010	1348611-0100		1	TEMPLATE	**12-69**

Pos	Part No	UN	Qty	Description	Page No

Machine Type | Group Description | Used-In | Group Number | Page No

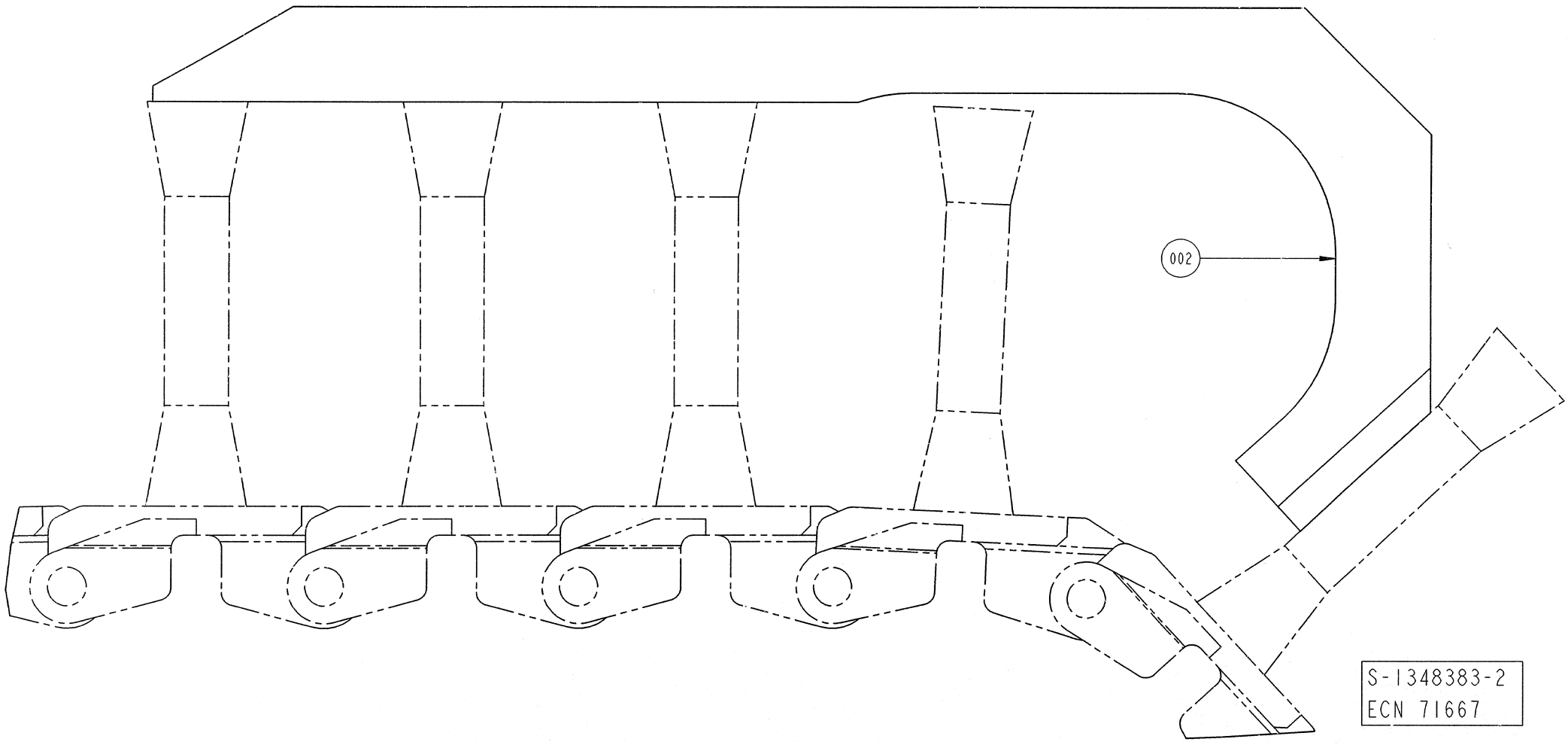
002
S-1348383-2
ECN 71667

ECM: 103999 - 20030513
Group number: 1348383-0100
Assembly Drawing: 1348383-2_1_AA

This list covers pages from 12-46 to 12-57

Pos	Part No	UN	Qty	Description	Page No
TPA 0200SQ					
001	2532588-0000		1	TEMPLATE	
003	1348378-0000		1	TEMPLATE	
004	1348380-0000		1	TEMPLATE	
TPA 0250SQ					
002	1255929-0000		1	TEMPLATE	
003	1348378-0000		1	TEMPLATE	
004	1348380-0000		1	TEMPLATE	
005	1348373-0000		1	TEMPLATE	
TPA 0330SQ					
002	1255929-0000		1	TEMPLATE	
003	1346329-0000		1	TEMPLATE	
004	1346330-0000		1	TEMPLATE	
005	1346666-0000		1	TEMPLATE	
Common Parts					
001	1255890-0000		1	TEMPLATE	
006	1348607-0100		1	TEMPLATE	**12-59, 12-61**
007	1348608-0100		1	TEMPLATE	**12-63**
008	1348609-0100		1	TEMPLATE	**12-65**
009	1348610-0100		1	TEMPLATE	**12-67**
010	1348611-0100		1	TEMPLATE	**12-69**

Pos	Part No	UN	Qty	Description	Page No

Machine Type	Group Description	Used-In	Group Number	Page No

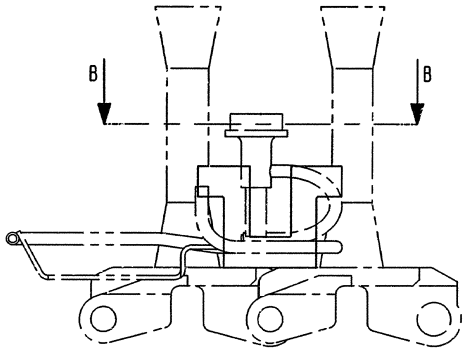

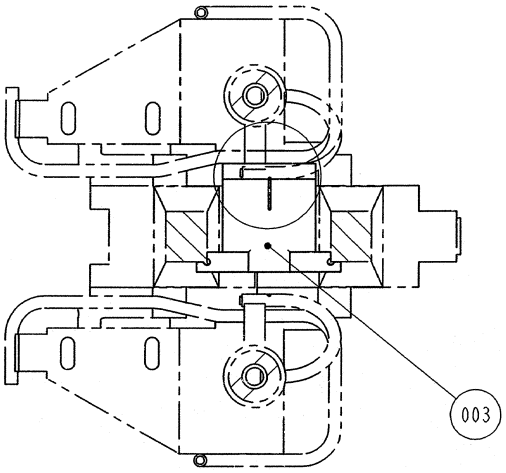

B-B

TOOL FOR:
LOWER AIR NOZZLE left & right
LOWER FOLDING BAR left & right

UTENSILE PER:
UGELLI SOFFIATORI INFERIORI (Sx & Dx)
GUIDE PIEGAORECCHIE INFERIORI (Sx & Dx)

S-1348383-3
ECN 71667

ECM: 103999 - 20030513
Group number: 1348383-0100
Assembly Drawing: 1348383-3_1_AA

This list covers pages from 12-46 to 12-57

Pos	Part No	UN	Qty	Description	Page No
TPA 0200SQ					
001	2532588-0000		1	TEMPLATE	
003	1348378-0000		1	TEMPLATE	
004	1348380-0000		1	TEMPLATE	
TPA 0250SQ					
002	1255929-0000		1	TEMPLATE	
003	1348378-0000		1	TEMPLATE	
004	1348380-0000		1	TEMPLATE	
005	1348373-0000		1	TEMPLATE	
TPA 0330SQ					
002	1255929-0000		1	TEMPLATE	
003	1346329-0000		1	TEMPLATE	
004	1346330-0000		1	TEMPLATE	
005	1346666-0000		1	TEMPLATE	
Common Parts					
001	1255890-0000		1	TEMPLATE	
006	1348607-0100		1	TEMPLATE	**12-59, 12-61**
007	1348608-0100		1	TEMPLATE	**12-63**
008	1348609-0100		1	TEMPLATE	**12-65**
009	1348610-0100		1	TEMPLATE	**12-67**
010	1348611-0100		1	TEMPLATE	**12-69**

Pos	Part No	UN	Qty	Description	Page No

Machine Type	Group Description	Used-In	Group Number	Page No

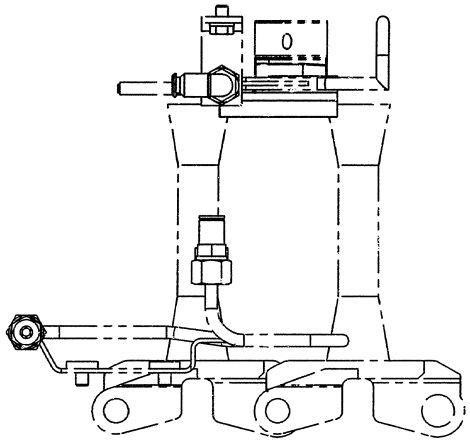

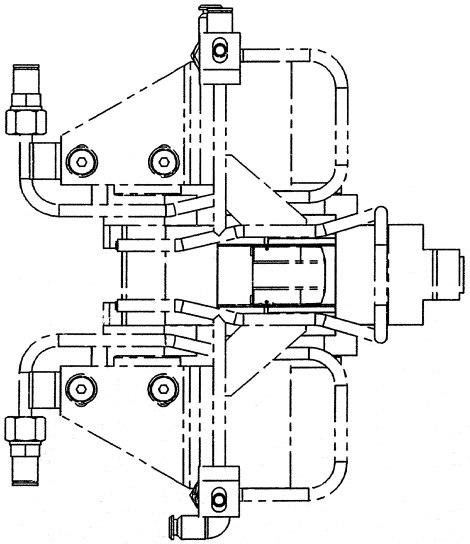

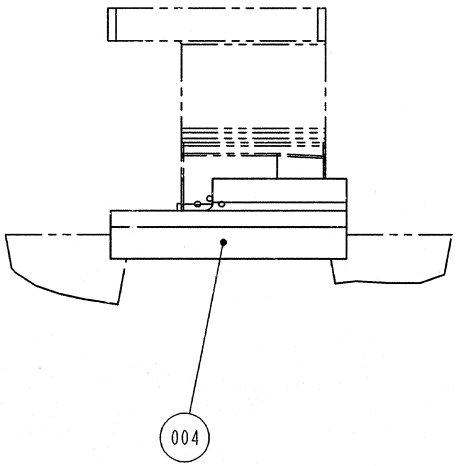

TOOL FOR:
UPPER AIR NOZZLE
UPPER FOLDING BAR

UTENSILE PER:
UGELLO SOFFIATORE SUPERIORE
GUIDA PIEGA ORECCHIE SUPERIORE

S-1348383-4
ECN 71667

ECM: 103999 - 20030513
Group number: 1348383-0100
Assembly Drawing: 1348383-4_1_AA

This list covers pages from 12-46 to 12-57

Pos	Part No	UN	Qty	Description	Page No
TPA 0200SQ					
001	2532588-0000		1	TEMPLATE	
003	1348378-0000		1	TEMPLATE	
004	1348380-0000		1	TEMPLATE	
TPA 0250SQ					
002	1255929-0000		1	TEMPLATE	
003	1348378-0000		1	TEMPLATE	
004	1348380-0000		1	TEMPLATE	
005	1348373-0000		1	TEMPLATE	
TPA 0330SQ					
002	1255929-0000		1	TEMPLATE	
003	1346329-0000		1	TEMPLATE	
004	1346330-0000		1	TEMPLATE	
005	1346666-0000		1	TEMPLATE	
Common Parts					
001	1255890-0000		1	TEMPLATE	
006	1348607-0100		1	TEMPLATE	**12-59, 12-61**
007	1348608-0100		1	TEMPLATE	**12-63**
008	1348609-0100		1	TEMPLATE	**12-65**
009	1348610-0100		1	TEMPLATE	**12-67**
010	1348611-0100		1	TEMPLATE	**12-69**

Pos	Part No	UN	Qty	Description	Page No

Machine Type	Group Description	Used-In	Group Number	Page No

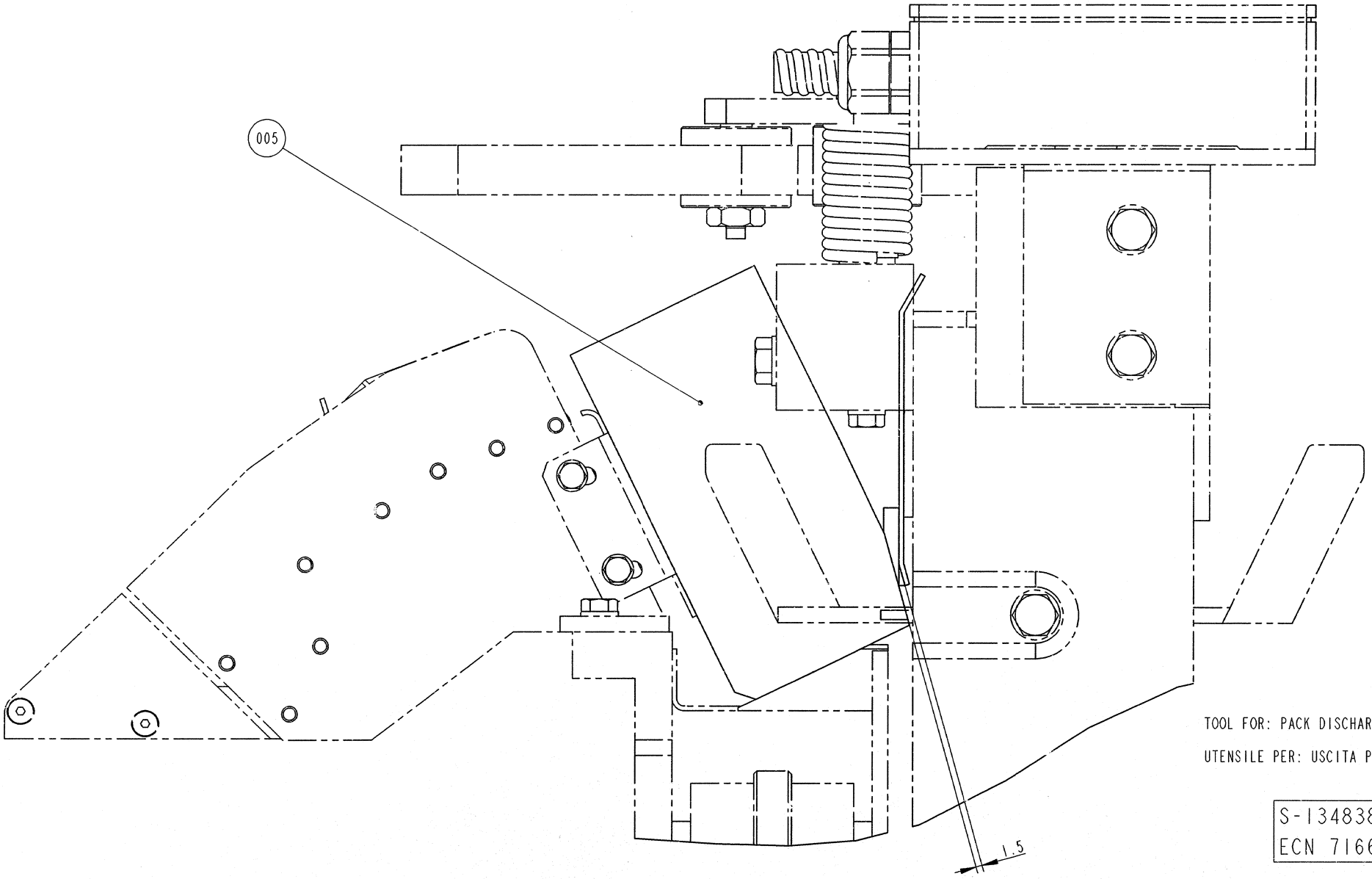
005
1.5
TOOL FOR: PACK DISCHARGE
UTENSILE PER: USCITA PACCHETTO
S-1348383-5
ECN 71667

ECM: 103999 - 20030513
Group number: 1348383-0100
Assembly Drawing: 1348383-5_1_AA

This list covers pages from 12-46 to 12-57

Pos	Part No	UN	Qty	Description	Page No
TPA 0200SQ					
001	2532588-0000		1	TEMPLATE	
003	1348378-0000		1	TEMPLATE	
004	1348380-0000		1	TEMPLATE	
TPA 0250SQ					
002	1255929-0000		1	TEMPLATE	
003	1348378-0000		1	TEMPLATE	
004	1348380-0000		1	TEMPLATE	
005	1348373-0000		1	TEMPLATE	
TPA 0330SQ					
002	1255929-0000		1	TEMPLATE	
003	1346329-0000		1	TEMPLATE	
004	1346330-0000		1	TEMPLATE	
005	1346666-0000		1	TEMPLATE	
Common Parts					
001	1255890-0000		1	TEMPLATE	
006	1348607-0100		1	TEMPLATE	**12-59, 12-61**
007	1348608-0100		1	TEMPLATE	**12-63**
008	1348609-0100		1	TEMPLATE	**12-65**
009	1348610-0100		1	TEMPLATE	**12-67**
010	1348611-0100		1	TEMPLATE	**12-69**

Pos	Part No	UN	Qty	Description	Page No

Machine Type	Group Description	Used-In	Group Number	Page No

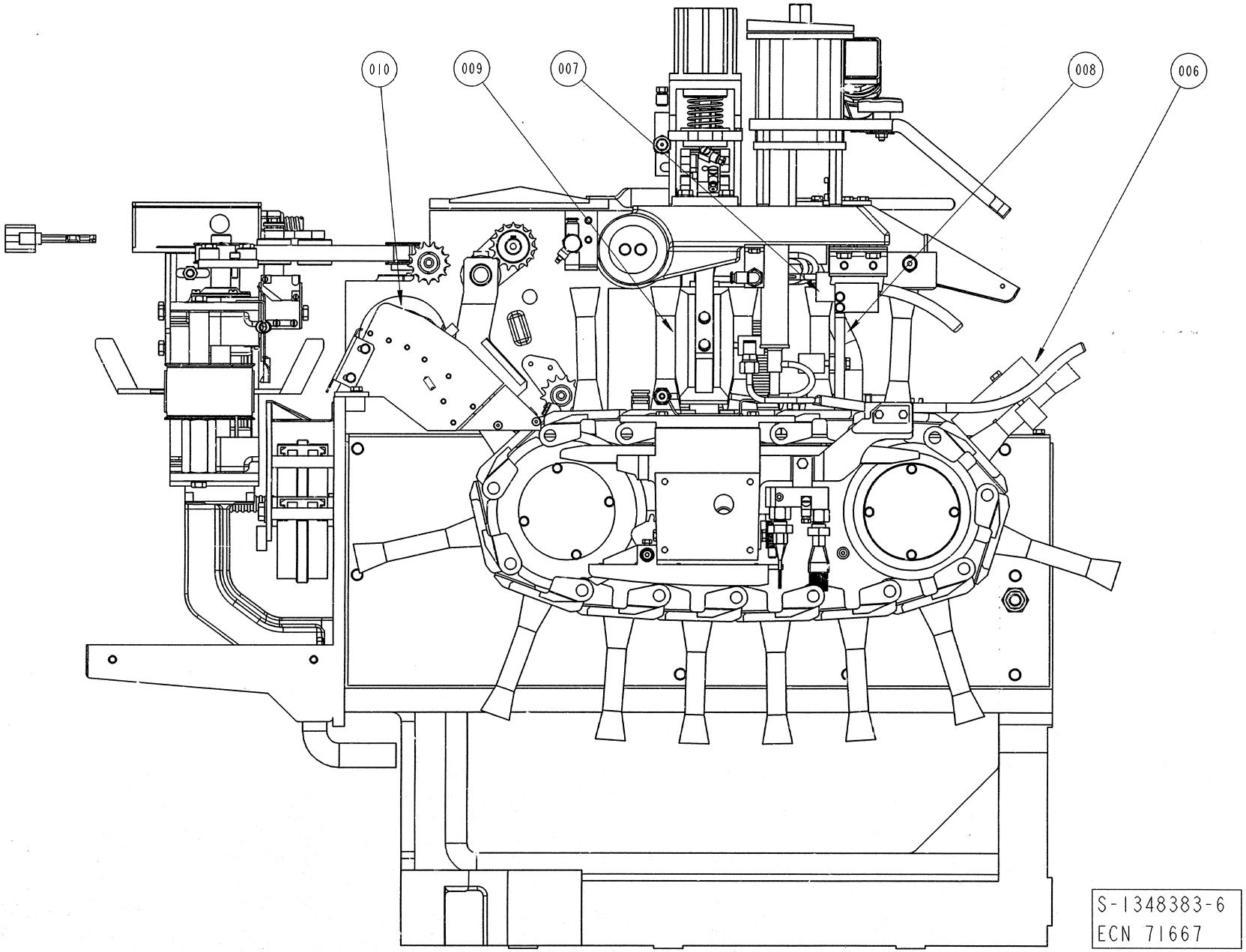
010
009
007
008
006
S-1348383-6
ECN 71667

ECM: 103999 - 20030513
Group number: 1348383-0100
Assembly Drawing: 1348383-6_1_AA

This list covers pages from 12-46 to 12-57

Pos	Part No	UN	Qty	Description	Page No
TPA 0200SQ					
001	2532588-0000		1	TEMPLATE	
003	1348378-0000		1	TEMPLATE	
004	1348380-0000		1	TEMPLATE	
TPA 0250SQ					
002	1255929-0000		1	TEMPLATE	
003	1348378-0000		1	TEMPLATE	
004	1348380-0000		1	TEMPLATE	
005	1348373-0000		1	TEMPLATE	
TPA 0330SQ					
002	1255929-0000		1	TEMPLATE	
003	1346329-0000		1	TEMPLATE	
004	1346330-0000		1	TEMPLATE	
005	1346666-0000		1	TEMPLATE	
Common Parts					
001	1255890-0000		1	TEMPLATE	
006	1348607-0100		1	TEMPLATE	**12-59, 12-61**
007	1348608-0100		1	TEMPLATE	**12-63**
008	1348609-0100		1	TEMPLATE	**12-65**
009	1348610-0100		1	TEMPLATE	**12-67**
010	1348611-0100		1	TEMPLATE	**12-69**

Pos	Part No	UN	Qty	Description	Page No

Machine Type | Group Description | Used-In | Group Number | Page No

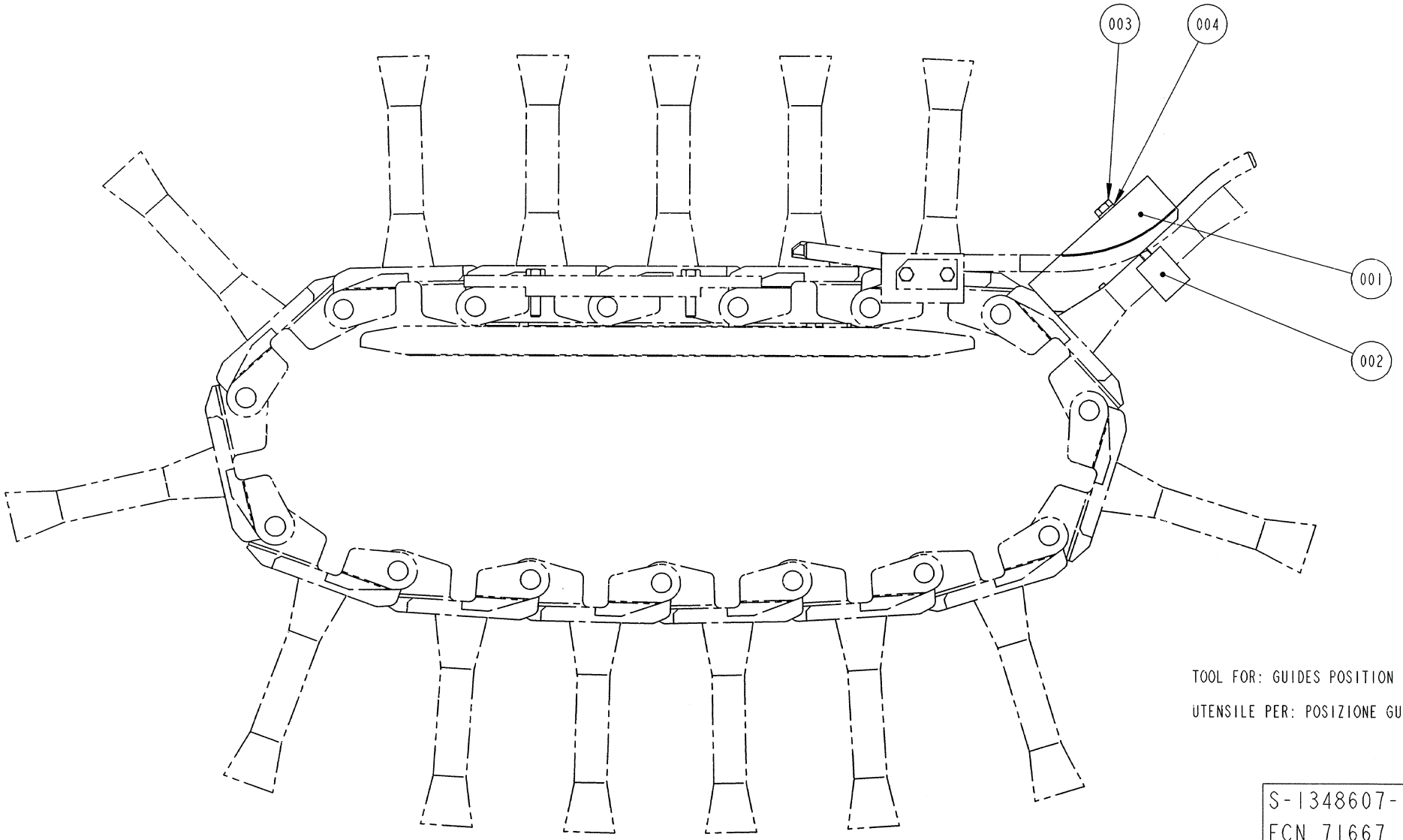

TOOL FOR: GUIDES POSITION

UTENSILE PER: POSIZIONE GUIDE

S-1348607-1
ECN 71667

ECM: 104003 - 20030513
Group number: 1348607-0100
Assembly Drawing: 1348607-1_1_AA

This list covers pages from 12-58 to 12-61

Pos	Part No	UN	Qty	Description	Page No
TPA 0200SQ (See drawing on page: 12-60)					
001	2532614-0000		1	TEMPLATE	
002	1348361-0000		1	CLAMP	
TPA 0250SQ (See drawing on page: 12-58)					
001	1348362-0000		1	TEMPLATE	
002	1348361-0000		1	CLAMP	
TPA 0330SQ (See drawing on page: 12-60)					
001	1512514-0000		1	TEMPLATE	
002	1346670-0000		1	CLAMP	
Common Parts					
003	312105-0380		2	SCREW, M6S ISO 4014 M6X50 A4 80	
004	315105-0153		2	WASHER PLAIN, 6,4X12X1,5 A4 BRB	

Pos	Part No	UN	Qty	Description	Page No

Machine Type | Group Description | Used-In | Group Number | Page No

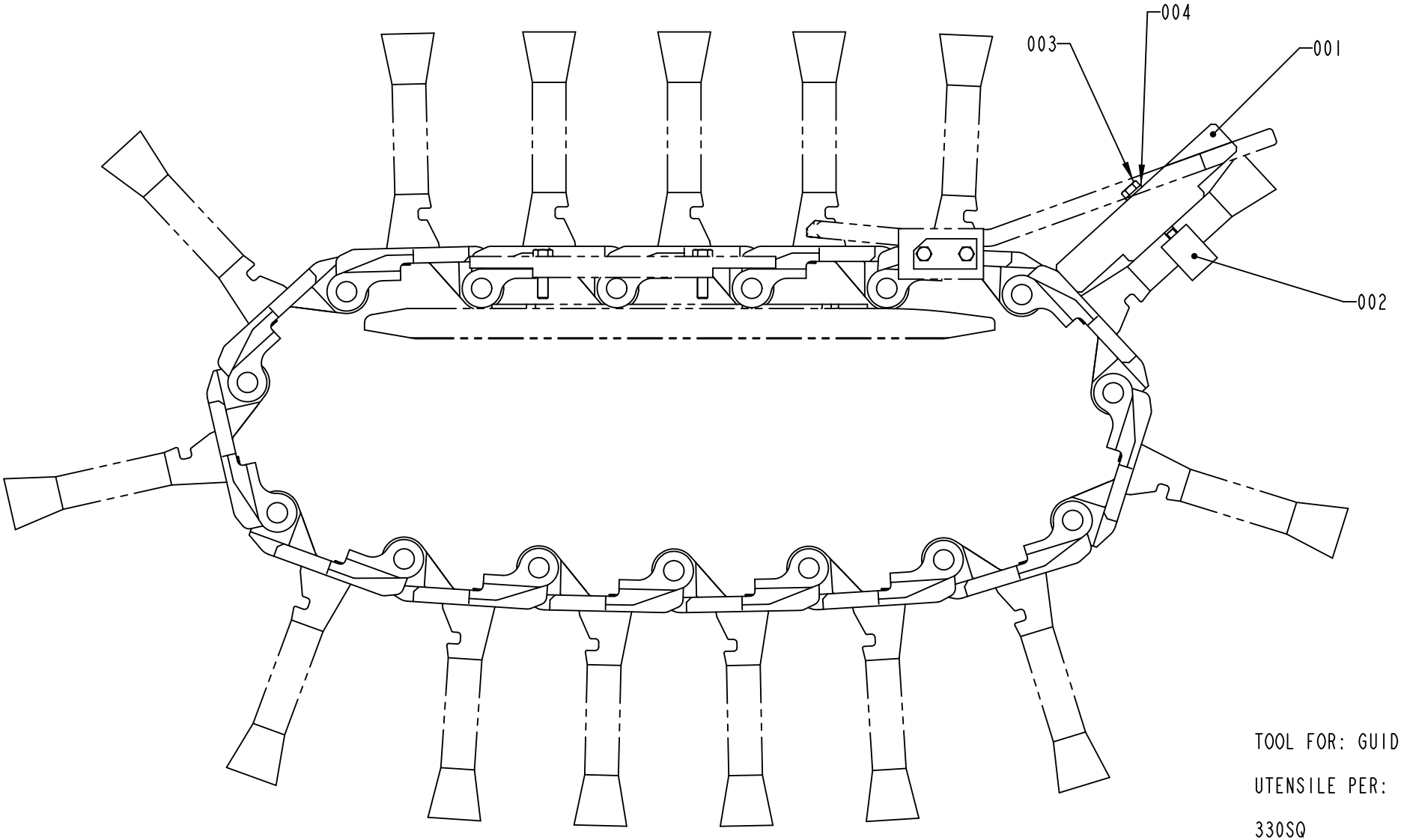

TOOL FOR: GUIDES POSITION

UTENSILE PER: POSIZIONE GUIDE

330SQ

1348607-2
ECN 73459

ECM: 104003 - 20030513
Group number: 1348607-0100
Assembly Drawing: 1348607-2_1_AA

This list covers pages from 12-58 to 12-61

Pos	Part No	UN	Qty	Description	Page No
TPA 0200SQ (See drawing on page: 12-60)					
001	2532614-0000		1	TEMPLATE	
002	1348361-0000		1	CLAMP	
TPA 0250SQ (See drawing on page: 12-58)					
001	1348362-0000		1	TEMPLATE	
002	1348361-0000		1	CLAMP	
TPA 0330SQ (See drawing on page: 12-60)					
001	1512514-0000		1	TEMPLATE	
002	1346670-0000		1	CLAMP	
Common Parts					
003	312105-0380		2	SCREW, M6S ISO 4014 M6X50 A4 80	
004	315105-0153		2	WASHER PLAIN, 6,4X12X1,5 A4 BRB	

Pos	Part No	UN	Qty	Description	Page No

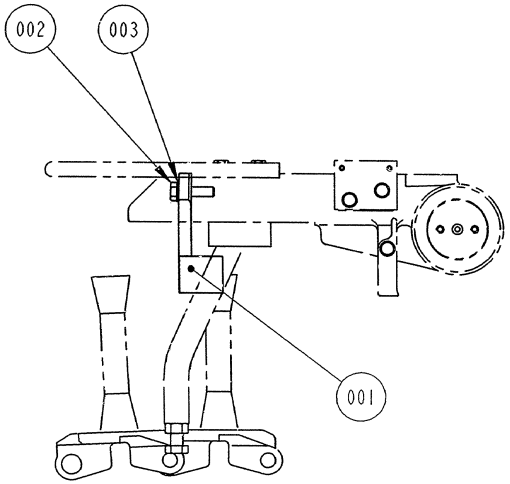

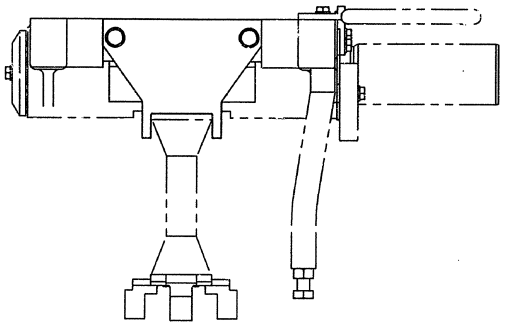

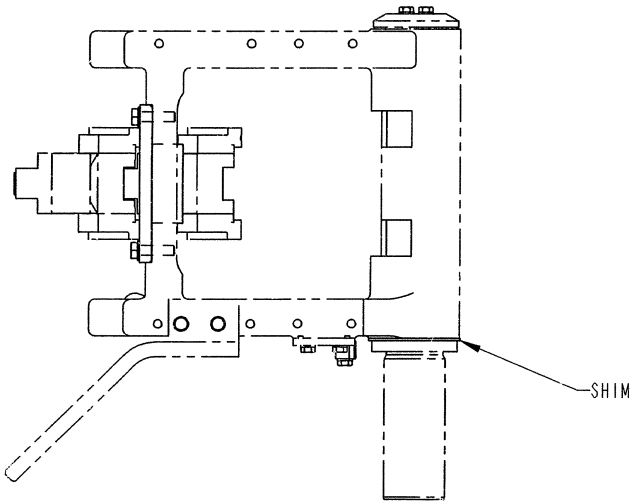

TOOL FOR: ARM POSITION

UTENSILE PER: POSIZIONE BRACCIO

S-1348608-1
ECN 71667

ECM: 104002 - 20030513
Group number: 1348608-0100
Assembly Drawing: 1348608-1_1_AA

Pos	Part No	UN	Qty	Description	Page No
TPA 0200SQ					
001	2532613-0000		1	TEMPLATE	
TPA 0250SQ					
001	1348364-0000		1	TEMPLATE	
TPA 0330SQ					
001	1346332-0000		1	TEMPLATE	
Common Parts					
002	312105-0455		2	SCREW, M6S ISO 4017 M8X30 A4 80	
003	315105-0165		2	WASHER PLAIN, 8,4X16X1,6 A4 BRB	

Pos	Part No	UN	Qty	Description	Page No

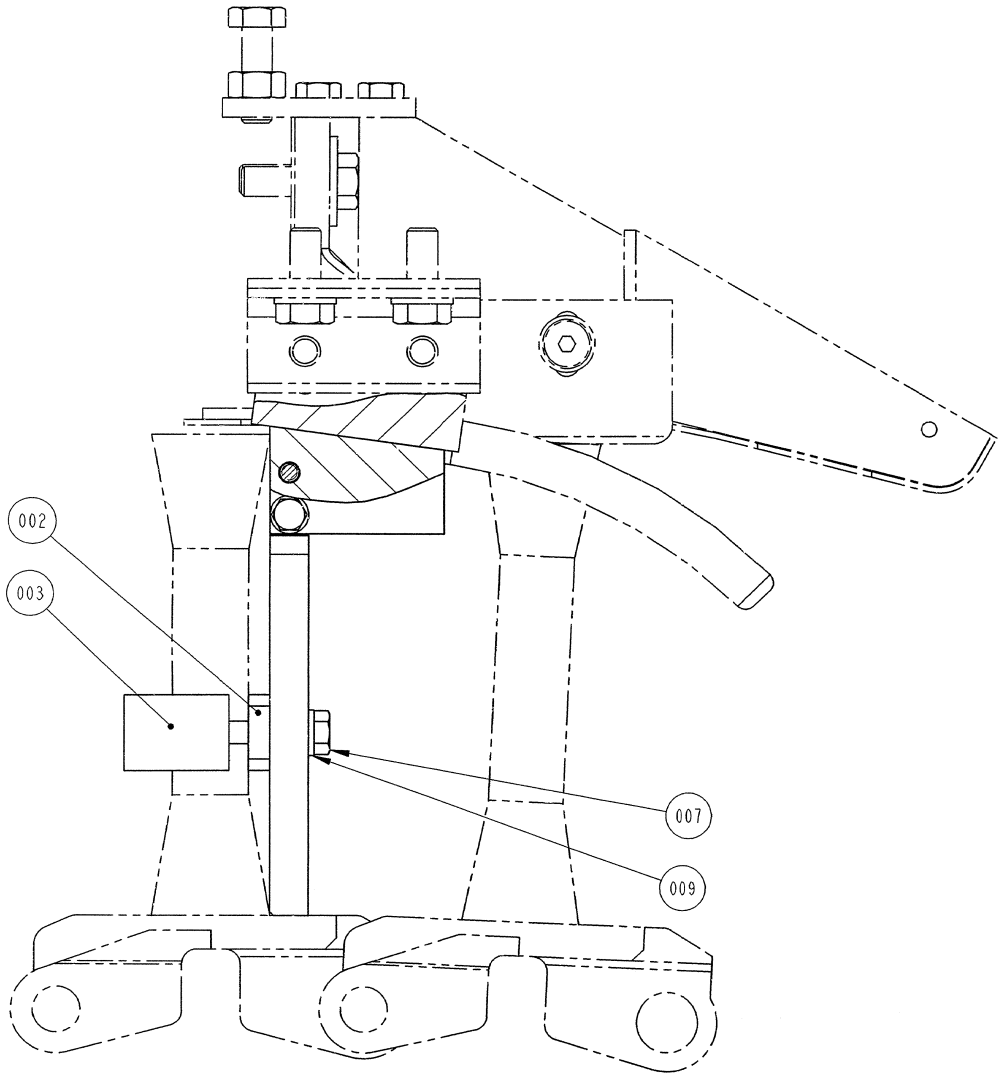

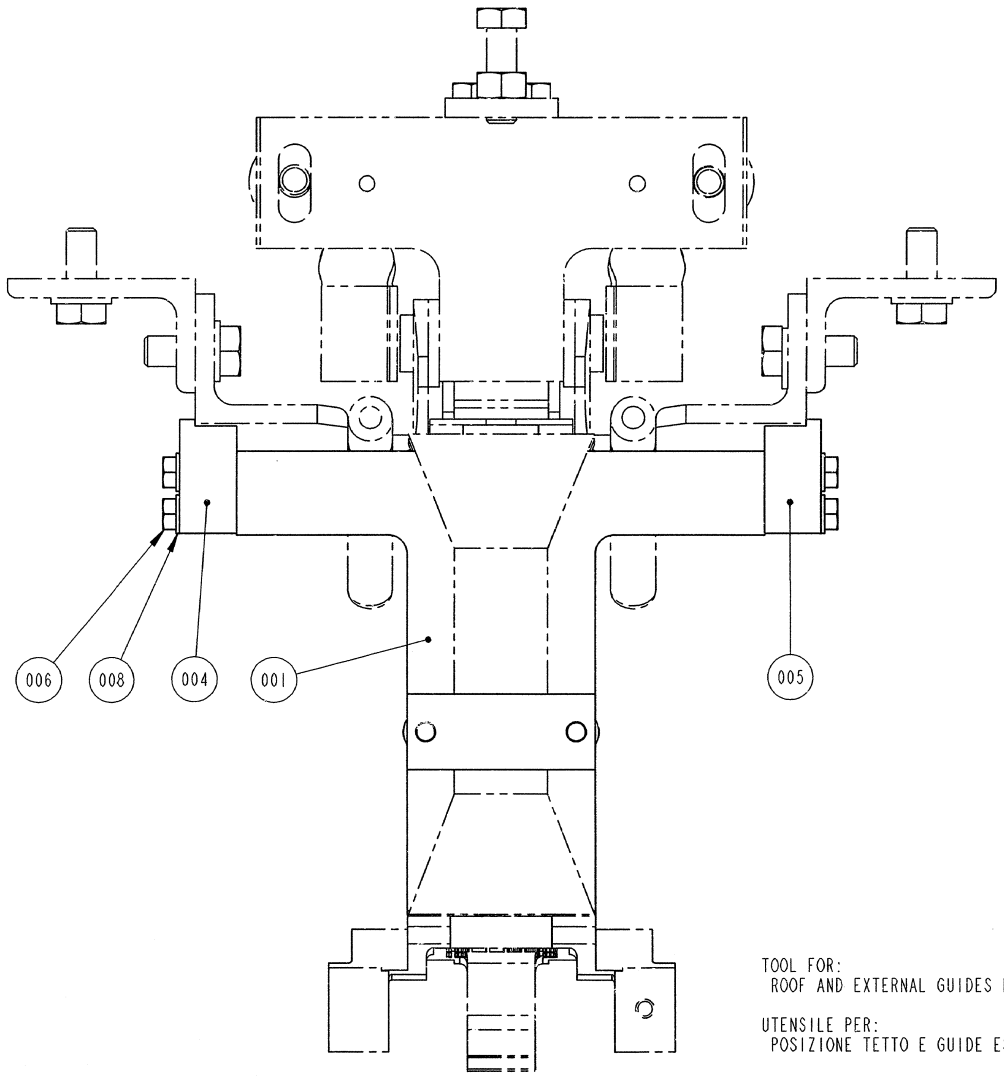

TOOL FOR:
ROOF AND EXTERNAL GUIDES POSITION

UTENSILE PER:
POSIZIONE TETTO E GUIDE ESTERNE

S-1348609-1
ECN 71667

ECM: 71667 - 19980612
Group number: 1348609-0100
Assembly Drawing: 1348609-1_1_AA

Pos	Part No	UN	Qty	Description	Page No
TPA 0250SQ					
001	1348367-0000		1	PLATE	
002	1348366-0000		1	SPACER	
003	1348361-0000		1	CLAMP	
004	1348368-0000		1	TEMPLATE	
005	1348369-0000		1	TEMPLATE	
TPA 0330SQ					
001	1346672-0000		1	PLATE	
002	1347356-0000		1	SPACER	
003	1346670-0000		1	CLAMP	
004	1346674-0000		1	TEMPLATE	
005	1347405-0000		1	TEMPLATE	
Common Parts					
006	312105-0331		4	SCREW, M6S ISO 4017 M5X20 A4 80	
007	312105-0374		2	SCREW, M6S ISO 4014 M6X30 A4 80	
008	315105-0146		4	WASHER PLAIN, 5,3X10X1 A4 BRB	
009	315105-0153		2	WASHER PLAIN, 6,4X12X1,5 A4 BRB	

Pos	Part No	UN	Qty	Description	Page No

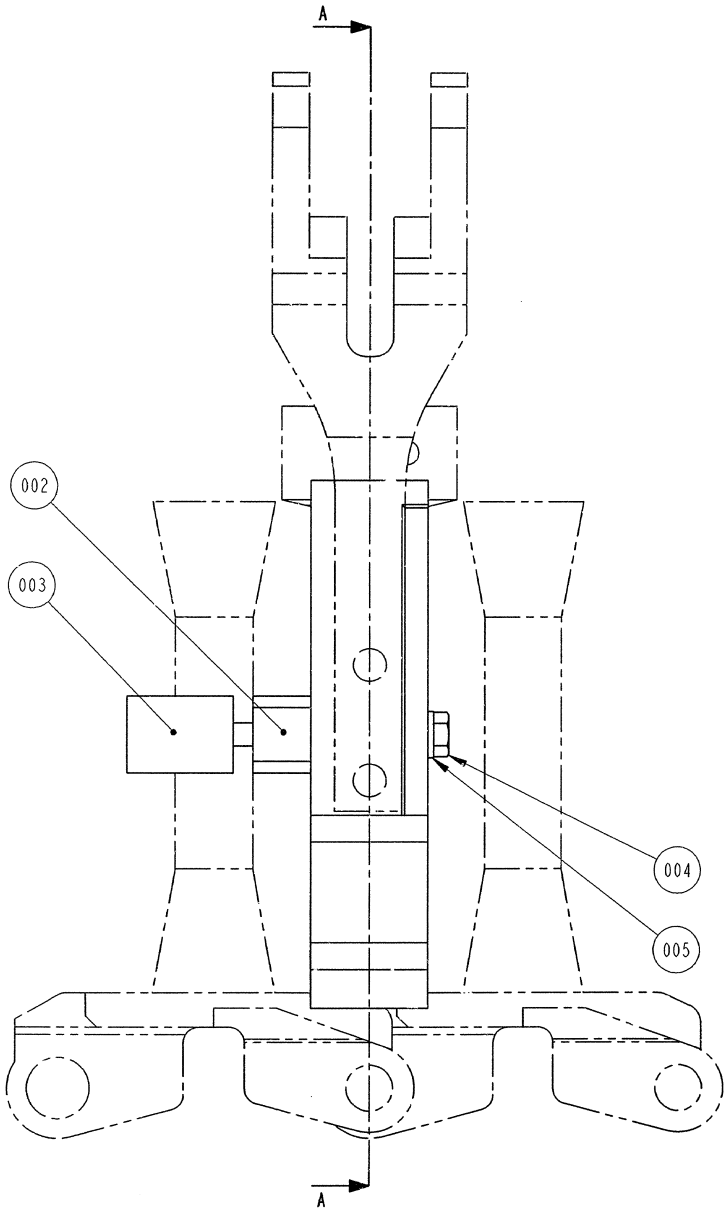

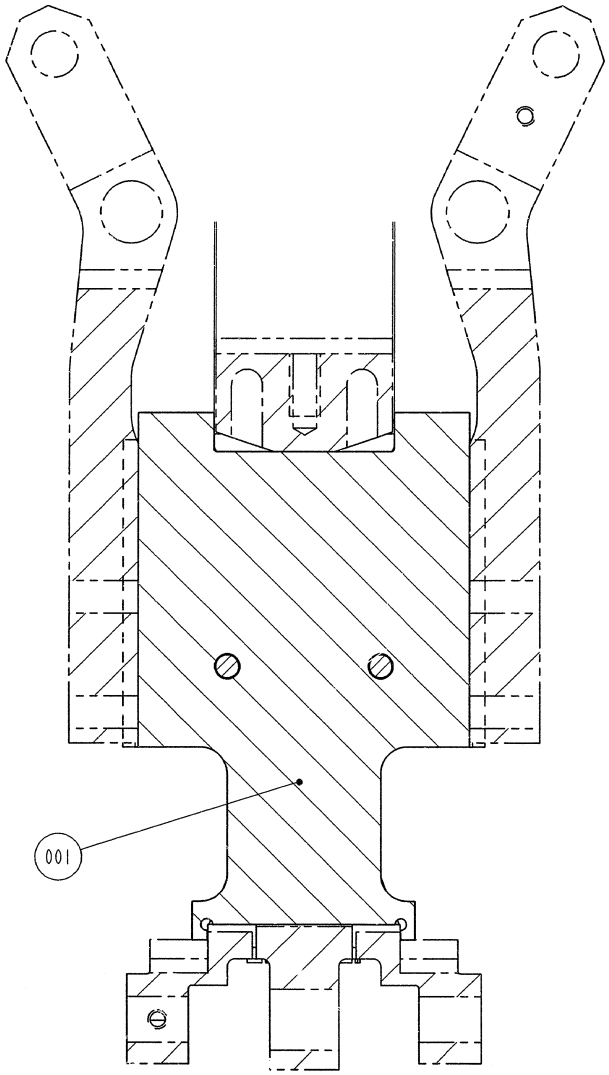

A-A

FOR:
PRESSURE DEVICE

TENSILE PER:
DISPOSITIVO DI PRESSIONE

S-1348610-1
ECN 71667

ECM: 214689 - 20050708
Group number: 1348610-0100
Assembly Drawing: 1348610-1_1_AA

Pos	Part No	UN	Qty	Description	Page No
TPA 0200SQ					
001	2532611-0000		1	TEMPLATE	
002	1348375-0000		1	SPACER	
003	1348361-0000		1	CLAMP	
TPA 0250SQ					
001	2761510-0000		1	TEMPLATE	
002	1348375-0000		1	SPACER	
003	1348361-0000		1	CLAMP	
TPA 0330SQ					
001	1350155-0000		1	TEMPLATE	
002	1346673-0000		1	SPACER	
003	1346670-0000		1	CLAMP	
Common Parts					
004	312105-0382		2	SCREW, M6S ISO 4014 M6X60 A4 80	
005	315105-0153		2	WASHER PLAIN, 6,4X12X1,5 A4 BRB	

Pos	Part No	UN	Qty	Description	Page No

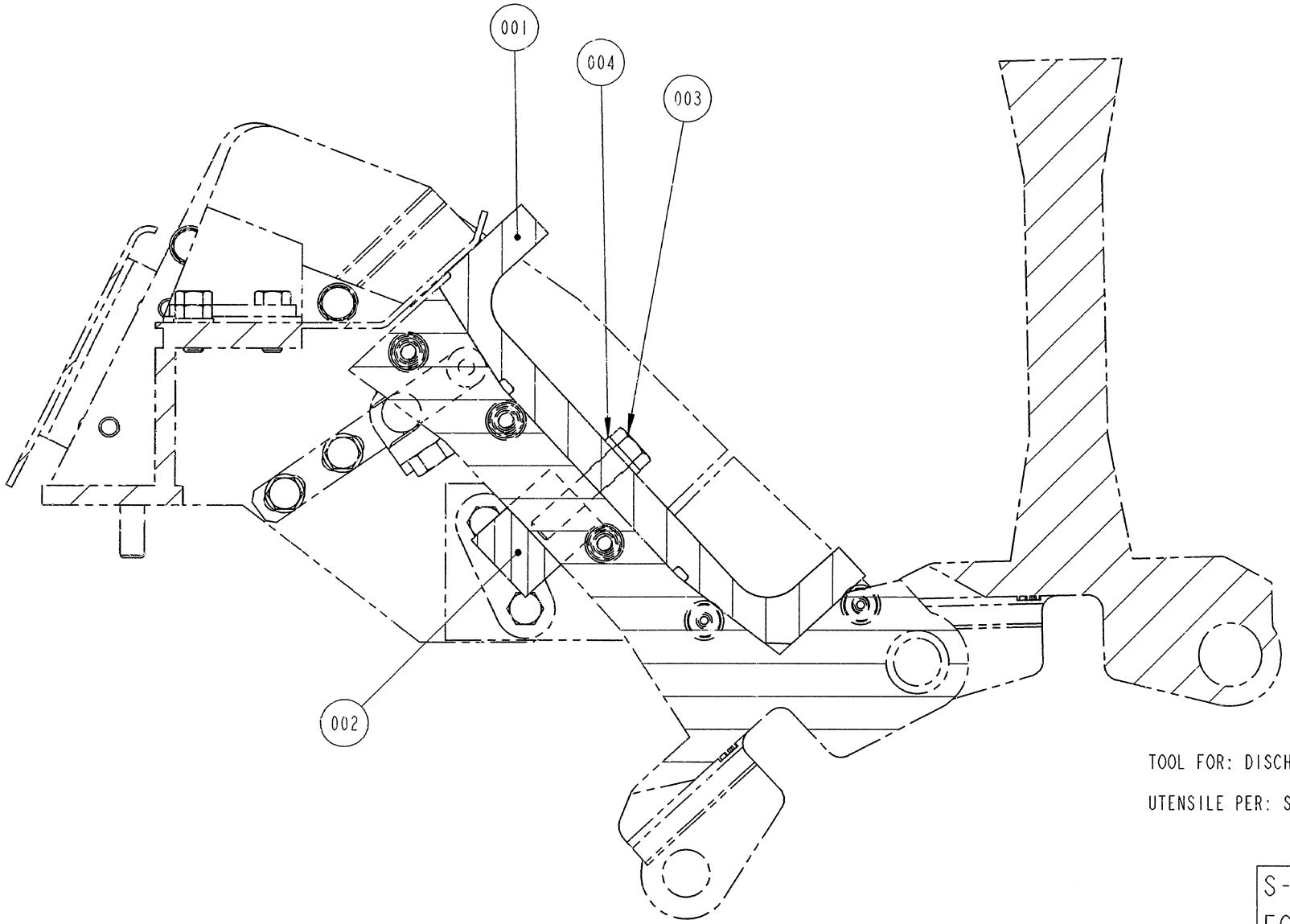

TOOL FOR: DISCHARGE CHUTE

UTENSILE PER: SCIVOLO DI SCARICO

S-1348611-1
ECN 71667

ECM: 104000 - 20030513
Group number: 1348611-0100
Assembly Drawing: 1348611-1_1_AA

Pos	Part No	UN	Qty	Description	Page No
TPA 0200SQ					
001	2532612-0000		1	TEMPLATE	
002	1348361-0000		1	CLAMP	
TPA 0250SQ					
001	1348371-0000		1	TEMPLATE	
002	1348361-0000		1	CLAMP	
TPA 0330SQ					
001	1346669-0000		1	TEMPLATE	
002	1346670-0000		1	CLAMP	
Common Parts					
003	312105-0374		2	SCREW, M6S ISO 4014 M6X30 A4 80	
004	315105-0153		2	WASHER PLAIN, 6,4X12X1,5 A4 BRB	

Pos	Part No	UN	Qty	Description	Page No

This page is intentionally left blank.

ECM: 291764 - 20070126
Group number: 76600-0200
Assembly Drawing:

Pos	Part No	UN	Qty	Description	Page No
TBA 0100B, TBA 0125S					
016	76592-0100		1	TEMPLATE TUBE FORMING	**12-73**
TBA 0160S, TBA 0200M, TBA 0200S, TBA 0250S, TPA 0250SQ, TPA 0200SQ					
017	76598-0100		1	TEMPLATE TUBE FORMING	**12-75**
TBA 0200B, TBA 0200SQ, TBA 0284B, TBA 0250B, TBA 0300S, TPA 0330SQ					
020	76333-0100		1	TEMPLATE UPPER FORMING CLAMP	**12-77**
030	76407-0100		1	TEMPLATE DIVIDED FORMING RING	**12-79**
040	76409-0100		1	TEMPLATE MOVABLE FORMING RING	**12-81**
TBA 0330S					
020	76333-0100		1	TEMPLATE UPPER FORMING CLAMP	**12-77**
030	76407-0100		1	TEMPLATE DIVIDED FORMING RING	**12-79**
Common Parts					
005	76591-0100		1	PONCH	**12-83**
010	76335-0200		1	SETTING TOOL	**12-85, 12-87, 12-89**
050	76402-0200		1	TEMPLATE DRIVEN BENDING ROLLER	**12-101**

Pos	Part No	UN	Qty	Description	Page No

Machine Type | Group Description | Used-In | Group Number | Page No

This page is intentionally left blank.

ECM: 73030 - 20000321
Group number: 76592-0100
Assembly Drawing:

Pos	Part No	UN	Qty	Description	Page No
-					
010	76593-0000		1	BRACKET	
020	76276-0000		2	SCREW	
500	311101-0308		2	PARALLEL PIN ISO 2338 5H6X16 ST	

Pos	Part No	UN	Qty	Description	Page No

This page is intentionally left blank.

ECM: 73030 - 20000321
Group number: 76598-0100
Assembly Drawing:

Pos	Part No	UN	Qty	Description	Page No
-					
010	76599-0000		1	BRACKET	
020	76276-0000		2	SCREW	
500	311101-0308		2	PARALLEL PIN ISO 2338 5H6X16 ST	

Pos	Part No	UN	Qty	Description	Page No

This page is intentionally left blank.

ECM: 471976 - 20100930
Group number: 76333-0100
Assembly Drawing:

Pos	Part No	UN	Qty	Description	Page No
-					
010	3099899-0000		1	BRACKET	
020	76276-0000		2	SCREW	
500	311101-0308		2	PARALLEL PIN ISO 2338 5H6X16 ST	

Pos	Part No	UN	Qty	Description	Page No

This page is intentionally left blank.

ECM: 73030 - 20000321
Group number: 76407-0100
Assembly Drawing:

Pos	Part No	UN	Qty	Description	Page No
-					
010	76408-0000		1	BRACKET	
020	76276-0000		2	SCREW	
500	311101-0308		2	PARALLEL PIN ISO 2338 5H6X16 ST	

Pos	Part No	UN	Qty	Description	Page No

This page is intentionally left blank.

ECM: 73030 - 20000321
Group number: 76409-0100
Assembly Drawing:

Pos	Part No	UN	Qty	Description	Page No
-					
010	76410-0000		1	BRACKET	
020	76276-0000		2	SCREW	
500	311101-0308		2	PARALLEL PIN ISO 2338 5H6X16 ST	

Pos	Part No	UN	Qty	Description	Page No

Machine Type | Group Description | Used-In | Group Number | Page No

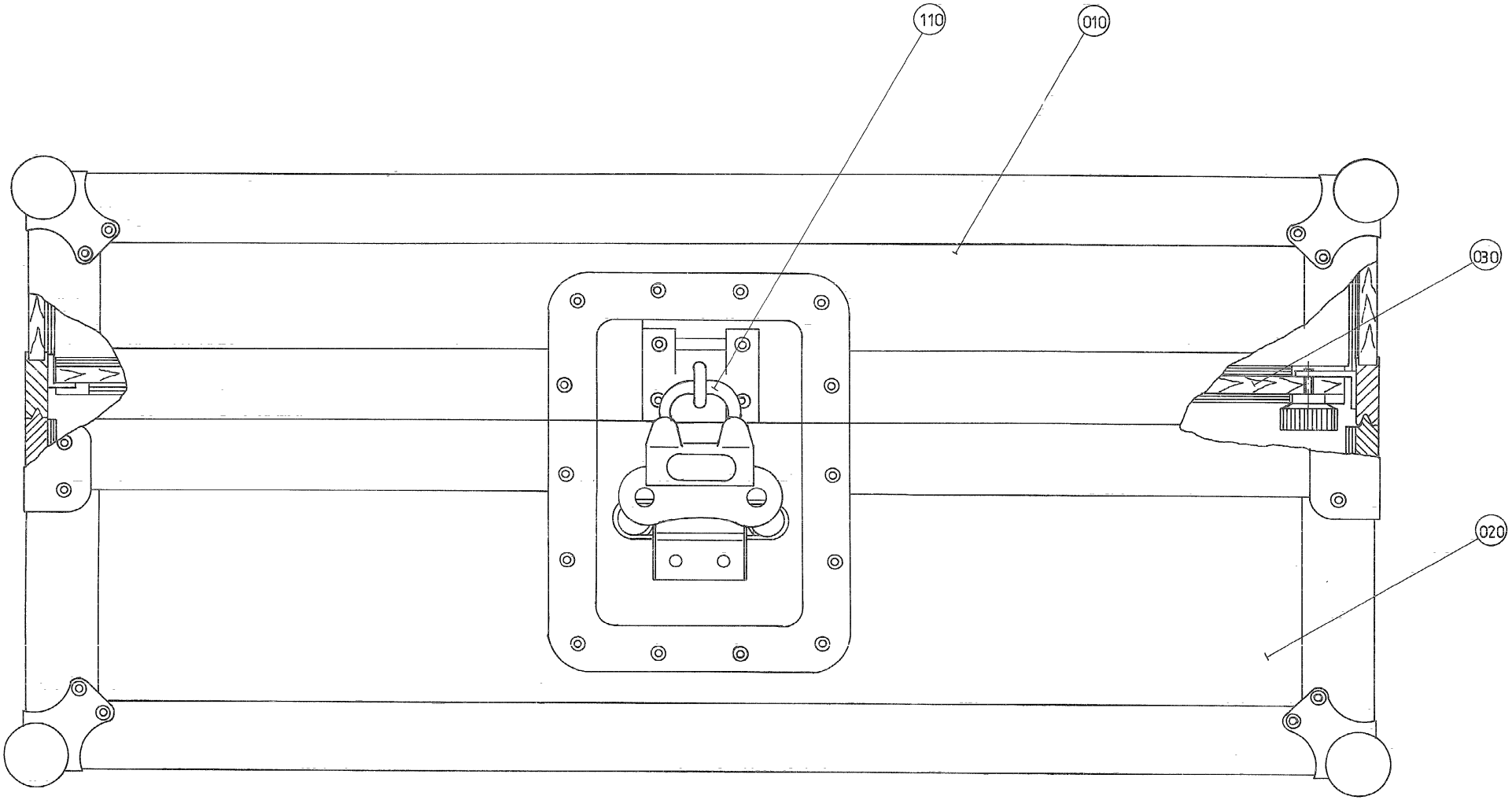
110
010
030
020

ECM: - -
Group number: 76591-0100
Assembly Drawing: 76591-1_1_AA

Pos	Part No	UN	Qty	Description	Page No
-					
010	76590-0000		1	PONCH	
	90194-0012		*1*	*LABEL REPL.BY 90194-0127*	
020	76337-0000		1	PONCH	
030	76484-0000		1	LID	
110	779911-0101		2	PADLOCK ABLOY, L=46 T=7	

Pos	Part No	UN	Qty	Description	Page No

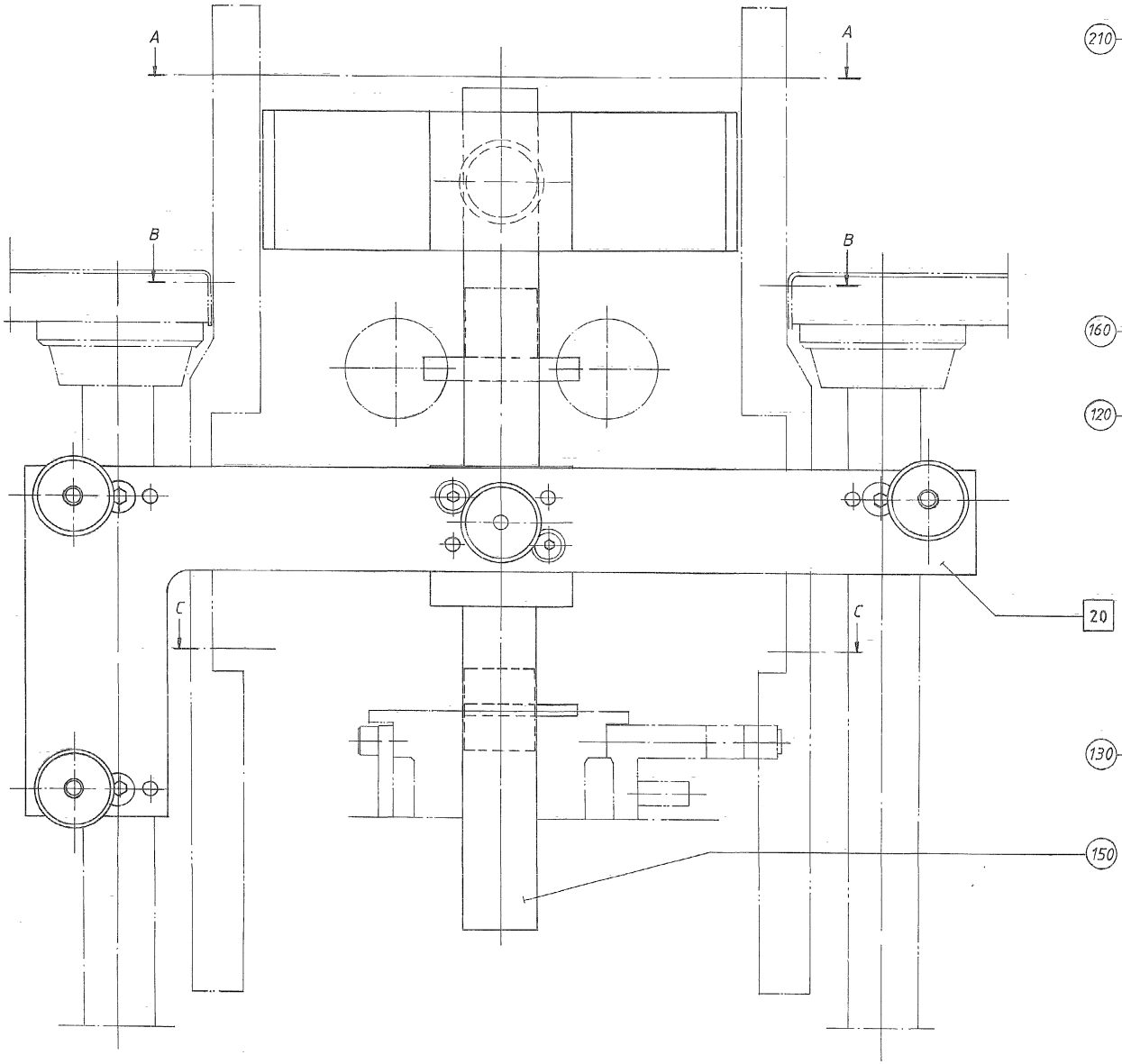
A
A
B
B
C
C
20
150

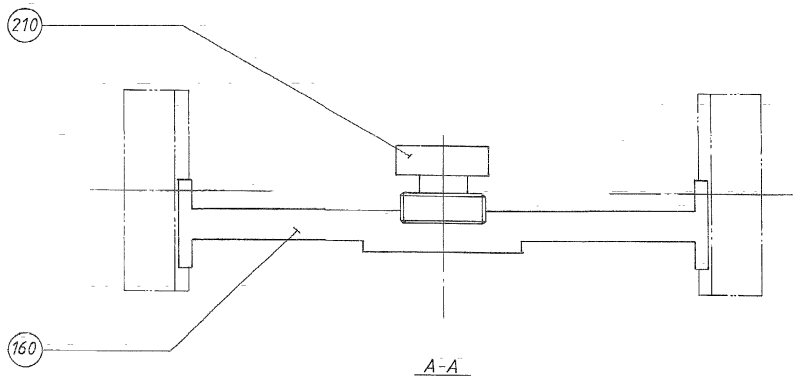
210
160
A-A

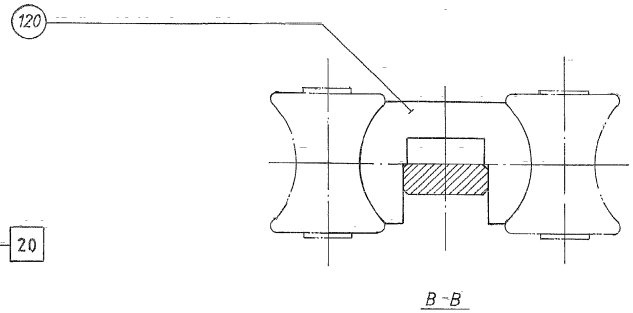
120
B-B

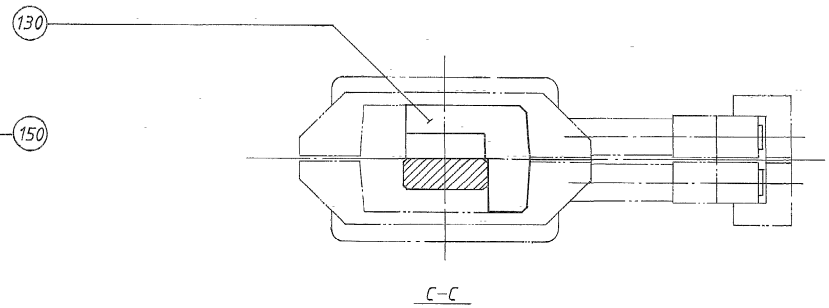
130
C-C

ECM: 291765 - 20070126
Group number: 76335-0200
Assembly Drawing: 76335-1_1_AA

This list covers pages from 12-84 to 12-89

Pos	Part No	UN	Qty	Description	Page No
TBA 0300S, TBA 0330S (See drawing on page: 12-84)					
010	75469-0300		1	SETTING TOOL VOLUME ADJUSTMENT	**12-91**
020	76291-0100		1	YOKE	**12-93**
030	76301-0100		1	TEMPLATE YOKE	**12-95**
040	76304-0100		1	COMPRESSION SPRING	**12-97**
120	75936-0000		1	TEMPLATE	
130	75939-0000		1	TEMPLATE	
140	75945-0000		1	CAM TEMPLATE	
150	76298-0000		1	RULER	
160	76299-0000		1	TEMPLATE SUPPORT ROLLERS	
170	76349-0000		1	CAM TEMPLATE	
210	90051-0059		1	KNOB, EXTERNAL THREAD. NO. 8308-1550	
TPA 0200SQ (See drawing on page: 12-84)					
010	75469-0300		1	SETTING TOOL VOLUME ADJUSTMENT	**12-91**
020	76291-0100		1	YOKE	**12-93**
030	929379-0100		1	TEMPLATE JAW SYSTEM	**12-99**
040	76304-0100		1	COMPRESSION SPRING	**12-97**
110	75931-0005		1	SETTING TEMPLATE	
120	76176-0000		1	TEMPLATE	
130	1350999-0000		1	TEMPLATE	
140	75945-0000		1	CAM TEMPLATE	
150	76298-0000		1	RULER	
160	76299-0000		1	TEMPLATE SUPPORT ROLLERS	
TPA 0250SQ (See drawing on page: 12-84)					
010	75469-0300		1	SETTING TOOL VOLUME ADJUSTMENT	**12-91**
020	76291-0100		1	YOKE	**12-93**
030	929379-0100		1	TEMPLATE JAW SYSTEM	**12-99**
040	76304-0100		1	COMPRESSION SPRING	**12-97**
110	75931-0016		1	SETTING TEMPLATE	
120	76176-0000		1	TEMPLATE	
130	1350999-0000		1	TEMPLATE	
140	75945-0000		1	CAM TEMPLATE	
150	76298-0000		1	RULER	
160	76299-0000		1	TEMPLATE SUPPORT ROLLERS	
220	929430-0000		1	TOOL	
TPA 0330SQ (See drawing on page: 12-84)					
010	75469-0300		1	SETTING TOOL VOLUME ADJUSTMENT	**12-91**
020	76291-0100		1	YOKE	**12-93**
030	929379-0100		1	TEMPLATE JAW SYSTEM	**12-99**
040	76304-0100		1	COMPRESSION SPRING	**12-97**
110	75931-0015		1	SETTING TEMPLATE	
120	929328-0000		1	TEMPLATE	
130	929373-0000		1	TEMPLATE	
140	75945-0000		1	CAM TEMPLATE	
150	76298-0000		1	RULER	
160	76299-0000		1	TEMPLATE SUPPORT ROLLERS	
220	929430-0000		1	TOOL	
TBA 0100B, TBA 0125S (See drawing on page: 12-86)					
110	75931-0009		1	SETTING TEMPLATE	
120	75937-0000		1	TEMPLATE	
130	75943-0000		1	TEMPLATE	
TBA 0160S (See drawing on pages: 12-84, 12-88)					
110	75931-0008		1	SETTING TEMPLATE	
120	75938-0000		1	TEMPLATE	
120	76176-0000		1	TEMPLATE	
130	75944-0000		1	TEMPLATE	
TBA 0200B (See drawing on page: 12-84)					
010	75469-0300		1	SETTING TOOL VOLUME ADJUSTMENT	**12-91**
020	76291-0100		1	YOKE	**12-93**
030	76301-0100		1	TEMPLATE YOKE	**12-95**
040	76304-0100		1	COMPRESSION SPRING	**12-97**
110	75931-0011		1	SETTING TEMPLATE	
120	75936-0000		1	TEMPLATE	
130	75939-0000		1	TEMPLATE	
140	75945-0000		1	CAM TEMPLATE	
150	76298-0000		1	RULER	
160	76299-0000		1	TEMPLATE SUPPORT ROLLERS	
170	76349-0000		1	CAM TEMPLATE	
210	90051-0059		1	KNOB, EXTERNAL THREAD. NO. 8308-1550	
TBA 0200M (See drawing on page: 12-84)					
110	75931-0005		1	SETTING TEMPLATE	
120	574454-0000		1	TEMPLATE	
130	574455-0000		1	TEMPLATE	
TBA 0200S (See drawing on page: 12-84)					
110	75931-0010		1	SETTING TEMPLATE	
120	76176-0000		1	TEMPLATE	
130	75944-0000		1	TEMPLATE	
TBA 0200SQ (See drawing on pages: 12-84, 12-86, 12-88)					
010	75469-0300		1	SETTING TOOL VOLUME ADJUSTMENT	**12-91**
020	76291-0100		1	YOKE	**12-93**
030	929379-0100		1	TEMPLATE JAW SYSTEM	**12-99**
040	76304-0100		1	COMPRESSION SPRING	**12-97**
110	75931-0017		1	SETTING TEMPLATE	
120	1532527-0000		1	TEMPLATE	

Machine Type | Group Description | Used-In | Group Number | Page No

SETTING TOOL

Drawing file: 76335-2_1_AA.tif

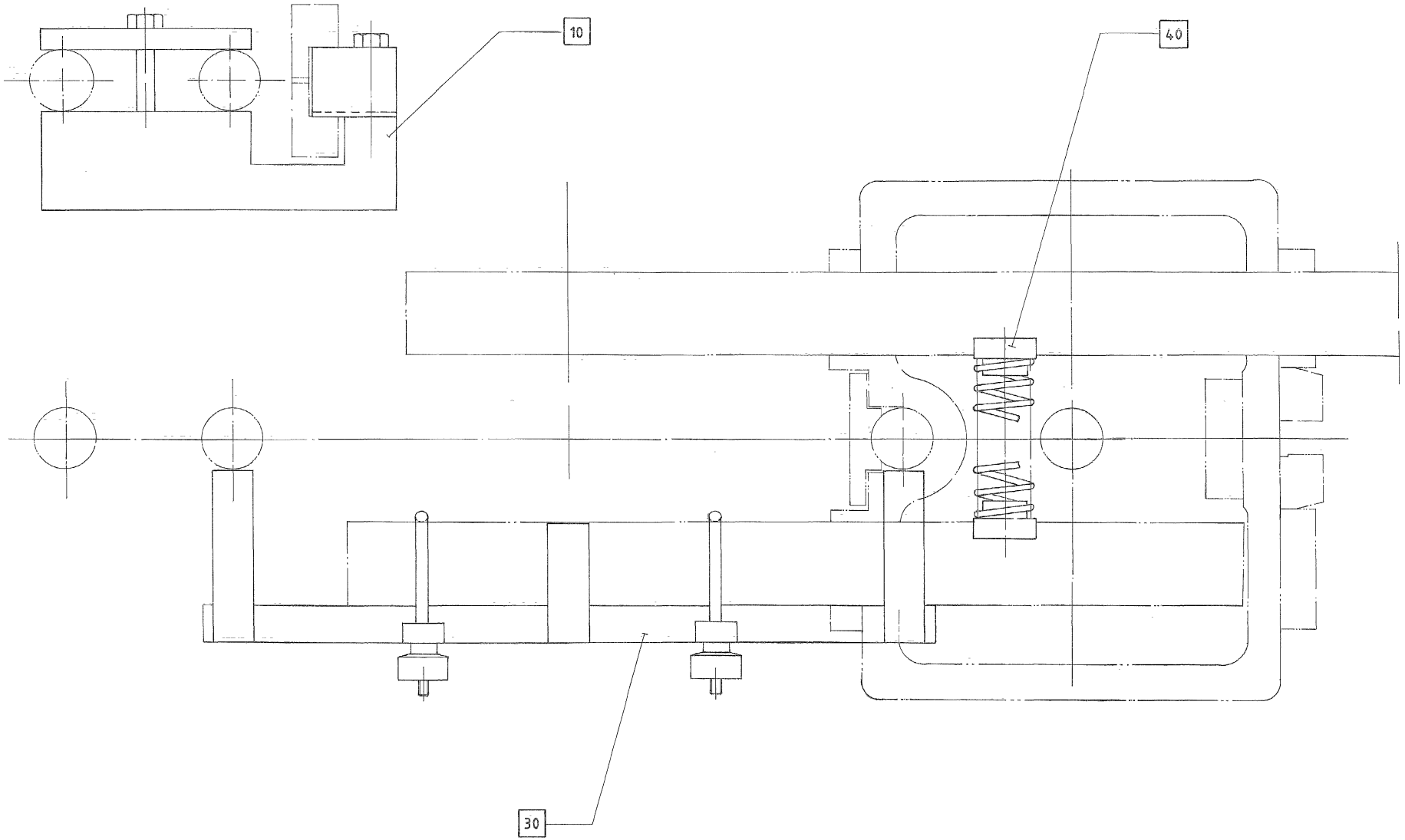

Pos	Part No	UN	Qty	Description	Page No
TBA 0200SQ (Cont'd) (See drawing on pages: 12-84, 12-86, 12-88)					
130	1538757-0000		1	TOOL	
140	75945-0000		1	CAM TEMPLATE	
150	76298-0000		1	RULER	
160	76299-0000		1	TEMPLATE SUPPORT ROLLERS	
170	76349-0000		1	CAM TEMPLATE	
210	90051-0059		1	KNOB, EXTERNAL THREAD. NO. 8308-1550	
TBA 0250B (See drawing on page: 12-84)					
010	75469-0300		1	SETTING TOOL VOLUME ADJUSTMENT	**12-91**
020	76291-0100		1	YOKE	**12-93**
030	76301-0100		1	TEMPLATE YOKE	**12-95**
040	76304-0100		1	COMPRESSION SPRING	**12-97**
110	75931-0005		1	SETTING TEMPLATE	
120	75936-0000		1	TEMPLATE	
130	75939-0000		1	TEMPLATE	
140	75945-0000		1	CAM TEMPLATE	
150	76298-0000		1	RULER	
160	76299-0000		1	TEMPLATE SUPPORT ROLLERS	
170	76349-0000		1	CAM TEMPLATE	
210	90051-0059		1	KNOB, EXTERNAL THREAD. NO. 8308-1550	
TBA 0250S (See drawing on page: 12-84)					
110	75931-0010		1	SETTING TEMPLATE	
120	574454-0000		1	TEMPLATE	
130	574455-0000		1	TEMPLATE	
TBA 0284B (See drawing on page: 12-84)					
010	75469-0300		1	SETTING TOOL VOLUME ADJUSTMENT	**12-91**
020	76291-0100		1	YOKE	**12-93**
030	76301-0100		1	TEMPLATE YOKE	**12-95**
040	76304-0100		1	COMPRESSION SPRING	**12-97**
110	75931-0012		1	SETTING TEMPLATE	
120	75936-0000		1	TEMPLATE	
130	75939-0000		1	TEMPLATE	
140	75945-0000		1	CAM TEMPLATE	
150	76298-0000		1	RULER	
160	76299-0000		1	TEMPLATE SUPPORT ROLLERS	
170	76349-0000		1	CAM TEMPLATE	
210	90051-0059		1	KNOB, EXTERNAL THREAD. NO. 8308-1550	
Common Parts					
110	75931-0004		1	SETTING TEMPLATE	

Pos	Part No	UN	Qty	Description	Page No

SETTING TOOL

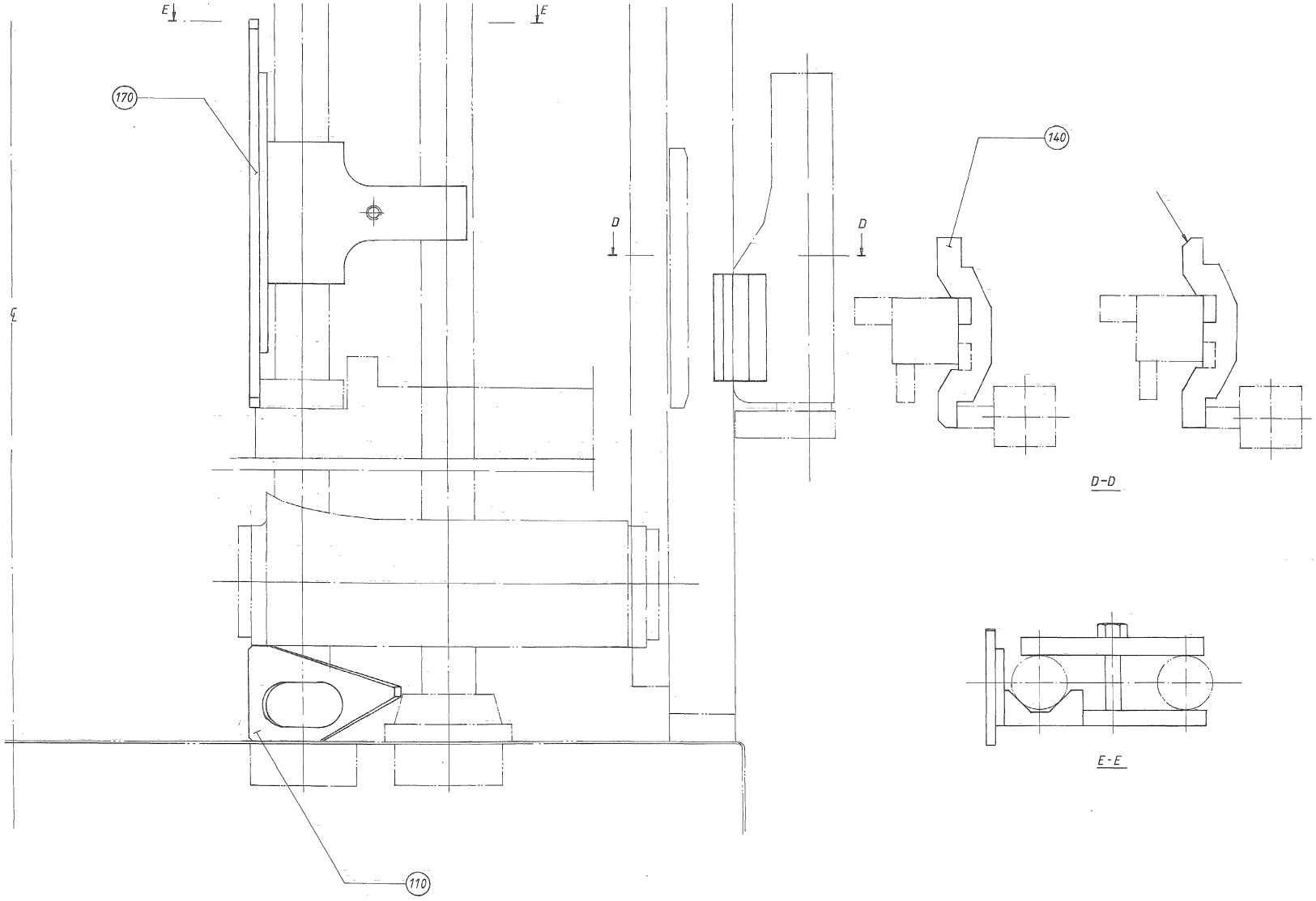

ECM: 291765 - 20070126
Group number: 76335-0200
Assembly Drawing: 76335-3_1_AA

This list covers pages from 12-84 to 12-89

Pos	Part No	UN	Qty	Description	Page No
SEE PREVIOUS LISTS PAGES: 12-85, 12-87.					

Pos	Part No	UN	Qty	Description	Page No

Machine Type	Group Description	Used-In	Group Number	Page No

SETTING TOOL VOLUME ADJUSTMENT

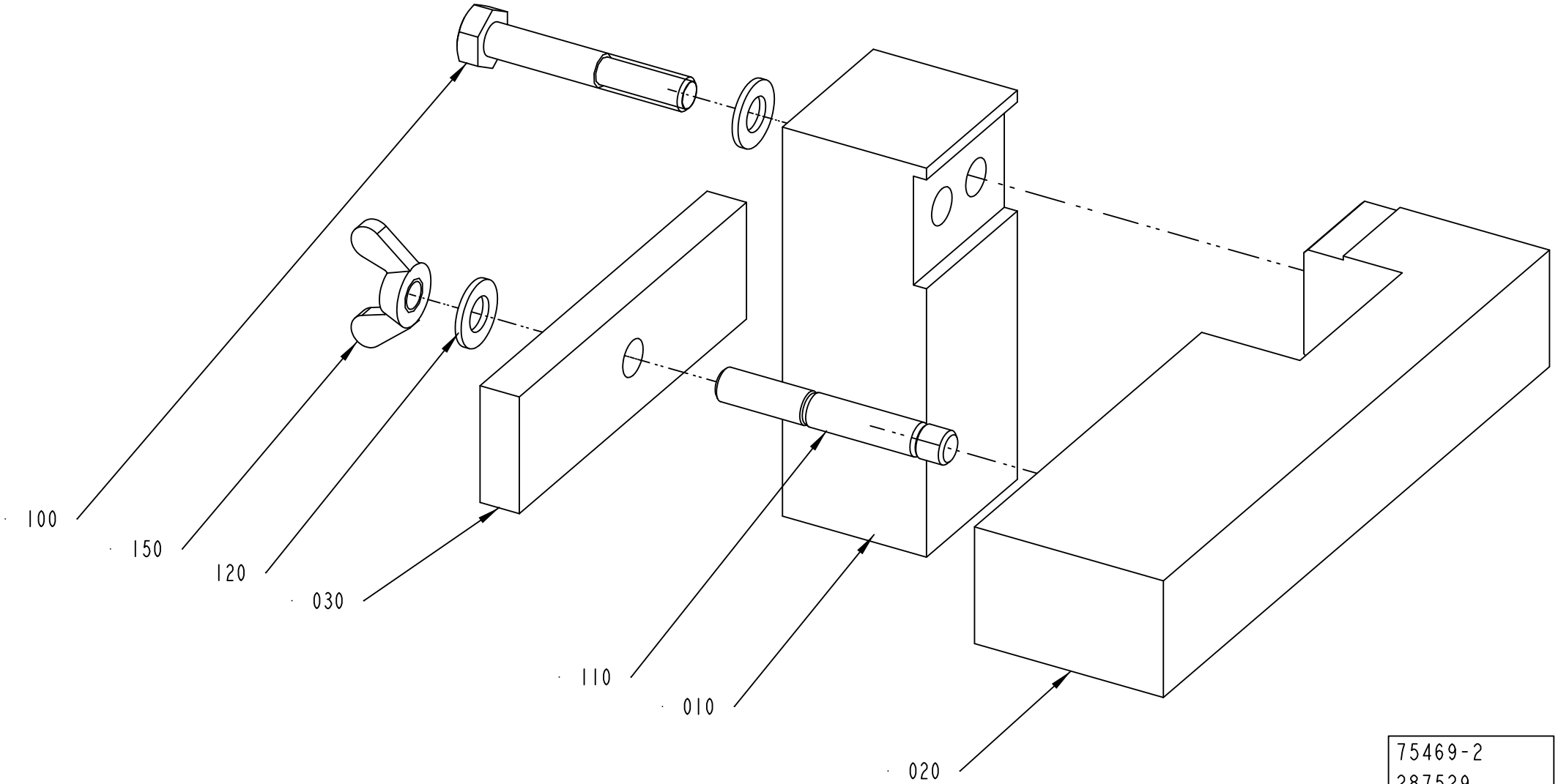

ECM: 291766 - 20070126
Group number: 75469-0300
Assembly Drawing: 75469-2_1_AA

Pos	Part No	UN	Qty	Description	Page No
TBA					
010	75470-0000		1	TEMPLATE	
TPA					
010	2854653-0000		1	TEMPLATE	
Common Parts					
020	75471-0000		1	BRACKET	
030	75472-0000		1	CLAMP IRON	
100	312101-0461		1	SCREW M6S M8X50 FZB	
110	312303-0463		1	SCREW DIN 938 PS M8X50 A4 80	
120	315105-0165		2	WASHER PLAIN, 8,4X16X1,6 A4 BRB	
150	312715-0118		1	WING NUT DIN 315 A2 MVM-K M8	

Pos	Part No	UN	Qty	Description	Page No

Machine Type | Group Description | Used-In | Group Number | Page No

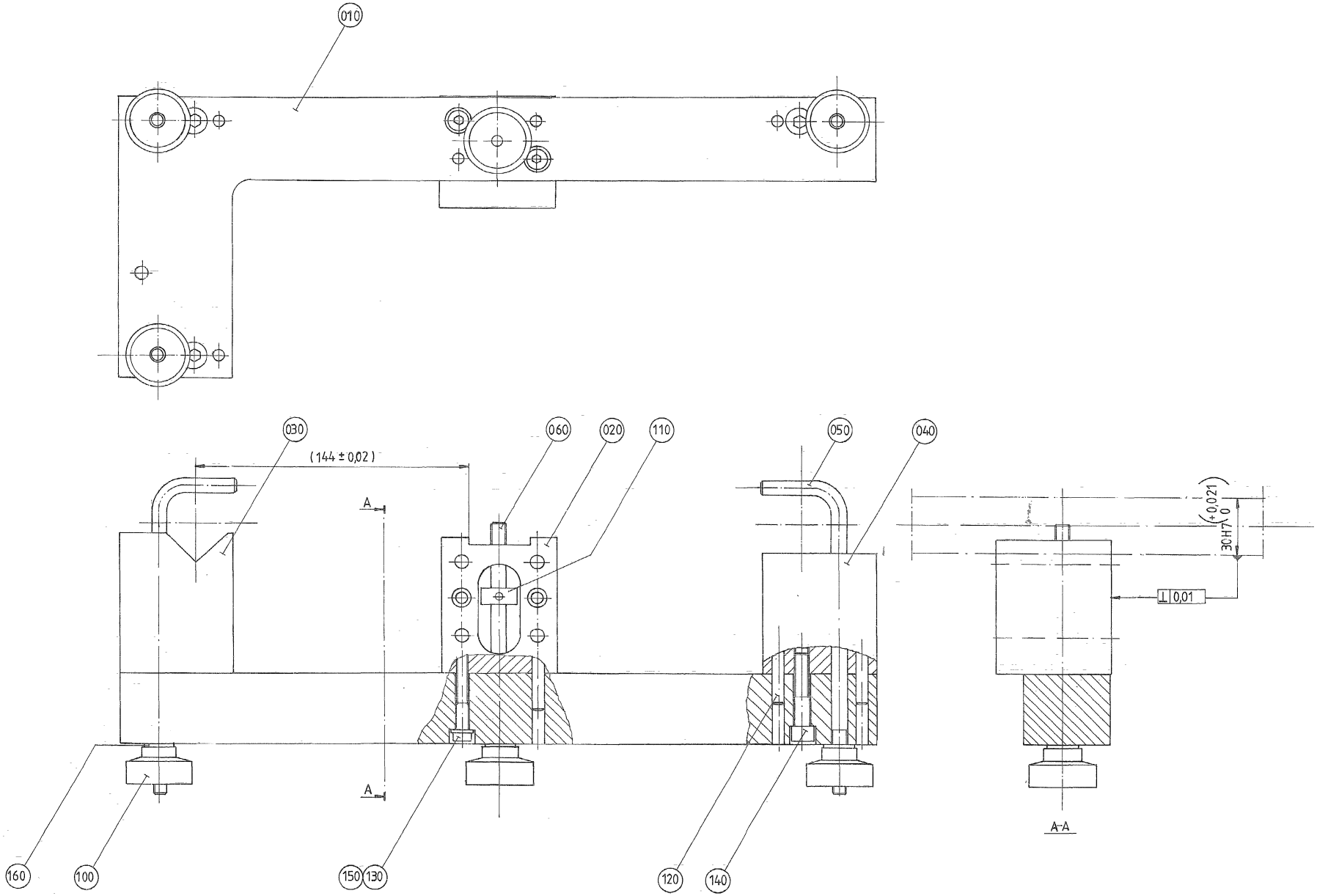
010
030
060
020
110
050
040
(144 ± 0,02)
A
A
30 H7 (+0,021 0)
⊥ 0,01
A-A
160
100
150
130
120
140

ECM: 71883 - 19990419
Group number: 76291-0100
Assembly Drawing: 76291-1_1_AA

Pos	Part No	UN	Qty	Description	Page No
TBA/19					
150	315105-0153		2	WASHER PLAIN, 6,4X12X1,5 A4 BRB	
160	315105-0165		4	WASHER PLAIN, 8,4X16X1,6 A4 BRB	
Common Parts					
010	76292-0000		1	YOKE	
020	76293-0000		1	CANTILEVER	
030	76294-0000		2	LOCATING PIECE	
040	76295-0000		1	SPACER	
050	76296-0000		3	HOOK	
060	76297-0000		1	SCREW	
100	90051-0040		3	KNOB, INTERNAL THREAD, NO. 8308-0627	
110	315742-0104		1	RETAINING RING, 8 SMS 199 RFR	
120	311103-0357		8	PARALLEL PIN ISO 2338 6M6X30 A1	
130	312115-0378		2	SCREW ISO4762 M6X40 A4 80	
140	312115-0459		3	SCREW ISO4762 M8X40 A4 80	

Pos	Part No	UN	Qty	Description	Page No

TEMPLATE YOKE

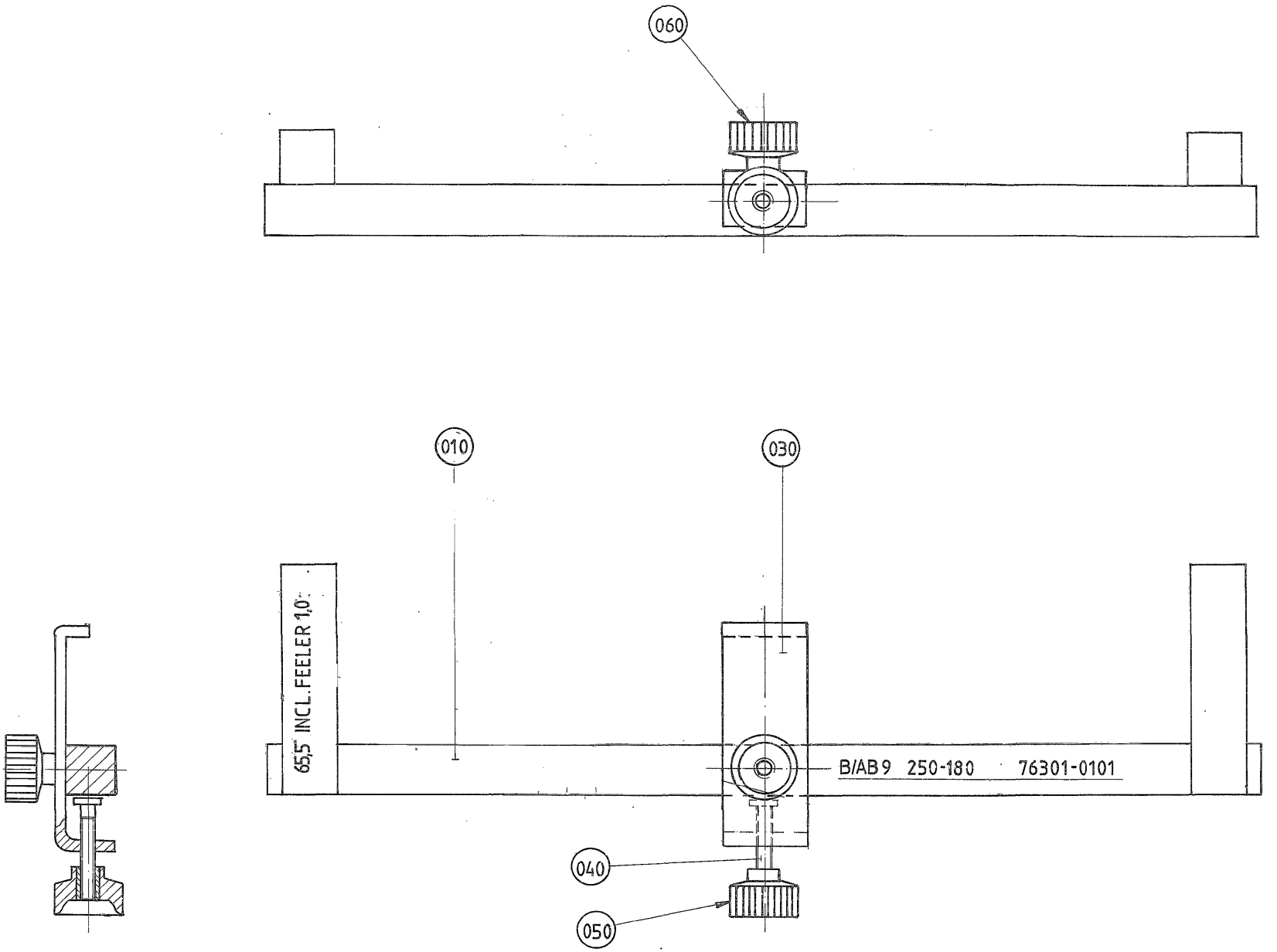

ECM: - -
Group number: 76301-0100
Assembly Drawing: 76301-1_1_AA

Pos	Part No	UN	Qty	Description	Page No
-					
010	76302-0000		1	BRACKET	
030	76464-0000		1	CANTILEVER	
040	76465-0000		1	SCREW	
050	90051-0053		1	KNOB, INTERNAL THREAD, M6 24X17	
060	90051-0083		1	KNOB, EXTERNAL THREAD. NO. 8308-1321	

Pos	Part No	UN	Qty	Description	Page No

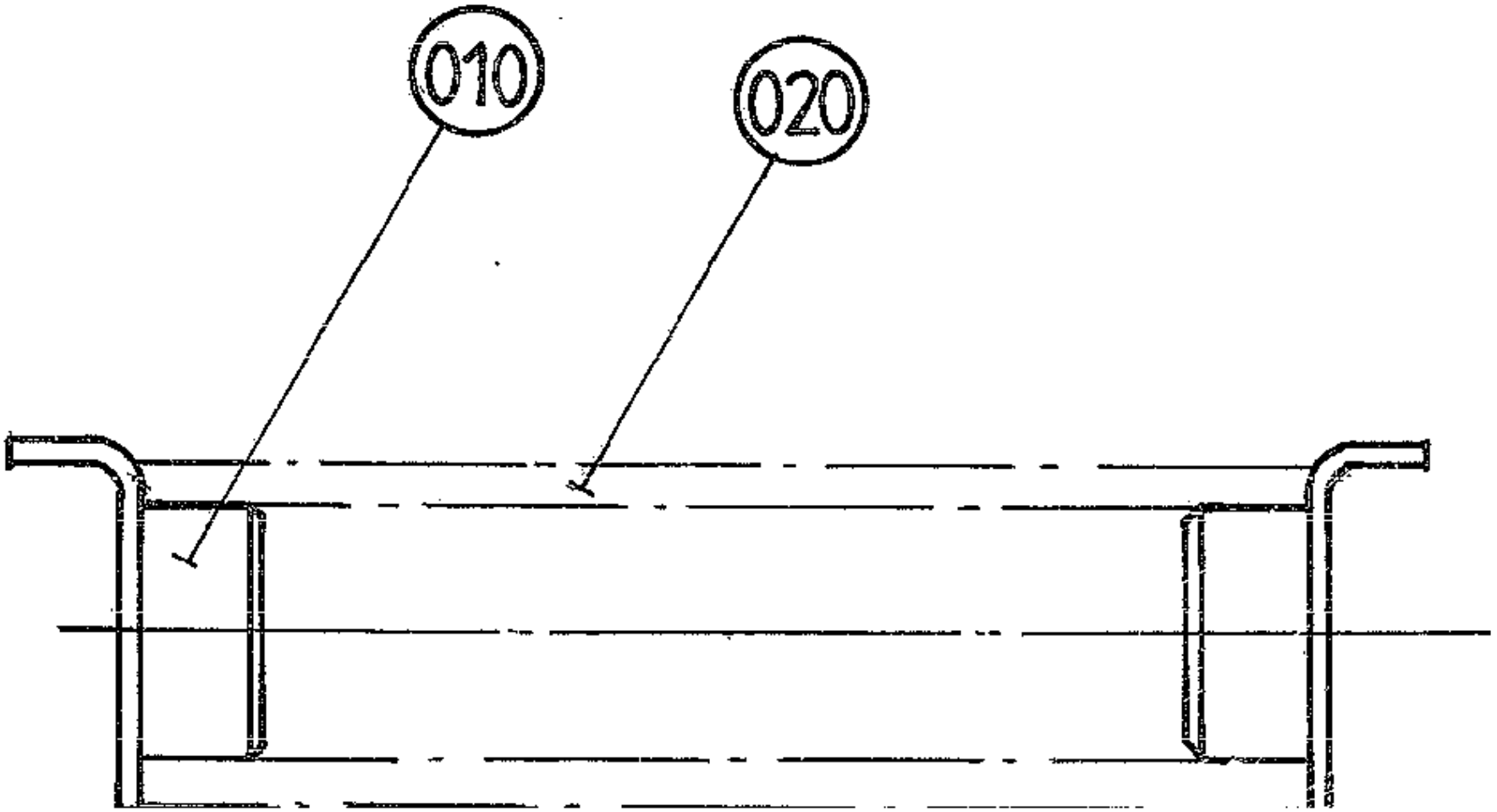
010
020

ECM: - -
Group number: 76304-0100
Assembly Drawing: 76304-1_1_AA

Pos	Part No	UN	Qty	Description	Page No
-					
010	76305-0000		2	BRACKET	
020	90335-0052		1	COMP. SPRING, 23400, 3,2X28,2X94,5	

Pos	Part No	UN	Qty	Description	Page No

TEMPLATE JAW SYSTEM

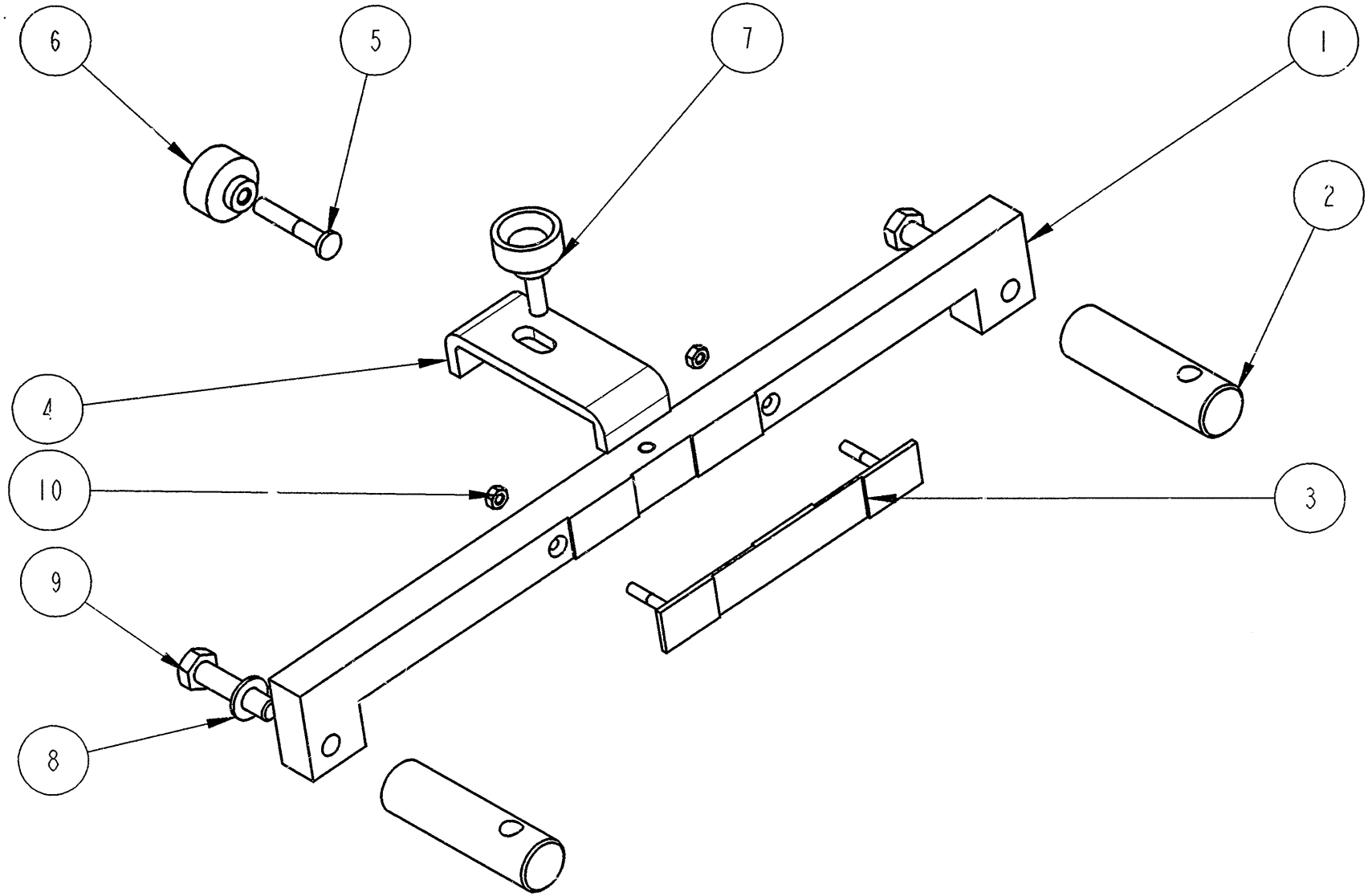

ECM: 89086 - 20010226
Group number: 929379-0100
Assembly Drawing: 929379-1_1_AA

Pos	Part No	UN	Qty	Description	Page No
TBA 0200SQ					
002	1524835-0000		2	TEMPLATE	
003	1524836-0000		1	SPACER	
TPA 0330SQ, TPA 0250SQ					
002	929378-0000		2	TEMPLATE YOKE	
003	929377-0000		1	SPACER	
Common Parts					
001	929376-0000		1	TEMPLATE YOKE	
004	929381-0000		1	BRACKET	
005	76465-0000		1	SCREW	
006	90051-0053		1	KNOB, INTERNAL THREAD, M6 24X17	
007	90051-0083		1	KNOB, EXTERNAL THREAD. NO. 8308-1321	
008	315105-0165		2	WASHER PLAIN, 8,4X16X1,6 A4 BRB	
009	312109-0457		2	SCREW, M6S ISO 4017 M8X35 A4 80	
010	312605-0312		2	HEXAGON NUT, M6M M4 A280	

Pos	Part No	UN	Qty	Description	Page No

TEMPLATE DRIVEN BENDING ROLLER

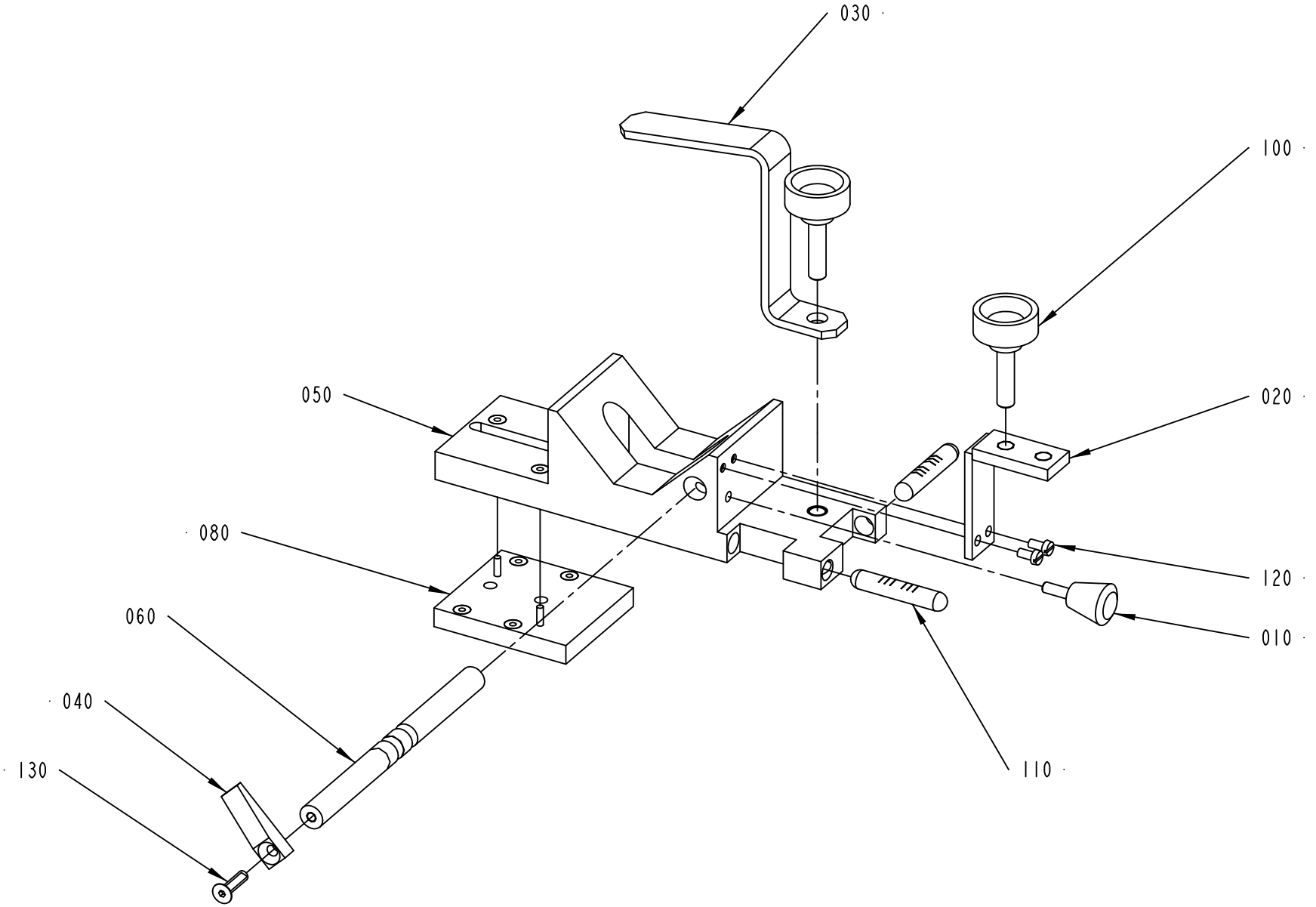

76402-2
181084

ECM: 224175 - 20050712
Group number: 76402-0200
Assembly Drawing: 76402-2_1_AB

Pos	Part No	UN	Qty	Description	Page No
-					
010	442113-0000		1	STOP	
020	752007-0000		1	HOLDER	
030	752668-0000		1	HOLDER	
040	1346000-0000		1	STOPPER	
050	1346001-0000		1	BLOCK	
060	1346002-0000		1	SHAFT	
070	1346003-0000		1	SHAFT	
080	1346004-0000		1	PLATE	
090	1346005-0000		1	PLATE	
100	90051-0059		2	KNOB, EXTERNAL THREAD. NO. 8308-1550	
110	90459-5200		2	SPIRIT LEVEL, 2864-0308	
120	312122-0287		2	SCREW ISO 1207 M4X8 NI PL BRASS	
130	312155-0331		1	SCREW DIN 7991 MF6S M5X20 A4 70	

Pos	Part No	UN	Qty	Description	Page No

This page is intentionally left blank.

ECM: - -
Group number: 577427-0100
Assembly Drawing:

Pos	Part No	UN	Qty	Description	Page No	Pos	Part No	UN	Qty	Description	Page No
-											
010	577333-0000		1	DOCUMENT FOLDER							

Machine Type	Group Description	Used-In	Group Number	Page No

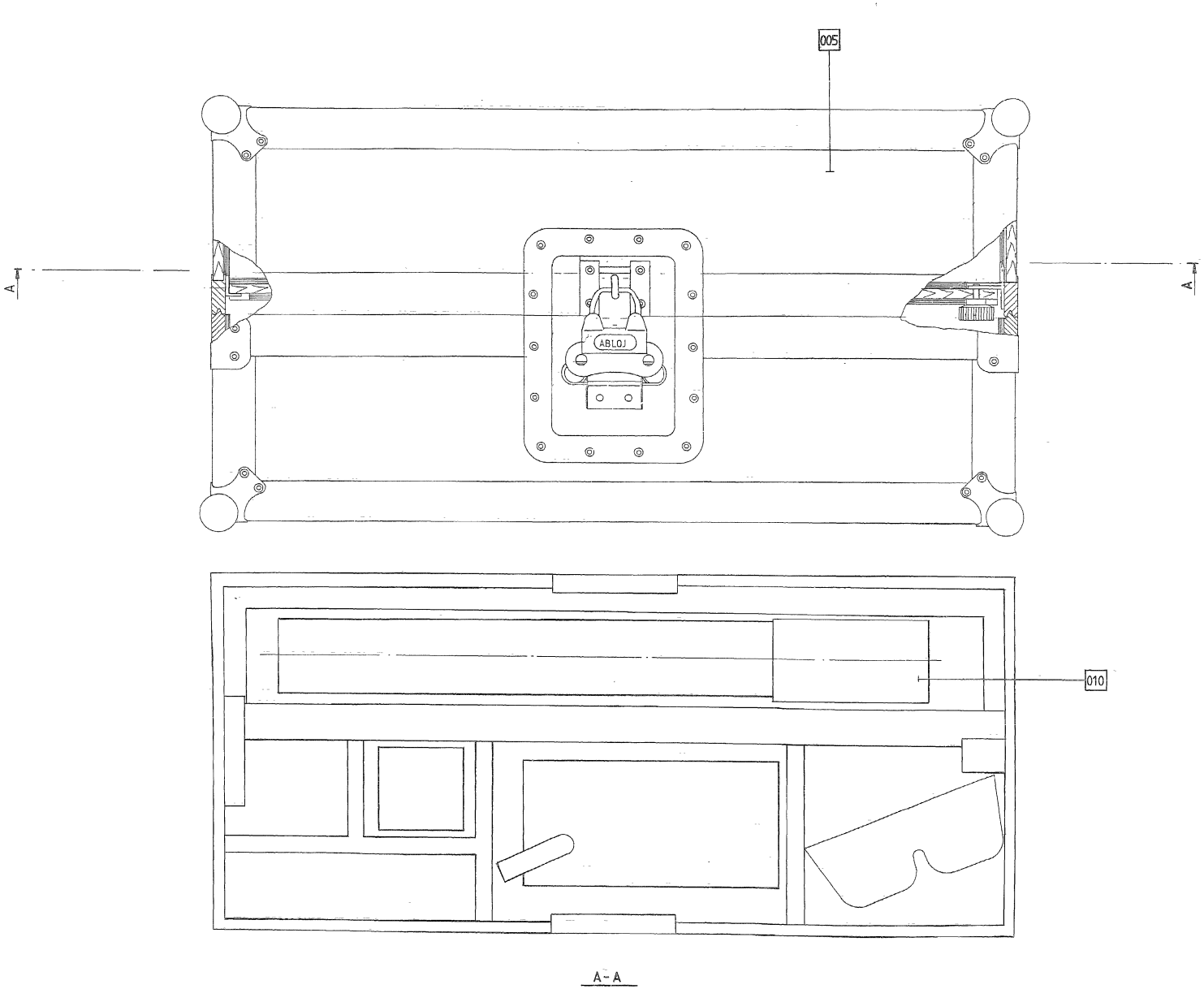
005
A
A
ABLOJ
010
A - A

ECM: 73030 - 20000321
Group number: 76350-0200
Assembly Drawing: 76350-1_1_AA

Pos	Part No	UN	Qty	Description	Page No
-					
F005	76470-0100		1	PONCH	**12-107**
F010	76594-0200		1	SETTING TOOL	**12-109**

Pos	Part No	UN	Qty	Description	Page No

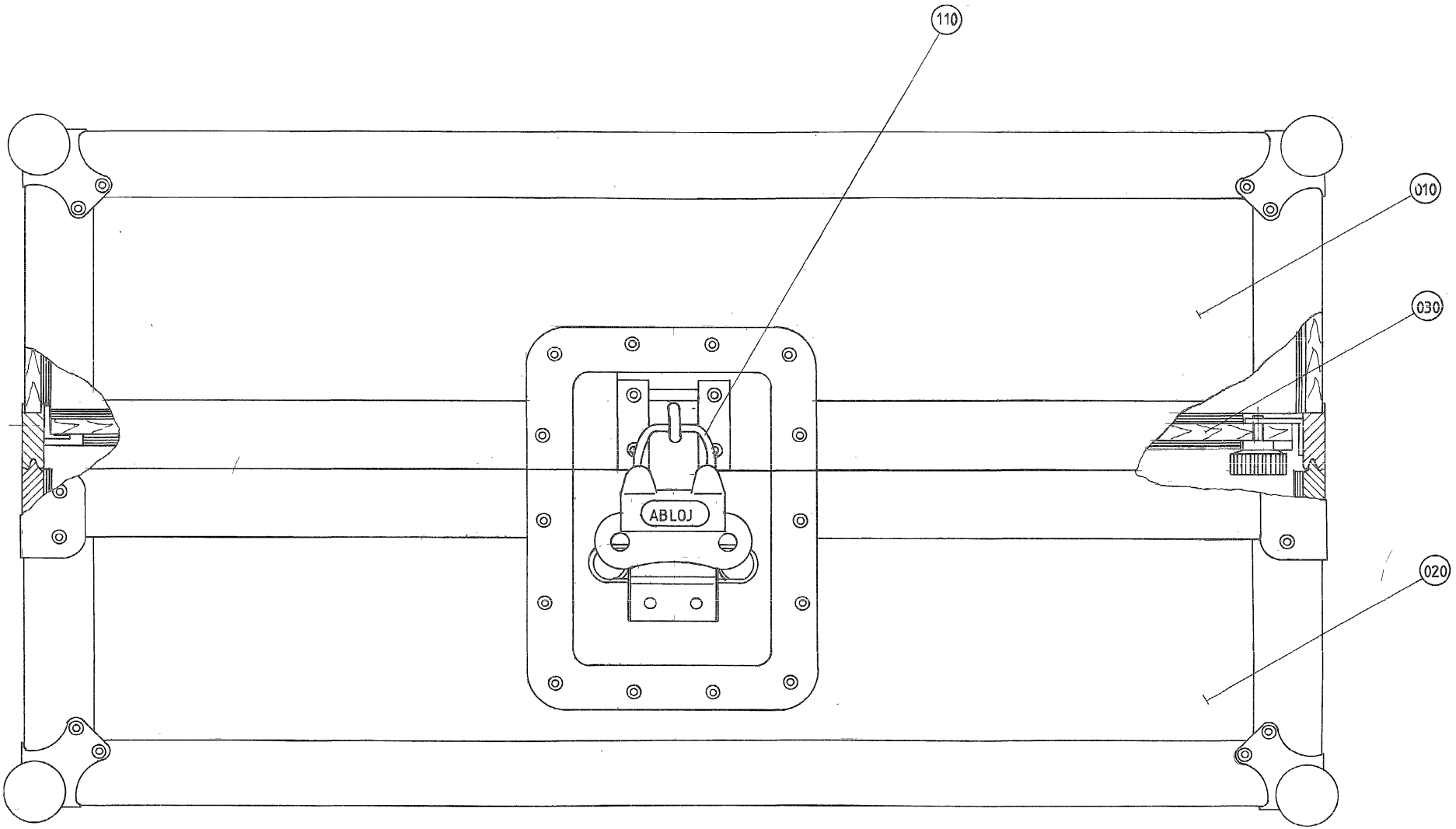
110
010
030
020
ABLOJ

ECM: - -
Group number: 76470-0100
Assembly Drawing: 76470-1_1_AA

Pos	Part No	UN	Qty	Description	Page No
-					
010	76471-0000		1	PONCH	
	90194-0012		*2*	*LABEL REPL.BY 90194-0127*	
020	76589-0000		1	PONCH	
030	76484-0000		1	LID	
110	779911-0101		2	PADLOCK ABLOY, L=46 T=7	

Pos	Part No	UN	Qty	Description	Page No

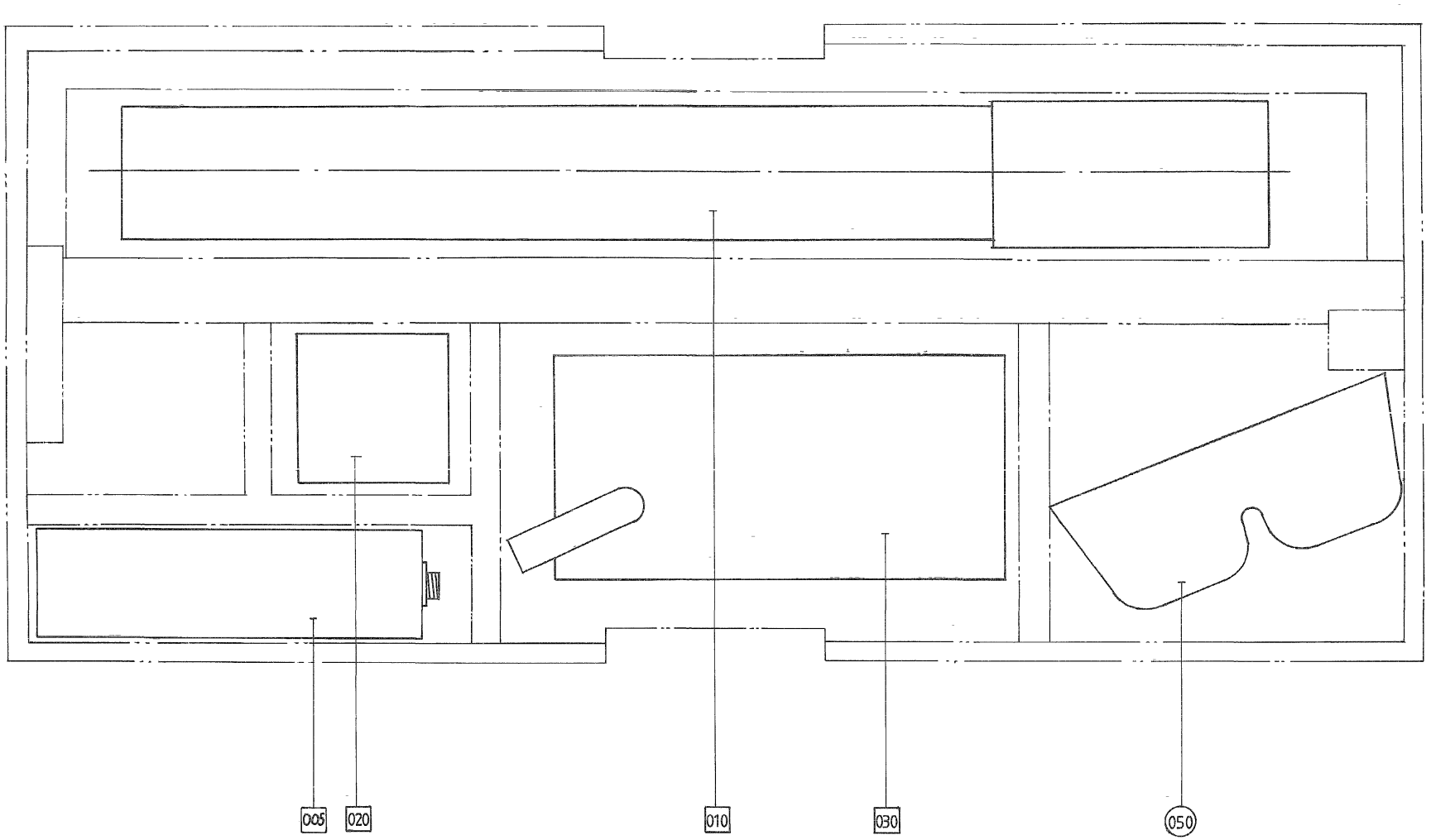
005
020
010
030
050

ECM: 471213 - 20100920
Group number: 76594-0200
Assembly Drawing: 76594-1_1_AA

Pos	Part No	UN	Qty	Description	Page No
TBA/19					
005	538432-0100		1	LASER DETECTOR	**12-111**
010	556662-0100		1	LASER	**12-113**
020	556672-0100		1	HOUSE	**12-115**
030	556667-0100		1	DISPLAY	**12-117**
050	90243-0126		1	PROTECTIVE GOGGLES	

Pos	Part No	UN	Qty	Description	Page No

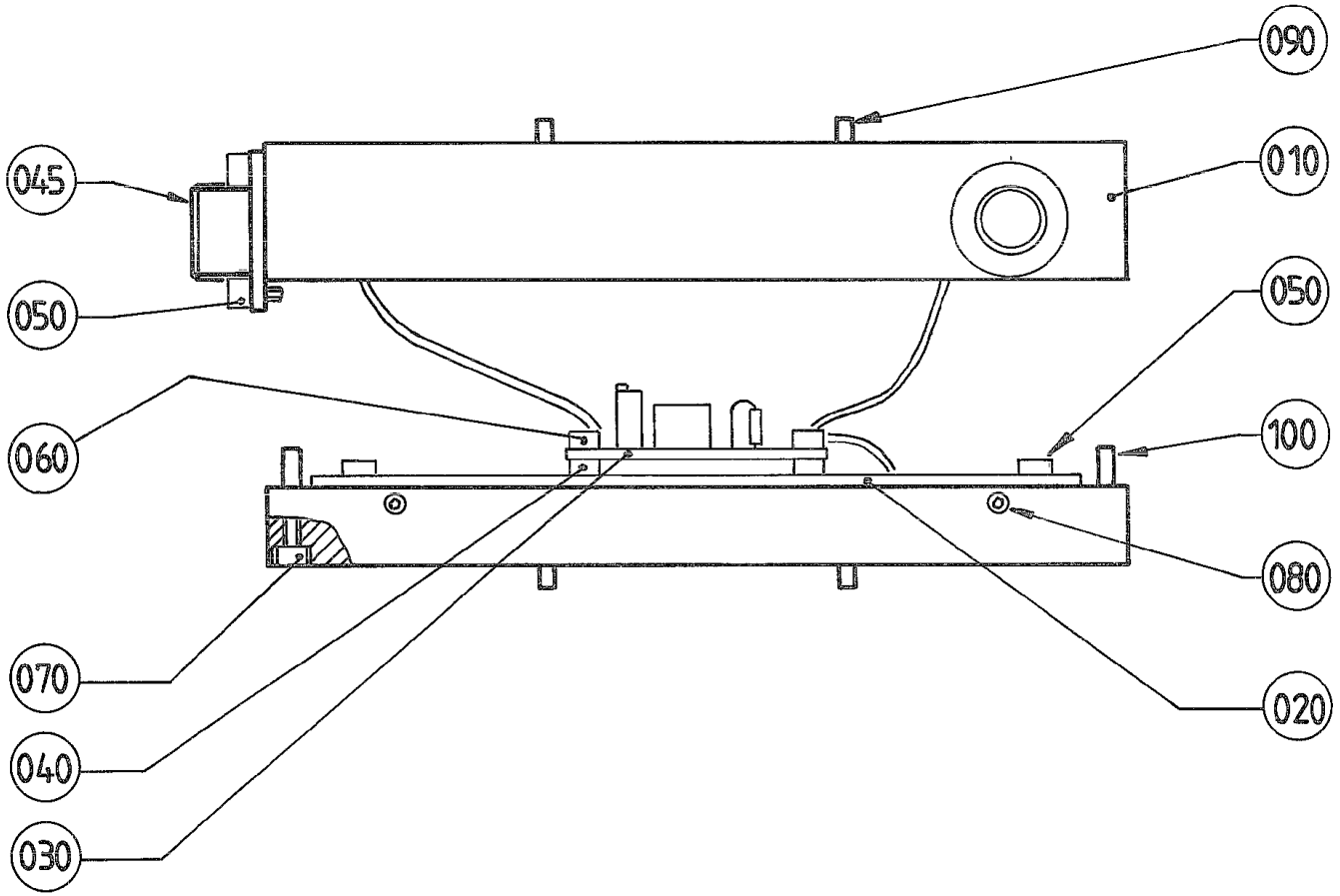
090
045
010
050
050
060
100
080
070
020
040
030

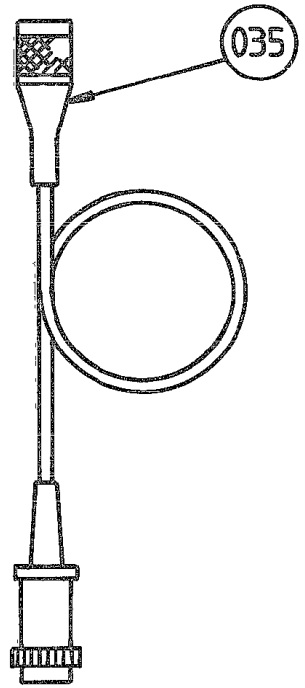
035

ECM: 471196 - 20100920
Group number: 538432-0100
Assembly Drawing: 538432-1_1_AA

Pos	Part No	UN	Qty	Description	Page No
-					
010	538433-0000		1	DETECTOR BODY	
020	538434-0000		1	DETECTOR CARD	
030	442092-0000		1	CIRCUIT BOARD	
035	539692-0000		1	CABLE	
040	90287-0170		4	DISTANCE SCREW	
050	312115-0220		8	SCREW ISO4762 M3X6 A4 80	
060	312115-0226		4	SCREW ISO4762 M3X12 A4 80	
070	312115-0228		4	SCREW ISO4762 M3X16 A4 80	
080	312318-0220		6	SET SCREW, CUP END ISO4029 M3X6 A4	
090	311103-0233		2	PARALLEL PIN ISO 2338 3M6X10 A1	
100	311103-0234		2	PARALLEL PIN ISO 2338 3M6X12 A1	

Pos	Part No	UN	Qty	Description	Page No

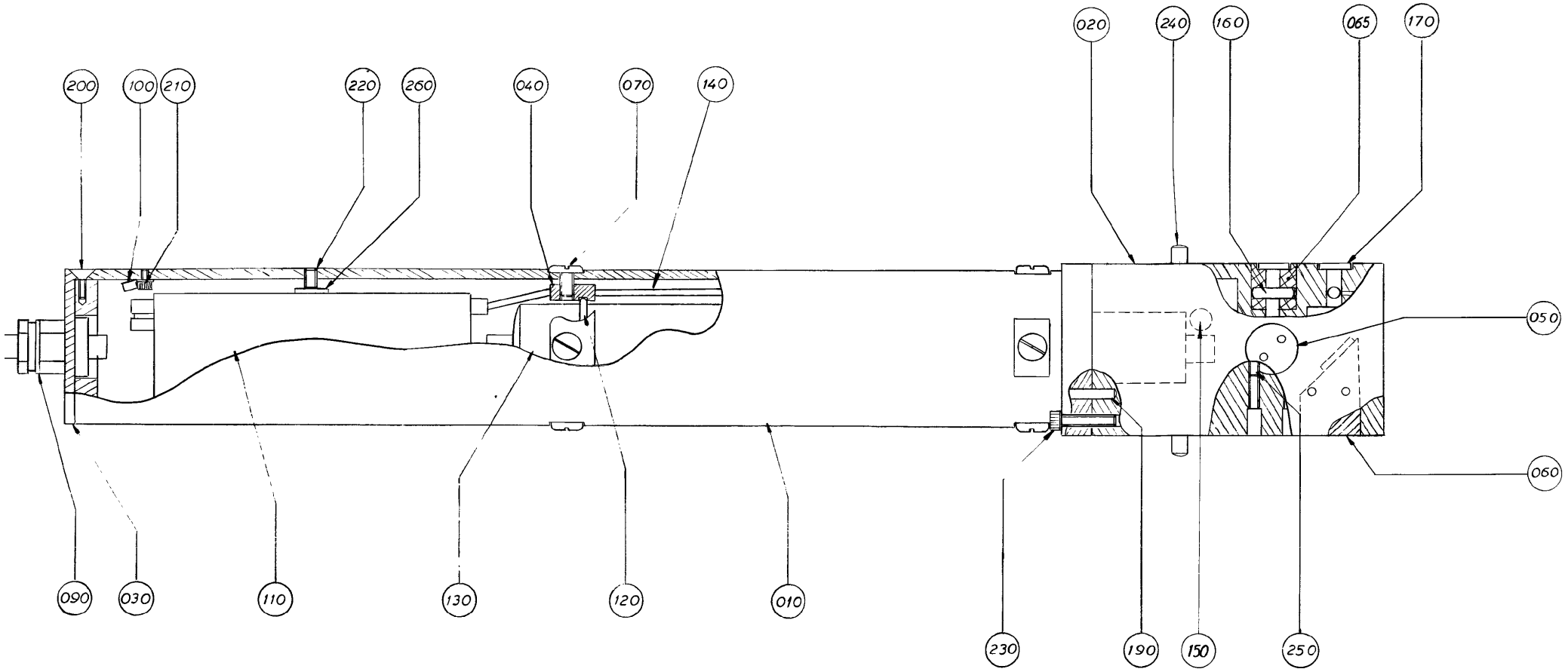
200
100
210
220
260
040
070
140
020
240
160
065
170
050
060
090
030
110
130
120
010
230
190
150
250

ECM: 471197 - 20100920
Group number: 556662-0100
Assembly Drawing: 556662-1_1_AA

Pos	Part No	UN	Qty	Description	Page No
-					
010	556663-0000		1	HOUSE	
020	556664-0000		1	HEAD	
030	556665-0000		1	END SECTION	
040	442084-0000		2	RING	
050	442085-0000		1	JET DIVERTER	
060	442086-0000		1	REFLECTOR	
065	556666-0000		1	HOLDER	
070	312132-0287		8	SLOTTED HEAD, PAN SCREW, MSCS M4X8	
090	352103-0096		1	CABLE GLAND, ST 7, PR 12,5/PG7	
100	353101-0120		1	CABLE SHOE 0,5-1,5MM2 M4 RED	
110	90243-0319		1	VOLTAGE SUPPLY UNIT	
120	315203-0219		2	O-RING 29,2X3 MM	
130	90243-0317		1	LASER	
140	90220-0057		1	CABLE TLPE 1X06MM2	
150	90121-0099		1	RESISTANCE FIXED, 100 KOHM, 6 W	
160	90243-0318		2	GLASS ROD	
170	90337-0342		2	GLASS-WINDOW D=12,5MM	
190	311102-0308		2	PARALLEL PIN ISO 2338 5M6X16 ST	
200	312151-0224		2	SCREW EN 10642 MF6S M3X10 10.9 EL.PL	
210	312115-0220		1	SCREW ISO4762 M3X6 A4 80	
220	312316-0289		1	SET SCREW, CUP END ISO4029 M4X10 FZB	
230	312115-0325		2	SCREW ISO4762 M5X10 A4 80	
240	311102-0351		4	PARALLEL PIN ISO 2338 6M6X16 ST	
250	312316-0291		4	SET SCREW, CUP END ISO4029 M4X12 FZB	
260	315101-0153		1	WASHER PLAIN, BRB, 6,4/12 H=1,5	

Pos	Part No	UN	Qty	Description	Page No

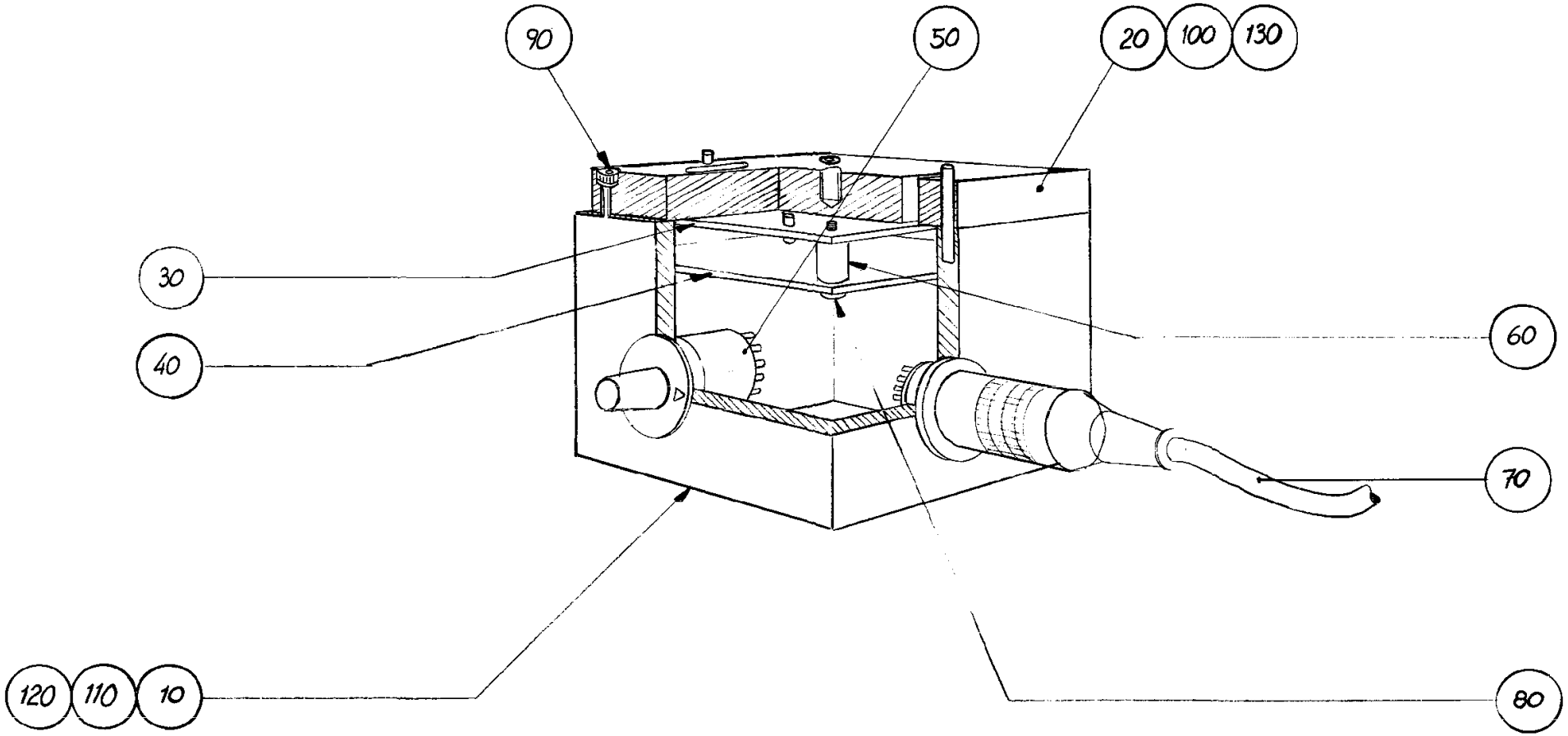
90
50
20
100
130
30
40
60
70
120
110
10
80

ECM: 471198 - 20100920
Group number: 556672-0100
Assembly Drawing: 556672-1_1_AA

Pos	Part No	UN	Qty	Description	Page No
-					
010	556673-0000		1	HOUSE	
020	556674-0000		1	LID	
030	556679-0000		1	PRINTED CIRCUIT BOARD	
040	556680-0000		1	PRINTED CIRCUIT BOARD	
050	556681-0000		1	PRINTED CIRCUIT BOARD	
060	90287-0170		4	DISTANCE SCREW	
070	539691-0000		1	CABLE	
080	312115-0220		4	SCREW ISO4762 M3X6 A4 80	
090	312115-0228		4	SCREW ISO4762 M3X16 A4 80	
100	312318-0220		8	SET SCREW, CUP END ISO4029 M3X6 A4	
110	312910-0113		2	THREADED INSERT, FREE RUNNING M5X1D	
120	311103-0234		2	PARALLEL PIN ISO 2338 3M6X12 A1	
130	311103-0239		2	PARALLEL PIN ISO 2338 3M6X22 A1	

Pos	Part No	UN	Qty	Description	Page No

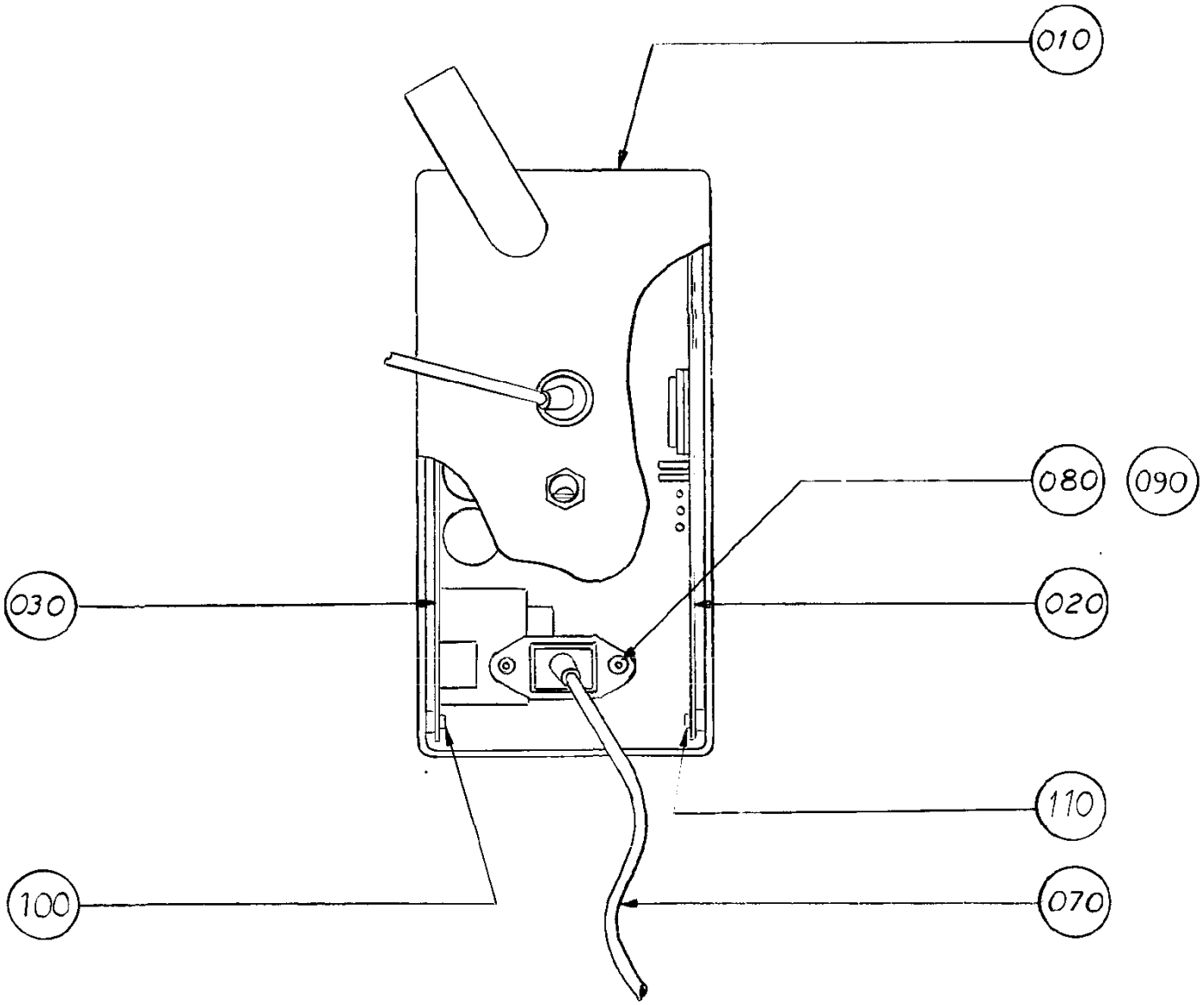
010
080
090
030
020
110
100
070

ECM: 471199 - 20100920
Group number: 556667-0100
Assembly Drawing: 556667-1_1_AA

Pos	Part No	UN	Qty	Description	Page No
-					
010	556668-0000		1	BOX	
020	556677-0000		1	PRINTED CIRCUIT BOARD	
030	556678-0000		1	PRINTED CIRCUIT BOARD	
070	90220-0058		1	CABLE, POWER SUPPLY, RKK 2M	
080	312151-0222		2	SCREW EN 10642 MF6S M3X8 10.9 EL.PL	
090	312605-0310		8	HEXAGON NUT, M6M M3 A280	
100	312115-0220		4	SCREW ISO4762 M3X6 A4 80	
110	312503-0221		4	TAPPING SCREW, ISO7049 ST2,9X6,5-C-Z	

Pos	Part No	UN	Qty	Description	Page No

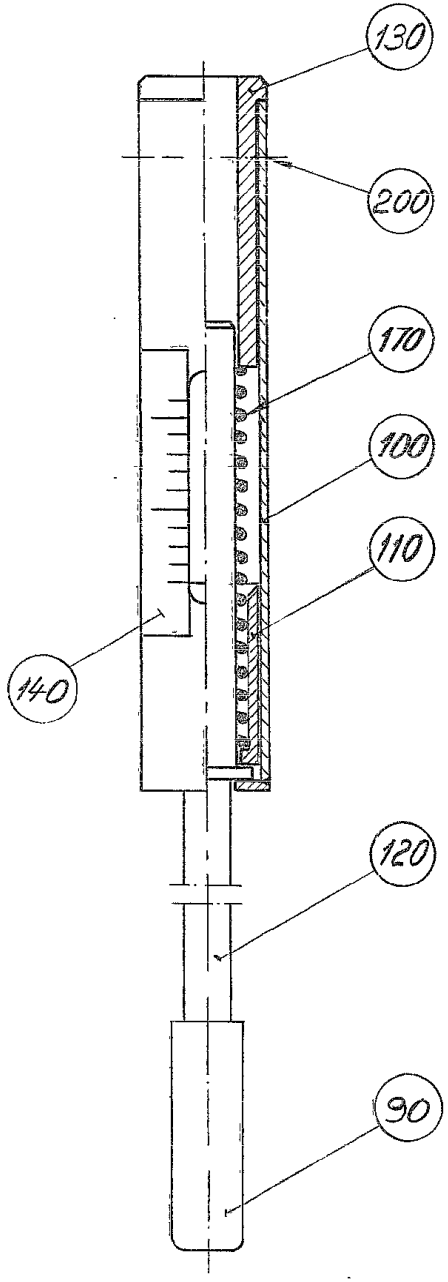
130
200
170
100
110
140
120
90

ECM: 71001 - 19970802
Group number: 74767-0102
Assembly Drawing: 74767-1_1_AA

Pos	Part No	UN	Qty	Description	Page No
-					
090	74912-0000		1	DOWEL	
100	74768-0000		1	SLEEVE	
110	74769-0000		1	SLEEVE	
120	74770-0000		1	ROD	
130	74771-0000		1	STEERING	
140	74772-0000		1	DIAL	
170	107000-0000		1	SPRING	
200	312125-0285		2	SLOTTED HEAD SCREW, ISO1207 M4X6 A4	

Pos	Part No	UN	Qty	Description	Page No

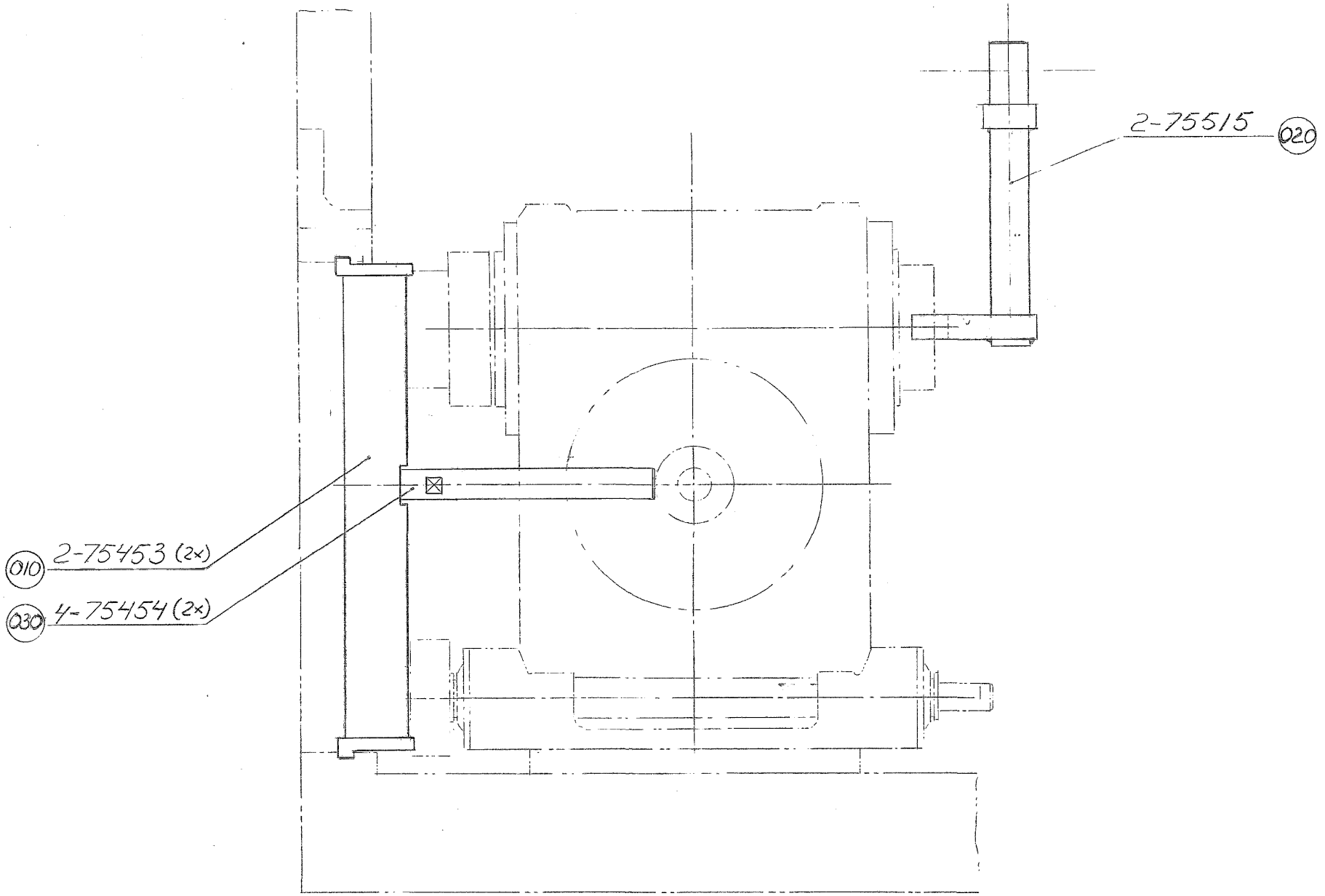
2-75515
020
010
2-75453 (2x)
030
4-75454 (2x)

ECM: 186183 - 20040928
Group number: 75466-0300
Assembly Drawing: 75466-1_1_AA

Pos	Part No	UN	Qty	Description	Page No
-					
010	75453-0000		2	HOLDER	
020	978421-0000		1	SETTING TEMPLATE	
030	75454-0000		2	ROD	

Pos	Part No	UN	Qty	Description	Page No

SETTING TOOL CURVES

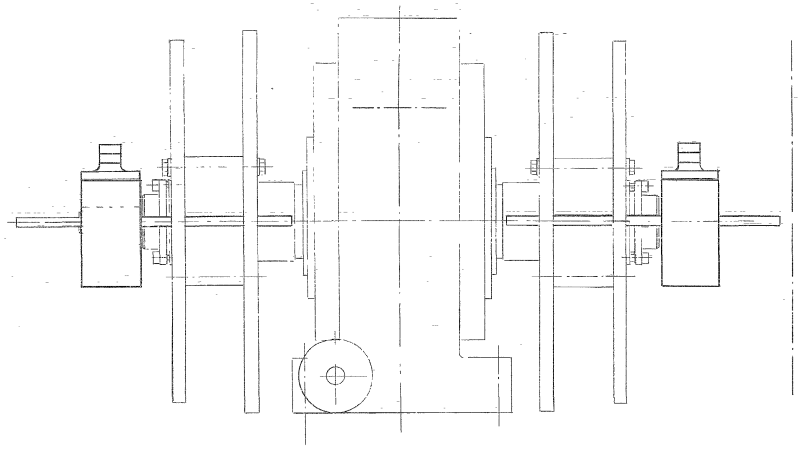

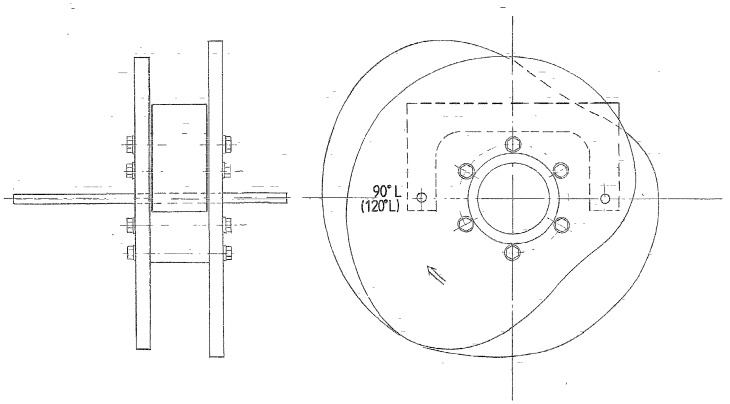

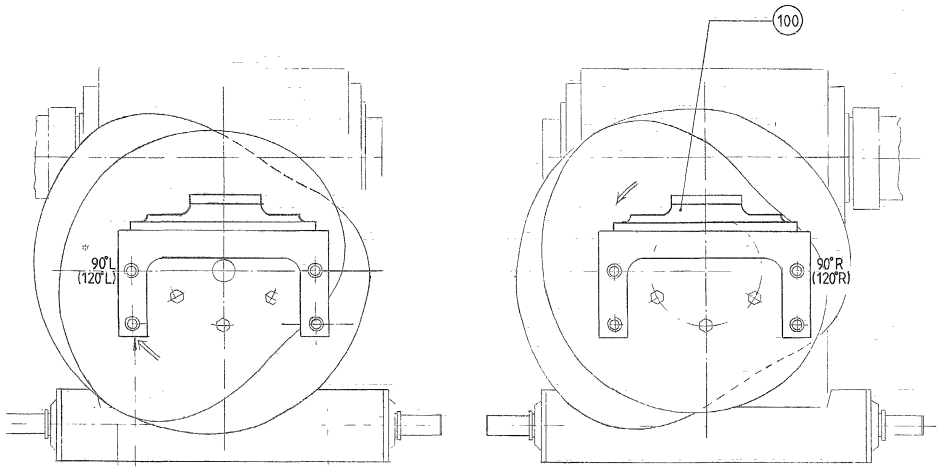

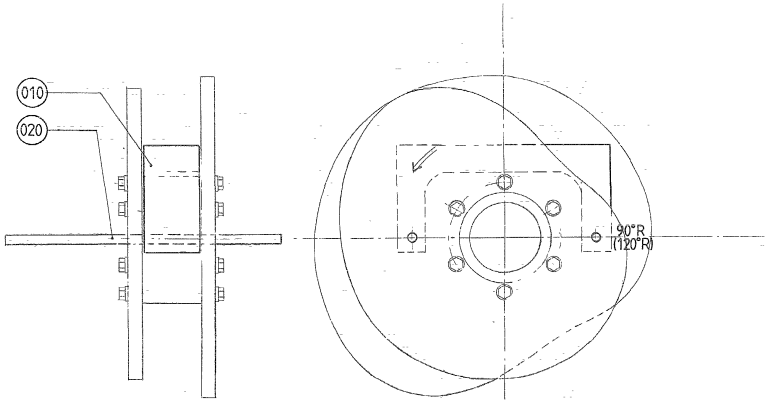

ECM: 186184 - 20040928
Group number: 75467-0200
Assembly Drawing: 75467-1_1_AA

Pos	Part No	UN	Qty	Description	Page No
-					
010	76338-0000		1	SETTING TOOL	
	90240-0113		*8*	*PLAIN BEARING*	
	76300-0000		*4*	*SLEEVE*	
020	75451-0000		2	GUIDE PIN	
100	783901-0106		1	SPIRIT LEVEL	

Pos	Part No	UN	Qty	Description	Page No

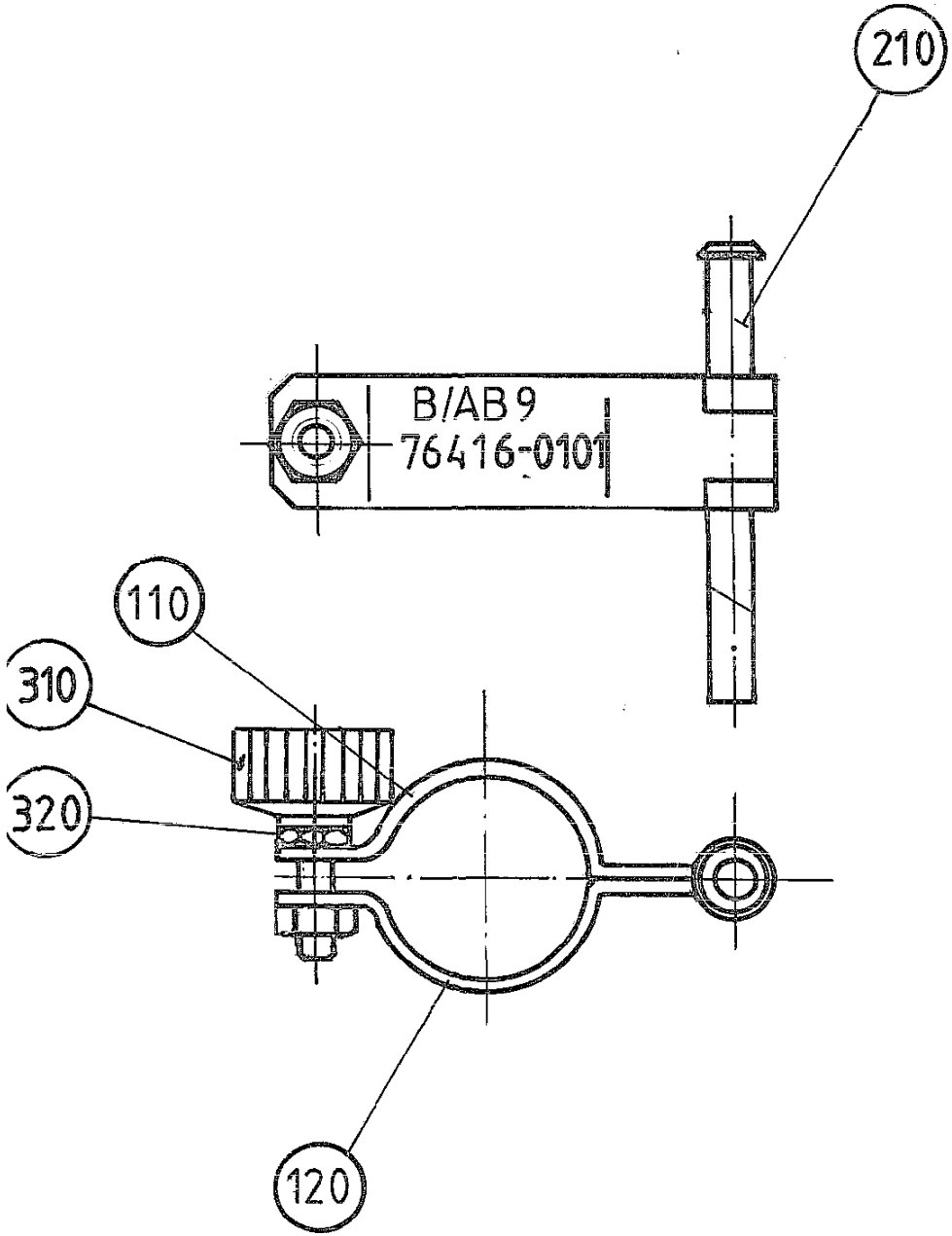
210
B/AB 9
76416-0101
110
310
320
120

ECM: - -
Group number: 76416-0100
Assembly Drawing: 76416-1_1_AA

Pos	Part No	UN	Qty	Description	Page No
-					
110	76417-0000		1	CLAMPING PIECE	
120	76418-0000		1	CLAMPING PIECE	
210	76466-0000		1	SHAFT	
310	90051-0083		1	KNOB, EXTERNAL THREAD. NO. 8308-1321	
320	312601-0314		1	HEXAGON NUT, DIN 934 M5 8 FZB	

Pos	Part No	UN	Qty	Description	Page No

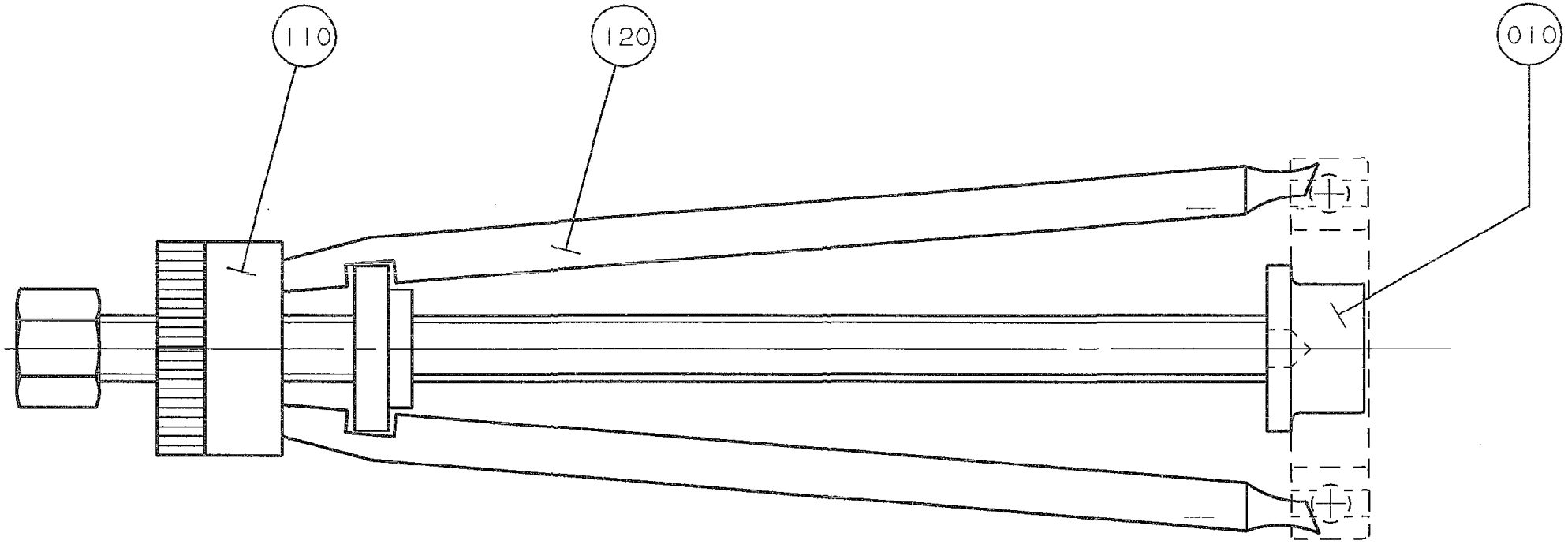
110
120
010

ECM: - -
Group number: 76175-0100
Assembly Drawing: 76175-1_1_AA

Pos	Part No	UN	Qty	Description	Page No
-					
010	76166-0000		1	STEER PLATE	
110	777603-0100		1	PULLER	
120	777603-0300		1	PULLER	

Pos	Part No	UN	Qty	Description	Page No

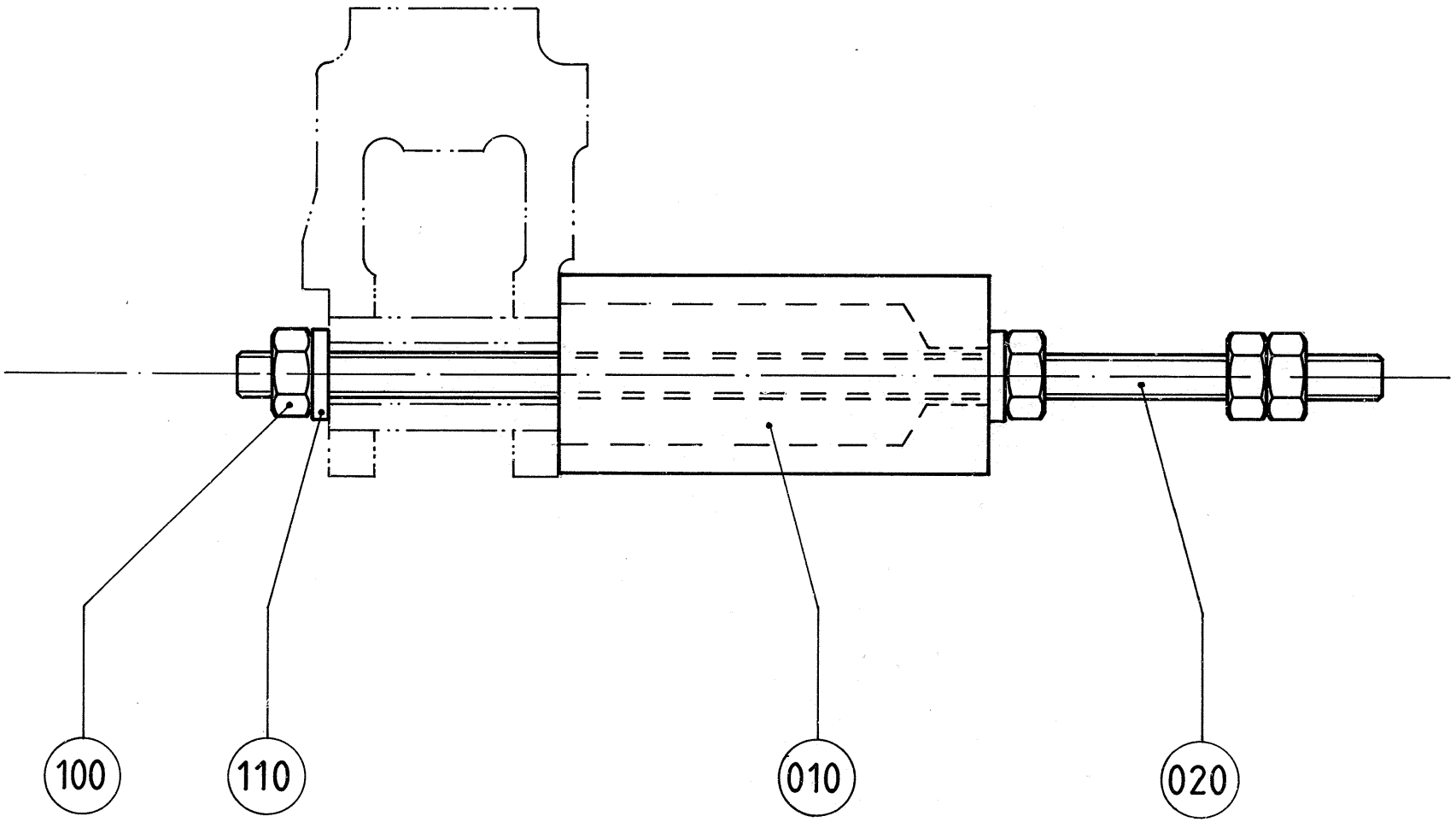
100
110
010
020

ECM: - -
Group number: 77165-0100
Assembly Drawing: 77165-1_1_AA

Pos	Part No	UN	Qty	Description	Page No
-					
010	77163-0000		1	SLEEVE	
020	77164-0000		1	STUD SCREW	
100	312605-0318		4	HEXAGON NUT, M6M M8 A280	
110	315115-0165		2	WASHER PLAIN, TBRB 8,4/16 H=3	

Pos	Part No	UN	Qty	Description	Page No

TOOL DISMOUNTING

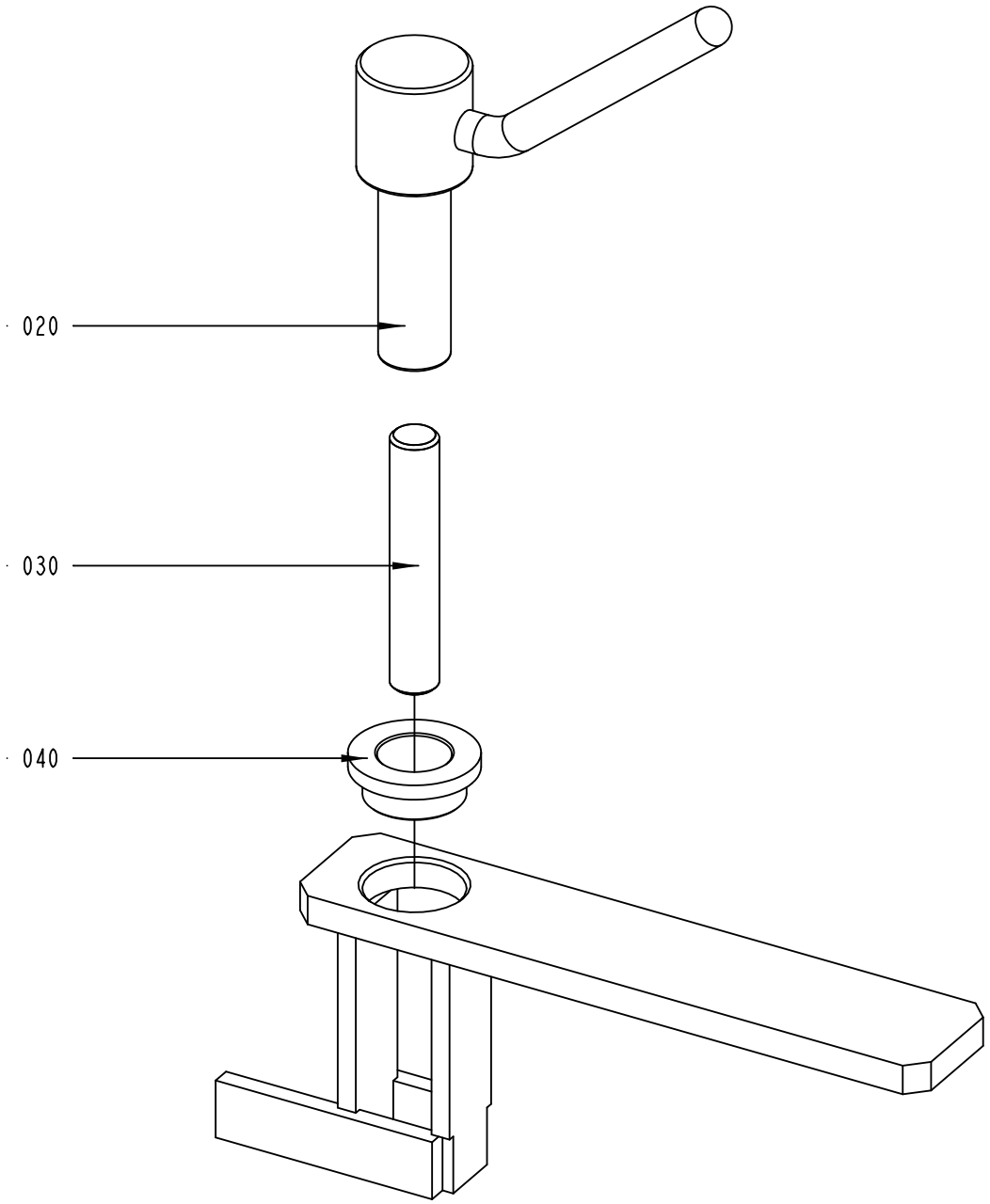

449969-1
ECN 93294

ECM: 479165 - 20101104
Group number: 449969-0100
Assembly Drawing: 449969-1_1_AB

Pos	Part No	UN	Qty	Description	Page No
-					
010	449970-0000		1	HOLDER	
020	449971-0000		1	SPINDLE	
030	312306-0546		1	SCREW ISO4026 M12X70 FZB	
040	321101-0222		1	FLANGE BUSHING, 18/25X12-32X4 MM	

Pos	Part No	UN	Qty	Description	Page No

PRESSURE TEST EQUIPMENT

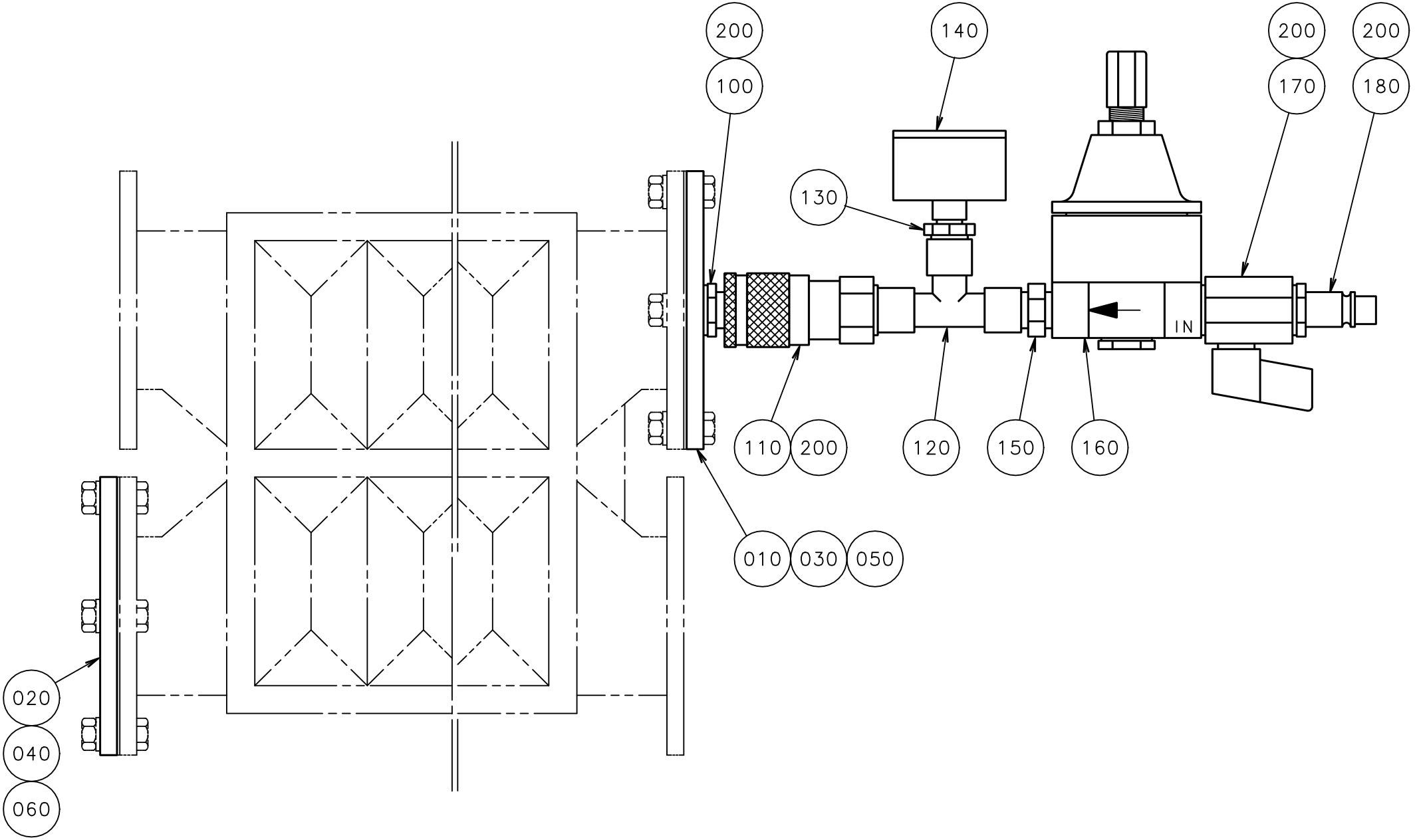

ECM: 70020 - 19960722
Group number: 565536-0100
Assembly Drawing: 565536-1_1_AB

Pos	Part No	UN	Qty	Description	Page No
-					
010	565534-0000		1	FLANGE	
020	565532-0000		1	BLANK-OFF FLANGE	
030	565535-0000		1	FLANGE	
040	565533-0000		1	BLANK-OFF FLANGE	
050	979951-0000		1	FLANGE	
060	979952-0000		1	BLANK FLANGE	
100	90163-0113		1	QUICK COUPLING, (M) LP-006-1-WR013-22	
110	90163-0016		1	QUICK COUPLING, (F) LP 006-0-WR013	
120	90140-0018		1	T-PIPE, INT. THREAD, 2003-1/4	
130	342701-0201		1	BUSHING, INT/EXT, G1/4-G1/8	
140	90043-0021		1	PRESSURE GAUGE, 2041 D=40 MM	
150	342700-0110		1	NIPPLE, EXT.THREAD, HEXAGON, G1/4-G1/4	
160	90113-0056		1	REGULATOR, 11-818-998	
170	90187-0045		1	BALL VALVE, G1/4 CR PL	
180	90163-0007		1	CONNECTION	
200	315233-0110		4	WASHER CAPTIVE SEALING G1/4	
210	567372-0000		1	INSTRUCTION FOR USE	

Pos	Part No	UN	Qty	Description	Page No

TOOL FOR JAW OVERLOAD

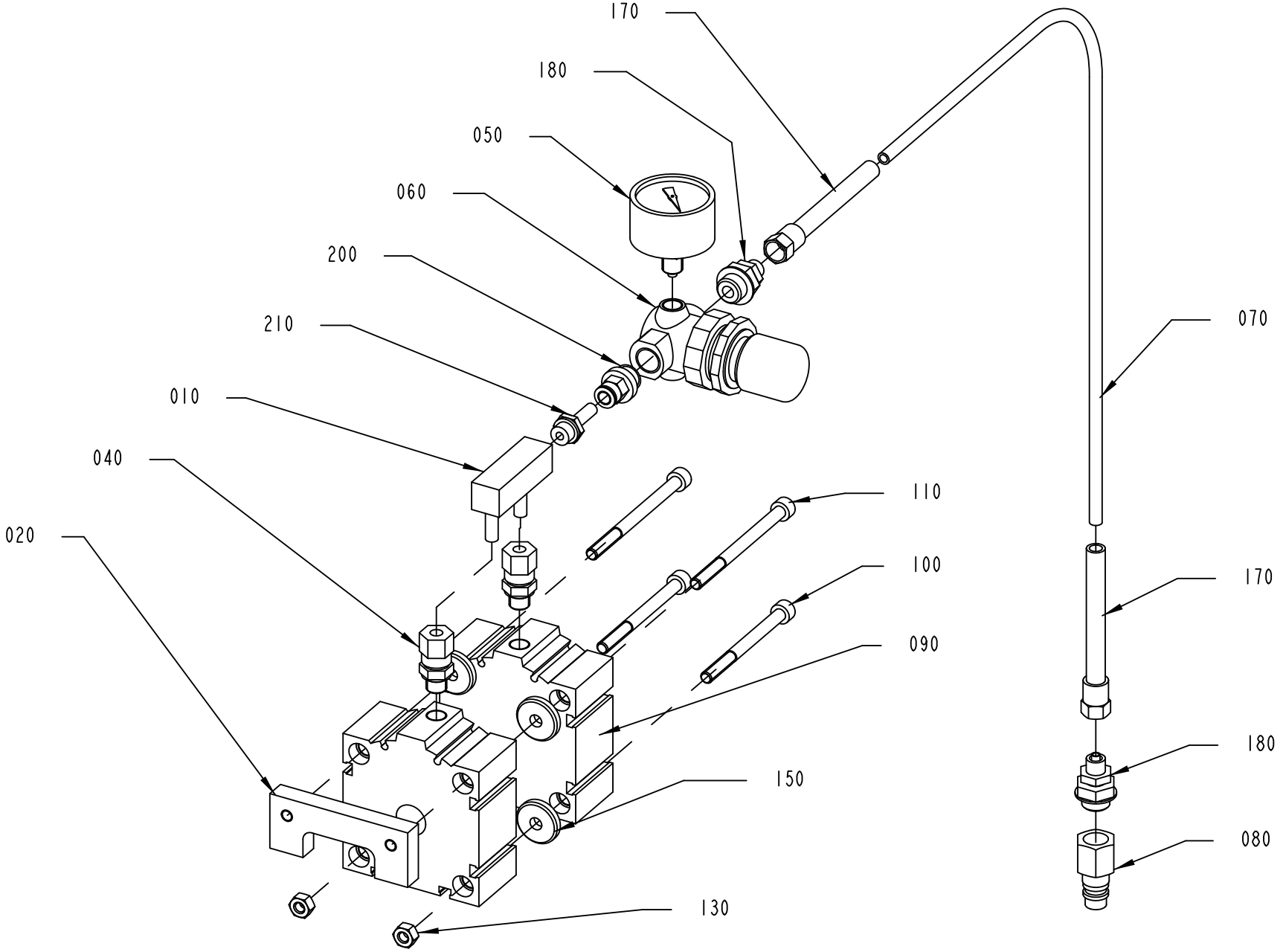

2949471-1
387364

ECM: 387368 - 20090313
Group number: 2949471-0100
Assembly Drawing: 2949471-1_1_AA

Pos	Part No	UN	Qty	Description	Page No
-					
010	2949469-0000		1	CONNECTION	
020	2949470-0000		1	SUPPORT	
040	90030-0184		2	CONN. STR., GE06LRED71	
050	90043-0043		1	PRESSURE GAUGE, 2041D=40 MM	
060	90113-0021		1	AIR PRESSURE REGULATOR	
070	90166-0117	M	4	HOSE 4/6 PVC BLUE	
080	90459-2254		1	QUICK COUPLING, (M) 10 320 5202	
090	90600-7766		2	SINGLE ACTING, SHORT STROKE, CYL 63-10	
100	312115-0384		2	SCREW ISO4762 M6X70 A4 80	
110	312115-0386		2	SCREW ISO4762 M6X80 A4 80	
130	312605-0316		2	HEXAGON NUT, M6M M6 A280	
150	315125-0153		4	WASHER HIGH, TBRSB 6,4X22X4 A4	
170	342903-0111		2	NUT WITH SPRING, 1723 6/4-M10X1	
180	342921-0114		2	STRAIGHT COUPLING, EXT.THREAD 6/4-G1/4	
200	350001-0008		1	PUSH-IN FITTING QS-F-G1/4-6	
210	350014-0006		1	FITTING QS-F-G1/8-6H	

Pos	Part No	UN	Qty	Description	Page No

This page is intentionally left blank.

ECM: 186186 - 20040928
Group number: 590509-0100
Assembly Drawing:

Pos	Part No	UN	Qty	Description	Page No
TBA 0100B, TBA 0125S					
030	590270-0000		1	RING	
TBA 0160S, TBA 0200S, TPA 0250SQ					
020	590269-0000		1	RING	
TBA 0200B, TBA 0284B, TBA 0250B, TBA 0300S, TBA 0330S					
040	590271-0000		1	RING	
TBA 0200M, TBA 0250S					
010	590268-0000		1	TEMPLATE	
TPA 0330SQ					
050	1334061-0000		1	RING	

Pos	Part No	UN	Qty	Description	Page No

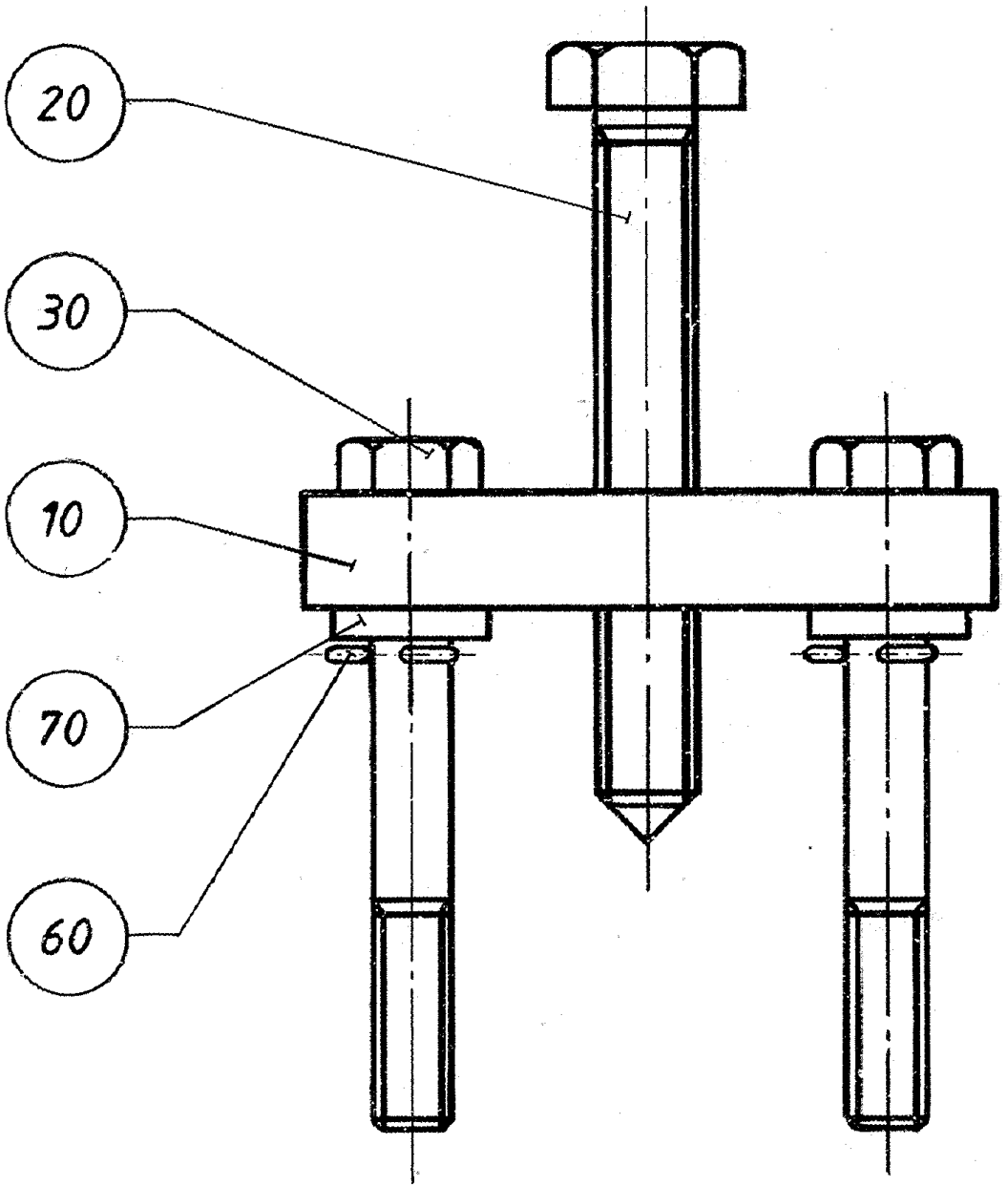
20
30
10
70
60

ECM: - -
Group number: 74305-0100
Assembly Drawing: 74305-1_1_AA

Pos	Part No	UN	Qty	Description	Page No
-					
010	74363-0000		1	FASTENING PLATE	
020	74364-0000		1	EXTRACTOR BOLT	
030	74365-0000		2	SCREW	
060	311411-0152		2	SPLIT PIN SP2X16RFR	
070	315115-0165		2	WASHER PLAIN, TBRB 8,4/16 H=3	

Pos	Part No	UN	Qty	Description	Page No

This page is intentionally left blank.

ECM: 337028 - 20080103
Group number: 2614370-0200
Assembly Drawing:

Pos	Part No	UN	Qty	Description	Page No
-					
010	2552941-0100		1	TOOL	**12-143**
010	2552943-0100		1	TOOL	**12-145**
020	2552944-0100		1	TOOL	**12-147**
030	2552946-0100		1	TOOL	**12-149**
040	2552947-0200		1	TOOL	**12-151**
060	2641477-0100		1	TOOL	**12-153**
070	2582795-0100		1	TOOL	**12-155**

Pos	Part No	UN	Qty	Description	Page No

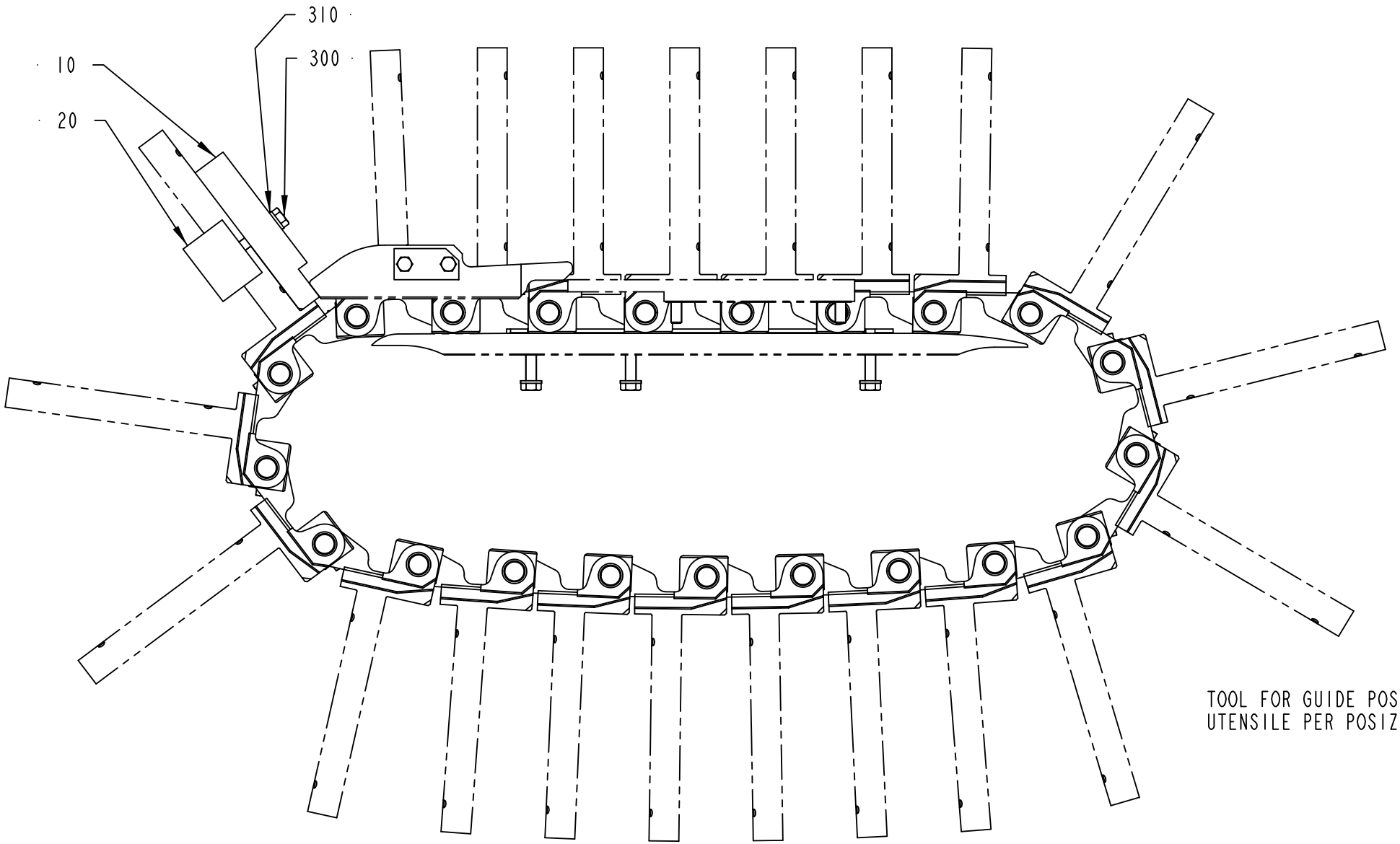

TOOL FOR GUIDE POSITION
UTENSILE PER POSIZIONE GUIDE

2552941-1
ECM 111480

ECM: 111571 - 20030820
Group number: 2552941-0100
Assembly Drawing: 2552941-1_1_AA

Pos	Part No	UN	Qty	Description	Page No
TBA 0100B, TBA 0125S, TBA 0160S, TBA 0200S					
020	1517518-0001		1	CLAMP	
TBA 0200B, TBA 0284B, TBA 0250B, TBA 0300S, TBA 0330S					
020	1517518-0002		1	CLAMP	
TBA 0200M, TBA 0250S					
020	1517518-0003		1	CLAMP	
Common Parts					
010	1517517-0000		1	TEMPLATE	
300	312105-0379		2	SCREW, M6S ISO 4014 M6X45 A4 80	
310	315105-0153		2	WASHER PLAIN, 6,4X12X1,5 A4 BRB	

Pos	Part No	UN	Qty	Description	Page No

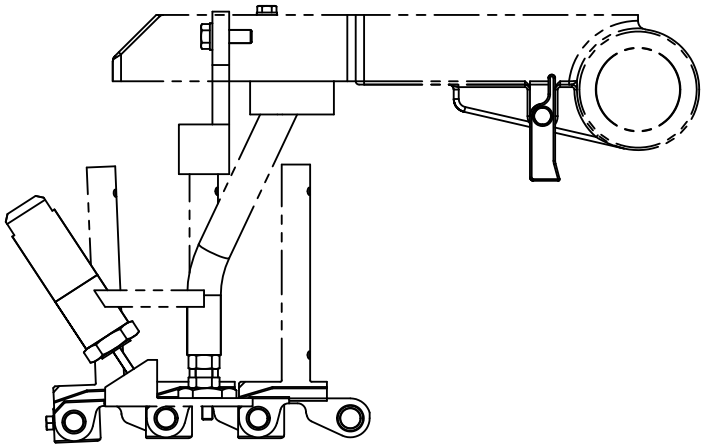

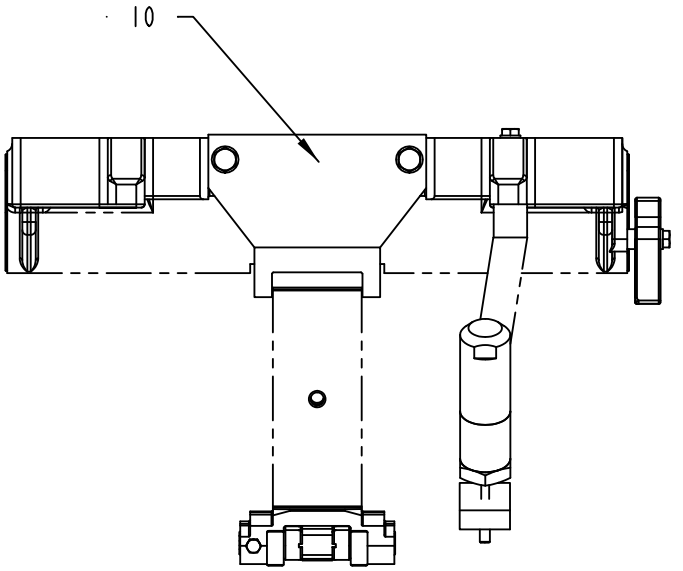

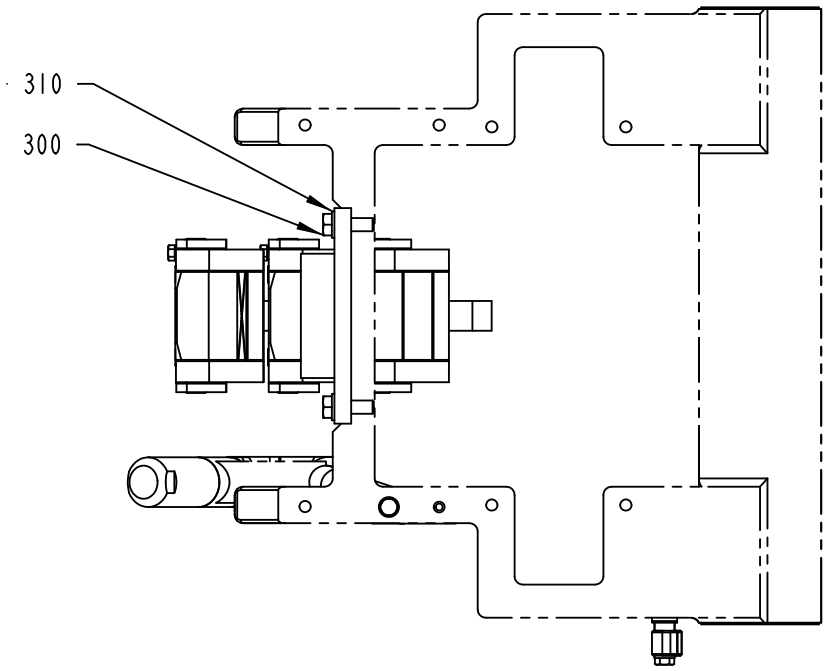

TOOL FOR ARM POSITION
UTENSILE PER POSIZIONE BRACCIO

2552943-1
ECM 111480

ECM: 140959 - 20030821
Group number: 2552943-0100
Assembly Drawing: 2552943-1_1_AA

Pos	Part No	UN	Qty	Description	Page No
TBA 0100B					
010	1512453-0002		1	TEMPLATE	
TBA 0125S					
010	1512453-0003		1	TEMPLATE	
TBA 0160S					
010	1512453-0004		1	TEMPLATE	
TBA 0200B					
010	1512453-0006		1	TEMPLATE	
TBA 0200M					
010	1512453-0007		1	TEMPLATE	
TBA 0200S					
010	1512453-0008		1	TEMPLATE	
TBA 0250B					
010	1512453-0009		1	TEMPLATE	
TBA 0250S					
010	1512453-0001		1	TEMPLATE	
TBA 0300S					
010	1512453-0011		1	TEMPLATE	
TBA 0330S					
010	1512453-0010		1	TEMPLATE	
Common Parts					
300	312105-0453		2	SCREW, M6S ISO 4017 M8X25 A4 80	
310	315105-0165		2	WASHER PLAIN, 8,4X16X1,6 A4 BRB	

Pos	Part No	UN	Qty	Description	Page No

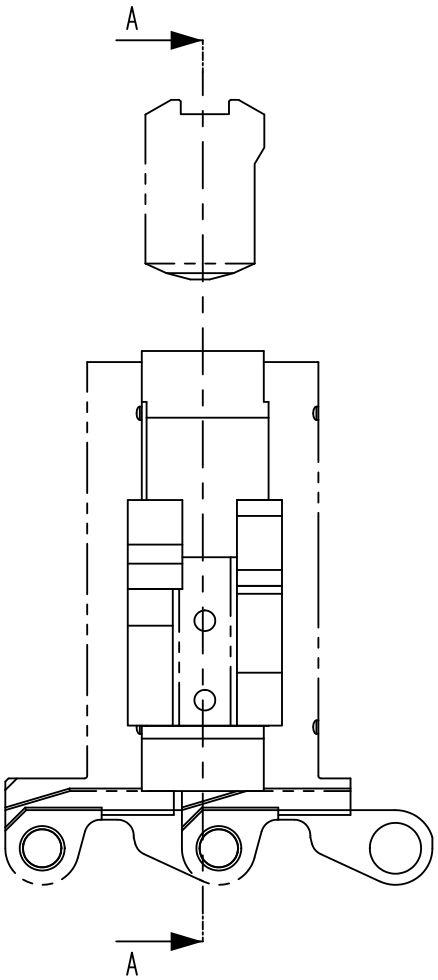

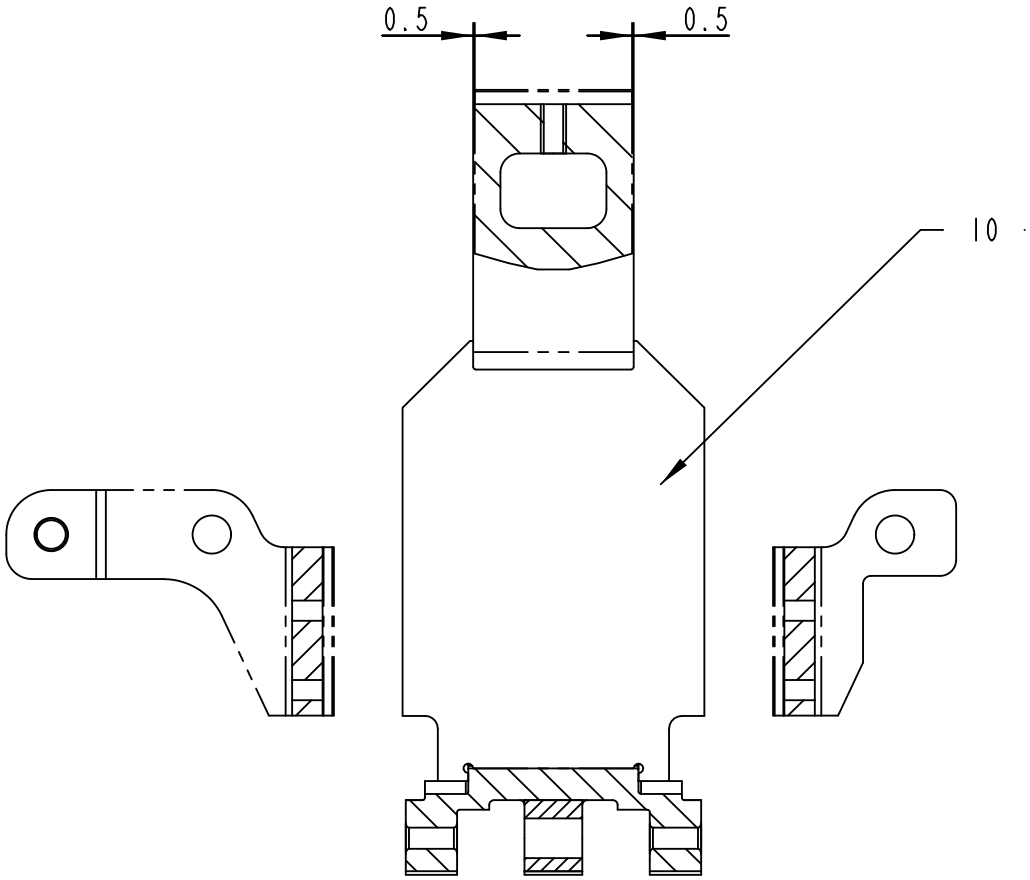

A-A

TOOL FOR PRESSURE DEVICE
UTENSILE PER SISTEMA DI PRESSIONE

2552944-1
ECM 111480

ECM: 140960 - 20030821
Group number: 2552944-0100
Assembly Drawing: 2552944-1_1_AA

Pos	Part No	UN	Qty	Description	Page No
TBA 0100B					
010	2552945-0002		1	TEMPLATE	
TBA 0125S					
010	2552945-0003		1	TEMPLATE	
TBA 0160S					
010	2552945-0004		1	TEMPLATE	
TBA 0200B					
010	2552945-0006		1	TEMPLATE	
TBA 0200M					
010	2552945-0007		1	TEMPLATE	
TBA 0200S					
010	2552945-0008		1	TEMPLATE	
TBA 0250B					
010	2552945-0009		1	TEMPLATE	
TBA 0250S					
010	2552945-0001		1	TEMPLATE	
TBA 0300S					
010	2552945-0011		1	TEMPLATE	
TBA 0330S					
010	2552945-0010		1	TEMPLATE	
Common Parts					
	2610198-0000		1	TOOL	
	2610197-0000		1	TOOL	

Pos	Part No	UN	Qty	Description	Page No

Machine Type	Group Description	Used-In	Group Number	Page No

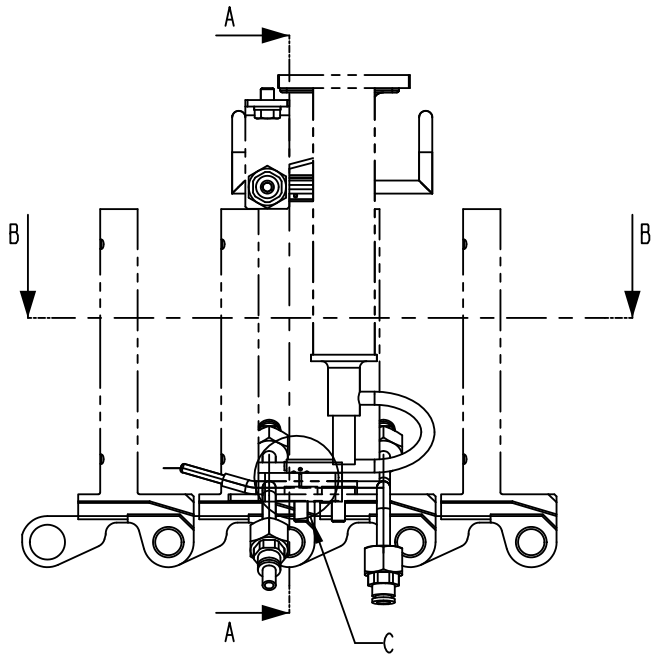

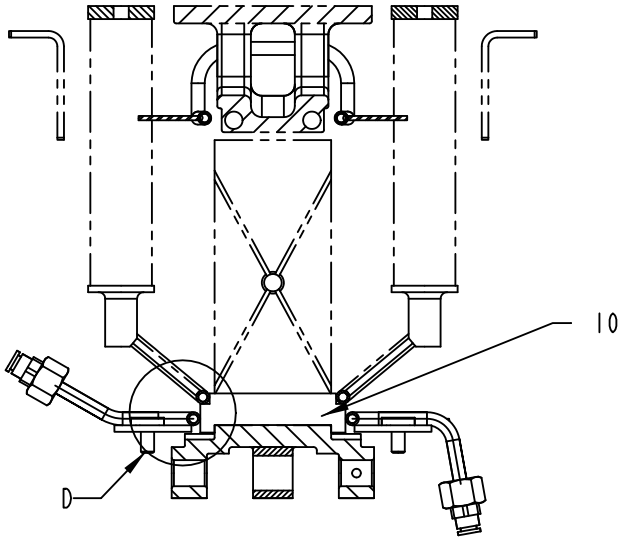

A-A

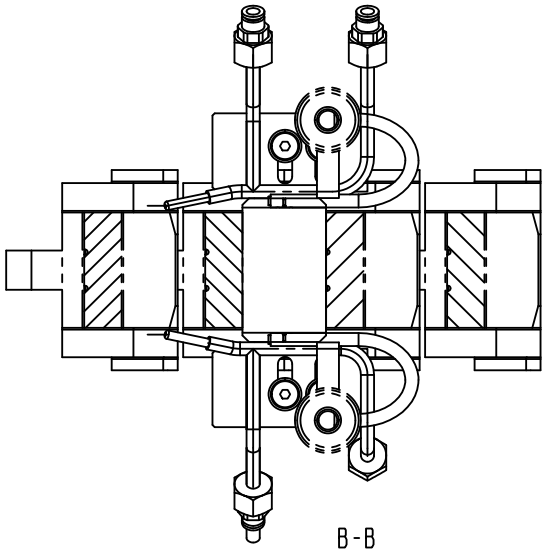

B-B

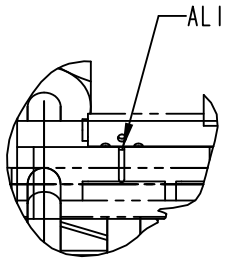

C
1:1

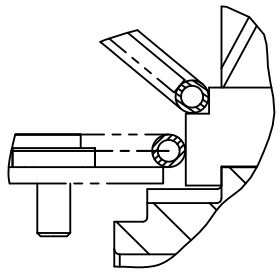

D
1:1

TOOL FOR:
LOWER AIR NOZZLE (left - right)
LOWER FOLDING BAR (left - right)

UTENSILI PER:
UGELLI SOFFIATORI INFERIORI (Sx-Dx)
GUIDE PIEGAORECCHIE INFERIORI (Sx-Dx)

2552946-1
ECM 111480

ECM: 140961 - 20030821
Group number: 2552946-0100
Assembly Drawing: 2552946-1_1_AA

Pos	Part No	UN	Qty	Description	Page No
TBA 0100B, TBA 0125S					
010	1512450-0002		1	TEMPLATE	
TBA 0160S, TBA 0200S					
010	1512450-0004		1	TEMPLATE	
TBA 0200B, TBA 0284B, TBA 0250B, TBA 0300S, TBA 0330S					
010	1512450-0003		1	TEMPLATE	
TBA 0200M, TBA 0250S					
010	1512450-0001		1	TEMPLATE	

Pos	Part No	UN	Qty	Description	Page No

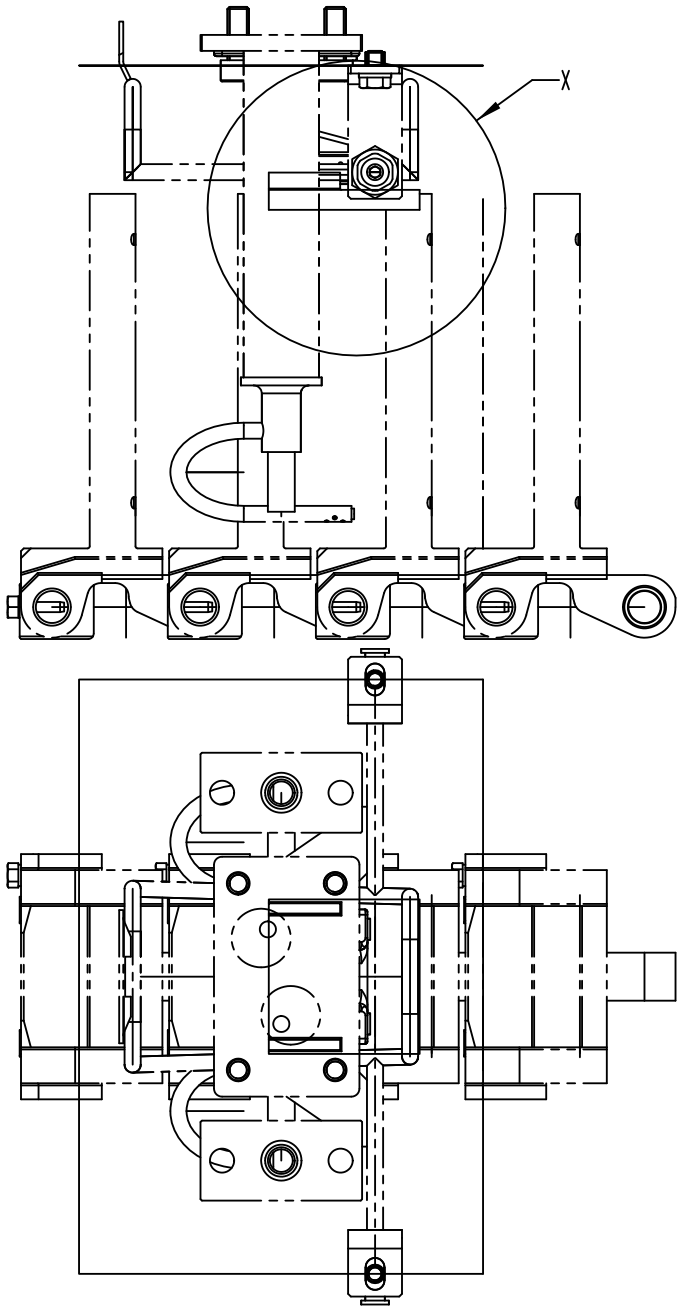

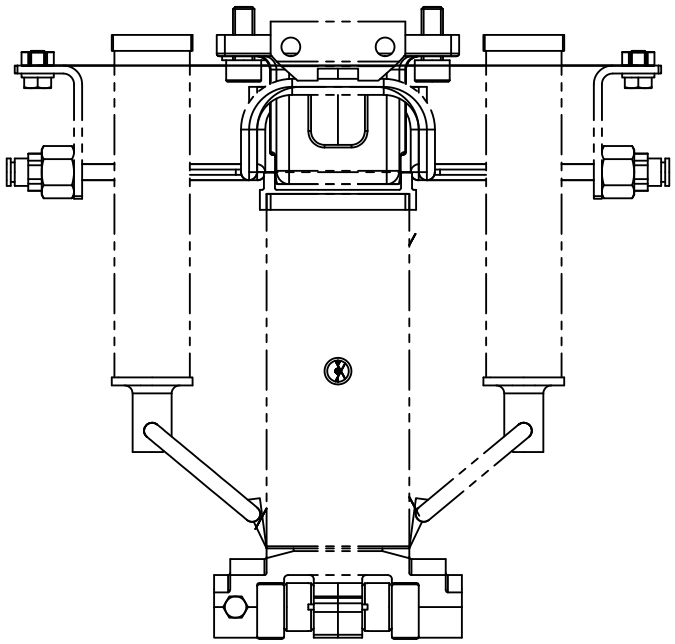

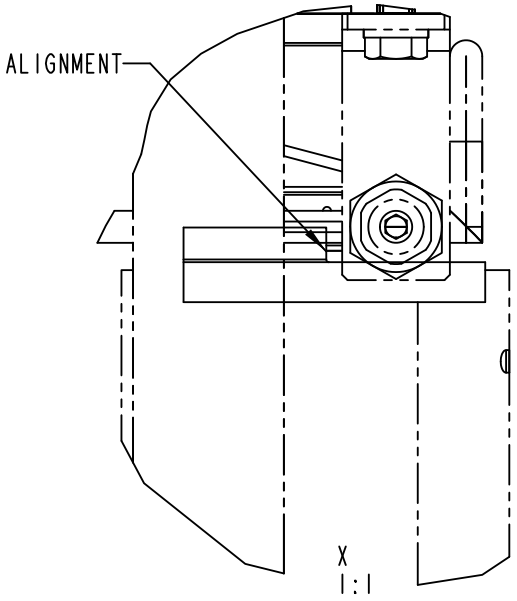

TOOL FOR:
UPPER AIR NOZZLE
UPPER FOLDING BAR

2552947-2
ECM 254456

ECM: 254469 - 20060519
Group number: 2552947-0200
Assembly Drawing: 2552947-2_1_AA

Pos	Part No	UN	Qty	Description	Page No
TBA 0100B, TBA 0125S					
010	2800345-0002		1	TEMPLATE	
TBA 0160S, TBA 0200S					
010	2800345-0004		1	TEMPLATE	
TBA 0200B, TBA 0284B, TBA 0250B, TBA 0300S, TBA 0330S					
010	2800345-0003		1	TEMPLATE	
TBA 0200M, TBA 0250S					
010	2800345-0001		1	TEMPLATE	

Pos	Part No	UN	Qty	Description	Page No

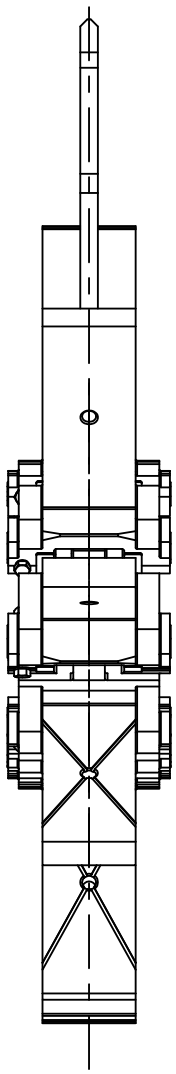

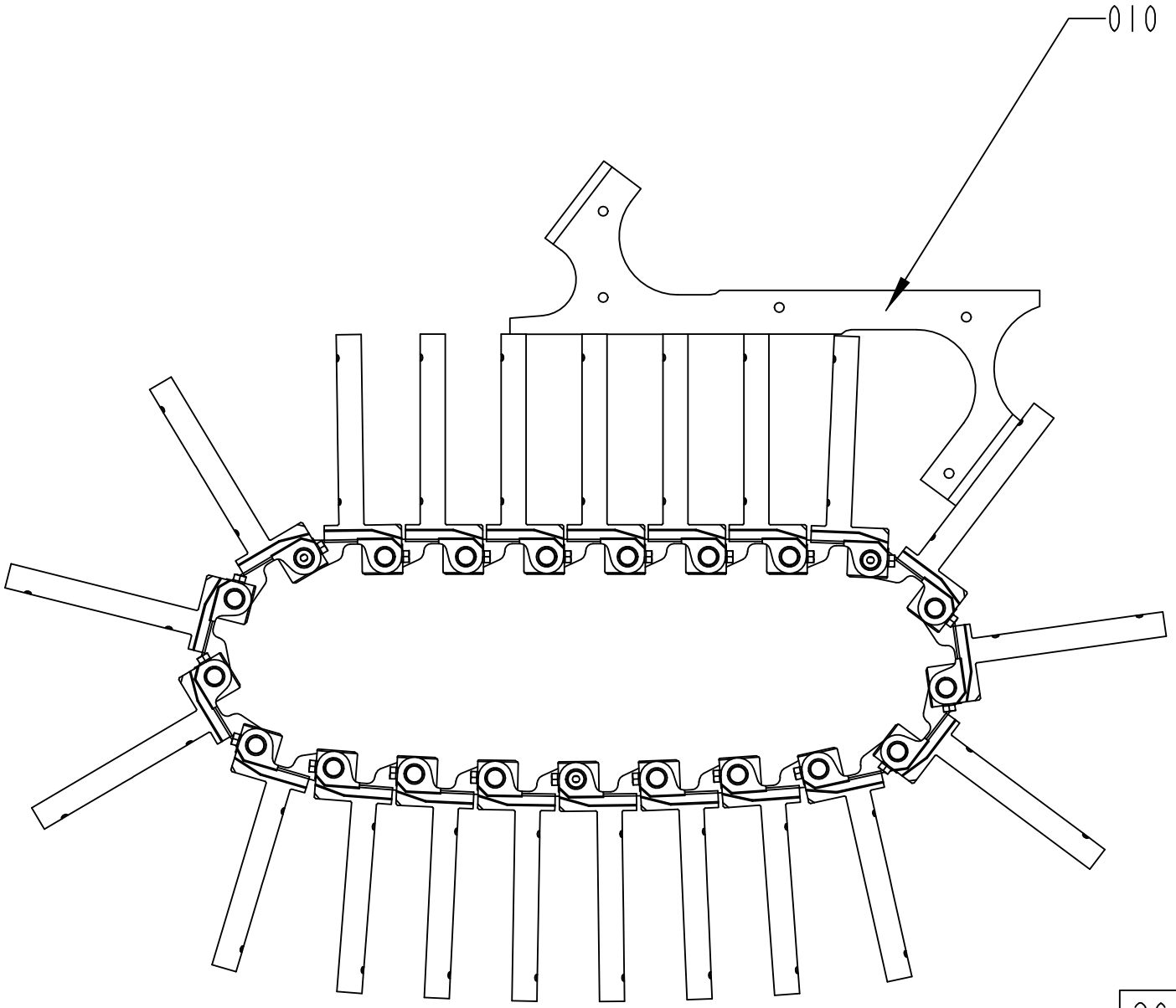

2641477-1
ECM 140998

ECM: 140998 - 20030821
Group number: 2641477-0100
Assembly Drawing: 2641477-1_1_AA

Pos	Part No	UN	Qty	Description	Page No
-					
010	76128-0000		1	TEMPLATE	

Pos	Part No	UN	Qty	Description	Page No

This page is intentionally left blank.

ECM: 422805 - 20091127
Group number: 2582795-0100
Assembly Drawing:

Pos	Part No	UN	Qty	Description	Page No
TWA 0125S					
010	2987325-0000		1	TEMPLATE	
TWA 0200S					
010	2914939-0000		1	TEMPLATE	

Pos	Part No	UN	Qty	Description	Page No

Machine Type	Group Description	Used-In	Group Number	Page No

PRESSURE GAUGE

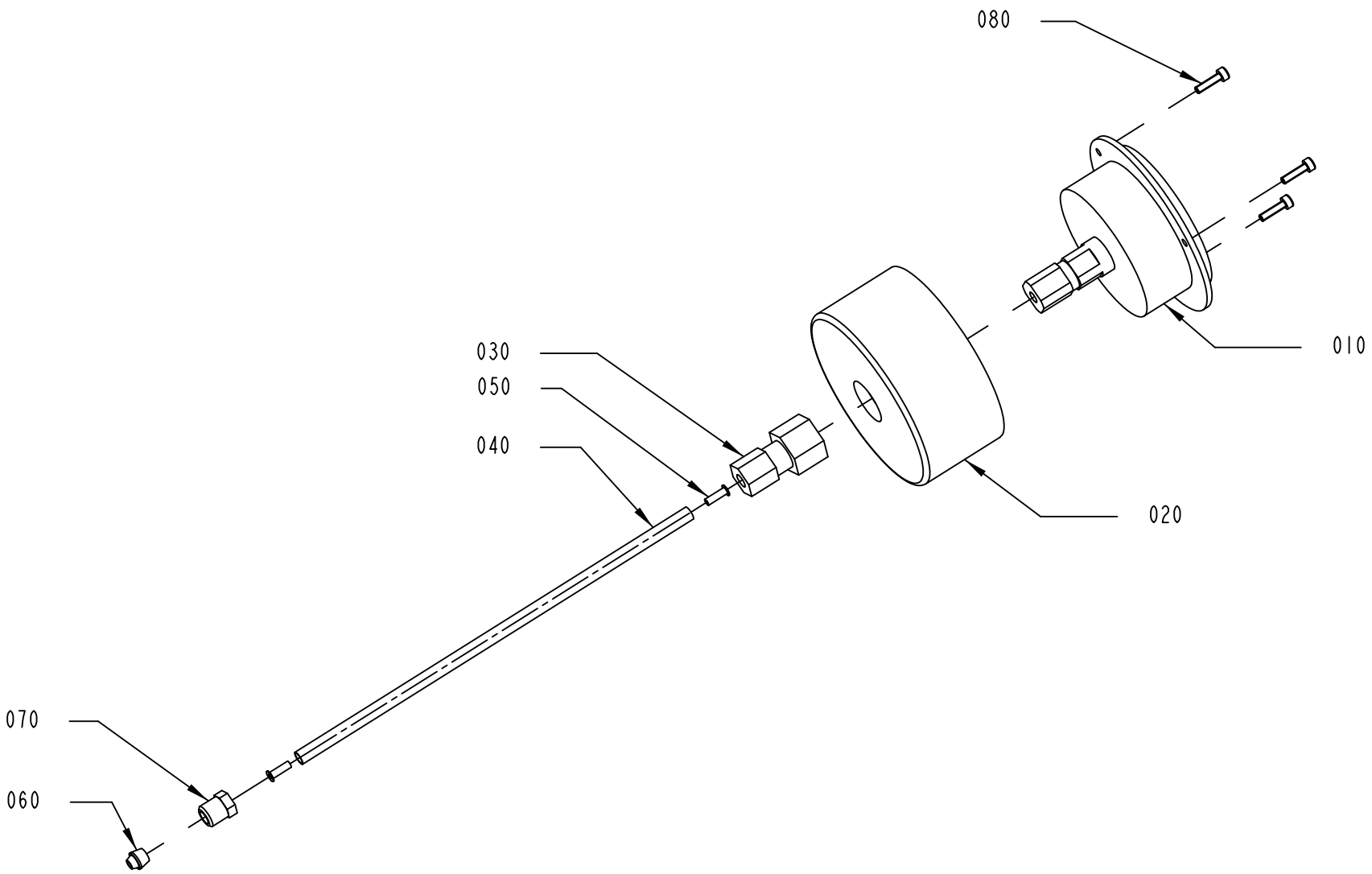

3137656-1
480902

ECM: 486282 - 20110110
Group number: 3137656-0100
Assembly Drawing: 3137656-1_1_AA

Pos	Part No	UN	Qty	Description	Page No
-					
010	90459-4615		1	PRESSURE GAUGE, 85120731	
020	3137648-0000		1	HOLDER	
030	342790-0102		1	MAV PRESSUR GAUGE CONNECTOR 6	
040	90166-0108	MM	200	TUBE 6 MM PA TRANSP.	
050	90134-0030		2	SLEEVE FOR PLASTIC TUBE	
060	90028-0025		1	CONE TUBE 6 MM	
070	90134-0055		1	BUSHING/NUT INLET/OUTLET 6 MM	
080	312115-0226		3	SCREW ISO4762 M3X12 A4 80	

Pos	Part No	UN	Qty	Description	Page No

This page is intentionally left blank.

ECM: 266655 - 20060519
Group number: 77094-0400
Assembly Drawing:

Pos	Part No	UN	Qty	Description	Page No
0100B, 0125S					
240	76180-0000		1	TEMPLATE	
0160S, 0200S					
250	76181-0000		1	TEMPLATE	
0200B, 0250B, 0284B, 0300S, 0330S					
050	76580-0100		1	SETTING TOOL FINAL FOLDER	**12-161**
260	76499-0000		1	TEMPLATE	
0200M, 0250S					
265	574455-0000		1	TEMPLATE	
Common Parts					
010	76200-0100		1	CONVEYOR SECTION	**12-163, 12-165**
040	76447-0200		1	TEMPLATE	**12-167**
060	76460-0100		1	SETTING TOOL CURVES	**12-169**
080	449969-0100		1	TOOL DISMOUNTING	**12-131**
100	589885-0100		1	TEMPLATE HOUSE/BENDING ROLLER	**12-171**
120	589889-0100		1	TEMPLATE LEVELING MACHINE	**12-173**
130	590273-0100		1	TEMPLATE VOLUME CAM	**12-175**
140	590507-0100		1	TEMPLATE FOR CENTERING RING	**12-177**
150	1296900-0100		1	LIFTING UNIT (RAILING)	**12-179**
280	2566433-0100		1	TEMPLATE PT19-020V	**12-181**
290	2552947-0200		1	TOOL	**12-151**

Pos	Part No	UN	Qty	Description	Page No

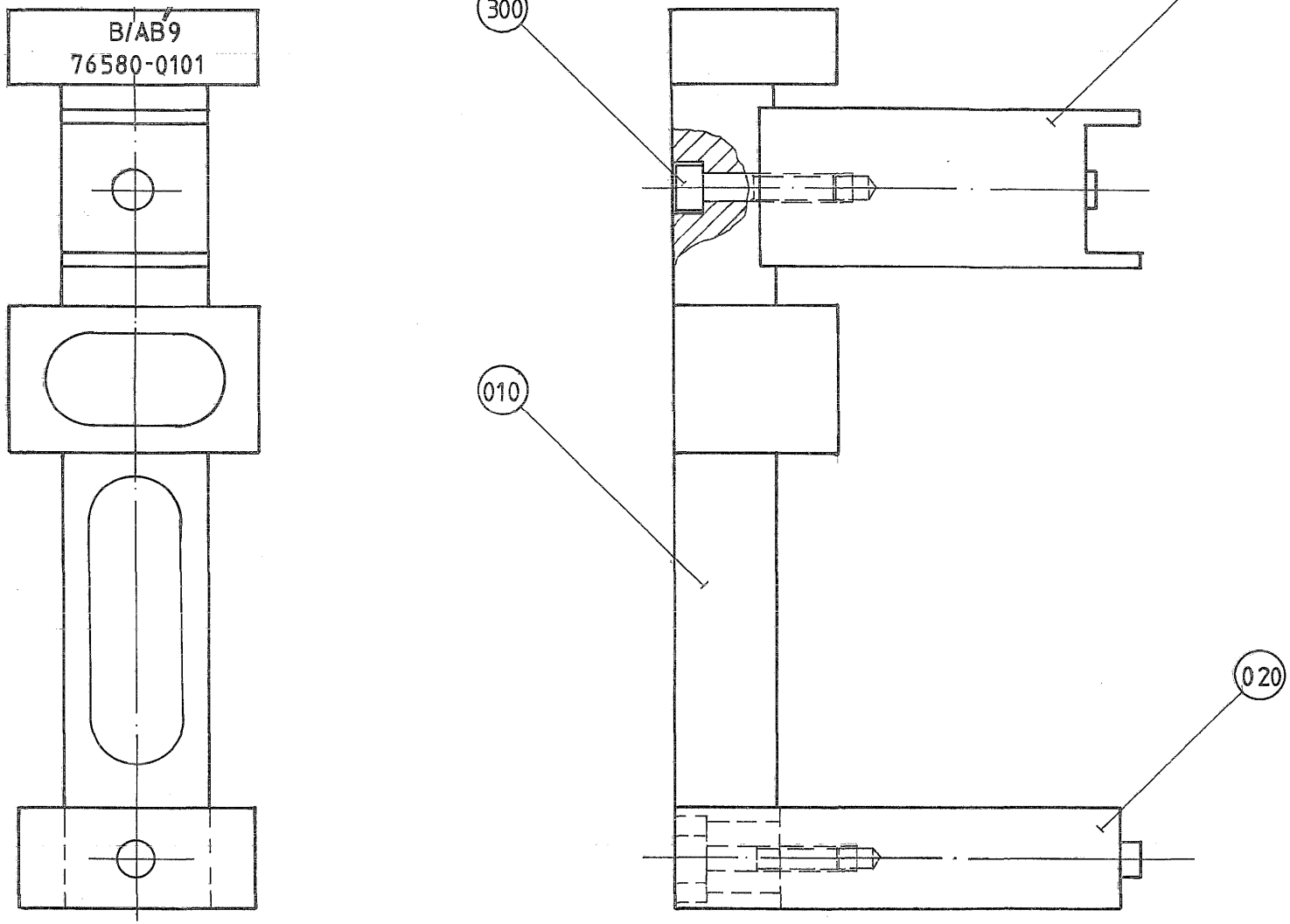
B/AB9
76580-0101
300
030
010
020

ECM: - -
Group number: 76580-0100
Assembly Drawing: 76580-1_1_AA

Pos	Part No	UN	Qty	Description	Page No
-					
010	76581-0000		1	VERTICAL PILLAR	
020	76582-0000		1	BLOCKING PIECE	
030	76583-0000		1	BLOCKING PIECE	
300	312115-0457		2	SCREW ISO4762 M8X35 A4 80	

Pos	Part No	UN	Qty	Description	Page No

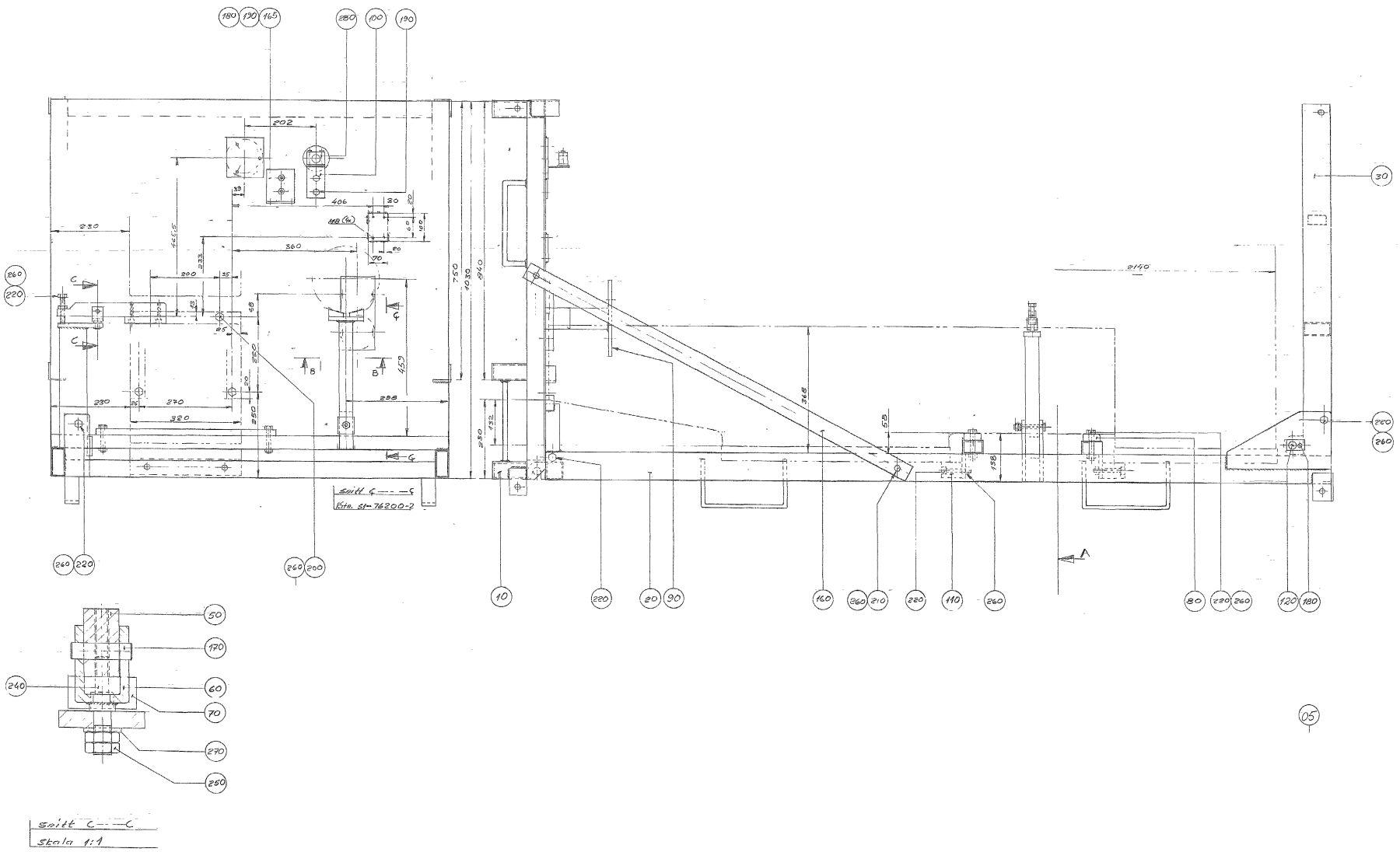
Snitt C—C
Skala 1:1

ECM: - -
Group number: 76200-0100
Assembly Drawing: 76200-1_1_AA

This list covers pages from 12-162 to 12-165

Pos	Part No	UN	Qty	Description	Page No
-					
005	76137-0000		1	PLATFORM TRANSPORT	
010	76201-0000		1	BOTTOM PLATE	
020	76202-0000		1	FRAME	
030	76203-0000		1	SUPPORT LEG	
040	76204-0000		1	ARM	
050	76205-0000		1	ARM	
060	76206-0000		1	JOINTED ARM	
070	76207-0000		1	STOPPER	
080	76208-0000		2	CUSHION	
090	76209-0000		1	SUPPORT	
100	76210-0000		1	BRACKET	
110	76211-0000		2	SUPPORT	
120	76212-0000		2	SHAFT	
130	76213-0000		2	SUPPORT	
140	76214-0000		1	ARM	
150	76215-0000		1	WASHER	
160	76216-0000		2	STRUT	
165	76217-0000		1	SUPPORT	
170	311102-0460		1	PARALLEL PIN ISO 2338 10M6X35 ST	
180	312101-0367		6	SCREW M6S M6X14 FZB	
190	312101-0449		2	SCREW M6S M8X16 FZB	
200	312101-0536		4	SCREW M6S M12X30 FZB	
210	312101-0544		4	SCREW M6S M12X60 FZB	
220	312101-0548		16	SCREW M6S M12X80 FZB	
230	312111-0451		6	SCREW HEX.SOCK.HD.MC6S-TT 8X20 88 FZB	
240	312111-0491		1	SCREW HEX.SOCK.HD.MC6S-TT 10X20 88 FZB	
250	312601-0320		1	HEXAGON NUT, M10 8 FZB, ISO 4032	
260	312601-0322		2	HEXAGON NUT, DIN 934 M12 8 FZB	
270	315105-0173		1	WASHER PLAIN, 10,5X22X2 A4 BRB	

Pos	Part No	UN	Qty	Description	Page No

CONVEYOR SECTION

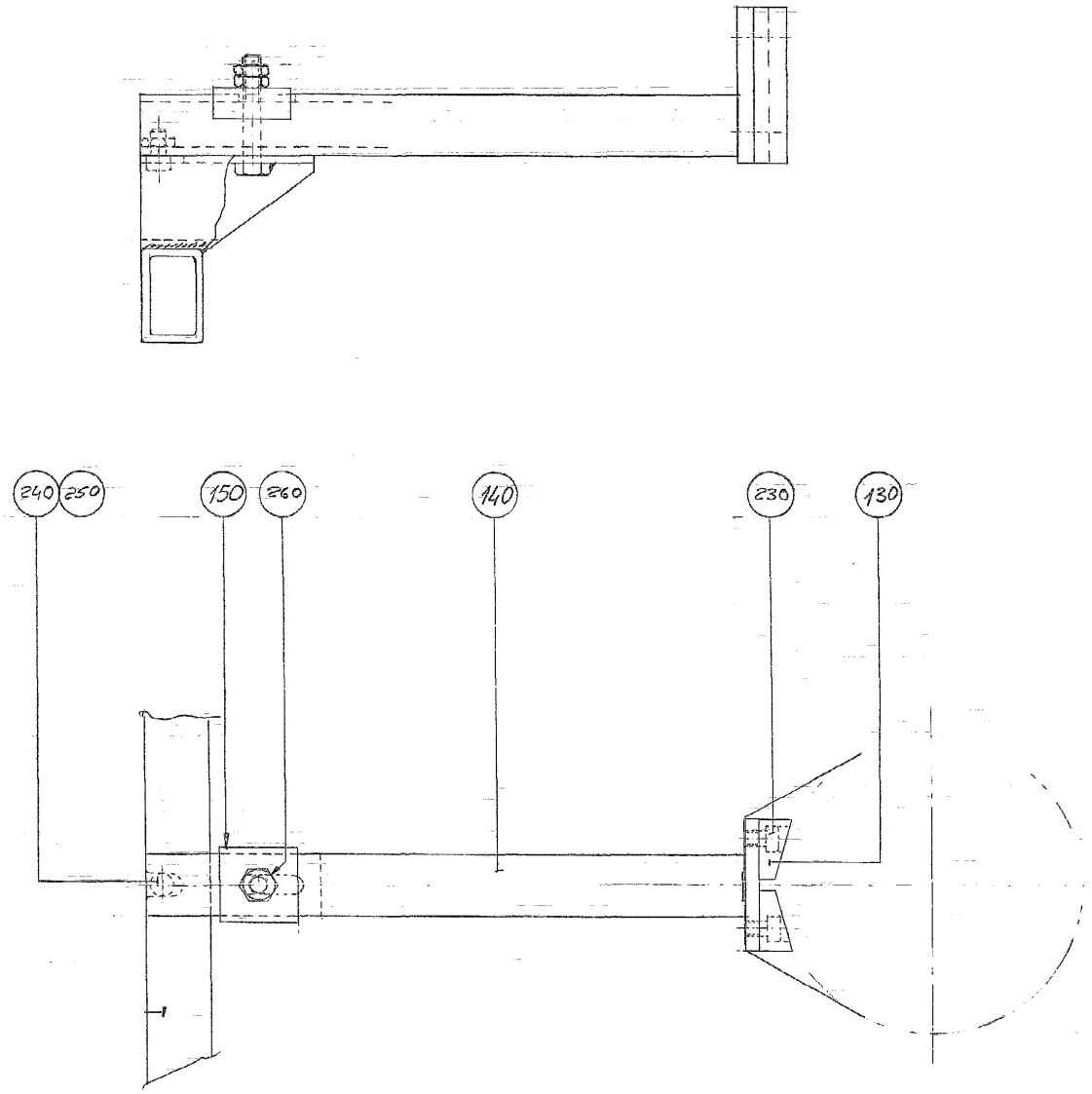

ECM: - -
Group number: 76200-0100
Assembly Drawing: 76200-2_1_AA

This list covers pages from 12-162 to 12-165

Pos	Part No	UN	Qty	Description	Page No
-					
005	76137-0000		1	PLATFORM TRANSPORT	
010	76201-0000		1	BOTTOM PLATE	
020	76202-0000		1	FRAME	
030	76203-0000		1	SUPPORT LEG	
040	76204-0000		1	ARM	
050	76205-0000		1	ARM	
060	76206-0000		1	JOINTED ARM	
070	76207-0000		1	STOPPER	
080	76208-0000		2	CUSHION	
090	76209-0000		1	SUPPORT	
100	76210-0000		1	BRACKET	
110	76211-0000		2	SUPPORT	
120	76212-0000		2	SHAFT	
130	76213-0000		2	SUPPORT	
140	76214-0000		1	ARM	
150	76215-0000		1	WASHER	
160	76216-0000		2	STRUT	
165	76217-0000		1	SUPPORT	
170	311102-0460		1	PARALLEL PIN ISO 2338 10M6X35 ST	
180	312101-0367		6	SCREW M6S M6X14 FZB	
190	312101-0449		2	SCREW M6S M8X16 FZB	
200	312101-0536		4	SCREW M6S M12X30 FZB	
210	312101-0544		4	SCREW M6S M12X60 FZB	
220	312101-0548		16	SCREW M6S M12X80 FZB	
230	312111-0451		6	SCREW HEX.SOCK.HD.MC6S-TT 8X20 88 FZB	
240	312111-0491		1	SCREW HEX.SOCK.HD.MC6S-TT 10X20 88 FZB	
250	312601-0320		1	HEXAGON NUT, M10 8 FZB, ISO 4032	
260	312601-0322		2	HEXAGON NUT, DIN 934 M12 8 FZB	
270	315105-0173		1	WASHER PLAIN, 10,5X22X2 A4 BRB	

Pos	Part No	UN	Qty	Description	Page No

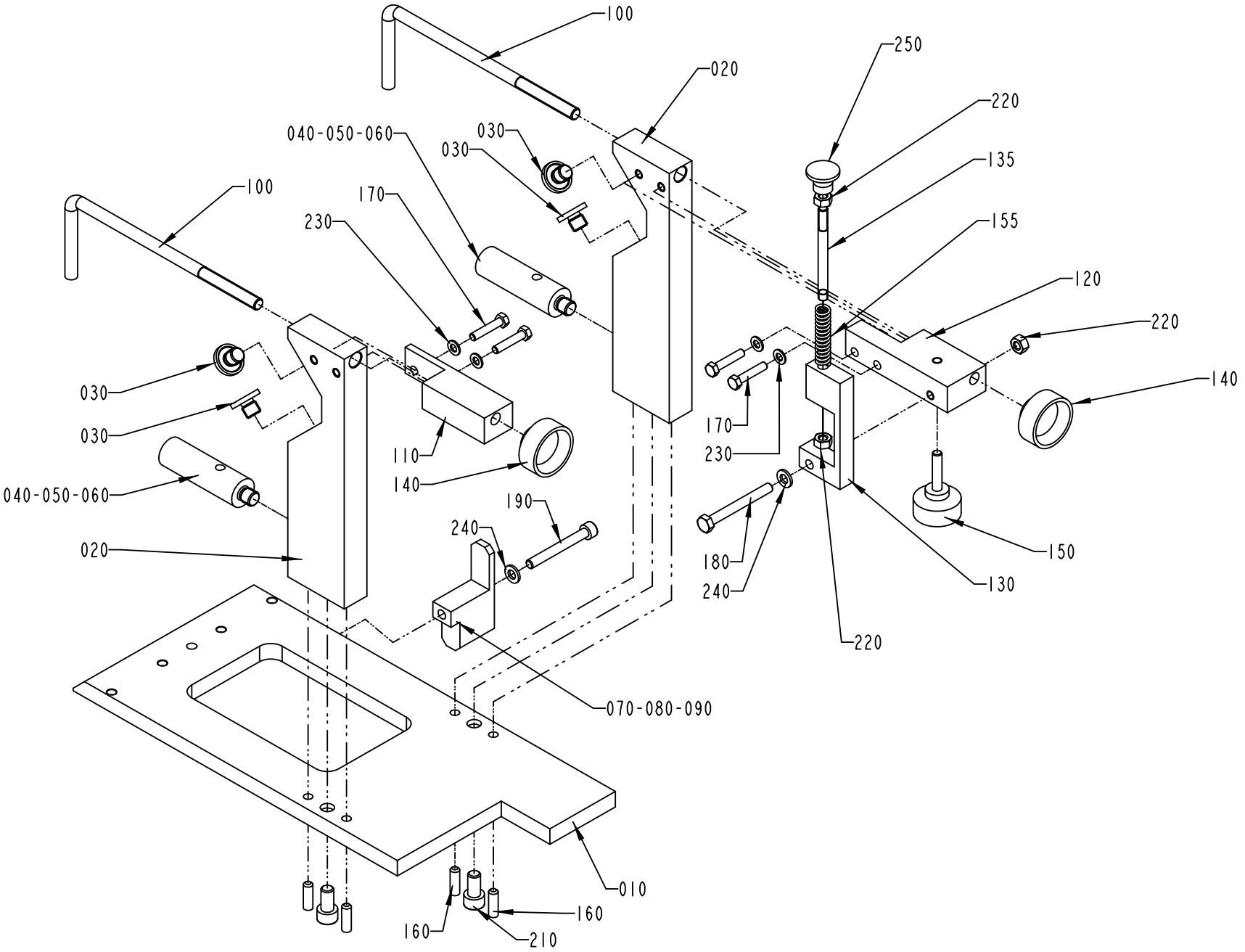

S-76447-2
ECN 73036

ECM: 73036 - 19991012
Group number: 76447-0200
Assembly Drawing: 76447-2_1_AB

Pos	Part No	UN	Qty	Description	Page No
-					
010	1334797-0000		1	PLATE	
020	1334798-0000		2	BLOCK	
030	1499674-0000		4	SPACER	
040	1334799-0002		2	SPACER	
050	1334799-0003		2	SPACER	
060	1334799-0004		2	SPACER	
070	1334800-0000		1	SUPPORT	
080	1334801-0000		1	SUPPORT	
090	1334802-0000		1	SUPPORT	
100	1334803-0000		2	HOOK	
110	1334804-0000		1	SPACER	
120	1334839-0000		1	SPACER	
130	1334840-0000		1	SUPPORT	
135	1511557-0000		1	STUD SCREW	
140	90051-0040		2	KNOB, INTERNAL THREAD, NO. 8308-0627	
150	90051-0084		1	KNOB, EXTERNAL THREAD. NO. 8308-1534	
155	90335-0149		1	COMP. SPRING, 2962, 1,6X9,6X35,5 FE	
160	311103-0353		4	PARALLEL PIN ISO 2338 6M6X20 A1	
170	312105-0333		4	SCREW, M6S ISO 4017 M5X25 A4 80	
180	312105-0381		1	SCREW, M6S ISO 4014 M6X55 A4 80	
190	312115-0380		1	SCREW ISO4762 M6X50 A4 80	
210	312115-0449		2	SCREW ISO4762 M8X16 A4 80	
220	312605-0316		3	HEXAGON NUT, M6M M6 A280	
230	315105-0146		4	WASHER PLAIN, 5,3X10X1 A4 BRB	
240	315105-0153		2	WASHER PLAIN, 6,4X12X1,5 A4 BRB	
250	318873-0103		1	KNOB, CIRCUL, THREADED BUSH, M6 21X17 MM	

Pos	Part No	UN	Qty	Description	Page No

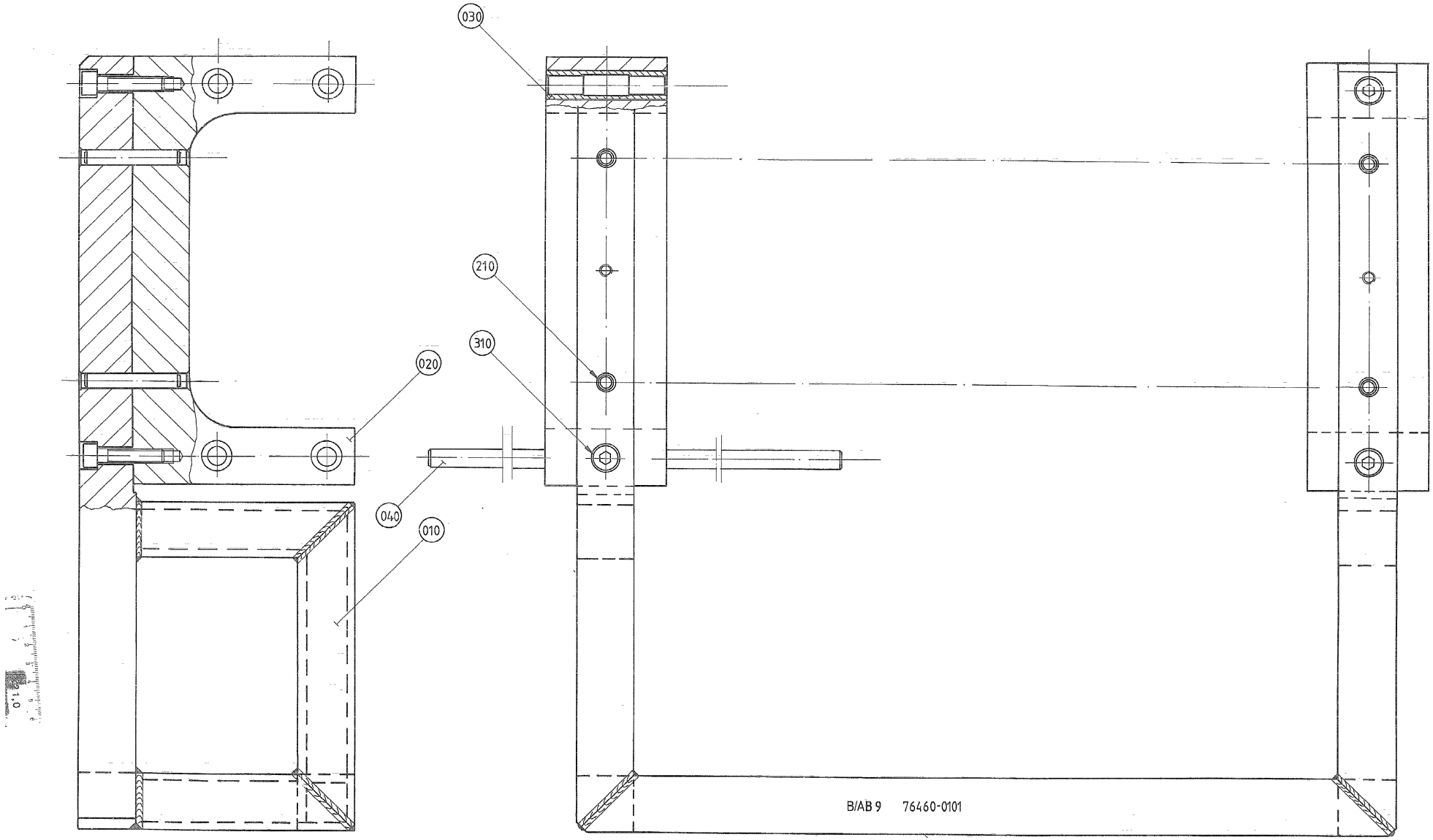
030
210
310
020
040
010
B/AB 9 76460-0101

ECM: - -
Group number: 76460-0100
Assembly Drawing: 76460-1_1_AA

Pos	Part No	UN	Qty	Description	Page No
-					
010	76461-0000		1	SUPPORT ARM	
020	76462-0000		2	TEMPLATE	
030	76463-0000		8	BUSHING	
040	75451-0000		4	GUIDE PIN	
210	311102-0413		4	PARALLEL PIN ISO 2338 8M6X50 ST	
310	312111-0457		4	SCREW HEX.SOCK.HD.MC6S-TT 8X35 88 FZB	

Pos	Part No	UN	Qty	Description	Page No

TEMPLATE HOUSE/BENDING ROLLER

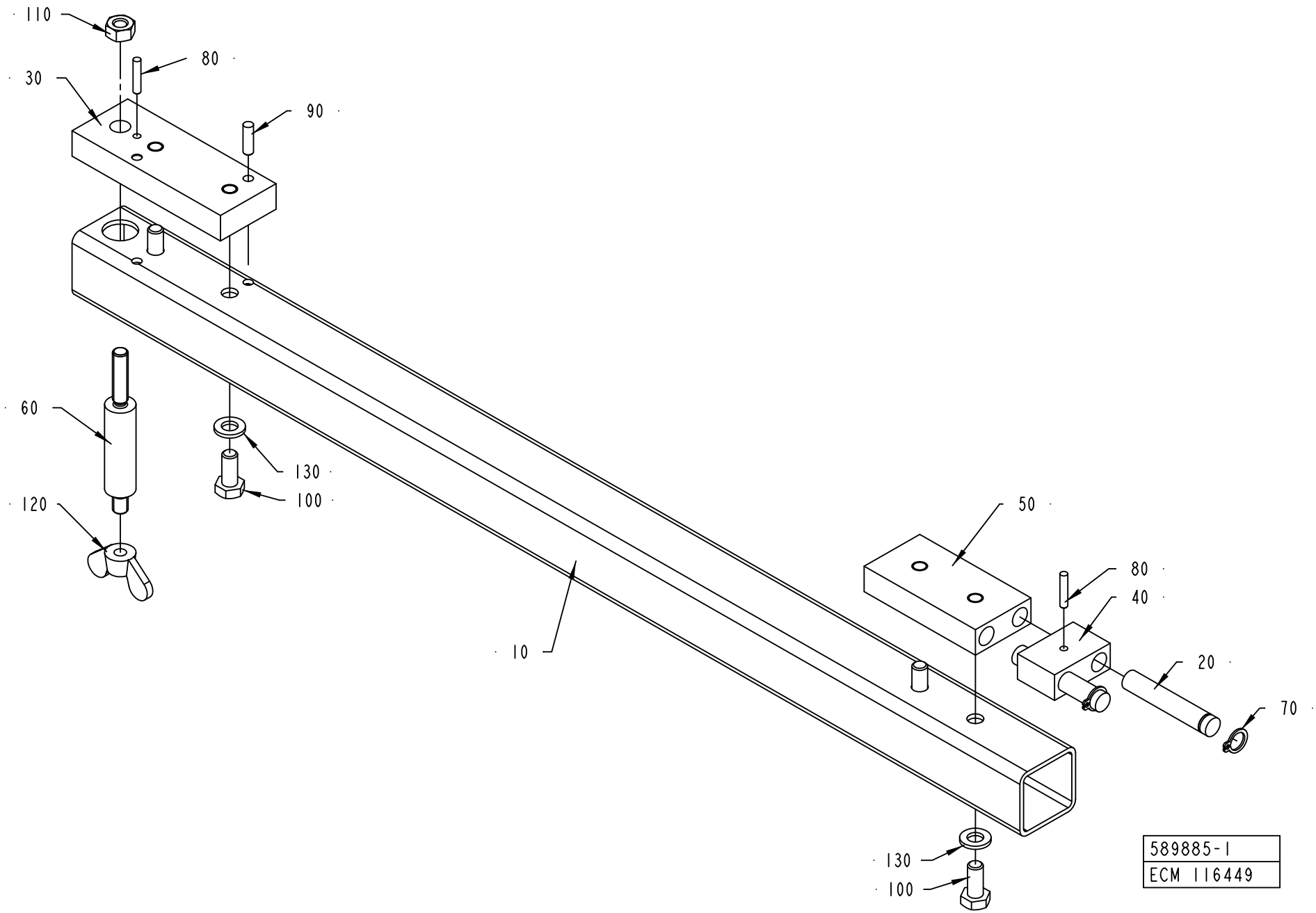

ECM: 117667 - 20031001
Group number: 589885-0100
Assembly Drawing: 589885-1_1_AB

Pos	Part No	UN	Qty	Description	Page No
-					
010	589910-0000		1	BEAM	
020	590205-0000		2	PIN	
030	590206-0000		1	BLOCK	
040	590207-0000		1	BLOCKING PIECE	
050	590208-0000		1	BLOCKING PIECE	
060	590219-0000		1	PIN	
070	90141-0015		2	RETAINING RING FOR SHAFT DIN 471 8 SS	
080	311103-0236		2	PARALLEL PIN ISO 2338 3M6X16 A1	
090	311103-0269		2	PARALLEL PIN ISO 2338 4M6X14 A1	
100	312115-0367		4	SCREW ISO4762 M6X14 A4 80	
110	312605-0316		1	HEXAGON NUT, M6M M6 A280	
120	312715-0116		1	WING NUT DIN 315 A2 MVM-K M6	
130	315105-0153		4	WASHER PLAIN, 6,4X12X1,5 A4 BRB	

Pos	Part No	UN	Qty	Description	Page No

Machine Type	Group Description	Used-In	Group Number	Page No

TEMPLATE LEVELING MACHINE

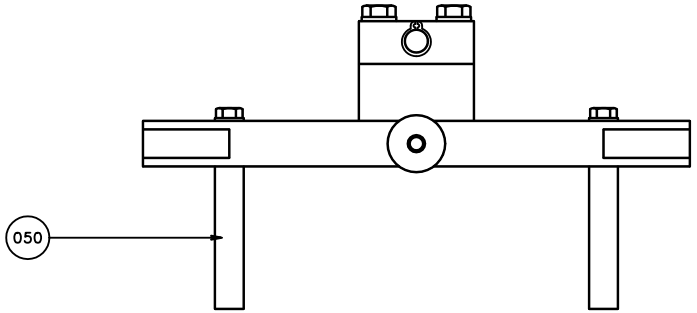

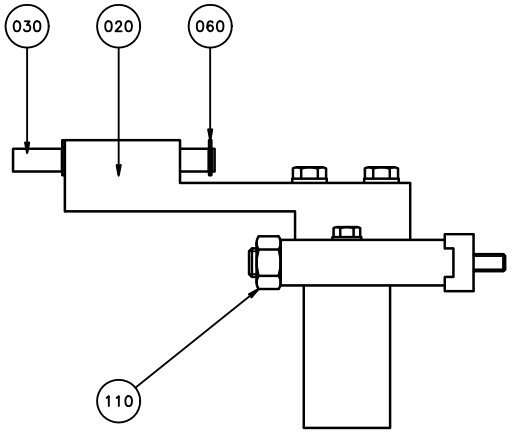

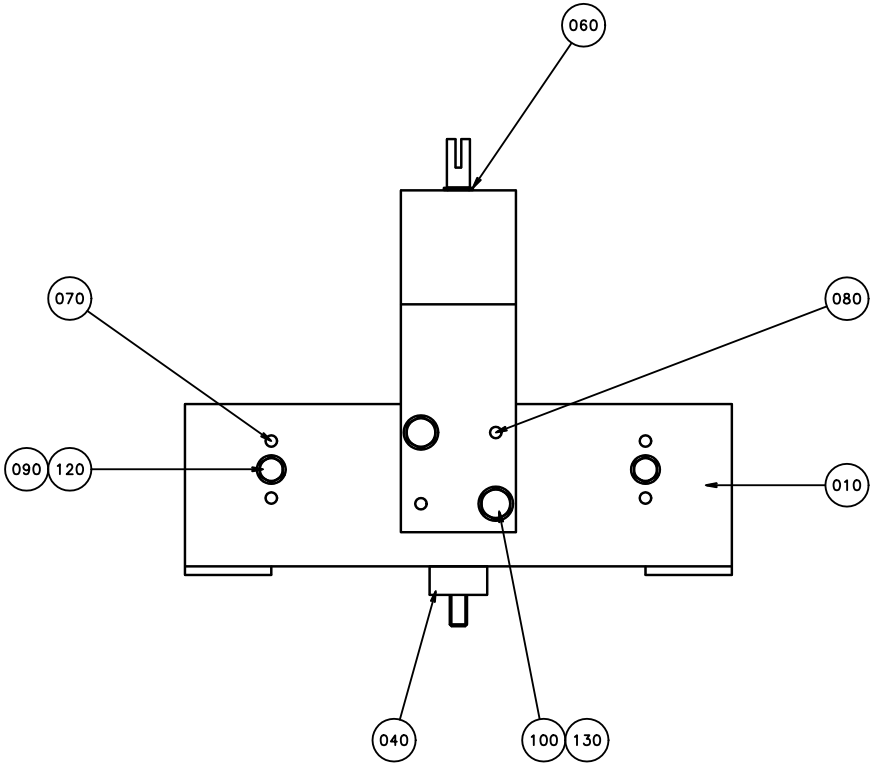

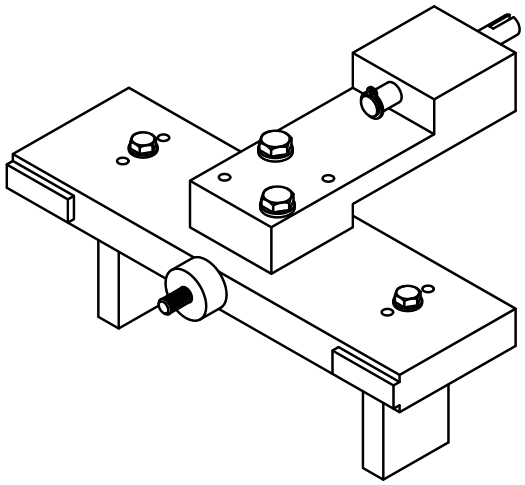

ECM: 70020 - 19960722
Group number: 589889-0100
Assembly Drawing: 589889-1_1_AA

Pos	Part No	UN	Qty	Description	Page No
-					
010	590262-0000		1	PLATE	
020	590263-0000		1	HOLDER	
030	590264-0000		1	SHAFT	
040	590265-0000		1	SHAFT	
050	590267-0000		2	BLOCKING PIECE	
060	90141-0015		2	RETAINING RING FOR SHAFT DIN 471 8 SS	
070	311103-0274		4	PARALLEL PIN ISO 2338 4M6X25 A1	
080	311103-0278		2	PARALLEL PIN ISO 2338 4M6X35 A1	
090	312105-0335		2	SCREW, M6S ISO 4014 M5X30 A4 80	
100	312105-0376		2	SCREW, M6S ISO 4014 M6X35 A4 80	
110	312605-0320		1	HEXAGON NUT, M6M M10 A280	
120	315105-0146		2	WASHER PLAIN, 5,3X10X1 A4 BRB	
130	315105-0153		2	WASHER PLAIN, 6,4X12X1,5 A4 BRB	

Pos	Part No	UN	Qty	Description	Page No

TEMPLATE VOLUME CAM

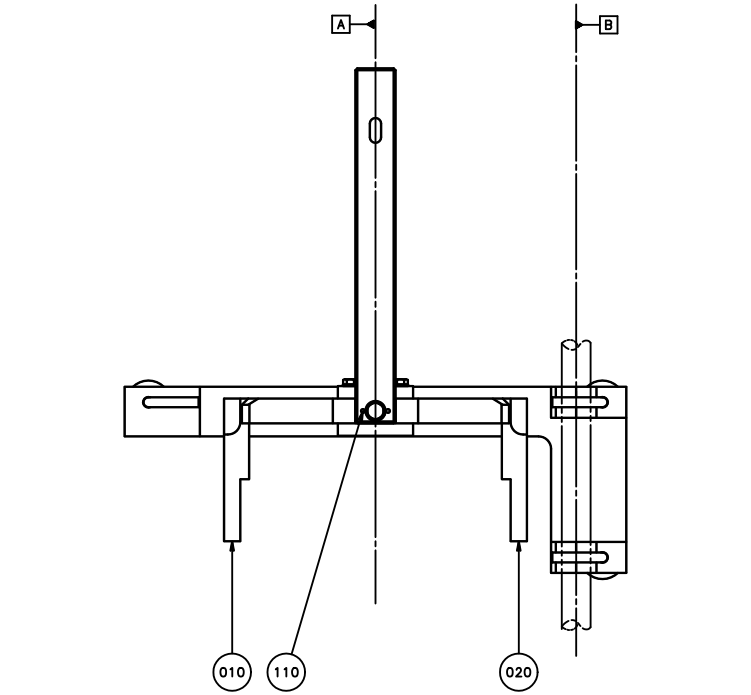

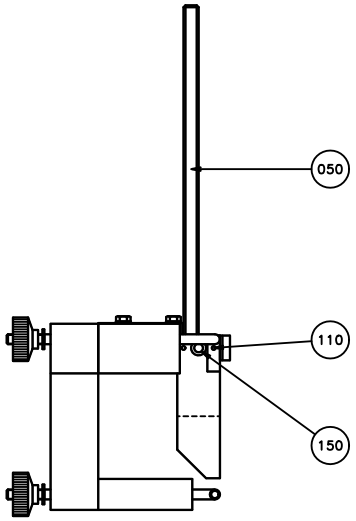

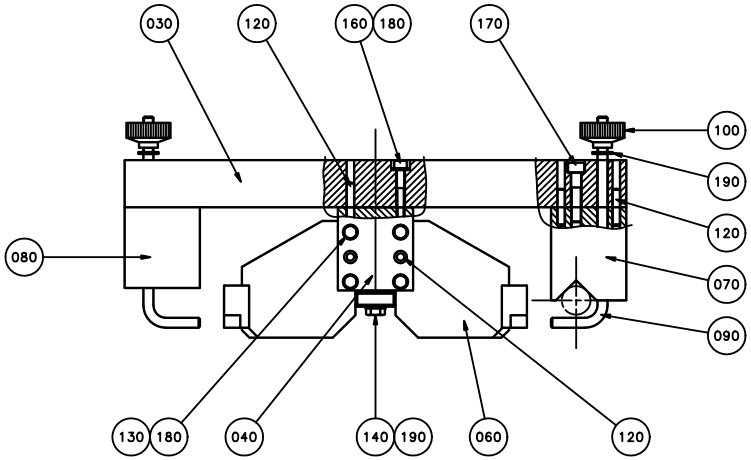

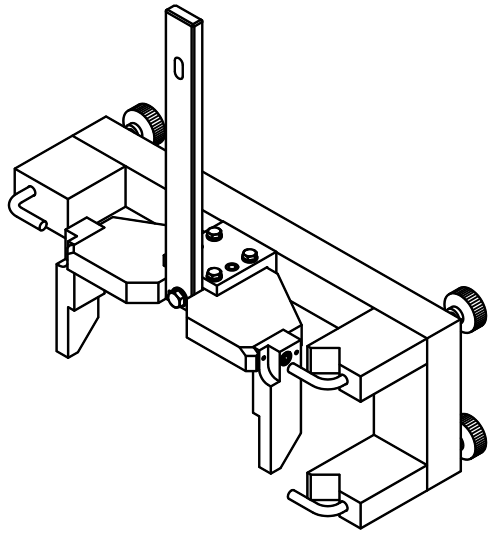

ECM: 70020 - 19960722
Group number: 590273-0100
Assembly Drawing: 590273-1_1_AA

Pos	Part No	UN	Qty	Description	Page No
-					
010	590274-0000		1	BRACKET RIGHT	
020	590275-0000		1	BRACKET LEFT	
030	590276-0000		1	HOLDER	
040	590277-0000		1	ANGLE BRACKET	
050	590278-0000		1	RULER	
060	590279-0000		1	PLATE	
070	76294-0000		2	LOCATING PIECE	
080	76295-0000		1	SPACER	
090	76296-0000		3	HOOK	
100	90051-0040		3	KNOB, INTERNAL THREAD, NO. 8308-0627	
110	311103-0276		6	PARALLEL PIN ISO 2338 4M6X30 A1	
120	311103-0357		10	PARALLEL PIN ISO 2338 6M6X30 A1	
130	312105-0370		4	SCREW, M6S ISO 4017 M6X20 A4 80	
140	312105-0453		1	SCREW, M6S ISO 4017 M8X25 A4 80	
150	312115-0370		2	SCREW ISO4762 M6X20 A4 80	
160	312115-0378		2	SCREW ISO4762 M6X40 A4 80	
170	312115-0459		3	SCREW ISO4762 M8X40 A4 80	
180	315105-0153		6	WASHER PLAIN, 6,4X12X1,5 A4 BRB	
190	315105-0165		4	WASHER PLAIN, 8,4X16X1,6 A4 BRB	

Pos	Part No	UN	Qty	Description	Page No

TEMPLATE FOR CENTERING RING

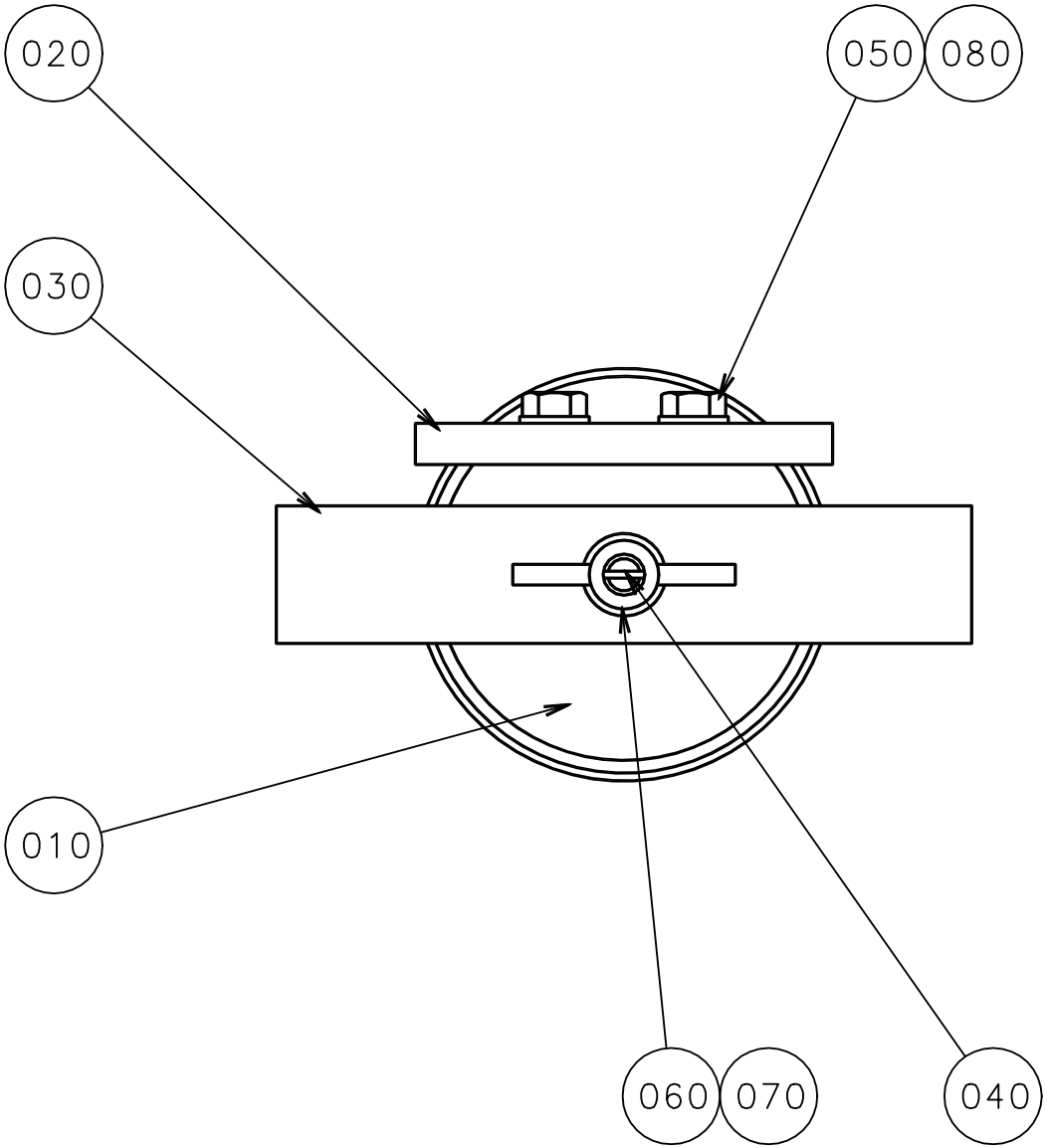

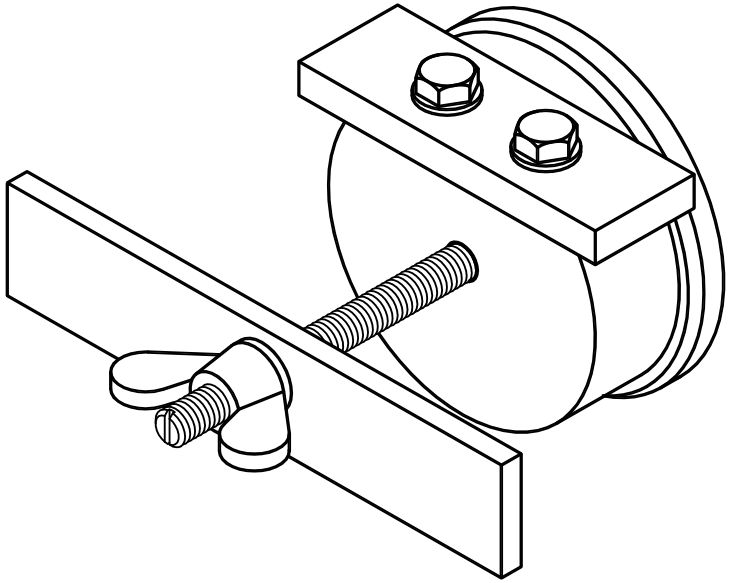

ECM: 71181 - 19980218
Group number: 590507-0100
Assembly Drawing: 590507-1_1_AA

Pos	Part No	UN	Qty	Description	Page No
TBA 0100B, TBA 0125S					
010	590285-0000		1	GAUGE	
020	590502-0000		1	PLATE	
TBA 0160S, TBA 0200S, TPA 0250SQ					
010	590280-0000		1	GAUGE	
020	590281-0000		1	PLATE	
TBA 0200B, TBA 0284B, TBA 0250B, TBA 0300S, TBA 0330S					
010	590283-0000		1	GAUGE	
020	590284-0000		1	PLATE	
TBA 0200M, TBA 0250S					
010	590503-0000		1	GAUGE	
020	590504-0000		1	PLATE	
TPA 0330SQ					
010	1334063-0000		1	GAUGE	
020	1334062-0000		1	PLATE	
Common Parts					
030	590282-0000		1	PLATE	
040	590508-0000		1	SCREW	
050	312105-0329		2	SCREW, M6S ISO 4017 M5X16 A4 80	
060	312715-0116		1	WING NUT DIN 315 A2 MVM-K M6	
070	315105-0153		1	WASHER PLAIN, 6,4X12X1,5 A4 BRB	
080	315105-0146		2	WASHER PLAIN, 5,3X10X1 A4 BRB	

Pos	Part No	UN	Qty	Description	Page No

LIFTING UNIT (RAILING)

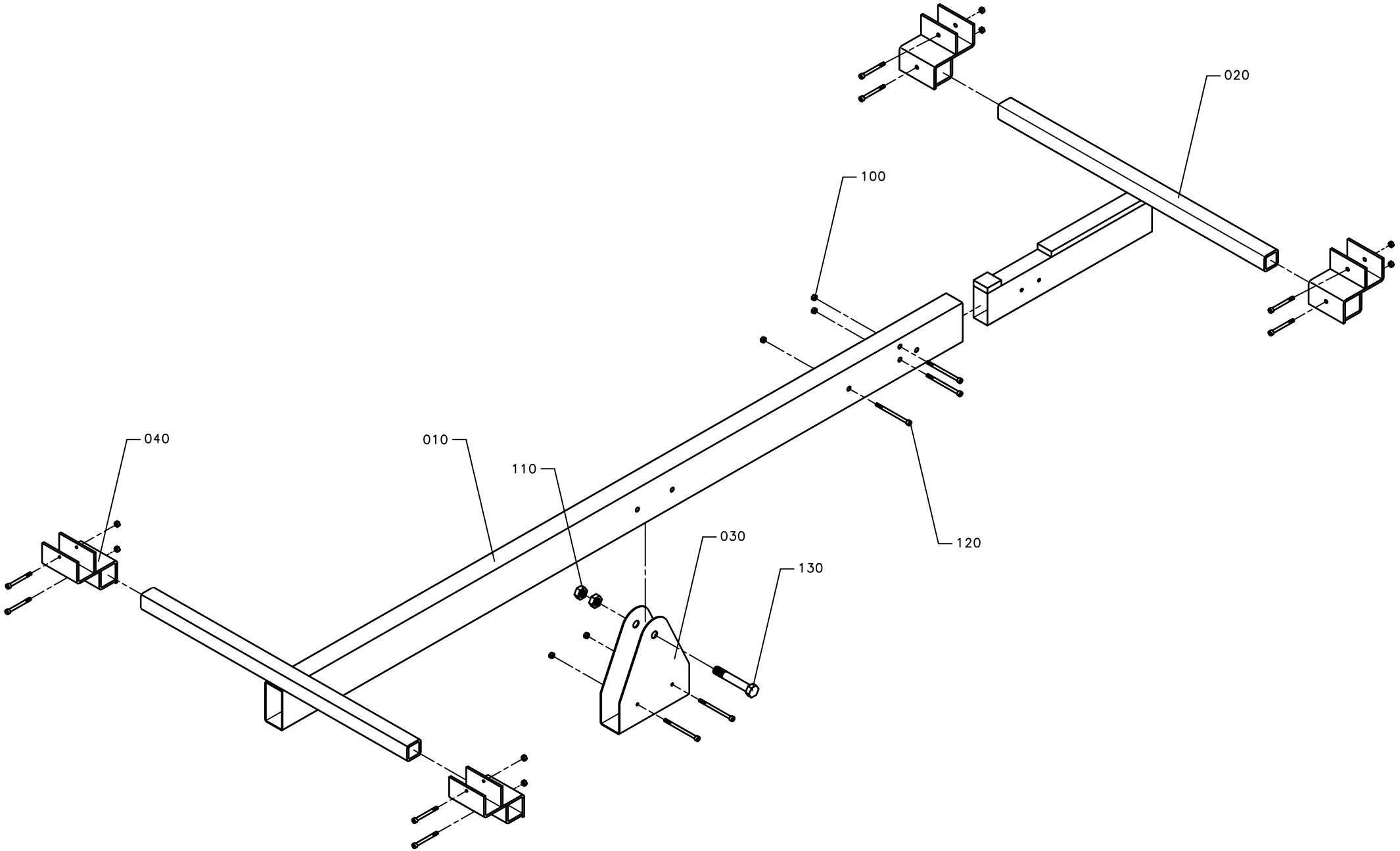

ECM: 71499 - 19980504
Group number: 1296900-0100
Assembly Drawing: 1296900-1_1_AA

Pos	Part No	UN	Qty	Description	Page No
-					
010	1296903-0000		1	BEAM	
020	1296904-0000		1	BEAM	
030	1296905-0000		1	SUPPORT	
040	1296901-0000		4	BRACKET	
100	312605-0316		13	HEXAGON NUT, M6M M6 A280	
110	90099-0131		2	NUT HEX. M16X2 SS	
120	312115-0384		13	SCREW ISO4762 M6X70 A4 80	
130	312105-0638		1	SCREW, M6S ISO 4014 M16X90 A4 80	

Pos	Part No	UN	Qty	Description	Page No

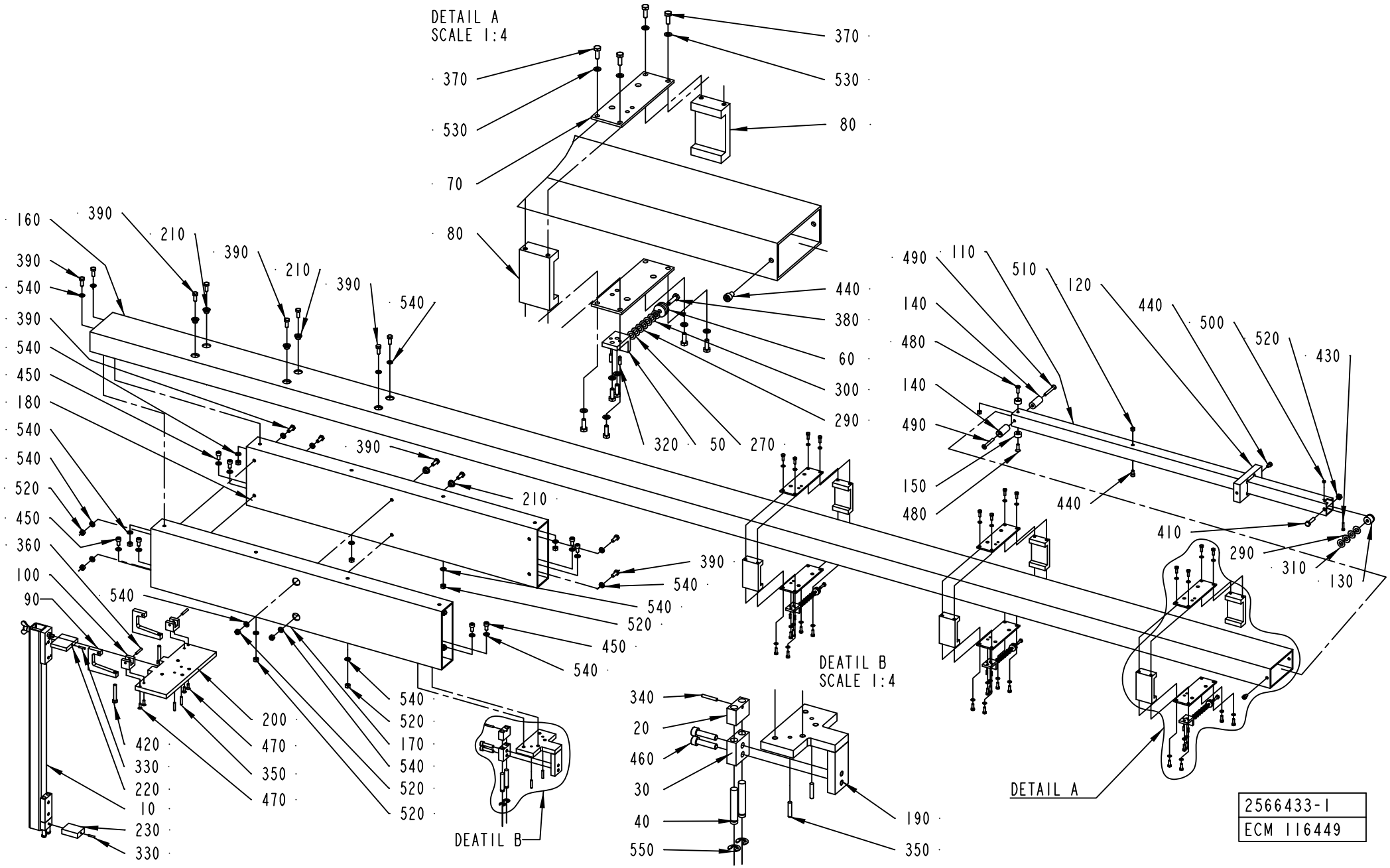
DETAIL A
SCALE 1:4
370
530
80
70
440
380
60
300
290
320
50
270
160
390
210
540
450
180
520
360
100
90
420
330
220
10
230
200
470
350
170
DEATIL B
490
110
510
120
440
500
520
430
140
480
150
410
290
310
130
DEATIL B
SCALE 1:4
340
20
460
30
40
550
190
DETAIL A
2566433-1
ECM 116449

ECM: 116451 - 20031001
Group number: 2566433-0100
Assembly Drawing: 2566433-1_1_AA

Pos	Part No	UN	Qty	Description	Page No
-					
010	589885-0100		1	TEMPLATE HOUSE/BENDING ROLLER	**12-171**
020	589908-0000		1	BLOCKING PIECE	
030	589909-0000		1	BLOCKING PIECE	
040	590205-0000		2	PIN	
050	590215-0000		3	SUPPORT	
060	590216-0000		3	ROLLER	
070	590217-0000		6	SHEET	
080	590218-0000		6	GUIDE	
090	2615467-0000		2	BRACKET	
100	590221-0000		2	BLOCK	
110	1350674-0000		1	EXTENSION	
120	1350675-0000		1	GUIDE	
130	1350676-0000		1	ROLLER	
140	1350677-0000		2	GUIDE	
150	1350678-0000		2	GUIDE	
160	2566434-0000		1	BEAM	
170	2566435-0000		1	BEAM	
180	2566436-0000		1	BEAM	
190	2566437-0000		1	ANGLE BRACKET	
200	2566438-0000		1	SUPPORT	
210	2566439-0000		6	BUSHING	
220	2594679-0000		1	BLOCK	
230	2594680-0000		1	BLOCK	
270	2033-0002		6	WASHER	
280	2033-0003		9	WASHER	
290	2033-0008		3	WASHER	
300	2033-0010		6	WASHER	
310	2033-0011		1	WASHER	
320	311103-0233		6	PARALLEL PIN ISO 2338 3M6X10 A1	
330	311103-0236		2	PARALLEL PIN ISO 2338 3M6X16 A1	
340	311103-0238		1	PARALLEL PIN ISO 2338 3M6X20 A1	
350	311103-0272		4	PARALLEL PIN ISO 2338 4M6X20 A1	
360	311103-1274		2	PARALLEL PIN ISO 2338 4M6X24 A1	
370	312105-0291		30	SCREW, M6S ISO 4017 M4X12 A4 70	
380	312105-0293		3	SCREW, M6S ISO 4017 M4X16 A4 70	
390	312105-0368		14	SCREW, M6S ISO 4017 M6X16 A4 80	
400	312105-0370		3	SCREW, M6S ISO 4017 M6X20 A4 80	
410	312105-0372		1	SCREW, M6S ISO 4017 M6X25 A4 80	
420	312109-0378		2	SCREW, M6S ISO 4017 M6X40 A4 80	
430	312115-0228		1	SCREW ISO4762 M3X16 A4 80	
440	312115-0323		3	SCREW ISO4762 M5X8 A4 80	
450	312115-0366		8	SCREW ISO4762 M6X12 A4 80	
460	312115-0372		2	SCREW ISO4762 M6X25 A4 80	
470	312155-0291		4	SCREW DIN 7991 MF6S M4X12 A4 70	
480	312155-0329		2	SCREW DIN 7991 MF6S M5X16 A4 70	
490	312155-0339		2	SCREW DIN 7991 MF6S M5X40 A4 70	
500	312605-0310		1	HEXAGON NUT, M6M M3 A280	
510	312605-0314		5	HEXAGON NUT, M6M M5 A280	
520	312605-0316		15	HEXAGON NUT, M6M M6 A280	
530	315105-0136		30	WASHER PLAIN, 4,3X9X0,8 A4 BRB	
540	315105-0153		30	WASHER PLAIN, 6,4X12X1,5 A4 BRB	
550	315755-0109		2	RETAINING RING SHAFT DIN 6799 7 SS	

Machine Type	Group Description	Used-In	Group Number	Page No

Tetra Pak

SPC
Spare Parts Catalogue

Part No	Description	Page No
1013-0000	SHAFT	8-15
1755-0001	WASHER	4-107, 4-109
1755-0002	WASHER	4-107, 4-109
1755-0003	WASHER	4-107, 4-109
2033-0002	WASHER	12-181
2033-0003	WASHER	12-181
2033-0007	WASHER	1-83, 1-85
2033-0008	WASHER	1-143, 1-145, 12-181
2033-0009	WASHER	4-111
2033-0010	WASHER	12-181
2033-0011	WASHER	1-125, 1-127, 1-135, 1-137, 1-139, 1-143, 1-145, 1-149, 1-151, 8-23, 8-25, 12-181
2033-0013	WASHER	7-23, 7-25, 7-27, 7-29, 7-51, 7-53
2033-0014	WASHER	4-111
2873-0000	SHAFT	12-39, 12-41
6161-0000	ROLL	1-193, 1-195
12228-0000	COMPRESSION SPRING	3-31
12242-0001	GASKET 32X25X5,5	1-43, 1-101
12242-0003	GASKET 48X38X5,5	1-163
12242-0005	GASKET 61X51X5,5	1-83, 1-85, 1-163
18542-0000	WASHER	2-57
20239-0000	COMPRESSION SPRING	4-93, 4-95
21047-0000	LOCK WASHER	5-89
21521-0000	COMPRESSION SPRING	1-71, 1-169
22463-0000	ROLL	4-7, 4-9, 4-11, 4-13, 4-15, 4-17, 4-45, 4-47
22475-0000	CURVE ROLLER	4-93, 4-95
26490-0000	WASHER	1-125, 1-127
27815-0000	WASHER	4-111
28036-0000	WASHER	1-83, 1-85, 1-193, 1-195, 8-23, 8-25
28037-0000	WASHER	1-125, 1-127
28509-0000	WASHER	4-101, 4-103
29876-0000	COVER	1-77, 1-79
30298-0000	INSULATION	1-77, 1-79
31017-0000	KNIFE	8-33
31553-0001	WASHER	5-179
31559-0000	SPRING PLATE	5-179
31723-0000	TEFLON STRIP	8-33
31724-0000	LOCK BAR	8-33
32079-0000	WASHER	4-101, 4-103
32544-0000	INSULATION NUT	4-101, 4-103
32644-0000	WASHER	4-87, 4-89, 4-91, 7-45
33408-0000	BEARING	4-7, 4-9, 4-11, 4-13, 4-15, 4-17
35918-0000	SHAFT	1-143, 1-145
35919-0000	COMPRESSION SPRING	1-143, 1-145
35962-0000	LID	6-13
36316-0000	PAPER SUPPORT	7-57
36325-0000	KNOB	1-143, 1-145
36489-0000	ASSEMBLY TOOL	12-13
37877-0400	HEATING BLOCK	8-31
37879-0000	LOCKING ARM	8-33
37880-0000	HINGE	8-33
37882-0000	PROTECTION PLATE	8-33
37883-0000	LOCK BAR	8-33
37884-0000	SHAFT	8-33
37885-0000	TENSION SPRING	8-33
37886-0000	INSULATING DISK	8-33
37888-0000	ROLL	8-33
37889-0000	SHAFT	8-33
37890-0000	FLANGE ROLLER	8-33
37893-0000	LID	8-33
37894-0100	COUNTER RAIL	8-31
37895-0000	RAIL	8-35
37896-0000	DOWEL	8-35
37897-0000	WASHER	8-35
37900-0000	KNIFE	8-37
37905-0000	FRAME	8-41
37908-0000	PLATE	8-41
37909-0000	SPRING	8-41
37910-0000	LOCK	8-41
37911-0000	LACE	8-41
37912-0000	LOCK PLATE	8-41
37913-0000	RULER	8-41
37916-0000	RULER	8-41
37917-0000	RULER	8-41
38087-0000	WASHER	2-83, 2-85
42062-0200	LEVEL PROBE	1-225
42063-0100	LEVEL DETECTOR	1-227
42067-0100	SENSOR BOARD	1-229
42068-0100	CONVERTER BOARD	1-229
42413-0400	SOFTWARE	10-3
42416-0400	ELECTRICAL DOCUMENT	10-3
48633-0302	PLMS ON-LINE CLIENT PROGRAM	10-9
48635-0302	PLMS ON-LINE SERVER PROGRAM	10-9
67347-0101	CARD BRAKEREG.MAGN.POWDER BRAKE	9-31
67369-0102	RACK WALLMOUNTED 84TE	9-31

Part No	Description	Page No
67372-0101	BACKPLANE 8TE(32 POLE)	9-31
67379-0114	TRANSFORMER	4-101, 4-103
67379-0202	TRANSFORMER	4-101, 4-103
67379-0204	TRANSFORMER	4-101, 4-103
67379-0264	TRANSFORMER	4-101, 4-103
67379-0265	TRANSFORMER	4-101, 4-103
67380-0208	TRANSFORMER	7-45
72947-0000	HOOK SPANNER	11-17
74305-0100	PULLER	12-27
74363-0000	FASTENING PLATE	12-139
74364-0000	EXTRACTOR BOLT	12-139
74365-0000	SCREW	12-139
74767-0102	DYNAMOMETER	12-27
74768-0000	SLEEVE	12-119
74769-0000	SLEEVE	12-119
74770-0000	ROD	12-119
74771-0000	STEERING	12-119
74772-0000	DIAL	12-119
74912-0000	DOWEL	12-119
75451-0000	GUIDE PIN	12-123, 12-169
75453-0000	HOLDER	12-121
75454-0000	ROD	12-121
75466-0300	SETTING TOOL	12-27
75467-0200	SETTING TOOL CURVES	12-27
75469-0300	SETTING TOOL VOLUME ADJUSTMENT	12-85, 12-87
75470-0000	TEMPLATE	12-91
75471-0000	BRACKET	12-91
75472-0000	CLAMP IRON	12-91
75525-0400	TEMPLATE	12-27
75545-0000	TEMPLATE	12-29, 12-31
75931-0004	SETTING TEMPLATE	12-85, 12-87
75931-0005	SETTING TEMPLATE	12-85, 12-87
75931-0008	SETTING TEMPLATE	12-85, 12-87
75931-0009	SETTING TEMPLATE	12-85, 12-87
75931-0010	SETTING TEMPLATE	12-85, 12-87
75931-0011	SETTING TEMPLATE	12-85, 12-87
75931-0012	SETTING TEMPLATE	12-85, 12-87
75931-0015	SETTING TEMPLATE	12-85, 12-87
75931-0016	SETTING TEMPLATE	12-85, 12-87
75931-0017	SETTING TEMPLATE	12-85, 12-87
75936-0000	TEMPLATE	12-85, 12-87
75937-0000	TEMPLATE	12-85, 12-87
75938-0000	TEMPLATE	12-85, 12-87
75939-0000	TEMPLATE	12-85, 12-87
75943-0000	TEMPLATE	12-85, 12-87
75944-0000	TEMPLATE	12-85, 12-87
75945-0000	CAM TEMPLATE	12-85, 12-87
76128-0000	TEMPLATE	12-27, 12-153
76131-0000	ASSEMBLY CONE	11-17
76132-0000	ASSEMBLY TOOL	11-17
76133-0100	TEMPLATE LS-ELEMENT	12-27
76137-0000	PLATFORM TRANSPORT	12-163, 12-165
76139-0000	STOPPER	12-43
76163-0000	BRACKET	12-43
76164-0000	BRACKET	12-43
76166-0000	STEER PLATE	12-127
76175-0100	PULLER	12-27
76176-0000	TEMPLATE	12-85, 12-87
76178-0000	STOPPER	12-39
76179-0000	STOPPER	12-39
76180-0000	TEMPLATE	12-159
76181-0000	TEMPLATE	12-159
76184-0000	BRACKET	12-41
76185-0000	STOPPER	12-41
76186-0000	STOPPER	12-41
76187-0000	TEMPLATE FILLING TUBE	12-27
76188-0000	TEMPLATE FILLING TUBE	12-27
76200-0100	CONVEYOR SECTION	12-159
76201-0000	BOTTOM PLATE	12-163, 12-165
76202-0000	FRAME	12-163, 12-165
76203-0000	SUPPORT LEG	12-163, 12-165
76204-0000	ARM	12-163, 12-165
76205-0000	ARM	12-163, 12-165
76206-0000	JOINTED ARM	12-163, 12-165
76207-0000	STOPPER	12-163, 12-165
76208-0000	CUSHION	12-163, 12-165
76209-0000	SUPPORT	12-163, 12-165
76210-0000	BRACKET	12-163, 12-165
76211-0000	SUPPORT	12-163, 12-165
76212-0000	SHAFT	12-163, 12-165
76213-0000	SUPPORT	12-163, 12-165
76214-0000	ARM	12-163, 12-165
76215-0000	WASHER	12-163, 12-165
76216-0000	STRUT	12-163, 12-165

Part No	Description	Page No
76217-0000	SUPPORT	12-163, 12-165
76276-0000	SCREW	12-73, 12-75, 12-77, 12-79, 12-81
76290-0000	SPACER	12-43
76291-0100	YOKE	12-85, 12-87
76292-0000	YOKE	12-93
76293-0000	CANTILEVER	12-93
76294-0000	LOCATING PIECE	12-93, 12-175
76295-0000	SPACER	12-93, 12-175
76296-0000	HOOK	12-93, 12-175
76297-0000	SCREW	12-93
76298-0000	RULER	12-85, 12-87
76299-0000	TEMPLATE SUPPORT ROLLERS	12-85, 12-87
76301-0100	TEMPLATE YOKE	12-85, 12-87
76302-0000	BRACKET	12-95
76304-0100	COMPRESSION SPRING	12-85, 12-87
76305-0000	BRACKET	12-97
76307-0001	TEMPLATE	12-29, 12-31
76307-0003	TEMPLATE	12-29, 12-31
76307-0005	TEMPLATE	12-29, 12-31
76307-0006	TEMPLATE	12-29, 12-31
76307-0008	TEMPLATE	12-29, 12-31
76307-0009	TEMPLATE	12-29, 12-31
76307-0010	TEMPLATE	12-29, 12-31
76307-0011	TEMPLATE	12-29, 12-31
76307-0012	TEMPLATE	12-29, 12-31
76307-0013	TEMPLATE	12-29, 12-31
76307-0014	TEMPLATE	12-29, 12-31
76308-0000	TEMPLATE	12-29, 12-31
76333-0100	TEMPLATE UPPER FORMING CLAMP	12-71
76335-0200	SETTING TOOL	12-71
76337-0000	PONCH	12-83
76338-0000	SETTING TOOL	12-123
76349-0000	CAM TEMPLATE	12-85, 12-87
76350-0200	SETTING TOOL	12-27
76398-0000	TEMPLATE	12-27
76402-0200	TEMPLATE DRIVEN BENDING ROLLER	12-71
76407-0100	TEMPLATE DIVIDED FORMING RING	12-71
76408-0000	BRACKET	12-79
76409-0100	TEMPLATE MOVABLE FORMING RING	12-71
76410-0000	BRACKET	12-81
76416-0100	CLAMPING PIECE	12-27
76417-0000	CLAMPING PIECE	12-125
76418-0000	CLAMPING PIECE	12-125
76447-0200	TEMPLATE	12-159
76460-0100	SETTING TOOL CURVES	12-159
76461-0000	SUPPORT ARM	12-169
76462-0000	TEMPLATE	12-169
76463-0000	BUSHING	12-169
76464-0000	CANTILEVER	12-95
76465-0000	SCREW	12-95, 12-99
76466-0000	SHAFT	12-125
76467-0000	TEMPLATE	12-27
76470-0100	PONCH	12-105
76471-0000	PONCH	12-107
76484-0000	LID	12-83, 12-107
76499-0000	TEMPLATE	12-159
76580-0100	SETTING TOOL FINAL FOLDER	12-159
76581-0000	VERTICAL PILLAR	12-161
76582-0000	BLOCKING PIECE	12-161
76583-0000	BLOCKING PIECE	12-161
76589-0000	PONCH	12-107
76590-0000	PONCH	12-83
76591-0100	PONCH	12-71
76592-0100	TEMPLATE TUBE FORMING	12-71
76593-0000	BRACKET	12-73
76594-0200	SETTING TOOL	12-105
76595-0100	TEMPLATE LS-ELEMENT	12-27
76597-0000	STOPPER	12-43
76598-0100	TEMPLATE TUBE FORMING	12-71
76599-0000	BRACKET	12-75
76600-0200	SETTING TOOL	12-27
76601-0000	RULER	12-43
76602-0000	GAUGE	12-27
76605-0000	BRACKET	12-39, 12-41
76606-0100	TEMPLATE LS-ELEMENT	12-27
76607-0000	RULER	12-39, 12-41, 12-45
76610-0000	BRACKET	12-39
77091-0700	OPTIONAL PARTS	12-3
77092-0700	SERVICE PARTS	12-3
77093-0200	TRIMMING PARTS	12-3
77094-0400	PRODUCTION PARTS	12-3
77099-0300	TOOL KIT	11-3
77163-0000	SLEEVE	12-129
77164-0000	STUD SCREW	12-129

Part No	Description	Page No
77165-0100	EXTRACTOR	12-27
77221-0000	TIGHTENING TOOL	12-13
77245-0000	BRACKET	12-45
78801-0000	CALIBRATION TOOL	11-17
79003-0000	PROTECTION PLATE	12-27
79201-0000	EXTRACTOR BOLT	12-27
81595-0103	USER MANUAL PLMS ON-LINE	10-9
81596-0103	INSTALLATION MANUAL PLMS ON-LINE	10-9
82197-0104	USER MANUAL	11-21
90001-0033	WALL SOCKET, E1834666	9-13, 9-15, 9-17, 9-19
90002-0004	BLANK-OFF PLUG, PR 22,5 SKINDICHT-BLK16	1-173, 1-175, 1-177, 1-179, 1-181, 1-183, 1-185, 1-187, 1-189, 1-191, 5-77, 5-79, 9-91, 9-93
90002-0009	BLANK-OFF PLUG, PR 18.6 SKINDICHT-BLK11	2-43, 2-45, 5-49, 5-51, 5-77, 5-79, 9-111, 9-113, 9-115, 9-117, 9-119, 9-121, 9-123, 9-125, 9-127, 9-129, 11-25, 11-31, 11-33
90002-0010	BLANK-OFF PLUG, PR 37 SKINDICHT-BLK29	1-173, 1-175, 1-177, 1-179, 1-181, 1-183, 1-185, 1-187, 1-189, 1-191, 5-77, 5-79, 9-91, 9-93, 9-95, 9-97
90002-0012	BLANK-OFF PLUG, PR 28,3 SKINDICHT-BLK21	1-173, 1-175, 1-177, 1-179, 1-181, 1-183, 1-185, 1-187, 1-189, 1-191, 5-121, 9-91, 9-93, 9-95, 9-97
90002-0013	BLANK-OFF PLUG, PR 15,2 SKINDICHT-BLK9	1-185, 1-187, 1-189, 1-191, 2-43, 2-45, 9-91, 9-93, 9-95, 9-97
90002-0018	BLANK-OFF PLUG, PR 12,5 SKINDICHT-BLK7	1-41
90003-0422	CORRUGATED CARDBOARD BOX	11-3
90005-0047	WASHER,PL.RND.CU.12,2/ H=1,5	4-105, 4-107, 4-109, 5-123, 5-125, 5-127
90005-0048	WASHER,PL.RND.CU.18,2/23,9 H=1,5	5-109
90005-0052	WASHER,PL.RND.CU.8/18 H=2	4-53, 4-55
90005-0060	WASHER PLAIN, RBS 6,4/M6)/18,H=1,5	1-213, 1-215, 1-217, 2-9, 2-11, 4-71, 4-73, 4-79, 4-81
90005-0082	WASHER PLAIN ROUND 4,3(M4)/12,H=1	7-13, 7-15, 7-19, 7-23, 7-25, 7-27, 7-29, 7-35, 7-37, 7-43, 7-45, 7-51, 7-53
90005-0105	WASHER PLAIN ROUND 8,4(M8)/24, H=1,5	6-95
90005-0116	WASHER PLAIN ROUND 8,4(M8)/24, H=2	5-101
90005-0143	SPACER 3,3/7, H=3	1-229
90012-0119	GLAND, EXTENDED WITH INSERT, PG9	1-227
90012-0126	GLAND FITTING, 155 ULI2120	1-77, 1-79
90015-0010	BUSHING	2-33
90015-0020	LEAD-IN, TET5-7, E-1458016	1-173, 1-175, 1-177, 1-179, 1-181, 1-183, 7-23, 7-25, 7-27, 7-29, 7-35, 7-37
90015-0021	LEAD-IN, TET 10-14, E1458023	1-173, 1-175, 1-177, 1-179, 1-181, 1-183
90015-0023	LEAD-IN, TET 7-10, E1458019	1-173, 1-175, 1-177, 1-179, 1-181, 1-183, 6-33, 8-45
90015-0028	LEAD-IN BUSHING	5-49, 5-51, 5-109
90016-0010	DISC SPRING,50X25,4X2	3-5
90017-0001	BIKE HANDLE	8-33, 8-37
90017-0022	HANDLE, NO. EL-037311	7-31, 7-35, 7-37, 7-59, 8-11, 8-13
90024-0062	CABLE PROTECTION, 40MM	9-7, 9-9, 9-11
90024-0063	CABLE PROTECTION, 25MM	9-7, 9-9, 9-11
90028-0001	CONE 5/32"	2-51, 2-53, 2-55
90028-0017	PROGRESSIVE RING 15	6-33
90028-0020	CONE TUBE 2,5MM	2-51, 2-53, 2-55, 3-11, 3-13, 3-15, 3-17, 4-97, 4-99, 4-113, 4-115, 5-17, 5-49, 5-51, 5-89
90028-0021	CONE TUBE 4 MM	2-51, 2-53, 2-55, 3-11, 3-13, 3-15, 3-17, 5-17, 5-49, 5-51, 5-89, 5-109
90028-0022	CONE TUBE 6 MM	6-95
90028-0025	CONE TUBE 6 MM	5-49, 5-51, 5-109, 6-95, 12-157
90030-0030	CONN. BULKHEAD SV12L71	1-107, 1-109, 6-77
90030-0051	CONN. STR. GE06LR71	2-51, 2-53, 2-55
90030-0058	CONN. T-PIPE T12L71	1-165, 1-167, 6-89, 6-91
90030-0062	CONN. STR. GE06L1/4NPT71	1-33, 1-101
90030-0065	PIPE CONNECTION	2-59, 2-61, 4-35, 4-37, 4-39, 4-41, 4-113, 4-115
90030-0066	CONN. BULKHEAD SV06L71	7-67
90030-0075	PIPE CONNECTION G 6	1-103, 1-105, 1-107, 1-109
90030-0076	CONN. T-PIPE T06L71	1-33, 1-103, 1-105, 6-95
90030-0086	CONN. STR. GE08LLR1/471	6-79
90030-0089	STRAIGHT CONNECTION	1-29, 1-223
90030-0091	PIPE CONNECTION G 8	2-59, 2-61
90030-0092	STRAIGHT CONN., 6-R1/4,EXT. TAPPERED	1-107, 1-109
90030-0096	ELBOW CONNECTION 12	1-9, 1-11
90030-0098	PROGRESSIVE RING 8	2-51, 2-53, 2-55
90030-0106	PIPE CONNECTION G 12	1-9, 1-11
90030-0109	STRAIGHT PIPE CONN. GE12LR1/271	1-31, 6-75
90030-0115	CONN. ELBOW, WE12LR71	1-31, 1-55, 1-57
90030-0116	NIPPLES, REDUCING, EXT. THR. NO. 2520	5-29
90030-0133	CONE NUT M15, NUT M-15 SS	6-33
90030-0136	ADJUSTABLE ELBOW CONNECTION 12-G3/8	6-85, 6-87
90030-0137	CONN. ELBOW, WE06LR71	1-31, 1-43
90030-0151	CONN. STR. GE15LR71	2-57
90030-0159	CONN. BULKHEAD SV15L71	1-49
90030-0162	CONN. STR. 6-M10X1, EXT. THREAD	2-51, 2-53, 2-55
90030-0164	CONN. T-PIPE T06LLCF	1-107, 1-109
90030-0170	REDUCER 2521-1/4X3/8	1-31
90030-0171	ADJUSTABLE ELBOW CONNECTION 6-G1/8	5-201, 5-203
90030-0180	CONN. STR. GE12L1/2NPT71	1-31
90030-0181	CONN. STR. GE12L3/8NPT71	6-89, 6-91
90030-0184	CONN. STR., GE06LRED71	1-9, 1-11, 1-35, 1-37, 1-49, 1-69, 1-73, 1-75, 1-103, 1-105, 1-107, 1-109, 1-157, 1-165, 1-167, 4-43, 4-113, 4-115, 5-19, 5-21, 5-23, 5-25, 5-27, 6-85, 6-87, 6-101, 6-103, 7-67, 12-135
90030-0186	CONN. STR. GE10LRED71	2-87, 2-89

Part No	Description	Page No
90030-0187	CONN. STR. GE12LRED71	1-9, 1-11, 1-69, 1-71, 1-73, 1-93, 1-95, 1-165, 1-167, 2-87, 2-89
90030-0188	CONN. STR. GE15LRED71	6-15, 6-17, 6-23, 6-27, 6-29, 6-31, 6-33, 6-35, 6-69, 6-85, 6-87, 6-101, 6-103
90030-0191	CONN. STR. GE18LRED71	1-31
90030-0200	CONN. ELBOW, WE06LM71	2-51, 2-53, 2-55
90030-0202	CONN. STR., 6-G1/4, EXT. THREAD	1-103, 1-105
90030-0203	ADJUSTABLE ELBOW CONNECTION 6-G1/4	1-103, 1-105
90030-0212	NIPPLES, REDUSING, INT. THR. NO. 2521	1-9, 1-11
90030-0223	BUSHING, INT.EXT. R1/2-R1/4	12-17, 12-19
90030-0224	NIPPLES, EXT. THREAD, HEXAGON, NO. 2511	12-17, 12-19
90030-0225	BUSHING, INT/EXT. R-THREAD 1/4X3/8	12-17, 12-19
90030-0230	CONN. BULKHEAD BCM6-316	1-35, 1-37, 2-87, 2-89
90030-0233	CONN. STR., M6MSC1/8BR-316	1-35, 1-37
90030-0234	CONN. ELBOW, M6MSEL1/8K-316	1-35, 1-37, 1-103, 1-105
90030-0336	CONN. STRAIGHT, 316L-12M-BVCO-3	1-17
90030-0338	NUT, PIPE & CONNECTORS, SS-8-BVCO-4	1-17
90030-0416	CONN. STR. M12MSC1/2K-316	1-31
90030-0479	CONN. STR., M6FSC1/4N-316	5-19, 5-21, 5-23, 5-25, 5-27
90030-0549	CONN. STRAIGHT, BULKHEAD, SS-4-VCO-61	1-47
90030-0630	REDUCER, 1,5MM, M6, NO. 815406	6-97, 6-99
90031-0051	BASEPLATE, 10-SLOT	9-41
90031-0053	BASEPLATE 10 SLOT EXP.	9-43, 9-45
90031-0057	PLC, DIGITAL INPUT MODULE	9-41, 9-43, 9-45
90031-0058	PLC, DIGITAL INPUT MODULE	9-41
90031-0059	PLC, DIGITAL OUTPUT MODULE	9-41, 9-43, 9-45
90031-0062	PLC, ANALOG OUTPUT MODULE 8PT/CURR/VOLT	9-41
90031-0063	PLC,ANALOG COMBO MODULE,IN-4PT/OUT-2PT	9-41
90031-0068	PLC, POWER SUPPLY	9-41, 9-43, 9-45
90031-0308	PLC,CABLES, I/O EXPANSION CABLE	9-41, 9-43
90032-0014	DISTR. BLOCK & DIST.5/16-24UNF X6	2-51, 2-53, 2-55
90032-0026	DISTR. BLOCK, 5/16-24UNF X2	2-51, 2-53, 2-55
90032-0030	DISTR. BLOCK, 5/16-24UNF X3	2-51, 2-53, 2-55
90032-0031	DISTR. BLOCK, 5/16-24UNF X5	2-51, 2-53, 2-55
90032-0038	BLOCK 2 WAYS	2-51, 2-53, 2-55
90032-0039	BLOCK 4 WAYS	2-51, 2-53, 2-55, 3-15, 3-17, 5-49, 5-51
90032-0040	BLOCK 6 WAYS	3-11, 3-13, 5-17, 5-49, 5-51, 5-89, 5-109
90032-0043	DISTRIBUTION BLOCK 3 WAYS	6-95
90036-0057	LIGHT BULB, BA9S 28V	7-17
90036-0068	BULB 5W 24V, SL-L24 205348	2-81, 2-95
90038-0021	DIODE, 1A 800V	2-13, 2-15, 2-29, 2-31
90041-0068	DATACABLE MODEM-PC, 25-113-93	11-21
90042-0134	SOLENOID VALVE ASCO SCE 210 802 24VDC	6-101, 6-103
90042-0171	SOLENOID VALVE, 330 3/2 NC	1-35, 1-37, 1-103, 1-105
90042-0172	SOLENOID VALVE, 4023/1005/1032 24VDC	6-29, 6-31, 6-33, 6-35
90042-0173	SOLENOID VALVE, 6013 2/2 NC	6-23, 6-45, 6-47
90042-0602	DISTRIBUTOR BLOCK, FR-4-1/2-B	6-15, 6-17
90043-0002	PRESSURE GAUGE, 2040 D=63 MM	6-93
90043-0006	PRESSURE GAUGE, 2041 D=63 MM	6-29, 6-31
90043-0021	PRESSURE GAUGE, 2041 D=40 MM	12-17, 12-19, 12-133
90043-0034	PRESSURE GAUGE	1-107, 1-109
90043-0043	PRESSURE GAUGE, 2041D=40 MM	12-17, 12-19, 12-135
90043-0069	PRESSURE GAUGE 0-4BAR WIEGAND 2040	1-223
90043-0082	PRESSURE GAUGE, 2840, D=63 MM	1-31
90043-0095	PRESSURE GAUGE, 2750, D=63 MM, GLYC.	6-43
90043-0302	SCREW	1-107, 1-109
90044-0084	5IMIT SW. 14 CE1-4	1-55, 1-57
90044-0104	INDUCTIVE SENSOR IN5227S	1-47, 1-93, 1-95, 5-123, 5-125, 5-127
90044-0117	PROX.SWITCH IX 0208	5-85
90044-0124	PROX.SWITCH 922AB2XM-A9P-050-LZ-876	3-37
90044-0194	INDUCTIVE SENSOR, IN 5329	1-9, 1-11, 1-43, 1-49, 1-83, 1-85, 1-91, 1-165, 1-167, 5-135, 5-139, 7-23, 7-25, 7-27, 7-29, 7-35, 7-37, 7-39, 7-41, 8-23, 8-25
90045-0161	MOTOR 4MGC11	6-83
90045-0228	MOTOR 7AA80M4-B5	6-97, 6-99
90048-0022	MANUAL PUMP INCL. BARROW 50-60 L	12-9
90050-0011	BOTTLE	6-13
90051-0035	KNOB, EXTERNAL THREAD. NO. 8308-1135	7-21, 12-39, 12-43
90051-0040	KNOB, INTERNAL THREAD, NO. 8308-0627	12-93, 12-167, 12-175
90051-0053	KNOB, INTERNAL THREAD, M6 24X17	12-41, 12-45, 12-95, 12-99
90051-0059	KNOB, EXTERNAL THREAD. NO. 8308-1550	12-85, 12-87, 12-101
90051-0083	KNOB, EXTERNAL THREAD. NO. 8308-1321	12-95, 12-99, 12-125
90051-0084	KNOB, EXTERNAL THREAD. NO. 8308-1534	12-167
90051-0112	LOCK KNOB, NO. GN 617 NIK5	5-123, 5-125, 5-127, 8-23, 8-25
90053-0029	COUNTER, F524.800FA3C 24VDC	9-149, 9-151, 9-153
90053-0031	HOUR COUNTER, B 609.10 10-50VDC	9-149, 9-151, 9-153
90055-0100	Y-CONNECTION, 6-6	1-197, 1-199, 1-201, 1-209, 1-211, 1-223, 7-67
90055-0132	HOSE NIPPLE, EXT.THR. R1/4X7,8 MM	6-101, 6-103
90055-0147	PUSH-IN Y-CONNECTOR QSY-12	6-15, 6-17
90055-0154	HOSE COUPLING	5-101
90055-0172	ELBOW WITH TAILPIECE 8/8 MM	5-89
90055-0207	ELBOW PIPE JOINT,EXT.THREAD,D=6 MM M5	2-33
90055-0209	BULKHEAD LEAD-IN	2-33
90055-0210	ELBOW PIPE JOINT,EXT.THREAD,D=6 MM G1/8	2-33
90055-0211	ELBOW PIPE JOINT,EXT.THREAD,D=8 MM G1/8	2-33
90055-0212	STRAIGHT COUPLING, D=6 MM - G1/8"	2-33

Part No	Description	Page No
90055-0217	ELBOW PIPE JOINT	2-37
90055-0229	T- WITH TAILPIECE 6 MM	2-33
90055-0257	PUSH-IN Y-CONNECTOR QSY-6	5-63
90056-0071	WORM GEAR	5-181
90059-0001	THERMOSTAT	8-33
90061-0027	ANGLE ENCODER, 670900035	3-37
90062-0015	LOCK WASHER SERRAT.EXT.GEAR,6,4/11 H=0,7	9-83, 9-103, 9-105, 9-131, 9-133, 9-135, 9-137, 9-149, 9-151, 9-153, 9-159, 9-163, 9-165
90062-0022	LOCK WASHER D=6,4/11	9-149, 9-151, 9-153
90062-0040	LOCK WASHER SERRAT.INT.GEAR,5,3/10 H=0,6	6-15, 6-17
90062-0058	LOCK WASHER SERRAT.EXT.GEAR,3,2/6 H=0,4	9-31
90062-0061	LOCK WASHER NORD-LOCK,6,5/10,8, T=2,2	9-13, 9-15, 9-17, 9-19, 9-31
90064-0082	PUSH BUTTON, WHITE	2-13, 2-15, 2-29, 2-31
90064-0085	PUSH BUTTON, RED	7-17, 8-45
90064-0098	PUSH BUTTON, WHITE	7-17
90064-0315	LAMP REMOVER, 700.004.0	11-11
90064-0335	TOUCH GUARD, 704.964.5	9-149, 9-151, 9-153
90071-0027	V-BELT, 3VX450	3-5
90074-0001	CABLE CLIPS, D=10 MM	1-209, 1-211
90074-0003	CABLE CLIPS, D=12 MM	9-171
90074-0026	PIPE CLIP FOR TUBE D=24-35 MM	3-5
90077-0079	TERMINAL PLINTH, AKZ 4	11-25, 11-31, 11-33
90077-0102	TERMINAL BLOCK, 1952.2	5-121, 8-33
90077-0113	TERMINAL BLOCK WDK 2.5	5-77, 5-79, 9-75, 9-77
90077-0114	END PLATE, WAP WDK 2.5 1059100000	9-75, 9-77
90077-0122	END PLATE, AP AKZ 2,5	1-41
90077-0123	TERMINAL FEED THROUGH	1-41
90077-0328	RAIL, TS15/5	11-25, 11-31, 11-33
90082-0301	OVER VOLT. PROTECT. PU 0 C 833951	11-11
90083-0016	AXIAL BEARING WASHER, AS2035	3-15, 3-17
90087-0002	PIPE PLUG	2-37
90087-0019	PLUG M10X1 STAINLESS	3-11, 3-13, 5-17, 5-49, 5-51, 5-109, 6-95
90087-0036	PLUG, KR 1/4	6-37
90087-0046	PLUG, EXT. 1/8 NPT-THREAD, 2PH-SS	1-31
90089-0004	REDUCING SLEEVE, PR28,3/PR22,5	8-45
90089-0005	REDUCING SLEEVE, PR37/PR28,3	8-45
90089-0007	REDUCING SLEEVE, PR18,6/PR22,5	8-17, 8-19
90090-0005	STEEL BALL 3MM, RB-3/G20W	4-35, 4-37, 4-39, 4-41
90090-0008	STEEL BALL 7,1MM, RB-7.144/III	2-51, 2-53, 2-55
90090-0016	STEEL BALL 15MM, RB-15 RS	1-209, 1-211
90091-0089	ROD SEAL 16X22X2,5 MM	4-35, 4-37, 4-39, 4-41
90091-0091	ROD SEAL 10X14X1,7 MM	4-7, 4-9, 4-11, 4-13, 4-15, 4-17, 4-45, 4-47
90091-0106	SCRAPER 30X40X7 MM	2-37
90091-0162	WEAR RING 16X19X3,2 MM	4-35, 4-37, 4-39, 4-41
90091-0169	WEAR RING 12X15X3,2 MM	4-7, 4-9, 4-11, 4-13, 4-15, 4-17, 4-45, 4-47
90091-0170	WEAR RING 25X30X4,2 MM	4-35, 4-37, 4-39, 4-41
90091-0214	ROD SEAL GLYD RING 16X20,9X2,2 MM	4-35, 4-37, 4-39, 4-41
90091-0215	ROD SEAL GLYD RING 25X32,5X3,2 MM	4-35, 4-37, 4-39, 4-41
90091-0216	PISTON SEAL GLYD RING 7,1X12X2,2 MM	4-7, 4-9, 4-11, 4-13, 4-15, 4-17, 4-45, 4-47
90091-0233	RADIAL SEAL 85X110X12 MM DUST LIP	5-85
90091-0237	ROD SEAL GLYD RING 20X27,5X3 MM	1-19, 1-21, 1-23, 1-51
90091-0238	WEAR RING 20X22X10 MM	1-19, 1-21, 1-23, 1-51
90091-0266	SEAL RING 10,4X16,3X2,5 MM	1-17, 11-37, 11-41
90091-0305	RADIAL SEAL 40X55X7 MM DUST LIP	5-85
90091-0306	RADIAL SEAL 30X47X7 MM DUST LIP	5-49, 5-51
90091-0335	PISTON SEAL GLYD RING 62,5X70X3,2 MM	1-21
90091-0336	PISTON SEAL GLYD RING 79X90X4,2 MM	1-19, 1-23, 1-51
90091-0359	X-SEAL 36,17X2,62 MM	4-53, 4-55
90091-0360	BACK-UP RING 37,5X1,4 MM	4-53, 4-55
90091-0362	SCRAPER, EXCLUDER 18X22,8X3,7 MM	4-53, 4-55
90091-0364	ROD SEAL, STEPSEAL 18X25,3X3,2 MM	4-53, 4-55
90091-0366	WEAR RING 18X23X3,9 MM	4-53, 4-55
90091-0380	SCRAPER, EXCLUDER 20X24,8X3,7 MM	5-123, 5-125, 5-127
90091-0387	ASSEMBLY TOOL	11-17
90091-0391	SEAL SLYDRING	4-53, 4-55
90091-0398	PISTON SEAL GLIDE RING T 20,5X28X3,2 MM	4-53, 4-55
90092-0048	OIL BRUSH, FLAT, 5/16-24 UNF	5-109
90092-0052	METERING VALVE 10 MM3	2-51, 2-53, 2-55, 3-11, 3-13, 3-15, 3-17, 4-35, 4-37, 4-39, 4-41, 4-93, 4-95, 4-97, 4-99, 4-113, 4-115, 5-17, 5-89
90092-0053	METERING VALVE 30 MM3	2-51, 2-53, 2-55, 3-11, 3-13, 3-15, 3-17, 4-35, 4-37, 4-39, 4-41, 5-49, 5-51, 5-109
90092-0054	METERING VALVE 50 MM3	5-49, 5-51, 5-89, 5-109
90094-0005	RAIL BRACKET, TSTW 5/5M	9-63, 9-65, 9-67, 9-69, 9-75, 9-77
90097-0017	FLAT PIN PLUG 6,3MM	9-7, 9-9, 9-11
90097-0019	FLAT PIN PLUG 2,8MM	9-7, 9-9, 9-11
90099-0001	NUT PG 9/PR 15,2	2-59, 2-61, 6-11, 6-85, 6-87
90099-0002	NUT PR 18,6 BRASS	2-41, 6-11
90099-0003	NUT PR 22,5	6-13
90099-0011	NUT PR 37 BRASS	1-173, 1-175, 1-177, 1-179, 1-181, 1-183, 5-109, 6-11
90099-0057	NUT HEX. M20X1,5	5-29, 5-93
90099-0058	HEXAGON NUT, M8X1, DIN936	1-55, 1-57
90099-0085	NUT	2-91
90099-0087	NUT PR=20,4	2-59, 2-61, 6-11
90099-0104	PLUG, PR 15,2 (PG9)	1-185, 1-187, 1-189, 1-191, 5-109, 5-123, 5-125, 5-127, 9-91, 9-93, 9-95

Part No	Description	Page No
		9-97, 9-111, 9-113, 9-115, 9-117, 9-119, 9-121, 9-123, 9-125, 9-127, 9-129
90099-0110	PLUG, PR 22,5 (PG16)	1-185, 1-187, 1-189, 1-191, 9-91, 9-93, 9-95, 9-97, 9-167
90099-0117	PLUG, PR 18,6 (PG11)	1-173, 1-175, 1-177, 1-179, 1-181, 1-183, 5-49, 5-51
90099-0119	PLUG, PR 28,3 (PG21)	1-35, 1-37, 1-173, 1-175, 1-177, 1-179, 1-181, 1-183, 1-185, 1-187
		1-189, 1-191, 9-91, 9-93, 9-95, 9-97
90099-0120	PLUG PR 37 (PG29)	1-35, 1-37, 1-173, 1-175, 1-177, 1-179, 1-181, 1-183, 1-185, 1-187, 1-189
		1-191, 9-91, 9-93, 9-95, 9-97
90099-0131	NUT HEX. M16X2 SS	12-179
90110-0028	CONTACT STAK 3 N GREY, 932140-106	9-83
90110-0095	CONNECTOR, PLUG SOCKET, MSSD-C-4P	6-83, 6-97, 6-99
90110-0123	HOUSING, 09 30 006 0301	9-103, 9-105
90110-0127	COAXIAL CONNECTOR, GE 15057C10HBNT-2PT	9-111, 9-113, 9-115, 9-117, 9-119, 9-121
		9-123, 9-125, 9-127, 9-129
90110-0150	MALE INSERT, HDC HE 24 MS, 1211 1000 00	7-33, 8-45
90110-0151	FEMALE INSERT, 24-POL 121130 0000	9-107, 9-111, 9-113, 9-115, 9-117, 9-119, 9-121, 9-123
		9-125, 9-127, 9-129
90110-0152	CABLE HOOD 24-POL 70.352.2428.1	8-45
90110-0153	CHASSIS HOUSING, HDC 24B ABU	9-107, 9-111, 9-113, 9-115, 9-117, 9-119, 9-121, 9-123
		9-125, 9-127, 9-129
90110-0156	MALE INSERT 70.210.0653.0	7-33
90110-0163	FEMALE INSERT 70 300 0640 0	9-167
90110-0207	SOCKET	6-83
90110-0226	CABLE HOOD 6-POL 70.350.0628.0	9-167
90110-0243	CONTACT HOUSING 16-POL 70.320.1628.0	9-111, 9-113, 9-115, 9-117, 9-119, 9-121, 9-123
		9-125, 9-127, 9-129
90110-0244	CABLE HOOD 6-POL 70.350.1628.0	7-33
90110-0247	EMALE INSERT 70.200.0653.0	9-111, 9-113, 9-115, 9-117, 9-119, 9-121, 9-123, 9-125, 9-127, 9-129
90110-0296	FEMALE INSERT, HDC-HA-4BS 149840-B/2	9-103, 9-105, 9-111, 9-113, 9-115, 9-117, 9-119
		9-121, 9-123, 9-125, 9-127, 9-129
90110-0346	HOOD, SIDE ENTRY, 12 11220 00 00	7-33
90110-0371	HOOD, TOP ENTRY, HDC-HA-3-TOVL1/11	8-17, 8-19, 8-45
90110-0518	CONNECTOR D-SUB, SUBCON 15/M-SH	11-21
90111-0120	ROTARY SWITCH, 704.510 .0A+704.901.5/A	9-149, 9-151, 9-153
90111-0122	KEY SWITCH, 2 NO CONTACTS	9-149, 9-151, 9-153
90111-0124	KEY SWITCH, 1NO, 1NC CONTACT	9-149, 9-151, 9-153
90111-0344	SIGN, PE, GREEN/YELLOW	9-159
90113-0021	AIR PRESSURE REGULATOR	12-135
90113-0056	REGULATOR, 11-818-998	12-133
90113-0059	FILTER REGULATOR 50UM, B08-396-A3MG	12-17, 12-19
90113-0384	BRACKET FOR R11, 5203-06	12-17, 12-19
90115-0054	ROD END, ID=8 MM, M8X1,25	8-37
90115-0137	ROD END, ID=6 MM, M6X1	2-35
90115-0138	ROD END, ID=6 MM, M6X1 LH	2-35
90115-0173	ROD END, ID=6 MM, M6X1	2-47, 2-49
90115-0181	ROD END, ID=10 MM M10X1,5	5-11, 5-13, 5-15
90115-0182	ROD END, ID=10 MM M10X1,5LH	5-11, 5-13, 5-15
90119-0086	RELAY, AUXILIARY MY4IN4 24VDC	9-29, 9-47
90119-0104	OPTO COUPLER AMMS 50070	9-37, 9-39
90119-0109	RELAY OMRON 24VDC MY4H	9-29
90119-0309	SOCKET, PYF14A-E	9-29, 9-47
90119-0310	CLAMP, TYPE PYC-A1	9-29, 9-47
90121-0099	RESISTANCE FIXED, 100 KOHM, 6 W	12-113
90121-0132	RESISTANCE FIXED, 0,51 KOHM, 0,25 W	9-75, 9-77
90125-0020	PLATE COMPLETE	1-73
90129-0006	BASE, S3-B	9-29, 9-75, 9-77
90134-0003	BUSHING	2-51, 2-53, 2-55
90134-0004	PIPE CONNECTION R1/8	5-17, 5-49, 5-51, 5-89, 5-109
90134-0030	SLEEVE FOR PLASTIC TUBE	2-51, 2-53, 2-55, 6-95, 12-157
90134-0031	SLEEVE FOR PLASTIC TUBE	2-51, 2-53, 2-55, 3-11, 3-13, 5-17, 5-49, 5-51, 5-89, 5-109
90134-0034	NIPPLE	2-51, 2-53, 2-55, 2-59, 2-61
90134-0038	BUSHING/NUT INLET/OUTLET 4 MM	2-51, 2-53, 2-55, 3-11, 3-13, 3-15, 3-17, 5-49, 5-51, 5-89
90134-0039	BUSHING VALVE CONNECTION 2,5 MM	2-51, 2-53, 2-55, 3-11, 3-13, 3-15, 3-17, 4-97, 4-99
		4-113, 4-115, 5-17, 5-49, 5-51, 5-89
90134-0040	BUSHING VALVE CONNECTION 4 MM	5-49, 5-51, 5-109
90134-0042	SPACER DOSING VALVE	4-35, 4-37, 4-39, 4-41, 5-109
90134-0045	PLUG M12X1	4-35, 4-37, 4-39, 4-41, 5-109
90134-0047	CONNECTION FOR DOSING VALVE	4-35, 4-37, 4-39, 4-41
90134-0051	SPACING COLLAR DOSING BLOCK	5-49, 5-51, 5-109
90134-0052	PLUG DOSING BLOCK	3-11, 3-13, 5-49, 5-51, 5-109
90134-0055	BUSHING/NUT INLET/OUTLET 6 MM	5-49, 5-51, 5-109, 6-95, 12-157
90134-0058	CONNECTION	3-5, 3-11, 3-13, 3-15, 3-17, 4-7, 4-9, 4-11, 4-13, 4-15, 4-17, 4-35, 4-37, 4-39
		4-41, 4-45, 4-47, 4-93, 4-95, 4-97, 4-99, 5-11, 5-13, 5-15, 5-89, 5-131
90134-0065	CONNECTION M6 TUBE 2,5 MM	5-55
90134-0066	CONNECTION M6 TUBE 4 MM	4-113, 4-115
90134-0068	CONNECTION	3-33, 3-35, 4-7, 4-9, 4-11, 4-13, 4-15, 4-17, 4-93, 4-95, 4-113, 4-115, 5-109
		5-123, 5-125, 5-127
90135-0019	CLAMP ZB 35	9-79, 9-81
90135-0026	EARTH TERMINAL AKE 4	11-25, 11-31, 11-33
90135-0042	EARTH TERMINAL AKE 2,5	1-41
90135-0044	EARTH WIRE, L=320 MM 16 MM2	9-83, 9-131, 9-133, 9-135, 9-137, 9-149, 9-151, 9-153, 9-163, 9-165
90136-0001	PLUG, EXT. THREAD, NO. 100727	1-33, 1-77, 1-79
90136-0002	PLUG 5/1624	2-51, 2-53, 2-55
90137-0010	BANJO CONN. M6, D=2,5 MM	2-37
90140-0010	T-PIPE, INT. THREAD, 20031/2	6-29, 6-31, 6-101, 6-103

Part No	Description	Page No
90140-0015	T-PIPE, INT. THREAD, 2003-1/8	1-35, 1-37, 12-17, 12-19
90140-0018	T-PIPE, INT. THREAD, 2003-1/4	12-133
90140-0023	T-PIPE, INT. THREAD, NO. 2070-3/8-3/8	6-101, 6-103
90141-0015	RETAINING RING FOR SHAFT DIN 471 8 SS	4-53, 4-55, 5-123, 5-125, 5-127, 5-131, 7-13, 7-47, 7-51, 7-53, 8-15, 12-171, 12-173
90141-0016	RETAINING RING FOR SHAFT DIN 471 10 SS	1-69, 7-13, 7-19, 7-21, 7-23, 7-25, 7-27, 7-29
90141-0017	RETAINING RING FOR SHAFT DIN 471 17 SS	1-47, 5-53, 5-123, 5-125, 5-127, 5-211
90141-0020	RETAINING RING FOR BORE DIN 472 42 SS	5-135
90141-0022	SNAP RING B 16	1-75, 1-99
90141-0030	CIRCLIP	5-123, 5-125, 5-127
90142-0005	HOSE	3-5
90143-0010	STRIP	2-37
90143-0012	STRIP	2-37
90143-0020	STRIP	6-71
90143-0028	STRIP	5-191, 5-193, 5-195
90143-0057	STRIP EMKA 1011-05 21X11MM	9-87, 9-89
90143-0060	EDGE STRIP 9,5X6,3MM BLACK PVC	2-87, 2-89, 6-11, 8-11, 8-13, 8-45
90143-0062	STRIP	6-61
90143-0068	RUBBER STRIP EMKA 1011-08	2-65, 2-67, 2-69, 2-71, 2-73, 2-75, 2-101, 2-103, 6-5, 6-7, 8-11, 8-13
90143-0073	FLAT GASKET TAPE W. ADHESIVE, 15X3.0	2-13, 2-15, 2-29, 2-31, 2-47, 2-49, 2-105, 5-115, 5-117, 9-87, 9-89
90143-0076	PROFILE	2-83, 2-85
90143-0094	SEAL	9-135, 9-137, 9-159, 9-173
90143-0097	SELF GRIPPING GASKET, 1011-24	1-35, 1-37, 2-13, 2-15, 2-29, 2-31, 9-167
90144-0003	TAPE	6-107, 11-43
90144-0030	TAPE	8-35
90144-0072	TAPE SCOTCH VHBS 4945 W=12,7MM	8-11, 8-13, 9-147, 9-163
90144-0073	TREBOFLON-TAPE W=13MM	1-33, 1-35, 1-37, 1-103, 1-105, 3-5, 5-49, 5-51, 5-109, 6-73
90148-0037	HYDRAULIC HOSE	2-51, 2-53, 2-55
90148-0038	HYDRAULIC HOSE	2-51, 2-53, 2-55
90151-0001	BRASS PIPE DI=2,6 MM	2-51, 2-53, 2-55
90152-0016	HOSE (SPIRAL)	2-77
90152-0017	HOSE (SPIRAL)	2-79
90152-0050	HOSE, SPIRAL CONDUIT, 20X13, UL 1313	1-55, 1-57
90152-0051	HOSE, SPIRAL CONDUIT, 25X18, UL 1816	2-37, 3-9, 5-121, 5-191, 5-193, 5-195, 6-67, 6-73, 6-97, 6-99, 7-17, 7-33, 8-45
90152-0058	HOSE, SPIRAL CONDUIT, 15X9, UL 0909	5-85, 5-123, 5-125, 5-127, 8-45
90152-0059	HOSE, SPIRAL CONDUIT, 18X12, UL 1211	2-13, 2-15, 2-23, 2-29, 2-31, 2-37, 5-115, 5-117, 6-13, 6-69, 6-83, 6-85, 6-87, 6-95, 6-97, 6-99, 8-33, 8-45, 8-47, 8-49
90152-0060	HOSE, SPIRAL CONDUIT, 42X35, UL3529	1-35, 1-37, 5-49, 5-51, 5-109
90152-0070	HOSE, SPIRAL CONDUIT, 32,5X26, UL 2023	1-35, 1-37, 1-55, 1-57, 1-77, 1-79, 2-37, 7-33, 8-47, 8-49
90153-0015	ADHESIVE,LOCTITE IS 496/CYANOLOT 303	4-7, 4-9, 4-11, 4-13, 4-15, 4-17, 11-3
90153-0016	ADHESIVE,TUBE 100G RHODORSIL CAF 3	1-55, 1-57
90153-0017	ADHESIVE, 2963 TUBE 160G	2-37
90153-0020	ADHESIVE, BOSTIK 1782 125ML	1-77, 1-79
90153-0023	ADHESIVE, SILICON 251470 TUB 90CC(UN1993	1-55, 1-57, 5-19, 5-21, 5-23, 5-25, 5-27
90153-0043	ADHESIVE, LOCTITE 495 20G	1-35, 1-37
90153-0048	ADHESIVE, LOCTITE HYSOL 3430 A&B	6-69
90155-0008	HANGER CHAIN, 18	1-43, 1-47
90155-0016	CHAIN LONG LINK, LLB-3-R	1-159, 1-161, 1-165, 1-167
90157-0016	THREAD LOCKING, LOCTITE 242 50 ML	1-203, 2-37, 3-5, 3-11, 3-13, 3-15, 3-17, 3-23, 3-25, 4-71, 4-73, 4-79, 4-81
90157-0021	LOCKING FLUID LOCTITE 270	4-107, 4-109
90157-0022	SEALING COMPOUND, SILICONE	2-37, 2-73, 2-75, 5-49, 5-51, 5-109, 5-115, 5-117
90157-0034	THREAD SEALANT LOCTITE 572 50 ML	2-33
90157-0037	THREAD SEALANT LOCTITE 542	1-9, 1-11
90157-0041	SEALING COMPOUND, RHODORSEAL 5651	2-13, 2-15, 2-29, 2-31, 2-65, 2-67, 2-69, 2-71, 2-101, 2-103, 6-5
90161-0001	O-RING MATERIAL 3 MM	2-9, 2-11, 2-25, 2-27
90163-0007	CONNECTION	12-23, 12-133
90163-0013	QUICK COUPLING, (F) LP 006-0-WR013-01-2	2-77, 2-79
90163-0015	QUICK COUPLING, (M) LP-006-1-WR513	2-77, 2-79
90163-0016	QUICK COUPLING, (F) LP 006-0-WR013	6-39, 12-133
90163-0046	SLEEVE LP-004-0-WR 0510-21-1 BRASS	5-49, 5-51, 5-109
90163-0048	NIPPLE LP-004-2-WR 510-23-1	5-17, 5-89
90163-0052	HOSE NIPPLE, EXT.THR. G1/4-12 MM	5-181, 6-95
90163-0056	QUICK COUPLING, (F) 5054-6/4	12-17, 12-19
90163-0057	QUICK COUPLING, (M) 5150-1/8	1-9, 1-11, 1-29, 1-49, 12-17, 12-19
90163-0062	QUICK COUPLING, (F) 5053-1/8	1-9, 1-11, 1-29, 1-49, 5-49, 5-51, 5-109
90163-0064	QUICK COUPLING, (M) LP-006-2-WR517	6-95
90163-0076	QUICK COUPLING, (F) LP-006-0-WR021	6-97, 6-99
90163-0087	QUICK COUPLING, (M) 5150-1/4	12-17, 12-19
90163-0113	QUICK COUPLING, (M) LP-006-1-WR013-22	12-133
90163-0304	QUICK COUPLING, LP-006-5-74-KU (DUST CAP	6-95
90164-0015	LIGHT FIXTURE, RL70CV-111 / 230V 50HZ	2-23, 8-45
90164-0301	HOLDING FIXTURE	2-41
90165-0002	PIPE CLIP FOR TUBE D=4 MM	2-51, 2-53, 2-55, 3-11, 3-13, 3-15, 3-17
90165-0022	PIPE CLIP, FOR TUBE D=2,5 MM, B-3570	2-51, 2-53, 2-55, 3-11, 3-13, 3-15, 3-17
90165-0023	CLIP	2-51, 2-53, 2-55
90165-0039	PIPE CLAMP D=15 MM, GSK15/12	2-51, 2-53, 2-55
90165-0057	PIPE CLIP FOR TUBE D=6 MM	5-201, 5-203, 6-95
90165-0065	PIPE CLAMP D=8 MM, GSK08/12	2-51, 2-53, 2-55, 3-15, 3-17, 3-33, 3-35
90165-0099	PIPE CLAMP, DOUBLE, RBP-108, D=8 MM	2-59, 2-61
90166-0008	HOSE 7/10 PVC TRANSP.	6-13

Part No	Description	Page No
90166-0013	TUBE 8 MM PA BLUE	5-49, 5-51, 5-91, 5-109
90166-0045	HOSE PVC TRANSP. 6/12	12-23
90166-0049	HOSE PVC 25/33-34	1-163
90166-0060	HOSE 19/26-27 REINF.PVC	3-5
90166-0061	HOSE 4/8 PVC TRANSP.	6-45, 6-47
90166-0068	TUBE 12 MM PA BLUE	7-67
90166-0081	TUBE 6 MM PA BLUE	2-51, 2-53, 2-55, 2-59, 2-61, 7-67
90166-0089	TUBE, 6,2 MM PE BLUE	5-183, 5-185, 5-187, 5-189
90166-0090	TUBE, 8,4 MM PE BLUE	5-183, 5-185, 5-187
90166-0095	TUBE 4 MM PA BLUE (50M)	4-43, 4-57, 4-59, 4-61, 4-63, 5-101, 7-19, 7-67
90166-0108	TUBE 6 MM PA TRANSP.	2-51, 2-53, 2-55, 2-59, 2-61, 5-31, 5-33, 5-95, 5-97, 5-99, 6-95, 12-157
90166-0109	TUBE 4 MM PA TRANSP.	2-51, 2-53, 2-55, 3-15, 3-17, 4-7, 4-9, 4-11, 4-13, 4-15, 4-17, 4-45, 4-47, 4-113, 4-115, 5-17, 5-49, 5-51, 5-89, 5-109, 5-123, 5-125, 5-127
90166-0113	HOSE	5-181, 6-95, 12-23
90166-0117	HOSE 4/6 PVC BLUE	12-135
90166-0118	TUBE 8 MM PA BLACK	2-51, 2-53, 2-55, 2-59, 2-61, 6-15, 6-17, 6-93
90166-0119	TUBE 6 MM PA BLACK	1-107, 1-109, 1-197, 1-199, 1-201, 6-15, 6-17
90166-0124	TUBE 6 MM PA,TRANSP.	12-17, 12-19
90166-0132	TUBE 6 MM PA,TRANSP.	1-33, 1-35, 1-37, 1-107, 1-109, 1-197, 1-199, 1-201, 1-209, 1-211, 2-87, 2-89
90166-0133	TUBE 8 MM PA,TRANSP. (1 PACK=50 M)	3-5
90166-0135	TUBE 10 MM PA BLACK	2-79
90166-0138	HOSE	6-69
90166-0143	TUBE 2,5 MM PA TRANSP.	3-11, 3-13, 3-15, 3-17, 4-35, 4-37, 4-39, 4-41, 4-97, 4-99, 4-113, 4-115, 5-17, 5-49, 5-51, 5-89
90166-0159	RUBBER HOSE	4-19, 4-21, 4-23, 4-27, 4-29, 4-31
90166-0193	TUBE 6 MM PUR BLUE	7-19
90166-0244	RUBBER HOSE	6-67
90166-0245	RUBBER HOSE	6-67
90181-0037	CABLE DUCT, PLASTIC, 25X40	9-173
90181-0044	CABLE DUCT, PLASTIC, 25X60	9-173
90181-0054	CABLE DUCT, PLASTIC, 60X80	9-83, 9-149, 9-151, 9-153
90181-0057	CABLE DUCT, PLASTIC, 120X80	9-175
90181-0060	CABLE DUCT, PLASTIC, 40X100	9-13, 9-15, 9-17, 9-19, 9-87, 9-89, 9-99, 9-101
90181-0061	CABLE DUCT, PLASTIC, 60X100	9-13, 9-15, 9-17, 9-19
90181-0062	CABLE DUCT, PLASTIC, 100X100	9-13, 9-15, 9-17, 9-19
90181-0064	LOCK ZP1 FOR CHANNEL T1	9-13, 9-15, 9-17, 9-19, 9-149, 9-151, 9-153
90181-0067	DIVIDING PLATE SEP80	9-13, 9-15, 9-17, 9-19, 9-149, 9-151, 9-153
90181-0088	PLASTIC RIVET, PR 52314	9-149, 9-151, 9-153, 9-173
90181-0174	CABLE DUCT	9-13, 9-15, 9-17, 9-19
90181-0190	CABLE DUCT, WALL BRACKET, B4 MINI	2-87, 2-89
90181-0313	RIVET, DUCTAFIX R4	9-13, 9-15, 9-17, 9-19, 9-99, 9-101, 9-135, 9-137, 9-175
90187-0028	INSTRUM. VALVE, R1/8, 1/4 TUBE CONN.	5-63
90187-0029	BALL VALVE, G1/2, NPBR	6-101, 6-103
90187-0045	BALL VALVE, G1/4 CR PL	12-23, 12-133
90187-0059	BALL VALVE, FOR HYDR.PER. G1/2 3MM HOLE	6-69, 6-75
90187-0062	BALL VALVE, G1/2, NPBR	6-93
90187-0104	MKS SAFETY VALVE, PRESCOR DN20/1,5BAR	6-93
90187-0105	PURGING VALVE, G3/8 FOR WATER	1-55, 1-57
90191-0047	WHEEL, NO.798 821	12-25
90191-0060	CASTOR WHEEL, NO. 1599PRT	12-25
90194-0016	WARNING SIGN, RISK OF ELECTRIC SHOCK	1-41, 2-43, 2-45
90194-0075	WARNING SIGN ISO, HOT SURFACE	5-91
90194-0080	SIGN, IDENTIFICATION OF WIRING	9-83
90194-0118	SIGN, RESIDUAL VOLTAGE, WAIT 5 MIN.	9-133, 9-157, 9-165
90194-0152	SIGN, EARTH	9-31
90194-0163	SIGN, EARTH WITHIN CIRCLE / SHEET 48 PCS	6-45, 6-47, 9-13, 9-15, 9-17, 9-19, 9-83, 9-87, 9-89, 9-103, 9-105, 9-131, 9-133, 9-135, 9-137, 9-149, 9-151, 9-153, 9-159, 9-163, 9-165
90194-0164	SIGN, FRAME/CHASSIS WITHIN CIRCLE	6-45, 6-47, 9-13, 9-15, 9-17, 9-19, 9-131, 9-133, 9-159
90195-0020	TERMINAL BLOCK, BK 2CRN, 0624 7200 00	2-41, 6-13
90195-0028	TERMINAL BLOCK, 6440	1-77, 1-79
90195-0029	CONN. LINK NO324 FOR -28	1-77, 1-79
90199-0020	LEVEL GLASS/THERMOM. FSA 76.1.1./T/12	6-97, 6-99
90199-0022	LEVEL GLAS	5-123, 5-125, 5-127
90201-0014	VALVE	6-97, 6-99
90201-0058	SOLENOID VALVE DC 24V	6-97, 6-99
90201-0131	VALVE	6-97, 6-99
90201-0132	VALVE	6-97, 6-99
90201-0133	VALVE	6-97, 6-99
90201-0136	DIRECT CHECK VALVE, NO. DGMDC-3-Y-PK-41	6-97, 6-99
90201-0407	BOLT KIT, NO. BK 464125M	6-97, 6-99
90201-0457	VALVE CONNECTION, NO. A15-L/R 3/8"/WD	6-97, 6-99
90206-0031	HEATING ELEMENT 700+1200W, 220V	1-73, 11-39
90206-0053	HEATING ELEMENT 230V 1200W	8-33
90206-0070	HEATING ELEMENT 6000W 380/220V	1-55, 1-57, 11-39
90206-0322	SPARE PART GASKET, 4056	1-73
90206-0326	CONNECTION BOX K2 FOR 90206-56 AND -70	1-55, 1-57
90207-0363	GASKET 75X85X1,8 MM 3" FDA 3-A	1-17, 11-37, 11-41
90207-0365	GASKET 53X63X1,8 MM 2,5" FDA 3-A	1-17, 1-49, 11-41
90208-0031	BUSHING	5-155, 5-157
90208-0080	CLAMPING ELEMENT, 25X34 L=25	3-23, 3-25
90208-0091	CLAMPING ELEMENT, 60X77 L=50	3-23, 3-25
90208-0120	CLAMPING ELEMENT, 22X32 L=25	3-5
90214-0092	BALL BEARING 17/30X7	5-53, 5-211

Part No	Description	Page No
90214-0095	BALL BEARING 20/42X12	5-135
90214-0122	BALL BEARING 30/72X27	5-159, 5-161
90214-0138	BALL BEARING 5/19X6	7-35, 7-37, 7-39, 7-41
90214-0166	BALL BEARING 20/37X9	4-105
90214-0167	BALL BEAR. 10/22X6 SOLID OIL	5-123, 5-125, 5-127, 5-131, 5-135
90214-0189	BALL BEARING, 17X40X12 MM	5-123, 5-125, 5-127
90214-0207	BALL BEARING 15/32X9	7-11
90214-0225	BALL BEARING, 20/42X12 SOLID OIL	5-139
90214-0303	SEALING RING, 18,6X35X2 MM	1-91
90217-0041	NIPPLE LKBN, RD 60-6 - R1 1/2 M	5-201, 5-203
90217-0203	UNION NUT, 1 APV, 07-01-276/17	1-43
90217-0204	ASEPT. MALE FITTING ISO, 03-32-406/42	1-159, 1-161
90217-0206	UNION NUT, 1 1/2 APV, 07-01-376/17	1-159, 1-161
90217-0207	ASEPT. MALE FITTING ISO, 03-32-456/42	1-9, 1-11
90217-0209	UNION NUT, 2 APV, 07-01-426/17	1-9, 1-11
90217-0312	CLAMP, ISO2852 FOR PIPE 101,6 MM	6-85, 6-87
90217-0313	GASKET 97,8X121,2X5,5 MM	6-85, 6-87
90217-0347	GASKET 32X22,6X3,6 MM	1-9, 1-11, 1-33, 1-43, 1-49, 1-159, 1-161, 1-163, 1-165, 1-167
90217-0348	GASKET 35,4X46,8X4 MM	1-9, 1-11, 1-33, 1-49, 1-159, 1-161, 1-165, 1-167
90217-0349	GASKET 48,4X59,8X4 MM	1-9, 1-11
90220-0034	THERMOC.CABLE, TEX/SITW-20F-KX 2X0,5MM2	2-37, 5-19, 5-21, 5-23, 5-25, 5-27
90220-0057	CABLE TLPE 1X06MM2	12-113
90220-0058	CABLE, POWER SUPPLY, RKK 2M	12-117
90220-0059	THERMOCOUPLE CABLE, P/PTW-20F-K 2X0,5MM2	1-9, 1-11, 1-43, 1-55, 1-57, 1-69, 1-73, 1-77, 1-79, 1-99, 1-165, 1-167, 9-13, 9-15, 9-17, 9-19, 9-29, 9-149, 9-151, 9-153
90220-0072	SCR. CABLE 4X0,34MM2	1-35, 1-37
90220-0085	CABLE, MULTI-CONDUCTOR SCREENED	1-227
90220-0091	CABLE, PAIR TWISTED 2X2X0,25MM2	1-223, 9-13, 9-15, 9-17, 9-19, 9-85, 11-21
90220-0092	CABLE, PAIR TWISTED 3X2X0,25MM2	9-13, 9-15, 9-17, 9-19
90220-0104	SCR. CABLE 4X1,5MM2	1-81, 2-37, 8-17, 8-19, 9-103, 9-105, 11-3
90220-0105	SCR. CABLE 4X2,5MM2	3-9
90220-0107	SCR. CABLE 5X0,75MM2	4-57, 4-59, 4-61, 4-63
90220-0183	SCR. CABLE 2X0,34MM2	9-13, 9-15, 9-17, 9-19, 9-41
90220-0305	CLAMP FOR SCR.CABLE, 16MM,	9-31
90224-0296	BULKHEAD LEAD-IN 15 MM	6-45, 6-47
90224-0303	CONN. ELBOW 1020-8-1/4	12-17, 12-19
90224-0308	CONN. BANJO, ART. NO. 2023-1/8-1/8	1-9, 1-11, 1-29, 1-49
90224-0372	NIPPLE, EXT.THREAD, HEXAGON, R1/4-R1/4	6-39, 6-57
90226-0004	CABINET	12-13
90226-0452	MOUNTING SCREW	1-35, 1-37
90230-0026	NON-RETURN VALVE RHZ 10-PLR-ED	6-97, 6-99
90230-0028	NON-RETURN VALVE H 151 R 3/8"	6-25
90230-0064	CHECK VALVE, 6 MM HIGH TEMP.	1-35, 1-37
90232-0103	PH.CELL E3S-CT61-L-5M	11-23, 11-27, 11-29
90232-0104	PH.CELL E3S-CT61-D-5M	11-23, 11-27, 11-29
90232-0123	PH.CELL WLL170-P135-6011723	8-47, 8-49
90232-0347	FIBRE, LL3-TB01, 5308 050	8-45
90235-0151	NON-RETURN VALVE, 534 098 110 0	6-15, 6-17
90235-0206	QUICK EXHAUST VALVE, SEU-1/8	5-89, 5-183, 5-185, 5-187
90235-0259	VALVE	1-9, 1-11, 1-107, 1-109, 7-67
90235-0274	THROTTLE CHECK VALVE, G1/8", SCU-604-1/9	1-9, 1-11, 1-73, 1-91, 1-93, 1-95, 1-149, 1-151, 2-33
90235-0280	THROTTLE CHECK VALVE,M5	1-69, 1-197, 1-199, 1-201
90235-0289	FLOW CONTROL VALVE, GRLA-M5	7-13, 7-19
90235-0832	QUICK EXHAUST VALVE, SE-1/8-B	5-49, 5-51
90235-0844	THROTTLE CHECK VALVE M5, MANUAL, 6MM	2-47, 2-49
90236-0041	BRACKET, 74504-50	1-35, 1-37
90237-0046	MAGNETIC LOCK, 46X33X15 MM	7-31, 7-35, 7-37
90237-0128	LOCK CYLINDER, 1109-SU125	2-101, 2-103, 6-5, 6-7, 8-11, 8-13, 9-163
90237-0129	LOCK CYLINDER, 1109-U6	6-7, 9-131, 9-133, 9-165
90237-0150	TURNING HANDLE, NO. 1125-U190-0A	8-11, 8-13, 9-131, 9-133, 9-163, 9-165
90237-0153	LOCK HOUSING, 1121-U26-0B	2-101, 2-103, 6-5, 6-7
90237-0154	LOCK HOUSING, 1121-U60-0C	8-11, 8-13, 9-131, 9-133, 9-163, 9-165
90237-0155	LOCK ADAPTER, 1121-U40	9-163
90237-0156	LOCK BOLT, 1000-16	8-11, 8-13, 9-131, 9-133, 9-163, 9-165
90237-0157	LOCK BOLT, 1000-230	9-83, 9-135, 9-137, 9-147, 9-149, 9-151, 9-153, 9-155, 9-157
90237-0175	TURNING HANDLE, 1125-U185-0A	6-5, 6-7
90237-0176	TURNING HANDLE, 1125-U190-A	2-101, 2-103, 9-131, 9-133, 9-163, 9-165
90237-0214	LOCK ADAPTER, 1121-U40	8-11, 8-13, 9-131, 9-133, 9-165
90237-0319	LOCK HOUSING, 1000-U134	9-83, 9-135, 9-137, 9-147, 9-149, 9-151, 9-153, 9-155, 9-157
90237-0320	LOCK HOUSING, 1000-U136	9-83, 9-135, 9-137, 9-147, 9-149, 9-151, 9-153, 9-155, 9-157
90237-0322	LOCK GASKET, 1000-U137	9-83, 9-135, 9-137, 9-147, 9-149, 9-151, 9-153, 9-155, 9-157
90237-0323	LOCK O-RING, 1000-24	9-147, 9-155, 9-157
90239-0357	ROD END, CLEVIS WITH AXLE M10X1,25	4-57, 4-59, 4-61, 4-63
90239-0405	ROD END,BALL JOINT EYE M10X1,25	1-91, 2-9, 2-11, 2-25, 2-27
90239-0453	BRACKET	1-91, 1-93, 1-95, 1-149, 1-151, 1-169
90239-0460	BRACKET	1-69
90239-0486	REAR, CLEVIS, MINI-ISO 16	2-47, 2-49
90239-0487	REAR, CLEVIS, MINI-ISO 20-25	1-73, 2-35
90239-0489	ROD END, CLEVIS WITH AXLE M6X1,25	1-219
90239-0491	ROD END, BALL JOINT EYE, MINI-ISO M6	7-19
90239-0516	ROD END, CLEVIS WITH AXLE M10X1,25	1-69, 1-71, 1-93, 1-95, 1-149, 1-151, 1-169
90239-0532	ROD END, CLEVIS WITH AXLE M8X1,25	1-69, 1-73, 2-35
90239-0773	CYLINDER, SHUTTLE 25-310	1-91, 1-93, 1-95
90239-0779	CYLINDER	1-69, 1-149, 1-151, 1-169

Part No	Description	Page No
90239-0817	DOUBLE ACTING, MINI-ISO, CYL.16-50	1-219
90239-0819	DOUBLE ACTING, MINI-ISO, CYL.16-100	7-13
90239-0840	DOUBLE ACTING, MINI-ISO, CYL.16-12	1-155
90239-0841	DOUBLE ACTING, MINI-ISO, CYL. 16-25	2-33
90239-0847	DOUBLE ACTING, MINI-ISO, CYL.20-50	1-73, 2-35
90240-0048	PLAIN BEAR,SELF ADJ.SPHER. 25X42X20 MM	3-11, 3-13, 3-15, 3-17
90240-0050	PLAIN BEAR,SELF ADJ. 20X35X24	3-11, 3-13, 3-15, 3-17
90240-0094	BEARING BUSHING W/O FL, 50X55X40 MM	5-29, 5-93
90240-0121	FLANGE BUSHING, 8X10X12 MM	8-21
90240-0146	FLANGE BUSHING, 15X21X20 MM	1-55, 1-57
90240-0152	PLAIN BEAR,SELF ADJ.SPHER.12X22X10 MM	4-105
90240-0172	FLANGE BUSHING, 8X12X10 MM	1-125, 1-127, 1-135, 1-137, 1-139, 1-143, 1-145, 1-149, 1-151
90240-0180	FLANGE BUSHING 10X14X15MM	1-155, 4-111
90240-0254	FLANGE BUSHING, 10X15X7 MM	5-123, 5-125, 5-127
90240-0262	FLANGE BUSHING, IGLIDUR X 12X14X12	5-11, 5-13, 5-15
90240-0325	FLANGE BUSHING, IGLIDUR X 16X18X12	5-11, 5-13, 5-15
90240-0331	FLANGE BUSHING, IGLIDUR G 10X12X17	5-81
90240-0332	FLANGE BUSHING, IGLIDUR G 16X18X12	5-81
90242-0093	O-RING MATERIAL 1,5 MM	4-7, 4-9, 4-11, 4-13, 4-15, 4-17, 4-45, 4-47
90243-0061	AIR GUN, CEJN SERIE 204 ED: 90459-0173	2-77
90243-0118	TOOL BOX, NO. ZERO 105X-SI	12-21
90243-0126	PROTECTIVE GOGGLES	12-109
90243-0133	LIQUID SOAP DISPENSER 0,4L, 742634	8-11, 8-13
90243-0134	FLOW METER, EK-4244	6-41
90243-0136	SPIRIT LEVEL	12-13
90243-0137	PRESSURE GAUGE KIT 0-50 MM WC, 229900	12-17, 12-19
90243-0147	FLOW METER	12-17, 12-19
90243-0317	LASER	12-113
90243-0318	GLASS ROD	12-113
90243-0319	VOLTAGE SUPPLY UNIT	12-113
90245-0024	MATCHING TRANSF. 65 KVA SEC 93,4A	12-9
90245-0029	TRANSFORMER, 1-PH 6500 VA SEC 130A	9-87, 9-89
90248-0026	HINGE, 1703-80X32	8-23, 8-25
90248-0034	HINGE, 66073	6-45, 6-47
90257-0001	FILTER PLUG ART.NO.8145-00-140 TYPE F14	1-35, 1-37
90257-0002	FILTER PLUG, NO. 8145-00-120 TYPE F12	5-181
90258-0031	PIN, STRAIGHT SLOTTED SPRING FRP 3X20	4-105
90259-0308	INCOMING TERMINAL, BK25/3-PKZ0	9-145
90259-0309	CIRCUIT BREAKER, B3.1/4-PKZ0	9-145
90259-0313	AUXILIARY SWITCH, NHI21-PKZ0	9-145
90259-0315	CIRCUIT BREAKER , B3.1/2-PKZ0	9-145
90261-0049	PLUG, BLIND, PLASTIC, NO. SR1750	7-11
90261-0071	PLUG, BLIND, PLASTIC, NO. GPN500B58	1-55, 1-57
90261-0073	PLUG, BLIND, PLASTIC, NO. GPN250/15	5-181
90266-0006	TUBE	2-51, 2-53, 2-55
90266-0019	PIPE	2-51, 2-53, 2-55, 3-11, 3-13, 3-15, 3-17, 4-113, 4-115
90266-0166	PIPE	5-19, 5-21, 5-23, 5-25, 5-27
90270-0017	COMPRESSOR NASH/ELMO 112 MB/4-2083	6-67
90270-0347	VALVE	6-29, 6-31
90274-0045	PRESSURE GUARD, 14 KPA	2-43, 2-45
90274-0066	PRESSURE SWITCH, 5,516 - 689,5 KPA	1-35, 1-37
90274-0084	PRESSURE GUARD, 1800 KPA	6-95
90277-0055	FILTER HOUSING / MDS 4463 G 08 H	1-31
90277-0062	FILTER HOUSING SS-4TF2-60	1-33
90277-0104	FILTER F64B-2GN-ARO	1-35, 1-37
90277-0323	FILTER HOUSING / ART.NO 95S6-1/4 S 5430	1-35, 1-37
90277-0324	FILTER CARTRIDGE 050-11-A	1-35, 1-37
90277-0333	GASKET KIT / ART.NO ACS 0325 EH	11-37
90277-0407	FILTER ELEMENT 60Âµ, SS-4F-K4-60	1-33
90278-0001	PUMP	12-13
90279-0001	OIL CAN 0,4L, 42AM FLEX	12-13
90287-0022	SCREW HEX.SOCK.SET CONEPT. MS6SS M6X8	5-139
90287-0075	SCREW SLOT. PAN HEAD LKCS M6X12	2-13, 2-15, 2-29, 2-31, 2-37, 2-47, 2-49, 2-101, 2-103, 4-57, 4-59, 4-61, 4-63, 6-9, 6-61, 8-7, 8-11, 8-13, 8-15
90287-0076	SCREW SLOT. PAN HEAD LKCS M6X20	2-37
90287-0081	SCREW MC6S M6X10 129	3-5
90287-0106	SCREW SPRINGLOAD. SLOTTED HEAD M10X21	7-11
90287-0112	SCREW SPRINGLOAD. SLOTTED HEAD M8X16	7-21, 8-5
90287-0125	SCREW M6S M12X180 A4	5-123, 5-125, 5-127
90287-0143	SCREW ISO4762 M6X25 12.9	3-15, 3-17
90287-0144	SCREW ISO4762 M6X35 12.9	3-15, 3-17
90287-0145	SCREW ISO4762 M5X16 12.9	3-23, 3-25
90287-0148	SCREW SPRINGLOAD. SLOTTED HEAD M5X12	7-61
90287-0159	SET SCREW, DOGPOINT M6X16 A4	6-73
90287-0163	SCREW SPRINGLOAD. SLOTTED HEAD M6X14	3-31
90287-0170	DISTANCE SCREW	12-111, 12-115
90287-0295	SCREW HEX.SOCK.COUNT.MF6S M3X8 A280	4-7, 4-9, 4-11, 4-13, 4-15, 4-17
90287-0314	SCREW MC6S M4X60 A470	1-9, 1-11, 1-223
90287-0316	SCREW	8-11, 8-13
90287-0328	SCREW, M6S ISO 4014 M12X160 A4 80	5-191, 5-193, 5-195
90287-0330	SCREW, M6S ISO 4017 M10X70 A4 80	3-9
90287-0331	SCREW, BUTTON HEAD ISO7380 K6S M5X12 A4	8-29
90287-0335	SCREW MC6S M8X90 A280	5-19, 5-21, 5-23, 5-25, 5-27
90288-0066	ROLLER CHAIN, SIMPLEX 3/8 -365, SS	1-55, 1-57

Part No	Description	Page No
90296-0053	SHELL TELLUS OIL T 32 (1PC=20L)	6-107
90296-0068	SHELL ALVANIA GREASE EP 2 (CARTR.400G)	3-5, 4-35, 4-37, 4-39, 4-41
90296-0070	SHELL ALVANIA GREASE EP 1	5-85, 5-145, 5-159, 5-161
90296-0073	OIL	5-163, 5-165, 5-167, 5-169, 5-171, 5-173, 5-175, 5-177, 5-181
90296-0075	SHELL OMALA OIL 320 (1PC=20L)	3-5, 5-123, 5-125, 5-127, 6-107
90296-0091	LUBRICATION GREASE, FLUOLUB 210	1-219, 1-221
90297-0006	FLUORESCENT TUBE, PL9	2-41
90297-0306	BALLAST COIL 230V 50/60 HZ, L11D E790011	9-13, 9-15, 9-17, 9-19
90298-0019	DETERGENT, SU 118, 20 LITRES	6-107, 11-43
90303-0011	PROTECTIVE GOGGLES	11-15
90303-0012	PROTECTIVE GLOVES	11-15
90303-0013	APRON	11-15
90304-0307	ATTACHMENT PIPE	6-93
90321-0037	PUMP C-6125P EP 220V, 50HZ	6-13
90321-0101	PUMP, 4TP213A	6-83
90321-0490	O-RING	11-37
90321-0491	O-RING, NAKAMURA A/CMXT 2500,3500 POS35	11-37
90321-0492	O-RING	11-37
90321-0493	O-RING	11-37
90321-0496	O-RING	11-37
90321-0498	O-RING	11-37
90321-0500	O-RING	11-37
90321-0504	O-RING, NAKAMURA AMXT 2500,3500 POS59	11-37
90326-0012	PROTECTIVE COVER, 03-00100	1-9, 1-11, 1-43, 1-55, 1-57, 1-69, 1-73, 1-77, 1-79, 1-99, 1-165, 1-167
90326-0020	SOCKET, FEMALE YELLOW CR-AL, 03-22000A	1-9, 1-11, 1-43, 1-55, 1-57, 1-69, 1-73, 1-77, 1-79, 1-99, 1-165, 1-167
90326-0022	PLUG, MALE YELLOW CR-AL, 03-21000A	1-43, 5-19, 5-21, 5-23, 5-25, 5-27, 5-91
90326-0048	THERMOCOUPLE, 5110 048-000	1-69, 1-73
90326-0051	THERMOCOUPLE, 5110 051-000	1-77, 1-79, 1-99, 1-165, 1-167
90326-0052	THERMO ELEMENT	1-55, 1-57
90326-0057	THERMOCOUPLE, 5110 057-000	1-69
90326-0060	THERMOCOUPLE, 5110060-000 CR-AL	1-43
90326-0077	CONTACT, 5100 004-001	5-19, 5-21, 5-23, 5-25, 5-27, 5-91
90326-0080	THERMOCOUPLE, 5110 080-000	5-19, 5-21, 5-23, 5-25, 5-27, 5-91
90326-0089	THERMOCOUPLE, 5110 089-000	1-9, 1-11
90326-0304	COMPRESSION FITTING, 5101015-005	1-69, 1-73
90326-0306	COMPRESSION FITTING, 5101015-010	1-69, 1-73
90328-0003	SILENCER, 338/110	1-107, 1-109
90328-0020	SILENCER, U-M5	1-219
90328-0025	SILENCER G1/2"	12-23
90328-0026	SILENCER, G1/4"	1-29, 1-31, 1-35, 1-37, 1-223, 11-39
90328-0029	SILENCER, M5	6-49, 6-51, 6-53, 7-13
90328-0047	SILENCER, G1/8"	1-9, 1-11, 5-49, 5-51, 6-49, 6-51
90330-0012	SLEEVE, REDUCTION, INT, R-2021/4X1/8	6-101, 6-103
90330-0013	NIPPLE, EXT.THREAD, HEXAGON, R1/4-R1/8	1-103, 1-105
90330-0019	NIPPLE, EXT.THREAD, HEXAGON, R1/2-R3/8	6-29, 6-31
90330-0020	ELBOW, 90 INT. THREAD, R-2221/2	6-69, 6-85, 6-87
90330-0021	NIPPLE, EXT.THREAD, HEXAGON, R1/2-R1/2	1-31, 6-69
90330-0025	BUSHING, INT.EXT. THR. R1/4-G1/8	1-35, 1-37, 1-107, 1-109
90330-0026	PLUG, EXT. G-THREAD, G1/4	1-35, 1-37
90330-0029	PLUG, G3/8EXT, R-236R3/8	1-31, 1-73, 6-85, 6-87, 6-89, 6-91, 6-97, 6-99, 6-101, 6-103, 12-17, 12-19
90330-0032	NIPPLE, EXT.THREAD, HEXAGON, R1/8-R1/8	1-9, 1-11, 1-103, 1-105
90330-0037	PLUG, G1/2EXT, G1/2	4-97, 4-99, 5-123, 5-125, 5-127, 6-39, 6-67
90330-0043	NIPPLE, EXT.THREAD, HEXAGON, R1/4-R1/4	1-35, 1-37
90330-0046	PLUG, G3/4EXT, R-236G3/4	2-87, 2-89
90330-0066	PLUG, G1/8EXT, G1/8	1-29, 1-107, 1-109, 4-7, 4-9, 4-11, 4-13, 4-15, 4-17, 4-45, 4-47, 5-29, 6-97, 6-99
90330-0078	BUSHING, INT.EXT. THR. R3/4-G3/8	5-49, 5-51, 5-109
90330-0079	BUSHING, INT/EXT. THREAD NO. R-2113/8X1/	5-201, 5-203
90330-0083	NIPPLE, EXT.THREAD, HEXAGON, R3/8-R1/4	1-35, 1-37
90330-0085	BUSHING, INT.EXT. THR. R1/2-G1/4	5-181
90330-0095	T-PIPE, INT. THREAD, R-221-R1/8	1-103, 1-105
90330-0097	NIPPLES, EXT. THREAD, G1/8	2-57
90330-0099	ELBOW, 90 INT. THREAD, R-222R1/8	2-57
90330-0101	NIPPLES, EXT. THREAD, G1/4	5-53, 5-211
90330-0105	NUT, HEXAGON SS, G 3/8	1-107, 1-109
90330-0106	PIPE COUPLING	1-31
90330-0120	NUT, HEXAGON SS, G1/4	6-95
90330-0169	ELBOW, 90 INT. THREAD, 4-4FE. SS	1-33
90335-0008	COMP. SPRING, 22490, 1,6X14,1X115	1-125, 1-127
90335-0025	COMP. SPRING, 22010, 1X11X26	8-43
90335-0027	COMP. SPRING, 22170, 1,25X9,25X33	7-51, 7-53
90335-0036	COMP. SPRING, 22450, 1,6X14,1X24	5-19, 5-21, 5-23, 5-25, 5-27, 8-15
90335-0041	TENSION SPRING, 42350, 2X14X68	8-23, 8-25
90335-0052	COMP. SPRING, 23400, 3,2X28,2X94,5	12-97
90335-0055	COMP. SPRING, 22470, 1,6X14,1X53,5	5-91, 5-111
90335-0146	COMP. SPRING, 0,6X7,2X20	7-43
90335-0149	COMP. SPRING, 2962, 1,6X9,6X35,5 FE	12-167
90335-0152	COMP. SPRING, 22300, 1,25X17,25X40,5	1-93, 1-95, 5-55
90335-0216	TENSION SPRING, 40910, 0,5X5,5X27,7	7-35, 7-37, 7-39, 7-41, 7-61
90337-0315	FILTER INSERT / MCS 4463	1-31
90337-0342	GLASS-WINDOW D=12,5MM	12-113
90342-0013	BELLOWS	7-13
90344-0022	SPROCKET	3-31

Part No	Description	Page No
90347-0004	VIBRATION DAMPER D=30 TH=M8 H=17 H2=21MM	2-97, 6-69
90347-0005	DAMPER, NO. F 1006 B	8-41
90347-0024	SHOCK ABSORBER, 370-120-400	7-59
90347-0054	ROTARY DASHPOT, S-CRD-P277	8-27
90347-0108	GAS SPRING NO. 03-08-100-084174	8-15
90347-0144	VIBRATION DAMPER, NO. RA 40EM-A	6-67
90347-0175	MACHINE SHOE BRIK T 125	11-3
90347-0189	SHOCK ABSORBER, 370-050-400	5-29, 5-93
90348-0007	FREE-WHEEL COUPLING, 15,875X22,225 MM	1-81, 1-97
90355-0048	TORQUE RIGID COUPLING, 22X22 MM	3-19, 3-21
90355-0088	ELECTROMAGNETIC CLUTCH, 30 MM/24 VDC	3-5
90355-0205	CLUTCH 2,6 NM	5-135, 5-139
90360-0020	STEAM TRAP / MK36/51 3/8 INCH	1-9, 1-11
90360-0305	FLOAT, ART NO 10739920	6-85, 6-87
90410-0341	CASSETTE FOR TEMP. REGULATOR 90410-0044	9-149, 9-151, 9-153
90411-0005	INSULATION 1200MM SERIE 21 89/154X30	1-77, 1-79
90415-0018	FILTER FOR LIME SEPARATING / D MOD.AD	6-29, 6-31
90415-0019	FILTER / ART.NO. HH-M15-RG	6-29, 6-31
90415-0022	FILTER / R1 1/2" TYP. 1012	5-201, 5-203
90415-0033	OIL FILTER REFILLING UC-HP-1229-25	6-95
90417-0076	TIMING BELT 25T10/920 PU	3-5
90419-0307	GASKET, XVA-C09	2-81, 2-95
90424-0009	SPRAY NOZZLE, 103 DEG R1/8, GGA 8W	5-183, 5-185, 5-187
90424-0010	SPRAY NOZZLE, 142 DEG R1/4, K5	5-49, 5-51, 5-109
90424-0016	SPRAY NOZZLE, 103 DEG R1/8 BSPT GG8W	5-183, 5-185, 5-187
90424-0017	SPRAY NOZZLE, 1/4NPT JCO-SS-12....	1-101
90424-0025	SPRAY NOZZLE, 145 DEG K1/4 10	5-53
90424-0027	SPRAY NOZZLE TIP, 8613-8V-TC	2-37
90424-0032	SPRAY NOZZLE, 95 DEG H1/8 U-9515	2-57, 5-65
90424-0033	SPRAY NOZZLE, 76 DEG R1/8 B5	2-57
90424-0035	SPRAY NOZZLE, 95 DEG HB1/4 U-9515 BSPT	2-57, 5-211
90424-0054	SPRAY NOZZLE 120 DEG	6-89, 6-91
90424-0066	ROT.SPRAY NOZZLE, D26984-R3/8"-PVDF...	5-209
90424-0068	AIR NOZZLE, G1/4, MOD. 216 BSP	5-19, 5-21, 5-23, 5-25, 5-27, 5-29, 5-35, 5-37, 5-39, 5-41, 5-43
90424-0070	SPRAY NOZZLE, 61 DEG 1/4 HH 10	5-207, 5-209, 5-213
90424-0304	GASKET	11-39
90425-0016	MECMAN TYPE E120 735-120-000	12-23
90426-0003	HAND SHOWER, 361100	2-79
90432-0023	BRAKE ORTLINGHAUS	3-5
90450-0033	CYLINDER	2-9, 2-11, 2-25, 2-27
90450-0281	DOUBLE ACTING,PROF.CYL 32-80	1-75, 1-99
90450-0306	DOUBLE ACTING, MINI-ISO, CYL. 12-25	7-19
90450-0328	DOUBLE ACTING,PROFILE CYL32-25	1-71
90450-0380	SINGLE ACTING, PANCAKE EV-20/75-5	5-153
90450-0654	BRACKET,REAR,EYE WITH AXLE 32	4-57, 4-59, 4-61, 4-63
90450-0669	SENSOR, BRACKET SERIES 168	1-71, 1-99
90450-0725	ROD END, CLEVIS WITH AXLE M6	2-33, 3-7
90450-0756	BRACKET, REAR EYE 32	1-71
90453-0001	MODEM MA-12	11-21
90453-0002	MODEM MD-12 DC	9-85
90457-0013	PUMP-MOTOR BRACKET, LS-211, NO 1711121	6-97, 6-99
90457-0014	FLEXIBLE COUPLING, ND5-A, CON.10X19 MM	6-97, 6-99
90457-0015	HYDR.PUMP, TFP100/2,2-S-C001, NO 1111250	6-97, 6-99
90457-0016	HYDR. VALVE MANIFOLD BLOCK, NO A1-17253	6-97, 6-99
90457-0017	TANK RET. OUTLET PIPE, NO 8185-0187	6-97, 6-99
90457-0018	HYDR.ACCU, SBO210-0,32E1/112U-210AK55	6-97, 6-99
90457-0019	LEVEL PROBE, HMFB-S=45-0=80-0=90-T70	6-97, 6-99
90457-0022	HYDR. HOSE, 6,4 & M16X1,5 STR+90DEGR.CON	6-97, 6-99
90457-0023	CONN.STRAIGHTG1/2-M22X1,5, VADKO15-RL/WD	6-97, 6-99
90457-0024	RETURNFILTER UNIT, RF-P/30-BB-010E1.0/-T	6-97, 6-99
90457-0027	INSERT, MULTI HOLE, E155M1X5/4X9	5-77, 5-79, 9-91, 9-93
90457-0028	INSERT, MULTI HOLE, E154M5X5	5-75, 5-121
90457-0030	INSERT, MULTI HOLE, EK155M4X9	5-77, 5-79
90457-0039	PUMP CONN. ELBOW FLANGE T-26/12-3/8	6-97, 6-99
90457-0047	SENSOR 2750-1-5111-1 W.ADAPTER PNP	1-71, 1-99
90457-0050	BULKHEAD HOUSING, HDC 04A ALU	9-103, 9-105
90457-0051	END PLATE, AP DLD2,5/PE DB	5-77, 5-79, 9-63, 9-65, 9-67, 9-69, 9-71, 9-73, 9-75, 9-77
90457-0052	END PLATE	9-63, 9-65, 9-67, 9-69, 9-71, 9-73
90457-0054	FEED THROUGH TERMINAL, 161527	9-63, 9-65, 9-67, 9-69
90457-0056	FAN 7450 ES	9-13, 9-15, 9-17, 9-19
90457-0057	GRID, LZ36	9-13, 9-15, 9-17, 9-19
90457-0058	SIGN, LS SHORT STOP	9-149, 9-151, 9-153
90457-0086	BULKHEAD CONNECTOR 6MM	1-33, 1-107, 1-109, 2-87, 2-89
90457-0100	ACCUMULATOR CRVZS-2	6-55, 6-59
90457-0104	BLANK RIVET 2X7,4	6-45, 6-47
90457-0123	SIGN, MAIN SWITCH	9-87, 9-89
90457-0126	FLOW RESTRICTOR M6, 2,2	9-139, 9-141, 9-145
90457-0131	PUMP SV805 R22T 50HZ	5-201, 5-203
90457-0132	VALVE, BUTTERFLY, ZVF1200BSAAOCSF INOX	5-189
90457-0136	FLAT GASKET TAPE W. ADHESIVE, 10X3.0	6-97, 6-99
90457-0137	GASKET, GP IP	6-97, 6-99
90457-0138	GASKET, DP-200	6-97, 6-99
90457-0139	CONN.STRAIGHT G3/8-10 MM, A 10-L/R3/8/WD	6-97, 6-99

Part No	Description	Page No
90457-0141	BULKHEAD CONNECTOR, 8MM	5-19, 5-21, 5-23, 5-25, 5-27
90457-0143	SCREW, M6S ISO 4014 M6X130 A4 80	6-101, 6-103
90457-0147	INSERT, MULTI HOLE, EK154M 2X7	9-111, 9-113, 9-115, 9-117, 9-119, 9-121, 9-123, 9-125, 9-127, 9-129
90457-0148	SCREW CAP HEAD SQ. NECK M6X100 SS	6-11
90457-0150	FLEXIBLE COUPLING, 10X25 MM	3-37
90457-0151	WORM GEAR UCZ 151 SIZE 125 39:1	3-5
90457-0162	CLAMPING ELEMENT, 00203005	3-37
90457-0166	DOUBLE ACTING, COMPACT, 12-10	4-43
90457-0167	SCREW MC6S M3X35 A480	4-43
90457-0172	MOTOR 3GAA 131001-ASA	3-9
90457-0178	EQUAL BULKHEAD ELBOW CONNECTOR 36390800	2-59, 2-61
90457-0179	ELBOW 90 COUPL., EXT. THREAD 4/2-G1/8"	2-59, 2-61
90457-0180	ELBOW 90 COUPL., EXT. THREAD 6/4-R1/8"	2-59, 2-61
90457-0181	EQUAL BULKHEAD ELBOW CONNECTOR 31390600	2-59, 2-61
90457-0182	PIPE CLAMP, D=8 MM, RAPOD8X	2-59, 2-61
90457-0183	COVER PLATE, DPA0X, FOR 90457-0182	2-59, 2-61, 2-63
90457-0184	T-CONNECTION 6 MM 6104 06 00	2-59, 2-61
90457-0192	WASHER PLAIN ROUND, 6,5/18, H=1,5	9-83, 9-87, 9-89, 9-131, 9-133, 9-135, 9-137, 9-149, 9-151, 9-153, 9-163, 9-165
90457-0199	INSERT EK 156M 5X5/4X9	5-19, 5-21, 5-23, 5-25, 5-27, 5-49, 5-51
90457-0922	ELBOW PIPE JOINT, EXT.THREAD, D=6MM M5	5-153
90457-0937	SCREW MC6S M3X40 A480	4-43
90457-0948	ADAPTER CABLE KS 800-PC	9-149, 9-151, 9-153, 12-27
90458-0058	SCREW M5X60 A280	8-17, 8-19
90458-0072	SCREW ISO 7380 S M6X12 A2	2-83, 2-85
90458-0073	WASHER 6,4/30, H=1,5	2-83, 2-85
90458-0138	PROX.SWITCH E2EG-X1R5B1-5M	1-29, 3-33, 3-35, 11-39
90458-0146	GLAND FITTING, VK 154YUL16	7-33
90458-0147	INSERT, MULTI HOLE, EK153M 2X6,5	5-77, 5-79
90458-0188	INSERT, MULTI HOLE, EK154M 1X7, 1X10,5	9-111, 9-113, 9-115, 9-117, 9-119, 9-121, 9-123, 9-125, 9-127, 9-129
90458-0220	TENSION ROLLER, M40/60-0-M EXCENTRIC	5-49, 5-51, 5-85
90458-0254	PRECISION PRESSURE REGULATOR,LRP-1/4-0,7	6-37
90458-0256	PROX.SWITCH IIA 3010-BPKG/6M	2-9, 2-11, 2-25, 2-27
90458-0258	TRANSFORMER, 1-PH 100VA SEC 8,3A	9-87, 9-89
90458-0292	TERMINAL ELEMENT, PSD-S CE-TM SCREW/W	2-81, 2-95
90458-0293	LIGHT ELEMENT, RED, PSD-S OE RD/W	2-81, 2-95
90458-0294	LIGHT ELEMENT, YELLOW, PSD-S OE YE/W	2-81, 2-95
90458-0295	LIGHT ELEMENT, BLUE, PSD-S OE BU/W	2-81, 2-95
90458-0302	SIREN ELEMENT, PSD-S AE SM8-5 100DB/1/W	2-95
90458-0305	CABLE GLAND, M12X1,5, 5311 1000	7-33, 9-111, 9-113, 9-115, 9-117, 9-119, 9-121, 9-123, 9-125, 9-127, 9-129
90458-0306	CABLE GLAND, M16X1,5, 5311 1010	1-83, 1-85, 8-47, 8-49, 9-95, 9-97, 9-107
90458-0307	CABLE GLAND, M20X1,5, 5311 1020	8-17, 8-19, 8-47, 8-49, 9-171
90458-0310	CABLE GLAND, M40X1,5, 5311 1050	5-75
90458-0311	CABLE GLAND, M50X1,5, 5311 1060	2-87, 2-89, 9-87, 9-89
90458-0314	CABLE GLAND, M16X1,5, 5311 1110	5-49, 5-51
90458-0315	CABLE GLAND, M20X1,5, 5311 1120	8-45, 8-47, 8-49
90458-0316	CABLE GLAND, M25X1,5, 5311 1130	5-75
90458-0321	NUT, M12X1,5	9-111, 9-113, 9-115, 9-117, 9-119, 9-121, 9-123, 9-125, 9-127, 9-129
90458-0322	NUT, M16X1,5	1-173, 1-175, 1-177, 1-179, 1-181, 1-183, 5-49, 5-51, 5-85, 9-95, 9-97, 9-107
90458-0323	NUT, M20X1,5	8-33, 8-45, 9-171
90458-0324	NUT, M25X1,5	9-111, 9-113, 9-115, 9-117, 9-119, 9-121, 9-123, 9-125, 9-127, 9-129
90458-0326	NUT, M40X1,5	5-49, 5-51
90458-0327	NUT, M50X1,5	2-87, 2-89, 9-87, 9-89, 9-111, 9-113, 9-115, 9-117, 9-119, 9-121, 9-123, 9-125, 9-127, 9-129
90458-0328	NUT, M63X1,5	9-87, 9-89
90458-0404	CABLE GLAND, VK 21650Y	8-45, 8-47, 8-49
90458-0406	CABLE GLAND, VK 22052Y	8-47, 8-49
90458-0408	CABLE GLAND, VK 23254Y	5-75
90458-0413	CABLE FITTING, VK 22052YUL11	8-45, 8-47, 8-49
90458-0417	GLAND FITTING, VK 21650YUL9	8-45, 8-47, 8-49
90458-0422	CABLE GLAND, VK 22053Y	7-33, 9-111, 9-113, 9-115, 9-117, 9-119, 9-121, 9-123, 9-125, 9-127, 9-129
90458-0423	CABLE GLAND, VK 23255Y	5-75
90458-0427	GLAND FITTING, VK 21652YUL11	1-173, 1-175, 1-177, 1-179, 1-181, 1-183, 2-13, 2-15, 2-29, 2-31, 5-85, 5-115, 5-117
90458-0428	GLAND FITTING, VK 22052YUL11	8-33, 8-45, 9-111, 9-113, 9-115, 9-117, 9-119, 9-121, 9-123, 9-125, 9-127, 9-129
90458-0430	GLAND FITTING, VK 22054YUL16	5-201, 5-203, 7-33, 8-45, 9-111, 9-113, 9-115, 9-117, 9-119, 9-121, 9-123, 9-125, 9-127, 9-129
90458-0431	GLAND FITTING, VK 22554YUL16	5-191, 5-193, 5-195, 6-97, 6-99, 7-17, 7-33, 9-111, 9-113, 9-115, 9-117, 9-119, 9-121, 9-123, 9-125, 9-127, 9-129
90458-0433	GLAND FITTING, VK 23255YUL21	7-33, 8-47, 8-49
90458-0438	GLAND, EXTENDED WITH INSERT, M20X1,5	1-81, 4-57, 4-59, 4-61, 4-63
90458-0450	GLAND FITTING, 2205416S08 UL16	3-9
90458-0459	GLAND FITTING, VK 24056 D UL21	5-19, 5-21, 5-23, 5-25, 5-27, 5-49, 5-51
90458-0461	GLAND, LOCK NUT, M20X1,9	9-111, 9-113, 9-115, 9-117, 9-119, 9-121, 9-123, 9-125, 9-127, 9-129
90458-0462	GLAND, LOCK NUT, M25X1,9	9-111, 9-113, 9-115, 9-117, 9-119, 9-121, 9-123, 9-125, 9-127, 9-129
90458-0465	GLAND, LOCK NUT, M50X1,9	9-111, 9-113, 9-115, 9-117, 9-119, 9-121, 9-123, 9-125, 9-127, 9-129
90458-0576	CIRCUIT BREAKER, B3.1/5-PKZ0	9-145
90458-0601	CONTRAST SCANNER, KT15W-P2110S01	1-209, 1-211
90458-0672	INDICTIVE SENSOR, E2E2-X5MB1-5M	2-33

Part No	Description	Page No
90458-0675	PROX.SENSOR, E2EG-X5MB1-5M	8-17, 8-19
90458-0726	PRESSURE GAUGE, D=50 MM WITH FILTER	6-97, 6-99
90458-0742	GENERAL WARNING SIGN ISO,	6-97, 6-99
90458-0746	STEP MOTOR DRIVE, L50	9-13, 9-15, 9-17, 9-19
90458-0747	SENSOR FOR CYLINDER, SMH-1PC	4-57, 4-59, 4-61, 4-63
90458-0824	BUSHING, IGLIDUR Z 8X10X8	1-219
90458-0825	FLANGE BUSHING, IGLIDUR Z 16X18X17	1-219
90458-0875	HINGED FRAME, 09 14 006 0313	9-103, 9-105
90458-0876	FEMALE INSERT, HAN 6B 09 14 002 2751	9-103, 9-105
90458-0894	PROX.SENSOR E2E2-X10MB1-5M	5-49, 5-51
90458-0921	FILTER SP 122-200	6-29, 6-31
90458-1092	PROPORTIONAL VALVE, 0-10V/0-6 BAR	1-223
90458-1114	BIMET. ELECTROMECH. THERMOSTAT K7H.020	9-79, 9-81
90458-1136	EARTH TERMINAL WDK 2,5 PE	5-77, 5-79, 9-71, 9-73, 9-75, 9-77
90458-1150	CABLE GLAND, RG M63/4	9-87, 9-89
90458-1181	BULKHEAD HOUSING, HDC-HA-3-AWVL1/11	9-111, 9-113, 9-115, 9-117, 9-119, 9-121, 9-123, 9-125, 9-127, 9-129
90458-1194	VALVE, 5/2 MONOSTABLE	6-49, 6-51, 6-53
90458-1197	VALVE, 5/2 BISTABLE	6-49, 6-51
90458-1200	VALVE OPEN IN MID-POSITION 5/3	6-49, 6-51
90458-1202	VALVES 2X3/2, CLOSED	6-49, 6-51
90458-1203	VALVE 2X3/2 1X OPEN 1X CLOSED	6-49, 6-51
90458-1205	BASIC SUB-BASE 8 VALVES, CDVI5.0-GB8-MP	6-49, 6-51
90458-1206	EXP. SUB-BASE 2 VALVES, CDVI5.0-EB	6-49, 6-51
90458-1207	SEALING, STANDARD	6-49, 6-51
90458-1208	SEALING, CHANNEL 1 BLOCKED	6-49, 6-51
90458-1212	LEFT ENDPLATE INCL. 10M CABLE	6-49, 6-51
90458-1214	RIGHT ENDPL EXT. PILOT AIR,CDVI5.0-EPR-S	6-49, 6-51
90458-1215	COVER PLATE, EMPTY VALVE POSITION	6-49, 6-51
90458-1226	HANDLE, NO. GN 310-12-100-A-NI	8-15
90458-1227	LEAD-IN, BUSHING, DA 130/170/50	6-61
90458-1228	LEAD-IN, BUSHING, DA 230/300/60	8-5
90458-1230	CLAMPING ELEMENT, DI=36 MM	8-17, 8-19
90458-1231	FORK W. BACKHOLE, 913588/04	8-17, 8-19
90458-1232	BEARING BRACKET AY15	8-17, 8-19
90458-1233	TIMING BELT 16T10/340 PU	8-17, 8-19
90458-1234	PROTECTIVE CAP 2X20X1.2X100	8-17, 8-19
90458-1238	INSERT, SINGLE HOLE, 150M 1X3	8-45, 8-47, 8-49
90458-1239	INSERT, MULTI HOLE, EK154M 1X9, 1X5,5	8-45
90458-1240	RUBBERSPRING DK-A 15X40	8-17, 8-19
90458-1241	TENSION SPRING RZ-1221	8-37
90458-1253	MANDATORY ACTION SIGN CONSULT OM ISO	6-5, 6-7
90458-1273	TRANSFORMER, OFL-1350	9-87, 9-89
90458-1279	PLUG CONNECTOR, DP1	9-13, 9-15, 9-17, 9-19
90458-1298	CONNECTOR, AND CABLE 403000E 18M 080	4-57, 4-59, 4-61, 4-63
90458-1300	2 AXIS DOCKING STATION, D2/PLC	9-13, 9-15, 9-17, 9-19
90458-1301	LINEAR ACTUATOR, ETS32-M10NA2X-FM50-...	4-57, 4-59, 4-61, 4-63
90458-1306	BLIND PLUG CIRCULAR, M12X1,5 514GFK/212	7-33, 9-111, 9-113, 9-115, 9-117, 9-119, 9-121, 9-123, 9-125, 9-127, 9-129
90458-1307	BLIND PLUG CIRCULAR, M16X1,5 514GFK/216	7-33, 8-47, 8-49, 9-107
90458-1308	BLIND PLUG CIRCULAR, M20X1,5 514GFK/220	8-47, 8-49, 9-111, 9-113, 9-115, 9-117, 9-119, 9-121, 9-123, 9-125, 9-127, 9-129
90458-1309	BLIND PLUG CIRCULAR, M25X1,5 514GFK/225	9-111, 9-113, 9-115, 9-117, 9-119, 9-121, 9-123, 9-125, 9-127, 9-129
90458-1310	BLIND PLUG CIRCULAR, M32X1,5 514GFK/232	5-75
90458-1312	BLIND PLUG CIRCULAR, M50X1,5 514GFK/250	9-111, 9-113, 9-115, 9-117, 9-119, 9-121, 9-123, 9-125, 9-127, 9-129
90458-1313	BLIND PLUG CIRCULAR, M63X1,5 514GFK/263	9-87, 9-89
90458-1406	FEMALE INSERT, 1207700000	9-111, 9-113, 9-115, 9-117, 9-119, 9-121, 9-123, 9-125, 9-127, 9-129
90458-1423	CONNECTOR, PC 4/4-STF-7.62	9-173
90458-1424	CONNECTOR, MSTB 2.5/10-STF-5.08	9-173
90458-1447	MOUNTING RAIL SUPPORT, TST 128660	9-63, 9-65, 9-67, 9-69, 9-71, 9-73
90458-1477	CONNECTOR 6-1/8 NPT, EXT. TAPERED	1-31
90458-1489	CABLE CLIPS, D=4,75 MM	2-59, 2-61, 9-13, 9-15, 9-17, 9-19
90458-1490	CABLE CLIPS, D=7,9 MM	9-13, 9-15, 9-17, 9-19
90458-1517	SCREW SPRINGLOAD. SOCK. HEX HEAD M8X18	4-105
90458-1590	KNOB WITH SHAFT, M6	3-31
90458-1612	SCREW CAP HEAD SQ. NECK M6X120 SS	6-11
90458-1613	SCREW CAP HEAD SQ. NECK M6X140 SS	6-11
90458-1704	BALL BEARING 15/35X11	1-81, 1-91, 1-97, 1-221, 8-23, 8-25
90458-1721	INDEXING GEAR, 10.707.207	5-163, 5-165, 5-167, 5-169, 5-171, 5-173, 5-175, 5-177
90458-1790	BUSHING, IGLIDUR Z 6X8X6	1-219
90458-1856	ADHESIVE LABEL, CONNECTION DIAGRAM	9-25
90458-1879	GEARS, WORM MOTOR 528V--L06-B01	1-97
90458-1906	INSERT, MULTI HOLE, E153M 4X5	5-77, 5-79
90458-1921	DISTRIBUTOR BLOCK, FR-8-1/4	6-15, 6-17
90458-1958	ARTICULATION, 300DEG WITH STOP	2-91
90458-1959	LIFTING EYE BOLT, LGB (3) 3T M24	11-19
90458-1960	STRETCHING SCREW, 468-697MM MAX2950KG	11-19
90458-2039	CONN. STR., 6-R1/8, EXT. THREAD	1-203
90458-2040	ELBOW PIPE JOINT, INT. THREAD, G1/8" D=6	1-203
90458-2078	SCREW SPRINGLOAD. SOCK. HEX HEAD M12X26	8-39
90458-2199	GASKET, LOWARA 168061340	5-201, 5-203

Part No	Description	Page No
90458-2242	PARALLEL KEY W. ROUND ENDS 5X5X35 MM	5-139
90458-2421	PRESSURE GAUGE, 1453 W. BRACKET	6-45, 6-47
90458-2466	MOTOR 3GVA071002-CSC-M2VA71B2	6-73
90458-2487	SCREW PLUG HD-PE, M24	6-61
90458-2488	MEASURING HOSE DN2 L=1500MM, MAX 400BAR	6-45, 6-47
90458-2580	LEVEL CONTROL RELAY, RM4-LA32M	9-37, 9-39
90458-2601	BALL VALVE 3A DAIRY CLAMP, EG90CC-61.0	1-163
90458-2640	TIMING BELT T5X630X16 POLYURETHANE	5-135, 5-139
90458-2762	PUMP SV805 R406T 60HZ	5-201, 5-203
90458-2794	SAFETY SENSOR, EVA 20-046-00	1-83, 1-85, 3-31, 6-5, 6-7, 7-31, 8-11, 8-13, 8-23, 8-25
90458-2840	SHAFT COUPLING 22,225H9/9	1-97
90458-2841	SHAFT COUPLING 22,225H9/15	1-81
90458-2954	ELBOW PIPE JOINT, EXT.THREAD, D=4MM M5	4-43
90458-2956	ELBOW PIPE JOINT, EXT.THREAD, D=6MM-G1/8	2-33, 5-11, 5-13, 5-15, 5-95, 5-97, 5-99, 5-145, 5-189
90458-2957	ELBOW PIPE JOINT, EXT.THREAD, D=6MM-G1/4	1-35, 1-37
90458-2964	ELBOW PIPE JOINT, EXT.THREAD, D=8MM-G1/8	5-183, 5-185, 5-187, 6-45, 6-47
90458-2969	PRESSURE GAUGE, MAP-40-1-1/8-EN	6-37
90458-2971	BRACKET, HR-1/4-P FOR LRP-1/4-0,7	6-37
90459-0075	HINGE, 1056-U30	7-35, 7-37
90459-0080	RECORDER 6-CHANNEL, LOGOPRINT 500	9-149, 9-151, 9-153
90459-0087	PRINT WHEEL, 6-COLOURS	11-11
90459-0251	DOUBLE ACTING, COMPACT, CYL 12-15	4-43
90459-0290	NON-RETURN VALVE, H-QS-6	5-63, 6-15, 6-17
90459-0306	CONNECTOR FOR OPERATOR PANEL, 6664.000	2-93
90459-0336	ANGLE SEAT VALVE, G1/2, N.C. DN13	1-31
90459-0486	BALL VALVE PANEL MOUNTED G1/8	1-197, 1-199, 1-201
90459-0487	ELBOW PIPE JOINT, EXT.THREAD, D=6MM G1/8	1-197, 1-199, 1-201
90459-0606	MARKING, DKE 5 MARKED E1-E50	9-161
90459-0691	SIGN, STRIP SPLICE/ RESET ALARM	7-17
90459-0737	SAFETY CLUTCH, SK1 15/D/20/5-20	5-85
90459-0765	O-RING 78X2 MM	5-85
90459-0766	SLEEVE, CR 99334	5-85
90459-1060	VIBRATION DAMPER, T15688	2-105, 8-23, 8-25
90459-1066	LEAD-IN, BUSHING, DA 300/350/10	2-87, 2-89
90459-1094	HEATING ELEMENT 3000W 240V AC	1-69
90459-1131	SAFETY RELAY, E1T	9-37, 9-39
90459-1172	BLIND PLUG HEXAGONAL, M20X1,5	9-87, 9-89
90459-1333	SCREW ISO 7380 K6S M5X8 A2	2-13, 2-15, 2-29, 2-31
90459-1337	INDEXING GEAR, 180X6, 10.734.213	5-163, 5-165, 5-167, 5-169, 5-171, 5-173, 5-175, 5-177
90459-1382	HEATING ELEMENT 1100W 220V	5-19, 5-21, 5-23, 5-25, 5-27, 5-91
90459-1420	PROPORTIONAL VALVE 0 - 10V/0-6 BAR	1-35, 1-37
90459-1690	DIRECTIONAL VALVE, DG4V-3-6C-MUH-7-60-EN	6-97, 6-99
90459-1738	MANDATORY ACTION SIGN ISO, READ MAINTENA	9-13, 9-15, 9-17, 9-19
90459-1826	ELBOW PIPE JOINT, EXT.THREAD,D=16MM-G1/2	6-39
90459-1845	DOUBLE ACTING, COMPACT, 50-30	5-11, 5-13, 5-15, 5-89
90459-1852	SHUT OFF VALVE, MS6-EM1-1/2	6-39
90459-1856	DISTRIBUTOR, MS6-FRM-1/2	6-39
90459-1857	FILTER, MS6-LF-1/2-CRV	6-39
90459-1858	BRACKET, MS6-WP	6-39
90459-1859	BRACKET, MS6-MV	6-39
90459-2215	STRAIGHT COUPLING, D=16 MM - G1/2"	6-101, 6-103
90459-2216	BUSHING, INT/EXT, G1/4-G1/2	6-39
90459-2241	REGULATOR, MS4-LRB-1/4-D5-AS	6-37
90459-2242	REGULATOR, MS4-LRB-1/4-D7-AS	6-37
90459-2247	BRACKET, MS4-WP	6-37
90459-2254	QUICK COUPLING, (M) 10 320 5202	12-135
90459-2291	SAFETY RELAY, E1T	9-37, 9-39
90459-2309	FLEXIBLE CHAIN, A325A103KM	9-175
90459-2327	GEARS, WORM MOTOR IGL 80-60 + VE 31GR5	1-81, 8-17, 8-19
90459-2350	END BRACKET, A325A103KM	9-175
90459-2360	DOUBLE ACTING, COMPACT, 16-15	1-155
90459-2412	CONNECTOR, HDC-KITS, HDC-HA-4SS	8-17, 8-19, 8-45
90459-2425	PRESSURE REGULATOR IN-LINE, BSP-1/4	6-15, 6-17
90459-2435	CONTAINER 1,8L , GN 1406	1-9, 1-11, 1-49
90459-2452	CABLE DUCT, PLASTIC, 25X100	9-13, 9-15, 9-17, 9-19
90459-2530	DEVICENET CABLE THIN	2-93, 9-41
90459-2562	SERVO AMP. ULTRA 5000, 2098-IPD-020	9-13, 9-15, 9-17, 9-19
90459-2591	SINGLE VALVE SUB-BASE CDSV5.0-AS-1/8	6-49, 6-51, 6-53
90459-2617	END PLATE, MS6-AGD	6-15, 6-17
90459-2707	TANK-12L, A2-18076	6-97, 6-99
90459-2708	LID, A2-18077	6-97, 6-99
90459-2772	FILTER, MS6-LFM-1/2-ARV	6-39
90459-2773	FILTER, MS6-LFM-1/2-BRV	6-39
90459-2912	BAR, TR1	9-7, 9-9, 9-11
90459-3092	CABLE PROTECTION, CP10	9-7, 9-9, 9-11
90459-3318	DOMED LOCKING NUT, M5 SS 304	1-93, 1-95
90459-3446	FREQ. CONV., 22B-D012N104	9-13, 9-15, 9-17, 9-19
90459-3450	FREQ. CONV., 22A-A4P5N104	9-13, 9-15, 9-17, 9-19
90459-3459	FOOTPRINT FILTER 3 PHASE 18A	9-13, 9-15, 9-17, 9-19
90459-3460	FOOTPRINT FILTER 1 PHASE 10A	9-13, 9-15, 9-17, 9-19
90459-3881	FOLDED PAPER, 420840	11-11
90459-4089	SAFETY SENSOR, EVA E, 20-046-06	2-65, 2-67, 2-69, 2-71, 2-101, 2-103
90459-4133	POWER SUPPLY UNIT 6EP1 436-3BA00	9-109

Part No	Description	Page No
90459-4142	SAFETY SENSOR, ADAM M12, 20-051-00	1-83, 1-85, 3-31, 6-61, 7-31, 8-11, 8-13, 8-23, 8-25
90459-4146	RELAY G2R-1-T 24VDC	8-11, 8-13
90459-4164	SAFETY SCREW, SM4X20	2-101, 2-103, 3-31, 6-5, 6-7, 7-31
90459-4165	SAFETY SCREW, SM4X25	2-65, 2-67, 2-69, 2-71, 2-101, 2-103, 2-105, 6-61, 8-23, 8-25
90459-4182	MAIN SWITCH, NZM1-XS-R	9-159
90459-4233	DEVICENET MASTER MODULE	9-41
90459-4254	CONNECTION BLOCK TINA 4A, 20-054-03	1-173, 1-175, 1-177, 1-179, 1-181, 1-183, 8-23, 8-25 9-99, 9-101
90459-4615	PRESSURE GAUGE, 85120731	12-157
90459-4735	SCREW, M6S ISO 4017 M8X10 A4 80	5-119
90459-4786	CYLINDER, WITH INT. GUIDING BORE 16	9-131
90459-4816	FLAP VALVE, G1/4, L=33	6-97, 6-99
90459-4876	FOCUS JUMPER CABLE M12 5P 3M, 20-056-21	1-173, 1-175, 1-177, 1-179, 1-181, 1-183, 3-31 6-61, 7-31, 8-11, 8-13, 9-99, 9-101, 9-111, 9-113, 9-115, 9-117, 9-119, 9-121, 9-123, 9-125, 9-127 9-129, 9-133
90459-4891	IDENTIFIER, ID-FIX RW	9-37, 9-39
90459-4968	DOUBLE ACTING, COMPACT, 50-20	5-35, 5-37, 5-39, 5-41, 5-43, 5-145
90459-5018	SEALING RING, VARILIP 20X35X7 MM	6-73
90459-5200	SPIRIT LEVEL, 2864-0308	12-101
90459-5253	TERMINAL BLOCK WDK 2,5 V	9-37, 9-39, 9-75, 9-77, 9-79, 9-81
90459-5320	OVERLOAD PROTECTION, PKZM0-0,25	9-145
90459-5324	OVERLOAD PROTECTION, PKZM0-1,6	9-145
90459-5326	OVERLOAD PROTECTION, PKZM0-4	9-145
90459-5328	OVERLOAD PROTECTION, PKZM0-10	9-145
90459-5418	AUXILIARY CONTACTS, DILM150-XHI22	9-13, 9-15, 9-17, 9-19
90459-5440	CONTACTOR 4KW 24VDC, DILM9-01	9-23, 9-47
90459-5441	CONTACTOR 7,5KW 24VDC, DILM17-01	9-47
90459-5481	OIL PUMP 3L, 10P-P3	6-95
90459-5518	CIRCUIT BREAKER, NZMB1-4-A63	9-159
90459-5522	CONN. BANJO, COR8PB6M10	6-95
90459-5574	CONNECTOR, 1787-PLUG10R	9-41
90459-5626	BUSHING, IGLIDUR W300 8X10X15	5-11, 5-13, 5-15
90459-5627	CONNECTION, TINA 1-A	73, 1-175, 1-177, 1-179, 1-181, 1-183, 8-23, 8-25, 9-91, 9-93, 9-99, 9-101
90459-5628	CONNECTION, TINA 2-A	9-13, 9-15, 9-17, 9-19
90459-5632	POWER SUPPLY UNIT, S8TS-06024_1	9-71, 9-73
90459-5786	FILTERED SILENCER, 10494 LFU-1/2	6-15, 6-17
90459-5804	FILTER REGULATOR, MS6-LFR-1/2-D6-ERV-AS	6-39
90459-5811	RESIDUAL CURRENT DEVICE, FI-25/2/003-A	9-139, 9-141
90459-5813	AUXILIARY CONTACT, FAZ-XHIN11	9-61, 9-139, 9-141
90459-5884	COMMONING BUSBAR, 3-P 3-PH 3X19 MOD 63A	9-139, 9-141
90459-5924	PLUG LD-PE, Ã¸10.7 NATUR	2-97
90459-5936	BEARING SEAL 12X16X3 MM	4-7, 4-9, 4-11, 4-13, 4-15, 4-17, 4-45, 4-47
90459-6072	INDEXING GEAR, 10.707.210	5-163, 5-165, 5-167, 5-169, 5-171, 5-173, 5-175, 5-177
90459-6335	BALL BEARING 8/22X7	1-91
90459-6477	THREADED INSERTS, BUSHING, M4	9-79, 9-81
90459-6716	PRESSURE SWITCH, PEV-1/4-B-SA	6-45, 6-47
90459-6727	SPHERICAL BEARING, 25X42X20 MM	3-29
90459-6738	SCREW ISO 7380 88-MKT M5X10 A4	5-11, 5-13, 5-15
90459-6797	RESISTANCE FIXED, 120 OHM, 0,40 W	9-41
90459-6812	TIMING BELT T10X690X16 POLYURETHANE	5-85
90459-6852	AUXILIARY CONTACT, DILA-XHI22	9-47
90459-7095	FOCUS JUMPER CABLE M12 5P 1M, 20-056-20	1-83, 1-85, 6-61, 7-31, 8-23, 8-25, 9-99, 9-101
90459-7198	AUXILIARY BATTERY MODULE, IC693ACC302	9-13, 9-15, 9-17, 9-19
90459-7293	SET SCREW DIN 551M5X8 PA66	2-17, 5-59, 5-61, 5-115, 5-117
90459-7440	ANGLE SEAT VALVE, W. FLANGES, N.O. DN40	6-77
90459-7549	FLOW CONTROL VALVE, GRLZ-1/8-QS-8-D	6-49, 6-51
90459-7584	PROHOBITION SIGN ISO, DO NOT REACH IN	2-17
90600-0332	ELBOW PIPE JOINT, EXT.THREAD, D=4MM M5	4-45, 4-47
90600-0352	BALL BEARING 35/62X14	3-5
90600-0459	INDUCTIVE SWITCH, E2A-M12KN05-WP-B1 5M	1-219
90600-0463	INDUCTIVE SWITCH,E2A-M12LN05-WP-B1-TP 5M	5-109
90600-0467	INDUCTIVE SWITCH,E2A-M18KS05-WP-B1-TP 6M	1-9, 1-11, 1-49
90600-0473	INDUCTIVE SWITCH E2A-S08KS01-WP-B1-TP 5M	7-59
90600-0491	ACTUATOR, 9650-0089-Z-I-OTI	1-43
90600-0493	DIAPHRAGM 3A, 600-8M-5AD	1-43
90600-0913	PUSH-IN FITTING QSQ-G1/4-6	6-15, 6-17
90600-0916	CROSS CONNECTION, 15 UNION	6-29, 6-31
90600-0934	CABLE M12-C62 5 POLE MALE, 20-056-02	2-93, 7-17, 8-45
90600-0936	CABLE M12-C612 5 POLE, 20-056-22	1-9, 1-11
90600-0946	SOLID STATE RELAY, 3RF2050-1AA04	9-27, 9-49, 9-51, 9-53, 9-55, 9-57, 9-59
90600-1154	FLOW METER,D-6230-HGB-BB-AV-99-0-N2/IP65	1-35, 1-37
90600-1202	TENSION SPRING, 3747, SF-DFR 0,75X6X30	3-31
90600-1223	CPU374, ETHERNET COMMUNICATION	9-41
90600-1385	PRESSURE GUARD, PEV-1/4-B SA234332	6-39, 6-57
90600-1559	PANEL FEED THROUGH, FWD5 54218	1-185, 1-187, 1-189, 1-191, 9-91, 9-93, 9-103, 9-105 9-111, 9-113, 9-115, 9-117, 9-119, 9-121, 9-123, 9-125, 9-127, 9-129
90600-1643	CONTACTOR, DILK12-11	9-47
90600-1738	WARNING SIGN ISO, ELECTRIC SHOCK	1-77, 1-79
90600-1758	CONTACTOR 30KW 24VDC,DILM65 +DILM65-XIP2	9-13, 9-15, 9-17, 9-19
90600-1933	SCREW 5X12, DELTA PT 50X12 WN5454 A4	2-17
90600-2007	HEATING ELEM.15KW 3X230/400V,T90600-2007	1-77, 1-79
90600-2132	INTOUCH OEM 2000 V.9,5 HW KEY USB	9-83
90600-2134	TERMINAL DISCONNECATBLE, WTR 2,5/O.TNHE	9-75, 9-77
90600-2135	MODULE CONNECTOR 250V, BEST/D 1878560000	9-75, 9-77

Part No	Description	Page No
90600-2537	DOUBLE ACTING, MINI-ISO, CYL. 16-50	2-47, 2-49
90600-3678	TEMP. CONTROLLER, KS40-102-00090-049	9-149, 9-151, 9-153
90600-3697	SDL FLEX CABLE 10M, 5CASDL.0100-03	2-93
90600-3701	BALL VALVE, 1/2NPT	1-31
90600-3772	COOLING UNIT, KB17TB.01.CB	9-167
90600-3779	BALL VALVE, 700000 F-F-G1/2	6-29, 6-31, 6-35
90600-3838	FUSE HOLDER CYLINDRICAL FUSE, 3NC1 091	9-143
90600-3840	FUSE HOLDER CYLINDRICAL FUSE, 3NC1 093	9-143
90600-4047	AIR NOZZLE FLAT, 971	2-33
90600-4048	LIGHT FIXTURE, TCH128 1XTL5-14W/830 HF	9-87, 9-89
90600-4049	LIGHT FIXTURE, TCH128 1XTL5-21W/830 HF	9-87, 9-89
90600-4289	BEAR. BUSH. WITHOUT FL, 14X16X15 MM	4-57, 4-59, 4-61, 4-63
90600-4585	ONE WAY FLOW CONTROL, G1/8", MANUAL	6-49, 6-51
90600-4656	BUSBAR 3-P 120A, 5ST3708	9-143
90600-4662	END COVER 3-P, 5ST3750	9-143
90600-4687	BEARING BUSH W/O FLANGE, 10X12X8 MM	4-57, 4-59, 4-61, 4-63
90600-4688	BEARING BUSH W/O FLANGE, 24X27X20 MM	4-57, 4-59, 4-61, 4-63
90600-4876	CONNECTION BOX TINA 8A , 20-054-05	9-99, 9-101
90600-4958	BALL VALVE 1/8NPT 5-WAY, SS-43ZF2-049	1-31
90600-5002	OPERATOR PANEL, 5AP920_1505-K42-C0	2-93
90600-5235	MANDATORY ACTION SIGN ISO, READ MANUAL	2-93
90600-5249	FERRITE, B64290L616X38	9-13, 9-15, 9-17, 9-19
90600-5253	LINE FILTER, B84113HB60	9-13, 9-15, 9-17, 9-19
90600-5255	LINE FILTER, B84113HB116	9-13, 9-15, 9-17, 9-19
90600-5263	LINE FILTER, B84144A90R120	9-159
90600-5266	FEED THROUGH FILTER, B85321A2502W160	9-159
90600-5337	HARDDISK COPY TOOL, 03607-001	12-9
90600-5579	CABLE ENTRY KIT, EZENTRY 4/4	2-91, 9-87, 9-89
90600-5926	SAFETY SENSOR, ADAM E M12 5M CABLE	2-65, 2-67, 2-69, 2-71, 2-105
90600-5930	CABLE C9, 20-057-15	1-173, 1-175, 1-177, 1-179, 1-181, 1-183, 6-15, 6-17, 6-39, 8-23, 8-25, 9-99, 9-101
90600-6032	TEMPERATURE CONTROLLER, KS50	9-149, 9-151, 9-153
90600-6048	EMERG. STOP SMILE 11 EA TINA, 30-050-00	1-9, 1-11, 1-173, 1-175, 1-177, 1-179, 1-181, 1-183
90600-6049	EMERG. STOP SMILE 11 EAR TINA, 30-050-01	9-131, 9-133
90600-6050	EMERGENCY STOP INCA 1 TINA, 30-054-00	2-93, 7-17, 8-45
90600-6055	PLUG, EXT THREAD HEX SOCKET B-3/8	6-93
90600-6446	RELAY, MKS3PI-5 24VDC	9-29, 9-75, 9-77
90600-7487	SURGE PROTECTION DEV., VAL-MS 230/3+1 FM	9-161
90600-7766	SINGLE ACTING, SHORT STROKE, CYL 63-10	12-135
90600-9527	ES SIGN, FOR SMILE EAR	9-131, 9-133
90600-9809	ES SIGN, FOR INCA	7-17, 8-45
90601-0026	JUNCTION BLOCK,TINA 11-A	7-31
90601-1126	SAFETY VALVE, MS6-SV-1/2-E-10V24-AG	6-15, 6-17, 6-39
90601-1168	SOCKET CONNECTOR, NECA-S1G9-P9-MP3	6-15, 6-17, 6-39
90601-1326	COMPUTER APC620, 5S62:400547.000-00	9-83
90601-1586	SILENCER, G1"	6-15, 6-17, 6-39
90601-1587	BRACKET, MS6-WPB	6-15, 6-17
90601-6250	MARKING, DEK 5 GW PE	9-161
90601-6650	RELAY, PLC-RSC-24DC/21	9-37, 9-39
90601-6651	RELAY, PLC-RSC-24DC/21-21	9-37, 9-39
90601-7290	SAFETY PLC, PLUTO B46 20-070-17	9-37, 9-39
90601-7910	NON RETURN VALVE, M12A-C6L-5-EPR-SS	1-31
90602-0232	GLAND, 5GM0000011614	2-93
90602-0233	GLAND, 5GM0000011615	2-93
90602-2911	O-RING 19,2X3 MM FDA, 3-A	1-21
90602-2912	O-RING 49,5X3 MM FDA, 3-A	1-21
90602-2970	MINIATURE CIRCUIT BREAKER, AZ-2-C63	9-139, 9-141
90602-3433	CABLE LEAD-IN, 5EM0000011991	2-91, 9-87, 9-89
90602-3434	CABLE LEAD-IN, 5EM0000011992	2-91, 9-87, 9-89
90602-3531	PRESSURE EXPANSION VESSEL, 13424	6-93
90602-4126	CABLE CLIPS, D=9,5 MM	9-13, 9-15, 9-17, 9-19
90602-4847	THREAD LOCKING, LOCTITE 243 50 ML	7-11
90602-8807	LIMIT SW. SZ 2586.010	9-87, 9-89
90603-2325	BALL BEARING 17/35X10	2-21, 5-73
90603-3401	PAPER REEL TROLLEY, 32.04.250.9	11-3, 11-13
90603-9953	WHEEL	11-13
90604-0333	HYDRAULIC HOSE	11-13
90604-0373	CYLINDER	11-13
90604-0393	OIL SEAL	11-13
90604-0413	SPRING	11-13
90604-0453	PUMP GROUP	11-13
90604-1373	COVER	11-13
90604-1395	HANDLE	11-13
90604-1414	BRAKE UNIT	11-13
90604-1453	WHEEL	11-13
90604-1654	LEVER MECHANISM	11-13
90604-1827	HANDLE	11-13
107000-0000	SPRING	12-119
118582-0000	COMPRESSION SPRING	5-123, 5-125, 5-127, 5-131
206913-0000	LOCKING LOOP	8-37
208173-0000	SHAFT	8-33
209145-0000	THROTTLE SCREW	1-165, 1-167, 6-89, 6-91
209146-0000	BARRIER NUT	1-165, 1-167, 6-89, 6-91
209183-0000	RING	1-43, 1-47, 1-159, 1-161

Part No	Description	Page No
229775-0000 ..	SPACER	8-33
230551-0000 ..	GASKET	6-67
239440-0000 ..	SHAFT	1-149, 1-151
240797-0000 ..	HANDLE	4-105
243132-0000 ..	PROTECTION PLATE	8-33
243133-0000 ..	SHIELD PLATE	8-33
245221-0000 ..	STOP	8-33
247248-0000 ..	PIN	1-55, 1-57
247349-0000 ..	STEERING	1-83, 1-85
247357-0000 ..	SPROCKET	1-83, 1-85
247358-0000 ..	SHIFTER HANDLE	1-83, 1-85
247385-0000 ..	SIGN	6-45, 6-47
247386-0000 ..	SIGN	6-45, 6-47
250590-0000 ..	BEARING COVER	1-81
250592-0000 ..	WASHER	1-81, 1-97
253107-0000 ..	WASHER	8-23, 8-25
255301-0000 ..	HEATING RAIL	8-33
255609-0000 ..	ARM CUTTING JAW	4-93, 4-95
255653-0000 ..	FLANGE BUSHING	4-93, 4-95
255742-0000 ..	COMPRESSION SPRING	4-7, 4-9, 4-11, 4-13, 4-15, 4-17, 4-45, 4-47
255801-0000 ..	RETAINING RING	4-7, 4-9, 4-11, 4-13, 4-15, 4-17, 4-45, 4-47
255870-0000 ..	VALVE HOUSING	1-71
255874-0000 ..	BEARING COVER	1-169
255875-0000 ..	BUSHING	1-71, 1-169
255939-0000 ..	WASHER	2-9, 2-11, 2-25, 2-27
255940-0000 ..	SPACER	2-9, 2-11, 2-25, 2-27
255942-0000 ..	SLIDER	2-9, 2-11
255943-0000 ..	HOLDER	2-9, 2-11, 2-25, 2-27
255969-0000 ..	SHAFT	1-149, 1-151
255970-0000 ..	BUSHING	1-149, 1-151
255977-0000 ..	SHAFT	1-171
255978-0000 ..	FORK	1-171
255986-0000 ..	WHEEL	1-83, 1-85
255995-0000 ..	SCREW	1-93, 1-95
256005-0000 ..	GASKET	1-55, 1-57
256014-0900 ..	BATH	1-3, 1-5, 1-7
256022-0000 ..	BUSHING	1-93, 1-95
256055-0800 ..	HOT AIR ELEMENT	1-3, 1-5, 1-7
256082-0000 ..	CAP	4-93, 4-95
256084-0800 ..	CHANGE-OVER VALVE	1-3, 1-5, 1-7
256095-0700 ..	HOT AIR ELEMENT	1-3, 1-5, 1-7
256112-0000 ..	BRACKET	1-73
256163-0000 ..	SHAFT	1-83, 1-85
256170-0000 ..	DRIP PLATE	1-83, 1-85
256173-0800 ..	WORM GEAR	3-3
256176-0000 ..	TIMING BELT PULLEY	3-5
256177-0000 ..	SHAFT	3-5
256178-0000 ..	FIXING RING	3-5
256179-0000 ..	SPACER SLEEVE	3-5
256180-0000 ..	SPACER	3-5
256181-0000 ..	SPACER PIPE	3-5
256197-0500 ..	ARM	3-3
256200-0300 ..	INTERMEDIARY SHAFT	3-3
256202-0700 ..	CURVE PACK	3-3
256204-0700 ..	CUTTING JAW	4-3, 4-5
256205-0700 ..	CUTTING JAW	4-3, 4-5
256208-0400 ..	KNIFE HOLDER	4-3, 4-5
256212-0600 ..	PRESSURE JAW	4-3, 4-5
256213-0600 ..	PRESSURE JAW	4-3, 4-5
256214-0400 ..	PRESSURE RAIL	4-3, 4-5
256217-0500 ..	GUIDE	4-3, 4-5
256248-0001 ..	LID	8-23, 8-25
256276-0000 ..	3HAFT	5-109
256279-0000 ..	ANGLE	1-135, 1-137, 1-139
256280-0000 ..	DOWEL	1-125, 1-127, 1-135, 1-137, 1-139
256309-0000 ..	SHAFT	1-125, 1-127
256312-0000 ..	WASHER	1-125, 1-127, 5-137
256409-0000 ..	WASHER	8-23, 8-25
256410-0900 ..	INDEXING UNIT	5-3, 5-5, 5-7
256418-0000 ..	BEARING BRACKET	3-15, 3-17
256421-0000 ..	PULLEY	3-11, 3-13
256422-0000 ..	WASHER	3-11, 3-13, 3-15, 3-17
256426-0001 ..	WASHER	3-11, 3-13, 3-15, 3-17
256426-0002 ..	WASHER	3-11, 3-13, 3-15, 3-17
256427-0000 ..	SHAFT	3-11, 3-13, 3-15, 3-17
256437-0200 ..	DISC COUPLING	5-3, 5-5, 5-7
256438-0300 ..	WORM GEAR	5-3, 5-5, 5-7
256462-0000 ..	SCREW	5-89
256472-0000 ..	WASHER	3-11, 3-13, 3-15, 3-17
256487-0000 ..	CUTTING JAW	4-7, 4-9, 4-11, 4-13, 4-15, 4-17
256515-0000 ..	END PIECE	3-15, 3-17
256516-0000 ..	CAP	3-15, 3-17, 3-27
256517-0000 ..	SCREW	3-15, 3-17
256557-0001 ..	WASHER	4-35, 4-37, 4-39, 4-41

Part No	Description	Page No
256557-0002 ..	WASHER	4-35, 4-37, 4-39, 4-41
256557-0003 ..	WASHER	4-35, 4-37, 4-39, 4-41
256576-0000 ..	ROLL	4-35, 4-37, 4-39, 4-41
256607-0000 ..	AXLE PIN	4-7, 4-9, 4-11, 4-13, 4-15, 4-17, 4-45, 4-47
256621-0000 ..	WASHER	4-57, 4-59, 4-61, 4-63
256626-0000 ..	EAR	4-7, 4-9, 4-11, 4-13, 4-15, 4-17, 4-45, 4-47
256628-0000 ..	PIECE	4-93, 4-95
256629-0001 ..	AXLE PIN	4-93, 4-95
256629-0003 ..	AXLE PIN	4-93, 4-95
256659-0000 ..	OPERATING ROD	4-7, 4-9, 4-11, 4-13, 4-15, 4-17, 4-45, 4-47
256665-0300 ..	HATCH	2-3, 2-5, 2-7
256674-0500 ..	BOTTOM VALVE	5-3, 5-5, 5-7
256704-0000 ..	WASHER	4-93, 4-95
256705-0000 ..	LACE	4-57, 4-59, 4-61, 4-63
256706-0000 ..	BEARING PLATE	4-7, 4-9, 4-11, 4-13, 4-15, 4-17, 4-45, 4-47
256707-0000 ..	BRACKET	4-57, 4-59, 4-61, 4-63
256710-0000 ..	SHAFT	4-93, 4-95
256738-0000 ..	WASHER	4-97, 4-99
256739-0000 ..	SCREW	4-97, 4-99
256769-0000 ..	CUTTING JAW	4-7, 4-9, 4-11, 4-13, 4-15, 4-17
256812-0000 ..	SHAFT	3-31
256814-0000 ..	WASHER	3-31
256816-0000 ..	PIPE	3-31
256828-0000 ..	SPRING	3-31
256829-0000 ..	SCREW	4-93, 4-95, 4-97, 4-99
256831-0001 ..	SPACER	4-93, 4-95
256831-0002 ..	SPACER	4-93, 4-95
256831-0003 ..	SPACER	4-93, 4-95, 4-97, 4-99
256831-0004 ..	SPACER	4-97, 4-99
256834-0000 ..	YOKE	4-93, 4-95
256849-0000 ..	VOLUMEFLAP 125 ML	4-19, 4-21, 4-23, 4-27, 4-29, 4-31
256859-0000 ..	SCREW	4-19, 4-21, 4-23, 4-27, 4-29, 4-31, 4-49, 4-51
256860-0000 ..	ROLL	4-19, 4-21, 4-23, 4-27, 4-29, 4-31, 4-49, 4-51
256870-0000 ..	BRACKET	4-93, 4-95
256882-0000 ..	WASHER	4-87, 4-89, 4-91
256889-0000 ..	PLUNGER	4-93, 4-95
256890-0000 ..	LACE	4-93, 4-95
256891-0000 ..	LACE	4-93, 4-95
256899-0000 ..	SHAFT	1-193, 1-195
256907-0000 ..	WASHER	5-183, 5-185, 5-187
256915-0000 ..	SPACER RING	3-7
256951-0500 ..	YOKE RIGHT	4-3, 4-5
256952-0500 ..	YOKE LEFT	4-3, 4-5
256953-0000 ..	BLOCK RIGHT	4-93
256954-0000 ..	BLOCK LEFT	4-95
257000-0000 ..	NIPPLE	4-113, 4-115
257040-0000 ..	FORK	1-149, 1-151
257041-0000 ..	FORK	1-149, 1-151
257042-0000 ..	BRACKET	1-149, 1-151
257043-0000 ..	ANGLE BRACKET	1-149, 1-151
257044-0000 ..	ROLL	1-149, 1-151
257090-0000 ..	SHIFTER HANDLE	1-125, 1-127
257174-0000 ..	SEALING WASHER	3-5
257175-0000 ..	WASHER	1-143, 1-145
257179-0000 ..	GEAR WHEEL	3-5, 3-31
257190-0000 ..	SEPARATION BLOCK	2-57
257202-0000 ..	STRAINER	6-69
257213-0000 ..	BUSHING	4-93, 4-95
257231-0000 ..	WINDOW	2-73, 2-75
257249-0000 ..	SCREW	4-35, 4-37, 4-39, 4-41
257250-0000 ..	LID	4-35, 4-37, 4-39, 4-41
257306-0000 ..	ROLL	3-11, 3-13
257308-0000 ..	SCREW	3-11, 3-13
257309-0000 ..	SHAFT	3-11, 3-13, 3-33, 3-35
257310-0000 ..	NUT	3-11, 3-13, 3-33, 3-35
257311-0000 ..	CAP	3-11, 3-13, 3-15, 3-17
257317-0000 ..	LACE	4-93, 4-95
257326-0000 ..	CRANK	3-31
257327-0000 ..	SLIDER	3-31
257328-0000 ..	END PIECE	3-31
257330-0000 ..	PRESSURE ROLLER (10 PCS)	1-171, 11-39
257334-0000 ..	LEAF SPRING	4-57, 4-59, 4-61, 4-63
257362-0000 ..	LACE	4-7, 4-9, 4-11, 4-13, 4-15, 4-17, 4-45, 4-47
257379-0000 ..	HYDRAULIC PIPE RIGHT	4-113
257380-0000 ..	HYDRAULIC PIPE LEFT	4-115
257381-0400 ..	MANIFOLD RIGHT	4-3, 4-5
257382-0400 ..	MANIFOLD LEFT	4-3, 4-5
263311-0000 ..	WASHER	1-93, 1-95
263655-0006 ..	SHAFT	1-83, 1-85, 12-43
265568-0000 ..	DUST COVER	8-23, 8-25
265957-0000 ..	SHAFT	1-193, 1-195
266737-0000 ..	WASHER	1-71, 1-169, 7-35, 7-37, 7-39, 7-41
266739-0000 ..	CABLE GLAND	1-73
267033-0000 ..	WASHER	1-83, 1-85

Part No	Description	Page No
269859-0000 ..	BRACKET	6-67
271007-0000 ..	POINTER	3-23, 3-25
271100-0000 ..	DOWEL	4-93, 4-95
271121-0000 ..	FORCE SPRING	2-57
271163-0000 ..	CANTILEVER	2-9, 2-11
271169-0500 ..	VALVE	1-3, 1-5, 1-7
271181-0600 ..	AIR SUPER-HEATER	1-3, 1-5, 1-7
271261-0700 ..	CLEANING SYSTEM	2-51, 2-53, 2-55
271269-0000 ..	BUSHING	1-69, 1-73, 1-91
271284-0000 ..	BLOCKING PIECE	4-57, 4-59, 4-61, 4-63
271387-0400 ..	SPRAY GUN	2-3, 2-5, 2-7
271414-0300 ..	AIR JET GUN	2-3, 2-5, 2-7
271435-0000 ..	WASHER	5-201, 5-203
271622-0000 ..	LACE	2-51, 2-53, 2-55
271623-0000 ..	LACE	2-51, 2-53, 2-55
271641-0500 ..	SPLICING TABLE	8-31
271642-0000 ..	RULER	8-41
271643-0000 ..	RULER	8-41
271644-0000 ..	RULER	8-41
271689-0000 ..	WASHER	3-5
271820-0001 ..	STEERING RAIL	1-93, 1-95
271820-0002 ..	STEERING RAIL	1-93, 1-95
271824-0000 ..	AIR KNIFE, MOVABLE	1-93, 1-95
271825-0000 ..	FIXED AIR KNIFE	1-93, 1-95
271827-0001 ..	HEAD PLATE	1-93, 1-95
271827-0002 ..	HEAD PLATE	1-93, 1-95
271846-0000 ..	INSULATION NUT	4-87, 4-89, 4-91
271848-0000 ..	SCREW	4-87, 4-89, 4-91
271858-0000 ..	FLANGE	1-93, 1-95
271860-0000 ..	CLAMP BLOCK	1-205, 1-207
271863-0000 ..	SHAFT	1-83, 1-85
271864-0000 ..	WASHER	1-83, 1-85
271898-0000 ..	SCREW	1-91
271899-0000 ..	SCREW	1-91
271939-0001 ..	SLIDE SHEET	5-35, 5-37, 5-39, 5-41, 5-43
271939-0003 ..	SLIDE SHEET	5-35, 5-37, 5-39, 5-41, 5-43
271942-0001 ..	AIR GUIDE	1-93, 1-95
271942-0002 ..	AIR GUIDE	1-93, 1-95
272002-0000 ..	PROTECTIVE COVER LEFT	1-83, 1-85
272003-0000 ..	PROTECTIVE COVER RIGHT	1-83, 1-85
272004-0500 ..	BENDING ROLLER	1-3, 1-5, 1-7
272021-1000 ..	ASEPTIC CHAMBER	1-3, 1-5, 1-7
272022-0000 ..	AIR KNIFE, MOVABLE	1-93, 1-95
272023-0000 ..	FIXED AIR KNIFE	1-93, 1-95
272024-0500 ..	CALENDER ROLLER	1-3, 1-5, 1-7
272025-0600 ..	AIR KNIFE	1-3, 1-5, 1-7
272026-0001 ..	AIR DISTRIBUTOR	1-93, 1-95
272026-0002 ..	AIR DISTRIBUTOR	1-93, 1-95
272028-0800 ..	BENDING ROLLER	1-3, 1-5, 1-7
272033-0000 ..	BRACKET	1-91
272045-0001 ..	SLIDE SHEET	5-35, 5-37, 5-39, 5-41, 5-43
272045-0002 ..	SLIDE SHEET	5-35, 5-37, 5-39, 5-41, 5-43
272045-0003 ..	SLIDE SHEET	5-35, 5-37, 5-39, 5-41, 5-43
272095-0000 ..	SHAFT	1-193, 1-195
272116-0000 ..	CAP	3-11, 3-13
272140-0001 ..	HEAD PLATE	1-93, 1-95
272140-0002 ..	HEAD PLATE	1-93, 1-95
272141-0001 ..	FILTER	1-93, 1-95
272141-0002 ..	FILTER	1-93, 1-95
272191-0000 ..	DISTRIBUTOR	5-183, 5-185, 5-187
272275-0000 ..	LID	1-101
272277-0000 ..	GASKET	1-101
272286-0000 ..	AXLE SUPPORT	1-69
272287-0000 ..	AXLE SUPPORT	1-73
272325-0000 ..	SPIRAL	1-101
272329-0001 ..	LACE	1-93, 1-95
272329-0002 ..	LACE	1-93, 1-95
272337-0600 ..	VALVE	1-3, 1-5, 1-7
272372-0000 ..	HOUSE	3-5
272374-0000 ..	CARRIER	3-5
272376-0000 ..	SHUTTER	3-5
272377-0001 ..	CRAMP	3-5
272377-0002 ..	CRAMP	3-5
272388-0000 ..	CRAMP	3-5
272407-0400 ..	GENERATOR	1-3, 1-5, 1-7
272415-0000 ..	ARM	4-93, 4-95
272419-0000 ..	CARRIER	4-7, 4-9, 4-11, 4-13, 4-15, 4-17, 4-45, 4-47
272420-0000 ..	FOLDING FLAP	4-7, 4-9, 4-11, 4-13, 4-15, 4-17
272421-0000 ..	FOLDING FLAP	4-7, 4-9, 4-11, 4-13, 4-15, 4-17
272422-0000 ..	FOLDING FLAP	4-7, 4-9, 4-11, 4-13, 4-15, 4-17
272423-0000 ..	FOLDING FLAP	4-7, 4-9, 4-11, 4-13, 4-15, 4-17
272427-0000 ..	BRACKET	4-7, 4-9, 4-11, 4-13, 4-15, 4-17
272431-0000 ..	BRACKET	3-9
272434-0000 ..	SHAFT	3-9

Part No	Description	Page No
272442-0000 ..	CANTILEVER	3-11, 3-13
272454-0000 ..	PIVOT PIN	4-93, 4-95
272455-0000 ..	BEARING BRACKET	3-11, 3-13
272456-0000 ..	LINK	3-11, 3-13
272457-0000 ..	BOW CLAMP	3-11, 3-13
272458-0000 ..	ECCENTRIC SHAFT	3-11
272459-0000 ..	WASHER	3-11
272461-0000 ..	WASHER	3-11
272462-0000 ..	AXLE BOLT	3-15, 3-17
272464-0000 ..	ANGLE BRACKET	1-93, 1-95
272472-0000 ..	END PIECE	3-33, 3-35
272479-0000 ..	PRESSURE ROLLER (10PCS)	1-171, 11-39
272490-0000 ..	SLEEVE	4-97, 4-99
272491-0000 ..	BRACKET	4-57, 4-59, 4-61, 4-63
272492-0000 ..	ARM RIGHT	4-93
272493-0000 ..	ARM LEFT	4-95
272496-0000 ..	BRACKET RIGHT	4-93
272497-0000 ..	BRACKET LEFT	4-95
272501-0000 ..	BRACKET RIGHT	4-35, 4-37
272502-0000 ..	BRACKET LEFT	4-39, 4-41
272503-0000 ..	CLAMPING PIECE	4-35, 4-37, 4-39, 4-41
272506-0000 ..	LACE	4-35, 4-37, 4-39, 4-41
272546-0000 ..	SLIDER	5-123, 5-125, 5-127, 5-131
272547-0000 ..	TACK	5-123, 5-125, 5-127, 5-131
272549-0000 ..	WASHER	5-123, 5-125, 5-127, 5-131
272550-0000 ..	ADJUSTING SCREW	5-123, 5-125, 5-127, 5-131
272560-1000 ..	PRODUCT VALVE	1-3, 1-5, 1-7
272600-0000 ..	ARM	2-9, 2-11, 2-25, 2-27
272602-0000 ..	SCREW	2-9, 2-11, 2-25, 2-27
272607-0000 ..	BELT HOLDER	3-15, 3-17
272608-0000 ..	BELT HOLDER	3-27
272623-0900 ..	SPRAY SYSTEM	1-3, 1-5, 1-7
272640-0001 ..	COUNTER CAM	4-57, 4-59, 4-61, 4-63
272640-0002 ..	COUNTER CAM	4-57, 4-59, 4-61, 4-63
272640-0005 ..	COUNTER CAM	4-57, 4-59, 4-61, 4-63
272640-0006 ..	COUNTER CAM	4-57, 4-59, 4-61, 4-63
272640-0009 ..	COUNTER CAM	4-57, 4-59, 4-61, 4-63
272641-0000 ..	PILLAR	4-61, 4-63
272642-0000 ..	PILLAR	4-57, 4-59
272645-0000 ..	RAIL	4-57, 4-59, 4-61, 4-63
272654-0000 ..	ECCENTRIC SHAFT	4-57, 4-59, 4-61, 4-63
272664-0000 ..	CANTILEVER	3-31
272679-0000 ..	PIPE	2-57
272728-0000 ..	BARRIER	8-43
272736-0000 ..	CANTILEVER	3-31
272737-0000 ..	BRACKET	3-31
272742-0000 ..	FINGER	2-9, 2-11, 2-25, 2-27
272743-0000 ..	LID	5-191, 5-193, 5-195
272746-0000 ..	ROD	5-179
272747-0000 ..	CONNECTION	5-179
272753-0000 ..	STEERING	4-65, 4-67, 4-69
272755-0000 ..	NUT	4-65, 4-67, 4-69
272840-0000 ..	ROD	4-97, 4-99
272844-0000 ..	BRACKET	1-103, 1-105
272852-0000 ..	HOLDER	2-9, 2-11, 2-25, 2-27
272853-0000 ..	SCREW	2-9, 2-11, 2-25, 2-27
272857-0000 ..	RING	3-19, 3-21
272862-0000 ..	HOLDER	8-39
272886-0000 ..	RULER	8-41
272887-0000 ..	RULER	8-41
272888-0000 ..	RULER	8-41
272927-0000 ..	PRESSURE ARM	1-91
272945-0000 ..	LOCK	1-173, 1-175, 1-177, 1-179, 1-181, 1-183
272948-0003 ..	SHAFT	1-73
272949-0000 ..	VOLUME CAM LEFT	4-107, 4-109
272957-0000 ..	VOLUME CAM RIGHT	4-107, 4-109
272973-0000 ..	DOWEL	4-107, 4-109
272986-0001 ..	VOLUME SHIM	4-19, 4-21, 4-23, 4-27, 4-29, 4-31
272986-0003 ..	VOLUME SHIM	4-19, 4-21, 4-23, 4-27, 4-29, 4-31
272986-0005 ..	VOLUME SHIM	4-19, 4-21, 4-23, 4-27, 4-29, 4-31
272986-0006 ..	VOLUME SHIM 330S	4-19, 4-21, 4-23, 4-27, 4-29, 4-31
272987-0000 ..	VOLUME SHIM	4-19, 4-21, 4-23, 4-27, 4-29, 4-31
272990-0000 ..	VOLUME BULGE	4-19, 4-21, 4-23, 4-27, 4-29, 4-31
272991-0000 ..	VOLUME SHIM	4-19, 4-21, 4-23, 4-27, 4-29, 4-31
272997-0000 ..	STOPPER	5-29, 5-93, 5-109
273429-0000 ..	WASHER	1-69, 1-73
273449-0000 ..	SIGN, FLAP SEALING	6-45, 6-47
273450-0000 ..	SIGN, AIR SPRAY	6-45, 6-47
273452-0000 ..	SIGN, ROLLING MACHINE FOR FABRICS	6-45, 6-47
273454-0000 ..	SIGN, COOLING JAWS	6-45, 6-47
273455-0000 ..	SIGN, COLD WATER	2-87, 2-89, 6-45, 6-47
273456-0000 ..	SIGN, HOT WATER	2-87, 2-89, 6-45, 6-47
273458-0000 ..	SIGN, AIR	2-87, 2-89, 6-45, 6-47
273953-0000 ..	SEAL	1-83, 1-85

Part No	Description	Page No
273964-0000 ..	LID	6-71
273965-0001 ..	WEIGHT	6-71
273977-0000 ..	NUT	6-81
273978-0000 ..	LEVEL GLAS	6-81
273980-0000 ..	SPRING	6-81
273985-0000 ..	CARRIAGE	12-25
273996-0000 ..	NUT	6-81
279008-0000 ..	BUSHING	1-83, 1-85
279589-0000 ..	NUT	1-165, 1-167, 6-89, 6-91
292449-0000 ..	PUMP HOUSING	6-73
292456-0000 ..	BEARING COVER	6-73
293610-0000 ..	GEAR WHEEL	4-105
295045-0900 ..	PIPE WORK-PNEUMATIC	1-3, 1-5, 1-7
295057-0001 ..	RAIL	5-35, 5-37, 5-39, 5-41, 5-43
295057-0002 ..	RAIL	5-35, 5-37, 5-39, 5-41, 5-43
295057-0004 ..	RAIL	5-35, 5-37, 5-39, 5-41, 5-43
295058-0001 ..	RAIL	5-35, 5-37, 5-39, 5-41, 5-43
295058-0002 ..	RAIL	5-35, 5-37, 5-39, 5-41, 5-43
295058-0004 ..	RAIL	5-35, 5-37, 5-39, 5-41, 5-43
295059-0000 ..	RAIL LEFT	5-35, 5-37, 5-39, 5-41, 5-43
295060-0000 ..	RAIL	5-35, 5-37, 5-39, 5-41, 5-43
295061-0000 ..	RAIL	5-35, 5-37, 5-39, 5-41, 5-43
295062-0000 ..	RAIL	5-35, 5-37, 5-39, 5-41, 5-43
295075-0000 ..	PROTECTION	2-9, 2-11
295097-0000 ..	SLIDER	2-9, 2-11
295140-0000 ..	PIN	3-5, 3-23, 3-25
295203-0000 ..	LID	5-57, 5-93
295204-0001 ..	SHIM	5-29, 5-93
295204-0002 ..	SHIM	5-29, 5-93
295204-0003 ..	SHIM	5-29, 5-93
295205-0000 ..	SPACER SLEEVE	5-29, 5-93
295206-0000 ..	FLAP	5-29, 5-93
295259-0000 ..	HOLDER	6-61
295313-0000 ..	SHAFT	5-123, 5-125, 5-127
295376-0000 ..	SHAFT	1-171
295377-0001 ..	HOOD	1-171
295377-0002 ..	HOOD	1-171
295387-0000 ..	SIGN BOARD	6-13
295399-0000 ..	HOLDER	2-9, 2-11
295417-0000 ..	GASKET	2-57, 5-201, 5-203
295426-0000 ..	CAP	1-83, 1-85
295427-0000 ..	LOCK	1-83, 1-85
295428-0000 ..	HINGE	1-83, 1-85
295429-0000 ..	HANDLE	1-83, 1-85
295434-0000 ..	BUSHING	5-201, 5-203
295466-0000 ..	LOCK	1-173, 1-175, 1-177, 1-179, 1-181, 1-183
295496-0000 ..	BLOCKING PIECE	6-45, 6-47
295523-0500 ..	START-UP KIT	11-35
295604-0000 ..	CRAMP	1-107, 1-109
295605-0000 ..	BRACKET	1-107, 1-109
295729-0000 ..	WASHER	5-45, 5-47, 5-103, 5-105, 5-107
295766-0000 ..	SCREW	3-5
295767-0000 ..	SEALING WASHER	3-5
295770-0000 ..	AXLE BOLT	3-11, 3-13
295778-0600 ..	START-UP KIT	11-35
295785-0000 ..	FORCE SPRING	2-57
295909-0000 ..	BUSHING	1-69
295910-0000 ..	BUSHING	1-73
295936-0000 ..	BUSHING	1-73
295978-0000 ..	PIPE	2-57
295983-0000 ..	CONNECTION	3-19, 3-21
295984-0000 ..	DRIP GUARD	1-171
295985-0000 ..	FORCE SPRING	2-57
295986-0000 ..	HOLDER	2-51, 2-53, 2-55
295993-0000 ..	GASKET HOLDER	1-101
297495-0001 ..	WEDGE	5-135, 5-139
311101-0267 ..	PARALLEL PIN ISO 2338 4H6X10 ST	3-11, 3-13, 3-15, 3-17
311101-0308 ..	PARALLEL PIN ISO 2338 5H6X16 ST	12-73, 12-75, 12-77, 12-79, 12-81
311102-0308 ..	PARALLEL PIN ISO 2338 5M6X16 ST	12-113
311102-0351 ..	PARALLEL PIN ISO 2338 6M6X16 ST	12-113
311102-0413 ..	PARALLEL PIN ISO 2338 8M6X50 ST	12-169
311102-0460 ..	PARALLEL PIN ISO 2338 10M6X35 ST	12-163, 12-165
311103-0233 ..	PARALLEL PIN ISO 2338 3M6X10 A1	12-111, 12-181
311103-0234 ..	PARALLEL PIN ISO 2338 3M6X12 A1	12-111, 12-115
311103-0235 ..	PARALLEL PIN ISO 2338 3M6X14 A1	12-23
311103-0236 ..	PARALLEL PIN ISO 2338 3M6X16 A1	1-101, 12-171, 12-181
311103-0238 ..	PARALLEL PIN ISO 2338 3M6X20 A1	1-149, 1-151, 4-105, 12-181
311103-0239 ..	PARALLEL PIN ISO 2338 3M6X22 A1	12-115
311103-0242 ..	PARALLEL PIN ISO 2338 3M6X30 A1	4-35, 4-37, 4-39, 4-41, 8-15
311103-0267 ..	PARALLEL PIN ISO 2338 4M6X10 A1	3-11, 3-13, 3-15, 3-17, 8-41
311103-0268 ..	PARALLEL PIN ISO 2338 4M6X12 A1	4-45, 4-47, 4-93, 4-95, 8-43
311103-0269 ..	PARALLEL PIN ISO 2338 4M6X14 A1	12-171
311103-0270 ..	PARALLEL PIN ISO 2338 4M6X16 A1	1-55, 1-57, 4-53, 4-55, 4-87, 4-89, 4-91
311103-0272 ..	PARALLEL PIN ISO 2338 4M6X20 A1	2-57, 3-23, 3-25, 4-111, 5-81, 7-63, 12-181

Part No	Description	Page No
311103-0274 ..	PARALLEL PIN ISO 2338 4M6X25 A1	12-173
311103-0276 ..	PARALLEL PIN ISO 2338 4M6X30 A1	1-83, 1-85, 3-23, 3-25, 12-175
311103-0278 ..	PARALLEL PIN ISO 2338 4M6X35 A1	4-71, 4-73, 7-57, 12-173
311103-0280 ..	PARALLEL PIN ISO 2338 4M6X40 A1	4-71, 4-73, 4-79, 4-81
311103-0308 ..	PARALLEL PIN ISO 2338 5M6X16 A1	1-83, 1-85, 4-53, 4-55
311103-0309 ..	PARALLEL PIN ISO 2338 5M6X18 A1	5-35, 5-37, 5-39, 5-41, 5-43
311103-0310 ..	PARALLEL PIN ISO 2338 5M6X20 A1	1-83, 1-85
311103-0312 ..	PARALLEL PIN ISO 2338 5M6X25 A1	1-143, 1-145, 4-7, 4-9, 4-11, 4-13, 4-15, 4-17, 4-35, 4-37, 4-39, 4-41
311103-0313 ..	PARALLEL PIN ISO 2338 5M6X28 A1	1-83, 1-85, 5-35, 5-37, 5-39, 5-41, 5-43
311103-0314 ..	PARALLEL PIN ISO 2338 5M6X30 A1	1-89, 4-57, 4-59, 4-61, 4-63
311103-0316 ..	PARALLEL PIN ISO 2338 5M6X35 A1	4-57, 4-59, 4-61, 4-63
311103-0320 ..	PARALLEL PIN ISO 2338 5M6X45 A1	4-57, 4-59, 4-61, 4-63
311103-0351 ..	PARALLEL PIN ISO 2338 6M6X16 A1	5-11, 5-13, 5-15
311103-0353 ..	PARALLEL PIN ISO 2338 6M6X20 A1	5-85, 12-43, 12-167
311103-0355 ..	PARALLEL PIN ISO 2338 6M6X25 A1	1-55, 1-57, 4-107, 4-109
311103-0357 ..	PARALLEL PIN ISO 2338 6M6X30 A1	6-71, 12-39, 12-41, 12-43, 12-45, 12-93, 12-175
311103-0361 ..	PARALLEL PIN ISO 2338 6M6X40 A1	1-55, 1-57, 3-31
311103-0401 ..	PARALLEL PIN ISO 2338 8M6X20 A1	4-93, 4-95, 4-97, 4-99, 5-49, 5-51, 5-109
311103-0407 ..	PARALLEL PIN ISO 2338 8M6X35 A1	5-191, 5-193, 5-195
311103-0409 ..	PARALLEL PIN ISO 2338 8M6X40 A1	4-57, 4-59, 4-61, 4-63, 5-57
311103-0413 ..	PARALLEL PIN ISO 2338 8M6X50 A1	1-205, 1-207
311103-0455 ..	PARALLEL PIN ISO 2338 10M6X22 A1	5-115, 5-117
311103-0458 ..	PARALLEL PIN ISO 2338 10M6X30 A1	2-37, 5-191, 5-193, 5-195
311103-0466 ..	PARALLEL PIN ISO 2338 10M6X50 A1	2-37
311103-0470 ..	PARALLEL PIN ISO 2338 10M6X60 A1	3-31
311103-1274 ..	PARALLEL PIN ISO 2338 4M6X24 A1	4-79, 4-81, 12-181
311103-1312 ..	PARALLEL PIN ISO 2338 5M6X24 A1	4-45, 4-47
311111-0207 ..	SPRING PIN ISO 8752 3X14-ST	4-7, 4-9, 4-11, 4-13, 4-15, 4-17, 4-45, 4-47
311111-0209 ..	SPRING PIN ISO 8752 3X18-ST	1-227
311111-0308 ..	SPRING PIN ISO 8752 5X20-ST	4-7, 4-9, 4-11, 4-13, 4-15, 4-17, 4-45, 4-47
311112-0256 ..	SPRING PIN, ISO 8752 4X20 A2	1-83, 1-85, 4-105, 6-73
311112-0258 ..	SPRING PIN, ISO 8752 4X24 A2	5-147
311112-0262 ..	SPRING PIN, ISO 8752 4X32 A2	1-83, 1-85
311303-0234 ..	SLOTTED PIN RPB3X12FZB	3-11
311307-0275 ..	SLOTTED PIN RPD4X28FZB	3-31
311411-0140 ..	SPLIT PIN SP1,6X16RFR	1-149, 1-151
311411-0150 ..	SPLIT PIN SP2X12RFR	1-143, 1-145
311411-0152 ..	SPLIT PIN SP2X16RFR	12-139
311411-0165 ..	SPLIT PIN SP2,5X16RFR	1-143, 1-145
311411-0169 ..	SPLIT PIN SP2,5X25RFR	6-73
311521-0142 ..	RIVET, BLANK 3,2X6	1-31
311521-0143 ..	RIVET, BLANK 3,2X8	11-3
311521-0144 ..	RIVET, BLANK 3,2X10	11-47
311521-0146 ..	RIVET, BLANK 3,2X12	9-87, 9-89, 9-149, 9-151, 9-153, 9-173
311521-0152 ..	RIVET, BLANK 4,0X8	8-33
312101-0289 ..	SCREW M6S M4X10 FZB	3-33, 3-35
312101-0295 ..	SCREW M6S M4X20 FZB	5-17
312101-0297 ..	SCREW M6S M4X25 FZB	3-11, 3-13, 3-15, 3-17
312101-0323 ..	SCREW M6S M5X8 FZB	8-17, 8-19
312101-0325 ..	SCREW M6S M5X10 FZB	3-23, 3-25
312101-0327 ..	SCREW M6S M5X12 FZB	8-37
312101-0329 ..	SCREW M6S M5X16 FZB	3-5, 8-37
312101-0331 ..	SCREW M6S M5X20 FZB	2-9, 2-11, 2-25, 2-27
312101-0333 ..	SCREW M6S M5X25 FZB	3-15, 3-17, 3-27
312101-0337 ..	SCREW M6S M5X35 FZB	2-51, 2-53, 2-55
312101-0343 ..	SCREW M6S M5X60 FZB	4-101, 4-103
312101-0344 ..	SCREW M6S M5X65 FZB	7-45
312101-0362 ..	SCREW M6S M6X8 FZB	3-11, 3-13, 3-15, 3-17
312101-0364 ..	SCREW M6S M6X10 FZB	3-11, 3-13, 3-15, 3-17
312101-0366 ..	SCREW M6S M6X12 FZB	3-5
312101-0367 ..	SCREW M6S M6X14 FZB	12-163, 12-165
312101-0368 ..	SCREW M6S M6X16 FZB	3-5
312101-0370 ..	SCREW M6S M6X20 FZB	3-5
312101-0374 ..	SCREW M6S M6X30 FZB	5-59, 5-61
312101-0376 ..	SCREW M6S M6X35 FZB	3-5, 3-33, 3-35
312101-0381 ..	SCREW M6S M6X55 FZB	8-43
312101-0392 ..	SCREW M6S M6X110 FZB	2-59, 2-61
312101-0449 ..	SCREW M6S M8X16 FZB	6-97, 6-99, 12-163, 12-165
312101-0451 ..	SCREW M6S M8X20 FZB	6-95
312101-0453 ..	SCREW M6S M8X25 FZB	3-11, 3-13, 5-179
312101-0455 ..	SCREW M6S M8X30 FZB	5-179
312101-0459 ..	SCREW M6S M8X40 FZB	5-179
312101-0461 ..	SCREW M6S M8X50 FZB	12-91
312101-0489 ..	SCREW M6S M10X16 FZB	3-5
312101-0493 ..	SCREW M6S M10X25 FZB	3-11, 3-13, 3-15, 3-17
312101-0499 ..	SCREW M6S M10X40 FZB	2-9, 2-11, 2-25, 2-27
312101-0502 ..	SCREW M6S M10X55 FZB	3-13, 3-33, 3-35
312101-0504 ..	SCREW M6S M10X65 FZB	3-5, 3-11, 3-13, 3-15, 3-17, 11-5
312101-0507 ..	SCREW M6S M10X80 FZB	3-11, 3-13
312101-0515 ..	SCREW M6S M10X120 FZB	3-15, 3-17
312101-0530 ..	SCREW M6S M12X16 FZB	5-155, 5-157
312101-0536 ..	SCREW M6S M12X30 FZB	12-163, 12-165
312101-0544 ..	SCREW M6S M12X60 FZB	12-163, 12-165

Part No	Description	Page No
312101-0548 ..	SCREW M6S M12X80 FZB	12-163, 12-165
312101-0550 ..	SCREW M6S M12X90 FZB	3-5
312101-0552 ..	SCREW M6S M12X100 FZB	5-181
312104-0499 ..	SCREW M6S M10X40H FZB	3-31, 6-97, 6-99
312105-0153 ..	SCREW EN 10642 MF6S M5X25 A480	2-13, 2-15
312105-0287 ..	SCREW, M6S ISO 4017 M4X8 A4 70	1-29, 1-73, 1-77, 1-79, 1-81, 1-97, 1-193, 1-195, 1-209, 1-211, 5-153, 6-95, 7-61
312105-0289 ..	SCREW, M6S ISO 4017 M4X10 A4 70	1-49, 1-221
312105-0291 ..	SCREW, M6S ISO 4017 M4X12 A4 70	1-155, 2-25, 2-27, 2-33, 2-47, 2-49, 5-85, 9-83, 12-181
312105-0293 ..	SCREW, M6S ISO 4017 M4X16 A4 70	1-91, 1-93, 1-95, 5-89, 5-115, 5-117, 5-139, 6-69, 7-15, 7-23, 7-25, 7-27, 7-29, 8-11, 8-13, 12-181
312105-0295 ..	SCREW, M6S ISO 4017 M4X20 A4 70	1-93, 1-95, 2-51, 2-53, 2-55, 7-39, 7-41
312105-0297 ..	SCREW, M6S ISO 4017 M4X25 A4 70	2-51, 2-53, 2-55, 5-109, 8-33
312105-0299 ..	SCREW, M6S ISO 4017 M4X30 A4 70	6-95, 7-45
312105-0301 ..	SCREW, M6S ISO 4017 M4X35 A4 70	1-219, 2-47, 2-49
312105-0303 ..	SCREW, M6S ISO 4017 M4X40 A4 70	5-49, 5-51
312105-0323 ..	SCREW, M6S ISO 4017 M5X8 A4 80	1-93, 1-95, 1-101, 2-33, 4-45, 4-47, 5-55, 5-59, 5-61, 5-65, 5-89, 5-111, 5-129, 6-11, 6-79, 8-23, 8-25, 8-33, 11-27, 11-29
312105-0325 ..	SCREW, M6S ISO 4017 M5X10 A4 80	1-9, 1-11, 1-35, 1-37, 1-47, 1-77, 1-79, 1-81, 1-143, 1-145, 1-193, 1-195, 1-219, 2-41, 4-101, 4-103, 5-201, 5-203, 7-35, 7-37, 8-41, 12-17, 12-19
312105-0327 ..	SCREW, M6S ISO 4017 M5X12 A4 80	1-55, 1-57, 1-69, 1-83, 1-85, 2-57, 2-59, 2-61, 3-37, 4-71, 4-73, 4-79, 4-81, 5-129, 5-135, 5-139, 6-15, 6-17, 6-23, 6-33, 6-37, 6-45, 6-47, 6-85, 6-87, 8-23, 8-25, 9-135, 9-137, 11-23, 11-27, 11-29
312105-0328 ..	SCREW M6S ISO 4017 M5X14 A4 80	1-197, 1-199, 1-201, 4-101, 4-103, 5-85, 7-35, 7-37, 7-39, 7-41
312105-0329 ..	SCREW, M6S ISO 4017 M5X16 A4 80	1-49, 1-89, 1-143, 1-145, 1-209, 1-211, 1-223, 2-93, 4-87, 4-89, 4-91, 5-65, 5-123, 5-125, 5-127, 5-135, 5-139, 6-83, 7-23, 7-25, 7-27, 7-29, 8-17, 8-19, 8-23, 8-25, 9-87, 9-89, 9-171, 12-177
312105-0331 ..	SCREW, M6S ISO 4017 M5X20 A4 80	1-93, 1-95, 1-149, 1-151, 1-219, 5-35, 5-37, 5-39, 5-41, 5-43, 5-45, 5-47, 5-159, 5-161, 7-51, 7-53, 12-65
312105-0332 ..	SCREW, M6S ISO 4017 M5X22 A4 70	1-125, 1-127, 1-143, 1-145
312105-0333 ..	SCREW, M6S ISO 4017 M5X25 A4 80	1-43, 1-193, 1-195, 2-91, 4-111, 5-103, 5-105, 5-107, 7-49, 7-61, 12-167
312105-0335 ..	SCREW, M6S ISO 4014 M5X30 A4 80	1-35, 1-37, 1-97, 4-101, 4-103, 5-155, 5-157, 6-33, 6-45, 6-47, 12-173
312105-0337 ..	SCREW, M6S ISO 4014 M5X35 A4 80	1-93, 1-95, 2-37, 5-137, 8-21
312105-0339 ..	SCREW, M6S ISO 4014 M5X40 A4 80	6-45, 6-47, 7-35, 7-37
312105-0341 ..	SCREW, M6S ISO 4014 M5X50 A4 80	1-125, 1-127, 6-41
312105-0343 ..	SCREW, M6S ISO 4014 M5X60 A4 80	1-149, 1-151
312105-0362 ..	SCREW, M6S ISO 4017 M6X8 A4 80	1-69, 1-83, 1-85, 1-155, 4-7, 4-9, 4-11, 4-13, 4-15, 4-17, 5-19, 5-21, 5-23, 5-25, 5-27, 5-35, 5-37, 5-39, 5-41, 5-43, 5-91, 5-123, 5-125, 5-127, 6-79, 8-41
312105-0364 ..	SCREW, M6S ISO 4017 M6X10 A4 80	1-31, 1-35, 1-37, 1-55, 1-57, 1-73, 1-91, 1-93, 1-95, 1-107, 1-109, 1-149, 1-151, 1-159, 1-161, 1-165, 1-167, 1-169, 1-171, 1-173, 1-175, 1-177, 1-179, 1-181, 1-183, 1-213, 1-215, 1-217, 2-13, 2-15, 2-25, 2-27, 2-29, 2-31, 2-57, 4-105, 5-31, 5-33, 5-65, 5-95, 5-97, 5-99, 6-61, 6-69, 6-95, 8-33, 8-45
312105-0366 ..	SCREW, M6S ISO 4017 M6X12 A4 80	1-29, 1-71, 1-73, 1-81, 1-91, 1-93, 1-95, 1-103, 1-105, 1-155, 1-165, 1-167, 1-173, 1-175, 1-177, 1-179, 1-181, 1-183, 1-193, 1-195, 1-205, 1-207, 1-209, 1-211, 1-213, 1-215, 1-217, 1-219, 2-9, 2-11, 2-33, 2-37, 2-43, 2-45, 2-59, 2-61, 2-79, 2-87, 2-89, 3-31, 4-105, 5-49, 5-51, 5-69, 5-71, 5-83, 5-101, 5-109, 5-115, 5-117, 5-119, 5-135, 5-145, 5-191, 5-193, 5-195, 5-207, 5-209, 5-213, 6-11, 6-13, 6-15, 6-17, 6-43, 6-61, 6-101, 6-103, 7-35, 7-37, 7-45, 7-47, 7-49, 7-51, 7-53, 8-11, 8-13, 8-29, 8-45
312105-0367 ..	SCREW, M6S ISO 4017 M6X14 A4 80	1-47, 1-55, 1-57, 1-157, 1-219, 2-25, 2-27, 2-33, 4-7, 4-9, 4-11, 4-13, 4-15, 4-17, 4-45, 4-47, 5-11, 5-13, 5-15, 5-139, 7-23, 7-25, 7-27, 7-29, 7-47
312105-0368 ..	SCREW, M6S ISO 4017 M6X16 A4 80	1-31, 1-49, 1-55, 1-57, 1-69, 1-73, 1-83, 1-85, 1-93, 1-95, 1-97, 1-101, 1-107, 1-109, 1-125, 1-127, 1-135, 1-137, 1-139, 1-141, 1-143, 1-145, 1-149, 1-151, 1-213, 1-215, 1-217, 2-9, 2-11, 2-23, 2-25, 2-27, 2-33, 2-35, 2-81, 2-95, 2-97, 2-105, 3-31, 4-57, 4-59, 4-61, 4-63, 4-71, 4-73, 4-79, 4-81, 4-93, 4-95, 5-19, 5-21, 5-23, 5-25, 5-27, 5-35, 5-37, 5-39, 5-41, 5-43, 5-109, 5-123, 5-125, 5-127, 5-137, 5-149, 5-151, 5-201, 5-203, 5-209, 6-5, 6-7, 6-15, 6-17, 6-27, 6-55, 6-59, 6-75, 6-77, 6-93, 7-23, 7-25, 7-27, 7-29, 7-35, 7-37, 7-47, 7-61, 9-83, 9-131, 9-133, 9-135, 9-137, 9-149, 9-151, 9-153, 9-163, 9-165, 12-181
312105-0370 ..	SCREW, M6S ISO 4017 M6X20 A4 80	1-29, 1-69, 1-73, 1-75, 1-93, 1-95, 1-99, 1-141, 1-143, 1-145, 1-149, 1-151, 1-155, 1-159, 1-161, 1-169, 1-209, 1-211, 2-33, 2-35, 3-29, 3-31, 4-35, 4-37, 4-39, 4-41, 5-11, 5-13, 5-15, 5-35, 5-37, 5-39, 5-41, 5-43, 5-55, 5-57, 5-69, 5-71, 5-85, 5-89, 5-93, 5-111, 5-119, 5-129, 5-135, 5-139, 5-163, 5-165, 5-167, 5-169, 5-171, 5-173, 5-175, 5-177, 5-191, 5-193, 5-195, 5-201, 5-203, 6-13, 6-15, 6-17, 6-73, 6-97, 6-99, 7-9, 7-19, 7-21, 7-49, 7-51, 7-53, 8-17, 8-19, 8-23, 8-25, 9-135, 9-137, 12-175, 12-181
312105-0371 ..	SCREW, M6S ISO 4017 M6X22 A4 80	1-125, 1-127, 1-163, 2-83, 2-85
312105-0372 ..	SCREW, M6S ISO 4017 M6X25 A4 80	1-45, 1-49, 1-55, 1-57, 1-69, 1-71, 1-73, 1-83, 1-85, 1-149, 1-151, 1-157, 1-171, 1-213, 1-215, 1-217, 2-9, 2-11, 2-25, 2-27, 2-51, 2-53, 2-55, 3-5, 3-31, 4-57, 4-59, 4-61, 4-63, 4-71, 4-73, 4-79, 4-81, 4-97, 4-99, 5-11, 5-13, 5-15, 5-45, 5-47, 5-49, 5-51, 5-57, 5-89, 5-103, 5-105, 5-107, 5-123, 5-125, 5-127, 5-149, 5-151, 5-201, 5-203, 5-209, 6-85, 6-87, 7-49, 8-17, 8-19, 8-23, 8-25, 12-181
312105-0374 ..	SCREW, M6S ISO 4014 M6X30 A4 80	2-37, 3-11, 3-13, 3-15, 3-17, 4-7, 4-9, 4-11, 4-13, 4-15, 4-17, 4-35, 4-37, 4-39, 4-41, 4-97, 4-99, 5-11, 5-13, 5-15, 5-19, 5-21, 5-23, 5-25, 5-27, 5-29, 5-93, 5-95, 5-97, 5-99, 5-183, 5-185, 5-187, 5-201, 5-203, 6-75, 7-23, 7-25, 7-27, 7-29, 7-51, 7-53, 8-23, 8-25, 12-23, 12-65, 12-69
312105-0376 ..	SCREW, M6S ISO 4014 M6X35 A4 80	1-69, 2-9, 2-11, 2-25, 2-27, 3-7, 4-7, 4-9, 4-11, 4-13, 4-15, 4-17, 4-19, 4-21, 4-23, 4-27, 4-29, 4-31, 4-35, 4-37, 4-39, 4-41, 4-45, 4-47, 4-53, 4-55, 4-93, 4-95, 4-113, 4-115, 5-11, 5-13, 5-15, 5-103, 5-105, 5-107, 6-93, 7-51, 7-53, 12-173
312105-0378 ..	SCREW, M6S ISO 4014 M6X40 A4 80	1-45, 1-83, 1-85, 2-57, 5-95, 5-97, 5-99, 5-183, 5-185, 5-187, 6-15, 6-17, 6-53, 6-97, 6-99, 7-15
312105-0379 ..	SCREW, M6S ISO 4014 M6X45 A4 80	1-83, 1-85, 4-19, 4-21, 4-23, 4-27, 4-29, 4-31, 12-143
312105-0380 ..	SCREW, M6S ISO 4014 M6X50 A4 80	1-55, 1-57, 2-9, 2-11, 2-25, 2-27, 4-53, 4-55, 4-57, 4-59, 4-61, 4-63, 4-93, 4-95, 4-105, 5-29, 5-81, 5-101, 5-183, 5-185, 5-187, 12-59, 12-61
312105-0381 ..	SCREW, M6S ISO 4014 M6X55 A4 80	1-143, 1-145, 5-93, 7-49, 12-167

Part No	Description	Page No
312105-0382 ..	SCREW, M6S ISO 4014 M6X60 A4 80	6-73, 12-67
312105-0383 ..	SCREW, M6S ISO 4014 M6X65 A4 80	12-17, 12-19
312105-0384 ..	SCREW, M6S ISO 4014 M6X70 A4 80	4-57, 4-59, 4-61, 4-63, 6-11
312105-0386 ..	SCREW, M6S ISO 4014 M6X80 A4 80	6-105
312105-0447 ..	SCREW, M6S ISO 4017 M8X12 A4 80	1-91, 1-93, 1-95, 1-149, 1-151, 2-17, 2-19, 2-105, 4-35, 4-37, 4-39, 4-41, 4-53, 4-55, 5-59, 5-61, 6-15, 6-17, 7-31, 7-59, 8-11, 8-13, 8-17, 8-19
312105-0449 ..	SCREW, M6S ISO 4017 M8X16 A4 80	1-31, 1-55, 1-57, 1-69, 1-97, 1-209, 1-211, 2-97, 2-105, 3-7, 4-105, 5-215, 6-67, 6-69, 6-89, 6-91, 7-15, 7-35, 7-37, 7-39, 7-41, 8-17, 8-19, 8-33, 12-25
312105-0451 ..	SCREW, M6S ISO 4017 M8X20 A4 80	1-9, 1-11, 1-83, 1-85, 1-89, 1-125, 1-127, 1-135, 1-137, 1-139, 1-149, 1-151, 1-205, 1-207, 1-213, 1-215, 1-217, 1-225, 2-9, 2-11, 2-13, 2-15, 2-25, 2-27, 2-39, 2-97, 2-105, 4-105, 5-69, 5-71, 5-91, 5-101, 5-119, 5-135, 5-191, 5-193, 5-195, 5-197, 5-199, 6-63, 6-75, 6-77, 7-35, 7-37, 8-9, 12-15
312105-0452 ..	SCREW, M6S ISO 4017 M8X22 A4 80	1-225, 4-97, 4-99, 7-57
312105-0453 ..	SCREW, M6S ISO 4017 M8X25 A4 80	1-9, 1-11, 1-35, 1-37, 1-45, 1-49, 1-75, 1-77, 1-79, 1-99, 1-101, 1-149, 1-151, 1-155, 1-157, 1-165, 1-167, 2-105, 3-31, 4-35, 4-37, 4-39, 4-41, 4-57, 4-59, 4-61, 4-63, 4-93, 4-95, 5-11, 5-13, 5-15, 5-19, 5-21, 5-23, 5-25, 5-27, 5-89, 5-101, 5-135, 5-139, 5-191, 5-193, 5-195, 6-67, 6-69, 6-77, 6-85, 6-87, 6-89, 6-91, 7-47, 8-15, 8-41, 12-145, 12-175
312105-0455 ..	SCREW, M6S ISO 4017 M8X30 A4 80	1-69, 1-73, 1-97, 1-135, 1-137, 1-139, 2-9, 2-11, 2-25, 2-27, 3-9, 4-35, 4-37, 4-39, 4-41, 4-57, 4-59, 4-61, 4-63, 4-93, 4-95, 5-19, 5-21, 5-23, 5-25, 5-27, 5-35, 5-37, 5-39, 5-41, 5-43, 5-81, 5-85, 5-123, 5-125, 5-127, 5-139, 5-145, 5-199, 8-37, 12-23, 12-63
312105-0457 ..	SCREW, M6S ISO 4014 M8X35 A4 80	1-77, 1-79, 1-135, 1-137, 1-139, 4-111, 5-35, 5-37, 5-39, 5-41, 5-43, 5-59, 5-61, 5-101
312105-0459 ..	SCREW, M6S ISO 4014 M8X40 A4 80	2-57, 4-57, 4-59, 4-61, 4-63, 5-35, 5-37, 5-39, 5-41, 5-43, 5-49, 5-51, 5-109, 5-147, 8-23, 8-25, 12-25
312105-0460 ..	SCREW, M6S ISO 4014 M8X45 A4 80	1-93, 1-95, 4-97, 4-99, 5-11, 5-13, 5-15, 5-89, 5-91, 5-147
312105-0461 ..	SCREW, M6S ISO 4014 M8X50 A4 80	6-71, 8-41
312105-0462 ..	SCREW, M6S ISO 4014 M8X55 A4 80	4-89, 4-7, 4-9, 4-11, 4-13, 4-15, 4-17, 5-135, 12-33, 12-35, 12-37
312105-0463 ..	SCREW, M6S ISO 4014 M8X60 A4 80	5-183, 5-185, 5-187, 11-19
312105-0464 ..	SCREW, M6S ISO 4014 M8X65 A4 80	1-93, 1-95, 5-35, 5-37, 5-39, 5-41, 5-43
312105-0467 ..	SCREW, M6S ISO 4014 M8X80 A4 80	2-17, 5-59, 5-61
312105-0469 ..	SCREW, M6S ISO 4014 M8X90 A4 80	5-35, 5-37, 5-39, 5-41, 5-43, 5-115, 5-117, 5-135, 5-201, 5-203
312105-0471 ..	SCREW, M6S ISO 4014 M8X100 A4 80	5-201, 5-203
312105-0489 ..	SCREW, M6S ISO 4017 M10X16 A4 80	2-37, 6-61
312105-0491 ..	SCREW, M6S ISO 4017 M10X20 A4 80	5-149, 5-151, 5-201, 5-203, 6-67, 8-41, 12-25
312105-0493 ..	SCREW, M6S ISO 4017 M10X25 A4 80	8-23, 8-25
312105-0495 ..	SCREW, M6S ISO 4017 M10X30 A4 80	1-91, 1-143, 1-145, 3-9, 5-11, 5-13, 5-15, 6-67
312105-0497 ..	SCREW, M6S ISO 4017 M10X35 A4 80	5-29, 5-93, 8-39
312105-0499 ..	SCREW, M6S ISO 4014 M10X40 A4 80	1-83, 1-85
312105-0500 ..	SCREW, M6S ISO 4014 M10X45 A4 80	8-39
312105-0503 ..	SCREW, M6S ISO 4014 M10X60 A4 80	1-31, 4-45, 4-47
312105-0507 ..	SCREW, M6S ISO 4014 M10X80 A4 80	8-5
312105-0511 ..	SCREW, M6S ISO 4014 M10X100 A4 80	2-91
312105-0515 ..	SCREW, M6S ISO 4014 M10X120 A4 80	2-105
312105-0532 ..	SCREW, M6S ISO 4017 M12X20 A4 80	3-9, 3-29, 5-201, 5-203
312105-0534 ..	SCREW, M6S ISO 4017 M12X25 A4 80	2-83, 2-85, 5-159, 5-161
312105-0536 ..	SCREW, M6S ISO 4017 M12X30 A4 80	1-91, 1-143, 1-145, 1-149, 1-151, 1-155
312105-0538 ..	SCREW, M6S ISO 4017 M12X35 A4 80	5-139, 12-15
312105-0540 ..	SCREW, M6S ISO 4017 M12X40 A4 80	6-61
312105-0544 ..	SCREW, M6S ISO 4014 M12X60 A4 80	5-57, 5-191, 5-193, 5-195
312105-0547 ..	SCREW, M6S ISO 4014 M12X75 A4 80	5-163, 5-165, 5-167, 5-169, 5-171, 5-173, 5-175, 5-177
312105-0548 ..	SCREW, M6S ISO 4014 M12X80 A4 80	6-61
312105-0622 ..	SCREW, M6S ISO 4017 M16X25 A4 80	2-83, 2-85
312105-0628 ..	SCREW, M6S ISO 4017 M16X40 A4 80	2-83, 2-85, 5-201, 5-203
312105-0630 ..	SCREW, M6S ISO 4017 M16X50 A4 80	12-15
312105-0638 ..	SCREW, M6S ISO 4014 M16X90 A4 80	12-179
312105-0648 ..	SCREW, M6S ISO 4014 M16X150 A4 80	2-83, 2-85
312107-0316 ..	HEXAGON FLANGE NUT ISO 4161 M6 A2	3-7
312109-0335 ..	SCREW, M6S ISO 4017 M5X30 A4 80	1-209, 1-211
312109-0374 ..	SCREW, M6S ISO 4017 M6X30 A4 80	5-101, 5-115, 5-117, 5-135, 5-137, 5-139, 5-153
312109-0376 ..	SCREW, M6S ISO 4017 M6X35 A4 80	1-107, 1-109
312109-0378 ..	SCREW, M6S ISO 4017 M6X40 A4 80	2-9, 2-11, 5-137, 5-139, 12-181
312109-0382 ..	SCREW, M6S ISO 4017 M6X60 A4 80	5-139
312109-0386 ..	SCREW, M6S ISO 4017 M6X80 A4 80	3-7
312109-0457 ..	SCREW, M6S ISO 4017 M8X35 A4 80	1-69, 5-19, 5-21, 5-23, 5-25, 5-27, 5-139, 12-99
312109-0459 ..	SCREW, M6S ISO 4017 M8X40 A4 80	7-57
312109-0499 ..	SCREW, M6S ISO 4017 M10X40 A4 80	5-11, 5-13, 5-15, 5-149, 5-151
312111-0295 ..	SCREW HEX.SOCK.HD.MC6S-TT 4X20 88 FZB	6-97, 6-99
312111-0331 ..	SCREW HEX.SOCK.HD.MC6S-TT 5X20 88 FZB	6-97, 6-99
312111-0368 ..	SCREW HEX.SOCK.HD.MC6S-TT 6X16 88 FZB	3-19, 3-21
312111-0372 ..	SCREW HEX.SOCK.HD.MC6S-TT 6X25 88 FZB	6-97, 6-99
312111-0376 ..	SCREW HEX.SOCK.HD.MC6S-TT 6X35 88 FZB	3-11, 3-13
312111-0378 ..	SCREW HEX.SOCK.HD.MC6S-TT 6X40 88 FZB	3-11, 3-13
312111-0380 ..	SCREW HEX.SOCK.HD.MC6S-TT 6X50 88 FZB	3-5
312111-0385 ..	SCREW HEX.SOCK.HD.MC6S-TT 6X75 88 FZB	5-145
312111-0390 ..	SCREW HEX.SOCK.HD.MC6S-TT 6X100 88 FZB	5-89
312111-0451 ..	SCREW HEX.SOCK.HD.MC6S-TT 8X20 88 FZB	12-163, 12-165
312111-0457 ..	SCREW HEX.SOCK.HD.MC6S-TT 8X35 88 FZB	12-169
312111-0471 ..	SCREW HEX.SOCK.HD.MC6S-TT 8X100 88 FZB	6-23
312111-0491 ..	SCREW HEX.SOCK.HD.MC6S-TT 10X20 88 FZB	12-163, 12-165
312113-0287 ..	SCREW, SERRATED COMBI TORX M4X8 A2	9-13, 9-15, 9-17, 9-19
312113-0323 ..	SCREW, SERRATED COMBI TORX M5X8 A2	9-13, 9-15, 9-17, 9-19, 9-99, 9-101, 9-139, 9-141
312115-0220 ..	SCREW ISO4762 M3X6 A4 80	7-35, 7-37, 9-111, 9-113, 9-115, 9-117, 9-119, 9-121, 9-123, 9-125, 9-127, 9-129, 12-111, 12-113, 12-115, 12-117

Part No	Description	Page No
312115-0222 ..	SCREW ISO4762 M3X8 A4 80	9-149, 9-151, 9-153
312115-0224 ..	SCREW ISO4762 M3X10 A4 80	1-169, 6-83, 9-31, 9-111, 9-113, 9-115, 9-117, 9-119, 9-121, 9-123, 9-125, 9-127, 9-129
312115-0226 ..	SCREW ISO4762 M3X12 A4 80	3-37, 9-103, 9-105, 12-111, 12-157
312115-0228 ..	SCREW ISO4762 M3X16 A4 80	1-9, 1-11, 1-49, 1-165, 1-167, 7-35, 7-37, 7-39, 7-41, 7-43, 12-111, 12-115, 12-181
312115-0230 ..	SCREW ISO4762 M3X20 A4 80	7-23, 7-25, 7-27, 7-29
312115-0287 ..	SCREW ISO4762 M4X8 A4 80	1-29, 2-9, 2-11, 2-91, 5-123, 5-125, 5-127, 6-45, 6-47, 7-21, 8-17, 8-19
312115-0289 ..	SCREW ISO4762 M4X10 A4 80	1-35, 1-37, 2-51, 2-53, 2-55, 5-55, 5-111, 9-13, 9-15, 9-17, 9-19, 9-27, 9-41, 9-43, 9-45, 9-49, 9-51, 9-53, 9-55, 9-57, 9-59, 9-87, 9-89
312115-0291 ..	SCREW ISO4762 M4X12 A4 80	1-23, 1-43, 1-173, 1-175, 1-177, 1-179, 1-181, 1-183, 4-43, 5-55, 5-181, 9-13, 9-15, 9-17, 9-19, 9-99, 9-101, 9-107, 9-111, 9-113, 9-115, 9-117, 9-119, 9-121, 9-123, 9-125, 9-127, 9-129
312115-0293 ..	SCREW ISO4762 M4X16 A4 80	1-83, 1-85, 4-87, 4-89, 4-91, 8-23, 8-25, 9-87, 9-89, 9-91, 9-93, 9-95, 9-97, 9-103, 9-105, 9-107, 11-25, 11-31, 11-33
312115-0295 ..	SCREW ISO4762 M4X20 A4 80	1-93, 1-95, 5-85, 7-61, 9-13, 9-15, 9-17, 9-19
312115-0297 ..	SCREW ISO4762 M4X25 A4 80	1-9, 1-11, 1-173, 1-175, 1-177, 1-179, 1-181, 1-183, 2-91, 4-87, 4-89, 4-91, 9-87, 9-89
312115-0299 ..	SCREW ISO4762 M4X30 A4 80	1-223, 9-27, 9-49, 9-51, 9-53, 9-55, 9-57, 9-59, 9-87, 9-89
312115-0304 ..	SCREW ISO4762 M4X45 A4 80	8-33
312115-0305 ..	SCREW ISO4762 M4X50 A4 80	1-9, 1-11, 1-35, 1-37, 1-49
312115-0323 ..	SCREW ISO4762 M5X8 A4 80	1-103, 1-105, 7-19, 7-21, 7-43, 8-41, 9-13, 9-15, 9-17, 9-19, 9-23, 9-29, 9-47, 9-61, 9-63, 9-65, 9-67, 9-69, 9-71, 9-73, 9-75, 9-77, 9-79, 9-81, 12-181
312115-0325 ..	SCREW ISO4762 M5X10 A4 80	1-35, 1-37, 1-93, 1-95, 2-87, 2-89, 9-13, 9-15, 9-17, 9-19, 9-31, 9-37, 9-39, 9-87, 9-89, 9-167, 12-113
312115-0327 ..	SCREW ISO4762 M5X12 A4 80	2-65, 2-67, 2-69, 2-71, 2-101, 2-103, 5-63, 6-5, 6-7, 7-23, 7-25, 7-27, 7-29, 7-43, 7-59, 8-11, 8-13, 9-75, 9-77, 9-173
312115-0329 ..	SCREW ISO4762 M5X16 A4 80	1-9, 1-11, 1-49, 1-165, 1-167, 2-65, 2-67, 2-69, 2-71, 2-101, 2-103, 4-7, 4-9, 4-11, 4-13, 4-15, 4-17, 4-45, 4-47, 4-49, 4-51, 5-85, 5-123, 5-125, 5-127, 6-5, 6-7, 8-23, 8-25, 9-83, 9-87, 9-89, 9-149, 9-151, 9-153
312115-0331 ..	SCREW ISO4762 M5X20 A4 80	1-55, 1-57, 2-41, 4-53, 4-55, 4-87, 4-89, 4-91, 5-11, 5-13, 5-15, 5-153
312115-0333 ..	SCREW ISO4762 M5X25 A4 80	1-31, 1-49, 1-93, 1-95, 8-23, 8-25, 8-27, 9-13, 9-15, 9-17, 9-19
312115-0335 ..	SCREW ISO4762 M5X30 A4 80	7-21
312115-0337 ..	SCREW ISO4762 M5X35 A4 80	1-31
312115-0339 ..	SCREW ISO4762 M5X40 A4 80	1-31, 9-175
312115-0340 ..	SCREW ISO4762 M5X45 A4 80	1-9, 1-11
312115-0362 ..	SCREW ISO4762 M6X8 A4 80	3-5, 5-63
312115-0364 ..	SCREW ISO4762 M6X10 A4 80	1-97, 1-169, 2-57, 4-43
312115-0366 ..	SCREW ISO4762 M6X12 A4 80	1-67, 1-93, 1-95, 1-169, 1-203, 2-65, 2-67, 4-7, 4-9, 4-11, 4-13, 4-15, 4-17, 4-45, 4-47, 4-53, 4-55, 5-77, 5-79, 5-139, 6-69, 7-35, 7-37, 8-45, 9-13, 9-15, 9-17, 9-19, 9-87, 9-89, 9-167, 12-181
312115-0367 ..	SCREW ISO4762 M6X14 A4 80	7-23, 7-25, 7-27, 7-29, 12-171
312115-0368 ..	SCREW ISO4762 M6X16 A4 80	2-19, 5-11, 5-13, 5-15, 6-5, 6-73, 7-63, 8-11, 8-13, 8-17, 8-19, 9-87, 9-89, 9-167, 9-175
312115-0370 ..	SCREW ISO4762 M6X20 A4 80	1-81, 1-83, 1-85, 4-7, 4-9, 4-11, 4-13, 4-15, 4-17, 4-111, 6-73, 7-59, 8-29, 12-39, 12-41, 12-43, 12-45, 12-175
312115-0371 ..	SCREW ISO4762 M6X22 A4 70	4-35, 4-37, 4-39, 4-41
312115-0372 ..	SCREW ISO4762 M6X25 A4 80	1-81, 1-219, 2-43, 2-45, 2-59, 2-61, 4-7, 4-9, 4-11, 4-13, 4-15, 4-17, 4-97, 4-99, 5-49, 5-51, 5-77, 5-79, 5-109, 7-17, 7-33, 8-17, 8-19, 8-47, 8-49, 12-39, 12-41, 12-43, 12-45, 12-181
312115-0374 ..	SCREW ISO4762 M6X30 A4 80	1-81, 1-83, 1-85, 2-87, 2-89, 4-53, 4-55, 5-85, 5-123, 5-125, 5-127
312115-0376 ..	SCREW ISO4762 M6X35 A4 80	5-35, 5-37, 5-39, 5-41, 5-43, 5-131
312115-0378 ..	SCREW ISO4762 M6X40 A4 80	7-35, 7-37, 12-93, 12-175
312115-0380 ..	SCREW ISO4762 M6X50 A4 80	6-15, 6-17, 8-33, 12-167
312115-0384 ..	SCREW ISO4762 M6X70 A4 80	5-35, 5-37, 5-39, 5-41, 5-43, 12-135, 12-179
312115-0385 ..	SCREW ISO4762 M6X75 A4 80	2-87, 2-89
312115-0386 ..	SCREW ISO4762 M6X80 A4 80	5-11, 5-13, 5-15, 12-135
312115-0447 ..	SCREW ISO4762 M8X12 A4 80	5-123, 5-125, 5-127, 8-23, 8-25
312115-0449 ..	SCREW ISO4762 M8X16 A4 80	1-155, 7-57, 12-167
312115-0451 ..	SCREW ISO4762 M8X20 A4 80	5-19, 5-21, 5-23, 5-25, 5-27, 6-45, 6-47
312115-0453 ..	SCREW ISO4762 M8X25 A4 80	3-23, 3-25, 4-57, 4-59, 4-61, 4-63, 4-107, 4-109, 5-35, 5-37, 5-39, 5-41, 5-43, 5-85, 5-145, 7-65
312115-0455 ..	SCREW ISO4762 M8X30 A4 80	1-97, 1-171, 7-57, 7-59
312115-0457 ..	SCREW ISO4762 M8X35 A4 80	5-19, 5-21, 5-23, 5-25, 5-27, 7-67, 12-161
312115-0459 ..	SCREW ISO4762 M8X40 A4 80	5-19, 5-21, 5-23, 5-25, 5-27, 5-131, 12-93, 12-175
312115-0460 ..	SCREW ISO4762 M8X45 A4 80	5-19, 5-21, 5-23, 5-25, 5-27
312115-0461 ..	SCREW ISO4762 M8X50 A4 80	5-19, 5-21, 5-23, 5-25, 5-27
312115-0463 ..	SCREW ISO4762 M8X60 A4 80	2-73, 2-75, 5-19, 5-21, 5-23, 5-25, 5-27
312115-0465 ..	SCREW ISO4762 M8X70 A4 80	5-19, 5-21, 5-23, 5-25, 5-27
312115-0467 ..	SCREW ISO4762 M8X80 A4 80	5-19, 5-21, 5-23, 5-25, 5-27
312115-0495 ..	SCREW ISO4762 M10X30 A4 80	8-17, 8-19
312115-0500 ..	SCREW ISO4762 M10X45 A4 80	3-23, 3-25, 5-49, 5-51, 5-85
312115-0503 ..	SCREW ISO4762 M10X60 A4 80	2-37
312115-0532 ..	SCREW ISO4762 M12X20 A4 80	5-123, 5-125, 5-127
312115-0540 ..	SCREW ISO4762 M12X40 A4 80	5-123, 5-125, 5-127
312115-0630 ..	SCREW ISO4762 M16X50 A4 80	2-99
312121-0287 ..	SCREW ISO 1207 M4X8 4.8-5.8 Z.PL.	3-11, 3-13, 3-15, 3-17
312121-0289 ..	SCREW ISO 1207 M4X10 4.8-5.8 Z.PL.	2-51, 2-53, 2-55, 9-13, 9-15, 9-17, 9-19
312121-0323 ..	SCREW ISO 1207 M5X8 4.8-5.8 Z.PL.	3-5
312122-0285 ..	SCREW ISO 1207 M4X6 NI PL BRASS	8-23, 8-25
312122-0287 ..	SCREW ISO 1207 M4X8 NI PL BRASS	12-101
312122-0294 ..	SCREW ISO 1207 M4X18 NI PL BRASS	4-101, 4-103
312122-0366 ..	SCREW ISO 1207 M6X12 NI PL BRASS	9-13, 9-15, 9-17, 9-19
312125-0220 ..	SCREW ISO 1207 M3X6 A4	1-73, 2-41, 4-43, 5-135, 5-139

Part No	Description	Page No
312125-0222 ..	SLOTTED HEAD SCREW, ISO1207 M3X8 A4	2-37, 7-31, 7-35, 7-37, 9-87, 9-89
312125-0226 ..	SLOTTED HEAD SCREW, ISO1207 M3X12 A4	4-45, 4-47, 6-83, 9-31, 9-87, 9-89
312125-0228 ..	SLOTTED HEAD SCREW, ISO1207 M3X16 A4	1-43, 1-47, 1-49, 1-91, 1-229, 5-123, 5-125 5-127, 5-135, 5-139
312125-0230 ..	SLOTTED HEAD SCREW, ISO1207 M3X20 A4	1-49, 1-83, 1-85, 1-93, 1-95, 2-41, 8-23, 8-25, 8-33
312125-0232 ..	SLOTTED HEAD SCREW, ISO1207 M3X25 A4	7-23, 7-25, 7-27, 7-29, 9-31
312125-0234 ..	SLOTTED HEAD SCREW, ISO1207 M3X30 A4	7-35, 7-37
312125-0285 ..	SLOTTED HEAD SCREW, ISO1207 M4X6 A4	1-41, 1-55, 1-57, 1-73, 1-103, 1-105, 4-57, 4-59 4-61, 4-63, 6-85, 6-87, 7-15, 12-119
312125-0287 ..	SLOTTED HEAD SCREW, ISO1207 M4X8 A4	1-83, 1-85, 2-51, 2-53, 2-55, 2-59, 2-61, 2-105 3-37, 5-75, 5-121, 6-61, 7-13, 7-19, 7-23, 7-25, 7-27, 7-29, 7-35, 7-37, 7-43, 7-51, 7-53, 8-33, 8-45
312125-0291 ..	SLOTTED HEAD SCREW, ISO1207 M4X12 A4	1-73, 2-73, 2-75, 4-49, 4-51, 7-19, 7-21, 8-41
312125-0293 ..	SLOTTED HEAD SCREW, ISO1207 M4X16 A4	1-41, 7-21, 11-23, 11-27, 11-29
312125-0297 ..	SLOTTED HEAD SCREW, ISO1207 M4X25 A4	8-45
312125-0299 ..	SLOTTED HEAD SCREW, ISO1207 M4X30 A4	6-95
312125-0323 ..	SLOTTED HEAD SCREW, ISO1207 M5X8 A4	1-19, 1-21, 1-23, 1-51, 1-69, 1-77, 1-79, 1-173 1-175, 1-177, 1-179, 1-181, 1-183, 2-9, 2-11, 2-37, 2-51, 2-53, 2-55, 2-91, 5-135, 9-145, 11-25 11-31, 11-33
312125-0325 ..	SCREW ISO 1207 M5X10 A4	2-95, 6-11, 8-23, 8-25
312125-0327 ..	SLOTTED HEAD SCREW, ISO1207 M5X12 A4	2-13, 2-15, 2-29, 2-31, 7-59, 9-63, 9-65, 9-67 9-69, 9-139, 9-141, 9-143, 12-23
312125-0329 ..	SLOTTED HEAD SCREW, ISO1207 M5X16 A4	2-73
312125-0331 ..	SLOTTED HEAD SCREW, ISO1207 M5X20 A4	1-77, 1-79
312125-0364 ..	SCREW ISO 1207 M6X10 A4	1-77, 1-79, 2-43, 2-45, 5-77, 5-79, 7-33, 8-47, 8-49
312125-0366 ..	SLOTTED HEAD SCREW, ISO1207 M6X12 A4	8-29
312132-0284 ..	SLOTTED HEAD, PAN SCREW, MSCS M4X5	9-171
312132-0287 ..	SLOTTED HEAD, PAN SCREW, MSCS M4X8	12-113
312132-0323 ..	SLOTTED HEAD, PAN SCREW, MSCS M5X8	2-13, 2-15, 2-29, 2-31
312145-0220 ..	SCREW ISO 2009 MFS M3X6 A4	3-11, 3-13, 3-15, 3-17, 8-41
312145-0228 ..	SCREW ISO 2009 MFS M3X16 A4	1-73
312145-0285 ..	SCREW ISO 2009 MFS M4X6 A4	8-23, 8-25, 9-13, 9-15, 9-17, 9-19
312145-0289 ..	SCREW ISO 2009 MFS M4X10 A4	4-7, 4-9, 4-11, 4-13, 4-15, 4-17
312145-0291 ..	SCREW ISO 2009 MFS M4X12 A4	1-35, 1-37, 4-7, 4-9, 4-11, 4-13, 4-15, 4-17, 4-19, 4-21, 4-23 4-27, 4-29, 4-31, 8-37
312145-0293 ..	SCREW ISO 2009 MFS M4X16 A4	8-23, 8-25
312145-0325 ..	SCREW ISO 2009 MFS M5X10 A4	1-35, 1-37
312145-0366 ..	SCREW ISO 2009 MFS M6X12 A4	1-35, 1-37
312145-0370 ..	SCREW ISO 2009 MFS M6X20 A4	5-135, 5-139
312145-0380 ..	SCREW ISO 2009 MFS M6X50 A4	12-23
312145-0451 ..	SCREW ISO 2009 MFS M8X20 A4	5-115, 5-117
312145-0455 ..	SCREW ISO 2009 MFS M8X30 A4	5-115, 5-117
312151-0222 ..	SCREW EN 10642 MF6S M3X8 10.9 EL.PL	12-117
312151-0224 ..	SCREW EN 10642 MF6S M3X10 10.9 EL.PL	12-113
312151-0287 ..	SCREW EN 10642 MF6S M4X8 10.9 EL.PL	3-11, 3-13, 3-15, 3-17
312151-0364 ..	SCREW EN 10642 MF6S M6X10 10.9 EL.PL	3-11, 3-13, 3-15, 3-17
312155-0220 ..	SCREW DIN 7991 MF6S M3X6 A4 70	9-173
312155-0226 ..	SCREW DIN 7991 MF6S M3X12 A4 70	7-21
312155-0285 ..	SCREW DIN 7991 MF6S M4X6 A4 70	1-93, 1-95, 4-87, 4-89, 4-91
312155-0287 ..	SCREW DIN 7991 MF6S M4X8 A4 70	1-35, 1-37, 4-49, 4-51, 4-87, 4-89, 4-91, 7-23, 7-25, 7-27, 7-29
312155-0291 ..	SCREW DIN 7991 MF6S M4X12 A4 70	9-87, 9-89, 9-131, 9-133, 9-135, 9-137, 9-149, 9-151 9-153, 9-163, 9-165, 12-181
312155-0293 ..	SCREW DIN 7991 MF6S M4X16 A4 70	7-61, 9-83
312155-0295 ..	SCREW DIN 7991 MF6S M4X20 A4 70	4-49, 4-51, 5-89, 7-59
312155-0297 ..	SCREW DIN 7991 MF6S M4X25 A4 70	9-131, 9-133, 9-163, 9-165
312155-0299 ..	SCREW DIN 7991 MF6S M4X30 A4 70	5-53, 5-211
312155-0301 ..	SCREW DIN 7991 MF6S M4X35 A4 70	9-83, 9-135, 9-137, 9-149, 9-151, 9-153
312155-0323 ..	SCREW DIN 7991 MF6S M5X8 A4 70	4-19, 4-21, 4-23, 4-27, 4-29, 4-31, 8-15
312155-0325 ..	SCREW DIN 7991 MF6S M5X10 A4 70	2-37, 7-35, 7-37
312155-0327 ..	SCREW DIN 7991 MF6S M5X12 A4 70	7-35, 7-37, 8-15, 8-23, 8-25, 8-27
312155-0329 ..	SCREW DIN 7991 MF6S M5X16 A4 70	2-65, 2-67, 2-69, 2-71, 2-105, 6-5, 6-7, 12-181
312155-0331 ..	SCREW DIN 7991 MF6S M5X20 A4 70	12-101
312155-0333 ..	SCREW DIN 7991 MF6S M5X25 A4 70	5-123, 5-125, 5-127
312155-0339 ..	SCREW DIN 7991 MF6S M5X40 A4 70	12-181
312155-0364 ..	SCREW DIN 7991 MF6S M6X10 A4 70	1-67, 1-71, 1-169, 2-25, 2-27, 5-115, 5-117
312155-0366 ..	SCREW DIN 7991 MF6S M6X12 A4 70	1-49, 2-19, 3-31, 4-71, 4-73, 4-79, 4-81, 5-95, 5-97, 5-99
312155-0368 ..	SCREW DIN 7991 MF6S M6X16 A4 70	2-9, 2-11, 4-71, 4-73, 4-79, 4-81, 5-31, 5-33, 7-9, 7-59
312155-0370 ..	SCREW DIN 7991 MF6S M6X20 A4 70	1-47, 1-219, 5-57, 5-101, 5-139, 7-47
312155-0372 ..	SCREW DIN 7991 MF6S M6X25 A4 70	5-45, 5-47, 5-49, 5-51
312155-0374 ..	SCREW DIN 7991 MF6S M6X30 A4 70	1-71, 7-15
312155-0449 ..	SCREW DIN 7991 MF6S M8X16 A4 70	3-5, 5-135, 5-199
312155-0451 ..	SCREW DIN 7991 MF6S M8X20 A4 70	4-107, 4-109, 5-139
312155-0457 ..	SCREW DIN 7991 MF6S M8X35 A4 70	8-23, 8-25
312155-0459 ..	SCREW DIN 7991 MF6S M8X40 A4 70	4-107, 4-109
312155-0491 ..	SCREW DIN 7991 MF6S M10X20 A4 70	8-15
312155-0532 ..	SCREW DIN 7991 MF6S M12X20 A4 70	1-9, 1-11
312156-0329 ..	SCREW EN 10642 MF6S M5X16 A470	5-85
312156-0449 ..	SCREW EN 10642 MF6S M8X16 A470	5-85
312156-0453 ..	SCREW EN 10642 MF6S M8X25 A470	5-85
312303-0463 ..	SCREW DIN 938 PS M8X50 A4 80	12-91
312306-0546 ..	SCREW ISO4026 M12X70 FZB	12-131
312311-0285 ..	SET SCREW, DOG POINT ISO4028 M4X6 FZB	7-65
312311-0287 ..	SET SCREW, DOG POINT ISO4028 M4X8 FZB	1-97
312311-0321 ..	SET SCREW, DOG POINT ISO4028 M5X6 FZB	1-81, 3-15, 3-17
312311-0366 ..	SET SCREW, DOG POINT ISO4028 M6X12 FZB	1-81, 1-97, 3-9

Part No	Description	Page No
312311-0370 ..	SET SCREW, DOG PONT ISO4028 M6X20 FZB	2-33, 2-35
312316-0289 ..	SET SCREW, CUP END ISO4029 M4X10 FZB	12-113
312316-0291 ..	SET SCREW, CUP END ISO4029 M4X12 FZB	12-113
312316-0321 ..	SET SCREW, CUP END ISO4029 M5X6 FZB	8-37
312318-0220 ..	SET SCREW, CUP END ISO4029 M3X6 A4	12-45, 12-111, 12-115
312318-0222 ..	SET SCREW, CUP END ISO4029 M3X8 A4	5-85
312318-0283 ..	SET SCREW, CUP END ISO4029 M4X4 A4	4-45, 4-47, 4-53, 4-55, 5-123, 5-125, 5-127, 7-47
312318-0285 ..	SET SCREW, CUP END ISO4029 M4X6 A4	1-143, 1-145, 1-149, 1-151, 5-139, 7-23, 7-25, 7-27, 7-29
312318-0287 ..	SET SCREW, CUP END ISO4029 M4X8 A4	1-93, 1-95, 5-153, 8-17, 8-19, 8-21, 8-29, 8-33
312318-0321 ..	SET SCREW, CUP END ISO4029 M5X6 A4	5-123, 5-125, 5-127
312318-0323 ..	SET SCREW, CUP END ISO4029 M5X8 A4	2-35, 5-11, 5-13, 5-15, 5-93
312318-0325 ..	SET SCREW, CUP END ISO4029 M5X10 A4	1-209, 1-211, 5-11, 5-13, 5-15, 5-109, 5-135, 8-27
312318-0327 ..	SET SCREW, CUP END ISO4029 M5X12 A4	7-57
312318-0329 ..	SET SCREW, CUP END ISO4029 M5X16 A4	8-17, 8-19
312318-0360 ..	SET SCREW, CUP END ISO4029 M6X6 A4	4-93, 4-95
312318-0362 ..	SET SCREW, CUP END ISO4029 M6X8 A4	1-91, 3-27, 3-31, 4-53, 4-55, 5-149, 5-151, 7-35, 7-37, 7-63, 8-17, 8-19, 8-41, 9-171
312318-0364 ..	SET SCREW, CUP END ISO4029 M6X10 A4	3-23, 3-25, 7-65
312318-0366 ..	SET SCREW, CUP END ISO4029 M6X12 A4	3-31, 7-49, 7-63, 8-17, 8-19
312318-0368 ..	SET SCREW, CUP END ISO4029 M6X16 A4	1-149, 1-151, 4-93, 4-95, 5-11, 5-13, 5-15
312318-0372 ..	SET SCREW, CUP END ISO4029 M6X25 A4	8-23, 8-25
312318-0443 ..	SET SCREW, CUP END ISO4029 M8X8 A4	5-115, 5-117, 5-137
312318-0447 ..	SET SCREW, CUP END ISO4029 M8X12 A4	2-97, 2-99
312318-0451 ..	SET SCREW, CUP END ISO4029 M8X20 A4	1-149, 1-151
312502-0120 ..	DRIVE SCREW ROUND HEAD KDS 0X5	1-107, 1-109, 2-87, 2-89
312503-0221 ..	TAPPING SCREW, ISO7049 ST2,9X6,5-C-Z	12-117
312601-0314 ..	HEXAGON NUT, DIN 934 M5 8 FZB	12-125
312601-0318 ..	HEXAGON NUT, DIN 934 M8 8 FZB	3-11, 3-13, 3-15, 3-17
312601-0320 ..	HEXAGON NUT, M10 8 FZB, ISO 4032	2-9, 2-11, 2-25, 2-27, 6-97, 6-99, 12-163, 12-165
312601-0322 ..	HEXAGON NUT, DIN 934 M12 8 FZB	12-163, 12-165
312601-0324 ..	HEXAGON NUT, DIN 934 M16 8 FZB	3-15, 3-17
312602-0312 ..	HEXAGON NUT, EN 24032 M6M M4 NIPLBR	4-101, 4-103, 12-17, 12-19
312602-0316 ..	NUT, EN 24032 M6M M6 NIPLBR	6-45, 6-47
312605-0310 ..	HEXAGON NUT, M6M M3 A280	1-49, 1-93, 1-95, 6-83, 7-23, 7-25, 7-27, 7-29, 7-31, 7-35, 7-37, 7-39, 7-41, 8-33, 9-31, 9-103, 9-105, 12-117, 12-181
312605-0312 ..	HEXAGON NUT, M6M M4 A280	1-35, 1-37, 1-55, 1-57, 1-93, 1-95, 1-103, 1-105, 1-193, 1-195, 2-73, 2-75, 2-101, 2-103, 3-31, 4-49, 4-51, 6-85, 6-87, 7-39, 7-41, 7-45, 7-59, 8-23, 8-25, 9-103, 9-105, 9-107, 9-131, 9-133, 9-163, 9-165, 9-167, 12-99
312605-0314 ..	HEXAGON NUT, M6M M5 A280	1-35, 1-37, 1-93, 1-95, 1-101, 2-13, 2-15, 2-29, 2-31, 2-33, 2-87, 2-89, 3-31, 5-49, 5-51, 5-65, 5-201, 5-203, 6-7, 6-11, 6-15, 6-17, 6-45, 6-47, 6-69, 7-21, 7-31, 7-35, 7-37, 7-45, 7-59, 7-61, 8-23, 8-25, 9-109, 11-23, 11-27, 11-29, 12-17, 12-19, 12-181
312605-0316 ..	HEXAGON NUT, M6M M6 A280	1-45, 1-47, 1-55, 1-57, 1-81, 1-83, 1-85, 1-149, 1-151, 1-157, 1-159, 1-161, 1-173, 1-175, 1-177, 1-179, 1-181, 1-183, 1-213, 1-215, 1-217, 1-219, 2-23, 2-33, 2-35, 2-83, 2-85, 2-87, 2-89, 2-97, 5-11, 5-13, 5-15, 5-59, 5-61, 5-83, 5-89, 5-101, 5-135, 5-137, 5-139, 5-183, 5-185, 5-187, 5-201, 5-203, 6-11, 6-13, 6-15, 6-17, 6-45, 6-47, 6-53, 6-55, 6-73, 6-75, 6-97, 6-99, 7-13, 7-15, 7-21, 7-23, 7-25, 7-27, 7-29, 7-43, 7-47, 7-51, 7-53, 7-61, 8-15, 8-23, 8-25, 8-45, 9-83, 9-103, 9-105, 9-131, 9-133, 9-135, 9-137, 9-149, 9-151, 9-153, 9-159, 9-163, 9-165, 12-17, 12-19, 12-135, 12-167, 12-171, 12-179, 12-181
312605-0318 ..	HEXAGON NUT, M6M M8 A280	1-35, 1-37, 1-45, 1-69, 1-75, 1-77, 1-79, 1-89, 1-99, 1-101, 1-135, 1-137, 1-139, 1-149, 1-151, 1-155, 1-157, 1-165, 1-167, 1-171, 1-193, 1-195, 1-213, 1-215, 1-217, 2-9, 2-11, 2-25, 2-27, 2-73, 2-75, 2-97, 4-7, 4-9, 4-11, 4-13, 4-15, 4-17, 4-45, 4-47, 4-107, 4-109, 5-101, 5-139, 5-147, 5-149, 5-151, 5-199, 6-67, 6-69, 6-77, 6-85, 6-87, 6-89, 6-91, 6-97, 6-99, 7-35, 7-37, 7-67, 8-5, 8-23, 8-25, 8-37, 12-23, 12-25, 12-33, 12-35, 12-37, 12-129
312605-0320 ..	HEXAGON NUT, M6M M10 A280	1-91, 1-149, 1-151, 3-9, 3-31, 5-11, 5-13, 5-15, 5-19, 5-21, 5-23, 5-25, 5-27, 5-29, 5-91, 5-93, 5-149, 5-151, 6-73, 7-11, 8-17, 8-19, 12-173
312605-0322 ..	HEXAGON NUT, M6M M12 A280	1-155, 2-97, 5-19, 5-21, 5-23, 5-25, 5-27, 5-89, 5-91, 5-113, 5-137, 5-163, 5-165, 5-167, 5-169, 5-171, 5-173, 5-175, 5-177
312605-0324 ..	HEXAGON NUT, M6M M16 A280	8-35
312605-0326 ..	HEXAGON NUT, M6M M20 A280	5-113
312607-0314 ..	HEXAGON NUT, EN 24032 M6M M5 A480	1-55, 1-57, 1-223
312607-0316 ..	HEXAGON NUT, EN 24032 M6M M6 A480	1-31
312607-0320 ..	HEXAGON NUT, EN 24032 M6M M10 A480	1-31
312625-0316 ..	HEXAGON THIN NUT, EN 24035 ML6M M6 A4	1-125, 1-127, 3-31, 7-13, 7-15
312625-0318 ..	HEXAGON THIN NUT, EN 24035 ML6M M8 A4	7-21
312625-0320 ..	HEXAGON THIN NUT, EN 24035 ML6M M10 A4	8-17, 8-19
312625-0322 ..	HEXAGON THIN NUT, EN 24035 ML6M M12 A4	5-123, 5-125, 5-127, 5-131
312625-0326 ..	HEXAGON THIN NUT, EN 24035 ML6M M20 A4	1-107, 1-109
312631-0321 ..	HEX.NUT FINE, EN 24032 M6M M10X1,25 FZB8	2-25, 2-27
312705-0312 ..	NUT HEX. DOMED CAP MHM-6 M4 A280	2-65, 2-67, 2-69, 2-71, 6-5, 6-7
312705-0314 ..	NUT HEX. DOMED CAP MHM-6 M5 A280	2-13, 2-15, 2-29, 2-31, 11-27, 11-29
312705-0316 ..	HEX. DOMED CAP MHM-6 M6 A280	1-173, 1-175, 1-177, 1-179, 1-181, 1-183, 2-47, 2-49, 7-13, 7-49, 9-147
312715-0116 ..	WING NUT DIN 315 A2 MVM-K M6	12-171, 12-177
312715-0118 ..	WING NUT DIN 315 A2 MVM-K M8	12-91
312805-0102 ..	NUT ROUND WITH SLOTS M15X1 FE	5-123, 5-125, 5-127
312805-0106 ..	NUT ROUND WITH SLOTS M30X1,5 FE	5-159, 5-161
312810-0314 ..	HEXAGON NUT, NY-LOCK M5 FZB	2-73
312810-0324 ..	HEXAGON NUT, NY-LOCK M16 FZB	5-159, 5-161
312811-0316 ..	NUT HEX.LOCK HELI COIL MID GRIP M6 SS	1-163, 6-73
312811-0318 ..	NUT HEX.LOCK HELI COIL M8 SS	4-93, 4-95, 5-135
312811-0320 ..	NUT HEX.LOCK HELI COIL MID GRIP M10 SS	4-111
312811-0322 ..	NUT HEX.LOCK HELI COIL MID GRIP M12 SS	3-11
312811-0324 ..	NUT HEX.LOCK HELI COIL MID GRIP M16 SS	3-11, 3-13, 3-15, 3-17
312811-0326 ..	NUT HEX.LOCK HELI COIL MID GRIP M20 SS	3-11, 3-13, 3-15, 3-17

Part No	Description	Page No
312812-0310 ..	HEXAGON NUT, NY-LOCK M3 A4 80	1-229
312812-0312 ..	HEXAGON NUT, NY-LOCK M4 A4 80	1-223, 2-35, 2-47, 2-49, 5-129, 5-141, 5-143, 6-95, 8-23, 8-25, 9-13, 9-15, 9-17, 9-19, 9-83, 9-87, 9-89
312812-0314 ..	HEXAGON NUT, NY-LOCK M5 A4 80	1-43, 1-89, 2-25, 2-27, 2-101, 2-103, 5-115, 5-117, 7-35, 7-37, 7-59, 9-85, 9-161
312812-0316 ..	HEXAGON NUT, NY-LOCK M6 A4 80	1-209, 1-211, 1-213, 1-215, 1-217, 2-33, 2-35, 2-47, 2-49, 3-31, 5-93, 5-123, 5-125, 5-127, 7-19, 8-43, 9-83, 9-87, 9-89, 9-109, 9-131, 9-133, 9-135, 9-137, 9-149, 9-151, 9-153, 9-159, 9-163, 9-165, 12-23
312812-0318 ..	HEXAGON NUT, NY-LOCK M8 A4 80	1-209, 1-211, 2-17, 5-59, 5-61, 6-95, 8-23, 8-25
312812-0320 ..	HEXAGON NUT, NY-LOCK M10 A4 80	3-29, 9-109
312812-0322 ..	HEXAGON NUT, NY-LOCK M12 A4 80	8-5
312812-0324 ..	HEXAGON NUT, NY-LOCK M16 A4 80	2-83, 2-85
312901-0324 ..	NUT M6M16VFZB	3-15, 3-17
312902-0316 ..	NUT HEX. LEFT THREAD, M6 A280	1-219, 2-35
312902-0320 ..	NUT HEX. LEFT THREAD, M10 A280	5-11, 5-13, 5-15
312910-0113 ..	THREADED INSERT, FREE RUNNING M5X1D	12-115
315101-0136 ..	WASHER BRB, 4,3/8 H=0,8	3-11, 3-13, 3-15, 3-17, 5-85, 9-13, 9-15, 9-17, 9-19, 9-99, 9-101
315101-0146 ..	WASHER PLAIN, BRB, 5,3/10 H=1	2-51, 2-53, 2-55, 3-15, 3-17, 3-23, 3-25, 3-27, 8-37, 9-135, 9-137
315101-0153 ..	WASHER PLAIN, BRB, 6,4/12 H=1,5	2-59, 2-61, 3-5, 3-11, 3-13, 3-15, 3-17, 3-33, 3-35, 7-21, 8-43, 9-175, 12-113
315101-0165 ..	WASHER PLAIN, BRB, 8,4/16 H=1,5	3-11, 3-13
315101-0173 ..	WASHER PLAIN, BRB, 10,5/22 H=2	3-11, 3-13, 3-15, 3-17, 3-23, 3-25, 11-5
315101-0178 ..	WASHER PLAIN, BRB, 13/24 H=2	5-181
315101-0186 ..	WASHER PLAIN, BRB, 17/30 H=3	3-11, 3-13, 3-15, 3-17
315103-0136 ..	WASHER PLAIN, 4,3X8X0,8 BR NI PL	1-155, 12-17, 12-19
315103-0146 ..	WASHER PLAIN, 5,3X10X1 BR NI PL	5-63, 5-201, 5-203
315103-0153 ..	WASHER PLAIN, 6,4X12X1,5 BR NI PL	1-125, 1-127
315103-0173 ..	WASHER PLAIN, 10,5X22X2 BR NI PL	2-33
315103-0178 ..	WASHER PLAIN, 13X24X2,5 BR NI PL	3-9
315105-0124 ..	WASHER PLAIN, 3,2X6X0,5 A4 BRB	1-9, 1-11, 1-43, 1-47, 1-49, 1-83, 1-85, 1-165, 1-167, 1-229, 2-41, 3-37, 5-135, 5-139, 6-83, 7-23, 7-25, 7-27, 7-29, 7-31, 7-35, 7-37, 7-39, 7-41, 8-23, 8-25, 9-31, 9-103, 9-105, 9-111, 9-113, 9-115, 9-117, 9-119, 9-121, 9-123, 9-125, 9-127, 9-129
315105-0136 ..	WASHER PLAIN, 4,3X9X0,8 A4 BRB	1-9, 1-11, 1-29, 1-35, 1-37, 1-41, 1-49, 1-55, 1-57, 1-73, 1-103, 1-105, 1-143, 1-145, 1-223, 2-9, 2-11, 2-25, 2-27, 2-33, 2-47, 2-49, 2-65, 2-67, 2-69, 2-71, 2-91, 2-101, 2-103, 2-105, 3-37, 4-43, 4-49, 4-51, 4-87, 4-89, 4-91, 5-17, 5-49, 5-51, 5-109, 5-129, 5-139, 5-181, 6-5, 6-7, 6-61, 6-69, 6-85, 6-87, 6-95, 7-15, 7-23, 7-25, 7-27, 7-29, 7-31, 8-11, 8-13, 8-17, 8-19, 8-23, 8-25, 8-33, 8-45, 9-13, 9-15, 9-17, 9-19, 9-27, 9-41, 9-43, 9-45, 9-49, 9-51, 9-53, 9-55, 9-57, 9-59, 9-87, 9-89, 9-91, 9-93, 9-95, 9-97, 9-103, 9-105, 9-107, 9-135, 9-137, 9-167, 11-23, 11-27, 11-29, 12-181
315105-0146 ..	WASHER PLAIN, 5,3X10X1 A4 BRB	1-9, 1-11, 1-31, 1-35, 1-37, 1-43, 1-47, 1-49, 1-69, 1-77, 1-79, 1-83, 1-85, 1-89, 1-93, 1-95, 1-97, 1-101, 1-173, 1-175, 1-177, 1-179, 1-181, 1-183, 1-185, 1-187, 1-189, 1-191, 1-197, 1-199, 1-201, 1-209, 1-211, 1-219, 1-223, 2-9, 2-11, 2-13, 2-15, 2-25, 2-27, 2-29, 2-31, 2-33, 2-37, 2-41, 2-57, 2-59, 2-61, 2-65, 2-67, 2-69, 2-71, 2-73, 2-87, 2-89, 2-93, 2-101, 2-103, 3-31, 3-37, 4-49, 4-51, 4-71, 4-73, 4-79, 4-81, 4-87, 4-89, 4-91, 4-101, 4-103, 5-11, 5-13, 5-15, 5-49, 5-51, 5-85, 5-123, 5-125, 5-127, 5-129, 5-135, 5-137, 5-139, 5-155, 5-157, 5-159, 5-161, 6-5, 6-7, 6-11, 6-15, 6-17, 6-23, 6-33, 6-37, 6-41, 6-45, 6-47, 6-83, 6-85, 6-87, 7-23, 7-25, 7-27, 7-29, 7-31, 7-35, 7-37, 7-39, 7-41, 7-43, 7-45, 7-49, 7-51, 7-53, 7-59, 7-61, 8-11, 8-13, 8-17, 8-19, 8-21, 8-23, 8-25, 8-27, 8-41, 9-13, 9-15, 9-17, 9-19, 9-23, 9-29, 9-37, 9-39, 9-47, 9-61, 9-63, 9-65, 9-67, 9-69, 9-71, 9-73, 9-75, 9-77, 9-79, 9-81, 9-83, 9-85, 9-87, 9-89, 9-109, 9-111, 9-113, 9-115, 9-117, 9-119, 9-121, 9-123, 9-125, 9-127, 9-129, 9-139, 9-141, 9-143, 9-159, 9-161, 9-171, 9-173, 11-23, 11-27, 11-29, 12-17, 12-19, 12-65, 12-167, 12-173, 12-177
315105-0153 ..	WASHER PLAIN, 6,4X12X1,5 A4 BRB	1-29, 1-31, 1-35, 1-37, 1-45, 1-47, 1-49, 1-55, 1-57, 1-67, 1-71, 1-73, 1-81, 1-83, 1-85, 1-91, 1-93, 1-95, 1-97, 1-103, 1-105, 1-149, 1-151, 1-155, 1-159, 1-161, 1-165, 1-167, 1-169, 1-173, 1-175, 1-177, 1-179, 1-181, 1-183, 1-193, 1-195, 1-203, 1-209, 1-211, 1-213, 1-215, 1-217, 1-219, 2-9, 2-11, 2-13, 2-15, 2-23, 2-25, 2-27, 2-29, 2-31, 2-33, 2-35, 2-37, 2-43, 2-45, 2-47, 2-49, 2-57, 2-59, 2-61, 2-79, 2-81, 2-83, 2-85, 2-87, 2-89, 2-95, 2-97, 2-105, 3-29, 3-31, 4-35, 4-37, 4-39, 4-41, 4-43, 4-53, 4-55, 4-57, 4-59, 4-61, 4-63, 4-71, 4-73, 4-79, 4-81, 4-97, 4-99, 4-105, 4-111, 5-11, 5-13, 5-15, 5-19, 5-21, 5-23, 5-25, 5-27, 5-29, 5-31, 5-33, 5-35, 5-37, 5-39, 5-41, 5-43, 5-45, 5-47, 5-49, 5-51, 5-55, 5-57, 5-59, 5-61, 5-81, 5-83, 5-89, 5-91, 5-93, 5-95, 5-97, 5-99, 5-103, 5-105, 5-107, 5-109, 5-111, 5-115, 5-117, 5-129, 5-135, 5-137, 5-139, 5-145, 5-149, 5-151, 5-153, 5-183, 5-185, 5-187, 5-191, 5-193, 5-195, 5-201, 5-203, 5-207, 5-209, 5-213, 6-5, 6-7, 6-11, 6-13, 6-15, 6-17, 6-27, 6-43, 6-45, 6-47, 6-55, 6-59, 6-61, 6-69, 6-73, 6-77, 6-79, 6-85, 6-87, 6-95, 6-97, 6-99, 6-101, 6-103, 6-105, 7-9, 7-13, 7-15, 7-23, 7-25, 7-27, 7-29, 7-33, 7-35, 7-37, 7-43, 7-45, 7-47, 7-49, 7-51, 7-53, 7-59, 7-61, 8-11, 8-13, 8-17, 8-19, 8-23, 8-25, 8-29, 8-33, 8-45, 9-13, 9-15, 9-17, 9-19, 9-83, 9-87, 9-89, 9-109, 9-131, 9-133, 9-135, 9-137, 9-147, 9-149, 9-151, 9-153, 9-159, 9-163, 9-165, 9-167, 12-17, 12-19, 12-23, 12-59, 12-61, 12-65, 12-67, 12-69, 12-93, 12-143, 12-167, 12-171, 12-173, 12-175, 12-177, 12-181
315105-0156 ..	WASHER PLAIN, 6,7X14X1,5 A4 BRB	5-83, 7-47, 7-49
315105-0165 ..	WASHER PLAIN, 8,4X16X1,6 A4 BRB	1-9, 1-11, 1-31, 1-35, 1-37, 1-55, 1-57, 1-69, 1-77, 1-79, 1-89, 1-125, 1-127, 1-143, 1-145, 1-149, 1-151, 1-155, 1-213, 1-215, 1-217, 2-9, 2-11, 2-13, 2-15, 2-25, 2-27, 2-39, 2-73, 2-75, 2-97, 2-105, 3-9, 3-31, 4-35, 4-37, 4-39, 4-41, 4-57, 4-59, 4-61, 4-63, 4-93, 4-95, 4-97, 4-99, 4-105, 4-107, 4-109, 5-11, 5-13, 5-15, 5-19, 5-21, 5-23, 5-25, 5-27, 5-35, 5-37, 5-39, 5-41, 5-43, 5-59, 5-61, 5-69, 5-71, 5-81, 5-85, 5-89, 5-95, 5-97, 5-99, 5-119, 5-131, 5-135, 5-139, 5-145, 5-147, 5-149, 5-151, 5-191, 5-193, 5-195, 5-197, 5-199, 5-201, 5-203, 5-215, 6-15, 6-17, 6-63, 6-69, 6-89, 6-91, 6-97, 6-99, 7-15, 7-35, 7-37, 7-39, 7-41, 7-47, 7-51, 7-53, 7-57, 7-59, 8-9, 8-11, 8-13, 8-15, 8-17, 8-19, 8-37, 8-41, 12-15, 12-33, 12-35, 12-37, 12-63, 12-91, 12-93, 12-99, 12-145, 12-175
315105-0171 ..	WASHER PLAIN, 10X18X2 A4 BRB	1-227, 8-17, 8-19
315105-0173 ..	WASHER PLAIN, 10,5X22X2 A4 BRB	1-31, 2-91, 3-9, 3-29, 4-111, 5-19, 5-21, 5-23, 5-25, 5-27, 5-115, 5-117, 5-149, 5-151, 6-61, 6-67, 6-73, 7-11, 8-23, 8-25, 8-39, 9-109, 12-163, 12-165
315105-0178 ..	WASHER PLAIN, 13X24X2,5 A4 BRB	2-83, 2-85, 3-37, 5-57, 5-123, 5-125, 5-127, 5-139, 5-163, 5-165, 5-167, 5-169, 5-171, 5-173, 5-175, 5-177, 5-191, 5-193, 5-195, 5-201, 5-203, 6-61, 7-59, 8-23, 8-25, 12-15
315105-0186 ..	WASHER PLAIN, 17X30X3 A4 BRB	2-83, 2-85, 2-99, 5-201, 5-203, 12-15

Part No	Description	Page No
315105-0191 ..	WASHER PLAIN, 20X36X3 A4 BRB	8-5
315105-0192 ..	WASHER PLAIN, 21X36X3 A4 BRB	5-113, 12-25
315106-0124 ..	WASHER PLAIN, M3 ISO7089-3-200 HV A4	7-35, 7-37
315106-0136 ..	WASHER PLAIN, M4 ISO7089-4-200 HV A4	1-173, 1-175, 1-177, 1-179, 1-181, 1-183
315106-0146 ..	WASHER PLAIN, M5 ISO7089-5-200 HV A4	1-55, 1-57, 5-65, 8-23, 8-25
315106-0153 ..	WASHER PLAIN, M6 ISO7089-6-200 HV A4	1-55, 1-57, 1-155, 5-63, 5-65, 6-53, 8-23, 8-25
315111-0165 ..	WASHER PLAIN, TBRB 8,4/16 H=3	5-49, 5-51, 5-109
315111-0173 ..	WASHER PLAIN, TBRB 10,5/22 H=4	3-5, 3-11, 3-13, 3-15, 3-17
315111-0178 ..	WASHER PLAIN, TBRB 13/24 H=4	3-5
315111-0186 ..	WASHER PLAIN, TBRB 17/30 H=6	5-159, 5-161
315115-0153 ..	WASHER PLAIN, TBRB 6,4/12 H=3	1-83, 1-85, 1-91, 1-209, 1-211, 4-7, 4-9, 4-11, 4-13, 4-15, 4-17, 4-35, 4-37, 4-39, 4-41, 4-45, 4-47, 4-71, 4-73, 4-79, 4-81, 4-93, 4-95, 4-113, 4-115, 7-61
315115-0165 ..	WASHER PLAIN, TBRB 8,4/16 H=3	1-83, 1-85, 1-97, 1-125, 1-127, 1-135, 1-137, 1-139, 1-149, 1-151, 1-209, 1-211, 1-225, 2-9, 2-11, 2-25, 2-27, 4-57, 4-59, 4-61, 4-63, 4-111, 5-91, 6-75, 12-129, 12-139
315115-0173 ..	WASHER PLAIN, TBRB 10,5/22 H=4	1-83, 1-85, 12-25
315115-0178 ..	WASHER PLAIN, TBRB 13/24 H=4	1-143, 1-145, 1-149, 1-151, 8-5
315121-0153 ..	WASHER PLAIN, TBRSB 6,4/22 H=4	3-5
315121-0165 ..	WASHER PLAIN, TBRSB 8,4/26 H=5	12-39, 12-41
315121-0173 ..	WASHER PLAIN, TBRSB 10,5/28 H=6	3-13, 3-33, 3-35
315121-0178 ..	WASHER PLAIN, TBRSB 13/36 H=6	3-5, 3-29
315125-0146 ..	WASHER HIGH, TBRSB 5.3X15X1 A4	9-31
315125-0153 ..	WASHER HIGH, TBRSB 6,4X22X4 A4	1-69, 1-83, 1-85, 1-171, 2-25, 2-27, 2-33, 3-7, 3-31, 8-15, 12-135
315125-0165 ..	WASHER HIGH, TBRSB 8,4X26X5 A4	1-9, 1-11, 1-49, 1-69, 1-73, 3-7, 5-145, 7-35, 7-37, 7-57
315125-0173 ..	WASHER HIGH, TBRSB 10,5X28X6 A4	2-105, 6-15, 6-17, 8-5, 8-15
315202-0102 ..	O-RING 4,1X1,6 MM	4-35, 4-37, 4-39, 4-41, 4-53, 4-55, 4-87, 4-89, 4-91
315202-0105 ..	O-RING 7,1X1,6 MM	4-53, 4-55
315202-0106 ..	O-RING 8,1X1,6 MM	4-35, 4-37, 4-39, 4-41, 4-97, 4-99
315202-0107 ..	O-RING 9,1X1,6 MM	5-123, 5-125, 5-127
315202-0108 ..	O-RING 10,1X1,6 MM	4-35, 4-37, 4-39, 4-41
315202-0110 ..	O-RING 12,1X1,6 MM	4-7, 4-9, 4-11, 4-13, 4-15, 4-17, 4-45, 4-47
315202-0112 ..	O-RING 14,1X1,6 MM	6-97, 6-99
315202-0118 ..	O-RING 22,1X1,6 MM	5-49, 5-51, 5-109
315202-0120 ..	O-RING 27,1X1,6 MM	1-227
315202-0204 ..	O-RING 5,3X2,4 MM	4-97, 4-99, 5-123, 5-125, 5-127
315202-0206 ..	O-RING 7,3X2,4 MM	2-9, 2-11, 2-25, 2-27, 4-93, 4-95
315202-0207 ..	O-RING 8,3X2,4 MM	4-93, 4-95, 4-97, 4-99
315202-0211 ..	O-RING 13,3X2,4 MM	2-37
315202-0215 ..	O-RING 19,2X3 MM	5-29, 5-93, 5-109, 5-163, 5-165, 5-167, 5-169, 5-171, 5-173, 5-175, 5-177, 5-201, 5-203, 5-209
315202-0217 ..	O-RING 24,2X3 MM	5-53, 5-211
315202-0218 ..	O-RING 26,2X3 MM	5-85, 5-163, 5-165, 5-167, 5-169, 5-171, 5-173, 5-175, 5-177
315202-0219 ..	O-RING 29,2X3 MM	4-93, 4-95, 4-97, 4-99
315202-0220 ..	O-RING 32,2X3 MM	5-123, 5-125, 5-127
315202-0223 ..	O-RING 39,2X3 MM	5-85
315202-0224 ..	O-RING 42,2X3 MM	12-13
315202-0244 ..	O-RING 134,3X5,7 MM	6-85, 6-87
315202-0265 ..	O-RING 12,3X2,4 MM	4-7, 4-9, 4-11, 4-13, 4-15, 4-17, 4-45, 4-47
315202-0304 ..	O-RING 64,5X3 MM	1-21
315202-0305 ..	O-RING 69,5X3 MM	5-85
315202-0306 ..	O-RING 74,5X3 MM	5-155, 5-157, 5-159, 5-161
315202-0308 ..	O-RING 84,5X3 MM	1-19, 1-23, 1-51
315202-0311 ..	O-RING 99,5X3 MM	5-123, 5-125, 5-127
315202-0317 ..	O-RING 129,5X3 MM	6-89, 6-91
315202-0504 ..	O-RING 5,28X1,78 MM	9-171
315202-0505 ..	O-RING 6,07X1,78 MM	5-35, 5-37, 5-39, 5-41, 5-43
315202-0708 ..	O-RING 21,95X1,78 MM	9-171
315202-0736 ..	O-RING 50,47X2,62 MM	2-13, 2-15, 2-29, 2-31
315203-0219 ..	O-RING 29,2X3 MM	12-113
315204-0109 ..	O-RING 11,1X1,6 MM	1-83, 1-85
315204-0110 ..	O-RING 12,1X1,6 MM	1-71, 1-169
315204-0111 ..	O-RING 13,1X1,6 MM	1-91
315204-0114 ..	O-RING 16,1X1,6 MM	5-91
315204-0119 ..	O-RING 25,1X1,6 MM	1-165, 1-167
315204-0207 ..	O-RING 8,3X2,4 MM	1-43
315204-0213 ..	O-RING 15,3X2,4 MM	1-35, 1-37
315204-0215 ..	O-RING 19,2X3 MM	1-19, 1-23, 1-51, 11-41
315204-0222 ..	O-RING 36,2X3 MM	1-169
315204-0223 ..	O-RING 39,2X3 MM	1-99
315204-0301 ..	O-RING 49,5X3 MM	1-83, 1-85, 1-165, 1-167, 11-41
315204-0302 ..	O-RING 54,5X3 MM	1-71, 1-169
315204-0309 ..	O-RING 89,5X3 MM	1-83, 1-85, 1-97
315205-0505 ..	O-RING 6,07X1,78 MM	1-33, 1-43, 1-47
315205-0705 ..	O-RING 17,17X1,78 MM	5-85
315206-0701 ..	O-RING 10,82X1,78 MM	1-29
315207-0514 ..	O-RING 18,72X2,62 MM	1-55, 1-57
315211-0101 ..	BONDED SEAL SS/NBR90 M4	4-7, 4-9, 4-11, 4-13, 4-15, 4-17, 4-45, 4-47
315211-0103 ..	BONDED SEAL SS/NBR90 M6	4-7, 4-9, 4-11, 4-13, 4-15, 4-17, 4-45, 4-47, 4-97, 4-99, 4-113, 4-115, 5-85
315211-0104 ..	BONDED SEAL SS/NBR90 M8	4-113, 4-115, 5-183, 5-185, 5-187, 6-97, 6-99
315211-0106 ..	BONDED SEAL SS/NBR90 M10	6-97, 6-99
315211-0107 ..	BONDED SEAL SS/NBR90 M12	5-201, 5-203
315211-0108 ..	BONDED SEAL SS/NBR90 G1/4	4-113, 4-115
315211-0111 ..	BONDED SEAL SS/NBR90 G1/2	4-97, 4-99, 5-123, 5-125, 5-127, 6-97, 6-99
315217-0111 ..	BONDED SEAL SS/VITON G1/2	1-31

Part No	Description	Page No
315220-0167 ..	V-RING 27X35X10,5 MM V-30S	1-97
315220-0210 ..	V-RING 54X64X13 MM V-60S	5-155, 5-157, 5-159, 5-161
315221-0137 ..	RADIAL SEAL 17X35X7 MM	5-123, 5-125, 5-127
315221-0169 ..	RADIAL SEAL 30X47X7 MM	3-5
315221-0175 ..	RADIAL SEAL 35X47X7 MM	5-85
315221-0177 ..	RADIAL SEAL 35X52X7 MM	5-159, 5-161
315221-0185 ..	RADIAL SEAL 40X62X7 MM	5-85
315229-0101 ..	SQUARE RING, 10,4X17,4X3,7 MM 1/2" FDA	1-55, 1-57, 1-157, 6-77
315229-0103 ..	SQUARE RING, 23,1X30,1X3,7 MM 1" FDA	1-55, 1-57
315229-0104 ..	SQUARE RING, 35,8X42,8X3,7 MM 1"1/2 FD	1-43, 1-155, 1-157, 1-163, 6-77
315229-0105 ..	SQUARE RING, 48,5X55,5X3,7 MM 2" FDA	1-155, 6-67, 6-85, 6-87, 6-89, 6-91
315229-0106 ..	SQUARE RING, 61,2X68,2X3,7 MM 2"1/2 FDA	6-67
315229-0203 ..	GASKET 22,1X30,1X3,7 MM 1"	1-99, 1-165, 1-167
315229-0204 ..	GASKET 34,8X42,8X3,7 MM 1"1/2	1-77, 1-79, 1-99
315229-0205 ..	GASKET 47,5X55,5X3,7 MM 2 INCH	1-45, 1-75, 1-77, 1-79, 1-99, 1-101
315229-0206 ..	GASKET 60,2X68,2X3,7 MM 2"1/2	1-75, 1-77, 1-79, 1-99, 1-165, 1-167
315230-0422 ..	BEARING SEAL G40X50X4 MM	5-123, 5-125, 5-127
315233-0101 ..	WASHER CAPTIVE SEALING M5(NEW315239-101)	1-51
315233-0109 ..	WASHER CAPTIVE SEALING G1/8	2-33, 12-17, 12-19
315233-0110 ..	WASHER CAPTIVE SEALING G1/4	2-77, 2-79, 12-17, 12-19, 12-23, 12-133
315233-0111 ..	WASHER CAPTIVE SEALING G3/8	6-23, 6-85, 6-87, 6-89, 6-91, 12-17, 12-19
315233-0113 ..	WASHER CAPTIVE SEALING G1/2	2-57, 2-79, 12-17, 12-19, 12-23
315234-0109 ..	WASHER,PL.RND.CU.10,3/13,5 H=1,0	1-9, 1-11, 1-33, 1-55, 1-57, 1-69, 1-73, 1-77, 1-79, 2-51, 2-53, 2-55, 4-35, 4-37, 4-39, 4-41, 6-97, 6-99
315234-0110 ..	WASHER,PL.RND.CU.13,5/18 H=1,5	5-181
315234-0111 ..	WASHER,PL.RND.CU.17,5//21 H=1,5	6-97, 6-99
315234-0113 ..	WASHER PL.RND.CU.21,3//26 H=1,5	5-181, 6-67
315237-0106 ..	WASHER,PL.RND.AL.6/10,H=1	4-7, 4-9, 4-11, 4-13, 4-15, 4-17, 4-35, 4-37, 4-39, 4-41
315237-0107 ..	WASHER,PL.RND.AL.8/14,H=1	4-35, 4-37, 4-39, 4-41
315237-0108 ..	WASHER,PL.RND.AL.5,2/8,H=0,5	4-45, 4-47
315237-0109 ..	WASHER,PL.RND.AL.10/14,H=1,5	4-7, 4-9, 4-11, 4-13, 4-15, 4-17, 4-45, 4-47
315237-0110 ..	WASHER,PL.RND.AL.13,5/18,H=1,5	1-35, 1-37, 4-53, 4-55
315239-0101 ..	NYLON WASHER M5, M5RRP	1-19, 1-21, 1-23, 5-9, 5-87, 5-141, 5-143, 6-15, 6-17
315239-0109 ..	NYLON WASHER G1/8, 1/8RRP	1-29, 1-203, 2-37, 4-57, 4-59, 4-61, 4-63, 5-49, 5-51, 5-109, 6-23, 6-45, 6-47
315239-0110 ..	NYLON WASHER G1/4, 1/4RRP	5-109, 6-23, 6-29, 6-31, 6-39, 6-95, 6-101, 6-103
315239-0111 ..	NYLON WASHER G3/8, 3/8RRP	2-9, 2-11, 2-25, 2-27, 5-49, 5-51, 5-109, 6-25, 6-93, 6-101, 6-103
315239-0113 ..	NYLON WASHER G1/2, 1/2RRP	6-23, 6-27, 6-29, 6-31, 6-33, 6-35, 6-101, 6-103
315239-0115 ..	NYLON WASHER G3/4, 3/4RRP	2-87, 2-89
315250-0103 ..	GASKET 48X38X5,5 MM	5-201, 5-203
315250-0104 ..	GASKET 61X51X5,5 MM	5-189, 5-201, 5-203
315259-0102 ..	FELT SEAL 22-47 MM	2-37
315400-0001 ..	TUBE PUN-H-6X1-BL	1-155, 1-223, 2-33, 5-63, 6-15, 6-17, 6-53
315400-0003 ..	TUBE PUN-H-6X1-SW	5-63
315400-0004 ..	TUBE PUN-H-8X1,25-BL	2-33, 5-19, 5-21, 5-23, 5-25, 5-27, 5-183, 5-185, 5-187, 6-15, 6-17, 6-53
315400-0010 ..	TUBE PUN-H-12X2-BL	6-15, 6-17, 6-55, 6-101, 6-103
315400-0011 ..	TUBE PUN-H-12X2-NT	9-169, 9-171
315400-0013 ..	TUBE PUN-H-16-2,5-BL	6-101, 6-103
315401-0153 ..	WASHER FBH6, 1FZB	9-87, 9-89, 9-167, 9-175
315402-0128 ..	LOCK WASHER, DIN127B 3,6 A4, M3,5	9-103, 9-105
315402-0136 ..	LOCK WASHER, DIN127B 4,1 A4, M4-5/32	1-23, 9-27, 9-41, 9-43, 9-45, 9-49, 9-51, 9-53, 9-55 9-57, 9-59, 9-87, 9-89, 9-91, 9-93, 9-95, 9-97, 9-103, 9-105, 9-107, 9-111, 9-113, 9-115, 9-117 9-119, 9-121, 9-123, 9-125, 9-127, 9-129, 9-131, 9-133, 9-163, 9-165
315402-0146 ..	LOCK WASHER, DIN127B 5,1 A4, M5-3/16	1-185, 1-187, 1-189, 1-191, 6-97, 6-99, 9-13, 9-15 9-17, 9-19, 9-31, 9-83, 9-87, 9-89, 9-149, 9-151, 9-153, 9-167
315402-0156 ..	LOCK WASHER, DIN127B 6,5 A4, 1/4	9-87, 9-89
315402-0165 ..	LOCK WASHER, DIN127B 8,2 A4, M8-5/16	6-45, 6-47
315410-0106 ..	LOCK WASHER MB 6 D=30 H=1,25	5-159, 5-161
315701-0169 ..	PARALLEL KEY W. ROUND ENDS, 4X4X18 MM	8-29
315701-0234 ..	PARALLEL KEY W. ROUND ENDS, 6X6X25 MM	5-85
315701-0235 ..	PARALLEL KEY W. ROUND ENDS, 6X6X28 MM	3-19, 3-21
315701-0239 ..	PARALLEL KEY W. ROUND ENDS, 6X6X40 MM	3-5, 3-19, 3-21
315701-0268 ..	PARALLEL KEY W. ROUND ENDS, 8X7X32 MM	3-5
315701-0335 ..	PARALLEL KEY W. ROUND ENDS, 12X8X56 MM	3-11, 3-13, 3-15, 3-17
315705-0166 ..	PARALLEL KEY W. ROUND ENDS, 4X4X12 MM	8-17, 8-19
315705-0196 ..	PARALLEL KEY W. ROUND ENDS, 5X5X10 MM	6-73
315705-0198 ..	PARALLEL KEY W. ROUND ENDS, 5X5X14 MM	5-123, 5-125, 5-127, 5-139
315705-0201 ..	PARALLEL KEY W. ROUND ENDS, 5X5X20 MM	1-81, 5-123, 5-125, 5-127
315705-0230 ..	PARALLEL KEY W. ROUND ENDS, 6X6X16 MM	5-123, 5-125, 5-127, 5-135
315705-0232 ..	PARALLEL KEY W. ROUND ENDS, 6X6X20 MM	3-31, 5-85, 5-123, 5-125, 5-127, 5-139, 5-163 5-165, 5-167, 5-169, 5-171, 5-173, 5-175, 5-177
315705-0234 ..	PARALLEL KEY W. ROUND ENDS, 6X6X25 MM	5-135
315705-0263 ..	PARALLEL KEY W. ROUND ENDS, 8X7X20 MM	5-163, 5-165, 5-167, 5-169, 5-171, 5-173 5-175, 5-177
315705-0265 ..	PARALLEL KEY W. ROUND ENDS, 8X7X25 MM	5-85
315705-0269 ..	PARALLEL KEY W. ROUND ENDS, 8X7X35 MM	3-5
315705-0271 ..	PARALLEL KEY W. ROUND ENDS, 8X7X45 MM	5-163, 5-165, 5-167, 5-169, 5-171, 5-173 5-175, 5-177
315705-0307 ..	PARALLEL KEY W. ROUND ENDS, 10X8X70 MM	3-9
315742-0102 ..	RETAINING RING, 6 SMS 199 RFR	4-57, 4-59, 4-61, 4-63
315742-0104 ..	RETAINING RING, 8 SMS 199 RFR	8-21, 12-93
315742-0111 ..	RETAINING RING, 15 SMS 199 RFR	7-63
315742-0112 ..	RETAINING RING, 16 SMS 199 RFR	1-91
315742-0116 ..	RETAINING RING, 20 SMS 199 RFR	3-31

Part No	Description	Page No
315751-0103 ..	RETAINING RING FOR SHAFT DIN 471 6X 0.7C	2-35, 2-47, 2-49, 7-61
315751-0109 ..	RETAINING RING FOR SHAFT DIN 471 12 SS	4-105, 4-107, 4-109, 7-15, 7-35, 7-37, 7-39, 7-41
315751-0112 ..	RETAINING RING FOR SHAFT DIN 471 15 SS	1-91, 1-97, 1-221, 5-139, 7-11, 8-17, 8-19
315751-0116 ..	RETAINING RING FOR SHAFT DIN 471 20 SS	4-105, 5-123, 5-125, 5-127, 5-135
315751-0119 ..	RETAINING RING FOR SHAFT DIN 471 25 SS	3-29
315751-0122 ..	RETAINING RING FOR SHAFT DIN 471 30 SS	4-105
315751-0124 ..	RETAINING RING FOR SHAFT DIN 471 35 SS	5-85
315751-0127 ..	RETAINING RING FOR SHAFT DIN 471 40 SS	5-123, 5-125, 5-127
315752-0120 ..	RETAINING RING FOR BORE DIN 472 26	7-61
315752-0125 ..	RETAINING RING FOR BORE DIN 472 37	4-105
315753-0122 ..	RETAINING RING FOR BORE DIN 472 30 SS	7-49
315753-0123 ..	RETAINING RING FOR BORE DIN 472 32 SS	3-7
315753-0124 ..	RETAINING RING FOR BORE DIN 472 35 SS	1-91, 1-97
315753-0127 ..	RETAINING RING FOR BORE DIN 472 40X1.75C	5-123, 5-125, 5-127
315753-0132 ..	RETAINING RING FOR BORE DIN 472 52 SS	5-85
315754-0113 ..	RETAINING RING SHAFT DIN 6799 15	1-19, 1-21, 1-23, 1-51
315755-0106 ..	RETAINING RING SHAFT DIN 6799 4 SS	4-43, 5-123, 5-125, 5-127, 7-23, 7-25, 7-27, 7-29, 7-59
315755-0107 ..	RETAINING RING SHAFT DIN 6799 5 SS	1-219, 2-33, 7-23, 7-25, 7-27, 7-29
315755-0109 ..	RETAINING RING SHAFT DIN 6799 7 SS	12-181
315755-0110 ..	RETAINING RING SHAFT DIN 6799 9 SS	7-51, 7-53
315755-0801 ..	RETAINING RING SHAFT DIN 6799 8 SS	7-47
318163-0128 ..	TIMING BELT 16T5/525 PU	5-139
318201-0047 ..	ROLLER CHAIN, SIMPLEX 3/8 -47	5-123, 5-125, 5-127
318201-0150 ..	ROLLER CHAIN, SIMPLEX 3/8 -150	3-31
318241-0030 ..	ROLLER CHAIN, DUPLEX 3/8" -30, SS	5-123, 5-125, 5-127, 5-131
318800-0103 ..	HANDLES,SPHERICAL KNOB,INT.THRE.,D.25-M6	1-83, 1-85
318800-0104 ..	HANDLE,SPHERICAL KNOB,INT.THRE.,D.30-M8	7-47
318871-0104 ..	KNOB CIRCULAR, EXT THREAD, NO. 8302-6118	8-15
318873-0103 ..	KNOB, CIRCUL, THREADED BUSH, M6 21X17 MM	12-167
321101-0143 ..	FLANGE BUSHING, 8/14X8-18X3 MM	1-209, 1-211
321101-0172 ..	FLANGE BUSHING, 12X18X10 MM	4-105
321101-0173 ..	FLANGE BUSHING, 12X18X12 MM	4-107, 4-109, 8-33
321101-0222 ..	FLANGE BUSHING, 18/25X12-32X4 MM	12-131
321101-0233 ..	FLANGE BUSHING, 20/28X20-35X4 MM	8-39
321111-0066 ..	FLANGE BUSHING, 6/10X10-14X2 MM	2-35
321111-0097 ..	FLANGE BUSHING, 8/12X12-16X2 MM	7-13, 7-51, 7-53
321111-0135 ..	FLANGE BUSHING, 10/16X10-22X3 MM	7-13
321116-0307 ..	BUSHING W/O FLANGE, 20/26X30 MM	5-123, 5-125, 5-127
321120-0132 ..	BEARING BUSH W/O FLANGE, 18X20X20 MM	4-35, 4-37, 4-39, 4-41
321129-0137 ..	THRUST WASHER, 22X38X1,5 MM	3-11, 3-13
321130-0180 ..	THRUST WASHER, 12X24X1,5 MM	7-15
321130-0200 ..	THRUST WASHER, 14X26X1,5 MM	5-11, 5-13, 5-15
321130-0260 ..	THRUST WASHER, 20X36X1,5 MM	3-31
321135-0183 ..	BUSHING, IGLIDUR X 12X14X15	5-11, 5-13, 5-15
321141-0140 ..	BEARING BUSHING, 10X12X10 MM	7-49
321141-0142 ..	BEARING BUSHING, 10X12X12 MM	5-55, 5-111
321141-0183 ..	BEARING BUSHING, 12X14X15 MM	5-123, 5-125, 5-127, 7-35, 7-37, 7-39, 7-41
321141-0193 ..	BEARING BUSHING, 12X14X25 MM	7-15
321141-0224 ..	BEARING BUSHING, 16X18X20 MM	2-9, 2-11, 2-25, 2-27
321141-0260 ..	BEARING BUSHING, 20X23X20 MM	3-31
321141-0300 ..	BEARING BUSHING, 25X28X25 MM	5-109
321161-0062 ..	FLANGE BEARING, 6X8X8 MM	5-153
321302-0298 ..	BALL BEARING 8/22X7	7-65
321306-0105 ..	BALL BEARING 25/47X12	5-123, 5-125, 5-127
321306-0107 ..	BALL BEARING 35/62X14	5-85
321308-0108 ..	BALL BEARING 40/68X15	5-123, 5-125, 5-127
321308-0200 ..	BALL BEARING 10/26X8	7-61
321308-0202 ..	BALL BEARING 15/32X9	3-7, 8-17, 8-19
321308-0203 ..	BALL BEARING 17/35X10	5-123, 5-125, 5-127
321309-0104 ..	BALL BEARING 20/47X14	5-85
321309-0105 ..	BALL BEARING 25/52X15	5-85
321313-0100 ..	BALL BEARING 10/30X9	7-49
321313-0102 ..	BALL BEARING 15/35X11	7-63, 8-17, 8-19
321313-0105 ..	BALL BEARING 25/52X15	3-5
321316-0205 ..	BALL BEARING 25/62X17	5-123, 5-125, 5-127
321317-0109 ..	BALL BEARING 15/28X7	5-139
321330-0100 ..	ANG. BALL BEAR 10/30X14	7-61
321330-0106 ..	ANG. BALL BEAR 30/62X23,8	5-85
321531-0248 ..	NEEDLE SLEEVE W/O CONE, 20X26X16 MM	3-11, 3-13, 3-15, 3-17
321576-0260 ..	CAM ROLLER, 20X47X25 MM	3-11, 3-13, 3-15, 3-17
321580-0116 ..	CAM ROLLER, 6X16X28 MM	5-123, 5-125, 5-127
321600-0114 ..	SEAL COVER LL3052	3-5
321601-0106 ..	SEAL COVER LL42	5-135
321601-0118 ..	SEAL COVER LL62	5-123, 5-125, 5-127
341001-0228 ..	COPPER TUBE	6-15, 6-17
342700-0110 ..	NIPPLE, EXT.THREAD, HEXAGON, G1/4-G1/4	12-133
342700-0113 ..	NIPPLE, EXT.THREAD, HEXAGON, G1/2-G1/2	6-29, 6-31, 6-93, 6-97, 6-99, 6-101, 6-103
342700-0203 ..	NIPPLE, EXT.THREAD, HEXAGON, G3/8-G1/4	6-95
342700-0205 ..	NIPPLE, EXT.THREAD, HEXAGON, G1/2-G1/4	6-97, 6-99
342700-0210 ..	NIPPLE, EXT.THREAD, HEXAGON, G3/4-G1/2	6-85, 6-87
342701-0201 ..	BUSHING, INT/EXT, G1/4-G1/8	12-17, 12-19, 12-133
342701-0203 ..	BUSHING, INT/EXT. G 3/8 - G 1/4	6-23, 6-93, 6-101, 6-103
342701-0205 ..	BUSHING, INT/EXT, G 1/2 - G1/4	2-79, 6-15, 6-17, 6-29, 6-31, 6-39, 6-59, 6-93
342701-0206 ..	BUSHING, INT/EXT, G 1/2 - G3/8	6-39

Part No	Description	Page No
342701-0208 ..	BUSHING, INT/EXT. G 3/4 - G1/4	3-5
342701-0209 ..	BUSHING, INT/EXT, G 3/4 - G 3/8	6-93
342703-0208 ..	CONE NUT M8, NUT M-8 SS	2-51, 2-53, 2-55
342706-0130 ..	STIFFNER SLEEVE FOR HOSE 6X1	1-33, 1-35, 1-37, 1-107, 1-109, 2-59, 2-61
342707-0109 ..	SLEEVE, INT. THREAD, NO. 2543-1/8	1-223
342710-0115 ..	REDUCTION RBM 16/8	2-57
342713-0209 ..	PLUG, EXT THREAD HEX SOCKET 8638-00-180	2-57, 4-35, 4-37, 4-39, 4-41, 6-23, 6-27, 6-97, 6-99
342713-0210 ..	PLUG, EXT THREAD HEX SOCKET	1-35, 1-37, 6-15, 6-17, 6-23, 6-29, 6-31
342713-0211 ..	PLUG, EXT THREAD HEX SOCKET 8638-00-380	6-23, 6-97, 6-99
342713-0213 ..	PLUG, EXT THREAD HEX SOCKET 8638-00-120	6-15, 6-17, 6-27, 6-29, 6-31
342716-0202 ..	REDUCER 4-6	2-59, 2-61
342716-0203 ..	REDUCER 6-8	2-51, 2-53, 2-55
342716-0210 ..	REDUCER 6-12	7-67
342720-0114 ..	CONN. STR. GA-15-G1/2	2-57
342722-0197 ..	STRAIGHT COUPLING	1-219
342722-0198 ..	STRAIGHT COUPLING	5-101
342722-0199 ..	STRAIGHT COUPLING	7-67
342722-0202 ..	PIPE COUPLING 1/8" D=6MM	1-197, 1-199, 1-201, 5-31, 5-33, 5-95, 5-97, 5-99, 5-183, 5-185, 5-187, 6-77, 7-67
342722-0203 ..	STRAIGHT COUPLING	1-35, 1-37
342722-0204 ..	PIPE COUPLING	5-89
342722-0210 ..	STRAIGHT COUPLING, D=12 MM - G3/8"	6-39
342725-0108 ..	CONN. STR. PIPE GAI10LR71	2-77
342725-0114 ..	CONN. STR. PIPE GAI15LR71	6-29, 6-31, 6-69
342726-0109 ..	CONN. PIPE G-12	2-57
342726-0114 ..	CONN. PIPE G-15	2-57
342727-0102 ..	PIPE CONNECTION G 6	2-51, 2-53, 2-55
342727-0214 ..	PIPE CONNECTION G 15	6-101, 6-103
342731-0221 ..	CONN. ELBOW, WE15LR71	6-15, 6-17, 6-101, 6-103
342732-0099 ..	ELBOW PIPE JOINT, (REEMP. 90458-2954)	7-19
342732-0104 ..	ELBOW PIPE JOINT, EXT.THREAD, D=8MM-G1/4	6-59
342736-0114 ..	CONN. ELBOW W-15	2-57
342737-0204 ..	ELBOW CONNECTION 6, W06L71	1-9, 1-11, 6-95
342738-0108 ..	ADJUSTABLE ELBOW CONNECTION 8-G1/4	4-53, 4-55
342738-0208 ..	ADJUSTABLE ELBOW CONNECTION 8-G1/4	2-59, 2-61
342738-0221 ..	ADJUSTABLE ELBOW CONNECTION 15-G1/2	6-29, 6-31, 6-35
342746-0114 ..	CONN. T-PIPE T-15	2-57, 5-183, 5-185, 5-187
342748-0100 ..	T-CONNECTION 4MM	4-43
342748-0102 ..	T-CONNECTION 6MM	1-33, 2-33, 2-59, 2-61
342748-0103 ..	T-CONNECTION 8MM	2-51, 2-53, 2-55
342748-0109 ..	T-CONNECTION 12MM	7-67
342751-0204 ..	PIPE FITTING TEE, LE06LR71	1-107, 1-109
342752-0103 ..	CONN. STR. GE08LREDCF	6-97, 6-99
342752-0110 ..	CONN. STR. GE12LREDCF	6-93, 6-97, 6-99
342762-0114 ..	CONN. BULKHEAD SV15LCF	6-85, 6-87
342767-0100 ..	BULKHEAD LEAD-IN, G1/8	2-51, 2-53, 2-55, 2-59, 2-61
342767-0104 ..	BULKHEAD LEAD-IN, G1/4	2-59, 2-61
342768-0102 ..	BULKHEAD CONNECTOR, 6 MM	2-37, 2-59, 2-61
342770-0101 ..	RAIGHT COUPLING INT, D=4 MM - G1/8	4-43
342770-0107 ..	STRAIGHT COUPLING INT, D=8 MM - G1/8	5-183, 5-185, 5-187
342772-0113 ..	ELBOW FITTING, 6 - G1/8	1-35, 1-37, 7-67
342772-0114 ..	ELBOW FITTING, 6 - G1/4	1-35, 1-37
342790-0102 ..	MAV PRESSUR GAUGE CONNECTOR 6	1-31, 12-157
342797-0121 ..	BANJO CONN., RINGPIECE 6-1/8	1-69, 1-71, 1-73, 1-91, 1-99, 1-107, 1-109, 1-149, 1-151, 1-169, 2-33, 2-51, 2-53, 2-55
342797-0122 ..	BANJO CONN., RINGPIECE 6-1/4	1-31, 6-43
342800-1102 ..	DIAPHRAGM, FDA PTFE/EPDM 5E, SEAT S. 10	11-37
342803-0103 ..	UNION NUT, RD 60-6 (SMS 38)	5-201, 5-203
342807-0104 ..	PIPE ELBOW 90 DEGR. SMS1220, D=51 MM	5-189
342840-0101 ..	CLAMP, 12,7 AND 19,1 MM 3-A PCS+PMCS	1-55, 1-57, 5-207
342840-0103 ..	CLAMPING PIECE DN 1-11/2, GH13LAH112304N	1-163
342840-0105 ..	CLAMPING PIECE, GH13LAH2304NO79612011202	6-85, 6-87
342841-0103 ..	FERRULE, 3-A, GC-CLAMP 25,4 MM (1")	1-163
342850-0101 ..	GASKET 11,1X21,8X4,45 MM 1/2" FDA 3-A	5-207
342850-0201 ..	GASKET 11,1X21,8X4,45 MM 1/2" FDA 3-A	1-55, 1-57
342850-0203 ..	GASKET 22,7X49,1X5,2 MM 1" FDA 3-A	1-163
342850-0303 ..	GASKET 22,7X49,1X5,2 MM 1" FDA, 3-A	11-39
342850-0304 ..	GASKET 35,4X49,1X5,2 1"1/2 FDA, 3-A	11-39
342850-0305 ..	GASKET 47,8X62,6X5,2 MM 2" FDA 3-A	6-85, 6-87, 11-39
342903-0111 ..	NUT WITH SPRING, 1723 6/4-M10X1	12-135
342903-0121 ..	NUT WITH SPRING, 1723 8/6-M12X1	2-9, 2-11, 6-29, 6-31, 6-45, 6-47
342920-0123 ..	STRAIHGT COUPLING, EXT.THREAD 8/6-R3/8	6-101, 6-103
342920-0133 ..	STRAIGHT COUPLING, EXT.THREAD 10/8-R3/8	6-101, 6-103
342921-0111 ..	STRAIGHT COUPLING,EXT.THREAD 6/4-M5	7-13, 7-19
342921-0112 ..	STRAIGHT COUPLING, EXT.THREAD 6/4-6M	5-149, 5-151, 5-183, 5-185, 5-187
342921-0113 ..	STRAIGHT COUPLING, EXT.THREAD 6/4-G1/8	5-49, 5-51, 5-65, 5-109, 6-45, 6-47, 12-17, 12-19
342921-0114 ..	STRAIGHT COUPLING, EXT.THREAD 6/4-G1/4	12-17, 12-19, 12-135
342921-0121 ..	STRAIGHT COUPLING, EXT.THREAD 8/6-G1/8	6-27, 6-45, 6-47
342921-0122 ..	STRAIGHT COUPLING, EXT.THREAD 8/6-G1/4	6-23, 6-97, 6-99
342921-0123 ..	STRAIGHT COUPLING, EXT.THREAD 8/6-G3/8	6-23
342923-0121 ..	STRAIGHT COUPL.,INT.THREADED 8/6-G1/8"	6-29, 6-31
342923-0132 ..	STRAIGHT COUPL.,INT.THREADED 10/8-G1/4"	2-79
342930-0113 ..	ELBOW 90COUPL., EXT. THREAD 6/4-R1/8"	5-65
342930-0122 ..	ELBOW 90 COUPL., EXT. THREAD 8/6-R1/4"	3-5

Machine Type Group Description Page No

Part No	Description	Page No
342931-0122	ELBOW 90 COUPL., EXT. THREAD 8/6-G1/4"	6-23, 6-29, 6-31, 6-41, 6-93
342946-0112	T-COUPLING,UNION 6/4	1-197, 1-199, 1-201, 6-15, 6-17
342946-0122	T-COUPLING,UNION 8/6	6-15, 6-17
342960-0112	BULKHEAD COUPLING 6/4	2-33, 5-49, 5-51, 5-63, 5-109, 5-183, 5-185, 5-187, 6-45, 6-47
342960-0121	BULKHEAD COUPLING 8/6-6/4	5-183, 5-185, 5-187
342960-0122	BULKHEAD COUPLING 8/6	5-49, 5-51, 5-109, 5-183, 5-185, 5-187, 6-45, 6-47
342980-0111	HOSE FITTING, BANJO RING L PO M5 6/4	1-155
342980-0113	HOSE FITTING, BANJO RING L PO G1/8 6/4	1-93, 1-95, 1-107, 1-109, 1-197, 1-199, 1-201
342980-0114	HOSE FITTING, BANJO RING L PO G1/4 6/4	12-17, 12-19
342980-0121	HOSE FITTING, BANJO RING L PO G1/8 8/6	2-9, 2-11, 2-25, 2-27, 4-53, 4-55, 4-113, 4-115
342980-0122	HOSE FITTING, BANJO RING L PO G1/4 8/6	3-5, 6-45, 6-47
342980-0301	BANJO-HOLLOW BOLT COUPL.,EXT.THREA.01-M5	1-155
342980-0303	BANJO-HOLLOW BOLT COUPL,EXT.THR.01-G1/8	1-9, 1-11, 1-29, 1-49, 1-71, 1-99, 1-107 1-109, 1-169, 1-197, 1-199, 1-201, 2-9, 2-11, 2-25, 2-27, 2-51, 2-53, 2-55, 4-53, 4-55, 4-113, 4-115
342980-0304	BANJO-HOLLOW BOLT COUPL,EXT.THR.01-G1/4	1-31, 3-5, 6-43, 6-45, 6-47
342980-0314	BANJO-HOLLOW BOLT COUPL,EXT.THR.02-G1/4	12-17, 12-19
342991-0100	HOSE CLIP,WORM DRIVE TYPE (8)-14	6-101, 6-103, 12-23
342991-0101	HOSE CLIP,WORM DRIVE TYPE (11)-17	5-181, 6-69, 6-95, 12-23
342991-0104	HOSE CLIP,WORM DRIVE TYPE (19)-28	3-5
342991-0106	HOSE CLIP,WORM DRIVE TYPE (26)-38	1-163
342991-0112	HOSE CLIP,WORM DRIVE TYPE (68)-85	6-67
342991-0113	HOSE CLIP,WORM DRIVE TYPE (77)-95	6-67
350001-0002	PUSH-IN FITTING QS-F-M5-6	5-49, 5-51
350001-0006	PUSH-IN FITTING QS-F-G1/8-6	5-49, 5-51
350001-0008	PUSH-IN FITTING QS-F-G1/4-6	12-135
350001-0009	PUSH-IN FITTING QS-F-G1/4-8	6-15, 6-17, 6-101, 6-103
350001-0011	PUSH-IN FITTING QS-F-G1/4-12	6-15, 6-17
350001-0016	PUSH-IN FITTING QS-F-G1/2-12	6-15, 6-17, 6-101, 6-103
350002-0002	PUSH-IN L-FITTING QSL-F-M5-6	1-155, 5-35, 5-37, 5-39, 5-41, 5-43, 6-49, 6-51, 6-53
350002-0006	PUSH-IN L-FITTING QSL-F-G1/8-6	1-35, 1-37, 2-33, 5-19, 5-21, 5-23, 5-25, 5-27, 5-35, 5-37 5-39, 5-41, 5-43, 6-33, 6-49, 6-51, 6-53
350002-0007	PUSH-IN L-FITTING QSL-F-G1/8-8	6-49, 6-51, 6-53
350002-0008	PUSH-IN L-FITTING QSL-F-G1/4-6	1-223, 5-63, 6-15, 6-17
350002-0009	PUSH-IN L-FITTING QSL-F-G1/4-8	6-15, 6-17, 6-37
350002-0011	PUSH-IN L-FITTING QSL-F-G1/4-12	6-15, 6-17
350002-0014	PUSH-IN L-FITTING QSL-F-G3/8-12	6-49, 6-51, 9-171
350002-0016	PUSH-IN L-FITTING QSL-F-G1/2-12	6-15, 6-17, 6-39, 6-55
350003-0007	USH-IN FITTING QS-F-G1/4-8-I	6-37
350004-0005	PUSH-IN L-FITTING QSL-F-12	6-39
350005-0002	PUSH-IN T-FITTING QST-F-6	6-15, 6-17
350006-0008	PUSH-IN FITTING QS-F-12H-8	6-15, 6-17
350007-0006	PUSH-IN T-FITTING QST-F-G1/8-6	1-223
350007-0009	PUSH-IN T-FITTING QST-F-G1/4-8	6-15, 6-17
350008-0003	PUSH-IN FITTING QSF-F-G1/8-6	1-223, 2-33, 5-49, 5-51
350010-0002	PUSH-IN BULKHEAD FITTING QSS-F-6	1-173, 1-175, 1-177, 1-179, 1-181, 1-183, 5-183, 5-185, 5-187
350012-0002	SLEEVE QSH-F-6	5-49, 5-51
350013-0002	PLUG QSC-6H	6-15, 6-17, 6-49, 6-51
350013-0003	PLUG QSC-8H	6-15, 6-17, 6-49, 6-51
350013-0005	PLUG QSC-12H	6-15, 6-17
350014-0006	FITTING QS-F-G1/8-6H	12-135
350015-0001	PUSH-IN Y-CONNECTOR QSY-F-6	6-15, 6-17, 6-53
350015-0003	PUSH-IN Y-CONNECTOR QSY-F-8	5-183, 5-185, 5-187, 6-15, 6-17, 6-53
351120-0144	CABLE Ã–LFLEX HEAT 180 SIHF 3X1,5	1-73, 5-19, 5-21, 5-23, 5-25, 5-27, 8-47, 8-49
351120-0145	CABLE Ã–LFLEX HEAT 180 SIHF 3X2,5	1-69, 7-21
351120-0146	CABLE Ã–LFLEX HEAT 180 SIHF 3X4	7-19
351120-0168	CABLE SIHF 4X10MM2 GREEN/YELLOW	1-77, 1-79
351120-0267	CABLE Ã–LFLEX HEAT 180 SIHF 4X6	1-55, 1-57
351150-0187	CABLE OLFLEX 5X6 MM2 LIGHT/GREY	9-13, 9-15, 9-17, 9-19
351150-0403	CABLE OLFLEX 3X0,75 MM2 LIGHT/GREY	1-35, 1-37, 1-55, 1-57, 1-103, 1-105, 2-93, 6-29 6-31, 6-33, 6-39, 6-45, 6-47, 6-57, 6-83, 6-95, 6-97, 6-99, 6-101, 6-103
351150-0404	CABLE OLFLEX 4X0,75 MM2 LIGHT/GREY	1-35, 1-37, 1-103, 1-105, 2-13, 2-15, 2-29, 2-31 6-95, 6-97, 6-99, 8-45
351150-0405	CABLE OLFLEX 5X0,75 MM2 LIGHT/GREY	6-69, 8-47, 8-49, 11-3, 11-25, 11-31, 11-33
351150-0406	CABLE OLFLEX 7X0,75 MM2 LIGHT/GREY	2-81, 8-45, 8-47, 8-49
351150-0407	CABLE OLFLEX 12X0,75 MM2 LIGHT/GREY	7-17, 7-33, 9-13, 9-15, 9-17, 9-19
351150-0412	CABLE OLFLEX 3X1,5 MM2 LIGHT/GREY	1-55, 1-57, 2-13, 2-15, 2-29, 2-31, 2-37, 6-13, 8-47, 8-49
351150-0413	CABLE OLFLEX 4GX1,5 MM2 LIGHT/GREY	1-97, 2-37
351150-0414	CABLE OLFLEX 5X1,5 MM2 LIGHT/GREY	8-47, 8-49, 9-13, 9-15, 9-17, 9-19
351150-0415	CABLE OLFLEX 7X1,5 MM2 LIGHT/GREY	9-167
351150-0418	CABLE OLFLEX 4X2,5 MM2 LIGHT/GREY	2-37, 6-67, 6-73, 6-97, 6-99
351150-0422	CABLE OLFLEX 3X4 MM2 LIGHT/GREY	7-33
351150-0425	CABLE OLFLEX 25X0,75 MM2 LIGHT/GREY	1-35, 1-37, 2-37, 7-33, 8-47, 8-49
351150-0428	CABLE OLFLEX 41X0,75 MM2 LIGHT/GREY	2-37
351150-0431	CABLE OLFLEX 2X0,75 MM2 LIGHT/GREY	1-29, 1-55, 1-57, 5-201, 5-203, 6-23, 6-35, 6-85, 6-87
351160-0102	WIRE AWM 1X0,75 MM2 DARKBLUE	1-41, 9-7, 9-9, 9-11
351160-0105	WIRE AWM 1X2,5 MM2 DARKBLUE	9-7, 9-9, 9-11
351160-0107	WIRE AWM 1X6 MM2 DARKBLUE	9-7, 9-9, 9-11
351161-0104	WIRE AWM 1X1,5 MM2 LIGHTBLUE	9-7, 9-9, 9-11
351161-0105	WIRE AWM 1X2,5 MM2 LIGHTBLUE	9-7, 9-9, 9-11
351161-0106	WIRE AWM 1X4 MM2 LIGHTBLUE	9-7, 9-9, 9-11
351161-0109	WIRE AWM 1X16 MM2 LIGHTBLUE	9-7, 9-9, 9-11
351161-0110	WIRE AWM 1X25 MM2 LIGHTBLUE	9-7, 9-9, 9-11
351162-0102	WIRE AWM 1X0,75 MM2 YELLOW-GREEN	6-83
351162-0104	WIRE AWM 1X1,5 MM2 YELLOW-GREEN	9-7, 9-9, 9-11

Part No	Description	Page No
351162-0105 ..	WIRE AWM 1X2,5 MM2 YELLOW-GREEN	9-7, 9-9, 9-11
351162-0106 ..	WIRE AWM 1X4 MM2 YELLOW-GREEN	2-37, 2-93, 6-45, 6-47, 9-7, 9-9, 9-11
351162-0107 ..	WIRE AWM 1X6 MM2 YELLOW-GREEN	9-7, 9-9, 9-11
351162-0109 ..	WIRE AWM 1X16 MM2 YELLOW-GREEN	6-61, 9-7, 9-9, 9-11
351163-0107 ..	WIRE AWM 1X6 MM2 RED	9-7, 9-9, 9-11
351164-0104 ..	WIRE AWM 1X1,5 MM2 BLACK	9-7, 9-9, 9-11
351164-0105 ..	WIRE AWM 1X2,5 MM2 BLACK	9-7, 9-9, 9-11
351164-0106 ..	WIRE AWM 1X4 MM2 BLACK	9-7, 9-9, 9-11
351164-0107 ..	WIRE AWM 1X6 MM2 BLACK	9-7, 9-9, 9-11
351164-0110 ..	WIRE AWM 1X25 MM2 BLACK	9-7, 9-9, 9-11
351164-0111 ..	WIRE AWM 1X35 MM2 BLACK	9-7, 9-9, 9-11
351166-0102 ..	WIRE AWM 1X0,75 MM2 ORANGE	9-7, 9-9, 9-11
351416-0060 ..	MINIATURE CIRC. BREAK., FAZ -D6 1-POLE	9-61, 9-145
351416-0100 ..	MINIATURE CIRC. BREAK., FAZ -D10 1-POLE	9-61, 9-139, 9-141
351416-0160 ..	MINIATURE CIRC. BREAK., FAZ -D16 1-POLE	9-139, 9-141
351418-0250 ..	MINIATURE CIRC. BREAK.,FAZ-D25/3 3-POLE	9-135, 9-137
351423-0004 ..	CABLE UNITRONIC LICY 2X0,34	9-173
351501-0030 ..	ETHERNET PATCH CABLE, FL CAT5 PATCH 3,0	9-83
352100-0106 ..	CABLE GLAND NO.18,6-10,5	1-69
352101-0103 ..	LEAD-IN, PR18,6/PG11, E-1457518	6-15, 6-17, 6-45, 6-47
352101-0107 ..	LEAD-IN, PR37/PG29, E1457555	1-173, 1-175, 1-177, 1-179, 1-181, 1-183
352103-0096 ..	CABLE GLAND, ST 7, PR 12,5/PG7	1-41, 12-113
352103-0100 ..	CABLE GLAND, STR 9, PR15,2/PG9	2-33, 2-37
352103-0101 ..	CABLE GLAND, ST 9, PR15,2/PG9	1-41, 1-83, 1-85, 1-185, 1-187, 1-189, 1-191, 2-43, 2-45 2-59, 2-61, 6-11, 7-17, 9-91, 9-93, 9-95, 9-97, 9-111, 9-113, 9-115, 9-117, 9-119, 9-121, 9-123 9-125, 9-127, 9-129
352103-0106 ..	CABLE GLAND, ST 11, PR18,6/PG11	1-73, 1-225, 2-43, 2-45, 5-77, 5-79, 6-11, 8-45, 9-111 9-113, 9-115, 9-117, 9-119, 9-121, 9-123, 9-125, 9-127, 9-129
352103-0108 ..	CABLE GLAND, ST 13,5 , PR20,4/PG13,5	2-59, 2-61, 6-11
352103-0110 ..	CABLE GLAND, STR 16, PR22,5/PG16	1-185, 1-187, 1-189, 1-191, 9-91, 9-93, 9-95, 9-97
352103-0111 ..	CABLE GLAND, ST 16, PR22,5/PG16	1-185, 1-187, 1-189, 1-191, 5-121, 8-17, 8-19, 9-95, 9-97, 9-167
352103-0116 ..	CABLE GLAND, ST 21, PR28,3/PG21	1-41, 1-185, 1-187, 1-189, 1-191, 2-43, 2-45, 9-95, 9-97
352103-0120 ..	CABLE GLAND, STR 29, PR37,0/PG29	1-185, 1-187, 1-189, 1-191
352103-0121 ..	CABLE GLAND, ST 29, PR37,0/PG29	1-185, 1-187, 1-189, 1-191, 5-77, 5-79, 5-121, 9-95, 9-97
352110-0100 ..	CABLE CLIPS, D=5-7 MM	1-83, 1-85
352110-0103 ..	CABLE CLIPS, D=14-20 MM	5-181
352113-0101 ..	CABLE TIE, BLACK 92X2,5 MM	2-51, 2-53, 2-55, 3-15, 3-17, 4-57, 4-59, 4-61, 4-63, 4-113 4-115, 6-13, 9-7, 9-9, 9-11
352113-0102 ..	CABLE TIE, BLACK 188X4,8 MM	1-225, 2-105, 4-7, 4-9, 4-11, 4-13, 4-15, 4-17, 4-45, 4-47, 5-75 5-121, 8-23, 8-25, 9-7, 9-9, 9-11, 9-171, 12-23
352113-0103 ..	CABLE TIE, BLACK 290X7,6 MM	5-115, 5-117
352113-0104 ..	CABLE TIE, BLACK 300X4,8 MM	6-15, 6-17
352113-0203 ..	ANCHOR PLATES FOR STRIPS, TM3S8-M0	6-61, 8-45
352113-0204 ..	ANCHOR PLATES FOR STRIPS, TM3S25-M	2-13, 2-15, 2-29, 2-31, 2-105, 6-11, 6-53
352113-0205 ..	ANCHOR PLATES FOR STRIPS, TM2S8-C100	3-37, 4-57, 4-59, 4-61, 4-63, 5-75, 5-121, 7-19 7-35, 7-37, 8-23, 8-25, 9-87, 9-89, 9-103, 9-105, 9-107, 9-135, 9-137
352113-0206 ..	ANCHOR PLATES FOR STRIPS, ABM100-AT	7-23, 7-25, 7-27, 7-29
352553-0100 ..	CYLINDRICAL FUSE 10A, 3NC1010	9-143
352553-0160 ..	CYLINDRICAL FUSE 16A, 3NC1016	9-143, 11-11
352553-0250 ..	CYLINDRICAL FUSE 25A, 3NC1025	9-143, 11-11
352554-0040 ..	CYLINDRICAL FUSE 4A, 3NC1404	9-143
353001-0101 ..	END SLEEVE 0,5 MM2	11-21
353001-0102 ..	END SLEEVE 0,75 MM2	9-7, 9-9, 9-11, 11-21
353001-0113 ..	END SLEEVE 0,75MM2	9-7, 9-9, 9-11, 11-25, 11-31, 11-33
353001-0114 ..	END SLEEVE 1,50 MM2	9-7, 9-9, 9-11
353001-0115 ..	END SLEEVE 2,5/14	9-7, 9-9, 9-11
353001-0117 ..	END SLEEVE H4.0/20 GREY	9-7, 9-9, 9-11
353001-0118 ..	END SLEEVE 6MM2 BLACK	9-7, 9-9, 9-11
353001-0119 ..	END SLEEVE H 1.0/14 YELLOW	9-7, 9-9, 9-11
353001-0120 ..	END SLEEVE H 10/28	9-7, 9-9, 9-11
353021-0132 ..	TERMINAL, DLD 2,5/PE	5-77, 5-79, 9-63, 9-65, 9-67, 9-69, 9-71, 9-73, 9-75, 9-77
353021-0133 ..	TERMINAL, MAK 2,5	9-71, 9-73
353021-0212 ..	FEED THROUGH TERMINAL, WDU 2,5	2-43, 2-45, 7-33, 8-47, 8-49, 9-63, 9-65, 9-67, 9-69 9-79, 9-81
353021-0213 ..	FEED THROUGH TERMINAL, WDU 4	5-77, 5-79, 7-33, 9-63, 9-65, 9-67, 9-69
353021-0214 ..	FEED THROUGH TERMINAL, WDU 6	9-63, 9-65, 9-67, 9-69
353021-0215 ..	FEED THROUGH TERMINAL, WDU 10	9-63, 9-65, 9-67, 9-69
353021-0219 ..	FEED THROUGH TERMINAL, WDU 35	9-79, 9-81, 9-161
353021-0301 ..	TERMINAL, DLI 2,5/35	5-77, 5-79
353021-0302 ..	TERMINAL, DLD 2,5/35	5-77, 5-79, 9-71, 9-73, 9-75, 9-77
353022-0003 ..	TERMINAL WNT 6 10X3	9-79, 9-81
353022-0006 ..	TERMINAL WNT 2.5 10X3	9-79, 9-81
353024-0204 ..	EARTH TERMINAL WPE 2,5	2-43, 2-45, 5-77, 5-79, 8-47, 8-49, 9-63, 9-65, 9-67, 9-69
353024-0205 ..	EARTH TERMINAL WPE 4	7-33, 8-47, 8-49, 9-63, 9-65, 9-67, 9-69, 9-79, 9-81
353024-0206 ..	EARTH TERMINAL WPE 6	5-77, 5-79, 9-63, 9-65, 9-67, 9-69, 9-71, 9-73, 9-75, 9-77
353024-0207 ..	EARTH TERMINAL WPE 10	9-63, 9-65, 9-67, 9-69
353024-0208 ..	EARTH TERMINAL WPE 16	9-79, 9-81
353024-0209 ..	EARTH TERMINAL WPE 35	9-79, 9-81, 9-161
353031-0203 ..	END BRACKET, WEW 35/2	2-43, 2-45, 9-37, 9-39, 9-63, 9-65, 9-67, 9-69, 9-71, 9-73, 9-75 9-77, 9-79, 9-81, 9-139, 9-141, 9-161
353032-0004 ..	END PLATE, WAP 2,5-10, BEIGE	5-77, 5-79, 9-63, 9-65, 9-67, 9-69
353032-0009 ..	END PLATE, WAP WDK 2,5	5-77, 5-79, 9-37, 9-39, 9-71, 9-73, 9-79, 9-81
353032-0013 ..	END PLATE, AP, 138 186	5-77, 5-79
353032-0302 ..	END PLATE, AP DLD2,5 DB	5-77, 5-79, 9-71, 9-73, 9-75, 9-77

Part No	Description	Page No
353033-0104 ..	END PLATE, WHP2,5-35N/10X3 BL	9-79, 9-81
353033-0105 ..	END PLATE, WAP 16+35 WTW 2,5-10	9-79, 9-81, 9-161
353034-0026 ..	BRIDGE CONNECTOR WQV 35/2	9-161
353034-0030 ..	BRIDGE CONNECTOR WQV 2,5/10	2-43, 2-45, 7-33, 8-47, 8-49, 9-37, 9-39, 9-75, 9-77, 9-79, 9-81
353034-0032 ..	BRIDGE CONNECTOR WQV 6/10	9-63, 9-65, 9-67, 9-69
353034-0035 ..	BRIDGE CONNECTOR WQV 35/10	9-79, 9-81
353034-0039 ..	BRIDGE CONNECTOR WQV 4/4	7-33
353034-0401 ..	BRIDGE CONNECTOR Q 2 DLI	5-77, 5-79, 9-63, 9-65, 9-67, 9-69, 9-75, 9-77
353034-0402 ..	BRIDGE CONNECTOR Q 3 DLI	9-63, 9-65, 9-67, 9-69, 9-75, 9-77
353034-0403 ..	BRIDGE CONNECTOR Q 4 DLI	9-63, 9-65, 9-67, 9-69, 9-71, 9-73, 9-75, 9-77
353034-0404 ..	BRIDGE CONNECTOR Q 10 DLI	5-77, 5-79, 9-63, 9-65, 9-67, 9-69, 9-71, 9-73, 9-75, 9-77
353042-0003 ..	RAIL, TS35/15/2.3	9-139, 9-141, 9-143
353042-0004 ..	RAIL, TS 35/7,5	9-13, 9-15, 9-17, 9-19, 9-23, 9-29, 9-37, 9-39, 9-47, 9-61, 9-63, 9-65, 9-67, 9-69, 9-71, 9-73, 9-75, 9-77, 9-79, 9-81, 9-85, 9-109, 9-139, 9-141, 9-145
353042-0005 ..	RAIL, TS 35/7.5 NO HOLE	5-77, 5-79
353042-0006 ..	RAIL, TS 35/155/15/2,3	9-161
353101-0118 ..	CABLE SHOE 0,5-1,5MM2 M3 RED	6-83
353101-0120 ..	CABLE SHOE 0,5-1,5MM2 M4 RED	9-7, 9-9, 9-11, 12-113
353101-0123 ..	CABLE SHOE 0,5-1,5MM2 M6 RED	5-201, 5-203
353101-0126 ..	CABLE SHOE	5-201, 5-203
353101-0129 ..	CABLE SHOE 1,5-2,5MM2 M3 BLUE	9-7, 9-9, 9-11
353101-0130 ..	CABLE SHOE 1,5-2,5MM2 M4 BLUE	7-21, 9-7, 9-9, 9-11
353101-0132 ..	CABLE SHOE 1,5-2,5MM2 M5 BLUE	1-69, 7-19, 7-21, 9-7, 9-9, 9-11
353101-0150 ..	CABLE SHOE 4,0-6,0MM2 M4 YELLOW	9-7, 9-9, 9-11
353101-0152 ..	CABLE SHOE 4,0-6,0MM2 M5 YELLOW	9-7, 9-9, 9-11
353101-0153 ..	CABLE SHOE 4,0-6,0MM2 M6 YELLOW	6-45, 6-47, 9-7, 9-9, 9-11
353103-0120 ..	CABLE SHOE 1,25 MMÂ² RED	9-7, 9-9, 9-11
353103-0130 ..	CABLE SHOE	9-7, 9-9, 9-11
353103-0138 ..	CABLE SHOE	9-7, 9-9, 9-11
353104-0130 ..	CABLE SHOE, RING UNINS., YAV 025 M 4	1-73
353104-0140 ..	CABLE SHOE, RING UNINS., YAV 06 M 4	7-19
353104-0164 ..	CABLE SHOE, RING UNINS., YAV 10 M 10	9-7, 9-9, 9-11
353104-0168 ..	CABLE SHOE, RING UNINS., YAV 16 M 6	9-7, 9-9, 9-11
353104-0175 ..	CABLE SHOE, RING UNINS., YAV 25 M 6	9-7, 9-9, 9-11
353240-0002 ..	COMPRESSION GLAND, VK 150Y	11-25, 11-31, 11-33
353240-0004 ..	COMPRESSION GLAND, VK 153Y	5-77, 5-79
353240-0005 ..	COMPRESSION GLAND, VK 154Y	1-185, 1-187, 1-189, 1-191, 5-77, 5-79, 5-121, 9-91, 9-93
353240-0006 ..	COMPRESSION GLAND, VK 155Y	5-77, 5-79, 6-11, 9-91, 9-93
353240-0007 ..	COMPRESSION GLAND, VK 156Y	2-91
353241-0002 ..	COMPRESSION GLAND, VK 15152Y	11-25, 11-31, 11-33
353241-0003 ..	COMPRESSION GLAND, VK 15455Y	5-121
353241-0005 ..	COMPRESSION GLAND, VK 15253Y	5-77, 5-79
353241-0007 ..	CABLE GLAND, VK 15354Y	5-77, 5-79
353242-0001 ..	COMPRESSION GLAND, VK 152YUL11	6-13, 6-95
353242-0003 ..	COMPRESSION GLAND, VK 155YUL21	7-33, 8-45, 9-91, 9-93
353243-0001 ..	GLAND FITTING, VK 15052YUL11	5-109, 5-123, 5-125, 5-127, 6-83, 6-85, 6-87, 6-95, 6-97, 6-99, 9-91, 9-93, 9-95, 9-97
353243-0002 ..	GLAND FITTING, VK 15152YUL11	1-173, 1-175, 1-177, 1-179, 1-181, 1-183, 2-23, 2-41, 6-69, 6-97, 6-99, 8-45
353243-0003 ..	GLAND FITTING, VK 15153YUL13	1-55, 1-57, 1-173, 1-175, 1-177, 1-179, 1-181, 1-183
353243-0005 ..	GLAND FITTING, VK 15354YUL16	5-121, 6-67, 6-73, 9-91, 9-93
353243-0007 ..	GLAND FITTING, VK 15455YUL21	1-35, 1-37, 1-55, 1-57, 1-173, 1-175, 1-177, 1-179, 1-181, 1-183
353243-0008 ..	GLAND FITTING, VK 15556YUL29	1-35, 1-37
353249-0003 ..	INSERT, SINGLE HOLE, E151 11	11-25, 11-31, 11-33
353249-0008 ..	INSERT, SINGLE HOLE, EK152 7	5-85, 5-109, 5-115, 5-117, 5-123, 5-125, 5-127
353249-0009 ..	INSERT, SINGLE HOLE, EK152 9	1-173, 1-175, 1-177, 1-179, 1-181, 1-183, 2-13, 2-15, 2-29, 2-31, 2-41, 6-69, 6-83, 6-85, 6-87, 6-95, 6-97, 6-99, 9-91, 9-93, 9-95, 9-97
353249-0010 ..	INSERT, SINGLE HOLE, EK152 11	1-173, 1-175, 1-177, 1-179, 1-181, 1-183, 2-23, 8-33, 8-45
353249-0011 ..	INSERT, SINGLE HOLE, EK153 11	1-55, 1-57, 1-173, 1-175, 1-177, 1-179, 1-181, 1-183
353249-0012 ..	INSERT, SINGLE HOLE, EK154 11	8-45
353249-0013 ..	INSERT, SINGLE HOLE, EK154 13	5-121, 5-191, 5-193, 5-195, 6-67, 6-73, 6-97, 6-99, 7-33, 9-91, 9-93, 9-111, 9-113, 9-115, 9-117, 9-119, 9-121, 9-123, 9-125, 9-127, 9-129
353249-0014 ..	INSERT, SINGLE HOLE, EK154 16	5-201, 5-203, 7-17, 7-33, 9-91, 9-93
353249-0016 ..	INSERT, SINGLE HOLE, EK155 18	1-55, 1-57, 1-173, 1-175, 1-177, 1-179, 1-181, 1-183, 8-47, 8-49
353249-0017 ..	INSERT, SINGLE HOLE, HI.TEMP, EK152 I 7	1-35, 1-37
353249-0025 ..	INSERT, MULTI HOLE, E152M 3X4	8-45, 8-47, 8-49
353249-0028 ..	INSERT, MULTI HOLE, E153M 2X8	5-183, 5-185, 5-187
353249-0036 ..	INSERT, MULTI HOLE, EK152M 2X4	9-111, 9-113, 9-115, 9-117, 9-119, 9-121, 9-123, 9-125, 9-127, 9-129, 11-25, 11-31, 11-33
353249-0037 ..	INSERT, MULTI HOLE, EK155M 4X8	5-75, 5-121
353249-0051 ..	INSERT, MULTI HOLE, E154M 4X6	1-185, 1-187, 1-189, 1-191, 5-77, 5-79, 9-91, 9-93
353249-0059 ..	INSERT, MULTI HOLE, E154M 4X8	5-77, 5-79
353249-0060 ..	INSERT, MULTI HOLE, E155M 2X13	5-77, 5-79
353249-0061 ..	INSERT, SINGLE HOLE, EK155 20	1-173, 1-175, 1-177, 1-179, 1-181, 1-183, 7-33
353249-0065 ..	INSERT, SINGLE HOLE, E152 9	6-13, 6-95, 8-47, 8-49
353249-0070 ..	INSERT, SINGLE HOLE, E154 16	7-33
353249-0072 ..	INSERT, SINGLE HOLE, E155 20	7-33, 8-45
353249-0075 ..	INSERT, SINGLE HOLE, EK153 13	7-33, 9-111, 9-113, 9-115, 9-117, 9-119, 9-121, 9-123, 9-125, 9-127, 9-129
353249-0084 ..	INSERT, MULTI HOLE, EK154M 4X7,5	5-75, 5-77, 5-79
353249-0301 ..	SEALING PIN, 4,0X20	8-45, 8-47, 8-49, 11-25, 11-31, 11-33
353249-0304 ..	SEALING PIN, 6,0X25	5-77, 5-79
353249-0307 ..	SEALING PIN, 7,5X20	5-75
353249-0308 ..	SEALING PIN, 8,0X20	5-77, 5-79

Part No	Description	Page No
353249-0309	SEALING PIN, 9,3X20	5-77, 5-79
353249-0311	SEALING PIN, 12,0X25	5-121
353250-0020	GLAND LOCK NUT, M20X1,5	9-87, 9-89
353300-0006	HEATSHRINK TUBING	1-35, 1-37
354000-0005	MINIATURE CIRCUIT BREAKER, FAZ-C0,5/1	9-139, 9-141
354000-0010	MINIATURE CIRCUIT BREAKER, FAZ-C1/1	9-139, 9-141
354000-0030	MINIATURE CIRCUIT BREAKER, FAZ-C3/1	9-61, 9-139, 9-141
354000-0100	MINIATURE CIRCUIT BREAKER, FAZ-C10/1	9-61, 9-139, 9-141, 9-145
354000-0200	MINIATURE CIRCUIT BREAKER, FAZ-C20/1	9-145
354001-0100	MINIATURE CIRCUIT BREAKER, FAZ-C10/2	9-139, 9-141
354002-0020	MINIATURE CIRCUIT BREAKER, FAZ-C2/3	9-145
354002-0060	MINIATURE CIRCUIT BREAKER, FAZ-C6/3	9-139, 9-141
354002-0200	MINIATURE CIRCUIT BREAKER, FAZ-C20/3	9-145
359000-0100	WIRE MARKING, YELLOW, PY01/3"0"	11-21
359000-0101	WIRE MARKING, YELLOW, PY01/3"1"	11-21
359000-0102	WIRE MARKING, YELLOW, PY01/3"2"	11-21
359000-0103	WIRE MARKING, YELLOW, PY01/3"3"	11-21
359000-0104	WIRE MARKING, YELLOW, PY01/3"4"	11-21
359000-0105	WIRE MARKING, YELLOW, PY01/3"5"	11-21
359000-0106	WIRE MARKING, YELLOW, PY01/3"6"	11-21
359000-0107	WIRE MARKING, YELLOW, PY01/3"7"	11-21
359000-0108	WIRE MARKING, YELLOW, PY01/3"8"	11-21
359000-0109	WIRE MARKING, YELLOW, PY01/3"9"	11-21
359000-0201	WIRE MARKING, YELLOW, PA02/3"1"	11-25, 11-31, 11-33
359000-0204	WIRE MARKING, YELLOW, PA02/3"4"	11-25, 11-31, 11-33
359000-0400	WIRE MARKING, YELLOW, PA2/4"0"	1-33, 1-35, 1-37, 1-107, 1-109, 1-155, 1-197, 1-199, 1-201, 2-51, 2-53, 2-55, 5-183, 5-185, 5-187, 6-15, 6-17, 7-67
359000-0401	WIRE MARKING, YELLOW, PA2/4"1"	1-33, 1-35, 1-37, 1-107, 1-109, 1-155, 1-197, 1-199, 1-201, 2-51, 2-53, 2-55, 5-183, 5-185, 5-187, 6-15, 6-17, 7-67
359000-0402	WIRE MARKING, YELLOW, PA2/4"2"	1-107, 1-109, 1-155, 1-197, 1-199, 1-201, 2-51, 2-53, 2-55, 5-183, 5-185, 5-187, 6-15, 6-17, 7-67
359000-0403	WIRE MARKING, YELLOW, PA2/4"3"	1-35, 1-37, 1-107, 1-109, 1-155, 1-197, 1-199, 1-201, 2-33, 2-51, 2-53, 2-55, 5-183, 5-185, 5-187, 6-15, 6-17
359000-0404	WIRE MARKING, YELLOW, PA2/4"4"	1-35, 1-37, 1-107, 1-109, 5-183, 5-185, 5-187, 6-15, 6-17, 7-67
359000-0405	WIRE MARKING, YELLOW, PA2/4"5"	1-33, 1-35, 1-37, 1-107, 1-109, 2-51, 2-53, 2-55, 6-15, 6-17, 7-67
359000-0406	WIRE MARKING, YELLOW, PA2/4"6"	1-35, 1-37, 1-107, 1-109, 2-51, 2-53, 2-55, 6-15, 6-17
359000-0407	WIRE MARKING, YELLOW, PA2/4"7"	1-35, 1-37, 1-107, 1-109, 2-51, 2-53, 2-55, 5-183, 5-185, 5-187, 6-15, 6-17
359000-0408	WIRE MARKING, YELLOW, PA2/4"8"	1-107, 1-109, 6-15, 6-17
359000-0409	WIRE MARKING, YELLOW, PA2/4"9"	1-107, 1-109, 1-197, 1-199, 1-201, 5-183, 5-185, 5-187, 6-15, 6-17
359000-0722	WIRE MARKING, YELLOW, PA1/3"W"	6-15, 6-17
359000-0771	WIRE MARKING, YELLOW, PA2/4"V"	1-107, 1-109, 1-197, 1-199, 1-201, 2-51, 2-53, 2-55, 5-183, 5-185, 5-187, 6-15, 6-17
359011-0807	MARKING, DEK 5 FW 1-50	1-41, 2-43, 2-45, 5-77, 5-79, 7-33, 8-47, 8-49, 9-37, 9-39, 9-63, 9-65, 9-67, 9-69, 9-71, 9-73, 9-75, 9-77, 9-79, 9-81, 9-161
359011-0808	MARKING, DEK 5FW 51-100	5-77, 5-79, 9-63, 9-65, 9-67, 9-69, 9-71, 9-73, 9-75, 9-77, 9-79, 9-81
359011-0809	MARKING, DEK 5 FW 101-150	8-47, 8-49, 9-63, 9-65, 9-67, 9-69, 9-71, 9-73, 9-75, 9-77
359011-0810	MARKING, DEK 5 FW 151-200	9-71, 9-73, 9-75, 9-77
359011-0811	MARKING, DEK 5 FW 201-250	9-71, 9-73, 9-75, 9-77
359011-0812	MARKING, DEK 5FW 251-300	9-71, 9-73, 9-75, 9-77
359011-0813	MARKING, DEK 5 FW 301-350	9-71, 9-73
359011-0818	MARKING, DEK 5GW (-)	5-77, 5-79, 8-47, 8-49
359011-0819	MARKING, EARTH, DEK 5 GW ERDE I.KR.	1-41, 2-43, 2-45, 7-33, 9-63, 9-65, 9-67, 9-69, 9-71, 9-73, 9-75, 9-77, 9-161, 11-25, 11-31, 11-33
359011-0821	MARKING, DEK 6 FW 1-50	11-25, 11-31, 11-33
359240-0001	SIGN, NOT ENGRAVED	9-149, 9-151, 9-153
359240-0100	SIGN HOLDER FOR 359240-0001	9-87, 9-89, 9-149, 9-151, 9-153, 9-173
359241-0121	SIGN: " STEAM"	9-149, 9-151, 9-153
359241-0122	SIGN: " CLEANING STEAM BARRIER SPACE"	9-149, 9-151, 9-153
359241-0123	SIGN: " TEMP. PRESTERILIZATION VALVE"	9-149, 9-151, 9-153
359241-0125	SIGN: " TEMP. PEROXIDE BATH"	9-149, 9-151, 9-153
359241-0126	SIGN: " TEMP. AIR KNIFE"	9-149, 9-151, 9-153
359241-0130	SIGN: TEMP. AIR SUPER HEATER	9-149, 9-151, 9-153
359241-0131	SIGN: TEMP. LS	9-149, 9-151, 9-153
359241-0132	SIGN: " TEMP. SA"	9-173
359241-0133	SIGN: SERVICE SWITCH	9-149, 9-151, 9-153
359241-0135	SIGN: " TRANSVERSAL SEALING"	9-173
359241-0140	SIGN: LIGHT OFF/ON	9-149, 9-151, 9-153
359241-0141	SIGN: WATER BATH	9-149, 9-151, 9-153
359241-0180	SIGN: PRODUCTION	9-149, 9-151, 9-153
359241-0201	SIGN: " HOUR METER"	9-149, 9-151, 9-153
359241-0268	SIGN: SPRAYING, HEAD SPACE	9-149, 9-151, 9-153
359241-0297	SIGN: 50 HZ	9-87, 9-89
359241-0337	SIGN: " FLAP HEATING TOP RIGHT"	9-149, 9-151, 9-153
359241-0338	SIGN: " FLAP HEATING TOP LEFT"	9-149, 9-151, 9-153
359241-0339	SIGN: " FLAP HEATING BOTTOM RIGHT"	9-149, 9-151, 9-153
359241-0340	SIGN: " FLAP HEATING BOTTOM LEFT"	9-149, 9-151, 9-153
359241-0439	SIGN"PATCH SEALER"	9-149, 9-151, 9-153
359241-0444	SIGN"TAB RESEAL"	9-149, 9-151, 9-153
359241-0459	SIGN "PT HOUR METER"	9-149, 9-151, 9-153
359241-0460	SIGN "PATCH SEALER 2"	9-149, 9-151, 9-153
359241-0465	SIGN"PRE-PATCH SEALER"	9-149, 9-151, 9-153

Part No	Description	Page No
359301-0110 ..	BUTTON SIGN, SHORT STOP	7-17, 8-45
359301-0504 ..	BUTTON SIGN, RESET	2-13, 2-15, 2-29, 2-31
359705-0001 ..	WARNING SIGN ISO, ENTANGLEMENT	8-17, 8-19, 8-23, 8-25
359705-0003 ..	WARNING SIGN ISO, DANGEROUS CHEMICALS	1-159, 1-161, 6-61
359705-0005 ..	WARNING SIGN ISO, MOVING PART	8-11, 8-13, 8-33
359705-0006 ..	WARNING SIGN ISO, MOVING PART	2-13, 2-15, 2-29, 2-31, 2-47, 2-49
359705-0007 ..	WARNING SIGN ISO, HOT SURFACE	5-19, 5-21, 5-23, 5-25, 5-27, 5-91
359705-0015 ..	WARNING SIGN ISO, RISK OF ELECTRIC SHOCK	1-55, 1-57, 4-101, 4-103, 5-19, 5-21, 5-23 5-25, 5-27, 5-77, 5-79, 7-17, 7-33, 8-33, 8-45, 9-13, 9-15, 9-17, 9-19, 9-131, 9-133, 9-147, 9-155 9-157, 9-163, 9-165, 11-25, 11-31, 11-33
359710-0001 ..	WARNING SIGN ISO, HOT SURFACE	1-9, 1-11, 1-31, 1-49, 1-55, 1-57, 1-77, 1-79, 1-83, 1-85 1-205, 1-207, 1-213, 1-215, 1-217, 8-33
400800-0000 ..	SPRING	7-13
400828-0000 ..	SPRING	7-19
400833-0000 ..	PLUNGER	7-19
401183-0000 ..	GUIDE AXLE	7-13
401186-0000 ..	HEX NUT	7-13
401370-0000 ..	BUSHING	7-13
401371-0000 ..	BUSHING	7-13
401372-0000 ..	BUSHING	7-13
434448-0000 ..	TOOL	12-27
440252-0000 ..	SLEEVE	8-15
440253-0000 ..	SLEEVE	8-15
440259-0000 ..	RETAINING RING	8-43
440271-0000 ..	SCREW	8-15
440647-0000 ..	SLEEVE	1-9, 1-11
440655-0000 ..	RING	1-19
440659-0000 ..	CYLINDRICAL PIN	1-23
440660-0000 ..	COMPRESSION SPRING	1-23
440661-0000 ..	COMPRESSION SPRING	1-23
440662-0000 ..	COMPRESSION SPRING	1-21
440663-0000 ..	COMPRESSION SPRING	1-19, 1-23, 1-51
440731-0000 ..	PLATE	1-9, 1-11, 1-49
440880-0000 ..	WASHER	5-123, 5-125, 5-127
441024-0000 ..	LACE	3-5
441031-0000 ..	LINK BEARING	4-97, 4-99
441077-0000 ..	NOZZLE BRACKET	2-37
441212-0000 ..	HOLDER	2-37
441217-0000 ..	BUSHING LOWER	2-37
441218-0000 ..	BUSHING UPPER	2-37
441221-0000 ..	WASHER	2-37
441268-0000 ..	GUIDE	4-97, 4-99
441269-0000 ..	GUIDE	4-97, 4-99
441304-0400 ..	MOVABLE FORMING RING	1-3, 1-5, 1-7
441307-0300 ..	UPPER TUBE SUPPORT	1-3, 1-5, 1-7
441339-0000 ..	SHAFT	3-19, 3-21
441353-0000 ..	TENSION SPRING	3-27
441355-0000 ..	BLEEDING SCREW	4-35, 4-37, 4-39, 4-41, 4-97, 4-99, 4-113, 4-115
441356-0000 ..	BRACKET	3-5
441360-0000 ..	PLATE	3-5
441385-0000 ..	HUB	4-35, 4-37, 4-39, 4-41
441387-0000 ..	MOTOR CRADLE	3-9
441483-0000 ..	CYLINDER BRACKET	1-149, 1-151, 1-169
441486-0400 ..	DIVIDED FORMING RING	1-3, 1-5, 1-7
441501-0000 ..	INSULATION	1-101
441534-0200 ..	LIGHT FIXTURE	2-37
441536-0000 ..	GASKET	2-41
441556-0001 ..	SPACER	8-29
441556-0002 ..	SPACER	8-29
441556-0004 ..	SPACER	8-29
441556-0012 ..	SPACER	8-29
441576-0000 ..	SPACER	1-93, 1-95
441578-0001 ..	CYLINDER BRACKET	1-93, 1-95
441578-0002 ..	CYLINDER BRACKET	1-91
441589-0000 ..	SHIM	5-159, 5-161
441593-0000 ..	GASKET	2-37
441665-0000 ..	FORCE SPRING	2-57
441677-0000 ..	FRONT PLATE	2-37
441679-0000 ..	STAIR	2-97
441695-0600 ..	MACHINE BODY	5-3, 5-5, 5-7
441706-0000 ..	WASHER	4-93, 4-95
441720-0000 ..	SPACER	3-19, 3-21
441725-0000 ..	COVERING PLATE	11-3
441727-0000 ..	CUTTING JAW	4-7, 4-9, 4-11, 4-13, 4-15, 4-17
441737-0000 ..	WASHER	1-205, 1-207
441739-0000 ..	WASHER	1-205, 1-207
441740-0000 ..	HINGE FLANGE	1-205, 1-207
441741-0000 ..	HINGE FLANGE	1-205, 1-207
441750-0000 ..	YOKE	4-97, 4-99
441751-0000 ..	LACE	4-97, 4-99
441758-0000 ..	PIPE RIGHT	4-107, 4-109
441759-0000 ..	PIPE LEFT	4-107, 4-109
441764-0000 ..	SHAFT	4-35, 4-37, 4-39, 4-41
441792-0000 ..	HEAD	5-53, 5-211

Part No	Description	Page No
441793-0000 ..	BEARING HOUSING	5-53, 5-211
441794-0000 ..	PIVOT PIN	5-53, 5-211
441795-0000 ..	WASHER	5-53, 5-211
441796-0000 ..	SEAL	5-53, 5-211
441797-0000 ..	SHIM	5-53, 5-211
441798-0100 ..	ROTOR	5-209
441799-0000 ..	ATTACHMENT	5-211
441800-0000 ..	STRAIGHT FITTING	5-53
441804-0000 ..	COIL HEATER	11-39
441811-0100 ..	ROTOR	5-49, 5-51, 5-109, 5-201, 5-203
441850-0700 ..	CABLE	5-3, 5-5, 5-7
441871-0000 ..	PENDULUM SUSPENSION	1-75, 1-99
441876-0000 ..	ROLL	1-83, 1-85
441904-0000 ..	ARM	1-91
441905-0000 ..	RETARD PIN	2-97
441918-0000 ..	BRACKET	1-143, 1-145
441957-0000 ..	BEARING COVER	1-71
442084-0000 ..	RING	12-113
442085-0000 ..	JET DIVERTER	12-113
442086-0000 ..	REFLECTOR	12-113
442092-0000 ..	CIRCUIT BOARD	12-111
442113-0000 ..	STOP	12-101
442237-0000 ..	NUT	1-165, 1-167
445533-0000 ..	SIGN, COLD WATER FLOW TS-LEFT	6-45, 6-47
445534-0000 ..	SIGN, COLD WATER FLOW TS-RIGHT	6-45, 6-47
449969-0100 ..	TOOL DISMOUNTING	12-27, 12-159
449970-0000 ..	HOLDER	12-131
449971-0000 ..	SPINDLE	12-131
450101-0300 ..	TEARING DEVICE	8-31
450833-0000 ..	FILTER	1-103, 1-105
451117-0000 ..	ROLL	1-143, 1-145
451148-0000 ..	BRACKET	1-143, 1-145
451149-0000 ..	SHAFT	1-143, 1-145
451430-0000 ..	CONNECTION HOUS.(MINOR)	1-77, 1-79
456002-0000 ..	BEARING	4-97, 4-99
456004-0000 ..	SPACER	4-97, 4-99
456005-0001 ..	VOLUME BULGE	4-19, 4-21, 4-23, 4-27, 4-29, 4-31
456005-0003 ..	VOLUME BULGE	4-19, 4-21, 4-23, 4-27, 4-29, 4-31
456009-0000 ..	LINK	4-65, 4-67, 4-69
456017-0000 ..	HOSE HOLDER RIGHT	4-113
456018-0000 ..	HOSE HOLDER LEFT	4-115
456042-0000 ..	SCREW	1-125, 1-127
456128-0000 ..	FORCE SPRING	2-57
456129-0001 ..	FORCE SPRING	2-57
456129-0002 ..	FORCE SPRING	2-57
456137-0000 ..	HOSE	6-15, 6-17
456181-0000 ..	SPACER	1-143, 1-145
456182-0000 ..	PLATE	1-143, 1-145
456199-0000 ..	LOCK PLATE	1-143, 1-145
456230-0000 ..	ANGLE BRACKET	1-143, 1-145
456249-0000 ..	PROTECTIVE COVER	5-121
456263-0000 ..	SHEET	2-41
456264-0000 ..	GLASS	2-41
456309-0600 ..	LOWER FORMING RING	1-3, 1-5, 1-7
456311-0000 ..	TORSION SPRING RIGHT	4-35, 4-37
456312-0000 ..	TORSION SPRING LEFT	4-39, 4-41
456395-0000 ..	GASKET	5-201, 5-203
456396-0000 ..	GASKET	5-201, 5-203
456407-0000 ..	LACE	2-51, 2-53, 2-55
456455-0700 ..	PIPE WORK	5-3, 5-5, 5-7
456472-0000 ..	ANGLE	1-55, 1-57
456474-0000 ..	ADJUSTMENT PLATE	1-55, 1-57
456555-0700 ..	SUCTION PIPE	1-3, 1-5, 1-7
456556-0400 ..	PEROXIDE PIPE	1-3, 1-5, 1-7
456744-0000 ..	HUB	3-23, 3-25
456755-0000 ..	BLOCK	6-23
456756-0000 ..	BLOCK	6-23
456757-0300 ..	AIR INJECTOR	6-15, 6-17
456760-0003 ..	FOLDING FLAP CAM 200S	4-57, 4-59, 4-61, 4-63
456760-0010 ..	FOLDING FLAP CAM 200B & 125S	4-57, 4-59, 4-61, 4-63
456760-0011 ..	FOLDING FLAP CAM 250B	4-57, 4-59, 4-61, 4-63
456760-0012 ..	FOLDING FLAP CAM	4-57, 4-59, 4-61, 4-63
456794-0000 ..	RING	1-83, 1-85
456796-0000 ..	ROLLER	1-83, 1-85
456797-0000 ..	AXLE SUPPORT	1-83, 1-85
456817-0001 ..	SHIM	8-29
456817-0002 ..	SHIM	8-29
456827-0400 ..	CONNECTION BOX	2-37
456836-0800 ..	CLEANING SYSTEM	1-3, 1-5, 1-7
456837-0000 ..	HOLDER	1-149, 1-151
456853-0001 ..	PIPE CLAMP	5-183, 5-185, 5-187
456853-0002 ..	PIPE CLAMP	5-183, 5-185, 5-187
456853-0003 ..	PIPE CLAMP	5-183, 5-185, 5-187
456854-0001 ..	CRAMP	5-183, 5-185, 5-187

Part No	Description	Page No
456854-0002 ..	CRAMP	5-183, 5-185, 5-187
456872-0000 ..	LOCK PLATE	1-143, 1-145
456900-0000 ..	PIPE	1-103, 1-105
456905-0000 ..	FASTENING PLATE	1-125, 1-127
456907-0000 ..	LOCK PLATE	1-125, 1-127
456934-0000 ..	SEALING WASHER	3-5
456975-0200 ..	TOOL CABINET	12-9
456976-0800 ..	HEAT EXCHANGER	1-3, 1-5, 1-7
456995-0000 ..	CARRIER	1-55, 1-57
456996-0000 ..	ROLLER	1-83, 1-85
457358-0000 ..	SLEEVE	8-15
457367-0000 ..	SHAFT	1-209, 1-211
457368-0000 ..	SPRING	1-209, 1-211
464173-0000 ..	LABEL HOLDER	1-107, 1-109
464174-0000 ..	SIGN, LONGITUDINAL SEALING	1-107, 1-109
464175-0000 ..	SIGN, LONGITUDINAL SEALING SHORT STOP	1-107, 1-109
466477-0000 ..	INNER PIPE	1-169
466478-0000 ..	OUTER PIPE	1-169
466479-0000 ..	PIECE	1-169
466483-0000 ..	CLAMPING PIECE	1-169
466484-0000 ..	NET	1-169
469041-0000 ..	HOLDER	1-135, 1-137, 1-139
469047-0000 ..	ANGLE	1-135, 1-137, 1-139
469078-0000 ..	HOLDER	1-135, 1-137, 1-139
469091-0600 ..	FILLER TUBE	1-3, 1-5, 1-7
469121-0400 ..	JUNCTION BLOCK	6-15, 6-17
469122-0000 ..	BLOCK	6-27
469131-0000 ..	LACE	2-51, 2-53, 2-55
469132-0000 ..	PIPE	2-51, 2-53, 2-55
469133-0000 ..	PIPE	2-51, 2-53, 2-55
469141-0000 ..	HOLDER	8-41
469146-0000 ..	HOSE	2-57
469159-0000 ..	PIN	7-23, 7-25, 7-27, 7-29
469336-0000 ..	COVER	2-41
469337-0000 ..	REFLECTOR	2-41
469374-0800 ..	CABLE TRENCH	1-3, 1-5, 1-7
469384-0100 ..	START-UP KIT	6-3
469384-0200 ..	START-UP KIT	11-35
469452-0500 ..	COMPRESSOR UNIT	6-65
469458-0000 ..	BRACKET	1-193, 1-195
469459-0000 ..	BRACKET	1-193, 1-195
469460-0000 ..	BRACKET	1-193, 1-195
469461-0000 ..	ROLL	1-193, 1-195
469463-0000 ..	SHAFT	1-193, 1-195
469464-0000 ..	ROLL	1-193, 1-195
469466-0000 ..	PLATE	1-193, 1-195
469501-0400 ..	AIR NOZZLE	1-3, 1-5, 1-7
469502-0000 ..	SLIDER	2-9, 2-11
469527-0000 ..	SETTING PLATE	5-93
469745-0000 ..	BRACKET	1-143, 1-145
469781-0500 ..	TUBE FLUSHING DEVICE	1-3, 1-5, 1-7
469867-0000 ..	HOSE HOLDER	3-5
469937-0000 ..	PIPE	2-37
469964-0000 ..	LID	2-73
469999-0000 ..	FLANGE	3-5
476117-0000 ..	CATCH	8-15
476859-0300 ..	WEAC-VALVE	1-165, 1-167
484196-0000 ..	FILTER	1-103, 1-105
484197-0000 ..	FILTER	11-39
490518-0000 ..	HOLDER	1-149, 1-151
490761-0200 ..	DETERGENT PUMP	6-3
490768-0000 ..	BOX	6-13
490769-0000 ..	BRACKET	6-13
490876-0000 ..	BRACKET	1-209, 1-211
490890-0000 ..	NUT PLATE	1-55, 1-57
490900-0000 ..	SEALING RING	1-83, 1-85
490901-0000 ..	SEAL	1-83, 1-85
490902-0000 ..	AXLE SUPPORT	1-83, 1-85
490903-0000 ..	SHAFT	1-83, 1-85
490916-0000 ..	AXLE PIN	3-11, 3-13, 3-15, 3-17
490932-0000 ..	SLEEVE	5-109
490933-0000 ..	NUT	5-109
490940-0000 ..	CYLINDER	4-35, 4-37, 4-39, 4-41
490942-0000 ..	COMPRESSION SPRING	4-35, 4-37, 4-39, 4-41, 5-11, 5-13, 5-15
490943-0000 ..	COMPRESSION SPRING	4-35, 4-37, 4-39, 4-41
490964-0000 ..	COVER	1-83, 1-85
490985-0000 ..	SPACER SHEET	1-9, 1-11, 1-49
490998-0000 ..	THROTTLE SCREW	1-165, 1-167
491022-0000 ..	CYLINDER BRACKET	1-149, 1-151
491097-0000 ..	HEAT GUARD	1-73
491128-0000 ..	GASKET	1-83, 1-85
491143-0000 ..	BRACKET	1-193, 1-195
491153-0000 ..	COMPRESSION GLAND	1-125, 1-127
491165-0000 ..	ROLL	3-15, 3-17

Part No	Description	Page No
491166-0000 ..	SHAFT	3-15, 3-17
491169-0000 ..	PIVOT ARM	1-69
491170-0000 ..	COVER	1-69
491171-0000 ..	BEARING BLOCK	1-69
491172-0000 ..	GASKET	1-69
491173-0000 ..	BRACKET	1-69
491174-0000 ..	ARM	1-69
491175-0000 ..	LINK	1-69
491177-0000 ..	ARM	1-69
491203-0000 ..	STRUT	6-69
491223-0000 ..	COVER	1-73
491224-0000 ..	BRACKET	1-73
491227-0000 ..	SLIDER	5-9, 5-87, 5-141, 5-143
491228-0001 ..	SHAFT	5-9, 5-87, 5-141, 5-143
491228-0002 ..	SHAFT	5-9, 5-87, 5-141, 5-143
491229-0000 ..	BUSHING	5-9, 5-87, 5-141, 5-143
491230-0000 ..	GRUB SCREW(LI - CHINE)	5-9, 5-87, 5-141, 5-143
491231-0000 ..	BUSHING	5-9, 5-87, 5-141, 5-143
491258-0000 ..	DRIVE WHEEL	5-155, 5-157
491266-0000 ..	SHIM	5-45, 5-47, 5-49, 5-51, 5-103, 5-105, 5-107
491274-0000 ..	HUB	3-5
491291-0000 ..	LID	5-159, 5-161
491303-0000 ..	WASHER	6-69
491304-0000 ..	WASHER	6-69
491305-0000 ..	CONN.DIAGRAM AIR SUPERH.	1-77, 1-79
491319-0000 ..	LACE	3-15, 3-17
491349-0000 ..	BEARING SEAT	4-93, 4-95
491350-0000 ..	SLIDER	4-93, 4-95
491390-0000 ..	PIPE CENTRAL LUBRICATION	2-51, 2-53, 2-55
491409-0000 ..	WASHER	3-5
491410-0000 ..	LACE	3-5
491418-0001 ..	O-RING 284X3 FPM	1-171, 11-39
491418-0002 ..	O-RING 352X3 FPM	1-83, 1-85
491434-0000 ..	VOLUME CAM RIGHT	4-107, 4-109
491436-0000 ..	VOLUME CAM LEFT	4-107, 4-109
491441-0000 ..	HOOD	1-171
491487-0000 ..	BUSHING	1-69
491536-0200 ..	NON-RETURN VALVE	6-23
491545-0000 ..	BRACKET	1-73
491602-0000 ..	GASKET HOLDER	1-83, 1-85
491681-0000 ..	GASKET	4-87, 4-89, 4-91
491814-0300 ..	SLEWING BRACKET RIGHT	3-3
491815-0300 ..	SLEWING BRACKET LEFT	3-3
491846-0300 ..	TENSION SPROCKET	5-3, 5-5, 5-7
491848-0000 ..	SHAFT	5-159, 5-161
491850-0100 ..	DRIVE WHEEL	5-3, 5-5, 5-7
491851-0000 ..	LID	5-155, 5-157
491854-0000 ..	PIPE WATER	2-51, 2-53, 2-55
491859-0000 ..	HOLDER	2-51, 2-53, 2-55
491860-0000 ..	HOLDER	2-51, 2-53, 2-55
491868-0000 ..	VOLUME BULGE	4-19, 4-21, 4-23, 4-27, 4-29, 4-31
491880-0000 ..	FASTENING PLATE	1-209, 1-211
491881-0003 ..	PIVOT ARM	2-25, 2-27
491929-0000 ..	IMPELLER WHEEL	6-73
491931-0000 ..	SHAFT	1-69
491965-0000 ..	CAM	8-23, 8-25
491976-0400 ..	PHOTOCELL UNIT	1-3, 1-5, 1-7
493652-0100 ..	LID	6-69, 6-75
493735-0000 ..	NIPPLE	12-17, 12-19
495498-0028 ..	CU-RAIL L=280MM	9-79, 9-81
497748-0000 ..	PIN	1-25, 1-27
520072-0000 ..	SIGN BOARD	1-35, 1-37
527898-0100 ..	CONTAINER H2O2	6-79
527906-0000 ..	GASKET	6-75
529146-0000 ..	ANGLE BRACKET	1-67
529147-0000 ..	SPRING BRACKET	1-67
529149-0000 ..	DOLLY WASHER	1-67
529345-0100 ..	FILLING STATION H2O2	12-9
530587-0000 ..	WASHER	1-21
530589-0000 ..	SEAL RING	1-75, 1-99
530590-0000 ..	VALVE CONE	1-75, 1-99
530591-0000 ..	HOLDER	1-23
530595-0000 ..	SEAL RING HOLDER	1-19
530597-0000 ..	WASHER	1-23
530598-0000 ..	WASHER	1-23
530599-0000 ..	RING	1-23, 1-75, 1-99
531345-0200 ..	PERSONAL PROTECT. EQ H2O2	11-3
531731-0000 ..	GASKET	1-77, 1-79
532117-0000 ..	CLAMP RING	1-25
532118-0000 ..	CLAMP RING	1-27
532205-0000 ..	LID	6-75
532206-0000 ..	GASKET	6-75
532208-0000 ..	SHAFT	12-25
532209-0000 ..	SHEET	12-25

Part No	Description	Page No
532210-0100 ..	PEROXIDE CONTAINER TROLLEY	12-9
532211-0000 ..	DOWEL	12-25
532349-0000 ..	PLAIN BEARING	1-75, 1-99
532412-0000 ..	SPRING	11-23, 11-27, 11-29
532655-0000 ..	CAUTION SIGN	6-81
532676-0000 ..	SHEET	12-17, 12-19
532677-0000 ..	PIPE	12-17, 12-19
532678-0000 ..	DOWEL	12-17, 12-19
532679-0000 ..	PLATE	12-17, 12-19
533014-0100 ..	LEAK FINDING EQUIPMENT (SUPERSTRUCTURE)	12-9
533015-0000 ..	WIRING DIAGRAM	12-17, 12-19
533169-0000 ..	DIAPHRAGM	1-19
533374-0000 ..	FITMENT BOTTOM	12-21
533905-0100 ..	PONCH	12-17, 12-19
533906-0000 ..	FITMENT COVER	12-21
534634-0000 ..	PIPE	12-23
534635-0000 ..	VALVE	12-23
534636-0000 ..	LEVEL GLAS	12-23
534637-0000 ..	ATTACHMENT	12-23
534691-0000 ..	DIAPHRAGM	12-23
534692-0000 ..	FRAME SECTION	12-23
534693-0000 ..	PLATE	12-23
534694-0000 ..	SUCTIONPIPE	12-23
534695-0000 ..	WEIGHT	12-23
534696-0000 ..	VALVE	12-23
534697-0000 ..	VALVE HOUSING	12-23
534698-0000 ..	NIPPLE	12-23
536374-0000 ..	WASHER	1-209, 1-211
536913-0000 ..	HUB	7-11
536917-0000 ..	AXLE PIN	7-15
537327-0000 ..	SHAFT	7-11
538432-0100 ..	LASER DETECTOR	12-109
538433-0000 ..	DETECTOR BODY	12-111
538434-0000 ..	DETECTOR CARD	12-111
539212-0000 ..	GASKET	1-17, 1-49, 11-41
539691-0000 ..	CABLE	12-115
539692-0000 ..	CABLE	12-111
540169-0000 ..	DOWEL	5-119
540282-0002 ..	COMPONENTS WITHOUT TP-NO	9-35
540719-0000 ..	WHEEL	8-27
541070-0000 ..	SHAFT	7-15
541163-0200 ..	CLAMP RING	1-17, 1-49
541164-0200 ..	CLAMP RING	1-17, 1-49
541165-0000 ..	WASHER	1-25, 1-27
541166-0000 ..	WASHER	1-19
541751-0000 ..	CONICAL BOBBIN	7-11
543319-0000 ..	PRINTED CIRCUIT BOARD	9-33
543336-0001 ..	COMPONENTS WITHOUT TP-NO	9-33
543337-0000 ..	TERMINAL LABELS 1-4	9-33
544726-0000 ..	AXLE PIN	7-15
544906-0000 ..	SOLENOID VALVE	1-55, 1-57, 1-103, 1-105
546929-0000 ..	FILTER	6-85, 6-87, 6-89, 6-91
548770-0006 ..	COAXIAL CABLE L=1200 MM	7-45
551969-0006 ..	COAXIAL CABLES	2-37
551969-0012 ..	COAXIAL CABLE	9-173
553586-0000 ..	SPACER	1-163
553607-0000 ..	SLEEVE	1-19, 1-21, 1-23, 1-51
554162-0000 ..	SCREW	1-25, 1-27
555458-0000 ..	SEALING WASHER	1-23, 1-51
555541-0000 ..	BRACKET	1-169
556133-0000 ..	SEALING WASHER	1-21
556422-0000 ..	PROTECTION	8-23, 8-25
556541-0000 ..	SCREW	7-61
556662-0100 ..	LASER	12-109
556663-0000 ..	HOUSE	12-113
556664-0000 ..	HEAD	12-113
556665-0000 ..	END SECTION	12-113
556666-0000 ..	HOLDER	12-113
556667-0100 ..	DISPLAY	12-109
556668-0000 ..	BOX	12-117
556672-0100 ..	HOUSE	12-109
556673-0000 ..	HOUSE	12-115
556674-0000 ..	LID	12-115
556677-0000 ..	PRINTED CIRCUIT BOARD	12-117
556678-0000 ..	PRINTED CIRCUIT BOARD	12-117
556679-0000 ..	PRINTED CIRCUIT BOARD	12-115
556680-0000 ..	PRINTED CIRCUIT BOARD	12-115
556681-0000 ..	PRINTED CIRCUIT BOARD	12-115
559810-0101 ..	TMCC2 CONTROLLER	9-31
560931-0000 ..	BRACKET	1-35, 1-37, 1-55, 1-57, 1-103, 1-105, 6-85, 6-87
561427-0000 ..	CONTAINER	6-81
562118-0000 ..	LID	4-101, 4-103
562119-0000 ..	GASKET	4-101, 4-103
562120-0000 ..	ARM PRESSURE JAW	4-93, 4-95

Part No	Description	Page No
563286-0000	GASKET	6-69
563287-0000	WASHER	6-69
565250-0000	WASHER	6-81
565251-0000	VALVE	6-81
565462-0100	LOCK PLATE	1-135, 1-137, 1-139
565532-0000	BLANK-OFF FLANGE	12-133
565533-0000	BLANK-OFF FLANGE	12-133
565534-0000	FLANGE	12-133
565535-0000	FLANGE	12-133
565536-0100	PRESSURE TEST EQUIPMENT	12-27
566191-0000	BENDING ROLLER	1-55, 1-57
566404-0001	TIMING BELT	3-27
566404-0002	TIMING BELT	3-27
566404-0003	TIMING BELT	3-27
566404-0004	TIMING BELT	3-27
566404-0005	TIMING BELT	3-27
566669-0000	NIPPLE	1-155
566696-0000	GUIDE CONSOLE	1-91
566697-0000	AXLE SUPPORT	1-91
567018-0000	STEAM HOUSE	1-17, 1-49
567070-0010	ELECTRODE	1-103, 1-105
567070-0011	ELECTRODE	1-55, 1-57
567070-0012	ELECTRODE	6-85, 6-87
567070-0014	ELECTRODE	1-35, 1-37
567070-0015	ELECTRODE	1-103, 1-105
567070-0019	ELECTRODE	1-55, 1-57
567372-0000	INSTRUCTION FOR USE	12-133
568577-0000	AIR NOZZLE	1-193, 1-195
568578-0000	AIR NOZZLE	1-193, 1-195
568581-0000	DISTRIBUTOR WING	1-193, 1-195
568583-0000	FORK	1-171
568806-0000	LID	6-89, 6-91
568828-0000	FLOAT GUARD	6-85, 6-87
570482-0000	SPACER	9-79, 9-81
571087-0000	RETAINING RING	6-89, 6-91
571088-0000	DRAINING	6-85, 6-87
571532-0000	BRACKET	1-73
571533-0000	BRACKET	1-73
571534-0000	PLATE	1-125, 1-127
571535-0000	CANTILEVER	1-125, 1-127
571536-0000	CANTILEVER	1-125, 1-127
571537-0000	RING	1-83, 1-85
571538-0000	RING	1-83, 1-85
571539-0000	RING	1-83, 1-85
571540-0000	PIN	1-83, 1-85
571543-0000	BEARING PLATE	1-149, 1-151
571544-0000	BEARING PLATE	1-149, 1-151
571869-0000	BUSBAR,RIGHT	4-101
571870-0000	BUSBAR,LEFT	4-103
571871-0000	BUSBAR,RIGHT	4-101
571872-0000	BUSBAR,LEFT	4-103
571873-0000	SEAL	4-101, 4-103
571874-0000	SEALING PLUG	4-101, 4-103
571920-0000	PRESSURE ARM	8-37
572157-0000	BEARING PANEL	1-97
572158-0000	BEARING PANEL	1-97
572252-0000	BRACKET	8-23, 8-25
572253-0000	SHEET	8-23, 8-25
572485-0000	BRACKET	1-155
572486-0000	PISTON	1-155
572487-0000	THROTTLING	1-155
572642-0200	TRANSFER	4-3, 4-5
572643-0200	TRANSFER	4-3, 4-5
574333-0000	ROLL	1-83, 1-85
574334-0000	RING	1-83, 1-85
574335-0000	RING	1-83, 1-85
574336-0000	SEAL	1-83, 1-85
574337-0000	BRACKET	1-149, 1-151
574341-0000	FORK	1-149, 1-151
574346-0000	ROLL	1-149, 1-151
574347-0000	COUNTER ROLLER	1-149, 1-151
574348-0000	RAIL LEFT	5-35, 5-37, 5-39, 5-41, 5-43
574349-0000	RAIL RIGHT	5-35, 5-37, 5-39, 5-41, 5-43
574365-0000	VOLUMEFLAP 250S	4-19, 4-21, 4-23, 4-27, 4-29, 4-31
574366-0000	VOLUME SHIM	4-19, 4-21, 4-23, 4-27, 4-29, 4-31
574367-0000	VOLUME BULGE	4-19, 4-21, 4-23, 4-27, 4-29, 4-31
574369-0000	CARRIER RULER RIGHT	4-7, 4-9, 4-11
574370-0000	CARRIER RULER RIGHT	4-7, 4-9, 4-11
574371-0000	CARRIER RULER LEFT	4-13, 4-15, 4-17
574372-0000	CARRIER RULER LEFT	4-13, 4-15, 4-17
574385-0000	ROLLER TBA250SL	4-111
574386-0000	CUTTING JAW	4-7, 4-9, 4-11, 4-13, 4-15, 4-17
574393-0000	LOCK PLATE	1-143, 1-145
574395-0000	SHAFT	1-143, 1-145

Part No	Description	Page No
574396-0000 ..	BRACKET	1-143, 1-145
574397-0000 ..	ROLL	1-143, 1-145
574398-0000 ..	ROLL	1-143, 1-145
574399-0000 ..	ROLL	1-143, 1-145
574400-0000 ..	ROLL	1-143, 1-145
574401-0000 ..	ROLL	1-143, 1-145
574402-0000 ..	ROLL	1-143, 1-145
574403-0000 ..	ROLL	1-143, 1-145
574404-0000 ..	BRACKET	1-125, 1-127
574415-0000 ..	INDICATOR 250S	1-81
574416-0000 ..	BRACKET	1-135, 1-137, 1-139
574417-0000 ..	ROLL	1-135, 1-137, 1-139
574418-0000 ..	ROLL	1-135, 1-137, 1-139
574426-0000 ..	RULER	8-41
574427-0000 ..	RULER	8-41
574428-0000 ..	RULER	8-41
574442-0000 ..	TEMPLATE	12-29, 12-31
574446-0000 ..	TRIMMING ROLLER PLUS	12-7
574447-0000 ..	TRIMMING ROLLER MINUS	12-7
574449-0000 ..	SLIDER	2-9, 2-11
574452-0000 ..	PROTECTION	2-9, 2-11
574453-0000 ..	TEMPLATE	12-27
574454-0000 ..	TEMPLATE	12-85, 12-87
574455-0000 ..	TEMPLATE	12-85, 12-87, 12-159
574456-0000 ..	BRACKET	1-143, 1-145
574479-0000 ..	ROLL	1-125, 1-127
574480-0000 ..	ROLL	1-125, 1-127
574481-0000 ..	ROLL	1-125, 1-127
574494-0000 ..	FOLDING FLAP CAM	4-57, 4-59, 4-61, 4-63
574932-0000 ..	BENDING ROLLER	8-17, 8-19
574937-0000 ..	SHAFT	8-17, 8-19
574940-0000 ..	BLOCKING PIECE	8-17, 8-19
574945-0000 ..	TOOTHED PULLEY	8-17, 8-19
574946-0000 ..	FLAG	8-17, 8-19
575034-0000 ..	ROUND NUT	6-5, 6-7, 7-31, 8-11, 8-13
576274-0000 ..	BRACKET	8-17, 8-19
576286-0000 ..	HOLDER	6-33, 6-45, 6-47
576287-0000 ..	PIPE	6-29, 6-31, 6-35
576434-0200 ..	AP-VALVE 51-38	1-9, 1-11
576436-0100 ..	A-CYLINDER	1-17, 1-49
576437-0100 ..	C-CYLINDER	1-17
576437-0200 ..	C-CYLINDER	1-49
576438-0100 ..	B-CYLINDER	1-17, 1-49
576439-0000 ..	CYLINDER HOUSING	1-19, 1-23, 1-51
576440-0000 ..	END SECTION	1-19, 1-23, 1-51
576441-0000 ..	PISTON	1-19, 1-23, 1-51
576442-0000 ..	PISTON ROD	1-23
576443-0000 ..	CYLINDER HOUSING	1-21
576444-0000 ..	END SECTION	1-21
576445-0000 ..	PISTON	1-21
576446-0000 ..	PISTON ROD	1-19
576447-0000 ..	PISTON ROD	1-21
576448-0000 ..	SPACER	1-19
576449-0000 ..	SPACER	1-19
576450-0000 ..	SPACER	1-23, 1-51
576451-0000 ..	SPACER	1-21
577211-0000 ..	VOLUMEFLAP 160 ML	4-19, 4-21, 4-23, 4-27, 4-29, 4-31
577212-0000 ..	VOLUME SHIM	4-19, 4-21, 4-23, 4-27, 4-29, 4-31
577213-0000 ..	VOLUME BULGE 160 ML	4-19, 4-21, 4-23, 4-27, 4-29, 4-31
577217-0000 ..	YOKECAM 160ML	3-23, 3-25
577218-0000 ..	ARMCAM 160ML	3-23, 3-25
577219-0000 ..	CAMSEGMENT R	3-23, 3-25
577220-0000 ..	CAMSEGMENT L	3-23, 3-25
577225-0000 ..	FOLDING FLAP CAM	4-57, 4-59, 4-61, 4-63
577333-0000 ..	DOCUMENT FOLDER	12-103
577360-0000 ..	CANTILEVER	1-9, 1-11
577427-0100 ..	MACH.ALIG.TOOLS+LASER EQ.	12-27
577439-0000 ..	SHAFT	5-135
577440-0000 ..	SHAFT	5-135
577462-0000 ..	CABLE TRENCH	1-173, 1-175, 1-177, 1-179, 1-181, 1-183
577467-0000 ..	LID	1-173, 1-175, 1-177, 1-179, 1-181, 1-183
577468-0000 ..	LID	1-173, 1-175, 1-177, 1-179, 1-181, 1-183
577469-0000 ..	LID	1-173, 1-175, 1-177, 1-179, 1-181, 1-183
577470-0000 ..	LID	1-173, 1-175, 1-177, 1-179, 1-181, 1-183
577541-0000 ..	TUBE 90	1-107, 1-109
577542-0000 ..	TUBE 90	1-107, 1-109
577730-0000 ..	HOUSE	5-123, 5-125, 5-127
577731-0000 ..	LID	5-123, 5-125, 5-127
577732-0000 ..	SHOULDER RING	5-123, 5-125, 5-127
577733-0000 ..	LID	5-123, 5-125, 5-127
577734-0000 ..	LID	5-123, 5-125, 5-127
577735-0000 ..	SHIM	5-123, 5-125, 5-127
577738-0000 ..	GEAR WHEEL	5-123, 5-125, 5-127
577739-0000 ..	SHAFT	5-123, 5-125, 5-127

Part No	Description	Page No
577740-0000 ..	GEAR WHEEL	5-123, 5-125, 5-127
577741-0000 ..	TOOTHED PULLEY	5-123, 5-125, 5-127, 5-139
577742-0000 ..	SHAFT	5-123, 5-125, 5-127
577743-0000 ..	SPROCKET	5-123, 5-125, 5-127
577744-0000 ..	SPACER	5-123, 5-125, 5-127
577745-0000 ..	SPACER	5-123, 5-125, 5-127
577747-0000 ..	ROLLER	5-135
577750-0000 ..	SHAFT	5-123, 5-125, 5-127
577751-0000 ..	ARM	5-123, 5-125, 5-127
577752-0000 ..	SHEET	5-123, 5-125, 5-127
577754-0000 ..	BALL PIN	5-123, 5-125, 5-127
577755-0000 ..	PLUG	5-123, 5-125, 5-127
577756-0000 ..	DOWEL	5-123, 5-125, 5-127
577758-0000 ..	AXLE BOLT	5-123, 5-125, 5-127, 5-131
577759-0000 ..	SPACER	5-123, 5-125, 5-127, 5-131
577761-0000 ..	SPROCKET	5-123, 5-125, 5-127
577762-0000 ..	SPACER	5-123, 5-125, 5-127
577763-0000 ..	SPROCKET	5-123, 5-125, 5-127
577766-0000 ..	SHAFT	5-131
577767-0000 ..	FLANGE SEAL	5-123, 5-125, 5-127
577769-0000 ..	EXTENSION PIPE	6-73
577770-0000 ..	GASKET	6-73
577771-0000 ..	SHAFT	6-73
577773-0000 ..	GASKET	6-69
577782-0000 ..	TUBE 200	1-107, 1-109
577783-0000 ..	TUBE 201	1-107, 1-109
577784-0000 ..	TUBE260	1-107, 1-109
577785-0000 ..	TUBE 261	1-107, 1-109
577786-0000 ..	TUBE 240	1-107, 1-109
577787-0000 ..	TUBE 241	1-107, 1-109
577788-0000 ..	TUBE 80	1-107, 1-109
577789-0000 ..	TUBE 90	1-107, 1-109
577790-0000 ..	TUBE 70	1-107, 1-109
577791-0000 ..	TUBE 40	1-107, 1-109
577798-0000 ..	GUIDING ARBOR	8-21
577799-0000 ..	SHAFT	8-21
577800-0200 ..	PAPER GUIDE	8-17, 8-19
577822-0300 ..	PRESSURE REGULATOR GROUP	6-15, 6-17
577824-0300 ..	COOL WATER VALVE	6-15, 6-17
577825-0300 ..	HOT WATER VALVE	6-15, 6-17
577832-0000 ..	PIPE	6-15, 6-17
578004-0000 ..	TUBE 211	1-107, 1-109
578005-0000 ..	TUBE 213	1-107, 1-109
578013-0000 ..	TUBE 213 AND 211	1-107, 1-109
578019-0000 ..	TUBE40	1-103, 1-105
578020-0000 ..	TUBE 70	1-107, 1-109
578022-0000 ..	TUBE 211	1-107, 1-109
578023-0000 ..	TUBE 213	1-107, 1-109
578027-0000 ..	CRAMP	1-107, 1-109
578028-0000 ..	BRACKET	1-107, 1-109
578030-0000 ..	GASKET	1-107, 1-109
578031-0000 ..	VALVE HOUSING	1-169
578035-0000 ..	LID	1-173, 1-175, 1-177, 1-179, 1-181, 1-183
578091-0000 ..	BRANCH PIPE	2-57
578092-0000 ..	ROD	5-123, 5-125, 5-127
578096-0000 ..	PUSHER	5-123, 5-125, 5-127
578104-0000 ..	SHEET	4-101, 4-103
578105-0000 ..	WASHER	5-123, 5-125, 5-127
578480-0000 ..	BRACKET	1-9, 1-11, 1-49
578486-0000 ..	WHEEL	1-55, 1-57
578490-0000 ..	LID	1-55, 1-57
578491-0000 ..	LID	1-55, 1-57
578492-0000 ..	LID	1-55, 1-57
578493-0000 ..	SHAFT	1-55, 1-57
578494-0000 ..	O-RING 226X5,7 FPM	1-55, 1-57, 11-39
578495-0000 ..	O-RING	1-55, 1-57, 11-39
578496-0000 ..	LID	1-173, 1-175, 1-177, 1-179, 1-181, 1-183
578500-0000 ..	PIPE	1-173, 1-175, 1-177, 1-179, 1-181, 1-183
578676-0000 ..	RAIL	2-43, 2-45
578685-0000 ..	GUIDING ARBOR	8-21
578686-0000 ..	GUIDING ARBOR	8-21
578687-0000 ..	GUIDING ARBOR	8-21
578703-0100 ..	DISCHARGER	5-3, 5-5, 5-7
579553-0000 ..	SHAFT	7-13, 7-43, 7-51, 7-53
579623-0000 ..	PROTECTIVE CASING	3-29
579624-0000 ..	GASKET	3-29
579625-0400 ..	PROTECTIVE COVER	1-3, 1-5, 1-7
579629-0000 ..	TOUCH GUARD	1-213, 1-215, 1-217
579630-0000 ..	BRACKET	1-213, 1-215, 1-217
579633-0000 ..	BRACKET	1-213, 1-215, 1-217
579637-0000 ..	CATCH	1-163
579771-0000 ..	CATCH	1-163
579899-0000 ..	LIFTING UNIT	11-3
580036-0200 ..	STRIP APPLICATOR	7-3

Part No	Description	Page No
580037-0400 ..	STRIP MAGAZINE	7-3
580038-0200 ..	INDUCTOR	7-35, 7-37
580042-0100 ..	HUB JUMBO	7-5, 7-7
580044-0200 ..	SPLICING MAGAZINE	7-5, 7-7
580055-0000 ..	ARM	7-13
580060-0200 ..	BRAKE ARM	7-5, 7-7
580064-0200 ..	CONNECTION BOX	7-5, 7-7
580329-0300 ..	PUSH BUTTON BOX	7-5, 7-7
580335-0200 ..	PIPE WORK-PNEUMATIC	7-55
580356-0000 ..	YOKECAM 250ML SLIM	3-23, 3-25
580357-0000 ..	ARMCAM 250ML SLIM	3-23, 3-25
580358-0000 ..	CAM SEGMENT L	3-23, 3-25
580359-0000 ..	CAM SEGMENT R	3-23, 3-25
580363-0000 ..	PIPE 71	1-107, 1-109
580364-0000 ..	PIPE 71	1-107, 1-109
580993-0000 ..	WATER DIAGRAM	6-15, 6-17
581015-0000 ..	PIPE 91	1-107, 1-109
581016-0000 ..	PIPE 91	1-107, 1-109
581341-0000 ..	TOUCH GUARD	1-45
581533-0000 ..	YOKE CAM 284ML	3-23, 3-25
581534-0000 ..	ARM CAM 284ML	3-23, 3-25
581535-0000 ..	CAMSEGMENT R 284ML	3-23, 3-25
581536-0000 ..	CAMSEGMENT L 284ML	3-23, 3-25
582162-0000 ..	FOLDING FLAP CAM	4-57, 4-59, 4-61, 4-63
582163-0000 ..	VOLUME FLAP 330S	4-19, 4-21, 4-23, 4-27, 4-29, 4-31
582164-0000 ..	VOLUME CAM R 330S	4-107, 4-109
582165-0000 ..	VOLUME CAM R WIDE 330S	4-107, 4-109
582166-0000 ..	VOLUME CAM L 330S	4-107, 4-109
582167-0000 ..	VOLUME CAM L WIDE 330S	4-107, 4-109
582195-0000 ..	ARM CAM 330S	3-23, 3-25
582197-0000 ..	YOKE CAM 330S	3-23, 3-25
582199-0000 ..	CAM SEGMENT RIGHT	3-23, 3-25
582200-0000 ..	CAM SEGMENT LEFT	3-23, 3-25
583683-0000 ..	SHAFT	7-63
583684-0000 ..	AXLE SUPPORT	7-63
583685-0000 ..	BEARING SEAT	7-63
583735-0000 ..	PIN	7-61
583737-0000 ..	ROLLER	7-61
583738-0000 ..	ROLLER	7-61
583749-0000 ..	PIN	7-61
583878-0000 ..	SPRING BRACKET	7-15
589432-0000 ..	SCREW	7-61
589449-0000 ..	NOZZLE	1-197, 1-199, 1-201
589885-0100 ..	TEMPLATE HOUSE/BENDING ROLLER	12-159, 12-181
589889-0100 ..	TEMPLATE LEVELING MACHINE	12-159
589908-0000 ..	BLOCKING PIECE	12-181
589909-0000 ..	BLOCKING PIECE	12-181
589910-0000 ..	BEAM	12-171
590205-0000 ..	PIN	12-171, 12-181
590206-0000 ..	BLOCK	12-171
590207-0000 ..	BLOCKING PIECE	12-171
590208-0000 ..	BLOCKING PIECE	12-171
590215-0000 ..	SUPPORT	12-181
590216-0000 ..	ROLLER	12-181
590217-0000 ..	SHEET	12-181
590218-0000 ..	GUIDE	12-181
590219-0000 ..	PIN	12-171
590221-0000 ..	BLOCK	12-181
590222-0200 ..	TEMPLATE LS-ELEMENT	12-27
590223-0000 ..	SETTING TEMPLATE	12-29, 12-31
590224-0000 ..	SETTING TEMPLATE	12-29, 12-31
590245-0000 ..	SETTING TEMPLATE	12-29, 12-31
590246-0000 ..	SETTING TEMPLATE	12-29, 12-31
590247-0000 ..	SETTING TEMPLATE	12-29, 12-31
590248-0000 ..	SETTING TEMPLATE	12-29, 12-31
590249-0000 ..	SETTING TEMPLATE	12-29, 12-31
590250-0000 ..	SETTING TEMPLATE	12-29, 12-31
590262-0000 ..	PLATE	12-173
590263-0000 ..	HOLDER	12-173
590264-0000 ..	SHAFT	12-173
590265-0000 ..	SHAFT	12-173
590267-0000 ..	BLOCKING PIECE	12-173
590268-0000 ..	TEMPLATE	12-137
590269-0000 ..	RING	12-137
590270-0000 ..	RING	12-137
590271-0000 ..	RING	12-137
590273-0100 ..	TEMPLATE VOLUME CAM	12-159
590274-0000 ..	BRACKET RIGHT	12-175
590275-0000 ..	BRACKET LEFT	12-175
590276-0000 ..	HOLDER	12-175
590277-0000 ..	ANGLE BRACKET	12-175
590278-0000 ..	RULER	12-175
590279-0000 ..	PLATE	12-175
590280-0000 ..	GAUGE	12-177

Part No	Description	Page No
590281-0000 ..	PLATE	12-177
590282-0000 ..	PLATE	12-177
590283-0000 ..	GAUGE	12-177
590284-0000 ..	PLATE	12-177
590285-0000 ..	GAUGE	12-177
590369-0000 ..	COMPRESSION SPRING	4-53, 4-55
590502-0000 ..	PLATE	12-177
590503-0000 ..	GAUGE	12-177
590504-0000 ..	PLATE	12-177
590507-0100 ..	TEMPLATE FOR CENTERING RING	12-159
590508-0000 ..	SCREW	12-177
590509-0100 ..	RING	12-27
591427-0000 ..	STOPPER	4-71, 4-73
591428-0000 ..	STOPPER	4-79, 4-81
591429-0000 ..	SPRING	4-71, 4-73
591430-0000 ..	SPRING	4-79, 4-81
591432-0000 ..	SPACER	4-71, 4-73, 4-79, 4-81
591433-0000 ..	SLEEVE	4-71, 4-73, 4-79, 4-81
591434-0000 ..	WASHER	4-71, 4-73, 4-79, 4-81
591438-0000 ..	SHAFT	4-19, 4-21, 4-23, 4-27, 4-29, 4-31
591439-0000 ..	VOLUME FLAP	4-19, 4-21, 4-23, 4-27, 4-29, 4-31
591440-0000 ..	SHAFT	3-19, 3-21
591443-0000 ..	RAIL LEFT	5-145
591444-0000 ..	RAIL RIGHT	5-145
591445-0000 ..	FOLDING FLAP RIGHT	4-7, 4-9, 4-11, 4-13, 4-15, 4-17
591446-0000 ..	FOLDING FLAP LEFT	4-7, 4-9, 4-11, 4-13, 4-15, 4-17
591454-0000 ..	GASKET	2-33
591457-0000 ..	BRACKET	2-33
591567-0000 ..	LACE	8-29
591586-0000 ..	HOLDER	5-147
591634-0100 ..	STATION CHAIN	5-3, 5-5, 5-7
591677-0200 ..	PULL-DOWN DEVICE	5-3, 5-5, 5-7
593684-0000 ..	LIFTING DEVICE SIGN EEA(CE-MARK)	11-47
594933-0000 ..	SHIM	5-147
594952-0000 ..	CREASE BAR	8-29
594953-0000 ..	SPACER	8-29
594969-0000 ..	PIPE RIGHT	4-107, 4-109
594970-0000 ..	PIPE LEFT	4-107, 4-109
594977-0000 ..	SPLASH PLATE	5-145
595430-0200 ..	LIGHT FIXTURE	2-13, 2-15, 2-29, 2-31
597987-0000 ..	VOLUME FLAP	4-19, 4-21, 4-23, 4-27, 4-29, 4-31
597988-0000 ..	VOLUME BULGE	4-19, 4-21, 4-23, 4-27, 4-29, 4-31
597989-0000 ..	VOLUME SHIM	4-19, 4-21, 4-23, 4-27, 4-29, 4-31
597993-0000 ..	FOLDING FLAP	4-7, 4-9, 4-11, 4-13, 4-15, 4-17
597994-0000 ..	FOLDING FLAP	4-7, 4-9, 4-11, 4-13, 4-15, 4-17
598049-0000 ..	GUIDE RAIL	5-149, 5-151
598050-0000 ..	GUIDE RAIL	5-149, 5-151
598148-0000 ..	LEG	2-39, 5-197, 6-63, 8-9
598762-0400 ..	LADDER	2-3, 2-5, 2-7
598775-0000 ..	V-BELT PULLEY	3-9
735549-0000 ..	HOOK HOLDER	1-49
736168-0000 ..	SEPARATION BLOCK	5-65
736514-0000 ..	SHOCK ABSORBER	1-29, 1-227, 11-39
736730-0001 ..	LEAD PLATE	5-35, 5-37, 5-39, 5-41, 5-43
736730-0002 ..	LEAD PLATE	5-35, 5-37, 5-39, 5-41, 5-43
736730-0003 ..	LEAD PLATE	5-35, 5-37, 5-39, 5-41, 5-43
736730-0004 ..	LEAD PLATE	5-35, 5-37, 5-39, 5-41, 5-43
736730-0005 ..	LEAD PLATE	5-35, 5-37, 5-39, 5-41, 5-43
736730-0006 ..	LEAD PLATE	5-35, 5-37, 5-39, 5-41, 5-43
751009-0000 ..	INSULATION	1-77, 1-79
751010-0000 ..	GASKET	1-193, 1-195
751015-0000 ..	GASKET	1-73
751016-0000 ..	GASKET	1-45
751018-0000 ..	WASHER	1-73
751019-0000 ..	WASHER	1-69
751020-0000 ..	GASKET	1-69
751023-0000 ..	GASKET	1-69, 1-73
751024-0000 ..	GASKET	1-193, 1-195
751070-0000 ..	DISTRIBUTOR BLOCK	5-109
751078-0000 ..	BRACKET RIGHT	3-15
751079-0000 ..	BRACKET LEFT	3-17
751085-0000 ..	BUSHING	2-37
751086-0000 ..	NIPPLE	6-25
751109-0000 ..	RAIL RIGHT	5-45, 5-47
751110-0000 ..	RAIL LEFT	5-45, 5-47
751131-0000 ..	SHAFT	1-83, 1-85
751132-0000 ..	SHAFT	1-91
751165-0000 ..	BUSHING	1-93, 1-95
751212-0000 ..	ARM	3-11, 3-13, 3-15, 3-17
751220-0000 ..	FILLER CAP	6-69
751223-0000 ..	LID	6-75
751230-0000 ..	PLAIN BEARING	1-83, 1-85
751243-0000 ..	TOOTHED PULLEY	3-5
751245-0000 ..	FLANGE	3-5

Part No	Description	Page No
751254-0000 ..	ROLL	3-7
751267-0000 ..	CANTILEVER	1-135, 1-137, 1-139
751283-0000 ..	ROLL	1-135, 1-137, 1-139
751284-0000 ..	ROLL	1-135, 1-137, 1-139
751287-0000 ..	PLATE	1-135, 1-137, 1-139
751288-0000 ..	PLATE	1-135, 1-137, 1-139
751316-0000 ..	ELBOW PIPE	6-73
751318-0000 ..	SHAFT	1-143, 1-145
751331-0000 ..	GASKET	1-55, 1-57
751333-0000 ..	SETTING PLATE	1-125, 1-127
751334-0000 ..	SPACER	1-125, 1-127
751373-0400 ..	PEROXIDE TANK	6-65
751393-0300 ..	PEROXIDE PUMP	6-69
751395-0000 ..	FLANGE	6-73
751398-0400 ..	TANK	6-65
751403-0000 ..	BRACKET	6-75
751457-0000 ..	CANTILEVER	1-209, 1-211
751476-0000 ..	CANTILEVER	1-209, 1-211
751491-0000 ..	ROLL	1-125, 1-127
751492-0000 ..	ROLL	1-125, 1-127
751494-0000 ..	ROLL	1-125, 1-127
751495-0000 ..	ROLL	1-143, 1-145
751496-0000 ..	ROLL	1-143, 1-145
751497-0000 ..	ROLL	1-143, 1-145
751498-0000 ..	ROLL	1-143, 1-145
751499-0000 ..	ROLL	1-143, 1-145
751500-0000 ..	ROLL	1-143, 1-145
751501-0000 ..	ROLL	1-143, 1-145
751502-0000 ..	ROLLER	1-149, 1-151
751503-0000 ..	COUNTER ROLLER	1-149, 1-151
751553-0000 ..	ARM	5-89
751554-0002 ..	SHAFT	5-89
751555-0000 ..	BUSHING	5-89
751557-0000 ..	SLEEVE	5-89
751567-0000 ..	SPACER RING	5-123, 5-125, 5-127
751575-0000 ..	RULERPART R	4-7, 4-9, 4-11
751576-0000 ..	RULERPART L	4-13, 4-15, 4-17
751577-0000 ..	RULERPART R	4-7, 4-9, 4-11
751578-0000 ..	RULERPART L	4-13, 4-15, 4-17
751579-0000 ..	ADJUSTING SCREW	4-7, 4-9, 4-11, 4-13, 4-15, 4-17, 4-45, 4-47
751580-0000 ..	SHIM	4-7, 4-9, 4-11, 4-13, 4-15, 4-17, 4-45, 4-47
751722-0000 ..	PIPE-LINE	1-193, 1-195
751731-0000 ..	BEARING COVER	1-71
751732-0000 ..	BRACKET	1-71
751733-0000 ..	HEATING PIPE	1-73
751742-0004 ..	V-BELT PULLEY	3-5
751743-0000 ..	PISTON	4-35, 4-37, 4-39, 4-41
751769-0000 ..	SLEEVE	4-35, 4-37, 4-39, 4-41
752007-0000 ..	HOLDER	12-101
752009-0000 ..	RULERPART R	4-7, 4-9, 4-11
752010-0000 ..	RULERPART R	4-7, 4-9, 4-11
752011-0000 ..	RULERPART L	4-13, 4-15, 4-17
752012-0000 ..	RULERPART L	4-13, 4-15, 4-17
752014-0000 ..	RULERPART R	4-7, 4-9, 4-11
752015-0000 ..	RULERPART R	4-7, 4-9, 4-11
752016-0000 ..	RULERPART L	4-13, 4-15, 4-17
752017-0000 ..	RULERPART L	4-13, 4-15, 4-17
752038-0000 ..	SHIM	1-149, 1-151
752047-0000 ..	BUSHING	1-149, 1-151
752085-0000 ..	SPRING	8-21
752099-0000 ..	PASSIVATINGSEAL	12-27
752115-0000 ..	PLUNGER	4-7, 4-9, 4-11, 4-13, 4-15, 4-17, 4-45, 4-47
752126-0000 ..	FORMING ROLLER	1-125, 1-127
752127-0000 ..	FORMING ROLLER	1-125, 1-127
752128-0000 ..	FORMING ROLLER	1-125, 1-127
752129-0000 ..	FORMING ROLLER	1-135, 1-137, 1-139
752130-0000 ..	FORMING ROLLER	1-135, 1-137, 1-139
752131-0000 ..	FORMING ROLLER	1-143, 1-145
752132-0000 ..	FORMING ROLLER	1-143, 1-145
752133-0000 ..	FORMING ROLLER	1-143, 1-145
752134-0000 ..	FORMING ROLLER	1-143, 1-145
752135-0000 ..	FORMING ROLLER	1-143, 1-145
752136-0000 ..	FORMING ROLLER	1-143, 1-145
752137-0000 ..	FORMING ROLLER	1-143, 1-145
752138-0000 ..	FORMING ROLLER	1-149, 1-151
752140-0000 ..	COUNTER ROLLER	1-149, 1-151
752141-0000 ..	FORMING ROLLER	1-125, 1-127
752142-0000 ..	FORMING ROLLER	1-125, 1-127
752143-0000 ..	FORMING ROLLER	1-125, 1-127
752144-0000 ..	FORMING ROLLER	1-135, 1-137, 1-139
752145-0000 ..	FORMING ROLLER	1-135, 1-137, 1-139
752146-0000 ..	FORMING ROLLER	1-143, 1-145
752147-0000 ..	FORMING ROLLER	1-143, 1-145
752148-0000 ..	FORMING ROLLER	1-143, 1-145

Part No	Description	Page No
752149-0000 ..	FORMING ROLLER	1-143, 1-145
752150-0000 ..	FORMING ROLLER	1-143, 1-145
752151-0000 ..	FORMING ROLLER	1-143, 1-145
752152-0000 ..	FORMING ROLLER	1-143, 1-145
752153-0000 ..	FORMING ROLLER	1-149, 1-151
752155-0000 ..	COUNTER ROLLER	1-149, 1-151
752156-0000 ..	FLANGE BUSHING	1-125, 1-127, 1-143, 1-145
752174-0000 ..	HEATING PIPE	1-69
752185-0000 ..	SHAFT	1-143, 1-145
752186-0001 ..	SHAFT	1-135, 1-137, 1-139
752186-0002 ..	SHAFT	1-125, 1-127
752186-0003 ..	SHAFT	1-143, 1-145, 1-149, 1-151
752186-0004 ..	SHAFT	1-135, 1-137, 1-139, 1-143, 1-145, 1-149, 1-151
752186-0005 ..	SHAFT	1-125, 1-127, 1-143, 1-145, 1-149, 1-151
752186-0006 ..	SHAFT	1-125, 1-127, 1-143, 1-145
752186-0007 ..	SHAFT	1-143, 1-145
752186-0008 ..	SHAFT	1-125, 1-127
752186-0009 ..	SHAFT	1-125, 1-127
752186-0010 ..	SHAFT	1-135, 1-137, 1-139
752186-0011 ..	SHAFT	1-135, 1-137, 1-139
752186-0012 ..	SHAFT	1-135, 1-137, 1-139, 1-149, 1-151
752187-0000 ..	SHAFT	1-125, 1-127
752200-0000 ..	CANTILEVER	8-23, 8-25
752212-0000 ..	VOLUME FLAP 200 ML	4-19, 4-21, 4-23, 4-27, 4-29, 4-31
752218-0000 ..	ATTACHMENT	1-193, 1-195
752240-0000 ..	LID	8-23, 8-25
752282-0000 ..	CONNECTION RIGHT	4-35, 4-37
752283-0000 ..	CONNECTION LEFT	4-39, 4-41
752284-0000 ..	SHAFT	4-35, 4-37, 4-39, 4-41
752288-0000 ..	SLEEVE	4-7, 4-9, 4-11, 4-13, 4-15, 4-17, 4-45, 4-47
752289-0000 ..	CLAMP RIGHT	4-35, 4-37
752290-0000 ..	CLAMP LEFT	4-39, 4-41
752425-0000 ..	LINK	4-71, 4-73, 4-79, 4-81
752462-0000 ..	TRIMMING ROLLER PLUS	12-7
752463-0000 ..	TRIMMING ROLLER MINUS	12-7
752464-0000 ..	TRIMMING ROLLER PLUS	12-7
752465-0000 ..	TRIMMING ROLLER MINUS	12-7
752466-0000 ..	TRIMMING ROLLER PLUS	12-7
752467-0000 ..	TRIMMING ROLLER MINUS	12-7
752476-0000 ..	SCREW	4-7, 4-9, 4-11, 4-13, 4-15, 4-17, 4-35, 4-37, 4-39, 4-41, 4-45, 4-47
752495-0400 ..	ATTACHMENT	1-159, 1-161
752499-0000 ..	RING	1-163
752519-0002 ..	PIN	1-83, 1-85
752534-0000 ..	PLATE	8-23, 8-25
752538-0000 ..	SHAFT	8-23, 8-25
752539-0000 ..	PLATE	8-23, 8-25
752542-0001 ..	BENDING ROLLER	8-23, 8-25
752543-0001 ..	SHAFT	8-23, 8-25
752544-0001 ..	SHIM	8-23, 8-25
752544-0002 ..	SHIM	8-23, 8-25
752554-0000 ..	SPACER	1-209, 1-211
752556-0000 ..	SPACER	4-71, 4-73, 4-79, 4-81
752559-0000 ..	STOP PERF 1	4-71, 4-73
752560-0000 ..	STOP PERF 2	4-79, 4-81
752563-0000 ..	STOP PERF 1	4-71, 4-73
752564-0000 ..	STOP PERF 2	4-79, 4-81
752576-0000 ..	CONTAINER	1-103, 1-105
752598-0000 ..	SHAFT	4-19, 4-21, 4-23, 4-27, 4-29, 4-31
752615-0000 ..	SPACER	4-19, 4-21, 4-23, 4-27, 4-29, 4-31
752655-0000 ..	GUIDE PIN	5-35, 5-37, 5-39, 5-41, 5-43
752668-0000 ..	HOLDER	12-101
752671-0100 ..	SHOCK ABSORBER	4-3, 4-5
752672-0100 ..	SHOCK ABSORBER	4-3, 4-5
752673-0000 ..	SPACER	4-71, 4-73, 4-79, 4-81
752678-0000 ..	SPRING PERF 1	4-71, 4-73
752679-0000 ..	SPRING PERF 2	4-79, 4-81
752680-0000 ..	SLEEVE	4-71, 4-73, 4-79, 4-81
752681-0000 ..	WASHER	4-71, 4-73, 4-79, 4-81
752739-0000 ..	VOLUME BULGE	4-19, 4-21, 4-23, 4-27, 4-29, 4-31
752774-0000 ..	PLUNGER	3-23, 3-25
752857-0000 ..	POINTER	1-81
752858-0000 ..	POINTER	1-81
752859-0000 ..	POINTER	1-81
752999-0000 ..	VOLUME FLAP 200S	4-19, 4-21, 4-23, 4-27, 4-29, 4-31
772220-0100 ..	ASSEMBLY T VOMO 6-L	12-13
772220-0101 ..	ASSEMBLY T VOMO 8-L	12-13
772220-0103 ..	ASSEMBLY T VOMO 12-L	12-13
772220-0104 ..	ASSEMBLY T VOMO 15-L	12-13
776422-0101 ..	BRASS WIRE BRUSH	12-13
777100-0113 ..	SCREW DRIVER	12-13
777100-0184 ..	SCREW DRIVER	12-13
777150-0801 ..	SET OF SPANNERS, HEXAGONAL	11-17
777510-0101 ..	SCISSORS	12-13
777603-0100 ..	PULLER	12-127

Part No	Description	Page No
777603-0300 ..	PULLER	12-127
779911-0101 ..	PADLOCK ABLOY, L=46 T=7	12-83, 12-107
783901-0106 ..	SPIRIT LEVEL	12-123
925419-0100 ..	BED	11-3
925471-0000 ..	SEAL HOLDER	1-51
925472-0000 ..	SEAL HOLDER	1-51
925765-0000 ..	BED	11-5
925877-0000 ..	SUPPORT	1-227
925991-0300 ..	LEVEL PROBE	1-3, 1-5, 1-7
925998-0000 ..	DIAPHRAGM	1-29, 11-39
925999-0000 ..	PROTECTION PIPE	1-227
926820-0000 ..	PLUG	1-227
926822-0000 ..	GASKET	11-39
926906-0000 ..	SPACER	1-29
926907-0000 ..	SCREW	1-29
926909-0000 ..	COMPRESSION SPRING	1-29
926934-0000 ..	SUPPORT	1-29
927007-0000 ..	SHUTTER	1-29
927044-0000 ..	SPACER	1-29
927081-0000 ..	SUPPORT	1-47
927194-0000 ..	BODY	1-29
927203-0000 ..	COVER	1-29
927205-0200 ..	REGULATING VALVE	1-9, 1-11, 1-49
927421-0003 ..	O-RING 13.3X2.4 SILICONE	1-55, 1-57, 1-103, 1-105
927421-0004 ..	O-RING 15.3X2.4 SILICONE	1-55, 1-57, 1-103, 1-105, 6-85, 6-87
927421-0005 ..	O-RING 7.3X2.4 SILICONE	6-79, 12-23
927421-0006 ..	O-RING 17.3X2.4 SILICONE	1-171, 11-39
927422-0001 ..	O-RING 19.2X3 SILICONE	5-19, 5-21, 5-23, 5-25, 5-27, 12-23
927422-0003 ..	O.RING 24.2X3 SILICONE	6-81, 11-39
927422-0004 ..	O-RING 29.2X3 SILICONE	6-73
927422-0007 ..	O-RING 44.2X3 SILICONE	6-69, 6-73
927422-0008 ..	O-RING 49.5X3 SILICONE	1-155, 11-39
927422-0009 ..	O-RING 54.5X3 SILICONE	6-75
927422-0011 ..	O-RING 69.5X3 SILICONE	1-103, 1-105
927422-0014 ..	O-RING 34.2X3 SILICONE	1-55, 1-57, 6-69
928139-0000 ..	PLATE	5-91
929036-0000 ..	PLATE	5-91
929037-0000 ..	PLATE	5-91
929276-0000 ..	FLOAT	1-225
929278-0000 ..	TEMPLATE	12-27
929279-0000 ..	ROLLER	1-149, 1-151
929280-0000 ..	COUNTER ROLLER	1-149, 1-151
929282-0000 ..	TRIMMING ROLLER PLUS	12-7
929283-0000 ..	TRIMMING ROLLER MINUS	12-7
929284-0000 ..	ROLLER	1-83, 1-85
929286-0000 ..	SEAL	1-83, 1-85
929288-0000 ..	INDICATOR	1-81
929305-0000 ..	CARRIER RIGHT	4-45
929306-0000 ..	CARRIER LEFT	4-47
929308-0000 ..	CUTTING JAW	4-45, 4-47
929309-0000 ..	CATCH	4-45, 4-47
929310-0000 ..	CARRIER RULER RIGHT	4-45
929311-0000 ..	CARRIER RULER LEFT	4-47
929312-0000 ..	CARRIER RULER RIGHT	4-45
929313-0000 ..	CARRIER RULER LEFT	4-47
929314-0000 ..	FOLDING FLAP RIGHT	4-45, 4-47
929315-0000 ..	FOLDING FLAP LEFT	4-45, 4-47
929316-0001 ..	BEARING	4-7, 4-9, 4-11, 4-13, 4-15, 4-17, 4-45, 4-47
929316-0002 ..	BEARING	4-7, 4-9, 4-11, 4-13, 4-15, 4-17, 4-45, 4-47
929319-0000 ..	STOP	4-49
929320-0000 ..	STOP	4-51
929322-0300 ..	CUTTING JAW	4-3, 4-5
929323-0300 ..	CUTTING JAW	4-3, 4-5
929324-0200 ..	PRESSURE JAW	4-3, 4-5
929325-0200 ..	PRESSURE JAW	4-3, 4-5
929328-0000 ..	TEMPLATE	12-85, 12-87
929334-0000 ..	VOLUME FLAP	4-51
929335-0000 ..	CARRIER RIGHT	4-53
929336-0000 ..	CARRIER LEFT	4-55
929344-0000 ..	CATCH	4-53, 4-55
929346-0000 ..	LID	4-53, 4-55
929352-0000 ..	STOP	4-71, 4-73, 4-79, 4-81
929354-0000 ..	VOLUME FLAP	4-49
929355-0000 ..	ROLLER TPA 330	4-111
929356-0000 ..	FOLDING FLAP CAM P48 330	4-57, 4-59, 4-61, 4-63
929366-0000 ..	ARM CAM P48 330	3-23, 3-25
929367-0000 ..	CAM SEGMENT L P48 330SQ	3-23, 3-25
929368-0000 ..	CAM SEGMENT R P48 330SQ	3-23, 3-25
929371-0000 ..	SLEEVE	4-53, 4-55
929372-0000 ..	PISTON	4-53, 4-55
929373-0000 ..	TEMPLATE	12-85, 12-87
929374-0000 ..	VOLUME BULGE P48 330	4-49, 4-51
929375-0000 ..	SUPPORT	4-53, 4-55
929376-0000 ..	TEMPLATE YOKE	12-99

Part No	Description	Page No
929377-0000 ..	SPACER	12-99
929378-0000 ..	TEMPLATE YOKE	12-99
929379-0100 ..	TEMPLATE JAW SYSTEM	12-85, 12-87
929381-0000 ..	BRACKET	12-99
929391-0000 ..	SPRING	4-53, 4-55
929396-0000 ..	HUB	3-23, 3-25
929402-0000 ..	ARM	4-57, 4-59, 4-61, 4-63
929407-0000 ..	SPACER	4-71, 4-73, 4-79, 4-81
929408-0000 ..	STOP	4-71, 4-73
929409-0000 ..	STOP	4-79, 4-81
929412-0000 ..	LINK	4-71, 4-73, 4-79, 4-81
929413-0000 ..	SIGN	6-45, 6-47
929415-0100 ..	BALANCE TANK	6-15, 6-17
929420-0000 ..	CONNECTION	5-89
929430-0000 ..	TOOL	12-85, 12-87
929436-0000 ..	BUSBAR RIGHT	4-101
929437-0000 ..	BUSBAR LEFT	4-103
929438-0100 ..	ARM	3-3
929440-0000 ..	COUNTER CAM	4-57, 4-59, 4-61, 4-63
929441-0000 ..	ROLL	1-135, 1-137, 1-139
929442-0000 ..	ROLL	1-135, 1-137, 1-139
929444-0000 ..	PIN	3-23, 3-25
950351-0000 ..	SHAFT	4-53, 4-55
975924-0000 ..	WASHER	8-11, 8-13
977527-0000 ..	BRACKET	5-85, 5-135, 5-139, 6-85, 6-87
978010-0000 ..	SIGN BOARD	2-87, 2-89
978031-0000 ..	VOLUMEFLAP 284 ML	4-19, 4-21, 4-23, 4-27, 4-29, 4-31
978184-0000 ..	STOPPER	4-57, 4-59, 4-61, 4-63
978185-0000 ..	SHIM	4-57, 4-59, 4-61, 4-63
978207-0000 ..	SPACER PIPE	3-29
978209-0000 ..	NUT	3-29
978235-0000 ..	VALVE PLATE	1-35, 1-37
978262-0000 ..	GUIDE PIN	3-23, 3-25
978272-0000 ..	BRACKET	3-11, 3-13, 3-15, 3-17
978275-0000 ..	BEARING HOLDER	3-11, 3-13, 3-15, 3-17
978340-0000 ..	SPACER	3-23, 3-25
978366-0000 ..	VOLUME FLAP 250 ML	4-19, 4-21, 4-23, 4-27, 4-29, 4-31
978380-0000 ..	BLIND PLUG	1-47
978381-0000 ..	WASHER 56X2MM	1-47
978421-0000 ..	SETTING TEMPLATE	12-121
978440-0000 ..	CRAMP	1-43
978462-0000 ..	PROTECTION PLATE	1-91
978603-0000 ..	SIGN	6-45, 6-47
978609-0000 ..	ALIGNMENT TEMPLATE	3-23, 3-25
978631-0000 ..	SLIDING STRIP	5-135, 5-139
978636-0000 ..	RIM	5-135, 5-139
978714-0000 ..	CARRIER LEFT	4-13, 4-15, 4-17
978715-0000 ..	CARRIER RIGHT	4-7, 4-9, 4-11
978735-0000 ..	FASTENING PLATE	1-209, 1-211
978736-0000 ..	BRACKET	1-69
978745-0000 ..	CATCH	4-7, 4-9, 4-11, 4-13, 4-15, 4-17
978746-0000 ..	CATCH	4-35, 4-37, 4-39, 4-41
978756-0000 ..	PIN	4-111
978757-0000 ..	ROLLER 180-284ML	4-111
978758-0000 ..	ROLLER 125ML	4-111
978760-0000 ..	ROLLER TBA200SL	4-111
978768-0000 ..	YOKECURVE200ML	3-23, 3-25
978769-0000 ..	ARMCURVE 200ML	3-23, 3-25
978770-0000 ..	CAMSEGMENTL	3-23, 3-25
978771-0000 ..	CAMSEGMENTL	3-23, 3-25
978772-0000 ..	YOKECURVE 200SL	3-23, 3-25
978773-0000 ..	ARMCURVE 200SL	3-23, 3-25
978774-0000 ..	CAMSEGMENT R	3-23, 3-25
978775-0000 ..	CAMSEGMENT L	3-23, 3-25
978776-0000 ..	YOKECURVE 250ML	3-23, 3-25
978777-0000 ..	ARMCURVE 250ML	3-23, 3-25
978778-0000 ..	CAMSEGMENT R	3-23, 3-25
978779-0000 ..	CAMSEGMENT L	3-23, 3-25
978790-0000 ..	BRACKET	1-143, 1-145
978791-0000 ..	HOLDER	1-135, 1-137, 1-139
978792-0000 ..	PLATE	1-125, 1-127
978793-0000 ..	YOKECURVE 125ML	3-23, 3-25
978794-0000 ..	ARMCURVE 125ML	3-23, 3-25
978795-0000 ..	CAMSEGMENT R	3-23, 3-25
978796-0000 ..	CAMSEGMENT L	3-23, 3-25
978823-0300 ..	CENTRAL LUBRICATION	6-3
978834-0400 ..	PEROXIDE AND STERILSYSTEM	6-3
978835-0200 ..	PIPE WORK	6-65
978838-0000 ..	HEAT EXCHANGER	1-165, 1-167
978865-0000 ..	HOUSE	1-83, 1-85
978870-0000 ..	BEARING PLATE	1-83, 1-85
978871-0000 ..	BEARING PLATE	1-83, 1-85
978872-0000 ..	LOCK WASHER	1-83, 1-85
978876-0000 ..	SHAFT	8-41

Part No	Description	Page No
978877-0000 ..	SHAFT	8-41
978879-0000 ..	CONTAINER	1-101
978963-0000 ..	PIPE	6-67
978970-0000 ..	METERING DEVICE	6-75
978971-0000 ..	DISCHARGE TRAY	1-101
978972-0000 ..	DISCHARGE TRAY	1-101
978973-0001 ..	HOSE	6-69
978973-0003 ..	HOSE	6-85, 6-87
978988-0300 ..	SEPARATOR	6-65
978989-0200 ..	SCRUBBER	6-65
978996-0000 ..	BRANCH PIPE	1-99
979026-0300 ..	WATER CIRCULATION	6-65
979028-0000 ..	PIPE	1-165, 1-167
979031-0000 ..	PIPE	1-165, 1-167
979069-0000 ..	PIPE	6-67
979111-0000 ..	BELT TIGHTENER	5-135
979204-0000 ..	PLATE	8-41
979215-0200 ..	COVER PLATE	6-3
979216-0400 ..	MACHINE BODY	6-3
979217-0000 ..	PIPE	6-13
979247-0000 ..	HOUSE	1-45
979254-0000 ..	SUPPORT	1-47
979279-0000 ..	COVER HOUSING	6-83
979280-0000 ..	COVER	6-83
979300-0000 ..	PIPE	6-79
979304-0000 ..	CARRIER	5-123, 5-125, 5-127, 5-131
979308-0000 ..	SEAT	5-123, 5-125, 5-127
979309-0000 ..	BALL PIN	5-123, 5-125, 5-127
979312-0000 ..	SHAFT	5-123, 5-125, 5-127
979328-0200 ..	CABINET	6-65
979329-0200 ..	FILLING UNIT	6-79
979336-0000 ..	HOSE NIPPLE	6-69
979368-0000 ..	HOLDER	1-225
979382-0000 ..	SHAFT	8-43
979383-0000 ..	PLUNGER	8-43
979384-0000 ..	SLEEVE	8-43
979385-0000 ..	SLEEVE	8-43
979421-0000 ..	SIGN	6-45, 6-47
979434-0000 ..	FERRULE	1-29
979446-0000 ..	HOLDER	6-33, 6-45, 6-47
979458-0000 ..	PIPE CONNECTION	5-109
979461-0000 ..	SPROCKET	5-123, 5-125, 5-127, 5-131
979462-0000 ..	AXLE BOLT	5-123, 5-125, 5-127, 5-131
979472-0000 ..	SPACER	5-123, 5-125, 5-127, 5-131
979474-0000 ..	BRACKET	1-35, 1-37
979475-0000 ..	CONNECTION BOX	1-41
979476-0000 ..	RAIL	1-41
979486-0000 ..	LUBRICATING PIPE	2-51, 2-53, 2-55
979500-0001 ..	ELECTRODE	1-55, 1-57
979529-0000 ..	TUBE SUPPORT	5-115, 5-117
979550-0000 ..	GUARD PLATE	5-131
979555-0000 ..	WEB TENSION ROLLER	8-17, 8-19
979556-0000 ..	GUARD PLATE	5-123, 5-125, 5-127
979559-0000 ..	HINGE	1-55, 1-57
979575-0000 ..	ROLLER PLATE	7-43
979576-0000 ..	AXLE PIN	7-13
979578-0000 ..	AXLE PIN	7-13
979582-0000 ..	ROLLER	7-61
979667-0000 ..	ARM	7-23, 7-25, 7-27, 7-29
979668-0000 ..	FINGER	7-23, 7-25, 7-27, 7-29
979669-0000 ..	FORCE PLATE	7-23, 7-25, 7-27, 7-29
979702-0000 ..	SEAL HOLDER (OLD 578107 BEARING HOUSING)	5-123, 5-125, 5-127
979709-0000 ..	BENDING ROLLER	8-23, 8-25
979722-0000 ..	BLOCK	1-71
979728-0000 ..	CATCH	1-163
979737-0000 ..	RAIL LEFT	5-35, 5-37, 5-39, 5-41, 5-43
979738-0000 ..	RAIL RIGHT	5-35, 5-37, 5-39, 5-41, 5-43
979749-0000 ..	PUSHER	5-123, 5-125, 5-127
979751-0000 ..	VOLUME FLAP 100	4-19, 4-21, 4-23, 4-27, 4-29, 4-31
979754-0000 ..	VOLUME SHIM 100	4-19, 4-21, 4-23, 4-27, 4-29, 4-31
979755-0000 ..	VOLUME BULGE 100	4-19, 4-21, 4-23, 4-27, 4-29, 4-31
979756-0000 ..	SHAFT	4-19, 4-21, 4-23, 4-27, 4-29, 4-31
979757-0000 ..	SPACER	4-19, 4-21, 4-23, 4-27, 4-29, 4-31
979758-0000 ..	STOP PERF 1	4-71, 4-73
979759-0000 ..	STOP PERF 2	4-79, 4-81
979760-0000 ..	SPACER	4-71, 4-73, 4-79, 4-81
979761-0000 ..	SLEEVE	4-71, 4-73, 4-79, 4-81
979762-0000 ..	CARRIER RIGHT	4-7, 4-9, 4-11
979763-0000 ..	CARRIER LEFT	4-13, 4-15, 4-17
979764-0000 ..	CARRIER RIGHT 100	4-35, 4-37
979765-0000 ..	CARRIER LEFT 100	4-39, 4-41
979770-0000 ..	FOLDING FLAP CAM 100	4-57, 4-59, 4-61, 4-63
979771-0000 ..	COUNTER CAM 100	4-57, 4-59, 4-61, 4-63
979772-0000 ..	VOLUME CAM L 100	4-107, 4-109

Part No	Description	Page No
979773-0000 ..	VOLUME CAM L WIDE 100	4-107, 4-109
979774-0000 ..	VOLUME CAM R 100	4-107, 4-109
979775-0000 ..	VOLUME CAM R WIDE 100	4-107, 4-109
979778-0000 ..	YOKE CAM 100	3-23, 3-25
979779-0000 ..	ARM CAM 100	3-23, 3-25
979780-0000 ..	CAM SEGMENT R 100	3-23, 3-25
979781-0000 ..	CAM SEGMENT L 100	3-23, 3-25
979783-0000 ..	PLATE	8-41
979784-0000 ..	SHAFT	8-37
979788-0000 ..	SPRING HOLDER	8-23, 8-25
979789-0000 ..	SPRING HOLDER	8-23, 8-25
979790-0000 ..	COVER	8-23, 8-25
979792-0000 ..	VOLUME BULGE	4-19, 4-21, 4-23, 4-27, 4-29, 4-31
979793-0000 ..	CARRIER	4-35, 4-37
979794-0000 ..	CARRIER	4-39, 4-41
979814-0000 ..	BRACKET	1-43
979858-0000 ..	COMPRESSION SPRING	5-123, 5-125, 5-127
979859-0000 ..	VOLUME FLAP	4-19, 4-21, 4-23, 4-27, 4-29, 4-31
979860-0000 ..	VOLUME BULGE	4-19, 4-21, 4-23, 4-27, 4-29, 4-31
979861-0000 ..	VOLUME SHIM	4-19, 4-21, 4-23, 4-27, 4-29, 4-31
979864-0000 ..	RAIL LEFT	5-35, 5-37, 5-39, 5-41, 5-43
979865-0000 ..	RAIL RIGHT	5-35, 5-37, 5-39, 5-41, 5-43
979881-0000 ..	PUSHER	5-123, 5-125, 5-127
979899-0000 ..	BRACKET	7-35, 7-37, 7-39, 7-41
979931-0000 ..	VOLUME BULGE	4-19, 4-21, 4-23, 4-27, 4-29, 4-31
979938-0000 ..	SLIDER	2-9, 2-11
979946-0000 ..	STEEL TUBE	8-17, 8-19
979951-0000 ..	FLANGE	12-133
979952-0000 ..	BLANK FLANGE	12-133
979953-0000 ..	WASHER	1-169
979956-0000 ..	SOLENOID VALVE	1-35, 1-37
979966-0000 ..	BRACKET	2-97
979978-0000 ..	DRIVE DISC	5-123, 5-125, 5-127
979979-0000 ..	GEAR WHEEL	5-123, 5-125, 5-127
979990-0000 ..	BELT BRAKE	7-15
979991-0000 ..	BLOCK	7-15
979994-0000 ..	ARM	7-15
980002-0000 ..	BRACKET	8-27
980003-0000 ..	SHAFT	8-27
980004-0000 ..	PLUG	8-27
988685-0000 ..	PIN	2-65, 2-67, 2-69, 2-71, 2-101, 2-103, 6-5, 6-7, 8-11, 8-13
1020637-0000 .	HOLDER	5-65, 11-23, 11-27, 11-29
1020638-0000 .	HOLDER	11-23, 11-27, 11-29
1035587-0000 .	INDUCTOR	7-45
1035792-0000 .	E-HINGE	2-65, 2-67, 2-69, 2-71, 2-101, 2-103, 6-5, 6-7, 8-11, 8-13
1035794-0000 .	BLOCKING PIECE	2-65, 2-67, 2-69, 2-71, 2-101, 2-103, 6-5, 6-7, 7-23, 7-25, 7-27, 7-29, 7-59, 8-11, 8-13
1035893-0000 .	ADJUSTING SCREW	7-51, 7-53
1035895-0000 .	SHAFT	7-47
1035897-0000 .	SHAFT	7-35, 7-37, 7-39, 7-41
1036187-0000 .	T-PIPE	1-99
1036188-0000 .	SHAFT	1-75, 1-99
1036189-0000 .	SPINDEL GUIDE	1-75, 1-99
1036191-0000 .	SEAL HOLDER	1-75, 1-99
1036192-0000 .	SPACER ROD	1-75, 1-99
1036193-0000 .	CYLINDER BRACKET	1-75, 1-99
1036194-0000 .	T-PIPE	1-75, 1-99
1036443-0000 .	CONTACT UNIT	5-19, 5-21, 5-23, 5-25, 5-27, 5-91
1036588-0000 .	BRACKET	7-45
1036622-0000 .	GUIDE ROLLER	7-49
1036623-0000 .	GUIDE ROLLER	7-49
1036713-0000 .	TURN SPRING	5-123, 5-125, 5-127
1037120-0000 .	SHAFT	7-19
1037121-0000 .	SHAFT	7-19
1037124-0000 .	HOLDER	7-19
1037572-0000 .	COVER PLATE	9-103, 9-105
1037573-0000 .	GASKET	9-103, 9-105
1037574-0000 .	COVER PLATE	9-111, 9-113, 9-115, 9-117, 9-119, 9-121, 9-123, 9-125, 9-127, 9-129
1037575-0000 .	GASKET	9-111, 9-113, 9-115, 9-117, 9-119, 9-121, 9-123, 9-125, 9-127, 9-129
1037761-0000 .	PIN	2-37
1038016-0000 .	SPACER	7-45
1038240-0000 .	SPACER	4-53, 4-55
1086870-0000 .	SIGN	2-17, 5-59, 5-61
1086888-0000 .	COVER	11-23, 11-27, 11-29
1110211-0000 .	CUTTING RAIL	4-45, 4-47
1110378-0001 .	DOLLY	12-11
1110391-0000 .	DOLLY	4-7, 4-9, 4-11, 4-13, 4-15, 4-17, 4-45, 4-47, 11-45
1110530-0000 .	INDUCTOR	4-87, 4-89, 4-91, 11-45
1110532-0000 .	INDUCTOR	4-87, 4-89, 4-91, 11-45
1110534-0000 .	INDUCTOR	4-87, 4-89, 4-91, 11-45
1110535-0000 .	INDUCTOR	4-87, 4-89, 4-91, 11-45
1110556-0000 .	INDUCTOR	4-87, 4-89, 4-91, 11-45
1110706-0000 .	INDUCTOR	4-87, 4-89, 4-91, 11-45
1110820-0000 .	CUTTING RAIL	4-7, 4-9, 4-11, 4-13, 4-15, 4-17

Part No	Description	Page No
1110829-0000	.CUTTING RAIL	4-7, 4-9, 4-11, 4-13, 4-15, 4-17
1110871-0000	.BRACKET	4-45, 4-47
1129274-0000	.GUIDE LUG	2-101, 2-103, 6-5, 6-7
1129478-0000	.GASKET	9-111, 9-113, 9-115, 9-117, 9-119, 9-121, 9-123, 9-125, 9-127, 9-129
1129481-0000	.COVERING PLATE	9-111, 9-113, 9-115, 9-117, 9-119, 9-121, 9-123, 9-125, 9-127, 9-129
1140129-0000	.HOLDER	2-23
1140840-0000	.WHEEL	12-15
1140996-0000	.FLANGE	8-17, 8-19
1143975-0000	.DRIVE WHEEL	5-155, 5-157
1143977-0000	.SUPPORTING ARM	5-109
1143978-0100	.GUIDE	5-3, 5-5, 5-7
1143980-0100	.PRESSURE DEVICE	5-3, 5-5, 5-7
1144050-0000	.GASKET	5-91
1144059-0000	.WIRE	5-19, 5-21, 5-23, 5-25, 5-27, 5-91
1144122-0000	.REDUCTION	5-19, 5-21, 5-23, 5-25, 5-27, 5-91
1144140-0000	.NUT	5-91
1144150-0000	.GLAND FITTING	5-91, 5-109
1144507-0000	.BUSHING	5-11, 5-13, 5-15
1144521-0000	.CLAMP	5-11, 5-13, 5-15
1190007-0402	.PLMS RECEIVE	10-7
1195009-0300	.CANTILEVER	5-3, 5-5, 5-7
1195019-0000	.BLOCK	5-115, 5-117
1195023-0200	.FRAME	5-3, 5-5, 5-7
1195033-0000	.RAIL RIGHT	5-103, 5-105, 5-107
1195034-0000	.RAIL LEFT	5-103, 5-105, 5-107
1195035-0000	.BRACKET	5-89
1195037-0000	.BLOCK	5-89
1195039-0100	.FLAP HEATER	5-3, 5-5, 5-7
1195040-0000	.HEATING CHAMBER	5-91
1195043-0000	.FLANGE	5-89
1195044-0000	.SPRING	5-11, 5-13, 5-15, 5-89
1195046-0000	.FLANGE	5-89
1195047-0000	.PLATE	5-89
1195048-0000	.AXLE PIN	5-89
1195054-0000	.ROLLER	5-89
1195056-0100	.FOLDING BAR	5-3, 5-5, 5-7
1195059-0000	.PLATE	5-103, 5-105, 5-107
1195408-0000	.AIR NOZZLE	5-91
1195409-0000	.AIR NOZZLE	5-91
1195410-0000	.BRACKET	5-91
1195411-0000	.BRACKET	5-89
1195418-0000	.AXLE PIN	5-89
1195419-0000	.ARM	5-89
1195420-0000	.SLIDER	2-25, 2-27
1195421-0000	.PLATE	2-25, 2-27
1195423-0000	.CANTILEVER	2-25, 2-27
1195424-0100	.DROP CHUTE	2-3, 2-5, 2-7
1195428-0000	.GASKET	2-37
1195429-0000	.DROP CHUTE	2-25, 2-27
1195432-0000	.TENSION SPROCKET	5-159, 5-161
1195454-0000	.BRACKET	5-55, 5-111
1195455-0000	.BRACKET	5-111
1195456-0000	.SHAFT	5-55, 5-111
1254027-0000	.CORNER STRIP	2-83, 2-85
1254028-0000	.FASTENING PLATE	2-83, 2-85
1254442-0000	.CABLE SERIAL	9-83
1254471-0411	.PLMS OFF-LINE	10-7
1255391-0000	.PLATE	5-111
1255392-0000	.GUIDE	5-111
1255535-0200	.STATION CHAIN	5-3, 5-5, 5-7
1255537-0000	.BRACKET	5-135
1255541-0000	.BUSHING	4-7, 4-9, 4-11, 4-13, 4-15, 4-17, 4-35, 4-37, 4-39, 4-41
1255614-0000	.LINK	5-109
1255874-0000	.SPACER	5-77, 5-79
1255876-0100	.CHAIN TENSIONER	5-109
1255876-0200	.CHAIN TENSIONER	5-49, 5-51
1255877-0100	.CLAMPING ELEMENT	5-109
1255890-0000	.TEMPLATE	12-47, 12-49, 12-51, 12-53, 12-55, 12-57
1255929-0000	.TEMPLATE	12-47, 12-49, 12-51, 12-53, 12-55, 12-57
1255932-0000	.AXLE PIN	5-113
1255933-0000	.NUT	5-113
1260065-0000	.BRACKET	5-81
1260068-0000	.SHAFT	5-81
1260069-0000	.ROLLER	5-81
1260070-0000	.SHAFT	5-81
1260205-0000	.SPACER	5-109
1260311-0000	.COVER	1-31
1260316-0000	.LAND FITTING	5-91, 5-109
1260318-0000	.TOOTHED PULLEY	5-123, 5-125, 5-127
1260480-0000	.PIPE	1-165, 1-167
1260481-0000	.PIPE	1-165, 1-167
1260486-0000	.PLATE	1-209, 1-211
1260487-0000	.PLATE	1-209, 1-211
1260489-0000	.PIPE	1-165, 1-167

Part No	Description	Page No
1260490-0000	.NUT	1-209, 1-211
1260491-0000	.NUT	1-209, 1-211
1260548-0000	.TIMING BELT	5-135, 5-139
1260645-0000	.PIVOT ARM	5-93
1260656-0000	.BLOCK	5-89
1260678-0000	.ARM	7-15
1260687-0000	.SHAFT	5-123, 5-125, 5-127
1260694-0000	.BRACKET	5-101
1260743-0000	.HEAT GUARD	1-69
1279044-0000	.HATCH	2-73
1279045-0000	.HATCH	2-75
1279086-0000	.LOCKING PLATE	1-143, 1-145
1279087-0000	.LOCKING PLATE	1-125, 1-127, 1-141
1279088-0000	.LOCKING PLATE	1-135, 1-137, 1-139
1279089-0000	.LOCKING PLATE	1-135, 1-137, 1-139
1279090-0000	.LOCKING PLATE	1-143, 1-145
1279091-0000	.LOCKING PLATE	1-125, 1-127
1279092-0000	.LOCKING PLATE	1-149, 1-151
1279093-0000	.LOCKING PLATE	1-143, 1-145
1279094-0000	.LOCKING PLATE	1-143, 1-145
1279095-0000	.LOCKING PLATE	1-149, 1-151
1279096-0000	.LOCKING PLATE	1-149, 1-151
1279106-0000	.BRACKET	5-123, 5-125, 5-127
1279456-0000	.LABEL	1-31
1279469-0000	.SCREW	5-91
1279479-0000	.LID	5-91
1279624-0200	.SPLICE DETECTOR	7-35, 7-37
1279701-0000	.WASHER	5-159, 5-161
1279702-0000	.BRACKET	5-19, 5-21, 5-23, 5-25, 5-27
1282309-0000	.ARM CAM 200 ML MID	3-23, 3-25
1282310-0000	.YOKE CAM 200ML MID	3-23, 3-25
1282311-0000	.CAM SEGMENT L	3-23, 3-25
1282312-0000	.CAM SEGMENT R	3-23, 3-25
1282315-0000	.VOLUME CAM LEFT	4-107, 4-109
1282316-0000	.VOLUME CAM RIGHT	4-107, 4-109
1282411-0000	.FLOAT	6-69
1282426-0000	.CLIP	2-37, 4-101, 4-103
1282581-0000	.BENDING ROLLER	1-55, 1-57
1282645-0000	.KNIFE	4-65, 4-67, 4-69
1282646-0000	.KNIFE	4-65, 4-67, 4-69
1282647-0000	.KNIFE	4-65, 4-67, 4-69
1282733-0000	.SHEET	5-123, 5-125, 5-127
1282800-0000	.WASHER	5-123, 5-125, 5-127
1282988-0000	.RAIL	7-35, 7-37
1282989-0000	.AXLE PIN	7-35, 7-37
1285109-0000	.NUT	9-83, 9-87, 9-89, 9-135, 9-137, 9-149, 9-151, 9-153
1285484-0100	.FORMING UNIT	5-3, 5-5, 5-7
1285546-0000	.ROLL	7-51, 7-53
1285920-0000	.PLATE	5-91
1285922-0000	.HANDLE	5-91
1286000-0000	.PIPE	2-87, 2-89
1296118-0000	.PROTECTION	6-69
1296120-0200	.SIDE FEEDER	5-133
1296415-0000	.GASKET	5-19, 5-21, 5-23, 5-25, 5-27, 5-91
1296416-0000	.GASKET	5-91
1296777-0000	.SIDE PLATE	5-129
1296778-0000	.SIDE PLATE	5-129
1296779-0000	.WASHER	5-129
1296814-0100	.PAPER REEL HOLDER,JUMBO REEL	8-3
1296815-0200	.HATCH	2-3, 2-5, 2-7
1296849-0000	.DISCHARGE TRAY	1-77, 1-79
1296850-0000	.DISCHARGE TRAY	1-77, 1-79
1296854-0000	.PIPE	2-87, 2-89
1296855-0000	.BATH	1-55, 1-57
1296877-0100	.SEAL KIT	11-39
1296880-0000	.LEAF SPRING	2-25, 2-27
1296881-0000	.LEAF SPRING	2-25, 2-27
1296900-0100	.LIFTING UNIT (RAILING)	12-159
1296901-0000	.BRACKET	12-179
1296903-0000	.BEAM	12-179
1296904-0000	.BEAM	12-179
1296905-0000	.SUPPORT	12-179
1296912-0000	.ROLL	1-125, 1-127
1296913-0000	.ROLL	1-125, 1-127
1296914-0000	.ROLL	1-125, 1-127
1296915-0000	.ROLL	1-125, 1-127
1317016-0000	.PLATE	2-25, 2-27
1317017-0000	.BRACKET	2-25, 2-27
1317018-0000	.LEAF SPRING	2-25, 2-27
1317228-0000	.WASHER	5-31, 5-33, 5-95, 5-97, 5-99, 5-101
1317262-0000	.COVER	1-9, 1-11
1317395-0000	.DROP CHUTE	2-25, 2-27
1317396-0000	.SLIDER	2-25, 2-27
1317398-0000	.HOLDER	2-25, 2-27

Part No	Description	Page No
1317503-0200	.LEVEL PROBE	1-3, 1-5, 1-7
1317526-0200	.STATION CHAIN	5-3, 5-5, 5-7
1317640-0200	.START-UP KIT	11-35
1317663-0000	.PIPE	1-9, 1-11, 1-49
1317756-0000	.PIPE	1-9, 1-11, 1-49
1317905-0000	.BRACKET	1-9, 1-11, 1-49
1317991-0000	.SPRING	1-171
1317996-0000	.COVER	5-91
1334061-0000	.RING	12-137
1334062-0000	.PLATE	12-177
1334063-0000	.GAUGE	12-177
1334184-0000	.BRACKET	12-15
1334193-0000	.LEAF SPRING	2-25, 2-27
1334194-0000	.LEAF SPRING	2-25, 2-27
1334234-0000	.HUB	1-81, 1-97
1334256-0000	.SHAFT	7-61
1334331-0000	.FLANGE	7-35, 7-37
1334570-0000	.STOPPER	12-45
1334571-0000	.STOPPER	12-45
1334572-0000	.BRACKET	12-45
1334573-0000	.SHAFT	12-45
1334631-0000	.WASHER	12-45
1334694-0000	.CONNECTION PLATE	2-87, 2-89
1334721-0000	.BLOCK	5-55
1334769-0000	.LID	1-173, 1-175, 1-177, 1-179, 1-181, 1-183
1334797-0000	.PLATE	12-167
1334798-0000	.BLOCK	12-167
1334799-0002	.SPACER	12-167
1334799-0003	.SPACER	12-167
1334799-0004	.SPACER	12-167
1334800-0000	.SUPPORT	12-167
1334801-0000	.SUPPORT	12-167
1334802-0000	.SUPPORT	12-167
1334803-0000	.HOOK	12-167
1334804-0000	.SPACER	12-167
1334839-0000	.SPACER	12-167
1334840-0000	.SUPPORT	12-167
1334841-0400	.T.C.S.B UNIT	1-9, 1-11
1334971-0000	.WASHER	5-139
1334973-0000	.AXLE PIN	5-135
1346000-0000	.STOPPER	12-101
1346001-0000	.BLOCK	12-101
1346002-0000	.SHAFT	12-101
1346003-0000	.SHAFT	12-101
1346004-0000	.PLATE	12-101
1346005-0000	.PLATE	12-101
1346061-0000	.DRAIN CHUTE	6-45, 6-47
1346329-0000	.TEMPLATE	12-47, 12-49, 12-51, 12-53, 12-55, 12-57
1346330-0000	.TEMPLATE	12-47, 12-49, 12-51, 12-53, 12-55, 12-57
1346332-0000	.TEMPLATE	12-63
1346598-0000	.SPACER	5-135, 5-139
1346599-0000	.BRACKET	5-135, 5-139
1346600-0000	.PLATE	5-135
1346612-0000	.SHAFT	7-49, 7-61
1346666-0000	.TEMPLATE	12-47, 12-49, 12-51, 12-53, 12-55, 12-57
1346669-0000	.TEMPLATE	12-69
1346670-0000	.CLAMP	12-59, 12-61, 12-65, 12-67, 12-69
1346672-0000	.PLATE	12-65
1346673-0000	.SPACER	12-67
1346674-0000	.TEMPLATE	12-65
1346746-0000	.LEVER	7-51, 7-53
1346933-0000	.BRACKET	5-55
1346988-0000	.ROLL	7-47
1347356-0000	.SPACER	12-65
1347405-0000	.TEMPLATE	12-65
1348053-0000	.BRACKET	4-7, 4-9, 4-11, 4-13, 4-15, 4-17
1348361-0000	.CLAMP	12-59, 12-61, 12-65, 12-67, 12-69
1348362-0000	.TEMPLATE	12-59, 12-61
1348364-0000	.TEMPLATE	12-63
1348366-0000	.SPACER	12-65
1348367-0000	.PLATE	12-65
1348368-0000	.TEMPLATE	12-65
1348369-0000	.TEMPLATE	12-65
1348371-0000	.TEMPLATE	12-69
1348373-0000	.TEMPLATE	12-47, 12-49, 12-51, 12-53, 12-55, 12-57
1348375-0000	.SPACER	12-67
1348378-0000	.TEMPLATE	12-47, 12-49, 12-51, 12-53, 12-55, 12-57
1348380-0000	.TEMPLATE	12-47, 12-49, 12-51, 12-53, 12-55, 12-57
1348383-0100	.TEMPLATE	12-27
1348476-0000	.TOUCH GUARD	1-9, 1-11, 1-49
1348477-0000	.TOUCH GUARD	1-165, 1-167
1348607-0100	.TEMPLATE	12-47, 12-49, 12-51, 12-53, 12-55, 12-57
1348608-0100	.TEMPLATE	12-47, 12-49, 12-51, 12-53, 12-55, 12-57
1348609-0100	.TEMPLATE	12-47, 12-49, 12-51, 12-53, 12-55, 12-57

Part No	Description	Page No
1348610-0100	.TEMPLATE	12-47, 12-49, 12-51, 12-53, 12-55, 12-57
1348611-0100	.TEMPLATE	12-47, 12-49, 12-51, 12-53, 12-55, 12-57
1348636-0000	.TOUCH GUARD	1-9, 1-11, 1-49
1348637-0000	.TOUCH GUARD	1-165, 1-167
1348968-0000	.PLUG	12-27
1349014-0000	.PAD	7-21
1349029-0300	.VALVE PANEL	6-3
1349090-0200	.FLOW METER	6-15, 6-17
1349091-0100	.GAUGE GROUP	6-15, 6-17
1349092-0000	.SUPPORT	6-43
1349094-0300	.VALVE PLATE	6-15, 6-17
1349413-0000	.SPACER	5-91
1349414-0000	.SPACER	5-95, 5-97, 5-99
1349415-0000	.SPACER	5-89
1349420-0000	.PUSHER	5-123, 5-125, 5-127
1349568-0000	.CONNECTION BOX	11-25, 11-31, 11-33
1349801-0000	.PIN	5-131
1349920-0000	.GASKET	6-73
1350086-0500	.INSTALLATION DRAWING	11-3
1350087-0400	.DIAGRAM	11-3
1350148-0100	.MACHINE CARRIAGE	12-9
1350149-0000	.BEAM	12-15
1350150-0000	.BEAM	12-15
1350155-0000	.TEMPLATE	12-67
1350184-0200	.PIPE WORK, AIR WATER	6-3
1350186-0000	.PIPE	6-93
1350195-0000	.CURVE ARM GUIDE	5-123, 5-125, 5-127
1350196-0000	.SHAFT	5-123, 5-125, 5-127
1350197-0000	.GUIDE BUSHING	5-123, 5-125, 5-127
1350198-0000	.SHIM	5-123, 5-125, 5-127
1350199-0000	.SHIM	5-123, 5-125, 5-127
1350200-0000	.BUSHING	5-123, 5-125, 5-127
1350307-0000	.PIPE	2-87, 2-89
1350308-0000	.PIPE	2-87, 2-89
1350309-0000	.PIPE	2-87, 2-89
1350472-0000	.HOLDER	2-87, 2-89
1350473-0000	.HOLDER	2-87, 2-89
1350493-0000	.WASHER	2-25, 2-27
1350494-0000	.PLATE	2-25, 2-27
1350529-0300	.DOORS LEFT SIDE	6-3
1350531-0200	.DOORS RIGHT SIDE	6-3
1350674-0000	.EXTENSION	12-181
1350675-0000	.GUIDE	12-181
1350676-0000	.ROLLER	12-181
1350677-0000	.GUIDE	12-181
1350678-0000	.GUIDE	12-181
1350712-0000	.WASHER	5-129
1350921-0000	.HOLDER	2-25, 2-27
1350957-0000	.STOP	4-49
1350958-0000	.STOP	4-51
1350959-0000	.VOLUME BULGE P48 250	4-49, 4-51
1350960-0000	.VOLUME FLAP	4-51
1350961-0000	.VOLUME FLAP	4-49
1350970-0000	.SIDE PLATE	5-129
1350971-0000	.SIDE PLATE	5-129
1350975-0000	.AIR NOZZLE	5-91
1350976-0000	.AIR NOZZLE	5-91
1350977-0000	.GUIDE R	5-103, 5-105, 5-107
1350978-0000	.GUIDE L	5-103, 5-105, 5-107
1350985-0000	.FOLDING FLAP RIGHT	4-45, 4-47
1350986-0000	.FOLDING FLAP LEFT	4-45, 4-47
1350989-0000	.ARM CAM P48 250	3-23, 3-25
1350990-0000	.CAM SEGMENT R P48 250SQ	3-23, 3-25
1350991-0000	.CAM SEGMENT L P48 250SQ	3-23, 3-25
1350992-0000	.FOLDING FLAP CAM P48 250	4-57, 4-59, 4-61, 4-63
1350994-0000	.CUTTING JAW	4-45, 4-47
1350995-0000	.CARRIER RULER RIGHT	4-45
1350996-0000	.CARRIER RULER RIGHT	4-45
1350997-0000	.CARRIER RULER LEFT	4-47
1350998-0000	.CARRIER RULER LEFT	4-47
1350999-0000	.TEMPLATE	12-85, 12-87
1359565-0000	.NUT	5-69, 5-71, 5-119
1360399-0000	.PIPE HOLDER	12-17, 12-19
1360582-0000	.SPACER	8-29
1360583-0000	.CREASE UNIT	8-29
1360618-0000	.SPACER SLEEVE	4-19, 4-21, 4-23, 4-27, 4-29, 4-31
1360633-0000	.FOLDING FLAP CAM 200S	4-57, 4-59, 4-61, 4-63
1360634-0000	.COUNTER CAM	4-57, 4-59, 4-61, 4-63
1360638-0000	.COUNTER CAM	4-57, 4-59, 4-61, 4-63
1360663-0000	.CARTON STATION	5-141, 5-143
1360691-0000	.STEERING RAIL	5-45, 5-47
1360692-0000	.STEERING RAIL	5-45, 5-47
1360696-0000	.GUIDE PLATE	2-33
1366727-0000	.CLAMP	5-69, 5-71, 5-119

Part No	Description	Page No
1367022-0000	.ALIGNMENT SCREW	8-5
1369439-0302	.PLMS ON-LINE PROGRAM	10-7
1478222-0000	.BEARING HOUSING	4-7, 4-9, 4-11, 4-13, 4-15, 4-17
1478223-0000	.BEARING HOUSING	4-7, 4-9, 4-11, 4-13, 4-15, 4-17
1478224-0000	.BEARING HOUSING	4-7, 4-9, 4-11, 4-13, 4-15, 4-17
1478225-0000	.BEARING HOUSING	4-7, 4-9, 4-11, 4-13, 4-15, 4-17
1478303-0000	.TENSION SPRING	7-47
1478549-0000	.BRACKET	5-135
1478550-0000	.BRACKET	5-135
1478551-0000	.SHAFT	5-135
1478552-0000	.TOOTHED PULLEY	5-135, 5-139
1478553-0000	.TOOTHED PULLEY	5-135
1478554-0000	.ROLLER	5-135
1478653-0000	.INSERT	5-121
1478659-0000	.BRACKET	11-27, 11-29
1478717-0300	.VALVE GROUP	6-15, 6-17
1478814-0000	.SENSOR	1-29
1484452-0000	.SHAFT	3-29
1484453-0000	.SPACER	3-29
1484454-0000	.ROCKER ARM	3-29
1484455-0000	.SPACER	3-29
1484456-0000	.SHAFT	3-29
1484457-0000	.BRACKET	3-29
1484461-0000	.SPACER	3-29
1484486-0000	.SPRING	7-15
1484557-0000	.BRACKET	5-135, 5-139
1484558-0000	.FEEDER	5-135
1484791-0000	.SCALE	3-11, 3-13, 3-15, 3-17
1484792-0000	.SCALE	3-11, 3-13, 3-15, 3-17
1487430-0000	.COVER	9-103, 9-105, 9-111, 9-113, 9-115, 9-117, 9-119, 9-121, 9-123, 9-125, 9-127, 9-129
1487431-0000	.GASKET	9-103, 9-105, 9-111, 9-113, 9-115, 9-117, 9-119, 9-121, 9-123, 9-125, 9-127, 9-129
1487447-0200	.FUSE	9-135, 9-137
1487987-0000	.SHIM	4-53, 4-55
1490113-0000	.LINK HEAD	3-33, 3-35
1490114-0000	.PIN	3-33, 3-35
1490116-0000	.SPACER	3-33, 3-35
1490117-0000	.NUT	3-33, 3-35
1490118-0000	.LINK	3-33, 3-35
1490119-0000	.SHAFT	3-33, 3-35
1490120-0100	.DISCONNECTION LINK LEFT	3-3
1490133-0000	.SPACER	3-33, 3-35
1490235-0000	.VOLUME CAM	4-107, 4-109
1490236-0000	.VOLUME CAM	4-107, 4-109
1490237-0000	.VOLUME CAM, WIDE	4-107, 4-109
1490238-0000	.VOLUME CAM, WIDE	4-107, 4-109
1490239-0000	.VOLUME CAM	4-107, 4-109
1490240-0000	.VOLUME CAM	4-107, 4-109
1490407-0000	.WASHER	1-81
1490804-0000	.HOLDER	7-19
1490839-0000	.PIPE	1-55, 1-57
1490840-0000	.PIPE	1-55, 1-57
1490928-0000	.SHAFT	5-159, 5-161
1498155-0000	.GUIDE L	5-103, 5-105, 5-107
1498156-0000	.GUIDE R	5-103, 5-105, 5-107
1498194-0000	.SPACER	3-33, 3-35
1498216-0000	.LID	5-19, 5-21, 5-23, 5-25, 5-27
1498217-0000	.HEATING CHAMBER	5-19, 5-21, 5-23, 5-25, 5-27
1498218-0000	.PIPE	5-19, 5-21, 5-23, 5-25, 5-27
1498219-0000	.PIPE	5-19, 5-21, 5-23, 5-25, 5-27
1498220-0000	.PIPE	5-19, 5-21, 5-23, 5-25, 5-27
1498221-0000	.PIPE	5-19, 5-21, 5-23, 5-25, 5-27
1498222-0000	.PLATE	5-19, 5-21, 5-23, 5-25, 5-27
1498223-0000	.PLATE	5-19, 5-21, 5-23, 5-25, 5-27
1498224-0000	.PLATE	5-19, 5-21, 5-23, 5-25, 5-27
1498233-0000	.GASKET	5-19, 5-21, 5-23, 5-25, 5-27
1498245-0000	.SUPPORTING ARM	5-49, 5-51
1498751-0300	.DOORS	7-5, 7-7
1498753-0100	.MAGAZINE HOLDER	7-5, 7-7
1498756-0100	.BENDING ROLLER	7-55
1498757-0000	.FLANGE	7-9
1498758-0000	.AXLE PIN	7-9
1498759-0000	.ANGLE HOLDER	7-57
1498761-0000	.MAGAZINE HOLDER	7-9
1498762-0000	.AXLE PIN	7-23, 7-25, 7-27, 7-29
1498763-0000	.JOINT PIECE	7-57
1498764-0000	.COVER	7-23, 7-25, 7-27, 7-29
1498765-0000	.AXLE PIN	7-35, 7-37
1498766-0000	.LOWER PLATE	7-57
1498767-0000	.SIDE PIECE	7-57
1498768-0000	.LOWER PLATE	7-57
1498769-0000	.WALL	7-57
1498771-0000	.HOLDER	7-57
1498773-0000	.CANTILEVER	7-35, 7-37
1498775-0000	.BOX BRACKET	7-23, 7-25, 7-27, 7-29

Part No	Description	Page No
1498777-0000	.GUIDE HOLDER	7-35, 7-37
1498778-0000	.SHAFT	7-35, 7-37
1498780-0000	.BACK COVER	7-59
1498819-0000	.COOLING PLATE	9-27, 9-49, 9-51, 9-53, 9-55, 9-57, 9-59
1499024-0000	.BAR	7-49
1499026-0000	.SHAFT	7-49
1499027-0000	.BRACKET	7-49
1499060-0000	.HOLDER	6-69
1499061-0000	.PILLAR	6-69
1499062-0000	.PILLAR	6-69
1499371-0000	.JOINT PLATE	7-57
1499477-0100	.WEB TUNNEL	7-3
1499480-0200	.MOUNTING PLATE	7-5, 7-7
1499481-0000	.ROLLER	7-23, 7-25, 7-27, 7-29
1499483-0000	.PANE	7-35, 7-37
1499484-0100	.TUNNEL FRAME	7-55
1499485-0000	.TRANSPORT BRACKET	7-55
1499486-0000	.TOP COVER	7-59
1499511-0000	.PANEL	7-31
1499512-0000	.PIN	7-23, 7-25, 7-27, 7-29, 7-59
1499513-0000	.NUT PLATE	7-59
1499514-0000	.E-HINGE	7-23, 7-25, 7-27, 7-29, 7-59
1499515-0000	.SHAFT	7-13
1499517-0000	.SHAFT	7-65
1499642-0301	.TPIH GENERATOR	9-173
1499674-0000	.SPACER	12-167
1499899-0000	.INSULATION CLOTH	6-69
1511000-0000	.PLATE	7-49
1511001-0000	.SHAFT	7-49
1511002-0000	.HOLDER	7-49
1511003-0000	.WEIGHT	7-49
1511021-0000	.SHAFT	5-11, 5-13, 5-15
1511069-0200	.TUBE FOLDING DEVICE	4-3, 4-5
1511291-0000	.CURVE	5-201, 5-203
1511293-0000	.BRACKET	5-201, 5-203
1511294-0000	.CLEANING PIPE	5-201, 5-203
1511307-0000	.ROLLER	7-65
1511308-0000	.NUT PLATE	7-57, 7-59
1511310-0000	.NUT	7-57, 7-65
1511311-0000	.GLASS PANE	7-59
1511314-0000	.DAMPER BRACKET	7-59
1511315-0000	.SLIDE BLOCK	7-59
1511317-0000	.PANE	7-59
1511318-0000	.SPACER	7-59
1511319-0100	.TUNNEL COVER	7-55
1511320-0000	.STRIP	7-57
1511323-0000	.STRIP ADHESIVE	7-31
1511324-0000	.SPRING	7-59
1511403-0100	.SUPPORT ROLLER	4-3, 4-5
1511404-0000	.ECCENTRIC SHAFT	4-111
1511405-0001	.BRACKET	4-111
1511405-0002	.BRACKET	4-111
1511405-0003	.BRACKET	4-111
1511405-0004	.BRACKET	4-111
1511406-0000	.BRACKET	4-111
1511407-0000	.BRACKET	4-111
1511409-0000	.CLAMPING PIECE	5-149, 5-151
1511410-0000	.NOZZLE	5-149, 5-151
1511443-0400	.GUIDE RAIL	5-3, 5-5, 5-7
1511460-0000	.PIPE 1050	7-67
1511461-0000	.PIPE 1051	7-67
1511462-0000	.STRAIGHT PIPE	7-67
1511463-0000	.PIPE HOLDER	7-67
1511464-0000	.PIPE HOLDER	7-67
1511487-0000	.STUD SCREW	5-163, 5-165, 5-167, 5-169, 5-171, 5-173, 5-175, 5-177
1511557-0000	.STUD SCREW	12-167
1511600-0000	.SPACER	1-29
1511609-0000	.COVER	6-7
1511610-0000	.COVER	6-7
1511611-0000	.GASKET	6-7
1511612-0000	.GASKET	6-7
1511613-0000	.LOCKING ARM	6-5, 6-7
1511614-0000	.LOCKING ARM	6-5
1511681-0000	.LOCKING ARM	6-7
1511683-0000	.PIPE	6-75
1511701-0000	.FILTER	6-77
1511773-0000	.CONNECTOR	6-79
1511774-0000	.PIPE	6-67
1511775-0000	.SEPARATOR	6-85, 6-87
1511779-0300	.COMPONENT PLATES	9-3, 9-5
1511784-0200	.POWER CABLE INLETS	9-87, 9-89
1511785-0200	.CONTROL CABLE INLETS	9-87, 9-89
1511786-0200	.TOWER CABLE INLETS	1-173, 1-175, 1-177, 1-179, 1-181, 1-183
1511787-0200	.STRIP APPLICATOR CABLE INLETS	9-109

Part No	Description	Page No
1511788-0200	.POWER CONNECTOR PLATE	9-87, 9-89
1511789-0200	.CONTROL CONNECTOR PLATE	9-87, 9-89
1511791-0300	.DOOR	9-87, 9-89
1511795-0300	.CABINET	9-3, 9-5
1511796-0300	.DOOR	9-3, 9-5
1511798-0000	.FRAME	9-109
1511799-0300	.DOOR	9-3, 9-5
1511800-0100	.POWER SIDE,BOTTOM TERMINAL BLOCK	9-13, 9-15, 9-17, 9-19
1511801-0200	.SOLID STATE RELAY RAIL 1	9-13, 9-15, 9-17, 9-19
1511802-0300	.TERMINAL BLOCK	9-13, 9-15, 9-17, 9-19
1511803-0200	.RELAYS RAIL	9-13, 9-15, 9-17, 9-19
1511804-0200	.LOGIC SIDE TOP TERMINAL BLOCK	9-13, 9-15, 9-17, 9-19
1511805-0100	.RACK	9-13, 9-15, 9-17, 9-19
1511806-0200	.X300	9-159
1511810-0300	.DOOR	9-3, 9-5
1511811-0200	.DOOR	9-3, 9-5
1511813-0000	.WINDOW	9-147
1511814-0300	.DOOR	9-3, 9-5
1511817-0000	.CABLE DUCT	9-149, 9-151, 9-153
1511819-0200	.DOOR	9-3, 9-5
1511820-0200	.DOOR	9-3, 9-5
1511821-0300	.BOX	9-3, 9-5
1511822-0300	.RAIL	9-135, 9-137
1511823-0300	.RAIL	9-135, 9-137
1511824-0300	.RAIL	9-13, 9-15, 9-17, 9-19
1511825-0300	.PLC RACK 1	9-13, 9-15, 9-17, 9-19
1511826-0100	.PLC RACK 2	9-13, 9-15, 9-17, 9-19
1511827-0100	.PLC RACK 3	9-13, 9-15, 9-17, 9-19
1511829-0200	.POWER SIDE, TOP TERMINAL BLOCK	9-13, 9-15, 9-17, 9-19
1511830-0100	.EXTERNAL DOOR TERMOREGULATORS	9-3, 9-5
1511833-0000	.GASKET	9-111, 9-113, 9-115, 9-117, 9-119, 9-121, 9-123, 9-125, 9-127, 9-129
1511834-0300	.RAIL	9-13, 9-15, 9-17, 9-19
1511836-0000	.GASKET	1-185, 1-187, 1-189, 1-191
1511838-0000	.GASKET	9-103, 9-105
1511840-0000	.GASKET	9-107
1511841-0000	.GASKET	9-91, 9-93
1511843-0000	.GASKET	9-95, 9-97
1511887-0000	.DISTRIBUTOR	5-183, 5-185, 5-187
1512128-0000	.PLUG	5-29, 5-93
1512129-0000	.BRACKET	5-29, 5-93
1512133-0000	.STOP	5-29, 5-93
1512264-0002	.CREASE BAR	8-29
1512283-0000	.CONNECTION BOX	7-33
1512284-0100	.ANGLE ENCODER	3-3
1512286-0200	.CRANK	3-3
1512304-0300	.HYDRAULIC SYSTEM	6-3
1512305-0100	.MOTORIZED DESIGN CONTROL SYSTEM, LEFT	4-3, 4-5
1512306-0100	.MOTORIZED DESIGN CONTROL SYSTEM, RIGHT	4-3, 4-5
1512322-0000	.COPPER BRAID	9-41, 9-43, 9-45
1512350-0000	.PLATFORM	2-83, 2-85
1512351-0000	.PLATFORM	2-83, 2-85
1512352-0000	.RAIL	7-33
1512353-0000	.PIPE	6-101, 6-103
1512354-0000	.BRACKET	3-31
1512355-0000	.ECCENTRIC SHAFT	3-31
1512356-0000	.CONNECTION DEVICE	1-107, 1-109
1512377-0000	.COVER	1-9, 1-11
1512411-0000	.PIPE	1-9, 1-11
1512440-0000	.BRACKET	5-201, 5-203
1512442-0000	.CONNECTING PIPE	5-49, 5-51
1512443-0000	.PLATE CHOKE	5-55
1512444-0000	.GUIDE RAIL	5-55
1512448-0000	.PIPE CONNECTION	5-49, 5-51
1512450-0001	.TEMPLATE	12-149
1512450-0002	.TEMPLATE	12-149
1512450-0003	.TEMPLATE	12-149
1512450-0004	.TEMPLATE	12-149
1512453-0001	.TEMPLATE	12-145
1512453-0002	.TEMPLATE	12-145
1512453-0003	.TEMPLATE	12-145
1512453-0004	.TEMPLATE	12-145
1512453-0006	.TEMPLATE	12-145
1512453-0007	.TEMPLATE	12-145
1512453-0008	.TEMPLATE	12-145
1512453-0009	.TEMPLATE	12-145
1512453-0010	.TEMPLATE	12-145
1512453-0011	.TEMPLATE	12-145
1512486-0000	.MACHINE BODY	6-61
1512514-0000	.TEMPLATE	12-59, 12-61
1512583-0000	.ROLLER	7-13, 7-15, 7-23, 7-25, 7-27, 7-29, 7-35, 7-37, 7-43, 7-51, 7-53
1512631-0000	.CHECKER PLATE	2-83, 2-85
1512632-0000	.CHECKER PLATE	2-83, 2-85
1512633-0000	.CHECKER PLATE	2-83, 2-85
1512635-0000	.RAILING	2-99

Part No	Description	Page No
1512636-0000	.RAILING	2-99
1512637-0000	.RAILING	2-99
1512640-0000	.TOE PLATE	2-83, 2-85
1512641-0000	.TOE PLATE	2-83, 2-85
1512642-0000	.TOE PLATE	2-83, 2-85
1512643-0000	.TOE PLATE	2-83, 2-85
1512660-0300	.PLATFORM	2-3, 2-5, 2-7
1512666-0000	.TOE PLATE	2-83, 2-85
1512667-0000	.CONNECTION BOX	2-43, 2-45
1512805-0000	.CABINET (SMALL)	6-79
1512806-0000	.PIPE	6-29, 6-31
1512826-0000	.DOOR	6-5
1512829-0000	.DOOR	6-7
1512830-0000	.DOOR	6-7
1512831-0000	.DOOR	6-7
1512840-0000	.BRACKET	2-43, 2-45
1512845-0000	.CHECKER PLATE	2-83, 2-85
1512846-0000	.CHECKER PLATE	2-83, 2-85
1512847-0000	.BRACKET	2-83, 2-85
1512848-0000	.BRACKET	11-19
1512851-0000	.COVER	2-83, 2-85
1517058-0000	.GASKET	6-77
1517059-0000	.SCREW	12-27
1517060-0000	.TOOL	12-27
1517065-0100	.WEB GUIDE	7-55
1517066-0000	.PIVOT ARM	7-61
1517067-0000	.SPRING HOLDER	7-61
1517068-0000	.PILLAR	7-61
1517069-0000	.CLAMP PLATE	7-61
1517070-0000	.BEARING SEAT	7-61
1517071-0000	.BOW CLAMP	7-61
1517072-0000	.PLATE	6-9
1517073-0000	.PLATE	6-9
1517074-0000	.PLATE	6-9
1517075-0000	.PLATE	6-9
1517076-0000	.PLATE	6-9
1517077-0000	.PLATE	6-9
1517181-0000	.GASKET	6-101, 6-103
1517182-0000	.SPACER	6-5, 6-7
1517248-0000	.BRACKET	2-81, 2-95
1517249-0000	.BRACKET	2-83, 2-85
1517252-0000	.BOLT Ã˜20H7	6-61
1517268-0000	.CABLE TRENCH	1-173, 1-175, 1-177, 1-179, 1-181, 1-183
1517269-0000	.CABLE TRENCH	1-173, 1-175, 1-177, 1-179, 1-181, 1-183
1517270-0000	.LID	1-173, 1-175, 1-177, 1-179, 1-181, 1-183
1517293-0000	.ROLLER	7-23, 7-25, 7-27, 7-29
1517464-0000	.SIGN	7-23, 7-25, 7-27, 7-29
1517487-0000	.PIPE	6-101, 6-103
1517488-0000	.PIPE	6-101, 6-103
1517489-0000	.PIPE	6-101, 6-103
1517490-0000	.INFERIOR HOLDER	6-101, 6-103
1517491-0000	.INFERIOR HOLDER	6-101, 6-103
1517492-0000	.GASKET	6-77
1517493-0000	.PIPE	1-103, 1-105
1517495-0000	.PIPE	1-103, 1-105
1517504-0000	.AIR NOZZLE	5-19, 5-21, 5-23, 5-25, 5-27
1517505-0000	.AIR NOZZLE	5-19, 5-21, 5-23, 5-25, 5-27
1517506-0000	.SHIM	5-159, 5-161
1517510-0000	.PIPE	5-207
1517517-0000	.TEMPLATE	12-143
1517518-0001	.CLAMP	12-143
1517518-0002	.CLAMP	12-143
1517518-0003	.CLAMP	12-143
1517519-0000	.PLATE	5-183, 5-185, 5-187
1517523-0000	.BLOCK	5-201, 5-203
1517534-0000	.RUNNER RING	7-35, 7-37
1517535-0000	.STEERING	7-35, 7-37
1517651-0200	.SOLID STATE RELAY RAIL 2	9-13, 9-15, 9-17, 9-19
1517652-0200	.SOLID STATE RELAY RAIL 3	9-13, 9-15, 9-17, 9-19
1517653-0200	.EXTERNAL DOOR FUSES	9-3, 9-5
1517654-0000	.DELIVERED DESIGN	9-83
1517659-0200	.MODEM	9-83
1517663-0000	.DOOR	9-163
1517664-0000	.FRAME	9-131, 9-133, 9-163, 9-165
1517665-0000	.WINDOW	9-163
1517667-0000	.DOOR	9-165
1517675-0000	.SPACER	9-27, 9-49, 9-51, 9-53, 9-55, 9-57, 9-59
1517676-0000	.SPACER	1-185, 1-187, 1-189, 1-191, 9-111, 9-113, 9-115, 9-117, 9-119, 9-121, 9-123, 9-125, 9-127, 9-129
1517677-0100	.COOLER	9-3, 9-5
1517678-0200	.TPIH GENERATOR	9-3, 9-5
1517694-0000	.END BLOCK	9-87, 9-89
1517699-0000	.SUPPORT	9-87, 9-89
1517700-0000	.EDGE GUIDE	9-87, 9-89

Part No	Description	Page No
1517751-0000	.SHAFT	7-21
1517753-0000	.ADJUSTING NUT	7-61
1517984-0000	.SHAFT	3-31
1517985-0000	.SETTING RING	3-31
1517986-0000	.SCREW BUSHING	3-31
1519086-0100	.LAMP	2-3, 2-5, 2-7
1519117-0100	.VOLUME ADJUSTER	4-3, 4-5
1519118-0100	.VOLUM CURVE PIECE	4-105
1519133-0000	.JOINT	4-107, 4-109
1519134-0000	.JOINT	4-107, 4-109
1519214-0000	.CARRIER	4-35, 4-37
1519215-0000	.BEARING HOUSING	4-7, 4-9, 4-11, 4-13, 4-15, 4-17
1519216-0000	.CARRIER RULER	4-7, 4-9, 4-11
1519219-0000	.CARRIER	4-7, 4-9, 4-11
1519227-0000	.STOP	4-71, 4-73
1519228-0000	.STOP	4-79, 4-81
1519230-0000	.CARRIER	4-39, 4-41
1519231-0000	.CARRIER RULER	4-13, 4-15, 4-17
1519307-0000	.AIR NOZZLE	5-19, 5-21, 5-23, 5-25, 5-27
1519308-0000	.AIR NOZZLE	5-19, 5-21, 5-23, 5-25, 5-27
1519313-0000	.AIR NOZZLE	5-19, 5-21, 5-23, 5-25, 5-27
1519314-0000	.AIR NOZZLE	5-19, 5-21, 5-23, 5-25, 5-27
1519318-0000	.AIR NOZZLE	5-19, 5-21, 5-23, 5-25, 5-27
1519319-0000	.AIR NOZZLE	5-19, 5-21, 5-23, 5-25, 5-27
1519374-0001	.CARRIER	4-19, 4-21, 4-23, 4-27, 4-29, 4-31
1519374-0003	.CARRIER	4-19, 4-21, 4-23, 4-27, 4-29, 4-31
1519375-0001	.SHAFT	4-19, 4-21, 4-23, 4-27, 4-29, 4-31
1519375-0002	.SHAFT	4-19, 4-21, 4-23, 4-27, 4-29, 4-31
1519375-0003	.SHAFT	4-19, 4-21, 4-23, 4-27, 4-29, 4-31
1519376-0000	.AXLE PIN	4-19, 4-21, 4-23, 4-27, 4-29, 4-31
1519377-0000	.WASHER	4-19, 4-21, 4-23, 4-27, 4-29, 4-31
1519380-0000	.PIPE	1-165, 1-167
1519381-0000	.PIPE	1-165, 1-167
1519382-0000	.PIPE	1-165, 1-167
1519383-0000	.PIPE	1-165, 1-167
1519384-0000	.PIPE	1-165, 1-167
1519385-0000	.PIPE	1-165, 1-167
1519386-0000	.PIPE	1-165, 1-167
1519387-0000	.PIPE	1-165, 1-167
1519388-0000	.PIPE	1-165, 1-167
1519389-0000	.TANK	6-75
1519390-0000	.PIPE(FOR 60HZ)	6-89, 6-91
1519391-0000	.PIPE BEND	6-89, 6-91
1519392-0000	.SCRUBBER	6-89, 6-91
1519393-0000	.PLATE	6-89, 6-91
1519394-0000	.PIPE	6-89, 6-91
1519401-0000	.SUCTION PIPE	1-155
1519402-0000	.SUCTION PIPE	1-155
1519403-0000	.SUCTION PIPE	1-155
1519417-0000	.STAIR	5-199
1519418-0000	.PLATE	5-199
1519421-0000	.BUSHING	5-199
1519422-0000	.BUSHING	5-199
1519423-0000	.SUPPORT	5-199
1519424-0000	.SUPPORT	5-199
1519425-0000	.SPACER	5-199
1519426-0100	.STAIR	5-191, 5-193, 5-195
1519427-0100	.VOLUME FLAP	4-3, 4-5
1519482-0000	.PIPE	1-77, 1-79
1519483-0000	.HEATING PIPE	1-77, 1-79
1519484-0000	.SUPPORT	1-77, 1-79
1519536-0000	.CARRIER	4-13, 4-15, 4-17
1519561-0000	.PIPE	5-95, 5-97, 5-99
1519562-0000	.PIPE	5-95, 5-97, 5-99
1519563-0000	.PIPE	5-95, 5-97, 5-99
1519564-0000	.SPACER	5-95, 5-97, 5-99
1519572-0000	.PUSHER	5-123, 5-125, 5-127
1519576-0000	.PIPE	6-101, 6-103
1519601-0000	.BUSHING	1-77, 1-79
1519602-0200	.RAILING	2-3, 2-5, 2-7
1519619-0000	.PUSHER	5-123, 5-125, 5-127
1519620-0000	.PLATE	5-123, 5-125, 5-127
1519621-0000	.PLATE	5-123, 5-125, 5-127
1519622-0000	.PLATE	5-123, 5-125, 5-127
1519623-0000	.PLATE	5-123, 5-125, 5-127
1519624-0000	.FRAME	5-129
1519625-0000	.SCREW	5-129
1519626-0000	.ROLLER	5-129
1519627-0000	.SIDE PLATE	5-129
1519628-0000	.SIDE PLATE	5-129
1519629-0000	.PLATE	5-129
1519630-0000	.BRACKET	5-129
1519632-0000	.SUPPORT	5-129
1519635-0000	.BRACKET	5-129

Part No	Description	Page No
1519636-0000	.BRACKET	5-129
1519637-0000	.PLATE	5-129
1519638-0000	.PLATE	5-129
1519663-0200	.PIPE WORK-HYDRAULIC	6-3
1519668-0000	.PIPE HOLDER	6-105
1519669-0000	.PIPE HOLDER	6-105
1519670-0000	.PIPE HOLDER	6-105
1519671-0000	.PIPE HOLDER	6-105
1519758-0000	.CABLE DUCT	6-11
1519759-0000	.CABLE DUCT	6-11
1519760-0000	.CABLE DUCT	6-11
1519761-0000	.CABLE DUCT	6-11
1519762-0000	.CABLE DUCT	6-11
1519763-0000	.CABLE DUCT	6-11
1519764-0000	.SPACER	6-11
1519765-0001	.SUPPORT	6-11
1519765-0002	.SUPPORT	6-11
1519934-0000	.PIPE	1-71
1519936-0000	.PIPE	1-9, 1-11
1519937-0000	.REGULATOR BODY	1-29
1520078-0000	.INDUCTOR	4-87, 4-89, 4-91, 11-45
1520577-0001	.DOLLY	4-7, 4-9, 4-11, 4-13, 4-15, 4-17, 11-45
1520972-0000	.TPO-BAR	11-3
1523049-0000	.PIPE	1-157
1523050-0000	.PIPE	1-157
1523051-0000	.PIPE	1-157
1523052-0000	.PIPE	1-157
1523053-0000	.PIPE	1-157
1523057-0000	.AP-VALVE-BODY (51-38)	1-17
1523058-0000	.TANK	6-69
1523059-0000	.HOLDER	6-69
1523060-0000	.FILLER TUBE	6-69
1523061-0000	.FLANGE	6-73
1523062-0000	.FILLING PIPE	6-77
1523063-0000	.TUBE	6-77
1523064-0000	.RETURN PIPE	6-77
1523065-0000	.PLATE	6-77
1523066-0000	.GASKET	6-77
1523067-0000	.PLATE	6-77
1523068-0000	.PIPE	6-77
1523069-0000	.PIPE CONNECTION	6-77
1523151-0000	.BRACKET	3-37
1523152-0000	.ANGLE ENCODER	3-37
1523158-0001	.SHIM	1-83, 1-85
1523158-0002	.SHIM	1-83, 1-85
1523158-0003	.SHIM	1-83, 1-85
1523210-0200	.MOTOR	3-3
1523211-0000	.WASHER	3-9
1523222-0000	.PLATE	1-171
1523223-0000	.NUT	1-171
1523224-0000	.NUT	1-171
1523225-0000	.FASTENING PLATE	1-171
1523228-0000	.FLANGE	1-81
1523324-0000	.TOOTHED PULLEY	5-139
1523332-0000	.AIR DISTRIBUTOR	1-93, 1-95
1523333-0000	.AXLE PIN	1-93, 1-95
1523334-0000	.PLUG	1-93, 1-95
1523335-0000	.SUPPORT	1-93, 1-95
1523336-0000	.PIPE	1-93, 1-95
1523337-0000	.PLATE	1-93, 1-95
1523338-0000	.BLOCK	1-93, 1-95
1523339-0000	.WASHER	1-93, 1-95
1523340-0000	.WASHER	1-93, 1-95
1523346-0000	.PLATE	1-93, 1-95
1523350-0000	.PIPE	1-93, 1-95
1523364-0000	.LID	1-159, 1-161
1523365-0000	.PIPE	1-159, 1-161
1523366-0000	.PIPE	1-159, 1-161
1523383-0000	.CONNECTION PLATE	2-59, 2-61
1523384-0000	.CONNECTION PLATE	2-59, 2-61
1523431-0000	.PIPE	2-59, 2-61
1523432-0000	.PIPE	2-59, 2-61
1523433-0000	.PIPE	2-59, 2-61
1523434-0000	.PIPE	2-59, 2-61
1523437-0000	.HINGE	9-83, 9-135, 9-137, 9-149, 9-151, 9-153
1523438-0000	.HINGE	9-131, 9-133, 9-163, 9-165
1523439-0000	.SPACER	9-149, 9-151, 9-153
1523440-0000	.SPACER	9-83, 9-135, 9-137, 9-149, 9-151, 9-153
1523441-0000	.SPACER SHEET	9-131, 9-133, 9-163, 9-165
1523442-0000	.SPACER SHEET	9-131, 9-133, 9-163, 9-165
1523443-0000	.COVER	9-149, 9-151, 9-153
1523444-0000	.SPACER	9-149, 9-151, 9-153
1523445-0200	.SOLID STATE RELAY RAIL 4	9-13, 9-15, 9-17, 9-19
1523448-0000	.FRAME	9-167

Part No	Description	Page No
1523449-0000	.SLIDE	9-167
1523450-0000	.SLIDE	9-167
1523451-0000	.SLIDE	9-167
1523452-0000	.SUPPORT	9-167
1523453-0000	.SUPPORT	9-167
1523454-0000	.SCREW	9-167
1523455-0000	.FRAME	9-173
1523456-0000	.SLIDE	9-173
1523464-0000	.GASKET	9-87, 9-89
1523494-0000	.PILLAR	1-83, 1-85
1523754-0000	.MACHINE BODY	2-37
1523755-0000	.COVERING PLATE	2-37
1523756-0000	.COVER	2-37
1523757-0000	.PLATE	2-37
1523758-0000	.PLATE	2-37
1523759-0000	.COVER	2-37
1523760-0000	.FRONT PLATE	2-37
1523828-0000	.SPACER	3-23, 3-25
1523829-0100	.DISTRIBUTOR BLOCK	2-51, 2-53, 2-55
1523832-0000	.HOSE HOLDER	2-59, 2-61
1523886-0000	.SPACER PLATE	2-59, 2-61
1523887-0000	.SPACER PLATE	2-59, 2-61
1523919-0000	.BLOCK	5-89
1523920-0000	.BLOCK	5-89
1523922-0000	.PIPE	5-95, 5-97, 5-99
1523923-0000	.PIPE	5-95, 5-97, 5-99
1523924-0000	.CATCH	4-7, 4-9, 4-11, 4-13, 4-15, 4-17
1523960-0000	.SPACER	9-87, 9-89
1523968-0000	.HANDLE	9-135, 9-137, 9-149, 9-151, 9-153
1523972-0100	.ELECTRICAL MATERIALS	9-3, 9-5
1523973-0000	.FRAME	9-167
1524319-0100	.CABLE DUCT	6-3
1524477-0100	.CUTTING TABLE	7-5, 7-7
1524481-0000	.SEALING BLOCK	7-21
1524630-0000	.STOPPER	5-137
1524631-0000	.BRACKET	5-137
1524637-0000	.PLATE	5-137
1524638-0000	.PLATE	5-137
1524646-0000	.GUIDE	5-129
1524648-0000	.SUPPORT TUBE	5-129
1524653-0000	.BRACKET	1-93, 1-95
1524654-0000	.ARM	1-93, 1-95
1524655-0000	.PROTECTION PLATE	1-93, 1-95
1524662-0000	.AIR NOZZLE	1-73
1524663-0000	.TUBE 55	1-107, 1-109
1524664-0000	.TUBE 861	1-107, 1-109
1524665-0000	.TUBE 860	1-107, 1-109
1524666-0000	.TUBE 230	1-107, 1-109
1524667-0000	.TUBE 231	1-107, 1-109
1524674-0000	.REDUCTION SLEEVE	1-107, 1-109
1524780-0000	.PLATE	1-97
1524805-0000	.PLATE	1-97
1524829-0000	.PLATE	1-219
1524830-0000	.SHAFT	1-219
1524835-0000	.TEMPLATE	12-99
1524836-0000	.SPACER	12-99
1532440-0000	.FOLDING FLAP	4-7, 4-9, 4-11, 4-13, 4-15, 4-17
1532441-0000	.FOLDING FLAP	4-7, 4-9, 4-11, 4-13, 4-15, 4-17
1532526-0000	.ROLLER	4-111
1532527-0000	.TEMPLATE	12-85, 12-87
1532584-0200	.MACHINE BODY	2-3, 2-5, 2-7
1532981-0000	.VOLUME FLAP	4-49
1538026-0000	.GUIDE	5-103, 5-105, 5-107
1538027-0000	.GUIDE	5-103, 5-105, 5-107
1538039-0000	.CURVE	4-97, 4-99
1538089-0000	.PLATE	6-9
1538096-0000	.CALENDER ROLLER	1-91
1538097-0000	.CALENDER ROLLER	1-91
1538098-0000	.CLAMP	1-91
1538103-0000	.FORK	1-91
1538107-0000	.SHAFT	7-61
1538109-0000	.COMPRESSION SPRING	4-65, 4-67, 4-69
1538150-0000	.ROLLER	1-149, 1-151
1538151-0000	.COUNTER ROLLER	1-149, 1-151
1538219-0000	.SWITCH BRACKET	7-23, 7-25, 7-27, 7-29
1538471-0000	.ARM CAM P48 200	3-23, 3-25
1538473-0000	.SEALING BLOCK	7-19
1538517-0000	.CAM SEGMENT L P48 200SQ	3-23, 3-25
1538518-0000	.CAM SEGMENT R P48 200SQ	3-23, 3-25
1538756-0000	.VOLUME BULGE	4-7, 4-9, 4-11, 4-13, 4-15, 4-17
1538757-0000	.TOOL	12-85, 12-87
1538758-0000	.SPACER	1-223
1538782-0000	.VOLUME BULGE P48 200	4-49, 4-51
1538868-0000	.BRACKET	2-105, 6-5, 6-7

Part No	Description	Page No
1538906-0000	.PIPE	6-95
1538908-0000	.PIPE	6-95
1538917-0000	.STEERING RAIL	5-45, 5-47
1538918-0000	.STEERING RAIL	5-45, 5-47
1538924-0000	.RAILING	2-99
1538933-0000	.GUIDE RAIL	5-149, 5-151
1538934-0000	.GUIDE RAIL	5-149, 5-151
1538935-0000	.GUIDE	5-149, 5-151
1538942-0000	.CARRIER	4-19, 4-21, 4-23, 4-27, 4-29, 4-31
1538948-0000	.ROLLER	4-105
1538949-0000	.ECCENTRIC	4-105
1539101-0000	.BRACKET	4-107, 4-109
1539102-0000	.ARM	4-107, 4-109
1539103-0000	.ARM	4-107, 4-109
1539104-0000	.SPINDLE	4-107, 4-109
1539105-0000	.BOX	4-105
1539106-0000	.SHAFT	4-105
1539107-0000	.TIMING BELT	4-105
1539108-0000	.TIMING BELT PULLEY	4-105
1539109-0000	.SHAFT	4-105
1539110-0000	.LID	4-105
1539111-0000	.SUPPORT	4-105
1539112-0000	.SUPPORT	4-105
1539113-0000	.COVER	2-91
1539120-0000	.VOLUME BULGE	4-87, 4-89, 4-91
1539238-0000	.PIPE	1-9, 1-11
1539250-0000	.SPACER	1-107, 1-109
1539256-0000	.TOOTHED PULLEY	5-85
1539260-0000	.TOOTHED PULLEY	5-85
1539261-0000	.WASHER	5-85, 5-163, 5-165, 5-167, 5-169, 5-171, 5-173, 5-175, 5-177
1539265-0100	.OUTFEED UNIT	5-3, 5-5, 5-7
1539266-0000	.CAM	5-81
1539267-0000	.DRUM	5-81
1539268-0000	.CARRIER	5-81
1539301-0000	.TOOTHED PULLEY	5-163, 5-165, 5-167, 5-169, 5-171, 5-173, 5-175, 5-177
1539302-0000	.SPACER	5-163, 5-165, 5-167, 5-169, 5-171, 5-173, 5-175, 5-177
1539332-0000	.PIPE	6-95
1539357-0000	.FOLDING FLAP CAM P48 200	4-57, 4-59, 4-61, 4-63
1539593-0000	.COVER	4-87, 4-89, 4-91
1539596-0000	.PIPE	1-45
1539597-0000	.T-PIECE	1-43
1539599-0100	.HEAT EXCHANGER	1-33
1539600-0000	.SUPPORT	1-47
1539601-0000	.CLEANING PIPE	1-33
1539602-0100	.CONNECTION SYSTEM	1-33
1539603-0000	.PIPE	1-45
1539604-0000	.PIPE	1-33
1539605-0000	.COOLING PIPE	1-33
1539606-0002	.SPRAY NOZZLE	1-43
1539606-0003	.SPRAY NOZZLE	1-43
1539606-0004	.SPRAY NOZZLE	1-43
1539606-0005	.SPRAY NOZZLE	1-43
1539607-0000	.HOLDER	1-149, 1-151
1539608-0000	.SHAFT	1-149, 1-151
1539766-0100	.DISCONNECTION LINK RIGHT	3-3
1539792-0000	.PIN	5-101
1539920-0300	.PENDULUM	1-3, 1-5, 1-7
1539947-0000	.PIPE	5-201, 5-203
1539948-0000	.SHAFT	5-57
1539949-0100	.FIXING UNIT	5-3, 5-5, 5-7
1539950-0000	.WASHER	5-57
1539951-0000	.HOUSE	5-57
1539953-0000	.PROTECTIVE COVER	5-49, 5-51
1539956-0000	.PLATE	5-83
1539957-0000	.PLATE	5-49, 5-51
1539960-0000	.MACHINE BODY	5-191, 5-193, 5-195
1539965-0000	.PLATE	5-57
1539966-0000	.BRACKET	5-19, 5-21, 5-23, 5-25, 5-27
1539967-0000	.GASKET	5-19, 5-21, 5-23, 5-25, 5-27
1539968-0200	.FLAP HEATER	5-3, 5-5, 5-7
1539969-0200	.GUIDE	5-3, 5-5, 5-7
1539970-0200	.FOLDING BAR	5-3, 5-5, 5-7
1539995-0200	.CANTILEVER	5-3, 5-5, 5-7
1539996-0000	.SHAFT	1-221
1539997-0000	.AXLE SUPPORT	1-97
1548000-0200	.FRAME	5-3, 5-5, 5-7
1548003-0000	.LINK	1-219
1548004-0001	.LINK	1-219
1548004-0002	.LINK	1-219
1548005-0000	.SHAFT	1-219
1548006-0000	.ADJUSTING SCREW	1-219
1548010-0200	.PENDULUM ROLLER	1-219
1548052-0000	.ROLLER	1-221
1548053-0000	.COVER	1-221

Part No	Description	Page No
1548056-0000	.AXLE SUPPORT	1-81
1548059-0000	.AXLE SUPPORT	1-219
1548141-0000	.WASHER	1-219
1548142-0000	.BUSHING	1-219
1548143-0000	.END PLATE	1-97
1548147-0000	.PLATE	1-219
1548148-0000	.PLATE	1-219
1548152-0000	.PIN	1-219
1548155-0000	.COAXIAL CABLE	4-101, 4-103
1548156-0000	.PIPE	6-101, 6-103
1548225-0000	.CLAMP	1-219
1548275-0000	.SEAL COVER	1-81
1548276-0000	.LEVER	1-219
1548277-0000	.FLANGE	1-219
1548284-0000	.ROLLER	1-81
1548313-0000	.FORCE LIMITING DEVICE	3-33, 3-35
1548315-0000	.PIPE	1-157
1548316-0000	.PIPE	6-77
1548532-0000	.LEVER	1-219
1548576-0100	.PIPE WORK	2-3, 2-5, 2-7
1548833-0000	.BRACKET	1-159, 1-161
1548942-0000	.CUTTING JAW	4-7, 4-9, 4-11, 4-13, 4-15, 4-17
1549182-0000	.CARRIER	5-81
1549183-0000	.CARRIER	5-81
1549184-0000	.CARRIER	5-81
1549186-0000	.CARRIER	5-81
1549187-0000	.CARRIER	5-81
1549190-0000	.CARRIER	5-81
1549191-0000	.CARRIER	5-81
1549266-0000	.BLOCK	5-89
1549267-0000	.PIPE	5-95, 5-97, 5-99
1549294-0000	.MACHINE BODY	8-5
1549295-0200	.MACHINE BODY	8-3
1549296-0300	.COVER PLATE	8-3
1549297-0000	.REEL HOLDER	8-15
1549298-0000	.REEL HOLDER	8-15
1549299-0000	.PLATE	8-11, 8-13
1549300-0100	.PAPER MAGAZINE	8-3
1549302-0000	.SHAFT	8-17, 8-19
1549303-0000	.PLATE	8-17, 8-19
1549304-0000	.ARM	8-17, 8-19
1549305-0100	.COVER	8-3
1549306-0000	.COVER	8-15
1549307-0000	.BRACKET	8-17, 8-19
1549365-0000	.AXLE PIN	5-129
1549366-0000	.TORSION SPRING	5-129
1549370-0100	.DISCHARGE CHUTE	5-3, 5-5, 5-7
1549386-0000	.LEAF SPRING	2-25, 2-27
1549387-0000	.LEAF SPRING	2-25, 2-27
1549474-0000	.SHAFT	8-17, 8-19
1549475-0000	.BRACKET	8-17, 8-19
1549476-0000	.PLATE	8-15
1549477-0000	.PLATE	8-15
1549478-0000	.PLATE	8-15
1549479-0000	.PLATE	8-15
1549480-0200	.ELECTRIC EQUIPMENT	8-3
1549481-0000	.REEL HOLDER	8-15
1549482-0000	.REEL HOLDER	8-15
1549484-0000	.PLATE	8-11, 8-13
1549487-0000	.PLATE	8-11, 8-13
1549488-0000	.PLATE	8-11, 8-13
1549489-0000	.BRACKET	8-11, 8-13
1549491-0000	.REEL HOLDER	8-15
1549492-0000	.HOLDER	8-15
1549493-0000	.HANDSPIKE	8-17, 8-19
1549540-0000	.BRACKET	4-43
1549581-0100	.VOLUME FLAP	4-3, 4-5
1549584-0100	.PAPER BRAKE	8-23, 8-25
1549603-0100	.LAMP	2-3, 2-5, 2-7
1549608-0000	.GLASS PANE	2-13, 2-15, 2-29, 2-31
1549885-0000	.BRACKET	2-33
1549886-0000	.PROTECTIVE COVER	2-33
1549888-0000	.COVERING PLATE	2-33
1549889-0000	.GASKET	2-33
1549909-0000	.GUIDE	5-103, 5-105, 5-107
1549910-0000	.GUIDE	5-103, 5-105, 5-107
1549930-0000	.TOOL	12-33, 12-35, 12-37
1549937-0000	.PIPE	5-95, 5-97, 5-99
1549938-0000	.PIPE	5-95, 5-97, 5-99
1549944-0000	.DROP CHUTE	2-25, 2-27
1549945-0000	.PLATE	2-25, 2-27
1549968-0000	.PLATE	2-25, 2-27
1550595-0390	.SLIDING STRIP	2-17
1550595-3840	.SLIDING STRIP	2-17

Part No	Description	Page No
1550595-4903	.SLIDING STRIP	5-59, 5-61
1550595-4904	.SLIDING STRIP	5-59, 5-61
1550595-6493	.STRIP	5-115, 5-117
1550595-6494	.SLIDING STRIP	5-115, 5-117
1550595-6993	.SLIDING STRIP	5-115, 5-117
1550595-6994	.SLIDING STRIP	5-115, 5-117
1550772-0000	.HOLDER	5-119
1558009-0000	.BLOCK	5-89
1558010-0000	.BLOCK	5-89
1558043-0000	.SIDE PLATE	5-129
1558044-0000	.SIDE PLATE	5-129
1558126-0000	.PIPE	4-43
1558127-0000	.PIPE	4-43
1558128-0200	.NOZZLE	1-197, 1-199, 1-201
1558129-0000	.BRACKET	4-43
1558190-0012	.HOLDER	5-101
1558190-0013	.HOLDER	5-101
1558190-0014	.HOLDER	5-101
1558191-0000	.PLATE	5-101
1558313-0000	.SHAFT	8-15
1558314-0000	.BRACKET	8-15
1558315-0000	.BRACKET	8-45
1558316-0000	.BRACKET	8-45
1558317-0000	.BRACKET	8-39
1558318-0100	.CONNECTION BOX	8-45
1558319-0000	.BUSHING	8-17, 8-19
1558320-0100	.PLATFORM	8-5
1558321-0000	.COVER PLATE	8-7
1558322-0000	.JOINT BOLT	8-7
1558403-0000	.DISC	1-97
1558897-0100	.HEATING DEVICE	7-5, 7-7
1566742-0000	.CUTTING RAIL	4-7, 4-9, 4-11, 4-13, 4-15, 4-17
1566761-0000	.DOLLY	4-7, 4-9, 4-11, 4-13, 4-15, 4-17, 11-45
1566762-0000	.INDUCTOR	11-45
1566802-0000	.DOLLY	4-7, 4-9, 4-11, 4-13, 4-15, 4-17, 11-45
2500050-0000	.GLASS	8-11, 8-13
2500200-0200	.AIR INLET GROUP	6-15, 6-17
2500201-0000	.VALVE PLATE	6-45, 6-47
2500202-0000	.PLATE	6-45, 6-47
2500203-0000	.HOLDER	6-41
2500207-0000	.BRACKET	1-223
2500214-0200	.PIPE WORK	2-83, 2-85
2500215-0000	.CABLE DUCT	2-87, 2-89
2500217-0000	.BRACKET	2-87, 2-89
2500218-0000	.CABLE TRENCH	2-87, 2-89
2500260-0000	.ARM	2-91
2500294-0000	.PIPE	1-203
2500331-0000	.CARTON STATION	5-87
2500332-0200	.PIVOT ARM	2-83, 2-85
2500587-0100	.SUSPENSION ARM	8-31
2500593-0000	.BOW CLAMP	8-39
2501265-0000	.CONNECTION BOX	8-47, 8-49
2501266-0000	.RAIL	8-47, 8-49
2501362-0000	.CLAMP RING	8-17, 8-19
2501385-0000	.SHAFT	8-39
2501465-0100	.CONNECTION BOX	11-21
2501466-0100	.CONNECTION BOX	11-21
2501471-0100	.COUNTER	11-21
2501472-0100	.COUNTER	11-21
2501528-0200	.PLMS KIT	11-3
2501542-0000	.AXLE SUPPORT	1-81
2501547-0100	.QUEUE GUARD	11-21
2501613-0000	.SHAFT	8-17, 8-19
2501740-0100	.TEMPLATE	12-29, 12-31
2501835-0000	.SHAFT	8-41
2501836-0100	.SPLICING DEVICE	8-3
2501847-0000	.BLOCK	5-89
2501848-0000	.BLOCK	5-89
2502192-0000	.CARRIER	5-81
2502194-0000	.CARRIER	5-81
2502197-0000	.PIPE	1-107, 1-109
2502198-0000	.PIPE	1-107, 1-109
2502199-0000	.PIPE	1-107, 1-109
2502423-0000	.PLATE	5-129
2502424-0200	.LUBRICATION	5-11, 5-13, 5-15
2504445-0000	.PLATE	2-9, 2-11
2504449-0000	.INSERT	6-11, 9-91, 9-93
2504468-0000	.BLOCK	5-101
2504952-0000	.PROTRACTOR	3-23, 3-25
2505236-0000	.PLATFORM	2-83, 2-85
2505282-0000	.CHECKER PLATE	2-83, 2-85
2506319-0000	.HEAD PLATE	2-9, 2-11
2506321-0000	.HEAD PLATE	2-9, 2-11
2506323-0000	.HEAD PLATE	2-9, 2-11

Part No	Description	Page No
2506324-0000	.HEAD PLATE	2-9, 2-11
2506331-0200	.CONNECTION BOX	5-75, 5-121
2506332-0000	.BOX	5-77, 5-79
2506471-0000	.BRACKET	7-47
2506472-0000	.HOLDER	7-47
2506473-0000	.BRACKET	7-47
2506474-0000	.FASTENING BRACKET	7-47
2506475-0100	.PRESSURE ROLLER	7-35, 7-37
2506478-0000	.COVER	7-23, 7-25, 7-27, 7-29
2506480-0000	.HOLDER	7-65
2506601-0000	.SPACER FRAME	5-191, 5-193, 5-195
2506608-0000	.PLATE	2-83, 2-85
2506609-0000	.PLATE	2-83, 2-85
2506638-0000	.VOLUME CAM	4-107, 4-109
2506639-0000	.VOLUME CAM	4-107, 4-109
2506640-0000	.VOLUME CAM	4-107, 4-109
2506641-0000	.VOLUME CAM	4-107, 4-109
2506642-0000	.VOLUME CAM	4-107, 4-109
2506643-0000	.VOLUME CAM	4-107, 4-109
2506644-0000	.VOLUME CAM	4-107, 4-109
2506645-0000	.VOLUME CAM	4-107, 4-109
2506673-0000	.VOLUME FLAP	4-51
2506790-0100	.HOLD-DOWN DEVICE	3-3
2507014-0100	.ROCKER ARM	3-27
2508118-0000	.FIXING RING	8-15
2509543-0000	.PROTECTION	8-17, 8-19
2509548-0000	.SHAFT	5-123, 5-125, 5-127
2509554-0000	.AIR NOZZLE	5-91
2509555-0000	.AIR NOZZLE	5-91
2509556-0000	.PRESSURE PLATE	5-101
2509557-0000	.BLOCK	5-101
2509558-0000	.GUIDE	5-101
2509559-0000	.GUIDE	5-101
2509560-0000	.PRESSURE PLATE	5-101
2509561-0000	.BLOCK	5-101
2510372-0000	.BUSHING	6-73
2510532-0000	.PROTECTION	1-219
2510844-0100	.CONNECTION BOX	11-21
2511330-0000	.SPACER	1-35, 1-37
2511668-0000	.SUPPORT	5-59, 5-61
2511725-0000	.GUIDE	5-101
2511726-0000	.GUIDE	5-101
2512787-0000	.HOLDER	4-57, 4-59, 4-61, 4-63
2512805-0000	.TOE PLATE	2-83, 2-85
2514018-0000	.TOP TIE PLATE	2-83, 2-85
2514041-0000	.PROTECTION	4-57, 4-59
2514042-0000	.PROTECTION	4-61, 4-63
2514090-0000	.FORCE PLATE	4-97, 4-99
2514091-0000	.BRACKET	4-97, 4-99
2514112-0000	.COVER	2-97
2514391-0000	.PIPE	6-67
2514491-0000	.METERING DEVICE	6-75
2516972-0000	.HOSE HOLDER	2-57
2517066-0000	.DOLLY	11-3
2517179-0000	.FEEDER	5-139
2517796-0000	.TOOL	12-33, 12-35, 12-37
2518415-0000	.COVER PLATE	6-61
2518416-0000	.JOINT BOLT	6-61
2519460-0000	.SPRING BRACKET	3-27
2519644-0000	.BRACKET	7-23, 7-25, 7-27, 7-29
2519646-0000	.PLATE	7-59
2519647-0000	.BRACKET	7-59
2522105-0000	.HEAD PLATE	2-9, 2-11
2522106-0000	.HEAD PLATE	2-9, 2-11
2522107-0000	.HEAD PLATE	2-9, 2-11
2522108-0000	.HEAD PLATE	2-9, 2-11
2522109-0000	.HEAD PLATE	2-9, 2-11
2522110-0000	.PLATE	2-9, 2-11
2522248-0000	.BRACKET	1-97
2522249-0000	.SHAFT	1-97
2523596-0000	.COVER	7-19
2523597-0000	.SLIDER	7-21
2523598-0000	.SPLICING TABLE	7-21
2523599-0000	.SUPPORT	7-21
2523600-0000	.PIN	7-21
2523601-0000	.PAD	7-21
2523703-0000	.PIPE	2-87, 2-89
2523725-0200	.PRESSURE DEVICE	5-3, 5-5, 5-7
2523736-0000	.SHAFT	5-11, 5-13, 5-15
2523737-0000	.SHAFT	5-11, 5-13, 5-15
2523738-0000	.BUSHING	5-11, 5-13, 5-15
2524394-0000	.BRACKET	2-79
2524476-0100	.WEB GUIDE	7-35, 7-37
2524477-0000	.ROLLER	7-49

Part No	Description	Page No
2524478-0000	.BRACKET	7-35, 7-37, 7-39, 7-41
2524479-0000	.PLATE	7-47
2524480-0000	.PIN	7-47
2524482-0000	.BRACKET	7-47
2524484-0000	.PIN	7-47
2524485-0000	.PIN	7-47
2524579-0005	.BLOCK	5-11, 5-13, 5-15
2524579-0008	.BLOCK	5-11, 5-13, 5-15
2524579-0010	.BLOCK	5-11, 5-13, 5-15
2524579-0011	.BLOCK	5-11, 5-13, 5-15
2525340-0000	.BRACKET	8-17, 8-19
2526300-0000	.DROP CHUTE	2-9, 2-11
2526301-0000	.DROP CHUTE	2-9, 2-11
2526302-0000	.DROP CHUTE	2-9, 2-11
2526303-0000	.DROP CHUTE	2-9, 2-11
2526304-0000	.DROP CHUTE	2-9, 2-11
2526306-0000	.DROP CHUTE	2-9, 2-11
2526308-0000	.DROP CHUTE	2-9, 2-11
2526309-0000	.DROP CHUTE	2-9, 2-11
2526310-0000	.DROP CHUTE	2-9, 2-11
2526311-0000	.DROP CHUTE	2-9, 2-11
2526323-0000	.LEAF SPRING	2-9, 2-11
2526324-0000	.LEAF SPRING	2-9, 2-11
2526325-0000	.LEAF SPRING	2-9, 2-11
2526326-0000	.LEAF SPRING	2-9, 2-11
2526328-0000	.LEAF SPRING	2-9, 2-11
2526329-0000	.LEAF SPRING	2-9, 2-11
2526338-0100	.DROP CHUTE	2-3, 2-5, 2-7
2526341-0000	.LAMP HOLDER	8-45
2526342-0000	.BRACKET	8-45
2526343-0000	.PLATE	5-45, 5-47
2526344-0000	.PLATE	5-45, 5-47
2526381-0000	.SIDE PLATE	2-33
2526399-0000	.STOP	2-33
2526843-0000	.CABLE TRENCH	1-173, 1-175, 1-177, 1-179, 1-181, 1-183
2526844-0000	.LID	1-173, 1-175, 1-177, 1-179, 1-181, 1-183
2526846-0000	.LID	1-173, 1-175, 1-177, 1-179, 1-181, 1-183
2526847-0000	.CABLE TRENCH	1-173, 1-175, 1-177, 1-179, 1-181, 1-183
2526863-0000	.PUMP	1-55, 1-57
2526914-0000	.BEARING HOUSING	4-53, 4-55
2526915-0000	.RAIL	4-87, 4-89, 4-91
2527135-0000	.RAIL (TITANIUM)	4-87, 4-89, 4-91
2527136-0000	.RAIL	4-87, 4-89, 4-91
2527137-0000	.RAIL (TITANIUM)	4-87, 4-89, 4-91
2527337-0000	.CYLINDER BRACKET	1-71
2527454-0000	.SHIM	5-11, 5-13, 5-15
2527513-0000	.SIDE PIECE	2-97
2527514-0000	.SIDE PIECE	2-97
2527526-0000	.PIN	5-137
2527527-0000	.PIN	5-137
2527528-0000	.SPRING	5-137
2527718-0000	.SPACER	1-97
2527724-0000	.CARRIER	4-7, 4-9, 4-11, 4-13, 4-15, 4-17
2528094-0000	.PIPE	1-55, 1-57
2528199-0000	.HANDLE	5-19, 5-21, 5-23, 5-25, 5-27
2529075-0000	.RAIL	4-87, 4-89, 4-91
2529564-0000	.COVER	8-45
2529646-0000	.SHAFT	7-47
2530400-0100	.TRANSMISSION UNIT	5-3, 5-5, 5-7
2530401-0000	.SHIM	5-11, 5-13, 5-15
2531115-0000	.SCREW	8-23, 8-25
2532539-0000	.FOLDING FLAP	4-7, 4-9, 4-11, 4-13, 4-15, 4-17
2532540-0000	.FOLDING FLAP	4-7, 4-9, 4-11, 4-13, 4-15, 4-17
2532541-0000	.FOLDING FLAP	4-7, 4-9, 4-11, 4-13, 4-15, 4-17
2532542-0000	.FOLDING FLAP	4-7, 4-9, 4-11, 4-13, 4-15, 4-17
2532543-0000	.FOLDING FLAP	4-7, 4-9, 4-11, 4-13, 4-15, 4-17
2532544-0000	.BUSHING	4-7, 4-9, 4-11, 4-13, 4-15, 4-17, 4-35, 4-37, 4-39, 4-41
2532588-0000	.TEMPLATE	12-47, 12-49, 12-51, 12-53, 12-55, 12-57
2532611-0000	.TEMPLATE	12-67
2532612-0000	.TEMPLATE	12-69
2532613-0000	.TEMPLATE	12-63
2532614-0000	.TEMPLATE	12-59, 12-61
2532923-0000	.PIPE	1-55, 1-57
2538621-0100	.ROUNDED DOLLY	12-9
2540724-0000	.HOSE INSTALLATION	7-3
2540726-0000	.FINGER	7-21
2540729-0000	.WALL	7-57
2540730-0000	.STRIP	7-57
2541112-0000	.LINK HEAD	3-33, 3-35
2541113-0000	.SPACER	3-33, 3-35
2541114-0000	.NUT	3-33, 3-35
2541115-0000	.LINK	3-33, 3-35
2541116-0000	.SHAFT	3-33, 3-35
2541126-0100	.INSTALLATION ACCESSORIES	11-3

Part No	Description	Page No
2541886-0100	.START-UP KIT	11-3
2543227-0000	.SHAFT	5-153
2543594-0300	.ELECTRICAL COMPONENTS	11-3
2544855-0000	.PIPE	1-107, 1-109
2544856-0000	.PIPE	1-107, 1-109
2544863-0000	.PIPE	1-107, 1-109
2544864-0000	.PIPE	1-107, 1-109
2544868-0000	.PIPE	1-107, 1-109
2544869-0000	.PIPE	1-107, 1-109
2544957-0000	.AXLE SUPPORT	5-85
2544958-0000	.BEARING FLANGE	5-85
2544959-0000	.PIPE	5-201, 5-203
2544961-0100	.RAIL	5-3, 5-5, 5-7
2544962-0000	.SHAFT	5-85
2544963-0000	.SHAFT	5-85
2544964-0000	.FLANGE	5-85
2544965-0000	.TOOTHED PULLEY	5-85
2544966-0000	.PLATE	5-49, 5-51
2544968-0000	.INNER RING	5-85
2544969-0000	.SPACER	5-85
2544970-0000	.FLANGE	5-85
2544971-0000	.BRACKET	5-85
2544973-0000	.CUP	5-85
2544974-0000	.BLANK PLUG	5-85
2544975-0000	.SHEET	5-85
2544979-0000	.PIPE	5-207
2544980-0200	.CLEANING SYSTEM	5-3, 5-5, 5-7
2544981-0100	.CLEANING CIRCUIT	5-201, 5-203
2545062-0000	.CLEANING PIPE	1-33
2545080-0200	.INJECTION SYSTEM	1-33
2545083-0200	.CONTROL CABINET	1-33
2545132-0000	.TRANSITION PIPE	1-43
2545134-0000	.SPRAY NOZZLE	1-43
2545155-0000	.PLUG	1-43
2545249-0000	.TEFLON HOSE	4-35, 4-37, 4-39, 4-41
2545425-0000	.SPRAY PIPE	1-35, 1-37
2545426-0000	.MOUNTING PLATE	1-35, 1-37
2545427-0000	.FILLING PIPE	1-35, 1-37
2545428-0000	.RETURN PIPE	1-35, 1-37
2545429-0000	.PIPE	1-35, 1-37
2545432-0000	.CLEANING PIPE	1-33
2545667-0000	.GUIDE	5-83
2546226-0000	.SUPPORT	5-59, 5-61
2546444-0000	.PIPE	1-33
2546445-0000	.AIR PIPE	1-33
2546446-0000	.PIPE	1-33
2546447-0000	.SPRAY PIPE	1-33
2546448-0000	.SUPPORT	1-35, 1-37
2546471-0000	.AIR PIPE	1-33
2546472-0000	.PIPE	1-33
2546473-0000	.FILLING PIPE	1-33
2547005-0000	.LACE	8-17, 8-19
2547006-0000	.RETURN PIPE	1-33
2547007-0000	.RETURN PIPE	1-33
2547177-0100	.CLAMPING ELEMENT	5-3, 5-5, 5-7
2547217-0000	.AXLE PIN	7-23, 7-25, 7-27, 7-29
2547218-0000	.AXLE PIN	7-23, 7-25, 7-27, 7-29
2547219-0000	.AXLE PIN	7-23, 7-25, 7-27, 7-29
2547232-0000	.PIVOT ARM	2-9, 2-11
2547315-0000	.SUPPORT	1-35, 1-37
2547485-0000	.SHIM	5-141, 5-143
2547486-0000	.SHIM	5-141, 5-143
2547487-0000	.SHIM	5-141, 5-143
2549261-0000	.TUBE	1-93, 1-95
2549262-0000	.PLATE	1-93, 1-95
2549263-0000	.CRAMP	1-93, 1-95
2550181-0000	.GASKET	6-77
2552073-0000	.SEAL	5-19, 5-21, 5-23, 5-25, 5-27
2552081-0000	.REDUCTION	5-19, 5-21, 5-23, 5-25, 5-27
2552527-0000	.BEARING HOUSING	4-35, 4-37, 4-39, 4-41
2552528-0000	.BEARING HOUSING	4-35, 4-37, 4-39, 4-41
2552529-0000	.BEARING HOUSING	4-35, 4-37, 4-39, 4-41
2552530-0000	.BEARING HOUSING	4-35, 4-37, 4-39, 4-41
2552531-0000	.BEARING HOUSING	4-35, 4-37, 4-39, 4-41
2552619-0000	.COVER	7-35, 7-37
2552620-0000	.DOOR	7-35, 7-37
2552621-0000	.HOLDER	7-35, 7-37
2552622-0000	.HOLDER	7-35, 7-37
2552624-0000	.BOX BRACKET	7-23, 7-25, 7-27, 7-29
2552628-0000	.PIN	7-49
2552630-0000	.MOUNTING PLATE	7-35, 7-37
2552631-0000	.AXLE PIN	7-43
2552632-0000	.ROLLER	7-43
2552633-0000	.ROLLER	7-43

Part No	Description	Page No
2552679-0000	.GLASS PANE	2-101, 2-103
2552680-0300	.DOOR LEFT	2-3, 2-5, 2-7
2552681-0300	.DOOR RIGHT	2-3, 2-5, 2-7
2552682-0000	.LOCKING ARM	2-101, 2-103
2552683-0000	.LOCKING ARM	2-101, 2-103
2552684-0000	.CHUTE	2-105
2552685-0000	.CHUTE	2-105
2552687-0000	.SPACER	2-101, 2-103
2552688-0000	.GUIDE BRACKET	2-101, 2-103
2552691-0000	.DOOR	2-101
2552692-0000	.DOOR	2-103
2552694-0300	.DOOR LEFT	2-3, 2-5, 2-7
2552695-0300	.DOOR RIGHT	2-3, 2-5, 2-7
2552697-0000	.LID	2-47, 2-49
2552698-0000	.DISCHARGE CHUTE	2-47, 2-49
2552699-0200	.DISCHARGE CHUTE	2-3, 2-5, 2-7
2552700-0200	.COVER PLATES	2-3, 2-5, 2-7
2552701-0000	.TOP SECTION	2-13, 2-15, 2-29, 2-31
2552702-0000	.COVER	2-13, 2-15, 2-29, 2-31
2552703-0000	.COVER	2-13, 2-15, 2-29, 2-31
2552704-0000	.COVER PLATE	2-13, 2-15, 2-29, 2-31
2552706-0000	.COVER	2-13, 2-15
2552707-0000	.COVER PLATE	2-13, 2-15, 2-29, 2-31
2552708-0000	.COVERING PLATE	2-13, 2-15
2552709-0000	.COVERING PLATE	2-13, 2-15, 2-29, 2-31
2552710-0000	.COVER	2-13, 2-15
2552711-0000	.COVER	2-13, 2-15
2552713-0000	.BUSHING	2-47, 2-49
2552714-0000	.BRACKET	2-47, 2-49
2552721-0000	.CAM	5-11, 5-13, 5-15
2552722-0000	.AXLE PIN	5-11, 5-13, 5-15
2552723-0000	.SPRING BRACKET	5-11, 5-13, 5-15
2552724-0000	.SUPPORT	5-11, 5-13, 5-15
2552726-0000	.GUIDE	5-11, 5-13, 5-15
2552727-0000	.PLATE	5-11, 5-13, 5-15
2552731-0000	.WASHER	5-11, 5-13, 5-15
2552732-0000	.SPRING BRACKET	5-11, 5-13, 5-15
2552734-0001	.BLOCK	5-11, 5-13, 5-15
2552734-0002	.BLOCK	5-11, 5-13, 5-15
2552941-0100	.TOOL	12-141
2552943-0100	.TOOL	12-141
2552944-0100	.TOOL	12-141
2552945-0001	.TEMPLATE	12-147
2552945-0002	.TEMPLATE	12-147
2552945-0003	.TEMPLATE	12-147
2552945-0004	.TEMPLATE	12-147
2552945-0006	.TEMPLATE	12-147
2552945-0007	.TEMPLATE	12-147
2552945-0008	.TEMPLATE	12-147
2552945-0009	.TEMPLATE	12-147
2552945-0010	.TEMPLATE	12-147
2552945-0011	.TEMPLATE	12-147
2552946-0100	.TOOL	12-141
2552947-0200	.TOOL	12-141, 12-159
2553110-0000	.CAM	4-107, 4-109
2553111-0000	.CAM	4-107, 4-109
2553830-0200	.FRAME	2-3, 2-5, 2-7
2553831-0000	.FRAME	2-105
2553832-0000	.FRAME	2-105
2553895-0000	.COVER	2-13, 2-15, 2-29, 2-31
2554959-0000	.GUIDE	2-101, 2-103
2554960-0000	.BUSBAR LEFT	4-103
2554961-0000	.BUSBAR RIGHT	4-101
2554975-0000	.COVER	2-47, 2-49
2554977-0001	.BLOCK	5-11, 5-13, 5-15
2554977-0002	.BLOCK	5-11, 5-13, 5-15
2554977-0003	.BLOCK	5-11, 5-13, 5-15
2554977-0004	.BLOCK	5-11, 5-13, 5-15
2555063-0000	.PIN	2-99
2555070-0000	.SIGN	2-87, 2-89
2555116-0000	.WHEEL	8-17, 8-19
2555310-0000	.COIL	1-45
2555562-0000	.GUIDE	5-83
2555563-0000	.GUIDE	5-83
2555564-0000	.GUIDE	5-83
2555565-0000	.GUIDE	5-83
2555566-0000	.GUIDE	5-83
2555568-0000	.GUIDE	5-83
2555569-0000	.GUIDE	5-83
2555571-0000	.GUIDE	5-83
2555633-0000	.SHAFT	1-91
2555634-0000	.SHAFT	1-91
2556243-0000	.SPACER	2-101, 2-103
2556246-0000	.HATCH	2-37

Part No	Description	Page No
2556349-0000	.CAM	3-23, 3-25
2556350-0000	.CAM	3-23, 3-25
2556351-0000	.CAM	3-23, 3-25
2558133-0000	.PRESSURE REGULATOR	1-31
2558134-0000	.PRESSURE REGULATOR	1-31
2558744-0000	.PIPE	1-35, 1-37
2558745-0000	.PIPE	1-35, 1-37
2559068-0000	.BENDING ROLLER	1-97
2559069-0000	.BENDING ROLLER	1-97
2559070-0000	.BENDING ROLLER	1-97
2559071-0000	.BENDING ROLLER	1-97
2559087-0000	.CLAMP	1-97
2559122-0000	.FLANGE	5-85
2561206-0000	.SPACER	2-17, 5-59, 5-61, 5-119
2561244-0200	.DRIVE WHEEL	2-17, 5-59, 5-61, 5-115, 5-117
2561267-0000	.SHAFT	2-21, 5-73, 5-115, 5-117
2563209-0000	.LID	6-85, 6-87
2563210-0000	.PIPE	6-85, 6-87
2564115-0000	.PUSH BUTTON BOX	8-45
2564686-0000	.CARTON STATION	5-87
2564687-0000	.CARTON STATION	5-87
2565515-0000	.TOUCH GUARD	1-213, 1-215, 1-217
2565736-0000	.RESERVOIR	1-35, 1-37
2566131-0000	.PLATE	5-89
2566433-0100	.TEMPLATE PT19-020V	12-159
2566434-0000	.BEAM	12-181
2566435-0000	.BEAM	12-181
2566436-0000	.BEAM	12-181
2566437-0000	.ANGLE BRACKET	12-181
2566438-0000	.SUPPORT	12-181
2566439-0000	.BUSHING	12-181
2568779-0000	.DIAGRAM	1-33
2569884-0000	.TENSION SPROCKET	5-159, 5-161
2569978-0000	.WATER DIAGRAM	11-9
2569979-0000	.HYDRAULIC SYSTEM	11-9
2569980-0000	.LUBRIFICATION DIAGRAM	11-9
2570391-0000	.PIPE	1-35, 1-37
2570392-0000	.RETAINING RING	7-65
2570393-0000	.BENDING ROLLER	7-63
2570394-0100	.BENDING ROLLER	7-55
2570400-0000	.ROD	7-51, 7-53
2570401-0000	.ROD	7-51, 7-53
2574348-0000	.VALVE BRACKET	1-35, 1-37
2575480-0000	.HOLDER	7-51, 7-53
2575482-0000	.PIN	7-51, 7-53
2575484-0000	.HOLDER	7-51, 7-53
2575624-0001	.BLOCK	5-11, 5-13, 5-15
2575624-0002	.BLOCK	5-11, 5-13, 5-15
2575624-0003	.BLOCK	5-11, 5-13, 5-15
2575624-0005	.BLOCK	5-11, 5-13, 5-15
2575624-0006	.BLOCK	5-11, 5-13, 5-15
2575624-0007	.BLOCK	5-11, 5-13, 5-15
2575624-0008	.BLOCK	5-11, 5-13, 5-15
2575624-0009	.BLOCK	5-11, 5-13, 5-15
2575624-0010	.BLOCK	5-11, 5-13, 5-15
2575624-0011	.BLOCK	5-11, 5-13, 5-15
2575625-0001	.BLOCK	5-11, 5-13, 5-15
2575625-0002	.BLOCK	5-11, 5-13, 5-15
2575625-0003	.BLOCK	5-11, 5-13, 5-15
2575625-0005	.BLOCK	5-11, 5-13, 5-15
2575625-0006	.BLOCK	5-11, 5-13, 5-15
2575625-0007	.BLOCK	5-11, 5-13, 5-15
2575625-0008	.BLOCK	5-11, 5-13, 5-15
2575625-0009	.BLOCK	5-11, 5-13, 5-15
2575625-0010	.BLOCK	5-11, 5-13, 5-15
2575625-0011	.BLOCK	5-11, 5-13, 5-15
2576239-0000	.HOLDER	7-51, 7-53
2576240-0100	.STRIP GUIDE	7-35, 7-37
2576243-0100	.STRIP GUIDE	7-35, 7-37
2576346-0000	.ROLLER	5-11, 5-13, 5-15
2576347-0000	.SHAFT	5-11, 5-13, 5-15
2576349-0000	.ROLLER	5-11, 5-13, 5-15
2576350-0000	.ROLLER	5-11, 5-13, 5-15
2576351-0000	.AXLE PIN	5-11, 5-13, 5-15
2576352-0000	.PLATE	5-11, 5-13, 5-15
2576353-0000	.SUPPORT	5-11, 5-13, 5-15
2576398-0000	.SPACER	1-29
2582795-0100	.TOOL	12-141
2588000-0000	.BRACKET	7-23, 7-25, 7-27, 7-29
2588001-0000	.AXLE PIN	7-23, 7-25, 7-27, 7-29
2588207-0000	.TEMPLATE TOP NOZZLE	12-29, 12-31
2588208-0000	.TEMPLATE BOTTOM NOZZLE	12-29, 12-31
2589960-4200	.SLIDING STRIP	5-59, 5-61
2594128-0000	.COVER	2-13, 2-15

Part No	Description	Page No
2594221-0000	.BOW CLAMP	2-13, 2-15, 2-29, 2-31
2594657-0000	.AXLE PIN	5-11, 5-13, 5-15
2594658-0000	.LEVER	5-11, 5-13, 5-15
2594659-0000	.AXLE PIN	5-11, 5-13, 5-15
2594661-0000	.GUIDE RAIL	5-55
2594679-0000	.BLOCK	12-181
2594680-0000	.BLOCK	12-181
2597663-0000	.FOLDING FLAP	4-7, 4-9, 4-11, 4-13, 4-15, 4-17
2598113-0100	.CABLE LEAD-IN PLATE	9-3, 9-5
2598375-0000	.CABLE DUCT	9-135, 9-137
2598376-0000	.CABLE DUCT	9-135, 9-137
2598377-0000	.CABLE DUCT	9-135, 9-137
2598430-0000	.SUPPORT	9-175
2598932-0000	.CARRIER	5-123, 5-125, 5-127
2603016-0000	.BRACKET	7-43
2603631-0000	.BRACKET	1-9, 1-11, 1-49
2604460-0000	.CABLE DUCT	9-13, 9-15, 9-17, 9-19
2604461-0000	.CABLE DUCT	9-13, 9-15, 9-17, 9-19
2604462-0000	.CABLE DUCT	9-13, 9-15, 9-17, 9-19
2604463-0000	.CABLE DUCT	9-13, 9-15, 9-17, 9-19
2604464-0000	.CABLE DUCT	9-13, 9-15, 9-17, 9-19
2604465-0000	.CABLE DUCT	9-13, 9-15, 9-17, 9-19
2604466-0000	.CABLE DUCT	9-13, 9-15, 9-17, 9-19
2604467-0000	.CABLE DUCT	9-13, 9-15, 9-17, 9-19
2604468-0000	.CABLE DUCT	9-13, 9-15, 9-17, 9-19
2606879-0000	.PLATE	5-11, 5-13, 5-15
2606880-0000	.HOLDER	5-11, 5-13, 5-15
2606881-0000	.ADJUSTING SCREW	5-11, 5-13, 5-15
2610111-0000	.BEARING BRACKET	8-17, 8-19
2610112-0000	.BEARING BRACKET	8-17, 8-19
2610197-0000	.TOOL	12-147
2610198-0000	.TOOL	12-147
2611008-0000	.BRACKET	1-213, 1-215, 1-217
2611151-0003	.AIR NOZZLE	5-19, 5-21, 5-23, 5-25, 5-27
2611151-0004	.AIR NOZZLE	5-19, 5-21, 5-23, 5-25, 5-27
2611190-0011	.SPACER	5-19, 5-21, 5-23, 5-25, 5-27
2611190-0012	.SPACER	5-19, 5-21, 5-23, 5-25, 5-27
2611190-0013	.SPACER	5-19, 5-21, 5-23, 5-25, 5-27
2611190-0014	.SPACER	5-19, 5-21, 5-23, 5-25, 5-27
2611190-0015	.SPACER	5-19, 5-21, 5-23, 5-25, 5-27
2611190-0017	.SPACER	5-19, 5-21, 5-23, 5-25, 5-27
2611190-0018	.SPACER	5-19, 5-21, 5-23, 5-25, 5-27
2611190-0019	.SPACER	5-19, 5-21, 5-23, 5-25, 5-27
2611190-0020	.SPACER	5-19, 5-21, 5-23, 5-25, 5-27
2612575-0000	.SUPPORT ROLLER	1-125, 1-127
2612576-0000	.SHAFT	1-125, 1-127
2612578-0000	.ROLLER	1-125, 1-127
2613035-0000	.SUPPORT	2-87, 2-89
2613754-0000	.FRAME	6-61
2614225-0000	.CABLE TRACK	8-45
2614226-0000	.CABLE TRACK	8-45
2614227-0000	.CABLE TRACK	8-45
2614228-0000	.CABLE TRACK	8-45
2614370-0200	.SERVICE PARTS	12-27
2615467-0000	.BRACKET	12-181
2616035-0000	.CONNECTION BOX	8-33
2618263-0000	.CONTAINER	1-9, 1-11
2618264-0000	.PIPE	1-9, 1-11
2618266-0000	.PIPE	1-9, 1-11
2619758-0200	.HEAD SPACE BY INJECTION	1-3, 1-5, 1-7
2623674-0100	.CONNECTION BOX	1-35, 1-37
2628609-0000	.PROTECTION	5-153
2628631-0000	.BRACKET	5-153
2628632-0000	.CLAMPING PIECE	5-153
2632603-0000	.CHECKER PLATE	2-83, 2-85
2633435-0000	.PLATE	5-49, 5-51
2635109-0000	.CLAMP	1-9, 1-11
2638206-0000	.BRACKET	1-103, 1-105
2640155-0000	.BRACKET	1-197, 1-199, 1-201
2640262-0000	.AXLE PIN	1-89
2640265-0000	.LOCK SPRING	1-89
2640472-0000	.HOLDER	1-165, 1-167
2641397-0000	.PLATE	8-33
2641477-0100	.TOOL	12-141
2644651-0000	.BRACKET	1-125, 1-127
2644652-0000	.LOCK PLATE	1-125, 1-127
2646248-0000	.MOUNTING BRACKET	1-89
2651347-0000	.PIPE	5-95, 5-97, 5-99
2652212-0000	.PLATE	5-11, 5-13, 5-15
2652213-0000	.THRUST WASHER	5-11, 5-13, 5-15
2656672-0000	.SPROCKET	2-21, 5-73
2656673-0000	.SPACER	2-21, 5-73
2665284-0000	.CARTON STATION	5-141, 5-143
2665718-0000	.CARRIER	4-7, 4-9, 4-11, 4-13, 4-15, 4-17

Part No	Description	Page No
2672115-0000	.BENDING ROLLER	1-97
2677789-0000	.PIPE	5-95, 5-97, 5-99
2681269-0000	.BLOCKING PIECE	5-145
2685203-0000	.PIPE	5-213
2685204-0000	.COVER	2-13, 2-15
2685206-0000	.BLOCK	5-201, 5-203
2685207-0000	.CURVE	5-201, 5-203
2685213-0000	.PIPE	5-201, 5-203
2685216-0100	.CLEANING CIRCUIT	5-201, 5-203
2685217-0000	.COVERING PLATE	2-13, 2-15
2685218-0000	.COVERING PLATE	2-13, 2-15
2685221-0000	.BRACKET	5-149, 5-151
2685224-0000	.FRAME	2-105
2685647-0000	.PROFILE	9-147, 9-155, 9-157
2685652-0000	.BRACKET	9-13, 9-15, 9-17, 9-19
2685677-0001	.LEVER	5-11, 5-13, 5-15
2685677-0002	.LEVER	5-11, 5-13, 5-15
2685677-0003	.LEVER	5-11, 5-13, 5-15
2685677-0005	.LEVER	5-11, 5-13, 5-15
2685677-0006	.LEVER	5-11, 5-13, 5-15
2685677-0007	.LEVER	5-11, 5-13, 5-15
2685677-0008	.LEVER	5-11, 5-13, 5-15
2685677-0009	.LEVER	5-11, 5-13, 5-15
2685677-0010	.LEVER	5-11, 5-13, 5-15
2685677-0011	.LEVER	5-11, 5-13, 5-15
2685677-0012	.LEVER	5-11, 5-13, 5-15
2685677-0013	.LEVER	5-11, 5-13, 5-15
2685679-0000	.LID	5-35, 5-37, 5-39, 5-41, 5-43
2685680-0000	.LID	1-55, 1-57
2691760-0000	.BLOCK	5-89
2691825-0000	.DRIVE WHEEL	5-155, 5-157
2696573-0000	.BRACKET	5-145
2696621-0000	.PIVOT ARM	5-29
2696960-0000	.HEATING CHAMBER	5-19, 5-21, 5-23, 5-25, 5-27
2697306-0001	.AIR NOZZLE	5-19, 5-21, 5-23, 5-25, 5-27
2697306-0002	.AIR NOZZLE	5-19, 5-21, 5-23, 5-25, 5-27
2699436-0000	.SPACER	5-69, 5-71, 5-119
2699437-0000	.RAIL HOLDER	5-69, 5-71, 5-119
2699621-0000	.BRACKET	2-19
2699670-0000	.PLATE	5-45, 5-47
2699713-0000	.SHIELD PLATE	5-49, 5-51
2701082-0000	.AIR NOZZLE	5-19, 5-21, 5-23, 5-25, 5-27
2701083-0000	.AIR NOZZLE	5-19, 5-21, 5-23, 5-25, 5-27
2701872-0000	.BLOCK	5-11, 5-13, 5-15
2701883-0000	.HOLDER	5-11, 5-13, 5-15
2702030-0000	.SHIM	5-11, 5-13, 5-15
2707867-0000	.BRACKET	5-201, 5-203
2709292-0000	.GUIDE PLATE	2-33
2715303-0000	.ARM	4-19, 4-21, 4-23, 4-27, 4-29, 4-31
2715383-0000	.PLATE	5-49, 5-51
2721238-0000	.PIPE	1-9, 1-11, 1-49
2721239-0000	.SPACER	1-9, 1-11, 1-49
2721240-0000	.BRACKET	1-9, 1-11, 1-49
2721241-0000	.SUPPORT	1-9, 1-11, 1-49
2731184-0000	.HINGE	2-35
2732557-0000	.SHAFT	8-41
2733917-0000	.DOOR	2-35
2733920-0100	.TURNING DEVICE	2-3, 2-5, 2-7
2738219-0000	.BRACKET	2-35
2738220-0000	.RIGGING SCREW	2-35
2743283-0000	.DOOR	2-35
2743327-0000	.LID	1-103, 1-105
2743328-0000	.PIPE	1-103, 1-105
2743329-0000	.PIPE	1-103, 1-105
2743331-0000	.PIPE	1-103, 1-105
2743336-0000	.MOTOR COVER	2-13, 2-15
2743337-0000	.COVER	2-13, 2-15
2743338-0000	.TUNNEL	2-13, 2-15
2743339-0000	.PIPE CONNECTION	5-201, 5-203
2743341-0000	.LID	2-47, 2-49
2743342-0000	.DISCHARGE CHUTE	2-47, 2-49
2743343-0000	.BRACKET	2-47, 2-49
2743344-0000	.COVER	2-47, 2-49
2743345-0000	.PIPE	5-201, 5-203
2743347-0000	.SHAFT	5-149, 5-151
2743348-0000	.BRACKET	5-149, 5-151
2743349-0000	.BRACKET	5-149, 5-151
2743350-0000	.HOLDER	5-147
2745175-0000	.TURNING DEVICE	2-35
2745176-0000	.GUIDE PLATE	2-33
2745177-0000	.GUIDE PLATE	2-33
2745180-0000	.CLEANING PIPE	5-201, 5-203
2745181-0000	.BRACKET	5-49, 5-51
2745183-0000	.BLOCK	5-11, 5-13, 5-15

Part No	Description	Page No
2745184-0000	.DISTANCE PIECE LOCK	2-33
2745192-0000	.VOLUME SHIM	4-19, 4-21, 4-23, 4-27, 4-29, 4-31
2745194-0000	.VOLUME BULGE	4-19, 4-21, 4-23, 4-27, 4-29, 4-31
2746794-0000	.SHIM	5-141, 5-143
2746795-0000	.SHIM	5-141, 5-143
2746796-0000	.SPRING	2-35
2746797-0000	.SPRING	2-35
2746798-0000	.PLATE	2-35
2746799-0000	.SHIM	5-141, 5-143
2748676-0000	.DOOR	8-11, 8-13
2748677-0000	.DOOR	2-65, 2-67
2748678-0000	.DOOR	2-69, 2-71
2748679-0000	.GLASS	2-65, 2-67, 2-69, 2-71
2748682-0000	.PLATE	8-11, 8-13
2748683-0000	.COVER	8-11, 8-13
2751445-0000	.PIPE	5-31, 5-33
2751446-0000	.ARM	5-35, 5-37, 5-39, 5-41, 5-43
2751447-0000	.BRACKET	5-35, 5-37, 5-39, 5-41, 5-43
2751448-0000	.BLOCKING PIECE	5-35, 5-37, 5-39, 5-41, 5-43
2751450-0000	.FASTENING PLATE	5-35, 5-37, 5-39, 5-41, 5-43
2751451-0000	.ARM	5-35, 5-37, 5-39, 5-41, 5-43
2754789-0000	.BRACKET	2-35
2754791-0100	.TURNING DEVICE	2-33
2754792-0000	.HINGE	2-35
2754793-0000	.HINGE	2-35
2754794-0000	.AXLE PIN	2-35
2754795-0000	.HINGE	2-35
2761510-0000	.TEMPLATE	12-67
2761512-0000	.GLASS PANE	2-13, 2-15
2761517-0000	.BAR	2-35
2761518-0000	.BAR	2-35
2761519-0000	.DOOR	2-35
2761751-0000	.PIPE	6-105
2761752-0000	.PIPE	6-105
2761753-0000	.PIPE	6-105
2761754-0000	.PIPE	6-105
2761755-0000	.BRACKET	1-31
2761756-0000	.PIPE HOLDER	1-31
2761759-0000	.PIPE	1-9, 1-11
2761760-0000	.PIPE	1-9, 1-11
2763303-0000	.STRIP	2-19
2763373-0000	.HOLDER	2-19
2763430-0100	.RAILING KIT	2-17
2763553-0001	.RAIL	2-19
2763553-0002	.RAIL	2-19
2763796-0000	.AIR NOZZLE	1-193, 1-195
2763797-0000	.AIR NOZZLE	1-193, 1-195
2764343-0000	.AIR CONNECTION	5-35, 5-37, 5-39, 5-41, 5-43
2764344-0100	.PULL-DOWN DEVICE	5-3, 5-5, 5-7
2764345-0000	.BLOCKING PIECE	5-35, 5-37, 5-39, 5-41, 5-43
2764346-0000	.PIPE	5-31, 5-33
2764347-0000	.ARM	5-35, 5-37, 5-39, 5-41, 5-43
2764348-0000	.ARM	5-35, 5-37, 5-39, 5-41, 5-43
2764349-0000	.FASTENING PLATE	5-35, 5-37, 5-39, 5-41, 5-43
2769654-0000	.DOOR	2-35
2769655-0000	.SIDE PLATE	2-33
2769656-0000	.BRACKET	2-33
2769657-0000	.TURNING DEVICE	2-35
2769984-0000	.RAIL	2-97
2769985-0000	.RAIL	2-97
2769988-0000	.BRACKET	2-97
2769991-0000	.RAILING	2-99
2769992-0000	.RAILING	2-99
2773918-0000	.CABLE TRENCH	1-173, 1-175, 1-177, 1-179, 1-181, 1-183
2773919-0000	.LID	1-173, 1-175, 1-177, 1-179, 1-181, 1-183
2773920-0000	.CLEANING TANK	5-201, 5-203
2773921-0000	.CLEANING TANK	5-201, 5-203
2773922-0000	.BOTTOM PLATE	5-191, 5-193, 5-195
2773923-0000	.LEG	5-197
2773924-0100	.LEG	5-191, 5-193, 5-195
2773925-0000	.LEG	2-39, 6-63, 8-9
2773926-0100	.LEG	2-37, 6-61, 8-5
2774503-0100	.CONVERTER	1-3, 1-5, 1-7
2774504-0000	.BRACKET	1-223
2775602-0202	.END UNIT	2-13, 2-15
2775693-0000	.BRACKET	2-19
2775930-0000	.CHAIN SUPPORT	2-17
2775931-0000	.0HAIN SUPPORT	2-17
2776725-0000	.GUIDE	5-35, 5-37, 5-39, 5-41, 5-43
2776726-0000	.GUIDE BRACKET	5-35, 5-37, 5-39, 5-41, 5-43
2776727-0000	.SPACER	5-35, 5-37, 5-39, 5-41, 5-43
2776729-0000	.ARM	5-35, 5-37, 5-39, 5-41, 5-43
2776730-0000	.ARM	5-35, 5-37, 5-39, 5-41, 5-43
2776731-0000	.FASTENING PLATE	5-35, 5-37, 5-39, 5-41, 5-43

Part No	Description	Page No
2776732-0000	.PIPE	5-31, 5-33
2776733-0000	.BLOCKING PIECE	5-35, 5-37, 5-39, 5-41, 5-43
2776734-0000	.SLIDE SHEET	5-35, 5-37, 5-39, 5-41, 5-43
2776735-0000	.FASTENING PLATE	5-35, 5-37, 5-39, 5-41, 5-43
2776736-0000	.ARM	5-35, 5-37, 5-39, 5-41, 5-43
2776737-0000	.ARM	5-35, 5-37, 5-39, 5-41, 5-43
2776738-0000	.PIPE	5-31, 5-33
2776741-0000	.FOLDING BAR RIGHT	5-45, 5-47
2776742-0000	.FOLDING BAR LEFT	5-45, 5-47
2776743-0000	.SIDE PIPE	5-31, 5-33
2776744-0000	.SIDE PIPE	5-31, 5-33
2776750-0400	.SOFTWARE TPOP	10-5
2781021-0000	.LEG	5-215
2781214-0000	.TOUCH GUARD	1-213, 1-215, 1-217
2781215-0000	.TOUCH GUARD	1-213, 1-215, 1-217
2781218-0000	.COLLAR	2-37
2781220-0000	.CABLE TRENCH	1-173, 1-175, 1-177, 1-179, 1-181, 1-183
2781221-0000	.CLEANING PIPE	1-163
2781222-0000	.CLEANING PIPE	1-163
2781223-0000	.CLEANING PIPE	1-163
2787346-0000	.HANDLE	5-19, 5-21, 5-23, 5-25, 5-27
2787350-0000	.PIPE	5-31, 5-33
2788107-0000	.PIPE	6-101, 6-103
2788109-0000	.PIPE	6-101, 6-103
2788110-0000	.PIPE	6-101, 6-103
2788111-0000	.CONNECTION PLATE	6-101, 6-103
2788117-0000	.GLASS PANE	6-5
2788118-0000	.PIPE	1-223
2788121-0000	.GLASS PANE	6-5
2788122-0000	.DOOR	6-5
2788123-0000	.DOOR	6-5
2790830-0000	.SUPPORT BAR	1-89
2790831-0000	.SUPPORT PLATE	1-89
2790832-0100	.SUPPORT	1-83, 1-85
2790833-0000	.MOUNTING SHEET	6-95
2790834-0000	.PIPE	6-95
2790835-0000	.PIPE	6-85, 6-87
2795368-0000	.SEAL	1-55, 1-57
2796072-0001	.LOCKING FORK	1-53, 1-225
2796072-0002	.LOCKING FORK	1-53, 1-225
2798052-0000	.DOOR	9-109
2798073-0000	.DOOR	9-147
2798074-0000	.DOOR	9-155
2798075-0000	.DOOR	9-157
2800334-0001	.CARTON STATION	5-9
2800334-0002	.CARTON STATION	5-9
2800334-0004	.CARTON STATION	5-9
2800334-0007	.CARTON STATION	5-9
2800335-0001	.CARTON STATION	5-9
2800335-0002	.CARTON STATION	5-9
2800336-0001	.CARTON STATION	5-9
2800336-0002	.CARTON STATION	5-9
2800336-0003	.CARTON STATION	5-9
2800336-0004	.CARTON STATION	5-9
2800338-0000	.FOLDING BAR	5-45, 5-47
2800339-0000	.FOLDING BAR	5-45, 5-47
2800340-0000	.FOLDING BAR	5-45, 5-47
2800341-0000	.FOLDING BAR	5-45, 5-47
2800342-0000	.ARM	5-35, 5-37, 5-39, 5-41, 5-43
2800343-0000	.ARM	5-35, 5-37, 5-39, 5-41, 5-43
2800344-0000	.BLOCKING PIECE	5-35, 5-37, 5-39, 5-41, 5-43
2800345-0001	.TEMPLATE	12-151
2800345-0002	.TEMPLATE	12-151
2800345-0003	.TEMPLATE	12-151
2800345-0004	.TEMPLATE	12-151
2800346-0000	.FASTENING PLATE	5-35, 5-37, 5-39, 5-41, 5-43
2800347-0000	.SPACER	5-35, 5-37, 5-39, 5-41, 5-43
2800348-0000	.PIPE	5-31, 5-33
2800350-0000	.FOLDING BAR	5-45, 5-47
2800351-0000	.FOLDING BAR	5-45, 5-47
2800352-0000	.CABINET	1-35, 1-37
2800353-0000	.COVER	1-35, 1-37
2805942-0000	.MACHINE SIGN	11-3
2807003-0100	.DISCHARGE SUPPORT	5-3, 5-5, 5-7
2807004-0000	.BRACKET	5-131
2807005-0000	.MACHINE BODY	5-191, 5-193, 5-195
2807008-0000	.BRACKET	5-135, 5-139
2807010-0000	.PIPE	5-209
2807012-0000	.PIPE	5-209
2807015-0000	.PIPE	5-201, 5-203
2807016-0000	.COVER	2-29, 2-31
2807026-0000	.BLOCK	5-201, 5-203
2810391-0000	.BEARING HOUSING	4-45, 4-47
2810392-0000	.BEARING HOUSING	4-45, 4-47

Part No	Description	Page No
2810393-0000	.BEARING HOUSING	4-45, 4-47
2810394-0000	.BUSHING	4-49, 4-51
2810395-0000	.SHAFT	4-49, 4-51
2810396-0000	.SHAFT	4-49, 4-51
2810397-0000	.AXLE SUPPORT	4-53, 4-55
2810398-0000	.AXLE SUPPORT	4-53, 4-55
2810399-0000	.AXLE SUPPORT	4-53, 4-55
2810402-0000	.SHAFT	4-49, 4-51
2810406-0000	.GUIDING ARBOR	8-21
2810410-0000	.VOLUME CAM	4-107, 4-109
2810411-0000	.VOLUME CAM	4-107, 4-109
2810412-0000	.VOLUME CAM	4-107, 4-109
2810413-0000	.VOLUME CAM	4-107, 4-109
2810414-0000	.VOLUME CAM	4-107, 4-109
2810415-0000	.VOLUME CAM	4-107, 4-109
2810416-0000	.TUNNEL	2-29, 2-31
2810417-0000	.FRAME	2-105
2810418-0000	.COVER	2-29, 2-31
2810419-0000	.DRIP GUARD	5-115, 5-117
2810420-0000	.DRIP GUARD	5-115, 5-117
2810421-0000	.DRIP GUARD	5-115, 5-117
2810428-0000	.COVERING PLATE	2-29, 2-31
2810429-0000	.DISCHARGE CHUTE	2-47, 2-49
2810430-0100	.VOLUME FLAP	4-3, 4-5
2810431-0100	.VOLUME FLAP	4-3, 4-5
2810432-0000	.COVER	2-47, 2-49
2810433-0000	.LID	2-47, 2-49
2810440-0200	.COVER PLATES	2-3, 2-5, 2-7
2814875-0000	.PIVOT ARM	5-29
2814876-0000	.SHIELD PLATE	5-49, 5-51
2814877-0000	.VALVE BODY	1-43
2814879-0000	.PIPE	5-31, 5-33
2814880-0000	.FASTENING PLATE	5-35, 5-37, 5-39, 5-41, 5-43
2814881-0000	.ARM	5-35, 5-37, 5-39, 5-41, 5-43
2814882-0000	.ARM	5-35, 5-37, 5-39, 5-41, 5-43
2814883-0000	.PIPE	5-31, 5-33
2814885-0000	.ARM	5-35, 5-37, 5-39, 5-41, 5-43
2814886-0000	.ARM	5-35, 5-37, 5-39, 5-41, 5-43
2814887-0000	.FASTENING PLATE	5-35, 5-37, 5-39, 5-41, 5-43
2814888-0000	.FOLDING BAR	5-45, 5-47
2814889-0000	.FOLDING BAR	5-45, 5-47
2814890-0000	.PIPE	5-31, 5-33
2814891-0000	.ARM	5-35, 5-37, 5-39, 5-41, 5-43
2814892-0000	.ARM	5-35, 5-37, 5-39, 5-41, 5-43
2815750-0001	.FRAME	1-93, 1-95
2815750-0002	.FRAME	1-93, 1-95
2815751-0001	.COVER PLATE	1-93, 1-95
2815751-0002	.COVER PLATE	1-93, 1-95
2815754-0200	.CREASE UNIT	8-23, 8-25
2815756-0000	.HOLDER	1-209, 1-211
2815765-0000	.BRACKET	1-107, 1-109
2815767-0000	.PIPE	1-107, 1-109
2815768-0000	.PIPE	1-107, 1-109
2816485-0100	.CLEANING CIRCUIT	5-201, 5-203
2816486-0100	.PACKAGE STOP	5-135, 5-139
2816487-0100	.CABLE	5-3, 5-5, 5-7
2816495-0000	.SHIELD PLATE	5-109
2826439-0000	.VALVE CONE	1-21
2826440-0000	.SEAL RING	1-21, 11-41
2826441-0000	.SEAL RING	1-19, 1-23, 1-51, 11-41
2826442-0000	.VALVE CONE	1-19, 1-23, 1-51
2826443-0000	.DIAPHRAGM	11-41
2826636-0001	.UPPER FILLING PIPE	1-171
2826636-0002	.UPPER FILLING PIPE	1-171
2826637-0001	.LOWER FILLING PIPE	1-225
2826637-0002	.LOWER FILLING PIPE	1-225
2826637-0003	.LOWER FILLING PIPE	1-225
2826637-0004	.LOWER FILLING PIPE	1-225
2826637-0005	.LOWER FILLING PIPE	1-225
2826637-0006	.LOWER FILLING PIPE	1-225
2826637-0007	.LOWER FILLING PIPE	1-225
2826638-0001	.LOWER FILLING PIPE	1-225
2826638-0002	.LOWER FILLING PIPE	1-225
2826638-0003	.LOWER FILLING PIPE	1-225
2826638-0004	.LOWER FILLING PIPE	1-225
2826638-0005	.LOWER FILLING PIPE	1-225
2826640-0000	.UPPER FILLING PIPE	1-171
2826649-0000	.BRACKET	9-13, 9-15, 9-17, 9-19
2829688-0000	.BRACKET	4-107, 4-109
2829689-0000	.BRACKET	2-13, 2-15
2829701-0000	.VOLUME BULGE	4-19, 4-21, 4-23, 4-27, 4-29, 4-31
2829703-0000	.PIPE	5-201, 5-203
2829713-0000	.VOLUME CAM L	4-107, 4-109
2829714-0000	.VOLUME CAM R	4-107, 4-109

Part No	Description	Page No
2830499-0000	.PIPE	5-31, 5-33
2830504-0000	.FASTENING PLATE	5-35, 5-37, 5-39, 5-41, 5-43
2830505-0000	.ARM	5-35, 5-37, 5-39, 5-41, 5-43
2830506-0000	.ARM	5-35, 5-37, 5-39, 5-41, 5-43
2830507-0000	.PIPE	5-31, 5-33
2831057-0000	.VALVE PANEL	11-9
2831058-0000	.VALVE PANEL	11-9
2831063-0000	.VALVE PANEL	11-9
2831064-0000	.VALVE PANEL	11-9
2832785-0000	.THROTTLE SCREW	1-165, 1-167
2832787-0000	.PLATE	1-9, 1-11
2832789-0000	.PLATE	1-223
2833037-0000	.SEAL RING	1-19
2839449-0000	.SPACER	5-115, 5-117
2839810-0000	.BRACKET	7-51, 7-53
2845921-0000	.734013 NORDSON	5-19, 5-21, 5-23, 5-25, 5-27
2845922-0000	.DRAIN CHUTE	9-169
2850445-0000	.GUIDE WHEEL	7-51, 7-53
2854615-0000	.PLATE	5-115, 5-117
2854616-0000	.CANTILEVER	5-139
2854617-0000	.GEAR WHEEL	5-139
2854618-0000	.SLIDE PLANE	5-115, 5-117
2854619-0000	.SIDE PLATE	5-115, 5-117
2854620-0100	.SIDE FEEDER	5-133
2854621-0000	.SIDE PLATE	5-115, 5-117
2854622-0000	.PLATE	5-115, 5-117
2854623-0000	.SLIDE RAIL	5-119
2854624-0000	.SLIDE PLATE	5-115, 5-117
2854626-0000	.SLIDE RAIL	5-119
2854627-0000	.HOLDER	5-119
2854628-0000	.SLIDE RAIL	5-115, 5-117
2854629-0000	.SHAFT	5-139
2854630-0100	.CONVEYOR	5-3, 5-5, 5-7
2854631-0000	.TENSION ARM	5-139
2854632-0000	.ROLLER	5-139
2854633-0000	.TENSION ARM	5-139
2854634-0000	.SHAFT	5-139
2854635-0100	.CONVEYOR JOINT	5-115, 5-117
2854637-0000	.ADJUSTMENT PLATE	5-139
2854638-0000	.AXLE LINK	5-139
2854639-0000	.SHAFT	5-139
2854641-0000	.BEARING CONSOLE	5-139
2854642-0000	.PLATE	5-139
2854643-0000	.PLATE	5-137
2854644-0000	.PLATE	5-137
2854645-0000	.SHAFT	5-137
2854648-0000	.COVER	2-29, 2-31
2854649-0000	.TUNNEL	2-29, 2-31
2854651-0000	.COVER	2-29, 2-31
2854652-0000	.HANDLE	5-93
2854653-0000	.TEMPLATE	12-91
2854656-0000	.SLIDE PLATE	5-115, 5-117
2854660-0100	.SIDE FEEDER	5-3, 5-5, 5-7
2854809-0100	.END UNIT	5-3, 5-5, 5-7
2854810-0000	.SIDE PLATE	5-59, 5-61
2854811-0000	.SIDE PLATE	5-59, 5-61
2854812-0000	.RAIL	5-67
2854813-0000	.RAIL	5-67
2854814-0000	.RAIL	5-67
2854816-0000	.SLIDE RAIL	5-59, 5-61
2854817-0000	.SLIDE RAIL	5-59, 5-61
2854818-0100	.LEG	5-201, 5-203
2854819-0000	.LEG	5-215
2854820-0100	.RAIL HOLDER	5-67
2854821-0100	.RAILING	5-59, 5-61
2854822-0000	.HOLDER	5-69
2854823-0000	.SIDE PLATE	5-59, 5-61
2854824-0000	.SIDE PLATE	5-59, 5-61
2854951-0000	.COVER	2-37
2872726-0000	.SCREW	1-83, 1-85, 2-65, 2-67, 2-69, 2-71, 8-23, 8-25
2873064-0000	.BRACKET	1-35, 1-37
2879201-0000	.DIAGRAM AIR/WATER	11-9
2881033-0000	.SIDE PLATE	2-17
2881034-0000	.SIDE PLATE	2-17
2887605-0100	.COLLECTION TRAY	9-167
2887606-0000	.FLANGE	9-171
2887607-0000	.FLANGE	9-171
2887608-0100	.DRAINING	9-167
2887612-0000	.DRAIN PIPE	6-9
2887613-0000	.HOSE HOLDER	9-171
2887617-0000	.CARTON STATION	5-141, 5-143
2887703-0000	.CAM SEGMENT L	3-23, 3-25
2887704-0000	.CAM SEGMENT R	3-23, 3-25
2887705-0000	.CURVE ARM	3-23, 3-25

Part No	Description	Page No
2887706-0000	.CURVE YOKE	3-23, 3-25
2888967-0000	.PIPE	1-103, 1-105
2889197-0000	.VALVE BODY (51-38)	1-49
2898124-0000	.BRACKET	1-49
2898196-0000	.PIPE	1-165, 1-167
2898203-0000	.VALVE CONE	1-19
2903599-0000	.BRACKET	2-33
2905938-0000	.CLEANING PIPE	1-159, 1-161
2905939-0000	.CLEANING PIPE	1-159, 1-161
2905947-0000	.STERILE SYSTEM TBA/19 HVA	11-9
2909523-0000	.SPRING	1-171
2911353-0000	.VOLUME SHIM	4-19, 4-21, 4-23, 4-27, 4-29, 4-31
2912228-0003	.TPOP BASIC V 3.2	10-7
2913550-0100	.VALVE PANEL	6-29, 6-31
2913560-0100	.SEPARATION BLOCK	5-59, 5-61
2913726-0000	.SUPPORT	1-49
2913730-0000	.BRACKET	1-49
2913732-0000	.PISTON ROD	1-51
2914808-0001	.PRESSURE FLANGE	1-225
2914808-0002	.PRESSURE FLANGE	1-225
2914808-0003	.PRESSURE FLANGE	1-225
2914808-0004	.PRESSURE FLANGE	1-225
2914808-0005	.PRESSURE FLANGE	1-225
2914808-0006	.PRESSURE FLANGE	1-225
2914808-0007	.PRESSURE FLANGE	1-225
2914808-0008	.PRESSURE FLANGE	1-225
2914809-0000	.PRESSURE FLANGE	1-225
2914813-0000	.PRESSURE FLANGE	1-53
2914814-0000	.PRESSURE FLANGE	1-53
2914815-0000	.PRESSURE FLANGE	1-53
2914816-0000	.PRESSURE FLANGE	1-53
2914817-0000	.PRESSURE FLANGE	1-53
2914818-0000	.PRESSURE FLANGE	1-53
2914819-0000	.BRACKET	1-213, 1-215, 1-217
2914826-0100	.DOOR	1-3, 1-5, 1-7
2914827-0100	.DOOR	1-3, 1-5, 1-7
2914828-0000	.BRACKET	1-219
2914829-0000	.BRACKET	1-83, 1-85
2914830-0000	.BRACKET	1-83, 1-85
2914832-0000	.DOOR	1-207
2914833-0000	.DOOR	1-205
2914838-0000	.PLATE	1-173, 1-175, 1-177, 1-179, 1-181, 1-183
2914839-0000	.PIPE HOLDER	1-31
2914842-0000	.PIPE HOLDER	1-49
2914845-0000	.TOUCH GUARD	1-213, 1-215, 1-217
2914846-0000	.TOUCH GUARD	1-213, 1-215, 1-217
2914847-0000	.BRACKET	1-213, 1-215, 1-217
2914848-0000	.BRACKET	1-213, 1-215, 1-217
2914849-0000	.BRACKET	1-213, 1-215, 1-217
2914850-0000	.BRACKET	1-213, 1-215, 1-217
2914851-0000	.TOUCH GUARD	1-69
2914854-0000	.CABLE DUCT	1-173, 1-175, 1-177, 1-179, 1-181, 1-183
2914855-0000	.CABLE DUCT	1-173, 1-175, 1-177, 1-179, 1-181, 1-183
2914939-0000	.TEMPLATE	12-155
2915994-0100	.EXTERNAL CLEANING UNIT	5-59, 5-61
2915995-0000	.BRACKET	5-65
2915996-0000	.HOLDER	5-65
2921874-0000	.SEPARATION BLOCK	5-63
2921878-0000	.PIPE	6-33
2921879-0000	.PIPE	6-33
2921880-0000	.FLOAT	1-225
2921881-0000	.PLATE	5-63
2921884-0000	.SUPPORT	9-87, 9-89
2921885-0000	.SUPPORT	9-87, 9-89
2921890-0000	.FLOAT	1-225
2921894-0000	.PLATE	5-19, 5-21, 5-23, 5-25, 5-27
2924201-0000	.TUBE	1-49
2924213-0200	.PRODUCT VALVE	1-3, 1-5, 1-7
2927578-0000	.WASHER	1-209, 1-211
2927582-0000	.CONNECTION DEVICE	1-107, 1-109
2927583-0000	.COVER	2-13, 2-15
2927584-0000	.TOUCH GUARD	1-213, 1-215, 1-217
2927587-0000	.SHIELD PLATE	5-49, 5-51
2930296-0000	.HOLDER	5-71
2930298-0100	.RAIL HOLDER	5-67
2941706-0000	.PIPE HOLDER	6-97, 6-99
2941707-0000	.PIPE HOLDER	6-97, 6-99
2944318-0000	.CARTON STATION	5-141, 5-143
2944323-0000	.SPRING HOUSING	5-11, 5-13, 5-15
2944324-0000	.BLOCK	5-11, 5-13, 5-15
2944325-0000	.AXLE	5-11, 5-13, 5-15
2944329-0000	.BLOCK	5-11, 5-13, 5-15
2944330-0000	.FOLDING BAR	5-31, 5-33
2944332-0000	.BRACKET	3-7

Part No	Description	Page No
2944333-0000	.PIN	3-7
2949463-0000	.TOUCH GUARD	1-31
2949464-0000	.SIGN	1-31
2949465-0000	.STEAM PIPE	1-31
2949466-0000	.STEAM PIPE	1-31
2949467-0000	.STEAM PIPE	1-31
2949468-0000	.PIPE	1-31
2949469-0000	.CONNECTION	12-135
2949470-0000	.SUPPORT	12-135
2949471-0100	.TOOL FOR JAW OVERLOAD	12-27
2958807-0000	.LID	1-155
2958808-0000	.SHAFT	1-155
2962076-0000	.COMPONENT PLATES	9-13, 9-15, 9-17, 9-19
2962080-0000	.ENDING DOOR	9-87, 9-89
2964430-0000	.CHAMBER	1-55, 1-57
2964431-0000	.LID	1-55, 1-57
2964432-0000	.SCREW	1-55, 1-57
2964433-0000	.THROTTLE	1-55, 1-57
2964437-0000	.GUIDE	1-67
2964439-0000	.SUCTION PIPE	1-155
2964511-0000	.LABEL HOLDER	6-97, 6-99
2964518-0000	.GUIDE	5-147
2964524-0000	.SIDE PLATE	5-147
2964525-0000	.SPRING BRACKET	5-11, 5-13, 5-15
2964526-0000	.SHIM	5-11, 5-13, 5-15
2964527-0000	.BUSHING	5-11, 5-13, 5-15
2964528-0000	.LOCATING PIECE	5-11, 5-13, 5-15
2968251-0000	.MACHINE SIGN	11-3
2974217-0000	.PLATE	6-53
2974314-0000	.SCREW	1-55, 1-57
2982066-0000	.PROTECTIC CAP	1-165, 1-167
2982067-0000	.PROTECTIVE CAP	1-159, 1-161, 1-165, 1-167
2983247-0100	.GUIDING PULLTAB	1-55, 1-57
2987281-0000	.SIDE PLATE RIGHT	5-147
2987284-0000	.CURVE	3-23, 3-25
2987285-0000	.CURVE	3-23, 3-25
2987286-0000	.CAM	3-23, 3-25
2987287-0000	.CAM	3-23, 3-25
2987294-0000	.SIDE PLATE LEFT	5-147
2987295-0000	.SIDE PLATE LEFT	5-147
2987296-0000	.FOLDING FLAP CAM	4-57, 4-59, 4-61, 4-63
2987302-0100	.FINGER	5-3, 5-5, 5-7
2987303-0000	.VOLUME BULGE	4-19, 4-21, 4-23, 4-27, 4-29, 4-31
2987305-0000	.VOLUME SHIM	4-19, 4-21, 4-23, 4-27, 4-29, 4-31
2987315-0000	.VOLUME CAM	4-107, 4-109
2987316-0000	.VOLUME CAM	4-107, 4-109
2987317-0000	.BLOCKING PIECE	5-145
2987325-0000	.TEMPLATE	12-155
2987326-0000	.CUTTING RAIL	4-7, 4-9, 4-11, 4-13, 4-15, 4-17
2987327-0000	.INDUCTOR	4-87, 4-89, 4-91
2993294-0000	.BRACKET	3-7
2993295-0000	.AXLE	3-7
2993296-0000	.SPACER RING	3-7
2993297-0000	.AXLE	3-7
2993304-0100	.BELT TENSIONER	3-5
2995654-0100	.VALVE GROUP	6-15, 6-17
3004053-0000	.ASEPTIC DIAGRAM	11-9
3015473-0000	.PIPE	1-9, 1-11
3015475-0000	.PIPE	1-9, 1-11
3017332-0000	.SHAFT	8-29
3017333-0000	.SPACER	8-23, 8-25
3017335-0100	.INFEED UNIT	8-3
3017351-0000	.BRACKET	7-31
3017352-0000	.MOUNTING PLATE	7-23, 7-25, 7-27, 7-29
3017353-0000	.DOOR	7-31
3017354-0000	.DOOR	7-31
3017371-0000	.BRACKET	8-11, 8-13
3017372-0000	.FASTENING PLATE	8-23, 8-25
3017373-0000	.FASTENING BRACKET	7-59
3017412-0000	.PLATE	8-11, 8-13
3017413-0000	.COVER	8-11, 8-13
3017419-0000	.SHAFT	8-29
3017420-0000	.PLATE	4-113, 4-115
3019228-0000	.TRANSPORT BOX TBA/19	12-5
3019229-0000	.TRANSPORT BOX PT/19	12-5
3019230-0000	.TRANSPORT BOX ASU	12-5
3019231-0000	.TRANSPORT BOX FLIGHT	12-5
3019232-0000	.TRANSPORT BOX FLIGHT	12-5
3019234-0000	.PIN	3-31
3019235-0000	.FASTENING PLATE	2-101, 2-103
3019236-0000	.PLATE	2-101, 2-103
3019238-0000	.PLATE	2-105
3019240-0000	.FASTENING PLATE	2-65, 2-67, 2-69, 2-71
3019241-0100	.TPOP TBA/19	2-91

Part No	Description	Page No
3019242-0000	.ARM	3-31
3019243-0000	.BRACKET	3-31
3019244-0000	.DISTANCE	3-31
3019245-0000	.SLEEVE	3-31
3019246-0000	.WASHER	3-31
3019247-0000	.FLANGE	2-93
3019603-0000	.FRAME	9-149, 9-151, 9-153
3019605-0000	.DOOR	9-135, 9-137
3022601-0005	.SOFTWARE CD	10-5
3024322-0000	.GASKET	11-37
3024349-0000	.PIPE	6-69
3024350-0000	.BRACKET	6-5, 6-7
3024351-0000	.PLATE	6-15, 6-17
3024352-0000	.PIPE	6-15, 6-17
3024353-0000	.TUBE	6-15, 6-17
3024355-0000	.PIPE	1-103, 1-105
3024821-0000	.BOX	9-159
3024822-0000	.COVER	9-159
3024823-0000	.DOOR	9-131
3024825-0000	.WELDED CABINET	9-87, 9-89
3024827-0000	.SPACER	9-83
3024830-0000	.BOX	9-159
3024832-0000	.COVER	9-159
3024833-0000	.CABLE SERIAL	9-83
3024835-0000	.DOOR	9-133
3024838-0100	.RAIL	9-13, 9-15, 9-17, 9-19
3024839-0100	.SWING FRAME APC	9-3, 9-5
3024840-0000	.DOOR	9-83
3027749-0100	.TRANSPORT BOX	12-3
3036083-0000	.SLEEVE	2-93
3036084-0000	.WARNING TAPE	2-97
3036085-0000	.INSERT	2-91
3036086-0000	.TRANSPORT COVER	11-3
3036087-0000	.FRONT COVER	2-13, 2-15, 2-29, 2-31
3036088-0000	.COVER	2-13, 2-15
3036089-0000	.COVER HOUSING	2-13, 2-15, 2-29, 2-31
3036090-0000	.COVER	2-13, 2-15
3036093-0000	.ADAPTER	3-5
3038090-0000	.PNEUMATIC DIAGRAM TBA	6-15, 6-17, 11-9
3038091-0000	.PNEUMATIC DIAGRAM TWA	6-15, 6-17, 11-9
3038092-0000	.PNEUMATIC DIAGRAM TPA	6-15, 6-17, 11-9
3038093-0000	.PNEUMATIC DIAGRAM	11-9
3038094-0000	.PNEUMATIC DIAGRAM	11-9
3040326-0100	.CONTACTOR RAIL PT	9-13, 9-15, 9-17, 9-19
3040327-0000	.PLATE	9-91, 9-93
3040328-0000	.PLATE	1-185, 1-187, 1-189, 1-191
3040331-0000	.WELDED CABINET	9-87, 9-89
3040333-0100	.TINA GROUP	9-87, 9-89
3040334-0000	.MOUNTING PLATE	9-99, 9-101
3040336-0000	.FUSE PANEL LABEL	9-165
3040340-0000	.CONNECTION BOX	7-17
3040341-0000	.PLATE	9-111, 9-113, 9-115, 9-117, 9-119, 9-121, 9-123, 9-125, 9-127, 9-129
3040342-0000	.PLATE	9-95, 9-97
3040345-0000	.ROUND NUT	9-131, 9-133
3046066-0000	.COVER	8-23, 8-25
3046766-0000	.BRACKET	8-23, 8-25
3046767-0000	.COVER	8-23, 8-25
3046769-0000	.BLOCK	8-23, 8-25
3047665-0000	.COVER	2-29, 2-31
3047666-0000	.COVER	2-29, 2-31
3047670-0000	.CABLE TRENCH	1-173, 1-175, 1-177, 1-179, 1-181, 1-183
3047671-0000	.LID	1-173, 1-175, 1-177, 1-179, 1-181, 1-183
3047673-0000	.BRACKET	2-65, 2-67, 2-69, 2-71
3047674-0000	.BRACKET	2-65, 2-67
3047675-0000	.BRACKET	2-69, 2-71
3052461-0000	.BRACKET	8-23, 8-25
3055883-0000	.BRACKET	9-87, 9-89
3058552-0000	.SUPPORT	11-3
3062129-0000	.BRACKET	2-91
3062131-0000	.CABLE DUCT	2-87, 2-89
3062160-0000	.STRAINER	1-55, 1-57
3070148-0000	.FORK HEAD	4-43
3070149-0000	.SHAFT	4-43
3070151-0000	.ROLL	4-43
3070154-0000	.BRACKET	4-43
3072096-0000	.JUNCTION BLOCK	6-29, 6-31
3072097-0000	.PIPE	6-29, 6-31
3072098-0000	.PIPE	6-29, 6-31
3072100-0000	.BRACKET	6-93
3072110-0000	.COVER PLATE	9-13, 9-15, 9-17, 9-19
3072114-0000	.EARTH WIRE	6-15, 6-17
3072120-0000	.PLATE	9-107
3072121-0000	.PLATE	9-103, 9-105
3072122-0000	.HANDLE	9-83

Tetra Pak

SPC
Spare Parts Catalogue

Part No	Description	Page No
2775931-0000	.0HAIN SUPPORT	2-17
90458-1300	.... 2 AXIS DOCKING STATION, D2/PLC	9-13, 9-15, 9-17, 9-19
256276-0000	.. 3HAFT	5-109
90044-0084	.... 5IMIT SW. 14 CE1-4	1-55, 1-57
2845921-0000	.734013 NORDSON	5-19, 5-21, 5-23, 5-25, 5-27
576436-0100	.. A-CYLINDER	1-17, 1-49
90457-0100	.... ACCUMULATOR CRVZS-2	6-55, 6-59
90600-0491	.... ACTUATOR, 9650-0089-Z-I-OTI	1-43
3036093-0000	.ADAPTER	3-5
90457-0948	.... ADAPTER CABLE KS 800-PC	9-149, 9-151, 9-153, 12-27
90458-1856	.... ADHESIVE LABEL, CONNECTION DIAGRAM	9-25
90153-0017	.... ADHESIVE, 2963 TUBE 160G	2-37
90153-0020	.... ADHESIVE, BOSTIK 1782 125ML	1-77, 1-79
90153-0043	.... ADHESIVE, LOCTITE 495 20G	1-35, 1-37
90153-0048	.... ADHESIVE, LOCTITE HYSOL 3430 A&B	6-69
90153-0023	.... ADHESIVE, SILICON 251470 TUB 90CC(UN1993	1-55, 1-57, 5-19, 5-21, 5-23, 5-25, 5-27
90153-0015	.... ADHESIVE,LOCTITE IS 496/CYANOLOT 303	4-7, 4-9, 4-11, 4-13, 4-15, 4-17, 11-3
90153-0016	.... ADHESIVE,TUBE 100G RHODORSIL CAF 3	1-55, 1-57
90030-0136	.... ADJUSTABLE ELBOW CONNECTION 12-G3/8	6-85, 6-87
342738-0221	.. ADJUSTABLE ELBOW CONNECTION 15-G1/2	6-29, 6-31, 6-35
90030-0203	.... ADJUSTABLE ELBOW CONNECTION 6-G1/4	1-103, 1-105
90030-0171	.... ADJUSTABLE ELBOW CONNECTION 6-G1/8	5-201, 5-203
342738-0108	.. ADJUSTABLE ELBOW CONNECTION 8-G1/4	4-53, 4-55
342738-0208	.. ADJUSTABLE ELBOW CONNECTION 8-G1/4	2-59, 2-61
1517753-0000	.ADJUSTING NUT	7-61
272550-0000	.. ADJUSTING SCREW	5-123, 5-125, 5-127, 5-131
751579-0000	.. ADJUSTING SCREW	4-7, 4-9, 4-11, 4-13, 4-15, 4-17, 4-45, 4-47
1035893-0000	.ADJUSTING SCREW	7-51, 7-53
1548006-0000	.ADJUSTING SCREW	1-219
2606881-0000	.ADJUSTING SCREW	5-11, 5-13, 5-15
456474-0000	.. ADJUSTMENT PLATE	1-55, 1-57
2854637-0000	.ADJUSTMENT PLATE	5-139
2764343-0000	.AIR CONNECTION	5-35, 5-37, 5-39, 5-41, 5-43
272026-0001	.. AIR DISTRIBUTOR	1-93, 1-95
272026-0002	.. AIR DISTRIBUTOR	1-93, 1-95
1523332-0000	.AIR DISTRIBUTOR	1-93, 1-95
271942-0001	.. AIR GUIDE	1-93, 1-95
271942-0002	.. AIR GUIDE	1-93, 1-95
90243-0061	.... AIR GUN, CEJN SERIE 204 ED: 90459-0173	2-77
456757-0300	.. AIR INJECTOR	6-15, 6-17
2500200-0200	.AIR INLET GROUP	6-15, 6-17
271414-0300	.. AIR JET GUN	2-3, 2-5, 2-7
272025-0600	.. AIR KNIFE	1-3, 1-5, 1-7
271824-0000	.. AIR KNIFE, MOVABLE	1-93, 1-95
272022-0000	.. AIR KNIFE, MOVABLE	1-93, 1-95
469501-0400	.. AIR NOZZLE	1-3, 1-5, 1-7
568577-0000	.. AIR NOZZLE	1-193, 1-195
568578-0000	.. AIR NOZZLE	1-193, 1-195
1195408-0000	.AIR NOZZLE	5-91
1195409-0000	.AIR NOZZLE	5-91
1350975-0000	.AIR NOZZLE	5-91
1350976-0000	.AIR NOZZLE	5-91
1517504-0000	.AIR NOZZLE	5-19, 5-21, 5-23, 5-25, 5-27
1517505-0000	.AIR NOZZLE	5-19, 5-21, 5-23, 5-25, 5-27
1519307-0000	.AIR NOZZLE	5-19, 5-21, 5-23, 5-25, 5-27
1519308-0000	.AIR NOZZLE	5-19, 5-21, 5-23, 5-25, 5-27
1519313-0000	.AIR NOZZLE	5-19, 5-21, 5-23, 5-25, 5-27
1519314-0000	.AIR NOZZLE	5-19, 5-21, 5-23, 5-25, 5-27
1519318-0000	.AIR NOZZLE	5-19, 5-21, 5-23, 5-25, 5-27
1519319-0000	.AIR NOZZLE	5-19, 5-21, 5-23, 5-25, 5-27
1524662-0000	.AIR NOZZLE	1-73
2509554-0000	.AIR NOZZLE	5-91
2509555-0000	.AIR NOZZLE	5-91
2611151-0003	.AIR NOZZLE	5-19, 5-21, 5-23, 5-25, 5-27
2611151-0004	.AIR NOZZLE	5-19, 5-21, 5-23, 5-25, 5-27
2697306-0001	.AIR NOZZLE	5-19, 5-21, 5-23, 5-25, 5-27
2697306-0002	.AIR NOZZLE	5-19, 5-21, 5-23, 5-25, 5-27
2701082-0000	.AIR NOZZLE	5-19, 5-21, 5-23, 5-25, 5-27
2701083-0000	.AIR NOZZLE	5-19, 5-21, 5-23, 5-25, 5-27
2763796-0000	.AIR NOZZLE	1-193, 1-195
2763797-0000	.AIR NOZZLE	1-193, 1-195
90600-4047	.... AIR NOZZLE FLAT, 971	2-33
90424-0068	.... AIR NOZZLE, G1/4, MOD. 216 BSP	5-19, 5-21, 5-23, 5-25, 5-27, 5-29, 5-35, 5-37, 5-39, 5-41, 5-43
2546445-0000	.AIR PIPE	1-33
2546471-0000	.AIR PIPE	1-33
90113-0021	.... AIR PRESSURE REGULATOR	12-135
271181-0600	.. AIR SUPER-HEATER	1-3, 1-5, 1-7
1367022-0000	.ALIGNMENT SCREW	8-5
978609-0000	.. ALIGNMENT TEMPLATE	3-23, 3-25
352113-0206	.. ANCHOR PLATES FOR STRIPS, ABM100-AT	7-23, 7-25, 7-27, 7-29
352113-0205	.. ANCHOR PLATES FOR STRIPS, TM2S8-C100	3-37, 4-57, 4-59, 4-61, 4-63, 5-75, 5-121, 7-19, 7-35, 7-37, 8-23, 8-25, 9-87, 9-89, 9-103, 9-105, 9-107, 9-135, 9-137
352113-0204	.. ANCHOR PLATES FOR STRIPS, TM3S25-M	2-13, 2-15, 2-29, 2-31, 2-105, 6-11, 6-53

Part No	Description	Page No
352113-0203 ..	ANCHOR PLATES FOR STRIPS, TM3S8-M0	6-61, 8-45
321330-0100 ..	ANG. BALL BEAR 10/30X14	7-61
321330-0106 ..	ANG. BALL BEAR 30/62X23,8	5-85
256279-0000 ..	ANGLE	1-135, 1-137, 1-139
456472-0000 ..	ANGLE	1-55, 1-57
469047-0000 ..	ANGLE	1-135, 1-137, 1-139
257043-0000 ..	ANGLE BRACKET	1-149, 1-151
272464-0000 ..	ANGLE BRACKET	1-93, 1-95
456230-0000 ..	ANGLE BRACKET	1-143, 1-145
529146-0000 ..	ANGLE BRACKET	1-67
590277-0000 ..	ANGLE BRACKET	12-175
2566437-0000 .	ANGLE BRACKET	12-181
1512284-0100 .	ANGLE ENCODER	3-3
1523152-0000 .	ANGLE ENCODER	3-37
90061-0027	ANGLE ENCODER, 670900035	3-37
1498759-0000 .	ANGLE HOLDER	7-57
90459-0336	ANGLE SEAT VALVE, G1/2, N.C. DN13	1-31
90459-7440	ANGLE SEAT VALVE, W. FLANGES, N.O. DN40	6-77
576434-0200 ..	AP-VALVE 51-38	1-9, 1-11
1523057-0000 .	AP-VALVE-BODY (51-38)	1-17
90303-0013	APRON	11-15
76204-0000	ARM	12-163, 12-165
76205-0000	ARM	12-163, 12-165
76214-0000	ARM	12-163, 12-165
256197-0500 ..	ARM	3-3
272415-0000 ..	ARM	4-93, 4-95
272600-0000 ..	ARM	2-9, 2-11, 2-25, 2-27
441904-0000 ..	ARM	1-91
491174-0000 ..	ARM	1-69
491177-0000 ..	ARM	1-69
577751-0000 ..	ARM	5-123, 5-125, 5-127
580055-0000 ..	ARM	7-13
751212-0000 ..	ARM	3-11, 3-13, 3-15, 3-17
751553-0000 ..	ARM	5-89
929402-0000 ..	ARM	4-57, 4-59, 4-61, 4-63
929438-0100 ..	ARM	3-3
979667-0000 ..	ARM	7-23, 7-25, 7-27, 7-29
979994-0000 ..	ARM	7-15
1195419-0000 .	ARM	5-89
1260678-0000 .	ARM	7-15
1524654-0000 .	ARM	1-93, 1-95
1539102-0000 .	ARM	4-107, 4-109
1539103-0000 .	ARM	4-107, 4-109
1549304-0000 .	ARM	8-17, 8-19
2500260-0000 .	ARM	2-91
2715303-0000 .	ARM	4-19, 4-21, 4-23, 4-27, 4-29, 4-31
2751446-0000 .	ARM	5-35, 5-37, 5-39, 5-41, 5-43
2751451-0000 .	ARM	5-35, 5-37, 5-39, 5-41, 5-43
2764347-0000 .	ARM	5-35, 5-37, 5-39, 5-41, 5-43
2764348-0000 .	ARM	5-35, 5-37, 5-39, 5-41, 5-43
2776729-0000 .	ARM	5-35, 5-37, 5-39, 5-41, 5-43
2776730-0000 .	ARM	5-35, 5-37, 5-39, 5-41, 5-43
2776736-0000 .	ARM	5-35, 5-37, 5-39, 5-41, 5-43
2776737-0000 .	ARM	5-35, 5-37, 5-39, 5-41, 5-43
2800342-0000 .	ARM	5-35, 5-37, 5-39, 5-41, 5-43
2800343-0000 .	ARM	5-35, 5-37, 5-39, 5-41, 5-43
2814881-0000 .	ARM	5-35, 5-37, 5-39, 5-41, 5-43
2814882-0000 .	ARM	5-35, 5-37, 5-39, 5-41, 5-43
2814885-0000 .	ARM	5-35, 5-37, 5-39, 5-41, 5-43
2814886-0000 .	ARM	5-35, 5-37, 5-39, 5-41, 5-43
2814891-0000 .	ARM	5-35, 5-37, 5-39, 5-41, 5-43
2814892-0000 .	ARM	5-35, 5-37, 5-39, 5-41, 5-43
2830505-0000 .	ARM	5-35, 5-37, 5-39, 5-41, 5-43
2830506-0000 .	ARM	5-35, 5-37, 5-39, 5-41, 5-43
3019242-0000 .	ARM	3-31
979779-0000 ..	ARM CAM 100	3-23, 3-25
1282309-0000 .	ARM CAM 200 ML MID	3-23, 3-25
581534-0000 ..	ARM CAM 284ML	3-23, 3-25
582195-0000 ..	ARM CAM 330S	3-23, 3-25
1538471-0000 .	ARM CAM P48 200	3-23, 3-25
1350989-0000 .	ARM CAM P48 250	3-23, 3-25
929366-0000 ..	ARM CAM P48 330	3-23, 3-25
255609-0000 ..	ARM CUTTING JAW	4-93, 4-95
272493-0000 ..	ARM LEFT	4-95
562120-0000 ..	ARM PRESSURE JAW	4-93, 4-95
272492-0000 ..	ARM RIGHT	4-93
577218-0000 ..	ARMCAM 160ML	3-23, 3-25
580357-0000 ..	ARMCAM 250ML SLIM	3-23, 3-25
978794-0000 ..	ARMCURVE 125ML	3-23, 3-25
978769-0000 ..	ARMCURVE 200ML	3-23, 3-25
978773-0000 ..	ARMCURVE 200SL	3-23, 3-25
978777-0000 ..	ARMCURVE 250ML	3-23, 3-25
90458-1958	ARTICULATION, 300DEG WITH STOP	2-91
90217-0204	ASEPT. MALE FITTING ISO, 03-32-406/42	1-159, 1-161

Part No	Description	Page No
90217-0207	ASEPT. MALE FITTING ISO, 03-32-456/42	1-9, 1-11
272021-1000 ..	ASEPTIC CHAMBER	1-3, 1-5, 1-7
3004053-0000 .	ASEPTIC DIAGRAM	11-9
76131-0000	ASSEMBLY CONE	11-17
772220-0103 ..	ASSEMBLY T VOMO 12-L	12-13
772220-0104 ..	ASSEMBLY T VOMO 15-L	12-13
772220-0100 ..	ASSEMBLY T VOMO 6-L	12-13
772220-0101 ..	ASSEMBLY T VOMO 8-L	12-13
36489-0000	ASSEMBLY TOOL	12-13
76132-0000	ASSEMBLY TOOL	11-17
90091-0387	ASSEMBLY TOOL	11-17
441799-0000 ..	ATTACHMENT	5-211
534637-0000 ..	ATTACHMENT	12-23
752218-0000 ..	ATTACHMENT	1-193, 1-195
752495-0400 ..	ATTACHMENT	1-159, 1-161
90304-0307	ATTACHMENT PIPE	6-93
90459-7198	AUXILIARY BATTERY MODULE, IC693ACC302	9-13, 9-15, 9-17, 9-19
90459-6852	AUXILIARY CONTACT, DILA-XHI22	9-47
90459-5813	AUXILIARY CONTACT, FAZ-XHIN11	9-61, 9-139, 9-141
90459-5418	AUXILIARY CONTACTS, DILM150-XHI22	9-13, 9-15, 9-17, 9-19
90259-0313	AUXILIARY SWITCH, NHI21-PKZ0	9-145
90083-0016	AXIAL BEARING WASHER, AS2035	3-15, 3-17
2944325-0000 .	AXLE	5-11, 5-13, 5-15
2993295-0000 .	AXLE	3-7
2993297-0000 .	AXLE	3-7
272462-0000 ..	AXLE BOLT	3-15, 3-17
295770-0000 ..	AXLE BOLT	3-11, 3-13
577758-0000 ..	AXLE BOLT	5-123, 5-125, 5-127, 5-131
979462-0000 ..	AXLE BOLT	5-123, 5-125, 5-127, 5-131
2854638-0000 .	AXLE LINK	5-139
256607-0000 ..	AXLE PIN	4-7, 4-9, 4-11, 4-13, 4-15, 4-17, 4-45, 4-47
256629-0001 ..	AXLE PIN	4-93, 4-95
256629-0003 ..	AXLE PIN	4-93, 4-95
490916-0000 ..	AXLE PIN	3-11, 3-13, 3-15, 3-17
536917-0000 ..	AXLE PIN	7-15
544726-0000 ..	AXLE PIN	7-15
979576-0000 ..	AXLE PIN	7-13
979578-0000 ..	AXLE PIN	7-13
1195048-0000 .	AXLE PIN	5-89
1195418-0000 .	AXLE PIN	5-89
1255932-0000 .	AXLE PIN	5-113
1282989-0000 .	AXLE PIN	7-35, 7-37
1334973-0000 .	AXLE PIN	5-135
1498758-0000 .	AXLE PIN	7-9
1498762-0000 .	AXLE PIN	7-23, 7-25, 7-27, 7-29
1498765-0000 .	AXLE PIN	7-35, 7-37
1519376-0000 .	AXLE PIN	4-19, 4-21, 4-23, 4-27, 4-29, 4-31
1523333-0000 .	AXLE PIN	1-93, 1-95
1549365-0000 .	AXLE PIN	5-129
2547217-0000 .	AXLE PIN	7-23, 7-25, 7-27, 7-29
2547218-0000 .	AXLE PIN	7-23, 7-25, 7-27, 7-29
2547219-0000 .	AXLE PIN	7-23, 7-25, 7-27, 7-29
2552631-0000 .	AXLE PIN	7-43
2552722-0000 .	AXLE PIN	5-11, 5-13, 5-15
2576351-0000 .	AXLE PIN	5-11, 5-13, 5-15
2588001-0000 .	AXLE PIN	7-23, 7-25, 7-27, 7-29
2594657-0000 .	AXLE PIN	5-11, 5-13, 5-15
2594659-0000 .	AXLE PIN	5-11, 5-13, 5-15
2640262-0000 .	AXLE PIN	1-89
2754794-0000 .	AXLE PIN	2-35
272286-0000 ..	AXLE SUPPORT	1-69
272287-0000 ..	AXLE SUPPORT	1-73
456797-0000 ..	AXLE SUPPORT	1-83, 1-85
490902-0000 ..	AXLE SUPPORT	1-83, 1-85
566697-0000 ..	AXLE SUPPORT	1-91
583684-0000 ..	AXLE SUPPORT	7-63
1539997-0000 .	AXLE SUPPORT	1-97
1548056-0000 .	AXLE SUPPORT	1-81
1548059-0000 .	AXLE SUPPORT	1-219
2501542-0000 .	AXLE SUPPORT	1-81
2544957-0000 .	AXLE SUPPORT	5-85
2810397-0000 .	AXLE SUPPORT	4-53, 4-55
2810398-0000 .	AXLE SUPPORT	4-53, 4-55
2810399-0000 .	AXLE SUPPORT	4-53, 4-55
576438-0100 ..	B-CYLINDER	1-17, 1-49
1498780-0000 .	BACK COVER	7-59
90091-0360	BACK-UP RING 37,5X1,4 MM	4-53, 4-55
67372-0101	BACKPLANE 8TE(32 POLE)	9-31
929415-0100 ..	BALANCE TANK	6-15, 6-17
3096154-0100 .	BALANCE TANK	6-15, 6-17
90214-0167	BALL BEAR. 10/22X6 SOLID OIL	5-123, 5-125, 5-127, 5-131, 5-135
321308-0200 ..	BALL BEARING 10/26X8	7-61
321313-0100 ..	BALL BEARING 10/30X9	7-49
321317-0109 ..	BALL BEARING 15/28X7	5-139

Part No	Description	Page No
90214-0207	BALL BEARING 15/32X9	7-11
321308-0202 ..	BALL BEARING 15/32X9	3-7, 8-17, 8-19
90458-1704	BALL BEARING 15/35X11	1-81, 1-91, 1-97, 1-221, 8-23, 8-25
321313-0102 ..	BALL BEARING 15/35X11	7-63, 8-17, 8-19
90214-0092	BALL BEARING 17/30X7	5-53, 5-211
90603-2325	BALL BEARING 17/35X10	2-21, 5-73
321308-0203 ..	BALL BEARING 17/35X10	5-123, 5-125, 5-127
90214-0166	BALL BEARING 20/37X9	4-105
90214-0095	BALL BEARING 20/42X12	5-135
321309-0104 ..	BALL BEARING 20/47X14	5-85
321306-0105 ..	BALL BEARING 25/47X12	5-123, 5-125, 5-127
321309-0105 ..	BALL BEARING 25/52X15	5-85
321313-0105 ..	BALL BEARING 25/52X15	3-5
321316-0205 ..	BALL BEARING 25/62X17	5-123, 5-125, 5-127
90214-0122	BALL BEARING 30/72X27	5-159, 5-161
90600-0352	BALL BEARING 35/62X14	3-5
321306-0107 ..	BALL BEARING 35/62X14	5-85
321308-0108 ..	BALL BEARING 40/68X15	5-123, 5-125, 5-127
90214-0138	BALL BEARING 5/19X6	7-35, 7-37, 7-39, 7-41
90459-6335	BALL BEARING 8/22X7	1-91
321302-0298 ..	BALL BEARING 8/22X7	7-65
90214-0189	BALL BEARING, 17X40X12 MM	5-123, 5-125, 5-127
90214-0225	BALL BEARING, 20/42X12 SOLID OIL	5-139
577754-0000 ..	BALL PIN	5-123, 5-125, 5-127
979309-0000 ..	BALL PIN	5-123, 5-125, 5-127
90600-4958	BALL VALVE 1/8NPT 5-WAY, SS-43ZF2-049	1-31
90458-2601	BALL VALVE 3A DAIRY CLAMP, EG90CC-61.0	1-163
90459-0486	BALL VALVE PANEL MOUNTED G1/8	1-197, 1-199, 1-201
90600-3701	BALL VALVE, 1/2NPT	1-31
90600-3779	BALL VALVE, 700000 F-F-G1/2	6-29, 6-31, 6-35
90187-0059	BALL VALVE, FOR HYDR.PER. G1/2 3MM HOLE	6-69, 6-75
90187-0029	BALL VALVE, G1/2, NPBR	6-101, 6-103
90187-0062	BALL VALVE, G1/2, NPBR	6-93
90187-0045	BALL VALVE, G1/4 CR PL	12-23, 12-133
90297-0306	BALLAST COIL 230V 50/60 HZ, L11D E790011	9-13, 9-15, 9-17, 9-19
90137-0010	BANJO CONN. M6, D=2,5 MM	2-37
342797-0122 ..	BANJO CONN., RINGPIECE 6-1/4	1-31, 6-43
342797-0121 ..	BANJO CONN., RINGPIECE 6-1/8	1-69, 1-71, 1-73, 1-91, 1-99, 1-107, 1-109, 1-149, 1-151, 1-169, 2-33, 2-51, 2-53, 2-55
342980-0304 ..	BANJO-HOLLOW BOLT COUPL,EXT.THR.01-G1/4	1-31, 3-5, 6-43, 6-45, 6-47
342980-0303 ..	BANJO-HOLLOW BOLT COUPL,EXT.THR.01-G1/8	1-9, 1-11, 1-29, 1-49, 1-71, 1-99, 1-107, 1-109, 1-169, 1-197, 1-199, 1-201, 2-9, 2-11, 2-25, 2-27, 2-51, 2-53, 2-55, 4-53, 4-55, 4-113, 4-115
342980-0314 ..	BANJO-HOLLOW BOLT COUPL,EXT.THR.02-G1/4	12-17, 12-19
342980-0301 ..	BANJO-HOLLOW BOLT COUPL.,EXT.THREA.01-M5	1-155
1499024-0000 .	BAR	7-49
2761517-0000 .	BAR	2-35
2761518-0000 .	BAR	2-35
90459-2912	BAR, TR1	9-7, 9-9, 9-11
272728-0000 ..	BARRIER	8-43
209146-0000 ..	BARRIER NUT	1-165, 1-167, 6-89, 6-91
90129-0006	BASE, S3-B	9-29, 9-75, 9-77
90031-0053	BASEPLATE 10 SLOT EXP.	9-43, 9-45
90031-0051	BASEPLATE, 10-SLOT	9-41
90458-1205	BASIC SUB-BASE 8 VALVES, CDVI5.0-GB8-MP	6-49, 6-51
256014-0900 ..	BATH	1-3, 1-5, 1-7
1296855-0000 .	BATH	1-55, 1-57
589910-0000 ..	BEAM	12-171
1296903-0000 .	BEAM	12-179
1296904-0000 .	BEAM	12-179
1350149-0000 .	BEAM	12-15
1350150-0000 .	BEAM	12-15
2566434-0000 .	BEAM	12-181
2566435-0000 .	BEAM	12-181
2566436-0000 .	BEAM	12-181
90600-4289	BEAR. BUSH. WITHOUT FL, 14X16X15 MM	4-57, 4-59, 4-61, 4-63
33408-0000	BEARING	4-7, 4-9, 4-11, 4-13, 4-15, 4-17
456002-0000 ..	BEARING	4-97, 4-99
929316-0001 ..	BEARING	4-7, 4-9, 4-11, 4-13, 4-15, 4-17, 4-45, 4-47
929316-0002 ..	BEARING	4-7, 4-9, 4-11, 4-13, 4-15, 4-17, 4-45, 4-47
491171-0000 ..	BEARING BLOCK	1-69
256418-0000 ..	BEARING BRACKET	3-15, 3-17
272455-0000 ..	BEARING BRACKET	3-11, 3-13
2610111-0000 .	BEARING BRACKET	8-17, 8-19
2610112-0000 .	BEARING BRACKET	8-17, 8-19
90458-1232	BEARING BRACKET AY15	8-17, 8-19
90600-4687	BEARING BUSH W/O FLANGE, 10X12X8 MM	4-57, 4-59, 4-61, 4-63
321120-0132 ..	BEARING BUSH W/O FLANGE, 18X20X20 MM	4-35, 4-37, 4-39, 4-41
90600-4688	BEARING BUSH W/O FLANGE, 24X27X20 MM	4-57, 4-59, 4-61, 4-63
90240-0094	BEARING BUSHING W/O FL, 50X55X40 MM	5-29, 5-93
321141-0140 ..	BEARING BUSHING, 10X12X10 MM	7-49
321141-0142 ..	BEARING BUSHING, 10X12X12 MM	5-55, 5-111
321141-0183 ..	BEARING BUSHING, 12X14X15 MM	5-123, 5-125, 5-127, 7-35, 7-37, 7-39, 7-41
321141-0193 ..	BEARING BUSHING, 12X14X25 MM	7-15
321141-0224 ..	BEARING BUSHING, 16X18X20 MM	2-9, 2-11, 2-25, 2-27

Part No	Description	Page No
321141-0260 ..	BEARING BUSHING, 20X23X20 MM	3-31
321141-0300 ..	BEARING BUSHING, 25X28X25 MM	5-109
2854641-0000 .	BEARING CONSOLE	5-139
250590-0000 ..	BEARING COVER	1-81
255874-0000 ..	BEARING COVER	1-169
292456-0000 ..	BEARING COVER	6-73
441957-0000 ..	BEARING COVER	1-71
751731-0000 ..	BEARING COVER	1-71
2544958-0000 .	BEARING FLANGE	5-85
978275-0000 ..	BEARING HOLDER	3-11, 3-13, 3-15, 3-17
441793-0000 ..	BEARING HOUSING	5-53, 5-211
1478222-0000 .	BEARING HOUSING	4-7, 4-9, 4-11, 4-13, 4-15, 4-17
1478223-0000 .	BEARING HOUSING	4-7, 4-9, 4-11, 4-13, 4-15, 4-17
1478224-0000 .	BEARING HOUSING	4-7, 4-9, 4-11, 4-13, 4-15, 4-17
1478225-0000 .	BEARING HOUSING	4-7, 4-9, 4-11, 4-13, 4-15, 4-17
1519215-0000 .	BEARING HOUSING	4-7, 4-9, 4-11, 4-13, 4-15, 4-17
2526914-0000 .	BEARING HOUSING	4-53, 4-55
2552527-0000 .	BEARING HOUSING	4-35, 4-37, 4-39, 4-41
2552528-0000 .	BEARING HOUSING	4-35, 4-37, 4-39, 4-41
2552529-0000 .	BEARING HOUSING	4-35, 4-37, 4-39, 4-41
2552530-0000 .	BEARING HOUSING	4-35, 4-37, 4-39, 4-41
2552531-0000 .	BEARING HOUSING	4-35, 4-37, 4-39, 4-41
2810391-0000 .	BEARING HOUSING	4-45, 4-47
2810392-0000 .	BEARING HOUSING	4-45, 4-47
2810393-0000 .	BEARING HOUSING	4-45, 4-47
572157-0000 ..	BEARING PANEL	1-97
572158-0000 ..	BEARING PANEL	1-97
256706-0000 ..	BEARING PLATE	4-7, 4-9, 4-11, 4-13, 4-15, 4-17, 4-45, 4-47
571543-0000 ..	BEARING PLATE	1-149, 1-151
571544-0000 ..	BEARING PLATE	1-149, 1-151
978870-0000 ..	BEARING PLATE	1-83, 1-85
978871-0000 ..	BEARING PLATE	1-83, 1-85
90459-5936	BEARING SEAL 12X16X3 MM	4-7, 4-9, 4-11, 4-13, 4-15, 4-17, 4-45, 4-47
315230-0422 ..	BEARING SEAL G40X50X4 MM	5-123, 5-125, 5-127
491349-0000 ..	BEARING SEAT	4-93, 4-95
583685-0000 ..	BEARING SEAT	7-63
1517070-0000 .	BEARING SEAT	7-61
925419-0100 ..	BED	11-3
925765-0000 ..	BED	11-5
90342-0013	BELLOWS	7-13
979990-0000 ..	BELT BRAKE	7-15
272607-0000 ..	BELT HOLDER	3-15, 3-17
272608-0000 ..	BELT HOLDER	3-27
2993304-0100 .	BELT TENSIONER	3-5
979111-0000 ..	BELT TIGHTENER	5-135
272004-0500 ..	BENDING ROLLER	1-3, 1-5, 1-7
272028-0800 ..	BENDING ROLLER	1-3, 1-5, 1-7
566191-0000 ..	BENDING ROLLER	1-55, 1-57
574932-0000 ..	BENDING ROLLER	8-17, 8-19
752542-0001 ..	BENDING ROLLER	8-23, 8-25
979709-0000 ..	BENDING ROLLER	8-23, 8-25
1282581-0000 .	BENDING ROLLER	1-55, 1-57
1498756-0100 .	BENDING ROLLER	7-55
2559068-0000 .	BENDING ROLLER	1-97
2559069-0000 .	BENDING ROLLER	1-97
2559070-0000 .	BENDING ROLLER	1-97
2559071-0000 .	BENDING ROLLER	1-97
2570393-0000 .	BENDING ROLLER	7-63
2570394-0100 .	BENDING ROLLER	7-55
2672115-0000 .	BENDING ROLLER	1-97
90017-0001	BIKE HANDLE	8-33, 8-37
90458-1114	BIMET. ELECTROMECH. THERMOSTAT K7H.020	9-79, 9-81
979952-0000 ..	BLANK FLANGE	12-133
2544974-0000 .	BLANK PLUG	5-85
90457-0104	BLANK RIVET 2X7,4	6-45, 6-47
565532-0000 ..	BLANK-OFF FLANGE	12-133
565533-0000 ..	BLANK-OFF FLANGE	12-133
90002-0018	BLANK-OFF PLUG, PR 12,5 SKINDICHT-BLK7	1-41
90002-0013	BLANK-OFF PLUG, PR 15,2 SKINDICHT-BLK9	1-185, 1-187, 1-189, 1-191, 2-43, 2-45, 9-91, 9-93, 9-95, 9-97
90002-0009	BLANK-OFF PLUG, PR 18.6 SKINDICHT-BLK11	2-43, 2-45, 5-49, 5-51, 5-77, 5-79, 9-111, 9-113, 9-115, 9-117, 9-119, 9-121, 9-123, 9-125, 9-127, 9-129, 11-25, 11-31, 11-33
90002-0004	BLANK-OFF PLUG, PR 22,5 SKINDICHT-BLK16	1-173, 1-175, 1-177, 1-179, 1-181, 1-183, 1-185, 1-187, 1-189, 1-191, 5-77, 5-79, 9-91, 9-93
90002-0012	BLANK-OFF PLUG, PR 28,3 SKINDICHT-BLK21	1-173, 1-175, 1-177, 1-179, 1-181, 1-183, 1-185, 1-187, 1-189, 1-191, 5-121, 9-91, 9-93, 9-95, 9-97
90002-0010	BLANK-OFF PLUG, PR 37 SKINDICHT-BLK29	1-173, 1-175, 1-177, 1-179, 1-181, 1-183, 1-185, 1-187, 1-189, 1-191, 5-77, 5-79, 9-91, 9-93, 9-95, 9-97
441355-0000 ..	BLEEDING SCREW	4-35, 4-37, 4-39, 4-41, 4-97, 4-99, 4-113, 4-115
978380-0000 ..	BLIND PLUG	1-47
90458-1306	BLIND PLUG CIRCULAR, M12X1,5 514GFK/212	7-33, 9-111, 9-113, 9-115, 9-117, 9-119, 9-121, 9-123, 9-125, 9-127, 9-129
90458-1307	BLIND PLUG CIRCULAR, M16X1,5 514GFK/216	7-33, 8-47, 8-49, 9-107
90458-1308	BLIND PLUG CIRCULAR, M20X1,5 514GFK/220	8-47, 8-49, 9-111, 9-113, 9-115, 9-117, 9-119

Part No	Description	Page No
		9-121, 9-123, 9-125, 9-127, 9-129
90458-1309	BLIND PLUG CIRCULAR, M25X1,5 514GFK/225	9-111, 9-113, 9-115, 9-117, 9-119, 9-121
		9-123, 9-125, 9-127, 9-129
90458-1310	BLIND PLUG CIRCULAR, M32X1,5 514GFK/232	5-75
90458-1312	BLIND PLUG CIRCULAR, M50X1,5 514GFK/250	9-111, 9-113, 9-115, 9-117, 9-119, 9-121
		9-123, 9-125, 9-127, 9-129
90458-1313	BLIND PLUG CIRCULAR, M63X1,5 514GFK/263	9-87, 9-89
90459-1172	BLIND PLUG HEXAGONAL, M20X1,5	9-87, 9-89
456755-0000 ..	BLOCK	6-23
456756-0000 ..	BLOCK	6-23
469122-0000 ..	BLOCK	6-27
590206-0000 ..	BLOCK	12-171
590221-0000 ..	BLOCK	12-181
979722-0000 ..	BLOCK	1-71
979991-0000 ..	BLOCK	7-15
1195019-0000 .	BLOCK	5-115, 5-117
1195037-0000 .	BLOCK	5-89
1260656-0000 .	BLOCK	5-89
1334721-0000 .	BLOCK	5-55
1334798-0000 .	BLOCK	12-167
1346001-0000 .	BLOCK	12-101
1517523-0000 .	BLOCK	5-201, 5-203
1523338-0000 .	BLOCK	1-93, 1-95
1523919-0000 .	BLOCK	5-89
1523920-0000 .	BLOCK	5-89
1549266-0000 .	BLOCK	5-89
1558009-0000 .	BLOCK	5-89
1558010-0000 .	BLOCK	5-89
2501847-0000 .	BLOCK	5-89
2501848-0000 .	BLOCK	5-89
2504468-0000 .	BLOCK	5-101
2509557-0000 .	BLOCK	5-101
2509561-0000 .	BLOCK	5-101
2524579-0005 .	BLOCK	5-11, 5-13, 5-15
2524579-0008 .	BLOCK	5-11, 5-13, 5-15
2524579-0010 .	BLOCK	5-11, 5-13, 5-15
2524579-0011 .	BLOCK	5-11, 5-13, 5-15
2552734-0001 .	BLOCK	5-11, 5-13, 5-15
2552734-0002 .	BLOCK	5-11, 5-13, 5-15
2554977-0001 .	BLOCK	5-11, 5-13, 5-15
2554977-0002 .	BLOCK	5-11, 5-13, 5-15
2554977-0003 .	BLOCK	5-11, 5-13, 5-15
2554977-0004 .	BLOCK	5-11, 5-13, 5-15
2575624-0001 .	BLOCK	5-11, 5-13, 5-15
2575624-0002 .	BLOCK	5-11, 5-13, 5-15
2575624-0003 .	BLOCK	5-11, 5-13, 5-15
2575624-0005 .	BLOCK	5-11, 5-13, 5-15
2575624-0006 .	BLOCK	5-11, 5-13, 5-15
2575624-0007 .	BLOCK	5-11, 5-13, 5-15
2575624-0008 .	BLOCK	5-11, 5-13, 5-15
2575624-0009 .	BLOCK	5-11, 5-13, 5-15
2575624-0010 .	BLOCK	5-11, 5-13, 5-15
2575624-0011 .	BLOCK	5-11, 5-13, 5-15
2575625-0001 .	BLOCK	5-11, 5-13, 5-15
2575625-0002 .	BLOCK	5-11, 5-13, 5-15
2575625-0003 .	BLOCK	5-11, 5-13, 5-15
2575625-0005 .	BLOCK	5-11, 5-13, 5-15
2575625-0006 .	BLOCK	5-11, 5-13, 5-15
2575625-0007 .	BLOCK	5-11, 5-13, 5-15
2575625-0008 .	BLOCK	5-11, 5-13, 5-15
2575625-0009 .	BLOCK	5-11, 5-13, 5-15
2575625-0010 .	BLOCK	5-11, 5-13, 5-15
2575625-0011 .	BLOCK	5-11, 5-13, 5-15
2594679-0000 .	BLOCK	12-181
2594680-0000 .	BLOCK	12-181
2685206-0000 .	BLOCK	5-201, 5-203
2691760-0000 .	BLOCK	5-89
2701872-0000 .	BLOCK	5-11, 5-13, 5-15
2745183-0000 .	BLOCK	5-11, 5-13, 5-15
2807026-0000 .	BLOCK	5-201, 5-203
2944324-0000 .	BLOCK	5-11, 5-13, 5-15
2944329-0000 .	BLOCK	5-11, 5-13, 5-15
3046769-0000 .	BLOCK	8-23, 8-25
90032-0038	BLOCK 2 WAYS	2-51, 2-53, 2-55
90032-0039	BLOCK 4 WAYS	2-51, 2-53, 2-55, 3-15, 3-17, 5-49, 5-51
90032-0040	BLOCK 6 WAYS	3-11, 3-13, 5-17, 5-49, 5-51, 5-89, 5-109
256954-0000 ..	BLOCK LEFT	4-95
256953-0000 ..	BLOCK RIGHT	4-93
76582-0000	BLOCKING PIECE	12-161
76583-0000	BLOCKING PIECE	12-161
271284-0000 ..	BLOCKING PIECE	4-57, 4-59, 4-61, 4-63
295496-0000 ..	BLOCKING PIECE	6-45, 6-47
574940-0000 ..	BLOCKING PIECE	8-17, 8-19

Part No	Description	Page No
589908-0000 ..	BLOCKING PIECE	12-181
589909-0000 ..	BLOCKING PIECE	12-181
590207-0000 ..	BLOCKING PIECE	12-171
590208-0000 ..	BLOCKING PIECE	12-171
590267-0000 ..	BLOCKING PIECE	12-173
1035794-0000 .	BLOCKING PIECE	2-65, 2-67, 2-69, 2-71, 2-101, 2-103, 6-5, 6-7, 7-23, 7-25, 7-27, 7-29, 7-59, 8-11, 8-13
2681269-0000 .	BLOCKING PIECE	5-145
2751448-0000 .	BLOCKING PIECE	5-35, 5-37, 5-39, 5-41, 5-43
2764345-0000 .	BLOCKING PIECE	5-35, 5-37, 5-39, 5-41, 5-43
2776733-0000 .	BLOCKING PIECE	5-35, 5-37, 5-39, 5-41, 5-43
2800344-0000 .	BLOCKING PIECE	5-35, 5-37, 5-39, 5-41, 5-43
2987317-0000 .	BLOCKING PIECE	5-145
927194-0000 ..	BODY	1-29
90201-0407	BOLT KIT, NO. BK 464125M	6-97, 6-99
1517252-0000 .	BOLT Ã¯20H7	6-61
315211-0111 ..	BONDED SEAL SS/NBR90 G1/2	4-97, 4-99, 5-123, 5-125, 5-127, 6-97, 6-99
315211-0108 ..	BONDED SEAL SS/NBR90 G1/4	4-113, 4-115
315211-0106 ..	BONDED SEAL SS/NBR90 M10	6-97, 6-99
315211-0107 ..	BONDED SEAL SS/NBR90 M12	5-201, 5-203
315211-0101 ..	BONDED SEAL SS/NBR90 M4	4-7, 4-9, 4-11, 4-13, 4-15, 4-17, 4-45, 4-47
315211-0103 ..	BONDED SEAL SS/NBR90 M6	4-7, 4-9, 4-11, 4-13, 4-15, 4-17, 4-45, 4-47, 4-97, 4-99, 4-113, 4-115, 5-85
315211-0104 ..	BONDED SEAL SS/NBR90 M8	4-113, 4-115, 5-183, 5-185, 5-187, 6-97, 6-99
315217-0111 ..	BONDED SEAL SS/VITON G1/2	1-31
90050-0011	BOTTLE	6-13
76201-0000	BOTTOM PLATE	12-163, 12-165
2773922-0000 .	BOTTOM PLATE	5-191, 5-193, 5-195
256674-0500 ..	BOTTOM VALVE	5-3, 5-5, 5-7
272457-0000 ..	BOW CLAMP	3-11, 3-13
1517071-0000 .	BOW CLAMP	7-61
2500593-0000 .	BOW CLAMP	8-39
2594221-0000 .	BOW CLAMP	2-13, 2-15, 2-29, 2-31
490768-0000 ..	BOX	6-13
556668-0000 ..	BOX	12-117
1511821-0300 .	BOX	9-3, 9-5
1539105-0000 .	BOX	4-105
2506332-0000 .	BOX	5-77, 5-79
3024821-0000 .	BOX	9-159
3024830-0000 .	BOX	9-159
1498775-0000 .	BOX BRACKET	7-23, 7-25, 7-27, 7-29
2552624-0000 .	BOX BRACKET	7-23, 7-25, 7-27, 7-29
75471-0000	BRACKET	12-91
76163-0000	BRACKET	12-43
76164-0000	BRACKET	12-43
76184-0000	BRACKET	12-41
76210-0000	BRACKET	12-163, 12-165
76302-0000	BRACKET	12-95
76305-0000	BRACKET	12-97
76408-0000	BRACKET	12-79
76410-0000	BRACKET	12-81
76593-0000	BRACKET	12-73
76599-0000	BRACKET	12-75
76605-0000	BRACKET	12-39, 12-41
76610-0000	BRACKET	12-39
77245-0000	BRACKET	12-45
90239-0453	BRACKET	1-91, 1-93, 1-95, 1-149, 1-151, 1-169
90239-0460	BRACKET	1-69
256112-0000 ..	BRACKET	1-73
256707-0000 ..	BRACKET	4-57, 4-59, 4-61, 4-63
256870-0000 ..	BRACKET	4-93, 4-95
257042-0000 ..	BRACKET	1-149, 1-151
269859-0000 ..	BRACKET	6-67
272033-0000 ..	BRACKET	1-91
272427-0000 ..	BRACKET	4-7, 4-9, 4-11, 4-13, 4-15, 4-17
272431-0000 ..	BRACKET	3-9
272491-0000 ..	BRACKET	4-57, 4-59, 4-61, 4-63
272737-0000 ..	BRACKET	3-31
272844-0000 ..	BRACKET	1-103, 1-105
295605-0000 ..	BRACKET	1-107, 1-109
441356-0000 ..	BRACKET	3-5
441918-0000 ..	BRACKET	1-143, 1-145
451148-0000 ..	BRACKET	1-143, 1-145
469458-0000 ..	BRACKET	1-193, 1-195
469459-0000 ..	BRACKET	1-193, 1-195
469460-0000 ..	BRACKET	1-193, 1-195
469745-0000 ..	BRACKET	1-143, 1-145
490769-0000 ..	BRACKET	6-13
490876-0000 ..	BRACKET	1-209, 1-211
491143-0000 ..	BRACKET	1-193, 1-195
491173-0000 ..	BRACKET	1-69
491224-0000 ..	BRACKET	1-73
491545-0000 ..	BRACKET	1-73
555541-0000 ..	BRACKET	1-169

Part No	Description	Page No
560931-0000 ..	BRACKET	1-35, 1-37, 1-55, 1-57, 1-103, 1-105, 6-85, 6-87
571532-0000 ..	BRACKET	1-73
571533-0000 ..	BRACKET	1-73
572252-0000 ..	BRACKET	8-23, 8-25
572485-0000 ..	BRACKET	1-155
574337-0000 ..	BRACKET	1-149, 1-151
574396-0000 ..	BRACKET	1-143, 1-145
574404-0000 ..	BRACKET	1-125, 1-127
574416-0000 ..	BRACKET	1-135, 1-137, 1-139
574456-0000 ..	BRACKET	1-143, 1-145
576274-0000 ..	BRACKET	8-17, 8-19
578028-0000 ..	BRACKET	1-107, 1-109
578480-0000 ..	BRACKET	1-9, 1-11, 1-49
579630-0000 ..	BRACKET	1-213, 1-215, 1-217
579633-0000 ..	BRACKET	1-213, 1-215, 1-217
591457-0000 ..	BRACKET	2-33
751403-0000 ..	BRACKET	6-75
751732-0000 ..	BRACKET	1-71
929381-0000 ..	BRACKET	12-99
977527-0000 ..	BRACKET	5-85, 5-135, 5-139, 6-85, 6-87
978272-0000 ..	BRACKET	3-11, 3-13, 3-15, 3-17
978736-0000 ..	BRACKET	1-69
978790-0000 ..	BRACKET	1-143, 1-145
979474-0000 ..	BRACKET	1-35, 1-37
979814-0000 ..	BRACKET	1-43
979899-0000 ..	BRACKET	7-35, 7-37, 7-39, 7-41
979966-0000 ..	BRACKET	2-97
980002-0000 ..	BRACKET	8-27
1036588-0000 .	BRACKET	7-45
1110871-0000 .	BRACKET	4-45, 4-47
1195035-0000 .	BRACKET	5-89
1195410-0000 .	BRACKET	5-91
1195411-0000 .	BRACKET	5-89
1195454-0000 .	BRACKET	5-55, 5-111
1195455-0000 .	BRACKET	5-111
1255537-0000 .	BRACKET	5-135
1260065-0000 .	BRACKET	5-81
1260694-0000 .	BRACKET	5-101
1279106-0000 .	BRACKET	5-123, 5-125, 5-127
1279702-0000 .	BRACKET	5-19, 5-21, 5-23, 5-25, 5-27
1296901-0000 .	BRACKET	12-179
1317017-0000 .	BRACKET	2-25, 2-27
1317905-0000 .	BRACKET	1-9, 1-11, 1-49
1334184-0000 .	BRACKET	12-15
1334572-0000 .	BRACKET	12-45
1346599-0000 .	BRACKET	5-135, 5-139
1346933-0000 .	BRACKET	5-55
1348053-0000 .	BRACKET	4-7, 4-9, 4-11, 4-13, 4-15, 4-17
1478549-0000 .	BRACKET	5-135
1478550-0000 .	BRACKET	5-135
1478659-0000 .	BRACKET	11-27, 11-29
1484457-0000 .	BRACKET	3-29
1484557-0000 .	BRACKET	5-135, 5-139
1499027-0000 .	BRACKET	7-49
1511293-0000 .	BRACKET	5-201, 5-203
1511405-0001 .	BRACKET	4-111
1511405-0002 .	BRACKET	4-111
1511405-0003 .	BRACKET	4-111
1511405-0004 .	BRACKET	4-111
1511406-0000 .	BRACKET	4-111
1511407-0000 .	BRACKET	4-111
1512129-0000 .	BRACKET	5-29, 5-93
1512354-0000 .	BRACKET	3-31
1512440-0000 .	BRACKET	5-201, 5-203
1512840-0000 .	BRACKET	2-43, 2-45
1512847-0000 .	BRACKET	2-83, 2-85
1512848-0000 .	BRACKET	11-19
1517248-0000 .	BRACKET	2-81, 2-95
1517249-0000 .	BRACKET	2-83, 2-85
1519630-0000 .	BRACKET	5-129
1519635-0000 .	BRACKET	5-129
1519636-0000 .	BRACKET	5-129
1523151-0000 .	BRACKET	3-37
1524631-0000 .	BRACKET	5-137
1524653-0000 .	BRACKET	1-93, 1-95
1538868-0000 .	BRACKET	2-105, 6-5, 6-7
1539101-0000 .	BRACKET	4-107, 4-109
1539966-0000 .	BRACKET	5-19, 5-21, 5-23, 5-25, 5-27
1548833-0000 .	BRACKET	1-159, 1-161
1549307-0000 .	BRACKET	8-17, 8-19
1549475-0000 .	BRACKET	8-17, 8-19
1549489-0000 .	BRACKET	8-11, 8-13
1549540-0000 .	BRACKET	4-43
1549885-0000 .	BRACKET	2-33

Part No	Description	Page No
1558129-0000	.BRACKET	4-43
1558314-0000	.BRACKET	8-15
1558315-0000	.BRACKET	8-45
1558316-0000	.BRACKET	8-45
1558317-0000	.BRACKET	8-39
2500207-0000	.BRACKET	1-223
2500217-0000	.BRACKET	2-87, 2-89
2506471-0000	.BRACKET	7-47
2506473-0000	.BRACKET	7-47
2514091-0000	.BRACKET	4-97, 4-99
2519644-0000	.BRACKET	7-23, 7-25, 7-27, 7-29
2519647-0000	.BRACKET	7-59
2522248-0000	.BRACKET	1-97
2524394-0000	.BRACKET	2-79
2524478-0000	.BRACKET	7-35, 7-37, 7-39, 7-41
2524482-0000	.BRACKET	7-47
2525340-0000	.BRACKET	8-17, 8-19
2526342-0000	.BRACKET	8-45
2544971-0000	.BRACKET	5-85
2552714-0000	.BRACKET	2-47, 2-49
2588000-0000	.BRACKET	7-23, 7-25, 7-27, 7-29
2603016-0000	.BRACKET	7-43
2603631-0000	.BRACKET	1-9, 1-11, 1-49
2611008-0000	.BRACKET	1-213, 1-215, 1-217
2615467-0000	.BRACKET	12-181
2628631-0000	.BRACKET	5-153
2638206-0000	.BRACKET	1-103, 1-105
2640155-0000	.BRACKET	1-197, 1-199, 1-201
2644651-0000	.BRACKET	1-125, 1-127
2685221-0000	.BRACKET	5-149, 5-151
2685652-0000	.BRACKET	9-13, 9-15, 9-17, 9-19
2696573-0000	.BRACKET	5-145
2699621-0000	.BRACKET	2-19
2707867-0000	.BRACKET	5-201, 5-203
2721240-0000	.BRACKET	1-9, 1-11, 1-49
2738219-0000	.BRACKET	2-35
2743343-0000	.BRACKET	2-47, 2-49
2743348-0000	.BRACKET	5-149, 5-151
2743349-0000	.BRACKET	5-149, 5-151
2745181-0000	.BRACKET	5-49, 5-51
2751447-0000	.BRACKET	5-35, 5-37, 5-39, 5-41, 5-43
2754789-0000	.BRACKET	2-35
2761755-0000	.BRACKET	1-31
2769656-0000	.BRACKET	2-33
2769988-0000	.BRACKET	2-97
2774504-0000	.BRACKET	1-223
2775693-0000	.BRACKET	2-19
2807004-0000	.BRACKET	5-131
2807008-0000	.BRACKET	5-135, 5-139
2815765-0000	.BRACKET	1-107, 1-109
2826649-0000	.BRACKET	9-13, 9-15, 9-17, 9-19
2829688-0000	.BRACKET	4-107, 4-109
2829689-0000	.BRACKET	2-13, 2-15
2839810-0000	.BRACKET	7-51, 7-53
2873064-0000	.BRACKET	1-35, 1-37
2898124-0000	.BRACKET	1-49
2903599-0000	.BRACKET	2-33
2913730-0000	.BRACKET	1-49
2914819-0000	.BRACKET	1-213, 1-215, 1-217
2914828-0000	.BRACKET	1-219
2914829-0000	.BRACKET	1-83, 1-85
2914830-0000	.BRACKET	1-83, 1-85
2914847-0000	.BRACKET	1-213, 1-215, 1-217
2914848-0000	.BRACKET	1-213, 1-215, 1-217
2914849-0000	.BRACKET	1-213, 1-215, 1-217
2914850-0000	.BRACKET	1-213, 1-215, 1-217
2915995-0000	.BRACKET	5-65
2944332-0000	.BRACKET	3-7
2993294-0000	.BRACKET	3-7
3017351-0000	.BRACKET	7-31
3017371-0000	.BRACKET	8-11, 8-13
3019243-0000	.BRACKET	3-31
3024350-0000	.BRACKET	6-5, 6-7
3046766-0000	.BRACKET	8-23, 8-25
3047673-0000	.BRACKET	2-65, 2-67, 2-69, 2-71
3047674-0000	.BRACKET	2-65, 2-67
3047675-0000	.BRACKET	2-69, 2-71
3052461-0000	.BRACKET	8-23, 8-25
3055883-0000	.BRACKET	9-87, 9-89
3062129-0000	.BRACKET	2-91
3070154-0000	.BRACKET	4-43
3072100-0000	.BRACKET	6-93
3099899-0000	.BRACKET	12-77
90113-0384	.... BRACKET FOR R11, 5203-06	12-17, 12-19

Part No	Description	Page No
272497-0000 ..	BRACKET LEFT	4-95
272502-0000 ..	BRACKET LEFT	4-39, 4-41
590275-0000 ..	BRACKET LEFT	12-175
751079-0000 ..	BRACKET LEFT	3-17
272496-0000 ..	BRACKET RIGHT	4-93
272501-0000 ..	BRACKET RIGHT	4-35, 4-37
590274-0000 ..	BRACKET RIGHT	12-175
751078-0000 ..	BRACKET RIGHT	3-15
90236-0041	BRACKET, 74504-50	1-35, 1-37
90458-2971	BRACKET, HR-1/4-P FOR LRP-1/4-0,7	6-37
90459-2247	BRACKET, MS4-WP	6-37
90459-1859	BRACKET, MS6-MV	6-39
90459-1858	BRACKET, MS6-WP	6-39
90601-1587	BRACKET, MS6-WPB	6-15, 6-17
90450-0756	BRACKET, REAR EYE 32	1-71
90450-0654	BRACKET,REAR,EYE WITH AXLE 32	4-57, 4-59, 4-61, 4-63
580060-0200 ..	BRAKE ARM	7-5, 7-7
90432-0023	BRAKE ORTLINGHAUS	3-5
90604-1414	BRAKE UNIT	11-13
578091-0000 ..	BRANCH PIPE	2-57
978996-0000 ..	BRANCH PIPE	1-99
90151-0001	BRASS PIPE DI=2,6 MM	2-51, 2-53, 2-55
776422-0101 ..	BRASS WIRE BRUSH	12-13
353034-0035 ..	BRIDGE CONNECTOR WQV 35/10	9-79, 9-81
353034-0032 ..	BRIDGE CONNECTOR WQV 6/10	9-63, 9-65, 9-67, 9-69
353034-0404 ..	BRIDGE CONNECTOR Q 10 DLI	5-77, 5-79, 9-63, 9-65, 9-67, 9-69, 9-71, 9-73, 9-75, 9-77
353034-0401 ..	BRIDGE CONNECTOR Q 2 DLI	5-77, 5-79, 9-63, 9-65, 9-67, 9-69, 9-75, 9-77
353034-0402 ..	BRIDGE CONNECTOR Q 3 DLI	9-63, 9-65, 9-67, 9-69, 9-75, 9-77
353034-0403 ..	BRIDGE CONNECTOR Q 4 DLI	9-63, 9-65, 9-67, 9-69, 9-71, 9-73, 9-75, 9-77
353034-0030 ..	BRIDGE CONNECTOR WQV 2,5/10	2-43, 2-45, 7-33, 8-47, 8-49, 9-37, 9-39, 9-75, 9-77, 9-79, 9-81
353034-0026 ..	BRIDGE CONNECTOR WQV 35/2	9-161
353034-0039 ..	BRIDGE CONNECTOR WQV 4/4	7-33
90036-0068	BULB 5W 24V, SL-L24 205348	2-81, 2-95
90457-0086	BULKHEAD CONNECTOR 6MM	1-33, 1-107, 1-109, 2-87, 2-89
342768-0102 ..	BULKHEAD CONNECTOR, 6 MM	2-37, 2-59, 2-61
90457-0141	BULKHEAD CONNECTOR, 8MM	5-19, 5-21, 5-23, 5-25, 5-27
342960-0112 ..	BULKHEAD COUPLING 6/4	2-33, 5-49, 5-51, 5-63, 5-109, 5-183, 5-185, 5-187, 6-45, 6-47
342960-0122 ..	BULKHEAD COUPLING 8/6	5-49, 5-51, 5-109, 5-183, 5-185, 5-187, 6-45, 6-47
342960-0121 ..	BULKHEAD COUPLING 8/6-6/4	5-183, 5-185, 5-187
90457-0050	BULKHEAD HOUSING, HDC 04A ALU	9-103, 9-105
90458-1181	BULKHEAD HOUSING, HDC-HA-3-AWVL1/11	9-111, 9-113, 9-115, 9-117, 9-119, 9-121, 9-123, 9-125, 9-127, 9-129
90055-0209	BULKHEAD LEAD-IN	2-33
90224-0296	BULKHEAD LEAD-IN 15 MM	6-45, 6-47
342767-0104 ..	BULKHEAD LEAD-IN, G1/4	2-59, 2-61
342767-0100 ..	BULKHEAD LEAD-IN, G1/8	2-51, 2-53, 2-55, 2-59, 2-61
90600-4656	BUSBAR 3-P 120A, 5ST3708	9-143
929437-0000 ..	BUSBAR LEFT	4-103
2554960-0000 .	BUSBAR LEFT	4-103
929436-0000 ..	BUSBAR RIGHT	4-101
2554961-0000 .	BUSBAR RIGHT	4-101
571870-0000 ..	BUSBAR,LEFT	4-103
571872-0000 ..	BUSBAR,LEFT	4-103
571869-0000 ..	BUSBAR,RIGHT	4-101
571871-0000 ..	BUSBAR,RIGHT	4-101
76463-0000	BUSHING	12-169
90015-0010	BUSHING	2-33
90134-0003	BUSHING	2-51, 2-53, 2-55
90208-0031	BUSHING	5-155, 5-157
255875-0000 ..	BUSHING	1-71, 1-169
255970-0000 ..	BUSHING	1-149, 1-151
256022-0000 ..	BUSHING	1-93, 1-95
257213-0000 ..	BUSHING	4-93, 4-95
271269-0000 ..	BUSHING	1-69, 1-73, 1-91
279008-0000 ..	BUSHING	1-83, 1-85
295434-0000 ..	BUSHING	5-201, 5-203
295909-0000 ..	BUSHING	1-69
295910-0000 ..	BUSHING	1-73
295936-0000 ..	BUSHING	1-73
401370-0000 ..	BUSHING	7-13
401371-0000 ..	BUSHING	7-13
401372-0000 ..	BUSHING	7-13
491229-0000 ..	BUSHING	5-9, 5-87, 5-141, 5-143
491231-0000 ..	BUSHING	5-9, 5-87, 5-141, 5-143
491487-0000 ..	BUSHING	1-69
751085-0000 ..	BUSHING	2-37
751165-0000 ..	BUSHING	1-93, 1-95
751555-0000 ..	BUSHING	5-89
752047-0000 ..	BUSHING	1-149, 1-151
1144507-0000 .	BUSHING	5-11, 5-13, 5-15
1255541-0000 .	BUSHING	4-7, 4-9, 4-11, 4-13, 4-15, 4-17, 4-35, 4-37, 4-39, 4-41
1350200-0000 .	BUSHING	5-123, 5-125, 5-127
1519421-0000 .	BUSHING	5-199
1519422-0000 .	BUSHING	5-199

Part No	Description	Page No
1519601-0000	BUSHING	1-77, 1-79
1548142-0000	BUSHING	1-219
1558319-0000	BUSHING	8-17, 8-19
2510372-0000	BUSHING	6-73
2523738-0000	BUSHING	5-11, 5-13, 5-15
2532544-0000	BUSHING	4-7, 4-9, 4-11, 4-13, 4-15, 4-17, 4-35, 4-37, 4-39, 4-41
2552713-0000	BUSHING	2-47, 2-49
2566439-0000	BUSHING	12-181
2810394-0000	BUSHING	4-49, 4-51
2964527-0000	BUSHING	5-11, 5-13, 5-15
441217-0000	BUSHING LOWER	2-37
441218-0000	BUSHING UPPER	2-37
90134-0039	BUSHING VALVE CONNECTION 2,5 MM	2-51, 2-53, 2-55, 3-11, 3-13, 3-15, 3-17, 4-97, 4-99, 4-113, 4-115, 5-17, 5-49, 5-51, 5-89
90134-0040	BUSHING VALVE CONNECTION 4 MM	5-49, 5-51, 5-109
321116-0307	BUSHING W/O FLANGE, 20/26X30 MM	5-123, 5-125, 5-127
90459-5626	BUSHING, IGLIDUR W300 8X10X15	5-11, 5-13, 5-15
321135-0183	BUSHING, IGLIDUR X 12X14X15	5-11, 5-13, 5-15
90458-1790	BUSHING, IGLIDUR Z 6X8X6	1-219
90458-0824	BUSHING, IGLIDUR Z 8X10X8	1-219
90030-0223	BUSHING, INT.EXT. R1/2-R1/4	12-17, 12-19
90330-0085	BUSHING, INT.EXT. THR. R1/2-G1/4	5-181
90330-0025	BUSHING, INT.EXT. THR. R1/4-G1/8	1-35, 1-37, 1-107, 1-109
90330-0078	BUSHING, INT.EXT. THR. R3/4-G3/8	5-49, 5-51, 5-109
342701-0205	BUSHING, INT/EXT, G 1/2 - G1/4	2-79, 6-15, 6-17, 6-29, 6-31, 6-39, 6-59, 6-93
342701-0206	BUSHING, INT/EXT, G 1/2 - G3/8	6-39
342701-0209	BUSHING, INT/EXT, G 3/4 - G 3/8	6-93
90459-2216	BUSHING, INT/EXT, G1/4-G1/2	6-39
342701-0201	BUSHING, INT/EXT, G1/4-G1/8	12-17, 12-19, 12-133
342701-0208	BUSHING, INT/EXT. G 3/4 - G1/4	3-5
342701-0203	BUSHING, INT/EXT. G 3/8 - G 1/4	6-23, 6-93, 6-101, 6-103
90030-0225	BUSHING, INT/EXT. R-THREAD 1/4X3/8	12-17, 12-19
90330-0079	BUSHING, INT/EXT. THREAD NO. R-2113/8X1/	5-201, 5-203
90134-0038	BUSHING/NUT INLET/OUTLET 4 MM	2-51, 2-53, 2-55, 3-11, 3-13, 3-15, 3-17, 5-49, 5-51, 5-89
90134-0055	BUSHING/NUT INLET/OUTLET 6 MM	5-49, 5-51, 5-109, 6-95, 12-157
359301-0504	BUTTON SIGN, RESET	2-13, 2-15, 2-29, 2-31
359301-0110	BUTTON SIGN, SHORT STOP	7-17, 8-45
576437-0100	C-CYLINDER	1-17
576437-0200	C-CYLINDER	1-49
90226-0004	CABINET	12-13
979328-0200	CABINET	6-65
1511795-0300	CABINET	9-3, 9-5
2800352-0000	CABINET	1-35, 1-37
1512805-0000	CABINET (SMALL)	6-79
441850-0700	CABLE	5-3, 5-5, 5-7
539691-0000	CABLE	12-115
539692-0000	CABLE	12-111
2816487-0100	CABLE	5-3, 5-5, 5-7
90600-5930	CABLE C9, 20-057-15	1-173, 1-175, 1-177, 1-179, 1-181, 1-183, 6-15, 6-17, 6-39, 8-23, 8-25, 9-99, 9-101
90074-0001	CABLE CLIPS, D=10 MM	1-209, 1-211
90074-0003	CABLE CLIPS, D=12 MM	9-171
352110-0103	CABLE CLIPS, D=14-20 MM	5-181
90458-1489	CABLE CLIPS, D=4,75 MM	2-59, 2-61, 9-13, 9-15, 9-17, 9-19
352110-0100	CABLE CLIPS, D=5-7 MM	1-83, 1-85
90458-1490	CABLE CLIPS, D=7,9 MM	9-13, 9-15, 9-17, 9-19
90602-4126	CABLE CLIPS, D=9,5 MM	9-13, 9-15, 9-17, 9-19
90181-0174	CABLE DUCT	9-13, 9-15, 9-17, 9-19
1511817-0000	CABLE DUCT	9-149, 9-151, 9-153
1519758-0000	CABLE DUCT	6-11
1519759-0000	CABLE DUCT	6-11
1519760-0000	CABLE DUCT	6-11
1519761-0000	CABLE DUCT	6-11
1519762-0000	CABLE DUCT	6-11
1519763-0000	CABLE DUCT	6-11
1524319-0100	CABLE DUCT	6-3
2500215-0000	CABLE DUCT	2-87, 2-89
2598375-0000	CABLE DUCT	9-135, 9-137
2598376-0000	CABLE DUCT	9-135, 9-137
2598377-0000	CABLE DUCT	9-135, 9-137
2604460-0000	CABLE DUCT	9-13, 9-15, 9-17, 9-19
2604461-0000	CABLE DUCT	9-13, 9-15, 9-17, 9-19
2604462-0000	CABLE DUCT	9-13, 9-15, 9-17, 9-19
2604463-0000	CABLE DUCT	9-13, 9-15, 9-17, 9-19
2604464-0000	CABLE DUCT	9-13, 9-15, 9-17, 9-19
2604465-0000	CABLE DUCT	9-13, 9-15, 9-17, 9-19
2604466-0000	CABLE DUCT	9-13, 9-15, 9-17, 9-19
2604467-0000	CABLE DUCT	9-13, 9-15, 9-17, 9-19
2604468-0000	CABLE DUCT	9-13, 9-15, 9-17, 9-19
2914854-0000	CABLE DUCT	1-173, 1-175, 1-177, 1-179, 1-181, 1-183
2914855-0000	CABLE DUCT	1-173, 1-175, 1-177, 1-179, 1-181, 1-183
3062131-0000	CABLE DUCT	2-87, 2-89
90181-0044	CABLE DUCT, PLASTIC, 25X60	9-173
90181-0062	CABLE DUCT, PLASTIC, 100X100	9-13, 9-15, 9-17, 9-19

Part No	Description	Page No
90181-0057	CABLE DUCT, PLASTIC, 120X80	9-175
90459-2452	CABLE DUCT, PLASTIC, 25X100	9-13, 9-15, 9-17, 9-19
90181-0037	CABLE DUCT, PLASTIC, 25X40	9-173
90181-0060	CABLE DUCT, PLASTIC, 40X100	9-13, 9-15, 9-17, 9-19, 9-87, 9-89, 9-99, 9-101
90181-0061	CABLE DUCT, PLASTIC, 60X100	9-13, 9-15, 9-17, 9-19
90181-0054	CABLE DUCT, PLASTIC, 60X80	9-83, 9-149, 9-151, 9-153
90181-0190	CABLE DUCT, WALL BRACKET, B4 MINI	2-87, 2-89
90600-5579	CABLE ENTRY KIT, EZENTRY 4/4	2-91, 9-87, 9-89
90458-0413	CABLE FITTING, VK 22052YUL11	8-45, 8-47, 8-49
266739-0000	CABLE GLAND	1-73
352100-0106	CABLE GLAND NO.18,6-10,5	1-69
90458-0305	CABLE GLAND, M12X1,5, 5311 1000	7-33, 9-111, 9-113, 9-115, 9-117, 9-119, 9-121, 9-123, 9-125, 9-127, 9-129
90458-0306	CABLE GLAND, M16X1,5, 5311 1010	1-83, 1-85, 8-47, 8-49, 9-95, 9-97, 9-107
90458-0314	CABLE GLAND, M16X1,5, 5311 1110	5-49, 5-51
90458-0307	CABLE GLAND, M20X1,5, 5311 1020	8-17, 8-19, 8-47, 8-49, 9-171
90458-0315	CABLE GLAND, M20X1,5, 5311 1120	8-45, 8-47, 8-49
90458-0316	CABLE GLAND, M25X1,5, 5311 1130	5-75
90458-0310	CABLE GLAND, M40X1,5, 5311 1050	5-75
90458-0311	CABLE GLAND, M50X1,5, 5311 1060	2-87, 2-89, 9-87, 9-89
90458-1150	CABLE GLAND, RG M63/4	9-87, 9-89
352103-0106	CABLE GLAND, ST 11, PR18,6/PG11	1-73, 1-225, 2-43, 2-45, 5-77, 5-79, 6-11, 8-45, 9-111, 9-113, 9-115, 9-117, 9-119, 9-121, 9-123, 9-125, 9-127, 9-129
352103-0108	CABLE GLAND, ST 13,5 , PR20,4/PG13,5	2-59, 2-61, 6-11
352103-0111	CABLE GLAND, ST 16, PR22,5/PG16	1-185, 1-187, 1-189, 1-191, 5-121, 8-17, 8-19, 9-95, 9-97, 9-167
352103-0116	CABLE GLAND, ST 21, PR28,3/PG21	1-41, 1-185, 1-187, 1-189, 1-191, 2-43, 2-45, 9-95, 9-97
352103-0121	CABLE GLAND, ST 29, PR37,0/PG29	1-185, 1-187, 1-189, 1-191, 5-77, 5-79, 5-121, 9-95, 9-97
352103-0096	CABLE GLAND, ST 7, PR 12,5/PG7	1-41, 12-113
352103-0101	CABLE GLAND, ST 9, PR15,2/PG9	1-41, 1-83, 1-85, 1-185, 1-187, 1-189, 1-191, 2-43, 2-45, 2-59, 2-61, 6-11, 7-17, 9-91, 9-93, 9-95, 9-97, 9-111, 9-113, 9-115, 9-117, 9-119, 9-121, 9-123, 9-125, 9-127, 9-129
352103-0110	CABLE GLAND, STR 16, PR22,5/PG16	1-185, 1-187, 1-189, 1-191, 9-91, 9-93, 9-95, 9-97
352103-0120	CABLE GLAND, STR 29, PR37,0/PG29	1-185, 1-187, 1-189, 1-191
352103-0100	CABLE GLAND, STR 9, PR15,2/PG9	2-33, 2-37
353241-0007	CABLE GLAND, VK 15354Y	5-77, 5-79
90458-0404	CABLE GLAND, VK 21650Y	8-45, 8-47, 8-49
90458-0406	CABLE GLAND, VK 22052Y	8-47, 8-49
90458-0422	CABLE GLAND, VK 22053Y	7-33, 9-111, 9-113, 9-115, 9-117, 9-119, 9-121, 9-123, 9-125, 9-127, 9-129
90458-0408	CABLE GLAND, VK 23254Y	5-75
90458-0423	CABLE GLAND, VK 23255Y	5-75
90110-0152	CABLE HOOD 24-POL 70.352.2428.1	8-45
90110-0226	CABLE HOOD 6-POL 70.350.0628.0	9-167
90110-0244	CABLE HOOD 6-POL 70.350.1628.0	7-33
2598113-0100	CABLE LEAD-IN PLATE	9-3, 9-5
90602-3433	CABLE LEAD-IN, 5EM0000011991	2-91, 9-87, 9-89
90602-3434	CABLE LEAD-IN, 5EM0000011992	2-91, 9-87, 9-89
90600-0936	CABLE M12-C612 5 POLE, 20-056-22	1-9, 1-11
90600-0934	CABLE M12-C62 5 POLE MALE, 20-056-02	2-93, 7-17, 8-45
351150-0407	CABLE OLFLEX 12X0,75 MM2 LIGHT/GREY	7-17, 7-33, 9-13, 9-15, 9-17, 9-19
351150-0425	CABLE OLFLEX 25X0,75 MM2 LIGHT/GREY	1-35, 1-37, 2-37, 7-33, 8-47, 8-49
351150-0431	CABLE OLFLEX 2X0,75 MM2 LIGHT/GREY	1-29, 1-55, 1-57, 5-201, 5-203, 6-23, 6-35, 6-85, 6-87
351150-0403	CABLE OLFLEX 3X0,75 MM2 LIGHT/GREY	1-35, 1-37, 1-55, 1-57, 1-103, 1-105, 2-93, 6-29, 6-31, 6-33, 6-39, 6-45, 6-47, 6-57, 6-83, 6-95, 6-97, 6-99, 6-101, 6-103
351150-0412	CABLE OLFLEX 3X1,5 MM2 LIGHT/GREY	1-55, 1-57, 2-13, 2-15, 2-29, 2-31, 2-37, 6-13, 8-47, 8-49
351150-0422	CABLE OLFLEX 3X4 MM2 LIGHT/GREY	7-33
351150-0428	CABLE OLFLEX 41X0,75 MM2 LIGHT/GREY	2-37
351150-0413	CABLE OLFLEX 4GX1,5 MM2 LIGHT/GREY	1-97, 2-37
351150-0404	CABLE OLFLEX 4X0,75 MM2 LIGHT/GREY	1-35, 1-37, 1-103, 1-105, 2-13, 2-15, 2-29, 2-31, 6-95, 6-97, 6-99, 8-45
351150-0418	CABLE OLFLEX 4X2,5 MM2 LIGHT/GREY	2-37, 6-67, 6-73, 6-97, 6-99
351150-0405	CABLE OLFLEX 5X0,75 MM2 LIGHT/GREY	6-69, 8-47, 8-49, 11-3, 11-25, 11-31, 11-33
351150-0414	CABLE OLFLEX 5X1,5 MM2 LIGHT/GREY	8-47, 8-49, 9-13, 9-15, 9-17, 9-19
351150-0187	CABLE OLFLEX 5X6 MM2 LIGHT/GREY	9-13, 9-15, 9-17, 9-19
351150-0406	CABLE OLFLEX 7X0,75 MM2 LIGHT/GREY	2-81, 8-45, 8-47, 8-49
351150-0415	CABLE OLFLEX 7X1,5 MM2 LIGHT/GREY	9-167
90024-0063	CABLE PROTECTION, 25MM	9-7, 9-9, 9-11
90024-0062	CABLE PROTECTION, 40MM	9-7, 9-9, 9-11
90459-3092	CABLE PROTECTION, CP10	9-7, 9-9, 9-11
1254442-0000	CABLE SERIAL	9-83
3024833-0000	CABLE SERIAL	9-83
353101-0126	CABLE SHOE	5-201, 5-203
353103-0130	CABLE SHOE	9-7, 9-9, 9-11
353103-0138	CABLE SHOE	9-7, 9-9, 9-11
353101-0118	CABLE SHOE 0,5-1,5MM2 M3 RED	6-83
353101-0120	CABLE SHOE 0,5-1,5MM2 M4 RED	9-7, 9-9, 9-11, 12-113
353101-0123	CABLE SHOE 0,5-1,5MM2 M6 RED	5-201, 5-203
353103-0120	CABLE SHOE 1,25 MMÂ² RED	9-7, 9-9, 9-11
353101-0129	CABLE SHOE 1,5-2,5MM2 M3 BLUE	9-7, 9-9, 9-11
353101-0130	CABLE SHOE 1,5-2,5MM2 M4 BLUE	7-21, 9-7, 9-9, 9-11
353101-0132	CABLE SHOE 1,5-2,5MM2 M5 BLUE	1-69, 7-19, 7-21, 9-7, 9-9, 9-11
353101-0150	CABLE SHOE 4,0-6,0MM2 M4 YELLOW	9-7, 9-9, 9-11
353101-0152	CABLE SHOE 4,0-6,0MM2 M5 YELLOW	9-7, 9-9, 9-11
353101-0153	CABLE SHOE 4,0-6,0MM2 M6 YELLOW	6-45, 6-47, 9-7, 9-9, 9-11

Machine Type Group Description Page No

Part No	Description	Page No
353104-0130 ..	CABLE SHOE, RING UNINS., YAV 025 M 4	1-73
353104-0140 ..	CABLE SHOE, RING UNINS., YAV 06 M 4	7-19
353104-0164 ..	CABLE SHOE, RING UNINS., YAV 10 M 10	9-7, 9-9, 9-11
353104-0168 ..	CABLE SHOE, RING UNINS., YAV 16 M 6	9-7, 9-9, 9-11
353104-0175 ..	CABLE SHOE, RING UNINS., YAV 25 M 6	9-7, 9-9, 9-11
351120-0168 ..	CABLE SIHF 4X10MM2 GREEN/YELLOW	1-77, 1-79
352113-0102 ..	CABLE TIE, BLACK 188X4,8 MM	1-225, 2-105, 4-7, 4-9, 4-11, 4-13, 4-15, 4-17, 4-45, 4-47, 5-75, 5-121, 8-23, 8-25, 9-7, 9-9, 9-11, 9-171, 12-23
352113-0103 ..	CABLE TIE, BLACK 290X7,6 MM	5-115, 5-117
352113-0104 ..	CABLE TIE, BLACK 300X4,8 MM	6-15, 6-17
352113-0101 ..	CABLE TIE, BLACK 92X2,5 MM	2-51, 2-53, 2-55, 3-15, 3-17, 4-57, 4-59, 4-61, 4-63, 4-113, 4-115, 6-13, 9-7, 9-9, 9-11
90220-0057	CABLE TLPE 1X06MM2	12-113
2614225-0000 .	CABLE TRACK	8-45
2614226-0000 .	CABLE TRACK	8-45
2614227-0000 .	CABLE TRACK	8-45
2614228-0000 .	CABLE TRACK	8-45
469374-0800 ..	CABLE TRENCH	1-3, 1-5, 1-7
577462-0000 ..	CABLE TRENCH	1-173, 1-175, 1-177, 1-179, 1-181, 1-183
1517268-0000 .	CABLE TRENCH	1-173, 1-175, 1-177, 1-179, 1-181, 1-183
1517269-0000 .	CABLE TRENCH	1-173, 1-175, 1-177, 1-179, 1-181, 1-183
2500218-0000 .	CABLE TRENCH	2-87, 2-89
2526843-0000 .	CABLE TRENCH	1-173, 1-175, 1-177, 1-179, 1-181, 1-183
2526847-0000 .	CABLE TRENCH	1-173, 1-175, 1-177, 1-179, 1-181, 1-183
2773918-0000 .	CABLE TRENCH	1-173, 1-175, 1-177, 1-179, 1-181, 1-183
2781220-0000 .	CABLE TRENCH	1-173, 1-175, 1-177, 1-179, 1-181, 1-183
3047670-0000 .	CABLE TRENCH	1-173, 1-175, 1-177, 1-179, 1-181, 1-183
351423-0004 ..	CABLE UNITRONIC LICY 2X0,34	9-173
351120-0144 ..	CABLE Ã–LFLEX HEAT 180 SIHF 3X1,5	1-73, 5-19, 5-21, 5-23, 5-25, 5-27, 8-47, 8-49
351120-0145 ..	CABLE Ã–LFLEX HEAT 180 SIHF 3X2,5	1-69, 7-21
351120-0146 ..	CABLE Ã–LFLEX HEAT 180 SIHF 3X4	7-19
351120-0267 ..	CABLE Ã–LFLEX HEAT 180 SIHF 4X6	1-55, 1-57
90220-0085	CABLE, MULTI-CONDUCTOR SCREENED	1-227
90220-0091	CABLE, PAIR TWISTED 2X2X0,25MM2	1-223, 9-13, 9-15, 9-17, 9-19, 9-85, 11-21
90220-0092	CABLE, PAIR TWISTED 3X2X0,25MM2	9-13, 9-15, 9-17, 9-19
90220-0058	CABLE, POWER SUPPLY, RKK 2M	12-117
272024-0500 ..	CALENDER ROLLER	1-3, 1-5, 1-7
1538096-0000 .	CALENDER ROLLER	1-91
1538097-0000 .	CALENDER ROLLER	1-91
78801-0000	CALIBRATION TOOL	11-17
491965-0000 ..	CAM	8-23, 8-25
1539266-0000 .	CAM	5-81
2552721-0000 .	CAM	5-11, 5-13, 5-15
2553110-0000 .	CAM	4-107, 4-109
2553111-0000 .	CAM	4-107, 4-109
2556349-0000 .	CAM	3-23, 3-25
2556350-0000 .	CAM	3-23, 3-25
2556351-0000 .	CAM	3-23, 3-25
2987286-0000 .	CAM	3-23, 3-25
2987287-0000 .	CAM	3-23, 3-25
321576-0260 ..	CAM ROLLER, 20X47X25 MM	3-11, 3-13, 3-15, 3-17
321580-0116 ..	CAM ROLLER, 6X16X28 MM	5-123, 5-125, 5-127
580358-0000 ..	CAM SEGMENT L	3-23, 3-25
1282311-0000 .	CAM SEGMENT L	3-23, 3-25
2887703-0000 .	CAM SEGMENT L	3-23, 3-25
979781-0000 ..	CAM SEGMENT L 100	3-23, 3-25
1538517-0000 .	CAM SEGMENT L P48 200SQ	3-23, 3-25
1350991-0000 .	CAM SEGMENT L P48 250SQ	3-23, 3-25
929367-0000 ..	CAM SEGMENT L P48 330SQ	3-23, 3-25
582200-0000 ..	CAM SEGMENT LEFT	3-23, 3-25
580359-0000 ..	CAM SEGMENT R	3-23, 3-25
1282312-0000 .	CAM SEGMENT R	3-23, 3-25
2887704-0000 .	CAM SEGMENT R	3-23, 3-25
979780-0000 ..	CAM SEGMENT R 100	3-23, 3-25
1538518-0000 .	CAM SEGMENT R P48 200SQ	3-23, 3-25
1350990-0000 .	CAM SEGMENT R P48 250SQ	3-23, 3-25
929368-0000 ..	CAM SEGMENT R P48 330SQ	3-23, 3-25
582199-0000 ..	CAM SEGMENT RIGHT	3-23, 3-25
75945-0000	CAM TEMPLATE	12-85, 12-87
76349-0000	CAM TEMPLATE	12-85, 12-87
577220-0000 ..	CAMSEGMENT L	3-23, 3-25
978775-0000 ..	CAMSEGMENT L	3-23, 3-25
978779-0000 ..	CAMSEGMENT L	3-23, 3-25
978796-0000 ..	CAMSEGMENT L	3-23, 3-25
581536-0000 ..	CAMSEGMENT L 284ML	3-23, 3-25
577219-0000 ..	CAMSEGMENT R	3-23, 3-25
978774-0000 ..	CAMSEGMENT R	3-23, 3-25
978778-0000 ..	CAMSEGMENT R	3-23, 3-25
978795-0000 ..	CAMSEGMENT R	3-23, 3-25
581535-0000 ..	CAMSEGMENT R 284ML	3-23, 3-25
978770-0000 ..	CAMSEGMENTL	3-23, 3-25
978771-0000 ..	CAMSEGMENTL	3-23, 3-25
76293-0000	CANTILEVER	12-93
76464-0000	CANTILEVER	12-95

Part No	Description	Page No
271163-0000 ..	CANTILEVER	2-9, 2-11
272442-0000 ..	CANTILEVER	3-11, 3-13
272664-0000 ..	CANTILEVER	3-31
272736-0000 ..	CANTILEVER	3-31
571535-0000 ..	CANTILEVER	1-125, 1-127
571536-0000 ..	CANTILEVER	1-125, 1-127
577360-0000 ..	CANTILEVER	1-9, 1-11
751267-0000 ..	CANTILEVER	1-135, 1-137, 1-139
751457-0000 ..	CANTILEVER	1-209, 1-211
751476-0000 ..	CANTILEVER	1-209, 1-211
752200-0000 ..	CANTILEVER	8-23, 8-25
1195009-0300 .	CANTILEVER	5-3, 5-5, 5-7
1195423-0000 .	CANTILEVER	2-25, 2-27
1498773-0000 .	CANTILEVER	7-35, 7-37
1539995-0200 .	CANTILEVER	5-3, 5-5, 5-7
2854616-0000 .	CANTILEVER	5-139
256082-0000 ..	CAP	4-93, 4-95
256516-0000 ..	CAP	3-15, 3-17, 3-27
257311-0000 ..	CAP	3-11, 3-13, 3-15, 3-17
272116-0000 ..	CAP	3-11, 3-13
295426-0000 ..	CAP	1-83, 1-85
67347-0101	CARD BRAKEREG.MAGN.POWDER BRAKE	9-31
273985-0000 ..	CARRIAGE	12-25
272374-0000 ..	CARRIER	3-5
272419-0000 ..	CARRIER	4-7, 4-9, 4-11, 4-13, 4-15, 4-17, 4-45, 4-47
456995-0000 ..	CARRIER	1-55, 1-57
979304-0000 ..	CARRIER	5-123, 5-125, 5-127, 5-131
979793-0000 ..	CARRIER	4-35, 4-37
979794-0000 ..	CARRIER	4-39, 4-41
1519214-0000 .	CARRIER	4-35, 4-37
1519219-0000 .	CARRIER	4-7, 4-9, 4-11
1519230-0000 .	CARRIER	4-39, 4-41
1519374-0001 .	CARRIER	4-19, 4-21, 4-23, 4-27, 4-29, 4-31
1519374-0003 .	CARRIER	4-19, 4-21, 4-23, 4-27, 4-29, 4-31
1519536-0000 .	CARRIER	4-13, 4-15, 4-17
1538942-0000 .	CARRIER	4-19, 4-21, 4-23, 4-27, 4-29, 4-31
1539268-0000 .	CARRIER	5-81
1549182-0000 .	CARRIER	5-81
1549183-0000 .	CARRIER	5-81
1549184-0000 .	CARRIER	5-81
1549186-0000 .	CARRIER	5-81
1549187-0000 .	CARRIER	5-81
1549190-0000 .	CARRIER	5-81
1549191-0000 .	CARRIER	5-81
2502192-0000 .	CARRIER	5-81
2502194-0000 .	CARRIER	5-81
2527724-0000 .	CARRIER	4-7, 4-9, 4-11, 4-13, 4-15, 4-17
2598932-0000 .	CARRIER	5-123, 5-125, 5-127
2665718-0000 .	CARRIER	4-7, 4-9, 4-11, 4-13, 4-15, 4-17
929306-0000 ..	CARRIER LEFT	4-47
929336-0000 ..	CARRIER LEFT	4-55
978714-0000 ..	CARRIER LEFT	4-13, 4-15, 4-17
979763-0000 ..	CARRIER LEFT	4-13, 4-15, 4-17
979765-0000 ..	CARRIER LEFT 100	4-39, 4-41
929305-0000 ..	CARRIER RIGHT	4-45
929335-0000 ..	CARRIER RIGHT	4-53
978715-0000 ..	CARRIER RIGHT	4-7, 4-9, 4-11
979762-0000 ..	CARRIER RIGHT	4-7, 4-9, 4-11
979764-0000 ..	CARRIER RIGHT 100	4-35, 4-37
1519216-0000 .	CARRIER RULER	4-7, 4-9, 4-11
1519231-0000 .	CARRIER RULER	4-13, 4-15, 4-17
574371-0000 ..	CARRIER RULER LEFT	4-13, 4-15, 4-17
574372-0000 ..	CARRIER RULER LEFT	4-13, 4-15, 4-17
929311-0000 ..	CARRIER RULER LEFT	4-47
929313-0000 ..	CARRIER RULER LEFT	4-47
1350997-0000 .	CARRIER RULER LEFT	4-47
1350998-0000 .	CARRIER RULER LEFT	4-47
574369-0000 ..	CARRIER RULER RIGHT	4-7, 4-9, 4-11
574370-0000 ..	CARRIER RULER RIGHT	4-7, 4-9, 4-11
929310-0000 ..	CARRIER RULER RIGHT	4-45
929312-0000 ..	CARRIER RULER RIGHT	4-45
1350995-0000 .	CARRIER RULER RIGHT	4-45
1350996-0000 .	CARRIER RULER RIGHT	4-45
1360663-0000 .	CARTON STATION	5-141, 5-143
2500331-0000 .	CARTON STATION	5-87
2564686-0000 .	CARTON STATION	5-87
2564687-0000 .	CARTON STATION	5-87
2665284-0000 .	CARTON STATION	5-141, 5-143
2800334-0001 .	CARTON STATION	5-9
2800334-0002 .	CARTON STATION	5-9
2800334-0004 .	CARTON STATION	5-9
2800334-0007 .	CARTON STATION	5-9
2800335-0001 .	CARTON STATION	5-9
2800335-0002 .	CARTON STATION	5-9

Part No	Description	Page No
2800336-0001	.CARTON STATION	5-9
2800336-0002	.CARTON STATION	5-9
2800336-0003	.CARTON STATION	5-9
2800336-0004	.CARTON STATION	5-9
2887617-0000	.CARTON STATION	5-141, 5-143
2944318-0000	.CARTON STATION	5-141, 5-143
90410-0341	.... CASSETTE FOR TEMP. REGULATOR 90410-0044	9-149, 9-151, 9-153
90191-0060	.... CASTOR WHEEL, NO. 1599PRT	12-25
476117-0000	.. CATCH	8-15
579637-0000	.. CATCH	1-163
579771-0000	.. CATCH	1-163
929309-0000	.. CATCH	4-45, 4-47
929344-0000	.. CATCH	4-53, 4-55
978745-0000	.. CATCH	4-7, 4-9, 4-11, 4-13, 4-15, 4-17
978746-0000	.. CATCH	4-35, 4-37, 4-39, 4-41
979728-0000	.. CATCH	1-163
1523924-0000	.CATCH	4-7, 4-9, 4-11, 4-13, 4-15, 4-17
532655-0000	.. CAUTION SIGN	6-81
978823-0300	.. CENTRAL LUBRICATION	6-3
90155-0016	.... CHAIN LONG LINK, LLB-3-R	1-159, 1-161, 1-165, 1-167
2775930-0000	.CHAIN SUPPORT	2-17
1255876-0100	.CHAIN TENSIONER	5-109
1255876-0200	.CHAIN TENSIONER	5-49, 5-51
2964430-0000	.CHAMBER	1-55, 1-57
256084-0800	.. CHANGE-OVER VALVE	1-3, 1-5, 1-7
90110-0153	.... CHASSIS HOUSING, HDC 24B ABU	9-107, 9-111, 9-113, 9-115, 9-117, 9-119, 9-121, 9-123, 9-125, 9-127, 9-129
90230-0064	.... CHECK VALVE, 6 MM HIGH TEMP.	1-35, 1-37
1512631-0000	.CHECKER PLATE	2-83, 2-85
1512632-0000	.CHECKER PLATE	2-83, 2-85
1512633-0000	.CHECKER PLATE	2-83, 2-85
1512845-0000	.CHECKER PLATE	2-83, 2-85
1512846-0000	.CHECKER PLATE	2-83, 2-85
2505282-0000	.CHECKER PLATE	2-83, 2-85
2632603-0000	.CHECKER PLATE	2-83, 2-85
2552684-0000	.CHUTE	2-105
2552685-0000	.CHUTE	2-105
90141-0030	.... CIRCLIP	5-123, 5-125, 5-127
442092-0000	.. CIRCUIT BOARD	12-111
90259-0315	.... CIRCUIT BREAKER , B3.1/2-PKZ0	9-145
90259-0309	.... CIRCUIT BREAKER, B3.1/4-PKZ0	9-145
90458-0576	.... CIRCUIT BREAKER, B3.1/5-PKZ0	9-145
90459-5518	.... CIRCUIT BREAKER, NZMB1-4-A63	9-159
1144521-0000	.CLAMP	5-11, 5-13, 5-15
1346670-0000	.CLAMP	12-59, 12-61, 12-65, 12-67, 12-69
1348361-0000	.CLAMP	12-59, 12-61, 12-65, 12-67, 12-69
1366727-0000	.CLAMP	5-69, 5-71, 5-119
1517518-0001	.CLAMP	12-143
1517518-0002	.CLAMP	12-143
1517518-0003	.CLAMP	12-143
1538098-0000	.CLAMP	1-91
1548225-0000	.CLAMP	1-219
2559087-0000	.CLAMP	1-97
2635109-0000	.CLAMP	1-9, 1-11
271860-0000	.. CLAMP BLOCK	1-205, 1-207
90220-0305	.... CLAMP FOR SCR.CABLE, 16MM,	9-31
75472-0000	.... CLAMP IRON	12-91
752290-0000	.. CLAMP LEFT	4-39, 4-41
1517069-0000	.CLAMP PLATE	7-61
752289-0000	.. CLAMP RIGHT	4-35, 4-37
532117-0000	.. CLAMP RING	1-25
532118-0000	.. CLAMP RING	1-27
541163-0200	.. CLAMP RING	1-17, 1-49
541164-0200	.. CLAMP RING	1-17, 1-49
2501362-0000	.CLAMP RING	8-17, 8-19
90135-0019	.... CLAMP ZB 35	9-79, 9-81
342840-0101	.. CLAMP, 12,7 AND 19,1 MM 3-A PCS+PMCS	1-55, 1-57, 5-207
90217-0312	.... CLAMP, ISO2852 FOR PIPE 101,6 MM	6-85, 6-87
90119-0310	.... CLAMP, TYPE PYC-A1	9-29, 9-47
1255877-0100	.CLAMPING ELEMENT	5-109
2547177-0100	.CLAMPING ELEMENT	5-3, 5-5, 5-7
90457-0162	.... CLAMPING ELEMENT, 00203005	3-37
90208-0120	.... CLAMPING ELEMENT, 22X32 L=25	3-5
90208-0080	.... CLAMPING ELEMENT, 25X34 L=25	3-23, 3-25
90208-0091	.... CLAMPING ELEMENT, 60X77 L=50	3-23, 3-25
90458-1230	.... CLAMPING ELEMENT, DI=36 MM	8-17, 8-19
76416-0100	.... CLAMPING PIECE	12-27
76417-0000	.... CLAMPING PIECE	12-125
76418-0000	.... CLAMPING PIECE	12-125
272503-0000	.. CLAMPING PIECE	4-35, 4-37, 4-39, 4-41
466483-0000	.. CLAMPING PIECE	1-169
1511409-0000	.CLAMPING PIECE	5-149, 5-151
2628632-0000	.CLAMPING PIECE	5-153
342840-0103	.. CLAMPING PIECE DN 1-11/2, GH13LAH112304N	1-163

Part No	Description	Page No
342840-0105 ..	CLAMPING PIECE, GH13LAH2304NO79612011202	6-85, 6-87
2544981-0100 .	CLEANING CIRCUIT	5-201, 5-203
2685216-0100 .	CLEANING CIRCUIT	5-201, 5-203
2816485-0100 .	CLEANING CIRCUIT	5-201, 5-203
1511294-0000 .	CLEANING PIPE	5-201, 5-203
1539601-0000 .	CLEANING PIPE	1-33
2545062-0000 .	CLEANING PIPE	1-33
2545432-0000 .	CLEANING PIPE	1-33
2745180-0000 .	CLEANING PIPE	5-201, 5-203
2781221-0000 .	CLEANING PIPE	1-163
2781222-0000 .	CLEANING PIPE	1-163
2781223-0000 .	CLEANING PIPE	1-163
2905938-0000 .	CLEANING PIPE	1-159, 1-161
2905939-0000 .	CLEANING PIPE	1-159, 1-161
271261-0700 ..	CLEANING SYSTEM	2-51, 2-53, 2-55
456836-0800 ..	CLEANING SYSTEM	1-3, 1-5, 1-7
2544980-0200 .	CLEANING SYSTEM	5-3, 5-5, 5-7
2773920-0000 .	CLEANING TANK	5-201, 5-203
2773921-0000 .	CLEANING TANK	5-201, 5-203
90165-0023	CLIP	2-51, 2-53, 2-55
1282426-0000 .	CLIP	2-37, 4-101, 4-103
90355-0205	CLUTCH 2,6 NM	5-135, 5-139
551969-0012 ..	COAXIAL CABLE	9-173
1548155-0000 .	COAXIAL CABLE	4-101, 4-103
548770-0006 ..	COAXIAL CABLE L=1200 MM	7-45
551969-0006 ..	COAXIAL CABLES	2-37
90110-0127	COAXIAL CONNECTOR, GE 15057C10HBNT-2PT	9-111, 9-113, 9-115, 9-117, 9-119, 9-121, 9-123, 9-125, 9-127, 9-129
2555310-0000 .	COIL	1-45
441804-0000 ..	COIL HEATER	11-39
2781218-0000 .	COLLAR	2-37
2887605-0100 .	COLLECTION TRAY	9-167
90459-5884	COMMONING BUSBAR, 3-P 3-PH 3X19 MOD 63A	9-139, 9-141
90335-0146	COMP. SPRING, 0,6X7,2X20	7-43
90335-0025	COMP. SPRING, 22010, 1X11X26	8-43
90335-0027	COMP. SPRING, 22170, 1,25X9,25X33	7-51, 7-53
90335-0152	COMP. SPRING, 22300, 1,25X17,25X40,5	1-93, 1-95, 5-55
90335-0036	COMP. SPRING, 22450, 1,6X14,1X24	5-19, 5-21, 5-23, 5-25, 5-27, 8-15
90335-0055	COMP. SPRING, 22470, 1,6X14,1X53,5	5-91, 5-111
90335-0008	COMP. SPRING, 22490, 1,6X14,1X115	1-125, 1-127
90335-0052	COMP. SPRING, 23400, 3,2X28,2X94,5	12-97
90335-0149	COMP. SPRING, 2962, 1,6X9,6X35,5 FE	12-167
1511779-0300 .	COMPONENT PLATES	9-3, 9-5
2962076-0000 .	COMPONENT PLATES	9-13, 9-15, 9-17, 9-19
540282-0002 ..	COMPONENTS WITHOUT TP-NO	9-35
543336-0001 ..	COMPONENTS WITHOUT TP-NO	9-33
90326-0304	COMPRESSION FITTING, 5101015-005	1-69, 1-73
90326-0306	COMPRESSION FITTING, 5101015-010	1-69, 1-73
491153-0000 ..	COMPRESSION GLAND	1-125, 1-127
353240-0002 ..	COMPRESSION GLAND, VK 150Y	11-25, 11-31, 11-33
353241-0002 ..	COMPRESSION GLAND, VK 15152Y	11-25, 11-31, 11-33
353241-0005 ..	COMPRESSION GLAND, VK 15253Y	5-77, 5-79
353242-0001 ..	COMPRESSION GLAND, VK 152YUL11	6-13, 6-95
353240-0004 ..	COMPRESSION GLAND, VK 153Y	5-77, 5-79
353241-0003 ..	COMPRESSION GLAND, VK 15455Y	5-121
353240-0005 ..	COMPRESSION GLAND, VK 154Y	1-185, 1-187, 1-189, 1-191, 5-77, 5-79, 5-121, 9-91, 9-93
353240-0006 ..	COMPRESSION GLAND, VK 155Y	5-77, 5-79, 6-11, 9-91, 9-93
353242-0003 ..	COMPRESSION GLAND, VK 155YUL21	7-33, 8-45, 9-91, 9-93
353240-0007 ..	COMPRESSION GLAND, VK 156Y	2-91
12228-0000	COMPRESSION SPRING	3-31
20239-0000	COMPRESSION SPRING	4-93, 4-95
21521-0000	COMPRESSION SPRING	1-71, 1-169
35919-0000	COMPRESSION SPRING	1-143, 1-145
76304-0100	COMPRESSION SPRING	12-85, 12-87
118582-0000 ..	COMPRESSION SPRING	5-123, 5-125, 5-127, 5-131
255742-0000 ..	COMPRESSION SPRING	4-7, 4-9, 4-11, 4-13, 4-15, 4-17, 4-45, 4-47
440660-0000 ..	COMPRESSION SPRING	1-23
440661-0000 ..	COMPRESSION SPRING	1-23
440662-0000 ..	COMPRESSION SPRING	1-21
440663-0000 ..	COMPRESSION SPRING	1-19, 1-23, 1-51
490942-0000 ..	COMPRESSION SPRING	4-35, 4-37, 4-39, 4-41, 5-11, 5-13, 5-15
490943-0000 ..	COMPRESSION SPRING	4-35, 4-37, 4-39, 4-41
590369-0000 ..	COMPRESSION SPRING	4-53, 4-55
926909-0000 ..	COMPRESSION SPRING	1-29
979858-0000 ..	COMPRESSION SPRING	5-123, 5-125, 5-127
1538109-0000 .	COMPRESSION SPRING	4-65, 4-67, 4-69
90270-0017	COMPRESSOR NASH/ELMO 112 MB/4-2083	6-67
469452-0500 ..	COMPRESSOR UNIT	6-65
90601-1326	COMPUTER APC620, 5S62:400547.000-00	9-83
90028-0001	CONE 5/32"	2-51, 2-53, 2-55
90030-0133	CONE NUT M15, NUT M-15 SS	6-33
342703-0208 ..	CONE NUT M8, NUT M-8 SS	2-51, 2-53, 2-55
90028-0020	CONE TUBE 2,5MM	2-51, 2-53, 2-55, 3-11, 3-13, 3-15, 3-17, 4-97, 4-99, 4-113, 4-115, 5-17, 5-49, 5-51, 5-89

Part No	Description	Page No
90028-0021	CONE TUBE 4 MM	2-51, 2-53, 2-55, 3-11, 3-13, 3-15, 3-17, 5-17, 5-49, 5-51, 5-89, 5-109
90028-0022	CONE TUBE 6 MM	6-95
90028-0025	CONE TUBE 6 MM	5-49, 5-51, 5-109, 6-95, 12-157
541751-0000 ..	CONICAL BOBBIN	7-11
90224-0308	CONN. BANJO, ART. NO. 2023-1/8-1/8	1-9, 1-11, 1-29, 1-49
90459-5522	CONN. BANJO, COR8PB6M10	6-95
90030-0230	CONN. BULKHEAD BCM6-316	1-35, 1-37, 2-87, 2-89
90030-0066	CONN. BULKHEAD SV06L71	7-67
90030-0030	CONN. BULKHEAD SV12L71	1-107, 1-109, 6-77
90030-0159	CONN. BULKHEAD SV15L71	1-49
342762-0114 ..	CONN. BULKHEAD SV15LCF	6-85, 6-87
90224-0303	CONN. ELBOW 1020-8-1/4	12-17, 12-19
342736-0114 ..	CONN. ELBOW W-15	2-57
90030-0234	CONN. ELBOW, M6MSEL1/8K-316	1-35, 1-37, 1-103, 1-105
90030-0200	CONN. ELBOW, WE06LM71	2-51, 2-53, 2-55
90030-0137	CONN. ELBOW, WE06LR71	1-31, 1-43
90030-0115	CONN. ELBOW, WE12LR71	1-31, 1-55, 1-57
342731-0221 ..	CONN. ELBOW, WE15LR71	6-15, 6-17, 6-101, 6-103
90195-0029	CONN. LINK NO324 FOR -28	1-77, 1-79
342726-0109 ..	CONN. PIPE G-12	2-57
342726-0114 ..	CONN. PIPE G-15	2-57
90030-0162	CONN. STR. 6-M10X1, EXT. THREAD	2-51, 2-53, 2-55
342720-0114 ..	CONN. STR. GA-15-G1/2	2-57
90030-0062	CONN. STR. GE06L1/4NPT71	1-33, 1-101
90030-0051	CONN. STR. GE06LR71	2-51, 2-53, 2-55
90030-0086	CONN. STR. GE08LLR1/471	6-79
342752-0103 ..	CONN. STR. GE08LREDCF	6-97, 6-99
90030-0186	CONN. STR. GE10LRED71	2-87, 2-89
90030-0180	CONN. STR. GE12L1/2NPT71	1-31
90030-0181	CONN. STR. GE12L3/8NPT71	6-89, 6-91
90030-0187	CONN. STR. GE12LRED71	1-9, 1-11, 1-69, 1-71, 1-73, 1-93, 1-95, 1-165, 1-167, 2-87, 2-89
342752-0110 ..	CONN. STR. GE12LREDCF	6-93, 6-97, 6-99
90030-0151	CONN. STR. GE15LR71	2-57
90030-0188	CONN. STR. GE15LRED71	6-15, 6-17, 6-23, 6-27, 6-29, 6-31, 6-33, 6-35, 6-69, 6-85, 6-87, 6-101, 6-103
90030-0191	CONN. STR. GE18LRED71	1-31
90030-0416	CONN. STR. M12MSC1/2K-316	1-31
342725-0108 ..	CONN. STR. PIPE GAI10LR71	2-77
342725-0114 ..	CONN. STR. PIPE GAI15LR71	6-29, 6-31, 6-69
90030-0202	CONN. STR., 6-G1/4, EXT. THREAD	1-103, 1-105
90458-2039	CONN. STR., 6-R1/8, EXT. THREAD	1-203
90030-0184	CONN. STR., GE06LRED71	1-9, 1-11, 1-35, 1-37, 1-49, 1-69, 1-73, 1-75, 1-103, 1-105, 1-107, 1-109, 1-157, 1-165, 1-167, 4-43, 4-113, 4-115, 5-19, 5-21, 5-23, 5-25, 5-27, 6-85, 6-87, 6-101, 6-103, 7-67, 12-135
90030-0479	CONN. STR., M6FSC1/4N-316	5-19, 5-21, 5-23, 5-25, 5-27
90030-0233	CONN. STR., M6MSC1/8BR-316	1-35, 1-37
90030-0336	CONN. STRAIGHT, 316L-12M-BVCO-3	1-17
90030-0549	CONN. STRAIGHT, BULKHEAD, SS-4-VCO-61	1-47
342746-0114 ..	CONN. T-PIPE T-15	2-57, 5-183, 5-185, 5-187
90030-0076	CONN. T-PIPE T06L71	1-33, 1-103, 1-105, 6-95
90030-0164	CONN. T-PIPE T06LLCF	1-107, 1-109
90030-0058	CONN. T-PIPE T12L71	1-165, 1-167, 6-89, 6-91
491305-0000 ..	CONN.DIAGRAM AIR SUPERH.	1-77, 1-79
90457-0139	CONN.STRAIGHT G3/8-10 MM, A 10-L/R3/8/WD	6-97, 6-99
90457-0023	CONN.STRAIGHTG1/2-M22X1,5, VADKO15-RL/WD	6-97, 6-99
1512442-0000 .	CONNECTING PIPE	5-49, 5-51
90134-0058	CONNECTION	3-5, 3-11, 3-13, 3-15, 3-17, 4-7, 4-9, 4-11, 4-13, 4-15, 4-17, 4-35, 4-37, 4-39, 4-41, 4-45, 4-47, 4-93, 4-95, 4-97, 4-99, 5-11, 5-13, 5-15, 5-89, 5-131
90134-0068	CONNECTION	3-33, 3-35, 4-7, 4-9, 4-11, 4-13, 4-15, 4-17, 4-93, 4-95, 4-113, 4-115, 5-109, 5-123, 5-125, 5-127
90163-0007	CONNECTION	12-23, 12-133
272747-0000 ..	CONNECTION	5-179
295983-0000 ..	CONNECTION	3-19, 3-21
929420-0000 ..	CONNECTION	5-89
2949469-0000 .	CONNECTION	12-135
90459-4254	CONNECTION BLOCK TINA 4A, 20-054-03	1-173, 1-175, 1-177, 1-179, 1-181, 1-183, 8-23, 8-25, 9-99, 9-101
456827-0400 ..	CONNECTION BOX	2-37
580064-0200 ..	CONNECTION BOX	7-5, 7-7
979475-0000 ..	CONNECTION BOX	1-41
1349568-0000 .	CONNECTION BOX	11-25, 11-31, 11-33
1512283-0000 .	CONNECTION BOX	7-33
1512667-0000 .	CONNECTION BOX	2-43, 2-45
1558318-0100 .	CONNECTION BOX	8-45
2501265-0000 .	CONNECTION BOX	8-47, 8-49
2501465-0100 .	CONNECTION BOX	11-21
2501466-0100 .	CONNECTION BOX	11-21
2506331-0200 .	CONNECTION BOX	5-75, 5-121
2510844-0100 .	CONNECTION BOX	11-21
2616035-0000 .	CONNECTION BOX	8-33
2623674-0100 .	CONNECTION BOX	1-35, 1-37
3040340-0000 .	CONNECTION BOX	7-17
90206-0326	CONNECTION BOX K2 FOR 90206-56 AND -70	1-55, 1-57

Part No	Description	Page No
90600-4876	CONNECTION BOX TINA 8A , 20-054-05	9-99, 9-101
1512356-0000 .	CONNECTION DEVICE	1-107, 1-109
2927582-0000 .	CONNECTION DEVICE	1-107, 1-109
90134-0047	CONNECTION FOR DOSING VALVE	4-35, 4-37, 4-39, 4-41
451430-0000 ..	CONNECTION HOUS.(MINOR)	1-77, 1-79
752283-0000 ..	CONNECTION LEFT	4-39, 4-41
90134-0065	CONNECTION M6 TUBE 2,5 MM	5-55
90134-0066	CONNECTION M6 TUBE 4 MM	4-113, 4-115
1334694-0000 .	CONNECTION PLATE	2-87, 2-89
1523383-0000 .	CONNECTION PLATE	2-59, 2-61
1523384-0000 .	CONNECTION PLATE	2-59, 2-61
2788111-0000 .	CONNECTION PLATE	6-101, 6-103
752282-0000 ..	CONNECTION RIGHT	4-35, 4-37
1539602-0100 .	CONNECTION SYSTEM	1-33
90459-5627	CONNECTION, TINA 1-A	73, 1-175, 1-177, 1-179, 1-181, 1-183, 8-23, 8-25, 9-91, 9-93, 9-99, 9-101
90459-5628	CONNECTION, TINA 2-A	9-13, 9-15, 9-17, 9-19
1511773-0000 .	CONNECTOR	6-79
90458-1477	CONNECTOR 6-1/8 NPT, EXT. TAPERED	1-31
90110-0518	CONNECTOR D-SUB, SUBCON 15/M-SH	11-21
90459-0306	CONNECTOR FOR OPERATOR PANEL, 6664.000	2-93
90459-5574	CONNECTOR, 1787-PLUG10R	9-41
90458-1298	CONNECTOR, AND CABLE 403000E 18M 080	4-57, 4-59, 4-61, 4-63
90459-2412	CONNECTOR, HDC-KITS, HDC-HA-4SS	8-17, 8-19, 8-45
90458-1424	CONNECTOR, MSTB 2.5/10-STF-5.08	9-173
90458-1423	CONNECTOR, PC 4/4-STF-7.62	9-173
90110-0095	CONNECTOR, PLUG SOCKET, MSSD-C-4P	6-83, 6-97, 6-99
90110-0243	CONTACT HOUSING 16-POL 70.320.1628.0	9-111, 9-113, 9-115, 9-117, 9-119, 9-121, 9-123, 9-125, 9-127, 9-129
90110-0028	CONTACT STAK 3 N GREY, 932140-106	9-83
1036443-0000 .	CONTACT UNIT	5-19, 5-21, 5-23, 5-25, 5-27, 5-91
90326-0077	CONTACT, 5100 004-001	5-19, 5-21, 5-23, 5-25, 5-27, 5-91
90600-1758	CONTACTOR 30KW 24VDC,DILM65 +DILM65-XIP2	9-13, 9-15, 9-17, 9-19
90459-5440	CONTACTOR 4KW 24VDC, DILM9-01	9-23, 9-47
90459-5441	CONTACTOR 7,5KW 24VDC, DILM17-01	9-47
3040326-0100 .	CONTACTOR RAIL PT	9-13, 9-15, 9-17, 9-19
90600-1643	CONTACTOR, DILK12-11	9-47
561427-0000 ..	CONTAINER	6-81
752576-0000 ..	CONTAINER	1-103, 1-105
978879-0000 ..	CONTAINER	1-101
2618263-0000 .	CONTAINER	1-9, 1-11
90459-2435	CONTAINER 1,8L , GN 1406	1-9, 1-11, 1-49
527898-0100 ..	CONTAINER H2O2	6-79
90458-0601	CONTRAST SCANNER, KT15W-P2110S01	1-209, 1-211
2545083-0200 .	CONTROL CABINET	1-33
1511785-0200 .	CONTROL CABLE INLETS	9-87, 9-89
1511789-0200 .	CONTROL CONNECTOR PLATE	9-87, 9-89
2774503-0100 .	CONVERTER	1-3, 1-5, 1-7
42068-0100	CONVERTER BOARD	1-229
2854630-0100 .	CONVEYOR	5-3, 5-5, 5-7
2854635-0100 .	CONVEYOR JOINT	5-115, 5-117
76200-0100	CONVEYOR SECTION	12-159
577824-0300 ..	COOL WATER VALVE	6-15, 6-17
1517677-0100 .	COOLER	9-3, 9-5
1539605-0000 .	COOLING PIPE	1-33
1498819-0000 .	COOLING PLATE	9-27, 9-49, 9-51, 9-53, 9-55, 9-57, 9-59
90600-3772	COOLING UNIT, KB17TB.01.CB	9-167
1512322-0000 .	COPPER BRAID	9-41, 9-43, 9-45
341001-0228 ..	COPPER TUBE	6-15, 6-17
3072884-0000 .	COPPER TUBE	6-15, 6-17
1254027-0000 .	CORNER STRIP	2-83, 2-85
90003-0422	CORRUGATED CARDBOARD BOX	11-3
2501471-0100 .	COUNTER	11-21
2501472-0100 .	COUNTER	11-21
272640-0001 ..	COUNTER CAM	4-57, 4-59, 4-61, 4-63
272640-0002 ..	COUNTER CAM	4-57, 4-59, 4-61, 4-63
272640-0005 ..	COUNTER CAM	4-57, 4-59, 4-61, 4-63
272640-0006 ..	COUNTER CAM	4-57, 4-59, 4-61, 4-63
272640-0009 ..	COUNTER CAM	4-57, 4-59, 4-61, 4-63
929440-0000 ..	COUNTER CAM	4-57, 4-59, 4-61, 4-63
1360634-0000 .	COUNTER CAM	4-57, 4-59, 4-61, 4-63
1360638-0000 .	COUNTER CAM	4-57, 4-59, 4-61, 4-63
979771-0000 ..	COUNTER CAM 100	4-57, 4-59, 4-61, 4-63
37894-0100	COUNTER RAIL	8-31
574347-0000 ..	COUNTER ROLLER	1-149, 1-151
751503-0000 ..	COUNTER ROLLER	1-149, 1-151
752140-0000 ..	COUNTER ROLLER	1-149, 1-151
752155-0000 ..	COUNTER ROLLER	1-149, 1-151
929280-0000 ..	COUNTER ROLLER	1-149, 1-151
1538151-0000 .	COUNTER ROLLER	1-149, 1-151
90053-0029	COUNTER, F524.800FA3C 24VDC	9-149, 9-151, 9-153
29876-0000	COVER	1-77, 1-79
90604-1373	COVER	11-13
469336-0000 ..	COVER	2-41
490964-0000 ..	COVER	1-83, 1-85

Part No	Description	Page No
491170-0000 ..	COVER	1-69
491223-0000 ..	COVER	1-73
927203-0000 ..	COVER	1-29
979280-0000 ..	COVER	6-83
979790-0000 ..	COVER	8-23, 8-25
1086888-0000 .	COVER	11-23, 11-27, 11-29
1260311-0000 .	COVER	1-31
1317262-0000 .	COVER	1-9, 1-11
1317996-0000 .	COVER	5-91
1487430-0000 .	COVER	9-103, 9-105, 9-111, 9-113, 9-115, 9-117, 9-119, 9-121, 9-123, 9-125, 9-127, 9-129
1498764-0000 .	COVER	7-23, 7-25, 7-27, 7-29
1511609-0000 .	COVER	6-7
1511610-0000 .	COVER	6-7
1512377-0000 .	COVER	1-9, 1-11
1512851-0000 .	COVER	2-83, 2-85
1523443-0000 .	COVER	9-149, 9-151, 9-153
1523756-0000 .	COVER	2-37
1523759-0000 .	COVER	2-37
1539113-0000 .	COVER	2-91
1539593-0000 .	COVER	4-87, 4-89, 4-91
1548053-0000 .	COVER	1-221
1549305-0100 .	COVER	8-3
1549306-0000 .	COVER	8-15
2506478-0000 .	COVER	7-23, 7-25, 7-27, 7-29
2514112-0000 .	COVER	2-97
2523596-0000 .	COVER	7-19
2529564-0000 .	COVER	8-45
2552619-0000 .	COVER	7-35, 7-37
2552702-0000 .	COVER	2-13, 2-15, 2-29, 2-31
2552703-0000 .	COVER	2-13, 2-15, 2-29, 2-31
2552706-0000 .	COVER	2-13, 2-15
2552710-0000 .	COVER	2-13, 2-15
2552711-0000 .	COVER	2-13, 2-15
2553895-0000 .	COVER	2-13, 2-15, 2-29, 2-31
2554975-0000 .	COVER	2-47, 2-49
2594128-0000 .	COVER	2-13, 2-15
2685204-0000 .	COVER	2-13, 2-15
2743337-0000 .	COVER	2-13, 2-15
2743344-0000 .	COVER	2-47, 2-49
2748683-0000 .	COVER	8-11, 8-13
2800353-0000 .	COVER	1-35, 1-37
2807016-0000 .	COVER	2-29, 2-31
2810418-0000 .	COVER	2-29, 2-31
2810432-0000 .	COVER	2-47, 2-49
2854648-0000 .	COVER	2-29, 2-31
2854651-0000 .	COVER	2-29, 2-31
2854951-0000 .	COVER	2-37
2927583-0000 .	COVER	2-13, 2-15
3017413-0000 .	COVER	8-11, 8-13
3024822-0000 .	COVER	9-159
3024832-0000 .	COVER	9-159
3036088-0000 .	COVER	2-13, 2-15
3036090-0000 .	COVER	2-13, 2-15
3046066-0000 .	COVER	8-23, 8-25
3046767-0000 .	COVER	8-23, 8-25
3047665-0000 .	COVER	2-29, 2-31
3047666-0000 .	COVER	2-29, 2-31
979279-0000 ..	COVER HOUSING	6-83
3036089-0000 .	COVER HOUSING	2-13, 2-15, 2-29, 2-31
979215-0200 ..	COVER PLATE	6-3
1037572-0000 .	COVER PLATE	9-103, 9-105
1037574-0000 .	COVER PLATE	9-111, 9-113, 9-115, 9-117, 9-119, 9-121, 9-123, 9-125, 9-127, 9-129
1549296-0300 .	COVER PLATE	8-3
1558321-0000 .	COVER PLATE	8-7
2518415-0000 .	COVER PLATE	6-61
2552704-0000 .	COVER PLATE	2-13, 2-15, 2-29, 2-31
2552707-0000 .	COVER PLATE	2-13, 2-15, 2-29, 2-31
2815751-0001 .	COVER PLATE	1-93, 1-95
2815751-0002 .	COVER PLATE	1-93, 1-95
3072110-0000 .	COVER PLATE	9-13, 9-15, 9-17, 9-19
90458-1215	COVER PLATE, EMPTY VALVE POSITION	6-49, 6-51
90457-0183	COVER PLATE, DPA0X, FOR 90457-0182	2-59, 2-61, 2-63
2552700-0200 .	COVER PLATES	2-3, 2-5, 2-7
2810440-0200 .	COVER PLATES	2-3, 2-5, 2-7
441725-0000 ..	COVERING PLATE	11-3
1129481-0000 .	COVERING PLATE	9-111, 9-113, 9-115, 9-117, 9-119, 9-121, 9-123, 9-125, 9-127, 9-129
1523755-0000 .	COVERING PLATE	2-37
1549888-0000 .	COVERING PLATE	2-33
2552708-0000 .	COVERING PLATE	2-13, 2-15
2552709-0000 .	COVERING PLATE	2-13, 2-15, 2-29, 2-31
2685217-0000 .	COVERING PLATE	2-13, 2-15
2685218-0000 .	COVERING PLATE	2-13, 2-15
2810428-0000 .	COVERING PLATE	2-29, 2-31
90600-1223	CPU374, ETHERNET COMMUNICATION	9-41

Part No	Description	Page No
272377-0001 ..	CRAMP	3-5
272377-0002 ..	CRAMP	3-5
272388-0000 ..	CRAMP	3-5
295604-0000 ..	CRAMP	1-107, 1-109
456854-0001 ..	CRAMP	5-183, 5-185, 5-187
456854-0002 ..	CRAMP	5-183, 5-185, 5-187
578027-0000 ..	CRAMP	1-107, 1-109
978440-0000 ..	CRAMP	1-43
2549263-0000 .	CRAMP	1-93, 1-95
257326-0000 ..	CRANK	3-31
1512286-0200 .	CRANK	3-3
594952-0000 ..	CREASE BAR	8-29
1512264-0002 .	CREASE BAR	8-29
1360583-0000 .	CREASE UNIT	8-29
2815754-0200 .	CREASE UNIT	8-23, 8-25
90600-0916	CROSS CONNECTION, 15 UNION	6-29, 6-31
495498-0028 ..	CU-RAIL L=280MM	9-79, 9-81
2544973-0000 .	CUP	5-85
1511291-0000 .	CURVE	5-201, 5-203
1538039-0000 .	CURVE	4-97, 4-99
2685207-0000 .	CURVE	5-201, 5-203
2987284-0000 .	CURVE	3-23, 3-25
2987285-0000 .	CURVE	3-23, 3-25
2887705-0000 .	CURVE ARM	3-23, 3-25
1350195-0000 .	CURVE ARM GUIDE	5-123, 5-125, 5-127
256202-0700 ..	CURVE PACK	3-3
22475-0000	CURVE ROLLER	4-93, 4-95
2887706-0000 .	CURVE YOKE	3-23, 3-25
76208-0000	CUSHION	12-163, 12-165
256204-0700 ..	CUTTING JAW	4-3, 4-5
256205-0700 ..	CUTTING JAW	4-3, 4-5
256487-0000 ..	CUTTING JAW	4-7, 4-9, 4-11, 4-13, 4-15, 4-17
256769-0000 ..	CUTTING JAW	4-7, 4-9, 4-11, 4-13, 4-15, 4-17
441727-0000 ..	CUTTING JAW	4-7, 4-9, 4-11, 4-13, 4-15, 4-17
574386-0000 ..	CUTTING JAW	4-7, 4-9, 4-11, 4-13, 4-15, 4-17
929308-0000 ..	CUTTING JAW	4-45, 4-47
929322-0300 ..	CUTTING JAW	4-3, 4-5
929323-0300 ..	CUTTING JAW	4-3, 4-5
1350994-0000 .	CUTTING JAW	4-45, 4-47
1548942-0000 .	CUTTING JAW	4-7, 4-9, 4-11, 4-13, 4-15, 4-17
1110211-0000 .	CUTTING RAIL	4-45, 4-47
1110820-0000 .	CUTTING RAIL	4-7, 4-9, 4-11, 4-13, 4-15, 4-17
1110829-0000 .	CUTTING RAIL	4-7, 4-9, 4-11, 4-13, 4-15, 4-17
1566742-0000 .	CUTTING RAIL	4-7, 4-9, 4-11, 4-13, 4-15, 4-17
2987326-0000 .	CUTTING RAIL	4-7, 4-9, 4-11, 4-13, 4-15, 4-17
1524477-0100 .	CUTTING TABLE	7-5, 7-7
90239-0779	CYLINDER	1-69, 1-149, 1-151, 1-169
90450-0033	CYLINDER	2-9, 2-11, 2-25, 2-27
90604-0373	CYLINDER	11-13
490940-0000 ..	CYLINDER	4-35, 4-37, 4-39, 4-41
441483-0000 ..	CYLINDER BRACKET	1-149, 1-151, 1-169
441578-0001 ..	CYLINDER BRACKET	1-93, 1-95
441578-0002 ..	CYLINDER BRACKET	1-91
491022-0000 ..	CYLINDER BRACKET	1-149, 1-151
1036193-0000 .	CYLINDER BRACKET	1-75, 1-99
2527337-0000 .	CYLINDER BRACKET	1-71
576439-0000 ..	CYLINDER HOUSING	1-19, 1-23, 1-51
576443-0000 ..	CYLINDER HOUSING	1-21
90239-0773	CYLINDER, SHUTTLE 25-310	1-91, 1-93, 1-95
90459-4786	CYLINDER, WITH INT. GUIDING BORE 16	9-131
352553-0100 ..	CYLINDRICAL FUSE 10A, 3NC1010	9-143
352553-0160 ..	CYLINDRICAL FUSE 16A, 3NC1016	9-143, 11-11
352553-0250 ..	CYLINDRICAL FUSE 25A, 3NC1025	9-143, 11-11
352554-0040 ..	CYLINDRICAL FUSE 4A, 3NC1404	9-143
440659-0000 ..	CYLINDRICAL PIN	1-23
1511314-0000 .	DAMPER BRACKET	7-59
90347-0005	DAMPER, NO. F 1006 B	8-41
90041-0068	DATACABLE MODEM-PC, 25-113-93	11-21
1517654-0000 .	DELIVERED DESIGN	9-83
538433-0000 ..	DETECTOR BODY	12-111
538434-0000 ..	DETECTOR CARD	12-111
490761-0200 ..	DETERGENT PUMP	6-3
90298-0019	DETERGENT, SU 118, 20 LITRES	6-107, 11-43
90459-2530	DEVICENET CABLE THIN	2-93, 9-41
90459-4233	DEVICENET MASTER MODULE	9-41
1350087-0400 .	DIAGRAM	11-3
2568779-0000 .	DIAGRAM	1-33
2879201-0000 .	DIAGRAM AIR/WATER	11-9
74772-0000	DIAL	12-119
533169-0000 ..	DIAPHRAGM	1-19
534691-0000 ..	DIAPHRAGM	12-23
925998-0000 ..	DIAPHRAGM	1-29, 11-39
2826443-0000 .	DIAPHRAGM	11-41
90600-0493	DIAPHRAGM 3A, 600-8M-5AD	1-43

Part No	Description	Page No
342800-1102 ..	DIAPHRAGM, FDA PTFE/EPDM 5E, SEAT S. 10	11-37
90038-0021	DIODE, 1A 800V	2-13, 2-15, 2-29, 2-31
90201-0136	DIRECT CHECK VALVE, NO. DGMDC-3-Y-PK-41	6-97, 6-99
90459-1690	DIRECTIONAL VALVE, DG4V-3-6C-MUH-7-60-EN	6-97, 6-99
1558403-0000 .	DISC	1-97
256437-0200 ..	DISC COUPLING	5-3, 5-5, 5-7
90016-0010	DISC SPRING,50X25,4X2	3-5
1549370-0100 .	DISCHARGE CHUTE	5-3, 5-5, 5-7
2552698-0000 .	DISCHARGE CHUTE	2-47, 2-49
2552699-0200 .	DISCHARGE CHUTE	2-3, 2-5, 2-7
2743342-0000 .	DISCHARGE CHUTE	2-47, 2-49
2810429-0000 .	DISCHARGE CHUTE	2-47, 2-49
2807003-0100 .	DISCHARGE SUPPORT	5-3, 5-5, 5-7
978971-0000 ..	DISCHARGE TRAY	1-101
978972-0000 ..	DISCHARGE TRAY	1-101
1296849-0000 .	DISCHARGE TRAY	1-77, 1-79
1296850-0000 .	DISCHARGE TRAY	1-77, 1-79
578703-0100 ..	DISCHARGER	5-3, 5-5, 5-7
1490120-0100 .	DISCONNECTION LINK LEFT	3-3
1539766-0100 .	DISCONNECTION LINK RIGHT	3-3
556667-0100 ..	DISPLAY	12-109
3019244-0000 .	DISTANCE	3-31
2745184-0000 .	DISTANCE PIECE LOCK	2-33
90287-0170	DISTANCE SCREW	12-111, 12-115
90032-0014	DISTR. BLOCK & DIST.5/16-24UNF X6	2-51, 2-53, 2-55
90032-0026	DISTR. BLOCK, 5/16-24UNF X2	2-51, 2-53, 2-55
90032-0030	DISTR. BLOCK, 5/16-24UNF X3	2-51, 2-53, 2-55
90032-0031	DISTR. BLOCK, 5/16-24UNF X5	2-51, 2-53, 2-55
90032-0043	DISTRIBUTION BLOCK 3 WAYS	6-95
272191-0000 ..	DISTRIBUTOR	5-183, 5-185, 5-187
1511887-0000 .	DISTRIBUTOR	5-183, 5-185, 5-187
751070-0000 ..	DISTRIBUTOR BLOCK	5-109
1523829-0100 .	DISTRIBUTOR BLOCK	2-51, 2-53, 2-55
90042-0602	DISTRIBUTOR BLOCK, FR-4-1/2-B	6-15, 6-17
90458-1921	DISTRIBUTOR BLOCK, FR-8-1/4	6-15, 6-17
568581-0000 ..	DISTRIBUTOR WING	1-193, 1-195
90459-1856	DISTRIBUTOR, MS6-FRM-1/2	6-39
441486-0400 ..	DIVIDED FORMING RING	1-3, 1-5, 1-7
90181-0067	DIVIDING PLATE SEP80	9-13, 9-15, 9-17, 9-19, 9-149, 9-151, 9-153
577333-0000 ..	DOCUMENT FOLDER	12-103
1110378-0001 .	DOLLY	12-11
1110391-0000 .	DOLLY	4-7, 4-9, 4-11, 4-13, 4-15, 4-17, 4-45, 4-47, 11-45
1520577-0001 .	DOLLY	4-7, 4-9, 4-11, 4-13, 4-15, 4-17, 11-45
1566761-0000 .	DOLLY	4-7, 4-9, 4-11, 4-13, 4-15, 4-17, 11-45
1566802-0000 .	DOLLY	4-7, 4-9, 4-11, 4-13, 4-15, 4-17, 11-45
2517066-0000 .	DOLLY	11-3
529149-0000 ..	DOLLY WASHER	1-67
90459-3318	DOMED LOCKING NUT, M5 SS 304	1-93, 1-95
1511791-0300 .	DOOR	9-87, 9-89
1511796-0300 .	DOOR	9-3, 9-5
1511799-0300 .	DOOR	9-3, 9-5
1511810-0300 .	DOOR	9-3, 9-5
1511811-0200 .	DOOR	9-3, 9-5
1511814-0300 .	DOOR	9-3, 9-5
1511819-0200 .	DOOR	9-3, 9-5
1511820-0200 .	DOOR	9-3, 9-5
1512826-0000 .	DOOR	6-5
1512829-0000 .	DOOR	6-7
1512830-0000 .	DOOR	6-7
1512831-0000 .	DOOR	6-7
1517663-0000 .	DOOR	9-163
1517667-0000 .	DOOR	9-165
2552620-0000 .	DOOR	7-35, 7-37
2552691-0000 .	DOOR	2-101
2552692-0000 .	DOOR	2-103
2733917-0000 .	DOOR	2-35
2743283-0000 .	DOOR	2-35
2748676-0000 .	DOOR	8-11, 8-13
2748677-0000 .	DOOR	2-65, 2-67
2748678-0000 .	DOOR	2-69, 2-71
2761519-0000 .	DOOR	2-35
2769654-0000 .	DOOR	2-35
2788122-0000 .	DOOR	6-5
2788123-0000 .	DOOR	6-5
2798052-0000 .	DOOR	9-109
2798073-0000 .	DOOR	9-147
2798074-0000 .	DOOR	9-155
2798075-0000 .	DOOR	9-157
2914826-0100 .	DOOR	1-3, 1-5, 1-7
2914827-0100 .	DOOR	1-3, 1-5, 1-7
2914832-0000 .	DOOR	1-207
2914833-0000 .	DOOR	1-205
3017353-0000 .	DOOR	7-31
3017354-0000 .	DOOR	7-31

Part No	Description	Page No
3019605-0000	.DOOR	9-135, 9-137
3024823-0000	.DOOR	9-131
3024835-0000	.DOOR	9-133
3024840-0000	.DOOR	9-83
2552680-0300	.DOOR LEFT	2-3, 2-5, 2-7
2552694-0300	.DOOR LEFT	2-3, 2-5, 2-7
2552681-0300	.DOOR RIGHT	2-3, 2-5, 2-7
2552695-0300	.DOOR RIGHT	2-3, 2-5, 2-7
1498751-0300	.DOORS	7-5, 7-7
1350529-0300	.DOORS LEFT SIDE	6-3
1350531-0200	.DOORS RIGHT SIDE	6-3
90457-0166	.... DOUBLE ACTING, COMPACT, 12-10	4-43
90459-2360	.... DOUBLE ACTING, COMPACT, 16-15	1-155
90459-4968	.... DOUBLE ACTING, COMPACT, 50-20	5-35, 5-37, 5-39, 5-41, 5-43, 5-145
90459-1845	.... DOUBLE ACTING, COMPACT, 50-30	5-11, 5-13, 5-15, 5-89
90459-0251	.... DOUBLE ACTING, COMPACT, CYL 12-15	4-43
90450-0306	.... DOUBLE ACTING, MINI-ISO, CYL. 12-25	7-19
90239-0841	.... DOUBLE ACTING, MINI-ISO, CYL. 16-25	2-33
90600-2537	.... DOUBLE ACTING, MINI-ISO, CYL. 16-50	2-47, 2-49
90239-0819	.... DOUBLE ACTING, MINI-ISO, CYL.16-100	7-13
90239-0840	.... DOUBLE ACTING, MINI-ISO, CYL.16-12	1-155
90239-0817	.... DOUBLE ACTING, MINI-ISO, CYL.16-50	1-219
90239-0847	.... DOUBLE ACTING, MINI-ISO, CYL.20-50	1-73, 2-35
90450-0281	.... DOUBLE ACTING,PROF.CYL 32-80	1-75, 1-99
90450-0328	.... DOUBLE ACTING,PROFILE CYL32-25	1-71
37896-0000	.... DOWEL	8-35
74912-0000	.... DOWEL	12-119
256280-0000	.. DOWEL	1-125, 1-127, 1-135, 1-137, 1-139
271100-0000	.. DOWEL	4-93, 4-95
272973-0000	.. DOWEL	4-107, 4-109
532211-0000	.. DOWEL	12-25
532678-0000	.. DOWEL	12-17, 12-19
540169-0000	.. DOWEL	5-119
577756-0000	.. DOWEL	5-123, 5-125, 5-127
1346061-0000	.DRAIN CHUTE	6-45, 6-47
2845922-0000	.DRAIN CHUTE	9-169
2887612-0000	.DRAIN PIPE	6-9
571088-0000	.. DRAINING	6-85, 6-87
2887608-0100	.DRAINING	9-167
295984-0000	.. DRIP GUARD	1-171
2810419-0000	.DRIP GUARD	5-115, 5-117
2810420-0000	.DRIP GUARD	5-115, 5-117
2810421-0000	.DRIP GUARD	5-115, 5-117
256170-0000	.. DRIP PLATE	1-83, 1-85
979978-0000	.. DRIVE DISC	5-123, 5-125, 5-127
312502-0120	.. DRIVE SCREW ROUND HEAD KDS 0X5	1-107, 1-109, 2-87, 2-89
491258-0000	.. DRIVE WHEEL	5-155, 5-157
491850-0100	.. DRIVE WHEEL	5-3, 5-5, 5-7
1143975-0000	.DRIVE WHEEL	5-155, 5-157
2561244-0200	.DRIVE WHEEL	2-17, 5-59, 5-61, 5-115, 5-117
2691825-0000	.DRIVE WHEEL	5-155, 5-157
1195424-0100	.DROP CHUTE	2-3, 2-5, 2-7
1195429-0000	.DROP CHUTE	2-25, 2-27
1317395-0000	.DROP CHUTE	2-25, 2-27
1549944-0000	.DROP CHUTE	2-25, 2-27
2526300-0000	.DROP CHUTE	2-9, 2-11
2526301-0000	.DROP CHUTE	2-9, 2-11
2526302-0000	.DROP CHUTE	2-9, 2-11
2526303-0000	.DROP CHUTE	2-9, 2-11
2526304-0000	.DROP CHUTE	2-9, 2-11
2526306-0000	.DROP CHUTE	2-9, 2-11
2526308-0000	.DROP CHUTE	2-9, 2-11
2526309-0000	.DROP CHUTE	2-9, 2-11
2526310-0000	.DROP CHUTE	2-9, 2-11
2526311-0000	.DROP CHUTE	2-9, 2-11
2526338-0100	.DROP CHUTE	2-3, 2-5, 2-7
1539267-0000	.DRUM	5-81
265568-0000	.. DUST COVER	8-23, 8-25
74767-0102	.... DYNAMOMETER	12-27
1035792-0000	.E-HINGE	2-65, 2-67, 2-69, 2-71, 2-101, 2-103, 6-5, 6-7, 8-11, 8-13
1499514-0000	.E-HINGE	7-23, 7-25, 7-27, 7-29, 7-59
256626-0000	.. EAR	4-7, 4-9, 4-11, 4-13, 4-15, 4-17, 4-45, 4-47
90135-0042	.... EARTH TERMINAL AKE 2,5	1-41
90135-0026	.... EARTH TERMINAL AKE 4	11-25, 11-31, 11-33
90458-1136	.... EARTH TERMINAL WDK 2,5 PE	5-77, 5-79, 9-71, 9-73, 9-75, 9-77
353024-0207	.. EARTH TERMINAL WPE 10	9-63, 9-65, 9-67, 9-69
353024-0208	.. EARTH TERMINAL WPE 16	9-79, 9-81
353024-0204	.. EARTH TERMINAL WPE 2,5	2-43, 2-45, 5-77, 5-79, 8-47, 8-49, 9-63, 9-65, 9-67, 9-69
353024-0209	.. EARTH TERMINAL WPE 35	9-79, 9-81, 9-161
353024-0205	.. EARTH TERMINAL WPE 4	7-33, 8-47, 8-49, 9-63, 9-65, 9-67, 9-69, 9-79, 9-81
353024-0206	.. EARTH TERMINAL WPE 6	5-77, 5-79, 9-63, 9-65, 9-67, 9-69, 9-71, 9-73, 9-75, 9-77
3072114-0000	.EARTH WIRE	6-15, 6-17
90135-0044	.... EARTH WIRE, L=320 MM 16 MM2	9-83, 9-131, 9-133, 9-135, 9-137, 9-149, 9-151, 9-153, 9-163, 9-165
1538949-0000	.ECCENTRIC	4-105

Part No	Description	Page No
272458-0000 ..	ECCENTRIC SHAFT	3-11
272654-0000 ..	ECCENTRIC SHAFT	4-57, 4-59, 4-61, 4-63
1511404-0000 .	ECCENTRIC SHAFT	4-111
1512355-0000 .	ECCENTRIC SHAFT	3-31
1517700-0000 .	EDGE GUIDE	9-87, 9-89
90143-0060	EDGE STRIP 9,5X6,3MM BLACK PVC	2-87, 2-89, 6-11, 8-11, 8-13, 8-45
90457-0179	ELBOW 90 COUPL., EXT. THREAD 4/2-G1/8"	2-59, 2-61
90457-0180	ELBOW 90 COUPL., EXT. THREAD 6/4-R1/8"	2-59, 2-61
342931-0122 ..	ELBOW 90 COUPL., EXT. THREAD 8/6-G1/4"	6-23, 6-29, 6-31, 6-41, 6-93
342930-0122 ..	ELBOW 90 COUPL., EXT. THREAD 8/6-R1/4"	3-5
342930-0113 ..	ELBOW 90COUPL., EXT. THREAD 6/4-R1/8"	5-65
90030-0096	ELBOW CONNECTION 12	1-9, 1-11
342737-0204 ..	ELBOW CONNECTION 6, W06L71	1-9, 1-11, 6-95
342772-0114 ..	ELBOW FITTING, 6 - G1/4	1-35, 1-37
342772-0113 ..	ELBOW FITTING, 6 - G1/8	1-35, 1-37, 7-67
751316-0000 ..	ELBOW PIPE	6-73
90055-0217	ELBOW PIPE JOINT	2-37
342732-0099 ..	ELBOW PIPE JOINT, (REEMP. 90458-2954)	7-19
90458-2954	ELBOW PIPE JOINT, EXT.THREAD, D=4MM M5	4-43
90600-0332	ELBOW PIPE JOINT, EXT.THREAD, D=4MM M5	4-45, 4-47
90459-0487	ELBOW PIPE JOINT, EXT.THREAD, D=6MM G1/8	1-197, 1-199, 1-201
90457-0922	ELBOW PIPE JOINT, EXT.THREAD, D=6MM M5	5-153
90458-2957	ELBOW PIPE JOINT, EXT.THREAD, D=6MM-G1/4	1-35, 1-37
90458-2956	ELBOW PIPE JOINT, EXT.THREAD, D=6MM-G1/8	2-33, 5-11, 5-13, 5-15, 5-95, 5-97, 5-99, 5-145, 5-189
342732-0104 ..	ELBOW PIPE JOINT, EXT.THREAD, D=8MM-G1/4	6-59
90458-2964	ELBOW PIPE JOINT, EXT.THREAD, D=8MM-G1/8	5-183, 5-185, 5-187, 6-45, 6-47
90459-1826	ELBOW PIPE JOINT, EXT.THREAD,D=16MM-G1/2	6-39
90458-2040	ELBOW PIPE JOINT, INT. THREAD, G1/8" D=6	1-203
90055-0210	ELBOW PIPE JOINT,EXT.THREAD,D=6 MM G1/8	2-33
90055-0207	ELBOW PIPE JOINT,EXT.THREAD,D=6 MM M5	2-33
90055-0211	ELBOW PIPE JOINT,EXT.THREAD,D=8 MM G1/8	2-33
90055-0172	ELBOW WITH TAILPIECE 8/8 MM	5-89
90330-0169	ELBOW, 90 INT. THREAD, 4-4FE. SS	1-33
90330-0020	ELBOW, 90 INT. THREAD, R-2221/2	6-69, 6-85, 6-87
90330-0099	ELBOW, 90 INT. THREAD, R-222R1/8	2-57
1549480-0200 .	ELECTRIC EQUIPMENT	8-3
2543594-0300 .	ELECTRICAL COMPONENTS	11-3
42416-0400	ELECTRICAL DOCUMENT	10-3
1523972-0100 .	ELECTRICAL MATERIALS	9-3, 9-5
567070-0010 ..	ELECTRODE	1-103, 1-105
567070-0011 ..	ELECTRODE	1-55, 1-57
567070-0012 ..	ELECTRODE	6-85, 6-87
567070-0014 ..	ELECTRODE	1-35, 1-37
567070-0015 ..	ELECTRODE	1-103, 1-105
567070-0019 ..	ELECTRODE	1-55, 1-57
979500-0001 ..	ELECTRODE	1-55, 1-57
90355-0088	ELECTROMAGNETIC CLUTCH, 30 MM/24 VDC	3-5
90110-0247	EMALE INSERT 70.200.06539	9-111, 9-113, 9-115, 9-117, 9-119, 9-121, 9-123, 9-125, 9-127, 9-129
90600-6048	EMERG. STOP SMILE 11 EA TINA, 30-050-001-9, 1-11, 1-173, 1-175, 1-177, 1-179, 1-181, 1-183	
90600-6049	EMERG. STOP SMILE 11 EAR TINA, 30-050-01	9-131, 9-133
90600-6050	EMERGENCY STOP INCA 1 TINA, 30-054-00	2-93, 7-17, 8-45
1517694-0000 .	END BLOCK	9-87, 9-89
90459-2350	END BRACKET, A325A103KM	9-175
353031-0203 ..	END BRACKET, WEW 35/2	2-43, 2-45, 9-37, 9-39, 9-63, 9-65, 9-67, 9-69, 9-71, 9-73, 9-75, 9-77, 9-79, 9-81, 9-139, 9-141, 9-161
90600-4662	END COVER 3-P, 5ST3750	9-143
256515-0000 ..	END PIECE	3-15, 3-17
257328-0000 ..	END PIECE	3-31
272472-0000 ..	END PIECE	3-33, 3-35
90457-0052	END PLATE	9-63, 9-65, 9-67, 9-69, 9-71, 9-73
1548143-0000 .	END PLATE	1-97
90077-0122	END PLATE, AP AKZ 2,5	1-41
353032-0302 ..	END PLATE, AP DLD2,5 DB	5-77, 5-79, 9-71, 9-73, 9-75, 9-77
90457-0051	END PLATE, AP DLD2,5/PE DB	5-77, 5-79, 9-63, 9-65, 9-67, 9-69, 9-71, 9-73, 9-75, 9-77
353032-0013 ..	END PLATE, AP, 138 186	5-77, 5-79
90459-2617	END PLATE, MS6-AGD	6-15, 6-17
353033-0105 ..	END PLATE, WAP 16+35 WTW 2,5-10	9-79, 9-81, 9-161
353032-0004 ..	END PLATE, WAP 2,5-10, BEIGE	5-77, 5-79, 9-63, 9-65, 9-67, 9-69
353032-0009 ..	END PLATE, WAP WDK 2,5	5-77, 5-79, 9-37, 9-39, 9-71, 9-73, 9-79, 9-81
90077-0114	END PLATE, WAP WDK 2.5 1059100000	9-75, 9-77
353033-0104 ..	END PLATE, WHP2,5-35N/10X3 BL	9-79, 9-81
556665-0000 ..	END SECTION	12-113
576440-0000 ..	END SECTION	1-19, 1-23, 1-51
576444-0000 ..	END SECTION	1-21
353001-0101 ..	END SLEEVE 0,5 MM2	11-21
353001-0102 ..	END SLEEVE 0,75 MM2	9-7, 9-9, 9-11, 11-21
353001-0113 ..	END SLEEVE 0,75MM2	9-7, 9-9, 9-11, 11-25, 11-31, 11-33
353001-0114 ..	END SLEEVE 1,50 MM2	9-7, 9-9, 9-11
353001-0115 ..	END SLEEVE 2,5/14	9-7, 9-9, 9-11
353001-0118 ..	END SLEEVE 6MM2 BLACK	9-7, 9-9, 9-11
353001-0119 ..	END SLEEVE H 1.0/14 YELLOW	9-7, 9-9, 9-11
353001-0120 ..	END SLEEVE H 10/28	9-7, 9-9, 9-11
353001-0117 ..	END SLEEVE H4.0/20 GREY	9-7, 9-9, 9-11

Part No	Description	Page No
2775602-0202	END UNIT	2-13, 2-15
2854809-0100	END UNIT	5-3, 5-5, 5-7
2962080-0000	ENDING DOOR	9-87, 9-89
90457-0181	EQUAL BULKHEAD ELBOW CONNECTOR 31390600	2-59, 2-61
90457-0178	EQUAL BULKHEAD ELBOW CONNECTOR 36390800	2-59, 2-61
90600-9809	ES SIGN, FOR INCA	7-17, 8-45
90600-9527	ES SIGN, FOR SMILE EAR	9-131, 9-133
351501-0030	ETHERNET PATCH CABLE, FL CAT5 PATCH 3,0	9-83
90458-1206	EXP. SUB-BASE 2 VALVES, CDVI5.0-EB	6-49, 6-51
1350674-0000	EXTENSION	12-181
577769-0000	EXTENSION PIPE	6-73
2915994-0100	EXTERNAL CLEANING UNIT	5-59, 5-61
1517653-0200	EXTERNAL DOOR FUSES	9-3, 9-5
1511830-0100	EXTERNAL DOOR TERMOREGULATORS	9-3, 9-5
77165-0100	EXTRACTOR	12-27
74364-0000	EXTRACTOR BOLT	12-139
79201-0000	EXTRACTOR BOLT	12-27
90457-0056	FAN 7450 ES	9-13, 9-15, 9-17, 9-19
2506474-0000	FASTENING BRACKET	7-47
3017373-0000	FASTENING BRACKET	7-59
74363-0000	FASTENING PLATE	12-139
456905-0000	FASTENING PLATE	1-125, 1-127
491880-0000	FASTENING PLATE	1-209, 1-211
978735-0000	FASTENING PLATE	1-209, 1-211
1254028-0000	FASTENING PLATE	2-83, 2-85
1523225-0000	FASTENING PLATE	1-171
2751450-0000	FASTENING PLATE	5-35, 5-37, 5-39, 5-41, 5-43
2764349-0000	FASTENING PLATE	5-35, 5-37, 5-39, 5-41, 5-43
2776731-0000	FASTENING PLATE	5-35, 5-37, 5-39, 5-41, 5-43
2776735-0000	FASTENING PLATE	5-35, 5-37, 5-39, 5-41, 5-43
2800346-0000	FASTENING PLATE	5-35, 5-37, 5-39, 5-41, 5-43
2814880-0000	FASTENING PLATE	5-35, 5-37, 5-39, 5-41, 5-43
2814887-0000	FASTENING PLATE	5-35, 5-37, 5-39, 5-41, 5-43
2830504-0000	FASTENING PLATE	5-35, 5-37, 5-39, 5-41, 5-43
3017372-0000	FASTENING PLATE	8-23, 8-25
3019235-0000	FASTENING PLATE	2-101, 2-103
3019240-0000	FASTENING PLATE	2-65, 2-67, 2-69, 2-71
90600-5266	FEED THROUGH FILTER, B85321A2502W160	9-159
90457-0054	FEED THROUGH TERMINAL, 161527	9-63, 9-65, 9-67, 9-69
353021-0215	FEED THROUGH TERMINAL, WDU 10	9-63, 9-65, 9-67, 9-69
353021-0212	FEED THROUGH TERMINAL, WDU 2,5	2-43, 2-45, 7-33, 8-47, 8-49, 9-63, 9-65, 9-67, 9-69, 9-79, 9-81
353021-0219	FEED THROUGH TERMINAL, WDU 35	9-79, 9-81, 9-161
353021-0213	FEED THROUGH TERMINAL, WDU 4	5-77, 5-79, 7-33, 9-63, 9-65, 9-67, 9-69
353021-0214	FEED THROUGH TERMINAL, WDU 6	9-63, 9-65, 9-67, 9-69
1484558-0000	FEEDER	5-135
2517179-0000	FEEDER	5-139
315259-0102	FELT SEAL 22-47 MM	2-37
90110-0163	FEMALE INSERT 70 300 0640 0	9-167
90458-1406	FEMALE INSERT, 1207700000	9-111, 9-113, 9-115, 9-117, 9-119, 9-121, 9-123, 9-125, 9-127, 9-129
90110-0151	FEMALE INSERT, 24-POL 121130 0000	9-107, 9-111, 9-113, 9-115, 9-117, 9-119, 9-121, 9-123, 9-125, 9-127, 9-129
90458-0876	FEMALE INSERT, HAN 6B 09 14 002 2751	9-103, 9-105
90110-0296	FEMALE INSERT, HDC-HA-4BS 149840-B/2	9-103, 9-105, 9-111, 9-113, 9-115, 9-117, 9-119, 9-121, 9-123, 9-125, 9-127, 9-129
90600-5249	FERRITE, B64290L616X38	9-13, 9-15, 9-17, 9-19
979434-0000	FERRULE	1-29
342841-0103	FERRULE, 3-A, GC-CLAMP 25,4 MM (1")	1-163
90232-0347	FIBRE, LL3-TB01, 5308 050	8-45
751220-0000	FILLER CAP	6-69
469091-0600	FILLER TUBE	1-3, 1-5, 1-7
1523060-0000	FILLER TUBE	6-69
1523062-0000	FILLING PIPE	6-77
2545427-0000	FILLING PIPE	1-35, 1-37
2546473-0000	FILLING PIPE	1-33
529345-0100	FILLING STATION H2O2	12-9
979329-0200	FILLING UNIT	6-79
272141-0001	FILTER	1-93, 1-95
272141-0002	FILTER	1-93, 1-95
450833-0000	FILTER	1-103, 1-105
484196-0000	FILTER	1-103, 1-105
484197-0000	FILTER	11-39
546929-0000	FILTER	6-85, 6-87, 6-89, 6-91
1511701-0000	FILTER	6-77
90415-0019	FILTER / ART.NO. HH-M15-RG	6-29, 6-31
90415-0022	FILTER / R1 1/2" TYP. 1012	5-201, 5-203
90277-0324	FILTER CARTRIDGE 050-11-A	1-35, 1-37
90277-0407	FILTER ELEMENT 60Âµ, SS-4F-K4-60	1-33
90277-0104	FILTER F64B-2GN-ARO	1-35, 1-37
90415-0018	FILTER FOR LIME SEPARATING / D MOD.AD	6-29, 6-31
90277-0323	FILTER HOUSING / ART.NO 95S6-1/4 S 5430	1-35, 1-37
90277-0055	FILTER HOUSING / MDS 4463 G 08 H	1-31
90277-0062	FILTER HOUSING SS-4TF2-60	1-33

Part No	Description	Page No
90337-0315	FILTER INSERT / MCS 4463	1-31
90257-0001	FILTER PLUG ART.NO.8145-00-140 TYPE F14	1-35, 1-37
90257-0002	FILTER PLUG, NO. 8145-00-120 TYPE F12	5-181
90113-0059	FILTER REGULATOR 50UM, B08-396-A3MG	12-17, 12-19
90459-5804	FILTER REGULATOR, MS6-LFR-1/2-D6-ERV-AS	6-39
90458-0921	FILTER SP 122-200	6-29, 6-31
90459-1857	FILTER, MS6-LF-1/2-CRV	6-39
90459-2772	FILTER, MS6-LFM-1/2-ARV	6-39
90459-2773	FILTER, MS6-LFM-1/2-BRV	6-39
90459-5786	FILTERED SILENCER, 10494 LFU-1/2	6-15, 6-17
272742-0000 ..	FINGER	2-9, 2-11, 2-25, 2-27
979668-0000 ..	FINGER	7-23, 7-25, 7-27, 7-29
2540726-0000 .	FINGER	7-21
2987302-0100 .	FINGER	5-3, 5-5, 5-7
533374-0000 ..	FITMENT BOTTOM	12-21
533906-0000 ..	FITMENT COVER	12-21
350014-0006 ..	FITTING QS-F-G1/8-6H	12-135
271825-0000 ..	FIXED AIR KNIFE	1-93, 1-95
272023-0000 ..	FIXED AIR KNIFE	1-93, 1-95
256178-0000 ..	FIXING RING	3-5
2508118-0000 .	FIXING RING	8-15
1539949-0100 .	FIXING UNIT	5-3, 5-5, 5-7
574946-0000 ..	FLAG	8-17, 8-19
271858-0000 ..	FLANGE	1-93, 1-95
469999-0000 ..	FLANGE	3-5
565534-0000 ..	FLANGE	12-133
565535-0000 ..	FLANGE	12-133
751245-0000 ..	FLANGE	3-5
751395-0000 ..	FLANGE	6-73
979951-0000 ..	FLANGE	12-133
1140996-0000 .	FLANGE	8-17, 8-19
1195043-0000 .	FLANGE	5-89
1195046-0000 .	FLANGE	5-89
1334331-0000 .	FLANGE	7-35, 7-37
1498757-0000 .	FLANGE	7-9
1523061-0000 .	FLANGE	6-73
1523228-0000 .	FLANGE	1-81
1548277-0000 .	FLANGE	1-219
2544964-0000 .	FLANGE	5-85
2544970-0000 .	FLANGE	5-85
2559122-0000 .	FLANGE	5-85
2887606-0000 .	FLANGE	9-171
2887607-0000 .	FLANGE	9-171
3019247-0000 .	FLANGE	2-93
321161-0062 ..	FLANGE BEARING, 6X8X8 MM	5-153
255653-0000 ..	FLANGE BUSHING	4-93, 4-95
752156-0000 ..	FLANGE BUSHING	1-125, 1-127, 1-143, 1-145
90240-0180	FLANGE BUSHING 10X14X15MM	1-155, 4-111
321111-0135 ..	FLANGE BUSHING, 10/16X10-22X3 MM	7-13
90240-0254	FLANGE BUSHING, 10X15X7 MM	5-123, 5-125, 5-127
321101-0172 ..	FLANGE BUSHING, 12X18X10 MM	4-105
321101-0173 ..	FLANGE BUSHING, 12X18X12 MM	4-107, 4-109, 8-33
90240-0146	FLANGE BUSHING, 15X21X20 MM	1-55, 1-57
321101-0222 ..	FLANGE BUSHING, 18/25X12-32X4 MM	12-131
321101-0233 ..	FLANGE BUSHING, 20/28X20-35X4 MM	8-39
321111-0066 ..	FLANGE BUSHING, 6/10X10-14X2 MM	2-35
321111-0097 ..	FLANGE BUSHING, 8/12X12-16X2 MM	7-13, 7-51, 7-53
321101-0143 ..	FLANGE BUSHING, 8/14X8-18X3 MM	1-209, 1-211
90240-0121	FLANGE BUSHING, 8X10X12 MM	8-21
90240-0172	FLANGE BUSHING, 8X12X10 MM	1-125, 1-127, 1-135, 1-137, 1-139, 1-143, 1-145, 1-149, 1-151
90240-0331	FLANGE BUSHING, IGLIDUR G 10X12X17	5-81
90240-0332	FLANGE BUSHING, IGLIDUR G 16X18X12	5-81
90240-0262	FLANGE BUSHING, IGLIDUR X 12X14X12	5-11, 5-13, 5-15
90240-0325	FLANGE BUSHING, IGLIDUR X 16X18X12	5-11, 5-13, 5-15
90458-0825	FLANGE BUSHING, IGLIDUR Z 16X18X17	1-219
37890-0000	FLANGE ROLLER	8-33
577767-0000 ..	FLANGE SEAL	5-123, 5-125, 5-127
295206-0000 ..	FLAP	5-29, 5-93
1195039-0100 .	FLAP HEATER	5-3, 5-5, 5-7
1539968-0200 .	FLAP HEATER	5-3, 5-5, 5-7
90459-4816	FLAP VALVE, G1/4, L=33	6-97, 6-99
90457-0136	FLAT GASKET TAPE W. ADHESIVE, 10X3.0	6-97, 6-99
90143-0073	FLAT GASKET TAPE W. ADHESIVE, 15X3.0	2-13, 2-15, 2-29, 2-31, 2-47, 2-49, 2-105, 5-115, 5-117, 9-87, 9-89
90097-0019	FLAT PIN PLUG 2,8MM	9-7, 9-9, 9-11
90097-0017	FLAT PIN PLUG 6,3MM	9-7, 9-9, 9-11
90459-2309	FLEXIBLE CHAIN, A325A103KM	9-175
90457-0150	FLEXIBLE COUPLING, 10X25 MM	3-37
90457-0014	FLEXIBLE COUPLING, ND5-A, CON.10X19 MM	6-97, 6-99
929276-0000 ..	FLOAT	1-225
1282411-0000 .	FLOAT	6-69
2921880-0000 .	FLOAT	1-225
2921890-0000 .	FLOAT	1-225
568828-0000 ..	FLOAT GUARD	6-85, 6-87

Part No	Description	Page No
90360-0305	FLOAT, ART NO 10739920	6-85, 6-87
90235-0289	FLOW CONTROL VALVE, GRLA-M5	7-13, 7-19
90459-7549	FLOW CONTROL VALVE, GRLZ-1/8-QS-8-D	6-49, 6-51
90243-0147	FLOW METER	12-17, 12-19
1349090-0200 .	FLOW METER	6-15, 6-17
90243-0134	FLOW METER, EK-4244	6-41
90600-1154	FLOW METER,D-6230-HGB-BB-AV-99-0-N2/IP65	1-35, 1-37
90457-0126	FLOW RESTRICTOR M6, 2,2	9-139, 9-141, 9-145
90297-0006	FLUORESCENT TUBE, PL9	2-41
90459-7095	FOCUS JUMPER CABLE M12 5P 1M, 20-056-20	1-83, 1-85, 6-61, 7-31, 8-23, 8-25, 9-99, 9-101
90459-4876	FOCUS JUMPER CABLE M12 5P 3M, 20-056-21	1-173, 1-175, 1-177, 1-179, 1-181, 1-183, 3-31 6-61, 7-31, 8-11, 8-13, 9-99, 9-101, 9-111, 9-113, 9-115, 9-117, 9-119, 9-121, 9-123, 9-125, 9-127 ... 9-129, 9-133
90459-3881	FOLDED PAPER, 420840	11-11
1195056-0100 .	FOLDING BAR	5-3, 5-5, 5-7
1539970-0200 .	FOLDING BAR	5-3, 5-5, 5-7
2800338-0000 .	FOLDING BAR	5-45, 5-47
2800339-0000 .	FOLDING BAR	5-45, 5-47
2800340-0000 .	FOLDING BAR	5-45, 5-47
2800341-0000 .	FOLDING BAR	5-45, 5-47
2800350-0000 .	FOLDING BAR	5-45, 5-47
2800351-0000 .	FOLDING BAR	5-45, 5-47
2814888-0000 .	FOLDING BAR	5-45, 5-47
2814889-0000 .	FOLDING BAR	5-45, 5-47
2944330-0000 .	FOLDING BAR	5-31, 5-33
2776742-0000 .	FOLDING BAR LEFT	5-45, 5-47
2776741-0000 .	FOLDING BAR RIGHT	5-45, 5-47
272420-0000 ..	FOLDING FLAP	4-7, 4-9, 4-11, 4-13, 4-15, 4-17
272421-0000 ..	FOLDING FLAP	4-7, 4-9, 4-11, 4-13, 4-15, 4-17
272422-0000 ..	FOLDING FLAP	4-7, 4-9, 4-11, 4-13, 4-15, 4-17
272423-0000 ..	FOLDING FLAP	4-7, 4-9, 4-11, 4-13, 4-15, 4-17
597993-0000 ..	FOLDING FLAP	4-7, 4-9, 4-11, 4-13, 4-15, 4-17
597994-0000 ..	FOLDING FLAP	4-7, 4-9, 4-11, 4-13, 4-15, 4-17
1532440-0000 .	FOLDING FLAP	4-7, 4-9, 4-11, 4-13, 4-15, 4-17
1532441-0000 .	FOLDING FLAP	4-7, 4-9, 4-11, 4-13, 4-15, 4-17
2532539-0000 .	FOLDING FLAP	4-7, 4-9, 4-11, 4-13, 4-15, 4-17
2532540-0000 .	FOLDING FLAP	4-7, 4-9, 4-11, 4-13, 4-15, 4-17
2532541-0000 .	FOLDING FLAP	4-7, 4-9, 4-11, 4-13, 4-15, 4-17
2532542-0000 .	FOLDING FLAP	4-7, 4-9, 4-11, 4-13, 4-15, 4-17
2532543-0000 .	FOLDING FLAP	4-7, 4-9, 4-11, 4-13, 4-15, 4-17
2597663-0000 .	FOLDING FLAP	4-7, 4-9, 4-11, 4-13, 4-15, 4-17
456760-0012 ..	FOLDING FLAP CAM	4-57, 4-59, 4-61, 4-63
574494-0000 ..	FOLDING FLAP CAM	4-57, 4-59, 4-61, 4-63
577225-0000 ..	FOLDING FLAP CAM	4-57, 4-59, 4-61, 4-63
582162-0000 ..	FOLDING FLAP CAM	4-57, 4-59, 4-61, 4-63
2987296-0000 .	FOLDING FLAP CAM	4-57, 4-59, 4-61, 4-63
979770-0000 ..	FOLDING FLAP CAM 100	4-57, 4-59, 4-61, 4-63
456760-0010 ..	FOLDING FLAP CAM 200B & 125S	4-57, 4-59, 4-61, 4-63
456760-0003 ..	FOLDING FLAP CAM 200S	4-57, 4-59, 4-61, 4-63
1360633-0000 .	FOLDING FLAP CAM 200S	4-57, 4-59, 4-61, 4-63
456760-0011 ..	FOLDING FLAP CAM 250B	4-57, 4-59, 4-61, 4-63
1539357-0000 .	FOLDING FLAP CAM P48 200	4-57, 4-59, 4-61, 4-63
1350992-0000 .	FOLDING FLAP CAM P48 250	4-57, 4-59, 4-61, 4-63
929356-0000 ..	FOLDING FLAP CAM P48 330	4-57, 4-59, 4-61, 4-63
591446-0000 ..	FOLDING FLAP LEFT	4-7, 4-9, 4-11, 4-13, 4-15, 4-17
929315-0000 ..	FOLDING FLAP LEFT	4-45, 4-47
1350986-0000 .	FOLDING FLAP LEFT	4-45, 4-47
591445-0000 ..	FOLDING FLAP RIGHT	4-7, 4-9, 4-11, 4-13, 4-15, 4-17
929314-0000 ..	FOLDING FLAP RIGHT	4-45, 4-47
1350985-0000 .	FOLDING FLAP RIGHT	4-45, 4-47
90459-3460	FOOTPRINT FILTER 1 PHASE 10A	9-13, 9-15, 9-17, 9-19
90459-3459	FOOTPRINT FILTER 3 PHASE 18A	9-13, 9-15, 9-17, 9-19
1548313-0000 .	FORCE LIMITING DEVICE	3-33, 3-35
979669-0000 ..	FORCE PLATE	7-23, 7-25, 7-27, 7-29
2514090-0000 .	FORCE PLATE	4-97, 4-99
271121-0000 ..	FORCE SPRING	2-57
295785-0000 ..	FORCE SPRING	2-57
295985-0000 ..	FORCE SPRING	2-57
441665-0000 ..	FORCE SPRING	2-57
456128-0000 ..	FORCE SPRING	2-57
456129-0001 ..	FORCE SPRING	2-57
456129-0002 ..	FORCE SPRING	2-57
255978-0000 ..	FORK	1-171
257040-0000 ..	FORK	1-149, 1-151
257041-0000 ..	FORK	1-149, 1-151
568583-0000 ..	FORK	1-171
574341-0000 ..	FORK	1-149, 1-151
1538103-0000 .	FORK	1-91
3070148-0000 .	FORK HEAD	4-43
90458-1231	FORK W. BACKHOLE, 913588/04	8-17, 8-19
752126-0000 ..	FORMING ROLLER	1-125, 1-127
752127-0000 ..	FORMING ROLLER	1-125, 1-127
752128-0000 ..	FORMING ROLLER	1-125, 1-127
752129-0000 ..	FORMING ROLLER	1-135, 1-137, 1-139

Part No	Description	Page No
752130-0000 ..	FORMING ROLLER	1-135, 1-137, 1-139
752131-0000 ..	FORMING ROLLER	1-143, 1-145
752132-0000 ..	FORMING ROLLER	1-143, 1-145
752133-0000 ..	FORMING ROLLER	1-143, 1-145
752134-0000 ..	FORMING ROLLER	1-143, 1-145
752135-0000 ..	FORMING ROLLER	1-143, 1-145
752136-0000 ..	FORMING ROLLER	1-143, 1-145
752137-0000 ..	FORMING ROLLER	1-143, 1-145
752138-0000 ..	FORMING ROLLER	1-149, 1-151
752141-0000 ..	FORMING ROLLER	1-125, 1-127
752142-0000 ..	FORMING ROLLER	1-125, 1-127
752143-0000 ..	FORMING ROLLER	1-125, 1-127
752144-0000 ..	FORMING ROLLER	1-135, 1-137, 1-139
752145-0000 ..	FORMING ROLLER	1-135, 1-137, 1-139
752146-0000 ..	FORMING ROLLER	1-143, 1-145
752147-0000 ..	FORMING ROLLER	1-143, 1-145
752148-0000 ..	FORMING ROLLER	1-143, 1-145
752149-0000 ..	FORMING ROLLER	1-143, 1-145
752150-0000 ..	FORMING ROLLER	1-143, 1-145
752151-0000 ..	FORMING ROLLER	1-143, 1-145
752152-0000 ..	FORMING ROLLER	1-143, 1-145
752153-0000 ..	FORMING ROLLER	1-149, 1-151
1285484-0100 .	FORMING UNIT	5-3, 5-5, 5-7
37905-0000	FRAME	8-41
76202-0000	FRAME	12-163, 12-165
1195023-0200 .	FRAME	5-3, 5-5, 5-7
1511798-0000 .	FRAME	9-109
1517664-0000 .	FRAME	9-131, 9-133, 9-163, 9-165
1519624-0000 .	FRAME	5-129
1523448-0000 .	FRAME	9-167
1523455-0000 .	FRAME	9-173
1523973-0000 .	FRAME	9-167
1548000-0200 .	FRAME	5-3, 5-5, 5-7
2553830-0200 .	FRAME	2-3, 2-5, 2-7
2553831-0000 .	FRAME	2-105
2553832-0000 .	FRAME	2-105
2613754-0000 .	FRAME	6-61
2685224-0000 .	FRAME	2-105
2810417-0000 .	FRAME	2-105
2815750-0001 .	FRAME	1-93, 1-95
2815750-0002 .	FRAME	1-93, 1-95
3019603-0000 .	FRAME	9-149, 9-151, 9-153
534692-0000 ..	FRAME SECTION	12-23
90348-0007	FREE-WHEEL COUPLING, 15,875X22,225 MM	1-81, 1-97
90459-3450	FREQ. CONV., 22A-A4P5N104	9-13, 9-15, 9-17, 9-19
90459-3446	FREQ. CONV., 22B-D012N104	9-13, 9-15, 9-17, 9-19
3036087-0000 .	FRONT COVER	2-13, 2-15, 2-29, 2-31
441677-0000 ..	FRONT PLATE	2-37
1523760-0000 .	FRONT PLATE	2-37
3081141-0000 .	FUNCTION DESCRIPTION	11-3
1487447-0200 .	FUSE	9-135, 9-137
90600-3838	FUSE HOLDER CYLINDRICAL FUSE, 3NC1 091	9-143
90600-3840	FUSE HOLDER CYLINDRICAL FUSE, 3NC1 093	9-143
3040336-0000 .	FUSE PANEL LABEL	9-165
90347-0108	GAS SPRING NO. 03-08-100-084174	8-15
90424-0304	GASKET	11-39
230551-0000 ..	GASKET	6-67
256005-0000 ..	GASKET	1-55, 1-57
272277-0000 ..	GASKET	1-101
295417-0000 ..	GASKET	2-57, 5-201, 5-203
441536-0000 ..	GASKET	2-41
441593-0000 ..	GASKET	2-37
456395-0000 ..	GASKET	5-201, 5-203
456396-0000 ..	GASKET	5-201, 5-203
491128-0000 ..	GASKET	1-83, 1-85
491172-0000 ..	GASKET	1-69
491681-0000 ..	GASKET	4-87, 4-89, 4-91
527906-0000 ..	GASKET	6-75
531731-0000 ..	GASKET	1-77, 1-79
532206-0000 ..	GASKET	6-75
539212-0000 ..	GASKET	1-17, 1-49, 11-41
562119-0000 ..	GASKET	4-101, 4-103
563286-0000 ..	GASKET	6-69
577770-0000 ..	GASKET	6-73
577773-0000 ..	GASKET	6-69
578030-0000 ..	GASKET	1-107, 1-109
579624-0000 ..	GASKET	3-29
591454-0000 ..	GASKET	2-33
751010-0000 ..	GASKET	1-193, 1-195
751015-0000 ..	GASKET	1-73
751016-0000 ..	GASKET	1-45
751020-0000 ..	GASKET	1-69
751023-0000 ..	GASKET	1-69, 1-73
751024-0000 ..	GASKET	1-193, 1-195

Part No	Description	Page No
751331-0000 ..	GASKET	1-55, 1-57
926822-0000 ..	GASKET	11-39
1037573-0000 .	GASKET	9-103, 9-105
1037575-0000 .	GASKET	9-111, 9-113, 9-115, 9-117, 9-119, 9-121, 9-123, 9-125, 9-127, 9-129
1129478-0000 .	GASKET	9-111, 9-113, 9-115, 9-117, 9-119, 9-121, 9-123, 9-125, 9-127, 9-129
1144050-0000 .	GASKET	5-91
1195428-0000 .	GASKET	2-37
1296415-0000 .	GASKET	5-19, 5-21, 5-23, 5-25, 5-27, 5-91
1296416-0000 .	GASKET	5-91
1349920-0000 .	GASKET	6-73
1487431-0000 .	GASKET	9-103, 9-105, 9-111, 9-113, 9-115, 9-117, 9-119, 9-121, 9-123, 9-125, 9-127, 9-129
1498233-0000 .	GASKET	5-19, 5-21, 5-23, 5-25, 5-27
1511611-0000 .	GASKET	6-7
1511612-0000 .	GASKET	6-7
1511833-0000 .	GASKET	9-111, 9-113, 9-115, 9-117, 9-119, 9-121, 9-123, 9-125, 9-127, 9-129
1511836-0000 .	GASKET	1-185, 1-187, 1-189, 1-191
1511838-0000 .	GASKET	9-103, 9-105
1511840-0000 .	GASKET	9-107
1511841-0000 .	GASKET	9-91, 9-93
1511843-0000 .	GASKET	9-95, 9-97
1517058-0000 .	GASKET	6-77
1517181-0000 .	GASKET	6-101, 6-103
1517492-0000 .	GASKET	6-77
1523066-0000 .	GASKET	6-77
1523464-0000 .	GASKET	9-87, 9-89
1539967-0000 .	GASKET	5-19, 5-21, 5-23, 5-25, 5-27
1549889-0000 .	GASKET	2-33
2550181-0000 .	GASKET	6-77
3024322-0000 .	GASKET	11-37
3092163-0000 .	GASKET	11-37
3092164-0000 .	GASKET	11-37
342850-0101 ..	GASKET 11,1X21,8X4,45 MM 1/2" FDA 3-A	5-207
342850-0201 ..	GASKET 11,1X21,8X4,45 MM 1/2" FDA 3-A	1-55, 1-57
315229-0203 ..	GASKET 22,1X30,1X3,7 MM 1"	1-99, 1-165, 1-167
342850-0203 ..	GASKET 22,7X49,1X5,2 MM 1" FDA 3-A	1-163
342850-0303 ..	GASKET 22,7X49,1X5,2 MM 1" FDA, 3-A	11-39
90217-0347	GASKET 32X22,6X3,6 MM	1-9, 1-11, 1-33, 1-43, 1-49, 1-159, 1-161, 1-163, 1-165, 1-167
12242-0001	GASKET 32X25X5,5	1-43, 1-101
315229-0204 ..	GASKET 34,8X42,8X3,7 MM 1"1/2	1-77, 1-79, 1-99
90217-0348	GASKET 35,4X46,8X4 MM	1-9, 1-11, 1-33, 1-49, 1-159, 1-161, 1-165, 1-167
342850-0304 ..	GASKET 35,4X49,1X5,2 1"1/2 FDA, 3-A	11-39
315229-0205 ..	GASKET 47,5X55,5X3,7 MM 2 INCH	1-45, 1-75, 1-77, 1-79, 1-99, 1-101
342850-0305 ..	GASKET 47,8X62,6X5,2 MM 2" FDA 3-A	6-85, 6-87, 11-39
90217-0349	GASKET 48,4X59,8X4 MM	1-9, 1-11
12242-0003	GASKET 48X38X5,5	1-163
315250-0103 ..	GASKET 48X38X5,5 MM	5-201, 5-203
90207-0365	GASKET 53X63X1,8 MM 2,5" FDA 3-A	1-17, 1-49, 11-41
315229-0206 ..	GASKET 60,2X68,2X3,7 MM 2"1/2	1-75, 1-77, 1-79, 1-99, 1-165, 1-167
12242-0005	GASKET 61X51X5,5	1-83, 1-85, 1-163
315250-0104 ..	GASKET 61X51X5,5 MM	5-189, 5-201, 5-203
90207-0363	GASKET 75X85X1,8 MM 3" FDA 3-A	1-17, 11-37, 11-41
90217-0313	GASKET 97,8X121,2X5,5 MM	6-85, 6-87
295993-0000 ..	GASKET HOLDER	1-101
491602-0000 ..	GASKET HOLDER	1-83, 1-85
90277-0333	GASKET KIT / ART.NO ACS 0325 EH	11-37
90457-0138	GASKET, DP-200	6-97, 6-99
90457-0137	GASKET, GP IP	6-97, 6-99
90458-2199	GASKET, LOWARA 168061340	5-201, 5-203
90419-0307	GASKET, XVA-C09	2-81, 2-95
76602-0000	GAUGE	12-27
590280-0000 ..	GAUGE	12-177
590283-0000 ..	GAUGE	12-177
590285-0000 ..	GAUGE	12-177
590503-0000 ..	GAUGE	12-177
1334063-0000 .	GAUGE	12-177
1349091-0100 .	GAUGE GROUP	6-15, 6-17
257179-0000 ..	GEAR WHEEL	3-5, 3-31
293610-0000 ..	GEAR WHEEL	4-105
577738-0000 ..	GEAR WHEEL	5-123, 5-125, 5-127
577740-0000 ..	GEAR WHEEL	5-123, 5-125, 5-127
979979-0000 ..	GEAR WHEEL	5-123, 5-125, 5-127
2854617-0000 .	GEAR WHEEL	5-139
90458-1879	GEARS, WORM MOTOR 528V--L06-B01	1-97
90459-2327	GEARS, WORM MOTOR IGL 80-60 + VE 31GR5	1-81, 8-17, 8-19
90458-0742	GENERAL WARNING SIGN ISO,	6-97, 6-99
272407-0400 ..	GENERATOR	1-3, 1-5, 1-7
1144150-0000 .	GLAND FITTING	5-91, 5-109
90012-0126	GLAND FITTING, 155 ULI2120	1-77, 1-79
90458-0450	GLAND FITTING, 2205416S08 UL16	3-9
353243-0001 ..	GLAND FITTING, VK 15052YUL11	5-109, 5-123, 5-125, 5-127, 6-83, 6-85, 6-87, 6-95, 6-97, 6-99, 9-91, 9-93, 9-95, 9-97
353243-0002 ..	GLAND FITTING, VK 15152YUL11	1-173, 1-175, 1-177, 1-179, 1-181, 1-183, 2-23, 2-41, 6-69, 6-97, 6-99, 8-45
353243-0003 ..	GLAND FITTING, VK 15153YUL13	1-55, 1-57, 1-173, 1-175, 1-177, 1-179, 1-181, 1-183

Part No	Description	Page No
353243-0005 ..	GLAND FITTING, VK 15354YUL16	5-121, 6-67, 6-73, 9-91, 9-93
353243-0007 ..	GLAND FITTING, VK 15455YUL211	5-35, 1-37, 1-55, 1-57, 1-173, 1-175, 1-177, 1-179, 1-181, 1-183
90458-0146	GLAND FITTING, VK 154YUL16	7-33
353243-0008 ..	GLAND FITTING, VK 15556YUL29	1-35, 1-37
90458-0417	GLAND FITTING, VK 21650YUL9	8-45, 8-47, 8-49
90458-0427	GLAND FITTING, VK 21652YUL11	1-173, 1-175, 1-177, 1-179, 1-181, 1-183, 2-13, 2-15, 2-29 2-31, 5-85, 5-115, 5-117
90458-0428	GLAND FITTING, VK 22052YUL11	8-33, 8-45, 9-111, 9-113, 9-115, 9-117, 9-119, 9-121, 9-123 9-125, 9-127, 9-129
90458-0430	GLAND FITTING, VK 22054YUL16	5-201, 5-203, 7-33, 8-45, 9-111, 9-113, 9-115, 9-117, 9-119 9-121, 9-123, 9-125, 9-127, 9-129
90458-0431	GLAND FITTING, VK 22554YUL16	5-191, 5-193, 5-195, 6-97, 6-99, 7-17, 7-33, 9-111, 9-113 9-115, 9-117, 9-119, 9-121, 9-123, 9-125, 9-127, 9-129
90458-0433	GLAND FITTING, VK 23255YUL21	7-33, 8-47, 8-49
90458-0459	GLAND FITTING, VK 24056 D UL21	5-19, 5-21, 5-23, 5-25, 5-27, 5-49, 5-51
353250-0020 ..	GLAND LOCK NUT, M20X1,5	9-87, 9-89
90602-0232	GLAND, 5GM0000011614	2-93
90602-0233	GLAND, 5GM0000011615	2-93
90458-0438	GLAND, EXTENDED WITH INSERT, M20X1,5	1-81, 4-57, 4-59, 4-61, 4-63
90012-0119	GLAND, EXTENDED WITH INSERT, PG9	1-227
90458-0461	GLAND, LOCK NUT, M20X1,5	9-111, 9-113, 9-115, 9-117, 9-119, 9-121, 9-123, 9-125, 9-127, 9-129
90458-0462	GLAND, LOCK NUT, M25X1,5	9-111, 9-113, 9-115, 9-117, 9-119, 9-121, 9-123, 9-125, 9-127, 9-129
90458-0465	GLAND, LOCK NUT, M50X1,5	9-111, 9-113, 9-115, 9-117, 9-119, 9-121, 9-123, 9-125, 9-127, 9-129
456264-0000 ..	GLASS	2-41
2500050-0000 .	GLASS	8-11, 8-13
2748679-0000 .	GLASS	2-65, 2-67, 2-69, 2-71
1511311-0000 .	GLASS PANE	7-59
1549608-0000 .	GLASS PANE	2-13, 2-15, 2-29, 2-31
2552679-0000 .	GLASS PANE	2-101, 2-103
2761512-0000 .	GLASS PANE	2-13, 2-15
2788117-0000 .	GLASS PANE	6-5
2788121-0000 .	GLASS PANE	6-5
90243-0318	GLASS ROD	12-113
90337-0342	GLASS-WINDOW D=12,5MM	12-113
90457-0057	GRID, LZ36	9-13, 9-15, 9-17, 9-19
491230-0000 ..	GRUB SCREW(LI - CHINE)	5-9, 5-87, 5-141, 5-143
979550-0000 ..	GUARD PLATE	5-131
979556-0000 ..	GUARD PLATE	5-123, 5-125, 5-127
256217-0500 ..	GUIDE	4-3, 4-5
441268-0000 ..	GUIDE	4-97, 4-99
441269-0000 ..	GUIDE	4-97, 4-99
590218-0000 ..	GUIDE	12-181
1143978-0100 .	GUIDE	5-3, 5-5, 5-7
1255392-0000 .	GUIDE	5-111
1350675-0000 .	GUIDE	12-181
1350677-0000 .	GUIDE	12-181
1350678-0000 .	GUIDE	12-181
1524646-0000 .	GUIDE	5-129
1538026-0000 .	GUIDE	5-103, 5-105, 5-107
1538027-0000 .	GUIDE	5-103, 5-105, 5-107
1538935-0000 .	GUIDE	5-149, 5-151
1539969-0200 .	GUIDE	5-3, 5-5, 5-7
1549909-0000 .	GUIDE	5-103, 5-105, 5-107
1549910-0000 .	GUIDE	5-103, 5-105, 5-107
2509558-0000 .	GUIDE	5-101
2509559-0000 .	GUIDE	5-101
2511725-0000 .	GUIDE	5-101
2511726-0000 .	GUIDE	5-101
2545667-0000 .	GUIDE	5-83
2552726-0000 .	GUIDE	5-11, 5-13, 5-15
2554959-0000 .	GUIDE	2-101, 2-103
2555562-0000 .	GUIDE	5-83
2555563-0000 .	GUIDE	5-83
2555564-0000 .	GUIDE	5-83
2555565-0000 .	GUIDE	5-83
2555566-0000 .	GUIDE	5-83
2555568-0000 .	GUIDE	5-83
2555569-0000 .	GUIDE	5-83
2555571-0000 .	GUIDE	5-83
2776725-0000 .	GUIDE	5-35, 5-37, 5-39, 5-41, 5-43
2964437-0000 .	GUIDE	1-67
2964518-0000 .	GUIDE	5-147
401183-0000 ..	GUIDE AXLE	7-13
2552688-0000 .	GUIDE BRACKET	2-101, 2-103
2776726-0000 .	GUIDE BRACKET	5-35, 5-37, 5-39, 5-41, 5-43
1350197-0000 .	GUIDE BUSHING	5-123, 5-125, 5-127
566696-0000 ..	GUIDE CONSOLE	1-91
1498777-0000 .	GUIDE HOLDER	7-35, 7-37
1350978-0000 .	GUIDE L	5-103, 5-105, 5-107
1498155-0000 .	GUIDE L	5-103, 5-105, 5-107
1129274-0000 .	GUIDE LUG	2-101, 2-103, 6-5, 6-7
75451-0000	GUIDE PIN	12-123, 12-169
752655-0000 ..	GUIDE PIN	5-35, 5-37, 5-39, 5-41, 5-43
978262-0000 ..	GUIDE PIN	3-23, 3-25

Part No	Description	Page No
1360696-0000	.GUIDE PLATE	2-33
2709292-0000	.GUIDE PLATE	2-33
2745176-0000	.GUIDE PLATE	2-33
2745177-0000	.GUIDE PLATE	2-33
1350977-0000	.GUIDE R	5-103, 5-105, 5-107
1498156-0000	.GUIDE R	5-103, 5-105, 5-107
598049-0000	.. GUIDE RAIL	5-149, 5-151
598050-0000	.. GUIDE RAIL	5-149, 5-151
1511443-0400	.GUIDE RAIL	5-3, 5-5, 5-7
1512444-0000	.GUIDE RAIL	5-55
1538933-0000	.GUIDE RAIL	5-149, 5-151
1538934-0000	.GUIDE RAIL	5-149, 5-151
2594661-0000	.GUIDE RAIL	5-55
1036622-0000	.GUIDE ROLLER	7-49
1036623-0000	.GUIDE ROLLER	7-49
2850445-0000	.GUIDE WHEEL	7-51, 7-53
577798-0000	.. GUIDING ARBOR	8-21
578685-0000	.. GUIDING ARBOR	8-21
578686-0000	.. GUIDING ARBOR	8-21
578687-0000	.. GUIDING ARBOR	8-21
2810406-0000	.GUIDING ARBOR	8-21
2983247-0100	.GUIDING PULLTAB	1-55, 1-57
90426-0003	.... HAND SHOWER, 361100	2-79
90604-1395	.... HANDLE	11-13
90604-1827	.... HANDLE	11-13
240797-0000	.. HANDLE	4-105
295429-0000	.. HANDLE	1-83, 1-85
1285922-0000	.HANDLE	5-91
1523968-0000	.HANDLE	9-135, 9-137, 9-149, 9-151, 9-153
2528199-0000	.HANDLE	5-19, 5-21, 5-23, 5-25, 5-27
2787346-0000	.HANDLE	5-19, 5-21, 5-23, 5-25, 5-27
2854652-0000	.HANDLE	5-93
3072122-0000	.HANDLE	9-83
90017-0022	.... HANDLE, NO. EL-037311	7-31, 7-35, 7-37, 7-59, 8-11, 8-13
90458-1226	.... HANDLE, NO. GN 310-12-100-A-NI	8-15
318800-0104	.. HANDLE,SPHERICAL KNOB,INT.THRE.,D.30-M8	7-47
318800-0103	.. HANDLES,SPHERICAL KNOB,INT.THRE.,D.25-M6	1-83, 1-85
1549493-0000	.HANDSPIKE	8-17, 8-19
90155-0008	.... HANGER CHAIN, 18	1-43, 1-47
90600-5337	.... HARDDISK COPY TOOL, 03607-001	12-9
256665-0300	.. HATCH	2-3, 2-5, 2-7
1279044-0000	.HATCH	2-73
1279045-0000	.HATCH	2-75
1296815-0200	.HATCH	2-3, 2-5, 2-7
2556246-0000	.HATCH	2-37
441792-0000	.. HEAD	5-53, 5-211
556664-0000	.. HEAD	12-113
271827-0001	.. HEAD PLATE	1-93, 1-95
271827-0002	.. HEAD PLATE	1-93, 1-95
272140-0001	.. HEAD PLATE	1-93, 1-95
272140-0002	.. HEAD PLATE	1-93, 1-95
2506319-0000	.HEAD PLATE	2-9, 2-11
2506321-0000	.HEAD PLATE	2-9, 2-11
2506323-0000	.HEAD PLATE	2-9, 2-11
2506324-0000	.HEAD PLATE	2-9, 2-11
2522105-0000	.HEAD PLATE	2-9, 2-11
2522106-0000	.HEAD PLATE	2-9, 2-11
2522107-0000	.HEAD PLATE	2-9, 2-11
2522108-0000	.HEAD PLATE	2-9, 2-11
2522109-0000	.HEAD PLATE	2-9, 2-11
2619758-0200	.HEAD SPACE BY INJECTION	1-3, 1-5, 1-7
456976-0800	.. HEAT EXCHANGER	1-3, 1-5, 1-7
978838-0000	.. HEAT EXCHANGER	1-165, 1-167
1539599-0100	.HEAT EXCHANGER	1-33
491097-0000	.. HEAT GUARD	1-73
1260743-0000	.HEAT GUARD	1-69
37877-0400	.... HEATING BLOCK	8-31
1195040-0000	.HEATING CHAMBER	5-91
1498217-0000	.HEATING CHAMBER	5-19, 5-21, 5-23, 5-25, 5-27
2696960-0000	.HEATING CHAMBER	5-19, 5-21, 5-23, 5-25, 5-27
1558897-0100	.HEATING DEVICE	7-5, 7-7
90600-2007	.... HEATING ELEM.15KW 3X230/400V,T90600-2007	1-77, 1-79
90459-1382	.... HEATING ELEMENT 1100W 220V	5-19, 5-21, 5-23, 5-25, 5-27, 5-91
90206-0053	.... HEATING ELEMENT 230V 1200W	8-33
90459-1094	.... HEATING ELEMENT 3000W 240V AC	1-69
90206-0070	.... HEATING ELEMENT 6000W 380/220V	1-55, 1-57, 11-39
90206-0031	.... HEATING ELEMENT 700+1200W, 220V	1-73, 11-39
751733-0000	.. HEATING PIPE	1-73
752174-0000	.. HEATING PIPE	1-69
1519483-0000	.HEATING PIPE	1-77, 1-79
255301-0000	.. HEATING RAIL	8-33
353300-0006	.. HEATSHRINK TUBING	1-35, 1-37
401186-0000	.. HEX NUT	7-13
312705-0316	.. HEX. DOMED CAP MHM-6 M6 A280	1-173, 1-175, 1-177, 1-179, 1-181, 1-183, 2-47, 2-49, 7-13

Part No	Description	Page No
		7-49, 9-147
312631-0321 ..	HEX.NUT FINE, EN 24032 M6M M10X1,25 FZB8	2-25, 2-27
312107-0316 ..	HEXAGON FLANGE NUT ISO 4161 M6 A2	3-7
312601-0320 ..	HEXAGON NUT, M10 8 FZB, ISO 4032	2-9, 2-11, 2-25, 2-27, 6-97, 6-99, 12-163, 12-165
312601-0322 ..	HEXAGON NUT, DIN 934 M12 8 FZB	12-163, 12-165
312601-0324 ..	HEXAGON NUT, DIN 934 M16 8 FZB	3-15, 3-17
312601-0314 ..	HEXAGON NUT, DIN 934 M5 8 FZB	12-125
312601-0318 ..	HEXAGON NUT, DIN 934 M8 8 FZB	3-11, 3-13, 3-15, 3-17
312607-0320 ..	HEXAGON NUT, EN 24032 M6M M10 A480	1-31
312602-0312 ..	HEXAGON NUT, EN 24032 M6M M4 NIPLBR	4-101, 4-103, 12-17, 12-19
312607-0314 ..	HEXAGON NUT, EN 24032 M6M M5 A480	1-55, 1-57, 1-223
312607-0316 ..	HEXAGON NUT, EN 24032 M6M M6 A480	1-31
312605-0320 ..	HEXAGON NUT, M6M M10 A280	1-91, 1-149, 1-151, 3-9, 3-31, 5-11, 5-13, 5-15, 5-19, 5-21, 5-23, 5-25, 5-27, 5-29, 5-91, 5-93, 5-149, 5-151, 6-73, 7-11, 8-17, 8-19, 12-173
312605-0322 ..	HEXAGON NUT, M6M M12 A280	1-155, 2-97, 5-19, 5-21, 5-23, 5-25, 5-27, 5-89, 5-91, 5-113, 5-137, 5-163, 5-165, 5-167, 5-169, 5-171, 5-173, 5-175, 5-177
312605-0324 ..	HEXAGON NUT, M6M M16 A280	8-35
312605-0326 ..	HEXAGON NUT, M6M M20 A280	5-113
312605-0310 ..	HEXAGON NUT, M6M M3 A280	1-49, 1-93, 1-95, 6-83, 7-23, 7-25, 7-27, 7-29, 7-31, 7-35, 7-37, 7-39, 7-41, 8-33, 9-31, 9-103, 9-105, 12-117, 12-181
312605-0312 ..	HEXAGON NUT, M6M M4 A280	1-35, 1-37, 1-55, 1-57, 1-93, 1-95, 1-103, 1-105, 1-193, 1-195, 2-73, 2-75, 2-101, 2-103, 3-31, 4-49, 4-51, 6-85, 6-87, 7-39, 7-41, 7-45, 7-59, 8-23, 8-25, 9-103, 9-105, 9-107, 9-131, 9-133, 9-163, 9-165, 9-167, 12-99
312605-0314 ..	HEXAGON NUT, M6M M5 A280	1-35, 1-37, 1-93, 1-95, 1-101, 2-13, 2-15, 2-29, 2-31, 2-33, 2-87, 2-89, 3-31, 5-49, 5-51, 5-65, 5-201, 5-203, 6-7, 6-11, 6-15, 6-17, 6-45, 6-47, 6-69, 7-21, 7-31, 7-35, 7-37, 7-45, 7-59, 7-61, 8-23, 8-25, 9-109, 11-23, 11-27, 11-29, 12-17, 12-19, 12-181
312605-0316 ..	HEXAGON NUT, M6M M6 A280	1-45, 1-47, 1-55, 1-57, 1-81, 1-83, 1-85, 1-149, 1-151, 1-157, 1-159, 1-161, 1-173, 1-175, 1-177, 1-179, 1-181, 1-183, 1-213, 1-215, 1-217, 1-219, 2-23, 2-33, 2-35, 2-83, 2-85, 2-87, 2-89, 2-97, 5-11, 5-13, 5-15, 5-59, 5-61, 5-83, 5-89, 5-101, 5-135, 5-137, 5-139, 5-183, 5-185, 5-187, 5-201, 5-203, 6-11, 6-13, 6-15, 6-17, 6-45, 6-47, 6-53, 6-55, 6-73, 6-75, 6-97, 6-99, 7-13, 7-15, 7-21, 7-23, 7-25, 7-27, 7-29, 7-43, 7-47, 7-51, 7-53, 7-61, 8-15, 8-23, 8-25, 8-45, 9-83, 9-103, 9-105, 9-131, 9-133, 9-135, 9-137, 9-149, 9-151, 9-153, 9-159, 9-163, 9-165, 12-17, 12-19, 12-135, 12-167, 12-171, 12-179, 12-181
312605-0318 ..	HEXAGON NUT, M6M M8 A280	1-35, 1-37, 1-45, 1-69, 1-75, 1-77, 1-79, 1-89, 1-99, 1-101, 1-135, 1-137, 1-139, 1-149, 1-151, 1-155, 1-157, 1-165, 1-167, 1-171, 1-193, 1-195, 1-213, 1-215, 1-217, 2-9, 2-11, 2-25, 2-27, 2-73, 2-75, 2-97, 4-7, 4-9, 4-11, 4-13, 4-15, 4-17, 4-45, 4-47, 4-107, 4-109, 5-101, 5-139, 5-147, 5-149, 5-151, 5-199, 6-67, 6-69, 6-77, 6-85, 6-87, 6-89, 6-91, 6-97, 6-99, 7-35, 7-37, 7-67, 8-5, 8-23, 8-25, 8-37, 12-23, 12-25, 12-33, 12-35, 12-37, 12-129
90099-0058	HEXAGON NUT, M8X1, DIN936	1-55, 1-57
312812-0320 ..	HEXAGON NUT, NY-LOCK M10 A4 80	3-29, 9-109
312812-0322 ..	HEXAGON NUT, NY-LOCK M12 A4 80	8-5
312812-0324 ..	HEXAGON NUT, NY-LOCK M16 A4 80	2-83, 2-85
312810-0324 ..	HEXAGON NUT, NY-LOCK M16 FZB	5-159, 5-161
312812-0310 ..	HEXAGON NUT, NY-LOCK M3 A4 80	1-229
312812-0312 ..	HEXAGON NUT, NY-LOCK M4 A4 80	1-223, 2-35, 2-47, 2-49, 5-129, 5-141, 5-143, 6-95, 8-23, 8-25, 9-13, 9-15, 9-17, 9-19, 9-83, 9-87, 9-89
312812-0314 ..	HEXAGON NUT, NY-LOCK M5 A4 80	1-43, 1-89, 2-25, 2-27, 2-101, 2-103, 5-115, 5-117, 7-35, 7-37, 7-59, 9-85, 9-161
312810-0314 ..	HEXAGON NUT, NY-LOCK M5 FZB	2-73
312812-0316 ..	HEXAGON NUT, NY-LOCK M6 A4 80	1-209, 1-211, 1-213, 1-215, 1-217, 2-33, 2-35, 2-47, 2-49, 3-31, 5-93, 5-123, 5-125, 5-127, 7-19, 8-43, 9-83, 9-87, 9-89, 9-109, 9-131, 9-133, 9-135, 9-137, 9-149, 9-151, 9-153, 9-159, 9-163, 9-165, 12-23
312812-0318 ..	HEXAGON NUT, NY-LOCK M8 A4 80	1-209, 1-211, 2-17, 5-59, 5-61, 6-95, 8-23, 8-25
312625-0320 ..	HEXAGON THIN NUT, EN 24035 ML6M M10 A4	8-17, 8-19
312625-0322 ..	HEXAGON THIN NUT, EN 24035 ML6M M12 A4	5-123, 5-125, 5-127, 5-131
312625-0326 ..	HEXAGON THIN NUT, EN 24035 ML6M M20 A4	1-107, 1-109
312625-0316 ..	HEXAGON THIN NUT, EN 24035 ML6M M6 A4	1-125, 1-127, 3-31, 7-13, 7-15
312625-0318 ..	HEXAGON THIN NUT, EN 24035 ML6M M8 A4	7-21
37880-0000	HINGE	8-33
295428-0000 ..	HINGE	1-83, 1-85
979559-0000 ..	HINGE	1-55, 1-57
1523437-0000 .	HINGE	9-83, 9-135, 9-137, 9-149, 9-151, 9-153
1523438-0000 .	HINGE	9-131, 9-133, 9-163, 9-165
2731184-0000 .	HINGE	2-35
2754792-0000 .	HINGE	2-35
2754793-0000 .	HINGE	2-35
2754795-0000 .	HINGE	2-35
441740-0000 ..	HINGE FLANGE	1-205, 1-207
441741-0000 ..	HINGE FLANGE	1-205, 1-207
90459-0075	HINGE, 1056-U30	7-35, 7-37
90248-0026	HINGE, 1703-80X32	8-23, 8-25
90248-0034	HINGE, 66073	6-45, 6-47
90458-0875	HINGED FRAME, 09 14 006 0313	9-103, 9-105
2506790-0100 .	HOLD-DOWN DEVICE	3-3
75453-0000	HOLDER	12-121
255943-0000 ..	HOLDER	2-9, 2-11, 2-25, 2-27
272852-0000 ..	HOLDER	2-9, 2-11, 2-25, 2-27
272862-0000 ..	HOLDER	8-39
295259-0000 ..	HOLDER	6-61
295399-0000 ..	HOLDER	2-9, 2-11
295986-0000 ..	HOLDER	2-51, 2-53, 2-55
441212-0000 ..	HOLDER	2-37
449970-0000 ..	HOLDER	12-131

Part No	Description	Page No
456837-0000 ..	HOLDER	1-149, 1-151
469041-0000 ..	HOLDER	1-135, 1-137, 1-139
469078-0000 ..	HOLDER	1-135, 1-137, 1-139
469141-0000 ..	HOLDER	8-41
490518-0000 ..	HOLDER	1-149, 1-151
491859-0000 ..	HOLDER	2-51, 2-53, 2-55
491860-0000 ..	HOLDER	2-51, 2-53, 2-55
530591-0000 ..	HOLDER	1-23
556666-0000 ..	HOLDER	12-113
576286-0000 ..	HOLDER	6-33, 6-45, 6-47
590263-0000 ..	HOLDER	12-173
590276-0000 ..	HOLDER	12-175
591586-0000 ..	HOLDER	5-147
752007-0000 ..	HOLDER	12-101
752668-0000 ..	HOLDER	12-101
978791-0000 ..	HOLDER	1-135, 1-137, 1-139
979368-0000 ..	HOLDER	1-225
979446-0000 ..	HOLDER	6-33, 6-45, 6-47
1020637-0000 .	HOLDER	5-65, 11-23, 11-27, 11-29
1020638-0000 .	HOLDER	11-23, 11-27, 11-29
1037124-0000 .	HOLDER	7-19
1140129-0000 .	HOLDER	2-23
1317398-0000 .	HOLDER	2-25, 2-27
1350472-0000 .	HOLDER	2-87, 2-89
1350473-0000 .	HOLDER	2-87, 2-89
1350921-0000 .	HOLDER	2-25, 2-27
1490804-0000 .	HOLDER	7-19
1498771-0000 .	HOLDER	7-57
1499060-0000 .	HOLDER	6-69
1511002-0000 .	HOLDER	7-49
1523059-0000 .	HOLDER	6-69
1539607-0000 .	HOLDER	1-149, 1-151
1549492-0000 .	HOLDER	8-15
1550772-0000 .	HOLDER	5-119
1558190-0012 .	HOLDER	5-101
1558190-0013 .	HOLDER	5-101
1558190-0014 .	HOLDER	5-101
2500203-0000 .	HOLDER	6-41
2506472-0000 .	HOLDER	7-47
2506480-0000 .	HOLDER	7-65
2512787-0000 .	HOLDER	4-57, 4-59, 4-61, 4-63
2552621-0000 .	HOLDER	7-35, 7-37
2552622-0000 .	HOLDER	7-35, 7-37
2575480-0000 .	HOLDER	7-51, 7-53
2575484-0000 .	HOLDER	7-51, 7-53
2576239-0000 .	HOLDER	7-51, 7-53
2606880-0000 .	HOLDER	5-11, 5-13, 5-15
2640472-0000 .	HOLDER	1-165, 1-167
2701883-0000 .	HOLDER	5-11, 5-13, 5-15
2743350-0000 .	HOLDER	5-147
2763373-0000 .	HOLDER	2-19
2815756-0000 .	HOLDER	1-209, 1-211
2854627-0000 .	HOLDER	5-119
2854822-0000 .	HOLDER	5-69
2915996-0000 .	HOLDER	5-65
2930296-0000 .	HOLDER	5-71
3137648-0000 .	HOLDER	12-157
90164-0301	HOLDING FIXTURE	2-41
295377-0001 ..	HOOD	1-171
295377-0002 ..	HOOD	1-171
491441-0000 ..	HOOD	1-171
90110-0346	HOOD, SIDE ENTRY, 12 11220 00 00	7-33
90110-0371	HOOD, TOP ENTRY, HDC-HA-3-TOVL1/11	8-17, 8-19, 8-45
76296-0000	HOOK	12-93, 12-175
1334803-0000 .	HOOK	12-167
735549-0000 ..	HOOK HOLDER	1-49
72947-0000	HOOK SPANNER	11-17
90142-0005	HOSE	3-5
90166-0113	HOSE	5-181, 6-95, 12-23
90166-0138	HOSE	6-69
456137-0000 ..	HOSE	6-15, 6-17
469146-0000 ..	HOSE	2-57
978973-0001 ..	HOSE	6-69
978973-0003 ..	HOSE	6-85, 6-87
90152-0016	HOSE (SPIRAL)	2-77
90152-0017	HOSE (SPIRAL)	2-79
90166-0060	HOSE 19/26-27 REINF.PVC	3-5
90166-0117	HOSE 4/6 PVC BLUE	12-135
90166-0061	HOSE 4/8 PVC TRANSP.	6-45, 6-47
90166-0008	HOSE 7/10 PVC TRANSP.	6-13
342991-0101 ..	HOSE CLIP,WORM DRIVE TYPE (11)-17	5-181, 6-69, 6-95, 12-23
342991-0104 ..	HOSE CLIP,WORM DRIVE TYPE (19)-28	3-5
342991-0106 ..	HOSE CLIP,WORM DRIVE TYPE (26)-38	1-163
342991-0112 ..	HOSE CLIP,WORM DRIVE TYPE (68)-85	6-67

Part No	Description	Page No
342991-0113 ..	HOSE CLIP,WORM DRIVE TYPE (77)-95	6-67
342991-0100 ..	HOSE CLIP,WORM DRIVE TYPE (8)-14	6-101, 6-103, 12-23
90055-0154	HOSE COUPLING	5-101
342980-0114 ..	HOSE FITTING, BANJO RING L PO G1/4 6/4	12-17, 12-19
342980-0122 ..	HOSE FITTING, BANJO RING L PO G1/4 8/6	3-5, 6-45, 6-47
342980-0113 ..	HOSE FITTING, BANJO RING L PO G1/8 6/4	1-93, 1-95, 1-107, 1-109, 1-197, 1-199, 1-201
342980-0121 ..	HOSE FITTING, BANJO RING L PO G1/8 8/6	2-9, 2-11, 2-25, 2-27, 4-53, 4-55, 4-113, 4-115
342980-0111 ..	HOSE FITTING, BANJO RING L PO M5 6/4	1-155
469867-0000 ..	HOSE HOLDER	3-5
1523832-0000 .	HOSE HOLDER	2-59, 2-61
2516972-0000 .	HOSE HOLDER	2-57
2887613-0000 .	HOSE HOLDER	9-171
456018-0000 ..	HOSE HOLDER LEFT	4-115
456017-0000 ..	HOSE HOLDER RIGHT	4-113
2540724-0000 .	HOSE INSTALLATION	7-3
979336-0000 ..	HOSE NIPPLE	6-69
90163-0052	HOSE NIPPLE, EXT.THR. G1/4-12 MM	5-181, 6-95
90055-0132	HOSE NIPPLE, EXT.THR. R1/4X7,8 MM	6-101, 6-103
90166-0049	HOSE PVC 25/33-34	1-163
90166-0045	HOSE PVC TRANSP. 6/12	12-23
90152-0058	HOSE, SPIRAL CONDUIT, 15X9, UL 0909	5-85, 5-123, 5-125, 5-127, 8-45
90152-0059	HOSE, SPIRAL CONDUIT, 18X12, UL 1211	2-13, 2-15, 2-23, 2-29, 2-31, 2-37, 5-115, 5-117 6-13, 6-69, 6-83, 6-85, 6-87, 6-95, 6-97, 6-99, 8-33, 8-45, 8-47, 8-49
90152-0050	HOSE, SPIRAL CONDUIT, 20X13, UL 1313	1-55, 1-57
90152-0051	HOSE, SPIRAL CONDUIT, 25X18, UL 1816	2-37, 3-9, 5-121, 5-191, 5-193, 5-195, 6-67, 6-73 6-97, 6-99, 7-17, 7-33, 8-45
90152-0070	HOSE, SPIRAL CONDUIT, 32,5X26, UL 2631	1-35, 1-37, 1-55, 1-57, 1-77, 1-79, 2-37, 7-33, 8-47, 8-49
90152-0060	HOSE, SPIRAL CONDUIT, 42X35, UL3529	1-35, 1-37, 5-49, 5-51, 5-109
256055-0800 ..	HOT AIR ELEMENT	1-3, 1-5, 1-7
256095-0700 ..	HOT AIR ELEMENT	1-3, 1-5, 1-7
577825-0300 ..	HOT WATER VALVE	6-15, 6-17
90053-0031	HOUR COUNTER, B 609.10 10-50VDC	9-149, 9-151, 9-153
272372-0000 ..	HOUSE	3-5
556663-0000 ..	HOUSE	12-113
556672-0100 ..	HOUSE	12-109
556673-0000 ..	HOUSE	12-115
577730-0000 ..	HOUSE	5-123, 5-125, 5-127
978865-0000 ..	HOUSE	1-83, 1-85
979247-0000 ..	HOUSE	1-45
1539951-0000 .	HOUSE	5-57
90110-0123	HOUSING, 09 30 006 0301	9-103, 9-105
441385-0000 ..	HUB	4-35, 4-37, 4-39, 4-41
456744-0000 ..	HUB	3-23, 3-25
491274-0000 ..	HUB	3-5
536913-0000 ..	HUB	7-11
929396-0000 ..	HUB	3-23, 3-25
1334234-0000 .	HUB	1-81, 1-97
580042-0100 ..	HUB JUMBO	7-5, 7-7
90457-0022	HYDR. HOSE, 6,4 & M16X1,5 STR+90DEGR.CON	6-97, 6-99
90457-0016	HYDR. VALVE MANIFOLD BLOCK, NO A1-17253	6-97, 6-99
90457-0018	HYDR.ACCU, SBO210-0,32E1/112U-210AK55	6-97, 6-99
90457-0015	HYDR.PUMP, TFP100/2,2-S-C001, NO 1111250	6-97, 6-99
90148-0037	HYDRAULIC HOSE	2-51, 2-53, 2-55
90148-0038	HYDRAULIC HOSE	2-51, 2-53, 2-55
90604-0333	HYDRAULIC HOSE	11-13
257380-0000 ..	HYDRAULIC PIPE LEFT	4-115
257379-0000 ..	HYDRAULIC PIPE RIGHT	4-113
1512304-0300 .	HYDRAULIC SYSTEM	6-3
2569979-0000 .	HYDRAULIC SYSTEM	11-9
90459-4891	IDENTIFIER, ID-FIX RW	9-37, 9-39
491929-0000 ..	IMPELLER WHEEL	6-73
90259-0308	INCOMING TERMINAL, BK25/3-PKZ0	9-145
90458-1721	INDEXING GEAR, 10.707.207	5-163, 5-165, 5-167, 5-169, 5-171, 5-173, 5-175, 5-177
90459-6072	INDEXING GEAR, 10.707.210	5-163, 5-165, 5-167, 5-169, 5-171, 5-173, 5-175, 5-177
90459-1337	INDEXING GEAR, 180X6, 10.734.213	5-163, 5-165, 5-167, 5-169, 5-171, 5-173, 5-175, 5-177
256410-0900 ..	INDEXING UNIT	5-3, 5-5, 5-7
929288-0000 ..	INDICATOR	1-81
574415-0000 ..	INDICATOR 250S	1-81
90458-0672	INDICTIVE SENSOR, E2E2-X5MB1-5M	2-33
90044-0104	INDUCTIVE SENSOR IN5227S	1-47, 1-93, 1-95, 5-123, 5-125, 5-127
90044-0194	INDUCTIVE SENSOR, IN 5329	1-9, 1-11, 1-43, 1-49, 1-83, 1-85, 1-91, 1-165, 1-167, 5-135 5-139, 7-23, 7-25, 7-27, 7-29, 7-35, 7-37, 7-39, 7-41, 8-23, 8-25
90600-0473	INDUCTIVE SWITCH E2A-S08KS01-WP-B1-TP 5M	7-59
90600-0459	INDUCTIVE SWITCH, E2A-M12KN05-WP-B1 5M	1-219
90600-0463	INDUCTIVE SWITCH,E2A-M12LN05-WP-B1-TP 5M	5-109
90600-0467	INDUCTIVE SWITCH,E2A-M18KS05-WP-B1-TP 6M	1-9, 1-11, 1-49
580038-0200 ..	INDUCTOR	7-35, 7-37
1035587-0000 .	INDUCTOR	7-45
1110530-0000 .	INDUCTOR	4-87, 4-89, 4-91, 11-45
1110532-0000 .	INDUCTOR	4-87, 4-89, 4-91, 11-45
1110534-0000 .	INDUCTOR	4-87, 4-89, 4-91, 11-45
1110535-0000 .	INDUCTOR	4-87, 4-89, 4-91, 11-45
1110556-0000 .	INDUCTOR	4-87, 4-89, 4-91, 11-45
1110706-0000 .	INDUCTOR	4-87, 4-89, 4-91, 11-45

Part No	Description	Page No
1520078-0000	INDUCTOR	4-87, 4-89, 4-91, 11-45
1566762-0000	INDUCTOR	11-45
2987327-0000	INDUCTOR	4-87, 4-89, 4-91
3017335-0100	INFEED UNIT	8-3
1517490-0000	INFERIOR HOLDER	6-101, 6-103
1517491-0000	INFERIOR HOLDER	6-101, 6-103
2545080-0200	INJECTION SYSTEM	1-33
466477-0000	INNER PIPE	1-169
2544968-0000	INNER RING	5-85
1478653-0000	INSERT	5-121
2504449-0000	INSERT	6-11, 9-91, 9-93
3036085-0000	INSERT	2-91
90457-0199	INSERT EK 156M 5X5/4X9	5-19, 5-21, 5-23, 5-25, 5-27, 5-49, 5-51
353249-0025	INSERT, MULTI HOLE, E152M 3X4	8-45, 8-47, 8-49
353249-0028	INSERT, MULTI HOLE, E153M 2X8	5-183, 5-185, 5-187
90458-1906	INSERT, MULTI HOLE, E153M 4X5	5-77, 5-79
353249-0051	INSERT, MULTI HOLE, E154M 4X6	1-185, 1-187, 1-189, 1-191, 5-77, 5-79, 9-91, 9-93
353249-0059	INSERT, MULTI HOLE, E154M 4X8	5-77, 5-79
90457-0028	INSERT, MULTI HOLE, E154M5X5	5-75, 5-121
353249-0060	INSERT, MULTI HOLE, E155M 2X13	5-77, 5-79
90457-0027	INSERT, MULTI HOLE, E155M1X5/4X9	5-77, 5-79, 9-91, 9-93
353249-0036	INSERT, MULTI HOLE, EK152M 2X4	9-111, 9-113, 9-115, 9-117, 9-119, 9-121, 9-123, 9-125, 9-127, 9-129, 11-25, 11-31, 11-33
90458-0147	INSERT, MULTI HOLE, EK153M 2X6,5	5-77, 5-79
90458-0188	INSERT, MULTI HOLE, EK154M 1X7, 1X10,5	9-111, 9-113, 9-115, 9-117, 9-119, 9-121, 9-123, 9-125, 9-127, 9-129
90458-1239	INSERT, MULTI HOLE, EK154M 1X9, 1X5,5	8-45
90457-0147	INSERT, MULTI HOLE, EK154M 2X7	9-111, 9-113, 9-115, 9-117, 9-119, 9-121, 9-123, 9-125, 9-127, 9-129
353249-0084	INSERT, MULTI HOLE, EK154M 4X7,5	5-75, 5-77, 5-79
353249-0037	INSERT, MULTI HOLE, EK155M 4X8	5-75, 5-121
90457-0030	INSERT, MULTI HOLE, EK155M4X9	5-77, 5-79
90458-1238	INSERT, SINGLE HOLE, 150M 1X3	8-45, 8-47, 8-49
353249-0003	INSERT, SINGLE HOLE, E151 11	11-25, 11-31, 11-33
353249-0065	INSERT, SINGLE HOLE, E152 9	6-13, 6-95, 8-47, 8-49
353249-0070	INSERT, SINGLE HOLE, E154 16	7-33
353249-0072	INSERT, SINGLE HOLE, E155 20	7-33, 8-45
353249-0010	INSERT, SINGLE HOLE, EK152 11	1-173, 1-175, 1-177, 1-179, 1-181, 1-183, 2-23, 8-33, 8-45
353249-0008	INSERT, SINGLE HOLE, EK152 7	5-85, 5-109, 5-115, 5-117, 5-123, 5-125, 5-127
353249-0009	INSERT, SINGLE HOLE, EK152 9	1-173, 1-175, 1-177, 1-179, 1-181, 1-183, 2-13, 2-15, 2-29, 2-31, 2-41, 6-69, 6-83, 6-85, 6-87, 6-95, 6-97, 6-99, 9-91, 9-93, 9-95, 9-97
353249-0011	INSERT, SINGLE HOLE, EK153 11	1-55, 1-57, 1-173, 1-175, 1-177, 1-179, 1-181, 1-183
353249-0075	INSERT, SINGLE HOLE, EK153 13	7-33, 9-111, 9-113, 9-115, 9-117, 9-119, 9-121, 9-123, 9-125, 9-127, 9-129
353249-0012	INSERT, SINGLE HOLE, EK154 11	8-45
353249-0013	INSERT, SINGLE HOLE, EK154 13	5-121, 5-191, 5-193, 5-195, 6-67, 6-73, 6-97, 6-99, 7-33, 9-91, 9-93, 9-111, 9-113, 9-115, 9-117, 9-119, 9-121, 9-123, 9-125, 9-127, 9-129
353249-0014	INSERT, SINGLE HOLE, EK154 16	5-201, 5-203, 7-17, 7-33, 9-91, 9-93
353249-0016	INSERT, SINGLE HOLE, EK155 18	8-55, 1-57, 1-173, 1-175, 1-177, 1-179, 1-181, 1-183, 8-47, 8-49
353249-0061	INSERT, SINGLE HOLE, EK155 20	1-173, 1-175, 1-177, 1-179, 1-181, 1-183, 7-33
353249-0017	INSERT, SINGLE HOLE, HI.TEMP, EK152 I 7	1-35, 1-37
2541126-0100	INSTALLATION ACCESSORIES	11-3
1350086-0500	INSTALLATION DRAWING	11-3
81596-0103	INSTALLATION MANUAL PLMS ON-LINE	10-9
567372-0000	INSTRUCTION FOR USE	12-133
90187-0028	INSTRUM. VALVE, R1/8, 1/4 TUBE CONN.	5-63
37886-0000	INSULATING DISK	8-33
30298-0000	INSULATION	1-77, 1-79
441501-0000	INSULATION	1-101
751009-0000	INSULATION	1-77, 1-79
90411-0005	INSULATION 1200MM SERIE 21 89/154X30	1-77, 1-79
1499899-0000	INSULATION CLOTH	6-69
32544-0000	INSULATION NUT	4-101, 4-103
271846-0000	INSULATION NUT	4-87, 4-89, 4-91
256200-0300	INTERMEDIARY SHAFT	3-3
90600-2132	INTOUCH OEM 2000 V.9,5 HW KEY USB	9-83
442085-0000	JET DIVERTER	12-113
1519133-0000	JOINT	4-107, 4-109
1519134-0000	JOINT	4-107, 4-109
1558322-0000	JOINT BOLT	8-7
2518416-0000	JOINT BOLT	6-61
1498763-0000	JOINT PIECE	7-57
1499371-0000	JOINT PLATE	7-57
76206-0000	JOINTED ARM	12-163, 12-165
469121-0400	JUNCTION BLOCK	6-15, 6-17
3072096-0000	JUNCTION BLOCK	6-29, 6-31
90601-0026	JUNCTION BLOCK,TINA 11-A	7-31
90111-0124	KEY SWITCH, 1NO, 1NC CONTACT	9-149, 9-151, 9-153
90111-0122	KEY SWITCH, 2 NO CONTACTS	9-149, 9-151, 9-153
31017-0000	KNIFE	8-33
37900-0000	KNIFE	8-37
1282645-0000	KNIFE	4-65, 4-67, 4-69
1282646-0000	KNIFE	4-65, 4-67, 4-69
1282647-0000	KNIFE	4-65, 4-67, 4-69

Part No	Description	Page No
256208-0400 ..	KNIFE HOLDER	4-3, 4-5
36325-0000	KNOB	1-143, 1-145
318871-0104 ..	KNOB CIRCULAR, EXT THREAD, NO. 8302-6118	8-15
90458-1590	KNOB WITH SHAFT, M6	3-31
318873-0103 ..	KNOB, CIRCUL, THREADED BUSH, M6 21X17 MM	12-167
90051-0035	KNOB, EXTERNAL THREAD. NO. 8308-1135	7-21, 12-39, 12-43
90051-0083	KNOB, EXTERNAL THREAD. NO. 8308-1321	12-95, 12-99, 12-125
90051-0084	KNOB, EXTERNAL THREAD. NO. 8308-1534	12-167
90051-0059	KNOB, EXTERNAL THREAD. NO. 8308-1550	12-85, 12-87, 12-101
90051-0053	KNOB, INTERNAL THREAD, M6 24X17	12-41, 12-45, 12-95, 12-99
90051-0040	KNOB, INTERNAL THREAD, NO. 8308-0627	12-93, 12-167, 12-175
1279456-0000 .	LABEL	1-31
464173-0000 ..	LABEL HOLDER	1-107, 1-109
2964511-0000 .	LABEL HOLDER	6-97, 6-99
37911-0000	LACE	8-41
256705-0000 ..	LACE	4-57, 4-59, 4-61, 4-63
256890-0000 ..	LACE	4-93, 4-95
256891-0000 ..	LACE	4-93, 4-95
257317-0000 ..	LACE	4-93, 4-95
257362-0000 ..	LACE	4-7, 4-9, 4-11, 4-13, 4-15, 4-17, 4-45, 4-47
271622-0000 ..	LACE	2-51, 2-53, 2-55
271623-0000 ..	LACE	2-51, 2-53, 2-55
272329-0001 ..	LACE	1-93, 1-95
272329-0002 ..	LACE	1-93, 1-95
272506-0000 ..	LACE	4-35, 4-37, 4-39, 4-41
441024-0000 ..	LACE	3-5
441751-0000 ..	LACE	4-97, 4-99
456407-0000 ..	LACE	2-51, 2-53, 2-55
469131-0000 ..	LACE	2-51, 2-53, 2-55
491319-0000 ..	LACE	3-15, 3-17
491410-0000 ..	LACE	3-5
591567-0000 ..	LACE	8-29
2547005-0000 .	LACE	8-17, 8-19
598762-0400 ..	LADDER	2-3, 2-5, 2-7
1519086-0100 .	LAMP	2-3, 2-5, 2-7
1549603-0100 .	LAMP	2-3, 2-5, 2-7
2526341-0000 .	LAMP HOLDER	8-45
90064-0315	LAMP REMOVER, 700.004.0	11-11
1260316-0000 .	LAND FITTING	5-91, 5-109
90243-0317	LASER	12-113
556662-0100 ..	LASER	12-109
538432-0100 ..	LASER DETECTOR	12-109
736730-0001 ..	LEAD PLATE	5-35, 5-37, 5-39, 5-41, 5-43
736730-0002 ..	LEAD PLATE	5-35, 5-37, 5-39, 5-41, 5-43
736730-0003 ..	LEAD PLATE	5-35, 5-37, 5-39, 5-41, 5-43
736730-0004 ..	LEAD PLATE	5-35, 5-37, 5-39, 5-41, 5-43
736730-0005 ..	LEAD PLATE	5-35, 5-37, 5-39, 5-41, 5-43
736730-0006 ..	LEAD PLATE	5-35, 5-37, 5-39, 5-41, 5-43
90015-0028	LEAD-IN BUSHING	5-49, 5-51, 5-109
90458-1227	LEAD-IN, BUSHING, DA 130/170/50	6-61
90458-1228	LEAD-IN, BUSHING, DA 230/300/60	8-5
90459-1066	LEAD-IN, BUSHING, DA 300/350/10	2-87, 2-89
352101-0103 ..	LEAD-IN, PR18,6/PG11, E-1457518	6-15, 6-17, 6-45, 6-47
352101-0107 ..	LEAD-IN, PR37/PG29, E1457555	1-173, 1-175, 1-177, 1-179, 1-181, 1-183
90015-0021	LEAD-IN, TET 10-14, E1458023	1-173, 1-175, 1-177, 1-179, 1-181, 1-183
90015-0023	LEAD-IN, TET 7-10, E1458019	1-173, 1-175, 1-177, 1-179, 1-181, 1-183, 6-33, 8-45
90015-0020	LEAD-IN, TET5-7, E-1458016	1-173, 1-175, 1-177, 1-179, 1-181, 1-183, 7-23, 7-25, 7-27, 7-29, 7-35, 7-37
257334-0000 ..	LEAF SPRING	4-57, 4-59, 4-61, 4-63
1296880-0000 .	LEAF SPRING	2-25, 2-27
1296881-0000 .	LEAF SPRING	2-25, 2-27
1317018-0000 .	LEAF SPRING	2-25, 2-27
1334193-0000 .	LEAF SPRING	2-25, 2-27
1334194-0000 .	LEAF SPRING	2-25, 2-27
1549386-0000 .	LEAF SPRING	2-25, 2-27
1549387-0000 .	LEAF SPRING	2-25, 2-27
2526323-0000 .	LEAF SPRING	2-9, 2-11
2526324-0000 .	LEAF SPRING	2-9, 2-11
2526325-0000 .	LEAF SPRING	2-9, 2-11
2526326-0000 .	LEAF SPRING	2-9, 2-11
2526328-0000 .	LEAF SPRING	2-9, 2-11
2526329-0000 .	LEAF SPRING	2-9, 2-11
533014-0100 ..	LEAK FINDING EQUIPMENT (SUPERSTRUCTURE)	12-9
90458-1212	LEFT ENDPLATE INCL. 10M CABLE	6-49, 6-51
598148-0000 ..	LEG	2-39, 5-197, 6-63, 8-9
2773923-0000 .	LEG	5-197
2773924-0100 .	LEG	5-191, 5-193, 5-195
2773925-0000 .	LEG	2-39, 6-63, 8-9
2773926-0100 .	LEG	2-37, 6-61, 8-5
2781021-0000 .	LEG	5-215
2854818-0100 .	LEG	5-201, 5-203
2854819-0000 .	LEG	5-215
90458-2580	LEVEL CONTROL RELAY, RM4-LA32M	9-37, 9-39
42063-0100	LEVEL DETECTOR	1-227

Part No	Description	Page No
90199-0022	LEVEL GLAS	5-123, 5-125, 5-127
273978-0000 ..	LEVEL GLAS	6-81
534636-0000 ..	LEVEL GLAS	12-23
90199-0020	LEVEL GLASS/THERMOM. FSA 76.1.1./T/12	6-97, 6-99
42062-0200	LEVEL PROBE	1-225
925991-0300 ..	LEVEL PROBE	1-3, 1-5, 1-7
1317503-0200 .	LEVEL PROBE	1-3, 1-5, 1-7
90457-0019	LEVEL PROBE, HMFB-S=45-0=80-0=90-T70	6-97, 6-99
1346746-0000 .	LEVER	7-51, 7-53
1548276-0000 .	LEVER	1-219
1548532-0000 .	LEVER	1-219
2594658-0000 .	LEVER	5-11, 5-13, 5-15
2685677-0001 .	LEVER	5-11, 5-13, 5-15
2685677-0002 .	LEVER	5-11, 5-13, 5-15
2685677-0003 .	LEVER	5-11, 5-13, 5-15
2685677-0005 .	LEVER	5-11, 5-13, 5-15
2685677-0006 .	LEVER	5-11, 5-13, 5-15
2685677-0007 .	LEVER	5-11, 5-13, 5-15
2685677-0008 .	LEVER	5-11, 5-13, 5-15
2685677-0009 .	LEVER	5-11, 5-13, 5-15
2685677-0010 .	LEVER	5-11, 5-13, 5-15
2685677-0011 .	LEVER	5-11, 5-13, 5-15
2685677-0012 .	LEVER	5-11, 5-13, 5-15
2685677-0013 .	LEVER	5-11, 5-13, 5-15
90604-1654	LEVER MECHANISM	11-13
35962-0000	LID	6-13
37893-0000	LID	8-33
76484-0000	LID	12-83, 12-107
256248-0001 ..	LID	8-23, 8-25
257250-0000 ..	LID	4-35, 4-37, 4-39, 4-41
272275-0000 ..	LID	1-101
272743-0000 ..	LID	5-191, 5-193, 5-195
273964-0000 ..	LID	6-71
295203-0000 ..	LID	5-57, 5-93
469964-0000 ..	LID	2-73
491291-0000 ..	LID	5-159, 5-161
491851-0000 ..	LID	5-155, 5-157
493652-0100 ..	LID	6-69, 6-75
532205-0000 ..	LID	6-75
556674-0000 ..	LID	12-115
562118-0000 ..	LID	4-101, 4-103
568806-0000 ..	LID	6-89, 6-91
577467-0000 ..	LID	1-173, 1-175, 1-177, 1-179, 1-181, 1-183
577468-0000 ..	LID	1-173, 1-175, 1-177, 1-179, 1-181, 1-183
577469-0000 ..	LID	1-173, 1-175, 1-177, 1-179, 1-181, 1-183
577470-0000 ..	LID	1-173, 1-175, 1-177, 1-179, 1-181, 1-183
577731-0000 ..	LID	5-123, 5-125, 5-127
577733-0000 ..	LID	5-123, 5-125, 5-127
577734-0000 ..	LID	5-123, 5-125, 5-127
578035-0000 ..	LID	1-173, 1-175, 1-177, 1-179, 1-181, 1-183
578490-0000 ..	LID	1-55, 1-57
578491-0000 ..	LID	1-55, 1-57
578492-0000 ..	LID	1-55, 1-57
578496-0000 ..	LID	1-173, 1-175, 1-177, 1-179, 1-181, 1-183
751223-0000 ..	LID	6-75
752240-0000 ..	LID	8-23, 8-25
929346-0000 ..	LID	4-53, 4-55
1279479-0000 .	LID	5-91
1334769-0000 .	LID	1-173, 1-175, 1-177, 1-179, 1-181, 1-183
1498216-0000 .	LID	5-19, 5-21, 5-23, 5-25, 5-27
1517270-0000 .	LID	1-173, 1-175, 1-177, 1-179, 1-181, 1-183
1523364-0000 .	LID	1-159, 1-161
1539110-0000 .	LID	4-105
2526844-0000 .	LID	1-173, 1-175, 1-177, 1-179, 1-181, 1-183
2526846-0000 .	LID	1-173, 1-175, 1-177, 1-179, 1-181, 1-183
2552697-0000 .	LID	2-47, 2-49
2563209-0000 .	LID	6-85, 6-87
2685679-0000 .	LID	5-35, 5-37, 5-39, 5-41, 5-43
2685680-0000 .	LID	1-55, 1-57
2743327-0000 .	LID	1-103, 1-105
2743341-0000 .	LID	2-47, 2-49
2773919-0000 .	LID	1-173, 1-175, 1-177, 1-179, 1-181, 1-183
2810433-0000 .	LID	2-47, 2-49
2958807-0000 .	LID	1-155
2964431-0000 .	LID	1-55, 1-57
3047671-0000 .	LID	1-173, 1-175, 1-177, 1-179, 1-181, 1-183
90459-2708	LID, A2-18077	6-97, 6-99
593684-0000 ..	LIFTING DEVICE SIGN EEA(CE-MARK)	11-47
90458-1959	LIFTING EYE BOLT, LGB (3) 3T M24	11-19
579899-0000 ..	LIFTING UNIT	11-3
1296900-0100 .	LIFTING UNIT (RAILING)	12-159
90036-0057	LIGHT BULB, BA9S 28V	7-17
90458-0295	LIGHT ELEMENT, BLUE, PSD-S OE BU/W	2-81, 2-95
90458-0293	LIGHT ELEMENT, RED, PSD-S OE RD/W	2-81, 2-95

Part No	Description	Page No
90458-0294	LIGHT ELEMENT, YELLOW, PSD-S OE YE/W	2-81, 2-95
441534-0200 ..	LIGHT FIXTURE	2-37
595430-0200 ..	LIGHT FIXTURE	2-13, 2-15, 2-29, 2-31
90164-0015	LIGHT FIXTURE, RL70CV-111 / 230V 50HZ	2-23, 8-45
90600-4048	LIGHT FIXTURE, TCH128 1XTL5-14W/830 HF	9-87, 9-89
90600-4049	LIGHT FIXTURE, TCH128 1XTL5-21W/830 HF	9-87, 9-89
90602-8807	LIMIT SW. SZ 2586.010	9-87, 9-89
90600-5255	LINE FILTER, B84113HB116	9-13, 9-15, 9-17, 9-19
90600-5253	LINE FILTER, B84113HB60	9-13, 9-15, 9-17, 9-19
90600-5263	LINE FILTER, B84144A90R120	9-159
90458-1301	LINEAR ACTUATOR, ETS32-M10NA2X-FM50-...	4-57, 4-59, 4-61, 4-63
272456-0000 ..	LINK	3-11, 3-13
456009-0000 ..	LINK	4-65, 4-67, 4-69
491175-0000 ..	LINK	1-69
752425-0000 ..	LINK	4-71, 4-73, 4-79, 4-81
929412-0000 ..	LINK	4-71, 4-73, 4-79, 4-81
1255614-0000 .	LINK	5-109
1490118-0000 .	LINK	3-33, 3-35
1548003-0000 .	LINK	1-219
1548004-0001 .	LINK	1-219
1548004-0002 .	LINK	1-219
2541115-0000 .	LINK	3-33, 3-35
441031-0000 ..	LINK BEARING	4-97, 4-99
1490113-0000 .	LINK HEAD	3-33, 3-35
2541112-0000 .	LINK HEAD	3-33, 3-35
90243-0133	LIQUID SOAP DISPENSER 0,4L, 742634	8-11, 8-13
76294-0000	LOCATING PIECE	12-93, 12-175
2964528-0000 .	LOCATING PIECE	5-11, 5-13, 5-15
37910-0000	LOCK	8-41
272945-0000 ..	LOCK	1-173, 1-175, 1-177, 1-179, 1-181, 1-183
295427-0000 ..	LOCK	1-83, 1-85
295466-0000 ..	LOCK	1-173, 1-175, 1-177, 1-179, 1-181, 1-183
90237-0155	LOCK ADAPTER, 1121-U40	9-163
90237-0214	LOCK ADAPTER, 1121-U40	8-11, 8-13, 9-131, 9-133, 9-165
31724-0000	LOCK BAR	8-33
37883-0000	LOCK BAR	8-33
90237-0156	LOCK BOLT, 1000-16	8-11, 8-13, 9-131, 9-133, 9-163, 9-165
90237-0157	LOCK BOLT, 1000-230	9-83, 9-135, 9-137, 9-147, 9-149, 9-151, 9-153, 9-155, 9-157
90237-0128	LOCK CYLINDER, 1109-SU125	2-101, 2-103, 6-5, 6-7, 8-11, 8-13, 9-163
90237-0129	LOCK CYLINDER, 1109-U6	6-7, 9-131, 9-133, 9-165
90237-0322	LOCK GASKET, 1000-U137	9-83, 9-135, 9-137, 9-147, 9-149, 9-151, 9-153, 9-155, 9-157
90237-0319	LOCK HOUSING, 1000-U134	9-83, 9-135, 9-137, 9-147, 9-149, 9-151, 9-153, 9-155, 9-157
90237-0320	LOCK HOUSING, 1000-U136	9-83, 9-135, 9-137, 9-147, 9-149, 9-151, 9-153, 9-155, 9-157
90237-0153	LOCK HOUSING, 1121-U26-0B	2-101, 2-103, 6-5, 6-7
90237-0154	LOCK HOUSING, 1121-U60-0C	8-11, 8-13, 9-131, 9-133, 9-163, 9-165
90051-0112	LOCK KNOB, NO. GN 617 NIK5	5-123, 5-125, 5-127, 8-23, 8-25
90237-0323	LOCK O-RING, 1000-24	9-147, 9-155, 9-157
37912-0000	LOCK PLATE	8-41
456199-0000 ..	LOCK PLATE	1-143, 1-145
456872-0000 ..	LOCK PLATE	1-143, 1-145
456907-0000 ..	LOCK PLATE	1-125, 1-127
565462-0100 ..	LOCK PLATE	1-135, 1-137, 1-139
574393-0000 ..	LOCK PLATE	1-143, 1-145
2644652-0000 .	LOCK PLATE	1-125, 1-127
2640265-0000 .	LOCK SPRING	1-89
21047-0000	LOCK WASHER	5-89
978872-0000 ..	LOCK WASHER	1-83, 1-85
90062-0022	LOCK WASHER D=6,4/11	9-149, 9-151, 9-153
315410-0106 ..	LOCK WASHER MB 6 D=30 H=1,25	5-159, 5-161
90062-0061	LOCK WASHER NORD-LOCK,6,5/10,8, T=2,2	9-13, 9-15, 9-17, 9-19, 9-31
90062-0058	LOCK WASHER SERRAT.EXT.GEAR,3,2/6 H=0,4	9-31
90062-0015	LOCK WASHER SERRAT.EXT.GEAR,6,4/11 H=0,7	9-83, 9-103, 9-105, 9-131, 9-133, 9-135, 9-137, 9-149, 9-151, 9-153, 9-159, 9-163, 9-165
90062-0040	LOCK WASHER SERRAT.INT.GEAR,5,3/10 H=0,6	6-15, 6-17
315402-0128 ..	LOCK WASHER, DIN127B 3,6 A4, M3,5	9-103, 9-105
315402-0136 ..	LOCK WASHER, DIN127B 4,1 A4, M4-5/32	1-23, 9-27, 9-41, 9-43, 9-45, 9-49, 9-51, 9-53, 9-55, 9-57, 9-59, 9-87, 9-89, 9-91, 9-93, 9-95, 9-97, 9-103, 9-105, 9-107, 9-111, 9-113, 9-115, 9-117, 9-119, 9-121, 9-123, 9-125, 9-127, 9-129, 9-131, 9-133, 9-163, 9-165
315402-0146 ..	LOCK WASHER, DIN127B 5,1 A4, M5-3/16	1-185, 1-187, 1-189, 1-191, 6-97, 6-99, 9-13, 9-15, 9-17, 9-19, 9-31, 9-83, 9-87, 9-89, 9-149, 9-151, 9-153, 9-167
315402-0156 ..	LOCK WASHER, DIN127B 6,5 A4, 1/4	9-87, 9-89
315402-0165 ..	LOCK WASHER, DIN127B 8,2 A4, M8-5/16	6-45, 6-47
90181-0064	LOCK ZP1 FOR CHANNEL T1	9-13, 9-15, 9-17, 9-19, 9-149, 9-151, 9-153
37879-0000	LOCKING ARM	8-33
1511613-0000 .	LOCKING ARM	6-5, 6-7
1511614-0000 .	LOCKING ARM	6-5
1511681-0000 .	LOCKING ARM	6-7
2552682-0000 .	LOCKING ARM	2-101, 2-103
2552683-0000 .	LOCKING ARM	2-101, 2-103
90157-0021	LOCKING FLUID LOCTITE 270	4-107, 4-109
2796072-0001 .	LOCKING FORK	1-53, 1-225
2796072-0002 .	LOCKING FORK	1-53, 1-225
206913-0000 ..	LOCKING LOOP	8-37
1279086-0000 .	LOCKING PLATE	1-143, 1-145

Part No	Description	Page No
1279087-0000	.LOCKING PLATE	1-125, 1-127, 1-141
1279088-0000	.LOCKING PLATE	1-135, 1-137, 1-139
1279089-0000	.LOCKING PLATE	1-135, 1-137, 1-139
1279090-0000	.LOCKING PLATE	1-143, 1-145
1279091-0000	.LOCKING PLATE	1-125, 1-127
1279092-0000	.LOCKING PLATE	1-149, 1-151
1279093-0000	.LOCKING PLATE	1-143, 1-145
1279094-0000	.LOCKING PLATE	1-143, 1-145
1279095-0000	.LOCKING PLATE	1-149, 1-151
1279096-0000	.LOCKING PLATE	1-149, 1-151
1511804-0200	.LOGIC SIDE TOP TERMINAL BLOCK	9-13, 9-15, 9-17, 9-19
2826637-0001	.LOWER FILLING PIPE	1-225
2826637-0002	.LOWER FILLING PIPE	1-225
2826637-0003	.LOWER FILLING PIPE	1-225
2826637-0004	.LOWER FILLING PIPE	1-225
2826637-0005	.LOWER FILLING PIPE	1-225
2826637-0006	.LOWER FILLING PIPE	1-225
2826637-0007	.LOWER FILLING PIPE	1-225
2826638-0001	.LOWER FILLING PIPE	1-225
2826638-0002	.LOWER FILLING PIPE	1-225
2826638-0003	.LOWER FILLING PIPE	1-225
2826638-0004	.LOWER FILLING PIPE	1-225
2826638-0005	.LOWER FILLING PIPE	1-225
456309-0600	.. LOWER FORMING RING	1-3, 1-5, 1-7
1498766-0000	.LOWER PLATE	7-57
1498768-0000	.LOWER PLATE	7-57
979486-0000	.. LUBRICATING PIPE	2-51, 2-53, 2-55
2502424-0200	.LUBRICATION	5-11, 5-13, 5-15
90296-0091	.... LUBRICATION GREASE, FLUOLUB 210	1-219, 1-221
2569980-0000	.LUBRIFICATION DIAGRAM	11-9
577427-0100	.. MACH.ALIG.TOOLS+LASER EQ.	12-27
441695-0600	.. MACHINE BODY	5-3, 5-5, 5-7
979216-0400	.. MACHINE BODY	6-3
1512486-0000	.MACHINE BODY	6-61
1523754-0000	.MACHINE BODY	2-37
1532584-0200	.MACHINE BODY	2-3, 2-5, 2-7
1539960-0000	.MACHINE BODY	5-191, 5-193, 5-195
1549294-0000	.MACHINE BODY	8-5
1549295-0200	.MACHINE BODY	8-3
2807005-0000	.MACHINE BODY	5-191, 5-193, 5-195
1350148-0100	.MACHINE CARRIAGE	12-9
90347-0175	.... MACHINE SHOE BRIK T 125	11-3
2805942-0000	.MACHINE SIGN	11-3
2968251-0000	.MACHINE SIGN	11-3
1498753-0100	.MAGAZINE HOLDER	7-5, 7-7
1498761-0000	.MAGAZINE HOLDER	7-9
90237-0046	.... MAGNETIC LOCK, 46X33X15 MM	7-31, 7-35, 7-37
90459-4182	.... MAIN SWITCH, NZM1-XS-R	9-159
90110-0156	.... MALE INSERT 70.210.0653.0	7-33
90110-0150	.... MALE INSERT, HDC HE 24 MS, 1211 1000 00	7-33, 8-45
90458-1253	.... MANDATORY ACTION SIGN CONSULT OM ISO	6-5, 6-7
90459-1738	.... MANDATORY ACTION SIGN ISO, READ MAINTENA	9-13, 9-15, 9-17, 9-19
90600-5235	.... MANDATORY ACTION SIGN ISO, READ MANUAL	2-93
257382-0400	.. MANIFOLD LEFT	4-3, 4-5
257381-0400	.. MANIFOLD RIGHT	4-3, 4-5
90048-0022	.... MANUAL PUMP INCL. BARROW 50-60 L	12-9
3072720-0000	.MARKING	6-15, 6-17
359011-0807	.. MARKING, DEK 5 FW 1-50	1-41, 2-43, 2-45, 5-77, 5-79, 7-33, 8-47, 8-49, 9-37, 9-39, 9-63, 9-65, 9-67, 9-69, 9-71, 9-73, 9-75, 9-77, 9-79, 9-81, 9-161
359011-0809	.. MARKING, DEK 5 FW 101-150	8-47, 8-49, 9-63, 9-65, 9-67, 9-69, 9-71, 9-73, 9-75, 9-77
359011-0810	.. MARKING, DEK 5 FW 151-200	9-71, 9-73, 9-75, 9-77
359011-0811	.. MARKING, DEK 5 FW 201-250	9-71, 9-73, 9-75, 9-77
359011-0813	.. MARKING, DEK 5 FW 301-350	9-71, 9-73
90601-6250	.... MARKING, DEK 5 GW PE	9-161
359011-0812	.. MARKING, DEK 5FW 251-300	9-71, 9-73, 9-75, 9-77
359011-0808	.. MARKING, DEK 5FW 51-100	5-77, 5-79, 9-63, 9-65, 9-67, 9-69, 9-71, 9-73, 9-75, 9-77, 9-79, 9-81
359011-0818	.. MARKING, DEK 5GW (-)	5-77, 5-79, 8-47, 8-49
359011-0821	.. MARKING, DEK 6 FW 1-50	11-25, 11-31, 11-33
90459-0606	.... MARKING, DKE 5 MARKED E1-E50	9-161
359011-0819	.. MARKING, EARTH, DEK 5 GW ERDE I.KR.	1-41, 2-43, 2-45, 7-33, 9-63, 9-65, 9-67, 9-69, 9-71, 9-73, 9-75, 9-77, 9-161, 11-25, 11-31, 11-33
90245-0024	.... MATCHING TRANSF. 65 KVA SEC 93,4A	12-9
342790-0102	.. MAV PRESSUR GAUGE CONNECTOR 6	1-31, 12-157
90458-2488	.... MEASURING HOSE DN2 L=1500MM, MAX 400BAR	6-45, 6-47
90425-0016	.... MECMAN TYPE E120 735-120-000	12-23
978970-0000	.. METERING DEVICE	6-75
2514491-0000	.METERING DEVICE	6-75
90092-0052	.... METERING VALVE 10 MM3	2-51, 2-53, 2-55, 3-11, 3-13, 3-15, 3-17, 4-35, 4-37, 4-39, 4-41, 4-93, 4-95, 4-97, 4-99, 4-113, 4-115, 5-17, 5-89
90092-0053	.... METERING VALVE 30 MM3	2-51, 2-53, 2-55, 3-11, 3-13, 3-15, 3-17, 4-35, 4-37, 4-39, 4-41, 5-49, 5-51, 5-109
90092-0054	.... METERING VALVE 50 MM3	5-49, 5-51, 5-89, 5-109
351416-0100	.. MINIATURE CIRC. BREAK., FAZ -D10 1-POLE	9-61, 9-139, 9-141
351416-0160	.. MINIATURE CIRC. BREAK., FAZ -D16 1-POLE	9-139, 9-141

Part No	Description	Page No
351416-0060 ..	MINIATURE CIRC. BREAK., FAZ -D6 1-POLE	9-61, 9-145
351418-0250 ..	MINIATURE CIRC. BREAK.,FAZ-D25/3 3-POLE	9-135, 9-137
90602-2970	MINIATURE CIRCUIT BREAKER, AZ-2-C63	9-139, 9-141
354000-0005 ..	MINIATURE CIRCUIT BREAKER, FAZ-C0,5/1	9-139, 9-141
354000-0010 ..	MINIATURE CIRCUIT BREAKER, FAZ-C1/1	9-139, 9-141
354000-0100 ..	MINIATURE CIRCUIT BREAKER, FAZ-C10/1	9-61, 9-139, 9-141, 9-145
354001-0100 ..	MINIATURE CIRCUIT BREAKER, FAZ-C10/2	9-139, 9-141
354002-0020 ..	MINIATURE CIRCUIT BREAKER, FAZ-C2/3	9-145
354000-0200 ..	MINIATURE CIRCUIT BREAKER, FAZ-C20/1	9-145
354002-0200 ..	MINIATURE CIRCUIT BREAKER, FAZ-C20/3	9-145
354000-0030 ..	MINIATURE CIRCUIT BREAKER, FAZ-C3/1	9-61, 9-139, 9-141
354002-0060 ..	MINIATURE CIRCUIT BREAKER, FAZ-C6/3	9-139, 9-141
90187-0104	MKS SAFETY VALVE, PRESCOR DN20/1,5BAR	6-93
1517659-0200 .	MODEM	9-83
90453-0001	MODEM MA-12	11-21
90453-0002	MODEM MD-12 DC	9-85
90600-2135	MODULE CONNECTOR 250V, BEST/D 1878560000	9-75, 9-77
1523210-0200 .	MOTOR	3-3
90457-0172	MOTOR 3GAA 131001-ASA	3-9
90458-2466	MOTOR 3GVA071002-CSC-M2VA71B2	6-73
90045-0161	MOTOR 4MGC11	6-83
90045-0228	MOTOR 7AA80M4-B5	6-97, 6-99
2743336-0000 .	MOTOR COVER	2-13, 2-15
441387-0000 ..	MOTOR CRADLE	3-9
1512305-0100 .	MOTORIZED DESIGN CONTROL SYSTEM, LEFT	4-3, 4-5
1512306-0100 .	MOTORIZED DESIGN CONTROL SYSTEM, RIGHT	4-3, 4-5
2646248-0000 .	MOUNTING BRACKET	1-89
1499480-0200 .	MOUNTING PLATE	7-5, 7-7
2545426-0000 .	MOUNTING PLATE	1-35, 1-37
2552630-0000 .	MOUNTING PLATE	7-35, 7-37
3017352-0000 .	MOUNTING PLATE	7-23, 7-25, 7-27, 7-29
3040334-0000 .	MOUNTING PLATE	9-99, 9-101
90458-1447	MOUNTING RAIL SUPPORT, TST 128660	9-63, 9-65, 9-67, 9-69, 9-71, 9-73
90226-0452	MOUNTING SCREW	1-35, 1-37
2790833-0000 .	MOUNTING SHEET	6-95
441304-0400 ..	MOVABLE FORMING RING	1-3, 1-5, 1-7
321531-0248 ..	NEEDLE SLEEVE W/O CONE, 20X26X16 MM	3-11, 3-13, 3-15, 3-17
466484-0000 ..	NET	1-169
90134-0034	NIPPLE	2-51, 2-53, 2-55, 2-59, 2-61
257000-0000 ..	NIPPLE	4-113, 4-115
493735-0000 ..	NIPPLE	12-17, 12-19
534698-0000 ..	NIPPLE	12-23
566669-0000 ..	NIPPLE	1-155
751086-0000 ..	NIPPLE	6-25
90217-0041	NIPPLE LKBN, RD 60-6 - R1 1/2 M	5-201, 5-203
90163-0048	NIPPLE LP-004-2-WR 510-23-1	5-17, 5-89
342700-0113 ..	NIPPLE, EXT.THREAD, HEXAGON, G1/2-G1/2	6-29, 6-31, 6-93, 6-97, 6-99, 6-101, 6-103
342700-0205 ..	NIPPLE, EXT.THREAD, HEXAGON, G1/2-G1/4	6-97, 6-99
342700-0110 ..	NIPPLE, EXT.THREAD, HEXAGON, G1/4-G1/4	12-133
342700-0210 ..	NIPPLE, EXT.THREAD, HEXAGON, G3/4-G1/2	6-85, 6-87
342700-0203 ..	NIPPLE, EXT.THREAD, HEXAGON, G3/8-G1/4	6-95
90330-0021	NIPPLE, EXT.THREAD, HEXAGON, R1/2-R1/2	1-31, 6-69
90330-0019	NIPPLE, EXT.THREAD, HEXAGON, R1/2-R3/8	6-29, 6-31
90224-0372	NIPPLE, EXT.THREAD, HEXAGON, R1/4-R1/4	6-39, 6-57
90330-0043	NIPPLE, EXT.THREAD, HEXAGON, R1/4-R1/4	1-35, 1-37
90330-0013	NIPPLE, EXT.THREAD, HEXAGON, R1/4-R1/8	1-103, 1-105
90330-0032	NIPPLE, EXT.THREAD, HEXAGON, R1/8-R1/8	1-9, 1-11, 1-103, 1-105
90330-0083	NIPPLE, EXT.THREAD, HEXAGON, R3/8-R1/4	1-35, 1-37
90330-0101	NIPPLES, EXT. THREAD, G1/4	5-53, 5-211
90330-0097	NIPPLES, EXT. THREAD, G1/8	2-57
90030-0224	NIPPLES, EXT. THREAD, HEXAGON, NO. 2511	12-17, 12-19
90030-0116	NIPPLES, REDUCING, EXT. THR. NO. 2520	5-29
90030-0212	NIPPLES, REDUSING, INT. THR. NO. 2521	1-9, 1-11
90601-7910	NON RETURN VALVE, M12A-C6L-5-EPR-SS	1-31
491536-0200 ..	NON-RETURN VALVE	6-23
90230-0028	NON-RETURN VALVE H 151 R 3/8"	6-25
90230-0026	NON-RETURN VALVE RHZ 10-PLR-ED	6-97, 6-99
90235-0151	NON-RETURN VALVE, 534 098 110 0	6-15, 6-17
90459-0290	NON-RETURN VALVE, H-QS-6	5-63, 6-15, 6-17
589449-0000 ..	NOZZLE	1-197, 1-199, 1-201
1511410-0000 .	NOZZLE	5-149, 5-151
1558128-0200 .	NOZZLE	1-197, 1-199, 1-201
441077-0000 ..	NOZZLE BRACKET	2-37
90099-0085	NUT	2-91
257310-0000 ..	NUT	3-11, 3-13, 3-33, 3-35
272755-0000 ..	NUT	4-65, 4-67, 4-69
273977-0000 ..	NUT	6-81
273996-0000 ..	NUT	6-81
279589-0000 ..	NUT	1-165, 1-167, 6-89, 6-91
442237-0000 ..	NUT	1-165, 1-167
490933-0000 ..	NUT	5-109
978209-0000 ..	NUT	3-29
1144140-0000 .	NUT	5-91
1255933-0000 .	NUT	5-113

Part No	Description	Page No
1260490-0000	NUT	1-209, 1-211
1260491-0000	NUT	1-209, 1-211
1285109-0000	NUT	9-83, 9-87, 9-89, 9-135, 9-137, 9-149, 9-151, 9-153
1359565-0000	NUT	5-69, 5-71, 5-119
1490117-0000	NUT	3-33, 3-35
1511310-0000	NUT	7-57, 7-65
1523223-0000	NUT	1-171
1523224-0000	NUT	1-171
2541114-0000	NUT	3-33, 3-35
312901-0324	NUT M6M16VFZB	3-15, 3-17
312705-0312	NUT HEX. DOMED CAP MHM-6 M4 A280	2-65, 2-67, 2-69, 2-71, 6-5, 6-7
312705-0314	NUT HEX. DOMED CAP MHM-6 M5 A280	2-13, 2-15, 2-29, 2-31, 11-27, 11-29
312902-0320	NUT HEX. LEFT THREAD, M10 A280	5-11, 5-13, 5-15
312902-0316	NUT HEX. LEFT THREAD, M6 A280	1-219, 2-35
90099-0131	NUT HEX. M16X2 SS	12-179
90099-0057	NUT HEX. M20X1,5	5-29, 5-93
312811-0318	NUT HEX.LOCK HELI COIL M8 SS	4-93, 4-95, 5-135
312811-0320	NUT HEX.LOCK HELI COIL MID GRIP M10 SS	4-111
312811-0322	NUT HEX.LOCK HELI COIL MID GRIP M12 SS	3-11
312811-0324	NUT HEX.LOCK HELI COIL MID GRIP M16 SS	3-11, 3-13, 3-15, 3-17
312811-0326	NUT HEX.LOCK HELI COIL MID GRIP M20 SS	3-11, 3-13, 3-15, 3-17
312811-0316	NUT HEX.LOCK HELI COIL MID GRIP M6 SS	1-163, 6-73
90099-0001	NUT PG 9/PR 15,2	2-59, 2-61, 6-11, 6-85, 6-87
490890-0000	NUT PLATE	1-55, 1-57
1499513-0000	NUT PLATE	7-59
1511308-0000	NUT PLATE	7-57, 7-59
90099-0002	NUT PR 18,6 BRASS	2-41, 6-11
90099-0003	NUT PR 22,5	6-13
90099-0011	NUT PR 37 BRASS	1-173, 1-175, 1-177, 1-179, 1-181, 1-183, 5-109, 6-11
90099-0087	NUT PR=20,4	2-59, 2-61, 6-11
312805-0102	NUT ROUND WITH SLOTS M15X1 FE	5-123, 5-125, 5-127
312805-0106	NUT ROUND WITH SLOTS M30X1,5 FE	5-159, 5-161
342903-0111	NUT WITH SPRING, 1723 6/4-M10X1	12-135
342903-0121	NUT WITH SPRING, 1723 8/6-M12X1	2-9, 2-11, 6-29, 6-31, 6-45, 6-47
312602-0316	NUT, EN 24032 M6M M6 NIPLBR	6-45, 6-47
90330-0105	NUT, HEXAGON SS, G 3/8	1-107, 1-109
90330-0120	NUT, HEXAGON SS, G1/4	6-95
90458-0321	NUT, M12X1,5	9-111, 9-113, 9-115, 9-117, 9-119, 9-121, 9-123, 9-125, 9-127, 9-129
90458-0322	NUT, M16X1,5	1-173, 1-175, 1-177, 1-179, 1-181, 1-183, 5-49, 5-51, 5-85, 9-95, 9-97, 9-107
90458-0323	NUT, M20X1,5	8-33, 8-45, 9-171
90458-0324	NUT, M25X1,5	9-111, 9-113, 9-115, 9-117, 9-119, 9-121, 9-123, 9-125, 9-127, 9-129
90458-0326	NUT, M40X1,5	5-49, 5-51
90458-0327	NUT, M50X1,5	2-87, 2-89, 9-87, 9-89, 9-111, 9-113, 9-115, 9-117, 9-119, 9-121, 9-123, 9-125, 9-127, 9-129
90458-0328	NUT, M63X1,5	9-87, 9-89
90030-0338	NUT, PIPE & CONNECTORS, SS-8-BVCO-4	1-17
315239-0113	NYLON WASHER G1/2, 1/2RRP	6-23, 6-27, 6-29, 6-31, 6-33, 6-35, 6-101, 6-103
315239-0110	NYLON WASHER G1/4, 1/4RRP	5-109, 6-23, 6-29, 6-31, 6-39, 6-95, 6-101, 6-103
315239-0109	NYLON WASHER G1/8, 1/8RRP	1-29, 1-203, 2-37, 4-57, 4-59, 4-61, 4-63, 5-49, 5-51, 5-109, 6-23, 6-45, 6-47
315239-0115	NYLON WASHER G3/4, 3/4RRP	2-87, 2-89
315239-0111	NYLON WASHER G3/8, 3/8RRP	2-9, 2-11, 2-25, 2-27, 5-49, 5-51, 5-109, 6-25, 6-93, 6-101, 6-103
315239-0101	NYLON WASHER M5, M5RRP	1-19, 1-21, 1-23, 5-9, 5-87, 5-141, 5-143, 6-15, 6-17
90321-0490	O-RING	11-37
90321-0492	O-RING	11-37
90321-0493	O-RING	11-37
90321-0496	O-RING	11-37
90321-0498	O-RING	11-37
90321-0500	O-RING	11-37
578495-0000	O-RING	1-55, 1-57, 11-39
315202-0108	O-RING 10,1X1,6 MM	4-35, 4-37, 4-39, 4-41
315206-0701	O-RING 10,82X1,78 MM	1-29
315204-0109	O-RING 11,1X1,6 MM	1-83, 1-85
315202-0110	O-RING 12,1X1,6 MM	4-7, 4-9, 4-11, 4-13, 4-15, 4-17, 4-45, 4-47
315204-0110	O-RING 12,1X1,6 MM	1-71, 1-169
315202-0265	O-RING 12,3X2,4 MM	4-7, 4-9, 4-11, 4-13, 4-15, 4-17, 4-45, 4-47
315202-0317	O-RING 129,5X3 MM	6-89, 6-91
315204-0111	O-RING 13,1X1,6 MM	1-91
315202-0211	O-RING 13,3X2,4 MM	2-37
927421-0003	O-RING 13.3X2.4 SILICONE	1-55, 1-57, 1-103, 1-105
315202-0244	O-RING 134,3X5,7 MM	6-85, 6-87
315202-0112	O-RING 14,1X1,6 MM	6-97, 6-99
315204-0213	O-RING 15,3X2,4 MM	1-35, 1-37
927421-0004	O-RING 15.3X2.4 SILICONE	1-55, 1-57, 1-103, 1-105, 6-85, 6-87
315204-0114	O-RING 16,1X1,6 MM	5-91
315205-0705	O-RING 17,17X1,78 MM	5-85
927421-0006	O-RING 17.3X2.4 SILICONE	1-171, 11-39
315207-0514	O-RING 18,72X2,62 MM	1-55, 1-57
315202-0215	O-RING 19,2X3 MM	5-29, 5-93, 5-109, 5-163, 5-165, 5-167, 5-169, 5-171, 5-173, 5-175, 5-177, 5-201, 5-203, 5-209
315204-0215	O-RING 19,2X3 MM	1-19, 1-23, 1-51, 11-41
90602-2911	O-RING 19,2X3 MM FDA, 3-A	1-21
927422-0001	O-RING 19.2X3 SILICONE	5-19, 5-21, 5-23, 5-25, 5-27, 12-23
315202-0708	O-RING 21,95X1,78 MM	9-171

Part No	Description	Page No
315202-0118 ..	O-RING 22,1X1,6 MM	5-49, 5-51, 5-109
578494-0000 ..	O-RING 226X5,7 FPM	1-55, 1-57, 11-39
315202-0217 ..	O-RING 24,2X3 MM	5-53, 5-211
315204-0119 ..	O-RING 25,1X1,6 MM	1-165, 1-167
315202-0218 ..	O-RING 26,2X3 MM	5-85, 5-163, 5-165, 5-167, 5-169, 5-171, 5-173, 5-175, 5-177
315202-0120 ..	O-RING 27,1X1,6 MM	1-227
491418-0001 ..	O-RING 284X3 FPM	1-171, 11-39
315202-0219 ..	O-RING 29,2X3 MM	4-93, 4-95, 4-97, 4-99
315203-0219 ..	O-RING 29,2X3 MM	12-113
927422-0004 ..	O-RING 29.2X3 SILICONE	6-73
315202-0220 ..	O-RING 32,2X3 MM	5-123, 5-125, 5-127
927422-0014 ..	O-RING 34.2X3 SILICONE	1-55, 1-57, 6-69
491418-0002 ..	O-RING 352X3 FPM	1-83, 1-85
315204-0222 ..	O-RING 36,2X3 MM	1-169
315202-0223 ..	O-RING 39,2X3 MM	5-85
315204-0223 ..	O-RING 39,2X3 MM	1-99
315202-0102 ..	O-RING 4,1X1,6 MM	4-35, 4-37, 4-39, 4-41, 4-53, 4-55, 4-87, 4-89, 4-91
315202-0224 ..	O-RING 42,2X3 MM	12-13
927422-0007 ..	O-RING 44.2X3 SILICONE	6-69, 6-73
315204-0301 ..	O-RING 49,5X3 MM	1-83, 1-85, 1-165, 1-167, 11-41
90602-2912	O-RING 49,5X3 MM FDA, 3-A	1-21
927422-0008 ..	O-RING 49.5X3 SILICONE	1-155, 11-39
315202-0504 ..	O-RING 5,28X1,78 MM	9-171
315202-0204 ..	O-RING 5,3X2,4 MM	4-97, 4-99, 5-123, 5-125, 5-127
315202-0736 ..	O-RING 50,47X2,62 MM	2-13, 2-15, 2-29, 2-31
315204-0302 ..	O-RING 54,5X3 MM	1-71, 1-169
927422-0009 ..	O-RING 54.5X3 SILICONE	6-75
315202-0505 ..	O-RING 6,07X1,78 MM	5-35, 5-37, 5-39, 5-41, 5-43
315205-0505 ..	O-RING 6,07X1,78 MM	1-33, 1-43, 1-47
315202-0304 ..	O-RING 64,5X3 MM	1-21
315202-0305 ..	O-RING 69,5X3 MM	5-85
927422-0011 ..	O-RING 69.5X3 SILICONE	1-103, 1-105
315202-0105 ..	O-RING 7,1X1,6 MM	4-53, 4-55
315202-0206 ..	O-RING 7,3X2,4 MM	2-9, 2-11, 2-25, 2-27, 4-93, 4-95
927421-0005 ..	O-RING 7.3X2.4 SILICONE	6-79, 12-23
315202-0306 ..	O-RING 74,5X3 MM	5-155, 5-157, 5-159, 5-161
90459-0765	O-RING 78X2 MM	5-85
315202-0106 ..	O-RING 8,1X1,6 MM	4-35, 4-37, 4-39, 4-41, 4-97, 4-99
315202-0207 ..	O-RING 8,3X2,4 MM	4-93, 4-95, 4-97, 4-99
315204-0207 ..	O-RING 8,3X2,4 MM	1-43
315202-0308 ..	O-RING 84,5X3 MM	1-19, 1-23, 1-51
315204-0309 ..	O-RING 89,5X3 MM	1-83, 1-85, 1-97
315202-0107 ..	O-RING 9,1X1,6 MM	5-123, 5-125, 5-127
315202-0311 ..	O-RING 99,5X3 MM	5-123, 5-125, 5-127
90242-0093	O-RING MATERIAL 1,5 MM	4-7, 4-9, 4-11, 4-13, 4-15, 4-17, 4-45, 4-47
90161-0001	O-RING MATERIAL 3 MM	2-9, 2-11, 2-25, 2-27
90321-0491	O-RING, NAKAMURA A/CMXT 2500,3500 POS35	11-37
90321-0504	O-RING, NAKAMURA AMXT 2500,3500 POS59	11-37
927422-0003 ..	O.RING 24.2X3 SILICONE	6-81, 11-39
90296-0073	OIL	5-163, 5-165, 5-167, 5-169, 5-171, 5-173, 5-175, 5-177, 5-181
90092-0048	OIL BRUSH, FLAT, 5/16-24 UNF	5-109
90279-0001	OIL CAN 0,4L, 42AM FLEX	12-13
90415-0033	OIL FILTER REFILLING UC-HP-1229-25	6-95
90459-5481	OIL PUMP 3L, 10P-P3	6-95
90604-0393	OIL SEAL	11-13
90600-4585	ONE WAY FLOW CONTROL, G1/8", MANUAL	6-49, 6-51
256659-0000 ..	OPERATING ROD	4-7, 4-9, 4-11, 4-13, 4-15, 4-17, 4-45, 4-47
90600-5002	OPERATOR PANEL, 5AP920_1505-K42-C0	2-93
77091-0700	OPTIONAL PARTS	12-3
90119-0104	OPTO COUPLER AMMS 50070	9-37, 9-39
466478-0000 ..	OUTER PIPE	1-169
1539265-0100 .	OUTFEED UNIT	5-3, 5-5, 5-7
90082-0301	OVER VOLT. PROTECT. PU 0 C 833951	11-11
90459-5320	OVERLOAD PROTECTION, PKZM0-0,25	9-145
90459-5324	OVERLOAD PROTECTION, PKZM0-1,6	9-145
90459-5328	OVERLOAD PROTECTION, PKZM0-10	9-145
90459-5326	OVERLOAD PROTECTION, PKZM0-4	9-145
2816486-0100 .	PACKAGE STOP	5-135, 5-139
1349014-0000 .	PAD	7-21
2523601-0000 .	PAD	7-21
779911-0101 ..	PADLOCK ABLOY, L=46 T=7	12-83, 12-107
1499483-0000 .	PANE	7-35, 7-37
1511317-0000 .	PANE	7-59
1499511-0000 .	PANEL	7-31
90600-1559	PANEL FEED THROUGH, FWD5 54218	1-185, 1-187, 1-189, 1-191, 9-91, 9-93, 9-103, 9-105, 9-111, 9-113, 9-115, 9-117, 9-119, 9-121, 9-123, 9-125, 9-127, 9-129
1549584-0100 .	PAPER BRAKE	8-23, 8-25
577800-0200 ..	PAPER GUIDE	8-17, 8-19
1549300-0100 .	PAPER MAGAZINE	8-3
1296814-0100 .	PAPER REEL HOLDER,JUMBO REEL	8-3
90603-3401	PAPER REEL TROLLEY, 32.04.250.9	11-3
36316-0000	PAPER SUPPORT	7-57
90603-3401_01	PAPER TROLLEY	11-13
90458-2242	PARALLEL KEY W. ROUND ENDS 5X5X35 MM	5-139

Part No	Description	Page No
315705-0307 ..	PARALLEL KEY W. ROUND ENDS, 10X8X70 MM	3-9
315701-0335 ..	PARALLEL KEY W. ROUND ENDS, 12X8X56 MM	3-11, 3-13, 3-15, 3-17
315705-0166 ..	PARALLEL KEY W. ROUND ENDS, 4X4X12 MM	8-17, 8-19
315701-0169 ..	PARALLEL KEY W. ROUND ENDS, 4X4X18 MM	8-29
315705-0196 ..	PARALLEL KEY W. ROUND ENDS, 5X5X10 MM	6-73
315705-0198 ..	PARALLEL KEY W. ROUND ENDS, 5X5X14 MM	5-123, 5-125, 5-127, 5-139
315705-0201 ..	PARALLEL KEY W. ROUND ENDS, 5X5X20 MM	1-81, 5-123, 5-125, 5-127
315705-0230 ..	PARALLEL KEY W. ROUND ENDS, 6X6X16 MM	5-123, 5-125, 5-127, 5-135
315705-0232 ..	PARALLEL KEY W. ROUND ENDS, 6X6X20 MM	3-31, 5-85, 5-123, 5-125, 5-127, 5-139, 5-163, 5-165, 5-167, 5-169, 5-171, 5-173, 5-175, 5-177
315701-0234 ..	PARALLEL KEY W. ROUND ENDS, 6X6X25 MM	5-85
315705-0234 ..	PARALLEL KEY W. ROUND ENDS, 6X6X25 MM	5-135
315701-0235 ..	PARALLEL KEY W. ROUND ENDS, 6X6X28 MM	3-19, 3-21
315701-0239 ..	PARALLEL KEY W. ROUND ENDS, 6X6X40 MM	3-5, 3-19, 3-21
315705-0263 ..	PARALLEL KEY W. ROUND ENDS, 8X7X20 MM	5-163, 5-165, 5-167, 5-169, 5-171, 5-173, 5-175, 5-177
315705-0265 ..	PARALLEL KEY W. ROUND ENDS, 8X7X25 MM	5-85
315701-0268 ..	PARALLEL KEY W. ROUND ENDS, 8X7X32 MM	3-5
315705-0269 ..	PARALLEL KEY W. ROUND ENDS, 8X7X35 MM	3-5
315705-0271 ..	PARALLEL KEY W. ROUND ENDS, 8X7X45 MM	5-163, 5-165, 5-167, 5-169, 5-171, 5-173, 5-175, 5-177
311103-0455 ..	PARALLEL PIN ISO 2338 10M6X22 A1	5-115, 5-117
311103-0458 ..	PARALLEL PIN ISO 2338 10M6X30 A1	2-37, 5-191, 5-193, 5-195
311102-0460 ..	PARALLEL PIN ISO 2338 10M6X35 ST	12-163, 12-165
311103-0466 ..	PARALLEL PIN ISO 2338 10M6X50 A1	2-37
311103-0470 ..	PARALLEL PIN ISO 2338 10M6X60 A1	3-31
311103-0233 ..	PARALLEL PIN ISO 2338 3M6X10 A1	12-111, 12-181
311103-0234 ..	PARALLEL PIN ISO 2338 3M6X12 A1	12-111, 12-115
311103-0235 ..	PARALLEL PIN ISO 2338 3M6X14 A1	12-23
311103-0236 ..	PARALLEL PIN ISO 2338 3M6X16 A1	1-101, 12-171, 12-181
311103-0238 ..	PARALLEL PIN ISO 2338 3M6X20 A1	1-149, 1-151, 4-105, 12-181
311103-0239 ..	PARALLEL PIN ISO 2338 3M6X22 A1	12-115
311103-0242 ..	PARALLEL PIN ISO 2338 3M6X30 A1	4-35, 4-37, 4-39, 4-41, 8-15
311101-0267 ..	PARALLEL PIN ISO 2338 4H6X10 ST	3-11, 3-13, 3-15, 3-17
311103-0267 ..	PARALLEL PIN ISO 2338 4M6X10 A1	3-11, 3-13, 3-15, 3-17, 8-41
311103-0268 ..	PARALLEL PIN ISO 2338 4M6X12 A1	4-45, 4-47, 4-93, 4-95, 8-43
311103-0269 ..	PARALLEL PIN ISO 2338 4M6X14 A1	12-171
311103-0270 ..	PARALLEL PIN ISO 2338 4M6X16 A1	1-55, 1-57, 4-53, 4-55, 4-87, 4-89, 4-91
311103-0272 ..	PARALLEL PIN ISO 2338 4M6X20 A1	2-57, 3-23, 3-25, 4-111, 5-81, 7-63, 12-181
311103-1274 ..	PARALLEL PIN ISO 2338 4M6X24 A1	4-79, 4-81, 12-181
311103-0274 ..	PARALLEL PIN ISO 2338 4M6X25 A1	12-173
311103-0276 ..	PARALLEL PIN ISO 2338 4M6X30 A1	1-83, 1-85, 3-23, 3-25, 12-175
311103-0278 ..	PARALLEL PIN ISO 2338 4M6X35 A1	4-71, 4-73, 7-57, 12-173
311103-0280 ..	PARALLEL PIN ISO 2338 4M6X40 A1	4-71, 4-73, 4-79, 4-81
311101-0308 ..	PARALLEL PIN ISO 2338 5H6X16 ST	12-73, 12-75, 12-77, 12-79, 12-81
311103-0308 ..	PARALLEL PIN ISO 2338 5M6X16 A1	1-83, 1-85, 4-53, 4-55
311102-0308 ..	PARALLEL PIN ISO 2338 5M6X16 ST	12-113
311103-0309 ..	PARALLEL PIN ISO 2338 5M6X18 A1	5-35, 5-37, 5-39, 5-41, 5-43
311103-0310 ..	PARALLEL PIN ISO 2338 5M6X20 A1	1-83, 1-85
311103-1312 ..	PARALLEL PIN ISO 2338 5M6X24 A1	4-45, 4-47
311103-0312 ..	PARALLEL PIN ISO 2338 5M6X25 A1	1-143, 1-145, 4-7, 4-9, 4-11, 4-13, 4-15, 4-17, 4-35, 4-37, 4-39, 4-41
311103-0313 ..	PARALLEL PIN ISO 2338 5M6X28 A1	1-83, 1-85, 5-35, 5-37, 5-39, 5-41, 5-43
311103-0314 ..	PARALLEL PIN ISO 2338 5M6X30 A1	1-89, 4-57, 4-59, 4-61, 4-63
311103-0316 ..	PARALLEL PIN ISO 2338 5M6X35 A1	4-57, 4-59, 4-61, 4-63
311103-0320 ..	PARALLEL PIN ISO 2338 5M6X45 A1	4-57, 4-59, 4-61, 4-63
311103-0351 ..	PARALLEL PIN ISO 2338 6M6X16 A1	5-11, 5-13, 5-15
311102-0351 ..	PARALLEL PIN ISO 2338 6M6X16 ST	12-113
311103-0353 ..	PARALLEL PIN ISO 2338 6M6X20 A1	5-85, 12-43, 12-167
311103-0355 ..	PARALLEL PIN ISO 2338 6M6X25 A1	1-55, 1-57, 4-107, 4-109
311103-0357 ..	PARALLEL PIN ISO 2338 6M6X30 A1	6-71, 12-39, 12-41, 12-43, 12-45, 12-93, 12-175
311103-0361 ..	PARALLEL PIN ISO 2338 6M6X40 A1	1-55, 1-57, 3-31
311103-0401 ..	PARALLEL PIN ISO 2338 8M6X20 A1	4-93, 4-95, 4-97, 4-99, 5-49, 5-51, 5-109
311103-0407 ..	PARALLEL PIN ISO 2338 8M6X35 A1	5-191, 5-193, 5-195
311103-0409 ..	PARALLEL PIN ISO 2338 8M6X40 A1	4-57, 4-59, 4-61, 4-63, 5-57
311103-0413 ..	PARALLEL PIN ISO 2338 8M6X50 A1	1-205, 1-207
311102-0413 ..	PARALLEL PIN ISO 2338 8M6X50 ST	12-169
752099-0000 ..	PASSIVATINGSEAL	12-27
1539920-0300 .	PENDULUM	1-3, 1-5, 1-7
1548010-0200 .	PENDULUM ROLLER	1-219
441871-0000 ..	PENDULUM SUSPENSION	1-75, 1-99
978834-0400 ..	PEROXIDE AND STERILSYSTEM	6-3
532210-0100 ..	PEROXIDE CONTAINER TROLLEY	12-9
456556-0400 ..	PEROXIDE PIPE	1-3, 1-5, 1-7
751393-0300 ..	PEROXIDE PUMP	6-69
751373-0400 ..	PEROXIDE TANK	6-65
531345-0200 ..	PERSONAL PROTECT. EQ H2O2	11-3
90232-0104	PH.CELL E3S-CT61-D-5M	11-23, 11-27, 11-29
90232-0103	PH.CELL E3S-CT61-L-5M	11-23, 11-27, 11-29
90232-0123	PH.CELL WLL170-P135-6011723	8-47, 8-49
491976-0400 ..	PHOTOCELL UNIT	1-3, 1-5, 1-7
256628-0000 ..	PIECE	4-93, 4-95
466479-0000 ..	PIECE	1-169
272641-0000 ..	PILLAR	4-61, 4-63

Part No	Description	Page No
272642-0000 ..	PILLAR	4-57, 4-59
1499061-0000 .	PILLAR	6-69
1499062-0000 .	PILLAR	6-69
1517068-0000 .	PILLAR	7-61
1523494-0000 .	PILLAR	1-83, 1-85
247248-0000 ..	PIN	1-55, 1-57
295140-0000 ..	PIN	3-5, 3-23, 3-25
469159-0000 ..	PIN	7-23, 7-25, 7-27, 7-29
497748-0000 ..	PIN	1-25, 1-27
571540-0000 ..	PIN	1-83, 1-85
583735-0000 ..	PIN	7-61
583749-0000 ..	PIN	7-61
590205-0000 ..	PIN	12-171, 12-181
590219-0000 ..	PIN	12-171
752519-0002 ..	PIN	1-83, 1-85
929444-0000 ..	PIN	3-23, 3-25
978756-0000 ..	PIN	4-111
988685-0000 ..	PIN	2-65, 2-67, 2-69, 2-71, 2-101, 2-103, 6-5, 6-7, 8-11, 8-13
1037761-0000 .	PIN	2-37
1349801-0000 .	PIN	5-131
1490114-0000 .	PIN	3-33, 3-35
1499512-0000 .	PIN	7-23, 7-25, 7-27, 7-29, 7-59
1539792-0000 .	PIN	5-101
1548152-0000 .	PIN	1-219
2523600-0000 .	PIN	7-21
2524480-0000 .	PIN	7-47
2524484-0000 .	PIN	7-47
2524485-0000 .	PIN	7-47
2527526-0000 .	PIN	5-137
2527527-0000 .	PIN	5-137
2552628-0000 .	PIN	7-49
2555063-0000 .	PIN	2-99
2575482-0000 .	PIN	7-51, 7-53
2944333-0000 .	PIN	3-7
3019234-0000 .	PIN	3-31
90258-0031	PIN, STRAIGHT SLOTTED SPRING FRP 3X20	4-105
90266-0019	PIPE	2-51, 2-53, 2-55, 3-11, 3-13, 3-15, 3-17, 4-113, 4-115
90266-0166	PIPE	5-19, 5-21, 5-23, 5-25, 5-27
256816-0000 ..	PIPE	3-31
272679-0000 ..	PIPE	2-57
295978-0000 ..	PIPE	2-57
456900-0000 ..	PIPE	1-103, 1-105
469132-0000 ..	PIPE	2-51, 2-53, 2-55
469133-0000 ..	PIPE	2-51, 2-53, 2-55
469937-0000 ..	PIPE	2-37
532677-0000 ..	PIPE	12-17, 12-19
534634-0000 ..	PIPE	12-23
576287-0000 ..	PIPE	6-29, 6-31, 6-35
577832-0000 ..	PIPE	6-15, 6-17
578500-0000 ..	PIPE	1-173, 1-175, 1-177, 1-179, 1-181, 1-183
978963-0000 ..	PIPE	6-67
979028-0000 ..	PIPE	1-165, 1-167
979031-0000 ..	PIPE	1-165, 1-167
979069-0000 ..	PIPE	6-67
979217-0000 ..	PIPE	6-13
979300-0000 ..	PIPE	6-79
1260480-0000 .	PIPE	1-165, 1-167
1260481-0000 .	PIPE	1-165, 1-167
1260489-0000 .	PIPE	1-165, 1-167
1286000-0000 .	PIPE	2-87, 2-89
1296854-0000 .	PIPE	2-87, 2-89
1317663-0000 .	PIPE	1-9, 1-11, 1-49
1317756-0000 .	PIPE	1-9, 1-11, 1-49
1350186-0000 .	PIPE	6-93
1350307-0000 .	PIPE	2-87, 2-89
1350308-0000 .	PIPE	2-87, 2-89
1350309-0000 .	PIPE	2-87, 2-89
1490839-0000 .	PIPE	1-55, 1-57
1490840-0000 .	PIPE	1-55, 1-57
1498218-0000 .	PIPE	5-19, 5-21, 5-23, 5-25, 5-27
1498219-0000 .	PIPE	5-19, 5-21, 5-23, 5-25, 5-27
1498220-0000 .	PIPE	5-19, 5-21, 5-23, 5-25, 5-27
1498221-0000 .	PIPE	5-19, 5-21, 5-23, 5-25, 5-27
1511683-0000 .	PIPE	6-75
1511774-0000 .	PIPE	6-67
1512353-0000 .	PIPE	6-101, 6-103
1512411-0000 .	PIPE	1-9, 1-11
1512806-0000 .	PIPE	6-29, 6-31
1517487-0000 .	PIPE	6-101, 6-103
1517488-0000 .	PIPE	6-101, 6-103
1517489-0000 .	PIPE	6-101, 6-103
1517493-0000 .	PIPE	1-103, 1-105
1517495-0000 .	PIPE	1-103, 1-105
1517510-0000 .	PIPE	5-207

Part No	Description	Page No
1519380-0000	.PIPE	1-165, 1-167
1519381-0000	.PIPE	1-165, 1-167
1519382-0000	.PIPE	1-165, 1-167
1519383-0000	.PIPE	1-165, 1-167
1519384-0000	.PIPE	1-165, 1-167
1519385-0000	.PIPE	1-165, 1-167
1519386-0000	.PIPE	1-165, 1-167
1519387-0000	.PIPE	1-165, 1-167
1519388-0000	.PIPE	1-165, 1-167
1519394-0000	.PIPE	6-89, 6-91
1519482-0000	.PIPE	1-77, 1-79
1519561-0000	.PIPE	5-95, 5-97, 5-99
1519562-0000	.PIPE	5-95, 5-97, 5-99
1519563-0000	.PIPE	5-95, 5-97, 5-99
1519576-0000	.PIPE	6-101, 6-103
1519934-0000	.PIPE	1-71
1519936-0000	.PIPE	1-9, 1-11
1523049-0000	.PIPE	1-157
1523050-0000	.PIPE	1-157
1523051-0000	.PIPE	1-157
1523052-0000	.PIPE	1-157
1523053-0000	.PIPE	1-157
1523068-0000	.PIPE	6-77
1523336-0000	.PIPE	1-93, 1-95
1523350-0000	.PIPE	1-93, 1-95
1523365-0000	.PIPE	1-159, 1-161
1523366-0000	.PIPE	1-159, 1-161
1523431-0000	.PIPE	2-59, 2-61
1523432-0000	.PIPE	2-59, 2-61
1523433-0000	.PIPE	2-59, 2-61
1523434-0000	.PIPE	2-59, 2-61
1523922-0000	.PIPE	5-95, 5-97, 5-99
1523923-0000	.PIPE	5-95, 5-97, 5-99
1538906-0000	.PIPE	6-95
1538908-0000	.PIPE	6-95
1539238-0000	.PIPE	1-9, 1-11
1539332-0000	.PIPE	6-95
1539596-0000	.PIPE	1-45
1539603-0000	.PIPE	1-45
1539604-0000	.PIPE	1-33
1539947-0000	.PIPE	5-201, 5-203
1548156-0000	.PIPE	6-101, 6-103
1548315-0000	.PIPE	1-157
1548316-0000	.PIPE	6-77
1549267-0000	.PIPE	5-95, 5-97, 5-99
1549937-0000	.PIPE	5-95, 5-97, 5-99
1549938-0000	.PIPE	5-95, 5-97, 5-99
1558126-0000	.PIPE	4-43
1558127-0000	.PIPE	4-43
2500294-0000	.PIPE	1-203
2502197-0000	.PIPE	1-107, 1-109
2502198-0000	.PIPE	1-107, 1-109
2502199-0000	.PIPE	1-107, 1-109
2514391-0000	.PIPE	6-67
2523703-0000	.PIPE	2-87, 2-89
2528094-0000	.PIPE	1-55, 1-57
2532923-0000	.PIPE	1-55, 1-57
2544855-0000	.PIPE	1-107, 1-109
2544856-0000	.PIPE	1-107, 1-109
2544863-0000	.PIPE	1-107, 1-109
2544864-0000	.PIPE	1-107, 1-109
2544868-0000	.PIPE	1-107, 1-109
2544869-0000	.PIPE	1-107, 1-109
2544959-0000	.PIPE	5-201, 5-203
2544979-0000	.PIPE	5-207
2545429-0000	.PIPE	1-35, 1-37
2546444-0000	.PIPE	1-33
2546446-0000	.PIPE	1-33
2546472-0000	.PIPE	1-33
2558744-0000	.PIPE	1-35, 1-37
2558745-0000	.PIPE	1-35, 1-37
2563210-0000	.PIPE	6-85, 6-87
2570391-0000	.PIPE	1-35, 1-37
2618264-0000	.PIPE	1-9, 1-11
2618266-0000	.PIPE	1-9, 1-11
2651347-0000	.PIPE	5-95, 5-97, 5-99
2677789-0000	.PIPE	5-95, 5-97, 5-99
2685203-0000	.PIPE	5-213
2685213-0000	.PIPE	5-201, 5-203
2721238-0000	.PIPE	1-9, 1-11, 1-49
2743328-0000	.PIPE	1-103, 1-105
2743329-0000	.PIPE	1-103, 1-105
2743331-0000	.PIPE	1-103, 1-105
2743345-0000	.PIPE	5-201, 5-203

Machine Type Group Description Page No

Part No	Description	Page No
2751445-0000	.PIPE	5-31, 5-33
2761751-0000	.PIPE	6-105
2761752-0000	.PIPE	6-105
2761753-0000	.PIPE	6-105
2761754-0000	.PIPE	6-105
2761759-0000	.PIPE	1-9, 1-11
2761760-0000	.PIPE	1-9, 1-11
2764346-0000	.PIPE	5-31, 5-33
2776732-0000	.PIPE	5-31, 5-33
2776738-0000	.PIPE	5-31, 5-33
2787350-0000	.PIPE	5-31, 5-33
2788107-0000	.PIPE	6-101, 6-103
2788109-0000	.PIPE	6-101, 6-103
2788110-0000	.PIPE	6-101, 6-103
2788118-0000	.PIPE	1-223
2790834-0000	.PIPE	6-95
2790835-0000	.PIPE	6-85, 6-87
2800348-0000	.PIPE	5-31, 5-33
2807010-0000	.PIPE	5-209
2807012-0000	.PIPE	5-209
2807015-0000	.PIPE	5-201, 5-203
2814879-0000	.PIPE	5-31, 5-33
2814883-0000	.PIPE	5-31, 5-33
2814890-0000	.PIPE	5-31, 5-33
2815767-0000	.PIPE	1-107, 1-109
2815768-0000	.PIPE	1-107, 1-109
2829703-0000	.PIPE	5-201, 5-203
2830499-0000	.PIPE	5-31, 5-33
2830507-0000	.PIPE	5-31, 5-33
2888967-0000	.PIPE	1-103, 1-105
2898196-0000	.PIPE	1-165, 1-167
2921878-0000	.PIPE	6-33
2921879-0000	.PIPE	6-33
2949468-0000	.PIPE	1-31
3015473-0000	.PIPE	1-9, 1-11
3015475-0000	.PIPE	1-9, 1-11
3024349-0000	.PIPE	6-69
3024352-0000	.PIPE	6-15, 6-17
3024355-0000	.PIPE	1-103, 1-105
3072097-0000	.PIPE	6-29, 6-31
3072098-0000	.PIPE	6-29, 6-31
3072125-0000	.PIPE	6-93
3072883-0000	.PIPE	6-29, 6-31
3072885-0000	.PIPE	6-101, 6-103
1511460-0000	.PIPE 1050	7-67
1511461-0000	.PIPE 1051	7-67
580363-0000	.. PIPE 71	1-107, 1-109
580364-0000	.. PIPE 71	1-107, 1-109
581015-0000	.. PIPE 91	1-107, 1-109
581016-0000	.. PIPE 91	1-107, 1-109
1519391-0000	.PIPE BEND	6-89, 6-91
491390-0000	.. PIPE CENTRAL LUBRICATION	2-51, 2-53, 2-55
456853-0001	.. PIPE CLAMP	5-183, 5-185, 5-187
456853-0002	.. PIPE CLAMP	5-183, 5-185, 5-187
456853-0003	.. PIPE CLAMP	5-183, 5-185, 5-187
90165-0039	.... PIPE CLAMP D=15 MM, GSK15/12	2-51, 2-53, 2-55
90165-0065	.... PIPE CLAMP D=8 MM, GSK08/12	2-51, 2-53, 2-55, 3-15, 3-17, 3-33, 3-35
90457-0182	.... PIPE CLAMP, D=8 MM, RAPOD8X	2-59, 2-61
90165-0099	.... PIPE CLAMP, DOUBLE, RBP-108, D=8 MM	2-59, 2-61
90074-0026	.... PIPE CLIP FOR TUBE D=24-35 MM	3-5
90165-0002	.... PIPE CLIP FOR TUBE D=4 MM	2-51, 2-53, 2-55, 3-11, 3-13, 3-15, 3-17
90165-0057	.... PIPE CLIP FOR TUBE D=6 MM	5-201, 5-203, 6-95
90165-0022	.... PIPE CLIP, FOR TUBE D=2,5 MM, B-3570	2-51, 2-53, 2-55, 3-11, 3-13, 3-15, 3-17
90030-0065	.... PIPE CONNECTION	2-59, 2-61, 4-35, 4-37, 4-39, 4-41, 4-113, 4-115
979458-0000	.. PIPE CONNECTION	5-109
1512448-0000	.PIPE CONNECTION	5-49, 5-51
1523069-0000	.PIPE CONNECTION	6-77
2743339-0000	.PIPE CONNECTION	5-201, 5-203
90030-0106	.... PIPE CONNECTION G 12	1-9, 1-11
342727-0214	.. PIPE CONNECTION G 15	6-101, 6-103
90030-0075	.... PIPE CONNECTION G 6	1-103, 1-105, 1-107, 1-109
342727-0102	.. PIPE CONNECTION G 6	2-51, 2-53, 2-55
90030-0091	.... PIPE CONNECTION G 8	2-59, 2-61
90134-0004	.... PIPE CONNECTION R1/8	5-17, 5-49, 5-51, 5-89, 5-109
90330-0106	.... PIPE COUPLING	1-31
342722-0204	.. PIPE COUPLING	5-89
342722-0202	.. PIPE COUPLING 1/8" D=6MM	1-197, 1-199, 1-201, 5-31, 5-33, 5-95, 5-97, 5-99, 5-183, 5-185, 5-187, 6-77, 7-67
342807-0104	.. PIPE ELBOW 90 DEGR. SMS1220, D=51 MM	5-189
342751-0204	.. PIPE FITTING TEE, LE06LR71	1-107, 1-109
1360399-0000	.PIPE HOLDER	12-17, 12-19
1511463-0000	.PIPE HOLDER	7-67
1511464-0000	.PIPE HOLDER	7-67
1519668-0000	.PIPE HOLDER	6-105

Part No	Description	Page No
1519669-0000	PIPE HOLDER	6-105
1519670-0000	PIPE HOLDER	6-105
1519671-0000	PIPE HOLDER	6-105
2761756-0000	PIPE HOLDER	1-31
2914839-0000	PIPE HOLDER	1-31
2914842-0000	PIPE HOLDER	1-49
2941706-0000	PIPE HOLDER	6-97, 6-99
2941707-0000	PIPE HOLDER	6-97, 6-99
441759-0000	PIPE LEFT	4-107, 4-109
594970-0000	PIPE LEFT	4-107, 4-109
90087-0002	PIPE PLUG	2-37
441758-0000	PIPE RIGHT	4-107, 4-109
594969-0000	PIPE RIGHT	4-107, 4-109
491854-0000	PIPE WATER	2-51, 2-53, 2-55
456455-0700	PIPE WORK	5-3, 5-5, 5-7
978835-0200	PIPE WORK	6-65
1548576-0100	PIPE WORK	2-3, 2-5, 2-7
2500214-0200	PIPE WORK	2-83, 2-85
1350184-0200	PIPE WORK, AIR WATER	6-3
1519663-0200	PIPE WORK-HYDRAULIC	6-3
295045-0900	PIPE WORK-PNEUMATIC	1-3, 1-5, 1-7
580335-0200	PIPE WORK-PNEUMATIC	7-55
1519390-0000	PIPE(FOR 60HZ)	6-89, 6-91
751722-0000	PIPE-LINE	1-193, 1-195
572486-0000	PISTON	1-155
576441-0000	PISTON	1-19, 1-23, 1-51
576445-0000	PISTON	1-21
751743-0000	PISTON	4-35, 4-37, 4-39, 4-41
929372-0000	PISTON	4-53, 4-55
576442-0000	PISTON ROD	1-23
576446-0000	PISTON ROD	1-19
576447-0000	PISTON ROD	1-21
2913732-0000	PISTON ROD	1-51
90091-0398	PISTON SEAL GLIDE RING T 20,5X28X3,2 MM	4-53, 4-55
90091-0335	PISTON SEAL GLYD RING 62,5X70X3,2 MM	1-21
90091-0216	PISTON SEAL GLYD RING 7,1X12X2,2 MM	4-7, 4-9, 4-11, 4-13, 4-15, 4-17, 4-45, 4-47
90091-0336	PISTON SEAL GLYD RING 79X90X4,2 MM	1-19, 1-23, 1-51
491169-0000	PIVOT ARM	1-69
491881-0003	PIVOT ARM	2-25, 2-27
1260645-0000	PIVOT ARM	5-93
1517066-0000	PIVOT ARM	7-61
2500332-0200	PIVOT ARM	2-83, 2-85
2547232-0000	PIVOT ARM	2-9, 2-11
2696621-0000	PIVOT ARM	5-29
2814875-0000	PIVOT ARM	5-29
272454-0000	PIVOT PIN	4-93, 4-95
441794-0000	PIVOT PIN	5-53, 5-211
90240-0050	PLAIN BEAR,SELF ADJ. 20X35X24	3-11, 3-13, 3-15, 3-17
90240-0048	PLAIN BEAR,SELF ADJ.SPHER. 25X42X20 MM	3-11, 3-13, 3-15, 3-17
90240-0152	PLAIN BEAR,SELF ADJ.SPHER.12X22X10 MM	4-105
532349-0000	PLAIN BEARING	1-75, 1-99
751230-0000	PLAIN BEARING	1-83, 1-85
90181-0088	PLASTIC RIVET, PR 52314	9-149, 9-151, 9-153, 9-173
37908-0000	PLATE	8-41
440731-0000	PLATE	1-9, 1-11, 1-49
441360-0000	PLATE	3-5
456182-0000	PLATE	1-143, 1-145
469466-0000	PLATE	1-193, 1-195
532679-0000	PLATE	12-17, 12-19
534693-0000	PLATE	12-23
571534-0000	PLATE	1-125, 1-127
590262-0000	PLATE	12-173
590279-0000	PLATE	12-175
590281-0000	PLATE	12-177
590282-0000	PLATE	12-177
590284-0000	PLATE	12-177
590502-0000	PLATE	12-177
590504-0000	PLATE	12-177
751287-0000	PLATE	1-135, 1-137, 1-139
751288-0000	PLATE	1-135, 1-137, 1-139
752534-0000	PLATE	8-23, 8-25
752539-0000	PLATE	8-23, 8-25
928139-0000	PLATE	5-91
929036-0000	PLATE	5-91
929037-0000	PLATE	5-91
978792-0000	PLATE	1-125, 1-127
979204-0000	PLATE	8-41
979783-0000	PLATE	8-41
1195047-0000	PLATE	5-89
1195059-0000	PLATE	5-103, 5-105, 5-107
1195421-0000	PLATE	2-25, 2-27
1255391-0000	PLATE	5-111
1260486-0000	PLATE	1-209, 1-211
1260487-0000	PLATE	1-209, 1-211

Part No	Description	Page No
1285920-0000	.PLATE	5-91
1317016-0000	.PLATE	2-25, 2-27
1334062-0000	.PLATE	12-177
1334797-0000	.PLATE	12-167
1346004-0000	.PLATE	12-101
1346005-0000	.PLATE	12-101
1346600-0000	.PLATE	5-135
1346672-0000	.PLATE	12-65
1348367-0000	.PLATE	12-65
1350494-0000	.PLATE	2-25, 2-27
1498222-0000	.PLATE	5-19, 5-21, 5-23, 5-25, 5-27
1498223-0000	.PLATE	5-19, 5-21, 5-23, 5-25, 5-27
1498224-0000	.PLATE	5-19, 5-21, 5-23, 5-25, 5-27
1511000-0000	.PLATE	7-49
1517072-0000	.PLATE	6-9
1517073-0000	.PLATE	6-9
1517074-0000	.PLATE	6-9
1517075-0000	.PLATE	6-9
1517076-0000	.PLATE	6-9
1517077-0000	.PLATE	6-9
1517519-0000	.PLATE	5-183, 5-185, 5-187
1519393-0000	.PLATE	6-89, 6-91
1519418-0000	.PLATE	5-199
1519620-0000	.PLATE	5-123, 5-125, 5-127
1519621-0000	.PLATE	5-123, 5-125, 5-127
1519622-0000	.PLATE	5-123, 5-125, 5-127
1519623-0000	.PLATE	5-123, 5-125, 5-127
1519629-0000	.PLATE	5-129
1519637-0000	.PLATE	5-129
1519638-0000	.PLATE	5-129
1523065-0000	.PLATE	6-77
1523067-0000	.PLATE	6-77
1523222-0000	.PLATE	1-171
1523337-0000	.PLATE	1-93, 1-95
1523346-0000	.PLATE	1-93, 1-95
1523757-0000	.PLATE	2-37
1523758-0000	.PLATE	2-37
1524637-0000	.PLATE	5-137
1524638-0000	.PLATE	5-137
1524780-0000	.PLATE	1-97
1524805-0000	.PLATE	1-97
1524829-0000	.PLATE	1-219
1538089-0000	.PLATE	6-9
1539956-0000	.PLATE	5-83
1539957-0000	.PLATE	5-49, 5-51
1539965-0000	.PLATE	5-57
1548147-0000	.PLATE	1-219
1548148-0000	.PLATE	1-219
1549299-0000	.PLATE	8-11, 8-13
1549303-0000	.PLATE	8-17, 8-19
1549476-0000	.PLATE	8-15
1549477-0000	.PLATE	8-15
1549478-0000	.PLATE	8-15
1549479-0000	.PLATE	8-15
1549484-0000	.PLATE	8-11, 8-13
1549487-0000	.PLATE	8-11, 8-13
1549488-0000	.PLATE	8-11, 8-13
1549945-0000	.PLATE	2-25, 2-27
1549968-0000	.PLATE	2-25, 2-27
1558191-0000	.PLATE	5-101
2500202-0000	.PLATE	6-45, 6-47
2502423-0000	.PLATE	5-129
2504445-0000	.PLATE	2-9, 2-11
2506608-0000	.PLATE	2-83, 2-85
2506609-0000	.PLATE	2-83, 2-85
2519646-0000	.PLATE	7-59
2522110-0000	.PLATE	2-9, 2-11
2524479-0000	.PLATE	7-47
2526343-0000	.PLATE	5-45, 5-47
2526344-0000	.PLATE	5-45, 5-47
2544966-0000	.PLATE	5-49, 5-51
2549262-0000	.PLATE	1-93, 1-95
2552727-0000	.PLATE	5-11, 5-13, 5-15
2566131-0000	.PLATE	5-89
2576352-0000	.PLATE	5-11, 5-13, 5-15
2606879-0000	.PLATE	5-11, 5-13, 5-15
2633435-0000	.PLATE	5-49, 5-51
2641397-0000	.PLATE	8-33
2652212-0000	.PLATE	5-11, 5-13, 5-15
2699670-0000	.PLATE	5-45, 5-47
2715383-0000	.PLATE	5-49, 5-51
2746798-0000	.PLATE	2-35
2748682-0000	.PLATE	8-11, 8-13
2832787-0000	.PLATE	1-9, 1-11

Part No	Description	Page No
2832789-0000	PLATE	1-223
2854615-0000	PLATE	5-115, 5-117
2854622-0000	PLATE	5-115, 5-117
2854642-0000	PLATE	5-139
2854643-0000	PLATE	5-137
2854644-0000	PLATE	5-137
2914838-0000	PLATE	1-173, 1-175, 1-177, 1-179, 1-181, 1-183
2921881-0000	PLATE	5-63
2921894-0000	PLATE	5-19, 5-21, 5-23, 5-25, 5-27
2974217-0000	PLATE	6-53
3017412-0000	PLATE	8-11, 8-13
3017420-0000	PLATE	4-113, 4-115
3019236-0000	PLATE	2-101, 2-103
3019238-0000	PLATE	2-105
3024351-0000	PLATE	6-15, 6-17
3040327-0000	PLATE	9-91, 9-93
3040328-0000	PLATE	1-185, 1-187, 1-189, 1-191
3040341-0000	PLATE	9-111, 9-113, 9-115, 9-117, 9-119, 9-121, 9-123, 9-125, 9-127, 9-129
3040342-0000	PLATE	9-95, 9-97
3072120-0000	PLATE	9-107
3072121-0000	PLATE	9-103, 9-105
3081140-0000	PLATE	1-203
1512443-0000	PLATE CHOKE	5-55
90125-0020	PLATE COMPLETE	1-73
1512350-0000	PLATFORM	2-83, 2-85
1512351-0000	PLATFORM	2-83, 2-85
1512660-0300	PLATFORM	2-3, 2-5, 2-7
1558320-0100	PLATFORM	8-5
2505236-0000	PLATFORM	2-83, 2-85
76137-0000	PLATFORM TRANSPORT	12-163, 12-165
1511825-0300	PLC RACK 1	9-13, 9-15, 9-17, 9-19
1511826-0100	PLC RACK 2	9-13, 9-15, 9-17, 9-19
1511827-0100	PLC RACK 3	9-13, 9-15, 9-17, 9-19
90031-0062	PLC, ANALOG OUTPUT MODULE 8PT/CURR/VOLT	9-41
90031-0057	PLC, DIGITAL INPUT MODULE	9-41, 9-43, 9-45
90031-0058	PLC, DIGITAL INPUT MODULE	9-41
90031-0059	PLC, DIGITAL OUTPUT MODULE	9-41, 9-43, 9-45
90031-0068	PLC, POWER SUPPLY	9-41, 9-43, 9-45
90031-0063	PLC,ANALOG COMBO MODULE,IN-4PT/OUT-2PT	9-41
90031-0308	PLC,CABLES, I/O EXPANSION CABLE	9-41, 9-43
2501528-0200	PLMS KIT	11-3
1254471-0411	PLMS OFF-LINE	10-7
48633-0302	PLMS ON-LINE CLIENT PROGRAM	10-9
1369439-0302	PLMS ON-LINE PROGRAM	10-7
48635-0302	PLMS ON-LINE SERVER PROGRAM	10-9
1190007-0402	PLMS RECEIVE	10-7
577755-0000	PLUG	5-123, 5-125, 5-127
926820-0000	PLUG	1-227
980004-0000	PLUG	8-27
1348968-0000	PLUG	12-27
1512128-0000	PLUG	5-29, 5-93
1523334-0000	PLUG	1-93, 1-95
2545155-0000	PLUG	1-43
90136-0002	PLUG 5/1624	2-51, 2-53, 2-55
90458-1279	PLUG CONNECTOR, DP1	9-13, 9-15, 9-17, 9-19
90134-0052	PLUG DOSING BLOCK	3-11, 3-13, 5-49, 5-51, 5-109
90459-5924	PLUG LD-PE, Ã¸10.7 NATUR	2-97
90087-0019	PLUG M10X1 STAINLESS	3-11, 3-13, 5-17, 5-49, 5-51, 5-109, 6-95
90134-0045	PLUG M12X1	4-35, 4-37, 4-39, 4-41, 5-109
90099-0120	PLUG PR 37 (PG29)	1-35, 1-37, 1-173, 1-175, 1-177, 1-179, 1-181, 1-183, 1-185, 1-187, 1-189, 1-191, 9-91, 9-93, 9-95, 9-97
350013-0005	PLUG QSC-12H	6-15, 6-17
350013-0002	PLUG QSC-6H	6-15, 6-17, 6-49, 6-51
350013-0003	PLUG QSC-8H	6-15, 6-17, 6-49, 6-51
90261-0073	PLUG, BLIND, PLASTIC, NO. GPN250/15	5-181
90261-0071	PLUG, BLIND, PLASTIC, NO. GPN500B58	1-55, 1-57
90261-0049	PLUG, BLIND, PLASTIC, NO. SR1750	7-11
342713-0210	PLUG, EXT THREAD HEX SOCKET	1-35, 1-37, 6-15, 6-17, 6-23, 6-29, 6-31
342713-0213	PLUG, EXT THREAD HEX SOCKET 8638-00-120	6-15, 6-17, 6-27, 6-29, 6-31
342713-0209	PLUG, EXT THREAD HEX SOCKET 8638-00-180	6-27, 4-35, 4-37, 4-39, 4-41, 6-23, 6-27, 6-97, 6-99
342713-0211	PLUG, EXT THREAD HEX SOCKET 8638-00-380	6-23, 6-97, 6-99
90600-6055	PLUG, EXT THREAD HEX SOCKET B-3/8	6-93
90087-0046	PLUG, EXT. 1/8 NPT-THREAD, 2PH-SS	1-31
90330-0026	PLUG, EXT. G-THREAD, G1/4	1-35, 1-37
90136-0001	PLUG, EXT. THREAD, NO. 100727	1-33, 1-77, 1-79
90330-0037	PLUG, G1/2EXT, G1/2	4-97, 4-99, 5-123, 5-125, 5-127, 6-39, 6-67
90330-0066	PLUG, G1/8EXT, G1/8	1-29, 1-107, 1-109, 4-7, 4-9, 4-11, 4-13, 4-15, 4-17, 4-45, 4-47, 5-29, 6-97, 6-99
90330-0046	PLUG, G3/4EXT, R-236G3/4	2-87, 2-89
90330-0029	PLUG, G3/8EXT, R-236R3/8	1-31, 1-73, 6-85, 6-87, 6-89, 6-91, 6-97, 6-99, 6-101, 6-103, 12-17, 12-19
90087-0036	PLUG, KR 1/4	6-37
90326-0022	PLUG, MALE YELLOW CR-AL, 03-21000A	1-43, 5-19, 5-21, 5-23, 5-25, 5-27, 5-91
90099-0104	PLUG, PR 15,2 (PG9)	1-185, 1-187, 1-189, 1-191, 5-109, 5-123, 5-125, 5-127, 9-91, 9-93, 9-95, 9-97, 9-111, 9-113, 9-115, 9-117, 9-119, 9-121, 9-123, 9-125, 9-127, 9-129

Part No	Description	Page No
90099-0117	PLUG, PR 18,6 (PG11)	1-173, 1-175, 1-177, 1-179, 1-181, 1-183, 5-49, 5-51
90099-0110	PLUG, PR 22,5 (PG16)	1-185, 1-187, 1-189, 1-191, 9-91, 9-93, 9-95, 9-97, 9-167
90099-0119	PLUG, PR 28,3 (PG21)	1-35, 1-37, 1-173, 1-175, 1-177, 1-179, 1-181, 1-183, 1-185, 1-187
		1-189, 1-191, 9-91, 9-93, 9-95, 9-97
256889-0000 ..	PLUNGER	4-93, 4-95
400833-0000 ..	PLUNGER	7-19
752115-0000 ..	PLUNGER	4-7, 4-9, 4-11, 4-13, 4-15, 4-17, 4-45, 4-47
752774-0000 ..	PLUNGER	3-23, 3-25
979383-0000 ..	PLUNGER	8-43
3038093-0000 .	PNEUMATIC DIAGRAM	11-9
3038094-0000 .	PNEUMATIC DIAGRAM	11-9
3038090-0000 .	PNEUMATIC DIAGRAM TBA	6-15, 6-17, 11-9
3038092-0000 .	PNEUMATIC DIAGRAM TPA	6-15, 6-17, 11-9
3038091-0000 .	PNEUMATIC DIAGRAM TWA	6-15, 6-17, 11-9
271007-0000 ..	POINTER	3-23, 3-25
752857-0000 ..	POINTER	1-81
752858-0000 ..	POINTER	1-81
752859-0000 ..	POINTER	1-81
76337-0000	PONCH	12-83
76470-0100	PONCH	12-105
76471-0000	PONCH	12-107
76589-0000	PONCH	12-107
76590-0000	PONCH	12-83
76591-0100	PONCH	12-71
533905-0100 ..	PONCH	12-17, 12-19
1511784-0200 .	POWER CABLE INLETS	9-87, 9-89
1511788-0200 .	POWER CONNECTOR PLATE	9-87, 9-89
1511829-0200 .	POWER SIDE, TOP TERMINAL BLOCK	9-13, 9-15, 9-17, 9-19
1511800-0100 .	POWER SIDE,BOTTOM TERMINAL BLOCK	9-13, 9-15, 9-17, 9-19
90459-4133	POWER SUPPLY UNIT 6EP1 436-3BA00	9-109
90459-5632	POWER SUPPLY UNIT, S8TS-06024_1	9-71, 9-73
90458-0254	PRECISION PRESSURE REGULATOR,LRP-1/4-0,7	6-37
272927-0000 ..	PRESSURE ARM	1-91
571920-0000 ..	PRESSURE ARM	8-37
1143980-0100 .	PRESSURE DEVICE	5-3, 5-5, 5-7
2523725-0200 .	PRESSURE DEVICE	5-3, 5-5, 5-7
90602-3531	PRESSURE EXPANSION VESSEL, 13424	6-93
2914808-0001 .	PRESSURE FLANGE	1-225
2914808-0002 .	PRESSURE FLANGE	1-225
2914808-0003 .	PRESSURE FLANGE	1-225
2914808-0004 .	PRESSURE FLANGE	1-225
2914808-0005 .	PRESSURE FLANGE	1-225
2914808-0006 .	PRESSURE FLANGE	1-225
2914808-0007 .	PRESSURE FLANGE	1-225
2914808-0008 .	PRESSURE FLANGE	1-225
2914809-0000 .	PRESSURE FLANGE	1-225
2914813-0000 .	PRESSURE FLANGE	1-53
2914814-0000 .	PRESSURE FLANGE	1-53
2914815-0000 .	PRESSURE FLANGE	1-53
2914816-0000 .	PRESSURE FLANGE	1-53
2914817-0000 .	PRESSURE FLANGE	1-53
2914818-0000 .	PRESSURE FLANGE	1-53
90043-0034	PRESSURE GAUGE	1-107, 1-109
3137656-0100 .	PRESSURE GAUGE	12-27
90043-0069	PRESSURE GAUGE 0-4BAR WIEGAND 2040	1-223
90243-0137	PRESSURE GAUGE KIT 0-50 MM WC, 229900	12-17, 12-19
90458-2421	PRESSURE GAUGE, 1453 W. BRACKET	6-45, 6-47
90043-0002	PRESSURE GAUGE, 2040 D=63 MM	6-93
90043-0021	PRESSURE GAUGE, 2041 D=40 MM	12-17, 12-19, 12-133
90043-0006	PRESSURE GAUGE, 2041 D=63 MM	6-29, 6-31
90043-0043	PRESSURE GAUGE, 2041D=40 MM	12-17, 12-19, 12-135
90043-0095	PRESSURE GAUGE, 2750, D=63 MM, GLYC.	6-43
90043-0082	PRESSURE GAUGE, 2840, D=63 MM	1-31
90459-4615	PRESSURE GAUGE, 85120731	12-157
90458-0726	PRESSURE GAUGE, D=50 MM WITH FILTER	6-97, 6-99
90458-2969	PRESSURE GAUGE, MAP-40-1-1/8-EN	6-37
90274-0045	PRESSURE GUARD, 14 KPA	2-43, 2-45
90274-0084	PRESSURE GUARD, 1800 KPA	6-95
90600-1385	PRESSURE GUARD, PEV-1/4-B SA234332	6-39, 6-57
256212-0600 ..	PRESSURE JAW	4-3, 4-5
256213-0600 ..	PRESSURE JAW	4-3, 4-5
929324-0200 ..	PRESSURE JAW	4-3, 4-5
929325-0200 ..	PRESSURE JAW	4-3, 4-5
2509556-0000 .	PRESSURE PLATE	5-101
2509560-0000 .	PRESSURE PLATE	5-101
256214-0400 ..	PRESSURE RAIL	4-3, 4-5
2558133-0000 .	PRESSURE REGULATOR	1-31
2558134-0000 .	PRESSURE REGULATOR	1-31
577822-0300 ..	PRESSURE REGULATOR GROUP	6-15, 6-17
90459-2425	PRESSURE REGULATOR IN-LINE, BSP-1/4	6-15, 6-17
2506475-0100 .	PRESSURE ROLLER	7-35, 7-37
257330-0000 ..	PRESSURE ROLLER (10 PCS)	1-171, 11-39
272479-0000 ..	PRESSURE ROLLER (10PCS)	1-171, 11-39
3096176-0100 .	PRESSURE SENSOR	6-15, 6-17

Part No	Description	Page No
90274-0066	PRESSURE SWITCH, 5,516 - 689,5 KPA	1-35, 1-37
90459-6716	PRESSURE SWITCH, PEV-1/4-B-SA	6-45, 6-47
565536-0100 ..	PRESSURE TEST EQUIPMENT	12-27
90459-0087	PRINT WHEEL, 6-COLOURS	11-11
543319-0000 ..	PRINTED CIRCUIT BOARD	9-33
556677-0000 ..	PRINTED CIRCUIT BOARD	12-117
556678-0000 ..	PRINTED CIRCUIT BOARD	12-117
556679-0000 ..	PRINTED CIRCUIT BOARD	12-115
556680-0000 ..	PRINTED CIRCUIT BOARD	12-115
556681-0000 ..	PRINTED CIRCUIT BOARD	12-115
272560-1000 ..	PRODUCT VALVE	1-3, 1-5, 1-7
2924213-0200 .	PRODUCT VALVE	1-3, 1-5, 1-7
77094-0400	PRODUCTION PARTS	12-3
90143-0076	PROFILE	2-83, 2-85
2685647-0000 .	PROFILE	9-147, 9-155, 9-157
90028-0017	PROGRESSIVE RING 15	6-33
90030-0098	PROGRESSIVE RING 8	2-51, 2-53, 2-55
90459-7584	PROHOBITION SIGN ISO, DO NOT REACH IN	2-17
90459-1420	PROPORTIONAL VALVE 0 - 10V/0-6 BAR	1-35, 1-37
90458-1092	PROPORTIONAL VALVE, 0-10V/0-6 BAR	1-223
2982066-0000 .	PROTECTIC CAP	1-165, 1-167
295075-0000 ..	PROTECTION	2-9, 2-11
556422-0000 ..	PROTECTION	8-23, 8-25
574452-0000 ..	PROTECTION	2-9, 2-11
1296118-0000 .	PROTECTION	6-69
2509543-0000 .	PROTECTION	8-17, 8-19
2510532-0000 .	PROTECTION	1-219
2514041-0000 .	PROTECTION	4-57, 4-59
2514042-0000 .	PROTECTION	4-61, 4-63
2628609-0000 .	PROTECTION	5-153
925999-0000 ..	PROTECTION PIPE	1-227
37882-0000	PROTECTION PLATE	8-33
79003-0000	PROTECTION PLATE	12-27
243132-0000 ..	PROTECTION PLATE	8-33
978462-0000 ..	PROTECTION PLATE	1-91
1524655-0000 .	PROTECTION PLATE	1-93, 1-95
2982067-0000 .	PROTECTIVE CAP	1-159, 1-161, 1-165, 1-167
90458-1234	PROTECTIVE CAP 2X20X1.2X100	8-17, 8-19
579623-0000 ..	PROTECTIVE CASING	3-29
456249-0000 ..	PROTECTIVE COVER	5-121
579625-0400 ..	PROTECTIVE COVER	1-3, 1-5, 1-7
1539953-0000 .	PROTECTIVE COVER	5-49, 5-51
1549886-0000 .	PROTECTIVE COVER	2-33
272002-0000 ..	PROTECTIVE COVER LEFT	1-83, 1-85
272003-0000 ..	PROTECTIVE COVER RIGHT	1-83, 1-85
90326-0012	PROTECTIVE COVER, 03-001 10	1-9, 1-11, 1-43, 1-55, 1-57, 1-69, 1-73, 1-77, 1-79, 1-99, 1-165, 1-167
90303-0012	PROTECTIVE GLOVES	11-15
90243-0126	PROTECTIVE GOGGLES	12-109
90303-0011	PROTECTIVE GOGGLES	11-15
2504952-0000 .	PROTRACTOR	3-23, 3-25
90458-0894	PROX.SENSOR E2E2-X10MB1-5M	5-49, 5-51
90458-0675	PROX.SENSOR, E2EG-X5MB1-5M	8-17, 8-19
90044-0124	PROX.SWITCH 922AB2XM-A9P-050-LZ-876	3-37
90458-0138	PROX.SWITCH E2EG-X1R5B1-5M	1-29, 3-33, 3-35, 11-39
90458-0256	PROX.SWITCH IIA 3010-BPKG/6M	2-9, 2-11, 2-25, 2-27
90044-0117	PROX.SWITCH IX 0208	5-85
591677-0200 ..	PULL-DOWN DEVICE	5-3, 5-5, 5-7
2764344-0100 .	PULL-DOWN DEVICE	5-3, 5-5, 5-7
74305-0100	PULLER	12-27
76175-0100	PULLER	12-27
777603-0100 ..	PULLER	12-127
777603-0300 ..	PULLER	12-127
256421-0000 ..	PULLEY	3-11, 3-13
90278-0001	PUMP	12-13
2526863-0000 .	PUMP	1-55, 1-57
90321-0037	PUMP C-6125P EP 220V, 50HZ	6-13
90457-0039	PUMP CONN. ELBOW FLANGE T-26/12-3/8	6-97, 6-99
90604-0453	PUMP GROUP	11-13
292449-0000 ..	PUMP HOUSING	6-73
90457-0131	PUMP SV805 R22T 50HZ	5-201, 5-203
90458-2762	PUMP SV805 R406T 60HZ	5-201, 5-203
90321-0101	PUMP, 4TP213A	6-83
90457-0013	PUMP-MOTOR BRACKET, LS-211, NO 1711121	6-97, 6-99
90187-0105	PURGING VALVE, G3/8 FOR WATER	1-55, 1-57
580329-0300 ..	PUSH BUTTON BOX	7-5, 7-7
2564115-0000 .	PUSH BUTTON BOX	8-45
90064-0085	PUSH BUTTON, RED	7-17, 8-45
90064-0082	PUSH BUTTON, WHITE	2-13, 2-15, 2-29, 2-31
90064-0098	PUSH BUTTON, WHITE	7-17
350015-0003 ..	PUSH-IN Y-CONNECTOR QSY-F-8	5-183, 5-185, 5-187, 6-15, 6-17, 6-53
350010-0002 ..	PUSH-IN BULKHEAD FITTING QSS1F-8	1-173, 1-175, 1-177, 1-179, 1-181, 1-183, 5-183, 5-185, 5-187
350006-0008 ..	PUSH-IN FITTING QS-F-12H-8	6-15, 6-17
350001-0016 ..	PUSH-IN FITTING QS-F-G1/2-12	6-15, 6-17, 6-101, 6-103

Part No	Description	Page No
350001-0011 ..	PUSH-IN FITTING QS-F-G1/4-12	6-15, 6-17
350001-0008 ..	PUSH-IN FITTING QS-F-G1/4-6	12-135
350001-0009 ..	PUSH-IN FITTING QS-F-G1/4-8	6-15, 6-17, 6-101, 6-103
350001-0006 ..	PUSH-IN FITTING QS-F-G1/8-6	5-49, 5-51
350001-0002 ..	PUSH-IN FITTING QS-F-M5-6	5-49, 5-51
350008-0003 ..	PUSH-IN FITTING QSF-F-G1/8-6	1-223, 2-33, 5-49, 5-51
90600-0913	PUSH-IN FITTING QSQ-G1/4-6	6-15, 6-17
350004-0005 ..	PUSH-IN L-FITTING QSL-F-12	6-39
350002-0016 ..	PUSH-IN L-FITTING QSL-F-G1/2-12	6-15, 6-17, 6-39, 6-55
350002-0011 ..	PUSH-IN L-FITTING QSL-F-G1/4-12	6-15, 6-17
350002-0008 ..	PUSH-IN L-FITTING QSL-F-G1/4-6	1-223, 5-63, 6-15, 6-17
350002-0009 ..	PUSH-IN L-FITTING QSL-F-G1/4-8	6-15, 6-17, 6-37
350002-0006 ..	PUSH-IN L-FITTING QSL-F-G1/8-6	1-35, 1-37, 2-33, 5-19, 5-21, 5-23, 5-25, 5-27, 5-35, 5-37, 5-39, 5-41, 5-43, 6-33, 6-49, 6-51, 6-53
350002-0007 ..	PUSH-IN L-FITTING QSL-F-G1/8-8	6-49, 6-51, 6-53
350002-0014 ..	PUSH-IN L-FITTING QSL-F-G3/8-12	6-49, 6-51, 9-171
350002-0002 ..	PUSH-IN L-FITTING QSL-F-M5-6	1-155, 5-35, 5-37, 5-39, 5-41, 5-43, 6-49, 6-51, 6-53
350005-0002 ..	PUSH-IN T-FITTING QST-F-6	6-15, 6-17
350007-0009 ..	PUSH-IN T-FITTING QST-F-G1/4-8	6-15, 6-17
350007-0006 ..	PUSH-IN T-FITTING QST-F-G1/8-6	1-223
350015-0001 ..	PUSH-IN Y-CONNECTOR QSY-F-6	6-15, 6-17, 6-53
90055-0147	PUSH-IN Y-CONNECTOR QSY-12	6-15, 6-17
90055-0257	PUSH-IN Y-CONNECTOR QSY-6	5-63
578096-0000 ..	PUSHER	5-123, 5-125, 5-127
979749-0000 ..	PUSHER	5-123, 5-125, 5-127
979881-0000 ..	PUSHER	5-123, 5-125, 5-127
1349420-0000 .	PUSHER	5-123, 5-125, 5-127
1519572-0000 .	PUSHER	5-123, 5-125, 5-127
1519619-0000 .	PUSHER	5-123, 5-125, 5-127
2501547-0100 .	QUEUE GUARD	11-21
90163-0062	QUICK COUPLING, (F) 5053-1/8	1-9, 1-11, 1-29, 1-49, 5-49, 5-51, 5-109
90163-0056	QUICK COUPLING, (F) 5054-6/4	12-17, 12-19
90163-0016	QUICK COUPLING, (F) LP 006-0-WR013	6-39, 12-133
90163-0013	QUICK COUPLING, (F) LP 006-0-WR013-01-2	2-77, 2-79
90163-0076	QUICK COUPLING, (F) LP-006-0-WR021	6-97, 6-99
90459-2254	QUICK COUPLING, (M) 10 320 5202	12-135
90163-0087	QUICK COUPLING, (M) 5150-1/4	12-17, 12-19
90163-0057	QUICK COUPLING, (M) 5150-1/8	1-9, 1-11, 1-29, 1-49, 12-17, 12-19
90163-0113	QUICK COUPLING, (M) LP-006-1-WR013-22	12-133
90163-0015	QUICK COUPLING, (M) LP-006-1-WR513	2-77, 2-79
90163-0064	QUICK COUPLING, (M) LP-006-2-WR517	6-95
90163-0304	QUICK COUPLING, LP-006-5-74-KU (DUST CAP	6-95
90235-0832	QUICK EXHAUST VALVE, SE-1/8-B	5-49, 5-51
90235-0206	QUICK EXHAUST VALVE, SEU-1/8	5-89, 5-183, 5-185, 5-187
1511805-0100 .	RACK	9-13, 9-15, 9-17, 9-19
67369-0102	RACK WALLMOUNTED 84TE	9-31
315221-0137 ..	RADIAL SEAL 17X35X7 MM	5-123, 5-125, 5-127
315221-0169 ..	RADIAL SEAL 30X47X7 MM	3-5
90091-0306	RADIAL SEAL 30X47X7 MM DUST LIP	5-49, 5-51
315221-0175 ..	RADIAL SEAL 35X47X7 MM	5-85
315221-0177 ..	RADIAL SEAL 35X52X7 MM	5-159, 5-161
90091-0305	RADIAL SEAL 40X55X7 MM DUST LIP	5-85
315221-0185 ..	RADIAL SEAL 40X62X7 MM	5-85
90091-0233	RADIAL SEAL 85X110X12 MM DUST LIP	5-85
342770-0101 ..	RAIGHT COUPLING INT, D=4 MM - G1/8	4-43
37895-0000	RAIL	8-35
272645-0000 ..	RAIL	4-57, 4-59, 4-61, 4-63
295057-0001 ..	RAIL	5-35, 5-37, 5-39, 5-41, 5-43
295057-0002 ..	RAIL	5-35, 5-37, 5-39, 5-41, 5-43
295057-0004 ..	RAIL	5-35, 5-37, 5-39, 5-41, 5-43
295058-0001 ..	RAIL	5-35, 5-37, 5-39, 5-41, 5-43
295058-0002 ..	RAIL	5-35, 5-37, 5-39, 5-41, 5-43
295058-0004 ..	RAIL	5-35, 5-37, 5-39, 5-41, 5-43
295060-0000 ..	RAIL	5-35, 5-37, 5-39, 5-41, 5-43
295061-0000 ..	RAIL	5-35, 5-37, 5-39, 5-41, 5-43
295062-0000 ..	RAIL	5-35, 5-37, 5-39, 5-41, 5-43
578676-0000 ..	RAIL	2-43, 2-45
979476-0000 ..	RAIL	1-41
1282988-0000 .	RAIL	7-35, 7-37
1511822-0300 .	RAIL	9-135, 9-137
1511823-0300 .	RAIL	9-135, 9-137
1511824-0300 .	RAIL	9-13, 9-15, 9-17, 9-19
1511834-0300 .	RAIL	9-13, 9-15, 9-17, 9-19
1512352-0000 .	RAIL	7-33
2501266-0000 .	RAIL	8-47, 8-49
2526915-0000 .	RAIL	4-87, 4-89, 4-91
2527136-0000 .	RAIL	4-87, 4-89, 4-91
2529075-0000 .	RAIL	4-87, 4-89, 4-91
2544961-0100 .	RAIL	5-3, 5-5, 5-7
2763553-0001 .	RAIL	2-19
2763553-0002 .	RAIL	2-19
2769984-0000 .	RAIL	2-97
2769985-0000 .	RAIL	2-97
2854812-0000 .	RAIL	5-67

Part No	Description	Page No
2854813-0000	RAIL	5-67
2854814-0000	RAIL	5-67
3024838-0100	RAIL	9-13, 9-15, 9-17, 9-19
2527135-0000	RAIL (TITANIUM)	4-87, 4-89, 4-91
2527137-0000	RAIL (TITANIUM)	4-87, 4-89, 4-91
90094-0005	RAIL BRACKET, TSTW 5/5M	9-63, 9-65, 9-67, 9-69, 9-75, 9-77
2699437-0000	RAIL HOLDER	5-69, 5-71, 5-119
2854820-0100	RAIL HOLDER	5-67
2930298-0100	RAIL HOLDER	5-67
295059-0000	RAIL LEFT	5-35, 5-37, 5-39, 5-41, 5-43
574348-0000	RAIL LEFT	5-35, 5-37, 5-39, 5-41, 5-43
591443-0000	RAIL LEFT	5-145
751110-0000	RAIL LEFT	5-45, 5-47
979737-0000	RAIL LEFT	5-35, 5-37, 5-39, 5-41, 5-43
979864-0000	RAIL LEFT	5-35, 5-37, 5-39, 5-41, 5-43
1195034-0000	RAIL LEFT	5-103, 5-105, 5-107
574349-0000	RAIL RIGHT	5-35, 5-37, 5-39, 5-41, 5-43
591444-0000	RAIL RIGHT	5-145
751109-0000	RAIL RIGHT	5-45, 5-47
979738-0000	RAIL RIGHT	5-35, 5-37, 5-39, 5-41, 5-43
979865-0000	RAIL RIGHT	5-35, 5-37, 5-39, 5-41, 5-43
1195033-0000	RAIL RIGHT	5-103, 5-105, 5-107
353042-0006	RAIL, TS 35/155/15/2,3	9-161
353042-0004	RAIL, TS 35/7,5	9-13, 9-15, 9-17, 9-19, 9-23, 9-29, 9-37, 9-39, 9-47, 9-61, 9-63, 9-65, 9-67, 9-69, 9-71, 9-73, 9-75, 9-77, 9-79, 9-81, 9-85, 9-109, 9-139, 9-141, 9-145
353042-0005	RAIL, TS 35/7.5 NO HOLE	5-77, 5-79
90077-0328	RAIL, TS15/5	11-25, 11-31, 11-33
353042-0003	RAIL, TS35/15/2.3	9-139, 9-141, 9-143
1512635-0000	RAILING	2-99
1512636-0000	RAILING	2-99
1512637-0000	RAILING	2-99
1519602-0200	RAILING	2-3, 2-5, 2-7
1538924-0000	RAILING	2-99
2769991-0000	RAILING	2-99
2769992-0000	RAILING	2-99
2854821-0100	RAILING	5-59, 5-61
2763430-0100	RAILING KIT	2-17
90239-0486	REAR, CLEVIS, MINI-ISO 16	2-47, 2-49
90239-0487	REAR, CLEVIS, MINI-ISO 20-25	1-73, 2-35
90459-0080	RECORDER 6-CHANNEL, LOGOPRINT 500	9-149, 9-151, 9-153
90030-0170	REDUCER 2521-1/4X3/8	1-31
342716-0202	REDUCER 4-6	2-59, 2-61
342716-0210	REDUCER 6-12	7-67
342716-0203	REDUCER 6-8	2-51, 2-53, 2-55
90030-0630	REDUCER, 1,5MM, M6, NO. 815406	6-97, 6-99
90089-0007	REDUCING SLEEVE, PR18,6/PR22,5	8-17, 8-19
90089-0004	REDUCING SLEEVE, PR28,3/PR22,5	8-45
90089-0005	REDUCING SLEEVE, PR37/PR28,3	8-45
1144122-0000	REDUCTION	5-19, 5-21, 5-23, 5-25, 5-27, 5-91
2552081-0000	REDUCTION	5-19, 5-21, 5-23, 5-25, 5-27
342710-0115	REDUCTION RBM 16/8	2-57
1524674-0000	REDUCTION SLEEVE	1-107, 1-109
1549297-0000	REEL HOLDER	8-15
1549298-0000	REEL HOLDER	8-15
1549481-0000	REEL HOLDER	8-15
1549482-0000	REEL HOLDER	8-15
1549491-0000	REEL HOLDER	8-15
442086-0000	REFLECTOR	12-113
469337-0000	REFLECTOR	2-41
927205-0200	REGULATING VALVE	1-9, 1-11, 1-49
1519937-0000	REGULATOR BODY	1-29
90113-0056	REGULATOR, 11-818-998	12-133
90459-2241	REGULATOR, MS4-LRB-1/4-D5-AS	6-37
90459-2242	REGULATOR, MS4-LRB-1/4-D7-AS	6-37
90459-4146	RELAY G2R-1-T 24VDC	8-11, 8-13
90119-0109	RELAY OMRON 24VDC MY4H	9-29
90119-0086	RELAY, AUXILIARY MY4IN4 24VDC	9-29, 9-47
90600-6446	RELAY, MKS3PI-5 24VDC	9-29, 9-75, 9-77
90601-6650	RELAY, PLC-RSC-24DC/21	9-37, 9-39
90601-6651	RELAY, PLC-RSC-24DC/21-21	9-37, 9-39
1511803-0200	RELAYS RAIL	9-13, 9-15, 9-17, 9-19
2565736-0000	RESERVOIR	1-35, 1-37
90459-5811	RESIDUAL CURRENT DEVICE, FI-25/2/003-A	9-139, 9-141
90121-0132	RESISTANCE FIXED, 0,51 KOHM, 0,25 W	9-75, 9-77
90121-0099	RESISTANCE FIXED, 100 KOHM, 6 W	12-113
90459-6797	RESISTANCE FIXED, 120 OHM, 0,40 W	9-41
255801-0000	RETAINING RING	4-7, 4-9, 4-11, 4-13, 4-15, 4-17, 4-45, 4-47
440259-0000	RETAINING RING	8-43
571087-0000	RETAINING RING	6-89, 6-91
2570392-0000	RETAINING RING	7-65
315752-0120	RETAINING RING FOR BORE DIN 472 26	7-61
315753-0122	RETAINING RING FOR BORE DIN 472 30 SS	7-49
315753-0123	RETAINING RING FOR BORE DIN 472 32 SS	3-7
315753-0124	RETAINING RING FOR BORE DIN 472 35 SS	1-91, 1-97

Part No	Description	Page No
315752-0125 ..	RETAINING RING FOR BORE DIN 472 37	4-105
315753-0127 ..	RETAINING RING FOR BORE DIN 472 40X1.75C	5-123, 5-125, 5-127
90141-0020	RETAINING RING FOR BORE DIN 472 42 SS	5-135
315753-0132 ..	RETAINING RING FOR BORE DIN 472 52 SS	5-85
90141-0016	RETAINING RING FOR SHAFT DIN 471 10 SS	1-69, 7-13, 7-19, 7-21, 7-23, 7-25, 7-27, 7-29
315751-0109 ..	RETAINING RING FOR SHAFT DIN 471 12 SS	4-105, 4-107, 4-109, 7-15, 7-35, 7-37, 7-39, 7-41
315751-0112 ..	RETAINING RING FOR SHAFT DIN 471 15 SS	1-91, 1-97, 1-221, 5-139, 7-11, 8-17, 8-19
90141-0017	RETAINING RING FOR SHAFT DIN 471 17 SS	1-47, 5-53, 5-123, 5-125, 5-127, 5-211
315751-0116 ..	RETAINING RING FOR SHAFT DIN 471 20 SS	4-105, 5-123, 5-125, 5-127, 5-135
315751-0119 ..	RETAINING RING FOR SHAFT DIN 471 25 SS	3-29
315751-0122 ..	RETAINING RING FOR SHAFT DIN 471 30 SS	4-105
315751-0124 ..	RETAINING RING FOR SHAFT DIN 471 35 SS	5-85
315751-0127 ..	RETAINING RING FOR SHAFT DIN 471 40 SS	5-123, 5-125, 5-127
315751-0103 ..	RETAINING RING FOR SHAFT DIN 471 6X 0.7C	2-35, 2-47, 2-49, 7-61
90141-0015	RETAINING RING FOR SHAFT DIN 471 8 SS	4-53, 4-55, 5-123, 5-125, 5-127, 5-131, 7-13, 7-47, 7-51, 7-53, 8-15, 12-171, 12-173
315754-0113 ..	RETAINING RING SHAFT DIN 6799 15	1-19, 1-21, 1-23, 1-51
315755-0106 ..	RETAINING RING SHAFT DIN 6799 4 SS	4-43, 5-123, 5-125, 5-127, 7-23, 7-25, 7-27, 7-29, 7-59
315755-0107 ..	RETAINING RING SHAFT DIN 6799 5 SS	1-219, 2-33, 7-23, 7-25, 7-27, 7-29
315755-0109 ..	RETAINING RING SHAFT DIN 6799 7 SS	12-181
315755-0801 ..	RETAINING RING SHAFT DIN 6799 8 SS	7-47
315755-0110 ..	RETAINING RING SHAFT DIN 6799 9 SS	7-51, 7-53
315742-0111 ..	RETAINING RING, 15 SMS 199 RFR	7-63
315742-0112 ..	RETAINING RING, 16 SMS 199 RFR	1-91
315742-0116 ..	RETAINING RING, 20 SMS 199 RFR	3-31
315742-0102 ..	RETAINING RING, 6 SMS 199 RFR	4-57, 4-59, 4-61, 4-63
315742-0104 ..	RETAINING RING, 8 SMS 199 RFR	8-21, 12-93
441905-0000 ..	RETARD PIN	2-97
1523064-0000 .	RETURN PIPE	6-77
2545428-0000 .	RETURN PIPE	1-35, 1-37
2547006-0000 .	RETURN PIPE	1-33
2547007-0000 .	RETURN PIPE	1-33
90457-0024	RETURNFILTER UNIT, RF-P/30-BB-010E1.0/-T	6-97, 6-99
2738220-0000 .	RIGGING SCREW	2-35
90458-1214	RIGHT ENDPL EXT. PILOT AIR,CDVI5.0-EPR-S	6-49, 6-51
978636-0000 ..	RIM	5-135, 5-139
209183-0000 ..	RING	1-43, 1-47, 1-159, 1-161
272857-0000 ..	RING	3-19, 3-21
440655-0000 ..	RING	1-19
442084-0000 ..	RING	12-113
456794-0000 ..	RING	1-83, 1-85
530599-0000 ..	RING	1-23, 1-75, 1-99
571537-0000 ..	RING	1-83, 1-85
571538-0000 ..	RING	1-83, 1-85
571539-0000 ..	RING	1-83, 1-85
574334-0000 ..	RING	1-83, 1-85
574335-0000 ..	RING	1-83, 1-85
590269-0000 ..	RING	12-137
590270-0000 ..	RING	12-137
590271-0000 ..	RING	12-137
590509-0100 ..	RING	12-27
752499-0000 ..	RING	1-163
1334061-0000 .	RING	12-137
311521-0144 ..	RIVET, BLANK 3,2X10	11-47
311521-0146 ..	RIVET, BLANK 3,2X12	9-87, 9-89, 9-149, 9-151, 9-153, 9-173
311521-0142 ..	RIVET, BLANK 3,2X6	1-31
311521-0143 ..	RIVET, BLANK 3,2X8	11-3
311521-0152 ..	RIVET, BLANK 4,0X8	8-33
90181-0313	RIVET, DUCTAFIX R4	9-13, 9-15, 9-17, 9-19, 9-99, 9-101, 9-135, 9-137, 9-175
1484454-0000 .	ROCKER ARM	3-29
2507014-0100 .	ROCKER ARM	3-27
74770-0000	ROD	12-119
75454-0000	ROD	12-121
272746-0000 ..	ROD	5-179
272840-0000 ..	ROD	4-97, 4-99
578092-0000 ..	ROD	5-123, 5-125, 5-127
2570400-0000 .	ROD	7-51, 7-53
2570401-0000 .	ROD	7-51, 7-53
90239-0491	ROD END, BALL JOINT EYE, MINI-ISO M6	7-19
90239-0357	ROD END, CLEVIS WITH AXLE M10X1,25	4-57, 4-59, 4-61, 4-63
90239-0516	ROD END, CLEVIS WITH AXLE M10X1,25	1-69, 1-71, 1-93, 1-95, 1-149, 1-151, 1-169
90450-0725	ROD END, CLEVIS WITH AXLE M6	2-33, 3-7
90239-0489	ROD END, CLEVIS WITH AXLE M6X1,25	1-219
90239-0532	ROD END, CLEVIS WITH AXLE M8X1,25	1-69, 1-73, 2-35
90115-0181	ROD END, ID=10 MM M10X1,5	5-11, 5-13, 5-15
90115-0182	ROD END, ID=10 MM M10X1,5LH	5-11, 5-13, 5-15
90115-0137	ROD END, ID=6 MM, M6X1	2-35
90115-0173	ROD END, ID=6 MM, M6X1	2-47, 2-49
90115-0138	ROD END, ID=6 MM, M6X1 LH	2-35
90115-0054	ROD END, ID=8 MM, M8X1,25	8-37
90239-0405	ROD END,BALL JOINT EYE M10X1,25	1-91, 2-9, 2-11, 2-25, 2-27
90091-0091	ROD SEAL 10X14X1,7 MM	4-7, 4-9, 4-11, 4-13, 4-15, 4-17, 4-45, 4-47
90091-0089	ROD SEAL 16X22X2,5 MM	4-35, 4-37, 4-39, 4-41
90091-0214	ROD SEAL GLYD RING 16X20,9X2,2 MM	4-35, 4-37, 4-39, 4-41

Part No	Description	Page No
90091-0237	ROD SEAL GLYD RING 20X27,5X3 MM	1-19, 1-21, 1-23, 1-51
90091-0215	ROD SEAL GLYD RING 25X32,5X3,2 MM	4-35, 4-37, 4-39, 4-41
90091-0364	ROD SEAL, STEPSEAL 18X25,3X3,2 MM	4-53, 4-55
6161-0000	ROLL	1-193, 1-195
22463-0000	ROLL	4-7, 4-9, 4-11, 4-13, 4-15, 4-17, 4-45, 4-47
37888-0000	ROLL	8-33
256576-0000 ..	ROLL	4-35, 4-37, 4-39, 4-41
256860-0000 ..	ROLL	4-19, 4-21, 4-23, 4-27, 4-29, 4-31, 4-49, 4-51
257044-0000 ..	ROLL	1-149, 1-151
257306-0000 ..	ROLL	3-11, 3-13
441876-0000 ..	ROLL	1-83, 1-85
451117-0000 ..	ROLL	1-143, 1-145
469461-0000 ..	ROLL	1-193, 1-195
469464-0000 ..	ROLL	1-193, 1-195
491165-0000 ..	ROLL	3-15, 3-17
574333-0000 ..	ROLL	1-83, 1-85
574346-0000 ..	ROLL	1-149, 1-151
574397-0000 ..	ROLL	1-143, 1-145
574398-0000 ..	ROLL	1-143, 1-145
574399-0000 ..	ROLL	1-143, 1-145
574400-0000 ..	ROLL	1-143, 1-145
574401-0000 ..	ROLL	1-143, 1-145
574402-0000 ..	ROLL	1-143, 1-145
574403-0000 ..	ROLL	1-143, 1-145
574417-0000 ..	ROLL	1-135, 1-137, 1-139
574418-0000 ..	ROLL	1-135, 1-137, 1-139
574479-0000 ..	ROLL	1-125, 1-127
574480-0000 ..	ROLL	1-125, 1-127
574481-0000 ..	ROLL	1-125, 1-127
751254-0000 ..	ROLL	3-7
751283-0000 ..	ROLL	1-135, 1-137, 1-139
751284-0000 ..	ROLL	1-135, 1-137, 1-139
751491-0000 ..	ROLL	1-125, 1-127
751492-0000 ..	ROLL	1-125, 1-127
751494-0000 ..	ROLL	1-125, 1-127
751495-0000 ..	ROLL	1-143, 1-145
751496-0000 ..	ROLL	1-143, 1-145
751497-0000 ..	ROLL	1-143, 1-145
751498-0000 ..	ROLL	1-143, 1-145
751499-0000 ..	ROLL	1-143, 1-145
751500-0000 ..	ROLL	1-143, 1-145
751501-0000 ..	ROLL	1-143, 1-145
929441-0000 ..	ROLL	1-135, 1-137, 1-139
929442-0000 ..	ROLL	1-135, 1-137, 1-139
1285546-0000 .	ROLL	7-51, 7-53
1296912-0000 .	ROLL	1-125, 1-127
1296913-0000 .	ROLL	1-125, 1-127
1296914-0000 .	ROLL	1-125, 1-127
1296915-0000 .	ROLL	1-125, 1-127
1346988-0000 .	ROLL	7-47
3070151-0000 .	ROLL	4-43
456796-0000 ..	ROLLER	1-83, 1-85
456996-0000 ..	ROLLER	1-83, 1-85
577747-0000 ..	ROLLER	5-135
583737-0000 ..	ROLLER	7-61
583738-0000 ..	ROLLER	7-61
590216-0000 ..	ROLLER	12-181
751502-0000 ..	ROLLER	1-149, 1-151
929279-0000 ..	ROLLER	1-149, 1-151
929284-0000 ..	ROLLER	1-83, 1-85
979582-0000 ..	ROLLER	7-61
1195054-0000 .	ROLLER	5-89
1260069-0000 .	ROLLER	5-81
1350676-0000 .	ROLLER	12-181
1478554-0000 .	ROLLER	5-135
1499481-0000 .	ROLLER	7-23, 7-25, 7-27, 7-29
1511307-0000 .	ROLLER	7-65
1512583-0000 .	ROLLER	7-13, 7-15, 7-23, 7-25, 7-27, 7-29, 7-35, 7-37, 7-43, 7-51, 7-53
1517293-0000 .	ROLLER	7-23, 7-25, 7-27, 7-29
1519626-0000 .	ROLLER	5-129
1532526-0000 .	ROLLER	4-111
1538150-0000 .	ROLLER	1-149, 1-151
1538948-0000 .	ROLLER	4-105
1548052-0000 .	ROLLER	1-221
1548284-0000 .	ROLLER	1-81
2524477-0000 .	ROLLER	7-49
2552632-0000 .	ROLLER	7-43
2552633-0000 .	ROLLER	7-43
2576346-0000 .	ROLLER	5-11, 5-13, 5-15
2576349-0000 .	ROLLER	5-11, 5-13, 5-15
2576350-0000 .	ROLLER	5-11, 5-13, 5-15
2612578-0000 .	ROLLER	1-125, 1-127
2854632-0000 .	ROLLER	5-139
978758-0000 ..	ROLLER 125ML	4-111

Machine Type Group Description Page No

Part No	Description	Page No
978757-0000 ..	ROLLER 180-284ML	4-111
318241-0030 ..	ROLLER CHAIN, DUPLEX 3/8" -30, SS	5-123, 5-125, 5-127, 5-131
318201-0150 ..	ROLLER CHAIN, SIMPLEX 3/8 -150	3-31
90288-0066	ROLLER CHAIN, SIMPLEX 3/8 -365, SS	1-55, 1-57
318201-0047 ..	ROLLER CHAIN, SIMPLEX 3/8 -47	5-123, 5-125, 5-127
979575-0000 ..	ROLLER PLATE	7-43
978760-0000 ..	ROLLER TBA200SL	4-111
574385-0000 ..	ROLLER TBA250SL	4-111
929355-0000 ..	ROLLER TPA 330	4-111
90424-0066	ROT.SPRAY NOZZLE, D26984-R3/8"-PVDF...	5-209
90347-0054	ROTARY DASHPOT, S-CRD-P277	8-27
90111-0120	ROTARY SWITCH, 704.510 .0A+704.901.5/A	9-149, 9-151, 9-153
441798-0100 ..	ROTOR	5-209
441811-0100 ..	ROTOR	5-49, 5-51, 5-109, 5-201, 5-203
575034-0000 ..	ROUND NUT	6-5, 6-7, 7-31, 8-11, 8-13
3040345-0000 .	ROUND NUT	9-131, 9-133
2538621-0100 .	ROUNDED DOLLY	12-9
90166-0159	RUBBER HOSE	4-19, 4-21, 4-23, 4-27, 4-29, 4-31
90166-0244	RUBBER HOSE	6-67
90166-0245	RUBBER HOSE	6-67
90143-0068	RUBBER STRIP EMKA 1011-08	2-65, 2-67, 2-69, 2-71, 2-73, 2-75, 2-101, 2-103, 6-5, 6-7, 8-11, 8-13
90458-1240	RUBBERSPRING DK-A 15X40	8-17, 8-19
37913-0000	RULER	8-41
37916-0000	RULER	8-41
37917-0000	RULER	8-41
76298-0000	RULER	12-85, 12-87
76601-0000	RULER	12-43
76607-0000	RULER	12-39, 12-41, 12-45
271642-0000 ..	RULER	8-41
271643-0000 ..	RULER	8-41
271644-0000 ..	RULER	8-41
272886-0000 ..	RULER	8-41
272887-0000 ..	RULER	8-41
272888-0000 ..	RULER	8-41
574426-0000 ..	RULER	8-41
574427-0000 ..	RULER	8-41
574428-0000 ..	RULER	8-41
590278-0000 ..	RULER	12-175
751576-0000 ..	RULERPART L	4-13, 4-15, 4-17
751578-0000 ..	RULERPART L	4-13, 4-15, 4-17
752011-0000 ..	RULERPART L	4-13, 4-15, 4-17
752012-0000 ..	RULERPART L	4-13, 4-15, 4-17
752016-0000 ..	RULERPART L	4-13, 4-15, 4-17
752017-0000 ..	RULERPART L	4-13, 4-15, 4-17
751575-0000 ..	RULERPART R	4-7, 4-9, 4-11
751577-0000 ..	RULERPART R	4-7, 4-9, 4-11
752009-0000 ..	RULERPART R	4-7, 4-9, 4-11
752010-0000 ..	RULERPART R	4-7, 4-9, 4-11
752014-0000 ..	RULERPART R	4-7, 4-9, 4-11
752015-0000 ..	RULERPART R	4-7, 4-9, 4-11
1517534-0000 .	RUNNER RING	7-35, 7-37
90459-0737	SAFETY CLUTCH, SK1 15/D/20/5-20	5-85
90601-7290	SAFETY PLC, PLUTO B46 20-070-17	9-37, 9-39
90459-1131	SAFETY RELAY, E1T	9-37, 9-39
90459-2291	SAFETY RELAY, E1T	9-37, 9-39
90459-4164	SAFETY SCREW, SM4X20	2-101, 2-103, 3-31, 6-5, 6-7, 7-31
90459-4165	SAFETY SCREW, SM4X25	2-65, 2-67, 2-69, 2-71, 2-101, 2-103, 2-105, 6-61, 8-23, 8-25
90459-4142	SAFETY SENSOR, ADAM M12, 20-051-00	1-83, 1-85, 3-31, 6-61, 7-31, 8-11, 8-13, 8-23, 8-25
90600-5926	SAFETY SENSOR, ADAM E M12 5M CABLE	2-65, 2-67, 2-69, 2-71, 2-105
90458-2794	SAFETY SENSOR, EVA 20-046-00	1-83, 1-85, 3-31, 6-5, 6-7, 7-31, 8-11, 8-13, 8-23, 8-25
90459-4089	SAFETY SENSOR, EVA E, 20-046-06	2-65, 2-67, 2-69, 2-71, 2-101, 2-103
90601-1126	SAFETY VALVE, MS6-SV-1/2-E-10V24-AG	6-15, 6-17, 6-39
1484791-0000 .	SCALE	3-11, 3-13, 3-15, 3-17
1484792-0000 .	SCALE	3-11, 3-13, 3-15, 3-17
777510-0101 ..	SCISSORS	12-13
90220-0183	SCR. CABLE 2X0,34MM2	9-13, 9-15, 9-17, 9-19, 9-41
90220-0072	SCR. CABLE 4X0,34MM2	1-35, 1-37
90220-0104	SCR. CABLE 4X1,5MM2	1-81, 2-37, 8-17, 8-19, 9-103, 9-105, 11-3
90220-0105	SCR. CABLE 4X2,5MM2	3-9
90220-0107	SCR. CABLE 5X0,75MM2	4-57, 4-59, 4-61, 4-63
90091-0106	SCRAPER 30X40X7 MM	2-37
90091-0362	SCRAPER, EXCLUDER 18X22,8X3,7 MM	4-53, 4-55
90091-0380	SCRAPER, EXCLUDER 20X24,8X3,7 MM	5-123, 5-125, 5-127
74365-0000	SCREW	12-139
76276-0000	SCREW	12-73, 12-75, 12-77, 12-79, 12-81
76297-0000	SCREW	12-93
76465-0000	SCREW	12-95, 12-99
90043-0302	SCREW	1-107, 1-109
90287-0316	SCREW	8-11, 8-13
255995-0000 ..	SCREW	1-93, 1-95
256462-0000 ..	SCREW	5-89
256517-0000 ..	SCREW	3-15, 3-17
256739-0000 ..	SCREW	4-97, 4-99
256829-0000 ..	SCREW	4-93, 4-95, 4-97, 4-99

Part No	Description	Page No
256859-0000 ..	SCREW	4-19, 4-21, 4-23, 4-27, 4-29, 4-31, 4-49, 4-51
257249-0000 ..	SCREW	4-35, 4-37, 4-39, 4-41
257308-0000 ..	SCREW	3-11, 3-13
271848-0000 ..	SCREW	4-87, 4-89, 4-91
271898-0000 ..	SCREW	1-91
271899-0000 ..	SCREW	1-91
272602-0000 ..	SCREW	2-9, 2-11, 2-25, 2-27
272853-0000 ..	SCREW	2-9, 2-11, 2-25, 2-27
295766-0000 ..	SCREW	3-5
440271-0000 ..	SCREW	8-15
456042-0000 ..	SCREW	1-125, 1-127
554162-0000 ..	SCREW	1-25, 1-27
556541-0000 ..	SCREW	7-61
589432-0000 ..	SCREW	7-61
590508-0000 ..	SCREW	12-177
752476-0000 ..	SCREW	4-7, 4-9, 4-11, 4-13, 4-15, 4-17, 4-35, 4-37, 4-39, 4-41, 4-45, 4-47
926907-0000 ..	SCREW	1-29
1279469-0000 .	SCREW	5-91
1517059-0000 .	SCREW	12-27
1519625-0000 .	SCREW	5-129
1523454-0000 .	SCREW	9-167
2531115-0000 .	SCREW	8-23, 8-25
2872726-0000 .	SCREW	1-83, 1-85, 2-65, 2-67, 2-69, 2-71, 8-23, 8-25
2964432-0000 .	SCREW	1-55, 1-57
2974314-0000 .	SCREW	1-55, 1-57
90600-1933	SCREW 5X12, DELTA PT 50X12 WN5454 A4	2-17
1517986-0000 .	SCREW BUSHING	3-31
90457-0148	SCREW CAP HEAD SQ. NECK M6X100 SS	6-11
90458-1612	SCREW CAP HEAD SQ. NECK M6X120 SS	6-11
90458-1613	SCREW CAP HEAD SQ. NECK M6X140 SS	6-11
312155-0491 ..	SCREW DIN 7991 MF6S M10X20 A4 70	8-15
312155-0532 ..	SCREW DIN 7991 MF6S M12X20 A4 70	1-9, 1-11
312155-0226 ..	SCREW DIN 7991 MF6S M3X12 A4 70	7-21
312155-0220 ..	SCREW DIN 7991 MF6S M3X6 A4 70	9-173
312155-0291 ..	SCREW DIN 7991 MF6S M4X12 A4 70	9-87, 9-89, 9-131, 9-133, 9-135, 9-137, 9-149, 9-151, 9-153, 9-163, 9-165, 12-181
312155-0293 ..	SCREW DIN 7991 MF6S M4X16 A4 70	7-61, 9-83
312155-0295 ..	SCREW DIN 7991 MF6S M4X20 A4 70	4-49, 4-51, 5-89, 7-59
312155-0297 ..	SCREW DIN 7991 MF6S M4X25 A4 70	9-131, 9-133, 9-163, 9-165
312155-0299 ..	SCREW DIN 7991 MF6S M4X30 A4 70	5-53, 5-211
312155-0301 ..	SCREW DIN 7991 MF6S M4X35 A4 70	9-83, 9-135, 9-137, 9-149, 9-151, 9-153
312155-0285 ..	SCREW DIN 7991 MF6S M4X6 A4 70	1-93, 1-95, 4-87, 4-89, 4-91
312155-0287 ..	SCREW DIN 7991 MF6S M4X8 A4 70	1-35, 1-37, 4-49, 4-51, 4-87, 4-89, 4-91, 7-23, 7-25, 7-27, 7-29
312155-0325 ..	SCREW DIN 7991 MF6S M5X10 A4 70	2-37, 7-35, 7-37
312155-0327 ..	SCREW DIN 7991 MF6S M5X12 A4 70	7-35, 7-37, 8-15, 8-23, 8-25, 8-27
312155-0329 ..	SCREW DIN 7991 MF6S M5X16 A4 70	2-65, 2-67, 2-69, 2-71, 2-105, 6-5, 6-7, 12-181
312155-0331 ..	SCREW DIN 7991 MF6S M5X20 A4 70	12-101
312155-0333 ..	SCREW DIN 7991 MF6S M5X25 A4 70	5-123, 5-125, 5-127
312155-0339 ..	SCREW DIN 7991 MF6S M5X40 A4 70	12-181
312155-0323 ..	SCREW DIN 7991 MF6S M5X8 A4 70	4-19, 4-21, 4-23, 4-27, 4-29, 4-31, 8-15
312155-0364 ..	SCREW DIN 7991 MF6S M6X10 A4 70	1-67, 1-71, 1-169, 2-25, 2-27, 5-115, 5-117
312155-0366 ..	SCREW DIN 7991 MF6S M6X12 A4 70	1-49, 2-19, 3-31, 4-71, 4-73, 4-79, 4-81, 5-95, 5-97, 5-99
312155-0368 ..	SCREW DIN 7991 MF6S M6X16 A4 70	2-9, 2-11, 4-71, 4-73, 4-79, 4-81, 5-31, 5-33, 7-9, 7-59
312155-0370 ..	SCREW DIN 7991 MF6S M6X20 A4 70	1-47, 1-219, 5-57, 5-101, 5-139, 7-47
312155-0372 ..	SCREW DIN 7991 MF6S M6X25 A4 70	5-45, 5-47, 5-49, 5-51
312155-0374 ..	SCREW DIN 7991 MF6S M6X30 A4 70	1-71, 7-15
312155-0449 ..	SCREW DIN 7991 MF6S M8X16 A4 70	3-5, 5-135, 5-199
312155-0451 ..	SCREW DIN 7991 MF6S M8X20 A4 70	4-107, 4-109, 5-139
312155-0457 ..	SCREW DIN 7991 MF6S M8X35 A4 70	8-23, 8-25
312155-0459 ..	SCREW DIN 7991 MF6S M8X40 A4 70	4-107, 4-109
312303-0463 ..	SCREW DIN 938 PS M8X50 A4 80	12-91
777100-0113 ..	SCREW DRIVER	12-13
777100-0184 ..	SCREW DRIVER	12-13
312151-0224 ..	SCREW EN 10642 MF6S M3X10 10.9 EL.PL	12-113
312151-0222 ..	SCREW EN 10642 MF6S M3X8 10.9 EL.PL	12-117
312151-0287 ..	SCREW EN 10642 MF6S M4X8 10.9 EL.PL	3-11, 3-13, 3-15, 3-17
312156-0329 ..	SCREW EN 10642 MF6S M5X16 A470	5-85
312105-0153 ..	SCREW EN 10642 MF6S M5X25 A480	2-13, 2-15
312151-0364 ..	SCREW EN 10642 MF6S M6X10 10.9 EL.PL	3-11, 3-13, 3-15, 3-17
312156-0449 ..	SCREW EN 10642 MF6S M8X16 A470	5-85
312156-0453 ..	SCREW EN 10642 MF6S M8X25 A470	5-85
90287-0295	SCREW HEX.SOCK.COUNT.MF6S M3X8 A280	4-7, 4-9, 4-11, 4-13, 4-15, 4-17
312111-0491 ..	SCREW HEX.SOCK.HD.MC6S-TT 10X20 88 FZB	12-163, 12-165
312111-0295 ..	SCREW HEX.SOCK.HD.MC6S-TT 4X20 88 FZB	6-97, 6-99
312111-0331 ..	SCREW HEX.SOCK.HD.MC6S-TT 5X20 88 FZB	6-97, 6-99
312111-0390 ..	SCREW HEX.SOCK.HD.MC6S-TT 6X100 88 FZB	5-89
312111-0368 ..	SCREW HEX.SOCK.HD.MC6S-TT 6X16 88 FZB	3-19, 3-21
312111-0372 ..	SCREW HEX.SOCK.HD.MC6S-TT 6X25 88 FZB	6-97, 6-99
312111-0376 ..	SCREW HEX.SOCK.HD.MC6S-TT 6X35 88 FZB	3-11, 3-13
312111-0378 ..	SCREW HEX.SOCK.HD.MC6S-TT 6X40 88 FZB	3-11, 3-13
312111-0380 ..	SCREW HEX.SOCK.HD.MC6S-TT 6X50 88 FZB	3-5
312111-0385 ..	SCREW HEX.SOCK.HD.MC6S-TT 6X75 88 FZB	5-145
312111-0471 ..	SCREW HEX.SOCK.HD.MC6S-TT 8X100 88 FZB	6-23
312111-0451 ..	SCREW HEX.SOCK.HD.MC6S-TT 8X20 88 FZB	12-163, 12-165

Part No	Description	Page No
312111-0457 ..	SCREW HEX.SOCK.HD.MC6S-TT 8X35 88 FZB	12-169
90287-0022	SCREW HEX.SOCK.SET CONEPT. MS6SS M6X8	5-139
312125-0220 ..	SCREW ISO 1207 M3X6 A4	1-73, 2-41, 4-43, 5-135, 5-139
312121-0289 ..	SCREW ISO 1207 M4X10 4.8-5.8 Z.PL.	2-51, 2-53, 2-55, 9-13, 9-15, 9-17, 9-19
312122-0294 ..	SCREW ISO 1207 M4X18 NI PL BRASS	4-101, 4-103
312122-0285 ..	SCREW ISO 1207 M4X6 NI PL BRASS	8-23, 8-25
312121-0287 ..	SCREW ISO 1207 M4X8 4.8-5.8 Z.PL.	3-11, 3-13, 3-15, 3-17
312122-0287 ..	SCREW ISO 1207 M4X8 NI PL BRASS	12-101
312125-0325 ..	SCREW ISO 1207 M5X10 A4	2-95, 6-11, 8-23, 8-25
312121-0323 ..	SCREW ISO 1207 M5X8 4.8-5.8 Z.PL.	3-5
312125-0364 ..	SCREW ISO 1207 M6X10 A4	1-77, 1-79, 2-43, 2-45, 5-77, 5-79, 7-33, 8-47, 8-49
312122-0366 ..	SCREW ISO 1207 M6X12 NI PL BRASS	9-13, 9-15, 9-17, 9-19
312145-0228 ..	SCREW ISO 2009 MFS M3X16 A4	1-73
312145-0220 ..	SCREW ISO 2009 MFS M3X6 A4	3-11, 3-13, 3-15, 3-17, 8-41
312145-0289 ..	SCREW ISO 2009 MFS M4X10 A4	4-7, 4-9, 4-11, 4-13, 4-15, 4-17
312145-0291 ..	SCREW ISO 2009 MFS M4X12 A4	1-35, 1-37, 4-7, 4-9, 4-11, 4-13, 4-15, 4-17, 4-19, 4-21, 4-23, 4-27, 4-29, 4-31, 8-37
312145-0293 ..	SCREW ISO 2009 MFS M4X16 A4	8-23, 8-25
312145-0285 ..	SCREW ISO 2009 MFS M4X6 A4	8-23, 8-25, 9-13, 9-15, 9-17, 9-19
312145-0325 ..	SCREW ISO 2009 MFS M5X10 A4	1-35, 1-37
312145-0366 ..	SCREW ISO 2009 MFS M6X12 A4	1-35, 1-37
312145-0370 ..	SCREW ISO 2009 MFS M6X20 A4	5-135, 5-139
312145-0380 ..	SCREW ISO 2009 MFS M6X50 A4	12-23
312145-0451 ..	SCREW ISO 2009 MFS M8X20 A4	5-115, 5-117
312145-0455 ..	SCREW ISO 2009 MFS M8X30 A4	5-115, 5-117
90459-6738	SCREW ISO 7380 88-MKT M5X10 A4	5-11, 5-13, 5-15
90459-1333	SCREW ISO 7380 K6S M5X8 A2	2-13, 2-15, 2-29, 2-31
90458-0072	SCREW ISO 7380 S M6X12 A2	2-83, 2-85
312306-0546 ..	SCREW ISO4026 M12X70 FZB	12-131
312115-0495 ..	SCREW ISO4762 M10X30 A4 80	8-17, 8-19
312115-0500 ..	SCREW ISO4762 M10X45 A4 80	3-23, 3-25, 5-49, 5-51, 5-85
312115-0503 ..	SCREW ISO4762 M10X60 A4 80	2-37
312115-0532 ..	SCREW ISO4762 M12X20 A4 80	5-123, 5-125, 5-127
312115-0540 ..	SCREW ISO4762 M12X40 A4 80	5-123, 5-125, 5-127
312115-0630 ..	SCREW ISO4762 M16X50 A4 80	2-99
312115-0224 ..	SCREW ISO4762 M3X10 A4 80	1-169, 6-83, 9-31, 9-111, 9-113, 9-115, 9-117, 9-119, 9-121, 9-123, 9-125, 9-127, 9-129
312115-0226 ..	SCREW ISO4762 M3X12 A4 80	3-37, 9-103, 9-105, 12-111, 12-157
312115-0228 ..	SCREW ISO4762 M3X16 A4 80	1-9, 1-11, 1-49, 1-165, 1-167, 7-35, 7-37, 7-39, 7-41, 7-43, 12-111, 12-115, 12-181
312115-0230 ..	SCREW ISO4762 M3X20 A4 80	7-23, 7-25, 7-27, 7-29
312115-0220 ..	SCREW ISO4762 M3X6 A4 80	7-35, 7-37, 9-111, 9-113, 9-115, 9-117, 9-119, 9-121, 9-123, 9-125, 9-127, 9-129, 12-111, 12-113, 12-115, 12-117
312115-0222 ..	SCREW ISO4762 M3X8 A4 80	9-149, 9-151, 9-153
312115-0289 ..	SCREW ISO4762 M4X10 A4 80	1-35, 1-37, 2-51, 2-53, 2-55, 5-55, 5-111, 9-13, 9-15, 9-17, 9-19, 9-27, 9-41, 9-43, 9-45, 9-49, 9-51, 9-53, 9-55, 9-57, 9-59, 9-87, 9-89
312115-0291 ..	SCREW ISO4762 M4X12 A4 80	1-23, 1-43, 1-173, 1-175, 1-177, 1-179, 1-181, 1-183, 4-43, 5-55, 5-181, 9-13, 9-15, 9-17, 9-19, 9-99, 9-101, 9-107, 9-111, 9-113, 9-115, 9-117, 9-119, 9-121, 9-123, 9-125, 9-127, 9-129
312115-0293 ..	SCREW ISO4762 M4X16 A4 80	1-83, 1-85, 4-87, 4-89, 4-91, 8-23, 8-25, 9-87, 9-89, 9-91, 9-93, 9-95, 9-97, 9-103, 9-105, 9-107, 11-25, 11-31, 11-33
312115-0295 ..	SCREW ISO4762 M4X20 A4 80	1-93, 1-95, 5-85, 7-61, 9-13, 9-15, 9-17, 9-19
312115-0297 ..	SCREW ISO4762 M4X25 A4 80	1-9, 1-11, 1-173, 1-175, 1-177, 1-179, 1-181, 1-183, 2-91, 4-87, 4-89, 4-91, 9-87, 9-89
312115-0299 ..	SCREW ISO4762 M4X30 A4 80	1-223, 9-27, 9-49, 9-51, 9-53, 9-55, 9-57, 9-59, 9-87, 9-89
312115-0304 ..	SCREW ISO4762 M4X45 A4 80	8-33
312115-0305 ..	SCREW ISO4762 M4X50 A4 80	1-9, 1-11, 1-35, 1-37, 1-49
312115-0287 ..	SCREW ISO4762 M4X8 A4 80	1-29, 2-9, 2-11, 2-91, 5-123, 5-125, 5-127, 6-45, 6-47, 7-21, 8-17, 8-19
312115-0325 ..	SCREW ISO4762 M5X10 A4 80	1-35, 1-37, 1-93, 1-95, 2-87, 2-89, 9-13, 9-15, 9-17, 9-19, 9-31, 9-37, 9-39, 9-87, 9-89, 9-167, 12-113
312115-0327 ..	SCREW ISO4762 M5X12 A4 80	2-65, 2-67, 2-69, 2-71, 2-101, 2-103, 5-63, 6-5, 6-7, 7-23, 7-25, 7-27, 7-29, 7-43, 7-59, 8-11, 8-13, 9-75, 9-77, 9-173
90287-0145	SCREW ISO4762 M5X16 12.9	3-23, 3-25
312115-0329 ..	SCREW ISO4762 M5X16 A4 80	1-9, 1-11, 1-49, 1-165, 1-167, 2-65, 2-67, 2-69, 2-71, 2-101, 2-103, 4-7, 4-9, 4-11, 4-13, 4-15, 4-17, 4-45, 4-47, 4-49, 4-51, 5-85, 5-123, 5-125, 5-127, 6-5, 6-7, 8-23, 8-25, 9-83, 9-87, 9-89, 9-149, 9-151, 9-153
312115-0331 ..	SCREW ISO4762 M5X20 A4 80	1-55, 1-57, 2-41, 4-53, 4-55, 4-87, 4-89, 4-91, 5-11, 5-13, 5-15, 5-153
312115-0333 ..	SCREW ISO4762 M5X25 A4 80	1-31, 1-49, 1-93, 1-95, 8-23, 8-25, 8-27, 9-13, 9-15, 9-17, 9-19
312115-0335 ..	SCREW ISO4762 M5X30 A4 80	7-21
312115-0337 ..	SCREW ISO4762 M5X35 A4 80	1-31
312115-0339 ..	SCREW ISO4762 M5X40 A4 80	1-31, 9-175
312115-0340 ..	SCREW ISO4762 M5X45 A4 80	1-9, 1-11
312115-0323 ..	SCREW ISO4762 M5X8 A4 80	1-103, 1-105, 7-19, 7-21, 7-43, 8-41, 9-13, 9-15, 9-17, 9-19, 9-23, 9-29, 9-47, 9-61, 9-63, 9-65, 9-67, 9-69, 9-71, 9-73, 9-75, 9-77, 9-79, 9-81, 12-181
312115-0364 ..	SCREW ISO4762 M6X10 A4 80	1-97, 1-169, 2-57, 4-43
312115-0366 ..	SCREW ISO4762 M6X12 A4 80	1-67, 1-93, 1-95, 1-169, 1-203, 2-65, 2-67, 4-7, 4-9, 4-11, 4-13, 4-15, 4-17, 4-45, 4-47, 4-53, 4-55, 5-77, 5-79, 5-139, 6-69, 7-35, 7-37, 8-45, 9-13, 9-15, 9-17, 9-19, 9-87, 9-89, 9-167, 12-181
312115-0367 ..	SCREW ISO4762 M6X14 A4 80	7-23, 7-25, 7-27, 7-29, 12-171
312115-0368 ..	SCREW ISO4762 M6X16 A4 80	2-19, 5-11, 5-13, 5-15, 6-5, 6-73, 7-63, 8-11, 8-13, 8-17, 8-19, 9-87, 9-89, 9-167, 9-175
312115-0370 ..	SCREW ISO4762 M6X20 A4 80	1-81, 1-83, 1-85, 4-7, 4-9, 4-11, 4-13, 4-15, 4-17, 4-111, 6-73, 7-59, 8-29, 12-39, 12-41, 12-43, 12-45, 12-175

Part No	Description	Page No
312115-0371 ..	SCREW ISO4762 M6X22 A4 70	4-35, 4-37, 4-39, 4-41
90287-0143	SCREW ISO4762 M6X25 12.9	3-15, 3-17
312115-0372 ..	SCREW ISO4762 M6X25 A4 80	1-81, 1-219, 2-43, 2-45, 2-59, 2-61, 4-7, 4-9, 4-11, 4-13, 4-15 4-17, 4-97, 4-99, 5-49, 5-51, 5-77, 5-79, 5-109, 7-17, 7-33, 8-17, 8-19, 8-47, 8-49, 12-39, 12-41 12-43, 12-45, 12-181
312115-0374 ..	SCREW ISO4762 M6X30 A4 80	1-81, 1-83, 1-85, 2-87, 2-89, 4-53, 4-55, 5-85, 5-123, 5-125, 5-127
90287-0144	SCREW ISO4762 M6X35 12.9	3-15, 3-17
312115-0376 ..	SCREW ISO4762 M6X35 A4 80	5-35, 5-37, 5-39, 5-41, 5-43, 5-131
312115-0378 ..	SCREW ISO4762 M6X40 A4 80	7-35, 7-37, 12-93, 12-175
312115-0380 ..	SCREW ISO4762 M6X50 A4 80	6-15, 6-17, 8-33, 12-167
312115-0384 ..	SCREW ISO4762 M6X70 A4 80	5-35, 5-37, 5-39, 5-41, 5-43, 12-135, 12-179
312115-0385 ..	SCREW ISO4762 M6X75 A4 80	2-87, 2-89
312115-0362 ..	SCREW ISO4762 M6X8 A4 80	3-5, 5-63
312115-0386 ..	SCREW ISO4762 M6X80 A4 80	5-11, 5-13, 5-15, 12-135
312115-0447 ..	SCREW ISO4762 M8X12 A4 80	5-123, 5-125, 5-127, 8-23, 8-25
312115-0449 ..	SCREW ISO4762 M8X16 A4 80	1-155, 7-57, 12-167
312115-0451 ..	SCREW ISO4762 M8X20 A4 80	5-19, 5-21, 5-23, 5-25, 5-27, 6-45, 6-47
312115-0453 ..	SCREW ISO4762 M8X25 A4 80	3-23, 3-25, 4-57, 4-59, 4-61, 4-63, 4-107, 4-109, 5-35, 5-37 5-39, 5-41, 5-43, 5-85, 5-145, 7-65
312115-0455 ..	SCREW ISO4762 M8X30 A4 80	1-97, 1-171, 7-57, 7-59
312115-0457 ..	SCREW ISO4762 M8X35 A4 80	5-19, 5-21, 5-23, 5-25, 5-27, 7-67, 12-161
312115-0459 ..	SCREW ISO4762 M8X40 A4 80	5-19, 5-21, 5-23, 5-25, 5-27, 5-131, 12-93, 12-175
312115-0460 ..	SCREW ISO4762 M8X45 A4 80	5-19, 5-21, 5-23, 5-25, 5-27
312115-0461 ..	SCREW ISO4762 M8X50 A4 80	5-19, 5-21, 5-23, 5-25, 5-27
312115-0463 ..	SCREW ISO4762 M8X60 A4 80	2-73, 2-75, 5-19, 5-21, 5-23, 5-25, 5-27
312115-0465 ..	SCREW ISO4762 M8X70 A4 80	5-19, 5-21, 5-23, 5-25, 5-27
312115-0467 ..	SCREW ISO4762 M8X80 A4 80	5-19, 5-21, 5-23, 5-25, 5-27
90458-0058	SCREW M5X60 A280	8-17, 8-19
312105-0328 ..	SCREW M6S ISO 4017 M5X14 A4 80	1-197, 1-199, 1-201, 4-101, 4-103, 5-85, 7-35, 7-37, 7-39, 7-41
312101-0515 ..	SCREW M6S M10X120 FZB	3-15, 3-17
312101-0489 ..	SCREW M6S M10X16 FZB	3-5
312101-0493 ..	SCREW M6S M10X25 FZB	3-11, 3-13, 3-15, 3-17
312101-0499 ..	SCREW M6S M10X40 FZB	2-9, 2-11, 2-25, 2-27
312104-0499 ..	SCREW M6S M10X40H FZB	3-31, 6-97, 6-99
312101-0502 ..	SCREW M6S M10X55 FZB	3-13, 3-33, 3-35
312101-0504 ..	SCREW M6S M10X65 FZB	3-5, 3-11, 3-13, 3-15, 3-17, 11-5
312101-0507 ..	SCREW M6S M10X80 FZB	3-11, 3-13
312101-0552 ..	SCREW M6S M12X100 FZB	5-181
312101-0530 ..	SCREW M6S M12X16 FZB	5-155, 5-157
90287-0125	SCREW M6S M12X180 A4	5-123, 5-125, 5-127
312101-0536 ..	SCREW M6S M12X30 FZB	12-163, 12-165
312101-0544 ..	SCREW M6S M12X60 FZB	12-163, 12-165
312101-0548 ..	SCREW M6S M12X80 FZB	12-163, 12-165
312101-0550 ..	SCREW M6S M12X90 FZB	3-5
312101-0289 ..	SCREW M6S M4X10 FZB	3-33, 3-35
312101-0295 ..	SCREW M6S M4X20 FZB	5-17
312101-0297 ..	SCREW M6S M4X25 FZB	3-11, 3-13, 3-15, 3-17
312101-0325 ..	SCREW M6S M5X10 FZB	3-23, 3-25
312101-0327 ..	SCREW M6S M5X12 FZB	8-37
312101-0329 ..	SCREW M6S M5X16 FZB	3-5, 8-37
312101-0331 ..	SCREW M6S M5X20 FZB	2-9, 2-11, 2-25, 2-27
312101-0333 ..	SCREW M6S M5X25 FZB	3-15, 3-17, 3-27
312101-0337 ..	SCREW M6S M5X35 FZB	2-51, 2-53, 2-55
312101-0343 ..	SCREW M6S M5X60 FZB	4-101, 4-103
312101-0344 ..	SCREW M6S M5X65 FZB	7-45
312101-0323 ..	SCREW M6S M5X8 FZB	8-17, 8-19
312101-0364 ..	SCREW M6S M6X10 FZB	3-11, 3-13, 3-15, 3-17
312101-0392 ..	SCREW M6S M6X110 FZB	2-59, 2-61
312101-0366 ..	SCREW M6S M6X12 FZB	3-5
312101-0367 ..	SCREW M6S M6X14 FZB	12-163, 12-165
312101-0368 ..	SCREW M6S M6X16 FZB	3-5
312101-0370 ..	SCREW M6S M6X20 FZB	3-5
312101-0374 ..	SCREW M6S M6X30 FZB	5-59, 5-61
312101-0376 ..	SCREW M6S M6X35 FZB	3-5, 3-33, 3-35
312101-0381 ..	SCREW M6S M6X55 FZB	8-43
312101-0362 ..	SCREW M6S M6X8 FZB	3-11, 3-13, 3-15, 3-17
312101-0449 ..	SCREW M6S M8X16 FZB	6-97, 6-99, 12-163, 12-165
312101-0451 ..	SCREW M6S M8X20 FZB	6-95
312101-0453 ..	SCREW M6S M8X25 FZB	3-11, 3-13, 5-179
312101-0455 ..	SCREW M6S M8X30 FZB	5-179
312101-0459 ..	SCREW M6S M8X40 FZB	5-179
312101-0461 ..	SCREW M6S M8X50 FZB	12-91
90457-0167	SCREW MC6S M3X35 A480	4-43
90457-0937	SCREW MC6S M3X40 A480	4-43
90287-0314	SCREW MC6S M4X60 A470	1-9, 1-11, 1-223
90287-0081	SCREW MC6S M6X10 129	3-5
90287-0335	SCREW MC6S M8X90 A280	5-19, 5-21, 5-23, 5-25, 5-27
90458-2487	SCREW PLUG HD-PE, M24	6-61
90287-0075	SCREW SLOT. PAN HEAD LKCS M6X12	2-13, 2-15, 2-29, 2-31, 2-37, 2-47, 2-49, 2-101, 2-103 4-57, 4-59, 4-61, 4-63, 6-9, 6-61, 8-7, 8-11, 8-13, 8-15
90287-0076	SCREW SLOT. PAN HEAD LKCS M6X20	2-37
90287-0106	SCREW SPRINGLOAD. SLOTTED HEAD M10X21	7-11
90287-0148	SCREW SPRINGLOAD. SLOTTED HEAD M5X12	7-61
90287-0163	SCREW SPRINGLOAD. SLOTTED HEAD M6X14	3-31

Part No	Description	Page No
90287-0112	SCREW SPRINGLOAD. SLOTTED HEAD M8X16	7-21, 8-5
90458-2078	SCREW SPRINGLOAD. SOCK. HEX HEAD M12X26	8-39
90458-1517	SCREW SPRINGLOAD. SOCK. HEX HEAD M8X18	4-105
90287-0331	SCREW, BUTTON HEAD ISO7380 K6S M5X12 A4	8-29
312105-0511 ..	SCREW, M6S ISO 4014 M10X100 A4 80	2-91
312105-0515 ..	SCREW, M6S ISO 4014 M10X120 A4 80	2-105
312105-0499 ..	SCREW, M6S ISO 4014 M10X40 A4 80	1-83, 1-85
312105-0500 ..	SCREW, M6S ISO 4014 M10X45 A4 80	8-39
312105-0503 ..	SCREW, M6S ISO 4014 M10X60 A4 80	1-31, 4-45, 4-47
312105-0507 ..	SCREW, M6S ISO 4014 M10X80 A4 80	8-5
90287-0328	SCREW, M6S ISO 4014 M12X160 A4 80	5-191, 5-193, 5-195
312105-0544 ..	SCREW, M6S ISO 4014 M12X60 A4 80	5-57, 5-191, 5-193, 5-195
312105-0547 ..	SCREW, M6S ISO 4014 M12X75 A4 80	5-163, 5-165, 5-167, 5-169, 5-171, 5-173, 5-175, 5-177
312105-0548 ..	SCREW, M6S ISO 4014 M12X80 A4 80	6-61
312105-0648 ..	SCREW, M6S ISO 4014 M16X150 A4 80	2-83, 2-85
312105-0638 ..	SCREW, M6S ISO 4014 M16X90 A4 80	12-179
312105-0335 ..	SCREW, M6S ISO 4014 M5X30 A4 80	1-35, 1-37, 1-97, 4-101, 4-103, 5-155, 5-157, 6-33, 6-45, 6-47, 12-173
312105-0337 ..	SCREW, M6S ISO 4014 M5X35 A4 80	1-93, 1-95, 2-37, 5-137, 8-21
312105-0339 ..	SCREW, M6S ISO 4014 M5X40 A4 80	6-45, 6-47, 7-35, 7-37
312105-0341 ..	SCREW, M6S ISO 4014 M5X50 A4 80	1-125, 1-127, 6-41
312105-0343 ..	SCREW, M6S ISO 4014 M5X60 A4 80	1-149, 1-151
90457-0143	SCREW, M6S ISO 4014 M6X130 A4 80	6-101, 6-103
312105-0374 ..	SCREW, M6S ISO 4014 M6X30 A4 80	2-37, 3-11, 3-13, 3-15, 3-17, 4-7, 4-9, 4-11, 4-13, 4-15 4-17, 4-35, 4-37, 4-39, 4-41, 4-97, 4-99, 5-11, 5-13, 5-15, 5-19, 5-21, 5-23, 5-25, 5-27, 5-29, 5-93 5-95, 5-97, 5-99, 5-183, 5-185, 5-187, 5-201, 5-203, 6-75, 7-23, 7-25, 7-27, 7-29, 7-51, 7-53, 8-23 8-25, 12-23, 12-65, 12-69
312105-0376 ..	SCREW, M6S ISO 4014 M6X35 A4 80	1-69, 2-9, 2-11, 2-25, 2-27, 3-7, 4-7, 4-9, 4-11, 4-13, 4-15 4-17, 4-19, 4-21, 4-23, 4-27, 4-29, 4-31, 4-35, 4-37, 4-39, 4-41, 4-45, 4-47, 4-53, 4-55, 4-93, 4-95 4-113, 4-115, 5-11, 5-13, 5-15, 5-103, 5-105, 5-107, 6-93, 7-51, 7-53, 12-173
312105-0378 ..	SCREW, M6S ISO 4014 M6X40 A4 80	1-45, 1-83, 1-85, 2-57, 5-95, 5-97, 5-99, 5-183, 5-185 5-187, 6-15, 6-17, 6-53, 6-97, 6-99, 7-15
312105-0379 ..	SCREW, M6S ISO 4014 M6X45 A4 80	1-83, 1-85, 4-19, 4-21, 4-23, 4-27, 4-29, 4-31, 12-143
312105-0380 ..	SCREW, M6S ISO 4014 M6X50 A4 80	1-55, 1-57, 2-9, 2-11, 2-25, 2-27, 4-53, 4-55, 4-57, 4-59 4-61, 4-63, 4-93, 4-95, 4-105, 5-29, 5-81, 5-101, 5-183, 5-185, 5-187, 12-59, 12-61
312105-0381 ..	SCREW, M6S ISO 4014 M6X55 A4 80	1-143, 1-145, 5-93, 7-49, 12-167
312105-0382 ..	SCREW, M6S ISO 4014 M6X60 A4 80	6-73, 12-67
312105-0383 ..	SCREW, M6S ISO 4014 M6X65 A4 80	12-17, 12-19
312105-0384 ..	SCREW, M6S ISO 4014 M6X70 A4 80	4-57, 4-59, 4-61, 4-63, 6-11
312105-0386 ..	SCREW, M6S ISO 4014 M6X80 A4 80	6-105
312105-0471 ..	SCREW, M6S ISO 4014 M8X100 A4 80	5-201, 5-203
312105-0457 ..	SCREW, M6S ISO 4014 M8X35 A4 80	1-77, 1-79, 1-135, 1-137, 1-139, 4-111, 5-35, 5-37, 5-39, 5-41, 5-43, 5-59, 5-61, 5-101
312105-0459 ..	SCREW, M6S ISO 4014 M8X40 A4 80	2-57, 4-57, 4-59, 4-61, 4-63, 5-35, 5-37, 5-39, 5-41, 5-43 5-49, 5-51, 5-109, 5-147, 8-23, 8-25, 12-25
312105-0460 ..	SCREW, M6S ISO 4014 M8X45 A4 80	1-93, 1-95, 4-97, 4-99, 5-11, 5-13, 5-15, 5-89, 5-91, 5-147
312105-0461 ..	SCREW, M6S ISO 4014 M8X50 A4 80	6-71, 8-41
312105-0462 ..	SCREW, M6S ISO 4014 M8X55 A4 80	1-69, 4-7, 4-9, 4-11, 4-13, 4-15, 4-17, 5-135, 12-33 12-35, 12-37
312105-0463 ..	SCREW, M6S ISO 4014 M8X60 A4 80	5-183, 5-185, 5-187, 11-19
312105-0464 ..	SCREW, M6S ISO 4014 M8X65 A4 80	1-93, 1-95, 5-35, 5-37, 5-39, 5-41, 5-43
312105-0467 ..	SCREW, M6S ISO 4014 M8X80 A4 80	2-17, 5-59, 5-61
312105-0469 ..	SCREW, M6S ISO 4014 M8X90 A4 80	5-35, 5-37, 5-39, 5-41, 5-43, 5-115, 5-117, 5-135, 5-201 5-203
312105-0489 ..	SCREW, M6S ISO 4017 M10X16 A4 80	2-37, 6-61
312105-0491 ..	SCREW, M6S ISO 4017 M10X20 A4 80	5-149, 5-151, 5-201, 5-203, 6-67, 8-41, 12-25
312105-0493 ..	SCREW, M6S ISO 4017 M10X25 A4 80	8-23, 8-25
312105-0495 ..	SCREW, M6S ISO 4017 M10X30 A4 80	1-91, 1-143, 1-145, 3-9, 5-11, 5-13, 5-15, 6-67
312105-0497 ..	SCREW, M6S ISO 4017 M10X35 A4 80	5-29, 5-93, 8-39
312109-0499 ..	SCREW, M6S ISO 4017 M10X40 A4 80	5-11, 5-13, 5-15, 5-149, 5-151
90287-0330	SCREW, M6S ISO 4017 M10X70 A4 80	3-9
312105-0532 ..	SCREW, M6S ISO 4017 M12X20 A4 80	3-9, 3-29, 5-201, 5-203
312105-0534 ..	SCREW, M6S ISO 4017 M12X25 A4 80	2-83, 2-85, 5-159, 5-161
312105-0536 ..	SCREW, M6S ISO 4017 M12X30 A4 80	1-91, 1-143, 1-145, 1-149, 1-151, 1-155
312105-0538 ..	SCREW, M6S ISO 4017 M12X35 A4 80	5-139, 12-15
312105-0540 ..	SCREW, M6S ISO 4017 M12X40 A4 80	6-61
312105-0622 ..	SCREW, M6S ISO 4017 M16X25 A4 80	2-83, 2-85
312105-0628 ..	SCREW, M6S ISO 4017 M16X40 A4 80	2-83, 2-85, 5-201, 5-203
312105-0630 ..	SCREW, M6S ISO 4017 M16X50 A4 80	12-15
312105-0289 ..	SCREW, M6S ISO 4017 M4X10 A4 70	1-49, 1-221
312105-0291 ..	SCREW, M6S ISO 4017 M4X12 A4 70	1-155, 2-25, 2-27, 2-33, 2-47, 2-49, 5-85, 9-83, 12-181
312105-0293 ..	SCREW, M6S ISO 4017 M4X16 A4 70	1-91, 1-93, 1-95, 5-89, 5-115, 5-117, 5-139, 6-69, 7-15 7-23, 7-25, 7-27, 7-29, 8-11, 8-13, 12-181
312105-0295 ..	SCREW, M6S ISO 4017 M4X20 A4 70	1-93, 1-95, 2-51, 2-53, 2-55, 7-39, 7-41
312105-0297 ..	SCREW, M6S ISO 4017 M4X25 A4 70	2-51, 2-53, 2-55, 5-109, 8-33
312105-0299 ..	SCREW, M6S ISO 4017 M4X30 A4 70	6-95, 7-45
312105-0301 ..	SCREW, M6S ISO 4017 M4X35 A4 70	1-219, 2-47, 2-49
312105-0303 ..	SCREW, M6S ISO 4017 M4X40 A4 70	5-49, 5-51
312105-0287 ..	SCREW, M6S ISO 4017 M4X8 A4 70	1-29, 1-73, 1-77, 1-79, 1-81, 1-97, 1-193, 1-195, 1-209 1-211, 5-153, 6-95, 7-61
312105-0325 ..	SCREW, M6S ISO 4017 M5X10 A4 80	1-9, 1-11, 1-35, 1-37, 1-47, 1-77, 1-79, 1-81, 1-143 1-145, 1-193, 1-195, 1-219, 2-41, 4-101, 4-103, 5-201, 5-203, 7-35, 7-37, 8-41, 12-17, 12-19
312105-0327 ..	SCREW, M6S ISO 4017 M5X12 A4 80	1-55, 1-57, 1-69, 1-83, 1-85, 2-57, 2-59, 2-61, 3-37, 4-71

Part No	Description	Page No
		4-73, 4-79, 4-81, 5-129, 5-135, 5-139, 6-15, 6-17, 6-23, 6-33, 6-37, 6-45, 6-47, 6-85, 6-87, 8-23
		8-25, 9-135, 9-137, 11-23, 11-27, 11-29
312105-0329 ..	SCREW, M6S ISO 4017 M5X16 A4 80	1-49, 1-89, 1-143, 1-145, 1-209, 1-211, 1-223, 2-93, 4-87
		4-89, 4-91, 5-65, 5-123, 5-125, 5-127, 5-135, 5-139, 6-83, 7-23, 7-25, 7-27, 7-29, 8-17, 8-19, 8-23
		8-25, 9-87, 9-89, 9-171, 12-177
312105-0331 ..	SCREW, M6S ISO 4017 M5X20 A4 80	1-93, 1-95, 1-149, 1-151, 1-219, 5-35, 5-37, 5-39, 5-41
		5-43, 5-45, 5-47, 5-159, 5-161, 7-51, 7-53, 12-65
312105-0332 ..	SCREW, M6S ISO 4017 M5X22 A4 70	1-125, 1-127, 1-143, 1-145
312105-0333 ..	SCREW, M6S ISO 4017 M5X25 A4 80	1-43, 1-193, 1-195, 2-91, 4-111, 5-103, 5-105, 5-107
		7-49, 7-61, 12-167
312109-0335 ..	SCREW, M6S ISO 4017 M5X30 A4 80	1-209, 1-211
312105-0323 ..	SCREW, M6S ISO 4017 M5X8 A4 80	1-93, 1-95, 1-101, 2-33, 4-45, 4-47, 5-55, 5-59, 5-61, 5-65
		5-89, 5-111, 5-129, 6-11, 6-79, 8-23, 8-25, 8-33, 11-27, 11-29
312105-0364 ..	SCREW, M6S ISO 4017 M6X10 A4 80	1-31, 1-35, 1-37, 1-55, 1-57, 1-73, 1-91, 1-93, 1-95, 1-107
		1-109, 1-149, 1-151, 1-159, 1-161, 1-165, 1-167, 1-169, 1-171, 1-173, 1-175, 1-177, 1-179, 1-181
		1-183, 1-213, 1-215, 1-217, 2-13, 2-15, 2-25, 2-27, 2-29, 2-31, 2-57, 4-105, 5-31, 5-33, 5-65, 5-95
		5-97, 5-99, 6-61, 6-69, 6-95, 8-33, 8-45
312105-0366 ..	SCREW, M6S ISO 4017 M6X12 A4 80	1-29, 1-71, 1-73, 1-81, 1-91, 1-93, 1-95, 1-103, 1-105
		1-155, 1-165, 1-167, 1-173, 1-175, 1-177, 1-179, 1-181, 1-183, 1-193, 1-195, 1-205, 1-207, 1-209
		1-211, 1-213, 1-215, 1-217, 1-219, 2-9, 2-11, 2-33, 2-37, 2-43, 2-45, 2-59, 2-61, 2-79, 2-87, 2-89
		3-31, 4-105, 5-49, 5-51, 5-69, 5-71, 5-83, 5-101, 5-109, 5-115, 5-117, 5-119, 5-135, 5-145, 5-191
		5-193, 5-195, 5-207, 5-209, 5-213, 6-11, 6-13, 6-15, 6-17, 6-43, 6-61, 6-101, 6-103, 7-35, 7-37
		7-45, 7-47, 7-49, 7-51, 7-53, 8-11, 8-13, 8-29, 8-45
312105-0367 ..	SCREW, M6S ISO 4017 M6X14 A4 80	1-47, 1-55, 1-57, 1-157, 1-219, 2-25, 2-27, 2-33, 4-7, 4-9
		4-11, 4-13, 4-15, 4-17, 4-45, 4-47, 5-11, 5-13, 5-15, 5-139, 7-23, 7-25, 7-27, 7-29, 7-47
312105-0368 ..	SCREW, M6S ISO 4017 M6X16 A4 80	1-31, 1-49, 1-55, 1-57, 1-69, 1-73, 1-83, 1-85, 1-93, 1-95
		1-97, 1-101, 1-107, 1-109, 1-125, 1-127, 1-135, 1-137, 1-139, 1-141, 1-143, 1-145, 1-149, 1-151
		1-213, 1-215, 1-217, 2-9, 2-11, 2-23, 2-25, 2-27, 2-33, 2-35, 2-81, 2-95, 2-97, 2-105, 3-31, 4-57
		4-59, 4-61, 4-63, 4-71, 4-73, 4-79, 4-81, 4-93, 4-95, 5-19, 5-21, 5-23, 5-25, 5-27, 5-35, 5-37, 5-39
		5-41, 5-43, 5-109, 5-123, 5-125, 5-127, 5-137, 5-149, 5-151, 5-201, 5-203, 5-209, 6-5, 6-7, 6-15
		6-17, 6-27, 6-55, 6-59, 6-75, 6-77, 6-93, 7-23, 7-25, 7-27, 7-29, 7-35, 7-37, 7-47, 7-61, 9-83, 9-131
		9-133, 9-135, 9-137, 9-149, 9-151, 9-153, 9-163, 9-165, 12-181
312105-0370 ..	SCREW, M6S ISO 4017 M6X20 A4 80	1-29, 1-69, 1-73, 1-75, 1-93, 1-95, 1-99, 1-141, 1-143
		1-145, 1-149, 1-151, 1-155, 1-159, 1-161, 1-169, 1-209, 1-211, 2-33, 2-35, 3-29, 3-31, 4-35, 4-37
		4-39, 4-41, 5-11, 5-13, 5-15, 5-35, 5-37, 5-39, 5-41, 5-43, 5-55, 5-57, 5-69, 5-71, 5-85, 5-89, 5-93
		5-111, 5-119, 5-129, 5-135, 5-139, 5-163, 5-165, 5-167, 5-169, 5-171, 5-173, 5-175, 5-177, 5-191
		5-193, 5-195, 5-201, 5-203, 6-13, 6-15, 6-17, 6-73, 6-97, 6-99, 7-9, 7-19, 7-21, 7-49, 7-51, 7-53
		8-17, 8-19, 8-23, 8-25, 9-135, 9-137, 12-175, 12-181
312105-0371 ..	SCREW, M6S ISO 4017 M6X22 A4 80	1-125, 1-127, 1-163, 2-83, 2-85
312105-0372 ..	SCREW, M6S ISO 4017 M6X25 A4 80	1-45, 1-49, 1-55, 1-57, 1-69, 1-71, 1-73, 1-83, 1-85, 1-149
		1-151, 1-157, 1-171, 1-213, 1-215, 1-217, 2-9, 2-11, 2-25, 2-27, 2-51, 2-53, 2-55, 3-5, 3-31, 4-57
		4-59, 4-61, 4-63, 4-71, 4-73, 4-79, 4-81, 4-97, 4-99, 5-11, 5-13, 5-15, 5-45, 5-47, 5-49, 5-51, 5-57
		5-89, 5-103, 5-105, 5-107, 5-123, 5-125, 5-127, 5-149, 5-151, 5-201, 5-203, 5-209, 6-85, 6-87
		7-49, 8-17, 8-19, 8-23, 8-25, 12-181
312109-0374 ..	SCREW, M6S ISO 4017 M6X30 A4 80	5-101, 5-115, 5-117, 5-135, 5-137, 5-139, 5-153
312109-0376 ..	SCREW, M6S ISO 4017 M6X35 A4 80	1-107, 1-109
312109-0378 ..	SCREW, M6S ISO 4017 M6X40 A4 80	2-9, 2-11, 5-137, 5-139, 12-181
312109-0382 ..	SCREW, M6S ISO 4017 M6X60 A4 80	5-139
312105-0362 ..	SCREW, M6S ISO 4017 M6X8 A4 80	1-69, 1-83, 1-85, 1-155, 4-7, 4-9, 4-11, 4-13, 4-15, 4-17
		5-19, 5-21, 5-23, 5-25, 5-27, 5-35, 5-37, 5-39, 5-41, 5-43, 5-91, 5-123, 5-125, 5-127, 6-79, 8-41
312109-0386 ..	SCREW, M6S ISO 4017 M6X80 A4 80	3-7
90459-4735	SCREW, M6S ISO 4017 M8X10 A4 80	5-119
312105-0447 ..	SCREW, M6S ISO 4017 M8X12 A4 80	1-91, 1-93, 1-95, 1-149, 1-151, 2-17, 2-19, 2-105, 4-35
		4-37, 4-39, 4-41, 4-53, 4-55, 5-59, 5-61, 6-15, 6-17, 7-31, 7-59, 8-11, 8-13, 8-17, 8-19
312105-0449 ..	SCREW, M6S ISO 4017 M8X16 A4 80	1-31, 1-55, 1-57, 1-69, 1-97, 1-209, 1-211, 2-97, 2-105
		3-7, 4-105, 5-215, 6-67, 6-69, 6-89, 6-91, 7-15, 7-35, 7-37, 7-39, 7-41, 8-17, 8-19, 8-33, 12-25
312105-0451 ..	SCREW, M6S ISO 4017 M8X20 A4 80	1-9, 1-11, 1-83, 1-85, 1-89, 1-125, 1-127, 1-135, 1-137
		1-139, 1-149, 1-151, 1-205, 1-207, 1-213, 1-215, 1-217, 1-225, 2-9, 2-11, 2-13, 2-15, 2-25, 2-27
		2-39, 2-97, 2-105, 4-105, 5-69, 5-71, 5-91, 5-101, 5-119, 5-135, 5-191, 5-193, 5-195, 5-197, 5-199
		6-63, 6-75, 6-77, 7-35, 7-37, 8-9, 12-15
312105-0452 ..	SCREW, M6S ISO 4017 M8X22 A4 80	1-225, 4-97, 4-99, 7-57
312105-0453 ..	SCREW, M6S ISO 4017 M8X25 A4 80	1-9, 1-11, 1-35, 1-37, 1-45, 1-49, 1-75, 1-77, 1-79, 1-99
		1-101, 1-149, 1-151, 1-155, 1-157, 1-165, 1-167, 2-105, 3-31, 4-35, 4-37, 4-39, 4-41, 4-57, 4-59
		4-61, 4-63, 4-93, 4-95, 5-11, 5-13, 5-15, 5-19, 5-21, 5-23, 5-25, 5-27, 5-89, 5-101, 5-135, 5-139
		5-191, 5-193, 5-195, 6-67, 6-69, 6-77, 6-85, 6-87, 6-89, 6-91, 7-47, 8-15, 8-41, 12-145, 12-175
312105-0455 ..	SCREW, M6S ISO 4017 M8X30 A4 80	1-69, 1-73, 1-97, 1-135, 1-137, 1-139, 2-9, 2-11, 2-25
		2-27, 3-9, 4-35, 4-37, 4-39, 4-41, 4-57, 4-59, 4-61, 4-63, 4-93, 4-95, 5-19, 5-21, 5-23, 5-25, 5-27
		5-35, 5-37, 5-39, 5-41, 5-43, 5-81, 5-85, 5-123, 5-125, 5-127, 5-139, 5-145, 5-199, 8-37, 12-23, 12-63
312109-0457 ..	SCREW, M6S ISO 4017 M8X35 A4 80	1-69, 5-19, 5-21, 5-23, 5-25, 5-27, 5-139, 12-99
312109-0459 ..	SCREW, M6S ISO 4017 M8X40 A4 80	7-57
312113-0287 ..	SCREW, SERRATED COMBI TORX M4X8 A2	9-13, 9-15, 9-17, 9-19
312113-0323 ..	SCREW, SERRATED COMBI TORX M5X8 A2	9-13, 9-15, 9-17, 9-19, 9-99, 9-101, 9-139, 9-141
978989-0200 ..	SCRUBBER	6-65
1519392-0000 .	SCRUBBER	6-89, 6-91
90600-3697	SDL FLEX CABLE 10M, 5CASDL.0100-03	2-93
90143-0094	SEAL	9-135, 9-137, 9-159, 9-173
273953-0000 ..	SEAL	1-83, 1-85
441796-0000 ..	SEAL	5-53, 5-211
490901-0000 ..	SEAL	1-83, 1-85
571873-0000 ..	SEAL	4-101, 4-103
574336-0000 ..	SEAL	1-83, 1-85
929286-0000 ..	SEAL	1-83, 1-85

Part No	Description	Page No
2552073-0000	.SEAL	5-19, 5-21, 5-23, 5-25, 5-27
2795368-0000	.SEAL	1-55, 1-57
1548275-0000	.SEAL COVER	1-81
321600-0114	.. SEAL COVER LL3052	3-5
321601-0106	.. SEAL COVER LL42	5-135
321601-0118	.. SEAL COVER LL62	5-123, 5-125, 5-127
925471-0000	.. SEAL HOLDER	1-51
925472-0000	.. SEAL HOLDER	1-51
1036191-0000	.SEAL HOLDER	1-75, 1-99
979702-0000	.. SEAL HOLDER (OLD 578107 BEARING HOUSING)	5-123, 5-125, 5-127
1296877-0100	.SEAL KIT	11-39
530589-0000	.. SEAL RING	1-75, 1-99
2826440-0000	.SEAL RING	1-21, 11-41
2826441-0000	.SEAL RING	1-19, 1-23, 1-51, 11-41
2833037-0000	.SEAL RING	1-19
90091-0266	.... SEAL RING 10,4X16,3X2,5 MM	1-17, 11-37, 11-41
530595-0000	.. SEAL RING HOLDER	1-19
90091-0391	.... SEAL SLYDRING	4-53, 4-55
1524481-0000	.SEALING BLOCK	7-21
1538473-0000	.SEALING BLOCK	7-19
90157-0041	.... SEALING COMPOUND, RHODORSEAL 5651	2-13, 2-15, 2-29, 2-31, 2-65, 2-67, 2-69, 2-71 2-101, 2-103, 6-5
90157-0022	.... SEALING COMPOUND, SILICONE	2-37, 2-73, 2-75, 5-49, 5-51, 5-109, 5-115, 5-117
353249-0311	.. SEALING PIN, 12,0X25	5-121
353249-0301	.. SEALING PIN, 4,0X20	8-45, 8-47, 8-49, 11-25, 11-31, 11-33
353249-0304	.. SEALING PIN, 6,0X25	5-77, 5-79
353249-0307	.. SEALING PIN, 7,5X20	5-75
353249-0308	.. SEALING PIN, 8,0X20	5-77, 5-79
353249-0309	.. SEALING PIN, 9,3X20	5-77, 5-79
571874-0000	.. SEALING PLUG	4-101, 4-103
490900-0000	.. SEALING RING	1-83, 1-85
90214-0303	.... SEALING RING, 18,6X35X2 MM	1-91
90459-5018	.... SEALING RING, VARILIP 20X35X7 MM	6-73
257174-0000	.. SEALING WASHER	3-5
295767-0000	.. SEALING WASHER	3-5
456934-0000	.. SEALING WASHER	3-5
555458-0000	.. SEALING WASHER	1-23, 1-51
556133-0000	.. SEALING WASHER	1-21
90458-1208	.... SEALING, CHANNEL 1 BLOCKED	6-49, 6-51
90458-1207	.... SEALING, STANDARD	6-49, 6-51
979308-0000	.. SEAT	5-123, 5-125, 5-127
90143-0097	.... SELF GRIPPING GASKET, 1011-24	1-35, 1-37, 2-13, 2-15, 2-29, 2-31, 9-167
1478814-0000	.SENSOR	1-29
90457-0047	.... SENSOR 2750-1-5111-1 W.ADAPTER PNP	1-71, 1-99
42067-0100	.... SENSOR BOARD	1-229
90458-0747	.... SENSOR FOR CYLINDER, SMH-1PC	4-57, 4-59, 4-61, 4-63
90450-0669	.... SENSOR, BRACKET SERIES 168	1-71, 1-99
257190-0000	.. SEPARATION BLOCK	2-57
736168-0000	.. SEPARATION BLOCK	5-65
2913560-0100	.SEPARATION BLOCK	5-59, 5-61
2921874-0000	.SEPARATION BLOCK	5-63
978988-0300	.. SEPARATOR	6-65
1511775-0000	.SEPARATOR	6-85, 6-87
77092-0700	.... SERVICE PARTS	12-3
2614370-0200	.SERVICE PARTS	12-27
90459-2562	.... SERVO AMP. ULTRA 5000, 2098-IPD-020	9-13, 9-15, 9-17, 9-19
777150-0801	.. SET OF SPANNERS, HEXAGONAL	11-17
90459-7293	.... SET SCREW DIN 551M5X8 PA66	2-17, 5-59, 5-61, 5-115, 5-117
312318-0220	.. SET SCREW, CUP END ISO4029 M3X6 A4	12-45, 12-111, 12-115
312318-0222	.. SET SCREW, CUP END ISO4029 M3X8 A4	5-85
312316-0289	.. SET SCREW, CUP END ISO4029 M4X10 FZB	12-113
312316-0291	.. SET SCREW, CUP END ISO4029 M4X12 FZB	12-113
312318-0283	.. SET SCREW, CUP END ISO4029 M4X4 A4	4-45, 4-47, 4-53, 4-55, 5-123, 5-125, 5-127, 7-47
312318-0285	.. SET SCREW, CUP END ISO4029 M4X6 A4	1-143, 1-145, 1-149, 1-151, 5-139, 7-23, 7-25, 7-27, 7-29
312318-0287	.. SET SCREW, CUP END ISO4029 M4X8 A4	1-93, 1-95, 5-153, 8-17, 8-19, 8-21, 8-29, 8-33
312318-0325	.. SET SCREW, CUP END ISO4029 M5X10 A4	1-209, 1-211, 5-11, 5-13, 5-15, 5-109, 5-135, 8-27
312318-0327	.. SET SCREW, CUP END ISO4029 M5X12 A4	7-57
312318-0329	.. SET SCREW, CUP END ISO4029 M5X16 A4	8-17, 8-19
312318-0321	.. SET SCREW, CUP END ISO4029 M5X6 A4	5-123, 5-125, 5-127
312316-0321	.. SET SCREW, CUP END ISO4029 M5X6 FZB	8-37
312318-0323	.. SET SCREW, CUP END ISO4029 M5X8 A4	2-35, 5-11, 5-13, 5-15, 5-93
312318-0364	.. SET SCREW, CUP END ISO4029 M6X10 A4	3-23, 3-25, 7-65
312318-0366	.. SET SCREW, CUP END ISO4029 M6X12 A4	3-31, 7-49, 7-63, 8-17, 8-19
312318-0368	.. SET SCREW, CUP END ISO4029 M6X16 A4	1-149, 1-151, 4-93, 4-95, 5-11, 5-13, 5-15
312318-0372	.. SET SCREW, CUP END ISO4029 M6X25 A4	8-23, 8-25
312318-0360	.. SET SCREW, CUP END ISO4029 M6X6 A4	4-93, 4-95
312318-0362	.. SET SCREW, CUP END ISO4029 M6X8 A4	1-91, 3-27, 3-31, 4-53, 4-55, 5-149, 5-151, 7-35 7-37, 7-63, 8-17, 8-19, 8-41, 9-171
312318-0447	.. SET SCREW, CUP END ISO4029 M8X12 A4	2-97, 2-99
312318-0451	.. SET SCREW, CUP END ISO4029 M8X20 A4	1-149, 1-151
312318-0443	.. SET SCREW, CUP END ISO4029 M8X8 A4	5-115, 5-117, 5-137
312311-0285	.. SET SCREW, DOG POINT ISO4028 M4X6 FZB	7-65
312311-0287	.. SET SCREW, DOG POINT ISO4028 M4X8 FZB	1-97
312311-0321	.. SET SCREW, DOG POINT ISO4028 M5X6 FZB	1-81, 3-15, 3-17

Part No	Description	Page No
312311-0366 ..	SET SCREW, DOG POINT ISO4028 M6X12 FZB	1-81, 1-97, 3-9
312311-0370 ..	SET SCREW, DOG PONT ISO4028 M6X20 FZB	2-33, 2-35
90287-0159	SET SCREW, DOGPOINT M6X16 A4	6-73
469527-0000 ..	SETTING PLATE	5-93
751333-0000 ..	SETTING PLATE	1-125, 1-127
1517985-0000 .	SETTING RING	3-31
75931-0004	SETTING TEMPLATE	12-85, 12-87
75931-0005	SETTING TEMPLATE	12-85, 12-87
75931-0008	SETTING TEMPLATE	12-85, 12-87
75931-0009	SETTING TEMPLATE	12-85, 12-87
75931-0010	SETTING TEMPLATE	12-85, 12-87
75931-0011	SETTING TEMPLATE	12-85, 12-87
75931-0012	SETTING TEMPLATE	12-85, 12-87
75931-0015	SETTING TEMPLATE	12-85, 12-87
75931-0016	SETTING TEMPLATE	12-85, 12-87
75931-0017	SETTING TEMPLATE	12-85, 12-87
590223-0000 ..	SETTING TEMPLATE	12-29, 12-31
590224-0000 ..	SETTING TEMPLATE	12-29, 12-31
590245-0000 ..	SETTING TEMPLATE	12-29, 12-31
590246-0000 ..	SETTING TEMPLATE	12-29, 12-31
590247-0000 ..	SETTING TEMPLATE	12-29, 12-31
590248-0000 ..	SETTING TEMPLATE	12-29, 12-31
590249-0000 ..	SETTING TEMPLATE	12-29, 12-31
590250-0000 ..	SETTING TEMPLATE	12-29, 12-31
978421-0000 ..	SETTING TEMPLATE	12-121
75466-0300	SETTING TOOL	12-27
76335-0200	SETTING TOOL	12-71
76338-0000	SETTING TOOL	12-123
76350-0200	SETTING TOOL	12-27
76594-0200	SETTING TOOL	12-105
76600-0200	SETTING TOOL	12-27
75467-0200	SETTING TOOL CURVES	12-27
76460-0100	SETTING TOOL CURVES	12-159
76580-0100	SETTING TOOL FINAL FOLDER	12-159
75469-0300	SETTING TOOL VOLUME ADJUSTMENT	12-85, 12-87
1013-0000	SHAFT	8-15
2873-0000	SHAFT	12-39, 12-41
35918-0000	SHAFT	1-143, 1-145
37884-0000	SHAFT	8-33
37889-0000	SHAFT	8-33
76212-0000	SHAFT	12-163, 12-165
76466-0000	SHAFT	12-125
208173-0000 ..	SHAFT	8-33
239440-0000 ..	SHAFT	1-149, 1-151
255969-0000 ..	SHAFT	1-149, 1-151
255977-0000 ..	SHAFT	1-171
256163-0000 ..	SHAFT	1-83, 1-85
256177-0000 ..	SHAFT	3-5
256309-0000 ..	SHAFT	1-125, 1-127
256427-0000 ..	SHAFT	3-11, 3-13, 3-15, 3-17
256710-0000 ..	SHAFT	4-93, 4-95
256812-0000 ..	SHAFT	3-31
256899-0000 ..	SHAFT	1-193, 1-195
257309-0000 ..	SHAFT	3-11, 3-13, 3-33, 3-35
263655-0006 ..	SHAFT	1-83, 1-85, 12-43
265957-0000 ..	SHAFT	1-193, 1-195
271863-0000 ..	SHAFT	1-83, 1-85
272095-0000 ..	SHAFT	1-193, 1-195
272434-0000 ..	SHAFT	3-9
272948-0003 ..	SHAFT	1-73
295313-0000 ..	SHAFT	5-123, 5-125, 5-127
295376-0000 ..	SHAFT	1-171
441339-0000 ..	SHAFT	3-19, 3-21
441764-0000 ..	SHAFT	4-35, 4-37, 4-39, 4-41
451149-0000 ..	SHAFT	1-143, 1-145
457367-0000 ..	SHAFT	1-209, 1-211
469463-0000 ..	SHAFT	1-193, 1-195
490903-0000 ..	SHAFT	1-83, 1-85
491166-0000 ..	SHAFT	3-15, 3-17
491228-0001 ..	SHAFT	5-9, 5-87, 5-141, 5-143
491228-0002 ..	SHAFT	5-9, 5-87, 5-141, 5-143
491848-0000 ..	SHAFT	5-159, 5-161
491931-0000 ..	SHAFT	1-69
532208-0000 ..	SHAFT	12-25
537327-0000 ..	SHAFT	7-11
541070-0000 ..	SHAFT	7-15
574395-0000 ..	SHAFT	1-143, 1-145
574937-0000 ..	SHAFT	8-17, 8-19
577439-0000 ..	SHAFT	5-135
577440-0000 ..	SHAFT	5-135
577739-0000 ..	SHAFT	5-123, 5-125, 5-127
577742-0000 ..	SHAFT	5-123, 5-125, 5-127
577750-0000 ..	SHAFT	5-123, 5-125, 5-127
577766-0000 ..	SHAFT	5-131

Part No	Description	Page No
577771-0000 ..	SHAFT	6-73
577799-0000 ..	SHAFT	8-21
578493-0000 ..	SHAFT	1-55, 1-57
579553-0000 ..	SHAFT	7-13, 7-43, 7-51, 7-53
583683-0000 ..	SHAFT	7-63
590264-0000 ..	SHAFT	12-173
590265-0000 ..	SHAFT	12-173
591438-0000 ..	SHAFT	4-19, 4-21, 4-23, 4-27, 4-29, 4-31
591440-0000 ..	SHAFT	3-19, 3-21
751131-0000 ..	SHAFT	1-83, 1-85
751132-0000 ..	SHAFT	1-91
751318-0000 ..	SHAFT	1-143, 1-145
751554-0002 ..	SHAFT	5-89
752185-0000 ..	SHAFT	1-143, 1-145
752186-0001 ..	SHAFT	1-135, 1-137, 1-139
752186-0002 ..	SHAFT	1-125, 1-127
752186-0003 ..	SHAFT	1-143, 1-145, 1-149, 1-151
752186-0004 ..	SHAFT	1-135, 1-137, 1-139, 1-143, 1-145, 1-149, 1-151
752186-0005 ..	SHAFT	1-125, 1-127, 1-143, 1-145, 1-149, 1-151
752186-0006 ..	SHAFT	1-125, 1-127, 1-143, 1-145
752186-0007 ..	SHAFT	1-143, 1-145
752186-0008 ..	SHAFT	1-125, 1-127
752186-0009 ..	SHAFT	1-125, 1-127
752186-0010 ..	SHAFT	1-135, 1-137, 1-139
752186-0011 ..	SHAFT	1-135, 1-137, 1-139
752186-0012 ..	SHAFT	1-135, 1-137, 1-139, 1-149, 1-151
752187-0000 ..	SHAFT	1-125, 1-127
752284-0000 ..	SHAFT	4-35, 4-37, 4-39, 4-41
752538-0000 ..	SHAFT	8-23, 8-25
752543-0001 ..	SHAFT	8-23, 8-25
752598-0000 ..	SHAFT	4-19, 4-21, 4-23, 4-27, 4-29, 4-31
950351-0000 ..	SHAFT	4-53, 4-55
978876-0000 ..	SHAFT	8-41
978877-0000 ..	SHAFT	8-41
979312-0000 ..	SHAFT	5-123, 5-125, 5-127
979382-0000 ..	SHAFT	8-43
979756-0000 ..	SHAFT	4-19, 4-21, 4-23, 4-27, 4-29, 4-31
979784-0000 ..	SHAFT	8-37
980003-0000 ..	SHAFT	8-27
1035895-0000 .	SHAFT	7-47
1035897-0000 .	SHAFT	7-35, 7-37, 7-39, 7-41
1036188-0000 .	SHAFT	1-75, 1-99
1037120-0000 .	SHAFT	7-19
1037121-0000 .	SHAFT	7-19
1195456-0000 .	SHAFT	5-55, 5-111
1260068-0000 .	SHAFT	5-81
1260070-0000 .	SHAFT	5-81
1260687-0000 .	SHAFT	5-123, 5-125, 5-127
1334256-0000 .	SHAFT	7-61
1334573-0000 .	SHAFT	12-45
1346002-0000 .	SHAFT	12-101
1346003-0000 .	SHAFT	12-101
1346612-0000 .	SHAFT	7-49, 7-61
1350196-0000 .	SHAFT	5-123, 5-125, 5-127
1478551-0000 .	SHAFT	5-135
1484452-0000 .	SHAFT	3-29
1484456-0000 .	SHAFT	3-29
1490119-0000 .	SHAFT	3-33, 3-35
1490928-0000 .	SHAFT	5-159, 5-161
1498778-0000 .	SHAFT	7-35, 7-37
1499026-0000 .	SHAFT	7-49
1499515-0000 .	SHAFT	7-13
1499517-0000 .	SHAFT	7-65
1511001-0000 .	SHAFT	7-49
1511021-0000 .	SHAFT	5-11, 5-13, 5-15
1517751-0000 .	SHAFT	7-21
1517984-0000 .	SHAFT	3-31
1519375-0001 .	SHAFT	4-19, 4-21, 4-23, 4-27, 4-29, 4-31
1519375-0002 .	SHAFT	4-19, 4-21, 4-23, 4-27, 4-29, 4-31
1519375-0003 .	SHAFT	4-19, 4-21, 4-23, 4-27, 4-29, 4-31
1524830-0000 .	SHAFT	1-219
1538107-0000 .	SHAFT	7-61
1539106-0000 .	SHAFT	4-105
1539109-0000 .	SHAFT	4-105
1539608-0000 .	SHAFT	1-149, 1-151
1539948-0000 .	SHAFT	5-57
1539996-0000 .	SHAFT	1-221
1548005-0000 .	SHAFT	1-219
1549302-0000 .	SHAFT	8-17, 8-19
1549474-0000 .	SHAFT	8-17, 8-19
1558313-0000 .	SHAFT	8-15
2501385-0000 .	SHAFT	8-39
2501613-0000 .	SHAFT	8-17, 8-19
2501835-0000 .	SHAFT	8-41

Part No	Description	Page No
2509548-0000	.SHAFT	5-123, 5-125, 5-127
2522249-0000	.SHAFT	1-97
2523736-0000	.SHAFT	5-11, 5-13, 5-15
2523737-0000	.SHAFT	5-11, 5-13, 5-15
2529646-0000	.SHAFT	7-47
2541116-0000	.SHAFT	3-33, 3-35
2543227-0000	.SHAFT	5-153
2544962-0000	.SHAFT	5-85
2544963-0000	.SHAFT	5-85
2555633-0000	.SHAFT	1-91
2555634-0000	.SHAFT	1-91
2561267-0000	.SHAFT	2-21, 5-73, 5-115, 5-117
2576347-0000	.SHAFT	5-11, 5-13, 5-15
2612576-0000	.SHAFT	1-125, 1-127
2732557-0000	.SHAFT	8-41
2743347-0000	.SHAFT	5-149, 5-151
2810395-0000	.SHAFT	4-49, 4-51
2810396-0000	.SHAFT	4-49, 4-51
2810402-0000	.SHAFT	4-49, 4-51
2854629-0000	.SHAFT	5-139
2854634-0000	.SHAFT	5-139
2854639-0000	.SHAFT	5-139
2854645-0000	.SHAFT	5-137
2958808-0000	.SHAFT	1-155
3017332-0000	.SHAFT	8-29
3017419-0000	.SHAFT	8-29
3070149-0000	.SHAFT	4-43
90458-2841	.... SHAFT COUPLING 22,225H9/15	1-81
90458-2840	.... SHAFT COUPLING 22,225H9/9	1-97
456263-0000	.. SHEET	2-41
532209-0000	.. SHEET	12-25
532676-0000	.. SHEET	12-17, 12-19
572253-0000	.. SHEET	8-23, 8-25
577752-0000	.. SHEET	5-123, 5-125, 5-127
578104-0000	.. SHEET	4-101, 4-103
590217-0000	.. SHEET	12-181
1282733-0000	.SHEET	5-123, 5-125, 5-127
2544975-0000	.SHEET	5-85
90296-0070	.... SHELL ALVANIA GREASE EP 1	5-85, 5-145, 5-159, 5-161
90296-0068	.... SHELL ALVANIA GREASE EP 2 (CARTR.400G)	3-5, 4-35, 4-37, 4-39, 4-41
90296-0075	.... SHELL OMALA OIL 320 (1PC=20L)	3-5, 5-123, 5-125, 5-127, 6-107
90296-0053	.... SHELL TELLUS OIL T 32 (1PC=20L)	6-107
243133-0000	.. SHIELD PLATE	8-33
2699713-0000	.SHIELD PLATE	5-49, 5-51
2814876-0000	.SHIELD PLATE	5-49, 5-51
2816495-0000	.SHIELD PLATE	5-109
2927587-0000	.SHIELD PLATE	5-49, 5-51
247358-0000	.. SHIFTER HANDLE	1-83, 1-85
257090-0000	.. SHIFTER HANDLE	1-125, 1-127
295204-0001	.. SHIM	5-29, 5-93
295204-0002	.. SHIM	5-29, 5-93
295204-0003	.. SHIM	5-29, 5-93
441589-0000	.. SHIM	5-159, 5-161
441797-0000	.. SHIM	5-53, 5-211
456817-0001	.. SHIM	8-29
456817-0002	.. SHIM	8-29
491266-0000	.. SHIM	5-45, 5-47, 5-49, 5-51, 5-103, 5-105, 5-107
577735-0000	.. SHIM	5-123, 5-125, 5-127
594933-0000	.. SHIM	5-147
751580-0000	.. SHIM	4-7, 4-9, 4-11, 4-13, 4-15, 4-17, 4-45, 4-47
752038-0000	.. SHIM	1-149, 1-151
752544-0001	.. SHIM	8-23, 8-25
752544-0002	.. SHIM	8-23, 8-25
978185-0000	.. SHIM	4-57, 4-59, 4-61, 4-63
1350198-0000	.SHIM	5-123, 5-125, 5-127
1350199-0000	.SHIM	5-123, 5-125, 5-127
1487987-0000	.SHIM	4-53, 4-55
1517506-0000	.SHIM	5-159, 5-161
1523158-0001	.SHIM	1-83, 1-85
1523158-0002	.SHIM	1-83, 1-85
1523158-0003	.SHIM	1-83, 1-85
2527454-0000	.SHIM	5-11, 5-13, 5-15
2530401-0000	.SHIM	5-11, 5-13, 5-15
2547485-0000	.SHIM	5-141, 5-143
2547486-0000	.SHIM	5-141, 5-143
2547487-0000	.SHIM	5-141, 5-143
2702030-0000	.SHIM	5-11, 5-13, 5-15
2746794-0000	.SHIM	5-141, 5-143
2746795-0000	.SHIM	5-141, 5-143
2746799-0000	.SHIM	5-141, 5-143
2964526-0000	.SHIM	5-11, 5-13, 5-15
736514-0000	.. SHOCK ABSORBER	1-29, 1-227, 11-39
752671-0100	.. SHOCK ABSORBER	4-3, 4-5
752672-0100	.. SHOCK ABSORBER	4-3, 4-5

Part No	Description	Page No
90347-0189	SHOCK ABSORBER, 370-050-400	5-29, 5-93
90347-0024	SHOCK ABSORBER, 370-120-400	7-59
577732-0000 ..	SHOULDER RING	5-123, 5-125, 5-127
90459-1852	SHUT OFF VALVE, MS6-EM1-1/2	6-39
272376-0000 ..	SHUTTER	3-5
927007-0000 ..	SHUTTER	1-29
1296120-0200 .	SIDE FEEDER	5-133
2854620-0100 .	SIDE FEEDER	5-133
2854660-0100 .	SIDE FEEDER	5-3, 5-5, 5-7
1498767-0000 .	SIDE PIECE	7-57
2527513-0000 .	SIDE PIECE	2-97
2527514-0000 .	SIDE PIECE	2-97
2776743-0000 .	SIDE PIPE	5-31, 5-33
2776744-0000 .	SIDE PIPE	5-31, 5-33
1296777-0000 .	SIDE PLATE	5-129
1296778-0000 .	SIDE PLATE	5-129
1350970-0000 .	SIDE PLATE	5-129
1350971-0000 .	SIDE PLATE	5-129
1519627-0000 .	SIDE PLATE	5-129
1519628-0000 .	SIDE PLATE	5-129
1558043-0000 .	SIDE PLATE	5-129
1558044-0000 .	SIDE PLATE	5-129
2526381-0000 .	SIDE PLATE	2-33
2769655-0000 .	SIDE PLATE	2-33
2854619-0000 .	SIDE PLATE	5-115, 5-117
2854621-0000 .	SIDE PLATE	5-115, 5-117
2854810-0000 .	SIDE PLATE	5-59, 5-61
2854811-0000 .	SIDE PLATE	5-59, 5-61
2854823-0000 .	SIDE PLATE	5-59, 5-61
2854824-0000 .	SIDE PLATE	5-59, 5-61
2881033-0000 .	SIDE PLATE	2-17
2881034-0000 .	SIDE PLATE	2-17
2964524-0000 .	SIDE PLATE	5-147
2987294-0000 .	SIDE PLATE LEFT	5-147
2987295-0000 .	SIDE PLATE LEFT	5-147
2987281-0000 .	SIDE PLATE RIGHT	5-147
247385-0000 ..	SIGN	6-45, 6-47
247386-0000 ..	SIGN	6-45, 6-47
929413-0000 ..	SIGN	6-45, 6-47
978603-0000 ..	SIGN	6-45, 6-47
979421-0000 ..	SIGN	6-45, 6-47
1086870-0000 .	SIGN	2-17, 5-59, 5-61
1517464-0000 .	SIGN	7-23, 7-25, 7-27, 7-29
2555070-0000 .	SIGN	2-87, 2-89
2949464-0000 .	SIGN	1-31
359241-0460 ..	SIGN "PATCH SEALER 2"	9-149, 9-151, 9-153
359241-0459 ..	SIGN "PT HOUR METER"	9-149, 9-151, 9-153
295387-0000 ..	SIGN BOARD	6-13
520072-0000 ..	SIGN BOARD	1-35, 1-37
978010-0000 ..	SIGN BOARD	2-87, 2-89
359240-0100 ..	SIGN HOLDER FOR 359240-0001	9-87, 9-89, 9-149, 9-151, 9-153, 9-173
359241-0439 ..	SIGN"PATCH SEALER"	9-149, 9-151, 9-153
359241-0465 ..	SIGN"PRE-PATCH SEALER"	9-149, 9-151, 9-153
359241-0444 ..	SIGN"TAB RESEAL"	9-149, 9-151, 9-153
273458-0000 ..	SIGN, AIR	2-87, 2-89, 6-45, 6-47
273450-0000 ..	SIGN, AIR SPRAY	6-45, 6-47
273455-0000 ..	SIGN, COLD WATER	2-87, 2-89, 6-45, 6-47
445533-0000 ..	SIGN, COLD WATER FLOW TS-LEFT	6-45, 6-47
445534-0000 ..	SIGN, COLD WATER FLOW TS-RIGHT	6-45, 6-47
273454-0000 ..	SIGN, COOLING JAWS	6-45, 6-47
90194-0152	SIGN, EARTH	9-31
90194-0163	SIGN, EARTH WITHIN CIRCLE / SHEET 48 PCS	6-45, 6-47, 9-13, 9-15, 9-17, 9-19, 9-83, 9-87, 9-89, 9-103, 9-105, 9-131, 9-133, 9-135, 9-137, 9-149, 9-151, 9-153, 9-159, 9-163, 9-165
273449-0000 ..	SIGN, FLAP SEALING	6-45, 6-47
90194-0164	SIGN, FRAME/CHASSIS WITHIN CIRCLE	6-45, 6-47, 9-13, 9-15, 9-17, 9-19, 9-131, 9-133, 9-159
273456-0000 ..	SIGN, HOT WATER	2-87, 2-89, 6-45, 6-47
90194-0080	SIGN, IDENTIFICATION OF WIRING	9-83
464174-0000 ..	SIGN, LONGITUDINAL SEALING	1-107, 1-109
464175-0000 ..	SIGN, LONGITUDINAL SEALING SHORT STOP	1-107, 1-109
90457-0058	SIGN, LS SHORT STOP	9-149, 9-151, 9-153
90457-0123	SIGN, MAIN SWITCH	9-87, 9-89
359240-0001 ..	SIGN, NOT ENGRAVED	9-149, 9-151, 9-153
90111-0344	SIGN, PE, GREEN/YELLOW	9-159
90194-0118	SIGN, RESIDUAL VOLTAGE, WAIT 5 MIN.	9-133, 9-157, 9-165
273452-0000 ..	SIGN, ROLLING MACHINE FOR FABRICS	6-45, 6-47
90459-0691	SIGN, STRIP SPLICE/ RESET ALARM	7-17
359241-0297 ..	SIGN: 50 HZ	9-87, 9-89
359241-0140 ..	SIGN: LIGHT OFF/ON	9-149, 9-151, 9-153
359241-0180 ..	SIGN: PRODUCTION	9-149, 9-151, 9-153
359241-0133 ..	SIGN: SERVICE SWITCH	9-149, 9-151, 9-153
359241-0268 ..	SIGN: SPRAYING, HEAD SPACE	9-149, 9-151, 9-153
359241-0130 ..	SIGN: TEMP. AIR SUPER HEATER	9-149, 9-151, 9-153
359241-0131 ..	SIGN: TEMP. LS	9-149, 9-151, 9-153
359241-0141 ..	SIGN: WATER BATH	9-149, 9-151, 9-153

Part No	Description	Page No
359241-0122 ..	SIGN: " CLEANING STEAM BARRIER SPACE"	9-149, 9-151, 9-153
359241-0340 ..	SIGN: " FLAP HEATING BOTTOM LEFT"	9-149, 9-151, 9-153
359241-0339 ..	SIGN: " FLAP HEATING BOTTOM RIGHT"	9-149, 9-151, 9-153
359241-0338 ..	SIGN: " FLAP HEATING TOP LEFT"	9-149, 9-151, 9-153
359241-0337 ..	SIGN: " FLAP HEATING TOP RIGHT"	9-149, 9-151, 9-153
359241-0201 ..	SIGN: " HOUR METER"	9-149, 9-151, 9-153
359241-0121 ..	SIGN: " STEAM"	9-149, 9-151, 9-153
359241-0126 ..	SIGN: " TEMP. AIR KNIFE"	9-149, 9-151, 9-153
359241-0125 ..	SIGN: " TEMP. PEROXIDE BATH"	9-149, 9-151, 9-153
359241-0123 ..	SIGN: " TEMP. PRESTERILIZATION VALVE"	9-149, 9-151, 9-153
359241-0132 ..	SIGN: " TEMP. SA"	9-173
359241-0135 ..	SIGN: " TRANSVERSAL SEALING"	9-173
90328-0025	SILENCER G1/2"	12-23
90328-0003	SILENCER, 338/110	1-107, 1-109
90601-1586	SILENCER, G1"	6-15, 6-17, 6-39
90328-0026	SILENCER, G1/4"	1-29, 1-31, 1-35, 1-37, 1-223, 11-39
90328-0047	SILENCER, G1/8"	1-9, 1-11, 5-49, 5-51, 6-49, 6-51
90328-0029	SILENCER, M5	6-49, 6-51, 6-53, 7-13
90328-0020	SILENCER, U-M5	1-219
90450-0380	SINGLE ACTING, PANCAKE EV-20/75-5	5-153
90600-7766	SINGLE ACTING, SHORT STROKE, CYL 63-10	12-135
90459-2591	SINGLE VALVE SUB-BASE CDSV5.0-AS-1/8	6-49, 6-51, 6-53
90458-0302	SIREN ELEMENT, PSD-S AE SM8-5 100DB/1/W	2-95
74768-0000	SLEEVE	12-119
74769-0000	SLEEVE	12-119
77163-0000	SLEEVE	12-129
272490-0000 ..	SLEEVE	4-97, 4-99
440252-0000 ..	SLEEVE	8-15
440253-0000 ..	SLEEVE	8-15
440647-0000 ..	SLEEVE	1-9, 1-11
457358-0000 ..	SLEEVE	8-15
490932-0000 ..	SLEEVE	5-109
553607-0000 ..	SLEEVE	1-19, 1-21, 1-23, 1-51
591433-0000 ..	SLEEVE	4-71, 4-73, 4-79, 4-81
751557-0000 ..	SLEEVE	5-89
751769-0000 ..	SLEEVE	4-35, 4-37, 4-39, 4-41
752288-0000 ..	SLEEVE	4-7, 4-9, 4-11, 4-13, 4-15, 4-17, 4-45, 4-47
752680-0000 ..	SLEEVE	4-71, 4-73, 4-79, 4-81
929371-0000 ..	SLEEVE	4-53, 4-55
979384-0000 ..	SLEEVE	8-43
979385-0000 ..	SLEEVE	8-43
979761-0000 ..	SLEEVE	4-71, 4-73, 4-79, 4-81
3019245-0000 .	SLEEVE	3-31
3036083-0000 .	SLEEVE	2-93
90134-0030	SLEEVE FOR PLASTIC TUBE	2-51, 2-53, 2-55, 6-95, 12-157
90134-0031	SLEEVE FOR PLASTIC TUBE	2-51, 2-53, 2-55, 3-11, 3-13, 5-17, 5-49, 5-51, 5-89, 5-109
90163-0046	SLEEVE LP-004-0-WR 0510-21-1 BRASS	5-49, 5-51, 5-109
350012-0002 ..	SLEEVE QSH-F-6	5-49, 5-51
90459-0766	SLEEVE, CR 99334	5-85
342707-0109 ..	SLEEVE, INT. THREAD, NO. 2543-1/8	1-223
90330-0012	SLEEVE, REDUCTION, INT, R-2021/4X1/8	6-101, 6-103
491815-0300 ..	SLEWING BRACKET LEFT	3-3
491814-0300 ..	SLEWING BRACKET RIGHT	3-3
1523449-0000 .	SLIDE	9-167
1523450-0000 .	SLIDE	9-167
1523451-0000 .	SLIDE	9-167
1523456-0000 .	SLIDE	9-173
1511315-0000 .	SLIDE BLOCK	7-59
2854618-0000 .	SLIDE PLANE	5-115, 5-117
2854624-0000 .	SLIDE PLATE	5-115, 5-117
2854656-0000 .	SLIDE PLATE	5-115, 5-117
2854623-0000 .	SLIDE RAIL	5-119
2854626-0000 .	SLIDE RAIL	5-119
2854628-0000 .	SLIDE RAIL	5-115, 5-117
2854816-0000 .	SLIDE RAIL	5-59, 5-61
2854817-0000 .	SLIDE RAIL	5-59, 5-61
271939-0001 ..	SLIDE SHEET	5-35, 5-37, 5-39, 5-41, 5-43
271939-0003 ..	SLIDE SHEET	5-35, 5-37, 5-39, 5-41, 5-43
272045-0001 ..	SLIDE SHEET	5-35, 5-37, 5-39, 5-41, 5-43
272045-0002 ..	SLIDE SHEET	5-35, 5-37, 5-39, 5-41, 5-43
272045-0003 ..	SLIDE SHEET	5-35, 5-37, 5-39, 5-41, 5-43
2776734-0000 .	SLIDE SHEET	5-35, 5-37, 5-39, 5-41, 5-43
255942-0000 ..	SLIDER	2-9, 2-11
257327-0000 ..	SLIDER	3-31
272546-0000 ..	SLIDER	5-123, 5-125, 5-127, 5-131
295097-0000 ..	SLIDER	2-9, 2-11
469502-0000 ..	SLIDER	2-9, 2-11
491227-0000 ..	SLIDER	5-9, 5-87, 5-141, 5-143
491350-0000 ..	SLIDER	4-93, 4-95
574449-0000 ..	SLIDER	2-9, 2-11
979938-0000 ..	SLIDER	2-9, 2-11
1195420-0000 .	SLIDER	2-25, 2-27
1317396-0000 .	SLIDER	2-25, 2-27
2523597-0000 .	SLIDER	7-21

Part No	Description	Page No
978631-0000 ..	SLIDING STRIP	5-135, 5-139
1550595-0390 ..	SLIDING STRIP	2-17
1550595-3840 ..	SLIDING STRIP	2-17
1550595-4903 ..	SLIDING STRIP	5-59, 5-61
1550595-4904 ..	SLIDING STRIP	5-59, 5-61
1550595-6494 ..	SLIDING STRIP	5-115, 5-117
1550595-6993 ..	SLIDING STRIP	5-115, 5-117
1550595-6994 ..	SLIDING STRIP	5-115, 5-117
2589960-4200 ..	SLIDING STRIP	5-59, 5-61
312125-0226 ..	SLOTTED HEAD SCREW, ISO1207 M3X12 A4	4-45, 4-47, 6-83, 9-31, 9-87, 9-89
312125-0228 ..	SLOTTED HEAD SCREW, ISO1207 M3X16 A4	1-43, 1-47, 1-49, 1-91, 1-229, 5-123, 5-125, 5-127, 5-135, 5-139
312125-0230 ..	SLOTTED HEAD SCREW, ISO1207 M3X20 A4	1-49, 1-83, 1-85, 1-93, 1-95, 2-41, 8-23, 8-25, 8-33
312125-0232 ..	SLOTTED HEAD SCREW, ISO1207 M3X25 A4	7-23, 7-25, 7-27, 7-29, 9-31
312125-0234 ..	SLOTTED HEAD SCREW, ISO1207 M3X30 A4	7-35, 7-37
312125-0222 ..	SLOTTED HEAD SCREW, ISO1207 M3X8 A4	2-37, 7-31, 7-35, 7-37, 9-87, 9-89
312125-0291 ..	SLOTTED HEAD SCREW, ISO1207 M4X12 A4	1-73, 2-73, 2-75, 4-49, 4-51, 7-19, 7-21, 8-41
312125-0293 ..	SLOTTED HEAD SCREW, ISO1207 M4X16 A4	1-41, 7-21, 11-23, 11-27, 11-29
312125-0297 ..	SLOTTED HEAD SCREW, ISO1207 M4X25 A4	8-45
312125-0299 ..	SLOTTED HEAD SCREW, ISO1207 M4X30 A4	6-95
312125-0285 ..	SLOTTED HEAD SCREW, ISO1207 M4X6 A4	1-41, 1-55, 1-57, 1-73, 1-103, 1-105, 4-57, 4-59, 4-61, 4-63, 6-85, 6-87, 7-15, 12-119
312125-0287 ..	SLOTTED HEAD SCREW, ISO1207 M4X8 A4	1-83, 1-85, 2-51, 2-53, 2-55, 2-59, 2-61, 2-105, 3-37, 5-75, 5-121, 6-61, 7-13, 7-19, 7-23, 7-25, 7-27, 7-29, 7-35, 7-37, 7-43, 7-51, 7-53, 8-33, 8-45
312125-0327 ..	SLOTTED HEAD SCREW, ISO1207 M5X12 A4	2-13, 2-15, 2-29, 2-31, 7-59, 9-63, 9-65, 9-67, 9-69, 9-139, 9-141, 9-143, 12-23
312125-0329 ..	SLOTTED HEAD SCREW, ISO1207 M5X16 A4	2-73
312125-0331 ..	SLOTTED HEAD SCREW, ISO1207 M5X20 A4	1-77, 1-79
312125-0323 ..	SLOTTED HEAD SCREW, ISO1207 M5X8 A4	1-19, 1-21, 1-23, 1-51, 1-69, 1-77, 1-79, 1-173, 1-175, 1-177, 1-179, 1-181, 1-183, 2-9, 2-11, 2-37, 2-51, 2-53, 2-55, 2-91, 5-135, 9-145, 11-25, 11-31, 11-33
312125-0366 ..	SLOTTED HEAD SCREW, ISO1207 M6X12 A4	8-29
312132-0284 ..	SLOTTED HEAD, PAN SCREW, MSCS M4X5	9-171
312132-0287 ..	SLOTTED HEAD, PAN SCREW, MSCS M4X8	12-113
312132-0323 ..	SLOTTED HEAD, PAN SCREW, MSCS M5X8	2-13, 2-15, 2-29, 2-31
311303-0234 ..	SLOTTED PIN RPB3X12FZB	3-11
311307-0275 ..	SLOTTED PIN RPD4X28FZB	3-31
90141-0022	SNAP RING B 16	1-75, 1-99
90110-0207	SOCKET	6-83
90601-1168	SOCKET CONNECTOR, NECA-S1G9-P9-MP3	6-15, 6-17, 6-39
90326-0020	SOCKET, FEMALE YELLOW CR-AL, 03-22000A	1-9, 1-11, 1-43, 1-55, 1-57, 1-69, 1-73, 1-77, 1-79, 1-99, 1-165, 1-167
90119-0309	SOCKET, PYF14A-E	9-29, 9-47
42413-0400	SOFTWARE	10-3
3022601-0005 ..	SOFTWARE CD	10-5
2776750-0400 ..	SOFTWARE TPOP	10-5
544906-0000 ..	SOLENOID VALVE	1-55, 1-57, 1-103, 1-105
979956-0000 ..	SOLENOID VALVE	1-35, 1-37
90042-0134	SOLENOID VALVE ASCO SCE 210 802 24VDC	6-101, 6-103
90201-0058	SOLENOID VALVE DC 24V	6-97, 6-99
90042-0171	SOLENOID VALVE, 330 3/2 NC	1-35, 1-37, 1-103, 1-105
90042-0172	SOLENOID VALVE, 4023/1005/1032 24VDC	6-29, 6-31, 6-33, 6-35
90042-0173	SOLENOID VALVE, 6013 2/2 NC	6-23, 6-45, 6-47
1511801-0200 ..	SOLID STATE RELAY RAIL 1	9-13, 9-15, 9-17, 9-19
1517651-0200 ..	SOLID STATE RELAY RAIL 2	9-13, 9-15, 9-17, 9-19
1517652-0200 ..	SOLID STATE RELAY RAIL 3	9-13, 9-15, 9-17, 9-19
1523445-0200 ..	SOLID STATE RELAY RAIL 4	9-13, 9-15, 9-17, 9-19
90600-0946	SOLID STATE RELAY, 3RF2050-1AA04	9-27, 9-49, 9-51, 9-53, 9-55, 9-57, 9-59
76290-0000	SPACER	12-43
76295-0000	SPACER	12-93, 12-175
229775-0000 ..	SPACER	8-33
255940-0000 ..	SPACER	2-9, 2-11, 2-25, 2-27
256180-0000 ..	SPACER	3-5
256831-0001 ..	SPACER	4-93, 4-95
256831-0002 ..	SPACER	4-93, 4-95
256831-0003 ..	SPACER	4-93, 4-95, 4-97, 4-99
256831-0004 ..	SPACER	4-97, 4-99
441556-0001 ..	SPACER	8-29
441556-0002 ..	SPACER	8-29
441556-0004 ..	SPACER	8-29
441556-0012 ..	SPACER	8-29
441576-0000 ..	SPACER	1-93, 1-95
441720-0000 ..	SPACER	3-19, 3-21
456004-0000 ..	SPACER	4-97, 4-99
456181-0000 ..	SPACER	1-143, 1-145
553586-0000 ..	SPACER	1-163
570482-0000 ..	SPACER	9-79, 9-81
576448-0000 ..	SPACER	1-19
576449-0000 ..	SPACER	1-19
576450-0000 ..	SPACER	1-23, 1-51
576451-0000 ..	SPACER	1-21
577744-0000 ..	SPACER	5-123, 5-125, 5-127
577745-0000 ..	SPACER	5-123, 5-125, 5-127
577759-0000 ..	SPACER	5-123, 5-125, 5-127, 5-131

Part No	Description	Page No
577762-0000 ..	SPACER	5-123, 5-125, 5-127
591432-0000 ..	SPACER	4-71, 4-73, 4-79, 4-81
594953-0000 ..	SPACER	8-29
751334-0000 ..	SPACER	1-125, 1-127
752554-0000 ..	SPACER	1-209, 1-211
752556-0000 ..	SPACER	4-71, 4-73, 4-79, 4-81
752615-0000 ..	SPACER	4-19, 4-21, 4-23, 4-27, 4-29, 4-31
752673-0000 ..	SPACER	4-71, 4-73, 4-79, 4-81
926906-0000 ..	SPACER	1-29
927044-0000 ..	SPACER	1-29
929377-0000 ..	SPACER	12-99
929407-0000 ..	SPACER	4-71, 4-73, 4-79, 4-81
978340-0000 ..	SPACER	3-23, 3-25
979472-0000 ..	SPACER	5-123, 5-125, 5-127, 5-131
979757-0000 ..	SPACER	4-19, 4-21, 4-23, 4-27, 4-29, 4-31
979760-0000 ..	SPACER	4-71, 4-73, 4-79, 4-81
1038016-0000	.SPACER	7-45
1038240-0000	.SPACER	4-53, 4-55
1255874-0000	.SPACER	5-77, 5-79
1260205-0000	.SPACER	5-109
1334799-0002	.SPACER	12-167
1334799-0003	.SPACER	12-167
1334799-0004	.SPACER	12-167
1334804-0000	.SPACER	12-167
1334839-0000	.SPACER	12-167
1346598-0000	.SPACER	5-135, 5-139
1346673-0000	.SPACER	12-67
1347356-0000	.SPACER	12-65
1348366-0000	.SPACER	12-65
1348375-0000	.SPACER	12-67
1349413-0000	.SPACER	5-91
1349414-0000	.SPACER	5-95, 5-97, 5-99
1349415-0000	.SPACER	5-89
1360582-0000	.SPACER	8-29
1484453-0000	.SPACER	3-29
1484455-0000	.SPACER	3-29
1484461-0000	.SPACER	3-29
1490116-0000	.SPACER	3-33, 3-35
1490133-0000	.SPACER	3-33, 3-35
1498194-0000	.SPACER	3-33, 3-35
1499674-0000	.SPACER	12-167
1511318-0000	.SPACER	7-59
1511600-0000	.SPACER	1-29
1517182-0000	.SPACER	6-5, 6-7
1517675-0000	.SPACER	9-27, 9-49, 9-51, 9-53, 9-55, 9-57, 9-59
1517676-0000	.SPACER	1-185, 1-187, 1-189, 1-191, 9-111, 9-113, 9-115, 9-117, 9-119, 9-121, 9-123, 9-125, 9-127, 9-129
1519425-0000	.SPACER	5-199
1519564-0000	.SPACER	5-95, 5-97, 5-99
1519764-0000	.SPACER	6-11
1523439-0000	.SPACER	9-149, 9-151, 9-153
1523440-0000	.SPACER	9-83, 9-135, 9-137, 9-149, 9-151, 9-153
1523444-0000	.SPACER	9-149, 9-151, 9-153
1523828-0000	.SPACER	3-23, 3-25
1523960-0000	.SPACER	9-87, 9-89
1524836-0000	.SPACER	12-99
1538758-0000	.SPACER	1-223
1539250-0000	.SPACER	1-107, 1-109
1539302-0000	.SPACER	5-163, 5-165, 5-167, 5-169, 5-171, 5-173, 5-175, 5-177
2511330-0000	.SPACER	1-35, 1-37
2527718-0000	.SPACER	1-97
2541113-0000	.SPACER	3-33, 3-35
2544969-0000	.SPACER	5-85
2552687-0000	.SPACER	2-101, 2-103
2556243-0000	.SPACER	2-101, 2-103
2561206-0000	.SPACER	2-17, 5-59, 5-61, 5-119
2576398-0000	.SPACER	1-29
2611190-0011	.SPACER	5-19, 5-21, 5-23, 5-25, 5-27
2611190-0012	.SPACER	5-19, 5-21, 5-23, 5-25, 5-27
2611190-0013	.SPACER	5-19, 5-21, 5-23, 5-25, 5-27
2611190-0014	.SPACER	5-19, 5-21, 5-23, 5-25, 5-27
2611190-0015	.SPACER	5-19, 5-21, 5-23, 5-25, 5-27
2611190-0017	.SPACER	5-19, 5-21, 5-23, 5-25, 5-27
2611190-0018	.SPACER	5-19, 5-21, 5-23, 5-25, 5-27
2611190-0019	.SPACER	5-19, 5-21, 5-23, 5-25, 5-27
2611190-0020	.SPACER	5-19, 5-21, 5-23, 5-25, 5-27
2656673-0000	.SPACER	2-21, 5-73
2699436-0000	.SPACER	5-69, 5-71, 5-119
2721239-0000	.SPACER	1-9, 1-11, 1-49
2776727-0000	.SPACER	5-35, 5-37, 5-39, 5-41, 5-43
2800347-0000	.SPACER	5-35, 5-37, 5-39, 5-41, 5-43
2839449-0000	.SPACER	5-115, 5-117
3017333-0000	.SPACER	8-23, 8-25
3024827-0000	.SPACER	9-83

Part No	Description	Page No
3159165-0000	.SPACER	9-131, 9-133, 9-163, 9-165
90005-0143	.... SPACER 3,3/7, H=3	1-229
90134-0042	.... SPACER DOSING VALVE	4-35, 4-37, 4-39, 4-41, 5-109
2506601-0000	.SPACER FRAME	5-191, 5-193, 5-195
256181-0000	.. SPACER PIPE	3-5
978207-0000	.. SPACER PIPE	3-29
1523886-0000	.SPACER PLATE	2-59, 2-61
1523887-0000	.SPACER PLATE	2-59, 2-61
256915-0000	.. SPACER RING	3-7
751567-0000	.. SPACER RING	5-123, 5-125, 5-127
2993296-0000	.SPACER RING	3-7
1036192-0000	.SPACER ROD	1-75, 1-99
490985-0000	.. SPACER SHEET	1-9, 1-11, 1-49
1523441-0000	.SPACER SHEET	9-131, 9-133, 9-163, 9-165
1523442-0000	.SPACER SHEET	9-131, 9-133, 9-163, 9-165
256179-0000	.. SPACER SLEEVE	3-5
295205-0000	.. SPACER SLEEVE	5-29, 5-93
1360618-0000	.SPACER SLEEVE	4-19, 4-21, 4-23, 4-27, 4-29, 4-31
90134-0051	.... SPACING COLLAR DOSING BLOCK	5-49, 5-51, 5-109
90206-0322	.... SPARE PART GASKET, 4056	1-73
90459-6727	.... SPHERICAL BEARING, 25X42X20 MM	3-29
1036189-0000	.SPINDEL GUIDE	1-75, 1-99
449971-0000	.. SPINDLE	12-131
1539104-0000	.SPINDLE	4-107, 4-109
272325-0000	.. SPIRAL	1-101
90243-0136	.... SPIRIT LEVEL	12-13
783901-0106	.. SPIRIT LEVEL	12-123
90459-5200	.... SPIRIT LEVEL, 2864-0308	12-101
594977-0000	.. SPLASH PLATE	5-145
1279624-0200	.SPLICE DETECTOR	7-35, 7-37
2501836-0100	.SPLICING DEVICE	8-3
580044-0200	.. SPLICING MAGAZINE	7-5, 7-7
271641-0500	.. SPLICING TABLE	8-31
2523598-0000	.SPLICING TABLE	7-21
311411-0140	.. SPLIT PIN SP1,6X16RFR	1-149, 1-151
311411-0165	.. SPLIT PIN SP2,5X16RFR	1-143, 1-145
311411-0169	.. SPLIT PIN SP2,5X25RFR	6-73
311411-0150	.. SPLIT PIN SP2X12RFR	1-143, 1-145
311411-0152	.. SPLIT PIN SP2X16RFR	12-139
271387-0400	.. SPRAY GUN	2-3, 2-5, 2-7
1539606-0002	.SPRAY NOZZLE	1-43
1539606-0003	.SPRAY NOZZLE	1-43
1539606-0004	.SPRAY NOZZLE	1-43
1539606-0005	.SPRAY NOZZLE	1-43
2545134-0000	.SPRAY NOZZLE	1-43
90424-0054	.... SPRAY NOZZLE 120 DEG	6-89, 6-91
90424-0027	.... SPRAY NOZZLE TIP, 8613-8V-TC	2-37
90424-0017	.... SPRAY NOZZLE, 1/4NPT JCO-SS-12....	1-101
90424-0016	.... SPRAY NOZZLE, 103 DEG R1/8 BSPT GG8W	5-183, 5-185, 5-187
90424-0009	.... SPRAY NOZZLE, 103 DEG R1/8, GGA 8W	5-183, 5-185, 5-187
90424-0010	.... SPRAY NOZZLE, 142 DEG R1/4, K5	5-49, 5-51, 5-109
90424-0025	.... SPRAY NOZZLE, 145 DEG K1/4 10	5-53
90424-0070	.... SPRAY NOZZLE, 61 DEG 1/4 HH 10	5-207, 5-209, 5-213
90424-0033	.... SPRAY NOZZLE, 76 DEG R1/8 B5	2-57
90424-0032	.... SPRAY NOZZLE, 95 DEG H1/8 U-9515	2-57, 5-65
90424-0035	.... SPRAY NOZZLE, 95 DEG HB1/4 U-9515 BSPT	2-57, 5-211
2545425-0000	.SPRAY PIPE	1-35, 1-37
2546447-0000	.SPRAY PIPE	1-33
272623-0900	.. SPRAY SYSTEM	1-3, 1-5, 1-7
37909-0000	.... SPRING	8-41
90604-0413	.... SPRING	11-13
107000-0000	.. SPRING	12-119
256828-0000	.. SPRING	3-31
273980-0000	.. SPRING	6-81
400800-0000	.. SPRING	7-13
400828-0000	.. SPRING	7-19
457368-0000	.. SPRING	1-209, 1-211
532412-0000	.. SPRING	11-23, 11-27, 11-29
591429-0000	.. SPRING	4-71, 4-73
591430-0000	.. SPRING	4-79, 4-81
752085-0000	.. SPRING	8-21
929391-0000	.. SPRING	4-53, 4-55
1195044-0000	.SPRING	5-11, 5-13, 5-15, 5-89
1317991-0000	.SPRING	1-171
1484486-0000	.SPRING	7-15
1511324-0000	.SPRING	7-59
2527528-0000	.SPRING	5-137
2746796-0000	.SPRING	2-35
2746797-0000	.SPRING	2-35
2909523-0000	.SPRING	1-171
529147-0000	.. SPRING BRACKET	1-67
583878-0000	.. SPRING BRACKET	7-15
2519460-0000	.SPRING BRACKET	3-27
2552723-0000	.SPRING BRACKET	5-11, 5-13, 5-15

Part No	Description	Page No
2552732-0000	.SPRING BRACKET	5-11, 5-13, 5-15
2964525-0000	.SPRING BRACKET	5-11, 5-13, 5-15
979788-0000	.. SPRING HOLDER	8-23, 8-25
979789-0000	.. SPRING HOLDER	8-23, 8-25
1517067-0000	.SPRING HOLDER	7-61
2944323-0000	.SPRING HOUSING	5-11, 5-13, 5-15
752678-0000	.. SPRING PERF 1	4-71, 4-73
752679-0000	.. SPRING PERF 2	4-79, 4-81
311111-0207	.. SPRING PIN ISO 8752 3X14-ST	4-7, 4-9, 4-11, 4-13, 4-15, 4-17, 4-45, 4-47
311111-0209	.. SPRING PIN ISO 8752 3X18-ST	1-227
311111-0308	.. SPRING PIN ISO 8752 5X20-ST	4-7, 4-9, 4-11, 4-13, 4-15, 4-17, 4-45, 4-47
311112-0256	.. SPRING PIN, ISO 8752 4X20 A2	1-83, 1-85, 4-105, 6-73
311112-0258	.. SPRING PIN, ISO 8752 4X24 A2	5-147
311112-0262	.. SPRING PIN, ISO 8752 4X32 A2	1-83, 1-85
31559-0000	.... SPRING PLATE	5-179
90344-0022	.... SPROCKET	3-31
247357-0000	.. SPROCKET	1-83, 1-85
577743-0000	.. SPROCKET	5-123, 5-125, 5-127
577761-0000	.. SPROCKET	5-123, 5-125, 5-127
577763-0000	.. SPROCKET	5-123, 5-125, 5-127
979461-0000	.. SPROCKET	5-123, 5-125, 5-127, 5-131
2656672-0000	.SPROCKET	2-21, 5-73
315229-0101	.. SQUARE RING, 10,4X17,4X3,7 MM 1/2" FDA	1-55, 1-57, 1-157, 6-77
315229-0103	.. SQUARE RING, 23,1X30,1X3,7 MM 1" FDA	1-55, 1-57
315229-0104	.. SQUARE RING, 35,8X42,8X3,7 MM 1"1/2 FD	1-43, 1-155, 1-157, 1-163, 6-77
315229-0105	.. SQUARE RING, 48,5X55,5X3,7 MM 2" FDA	1-155, 6-67, 6-85, 6-87, 6-89, 6-91
315229-0106	.. SQUARE RING, 61,2X68,2X3,7 MM 2"1/2 FDA	6-67
441679-0000	.. STAIR	2-97
1519417-0000	.STAIR	5-199
1519426-0100	.STAIR	5-191, 5-193, 5-195
295523-0500	.. START-UP KIT	11-35
295778-0600	.. START-UP KIT	11-35
469384-0100	.. START-UP KIT	6-3
469384-0200	.. START-UP KIT	11-35
1317640-0200	.START-UP KIT	11-35
2541886-0100	.START-UP KIT	11-3
591634-0100	.. STATION CHAIN	5-3, 5-5, 5-7
1255535-0200	.STATION CHAIN	5-3, 5-5, 5-7
1317526-0200	.STATION CHAIN	5-3, 5-5, 5-7
567018-0000	.. STEAM HOUSE	1-17, 1-49
2949465-0000	.STEAM PIPE	1-31
2949466-0000	.STEAM PIPE	1-31
2949467-0000	.STEAM PIPE	1-31
90360-0020	.... STEAM TRAP / MK36/51 3/8 INCH	1-9, 1-11
90090-0016	.... STEEL BALL 15MM, RB-15 RS	1-209, 1-211
90090-0005	.... STEEL BALL 3MM, RB-3/G20W	4-35, 4-37, 4-39, 4-41
90090-0008	.... STEEL BALL 7,1MM, RB-7.144/III	2-51, 2-53, 2-55
979946-0000	.. STEEL TUBE	8-17, 8-19
76166-0000	.... STEER PLATE	12-127
74771-0000	.... STEERING	12-119
247349-0000	.. STEERING	1-83, 1-85
272753-0000	.. STEERING	4-65, 4-67, 4-69
1517535-0000	.STEERING	7-35, 7-37
271820-0001	.. STEERING RAIL	1-93, 1-95
271820-0002	.. STEERING RAIL	1-93, 1-95
1360691-0000	.STEERING RAIL	5-45, 5-47
1360692-0000	.STEERING RAIL	5-45, 5-47
1538917-0000	.STEERING RAIL	5-45, 5-47
1538918-0000	.STEERING RAIL	5-45, 5-47
90458-0746	.... STEP MOTOR DRIVE, L50	9-13, 9-15, 9-17, 9-19
2905947-0000	.STERILE SYSTEM TBA/19 HVA	11-9
342706-0130	.. STIFFNER SLEEVE FOR HOSE 6X1	1-33, 1-35, 1-37, 1-107, 1-109, 2-59, 2-61
245221-0000	.. STOP	8-33
442113-0000	.. STOP	12-101
929319-0000	.. STOP	4-49
929320-0000	.. STOP	4-51
929352-0000	.. STOP	4-71, 4-73, 4-79, 4-81
929408-0000	.. STOP	4-71, 4-73
929409-0000	.. STOP	4-79, 4-81
1350957-0000	.STOP	4-49
1350958-0000	.STOP	4-51
1512133-0000	.STOP	5-29, 5-93
1519227-0000	.STOP	4-71, 4-73
1519228-0000	.STOP	4-79, 4-81
2526399-0000	.STOP	2-33
752559-0000	.. STOP PERF 1	4-71, 4-73
752563-0000	.. STOP PERF 1	4-71, 4-73
979758-0000	.. STOP PERF 1	4-71, 4-73
752560-0000	.. STOP PERF 2	4-79, 4-81
752564-0000	.. STOP PERF 2	4-79, 4-81
979759-0000	.. STOP PERF 2	4-79, 4-81
76139-0000	.... STOPPER	12-43
76178-0000	.... STOPPER	12-39
76179-0000	.... STOPPER	12-39

Part No	Description	Page No
76185-0000	STOPPER	12-41
76186-0000	STOPPER	12-41
76207-0000	STOPPER	12-163, 12-165
76597-0000	STOPPER	12-43
272997-0000 ..	STOPPER	5-29, 5-93, 5-109
591427-0000 ..	STOPPER	4-71, 4-73
591428-0000 ..	STOPPER	4-79, 4-81
978184-0000 ..	STOPPER	4-57, 4-59, 4-61, 4-63
1334570-0000 ..	STOPPER	12-45
1334571-0000 ..	STOPPER	12-45
1346000-0000 ..	STOPPER	12-101
1524630-0000 ..	STOPPER	5-137
90030-0092	STRAIGHT CONN., 6-R1/4,EXT. TAPPERED	1-107, 1-109
90030-0089	STRAIGHT CONNECTION	1-29, 1-223
342923-0132 ..	STRAIGHT COUPL.,INT.THREADED 10/8-G1/4"	2-79
342923-0121 ..	STRAIGHT COUPL.,INT.THREADED 8/6-G1/8"	6-29, 6-31
342722-0197 ..	STRAIGHT COUPLING	1-219
342722-0198 ..	STRAIGHT COUPLING	5-101
342722-0199 ..	STRAIGHT COUPLING	7-67
342722-0203 ..	STRAIGHT COUPLING	1-35, 1-37
342770-0107 ..	STRAIGHT COUPLING INT, D=8 MM - G1/8	5-183, 5-185, 5-187
342722-0210 ..	STRAIGHT COUPLING, D=12 MM - G3/8"	6-39
90459-2215	STRAIGHT COUPLING, D=16 MM - G1/2"	6-101, 6-103
90055-0212	STRAIGHT COUPLING, D=6 MM - G1/8"	2-33
342920-0133 ..	STRAIGHT COUPLING, EXT.THREAD 10/8-R3/8	6-101, 6-103
342921-0112 ..	STRAIGHT COUPLING, EXT.THREAD 6/4-6M	5-149, 5-151, 5-183, 5-185, 5-187
342921-0114 ..	STRAIGHT COUPLING, EXT.THREAD 6/4-G1/4	12-17, 12-19, 12-135
342921-0113 ..	STRAIGHT COUPLING, EXT.THREAD 6/4-G1/8	5-49, 5-51, 5-65, 5-109, 6-45, 6-47, 12-17, 12-19
342921-0122 ..	STRAIGHT COUPLING, EXT.THREAD 8/6-G1/4	6-23, 6-97, 6-99
342921-0121 ..	STRAIGHT COUPLING, EXT.THREAD 8/6-G1/8	6-27, 6-45, 6-47
342921-0123 ..	STRAIGHT COUPLING, EXT.THREAD 8/6-G3/8	6-23
342921-0111 ..	STRAIGHT COUPLING,EXT.THREAD 6/4-M5	7-13, 7-19
441800-0000 ..	STRAIGHT FITTING	5-53
1511462-0000 ..	STRAIGHT PIPE	7-67
90030-0109	STRAIGHT PIPE CONN. GE12LR1/271	1-31, 6-75
342920-0123 ..	STRAIHGT COUPLING, EXT.THREAD 8/6-R3/8	6-101, 6-103
257202-0000 ..	STRAINER	6-69
3062160-0000 ..	STRAINER	1-55, 1-57
90458-1960	STRETCHING SCREW, 468-697MM MAX2950KG	11-19
90143-0010	STRIP	2-37
90143-0012	STRIP	2-37
90143-0020	STRIP	6-71
90143-0028	STRIP	5-191, 5-193, 5-195
90143-0062	STRIP	6-61
1511320-0000 ..	STRIP	7-57
1550595-6493 ..	STRIP	5-115, 5-117
2540730-0000 ..	STRIP	7-57
2763303-0000 ..	STRIP	2-19
1511323-0000 ..	STRIP ADHESIVE	7-31
580036-0200 ..	STRIP APPLICATOR	7-3
1511787-0200 ..	STRIP APPLICATOR CABLE INLETS	9-109
90143-0057	STRIP EMKA 1011-05 21X11MM	9-87, 9-89
2576240-0100 ..	STRIP GUIDE	7-35, 7-37
2576243-0100 ..	STRIP GUIDE	7-35, 7-37
580037-0400 ..	STRIP MAGAZINE	7-3
76216-0000	STRUT	12-163, 12-165
491203-0000 ..	STRUT	6-69
77164-0000	STUD SCREW	12-129
1511487-0000 ..	STUD SCREW	5-163, 5-165, 5-167, 5-169, 5-171, 5-173, 5-175, 5-177
1511557-0000 ..	STUD SCREW	12-167
456555-0700 ..	SUCTION PIPE	1-3, 1-5, 1-7
1519401-0000 ..	SUCTION PIPE	1-155
1519402-0000 ..	SUCTION PIPE	1-155
1519403-0000 ..	SUCTION PIPE	1-155
2964439-0000 ..	SUCTION PIPE	1-155
534694-0000 ..	SUCTIONPIPE	12-23
76209-0000	SUPPORT	12-163, 12-165
76211-0000	SUPPORT	12-163, 12-165
76213-0000	SUPPORT	12-163, 12-165
76217-0000	SUPPORT	12-163, 12-165
590215-0000 ..	SUPPORT	12-181
925877-0000 ..	SUPPORT	1-227
926934-0000 ..	SUPPORT	1-29
927081-0000 ..	SUPPORT	1-47
929375-0000 ..	SUPPORT	4-53, 4-55
979254-0000 ..	SUPPORT	1-47
1296905-0000 ..	SUPPORT	12-179
1334800-0000 ..	SUPPORT	12-167
1334801-0000 ..	SUPPORT	12-167
1334802-0000 ..	SUPPORT	12-167
1334840-0000 ..	SUPPORT	12-167
1349092-0000 ..	SUPPORT	6-43
1517699-0000 ..	SUPPORT	9-87, 9-89
1519423-0000 ..	SUPPORT	5-199

Part No	Description	Page No
1519424-0000	.SUPPORT	5-199
1519484-0000	.SUPPORT	1-77, 1-79
1519632-0000	.SUPPORT	5-129
1519765-0001	.SUPPORT	6-11
1519765-0002	.SUPPORT	6-11
1523335-0000	.SUPPORT	1-93, 1-95
1523452-0000	.SUPPORT	9-167
1523453-0000	.SUPPORT	9-167
1539111-0000	.SUPPORT	4-105
1539112-0000	.SUPPORT	4-105
1539600-0000	.SUPPORT	1-47
2511668-0000	.SUPPORT	5-59, 5-61
2523599-0000	.SUPPORT	7-21
2546226-0000	.SUPPORT	5-59, 5-61
2546448-0000	.SUPPORT	1-35, 1-37
2547315-0000	.SUPPORT	1-35, 1-37
2552724-0000	.SUPPORT	5-11, 5-13, 5-15
2566438-0000	.SUPPORT	12-181
2576353-0000	.SUPPORT	5-11, 5-13, 5-15
2598430-0000	.SUPPORT	9-175
2613035-0000	.SUPPORT	2-87, 2-89
2721241-0000	.SUPPORT	1-9, 1-11, 1-49
2790832-0100	.SUPPORT	1-83, 1-85
2913726-0000	.SUPPORT	1-49
2921884-0000	.SUPPORT	9-87, 9-89
2921885-0000	.SUPPORT	9-87, 9-89
2949470-0000	.SUPPORT	12-135
3058552-0000	.SUPPORT	11-3
3159164-0000	.SUPPORT	9-87, 9-89
76461-0000	.... SUPPORT ARM	12-169
2790830-0000	.SUPPORT BAR	1-89
76203-0000	.... SUPPORT LEG	12-163, 12-165
2790831-0000	.SUPPORT PLATE	1-89
1511403-0100	.SUPPORT ROLLER	4-3, 4-5
2612575-0000	.SUPPORT ROLLER	1-125, 1-127
1524648-0000	.SUPPORT TUBE	5-129
1143977-0000	.SUPPORTING ARM	5-109
1498245-0000	.SUPPORTING ARM	5-49, 5-51
90600-7487	.... SURGE PROTECTION DEV., VAL-MS 230/3+1 FM	9-161
2500587-0100	.SUSPENSION ARM	8-31
3024839-0100	.SWING FRAME APC	9-3, 9-5
1538219-0000	.SWITCH BRACKET	7-23, 7-25, 7-27, 7-29
90055-0229	.... T- WITH TAILPIECE 6 MM	2-33
342748-0109	.. T-CONNECTION 12MM	7-67
342748-0100	.. T-CONNECTION 4MM	4-43
90457-0184	.... T-CONNECTION 6 MM 6104 06 00	2-59, 2-61
342748-0102	.. T-CONNECTION 6MM	1-33, 2-33, 2-59, 2-61
342748-0103	.. T-CONNECTION 8MM	2-51, 2-53, 2-55
342946-0112	.. T-COUPLING,UNION 6/4	1-197, 1-199, 1-201, 6-15, 6-17
342946-0122	.. T-COUPLING,UNION 8/6	6-15, 6-17
1539597-0000	.T-PIECE	1-43
1036187-0000	.T-PIPE	1-99
1036194-0000	.T-PIPE	1-75, 1-99
90140-0018	.... T-PIPE, INT. THREAD, 2003-1/4	12-133
90140-0015	.... T-PIPE, INT. THREAD, 2003-1/8	1-35, 1-37, 12-17, 12-19
90140-0010	.... T-PIPE, INT. THREAD, 20031/2	6-29, 6-31, 6-101, 6-103
90140-0023	.... T-PIPE, INT. THREAD, NO. 2070-3/8-3/8	6-101, 6-103
90330-0095	.... T-PIPE, INT. THREAD, R-221-R1/8	1-103, 1-105
1334841-0400	.T.C.S.B UNIT	1-9, 1-11
272547-0000	.. TACK	5-123, 5-125, 5-127, 5-131
751398-0400	.. TANK	6-65
1519389-0000	.TANK	6-75
1523058-0000	.TANK	6-69
90457-0017	.... TANK RET. OUTLET PIPE, NO 8185-0187	6-97, 6-99
90459-2707	.... TANK-12L, A2-18076	6-97, 6-99
90144-0003	.... TAPE	6-107, 11-43
90144-0030	.... TAPE	8-35
90144-0072	.... TAPE SCOTCH VHBS 4945 W=12,7MM	8-11, 8-13, 9-147, 9-163
312503-0221	.. TAPPING SCREW, ISO7049 ST2,9X6,5-C-Z	12-117
450101-0300	.. TEARING DEVICE	8-31
2545249-0000	.TEFLON HOSE	4-35, 4-37, 4-39, 4-41
31723-0000	.... TEFLON STRIP	8-33
90600-3678	.... TEMP. CONTROLLER, KS40-102-00090-049	9-149, 9-151, 9-153
90600-6032	.... TEMPERATURE CONTROLLER, KS50	9-149, 9-151, 9-153
75470-0000	.... TEMPLATE	12-91
75525-0400	.... TEMPLATE	12-27
75545-0000	.... TEMPLATE	12-29, 12-31
75936-0000	.... TEMPLATE	12-85, 12-87
75937-0000	.... TEMPLATE	12-85, 12-87
75938-0000	.... TEMPLATE	12-85, 12-87
75939-0000	.... TEMPLATE	12-85, 12-87
75943-0000	.... TEMPLATE	12-85, 12-87
75944-0000	.... TEMPLATE	12-85, 12-87
76128-0000	.... TEMPLATE	12-27, 12-153

Part No	Description	Page No
76176-0000	TEMPLATE	12-85, 12-87
76180-0000	TEMPLATE	12-159
76181-0000	TEMPLATE	12-159
76307-0001	TEMPLATE	12-29, 12-31
76307-0003	TEMPLATE	12-29, 12-31
76307-0005	TEMPLATE	12-29, 12-31
76307-0006	TEMPLATE	12-29, 12-31
76307-0008	TEMPLATE	12-29, 12-31
76307-0009	TEMPLATE	12-29, 12-31
76307-0010	TEMPLATE	12-29, 12-31
76307-0011	TEMPLATE	12-29, 12-31
76307-0012	TEMPLATE	12-29, 12-31
76307-0013	TEMPLATE	12-29, 12-31
76307-0014	TEMPLATE	12-29, 12-31
76308-0000	TEMPLATE	12-29, 12-31
76398-0000	TEMPLATE	12-27
76447-0200	TEMPLATE	12-159
76462-0000	TEMPLATE	12-169
76467-0000	TEMPLATE	12-27
76499-0000	TEMPLATE	12-159
574442-0000	TEMPLATE	12-29, 12-31
574453-0000	TEMPLATE	12-27
574454-0000	TEMPLATE	12-85, 12-87
574455-0000	TEMPLATE	12-85, 12-87, 12-159
590268-0000	TEMPLATE	12-137
929278-0000	TEMPLATE	12-27
929328-0000	TEMPLATE	12-85, 12-87
929373-0000	TEMPLATE	12-85, 12-87
1255890-0000	TEMPLATE	12-47, 12-49, 12-51, 12-53, 12-55, 12-57
1255929-0000	TEMPLATE	12-47, 12-49, 12-51, 12-53, 12-55, 12-57
1346329-0000	TEMPLATE	12-47, 12-49, 12-51, 12-53, 12-55, 12-57
1346330-0000	TEMPLATE	12-47, 12-49, 12-51, 12-53, 12-55, 12-57
1346332-0000	TEMPLATE	12-63
1346666-0000	TEMPLATE	12-47, 12-49, 12-51, 12-53, 12-55, 12-57
1346669-0000	TEMPLATE	12-69
1346674-0000	TEMPLATE	12-65
1347405-0000	TEMPLATE	12-65
1348362-0000	TEMPLATE	12-59, 12-61
1348364-0000	TEMPLATE	12-63
1348368-0000	TEMPLATE	12-65
1348369-0000	TEMPLATE	12-65
1348371-0000	TEMPLATE	12-69
1348373-0000	TEMPLATE	12-47, 12-49, 12-51, 12-53, 12-55, 12-57
1348378-0000	TEMPLATE	12-47, 12-49, 12-51, 12-53, 12-55, 12-57
1348380-0000	TEMPLATE	12-47, 12-49, 12-51, 12-53, 12-55, 12-57
1348383-0100	TEMPLATE	12-27
1348607-0100	TEMPLATE	12-47, 12-49, 12-51, 12-53, 12-55, 12-57
1348608-0100	TEMPLATE	12-47, 12-49, 12-51, 12-53, 12-55, 12-57
1348609-0100	TEMPLATE	12-47, 12-49, 12-51, 12-53, 12-55, 12-57
1348610-0100	TEMPLATE	12-47, 12-49, 12-51, 12-53, 12-55, 12-57
1348611-0100	TEMPLATE	12-47, 12-49, 12-51, 12-53, 12-55, 12-57
1350155-0000	TEMPLATE	12-67
1350999-0000	TEMPLATE	12-85, 12-87
1512450-0001	TEMPLATE	12-149
1512450-0002	TEMPLATE	12-149
1512450-0003	TEMPLATE	12-149
1512450-0004	TEMPLATE	12-149
1512453-0001	TEMPLATE	12-145
1512453-0002	TEMPLATE	12-145
1512453-0003	TEMPLATE	12-145
1512453-0004	TEMPLATE	12-145
1512453-0006	TEMPLATE	12-145
1512453-0007	TEMPLATE	12-145
1512453-0008	TEMPLATE	12-145
1512453-0009	TEMPLATE	12-145
1512453-0010	TEMPLATE	12-145
1512453-0011	TEMPLATE	12-145
1512514-0000	TEMPLATE	12-59, 12-61
1517517-0000	TEMPLATE	12-143
1524835-0000	TEMPLATE	12-99
1532527-0000	TEMPLATE	12-85, 12-87
2501740-0100	TEMPLATE	12-29, 12-31
2532588-0000	TEMPLATE	12-47, 12-49, 12-51, 12-53, 12-55, 12-57
2532611-0000	TEMPLATE	12-67
2532612-0000	TEMPLATE	12-69
2532613-0000	TEMPLATE	12-63
2532614-0000	TEMPLATE	12-59, 12-61
2552945-0001	TEMPLATE	12-147
2552945-0002	TEMPLATE	12-147
2552945-0003	TEMPLATE	12-147
2552945-0004	TEMPLATE	12-147
2552945-0006	TEMPLATE	12-147
2552945-0007	TEMPLATE	12-147
2552945-0008	TEMPLATE	12-147

Part No	Description	Page No
2552945-0009	.TEMPLATE	12-147
2552945-0010	.TEMPLATE	12-147
2552945-0011	.TEMPLATE	12-147
2761510-0000	.TEMPLATE	12-67
2800345-0001	.TEMPLATE	12-151
2800345-0002	.TEMPLATE	12-151
2800345-0003	.TEMPLATE	12-151
2800345-0004	.TEMPLATE	12-151
2854653-0000	.TEMPLATE	12-91
2914939-0000	.TEMPLATE	12-155
2987325-0000	.TEMPLATE	12-155
2588208-0000	.TEMPLATE BOTTOM NOZZLE	12-29, 12-31
76407-0100	.... TEMPLATE DIVIDED FORMING RING	12-71
76402-0200	.... TEMPLATE DRIVEN BENDING ROLLER	12-71
76187-0000	.... TEMPLATE FILLING TUBE	12-27
76188-0000	.... TEMPLATE FILLING TUBE	12-27
590507-0100	.. TEMPLATE FOR CENTERING RING	12-159
589885-0100	.. TEMPLATE HOUSE/BENDING ROLLER	12-159, 12-181
929379-0100	.. TEMPLATE JAW SYSTEM	12-85, 12-87
589889-0100	.. TEMPLATE LEVELING MACHINE	12-159
76133-0100	.... TEMPLATE LS-ELEMENT	12-27
76595-0100	.... TEMPLATE LS-ELEMENT	12-27
76606-0100	.... TEMPLATE LS-ELEMENT	12-27
590222-0200	.. TEMPLATE LS-ELEMENT	12-27
76409-0100	.... TEMPLATE MOVABLE FORMING RING	12-71
2566433-0100	.TEMPLATE PT19-020V	12-159
76299-0000	.... TEMPLATE SUPPORT ROLLERS	12-85, 12-87
2588207-0000	.TEMPLATE TOP NOZZLE	12-29, 12-31
76592-0100	.... TEMPLATE TUBE FORMING	12-71
76598-0100	.... TEMPLATE TUBE FORMING	12-71
76333-0100	.... TEMPLATE UPPER FORMING CLAMP	12-71
590273-0100	.. TEMPLATE VOLUME CAM	12-159
76301-0100	.... TEMPLATE YOKE	12-85, 12-87
929376-0000	.. TEMPLATE YOKE	12-99
929378-0000	.. TEMPLATE YOKE	12-99
2854631-0000	.TENSION ARM	5-139
2854633-0000	.TENSION ARM	5-139
90458-0220	.... TENSION ROLLER, M40/60-0-M EXCENTRIC	5-49, 5-51, 5-85
37885-0000	.... TENSION SPRING	8-33
441353-0000	.. TENSION SPRING	3-27
1478303-0000	.TENSION SPRING	7-47
90458-1241	.... TENSION SPRING RZ-1221	8-37
90600-1202	.... TENSION SPRING, 3747, SF-DFR 0,75X6X30	3-31
90335-0216	.... TENSION SPRING, 40910, 0,5X5,5X27,7	7-35, 7-37, 7-39, 7-41, 7-61
90335-0041	.... TENSION SPRING, 42350, 2X14X68	8-23, 8-25
491846-0300	.. TENSION SPROCKET	5-3, 5-5, 5-7
1195432-0000	.TENSION SPROCKET	5-159, 5-161
2569884-0000	.TENSION SPROCKET	5-159, 5-161
1511802-0300	.TERMINAL BLOCK	9-13, 9-15, 9-17, 9-19
90459-5253	.... TERMINAL BLOCK WDK 2,5 V	9-37, 9-39, 9-75, 9-77, 9-79, 9-81
90077-0113	.... TERMINAL BLOCK WDK 2.5	5-77, 5-79, 9-75, 9-77
90077-0102	.... TERMINAL BLOCK, 1952.2	5-121, 8-33
90195-0028	.... TERMINAL BLOCK, 6440	1-77, 1-79
90195-0020	.... TERMINAL BLOCK, BK 2CRN, 0624 7200 00	2-41, 6-13
90600-2134	.... TERMINAL DISCONNECATBLE, WTR 2,5/O.TNHE	9-75, 9-77
90458-0292	.... TERMINAL ELEMENT, PSD-S CE-TM SCREW/W	2-81, 2-95
90077-0123	.... TERMINAL FEED THROUGH	1-41
543337-0000	.. TERMINAL LABELS 1-4	9-33
90077-0079	.... TERMINAL PLINTH, AKZ 4	11-25, 11-31, 11-33
353022-0006	.. TERMINAL WNT 2.5 10X3	9-79, 9-81
353022-0003	.. TERMINAL WNT 6 10X3	9-79, 9-81
353021-0302	.. TERMINAL, DLD 2,5/35	5-77, 5-79, 9-71, 9-73, 9-75, 9-77
353021-0132	.. TERMINAL, DLD 2,5/PE	5-77, 5-79, 9-63, 9-65, 9-67, 9-69, 9-71, 9-73, 9-75, 9-77
353021-0301	.. TERMINAL, DLI 2,5/35	5-77, 5-79
353021-0133	.. TERMINAL, MAK 2,5	9-71, 9-73
90326-0052	.... THERMO ELEMENT	1-55, 1-57
90220-0034	.... THERMOC.CABLE, TEX/SITW-20F-KX 2X0,5MM2	2-37, 5-19, 5-21, 5-23, 5-25, 5-27
90220-0059	.... THERMOCOUPLE CABLE, P/PTW-20F-K 2X0,5MM2	1-9, 1-11, 1-43, 1-55, 1-57, 1-69, 1-73, 1-77, 1-79, 1-99, 1-165, 1-167, 9-13, 9-15, 9-17, 9-19, 9-29, 9-149, 9-151, 9-153
90326-0048	.... THERMOCOUPLE, 5110 048-000	1-69, 1-73
90326-0051	.... THERMOCOUPLE, 5110 051-000	1-77, 1-79, 1-99, 1-165, 1-167
90326-0057	.... THERMOCOUPLE, 5110 057-000	1-69
90326-0080	.... THERMOCOUPLE, 5110 080-000	5-19, 5-21, 5-23, 5-25, 5-27, 5-91
90326-0089	.... THERMOCOUPLE, 5110 089-000	1-9, 1-11
90326-0060	.... THERMOCOUPLE, 5110060-000 CR-AL	1-43
90059-0001	.... THERMOSTAT	8-33
90157-0016	.... THREAD LOCKING, LOCTITE 242 50 ML	1-203, 2-37, 3-5, 3-11, 3-13, 3-15, 3-17, 3-23, 3-25, 4-71, 4-73, 4-79, 4-81
90602-4847	.... THREAD LOCKING, LOCTITE 243 50 ML	7-11
90157-0037	.... THREAD SEALANT LOCTITE 542	1-9, 1-11
90157-0034	.... THREAD SEALANT LOCTITE 572 50 ML	2-33
312910-0113	.. THREADED INSERT, FREE RUNNING M5X1D	12-115
90459-6477	.... THREADED INSERTS, BUSHING, M4	9-79, 9-81
2964433-0000	.THROTTLE	1-55, 1-57

Part No	Description	Page No
90235-0844	THROTTLE CHECK VALVE M5, MANUAL, 6MM	2-47, 2-49
90235-0274	THROTTLE CHECK VALVE, G1/8", SCU-604-1/8	1-69, 1-11, 1-73, 1-91, 1-93, 1-95, 1-149, 1-151, 2-33
90235-0280	THROTTLE CHECK VALVE,M5	1-69, 1-197, 1-199, 1-201
209145-0000 ..	THROTTLE SCREW	1-165, 1-167, 6-89, 6-91
490998-0000 ..	THROTTLE SCREW	1-165, 1-167
2832785-0000 .	THROTTLE SCREW	1-165, 1-167
572487-0000 ..	THROTTLING	1-155
2652213-0000 .	THRUST WASHER	5-11, 5-13, 5-15
321130-0180 ..	THRUST WASHER, 12X24X1,5 MM	7-15
321130-0200 ..	THRUST WASHER, 14X26X1,5 MM	5-11, 5-13, 5-15
321130-0260 ..	THRUST WASHER, 20X36X1,5 MM	3-31
321129-0137 ..	THRUST WASHER, 22X38X1,5 MM	3-11, 3-13
77221-0000	TIGHTENING TOOL	12-13
566404-0001 ..	TIMING BELT	3-27
566404-0002 ..	TIMING BELT	3-27
566404-0003 ..	TIMING BELT	3-27
566404-0004 ..	TIMING BELT	3-27
566404-0005 ..	TIMING BELT	3-27
1260548-0000 .	TIMING BELT	5-135, 5-139
1539107-0000 .	TIMING BELT	4-105
90458-1233	TIMING BELT 16T10/340 PU	8-17, 8-19
318163-0128 ..	TIMING BELT 16T5/525 PU	5-139
90417-0076	TIMING BELT 25T10/920 PU	3-5
256176-0000 ..	TIMING BELT PULLEY	3-5
1539108-0000 .	TIMING BELT PULLEY	4-105
90459-6812	TIMING BELT T10X690X16 POLYURETHANE	5-85
90458-2640	TIMING BELT T5X630X16 POLYURETHANE	5-135, 5-139
3040333-0100 .	TINA GROUP	9-87, 9-89
559810-0101 ..	TMCC2 CONTROLLER	9-31
1512640-0000 .	TOE PLATE	2-83, 2-85
1512641-0000 .	TOE PLATE	2-83, 2-85
1512642-0000 .	TOE PLATE	2-83, 2-85
1512643-0000 .	TOE PLATE	2-83, 2-85
1512666-0000 .	TOE PLATE	2-83, 2-85
2512805-0000 .	TOE PLATE	2-83, 2-85
434448-0000 ..	TOOL	12-27
929430-0000 ..	TOOL	12-85, 12-87
1517060-0000 .	TOOL	12-27
1538757-0000 .	TOOL	12-85, 12-87
1549930-0000 .	TOOL	12-33, 12-35, 12-37
2517796-0000 .	TOOL	12-33, 12-35, 12-37
2552941-0100 .	TOOL	12-141
2552943-0100 .	TOOL	12-141
2552944-0100 .	TOOL	12-141
2552946-0100 .	TOOL	12-141
2552947-0200 .	TOOL	12-141, 12-159
2582795-0100 .	TOOL	12-141
2610197-0000 .	TOOL	12-147
2610198-0000 .	TOOL	12-147
2641477-0100 .	TOOL	12-141
2949471-0100 .	TOOL FOR JAW OVERLOAD	12-27
90243-0118	TOOL BOX, NO. ZERO 105X-SI	12-21
456975-0200 ..	TOOL CABINET	12-9
449969-0100 ..	TOOL DISMOUNTING	12-27, 12-159
77099-0300	TOOL KIT	11-3
574945-0000 ..	TOOTHED PULLEY	8-17, 8-19
577741-0000 ..	TOOTHED PULLEY	5-123, 5-125, 5-127, 5-139
751243-0000 ..	TOOTHED PULLEY	3-5
1260318-0000 .	TOOTHED PULLEY	5-123, 5-125, 5-127
1478552-0000 .	TOOTHED PULLEY	5-135, 5-139
1478553-0000 .	TOOTHED PULLEY	5-135
1523324-0000 .	TOOTHED PULLEY	5-139
1539256-0000 .	TOOTHED PULLEY	5-85
1539260-0000 .	TOOTHED PULLEY	5-85
1539301-0000 .	TOOTHED PULLEY	5-163, 5-165, 5-167, 5-169, 5-171, 5-173, 5-175, 5-177
2544965-0000 .	TOOTHED PULLEY	5-85
1499486-0000 .	TOP COVER	7-59
2552701-0000 .	TOP SECTION	2-13, 2-15, 2-29, 2-31
2514018-0000 .	TOP TIE PLATE	2-83, 2-85
90355-0048	TORQUE RIGID COUPLING, 22X22 MM	3-19, 3-21
1549366-0000 .	TORSION SPRING	5-129
456312-0000 ..	TORSION SPRING LEFT	4-39, 4-41
456311-0000 ..	TORSION SPRING RIGHT	4-35, 4-37
579629-0000 ..	TOUCH GUARD	1-213, 1-215, 1-217
581341-0000 ..	TOUCH GUARD	1-45
1348476-0000 .	TOUCH GUARD	1-9, 1-11, 1-49
1348477-0000 .	TOUCH GUARD	1-165, 1-167
1348636-0000 .	TOUCH GUARD	1-9, 1-11, 1-49
1348637-0000 .	TOUCH GUARD	1-165, 1-167
2565515-0000 .	TOUCH GUARD	1-213, 1-215, 1-217
2781214-0000 .	TOUCH GUARD	1-213, 1-215, 1-217
2781215-0000 .	TOUCH GUARD	1-213, 1-215, 1-217
2914845-0000 .	TOUCH GUARD	1-213, 1-215, 1-217
2914846-0000 .	TOUCH GUARD	1-213, 1-215, 1-217

Part No	Description	Page No
2914851-0000	TOUCH GUARD	1-69
2927584-0000	TOUCH GUARD	1-213, 1-215, 1-217
2949463-0000	TOUCH GUARD	1-31
90064-0335	TOUCH GUARD, 704.964.5	9-149, 9-151, 9-153
1511786-0200	TOWER CABLE INLETS	1-173, 1-175, 1-177, 1-179, 1-181, 1-183
1499642-0301	TPIH GENERATOR	9-173
1517678-0200	TPIH GENERATOR	9-3, 9-5
1520972-0000	TPO-BAR	11-3
2912228-0003	TPOP BASIC V 3.2	10-7
3019241-0100	TPOP TBA/19	2-91
572642-0200	TRANSFER	4-3, 4-5
572643-0200	TRANSFER	4-3, 4-5
67379-0114	TRANSFORMER	4-101, 4-103
67379-0202	TRANSFORMER	4-101, 4-103
67379-0204	TRANSFORMER	4-101, 4-103
67379-0264	TRANSFORMER	4-101, 4-103
67379-0265	TRANSFORMER	4-101, 4-103
67380-0208	TRANSFORMER	7-45
90458-0258	TRANSFORMER, 1-PH 100VA SEC 8,3A	9-87, 9-89
90245-0029	TRANSFORMER, 1-PH 6500 VA SEC 130A	9-87, 9-89
90458-1273	TRANSFORMER, OFL-1350	9-87, 9-89
2545132-0000	TRANSITION PIPE	1-43
2530400-0100	TRANSMISSION UNIT	5-3, 5-5, 5-7
3027749-0100	TRANSPORT BOX	12-3
3019230-0000	TRANSPORT BOX ASU	12-5
3019231-0000	TRANSPORT BOX FLIGHT	12-5
3019232-0000	TRANSPORT BOX FLIGHT	12-5
3019229-0000	TRANSPORT BOX PT/19	12-5
3019228-0000	TRANSPORT BOX TBA/19	12-5
1499485-0000	TRANSPORT BRACKET	7-55
3036086-0000	TRANSPORT COVER	11-3
90144-0073	TREBOFLON-TAPE W=13MM	1-33, 1-35, 1-37, 1-103, 1-105, 3-5, 5-49, 5-51, 5-109, 6-73
77093-0200	TRIMMING PARTS	12-3
574447-0000	TRIMMING ROLLER MINUS	12-7
752463-0000	TRIMMING ROLLER MINUS	12-7
752465-0000	TRIMMING ROLLER MINUS	12-7
752467-0000	TRIMMING ROLLER MINUS	12-7
929283-0000	TRIMMING ROLLER MINUS	12-7
574446-0000	TRIMMING ROLLER PLUS	12-7
752462-0000	TRIMMING ROLLER PLUS	12-7
752464-0000	TRIMMING ROLLER PLUS	12-7
752466-0000	TRIMMING ROLLER PLUS	12-7
929282-0000	TRIMMING ROLLER PLUS	12-7
90266-0006	TUBE	2-51, 2-53, 2-55
1523063-0000	TUBE	6-77
2549261-0000	TUBE	1-93, 1-95
2924201-0000	TUBE	1-49
3024353-0000	TUBE	6-15, 6-17
90166-0135	TUBE 10 MM PA BLACK	2-79
90166-0068	TUBE 12 MM PA BLUE	7-67
90166-0143	TUBE 2,5 MM PA TRANSP.	3-11, 3-13, 3-15, 3-17, 4-35, 4-37, 4-39, 4-41, 4-97, 4-99, 4-113, 4-115, 5-17, 5-49, 5-51, 5-89
577782-0000	TUBE 200	1-107, 1-109
577783-0000	TUBE 201	1-107, 1-109
578004-0000	TUBE 211	1-107, 1-109
578022-0000	TUBE 211	1-107, 1-109
578005-0000	TUBE 213	1-107, 1-109
578023-0000	TUBE 213	1-107, 1-109
578013-0000	TUBE 213 AND 211	1-107, 1-109
1524666-0000	TUBE 230	1-107, 1-109
1524667-0000	TUBE 231	1-107, 1-109
577786-0000	TUBE 240	1-107, 1-109
577787-0000	TUBE 241	1-107, 1-109
577785-0000	TUBE 261	1-107, 1-109
90166-0095	TUBE 4 MM PA BLUE (50M)	4-43, 4-57, 4-59, 4-61, 4-63, 5-101, 7-19, 7-67
90166-0109	TUBE 4 MM PA TRANSP.	2-51, 2-53, 2-55, 3-15, 3-17, 4-7, 4-9, 4-11, 4-13, 4-15, 4-17, 4-45, 4-47, 4-113, 4-115, 5-17, 5-49, 5-51, 5-89, 5-109, 5-123, 5-125, 5-127
577791-0000	TUBE 40	1-107, 1-109
1524663-0000	TUBE 55	1-107, 1-109
90166-0119	TUBE 6 MM PA BLACK	1-107, 1-109, 1-197, 1-199, 1-201, 6-15, 6-17
90166-0081	TUBE 6 MM PA BLUE	2-51, 2-53, 2-55, 2-59, 2-61, 7-67
90166-0108	TUBE 6 MM PA TRANSP.	2-51, 2-53, 2-55, 2-59, 2-61, 5-31, 5-33, 5-95, 5-97, 5-99, 6-95, 12-157
90166-0124	TUBE 6 MM PA,TRANSP.	12-17, 12-19
90166-0132	TUBE 6 MM PA,TRANSP.	1-33, 1-35, 1-37, 1-107, 1-109, 1-197, 1-199, 1-201, 1-209, 1-211, 2-87, 2-89
90166-0193	TUBE 6 MM PUR BLUE	7-19
577790-0000	TUBE 70	1-107, 1-109
578020-0000	TUBE 70	1-107, 1-109
90166-0118	TUBE 8 MM PA BLACK	2-51, 2-53, 2-55, 2-59, 2-61, 6-15, 6-17, 6-93
90166-0013	TUBE 8 MM PA BLUE	5-49, 5-51, 5-91, 5-109
90166-0133	TUBE 8 MM PA,TRANSP. (1 PACK=50 M)	3-5
577788-0000	TUBE 80	1-107, 1-109
1524665-0000	TUBE 860	1-107, 1-109
1524664-0000	TUBE 861	1-107, 1-109

Part No	Description	Page No
577541-0000 ..	TUBE 90	1-107, 1-109
577542-0000 ..	TUBE 90	1-107, 1-109
577789-0000 ..	TUBE 90	1-107, 1-109
469781-0500 ..	TUBE FLUSHING DEVICE	1-3, 1-5, 1-7
1511069-0200 .	TUBE FOLDING DEVICE	4-3, 4-5
315400-0010 ..	TUBE PUN-H-12X2-BL	6-15, 6-17, 6-55, 6-101, 6-103
315400-0011 ..	TUBE PUN-H-12X2-NT	9-169, 9-171
315400-0013 ..	TUBE PUN-H-16-2,5-BL	6-101, 6-103
315400-0001 ..	TUBE PUN-H-6X1-BL	1-155, 1-223, 2-33, 5-63, 6-15, 6-17, 6-53
315400-0003 ..	TUBE PUN-H-6X1-SW	5-63
315400-0004 ..	TUBE PUN-H-8X1,25-BL	2-33, 5-19, 5-21, 5-23, 5-25, 5-27, 5-183, 5-185, 5-187, 6-15, 6-17, 6-53
979529-0000 ..	TUBE SUPPORT	5-115, 5-117
90166-0089	TUBE, 6,2 MM PE BLUE	5-183, 5-185, 5-187, 5-189
90166-0090	TUBE, 8,4 MM PE BLUE	5-183, 5-185, 5-187
577784-0000 ..	TUBE260	1-107, 1-109
578019-0000 ..	TUBE40	1-103, 1-105
2743338-0000 .	TUNNEL	2-13, 2-15
2810416-0000 .	TUNNEL	2-29, 2-31
2854649-0000 .	TUNNEL	2-29, 2-31
1511319-0100 .	TUNNEL COVER	7-55
1499484-0100 .	TUNNEL FRAME	7-55
1036713-0000 .	TURN SPRING	5-123, 5-125, 5-127
2733920-0100 .	TURNING DEVICE	2-3, 2-5, 2-7
2745175-0000 .	TURNING DEVICE	2-35
2754791-0100 .	TURNING DEVICE	2-33
2769657-0000 .	TURNING DEVICE	2-35
90237-0175	TURNING HANDLE, 1125-U185-0A	6-5, 6-7
90237-0176	TURNING HANDLE, 1125-U190-A	2-101, 2-103, 9-131, 9-133, 9-163, 9-165
90237-0150	TURNING HANDLE, NO. 1125-U190-0A	8-11, 8-13, 9-131, 9-133, 9-163, 9-165
90217-0206	UNION NUT, 1 1/2 APV, 07-01-376/17	1-159, 1-161
90217-0203	UNION NUT, 1 APV, 07-01-276/17	1-43
90217-0209	UNION NUT, 2 APV, 07-01-426/17	1-9, 1-11
342803-0103 ..	UNION NUT, RD 60-6 (SMS 38)	5-201, 5-203
2826636-0001 .	UPPER FILLING PIPE	1-171
2826636-0002 .	UPPER FILLING PIPE	1-171
2826640-0000 .	UPPER FILLING PIPE	1-171
441307-0300 ..	UPPER TUBE SUPPORT	1-3, 1-5, 1-7
82197-0104	USER MANUAL	11-21
81595-0103	USER MANUAL PLMS ON-LINE	10-9
350003-0007 ..	USH-IN FITTING QS-F-G1/4-8-I	6-37
598775-0000 ..	V-BELT PULLEY	3-9
751742-0004 ..	V-BELT PULLEY	3-5
90071-0027	V-BELT, 3VX450	3-5
315220-0167 ..	V-RING 27X35X10,5 MM V-30S	1-97
315220-0210 ..	V-RING 54X64X13 MM V-60S	5-155, 5-157, 5-159, 5-161
90201-0014	VALVE	6-97, 6-99
90201-0131	VALVE	6-97, 6-99
90201-0132	VALVE	6-97, 6-99
90201-0133	VALVE	6-97, 6-99
90235-0259	VALVE	1-9, 1-11, 1-107, 1-109, 7-67
90270-0347	VALVE	6-29, 6-31
271169-0500 ..	VALVE	1-3, 1-5, 1-7
272337-0600 ..	VALVE	1-3, 1-5, 1-7
534635-0000 ..	VALVE	12-23
534696-0000 ..	VALVE	12-23
565251-0000 ..	VALVE	6-81
90458-1203	VALVE 2X3/2 1X OPEN 1X CLOSED	6-49, 6-51
2814877-0000 .	VALVE BODY	1-43
2889197-0000 .	VALVE BODY (51-38)	1-49
2574348-0000 .	VALVE BRACKET	1-35, 1-37
530590-0000 ..	VALVE CONE	1-75, 1-99
2826439-0000 .	VALVE CONE	1-21
2826442-0000 .	VALVE CONE	1-19, 1-23, 1-51
2898203-0000 .	VALVE CONE	1-19
90201-0457	VALVE CONNECTION, NO. A15-L/R 3/8"/WD	6-97, 6-99
1478717-0300 .	VALVE GROUP	6-15, 6-17
2995654-0100 .	VALVE GROUP	6-15, 6-17
255870-0000 ..	VALVE HOUSING	1-71
534697-0000 ..	VALVE HOUSING	12-23
578031-0000 ..	VALVE HOUSING	1-169
90458-1200	VALVE OPEN IN MID-POSITION 5/3	6-49, 6-51
1349029-0300 .	VALVE PANEL	6-3
2831057-0000 .	VALVE PANEL	11-9
2831058-0000 .	VALVE PANEL	11-9
2831063-0000 .	VALVE PANEL	11-9
2831064-0000 .	VALVE PANEL	11-9
2913550-0100 .	VALVE PANEL	6-29, 6-31
978235-0000 ..	VALVE PLATE	1-35, 1-37
1349094-0300 .	VALVE PLATE	6-15, 6-17
2500201-0000 .	VALVE PLATE	6-45, 6-47
90458-1197	VALVE, 5/2 BISTABLE	6-49, 6-51
90458-1194	VALVE, 5/2 MONOSTABLE	6-49, 6-51, 6-53
90457-0132	VALVE, BUTTERFLY, ZVF1200BSAAOCSF INOX	5-189
90458-1202	VALVES 2X3/2, CLOSED	6-49, 6-51

Part No	Description	Page No
76581-0000	VERTICAL PILLAR	12-161
90347-0004	VIBRATION DAMPER D=30 TH=M8 H=17 H2=21MM	2-97, 6-69
90347-0144	VIBRATION DAMPER, NO. RA 40EM-A	6-67
90459-1060	VIBRATION DAMPER, T15688	2-105, 8-23, 8-25
90243-0319	VOLTAGE SUPPLY UNIT	12-113
1519118-0100 .	VOLUM CURVE PIECE	4-105
1519117-0100 .	VOLUME ADJUSTER	4-3, 4-5
272990-0000 ..	VOLUME BULGE	4-19, 4-21, 4-23, 4-27, 4-29, 4-31
456005-0001 ..	VOLUME BULGE	4-19, 4-21, 4-23, 4-27, 4-29, 4-31
456005-0003 ..	VOLUME BULGE	4-19, 4-21, 4-23, 4-27, 4-29, 4-31
491868-0000 ..	VOLUME BULGE	4-19, 4-21, 4-23, 4-27, 4-29, 4-31
574367-0000 ..	VOLUME BULGE	4-19, 4-21, 4-23, 4-27, 4-29, 4-31
597988-0000 ..	VOLUME BULGE	4-19, 4-21, 4-23, 4-27, 4-29, 4-31
752739-0000 ..	VOLUME BULGE	4-19, 4-21, 4-23, 4-27, 4-29, 4-31
979792-0000 ..	VOLUME BULGE	4-19, 4-21, 4-23, 4-27, 4-29, 4-31
979860-0000 ..	VOLUME BULGE	4-19, 4-21, 4-23, 4-27, 4-29, 4-31
979931-0000 ..	VOLUME BULGE	4-19, 4-21, 4-23, 4-27, 4-29, 4-31
1538756-0000 .	VOLUME BULGE	4-7, 4-9, 4-11, 4-13, 4-15, 4-17
1539120-0000 .	VOLUME BULGE	4-87, 4-89, 4-91
2745194-0000 .	VOLUME BULGE	4-19, 4-21, 4-23, 4-27, 4-29, 4-31
2829701-0000 .	VOLUME BULGE	4-19, 4-21, 4-23, 4-27, 4-29, 4-31
2987303-0000 .	VOLUME BULGE	4-19, 4-21, 4-23, 4-27, 4-29, 4-31
979755-0000 ..	VOLUME BULGE 100	4-19, 4-21, 4-23, 4-27, 4-29, 4-31
577213-0000 ..	VOLUME BULGE 160 ML	4-19, 4-21, 4-23, 4-27, 4-29, 4-31
1538782-0000 .	VOLUME BULGE P48 200	4-49, 4-51
1350959-0000 .	VOLUME BULGE P48 250	4-49, 4-51
929374-0000 ..	VOLUME BULGE P48 330	4-49, 4-51
1490235-0000 .	VOLUME CAM	4-107, 4-109
1490236-0000 .	VOLUME CAM	4-107, 4-109
1490239-0000 .	VOLUME CAM	4-107, 4-109
1490240-0000 .	VOLUME CAM	4-107, 4-109
2506638-0000 .	VOLUME CAM	4-107, 4-109
2506639-0000 .	VOLUME CAM	4-107, 4-109
2506640-0000 .	VOLUME CAM	4-107, 4-109
2506641-0000 .	VOLUME CAM	4-107, 4-109
2506642-0000 .	VOLUME CAM	4-107, 4-109
2506643-0000 .	VOLUME CAM	4-107, 4-109
2506644-0000 .	VOLUME CAM	4-107, 4-109
2506645-0000 .	VOLUME CAM	4-107, 4-109
2810410-0000 .	VOLUME CAM	4-107, 4-109
2810411-0000 .	VOLUME CAM	4-107, 4-109
2810412-0000 .	VOLUME CAM	4-107, 4-109
2810413-0000 .	VOLUME CAM	4-107, 4-109
2810414-0000 .	VOLUME CAM	4-107, 4-109
2810415-0000 .	VOLUME CAM	4-107, 4-109
2987315-0000 .	VOLUME CAM	4-107, 4-109
2987316-0000 .	VOLUME CAM	4-107, 4-109
2829713-0000 .	VOLUME CAM L	4-107, 4-109
979772-0000 ..	VOLUME CAM L 100	4-107, 4-109
582166-0000 ..	VOLUME CAM L 330S	4-107, 4-109
979773-0000 ..	VOLUME CAM L WIDE 100	4-107, 4-109
582167-0000 ..	VOLUME CAM L WIDE 330S	4-107, 4-109
272949-0000 ..	VOLUME CAM LEFT	4-107, 4-109
491436-0000 ..	VOLUME CAM LEFT	4-107, 4-109
1282315-0000 .	VOLUME CAM LEFT	4-107, 4-109
2829714-0000 .	VOLUME CAM R	4-107, 4-109
979774-0000 ..	VOLUME CAM R 100	4-107, 4-109
582164-0000 ..	VOLUME CAM R 330S	4-107, 4-109
979775-0000 ..	VOLUME CAM R WIDE 100	4-107, 4-109
582165-0000 ..	VOLUME CAM R WIDE 330S	4-107, 4-109
272957-0000 ..	VOLUME CAM RIGHT	4-107, 4-109
491434-0000 ..	VOLUME CAM RIGHT	4-107, 4-109
1282316-0000 .	VOLUME CAM RIGHT	4-107, 4-109
1490237-0000 .	VOLUME CAM, WIDE	4-107, 4-109
1490238-0000 .	VOLUME CAM, WIDE	4-107, 4-109
591439-0000 ..	VOLUME FLAP	4-19, 4-21, 4-23, 4-27, 4-29, 4-31
597987-0000 ..	VOLUME FLAP	4-19, 4-21, 4-23, 4-27, 4-29, 4-31
929334-0000 ..	VOLUME FLAP	4-51
929354-0000 ..	VOLUME FLAP	4-49
979859-0000 ..	VOLUME FLAP	4-19, 4-21, 4-23, 4-27, 4-29, 4-31
1350960-0000 .	VOLUME FLAP	4-51
1350961-0000 .	VOLUME FLAP	4-49
1519427-0100 .	VOLUME FLAP	4-3, 4-5
1532981-0000 .	VOLUME FLAP	4-49
1549581-0100 .	VOLUME FLAP	4-3, 4-5
2506673-0000 .	VOLUME FLAP	4-51
2810430-0100 .	VOLUME FLAP	4-3, 4-5
2810431-0100 .	VOLUME FLAP	4-3, 4-5
979751-0000 ..	VOLUME FLAP 100	4-19, 4-21, 4-23, 4-27, 4-29, 4-31
752212-0000 ..	VOLUME FLAP 200 ML	4-19, 4-21, 4-23, 4-27, 4-29, 4-31
752999-0000 ..	VOLUME FLAP 200S	4-19, 4-21, 4-23, 4-27, 4-29, 4-31
978366-0000 ..	VOLUME FLAP 250 ML	4-19, 4-21, 4-23, 4-27, 4-29, 4-31
582163-0000 ..	VOLUME FLAP 330S	4-19, 4-21, 4-23, 4-27, 4-29, 4-31
272986-0001 ..	VOLUME SHIM	4-19, 4-21, 4-23, 4-27, 4-29, 4-31

Part No	Description	Page No
272986-0003 ..	VOLUME SHIM	4-19, 4-21, 4-23, 4-27, 4-29, 4-31
272986-0005 ..	VOLUME SHIM	4-19, 4-21, 4-23, 4-27, 4-29, 4-31
272987-0000 ..	VOLUME SHIM	4-19, 4-21, 4-23, 4-27, 4-29, 4-31
272991-0000 ..	VOLUME SHIM	4-19, 4-21, 4-23, 4-27, 4-29, 4-31
574366-0000 ..	VOLUME SHIM	4-19, 4-21, 4-23, 4-27, 4-29, 4-31
577212-0000 ..	VOLUME SHIM	4-19, 4-21, 4-23, 4-27, 4-29, 4-31
597989-0000 ..	VOLUME SHIM	4-19, 4-21, 4-23, 4-27, 4-29, 4-31
979861-0000 ..	VOLUME SHIM	4-19, 4-21, 4-23, 4-27, 4-29, 4-31
2745192-0000 .	VOLUME SHIM	4-19, 4-21, 4-23, 4-27, 4-29, 4-31
2911353-0000 .	VOLUME SHIM	4-19, 4-21, 4-23, 4-27, 4-29, 4-31
2987305-0000 .	VOLUME SHIM	4-19, 4-21, 4-23, 4-27, 4-29, 4-31
979754-0000 ..	VOLUME SHIM 100	4-19, 4-21, 4-23, 4-27, 4-29, 4-31
272986-0006 ..	VOLUME SHIM 330S	4-19, 4-21, 4-23, 4-27, 4-29, 4-31
256849-0000 ..	VOLUMEFLAP 125 ML	4-19, 4-21, 4-23, 4-27, 4-29, 4-31
577211-0000 ..	VOLUMEFLAP 160 ML	4-19, 4-21, 4-23, 4-27, 4-29, 4-31
574365-0000 ..	VOLUMEFLAP 250S	4-19, 4-21, 4-23, 4-27, 4-29, 4-31
978031-0000 ..	VOLUMEFLAP 284 ML	4-19, 4-21, 4-23, 4-27, 4-29, 4-31
1498769-0000 .	WALL	7-57
2540729-0000 .	WALL	7-57
90001-0033	WALL SOCKET, E1834666	9-13, 9-15, 9-17, 9-19
359705-0003 ..	WARNING SIGN ISO, DANGEROUS CHEMICALS	1-159, 1-161, 6-61
90600-1738	WARNING SIGN ISO, ELECTRIC SHOCK	1-77, 1-79
359705-0001 ..	WARNING SIGN ISO, ENTANGLEMENT	8-17, 8-19, 8-23, 8-25
90194-0075	WARNING SIGN ISO, HOT SURFACE	5-91
359705-0007 ..	WARNING SIGN ISO, HOT SURFACE	5-19, 5-21, 5-23, 5-25, 5-27, 5-91
359710-0001 ..	WARNING SIGN ISO, HOT SURFACE	1-9, 1-11, 1-31, 1-49, 1-55, 1-57, 1-77, 1-79, 1-83, 1-85, 1-205, 1-207, 1-213, 1-215, 1-217, 8-33
359705-0005 ..	WARNING SIGN ISO, MOVING PART	8-11, 8-13, 8-33
359705-0006 ..	WARNING SIGN ISO, MOVING PART	2-13, 2-15, 2-29, 2-31, 2-47, 2-49
359705-0015 ..	WARNING SIGN ISO, RISK OF ELECTRIC SHOCK	1-55, 1-57, 4-101, 4-103, 5-19, 5-21, 5-23, 5-25, 5-27, 5-77, 5-79, 7-17, 7-33, 8-33, 8-45, 9-13, 9-15, 9-17, 9-19, 9-131, 9-133, 9-147, 9-155, 9-157, 9-163, 9-165, 11-25, 11-31, 11-33
90194-0016	WARNING SIGN, RISK OF ELECTRIC SHOCK	1-41, 2-43, 2-45
3036084-0000 .	WARNING TAPE	2-97
1755-0001	WASHER	4-107, 4-109
1755-0002	WASHER	4-107, 4-109
1755-0003	WASHER	4-107, 4-109
2033-0002	WASHER	12-181
2033-0003	WASHER	12-181
2033-0007	WASHER	1-83, 1-85
2033-0008	WASHER	1-143, 1-145, 12-181
2033-0009	WASHER	4-111
2033-0010	WASHER	12-181
2033-0011	WASHER	1-125, 1-127, 1-135, 1-137, 1-139, 1-143, 1-145, 1-149, 1-151, 8-23, 8-25, 12-181
2033-0013	WASHER	7-23, 7-25, 7-27, 7-29, 7-51, 7-53
2033-0014	WASHER	4-111
18542-0000	WASHER	2-57
26490-0000	WASHER	1-125, 1-127
27815-0000	WASHER	4-111
28036-0000	WASHER	1-83, 1-85, 1-193, 1-195, 8-23, 8-25
28037-0000	WASHER	1-125, 1-127
28509-0000	WASHER	4-101, 4-103
31553-0001	WASHER	5-179
32079-0000	WASHER	4-101, 4-103
32644-0000	WASHER	4-87, 4-89, 4-91, 7-45
37897-0000	WASHER	8-35
38087-0000	WASHER	2-83, 2-85
76215-0000	WASHER	12-163, 12-165
250592-0000 ..	WASHER	1-81, 1-97
253107-0000 ..	WASHER	8-23, 8-25
255939-0000 ..	WASHER	2-9, 2-11, 2-25, 2-27
256312-0000 ..	WASHER	1-125, 1-127, 5-137
256409-0000 ..	WASHER	8-23, 8-25
256422-0000 ..	WASHER	3-11, 3-13, 3-15, 3-17
256426-0001 ..	WASHER	3-11, 3-13, 3-15, 3-17
256426-0002 ..	WASHER	3-11, 3-13, 3-15, 3-17
256472-0000 ..	WASHER	3-11, 3-13, 3-15, 3-17
256557-0001 ..	WASHER	4-35, 4-37, 4-39, 4-41
256557-0002 ..	WASHER	4-35, 4-37, 4-39, 4-41
256557-0003 ..	WASHER	4-35, 4-37, 4-39, 4-41
256621-0000 ..	WASHER	4-57, 4-59, 4-61, 4-63
256704-0000 ..	WASHER	4-93, 4-95
256738-0000 ..	WASHER	4-97, 4-99
256814-0000 ..	WASHER	3-31
256882-0000 ..	WASHER	4-87, 4-89, 4-91
256907-0000 ..	WASHER	5-183, 5-185, 5-187
257175-0000 ..	WASHER	1-143, 1-145
263311-0000 ..	WASHER	1-93, 1-95
266737-0000 ..	WASHER	1-71, 1-169, 7-35, 7-37, 7-39, 7-41
267033-0000 ..	WASHER	1-83, 1-85
271435-0000 ..	WASHER	5-201, 5-203
271689-0000 ..	WASHER	3-5
271864-0000 ..	WASHER	1-83, 1-85
272459-0000 ..	WASHER	3-11

Part No	Description	Page No
272461-0000 ..	WASHER	3-11
272549-0000 ..	WASHER	5-123, 5-125, 5-127, 5-131
273429-0000 ..	WASHER	1-69, 1-73
295729-0000 ..	WASHER	5-45, 5-47, 5-103, 5-105, 5-107
440880-0000 ..	WASHER	5-123, 5-125, 5-127
441221-0000 ..	WASHER	2-37
441706-0000 ..	WASHER	4-93, 4-95
441737-0000 ..	WASHER	1-205, 1-207
441739-0000 ..	WASHER	1-205, 1-207
441795-0000 ..	WASHER	5-53, 5-211
491303-0000 ..	WASHER	6-69
491304-0000 ..	WASHER	6-69
491409-0000 ..	WASHER	3-5
530587-0000 ..	WASHER	1-21
530597-0000 ..	WASHER	1-23
530598-0000 ..	WASHER	1-23
536374-0000 ..	WASHER	1-209, 1-211
541165-0000 ..	WASHER	1-25, 1-27
541166-0000 ..	WASHER	1-19
563287-0000 ..	WASHER	6-69
565250-0000 ..	WASHER	6-81
578105-0000 ..	WASHER	5-123, 5-125, 5-127
591434-0000 ..	WASHER	4-71, 4-73, 4-79, 4-81
751018-0000 ..	WASHER	1-73
751019-0000 ..	WASHER	1-69
752681-0000 ..	WASHER	4-71, 4-73, 4-79, 4-81
975924-0000 ..	WASHER	8-11, 8-13
979953-0000 ..	WASHER	1-169
1279701-0000 .	WASHER	5-159, 5-161
1282800-0000 .	WASHER	5-123, 5-125, 5-127
1296779-0000 .	WASHER	5-129
1317228-0000 .	WASHER	5-31, 5-33, 5-95, 5-97, 5-99, 5-101
1334631-0000 .	WASHER	12-45
1334971-0000 .	WASHER	5-139
1350493-0000 .	WASHER	2-25, 2-27
1350712-0000 .	WASHER	5-129
1490407-0000 .	WASHER	1-81
1519377-0000 .	WASHER	4-19, 4-21, 4-23, 4-27, 4-29, 4-31
1523211-0000 .	WASHER	3-9
1523339-0000 .	WASHER	1-93, 1-95
1523340-0000 .	WASHER	1-93, 1-95
1539261-0000 .	WASHER	5-85, 5-163, 5-165, 5-167, 5-169, 5-171, 5-173, 5-175, 5-177
1539950-0000 .	WASHER	5-57
1548141-0000 .	WASHER	1-219
2552731-0000 .	WASHER	5-11, 5-13, 5-15
2927578-0000 .	WASHER	1-209, 1-211
3019246-0000 .	WASHER	3-31
3112808-0000 .	WASHER	1-23
978381-0000 ..	WASHER 56X2MM	1-47
90458-0073	WASHER 6,4/30, H=1,5	2-83, 2-85
315101-0136 ..	WASHER BRB, 4,3/8 H=0,8	3-11, 3-13, 3-15, 3-17, 5-85, 9-13, 9-15, 9-17, 9-19, 9-99, 9-101
315233-0113 ..	WASHER CAPTIVE SEALING G1/2	2-57, 2-79, 12-17, 12-19, 12-23
315233-0110 ..	WASHER CAPTIVE SEALING G1/4	2-77, 2-79, 12-17, 12-19, 12-23, 12-133
315233-0109 ..	WASHER CAPTIVE SEALING G1/8	2-33, 12-17, 12-19
315233-0111 ..	WASHER CAPTIVE SEALING G3/8	6-23, 6-85, 6-87, 6-89, 6-91, 12-17, 12-19
315233-0101 ..	WASHER CAPTIVE SEALING M5(NEW315239-101)	1-51
315401-0153 ..	WASHER FBH6, 1FZB	9-87, 9-89, 9-167, 9-175
315125-0173 ..	WASHER HIGH, TBRSB 10,5X28X6 A4	2-105, 6-15, 6-17, 8-5, 8-15
315125-0146 ..	WASHER HIGH, TBRSB 5.3X15X1 A4	9-31
315125-0153 ..	WASHER HIGH, TBRSB 6,4X22X1,6 A4	1-69, 1-83, 1-85, 1-171, 2-25, 2-27, 2-33, 3-7, 3-31, 8-15, 12-135
315125-0165 ..	WASHER HIGH, TBRSB 8,4X26X5 A4	1-9, 1-11, 1-49, 1-69, 1-73, 3-7, 5-145, 7-35, 7-37, 7-57
315234-0113 ..	WASHER PL.RND.CU.21,3//26 H=1,5	5-181, 6-67
90005-0082	WASHER PLAIN ROUND 4,3(M4)/12,H=1	7-13, 7-15, 7-19, 7-23, 7-25, 7-27, 7-29, 7-35, 7-37, 7-43, 7-45, 7-51, 7-53
90005-0105	WASHER PLAIN ROUND 8,4(M8)/24, H=1,5	6-95
90005-0116	WASHER PLAIN ROUND 8,4(M8)/24, H=2	5-101
90457-0192	WASHER PLAIN ROUND, 6,5/18, H=1,5	9-83, 9-87, 9-89, 9-131, 9-133, 9-135, 9-137, 9-149, 9-151, 9-153, 9-163, 9-165
315105-0173 ..	WASHER PLAIN, 10,5X22X2 A4 BRB	1-31, 2-91, 3-9, 3-29, 4-111, 5-19, 5-21, 5-23, 5-25, 5-27, 5-115, 5-117, 5-149, 5-151, 6-61, 6-67, 6-73, 7-11, 8-23, 8-25, 8-39, 9-109, 12-163, 12-165
315103-0173 ..	WASHER PLAIN, 10,5X22X2 BR NI PL	2-33
315105-0171 ..	WASHER PLAIN, 10X18X2 A4 BRB	1-227, 8-17, 8-19
315105-0178 ..	WASHER PLAIN, 13X24X2,5 A4 BRB	2-83, 2-85, 3-37, 5-57, 5-123, 5-125, 5-127, 5-139, 5-163, 5-165, 5-167, 5-169, 5-171, 5-173, 5-175, 5-177, 5-191, 5-193, 5-195, 5-201, 5-203, 6-61, 7-59, 8-23, 8-25, 12-15
315103-0178 ..	WASHER PLAIN, 13X24X2,5 BR NI PL	3-9
315105-0186 ..	WASHER PLAIN, 17X30X3 A4 BRB	2-83, 2-85, 2-99, 5-201, 5-203, 12-15
315105-0191 ..	WASHER PLAIN, 20X36X3 A4 BRB	8-5
315105-0192 ..	WASHER PLAIN, 21X36X3 A4 BRB	5-113, 12-25
315105-0124 ..	WASHER PLAIN, 3,2X6X0,5 A4 BRB	1-9, 1-11, 1-43, 1-47, 1-49, 1-83, 1-85, 1-165, 1-167, 1-229, 2-41, 3-37, 5-135, 5-139, 6-83, 7-23, 7-25, 7-27, 7-29, 7-31, 7-35, 7-37, 7-39, 7-41, 8-23, ... 8-25, 9-31, 9-103, 9-105, 9-111, 9-113, 9-115, 9-117, 9-119, 9-121, 9-123, 9-125, 9-127, 9-129
315103-0136 ..	WASHER PLAIN, 4,3X8X0,8 BR NI PL	1-155, 12-17, 12-19
315105-0136 ..	WASHER PLAIN, 4,3X9X0,8 A4 BRB	1-9, 1-11, 1-29, 1-35, 1-37, 1-41, 1-49, 1-55, 1-57, 1-73

Part No	Description	Page No
		1-103, 1-105, 1-143, 1-145, 1-223, 2-9, 2-11, 2-25, 2-27, 2-33, 2-47, 2-49, 2-65, 2-67, 2-69, 2-71 2-91, 2-101, 2-103, 2-105, 3-37, 4-43, 4-49, 4-51, 4-87, 4-89, 4-91, 5-17, 5-49, 5-51, 5-109, 5-129 5-139, 5-181, 6-5, 6-7, 6-61, 6-69, 6-85, 6-87, 6-95, 7-15, 7-23, 7-25, 7-27, 7-29, 7-31, 8-11, 8-13 8-17, 8-19, 8-23, 8-25, 8-33, 8-45, 9-13, 9-15, 9-17, 9-19, 9-27, 9-41, 9-43, 9-45, 9-49, 9-51, 9-53 9-55, 9-57, 9-59, 9-87, 9-89, 9-91, 9-93, 9-95, 9-97, 9-103, 9-105, 9-107, 9-135, 9-137, 9-167 ..... 11-23, 11-27, 11-29, 12-181
315105-0146 ..	WASHER PLAIN, 5,3X10X1 A4 BRB	1-9, 1-11, 1-31, 1-35, 1-37, 1-43, 1-47, 1-49, 1-69, 1-77 1-79, 1-83, 1-85, 1-89, 1-93, 1-95, 1-97, 1-101, 1-173, 1-175, 1-177, 1-179, 1-181, 1-183, 1-185 1-187, 1-189, 1-191, 1-197, 1-199, 1-201, 1-209, 1-211, 1-219, 1-223, 2-9, 2-11, 2-13, 2-15, 2-25 2-27, 2-29, 2-31, 2-33, 2-37, 2-41, 2-57, 2-59, 2-61, 2-65, 2-67, 2-69, 2-71, 2-73, 2-87, 2-89, 2-93 2-101, 2-103, 3-31, 3-37, 4-49, 4-51, 4-71, 4-73, 4-79, 4-81, 4-87, 4-89, 4-91, 4-101, 4-103, 5-11 5-13, 5-15, 5-49, 5-51, 5-85, 5-123, 5-125, 5-127, 5-129, 5-135, 5-137, 5-139, 5-155, 5-157, 5-159 5-161, 6-5, 6-7, 6-11, 6-15, 6-17, 6-23, 6-33, 6-37, 6-41, 6-45, 6-47, 6-83, 6-85, 6-87, 7-23, 7-25 7-27, 7-29, 7-31, 7-35, 7-37, 7-39, 7-41, 7-43, 7-45, 7-49, 7-51, 7-53, 7-59, 7-61, 8-11, 8-13, 8-17 8-19, 8-21, 8-23, 8-25, 8-27, 8-41, 9-13, 9-15, 9-17, 9-19, 9-23, 9-29, 9-37, 9-39, 9-47, 9-61, 9-63 9-65, 9-67, 9-69, 9-71, 9-73, 9-75, 9-77, 9-79, 9-81, 9-83, 9-85, 9-87, 9-89, 9-109, 9-111, 9-113 9-115, 9-117, 9-119, 9-121, 9-123, 9-125, 9-127, 9-129, 9-139, 9-141, 9-143, 9-159, 9-161, 9-171 ..... 9-173, 11-23, 11-27, 11-29, 12-17, 12-19, 12-65, 12-167, 12-173, 12-177
315103-0146 ..	WASHER PLAIN, 5,3X10X1 BR NI PL	..... 5-63, 5-201, 5-203
315105-0153 ..	WASHER PLAIN, 6,4X12X1,5 A4 BRB	1-29, 1-31, 1-35, 1-37, 1-45, 1-47, 1-49, 1-55, 1-57, 1-67 1-71, 1-73, 1-81, 1-83, 1-85, 1-91, 1-93, 1-95, 1-97, 1-103, 1-105, 1-149, 1-151, 1-155, 1-159 1-161, 1-165, 1-167, 1-169, 1-173, 1-175, 1-177, 1-179, 1-181, 1-183, 1-193, 1-195, 1-203, 1-209 1-211, 1-213, 1-215, 1-217, 1-219, 2-9, 2-11, 2-13, 2-15, 2-23, 2-25, 2-27, 2-29, 2-31, 2-33, 2-35 2-37, 2-43, 2-45, 2-47, 2-49, 2-57, 2-59, 2-61, 2-79, 2-81, 2-83, 2-85, 2-87, 2-89, 2-95, 2-97, 2-105 3-29, 3-31, 4-35, 4-37, 4-39, 4-41, 4-43, 4-53, 4-55, 4-57, 4-59, 4-61, 4-63, 4-71, 4-73, 4-79, 4-81 4-97, 4-99, 4-105, 4-111, 5-11, 5-13, 5-15, 5-19, 5-21, 5-23, 5-25, 5-27, 5-29, 5-31, 5-33, 5-35 5-37, 5-39, 5-41, 5-43, 5-45, 5-47, 5-49, 5-51, 5-55, 5-57, 5-59, 5-61, 5-81, 5-83, 5-89, 5-91, 5-93 5-95, 5-97, 5-99, 5-103, 5-105, 5-107, 5-109, 5-111, 5-115, 5-117, 5-129, 5-135, 5-137, 5-139 5-145, 5-149, 5-151, 5-153, 5-183, 5-185, 5-187, 5-191, 5-193, 5-195, 5-201, 5-203, 5-207, 5-209 5-213, 6-5, 6-7, 6-11, 6-13, 6-15, 6-17, 6-27, 6-43, 6-45, 6-47, 6-55, 6-59, 6-61, 6-69, 6-73, 6-77 6-79, 6-85, 6-87, 6-95, 6-97, 6-99, 6-101, 6-103, 6-105, 7-9, 7-13, 7-15, 7-23, 7-25, 7-27, 7-29 7-33, 7-35, 7-37, 7-43, 7-45, 7-47, 7-49, 7-51, 7-53, 7-59, 7-61, 8-11, 8-13, 8-17, 8-19, 8-23, 8-25 8-29, 8-33, 8-45, 9-13, 9-15, 9-17, 9-19, 9-83, 9-87, 9-89, 9-109, 9-131, 9-133, 9-135, 9-137, 9-147 9-149, 9-151, 9-153, 9-159, 9-163, 9-165, 9-167, 12-17, 12-19, 12-23, 12-59, 12-61, 12-65, 12-67 ..... 12-69, 12-93, 12-143, 12-167, 12-171, 12-173, 12-175, 12-177, 12-181
315103-0153 ..	WASHER PLAIN, 6,4X12X1,5 BR NI PL	..... 1-125, 1-127
315105-0156 ..	WASHER PLAIN, 6,7X14X1,5 A4 BRB	..... 5-83, 7-47, 7-49
315105-0165 ..	WASHER PLAIN, 8,4X16X1,6 A4 BRB	1-9, 1-11, 1-31, 1-35, 1-37, 1-55, 1-57, 1-69, 1-77, 1-79 1-89, 1-125, 1-127, 1-143, 1-145, 1-149, 1-151, 1-155, 1-213, 1-215, 1-217, 2-9, 2-11, 2-13, 2-15 2-25, 2-27, 2-39, 2-73, 2-75, 2-97, 2-105, 3-9, 3-31, 4-35, 4-37, 4-39, 4-41, 4-57, 4-59, 4-61, 4-63 4-93, 4-95, 4-97, 4-99, 4-105, 4-107, 4-109, 5-11, 5-13, 5-15, 5-19, 5-21, 5-23, 5-25, 5-27, 5-35 5-37, 5-39, 5-41, 5-43, 5-59, 5-61, 5-69, 5-71, 5-81, 5-85, 5-89, 5-95, 5-97, 5-99, 5-119, 5-131 5-135, 5-139, 5-145, 5-147, 5-149, 5-151, 5-191, 5-193, 5-195, 5-197, 5-199, 5-201, 5-203, 5-215 6-15, 6-17, 6-63, 6-69, 6-89, 6-91, 6-97, 6-99, 7-15, 7-35, 7-37, 7-39, 7-41, 7-47, 7-51, 7-53, 7-57 7-59, 8-9, 8-11, 8-13, 8-15, 8-17, 8-19, 8-37, 8-41, 12-15, 12-33, 12-35, 12-37, 12-63, 12-91 ..... 12-93, 12-99, 12-145, 12-175
315101-0173 ..	WASHER PLAIN, BRB, 10,5/22 H=2	..... 3-11, 3-13, 3-15, 3-17, 3-23, 3-25, 11-5
315101-0178 ..	WASHER PLAIN, BRB, 13/24 H=2	 5-181
315101-0186 ..	WASHER PLAIN, BRB, 17/30 H=3	..... 3-11, 3-13, 3-15, 3-17
315101-0146 ..	WASHER PLAIN, BRB, 5,3/10 H=2	1-51, 2-53, 2-55, 3-15, 3-17, 3-23, 3-25, 3-27, 8-37, 9-135, 9-137
315101-0153 ..	WASHER PLAIN, BRB, 6,4/12 H=1,5	2-59, 2-61, 3-5, 3-11, 3-13, 3-15, 3-17, 3-33, 3-35, 7-21 ..... 8-43, 9-175, 12-113
315101-0165 ..	WASHER PLAIN, BRB, 8,4/16 H=1,5	..... 3-11, 3-13
315106-0124 ..	WASHER PLAIN, M3 ISO7089-3-200 HV A4	..... 7-35, 7-37
315106-0136 ..	WASHER PLAIN, M4 ISO7089-4-200 HV A4	..... 1-173, 1-175, 1-177, 1-179, 1-181, 1-183
315106-0146 ..	WASHER PLAIN, M5 ISO7089-5-200 HV A4	..... 1-55, 1-57, 5-65, 8-23, 8-25
315106-0153 ..	WASHER PLAIN, M6 ISO7089-6-200 HV A4	..... 1-55, 1-57, 1-155, 5-63, 5-65, 6-53, 8-23, 8-25
90005-0060	WASHER PLAIN, RBS 6,4/M6)/18,H=1,5	1-213, 1-215, 1-217, 2-9, 2-11, 4-71, 4-73, 4-79, 4-81
315111-0173 ..	WASHER PLAIN, TBRB 10,5/22 H=4	..... 3-5, 3-11, 3-13, 3-15, 3-17
315115-0173 ..	WASHER PLAIN, TBRB 10,5/22 H=4	..... 1-83, 1-85, 12-25
315111-0178 ..	WASHER PLAIN, TBRB 13/24 H=4	 3-5
315115-0178 ..	WASHER PLAIN, TBRB 13/24 H=4	..... 1-143, 1-145, 1-149, 1-151, 8-5
315111-0186 ..	WASHER PLAIN, TBRB 17/30 H=6	..... 5-159, 5-161
315115-0153 ..	WASHER PLAIN, TBRB 6,4/12 H=3	1-83, 1-85, 1-91, 1-209, 1-211, 4-7, 4-9, 4-11, 4-13, 4-15 ..... 4-17, 4-35, 4-37, 4-39, 4-41, 4-45, 4-47, 4-71, 4-73, 4-79, 4-81, 4-93, 4-95, 4-113, 4-115, 7-61
315111-0165 ..	WASHER PLAIN, TBRB 8,4/16 H=3	..... 5-49, 5-51, 5-109
315115-0165 ..	WASHER PLAIN, TBRB 8,4/16 H=3	1-83, 1-85, 1-97, 1-125, 1-127, 1-135, 1-137, 1-139, 1-149 1-151, 1-209, 1-211, 1-225, 2-9, 2-11, 2-25, 2-27, 4-57, 4-59, 4-61, 4-63, 4-111, 5-91, 6-75 ..... 12-129, 12-139
315121-0173 ..	WASHER PLAIN, TBRSB 10,5/28 H=6	..... 3-13, 3-33, 3-35
315121-0178 ..	WASHER PLAIN, TBRSB 13/36 H=6	..... 3-5, 3-29
315121-0153 ..	WASHER PLAIN, TBRSB 6,4/22 H=4	 3-5
315121-0165 ..	WASHER PLAIN, TBRSB 8,4/26 H=5	..... 12-39, 12-41
315237-0109 ..	WASHER,PL.RND.AL.10/14,H=1,5	..... 4-7, 4-9, 4-11, 4-13, 4-15, 4-17, 4-45, 4-47
315237-0110 ..	WASHER,PL.RND.AL.13,5/18,H=1,5	..... 1-35, 1-37, 4-53, 4-55
315237-0108 ..	WASHER,PL.RND.AL.5,2/8,H=0,5	..... 4-45, 4-47
315237-0106 ..	WASHER,PL.RND.AL.6/10,H=1	..... 4-7, 4-9, 4-11, 4-13, 4-15, 4-17, 4-35, 4-37, 4-39, 4-41
315237-0107 ..	WASHER,PL.RND.AL.8/14,H=1	..... 4-35, 4-37, 4-39, 4-41
315234-0109 ..	WASHER,PL.RND.CU.10,3/13,5 H=1,0	1-9, 1-11, 1-33, 1-55, 1-57, 1-69, 1-73, 1-77, 1-79, 2-51 ..... 2-53, 2-55, 4-35, 4-37, 4-39, 4-41, 6-97, 6-99
90005-0047	WASHER,PL.RND.CU.12,2/ H=1,5	..... 4-105, 4-107, 4-109, 5-123, 5-125, 5-127
315234-0110 ..	WASHER,PL.RND.CU.13,5/18 H=1,5	 5-181

Part No	Description	Page No
315234-0111 ..	WASHER,PL.RND.CU.17,5//21 H=1,5	6-97, 6-99
90005-0048	WASHER,PL.RND.CU.18,2/23,9 H=1,5	5-109
90005-0052	WASHER,PL.RND.CU.8/18 H=2	4-53, 4-55
979026-0300 ..	WATER CIRCULATION	6-65
580993-0000 ..	WATER DIAGRAM	6-15, 6-17
2569978-0000 .	WATER DIAGRAM	11-9
476859-0300 ..	WEAC-VALVE	1-165, 1-167
90091-0169	WEAR RING 12X15X3,2 MM	4-7, 4-9, 4-11, 4-13, 4-15, 4-17, 4-45, 4-47
90091-0162	WEAR RING 16X19X3,2 MM	4-35, 4-37, 4-39, 4-41
90091-0366	WEAR RING 18X23X3,9 MM	4-53, 4-55
90091-0238	WEAR RING 20X22X10 MM	1-19, 1-21, 1-23, 1-51
90091-0170	WEAR RING 25X30X4,2 MM	4-35, 4-37, 4-39, 4-41
1517065-0100 .	WEB GUIDE	7-55
2524476-0100 .	WEB GUIDE	7-35, 7-37
979555-0000 ..	WEB TENSION ROLLER	8-17, 8-19
1499477-0100 .	WEB TUNNEL	7-3
297495-0001 ..	WEDGE	5-135, 5-139
273965-0001 ..	WEIGHT	6-71
534695-0000 ..	WEIGHT	12-23
1511003-0000 .	WEIGHT	7-49
3024825-0000 .	WELDED CABINET	9-87, 9-89
3040331-0000 .	WELDED CABINET	9-87, 9-89
90603-9953	WHEEL	11-13
90604-1453	WHEEL	11-13
255986-0000 ..	WHEEL	1-83, 1-85
540719-0000 ..	WHEEL	8-27
578486-0000 ..	WHEEL	1-55, 1-57
1140840-0000 .	WHEEL	12-15
2555116-0000 .	WHEEL	8-17, 8-19
90191-0047	WHEEL, NO.798 821	12-25
257231-0000 ..	WINDOW	2-73, 2-75
1511813-0000 .	WINDOW	9-147
1517665-0000 .	WINDOW	9-163
312715-0116 ..	WING NUT DIN 315 A2 MVM-K M6	12-171, 12-177
312715-0118 ..	WING NUT DIN 315 A2 MVM-K M8	12-91
1144059-0000 .	WIRE	5-19, 5-21, 5-23, 5-25, 5-27, 5-91
351160-0102 ..	WIRE AWM 1X0,75 MM2 DARKBLUE	1-41, 9-7, 9-9, 9-11
351166-0102 ..	WIRE AWM 1X0,75 MM2 ORANGE	9-7, 9-9, 9-11
351162-0102 ..	WIRE AWM 1X0,75 MM2 YELLOW-GREEN	6-83
351164-0104 ..	WIRE AWM 1X1,5 MM2 BLACK	9-7, 9-9, 9-11
351161-0104 ..	WIRE AWM 1X1,5 MM2 LIGHTBLUE	9-7, 9-9, 9-11
351162-0104 ..	WIRE AWM 1X1,5 MM2 YELLOW-GREEN	9-7, 9-9, 9-11
351161-0109 ..	WIRE AWM 1X16 MM2 LIGHTBLUE	9-7, 9-9, 9-11
351162-0109 ..	WIRE AWM 1X16 MM2 YELLOW-GREEN	6-61, 9-7, 9-9, 9-11
351164-0105 ..	WIRE AWM 1X2,5 MM2 BLACK	9-7, 9-9, 9-11
351160-0105 ..	WIRE AWM 1X2,5 MM2 DARKBLUE	9-7, 9-9, 9-11
351161-0105 ..	WIRE AWM 1X2,5 MM2 LIGHTBLUE	9-7, 9-9, 9-11
351162-0105 ..	WIRE AWM 1X2,5 MM2 YELLOW-GREEN	9-7, 9-9, 9-11
351164-0110 ..	WIRE AWM 1X25 MM2 BLACK	9-7, 9-9, 9-11
351161-0110 ..	WIRE AWM 1X25 MM2 LIGHTBLUE	9-7, 9-9, 9-11
351164-0111 ..	WIRE AWM 1X35 MM2 BLACK	9-7, 9-9, 9-11
351164-0106 ..	WIRE AWM 1X4 MM2 BLACK	9-7, 9-9, 9-11
351161-0106 ..	WIRE AWM 1X4 MM2 LIGHTBLUE	9-7, 9-9, 9-11
351162-0106 ..	WIRE AWM 1X4 MM2 YELLOW-GREEN	2-37, 2-93, 6-45, 6-47, 9-7, 9-9, 9-11
351164-0107 ..	WIRE AWM 1X6 MM2 BLACK	9-7, 9-9, 9-11
351160-0107 ..	WIRE AWM 1X6 MM2 DARKBLUE	9-7, 9-9, 9-11
351163-0107 ..	WIRE AWM 1X6 MM2 RED	9-7, 9-9, 9-11
351162-0107 ..	WIRE AWM 1X6 MM2 YELLOW-GREEN	9-7, 9-9, 9-11
359000-0201 ..	WIRE MARKING, YELLOW, PA02/3"1"	11-25, 11-31, 11-33
359000-0204 ..	WIRE MARKING, YELLOW, PA02/3"4"	11-25, 11-31, 11-33
359000-0722 ..	WIRE MARKING, YELLOW, PA1/3"W"	6-15, 6-17
359000-0400 ..	WIRE MARKING, YELLOW, PA2/4"0"	1-33, 1-35, 1-37, 1-107, 1-109, 1-155, 1-197, 1-199, 1-201, 2-51, 2-53, 2-55, 5-183, 5-185, 5-187, 6-15, 6-17, 7-67
359000-0401 ..	WIRE MARKING, YELLOW, PA2/4"1"	1-33, 1-35, 1-37, 1-107, 1-109, 1-155, 1-197, 1-199, 1-201, 2-51, 2-53, 2-55, 5-183, 5-185, 5-187, 6-15, 6-17, 7-67
359000-0402 ..	WIRE MARKING, YELLOW, PA2/4"2"	1-107, 1-109, 1-155, 1-197, 1-199, 1-201, 2-51, 2-53, 2-55, 5-183, 5-185, 5-187, 6-15, 6-17, 7-67
359000-0403 ..	WIRE MARKING, YELLOW, PA2/4"3"	1-35, 1-37, 1-107, 1-109, 1-155, 1-197, 1-199, 1-201, 2-33, 2-51, 2-53, 2-55, 5-183, 5-185, 5-187, 6-15, 6-17
359000-0404 ..	WIRE MARKING, YELLOW, PA2/4"4"	1-35, 1-37, 1-107, 1-109, 5-183, 5-185, 5-187, 6-15, 6-17, 7-67
359000-0405 ..	WIRE MARKING, YELLOW, PA2/4"5"	1-33, 1-35, 1-37, 1-107, 1-109, 2-51, 2-53, 2-55, 6-15, 6-17, 7-67
359000-0406 ..	WIRE MARKING, YELLOW, PA2/4"6"	1-35, 1-37, 1-107, 1-109, 2-51, 2-53, 2-55, 6-15, 6-17
359000-0407 ..	WIRE MARKING, YELLOW, PA2/4"7"	1-35, 1-37, 1-107, 1-109, 2-51, 2-53, 2-55, 5-183, 5-185, 5-187, 6-15, 6-17
359000-0408 ..	WIRE MARKING, YELLOW, PA2/4"8"	1-107, 1-109, 6-15, 6-17
359000-0409 ..	WIRE MARKING, YELLOW, PA2/4"9"	1-107, 1-109, 1-197, 1-199, 1-201, 5-183, 5-185, 5-187, 6-15, 6-17
359000-0771 ..	WIRE MARKING, YELLOW, PA2/4"V"	1-107, 1-109, 1-197, 1-199, 1-201, 2-51, 2-53, 2-55, 5-183, 5-185, 5-187, 6-15, 6-17
359000-0100 ..	WIRE MARKING, YELLOW, PY01/3"0"	11-21
359000-0101 ..	WIRE MARKING, YELLOW, PY01/3"1"	11-21
359000-0102 ..	WIRE MARKING, YELLOW, PY01/3"2"	11-21
359000-0103 ..	WIRE MARKING, YELLOW, PY01/3"3"	11-21

Tetra Pak

SPC
Spare Parts Catalogue

Pos	Part No	Description	Page No
A			
A002	90459-2562	SERVO AMP. ULTRA 5000, 2098-IPD-020	9-13, 9-15, 9-17, 9-19
A005	67347-0101	CARD BRAKEREG.MAGN.POWDER BRAKE	9-31
A005:1	67372-0101	BACKPLANE 8TE(32 POLE)	9-31
A006	67347-0101	CARD BRAKEREG.MAGN.POWDER BRAKE	9-31
A006.1	67372-0101	BACKPLANE 8TE(32 POLE)	9-31
A012	90458-1300	2 AXIS DOCKING STATION, D2/PLC	9-13, 9-15, 9-17, 9-19
A013	90458-0746	STEP MOTOR DRIVE, L50	9-13, 9-15, 9-17, 9-19
A014	90458-0746	STEP MOTOR DRIVE, L50	9-13, 9-15, 9-17, 9-19
A015	90458-1300	2 AXIS DOCKING STATION, D2/PLC	9-13, 9-15, 9-17, 9-19
A016	90458-0746	STEP MOTOR DRIVE, L50	9-13, 9-15, 9-17, 9-19
A017	90458-0746	STEP MOTOR DRIVE, L50	9-13, 9-15, 9-17, 9-19
A018	90458-1300	2 AXIS DOCKING STATION, D2/PLC	9-13, 9-15, 9-17, 9-19
A019	90458-0746	STEP MOTOR DRIVE, L50	9-13, 9-15, 9-17, 9-19
M.A002	90459-1852	SHUT OFF VALVE, MS6-EM1-1/2	6-39
M.A024	90459-5627	CONNECTION, TINA 1-A	1-173, 1-175, 1-177, 1-179, 1-181, 1-183
M.A029	90459-5627	CONNECTION, TINA 1-A	8-23
M.A028	90459-5627	CONNECTION, TINA 1-A	8-23
M.A029	90459-5627	CONNECTION, TINA 1-A	8-25
M.A028	90459-5627	CONNECTION, TINA 1-A	8-25
C.A014	90459-5627	CONNECTION, TINA 1-A	9-91, 9-93
C.A203	90459-5627	CONNECTION, TINA 1-A	9-99, 9-101
M.A102	90601-1168	SOCKET CONNECTOR, NECA-S1G9-P9-MP3	6-15, 6-17
M.A101	90601-1168	SOCKET CONNECTOR, NECA-S1G9-P9-MP3	6-39
A100	90031-0051	BASEPLATE, 10-SLOT	9-41
A101	90031-0053	BASEPLATE 10 SLOT EXP.	9-43
A102	90459-4233	DEVICENET MASTER MODULE	9-41
A103	90031-0057	PLC, DIGITAL INPUT MODULE	9-41
A104	90031-0057	PLC, DIGITAL INPUT MODULE	9-41
A105	90031-0057	PLC, DIGITAL INPUT MODULE	9-41
A106	90031-0058	PLC, DIGITAL INPUT MODULE	9-41
A107	90031-0059	PLC, DIGITAL OUTPUT MODULE	9-41
A108	90031-0062	PLC, ANALOG OUTPUT MODULE 8PT/CURR/VOLT	9-41
A109	90031-0063	PLC,ANALOG COMBO MODULE,IN-4PT/OUT-2PT	9-41
A111	90031-0057	PLC, DIGITAL INPUT MODULE	9-43
A112	90031-0057	PLC, DIGITAL INPUT MODULE	9-43
A113	90031-0057	PLC, DIGITAL INPUT MODULE	9-43
A114	90031-0059	PLC, DIGITAL OUTPUT MODULE	9-43
A115	90031-0059	PLC, DIGITAL OUTPUT MODULE	9-43
A116	90031-0059	PLC, DIGITAL OUTPUT MODULE	9-43
A117	90031-0059	PLC, DIGITAL OUTPUT MODULE	9-43
A118	90031-0059	PLC, DIGITAL OUTPUT MODULE	9-43
A119	90031-0059	PLC, DIGITAL OUTPUT MODULE	9-43
A120	90031-0059	PLC, DIGITAL OUTPUT MODULE	9-43
A121	90031-0059	PLC, DIGITAL OUTPUT MODULE	9-45
A122	90031-0059	PLC, DIGITAL OUTPUT MODULE	9-45
A123	90031-0059	PLC, DIGITAL OUTPUT MODULE	9-45
A124	90031-0059	PLC, DIGITAL OUTPUT MODULE	9-45
A125	90031-0057	PLC, DIGITAL INPUT MODULE	9-45
A126	90031-0057	PLC, DIGITAL INPUT MODULE	9-45
A127	90031-0057	PLC, DIGITAL INPUT MODULE	9-45
A128	90031-0057	PLC, DIGITAL INPUT MODULE	9-45
A135	90031-0053	BASEPLATE 10 SLOT EXP.	9-45
A142	90459-5628	CONNECTION, TINA 2-A	9-13, 9-15, 9-17, 9-19
A200	90600-6032	TEMPERATURE CONTROLLER, KS50	9-149, 9-151, 9-153
A200.1	359241-0123	SIGN: " TEMP. PRESTERILIZATION VALVE"	9-149, 9-151, 9-153
A201	90600-6032	TEMPERATURE CONTROLLER, KS50	9-149, 9-151, 9-153
A201.1	359241-0141	SIGN: WATER BATH	9-149, 9-151, 9-153
A202	90600-6032	TEMPERATURE CONTROLLER, KS50	9-149, 9-151, 9-153
A202.1	359241-0131	SIGN: TEMP. LS	9-149, 9-151, 9-153
A203	90600-6032	TEMPERATURE CONTROLLER, KS50	9-149, 9-151, 9-153
A203.1	359241-0130	SIGN: TEMP. AIR SUPER HEATER	9-149, 9-151, 9-153
A204	90600-6032	TEMPERATURE CONTROLLER, KS50	9-149, 9-151, 9-153
A204.1	359241-0126	SIGN: " TEMP. AIR KNIFE"	9-149, 9-151, 9-153
A205	90600-6032	TEMPERATURE CONTROLLER, KS50	9-149, 9-151, 9-153
A205.1	359241-0121	SIGN: " STEAM"	9-149, 9-151, 9-153
A206	90600-6032	TEMPERATURE CONTROLLER, KS50	9-149, 9-151, 9-153
A206.1	359241-0125	SIGN: " TEMP. PEROXIDE BATH"	9-149, 9-151, 9-153
A209	90600-6032	TEMPERATURE CONTROLLER, KS50	9-149, 9-151, 9-153
A209.1	359241-0439	SIGN"PATCH SEALER"	9-149, 9-151, 9-153
A210	90600-6032	TEMPERATURE CONTROLLER, KS50	9-149, 9-151, 9-153
A210.1	359241-0460	SIGN "PATCH SEALER 2"	9-149, 9-151, 9-153
A211	90600-6032	TEMPERATURE CONTROLLER, KS50	9-149, 9-151, 9-153
A211.1	359241-0444	SIGN"TAB RESEAL"	9-149, 9-151, 9-153
A212	90410-0341	CASSETTE FOR TEMP. REGULATOR 90410-0044	9-149, 9-151, 9-153
A212	90600-6032	TEMPERATURE CONTROLLER, KS50	9-149, 9-151, 9-153
A212.1	359240-0001	SIGN, NOT ENGRAVED	9-149, 9-151, 9-153
A212.1	359241-0338	SIGN: " FLAP HEATING TOP LEFT"	9-149, 9-151, 9-153
A213	90410-0341	CASSETTE FOR TEMP. REGULATOR 90410-0044	9-149, 9-151, 9-153
A213	90600-6032	TEMPERATURE CONTROLLER, KS50	9-149, 9-151, 9-153
A213.1	359240-0001	SIGN, NOT ENGRAVED	9-149, 9-151, 9-153
A213.1	359241-0337	SIGN: " FLAP HEATING TOP RIGHT"	9-149, 9-151, 9-153
A214	90600-6032	TEMPERATURE CONTROLLER, KS50	9-149, 9-151, 9-153

Pos	Part No	Description	Page No
A			
A214.1	359241-0340	SIGN: " FLAP HEATING BOTTOM LEFT"	9-149, 9-151, 9-153
A215	90600-6032	TEMPERATURE CONTROLLER, KS50	9-149, 9-151, 9-153
A215.1	359241-0339	SIGN: " FLAP HEATING BOTTOM RIGHT"	9-149, 9-151, 9-153
A216	90600-6032	TEMPERATURE CONTROLLER, KS50	9-149, 9-151, 9-153
A216.1	359241-0465	SIGN"PRE-PATCH SEALER"	9-149, 9-151, 9-153
A217	90600-6032	TEMPERATURE CONTROLLER, KS50	9-149, 9-151, 9-153
A217.1	90457-0058	SIGN, LS SHORT STOP	9-149, 9-151, 9-153
A300	90458-2580	LEVEL CONTROL RELAY, RM4-LA32M	9-37, 9-39
A301	90458-2580	LEVEL CONTROL RELAY, RM4-LA32M	9-37, 9-39
A302	90458-2580	LEVEL CONTROL RELAY, RM4-LA32M	9-37, 9-39
A303	90458-2580	LEVEL CONTROL RELAY, RM4-LA32M	9-37, 9-39
A305	90458-2580	LEVEL CONTROL RELAY, RM4-LA32M	9-37, 9-39
A307	90458-2580	LEVEL CONTROL RELAY, RM4-LA32M	9-37, 9-39
A310	559810-0101	TMCC2 CONTROLLER	9-31
A310.1	67372-0101	BACKPLANE 8TE(32 POLE)	9-31
A400	559810-0101	TMCC2 CONTROLLER	9-31
A400.1	67372-0101	BACKPLANE 8TE(32 POLE)	9-31
A401	559810-0101	TMCC2 CONTROLLER	9-31
A401.1	67372-0101	BACKPLANE 8TE(32 POLE)	9-31
A403	90119-0104	OPTO COUPLER AMMS 50070	9-37, 9-39
A404	90119-0104	OPTO COUPLER AMMS 50070	9-37, 9-39
A450	90453-0002	MODEM MD-12 DC	9-85
A452	90601-1326	COMPUTER APC620, 5S62:400547.000-00	9-83
A452.1	2912228-0003	TPOP BASIC V 3.2	10-7
A454	90600-2132	INTOUCH OEM 2000 V.9,5 HW KEY USB	9-83
A500	1499642-0301	TPIH GENERATOR	9-173
A500.1	90458-1423	CONNECTOR, PC 4/4-STF-7.62	9-173
A500.2	90458-1424	CONNECTOR, MSTB 2.5/10-STF-5.08	9-173
A500.3	359241-0135	SIGN: " TRANSVERSAL SEALING"	9-173
A501	1499642-0301	TPIH GENERATOR	9-173
A501.1	90458-1423	CONNECTOR, PC 4/4-STF-7.62	9-173
A501.2	90458-1424	CONNECTOR, MSTB 2.5/10-STF-5.08	9-173
A501.3	359241-0132	SIGN: " TEMP. SA"	9-173
A502	90600-3678	TEMP. CONTROLLER, KS40-102-00090-049	9-149, 9-151, 9-153
A503	90459-4891	IDENTIFIER, ID-FIX RW	9-37, 9-39
A504	90601-7290	SAFETY PLC, PLUTO B46 20-070-17	9-37, 9-39
A510	90458-2580	LEVEL CONTROL RELAY, RM4-LA32M	9-37, 9-39
A511	559810-0101	TMCC2 CONTROLLER	9-31
A511.1	67372-0101	BACKPLANE 8TE(32 POLE)	9-31
A518	90600-6032	TEMPERATURE CONTROLLER, KS50	9-149, 9-151, 9-153
A518.1	359241-0268	SIGN: SPRAYING, HEAD SPACE	9-149, 9-151, 9-153
A600	90119-0104	OPTO COUPLER AMMS 50070	9-37, 9-39
A601	90119-0104	OPTO COUPLER AMMS 50070	9-37, 9-39
A602	90119-0104	OPTO COUPLER AMMS 50070	9-37, 9-39
A604	90119-0104	OPTO COUPLER AMMS 50070	9-37, 9-39
A605	90119-0104	OPTO COUPLER AMMS 50070	9-37, 9-39
A606	90119-0104	OPTO COUPLER AMMS 50070	9-37, 9-39
A607	90119-0104	OPTO COUPLER AMMS 50070	9-37, 9-39
A608	90119-0104	OPTO COUPLER AMMS 50070	9-37, 9-39
A609	90119-0104	OPTO COUPLER AMMS 50070	9-37, 9-39
A610	90119-0104	OPTO COUPLER AMMS 50070	9-37, 9-39
A800	90459-1131	SAFETY RELAY, E1T	9-37, 9-39
A800.1	90459-1131	SAFETY RELAY, E1T	9-37, 9-39
A801	90459-1131	SAFETY RELAY, E1T	9-37, 9-39
A802	90459-1131	SAFETY RELAY, E1T	9-37, 9-39
A803	90459-1131	SAFETY RELAY, E1T	9-37, 9-39
A804	90459-1131	SAFETY RELAY, E1T	9-37, 9-39
A804.1	90459-1131	SAFETY RELAY, E1T	9-37, 9-39
A805	90459-1131	SAFETY RELAY, E1T	9-37, 9-39
A805.1	90459-2291	SAFETY RELAY, E1T	9-37, 9-39
A806	90459-1131	SAFETY RELAY, E1T	9-37, 9-39
A806.1	90459-1131	SAFETY RELAY, E1T	9-37, 9-39
B			
B001	90602-8807	LIMIT SW. SZ 2586.010	9-87, 9-89
B002	90602-8807	LIMIT SW. SZ 2586.010	9-87, 9-89
B003	90602-8807	LIMIT SW. SZ 2586.010	9-87, 9-89
B004	90602-8807	LIMIT SW. SZ 2586.010	9-87, 9-89
B005	90602-8807	LIMIT SW. SZ 2586.010	9-87, 9-89
B006	90602-8807	LIMIT SW. SZ 2586.010	9-87, 9-89
B007	90602-8807	LIMIT SW. SZ 2586.010	9-87, 9-89
B008	90458-1114	BIMET. ELECTROMECH. THERMOSTAT K7H.020	9-79, 9-81
M.B052	90044-0194	INDUCTIVE SENSOR, IN 5329	1-9
M.B053	90044-0194	INDUCTIVE SENSOR, IN 5329	1-9
M.B054	90044-0194	INDUCTIVE SENSOR, IN 5329	1-9
M.B104	90044-0194	INDUCTIVE SENSOR, IN 5329	1-9
M.B052	90044-0194	INDUCTIVE SENSOR, IN 5329	1-11
M.B053	90044-0194	INDUCTIVE SENSOR, IN 5329	1-11
M.B054	90044-0194	INDUCTIVE SENSOR, IN 5329	1-11
M.B104	90044-0194	INDUCTIVE SENSOR, IN 5329	1-11
M.B061	90044-0194	INDUCTIVE SENSOR, IN 5329	1-83, 1-85
M.B063	90044-0194	INDUCTIVE SENSOR, IN 5329	1-165, 1-167
M.B157	90044-0194	INDUCTIVE SENSOR, IN 5329	8-23, 8-25

Pos	Part No	Description	Page No
B			
M.B014	90059-0001	THERMOSTAT	8-33
M.B040	90326-0051	THERMOCOUPLE, 5110 051-000	1-165, 1-167
M.B050	90326-0089	THERMOCOUPLE, 5110 089-000	1-9, 1-11
M.B117	90458-0138	PROX.SWITCH E2EG-X1R5B1-5M	1-29
M.B023	90459-4142	SAFETY SENSOR, ADAM M12, 20-051-00	1-83
M.B022	90459-4142	SAFETY SENSOR, ADAM M12, 20-051-00	1-83
M.B021	90459-4142	SAFETY SENSOR, ADAM M12, 20-051-00	1-83
M.B023	90459-4142	SAFETY SENSOR, ADAM M12, 20-051-00	1-85
M.B022	90459-4142	SAFETY SENSOR, ADAM M12, 20-051-00	1-85
M.B021	90459-4142	SAFETY SENSOR, ADAM M12, 20-051-00	1-85
M.B010	90459-4142	SAFETY SENSOR, ADAM M12, 20-051-00	3-31
M.B017	90459-4142	SAFETY SENSOR, ADAM M12, 20-051-00	6-61
M.B016	90459-4142	SAFETY SENSOR, ADAM M12, 20-051-00	6-61
M.B114	90459-4142	SAFETY SENSOR, ADAM M12, 20-051-00	7-31
M.B113	90459-4142	SAFETY SENSOR, ADAM M12, 20-051-00	7-31
M.B115	90459-4142	SAFETY SENSOR, ADAM M12, 20-051-00	8-11, 8-13
M.B108	90459-4142	SAFETY SENSOR, ADAM M12, 20-051-00	8-23, 8-25
M.B007	90459-6716	PRESSURE SWITCH, PEV-1/4-B-SA	6-45, 6-47
M.B160	90600-0459	INDUCTIVE SWITCH, E2A-M12KN05-WP-B1 5M	1-219
M.B512	90600-0467	INDUCTIVE SWITCH,E2A-M18KS05-WP-B1-TP 6M	1-9, 1-11
M.B051	90600-0467	INDUCTIVE SWITCH,E2A-M18KS05-WP-B1-TP 6M	1-11
M.B059	90600-0473	INDUCTIVE SWITCH E2A-S08KS01-WP-B1-TP 5M	7-59
M.B003	90600-1385	PRESSURE GUARD, PEV-1/4-B SA234332	6-39
M.B002	90600-1385	PRESSURE GUARD, PEV-1/4-B SA234332	6-39
M.B026	90600-1385	PRESSURE GUARD, PEV-1/4-B SA234332	6-57
M.B015	90600-5926	SAFETY SENSOR, ADAM E M12 5M CABLE	2-65, 2-67
M.B019	90600-5926	SAFETY SENSOR, ADAM E M12 5M CABLE	2-69, 2-71
M.B012	90600-5926	SAFETY SENSOR, ADAM E M12 5M CABLE	2-105
M.B011	90600-5926	SAFETY SENSOR, ADAM E M12 5M CABLE	2-105
M.B116	1478814-0000	SENSOR	1-29
C			
M.C200	90459-2360	DOUBLE ACTING, COMPACT, 16-15	1-155
D			
D100	90600-1223	CPU374, ETHERNET COMMUNICATION	9-41
E			
E004	90600-4049	LIGHT FIXTURE, TCH128 1XTL5-21W/830 HF	9-87, 9-89
E005	90600-4049	LIGHT FIXTURE, TCH128 1XTL5-21W/830 HF	9-87, 9-89
E006	90600-4048	LIGHT FIXTURE, TCH128 1XTL5-14W/830 HF	9-87, 9-89
M.E003	90458-1921	DISTRIBUTOR BLOCK, FR-8-1/4	6-15
M.E002	90458-1921	DISTRIBUTOR BLOCK, FR-8-1/4	6-15
M.E001	90458-1921	DISTRIBUTOR BLOCK, FR-8-1/4	6-15
M.E003	90458-1921	DISTRIBUTOR BLOCK, FR-8-1/4	6-17
M.E002	90458-1921	DISTRIBUTOR BLOCK, FR-8-1/4	6-17
M.E001	90458-1921	DISTRIBUTOR BLOCK, FR-8-1/4	6-17
F			
F001	354001-0100	MINIATURE CIRCUIT BREAKER, FAZ-C10/2	9-139, 9-141
F002	354000-0100	MINIATURE CIRCUIT BREAKER, FAZ-C10/1	9-139, 9-141
F004	354000-0100	MINIATURE CIRCUIT BREAKER, FAZ-C10/1	9-145
F005	76470-0100	PONCH	12-105
F005	351416-0060	MINIATURE CIRC. BREAK., FAZ -D6 1-POLE	9-145
F005	456975-0200	TOOL CABINET	12-9
F006	354002-0060	MINIATURE CIRCUIT BREAKER, FAZ-C6/3	9-139, 9-141
F007	354002-0200	MINIATURE CIRCUIT BREAKER, FAZ-C20/3	9-145
F008	354000-0100	MINIATURE CIRCUIT BREAKER, FAZ-C10/1	9-145
F009	354000-0100	MINIATURE CIRCUIT BREAKER, FAZ-C10/1	9-145
F010	76594-0200	SETTING TOOL	12-105
F010	351416-0100	MINIATURE CIRC. BREAK., FAZ -D10 1-POLE	9-139, 9-141
F011	354000-0100	MINIATURE CIRCUIT BREAKER, FAZ-C10/1	9-61
F012	354000-0010	MINIATURE CIRCUIT BREAKER, FAZ-C1/1	9-139, 9-141
F012.1	90459-5813	AUXILIARY CONTACT, FAZ-XHIN11	9-139, 9-141
F013	354000-0200	MINIATURE CIRCUIT BREAKER, FAZ-C20/1	9-145
F015	354000-0100	MINIATURE CIRCUIT BREAKER, FAZ-C10/1	9-145
F016	351416-0160	MINIATURE CIRC. BREAK., FAZ -D16 1-POLE	9-139, 9-141
F019	354000-0100	MINIATURE CIRCUIT BREAKER, FAZ-C10/1	9-139, 9-141
F021	354000-0030	MINIATURE CIRCUIT BREAKER, FAZ-C3/1	9-139, 9-141
F024	90459-5811	RESIDUAL CURRENT DEVICE, FI-25/2/003-A	9-139, 9-141
F025	90602-2970	MINIATURE CIRCUIT BREAKER, AZ-2-C63	9-139, 9-141
F027	351416-0100	MINIATURE CIRC. BREAK., FAZ -D10 1-POLE	9-61
F029	351418-0250	MINIATURE CIRC. BREAK.,FAZ-D25/3 3-POLE	9-135, 9-137
F030	354000-0005	MINIATURE CIRCUIT BREAKER, FAZ-C0,5/1	9-139, 9-141
F032	351416-0060	MINIATURE CIRC. BREAK., FAZ -D6 1-POLE	9-61
F032	351416-0100	MINIATURE CIRC. BREAK., FAZ -D10 1-POLE	9-61
F033	354000-0100	MINIATURE CIRCUIT BREAKER, FAZ-C10/1	9-145
F034	354002-0020	MINIATURE CIRCUIT BREAKER, FAZ-C2/3	9-145
F040	1350148-0100	MACHINE CARRIAGE	12-9
F070	533014-0100	LEAK FINDING EQUIPMENT (SUPERSTRUCTURE)	12-9
F100	352553-0160	CYLINDRICAL FUSE 16A, 3NC1016	9-143
F100.1	90600-3840	FUSE HOLDER CYLINDRICAL FUSE, 3NC1 093	9-143
F101	352553-0250	CYLINDRICAL FUSE 25A, 3NC1025	9-143
F101.1	90600-3840	FUSE HOLDER CYLINDRICAL FUSE, 3NC1 093	9-143
F102	352554-0040	CYLINDRICAL FUSE 4A, 3NC1404	9-143
F102.1	90600-3840	FUSE HOLDER CYLINDRICAL FUSE, 3NC1 093	9-143

Pos	Part No	Description	Page No
F			
F103	352554-0040	CYLINDRICAL FUSE 4A, 3NC1404	9-143
F103.1	90600-3840	FUSE HOLDER CYLINDRICAL FUSE, 3NC1 093	9-143
F104	352553-0160	CYLINDRICAL FUSE 16A, 3NC1016	9-143
F104.1	90600-3838	FUSE HOLDER CYLINDRICAL FUSE, 3NC1 091	9-143
F106	352553-0100	CYLINDRICAL FUSE 10A, 3NC1010	9-143
F106.1	90600-3838	FUSE HOLDER CYLINDRICAL FUSE, 3NC1 091	9-143
F107	352553-0100	CYLINDRICAL FUSE 10A, 3NC1010	9-143
F107.1	90600-3838	FUSE HOLDER CYLINDRICAL FUSE, 3NC1 091	9-143
F155	529345-0100	FILLING STATION H2O2	12-9
F160	532210-0100	PEROXIDE CONTAINER TROLLEY	12-9
F551	354001-0100	MINIATURE CIRCUIT BREAKER, FAZ-C10/2	9-139, 9-141
F1001	354000-0030	MINIATURE CIRCUIT BREAKER, FAZ-C3/1	9-61
F1002	354000-0030	MINIATURE CIRCUIT BREAKER, FAZ-C3/1	9-61
F1002.1	90459-5813	AUXILIARY CONTACT, FAZ-XHIN11	9-61
F1003	354000-0030	MINIATURE CIRCUIT BREAKER, FAZ-C3/1	9-61
F1003.1	90459-5813	AUXILIARY CONTACT, FAZ-XHIN11	9-61
F1004	354000-0030	MINIATURE CIRCUIT BREAKER, FAZ-C3/1	9-61
F1004.1	90459-5813	AUXILIARY CONTACT, FAZ-XHIN11	9-61
F1005	354000-0030	MINIATURE CIRCUIT BREAKER, FAZ-C3/1	9-61
F1005.1	90459-5813	AUXILIARY CONTACT, FAZ-XHIN11	9-61
F1006	354000-0030	MINIATURE CIRCUIT BREAKER, FAZ-C3/1	9-61
F1006.1	90459-5813	AUXILIARY CONTACT, FAZ-XHIN11	9-61
F1007	354000-0030	MINIATURE CIRCUIT BREAKER, FAZ-C3/1	9-61
F1007.1	90459-5813	AUXILIARY CONTACT, FAZ-XHIN11	9-61
F1008	354000-0030	MINIATURE CIRCUIT BREAKER, FAZ-C3/1	9-61
F1008.1	90459-5813	AUXILIARY CONTACT, FAZ-XHIN11	9-61
F1009	354000-0030	MINIATURE CIRCUIT BREAKER, FAZ-C3/1	9-61
F1009.1	90459-5813	AUXILIARY CONTACT, FAZ-XHIN11	9-61
F1010	354000-0030	MINIATURE CIRCUIT BREAKER, FAZ-C3/1	9-61
F1010.1	90459-5813	AUXILIARY CONTACT, FAZ-XHIN11	9-61
F1011	354000-0030	MINIATURE CIRCUIT BREAKER, FAZ-C3/1	9-61
F1011.1	90459-5813	AUXILIARY CONTACT, FAZ-XHIN11	9-61
F1012	354000-0030	MINIATURE CIRCUIT BREAKER, FAZ-C3/1	9-61
F1012.1	90459-5813	AUXILIARY CONTACT, FAZ-XHIN11	9-61
F1013	354000-0030	MINIATURE CIRCUIT BREAKER, FAZ-C3/1	9-61
F1013.1	90459-5813	AUXILIARY CONTACT, FAZ-XHIN11	9-61
F1014	354000-0030	MINIATURE CIRCUIT BREAKER, FAZ-C3/1	9-61
F1014.1	90459-5813	AUXILIARY CONTACT, FAZ-XHIN11	9-61
G			
G001	90459-3450	FREQ. CONV., 22A-A4P5N104	9-13, 9-15, 9-17, 9-19
G002	90459-3450	FREQ. CONV., 22A-A4P5N104	9-13, 9-15, 9-17, 9-19
G003	90459-3450	FREQ. CONV., 22A-A4P5N104	9-13, 9-15, 9-17, 9-19
G004	90459-3446	FREQ. CONV., 22B-D012N104	9-13, 9-15, 9-17, 9-19
G005	90459-3450	FREQ. CONV., 22A-A4P5N104	9-13, 9-15, 9-17, 9-19
G006	90459-3450	FREQ. CONV., 22A-A4P5N104	9-13, 9-15, 9-17, 9-19
G010	90459-4133	POWER SUPPLY UNIT 6EP1 436-3BA00	9-109
G100	90031-0068	PLC, POWER SUPPLY	9-41
G101	90031-0068	PLC, POWER SUPPLY	9-43
G102	90031-0068	PLC, POWER SUPPLY	9-45
J			
M.J213	90235-0151	NON-RETURN VALVE, 534 098 110 0	6-15, 6-17
K			
K001	90459-5440	CONTACTOR 4KW 24VDC, DILM9-01	9-47
K002	90119-0086	RELAY, AUXILIARY MY4IN4 24VDC	9-47
K002.1	90119-0309	SOCKET, PYF14A-E	9-47
K002.2	90119-0310	CLAMP, TYPE PYC-A1	9-47
K003	90600-1758	CONTACTOR 30KW 24VDC,DILM65 +DILM65-XIP2	9-13, 9-15, 9-17, 9-19
K003.1	90459-5418	AUXILIARY CONTACTS, DILM150-XHI22	9-13, 9-15, 9-17, 9-19
K004	90459-5441	CONTACTOR 7,5KW 24VDC, DILM17-01	9-47
K005	90459-5441	CONTACTOR 7,5KW 24VDC, DILM17-01	9-47
K006	90459-5441	CONTACTOR 7,5KW 24VDC, DILM17-01	9-47
K007	90459-5440	CONTACTOR 4KW 24VDC, DILM9-01	9-47
K008	90459-5441	CONTACTOR 7,5KW 24VDC, DILM17-01	9-47
K009	90459-5440	CONTACTOR 4KW 24VDC, DILM9-01	9-47
K011	90459-5441	CONTACTOR 7,5KW 24VDC, DILM17-01	9-47
K012	90459-5440	CONTACTOR 4KW 24VDC, DILM9-01	9-47
K013	90459-5440	CONTACTOR 4KW 24VDC, DILM9-01	9-47
K014	90459-5441	CONTACTOR 7,5KW 24VDC, DILM17-01	9-47
K015	90459-5441	CONTACTOR 7,5KW 24VDC, DILM17-01	9-47
K016	90459-5441	CONTACTOR 7,5KW 24VDC, DILM17-01	9-47
K017	90459-5440	CONTACTOR 4KW 24VDC, DILM9-01	9-47
K018	90459-5441	CONTACTOR 7,5KW 24VDC, DILM17-01	9-47
K019	90459-5441	CONTACTOR 7,5KW 24VDC, DILM17-01	9-47
K019.1	90459-6852	AUXILIARY CONTACT, DILA-XHI22	9-47
K020	90459-5441	CONTACTOR 7,5KW 24VDC, DILM17-01	9-47
K022	90459-5441	CONTACTOR 7,5KW 24VDC, DILM17-01	9-47
K024	90459-5440	CONTACTOR 4KW 24VDC, DILM9-01	9-47
K025	90119-0086	RELAY, AUXILIARY MY4IN4 24VDC	9-47
K025.1	90119-0309	SOCKET, PYF14A-E	9-47
K025.2	90119-0310	CLAMP, TYPE PYC-A1	9-47
K026	90459-5440	CONTACTOR 4KW 24VDC, DILM9-01	9-47
K027	90459-5440	CONTACTOR 4KW 24VDC, DILM9-01	9-47

Pos	Part No	Description	Page No
K			
K028	90600-1643	CONTACTOR, DILK12-11	9-47
K029	90459-5440	CONTACTOR 4KW 24VDC, DILM9-01	9-47
K030	90600-1758	CONTACTOR 30KW 24VDC,DILM65 +DILM65-XIP2	9-13, 9-15, 9-17, 9-19
K030.1	90459-5418	AUXILIARY CONTACTS, DILM150-XHI22	9-13, 9-15, 9-17, 9-19
K031	90600-1643	CONTACTOR, DILK12-11	9-47
K032	90459-5441	CONTACTOR 7,5KW 24VDC, DILM17-01	9-47
K032.1	90459-6852	AUXILIARY CONTACT, DILA-XHI22	9-47
K042	90600-6446	RELAY, MKS3PI-5 24VDC	9-75, 9-77
K042.1	90129-0006	BASE, S3-B	9-75, 9-77
K097	90119-0086	RELAY, AUXILIARY MY4IN4 24VDC	9-29
K097.1	90119-0309	SOCKET, PYF14A-E	9-29
K097.2	90119-0310	CLAMP, TYPE PYC-A1	9-29
K098	90119-0086	RELAY, AUXILIARY MY4IN4 24VDC	9-29
K098.1	90119-0309	SOCKET, PYF14A-E	9-29
K098.2	90119-0310	CLAMP, TYPE PYC-A1	9-29
K099	90600-6446	RELAY, MKS3PI-5 24VDC	9-29
K099.1	90129-0006	BASE, S3-B	9-29
K100	90600-6446	RELAY, MKS3PI-5 24VDC	9-29
K100.1	90129-0006	BASE, S3-B	9-29
K101	90119-0109	RELAY OMRON 24VDC MY4H	9-29
K101.1	90119-0309	SOCKET, PYF14A-E	9-29
K101.2	90119-0310	CLAMP, TYPE PYC-A1	9-29
K102	90600-6446	RELAY, MKS3PI-5 24VDC	9-29
K102.1	90129-0006	BASE, S3-B	9-29
K103	90600-6446	RELAY, MKS3PI-5 24VDC	9-29
K103.1	90129-0006	BASE, S3-B	9-29
K104	90600-6446	RELAY, MKS3PI-5 24VDC	9-29
K104.1	90129-0006	BASE, S3-B	9-29
K105	90600-6446	RELAY, MKS3PI-5 24VDC	9-29
K105.1	90129-0006	BASE, S3-B	9-29
K106	90600-6446	RELAY, MKS3PI-5 24VDC	9-29
K106.1	90129-0006	BASE, S3-B	9-29
K107	90600-6446	RELAY, MKS3PI-5 24VDC	9-29
K107.1	90129-0006	BASE, S3-B	9-29
K110	90600-6446	RELAY, MKS3PI-5 24VDC	9-29
K110.1	90129-0006	BASE, S3-B	9-29
K200	90600-0946	SOLID STATE RELAY, 3RF2050-1AA04	9-49, 9-51
K201	90600-0946	SOLID STATE RELAY, 3RF2050-1AA04	9-53
K202	90600-0946	SOLID STATE RELAY, 3RF2050-1AA04	9-53
K203	90600-0946	SOLID STATE RELAY, 3RF2050-1AA04	9-53
K204	90600-0946	SOLID STATE RELAY, 3RF2050-1AA04	9-53
K205	90600-0946	SOLID STATE RELAY, 3RF2050-1AA04	9-49, 9-51
K206	90600-0946	SOLID STATE RELAY, 3RF2050-1AA04	9-49, 9-51
K207	90600-0946	SOLID STATE RELAY, 3RF2050-1AA04	9-55, 9-57, 9-59
K208	90600-0946	SOLID STATE RELAY, 3RF2050-1AA04	9-55, 9-57, 9-59
K209	90600-0946	SOLID STATE RELAY, 3RF2050-1AA04	9-55, 9-57, 9-59
K210	90600-0946	SOLID STATE RELAY, 3RF2050-1AA04	9-27
K211	90600-0946	SOLID STATE RELAY, 3RF2050-1AA04	9-27
K212	90600-0946	SOLID STATE RELAY, 3RF2050-1AA04	9-27
K213	90600-0946	SOLID STATE RELAY, 3RF2050-1AA04	9-27
K214	90600-0946	SOLID STATE RELAY, 3RF2050-1AA04	9-55, 9-57, 9-59
K215	90600-0946	SOLID STATE RELAY, 3RF2050-1AA04	9-49, 9-51
K250	90119-0086	RELAY, AUXILIARY MY4IN4 24VDC	9-29
K250.1	90119-0309	SOCKET, PYF14A-E	9-29
K250.2	90119-0310	CLAMP, TYPE PYC-A1	9-29
K252	90119-0086	RELAY, AUXILIARY MY4IN4 24VDC	9-29
K252.1	90119-0309	SOCKET, PYF14A-E	9-29
K252.2	90119-0310	CLAMP, TYPE PYC-A1	9-29
K500	90601-6650	RELAY, PLC-RSC-24DC/21	9-37, 9-39
K501	90601-6650	RELAY, PLC-RSC-24DC/21	9-37, 9-39
K502	90601-6651	RELAY, PLC-RSC-24DC/21-21	9-37, 9-39
K504	90601-6650	RELAY, PLC-RSC-24DC/21	9-37, 9-39
K505	90601-6650	RELAY, PLC-RSC-24DC/21	9-37, 9-39
K506	90601-6650	RELAY, PLC-RSC-24DC/21	9-37, 9-39
K915	90600-6446	RELAY, MKS3PI-5 24VDC	9-29
K915.1	90129-0006	BASE, S3-B	9-29
L			
L001	90297-0306	BALLAST COIL 230V 50/60 HZ, L11D E790011	9-13, 9-15, 9-17, 9-19
M			
M.S033H2	90036-0057	LIGHT BULB, BA9S 28V	7-17
M.E2522	90042-0602	DISTRIBUTOR BLOCK, FR-4-1/2-B	6-15
M.E2521	90042-0602	DISTRIBUTOR BLOCK, FR-4-1/2-B	6-15
M.E2522	90042-0602	DISTRIBUTOR BLOCK, FR-4-1/2-B	6-17
M.E2521	90042-0602	DISTRIBUTOR BLOCK, FR-4-1/2-B	6-17
M.S033H	90064-0098	PUSH BUTTON, WHITE	7-17
M.X050.1	90326-0012	PROTECTIVE COVER, 03-001 10	1-9, 1-11
M.X040.1	90326-0012	PROTECTIVE COVER, 03-001 10	1-165, 1-167
M.B010;1	90458-2794	SAFETY SENSOR, EVA 20-046-00	3-31
M.S033H1	90459-0691	SIGN, STRIP SPLICE/ RESET ALARM	7-17
M.T12/14	90459-2425	PRESSURE REGULATOR IN-LINE, BSP-1/4	6-15, 6-17
M.B015;1	90459-4089	SAFETY SENSOR, EVA E, 20-046-06	2-65, 2-67
M.B019;1	90459-4089	SAFETY SENSOR, EVA E, 20-046-06	2-69, 2-71

Pos	Part No	Description	Page No
M			
M.B011;1	90459-4089	SAFETY SENSOR, EVA E, 20-046-06	2-101
M.B012;12	90459-4089	SAFETY SENSOR, EVA E, 20-046-06	2-103
M.Z2522	90459-5786	FILTERED SILENCER, 10494 LFU-1/2	6-15
M.Z2521	90459-5786	FILTERED SILENCER, 10494 LFU-1/2	6-15
M.Z2522	90459-5786	FILTERED SILENCER, 10494 LFU-1/2	6-17
M.Z2521	90459-5786	FILTERED SILENCER, 10494 LFU-1/2	6-17
MY132.1	90110-0095	CONNECTOR, PLUG SOCKET, MSSD-C-4P	6-97
MY131.1	90110-0095	CONNECTOR, PLUG SOCKET, MSSD-C-4P	6-97
MY052B.1	90110-0095	CONNECTOR, PLUG SOCKET, MSSD-C-4P	6-97
MY052A.1	90110-0095	CONNECTOR, PLUG SOCKET, MSSD-C-4P	6-97
MY132.1	90110-0095	CONNECTOR, PLUG SOCKET, MSSD-C-4P	6-99
MY131.1	90110-0095	CONNECTOR, PLUG SOCKET, MSSD-C-4P	6-99
MY052B.1	90110-0095	CONNECTOR, PLUG SOCKET, MSSD-C-4P	6-99
MY052A.1	90110-0095	CONNECTOR, PLUG SOCKET, MSSD-C-4P	6-99
MB154.1	90232-0347	FIBRE, LL3-TB01, 5308 050	8-45
MX038.1	90326-0012	PROTECTIVE COVER, 03-001 10	1-55
MX004.1	90326-0012	PROTECTIVE COVER, 03-001 10	1-55
MX038.1	90326-0012	PROTECTIVE COVER, 03-001 10	1-57
MX004.1	90326-0012	PROTECTIVE COVER, 03-001 10	1-57
MX037A.1	90326-0012	PROTECTIVE COVER, 03-001 10	1-69
MX037B.1	90326-0012	PROTECTIVE COVER, 03-001 10	1-69
MX079.1	90326-0012	PROTECTIVE COVER, 03-001 10	1-73
MX039.1	90326-0012	PROTECTIVE COVER, 03-001 10	1-77, 1-79
MX055.1	90326-0012	PROTECTIVE COVER, 03-001 10	1-99
MX518.1	90326-0020	SOCKET, FEMALE YELLOW CR-AL, 03-22000A	1-43
MH035R.1	90458-0293	LIGHT ELEMENT, RED, PSD-S OE RD/W	2-81
MH034R.1	90458-0293	LIGHT ELEMENT, RED, PSD-S OE RD/W	2-95
MH035Y.1	90458-0294	LIGHT ELEMENT, YELLOW, PSD-S OE YE/W	2-81
MH034Y.1	90458-0294	LIGHT ELEMENT, YELLOW, PSD-S OE YE/W	2-95
MH035B.1	90458-0295	LIGHT ELEMENT, BLUE, PSD-S OE BU/W	2-81
MH034B.1	90458-0295	LIGHT ELEMENT, BLUE, PSD-S OE BU/W	2-95
MB080:1	90458-0601	CONTRAST SCANNER, KT15W-P2110S01	1-209, 1-211
M.B023:1	90458-2794	SAFETY SENSOR, EVA 20-046-00	1-83
M.B022:1	90458-2794	SAFETY SENSOR, EVA 20-046-00	1-83
M.B021:1	90458-2794	SAFETY SENSOR, EVA 20-046-00	1-83
M.B023:1	90458-2794	SAFETY SENSOR, EVA 20-046-00	1-85
M.B022:1	90458-2794	SAFETY SENSOR, EVA 20-046-00	1-85
M.B021:1	90458-2794	SAFETY SENSOR, EVA 20-046-00	1-85
M.B016:1	90458-2794	SAFETY SENSOR, EVA 20-046-00	6-5
M.B017:1	90458-2794	SAFETY SENSOR, EVA 20-046-00	6-7
M.B114:1	90458-2794	SAFETY SENSOR, EVA 20-046-00	7-31
M.B113:1	90458-2794	SAFETY SENSOR, EVA 20-046-00	7-31
M.B115:1	90458-2794	SAFETY SENSOR, EVA 20-046-00	8-11, 8-13
M.B108:1	90458-2794	SAFETY SENSOR, EVA 20-046-00	8-23, 8-25
M.S005:1	90600-9809	ES SIGN, FOR INCA	7-17
MS011.1	90600-9809	ES SIGN, FOR INCA	8-45
M.S035:1	359301-0110	BUTTON SIGN, SHORT STOP	7-17
MS008.1	359301-0110	BUTTON SIGN, SHORT STOP	8-45
MB043.1	567070-0010	ELECTRODE	1-103, 1-105
MB510.1	567070-0014	ELECTRODE	1-35, 1-37
MX518.2	90326-0012	PROTECTIVE COVER, 03-001 10	1-43
MB080:2	90458-0601	CONTRAST SCANNER, KT15W-P2110S01	1-209, 1-211
MB510.2	567070-0014	ELECTRODE	1-35, 1-37
MB043.2	567070-0015	ELECTRODE	1-103, 1-105
M.0104	90457-0100	ACCUMULATOR CRVZS-2	6-55
M001	90457-0056	FAN 7450 ES	9-13, 9-15, 9-17, 9-19
M016	90600-3772	COOLING UNIT, KB17TB.01.CB	9-167
MA451	90453-0001	MODEM MA-12	11-21
MBO79	90326-0048	THERMOCOUPLE, 5110 048-000	1-73
MB001	90061-0027	ANGLE ENCODER, 670900035	3-37
MB004	90326-0052	THERMO ELEMENT	1-55, 1-57
MB006	90274-0084	PRESSURE GUARD, 1800 KPA	6-95
MB009	90044-0194	INDUCTIVE SENSOR, IN 5329	7-35, 7-37
MB013	312105-0372	SCREW, M6S ISO 4017 M6X25 A4 80	5-201, 5-203
MB016A	90458-0138	PROX.SWITCH E2EG-X1R5B1-5M	3-33
MB016B	90458-0138	PROX.SWITCH E2EG-X1R5B1-5M	3-35
MB020	90458-0894	PROX.SENSOR E2E2-X10MB1-5M	5-49, 5-51
MB020	90600-0463	INDUCTIVE SWITCH,E2A-M12LN05-WP-B1-TP 5M	5-109
MB032	90044-0194	INDUCTIVE SENSOR, IN 5329	7-23, 7-25, 7-27, 7-29
MB034	567070-0011	ELECTRODE	1-55, 1-57
MB034	567070-0019	ELECTRODE	1-55, 1-57
MB037A	90326-0048	THERMOCOUPLE, 5110 048-000	1-69
MB037B	90326-0057	THERMOCOUPLE, 5110 057-000	1-69
MB038	90326-0052	THERMO ELEMENT	1-55, 1-57
MB039	90326-0051	THERMOCOUPLE, 5110 051-000	1-77, 1-79
MB045	90457-0019	LEVEL PROBE, HMFB-S=45-0=80-0=90-T70	6-97, 6-99
MB046	90044-0194	INDUCTIVE SENSOR, IN 5329	1-91
MB047	90044-0104	INDUCTIVE SENSOR IN5227S	1-93, 1-95
MB048B	90044-0084	5IMIT SW. 14 CE1-4	1-55
MB048A	90044-0084	5IMIT SW. 14 CE1-4	1-55
MB048B	90044-0084	5IMIT SW. 14 CE1-4	1-57
MB048A	90044-0084	5IMIT SW. 14 CE1-4	1-57

Pos	Part No	Description	Page No
M			
MB055	90326-0051	THERMOCOUPLE, 5110 051-000	1-99
MB062	90274-0045	PRESSURE GUARD, 14 KPA	2-43, 2-45
MB064	567070-0012	ELECTRODE	6-85, 6-87
MB071	90457-0047	SENSOR 2750-1-5111-1 W.ADAPTER PNP	1-99
MB072	90326-0080	THERMOCOUPLE, 5110 080-000	5-19, 5-21, 5-23, 5-25, 5-27
MB073	90326-0080	THERMOCOUPLE, 5110 080-000	5-19, 5-21, 5-23, 5-25, 5-27
MB074	90326-0080	THERMOCOUPLE, 5110 080-000	5-19, 5-21, 5-23, 5-25, 5-27
MB075	90326-0080	THERMOCOUPLE, 5110 080-000	5-19, 5-21, 5-23, 5-25, 5-27
MB085	979500-0001	ELECTRODE	1-55, 1-57
MB091A	90232-0103	PH.CELL E3S-CT61-L-5M	11-27
MB091B	90232-0104	PH.CELL E3S-CT61-D-5M	11-27
MB092A	90232-0103	PH.CELL E3S-CT61-L-5M	11-29
MB092B	90232-0104	PH.CELL E3S-CT61-D-5M	11-29
MB093A	90232-0103	PH.CELL E3S-CT61-L-5M	11-23
MB093B	90232-0104	PH.CELL E3S-CT61-D-5M	11-23
MB094	90457-0047	SENSOR 2750-1-5111-1 W.ADAPTER PNP	1-71
MB095	1282411-0000	FLOAT	6-69
MB109	90044-0194	INDUCTIVE SENSOR, IN 5329	7-23, 7-25, 7-27, 7-29
MB111	90044-0194	INDUCTIVE SENSOR, IN 5329	7-23, 7-25, 7-27, 7-29
MB112	42063-0100	LEVEL DETECTOR	1-227
MB119	90044-0117	PROX.SWITCH IX 0208	5-85
MB119	90044-0194	INDUCTIVE SENSOR, IN 5329	5-135, 5-139
MB120	90044-0124	PROX.SWITCH 922AB2XM-A9P-050-LZ-876	3-37
MB132	90458-0747	SENSOR FOR CYLINDER, SMH-1PC	4-61, 4-63
MB134	90458-0747	SENSOR FOR CYLINDER, SMH-1PC	4-57, 4-59
MB149	90458-0675	PROX.SENSOR, E2EG-X5MB1-5M	8-17, 8-19
MB150	90458-0675	PROX.SENSOR, E2EG-X5MB1-5M	8-17, 8-19
MB153	90044-0194	INDUCTIVE SENSOR, IN 5329	1-43
MB154	90232-0123	PH.CELL WLL170-P135-6011723	8-47, 8-49
MB236	90044-0194	INDUCTIVE SENSOR, IN 5329	7-39, 7-41
MB511	90274-0066	PRESSURE SWITCH, 5,516 - 689,5 KPA	1-35, 1-37
MB517	90044-0104	INDUCTIVE SENSOR IN5227S	1-47
MB518	90326-0060	THERMOCOUPLE, 5110060-000 CR-AL	1-43
MB519	90044-0104	INDUCTIVE SENSOR IN5227S	1-47
MB521	90600-1154	FLOW METER,D-6230-HGB-BB-AV-99-0-N2/IP65	1-35, 1-37
ME001B	441534-0200	LIGHT FIXTURE	2-37
ME001A	441534-0200	LIGHT FIXTURE	2-37
ME001C	595430-0200	LIGHT FIXTURE	2-13, 2-15, 2-29, 2-31
ME003	90164-0015	LIGHT FIXTURE, RL70CV-111 / 230V 50HZ	8-45
MH034Y	90036-0068	BULB 5W 24V, SL-L24 205348	2-95
MH034R	90036-0068	BULB 5W 24V, SL-L24 205348	2-95
MH034B	90036-0068	BULB 5W 24V, SL-L24 205348	2-95
MH034S	90458-0302	SIREN ELEMENT, PSD-S AE SM8-5 100DB/1/W	2-95
MH035Y	90036-0068	BULB 5W 24V, SL-L24 205348	2-81
MH035R	90036-0068	BULB 5W 24V, SL-L24 205348	2-81
MH035B	90036-0068	BULB 5W 24V, SL-L24 205348	2-81
ML001	571870-0000	BUSBAR,LEFT	4-103
ML001	571872-0000	BUSBAR,LEFT	4-103
ML001	929437-0000	BUSBAR LEFT	4-103
ML001	2554960-0000	BUSBAR LEFT	4-103
ML002	571869-0000	BUSBAR,RIGHT	4-101
ML002	571871-0000	BUSBAR,RIGHT	4-101
ML002	929436-0000	BUSBAR RIGHT	4-101
ML002	2554961-0000	BUSBAR RIGHT	4-101
ML003	1035587-0000	INDUCTOR	7-45
M.M013	90459-2327	GEARS, WORM MOTOR IGL 80-60 + VE 31GR5	1-81
M.M021	90459-2327	GEARS, WORM MOTOR IGL 80-60 + VE 31GR5	8-17, 8-19
MM001	90457-0172	MOTOR 3GAA 131001-ASA	3-9
MM004	90457-0131	PUMP SV805 R22T 50HZ	5-201, 5-203
MM004	90458-2762	PUMP SV805 R406T 60HZ	5-201, 5-203
MM005	90045-0228	MOTOR 7AA80M4-B5	6-97, 6-99
MM006	90321-0037	PUMP C-6125P EP 220V, 50HZ	6-13
MM007	90270-0017	COMPRESSOR NASH/ELMO 112 MB/4-2083	6-67
MM010	90458-2466	MOTOR 3GVA071002-CSC-M2VA71B2	6-73
MM017	2526863-0000	PUMP	1-55, 1-57
MM018	90045-0161	MOTOR 4MGC11	6-83
MM019	90458-1879	GEARS, WORM MOTOR 528V--L06-B01	1-97
MM132	90458-1301	LINEAR ACTUATOR, ETS32-M10NA2X-FM50-...	4-61, 4-63
MM134	90458-1301	LINEAR ACTUATOR, ETS32-M10NA2X-FM50-...	4-57, 4-59
MR005C	90459-1382	HEATING ELEMENT 1100W 220V	5-19
MR005D	90459-1382	HEATING ELEMENT 1100W 220V	5-19
MR005C	90459-1382	HEATING ELEMENT 1100W 220V	5-19
MR005D	90459-1382	HEATING ELEMENT 1100W 220V	5-19
MR005C	90459-1382	HEATING ELEMENT 1100W 220V	5-19
MR005D	90459-1382	HEATING ELEMENT 1100W 220V	5-19
MR005C	90459-1382	HEATING ELEMENT 1100W 220V	5-19
MR005D	90459-1382	HEATING ELEMENT 1100W 220V	5-19
MR005C	90459-1382	HEATING ELEMENT 1100W 220V	5-19
MR005D	90459-1382	HEATING ELEMENT 1100W 220V	5-19
MR005C	90459-1382	HEATING ELEMENT 1100W 220V	5-19
MR005D	90459-1382	HEATING ELEMENT 1100W 220V	5-19
MR005C	90459-1382	HEATING ELEMENT 1100W 220V	5-19

Pos	Part No	Description	Page No
M			
MR005D	90459-1382	HEATING ELEMENT 1100W 220V	5-19
MR005C	90459-1382	HEATING ELEMENT 1100W 220V	5-19
MR005D	90459-1382	HEATING ELEMENT 1100W 220V	5-19
MR005C	90459-1382	HEATING ELEMENT 1100W 220V	5-19
MR005D	90459-1382	HEATING ELEMENT 1100W 220V	5-19
MR005C	90459-1382	HEATING ELEMENT 1100W 220V	5-19
MR005D	90459-1382	HEATING ELEMENT 1100W 220V	5-19
MR005A	90459-1382	HEATING ELEMENT 1100W 220V	5-19
MR005B	90459-1382	HEATING ELEMENT 1100W 220V	5-19
MR005C	90459-1382	HEATING ELEMENT 1100W 220V	5-21
MR005D	90459-1382	HEATING ELEMENT 1100W 220V	5-21
MR005C	90459-1382	HEATING ELEMENT 1100W 220V	5-21
MR005D	90459-1382	HEATING ELEMENT 1100W 220V	5-21
MR005C	90459-1382	HEATING ELEMENT 1100W 220V	5-21
MR005D	90459-1382	HEATING ELEMENT 1100W 220V	5-21
MR005C	90459-1382	HEATING ELEMENT 1100W 220V	5-21
MR005D	90459-1382	HEATING ELEMENT 1100W 220V	5-21
MR005C	90459-1382	HEATING ELEMENT 1100W 220V	5-21
MR005D	90459-1382	HEATING ELEMENT 1100W 220V	5-21
MR005C	90459-1382	HEATING ELEMENT 1100W 220V	5-21
MR005D	90459-1382	HEATING ELEMENT 1100W 220V	5-21
MR005C	90459-1382	HEATING ELEMENT 1100W 220V	5-21
MR005D	90459-1382	HEATING ELEMENT 1100W 220V	5-21
MR005C	90459-1382	HEATING ELEMENT 1100W 220V	5-21
MR005D	90459-1382	HEATING ELEMENT 1100W 220V	5-21
MR005C	90459-1382	HEATING ELEMENT 1100W 220V	5-21
MR005D	90459-1382	HEATING ELEMENT 1100W 220V	5-21
MR005C	90459-1382	HEATING ELEMENT 1100W 220V	5-21
MR005D	90459-1382	HEATING ELEMENT 1100W 220V	5-21
MR005A	90459-1382	HEATING ELEMENT 1100W 220V	5-21
MR005B	90459-1382	HEATING ELEMENT 1100W 220V	5-21
MR005C	90459-1382	HEATING ELEMENT 1100W 220V	5-23
MR005D	90459-1382	HEATING ELEMENT 1100W 220V	5-23
MR005C	90459-1382	HEATING ELEMENT 1100W 220V	5-23
MR005D	90459-1382	HEATING ELEMENT 1100W 220V	5-23
MR005C	90459-1382	HEATING ELEMENT 1100W 220V	5-23
MR005D	90459-1382	HEATING ELEMENT 1100W 220V	5-23
MR005C	90459-1382	HEATING ELEMENT 1100W 220V	5-23
MR005D	90459-1382	HEATING ELEMENT 1100W 220V	5-23

Pos	Part No	Description	Page No
MR005C	90459-1382	HEATING ELEMENT 1100W 220V	5-23
MR005D	90459-1382	HEATING ELEMENT 1100W 220V	5-23
MR005C	90459-1382	HEATING ELEMENT 1100W 220V	5-23
MR005D	90459-1382	HEATING ELEMENT 1100W 220V	5-23
MR005C	90459-1382	HEATING ELEMENT 1100W 220V	5-23
MR005D	90459-1382	HEATING ELEMENT 1100W 220V	5-23
MR005C	90459-1382	HEATING ELEMENT 1100W 220V	5-23
MR005D	90459-1382	HEATING ELEMENT 1100W 220V	5-23
MR005A	90459-1382	HEATING ELEMENT 1100W 220V	5-23
MR005B	90459-1382	HEATING ELEMENT 1100W 220V	5-23
MR005C	90459-1382	HEATING ELEMENT 1100W 220V	5-25
MR005D	90459-1382	HEATING ELEMENT 1100W 220V	5-25
MR005C	90459-1382	HEATING ELEMENT 1100W 220V	5-25
MR005D	90459-1382	HEATING ELEMENT 1100W 220V	5-25
MR005C	90459-1382	HEATING ELEMENT 1100W 220V	5-25
MR005D	90459-1382	HEATING ELEMENT 1100W 220V	5-25
MR005C	90459-1382	HEATING ELEMENT 1100W 220V	5-25
MR005D	90459-1382	HEATING ELEMENT 1100W 220V	5-25
MR005C	90459-1382	HEATING ELEMENT 1100W 220V	5-25
MR005D	90459-1382	HEATING ELEMENT 1100W 220V	5-25
MR005C	90459-1382	HEATING ELEMENT 1100W 220V	5-25
MR005D	90459-1382	HEATING ELEMENT 1100W 220V	5-25
MR005C	90459-1382	HEATING ELEMENT 1100W 220V	5-25
MR005D	90459-1382	HEATING ELEMENT 1100W 220V	5-25
MR005C	90459-1382	HEATING ELEMENT 1100W 220V	5-25
MR005D	90459-1382	HEATING ELEMENT 1100W 220V	5-25
MR005C	90459-1382	HEATING ELEMENT 1100W 220V	5-25
MR005D	90459-1382	HEATING ELEMENT 1100W 220V	5-25
MR005C	90459-1382	HEATING ELEMENT 1100W 220V	5-25
MR005D	90459-1382	HEATING ELEMENT 1100W 220V	5-25
MR005A	90459-1382	HEATING ELEMENT 1100W 220V	5-25
MR005B	90459-1382	HEATING ELEMENT 1100W 220V	5-25
MR005C	90459-1382	HEATING ELEMENT 1100W 220V	5-27
MR005D	90459-1382	HEATING ELEMENT 1100W 220V	5-27
MR005C	90459-1382	HEATING ELEMENT 1100W 220V	5-27
MR005D	90459-1382	HEATING ELEMENT 1100W 220V	5-27
MR005C	90459-1382	HEATING ELEMENT 1100W 220V	5-27
MR005D	90459-1382	HEATING ELEMENT 1100W 220V	5-27
MR005C	90459-1382	HEATING ELEMENT 1100W 220V	5-27

Pos	Part No	Description	Page No
M			
MR005D	90459-1382	HEATING ELEMENT 1100W 220V	5-27
MR005C	90459-1382	HEATING ELEMENT 1100W 220V	5-27
MR005D	90459-1382	HEATING ELEMENT 1100W 220V	5-27
MR005C	90459-1382	HEATING ELEMENT 1100W 220V	5-27
MR005D	90459-1382	HEATING ELEMENT 1100W 220V	5-27
MR005C	90459-1382	HEATING ELEMENT 1100W 220V	5-27
MR005D	90459-1382	HEATING ELEMENT 1100W 220V	5-27
MR005C	90459-1382	HEATING ELEMENT 1100W 220V	5-27
MR005D	90459-1382	HEATING ELEMENT 1100W 220V	5-27
MR005C	90459-1382	HEATING ELEMENT 1100W 220V	5-27
MR005D	90459-1382	HEATING ELEMENT 1100W 220V	5-27
MR005C	90459-1382	HEATING ELEMENT 1100W 220V	5-27
MR005D	90459-1382	HEATING ELEMENT 1100W 220V	5-27
MR005A	90459-1382	HEATING ELEMENT 1100W 220V	5-27
MR005B	90459-1382	HEATING ELEMENT 1100W 220V	5-27
MR032	90600-2007	HEATING ELEM.15KW 3X230/400V,T90600-2007	1-77, 1-79
MR033	1538473-0000	SEALING BLOCK	7-19
MR034	1524481-0000	SEALING BLOCK	7-21
MR035	90459-1094	HEATING ELEMENT 3000W 240V AC	1-69
MR036	90206-0070	HEATING ELEMENT 6000W 380/220V	1-55, 1-57
MR037	90206-0031	HEATING ELEMENT 700+1200W, 220V	1-73
MS008	90064-0085	PUSH BUTTON, RED	8-45
MS011	90600-6050	EMERGENCY STOP INCA 1 TINA, 30-054-00	8-45
MT001	67379-0114	TRANSFORMER	4-103
MT001	67379-0202	TRANSFORMER	4-103
MT001	67379-0204	TRANSFORMER	4-103
MT001	67379-0264	TRANSFORMER	4-103
MT001	67379-0265	TRANSFORMER	4-103
MT002	67379-0114	TRANSFORMER	4-101
MT002	67379-0202	TRANSFORMER	4-101
MT002	67379-0204	TRANSFORMER	4-101
MT002	67379-0264	TRANSFORMER	4-101
MT002	67379-0265	TRANSFORMER	4-101
MW018	351150-0403	CABLE OLFLEX 3X0,75 MM2 LIGHT/GREY	2-93
MW327	90220-0091	CABLE, PAIR TWISTED 2X2X0,25MM2	1-223
MW380	90220-0091	CABLE, PAIR TWISTED 2X2X0,25MM2	1-223
MW392	351162-0106	WIRE AWM 1X4 MM2 YELLOW-GREEN	2-93
MW662	90600-0934	CABLE M12-C62 5 POLE MALE, 20-056-02	2-93
MW953	90600-3697	SDL FLEX CABLE 10M, 5CASDL.0100-03	2-93
MW958	90459-2530	DEVICENET CABLE THIN	2-93
MXO79	90326-0020	SOCKET, FEMALE YELLOW CR-AL, 03-22000A	1-73
MX002	2506331-0200	CONNECTION BOX	5-75, 5-121
MX004	90326-0020	SOCKET, FEMALE YELLOW CR-AL, 03-22000A	1-55, 1-57
MX006	90195-0020	TERMINAL BLOCK, BK 2CRN, 0624 7200 00	6-13
MX007	456827-0400	CONNECTION BOX	2-37
MX008	1036443-0000	CONTACT UNIT	5-19, 5-21, 5-23, 5-25, 5-27
MX009	1036443-0000	CONTACT UNIT	5-19, 5-21, 5-23, 5-25, 5-27
MX010	1036443-0000	CONTACT UNIT	5-19, 5-21, 5-23, 5-25, 5-27
MX011	1036443-0000	CONTACT UNIT	5-19, 5-21, 5-23, 5-25, 5-27
MX020	2501466-0100	CONNECTION BOX	11-21
MX021	2501465-0100	CONNECTION BOX	11-21
MX022	2510844-0100	CONNECTION BOX	11-21
MX031	580064-0200	CONNECTION BOX	7-5, 7-7
MX037A	90326-0020	SOCKET, FEMALE YELLOW CR-AL, 03-22000A	1-69
MX037B	90326-0020	SOCKET, FEMALE YELLOW CR-AL, 03-22000A	1-69
MX038	90326-0020	SOCKET, FEMALE YELLOW CR-AL, 03-22000A	1-55, 1-57
MX039	90326-0020	SOCKET, FEMALE YELLOW CR-AL, 03-22000A	1-77, 1-79
MX055	90326-0020	SOCKET, FEMALE YELLOW CR-AL, 03-22000A	1-99
MX060	1558318-0100	CONNECTION BOX	8-45
MX075	67380-0208	TRANSFORMER	7-45
MX212	90326-0022	PLUG, MALE YELLOW CR-AL, 03-21000A	5-19, 5-21, 5-23, 5-25, 5-27
MX212,1	90326-0077	CONTACT, 5100 004-001	5-19, 5-21, 5-23, 5-25, 5-27
MX213	90326-0022	PLUG, MALE YELLOW CR-AL, 03-21000A	5-19, 5-21, 5-23, 5-25, 5-27
MX213,1	90326-0077	CONTACT, 5100 004-001	5-19, 5-21, 5-23, 5-25, 5-27
MX214	90326-0022	PLUG, MALE YELLOW CR-AL, 03-21000A	5-19, 5-21, 5-23, 5-25, 5-27
MX214,1	90326-0077	CONTACT, 5100 004-001	5-19, 5-21, 5-23, 5-25, 5-27
MX215	90326-0022	PLUG, MALE YELLOW CR-AL, 03-21000A	5-19, 5-21, 5-23, 5-25, 5-27
MX215,1	90326-0077	CONTACT, 5100 004-001	5-19, 5-21, 5-23, 5-25, 5-27
MX518	90326-0022	PLUG, MALE YELLOW CR-AL, 03-21000A	1-43
MY004	90042-0171	SOLENOID VALVE, 330 3/2 NC	1-103, 1-105
MY022	90355-0088	ELECTROMAGNETIC CLUTCH, 30 MM/24 VDC	3-5
MY029	90042-0172	SOLENOID VALVE, 4023/1005/1032 24VDC	6-35
MY031	90042-0172	SOLENOID VALVE, 4023/1005/1032 24VDC	6-29, 6-31
MY032	90042-0172	SOLENOID VALVE, 4023/1005/1032 24VDC	6-29, 6-31
MY033	90042-0134	SOLENOID VALVE ASCO SCE 210 802 24VDC	6-101, 6-103
MY034	544906-0000	SOLENOID VALVE	1-103, 1-105
MY035	544906-0000	SOLENOID VALVE	1-103, 1-105
MY043	90432-0023	BRAKE ORTLINGHAUS	3-5
MY051	90042-0173	SOLENOID VALVE, 6013 2/2 NC	6-23
MY052	90459-1690	DIRECTIONAL VALVE, DG4V-3-6C-MUH-7-60-EN	6-97, 6-99
MY107	90458-1092	PROPORTIONAL VALVE, 0-10V/0-6 BAR	1-223
MY108	544906-0000	SOLENOID VALVE	1-55, 1-57

Pos	Part No	Description	Page No
M			
MY131	90201-0058	SOLENOID VALVE DC 24V	6-97, 6-99
MY132	90201-0058	SOLENOID VALVE DC 24V	6-97, 6-99
MY184	90458-1092	PROPORTIONAL VALVE, 0-10V/0-6 BAR	1-223
MY510	979956-0000	SOLENOID VALVE	1-35, 1-37
MY513	90042-0171	SOLENOID VALVE, 330 3/2 NC	1-35, 1-37
MY514	90042-0171	SOLENOID VALVE, 330 3/2 NC	1-35, 1-37
MY515	90042-0171	SOLENOID VALVE, 330 3/2 NC	1-35, 1-37
MY516	90042-0171	SOLENOID VALVE, 330 3/2 NC	1-35, 1-37
MY517	90042-0171	SOLENOID VALVE, 330 3/2 NC	1-35, 1-37
MY519	90459-1420	PROPORTIONAL VALVE 0 - 10V/0-6 BAR	1-35, 1-37
MY519	90600-0491	ACTUATOR, 9650-0089-Z-I-OTI	1-43
O			
M.O103	929415-0100	BALANCE TANK	6-15, 6-17
P			
P002	90053-0031	HOUR COUNTER, B 609.10 10-50VDC	9-149, 9-151, 9-153
P002.1	359241-0201	SIGN: " HOUR METER"	9-149, 9-151, 9-153
P003	90053-0029	COUNTER, F524.800FA3C 24VDC	9-149, 9-151, 9-153
P003.1	359241-0180	SIGN: PRODUCTION	9-149, 9-151, 9-153
P004	90053-0031	HOUR COUNTER, B 609.10 10-50VDC	9-149, 9-151, 9-153
P004.1	359241-0459	SIGN "PT HOUR METER"	9-149, 9-151, 9-153
P005	90459-0080	RECORDER 6-CHANNEL, LOGOPRINT 500	9-149, 9-151, 9-153
Q			
Q001	90459-5518	CIRCUIT BREAKER, NZMB1-4-A63	9-159
Q001.1	90457-0123	SIGN, MAIN SWITCH	9-87, 9-89
Q001.1	90459-4182	MAIN SWITCH, NZM1-XS-R	9-159
Q001.2	359241-0297	SIGN: 50 HZ	9-87, 9-89
Q006	90459-5328	OVERLOAD PROTECTION, PKZM0-10	9-145
Q006.1	90259-0313	AUXILIARY SWITCH, NHI21-PKZ0	9-145
Q007	90459-5326	OVERLOAD PROTECTION, PKZM0-4	9-145
Q007.1	90259-0313	AUXILIARY SWITCH, NHI21-PKZ0	9-145
Q008	90459-5328	OVERLOAD PROTECTION, PKZM0-10	9-145
Q008.1	90259-0313	AUXILIARY SWITCH, NHI21-PKZ0	9-145
Q008.2	90259-0308	INCOMING TERMINAL, BK25/3-PKZ0	9-145
Q009	90459-5324	OVERLOAD PROTECTION, PKZM0-1,6	9-145
Q009.1	90259-0313	AUXILIARY SWITCH, NHI21-PKZ0	9-145
Q009.2	90259-0308	INCOMING TERMINAL, BK25/3-PKZ0	9-145
Q016	90459-5320	OVERLOAD PROTECTION, PKZM0-0,25	9-145
Q016.1	90259-0313	AUXILIARY SWITCH, NHI21-PKZ0	9-145
Q016.2	90259-0308	INCOMING TERMINAL, BK25/3-PKZ0	9-145
Q027	90459-5324	OVERLOAD PROTECTION, PKZM0-1,6	9-145
Q027.1	90259-0313	AUXILIARY SWITCH, NHI21-PKZ0	9-145
Q027.2	90259-0308	INCOMING TERMINAL, BK25/3-PKZ0	9-145
R			
R007	90121-0132	RESISTANCE FIXED, 0,51 KOHM, 0,25 W	9-75, 9-77
M.R001	90206-0053	HEATING ELEMENT 230V 1200W	8-33
R503	90459-6797	RESISTANCE FIXED, 120 OHM, 0,40 W	9-41
S			
S001	90600-6049	EMERG. STOP SMILE 11 EAR TINA, 30-050-01	9-133
S002	90600-6049	EMERG. STOP SMILE 11 EAR TINA, 30-050-01	9-131
S003	90111-0124	KEY SWITCH, 1NO, 1NC CONTACT	9-149, 9-151, 9-153
S003.1	359241-0122	SIGN: " CLEANING STEAM BARRIER SPACE"	9-149, 9-151, 9-153
S004	90111-0122	KEY SWITCH, 2 NO CONTACTS	9-149, 9-151, 9-153
S004.1	359241-0133	SIGN: SERVICE SWITCH	9-149, 9-151, 9-153
S006	90111-0120	ROTARY SWITCH, 704.510 .0A+704.901.5/A	9-149, 9-151, 9-153
S006.1	359241-0140	SIGN: LIGHT OFF/ON	9-149, 9-151, 9-153
M.S501	90064-0082	PUSH BUTTON, WHITE	2-13
M.S502	90064-0082	PUSH BUTTON, WHITE	2-13
M.S501	90064-0082	PUSH BUTTON, WHITE	2-15
M.S502	90064-0082	PUSH BUTTON, WHITE	2-15, 2-29
M.S501	90064-0082	PUSH BUTTON, WHITE	2-29
M.S502	90064-0082	PUSH BUTTON, WHITE	2-31
M.S501	90064-0082	PUSH BUTTON, WHITE	2-31
M.S035	90064-0085	PUSH BUTTON, RED	7-17
M.S012	90600-6048	EMERG. STOP SMILE 11 EA TINA, 30-050-00	1-9, 1-11
M.S004	90600-6048	EMERG. STOP SMILE 11 EA TINA, 30-050-00	1-173, 1-175, 1-177, 1-179, 1-181, 1-183
M.S005	90600-6050	EMERGENCY STOP INCA 1 TINA, 30-054-00	7-17
T			
T004	90458-1273	TRANSFORMER, OFL-1350	9-87, 9-89
T005	90245-0029	TRANSFORMER, 1-PH 6500 VA SEC 130A	9-87, 9-89
T006	90458-0258	TRANSFORMER, 1-PH 100VA SEC 8,3A	9-87, 9-89
T007	90459-7198	AUXILIARY BATTERY MODULE, IC693ACC302	9-13, 9-15, 9-17, 9-19
M.T031	90458-0254	PRECISION PRESSURE REGULATOR,LRP-1/4-0,7	6-37
M.T021	90459-2241	REGULATOR, MS4-LRB-1/4-D5-AS	6-37
M.T004	90459-2241	REGULATOR, MS4-LRB-1/4-D5-AS	6-37
M.T001	90459-2241	REGULATOR, MS4-LRB-1/4-D5-AS	6-37
M.T103	90459-2242	REGULATOR, MS4-LRB-1/4-D7-AS	6-37
M.T002	90459-5804	FILTER REGULATOR, MS6-LFR-1/2-D6-ERV-AS	6-39
U			
M.U031	90458-2969	PRESSURE GAUGE, MAP-40-1-1/8-EN	6-37
V			
V014	90600-2135	MODULE CONNECTOR 250V, BEST/D 1878560000	9-75, 9-77

Pos	Part No	Description	Page No
V			
M.V501	90038-0021	DIODE, 1A 800V	2-13
M.V502	90038-0021	DIODE, 1A 800V	2-13
M.V501	90038-0021	DIODE, 1A 800V	2-15
M.V502	90038-0021	DIODE, 1A 800V	2-15, 2-29
M.V501	90038-0021	DIODE, 1A 800V	2-29
M.V502	90038-0021	DIODE, 1A 800V	2-31
M.V501	90038-0021	DIODE, 1A 800V	2-31
W			
W001	351150-0407	CABLE OLFLEX 12X0,75 MM2 LIGHT/GREY	9-13, 9-15, 9-17, 9-19
W003	90220-0091	CABLE, PAIR TWISTED 2X2X0,25MM2	9-13, 9-15, 9-17, 9-19
W005	351150-0418	CABLE OLFLEX 4X2,5 MM2 LIGHT/GREY	2-37
W006	351150-0412	CABLE OLFLEX 3X1,5 MM2 LIGHT/GREY	2-37
W007	351150-0412	CABLE OLFLEX 3X1,5 MM2 LIGHT/GREY	2-37
W008	351150-0414	CABLE OLFLEX 5X1,5 MM2 LIGHT/GREY	9-13, 9-15, 9-17, 9-19
W009	351150-0406	CABLE OLFLEX 7X0,75 MM2 LIGHT/GREY	2-81
W012	351150-0187	CABLE OLFLEX 5X6 MM2 LIGHT/GREY	9-13, 9-15, 9-17, 9-19
W013	351150-0431	CABLE OLFLEX 2X0,75 MM2 LIGHT/GREY	5-201, 5-203
W019	351150-0412	CABLE OLFLEX 3X1,5 MM2 LIGHT/GREY	2-13, 2-15, 2-29, 2-31
W023	90220-0104	SCR. CABLE 4X1,5MM2	2-37
W025	351150-0428	CABLE OLFLEX 41X0,75 MM2 LIGHT/GREY	2-37
W033	90220-0059	THERMOCOUPLE CABLE, P/PTW-20F-K 2X0,5MM2	9-149, 9-151, 9-153
W034	90220-0059	THERMOCOUPLE CABLE, P/PTW-20F-K 2X0,5MM2	9-149, 9-151, 9-153
W035	90220-0059	THERMOCOUPLE CABLE, P/PTW-20F-K 2X0,5MM2	9-29
W036	90220-0059	THERMOCOUPLE CABLE, P/PTW-20F-K 2X0,5MM2	9-29
W037	90220-0059	THERMOCOUPLE CABLE, P/PTW-20F-K 2X0,5MM2	9-149, 9-151, 9-153
W038	90220-0059	THERMOCOUPLE CABLE, P/PTW-20F-K 2X0,5MM2	9-149, 9-151, 9-153
W039	90220-0059	THERMOCOUPLE CABLE, P/PTW-20F-K 2X0,5MM2	9-149, 9-151, 9-153
W040	90220-0059	THERMOCOUPLE CABLE, P/PTW-20F-K 2X0,5MM2	9-149, 9-151, 9-153
W042	90220-0059	THERMOCOUPLE CABLE, P/PTW-20F-K 2X0,5MM2	9-149, 9-151, 9-153
W044	551969-0012	COAXIAL CABLE	9-173
W046	90220-0059	THERMOCOUPLE CABLE, P/PTW-20F-K 2X0,5MM2	9-149, 9-151, 9-153
W047	90220-0059	THERMOCOUPLE CABLE, P/PTW-20F-K 2X0,5MM2	9-149, 9-151, 9-153
W048	90220-0059	THERMOCOUPLE CABLE, P/PTW-20F-K 2X0,5MM2	9-149, 9-151, 9-153
W049	90220-0059	THERMOCOUPLE CABLE, P/PTW-20F-K 2X0,5MM2	9-149, 9-151, 9-153
W050	90031-0308	PLC,CABLES, I/O EXPANSION CABLE	9-41, 9-43
W056	90220-0059	THERMOCOUPLE CABLE, P/PTW-20F-K 2X0,5MM2	9-149, 9-151, 9-153
W057	90220-0059	THERMOCOUPLE CABLE, P/PTW-20F-K 2X0,5MM2	9-149, 9-151, 9-153
W058	90220-0059	THERMOCOUPLE CABLE, P/PTW-20F-K 2X0,5MM2	9-149, 9-151, 9-153
W059	90220-0059	THERMOCOUPLE CABLE, P/PTW-20F-K 2X0,5MM2	9-149, 9-151, 9-153
W061	1254442-0000	CABLE SERIAL	9-83
W062	351501-0030	ETHERNET PATCH CABLE, FL CAT5 PATCH 3,0	9-83
W063	90220-0091	CABLE, PAIR TWISTED 2X2X0,25MM2	9-85
W064	3024833-0000	CABLE SERIAL	9-83
W066	90220-0059	THERMOCOUPLE CABLE, P/PTW-20F-K 2X0,5MM2	9-149, 9-151, 9-153
W067	90220-0183	SCR. CABLE 2X0,34MM2	9-13, 9-15, 9-17, 9-19
W068	90220-0183	SCR. CABLE 2X0,34MM2	9-13, 9-15, 9-17, 9-19
W069	90220-0183	SCR. CABLE 2X0,34MM2	9-13, 9-15, 9-17, 9-19
W070	90220-0059	THERMOCOUPLE CABLE, P/PTW-20F-K 2X0,5MM2	9-149, 9-151, 9-153
W071	90220-0059	THERMOCOUPLE CABLE, P/PTW-20F-K 2X0,5MM2	9-149, 9-151, 9-153
W072	90220-0059	THERMOCOUPLE CABLE, P/PTW-20F-K 2X0,5MM2	9-149, 9-151, 9-153
W085	90220-0104	SCR. CABLE 4X1,5MM2	9-103, 9-105
M.W653	90459-4876	FOCUS JUMPER CABLE M12 5P 3M, 20-056-21	1-173, 1-175, 1-177, 1-179, 1-181, 1-183
M.W683	90459-4876	FOCUS JUMPER CABLE M12 5P 3M, 20-056-21	3-31
M.W677	90459-4876	FOCUS JUMPER CABLE M12 5P 3M, 20-056-21	6-61
M.W665	90459-4876	FOCUS JUMPER CABLE M12 5P 3M, 20-056-21	7-31
M.W689	90459-4876	FOCUS JUMPER CABLE M12 5P 3M, 20-056-21	8-11, 8-13
C.W699	90459-4876	FOCUS JUMPER CABLE M12 5P 3M, 20-056-21	9-99
C.W698	90459-4876	FOCUS JUMPER CABLE M12 5P 3M, 20-056-21	9-99
C.W693	90459-4876	FOCUS JUMPER CABLE M12 5P 3M, 20-056-21	9-99
C.W684	90459-4876	FOCUS JUMPER CABLE M12 5P 3M, 20-056-21	9-99
C.W676	90459-4876	FOCUS JUMPER CABLE M12 5P 3M, 20-056-21	9-99
C.W699	90459-4876	FOCUS JUMPER CABLE M12 5P 3M, 20-056-21	9-101
C.W698	90459-4876	FOCUS JUMPER CABLE M12 5P 3M, 20-056-21	9-101
C.W693	90459-4876	FOCUS JUMPER CABLE M12 5P 3M, 20-056-21	9-101
C.W684	90459-4876	FOCUS JUMPER CABLE M12 5P 3M, 20-056-21	9-101
C.W676	90459-4876	FOCUS JUMPER CABLE M12 5P 3M, 20-056-21	9-101
C.W666	90459-4876	FOCUS JUMPER CABLE M12 5P 3M, 20-056-21	9-111
C.W661	90459-4876	FOCUS JUMPER CABLE M12 5P 3M, 20-056-21	9-111
C.W666	90459-4876	FOCUS JUMPER CABLE M12 5P 3M, 20-056-21	9-113
C.W661	90459-4876	FOCUS JUMPER CABLE M12 5P 3M, 20-056-21	9-113
C.W666	90459-4876	FOCUS JUMPER CABLE M12 5P 3M, 20-056-21	9-115
C.W661	90459-4876	FOCUS JUMPER CABLE M12 5P 3M, 20-056-21	9-115
C.W666	90459-4876	FOCUS JUMPER CABLE M12 5P 3M, 20-056-21	9-117
C.W661	90459-4876	FOCUS JUMPER CABLE M12 5P 3M, 20-056-21	9-117
C.W666	90459-4876	FOCUS JUMPER CABLE M12 5P 3M, 20-056-21	9-119
C.W661	90459-4876	FOCUS JUMPER CABLE M12 5P 3M, 20-056-21	9-119
C.W666	90459-4876	FOCUS JUMPER CABLE M12 5P 3M, 20-056-21	9-121
C.W661	90459-4876	FOCUS JUMPER CABLE M12 5P 3M, 20-056-21	9-121
C.W666	90459-4876	FOCUS JUMPER CABLE M12 5P 3M, 20-056-21	9-123
C.W661	90459-4876	FOCUS JUMPER CABLE M12 5P 3M, 20-056-21	9-123
C.W666	90459-4876	FOCUS JUMPER CABLE M12 5P 3M, 20-056-21	9-125

Pos	Part No	Description	Page No
W			
C.W661	90459-4876	FOCUS JUMPER CABLE M12 5P 3M, 20-056-21	9-125
C.W666	90459-4876	FOCUS JUMPER CABLE M12 5P 3M, 20-056-21	9-127
C.W661	90459-4876	FOCUS JUMPER CABLE M12 5P 3M, 20-056-21	9-127
C.W666	90459-4876	FOCUS JUMPER CABLE M12 5P 3M, 20-056-21	9-129
C.W661	90459-4876	FOCUS JUMPER CABLE M12 5P 3M, 20-056-21	9-129
M.W669	90459-7095	FOCUS JUMPER CABLE M12 5P 1M, 20-056-20	1-83
M.W668	90459-7095	FOCUS JUMPER CABLE M12 5P 1M, 20-056-20	1-83
M.W667	90459-7095	FOCUS JUMPER CABLE M12 5P 1M, 20-056-20	1-83
M.W669	90459-7095	FOCUS JUMPER CABLE M12 5P 1M, 20-056-20	1-85
M.W668	90459-7095	FOCUS JUMPER CABLE M12 5P 1M, 20-056-20	1-85
M.W667	90459-7095	FOCUS JUMPER CABLE M12 5P 1M, 20-056-20	1-85
M.W675	90459-7095	FOCUS JUMPER CABLE M12 5P 1M, 20-056-20	6-61
M.W664	90459-7095	FOCUS JUMPER CABLE M12 5P 1M, 20-056-20	7-31
M.W663	90459-7095	FOCUS JUMPER CABLE M12 5P 1M, 20-056-20	7-31
M.W687	90459-7095	FOCUS JUMPER CABLE M12 5P 1M, 20-056-20	8-23, 8-25
C.W682	90459-7095	FOCUS JUMPER CABLE M12 5P 1M, 20-056-20	9-99
C.W680	90459-7095	FOCUS JUMPER CABLE M12 5P 1M, 20-056-20	9-99
C.W674	90459-7095	FOCUS JUMPER CABLE M12 5P 1M, 20-056-20	9-99
C.W672	90459-7095	FOCUS JUMPER CABLE M12 5P 1M, 20-056-20	9-99
C.W654	90459-7095	FOCUS JUMPER CABLE M12 5P 1M, 20-056-20	9-99
C.W651	90459-7095	FOCUS JUMPER CABLE M12 5P 1M, 20-056-20	9-99
C.W682	90459-7095	FOCUS JUMPER CABLE M12 5P 1M, 20-056-20	9-101
C.W680	90459-7095	FOCUS JUMPER CABLE M12 5P 1M, 20-056-20	9-101
C.W674	90459-7095	FOCUS JUMPER CABLE M12 5P 1M, 20-056-20	9-101
C.W672	90459-7095	FOCUS JUMPER CABLE M12 5P 1M, 20-056-20	9-101
C.W654	90459-7095	FOCUS JUMPER CABLE M12 5P 1M, 20-056-20	9-101
C.W651	90459-7095	FOCUS JUMPER CABLE M12 5P 1M, 20-056-20	9-101
M.W652	90600-0934	CABLE M12-C62 5 POLE MALE, 20-056-02	7-17
M.W657	90600-0934	CABLE M12-C62 5 POLE MALE, 20-056-02	8-45
M.W650	90600-0936	CABLE M12-C612 5 POLE, 20-056-22	1-9, 1-11
M.W670	90600-5930	CABLE C9, 20-057-15	1-173, 1-175, 1-177, 1-179, 1-181, 1-183
M.W151	90600-5930	CABLE C9, 20-057-15	6-15, 6-17
M.W150	90600-5930	CABLE C9, 20-057-15	6-39
M.W688	90600-5930	CABLE C9, 20-057-15	8-23, 8-25
C.W678	90600-5930	CABLE C9, 20-057-15	9-99
C.W658	90600-5930	CABLE C9, 20-057-15	9-99
C.W656	90600-5930	CABLE C9, 20-057-15	9-99
C.W678	90600-5930	CABLE C9, 20-057-15	9-101
C.W658	90600-5930	CABLE C9, 20-057-15	9-101
C.W656	90600-5930	CABLE C9, 20-057-15	9-101
M.W320	351150-0403	CABLE OLFLEX 3X0,75 MM2 LIGHT/GREY	6-39
M.W319	351150-0403	CABLE OLFLEX 3X0,75 MM2 LIGHT/GREY	6-39
M.W342	351150-0403	CABLE OLFLEX 3X0,75 MM2 LIGHT/GREY	6-45
M.W321	351150-0403	CABLE OLFLEX 3X0,75 MM2 LIGHT/GREY	6-45
M.W342	351150-0403	CABLE OLFLEX 3X0,75 MM2 LIGHT/GREY	6-47
M.W321	351150-0403	CABLE OLFLEX 3X0,75 MM2 LIGHT/GREY	6-47
M.W154	351150-0403	CABLE OLFLEX 3X0,75 MM2 LIGHT/GREY	6-57
M.W555	351150-0404	CABLE OLFLEX 4X0,75 MM2 LIGHT/GREY	2-13
M.W556	351150-0404	CABLE OLFLEX 4X0,75 MM2 LIGHT/GREY	2-13
M.W555	351150-0404	CABLE OLFLEX 4X0,75 MM2 LIGHT/GREY	2-15
M.W556	351150-0404	CABLE OLFLEX 4X0,75 MM2 LIGHT/GREY	2-15, 2-29
M.W555	351150-0404	CABLE OLFLEX 4X0,75 MM2 LIGHT/GREY	2-29
M.W556	351150-0404	CABLE OLFLEX 4X0,75 MM2 LIGHT/GREY	2-31
M.W555	351150-0404	CABLE OLFLEX 4X0,75 MM2 LIGHT/GREY	2-31
M.W605	351150-0407	CABLE OLFLEX 12X0,75 MM2 LIGHT/GREY	7-17
M.W391	351162-0106	WIRE AWM 1X4 MM2 YELLOW-GREEN	6-45
M.W132	351162-0106	WIRE AWM 1X4 MM2 YELLOW-GREEN	6-45
M.W391	351162-0106	WIRE AWM 1X4 MM2 YELLOW-GREEN	6-47
M.W132	351162-0106	WIRE AWM 1X4 MM2 YELLOW-GREEN	6-47
W088	1512322-0000	COPPER BRAID	9-41
W091	90220-0059	THERMOCOUPLE CABLE, P/PTW-20F-K 2X0,5MM2	9-13, 9-15, 9-17, 9-19
W092	90220-0091	CABLE, PAIR TWISTED 2X2X0,25MM2	9-13, 9-15, 9-17, 9-19
W096	90220-0091	CABLE, PAIR TWISTED 2X2X0,25MM2	9-13, 9-15, 9-17, 9-19
W098	351150-0415	CABLE OLFLEX 7X1,5 MM2 LIGHT/GREY	9-167
W099	90220-0092	CABLE, PAIR TWISTED 3X2X0,25MM2	9-13, 9-15, 9-17, 9-19
W101	90220-0105	SCR. CABLE 4X2,5MM2	3-9
W102	351423-0004	CABLE UNITRONIC LICY 2X0,34	9-173
W103	351423-0004	CABLE UNITRONIC LICY 2X0,34	9-173
W104	351423-0004	CABLE UNITRONIC LICY 2X0,34	9-173
W108	351150-0425	CABLE OLFLEX 25X0,75 MM2 LIGHT/GREY	2-37
W110	351150-0413	CABLE OLFLEX 4GX1,5 MM2 LIGHT/GREY	2-37
W121	1512322-0000	COPPER BRAID	9-41
W122	1512322-0000	COPPER BRAID	9-43
W123	1512322-0000	COPPER BRAID	9-45
W124	90220-0183	SCR. CABLE 2X0,34MM2	9-41
W125	90220-0183	SCR. CABLE 2X0,34MM2	9-41
W126	90220-0183	SCR. CABLE 2X0,34MM2	9-41
W0127	90220-0183	SCR. CABLE 2X0,34MM2	9-13, 9-15, 9-17, 9-19
W127	90220-0183	SCR. CABLE 2X0,34MM2	9-41
W128	90220-0183	SCR. CABLE 2X0,34MM2	9-41
W129	90220-0092	CABLE, PAIR TWISTED 3X2X0,25MM2	9-13, 9-15, 9-17, 9-19
W130	90220-0183	SCR. CABLE 2X0,34MM2	9-41

W

Pos	Part No	Description	Page No
W131	1512322-0000	COPPER BRAID	9-41
W140	351150-0403	CABLE OLFLEX 3X0,75 MM2 LIGHT/GREY	6-33
W230	351150-0412	CABLE OLFLEX 3X1,5 MM2 LIGHT/GREY	2-37
W231	351150-0412	CABLE OLFLEX 3X1,5 MM2 LIGHT/GREY	2-37
W232	351150-0412	CABLE OLFLEX 3X1,5 MM2 LIGHT/GREY	2-37
W233	351150-0412	CABLE OLFLEX 3X1,5 MM2 LIGHT/GREY	2-37
W234	90220-0034	THERMOC.CABLE, TEX/SITW-20F-KX 2X0,5MM2	2-37
W235	90220-0034	THERMOC.CABLE, TEX/SITW-20F-KX 2X0,5MM2	2-37
W236	90220-0034	THERMOC.CABLE, TEX/SITW-20F-KX 2X0,5MM2	2-37
W237	90220-0034	THERMOC.CABLE, TEX/SITW-20F-KX 2X0,5MM2	2-37
W238	90220-0034	THERMOC.CABLE, TEX/SITW-20F-KX 2X0,5MM2	5-19, 5-21, 5-23, 5-25, 5-27
W239	90220-0034	THERMOC.CABLE, TEX/SITW-20F-KX 2X0,5MM2	5-19, 5-21, 5-23, 5-25, 5-27
W240	90220-0034	THERMOC.CABLE, TEX/SITW-20F-KX 2X0,5MM2	5-19, 5-21, 5-23, 5-25, 5-27
W241	90220-0034	THERMOC.CABLE, TEX/SITW-20F-KX 2X0,5MM2	5-19, 5-21, 5-23, 5-25, 5-27
W242	351120-0144	CABLE Ã–LFLEX HEAT 180 SIHF 3X1,5	5-19, 5-21, 5-23, 5-25, 5-27
W243	351120-0144	CABLE Ã–LFLEX HEAT 180 SIHF 3X1,5	5-19, 5-21, 5-23, 5-25, 5-27
W244	351120-0144	CABLE Ã–LFLEX HEAT 180 SIHF 3X1,5	5-19, 5-21, 5-23, 5-25, 5-27
W245	351120-0144	CABLE Ã–LFLEX HEAT 180 SIHF 3X1,5	5-19, 5-21, 5-23, 5-25, 5-27
W290	351162-0106	WIRE AWM 1X4 MM2 YELLOW-GREEN	2-37
W301	351150-0418	CABLE OLFLEX 4X2,5 MM2 LIGHT/GREY	6-67
W302	351120-0144	CABLE Ã–LFLEX HEAT 180 SIHF 3X1,5	8-47, 8-49
W303	351150-0431	CABLE OLFLEX 2X0,75 MM2 LIGHT/GREY	6-85, 6-87
W304	351150-0418	CABLE OLFLEX 4X2,5 MM2 LIGHT/GREY	6-97, 6-99
W305	351150-0412	CABLE OLFLEX 3X1,5 MM2 LIGHT/GREY	6-13
W308	351150-0418	CABLE OLFLEX 4X2,5 MM2 LIGHT/GREY	6-73
W312	351150-0412	CABLE OLFLEX 3X1,5 MM2 LIGHT/GREY	1-55, 1-57
W316	351150-0403	CABLE OLFLEX 3X0,75 MM2 LIGHT/GREY	6-97, 6-99
W317	351150-0403	CABLE OLFLEX 3X0,75 MM2 LIGHT/GREY	6-97, 6-99
W322	351150-0403	CABLE OLFLEX 3X0,75 MM2 LIGHT/GREY	6-95
W325	351150-0403	CABLE OLFLEX 3X0,75 MM2 LIGHT/GREY	6-29, 6-31
W345	351150-0431	CABLE OLFLEX 2X0,75 MM2 LIGHT/GREY	6-35
W348	351150-0403	CABLE OLFLEX 3X0,75 MM2 LIGHT/GREY	6-29, 6-31
W349	351150-0403	CABLE OLFLEX 3X0,75 MM2 LIGHT/GREY	6-97, 6-99
W350	351150-0403	CABLE OLFLEX 3X0,75 MM2 LIGHT/GREY	6-97, 6-99
W352	351150-0431	CABLE OLFLEX 2X0,75 MM2 LIGHT/GREY	6-23
W354	351150-0403	CABLE OLFLEX 3X0,75 MM2 LIGHT/GREY	6-101, 6-103
W355	351150-0404	CABLE OLFLEX 4X0,75 MM2 LIGHT/GREY	6-97, 6-99
W356	351150-0404	CABLE OLFLEX 4X0,75 MM2 LIGHT/GREY	6-95
W360	351150-0405	CABLE OLFLEX 5X0,75 MM2 LIGHT/GREY	6-69
W361	351150-0403	CABLE OLFLEX 3X0,75 MM2 LIGHT/GREY	6-83
W370	551969-0006	COAXIAL CABLES	2-37
W371	551969-0006	COAXIAL CABLES	2-37
W372	1548155-0000	COAXIAL CABLE	4-103
W373	1548155-0000	COAXIAL CABLE	4-101
W390	351162-0109	WIRE AWM 1X16 MM2 YELLOW-GREEN	6-61
W401	351120-0267	CABLE Ã–LFLEX HEAT 180 SIHF 4X6	1-55, 1-57
W402	351120-0144	CABLE Ã–LFLEX HEAT 180 SIHF 3X1,5	1-73
W403	351120-0145	CABLE Ã–LFLEX HEAT 180 SIHF 3X2,5	1-69
W404	90220-0104	SCR. CABLE 4X1,5MM2	1-81
W405	351150-0431	CABLE OLFLEX 2X0,75 MM2 LIGHT/GREY	1-29
W406	90220-0059	THERMOCOUPLE CABLE, P/PTW-20F-K 2X0,5MM2	1-55, 1-57
W407	90220-0059	THERMOCOUPLE CABLE, P/PTW-20F-K 2X0,5MM2	1-165, 1-167
W408	90220-0059	THERMOCOUPLE CABLE, P/PTW-20F-K 2X0,5MM2	1-55, 1-57
W409	90220-0059	THERMOCOUPLE CABLE, P/PTW-20F-K 2X0,5MM2	1-77, 1-79
W410	90220-0059	THERMOCOUPLE CABLE, P/PTW-20F-K 2X0,5MM2	1-69
W411	90220-0059	THERMOCOUPLE CABLE, P/PTW-20F-K 2X0,5MM2	1-99
W412	90220-0059	THERMOCOUPLE CABLE, P/PTW-20F-K 2X0,5MM2	1-9, 1-11
W420	90220-0085	CABLE, MULTI-CONDUCTOR SCREENED	1-227
W425	351150-0404	CABLE OLFLEX 4X0,75 MM2 LIGHT/GREY	1-103, 1-105
W426	351150-0403	CABLE OLFLEX 3X0,75 MM2 LIGHT/GREY	1-55, 1-57
W427	351150-0431	CABLE OLFLEX 2X0,75 MM2 LIGHT/GREY	1-55, 1-57
W428	351150-0431	CABLE OLFLEX 2X0,75 MM2 LIGHT/GREY	1-55, 1-57
W430	351150-0403	CABLE OLFLEX 3X0,75 MM2 LIGHT/GREY	1-103, 1-105
W431	351150-0403	CABLE OLFLEX 3X0,75 MM2 LIGHT/GREY	1-103, 1-105
W432	351150-0403	CABLE OLFLEX 3X0,75 MM2 LIGHT/GREY	1-103, 1-105
W433	90220-0059	THERMOCOUPLE CABLE, P/PTW-20F-K 2X0,5MM2	1-73
W442	90458-1298	CONNECTOR, AND CABLE 403000E 18M 080	4-61, 4-63
W444	90458-1298	CONNECTOR, AND CABLE 403000E 18M 080	4-57, 4-59
W449	90220-0107	SCR. CABLE 5X0,75MM2	4-61, 4-63
W450	90220-0059	THERMOCOUPLE CABLE, P/PTW-20F-K 2X0,5MM2	1-69
W451	90220-0107	SCR. CABLE 5X0,75MM2	4-57, 4-59
W452	351120-0168	CABLE SIHF 4X10MM2 GREEN/YELLOW	1-77, 1-79
W459	351150-0413	CABLE OLFLEX 4GX1,5 MM2 LIGHT/GREY	1-97
W601	548770-0006	COAXIAL CABLE L=1200 MM	7-45
W602	351150-0422	CABLE OLFLEX 3X4 MM2 LIGHT/GREY	7-33
W605	351150-0407	CABLE OLFLEX 12X0,75 MM2 LIGHT/GREY	7-33
W615	351150-0425	CABLE OLFLEX 25X0,75 MM2 LIGHT/GREY	7-33
W630	351120-0146	CABLE Ã–LFLEX HEAT 180 SIHF 3X4	7-19
W631	351120-0145	CABLE Ã–LFLEX HEAT 180 SIHF 3X2,5	7-21
W655	90459-4876	FOCUS JUMPER CABLE M12 5P 3M, 20-056-21	9-133
W657	90459-4786	CYLINDER, WITH INT. GUIDING BORE 16	9-131
W701	351150-0403	CABLE OLFLEX 3X0,75 MM2 LIGHT/GREY	1-35, 1-37

Pos	Part No	Description	Page No
W			
W703	351150-0403	CABLE OLFLEX 3X0,75 MM2 LIGHT/GREY	1-35, 1-37
W704	351150-0403	CABLE OLFLEX 3X0,75 MM2 LIGHT/GREY	1-35, 1-37
W705	351150-0403	CABLE OLFLEX 3X0,75 MM2 LIGHT/GREY	1-35, 1-37
W706	351150-0403	CABLE OLFLEX 3X0,75 MM2 LIGHT/GREY	1-35, 1-37
W707	351150-0404	CABLE OLFLEX 4X0,75 MM2 LIGHT/GREY	1-35, 1-37
W715	351150-0425	CABLE OLFLEX 25X0,75 MM2 LIGHT/GREY	1-35, 1-37
W716	90220-0059	THERMOCOUPLE CABLE, P/PTW-20F-K 2X0,5MM2	1-43
W717	351150-0403	CABLE OLFLEX 3X0,75 MM2 LIGHT/GREY	1-35, 1-37
W721	90220-0072	SCR. CABLE 4X0,34MM2	1-35, 1-37
W721.1	353300-0006	HEATSHRINK TUBING	1-35, 1-37
W722	90220-0072	SCR. CABLE 4X0,34MM2	1-35, 1-37
W722.1	353300-0006	HEATSHRINK TUBING	1-35, 1-37
W750	351150-0414	CABLE OLFLEX 5X1,5 MM2 LIGHT/GREY	8-47, 8-49
W751	351150-0412	CABLE OLFLEX 3X1,5 MM2 LIGHT/GREY	8-47, 8-49
W753	351150-0404	CABLE OLFLEX 4X0,75 MM2 LIGHT/GREY	8-45
W753	351150-0406	CABLE OLFLEX 7X0,75 MM2 LIGHT/GREY	8-47, 8-49
W757	90220-0104	SCR. CABLE 4X1,5MM2	8-17, 8-19
W759	351150-0425	CABLE OLFLEX 25X0,75 MM2 LIGHT/GREY	8-47, 8-49
W780	351150-0406	CABLE OLFLEX 7X0,75 MM2 LIGHT/GREY	8-45
W788	351150-0405	CABLE OLFLEX 5X0,75 MM2 LIGHT/GREY	8-47, 8-49
W790	351150-0405	CABLE OLFLEX 5X0,75 MM2 LIGHT/GREY	8-47, 8-49
W951	90220-0091	CABLE, PAIR TWISTED 2X2X0,25MM2	11-21
W952	90220-0091	CABLE, PAIR TWISTED 2X2X0,25MM2	11-21
W954	351150-0405	CABLE OLFLEX 5X0,75 MM2 LIGHT/GREY	11-31
W955	351150-0405	CABLE OLFLEX 5X0,75 MM2 LIGHT/GREY	11-33
W956	90041-0068	DATACABLE MODEM-PC, 25-113-93	11-21
W957	90459-2530	DEVICENET CABLE THIN	9-41
W958	351150-0405	CABLE OLFLEX 5X0,75 MM2 LIGHT/GREY	11-25
X			
X001	1511800-0100	POWER SIDE,BOTTOM TERMINAL BLOCK	9-13, 9-15, 9-17, 9-19
X002	1511802-0300	TERMINAL BLOCK	9-13, 9-15, 9-17, 9-19
X003	1511804-0200	LOGIC SIDE TOP TERMINAL BLOCK	9-13, 9-15, 9-17, 9-19
X005	1517659-0200	MODEM	9-83
X009	1511829-0200	POWER SIDE, TOP TERMINAL BLOCK	9-13, 9-15, 9-17, 9-19
X011	90458-0876	FEMALE INSERT, HAN 6B 09 14 002 2751	9-103, 9-105
X011.1	90110-0123	HOUSING, 09 30 006 0301	9-103, 9-105
X011.2	90458-0875	HINGED FRAME, 09 14 006 0313	9-103, 9-105
X012	90110-0296	FEMALE INSERT, HDC-HA-4BS 149840-B/2	9-103, 9-105
X012	90459-2412	CONNECTOR, HDC-KITS, HDC-HA-4SS	8-45
X012.1	90110-0371	HOOD, TOP ENTRY, HDC-HA-3-TOVL1/11	8-45
X012.1	90457-0050	BULKHEAD HOUSING, HDC 04A ALU	9-103, 9-105
X013	90110-0296	FEMALE INSERT, HDC-HA-4BS 149840-B/2	9-103, 9-105
X013	90459-2412	CONNECTOR, HDC-KITS, HDC-HA-4SS	8-17, 8-19
X013.1	90110-0371	HOOD, TOP ENTRY, HDC-HA-3-TOVL1/11	8-17, 8-19
X013.1	90457-0050	BULKHEAD HOUSING, HDC 04A ALU	9-103, 9-105
X014	90110-0296	FEMALE INSERT, HDC-HA-4BS 149840-B/2	9-103, 9-105
X014.1	90457-0050	BULKHEAD HOUSING, HDC 04A ALU	9-103, 9-105
X015	90110-0150	MALE INSERT, HDC HE 24 MS, 1211 1000 00	8-45
X015	90110-0151	FEMALE INSERT, 24-POL 121130 0000	9-107
X015.1	90110-0152	CABLE HOOD 24-POL 70.352.2428.1	8-45
X015.1	90110-0153	CHASSIS HOUSING, HDC 24B ABU	9-107
X016	90110-0150	MALE INSERT, HDC HE 24 MS, 1211 1000 00	8-45
X016	90110-0151	FEMALE INSERT, 24-POL 121130 0000	9-107
X016.1	90110-0152	CABLE HOOD 24-POL 70.352.2428.1	8-45
X016.1	90110-0153	CHASSIS HOUSING, HDC 24B ABU	9-107
X017	90110-0163	FEMALE INSERT 70 300 0640 0	9-167
X017.1	90110-0226	CABLE HOOD 6-POL 70.350.0628.0	9-167
X018	90110-0247	EMALE INSERT 70.200.0653.0	9-111, 9-113, 9-115, 9-117, 9-119, 9-121, 9-123, 9-125, 9-127, 9-129
X018.1	90110-0243	CONTACT HOUSING 16-POL 70.320.1628.0	9-111, 9-113, 9-115, 9-117, 9-119, 9-121, 9-123, 9-125, 9-127, 9-129
X018.2	90110-0150	MALE INSERT, HDC HE 24 MS, 1211 1000 00	7-33
X018.3	90110-0346	HOOD, SIDE ENTRY, 12 11220 00 00	7-33
X019	90110-0151	FEMALE INSERT, 24-POL 121130 0000	9-111, 9-113, 9-115, 9-117, 9-119, 9-121, 9-123, 9-125, 9-127, 9-129
X019.1	90110-0153	CHASSIS HOUSING, HDC 24B ABU	9-111, 9-113, 9-115, 9-117, 9-119, 9-121, 9-123, 9-125, 9-127, 9-129
X019.2	90110-0156	MALE INSERT 70.210.0653.0	7-33
X019.3	90110-0244	CABLE HOOD 6-POL 70.350.1628.0	7-33
X020	90001-0033	WALL SOCKET, E1834666	9-13, 9-15, 9-17, 9-19
X020.1	90459-1738	MANDATORY ACTION SIGN ISO, READ MAINTENA	9-13, 9-15, 9-17, 9-19
X021	90001-0033	WALL SOCKET, E1834666	9-13, 9-15, 9-17, 9-19
X021.1	90459-1738	MANDATORY ACTION SIGN ISO, READ MAINTENA	9-13, 9-15, 9-17, 9-19
X022	90110-0296	FEMALE INSERT, HDC-HA-4BS 149840-B/2	9-111, 9-113, 9-115, 9-117, 9-119, 9-121, 9-123, 9-125, 9-127, 9-129
X022.1	90458-1181	BULKHEAD HOUSING, HDC-HA-3-AWVL1/11	9-111, 9-113, 9-115, 9-117, 9-119, 9-121, 9-123, 9-125, 9-127, 9-129
X023	90458-1279	PLUG CONNECTOR, DP1	9-13, 9-15, 9-17, 9-19
X025	90110-0151	FEMALE INSERT, 24-POL 121130 0000	9-111, 9-113, 9-115, 9-117, 9-119, 9-121, 9-123, 9-125, 9-127, 9-129
X025.1	90110-0153	CHASSIS HOUSING, HDC 24B ABU	9-111, 9-113, 9-115, 9-117, 9-119, 9-121, 9-123, 9-125, 9-127, 9-129

Pos	Part No	Description	Page No
X			
X026	90458-1406	FEMALE INSERT, 1207700000	9-111, 9-113, 9-115, 9-117, 9-119, 9-121, 9-123, 9-125, 9-127, 9-129
X026.1	90110-0243	CONTACT HOUSING 16-POL 70.320.1628.0	9-111, 9-113, 9-115, 9-117, 9-119, 9-121, 9-123, 9-125, 9-127, 9-129
X027	90458-1279	PLUG CONNECTOR, DP1	9-13, 9-15, 9-17, 9-19
M.X050	90326-0020	SOCKET, FEMALE YELLOW CR-AL, 03-22000A	1-9, 1-11
M.X040	90326-0020	SOCKET, FEMALE YELLOW CR-AL, 03-22000A	1-165, 1-167
M.X310	90459-4254	CONNECTION BLOCK TINA 4A, 20-054-03	1-173, 1-175, 1-177, 1-179, 1-181, 1-183
M.X313	90459-4254	CONNECTION BLOCK TINA 4A, 20-054-03	8-23, 8-25
C.X317	90459-4254	CONNECTION BLOCK TINA 4A, 20-054-03	9-99
C.X316	90459-4254	CONNECTION BLOCK TINA 4A, 20-054-03	9-99
C.X317	90459-4254	CONNECTION BLOCK TINA 4A, 20-054-03	9-101
C.X316	90459-4254	CONNECTION BLOCK TINA 4A, 20-054-03	9-101
C.X342	90600-1559	PANEL FEED THROUGH, FWD5 54218	9-103, 9-105
C.X334	90600-1559	PANEL FEED THROUGH, FWD5 54218	9-111
C.X332	90600-1559	PANEL FEED THROUGH, FWD5 54218	9-111
C.X334	90600-1559	PANEL FEED THROUGH, FWD5 54218	9-113
C.X332	90600-1559	PANEL FEED THROUGH, FWD5 54218	9-113
C.X334	90600-1559	PANEL FEED THROUGH, FWD5 54218	9-115
C.X332	90600-1559	PANEL FEED THROUGH, FWD5 54218	9-115
C.X334	90600-1559	PANEL FEED THROUGH, FWD5 54218	9-117
C.X332	90600-1559	PANEL FEED THROUGH, FWD5 54218	9-117
C.X334	90600-1559	PANEL FEED THROUGH, FWD5 54218	9-119
C.X332	90600-1559	PANEL FEED THROUGH, FWD5 54218	9-119
C.X334	90600-1559	PANEL FEED THROUGH, FWD5 54218	9-121
C.X332	90600-1559	PANEL FEED THROUGH, FWD5 54218	9-121
C.X334	90600-1559	PANEL FEED THROUGH, FWD5 54218	9-123
C.X332	90600-1559	PANEL FEED THROUGH, FWD5 54218	9-123
C.X334	90600-1559	PANEL FEED THROUGH, FWD5 54218	9-125
C.X332	90600-1559	PANEL FEED THROUGH, FWD5 54218	9-125
C.X334	90600-1559	PANEL FEED THROUGH, FWD5 54218	9-127
C.X332	90600-1559	PANEL FEED THROUGH, FWD5 54218	9-127
C.X334	90600-1559	PANEL FEED THROUGH, FWD5 54218	9-129
C.X332	90600-1559	PANEL FEED THROUGH, FWD5 54218	9-129
C.X311	90600-4876	CONNECTION BOX TINA 8A , 20-054-05	9-99, 9-101
M.X312	90601-0026	JUNCTION BLOCK,TINA 11-A	7-31
X300	1511806-0200	X300	9-159
X330	90600-1559	PANEL FEED THROUGH, FWD5 54218	1-185, 1-187, 1-189, 1-191
X333	90600-1559	PANEL FEED THROUGH, FWD5 54218	9-91, 9-93
X337	90600-1559	PANEL FEED THROUGH, FWD5 54218	9-91, 9-93
X338	90600-1559	PANEL FEED THROUGH, FWD5 54218	9-91, 9-93
X341	90600-1559	PANEL FEED THROUGH, FWD5 54218	9-91, 9-93
X452	90110-0028	CONTACT STAK 3 N GREY, 932140-106	9-83
X2004	90459-5574	CONNECTOR, 1787-PLUG10R	9-41
Y			
M.Y562	90042-0172	SOLENOID VALVE, 4023/1005/1032 24VDC	6-33
M.Y039	90042-0173	SOLENOID VALVE, 6013 2/2 NC	6-45, 6-47
M.Y182	90458-1194	VALVE, 5/2 MONOSTABLE	6-49
M.Y177	90458-1194	VALVE, 5/2 MONOSTABLE	6-49
M.Y027	90458-1194	VALVE, 5/2 MONOSTABLE	6-49
M.Y182	90458-1194	VALVE, 5/2 MONOSTABLE	6-49
M.Y177	90458-1194	VALVE, 5/2 MONOSTABLE	6-49
M.Y027	90458-1194	VALVE, 5/2 MONOSTABLE	6-49
M.Y009	90458-1194	VALVE, 5/2 MONOSTABLE	6-49
M.Y007	90458-1194	VALVE, 5/2 MONOSTABLE	6-49
M.Y027	90458-1194	VALVE, 5/2 MONOSTABLE	6-49
M.Y009	90458-1194	VALVE, 5/2 MONOSTABLE	6-49
M.Y007	90458-1194	VALVE, 5/2 MONOSTABLE	6-49
M.Y183	90458-1194	VALVE, 5/2 MONOSTABLE	6-49
M.Y182	90458-1194	VALVE, 5/2 MONOSTABLE	6-49
M.Y072	90458-1194	VALVE, 5/2 MONOSTABLE	6-49
M.Y009	90458-1194	VALVE, 5/2 MONOSTABLE	6-49
M.Y007	90458-1194	VALVE, 5/2 MONOSTABLE	6-49
M.Y915	90458-1194	VALVE, 5/2 MONOSTABLE	6-49
M.Y129	90458-1194	VALVE, 5/2 MONOSTABLE	6-49
M.Y105	90458-1194	VALVE, 5/2 MONOSTABLE	6-49
M.Y086	90458-1194	VALVE, 5/2 MONOSTABLE	6-49
M.Y026	90458-1194	VALVE, 5/2 MONOSTABLE	6-49
M.Y025	90458-1194	VALVE, 5/2 MONOSTABLE	6-49
M.Y024	90458-1194	VALVE, 5/2 MONOSTABLE	6-49
M.Y023	90458-1194	VALVE, 5/2 MONOSTABLE	6-49
M.Y021	90458-1194	VALVE, 5/2 MONOSTABLE	6-49
M.Y020	90458-1194	VALVE, 5/2 MONOSTABLE	6-49
M.Y019	90458-1194	VALVE, 5/2 MONOSTABLE	6-49
M.Y182	90458-1194	VALVE, 5/2 MONOSTABLE	6-51
M.Y177	90458-1194	VALVE, 5/2 MONOSTABLE	6-51
M.Y027	90458-1194	VALVE, 5/2 MONOSTABLE	6-51
M.Y182	90458-1194	VALVE, 5/2 MONOSTABLE	6-51
M.Y177	90458-1194	VALVE, 5/2 MONOSTABLE	6-51
M.Y027	90458-1194	VALVE, 5/2 MONOSTABLE	6-51
M.Y009	90458-1194	VALVE, 5/2 MONOSTABLE	6-51
M.Y007	90458-1194	VALVE, 5/2 MONOSTABLE	6-51

Pos	Part No	Description	Page No
Y			
M.Y027	90458-1194	VALVE, 5/2 MONOSTABLE	6-51
M.Y009	90458-1194	VALVE, 5/2 MONOSTABLE	6-51
M.Y007	90458-1194	VALVE, 5/2 MONOSTABLE	6-51
M.Y183	90458-1194	VALVE, 5/2 MONOSTABLE	6-51
M.Y182	90458-1194	VALVE, 5/2 MONOSTABLE	6-51
M.Y072	90458-1194	VALVE, 5/2 MONOSTABLE	6-51
M.Y009	90458-1194	VALVE, 5/2 MONOSTABLE	6-51
M.Y007	90458-1194	VALVE, 5/2 MONOSTABLE	6-51
M.Y915	90458-1194	VALVE, 5/2 MONOSTABLE	6-51
M.Y129	90458-1194	VALVE, 5/2 MONOSTABLE	6-51
M.Y105	90458-1194	VALVE, 5/2 MONOSTABLE	6-51
M.Y086	90458-1194	VALVE, 5/2 MONOSTABLE	6-51
M.Y026	90458-1194	VALVE, 5/2 MONOSTABLE	6-51
M.Y025	90458-1194	VALVE, 5/2 MONOSTABLE	6-51
M.Y024	90458-1194	VALVE, 5/2 MONOSTABLE	6-51
M.Y023	90458-1194	VALVE, 5/2 MONOSTABLE	6-51
M.Y021	90458-1194	VALVE, 5/2 MONOSTABLE	6-51
M.Y020	90458-1194	VALVE, 5/2 MONOSTABLE	6-51
M.Y019	90458-1194	VALVE, 5/2 MONOSTABLE	6-51
M.Y070	90458-1197	VALVE, 5/2 BISTABLE	6-49
M.Y027	90458-1197	VALVE, 5/2 BISTABLE	6-49
M.Y070	90458-1197	VALVE, 5/2 BISTABLE	6-51
M.Y027	90458-1197	VALVE, 5/2 BISTABLE	6-51
M.Y103	90458-1200	VALVE OPEN IN MID-POSITION 5/3	6-49, 6-51
M.Y017/008	90458-1202	VALVES 2X3/2, CLOSED	6-49
M.Y005/006	90458-1202	VALVES 2X3/2, CLOSED	6-49
M.Y002/003	90458-1202	VALVES 2X3/2, CLOSED	6-49
M.Y017/008	90458-1202	VALVES 2X3/2, CLOSED	6-51
M.Y005/006	90458-1202	VALVES 2X3/2, CLOSED	6-51
M.Y002/003	90458-1202	VALVES 2X3/2, CLOSED	6-51
M.Y001/102	90458-1203	VALVE 2X3/2 1X OPEN 1X CLOSED	6-49, 6-51
M.Y183	90458-1215	COVER PLATE, EMPTY VALVE POSITION	6-49
M.Y072	90458-1215	COVER PLATE, EMPTY VALVE POSITION	6-49
M.Y070	90458-1215	COVER PLATE, EMPTY VALVE POSITION	6-49
M.Y183	90458-1215	COVER PLATE, EMPTY VALVE POSITION	6-49
M.Y072	90458-1215	COVER PLATE, EMPTY VALVE POSITION	6-49
M.Y070	90458-1215	COVER PLATE, EMPTY VALVE POSITION	6-49
M.Y183	90458-1215	COVER PLATE, EMPTY VALVE POSITION	6-49
M.Y182	90458-1215	COVER PLATE, EMPTY VALVE POSITION	6-49
M.Y177	90458-1215	COVER PLATE, EMPTY VALVE POSITION	6-49
M.Y072	90458-1215	COVER PLATE, EMPTY VALVE POSITION	6-49
M.Y070	90458-1215	COVER PLATE, EMPTY VALVE POSITION	6-49
M.Y177	90458-1215	COVER PLATE, EMPTY VALVE POSITION	6-49
M.Y183	90458-1215	COVER PLATE, EMPTY VALVE POSITION	6-51
M.Y072	90458-1215	COVER PLATE, EMPTY VALVE POSITION	6-51
M.Y070	90458-1215	COVER PLATE, EMPTY VALVE POSITION	6-51
M.Y183	90458-1215	COVER PLATE, EMPTY VALVE POSITION	6-51
M.Y072	90458-1215	COVER PLATE, EMPTY VALVE POSITION	6-51
M.Y070	90458-1215	COVER PLATE, EMPTY VALVE POSITION	6-51
M.Y183	90458-1215	COVER PLATE, EMPTY VALVE POSITION	6-51
M.Y182	90458-1215	COVER PLATE, EMPTY VALVE POSITION	6-51
M.Y177	90458-1215	COVER PLATE, EMPTY VALVE POSITION	6-51
M.Y072	90458-1215	COVER PLATE, EMPTY VALVE POSITION	6-51
M.Y070	90458-1215	COVER PLATE, EMPTY VALVE POSITION	6-51
M.Y177	90458-1215	COVER PLATE, EMPTY VALVE POSITION	6-51
M.Y102	90601-1126	SAFETY VALVE, MS6-SV-1/2-E-10V24-AG	6-15, 6-17
M.Y101	90601-1126	SAFETY VALVE, MS6-SV-1/2-E-10V24-AG	6-39
Z			
Z001	90600-7487	SURGE PROTECTION DEV., VAL-MS 230/3+1 FM	9-161
Z002	90600-5263	LINE FILTER, B84144A90R120	9-159
Z003	90600-5266	FEED THROUGH FILTER, B85321A2502W160	9-159
Z003.1	90600-5266	FEED THROUGH FILTER, B85321A2502W160	9-159
Z004	90600-5249	FERRITE, B64290L616X38	9-13, 9-15, 9-17, 9-19
Z005	90600-5249	FERRITE, B64290L616X38	9-13, 9-15, 9-17, 9-19
Z006	90600-5249	FERRITE, B64290L616X38	9-13, 9-15, 9-17, 9-19
Z007	90600-5249	FERRITE, B64290L616X38	9-13, 9-15, 9-17, 9-19
Z008	90459-3460	FOOTPRINT FILTER 1 PHASE 10A	9-13, 9-15, 9-17, 9-19
Z009	90459-3460	FOOTPRINT FILTER 1 PHASE 10A	9-13, 9-15, 9-17, 9-19
Z010	90600-5249	FERRITE, B64290L616X38	9-13, 9-15, 9-17, 9-19
Z012	90459-3460	FOOTPRINT FILTER 1 PHASE 10A	9-13, 9-15, 9-17, 9-19
Z013	90600-5249	FERRITE, B64290L616X38	9-13, 9-15, 9-17, 9-19
Z015	90459-3459	FOOTPRINT FILTER 3 PHASE 18A	9-13, 9-15, 9-17, 9-19
Z016	90600-5249	FERRITE, B64290L616X38	9-13, 9-15, 9-17, 9-19
Z017	90459-3460	FOOTPRINT FILTER 1 PHASE 10A	9-13, 9-15, 9-17, 9-19
Z018	90600-5249	FERRITE, B64290L616X38	9-13, 9-15, 9-17, 9-19
Z019	90600-5253	LINE FILTER, B84113HB60	9-13, 9-15, 9-17, 9-19
Z020	90600-5249	FERRITE, B64290L616X38	9-13, 9-15, 9-17, 9-19
Z021	90600-5249	FERRITE, B64290L616X38	9-13, 9-15, 9-17, 9-19
Z023	90600-5253	LINE FILTER, B84113HB60	9-13, 9-15, 9-17, 9-19
Z024	90600-5249	FERRITE, B64290L616X38	9-13, 9-15, 9-17, 9-19
Z025	90600-5249	FERRITE, B64290L616X38	9-13, 9-15, 9-17, 9-19
Z026	90600-5253	LINE FILTER, B84113HB60	9-13, 9-15, 9-17, 9-19

Pos	Part No	Description	Page No
Z			
Z033	90459-3460	FOOTPRINT FILTER 1 PHASE 10A	9-13, 9-15, 9-17, 9-19
Z034	90600-5249	FERRITE, B64290L616X38	9-13, 9-15, 9-17, 9-19
Z035	90600-5249	FERRITE, B64290L616X38	9-13, 9-15, 9-17, 9-19
Z036	90600-5255	LINE FILTER, B84113HB116	9-13, 9-15, 9-17, 9-19
M.Z003	90459-1857	FILTER, MS6-LF-1/2-CRV	6-39
M.Z004	90459-2772	FILTER, MS6-LFM-1/2-ARV	6-39
M.Z005	90459-2773	FILTER, MS6-LFM-1/2-BRV	6-39

Pos	Part No	Description	Page No

Pos	Part No	Description	Page No	Pos	Part No	Description	Page No

Machine Type	Group Description	Page No

Tetra Pak

Label for 80 mm binder **Note!** *This page is generated* **automatically.**

TBA/19 0400
648160-0400 Issue 2012-05
Doc No. SPC-1531320-0107

TBA/19 0400
648160-0400 Issue 2012-05
Doc No. SPC-1531320-0107

TBA/19 0400
648160-0400 Issue 2012-05
Doc No. SPC-1531320-0107

TBA/19 0400 1(3)
648160-0400 Issue 2012-05
Doc No. SPC-1531320-0107

TBA/19 0400 1(2)
648160-0400 Issue 2012-05
Doc No. SPC-1531320-0107

TBA/19 0400 2(3)
648160-0400 Issue 2012-05
Doc No. SPC-1531320-0107

TBA/19 0400 2(2)
648160-0400 Issue 2012-05
Doc No. SPC-1531320-0107

TBA/19 0400 3(3)
648160-0400 Issue 2012-05
Doc No. SPC-1531320-0107

Label for 55 mm binder **Note!** *This page is generated* **automatically.**

TBA/19 0400
648160-0400 Issue 2012-05
Doc No. SPC-1531320-0107

TBA/19 0400 1(2)
648160-0400 Issue 2012-05
Doc No. SPC-1531320-0107

TBA/19 0400
648160-0400 Issue 2012-05
Doc No. SPC-1531320-0107

TBA/19 0400 2(2)
648160-0400 Issue 2012-05
Doc No. SPC-1531320-0107

TBA/19 0400
648160-0400 Issue 2012-05
Doc No. SPC-1531320-0107

TBA/19 0400 1(3)
648160-0400 Issue 2012-05
Doc No. SPC-1531320-0107

TBA/19 0400
648160-0400 Issue 2012-05
Doc No. SPC-1531320-0107

TBA/19 0400 2(3)
648160-0400 Issue 2012-05
Doc No. SPC-1531320-0107

TBA/19 0400
648160-0400 Issue 2012-05
Doc No. SPC-1531320-0107

TBA/19 0400 3(3)
648160-0400 Issue 2012-05
Doc No. SPC-1531320-0107

TBA/19 0400
648160-0400 Issue 2012-05
Doc No. SPC-1531320-0107

TBA/19 0400 3(3)
648160-0400 Issue 2012-05
Doc No. SPC-1531320-0107

Label for 40 mm binder **Note!** *This page is generated* **automatically.**

TBA/19 0400
648160-0400 Issue 2012-05
Doc No. SPC-1531320-0107

TBA/19 0400 1(2)
648160-0400 Issue 2012-05
Doc No. SPC-1531320-0107

TBA/19 0400
648160-0400 Issue 2012-05
Doc No. SPC-1531320-0107

TBA/19 0400 2(2)
648160-0400 Issue 2012-05
Doc No. SPC-1531320-0107

TBA/19 0400
648160-0400 Issue 2012-05
Doc No. SPC-1531320-0107

TBA/19 0400 1(2)
648160-0400 Issue 2012-05
Doc No. SPC-1531320-0107

TBA/19 0400
648160-0400 Issue 2012-05
Doc No. SPC-1531320-0107

TBA/19 0400 2(2)
648160-0400 Issue 2012-05
Doc No. SPC-1531320-0107

TBA/19 0400
648160-0400 Issue 2012-05
Doc No. SPC-1531320-0107

TBA/19 0400 1(3)
648160-0400 Issue 2012-05
Doc No. SPC-1531320-0107

TBA/19 0400
648160-0400 Issue 2012-05
Doc No. SPC-1531320-0107

TBA/19 0400 2(3)
648160-0400 Issue 2012-05
Doc No. SPC-1531320-0107

TBA/19 0400
648160-0400 Issue 2012-05
Doc No. SPC-1531320-0107

TBA/19 0400 3(3)
648160-0400 Issue 2012-05
Doc No. SPC-1531320-0107

TBA/19 0400
648160-0400 Issue 2012-05
Doc No. SPC-1531320-0107

TBA/19 0400 3(3)
648160-0400 Issue 2012-05
Doc No. SPC-1531320-0107