SPC

Spare Parts Catalogue

TBA/19 0400

648160-0400

Optional Kits (OK) 648184-0400

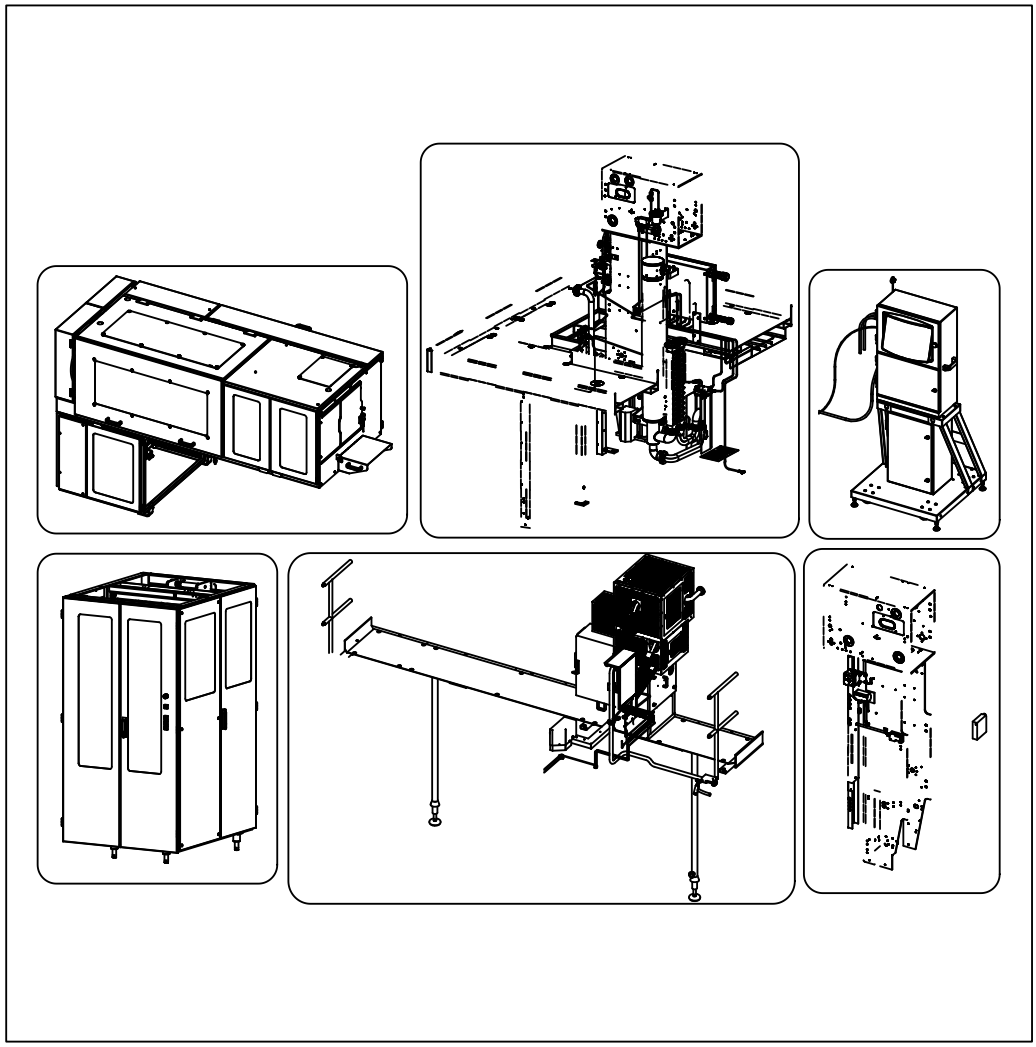

Tetra Pak

Doc. No: SPC-1531321-0105

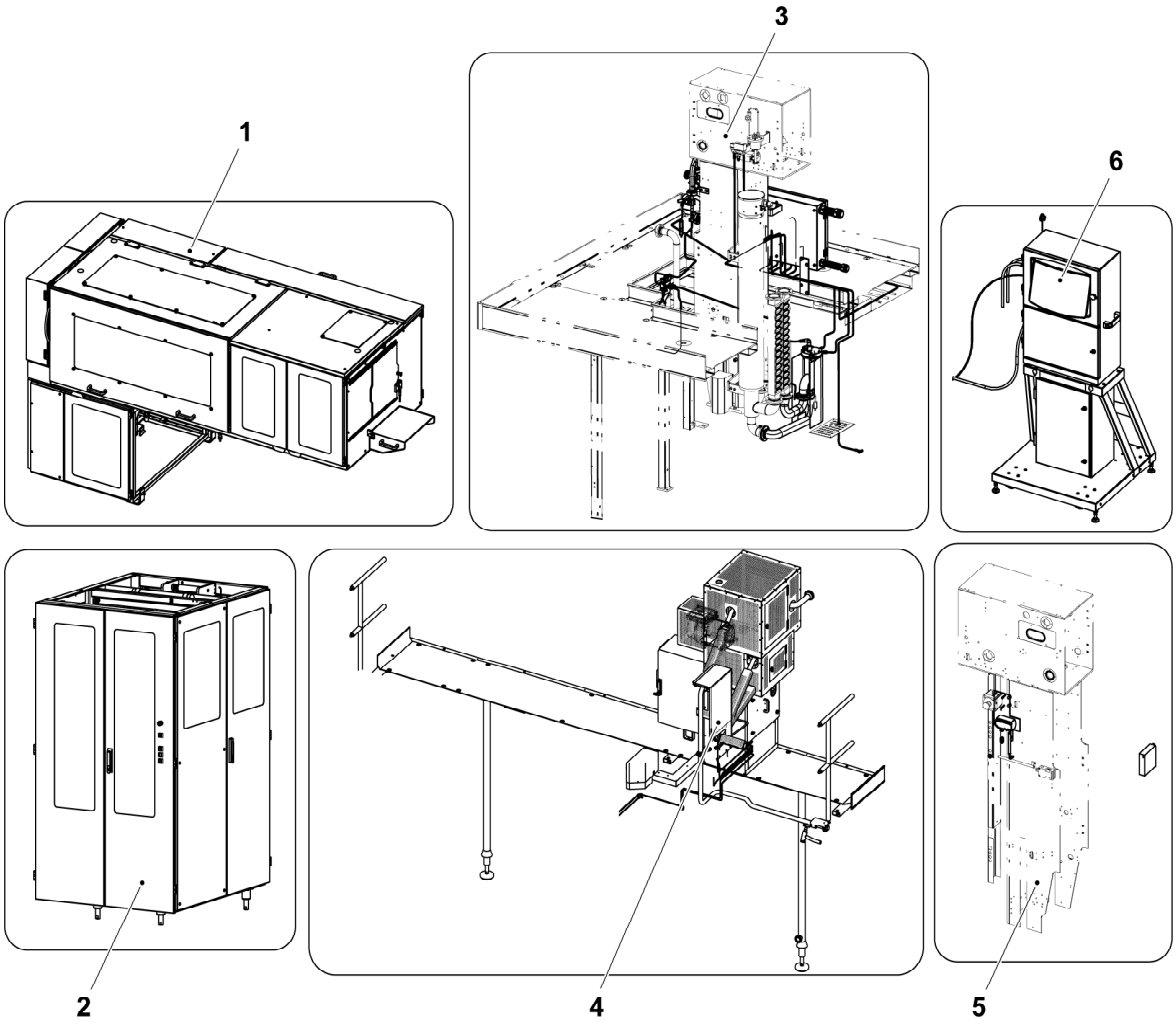

The position numbers in the illustration correspond with the chapter numbers listed on the next page.

Copyright © 2011 Tetra Pak Group

All rights reserved. No part of this document may be reproduced or copied in any form or by any means without written permission from Tetra Pak Packaging Solutions AB.

Tetra Pak and all Tetra Pak products are trademarks belonging to the Tetra Pak Group.

The content of this manual is in accordance with the design and construction of the machine or equipment at the time of publishing. Tetra Pak reserves the right to introduce design modifications without prior notice.

This document was produced by:

Tetra Pak Packaging Solutions AB
Technical Publications
Ruben Rausings gata
221 86 Lund Sweden

Additional copies can be ordered from Tetra Pak. When ordering additional copies, always provide the document number.

Doc. No. SPC-1531321-0105

Issue 2011-09

This document is valid from:

21217/00070

Series No/Machine No Sign.

SPC

Spare Parts Catalogue

TBA/19 0400
648160-0400

i Introduction

1 PullTab Unit PT19

2 Automatic Splicing Unit

3 Head Space by Injection

4 OE High Visc. Aseptic

5 OE Superv. Air Pressure

6 External Dating Unit

ii Part Number Index

iii Alphabetical Index

iv Ref. Des. Parts Index

Machine or equipment configurations that this catalogue is valid for are described on the next page.

Doc. No: SPC-1531321-0105

Issue 2011-09

Tetra Pak

Valid for:

Name	Drawing Specification and Development Step	Additional Information
TBA/19 0400	648160-0400	Valid for all volumes and package shapes

Update Log for Doc. No. SPC-1531321-0105

This table shows all changes made to this catalogue, including installed rebuilding kits, added or removed pages.

Date	Installed Kit	Added Pages (Doc. No.)	Removed Pages	Signature

Date	Installed Kit	Added Pages (Doc. No.)	Removed Pages	Signature

i Introduction

en About the Introduction Chapter
This chapter contains basic information about this catalogue and related Tetra Pak equipment.

bg За уводната глава
Тази глава съдържа основна информация за този каталог и приложимото Tetra Pak оборудване.

cs O kapitole Úvod
Tato kapitola obsahuje základní informace o této příručce a souvisejícím zařízení Tetra Pak.

da Om indledningen
Kapitlet indeholder grundlæggende oplysninger om dette katalog og tilhørende Tetra Pak-udstyr.

de Über das Einleitungskapitel
Diese Kapitel enthält grundlegende Informationen über diesen Katalog und die zugehörige Tetra Pak-Ausrüstung

el Σχετικά με το Κεφάλαιο 'Εισαγωγή'
Αυτό το κεφάλαιο περιέχει βασικές πληροφορίες για τον παρόντα κατάλογο και τον σχετικό εξοπλισμό της Tetra Pak.

es Acerca del capítulo Introducción
Este capítulo contiene información básica sobre este catálogo y el equipo Tetra Pak relacionado.

et Sissejuhatava peatüki kohta
See peatükk sisaldab teavet käesoleva kataloogi ja sellega seonduva Tetra Paki seadme kohta.

fi Tietoja Johdanto-luvusta
Tässä luvussa on perustietoja tästä luettelosta ja Tetra Pak -laitteesta.

fr À propos du chapitre Introduction
Ce chapitre contient les informations de base à propos de ce catalogue et de l'équipement Tetra Pak concerné.

hu A Bevezetés fejezetről
Ez a fejezet alapvető információkat tartalmaz a katalógusról és a hozzá tartozó Tetra Pak berendezésről.

is Um inngangskaflann
Þessi kafli inniheldur grundvallarupplýsingar um þennan vörulista og tengdan Tetra Pak búnað.

it Informazioni sul capitolo Introduzione
Questo capitolo contiene informazioni generali sul presente catalogo e sulla relativa macchina Tetra Pak.

lt Apie įvadinį skyrių
Šiame skyriuje pateikta pagrindinė informacija apie šį katalogą ir su juo susijusią "Tetra Pak" įrangą.

lv Par Ievada nodaļu
Šī nodaļa ietver galveno informāciju par šo katalogu un saistītajām Tetra Pak iekārtām.

nl Over de inleiding
Dit hoofdstuk bevat basisinformatie omtrent deze catalogus en aanverwante Tetra Pak-installatie.

no Om kapitlet Introduksjon
Dette kapitlet inneholder grunnleggende informasjon om denne katalogen og relatert Tetra Pak-utstyr.

pl Informacje na temat rozdziału wprowadzającego
Rozdział wprowadzający zawiera podstawowe informacje dotyczące niniejszego katalogu i związanej z nim maszyny Tetra Pak.

pt Acerca do Capítulo de Introdução
Este capítulo contém informações básicas sobre este catálogo e os equipamentos relacionados da Tetra Pak.

ro Despre capitolul introductiv
Acest capitol conține informații de bază despre acest catalog și despre echipamentul Tetra Pak corelat.

sk O kapitole Úvod
Táto kapitola obsahuje základné informácie o tomto návode a informácie súvisiace so zariadením Tetra Pak.

sl O uvodnem poglavju
To poglavje vsebuje osnovne informacije o tem katalogu in opremi Tetra Pak.

sv Om inledningskapitlet
Det här kapitlet innehåller grundläggande information om katalogen och Tetra Pak-utrustningen.

Introduction

Illustrations . . . . . i - 5
English Text . . . . . i - 7

Увод

Илюстрации . . . . . i - 5
Текст на български език . . . . . i -11

Úvod

Obrázky . . . . . i -5
Český text . . . . . i - 15

Indledning

Illustrationer . . . . . i - 5
Dansk tekst . . . . . i - 19

Einleitung

Abbildungen . . . . . i - 5
Deutscher Text . . . . . i - 23

Εισαγωγή

Εικόνες . . . . . i - 5
Ελληνικό Κείμενο . . . . . i - 27

Introducción

Ilustraciones . . . . . i - 5
Texto en español . . . . . i - 31

Sissejuhatus

Joonised . . . . . i - 5
Eestikeelne tekst . . . . . i - 35

Johdanto

Kuvat . . . . . i - 5
Suomenkielinen teksti . . . . . i - 39

Introduction

Illustrations . . . . . i - 5
Texte français . . . . . i - 43

Bevezetés

Ábrák . . . . . i - 5
Magyar szöveg . . . . . i - 47

Inngangur

Skýringarmyndir . . . . . i - 5
Íslenskur texti . . . . . i - 51

Introduzione

Figure . . . . . i - 5
Testo in italiano . . . . . i - 55

Įvadas

Paveikslėliai . . . . . i - 5
Lietuviškas tekstas . . . . . i - 59

Ievads

Ilustrācijas . . . . . i - 5
Teksts latviešu valodā . . . . . i - 63

Inleiding

Afbeeldingen . . . . . i - 5
Nederlands tekst . . . . . i - 67

Introduksjon

Illustrasjoner . . . . . i - 5
Norsk tekst . . . . . i - 71

Wprowadzenie

Rysunki . . . . . i - 5
Tekst polski . . . . . i - 75

Introdução

Ilustrações . . . . . i - 5
Texto em português . . . . . i - 79

Introducere

Ilustrații . . . . . i - 5
Text în limba română . . . . . i - 83

Úvod

Ilustrácie . . . . . i – 5
Slovenský text . . . . . i - 87

Uvod

Slike . . . . . i - 5
Slovensko besedilo . . . . . i - 91

Inledning

Bilder . . . . . i - 5
Svensk text . . . . . i - 95

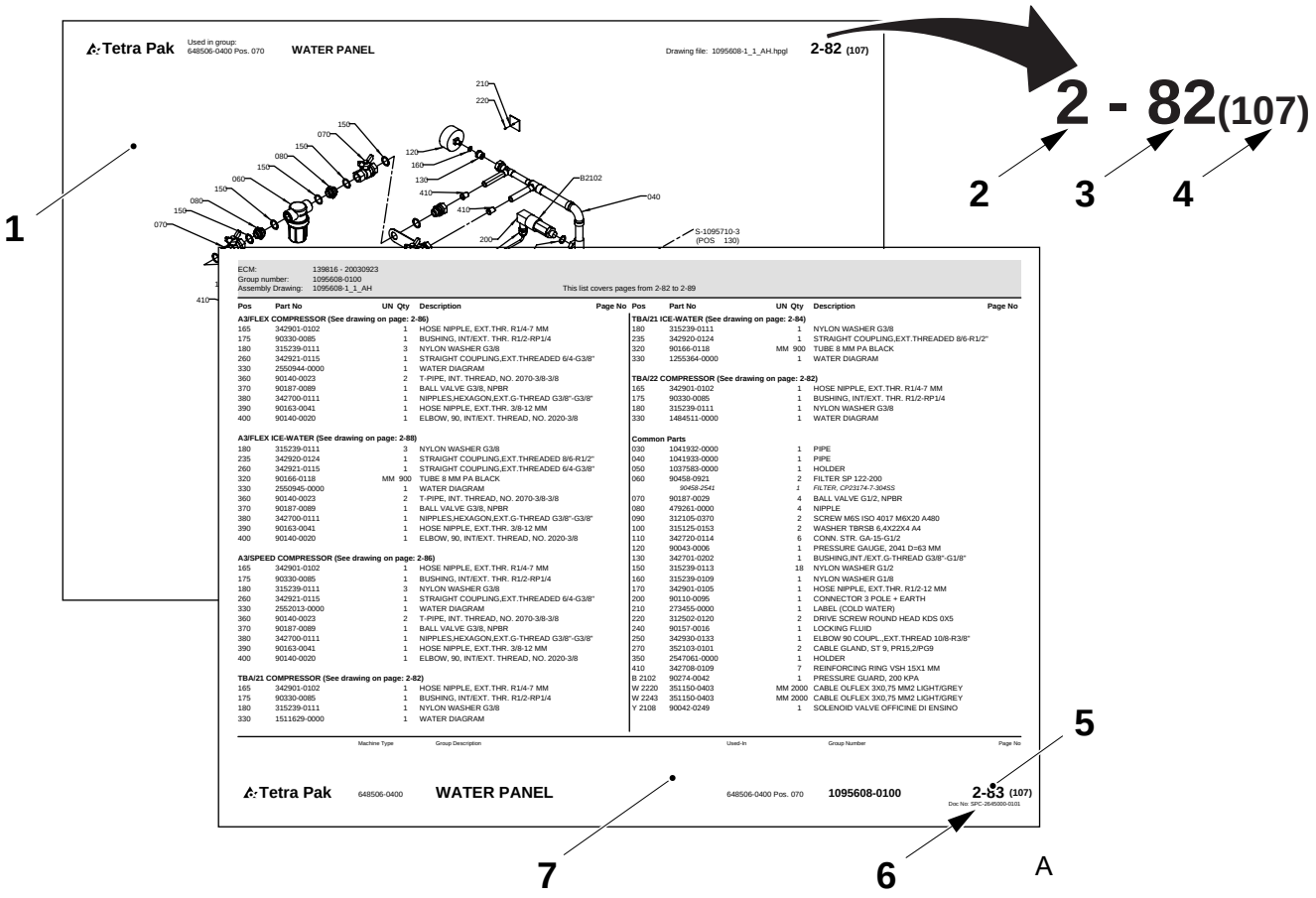
Tetra Pak
Used in group: 648506-0400 Pos. 070
WATER PANEL
Drawing file: 1095608-1_1_AH.hpgl
2-82 (107)
2 - 82(107)
1
2
3
4
5
6
7
A
ECM: 139816 - 20030923
Group number: 1095608-0100
Assembly Drawing: 1095608-1_1_AH
This list covers pages from 2-82 to 2-89
Tetra Pak
648506-0400
WATER PANEL
648506-0400 Pos. 070
1095608-0100
2-83 (107)

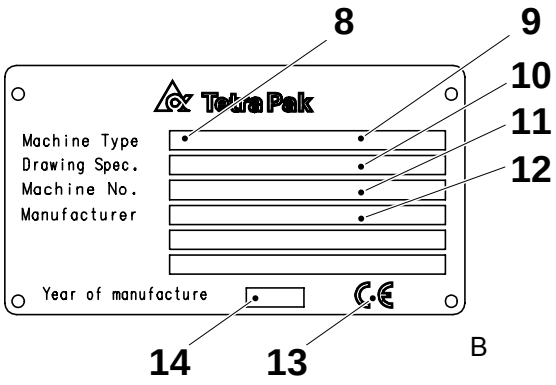
8
9
10
11
12
Tetra Pak
Machine Type
Drawing Spec.
Machine No.
Manufacturer
Year of manufacture
14
13
B

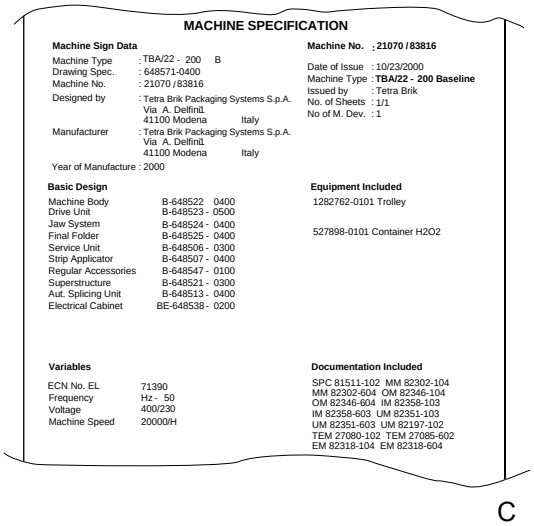
MACHINE SPECIFICATION
Machine Sign Data
Machine Type : TBA/22 - 200 B
Drawing Spec. : 648571-0400
Machine No. : 21070 / 83816
Designed by : Tetra Brik Packaging Systems S.p.A. Via A. Delfini1 41100 Modena Italy
Manufacturer : Tetra Brik Packaging Systems S.p.A. Via A. Delfini1 41100 Modena Italy
Year of Manufacture : 2000
Machine No. ; 21070 / 83816
Date of Issue : 10/23/2000
Machine Type : TBA/22 - 200 Baseline
Issued by : Tetra Brik
No. of Sheets : 1/1
No of M. Dev. : 1
Basic Design
Machine Body B-648522 0400
Drive Unit B-648523 - 0500
Jaw System B-648524 - 0400
Final Folder B-648525 - 0400
Service Unit B-648506 - 0300
Strip Applicator B-648507 - 0400
Regular Accessories B-648547 - 0100
Superstructure B-648521 - 0300
Aut. Splicing Unit B-648513 - 0400
Electrical Cabinet BE-648538 - 0200
Equipment Included
1282762-0101 Trolley
527898-0101 Container H2O2
Variables
ECN No. EL 71390
Frequency Hz - 50
Voltage 400/230
Machine Speed 20000/H
Documentation Included
SPC 81511-102 MM 82302-104
MM 82302-604 OM 82346-104
OM 82346-604 IM 82358-103
IM 82358-603 UM 82351-103
UM 82351-603 UM 82197-102
TEM 27080-102 TEM 27085-602
EM 82318-104 EM 82318-604
C

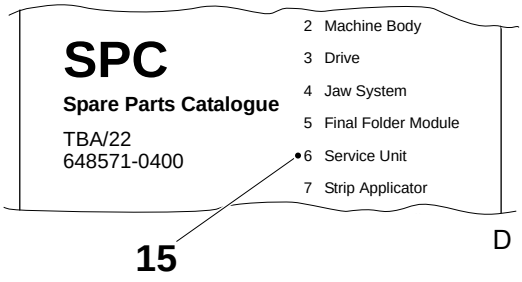
SPC
Spare Parts Catalogue
TBA/22
648571-0400
2 Machine Body
3 Drive
4 Jaw System
5 Final Folder Module
6 Service Unit
7 Strip Applicator
15
D

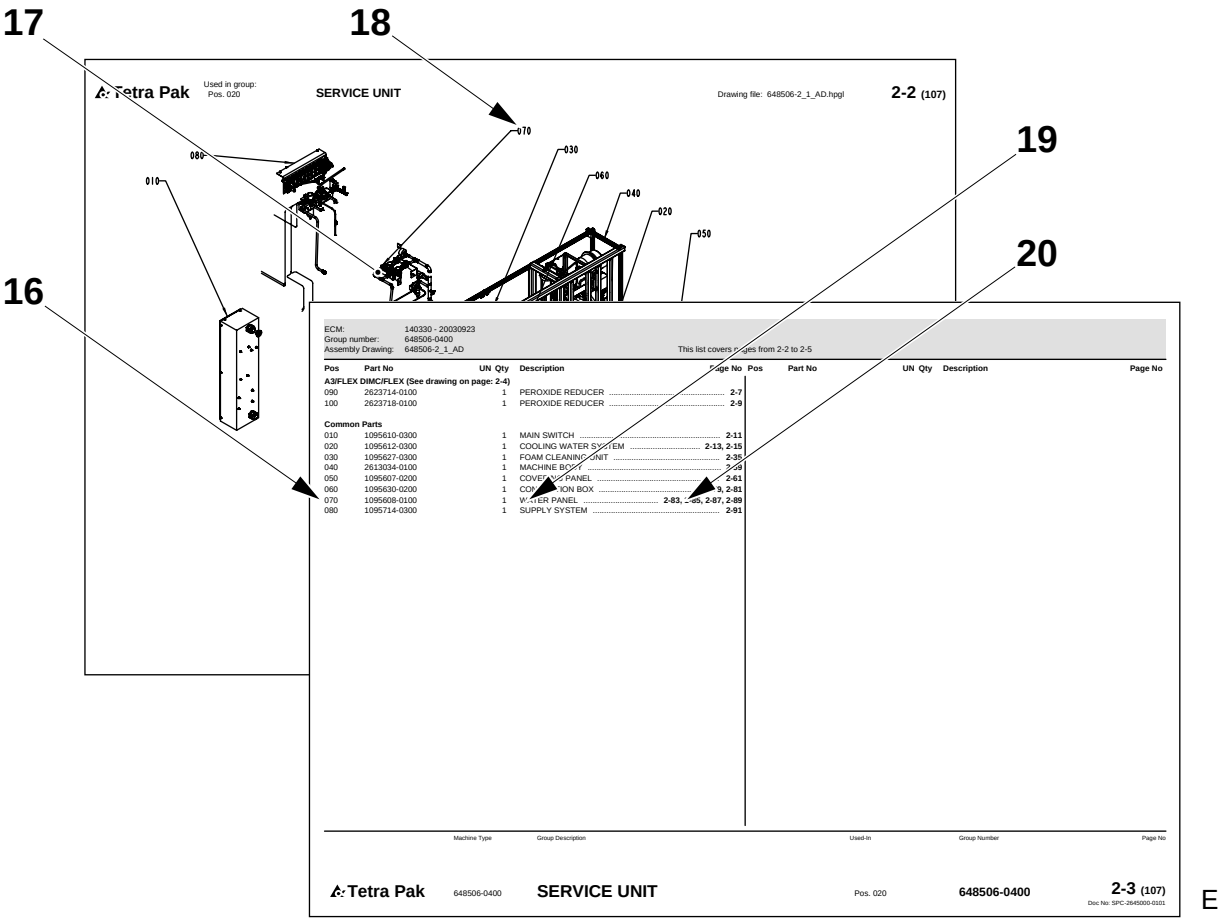
17
18
19
20
16
Tetra Pak
Used in group:
Pos. 020
SERVICE UNIT
Drawing file: 648506-2_1_AD.hpgl
2-2 (107)
070
030
080
060
010
040
020
050
ECM: 140330 - 20030923
Group number: 648506-0400
Assembly Drawing: 648506-2_1_AD
This list covers pages from 2-2 to 2-5
Pos Part No UN Qty Description Page No
A3/FLEX DIMC/FLEX (See drawing on page: 2-4)
090 2623714-0100 1 PEROXIDE REDUCER 2-7
100 2623718-0100 1 PEROXIDE REDUCER 2-9
Common Parts
010 1095610-0300 1 MAIN SWITCH 2-11
020 1095612-0300 1 COOLING WATER SYSTEM 2-13, 2-15
030 1095627-0300 1 FOAM CLEANING UNIT 2-35
040 2613034-0100 1 MACHINE BODY 2-39
050 1095607-0200 1 COVERING PANEL 2-61
060 1095630-0200 1 CONNECTION BOX 2-79, 2-81
070 1095608-0100 1 WATER PANEL 2-83, 2-85, 2-87, 2-89
080 1095714-0300 1 SUPPLY SYSTEM 2-91
Pos Part No UN Qty Description Page No
Machine Type Group Description Used-In Group Number Page No
Tetra Pak 648506-0400 SERVICE UNIT Pos. 020 648506-0400 2-3 (107)
Doc No: SPC-2645000-0101
E

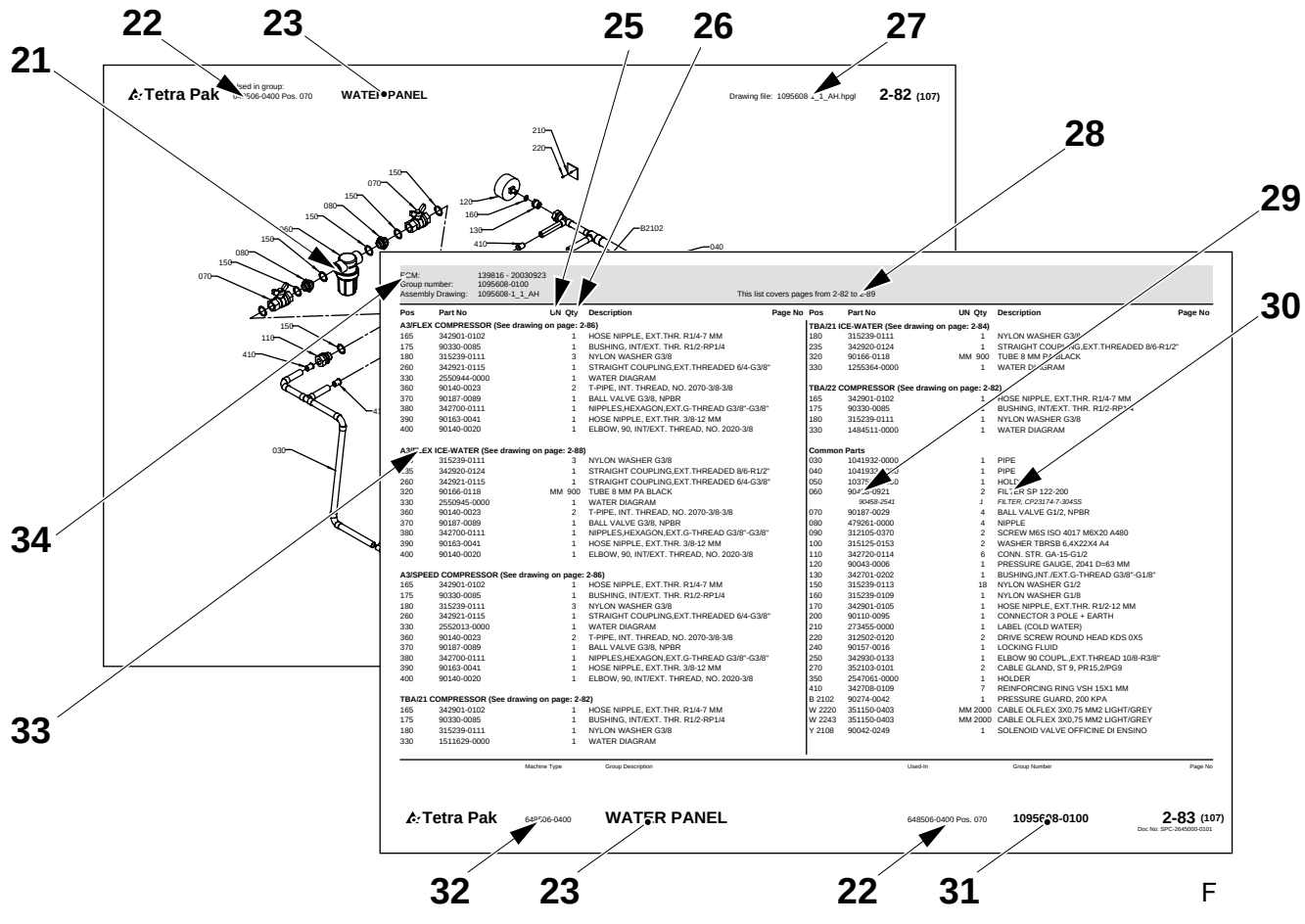
22
23
25
26
27
21
28
29
30
34
33
Tetra Pak
Used in group:
Pos. 070
WATER PANEL
Drawing file: 1095608-1_1_AH.hpgl
2-82 (107)
210
220
150
070
080
150
150
080
150
070
120
160
130
410
B2102
040
030
110
410
ECM: 139816 - 20030923
Group number: 1095608-0100
Assembly Drawing: 1095608-1_1_AH
This list covers pages from 2-82 to 2-89
Pos Part No UN Qty Description Page No
A3/FLEX COMPRESSOR (See drawing on page: 2-86)
165 342901-0102 1 HOSE NIPPLE, EXT.THR. R1/4-7 MM
175 90330-0085 1 BUSHING, INT/EXT. THR. R1/2-RP1/4
180 315239-0111 3 NYLON WASHER G3/8
260 342921-0115 1 STRAIGHT COUPLING,EXT.THREADED 6/4-G3/8"
330 2550944-0000 1 WATER DIAGRAM
360 90140-0023 2 T-PIPE, INT. THREAD, NO. 2070-3/8-3/8
370 90187-0089 1 BALL VALVE G3/8, NPBR
380 342700-0111 1 NIPPLES,HEXAGON,EXT.G-THREAD G3/8"-G3/8"
390 90163-0041 1 HOSE NIPPLE, EXT.THR. 3/8-12 MM
400 90140-0020 1 ELBOW, 90, INT/EXT. THREAD, NO. 2020-3/8
A3/FLEX ICE-WATER (See drawing on page: 2-88)
235 315239-0111 3 NYLON WASHER G3/8
235 342920-0124 1 STRAIGHT COUPLING,EXT.THREADED 8/6-R1/2"
260 342921-0115 1 STRAIGHT COUPLING,EXT.THREADED 6/4-G3/8"
320 90166-0118 MM 900 TUBE 8 MM PA BLACK
330 2550945-0000 1 WATER DIAGRAM
360 90140-0023 2 T-PIPE, INT. THREAD, NO. 2070-3/8-3/8
370 90187-0089 1 BALL VALVE G3/8, NPBR
380 342700-0111 1 NIPPLES,HEXAGON,EXT.G-THREAD G3/8"-G3/8"
390 90163-0041 1 HOSE NIPPLE, EXT.THR. 3/8-12 MM
400 90140-0020 1 ELBOW, 90, INT/EXT. THREAD, NO. 2020-3/8
A3/SPEED COMPRESSOR (See drawing on page: 2-86)
165 342901-0102 1 HOSE NIPPLE, EXT.THR. R1/4-7 MM
175 90330-0085 1 BUSHING, INT/EXT. THR. R1/2-RP1/4
180 315239-0111 3 NYLON WASHER G3/8
260 342921-0115 1 STRAIGHT COUPLING,EXT.THREADED 6/4-G3/8"
330 2552013-0000 1 WATER DIAGRAM
360 90140-0023 2 T-PIPE, INT. THREAD, NO. 2070-3/8-3/8
370 90187-0089 1 BALL VALVE G3/8, NPBR
380 342700-0111 1 NIPPLES,HEXAGON,EXT.G-THREAD G3/8"-G3/8"
390 90163-0041 1 HOSE NIPPLE, EXT.THR. 3/8-12 MM
400 90140-0020 1 ELBOW, 90, INT/EXT. THREAD, NO. 2020-3/8
TBA/21 COMPRESSOR (See drawing on page: 2-82)
165 342901-0102 1 HOSE NIPPLE, EXT.THR. R1/4-7 MM
175 90330-0085 1 BUSHING, INT/EXT. THR. R1/2-RP1/4
180 315239-0111 1 NYLON WASHER G3/8
330 1511629-0000 1 WATER DIAGRAM
TBA/21 ICE-WATER (See drawing on page: 2-84)
180 315239-0111 1 NYLON WASHER G3/8
235 342920-0124 1 STRAIGHT COUPLING,EXT.THREADED 8/6-R1/2"
320 90166-0118 MM 900 TUBE 8 MM PA BLACK
330 1255364-0000 1 WATER DIAGRAM
TBA/22 COMPRESSOR (See drawing on page: 2-82)
165 342901-0102 1 HOSE NIPPLE, EXT.THR. R1/4-7 MM
175 90330-0085 1 BUSHING, INT/EXT. THR. R1/2-RP1/4
180 315239-0111 1 NYLON WASHER G3/8
330 1484511-0000 1 WATER DIAGRAM
Common Parts
030 1041932-0000 1 PIPE
040 1041933-0000 1 PIPE
050 1037[illegible]-0000 1 HOLDER
060 90458-0921 2 FILTER SP 122-200
90458-2541 FILTER, CP23174-7-304SS
070 90187-0029 4 BALL VALVE G1/2, NPBR
080 479261-0000 4 NIPPLE
090 312105-0370 2 SCREW M6S ISO 4017 M6X20 A480
100 315125-0153 2 WASHER TBRSB 6,4X22X4 A4
110 342720-0114 6 CONN. STR. GA-15-G1/2
120 90043-0006 1 PRESSURE GAUGE, 2041 D=63 MM
130 342701-0202 1 BUSHING,INT./EXT.G-THREAD G3/8"-G1/8"
150 315239-0113 18 NYLON WASHER G1/2
160 315239-0109 1 NYLON WASHER G1/8
170 342901-0105 1 HOSE NIPPLE, EXT.THR. R1/2-12 MM
200 90110-0095 1 CONNECTOR 3 POLE + EARTH
210 273455-0000 1 LABEL (COLD WATER)
220 312502-0120 2 DRIVE SCREW ROUND HEAD KDS 0X5
240 90157-0016 1 LOCKING FLUID
250 342930-0133 1 ELBOW 90 COUPL.,EXT.THREAD 10/8-R3/8"
270 352103-0101 2 CABLE GLAND, ST 9, PR15,2/PG9
350 2547061-0000 1 HOLDER
410 342708-0109 7 REINFORCING RING VSH 15X1 MM
B 2102 90274-0042 1 PRESSURE GUARD, 200 KPA
W 2220 351150-0403 MM 2000 CABLE OLFLEX 3X0,75 MM2 LIGHT/GREY
W 2243 351150-0403 MM 2000 CABLE OLFLEX 3X0,75 MM2 LIGHT/GREY
Y 2108 90042-0249 1 SOLENOID VALVE OFFICINE DI ENSINO
Pos Part No UN Qty Description Page No
Machine Type Group Description Used-In Group Number Page No
Tetra Pak 648506-0400 WATER PANEL 648506-0400 Pos. 070 1095608-0100 2-83 (107)
Doc No: SPC-2645000-0101
32 23 22 31
F

Introduction

Manual Information

Tetra Pak recommends reading all delivered manuals carefully. Make sure that the delivered manuals are available to personnel who operate or maintain the equipment.

It is important to keep this catalogue for the lifetime of the equipment and to pass the catalogue on to any subsequent holder or user.

Tetra Pak will not be held responsible for any damage to the equipment caused by not following the instructions given in the manuals that accompany this equipment.

Delivered Manuals

Manuals delivered with this equipment may include

- CM
  The Conversion Manual provides technicians with information on converting the equipment between different production modes.
- EM
  The Electrical Manual provides technicians with information about the equipment's electrical system.
- IM
  The Installation Manual provides technicians with information required to safely install the equipment.
- MM
  The Maintenance Manual provides technicians with information on maintaining the equipment.
- OM
  The Operation Manual manual provides the operator with information on handling and operating the equipment before, during, and after production.
- SPC
  The Spare Parts Catalogue provides the information necessary to order spare parts from Tetra Pak
- TeM
  The Technical Manual
  - provides technicians with information required to safely install the equipment
  - provides technicians with information on maintaining the equipment
  - provides technicians with information about the machine's/ equipment's electrical system
  - provides the information necessary to order spare parts from Tetra Pak.

Page Layout

Refer to the illustration (A) on page i-5: The main pages in a Spare Parts Catalogue consist of an illustration page (1) and a corresponding list page (7). The page number (5) is shown in the header of an illustration page and in the footer of a list page. The document number (6) is shown in the footer of a list page.

Page Numbering

Refer to the illustration (A) on page i-5: A page number (5) has three parts:

- chapter number (2)
- consecutive page number within the chapter (3)
- total number of pages in the chapter (4)

Machine Introduction

Manufacturer

For the manufacturer's name and address, see the second page of this catalogue.

Service

To order spare parts for this machine, or to report problems associated with operating this machine, contact the nearest Tetra Pak office.

Contact the Liaison with other inquiries, comments, or suggestions for improvement regarding the equipment and its documentation.

Identification

CE Classification

This equipment complies with the basic health and safety regulations of the European Economic Area (EEA).

Machine Plate

The illustration (B) on page i-5 shows an example of a machine plate. An illustration of the valid machine plate and its location on the equipment is shown in the Introduction chapter of the manuals delivered with this equipment. The machine plate contains the data listed below, needed when contacting Tetra Pak concerning this specific equipment.

- Machine type (8)
- Volume (9)
- Drawing specifications (10)
- Machine serial number (11)
- Manufacturer (12)
- CE mark (13)
- Year of manufacture (14)

The illustration (C) on page i-5 shows an example of a machine specification. Make sure that the equipment data listed in the front pages of this manual corresponds to the machine plate data and the machine specification.

How to Use This Spare Parts Catalogue

Locate a Spare Part Number

a) Refer to the illustration (D) on page i-5: Go to the chapter number (15) indicated beside the main group that contains the part you want to locate.

Items b) and c) refer to the illustration (E) on page i-6.

b) On the main group illustration, look for the machine subgroup (17) that contains the part or subgroup you are looking for. Note the position number (18) and go to the list page that follows the illustration.

c) Look for the position number/reference designation (16) or the subgroup name (19). Go to the corresponding page number (20) listed in the right-hand column. Tetra Pak has chosen to always use the function oriented structure for reference designation. The prefix indicating function oriented structure (=) is not shown in the reference designation.

Items d) and e) refer to the illustration (F) on page i-6.

d) Locate the part (21) that you are looking for on the subgroup illustration and note the part's position number.

e) The part number (29) and part description (30) are listed beside the position number on the list page.

Information Listed in a Spare Parts Catalogue

The list below refers to the illustration (F) on page i-6. A Spare Parts Catalogue contains the following information about groups, subgroups, and spare parts for the equipment:

- Group structure reference (22). Indicates the next higher group in the equipment list structure.
- Group name (23)
- Unit of measure (25)
- Quantity (26)
- Assembly drawing number (27)
- List page range (28). Included if there are multiple pages in the group illustration or list.
- Part or subgroup number (29)
- Subgroup name or part description (30)
- Group number (31)
- Equipment number (32)
- Group information heading (33). Indicates if the section below the heading is for a specific machine variant or if it is a list of common parts. If a list has more than one variant and each variant has its own assembly drawing, a page reference to the variant's assembly drawing is shown.
- Internal information (34)

Увод

Информация за ръководството

Tetra Pak Ви препоръчва да прочетете внимателно всички доставени ръководства. Проверете дали доставените ръководства са достъпни за служителите, които поддържат или работят с оборудването.

Важно е да запазите този каталог през целия живот на оборудването и да го предадете на трети лица, които ще използват или съхраняват оборудването.

Tetra Pak не може да бъде държана под отговорност за щети върху оборудването, причинени от неспазване на даденте инструкции в ръководствата, които съпровождат оборудването.

Доставени ръководства

Ръководствата, доставени с това оборудване, могат да включват

- CM
  Ръководството за приспособяване осигурява на техническите лица информация за приспособяването на оборудване към различни производствени режими.
- EM
  Електрическото ръководство осигурява на техническите лица информация за електрическата система на оборудването.
- IM
  Ръководството за инсталиране предоставя на техническите лица информацията, която е необходима за безопасно инсталиране на оборудването.
- MM
  Ръководството за поддръжка предоставя на техническите лица информация относно поддържането на оборудването.
- OM
  Ръководството за операции предоставя на операторите информация за това, как да боравят и функционират с оборудването преди, по време на и след производство.
- SPC
  Каталогът с резервни части предоставя необходимата информация за поръчка на резервни части от Tetra Pak
- TeM
  Техническото ръководство
  - предоставя на техническите лица необходимата информация за безопасно инсталиране на оборудването
  - предоставя на техническите лица информация за поддръжка на оборудването
  - предоставя на техническите лица информация за електрическата система на машината/оборудването
  - предоставя необходимата информация за поръчка на резервни части от Tetra Pak.

Формат на страниците

Разгледайте илюстрация (A) на страница i-5: Главните страници в Каталога с резервни части се състоят от страница с илюстрация (1) и прилежаща страница със списък (7). Номерът на страницата (5) е посочен в горната част на страницата с илюстрация и в долната част на страницата със списъка. Номерът на документа (6) е показан в долната част на страницата със списъка.

Номериране на страници

Разгледайте илюстрация (A) на страница i-5: Един номер на страница (5) има три части:

- номер на глава (2)
- последователен номер на страница в една глава (3)
- общ брой страници в главата (4)

Машини Увод

Производител

Вижте втората страница на този каталог, за да проверите името и адреса на производителя.

Обслужване

За да поръчате резервни части за тази машина или да докладвате за проблеми, свързани с работата с тази машина, се свържете с най-близкия офис на Tetra Pak.

Свържете се с отдела за контакти с клиенти за други запитвания, коментари и предложения за подобрение по отношение на оборудването и прилежащата му документация.

Идентификация

Класификация на ЦЕ

Това оборудване отговаря на основните наредби, свързани с опазване на здравето и безопасността на Европейската Икономическа Общност (ЕИО).

Табелка на машина

Илюстрация (B) на страница i-5 показва пример с табелка на машина. В уводната глава на ръководствата, доставени с това оборудване, е показана илюстрация с валидната табелка на машината и нейното положение върху оборудването. Табелката на машината съдържа посочените по-долу данни, които Ви трябват, когато се свързвате с Tetra Pak относно това специфично оборудване.

- Тип машина (8)
- Обем (9)
- Спесификации за чертане (10)
- Сериен номер на машината (11)
- Производител (12)
- CE печат (13)
- Година на производство (14)

Илюстрация (C) на страница i-5 показва пример със спесификация за машина. Проверете дали данните за оборудването, изброени на предните страници в това ръководство отговарят на данните от табелката на машината и на спесификацията на машината.

Как да използвате този Каталог за резервни части

Намерете Номер на резервна част

a) Разгледайте илюстрация (D) на страница i-5: Отидете в глава номер (15) посочена до главната група, която съдържа частта, която искате да намерите.

Артикули b) и c) се отнасят до илюстрация (E) на страница i-6.

b) На главната обща илюстрация вижте подгрупата на машината (17), която съдържа частта или подгрупата, която търсите. Намерете номера на позицията (18) и отворете на страницата със списъка, която е след илюстрацията.

c) Намерете номера на позицията/референцията (16) или името на подгрупата (19). Отворете съответстващия номер на страница (20) в дясната колона. Tetra Pak е избрала да използва винаги функционално-ориентирана структура при обозначаване на референциите. Префиксът, който показва функционално-ориентирана структура (=) не е посочен в обозначаването на референциите.

Артикули d) и e) се отнасят до илюстрация (F) на страница i-6.

d) Намерете частта (21), която търсите в илюстрацията на подгрупата и запомнете номера на частта.

e) Номерът на частта (29) и описанието на частта (30) са изброени до номера на позицията на страницата със списъка.

Изброена информация в Каталога с резервни части

По-долу посоченият списък се отнася до илюстрация (F) на страница i-6. Каталогът с резервни части съдържа следната информация за групи, подгрупи и резервни части за оборудването:

- Референция за структурата (22). Показва следващата по-голяма група в структурата със списъка на оборудването.
- Име на група (23)
- Единица мярка (25)
- Количество (26)
- Номер за монтажен чертеж (27)
- Обхват на страницата със списък (28). Включен, ако има няколко страници в илюстрацията на групата или списъка.
- Номер на част или подгрупа (29)
- Име на подгрупа или описание на част (30)
- Номер на група (31)
- Номер на оборудване (32)
- Референция за информацията за групата (33). Показва дали частта под заглавието е за специфична версия на машината или е списък с общи части. Ако един списък има повече от един вариант и всеки вариант има собствен монтажен чертеж, се показва референцията на страницата към монтажния чертеж на варианта.
- Вътрешна информация (34)

Úvod

Informace o manuálu

Tetra Pak doporučuje, abyste si pozorně přečetli všechny dodané příručky. Přesvědčte se, že dodané manuály jsou k dispozici personálu, který obsluhuje nebo provádí údržbu zařízení.

Je důležité ponechat si tuto příručku po celou dobu životnosti zařízení a předat ho jakémukoliv následujícímu vlastníkovi nebo uživateli.

Tetra Pak nebude odpovídat za žádné škody zařízení, způsobené nedodržováním pokynů uvedených v této příručce.

Dodané příručky

Příručky dodané s tímto zařízením mohou obsahovat

- CM
  Konverzní manuál (CM) poskytuje technikům informace o konverzi zařízení mezi různými výrobními režimy.
- EM
  Elektrický manuál (EM) poskytuje technikům informace o elektrickém systému tohoto zařízení.
- IM
  Instalační manuál (IM) poskytuje technikům informace potřebné k bezpečné instalaci zařízení.
- MM
  Údržbový manuál (MM) poskytuje technikům informace o údržbě tohoto zařízení.
- OM
  Provozní manuál (OM) poskytuje operátorovi informace o manipulaci s tímto zařízením a provozu před, během a po výrobě.
- SPC
  Katalog náhradních dílů (SPC) poskytuje informace potřebné pro objednávání náhradních dílů od společnosti Tetra Pak
- TeM
  Technický manuál
  - poskytuje technikům informace potřebné k bezpečné instalaci tohoto zařízení
  - poskytuje technikům informace o údržbě tohoto zařízení
  - poskytuje technikům informace o elektrickém systému tohoto zařízení
  - poskytuje informace potřebné pro objednávání náhradních dílů od společnosti Tetra Pak

Rozvržení stránky

Viz obrázek (A) na straně i-5: Hlavní strany Katalogu náhradních dílů obsahují stranu s obrázky (1) a odpovídající stranu seznamu (7). Číslo strany (5) je uvedeno v záhlaví strany s obrázky a v zápatí strany seznamu. Číslo dokumentu (6) je uvedeno v zápatí strany seznamu.

Číslování stran

Viz obrázek (A) na straně i-5: Číslo strany (5) sestává ze tří částí:

- číslo kapitoly (2)
- pořadové číslo strany (3) v kapitole
- celkový počet stránek (4) v kapitole

Úvod ke stroji

Výrobce

Název a adresa výrobce je uvedena na druhé straně tohoto katalogu.

Servis

Chcete-li objednat náhradní díly nebo ohlásit problémy související s provozem tohoto stroje, kontaktujte nejbližší kancelář Tetra Pak.

S dalšími dotazy, připomínkami nebo náměty na vylepšení ohledně zařízení a této dokumentace se obracejte na kontaktní osobu.

Identifikace

Klasifikace CE

Toto zařízení splňuje základní zdravotní a bezpečnostní předpisy Evropského hospodářského prostoru (EEA).

Štítek na stroji

Obrázek (B) na straně i-5 znázorňuje příklad štítku na stroji. Obrázek platného štítku na stroji a jeho umístění na zařízení je uveden v příručkách dodaných s tímto strojem v kapitole Úvod. Na štítku jsou uvedeny údaje potřebné při kontaktování společnosti Tetra Pak, týkající se tohoto specifického zařízení.

- Typ stroje (8)
- Objem (9)
- Výkresové specifikace (10)
- Výrobní číslo stroje (11)
- Výrobce (12)
- Označení CE (13)
- Rok výroby (14)

Obrázek (C) na straně i-5 zobrazuje příklad specifikace stroje. Přesvědčte se, že údaje o zařízení uvedená v seznamu na předních stranách tohoto manuálu odpovídají údajům štítku na stroji a specifikaci stroje.

Jak používat tento Katalog náhradních dílů

Vyhledejte číslo náhradního dílu

a) Viz obrázek (D) na straně i-5: Přejděte na číslo kapitoly (15) uvedené vedle hlavní skupiny, která obsahuje hledaný díl.

Položky b) a c) odkazují na obrázek (E) na straně i-6.

b) Na vyobrazení hlavní skupiny vyhledejte strojní podskupinu (17), která obsahuje hledaný díl nebo podskupinu. Poznamenejte si číslo pozice (18) a přejděte na stranu seznamu vyplývající z obrázku.

c) Vyhledejte číslo pozice/označení odkazu (16) nebo název podskupiny (19). Přejděte na odpovídající číslo strany (20) v seznamu v pravém sloupci. Tetra Pak zvolil pro označování odkazu používat vždy uspořádání orientované na funkci. Prefix indikující uspořádání orientované na funkci (=) není uveden v označení odkazu.

Položky d) a e) odkazují na obrázek (F) na straně i-6.

d) Vyhledejte díl (21), který hledáte na vyobrazení podskupiny a poznamenejte si číslo pozice dílu.

e) Číslo dílu (29) a popis dílu (30) jsou uvedeny v seznamu vedle čísla pozice na straně seznamu.

Informace uvedené v seznamu v Katalogu náhradních dílů

Níže uvedený seznam odkazuje na obrázek (F) na straně i-6. Katalog náhradních dílů obsahuje následující informace o skupinách, podskupinách a náhradních dílech pro toto zařízení:

- Odkaz na uspořádání skupiny (22). Indikuje další vyšší skupinu v uspořádání seznamu zařízení.
- Název skupiny (23)
- Měrná jednotka (25)
- Množství (26)
- Číslo montážního výkresu (27)
- Rozsah stran seznamu (28). Včetně toho, zda existuje více stran v obrázku skupiny nebo seznamu.
- Díl nebo číslo podskupiny (29)
- Název podskupiny nebo popis dílu (30)
- Číslo skupiny (31)
- Číslo zařízení (32)
- Záhlaví informace o skupině (33). Indikuje, že oddíl pod záhlavím je pro specifickou variantu stroje nebo jde-li o seznam běžných dílů. Jestliže seznam obsahuje více než jednu variantu a každá varianta má svůj vlastní montážní výkres, pak je uveden odkaz na stranu montážního výkresu této varianty.
- Interní informace (34)

Indledning

Oplysninger om manualen

Tetra Pak anbefaler, at alle leverede manualer læses omhyggeligt. Sørg for, at de udleverede manualer er til rådighed for personale, som arbejder med eller vedligeholder udstyret.

Det er vigtigt at opbevare dette katalog hele udstyrets levetid og give kataloget videre til eventuelt kommende ejere eller brugere.

Tetra Pak kan ikke holdes ansvarlig for eventuel beskadigelse af udstyr, der opstår, fordi instruktionerne i manualerne til dette udstyr ikke følges.

Udleverede manualer

De manualer, der leveres sammen med dette udstyr, kan omfatte

- CM
  Denne konverteringsmanual forsyner teknikere med oplysninger om konvertering af udstyret mellem forskellige produktionstilstande.
- EM
  Denne elektriske manual forsyner teknikere med informationer om udstyrets elektriske system.
- IM
  Denne installationsmanual forsyner teknikere med nødvendig information i forbindelse med sikker installation af udstyret.
- MM
  Denne vedligeholdelsesmanual forsyner teknikere med information om vedligeholdelse af udstyret.
- OM
  Denne betjeningsmanual giver operatøren oplysninger om betjening af udstyret før, under og efter produktion.
- SPC
  Denne reservedelskatalog indeholder oplysninger, der er nødvendig for at bestille reservedele fra Tetra Pak
- TeM
  Den tekniske manual
  – forsyner teknikere med information, der er nødvendig for en sikker installation af udstyret.
  – forsyner teknikere med information om vedligeholdelse af udstyret.
  – forsyner teknikere med information om maskinens/udstyrets elektriske system.
  – indeholder de informationer, der er nødvendige for at kunne bestille reservedele fra Tetra Pak.

Sidelayout

Se illustration (A) på side i-5: Hovedsiderne i et reservedelskatalog består af en illustrationsside (1) og en tilsvarende listeside (7). Sidenummeret (5) vises i sidehovedet på en illlustrationsside og i sidefoden på en listeside. Dokumentnummeret (6) vises i sidefoden på en listeside.

Sidenummerering

Se illustrationen (A) på side i-5: Et sidenummer (5) har tre dele:

- kapitelnummer (2)
- fortløbende sidenummer i kapitlet (3)
- samlet sideantal i kapitlet (4)

Præsentation af maskinen

Producent

Producentens navn og adresse findes på side to i dette katalog.

Service

Kontakt nærmeste Tetra Pak-kontor for at bestille reservedele eller rapportere problemer i forbindelse med betjening af denne maskine.

Henvendelse til vores kontaktperson med andre forespørgsler, kommentarer eller forslag til forbedring angående udstyr og dokumentation.

Identificering

CE-klassificering

Dette udstyr lever op til de grundlæggende regulativer for sundhed og sikkerhed indenfor den Europæiske Økonomiske Samarbejdsområde (EØS).

Maskinskilt

Illustrationen (B) på side i-5 viser et eksempel på et maskinskilt.
En illustration af et gyldigt maskinskilt og dets placering på udstyret er vist i indledningskapitlet i de manualer, der leveres med dette udstyr. Maskinskiltet indeholder nedennævnte data. Disse er nødvendige ved kontakt med Tetra Pak vedrørende dette specifikke udstyr.

- Maskintype (8)
- Volumen (9)
- Tegningsspecifikationer (10)
- Maskinens serienummer (11)
- Producent (12)
- CE-mærke (13)
- Produktionsår (14)

Illustrationen (C) på side i-5 viser et eksempel på en maskinspecifikation. Kontroller, at de udstyrsdata, der er anført på de første sider i denne manual, svarer til maskinskiltsdataene og maskinspecifikationen.

Sådan bruges dette reservedelskatalog.

Find et reservedelsnummer

a) Se illustrationen (D) på side i-5: Gå til kapitelnummeret (15), der er angivet ved siden af hovedgruppen, der indeholder den del, der ønskes fundet.

Punkterne b) og c) refererer til illustrationen (E) på side i-6.

b) I hovedgruppeillustrationen skal man se efter maskinundergruppen (17), som indeholder den del eller undergruppe, der søges. Bemærk placeringsnummeret (18), og gå til listesiden, som følger illustrationen.

c) Se efter placeringsnummeret/henvisningsbetegnelse (16) eller undergruppens navn (19). Gå til det tilsvarende sidenummer (20) angivet i den højre kolonne. Tetra Pak har valgt altid at anvende den funktionsorienterede struktur til henvisningsbetegnelse. Præfikset angiver funktionsorienteret struktur (=) ikke vist i henvisningsbetegnelsen.

Punkterne d) og e) refererer til illustrationen (F) på side i-6.

d) Find den del (21), du søger i undergruppeillustrationen, og notér delens placeringsnummer.

e) Reservedelsnummeret (29) og -beskrivelsen (30) er angivet ved siden af placeringsnummeret på listesiden.

Informationer der er angivet i et reservedelskatalog

Listen nedenfor refererer til illustrationen (F) på side i-6. Et reservedelskatalog indeholder følgende informationer om grupper, undergrupper og reservedele til udstyret:

- Gruppestrukturreference (22). Angiver næste overordnede gruppe i udstyrslistestrukturen.
- Gruppenavn (23)
- Måleenhed (25)
- Antal (26)
- Samletegningsnummer (27)
- Listens sideområde (28). Er angivet, hvis gruppeillustrationen eller -listen inkluderer mange sider.
- Del- eller undergruppenummer (29)
- Undergruppens navn eller delsbeskrivelse (30)
- Gruppenummer (31)
- Udstyrsnummer (32)
- Overskrift for gruppeinformation (33). Angiver, om afsnittet under overskriften er for en specifik maskinvariant, eller om det er en liste over fælles dele. Hvis en liste har mere end én variant, og hver variant har sin egen samletegning, vises en sidereference til variantens samletegning.
- Intern information (34)

Einleitung

Informationen über das Handbuch

Tetra Pak empfiehlt, alle mitgelieferten Handbücher sorgfältig durchzulesen. Stellen Sie sicher, dass die Handbücher dem Personal, das die Ausrüstung betreibt oder wartet, zur Verfügung steht.

Es ist wichtig, dass Sie diesen Katalog für die gesamte Lebensdauer der Ausrüstung vorliegen haben und einem etwaigen Nachbesitzer oder -betreiber übergeben.

Tetra Pak haftet nicht für Schäden an der Ausrüstung, die aufgrund von Nichtbeachtung der Anweisungen aus den Handbüchern, die mit diesem Gerät geliefert werden, entstehen.

Gelieferte Handbücher

Die Handbücher, die mit dieser Ausrüstung geliefert wird, können Folgendes beinhalten

- CM
  Das Umbauhandbuch gibt den Technikern Informationen über den Umbau der Ausrüstung zwischen verschiedenen Produktionsweisen.
- EM
  Das Elektrohandbuch gibt den Technikern Informationen zum Elektrosystem der Ausrüstung.
- IM
  Das Installationshandbuch gibt den Technikern Informationen für die sichere Installation der Ausrüstung.
- MM
  Das Wartungshandbuch gibt den Technikern Informationen für die Wartung der Ausrüstung.
- OM
  Das Betriebshandbuch gibt dem Bediener Informationen über die Bedienung und den Betrieb der Ausrüstung vor, während und nach der Produktion.
- SPC
  Der Ersatzteilkatalog liefert die Informationen, die für die Bestellung von Ersatzteilen bei Tetra Pak erforderlich sind.
- TeM
  Das technische Handbuch
  - gibt den Technikern Informationen für die sichere Installation der Ausrüstung
  - gibt den Technikern Informationen für die Wartung der Ausrüstung
  - gibt den Techniker Informationen zum Elektrosystem der Ausrüstung/der Maschine
  - liefert die Informationen, die für die Bestellung von Ersatzteilen bei Tetra Pak erforderlich sind.

Seitenlayout

Bezugnahme auf Abbildung (A) auf Seite i-5: Die Hauptseiten in einem Ersatzteilkatalog bestehen aus einer Abbildungsseite (1) und einer entsprechenden Listenseite (7). Die Seitennummer (5) wird in der Kopfzeile einer Abbildungsseite und in der Fußzeile einer Listenseite aufgeführt. Die Dokumentennummer (6) wird in der Fußzeile einer Listenseite aufgeführt.

Seitennummerierung

Bezugnahme auf Abbildung (A) auf Seite i-5: Eine Seitennummer (5) besteht aus drei Teilen:

- Kapitelnummer (2)
- Fortlaufende Seitennummer innerhalb des Kapitels (3)
- Gesamtzahl der Seiten im Kapitel (4)

Einführung zur Maschine

Hersteller

Bitte entnehmen Sie den Namen und die Adresse des Herstellers der zweiten Seite dieses Katalogs.

Service

Zur Bestellung von Ersatzteilen für diese Maschine oder um Probleme im Zusammenhang mit dem Betrieb dieser Maschine zu melden, wenden Sie sich bitte an das nächstgelegene Büro von Tetra Pak.

Wenden Sie sich bei anderen Anfragen, Kommentaren oder Verbesserungsvorschlägen mit Bezug auf die Ausrüstung und seine Dokumentation an die Verbindungsstelle.

Identifizierung

CE-Klassifizierung

Diese Ausrüstung erfüllt die wesentlichen Anforderungen des Europäischen Wirtschaftsraum (EWR) für Gesundheitsschutz und die Sicherheit.

Maschinenschild

Die Abbildung (B) auf Seite i-5 zeigt ein Beispiel eines Maschinenschilds. Die Abbildung eines gültigen Maschinenschildes und seine Position auf der Ausrüstung wird im Einleitungskapitel der mit dieser Ausrüstung gelieferten Handbücher gezeigt. Das Maschinenschild enthält die Daten, die erforderlich sind, wenn Sie sich bezüglich dieser speziallen Ausrüstung an Tetra Pak wenden.

- Maschinentyp (8)
- Volumen (9)
- Zeichnungsspezifikationen (10)
- Seriennummer der Maschine (11)
- Hersteller (12)
- CE-Zeichen (13)
- Baujahr (14)

Die Abbildung (C) auf Seite i-5 zeigt ein Beispiel einer Maschinenspezifikation. Stellen Sie sicher, dass die Ausrüstungsdaten, die in den vorderen Seiten dieses Handbuchs aufgelistet sind, mit den Maschinenschilddaten und der Maschinenspezifikation übereinstimmen.

Benutzung dieses Ersatzteilkatalogs

Finden einer Ersatzteilnummer

a) Bezugnahme auf Abbildung (D) auf Seite i-5: Weiter zur Kapitel nummer (15), die neben der Hauptgruppe angegeben ist, die das entsprechende Teil enthält.

Die Positionen b) und c) beziehen sich auf die Abbildung (E) auf Seite i-6.

b) Suchen Sie auf der Hauptgruppenillustration nach der Maschinen-Untergruppe (17), die das gesuchte Teil oder die Untergruppe enthält. Notieren Sie die Positionsnummer (18) und gehen Sie dann zur Listenseite, die der Abbildung folgt.

c) Suchen Sie nach der Positionsnummer/Referenzbezeichnung (16) oder dem Namen der Untergruppe (19). Gehen Sie zur entsprechenden Seitennummer (20), die in der rechten Spalte aufgelistet ist. Tetra Pak hat sich dazu entschieden, stets eine funktionsorientierte Struktur für die Referenzbezeichnung zu verwenden. Die vorangestellte Kennzeichnung, welche die funktionsorientierte Struktur angibt (=), wird in der Referenzbezeichnung nicht angezeigt.

Die Positionen d) und e) beziehen sich auf die Abbildung (F) auf Seite i-6.

d) Finden Sie das gesuchte Teil (21) auf der Abbildung der Untergruppe und notieren Sie die Positionsnummer des Teils.

e) Die Teilenummer (29) und die Teilebeschreibung (30) werden neben der Positionsnummer auf der Listenseite aufgelistet.

In einem Ersatzteilkatalog aufgelistete Informationen

Die folgende Liste bezieht sich auf die Abbildung (F) auf Seite i-6. Ein Ersatzteilkatalog enthält folgende Informationen über Gruppen, Untergruppen und Ersatzteile für die Ausrüstung:

- Gruppenstrukturreferenz (22). Sie gibt die nächst höhere Gruppe in der Ausrüstungslistenstruktur an.
- Gruppenname (23)
- Maßeinheit (25)
- Menge (26)
- Nummer der Zusammenbauzeichnung (27)
- Listenseitenbereich (28). Enthalten, wenn es mehrere Seiten in der Gruppenabbildung oder Liste gibt.
- Teile- oder Untergruppennummer (29)
- Untergruppenname oder Teilebeschreibung (30)
- Gruppennummer (31)
- Ausrüstungsnummer (32)
- Gruppeninformationsüberschrift (33). Gibt an, ob sich der Abschnitt unter der Überschrift auf eine spezifische Maschinenvariante bezieht oder ob es sich um eine Liste der allgemeinen Teile handelt. Wenn eine Liste mehr als eine Variante hat und jede Variante über eine eigene Zusammenbauzeichnung verfügt, wird eine Seitenreferenz zur Zusammenbauzeichnung angezeigt.
- Interne Informationen (34)

Εισαγωγή

Πληροφορίες για το Εγχειρίδιο

Η Tetra Pak σάς συνιστά να διαβάζετε προσεκτικά όλα τα παρεχόμενα εγχειρίδια. Εξασφαλίζετε ότι όλα τα παρεχόμενα εγχειρίδια διατίθενται στο προσωπικό που χειρίζεται ή συντηρεί τον εξοπλισμό.

Είναι σημαντικό να διατηρείτε αυτό τον κατάλογο καθ' όλη τη διάρκεια ζωής του εξοπλισμού καθώς και να παραδίδετε τον κατάλογο στον τυχόν επόμενο ιδιοκτήτη ή χρήστη του εξοπλισμού.

Η Tetra Pak δεν πρόκειται να αναλάβει καμία ευθύνη για οποιαδήποτε ζημιά που μπορεί να προκληθεί στον εξοπλισμό εξαιτίας της μη τήρησης των οδηγιών οι οποίες παρέχονται στα εγχειρίδια που συνοδεύουν αυτό τον εξοπλισμό.

Παρεχόμενα Εγχειρίδια

Στα εγχειρίδια που παρέχονται μαζί μ' αυτό τον εξοπλισμό, μπορεί να περιλαμβάνονται τα εξής:

- CM
  Αυτό το Εγχειρίδιο Μετατροπής παρέχει στους τεχνικούς πληροφορίες για τη μετατροπή του εξοπλισμού μεταξύ των διάφορων λειτουργιών παραγωγής.
- EM
  Αυτό το Ηλεκτρικό Εγχειρίδιο παρέχει στους τεχνικούς πληροφορίες για το ηλεκτρικό σύστημα του εξοπλισμού.
- IM
  Αυτό το Εγχειρίδιο Εγκατάστασης παρέχει στους τεχνικούς τις απαιτούμενες πληροφορίες για την ασφαλή εγκατάσταση του εξοπλισμού.
- MM
  Αυτό το Εγχειρίδιο Συντήρησης παρέχει στους τεχνικούς πληροφορίες για τη συντήρηση του εξοπλισμού.
- OM
  Αυτό το Εγχειρίδιο Χειρισμού παρέχει στο χειριστή πληροφορίες για το χειρισμό και τη λειτουργία του εξοπλισμού πριν, κατά τη διάρκεια και μετά την παραγωγή.
- SPC
  Αυτός ο Κατάλογος Ανταλλακτικών παρέχει τις απαραίτητες πληροφορίες για την παραγγελία ανταλλακτικών από την Tetra Pak.
- TeM
  Το Τεχνικό Εγχειρίδιο
  - παρέχει στους τεχνικούς τις απαιτούμενες πληροφορίες για την ασφαλή εγκατάσταση του εξοπλισμού
  - παρέχει στους τεχνικούς πληροφορίες για τη συντήρηση του εξοπλισμού
  - παρέχει στους τεχνικούς πληροφορίες για το ηλεκτρικό σύστημα του εξοπλισμού/μηχανής
  - παρέχει τις απαραίτητες πληροφορίες για την παραγγελία ανταλλακτικών από την Tetra Pak.

Διάταξη Σελίδων

Ανατρέξτε στην εικόν (A) της σελίδας i-5: Οι κύριες σελίδες ενός Καταλόγου Ανταλλακτικών αποτελούνται από μία εικονογραφημένη σελίδα (1) και από μία αντίστοιχη σελίδα λίστας (7). Ο αριθμός σελίδας (5) εμφανίζεται στην κεφαλίδα μιας εικονογραφημένης σελίδας και στο υποσέλιδο μιας σελίδας λίστας. Ο αριθμός εγγράφου (6) εμφανίζεται στο υποσέλιδο μιας σελίδας λίστας.

Αρίθμηση Σελίδων

Ανατρέξτε στην εικόνα (A) της σελίδας i-5: Ένας αριθμός σελίδας (5) αποτελείται από τα εξής τρία μέρη:

- αριθμός κεφαλαίου (2)
- αύξων αριθμός σελίδας του κεφαλαίου (3)
- συνολικός αριθμός σελίδων του κεφαλαίου (4)

Παρουσίαση Μηχανής

Κατασκευαστής

Για το όνομα και τη διεύθυνση του κατασκευαστή, ανατρέξτε στη δεύτερη σελίδα αυτού του καταλόγου.

Τεχνική Εξυπηρέτηση

Για να παραγγείλετε ανταλλακτικά για τη συγκεκριμένη μηχανή ή για να αναφέρετε προβλήματα που σχετίζονται με τη λειτουργία αυτής της μηχανής, επικοινωνήστε με το πλησιέστερο γραφείο της Tetra Pak.

Εάν έχετε άλλου είδους ερωτήσεις, σχόλια ή προτάσεις βελτίωσης σχετικά με τον εξοπλισμό και την έγγραφη τεκμηρίωσή του, επικοινωνήστε με το Τμήμα Σχέσεων.

Στοιχεία Ταυτότητας

Σήμανση CE

Αυτός ο εξοπλισμός συμμορφώνεται με τους βασικούς κανονισμούς υγείας και ασφάλειας του Ευρωπαϊκού Οικονομικού Χώρου (ΕΟΧ).

Πινακίδα Αναγνώρισης Μηχανής

Η εικόνα (B) της σελίδας i-5 δείχνει ένα παράδειγμα μιας πινακίδας αναγνώρισης μηχανής.
Μια εικόνα που δείχνει την ενδεδειγμένη μορφή και θέση της πινακίδας αναγνώρισης μηχανής στον εξοπλισμό, παρουσιάζεται στο κεφάλαιο 'Εισαγωγή' των εγχειριδίων που παρέχονται μ' αυτόν τον εξοπλισμό.
Η πινακίδα αναγνώρισης μηχανής αναγράφει τα δεδομένα που παρατίθενται στη συνέχεια, τα οποία είναι απαραίτητα όταν επικοινωνείτε με την Tetra Pak για θέματα που αφορούν αυτό το συγκεκριμένο εξοπλισμό.

- Τύπος μηχανής (8)
- Χωρητικότητα (9)
- Στοιχεία σχεδίου (10)
- Αριθμός σειράς μηχανής (11)
- Κατασκευαστής (12)
- Σήμανση CE (13)
- Έτος κατασκευής (14)

Η εικόνα (Γ) της σελίδας i-5 δείχνει ένα παράδειγμα τεχνικών χαρακτηριστικών μηχανής. Βεβαιωθείτε ότι τα δεδομένα εξοπλισμού που παρατίθενται στις πρώτες σελίδες αυτού του εγχειριδίου συμφωνούν με τα δεδομένα της πινακίδας αναγνώρισης μηχανής και των τεχνικών χαρακτηριστικών μηχανής.

Πώς Χρησιμοποιείται Αυτός ο Κατάλογος Ανταλλακτικών

Εύρεση ενός Αριθμού Ανταλλακτικού

a) Ανατρέξτε στην εικόνα (Δ) της σελίδας i-5: Πηγαίνετε στον αριθμό κεφαλαίου (15) που υποδεικνύεται δίπλα από την κύρια ομάδα της μηχανής η οποία περιλαμβάνει το εξάρτημα που θέλετε να βρείτε.

Τα βήματα b) και c) αναφέρονται στην εικόνα (Ε) της σελίδας i-6.

b) Στην εικόνα της κύριας ομάδας μηχανής, αναζητήστε την υποομάδα μηχανής (17) η οποία περιλαμβάνει το εξάρτημα ή την υποομάδα που αναζητάτε. Σημειώστε τον αριθμό θέσης (18) και πηγαίνετε στη σελίδα λίστας που ακολουθεί την εικόνα.

c) Αναζητήστε τον αριθμό θέσης/ονομασία αναφοράς (16) ή το όνομα υποομάδας (19). Πηγαίνετε στον αντίστοιχο αριθμό σελίδας (20) που αναγράφεται στη δεξιά στήλη. Η Tetra Pak έχει επιλέξει να χρησιμοποιεί πάντα δομή ονομασίας αναφοράς με βάση τη λειτουργία. Το πρόθεμα που υποδεικνύει τη δομή με βάση τη λειτουργία (=) δε φαίνεται στο διάγραμμα αναφοράς.

Τα βήματα d) και e) αναφέρονται στην εικόνα (ΣΤ) της σελίδας i-6.

d) Βρείτε το εξάρτημα (21) που αναζητάτε στην εικόνα υποομάδας μηχανής και σημειώστε τον αριθμό θέσης του εξαρτήματος.

e) Ο αριθμός του εξαρτήματος (29) και η περιγραφή του εξαρτήματος (30) παρατίθενται δίπλα στον αριθμό θέσης στη σελίδα λίστας.

Πληροφορίες που Περιέχονται σε έναν Κατάλογο Ανταλλακτικών

Η λίστα που ακολουθεί αναφέρεται στην εικόνα (F) της σελίδας i-6. Ένας Κατάλογος Ανταλλακτικών περιέχει τις παρακάτω πληροφορίες σχετικά με τις ομάδες, τις υποομάδες και τα ανταλλακτικά του εξοπλισμού:

- Αναφορά δομής ομάδας (22). Υποδηλώνει την επόμενη μεγαλύτερη ομάδα στη δομή λίστας του εξοπλισμού.
- Όνομα ομάδας (23)
- Μονάδα μέτρησης (25)
- Ποσότητα (26)
- Αριθμός σχεδίου συγκροτήματος (27)
- Περιοχή σελίδων λίστας (28). Περιλαμβάνεται εφόσον η εικόνα ή η λίστα μιας ομάδας εκτίθεται σε περισσότερες από μία σελίδες.
- Αριθμός εξαρτήματος ή υποομάδας (29)
- Αριθμός υποομάδας ή περιγραφή εξαρτήματος (30)
- Αριθμός ομάδας (31)
- Αριθμός εξοπλισμού (32)
- Επικεφαλίδα πληροφοριών ομάδας (33). Υποδεικνύει εάν η ενότητα κάτω από την επικεφαλίδα αφορά μια συγκεκριμένη παραλλαγή μηχανής ή αποτελεί μια λίστα κοινών εξαρτημάτων. Σε περίπτωση που μια λίστα περιέχει περισσότερες από μία παραλλαγές και κάθε παραλλαγή έχει ξεχωριστό σχέδιο συγκροτήματος, εμφανίζεται μια παραπομπή προς τη σελίδα όπου βρίσκεται το σχέδιο συγκροτήματος της παραλλαγής.
- Εσωτερικές πληροφορίες (34)

Introducción

Información sobre el manual

Tetra Pak recomienda leer atentamente todos los manuales suministrados. Asegúrese de que los manuales están disponibles para el personal que opera o mantiene el equipo.

Es importante conservar este catálogo durante la vida útil del equipo, así como facilitárselo a cualquier propietario o usuario posterior.

Tetra Pak no se responsabilizará de daños en el equipo por no seguir las instrucciones proporcionadas en los manuales que acompañan este equipo.

Manuales entregados

Los manuales entregados con este equipo pueden incluir:

- CM
  El Manual de conversión proporciona a los técnicos información sobre cómo convertir el equipo a diferentes modos de producción.
- EM
  El Manual eléctrico proporciona a los técnicos información sobre el sistema eléctrico del equipo.
- IM
  El Manual de instalación proporciona a los técnicos la información necesaria para instalar el equipo de manera segura.
- MM
  El Manual de mantenimiento proporciona a los técnicos información sobre el mantenimiento del equipo.
- OM
  El Manual de funcionamiento proporciona al operador información sobre el manejo y el funcionamiento del equipo antes, durante y después de la producción.
- SPC
  El Catálogo de recambios proporciona la información necesaria para pedir las piezas de recambio a Tetra Pak.
- TeM
  El Manual técnico
  - proporciona a los técnicos la información necesaria para instalar de manera segura el equipo
  - proporciona a los técnicos información sobre el mantenimiento del equipo
  - proporciona a los técnicos información sobre el sistema eléctrico de la máquina/equipo
  - proporciona la información necesaria para pedir las piezas de recambio a Tetra Pak.

Organización de las páginas

Consultar la ilustración (A) en la página i-5: Las páginas principales en un Catálogo de recambios se componen de una página de ilustración (1) y una página de lista correspondiente (7). El número de la página (5) se muestra en el encabezado de una página de ilustración y en el pie de página de una página de lista. El número del documento (6) se muestra en el pie de página de una página de lista.

Numeración de las páginas

Consulte la ilustración (A) en la página i-5: Un número de página (5) consta de tres partes:

- número de capítulo (2)
- número de página consecutivo dentro del capítulo (3)
- número total de páginas del capítulo (4)

Introducción a la máquina

Fabricante

Para obtener el nombre y la dirección del fabricante, véase la segunda página de este catálogo.

Servicio

Para pedir recambios para esta máquina o informar de problemas asociados con el funcionamiento de la misma, póngase en contacto con la oficina de Tetra Pak más cercana.

Póngase en contacto con el representante para otras consultas, comentarios o consejos sobre mejoras referidos al equipo y su documentación.

Identificación

Clasificación de la CE

Este equipo cumple con la normativa básica sobre salud y seguridad del Espacio Económico Europeo (EEE).

Placa de máquina

La ilustración (B) en la página i-5 muestra un ejemplo de una placa de máquina.
En el capítulo Introducción de los manuales entregados con este equipo, se muestra una ilustración de la placa de máquina válida y su ubicación en el equipo. La placa de máquina contiene los datos que se enumeran a continuación, requeridos al ponerse en contacto con Tetra Pak en relación con este equipo específico.

- Tipo de máquina (8)
- Volumen (9)
- Especificaciones de plano (10)
- Número de serie de la máquina (11)
- Fabricante (12)
- Marca de la CE (13)
- Año de fabricación (14)

La ilustración (C) en la página i-5 muestra un ejemplo de especificación de la máquina. Asegúrese de que los datos de equipo que se enumeran en las páginas de la cubierta de este manual corresponden a los datos de la placa y las especificaciones de la máquina.

Cómo utilizar este Catálogo de recambios

Localizar un número de recambio

a) Consulte la ilustración (D) en la página i-5: Vaya al número de capítulo (15) indicado junto al grupo principal que contiene la pieza que desea localizar.

Los puntos b) y c) hacen referencia a la ilustración (E) en la página i-6.

b) En la ilustración del grupo principal, busque el subgrupo de la máquina (17) que contiene la pieza o el subgrupo que busca. Anote el número de posición (18) y vaya a la página de lista que sigue a la ilustración.

c) Busque el número de posición/denominación de referencia (16) o el nombre del subgrupo (19). Vaya al número de página correspondiente (20) que aparece en la columna de la derecha. Tetra Pak ha elegido utilizar siempre la estructura orientada a la función para la denominación de referencia. El prefijo que indica la estructura orientada a la función (=) no aparece en la denominación de referencia.

Los puntos d) y e) hacen referencia a la ilustración (F) en la página i-6.

d) Localice la pieza (21) que busca en la ilustración del subgrupo y anote el número de posición de la pieza.

e) El número de pieza (29) y la descripción de la misma (30) aparecen junto al número de posición en la página de lista.

Información que contiene un Catálogo de recambios

La lista que aparece a continuación hace referencia a la ilustración (F) en la página i-6. Un Catálogo de recambios contiene la siguiente información sobre grupos, subgrupos y recambios para el equipo:

- Referencia de estructura de grupo (22). Indica el siguiente grupo más alto en la estructura de lista del equipo.
- Nombre del grupo (23)
- Unidad de medida (25)
- Cantidad (26)
- Número de dibujo del conjunto (27)
- Intervalo de página de lista (28). Incluido si hay varias páginas en la ilustración o lista de grupo.
- Número de pieza o subgrupo (29)
- Nombre de subgrupo o descripción de pieza (30)
- Número de grupo (31)
- Número de equipo (32)
- Encabezado de información de grupo (33). Indica si la sección que aparece debajo del encabezado corresponde a una variante específica de la máquina o si es una lista de piezas comunes. Si la lista tiene más de una variante y cada variante tiene su propio dibujo de conjunto, se muestra una referencia de página al dibujo de conjunto de la variante.
- Información interna (34)

Sissejuhatus

Juhendi teave

Tetra Pak soovitab kõik juhendid hoolikalt läbi lugeda. Kontrollige, et juhendid oleksid seadmetega töötavatele ja neid hooldavatele isikutele kättesaadavad.

Kataloog tuleb seadme kasutusaja vältel alles hoida ning järgmisele omanikule või kasutajale edasi anda.

Tetra Pak ei vastuta seadme vigastuste eest, mis on tekkinud seadmega kaasnevate juhendite mittejärgimise tõttu.

Kaasaolevad juhendid

Seadmega kaasasolevad juhendid võivad sisaldada järgmist:

- CM
  Ümberseadistusjuhend annab tehnikutele teavet seadme ümber seadistamise kohta eri tootmisrežiimide korral.
- EM
  Elektrijuhend annab tehnikutele informatsiooni seadme elektrisüsteemi kohta.
- IM
  Paigaldusjuhend annab tehnikutele vajalikku teavet seadme ohutu paigaldamise kohta.
- MM
  Hooldusjuhend annab tehnikutele teavet seadme hoolduse kohta.
- OM
  Kasutusjuhend annab operaatorile teavet seadme käsitsemise ja kasutamise kohta enne tootmist, selle ajal ja pärast seda.
- SPC
  Varuosade kataloog annab vajalikku teavet Tetra Pakilt varuosade tellimiseks
- TeM
  Tehniline juhend
  - annab tehnikutele vajalikku teavet seadme ohutuks paigaldamiseks
  - annab tehnikutele teavet seadme hooldamise kohta
  - annab tehnikutele teavet masina/seadme elektrisüsteemi kohta
  - annab vajalikku teavet Tetra Pakilt varuosade tellimiseks.

Lehekülje kujundus

Vt joonist (A) lk i-5: Varuosade kataloogi põhilehtedeks on jooniste lehekülg (1) ja vastav loeteluleht (7). Lehekülje number (5) on toodud joonistelehe päises ja loetelulehe jaluses. Dokumendi number (6) on toodud loetelulehe jaluses.

Lehekülje nummerdus

Vt joonist (A) lk i-5: Lehekülje number (5) koosneb kolmest osast:

- peatüki number (2)
- järgneva lehekülje number (3) peatükis
- lehekülgede koguarv peatükis (4)

Sissejuhatus masina kohta

Tootja

Tootja nimi ja aadress on toodud kataloogi teisel lehel.

Teenindus

Masina varuosade tellimiseks või masina kasutamisega seonduvate probleemide teatamiseks võtke ühendust lähima Tetra Pak kontoriga.

Seadme ja dokumendiga seonduvate küsimuste, kommentaaride ja parandusettepanekute puhul võtke ühendust ettevõtte esindajaga.

Identifikatsioon

CE klassifikatsioon

Seade on kooskõlas Euroopa Majanduspiirkonna (EEA) tervishoiu- ja ohutusnõuetega.

Masina andmeplaat

Joonisel (B) leheküljel i-5 on kujutatud masina andmeplaati. Masina andmeplaadi joonis ja selle asukoht seadmel on toodud seadmega kaasasoleva juhendi sissejuhatavas peatükis. Masina andmeplaadil on toodud allpool loetletud andmed, mida vajate antud konkreetse seadmega seoses Tetra Paki poole pöördudes.

- Masina tüüp (8)
- Maht (9)
- Joonisspetsifikatsioonid (10)
- Masina seerianumber (11)
- Tootja (12)
- CE tähis (13)
- Tootmisaasta (14)

Joonisel (C) leheküljel i-5 on kujutatud näide masina spetsifikatsioonist. Veenduge, et juhendi esimestel lehekülgedel toodud andmed seadme kohta vastavad masina andmesildil olevatele andmetele ja masina spetsifikatsioonile.

Kuidas varuosade kataloogi kasutada

Leidke varuosa number

a) Vt joonist (D) lk i-5: Leidke peatükk, mille number (15) on toodud selle põhirühma juures, mis sisaldab otsitavat varuosa.

Punktid b) ja c) viitavad joonisele (E) lk i-6.

b) Põhirühma joonisel leidke masina alamrühm (17), mis sisaldab otsitavat osa või alamrühma. Leidke positsiooninumber (18) ja avage joonisele järgnev loeteluleht.

c) Leidke positsiooninumber/viite tähis (16) või alamgrupi nimetus (19). Avage parempoolses veerus loetletud vastav lehekülje number (20). Tetra Pak on valinud viite tähise puhul alatiseks kasutamiseks funktsioonile suunatud struktuuri. Funktsioonile suunatud struktuuri prefiks (=) pole viite tähises näidatud.

Punktid d) ja e) viitavad jooniselerefer (F) lk i-6.

d) Leidke otsitav osa (21) alamrühma joonisel ja seejärel osa positsioonnumber.

e) Osa number (29) ja osa kirjeldus (30) on toodud loetelulehel positsioonnumbri kõrval.

Varuosade kataloogis toodud teave

Allpool toodud loetelui viitab joonisele (F) lk i-6. Varuosade kataloog sisaldab järgmist teavet seadme rühmade, alamrühmade ja varuosade kohta:

- Rühmastruktuuri viide (22). Märgib seadme loetelu struktuuris järgmist kõrgemat rühma.
- Rühma nimetus (23)
- Mõõtühik (25)
- Kogus (26)
- Koostejoonise number (27)
- Loetelu lehekülgede vahemik (28). Kaasatud kui rühma joonised või loetelu on toodud mitmel lehel.
- Osa või alamrühma number (29)
- Alamrühma nimetus või osa kirjeldus (30)
- Rühma number (31)
- Seadme number (32)
- Rühma teabe pealkiri (33). Näitab, kas pealkirja all toodud jaotis on konkreetse masinavariandi kohta või on tegemist tavaliste varuosade loeteluga. Kui loetelus on toodud rohkem kui üks variant ja iga variandi jaoks on oma koostejoonis, esitatakse viide selle variandi koostejoonise leheküljele.
- Siseteave (34)

Johdanto

Tietoja käsikirjasta

Tetra Pak suosittelee kaikkien toimitettavien oppaiden lukemista huolellisesti. Varmista, että toimitetut oppaat ovat laitetta käyttävän tai huoltavan henkilökunnan saatavilla.

Tämä luettelo on säilytettävä laitteen käyttöiän ajan ja toimitettava edelleen mahdolliselle seuraavalle omistajalle tai käyttäjälle.

Tetra Pak ei vastaa laitevaurioista, jotka aiheutuvat laitteen mukana tulevissa oppaissa annettujen ohjeiden noudattamatta jättämisestä.

Toimitettavat ohjeet

Tämän laitteen mukana toimitettaviin ohjeisiin kuuluvat:

- CM
  Muunnoskirjassa on teknikoille tarkoitettuja ohjeita laitteiston muuttamisesta eri tuotantotiloihin.
- EM
  Sähkökirjassa on teknikoille tarkoitettuja tietoja laitteen sähköjärjestelmästä.
- IM
  Asennuskäsikirjassa on teknikoille tarkoitettuja tietoja, jotka tarvitaan laitteen turvallista asentamista varten.
- MM
  Huoltokäsikirjassa on teknikoille tarkoitettuja tietoja tämän laitteen huoltamisesta.
- OM
  Käyttäjän käsikirjassa on käyttäjälle tarkoitettuja tietoja laitteen käsittelystä ja käyttämisestä ennen tuotantoa, tuotannon aikana ja sen jälkeen.
- SPC
  Varaosaluettelossa on tietoja, joita tarvitaan varaosien tilaamiseen Tetra Pakilta.
- TeM
  Tekninen käsikirja
  - sisältää teknikoille tarkoitettuja tietoja, joita tarvitaan laitteen turvallista asentamista varten
  - sisältää teknikoille tarkoitettuja tietoja laitteen huoltamisesta
  - sisältää teknikoille tarkoitettuja tietoja koneen/laitteen sähköjärjestelmästä
  - sisältää tietoja, joita tarvitaan varaosien tilaamiseen Tetra Pakilta.

Sivujen asettelu

Katso kuva (A) sivulla i-5: Varaosaluettelon pääsivut koostuvat kuvasivusta (1) ja sitä vastaavasta luettelosivusta (7). Sivunumero (5) näytetään kuvasivun ylätunnisteessa ja luettelosivun alatunnisteessa. Asiakirjan numero (6) näytetään luettelosivun alatunnisteessa.

Sivunumerointi

Katso kuva (A) sivulla i-5: Sivunumerossa (5) on kolme osaa:

- luvun numero (2)
- perättäinen sivunumero (3) luvun sisällä
- luvun kokonaissivumäärä (4).

Koneen esittely

Valmistaja

Valmistajan nimi ja osoite on ilmoitettu tämän luettelon toisella sivulla.

Huolto

Jos haluat tilata tähän koneeseen varaosia tai jos tämän koneen käytössä ilmenee ongelmia, jotka haluat raportoida, ota yhteyttä lähimpään Tetra Pakin toimistoon.

Jos sinulla on muuta kysyttävää, huomautettavaa tai ehdotuksia ja sen asiakirjoja koskevista parannuksista, ota yhteys yhteyshenkilöön.

Tunnistetiedot

CE-luokitus

Tämä laite vastaa Euroopan talousalueen (ETA) terveyttä ja turvallisuutta koskevia perusvaatimuksia.

Koneen tyyppikilpi

Kuvassa (B) sivulla i-5 on esimerkki koneen tyyppikilvestä. Voimassa olevan tyyppikilven kuva ja sen sijainti koneessa käy ilmi laitteiston mukana tulleiden ohjeiden Johdanto-luvusta. Tyyppikilvessä on tarvitsemasi Tetra Pakin voimassa olevat yhteystiedot, kun on kyseessä tämä nimenomainen laite.

- Konetyyppi (8)
- Tilavuus (9)
- Piirustuserittely (10)
- Koneen sarjanumero (11)
- Valmistaja (12)
- CE-merkki (13)
- Valmistusvuosi (14)

Kuvassa (C) sivulla i-5 on esimerkki koneen erittelystä. Varmista, että tämän ohjeen etusivuilla ilmoitetut laitetiedot vastaavat tyyppikilven ja kone-erittelyn tietoja.

Tämän varaosaluettelon käyttäminen

Etsi varaosan numero

a) Katso kuva (D) sivulla i-5: Siirry lukuun (15), joka on ilmoitettu etsittävän osan pääryhmän vieressä.

Kohdat b) ja c) viittaavat kuvaan (E) sivulla i-6.

b) Etsi pääryhmän kuvasta koneen alaryhmä (17), joka sisältää etsimäsi osan tai alaryhmän. Merkitse muistiin paikkanumero (18) ja siirry luettelosivulle, joka seuraa kuvaa.

c) Etsi paikkanumero (16) tai alaryhmän nimi (19). Siirry vastaavalle sivunumerolle (20), joka on ilmoitettu oikeassa sarakkeessa. Tetra Pak on päättänyt aina noudattaa toimintoperusteista rakennetta viitemerkinnöissä. Viitemerkinnässä ei esitetä toimintoperusteisen rakenteen osoittavaa etuliitettä (=).

Kohdat d) ja e) viittaavat kuvaan (F) sivulla i-6.

d) Hae etsittävä osa (21) alaryhmän kuvasta ja merkitse osan paikkanumero muistiin.

e) Osanumero (29) ja osan kuvaus (30) on annettu paikkanumeron vieressä luettelosivulla.

Varaosaluettelossa olevat tiedot

Alla oleva luettelo viittaa kuvaan (F) sivulla i-6. Varaosaluettelo sisältää seuraavat tiedot ryhmistä, alaryhmistä ja laitteen varaosista:

- Ryhmärakenneviite (22). Osoittaa seuraavaksi ylemmän ryhmän laiteluettelorakenteessa.
- Ryhmän nimi (23)
- Mittayksikkö (25)
- Määrä (26)
- Kokoonpanopiirustuksen numero (27)
- Luettelon sivualue (28). Tämä on mukana, jos ryhmäkuvassa tai luettelossa on useita sivuja.
- Osan tai alaryhmän numero (29)
- Alaryhmän nimi tai osan kuvaus (30)
- Ryhmän numero (31)
- Laitteen numero (32)
- Ryhmätietojen otsikko (33). Osoittaa, koskeeko alla oleva osio tiettyä koneversiota vai onko kyseessä yhteisten osien luettelo. Jos luettelolla on useampi kuin yksi versio ja kullakin versiolla on oma kokoonpanopiirustuksensa, näytetään version kokoonpanopiirustuksen sivuviittaus.
- Sisäiset tiedot (34)

Introduction

Informations sur ce manuel

Tetra Pak recommande de lire attentivement tous les manuels remis. S'assurer que ceux-ci sont accessibles au personnel d'exploitation et de maintenance de l'équipement.

Il est important de conserver ce catalogue pendant la durée de vie de l'équipement et de le transmettre à tout détenteur ou à tout utilisateur ultérieur de l'équipement.

Tetra Pak ne pourra être tenu responsable d'aucun dommage causé à l'équipement suite au non respect des instructions fournies dans les manuels remis avec cet équipement.

Manuels remis

Les manuels remis avec cet équipement peuvent comprendre

- CM
  Le Manuel de Conversion contient les informations destinées aux techniciens pour la conversion de l'équipement en vue des différents modes de production.
- EM
  Le Manuel Electrique fournit aux techniciens des informations sur le système électrique de l'équipement.
- IM
  Le Manuel d'Installation fournit les informations nécessaires aux techniciens pour installer l'équipement en toute sécurité.
- MM
  Le Manuel d'Entretien contient les informations nécessaires aux techniciens pour la maintenance de l'équipement.
- OM
  Le Manuel d'Utilisation fournit à l'opérateur les informations nécessaires à la manutention et à l'exploitation de l'équipement, avant, pendant et après la production.
- SPC
  Le Catalogue des Pièces de Rechange contient les informations permettant de commander des pièces de rechange auprès de Tetra Pak
- TeM
  Le Manuel Technique
  - contient les informations nécessaires aux techniciens pour installer l'équipement en toute sécurité.
  - contient les informations nécessaires aux techniciens pour la maintenance de l'équipement.
  - fournit aux techniciens des informations sur le système électrique de la machine/de l'équipement.
  - fournit les informations permettant de commander des pièces de rechange auprès de Tetra Pak.

Mise en page

Reportez-vous au schéma (A) page i-5 : Dans un catalogue de Pièces de Rechange, les pages principales sont les pages de schémas (1) et les pages de listes correspondantes (7). Le numéro de page (5) est indiqué en en-tête sur une page de schéma et en bas de page sur une page de liste. Le numéro de document (6) est indiqué au bas d'une page de liste.

Numérotation des pages

Reportez-vous au schéma (A) page i-5 : Un numéro de page (5) se compose de trois éléments :

- numéro du chapitre (2)
- numéro de page séquentiel à l'intérieur du chapitre (3)
- nombre total de pages du chapitre (4)

Présentation de la machine

Fabricant

Les nom et adresse du fabricant sont donnés en deuxième page de ce catalogue.

Assistance technique

Pour commander des pièces de rechange pour cette machine ou signaler un problème lié à son fonctionnement, contactez l'agence Tetra Pak la plus proche.

Contactez le responsable de liaison pour tout autre renseignement, commentaire ou suggestion d'amélioration relatifs à l'équipement et à sa documentation.

Identification

Certification CE

Cet équipement est conforme aux réglementations essentielles en matière d'hygiène et de sécurité de l'Espace économique européen (EEE).

Plaque signalétique de la machine

Le schéma (B) de la page i-5 reproduit un exemple de plaque signalétique de la machine.
Le chapitre Introduction des manuels remis avec cet équipement comprend une reproduction de la plaque signalétique valide de la machine et indique son emplacement sur l'équipement. La plaque comporte les caractéristiques indiquées ci-dessous, nécessaires pour prendre contact avec Tetra Pak à propos de cet équipement spécifique.

- Type de la machine (8)
- Volume (9)
- Caractéristiques schéma (10)
- Numéro de série de la machine (11)
- Fabricant (12)
- Marquage CE (13)
- Année de fabrication (14)

Le schéma (C) de la page i-5 reproduit un exemple de plaque signalétique de la machine. Assurez-vous que les données relatives à l'équipement qui se trouvent au début de ce manuel correspondent bien aux données figurant sur la plaque signalétique de la machine et à ses spécifications.

Comment utiliser ce Catalogue des Pièces de Rechange

Trouver un numéro de pièce de rechange

a) Reportez-vous au schéma (D) page i-5 : Allez au numéro de chapitre (15) indiqué à côté du groupe principal contenant la pièce que vous recherchez.

Les éléments b) et c) se rapportent au schéma (E) de la page i-6.

b) Sur le schéma du groupe principal, recherchez le sous-groupe de la machine (17) contenant la pièce ou le sous-groupe que vous recherchez. Notez le numéro de position (18) et reportez-vous à la page de liste suivant le schéma.

c) Recherchez le numéro de position/la désignation de référence (16) ou le nom du sous-groupe (19). Allez au numéro de page correspondant (20) figurant dans la liste de la colonne de droite. Tetra Pak a pris le parti de toujours utiliser la structure de la fonction pour la désignation de la référence. Le préfixe indiquant la structure de la fonction (=) ne figure pas dans la désignation de la référence.

Les éléments d) et e) se rapportent au schéma (F) de la page i-6.

d) Repérez la pièce (21) que vous recherchez dans le schéma du sous-groupe et notez le numéro de position de la pièce.

e) Le numéro de la pièce (29) et sa description (30) figurent à côté du numéro de position sur la page de liste.

Informations données dans un Catalogue de Pièces de Rechange

La liste ci-dessous se rapporte au schéma (F) de la page i-6. Un Catalogue de Pièces de Rechange contient les informations suivantes concernant les groupes, sous-groupes et pièces de rechange de l'équipement :

- Référence de structure de groupe (22). Indique le groupe immédiatement supérieur dans la structure de liste de l'équipement.
- Nom du groupe (23)
- Unité de mesure (25)
- Quantité (26)
- Numéro de plan de montage (27)
- Groupe de pages de liste (28). Indiqué si la liste ou l'illustration du groupe comporte plusieurs pages.
- Numéro de pièce ou de sous-groupe (29)
- Nom du sous-groupe ou description de la pièce (30)
- Numéro de groupe (31)
- Numéro de l'équipement (32)
- Titre information du groupe (33) Indique si la section en-dessous du titre est destinée à une variante spécifique de la machine ou s'il s'agit d'une liste de pièces communes. Si une liste comprend plus d'une variante et que chaque variante a son propre plan de montage, une référence de page est donnée pour le plan de montage de la variante.
- Information interne (34)

Bevezetés

Kézikönyvre vonatkozó információk

A Tetra Pak javasolja, hogy az összes kapott kézikönyvet gondosan olvassa el. Gondoskodjon róla, hogy a kézikönyvek a berendezést üzemeltető és karbantartó személyzet számára elérhetők legyenek.

Fontos, hogy megőrizzék ezt a katalógust a berendezés élettartama alatt, és átadják a következő tulajdonosoknak és felhasználóknak.

A Tetra Pak nem vállal felelősséget a berendezés semmilyen megrongálódása esetén, ha nem követték a berendezéshez tartozó kézikönyvekben leírt utasításokat.

Szállított kézikönyvek

A berendezéssel szállított kézikönyvek az alábbiak lehetnek

- CM
  Az Átállási kézikönyv a műszaki szakemberek számára a berendezés különböző gyártási módjai közötti átállásra vonatkozó információkat tartalmaz.
- EM
  A Villamossági kézikönyv a berendezés elektronikai rendszerére vonatkozó információkat szolgáltat a műszaki szakemberek részére.
- IM
  Az Üzembe helyezési kézikönyv a berendezés biztonságos üzembe helyezésére vonatkozó információkat biztosít a technikai szakemberek részére.
- MM
  A Karbantartási kézikönyv a berendezés karbantartására vonatkozó információkat biztosít a technikai szakemberek részére.
- OM
  Az Üzemeltetési kézikönyv az üzemeltető személyzetnek szolgáltat a berendezés kezelésére és üzemeltetésére, a feldolgozás előtti, közbeni és utáni teendőkre vonatkozó információkat.
- SPC
  A Tartalékalkatrész-katalógus információt biztosít a pótalkatrészek Tetra Pak-tól történő megrendeléséhez.
- TeM
  A Technikai kézikönyv
  – a berendezés biztonságos üzembe helyezésére vonatkozó információkat biztosít a technikai szakemberek részére.
  – a berendezés karbantartására vonatkozó információkat biztosít a technikai szakemberek részére.
  – a gép/berendezés elektromos rendszerére vonatkotó információkat szolgáltat a technikai szakemberek számára.
  – információkat biztosít a pótalkatrészek Tetra Pak-tól történő megrendeléséhez.

Oldalelrendezés

Tekintse meg az i-5 oldalon lévő (A) ábrát: A Tartalékalkatrész-katalógus főoldalai egy rajzoldalból (1) és egy hozzá tartozó listaoldalból (7) állnak. Az oldalszám (5) a rajzoldal fejlécében és a listaoldal láblécében látható. A dokumentum száma (6) a listaoldal láblécében jelenik meg.

Oldalszámozás

Tekintse meg az i-5 oldalon lévő (A) ábrát: Az oldalszám (5) három részből áll:

- fejezetszám (2)
- folyamatos oldalszám (3) a fejezeten belül
- összes oldalszám (4) a fejezeten belül.

Bevezetés

Gyártó

A gyártó neve és címe a katalógus második oldalán található.

Szerviz

A gép valamely pótalkatrészének megrendelése vagy a berendezés működésével kapcsolatos zavarok bejelentése végett forduljon a legközelebbi Tetra Pak képviselethez.

Bármilyen más, a berendezésre illetve a dokumentációra vonatkozó kérdéseivel, megjegyzéseivel vagy javaslataival forduljon területi képviselőjéhez.

Azonosítás

CE besorolás

Ez a berendezés megfelel az Európai Gazdasági Régió (EEA) alapvető egészségügyi és biztonsági előírásainak.

Gépcímke

A(z) i-5 oldalon található (B) ábra a gépcímke egy példáját mutatja be. Egy érvényes gépcímkét és megfelelő elhelyezését ábrázoló rajz látható a berendezéssel szállított kézikönyv Bevezetés fejezetében. A gépcímke azokat az alább felsorolt adatokat tartalmazza, amelyek a Tetra Pak-kal történő, a berendezésre vonatkozó kommunikációhoz szükségesek.

- Géptípus (8)
- Térfogat (9)
- Tervrajzok (10)
- A gép sorozatszáma (11)
- Gyártó (12)
- CE jelzés (13)
- Gyártási év (14)

A(z) i-5 oldalon található (C) ábra a gép műszaki specifikációjának egy példáját mutatja be. Győződjön meg róla, hogy a kézikönyv első lapjain közölt berendezésadatok megegyeznek a gép adattábláján és a gép műszaki leírásában megjelenő információkkal.

A Tartalékalkatrész-katalógus használata

A tartalékalkatrész számának kikeresése

a) Tekintse meg a(z) i-5 oldalon lévő (D) ábrát: Lapozzon a keresett alkatrészt tartalmazó főcsoport mellett feltüntetett (15) számú fejezetre.

A b) és c) elemek az i-6 oldalon található ábrára vonatkoznak.

b) A főcsoport-ábrán keresse meg azt az alcsoportot (17), amelyik a keresett alkatrészt vagy alcsoportot tartalmazza. Jegyezze meg a pozíciószámot (18), majd lapozzon az ábrát követő listaoldalra.

c) Keresse meg a lejegyzett pozíciószámot/hivatkozási megjelölést (16) vagy a keresett alcsoport nevét (19). Lapozzon a jobb oldali oszlopban feltüntetett számú (20) oldalra. A Tetra Pak a hivatkozási jelöléseket mindig funkció-orientált struktúra alapján végzi el. Az előtaggal jelölt funkció-orientált struktúra (=) nem jelenik meg a hivatkozási jelölésben.

A d) és e) elemek az i-6 oldalon található (F) ábrára vonatkoznak.

d) Az alcsoport ábrán keresse meg a kívánt alkatrészt (21), és jegyezze meg az alkatrész pozíciószámát.

e) Az alkatrész száma (29) és leírása (30) a listaoldalon, a pozíciószám mellett látható.

A Tartalékalkatrész-katalógusban megtalálható információk

Az alábbi lista az i-6 oldalon található (F) ábrára vonatkozik.
A Tartalékalkatrész-katalógus a következő, csoportokra, alcsoportokra és pótalkatrészekre vonatkozó adatokat tartalmazza:

- Csoportstruktúra-hivatkozás (22). A berendezés listás struktúrájában közvetlenül az aktuális csoport fölött álló csoportot jelöli.
- Csoportnév (23)
- Mértékegység (25)
- Mennyiség (26)
- Összeszerelési rajzszám (27)
- Lista oldaltartománya (28). Abban az esetben jelenik meg, ha a csoport ábrája vagy listája többoldalas.
- Alkatrész vagy alcsoport száma (29)
- Alcsoport neve vagy alkatrész leírása (30)
- Csoportszám (31)
- Berendezésszám (32)
- Csoportinformáció fejléce (33). Azt mutatja, hogy a fejléc után következő rész egy speciális gépváltozatra vonatkozik vagy az általános pótalkatrészek listája. Ha a listának több változata van, és mindegyikhez saját összeszerelési rajz tartozik, az illető összeszerelési rajz oldalhivatkozása is megjelenik.
- Belső információ (34)

Inngangur

Upplýsingar um handbók

Tetra Pak mælir með því að allar handbækur sem afhentar eru séu lesnar vandlega. Gætið þess að afhentar handbækur séu tiltækar fyrir starfsfólk sem vinnur við eða viðheldur tækjabúnaðinum.

Það er mikilvægt að halda upp á þennan vörulista allan líftíma tækjabúnaðarins og að láta síðari eiganda eða notanda hafa vörulistann.

Ekki er hægt að gera Tetra Pak ábyrgt fyrir neinum skemmdum sem verða á tækjabúnaðinum vegna þess að ekki er farið eftir leiðbeiningunum í þeim handbókum sem fylgja tækjabúnaðinum.

Afhentar handbækur

Handbækur sem afhentar eru með þessum tækjabúnaði geta verið

- CM
  Breytingahandbók, sem veitir tæknimönnum upplýsingar um breytingar á tækjabúnaðinum milli mismunandi framleiðsluhama.
- EM
  Rafmagnshandbók, sem veitir tæknimönnum upplýsingar um rafkerfi tækjabúnaðarins.
- IM
  Uppsetningarhandbók, sem veitir tæknimönnum nauðsynlegar upplýsingar til að setja tækjabúnaðinn upp á öruggan hátt.
- MM
  Viðhaldshandbók, sem eitir tæknimönnum upplýsingar um viðhald tækjabúnaðarins.
- OM
  Notkunarhandbók, sem veitir stjórnandanum upplýsingar um meðhöndlun og notkun tækjabúnaðarins, fyrir, eftir og meðan á framleiðslu stendur.
- SPC
  Varahlutavörulisti, sem veitir nauðsynlegar upplýsingar til pöntunar varahluta frá Tetra Pak.
- TeM
  Tæknihandbók
  - sem veitir tæknimönnum nauðsynlegar upplýsingar til að setja tækjabúnaðinn upp á öruggan hátt
  - sem veitir tæknimönnum upplýsingar um viðhald tækjabúnaðarins
  - sem veitir tæknimönnum upplýsingar um rafkerfi vélarinnar/ tækjabúnaðarins
  - sem veitir nauðsynlegar upplýsingar til pöntunar varahluta frá Tetra Pak.

Umbrot

Sjá skýringarmynd (A) á síðu i-5: Aðalsíðurnar í Varahlutavörulistanum samanstanda af skýringarsíðu (1) og samsvarandi listasíðu (7). Síðunúmerið (5) er sýnt í haus síðunnar með skýringarmyndinni og í fæti listasíðunnar. Skjalnúmerið (6) er sýnt í fæti listasíðunnar.

Númerun síðu

Sjá skýringarmynd (A) á síðu i-5: Síðunúmer (5) er í þremur hlutum:

- kaflanúmer (2)
- samfellt síðunúmer innan kaflans (3)
- heildarfjölda blaðsíðna í kaflanum (4)

Kynning á vél

Framleiðandi

Fyrir nafn og heimilisfang framleiðanda, sjá síðu tvö í þessum vörulista.

Þjónusta

Til að panta varahluti fyrir þessa vél, eða til að tilkynna vandamál sem tengjast notkun þessarar vélar, skal hafa samband við næstu Tetra Pak skrifstofu.

Hafðu samband við Samskiptatengsl með aðrar fyrirspurnir, athugasemdir eða uppástungur varðandi tækjabúnaðinn og fylgiskjöl hans.

Kennsl

CE flokkun

Þessi tækjabúnaður er í samræmi við grundvallar heilbrigðis- og öryggisreglugerðir á Evrópska efnahags svæðinu (EES).

Nafnplata

Skýringarmynd (B) á síðu i-5 sýnir dæmi um nafnplötu.
Skýringarmynd af gildri nafnplötu og staðsetningu hennar á tækjabúnaðinum er sýnd í Inngangskafla handbókanna sem afhentar eru með þessum tækjabúnaði. Á nafnplötunni eru upplýsingarnar sem taldar eru upp hér að neðan, sem þörf er á þegar haft er samband við Tetra Pak varðandi þennan tiltekna tækjabúnað.

- Vélartegund (8)
- Fjöldi (9)
- Teikniupplýsingar (10)
- Raðnúmer vélar (11)
- Framleiðandi (12)
- CE merki (13)
- Framleiðsluár (14)

Skýringarmynd (C) á síðu i-5 sýnir dæmi um tæknilýsingu vélar. Gættu þess að upplýsingar um tækjabúnað sem talinn er upp á fremstu síðum þessarar handbóka samsvari upplýsingum á nafnplötu og tæknilýsingu vélar.

Hvernig nota á þennan Varahlutavörulista

Finndu varahlutarnúmer

a) Sjá skýringarmynd (D) á síðu i-5: Farðu í kaflanúmerið (15) sem gefið er til kynna við hlið aðalflokksins sem inniheldur hlutinn sem þú vilt finna.

Atriði b) og c) vísa til skýringarmyndar (E) á síðu i-6:

b) Á skýringarmynd aðalflokksins skaltu leita að undirflokki (17) vélarinnar, sem inniheldur hlutinn eða undirflokkinn sem þú ert að leita að. Taktu eftir stöðunúmerinu (18) og farðu á listasíðuna sem fylgir skýringarmyndinni.

c) Leitaðu að stöðunúmeri/tilvísunartitli (16) eða heiti undirflokksins (19). Farðu á samsvarandi síðunúmer (20) sem sýnt er í hægri dálkinum. Tetra Pak hefur kosið að nota alltaf sérhæfða skipan fyrir tilvísunartitla. Forskeytið sem gefur til kynna sérhæfða skipan (=) er ekki sýnt í tilvísunartitlinum.

Atriði d) og e) vísa til skýringarmyndar (F) á síðu i-6:

d) Finndu hlutinn (21) sem þú ert að leita að á undirflokksskýringarmyndinni og taktu eftir stöðunúmeri hlutarins.

e) Hlutarnúmerið (29) og lýsing hlutar (30) eru skráð hjá stöðunúmerinu á listasíðunni.

Upplýsingar skráðar í Varahlutavörulista

Listinn að neðan vísar til skýringarmyndar (F) á síðu i-6: Varahlutavörulisti inniheldur eftirfarandi upplýsingar um flokka, undirflokka og varahluti fyrir tækjabúnaðinn:

- Tilvísun flokkaskipunar (22). Gefur til kynna næsta flokk fyrir ofan í listaskipan tækjabúnaðarins.
- Heiti flokks (23)
- Mælieining (25)
- Magn (26)
- Númer samsetningarteikningar (27)
- Röð listasíðu (28). Fylgir með ef það eru margar blaðsíður í skýringarmynd eða lista flokksins.
- Númer hlutar eða undirflokks (29)
- Heiti undirflokks eða lýsing hlutar (30)
- Númer flokks (31)
- Númer tækjabúnaðar (32)
- Fyrirsögn flokkaskipunar (33). Gefur til kynna ef kaflinn fyrir neðan fyrirsögnina er fyrir sérstakt afbrigði vélar eða ef hann er listi yfir algenga hluti. Ef listi er með meira en eitt afbrigði og hvert afbrigði á sína eigin samsetningarteikningu, er sýnd blaðsíðutilvísun til samsetningarteikningar afbrigðisins.
- Innri upplýsingar (34)

Introduzione

Informazioni sul manuale

Tetra Pak consiglia di leggere con attenzione tutti i manuali forniti in dotazione. Assicurarsi che tutti i manuali in dotazione siano disponibili per il personale addetto al funzionamento o alla manutenzione della macchina.

È importante conservare il presente catalogo per tutta la durata della macchina e consegnarlo al successivo proprietario o utilizzatore.

Tetra Pak non sarà da ritenersi responsabile per eventuali danni alla macchina causati dal mancato rispetto delle istruzioni fornite nei manuali che accompagnano questa macchina.

Manuali in dotazione

I manuali consegnati con la presente macchina possono comprendere:

- CM (Manuale di conversione)
  Questo manuale fornisce ai tecnici le informazioni necessarie per la conversione della macchina da una modalità di produzione a un'altra.
- EM (Manuale elettrico)
  Questo manuale fornisce ai tecnici informazioni sull'impianto elettrico della macchina.
- IM (Manuale d'installazione)
  Questo manuale fornisce ai tecnici le informazioni necessarie per installare in sicurezza la macchina.
- MM (Manuale di manutenzione)
  Questo manuale fornisce ai tecnici le informazioni sulla manutenzione della macchina.
- OM (Manuale operativo)
  Questo manuale fornisce all'operatore le informazioni sull'utilizzo e il funzionamento della macchina prima, durante e dopo la produzione.
- SPC (Catalogo dei pezzi di ricambio)
  Questo catalogo fornisce le informazioni necessarie per ordinare i pezzi di ricambio a Tetra Pak.
- TeM (Manuale tecnico)
  Questo manuale:
  - fornisce ai tecnici le informazioni necessarie per installare in sicurezza la macchina
  - fornisce ai tecnici le informazioni sulla manutenzione della macchina
  - fornisce ai tecnici informazioni sull'impianto elettrico della macchina
  - fornisce le informazioni necessarie per ordinare i pezzi di ricambio a Tetra Pak.

Schema delle pagine

Consultare la figura (A) a pagina i-5: Le pagine principali di un Catalogo dei pezzi di ricambio sono costituite da una pagina con la figura (1) e una pagina elenco corrispondente (7). Il numero di pagina (5) è indicato nell'intestazione delle pagine con le figure e nel piè di pagina delle pagine elenco. Il codice del documento (6) è indicato nel piè di pagina delle pagine elenco.

Numerazione delle pagine

Consultare la figura (A) a pagina i-5: Il numero di pagina (5) è suddiviso in tre parti:

- numero del capitolo (2)
- numero progressivo di pagina all'interno del capitolo (3)
- numero totale di pagine nel capitolo (4)

Introduzione alla macchina

Fabbricante

Il nome e l'indirizzo del fabbricante sono riportati sulla seconda pagina del presente catalogo.

Assistenza

Per ordinare i pezzi di ricambio per questa macchina oppure per riferire problemi associati al funzionamento della macchina, contattare l'ufficio Tetra Pak più vicino.

Per tutte le altre richieste, commenti o suggerimenti per eventuali miglioramenti da apportare alla macchina e alla relativa documentazione, contattare il responsabile di collegamento.

Identificazione

Classificazione CE

Questa macchina è conforme alle principali norme sanitarie e di sicurezza dell'Area Economica Europea (EEA).

Targhetta della macchina

La figura (B) a pagina i-5 mostra un esempio di targhetta della macchina. Il capitolo Introduzione di tutti i manuali consegnati con la presente macchina contiene invece la figura della targhetta della macchina valida e la sua posizione sulla macchina. La targhetta riporta i dati elencati qui sotto, che sono necessari per contattare Tetra Pak in relazione a questa macchina specifica.

- Tipo di macchina (8)
- Volume (9)
- Specifiche disegno (10)
- Numero di matricola della macchina (11)
- Fabbricante (12)
- Marchio CE (13)
- Anno di fabbricazione (14)

La figura (C) a pagina i-5 mostra un esempio delle specifiche di una macchina. Verificare che i dati relativi alla macchina elencati nelle pagine iniziali del presente manuale corrispondano ai dati riportati sulla targhetta della macchina e nelle specifiche della macchina.

Come usare questo Catalogo dei pezzi di ricambio

Individuare il numero del pezzo di ricambio

a) Consultare la figura (D) a pagina i-5: andare al numero del capitolo (15) indicato accanto al gruppo principale che contiene il pezzo che si desidera individuare.

I punti b) e c) fanno riferimento alla figura (E) a pagina i-6.

b) Nella figura del gruppo principale, identificare il sottogruppo della macchina (17) che contiene il pezzo o il sottogruppo cercato. Annotare il numero di posizione (18) e andare alla pagina elenco che segue la figura.

c) Identificare il numero di posizione/l'indicazione di riferimento (16) o il nome del sottogruppo (19). Andare al numero di pagina corrispondente (20) indicato nella colonna di destra. Per le indicazioni di riferimento, Tetra Pak ha scelto di usare sempre la struttura "function-oriented". Il prefisso che indica la struttura "function-oriented" (=) non è mostrato nell'indicazione di riferimento.

I punti d) e e) fanno riferimento alla figura (F) a pagina i-6.

d) Individuare il pezzo (21) cercato sulla figura del sottogruppo e annotare il numero di posizione del pezzo.

e) Il numero del pezzo (29) e la descrizione del pezzo (30) sono indicati accanto al numero di posizione sulla pagina elenco.

Informazioni contenute nel Catalogo dei pezzi di ricambio

L'elenco seguente fa riferimento alla figura (F) a pagina i-6. Il Catalogo dei pezzi di ricambio contiene le seguenti informazioni sui gruppi, i sottogruppi e i pezzi di ricambio della macchina:

- Riferimento struttura gruppo (22). Indica il gruppo superiore successivo nella struttura elenco della macchina.
- Nome gruppo (23)
- Unità di misura (25)
- Quantità (26)
- Numero disegno di assemblaggio (27)
- Intervallo delle pagine elenco (28). Questa informazione è presente se la figura o l'elenco relativi al gruppo occupano più di una pagina del manuale.
- Numero pezzo o sottogruppo (29)
- Nome sottogruppo o descrizione pezzo (30)
- Numero gruppo (31)
- Numero macchina (32)
- Intestazione informazioni gruppo (33). Indica se la sezione che segue l'intestazione si riferisce a una variante di macchina specifica oppure se si tratta di un elenco di parti comuni. Se un elenco contiene più di una variante ed esiste un disegno di assemblaggio specifico per ogni variante, viene fornito il riferimento alla pagina in cui è mostrato il disegno di assemblaggio relativo alla variante.
- Informazioni interne (34)

Įvadas

Informacija apie instrukciją

"Tetra Pak" rekomenduoja atidžiai perskaityti visas pateiktas instrukcijas. Pasirūpinkite, kad instrukcijos būtų prieinamos darbuotojams, kurie eksploatuoja arba prižiūri įrangą.

Svarbu šį katalogą išsaugoti visą įrangos tarnavimo laiką ir perduoti jį kitam įrangos savininkui arba naudotojui.

"Tetra Pak" neprisiima atsakomybės už įrangos sugadinimą, jei nesilaikoma nurodymų, pateiktų prie šios įrangos pridedamuose kataloguose.

Pateikiamos instrukcijos

Su šia įranga pateikiamose instrukcijose gali būti

- CM
  Transformacijos instrukcija, suteikianti technikams informaciją apie įrangos transformavimą skirtingiems gamybos režimams.
- EM
  Elektrinės dalies instrukcija, suteikianti technikams informaciją apie įrangos elektros sistemą.
- IM
  Įrengimo instrukcija, suteikianti technikams informaciją, reikalingą norint saugiai sumontuoti įrangą.
- MM
  Techninės priežiūros instrukcija, suteikianti technikams informaciją apie įrangos priežiūrą.
- OM
  Eksploatavimo instrukcijos paskirtis yra suteikti informaciją operatoriui, kaip naudoti ir valdyti įrangą prieš gamybos procesą, jo metu ir po jo.
- SPC
  Atsarginių dalių katalogas, kuriame yra informacija, reikalinga atsarginėms dalims iš "Tetra Pak" užsakyti
- TeM
  Techninė instrukcija
  – suteikia technikams informaciją, reikalingą saugiai sumontuoti įrangą
  – suteikia technikams informaciją apie įrangos priežiūrą
  – suteikia technikams informaciją apie įrangos elektros sistemą
  – suteikia informaciją, reikalingą užsakyti iš "Tetra Pak" atsargines dalis

Puslapių išdėstymas

Žr. paveikslėlį (A) puslapyje i-5. Pagrindiniai atsarginių dalių katalogo puslapiai sudaryti iš paveikslėlio puslapio (1) ir atitinkamo sąrašo puslapio (7). Puslapio numeris (5) nurodomas paveikslėlio puslapio viršuje ir sąrašo puslapio apačioje. Dokumento numeris (6) nurodomas sąrašo puslapio apačioje.

Puslapių numeravimas

Žr. iliustraciją (A) puslapyje i-5. Puslapio numerį (5) sudaro trys dalys:

- skyriaus numeris (2)
- puslapio eilės numeris (3) skyriuje
- bendras puslapių skaičius (4) skyriuje

Įrenginio pristatymas

Gamintojas

Gamintojo pavadinimas ir adresas pateikti antrajame šio katalogo puslapyje.

Aptarnavimas

Jei reikia šiai įrangai užsakyti atsarginių dalių arba pranešti apie jos eksploatavimo nesklandumus, kreipkitės į artimiausią "Tetra Pak" biurą.

Su kitais klausimais, pastabomis ar įrangos ir jos dokumentacijos tobulinimo pasiūlymais kreipkitės į savo kontaktinį asmenį.

Identifikavimas

CE klasifikacija

Šis įrenginys atitinka esminius Europos ekonominės erdvės (EEE) sveikatos ir saugumo reikalavimus.

Vardinė plokštelė

Puslapyje i-5 pateiktame paveikslėlyje (B) parodytas įrangos vardinės plokštelės pavyzdys.
Atitinkamos įrangos vardinė plokštelė ir jos vieta ant įrangos parodoma su šia įranga pateikiamų instrukcijų įvade. Įrangos vardinėje plokštelėje pateikiami žemiau nurodyti duomenys, kurie reikalingi kreipiantis į "Tetra Pak" dėl konkretaus įrenginio.

- Mašinos tipas (8)
- Tomas (9)
- Brėžinių specifikacijos (10)
- Įrangos serijos numeris (11)
- Gamintojas (12)
- CE ženklas (13)
- Pagaminimo metai (14)

Paveikslėlyje (C) puslapyje i-5 parodytas įrangos specifikacijos pavyzdys. Patikrinkite, ar šios instrukcijos pirmuosiuose puslapiuose nurodyti duomenys atitinka duomenis vardinėje plokštelėje ir įrangos specifikaciją.

Kaip naudotis atsarginių dalių katalogu

Atsarginės dalies numerio suradimas

a) Žr. iliustraciją (D) puslapyje i-5. Atsiverskite skyrių (15), nurodytą šalia pagrindinio mazgo, kuriame yra jūsų ieškoma dalis.

Punktai b) ir c) atitinka paveikslėlį (E) puslapyje i-6.

b) Pagrindinio mazgo paveikslėlyje suraskite smulkesnį įrangos mazgą (17), kuriame yra jūsų ieškoma dalis arba mazgas. Pasižiūrėkite pozicijos numerį (18) ir suraskite jį toliau pateiktame sąraše.

c) Suraskite pozicijos numerį/pavadinimą (16) arba smulkesnio mazgo pavadinimą (19). Atsiverskite dešiniajame stulpelyje nurodytą puslapį (20). "Tetra Pak" nusprendė pavadinimuose visada naudoti paskirtį atitinkančią struktūrą. Pavadinimuose nepateikiamas paskirtį atitinkančios struktūros prefiksas (=).

Punktai d) ir e) atitinka paveikslėlį (F) puslapyje i-6.

d) Suraskite ieškomą dalį (21) smulkesnio mazgo paveikslėlyje ir pasižiūrėkite dalies pozicijos numerį.

e) Dalies numeris (29) ir dalies aprašymas (30) sąrašo puslapyje nurodyti šalia pozicijos numerio.

Atsarginių dalių kataloge pateikiama informacija

Žemiau pateiktas sąrašas atitinka paveikslėlį (F) puslapyje i-6. Atsarginių dalių kataloge apie įrangos mazgus, smulkesnius mazgus ir atsargines dalis pateikiama tokia informacija:

- Struktūrinė mazgo nuoroda (22). Nurodo stambesnį mazgą įrangos sąrašo struktūroje.
- Mazgo pavadinimas (23)
- Matavimo vienetai (25)
- Kiekis (26)
- Surinkimo brėžinio numeris (27)
- Sąrašo puslapių intervalas (28) Pateikiamas, jei mazgo paveikslėlis arba sąrašas užima kelis puslapius.
- Dalies arba smulkesnio mazgo numeris (29)
- Smulkesnio mazgo arba dalies aprašymas (30)
- Mazgo numeris (31)
- Įrangos numeris (32)
- Informacijos apie mazgą puslapio antraštė (33). Nurodo, ar po antrašte pateikta informacija yra specifinio įrangos varianto, ar tai paprastų dalių sąrašas. Jei yra daugiau kaip vienas sąrašo variantas ir kiekvienam variantui yra atskiras surinkimo brėžinys, nurodomas puslapis, kuriame pateiktas konkretaus varianto surinkimo brėžinys.
- Vidinė informacija (34)

Ievads

Informācija par rokasgrāmatu

Tetra Pak iesaka rūpīgi izlasīt visas piegādātās rokasgrāmatas. Jānodrošina, lai piegādātas rokasgrāmatas būtu pieejamas personālam, kas apkalpo iekārtas vai veic to apkopi.

Šo katalogu ir nepieciešams saglabāt visu laiku, kamēr iekārtas tiek izmantotas, un nodot katalogu nākamajam īpašniekam vai lietotājam.

Tetra Pak neatbild par jebkuriem iekārtas bojājumiem, kuri rodas līdz ar iekārtu piegādāto instrukciju neievērošanas rezultātā.

Piegādātas rokasgrāmatas

Līdz ar iekārtu var tikt piegādātas šādas rokasgrāmatas

- CM
  Pārslēgšanas rokasgrāmata sniedz tehniķiem informāciju par iekārtas pārslēgšanu dažādos atšķirīgos ražošanas režīmos.
- EM
  Elektriskās instalācijas rokasgrāmata sniedz tehniķiem informāciju par iekārtas elektriskās instalācijas sistēmu.
- IM
  Uzstādīšanas rokasgrāmata sniedz tehniķiem informāciju, kas nepieciešama drošai iekārtas uzstādīšanai.
- MM
  Apkopes rokasgrāmata sniedz tehniķiem informāciju par iekārtas apkopi.
- OM
  Ekspluatācijas rokasgrāmata sniedz apkalpojošajam personālam informāciju par iekārtas apkalpošanu un ekspluatēšanu pirms darba sākuma, darba laikā un pēc darba beigām.
- SPC
  Rezerves daļu katalogs sniedz informāciju, kas nepieciešama, lai pasūtītu rezerves daļas no Tetra Pak
- TeM
  Tehniskā rokasgrāmata
  - sniedz tehniķiem informāciju, kas nepieciešama drošai iekārtas uzstādīšanai
  - sniedz tehniķiem informāciju par iekārtas apkopi
  - sniedz tehniķiem informāciju par mašīnas/iekārtas elektrisko instalāciju
  - sniedz informāciju, kas nepieciešama, lai pasūtītu rezerves daļas no Tetra Pak.

Lappuses izkārtojums

Skatīt ilustrāciju (A) i-5 lappusē: Galvenās lappuses Rezerves daļu katalogā sastāv no ilustrāciju lapas (1) un atbilstīgās saraksta lapas (7). Lappuses numurs (5) ir norādīts ilustrāciju lapas galvenē un saraksta lapas kājenē. Dokumenta numurs (6) ir norādīts saraksta lapas kājenē.

Lappušu numerācija

Skatīt ilustrāciju (A) lappusē i-5: Lappuses numurs (5) sastāv no trim daļām:

- nodaļas numura (2)
- secīga lappuses numura nodaļas ietvaros (3)
- kopējā lappušu skaita nodaļā (3)

Iepazīstināšana ar iekārtu

Ražotājs

Ražotāja nosaukumu un adresi skatīt šī kataloga otrajā lappusē.

Serviss

Lai pasūtītu rezerves daļas šai mašīnai vai lai ziņotu par problēmām saistībā ar šīs mašīnas ekspluatāciju, sazinieties ar tuvāko Tetra Pak pārstāvniecību.

Ja Jums ir citi jautājumi, piezīmes vai ieteikumi par iekārtas un tās dokumentācijas uzlabošanu, tad lūdzam sazināties ar Sakaru biroju.

Identifikācija

EK klasifikācija

Šī iekārta atbilst galvenajām Eiropas Ekonomiskās Zonas (EEA) regulām, kuras attiecas uz veselību un drošību.

Mašīnas tipa plāksnīte

Ilustrācijā (B) i-5 lappusē ir redzams mašīnas tipa plāksnītes paraugs. Aktuālās mašīnas tipa plāksnīte un tās atrašanās vieta uz iekārtas ir parādīta līdz ar šo iekārtu piegādāto rokasgrāmatu Ievada nodaļā. Mašīnas tipa plāksnīte ietver turpmāk uzskaitīto informāciju, kura ir nepieciešama, sazinoties ar Tetra Pak par šo konkrēto iekārtu.

- Mašīnas tips (8)
- Daudzums (9)
- Rasējuma specifikācijas (10)
- Mašīnas sērijas numurs (11)
- Ražotājs (12)
- CE apzīmējums (13)
- Izgatavošanas gads (14)

Ilustrācijā (C) lappusē i-5 ir parādīts mašīnas specifikācijas paraugs. Pārliecinieties, ka šīs rokasgrāmatas titullapās minētā informācija par iekārtu atbilst tai, kas norādīta uz mašīnas tipa plāksnītes un mašīnas specifikācijā.

Rezerves daļu kataloga lietošana

Vajadzīgās rezerves daļas numura atrašana

a) Skatiet ilustrāciju (D) lappusē i-5: Atrodiet nodaļas numuru (15), kas norādīts līdzās galvenajai grupai, kurā ietilpst Jūsu meklētā rezerves daļa.

Pozīcijas b) un c) skatiet ilustrāciju (E) lappusē i-6.

b) Galvenās grupas ilustrācijā atrodiet mašīnas apakšgrupu (17), kurā ietilpst Jūsu meklētā detaļa vai apakšgrupa. Atzīmējiet pozīcijas numuru (18) un pievērsieties saraksta lappusei, kura seko šai ilustrācijai.

c) Sameklējiet atbilstīgo pozīcijas numuru (16) vai apakšgrupas nosaukumu (19). Pievērsieties atbilstīgajam lappuses numuram (20), kas norādīts ailē pa labi. Tetra Pak norādes apzīmēšanai ir izvēlējies vienmēr izmantot uz funkciju orientētu struktūru. Priedēklis, kas norāda uz funkciju orientētu struktūru (=), norādes apzīmējumā nav parādīts.

Pozīcijas d) un e) skatiet ilustrāciju (F) lappusē i-6.

d) Atrodiet vajadzīgo rezerves daļu (21) apakšgrupas ilustrācijā un atzīmējiet šīs detaļas pozīcijas numuru.

e) Šīs detaļas numurs (29) un apraksts (30) atrodas saraksta lapā līdzās pozīcijas numuram.

Rezerves daļu katalogā sniegtā informācija

Šis saraksts attiecas uz ilustrāciju (F) lappusē i-6. Rezerves daļu katalogs satur šādu informāciju par grupām, apakšgrupām un iekārtas rezerves daļām:

- Grupas struktūras norāde (22). Norāda nākamo augstāko grupu iekārtas saraksta struktūrā.
- Grupas nosaukums (23)
- Mērvienība (25)
- Skaits (26)
- Montāžas rasējuma numurs (27)
- Saraksta lappuses zona (28). Tiek izmantota tad, ja grupas ilustrācija vai saraksts ir uz vairākām lappusēm.
- Daļas vai apakšgrupas numurs (29)
- Apakšgrupas nosaukums vai daļas apraksts (30)
- Grupas numurs (31)
- Iekārtas numurs (32)
- Grupas informācijas iedaļas apzīmējums (33). Norāda, vai iedaļa zem šī apzīmējuma attiecas uz noteiktu mašīnas variantu, vai arī tas ir kopējo rezerves daļu saraksts. Ja sarakstam ir vairāk nekā viens variants un katram variantam ir savs montāžas rasējums, tad tiek dota atsauce uz lappusi, kur atrodams katra varianta montāžas rasējums.
- Iekšējā informācija (34)

Inleiding

Informatiehandboek

Tetra Pak adviseert alle meegeleverde handboeken zorgvuldig te lezen. Controleer of het bedienende of onderhoudspersoneel van de machine de beschikking heeft over de meegeleverde handboeken

Het is belangrijk deze catalogus tijdens de levensduur van de machine te bewaren en de catalogus door te geven aan iedere volgende eigenaar of gebruiker.

Tetra Pak stelt zich niet aansprakelijk voor eventuele schade aan de installatie als gevolg van het niet naleven van de instructies die in de meegeleverde handboeken worden gegeven.

Meegeleverde handboeken

De bij deze installatie meegeleverde handboeken omvatten

- CM
  Het conversiehandboek geeft technici informatie met betrekking tot de ombouw van de installatie tussen verschillende productiemodi.
- EM
  Het elektriciteitshandboek informeerttechnici omtrent het elektrischesysteem van de installatie.
- IM
  Het installatiehandboek informeert technici hoe men de installatie op veilige wijze installeert.
- MM
  Het onderhoudshandboek geeft technici informatie over het onderhoud van de installatie.
- OM
  Het bedieningshandboek informeert de operator betreffende het omgaan met en het bedienen van de installatie voor, tijdens en na de productie.
- SPC
  De reserveonderdelencatalogus geeft de nodige informatie omtrent het bestellen van reserveonderdelen bij Tetra Pak
- TeM
  Het technische handboek
  - informeert technici hoe men de installatie op veilige wijze installeert
  - informeert technici omtrent het onderhoud van de installatie
  - informeert technici omtrent het elektrische systeem van de machine/ installatie
  - informeert over welke informatie men nodig heeft om reserveonderdelen bij Tetra Pak te bestellen.

Pagina layout

Zie afbeelding (A) op pagina i-5: De belangrijkste bladzijden van een reserveonderdelencatalogus bestaan uit een bladzijde met afbeeldingen (1) en een bladzijde met een corresponderende lijst (7). Het bladzijde-nummer (5) is te vinden in de kop van een bladzijde met een afbeelding en in de voetnoot van een lijstbladzijde. Het documentennummer (6) is te vinden in de voetnoot van een lijstbladzijde.

Bladzijdenummering

Zie afbeelding (A) op pagina: i-5: Een bladzijdenummer (5) bestaat uit drie delen:

- hoofdstuknummer (2)
- opeenvolgend bladzijdenummer in het hoofdstuk (3)
- totaal aantal bladzijden in het hoofdstuk (4)

Introductie van de machine

Fabrikant

Zie de tweede bladzijde van deze catalogus voor naam en adres van de fabrikant.

Service

Neem voor het bestellen van reserveonderdelen voor deze machine, of om bedieningsproblemen met betrekking tot deze machine te melden, contact op met de dichtstbijzijnde Tetra Pak vestiging.

Neem contact op met de contactpersoon voor verdere informatie, opmerkingen of suggesties ter verbetering van de installatie en de bijbehorende documentatie.

Identificatie

CE-classificatie

Deze installatie voldoet aan de basisvoorschriften voor gezondheid en veiligheid voor het Europese Economische Gebied (EEG).

Machineplaatje

Afbeelding (B) op bladzijde i-5 toont een voorbeeld van een machineplaatje. Een afbeelding van het geldige machineplaatje en de plaatsing ervan worden getoond in de Inleiding van de handboeken, die bij deze installatie worden meegeleverd. Het machineplaatje bevat onderstaande gegevens, die men nodig heeft wanneer men omtrent de desbetreffende installatie contact opneemt met Tetra Pak.

- Machinetype (8)
- Volume (9)
- Specificatietekeningen (10)
- Serienummer van de machine (11)
- Fabrikant (12)
- CE-markering (13)
- Jaar van fabrikage (14)

Afbeelding (C) op pagina i-5 toont een voorbeeld van een machinespecificatie. Controleer of de gegevens betreffende de installatie op de eerste bladzijden van dit handboek overeenkomen met de gegevens op het machineplaatje en de machinespecificatie.

Gebruik van de reserveonderdelencatalogus

Vinden van het bestelnummer van een reserveonderdeel

a) Zie afbeelding (D) op pagina i-5: Ga naar het hoofdstuknummer (15) dat wordt aangeven naast de hoofdgroep waarin zich het door u gezochte onderdeel bevindt.

Items b) en c) verwijzen naar afbeelding (E) op pagina i-6.

b) Op de afbeelding van de hoofdgroep zoekt u de machinesubgroep (17), die het gezochte onderdeel of de gezochte subgroep bevat. Noteer het positienummer (18) en ga naar de lijstbladzijde die op de afbeelding volgt.

c) Zoek naar het positienummer/de referentie (16) of de subgroep-naam (19). Ga naar de corresponderende bladzijde (20) die in de rechterkolom staat vermeld. Tetra Pak heeft voor de benoeming van de referenties gekozen voor de functiegeoriënteerde structuur. De prefixaanduidende functiegeoriënteerde structuur (=) wordt niet in de referentie getoond.

Items d) en e) verwijzen naar afbeelding (F) op pagina i-6.

d) Zoek het gewenste deel (21) op de subgroepafbeelding en noteer het positienummer van het onderdeel.

e) Het bestelnummer (29) en de omschrijving (30) van het onderdeel staan naast het positienummer op de lijstbladzijde.

Informatie die in een reserveonderdelencatalogus wordt gegeven

De onderstaande lijst verwijst naar afbeelding (F) op bladzijde i-6. Een reserveonderdelencatalogus bevat de volgende informatie over groepen, subgroepen en reserveronderdelen voor de installatie:

- Referentie groepstructuur (22). Geeft de volgende hogere groep in de lijststructuur van de installatie aan.
- Groepsnaam (23)
- Meeteenheid (25)
- Hoeveelheid (26)
- Nummer montagetekening (27)
- Lijst bladzijdenreeks (28). Wordt vermeld wanneer er meerdere bladzijden in de groepsafbeelding of -lijst voorkomen.
- Deel- of subgroepnummer (29)
- Subgroepnaam of onderdeelbeschrijving (30)
- Groepsnummer (31)
- Machinenummer (32)
- Titel groepsinformatie (33). Geeft aan of het gedeelte onder de titel voor een specifieke machinesoort is of dat het een lijst met gebruikelijke onderdelen is. Indien een lijst meer dan één type bevat en ieder type zijn eigen montagetekening heeft, wordt een bladzijdereferentie getoond voor de montagetekening van het type.
- Interne informatie (34)

Introduksjon

Informasjon om manualen

Tetra Pak anbefaler at du leser nøye gjennom alle leverte manualer. Sørg for at manualene er tilgjengelige for alle som betjener eller vedlikeholder utstyret.

Det er viktig at du tar vare på denne katalogen under hele levetiden til utstyret og at du gir den videre til eventuelle nye eiere eller brukere.

Tetra Pak vil ikke være ansvarlig for skader på utstyret som oppstår fordi brukeren ikke følger instruksjonene i manualene som følger med utstyret.

Leverte manualer

Manualene som leveres med dette utstyret, kan inkludere

- CM
  Konverteringsmanualen gir teknikere informasjon om hvordan de konverterer utstyret mellom ulike produksjonsmodi.
- EM
  Den elektriske manualen gir teknikere informasjon om utstyrets elektriske system.
- IM
  Installasjonsmanualen gir teknikere informasjon som kreves for å kunne installere utstyret på en sikker måte.
- MM
  Vedlikeholdsmanualen gir teknikere informasjon om vedlikehold av utstyret.
- OM
  Driftsmanualen gir operatøren informasjon om hvordan han håndterer og bruker utstyret før, under og etter produksjon.
- SPC
  Reservedelskatalogen inneholder informasjon som du trenger for å bestille reservedeler fra Tetra Pak
- TeM
  Den tekniske manualen
  – gir teknikere informasjon om sikker installasjon av utstyret
  – gir teknikere informasjon om vedlikehold av utstyret
  – gir teknikere informasjon om maskinens/utstyrets elektriske system
  – inneholder informasjon som du trenger for å bestille reservedeler fra Tetra Pak.

Sideoppsett

Se illustrasjonen (A) på side i-5: Hovedsidene i reservedelskatalogen består av en illustrasjonsside (1) og en korresponderende listeside (7). Sidenummeret (5) vises i topteksten på illustrasjonssiden og i bunnteksten på listesiden. Dokumentnummeret (6) vises i bunnteksten på listesiden.

Sidenummerering

Se illustrasjonen (A) på side i-5: Et sidenummer (5) består av tre deler:

- kapittelnummer (2)
- etterfølgende sidenummer i kapitlet (3)
- det totale antall sider i kapitlet (4)

Introduksjon av maskinen

Produsent

Hvis du ønsker produsentens navn og adresse, kan du se side to i denne katalogen.

Service

Når du skal bestille reservedeler til denne maskinen eller rapportere problemer forbundet med driften av denne maskinen, må du kontakte ditt nærmeste Tetra Pak-kontor.

Når det gjelder andre forespørsler, kommentarer eller forslag til forbedringer av utstyret og dets dokumentasjon, kan du ta kontakt med din kontaktperson.

Identifisering

CE-klassifisering

Dette utstyret er i overensstemmelse med de grunnleggende helse- og sikkerhetsforskriftene i Det europeiske økonomiske samarbeidsområdet (EØS).

Maskinplate

Illustrasjonen (B) på side i-5 viser et eksempel på en maskinplate.
En illustrasjon av en gyldig maskinplate og hvor denne er plassert på utstyret, er vist i introduksjonskapitlet i manualene som følger med dette utstyret. Maskinplaten inneholder nedenstående data, som du trenger når du skal kontakte Tetra Pak angående dette bestemte utstyret.

- Maskintype (8)
- Volum (9)
- Tegningsspesifikasjoner (10)
- Maskin-serienummer (11)
- Produsent (12)
- CE-merke (13)
- Produksjonsår (14)

Illustrasjonen (C) på side i-5 viser et eksempel på en maskinspesifikasjon. Sørg for at utstyrsdataene som står oppført foran i denne manualen, samsvarer med dataene på maskinplaten og maskinspesifikasjonen.

Hvordan bruke denne reservedelskatalogen

Finn et reservedelsnummer

a) Se illustrasjonen (D) på side i-5: Gå til kapittelnummeret (15) som er angitt ved siden av hovedgruppen som inneholder delen du vil finne.

Punkt b) og c) viser til illustrasjonen (E) på side i-6.

b) På hovedgruppeillustrasjonen ser du etter maskinundergruppen (17) som inneholder delen eller undergruppen du ser etter. Merk deg posisjonsnummeret (18), og gå til listesiden som kommer etter illustrasjonen.

c) Se etter posisjonsnummeret/referansebetegnelsen (16) eller undergruppenavnet (19). Gå til det korresponderende sidenummeret (20) som står oppført i høyre kolonne. Tetra Pak har valgt å alltid bruke den funksjonsorienterte inndelingen for referansebetegnelse. Prefiksen som angir funksjonsorientert inndeling (=), er ikke vist i referansebetegnelsen.

Punkt d) og e) viser til illustrasjonen (F) på side i-6.

d) Finn delen (21) du ser etter på undergruppeillustrasjonen, og merk deg delens posisjonsnummer.

e) Delenummeret (29) og delebeskrivelsen (30) finner du ved siden av posisjonsnummeret på listesiden.

Informasjon i en reservedelskatalog

Listen nedenfor viser til illustrasjonen (F) på side i-6. En reservedelskatalog inneholder følgende informasjon om grupper, undergrupper og reservedeler for utstyret:

- Gruppeinndelingsreferanse (22). Angir den neste gruppen opp i inndelingen av utstyrslisten.
- Gruppenavn (23)
- Målenhet (25)
- Antall (26)
- Tegningsnummer (27)
- Listesideområde (28). Inkludert hvis det er flere sider i gruppe-illustrasjonen eller listen.
- Dele- eller undergruppenummer (29)
- Undergruppenavn eller delebeskrivelse (30)
- Gruppenummer (31)
- Utstyrsnummer (32)
- Gruppeinformasjonsoverskrift (33). Angir om avsnittet under overskriften er for en bestemt maskinvariant eller om det er en liste over vanlige deler. Hvis en liste har flere varianter og hver variant har sin egen sammenstillingstegning, vises det en sidereferanse til variantens sammenstillingstegning.
- Intern informasjon (34)

Wprowadzenie

Informacje na temat instrukcji

Firma Tetra Pak zaleca dokładne przeczytanie wszystkich dostarczonych instrukcji. Należy upewnić się, że dostarczone instrukcje są dostępne dla personelu, który obsługuje lub konserwuje maszynę.

Należy przechowywać ten katalog przez cały okres użytkowania maszyny i przekazać go kolejnemu właścicielowi lub użytkownikowi.

Firma Tetra Pak nie będzie ponosić odpowiedzialności za jakiekolwiek uszkodzenia maszyny spowodowane niestosowaniem się do zaleceń zawartych w instrukcjach dostarczonych z maszyną.

Dostarczone instrukcje

W skład dokumentacji dostarczonej z maszyną wchodzą:

- Instrukcja konwersji (CM)
  W tej instrukcji zawarte są informacje dotyczące dostosowania maszyny do różnych trybów produkcji.
- Instrukcja dotycząca wyposażenia elektrycznego (EM)
  W tej instrukcji zawarte są informacje dotyczące układu elektrycznego maszyny.
- Instrukcja instalacji (IM)
  W tej instrukcji zawarte są informacje niezbędne do bezpiecznego zainstalowania maszyny.
- Instrukcja konserwacji (MM)
  W tej instrukcji zawarte są informacje dotyczące konserwacji maszyny.
- Instrukcja obsługi (OM)
  W tej instrukcji zawarte są informacje dotyczące obsługi maszyny przed rozpoczęciem produkcji, w jej trakcie oraz po jej zakończeniu.
- Katalog części zamiennych (SPC)
  W katalogu zawarte są informacje dotyczące zamawiania części zamiennych w firmie Tetra Pak.
- Instrukcja techniczna (TeM)
  Instrukcja techniczna zawiera informacje:
  - dotyczące bezpiecznego instalowania maszyny,
  - dotyczące konserwacji maszyny,
  - dotyczące układu elektrycznego maszyny,
  - dotyczące zamawiania części zamiennych w firmie Tetra Pak.

Układ strony

Patrz rysunek (A) na stronie i-5: Główne strony w Katalogu części zamiennych składają się ze strony zawierającej rysunek (1) i odpowiadającej jej strony zawierającej listę (7). Numer strony (5) znajduje się w nagłówku strony zawierającej rysunek i w stopce strony zawierającej listę. Numer dokumentu (6) znajduje się w stopce strony zawierającej listę.

Numeracja stron

Patrz rysunek (A) na stronie i-5: Numer strony (5) składa się z trzech części:

- numeru rozdziału (2),
- kolejnego numeru strony w rozdziale (3),
- całkowitej liczby stron w rozdziale (4).

Ogólne informacje o maszynie

Producent

Nazwę i adres producenta można znaleźć na drugiej stronie niniejszego katalogu.

Serwis

Aby zamówić części zapasowe do tej maszyny lub zgłosić problemy związane z jej pracą, należy skontaktować się z najbliższym biurem Tetra Pak.

Można kontaktować się także w przypadku innych zapytań, uwag lub sugestii dotyczących udoskonalenia urządzenia i dokumentacji.

Identyfikacja

Klasyfikacja CE

Maszyna spełnia podstawowe wymogi z zakresu bezpieczeństwa i ochrony zdrowia obowiązujące w Europejskiej Strefie Ekonomicznej (EEA).

Tabliczka znamionowa

Na rysunku (B), znajdującym się na stronie i-5, pokazano przykładową tabliczkę znamionową.
Rysunek prawidłowej tabliczki znamionowej oraz jej umiejscowienie na maszynie pokazano w rozdziale Wprowadzenie zawartym w instrukcjach dostarczonych z maszyną. Tabliczka znamionowa zawiera następujące dane potrzebne w przypadku kontaktowania się z firmą Tetra Pak w sprawie dotyczącej danej maszyny:

- typ maszyny (8),
- objętość (9),
- specyfikacje rysunkowe (10),
- numer seryjny maszyny (11),
- nazwę producenta (12),
- oznaczenie CE (13),
- rok produkcji (14).

Na rysunku (C) zamieszczonym na stronie i-5 pokazano przykład specyfikacji maszyny. Należy sprawdzić, czy dane dotyczące maszyny przedstawione na pierwszej stronie tej instrukcji odpowiadają danym zawartym na tabliczce znamionowej maszyny oraz specyfikacji maszyny.

Jak korzystać z niniejszego Katalogu części zamiennych

Należy odnaleźć numer części zamiennej

a) Zapoznaj się z rysunkiem (D) na stronie i-5: przejdź do numeru rozdziału (15) pokazanego obok głównej grupy zawierającej część, którą chcesz odszukać.

Punkty b) i c) odnoszą się do rysunku (E) na stronie i-6.

b) Na rysunku grupy głównej odszukaj podgrupę maszyny (17), która zawiera odpowiednią część lub podgrupę, której szukasz. Zanotuj numer pozycji (18) i przejdź do strony z listą odpowiadającą rysunkowi.

c) Odszukaj numer pozycji/oznaczenie odnośnika (16) lub nazwę podgrupy (19). Przejdź do odpowiedniego numeru strony (20) podanego w kolumnie umieszczonej po prawej stronie. Firma Tetra Pak w przypadku oznaczenia odnośnika korzysta ze struktury ukierunkowanej na funkcję. Przedrostek wskazujący strukturę ukierunkowaną na funkcję (=) nie jest pokazany w oznaczeniu odnośnika.

Punkty d) i e) odnoszą się do rysunku (F) na stronie i-6.

d) Na rysunku podgrupyodszukaj odpowiednią część (21) i zanotuj numer pozycji części.

e) Numer części (29) oraz jej opis (30) podano na stronie zawierającej listę obok numeru pozycji.

Informacje zawarte w Katalogu części zamiennych

Poniższa lista odnosi się do rysunku (F), znajdującego się na stronie i-6. Katalog części zamiennych zawiera następujące informacje o grupach, podgrupach oraz częściach zamiennych maszyny:

- Odnośnik struktury grup (22). Wskazuje następną wyższą grupę zawartą w strukturze listy maszyny.
- Nazwa grupy (23).
- Jednostka miary (25).
- Liczba (26).
- Numer rysunku złożeniowego (27).
- Zakres stron zawierających listę (28). Podany w przypadku występowania wielu stron zawierających rysunek grupy lub listę.
- Numer części lub podgrupy (29).
- Nazwa podgrupy lub opis części (30).
- Numer grupy (31).
- Numer maszyny (32).
- Nagłówek informacyjny grupy (33). Wskazuje, czy sekcja umieszczona pod nagłówkiem dotyczy określonego wariantu maszyny, czy też jest to lista wspólna dla wszystkich wariantów. Jeśli lista występuje w wielu wariantach i dla każdego z nich dostępny jest osobny rysunek złożeniowy, podany jest odnośnik strony do rysunku złożeniowego dla danego wariantu.
- Informacje wewnętrzne (34).

Introdução

Informações sobre o Manual

A Tetra Pak recomenda que leia atentamente todos os manuais incluídos. Certifique-se de que os manuais incluídos estão disponíveis para o pessoal que utiliza ou faz a manutenção do equipamento.

É importante que mantenha este catálogo durante toda a vida útil do equipamento, devendo ainda ser fornecido a quaisquer proprietários e operadores subsequentes do mesmo.

A Tetra Pak não será responsável por quaisquer danos no equipamento provocados pelo não seguimento das instruções fornecidas nos manuais que acompanham este equipamento.

Manuais Fornecidos

Os manuais fornecidos com este equipamento podem incluir

- CM
  O Manual de Conversão (Conversion Manual) fornece aos técnicos informações sobre a conversão do equipamento entre modos de produção diferentes.
- EM
  O Manual Eléctrico (Electrical Manual) fornece aos técnicos informações sobre o sistema eléctrico do equipamento.
- IM
  O Manual de Instalação (Installation Manual) fornece aos técnicos as informações necessárias à instalação do equipamento em segurança.
- MM
  O Manual de Manutenção (Maintenance Manual) fornece aos técnicos informações sobre como realizar a manutenção do equipamento.
- OM
  O Manual de Funcionamento (Operation Manual) fornece ao operador informações sobre o manuseamento e funcionamento do equipamento antes, durante e após a produção.
- SPC
  O Spare Parts Catalogue (Catálogo das Peças Sobressalentes) fornece as informações necessárias para encomendar peças sobressalentes à Tetra Pak
- TeM
  O Manual Técnico (Technical Manual)
  - fornece aos técnicos as informações necessárias à instalação do equipamento em segurança
  - fornece aos técnicos informações sobre a manutenção do equipamento
  - fornece aos técnicos informações sobre o sistema eléctrico da máquina/equipamento
  - fornece as informações necessárias para encomendar peças sobressalentes à Tetra Pak.

Desenho da Página

Consulte a ilustração (A) na página i-5: As páginas principais num Catálogo de Peças Sobressalentes são constituídas por uma página de ilustração (1) e uma página de lista correspondente (7). O número de página (5) é apresentado no cabeçalho de uma página de ilustração e no rodapé de uma página de lista. O número do documento (6) é apresentado no rodapé de uma página de lista.

Numeração das Páginas

Consulte a ilustração (A) na página i-5: Um número de página (5) tem três partes:

- número do capítulo (2)
- número das páginas consecutivas dentro do capítulo (3)
- número de páginas total no capítulo (4)

Introdução da Máquina

Fabricante

Quanto ao nome e endereço do fabricante, consulte a segunda página deste catálogo.

Manutenção

Para encomendar peças sobressalentes para esta máquina ou para apresentar relatórios de problemas associados com o funcionamento desta máquina, contacte os escritórios mais próximos da Tetra Pak.

Contacte a Ligação com outras questões, comentários ou sugestões para melhoria referentes ao equipamento e à sua documentação.

Identificação

Classificação da CE

Este equipamento está em conformidade com as regulamentações básicas da saúde e segurança da Área Económica Europeia (AEE).

Chapa de Identificação da Máquina

A ilustração (B) na página i-5 mostra um exemplo de uma chapa de identificação da máquina.
No capítulo Introdução dos manuais entregues com este equipamento é apresentada uma ilustração da chapa de identificação válida da máquina e a sua localização no equipamento. A chapa de identificação da máquina contém os dados listados em baixo, necessários quando contactar a Tetra Pak em relação a este equipamento específico.

- Tipo de máquina (8)
- Volume (9)
- Especificações do desenho (10)
- Número de série da máquina (11)
- Fabricante (12)
- Marca da CE (13)
- Ano de fabricação (14)

A ilustração (C) na página i-5 mostra um exemplo de uma especificação da máquina. Certifique-se de que os dados do equipamento listados nas primeiras páginas deste manual correspondem aos dados indicados na chapa de identificação da máquina e às especificações da máquina.

Como utilizar este Catálogo de Peças Sobressalentes

Localize o Número da Peça Sobressalente

a) Consulte a ilustração (D) na página i-5: Vá para o número do capítulo (15) indicado no grupo principal que contém a peça que pretende localizar.

Os itens b) e c) referem-se à ilustração (E) na página i-6:

b) Na ilustração do grupo principal, procure o subgrupo da máquina (17) que contém a peça ou o subgrupo que procura. Tome nota do número de posição (18) e vá para a página de lista a seguir à ilustração.

c) Procure o número de posição/designação de referência (16) ou o nome do subgrupo (19). Vá para o número de página correspondente (20) indicado na coluna do lado direito. A Tetra Pak preferiu utilizar sempre a estrutura orientada para a função como designação de referência. O prefixo que inicia a estrutura orientada para a função (=) não está indicada na designação de referência.

Os itens d) e e) referem-se à ilustração (F) na página i-6:

d) Localize a peça (21) que procura na ilustração do subgrupo e tome nota do número de posição da peça.

e) O número de peça (29) e a descrição da peça (30) são apresentados ao lado do número da posição na página de lista.

Informações listadas num Catálogo de Peças Sobressalentes

A lista em baixo refere-se à ilustração (F) na página i-6: Um Catálogo de Peças Sobressalentes contém as seguintes informações sobre grupos, subgrupos e peças sobressalentes para o equipamento:

- Referência da estrutura do grupo (22). Indica o grupo mais elevado seguinte na estrutura da lista do equipamento.
- Nome do grupo (23)
- Unidade de medida (25)
- Quantidade (26)
- Número de série do conjunto (27)
- Intervalo de páginas da lista (28). Incluído se existirem várias páginas na ilustração ou na lista do grupo.
- Número de peça ou subgrupo (29)
- Nome do subgrupo ou descrição da peça (30)
- Número do grupo (31)
- Número do equipamento (32)
- Cabeçalho das informações do grupo (33). Indica se a secção em baixo do cabeçalho é de uma variante específica da máquina ou se é uma lista de peças comuns. Se uma lista tiver mais de uma variante e cada variante tiver o seu próprio desenho de conjunto, é apresentada uma referência de página ao desenho do conjunto da variante.
- Informações internas (34)

Introducere

Informații despre manual

Tetra Pak recomandă citirea cu atenție a tuturor manualelor livrate. Asigurați-vă că manualele livrate sunt puse la îndemâna personalului care exploatează sau întreține echipamentul.

Este important să păstrați acest catalog pe întreaga durată de viață a echipamentului și să transmiteți catalogul deținătorilor sau utilizatorilor ulteriori.

Tetra Pak nu va fi răspunzător pentru niciun defect al echipamentului cauzat prin nerespectarea instrucțiunilor date în manualele care însoțesc acest echipament.

Manuale livrate

Manualele livrate cu acest echipament pot include

- CM
  Manualul de conversie furnizează tehnicienilor informații despre conversia echipamentului între diferite moduri de producție.
- EM
  Manualul electric furnizează tehnicienilor informații despre sistemul electric al echipamentului.
- IM
  Manualul de instalare furnizează tehnicienilor informații necesare pentru instalarea în siguranță a echipamentului.
- MM
  Manualul de întreținere furnizează tehnicienilor informații cu privire la întreținerea echipamentului.
- OM
  Manualul de exploatare pune la dispoziție operatorilor informații despre manevrarea și exploatarea echipamentului înainte, în timpul și după producție.
- SPC
  Catalogul pieselor de schimb furnizează informații necesare pentru comandarea pieselor de schimb de la Tetra Pak.
- TeM
  Manualul tehnic
  – furnizează tehnicienilor informații necesare pentru instalarea în siguranță a echipamentului
  – furnizează tehnicienilor informații necesare cu privire la întreținerea echipamentului
  – furnizează tehnicienilor informații despre sistemul electric al mașinii/echipamentului
  – furnizează informații necesare pentru comandarea pieselor de schimb de la Tetra Pak.

Configurația paginilor

Examinați ilustrația (A) de pe pagina i-5: Paginile principale dintr-un catalog de piese de schimb constau dintr-o pagină de ilustrare (1) și o pagină de liste corespunzătoare (7). Numărul paginii (5) apare în antetul unei pagini de ilustrare și în subsolul unei pagini de liste. Numărul documentului (6) apare în subsolul unei pagini de liste.

Numerotarea paginilor

Examinați ilustrația (A) de la pagina i-5: Un număr de pagină (5) are trei părți:

- numărul capitolului (2)
- numărul paginii consecutive din cadrul capitolului (3)
- număr total de pagini din capitol (4)

Prezentare introductivă a mașinii

Producător

Pentru numele și adresa producătorului, consultați pagina a doua a acestui catalog.

Service

Pentru comandarea pieselor de schimb pentru această mașină sau pentru a raporta problemele asociate cu exploatarea acestei mașini, contactați cel mai apropiat birou Tetra Pak.

Contactați Liaison cu privire la alte întrebări, comentarii sau sugestii legate de îmbunătățirea echipamentului și a documentației acestuia.

Identificare

Clasificare CE

Acest echipament este fabricat în conformitate cu reglementările de bază cu privire la sănătate și siguranță din Zona economică europeană (EEA).

Plăcuța mașinii

Ilustrația (B) de la pagina i-5 arată un exemplu al unei plăcuțe de mașină. O ilustrație a plăcuței valide a mașinii și a poziției acesteia pe echipament este arătată în capitolul introductiv al manualelor livrate împreună cu acest echipament. Plăcuța mașinii conține datele listate mai jos, necesare în cazul în care contactați Tetra Pak în legătură cu acest echipament specific.

- Tip mașină (8)
- Volum (9)
- Specificații de desen (10)
- Număr de serie al mașinii (11)
- Producător (12)
- Marcaj CE (13)
- Anul fabricației (14)

Ilustrația (C) de la pagina i-5 arată un exemplu al unei specificații de mașină. Asigurați-vă că datele specifice echipamentului, listate în paginile din față ale acestui manual, corespund cu datele de pe plăcuța mașinii și cu specificațiile mașinii.

Cum se utilizează acest catalog de piese de schimb

Localizarea unui număr de piesă de schimb

a) Examinați ilustrația (D) de la pagina i-5: Treceți la numărul de capitol (15) indicat lângă grupa principală care conține piesa pe care doriți să o localizați.

Articolele b) și c) se referă la ilustrația (E) de la pagina i-6.

b) Pe ilustrația grupei principale, căutați subgrupa aferentă mașinii (17) care conține piesa sau subgrupa pe care o căutați. Notați numărul poziției (18) și treceți la pagina de liste care urmează după ilustrație.

c) Căutați numărul poziției/marcarea de referință (16) sau numele subgrupei (19). Treceți la numărul de pagină corespunzător (20) listat în coloana din partea dreaptă. Tetra Pak a optat ca întotdeauna să utilizeze structura orientată pe funcție pentru marcarea de referință. Prefixul care indică structura orientată pe funcție (=) nu este arătat în marcarea de referință.

Articolele d) și e) se referă la ilustrația (F) de la pagina i-6.

d) Localizați piesa (21) pe care o căutați pe ilustrația subgrupei și notați numărul de poziție al piesei.

e) Numărul piesei (29) și descrierea piesei (30) sunt listate lângă numărul de poziție de pe pagina de liste.

Informațiile listate într-un catalog de piese de schimb

Lista de mai jos se referă la ilustrația (F) de la pagina i-6. Un catalog de piese de schimb conține următoarele informații despre grupe, subgrupe și piese de schimb pentru echipament:

- Referința despre structura grupelor (22). Indică următoarea grupă superioară din structura de liste a echipamentului.
- Numele grupei (23)
- Unitatea de măsură (25)
- Cantitatea (26)
- Numărul de desen de ansamblu (27)
- Intervalul de pagini de liste (28). Inclus dacă există mai multe pagini în ilustrația sau lista grupei.
- Numărul piesei sau al subgrupei (29)
- Numele subgrupei sau descrierea piesei (30)
- Numărul grupei (31)
- Numărul echipamentului (32)
- Antet cu informații despre grupă (33). Indică dacă secțiunea de sub antet se referă la o anumită variantă de mașină sau este o listă de piese comune. Dacă o listă are mai multe variante și fiecare variantă are propriul său desen de ansamblu, este arătată o referință de pagină pentru desenul de ansamblu al variantei.
- Informații interne (34)

Úvod

Informácie o návode

Spoločnosť Tetra Pak odporúča, starostlivo si prečítať všetky dodané návody. Dbajte, aby pracovníci, obsluhujúci zariadenie alebo zabezpečujúci jeho údržbu, mali vždy dodané návody k dispozícii.

Je dôležité, aby bol tento katalóg k dispozícii počas celého času životnosti zariadenia, a aby sa katalóg dostal aj k jeho prípadnému ďalšiemu držiteľovi alebo používateľovi.

Spoločnosť Tetra Pak nepreberá zodpovednosť za akékoľvek poškodenie zariadenia spôsobené nedodržaním pokynov uvedených v návodoch dodávaných s týmto zariadením.

Dodané návody

S týmto zariadením vám mohli byť dodané nasledujúce návody:

- CM
  Návod na prestavovanie poskytuje technikom informácie o prestavovaní zariadenia do rôznych výrobných režimov.
- EM
  Elektrotechnický návod poskytujetechnikom informácie o elektrickom systéme zariadenia.
- IM
  Návod na inštaláciu poskytuje technikom informácie potrebné na bezpečnú inštaláciu zariadenia.
- MM
  Návod na údržbu poskytujetechnikom informácie o údržbe zariadenia.
- OM
  Návod na obsluhu poskytuje obsluhe informácie o zaobchádzaní a obsluhe zariadenia pred, počas a po prevádzke.
- SPC
  Katalóg náhradných dielcov poskytuje informácie potrebné na objednávanie náhradných dielcov od spoločnosti Tetra Pak
- TeM
  Technický návod
  - poskytuje technikom informácie potrebné na bezpečnú inštaláciu zariadenia
  - poskytuje technikom informácie o údržbe zariadenia
  - poskytuje technikom informácie o elektrickom systéme stroja/ zariadenia
  - poskytuje informácie potrebné na objednávanie náhradných dielcov od spoločnosti Tetra Pak.

Rozloženie strany

Pozri ilustráciu (A) na strane i-5: Hlavné strany Katalógu náhradných dielcov obsahujú stránku s ilustráciami (1) a príslušnú stranu so zoznamom (7). Číslo strany (5) sa uvádza v záhlaví na strane s ilustráciami a v päte strany so zoznamom. Číslo dokumentu (6) sa uvádza v päte strany so zoznamom.

Číslovanie strán

Pozri ilustráciu (A) na strane i-5: Číslo strany (5) má tri časti:

- číslo kapitoly (2)
- poradové číslo strany v rámci kapitoly (3)
- celkový počet strán v kapitole (4)

Základné informácie o stroji

Výrobca

Meno a adresa výrobcu sa uvádza na druhej strane tohto katalógu.

Servis

Pri objednávaní náhradných dielcov pre tento stroj alebo na nahlasovanie problémov súvisiacich s prevádzkou tohto stroja sa obráťte na najbližšie zastúpenie spoločnosti Tetra Pak.

S ostatnými otázkami, pripomienkami a podnetmi na vylepšenie stroja alebo zariadenia a jeho dokumentácie sa obracajte na kontaktnú osobu.

Identifikácia

Klasifikácia CE

Toto zariadenie spĺňa základné predpisy o ochrane zdravia a bezpečnosti Európskeho hospodárskeho priestoru (EEA).

Typový štítok stroja

Na ilustrácii (B) na strane i-5 uvádzame príklad typového štítku. Ilustrácia platného typového štítku stroja a jeho umiestnenia na zariadení sa uvádza v kapitole Úvod v návodoch, dodaných s týmto zariadením. Typový štítok obsahuje dolu údaje uvedené, potrebné pri kontaktoch so spoločnosťou Tetra Pak ohľadom tohto špecifického zariadenia.

- Typ stroja (8)
- Objem (9)
- Údaje o výkrese (10)
- Výrobné číslo stroja (11)
- Výrobca (12)
- Značka CE (13)
- Rok výroby (14)

Ilustrácia (C) na strane i-5 zobrazuje príklad špecifikácie stroja. Presvedčite sa, že údaje zariadenia uvedené na predných stranách tohto návodu zodpovedajú údajom na typovom štítku a v špecifikácii stroja.

Ako sa tento Katalóg náhradných dielcov používa

Vyhľadanie čísla náhradného dielca

a) Pozri ilustráciu (D) na strane i-5: Prejdite na číslo kapitoly (15) uvedené vedľa hlavnej skupiny obsahujúcej dielec, ktorý chcete vyhľadať.

Položky b) a c) odkazujú na ilustráciu (E) na strane i-6.

b) Na ilustrácii hlavnej skupiny hľadajte podskupinu stroja (17), ktorý obsahuje dielec alebo podskupinu, ktorú hľadáte. Poznamenajte si číslo položky (18) a prejdite stranu so zoznamom nasledujúcu po ilustrácii.

c) Vyhľadajte číslo položky/referenčné označenie (16) alebo názov podskupiny (19). Prejdite na príslušné číslo strany (20) uvedené v zozname v pravom stĺpci. Spoločnosť Tetra Pak sa rozhodla vždy používať funkčne zameranú štruktúru na referenčné označovanie. Predčíslie udávajúce funkčne orientovanú štruktúra (=) sa v referenčnom označení nezobrazuje.

Položky d) a e) odkazujú na ilustráciu (F) na strane i-6.

d) Nájdite dielec (21), ktorý hľadáte, na ilustrácii podskupiny a poznamenajte si číslo položky daného dielca.

e) Číslo dielca (29) a popis dielca (30) sa uvádza vedľa čísla položky na stránke so zoznamom.

Informácie uvádzané v Katalógu náhradných dielcov

Dolu uvedený zoznam odkazuje na ilustráciu (F) na strane i-6. Katalóg náhradných dielcov obsahuje nasledujúce informácia o skupinách, podskupinách a náhradných dielcov zariadenia:

- Referenčná štruktúrna skupina (22). Označuje najbližšiu vyššiu skupinu v štruktúre zoznamu zariadenia.
- Názobv skupiny (23)
- Jednotka merania (25)
- Množstvo (26)
- Číslo výkresu celkovej zostavy (27)
- Rozsah strán zoznamu (28). Uvádza sa, ak má ilustrácia alebo zoznam skupiny viac strán.
- Číslo dielca alebo podskupiny (29)
- Názov podskupiny alebo popis dielca (30)
- Číslo skupiny (31)
- Číslo zariadenia (32)
- Záhlavie informácií o skupine (33). Uvádza, či je časť nasledujúca pod záhlavím určená pre špecifický variant stroja, alebo či ide o zoznam spoločných dielcov. Ak má zoznam viac ako jeden variant a každý z variantov má vlastný výkres celkovej zostavy, uvádza sa odkaz na stranu s výkresom zostavy daného variantu.
- Interné informácie (34)

Uvod

Informacije o priročnikih

Tetra Pak priporoča, da natančno preberete vse priložene priročnike. Osebje, ki upravlja in vzdržuje opremo mora imeti dostop do priloženih priročnikov.

Katalog hranite v celotnem času uporabe opreme. V primeru, ko opremo pridobi drug imetnik ali uporabnik, mu obenem izročite tudi katalog.

Podjetje Tetra Pak ne prevzema odgovornosti za poškodbe na opremi, ki nastanejo zaradi neupoštevanja navodil iz priročnikov, ki so priloženi opremi.

Priloženi priročniki

Priročniki, ki so priloženi tej opremi, lahko vključujejo

- Priročnik za zamenjavo (CM)
  V tem priročniku so podatki, ki tehnikom omogočajo izvesti zamenjavo opreme med različnimi načini proizvodnje.
- Elektrotehnični priročnik (EM)
  Priročnik vsebuje podatke za tehnike o električnem sistemu opreme.
- Priročnik za montažo (IM)
  Priročnik vsebuje podatke, ki jih tehniki potrebujejo za varno montažo opreme.
- Priročnik za vzdrževanje (MM)
  Priročnik vsebuje podatke za tehnike o vzdrževanju opreme.
- Priročnik za obratovanje (OM)
  Priročnik je namenjen informiranju za pravilno rokovanje in upravljanje s strojem pred, med in po proizvodnem postopku.
- Katalog nadomestnih delov (SPC)
  Katalog vsebuje potrebne podatke za naročilo nadomestnih delov pri podjetju Tetra Pak.
- Tehnični priročnik (TeM)
  Priročnik
  - vsebuje podatke, ki jih tehniki potrebujejo za varno montažo opreme;
  - vsebuje podatke za tehnike o vzdrževanju opreme;
  - vsebuje podatke za tehnike o električnem sistemu stroja/opreme;
  - vsebuje potrebne podatke za naročilo nadomestnih delov pri podjetju Tetra Pak.

Postavitev strani

Poglejte sliko (A) na strani i-5: Glavne strani v Katalogu nadomestnih delov sestavljata stran s sliko (1) in ustrezna stran s seznamom (7). Številka strani (5) je prikazana na vrhu strani s sliko in na dnu strani s seznamom. Številka dokumenta (6) je prikazana na dnu strani s seznamom.

Številčenje strani

Oglejte si sliko (A) na strani i-5: Številka strani (5) ima tri dele:

- številko poglavja (2);
- zaporedno številko strani v poglavju (3);
- število vseh strani v poglavju (4).

Predstavitev stroja

Proizvajalec

Ime in naslov proizvajalca najdete na drugi strani kataloga.

Servisiranje

Za naročanje nadomestnih delov za stroj ter za sporočanje motenj pri delovanju stroja se obrnite na najbližjo servisno službo podjetja Tetra Pak.

V primeru drugih zahtev, komentarjev, predlogov za izboljšavo opreme ali dokumentacije se obrnite na odgovorno osebo.

Identifikacijska oznaka

CE-klasifikacija

Oprema je izdelana v skladu z osnovnimi zdravstvenimi in varnostnimi predpisi Evropskega gospodarskega prostora (EGS).

Napisna ploščica

Slika (B) na strani i-5 prikazuje primer napisne ploščice.
Sliko veljavne napisne ploščice in njeno mesto na opremi najdete v uvodnem poglavju priloženih priročnikov. Ploščica vsebuje spodaj navedene podatke, ki jih potrebujete, ko se v zvezi z določeno opremo obrnete na podjetje Tetra Pak:

- tip stroja (8);
- prostornino (9);
- specifikacije risbe (10);
- serijsko številko stroja (11);
- proizvajalca (12);
- oznako CE (13);
- leto izdelave (14).

Slika (C) na strani i-5 prikazuje primer specifikacije stroja. Podatki o opremi, navedeni na prvih straneh tega priročnika, se morajo ujemati s podatki o stroju, navedenimi na napisni ploščici in v specifikacijah.

Uporaba Kataloga nadomestnih delov

Iskanje številke nadomestnega dela

a) Oglejte si sliko (D) na strani i-5: Poiščite številko poglavja (15), navedeno poleg glavne skupine, ki vsebuje iskani del.

Točki b) in c) se nanašata na sliko (E) na strani i-6.

b) Na sliki glavne skupine poiščite podskupino stroja (17), ki vsebuje iskani del ali podskupino. Zapomnite si pozicijsko številko (18) in poiščite stran s seznamom, ki pripada sliki.

c) Poiščite pozicijsko številko/referenčno oznako (16) ali ime podskupine (19). Pojdite na stran (20), navedeno v desnem stolpcu. Tetra Pak za referenčno označevanje vedno uporablja funkcijsko strukturo. Predpona, ki označuje funkcijsko strukturo (=), ni prikazana v referenčni oznaki.

Točki d) in e) se nanašata na sliko (F) na strani i-6.

d) Na sliki podskupine poiščite del (21), ki ga iščete, in si zapomnite njegovo pozicijsko številko.

e) Številka (29) in opis dela (30) sta navedena poleg pozicijske številke na strani s seznamom.

Informacije v Katalogu nadomestnih delov

Spodnji seznam se nanaša na sliko (F) na strani i-6. Katalog nadomestnih delov vsebuje naslednje informacije o skupinah, podskupinah in nadomestnih delih za opremo:

- referenco strukture skupine (22); Označuje naslednjo višjo skupino v strukturi seznamov opreme.
- ime skupine (23);
- mersko enoto (25);
- količino (26);
- številko sestavne risbe (27);
- število strani seznama (28); Če je slika ali seznam skupine sestavljen iz več strani.
- številko dela ali podskupine (29);
- ime podskupine ali opis dela (30);
- številko skupine (31);
- številko opreme (32);
- naslov z informacijami o skupini (33). Označuje, ali je razdelek pod naslovom namenjen specifični izvedbi stroja ali gre za seznam skupnih delov. Če ima seznam več izvedb in če ima vsaka od njih svojo sestavno risbo, je ob vsaki izvedbi navedena referenčna stran s sestavno risbo.
- interne informacije (34).

Inledning

Information om manualen

Tetra Pak rekommenderar att alla manualer läses noggrant. Se till att manualerna är tillgängliga för personalen som använder eller underhåller utrustningen.

Det är viktigt att denna katalog behålls under utrustningens livslängd, och att den överlämnas till varje efterföljande innehavare eller användare av utrustningen.

Tetra Pak tar inte ansvar för någon skada på utrustningen som orsakats av att instruktionerna i medföljande manualer inte har följts.

Medföljande manualer

Följande manualer kan levereras tillsammans med utrustningen:

- CM
  Konverteringsmanualen (CM) innehåller information för tekniker om hur man konverterar utrustningen mellan olika produktionslägen.
- EM
  Den elektriska manualen (EM) innehåller information för tekniker om utrustningens elektriska system.
- IM
  Installationsmanualen (IM) innehåller information för tekniker om hur utrustningen installeras på ett säkert sätt.
- MM
  Underhållsmanualen (MM) innehåller information för tekniker om hur utrustningen underhålls.
- OM
  Driftsmanualen (OM) innehåller information för operatören om hur utrustningen ska hanteras före, under och efter produktion.
- SPC
  Reservdelskatalogen (SPC) innehåller den information som behövs för att beställa reservdelar från Tetra Pak.
- TeM
  Den tekniska manualen (TeM)
  - innehåller information för tekniker om hur utrustningen installeras på ett säkert sätt.
  - innehåller information för tekniker om hur utrustningen underhålls.
  - innehåller information för tekniker om maskinens/utrustningens elektriska system.
  - innehåller den information som behövs för att beställa reservdelar från Tetra Pak.

Sidlayout

Se bild (A) på sidan i-5: Huvudsidorna i reservdelskatalogen består av en bildsida (1) och en motsvarande listsida (7). Sidnumret (5) visas i sidhuvudet på bildsidan och i sidfoten på listsidan. Dokumentnumret (6) visas i sidfoten på listsidan.

Sidnumrering

Se bild (A) på sidan i-5: Ett sidnummer (5) består av tre delar:

- kapitlets nummer (2)
- löpande sidnummer inom kapitlet (3)
- totalt sidantal i kapitlet (4)

Introduktion till maskinen

Tillverkare

Tillverkarens namn och adress finns på sidan 2 i katalogen.

Service

För att beställa reservdelar till denna maskin eller för att rapportera problem som uppstått i samband med driften kontaktar du närmaste Tetra Pak-kontor.

Om du har andra frågor, kommentarer eller förslag till förbättringar av utrustningen och dokumentationen vänder du dig till din kontaktperson på Tetra Pak.

Identifiering

CE-märkning

Denna utrustning överensstämmer med den grundläggande hälso- och säkerhetslagstiftningen inom Europeiska ekonomiska samarbetsområdet (EES).

Maskinskylt

Bild (B) på sidan i-5 visar ett exempel på en maskinskylt.
En bild på giltig maskinskylt och dess placering på utrustningen visas i inledningskapitlet som medföljer utrustningen. Skylten innehåller de uppgifter som listas nedan och som behövs vid kontakt med Tetra Pak angående utrustningen.

- Maskintyp (8)
- Volym (9)
- Ritningsspecifikationer (10)
- Maskinnummer (11)
- Tillverkare (12)
- CE-märkning (13)
- Tillverkningsår (14)

Bild (C) på sidan i-5 visar ett exempel på en maskinspecifikation. Kontrollera att informationen om utrustningen som listas på de första sidorna i manualen motsvarar informationen på maskinskylten och i maskinspecifikationen.

Använda reservdelskatalogen

Hitta ett reservdelsnummer

a) Se bild (D) på sidan i-5: Gå till kapitelnumret (15) som står vid sidan om huvudgruppen som innehåller den del du vill hitta.

Punkt b) och c) hänvisar till bild (E) på sidan i-6.

b) På huvudgruppsbilden letar du efter den maskinundergrupp (17) som innehåller delen eller undergruppen du letar efter. Notera positionsnumret (18) och gå till listsidan som anges efter bilden.

c) Leta efter positionsnumret/referensbeteckningen (16) eller undergruppsnamnet (19). Gå till motsvarande sidnummer (20) som listas i den högra kolumnen. Tetra Pak har valt allt alltid använda en funktionsorienterad struktur för referensbeteckningarna. Prefixet för funktionsorienterad struktur (=) visas inte i referensbeteckningen.

Punkt d) och e) hänvisar till bild (F) på sidan i-6.

d) Leta reda på delen (21) i undergruppsbilden och notera delens positionsnummer.

e) Reservdelsnumret (29) och reservdelsbeskrivningen (30) står bredvid positionsnumret på listsidan.

Information i reservdelskatalogen

Listan nedan hänvisar till bild (F) på sidan i-6. Reservdelskatalogen innehåller följande information om grupper, undergrupper och reservdelar för utrustningen:

- Gruppstrukturreferens (22). Anger nästa högre grupp i utrustningslistans struktur.
- Gruppnamn (23)
- Måttenhet (25)
- Kvantitet (26)
- Monteringsritningsnummer (27)
- Listsideintervall (28). Anges om det finns flera sidor i gruppbilden eller grupplistan.
- Reservdels- eller undergruppsnummer (29)
- Undergruppsnamn eller reservdelsbeskrivning (30)
- Gruppnummer (31)
- Utrustningsnummer (32)
- Gruppinformationsrubrik (33). Anger om avsnittet under rubriken gäller en viss maskinvariant eller om det är en lista över allmänna delar. Om en lista har fler än en variant och varje variant har sin egen monteringsritning visas en sidhänvisning till variantens monteringsritning.
- Intern information (34)

SPC
Spare Parts Catalogue

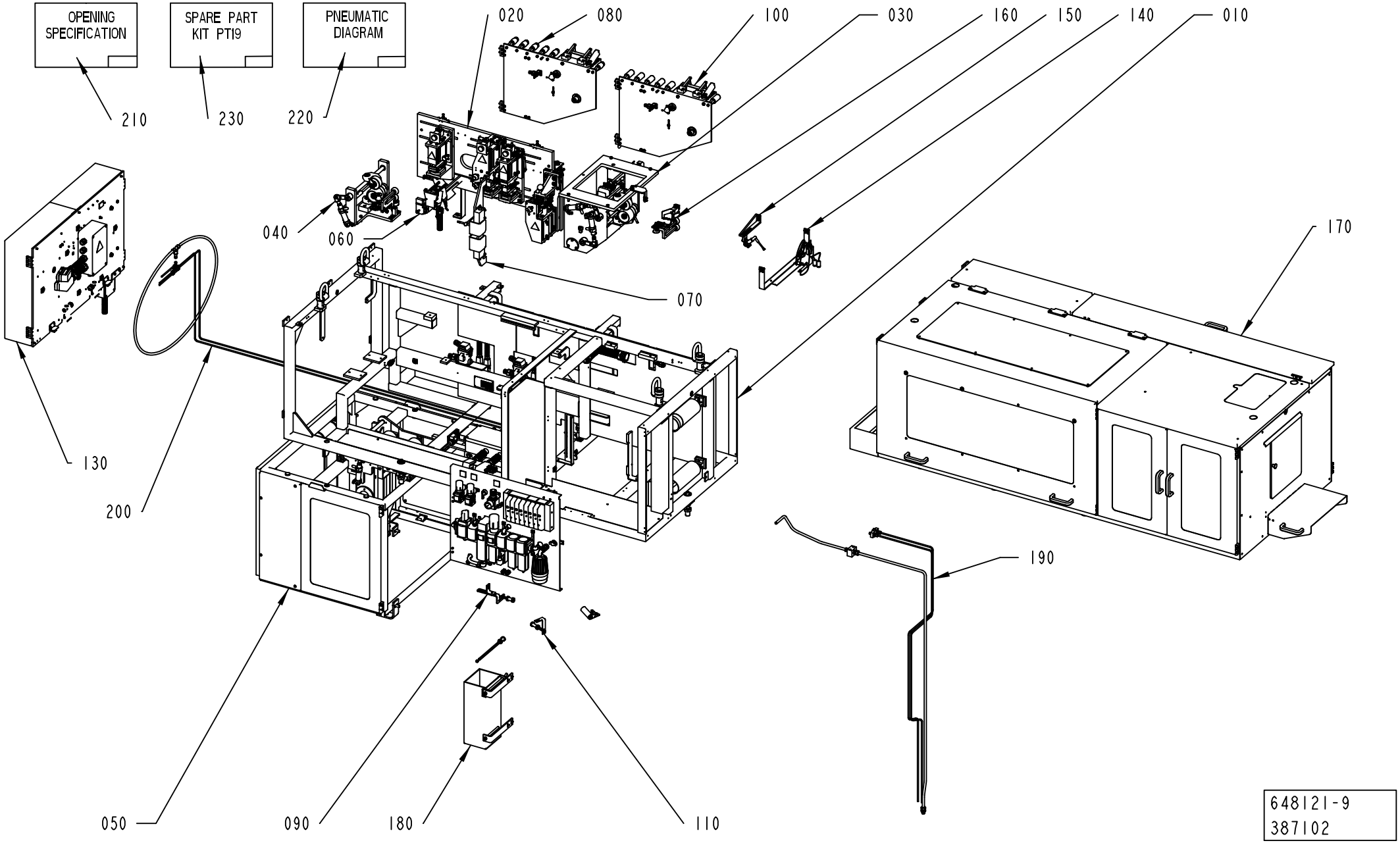
OPENING SPECIFICATION
SPARE PART KIT PT19
PNEUMATIC DIAGRAM
210
230
220
020
080
100
030
160
150
140
010
040
060
070
170
130
200
190
050
090
180
110
648121-9
387102

ECM: 438703 - 20100222
Group number: 648121-0400
Assembly Drawing: 648121-9_1_AA

This list covers pages from 1-2 to 1-5

Pos	Part No	UN	Qty	Description	Page No
TBA (See drawing on page: 1-2)					
080	581939-0200		1	PATCH MAGAZINE	**1-7, 1-9**
TPA (See drawing on page: 1-4)					
080	581939-0200		2	PATCH MAGAZINE	**1-7, 1-9**
240	2816489-0100		1	BENDING ROLLER OUTER PATCH	**1-17**
Common Parts					
010	979524-0400		1	FRAME	**1-19, 1-21, 1-23, 1-25**
020	583682-0200		1	MOUNTING SHEET	**1-47, 1-49, 1-51, 1-53, 1-55, 1-57, 1-59**
030	579384-0300		1	SERVO DRIVE UNIT	**1-105, 1-107**
040	2523592-0100		1	INFEED BRAKE	**1-117**
050	979551-0400		1	INFEED UNIT	**1-121**
060	979552-0200		1	PHOTOCELL UNIT	**1-149**
070	2871576-0100		1	ULTRASOUND UNIT	**1-151**
090	581938-0200		1	BENDING ROLLER PATCH	**1-153, 1-155**
100	979697-0200		1	TAB MAGAZINE	**1-157, 1-159**
110	581942-0200		1	BENDING ROLLER TAB	**1-163, 1-165**
120	581948-0400		1	PNEUMATIC UNIT	**1-167, 1-169**
130	580037-0400		1	STRIP MAGAZINE	**1-177, 1-179**
140	581952-0100		1	DETECTOR UNIT	**1-209, 1-211**
150	2618993-0100		1	STRIP SPLICE DETECTOR	**1-213**
160	583740-0100		1	WEB GUIDE	**1-215**
170	582403-0400		1	COVER	**1-217, 1-219, 1-221, 1-223, 1-225, 1-227**
180	2592560-0200		1	WASTE BOX	**1-237**
190	2570399-0100		1	PIPE WORK	**1-245**
200	2557579-0100		1	PIPE WORK-PNEUMATIC	**1-247**
210	979885-0100		1	OPENING SPECIFICATION	**1-249**
220	3038093-0000		1	PNEUMATIC DIAGRAM	
230	979691-0100		1	SPARE PART KIT PT19	**1-251**

Pos	Part No	UN	Qty	Description	Page No

OPENING SPECIFICATION
979885-0100 — 210

PNEUMATIC DIAGRAM
2930301-0000 PT 19 — 220

SPARE PART KIT PT19
979691-0100 — 230

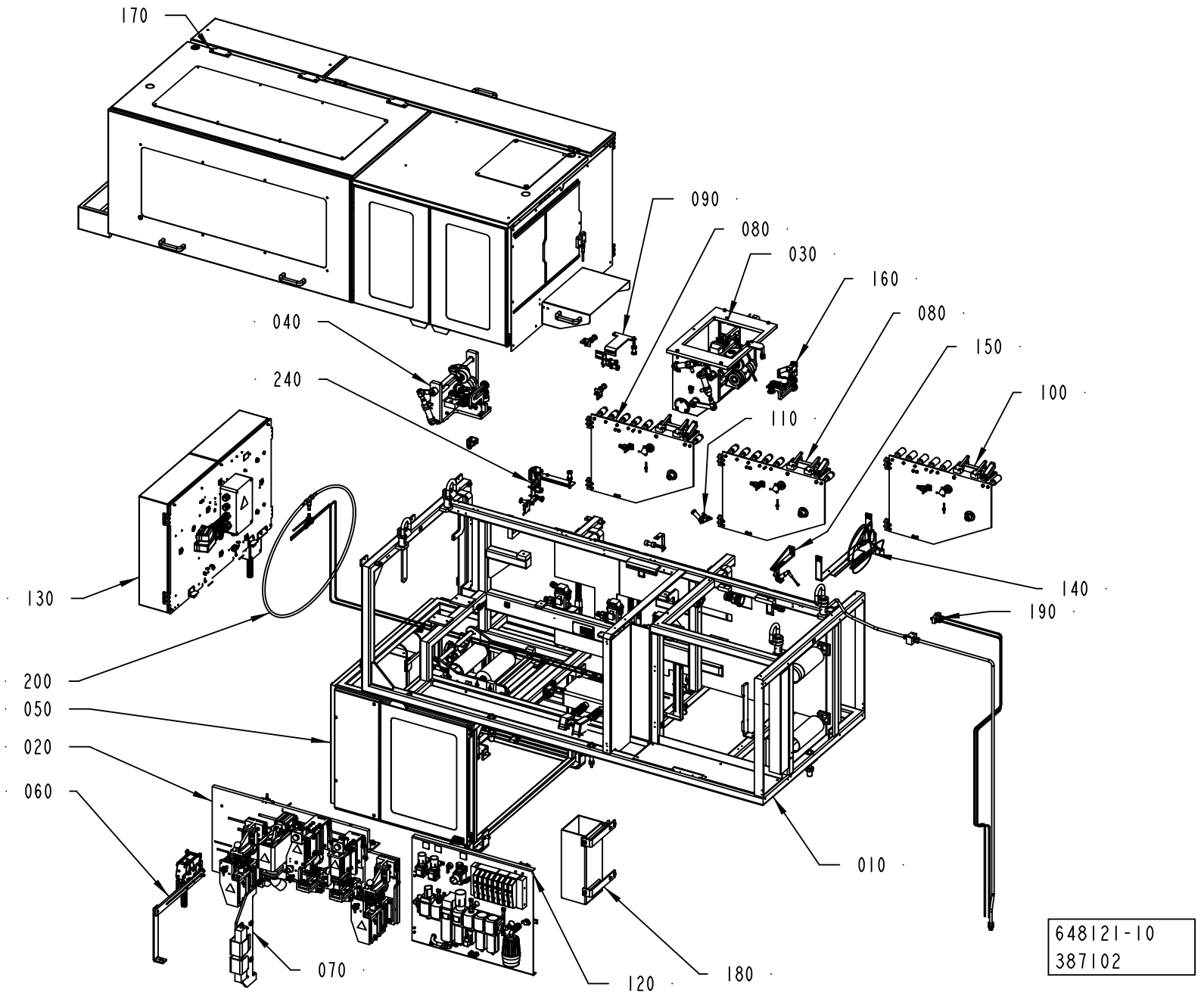

648121-10
387102

ECM: 438703 - 20100222
Group number: 648121-0400
Assembly Drawing: 648121-10_1_AA

This list covers pages from 1-2 to 1-5

Pos	Part No	UN	Qty	Description	Page No
TBA (See drawing on page: 1-2)					
080	581939-0200		1	PATCH MAGAZINE	**1-7, 1-9**
TPA (See drawing on page: 1-4)					
080	581939-0200		2	PATCH MAGAZINE	**1-7, 1-9**
240	2816489-0100		1	BENDING ROLLER OUTER PATCH	**1-17**
Common Parts					
010	979524-0400		1	FRAME	**1-19, 1-21, 1-23, 1-25**
020	583682-0200		1	MOUNTING SHEET	**1-47, 1-49, 1-51, 1-53, 1-55, 1-57, 1-59**
030	579384-0300		1	SERVO DRIVE UNIT	**1-105, 1-107**
040	2523592-0100		1	INFEED BRAKE	**1-117**
050	979551-0400		1	INFEED UNIT	**1-121**
060	979552-0200		1	PHOTOCELL UNIT	**1-149**
070	2871576-0100		1	ULTRASOUND UNIT	**1-151**
090	581938-0200		1	BENDING ROLLER PATCH	**1-153, 1-155**
100	979697-0200		1	TAB MAGAZINE	**1-157, 1-159**
110	581942-0200		1	BENDING ROLLER TAB	**1-163, 1-165**
120	581948-0400		1	PNEUMATIC UNIT	**1-167, 1-169**
130	580037-0400		1	STRIP MAGAZINE	**1-177, 1-179**
140	581952-0100		1	DETECTOR UNIT	**1-209, 1-211**
150	2618993-0100		1	STRIP SPLICE DETECTOR	**1-213**
160	583740-0100		1	WEB GUIDE	**1-215**
170	582403-0400		1	COVER	**1-217, 1-219, 1-221, 1-223, 1-225, 1-227**
180	2592560-0200		1	WASTE BOX	**1-237**
190	2570399-0100		1	PIPE WORK	**1-245**
200	2557579-0100		1	PIPE WORK-PNEUMATIC	**1-247**
210	979885-0100		1	OPENING SPECIFICATION	**1-249**
220	3038093-0000		1	PNEUMATIC DIAGRAM	
230	979691-0100		1	SPARE PART KIT PT19	**1-251**

Pos	Part No	UN	Qty	Description	Page No

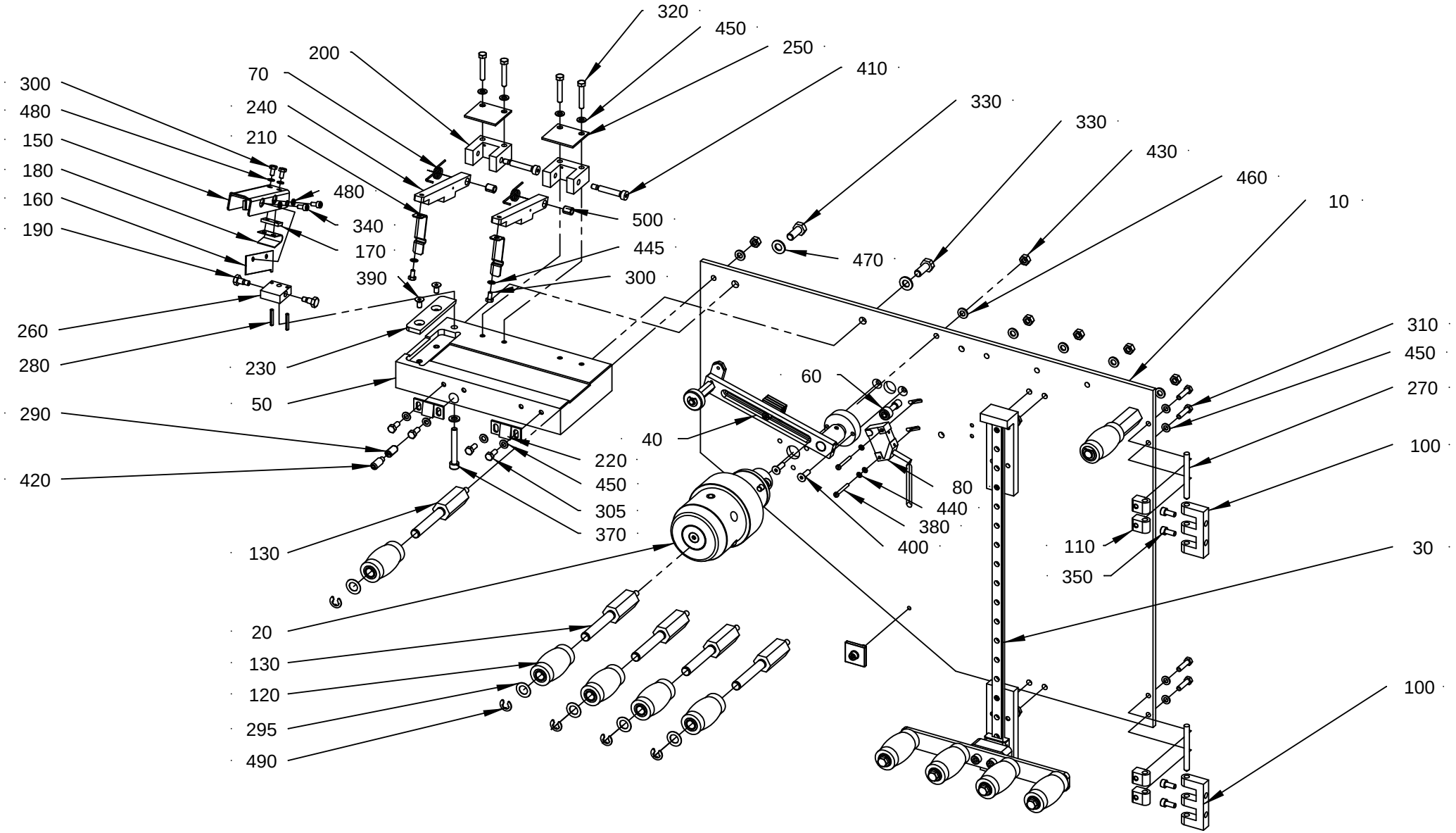

58193 9-2
316697

ECM: 316699 - 20080221
Group number: 581939-0200
Assembly Drawing: 581939-2_1_AC

This list covers pages from 1-6 to 1-9

Pos	Part No	UN	Qty	Description	Page No
-					
010	1549419-0000		1	PLATE	
020	1549420-0100		1	BOBBIN HOLDER	**1-11**
030	2903589-0100		1	MAGAZINE	**1-13**
040	2903591-0100		1	BRAKE	**1-15**
050	1549425-0000		1	PLATE	
060	2519631-0000		1	SCREW	
070	544427-0000		2	TURN SPRING	
080	90044-0194		1	INDUCTIVE SENSOR, IN 5329	
090	2540732-0000		1	HOLDER	
100	1035792-0000		2	E-HINGE	
110	1035794-0000		4	BLOCKING PIECE	
120	1519142-0000		6	ROLLER	
130	1549440-0000		6	AXLE PIN	
140	1549441-0000		1	FORCE PLATE	
150	522376-0000		1	KNIFE HOLDER	
160	522388-0002		1	KNIFE	
170	522393-0000		1	NUT	
180	522394-0000		1	SPRING	
190	522395-0000		2	SCREW	
200	532017-0000		2	MOUNTING LUG	
210	532021-0000		2	LOCKING LOOP	
220	532022-0000		2	LOCK BAR	
230	544422-0000		1	KNIFE	
240	544426-0000		2	LOCK GRIP	
250	544428-0000		2	SHEET	
260	552049-0000		1	LUG	
270	988685-0000		2	PIN	
280	90258-0031		2	PIN, STRAIGHT SLOTTED SPRING FRP 3X20	
290	90287-0112		1	SCREW SPRINGLOAD. SLOTTED HEAD M8X16	
295	2033-0009		6	WASHER	
300	312105-0287		4	SCREW M6S ISO 4017 M4X8 A470	
305	312105-0327		4	SCREW M6S ISO 4017 M5X12 A480	
310	312105-0331		4	SCREW M6S ISO 4017 M5X20 A480	
320	312105-0335		4	SCREW M6S ISO 4014 M5X30 A480	
330	312105-0451		2	SCREW M6S ISO 4017 M8X20 A480	
340	312115-0287		2	SCREW ISO4762 M4X8 A4 80	
345	312105-0323		2	SCREW M6S ISO 4017 M5X8 A480	
350	312115-0327		4	SCREW ISO4762 M5X12 A4 80	
370	312115-0379		1	SCREW ISO4762 M6X45 A4 80	
380	312125-0232		2	SCREW ISO 1207 M3X25 A4	
390	312155-0325		2	SCREW DIN 7991 MF6S M5X10 A4 70	
400	312155-0329		2	SCREW DIN 7991 MF6S M5X16 A4 70	
410	312180-0374		2	SCREW ISO7379 H6X30	
420	312311-0451		1	SCREW ISO4028 M8X20 FZB	
430	312605-0316		6	HEXAGON NUT, M6M M6 A280	
440	315105-0124		3	WASHER BRB 3,2X6 RFR	
445	315105-0136		2	WASHER BRB 4,3X8 RFR	
450	315105-0146		14	WASHER BRB 5,3X10 RFR	
460	315105-0153		7	WASHER BRB 6,4X12 RFR	
470	315105-0165		2	WASHER BRB 8,4X16 RFR	
480	315402-0136		4	LOCK WASHER, DIN127B 4,1 A4, M4-5/32	
490	315755-0109		6	RETAINING RING SHAFT DIN 6799 7 SS	
500	321141-0064		2	BEARING BUSH W/O FLANGE, 6X8X10 MM	
510	90458-0322		1	NUT, M16X1,5	
520	90458-0427		1	GLAND FITTING, VK 21652YUL11	
530	353249-0008		1	INSERT, SINGLE HOLE, EK152 7	

Machine Type | Group Description | Used-In | Group Number | Page No

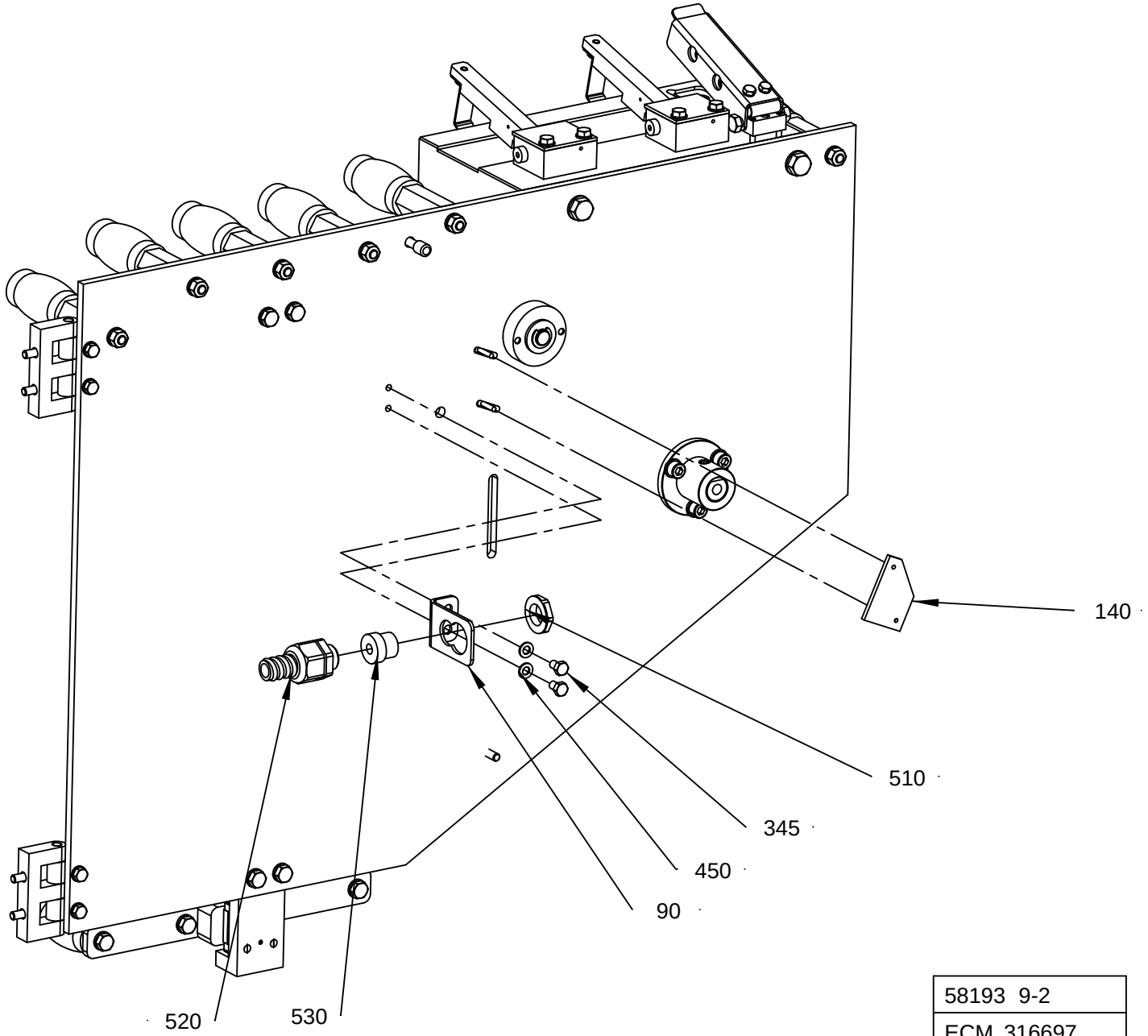

58193 9-2
ECM 316697

ECM: 316699 - 20080221
Group number: 581939-0200
Assembly Drawing: 581939-2_2_AC

This list covers pages from 1-6 to 1-9

Pos	Part No	UN	Qty	Description	Page No
-					
010	1549419-0000		1	PLATE	
020	1549420-0100		1	BOBBIN HOLDER	**1-11**
030	2903589-0100		1	MAGAZINE	**1-13**
040	2903591-0100		1	BRAKE	**1-15**
050	1549425-0000		1	PLATE	
060	2519631-0000		1	SCREW	
070	544427-0000		2	TURN SPRING	
080	90044-0194		1	INDUCTIVE SENSOR, IN 5329	
090	2540732-0000		1	HOLDER	
100	1035792-0000		2	E-HINGE	
110	1035794-0000		4	BLOCKING PIECE	
120	1519142-0000		6	ROLLER	
130	1549440-0000		6	AXLE PIN	
140	1549441-0000		1	FORCE PLATE	
150	522376-0000		1	KNIFE HOLDER	
160	522388-0002		1	KNIFE	
170	522393-0000		1	NUT	
180	522394-0000		1	SPRING	
190	522395-0000		2	SCREW	
200	532017-0000		2	MOUNTING LUG	
210	532021-0000		2	LOCKING LOOP	
220	532022-0000		2	LOCK BAR	
230	544422-0000		1	KNIFE	
240	544426-0000		2	LOCK GRIP	
250	544428-0000		2	SHEET	
260	552049-0000		1	LUG	
270	988685-0000		2	PIN	
280	90258-0031		2	PIN, STRAIGHT SLOTTED SPRING FRP 3X20	
290	90287-0112		1	SCREW SPRINGLOAD. SLOTTED HEAD M8X16	
295	2033-0009		6	WASHER	
300	312105-0287		4	SCREW M6S ISO 4017 M4X8 A470	
305	312105-0327		4	SCREW M6S ISO 4017 M5X12 A480	
310	312105-0331		4	SCREW M6S ISO 4017 M5X20 A480	
320	312105-0335		4	SCREW M6S ISO 4014 M5X30 A480	
330	312105-0451		2	SCREW M6S ISO 4017 M8X20 A480	
340	312115-0287		2	SCREW ISO4762 M4X8 A4 80	
345	312105-0323		2	SCREW M6S ISO 4017 M5X8 A480	
350	312115-0327		4	SCREW ISO4762 M5X12 A4 80	
370	312115-0379		1	SCREW ISO4762 M6X45 A4 80	
380	312125-0232		2	SCREW ISO 1207 M3X25 A4	
390	312155-0325		2	SCREW DIN 7991 MF6S M5X10 A4 70	
400	312155-0329		2	SCREW DIN 7991 MF6S M5X16 A4 70	
410	312180-0374		2	SCREW ISO7379 H6X30	
420	312311-0451		1	SCREW ISO4028 M8X20 FZB	
430	312605-0316		6	HEXAGON NUT, M6M M6 A280	
440	315105-0124		3	WASHER BRB 3,2X6 RFR	
445	315105-0136		2	WASHER BRB 4,3X8 RFR	
450	315105-0146		14	WASHER BRB 5,3X10 RFR	
460	315105-0153		7	WASHER BRB 6,4X12 RFR	
470	315105-0165		2	WASHER BRB 8,4X16 RFR	
480	315402-0136		4	LOCK WASHER, DIN127B 4,1 A4, M4-5/32	
490	315755-0109		6	RETAINING RING SHAFT DIN 6799 7 SS	
500	321141-0064		2	BEARING BUSH W/O FLANGE, 6X8X10 MM	
510	90458-0322		1	NUT, M16X1,5	
520	90458-0427		1	GLAND FITTING, VK 21652YUL11	
530	353249-0008		1	INSERT, SINGLE HOLE, EK152 7	

Machine Type | Group Description | Used-In | Group Number | Page No

BOBBIN HOLDER

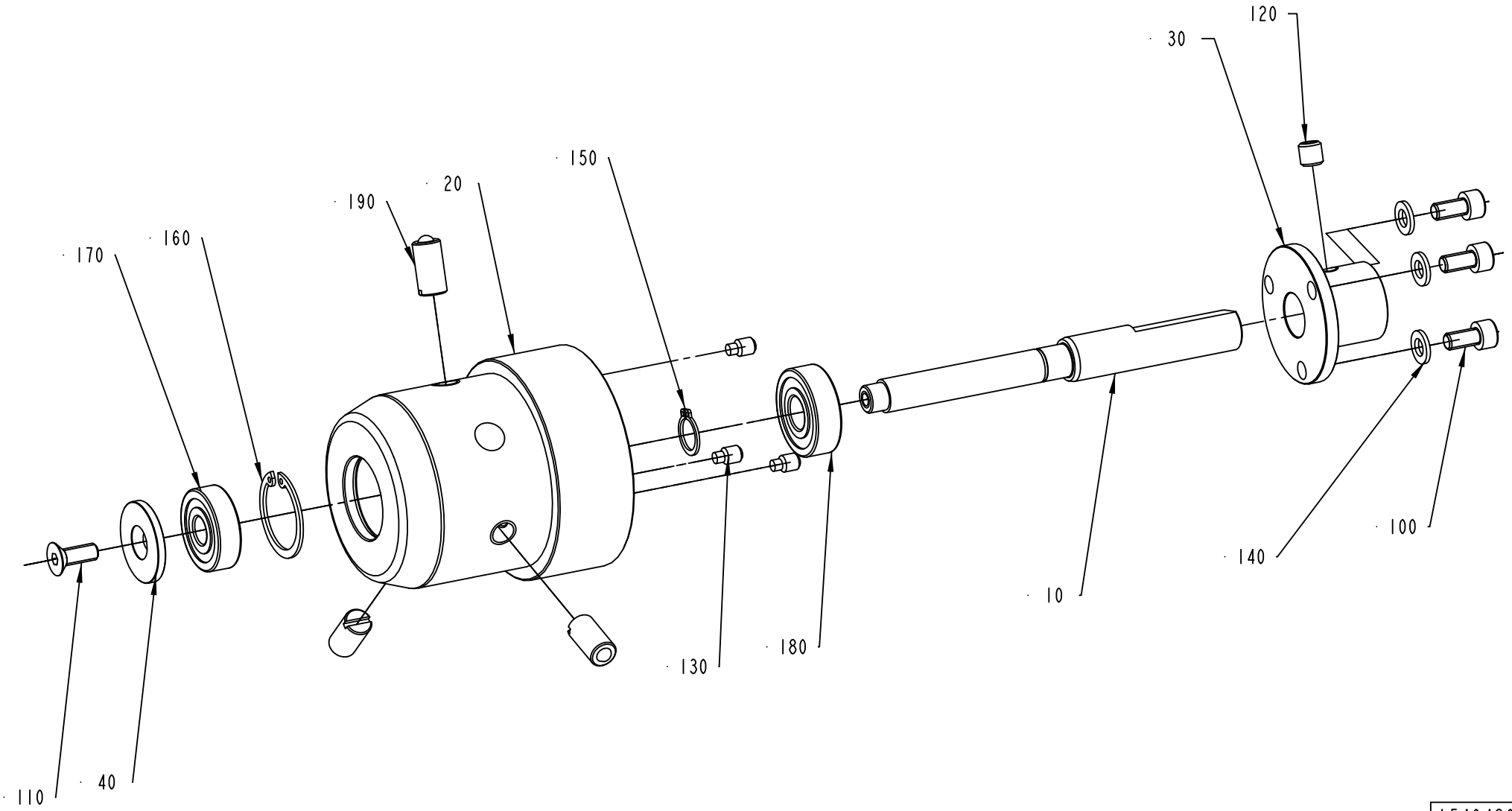

1549420-1
ECM 110837

ECM: 243206 - 20060127
Group number: 1549420-0100
Assembly Drawing: 1549420-1_1_AA

Pos	Part No	UN	Qty	Description	Page No
-					
010	1549421-0000		1	SHAFT	
020	1549422-0000		1	BOBBIN HOLDER	
030	1549424-0000		1	FLANGE	
040	1549423-0000		1	WASHER	
100	312115-0366		3	SCREW ISO4762 M6X12 A4 80	
110	312155-0368		1	SCREW DIN 7991 MF6S M6X16 A4 70	
120	312318-0443		1	SCREW ISO4029 M8X8 A4	
130	90287-0154		3	SCREW, SOCK.SET DOGPOINT M6X10	
140	315105-0153		3	WASHER BRB 6,4X12 RFR	
150	315751-0109		1	RETAINING RING FOR SHAFT DIN 471 12 SS	
160	315753-0122		1	RETAINING RING FOR BORE DIN 472 30 SS	
170	321309-0100		1	BALL BEARING 10/30X9	
180	321309-0101		1	BALL BEARING 12/32X10	
190	90287-0106		3	SCREW SPRINGLOAD. SLOTTED HEAD M10X21	

Pos	Part No	UN	Qty	Description	Page No

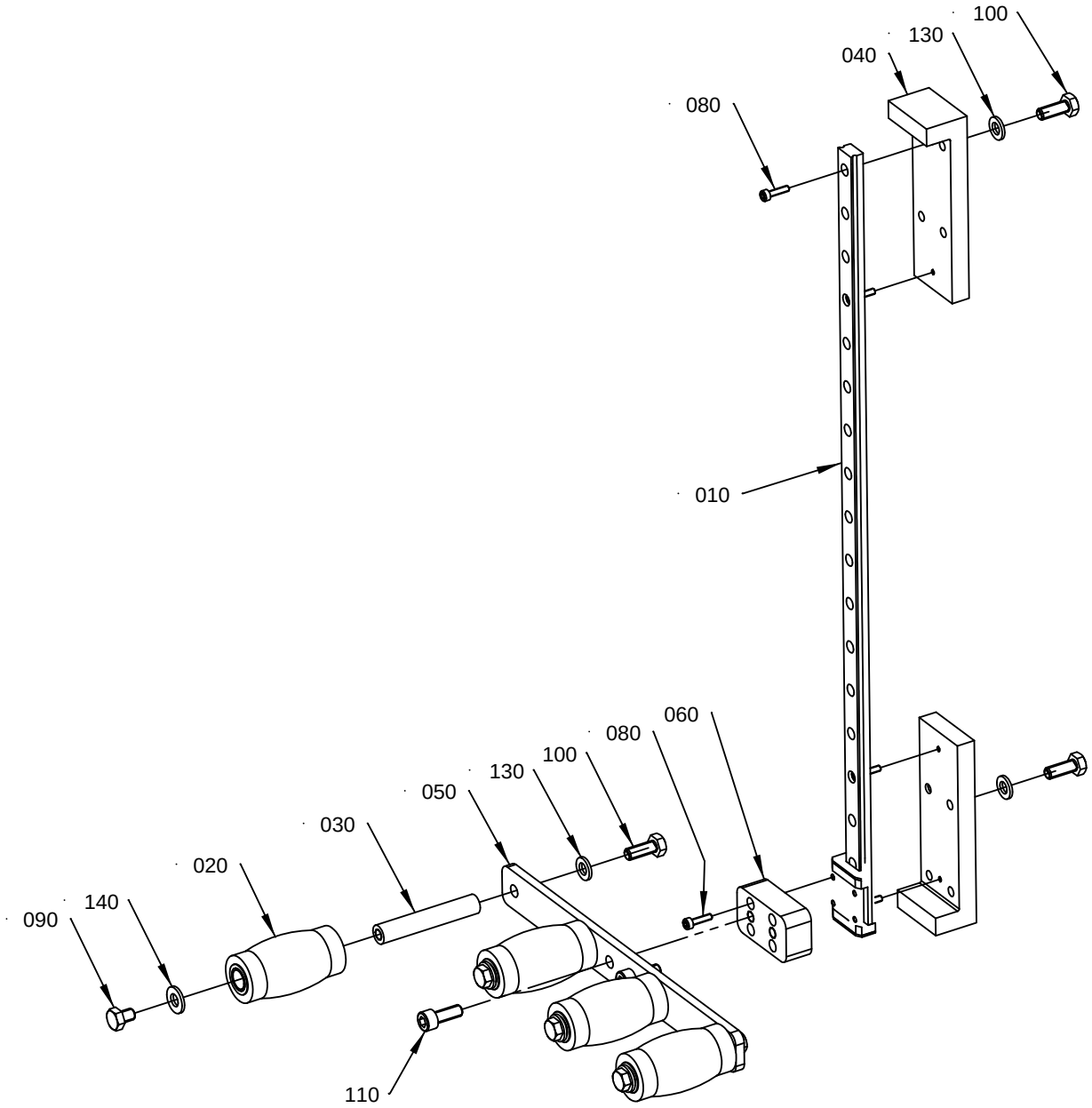

2903 589-1
316697

ECM: 316701 - 20080221
Group number: 2903589-0100
Assembly Drawing: 2903589-1_1_AA

Pos	Part No	UN	Qty	Description	Page No
-					
010	2614876-0000		1	LINEAR UNIT	
020	1519142-0000		4	ROLLER	
030	546298-0000		4	SHAFT	
040	2815755-0000		2	STOP	
050	2815757-0000		1	PLATE	
060	2815758-0000		1	SPACER	
080	312115-0226		8	SCREW ISO4762 M3X12 A4 80	
090	312105-0362		4	SCREW M6S ISO 4017 M6X8 A480	
100	312105-0368		8	SCREW M6S ISO 4017 M6X16 A480	
110	312115-0368		2	SCREW ISO4762 M6X16 A4 80	
130	315105-0153		8	WASHER BRB 6,4X12 RFR	
140	315105-0156		4	WASHER BRB 6,7X14 RFR	

Pos	Part No	UN	Qty	Description	Page No

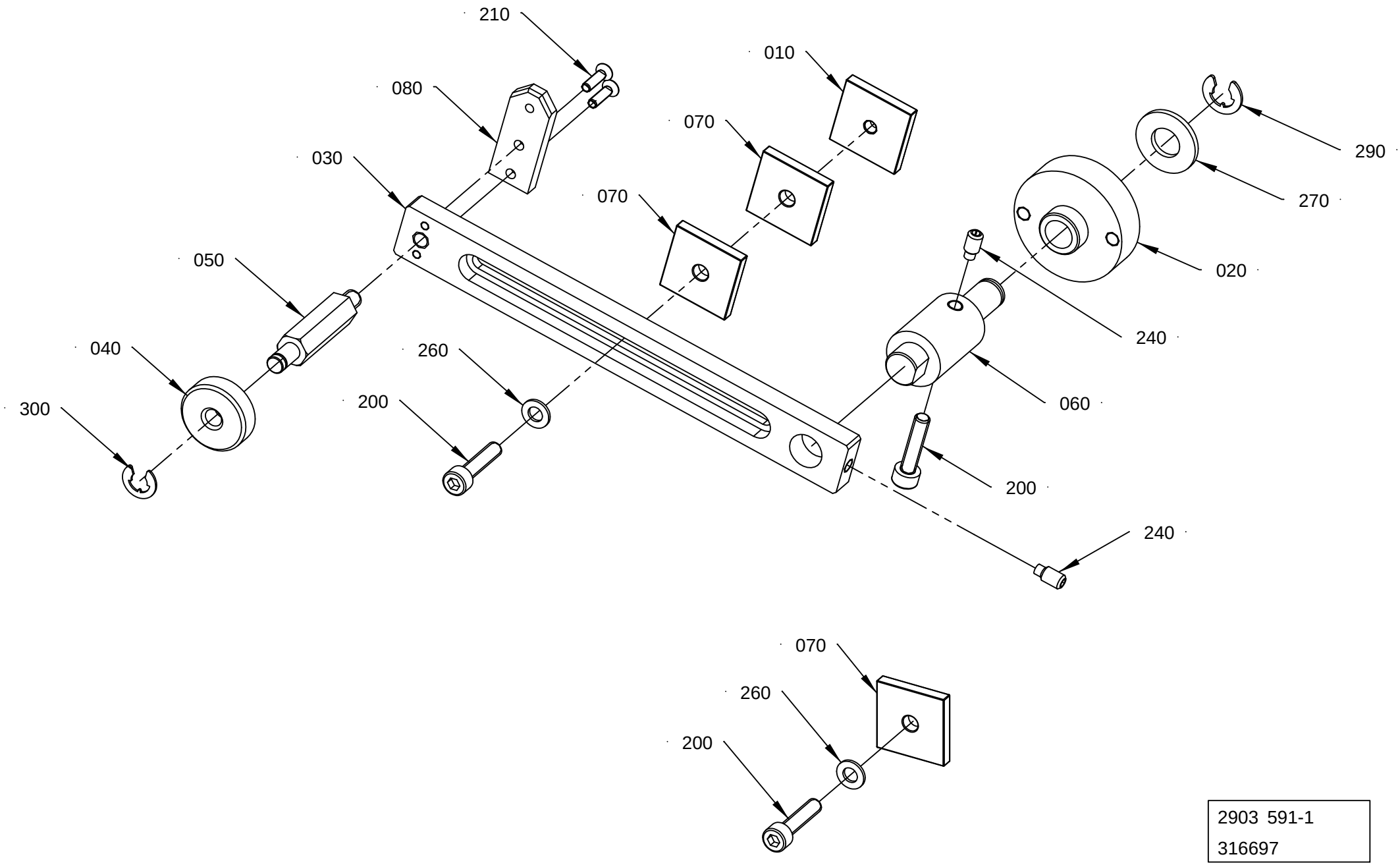

2903 591-1
316697

ECM: 316707 - 20080221
Group number: 2903591-0100
Assembly Drawing: 2903591-1_1_AA

Pos	Part No	UN	Qty	Description	Page No
-					
010	2903587-0000		1	END SECTION	
020	2552629-0000		1	BUSHING	
030	1549432-0000		1	ARM	
040	2574388-0000		1	SLIDE	
050	1549436-0000		1	PIN	
060	1549433-0000		1	PIN	
070	2903588-0000		3	WEIGHT	
080	2540725-0000		1	PLATE	
200	312115-0332		3	SCREW ISO4762 M5X22 A4 80	
210	312155-0226		2	SCREW DIN 7991 MF6S M3X12 A4 70	
240	312311-0325		2	SCREW ISO4028 M5X10 FZB	
260	315105-0146		2	WASHER BRB 5,3X10 RFR	
270	315105-0173		1	WASHER BRB 10,5X22 RFR	
290	315755-0109		1	RETAINING RING SHAFT DIN 6799 7 SS	
300	315755-0108		1	RETAINING RING SHAFT DIN 6799 6 SS	

Pos	Part No	UN	Qty	Description	Page No

BENDING ROLLER OUTER PATCH

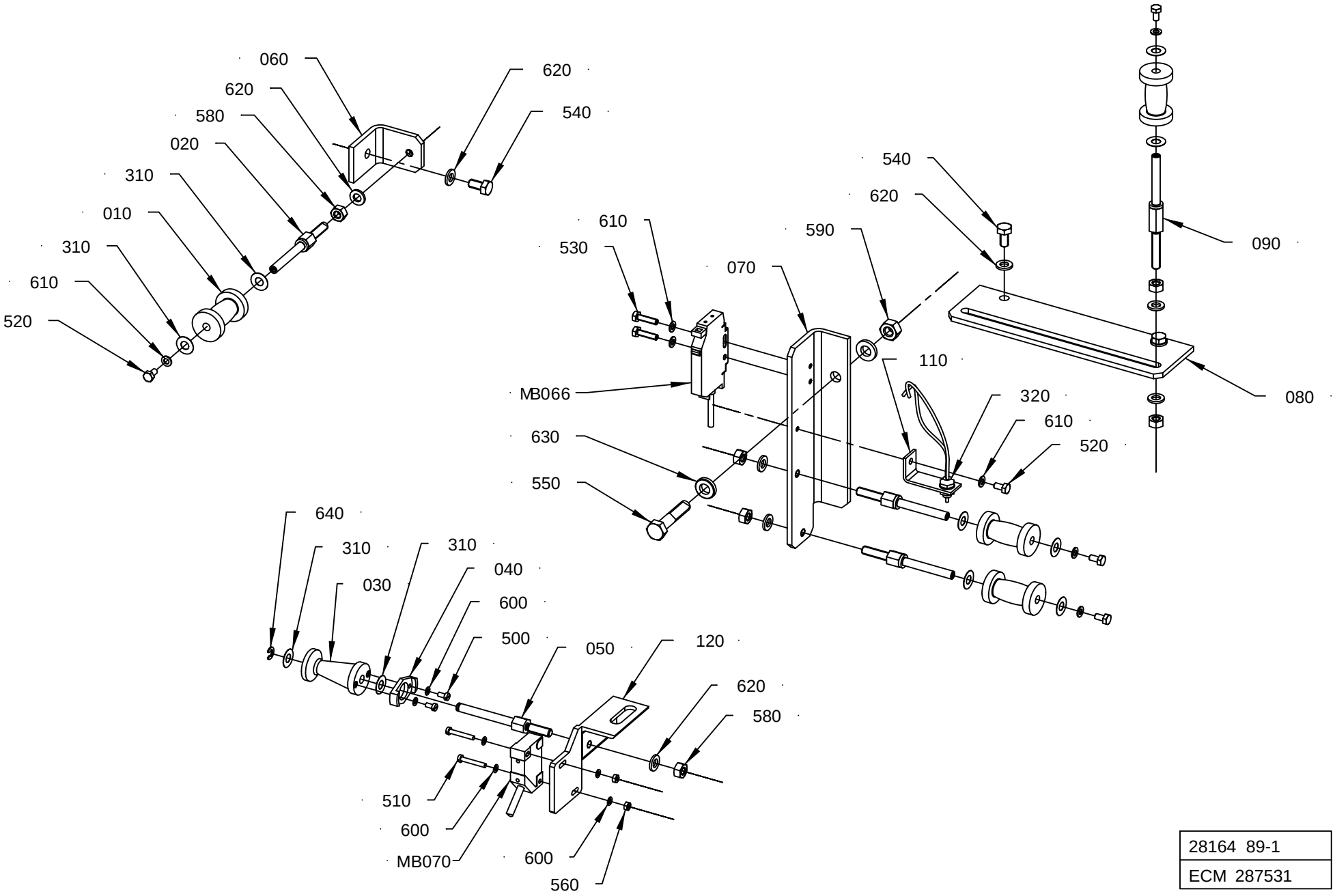

28164 89-1
ECM 287531

ECM: 293516 - 20070126
Group number: 2816489-0100
Assembly Drawing: 2816489-1_1_AA

Pos	Part No	UN	Qty	Description	Page No
-					
010	1255821-0000		4	ROLL	
020	2810425-0000		3	AXLE PIN	
030	1255950-0000		1	TAPER ROLLER	
040	1255964-0000		1	PLATE	
050	1260966-0000		1	AXLE BOLT	
060	2810424-0000		1	BRACKET	
070	2810427-0000		1	BRACKET	
080	2810426-0000		1	BRACKET	
090	1296785-0000		1	AXLE PINAXLE PIN	
110	2816492-0000		1	BRACKET	
120	2816493-0000		1	BRACKET	
310	2033-0013		10	WASHER	
320	90232-0346		1	FIBRE, LL3-DB01, 5308 074	
500	312125-0220		2	SCREW ISO 1207 M3X6 A4	
510	312125-0230		2	SCREW ISO 1207 M3X20 A4	
520	312105-0287		5	SCREW M6S ISO 4017 M4X8 A470	
530	312105-0293		2	SCREW M6S ISO 4017 M4X16 A470	
540	312105-0366		3	SCREW M6S ISO 4017 M6X12 A480	
550	312105-0459		1	SCREW M6S ISO 4014 M8X40 A480	
560	312605-0310		2	HEXAGON NUT, M6M M3 A280	
580	312605-0316		6	HEXAGON NUT, M6M M6 A280	
590	312605-0318		1	HEXAGON NUT, M6M M8 A280	
600	315105-0124		6	WASHER BRB 3,2X6 RFR	
610	315105-0136		7	WASHER BRB 4,3X8 RFR	
620	315105-0153		9	WASHER BRB 6,4X12 RFR	
630	315115-0165		2	WASHER PLAIN, TBRB 8,4/16 H=3	
640	315755-0106		1	RETAINING RING SHAFT DIN 6799 4 SS	
MB070	90044-0194		1	INDUCTIVE SENSOR, IN 5329	
MB066	90232-0123		1	PH.CELL WLL170-P135-6011723	

Pos	Part No	UN	Qty	Description	Page No

Machine Type	Group Description	Used-In	Group Number	Page No

DETAIL B

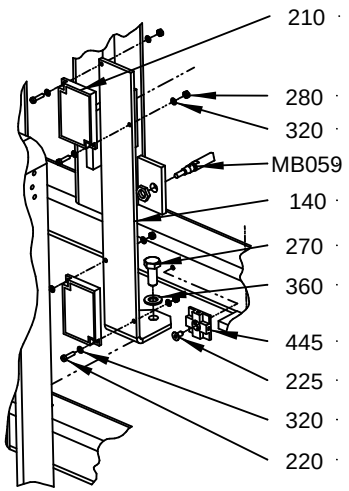

DETAIL A

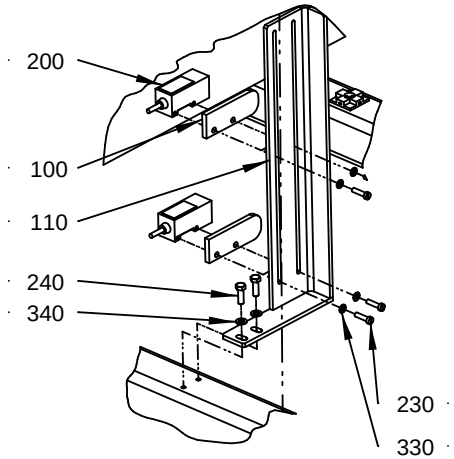

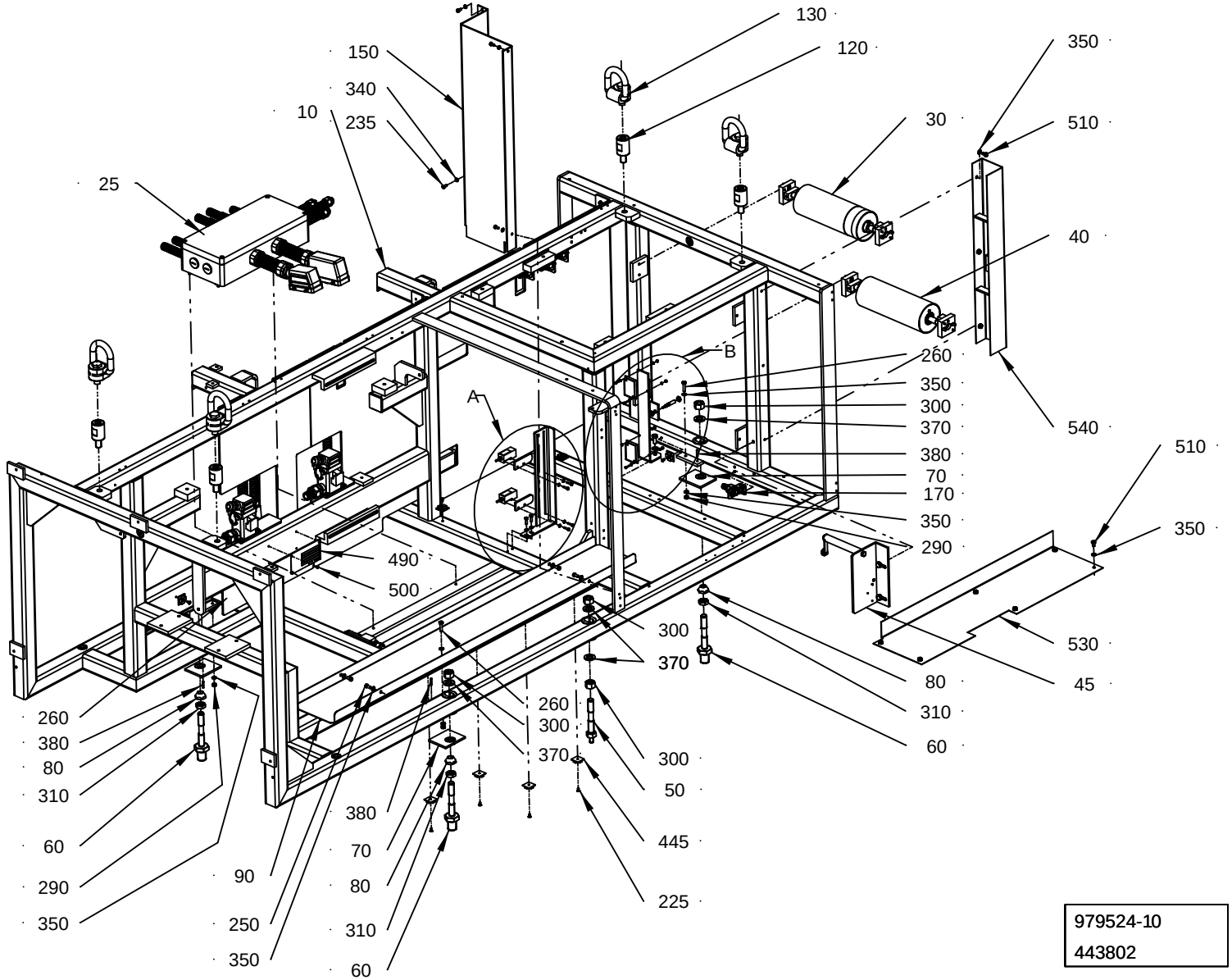

979524-10
443802

ECM: 448599 - 20100524
Group number: 979524-0400
Assembly Drawing: 979524-10_1_AC

This list covers pages from 1-18 to 1-25

Pos	Part No	UN	Qty	Description	Page No
TBA (See drawing on pages: 1-18, 1-20)					
010	2506477-0000		1	FRAME	
195	2592564-0000		2	BRACKET	
235	312105-0325		19	SCREW M6S ISO 4017 M5X10 A480	
240	312105-0329		6	SCREW M6S ISO 4017 M5X16 A480	
340	315105-0146		25	WASHER BRB 5,3X10 RFR	
560	3017399-0000		1	COVER	
TPA (See drawing on pages: 1-22, 1-24)					
010	2810988-0000		1	FRAME	
155	2854654-0000		1	COVER	
195	2592564-0000		3	BRACKET	
235	312105-0325		23	SCREW M6S ISO 4017 M5X10 A480	
240	312105-0329		8	SCREW M6S ISO 4017 M5X16 A480	
340	315105-0146		16	WASHER BRB 5,3X10 RFR	
560	3081887-0000		1	COVER	
Common Parts					
020	979592-0200		1	CONNECTION DEVICE	**1-27, 1-29**
025	2529614-0200		1	CONNECTION BOX	**1-31, 1-33, 1-35, 1-37**
030	979890-0100		1	BENDING ROLLER	**1-39**
040	979549-0100		1	BENDING ROLLER	**1-41**
045	1279624-0200		1	SPLICE DETECTOR	**1-43, 1-45**
050	979564-0000		2	ADJUSTING SCREW	
060	979565-0000		3	ADJUSTING SCREW	
070	979588-0000		3	ADJUSTING PLATE	
080	979589-0000		3	ADJUSTING NUT	
090	2529643-0000		1	PROTECTION	
100	979659-0000		2	PHOTOCELL SPACER	
110	2592565-0000		1	PHOTOCELL BRACKET	
120	2529628-0000		4	SPACER	
130	90459-2290		4	LIFTING EYE BOLT, LBG M16 RS 1T	
140	2592566-0000		1	HOLDER	
150	2540718-0000		1	COVER	
170	2540732-0000		5	HOLDER	
200	90232-0106		2	PH.CELL E3S-CR11-5M	
210	90232-0333		2	REFLECTOR, E39-R1	
220	312125-0226		4	SCREW ISO 1207 M3X12 A4	
225	312155-0287		13	SCREW DIN 7991 MF6S M4X8 A4 70	
230	312125-0293		4	SCREW ISO 1207 M4X16 A4	
250	312125-0366		4	SCREW ISO 1207 M6X12 A4	
260	312105-0372		3	SCREW M6S ISO 4017 M6X25 A480	
270	312105-0451		1	SCREW M6S ISO 4017 M8X20 A480	
280	312605-0310		4	HEXAGON NUT, M6M M3 A280	
290	312605-0316		3	HEXAGON NUT, M6M M6 A280	
300	312605-0324		7	HEXAGON NUT, M6M M16 A280	
310	90099-0131		3	NUT HEX. M16X2 SS	
320	315105-0124		8	WASHER BRB 3,2X6 RFR	
330	315105-0136		4	WASHER BRB 4,3X8 RFR	
350	315105-0153		19	WASHER BRB 6,4X12 RFR	
360	315105-0165		1	WASHER BRB 8,4X16 RFR	
370	315105-0186		7	WASHER BRB 17X30 RFR	
380	311103-0272		3	PARALLEL PIN ISO 2338 4M6X20 A1	
390	90458-0322		5	NUT, M16X1,5	
420	90458-0427		5	GLAND FITTING, VK 21652YUL11	
440	312115-0323		10	SCREW ISO4762 M5X8 A4 80	
445	352113-0206		13	ANCHOR PLATES FOR STRIPS, ABM100-AT	
460	353249-0008		4	INSERT, SINGLE HOLE, EK152 7	
480	353249-0036		1	INSERT, MULTI HOLE, EK152M 2X4	
490	579765-0000		1	MACHINE SIGN CE	
500	311521-0143		4	RIVET, BLANK 3,2X8	
510	312105-0364		9	SCREW M6S ISO 4017 M6X10 A480	
520	312115-0291		3	SCREW ISO4762 M4X12 A4 80	
530	3017346-0000		1	PLATE	
540	3017347-0000		1	COVER	
550	3017398-0000		1	COVER	
570	3017414-0000		1	COVER	
M.X315	90459-4254		1	CONNECTION BLOCK TINA 4A, 20-054-03	
M.W697	90600-5930	M	1.5	CABLE C9, 20-057-15	
M.B059	90600-0473		1	INDUCTIVE SWITCH E2A-S08KS01-WP-B1-TP 5M	
M.A046	90459-5627		1	CONNECTION TINA 1A, 20-054-00	

Machine Type | Group Description | Used-In | Group Number | Page No

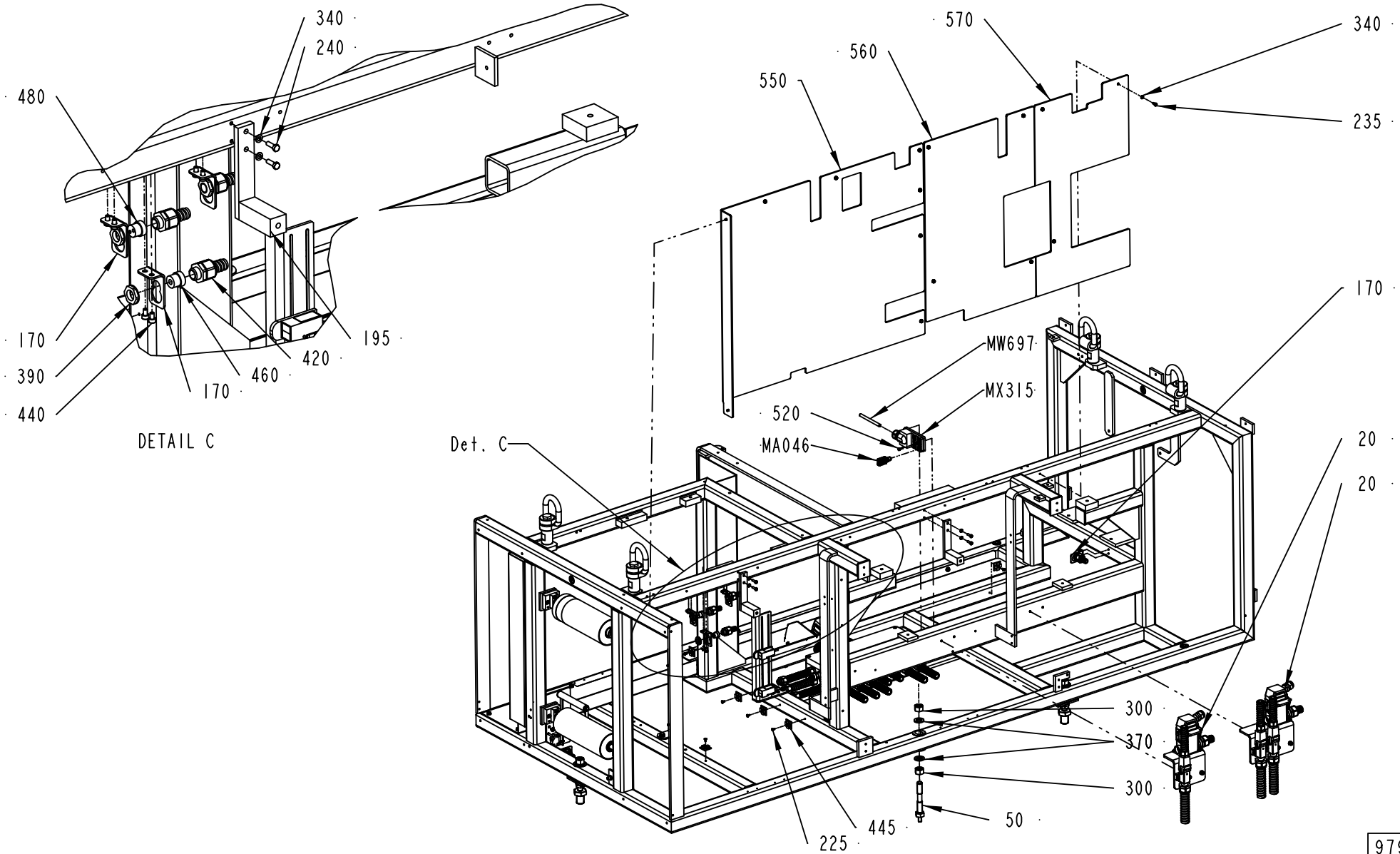
340
240
480
170
390
440
170
460
420
195
DETAIL C
570
560
550
340
235
170
MW697
MX315
520
MA046
Det. C
20
20
300
370
300
50
445
225
979524-10
443802

ECM: 448599 - 20100524
Group number: 979524-0400
Assembly Drawing: 979524-10_2_AC

This list covers pages from 1-18 to 1-25

Pos	Part No	UN	Qty	Description	Page No
TBA (See drawing on pages: 1-18, 1-20)					
010	2506477-0000		1	FRAME	
195	2592564-0000		2	BRACKET	
235	312105-0325		19	SCREW M6S ISO 4017 M5X10 A480	
240	312105-0329		6	SCREW M6S ISO 4017 M5X16 A480	
340	315105-0146		25	WASHER BRB 5,3X10 RFR	
560	3017399-0000		1	COVER	
TPA (See drawing on pages: 1-22, 1-24)					
010	2810988-0000		1	FRAME	
155	2854654-0000		1	COVER	
195	2592564-0000		3	BRACKET	
235	312105-0325		23	SCREW M6S ISO 4017 M5X10 A480	
240	312105-0329		8	SCREW M6S ISO 4017 M5X16 A480	
340	315105-0146		16	WASHER BRB 5,3X10 RFR	
560	3081887-0000		1	COVER	
Common Parts					
020	979592-0200		1	CONNECTION DEVICE	**1-27, 1-29**
025	2529614-0200		1	CONNECTION BOX	**1-31, 1-33, 1-35, 1-37**
030	979890-0100		1	BENDING ROLLER	**1-39**
040	979549-0100		1	BENDING ROLLER	**1-41**
045	1279624-0200		1	SPLICE DETECTOR	**1-43, 1-45**
050	979564-0000		2	ADJUSTING SCREW	
060	979565-0000		3	ADJUSTING SCREW	
070	979588-0000		3	ADJUSTING PLATE	
080	979589-0000		3	ADJUSTING NUT	
090	2529643-0000		1	PROTECTION	
100	979659-0000		2	PHOTOCELL SPACER	
110	2592565-0000		1	PHOTOCELL BRACKET	
120	2529628-0000		4	SPACER	
130	90459-2290		4	LIFTING EYE BOLT, LBG M16 RS 1T	
140	2592566-0000		1	HOLDER	
150	2540718-0000		1	COVER	
170	2540732-0000		5	HOLDER	
200	90232-0106		2	PH.CELL E3S-CR11-5M	
210	90232-0333		2	REFLECTOR, E39-R1	
220	312125-0226		4	SCREW ISO 1207 M3X12 A4	
225	312155-0287		13	SCREW DIN 7991 MF6S M4X8 A4 70	
230	312125-0293		4	SCREW ISO 1207 M4X16 A4	
250	312125-0366		4	SCREW ISO 1207 M6X12 A4	
260	312105-0372		3	SCREW M6S ISO 4017 M6X25 A480	
270	312105-0451		1	SCREW M6S ISO 4017 M8X20 A480	
280	312605-0310		4	HEXAGON NUT, M6M M3 A280	
290	312605-0316		3	HEXAGON NUT, M6M M6 A280	
300	312605-0324		7	HEXAGON NUT, M6M M16 A280	
310	90099-0131		3	NUT HEX. M16X2 SS	
320	315105-0124		8	WASHER BRB 3,2X6 RFR	
330	315105-0136		4	WASHER BRB 4,3X8 RFR	
350	315105-0153		19	WASHER BRB 6,4X12 RFR	
360	315105-0165		1	WASHER BRB 8,4X16 RFR	
370	315105-0186		7	WASHER BRB 17X30 RFR	
380	311103-0272		3	PARALLEL PIN ISO 2338 4M6X20 A1	
390	90458-0322		5	NUT, M16X1,5	
420	90458-0427		5	GLAND FITTING, VK 21652YUL11	
440	312115-0323		10	SCREW ISO4762 M5X8 A4 80	
445	352113-0206		13	ANCHOR PLATES FOR STRIPS, ABM100-AT	
460	353249-0008		4	INSERT, SINGLE HOLE, EK152 7	
480	353249-0036		1	INSERT, MULTI HOLE, EK152M 2X4	
490	579765-0000		1	MACHINE SIGN CE	
500	311521-0143		4	RIVET, BLANK 3,2X8	
510	312105-0364		9	SCREW M6S ISO 4017 M6X10 A480	
520	312115-0291		3	SCREW ISO4762 M4X12 A4 80	
530	3017346-0000		1	PLATE	
540	3017347-0000		1	COVER	
550	3017398-0000		1	COVER	
570	3017414-0000		1	COVER	
M.X315	90459-4254		1	CONNECTION BLOCK TINA 4A, 20-054-03	
M.W697	90600-5930	M	1.5	CABLE C9, 20-057-15	
M.B059	90600-0473		1	INDUCTIVE SWITCH E2A-S08KS01-WP-B1-TP 5M	
M.A046	90459-5627		1	CONNECTION TINA 1A, 20-054-00	

Machine Type | Group Description | Used-In | Group Number | Page No

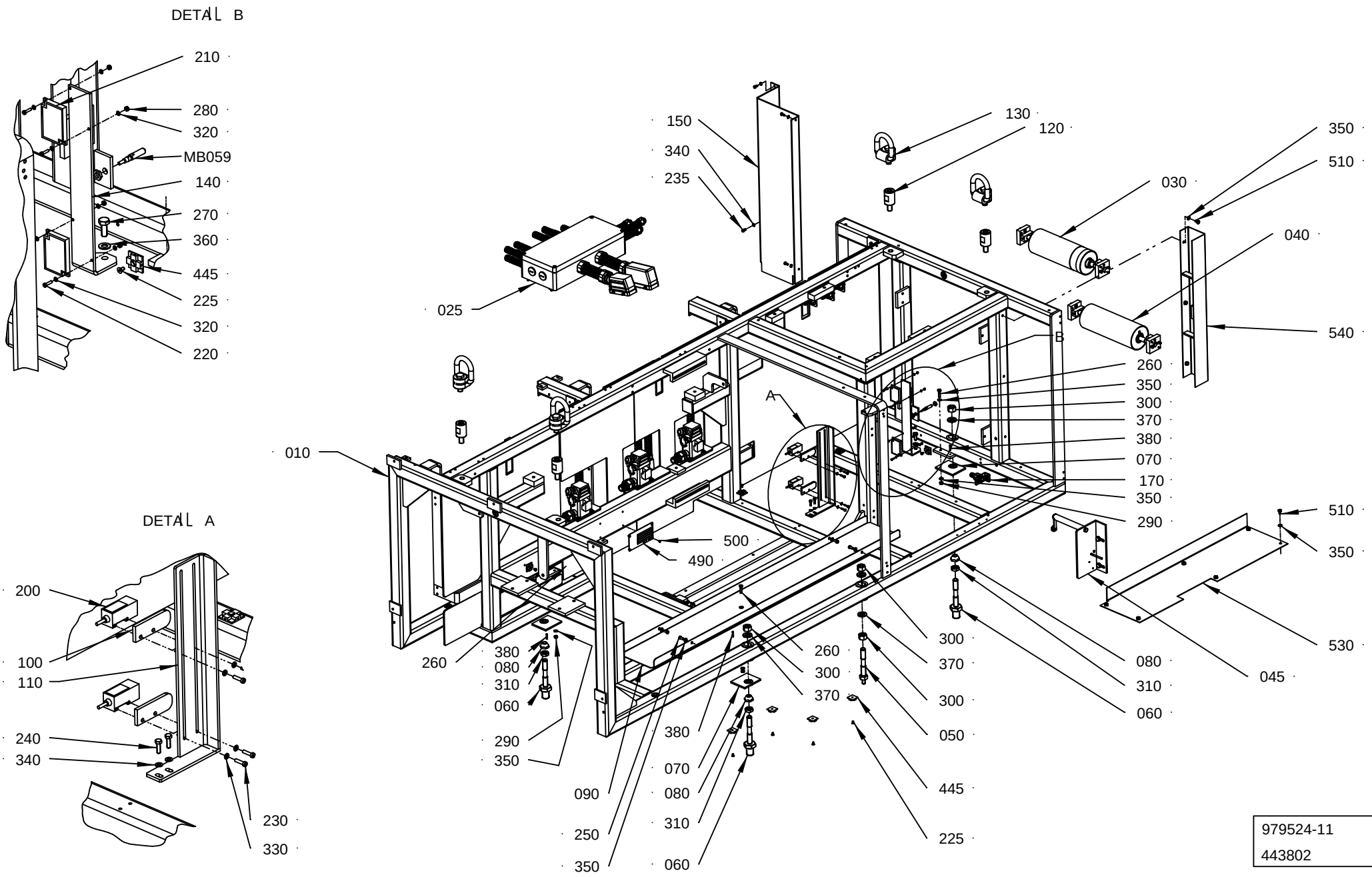

979524-11
443802

ECM: 448599 - 20100524
Group number: 979524-0400
Assembly Drawing: 979524-11_1_AC

This list covers pages from 1-18 to 1-25

Pos	Part No	UN	Qty	Description	Page No
TBA (See drawing on pages: 1-18, 1-20)					
010	2506477-0000		1	FRAME	
195	2592564-0000		2	BRACKET	
235	312105-0325		19	SCREW M6S ISO 4017 M5X10 A480	
240	312105-0329		6	SCREW M6S ISO 4017 M5X16 A480	
340	315105-0146		25	WASHER BRB 5,3X10 RFR	
560	3017399-0000		1	COVER	
TPA (See drawing on pages: 1-22, 1-24)					
010	2810988-0000		1	FRAME	
155	2854654-0000		1	COVER	
195	2592564-0000		3	BRACKET	
235	312105-0325		23	SCREW M6S ISO 4017 M5X10 A480	
240	312105-0329		8	SCREW M6S ISO 4017 M5X16 A480	
340	315105-0146		16	WASHER BRB 5,3X10 RFR	
560	3081887-0000		1	COVER	
Common Parts					
020	979592-0200		1	CONNECTION DEVICE	**1-27, 1-29**
025	2529614-0200		1	CONNECTION BOX	**1-31, 1-33, 1-35, 1-37**
030	979890-0100		1	BENDING ROLLER	**1-39**
040	979549-0100		1	BENDING ROLLER	**1-41**
045	1279624-0200		1	SPLICE DETECTOR	**1-43, 1-45**
050	979564-0000		2	ADJUSTING SCREW	
060	979565-0000		3	ADJUSTING SCREW	
070	979588-0000		3	ADJUSTING PLATE	
080	979589-0000		3	ADJUSTING NUT	
090	2529643-0000		1	PROTECTION	
100	979659-0000		2	PHOTOCELL SPACER	
110	2592565-0000		1	PHOTOCELL BRACKET	
120	2529628-0000		4	SPACER	
130	90459-2290		4	LIFTING EYE BOLT, LBG M16 RS 1T	
140	2592566-0000		1	HOLDER	
150	2540718-0000		1	COVER	
170	2540732-0000		5	HOLDER	
200	90232-0106		2	PH.CELL E3S-CR11-5M	
210	90232-0333		2	REFLECTOR, E39-R1	
220	312125-0226		4	SCREW ISO 1207 M3X12 A4	
225	312155-0287		13	SCREW DIN 7991 MF6S M4X8 A4 70	
230	312125-0293		4	SCREW ISO 1207 M4X16 A4	
250	312125-0366		4	SCREW ISO 1207 M6X12 A4	
260	312105-0372		3	SCREW M6S ISO 4017 M6X25 A480	
270	312105-0451		1	SCREW M6S ISO 4017 M8X20 A480	
280	312605-0310		4	HEXAGON NUT, M6M M3 A280	
290	312605-0316		3	HEXAGON NUT, M6M M6 A280	
300	312605-0324		7	HEXAGON NUT, M6M M16 A280	
310	90099-0131		3	NUT HEX. M16X2 SS	
320	315105-0124		8	WASHER BRB 3,2X6 RFR	
330	315105-0136		4	WASHER BRB 4,3X8 RFR	
350	315105-0153		19	WASHER BRB 6,4X12 RFR	
360	315105-0165		1	WASHER BRB 8,4X16 RFR	
370	315105-0186		7	WASHER BRB 17X30 RFR	
380	311103-0272		3	PARALLEL PIN ISO 2338 4M6X20 A1	
390	90458-0322		5	NUT, M16X1,5	
420	90458-0427		5	GLAND FITTING, VK 21652YUL11	
440	312115-0323		10	SCREW ISO4762 M5X8 A4 80	
445	352113-0206		13	ANCHOR PLATES FOR STRIPS, ABM100-AT	
460	353249-0008		4	INSERT, SINGLE HOLE, EK152 7	
480	353249-0036		1	INSERT, MULTI HOLE, EK152M 2X4	
490	579765-0000		1	MACHINE SIGN CE	
500	311521-0143		4	RIVET, BLANK 3,2X8	
510	312105-0364		9	SCREW M6S ISO 4017 M6X10 A480	
520	312115-0291		3	SCREW ISO4762 M4X12 A4 80	
530	3017346-0000		1	PLATE	
540	3017347-0000		1	COVER	
550	3017398-0000		1	COVER	
570	3017414-0000		1	COVER	
M.X315	90459-4254		1	CONNECTION BLOCK TINA 4A, 20-054-03	
M.W697	90600-5930	M	1.5	CABLE C9, 20-057-15	
M.B059	90600-0473		1	INDUCTIVE SWITCH E2A-S08KS01-WP-B1-TP 5M	
M.A046	90459-5627		1	CONNECTION TINA 1A, 20-054-00	

Machine Type | Group Description | Used-In | Group Number | Page No

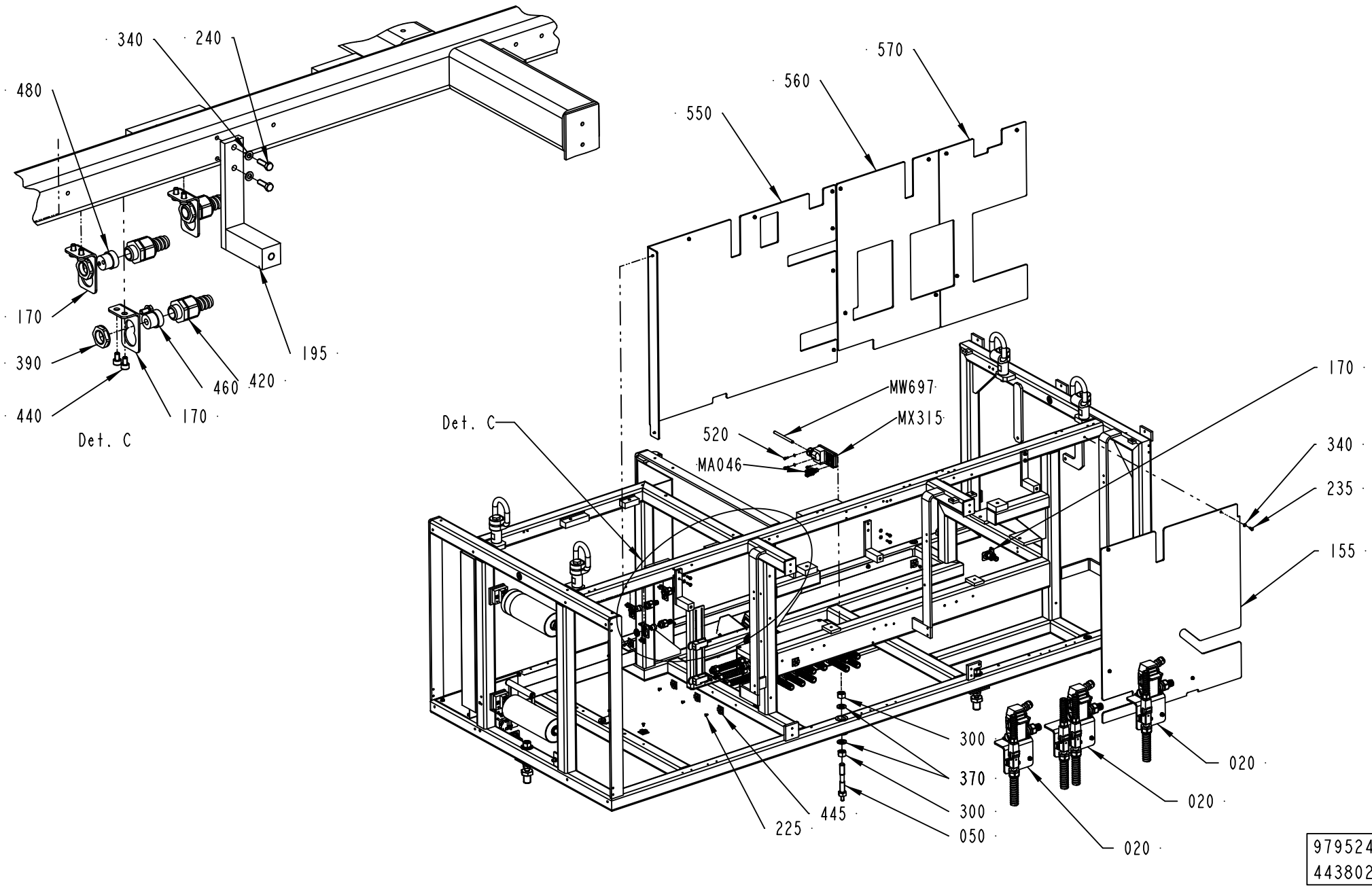
340
240
480
170
390
440
460
420
170
195
Det. C
570
560
550
MW697
MX315
520
MA046
Det. C
170
340
235
155
300
370
300
050
445
225
020
020
020
979524-11
443802

ECM: 448599 - 20100524
Group number: 979524-0400
Assembly Drawing: 979524-11_2_AC

This list covers pages from 1-18 to 1-25

Pos	Part No	UN	Qty	Description	Page No
TBA (See drawing on pages: 1-18, 1-20)					
010	2506477-0000		1	FRAME	
195	2592564-0000		2	BRACKET	
235	312105-0325		19	SCREW M6S ISO 4017 M5X10 A480	
240	312105-0329		6	SCREW M6S ISO 4017 M5X16 A480	
340	315105-0146		25	WASHER BRB 5,3X10 RFR	
560	3017399-0000		1	COVER	
TPA (See drawing on pages: 1-22, 1-24)					
010	2810988-0000		1	FRAME	
155	2854654-0000		1	COVER	
195	2592564-0000		3	BRACKET	
235	312105-0325		23	SCREW M6S ISO 4017 M5X10 A480	
240	312105-0329		8	SCREW M6S ISO 4017 M5X16 A480	
340	315105-0146		16	WASHER BRB 5,3X10 RFR	
560	3081887-0000		1	COVER	
Common Parts					
020	979592-0200		1	CONNECTION DEVICE	**1-27, 1-29**
025	2529614-0200		1	CONNECTION BOX	**1-31, 1-33, 1-35, 1-37**
030	979890-0100		1	BENDING ROLLER	**1-39**
040	979549-0100		1	BENDING ROLLER	**1-41**
045	1279624-0200		1	SPLICE DETECTOR	**1-43, 1-45**
050	979564-0000		2	ADJUSTING SCREW	
060	979565-0000		3	ADJUSTING SCREW	
070	979588-0000		3	ADJUSTING PLATE	
080	979589-0000		3	ADJUSTING NUT	
090	2529643-0000		1	PROTECTION	
100	979659-0000		2	PHOTOCELL SPACER	
110	2592565-0000		1	PHOTOCELL BRACKET	
120	2529628-0000		4	SPACER	
130	90459-2290		4	LIFTING EYE BOLT, LBG M16 RS 1T	
140	2592566-0000		1	HOLDER	
150	2540718-0000		1	COVER	
170	2540732-0000		5	HOLDER	
200	90232-0106		2	PH.CELL E3S-CR11-5M	
210	90232-0333		2	REFLECTOR, E39-R1	
220	312125-0226		4	SCREW ISO 1207 M3X12 A4	
225	312155-0287		13	SCREW DIN 7991 MF6S M4X8 A4 70	
230	312125-0293		4	SCREW ISO 1207 M4X16 A4	
250	312125-0366		4	SCREW ISO 1207 M6X12 A4	
260	312105-0372		3	SCREW M6S ISO 4017 M6X25 A480	
270	312105-0451		1	SCREW M6S ISO 4017 M8X20 A480	
280	312605-0310		4	HEXAGON NUT, M6M M3 A280	
290	312605-0316		3	HEXAGON NUT, M6M M6 A280	
300	312605-0324		7	HEXAGON NUT, M6M M16 A280	
310	90099-0131		3	NUT HEX. M16X2 SS	
320	315105-0124		8	WASHER BRB 3,2X6 RFR	
330	315105-0136		4	WASHER BRB 4,3X8 RFR	
350	315105-0153		19	WASHER BRB 6,4X12 RFR	
360	315105-0165		1	WASHER BRB 8,4X16 RFR	
370	315105-0186		7	WASHER BRB 17X30 RFR	
380	311103-0272		3	PARALLEL PIN ISO 2338 4M6X20 A1	
390	90458-0322		5	NUT, M16X1,5	
420	90458-0427		5	GLAND FITTING, VK 21652YUL11	
440	312115-0323		10	SCREW ISO4762 M5X8 A4 80	
445	352113-0206		13	ANCHOR PLATES FOR STRIPS, ABM100-AT	
460	353249-0008		4	INSERT, SINGLE HOLE, EK152 7	
480	353249-0036		1	INSERT, MULTI HOLE, EK152M 2X4	
490	579765-0000		1	MACHINE SIGN CE	
500	311521-0143		4	RIVET, BLANK 3,2X8	
510	312105-0364		9	SCREW M6S ISO 4017 M6X10 A480	
520	312115-0291		3	SCREW ISO4762 M4X12 A4 80	
530	3017346-0000		1	PLATE	
540	3017347-0000		1	COVER	
550	3017398-0000		1	COVER	
570	3017414-0000		1	COVER	
M.X315	90459-4254		1	CONNECTION BLOCK TINA 4A, 20-054-03	
M.W697	90600-5930	M	1.5	CABLE C9, 20-057-15	
M.B059	90600-0473		1	INDUCTIVE SWITCH E2A-S08KS01-WP-B1-TP 5M	
M.A046	90459-5627		1	CONNECTION TINA 1A, 20-054-00	

Machine Type | Group Description | Used-In | Group Number | Page No

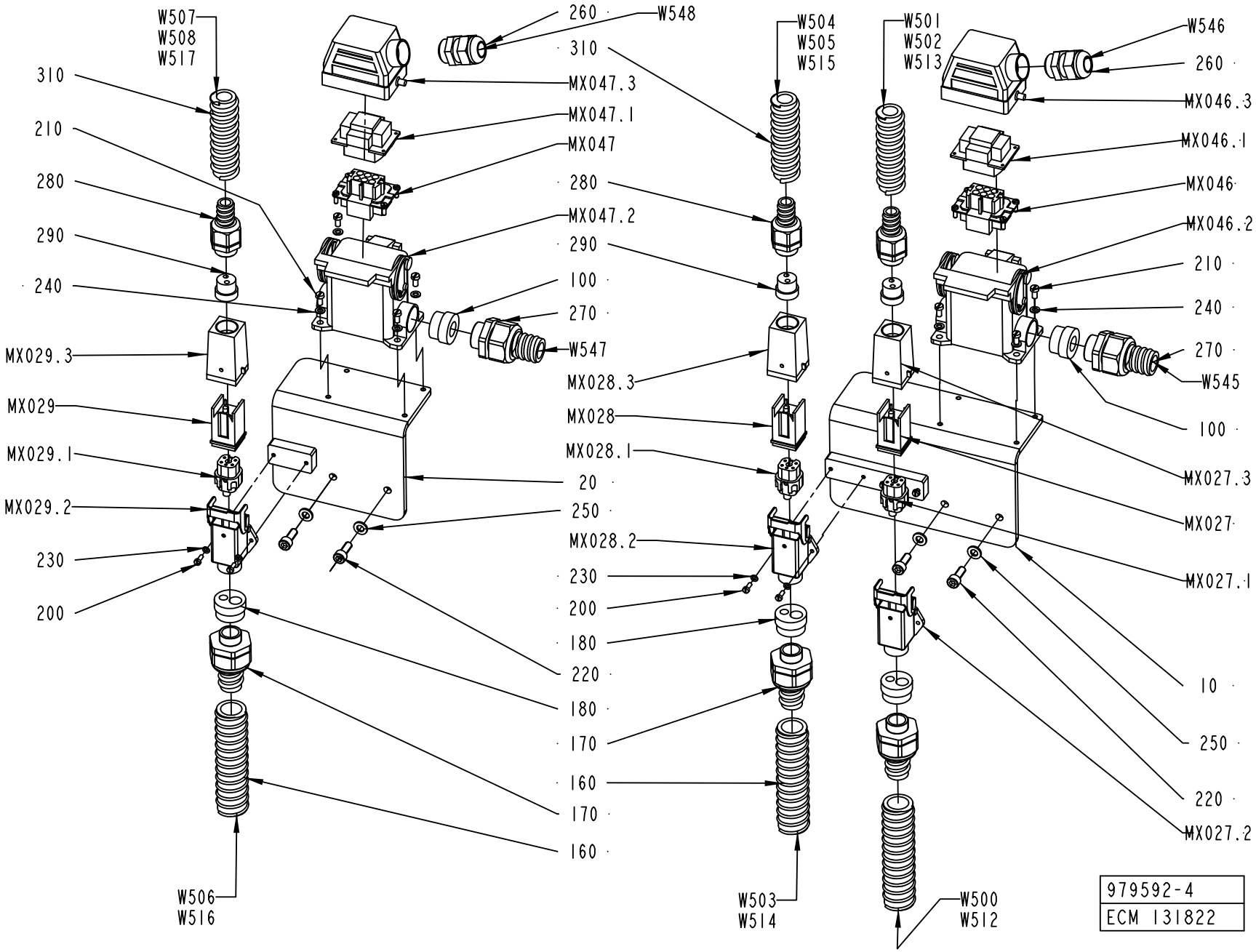
W507
W508
W517
310
210
280
290
240
MX029.3
MX029
MX029.1
MX029.2
230
200
W506
W516
260
W548
310
MX047.3
MX047.1
MX047
280
MX047.2
290
100
270
W547
20
250
220
180
170
160
W504
W505
W515
310
280
290
MX028.3
MX028
MX028.1
MX028.2
230
200
180
170
160
W503
W514
W501
W502
W513
W546
260
MX046.3
MX046.1
MX046
MX046.2
210
240
270
W545
100
MX027.3
MX027
MX027.1
10
250
220
MX027.2
W500
W512
979592-4
ECM 131822

Pos	Part No	UN	Qty	Description	Page No
TBA (See drawing on page: 1-26)					
020	2540731-0000		1	HOLDER	
100	353249-0013		5	INSERT, SINGLE HOLE, EK154 13	
160	90152-0051	M	6	HOSE, SPIRAL CONDUIT, 25X18, UL 1816	
170	90457-0146		3	GLAND FITTING, VK 15154YUL16	
180	90458-0188		3	INSERT, MULTI HOLE, EK154M 1X7, 1X10,5	
200	312125-0222		6	SCREW ISO 1207 M3X8 A4	
210	312125-0287		8	SCREW ISO 1207 M4X8 A4	
220	312115-0368		4	SCREW ISO4762 M6X16 A4 80	
230	315105-0124		6	WASHER BRB 3,2X6 RFR	
240	315105-0136		8	WASHER BRB 4,3X8 RFR	
250	315105-0153		4	WASHER BRB 6,4X12 RFR	
260	352103-0108		2	CABLE GLAND, ST 13,5 , PR20,4/PG13,5	
270	353243-0005		2	GLAND FITTING, VK 15354YUL16	
280	353243-0002		3	GLAND FITTING, VK 15152YUL11	
290	353249-0036		3	INSERT, MULTI HOLE, EK152M 2X4	
310	90152-0050	M	3	HOSE, SPIRAL CONDUIT, 20X13, UL 1313	
TPA (See drawing on page: 1-28)					
020	2540731-0000		2	HOLDER	
100	353249-0013		3	INSERT, SINGLE HOLE, EK154 13	
160	90152-0051	M	8	HOSE, SPIRAL CONDUIT, 25X18, UL 1816	
170	90457-0146		4	GLAND FITTING, VK 15154YUL16	
180	90458-0188		4	INSERT, MULTI HOLE, EK154M 1X7, 1X10,5	
200	312125-0222		8	SCREW ISO 1207 M3X8 A4	
210	312125-0287		12	SCREW ISO 1207 M4X8 A4	
220	312115-0368		6	SCREW ISO4762 M6X16 A4 80	
230	315105-0124		8	WASHER BRB 3,2X6 RFR	
240	315105-0136		12	WASHER BRB 4,3X8 RFR	
250	315105-0153		6	WASHER BRB 6,4X12 RFR	
260	352103-0108		3	CABLE GLAND, ST 13,5 , PR20,4/PG13,5	
270	353243-0005		3	GLAND FITTING, VK 15354YUL16	
280	353243-0002		4	GLAND FITTING, VK 15152YUL11	
290	353249-0036		4	INSERT, MULTI HOLE, EK152M 2X4	
310	90152-0050	M	4	HOSE, SPIRAL CONDUIT, 20X13, UL 1313	
MX048	90110-0163		1	FEMALE INSERT 70 300 0640 0	
MX030	90459-2412		1	CONNECTOR, HDC-KITS, HDC-HA-4SS	
MX048.1	90110-0159		1	MALE INSERT 70.310.0640.0	
MX030.1	90110-0296		1	FEMALE INSERT, HDC-HA-4BS 149840-B/2	
MX048.2	90110-0221		1	CHASSIS HOUSING 310162-33	
MX030.2	90110-0370		1	BASE HOUSING, HDC-HA-3-SVL1/11	
MX048.3	90110-0226		1	CABLE HOOD 6-POL 70.350.0628.0	
MX030.3	90110-0371		1	HOOD, TOP ENTRY, HDC-HA-3-TOVL1/11	

Pos	Part No	UN	Qty	Description	Page No
W509	351150-0412	M	4.5	CABLE OLFLEX 3X1,5 MM2 LIGHT/GREY	
W518	90220-0059	M	3	THERMOCOUPLE CABLE, K/PVC/20AWG 2X0,5MM2	
W519	351121-0213	M	1.2	CABLE RADOX 155 1X1,5 MMÂ² YELLOW/GREEN	
W549	90220-0107	M	4.5	SCR. CABLE 5X0,75MM2	
W550	90220-0107	MM	400	SCR. CABLE 5X0,75MM2	
Common Parts					
010	2529616-0000		1	HOLDER	
190	90458-0430		3	GLAND FITTING, VK 22054YUL16	
MX047	90110-0163		1	FEMALE INSERT 70 300 0640 0	
MX046	90110-0163		1	FEMALE INSERT 70 300 0640 0	
MX029	90459-2412		1	CONNECTOR, HDC-KITS, HDC-HA-4SS	
MX028	90459-2412		1	CONNECTOR, HDC-KITS, HDC-HA-4SS	
MX027	90459-2412		1	CONNECTOR, HDC-KITS, HDC-HA-4SS	
MX047.1	90110-0159		1	MALE INSERT 70.310.0640.0	
MX046.1	90110-0159		1	MALE INSERT 70.310.0640.0	
MX029.1	90110-0296		1	FEMALE INSERT, HDC-HA-4BS 149840-B/2	
MX028.1	90110-0296		1	FEMALE INSERT, HDC-HA-4BS 149840-B/2	
MX027.1	90110-0296		1	FEMALE INSERT, HDC-HA-4BS 149840-B/2	
MX047.2	90110-0221		1	CHASSIS HOUSING 310162-33	
MX046.2	90110-0221		1	CHASSIS HOUSING 310162-33	
MX029.2	90110-0370		1	BASE HOUSING, HDC-HA-3-SVL1/11	
MX028.2	90110-0370		1	BASE HOUSING, HDC-HA-3-SVL1/11	
MX027.2	90110-0370		1	BASE HOUSING, HDC-HA-3-SVL1/11	
MX047.3	90110-0226		1	CABLE HOOD 6-POL 70.350.0628.0	
MX046.3	90110-0226		1	CABLE HOOD 6-POL 70.350.0628.0	
MX029.3	90110-0371		1	HOOD, TOP ENTRY, HDC-HA-3-TOVL1/11	
MX028.3	90110-0371		1	HOOD, TOP ENTRY, HDC-HA-3-TOVL1/11	
MX027.3	90110-0371		1	HOOD, TOP ENTRY, HDC-HA-3-TOVL1/11	
W500	351150-0412	M	4.5	CABLE OLFLEX 3X1,5 MM2 LIGHT/GREY	
W502	351121-0213	M	1.2	CABLE RADOX 155 1X1,5 MMÂ² YELLOW/GREEN	
W503	351150-0412	M	4.5	CABLE OLFLEX 3X1,5 MM2 LIGHT/GREY	
W505	351121-0213	M	1.2	CABLE RADOX 155 1X1,5 MMÂ² YELLOW/GREEN	
W506	351150-0412	M	4.5	CABLE OLFLEX 3X1,5 MM2 LIGHT/GREY	
W508	351121-0213	M	1.2	CABLE RADOX 155 1X1,5 MMÂ² YELLOW/GREEN	
W512	90220-0059	M	3	THERMOCOUPLE CABLE, K/PVC/20AWG 2X0,5MM2	
W514	90220-0059	M	3	THERMOCOUPLE CABLE, K/PVC/20AWG 2X0,5MM2	
W516	90220-0059	M	3	THERMOCOUPLE CABLE, K/PVC/20AWG 2X0,5MM2	
W545	90220-0107	M	4.5	SCR. CABLE 5X0,75MM2	
W546	90220-0107	MM	400	SCR. CABLE 5X0,75MM2	
W547	90220-0107	M	5	SCR. CABLE 5X0,75MM2	
W548	90220-0107	MM	400	SCR. CABLE 5X0,75MM2	

Machine Type | Group Description | Used-In | Group Number | Page No

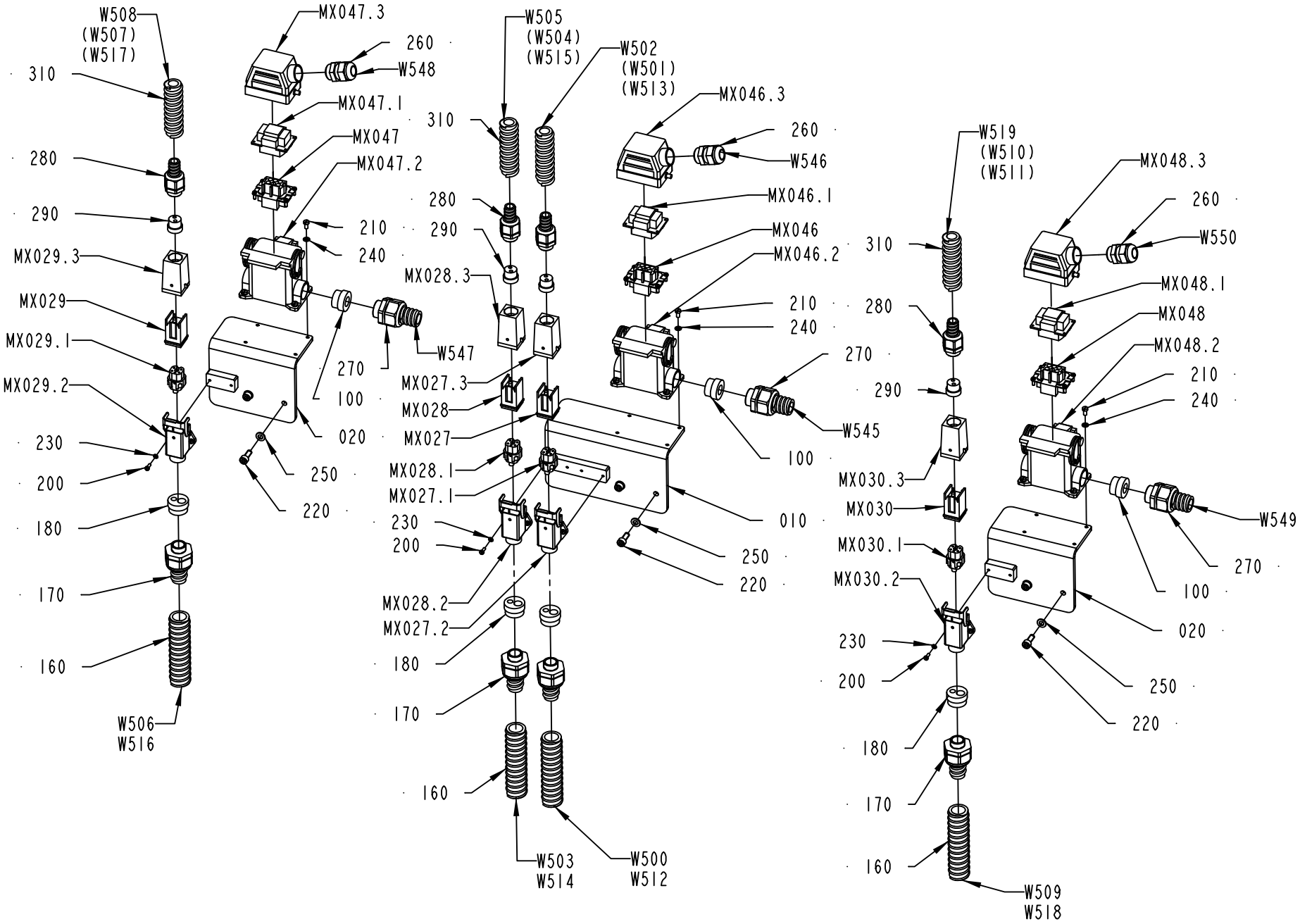

979592-6
287531

Pos	Part No	UN	Qty	Description	Page No
TBA (See drawing on page: 1-26)					
020	2540731-0000		1	HOLDER	
100	353249-0013		5	INSERT, SINGLE HOLE, EK154 13	
160	90152-0051	M	6	HOSE, SPIRAL CONDUIT, 25X18, UL 1816	
170	90457-0146		3	GLAND FITTING, VK 15154YUL16	
180	90458-0188		3	INSERT, MULTI HOLE, EK154M 1X7, 1X10,5	
200	312125-0222		6	SCREW ISO 1207 M3X8 A4	
210	312125-0287		8	SCREW ISO 1207 M4X8 A4	
220	312115-0368		4	SCREW ISO4762 M6X16 A4 80	
230	315105-0124		6	WASHER BRB 3,2X6 RFR	
240	315105-0136		8	WASHER BRB 4,3X8 RFR	
250	315105-0153		4	WASHER BRB 6,4X12 RFR	
260	352103-0108		2	CABLE GLAND, ST 13,5 , PR20,4/PG13,5	
270	353243-0005		2	GLAND FITTING, VK 15354YUL16	
280	353243-0002		3	GLAND FITTING, VK 15152YUL11	
290	353249-0036		3	INSERT, MULTI HOLE, EK152M 2X4	
310	90152-0050	M	3	HOSE, SPIRAL CONDUIT, 20X13, UL 1313	
TPA (See drawing on page: 1-28)					
020	2540731-0000		2	HOLDER	
100	353249-0013		3	INSERT, SINGLE HOLE, EK154 13	
160	90152-0051	M	8	HOSE, SPIRAL CONDUIT, 25X18, UL 1816	
170	90457-0146		4	GLAND FITTING, VK 15154YUL16	
180	90458-0188		4	INSERT, MULTI HOLE, EK154M 1X7, 1X10,5	
200	312125-0222		8	SCREW ISO 1207 M3X8 A4	
210	312125-0287		12	SCREW ISO 1207 M4X8 A4	
220	312115-0368		6	SCREW ISO4762 M6X16 A4 80	
230	315105-0124		8	WASHER BRB 3,2X6 RFR	
240	315105-0136		12	WASHER BRB 4,3X8 RFR	
250	315105-0153		6	WASHER BRB 6,4X12 RFR	
260	352103-0108		3	CABLE GLAND, ST 13,5 , PR20,4/PG13,5	
270	353243-0005		3	GLAND FITTING, VK 15354YUL16	
280	353243-0002		4	GLAND FITTING, VK 15152YUL11	
290	353249-0036		4	INSERT, MULTI HOLE, EK152M 2X4	
310	90152-0050	M	4	HOSE, SPIRAL CONDUIT, 20X13, UL 1313	
MX048	90110-0163		1	FEMALE INSERT 70 300 0640 0	
MX030	90459-2412		1	CONNECTOR, HDC-KITS, HDC-HA-4SS	
MX048.1	90110-0159		1	MALE INSERT 70.310.0640.0	
MX030.1	90110-0296		1	FEMALE INSERT, HDC-HA-4BS 149840-B/2	
MX048.2	90110-0221		1	CHASSIS HOUSING 310162-33	
MX030.2	90110-0370		1	BASE HOUSING, HDC-HA-3-SVL1/11	
MX048.3	90110-0226		1	CABLE HOOD 6-POL 70.350.0628.0	
MX030.3	90110-0371		1	HOOD, TOP ENTRY, HDC-HA-3-TOVL1/11	

Pos	Part No	UN	Qty	Description	Page No
W509	351150-0412	M	4.5	CABLE OLFLEX 3X1,5 MM2 LIGHT/GREY	
W518	90220-0059	M	3	THERMOCOUPLE CABLE, K/PVC/20AWG 2X0,5MM2	
W519	351121-0213	M	1.2	CABLE RADOX 155 1X1,5 MMÂ² YELLOW/GREEN	
W549	90220-0107	M	4.5	SCR. CABLE 5X0,75MM2	
W550	90220-0107	MM	400	SCR. CABLE 5X0,75MM2	
Common Parts					
010	2529616-0000		1	HOLDER	
190	90458-0430		3	GLAND FITTING, VK 22054YUL16	
MX047	90110-0163		1	FEMALE INSERT 70 300 0640 0	
MX046	90110-0163		1	FEMALE INSERT 70 300 0640 0	
MX029	90459-2412		1	CONNECTOR, HDC-KITS, HDC-HA-4SS	
MX028	90459-2412		1	CONNECTOR, HDC-KITS, HDC-HA-4SS	
MX027	90459-2412		1	CONNECTOR, HDC-KITS, HDC-HA-4SS	
MX047.1	90110-0159		1	MALE INSERT 70.310.0640.0	
MX046.1	90110-0159		1	MALE INSERT 70.310.0640.0	
MX029.1	90110-0296		1	FEMALE INSERT, HDC-HA-4BS 149840-B/2	
MX028.1	90110-0296		1	FEMALE INSERT, HDC-HA-4BS 149840-B/2	
MX027.1	90110-0296		1	FEMALE INSERT, HDC-HA-4BS 149840-B/2	
MX047.2	90110-0221		1	CHASSIS HOUSING 310162-33	
MX046.2	90110-0221		1	CHASSIS HOUSING 310162-33	
MX029.2	90110-0370		1	BASE HOUSING, HDC-HA-3-SVL1/11	
MX028.2	90110-0370		1	BASE HOUSING, HDC-HA-3-SVL1/11	
MX027.2	90110-0370		1	BASE HOUSING, HDC-HA-3-SVL1/11	
MX047.3	90110-0226		1	CABLE HOOD 6-POL 70.350.0628.0	
MX046.3	90110-0226		1	CABLE HOOD 6-POL 70.350.0628.0	
MX029.3	90110-0371		1	HOOD, TOP ENTRY, HDC-HA-3-TOVL1/11	
MX028.3	90110-0371		1	HOOD, TOP ENTRY, HDC-HA-3-TOVL1/11	
MX027.3	90110-0371		1	HOOD, TOP ENTRY, HDC-HA-3-TOVL1/11	
W500	351150-0412	M	4.5	CABLE OLFLEX 3X1,5 MM2 LIGHT/GREY	
W502	351121-0213	M	1.2	CABLE RADOX 155 1X1,5 MMÂ² YELLOW/GREEN	
W503	351150-0412	M	4.5	CABLE OLFLEX 3X1,5 MM2 LIGHT/GREY	
W505	351121-0213	M	1.2	CABLE RADOX 155 1X1,5 MMÂ² YELLOW/GREEN	
W506	351150-0412	M	4.5	CABLE OLFLEX 3X1,5 MM2 LIGHT/GREY	
W508	351121-0213	M	1.2	CABLE RADOX 155 1X1,5 MMÂ² YELLOW/GREEN	
W512	90220-0059	M	3	THERMOCOUPLE CABLE, K/PVC/20AWG 2X0,5MM2	
W514	90220-0059	M	3	THERMOCOUPLE CABLE, K/PVC/20AWG 2X0,5MM2	
W516	90220-0059	M	3	THERMOCOUPLE CABLE, K/PVC/20AWG 2X0,5MM2	
W545	90220-0107	M	4.5	SCR. CABLE 5X0,75MM2	
W546	90220-0107	MM	400	SCR. CABLE 5X0,75MM2	
W547	90220-0107	M	5	SCR. CABLE 5X0,75MM2	
W548	90220-0107	MM	400	SCR. CABLE 5X0,75MM2	

Machine Type | Group Description | Used-In | Group Number | Page No

CONNECTION BOX

Drawing file: 2529614-2_1_AB.hpgl

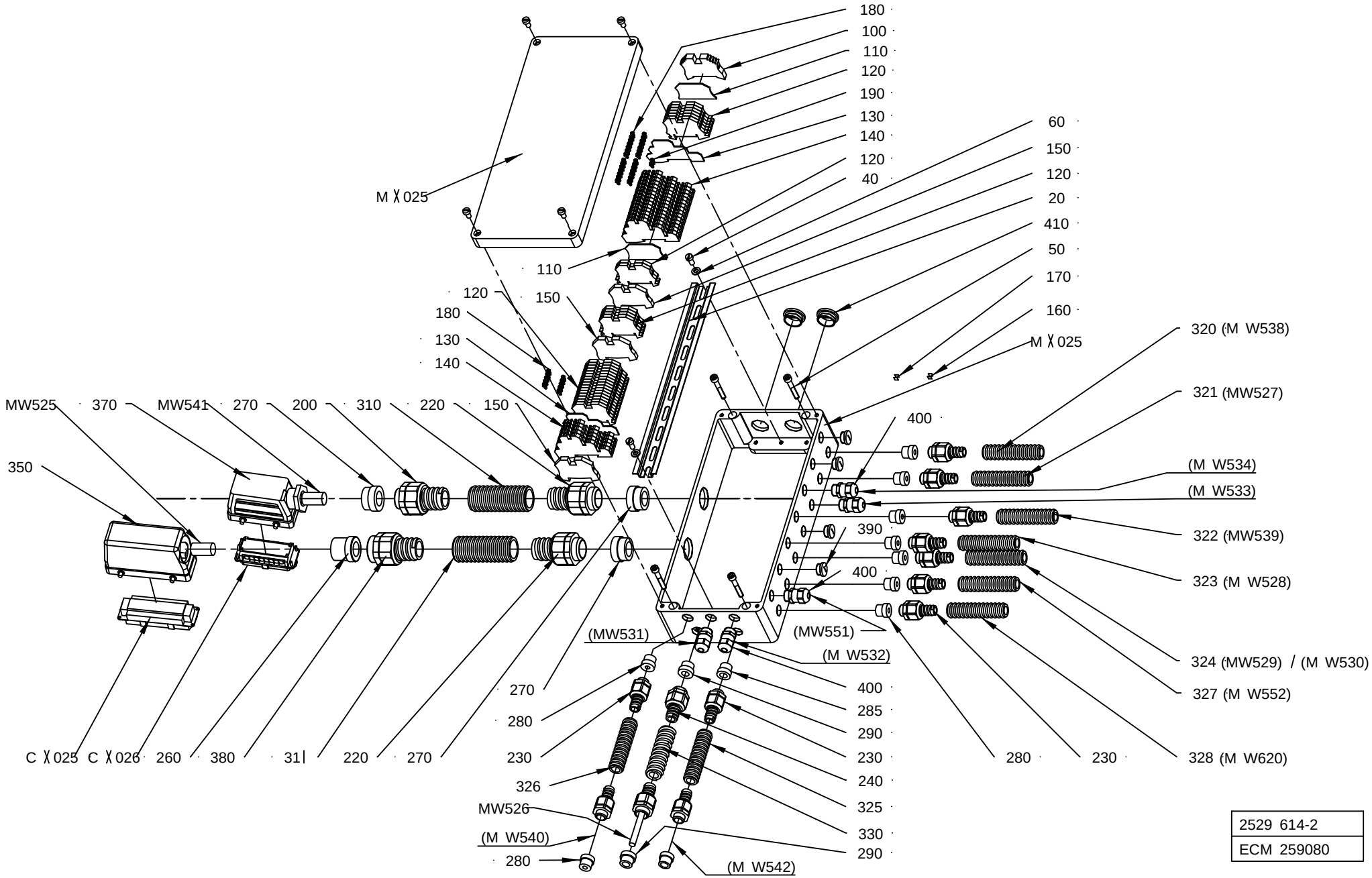

2529 614-2
ECM 259080

ECM: 293517 - 20070126
Group number: 2529614-0200
Assembly Drawing: 2529614-2_1_AB

This list covers pages from 1-30 to 1-37

Pos	Part No	UN	Qty	Description	Page No
TBA (See drawing on pages: 1-30, 1-32)					
230	90458-0427		11	GLAND FITTING, VK 21652YUL11	
280	353249-0008		9	INSERT, SINGLE HOLE, EK152 7	
390	90458-1307		4	BLIND PLUG CIRCULAR, M16X1,5 514GFK/216	
400	90458-0306		5	CABLE GLAND, M16X1,5, 5311 1010	
TPA (See drawing on pages: 1-34, 1-36)					
230	90458-0427		13	GLAND FITTING, VK 21652YUL11	
280	353249-0008		11	INSERT, SINGLE HOLE, EK152 7	
318	90152-0059	MM	1500	HOSE, SPIRAL CONDUIT, 18X12, UL 1211	
319	90152-0059	MM	1500	HOSE, SPIRAL CONDUIT, 18X12, UL 1211	
400	90458-0306		7	CABLE GLAND, M16X1,5, 5311 1010	
Common Parts					
020	571929-0000		1	RAIL	
040	312125-0366		2	SCREW ISO 1207 M6X12 A4	
050	312115-0378		4	SCREW ISO4762 M6X40 A4 80	
060	315105-0153		2	WASHER BRB 6,4X12 RFR	
100	353031-0203		1	END BRACKET, WEW 35/2	
110	353032-0004		2	END PLATE, WAP 2,5-10, BEIGE	
120	353021-0212		28	FEED THROUGH TERMINAL, WDU 2,5	
130	353032-0302		2	END PLATE, AP DLD2,5 DB	
140	353021-0302		20	TERMINAL, DLD 2,5/35	
150	353024-0205		3	EARTH TERMINAL WPE 4	
160	359011-0807		2	MARKING, DEK 5 FW 1-50	
170	359011-0808		2	MARKING, DEK 5FW 51-100	
180	353034-0404		5	BRIDGE CONNECTOR Q 10 DLI	
190	353034-0401		1	BRIDGE CONNECTOR Q 2 DLI	
200	353243-0007		1	GLAND FITTING, VK 15455YUL21	
220	90458-0433		2	GLAND FITTING, VK 23255YUL21	
240	90458-0429		2	GLAND FITTING, VK 22053YUL13	
260	353249-0072		1	INSERT, SINGLE HOLE, E155 20	
270	353249-0061		3	INSERT, SINGLE HOLE, EK155 20	
285	353249-0010		2	INSERT, SINGLE HOLE, EK152 11	
290	353249-0011		2	INSERT, SINGLE HOLE, EK153 11	
310	90152-0070	MM	1200	HOSE, SPIRAL CONDUIT, 32,5X26, UL 2621	
311	90152-0070	MM	1200	HOSE, SPIRAL CONDUIT, 32,5X26, UL 2621	
320	90152-0059	MM	1300	HOSE, SPIRAL CONDUIT, 18X12, UL 1211	
321	90152-0059	MM	1000	HOSE, SPIRAL CONDUIT, 18X12, UL 1211	
322	90152-0059	MM	1350	HOSE, SPIRAL CONDUIT, 18X12, UL 1211	
323	90152-0059	MM	1500	HOSE, SPIRAL CONDUIT, 18X12, UL 1211	
324	90152-0059	MM	1500	HOSE, SPIRAL CONDUIT, 18X12, UL 1211	
325	90152-0059	MM	1200	HOSE, SPIRAL CONDUIT, 18X12, UL 1211	
326	90152-0059	MM	1200	HOSE, SPIRAL CONDUIT, 18X12, UL 1211	
327	90152-0059	MM	1500	HOSE, SPIRAL CONDUIT, 18X12, UL 1211	
328	90152-0059	MM	2700	HOSE, SPIRAL CONDUIT, 18X12, UL 1211	
330	90152-0050	MM	1200	HOSE, SPIRAL CONDUIT, 20X13, UL 1313	
350	90110-0346		1	HOOD, SIDE ENTRY, 12 11220 00 00	
370	90110-0244		1	CABLE HOOD 6-POL 70.350.1628.0	
380	353242-0003		1	COMPRESSION GLAND, VK 155YUL21	
410	90458-1309		2	BLIND PLUG CIRCULAR, M25X1,5 514GFK/225	
C.X026	90458-1405		1	MALE INSERT, HDC HE 16 MS, 1207 5000 00	
C.X025	90110-0150		1	MALE INSERT, HDC HE 24 MS, 1211 1000 00	
M.X025	2529615-0000		1	CONNECTION BOX	
M.W541	351150-0425	MM	1600	CABLE OLFLEX 25X0,75 MM2 LIGHT/GREY	
M.W526	351150-0406	MM	1600	CABLE OLFLEX 7X0,75 MM2 LIGHT/GREY	
M.W525	351150-0425	MM	1600	CABLE OLFLEX 25X0,75 MM2 LIGHT/GREY	

Machine Type	Group Description	Used-In	Group Number	Page No

CONNECTION BOX

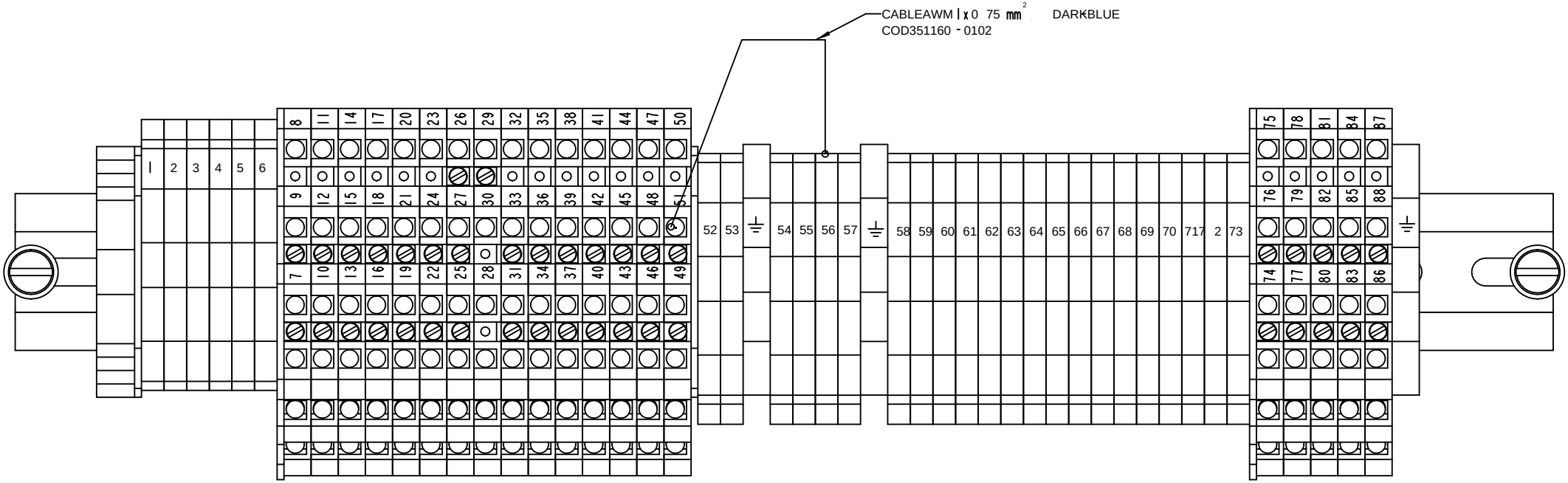

ECM: 293517 - 20070126
Group number: 2529614-0200
Assembly Drawing: 2529614-2_2_AB

This list covers pages from 1-30 to 1-37

Pos	Part No	UN	Qty	Description	Page No
TBA (See drawing on pages: 1-30, 1-32)					
230	90458-0427		11	GLAND FITTING, VK 21652YUL11	
280	353249-0008		9	INSERT, SINGLE HOLE, EK152 7	
390	90458-1307		4	BLIND PLUG CIRCULAR, M16X1,5 514GFK/216	
400	90458-0306		5	CABLE GLAND, M16X1,5, 5311 1010	
TPA (See drawing on pages: 1-34, 1-36)					
230	90458-0427		13	GLAND FITTING, VK 21652YUL11	
280	353249-0008		11	INSERT, SINGLE HOLE, EK152 7	
318	90152-0059	MM	1500	HOSE, SPIRAL CONDUIT, 18X12, UL 1211	
319	90152-0059	MM	1500	HOSE, SPIRAL CONDUIT, 18X12, UL 1211	
400	90458-0306		7	CABLE GLAND, M16X1,5, 5311 1010	
Common Parts					
020	571929-0000		1	RAIL	
040	312125-0366		2	SCREW ISO 1207 M6X12 A4	
050	312115-0378		4	SCREW ISO4762 M6X40 A4 80	
060	315105-0153		2	WASHER BRB 6,4X12 RFR	
100	353031-0203		1	END BRACKET, WEW 35/2	
110	353032-0004		2	END PLATE, WAP 2,5-10, BEIGE	
120	353021-0212		28	FEED THROUGH TERMINAL, WDU 2,5	
130	353032-0302		2	END PLATE, AP DLD2,5 DB	
140	353021-0302		20	TERMINAL, DLD 2,5/35	
150	353024-0205		3	EARTH TERMINAL WPE 4	
160	359011-0807		2	MARKING, DEK 5 FW 1-50	
170	359011-0808		2	MARKING, DEK 5FW 51-100	
180	353034-0404		5	BRIDGE CONNECTOR Q 10 DLI	
190	353034-0401		1	BRIDGE CONNECTOR Q 2 DLI	
200	353243-0007		1	GLAND FITTING, VK 15455YUL21	
220	90458-0433		2	GLAND FITTING, VK 23255YUL21	
240	90458-0429		2	GLAND FITTING, VK 22053YUL13	
260	353249-0072		1	INSERT, SINGLE HOLE, E155 20	
270	353249-0061		3	INSERT, SINGLE HOLE, EK155 20	
285	353249-0010		2	INSERT, SINGLE HOLE, EK152 11	
290	353249-0011		2	INSERT, SINGLE HOLE, EK153 11	
310	90152-0070	MM	1200	HOSE, SPIRAL CONDUIT, 32,5X26, UL 2621	
311	90152-0070	MM	1200	HOSE, SPIRAL CONDUIT, 32,5X26, UL 2621	
320	90152-0059	MM	1300	HOSE, SPIRAL CONDUIT, 18X12, UL 1211	
321	90152-0059	MM	1000	HOSE, SPIRAL CONDUIT, 18X12, UL 1211	
322	90152-0059	MM	1350	HOSE, SPIRAL CONDUIT, 18X12, UL 1211	
323	90152-0059	MM	1500	HOSE, SPIRAL CONDUIT, 18X12, UL 1211	
324	90152-0059	MM	1500	HOSE, SPIRAL CONDUIT, 18X12, UL 1211	
325	90152-0059	MM	1200	HOSE, SPIRAL CONDUIT, 18X12, UL 1211	
326	90152-0059	MM	1200	HOSE, SPIRAL CONDUIT, 18X12, UL 1211	
327	90152-0059	MM	1500	HOSE, SPIRAL CONDUIT, 18X12, UL 1211	
328	90152-0059	MM	2700	HOSE, SPIRAL CONDUIT, 18X12, UL 1211	
330	90152-0050	MM	1200	HOSE, SPIRAL CONDUIT, 20X13, UL 1313	
350	90110-0346		1	HOOD, SIDE ENTRY, 12 11220 00 00	
370	90110-0244		1	CABLE HOOD 6-POL 70.350.1628.0	
380	353242-0003		1	COMPRESSION GLAND, VK 155YUL21	
410	90458-1309		2	BLIND PLUG CIRCULAR, M25X1,5 514GFK/225	
C.X026	90458-1405		1	MALE INSERT, HDC HE 16 MS, 1207 5000 00	
C.X025	90110-0150		1	MALE INSERT, HDC HE 24 MS, 1211 1000 00	
M.X025	2529615-0000		1	CONNECTION BOX	
M.W541	351150-0425	MM	1600	CABLE OLFLEX 25X0,75 MM2 LIGHT/GREY	
M.W526	351150-0406	MM	1600	CABLE OLFLEX 7X0,75 MM2 LIGHT/GREY	
M.W525	351150-0425	MM	1600	CABLE OLFLEX 25X0,75 MM2 LIGHT/GREY	

Machine Type | Group Description | Used-In | Group Number | Page No

CONNECTION BOX

Drawing file: 2529614-3_1_AA.hpgl

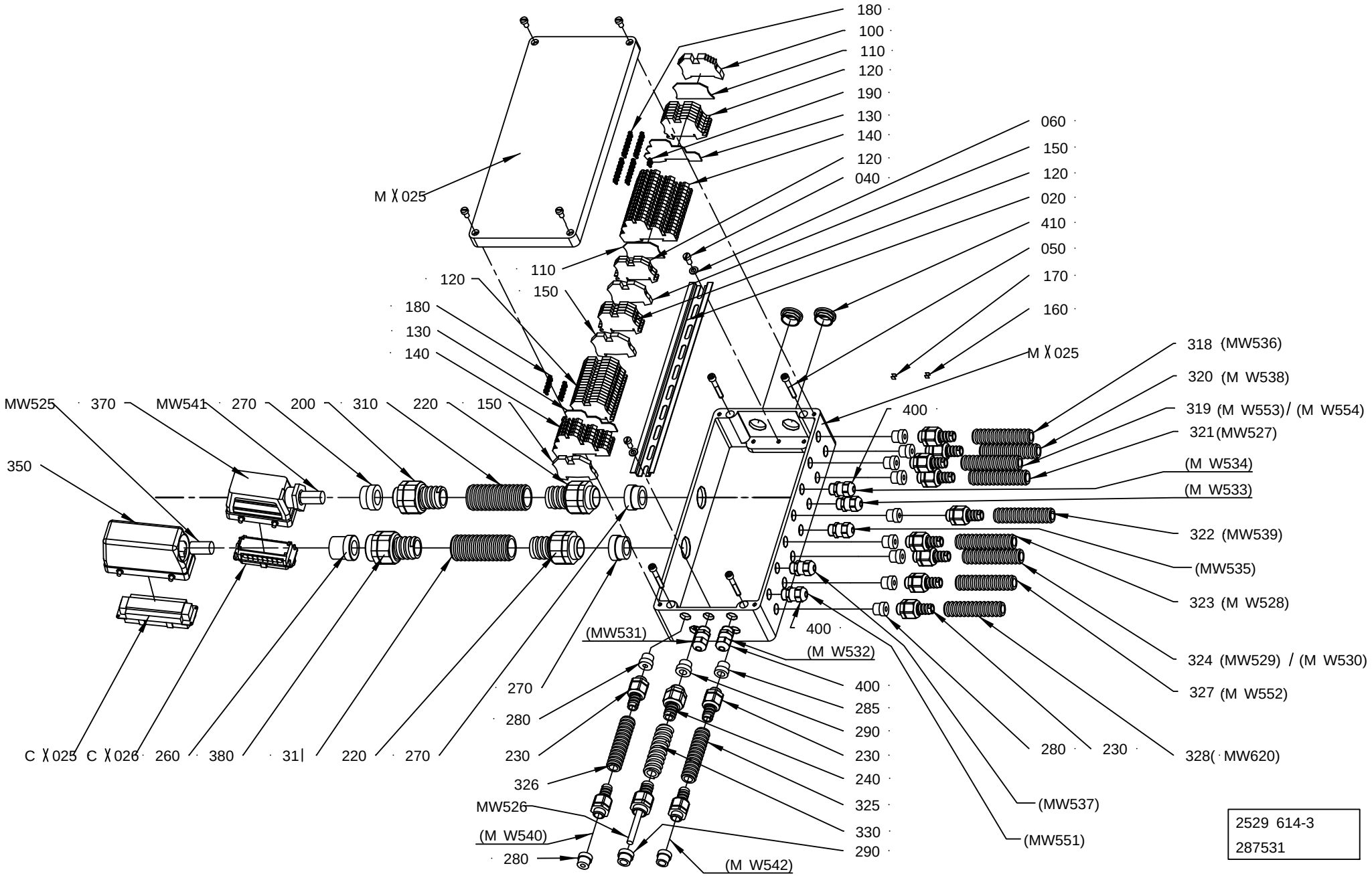

ECM: 293517 - 20070126
Group number: 2529614-0200
Assembly Drawing: 2529614-3_1_AA

This list covers pages from 1-30 to 1-37

Pos	Part No	UN	Qty	Description	Page No
TBA (See drawing on pages: 1-30, 1-32)					
230	90458-0427		11	GLAND FITTING, VK 21652YUL11	
280	353249-0008		9	INSERT, SINGLE HOLE, EK152 7	
390	90458-1307		4	BLIND PLUG CIRCULAR, M16X1,5 514GFK/216	
400	90458-0306		5	CABLE GLAND, M16X1,5, 5311 1010	
TPA (See drawing on pages: 1-34, 1-36)					
230	90458-0427		13	GLAND FITTING, VK 21652YUL11	
280	353249-0008		11	INSERT, SINGLE HOLE, EK152 7	
318	90152-0059	MM	1500	HOSE, SPIRAL CONDUIT, 18X12, UL 1211	
319	90152-0059	MM	1500	HOSE, SPIRAL CONDUIT, 18X12, UL 1211	
400	90458-0306		7	CABLE GLAND, M16X1,5, 5311 1010	
Common Parts					
020	571929-0000		1	RAIL	
040	312125-0366		2	SCREW ISO 1207 M6X12 A4	
050	312115-0378		4	SCREW ISO4762 M6X40 A4 80	
060	315105-0153		2	WASHER BRB 6,4X12 RFR	
100	353031-0203		1	END BRACKET, WEW 35/2	
110	353032-0004		2	END PLATE, WAP 2,5-10, BEIGE	
120	353021-0212		28	FEED THROUGH TERMINAL, WDU 2,5	
130	353032-0302		2	END PLATE, AP DLD2,5 DB	
140	353021-0302		20	TERMINAL, DLD 2,5/35	
150	353024-0205		3	EARTH TERMINAL WPE 4	
160	359011-0807		2	MARKING, DEK 5 FW 1-50	
170	359011-0808		2	MARKING, DEK 5FW 51-100	
180	353034-0404		5	BRIDGE CONNECTOR Q 10 DLI	
190	353034-0401		1	BRIDGE CONNECTOR Q 2 DLI	
200	353243-0007		1	GLAND FITTING, VK 15455YUL21	
220	90458-0433		2	GLAND FITTING, VK 23255YUL21	
240	90458-0429		2	GLAND FITTING, VK 22053YUL13	
260	353249-0072		1	INSERT, SINGLE HOLE, E155 20	
270	353249-0061		3	INSERT, SINGLE HOLE, EK155 20	
285	353249-0010		2	INSERT, SINGLE HOLE, EK152 11	
290	353249-0011		2	INSERT, SINGLE HOLE, EK153 11	
310	90152-0070	MM	1200	HOSE, SPIRAL CONDUIT, 32,5X26, UL 2621	
311	90152-0070	MM	1200	HOSE, SPIRAL CONDUIT, 32,5X26, UL 2621	
320	90152-0059	MM	1300	HOSE, SPIRAL CONDUIT, 18X12, UL 1211	
321	90152-0059	MM	1000	HOSE, SPIRAL CONDUIT, 18X12, UL 1211	
322	90152-0059	MM	1350	HOSE, SPIRAL CONDUIT, 18X12, UL 1211	
323	90152-0059	MM	1500	HOSE, SPIRAL CONDUIT, 18X12, UL 1211	
324	90152-0059	MM	1500	HOSE, SPIRAL CONDUIT, 18X12, UL 1211	
325	90152-0059	MM	1200	HOSE, SPIRAL CONDUIT, 18X12, UL 1211	
326	90152-0059	MM	1200	HOSE, SPIRAL CONDUIT, 18X12, UL 1211	
327	90152-0059	MM	1500	HOSE, SPIRAL CONDUIT, 18X12, UL 1211	
328	90152-0059	MM	2700	HOSE, SPIRAL CONDUIT, 18X12, UL 1211	
330	90152-0050	MM	1200	HOSE, SPIRAL CONDUIT, 20X13, UL 1313	
350	90110-0346		1	HOOD, SIDE ENTRY, 12 11220 00 00	
370	90110-0244		1	CABLE HOOD 6-POL 70.350.1628.0	
380	353242-0003		1	COMPRESSION GLAND, VK 155YUL21	
410	90458-1309		2	BLIND PLUG CIRCULAR, M25X1,5 514GFK/225	
C.X026	90458-1405		1	MALE INSERT, HDC HE 16 MS, 1207 5000 00	
C.X025	90110-0150		1	MALE INSERT, HDC HE 24 MS, 1211 1000 00	
M.X025	2529615-0000		1	CONNECTION BOX	
M.W541	351150-0425	MM	1600	CABLE OLFLEX 25X0,75 MM2 LIGHT/GREY	
M.W526	351150-0406	MM	1600	CABLE OLFLEX 7X0,75 MM2 LIGHT/GREY	
M.W525	351150-0425	MM	1600	CABLE OLFLEX 25X0,75 MM2 LIGHT/GREY	

Machine Type | Group Description | Used-In | Group Number | Page No

CONNECTION BOX

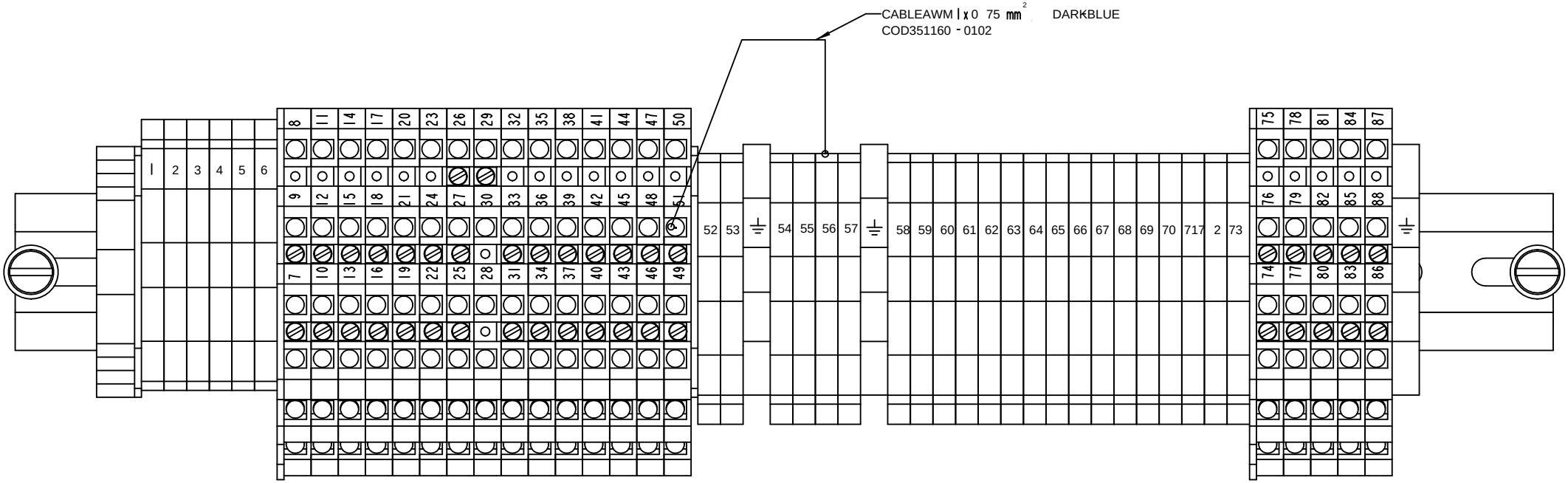

ECM: 293517 - 20070126
Group number: 2529614-0200
Assembly Drawing: 2529614-3_2_AA

This list covers pages from 1-30 to 1-37

Pos	Part No	UN	Qty	Description	Page No
TBA (See drawing on pages: 1-30, 1-32)					
230	90458-0427		11	GLAND FITTING, VK 21652YUL11	
280	353249-0008		9	INSERT, SINGLE HOLE, EK152 7	
390	90458-1307		4	BLIND PLUG CIRCULAR, M16X1,5 514GFK/216	
400	90458-0306		5	CABLE GLAND, M16X1,5, 5311 1010	
TPA (See drawing on pages: 1-34, 1-36)					
230	90458-0427		13	GLAND FITTING, VK 21652YUL11	
280	353249-0008		11	INSERT, SINGLE HOLE, EK152 7	
318	90152-0059	MM	1500	HOSE, SPIRAL CONDUIT, 18X12, UL 1211	
319	90152-0059	MM	1500	HOSE, SPIRAL CONDUIT, 18X12, UL 1211	
400	90458-0306		7	CABLE GLAND, M16X1,5, 5311 1010	
Common Parts					
020	571929-0000		1	RAIL	
040	312125-0366		2	SCREW ISO 1207 M6X12 A4	
050	312115-0378		4	SCREW ISO4762 M6X40 A4 80	
060	315105-0153		2	WASHER BRB 6,4X12 RFR	
100	353031-0203		1	END BRACKET, WEW 35/2	
110	353032-0004		2	END PLATE, WAP 2,5-10, BEIGE	
120	353021-0212		28	FEED THROUGH TERMINAL, WDU 2,5	
130	353032-0302		2	END PLATE, AP DLD2,5 DB	
140	353021-0302		20	TERMINAL, DLD 2,5/35	
150	353024-0205		3	EARTH TERMINAL WPE 4	
160	359011-0807		2	MARKING, DEK 5 FW 1-50	
170	359011-0808		2	MARKING, DEK 5FW 51-100	
180	353034-0404		5	BRIDGE CONNECTOR Q 10 DLI	
190	353034-0401		1	BRIDGE CONNECTOR Q 2 DLI	
200	353243-0007		1	GLAND FITTING, VK 15455YUL21	
220	90458-0433		2	GLAND FITTING, VK 23255YUL21	
240	90458-0429		2	GLAND FITTING, VK 22053YUL13	
260	353249-0072		1	INSERT, SINGLE HOLE, E155 20	
270	353249-0061		3	INSERT, SINGLE HOLE, EK155 20	
285	353249-0010		2	INSERT, SINGLE HOLE, EK152 11	
290	353249-0011		2	INSERT, SINGLE HOLE, EK153 11	
310	90152-0070	MM	1200	HOSE, SPIRAL CONDUIT, 32,5X26, UL 2621	
311	90152-0070	MM	1200	HOSE, SPIRAL CONDUIT, 32,5X26, UL 2621	
320	90152-0059	MM	1300	HOSE, SPIRAL CONDUIT, 18X12, UL 1211	
321	90152-0059	MM	1000	HOSE, SPIRAL CONDUIT, 18X12, UL 1211	
322	90152-0059	MM	1350	HOSE, SPIRAL CONDUIT, 18X12, UL 1211	
323	90152-0059	MM	1500	HOSE, SPIRAL CONDUIT, 18X12, UL 1211	
324	90152-0059	MM	1500	HOSE, SPIRAL CONDUIT, 18X12, UL 1211	
325	90152-0059	MM	1200	HOSE, SPIRAL CONDUIT, 18X12, UL 1211	
326	90152-0059	MM	1200	HOSE, SPIRAL CONDUIT, 18X12, UL 1211	
327	90152-0059	MM	1500	HOSE, SPIRAL CONDUIT, 18X12, UL 1211	
328	90152-0059	MM	2700	HOSE, SPIRAL CONDUIT, 18X12, UL 1211	
330	90152-0050	MM	1200	HOSE, SPIRAL CONDUIT, 20X13, UL 1313	
350	90110-0346		1	HOOD, SIDE ENTRY, 12 11220 00 00	
370	90110-0244		1	CABLE HOOD 6-POL 70.350.1628.0	
380	353242-0003		1	COMPRESSION GLAND, VK 155YUL21	
410	90458-1309		2	BLIND PLUG CIRCULAR, M25X1,5 514GFK/225	
C.X026	90458-1405		1	MALE INSERT, HDC HE 16 MS, 1207 5000 00	
C.X025	90110-0150		1	MALE INSERT, HDC HE 24 MS, 1211 1000 00	
M.X025	2529615-0000		1	CONNECTION BOX	
M.W541	351150-0425	MM	1600	CABLE OLFLEX 25X0,75 MM2 LIGHT/GREY	
M.W526	351150-0406	MM	1600	CABLE OLFLEX 7X0,75 MM2 LIGHT/GREY	
M.W525	351150-0425	MM	1600	CABLE OLFLEX 25X0,75 MM2 LIGHT/GREY	

Machine Type	Group Description	Used-In	Group Number	Page No

BENDING ROLLER

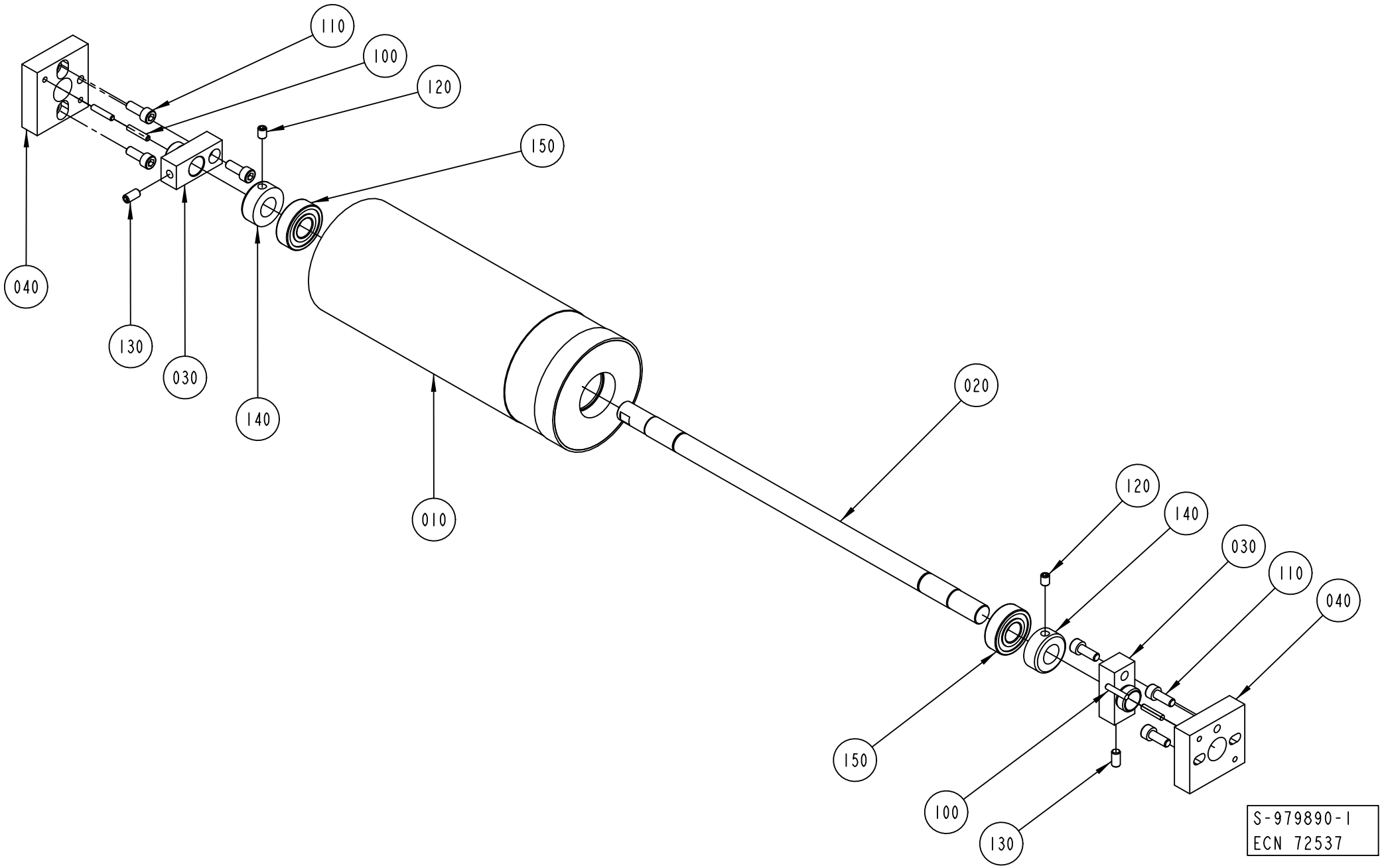

ECM: 293509 - 20070126
Group number: 979890-0100
Assembly Drawing: 979890-1_1_AB

Pos	Part No	UN	Qty	Description	Page No
TBA 0100B, TBA 0125S, TBA 0160S, TBA 0200S					
010	1255748-0003		1	ROLLER	
TBA 0200B, TBA 0236B, TBA 0284B, TBA 0250B, TBA 0300S, TBA 0330S					
010	1255748-0002		1	ROLLER	
TBA 0200M, TBA 0250S, TPA 0330SQ, TPA 0250SQ, TPA 0200SQ					
010	1255748-0001		1	ROLLER	
Common Parts					
020	583683-0000		1	SHAFT	
030	583684-0000		2	AXLE SUPPORT	
040	583685-0000		2	BEARING SEAT	
100	311103-0272		4	PARALLEL PIN ISO 2338 4M6X20 A1	
110	312115-0368		6	SCREW ISO4762 M6X16 A4 80	
120	312318-0362		2	SCREW ISO4029 M6X8 A4	
130	312318-0366		2	SCREW ISO4029 M6X12 A4	
140	315742-0111		2	RETAINING RING 15 SMS 199 RFR	
150	321313-0102		2	BALL BEARING 15/35X11	

Pos	Part No	UN	Qty	Description	Page No

BENDING ROLLER

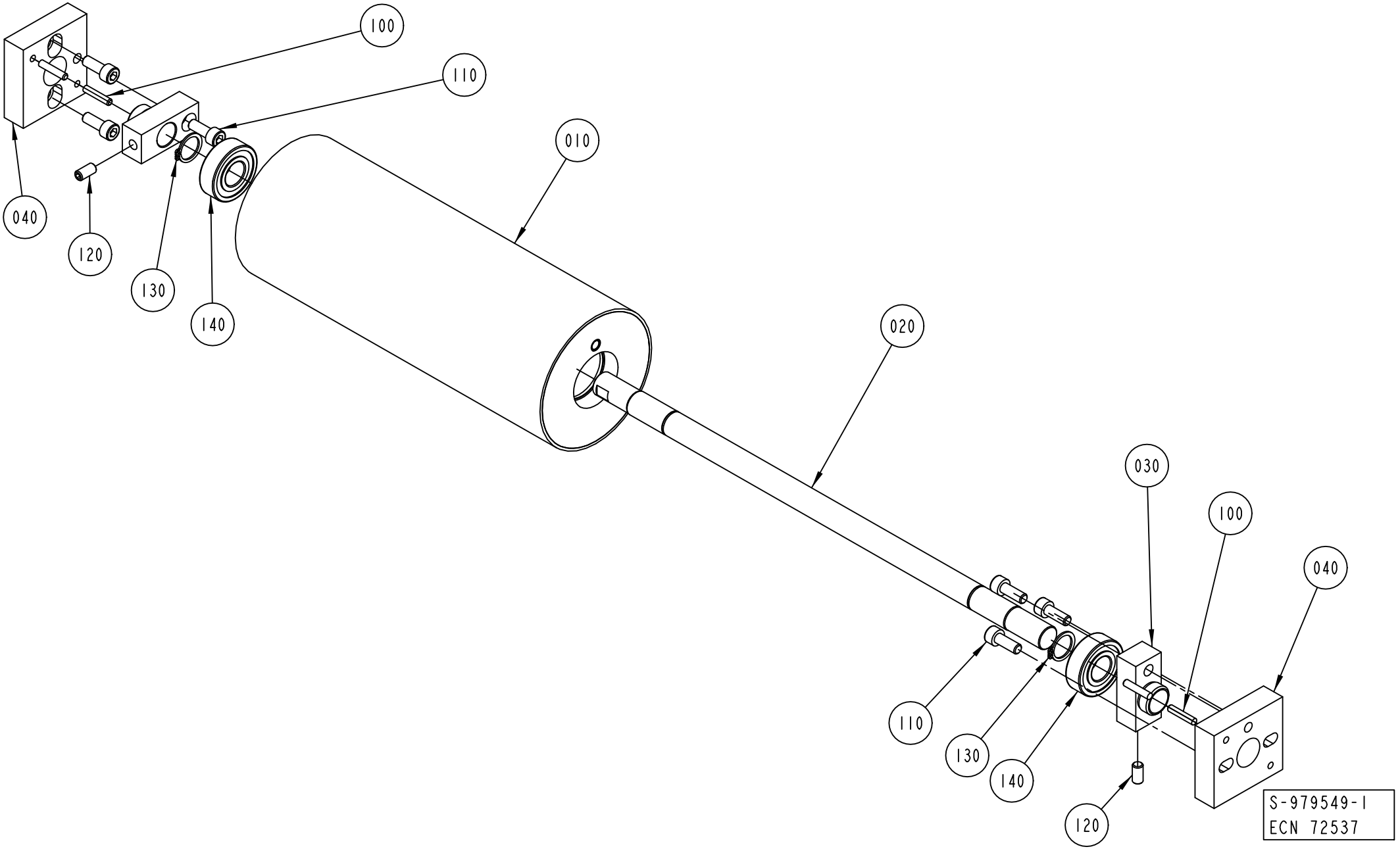

ECM: 243196 - 20060127
Group number: 979549-0100
Assembly Drawing: 979549-1_1_AB

Pos	Part No	UN	Qty	Description	Page No
-					
010	574932-0000		1	BENDING ROLLER	
020	583683-0000		1	SHAFT	
030	583684-0000		2	AXLE SUPPORT	
040	583685-0000		2	BEARING SEAT	
100	311103-0272		4	PARALLEL PIN ISO 2338 4M6X20 A1	
110	312115-0368		6	SCREW ISO4762 M6X16 A4 80	
120	312318-0366		2	SCREW ISO4029 M6X12 A4	
130	315751-0112		2	RETAINING RING FOR SHAFT DIN 471 15 SS	
140	321313-0102		2	BALL BEARING 15/35X11	

Pos	Part No	UN	Qty	Description	Page No

SPLICE DETECTOR

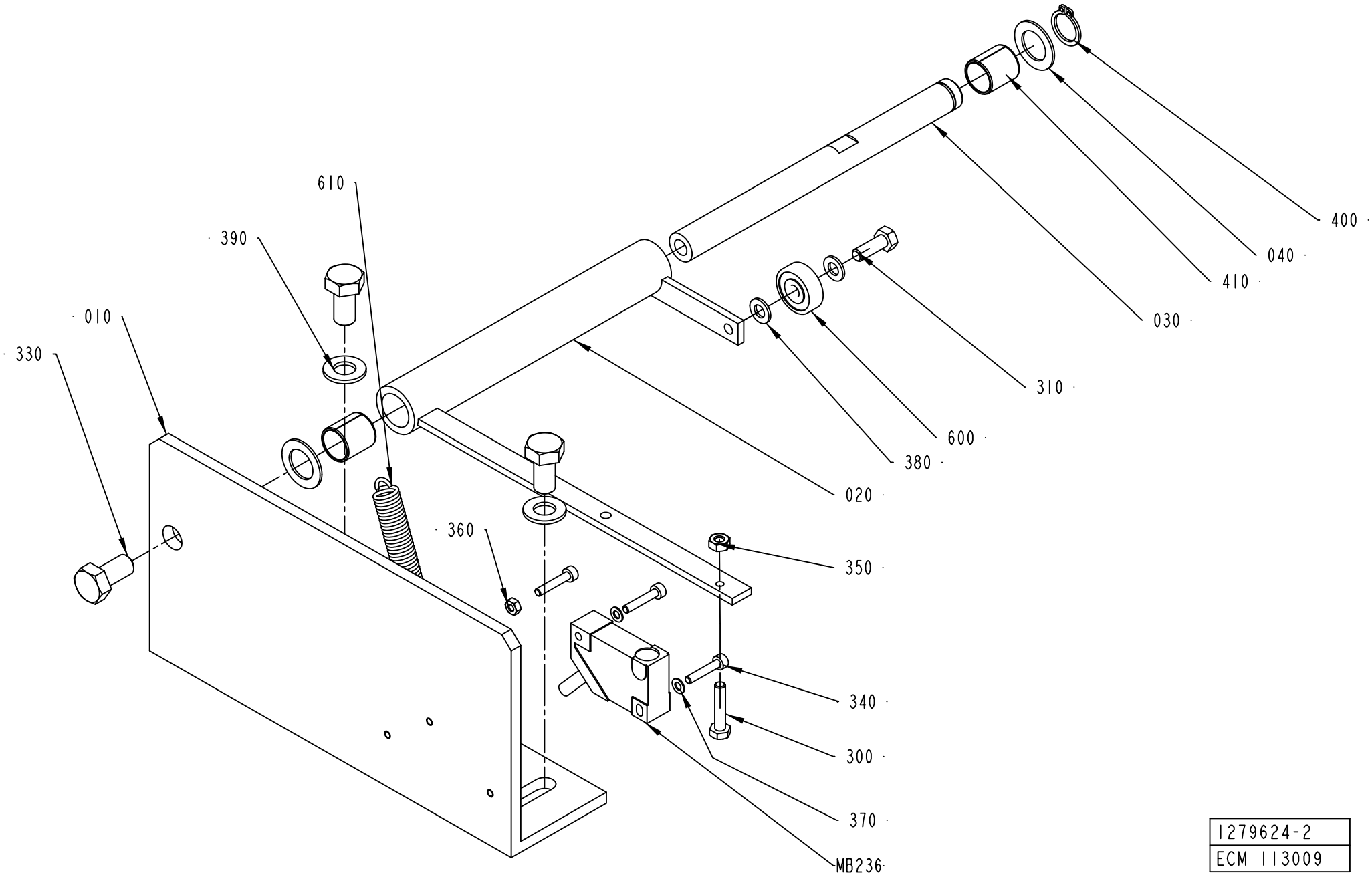

1279624-2
ECM 113009

ECM: 180857 - 20040910
Group number: 1279624-0200
Assembly Drawing: 1279624-2_1_AC

This list covers pages from 1-42 to 1-45

Pos	Part No	UN	Qty	Description	Page No
-					
010	2524478-0000		1	BRACKET	
020	979899-0000		1	BRACKET	
030	1035897-0000		1	SHAFT	
040	266737-0000		2	WASHER	
300	312105-0295		1	SCREW M6S ISO 4017 M4X20 A470	
310	312105-0328		1	SCREW M6S ISO 4017 M5X14 A480	
330	312105-0449		3	SCREW M6S ISO 4017 M8X16 A480	
340	312115-0228		3	SCREW ISO4762 M3X16 A4 80	
350	312605-0312		1	HEXAGON NUT, M6M M4 A280	
360	312605-0310		1	HEXAGON NUT, M6M M3 A280	
370	315105-0124		2	WASHER BRB 3,2X6 RFR	
380	315105-0146		2	WASHER BRB 5,3X10 RFR	
390	315105-0165		2	WASHER BRB 8,4X16 RFR	
400	315751-0109		1	RETAINING RING FOR SHAFT DIN 471 12 SS	
410	321141-0183		2	BEARING BUSH W/O FLANGE, 12X14X15 MM	
600	90214-0138		1	BALL BEARING 5/19X6	
610	90335-0216		1	TENSION SPRING 40910, 0,5X5,5X27,7	
MB236	90044-0194		1	INDUCTIVE SENSOR, IN 5329	

Pos	Part No	UN	Qty	Description	Page No

SPLICE DETECTOR

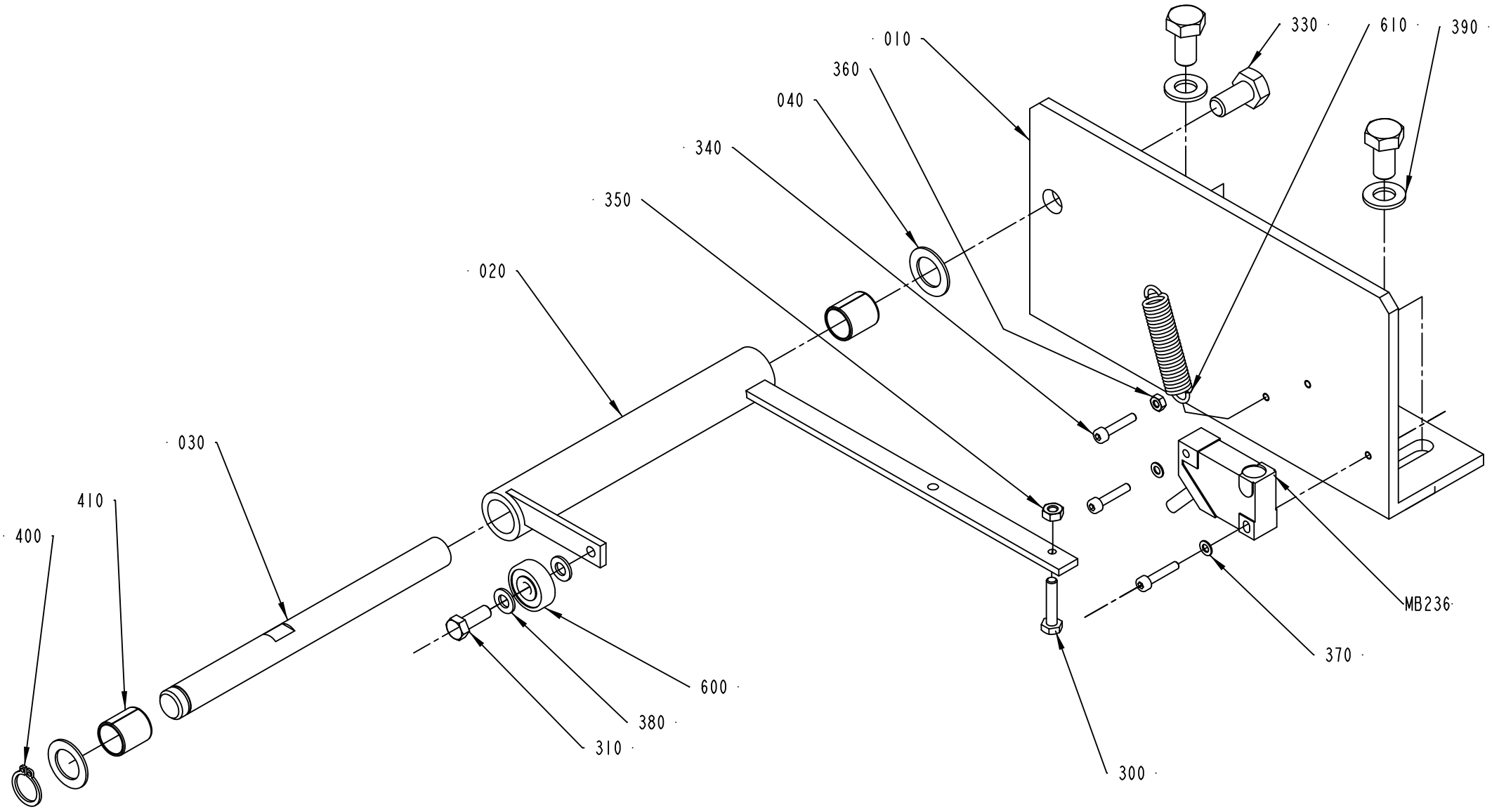

1279624-3
ECM 113009

ECM: 180857 - 20040910
Group number: 1279624-0200
Assembly Drawing: 1279624-3_1_AA

This list covers pages from 1-42 to 1-45

Pos	Part No	UN	Qty	Description	Page No
-					
010	2524478-0000		1	BRACKET	
020	979899-0000		1	BRACKET	
030	1035897-0000		1	SHAFT	
040	266737-0000		2	WASHER	
300	312105-0295		1	SCREW M6S ISO 4017 M4X20 A470	
310	312105-0328		1	SCREW M6S ISO 4017 M5X14 A480	
330	312105-0449		3	SCREW M6S ISO 4017 M8X16 A480	
340	312115-0228		3	SCREW ISO4762 M3X16 A4 80	
350	312605-0312		1	HEXAGON NUT, M6M M4 A280	
360	312605-0310		1	HEXAGON NUT, M6M M3 A280	
370	315105-0124		2	WASHER BRB 3,2X6 RFR	
380	315105-0146		2	WASHER BRB 5,3X10 RFR	
390	315105-0165		2	WASHER BRB 8,4X16 RFR	
400	315751-0109		1	RETAINING RING FOR SHAFT DIN 471 12 SS	
410	321141-0183		2	BEARING BUSH W/O FLANGE, 12X14X15 MM	
600	90214-0138		1	BALL BEARING 5/19X6	
610	90335-0216		1	TENSION SPRING 40910, 0,5X5,5X27,7	
MB236	90044-0194		1	INDUCTIVE SENSOR, IN 5329	

Pos	Part No	UN	Qty	Description	Page No

MOUNTING SHEET

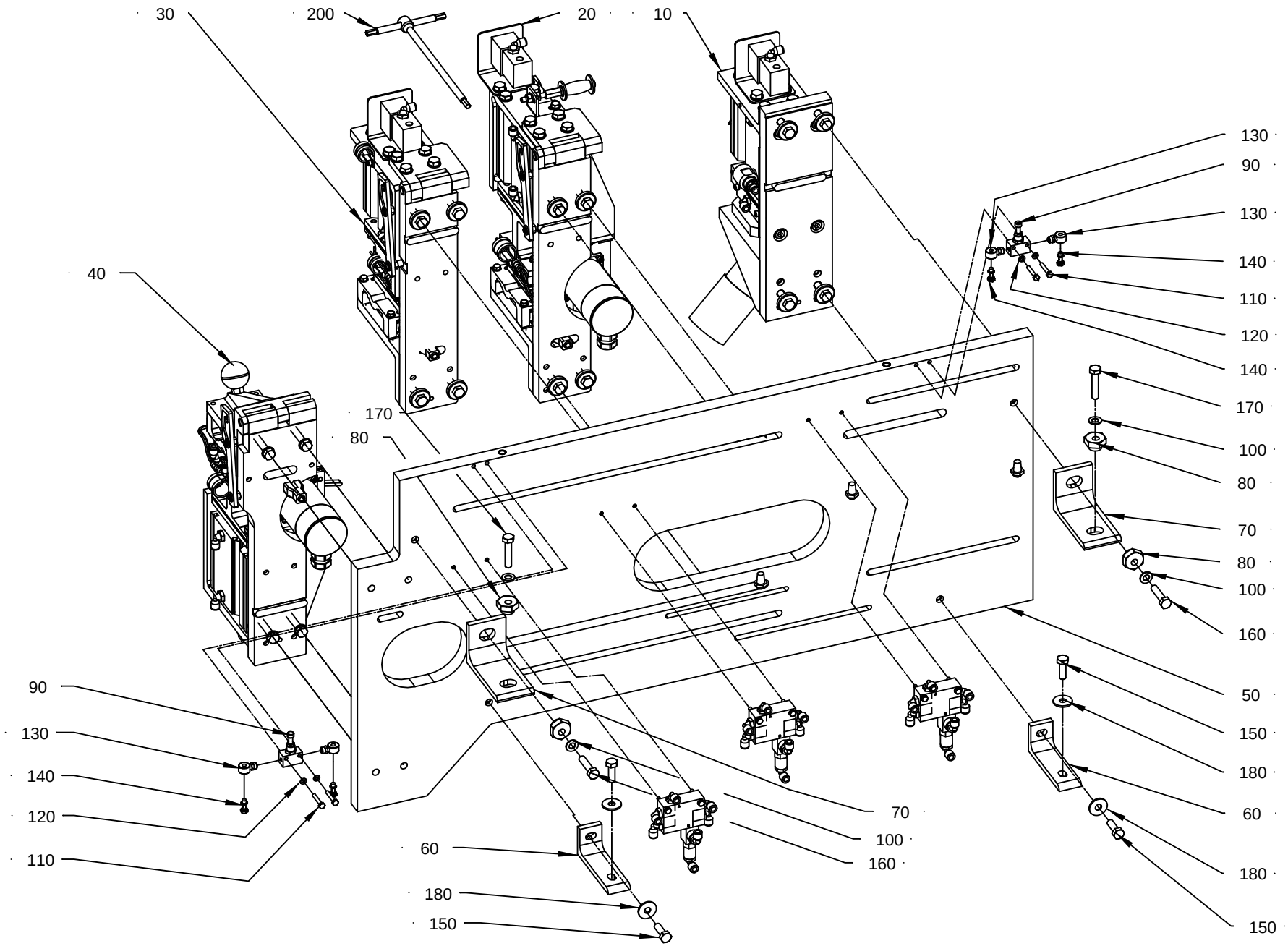

583682-6
ECM 142514

ECM: 293496 - 20070126
Group number: 583682-0200
Assembly Drawing: 583682-6_1_AB

This list covers pages from 1-46 to 1-59

Pos	Part No	UN	Qty	Description	Page No
TBA 0100B (See drawing on pages: 1-46, 1-48, 1-50)					
010	583755-0200		1	PUNCH	**1-61**
050	2519628-0000		1	MOUNTING SHEET	
090	90235-0723		2	FLOW CONTROL VALVE, GR-M5	
110	312105-0297		4	SCREW M6S ISO 4017 M4X25 A470	
130	342980-0111		4	BANJO-CONNECTION,RING 6/4-M5	
140	342980-0301		4	BANJO-HOLLOW BOLT COUPL.,EXT.THREA.01-M5	
	315233-0101		*1*	*WASHER CAPTIVE SEALING M5(NEW315239-101)*	
170	312105-0459		2	SCREW M6S ISO 4014 M8X40 A480	
TBA 0125S (See drawing on pages: 1-46, 1-48, 1-50)					
010	583755-0200		1	PUNCH	**1-61**
050	2519628-0000		1	MOUNTING SHEET	
090	90235-0723		2	FLOW CONTROL VALVE, GR-M5	
110	312105-0297		4	SCREW M6S ISO 4017 M4X25 A470	
130	342980-0111		4	BANJO-CONNECTION,RING 6/4-M5	
140	342980-0301		4	BANJO-HOLLOW BOLT COUPL.,EXT.THREA.01-M5	
	315233-0101		*1*	*WASHER CAPTIVE SEALING M5(NEW315239-101)*	
170	312105-0459		2	SCREW M6S ISO 4014 M8X40 A480	
TBA 0160S (See drawing on pages: 1-46, 1-48, 1-50)					
010	583755-0200		1	PUNCH	**1-61**
050	2519628-0000		1	MOUNTING SHEET	
090	90235-0723		2	FLOW CONTROL VALVE, GR-M5	
110	312105-0297		4	SCREW M6S ISO 4017 M4X25 A470	
130	342980-0111		4	BANJO-CONNECTION,RING 6/4-M5	
140	342980-0301		4	BANJO-HOLLOW BOLT COUPL.,EXT.THREA.01-M5	
	315233-0101		*1*	*WASHER CAPTIVE SEALING M5(NEW315239-101)*	
170	312105-0459		2	SCREW M6S ISO 4014 M8X40 A480	
TBA 0200B (See drawing on pages: 1-46, 1-48, 1-50)					
010	583755-0200		1	PUNCH	**1-61**
050	2519628-0000		1	MOUNTING SHEET	
090	90235-0723		2	FLOW CONTROL VALVE, GR-M5	
110	312105-0297		4	SCREW M6S ISO 4017 M4X25 A470	
130	342980-0111		4	BANJO-CONNECTION,RING 6/4-M5	
140	342980-0301		4	BANJO-HOLLOW BOLT COUPL.,EXT.THREA.01-M5	
	315233-0101		*1*	*WASHER CAPTIVE SEALING M5(NEW315239-101)*	
170	312105-0459		2	SCREW M6S ISO 4014 M8X40 A480	
TBA 0200M (See drawing on pages: 1-46, 1-48, 1-50)					
010	583755-0200		1	PUNCH	**1-61**
050	2519628-0000		1	MOUNTING SHEET	
090	90235-0723		2	FLOW CONTROL VALVE, GR-M5	
110	312105-0297		4	SCREW M6S ISO 4017 M4X25 A470	
130	342980-0111		4	BANJO-CONNECTION,RING 6/4-M5	
140	342980-0301		4	BANJO-HOLLOW BOLT COUPL.,EXT.THREA.01-M5	
	315233-0101		*1*	*WASHER CAPTIVE SEALING M5(NEW315239-101)*	
170	312105-0459		2	SCREW M6S ISO 4014 M8X40 A480	
TBA 0200S (See drawing on pages: 1-46, 1-48, 1-50)					
010	583755-0200		1	PUNCH	**1-61**
050	2519628-0000		1	MOUNTING SHEET	
090	90235-0723		2	FLOW CONTROL VALVE, GR-M5	
110	312105-0297		4	SCREW M6S ISO 4017 M4X25 A470	
130	342980-0111		4	BANJO-CONNECTION,RING 6/4-M5	
140	342980-0301		4	BANJO-HOLLOW BOLT COUPL.,EXT.THREA.01-M5	
	315233-0101		*1*	*WASHER CAPTIVE SEALING M5(NEW315239-101)*	
170	312105-0459		2	SCREW M6S ISO 4014 M8X40 A480	
TBA 0250B (See drawing on pages: 1-46, 1-48, 1-50)					
010	583755-0200		1	PUNCH	**1-61**
050	2519628-0000		1	MOUNTING SHEET	
090	90235-0723		2	FLOW CONTROL VALVE, GR-M5	
110	312105-0297		4	SCREW M6S ISO 4017 M4X25 A470	
130	342980-0111		4	BANJO-CONNECTION,RING 6/4-M5	
140	342980-0301		4	BANJO-HOLLOW BOLT COUPL.,EXT.THREA.01-M5	
	315233-0101		*1*	*WASHER CAPTIVE SEALING M5(NEW315239-101)*	
170	312105-0459		2	SCREW M6S ISO 4014 M8X40 A480	
TBA 0250S (See drawing on pages: 1-46, 1-48, 1-50)					
010	583755-0200		1	PUNCH	**1-61**
050	2519628-0000		1	MOUNTING SHEET	
090	90235-0723		2	FLOW CONTROL VALVE, GR-M5	
110	312105-0297		4	SCREW M6S ISO 4017 M4X25 A470	
130	342980-0111		4	BANJO-CONNECTION,RING 6/4-M5	
140	342980-0301		4	BANJO-HOLLOW BOLT COUPL.,EXT.THREA.01-M5	
	315233-0101		*1*	*WASHER CAPTIVE SEALING M5(NEW315239-101)*	
170	312105-0459		2	SCREW M6S ISO 4014 M8X40 A480	
TBA 0284B (See drawing on pages: 1-46, 1-48, 1-50)					
010	583755-0200		1	PUNCH	**1-61**
050	2519628-0000		1	MOUNTING SHEET	
090	90235-0723		2	FLOW CONTROL VALVE, GR-M5	
110	312105-0297		4	SCREW M6S ISO 4017 M4X25 A470	
130	342980-0111		4	BANJO-CONNECTION,RING 6/4-M5	
140	342980-0301		4	BANJO-HOLLOW BOLT COUPL.,EXT.THREA.01-M5	
	315233-0101		*1*	*WASHER CAPTIVE SEALING M5(NEW315239-101)*	
170	312105-0459		2	SCREW M6S ISO 4014 M8X40 A480	
TBA 0300S (See drawing on pages: 1-46, 1-48, 1-50)					
010	583755-0200		1	PUNCH	**1-61**
050	2519628-0000		1	MOUNTING SHEET	

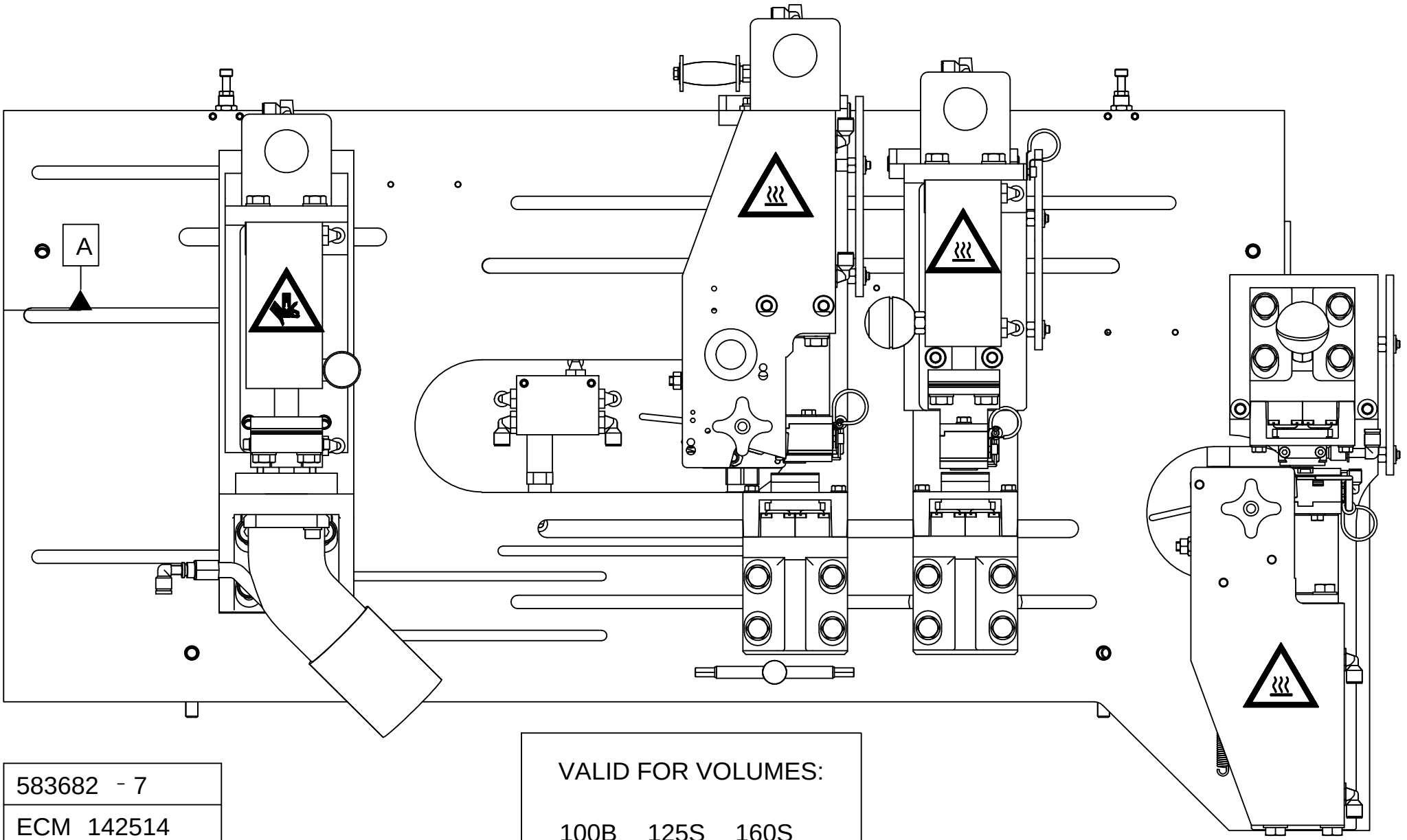

583682 - 7
ECM 142514

VALID FOR VOLUMES:

100B 125S 160S
180B 200B 250B

Pos	Part No	UN	Qty	Description	Page No
TBA 0300S (Cont'd) (See drawing on pages: 1-46, 1-48, 1-50)					
090	90235-0723		2	FLOW CONTROL VALVE, GR-M5	
110	312105-0297		4	SCREW M6S ISO 4017 M4X25 A470	
130	342980-0111		4	BANJO-CONNECTION,RING 6/4-M5	
140	342980-0301		4	BANJO-HOLLOW BOLT COUPL.,EXT.THREA.01-M5	
	315233-0101		*1*	*WASHER CAPTIVE SEALING M5(NEW315239-101)*	
170	312105-0459		2	SCREW M6S ISO 4014 M8X40 A480	
TBA 0330S (See drawing on pages: 1-46, 1-48, 1-50)					
010	583755-0200		1	PUNCH	**1-61**
050	2519628-0000		1	MOUNTING SHEET	
090	90235-0723		2	FLOW CONTROL VALVE, GR-M5	
110	312105-0297		4	SCREW M6S ISO 4017 M4X25 A470	
130	342980-0111		4	BANJO-CONNECTION,RING 6/4-M5	
140	342980-0301		4	BANJO-HOLLOW BOLT COUPL.,EXT.THREA.01-M5	
	315233-0101		*1*	*WASHER CAPTIVE SEALING M5(NEW315239-101)*	
170	312105-0459		2	SCREW M6S ISO 4014 M8X40 A480	
TPA 0200SQ (See drawing on pages: 1-52, 1-54, 1-56, 1-58)					
010	2529645-0200		1	PUNCH UNIT	**1-67, 1-69**
045	1255730-0200		1	SEALING UNIT OUTER PATCH	**1-71**
050	2813994-0000		1	MOUNTING SHEET	
090	90235-0723		1	FLOW CONTROL VALVE, GR-M5	
095	977527-0000		1	BRACKET	
110	312105-0297		2	SCREW M6S ISO 4017 M4X25 A470	
115	312105-0293		2	SCREW M6S ISO 4017 M4X16 A470	
130	342980-0111		2	BANJO-CONNECTION,RING 6/4-M5	
140	342980-0301		2	BANJO-HOLLOW BOLT COUPL.,EXT.THREA.01-M5	
	315233-0101		*1*	*WASHER CAPTIVE SEALING M5(NEW315239-101)*	
170	312105-0459		6	SCREW M6S ISO 4014 M8X40 A480	
220	2816494-0000		6	WASHER	
TPA 0250SQ (See drawing on pages: 1-52, 1-54, 1-56, 1-58)					
010	2529645-0200		1	PUNCH UNIT	**1-67, 1-69**
045	1255730-0200		1	SEALING UNIT OUTER PATCH	**1-71**
050	2813994-0000		1	MOUNTING SHEET	
090	90235-0723		1	FLOW CONTROL VALVE, GR-M5	
095	977527-0000		1	BRACKET	
110	312105-0297		2	SCREW M6S ISO 4017 M4X25 A470	
115	312105-0293		2	SCREW M6S ISO 4017 M4X16 A470	
130	342980-0111		2	BANJO-CONNECTION,RING 6/4-M5	
140	342980-0301		2	BANJO-HOLLOW BOLT COUPL.,EXT.THREA.01-M5	
	315233-0101		*1*	*WASHER CAPTIVE SEALING M5(NEW315239-101)*	
170	312105-0459		6	SCREW M6S ISO 4014 M8X40 A480	
220	2816494-0000		6	WASHER	

Pos	Part No	UN	Qty	Description	Page No
TPA 0330SQ (See drawing on pages: 1-52, 1-54, 1-56, 1-58)					
010	2529645-0200		1	PUNCH UNIT	**1-67, 1-69**
045	1255730-0200		1	SEALING UNIT OUTER PATCH	**1-71**
050	2813994-0000		1	MOUNTING SHEET	
090	90235-0723		1	FLOW CONTROL VALVE, GR-M5	
095	977527-0000		1	BRACKET	
110	312105-0297		2	SCREW M6S ISO 4017 M4X25 A470	
115	312105-0293		2	SCREW M6S ISO 4017 M4X16 A470	
130	342980-0111		2	BANJO-CONNECTION,RING 6/4-M5	
140	342980-0301		2	BANJO-HOLLOW BOLT COUPL.,EXT.THREA.01-M5	
	315233-0101		*1*	*WASHER CAPTIVE SEALING M5(NEW315239-101)*	
170	312105-0459		6	SCREW M6S ISO 4014 M8X40 A480	
220	2816494-0000		6	WASHER	
Common Parts					
020	583756-0200		1	SEALING UNIT	**1-77, 1-79**
030	583757-0200		1	SEALING DEVICE	**1-87, 1-89**
040	583758-0200		1	SEALING DEVICE	**1-93, 1-95**
060	590986-0000		2	HOLDER	
070	590985-0000		2	HOLDER	
080	590987-0000		4	ECCENTRIC	
100	315105-0165		4	WASHER BRB 8,4X16 RFR	
120	315105-0136		4	WASHER BRB 4,3X8 RFR	
150	312105-0453		4	SCREW M6S ISO 4017 M8X25 A480	
160	312105-0457		2	SCREW M6S ISO 4014 M8X35 A480	
180	90005-0116		4	WASHER PLAIN ROUND 8,4(M8)/24, H=2	
200	2660748-0000		1	KEY	

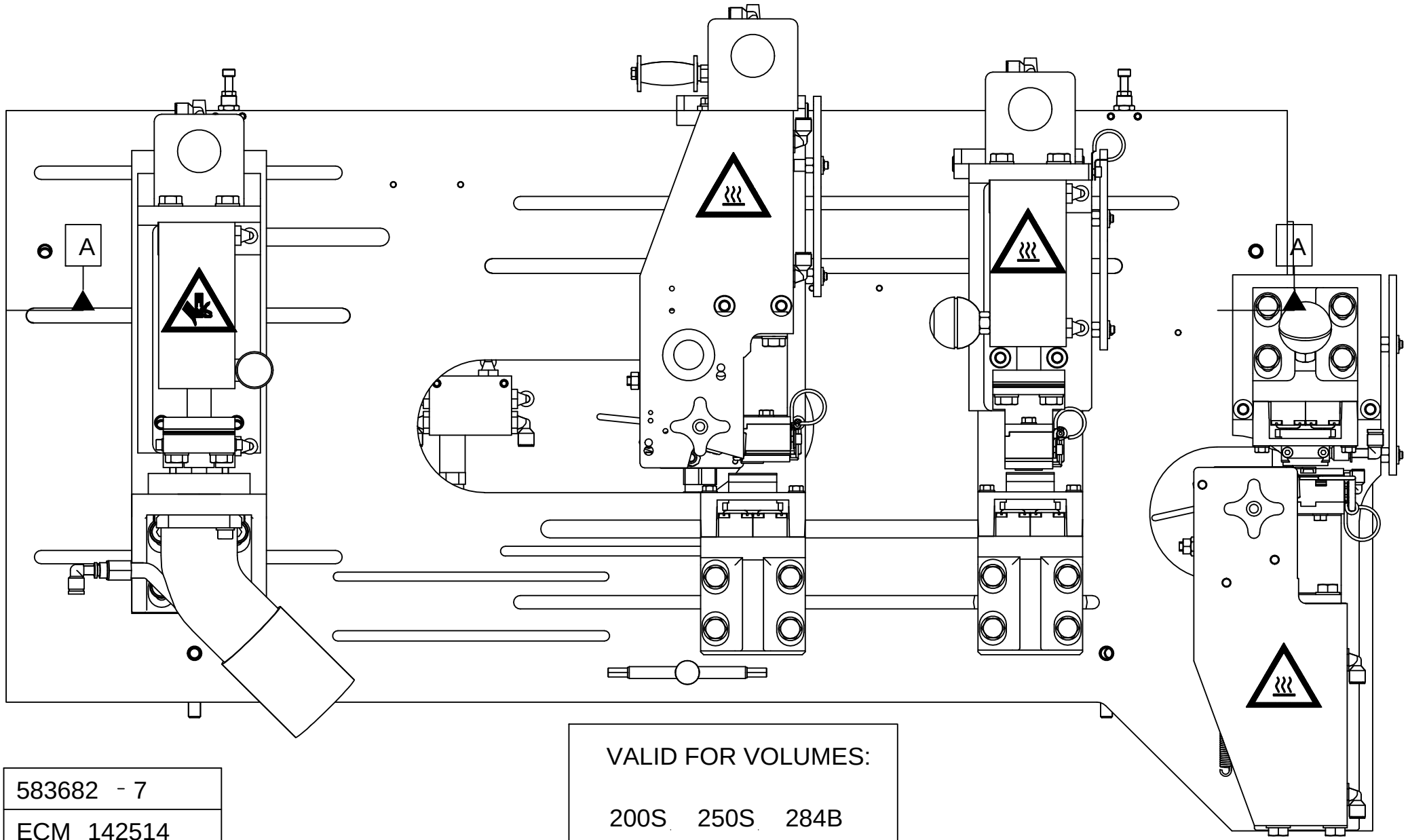

583682 - 7
ECM 142514

VALID FOR VOLUMES:

200S 250S 284B
300S 330S 200M

Pos	Part No	UN	Qty	Description	Page No
SEE PREVIOUS LISTS PAGES: 1-47, 1-49.					

Pos	Part No	UN	Qty	Description	Page No

MOUNTING SHEET

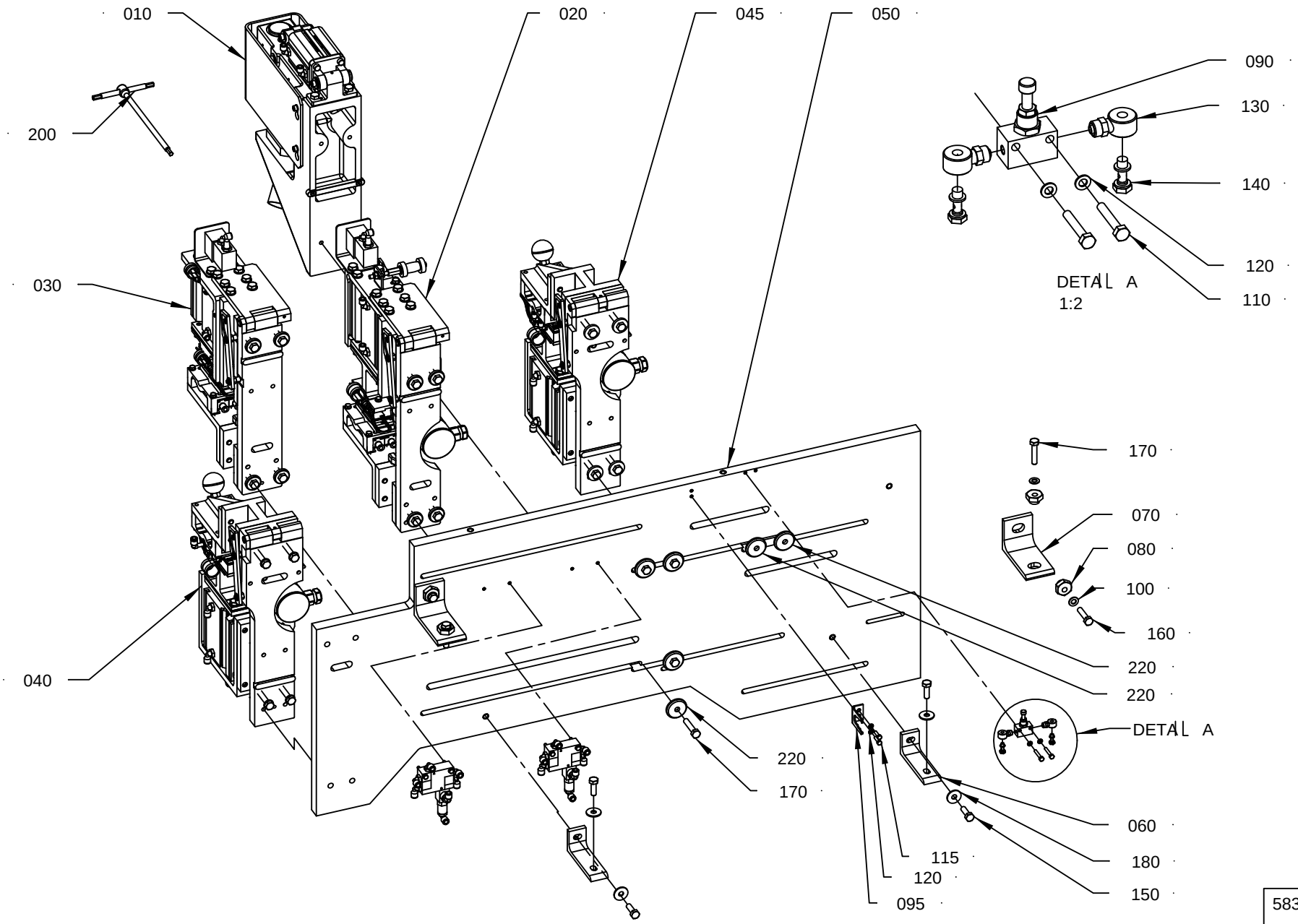

583682 - 9
287531

Pos	Part No	UN	Qty	Description	Page No
SEE PREVIOUS LISTS PAGES: 1-47, 1-49.					

Pos	Part No	UN	Qty	Description	Page No

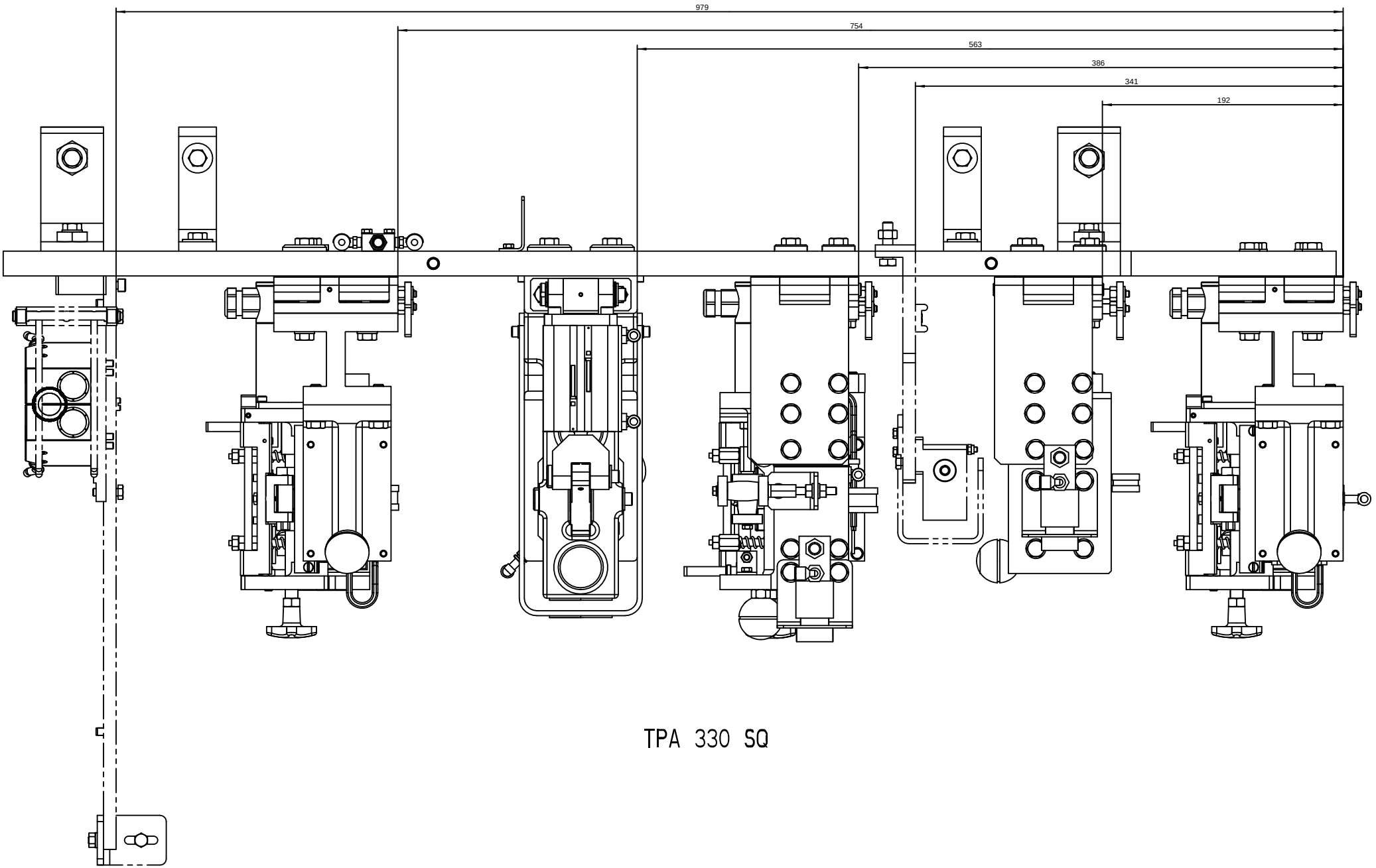
979
754
563
386
341
192
TPA 330 SQ

ECM: 293496 - 20070126
Group number: 583682-0200
Assembly Drawing: 583682-9_2_AA

This list covers pages from 1-46 to 1-59

Pos	Part No	UN	Qty	Description	Page No
SEE PREVIOUS LISTS PAGES: 1-47, 1-49.					

Pos	Part No	UN	Qty	Description	Page No

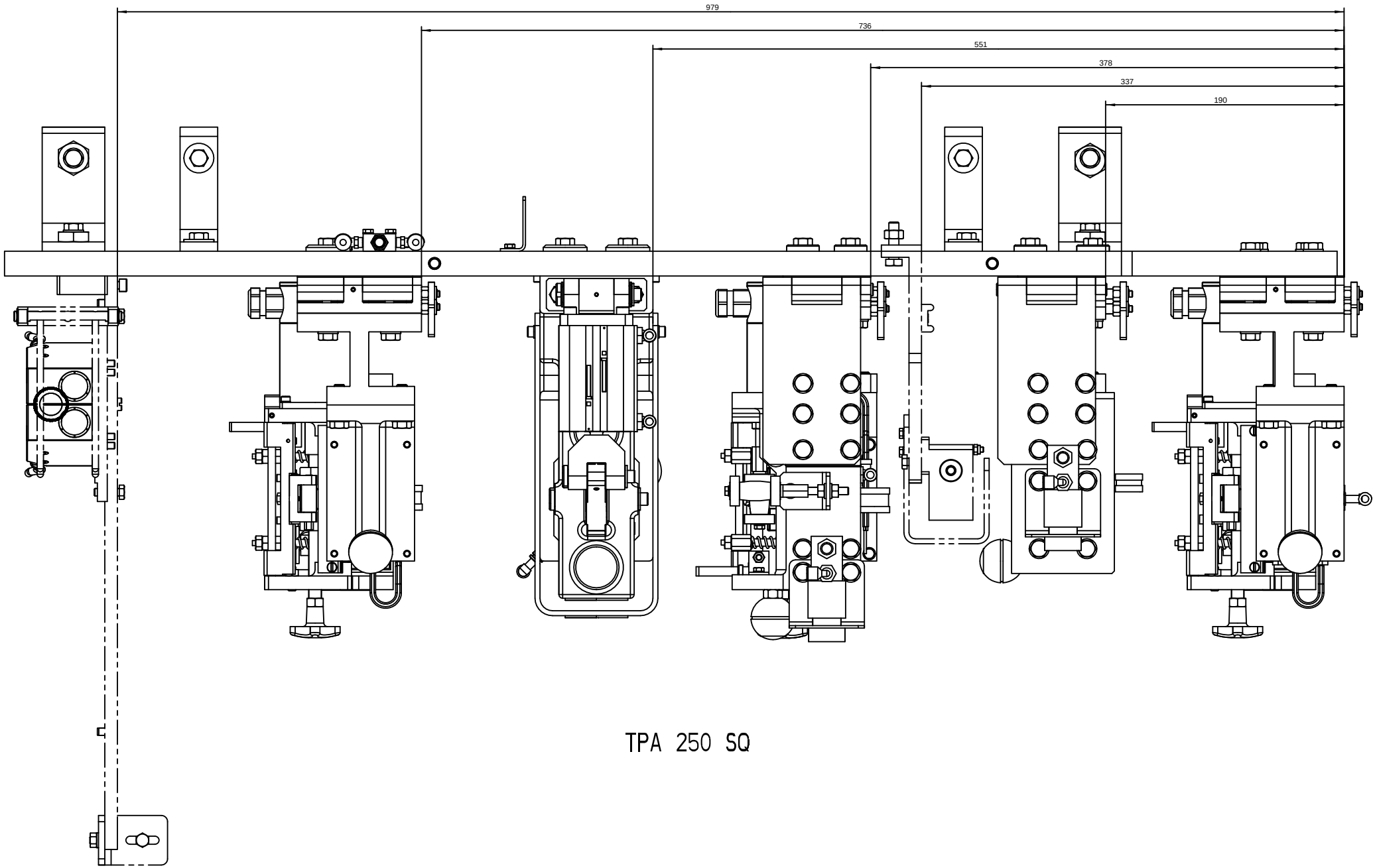
979
736
551
378
337
190
TPA 250 SQ

Pos	Part No	UN	Qty	Description	Page No
SEE PREVIOUS LISTS PAGES: 1-47, 1-49.					

Pos	Part No	UN	Qty	Description	Page No

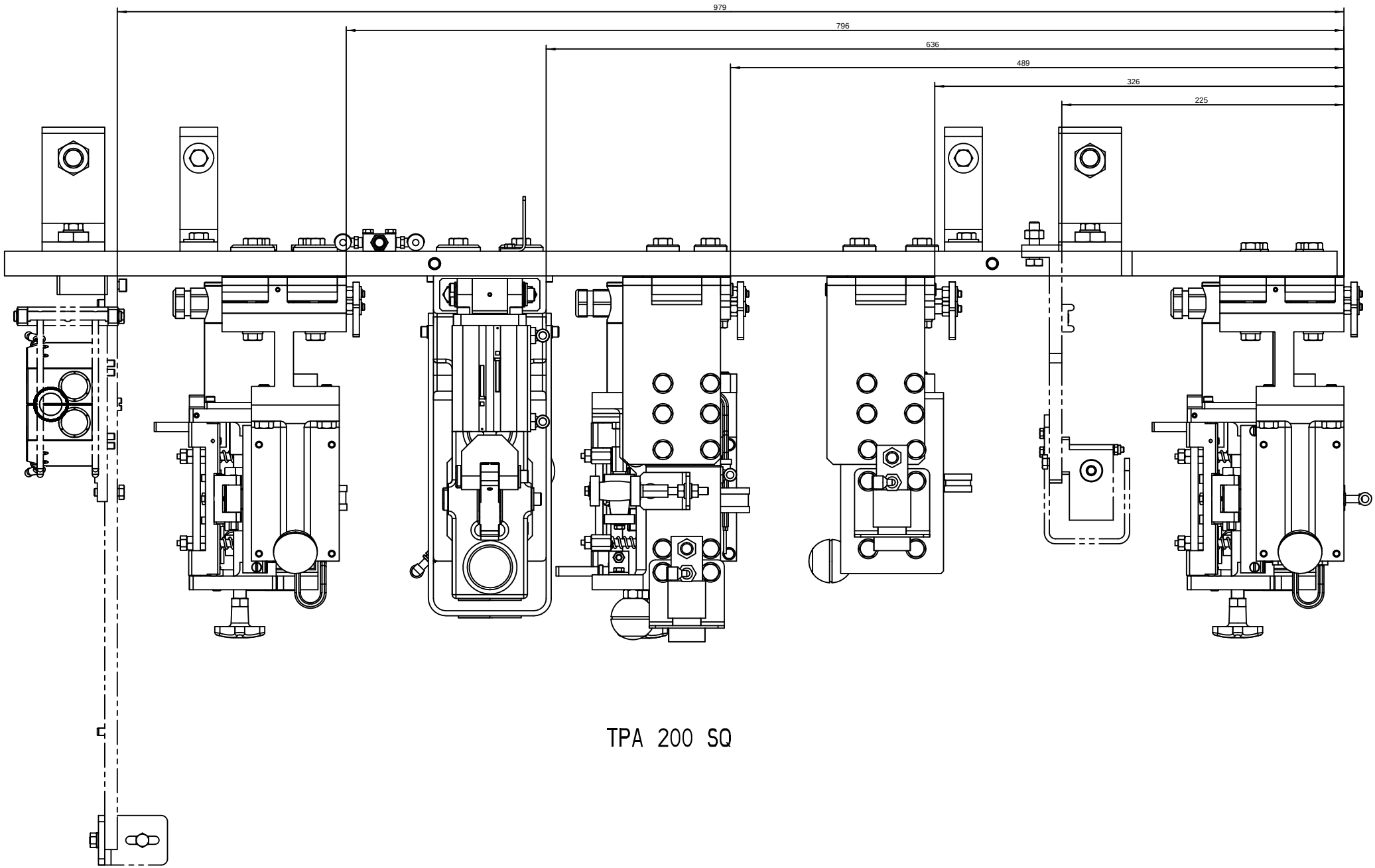
979
796
636
489
326
225
TPA 200 SQ

Pos	Part No	UN	Qty	Description	Page No
SEE PREVIOUS LISTS PAGES: 1-47, 1-49.					

Pos	Part No	UN	Qty	Description	Page No

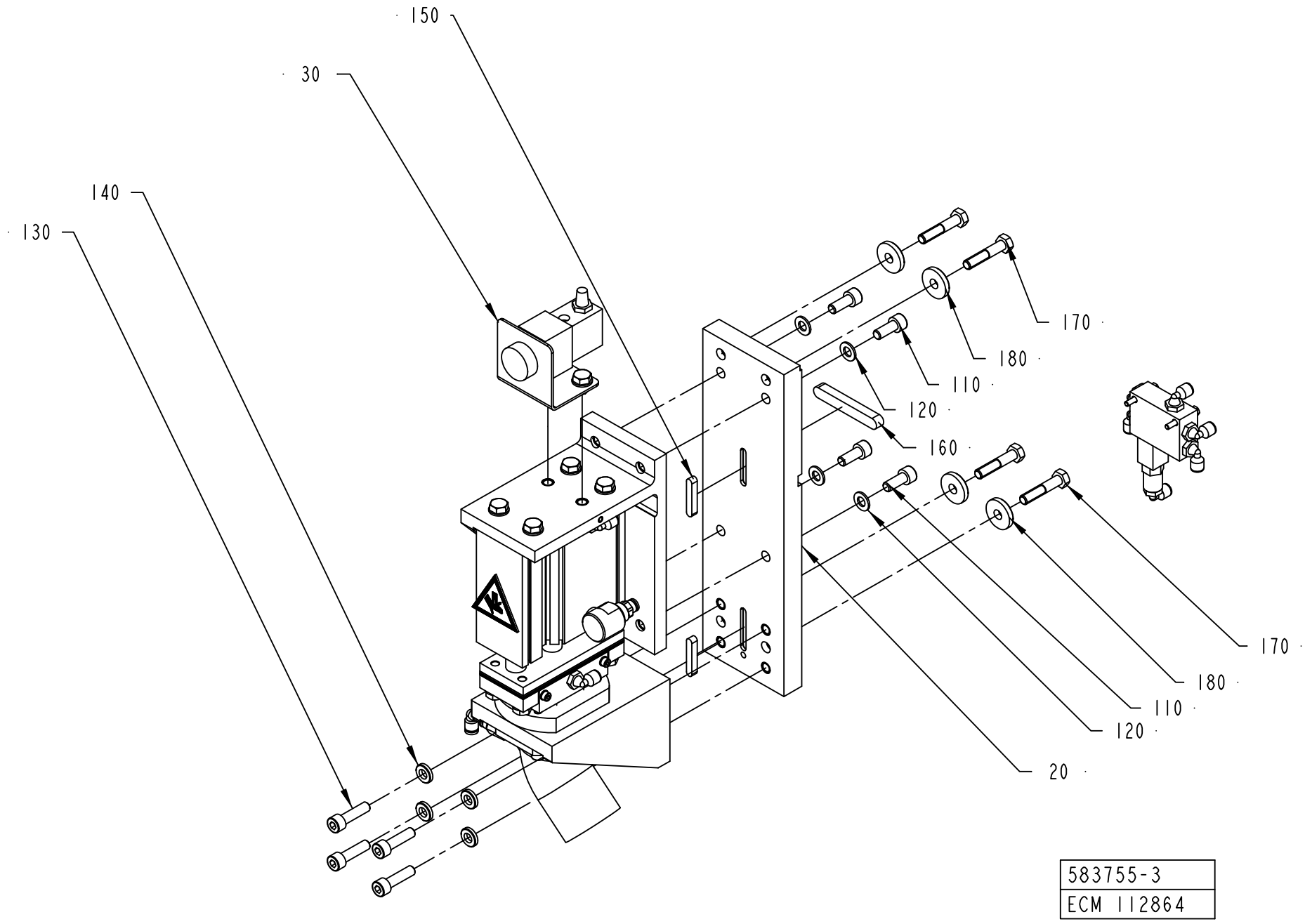

583755-3
ECM 112864

ECM: 128655 - 20030630
Group number: 583755-0200
Assembly Drawing: 583755-3_1_AA

Pos	Part No	UN	Qty	Description	Page No
-					
010	979532-0200		1	PUNCH UNIT	**1-63**
020	589433-0000		1	PLATE	
030	2574386-0100		1	HOLDING DEVICE	**1-65**
110	312115-0451		4	SCREW ISO4762 M8X20 A4 80	
120	315105-0165		4	WASHER BRB 8,4X16 RFR	
130	312115-0455		4	SCREW ISO4762 M8X30 A4 80	
140	315115-0165		4	WASHER PLAIN, TBRB 8,4/16 H=3	
150	315705-0238		2	PARALLEL KEY W. ROUND ENDS, 6X6X36 MM	
160	315705-0307		1	PARALLEL KEY W. ROUND ENDS, 10X8X70 MM	
170	312105-0459		4	SCREW M6S ISO 4014 M8X40 A480	
180	315125-0165		4	WASHER TBRSB 8,4X26X5 A4	

Pos	Part No	UN	Qty	Description	Page No

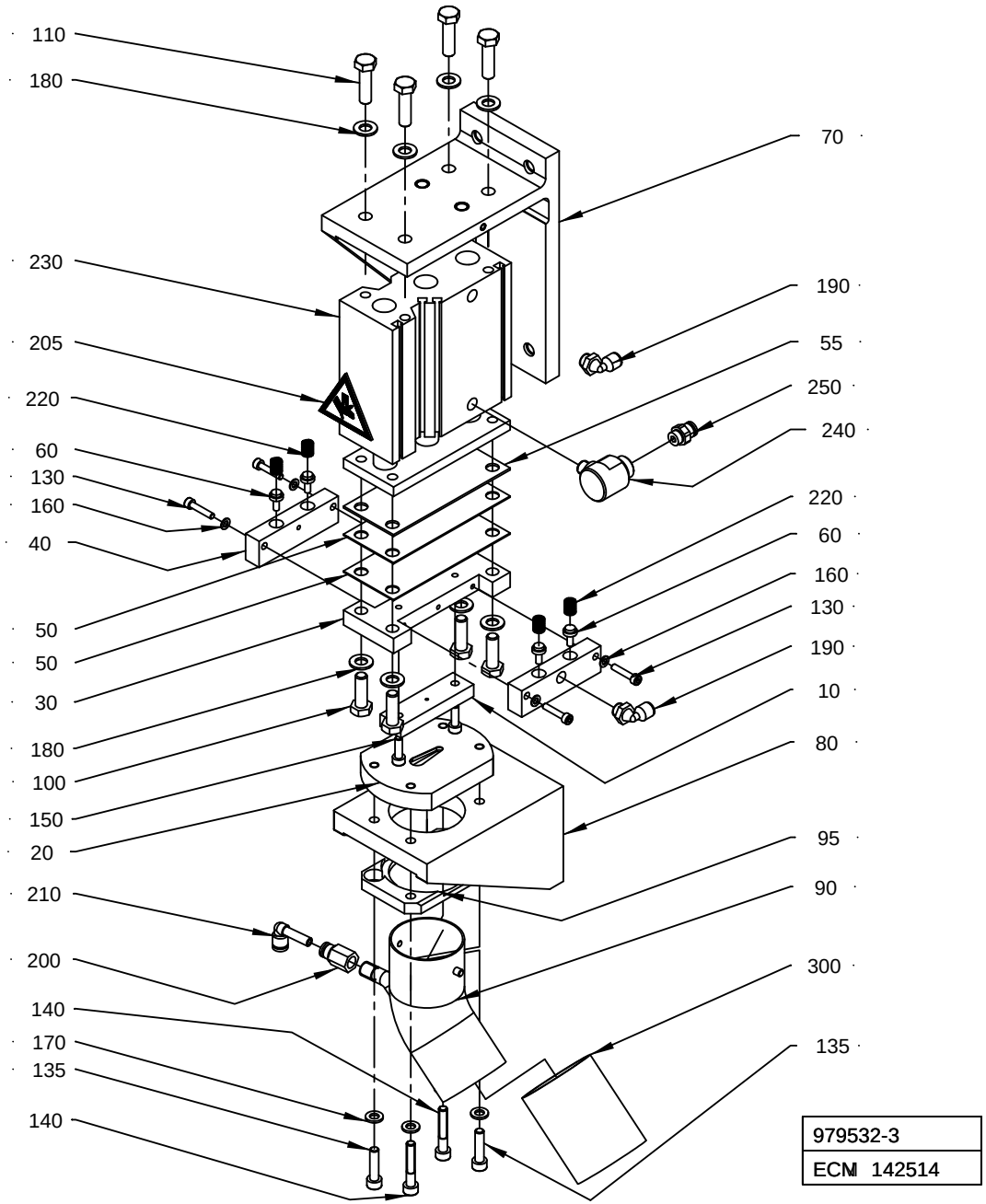
110
180
70
230
190
205
55
220
250
240
60
130
160
40
220
60
160
130
50
190
50
10
30
80
180
100
150
95
20
90
210
200
300
140
170
135
135
140
979532-3
ECM 142514

ECM: 271767 - 20060707
Group number: 979532-0200
Assembly Drawing: 979532-3_1_AB

Pos	Part No	UN	Qty	Description	Page No
HOLE12					
010	582446-0000		1	PUNCH	
020	582451-0000		1	DIE	
HOLE13					
010	582448-0000		1	PUNCH	
020	582453-0000		1	DIE	
HOLE17					
010	582447-0000		1	PUNCH	
020	582452-0000		1	DIE	
HOLE20					
010	582449-0000		1	PUNCH	
020	582454-0000		1	DIE	
HOLE21					
010	582450-0000		1	PUNCH	
020	582455-0000		1	DIE	
Common Parts					
030	1140293-0000		1	SPACER	
040	1140294-0001		2	PIN DISTANCE 30	
050	590988-0000		1	SHIM	
055	590989-0000		1	SHIM	
060	905285-0000		4	STRIPPER PIN	
070	582456-0000		1	HOLDER	
080	582457-0000		1	BRACKET	
090	1255825-0000		1	WASTE PIPE	
095	1255827-0000		1	CLAMP	
100	312105-0453		4	SCREW M6S ISO 4017 M8X25 A480	
110	312105-0455		4	SCREW M6S ISO 4017 M8X30 A480	
130	312115-0295		4	SCREW ISO4762 M4X20 A4 80	
135	312115-0372		2	SCREW ISO4762 M6X25 A4 80	
140	312115-0376		2	SCREW ISO4762 M6X35 A4 80	
150	312115-0329		2	SCREW ISO4762 M5X16 A4 80	
160	315105-0136		4	WASHER BRB 4,3X8 RFR	
170	315105-0153		4	WASHER BRB 6,4X12 RFR	
180	315105-0165		8	WASHER BRB 8,4X16 RFR	
190	90458-2956		2	ELBOW PIPE JOINT, EXT.THREAD, D=6MM-G1/8	
200	342770-0105		1	STRAIGHT COUPLING INT, D=6 MM - G1/8	
205	359705-0005		1	WARNING SIGN ISO, MOVING PART	
210	90055-0217		1	ELBOW PIPE JOINT	
220	90335-0005		4	SPRING	
230	90450-0397		1	CYLINDER	
240	90235-0206		1	QUICK EXHAUST VALVE, SEU-1/8	
250	342722-0202		1	PIPE COUPLING 1/8" D=6MM	

Pos	Part No	UN	Qty	Description	Page No
300	90152-0026	MM	1550	FLEXIBLE CONDUIT	

Machine Type	Group Description	Used-In	Group Number	Page No

HOLDING DEVICE

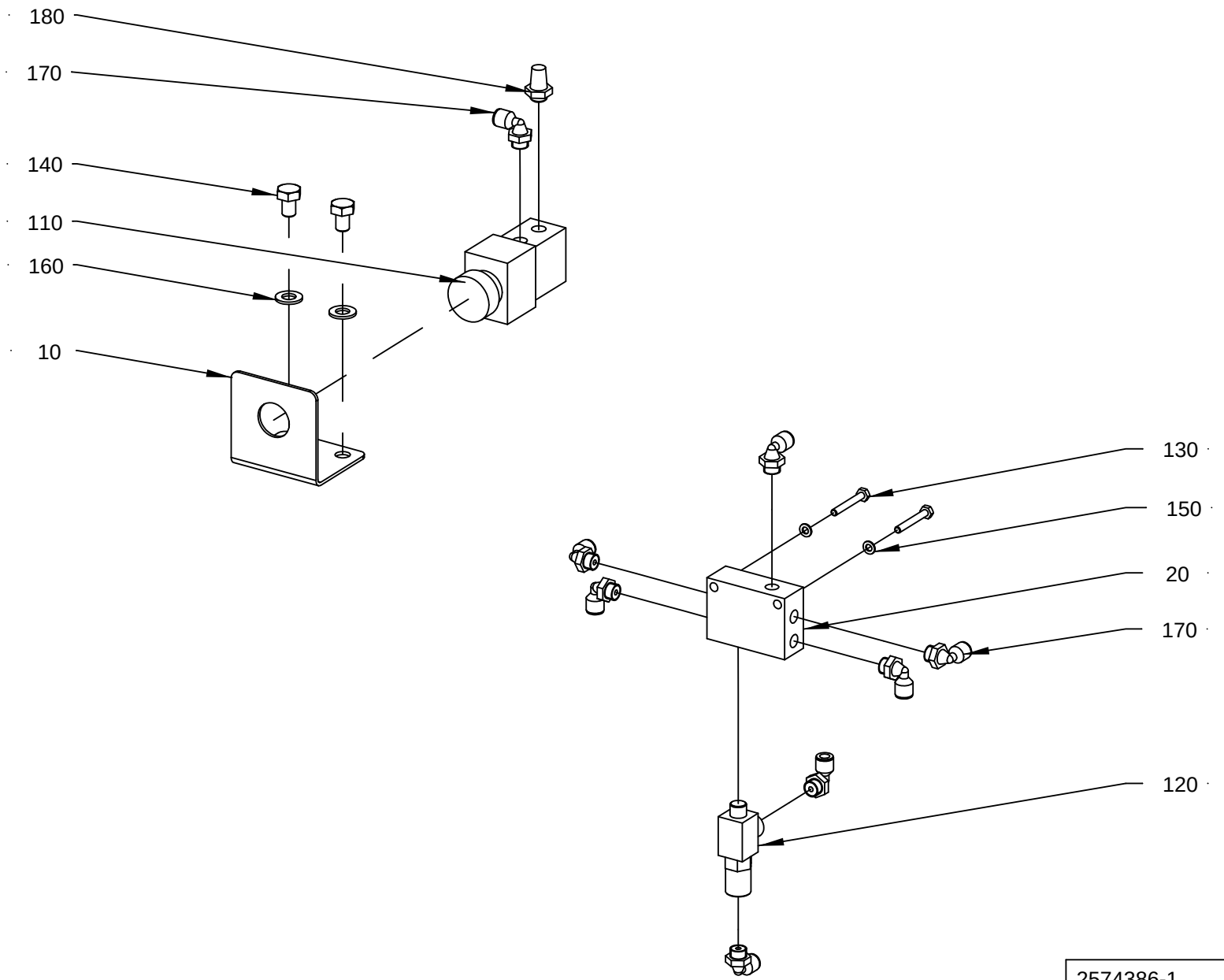

2574386-1
ECM 142514

ECM: 243215 - 20060127
Group number: 2574386-0100
Assembly Drawing: 2574386-1_1_AB

Pos	Part No	UN	Qty	Description	Page No
-					
010	2519630-0000		1	BRACKET	
020	2574384-0000		1	BRACKET	
100	90166-0089	MM	1000	TUBE, 6,2 MM PE BLUE	
110	90459-1919		1	PUSH BUTTON VALVE 550-053-000-0	
120	90459-1920		1	"NON-RETURN VALVE, G1/8""""	
130	312105-0299		2	SCREW M6S ISO 4017 M4X30 A470	
140	312105-0447		2	SCREW M6S ISO 4017 M8X12 A480	
150	315105-0136		2	WASHER BRB 4,3X8 RFR	
160	315105-0165		2	WASHER BRB 8,4X16 RFR	
170	90458-2956		8	ELBOW PIPE JOINT, EXT.THREAD, D=6MM-G1/8	
180	346800-0109		1	SILENCER FILTER R1/8"	

Pos	Part No	UN	Qty	Description	Page No

PUNCH UNIT

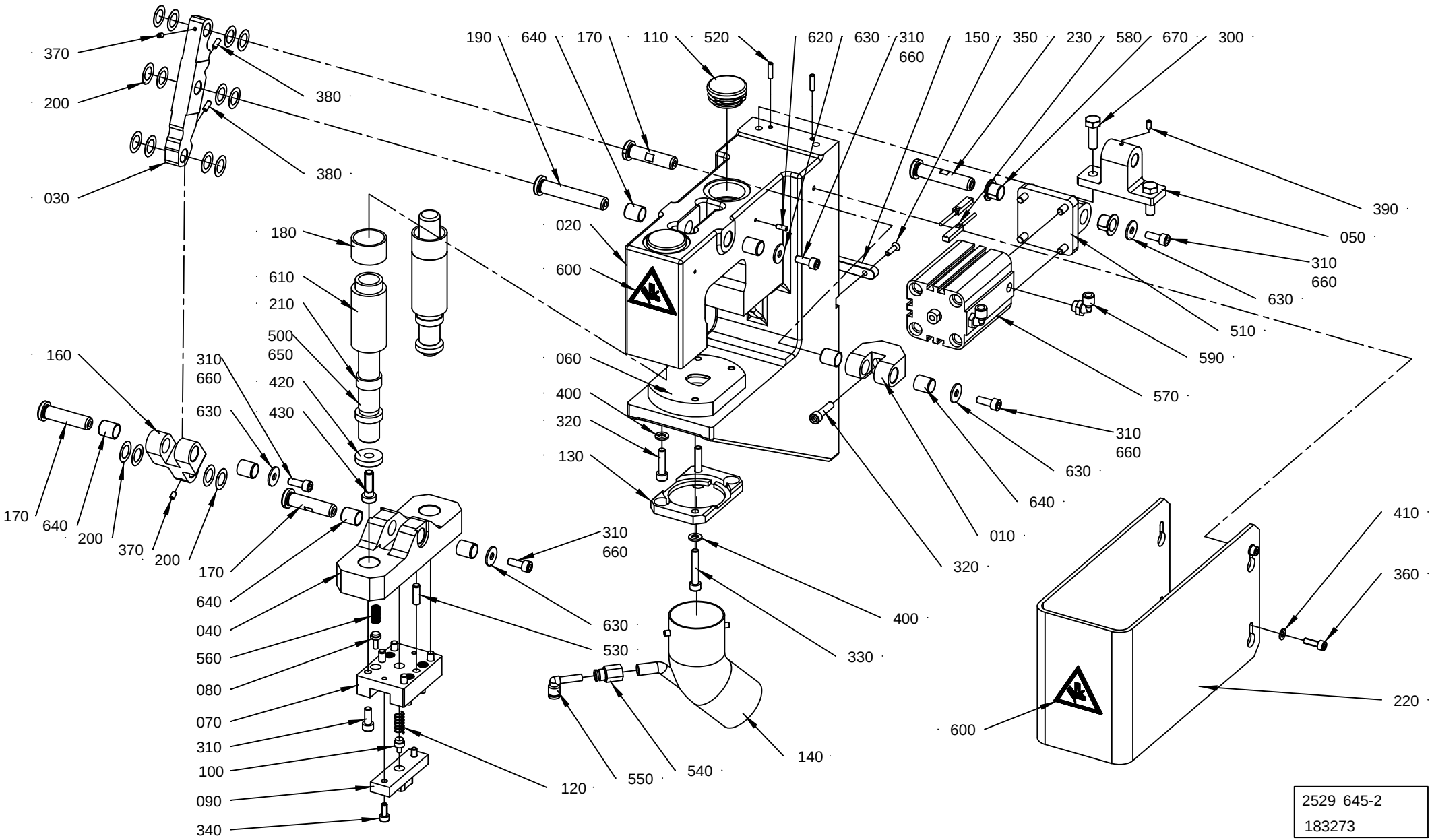

2529 645-2
183273

ECM: 183273 - 20041102
Group number: 2529645-0200
Assembly Drawing: 2529645-2_1_AB

This list covers pages from 1-66 to 1-69

Pos	Part No	UN	Qty	Description	Page No
HOLE48					
060	1255573-0000		1	DIE	
090	1317255-0000		1	PUNCH	
HOLE70					
060	1296993-0000		1	DIE	
090	1317383-0000		1	PUNCH	
HOLE72					
060	1317458-0000		1	DIE	
090	1317457-0000		1	PUNCH	
Common Parts					
010	2609932-0000		1	FORK	
020	2609940-0000		1	FRAME	
030	2609931-0000		1	LEVER	
040	2609935-0000		1	PLATE	
050	2609936-0000		1	BRACKET	
070	2540734-0000		1	PLATE	
080	2677792-0000		4	STRIPPER PIN	
100	2555497-0000		1	PIN	
110	2557567-0000		2	PLUG	
120	1478572-0000		1	SPRING	
130	1255827-0000		1	CLAMP	
140	1255825-0000		1	WASTE PIPE	
150	2555494-0000		1	KEY	
160	2609930-0000		1	LEVER	
170	2609928-0000		3	SHAFT	
180	2609933-0000		2	SPACER	
190	2609929-0000		1	SHAFT	
200	2609937-0000		16	WASHER	
210	2609934-0000		2	SPACER	
220	2615470-0000		1	COVER	
230	2699025-0000		1	SHAFT	
300	312105-0453		2	SCREW M6S ISO 4017 M8X25 A480	
310	312115-0368		9	SCREW ISO4762 M6X16 A4 80	
320	312115-0372		3	SCREW ISO4762 M6X25 A4 80	
330	312115-0376		2	SCREW ISO4762 M6X35 A4 80	
340	312115-0327		2	SCREW ISO4762 M5X12 A4 80	
350	312155-0293		2	SCREW DIN 7991 MF6S M4X16 A4 70	
360	312115-0329		4	SCREW ISO4762 M5X16 A4 80	
370	312318-0285		2	SCREW ISO4029 M4X6 A4	
380	312318-0289		2	SCREW ISO4029 M4X10 A4	
390	312318-0287		1	SCREW ISO4029 M4X8 A4	
400	315105-0153		4	WASHER BRB 6,4X12 RFR	
410	315105-0146		4	WASHER BRB 5,3X10 RFR	
420	90459-4618		2	WASHER 8,5/25/6, ST7387.20	
430	90459-4617		2	SCREW, SZ8512.08X020	
500	90459-2756		2	GUIDE PILLAR, ST7120. 19X112X135	
510	90459-1213		1	BRACKET, REAR, EYE WITH AXLE 40	
520	311103-0270		2	PARALLEL PIN ISO 2338 4M6X16 A1	
530	311103-0353		2	PARALLEL PIN ISO 2338 6M6X20 A1	
540	342770-0105		1	STRAIGHT COUPLING INT, D=6 MM - G1/8	
550	90055-0217		1	ELBOW PIPE JOINT	
560	90335-0005		4	SPRING	
570	90459-1212		1	DOUBLE ACTING, COMPACT, 40-40	
580	90044-0165		2	PROX. SENSOR, SME-8-K5-LED-24	
590	90458-2956		2	ELBOW PIPE JOINT, EXT.THREAD, D=6MM-G1/8	
600	359705-0005		2	WARNING SIGN ISO, MOVING PART	
610	90459-2755		2	GUIDE BUSHING, ST7403 19X060X063	
	90459-4622		*1*	*ROLLER CAGE, ST7140.19X063*	
620	90459-1681		4	SCREW HEX.SOCK.SET CONEPT.MS6SS M4X12 A2	
630	90005-0060		5	WASHER PLAIN, RBS 6,4/M6)/18,H=1,5	
640	90459-2758		8	BUSHING, IGLIDUR Z 12X14X15	
650	90296-0091		1	LUBRICATION GREASE	
660	90157-0016		1	THREAD LOCKING, LOCTITE 242 50 ML	
670	321161-0180		2	FLANGE BUSHING, 12X14X12MM	

Machine Type	Group Description	Used-In	Group Number	Page No

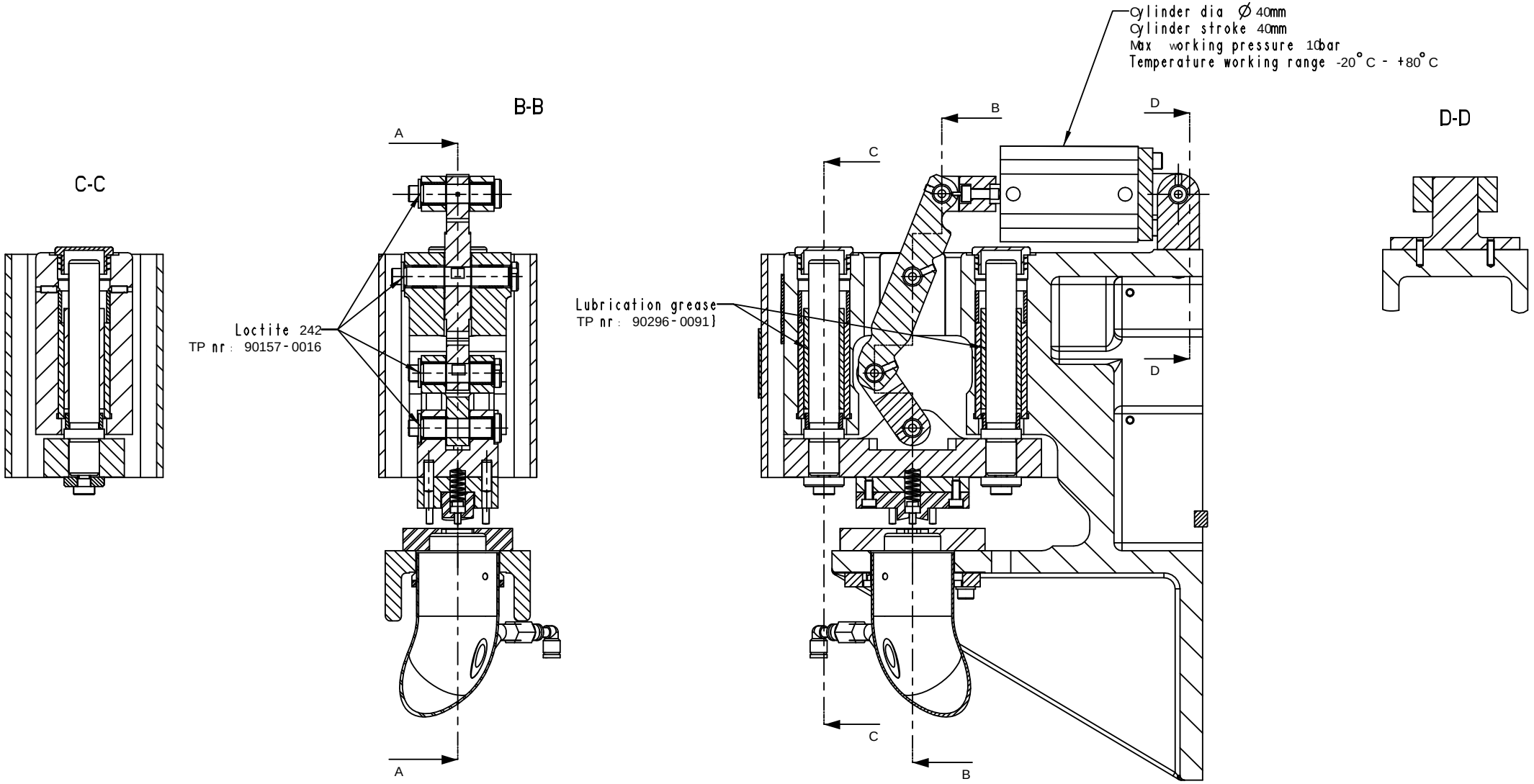
Cylinder dia Ø 40mm
Cylinder stroke 40mm
Max working pressure 10bar
Temperature working range -20°C - +80°C
C-C
B-B
D-D
A
B
C
D
Loctite 242
TP nr: 90157-0016
Lubrication grease
TP nr: 90296-0091

ECM: 183273 - 20041102
Group number: 2529645-0200
Assembly Drawing: 2529645-2_2_AB

This list covers pages from 1-66 to 1-69

Pos	Part No	UN	Qty	Description	Page No
HOLE48					
060	1255573-0000		1	DIE	
090	1317255-0000		1	PUNCH	
HOLE70					
060	1296993-0000		1	DIE	
090	1317383-0000		1	PUNCH	
HOLE72					
060	1317458-0000		1	DIE	
090	1317457-0000		1	PUNCH	
Common Parts					
010	2609932-0000		1	FORK	
020	2609940-0000		1	FRAME	
030	2609931-0000		1	LEVER	
040	2609935-0000		1	PLATE	
050	2609936-0000		1	BRACKET	
070	2540734-0000		1	PLATE	
080	2677792-0000		4	STRIPPER PIN	
100	2555497-0000		1	PIN	
110	2557567-0000		2	PLUG	
120	1478572-0000		1	SPRING	
130	1255827-0000		1	CLAMP	
140	1255825-0000		1	WASTE PIPE	
150	2555494-0000		1	KEY	
160	2609930-0000		1	LEVER	
170	2609928-0000		3	SHAFT	
180	2609933-0000		2	SPACER	
190	2609929-0000		1	SHAFT	
200	2609937-0000		16	WASHER	
210	2609934-0000		2	SPACER	
220	2615470-0000		1	COVER	
230	2699025-0000		1	SHAFT	
300	312105-0453		2	SCREW M6S ISO 4017 M8X25 A480	
310	312115-0368		9	SCREW ISO4762 M6X16 A4 80	
320	312115-0372		3	SCREW ISO4762 M6X25 A4 80	
330	312115-0376		2	SCREW ISO4762 M6X35 A4 80	
340	312115-0327		2	SCREW ISO4762 M5X12 A4 80	
350	312155-0293		2	SCREW DIN 7991 MF6S M4X16 A4 70	
360	312115-0329		4	SCREW ISO4762 M5X16 A4 80	
370	312318-0285		2	SCREW ISO4029 M4X6 A4	
380	312318-0289		2	SCREW ISO4029 M4X10 A4	
390	312318-0287		1	SCREW ISO4029 M4X8 A4	
400	315105-0153		4	WASHER BRB 6,4X12 RFR	
410	315105-0146		4	WASHER BRB 5,3X10 RFR	
420	90459-4618		2	WASHER 8,5/25/6, ST7387.20	
430	90459-4617		2	SCREW, SZ8512.08X020	
500	90459-2756		2	GUIDE PILLAR, ST7120. 19X112X135	
510	90459-1213		1	BRACKET, REAR, EYE WITH AXLE 40	
520	311103-0270		2	PARALLEL PIN ISO 2338 4M6X16 A1	
530	311103-0353		2	PARALLEL PIN ISO 2338 6M6X20 A1	
540	342770-0105		1	STRAIGHT COUPLING INT, D=6 MM - G1/8	
550	90055-0217		1	ELBOW PIPE JOINT	
560	90335-0005		4	SPRING	
570	90459-1212		1	DOUBLE ACTING, COMPACT, 40-40	
580	90044-0165		2	PROX. SENSOR, SME-8-K5-LED-24	
590	90458-2956		2	ELBOW PIPE JOINT, EXT.THREAD, D=6MM-G1/8	
600	359705-0005		2	WARNING SIGN ISO, MOVING PART	
610	90459-2755		2	GUIDE BUSHING, ST7403 19X060X063	
	90459-4622		*1*	*ROLLER CAGE, ST7140.19X063*	
620	90459-1681		4	SCREW HEX.SOCK.SET CONEPT.MS6SS M4X12 A2	
630	90005-0060		5	WASHER PLAIN, RBS 6,4/M6)/18,H=1,5	
640	90459-2758		8	BUSHING, IGLIDUR Z 12X14X15	
650	90296-0091		1	LUBRICATION GREASE	
660	90157-0016		1	THREAD LOCKING, LOCTITE 242 50 ML	
670	321161-0180		2	FLANGE BUSHING, 12X14X12MM	

Machine Type	Group Description	Used-In	Group Number	Page No

SEALING UNIT OUTER PATCH

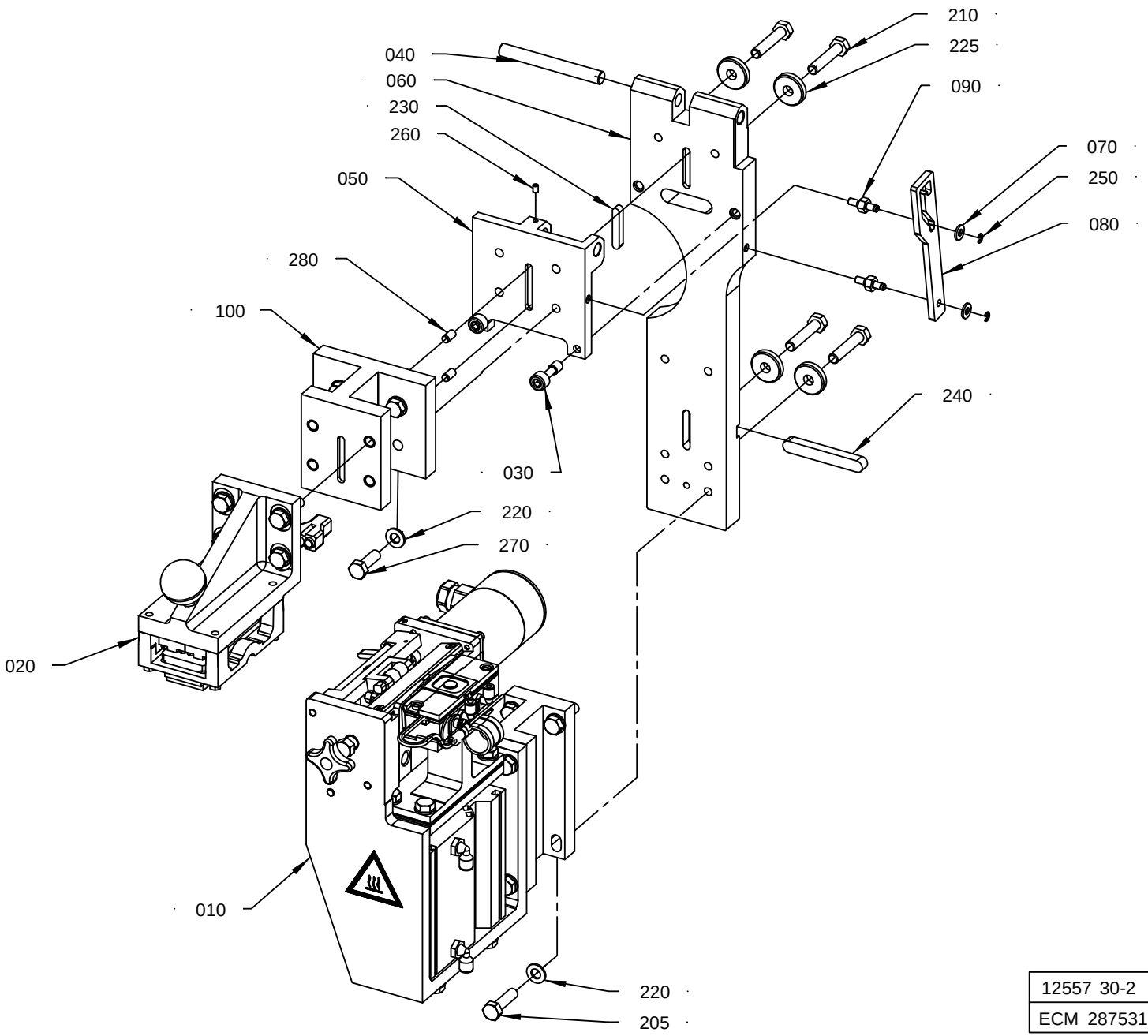

12557 30-2
ECM 287531

ECM: 293510 - 20070126
Group number: 1255730-0200
Assembly Drawing: 1255730-2_1_AA

Pos	Part No	UN	Qty	Description	Page No
-					
010	1255731-0200		1	SEALING UNIT OUTER PATCH	**1-73**
020	2813997-0100		1	COUNTER JAW	**1-75**
030	2519631-0000		2	SCREW	
040	2519632-0000		1	PIN	
050	2519635-0000		1	HINGE	
060	2519638-0000		1	PLATE	
070	2529647-0000		2	WASHER	
080	2529650-0000		1	LEVER	
090	2540719-0000		2	PIN	
100	2813998-0000		1	SPACER	
205	312105-0455		4	SCREW M6S ISO 4017 M8X30 A480	
210	312105-0459		4	SCREW M6S ISO 4014 M8X40 A480	
220	315105-0165		8	WASHER BRB 8,4X16 RFR	
225	315125-0165		4	WASHER TBRSB 8,4X26X5 A4	
230	315705-0238		1	PARALLEL KEY W. ROUND ENDS, 6X6X36 MM	
240	315705-0307		1	PARALLEL KEY W. ROUND ENDS, 10X8X70 MM	
250	315755-0105		2	RETAINING RING SHAFT DIN 6799 3,2 SS	
260	312318-0285		1	SCREW ISO4029 M4X6 A4	
270	312105-0453		4	SCREW M6S ISO 4017 M8X25 A480	
280	311103-0349		2	PARALLEL PIN ISO 2338 6M6X12 A1	

Pos	Part No	UN	Qty	Description	Page No

SEALING UNIT OUTER PATCH

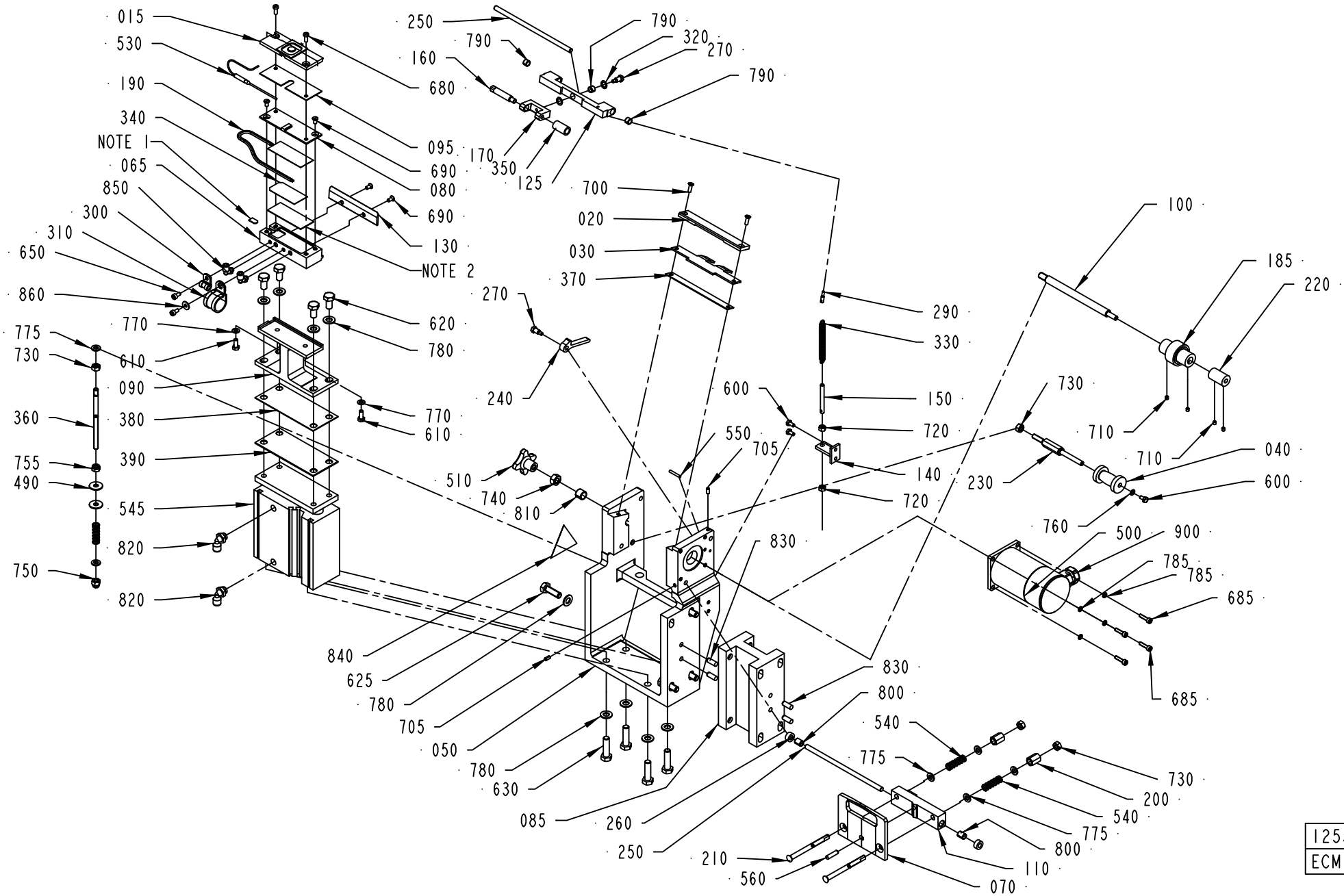

1255731-2
ECM 287531

ECM: 293511 - 20070126
Group number: 1255731-0200
Assembly Drawing: 1255731-2_1_AA

Pos	Part No	UN	Qty	Description	Page No
HOLE70, HOLE48					
015	2500029-0000		1	HEATING RAIL	
HOLE72					
015	2680070-0000		1	HEATING RAIL	
Common Parts					
020	979888-0000		1	STEERING	
030	979647-0000		1	HEAD PLATE	
040	1255821-0000		1	ROLL	
045	2033-0013		6	WASHER	
050	2519642-0000		1	CANTILEVER	
065	1548788-0000		1	HEATING CHAMBER	
070	1519378-0000		1	WINDOW KNIFE	
080	582481-0000		1	HEATER LOCK	
085	2813995-0000		1	SPACER	
090	582440-0000		1	BRACKET	
095	589437-0000		1	SHIM	
100	582423-0000		1	SHAFT	
110	582420-0000		1	KNIFE HOLDER	
125	1346217-0000		1	HOLDER	
130	1519379-0000		1	FLAT KNIFE	
140	582483-0000		1	HOLDER	
150	905215-0000		1	BOLT	
160	905413-0000		1	SHAFT	
170	905416-0000		1	PIVOT BRACKET-SWIVEL	
185	905471-0000		1	ROLLER DRIVE	
190	979699-0000		1	HEATER	
200	1334192-0000		2	NUT	
210	283551-0000		2	SCREW	
220	589442-0000		1	CONNECTION	
230	1350679-0000		1	SHAFT	
240	582425-0000		1	HANDSPIKE	
250	582426-0000		2	SHAFT	
260	589438-0000		2	SPACER	
270	905415-0000		2	SHAFT	
290	905607-0000		1	SCREW	
300	907138-0000		1	CLAMP	
310	907249-0000		1	CLAMP	
320	907487-0000		2	WASHER-CURVED	
330	907719-0000		1	SPRING	
340	1317796-0000		1	SHIM	
350	90348-0031		1	FREE-WHEEL COUPLING, 8X12 MM	
360	589439-0000		1	PIN	
370	589440-0000		1	SHIM	
380	590988-0000		1	SHIM	
390	590989-0000		1	SHIM	
490	90005-0060		2	WASHER PLAIN, RBS 6,4/M6)/18,H=1,5	
500	90458-0523		1	STEP MOTOR, SM 56.2.18J3 Z(202)	
510	90051-0007		1	STELLAR KNOB, INT. THREAD, NO. 40	
530	90326-0060		1	THERMOCOUPLE, CR-AL	
540	90335-0067		3	COMP. SPRING 22370, 1,6X9,6X31,75	
545	90450-0397		1	CYLINDER	
550	311103-0238		1	PARALLEL PIN ISO 2338 3M6X20 A1	
560	311103-0310		1	PARALLEL PIN ISO 2338 5M6X20 A1	
600	312105-0287		3	SCREW M6S ISO 4017 M4X8 A470	
610	312105-0327		2	SCREW M6S ISO 4017 M5X12 A480	
620	312105-0449		4	SCREW M6S ISO 4017 M8X16 A480	
625	312105-0453		4	SCREW M6S ISO 4017 M8X25 A480	
630	312105-0455		4	SCREW M6S ISO 4017 M8X30 A480	
650	312115-0287		2	SCREW ISO4762 M4X8 A4 80	
680	312125-0289		2	SCREW ISO 1207 M4X10 A4	
685	312115-0293		4	SCREW ISO4762 M4X16 A4 80	
690	312145-0287		4	SCREW ISO 2009 MFS M4X8 A4	
700	312145-0291		2	SCREW ISO 2009 MFS M4X12 A4	
705	312318-0287		2	SCREW ISO4029 M4X8 A4	
710	312318-0283		4	SCREW ISO4029 M4X4 A4	
720	312605-0314		2	HEXAGON NUT, M6M M5 A280	
730	312605-0316		4	HEXAGON NUT, M6M M6 A280	
740	312605-0318		1	HEXAGON NUT, M6M M8 A280	
750	312705-0316		1	HEX. DOMED CAP MHM-6 M6 A280	
755	312812-0316		1	HEXAGON NUT, NY-LOCK M6 A480	
760	315105-0136		1	WASHER BRB 4,3X8 RFR	
770	315105-0146		2	WASHER BRB 5,3X10 RFR	
775	315105-0153		6	WASHER BRB 6,4X12 RFR	
780	315105-0165		12	WASHER BRB 8,4X16 RFR	
785	315402-0136		4	LOCK WASHER, DIN127B 4,1 A4, M4-5/32	
790	321141-0060		3	BEARING BUSH W/O FLANGE, 6X8X6 MM	
800	321141-0064		2	BEARING BUSH W/O FLANGE, 6X8X10 MM	
810	321141-0140		1	BEARING BUSH W/O FLANGE, 10X12X10 MM	
820	90458-2956		2	ELBOW PIPE JOINT, EXT.THREAD, D=6MM-G1/8	
830	311103-0351		4	PARALLEL PIN ISO 2338 6M6X16 A1	
840	359705-0007		1	WARNING SIGN ISO, HOT SURFACE	
850	90458-2954		2	ELBOW PIPE JOINT, EXT.THREAD, D=4MM M5	
860	90005-0082		1	WASHER PLAIN ROUND 4,3(M4)/12,H=1	
900	90458-0438		1	GLAND, EXTENDED WITH INSERT, M20X1,5	

Machine Type | Group Description | Used-In | Group Number | Page No

COUNTER JAW

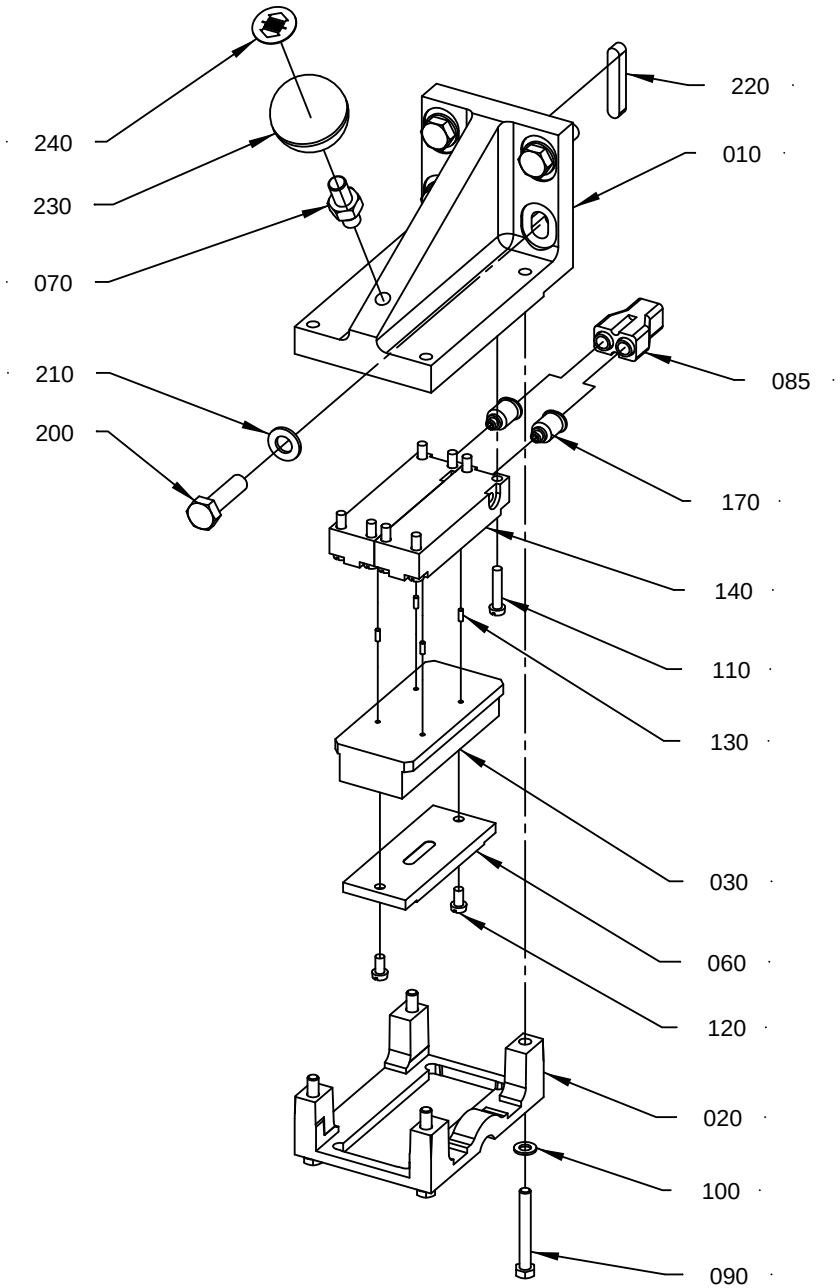

2813 997-1
ECM 287531

ECM: 293514 - 20070126
Group number: 2813997-0100
Assembly Drawing: 2813997-1_1_AA

Pos	Part No	UN	Qty	Description	Page No
-					
010	2519640-0000		1	BRACKET	
020	582487-0000		1	HOLDER	
030	582488-0000		1	BLOCKING PIECE	
060	2562321-0000		1	DOLLY	
070	2574385-0000		1	PIN	
085	90055-0100		1	Y-CONNECTION, 6-6	
090	312105-0339		4	SCREW M6S ISO 4014 M5X40 A480	
100	315105-0146		4	WASHER BRB 5,3X10 RFR	
110	312121-0295		8	SCREW ISO 1207 M4X20 4.8-5.8 Z.PL.	
120	312125-0287		2	SCREW ISO 1207 M4X8 A4	
130	311102-0185		4	PARALLEL PIN ISO 2338 2M6X6 ST	
140	90450-0398		2	SINGLE ACTING, PANCAKE EV-63/15-4	
170	90055-0218		2	STRAIGHT COUPLING, D=6 MM - M5	
200	312105-0455		4	SCREW M6S ISO 4017 M8X30 A480	
210	315105-0165		4	WASHER BRB 8,4X16 RFR	
220	315705-0238		1	PARALLEL KEY W. ROUND ENDS, 6X6X36 MM	
230	90459-1921		1	SPHERICAL KNOB TRANSPARENT CAP, Ã¸35	
240	90459-1922		1	LABEL, ELESA MA.20-P17	

Pos	Part No	UN	Qty	Description	Page No

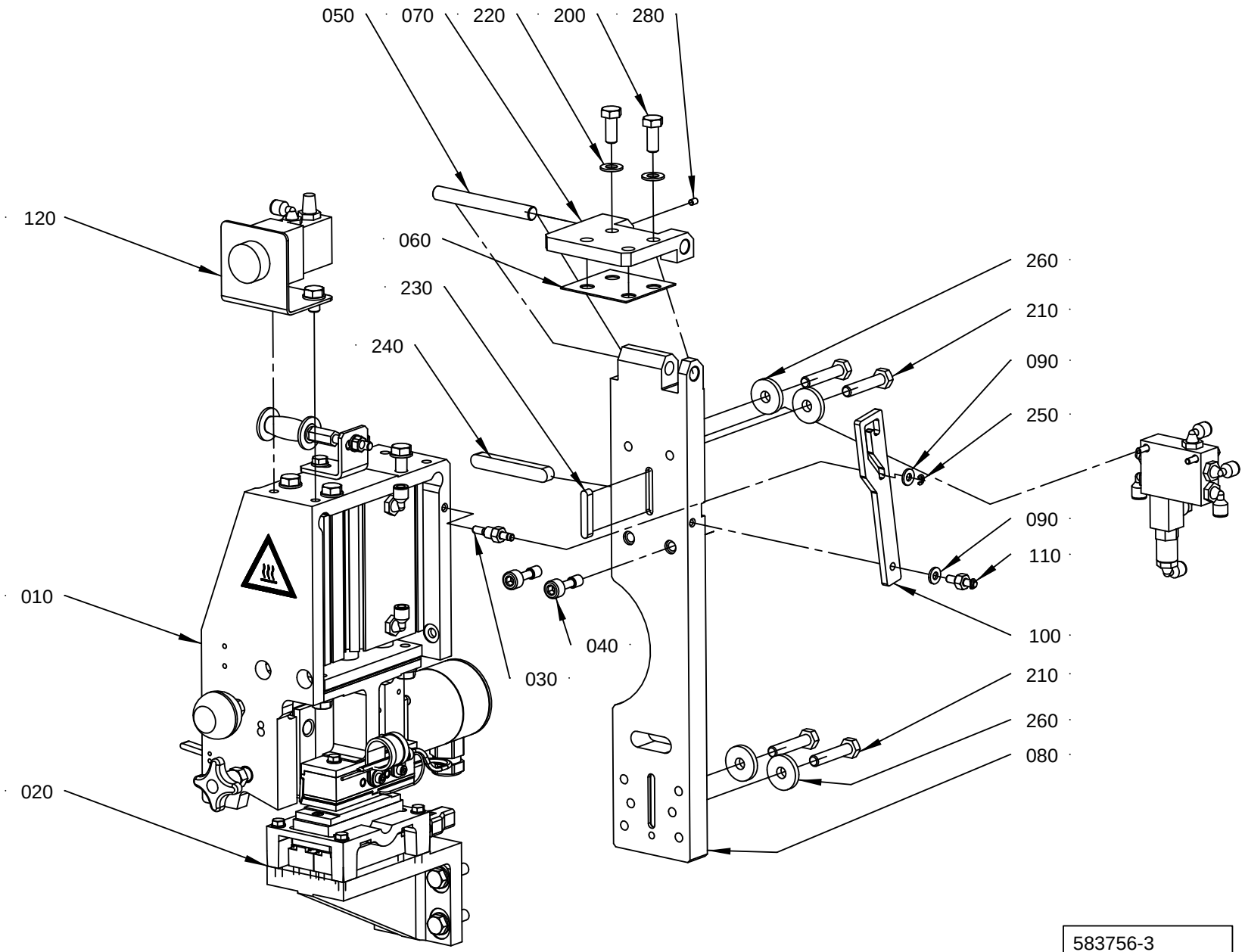

583756-3
2748 54

ECM: 293502 - 20070126
Group number: 583756-0200
Assembly Drawing: 583756-3_1_AB

This list covers pages from 1-76 to 1-79

Pos	Part No	UN	Qty	Description	Page No
TBA (See drawing on page: 1-76)					
030	2519629-0000		1	PIN	
040	2519631-0000		2	SCREW	
070	2519634-0000		1	HINGE	
110	2540719-0000		1	PIN	
200	312105-0451		2	SCREW M6S ISO 4017 M8X20 A480	
220	315105-0165		2	WASHER BRB 8,4X16 RFR	
TPA (See drawing on page: 1-78)					
040	2519631-0000		4	SCREW	
070	2810991-0000		1	HINGE	
105	2828676-0000		1	SPACER	
110	2540719-0000		2	PIN	
115	2813991-0000		1	SPACER	
200	312105-0451		4	SCREW M6S ISO 4017 M8X20 A480	
220	315105-0165		8	WASHER BRB 8,4X16 RFR	
270	312105-0455		4	SCREW M6S ISO 4017 M8X30 A480	
290	311103-0349		2	PARALLEL PIN ISO 2338 6M6X12 A1	
Common Parts					
010	979530-0200		1	SEALING UNIT	**1-81, 1-83**
020	979531-0100		1	COUNTER JAW	**1-85**
050	2519632-0000		1	PIN	
060	2519633-0000		1	SHIM	
080	2519636-0000		1	PLATE	
090	2529647-0000		2	WASHER	
100	2529650-0000		1	LEVER	
120	2574386-0100		1	HOLDING DEVICE	**1-65**
210	312105-0459		4	SCREW M6S ISO 4014 M8X40 A480	
230	315705-0238		1	PARALLEL KEY W. ROUND ENDS, 6X6X36 MM	
240	315705-0307		1	PARALLEL KEY W. ROUND ENDS, 10X8X70 MM	
250	315755-0105		2	RETAINING RING SHAFT DIN 6799 3,2 SS	
260	315125-0165		4	WASHER TBRSB 8,4X26X5 A4	
280	312318-0285		1	SCREW ISO4029 M4X6 A4	

Pos	Part No	UN	Qty	Description	Page No

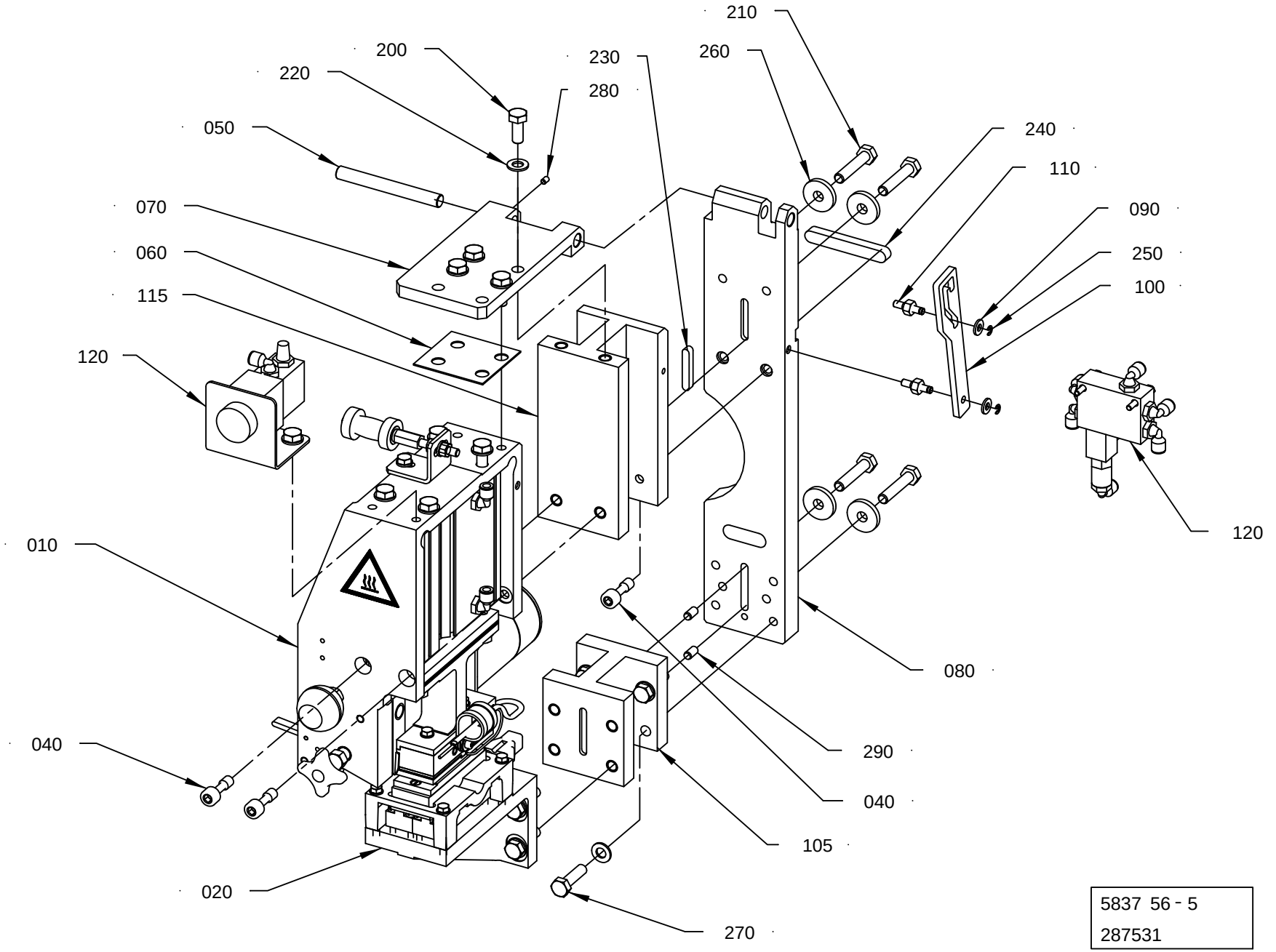

5837 56 - 5
287531

ECM: 293502 - 20070126
Group number: 583756-0200
Assembly Drawing: 583756-5_1_AA

This list covers pages from 1-76 to 1-79

Pos	Part No	UN	Qty	Description	Page No
TBA (See drawing on page: 1-76)					
030	2519629-0000		1	PIN	
040	2519631-0000		2	SCREW	
070	2519634-0000		1	HINGE	
110	2540719-0000		1	PIN	
200	312105-0451		2	SCREW M6S ISO 4017 M8X20 A480	
220	315105-0165		2	WASHER BRB 8,4X16 RFR	
TPA (See drawing on page: 1-78)					
040	2519631-0000		4	SCREW	
070	2810991-0000		1	HINGE	
105	2828676-0000		1	SPACER	
110	2540719-0000		2	PIN	
115	2813991-0000		1	SPACER	
200	312105-0451		4	SCREW M6S ISO 4017 M8X20 A480	
220	315105-0165		8	WASHER BRB 8,4X16 RFR	
270	312105-0455		4	SCREW M6S ISO 4017 M8X30 A480	
290	311103-0349		2	PARALLEL PIN ISO 2338 6M6X12 A1	
Common Parts					
010	979530-0200		1	SEALING UNIT	**1-81, 1-83**
020	979531-0100		1	COUNTER JAW	**1-85**
050	2519632-0000		1	PIN	
060	2519633-0000		1	SHIM	
080	2519636-0000		1	PLATE	
090	2529647-0000		2	WASHER	
100	2529650-0000		1	LEVER	
120	2574386-0100		1	HOLDING DEVICE	**1-65**
210	312105-0459		4	SCREW M6S ISO 4014 M8X40 A480	
230	315705-0238		1	PARALLEL KEY W. ROUND ENDS, 6X6X36 MM	
240	315705-0307		1	PARALLEL KEY W. ROUND ENDS, 10X8X70 MM	
250	315755-0105		2	RETAINING RING SHAFT DIN 6799 3,2 SS	
260	315125-0165		4	WASHER TBRSB 8,4X26X5 A4	
280	312318-0285		1	SCREW ISO4029 M4X6 A4	

Pos	Part No	UN	Qty	Description	Page No

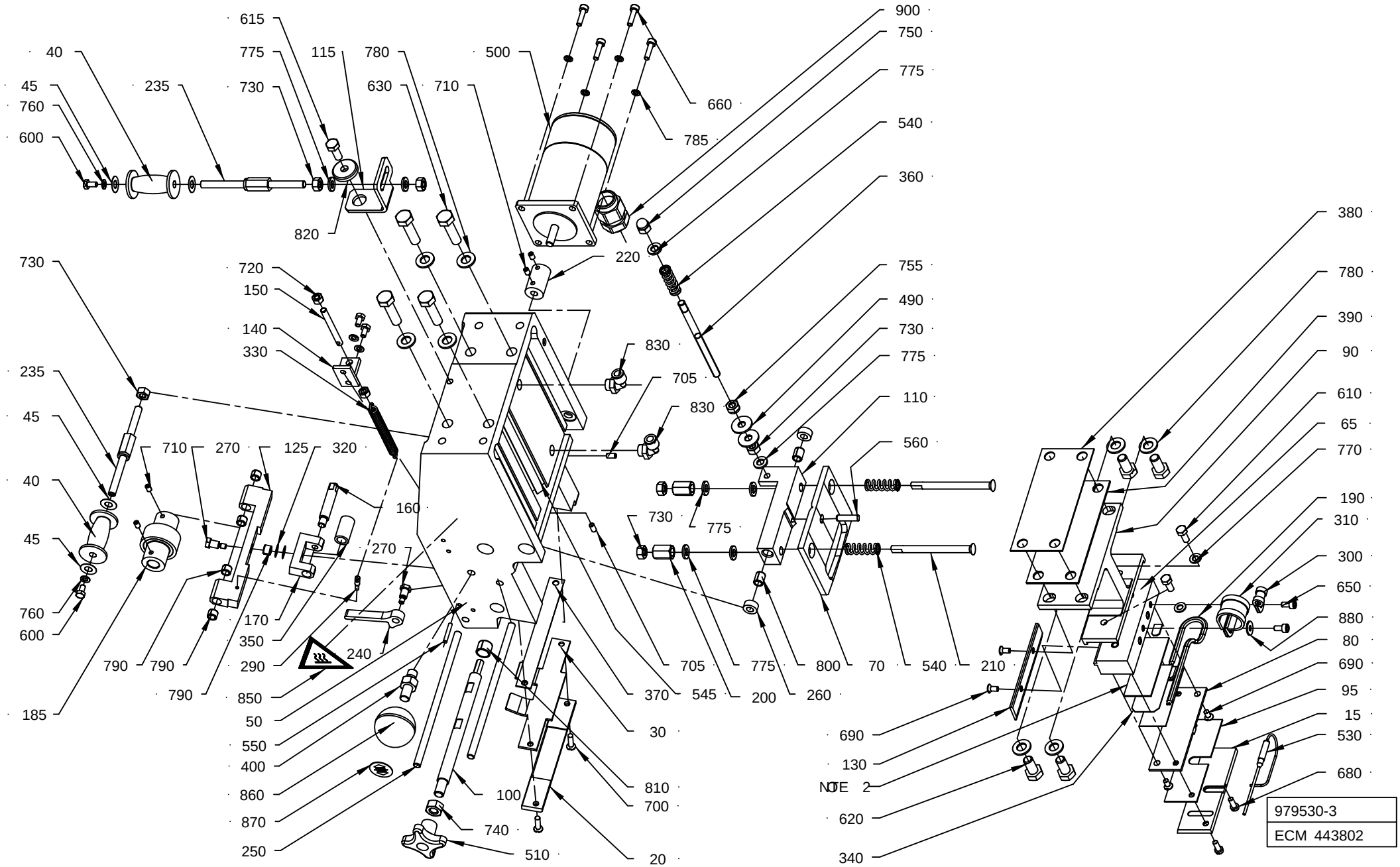
615
775
730
40
45
760
600
235
115
780
630
710
500
660
785
900
750
775
540
360
820
220
730
720
150
140
330
755
490
730
775
110
560
830
705
830
235
45
40
45
760
600
710
270
125
320
160
270
730
775
380
780
390
90
610
65
770
190
310
300
650
880
80
690
95
15
530
680
170
350
290
850
50
550
400
860
870
250
790
790
790
240
185
705
775
800
70
540
210
370
545
200
260
30
810
700
100
740
510
20
690
130
NOTE 2
620
340
979530-3
ECM 443802

ECM: 448601 - 20100524
Group number: 979530-0200
Assembly Drawing: 979530-3_1_AC

This list covers pages from 1-80 to 1-83

Pos	Part No	UN	Qty	Description	Page No
HOLE12					
015	2500040-0000		1	HEATING RAIL	
040	1282991-0003		2	ROLL	
HOLE13					
015	2500039-0000		1	HEATING RAIL	
040	1282991-0003		2	ROLL	
HOLE20, HOLE17					
015	2500038-0000		1	HEATING RAIL	
040	1282991-0002		2	ROLL	
HOLE21					
015	2500037-0000		1	HEATING RAIL	
040	1282991-0001		2	ROLL	
HOLE72, HOLE70, HOLE48					
015	2500036-0000		1	HEATING RAIL	
040	1282991-0003		2	ROLL	
Common Parts					
020	979888-0000		1	STEERING	
030	979647-0000		1	HEAD PLATE	
045	2033-0013		4	WASHER	
050	2519639-0000		1	CANTILEVER	
065	1548788-0000		1	HEATING CHAMBER	
070	1519378-0000		1	WINDOW KNIFE	
080	582481-0000		1	HEATER LOCK	
090	582440-0000		1	BRACKET	
095	589437-0000		1	SHIM	
100	582423-0000		1	SHAFT	
110	582420-0000		1	KNIFE HOLDER	
115	3062158-0000		1	HOLDER	
125	1346217-0000		1	HOLDER	
130	1519379-0000		1	FLAT KNIFE	
140	589441-0000		1	BRACKET	
150	905215-0000		1	BOLT	
160	905413-0000		1	SHAFT	
170	905416-0000		1	PIVOT BRACKET-SWIVEL	
185	905471-0000		1	ROLLER DRIVE	
190	979699-0000		1	HEATER	
200	1334192-0000		2	NUT	
210	283551-0000		2	SCREW	
220	589442-0000		1	CONNECTION	
235	1296785-0000		2	AXLE PINAXLE PIN	
240	582425-0000		1	HANDSPIKE	
250	582426-0000		2	SHAFT	
260	589438-0000		2	SPACER	
270	905415-0000		2	SHAFT	
290	905607-0000		1	SCREW	
300	907138-0000		1	CLAMP	
310	2655635-0000		1	CLAMP	
320	907487-0000		2	WASHER-CURVED	
330	907719-0000		1	SPRING	
340	1317796-0000		1	SHIM	
350	90348-0031		1	FREE-WHEEL COUPLING, 8X12 MM	
360	589439-0000		1	PIN	
370	589440-0000		1	SHIM	
380	590988-0000		1	SHIM	
390	590989-0000		1	SHIM	
400	2574385-0000		1	PIN	
490	90005-0060		2	WASHER PLAIN, RBS 6,4/M6)/18,H=1,5	
500	90458-0523		1	STEP MOTOR, SM 56.2.18J3 Z(202)	
510	90051-0007		1	STELLAR KNOB, INT. THREAD, NO. 40	
530	90326-0060		1	THERMOCOUPLE, CR-AL	
540	90335-0067		3	COMP. SPRING 22370, 1,6X9,6X31,75	
545	90450-0397		1	CYLINDER	
550	311103-0238		1	PARALLEL PIN ISO 2338 3M6X20 A1	
560	311103-0310		1	PARALLEL PIN ISO 2338 5M6X20 A1	
600	312105-0287		4	SCREW M6S ISO 4017 M4X8 A470	
610	312105-0327		2	SCREW M6S ISO 4017 M5X12 A480	
615	312105-0368		1	SCREW M6S ISO 4017 M6X16 A480	
620	312105-0449		4	SCREW M6S ISO 4017 M8X16 A480	
630	312105-0455		4	SCREW M6S ISO 4017 M8X30 A480	
650	312115-0287		2	SCREW ISO4762 M4X8 A4 80	
660	312115-0293		4	SCREW ISO4762 M4X16 A4 80	
680	312125-0289		2	SCREW ISO 1207 M4X10 A4	
690	312145-0287		4	SCREW ISO 2009 MFS M4X8 A4	
700	312145-0293		2	SCREW ISO 2009 MFS M4X16 A4	
705	312318-0287		2	SCREW ISO4029 M4X8 A4	
710	312318-0285		4	SCREW ISO4029 M4X6 A4	
720	312605-0314		2	HEXAGON NUT, M6M M5 A280	
730	312605-0316		6	HEXAGON NUT, M6M M6 A280	
740	312605-0318		1	HEXAGON NUT, M6M M8 A280	
750	312705-0316		1	HEX. DOMED CAP MHM-6 M6 A280	
755	312812-0316		1	HEXAGON NUT, NY-LOCK M6 A480	
760	315105-0136		4	WASHER BRB 4,3X8 RFR	
770	315105-0146		2	WASHER BRB 5,3X10 RFR	
775	315105-0153		8	WASHER BRB 6,4X12 RFR	

Machine Type | Group Description | Used-In | Group Number | Page No

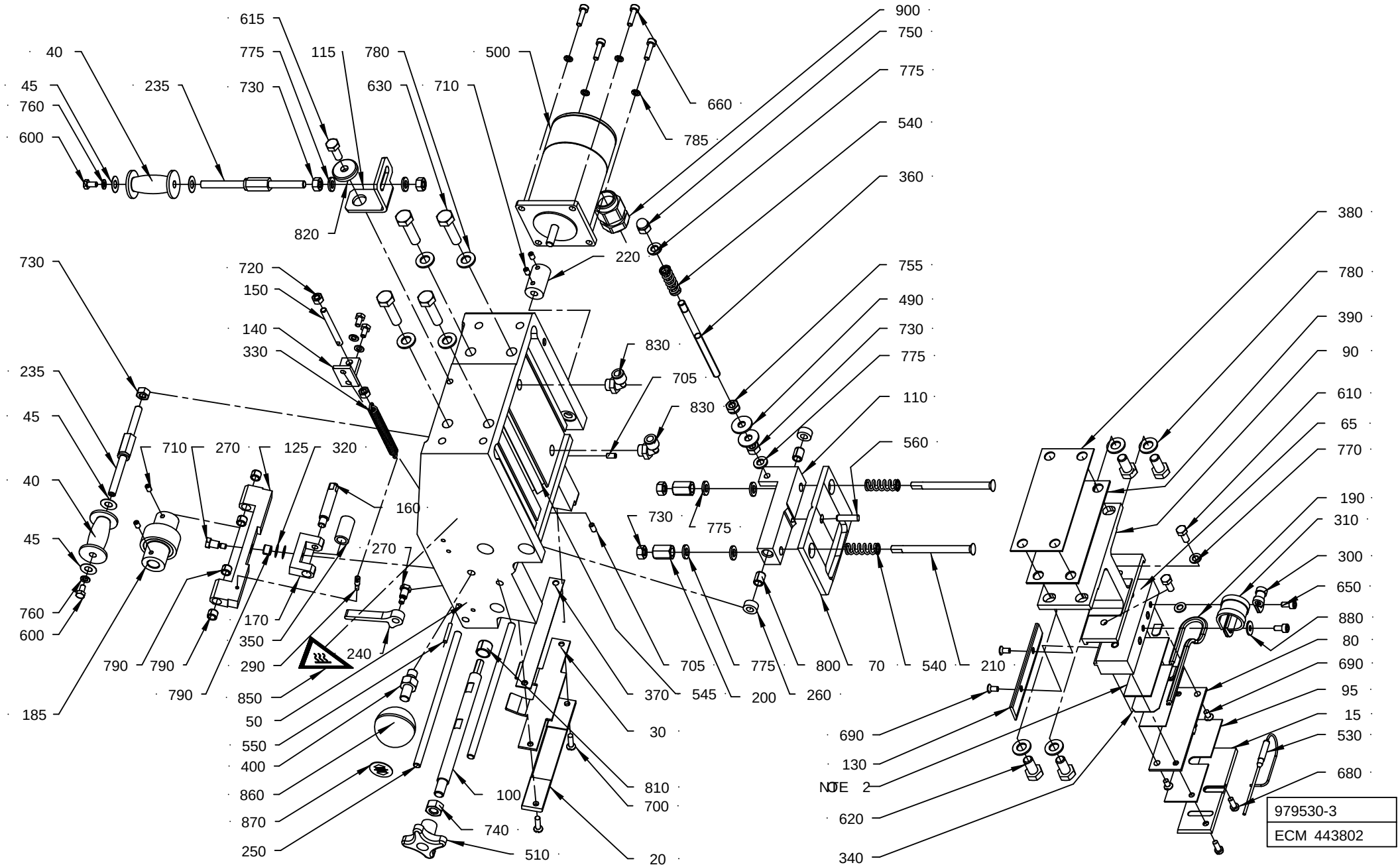
615
775
115
780
500
900
750
40
45
760
600
235
730
630
710
660
775
785
540
360
820
220
380
730
720
150
140
330
755
490
730
775
110
560
780
390
90
610
65
770
190
310
300
650
880
80
690
95
15
530
680
235
45
40
45
760
600
185
710
270
125
320
160
270
170
350
290
850
50
550
400
860
870
250
240
790
790
790
830
705
830
730
775
705
775
800
70
540
210
370
545
200
260
30
810
700
20
100
740
510
690
130
NOTE 2
620
340
979530-3
ECM 443802

Pos	Part No	UN	Qty	Description	Page No
Common Parts (Cont'd)					
780	315105-0165		8	WASHER BRB 8,4X16 RFR	
785	315402-0136		4	LOCK WASHER, DIN127B 4,1 A4, M4-5/32	
790	321141-0060		5	BEARING BUSH W/O FLANGE, 6X8X6 MM	
800	321141-0064		2	BEARING BUSH W/O FLANGE, 6X8X10 MM	
810	321141-0140		1	BEARING BUSH W/O FLANGE, 10X12X10 MM	
820	315125-0153		1	WASHER TBRSB 6,4X22X4 A4	
830	90458-2956		2	ELBOW PIPE JOINT, EXT.THREAD, D=6MM-G1/8	
850	359705-0007		1	WARNING SIGN ISO, HOT SURFACE	
860	90459-1921		1	SPHERICAL KNOB TRANSPARENT CAP, Ã¸35	
870	90459-1922		1	LABEL, ELESA MA.20-P17	
880	90005-0082		1	WASHER PLAIN ROUND 4,3(M4)/12,H=1	
900	90458-0438		1	GLAND, EXTENDED WITH INSERT, M20X1,5	

Pos	Part No	UN	Qty	Description	Page No

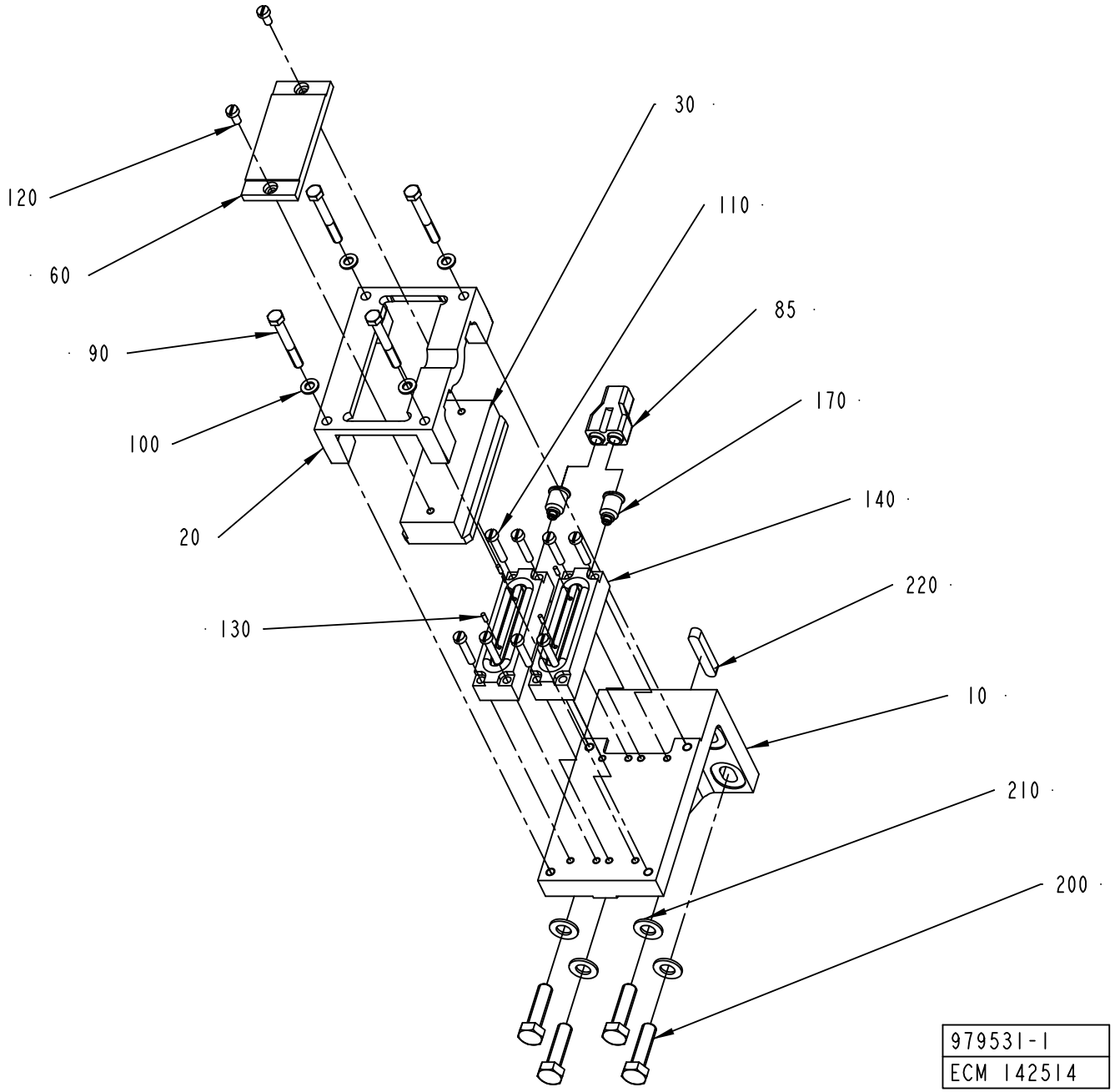
120
60
90
100
20
130
30
110
85
170
140
220
10
210
200
979531-1
ECM 142514

ECM: 243192 - 20060127
Group number: 979531-0100
Assembly Drawing: 979531-1_1_AF

Pos	Part No	UN	Qty	Description	Page No
-					
010	582486-0000		1	BRACKET	
020	582487-0000		1	HOLDER	
030	582488-0000		1	BLOCKING PIECE	
060	2562321-0000		1	DOLLY	
085	90055-0100		1	Y-CONNECTION, 6-6	
090	312105-0339		4	SCREW M6S ISO 4014 M5X40 A480	
100	315105-0146		4	WASHER BRB 5,3X10 RFR	
110	312121-0295		8	SCREW ISO 1207 M4X20 4.8-5.8 Z.PL.	
120	312125-0287		2	SCREW ISO 1207 M4X8 A4	
130	311102-0185		4	PARALLEL PIN ISO 2338 2M6X6 ST	
140	90450-0398		2	SINGLE ACTING, PANCAKE EV-63/15-4	
170	90055-0218		2	STRAIGHT COUPLING, D=6 MM - M5	
200	312105-0455		4	SCREW M6S ISO 4017 M8X30 A480	
210	315105-0165		4	WASHER BRB 8,4X16 RFR	
220	315705-0238		1	PARALLEL KEY W. ROUND ENDS, 6X6X36 MM	

Pos	Part No	UN	Qty	Description	Page No

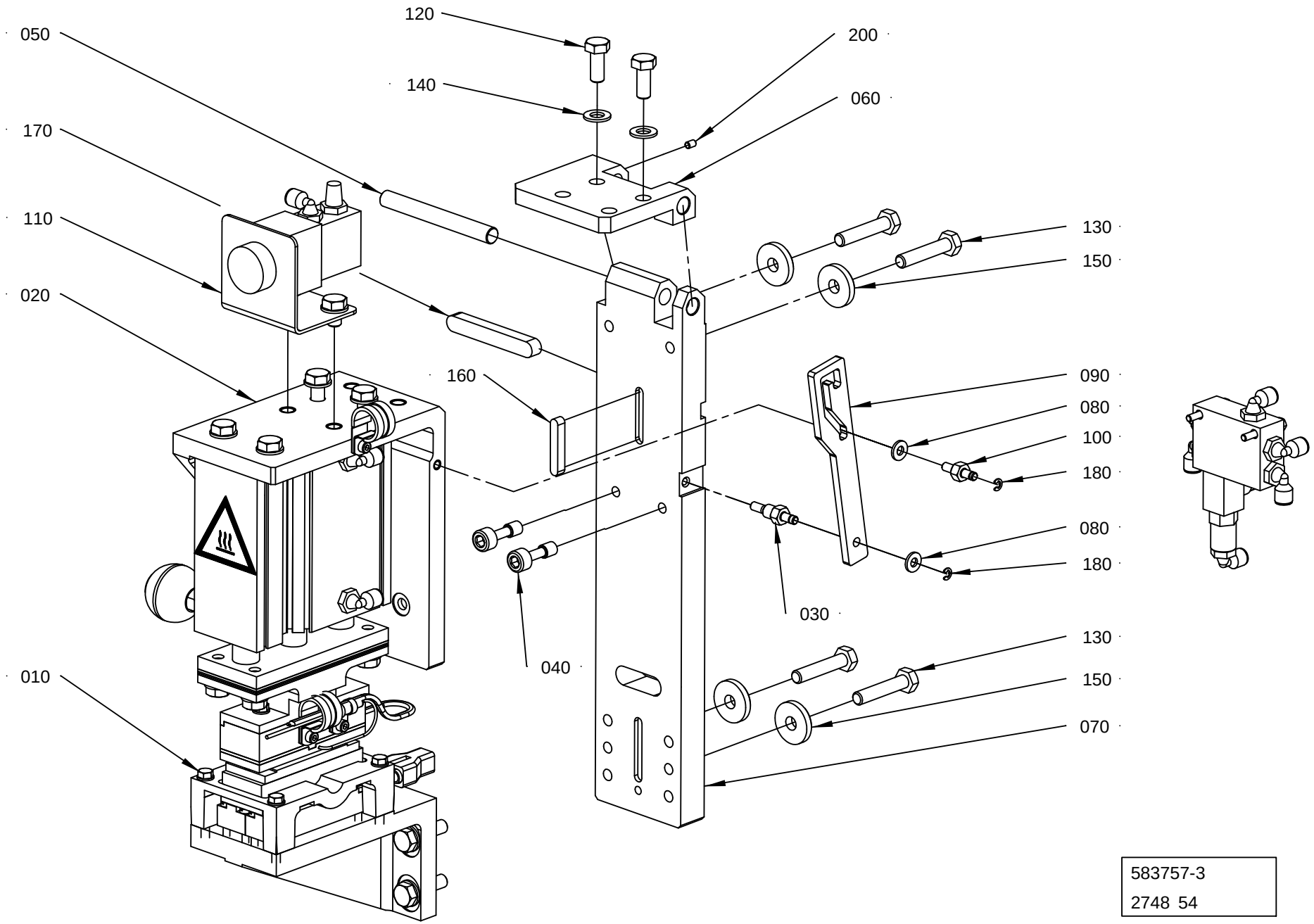
120
200
050
140
060
170
130
110
150
020
160
090
080
100
180
080
180
030
040
130
150
010
070
583757-3
2748 54

Pos	Part No	UN	Qty	Description	Page No
TBA (See drawing on page: 1-86)					
030	2519629-0000		1	PIN	
040	2519631-0000		2	SCREW	
060	2519634-0000		1	HINGE	
100	2540719-0000		1	PIN	
120	312105-0451		2	SCREW M6S ISO 4017 M8X20 A480	
140	315105-0165		2	WASHER BRB 8,4X16 RFR	
TPA (See drawing on page: 1-88)					
030	2519629-0000		2	PIN	
040	2519631-0000		4	SCREW	
060	2810991-0000		1	HINGE	
095	2813990-0000		1	SPACER	
105	2813992-0000		1	SPACER	
120	312105-0451		4	SCREW M6S ISO 4017 M8X20 A480	
140	315105-0165		8	WASHER BRB 8,4X16 RFR	
190	312105-0455		4	SCREW M6S ISO 4017 M8X30 A480	
210	311103-0349		2	PARALLEL PIN ISO 2338 6M6X12 A1	
Common Parts					
010	979531-0100		1	COUNTER JAW	**1-85**
020	979533-0200		1	PATCH FINAL-SEALER	**1-91**
050	2519632-0000		1	PIN	
070	2519637-0000		1	PLATE	
080	2529647-0000		2	WASHER	
090	2529650-0000		1	LEVER	
110	2574386-0100		1	HOLDING DEVICE	**1-65**
130	312105-0459		4	SCREW M6S ISO 4014 M8X40 A480	
150	315125-0165		4	WASHER TBRSB 8,4X26X5 A4	
160	315705-0238		1	PARALLEL KEY W. ROUND ENDS, 6X6X36 MM	
170	315705-0307		1	PARALLEL KEY W. ROUND ENDS, 10X8X70 MM	
180	315755-0105		2	RETAINING RING SHAFT DIN 6799 3,2 SS	
200	312318-0285		1	SCREW ISO4029 M4X6 A4	

Pos	Part No	UN	Qty	Description	Page No

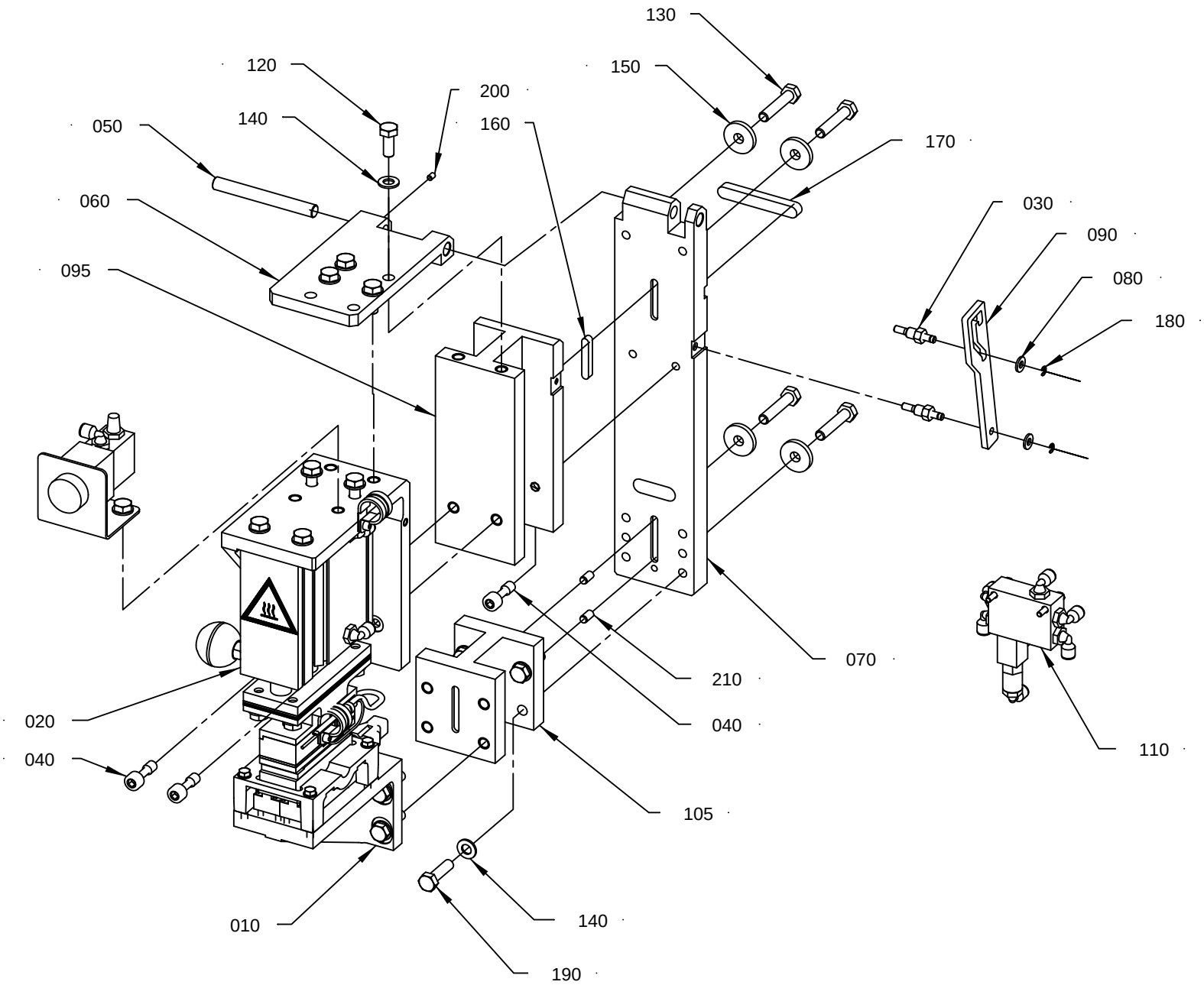

583757 - 5
ECM 287531

ECM: 293503 - 20070126
Group number: 583757-0200
Assembly Drawing: 583757-5_1_AA

This list covers pages from 1-86 to 1-89

Pos	Part No	UN	Qty	Description	Page No
TBA (See drawing on page: 1-86)					
030	2519629-0000		1	PIN	
040	2519631-0000		2	SCREW	
060	2519634-0000		1	HINGE	
100	2540719-0000		1	PIN	
120	312105-0451		2	SCREW M6S ISO 4017 M8X20 A480	
140	315105-0165		2	WASHER BRB 8,4X16 RFR	
TPA (See drawing on page: 1-88)					
030	2519629-0000		2	PIN	
040	2519631-0000		4	SCREW	
060	2810991-0000		1	HINGE	
095	2813990-0000		1	SPACER	
105	2813992-0000		1	SPACER	
120	312105-0451		4	SCREW M6S ISO 4017 M8X20 A480	
140	315105-0165		8	WASHER BRB 8,4X16 RFR	
190	312105-0455		4	SCREW M6S ISO 4017 M8X30 A480	
210	311103-0349		2	PARALLEL PIN ISO 2338 6M6X12 A1	
Common Parts					
010	979531-0100		1	COUNTER JAW	**1-85**
020	979533-0200		1	PATCH FINAL-SEALER	**1-91**
050	2519632-0000		1	PIN	
070	2519637-0000		1	PLATE	
080	2529647-0000		2	WASHER	
090	2529650-0000		1	LEVER	
110	2574386-0100		1	HOLDING DEVICE	**1-65**
130	312105-0459		4	SCREW M6S ISO 4014 M8X40 A480	
150	315125-0165		4	WASHER TBRSB 8,4X26X5 A4	
160	315705-0238		1	PARALLEL KEY W. ROUND ENDS, 6X6X36 MM	
170	315705-0307		1	PARALLEL KEY W. ROUND ENDS, 10X8X70 MM	
180	315755-0105		2	RETAINING RING SHAFT DIN 6799 3,2 SS	
200	312318-0285		1	SCREW ISO4029 M4X6 A4	

Pos	Part No	UN	Qty	Description	Page No

PATCH FINAL-SEALER

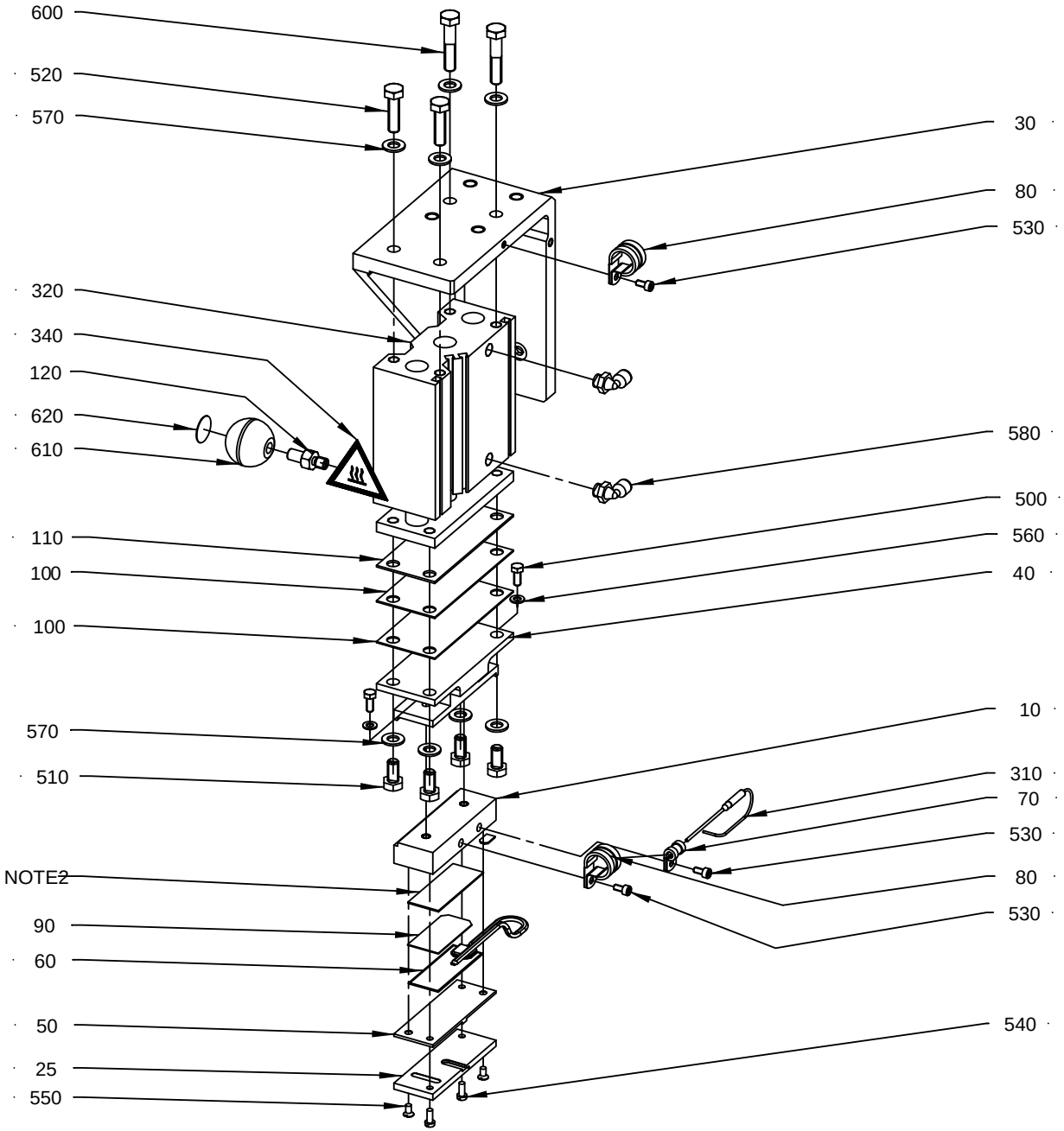

979533-3

ECM: 293506 - 20070126
Group number: 979533-0200
Assembly Drawing: 979533-3_1_AB

Pos	Part No	UN	Qty	Description	Page No
HOLE12					
025	2500035-0000		1	HEATING RAIL	
HOLE13					
025	2500034-0000		1	HEATING RAIL	
HOLE20, HOLE17					
025	2500032-0000		1	HEATING RAIL	
HOLE21					
025	2500031-0000		1	HEATING RAIL	
HOLE72, HOLE70, HOLE48					
025	2500030-0000		1	HEATING RAIL	
Common Parts					
010	583674-0000		1	HEATING CHAMBER	
030	2519641-0000		1	BRACKET	
040	583675-0000		1	BRACKET	
050	583677-0000		1	HEATER LOCK	
060	979699-0000		1	HEATER	
070	907138-0000		1	CLAMP	
080	907249-0000		2	CLAMP	
090	905484-0000		1	SHIM	
100	590988-0000		2	SHIM	
110	590989-0000		1	SHIM	
120	2574385-0000		1	PIN	
310	90326-0060		1	THERMOCOUPLE, CR-AL	
320	90450-0397		1	CYLINDER	
340	359705-0007		1	WARNING SIGN ISO, HOT SURFACE	
500	312105-0327		2	SCREW M6S ISO 4017 M5X12 A480	
510	312105-0449		4	SCREW M6S ISO 4017 M8X16 A480	
520	312105-0455		4	SCREW M6S ISO 4017 M8X30 A480	
530	312115-0287		3	SCREW ISO4762 M4X8 A4 80	
540	312125-0289		2	SCREW ISO 1207 M4X10 A4	
550	312145-0287		2	SCREW ISO 2009 MFS M4X8 A4	
560	315105-0146		2	WASHER BRB 5,3X10 RFR	
570	315105-0165		8	WASHER BRB 8,4X16 RFR	
580	90458-2956		2	ELBOW PIPE JOINT, EXT.THREAD, D=6MM-G1/8	
600	312105-0459		2	SCREW M6S ISO 4014 M8X40 A480	
610	90459-1921		1	SPHERICAL KNOB TRANSPARENT CAP, Ã¸35	
620	90459-1922		1	LABEL, ELESA MA.20-P17	

Pos	Part No	UN	Qty	Description	Page No

SEALING DEVICE

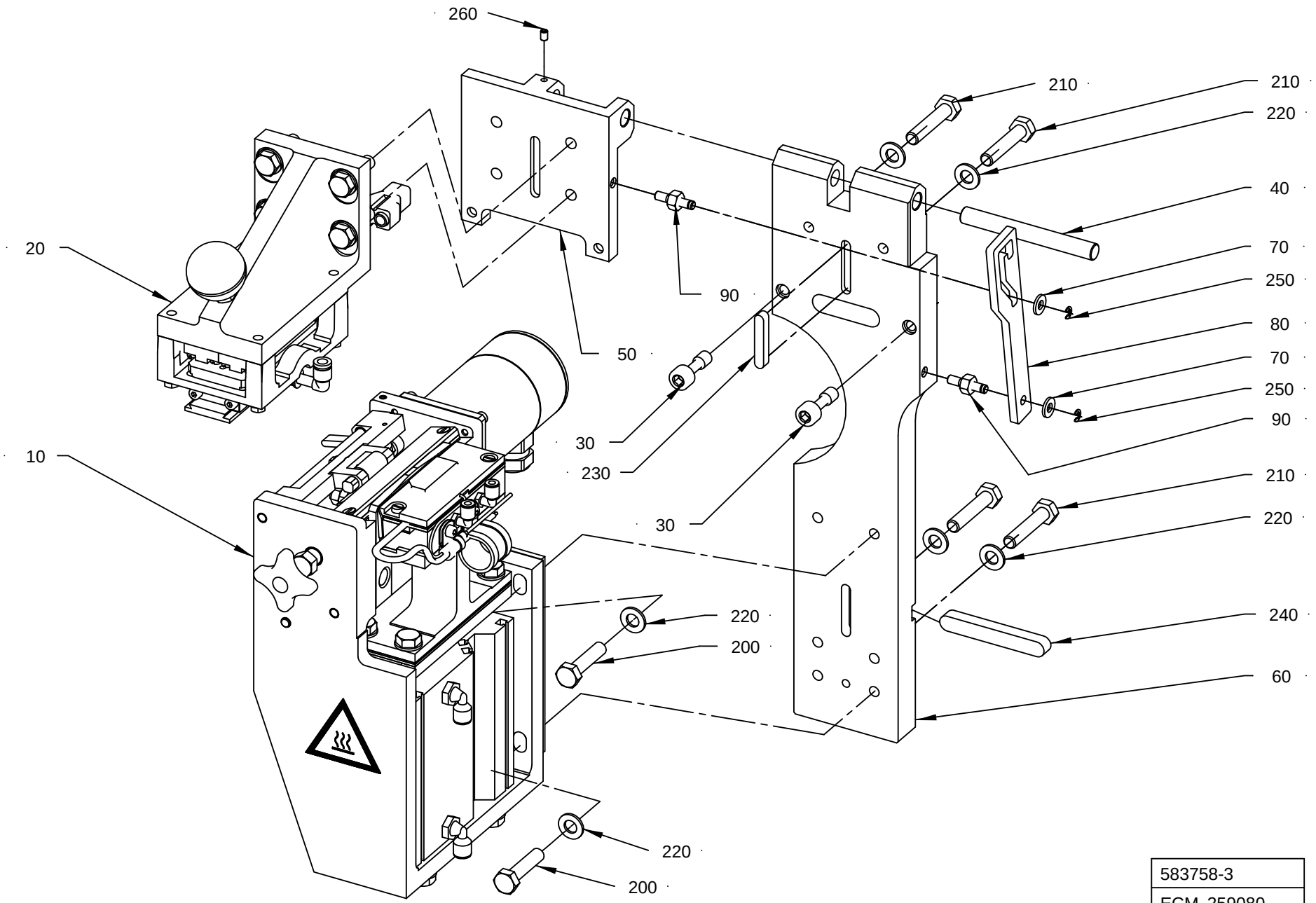

583758-3
ECM 259080

ECM: 293504 - 20070126
Group number: 583758-0200
Assembly Drawing: 583758-3_1_AB

This list covers pages from 1-92 to 1-95

Pos	Part No	UN	Qty	Description	Page No
TBA (See drawing on page: 1-92)					
020	1255736-0200		1	COUNTER JAW	**1-97**
200	312105-0457		4	SCREW M6S ISO 4014 M8X35 A480	
220	315105-0165		8	WASHER BRB 8,4X16 RFR	
TPA (See drawing on page: 1-94)					
020	1255737-0200		1	COUNTER JAW	**1-99**
100	2813989-0000		1	SPACER	
205	312105-0455		4	SCREW M6S ISO 4017 M8X30 A480	
220	315105-0165		12	WASHER BRB 8,4X16 RFR	
270	312105-0453		4	SCREW M6S ISO 4017 M8X25 A480	
280	311103-0349		2	PARALLEL PIN ISO 2338 6M6X12 A1	
Common Parts					
010	979534-0200		1	SEALING UNIT TAB	**1-101, 1-103**
030	2519631-0000		2	SCREW	
040	2519632-0000		1	PIN	
050	2519635-0000		1	HINGE	
060	2519638-0000		1	PLATE	
070	2529647-0000		2	WASHER	
080	2529650-0000		1	LEVER	
090	2540719-0000		2	PIN	
210	312105-0459		4	SCREW M6S ISO 4014 M8X40 A480	
230	315705-0238		1	PARALLEL KEY W. ROUND ENDS, 6X6X36 MM	
240	315705-0307		1	PARALLEL KEY W. ROUND ENDS, 10X8X70 MM	
250	315755-0105		2	RETAINING RING SHAFT DIN 6799 3,2 SS	
260	312318-0285		1	SCREW ISO4029 M4X6 A4	

Pos	Part No	UN	Qty	Description	Page No

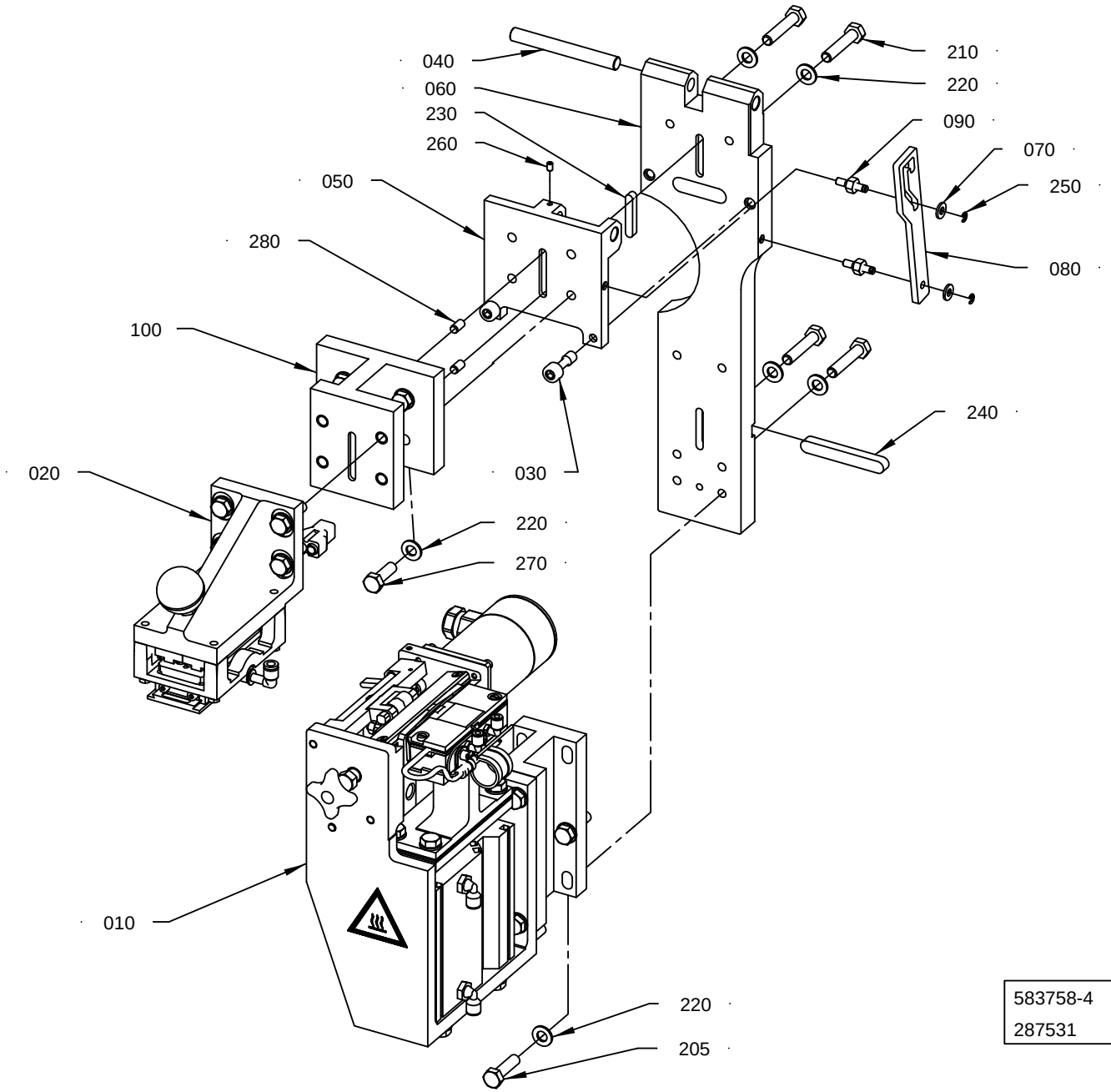

583758-4
287531

ECM: 293504 - 20070126
Group number: 583758-0200
Assembly Drawing: 583758-4_1_AA

This list covers pages from 1-92 to 1-95

Pos	Part No	UN	Qty	Description	Page No
TBA (See drawing on page: 1-92)					
020	1255736-0200		1	COUNTER JAW	**1-97**
200	312105-0457		4	SCREW M6S ISO 4014 M8X35 A480	
220	315105-0165		8	WASHER BRB 8,4X16 RFR	
TPA (See drawing on page: 1-94)					
020	1255737-0200		1	COUNTER JAW	**1-99**
100	2813989-0000		1	SPACER	
205	312105-0455		4	SCREW M6S ISO 4017 M8X30 A480	
220	315105-0165		12	WASHER BRB 8,4X16 RFR	
270	312105-0453		4	SCREW M6S ISO 4017 M8X25 A480	
280	311103-0349		2	PARALLEL PIN ISO 2338 6M6X12 A1	
Common Parts					
010	979534-0200		1	SEALING UNIT TAB	**1-101, 1-103**
030	2519631-0000		2	SCREW	
040	2519632-0000		1	PIN	
050	2519635-0000		1	HINGE	
060	2519638-0000		1	PLATE	
070	2529647-0000		2	WASHER	
080	2529650-0000		1	LEVER	
090	2540719-0000		2	PIN	
210	312105-0459		4	SCREW M6S ISO 4014 M8X40 A480	
230	315705-0238		1	PARALLEL KEY W. ROUND ENDS, 6X6X36 MM	
240	315705-0307		1	PARALLEL KEY W. ROUND ENDS, 10X8X70 MM	
250	315755-0105		2	RETAINING RING SHAFT DIN 6799 3,2 SS	
260	312318-0285		1	SCREW ISO4029 M4X6 A4	

Pos	Part No	UN	Qty	Description	Page No

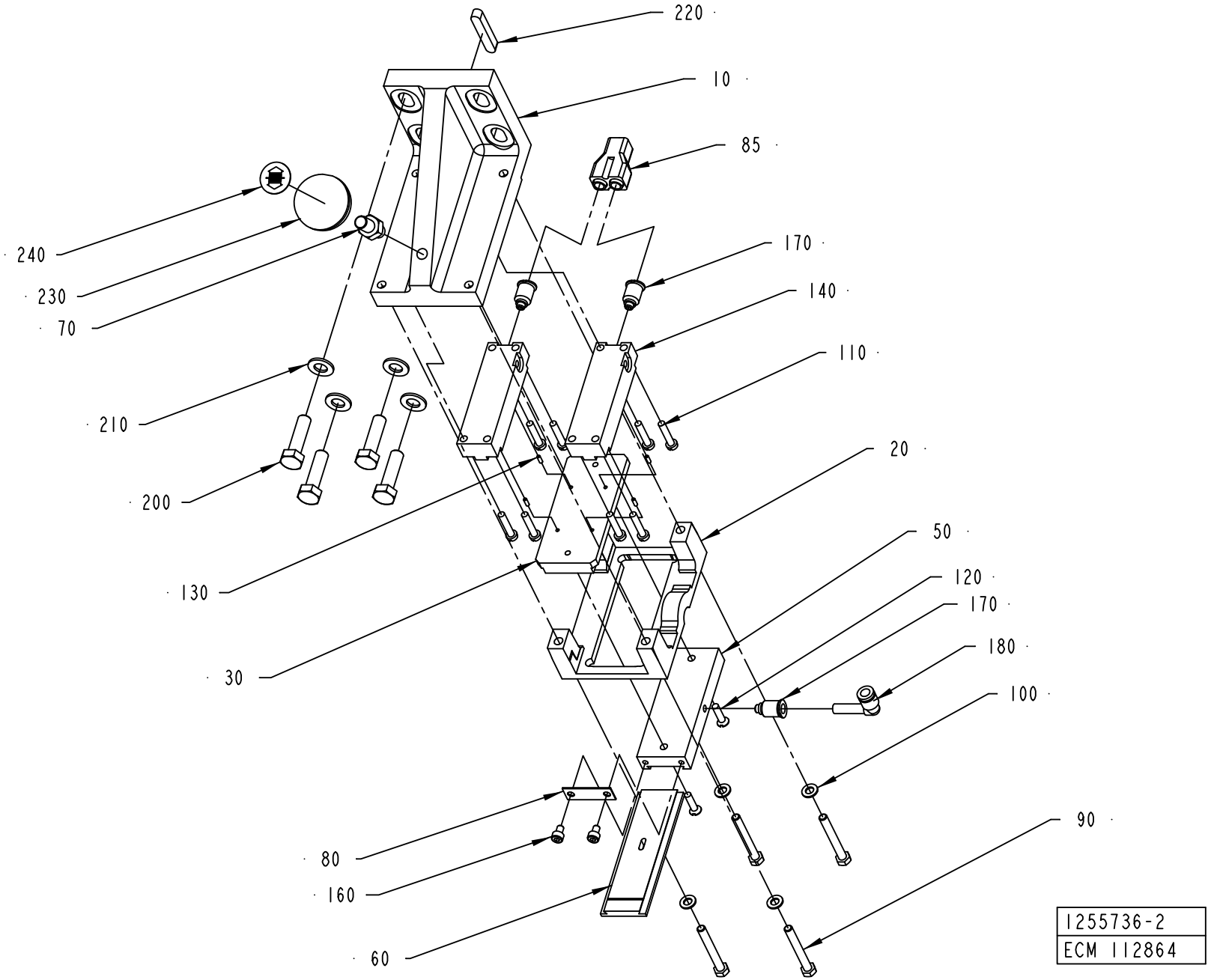
220
10
85
240
230
70
170
140
110
210
200
20
50
120
170
180
130
30
100
90
80
160
60
1255736-2
ECM 112864

ECM: 243203 - 20060127
Group number: 1255736-0200
Assembly Drawing: 1255736-2_1_AA

Pos	Part No	UN	Qty	Description	Page No
-					
010	2519640-0000		1	BRACKET	
020	582487-0000		1	HOLDER	
030	582489-0000		1	BLOCKING PIECE	
050	582491-0000		1	BRACKET	
060	2569878-0000		1	DOLLY	
070	2574385-0000		1	PIN	
080	582494-0000		1	TINPLATE	
085	90055-0100		1	Y-CONNECTION, 6-6	
090	312105-0339		4	SCREW M6S ISO 4014 M5X40 A480	
100	315101-0146		4	WASHER PLAIN, BRB, 5,3/10 H=1	
110	312121-0295		8	SCREW ISO 1207 M4X20 4.8-5.8 Z.PL.	
120	312141-0293		2	SCREW ISO 2009 MFS M4X16 4.8 EL.PL	
130	311102-0185		4	PARALLEL PIN ISO 2338 2M6X6 ST	
140	90450-0398		2	SINGLE ACTING, PANCAKE EV-63/15-4	
160	312115-0285		2	SCREW ISO4762 M4X6 A4 80	
170	90055-0218		3	STRAIGHT COUPLING, D=6 MM - M5	
180	90055-0217		1	ELBOW PIPE JOINT	
200	312105-0455		4	SCREW M6S ISO 4017 M8X30 A480	
210	315105-0165		4	WASHER BRB 8,4X16 RFR	
220	315705-0238		1	PARALLEL KEY W. ROUND ENDS, 6X6X36 MM	
230	90459-1921		1	SPHERICAL KNOB TRANSPARENT CAP, Ã¸35	
240	90459-1922		1	LABEL, ELESA MA.20-P17	

Pos	Part No	UN	Qty	Description	Page No

COUNTER JAW

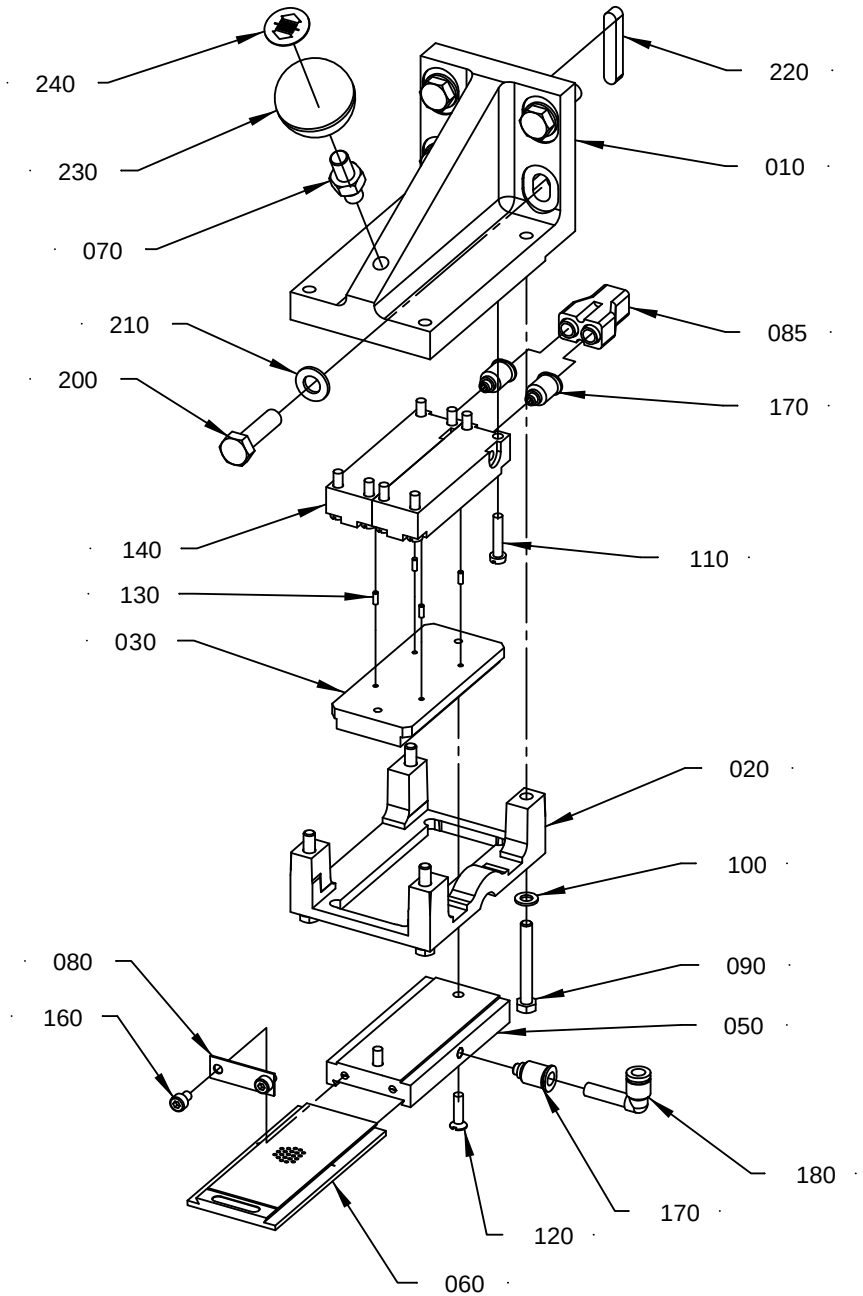

1255737-2
ECM 287531

ECM: 293512 - 20070126
Group number: 1255737-0200
Assembly Drawing: 1255737-2_1_AA

Pos	Part No	UN	Qty	Description	Page No
HOLE70, HOLE48					
060	2569877-0000		1	DOLLY	
HOLE72					
060	2557518-0000		1	DOLLY	
Common Parts					
010	2519640-0000		1	BRACKET	
020	582487-0000		1	HOLDER	
030	582489-0000		1	BLOCKING PIECE	
050	2569876-0000		1	BRACKET	
070	2574385-0000		1	PIN	
080	582494-0000		1	TINPLATE	
085	90055-0100		1	Y-CONNECTION, 6-6	
090	312105-0339		4	SCREW M6S ISO 4014 M5X40 A480	
100	315101-0146		4	WASHER PLAIN, BRB, 5,3/10 H=1	
110	312121-0295		8	SCREW ISO 1207 M4X20 4.8-5.8 Z.PL.	
120	312141-0293		2	SCREW ISO 2009 MFS M4X16 4.8 EL.PL	
130	311102-0185		4	PARALLEL PIN ISO 2338 2M6X6 ST	
140	90450-0398		2	SINGLE ACTING, PANCAKE EV-63/15-4	
160	312115-0285		2	SCREW ISO4762 M4X6 A4 80	
170	90055-0218		3	STRAIGHT COUPLING, D=6 MM - M5	
180	90055-0217		1	ELBOW PIPE JOINT	
200	312105-0455		4	SCREW M6S ISO 4017 M8X30 A480	
210	315105-0165		4	WASHER BRB 8,4X16 RFR	
220	315705-0238		1	PARALLEL KEY W. ROUND ENDS, 6X6X36 MM	
230	90459-1921		1	SPHERICAL KNOB TRANSPARENT CAP, Ã¸35	
240	90459-1922		1	LABEL, ELESA MA.20-P17	

Pos	Part No	UN	Qty	Description	Page No

SEALING UNIT TAB

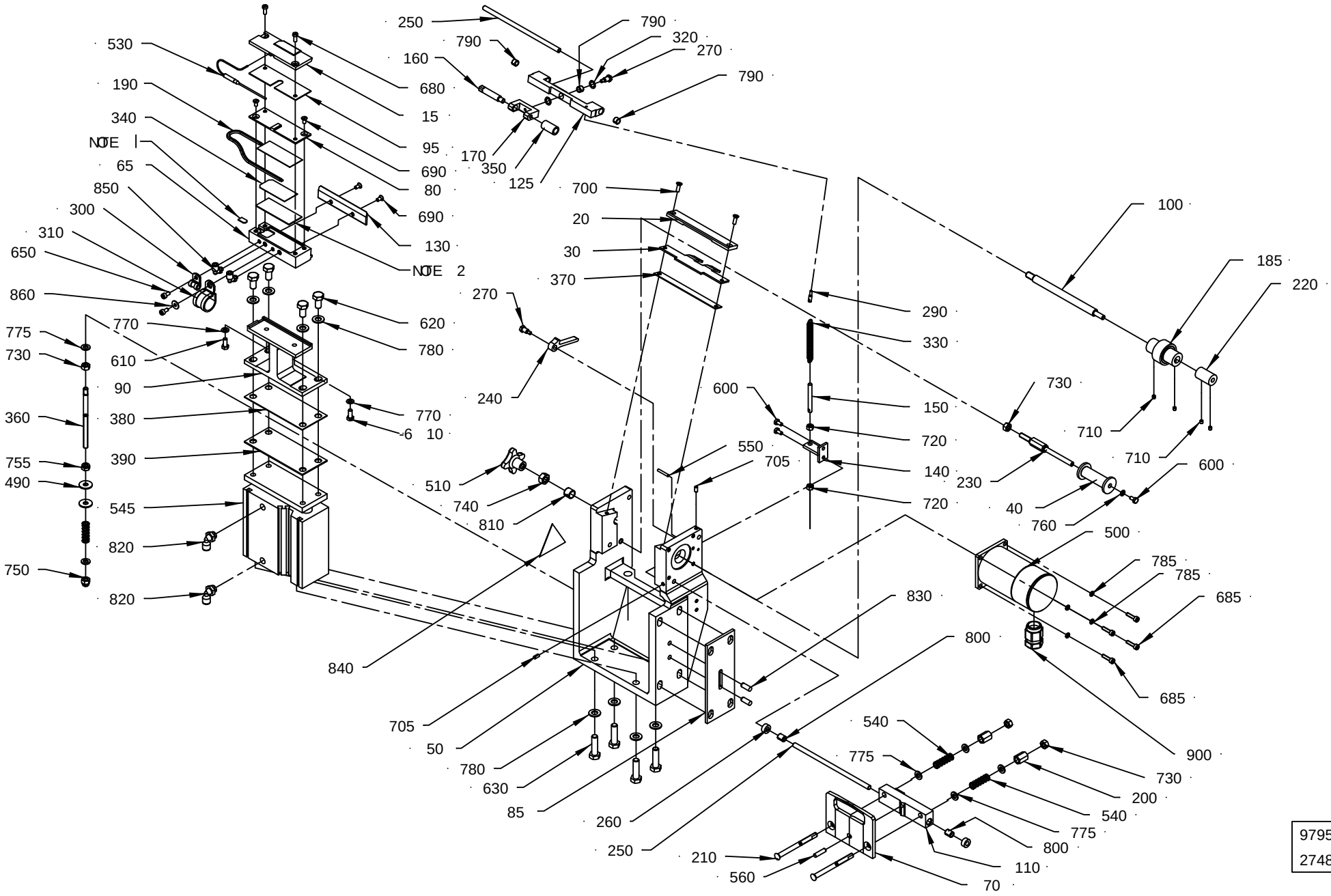

ECM: 287531 - 20080221
Group number: 979534-0200
Assembly Drawing: 979534-3_1_AC

This list covers pages from 1-100 to 1-103

Pos	Part No	UN	Qty	Description	Page No
HOLE12 (See drawing on page: 1-100)					
015	2500045-0000		1	HEATING RAIL	
040	582459-0003		1	ROLLER	
085	582485-0001		1	SPACER	
230	582484-0000		1	SHAFT	
780	315105-0165		8	WASHER BRB 8,4X16 RFR	
830	311103-0351		2	PARALLEL PIN ISO 2338 6M6X16 A1	
HOLE13 (See drawing on page: 1-100)					
015	2848876-0000		1	HEATING RAIL	
040	582459-0003		1	ROLLER	
085	582485-0005		1	SPACER	
230	582484-0000		1	SHAFT	
780	315105-0165		8	WASHER BRB 8,4X16 RFR	
830	311103-0351		2	PARALLEL PIN ISO 2338 6M6X16 A1	
HOLE17 (See drawing on page: 1-100)					
015	2500044-0000		1	HEATING RAIL	
040	582459-0002		1	ROLLER	
085	582485-0002		1	SPACER	
230	582484-0000		1	SHAFT	
780	315105-0165		8	WASHER BRB 8,4X16 RFR	
830	311103-0351		2	PARALLEL PIN ISO 2338 6M6X16 A1	
HOLE20 (See drawing on page: 1-100)					
015	2500043-0000		1	HEATING RAIL	
040	582459-0001		1	ROLLER	
085	582485-0006		1	SPACER	
230	582484-0000		1	SHAFT	
780	315105-0165		8	WASHER BRB 8,4X16 RFR	
830	311103-0351		2	PARALLEL PIN ISO 2338 6M6X16 A1	
HOLE21 (See drawing on page: 1-100)					
015	2500043-0000		1	HEATING RAIL	
040	582459-0001		1	ROLLER	
085	582485-0004		1	SPACER	
230	582484-0000		1	SHAFT	
780	315105-0165		8	WASHER BRB 8,4X16 RFR	
830	311103-0351		2	PARALLEL PIN ISO 2338 6M6X16 A1	
HOLE70, HOLE48 (See drawing on page: 1-102)					
015	2500041-0000		1	HEATING RAIL	
040	1255822-0000		1	ROLLER	
085	2813995-0000		1	SPACER	
230	1350679-0000		1	SHAFT	
625	312105-0453		4	SCREW M6S ISO 4017 M8X25 A480	
780	315105-0165		12	WASHER BRB 8,4X16 RFR	
830	311103-0351		4	PARALLEL PIN ISO 2338 6M6X16 A1	
HOLE72 (See drawing on page: 1-102)					
015	2500042-0000		1	HEATING RAIL	
040	1255822-0000		1	ROLLER	
085	2813995-0000		1	SPACER	
230	1350679-0000		1	SHAFT	
625	312105-0453		4	SCREW M6S ISO 4017 M8X25 A480	
780	315105-0165		12	WASHER BRB 8,4X16 RFR	
830	311103-0351		4	PARALLEL PIN ISO 2338 6M6X16 A1	
Common Parts					
020	979888-0000		1	STEERING	
030	979647-0000		1	HEAD PLATE	
050	2519642-0000		1	CANTILEVER	
065	1548788-0000		1	HEATING CHAMBER	
070	1519378-0000		1	WINDOW KNIFE	
080	582481-0000		1	HEATER LOCK	
090	582440-0000		1	BRACKET	
095	589437-0000		1	SHIM	
100	582423-0000		1	SHAFT	
110	582420-0000		1	KNIFE HOLDER	
125	1346217-0000		1	HOLDER	
130	1519379-0000		1	FLAT KNIFE	
140	582483-0000		1	HOLDER	
150	905215-0000		1	BOLT	
160	905413-0000		1	SHAFT	
170	905416-0000		1	PIVOT BRACKET-SWIVEL	
185	905471-0000		1	ROLLER DRIVE	
190	979699-0000		1	HEATER	
200	1334192-0000		2	NUT	
210	283551-0000		2	SCREW	
220	589442-0000		1	CONNECTION	
240	582425-0000		1	HANDSPIKE	
250	582426-0000		2	SHAFT	
260	589438-0000		2	SPACER	
270	905415-0000		2	SHAFT	
290	905607-0000		1	SCREW	
300	907138-0000		1	CLAMP	
310	907249-0000		1	CLAMP	
320	907487-0000		2	WASHER-CURVED	
330	907719-0000		1	SPRING	
340	1317796-0000		1	SHIM	
350	90348-0031		1	FREE-WHEEL COUPLING, 8X12 MM	

Machine Type | Group Description | Used-In | Group Number | Page No

SEALING UNIT TAB

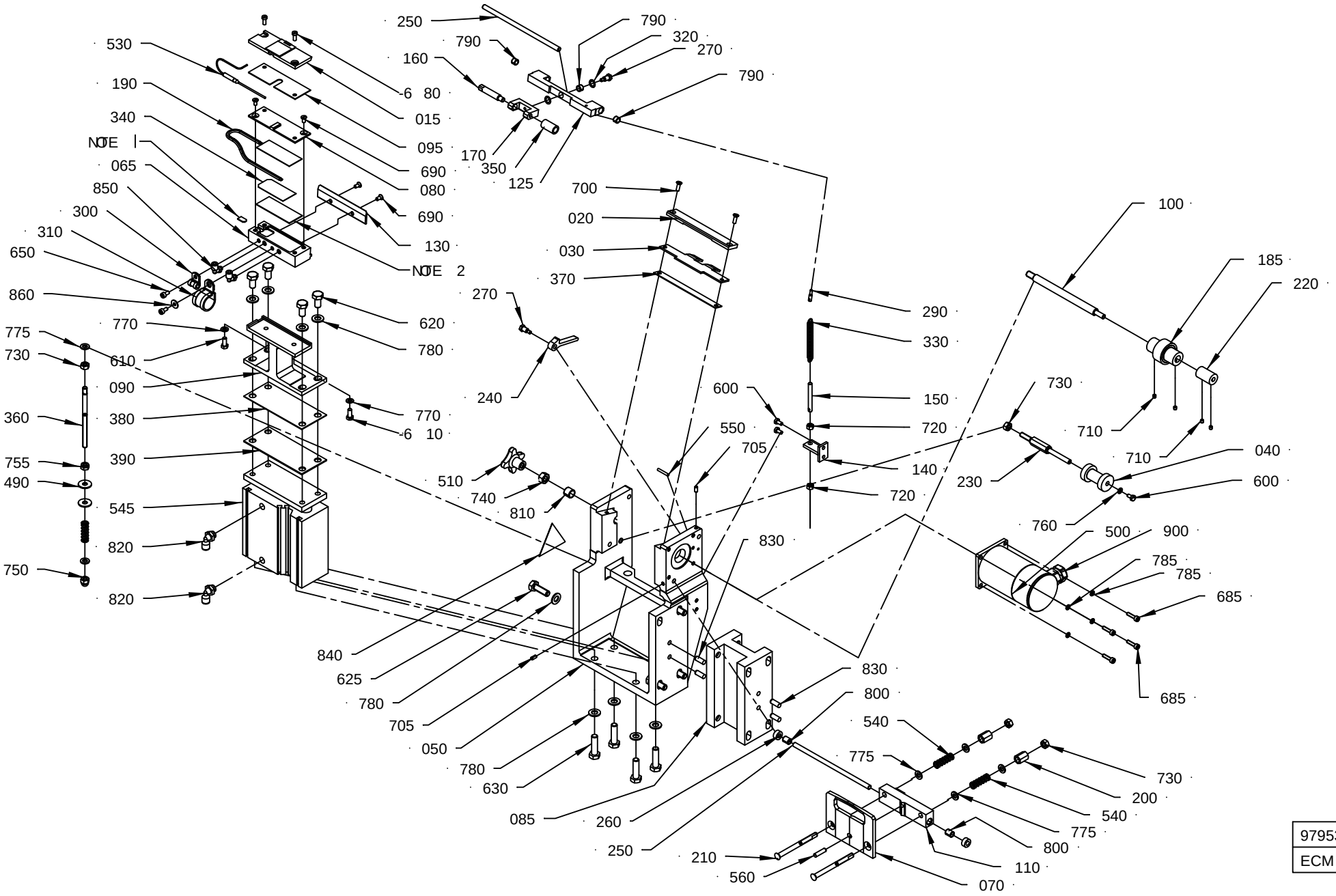

979534-4
ECM 287531

Pos	Part No	UN	Qty	Description	Page No
Common Parts (Cont'd)					
360	589439-0000		1	PIN	
370	589440-0000		1	SHIM	
380	590988-0000		1	SHIM	
390	590989-0000		1	SHIM	
490	90005-0060		2	WASHER PLAIN, RBS 6,4/M6)/18,H=1,5	
500	90458-0523		1	STEP MOTOR, SM 56.2.18J3 Z(202)	
510	90051-0007		1	STELLAR KNOB, INT. THREAD, NO. 40	
530	90326-0060		1	THERMOCOUPLE, CR-AL	
540	90335-0067		3	COMP. SPRING 22370, 1,6X9,6X31,75	
545	90450-0397		1	CYLINDER	
550	311103-0238		1	PARALLEL PIN ISO 2338 3M6X20 A1	
560	311103-0310		1	PARALLEL PIN ISO 2338 5M6X20 A1	
600	312105-0287		3	SCREW M6S ISO 4017 M4X8 A470	
610	312105-0327		2	SCREW M6S ISO 4017 M5X12 A480	
620	312105-0449		4	SCREW M6S ISO 4017 M8X16 A480	
630	312105-0455		4	SCREW M6S ISO 4017 M8X30 A480	
650	312115-0287		2	SCREW ISO4762 M4X8 A4 80	
680	312125-0289		2	SCREW ISO 1207 M4X10 A4	
685	312115-0293		4	SCREW ISO4762 M4X16 A4 80	
690	312145-0287		4	SCREW ISO 2009 MFS M4X8 A4	
700	312145-0291		2	SCREW ISO 2009 MFS M4X12 A4	
705	312318-0287		2	SCREW ISO4029 M4X8 A4	
710	312318-0283		4	SCREW ISO4029 M4X4 A4	
720	312605-0314		2	HEXAGON NUT, M6M M5 A280	
730	312605-0316		4	HEXAGON NUT, M6M M6 A280	
740	312605-0318		1	HEXAGON NUT, M6M M8 A280	
750	312705-0316		1	HEX. DOMED CAP MHM-6 M6 A280	
755	312812-0316		1	HEXAGON NUT, NY-LOCK M6 A480	
760	315105-0136		1	WASHER BRB 4,3X8 RFR	
770	315105-0146		2	WASHER BRB 5,3X10 RFR	
775	315105-0153		6	WASHER BRB 6,4X12 RFR	
785	315402-0136		4	LOCK WASHER, DIN127B 4,1 A4, M4-5/32	
790	321141-0060		3	BEARING BUSH W/O FLANGE, 6X8X6 MM	
800	321141-0064		2	BEARING BUSH W/O FLANGE, 6X8X10 MM	
810	321141-0140		1	BEARING BUSH W/O FLANGE, 10X12X10 MM	
820	90458-2956		2	ELBOW PIPE JOINT, EXT.THREAD, D=6MM-G1/8	
840	359705-0007		1	WARNING SIGN ISO, HOT SURFACE	
850	90458-2954		2	ELBOW PIPE JOINT, EXT.THREAD, D=4MM M5	
860	90005-0082		1	WASHER PLAIN ROUND 4,3(M4)/12,H=1	
900	90458-0438		1	GLAND, EXTENDED WITH INSERT, M20X1,5	

Pos	Part No	UN	Qty	Description	Page No

SERVO DRIVE UNIT

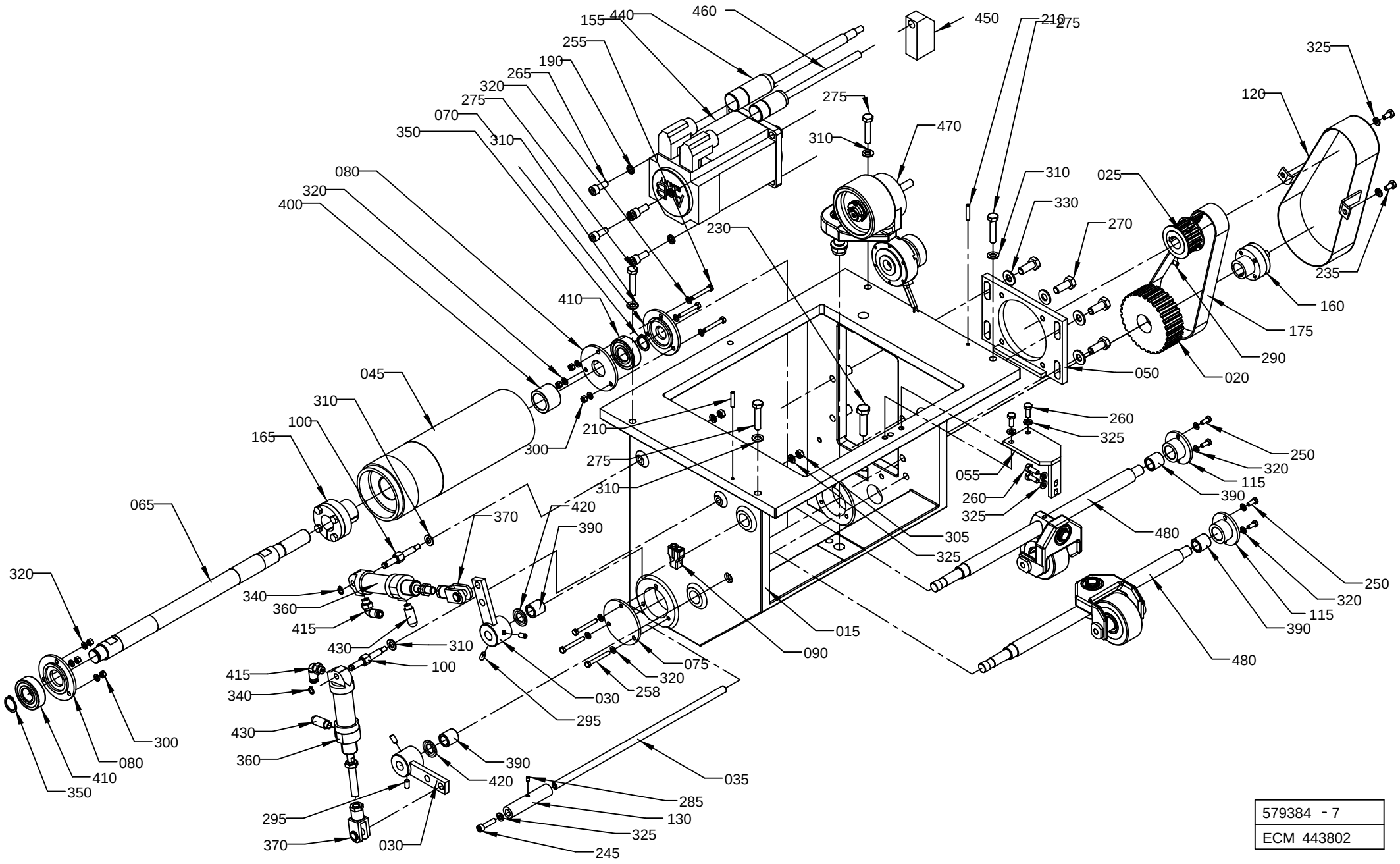

579384 - 7
ECM 443802

ECM: 448600 - 20100524
Group number: 579384-0300
Assembly Drawing: 579384-7_1_AB

This list covers pages from 1-104 to 1-107

Pos	Part No	UN	Qty	Description	Page No
TBA 0100B, TBA 0125S, TBA 0160S, TBA 0200S (See drawing on page: 1-104)					
030	583687-0000		2	ARM	
045	1255745-0003		1	ROLL	
470	979651-0100		1	WEB TENSIONER	**1-109**
480	579385-0100		2	PRESSURE ROLLER	**1-111**
TBA 0200B, TBA 0284B, TBA 0250B, TBA 0300S, TBA 0330S (See drawing on page: 1-104)					
030	583687-0000		2	ARM	
045	1255745-0002		1	ROLL	
470	979651-0100		1	WEB TENSIONER	**1-109**
480	579385-0100		2	PRESSURE ROLLER	**1-111**
TBA 0200M, TBA 0250S (See drawing on page: 1-104)					
030	583687-0000		2	ARM	
045	1255745-0001		1	ROLL	
470	979651-0100		1	WEB TENSIONER	**1-109**
480	579385-0100		2	PRESSURE ROLLER	**1-111**
TPA 0330SQ, TPA 0250SQ, TPA 0200SQ (See drawing on page: 1-106)					
030	583687-0000		1	ARM	
033	1317382-0000		1	ARM	
045	1255745-0001		1	ROLL	
470	2555484-0100		1	WEB TENSION ROLLER	**1-113**
480	2555479-0100		2	PRESSURE ROLLER	**1-115**
Common Parts					
015	583694-0000		1	CANTILEVER	
020	978850-0000		1	TOOTHED PULLEY	
025	979202-0000		1	TOOTHED PULLEY	
035	583686-0000		1	SHAFT	
050	3017362-0000		1	PLATE	
055	1334123-0000		1	BRACKET	
065	979889-0000		1	SHAFT	
070	469644-0000		1	LID	
075	469647-0000		1	LID	
080	469645-0000		2	LID	
090	90055-0100		1	Y-CONNECTION, 6-6	
100	583689-0000		2	DOWEL	
115	581921-0000		2	HUB	
120	590981-0000		1	PROTECTION	
130	1255742-0000		1	SPACER ROLLER	
155	90602-8227		1	SERVO MOTOR MPL-A430H-HJ72AA SERIES A	
160	90208-0078		1	CLAMPING ELEMENT WITH SLEEVE, 20X28 MM	
165	90208-0080		1	CLAMPING ELEMENT WITH SLEEVE, 25X34 MM	
175	90417-0074		1	TIMING BELT 25T10/610 PU	
190	90062-0031		4	"LOCK WASHER 8,2X12,8; T=2 DIN 7980"	
210	311103-1312		2	PARALLEL PIN ISO 2338 5M6X24 A1	
230	312104-0499		1	SCREW M6S M10X40H FZB	
235	312105-0366		2	SCREW M6S ISO 4017 M6X12 A480	
245	312115-0372		1	SCREW ISO4762 M6X25 A4 80	
250	312105-0327		4	SCREW M6S ISO 4017 M5X12 A480	
255	312105-0337		3	SCREW M6S ISO 4014 M5X35 A480	
258	312105-0339		3	SCREW M6S ISO 4014 M5X40 A480	
260	312105-0368		4	SCREW M6S ISO 4017 M6X16 A480	
265	312115-0451		4	SCREW ISO4762 M8X20 A4 80	
270	312105-0493		4	SCREW M6S ISO 4017 M10X25 A480	
275	312105-0459		4	SCREW M6S ISO 4014 M8X40 A480	
285	312318-0285		1	SCREW ISO4029 M4X6 A4	
290	312318-0323		2	SCREW ISO4029 M5X8 A4	
295	312318-0366		4	SCREW ISO4029 M6X12 A4	
300	312605-0314		6	HEXAGON NUT, M6M M5 A280	
305	312605-0316		2	HEXAGON NUT, M6M M6 A280	
310	315105-0165		6	WASHER BRB 8,4X16 RFR	
320	315105-0146		16	WASHER BRB 5,3X10 RFR	
325	315105-0153		9	WASHER BRB 6,4X12 RFR	
330	315105-0173		4	WASHER BRB 10,5X22 RFR	
340	90141-0015		2	RETAINING RING FOR SHAFT DIN 471 8 SS	
350	315751-0116		2	RETAINING RING FOR SHAFT DIN 471 20 SS	
360	90239-0863		2	SINGLE ACTING, MINI-ISO, CYL 25-25	
370	90239-0516		2	ROD END, CLEVIS WITH AXLE M10X1,25	
390	321105-0185		4	BUSHING W/O FLANGE, 14/20X20 MM	
400	321105-0253		1	BUSHING W/O FLANGE, 25X35X25 MM	
410	321313-0104		2	BALL BEARING 20/47X14	
415	90458-2956		2	ELBOW PIPE JOINT, EXT.THREAD, D=6MM-G1/8	
420	321130-0200		2	THRUST WASHER, 14X26X1,5 MM	
430	90328-0047		2	SILENCER G1/8"	
440	90602-3351		1	MOTOR POWER CABLE 2090-XXNPMF-16S03,A	
450	90459-4783		1	BREAKOUT BOARD FOR CN2, 2090-UXBB-DM15	
460	90602-2814		1	MOTOR FEEDBACK CABLE 2090-XXNFMF-S03,A	

Machine Type | Group Description | Used-In | Group Number | Page No

SERVO DRIVE UNIT

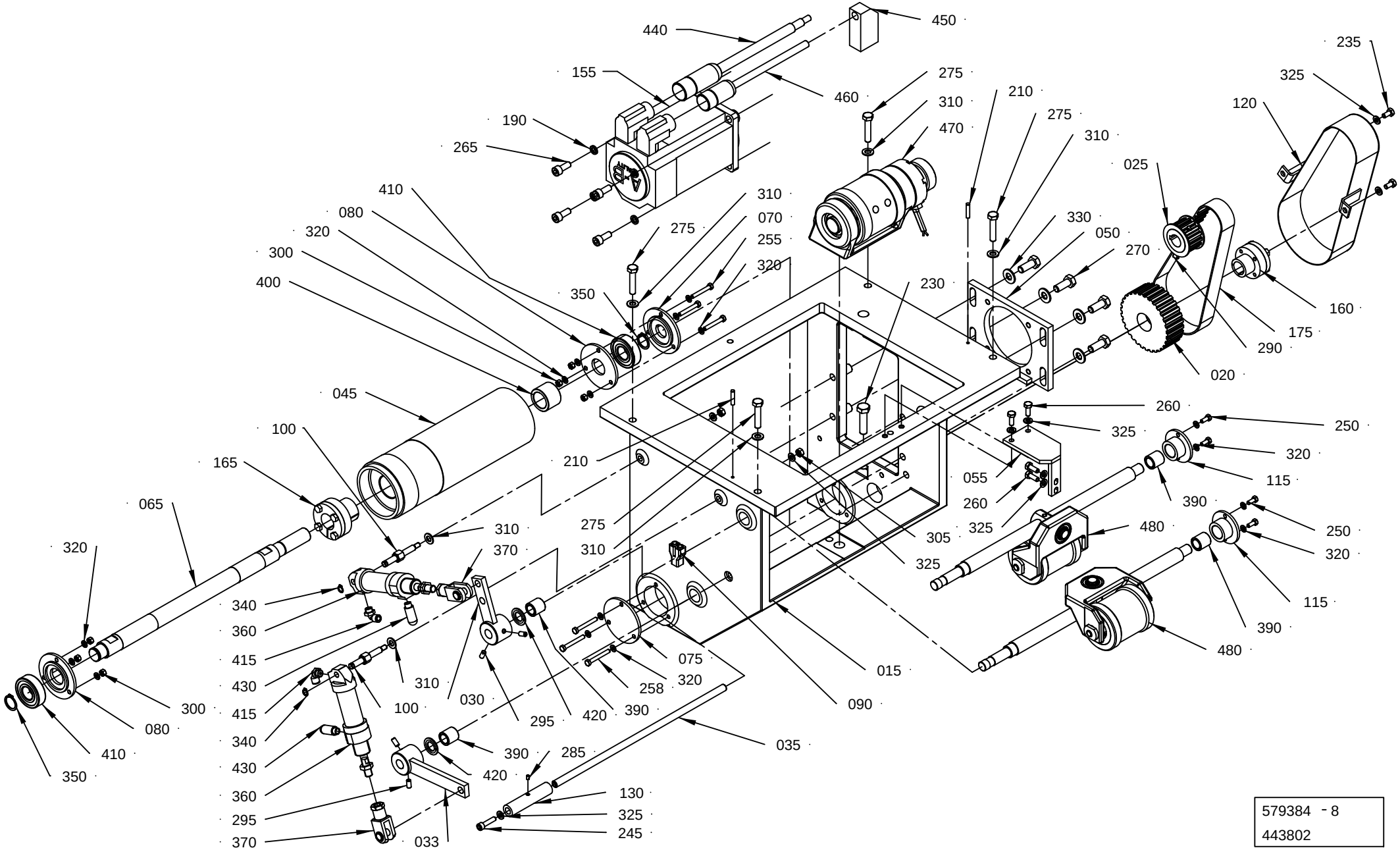

579384 - 8
443802

ECM: 448600 - 20100524
Group number: 579384-0300
Assembly Drawing: 579384-8_1_AB

This list covers pages from 1-104 to 1-107

Pos	Part No	UN	Qty	Description	Page No
TBA 0100B, TBA 0125S, TBA 0160S, TBA 0200S (See drawing on page: 1-104)					
030	583687-0000		2	ARM	
045	1255745-0003		1	ROLL	
470	979651-0100		1	WEB TENSIONER	**1-109**
480	579385-0100		2	PRESSURE ROLLER	**1-111**
TBA 0200B, TBA 0284B, TBA 0250B, TBA 0300S, TBA 0330S (See drawing on page: 1-104)					
030	583687-0000		2	ARM	
045	1255745-0002		1	ROLL	
470	979651-0100		1	WEB TENSIONER	**1-109**
480	579385-0100		2	PRESSURE ROLLER	**1-111**
TBA 0200M, TBA 0250S (See drawing on page: 1-104)					
030	583687-0000		2	ARM	
045	1255745-0001		1	ROLL	
470	979651-0100		1	WEB TENSIONER	**1-109**
480	579385-0100		2	PRESSURE ROLLER	**1-111**
TPA 0330SQ, TPA 0250SQ, TPA 0200SQ (See drawing on page: 1-106)					
030	583687-0000		1	ARM	
033	1317382-0000		1	ARM	
045	1255745-0001		1	ROLL	
470	2555484-0100		1	WEB TENSION ROLLER	**1-113**
480	2555479-0100		2	PRESSURE ROLLER	**1-115**
Common Parts					
015	583694-0000		1	CANTILEVER	
020	978850-0000		1	TOOTHED PULLEY	
025	979202-0000		1	TOOTHED PULLEY	
035	583686-0000		1	SHAFT	
050	3017362-0000		1	PLATE	
055	1334123-0000		1	BRACKET	
065	979889-0000		1	SHAFT	
070	469644-0000		1	LID	
075	469647-0000		1	LID	
080	469645-0000		2	LID	
090	90055-0100		1	Y-CONNECTION, 6-6	
100	583689-0000		2	DOWEL	
115	581921-0000		2	HUB	
120	590981-0000		1	PROTECTION	
130	1255742-0000		1	SPACER ROLLER	
155	90602-8227		1	SERVO MOTOR MPL-A430H-HJ72AA SERIES A	
160	90208-0078		1	CLAMPING ELEMENT WITH SLEEVE, 20X28 MM	
165	90208-0080		1	CLAMPING ELEMENT WITH SLEEVE, 25X34 MM	
175	90417-0074		1	TIMING BELT 25T10/610 PU	
190	90062-0031		4	"LOCK WASHER 8,2X12,8; T=2 DIN 7980"	
210	311103-1312		2	PARALLEL PIN ISO 2338 5M6X24 A1	
230	312104-0499		1	SCREW M6S M10X40H FZB	
235	312105-0366		2	SCREW M6S ISO 4017 M6X12 A480	
245	312115-0372		1	SCREW ISO4762 M6X25 A4 80	
250	312105-0327		4	SCREW M6S ISO 4017 M5X12 A480	
255	312105-0337		3	SCREW M6S ISO 4014 M5X35 A480	
258	312105-0339		3	SCREW M6S ISO 4014 M5X40 A480	
260	312105-0368		4	SCREW M6S ISO 4017 M6X16 A480	
265	312115-0451		4	SCREW ISO4762 M8X20 A4 80	
270	312105-0493		4	SCREW M6S ISO 4017 M10X25 A480	
275	312105-0459		4	SCREW M6S ISO 4014 M8X40 A480	
285	312318-0285		1	SCREW ISO4029 M4X6 A4	
290	312318-0323		2	SCREW ISO4029 M5X8 A4	
295	312318-0366		4	SCREW ISO4029 M6X12 A4	
300	312605-0314		6	HEXAGON NUT, M6M M5 A280	
305	312605-0316		2	HEXAGON NUT, M6M M6 A280	
310	315105-0165		6	WASHER BRB 8,4X16 RFR	
320	315105-0146		16	WASHER BRB 5,3X10 RFR	
325	315105-0153		9	WASHER BRB 6,4X12 RFR	
330	315105-0173		4	WASHER BRB 10,5X22 RFR	
340	90141-0015		2	RETAINING RING FOR SHAFT DIN 471 8 SS	
350	315751-0116		2	RETAINING RING FOR SHAFT DIN 471 20 SS	
360	90239-0863		2	SINGLE ACTING, MINI-ISO, CYL 25-25	
370	90239-0516		2	ROD END, CLEVIS WITH AXLE M10X1,25	
390	321105-0185		4	BUSHING W/O FLANGE, 14/20X20 MM	
400	321105-0253		1	BUSHING W/O FLANGE, 25X35X25 MM	
410	321313-0104		2	BALL BEARING 20/47X14	
415	90458-2956		2	ELBOW PIPE JOINT, EXT.THREAD, D=6MM-G1/8	
420	321130-0200		2	THRUST WASHER, 14X26X1,5 MM	
430	90328-0047		2	SILENCER G1/8"	
440	90602-3351		1	MOTOR POWER CABLE 2090-XXNPMF-16S03,A	
450	90459-4783		1	BREAKOUT BOARD FOR CN2, 2090-UXBB-DM15	
460	90602-2814		1	MOTOR FEEDBACK CABLE 2090-XXNFMF-S03,A	

Machine Type | Group Description | Used-In | Group Number | Page No

WEB TENSIONER

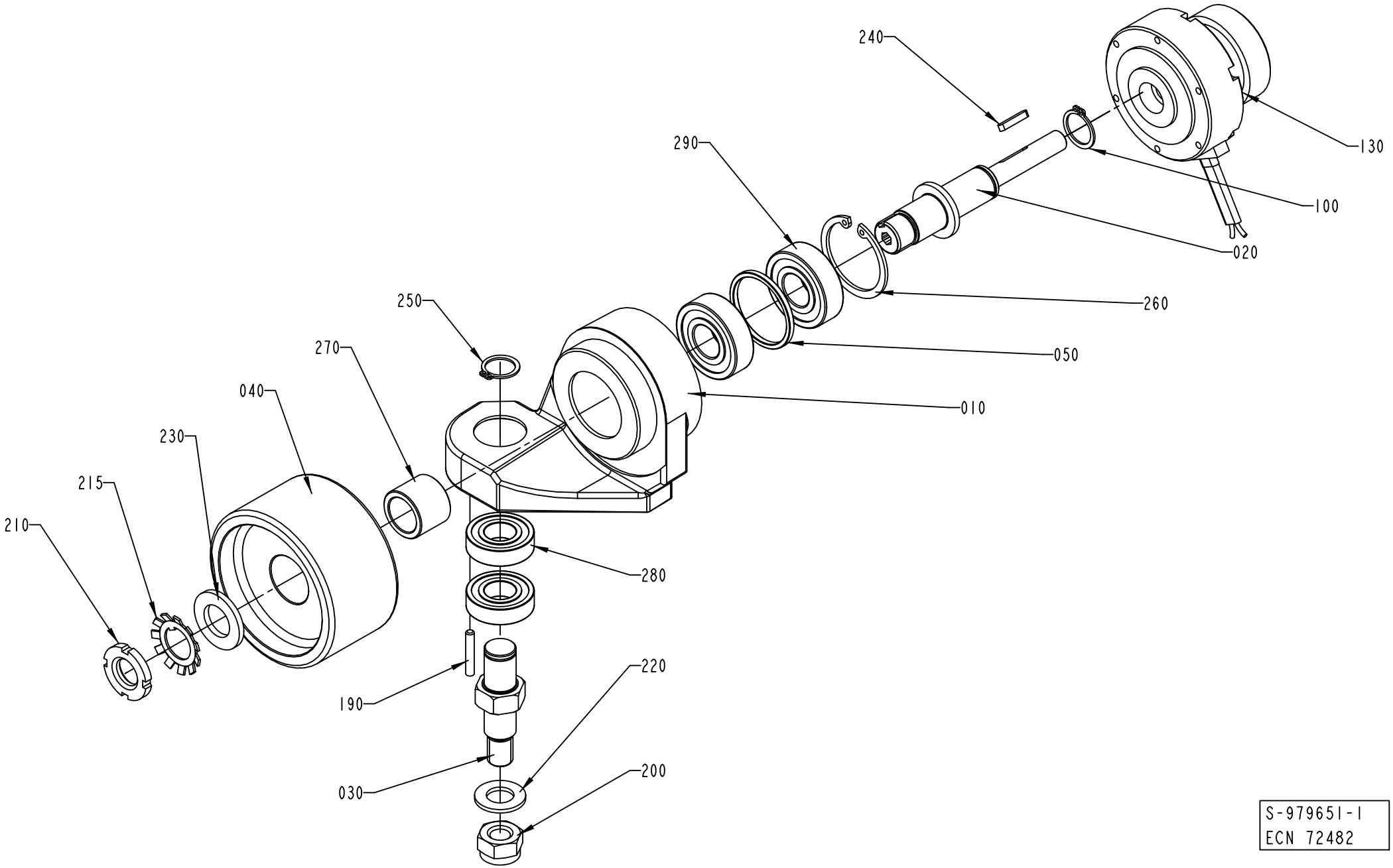

S-979651-1
ECN 72482

ECM: 243199 - 20060127
Group number: 979651-0100
Assembly Drawing: 979651-1_1_AB

Pos	Part No	UN	Qty	Description	Page No
-					
010	979637-0000		1	PIVOT BRACKET	
020	979640-0000		1	SHAFT	
030	979638-0000		1	AXLE PIN	
040	979639-0000		1	ROLL	
050	979641-0000		1	SPACER	
100	90141-0017		1	RETAINING RING FOR SHAFT DIN 471 17 SS	
130	90432-0012		1	EL.MAGNETIC POWDER BRAKE	
190	311103-0274		1	PARALLEL PIN ISO 2338 4M6X25 A1	
200	312812-0322		1	HEXAGON NUT, NY-LOCK M12 A480	
210	312805-0103		1	NUT ROUND WITH SLOTS M17X1 FE	
215	315410-0103		1	LOCK WASHER MB 3 D=17 H=1	
220	315105-0178		1	WASHER BRB 13X24 RFR	
230	315105-0186		1	WASHER BRB 17X30 RFR	
240	315701-0138		1	PARALLEL KEY W. ROUND ENDS, 3X3X18 MM	
250	315751-0112		1	RETAINING RING FOR SHAFT DIN 471 15 SS	
260	315753-0127		1	RETAINING RING FOR BORE DIN 472 40X1.75C	
270	321105-0224		1	BUSHING W/O FLANGE, 18/25X20 MM	
280	321308-0202		2	BALL BEARING 15/32X9	
290	321313-0103		2	BALL BEARING 17/40X12	

Pos	Part No	UN	Qty	Description	Page No

PRESSURE ROLLER

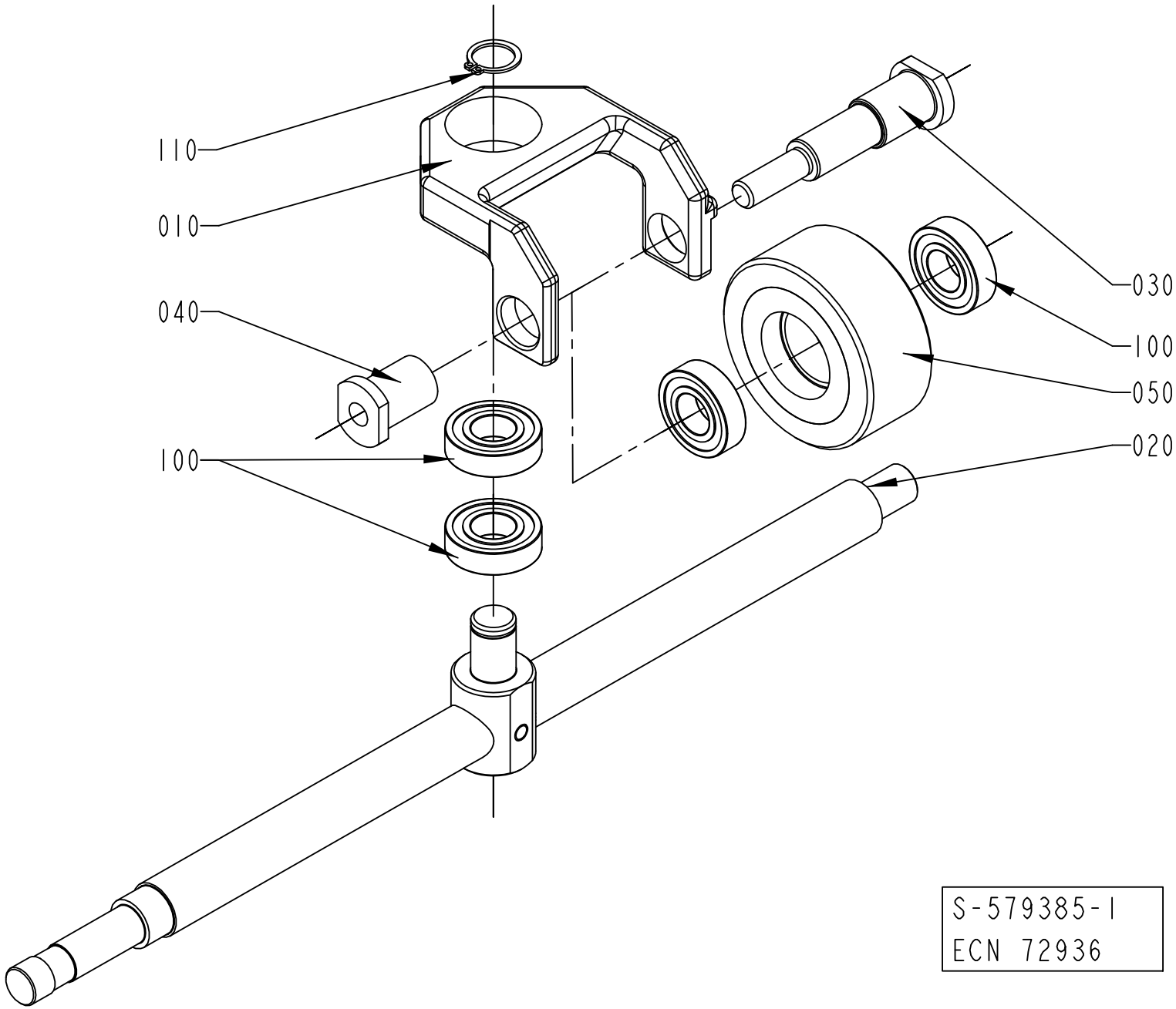

ECM: 243174 - 20060127
Group number: 579385-0100
Assembly Drawing: 579385-1_1_AB

Pos	Part No	UN	Qty	Description	Page No
-					
010	263150-0000		1	BRACKET	
020	581905-0000		1	SHAFT	
030	263152-0000		1	SHAFT	
040	263153-0000		1	NUT	
050	266710-0000		1	WHEEL	
100	321308-0202		4	BALL BEARING 15/32X9	
110	315751-0112		1	RETAINING RING FOR SHAFT DIN 471 15 SS	

Pos	Part No	UN	Qty	Description	Page No

WEB TENSION ROLLER

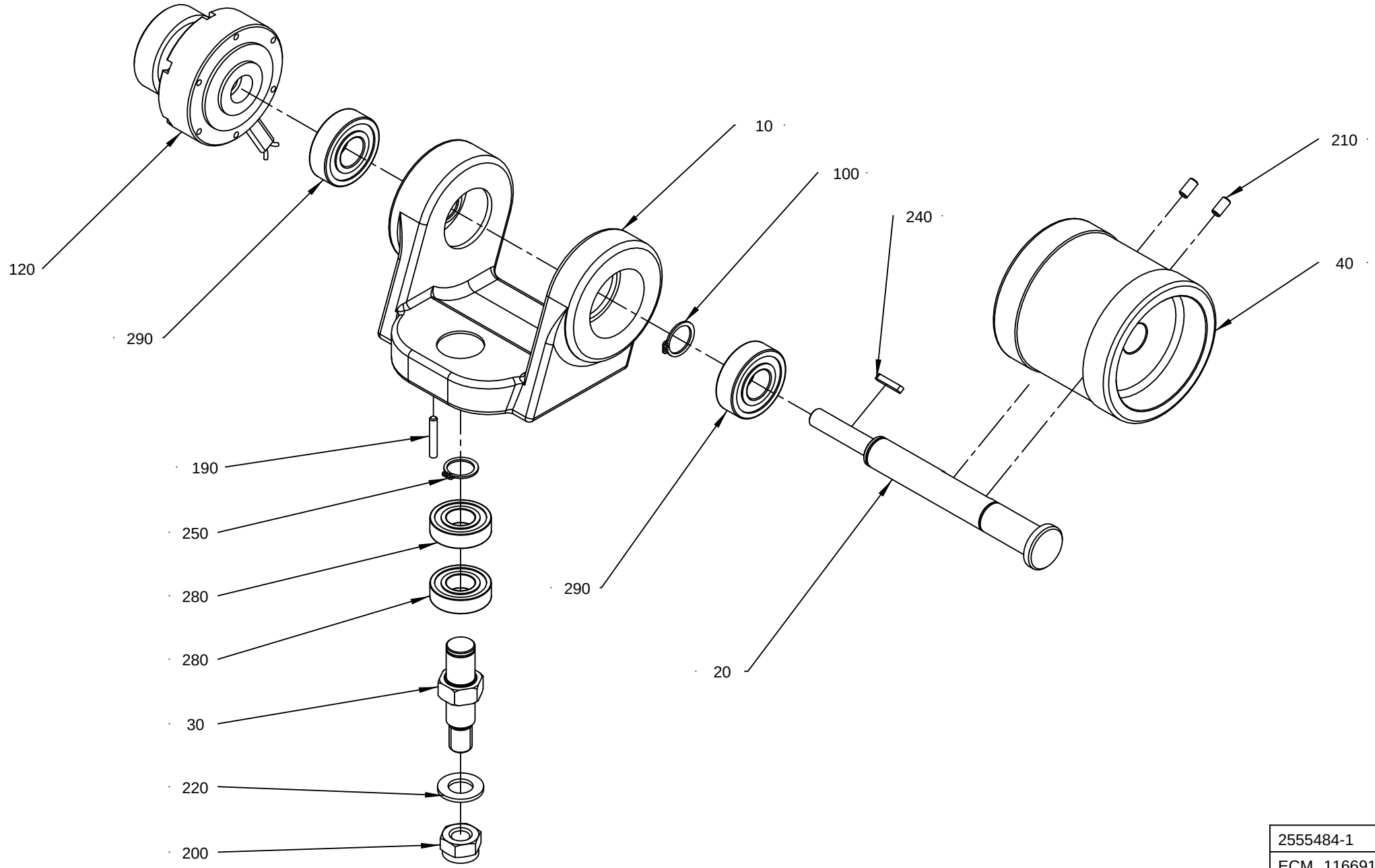

2555484-1
ECM 116691

ECM: 116696 - 20030113
Group number: 2555484-0100
Assembly Drawing: 2555484-1_1_AA

Pos	Part No	UN	Qty	Description	Page No
-					
010	2555481-0000		1	PIVOT BRACKET	
020	2555480-0000		1	SHAFT	
030	979638-0000		1	AXLE PIN	
040	2555478-0000		1	ROLLER	
100	90141-0017		2	RETAINING RING FOR SHAFT DIN 471 17 SS	
120	90432-0012		1	EL.MAGNETIC POWDER BRAKE	
190	311103-0274		1	PARALLEL PIN ISO 2338 4M6X25 A1	
200	312812-0322		1	HEXAGON NUT, NY-LOCK M12 A480	
210	312318-0325		2	SCREW ISO4029 M5X10 A4	
220	315105-0178		1	WASHER BRB 13X24 RFR	
240	315701-0138		1	PARALLEL KEY W. ROUND ENDS, 3X3X18 MM	
250	315751-0112		1	RETAINING RING FOR SHAFT DIN 471 15 SS	
280	321308-0202		2	BALL BEARING 15/32X9	
290	321313-0103		2	BALL BEARING 17/40X12	

Pos	Part No	UN	Qty	Description	Page No

PRESSURE ROLLER

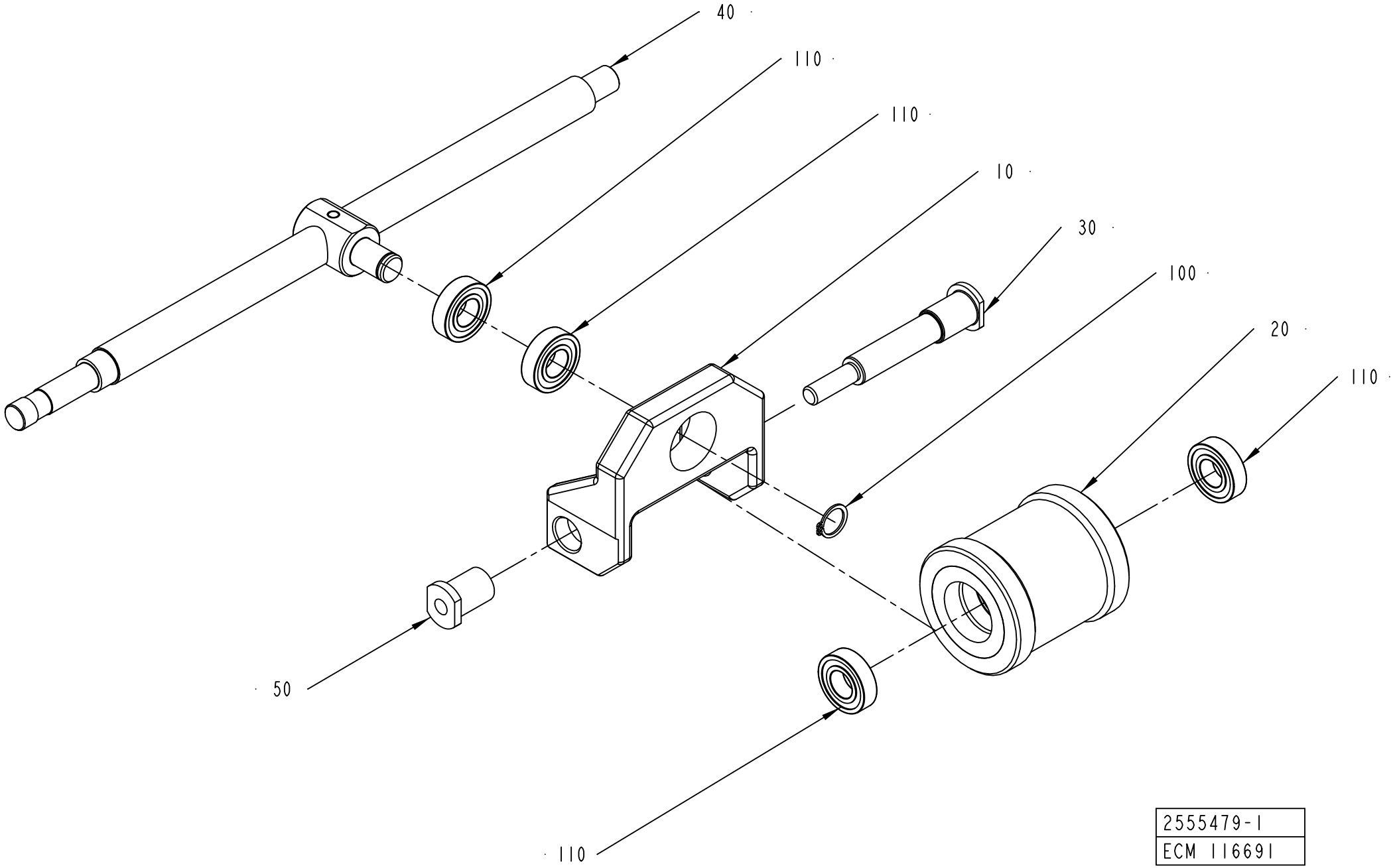

2555479-1
ECM 116691

ECM: 116695 - 20030113
Group number: 2555479-0100
Assembly Drawing: 2555479-1_1_AA

Pos	Part No	UN	Qty	Description	Page No
-					
010	2555482-0000		1	BRACKET	
020	2555483-0000		1	WHEEL	
030	2555485-0000		1	SHAFT	
040	581905-0000		1	SHAFT	
050	263153-0000		1	NUT	
100	315751-0112		1	RETAINING RING FOR SHAFT DIN 471 15 SS	
110	321308-0202		4	BALL BEARING 15/32X9	

Pos	Part No	UN	Qty	Description	Page No

INFEED BRAKE

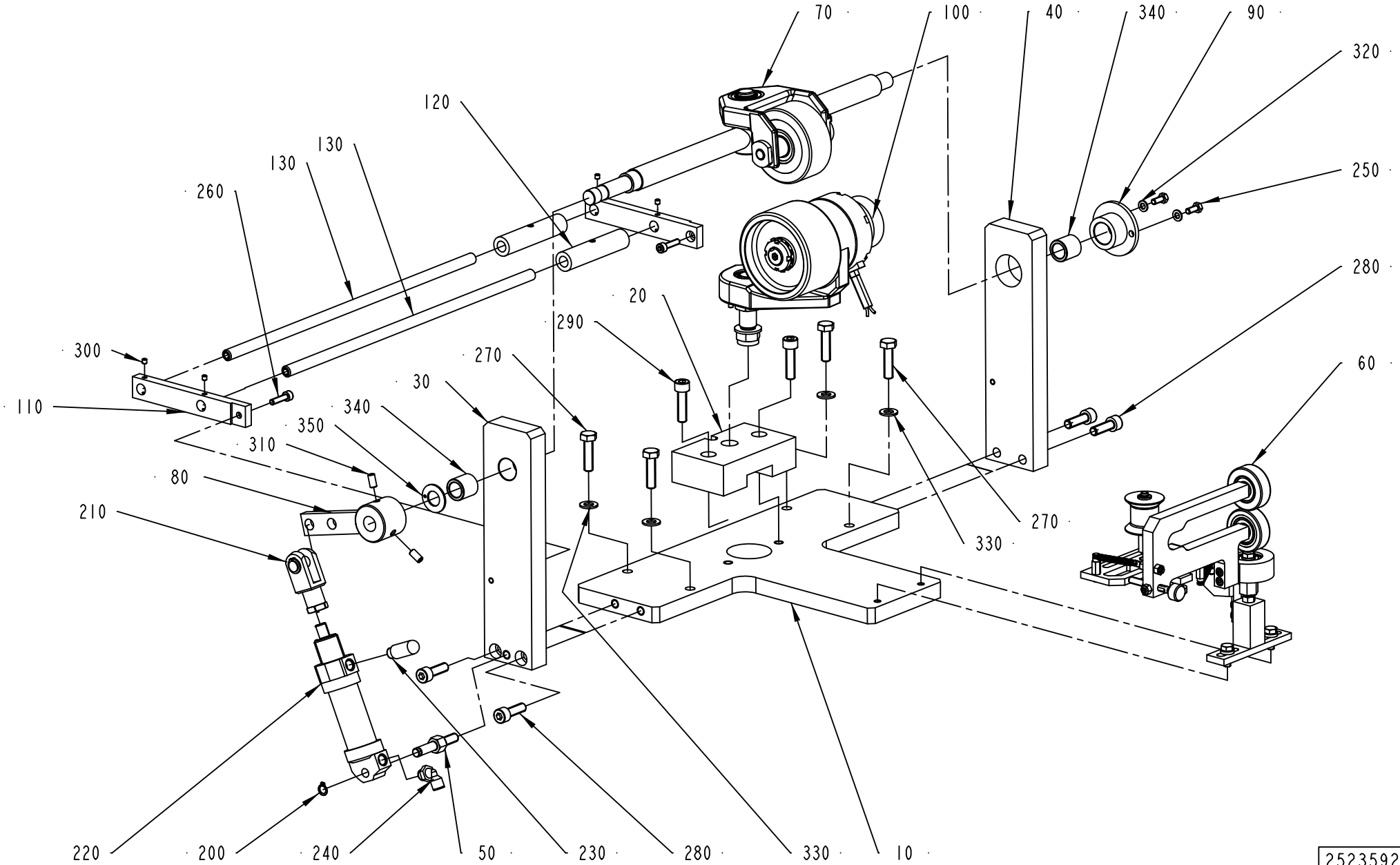

2523592-1
387102

ECM: 404582 - 20090706
Group number: 2523592-0100
Assembly Drawing: 2523592-1_1_AC

Pos	Part No	UN	Qty	Description	Page No
-					
010	2523593-0000		1	BRACKET	
020	2523594-0000		1	PLATE	
030	2523595-0000		1	PLATE	
040	2523602-0000		1	PLATE	
050	2524475-0000		1	AXLE PIN	
060	1517065-0100		1	WEB GUIDE	**1-119**
070	579385-0100		1	PRESSURE ROLLER	**1-111**
080	583687-0000		1	ARM	
090	581921-0000		1	HUB	
100	979651-0100		1	WEB TENSIONER	**1-109**
110	2982051-0000		2	HOLDER	
120	1255742-0000		2	SPACER ROLLER	
130	583686-0000		2	SHAFT	
200	90141-0015		1	RETAINING RING FOR SHAFT DIN 471 8 SS	
210	90239-0516		1	ROD END, CLEVIS WITH AXLE M10X1,25	
220	90239-0863		1	SINGLE ACTING, MINI-ISO, CYL 25-25	
230	90328-0047		1	SILENCER G1/8"	
240	90458-2956		1	ELBOW PIPE JOINT, EXT.THREAD, D=6MM-G1/8	
250	312105-0327		2	SCREW M6S ISO 4017 M5X12 A480	
260	312115-0331		2	SCREW ISO4762 M5X20 A4 80	
270	312105-0455		4	SCREW M6S ISO 4017 M8X30 A480	
280	312115-0453		4	SCREW ISO4762 M8X25 A4 80	
290	312115-0455		2	SCREW ISO4762 M8X30 A4 80	
300	312318-0283		4	SCREW ISO4029 M4X4 A4	
310	312318-0366		2	SCREW ISO4029 M6X12 A4	
320	315105-0146		2	WASHER BRB 5,3X10 RFR	
330	315105-0165		4	WASHER BRB 8,4X16 RFR	
340	321105-0185		2	BUSHING W/O FLANGE, 14/20X20 MM	
350	321130-0200		1	THRUST WASHER, 14X26X1,5 MM	

Pos	Part No	UN	Qty	Description	Page No

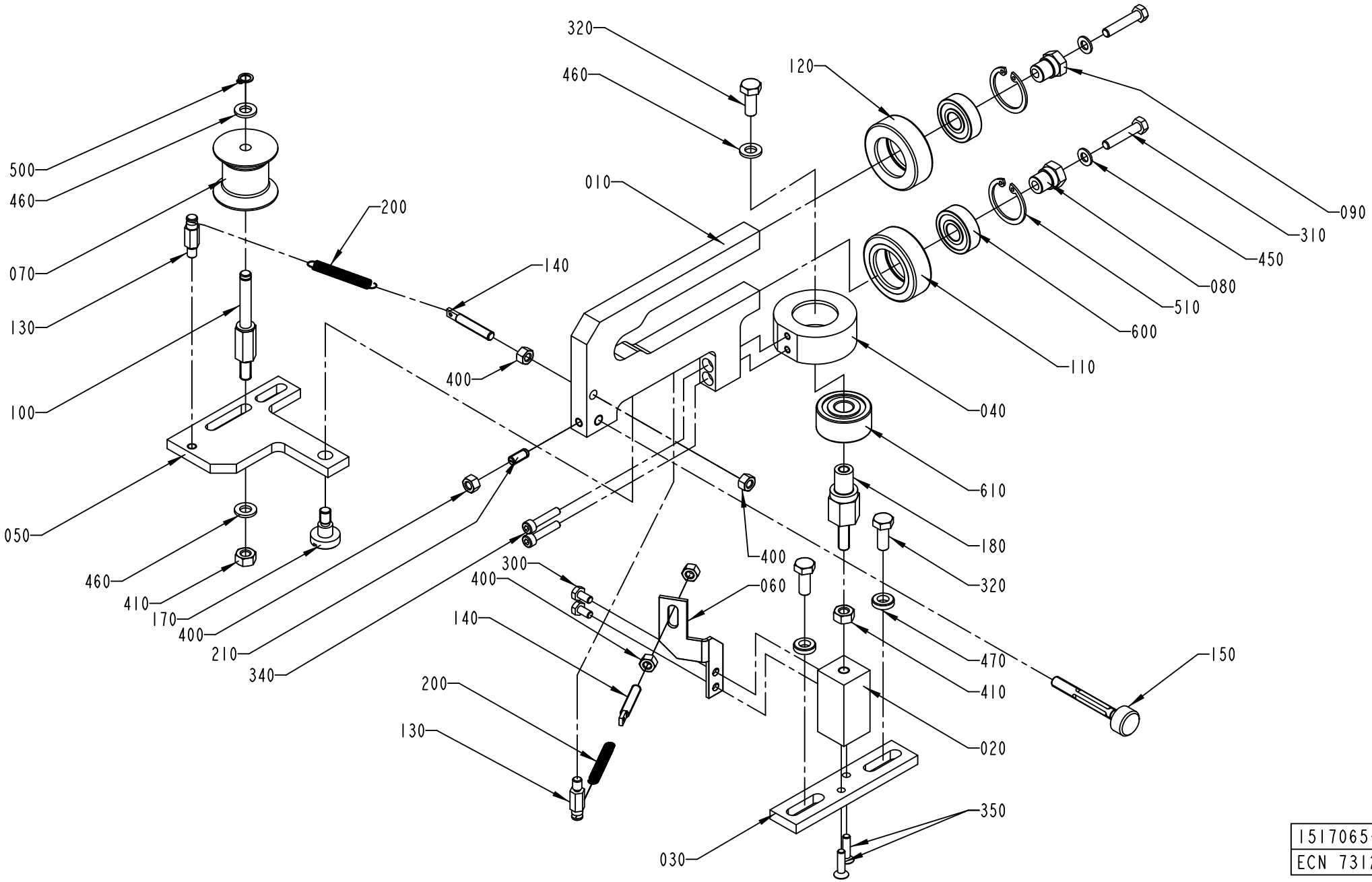

1517065-1
ECN 73123

ECM: 180904 - 20040910
Group number: 1517065-0100
Assembly Drawing: 1517065-1_1_AA

Pos	Part No	UN	Qty	Description	Page No
-					
010	1517071-0000		1	BOW CLAMP	
020	1517068-0000		1	PILLAR	
030	1517069-0000		1	CLAMP PLATE	
040	1517070-0000		1	BEARING SEAT	
050	1517066-0000		1	PIVOT ARM	
060	1517067-0000		1	SPRING HOLDER	
070	979582-0000		1	ROLLER	
080	1334256-0000		1	SHAFT	
090	1346612-0000		1	SHAFT	
100	1538107-0000		1	SHAFT	
110	583737-0000		1	ROLLER	
120	583738-0000		1	ROLLER	
130	583735-0000		2	PIN	
140	583749-0000		2	PIN	
150	589432-0000		1	SCREW	
170	556541-0000		1	SCREW	
180	1517753-0000		1	ADJUSTING NUT	
200	90335-0216		2	TENSION SPRING 40910, 0,5X5,5X27,7	
210	90287-0148		1	SCREW SPRINGLOAD. SLOTTED HEAD M5X12	
300	312105-0287		2	SCREW M6S ISO 4017 M4X8 A470	
310	312105-0333		2	SCREW M6S ISO 4017 M5X25 A480	
320	312105-0368		3	SCREW M6S ISO 4017 M6X16 A480	
340	312115-0295		2	SCREW ISO4762 M4X20 A4 80	
350	312155-0293		2	SCREW DIN 7991 MF6S M4X16 A4 70	
400	312605-0314		5	HEXAGON NUT, M6M M5 A280	
410	312605-0316		2	HEXAGON NUT, M6M M6 A280	
450	315105-0146		2	WASHER BRB 5,3X10 RFR	
460	315105-0153		3	WASHER BRB 6,4X12 RFR	
470	315115-0153		2	WASHER PLAIN, TBRB 6,4/12 H=3	
500	315751-0103		1	RETAINING RING FOR SHAFT DIN 471 6X 0.7C	
510	315752-0120		2	RETAINING RING FOR BORE DIN 472 26	
600	321308-0200		2	BALL BEARING 10/26X8	
610	321330-0100		1	ANG. BALL BEAR 10/30X14	

Pos	Part No	UN	Qty	Description	Page No

INFEED UNIT

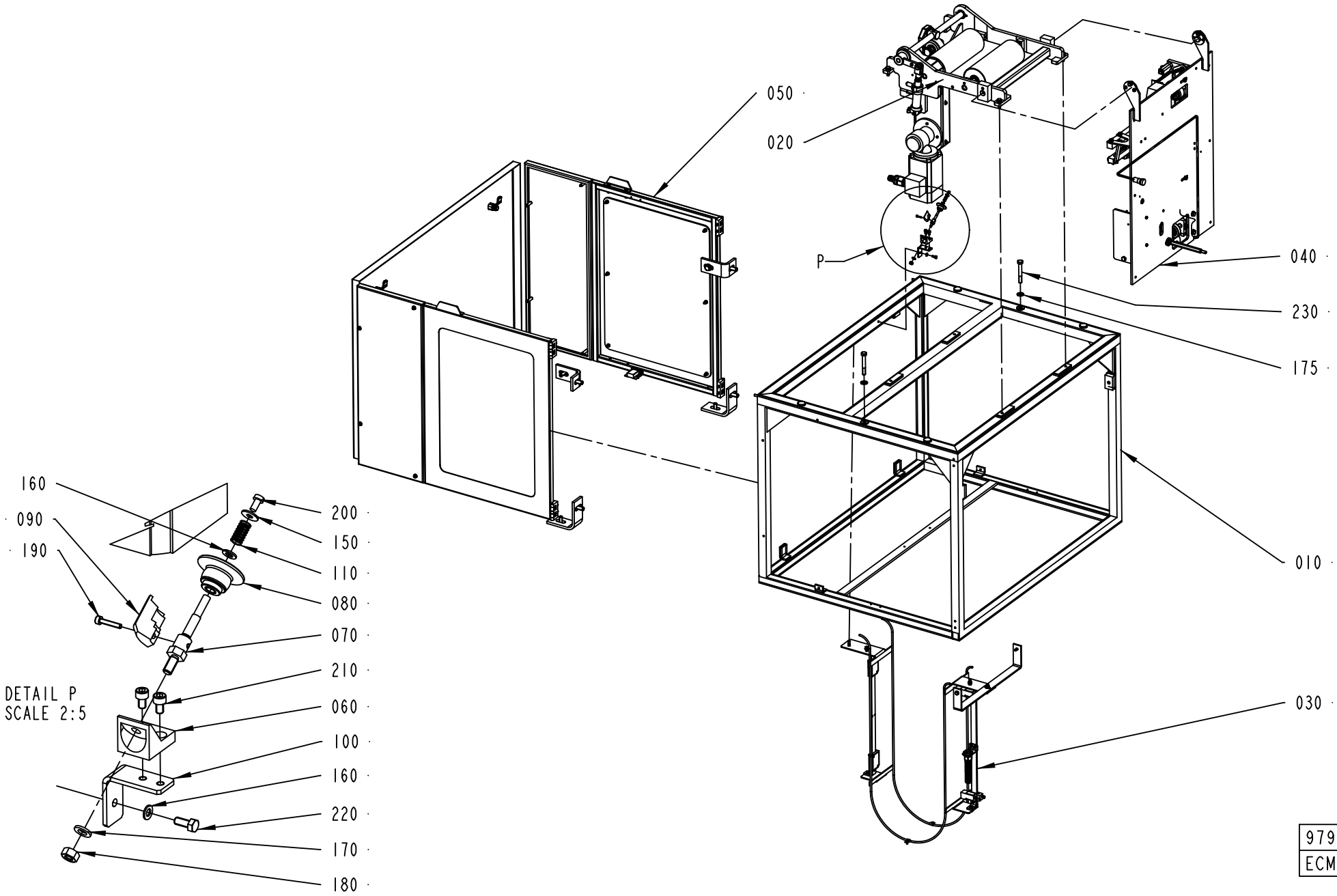
050
020
P
040
230
175
010
030
160
090
190
200
150
110
080
070
210
060
100
160
220
170
180
DETAIL P
SCALE 2:5
979551-9
ECM 387102

ECM: 404587 - 20090706
Group number: 979551-0400
Assembly Drawing: 979551-9_1_AA

Pos	Part No	UN	Qty	Description	Page No
-					
010	1549418-0000		1	FRAME LOWER, INFEED	
020	2552635-0200		1	INFEED TENSION DEVICE	**1-123**
030	2552623-0100		1	PAPER MAGAZINE	**1-127**
040	580036-0200		1	STRIP APPLICATOR	**1-129, 1-131**
050	2555487-0200		1	COVER	**1-145**
060	979575-0000		1	ROLLER PLATE	
070	2552631-0000		1	AXLE PIN	
080	2552632-0000		1	ROLLER	
090	2552633-0000		1	ROLLER	
100	2592563-0000		1	BRACKET	
110	90335-0146		1	COMP. SPRING, 0,6X7,2X20	
150	90005-0082		1	WASHER PLAIN ROUND 4,3(M4)/12,H=1	
160	315105-0146		2	WASHER BRB 5,3X10 RFR	
170	315105-0153		1	WASHER BRB 6,4X12 RFR	
175	315105-0173		2	WASHER BRB 10,5X22 RFR	
180	312605-0316		1	HEXAGON NUT, M6M M6 A280	
190	312115-0228		1	SCREW ISO4762 M3X16 A4 80	
200	312125-0287		1	SCREW ISO 1207 M4X8 A4	
210	312115-0323		2	SCREW ISO4762 M5X8 A4 80	
220	312105-0327		1	SCREW M6S ISO 4017 M5X12 A480	
230	312105-0506		2	FITTED BOLT M10X75MM	

Pos	Part No	UN	Qty	Description	Page No

INFEED TENSION DEVICE

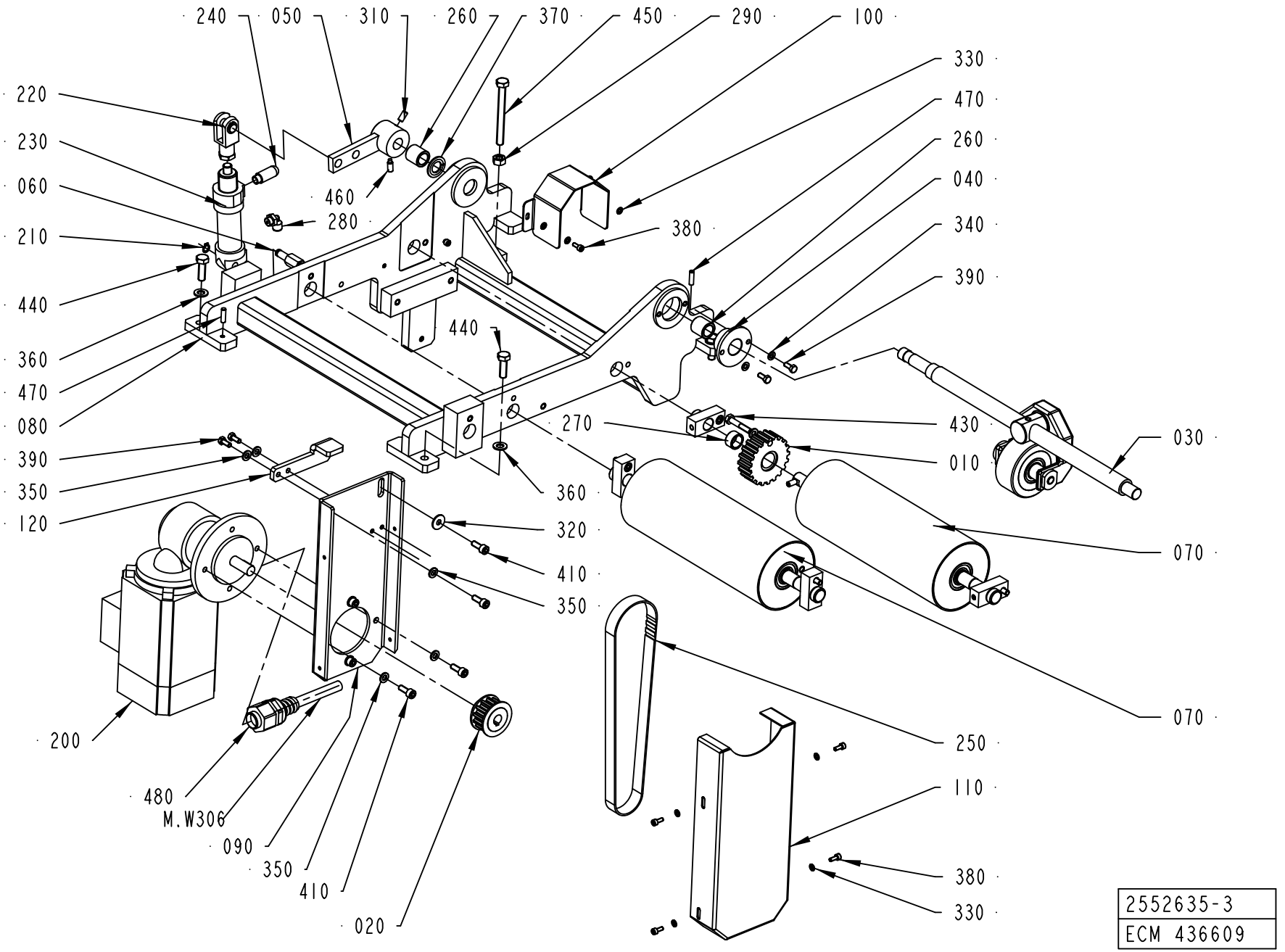

2552635-3
ECM 436609

ECM: 438706 - 20100222
Group number: 2552635-0200
Assembly Drawing: 2552635-3_1_AB

Pos	Part No	UN	Qty	Description	Page No
-					
010	574944-0000		1	TOOTHED PULLEY	
020	574945-0000		1	TOOTHED PULLEY	
030	579385-0100		1	PRESSURE ROLLER	**1-111**
040	581921-0000		1	HUB	
050	583687-0000		1	ARM	
060	2592562-0000		1	AXLE PIN	
070	979661-0200		2	BENDING ROLLER	**1-125**
080	2552634-0000		1	FRAME	
090	2540727-0000		1	BRACKET	
100	2552636-0000		1	COVER	
110	2552637-0000		1	COVER	
120	2555486-0000		1	TENSION ARM	
200	90459-2327		1	GEARS, WORM MOTOR IGL 80-60 + VE 31GR5	
210	90141-0015		1	RETAINING RING FOR SHAFT DIN 471 8 SS	
220	90239-0516		1	ROD END, CLEVIS WITH AXLE M10X1,25	
230	90239-0863		1	SINGLE ACTING, MINI-ISO, CYL 25-25	
240	90328-0047		1	SILENCER G1/8"	
250	318172-0139		1	TIMING BELT 16T10/630 PU	
260	321105-0185		2	BUSHING W/O FLANGE, 14/20X20 MM	
270	321116-0202		1	BUSHING W/O FLANGE, 15/19X10 MM	
280	90458-2956		1	ELBOW PIPE JOINT, EXT.THREAD, D=6MM-G1/8	
290	312605-0318		1	HEXAGON NUT, M6M M8 A280	
310	312318-0366		1	SCREW ISO4029 M6X12 A4	
320	90005-0060		1	WASHER PLAIN, RBS 6,4/M6)/18,H=1,5	
330	315105-0136		7	WASHER BRB 4,3X8 RFR	
340	315105-0146		2	WASHER BRB 5,3X10 RFR	
350	315105-0153		8	WASHER BRB 6,4X12 RFR	
360	315105-0165		4	WASHER BRB 8,4X16 RFR	
370	321130-0200		1	THRUST WASHER, 14X26X1,5 MM	
380	312115-0289		6	SCREW ISO4762 M4X10 A4 80	
390	312105-0327		4	SCREW M6S ISO 4017 M5X12 A480	
410	312115-0368		6	SCREW ISO4762 M6X16 A4 80	
430	312105-0376		1	SCREW M6S ISO 4014 M6X35 A480	
440	312105-0453		4	SCREW M6S ISO 4017 M8X25 A480	
450	312109-0467		1	SCREW M6S ISO 4017 M8X80 A480	
460	312311-0368		1	SCREW ISO4028 M6X16 FZB	
470	311103-0309		2	PARALLEL PIN ISO 2338 5M6X18 A1	
480	90458-0449		1	GLAND FITTING, 2205413S05 UL16	
M.W306	351422-0203	MM	550	CABLE Ã–LFLEX 150CY QUATTRO 4X1,5	

Pos	Part No	UN	Qty	Description	Page No

Machine Type | Group Description | Used-In | Group Number | Page No

BENDING ROLLER

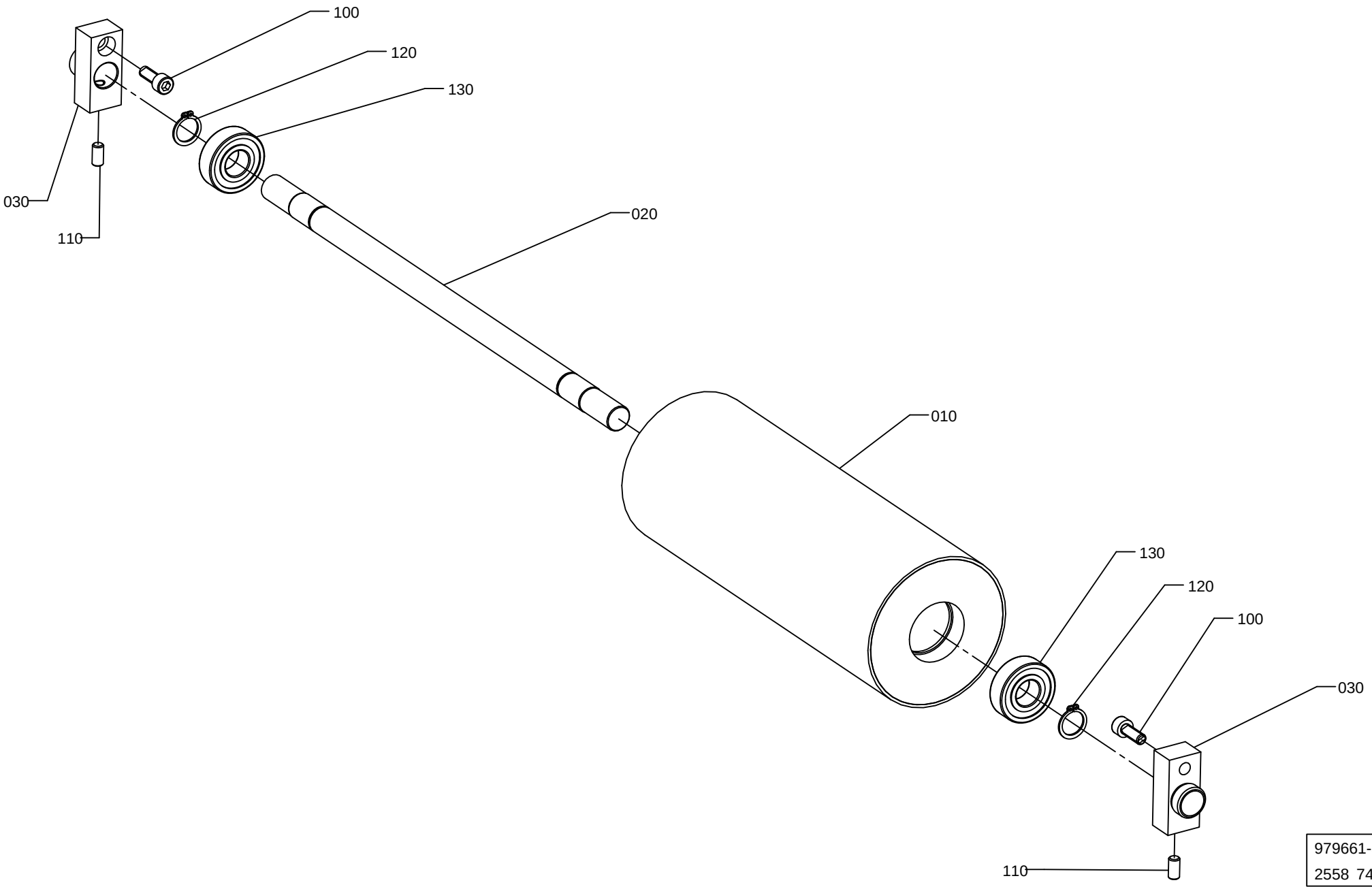

979661-3
2558 74

ECM: 258034 - 20060307
Group number: 979661-0200
Assembly Drawing: 979661-3_1_AA

Pos	Part No	UN	Qty	Description	Page No
-					
010	574932-0000		1	BENDING ROLLER	
020	979645-0000		1	SHAFT	
030	583684-0000		2	AXLE SUPPORT	
100	312115-0370		2	SCREW ISO4762 M6X20 A4 80	
110	312318-0366		2	SCREW ISO4029 M6X12 A4	
120	315751-0112		2	RETAINING RING FOR SHAFT DIN 471 15 SS	
130	321313-0102		2	BALL BEARING 15/35X11	

Pos	Part No	UN	Qty	Description	Page No

PAPER MAGAZINE

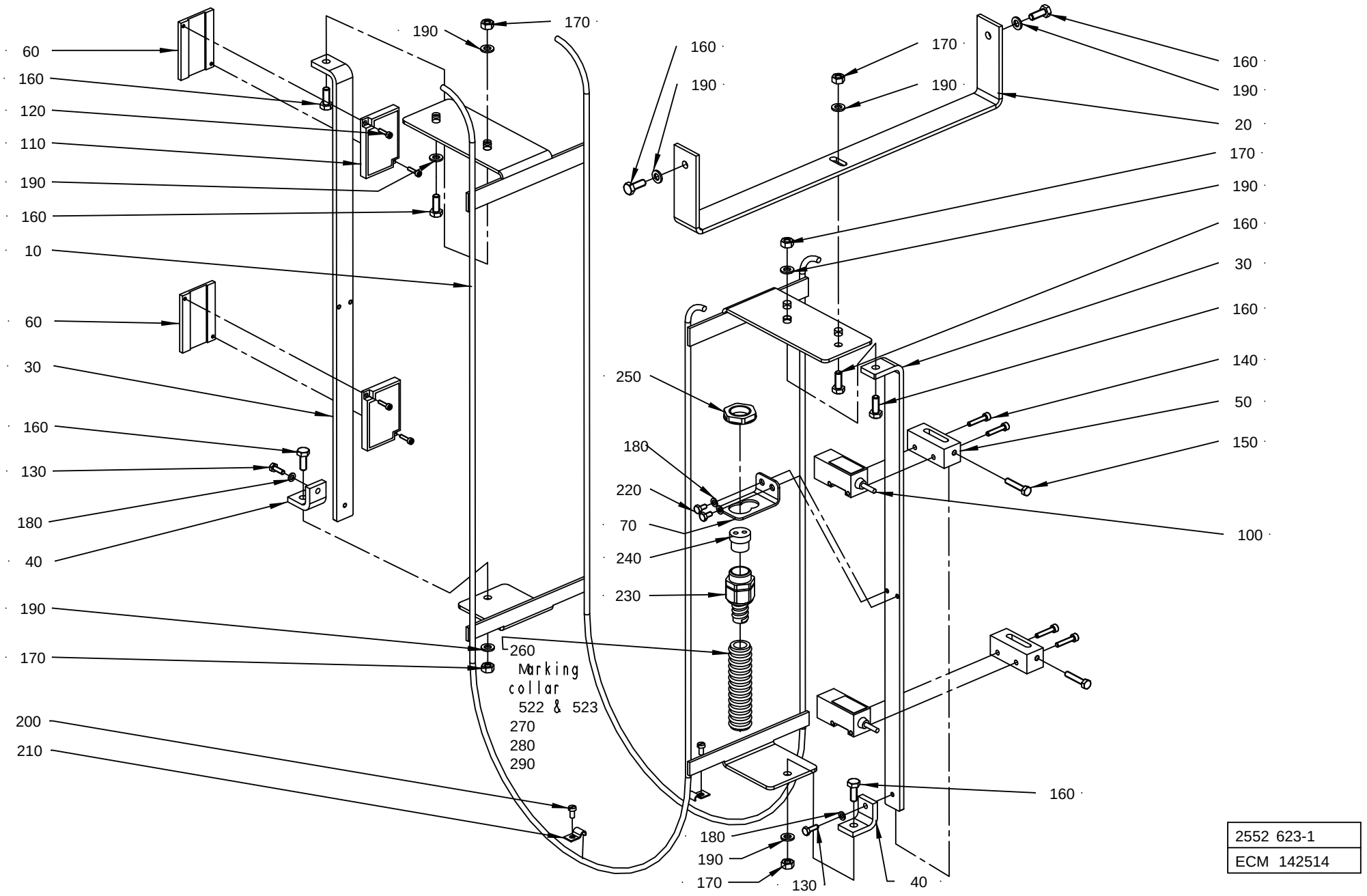

ECM: 243210 - 20060127
Group number: 2552623-0100
Assembly Drawing: 2552623-1_1_AB

Pos	Part No	UN	Qty	Description	Page No
-					
010	2529649-0000		1	GUIDE	
020	2552625-0000		1	BRACKET	
030	2552626-0000		2	BRACKET	
040	2552627-0000		2	BRACKET	
050	1517744-0000		2	PHOTOCELL CURSOR	
060	2555488-0000		2	REFLECTOR PLATE	
070	2540732-0000		1	HOLDER	
100	90232-0106		2	PH.CELL E3S-CR11-5M	
110	90232-0333		2	REFLECTOR, E39-R1	
120	312115-0226		4	SCREW ISO4762 M3X12 A4 80	
130	312105-0291		2	SCREW M6S ISO 4017 M4X12 A470	
140	312115-0295		4	SCREW ISO4762 M4X20 A4 80	
150	312105-0333		2	SCREW M6S ISO 4017 M5X25 A480	
160	312105-0368		8	SCREW M6S ISO 4017 M6X16 A480	
170	312605-0316		5	HEXAGON NUT, M6M M6 A280	
180	315105-0136		4	WASHER BRB 4,3X8 RFR	
190	315105-0153		9	WASHER BRB 6,4X12 RFR	
200	312125-0287		2	SCREW ISO 1207 M4X8 A4	
210	90165-0060		2	PIPE CLIP FOR TUBE D=5 MM	
220	312105-0287		2	SCREW M6S ISO 4017 M4X8 A470	
230	90458-0428		1	GLAND FITTING, VK 22052YUL11	
240	353249-0036		1	INSERT, MULTI HOLE, EK152M 2X4	
250	90458-0323		1	NUT, M20X1,5	
260	90152-0059	M	1	HOSE, SPIRAL CONDUIT, 18X12, UL 1211	
270	359000-0405		2	WIRE MARKING, YELLOW, PA2/4"5"	
280	359000-0402		3	WIRE MARKING, YELLOW, PA2/4"2"	
290	359000-0403		1	WIRE MARKING, YELLOW, PA2/4"3"	

Pos	Part No	UN	Qty	Description	Page No

STRIP APPLICATOR

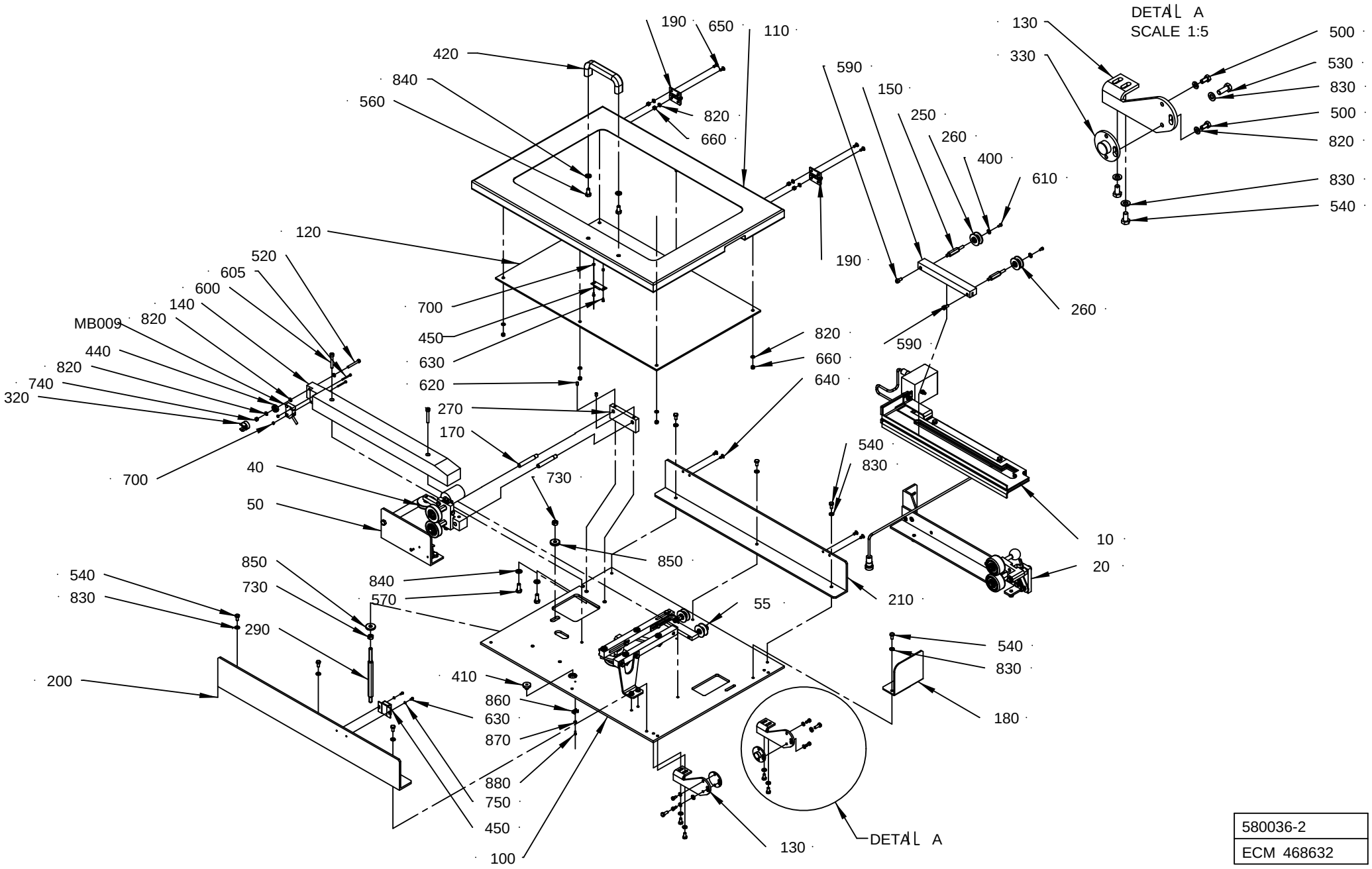

580036-2
ECM 468632

Pos	Part No	UN	Qty	Description	Page No
NOPT (See drawing on page: 1-128)					
050	1279624-0200		1	SPLICE DETECTOR	**1-43, 1-45**
110	2552620-0000		1	DOOR	
120	1499483-0000		1	PANE	
180	2552619-0000		1	COVER	
190	90459-0075		2	HINGE, 1056-U30	
200	2552622-0000		1	HOLDER	
210	2552621-0000		1	HOLDER	
420	90017-0022		1	HANDLE, NO. EL-037311	
450	90237-0046		1	MAGNETIC LOCK, 46X33X15 MM	
540	312105-0366		11	SCREW M6S ISO 4017 M6X12 A480	
560	312105-0449		2	SCREW M6S ISO 4017 M8X16 A480	
630	312115-0220		4	SCREW ISO4762 M3X6 A4 80	
640	312155-0325		4	SCREW DIN 7991 MF6S M5X10 A4 70	
650	312155-0327		4	SCREW DIN 7991 MF6S M5X12 A4 70	
660	312605-0314		10	HEXAGON NUT, M6M M5 A280	
700	312605-0310		4	HEXAGON NUT, M6M M3 A280	
750	315105-0124		2	WASHER BRB 3,2X6 RFR	
820	315105-0146		17	WASHER BRB 5,3X10 RFR	
830	315105-0153		13	WASHER BRB 6,4X12 RFR	
840	315105-0165		4	WASHER BRB 8,4X16 RFR	
860	352113-0205		2	ANCHOR PLATES FOR STRIPS, TM2S8-C100	
870	315106-0124		2	WASHER ISO 7089-3-200 HV A4	
880	312125-0222		2	SCREW ISO 1207 M3X8 A4	
PT19 (See drawing on page: 1-130)					
030	2576243-0100		1	STRIP GUIDE	**1-133**
540	312105-0366		6	SCREW M6S ISO 4017 M6X12 A480	
560	312105-0449		3	SCREW M6S ISO 4017 M8X16 A480	
700	312605-0310		3	HEXAGON NUT, M6M M3 A280	
820	315105-0146		9	WASHER BRB 5,3X10 RFR	
830	315105-0153		8	WASHER BRB 6,4X12 RFR	
840	315105-0165		4	WASHER BRB 8,4X16 RFR	
860	266737-0000		2	WASHER	
870	979899-0000		1	BRACKET	
880	1035897-0000		1	SHAFT	
890	2524478-0000		1	BRACKET	
900	312115-0228		1	SCREW ISO4762 M3X16 A4 80	
910	315751-0109		1	RETAINING RING FOR SHAFT DIN 471 12 SS	
920	321141-0183		2	BEARING BUSH W/O FLANGE, 12X14X15 MM	
930	90335-0216		1	TENSION SPRING 40910, 0,5X5,5X27,7	
940	312105-0328		1	SCREW M6S ISO 4017 M5X14 A480	
Common Parts					
010	580038-0200		1	INDUCTOR	**1-135**
020	2506475-0100		1	PRESSURE ROLLER	**1-137**
040	2524476-0100		1	WEB GUIDE	**1-139**
055	2576240-0100		1	STRIP GUIDE	**1-141, 1-143**
100	2552630-0000		1	MOUNTING PLATE	
130	1498773-0000		2	CANTILEVER	
140	1517535-0000		1	STEERING	
150	1282988-0000		1	RAIL	
170	1498778-0000		2	SHAFT	
250	1282989-0000		2	AXLE PIN	
260	1512583-0000		2	ROLLER	
	321120-0101		*2*	*BEARING BUSH W/O FLANGE, 6X8X6 MM*	
270	1498777-0000		1	GUIDE HOLDER	
290	1498765-0000		1	AXLE PIN	
320	1517534-0000		1	RUNNER RING	
330	1334331-0000		2	FLANGE	
400	90005-0082		2	WASHER PLAIN ROUND 4,3(M4)/12,H=1	
410	90015-0020		1	LEAD-IN, TET5-7, E-1458016	
440	90214-0138		1	BALL BEARING 5/19X6	
500	312105-0325		4	SCREW M6S ISO 4017 M5X10 A480	
520	312105-0339		1	SCREW M6S ISO 4014 M5X40 A480	
530	312105-0368		2	SCREW M6S ISO 4017 M6X16 A480	
570	312105-0451		2	SCREW M6S ISO 4017 M8X20 A480	
590	312115-0366		2	SCREW ISO4762 M6X12 A4 80	
600	312115-0378		2	SCREW ISO4762 M6X40 A4 80	
605	312125-0234		2	SCREW ISO 1207 M3X30 A4	
610	312125-0287		2	SCREW ISO 1207 M4X8 A4	
620	312318-0362		2	SCREW ISO4029 M6X8 A4	
730	312605-0318		2	HEXAGON NUT, M6M M8 A280	
740	312812-0314		1	HEXAGON NUT, NY-LOCK M5 A480	
850	315125-0165		2	WASHER TBRSB 8,4X26X5 A4	
MB009	90044-0194		1	INDUCTIVE SENSOR, IN 5329	

Machine Type | Group Description | Used-In | Group Number | Page No

STRIP APPLICATOR

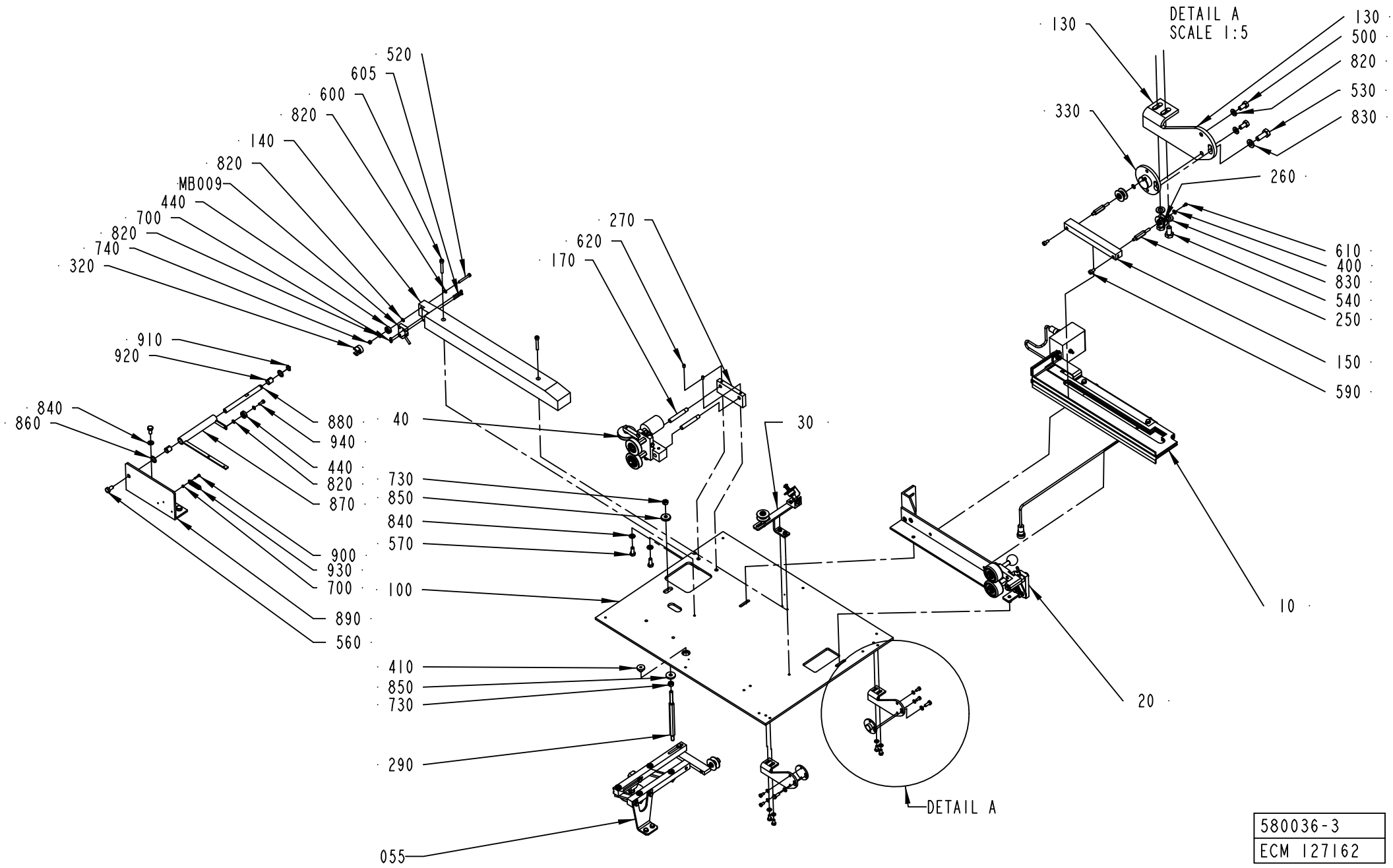

Pos	Part No	UN	Qty	Description	Page No
NOPT (See drawing on page: 1-128)					
050	1279624-0200		1	SPLICE DETECTOR	**1-43, 1-45**
110	2552620-0000		1	DOOR	
120	1499483-0000		1	PANE	
180	2552619-0000		1	COVER	
190	90459-0075		2	HINGE, 1056-U30	
200	2552622-0000		1	HOLDER	
210	2552621-0000		1	HOLDER	
420	90017-0022		1	HANDLE, NO. EL-037311	
450	90237-0046		1	MAGNETIC LOCK, 46X33X15 MM	
540	312105-0366		11	SCREW M6S ISO 4017 M6X12 A480	
560	312105-0449		2	SCREW M6S ISO 4017 M8X16 A480	
630	312115-0220		4	SCREW ISO4762 M3X6 A4 80	
640	312155-0325		4	SCREW DIN 7991 MF6S M5X10 A4 70	
650	312155-0327		4	SCREW DIN 7991 MF6S M5X12 A4 70	
660	312605-0314		10	HEXAGON NUT, M6M M5 A280	
700	312605-0310		4	HEXAGON NUT, M6M M3 A280	
750	315105-0124		2	WASHER BRB 3,2X6 RFR	
820	315105-0146		17	WASHER BRB 5,3X10 RFR	
830	315105-0153		13	WASHER BRB 6,4X12 RFR	
840	315105-0165		4	WASHER BRB 8,4X16 RFR	
860	352113-0205		2	ANCHOR PLATES FOR STRIPS, TM2S8-C100	
870	315106-0124		2	WASHER ISO 7089-3-200 HV A4	
880	312125-0222		2	SCREW ISO 1207 M3X8 A4	
PT19 (See drawing on page: 1-130)					
030	2576243-0100		1	STRIP GUIDE	**1-133**
540	312105-0366		6	SCREW M6S ISO 4017 M6X12 A480	
560	312105-0449		3	SCREW M6S ISO 4017 M8X16 A480	
700	312605-0310		3	HEXAGON NUT, M6M M3 A280	
820	315105-0146		9	WASHER BRB 5,3X10 RFR	
830	315105-0153		8	WASHER BRB 6,4X12 RFR	
840	315105-0165		4	WASHER BRB 8,4X16 RFR	
860	266737-0000		2	WASHER	
870	979899-0000		1	BRACKET	
880	1035897-0000		1	SHAFT	
890	2524478-0000		1	BRACKET	
900	312115-0228		1	SCREW ISO4762 M3X16 A4 80	
910	315751-0109		1	RETAINING RING FOR SHAFT DIN 471 12 SS	
920	321141-0183		2	BEARING BUSH W/O FLANGE, 12X14X15 MM	
930	90335-0216		1	TENSION SPRING 40910, 0,5X5,5X27,7	
940	312105-0328		1	SCREW M6S ISO 4017 M5X14 A480	
Common Parts					
010	580038-0200		1	INDUCTOR	**1-135**
020	2506475-0100		1	PRESSURE ROLLER	**1-137**
040	2524476-0100		1	WEB GUIDE	**1-139**
055	2576240-0100		1	STRIP GUIDE	**1-141, 1-143**
100	2552630-0000		1	MOUNTING PLATE	
130	1498773-0000		2	CANTILEVER	
140	1517535-0000		1	STEERING	
150	1282988-0000		1	RAIL	
170	1498778-0000		2	SHAFT	
250	1282989-0000		2	AXLE PIN	
260	1512583-0000		2	ROLLER	
	321120-0101		*2*	*BEARING BUSH W/O FLANGE, 6X8X6 MM*	
270	1498777-0000		1	GUIDE HOLDER	
290	1498765-0000		1	AXLE PIN	
320	1517534-0000		1	RUNNER RING	
330	1334331-0000		2	FLANGE	
400	90005-0082		2	WASHER PLAIN ROUND 4,3(M4)/12,H=1	
410	90015-0020		1	LEAD-IN, TET5-7, E-1458016	
440	90214-0138		1	BALL BEARING 5/19X6	
500	312105-0325		4	SCREW M6S ISO 4017 M5X10 A480	
520	312105-0339		1	SCREW M6S ISO 4014 M5X40 A480	
530	312105-0368		2	SCREW M6S ISO 4017 M6X16 A480	
570	312105-0451		2	SCREW M6S ISO 4017 M8X20 A480	
590	312115-0366		2	SCREW ISO4762 M6X12 A4 80	
600	312115-0378		2	SCREW ISO4762 M6X40 A4 80	
605	312125-0234		2	SCREW ISO 1207 M3X30 A4	
610	312125-0287		2	SCREW ISO 1207 M4X8 A4	
620	312318-0362		2	SCREW ISO4029 M6X8 A4	
730	312605-0318		2	HEXAGON NUT, M6M M8 A280	
740	312812-0314		1	HEXAGON NUT, NY-LOCK M5 A480	
850	315125-0165		2	WASHER TBRSB 8,4X26X5 A4	
MB009	90044-0194		1	INDUCTIVE SENSOR, IN 5329	

Machine Type | Group Description | Used-In | Group Number | Page No

STRIP GUIDE

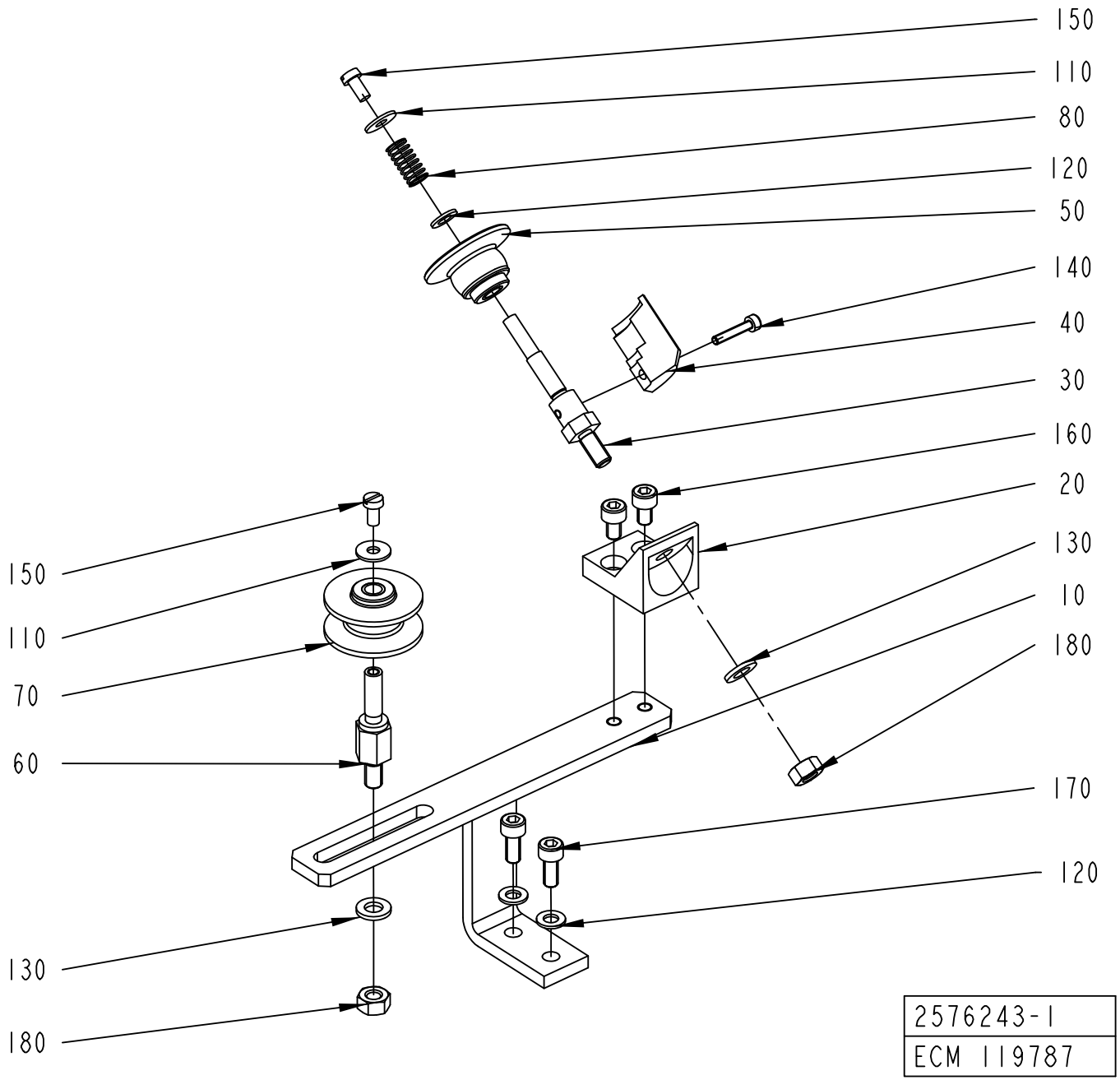
150
110
80
120
50
140
40
30
160
20
130
10
180
170
120
150
110
70
60
130
180
2576243-1
ECM 119787

ECM: 243217 - 20060127
Group number: 2576243-0100
Assembly Drawing: 2576243-1_1_AA

Pos	Part No	UN	Qty	Description	Page No
-					
010	2603016-0000		1	BRACKET	
020	979575-0000		1	ROLLER PLATE	
030	2552631-0000		1	AXLE PIN	
040	2552633-0000		1	ROLLER	
050	2552632-0000		1	ROLLER	
060	579553-0000		1	SHAFT	
070	1512583-0000		1	ROLLER	
	321120-0101		*2*	*BEARING BUSH W/O FLANGE, 6X8X6 MM*	
080	90335-0146		1	COMP. SPRING, 0,6X7,2X20	
110	90005-0082		2	WASHER PLAIN ROUND 4,3(M4)/12,H=1	
120	315105-0146		3	WASHER BRB 5,3X10 RFR	
130	315105-0153		2	WASHER BRB 6,4X12 RFR	
140	312115-0228		1	SCREW ISO4762 M3X16 A4 80	
150	312125-0287		2	SCREW ISO 1207 M4X8 A4	
160	312115-0323		2	SCREW ISO4762 M5X8 A4 80	
170	312115-0327		2	SCREW ISO4762 M5X12 A4 80	
180	312605-0316		2	HEXAGON NUT, M6M M6 A280	

Pos	Part No	UN	Qty	Description	Page No

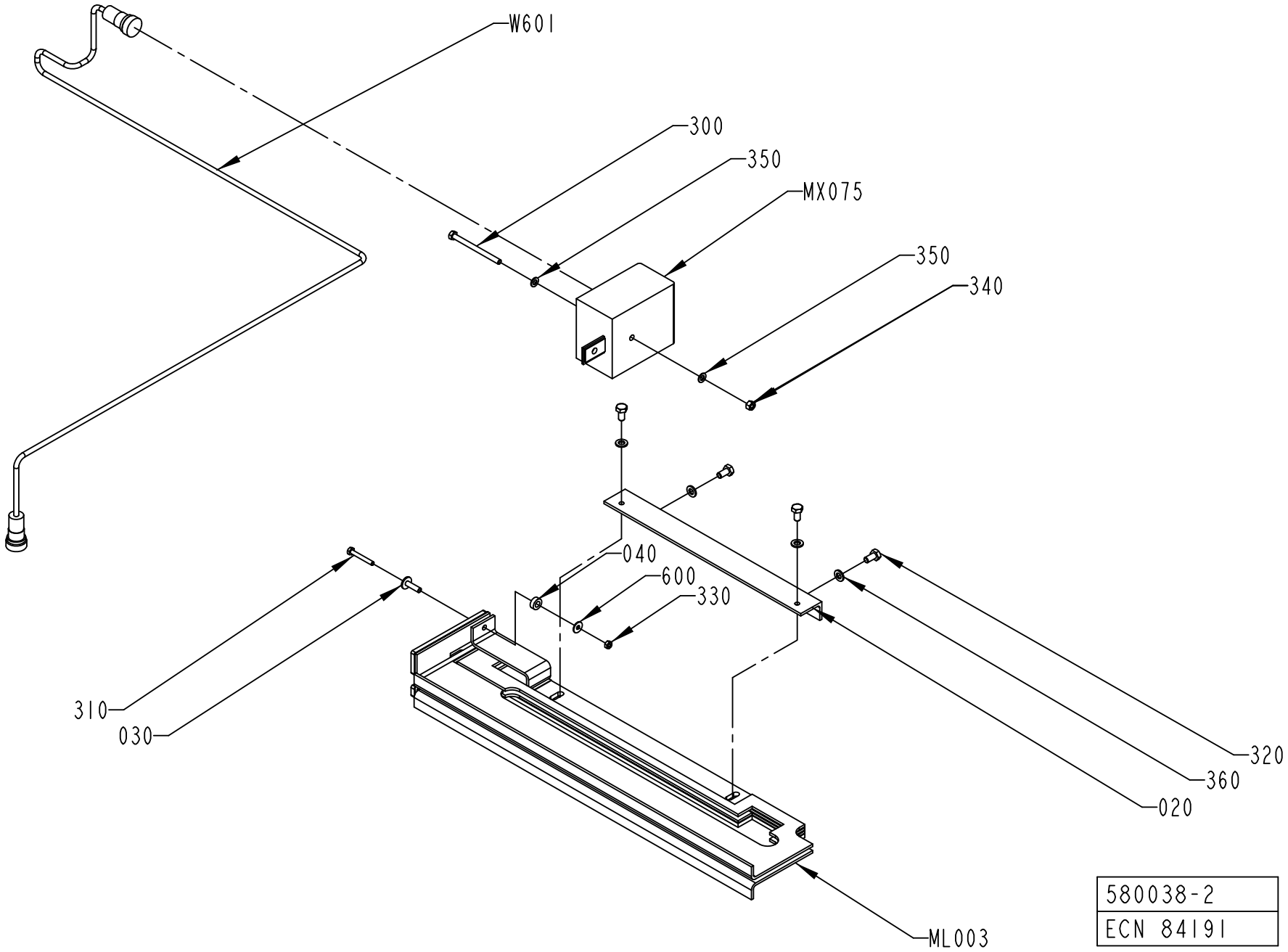
W601
300
350
MX075
350
340
040
600
330
310
030
320
360
020
ML003
580038-2
ECN 84191

ECM: 180858 - 20040910
Group number: 580038-0200
Assembly Drawing: 580038-2_1_AB

Pos	Part No	UN	Qty	Description	Page No
-					
020	1036588-0000		1	BRACKET	
030	1038016-0000		1	SPACER	
040	32644-0000		1	WASHER	
300	312101-0344		1	SCREW M6S M5X65 FZB	
310	312105-0299		1	SCREW M6S ISO 4017 M4X30 A470	
320	312105-0366		4	SCREW M6S ISO 4017 M6X12 A480	
330	312605-0312		1	HEXAGON NUT, M6M M4 A280	
340	312605-0314		1	HEXAGON NUT, M6M M5 A280	
350	315105-0146		2	WASHER BRB 5,3X10 RFR	
360	315105-0153		4	WASHER BRB 6,4X12 RFR	
600	90005-0082		1	WASHER PLAIN ROUND 4,3(M4)/12,H=1	
MX075	67380-0208		1	TRANSFORMER	
ML003	1035587-0000		1	INDUCTOR	
W601	548770-0006		1	COAXIAL CABLE L=1200 MM	

Pos	Part No	UN	Qty	Description	Page No

PRESSURE ROLLER

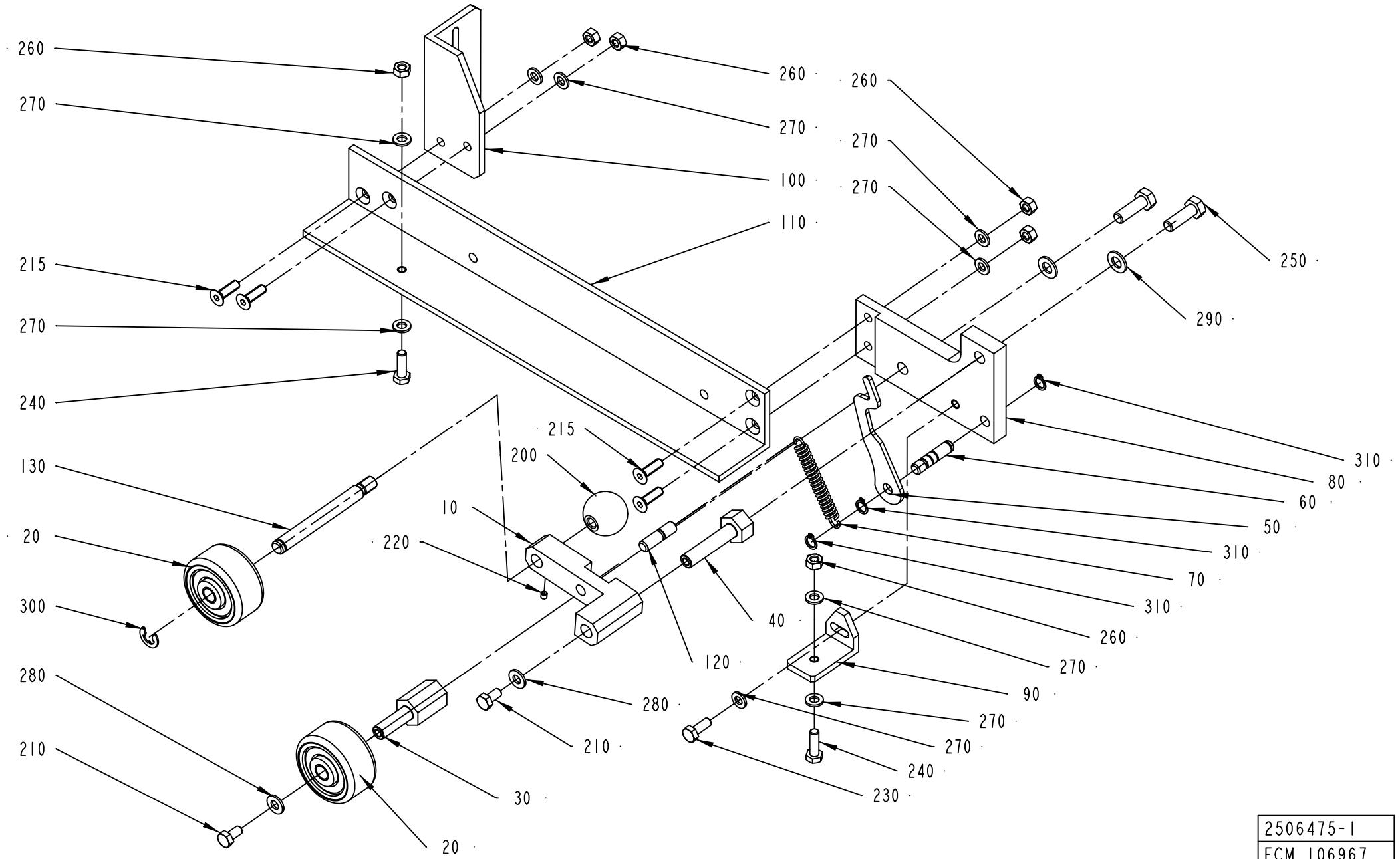

2506475-1
ECM 106967

ECM: 180899 - 20040910
Group number: 2506475-0100
Assembly Drawing: 2506475-1_1_AA

Pos	Part No	UN	Qty	Description	Page No
-					
010	2524482-0000		1	BRACKET	
020	1346988-0000		2	ROLL	
010	*90166-0056*	*MM*	*40*	*SHRINKABLE HOSE (2,5")*	
020	*321120-0104*		*2*	*BEARING BUSH W/O FLANGE, 10X12X10 MM*	
030	1035895-0000		1	SHAFT	
040	2529646-0000		1	SHAFT	
050	2524479-0000		1	PLATE	
060	2524480-0000		1	PIN	
070	1478303-0000		1	TENSION SPRING	
080	2506471-0000		1	BRACKET	
090	2506472-0000		1	HOLDER	
100	2506473-0000		1	BRACKET	
110	2506474-0000		1	FASTENING BRACKET	
120	2524484-0000		1	PIN	
130	2524485-0000		1	PIN	
200	318800-0104		1	HANDLE,SPHERICAL KNOB,INT.THRE.,D.30-M8	
210	312105-0366		2	SCREW M6S ISO 4017 M6X12 A480	
215	312155-0370		4	SCREW DIN 7991 MF6S M6X20 A4 70	
220	312318-0283		1	SCREW ISO4029 M4X4 A4	
230	312105-0368		1	SCREW M6S ISO 4017 M6X16 A480	
240	312105-0367		2	REW M6S ISO 4017 M6X14 A480	
250	312105-0453		2	SCREW M6S ISO 4017 M8X25 A480	
260	312605-0316		4	HEXAGON NUT, M6M M6 A280	
270	315105-0153		7	WASHER BRB 6,4X12 RFR	
280	315105-0156		2	WASHER BRB 6,7X14 RFR	
290	315105-0165		2	WASHER BRB 8,4X16 RFR	
300	315755-0801		1	RETAINING RING SHAFT DIN 6799 8 SS	
310	90141-0015		3	RETAINING RING FOR SHAFT DIN 471 8 SS	

Pos	Part No	UN	Qty	Description	Page No

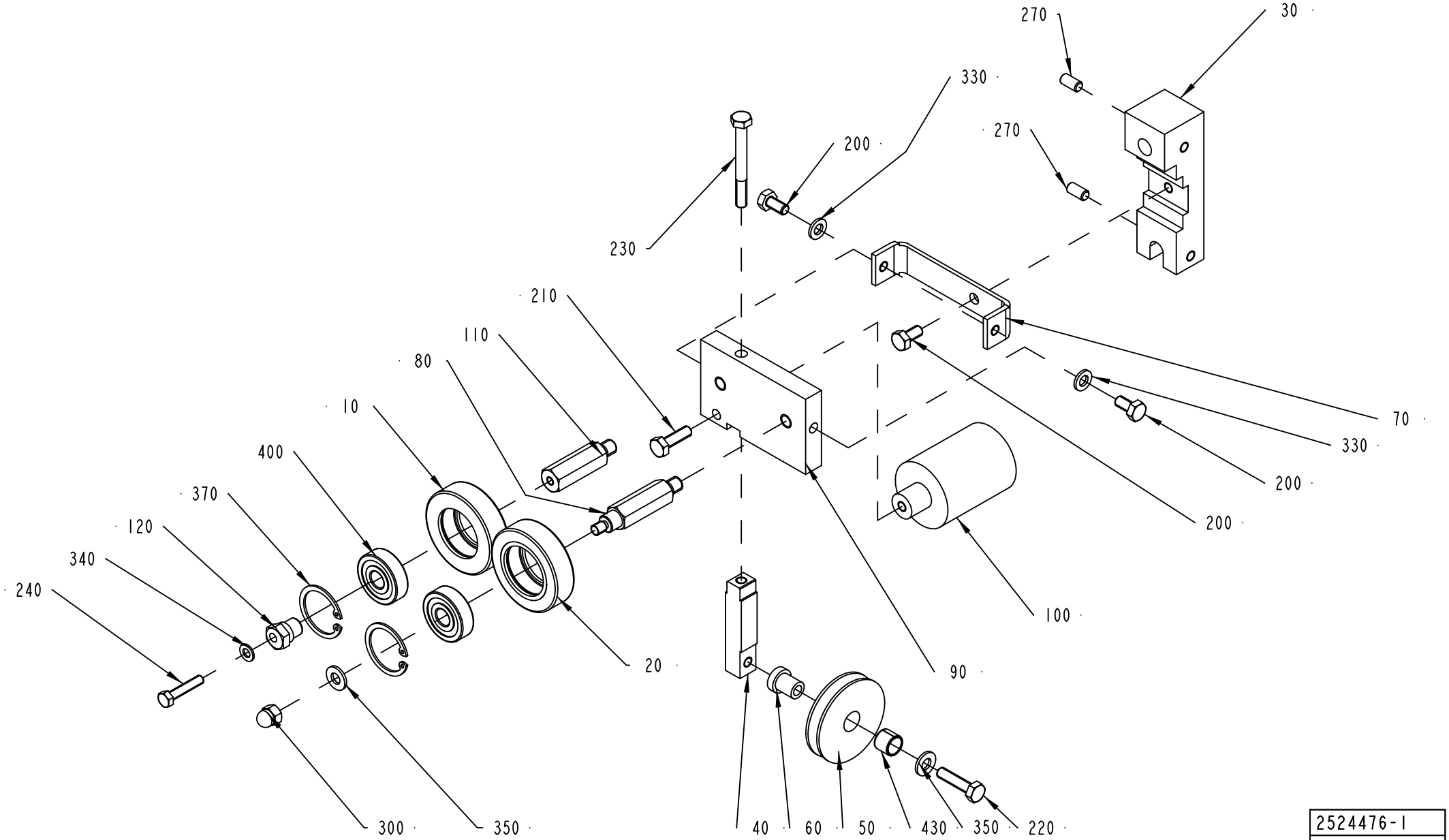

2524476-1
ECN 437380

ECM: 437380 - 20100222
Group number: 2524476-0100
Assembly Drawing: 2524476-1_1_AD

Pos	Part No	UN	Qty	Description	Page No
-					
010	1036622-0000		1	GUIDE ROLLER	
020	1036623-0000		1	GUIDE ROLLER	
030	1511002-0000		1	HOLDER	
040	1499024-0000		1	BAR	
050	2524477-0000		1	ROLLER	
060	1499026-0000		1	SHAFT	
070	1499027-0000		1	BRACKET	
080	1511001-0000		1	SHAFT	
090	1511000-0000		1	PLATE	
100	1511003-0000		1	WEIGHT	
110	2552628-0000		1	PIN	
120	1346612-0000		1	SHAFT	
200	312105-0366		3	SCREW M6S ISO 4017 M6X12 A480	
210	312105-0370		1	SCREW M6S ISO 4017 M6X20 A480	
220	312105-0372		1	SCREW M6S ISO 4017 M6X25 A480	
230	312105-0381		1	SCREW M6S ISO 4014 M6X55 A480	
240	312105-0333		1	SCREW M6S ISO 4017 M5X25 A480	
270	312318-0366		2	SCREW ISO4029 M6X12 A4	
300	312705-0316		2	HEX. DOMED CAP MHM-6 M6 A280	
330	315105-0153		2	WASHER BRB 6,4X12 RFR	
340	315105-0146		1	WASHER BRB 5,3X10 RFR	
350	315105-0156		2	WASHER BRB 6,7X14 RFR	
370	315753-0122		2	RETAINING RING FOR BORE DIN 472 30 SS	
400	321313-0100		2	BALL BEARING 10/30X9	
430	321141-0140		1	BEARING BUSH W/O FLANGE, 10X12X10 MM	

Pos	Part No	UN	Qty	Description	Page No

STRIP GUIDE

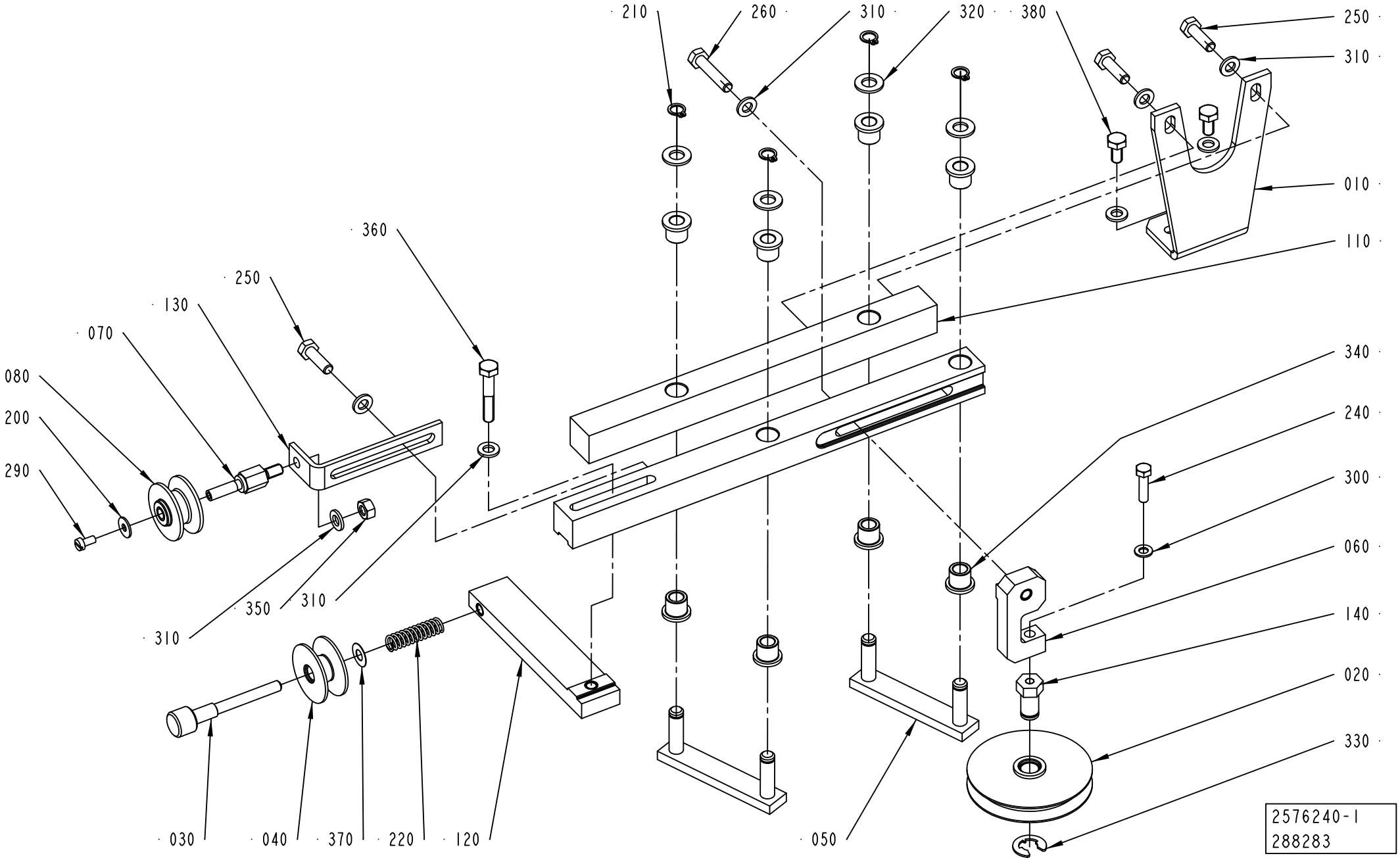
210
260
310
320
380
250
310
010
110
360
250
130
070
080
200
290
340
240
300
060
140
020
330
310
350
310
030
040
370
220
120
050
2576240-1
288283

ECM: 293072 - 20070126
Group number: 2576240-0100
Assembly Drawing: 2576240-1_1_AB

This list covers pages from 1-140 to 1-143

Pos	Part No	UN	Qty	Description	Page No
NOPT (See drawing on page: 1-140)					
070	579553-0000		1	SHAFT	
080	1512583-0000		1	ROLLER	
	321120-0101		*2*	*BEARING BUSH W/O FLANGE, 6X8X6 MM*	
130	2839810-0000		1	BRACKET	
200	90005-0082		1	WASHER PLAIN ROUND 4,3(M4)/12,H=1	
290	312125-0287		1	SCREW ISO 1207 M4X8 A4	
350	312605-0316		1	HEXAGON NUT, M6M M6 A280	
Common Parts					
010	2576239-0000		1	HOLDER	
020	2850445-0000		1	GUIDE WHEEL	
	321141-0142		*1*	*BEARING BUSH W/O FLANGE, 10X12X12 MM*	
030	1035893-0000		1	ADJUSTING SCREW	
040	1285546-0000		1	ROLL	
050	1346746-0000		2	LEVER	
060	2575480-0000		1	HOLDER	
100	2570400-0000		1	ROD	
110	2570401-0000		1	ROD	
120	2575484-0000		1	HOLDER	
140	2575482-0000		1	PIN	
210	90141-0015		4	RETAINING RING FOR SHAFT DIN 471 8 SS	
220	90335-0027		1	COMP. SPRING 22170, 1,25X9,25X33	
240	312105-0331		1	SCREW M6S ISO 4017 M5X20 A480	
250	312105-0370		3	SCREW M6S ISO 4017 M6X20 A480	
260	312105-0374		1	SCREW M6S ISO 4014 M6X30 A480	
300	315105-0146		1	WASHER BRB 5,3X10 RFR	
310	315105-0153		8	WASHER BRB 6,4X12 RFR	
320	315105-0165		4	WASHER BRB 8,4X16 RFR	
330	315755-0110		1	RETAINING RING SHAFT DIN 6799 9 SS	
340	321111-0097		8	FLANGE BUSHING, 8/12X12-16X2 MM	
360	312105-0376		1	SCREW M6S ISO 4014 M6X35 A480	
370	2033-0013		1	WASHER	
380	312105-0366		2	SCREW M6S ISO 4017 M6X12 A480	

Pos	Part No	UN	Qty	Description	Page No

STRIP GUIDE

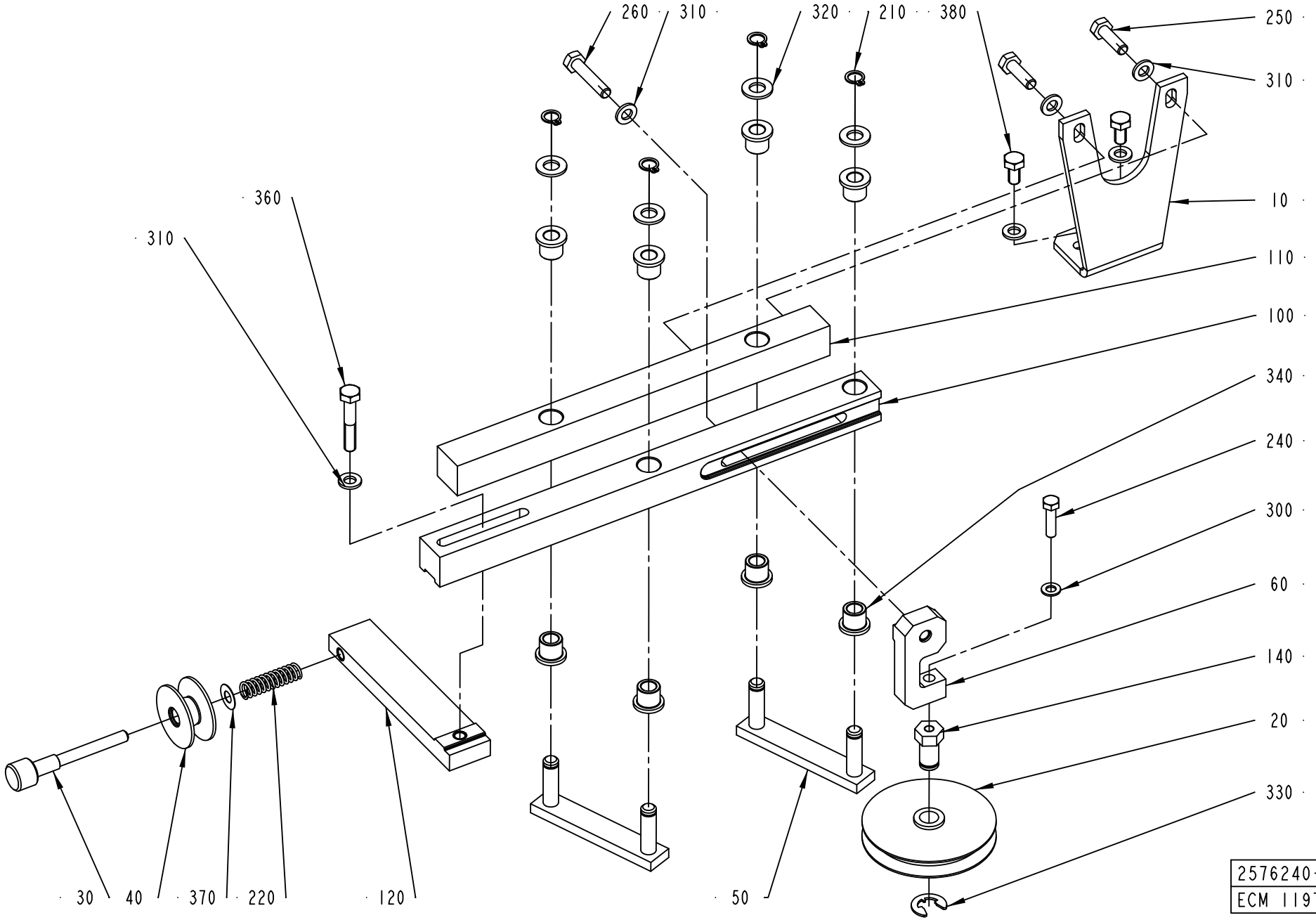
260
310
320
210
380
250
310
360
310
10
110
100
340
240
300
60
140
20
330
30
40
370
220
120
50
2576240-2
ECM 119787

ECM: 293072 - 20070126
Group number: 2576240-0100
Assembly Drawing: 2576240-2_1_AA

This list covers pages from 1-140 to 1-143

Pos	Part No	UN	Qty	Description	Page No
NOPT (See drawing on page: 1-140)					
070	579553-0000		1	SHAFT	
080	1512583-0000		1	ROLLER	
	321120-0101		*2*	*BEARING BUSH W/O FLANGE, 6X8X6 MM*	
130	2839810-0000		1	BRACKET	
200	90005-0082		1	WASHER PLAIN ROUND 4,3(M4)/12,H=1	
290	312125-0287		1	SCREW ISO 1207 M4X8 A4	
350	312605-0316		1	HEXAGON NUT, M6M M6 A280	
Common Parts					
010	2576239-0000		1	HOLDER	
020	2850445-0000		1	GUIDE WHEEL	
	321141-0142		*1*	*BEARING BUSH W/O FLANGE, 10X12X12 MM*	
030	1035893-0000		1	ADJUSTING SCREW	
040	1285546-0000		1	ROLL	
050	1346746-0000		2	LEVER	
060	2575480-0000		1	HOLDER	
100	2570400-0000		1	ROD	
110	2570401-0000		1	ROD	
120	2575484-0000		1	HOLDER	
140	2575482-0000		1	PIN	
210	90141-0015		4	RETAINING RING FOR SHAFT DIN 471 8 SS	
220	90335-0027		1	COMP. SPRING 22170, 1,25X9,25X33	
240	312105-0331		1	SCREW M6S ISO 4017 M5X20 A480	
250	312105-0370		3	SCREW M6S ISO 4017 M6X20 A480	
260	312105-0374		1	SCREW M6S ISO 4014 M6X30 A480	
300	315105-0146		1	WASHER BRB 5,3X10 RFR	
310	315105-0153		8	WASHER BRB 6,4X12 RFR	
320	315105-0165		4	WASHER BRB 8,4X16 RFR	
330	315755-0110		1	RETAINING RING SHAFT DIN 6799 9 SS	
340	321111-0097		8	FLANGE BUSHING, 8/12X12-16X2 MM	
360	312105-0376		1	SCREW M6S ISO 4014 M6X35 A480	
370	2033-0013		1	WASHER	
380	312105-0366		2	SCREW M6S ISO 4017 M6X12 A480	

Pos	Part No	UN	Qty	Description	Page No

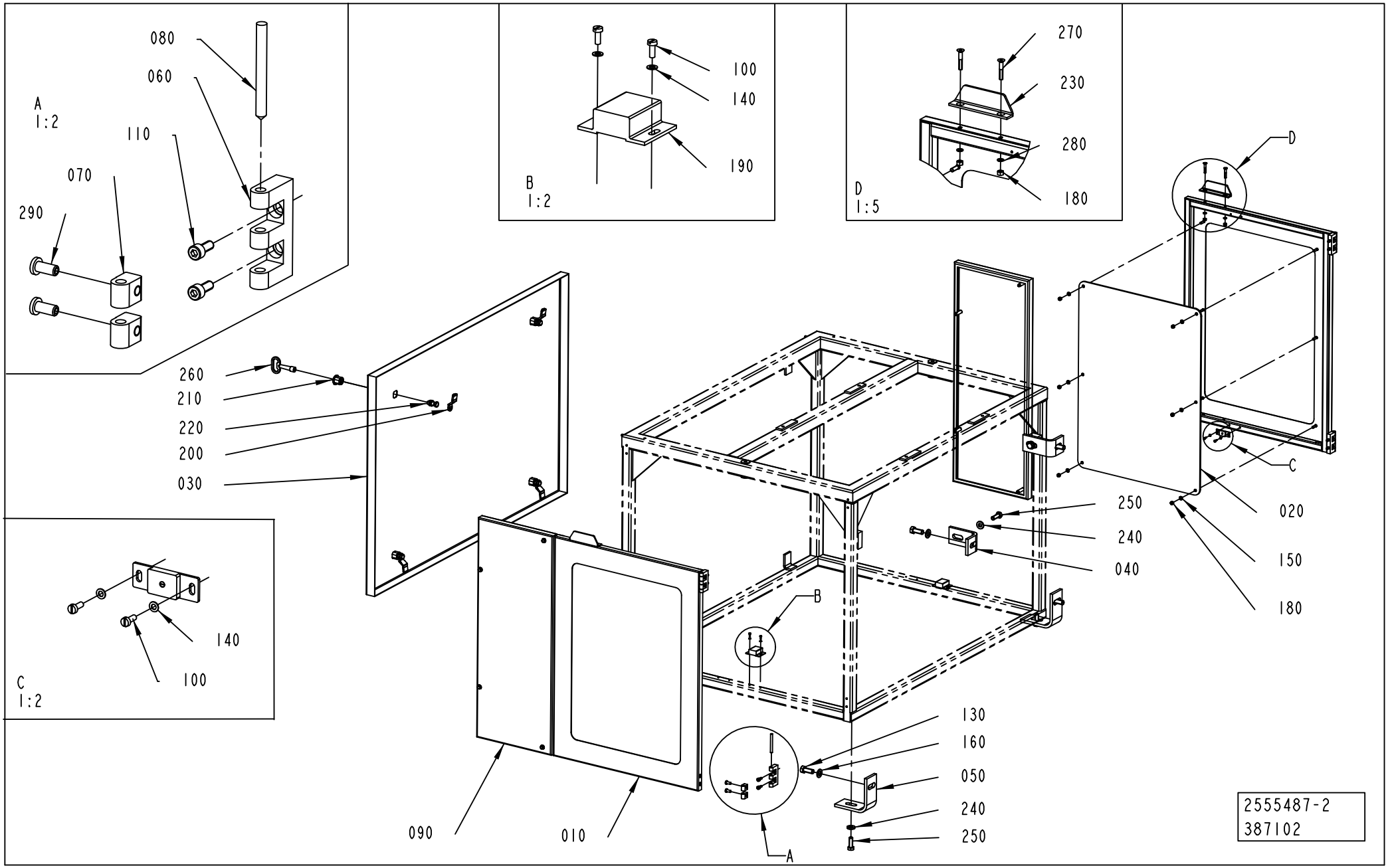
A
1:2
080
060
110
070
290
B
1:2
100
140
190
D
1:5
270
230
280
180
260
210
220
200
030
C
1:2
140
100
D
C
250
240
040
020
150
180
B
130
160
050
240
250
090
010
A
2555487-2
387102

ECM: 404588 - 20090706
Group number: 2555487-0200
Assembly Drawing: 2555487-2_1_AA

Pos	Part No	UN	Qty	Description	Page No
-					
010	3017356-0000		2	DOOR	
020	3017357-0000		2	GLASS PANE	
030	2523587-0000		1	COVER	
040	2523585-0000		2	FASTENER	
050	2523586-0000		2	FASTENER	
060	1035792-0000		4	E-HINGE	
070	1129770-0000		8	BLOCKING PIECE	
080	988685-0000		4	PIN	
090	3017360-0100		2	COVER	**1-147**
100	312125-0222		8	SCREW ISO 1207 M3X8 A4	
110	312115-0327		8	SCREW ISO4762 M5X12 A4 80	
130	312105-0536		4	SCREW M6S ISO 4017 M12X30 A480	
140	315105-0124		8	WASHER BRB 3,2X6 RFR	
150	315105-0146		12	WASHER BRB 5,3X10 RFR	
160	315105-0178		4	WASHER BRB 13X24 RFR	
180	312605-0314		20	HEXAGON NUT, M6M M5 A280	
190	90237-0046		2	MAGNETIC LOCK, 46X33X15 MM	
200	90237-0143		4	LOCK CAM, 1000-26	
210	90237-0319		4	LOCK HOUSING, 1000-U134	
220	90237-0320		4	LOCK HOUSING, 1000-U136	
230	3017358-0000		2	HANDLE	
240	315115-0173		4	WASHER PLAIN, TBRB 10,5/22 H=4	
250	312105-0495		4	SCREW M6S ISO 4017 M10X30 A480	
260	90237-0324		1	KEY, 1104-02 FOR SQUARE 8 MM	
270	312155-0335		4	SCREW DIN 7991 MF6S M5X30 A4 70	
280	315402-0146		4	LOCK WASHER, DIN127B 5,1 A4, M5-3/16	
290	1129767-0000		8	SCREW	

Pos	Part No	UN	Qty	Description	Page No

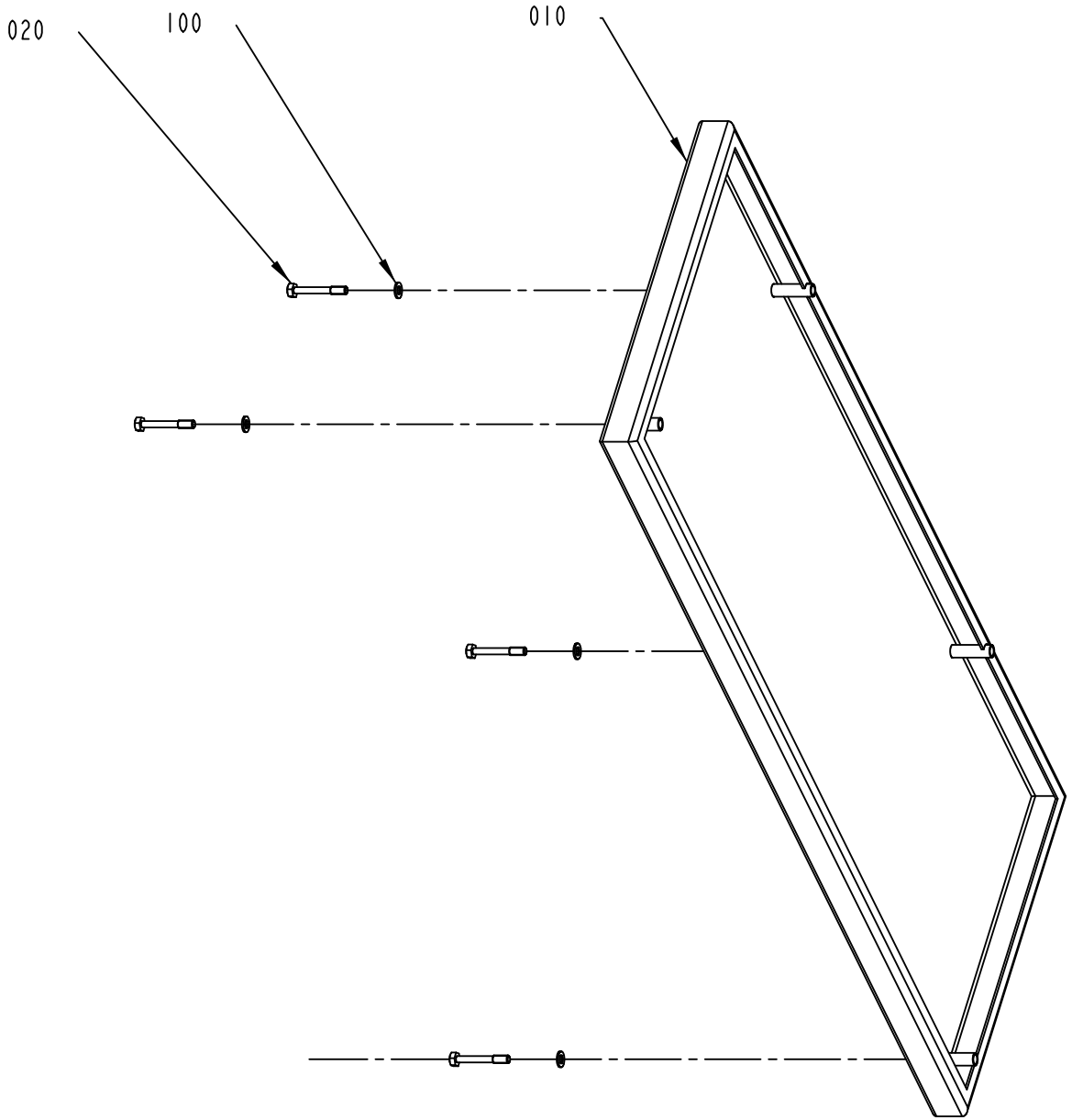

3017360-1
387102

ECM: 404920 - 20090706
Group number: 3017360-0100
Assembly Drawing: 3017360-1_1_AA

Pos	Part No	UN	Qty	Description	Page No
-					
010	3017359-0000		1	HATCH	
020	3017361-0000		4	SCREW	
100	315106-0146		4	WASHER ISO 7089-5-200 HV A4	

Pos	Part No	UN	Qty	Description	Page No

PHOTOCELL UNIT

Drawing file: 979552-3_1_AC.hpgl

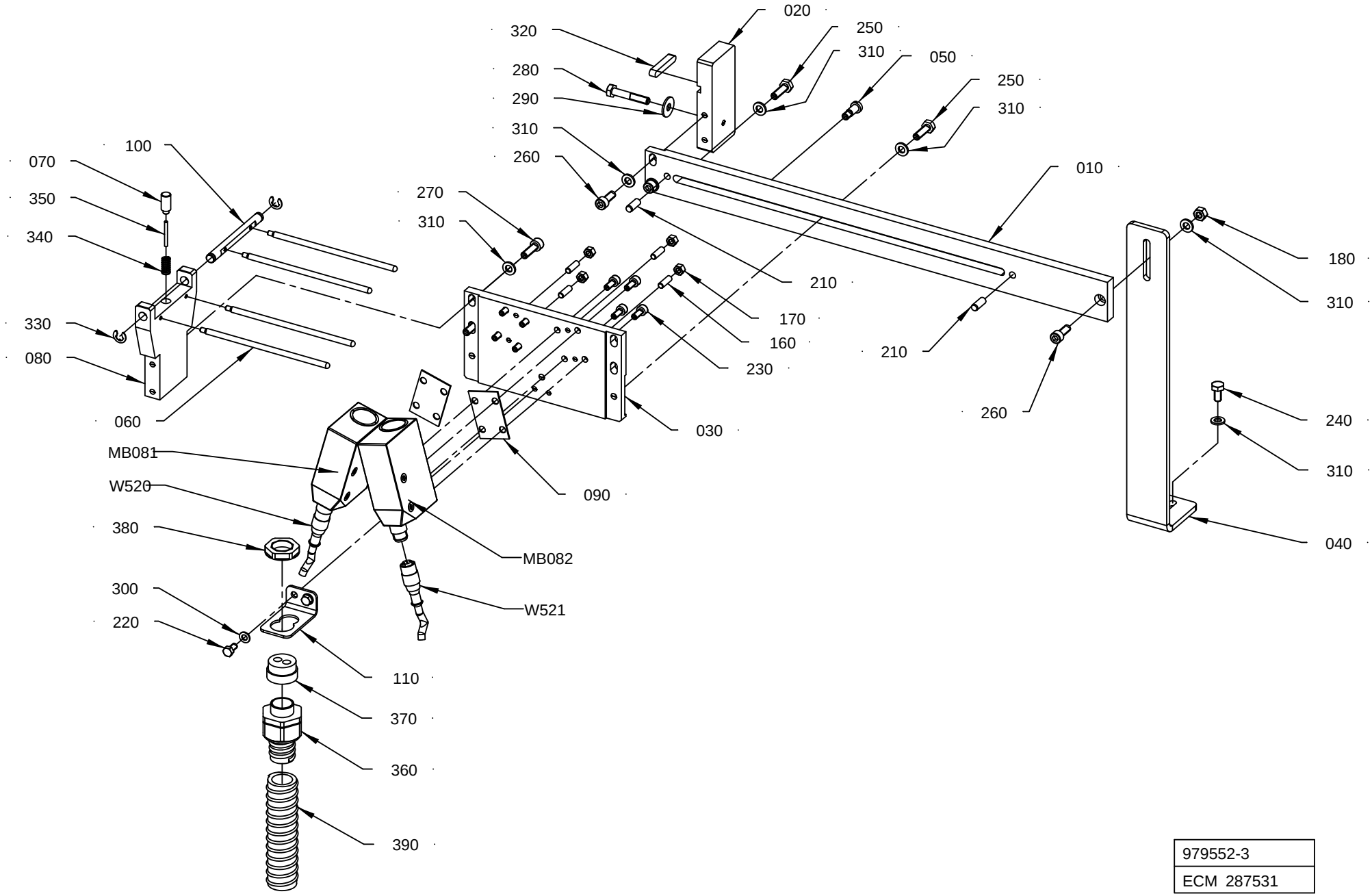

979552-3
ECM 287531

ECM: 293518 - 20070126
Group number: 979552-0200
Assembly Drawing: 979552-3_1_AC

Pos	Part No	UN	Qty	Description	Page No
-					
010	2524490-0000		1	BRACKET	
020	2524491-0000		1	HOLDER	
030	2524492-0000		1	PLATE	
040	2557578-0000		1	SUPPORT	
050	2524494-0000		1	SCREW	
060	2529611-0000		4	BAR	
070	2557569-0000		1	PIN	
080	2529613-0000		1	PLATE	
090	536374-0000		2	WASHER	
100	2557568-0000		1	PIVOT AXLE	
110	2540732-0000		1	HOLDER	
160	312318-0329		4	SCREW ISO4029 M5X16 A4	
170	312605-0314		4	HEXAGON NUT, M6M M5 A280	
180	312605-0316		1	HEXAGON NUT, M6M M6 A280	
210	311103-0351		2	PARALLEL PIN ISO 2338 6M6X16 A1	
220	312105-0325		2	SCREW M6S ISO 4017 M5X10 A480	
230	312115-0327		8	SCREW ISO4762 M5X12 A4 80	
240	312105-0366		1	SCREW M6S ISO 4017 M6X12 A480	
250	312105-0370		2	SCREW M6S ISO 4017 M6X20 A480	
260	312115-0368		3	SCREW ISO4762 M6X16 A4 80	
270	312115-0370		2	SCREW ISO4762 M6X20 A4 80	
280	312105-0376		1	SCREW M6S ISO 4014 M6X35 A480	
290	90005-0060		1	WASHER PLAIN, RBS 6,4/M6)/18,H=1,5	
300	315105-0146		2	WASHER BRB 5,3X10 RFR	
310	315105-0153		8	WASHER BRB 6,4X12 RFR	
320	315705-0238		1	PARALLEL KEY W. ROUND ENDS, 6X6X36 MM	
330	315755-0108		2	RETAINING RING SHAFT DIN 6799 6 SS	
340	90459-0494		1	COMP. SPRING 21920, 1X7,3X21,5	
350	311102-0214		1	PARALLEL PIN ISO 2338 2,5M6X25 ST	
360	90458-0430		1	GLAND FITTING, VK 22054YUL16	
370	90457-0147		1	INSERT, MULTI HOLE, EK154M 2X7	
380	90458-0323		1	NUT, M20X1,5	
390	90152-0051	M	1.2	HOSE, SPIRAL CONDUIT, 25X18, UL 1816	
MB082	90458-0602		1	CONTRAST SCANNER, KT15W-P2213S02	
MB081	90458-0602		1	CONTRAST SCANNER, KT15W-P2213S02	
W520	90458-0603		1	CONNECTOR, CABLE RECEPTACLES	
W521	90458-0603		1	CONNECTOR, CABLE RECEPTACLES	

Pos	Part No	UN	Qty	Description	Page No

ULTRASOUND UNIT

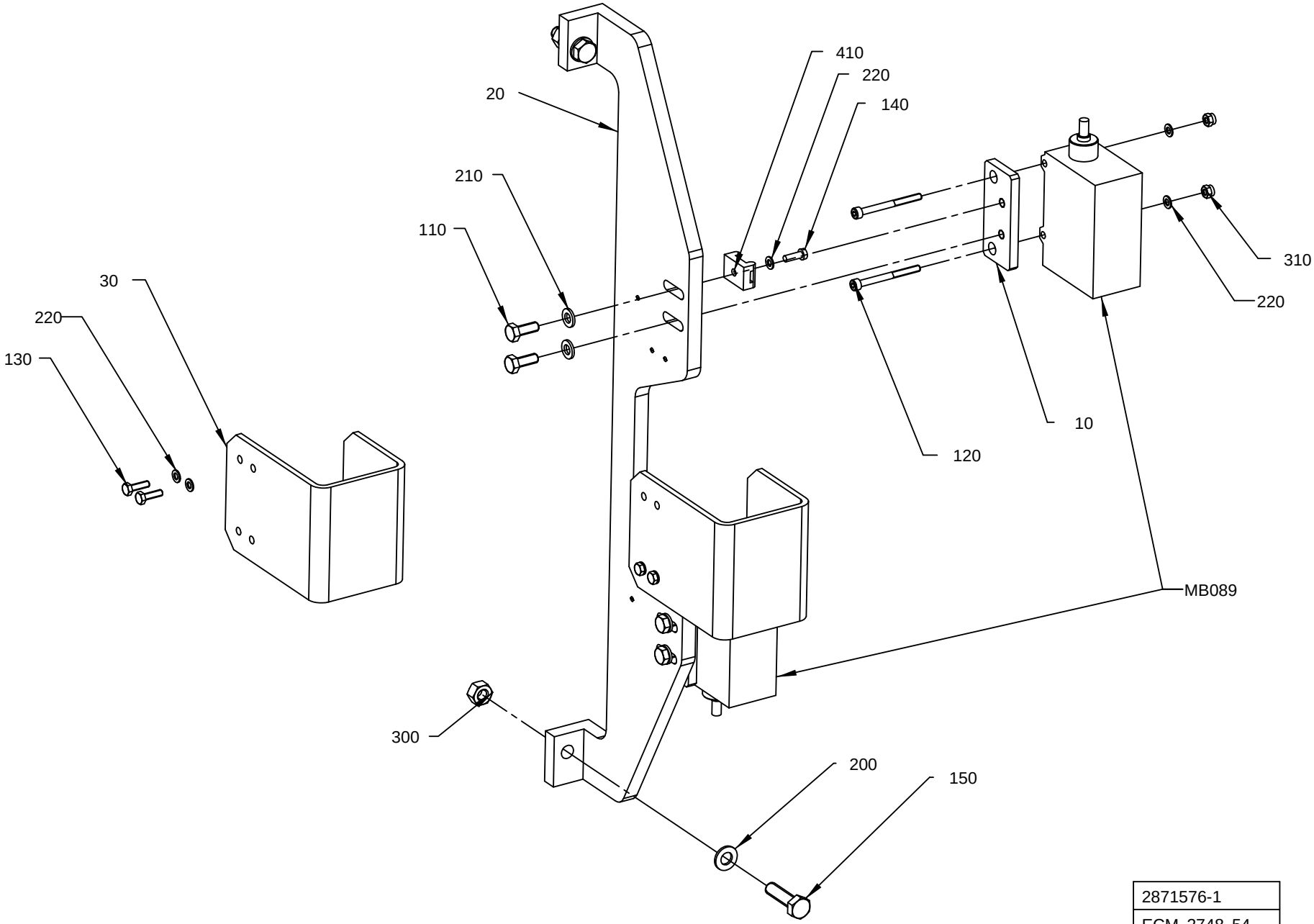

2871576-1
ECM 2748 54

ECM: 290363 - 20070126
Group number: 2871576-0100
Assembly Drawing: 2871576-1_1_AA

Pos	Part No	UN	Qty	Description	Page No
TBA					
020	2871743-0000		1	BRACKET	
TPA					
020	2871742-0000		1	BRACKET	
Common Parts					
010	2609945-0000		2	PLATE	
030	2609946-0000		2	COVER	
110	312105-0368		4	SCREW M6S ISO 4017 M6X16 A480	
120	312115-0304		4	SCREW ISO4762 M4X45 A4 80	
130	312105-0291		4	SCREW M6S ISO 4017 M4X12 A470	
140	312125-0291		2	SCREW ISO 1207 M4X12 A4	
150	312105-0455		2	SCREW M6S ISO 4017 M8X30 A480	
200	315105-0165		2	WASHER BRB 8,4X16 RFR	
210	315105-0153		4	WASHER BRB 6,4X12 RFR	
220	315105-0136		10	WASHER BRB 4,3X8 RFR	
300	312605-0318		2	HEXAGON NUT, M6M M8 A280	
310	312812-0312		4	HEXAGON NUT, NY-LOCK M4 A480	
410	352113-0203		2	ANCHOR PLATES FOR STRIPS, TM3S8-M0	
MB089	90457-0950		1	ULTRASONIC SENSOR, E4B-TS 50F4 5M	
	90600-1252		*1*	*ULTRASONIC SENSOR, E4B-TS 50RF4 5M*	
	90600-1251		*1*	*ULTRASONIC SENSOR, E4B-TS 50SF4 5M*	

Pos	Part No	UN	Qty	Description	Page No

BENDING ROLLER PATCH

Drawing file: 581938-3_1_AB.hpgl

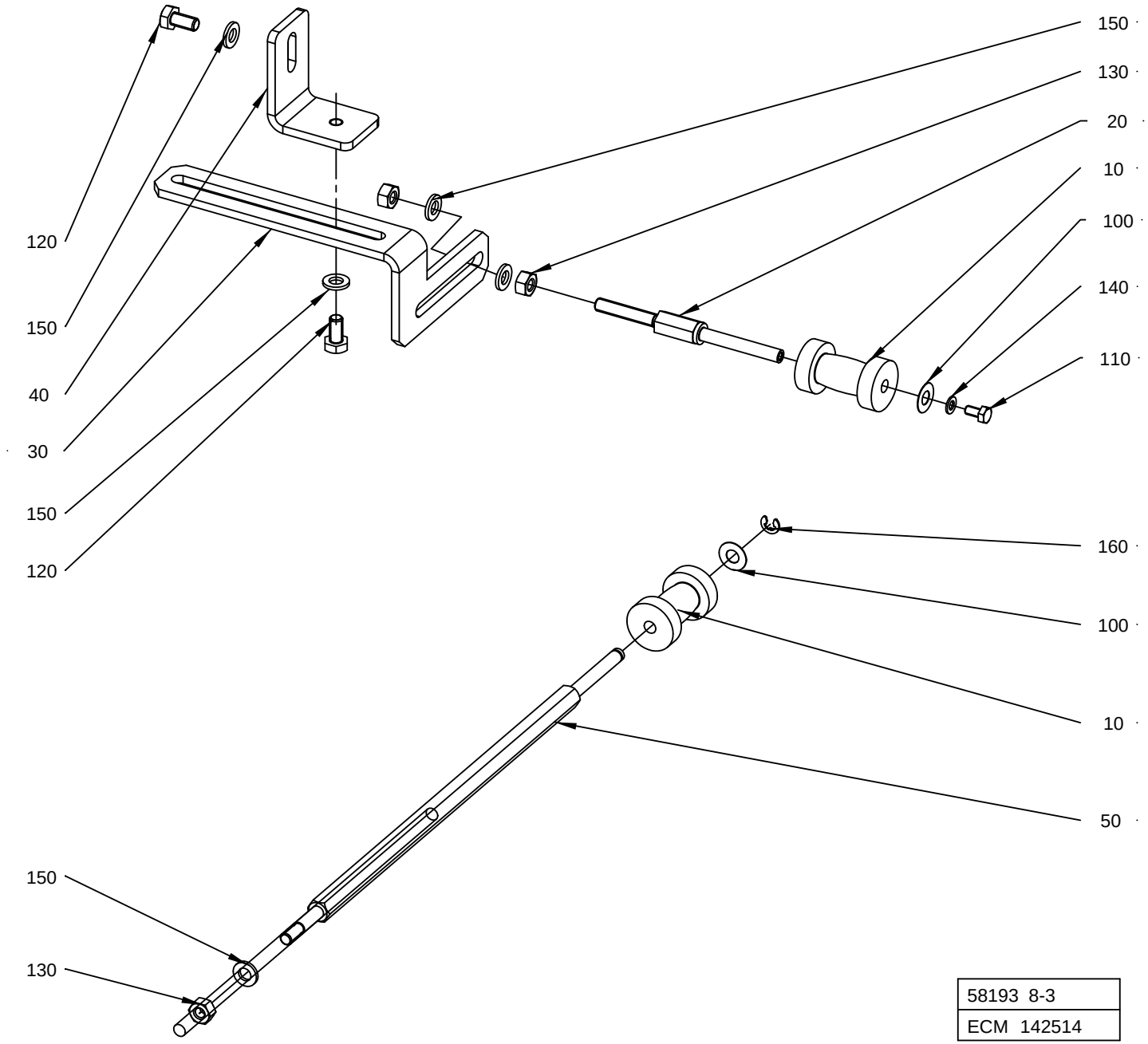

58193 8-3
ECM 142514

ECM: 299761 - 20070220
Group number: 581938-0200
Assembly Drawing: 581938-3_1_AB

This list covers pages from 1-152 to 1-155

Pos	Part No	UN	Qty	Description	Page No
HOLE12, HOLE13 (See drawing on page: 1-152)					
010	1282991-0003		2	ROLL	
020	1296785-0000		1	AXLE PINAXLE PIN	
030	2555489-0000		1	HOLDER	
040	2555491-0000		1	HOLDER	
050	2555492-0000		1	AXLE PIN	
100	2033-0013		8	WASHER	
110	312105-0287		1	SCREW M6S ISO 4017 M4X8 A470	
120	312105-0366		2	SCREW M6S ISO 4017 M6X12 A480	
130	312605-0316		3	HEXAGON NUT, M6M M6 A280	
140	315105-0136		1	WASHER BRB 4,3X8 RFR	
150	315105-0153		5	WASHER BRB 6,4X12 RFR	
160	315755-0106		1	RETAINING RING SHAFT DIN 6799 4 SS	
HOLE20, HOLE17 (See drawing on page: 1-152)					
010	1282991-0002		2	ROLL	
020	1296785-0000		1	AXLE PINAXLE PIN	
030	2555489-0000		1	HOLDER	
040	2555491-0000		1	HOLDER	
050	2555492-0000		1	AXLE PIN	
100	2033-0013		8	WASHER	
110	312105-0287		1	SCREW M6S ISO 4017 M4X8 A470	
120	312105-0366		2	SCREW M6S ISO 4017 M6X12 A480	
130	312605-0316		3	HEXAGON NUT, M6M M6 A280	
140	315105-0136		1	WASHER BRB 4,3X8 RFR	
150	315105-0153		5	WASHER BRB 6,4X12 RFR	
160	315755-0106		1	RETAINING RING SHAFT DIN 6799 4 SS	
HOLE21 (See drawing on page: 1-152)					
010	1282991-0001		2	ROLL	
020	1296785-0000		1	AXLE PINAXLE PIN	
030	2555489-0000		1	HOLDER	
040	2555491-0000		1	HOLDER	
050	2555492-0000		1	AXLE PIN	
100	2033-0013		8	WASHER	
110	312105-0287		1	SCREW M6S ISO 4017 M4X8 A470	
120	312105-0366		2	SCREW M6S ISO 4017 M6X12 A480	
130	312605-0316		3	HEXAGON NUT, M6M M6 A280	
140	315105-0136		1	WASHER BRB 4,3X8 RFR	
150	315105-0153		5	WASHER BRB 6,4X12 RFR	
160	315755-0106		1	RETAINING RING SHAFT DIN 6799 4 SS	
HOLE72, HOLE70, HOLE48 (See drawing on page: 1-154)					
010	1282991-0003		5	ROLL	
020	1296785-0000		5	AXLE PINAXLE PIN	
030	2810422-0000		1	BRACKET	
040	2555491-0000		2	HOLDER	
060	2810423-0000		1	BRACKET	
100	2033-0013		10	WASHER	
110	312105-0287		5	SCREW M6S ISO 4017 M4X8 A470	
120	312105-0366		6	SCREW M6S ISO 4017 M6X12 A480	
130	312605-0316		6	HEXAGON NUT, M6M M6 A280	
140	315105-0136		5	WASHER BRB 4,3X8 RFR	
150	315105-0153		12	WASHER BRB 6,4X12 RFR	

Machine Type | Group Description | Used-In | Group Number | Page No

BENDING ROLLER PATCH

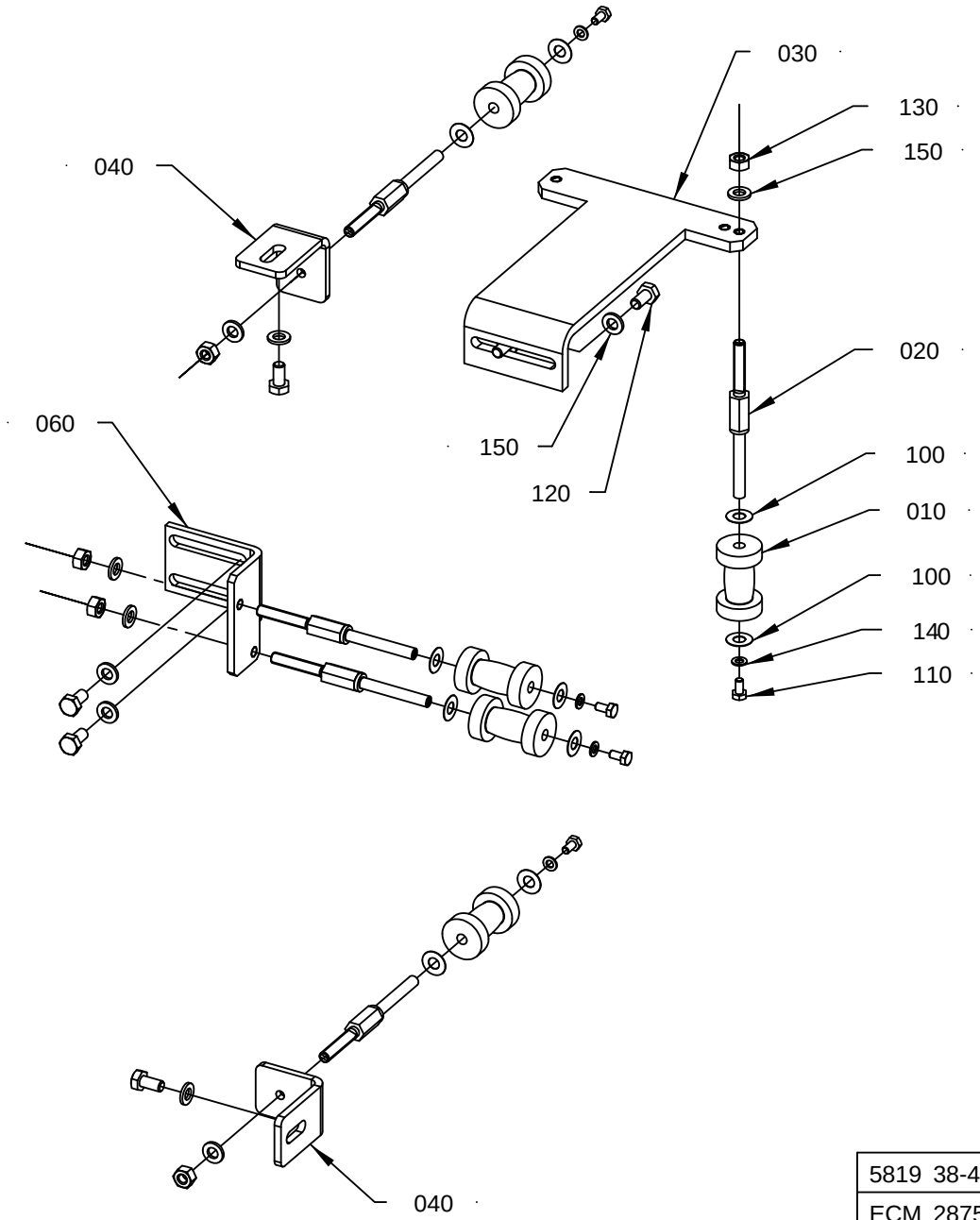

5819 38-4
ECM 287531

ECM: 299761 - 20070220
Group number: 581938-0200
Assembly Drawing: 581938-4_1_AA

This list covers pages from 1-152 to 1-155

Pos	Part No	UN	Qty	Description	Page No
HOLE12, HOLE13 (See drawing on page: 1-152)					
010	1282991-0003		2	ROLL	
020	1296785-0000		1	AXLE PINAXLE PIN	
030	2555489-0000		1	HOLDER	
040	2555491-0000		1	HOLDER	
050	2555492-0000		1	AXLE PIN	
100	2033-0013		8	WASHER	
110	312105-0287		1	SCREW M6S ISO 4017 M4X8 A470	
120	312105-0366		2	SCREW M6S ISO 4017 M6X12 A480	
130	312605-0316		3	HEXAGON NUT, M6M M6 A280	
140	315105-0136		1	WASHER BRB 4,3X8 RFR	
150	315105-0153		5	WASHER BRB 6,4X12 RFR	
160	315755-0106		1	RETAINING RING SHAFT DIN 6799 4 SS	
HOLE20, HOLE17 (See drawing on page: 1-152)					
010	1282991-0002		2	ROLL	
020	1296785-0000		1	AXLE PINAXLE PIN	
030	2555489-0000		1	HOLDER	
040	2555491-0000		1	HOLDER	
050	2555492-0000		1	AXLE PIN	
100	2033-0013		8	WASHER	
110	312105-0287		1	SCREW M6S ISO 4017 M4X8 A470	
120	312105-0366		2	SCREW M6S ISO 4017 M6X12 A480	
130	312605-0316		3	HEXAGON NUT, M6M M6 A280	
140	315105-0136		1	WASHER BRB 4,3X8 RFR	
150	315105-0153		5	WASHER BRB 6,4X12 RFR	
160	315755-0106		1	RETAINING RING SHAFT DIN 6799 4 SS	
HOLE21 (See drawing on page: 1-152)					
010	1282991-0001		2	ROLL	
020	1296785-0000		1	AXLE PINAXLE PIN	
030	2555489-0000		1	HOLDER	
040	2555491-0000		1	HOLDER	
050	2555492-0000		1	AXLE PIN	
100	2033-0013		8	WASHER	
110	312105-0287		1	SCREW M6S ISO 4017 M4X8 A470	
120	312105-0366		2	SCREW M6S ISO 4017 M6X12 A480	
130	312605-0316		3	HEXAGON NUT, M6M M6 A280	
140	315105-0136		1	WASHER BRB 4,3X8 RFR	
150	315105-0153		5	WASHER BRB 6,4X12 RFR	
160	315755-0106		1	RETAINING RING SHAFT DIN 6799 4 SS	
HOLE72, HOLE70, HOLE48 (See drawing on page: 1-154)					
010	1282991-0003		5	ROLL	
020	1296785-0000		5	AXLE PINAXLE PIN	
030	2810422-0000		1	BRACKET	
040	2555491-0000		2	HOLDER	
060	2810423-0000		1	BRACKET	
100	2033-0013		10	WASHER	
110	312105-0287		5	SCREW M6S ISO 4017 M4X8 A470	
120	312105-0366		6	SCREW M6S ISO 4017 M6X12 A480	
130	312605-0316		6	HEXAGON NUT, M6M M6 A280	
140	315105-0136		5	WASHER BRB 4,3X8 RFR	
150	315105-0153		12	WASHER BRB 6,4X12 RFR	

TAB MAGAZINE

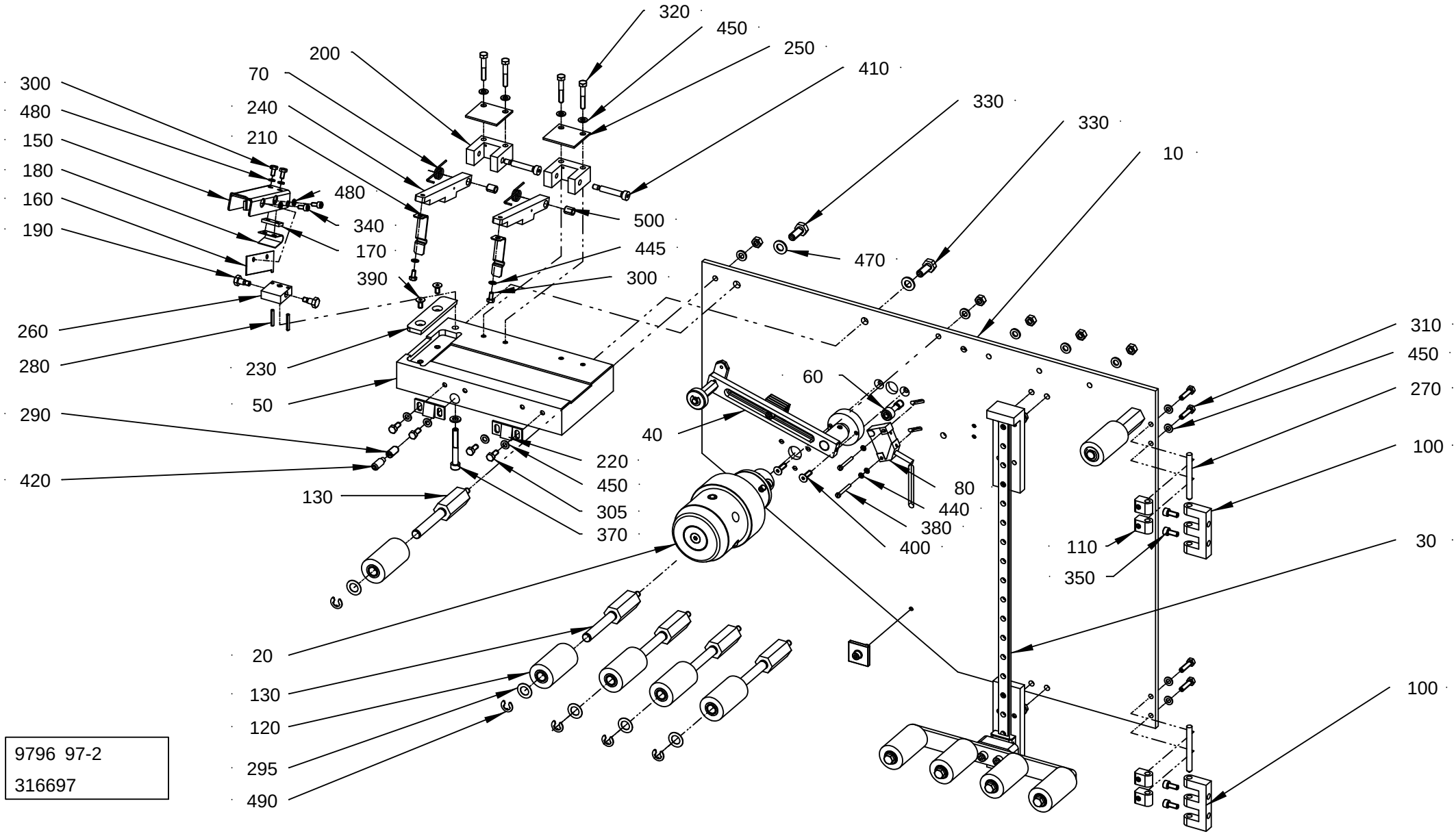

ECM: 316700 - 20080221
Group number: 979697-0200
Assembly Drawing: 979697-2_1_AB

This list covers pages from 1-156 to 1-159

Pos	Part No	UN	Qty	Description	Page No
-					
010	1549419-0000		1	PLATE	
020	1549420-0100		1	BOBBIN HOLDER	**1-11**
030	2903590-0100		1	MAGAZINE	**1-161**
040	2903591-0100		1	BRAKE	**1-15**
050	1549425-0000		1	PLATE	
060	2519631-0000		1	SCREW	
070	544427-0000		2	TURN SPRING	
080	90044-0194		1	INDUCTIVE SENSOR, IN 5329	
090	2540732-0000		1	HOLDER	
100	1035792-0000		2	E-HINGE	
110	1035794-0000		4	BLOCKING PIECE	
120	1519145-0000		6	ROLLER	
130	1549440-0000		6	AXLE PIN	
140	1549441-0000		1	FORCE PLATE	
150	522376-0000		1	KNIFE HOLDER	
160	522388-0002		1	KNIFE	
170	522393-0000		1	NUT	
180	522394-0000		1	SPRING	
190	522395-0000		2	SCREW	
200	532017-0000		2	MOUNTING LUG	
210	532021-0000		2	LOCKING LOOP	
220	532022-0000		2	LOCK BAR	
230	544422-0000		1	KNIFE	
240	544426-0000		2	LOCK GRIP	
250	544428-0000		2	SHEET	
260	552049-0000		1	LUG	
270	988685-0000		2	PIN	
280	90258-0031		2	PIN, STRAIGHT SLOTTED SPRING FRP 3X20	
290	90287-0112		1	SCREW SPRINGLOAD. SLOTTED HEAD M8X16	
295	2033-0009		6	WASHER	
300	312105-0287		4	SCREW M6S ISO 4017 M4X8 A470	
305	312105-0327		4	SCREW M6S ISO 4017 M5X12 A480	
310	312105-0331		4	SCREW M6S ISO 4017 M5X20 A480	
320	312105-0335		4	SCREW M6S ISO 4014 M5X30 A480	
330	312105-0451		2	SCREW M6S ISO 4017 M8X20 A480	
340	312115-0287		2	SCREW ISO4762 M4X8 A4 80	
345	312105-0323		2	SCREW M6S ISO 4017 M5X8 A480	
350	312115-0327		4	SCREW ISO4762 M5X12 A4 80	
370	312115-0379		1	SCREW ISO4762 M6X45 A4 80	
380	312125-0232		2	SCREW ISO 1207 M3X25 A4	
390	312155-0325		2	SCREW DIN 7991 MF6S M5X10 A4 70	
400	312155-0329		2	SCREW DIN 7991 MF6S M5X16 A4 70	
410	312180-0374		2	SCREW ISO7379 H6X30	
420	312311-0451		1	SCREW ISO4028 M8X20 FZB	
430	312605-0316		6	HEXAGON NUT, M6M M6 A280	
440	315105-0124		3	WASHER BRB 3,2X6 RFR	
445	315105-0136		2	WASHER BRB 4,3X8 RFR	
450	315105-0146		14	WASHER BRB 5,3X10 RFR	
460	315105-0153		7	WASHER BRB 6,4X12 RFR	
470	315105-0165		2	WASHER BRB 8,4X16 RFR	
480	315402-0136		4	LOCK WASHER, DIN127B 4,1 A4, M4-5/32	
490	315755-0109		6	RETAINING RING SHAFT DIN 6799 7 SS	
500	321141-0064		2	BEARING BUSH W/O FLANGE, 6X8X10 MM	
510	90458-0322		1	NUT, M16X1,5	
520	90458-0427		1	GLAND FITTING, VK 21652YUL11	
530	353249-0008		1	INSERT, SINGLE HOLE, EK152 7	

Machine Type | Group Description | Used-In | Group Number | Page No

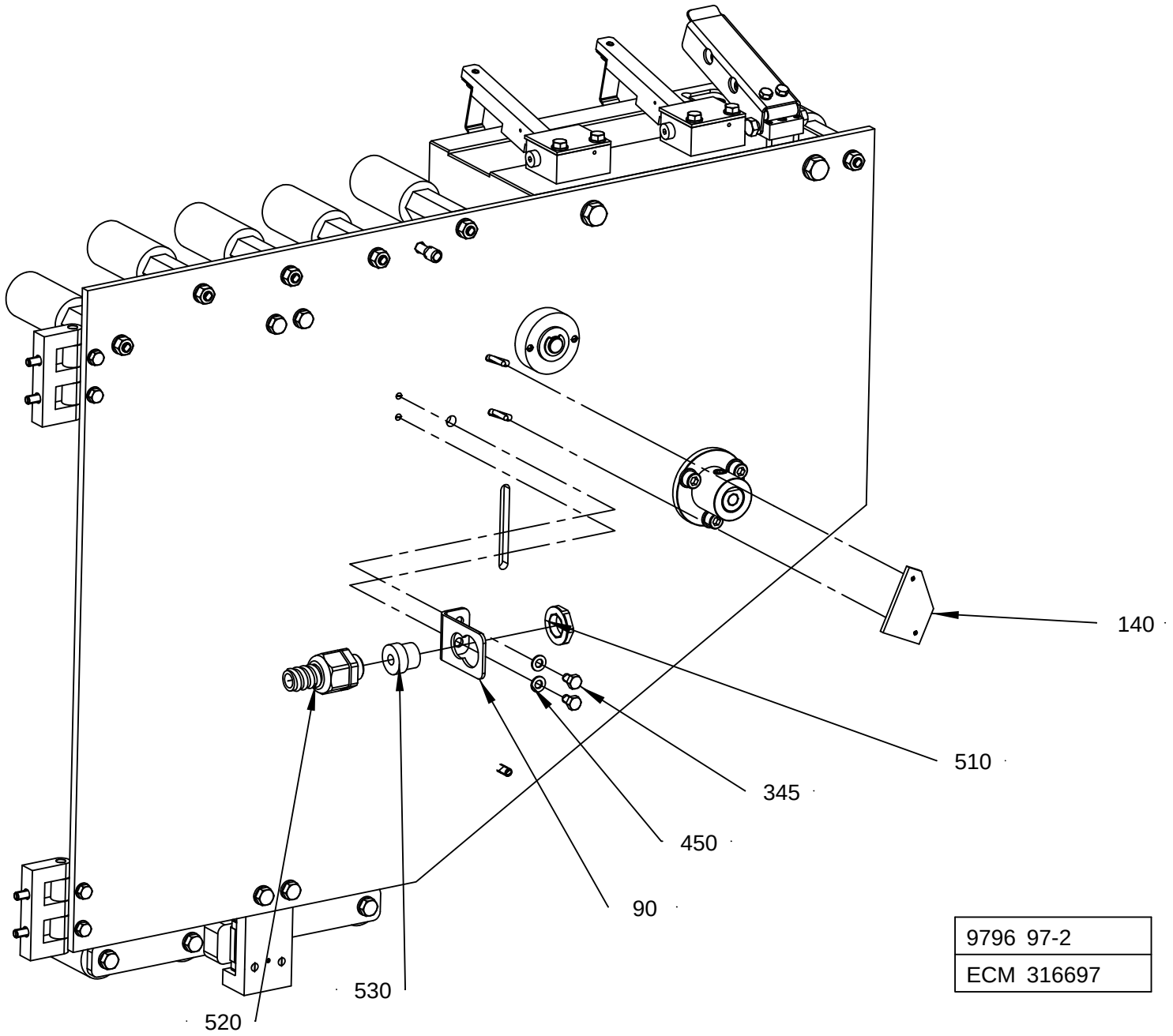

9796 97-2
ECM 316697

ECM: 316700 - 20080221
Group number: 979697-0200
Assembly Drawing: 979697-2_2_AB

This list covers pages from 1-156 to 1-159

Pos	Part No	UN	Qty	Description	Page No
-					
010	1549419-0000		1	PLATE	
020	1549420-0100		1	BOBBIN HOLDER	**1-11**
030	2903590-0100		1	MAGAZINE	**1-161**
040	2903591-0100		1	BRAKE	**1-15**
050	1549425-0000		1	PLATE	
060	2519631-0000		1	SCREW	
070	544427-0000		2	TURN SPRING	
080	90044-0194		1	INDUCTIVE SENSOR, IN 5329	
090	2540732-0000		1	HOLDER	
100	1035792-0000		2	E-HINGE	
110	1035794-0000		4	BLOCKING PIECE	
120	1519145-0000		6	ROLLER	
130	1549440-0000		6	AXLE PIN	
140	1549441-0000		1	FORCE PLATE	
150	522376-0000		1	KNIFE HOLDER	
160	522388-0002		1	KNIFE	
170	522393-0000		1	NUT	
180	522394-0000		1	SPRING	
190	522395-0000		2	SCREW	
200	532017-0000		2	MOUNTING LUG	
210	532021-0000		2	LOCKING LOOP	
220	532022-0000		2	LOCK BAR	
230	544422-0000		1	KNIFE	
240	544426-0000		2	LOCK GRIP	
250	544428-0000		2	SHEET	
260	552049-0000		1	LUG	
270	988685-0000		2	PIN	
280	90258-0031		2	PIN, STRAIGHT SLOTTED SPRING FRP 3X20	
290	90287-0112		1	SCREW SPRINGLOAD. SLOTTED HEAD M8X16	
295	2033-0009		6	WASHER	
300	312105-0287		4	SCREW M6S ISO 4017 M4X8 A470	
305	312105-0327		4	SCREW M6S ISO 4017 M5X12 A480	
310	312105-0331		4	SCREW M6S ISO 4017 M5X20 A480	
320	312105-0335		4	SCREW M6S ISO 4014 M5X30 A480	
330	312105-0451		2	SCREW M6S ISO 4017 M8X20 A480	
340	312115-0287		2	SCREW ISO4762 M4X8 A4 80	
345	312105-0323		2	SCREW M6S ISO 4017 M5X8 A480	
350	312115-0327		4	SCREW ISO4762 M5X12 A4 80	
370	312115-0379		1	SCREW ISO4762 M6X45 A4 80	
380	312125-0232		2	SCREW ISO 1207 M3X25 A4	
390	312155-0325		2	SCREW DIN 7991 MF6S M5X10 A4 70	
400	312155-0329		2	SCREW DIN 7991 MF6S M5X16 A4 70	
410	312180-0374		2	SCREW ISO7379 H6X30	
420	312311-0451		1	SCREW ISO4028 M8X20 FZB	
430	312605-0316		6	HEXAGON NUT, M6M M6 A280	
440	315105-0124		3	WASHER BRB 3,2X6 RFR	
445	315105-0136		2	WASHER BRB 4,3X8 RFR	
450	315105-0146		14	WASHER BRB 5,3X10 RFR	
460	315105-0153		7	WASHER BRB 6,4X12 RFR	
470	315105-0165		2	WASHER BRB 8,4X16 RFR	
480	315402-0136		4	LOCK WASHER, DIN127B 4,1 A4, M4-5/32	
490	315755-0109		6	RETAINING RING SHAFT DIN 6799 7 SS	
500	321141-0064		2	BEARING BUSH W/O FLANGE, 6X8X10 MM	
510	90458-0322		1	NUT, M16X1,5	
520	90458-0427		1	GLAND FITTING, VK 21652YUL11	
530	353249-0008		1	INSERT, SINGLE HOLE, EK152 7	

Machine Type | Group Description | Used-In | Group Number | Page No

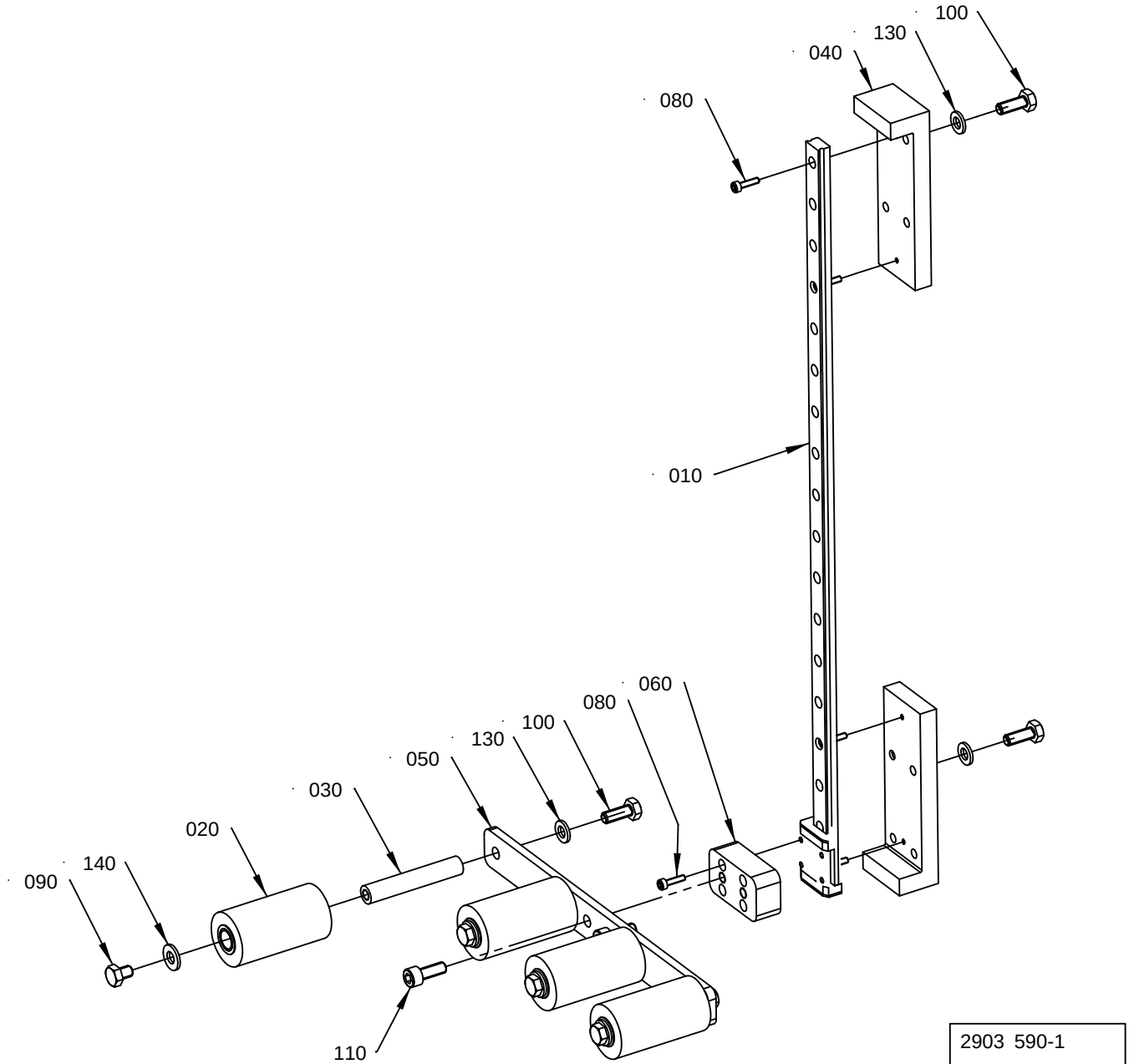

2903 590-1
316697

ECM: 316702 - 20080221
Group number: 2903590-0100
Assembly Drawing: 2903590-1_1_AA

Pos	Part No	UN	Qty	Description	Page No
-					
010	2614876-0000		1	LINEAR UNIT	
020	1519145-0000		4	ROLLER	
030	546298-0000		4	SHAFT	
040	2815755-0000		2	STOP	
050	2815757-0000		1	PLATE	
060	2815758-0000		1	SPACER	
080	312115-0226		8	SCREW ISO4762 M3X12 A4 80	
090	312105-0362		4	SCREW M6S ISO 4017 M6X8 A480	
100	312105-0368		8	SCREW M6S ISO 4017 M6X16 A480	
110	312115-0368		2	SCREW ISO4762 M6X16 A4 80	
130	315105-0153		8	WASHER BRB 6,4X12 RFR	
140	315105-0156		4	WASHER BRB 6,7X14 RFR	

Pos	Part No	UN	Qty	Description	Page No

BENDING ROLLER TAB

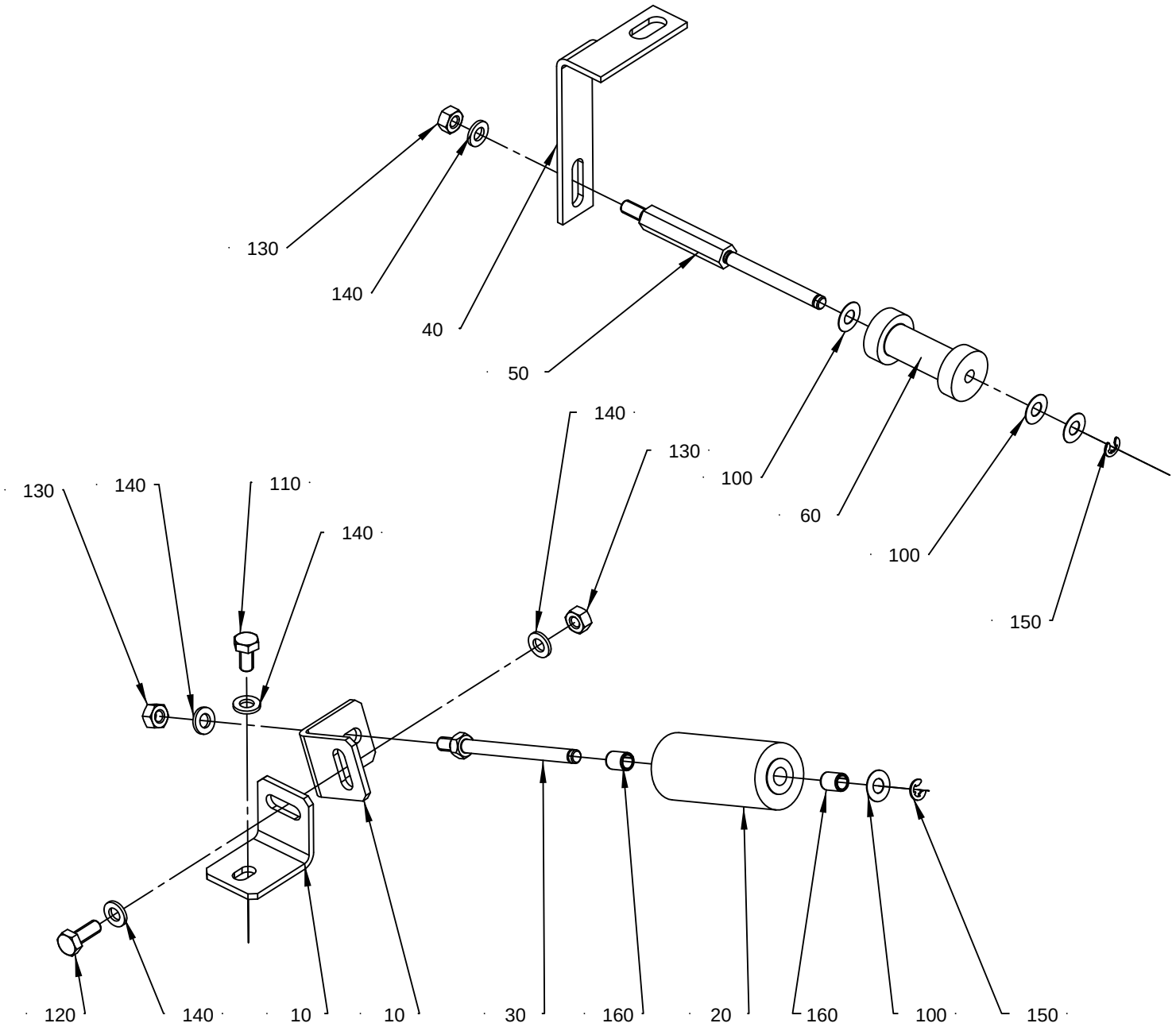

58194 2-3
ECM 142514

ECM: 299762 - 20070220
Group number: 581942-0200
Assembly Drawing: 581942-3_1_AB

This list covers pages from 1-162 to 1-165

Pos	Part No	UN	Qty	Description	Page No
HOLE12, HOLE13 (See drawing on page: 1-162)					
020	2613780-0000		1	ROLL	
060	582459-0003		1	ROLLER	
HOLE17 (See drawing on page: 1-162)					
020	2613780-0000		1	ROLL	
060	582459-0002		1	ROLLER	
HOLE20, HOLE21 (See drawing on page: 1-162)					
020	2613780-0000		1	ROLL	
060	582459-0001		1	ROLLER	
HOLE72, HOLE70, HOLE48 (See drawing on page: 1-164)					
020	2816491-0000		1	ROLLER	
060	2816490-0000		1	ROLLER	
Common Parts					
010	1296766-0000		2	HOLDER	
030	2613781-0000		1	AXLE PIN	
040	2633445-0000		1	HOLDER	
050	582460-0000		1	AXLE PIN	
100	2033-0013		4	WASHER	
110	312105-0366		1	SCREW M6S ISO 4017 M6X12 A480	
120	312105-0368		1	SCREW M6S ISO 4017 M6X16 A480	
130	312605-0316		3	HEXAGON NUT, M6M M6 A280	
140	315105-0153		5	WASHER BRB 6,4X12 RFR	
150	315755-0106		2	RETAINING RING SHAFT DIN 6799 4 SS	
160	321141-0064		2	BEARING BUSH W/O FLANGE, 6X8X10 MM	

Pos	Part No	UN	Qty	Description	Page No

BENDING ROLLER TAB

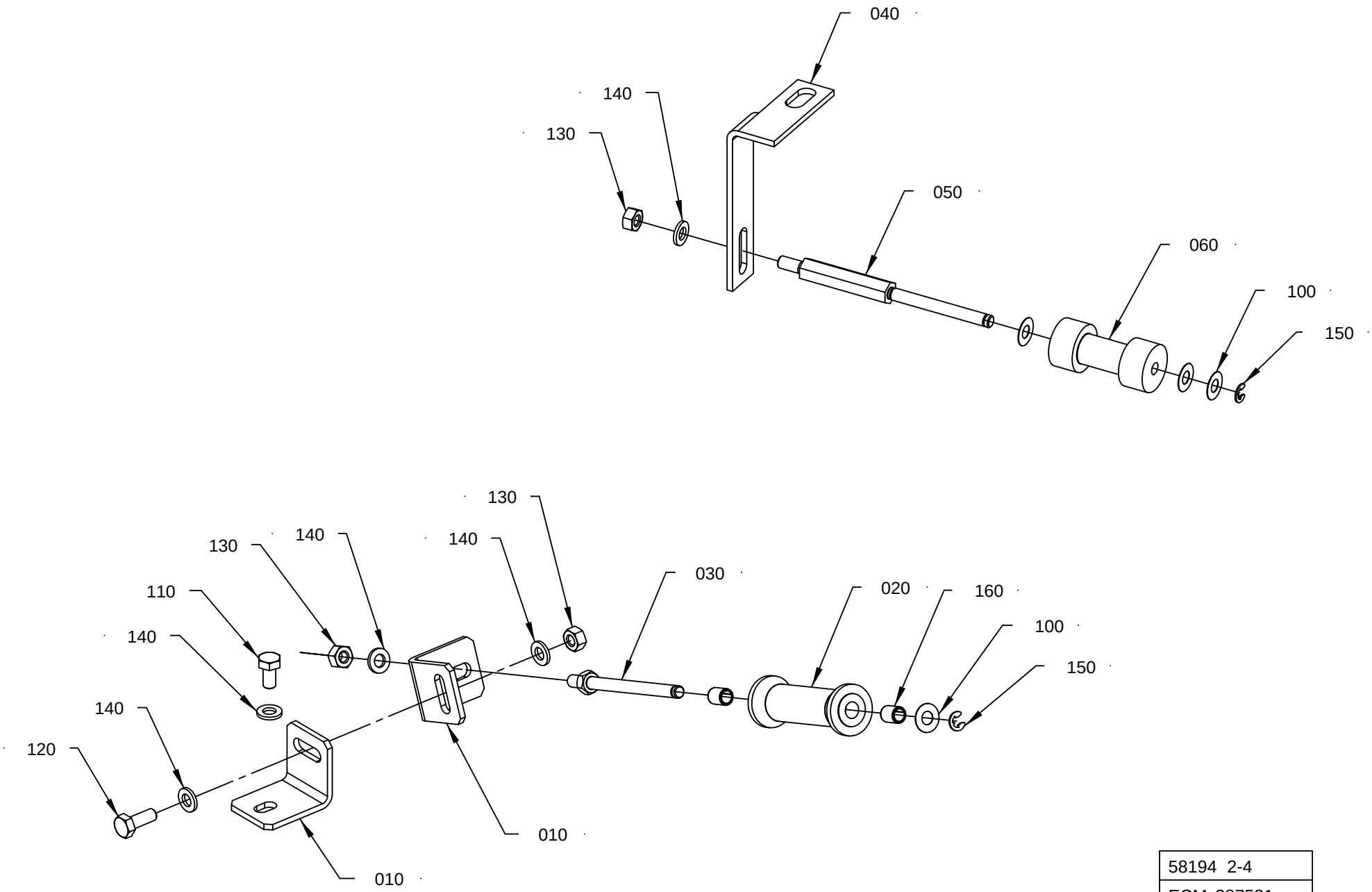

58194 2-4
ECM 287531

ECM: 299762 - 20070220
Group number: 581942-0200
Assembly Drawing: 581942-4_1_AA

This list covers pages from 1-162 to 1-165

Pos	Part No	UN	Qty	Description	Page No
HOLE12, HOLE13 (See drawing on page: 1-162)					
020	2613780-0000		1	ROLL	
060	582459-0003		1	ROLLER	
HOLE17 (See drawing on page: 1-162)					
020	2613780-0000		1	ROLL	
060	582459-0002		1	ROLLER	
HOLE20, HOLE21 (See drawing on page: 1-162)					
020	2613780-0000		1	ROLL	
060	582459-0001		1	ROLLER	
HOLE72, HOLE70, HOLE48 (See drawing on page: 1-164)					
020	2816491-0000		1	ROLLER	
060	2816490-0000		1	ROLLER	
Common Parts					
010	1296766-0000		2	HOLDER	
030	2613781-0000		1	AXLE PIN	
040	2633445-0000		1	HOLDER	
050	582460-0000		1	AXLE PIN	
100	2033-0013		4	WASHER	
110	312105-0366		1	SCREW M6S ISO 4017 M6X12 A480	
120	312105-0368		1	SCREW M6S ISO 4017 M6X16 A480	
130	312605-0316		3	HEXAGON NUT, M6M M6 A280	
140	315105-0153		5	WASHER BRB 6,4X12 RFR	
150	315755-0106		2	RETAINING RING SHAFT DIN 6799 4 SS	
160	321141-0064		2	BEARING BUSH W/O FLANGE, 6X8X10 MM	

Pos	Part No	UN	Qty	Description	Page No

PNEUMATIC UNIT

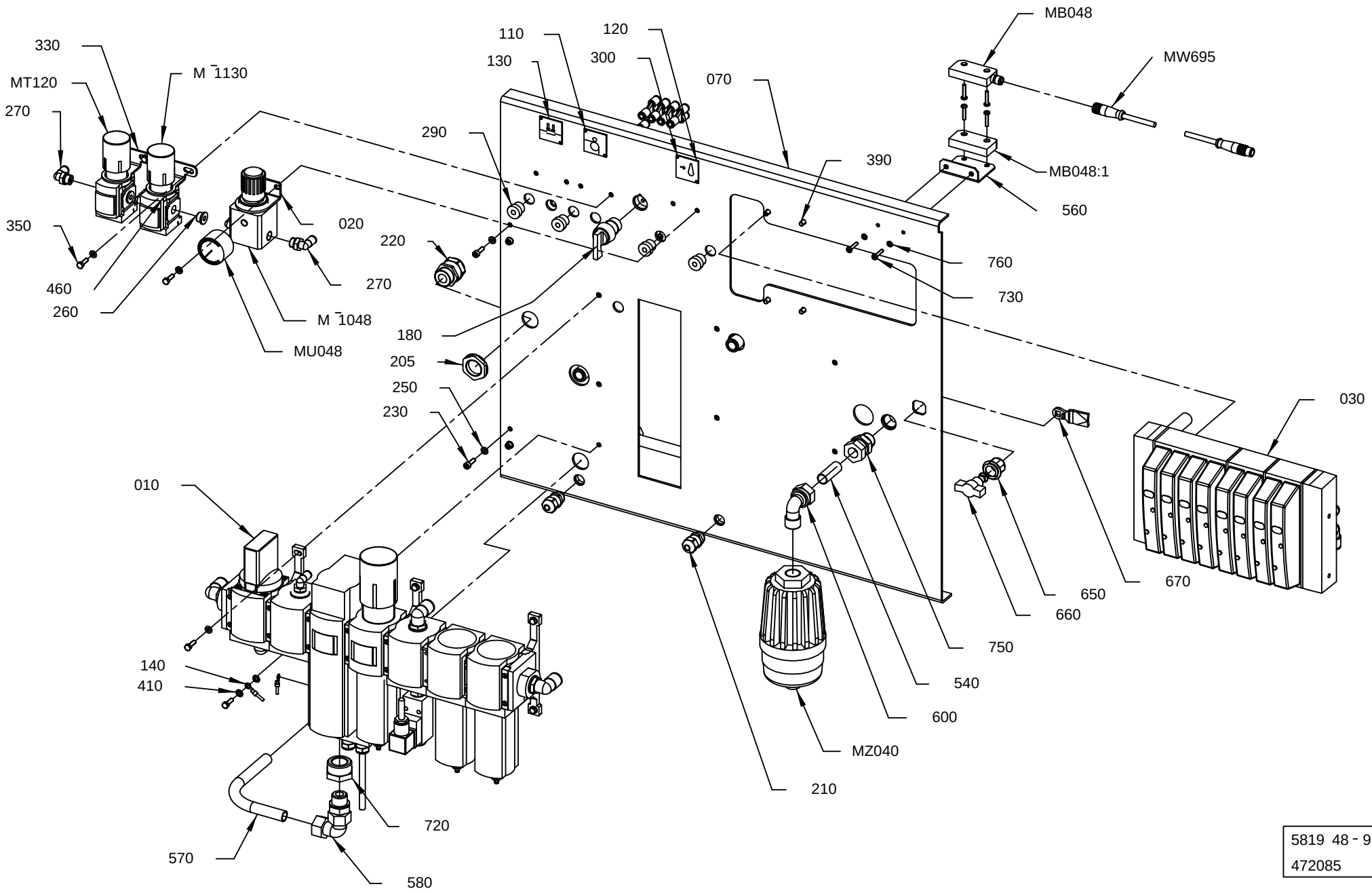

5819 48 - 9
472085

ECM: 472085 - 20100930
Group number: 581948-0400
Assembly Drawing: 581948-9_1_AE

This list covers pages from 1-166 to 1-169

Pos	Part No	UN	Qty	Description	Page No
-					
010	581947-0400		1	AIR INLET	**1-171**
020	90458-2971		1	BRACKET, HR-1/4-P FOR LRP-1/4-0,7	
030	581950-0300		1	VALVE GROUP	**1-173, 1-175**
040	988685-0000		2	PIN	
050	1035792-0000		2	E-HINGE	
060	1035794-0000		4	BLOCKING PIECE	
070	3017345-0000		1	PLATE	
110	1145221-0000		1	SIGN	
120	979426-0000		1	SIGN	
130	1145219-0000		1	SIGN	
140	3072114-0000		1	EARTH WIRE	
180	90235-0451		1	SELECTOR ACTUATOR, N-22-SW	
190	90328-0029		1	SILENCER M5	
200	90458-0322		2	NUT, M16X1,5	
205	90458-0324		1	NUT, M25X1,5	
210	90458-0306		2	CABLE GLAND, M16X1,5, 5311 1010	
220	90458-0316		1	CABLE GLAND, M25X1,5, 5311 1130	
230	312115-0329		9	SCREW ISO4762 M5X16 A4 80	
240	312605-0314		13	HEXAGON NUT, M6M M5 A280	
250	315105-0146		17	WASHER BRB 5,3X10 RFR	
260	342713-0210		2	PLUG, EXT THREAD HEX SOCKET	
270	350002-0008		4	PUSH-IN L-FITTING QSL-F-G1/4-6	
290	353249-0008		4	INSERT, SINGLE HOLE, EK152 7	
300	312502-0120		6	DRIVE SCREW ROUND HEAD KDS 0X5	
330	90459-2389		2	BRACKET, MS4-LR-WR	
350	312105-0329		12	SCREW M6S ISO 4017 M5X16 A480	
390	312105-0366		4	SCREW M6S ISO 4017 M6X12 A480	
400	315105-0153		4	WASHER BRB 6,4X12 RFR	
410	90062-0040		2	LOCK WASHER SERRAT.INT.GEAR,5,3/10 H=0,6	
430	350002-0002		2	PUSH-IN L-FITTING QSL-F-M5-6	
460	350001-0008		3	PUSH-IN FITTING QS-F-G1/4-6	
490	350004-0005		2	PUSH-IN L-FITTING QSL-F-12	
540	341001-0228	MM	80	COPPER TUBE	
550	3024356-0000		1	PIPE	
560	3017355-0000		1	BRACKET	
570	3024357-0000		1	PIPE	
580	342738-0221		2	ADJUSTABLE ELBOW CONNECTION 15-G1/2	
590	342737-0221		1	ELBOW CONNECTION 15, W15L71	
600	342731-0221		1	CONN. ELBOW, WE15LR71	
610	90459-3887		1	PUSH-IN Y-CONNECTOR QSY-G1/2-12	
620	350001-0016		1	PUSH-IN FITTING QS-F-G1/2-12	
630	350006-0003		1	PUSH-IN FITTING QS-F-8H-6	
640	350009-0003		1	PUSH-IN FITTING QS-F-8	
650	90237-0319		1	LOCK HOUSING, 1000-U134	
660	90237-0337		1	LOCK HANDLE FOR 90237-319	
670	90237-0156		1	LOCK BOLT, 1000-16	
680	90042-0602		1	DISTRIBUTOR BLOCK, FR-4-1/2-B	
720	342701-0214		1	BUSHING, INT/EXT, G1-G1/2	
730	90459-4164		6	SAFETY SCREW SM4X20, 20-053-42	
750	90030-0188		1	CONN. STR. GE15LRED71	
760	315105-0136		2	WASHER BRB 4,3X8 RFR	
770	350015-0001		14	PUSH-IN Y-CONNECTOR QSY-F-6	
M.Z040	90459-5786		1	FILTERED SILENCER, 10494 LFU-1/2	
	90459-7294		*1*	*FILTER CARTRIDGE, 10496 LFPU-1/2*	
M.W695	90459-4876		1	FOCUS JUMPER CABLE M12 5P 3M, 20-056-21	
M.U048	90458-2969		1	PRESSURE GAUGE, MAP-40-1-1/8-EN	
M.T130	90459-2241		1	REGULATOR, MS4-LRB-1/4-D5-AS	
M.T120	90459-2241		1	REGULATOR, MS4-LRB-1/4-D5-AS	
M.T048	90458-0254		1	PRECISION PRESSURE REGULATOR,LRP-1/4-0,7	
M.S130	90235-0804		1	FRONT PANEL VALVE 3/2, SV-3-M5	
M.B048.1	90458-2794		1	SENSOR, EVA 20-046-00	
M.B048	90459-4142		1	SENSOR, ADAM M12 20-051-00	

Machine Type	Group Description	Used-In	Group Number	Page No

PNEUMATIC UNIT

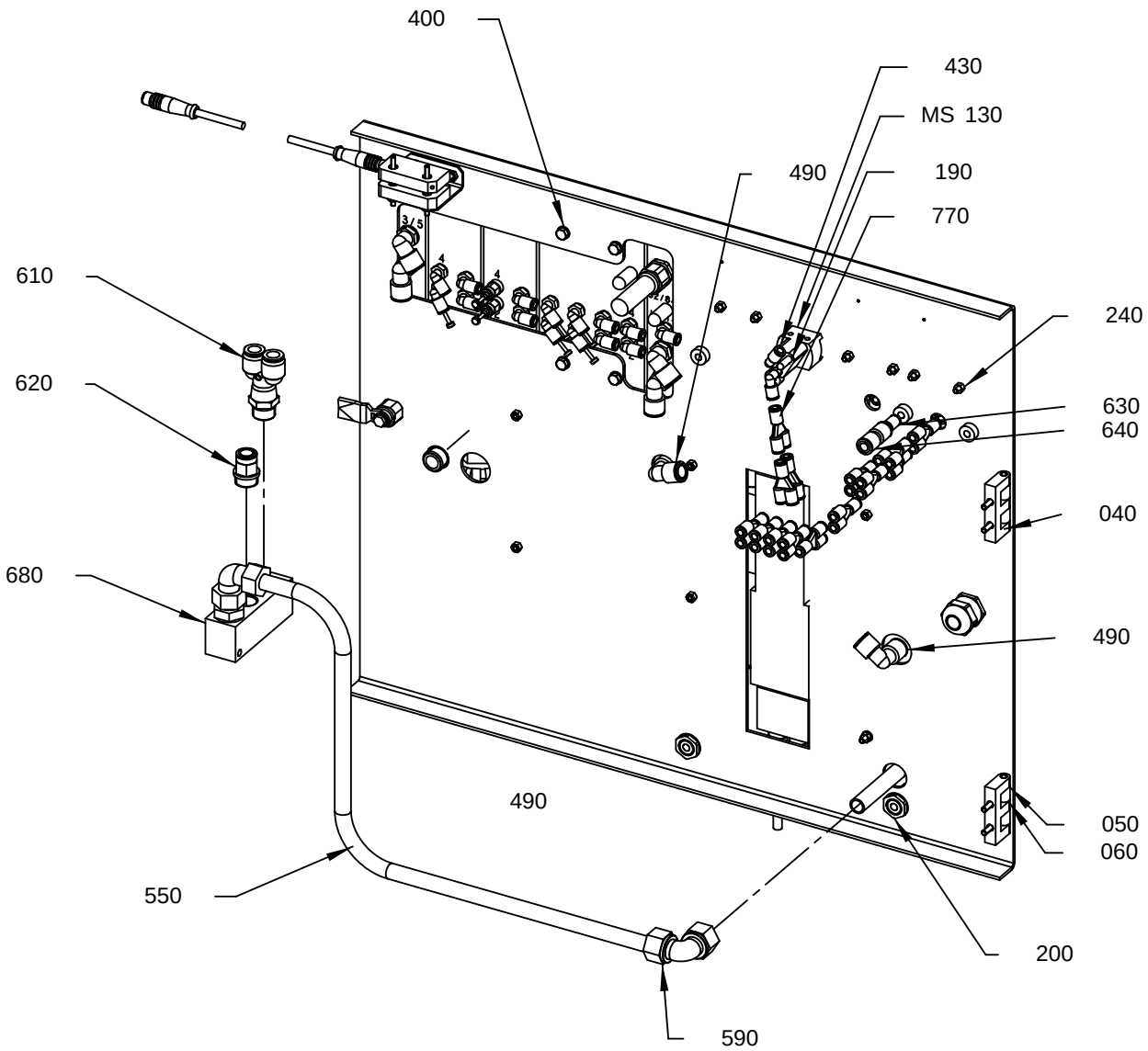

5819 48 - 9
472085

ECM: 472085 - 20100930
Group number: 581948-0400
Assembly Drawing: 581948-9_2_AE

This list covers pages from 1-166 to 1-169

Pos	Part No	UN	Qty	Description	Page No
-					
010	581947-0400		1	AIR INLET	**1-171**
020	90458-2971		1	BRACKET, HR-1/4-P FOR LRP-1/4-0,7	
030	581950-0300		1	VALVE GROUP	**1-173, 1-175**
040	988685-0000		2	PIN	
050	1035792-0000		2	E-HINGE	
060	1035794-0000		4	BLOCKING PIECE	
070	3017345-0000		1	PLATE	
110	1145221-0000		1	SIGN	
120	979426-0000		1	SIGN	
130	1145219-0000		1	SIGN	
140	3072114-0000		1	EARTH WIRE	
180	90235-0451		1	SELECTOR ACTUATOR, N-22-SW	
190	90328-0029		1	SILENCER M5	
200	90458-0322		2	NUT, M16X1,5	
205	90458-0324		1	NUT, M25X1,5	
210	90458-0306		2	CABLE GLAND, M16X1,5, 5311 1010	
220	90458-0316		1	CABLE GLAND, M25X1,5, 5311 1130	
230	312115-0329		9	SCREW ISO4762 M5X16 A4 80	
240	312605-0314		13	HEXAGON NUT, M6M M5 A280	
250	315105-0146		17	WASHER BRB 5,3X10 RFR	
260	342713-0210		2	PLUG, EXT THREAD HEX SOCKET	
270	350002-0008		4	PUSH-IN L-FITTING QSL-F-G1/4-6	
290	353249-0008		4	INSERT, SINGLE HOLE, EK152 7	
300	312502-0120		6	DRIVE SCREW ROUND HEAD KDS 0X5	
330	90459-2389		2	BRACKET, MS4-LR-WR	
350	312105-0329		12	SCREW M6S ISO 4017 M5X16 A480	
390	312105-0366		4	SCREW M6S ISO 4017 M6X12 A480	
400	315105-0153		4	WASHER BRB 6,4X12 RFR	
410	90062-0040		2	LOCK WASHER SERRAT.INT.GEAR,5,3/10 H=0,6	
430	350002-0002		2	PUSH-IN L-FITTING QSL-F-M5-6	
460	350001-0008		3	PUSH-IN FITTING QS-F-G1/4-6	
490	350004-0005		2	PUSH-IN L-FITTING QSL-F-12	
540	341001-0228	MM	80	COPPER TUBE	
550	3024356-0000		1	PIPE	
560	3017355-0000		1	BRACKET	
570	3024357-0000		1	PIPE	
580	342738-0221		2	ADJUSTABLE ELBOW CONNECTION 15-G1/2	
590	342737-0221		1	ELBOW CONNECTION 15, W15L71	
600	342731-0221		1	CONN. ELBOW, WE15LR71	
610	90459-3887		1	PUSH-IN Y-CONNECTOR QSY-G1/2-12	
620	350001-0016		1	PUSH-IN FITTING QS-F-G1/2-12	
630	350006-0003		1	PUSH-IN FITTING QS-F-8H-6	
640	350009-0003		1	PUSH-IN FITTING QS-F-8	
650	90237-0319		1	LOCK HOUSING, 1000-U134	
660	90237-0337		1	LOCK HANDLE FOR 90237-319	
670	90237-0156		1	LOCK BOLT, 1000-16	
680	90042-0602		1	DISTRIBUTOR BLOCK, FR-4-1/2-B	
720	342701-0214		1	BUSHING, INT/EXT, G1-G1/2	
730	90459-4164		6	SAFETY SCREW SM4X20, 20-053-42	
750	90030-0188		1	CONN. STR. GE15LRED71	
760	315105-0136		2	WASHER BRB 4,3X8 RFR	
770	350015-0001		14	PUSH-IN Y-CONNECTOR QSY-F-6	
M.Z040	90459-5786		1	FILTERED SILENCER, 10494 LFU-1/2	
	90459-7294		*1*	*FILTER CARTRIDGE, 10496 LFPU-1/2*	
M.W695	90459-4876		1	FOCUS JUMPER CABLE M12 5P 3M, 20-056-21	
M.U048	90458-2969		1	PRESSURE GAUGE, MAP-40-1-1/8-EN	
M.T130	90459-2241		1	REGULATOR, MS4-LRB-1/4-D5-AS	
M.T120	90459-2241		1	REGULATOR, MS4-LRB-1/4-D5-AS	
M.T048	90458-0254		1	PRECISION PRESSURE REGULATOR,LRP-1/4-0,7	
M.S130	90235-0804		1	FRONT PANEL VALVE 3/2, SV-3-M5	
M.B048.1	90458-2794		1	SENSOR, EVA 20-046-00	
M.B048	90459-4142		1	SENSOR, ADAM M12 20-051-00	

Machine Type | Group Description | Used-In | Group Number | Page No

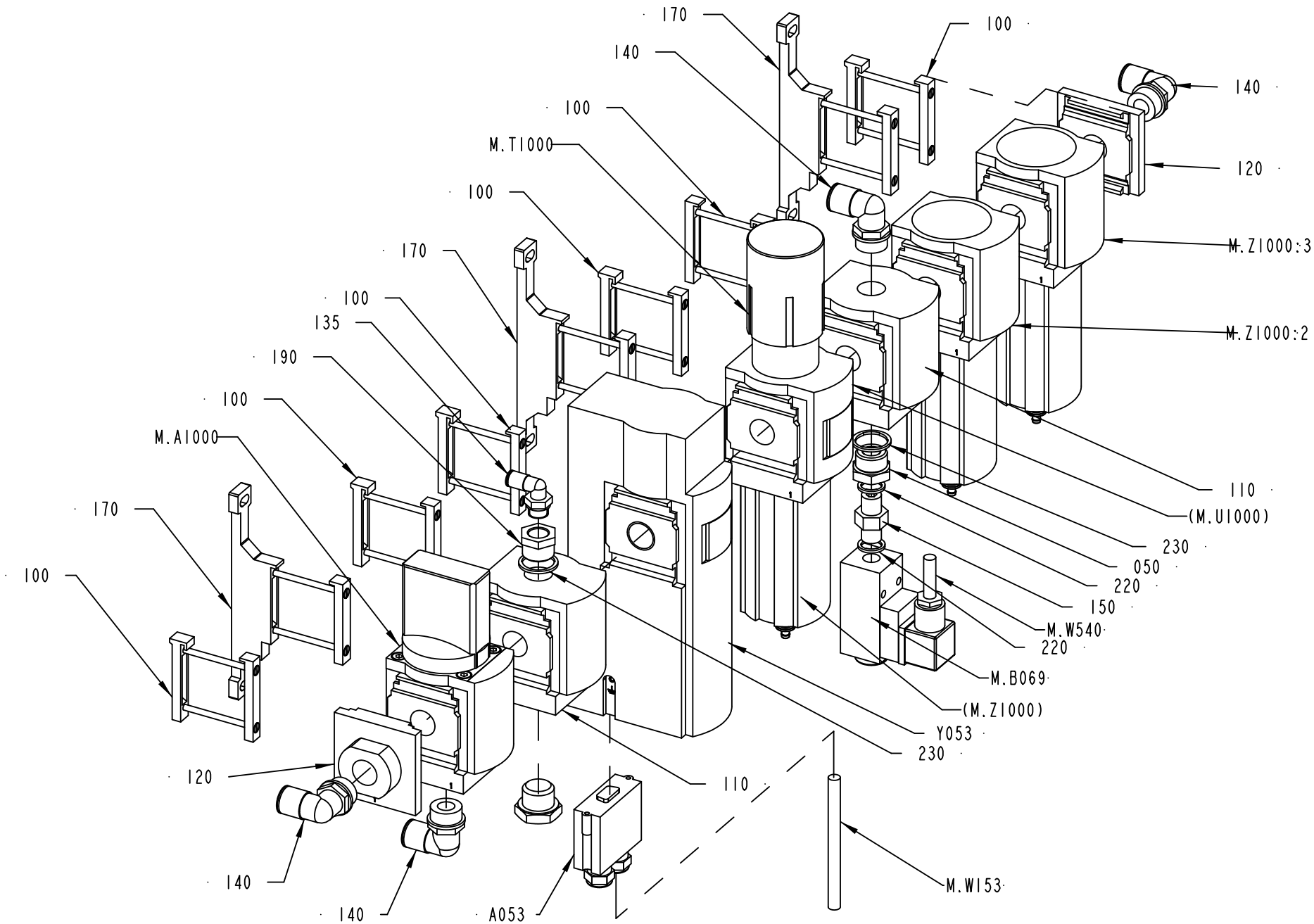

581947-4
436609

ECM: 438705 - 20100222
Group number: 581947-0400
Assembly Drawing: 581947-4_1_AC

Pos	Part No	UN	Qty	Description	Page No
-					
050	90459-2216		1	BUSHING, INT/EXT, G1/4-G1/2	
100	90459-1859		6	BRACKET, MS6-MV	
	90459-4787		*1*	*SENSOR BRACKET, WSM-12-J-M5*	
110	90459-1856		2	DISTRIBUTOR, MS6-FRM-1/2	
120	90459-2617		2	END PLATE, MS6-AGD	
135	350002-0008		1	PUSH-IN L-FITTING QSL-F-G1/4-6	
140	350002-0016		4	PUSH-IN L-FITTING QSL-F-G1/2-12	
150	90224-0372		1	NIPPLE, EXT.THREAD, HEXAGON, R1/4-R1/4	
170	90459-1858		3	BRACKET, MS6-WP	
190	342701-0205		1	BUSHING, INT/EXT, G1/2-G1/4	
220	315239-0110		2	NYLON WASHER G1/4, 1/4RRP	
230	315239-0113		2	NYLON WASHER G1/2, 1/2RRP	
240	90330-0037		1	PLUG, G1/2EXT, G1/2	
A053	90601-1168		1	SOCKET CONNECTOR, NECA-S1G9-P9-MP3	
M.Z1000:3	90459-2772		1	FILTER, MS6-LFM-1/2-ARV	
	90459-3811		*1*	*FILTER CARTRIDGE MS6-LFM-A*	
M.Z1000:2	90459-2773		1	FILTER, MS6-LFM-1/2-BRV	
	90459-3812		*1*	*FILTER CARTRIDGE, MS6-LFM-B*	
M.Y053	90601-1126		1	SAFETY VALVE, MS6-SV-1/2-E-10V24-AG	
M.W540	351150-0403	MM	1500	CABLE OLFLEX 3X0,75 MM2 LIGHT/GREY	
M.W153	90600-5930	M	4	CABLE C9, 20-057-15	
M.T1000	90459-6554		1	FILTER REGULATOR, MS6-LFR-1/2-D7-CRV-AS	
M.F027	90459-1855		1	SOFT START VALVE, MS6-DL-1/2	
M.B069	90274-0103		1	PRESSURE SWITTCH PEV-1/4-B	
M.A1000	90459-1852		1	SHUT OFF VALVE, MS6-EM1-1/2	

Pos	Part No	UN	Qty	Description	Page No

VALVE GROUP

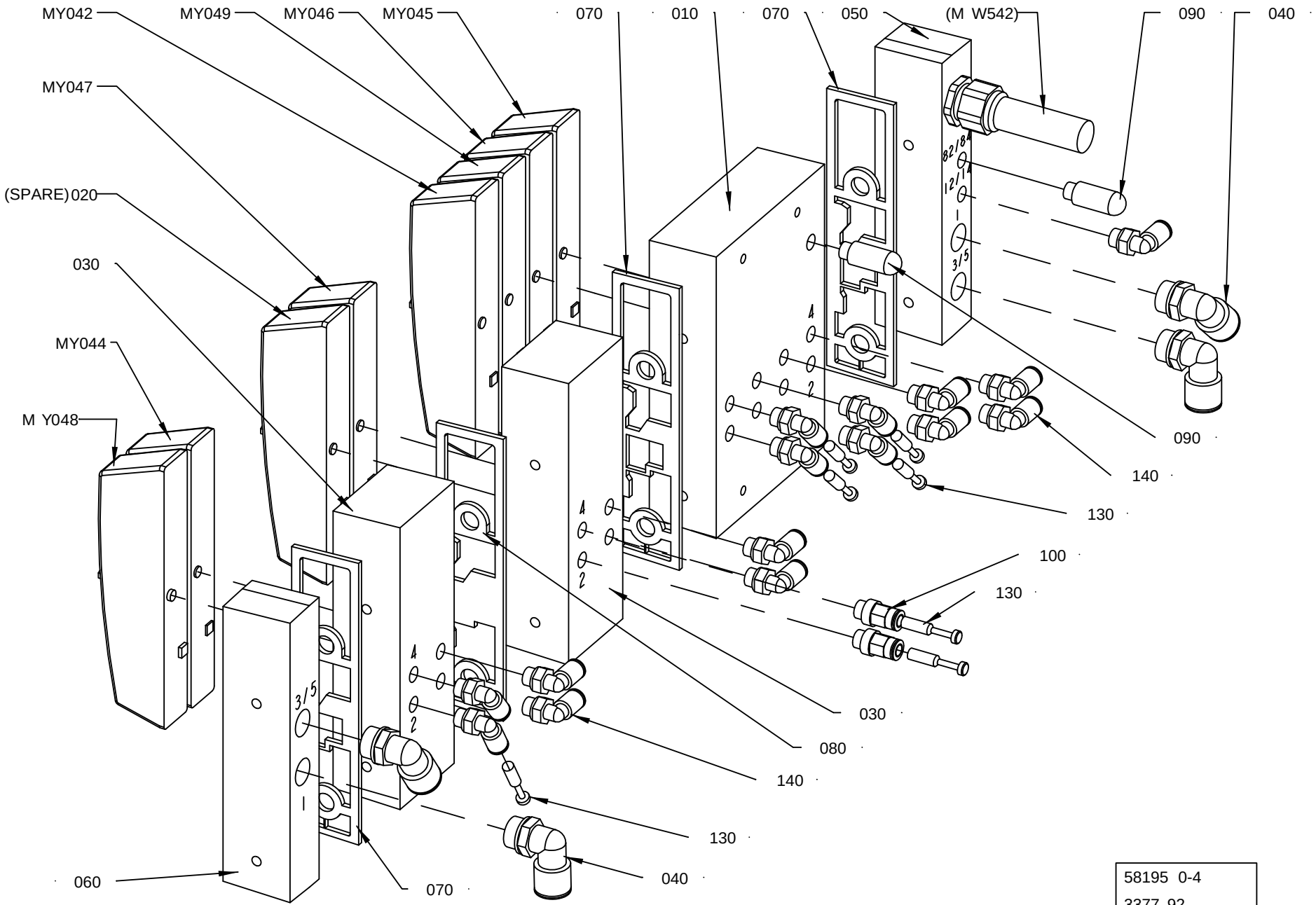

58195 0-4
3377 92

ECM: 339230 - 20080221
Group number: 581950-0300
Assembly Drawing: 581950-4_1_AC

This list covers pages from 1-172 to 1-175

Pos	Part No	UN	Qty	Description	Page No
TBA					
130	350013-0002		7	PLUG QSC-6H	
M.Y049	90458-1215		1	COVER PLATE, EMPTY VALVE POSITION	
M.Y044	90458-1194		1	VALVE, 5/2 MONOSTABLE	
M.Y042	90458-1215		1	COVER PLATE, EMPTY VALVE POSITION	
TPA					
130	350013-0002		5	PLUG QSC-6H	
M.Y049	90458-1194		1	VALVE, 5/2 MONOSTABLE	
M.Y044	90458-1215		1	COVER PLATE, EMPTY VALVE POSITION	
M.Y042	90458-1197		1	VALVE, 5/2 BISTABLE	
Common Parts					
010	90458-1204		1	BASIC SUB-BASE 4 VALVES, CDVI5.0-GB4-MP	
020	90458-1215		1	COVER PLATE, EMPTY VALVE POSITION	
030	90458-1206		1	EXP. SUB-BASE 2 VALVES, CDVI5.0-EB	
040	350002-0014		4	PUSH-IN L-FITTING QSL-F-G3/8-12	
050	90458-1212		1	LEFT ENDPLATE INCL. 10M CABLE	
060	90458-1214		1	RIGHT ENDPL EXT. PILOT AIR,CDVI5.0-EPR-S	
070	90458-1207		3	SEALING, STANDARD	
080	90458-1208		1	SEALING, CHANNEL 1 BLOCKED	
090	90328-0047		2	SILENCER G1/8"	
100	350001-0006		2	PUSH-IN FITTING QS-F-G1/8-6	
140	350002-0006		15	PUSH-IN L-FITTING QSL-F-G1/8-6	
M.Y048	90458-1194		1	VALVE, 5/2 MONOSTABLE	
M.Y047	90458-1194		1	VALVE, 5/2 MONOSTABLE	
M.Y046	90458-1194		1	VALVE, 5/2 MONOSTABLE	
M.Y045	90458-1194		1	VALVE, 5/2 MONOSTABLE	

Pos	Part No	UN	Qty	Description	Page No

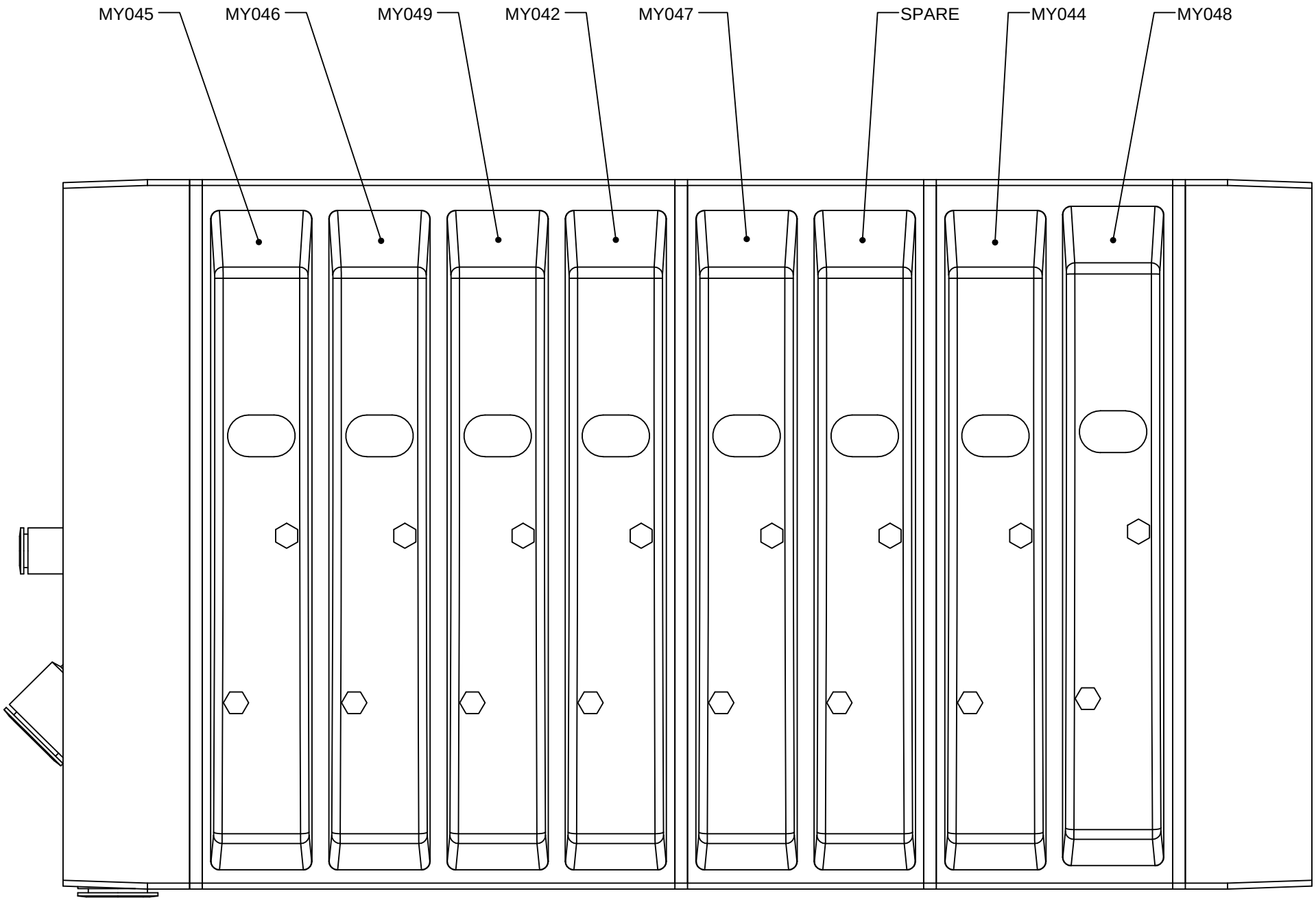
MY045
MY046
MY049
MY042
MY047
SPARE
MY044
MY048

ECM: 339230 - 20080221
Group number: 581950-0300
Assembly Drawing: 581950-4_2_AC

This list covers pages from 1-172 to 1-175

Pos	Part No	UN	Qty	Description	Page No
TBA					
130	350013-0002		7	PLUG QSC-6H	
M.Y049	90458-1215		1	COVER PLATE, EMPTY VALVE POSITION	
M.Y044	90458-1194		1	VALVE, 5/2 MONOSTABLE	
M.Y042	90458-1215		1	COVER PLATE, EMPTY VALVE POSITION	
TPA					
130	350013-0002		5	PLUG QSC-6H	
M.Y049	90458-1194		1	VALVE, 5/2 MONOSTABLE	
M.Y044	90458-1215		1	COVER PLATE, EMPTY VALVE POSITION	
M.Y042	90458-1197		1	VALVE, 5/2 BISTABLE	
Common Parts					
010	90458-1204		1	BASIC SUB-BASE 4 VALVES, CDVI5.0-GB4-MP	
020	90458-1215		1	COVER PLATE, EMPTY VALVE POSITION	
030	90458-1206		1	EXP. SUB-BASE 2 VALVES, CDVI5.0-EB	
040	350002-0014		4	PUSH-IN L-FITTING QSL-F-G3/8-12	
050	90458-1212		1	LEFT ENDPLATE INCL. 10M CABLE	
060	90458-1214		1	RIGHT ENDPL EXT. PILOT AIR,CDVI5.0-EPR-S	
070	90458-1207		3	SEALING, STANDARD	
080	90458-1208		1	SEALING, CHANNEL 1 BLOCKED	
090	90328-0047		2	SILENCER G1/8"	
100	350001-0006		2	PUSH-IN FITTING QS-F-G1/8-6	
140	350002-0006		15	PUSH-IN L-FITTING QSL-F-G1/8-6	
M.Y048	90458-1194		1	VALVE, 5/2 MONOSTABLE	
M.Y047	90458-1194		1	VALVE, 5/2 MONOSTABLE	
M.Y046	90458-1194		1	VALVE, 5/2 MONOSTABLE	
M.Y045	90458-1194		1	VALVE, 5/2 MONOSTABLE	

Pos	Part No	UN	Qty	Description	Page No

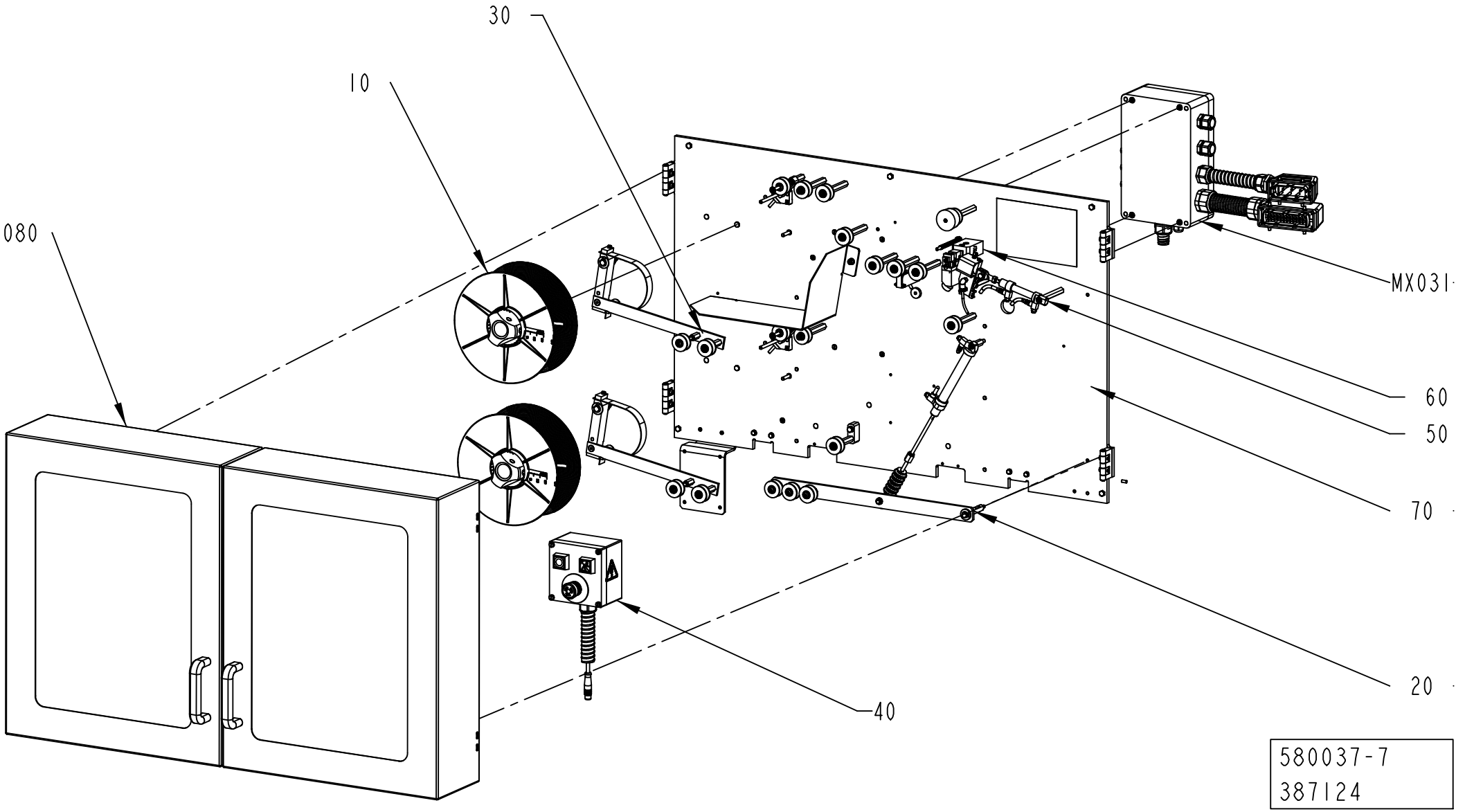
30
10
080
MX031
60
50
70
20
40
580037-7
387124

ECM: 415985 - 20090916
Group number: 580037-0400
Assembly Drawing: 580037-7_1_AA

This list covers pages from 1-176 to 1-179

Pos	Part No	UN	Qty	Description	Page No
NOPT (See drawing on page: 1-178)					
090	1498753-0100		1	MAGAZINE HOLDER	**1-181**
Common Parts					
010	580042-0100		2	HUB JUMBO	**1-183**
020	580044-0200		1	SPLICING MAGAZINE	**1-185**
030	580060-0200		2	BRAKE ARM	**1-187**
040	580329-0300		1	PUSH BUTTON BOX	**1-189**
050	1558897-0100		1	HEATING DEVICE	**1-191**
060	1524477-0100		1	CUTTING TABLE	**1-193**
070	1499480-0200		1	MOUNTING PLATE	**1-195, 1-197, 1-199, 1-201**
080	1498751-0300		1	DOORS	**1-203**
MX031	580064-0200		1	CONNECTION BOX	**1-205, 1-207**

Pos	Part No	UN	Qty	Description	Page No

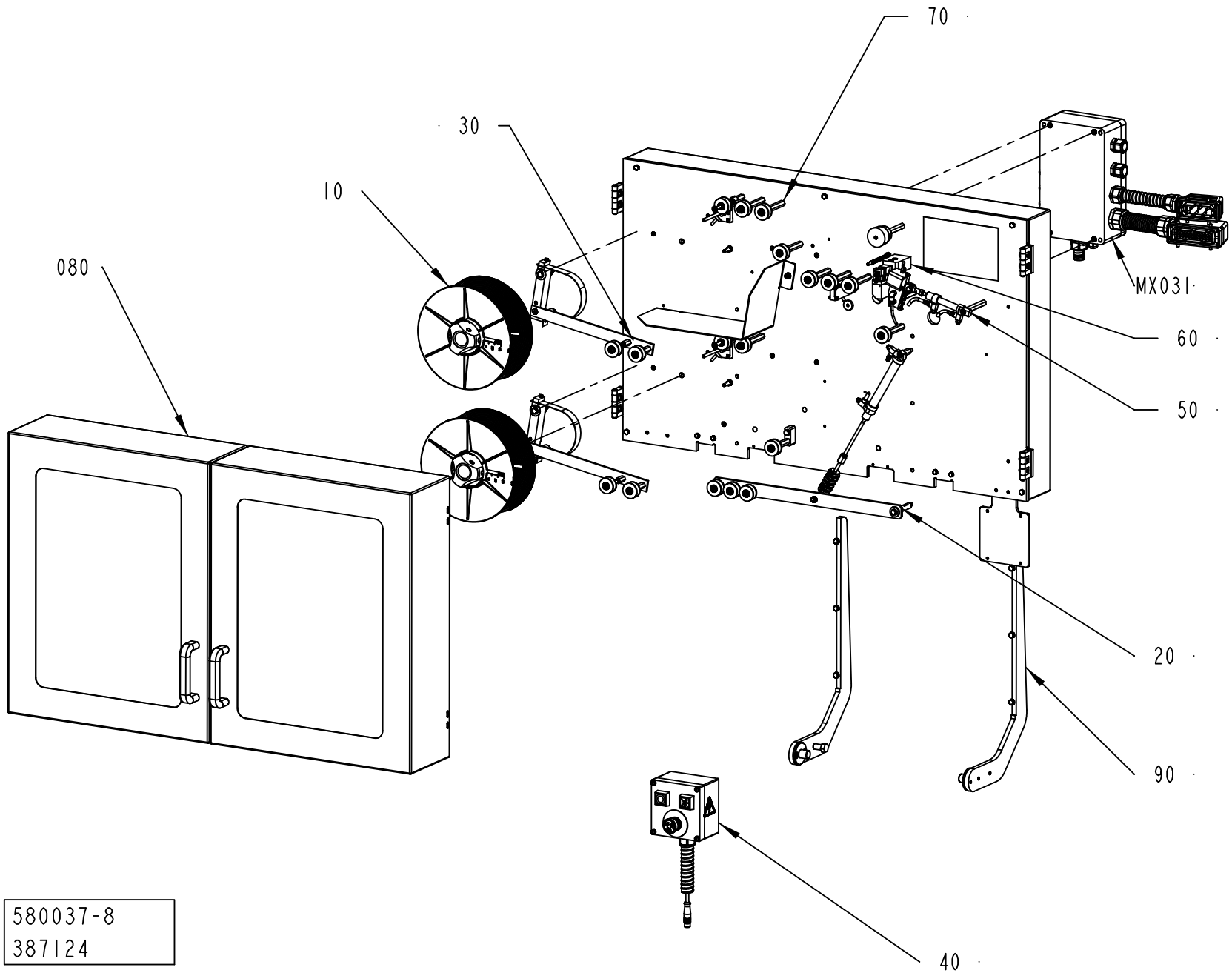
70
30
10
080
MX031
60
50
20
90
40
580037-8
387124

ECM: 415985 - 20090916
Group number: 580037-0400
Assembly Drawing: 580037-8_1_AA

This list covers pages from 1-176 to 1-179

Pos	Part No	UN	Qty	Description	Page No
NOPT (See drawing on page: 1-178)					
090	1498753-0100		1	MAGAZINE HOLDER	**1-181**
Common Parts					
010	580042-0100		2	HUB JUMBO	**1-183**
020	580044-0200		1	SPLICING MAGAZINE	**1-185**
030	580060-0200		2	BRAKE ARM	**1-187**
040	580329-0300		1	PUSH BUTTON BOX	**1-189**
050	1558897-0100		1	HEATING DEVICE	**1-191**
060	1524477-0100		1	CUTTING TABLE	**1-193**
070	1499480-0200		1	MOUNTING PLATE	**1-195, 1-197, 1-199, 1-201**
080	1498751-0300		1	DOORS	**1-203**
MX031	580064-0200		1	CONNECTION BOX	**1-205, 1-207**

Pos	Part No	UN	Qty	Description	Page No

MAGAZINE HOLDER

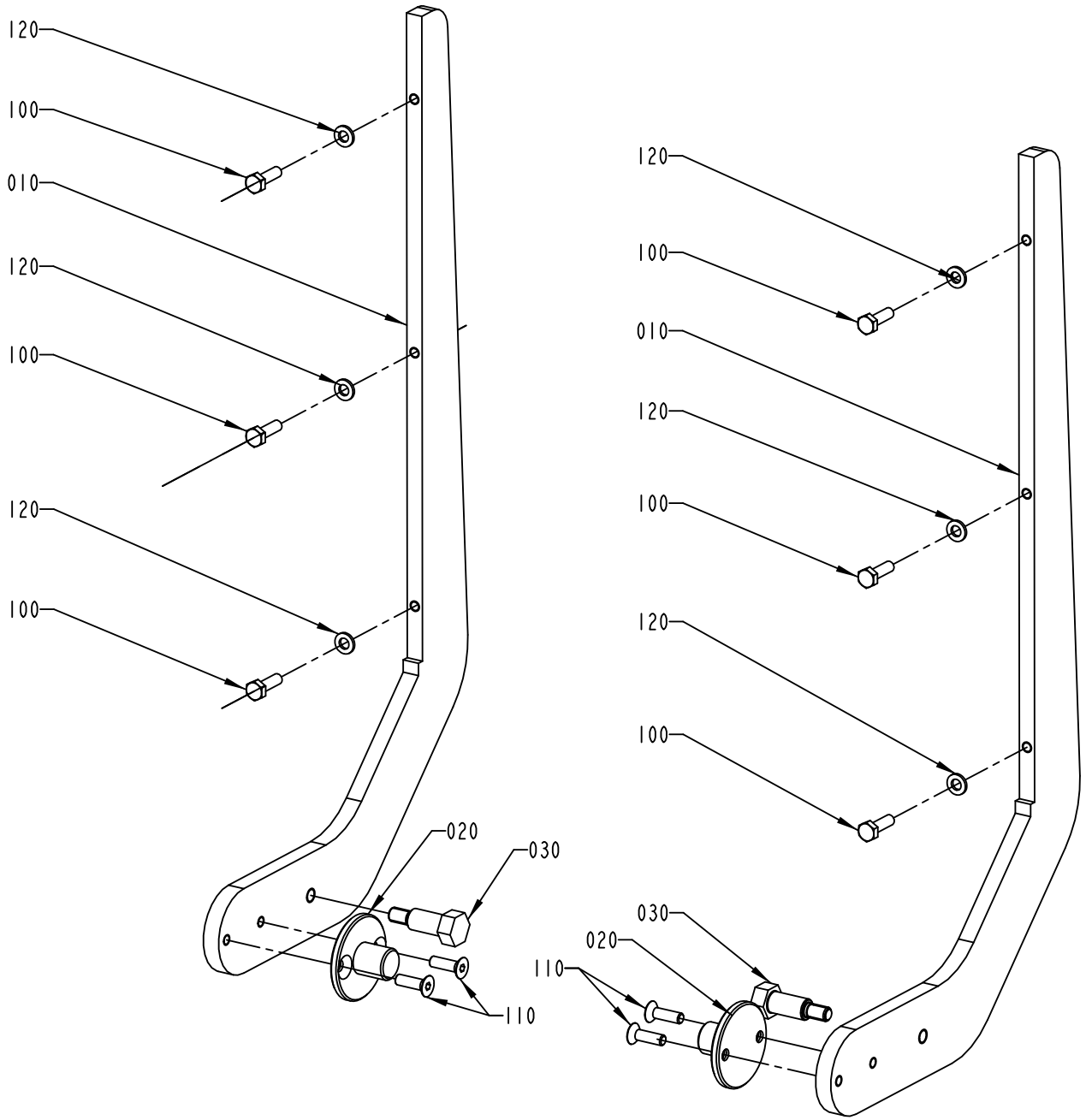

1498753-1
ECN 72945

ECM: 180865 - 20040910
Group number: 1498753-0100
Assembly Drawing: 1498753-1_1_AA

Pos	Part No	UN	Qty	Description	Page No
-					
010	1498761-0000		2	MAGAZINE HOLDER	
020	1498757-0000		2	FLANGE	
030	1498758-0000		2	AXLE PIN	
100	312105-0370		6	SCREW M6S ISO 4017 M6X20 A480	
110	312155-0368		4	SCREW DIN 7991 MF6S M6X16 A4 70	
120	315105-0153		6	WASHER BRB 6,4X12 RFR	

Pos	Part No	UN	Qty	Description	Page No

HUB JUMBO

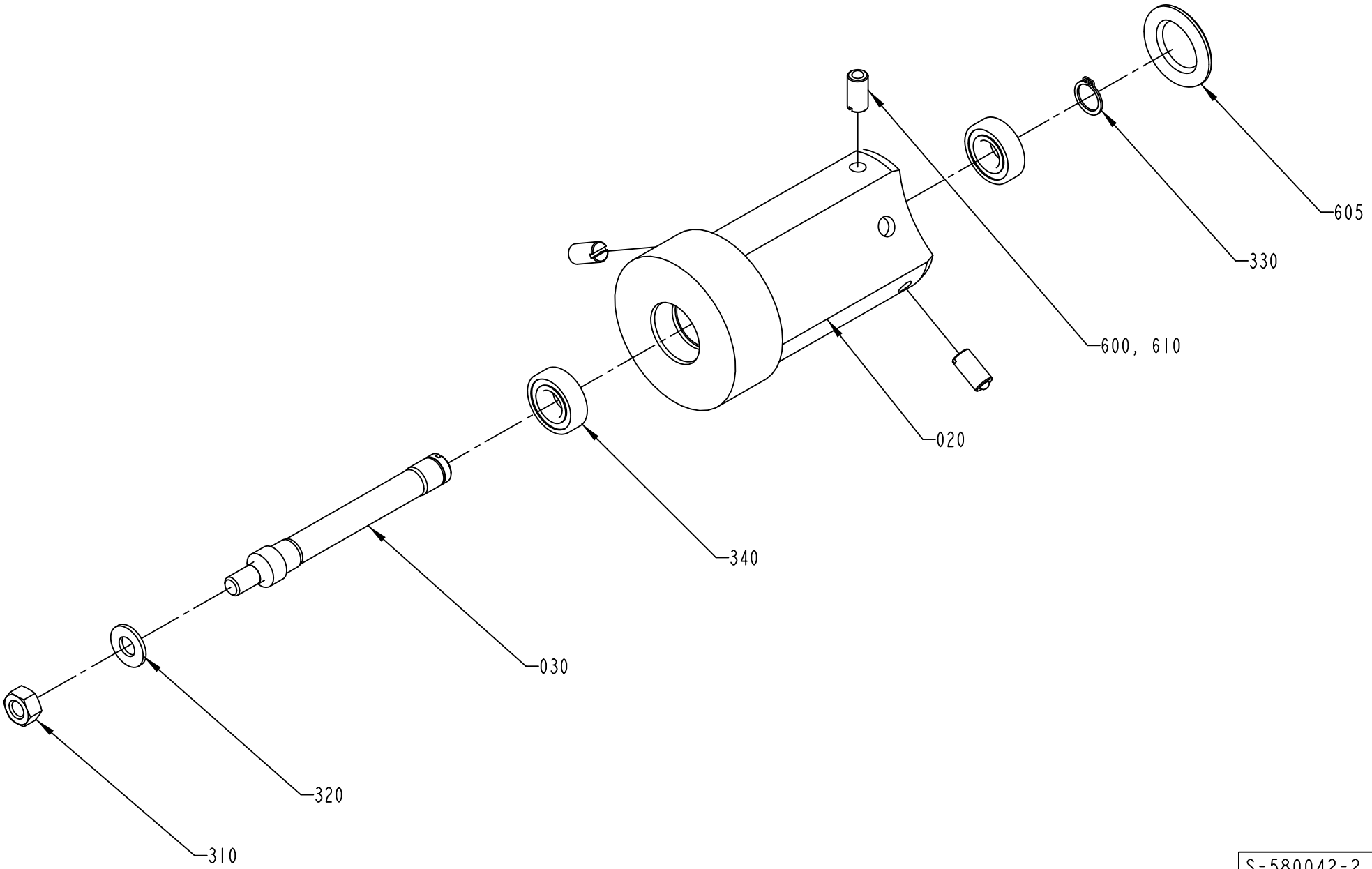

S-580042-2
ECN 72517

ECM: 384235 - 20090403
Group number: 580042-0100
Assembly Drawing: 580042-2_1_AB

Pos	Part No	UN	Qty	Description	Page No
TBA/19					
340	90214-0207		2	BALL BEARING 15/32X9	
Common Parts					
010	541751-0000		1	CONICAL BOBBIN	
020	536913-0000		1	HUB	
030	537327-0000		1	SHAFT	
310	312605-0320		1	HEXAGON NUT, M6M M10 A280	
320	315105-0173		1	WASHER BRB 10,5X22 RFR	
330	315751-0112		1	RETAINING RING FOR SHAFT DIN 471 15 SS	
600	90157-0016		1	THREAD LOCKING, LOCTITE 242 50 ML	
605	90261-0049		1	PLUG, BLIND, PLASTIC, NO. SR1750	
610	90287-0106		3	SCREW SPRINGLOAD. SLOTTED HEAD M10X21	

Pos	Part No	UN	Qty	Description	Page No

SPLICING MAGAZINE

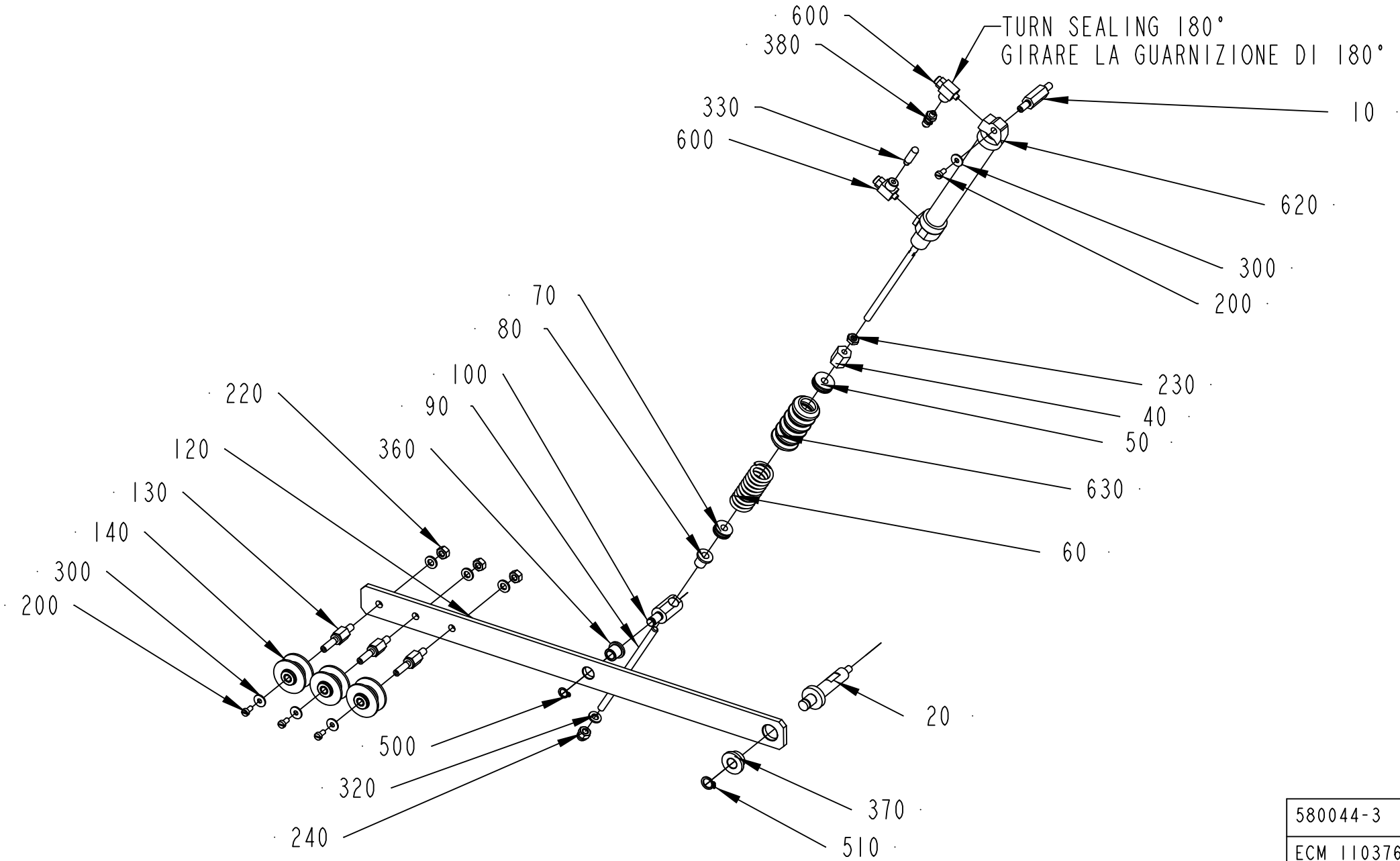

580044-3
ECM 110376

ECM: 485991 - 20101221
Group number: 580044-0200
Assembly Drawing: 580044-3_1_AD

Pos	Part No	UN	Qty	Description	Page No
-					
010	979576-0000		1	AXLE PIN	
020	979578-0000		1	AXLE PIN	
040	401186-0000		1	HEX NUT	
050	401371-0000		1	BUSHING	
060	400800-0000		1	SPRING	
070	401372-0000		1	BUSHING	
080	401370-0000		1	BUSHING	
090	1499515-0000		1	SHAFT	
100	401183-0000		1	GUIDE AXLE	
120	580055-0000		1	ARM	
130	579553-0000		3	SHAFT	
140	1512583-0000		3	ROLLER	
	321120-0101		*2*	*BEARING BUSH W/O FLANGE, 6X8X6 MM*	
200	312125-0287		4	SCREW ISO 1207 M4X8 A4	
220	312605-0316		3	HEXAGON NUT, M6M M6 A280	
230	312625-0316		1	HEXAGON THIN NUT, EN 24035 ML6M M6 A4	
240	312705-0316		1	HEX. DOMED CAP MHM-6 M6 A280	
300	90005-0082		4	WASHER PLAIN ROUND 4,3(M4)/12,H=1	
320	315105-0153		4	WASHER BRB 6,4X12 RFR	
330	90328-0029		1	SILENCER M5	
360	321111-0097		1	FLANGE BUSHING, 8/12X12-16X2 MM	
370	321111-0135		1	FLANGE BUSHING, 10/16X10-22X3 MM	
380	342921-0111		1	STRAIGHT COUPLING,EXT.THREAD 6/4-M5	
500	90141-0015		1	RETAINING RING FOR SHAFT DIN 471 8 SS	
510	90141-0016		1	RETAINING RING FOR SHAFT DIN 471 10 SS	
600	90235-0289		2	FLOW CONTROL VALVE, GRLA-M5	
620	90239-0819		1	DOUBLE ACTING, MINI-ISO, CYL.16-100	
630	90342-0013		1	BELLOWS	

Pos	Part No	UN	Qty	Description	Page No

BRAKE ARM

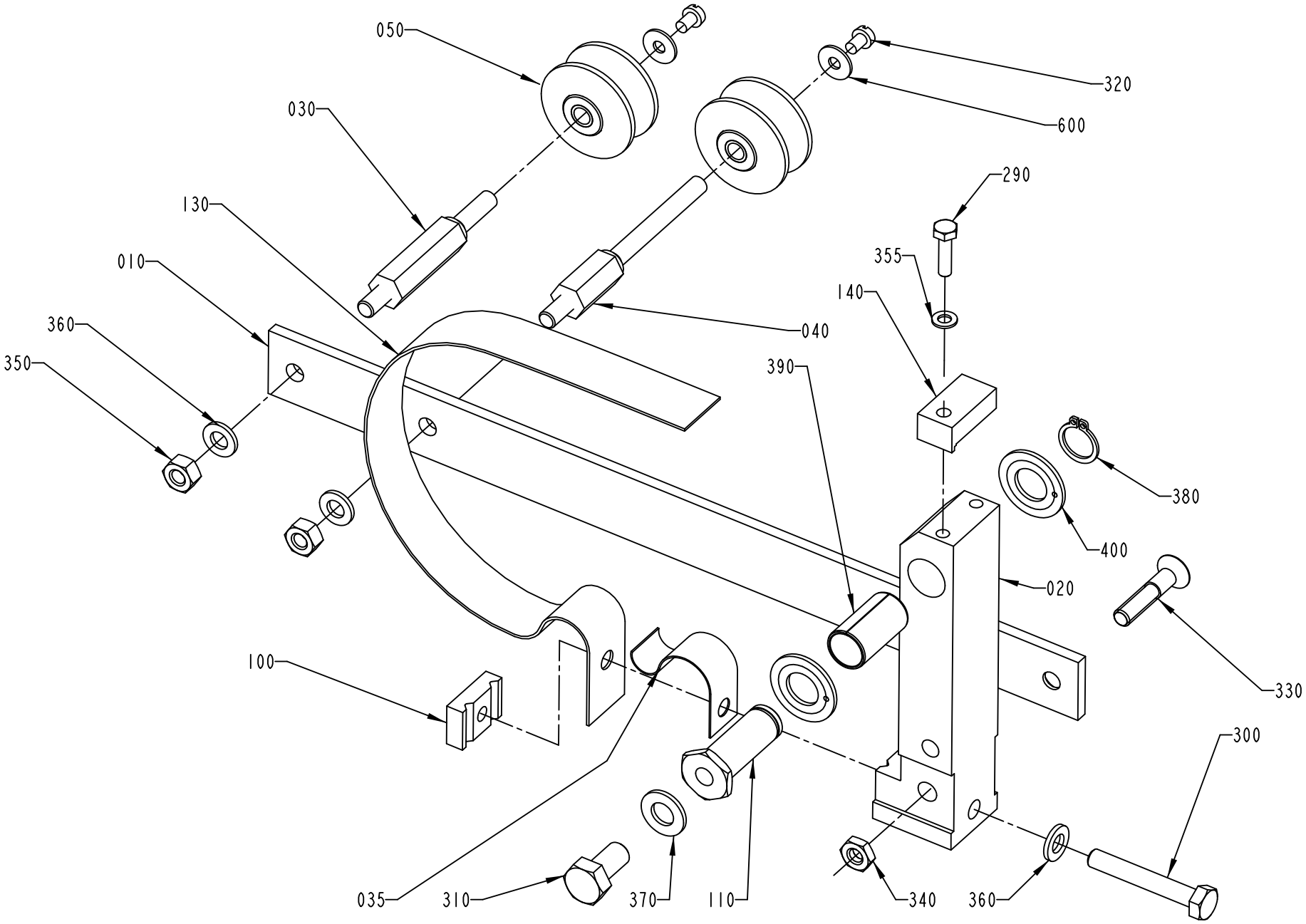

580060-3
ECM 98331

ECM: 107790 - 20051011
Group number: 580060-0200
Assembly Drawing: 580060-3_1_AB

Pos	Part No	UN	Qty	Description	Page No
-					
010	979994-0000		1	ARM	
020	1260678-0000		1	ARM	
030	536917-0000		1	AXLE PIN	
035	1484486-0000		1	SPRING	
040	544726-0000		1	AXLE PIN	
050	1512583-0000		2	ROLLER	
	321120-0101		*2*	*BEARING BUSH W/O FLANGE, 6X8X6 MM*	
100	583878-0000		1	SPRING BRACKET	
110	541070-0000		1	SHAFT	
130	979990-0000		1	BELT BRAKE	
140	979991-0000		1	BLOCK	
290	312105-0293		1	SCREW M6S ISO 4017 M4X16 A470	
300	312105-0378		1	SCREW M6S ISO 4014 M6X40 A480	
310	312105-0449		1	SCREW M6S ISO 4017 M8X16 A480	
320	312125-0285		2	SCREW ISO 1207 M4X6 A4	
330	312155-0374		1	SCREW DIN 7991 MF6S M6X30 A4 70	
340	312625-0316		1	HEXAGON THIN NUT, EN 24035 ML6M M6 A4	
350	312605-0316		2	HEXAGON NUT, M6M M6 A280	
355	315105-0136		1	WASHER BRB 4,3X8 RFR	
360	315105-0153		3	WASHER BRB 6,4X12 RFR	
370	315105-0165		1	WASHER BRB 8,4X16 RFR	
380	315751-0109		1	RETAINING RING FOR SHAFT DIN 471 12 SS	
390	321141-0193		1	BEARING BUSH W/O FLANGE, 12X14X25 MM	
400	321130-0180		2	THRUST WASHER, 12X24X1,5 MM	
600	90005-0082		2	WASHER PLAIN ROUND 4,3(M4)/12,H=1	

Pos	Part No	UN	Qty	Description	Page No

PUSH BUTTON BOX

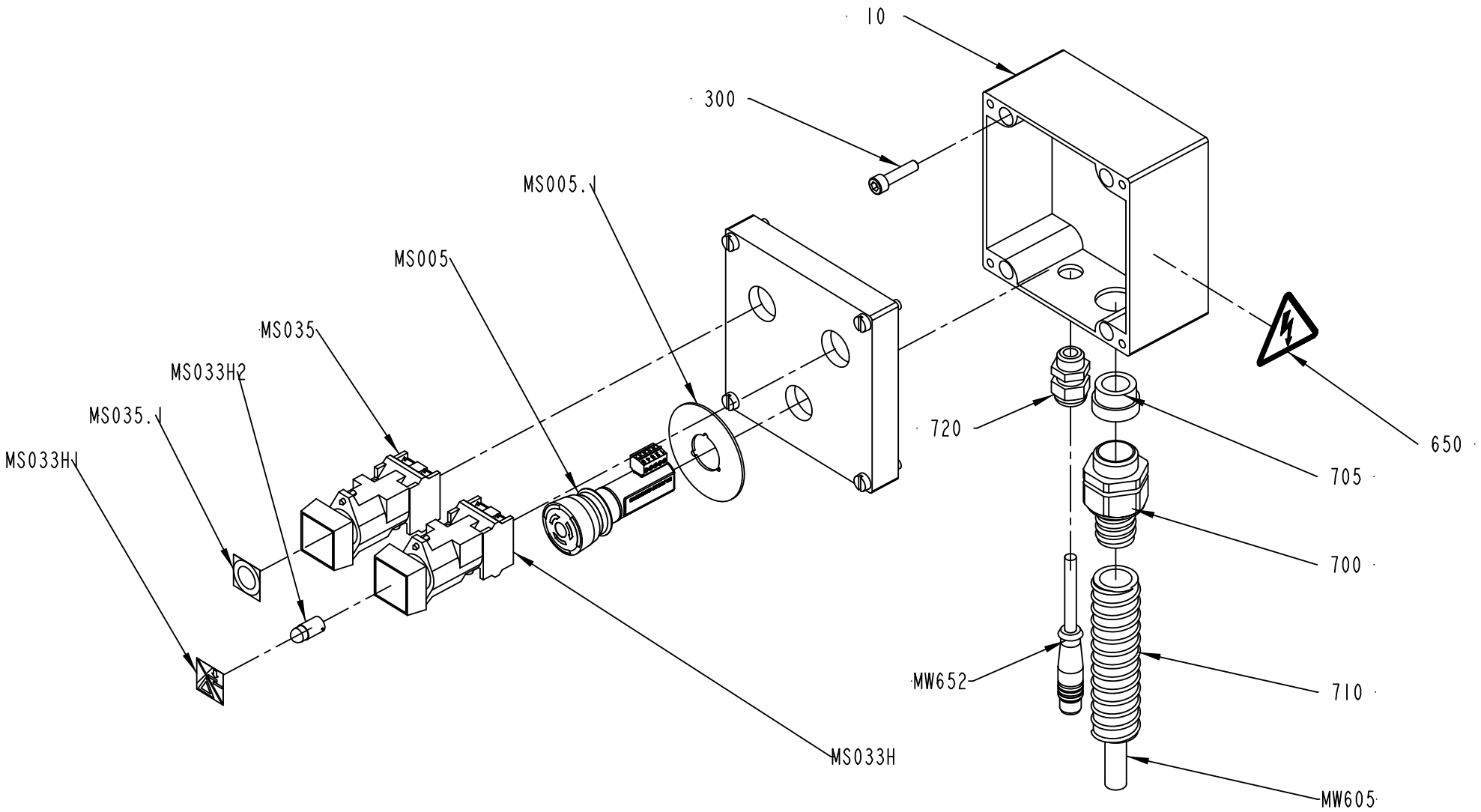

580329-4
428870

ECM: 430686 - 20091221
Group number: 580329-0300
Assembly Drawing: 580329-4_1_AB

Pos	Part No	UN	Qty	Description	Page No
-					
010	3040340-0000		1	CONNECTION BOX	
300	312115-0372		4	SCREW ISO4762 M6X25 A4 80	
650	359705-0015		1	WARNING SIGN ISO, RISK OF ELECTRIC SHOCK	
700	90458-0431		1	GLAND FITTING, VK 22554YUL16	
705	353249-0014		1	INSERT, SINGLE HOLE, EK154 16	
710	90152-0051	MM	1600	HOSE, SPIRAL CONDUIT, 25X18, UL 1816	
720	352103-0101		1	CABLE GLAND, ST 9, PR15,2/PG9	
M.W652	90600-0934		1	CABLE M12-C62 5 POLE MALE, 20-056-02	
M.W605	351150-0407	MM	1900	CABLE OLFLEX 12X0,75 MM2 LIGHT/GREY	
M.S035:1	359301-0110		1	BUTTON SIGN, SHORT STOP	
M.S035	90064-0085		1	PUSH BUTTON, RED	
M.S033H2	90036-0057		1	LIGHT BULB, BA9S 28V	
M.S033H1	90459-0691		1	SIGN, STRIP SPLICE/ RESET ALARM	
M.S033H	90064-0098		1	PUSH BUTTON, WHITE	
M.S005:1	90600-9809		1	ES SIGN FOR INCA, 30-054-09	
M.S005	90600-6050		1	EMERGENCY STOP INCA 1 TINA, 30-054-00	

Pos	Part No	UN	Qty	Description	Page No

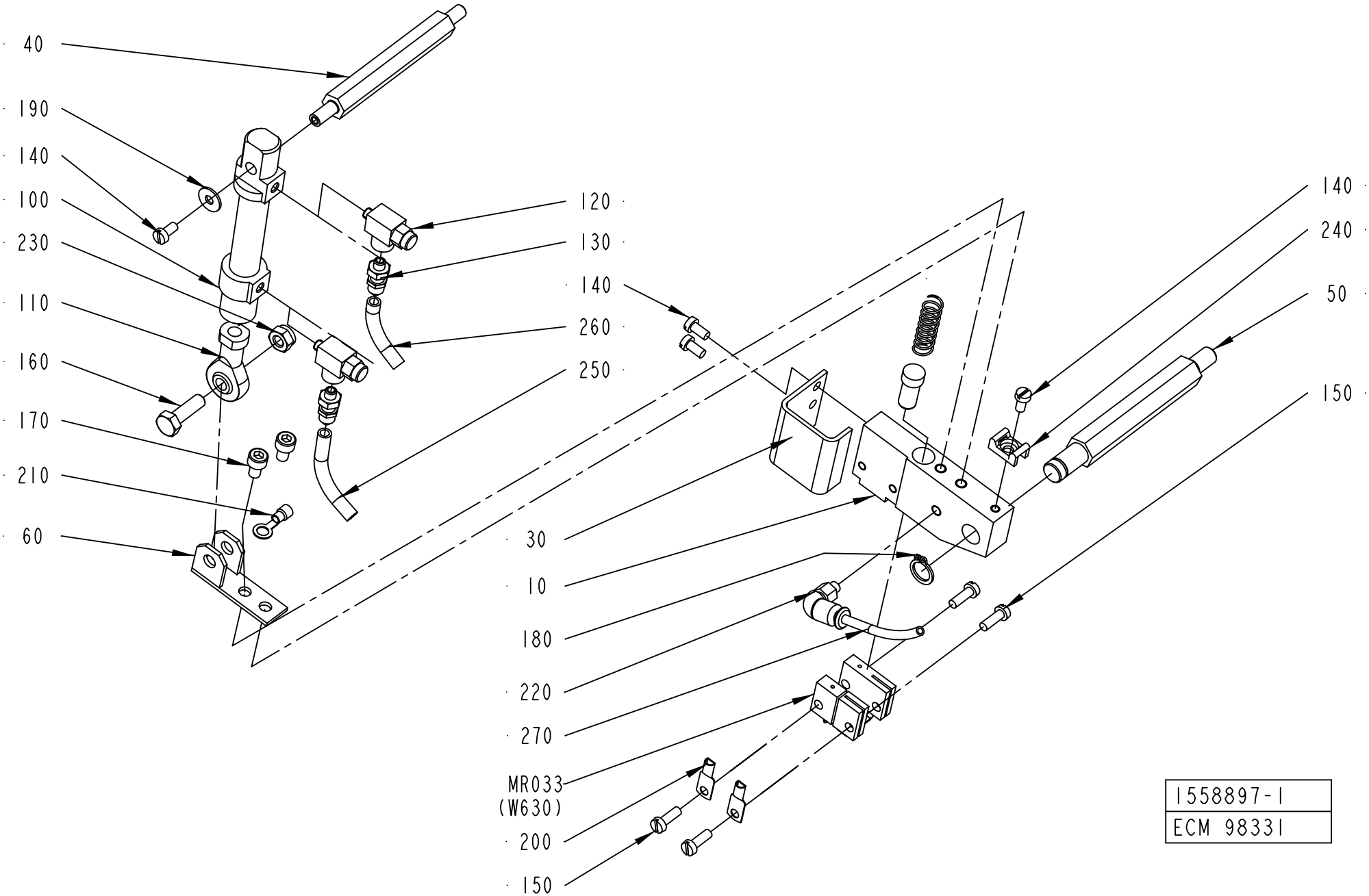
40
190
140
100
230
110
160
170
210
60
120
130
140
260
250
30
10
180
220
270
MR033
(W630)
200
150
140
240
50
150
1558897-1
ECM 98331

ECM: 180907 - 20040910
Group number: 1558897-0100
Assembly Drawing: 1558897-1_1_AA

Pos	Part No	UN	Qty	Description	Page No
-					
010	1490804-0000		1	HOLDER	
020	400833-0000		1	PLUNGER	
030	2523596-0000		1	COVER	
040	1037121-0000		1	SHAFT	
050	1037120-0000		1	SHAFT	
060	1037124-0000		1	HOLDER	
070	400828-0000		1	SPRING	
100	90450-0306		1	DOUBLE ACTING, MINI-ISO, CYL. 12-25	
110	90239-0491		1	ROD END, BALL JOINT EYE, MINI-ISO M6	
120	90235-0289		2	FLOW CONTROL VALVE, GRLA-M5	
130	342921-0111		2	STRAIGHT COUPLING,EXT.THREAD 6/4-M5	
140	312125-0287		4	SCREW ISO 1207 M4X8 A4	
150	312125-0291		4	SCREW ISO 1207 M4X12 A4	
160	312105-0370		1	SCREW M6S ISO 4017 M6X20 A480	
170	312115-0323		2	SCREW ISO4762 M5X8 A4 80	
180	90141-0016		1	RETAINING RING FOR SHAFT DIN 471 10 SS	
190	90005-0082		1	WASHER PLAIN ROUND 4,3(M4)/12,H=1	
200	353104-0140		2	CABLE SHOE, RING UNINS., YAV 06 M 4	
210	353101-0132		1	CABLE SHOE 1,5-2,5MM2 M5 BLUE	
220	342732-0099		1	ELBOW PIPE JOINT, (REEMP. 90458-2954)	
230	312812-0316		1	HEXAGON NUT, NY-LOCK M6 A480	
240	352113-0205		1	ANCHOR PLATES FOR STRIPS, TM2S8-C100	
250	90166-0193	MM	1000	TUBE 6 MM PUR BLUE	
260	90166-0193	MM	1000	TUBE 6 MM PUR BLUE	
270	90166-0095	MM	500	TUBE 4 MM PA BLUE (50M)	
MR033	1538473-0000		1	SEALING BLOCK	
W630	351120-0146	MM	1000	CABLE Ã–LFLEX HEAT 180 SIHF 3X4	

Pos	Part No	UN	Qty	Description	Page No

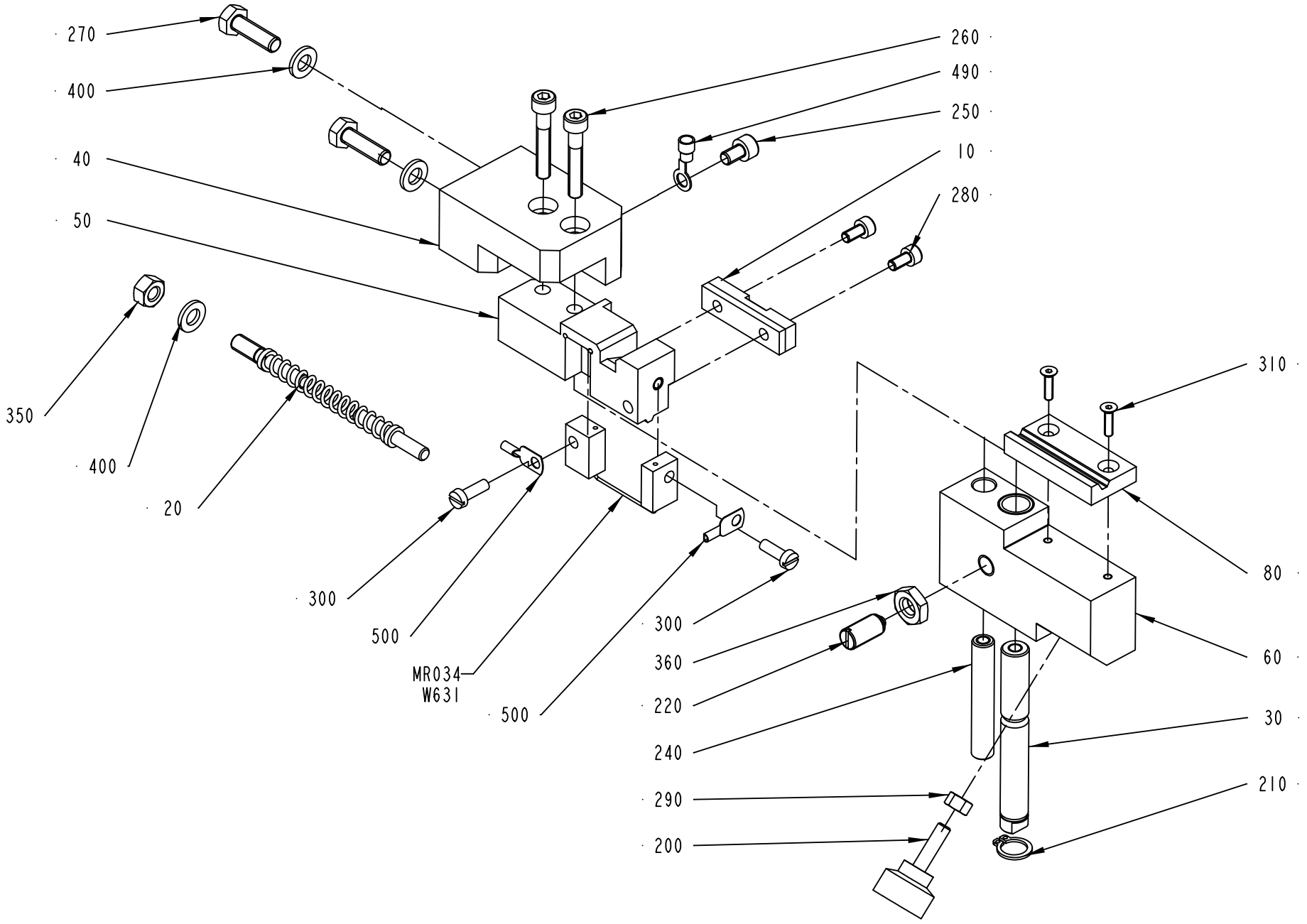

1524477-1
ECM 98331

ECM: 180906 - 20040910
Group number: 1524477-0100
Assembly Drawing: 1524477-1_1_AC

Pos	Part No	UN	Qty	Description	Page No
-					
010	1349014-0000		1	PAD	
020	2540726-0000		1	FINGER	
030	1517751-0000		1	SHAFT	
040	2523599-0000		1	SUPPORT	
050	2523598-0000		1	SPLICING TABLE	
060	2523597-0000		1	SLIDER	
080	2523601-0000		1	PAD	
090	2523600-0000		1	PIN	
200	90051-0035		1	KNOB, EXTERNAL THREAD. NO. 8308-1135	
210	90141-0016		1	RETAINING RING FOR SHAFT DIN 471 10 SS	
220	90287-0112		1	SCREW SPRINGLOAD. SLOTTED HEAD M8X16	
250	312115-0323		1	SCREW ISO4762 M5X8 A4 80	
260	312115-0335		2	SCREW ISO4762 M5X30 A4 80	
270	312105-0370		2	SCREW M6S ISO 4017 M6X20 A480	
280	312115-0287		2	SCREW ISO4762 M4X8 A4 80	
290	312605-0314		1	HEXAGON NUT, M6M M5 A280	
300	312125-0291		1	SCREW ISO 1207 M4X12 A4	
305	312125-0293		1	SCREW ISO 1207 M4X16 A4	
310	312155-0226		2	SCREW DIN 7991 MF6S M3X12 A4 70	
350	312605-0316		1	HEXAGON NUT, M6M M6 A280	
360	312625-0318		1	HEXAGON THIN NUT, EN 24035 ML6M M8 A4	
400	315101-0153		3	WASHER PLAIN, BRB, 6,4/12 H=1,5	
490	353101-0132		1	CABLE SHOE 1,5-2,5MM2 M5 BLUE	
500	353101-0130		2	CABLE SHOE 1,5-2,5MM2 M4 BLUE	
MR034	1524481-0000		1	SEALING BLOCK	
W631	351120-0145	MM	1000	CABLE Ã–LFLEX HEAT 180 SIHF 3X2,5	

Pos	Part No	UN	Qty	Description	Page No

MOUNTING PLATE

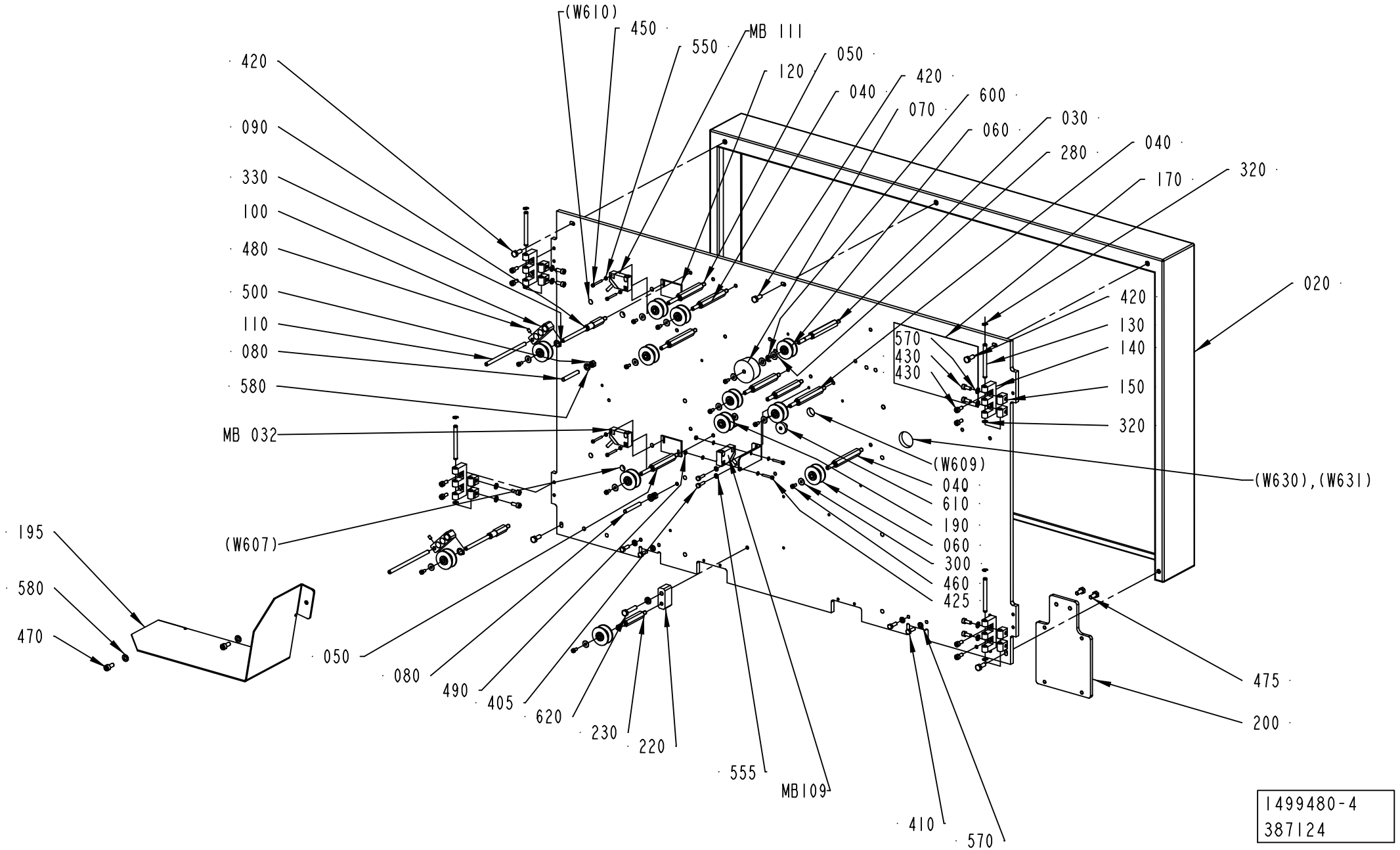

1499480-4
387124

ECM: 404989 - 20090706
Group number: 1499480-0200
Assembly Drawing: 1499480-4_1_AA

This list covers pages from 1-194 to 1-201

Pos	Part No	UN	Qty	Description	Page No
NOPT (See drawing on pages: 1-194, 1-196)					
020	1498764-0000		1	COVER	
200	1498775-0000		1	BOX BRACKET	
PT19 (See drawing on pages: 1-198, 1-200)					
200	2552624-0000		1	BOX BRACKET	
Common Parts					
010	3017352-0000		1	MOUNTING PLATE	
030	1498762-0000		1	AXLE PIN	
040	2547218-0000		7	AXLE PIN	
050	2547219-0000		2	AXLE PIN	
060	1512583-0000		11	ROLLER	
	321120-0101		*2*	*BEARING BUSH W/O FLANGE, 6X8X6 MM*	
070	1499481-0000		1	ROLLER	
080	469159-0000		2	PIN	
090	2547217-0000		2	AXLE PIN	
100	979667-0000		2	ARM	
110	979668-0000		2	FINGER	
120	979669-0000		2	FORCE PLATE	
130	1499512-0000		4	PIN	
140	1499514-0000		4	E-HINGE	
150	1035794-0000		8	BLOCKING PIECE	
160	2519644-0000		2	BRACKET	
170	1517464-0000		1	SIGN	
180	1538219-0000		1	SWITCH BRACKET	
190	1517293-0000		1	ROLLER	
	1512583-0000		*1*	*ROLLER*	
	321120-0101		*2*	*BEARING BUSH W/O FLANGE, 6X8X6 MM*	
195	2506478-0000		1	COVER	
220	2588000-0000		1	BRACKET	
230	2588001-0000		1	AXLE PIN	
280	2033-0013		2	WASHER	
290	352113-0206		9	ANCHOR PLATES FOR STRIPS, ABM100-AT	
300	90005-0082		12	WASHER PLAIN ROUND 4,3(M4)/12,H=1	
320	315755-0106		8	RETAINING RING SHAFT DIN 6799 4 SS	
330	90141-0016		2	RETAINING RING FOR SHAFT DIN 471 10 SS	
400	312155-0287		9	SCREW DIN 7991 MF6S M4X8 A4 70	
405	312105-0293		2	SCREW M6S ISO 4017 M4X16 A470	
410	312105-0329		4	SCREW M6S ISO 4017 M5X16 A480	
420	312105-0368		5	SCREW M6S ISO 4017 M6X16 A480	
425	312115-0230		2	SCREW ISO4762 M3X20 A4 80	
430	312115-0327		16	SCREW ISO4762 M5X12 A4 80	
450	312125-0232		4	SCREW ISO 1207 M3X25 A4	
460	312125-0287		12	SCREW ISO 1207 M4X8 A4	
470	312115-0367		2	SCREW ISO4762 M6X14 A4 80	
475	312105-0367		2	REW M6S ISO 4017 M6X14 A480	
480	312318-0285		2	SCREW ISO4029 M4X6 A4	
490	312605-0310		2	HEXAGON NUT, M6M M3 A280	
500	312605-0316		2	HEXAGON NUT, M6M M6 A280	
550	315105-0124		8	WASHER BRB 3,2X6 RFR	
555	315105-0136		2	WASHER BRB 4,3X8 RFR	
570	315105-0146		12	WASHER BRB 5,3X10 RFR	
580	315105-0153		4	WASHER BRB 6,4X12 RFR	
600	315755-0107		1	RETAINING RING SHAFT DIN 6799 5 SS	
610	90015-0020		1	LEAD-IN, TET5-7, E-1458016	
620	312105-0374		1	SCREW M6S ISO 4014 M6X30 A480	
MB111	90044-0194		1	INDUCTIVE SENSOR, IN 5329	
MB109	90044-0194		1	INDUCTIVE SENSOR, IN 5329	
MB032	90044-0194		1	INDUCTIVE SENSOR, IN 5329	

Machine Type | Group Description | Used-In | Group Number | Page No

MOUNTING PLATE

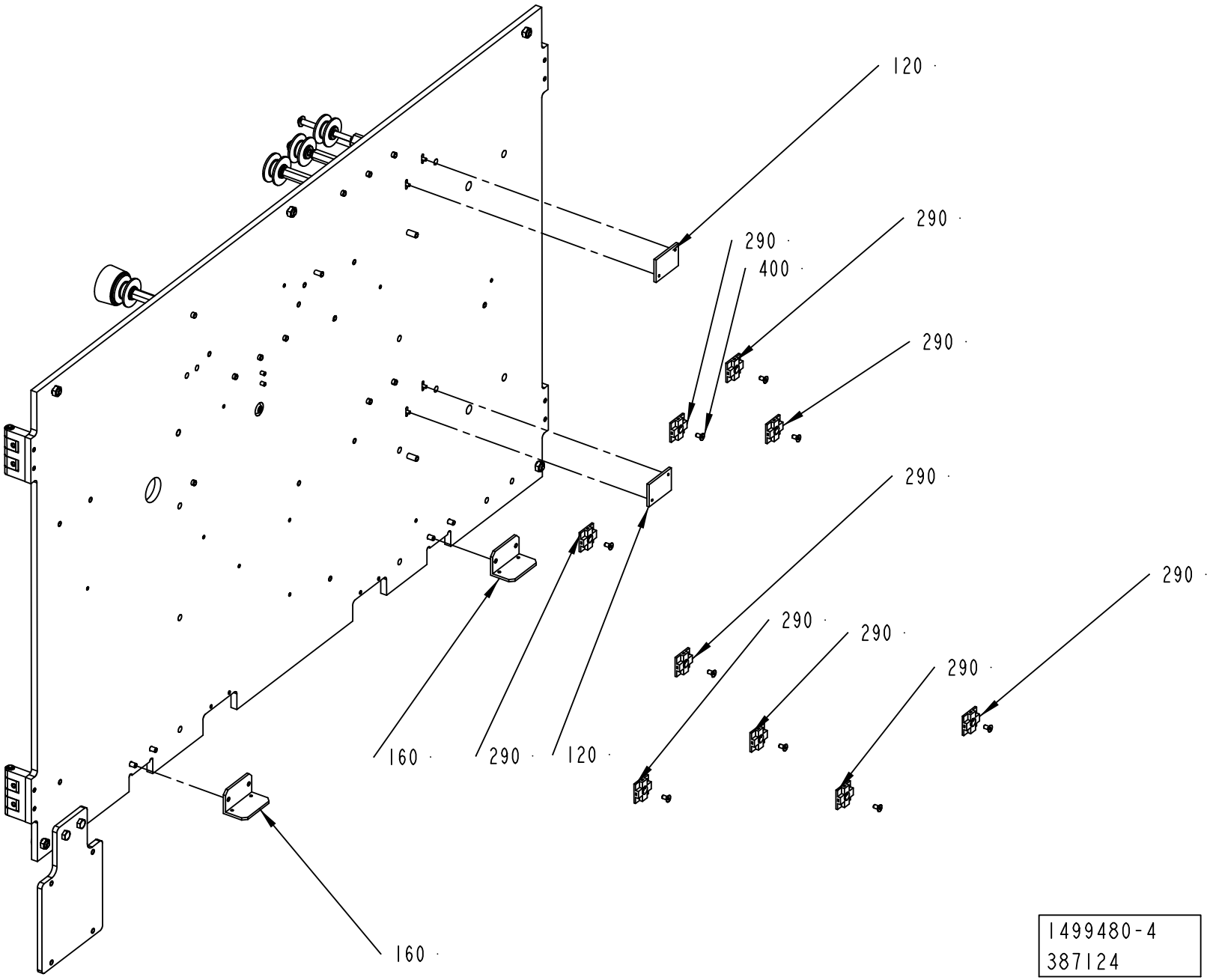

1499480-4
387124

ECM: 404989 - 20090706
Group number: 1499480-0200
Assembly Drawing: 1499480-4_2_AA

This list covers pages from 1-194 to 1-201

Pos	Part No	UN	Qty	Description	Page No
NOPT (See drawing on pages: 1-194, 1-196)					
020	1498764-0000		1	COVER	
200	1498775-0000		1	BOX BRACKET	
PT19 (See drawing on pages: 1-198, 1-200)					
200	2552624-0000		1	BOX BRACKET	
Common Parts					
010	3017352-0000		1	MOUNTING PLATE	
030	1498762-0000		1	AXLE PIN	
040	2547218-0000		7	AXLE PIN	
050	2547219-0000		2	AXLE PIN	
060	1512583-0000		11	ROLLER	
	321120-0101		*2*	*BEARING BUSH W/O FLANGE, 6X8X6 MM*	
070	1499481-0000		1	ROLLER	
080	469159-0000		2	PIN	
090	2547217-0000		2	AXLE PIN	
100	979667-0000		2	ARM	
110	979668-0000		2	FINGER	
120	979669-0000		2	FORCE PLATE	
130	1499512-0000		4	PIN	
140	1499514-0000		4	E-HINGE	
150	1035794-0000		8	BLOCKING PIECE	
160	2519644-0000		2	BRACKET	
170	1517464-0000		1	SIGN	
180	1538219-0000		1	SWITCH BRACKET	
190	1517293-0000		1	ROLLER	
	1512583-0000		*1*	*ROLLER*	
	321120-0101		*2*	*BEARING BUSH W/O FLANGE, 6X8X6 MM*	
195	2506478-0000		1	COVER	
220	2588000-0000		1	BRACKET	
230	2588001-0000		1	AXLE PIN	
280	2033-0013		2	WASHER	
290	352113-0206		9	ANCHOR PLATES FOR STRIPS, ABM100-AT	
300	90005-0082		12	WASHER PLAIN ROUND 4,3(M4)/12,H=1	
320	315755-0106		8	RETAINING RING SHAFT DIN 6799 4 SS	
330	90141-0016		2	RETAINING RING FOR SHAFT DIN 471 10 SS	
400	312155-0287		9	SCREW DIN 7991 MF6S M4X8 A4 70	
405	312105-0293		2	SCREW M6S ISO 4017 M4X16 A470	
410	312105-0329		4	SCREW M6S ISO 4017 M5X16 A480	
420	312105-0368		5	SCREW M6S ISO 4017 M6X16 A480	
425	312115-0230		2	SCREW ISO4762 M3X20 A4 80	
430	312115-0327		16	SCREW ISO4762 M5X12 A4 80	
450	312125-0232		4	SCREW ISO 1207 M3X25 A4	
460	312125-0287		12	SCREW ISO 1207 M4X8 A4	
470	312115-0367		2	SCREW ISO4762 M6X14 A4 80	
475	312105-0367		2	REW M6S ISO 4017 M6X14 A480	
480	312318-0285		2	SCREW ISO4029 M4X6 A4	
490	312605-0310		2	HEXAGON NUT, M6M M3 A280	
500	312605-0316		2	HEXAGON NUT, M6M M6 A280	
550	315105-0124		8	WASHER BRB 3,2X6 RFR	
555	315105-0136		2	WASHER BRB 4,3X8 RFR	
570	315105-0146		12	WASHER BRB 5,3X10 RFR	
580	315105-0153		4	WASHER BRB 6,4X12 RFR	
600	315755-0107		1	RETAINING RING SHAFT DIN 6799 5 SS	
610	90015-0020		1	LEAD-IN, TET5-7, E-1458016	
620	312105-0374		1	SCREW M6S ISO 4014 M6X30 A480	
MB111	90044-0194		1	INDUCTIVE SENSOR, IN 5329	
MB109	90044-0194		1	INDUCTIVE SENSOR, IN 5329	
MB032	90044-0194		1	INDUCTIVE SENSOR, IN 5329	

Machine Type | Group Description | Used-In | Group Number | Page No

MOUNTING PLATE

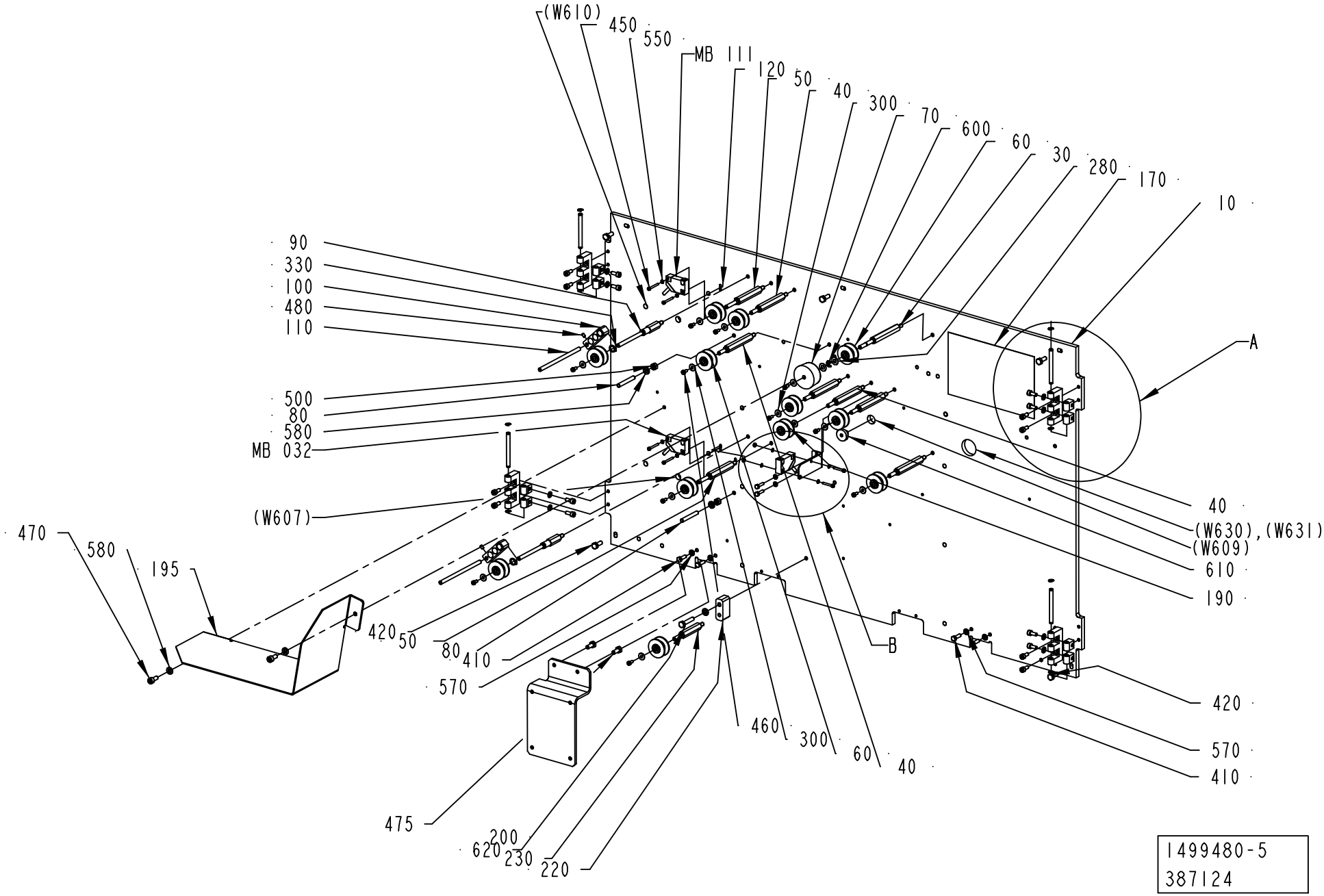

ECM: 404989 - 20090706
Group number: 1499480-0200
Assembly Drawing: 1499480-5_1_AA

This list covers pages from 1-194 to 1-201

Pos	Part No	UN	Qty	Description	Page No
NOPT (See drawing on pages: 1-194, 1-196)					
020	1498764-0000		1	COVER	
200	1498775-0000		1	BOX BRACKET	
PT19 (See drawing on pages: 1-198, 1-200)					
200	2552624-0000		1	BOX BRACKET	
Common Parts					
010	3017352-0000		1	MOUNTING PLATE	
030	1498762-0000		1	AXLE PIN	
040	2547218-0000		7	AXLE PIN	
050	2547219-0000		2	AXLE PIN	
060	1512583-0000		11	ROLLER	
	321120-0101		*2*	*BEARING BUSH W/O FLANGE, 6X8X6 MM*	
070	1499481-0000		1	ROLLER	
080	469159-0000		2	PIN	
090	2547217-0000		2	AXLE PIN	
100	979667-0000		2	ARM	
110	979668-0000		2	FINGER	
120	979669-0000		2	FORCE PLATE	
130	1499512-0000		4	PIN	
140	1499514-0000		4	E-HINGE	
150	1035794-0000		8	BLOCKING PIECE	
160	2519644-0000		2	BRACKET	
170	1517464-0000		1	SIGN	
180	1538219-0000		1	SWITCH BRACKET	
190	1517293-0000		1	ROLLER	
	1512583-0000		*1*	*ROLLER*	
	321120-0101		*2*	*BEARING BUSH W/O FLANGE, 6X8X6 MM*	
195	2506478-0000		1	COVER	
220	2588000-0000		1	BRACKET	
230	2588001-0000		1	AXLE PIN	
280	2033-0013		2	WASHER	
290	352113-0206		9	ANCHOR PLATES FOR STRIPS, ABM100-AT	
300	90005-0082		12	WASHER PLAIN ROUND 4,3(M4)/12,H=1	
320	315755-0106		8	RETAINING RING SHAFT DIN 6799 4 SS	
330	90141-0016		2	RETAINING RING FOR SHAFT DIN 471 10 SS	
400	312155-0287		9	SCREW DIN 7991 MF6S M4X8 A4 70	
405	312105-0293		2	SCREW M6S ISO 4017 M4X16 A470	
410	312105-0329		4	SCREW M6S ISO 4017 M5X16 A480	
420	312105-0368		5	SCREW M6S ISO 4017 M6X16 A480	
425	312115-0230		2	SCREW ISO4762 M3X20 A4 80	
430	312115-0327		16	SCREW ISO4762 M5X12 A4 80	
450	312125-0232		4	SCREW ISO 1207 M3X25 A4	
460	312125-0287		12	SCREW ISO 1207 M4X8 A4	
470	312115-0367		2	SCREW ISO4762 M6X14 A4 80	
475	312105-0367		2	REW M6S ISO 4017 M6X14 A480	
480	312318-0285		2	SCREW ISO4029 M4X6 A4	
490	312605-0310		2	HEXAGON NUT, M6M M3 A280	
500	312605-0316		2	HEXAGON NUT, M6M M6 A280	
550	315105-0124		8	WASHER BRB 3,2X6 RFR	
555	315105-0136		2	WASHER BRB 4,3X8 RFR	
570	315105-0146		12	WASHER BRB 5,3X10 RFR	
580	315105-0153		4	WASHER BRB 6,4X12 RFR	
600	315755-0107		1	RETAINING RING SHAFT DIN 6799 5 SS	
610	90015-0020		1	LEAD-IN, TET5-7, E-1458016	
620	312105-0374		1	SCREW M6S ISO 4014 M6X30 A480	
MB111	90044-0194		1	INDUCTIVE SENSOR, IN 5329	
MB109	90044-0194		1	INDUCTIVE SENSOR, IN 5329	
MB032	90044-0194		1	INDUCTIVE SENSOR, IN 5329	

Machine Type | Group Description | Used-In | Group Number | Page No

MOUNTING PLATE

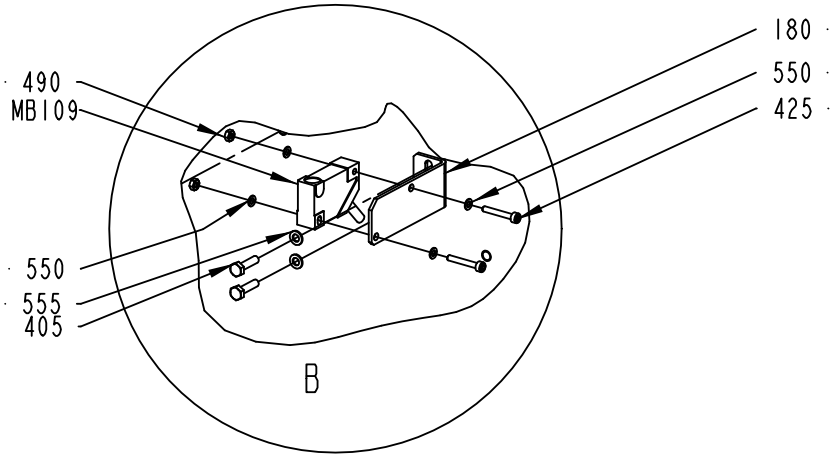

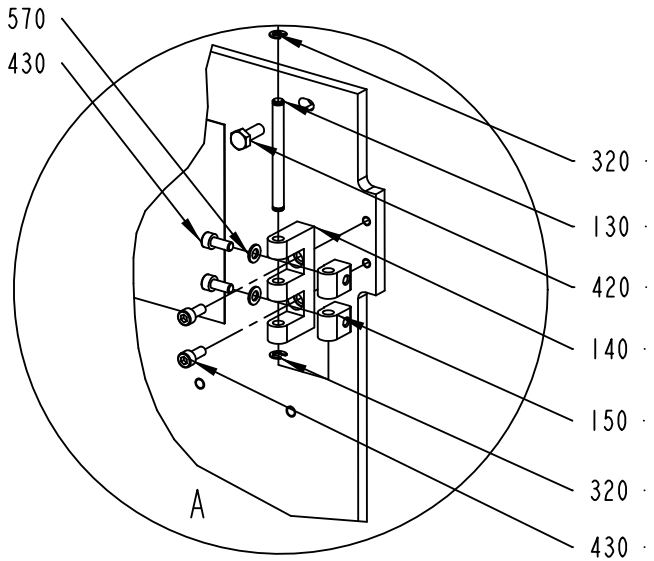

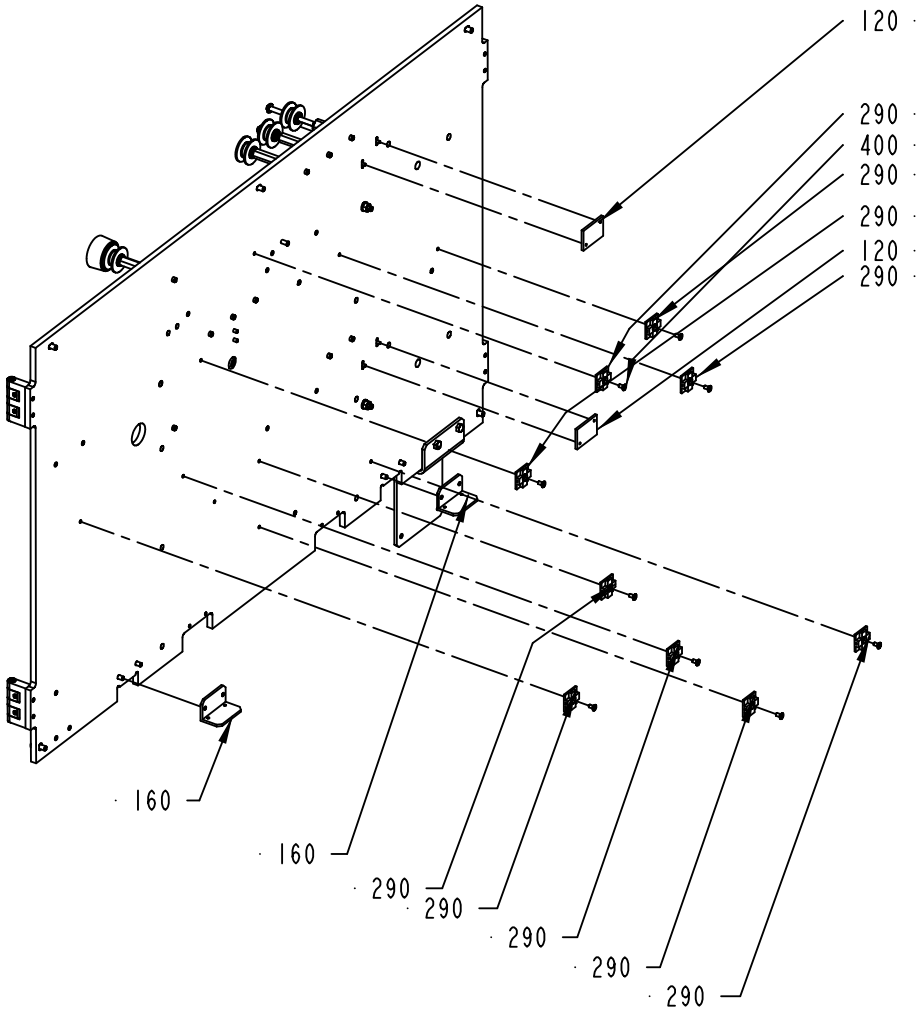

1499480-5
387124

ECM: 404989 - 20090706
Group number: 1499480-0200
Assembly Drawing: 1499480-5_2_AA

This list covers pages from 1-194 to 1-201

Pos	Part No	UN	Qty	Description	Page No
NOPT (See drawing on pages: 1-194, 1-196)					
020	1498764-0000		1	COVER	
200	1498775-0000		1	BOX BRACKET	
PT19 (See drawing on pages: 1-198, 1-200)					
200	2552624-0000		1	BOX BRACKET	
Common Parts					
010	3017352-0000		1	MOUNTING PLATE	
030	1498762-0000		1	AXLE PIN	
040	2547218-0000		7	AXLE PIN	
050	2547219-0000		2	AXLE PIN	
060	1512583-0000		11	ROLLER	
	321120-0101		*2*	*BEARING BUSH W/O FLANGE, 6X8X6 MM*	
070	1499481-0000		1	ROLLER	
080	469159-0000		2	PIN	
090	2547217-0000		2	AXLE PIN	
100	979667-0000		2	ARM	
110	979668-0000		2	FINGER	
120	979669-0000		2	FORCE PLATE	
130	1499512-0000		4	PIN	
140	1499514-0000		4	E-HINGE	
150	1035794-0000		8	BLOCKING PIECE	
160	2519644-0000		2	BRACKET	
170	1517464-0000		1	SIGN	
180	1538219-0000		1	SWITCH BRACKET	
190	1517293-0000		1	ROLLER	
	1512583-0000		*1*	*ROLLER*	
	321120-0101		*2*	*BEARING BUSH W/O FLANGE, 6X8X6 MM*	
195	2506478-0000		1	COVER	
220	2588000-0000		1	BRACKET	
230	2588001-0000		1	AXLE PIN	
280	2033-0013		2	WASHER	
290	352113-0206		9	ANCHOR PLATES FOR STRIPS, ABM100-AT	
300	90005-0082		12	WASHER PLAIN ROUND 4,3(M4)/12,H=1	
320	315755-0106		8	RETAINING RING SHAFT DIN 6799 4 SS	
330	90141-0016		2	RETAINING RING FOR SHAFT DIN 471 10 SS	
400	312155-0287		9	SCREW DIN 7991 MF6S M4X8 A4 70	
405	312105-0293		2	SCREW M6S ISO 4017 M4X16 A470	
410	312105-0329		4	SCREW M6S ISO 4017 M5X16 A480	
420	312105-0368		5	SCREW M6S ISO 4017 M6X16 A480	
425	312115-0230		2	SCREW ISO4762 M3X20 A4 80	
430	312115-0327		16	SCREW ISO4762 M5X12 A4 80	
450	312125-0232		4	SCREW ISO 1207 M3X25 A4	
460	312125-0287		12	SCREW ISO 1207 M4X8 A4	
470	312115-0367		2	SCREW ISO4762 M6X14 A4 80	
475	312105-0367		2	REW M6S ISO 4017 M6X14 A480	
480	312318-0285		2	SCREW ISO4029 M4X6 A4	
490	312605-0310		2	HEXAGON NUT, M6M M3 A280	
500	312605-0316		2	HEXAGON NUT, M6M M6 A280	
550	315105-0124		8	WASHER BRB 3,2X6 RFR	
555	315105-0136		2	WASHER BRB 4,3X8 RFR	
570	315105-0146		12	WASHER BRB 5,3X10 RFR	
580	315105-0153		4	WASHER BRB 6,4X12 RFR	
600	315755-0107		1	RETAINING RING SHAFT DIN 6799 5 SS	
610	90015-0020		1	LEAD-IN, TET5-7, E-1458016	
620	312105-0374		1	SCREW M6S ISO 4014 M6X30 A480	
MB111	90044-0194		1	INDUCTIVE SENSOR, IN 5329	
MB109	90044-0194		1	INDUCTIVE SENSOR, IN 5329	
MB032	90044-0194		1	INDUCTIVE SENSOR, IN 5329	

Machine Type	Group Description	Used-In	Group Number	Page No

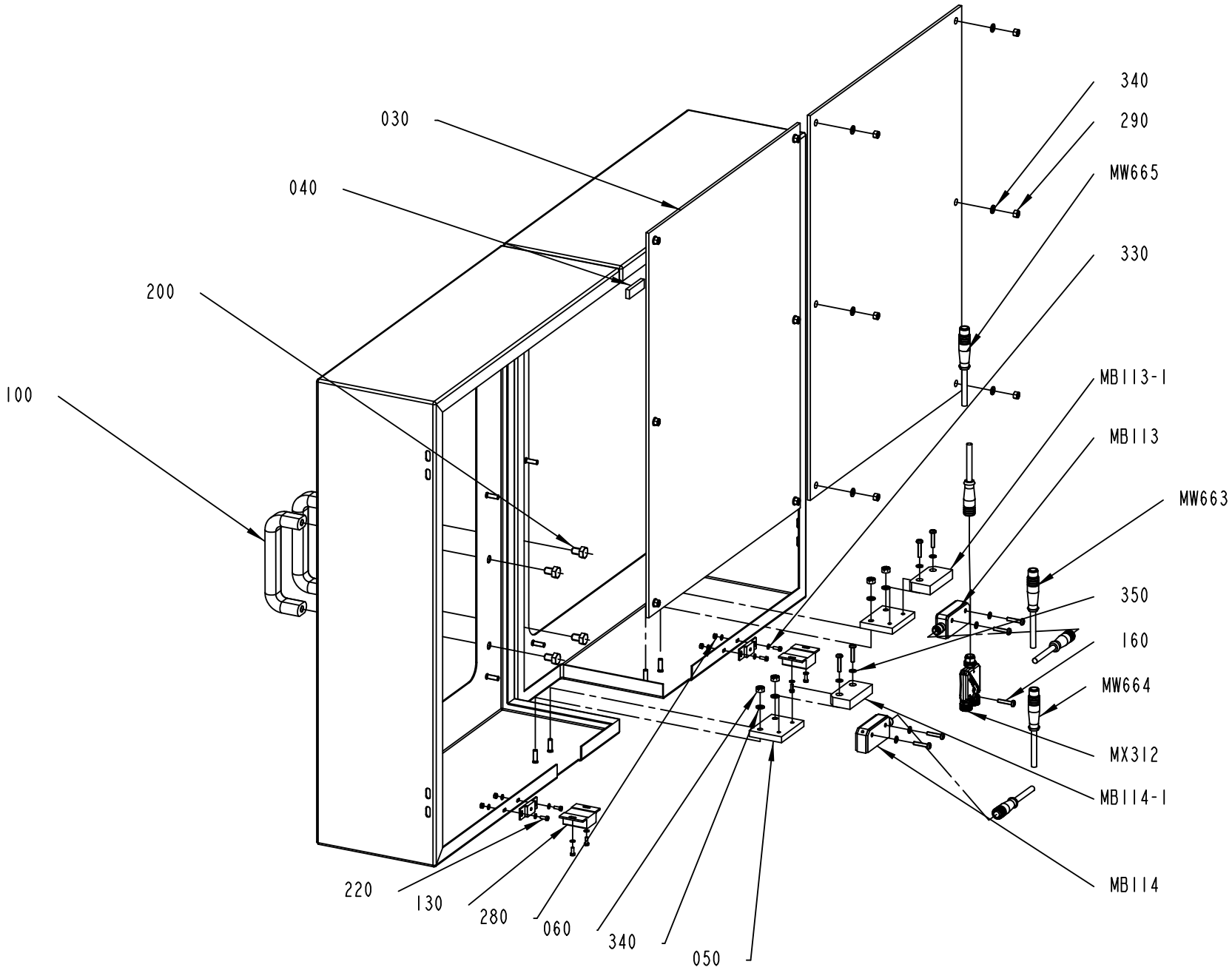

1498751-3
387124

ECM: 404988 - 20090706
Group number: 1498751-0300
Assembly Drawing: 1498751-3_1_AA

Pos	Part No	UN	Qty	Description	Page No
-					
030	1499511-0000		2	PANEL	
040	1511323-0000		2	STRIP ADHESIVE	
050	3017351-0000		2	BRACKET	
060	575034-0000		4	ROUND NUT	
070	3017353-0000		1	DOOR	
080	3017354-0000		1	DOOR	
100	90017-0022		2	HANDLE, NO. EL-037311	
130	90237-0046		2	MAGNETIC LOCK, 46X33X15 MM	
160	90459-4164		9	SAFETY SCREW SM4X20, 20-053-42	
200	312105-0447		4	SCREW M6S ISO 4017 M8X12 A480	
220	312125-0222		8	SCREW ISO 1207 M3X8 A4	
280	312605-0310		4	HEXAGON NUT, M6M M3 A280	
290	312605-0314		12	HEXAGON NUT, M6M M5 A280	
330	315105-0124		12	WASHER BRB 3,2X6 RFR	
340	315105-0146		10	WASHER BRB 5,3X10 RFR	
350	315105-0136		8	WASHER BRB 4,3X8 RFR	
M.X312	90601-0026		1	TINA 11A DISTRIBUTOR BLOCK, 20-054-17	
M.W665	90459-4876		1	FOCUS JUMPER CABLE M12 5P 3M, 20-056-21	
M.W664	90459-7095		1	FOCUS JUMPER CABLE M12 5P 1M, 20-056-20	
M.W663	90459-7095		1	FOCUS JUMPER CABLE M12 5P 1M, 20-056-20	
M.B114:1	90458-2794		1	SENSOR, EVA 20-046-00	
M.B114	90459-4142		1	SENSOR, ADAM M12 20-051-00	
M.B113:1	90458-2794		1	SENSOR, EVA 20-046-00	
M.B113	90459-4142		1	SENSOR, ADAM M12 20-051-00	

Pos	Part No	UN	Qty	Description	Page No

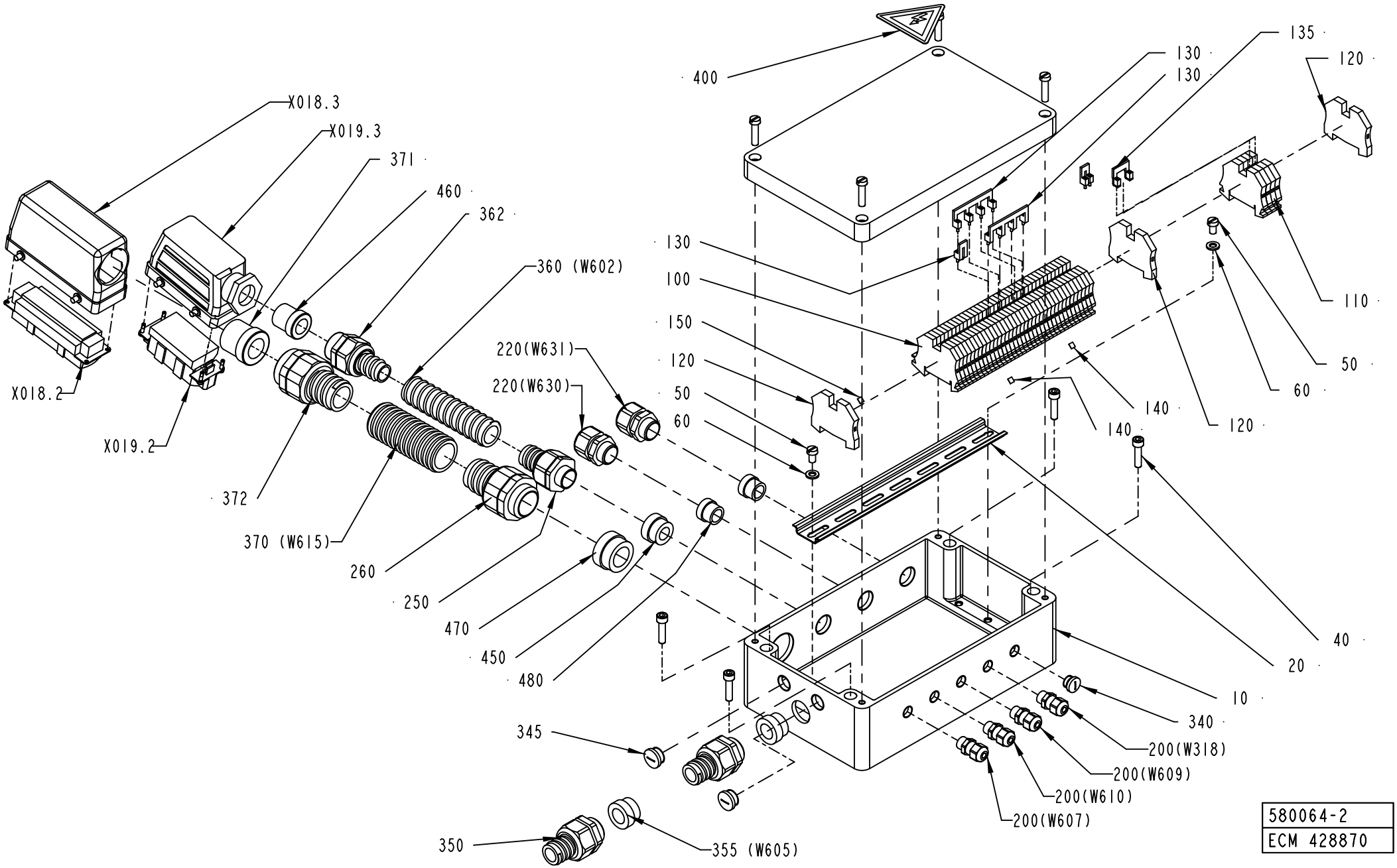

580064-2
ECM 428870

ECM: 430685 - 20091221
Group number: 580064-0200
Assembly Drawing: 580064-2_1_AF

This list covers pages from 1-204 to 1-207

Pos	Part No	UN	Qty	Description	Page No
-					
010	1512283-0000		1	CONNECTION BOX	
020	1512352-0000		1	RAIL	
040	312115-0372		4	SCREW ISO4762 M6X25 A4 80	
050	312125-0364		2	SCREW ISO 1207 M6X10 A4	
060	315105-0153		2	WASHER BRB 6,4X12 RFR	
100	353021-0212		36	FEED THROUGH TERMINAL, WDU 2,5	
110	353021-0213		4	FEED THROUGH TERMINAL, WDU 4	
120	353024-0205		3	EARTH TERMINAL WPE 4	
130	353034-0030		3	BRIDGE CONNECTOR WQV 2,5/10	
135	353034-0039		1	BRIDGE CONNECTOR WQV 4/4	
140	359011-0807		2	MARKING, DEK 5 FW 1-50	
150	359011-0819		1	MARKING, EARTH, DEK 5 GW ERDE I.KR.	
200	90458-0305		4	CABLE GLAND, M12X1,5, 5311 1000	
220	90458-0422		2	CABLE GLAND, VK 22053Y	
250	90458-0430		1	GLAND FITTING, VK 22054YUL16	
260	90458-0433		1	GLAND FITTING, VK 23255YUL21	
340	90458-1306		1	BLIND PLUG CIRCULAR, M12X1,5 514GFK/212	
345	90458-1307		2	BLIND PLUG CIRCULAR, M16X1,5 514GFK/216	
350	90458-0431		1	GLAND FITTING, VK 22554YUL16	
355	353249-0014		1	INSERT, SINGLE HOLE, EK154 16	
360	90152-0051	MM	1800	HOSE, SPIRAL CONDUIT, 25X18, UL 1816	
362	90458-0146		1	GLAND FITTING, VK 154YUL16	
370	90152-0070	MM	2100	HOSE, SPIRAL CONDUIT, 32,5X26, UL 2621	
371	353249-0072		1	INSERT, SINGLE HOLE, E155 20	
372	353242-0003		1	COMPRESSION GLAND, VK 155YUL21	
400	359705-0015		1	WARNING SIGN ISO, RISK OF ELECTRIC SHOCK	
450	353249-0013		1	INSERT, SINGLE HOLE, EK154 13	
460	353249-0070		1	INSERT, SINGLE HOLE, E154 16	
470	353249-0061		1	INSERT, SINGLE HOLE, EK155 20	
480	353249-0075		2	INSERT, SINGLE HOLE, EK153 13	
W602	351150-0422	MM	2300	CABLE OLFLEX 3X4 MM2 LIGHT/GREY	
W605	351150-0407	MM	1900	CABLE OLFLEX 12X0,75 MM2 LIGHT/GREY	
W615	351150-0425	MM	2600	CABLE OLFLEX 25X0,75 MM2 LIGHT/GREY	
X018.2	90110-0150		1	MALE INSERT, HDC HE 24 MS, 1211 1000 00	
X018.3	90110-0346		1	HOOD, SIDE ENTRY, 12 11220 00 00	
X019.2	90110-0156		1	MALE INSERT 70.210.0653.0	
X019.3	90110-0244		1	CABLE HOOD 6-POL 70.350.1628.0	

Pos	Part No	UN	Qty	Description	Page No

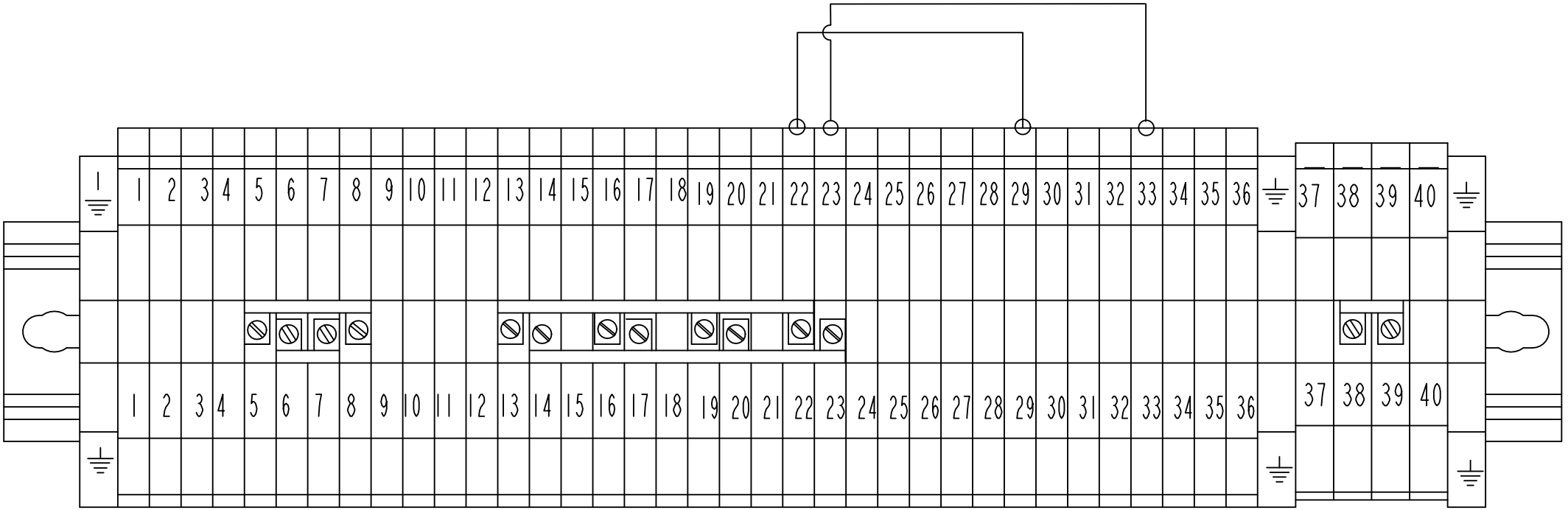

580064-2
ECM 428870

ECM: 430685 - 20091221
Group number: 580064-0200
Assembly Drawing: 580064-2_2_AF

This list covers pages from 1-204 to 1-207

Pos	Part No	UN	Qty	Description	Page No
-					
010	1512283-0000		1	CONNECTION BOX	
020	1512352-0000		1	RAIL	
040	312115-0372		4	SCREW ISO4762 M6X25 A4 80	
050	312125-0364		2	SCREW ISO 1207 M6X10 A4	
060	315105-0153		2	WASHER BRB 6,4X12 RFR	
100	353021-0212		36	FEED THROUGH TERMINAL, WDU 2,5	
110	353021-0213		4	FEED THROUGH TERMINAL, WDU 4	
120	353024-0205		3	EARTH TERMINAL WPE 4	
130	353034-0030		3	BRIDGE CONNECTOR WQV 2,5/10	
135	353034-0039		1	BRIDGE CONNECTOR WQV 4/4	
140	359011-0807		2	MARKING, DEK 5 FW 1-50	
150	359011-0819		1	MARKING, EARTH, DEK 5 GW ERDE I.KR.	
200	90458-0305		4	CABLE GLAND, M12X1,5, 5311 1000	
220	90458-0422		2	CABLE GLAND, VK 22053Y	
250	90458-0430		1	GLAND FITTING, VK 22054YUL16	
260	90458-0433		1	GLAND FITTING, VK 23255YUL21	
340	90458-1306		1	BLIND PLUG CIRCULAR, M12X1,5 514GFK/212	
345	90458-1307		2	BLIND PLUG CIRCULAR, M16X1,5 514GFK/216	
350	90458-0431		1	GLAND FITTING, VK 22554YUL16	
355	353249-0014		1	INSERT, SINGLE HOLE, EK154 16	
360	90152-0051	MM	1800	HOSE, SPIRAL CONDUIT, 25X18, UL 1816	
362	90458-0146		1	GLAND FITTING, VK 154YUL16	
370	90152-0070	MM	2100	HOSE, SPIRAL CONDUIT, 32,5X26, UL 2621	
371	353249-0072		1	INSERT, SINGLE HOLE, E155 20	
372	353242-0003		1	COMPRESSION GLAND, VK 155YUL21	
400	359705-0015		1	WARNING SIGN ISO, RISK OF ELECTRIC SHOCK	
450	353249-0013		1	INSERT, SINGLE HOLE, EK154 13	
460	353249-0070		1	INSERT, SINGLE HOLE, E154 16	
470	353249-0061		1	INSERT, SINGLE HOLE, EK155 20	
480	353249-0075		2	INSERT, SINGLE HOLE, EK153 13	
W602	351150-0422	MM	2300	CABLE OLFLEX 3X4 MM2 LIGHT/GREY	
W605	351150-0407	MM	1900	CABLE OLFLEX 12X0,75 MM2 LIGHT/GREY	
W615	351150-0425	MM	2600	CABLE OLFLEX 25X0,75 MM2 LIGHT/GREY	
X018.2	90110-0150		1	MALE INSERT, HDC HE 24 MS, 1211 1000 00	
X018.3	90110-0346		1	HOOD, SIDE ENTRY, 12 11220 00 00	
X019.2	90110-0156		1	MALE INSERT 70.210.0653.0	
X019.3	90110-0244		1	CABLE HOOD 6-POL 70.350.1628.0	

Pos	Part No	UN	Qty	Description	Page No

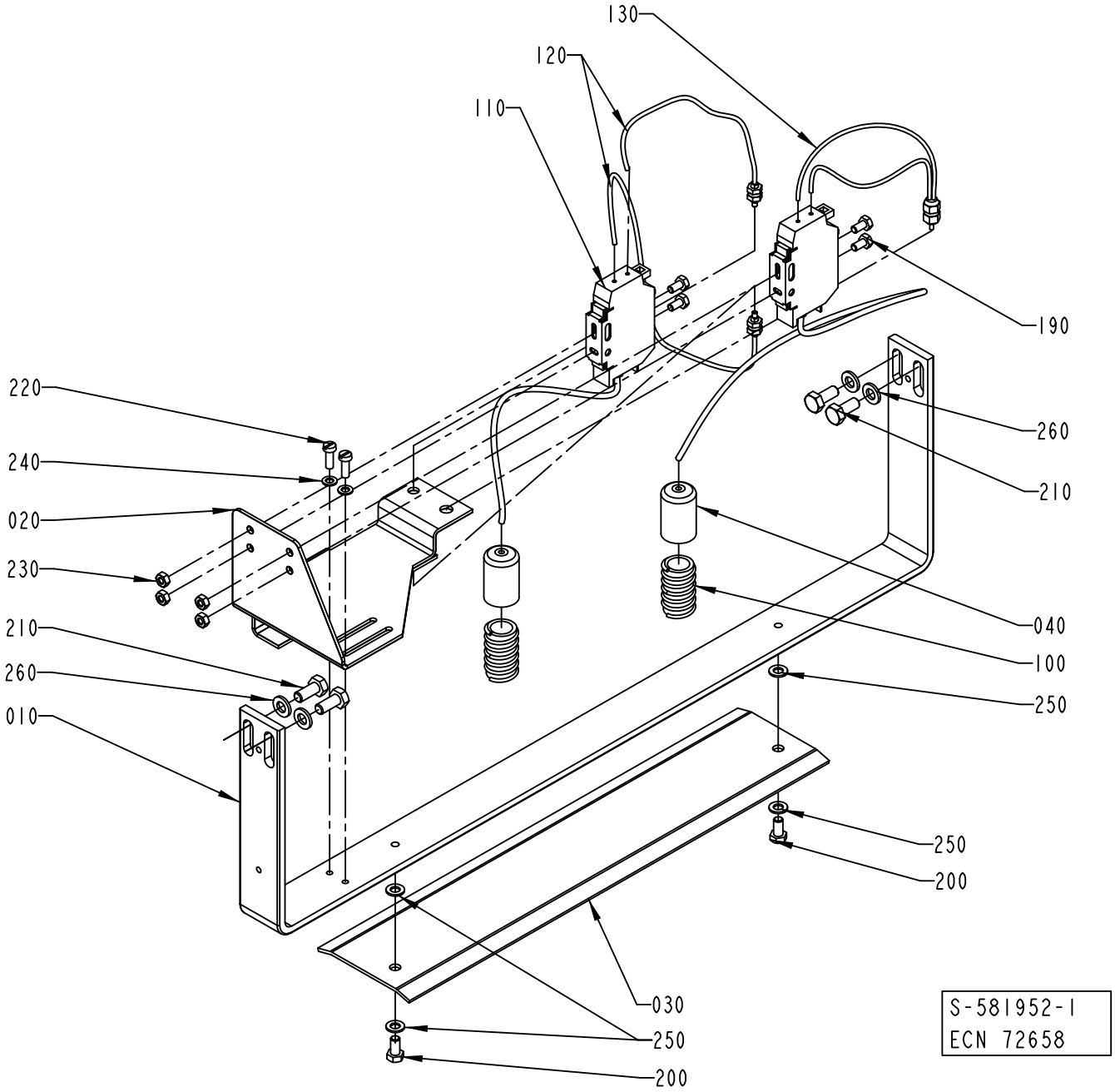
130
120
110
190
220
240
020
230
210
260
010
260
210
040
100
250
250
200
030
250
200
S-581952-I
ECN 72658

ECM: 243182 - 20060127
Group number: 581952-0100
Assembly Drawing: 581952-1_1_AD

This list covers pages from 1-208 to 1-211

Pos	Part No	UN	Qty	Description	Page No
TBA (See drawing on page: 1-208)					
010	583700-0000		1	ARM	
020	1498141-0000		1	BRACKET	
030	563738-0000		1	RAIL	
040	979593-0000		2	CAP	
100	90152-0033	M	1.5	SPIRAL CONDUIT FOR PR 15,2(PG 9)	
110	90232-0123		2	PH.CELL WLL170-P135-6011723	
120	90232-0347		1	FIBRE, LL3-TB01, 5308 050	
190	312105-0287		4	SCREW M6S ISO 4017 M4X8 A470	
220	312125-0291		7	SCREW ISO 1207 M4X12 A4	
230	312605-0312		4	HEXAGON NUT, M6M M4 A280	
240	315105-0136		10	WASHER BRB 4,3X8 RFR	
250	315105-0146		6	WASHER BRB 5,3X10 RFR	
TPA (See drawing on page: 1-210)					
010	583700-0000		1	ARM	
020	1498142-0000		1	BRACKET	
030	563738-0000		1	RAIL	
040	979593-0000		2	CAP	
100	90152-0033	M	1.5	SPIRAL CONDUIT FOR PR 15,2(PG 9)	
110	90232-0123		2	PH.CELL WLL170-P135-6011723	
120	90232-0347		1	FIBRE, LL3-TB01, 5308 050	
190	312105-0287		4	SCREW M6S ISO 4017 M4X8 A470	
220	312125-0291		7	SCREW ISO 1207 M4X12 A4	
230	312605-0312		4	HEXAGON NUT, M6M M4 A280	
240	315105-0136		10	WASHER BRB 4,3X8 RFR	
250	315105-0146		6	WASHER BRB 5,3X10 RFR	
Common Parts					
130	90232-0346		1	FIBRE, LL3-DB01, 5308 074	
200	312105-0325		2	SCREW M6S ISO 4017 M5X10 A480	
210	312105-0367		4	REW M6S ISO 4017 M6X14 A480	
260	315105-0153		4	WASHER BRB 6,4X12 RFR	

Pos	Part No	UN	Qty	Description	Page No

DETECTOR UNIT

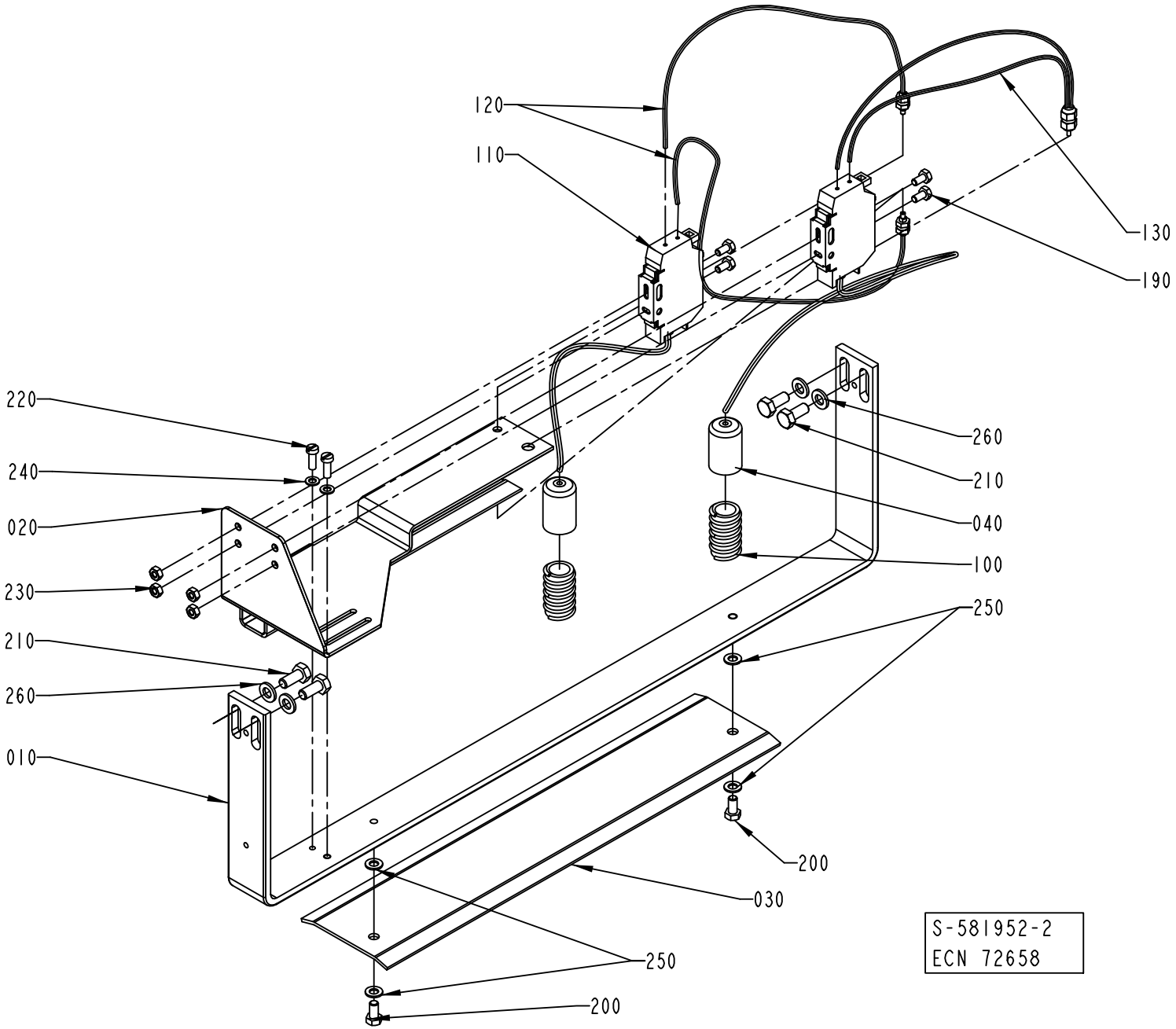

ECM: 243182 - 20060127
Group number: 581952-0100
Assembly Drawing: 581952-2_1_AB

This list covers pages from 1-208 to 1-211

Pos	Part No	UN	Qty	Description	Page No
TBA (See drawing on page: 1-208)					
010	583700-0000		1	ARM	
020	1498141-0000		1	BRACKET	
030	563738-0000		1	RAIL	
040	979593-0000		2	CAP	
100	90152-0033	M	1.5	SPIRAL CONDUIT FOR PR 15,2(PG 9)	
110	90232-0123		2	PH.CELL WLL170-P135-6011723	
120	90232-0347		1	FIBRE, LL3-TB01, 5308 050	
190	312105-0287		4	SCREW M6S ISO 4017 M4X8 A470	
220	312125-0291		7	SCREW ISO 1207 M4X12 A4	
230	312605-0312		4	HEXAGON NUT, M6M M4 A280	
240	315105-0136		10	WASHER BRB 4,3X8 RFR	
250	315105-0146		6	WASHER BRB 5,3X10 RFR	
TPA (See drawing on page: 1-210)					
010	583700-0000		1	ARM	
020	1498142-0000		1	BRACKET	
030	563738-0000		1	RAIL	
040	979593-0000		2	CAP	
100	90152-0033	M	1.5	SPIRAL CONDUIT FOR PR 15,2(PG 9)	
110	90232-0123		2	PH.CELL WLL170-P135-6011723	
120	90232-0347		1	FIBRE, LL3-TB01, 5308 050	
190	312105-0287		4	SCREW M6S ISO 4017 M4X8 A470	
220	312125-0291		7	SCREW ISO 1207 M4X12 A4	
230	312605-0312		4	HEXAGON NUT, M6M M4 A280	
240	315105-0136		10	WASHER BRB 4,3X8 RFR	
250	315105-0146		6	WASHER BRB 5,3X10 RFR	
Common Parts					
130	90232-0346		1	FIBRE, LL3-DB01, 5308 074	
200	312105-0325		2	SCREW M6S ISO 4017 M5X10 A480	
210	312105-0367		4	REW M6S ISO 4017 M6X14 A480	
260	315105-0153		4	WASHER BRB 6,4X12 RFR	

Pos	Part No	UN	Qty	Description	Page No

STRIP SPLICE DETECTOR

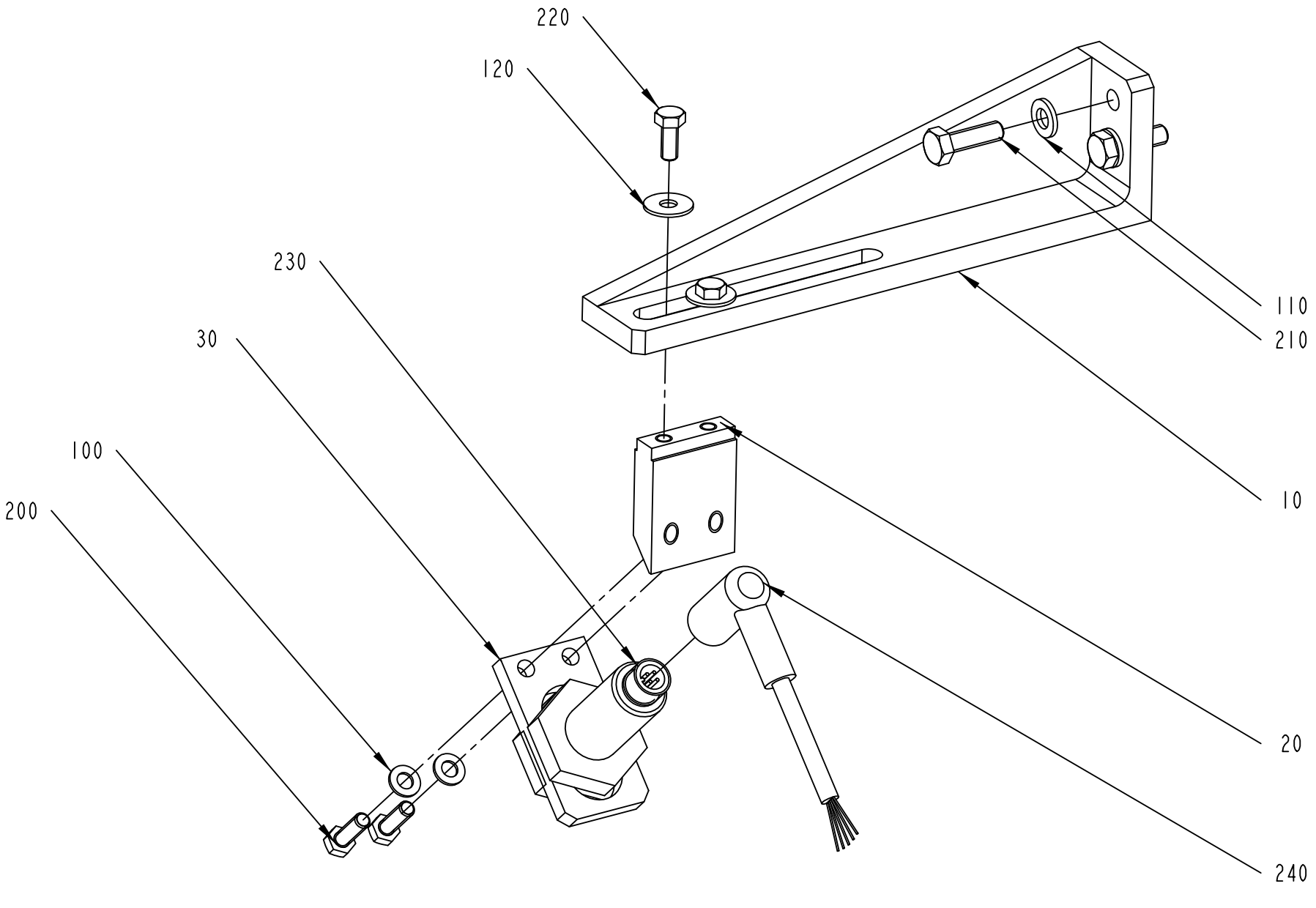

2618993-1
ECM 127562

ECM: 243219 - 20060127
Group number: 2618993-0100
Assembly Drawing: 2618993-1_1_AA

Pos	Part No	UN	Qty	Description	Page No
-					
010	2615473-0000		1	BRACKET	
020	2615472-0000		1	HOLDER	
030	2615471-0000		1	PLATE	
100	315105-0146		2	WASHER BRB 5,3X10 RFR	
110	315105-0153		2	WASHER BRB 6,4X12 RFR	
120	315125-0146		2	WASHER TBRSB 5.3X15X1 A4	
200	312105-0329		2	SCREW M6S ISO 4017 M5X16 A480	
210	312105-0370		2	SCREW M6S ISO 4017 M6X20 A480	
220	312105-0327		2	SCREW M6S ISO 4017 M5X12 A480	
230	90459-3041		1	ULTRASONIC SENSOR, SM657A-A08-01	
240	90459-3042		1	SENSOR CABLE AC117	

Pos	Part No	UN	Qty	Description	Page No

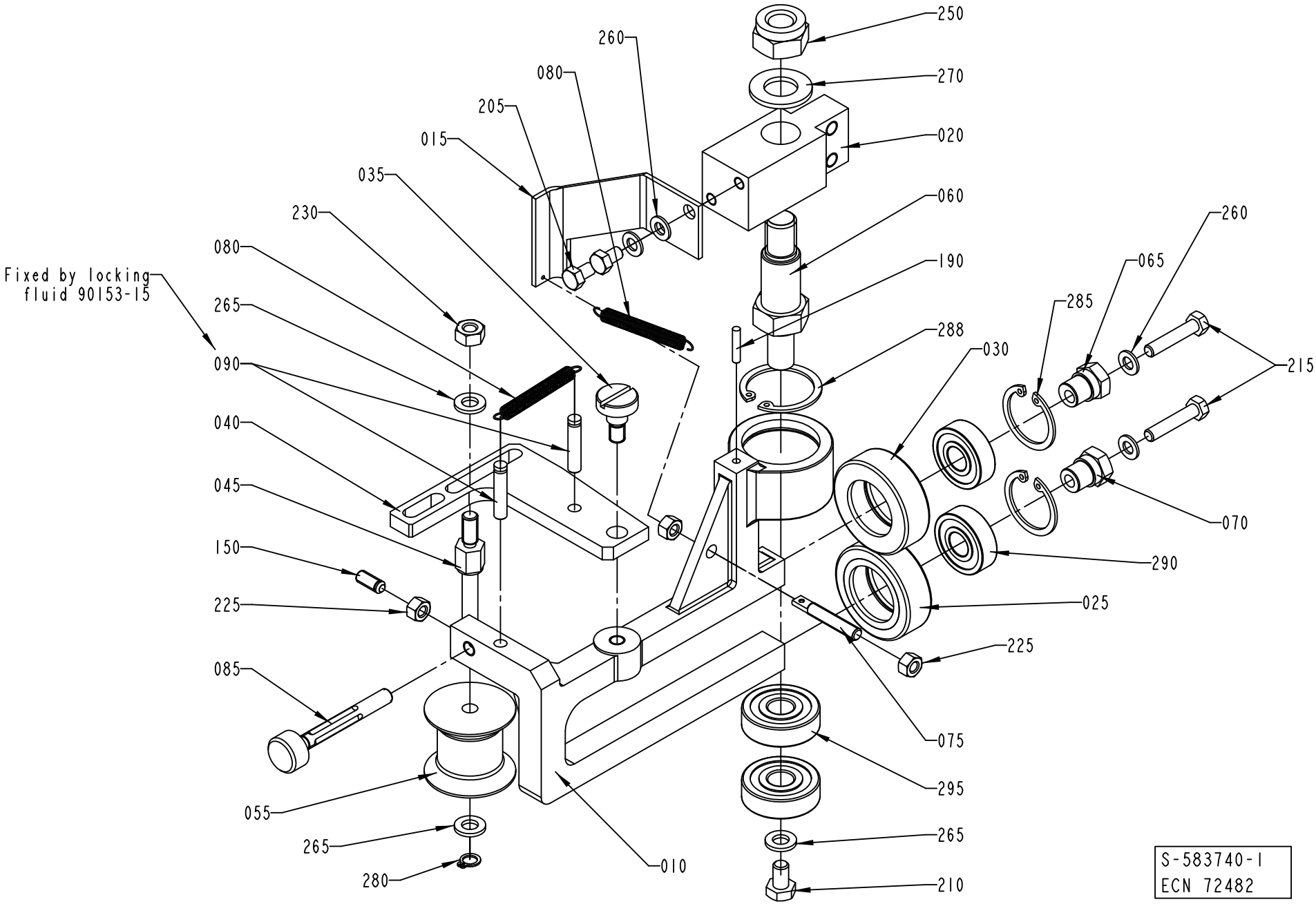
250
260
270
080
205
020
015
060
035
190
230
260
080
065
Fixed by locking
fluid 90153-15
285
265
288
030
215
090
040
070
045
290
150
025
225
225
085
075
295
055
265
265
010
280
210
S-583740-1
ECN 72482

ECM: 243186 - 20060127
Group number: 583740-0100
Assembly Drawing: 583740-1_1_AE

Pos	Part No	UN	Qty	Description	Page No
-					
010	1334255-0000		1	BOW CLAMP	
015	1334247-0000		1	BRACKET	
020	583733-0000		1	HOLDER	
025	583737-0000		1	ROLLER	
030	583738-0000		1	ROLLER	
035	556541-0000		1	SCREW	
040	1334124-0000		1	ARM	
045	979584-0000		1	SHAFT	
055	979582-0000		1	ROLLER	
060	583739-0000		1	SHAFT	
065	1346612-0000		1	SHAFT	
070	1334256-0000		1	SHAFT	
075	583749-0000		1	PIN	
080	90335-0216		2	TENSION SPRING 40910, 0,5X5,5X27,7	
085	589432-0000		1	SCREW	
090	590980-0000		2	PIN	
150	90287-0148		1	SCREW SPRINGLOAD. SLOTTED HEAD M5X12	
190	311103-0236		1	PARALLEL PIN ISO 2338 3M6X16 A1	
205	312105-0323		2	SCREW M6S ISO 4017 M5X8 A480	
210	312105-0364		1	SCREW M6S ISO 4017 M6X10 A480	
215	312105-0333		2	SCREW M6S ISO 4017 M5X25 A480	
225	312605-0314		3	HEXAGON NUT, M6M M5 A280	
230	312605-0316		2	HEXAGON NUT, M6M M6 A280	
250	312812-0322		1	HEXAGON NUT, NY-LOCK M12 A480	
260	315105-0146		4	WASHER BRB 5,3X10 RFR	
265	315105-0153		3	WASHER BRB 6,4X12 RFR	
270	315105-0178		1	WASHER BRB 13X24 RFR	
280	315751-0103		1	RETAINING RING FOR SHAFT DIN 471 6X 0.7C	
285	315752-0120		2	RETAINING RING FOR BORE DIN 472 26	
288	315753-0122		1	RETAINING RING FOR BORE DIN 472 30 SS	
290	321308-0200		2	BALL BEARING 10/26X8	
295	321313-0100		2	BALL BEARING 10/30X9	

Pos	Part No	UN	Qty	Description	Page No

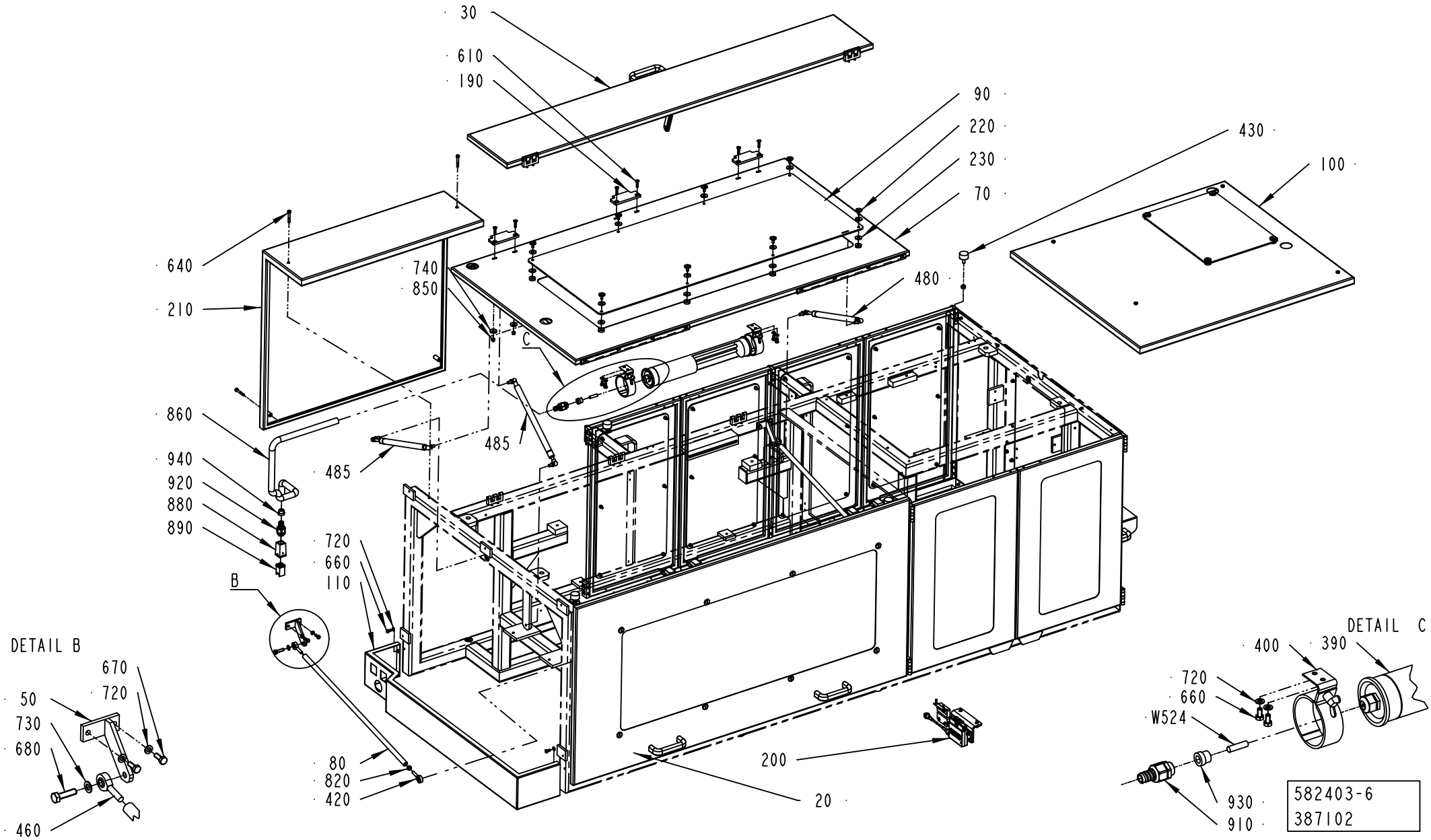
30
610
190
90
220
230
70
430
100
640
210
740
850
480
C
860
940
920
880
890
485
485
720
660
110
B
80
820
420
200
20
DETAIL B
670
720
50
730
680
460
DETAIL C
400
390
720
660
W524
930
910
582403-6
387102

ECM: 471334 - 20100930
Group number: 582403-0400
Assembly Drawing: 582403-6_1_AA

This list covers pages from 1-216 to 1-227

Pos	Part No	UN	Qty	Description	Page No
TBA (See drawing on pages: 1-216, 1-218, 1-220)					
010	3017365-0000		4	DOOR	
040	2529623-0000		6	GLASS PANE	
210	2611466-0000		1	COVER	
240	3017358-0000		6	HANDLE	
300	1035792-0000		10	E-HINGE	
310	988685-0000		10	PIN	
320	1499514-0000		3	E-HINGE	
330	1499512-0000		3	PIN	
340	1035794-0000		20	BLOCKING PIECE	
350	2529621-0000		2	BLOCKING PIECE	
360	90017-0022		3	HANDLE, NO. EL-037311	
370	315755-0106		6	RETAINING RING SHAFT DIN 6799 4 SS	
410	90237-0046		6	MAGNETIC LOCK, 46X33X15 MM	
430	90347-0004		4	VIBRATION DAMPER D=30 TH=M8 H=17 H2=21MM	
530	312115-0327		54	SCREW ISO4762 M5X12 A4 80	
540	312125-0222		12	SCREW ISO 1207 M3X8 A4	
590	312125-0226		12	SCREW ISO 1207 M3X12 A4	
620	312155-0327		12	SCREW DIN 7991 MF6S M5X12 A4 70	
640	312105-0378		4	SCREW M6S ISO 4014 M6X40 A480	
650	312105-0447		6	SCREW M6S ISO 4017 M8X12 A480	
700	315105-0124		36	WASHER BRB 3,2X6 RFR	
710	315105-0146		58	WASHER BRB 5,3X10 RFR	
820	312605-0318		6	HEXAGON NUT, M6M M8 A280	
830	312605-0314		12	HEXAGON NUT, M6M M5 A280	
840	312605-0310		12	HEXAGON NUT, M6M M3 A280	
950	315402-0146		12	LOCK WASHER, DIN127B 5,1 A4, M5-3/16	
TPA (See drawing on pages: 1-222, 1-224, 1-226)					
010	3017365-0000		6	DOOR	
035	2810989-0000		1	COVER	
040	2529623-0000		8	GLASS PANE	
150	3017417-0100		1	HATCH	**1-229**
240	3017358-0000		8	HANDLE	
300	1035792-0000		12	E-HINGE	
310	988685-0000		12	PIN	
320	1499514-0000		7	E-HINGE	
330	1499512-0000		7	PIN	
340	1035794-0000		24	BLOCKING PIECE	
350	2529621-0000		4	BLOCKING PIECE	
360	90017-0022		13	HANDLE, NO. EL-037311	
370	315755-0106		14	RETAINING RING SHAFT DIN 6799 4 SS	
410	90237-0046		8	MAGNETIC LOCK, 46X33X15 MM	
430	90347-0004		6	VIBRATION DAMPER D=30 TH=M8 H=17 H2=21MM	
530	312115-0327		46	SCREW ISO4762 M5X12 A4 80	
540	312125-0222		16	SCREW ISO 1207 M3X8 A4	
590	312125-0226		16	SCREW ISO 1207 M3X12 A4	
620	312155-0327		16	SCREW DIN 7991 MF6S M5X12 A4 70	
650	312105-0447		26	SCREW M6S ISO 4017 M8X12 A480	
700	315105-0124		46	WASHER BRB 3,2X6 RFR	
710	315105-0146		74	WASHER BRB 5,3X10 RFR	
820	312605-0318		8	HEXAGON NUT, M6M M8 A280	
830	312605-0314		66	HEXAGON NUT, M6M M5 A280	
840	312605-0310		16	HEXAGON NUT, M6M M3 A280	
950	315402-0146		16	LOCK WASHER, DIN127B 5,1 A4, M5-3/16	
Common Parts					
020	2529619-0000		1	COVER	
030	3017366-0100		1	HATCH	**1-231**
050	2769986-0000		2	BRACKET	
060	981935-0000		2	BRACKET	
070	2529617-0000		1	HATCH	
080	2557586-0000		2	BAR	
090	1548917-0000		2	GLASS PANE	
100	3017344-0100		1	COVER	**1-233**
110	2523589-0000		1	COVER	
120	3017348-0000		1	COVER	
130	2529627-0000		1	COVER	
140	3017363-0000		2	DOOR	
160	3017349-0000		1	PROTECTION	
170	2557583-0000		1	HOLDER	
180	2557584-0000		1	BAR	
190	2557585-0000		3	HINGE	
200	3017400-0100		1	DOOR SAFETY SWITCH	**1-235**
220	90287-0062		16	SCREW M6	
230	294734-0000		16	WASHER	
380	90600-1056		1	KEY SAF.SW. AZM 161SK-12/12RKA 024	
390	90164-0015		1	LIGHT FIXTURE, RL70CV-111 / 230V 50HZ	
	92297-0301		*1*	*GLOW IGNITER 4-65W S\10, E 8219023*	
	90297-0007		*1*	*FLUORESCENT TUBE, PLS 11*	
400	90164-0303		2	LIGHT FIXTURE, BRACKET 70MM	
420	90115-0156		2	ROD END, ID=8 MM, M8X1,25	
440	90051-0082		2	KNOB, CIRCUL, THREADED BUSH, M6 25X21 MM	
450	90051-0112		2	LOCK KNOB, NO. GN 617 NIK5	
460	90115-0157		2	ROD END, ID=8 MM, M8X1,25 LH	
470	90458-0373		1	KEY FOR SAFETY SWITCH AZM-161-B1	

Machine Type | Group Description | Used-In | Group Number | Page No

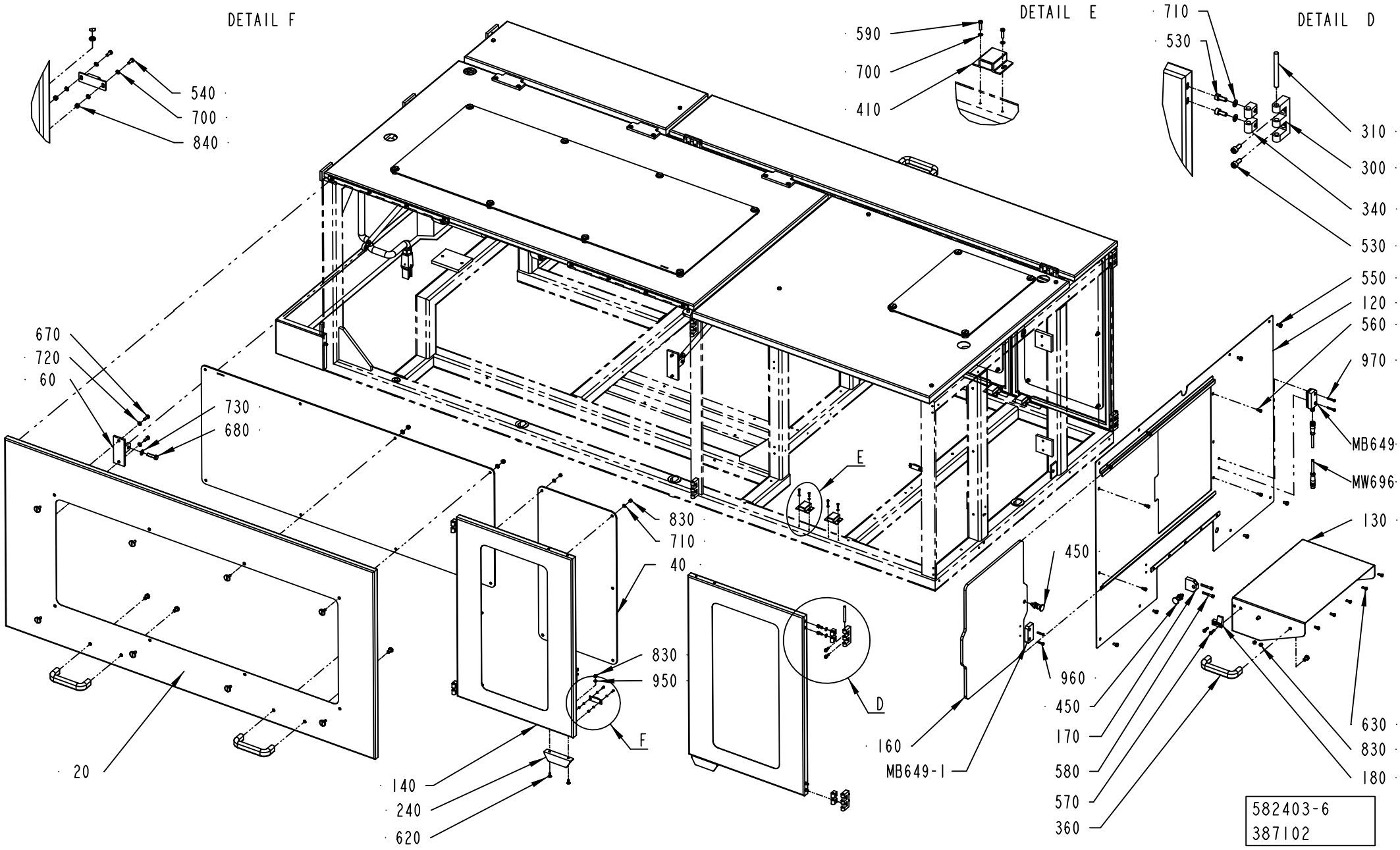
DETAIL F
540
700
840
DETAIL E
590
700
410
DETAIL D
710
530
310
300
340
530
550
120
560
970
MB649
MW696
130
450
960
450
170
580
570
360
630
830
180
160
MB649-1
670
720
60
730
680
E
830
710
40
830
950
D
F
20
140
240
620
582403-6
387102

Pos	Part No	UN	Qty	Description	Page No
Common Parts (Cont'd)					
480	90459-3636		1	GAS SPRING NO. 08 39 17	
485	90347-0113		2	DAMPER	
490	90459-3644		1	REDUCER, M20X1,5/M16X1,5	
510	312155-0329		2	SCREW DIN 7991 MF6S M5X16 A4 70	
550	312105-0364		8	SCREW M6S ISO 4017 M6X10 A480	
560	312115-0325		4	SCREW ISO4762 M5X10 A4 80	
570	312115-0329		2	SCREW ISO4762 M5X16 A4 80	
580	312115-0337		2	SCREW ISO4762 M5X35 A4 80	
600	312115-0368		2	SCREW ISO4762 M6X16 A4 80	
610	312155-0372		6	SCREW DIN 7991 MF6S M6X25 A4 70	
630	312105-0327		13	SCREW M6S ISO 4017 M5X12 A480	
660	312105-0366		6	SCREW M6S ISO 4017 M6X12 A480	
670	312105-0368		8	SCREW M6S ISO 4017 M6X16 A480	
680	312105-0455		4	SCREW M6S ISO 4017 M8X30 A480	
720	315105-0153		22	WASHER BRB 6,4X12 RFR	
730	315105-0165		4	WASHER BRB 8,4X16 RFR	
740	315125-0153		6	WASHER TBRSB 6,4X22X4 A4	
850	312812-0316		14	HEXAGON NUT, NY-LOCK M6 A480	
860	90152-0050	MM	4000	HOSE, SPIRAL CONDUIT, 20X13, UL 1313	
880	90110-0371		1	HOOD, TOP ENTRY, HDC-HA-3-TOVL1/11	
890	90459-2412		1	CONNECTOR, HDC-KITS, HDC-HA-4SS	
910	353243-0002		1	GLAND FITTING, VK 15152YUL11	
920	353243-0003		1	GLAND FITTING, VK 15153YUL13	
930	353249-0010		1	INSERT, SINGLE HOLE, EK152 11	
940	353249-0011		1	INSERT, SINGLE HOLE, EK153 11	
960	90459-4164		2	SAFETY SCREW SM4X20, 20-053-42	
970	90459-4165		2	SAFETY SCREW SM4X25, 20-053-43	
M.W696	90459-4876		1	FOCUS JUMPER CABLE M12 5P 3M, 20-056-21	
M.B649:1	90458-2794		1	SENSOR, EVA 20-046-00	
M.B649	90459-4142		1	SENSOR, ADAM M12 20-051-00	
W524	351150-0412	MM	4030	CABLE OLFLEX 3X1,5 MM2 LIGHT/GREY	

Pos	Part No	UN	Qty	Description	Page No

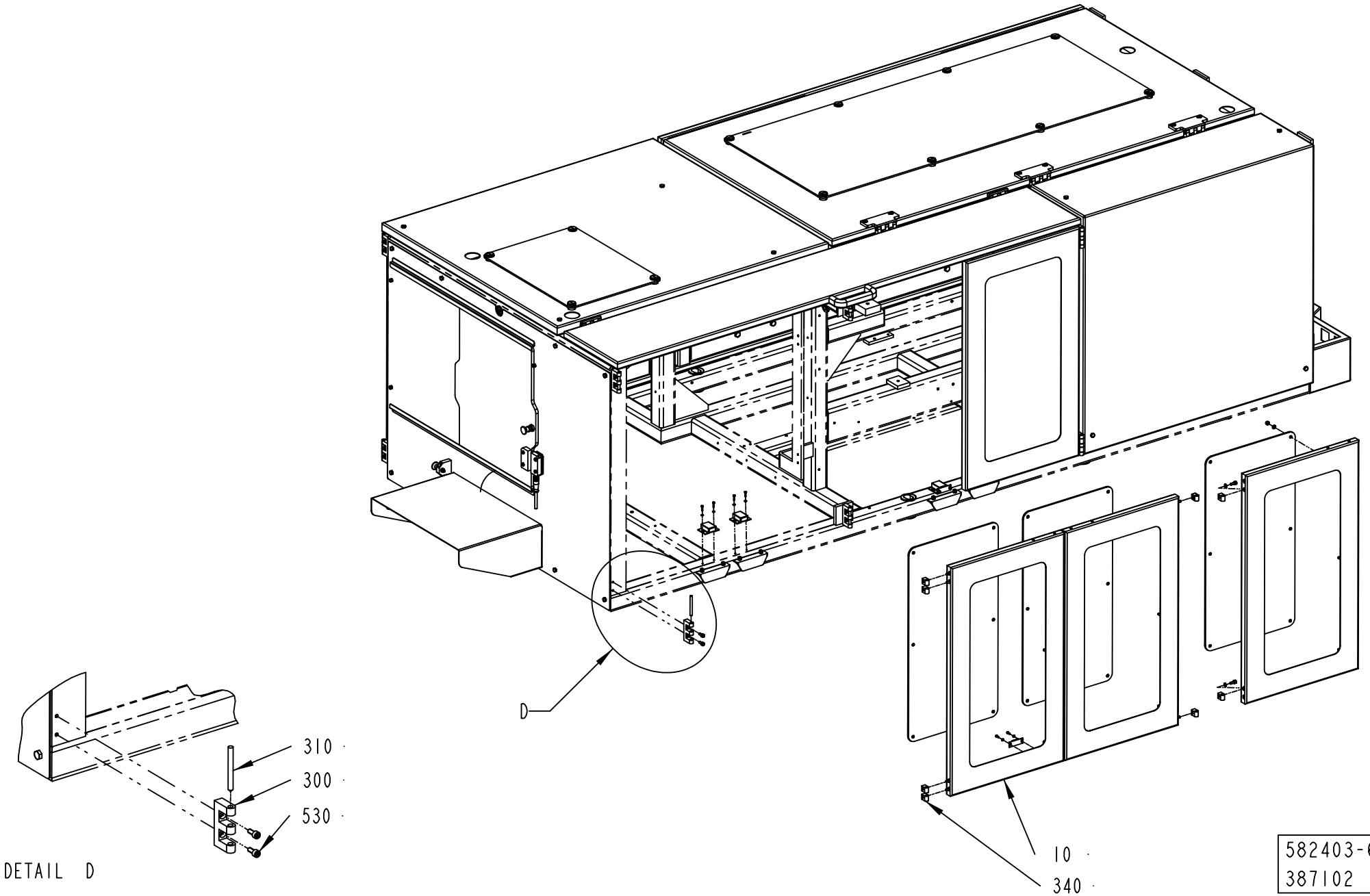
D
310
300
530
DETAIL D
10
340
582403-6
387102

Pos	Part No	UN	Qty	Description	Page No
SEE PREVIOUS LISTS PAGES: 1-217, 1-219.					

Pos	Part No	UN	Qty	Description	Page No

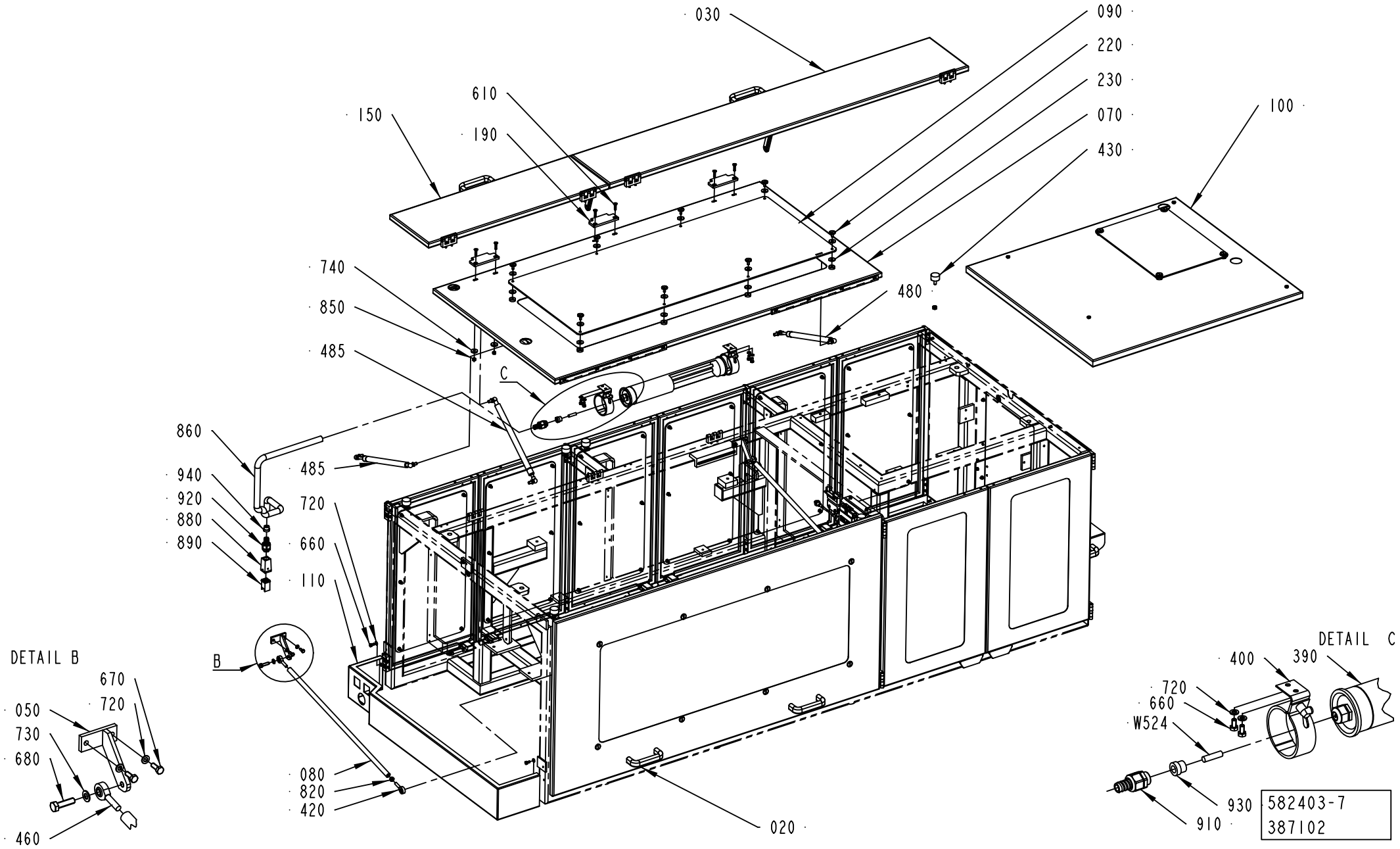
030
090
220
230
070
430
100
610
190
150
740
850
485
480
C
860
940
920
880
890
485
720
660
110
B
080
820
420
020
DETAIL B
670
720
050
730
680
460
DETAIL C
400
390
720
660
W524
930
910
582403-7
387102

Pos	Part No	UN	Qty	Description	Page No
SEE PREVIOUS LISTS PAGES: 1-217, 1-219.					

Pos	Part No	UN	Qty	Description	Page No

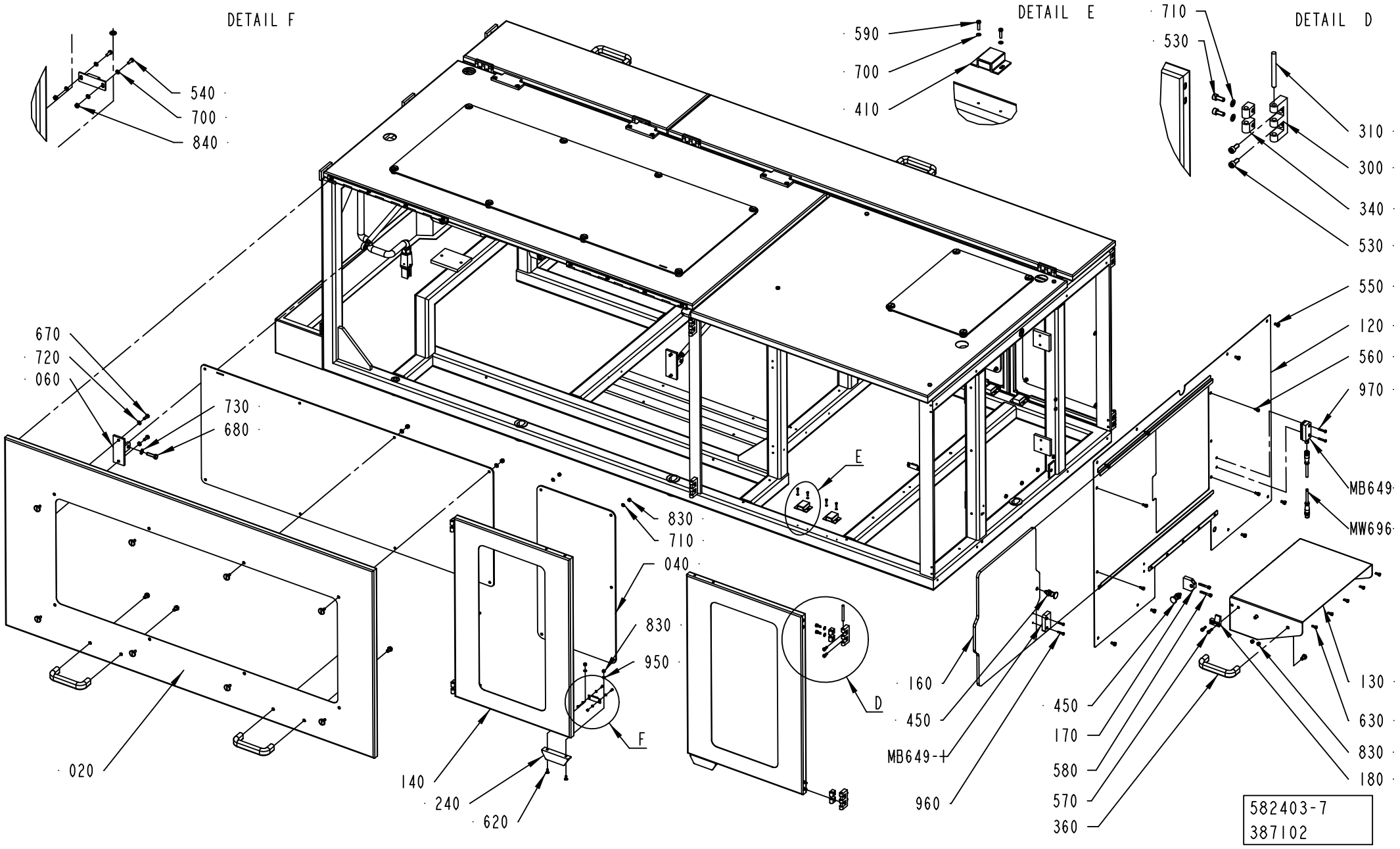
DETAIL F
540
700
840
DETAIL E
590
700
410
DETAIL D
710
530
310
300
340
530
550
120
560
970
MB649
MW696
670
720
060
730
680
E
830
710
040
830
950
F
D
020
140
240
620
160
450
MB649-+
960
450
170
580
570
360
130
630
830
180
582403-7
387102

Pos	Part No	UN	Qty	Description	Page No
SEE PREVIOUS LISTS PAGES: 1-217, 1-219.					

Pos	Part No	UN	Qty	Description	Page No

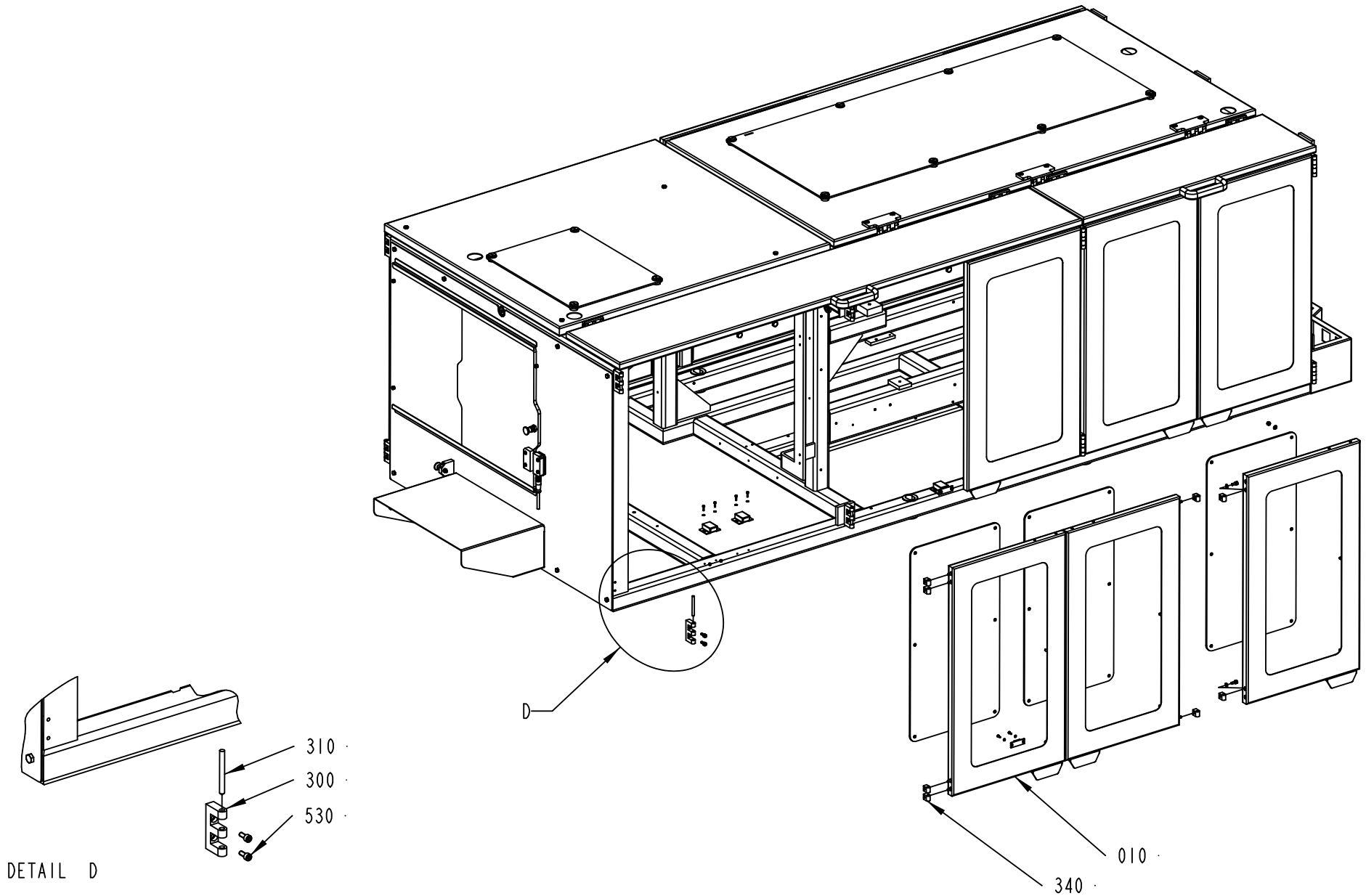

582403-7
387102

Pos	Part No	UN	Qty	Description	Page No
SEE PREVIOUS LISTS PAGES: 1-217, 1-219.					

Pos	Part No	UN	Qty	Description	Page No

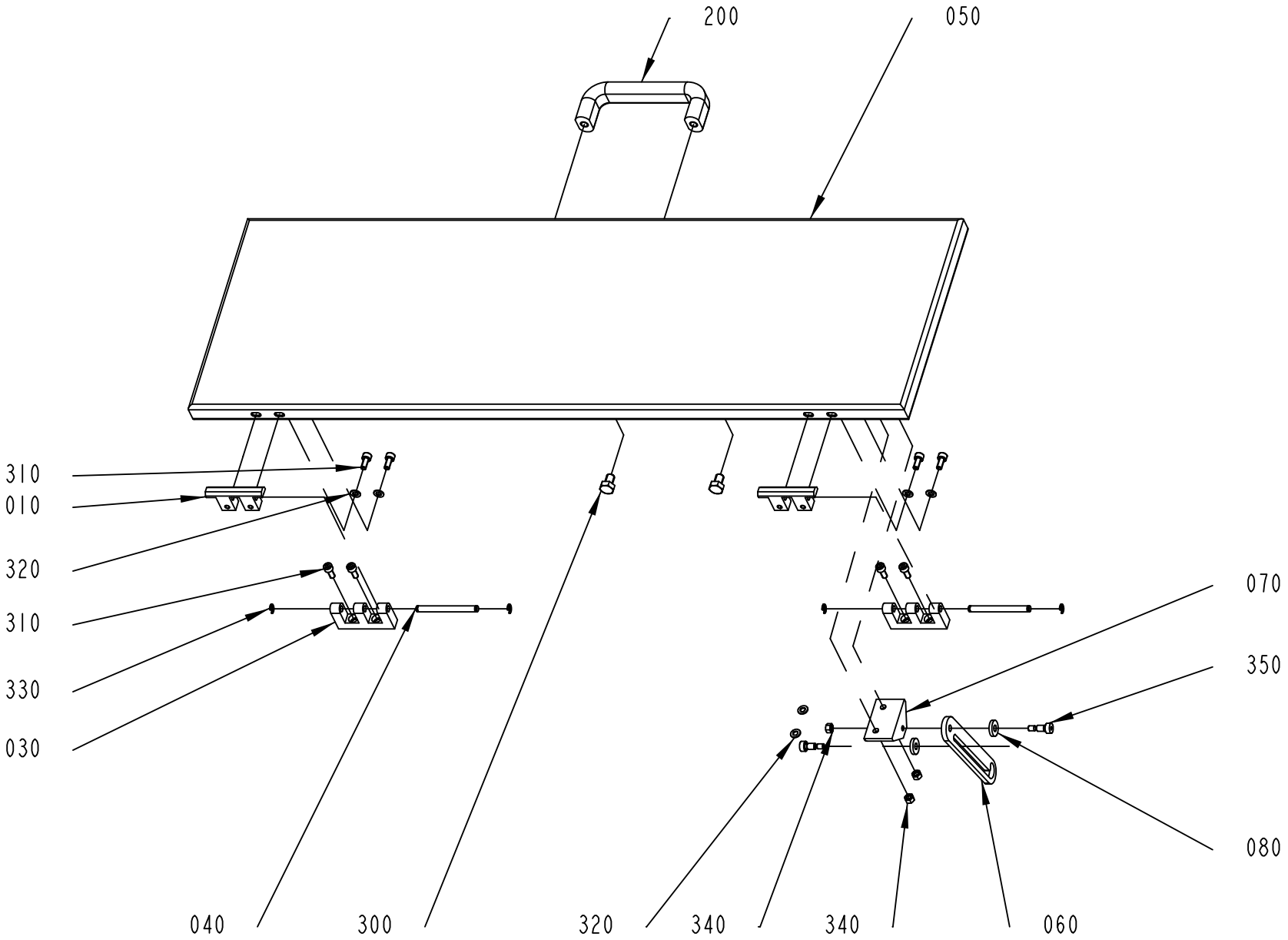

3017417-1
387102

ECM: 404709 - 20090706
Group number: 3017417-0100
Assembly Drawing: 3017417-1_1_AA

Pos	Part No	UN	Qty	Description	Page No
-					
010	2529621-0000		2	BLOCKING PIECE	
030	1499514-0000		2	E-HINGE	
040	1499512-0000		2	PIN	
050	3017418-0000		1	HATCH	
060	3017369-0000		1	BARRIER ARM	
070	3017368-0000		1	BRACKET	
080	3017370-0000		2	SPACER	
200	90017-0022		1	HANDLE, NO. EL-037311	
300	312105-0447		2	SCREW M6S ISO 4017 M8X12 A480	
310	312115-0327		8	SCREW ISO4762 M5X12 A4 80	
320	315105-0146		6	WASHER BRB 5,3X10 RFR	
330	315755-0106		4	RETAINING RING SHAFT DIN 6799 4 SS	
340	312605-0314		3	HEXAGON NUT, M6M M5 A280	
350	312180-0364		2	SCREW ISO7379 H6X10	

Pos	Part No	UN	Qty	Description	Page No

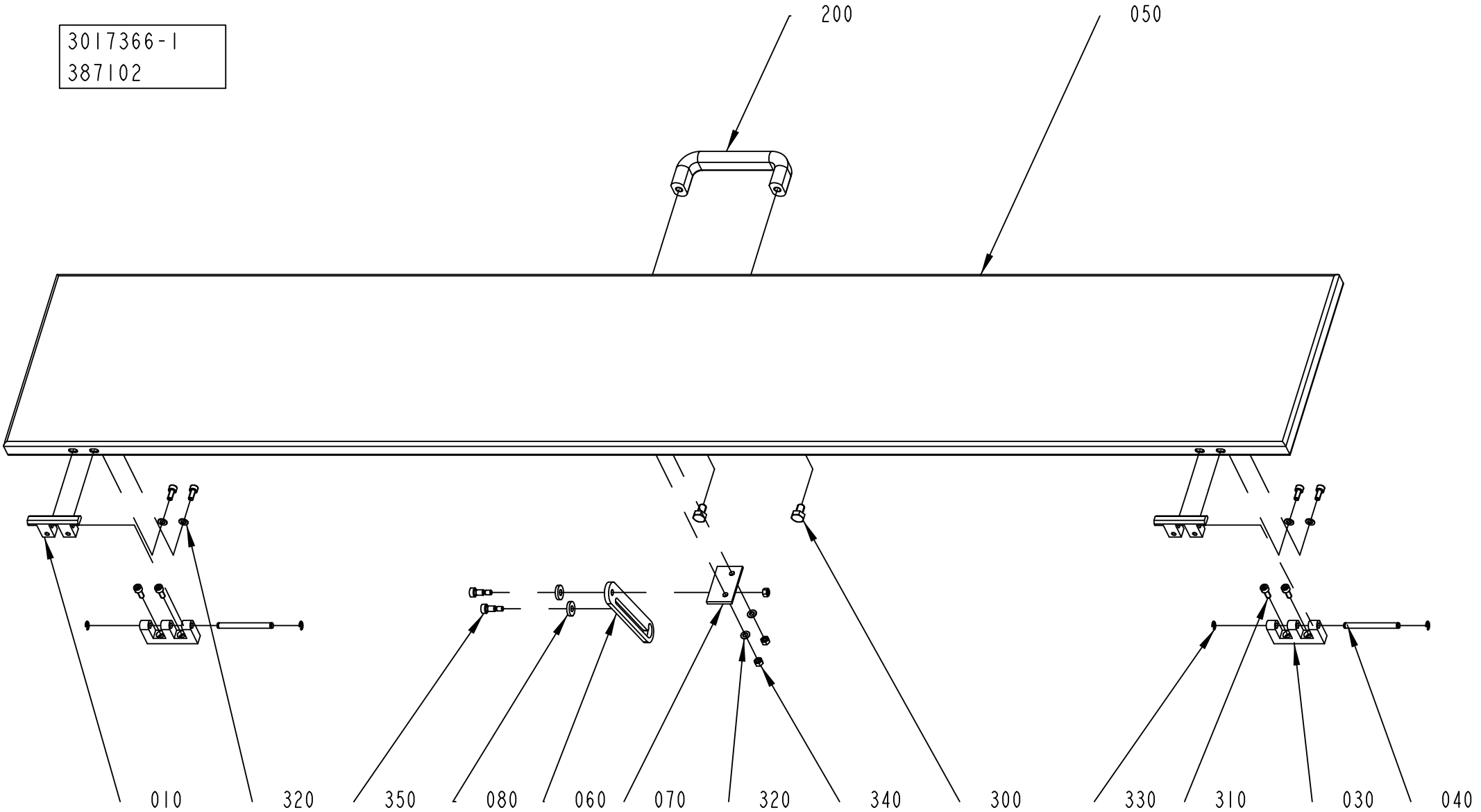
3017366-1
387102
200
050
010
320
350
080
060
070
320
340
300
330
310
030
040

ECM: 404592 - 20090706
Group number: 3017366-0100
Assembly Drawing: 3017366-1_1_AA

Pos	Part No	UN	Qty	Description	Page No
-					
010	2529621-0000		2	BLOCKING PIECE	
030	1499514-0000		2	E-HINGE	
040	1499512-0000		2	PIN	
050	3017367-0000		1	HATCH	
060	3017369-0000		1	BARRIER ARM	
070	3017368-0000		1	BRACKET	
080	3017370-0000		2	SPACER	
200	90017-0022		1	HANDLE, NO. EL-037311	
300	312105-0447		2	SCREW M6S ISO 4017 M8X12 A480	
310	312115-0327		8	SCREW ISO4762 M5X12 A4 80	
320	315105-0146		6	WASHER BRB 5,3X10 RFR	
330	315755-0106		4	RETAINING RING SHAFT DIN 6799 4 SS	
340	312605-0314		3	HEXAGON NUT, M6M M5 A280	
350	312180-0364		2	SCREW ISO7379 H6X10	

Pos	Part No	UN	Qty	Description	Page No

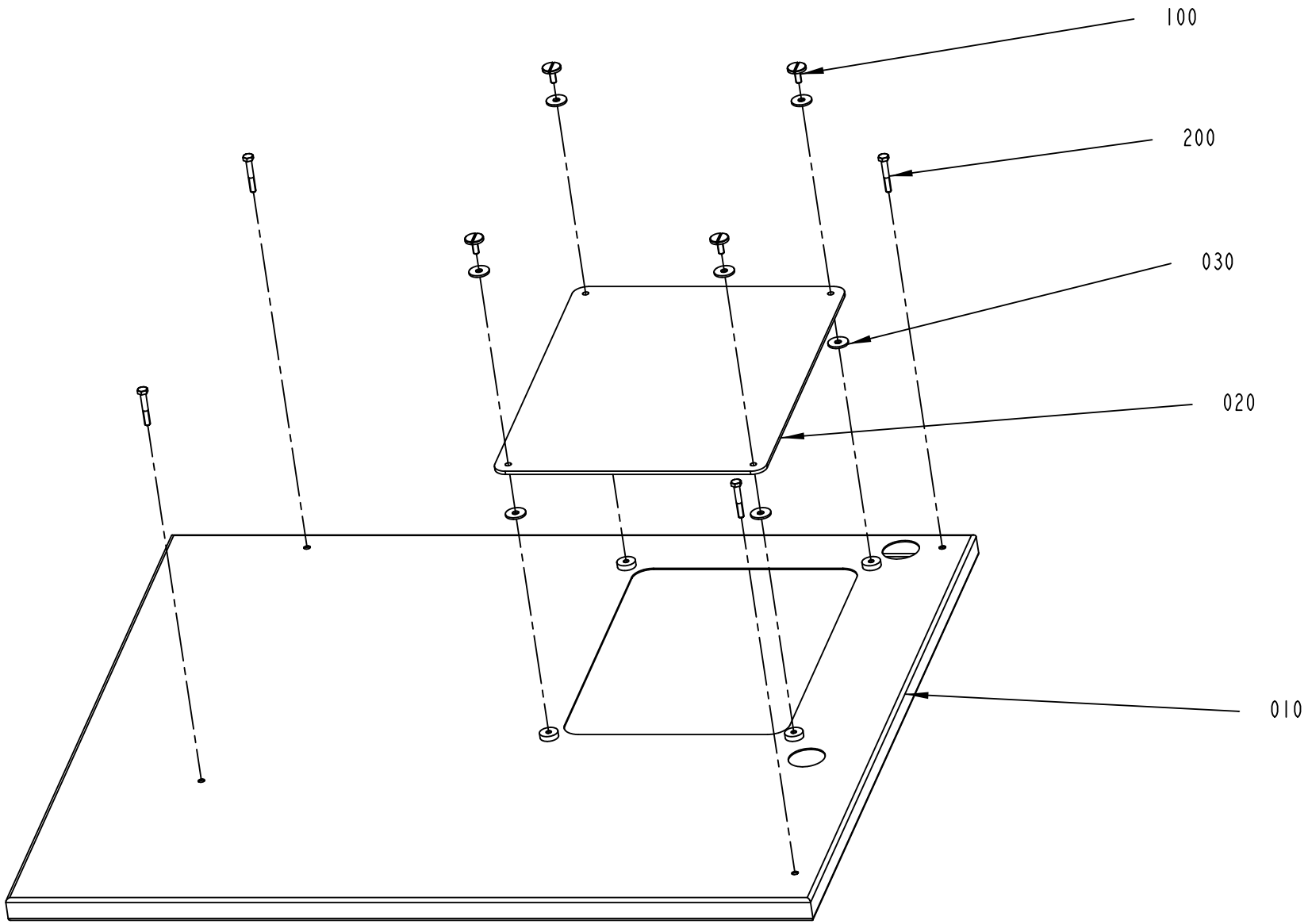

3017344-1
387102

ECM: 404589 - 20090706
Group number: 3017344-0100
Assembly Drawing: 3017344-1_1_AA

Pos	Part No	UN	Qty	Description	Page No
-					
010	3017342-0000		1	COVER	
020	3017343-0000		1	GLASS PANE	
030	294734-0000		8	WASHER	
100	90287-0062		4	SCREW M6	
200	312105-0378		4	SCREW M6S ISO 4014 M6X40 A480	

Pos	Part No	UN	Qty	Description	Page No

DOOR SAFETY SWITCH

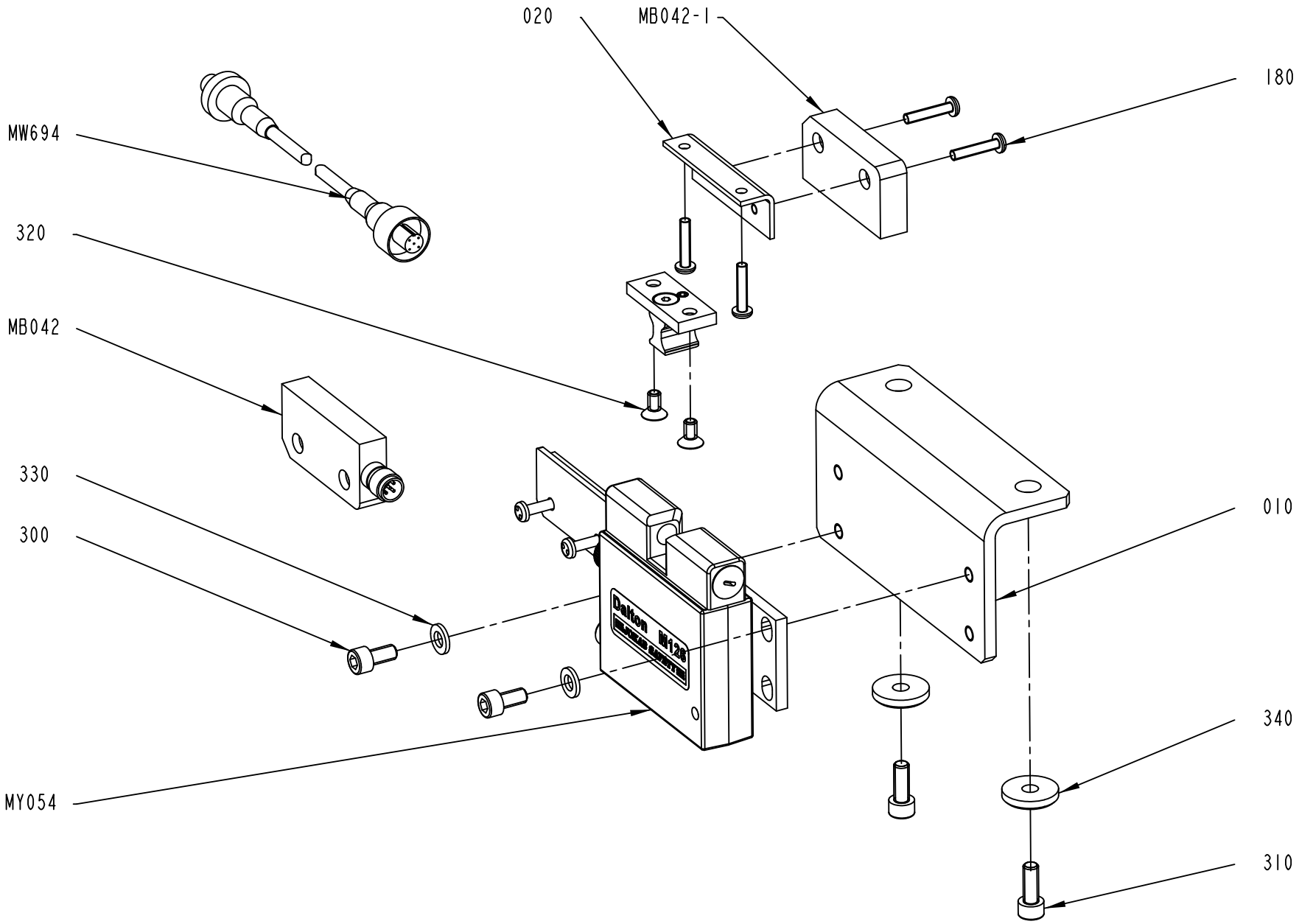

3017400-I
387102

ECM: 404590 - 20090706
Group number: 3017400-0100
Assembly Drawing: 3017400-1_1_AA

Pos	Part No	UN	Qty	Description	Page No
-					
020	3017402-0000		1	ANGLE BRACKET	
180	90459-4164		4	SAFETY SCREW SM4X20, 20-053-42	
300	312115-0366		2	SCREW ISO4762 M6X12 A4 80	
310	312115-0368		2	SCREW ISO4762 M6X16 A4 80	
320	312155-0325		2	SCREW DIN 7991 MF6S M5X10 A4 70	
330	315106-0153		2	WASHER ISO 7089-6-200 HV A4	
340	315125-0153		2	WASHER TBRSB 6,4X22X4 A4	
M.Y054	90600-8267		1	DOOR LOCKING DEV., DALTON M126 20-038-12	
M.W694	90600-9528		1	TRANSFER CABLE M12-CT0214, 20-060-01	
M.B042:1	90458-2794		1	SENSOR, EVA 20-046-00	
M.B042	90459-4142		1	SENSOR, ADAM M12 20-051-00	
01O	3017401-0000		1	ANGLE BRACKET	

Pos	Part No	UN	Qty	Description	Page No

WASTE BOX

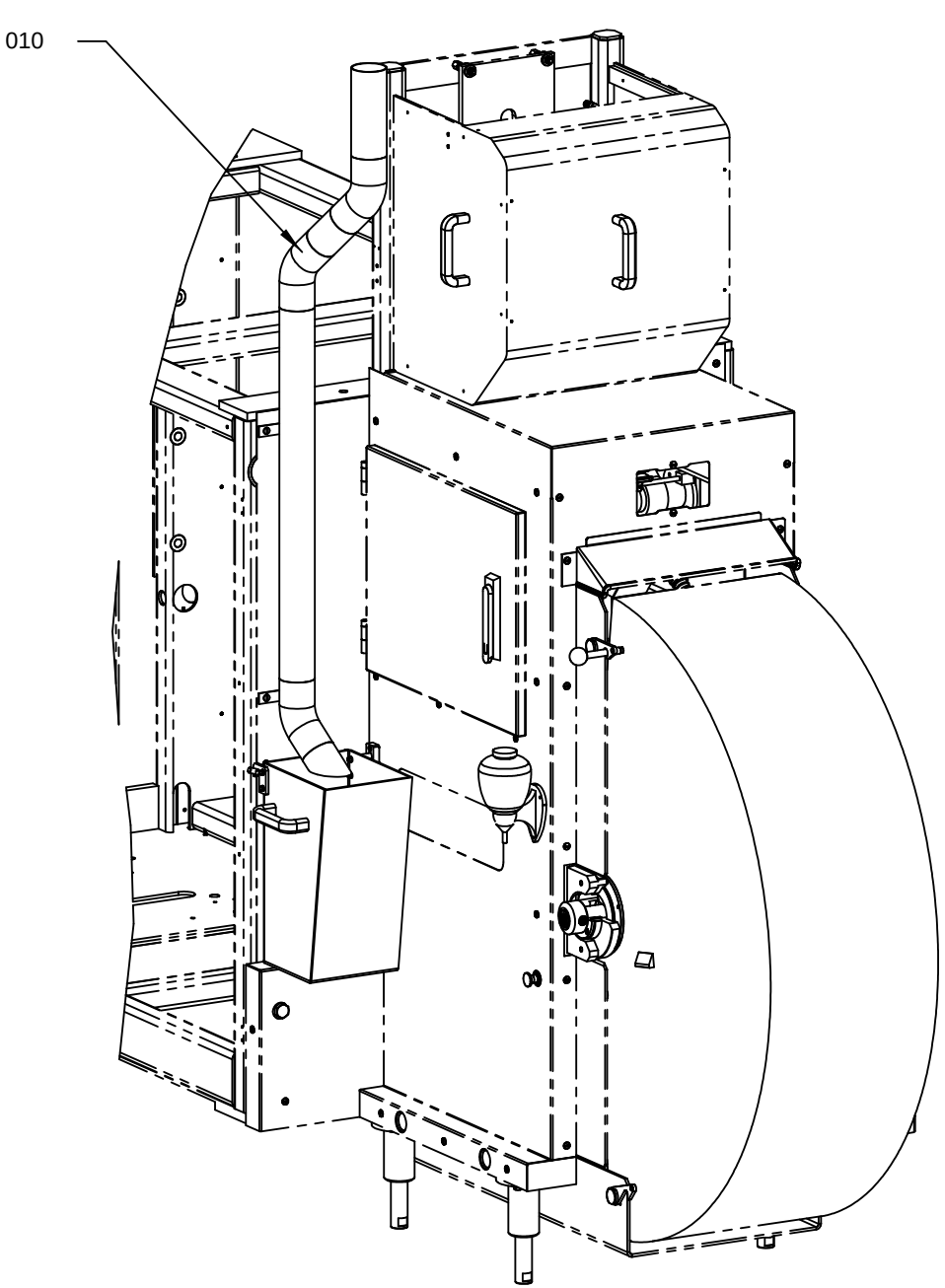

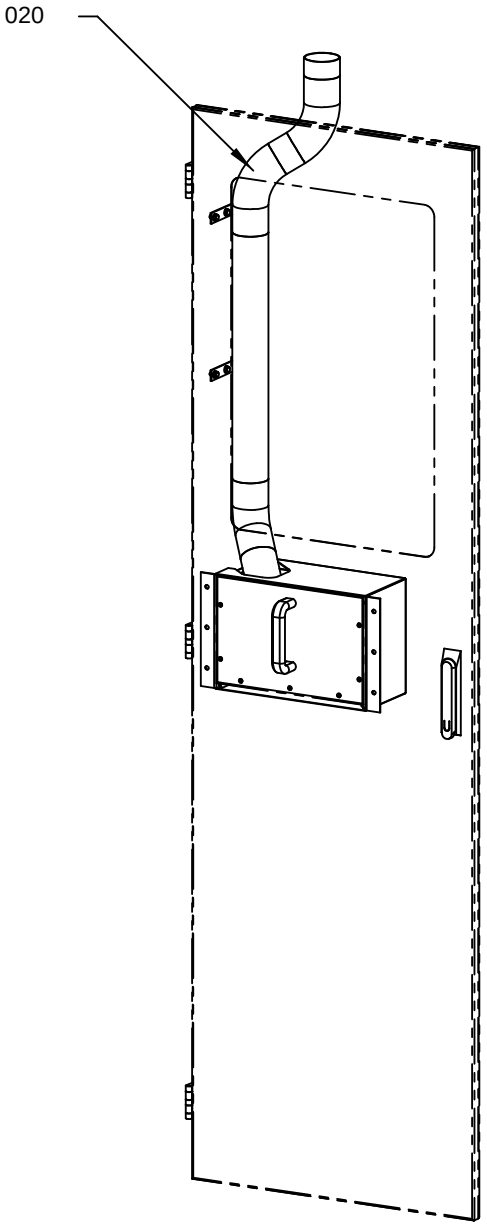

2592560-3
443802

ECM: 449109 - 20100524
Group number: 2592560-0200
Assembly Drawing: 2592560-3_1_AC

Pos	Part No	UN	Qty	Description	Page No
ASU					
020	3017416-0100		1	WASTE BOX	**1-239**
NOASU					
010	3017415-0100		1	WASTE BOX	**1-243**

Pos	Part No	UN	Qty	Description	Page No

WASTE BOX

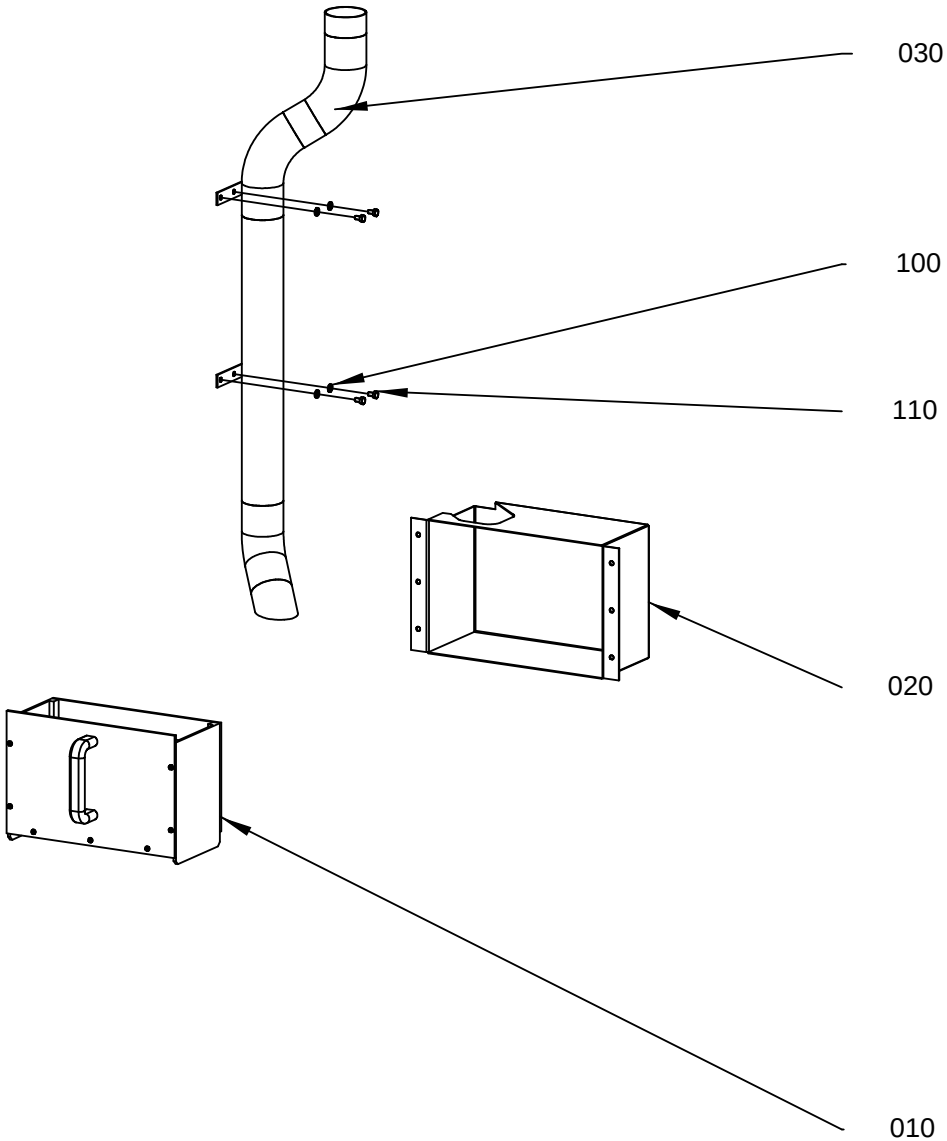

3017 416-1
443802

ECM: 448603 - 20100524
Group number: 3017416-0100
Assembly Drawing: 3017416-1_1_AB

Pos	Part No	UN	Qty	Description	Page No
-					
010	3017340-0100		1	BOX	**1-241**
020	3017341-0000		1	BOX	
030	3099900-0000		1	TUBE	
100	315106-0153		4	WASHER ISO 7089-6-200 HV A4	
110	312105-0364		4	SCREW M6S ISO 4017 M6X10 A480	

Pos	Part No	UN	Qty	Description	Page No

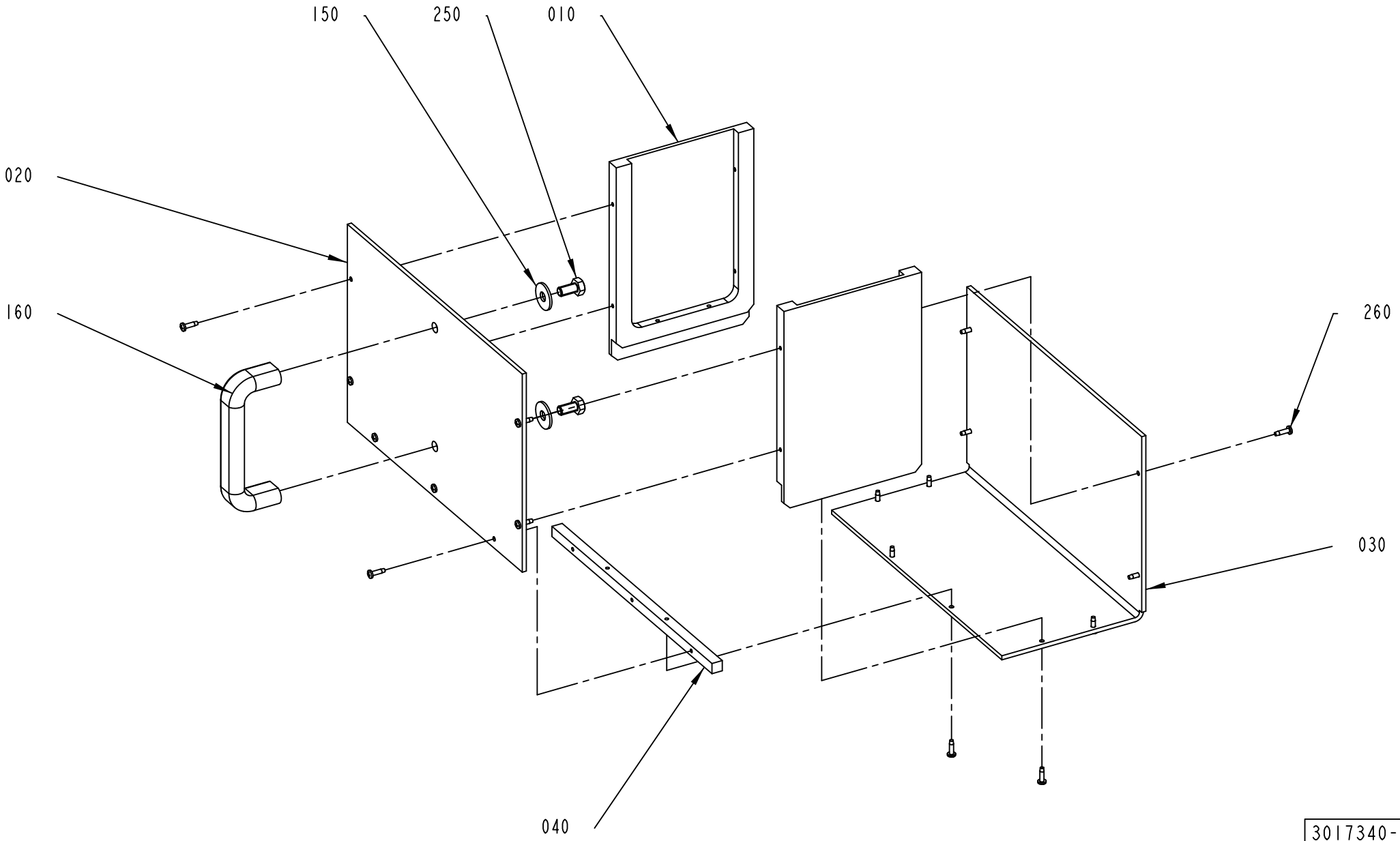

3017340-1
387102

ECM: 404586 - 20090706
Group number: 3017340-0100
Assembly Drawing: 3017340-1_1_AA

Pos	Part No	UN	Qty	Description	Page No
-					
010	3017394-0000		2	PLATE	
020	3017395-0000		1	PLATE	
030	3017396-0000		1	PLATE	
040	3017421-0000		1	CROSS BAR	
150	90005-0116		2	WASHER PLAIN ROUND 8,4(M8)/24, H=2	
160	90017-0022		1	HANDLE, NO. EL-037311	
250	312105-0449		2	SCREW M6S ISO 4017 M8X16 A480	
260	312504-0281		17	TAPPING SCREW ISO 7049-A4-ST3,5X13-C-Z	

Pos	Part No	UN	Qty	Description	Page No

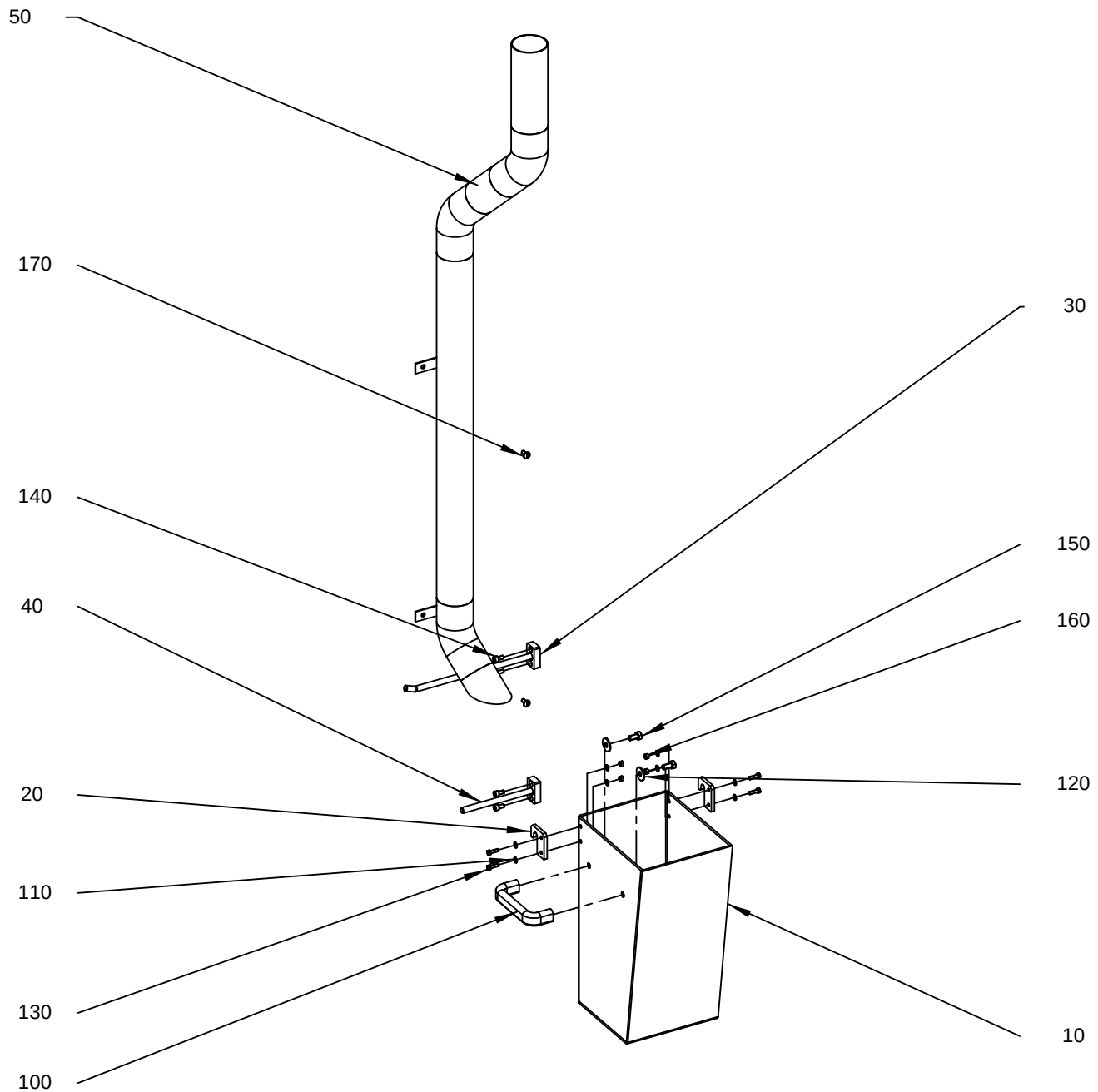

3017 415-1
443802

ECM: 448602 - 20100524
Group number: 3017415-0100
Assembly Drawing: 3017415-1_1_AC

Pos	Part No	UN	Qty	Description	Page No
-					
010	2603013-0000		1	BOX	
020	2574396-0000		2	HOOK	
030	2574397-0000		1	BRACKET	
040	2574398-0000		1	BRACKET	
050	3099898-0000		1	TUBE	
100	90017-0022		1	HANDLE, NO. EL-037311	
110	315105-0146		8	WASHER BRB 5,3X10 RFR	
120	90005-0116		2	WASHER PLAIN ROUND 8,4(M8)/24, H=2	
130	312105-0329		4	SCREW M6S ISO 4017 M5X16 A480	
140	312115-0366		4	SCREW ISO4762 M6X12 A4 80	
150	312105-0449		2	SCREW M6S ISO 4017 M8X16 A480	
160	312605-0314		4	HEXAGON NUT, M6M M5 A280	
170	90287-0075		2	SCREW SLOT. PAN HEAD LKCS M6X12	

Pos	Part No	UN	Qty	Description	Page No

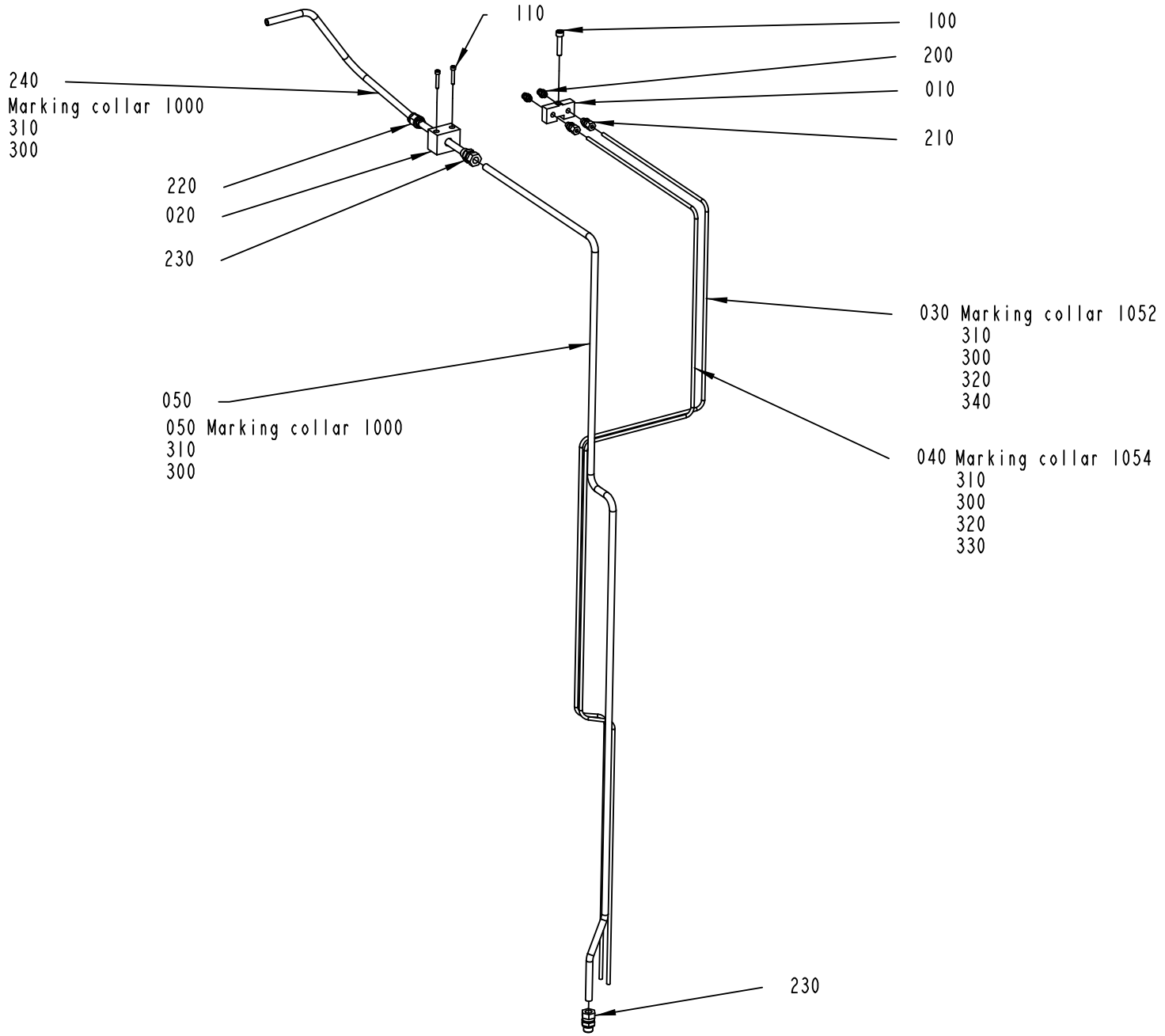

2570399-1
ECM 368759

ECM: 374892 - 20081219
Group number: 2570399-0100
Assembly Drawing: 2570399-1_1_AC

Pos	Part No	UN	Qty	Description	Page No
-					
010	1511464-0000		1	PIPE HOLDER	
020	2570398-0000		1	PIPE HOLDER	
030	2570395-0000		1	PIPE	
040	2570396-0000		1	PIPE	
050	2594264-0000		1	PIPE	
100	312115-0459		1	SCREW ISO4762 M8X40 A4 80	
110	312115-0335		2	SCREW ISO4762 M5X30 A4 80	
200	342722-0202		2	PIPE COUPLING 1/8" D=6MM	
210	90030-0184		2	CONN. STR., GE06LRED71	
220	350001-0014		1	PUSH-IN FITTING QS-F-G3/8-12	
230	90030-0187		2	CONN. STR. GE12LRED71	
240	315400-0010	MM	570	TUBE PUN-H-12X2-BL	
300	359000-0400		8	WIRE MARKING, YELLOW, PA2/4"0"	
310	359000-0401		4	WIRE MARKING, YELLOW, PA2/4"1"	
320	359000-0405		2	WIRE MARKING, YELLOW, PA2/4"5"	
330	359000-0404		1	WIRE MARKING, YELLOW, PA2/4"4"	
340	359000-0402		1	WIRE MARKING, YELLOW, PA2/4"2"	

Pos	Part No	UN	Qty	Description	Page No

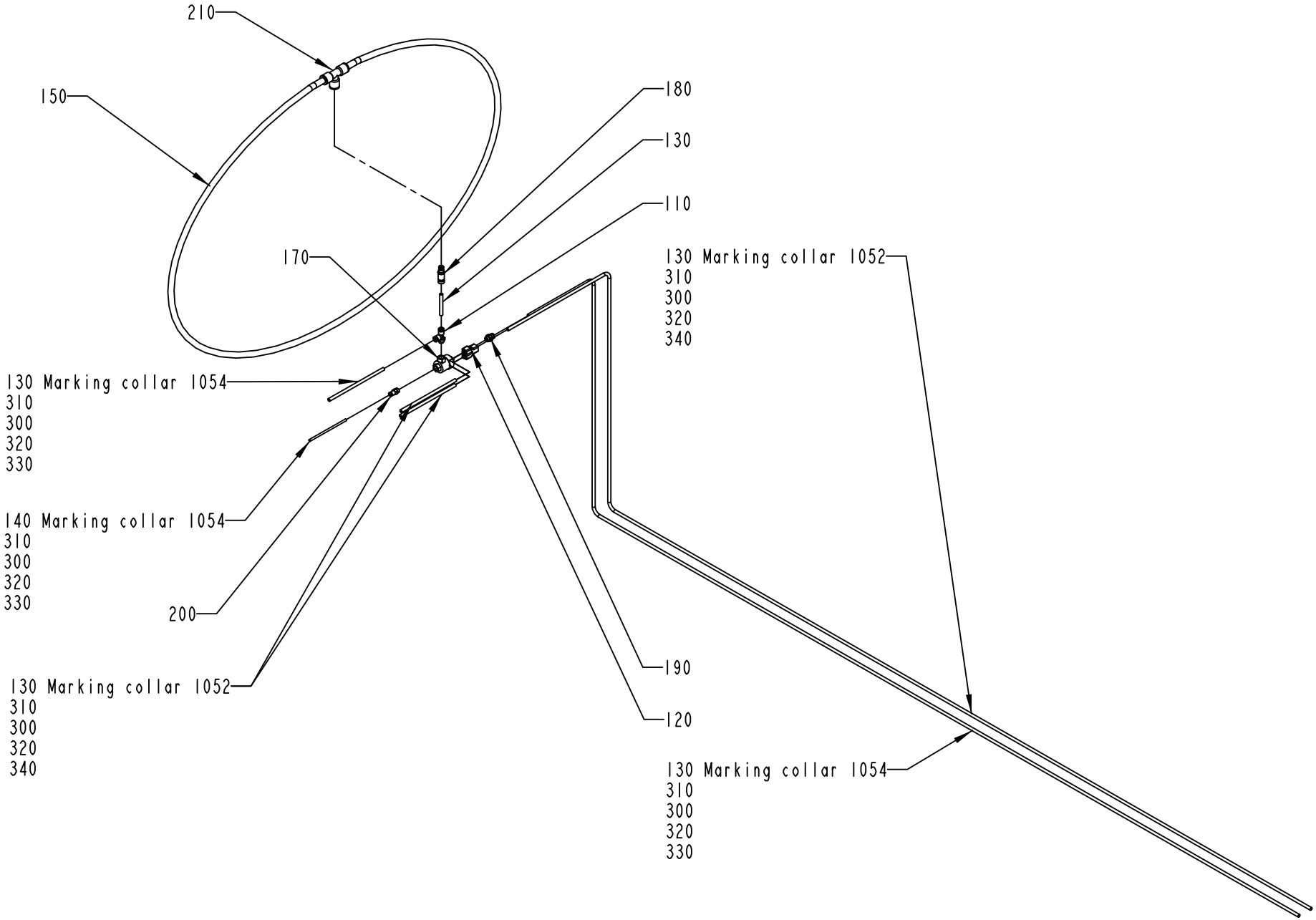

2557579-1
ECM 126692

ECM: 243214 - 20060127
Group number: 2557579-0100
Assembly Drawing: 2557579-1_1_AA

Pos	Part No	UN	Qty	Description	Page No
-					
110	342772-0113		1	ELBOW FITTING, 6 - G1/8	
120	90055-0100		1	Y-CONNECTION, 6-6	
130	90166-0081	MM	6000	TUBE 6 MM PA BLUE	
140	90166-0095	MM	1000	TUBE 4 MM PA BLUE (50M)	
150	90166-0068	MM	2500	TUBE 12 MM PA BLUE	
170	90235-0259		1	VALVE	
180	342716-0210		1	REDUCER 6-12	
190	342722-0202		1	PIPE COUPLING 1/8" D=6MM	
200	342722-0199		1	STRAIGHT COUPLING	
210	342748-0109		1	T-CONNECTION 12MM	
300	359000-0400		6	WIRE MARKING, YELLOW, PA2/4"0"	
310	359000-0401		6	WIRE MARKING, YELLOW, PA2/4"1"	
320	359000-0405		6	WIRE MARKING, YELLOW, PA2/4"5"	
330	359000-0404		3	WIRE MARKING, YELLOW, PA2/4"4"	
340	359000-0402		3	WIRE MARKING, YELLOW, PA2/4"2"	

Pos	Part No	UN	Qty	Description	Page No

This page is intentionally left blank.

ECM: 369599 - 20080930
Group number: 979885-0100
Assembly Drawing:

Pos	Part No	UN	Qty	Description	Page No
TBA 0100B HOLE12, TBA 0125S HOLE12					
010	582496-0001		1	OPENING SPECIFICATION	
TBA 0100B HOLE13, TBA 0125S HOLE13					
040	582496-0004		1	OPENING SPECIFICATION	
TBA 0160S HOLE12, TBA 0200S HOLE12					
020	582496-0002		1	OPENING SPECIFICATION	
TBA 0160S HOLE13, TBA 0200S HOLE13					
050	582496-0005		1	OPENING SPECIFICATION	
TBA 0180B HOLE20, TBA 0236B HOLE20, TBA 0300S HOLE20, TBA 0284B HOLE20					
060	582496-0006		1	OPENING SPECIFICATION	
TBA 0180B HOLE21, TBA 0236B HOLE21, TBA 0300S HOLE21, TBA 0284B HOLE21					
070	582496-0007		1	OPENING SPECIFICATION	
TBA 0200B HOLE20, TBA 0250B HOLE20					
090	582496-0009		1	OPENING SPECIFICATION	
TBA 0200B HOLE21, TBA 0250B HOLE21					
100	582496-0010		1	OPENING SPECIFICATION	
TBA 0200M HOLE17, TBA 0250S HOLE17					
030	582496-0003		1	OPENING SPECIFICATION	
TBA 0330S HOLE20					
080	582496-0008		1	OPENING SPECIFICATION	
TBA 0330S HOLE21					
110	582496-0011		1	OPENING SPECIFICATION	
TPA 0250SQ HOLE72, TPA 0200SQ HOLE72					
130	1317497-0000		1	OPENING SPECIFICATION	
TPA 0330SQ HOLE48					
120	1255270-0000		1	OPENING SPECIFICATION	
TPA 0330SQ HOLE70					
130	1350233-0000		1	OPENING SPECIFICATION	

Pos	Part No	UN	Qty	Description	Page No

This page is intentionally left blank.

ECM: 243593 - 20060127
Group number: 979691-0100
Assembly Drawing:

Pos	Part No	UN	Qty	Description	Page No
-					
010	979699-0000		1	HEATER	
020	90326-0060		1	THERMOCOUPLE, CR-AL	
030	905471-0000		1	ROLLER DRIVE	
040	2562321-0000		1	DOLLY	
050	90335-0005		4	SPRING	
060	905285-0000		4	STRIPPER PIN	
070	583674-0000		1	HEATING CHAMBER	
080	90298-0033		1	WATLUBE HEAT LIQUID	
090	1548788-0000		1	HEATING CHAMBER	
200	1350234-0000		1	SETTING RING	

Pos	Part No	UN	Qty	Description	Page No

Tetra Pak

SPC
Spare Parts Catalogue

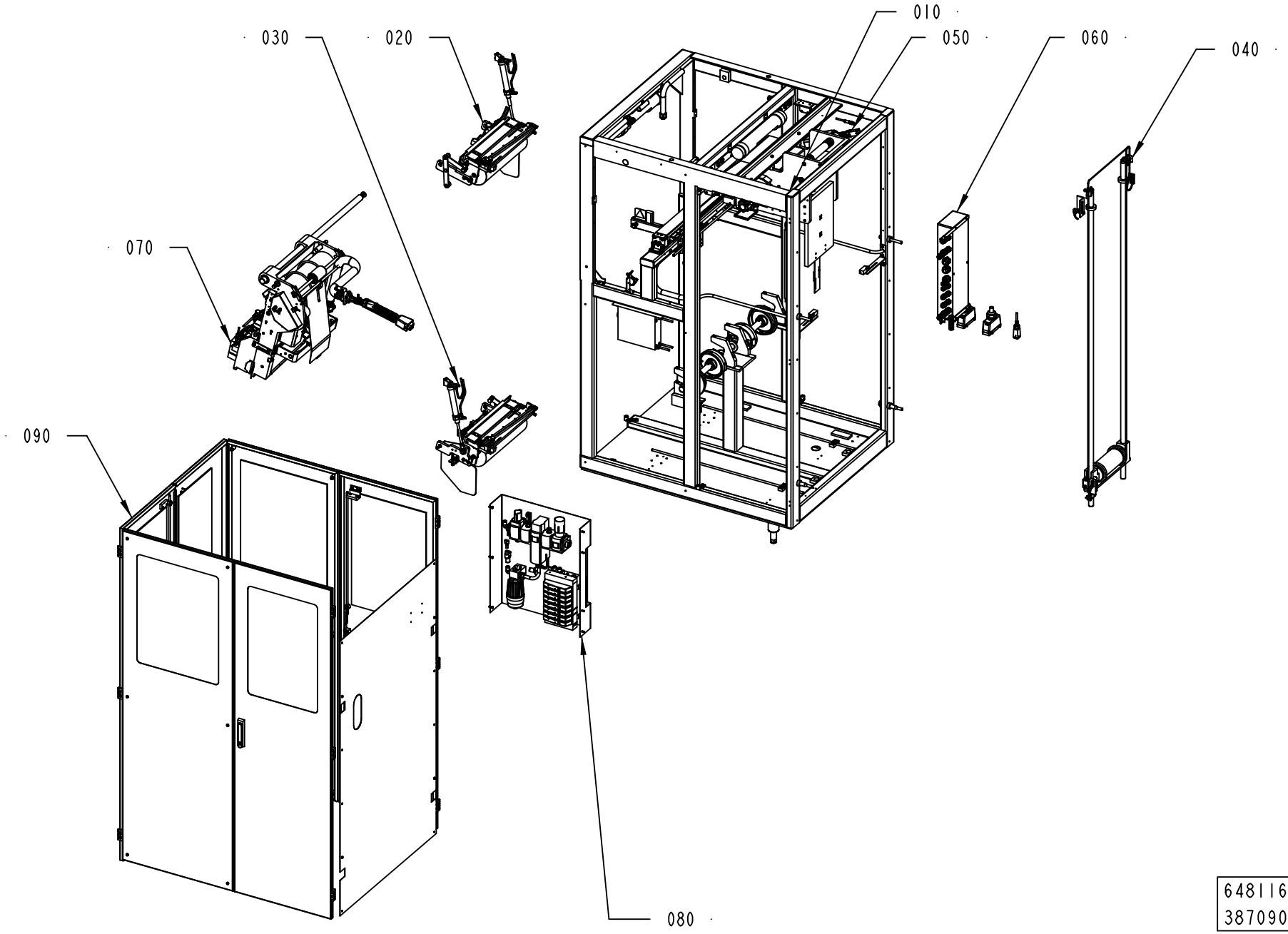

648116-3
387090

ECM: 403519 - 20090706
Group number: 648116-0300
Assembly Drawing: 648116-3_1_AA

Pos	Part No	UN	Qty	Description	Page No
-					
	1519961-0100		1	START UP KIT	**2-5**
010	1519948-0300		1	MACHINE BODY	**2-7, 2-9**
020	1487785-0300		1	MATERIAL HOLDER L1	**2-23, 2-25**
030	1484699-0300		1	MATERIAL HOLDER L2	**2-33, 2-35**
040	1484735-0100		1	WEB MAGAZINE	**2-43**
050	3017331-0100		1	INFEED UNIT	**2-45**
060	1364476-0300		1	CONNECTION BOX	**2-53, 2-55**
070	1484688-0300		1	SPLICING DEVICE	**2-59**
080	1511571-0300		1	VALVE PANEL	**2-79**
090	1519953-0300		1	COVERING PANEL	**2-87**
100	3038094-0000		1	PNEUMATIC DIAGRAM	

Pos	Part No	UN	Qty	Description	Page No

This page is intentionally left blank.

ECM: 471849 - 20101006
Group number: 1519961-0100
Assembly Drawing:

Pos	Part No	UN	Qty	Description	Page No
TBA, TPA, TWA					
010	1520972-0000		1	TPO-BAR	
030	2592780-0000		1	DOLLY	

Pos	Part No	UN	Qty	Description	Page No

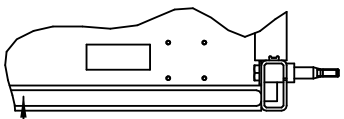

Make the corners round on the slip tape pos 610.
Use 500 mm of the tape on each side of the frame.

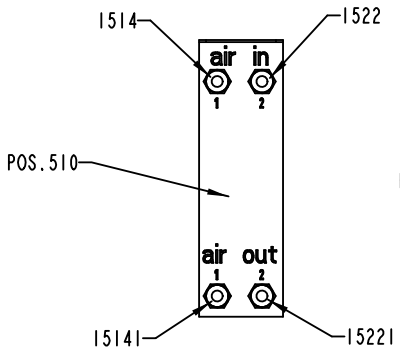

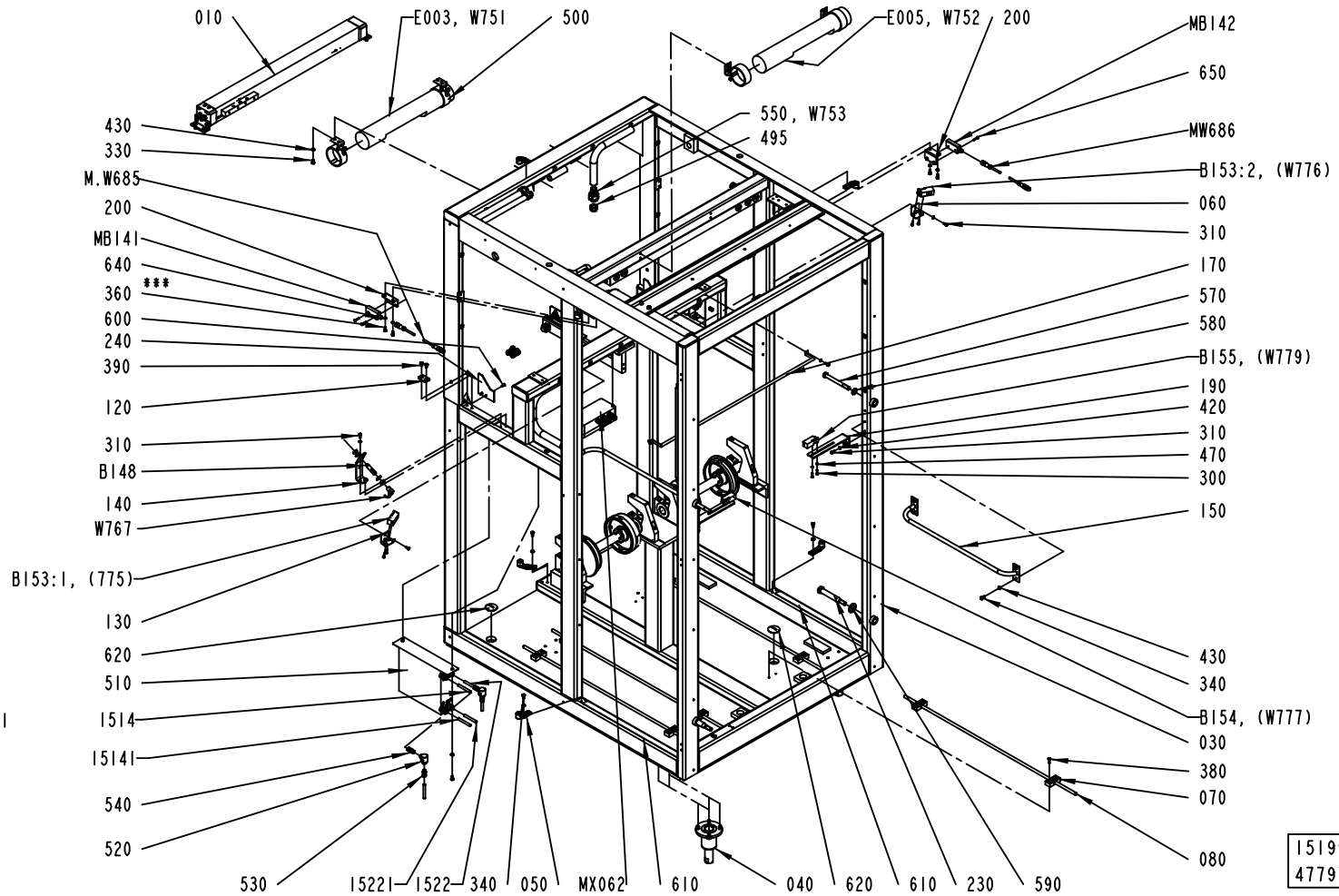

ECM: 480810 - 20110103
Group number: 1519948-0300
Assembly Drawing: 1519948-3_1_AC

This list covers pages from 2-6 to 2-9

Pos	Part No	UN	Qty	Description	Page No
-					
-	90166-0013	M	0.8	TUBE 8 MM PA BLUE	
-	90600-0460		4	INDUCTIVE SWITCH, E2A-M12KN05-M1-B1-TP	
010	1487544-0100		1	SIDE FEEDER	**2-11**
020	1499571-0100		2	PAPER REEL HOLDER	**2-13**
030	1484742-0100		1	CABLE DUCTS	**2-15, 2-17**
040	2781219-0100		4	LEG	**2-19**
050	1538868-0000		6	BRACKET	
060	2524369-0000		1	BRACKET	
070	1484730-0000		8	BRACKET	
080	1484736-0000		4	SHAFT	
090	1488005-0000		4	BEARING BLOCK	
100	1490219-0000		1	BRACKET	
110	3017410-0000		1	LOCK PLATE	
120	1512420-0000		2	PLATE	
130	1519949-0000		1	BRACKET	
140	2538075-0000		1	BRACKET	
145	2538076-0000		1	BRACKET	
150	2598217-0000		2	RAILING	
170	1558987-0000		1	GUIDE	
180	1499573-0000		1	PIN	
190	1558799-0000		2	ANGLE BRACKET	
200	3017380-0000		2	BRACKET	
210	3017384-0000		2	BRACKET	
220	3017391-0000		1	PLATE	
230	1367022-0000		2	ALIGNMENT SCREW	
240	1558484-0000		1	PROTECTION PLATE	
250	2529551-0000		1	PROTECTION PLATE	
260	2538073-0001		4	SHIMS	
270	2538073-0002		8	SHIMS	
300	312105-0293		8	SCREW M6S ISO 4017 M4X16 A470	
310	312105-0327		12	SCREW M6S ISO 4017 M5X12 A480	
330	312105-0364		10	SCREW M6S ISO 4017 M6X10 A480	
340	312105-0366		22	SCREW M6S ISO 4017 M6X12 A480	
350	312318-0370		1	SCREW ISO4029 M6X20 A4	
360	312115-0327		8	SCREW ISO4762 M5X12 A4 80	
370	312115-0463		8	SCREW ISO4762 M8X60 A4 80	
380	312155-0331		16	SCREW DIN 7991 MF6S M5X20 A4 70	
390	312155-0366		4	SCREW DIN 7991 MF6S M6X12 A4 70	
400	315755-0112		4	RETAINING RING SHAFT DIN 6799 12 SS	
410	312115-0327		2	SCREW ISO4762 M5X12 A4 80	
420	315105-0146		22	WASHER BRB 5,3X10 RFR	
430	315105-0153		36	WASHER BRB 6,4X12 RFR	
440	359705-0005		4	WARNING SIGN ISO, MOVING PART	
450	311103-1274		2	PARALLEL PIN ISO 2338 4M6X24 A1	
460	312105-0372		4	SCREW M6S ISO 4017 M6X25 A480	
470	315105-0136		4	WASHER BRB 4,3X8 RFR	
495	353249-0014		1	INSERT, SINGLE HOLE, EK154 16	
500	90164-0303		4	LIGHT FIXTURE, BRACKET 70MM	
510	90459-3832		1	VENTING BOX, P9852	
520	90235-0206		2	QUICK EXHAUST VALVE, SEU-1/8	
530	350001-0007		2	PUSH-IN FITTING QS-F-G1/8-8	
540	350008-0005		2	PUSH-IN FITTING QSF-F-G1/8-8	
550	90458-0430		1	GLAND FITTING, VK 22054YUL16	
570	312105-0556		2	SCREW M6S ISO 4014 M12X120 A480	
580	315105-0178		2	WASHER BRB 13X24 RFR	
590	315105-0192		2	WASHER BRB 21X36 RFR	
600	312145-0327		4	SCREW ISO 2009 MFS M5X12 A4	
610	90459-1848		1000	TAPE, SAFETY WALK R25MM X 18,3M	
620	90002-0010		2	BLANK-OFF PLUG, PR 37 SKINDICHT-BLK29	
630	312105-0370		2	SCREW M6S ISO 4017 M6X20 A480	
640	315106-0146		2	WASHER ISO 7089-5-200 HV A4	
650	90459-4164		8	SAFETY SCREW SM4X20, 20-053-42	
B146	90600-0460		1	INDUCTIVE SWITCH, E2A-M12KN05-M1-B1-TP	
B148	90600-0460		1	INDUCTIVE SWITCH, E2A-M12KN05-M1-B1-TP	
B153:2	90232-0129		1	PH.CELL E3S-CR61-5M	
B153:1	90232-0129		1	PH.CELL E3S-CR61-5M	
B154	90232-0129		1	PH.CELL E3S-CR61-5M	
B155	90232-0129		1	PH.CELL E3S-CR61-5M	
E003	90164-0015		1	LIGHT FIXTURE, RL70CV-111 / 230V 50HZ	
	92297-0301		*1*	*GLOW IGNITER 4-65W S\10, E 8219023*	
	90297-0007		*1*	*FLUORESCENT TUBE, PLS 11*	
E005	90164-0015		1	LIGHT FIXTURE, RL70CV-111 / 230V 50HZ	
	92297-0301		*1*	*GLOW IGNITER 4-65W S\10, E 8219023*	
	90297-0007		*1*	*FLUORESCENT TUBE, PLS 11*	
M.W691	90459-4876		1	FOCUS JUMPER CABLE M12 5P 3M, 20-056-21	
M.W690	90459-4876		1	FOCUS JUMPER CABLE M12 5P 3M, 20-056-21	
M.W686	90459-4876		1	FOCUS JUMPER CABLE M12 5P 3M, 20-056-21	
M.W685	90459-7095		1	FOCUS JUMPER CABLE M12 5P 1M, 20-056-20	
M.B144	90459-4142		1	SENSOR, ADAM M12 20-051-00	
M.B143	90459-4142		1	SENSOR, ADAM M12 20-051-00	
M.B142	90459-4142		1	SENSOR, ADAM M12 20-051-00	
M.B141	90459-4142		1	SENSOR, ADAM M12 20-051-00	
M.X062	2597097-0100		1	CONNECTION BOX	**2-21**

Machine Type | Group Description | Used-In | Group Number | Page No

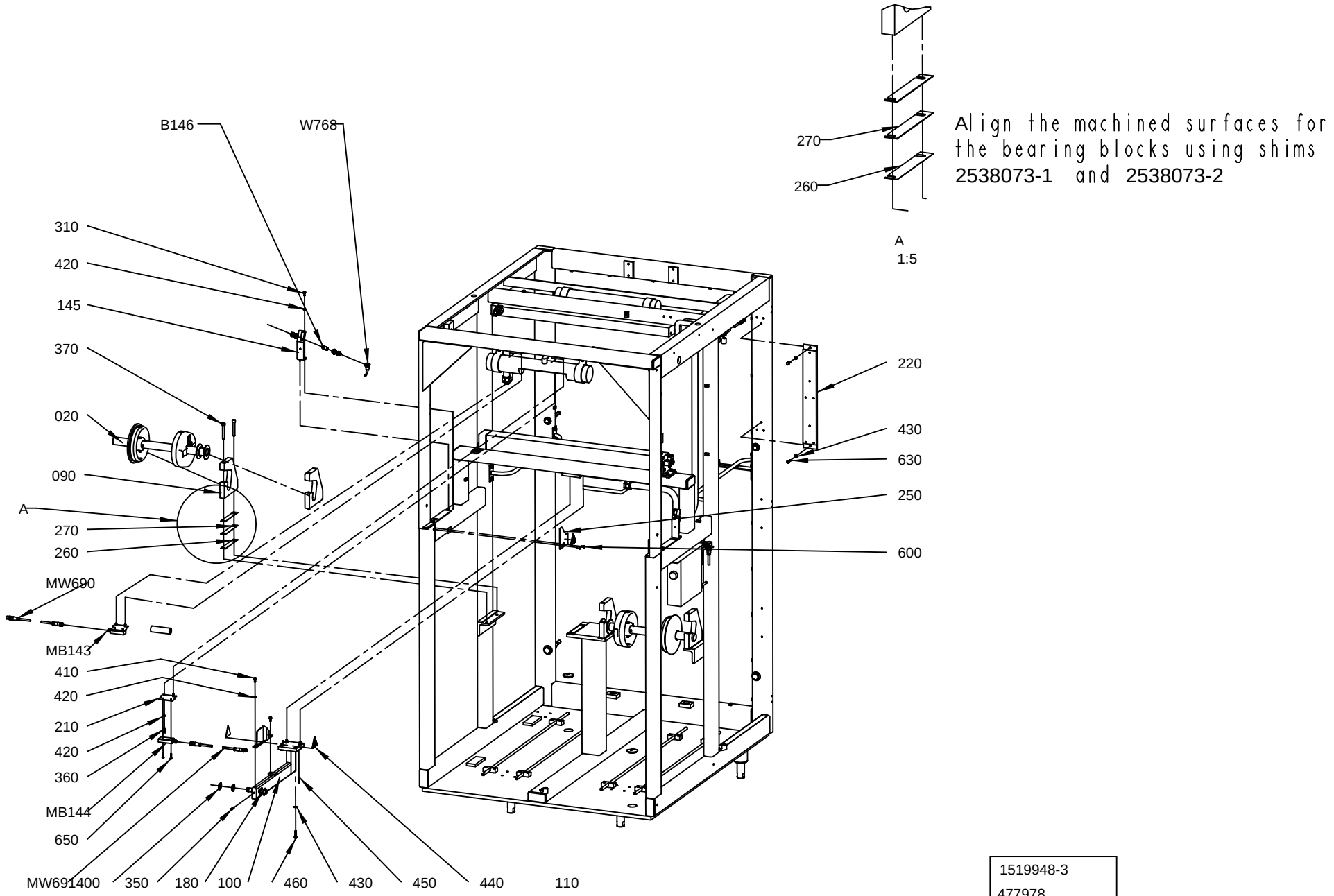

1519948-3
477978

Pos	Part No	UN	Qty	Description	Page No
- (Cont'd)					
W767	90458-1076		1	L-SHAPED CONNECTOR CABLE Y92EM12PVC4A5ML	
W768	90458-1076		1	L-SHAPED CONNECTOR CABLE Y92EM12PVC4A5ML	

Pos	Part No	UN	Qty	Description	Page No

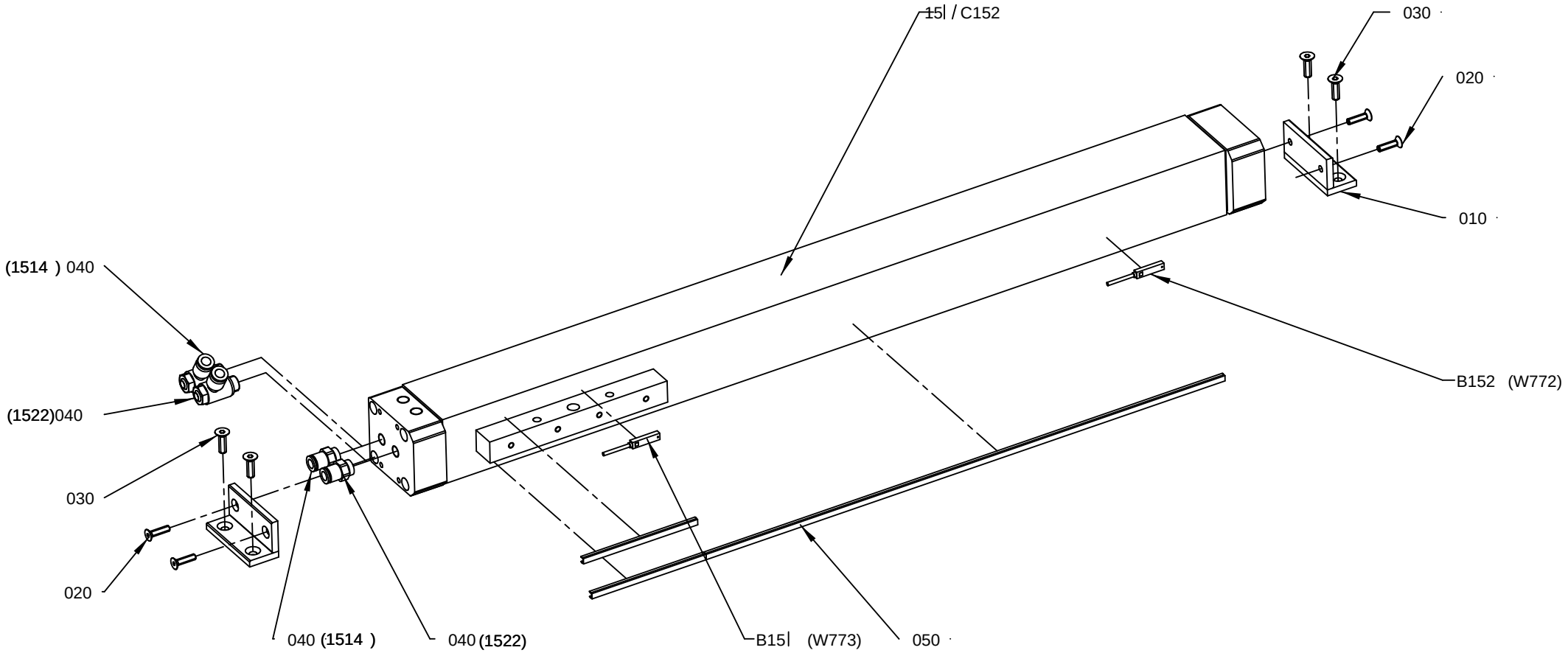

1487544-3
477978

ECM: 480809 - 20110103
Group number: 1487544-0100
Assembly Drawing: 1487544-3_1_AB

Pos	Part No	UN	Qty	Description	Page No
TBA/19					
040	90459-3685		2	THROTTLE VALVE GRLA-1/4-QS-8-D	
B151	90044-0165		1	PROX. SENSOR, SME-8-K5-LED-24	
B152	90044-0165		1	PROX. SENSOR, SME-8-K5-LED-24	
151/C152	90450-0552		1	CYLINDER, RODLESS MECH. 40-520	
Common Parts					
010	1498457-0000		2	BRACKET	
020	312155-0331		4	SCREW DIN 7991 MF6S M5X20 A4 70	
030	312155-0370		4	SCREW DIN 7991 MF6S M6X20 A4 70	
050	90458-0273		1	SLOT COVER, ABP-5-S	

Pos	Part No	UN	Qty	Description	Page No

PAPER REEL HOLDER

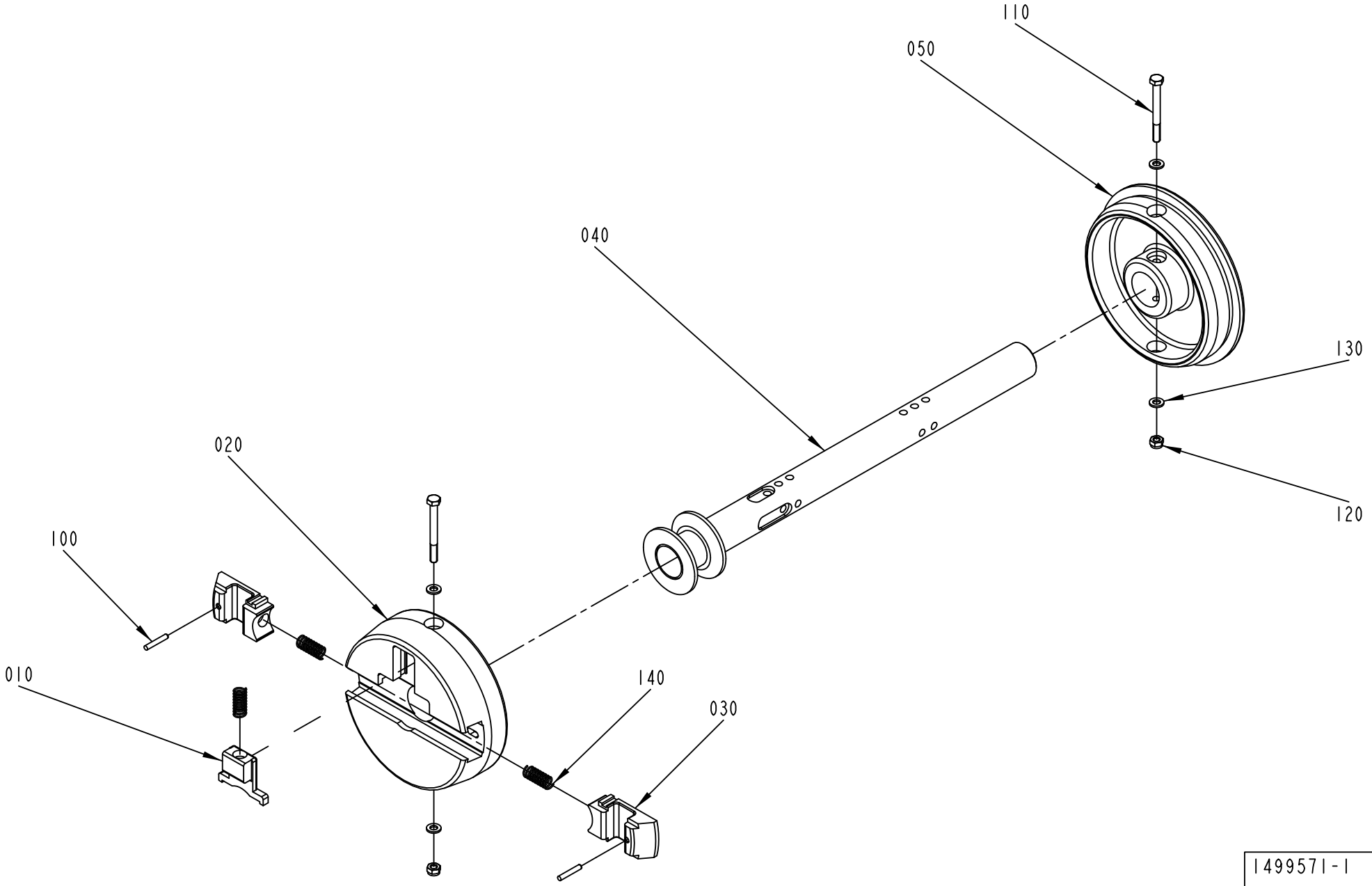

1499571-1
177034

ECM: 210983 - 20050808
Group number: 1499571-0100
Assembly Drawing: 1499571-1_1_AB

Pos	Part No	UN	Qty	Description	Page No
TBA/19					
040	1484737-0000		1	AXLE	
Common Parts					
010	272728-0000		1	BARRIER	
020	1512265-0000		1	SLEEVE	
030	575002-0000		2	PLUNGER	
050	1512266-0000		1	SLEEVE	
100	311103-0274		2	PARALLEL PIN ISO 2338 4M6X25 A1	
110	312105-0382		2	SCREW M6S ISO 4014 M6X60 A480	
120	312812-0316		2	HEXAGON NUT, NY-LOCK M6 A480	
130	315105-0153		4	WASHER BRB 6,4X12 RFR	
140	90335-0025		3	COMP. SPRING 22010, 1X11X26	

Pos	Part No	UN	Qty	Description	Page No

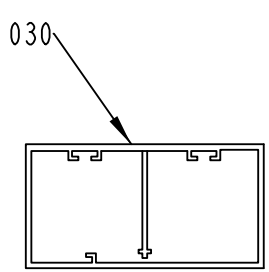

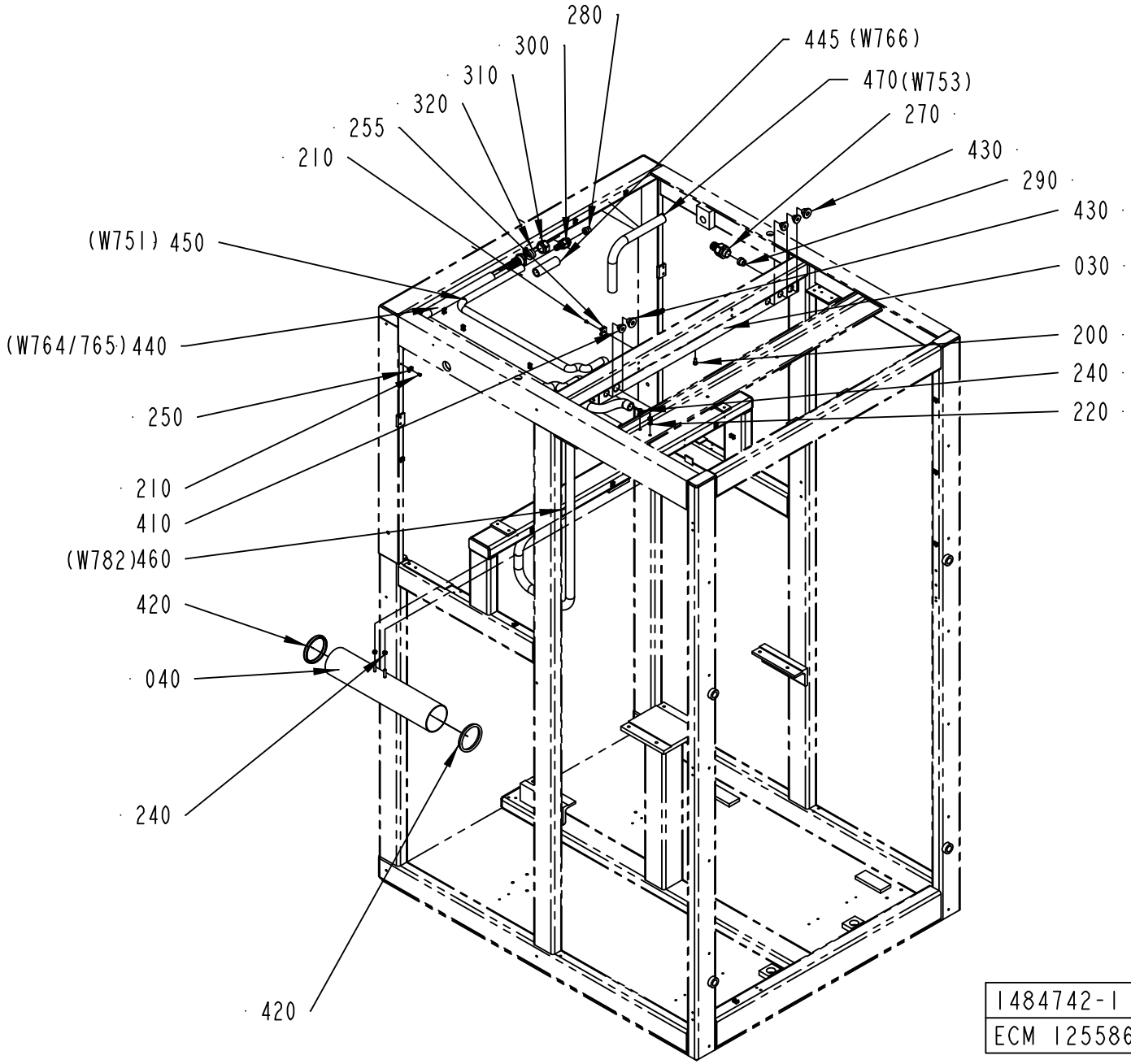

1484742-1
ECM 125586

ECM: 276172 - 20070126
Group number: 1484742-0100
Assembly Drawing: 1484742-1_1_AD

This list covers pages from 2-14 to 2-17

Pos	Part No	UN	Qty	Description	Page No
-					
010	1484727-0000		1	FRAME	
030	1511566-0000		1	CABLE DUCT	
040	2602664-0000		1	CABLE DUCT	
200	312115-0366		3	SCREW ISO4762 M6X12 A4 80	
210	312125-0285		44	SCREW ISO 1207 M4X6 A4	
220	315105-0153		2	WASHER BRB 6,4X12 RFR	
240	312605-0316		4	HEXAGON NUT, M6M M6 A280	
250	352113-0205		43	ANCHOR PLATES FOR STRIPS, TM2S8-C100	
255	352113-0203		1	ANCHOR PLATES FOR STRIPS, TM3S8-M0	
270	353243-0005		1	GLAND FITTING, VK 15354YUL16	
280	353249-0009		1	INSERT, SINGLE HOLE, EK152 9	
290	353249-0011		1	INSERT, SINGLE HOLE, EK153 11	
300	353243-0002		1	GLAND FITTING, VK 15152YUL11	
310	90457-0146		1	GLAND FITTING, VK 15154YUL16	
320	90457-0147		1	INSERT, MULTI HOLE, EK154M 2X7	
410	90015-0023		4	LEAD-IN, TET 7-10, E1458019	
420	90143-0060	MM	520	EDGE STRIP 9,5X6,3MM BLACK PVC	
430	90015-0021		3	LEAD-IN, TET 10-14, E1458023	
440	90152-0051	MM	1200	HOSE, SPIRAL CONDUIT, 25X18, UL 1816	
445	90152-0051	MM	70	HOSE, SPIRAL CONDUIT, 25X18, UL 1816	
450	90152-0050	MM	1200	HOSE, SPIRAL CONDUIT, 20X13, UL 1313	
460	90152-0051	MM	1600	HOSE, SPIRAL CONDUIT, 25X18, UL 1816	
470	90152-0050	MM	1250	HOSE, SPIRAL CONDUIT, 20X13, UL 1313	

Pos	Part No	UN	Qty	Description	Page No

Machine Type | Group Description | Used-In | Group Number | Page No

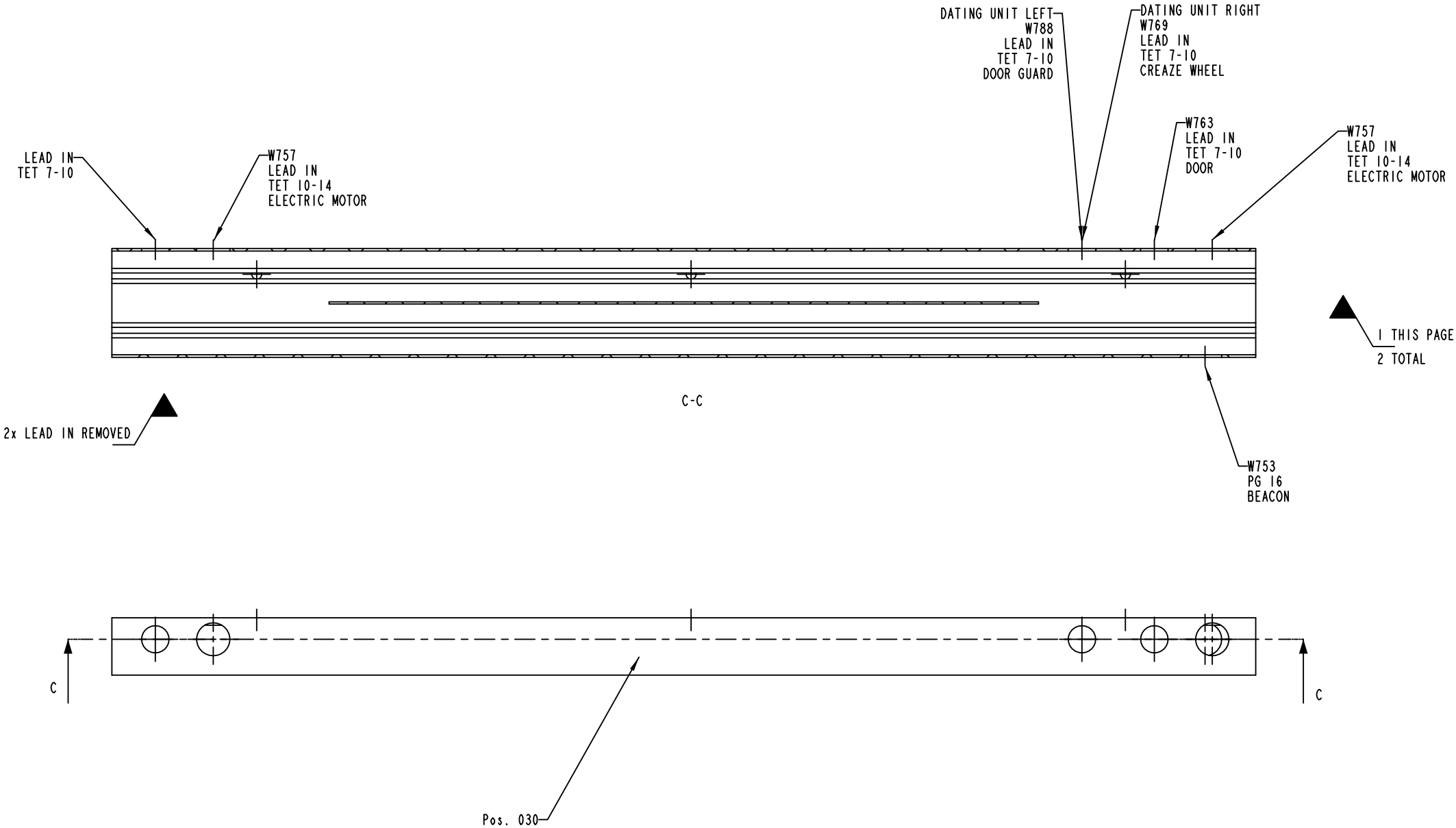
DATING UNIT LEFT
W788
LEAD IN
TET 7-10
DOOR GUARD
DATING UNIT RIGHT
W769
LEAD IN
TET 7-10
CREAZE WHEEL
W763
LEAD IN
TET 7-10
DOOR
W757
LEAD IN
TET 10-14
ELECTRIC MOTOR
LEAD IN
TET 7-10
W757
LEAD IN
TET 10-14
ELECTRIC MOTOR
1 THIS PAGE
2 TOTAL
C-C
2x LEAD IN REMOVED
W753
PG 16
BEACON
C
C
Pos. 030

ECM: 276172 - 20070126
Group number: 1484742-0100
Assembly Drawing: 1484742-1_2_AD

This list covers pages from 2-14 to 2-17

Pos	Part No	UN	Qty	Description	Page No
-					
010	1484727-0000		1	FRAME	
030	1511566-0000		1	CABLE DUCT	
040	2602664-0000		1	CABLE DUCT	
200	312115-0366		3	SCREW ISO4762 M6X12 A4 80	
210	312125-0285		44	SCREW ISO 1207 M4X6 A4	
220	315105-0153		2	WASHER BRB 6,4X12 RFR	
240	312605-0316		4	HEXAGON NUT, M6M M6 A280	
250	352113-0205		43	ANCHOR PLATES FOR STRIPS, TM2S8-C100	
255	352113-0203		1	ANCHOR PLATES FOR STRIPS, TM3S8-M0	
270	353243-0005		1	GLAND FITTING, VK 15354YUL16	
280	353249-0009		1	INSERT, SINGLE HOLE, EK152 9	
290	353249-0011		1	INSERT, SINGLE HOLE, EK153 11	
300	353243-0002		1	GLAND FITTING, VK 15152YUL11	
310	90457-0146		1	GLAND FITTING, VK 15154YUL16	
320	90457-0147		1	INSERT, MULTI HOLE, EK154M 2X7	
410	90015-0023		4	LEAD-IN, TET 7-10, E1458019	
420	90143-0060	MM	520	EDGE STRIP 9,5X6,3MM BLACK PVC	
430	90015-0021		3	LEAD-IN, TET 10-14, E1458023	
440	90152-0051	MM	1200	HOSE, SPIRAL CONDUIT, 25X18, UL 1816	
445	90152-0051	MM	70	HOSE, SPIRAL CONDUIT, 25X18, UL 1816	
450	90152-0050	MM	1200	HOSE, SPIRAL CONDUIT, 20X13, UL 1313	
460	90152-0051	MM	1600	HOSE, SPIRAL CONDUIT, 25X18, UL 1816	
470	90152-0050	MM	1250	HOSE, SPIRAL CONDUIT, 20X13, UL 1313	

Pos	Part No	UN	Qty	Description	Page No

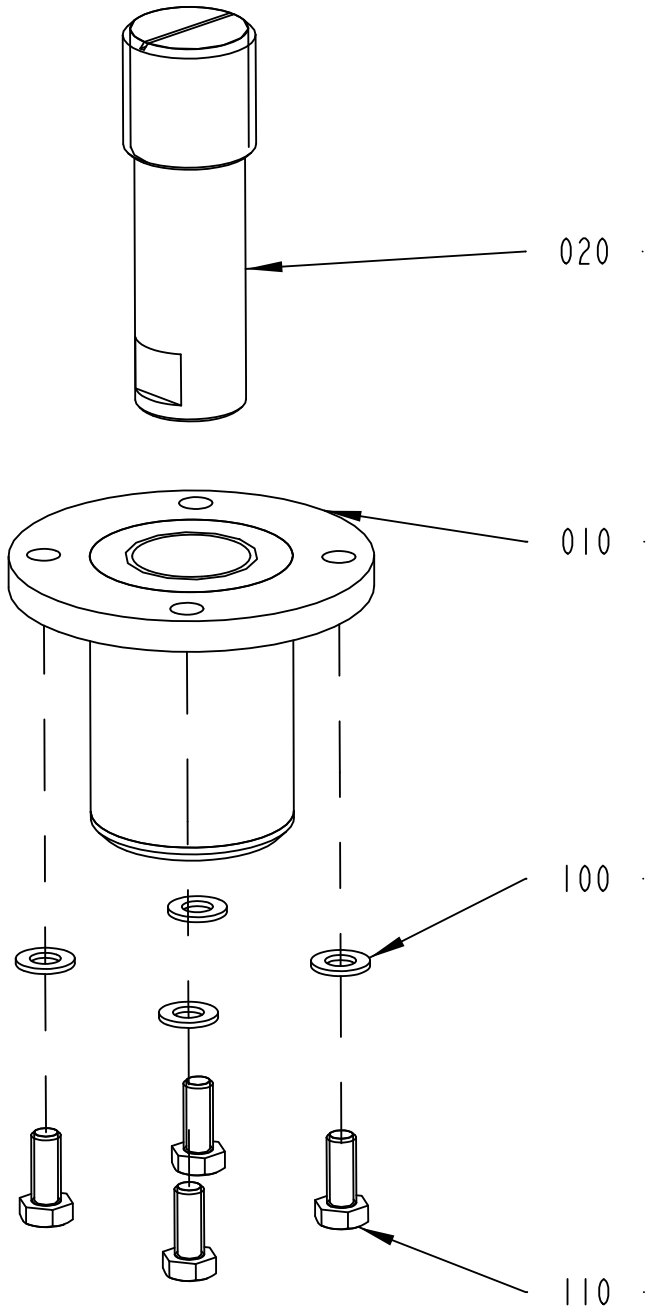

2781219-1
224518

ECM: 234363 - 20060112
Group number: 2781219-0100
Assembly Drawing: 2781219-1_1_AA

Pos	Part No	UN	Qty	Description	Page No
-					
010	2781217-0000		1	LEG	
020	2781021-0000		1	LEG	
100	315105-0165		4	WASHER BRB 8,4X16 RFR	
110	312105-0451		4	SCREW M6S ISO 4017 M8X20 A480	

Pos	Part No	UN	Qty	Description	Page No

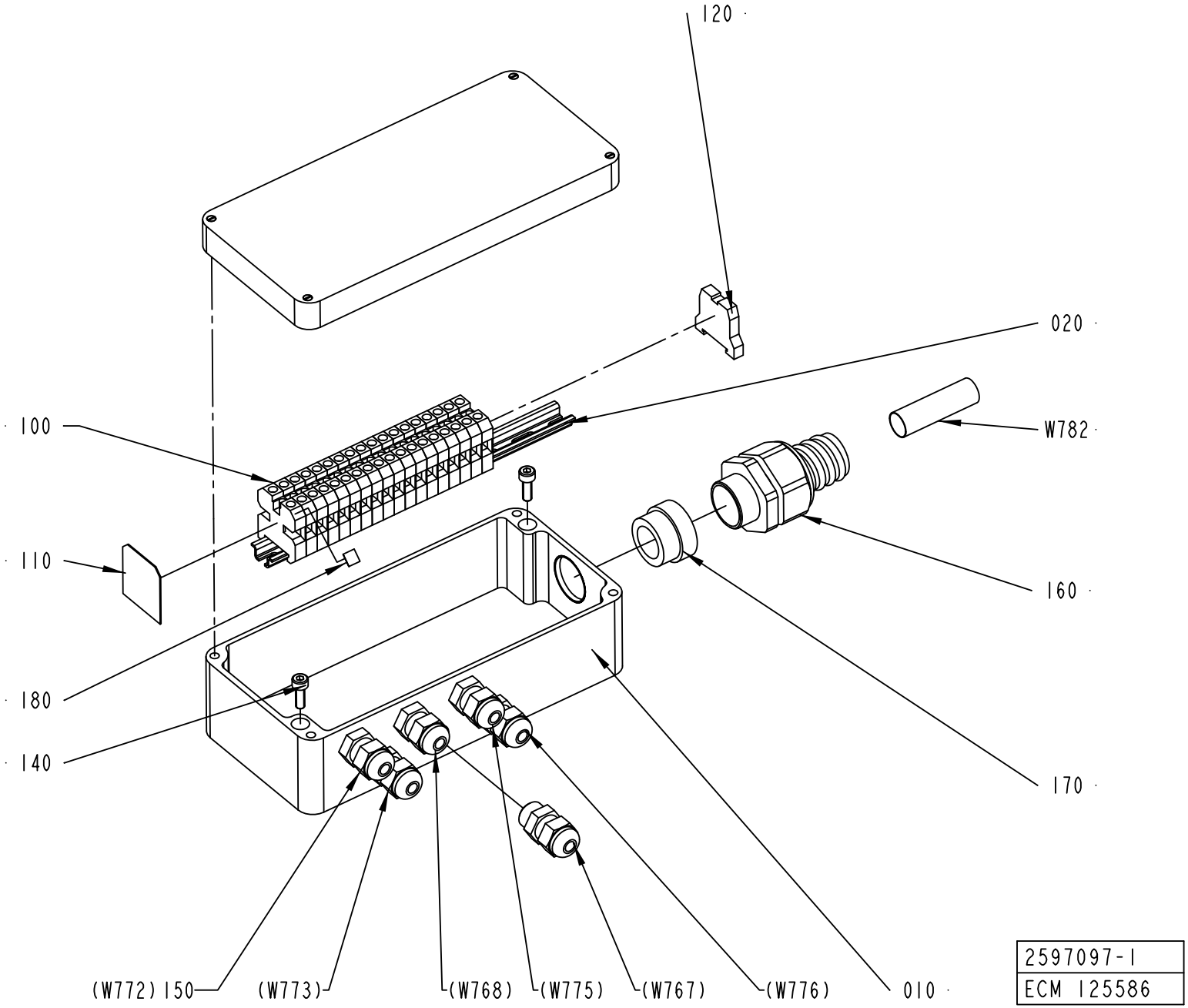
120
020
100
W782
110
160
180
170
140
(W772) 150
(W773)
(W768)
(W775)
(W767)
(W776)
010
2597097-1
ECM 125586

ECM: 125589 - 20031217
Group number: 2597097-0100
Assembly Drawing: 2597097-1_1_AA

Pos	Part No	UN	Qty	Description	Page No
-					
010	2597096-0000		1	CONNECTION BOX	
020	2597171-0000		1	RAIL	
100	90077-0079		18	TERMINAL PLINTH, AKZ 4	
110	90077-0307		1	END PLATE, AP AKZ4	
120	90135-0045		1	EARTH TERMINAL AKE 2,5	
140	312115-0291		2	SCREW ISO4762 M4X12 A4 80	
150	352103-0095		6	CABLE GLAND, STR 7, PR 12,5/PG7	
160	353243-0005		1	GLAND FITTING, VK 15354YUL16	
170	353249-0014		1	INSERT, SINGLE HOLE, EK154 16	
180	359011-0821		1	MARKING, DEK 6 FW 1-50	
W782	351150-0407	MM	4000	CABLE OLFLEX 12X0,75 MM2 LIGHT/GREY	

Pos	Part No	UN	Qty	Description	Page No

MATERIAL HOLDER L1

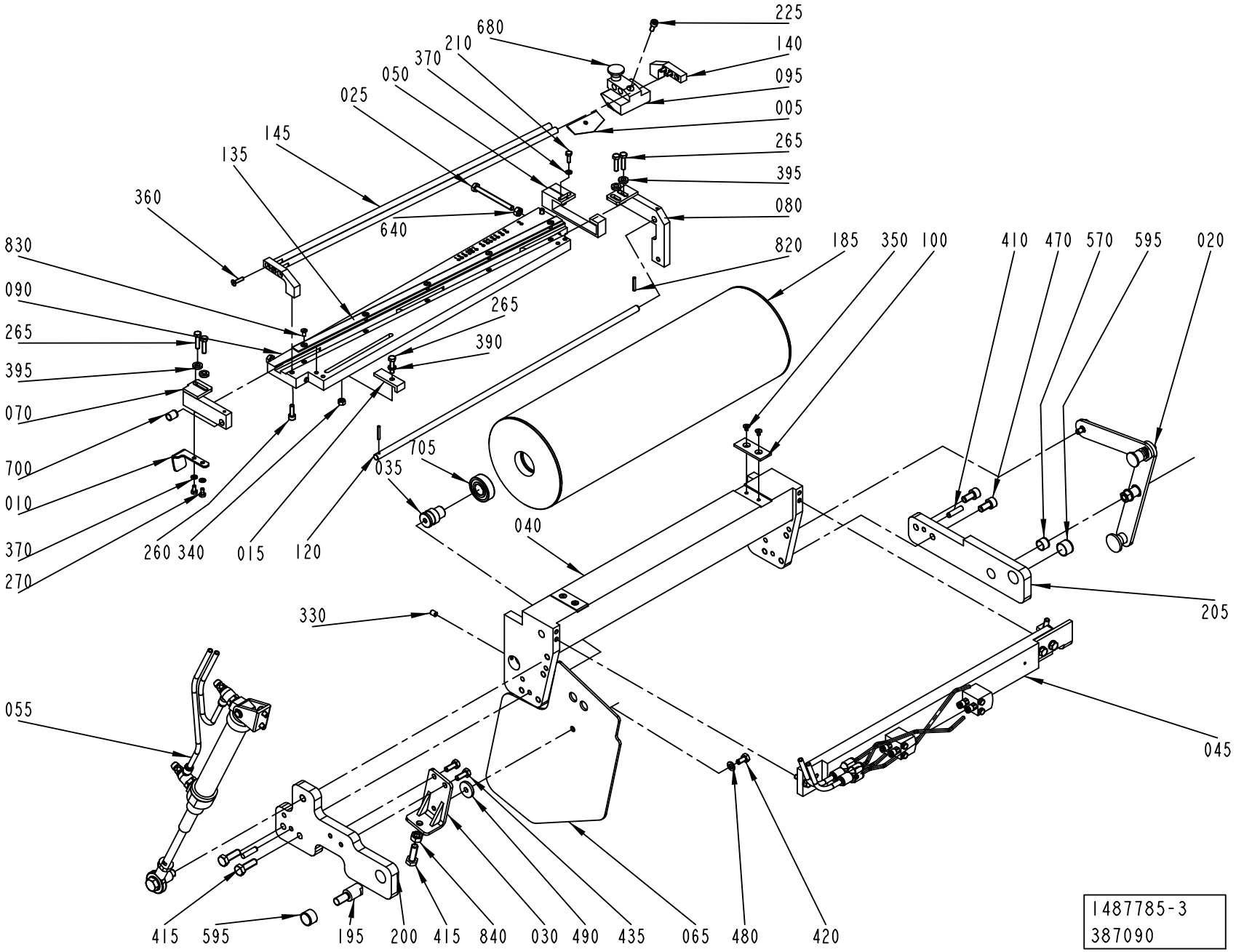

ECM: 403521 - 20090706
Group number: 1487785-0300
Assembly Drawing: 1487785-3_1_AA

This list covers pages from 2-22 to 2-25

Pos	Part No	UN	Qty	Description	Page No
-					
005	596678-0000		1	KNIFE	
010	3017407-0000		1	REFLECTOR	
015	1490821-0000		1	ANGLE PIECE	
020	1524398-0100		1	HANDLE	**2-27**
025	1490832-0000		2	SCREW	
030	1490199-0000		1	BRACKET	
035	1499582-0000		2	AXLE PIN	
040	1487770-0000		1	BRACKET	
045	1524397-0200		1	MATERIAL HOLDER	**2-29**
050	2538071-0000		1	ANGLE PIECE	
055	1524394-0200		1	CYLINDER	**2-31**
065	1512276-0000		1	PROTECTION PLATE	
070	1487774-0000		1	ROCKER ARM	
080	1487775-0000		1	ROCKER ARM	
090	1487776-0000		1	CUTTING TABLE	
095	1524746-0000		1	KNIFE HOLDER	
100	2553275-0000		2	SLIDE PLATE	
120	1487779-0000		1	SHAFT	
135	1487518-0000		1	RULER	
140	3017405-0000		2	BRACKET	
145	1487782-0000		2	SHAFT	
185	1499588-0000		1	BENDING ROLLER	
195	1511568-0000		1	PIN	
200	2587250-0000		1	ARM	
205	1511575-0000		1	ARM	
210	312105-0291		1	SCREW M6S ISO 4017 M4X12 A470	
225	312115-0327		1	SCREW ISO4762 M5X12 A4 80	
260	312115-0329		2	SCREW ISO4762 M5X16 A4 80	
265	312105-0331		5	SCREW M6S ISO 4017 M5X20 A480	
270	312105-0287		2	SCREW M6S ISO 4017 M4X8 A470	
330	312318-0362		2	SCREW ISO4029 M6X8 A4	
340	312605-0314		1	HEXAGON NUT, M6M M5 A280	
350	312155-0285		4	SCREW DIN 7991 MF6S M4X6 A4 70	
360	312155-0293		4	SCREW DIN 7991 MF6S M4X16 A4 70	
370	315105-0136		3	WASHER BRB 4,3X8 RFR	
390	315105-0146		1	WASHER BRB 5,3X10 RFR	
395	315115-0153		4	WASHER PLAIN, TBRB 6,4/12 H=3	
410	311103-1355		2	PARALLEL PIN ISO 2338 6M6X24 A1	
415	312105-0453		3	SCREW M6S ISO 4017 M8X25 A480	
420	312105-0366		1	SCREW M6S ISO 4017 M6X12 A480	
435	312105-0368		2	SCREW M6S ISO 4017 M6X16 A480	
470	312115-0449		2	SCREW ISO4762 M8X16 A4 80	
480	315105-0153		1	WASHER BRB 6,4X12 RFR	
490	315125-0153		1	WASHER TBRSB 6,4X22X4 A4	
570	321120-0109		1	BEARING BUSH W/O FLANGE, 12X14X10 MM	
595	321120-0123		2	BEARING BUSH W/O FLANGE, 16X18X12 MM	
640	312605-0316		2	HEXAGON NUT, M6M M6 A280	
680	318871-0102		1	KNOB CIRCULAR, EXT THREAD, NO. 8302-6037	
700	321120-0100		2	BEARING BUSH W/O FLANGE, 8X10X12 MM	
705	321313-0102		2	BALL BEARING 15/35X11	
820	90258-0031		2	PIN, STRAIGHT SLOTTED SPRING FRP 3X20	
830	312145-0287		5	SCREW ISO 2009 MFS M4X8 A4	
840	312605-0318		1	HEXAGON NUT, M6M M8 A280	

Machine Type	Group Description	Used-In	Group Number	Page No

MATERIAL HOLDER L1

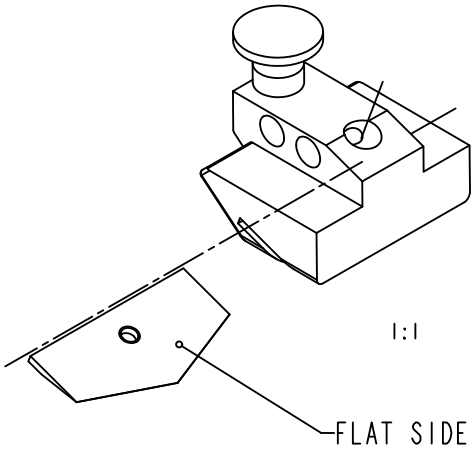

SETTINGS OF CUTTING TABLE POS 090
AT DIFFRENT WEB WIDTHS

ECM: 403521 - 20090706
Group number: 1487785-0300
Assembly Drawing: 1487785-3_2_AA

This list covers pages from 2-22 to 2-25

Pos	Part No	UN	Qty	Description	Page No
-					
005	596678-0000		1	KNIFE	
010	3017407-0000		1	REFLECTOR	
015	1490821-0000		1	ANGLE PIECE	
020	1524398-0100		1	HANDLE	**2-27**
025	1490832-0000		2	SCREW	
030	1490199-0000		1	BRACKET	
035	1499582-0000		2	AXLE PIN	
040	1487770-0000		1	BRACKET	
045	1524397-0200		1	MATERIAL HOLDER	**2-29**
050	2538071-0000		1	ANGLE PIECE	
055	1524394-0200		1	CYLINDER	**2-31**
065	1512276-0000		1	PROTECTION PLATE	
070	1487774-0000		1	ROCKER ARM	
080	1487775-0000		1	ROCKER ARM	
090	1487776-0000		1	CUTTING TABLE	
095	1524746-0000		1	KNIFE HOLDER	
100	2553275-0000		2	SLIDE PLATE	
120	1487779-0000		1	SHAFT	
135	1487518-0000		1	RULER	
140	3017405-0000		2	BRACKET	
145	1487782-0000		2	SHAFT	
185	1499588-0000		1	BENDING ROLLER	
195	1511568-0000		1	PIN	
200	2587250-0000		1	ARM	
205	1511575-0000		1	ARM	
210	312105-0291		1	SCREW M6S ISO 4017 M4X12 A470	
225	312115-0327		1	SCREW ISO4762 M5X12 A4 80	
260	312115-0329		2	SCREW ISO4762 M5X16 A4 80	
265	312105-0331		5	SCREW M6S ISO 4017 M5X20 A480	
270	312105-0287		2	SCREW M6S ISO 4017 M4X8 A470	
330	312318-0362		2	SCREW ISO4029 M6X8 A4	
340	312605-0314		1	HEXAGON NUT, M6M M5 A280	
350	312155-0285		4	SCREW DIN 7991 MF6S M4X6 A4 70	
360	312155-0293		4	SCREW DIN 7991 MF6S M4X16 A4 70	
370	315105-0136		3	WASHER BRB 4,3X8 RFR	
390	315105-0146		1	WASHER BRB 5,3X10 RFR	
395	315115-0153		4	WASHER PLAIN, TBRB 6,4/12 H=3	
410	311103-1355		2	PARALLEL PIN ISO 2338 6M6X24 A1	
415	312105-0453		3	SCREW M6S ISO 4017 M8X25 A480	
420	312105-0366		1	SCREW M6S ISO 4017 M6X12 A480	
435	312105-0368		2	SCREW M6S ISO 4017 M6X16 A480	
470	312115-0449		2	SCREW ISO4762 M8X16 A4 80	
480	315105-0153		1	WASHER BRB 6,4X12 RFR	
490	315125-0153		1	WASHER TBRSB 6,4X22X4 A4	
570	321120-0109		1	BEARING BUSH W/O FLANGE, 12X14X10 MM	
595	321120-0123		2	BEARING BUSH W/O FLANGE, 16X18X12 MM	
640	312605-0316		2	HEXAGON NUT, M6M M6 A280	
680	318871-0102		1	KNOB CIRCULAR, EXT THREAD, NO. 8302-6037	
700	321120-0100		2	BEARING BUSH W/O FLANGE, 8X10X12 MM	
705	321313-0102		2	BALL BEARING 15/35X11	
820	90258-0031		2	PIN, STRAIGHT SLOTTED SPRING FRP 3X20	
830	312145-0287		5	SCREW ISO 2009 MFS M4X8 A4	
840	312605-0318		1	HEXAGON NUT, M6M M8 A280	

Machine Type | Group Description | Used-In | Group Number | Page No

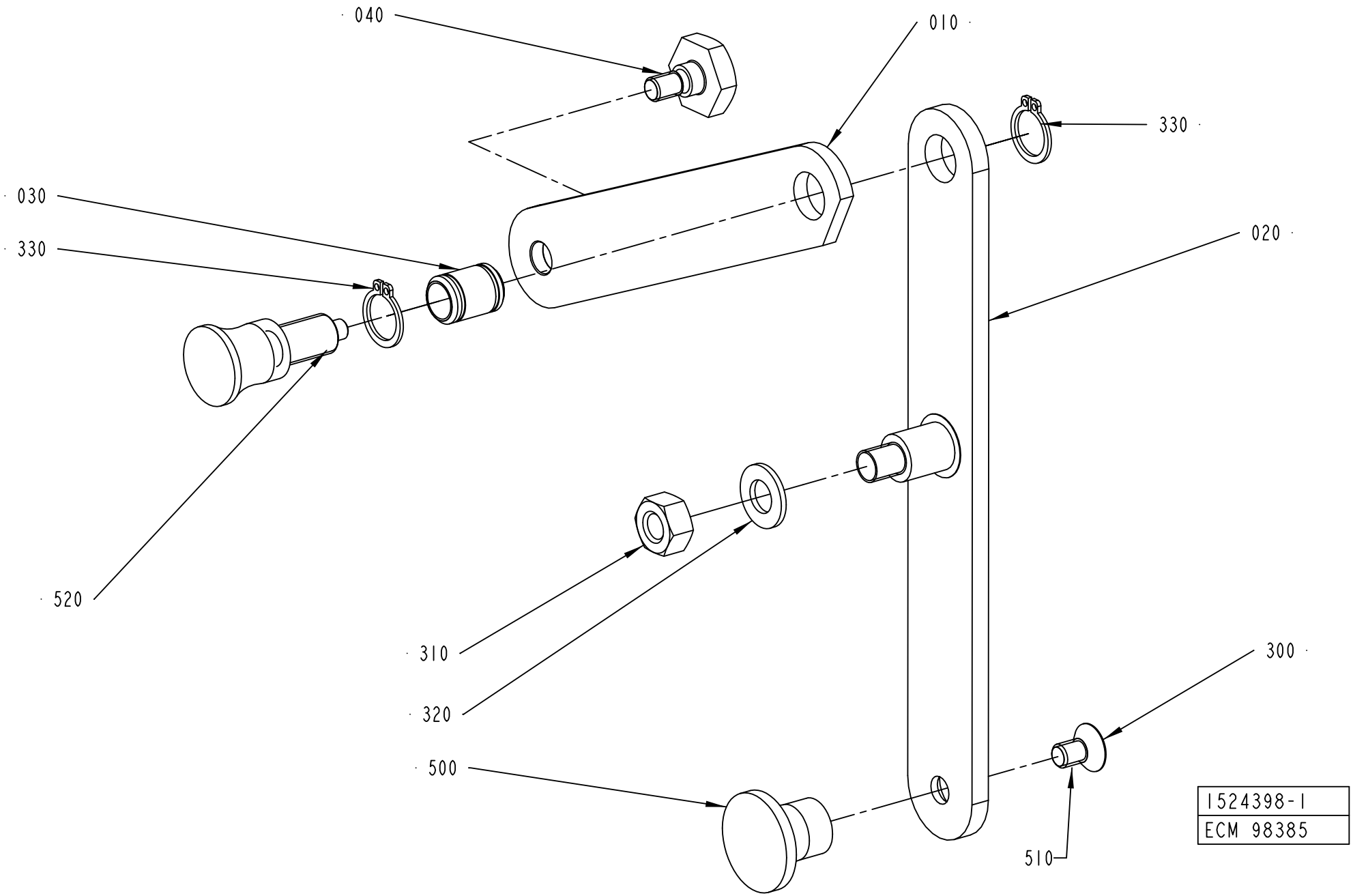
040
010
330
030
330
020
520
310
320
300
500
510
1524398-1
ECM 98385

ECM: 180696 - 20040910
Group number: 1524398-0100
Assembly Drawing: 1524398-1_1_AC

Pos	Part No	UN	Qty	Description	Page No
-					
010	1490809-0000		1	ARM	
020	1490810-0000		1	ARM	
030	1490812-0000		1	AXLE	
040	1490813-0000		1	SCREW	
300	312155-0364		1	SCREW DIN 7991 MF6S M6X10 A4 70	
310	312605-0318		1	HEXAGON NUT, M6M M8 A280	
320	315105-0165		1	WASHER BRB 8,4X16 RFR	
330	315751-0109		2	RETAINING RING FOR SHAFT DIN 471 12 SS	
500	90051-0082		1	KNOB, CIRCUL, THREADED BUSH, M6 25X21 MM	
510	90157-0016		1	THREAD LOCKING, LOCTITE 242 50 ML	
520	90051-0087		1	LOCK KNOB, NO. GN 617 A5	

Pos	Part No	UN	Qty	Description	Page No

MATERIAL HOLDER

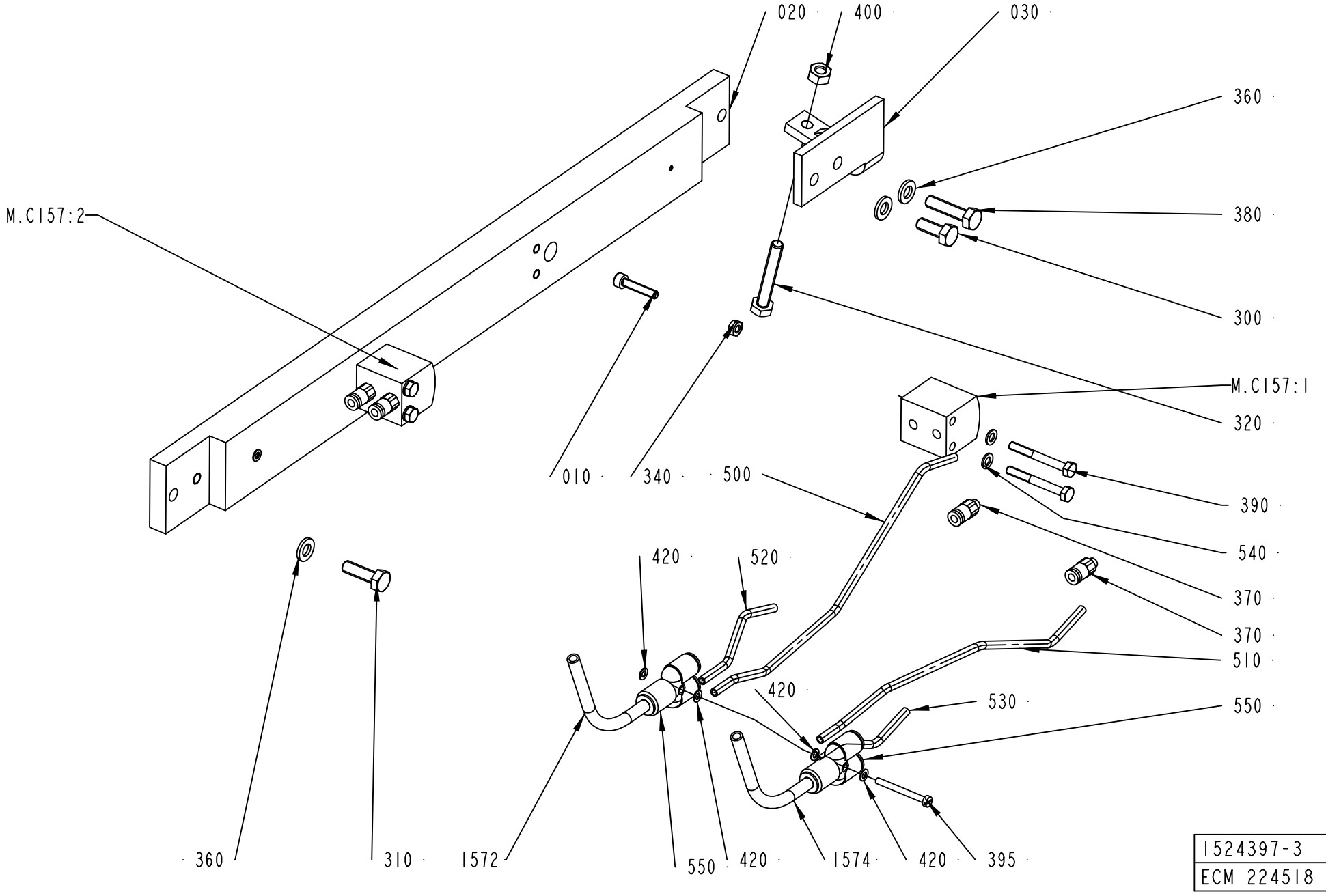

1524397-3
ECM 224518

ECM: 257927 - 20060307
Group number: 1524397-0200
Assembly Drawing: 1524397-3_1_AA

Pos	Part No	UN	Qty	Description	Page No
-					
010	312115-0295		2	SCREW ISO4762 M4X20 A4 80	
020	2788125-0000		1	CYLINDER BRACKET	
030	1490203-0000		1	SPACER	
300	312105-0368		1	SCREW M6S ISO 4017 M6X16 A480	
310	312105-0370		1	SCREW M6S ISO 4017 M6X20 A480	
320	312109-0378		1	SCREW M6S ISO 4017 M6X40 A480	
340	312605-0312		2	HEXAGON NUT, M6M M4 A280	
360	315105-0153		3	WASHER BRB 6,4X12 RFR	
370	342722-0198		4	STRAIGHT COUPLING	
380	312105-0372		1	SCREW M6S ISO 4017 M6X25 A480	
390	312105-0301		4	SCREW M6S ISO 4017 M4X35 A470	
395	312125-0234		1	SCREW ISO 1207 M3X30 A4	
400	312605-0316		1	HEXAGON NUT, M6M M6 A280	
420	315105-0124		5	WASHER BRB 3,2X6 RFR	
500	90166-0254	MM	300	TUBE 4 MM PUR BLUE	
510	90166-0254	MM	300	TUBE 4 MM PUR BLUE	
520	90166-0254	MM	200	TUBE 4 MM PUR BLUE	
530	90166-0254	MM	200	TUBE 4 MM PUR BLUE	
540	315103-0136		4	WASHER PLAIN, BRB, 4,3/8,H=0,8 NI PL BR	
550	90055-0154		2	HOSE COUPLING	
1572	90166-0193	MM	5500	TUBE 6 MM PUR BLUE	
1574	90166-0193	MM	5500	TUBE 6 MM PUR BLUE	
C157:2	90459-0503		1	DOUBLE ACTING, SHORT STROKE, CYL 16-10	
C157:1	90459-0503		1	DOUBLE ACTING, SHORT STROKE, CYL 16-10	

Pos	Part No	UN	Qty	Description	Page No

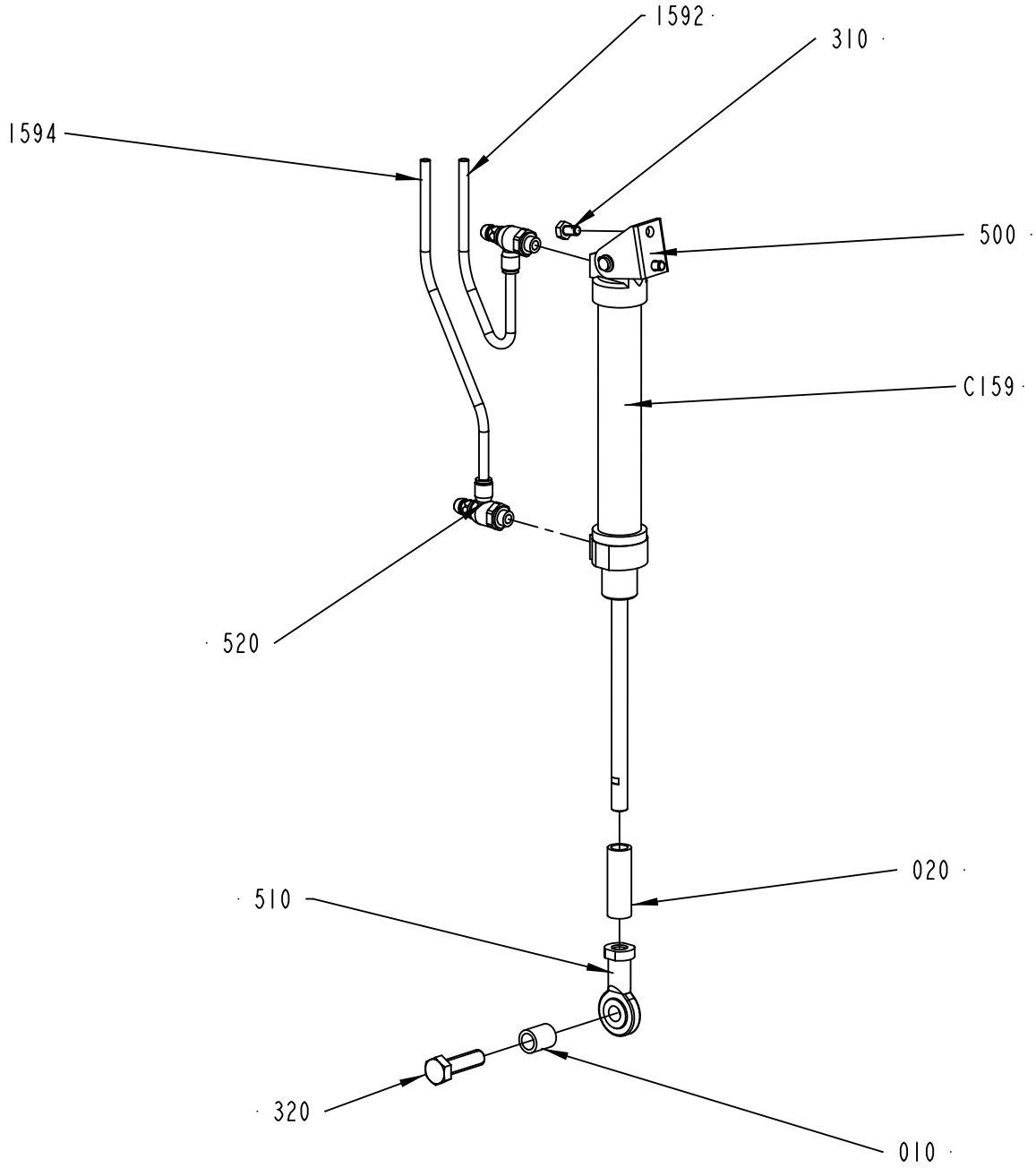

1524394-3
387090

ECM: 403522 - 20090706
Group number: 1524394-0200
Assembly Drawing: 1524394-3_1_AA

Pos	Part No	UN	Qty	Description	Page No
-					
010	3017403-0000		1	SPACER	
020	3017404-0000		1	SPACER	
310	312105-0364		2	SCREW M6S ISO 4017 M6X10 A480	
320	312105-0497		1	SCREW M6S ISO 4017 M10X35 A480	
500	90239-0487		1	REAR, CLEVIS, MINI-ISO 20-25	
510	90239-0405		1	ROD END,BALL JOINT EYE M10X1,25	
520	90235-0846		2	THROTTLE CHECK VALVE G1/8", MANUAL, 6	
1592	90166-0193	M	1	TUBE 6 MM PUR BLUE	
1594	90166-0193	M	1	TUBE 6 MM PUR BLUE	
C159	90239-0832		1	DOUBLE ACTING, MINI-ISO, CYL. 25-125	

Pos	Part No	UN	Qty	Description	Page No

MATERIAL HOLDER L2

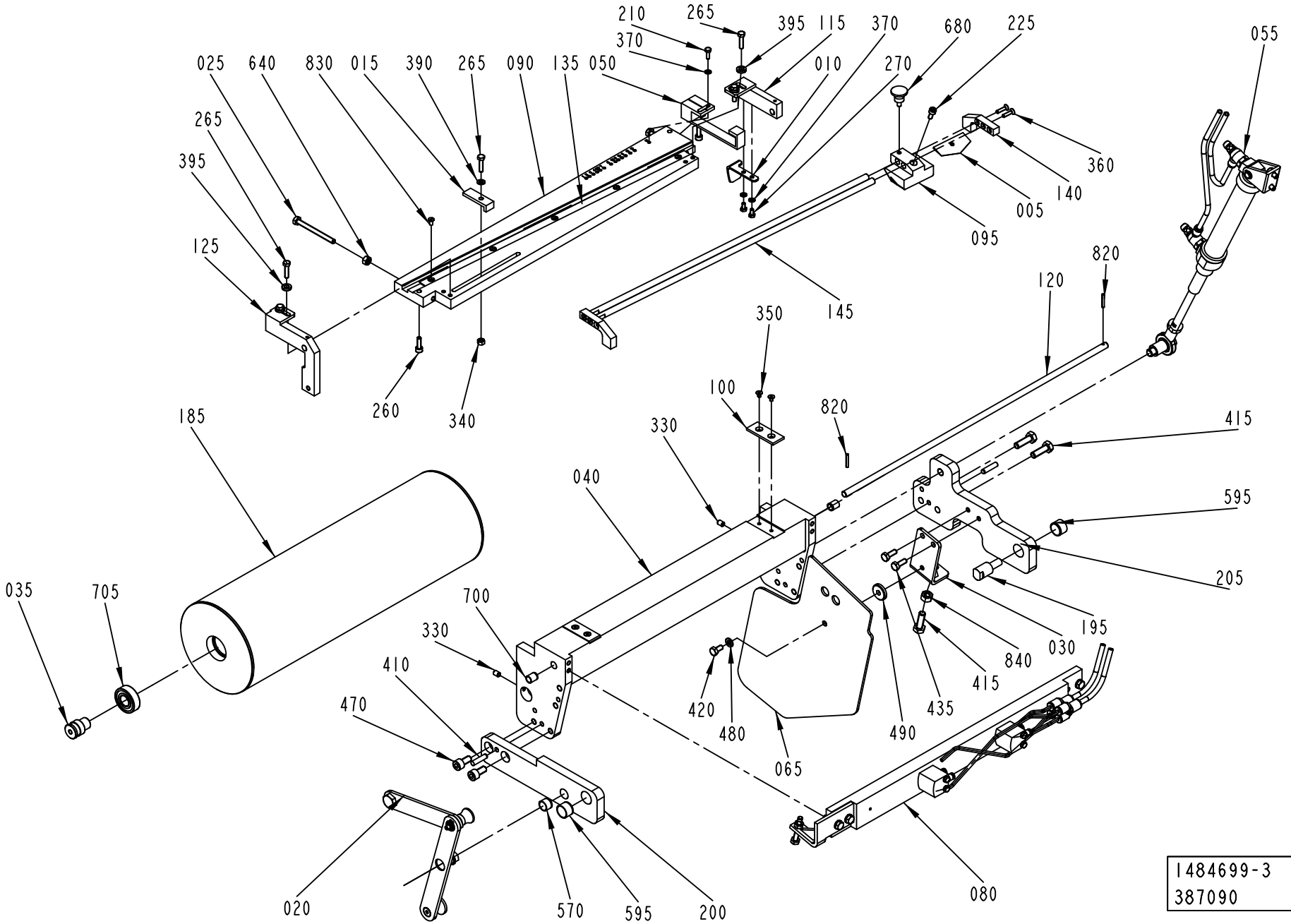

1484699-3
387090

ECM: 403523 - 20090706
Group number: 1484699-0300
Assembly Drawing: 1484699-3_1_AA

This list covers pages from 2-32 to 2-35

Pos	Part No	UN	Qty	Description	Page No
-					
005	596678-0000		1	KNIFE	
010	3017406-0000		1	REFLECTOR	
015	1490821-0000		1	ANGLE PIECE	
020	1519589-0100		1	HANDLE	2-37
025	1490832-0000		2	SCREW	
030	1490199-0000		1	BRACKET	
035	1499582-0000		2	AXLE PIN	
040	1487770-0000		1	BRACKET	
050	2538071-0000		1	ANGLE PIECE	
055	1487528-0200		1	CYLINDER	2-39
065	1512276-0000		1	PROTECTION PLATE	
080	1524729-0200		1	MATERIAL HOLDER	2-41
090	1487776-0000		1	CUTTING TABLE	
095	1524746-0000		1	KNIFE HOLDER	
100	2553275-0000		2	SLIDE PLATE	
115	1487772-0000		1	ROCKER ARM	
120	1487779-0000		1	SHAFT	
125	1487777-0000		1	ROCKER ARM	
135	1487518-0000		1	RULER	
140	3017405-0000		2	BRACKET	
145	1487782-0000		2	SHAFT	
185	1499588-0000		1	BENDING ROLLER	
195	1511568-0000		1	PIN	
200	1499577-0000		1	ARM	
205	2587250-0000		1	ARM	
210	312105-0291		1	SCREW M6S ISO 4017 M4X12 A470	
225	312115-0327		1	SCREW ISO4762 M5X12 A4 80	
260	312115-0329		2	SCREW ISO4762 M5X16 A4 80	
265	312105-0331		5	SCREW M6S ISO 4017 M5X20 A480	
270	312105-0287		2	SCREW M6S ISO 4017 M4X8 A470	
330	312318-0362		2	SCREW ISO4029 M6X8 A4	
340	312605-0314		1	HEXAGON NUT, M6M M5 A280	
350	312155-0285		4	SCREW DIN 7991 MF6S M4X6 A4 70	
360	312155-0293		4	SCREW DIN 7991 MF6S M4X16 A4 70	
370	315105-0136		3	WASHER BRB 4,3X8 RFR	
390	315105-0146		1	WASHER BRB 5,3X10 RFR	
395	315115-0153		4	WASHER PLAIN, TBRB 6,4/12 H=3	
410	311103-1355		2	PARALLEL PIN ISO 2338 6M6X24 A1	
415	312105-0453		3	SCREW M6S ISO 4017 M8X25 A480	
420	312105-0366		1	SCREW M6S ISO 4017 M6X12 A480	
435	312105-0368		2	SCREW M6S ISO 4017 M6X16 A480	
470	312115-0449		2	SCREW ISO4762 M8X16 A4 80	
480	315105-0153		1	WASHER BRB 6,4X12 RFR	
490	315125-0153		1	WASHER TBRSB 6,4X22X4 A4	
570	321120-0109		1	BEARING BUSH W/O FLANGE, 12X14X10 MM	
595	321120-0123		2	BEARING BUSH W/O FLANGE, 16X18X12 MM	
640	312605-0316		2	HEXAGON NUT, M6M M6 A280	
680	318871-0102		1	KNOB CIRCULAR, EXT THREAD, NO. 8302-6037	
700	321120-0100		2	BEARING BUSH W/O FLANGE, 8X10X12 MM	
705	321313-0102		2	BALL BEARING 15/35X11	
820	90258-0031		2	PIN, STRAIGHT SLOTTED SPRING FRP 3X20	
830	312145-0287		5	SCREW ISO 2009 MFS M4X8 A4	
840	312605-0318		1	HEXAGON NUT, M6M M8 A280	

Machine Type | Group Description | Used-In | Group Number | Page No

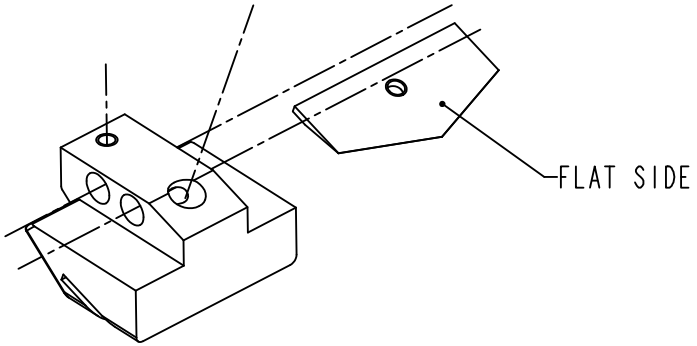

SETTINGS OF CUTTING TABLE POS 090
AT DIFFRENT WEB WIDTHS

ECM: 403523 - 20090706
Group number: 1484699-0300
Assembly Drawing: 1484699-3_2_AA

This list covers pages from 2-32 to 2-35

Pos	Part No	UN	Qty	Description	Page No
-					
005	596678-0000		1	KNIFE	
010	3017406-0000		1	REFLECTOR	
015	1490821-0000		1	ANGLE PIECE	
020	1519589-0100		1	HANDLE	2-37
025	1490832-0000		2	SCREW	
030	1490199-0000		1	BRACKET	
035	1499582-0000		2	AXLE PIN	
040	1487770-0000		1	BRACKET	
050	2538071-0000		1	ANGLE PIECE	
055	1487528-0200		1	CYLINDER	2-39
065	1512276-0000		1	PROTECTION PLATE	
080	1524729-0200		1	MATERIAL HOLDER	2-41
090	1487776-0000		1	CUTTING TABLE	
095	1524746-0000		1	KNIFE HOLDER	
100	2553275-0000		2	SLIDE PLATE	
115	1487772-0000		1	ROCKER ARM	
120	1487779-0000		1	SHAFT	
125	1487777-0000		1	ROCKER ARM	
135	1487518-0000		1	RULER	
140	3017405-0000		2	BRACKET	
145	1487782-0000		2	SHAFT	
185	1499588-0000		1	BENDING ROLLER	
195	1511568-0000		1	PIN	
200	1499577-0000		1	ARM	
205	2587250-0000		1	ARM	
210	312105-0291		1	SCREW M6S ISO 4017 M4X12 A470	
225	312115-0327		1	SCREW ISO4762 M5X12 A4 80	
260	312115-0329		2	SCREW ISO4762 M5X16 A4 80	
265	312105-0331		5	SCREW M6S ISO 4017 M5X20 A480	
270	312105-0287		2	SCREW M6S ISO 4017 M4X8 A470	
330	312318-0362		2	SCREW ISO4029 M6X8 A4	
340	312605-0314		1	HEXAGON NUT, M6M M5 A280	
350	312155-0285		4	SCREW DIN 7991 MF6S M4X6 A4 70	
360	312155-0293		4	SCREW DIN 7991 MF6S M4X16 A4 70	
370	315105-0136		3	WASHER BRB 4,3X8 RFR	
390	315105-0146		1	WASHER BRB 5,3X10 RFR	
395	315115-0153		4	WASHER PLAIN, TBRB 6,4/12 H=3	
410	311103-1355		2	PARALLEL PIN ISO 2338 6M6X24 A1	
415	312105-0453		3	SCREW M6S ISO 4017 M8X25 A480	
420	312105-0366		1	SCREW M6S ISO 4017 M6X12 A480	
435	312105-0368		2	SCREW M6S ISO 4017 M6X16 A480	
470	312115-0449		2	SCREW ISO4762 M8X16 A4 80	
480	315105-0153		1	WASHER BRB 6,4X12 RFR	
490	315125-0153		1	WASHER TBRSB 6,4X22X4 A4	
570	321120-0109		1	BEARING BUSH W/O FLANGE, 12X14X10 MM	
595	321120-0123		2	BEARING BUSH W/O FLANGE, 16X18X12 MM	
640	312605-0316		2	HEXAGON NUT, M6M M6 A280	
680	318871-0102		1	KNOB CIRCULAR, EXT THREAD, NO. 8302-6037	
700	321120-0100		2	BEARING BUSH W/O FLANGE, 8X10X12 MM	
705	321313-0102		2	BALL BEARING 15/35X11	
820	90258-0031		2	PIN, STRAIGHT SLOTTED SPRING FRP 3X20	
830	312145-0287		5	SCREW ISO 2009 MFS M4X8 A4	
840	312605-0318		1	HEXAGON NUT, M6M M8 A280	

Machine Type	Group Description	Used-In	Group Number	Page No

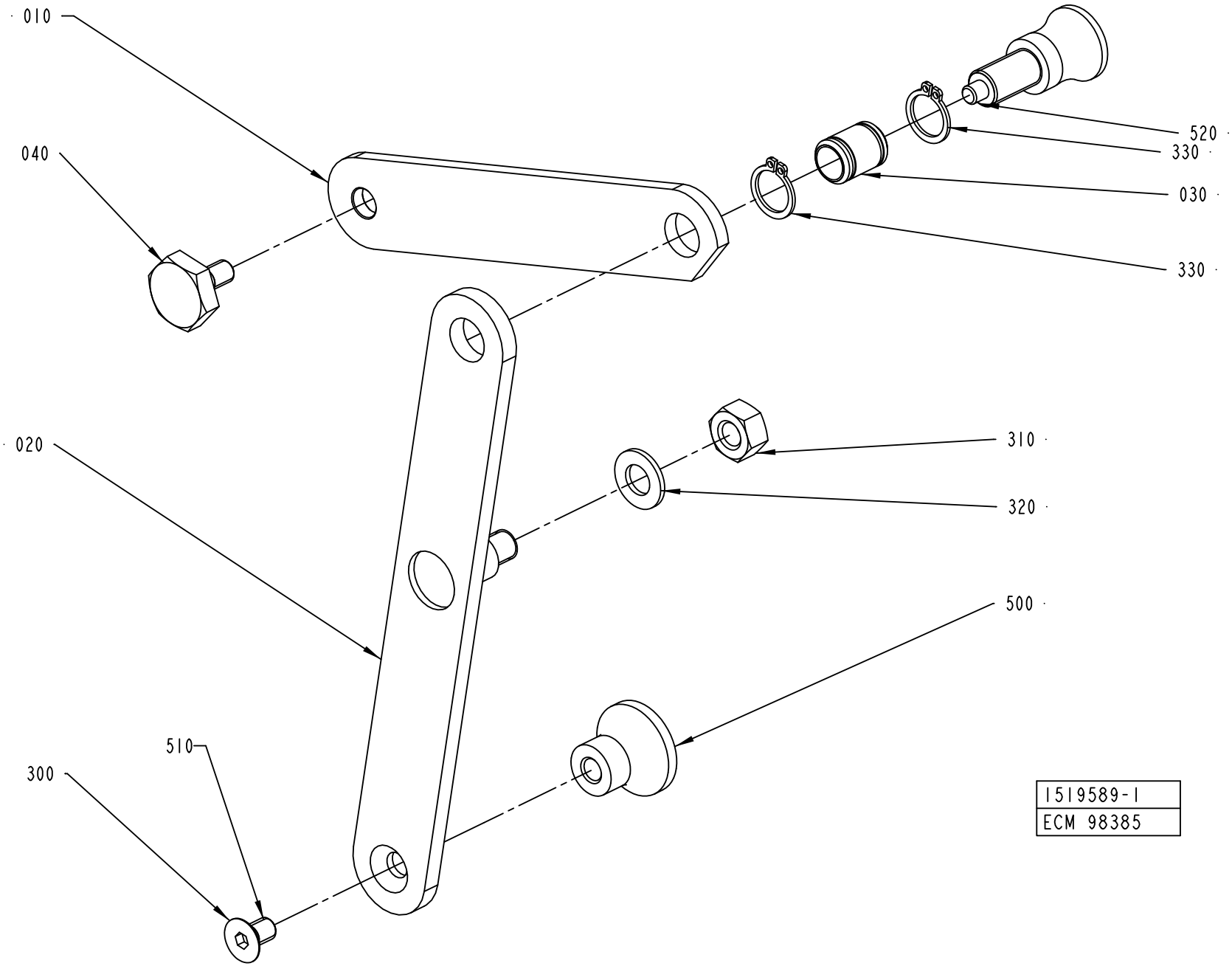
010
040
020
300
510
520
330
030
330
310
320
500
1519589-1
ECM 98385

ECM: 180681 - 20040910
Group number: 1519589-0100
Assembly Drawing: 1519589-1_1_AC

Pos	Part No	UN	Qty	Description	Page No
-					
010	1490809-0000		1	ARM	
020	1490810-0000		1	ARM	
030	1490812-0000		1	AXLE	
040	1490813-0000		1	SCREW	
300	312155-0364		1	SCREW DIN 7991 MF6S M6X10 A4 70	
310	312605-0318		1	HEXAGON NUT, M6M M8 A280	
320	315105-0165		1	WASHER BRB 8,4X16 RFR	
330	315751-0109		2	RETAINING RING FOR SHAFT DIN 471 12 SS	
500	90051-0082		1	KNOB, CIRCUL, THREADED BUSH, M6 25X21 MM	
510	90157-0016		1	THREAD LOCKING, LOCTITE 242 50 ML	
520	90051-0087		1	LOCK KNOB, NO. GN 617 A5	

Pos	Part No	UN	Qty	Description	Page No

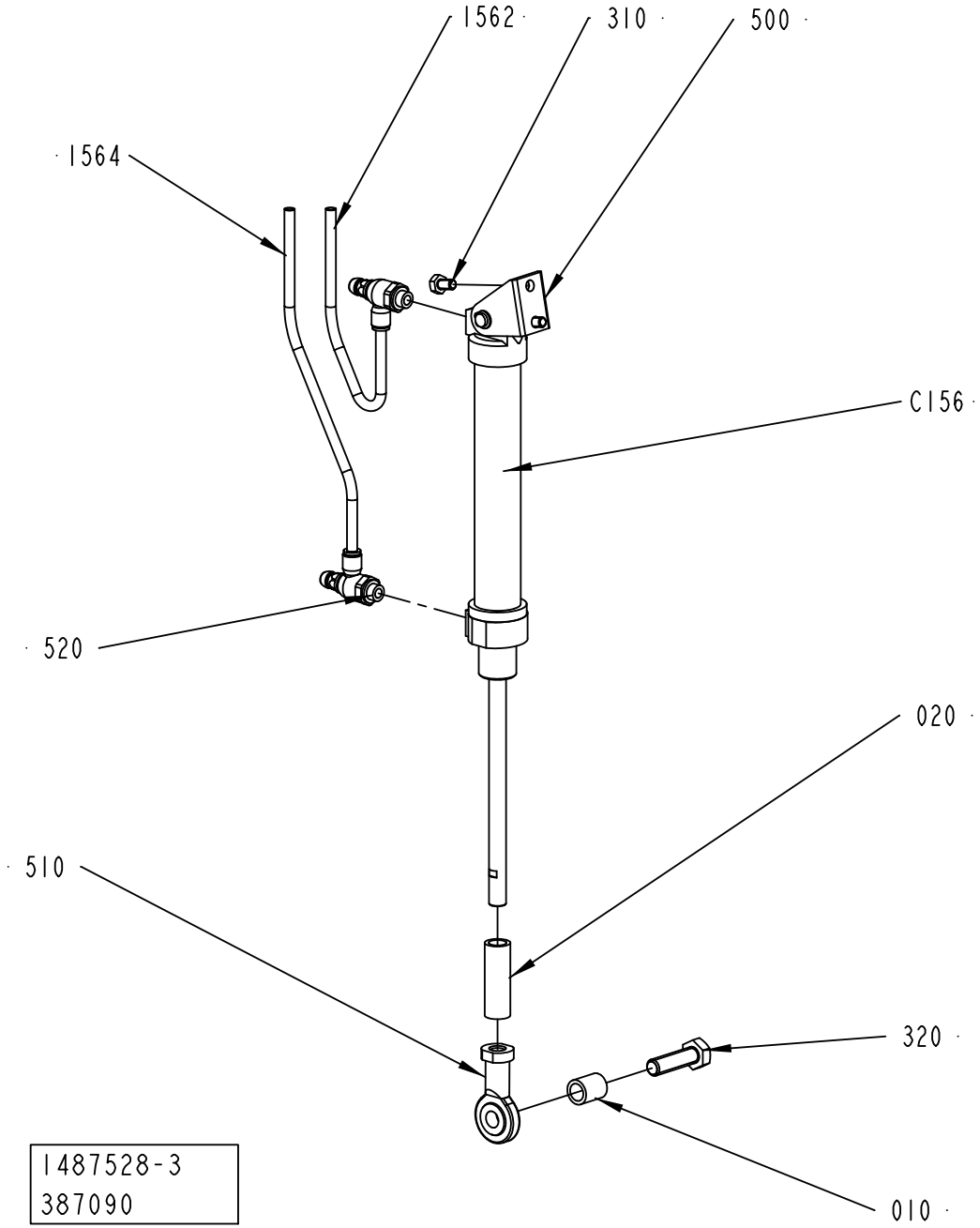
1562
310
500
1564
C156
520
020
510
320
010
1487528-3
387090

ECM: 403524 - 20090706
Group number: 1487528-0200
Assembly Drawing: 1487528-3_1_AA

Pos	Part No	UN	Qty	Description	Page No
-					
010	3017403-0000		1	SPACER	
020	3017404-0000		1	SPACER	
310	312105-0364		2	SCREW M6S ISO 4017 M6X10 A480	
320	312105-0497		1	SCREW M6S ISO 4017 M10X35 A480	
500	90239-0487		1	REAR, CLEVIS, MINI-ISO 20-25	
510	90239-0405		1	ROD END,BALL JOINT EYE M10X1,25	
520	90235-0846		2	THROTTLE CHECK VALVE G1/8", MANUAL, 6	
1562	90166-0081	M	1	TUBE 6 MM PA BLUE	
1564	90166-0081	M	1	TUBE 6 MM PA BLUE	
C156	90239-0832		1	DOUBLE ACTING, MINI-ISO, CYL. 25-125	

Pos	Part No	UN	Qty	Description	Page No

MATERIAL HOLDER

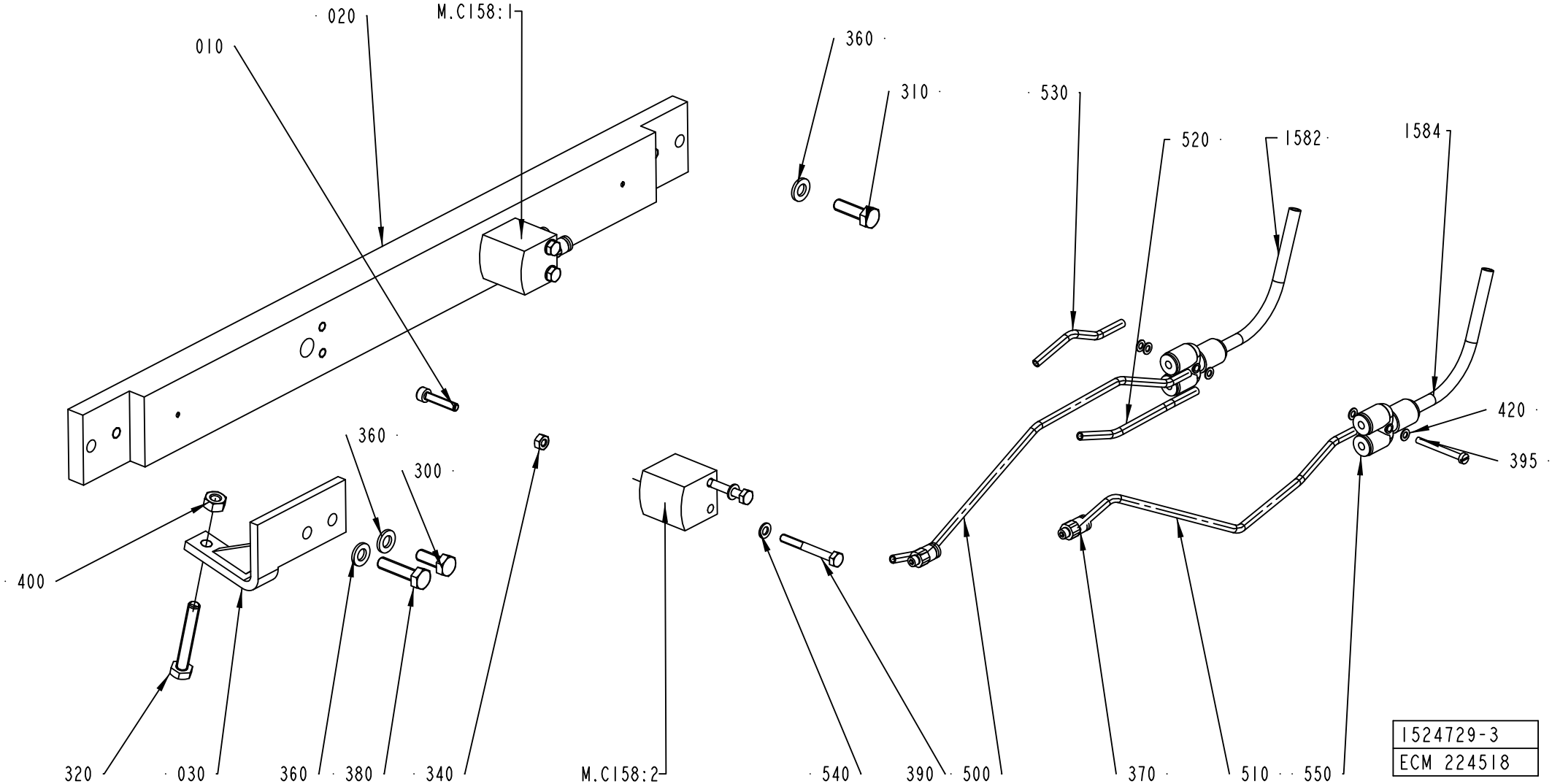

ECM: 239955 - 20060112
Group number: 1524729-0200
Assembly Drawing: 1524729-3_1_AA

Pos	Part No	UN	Qty	Description	Page No
-					
010	312115-0295		2	SCREW ISO4762 M4X20 A4 80	
020	2788125-0000		1	CYLINDER BRACKET	
030	1511577-0000		1	SPACER	
300	312105-0368		1	SCREW M6S ISO 4017 M6X16 A480	
310	312105-0370		1	SCREW M6S ISO 4017 M6X20 A480	
320	312109-0378		1	SCREW M6S ISO 4017 M6X40 A480	
340	312605-0312		2	HEXAGON NUT, M6M M4 A280	
360	315105-0153		3	WASHER BRB 6,4X12 RFR	
370	342722-0198		4	STRAIGHT COUPLING	
380	312105-0372		1	SCREW M6S ISO 4017 M6X25 A480	
390	312105-0301		4	SCREW M6S ISO 4017 M4X35 A470	
395	312125-0234		1	SCREW ISO 1207 M3X30 A4	
400	312605-0316		1	HEXAGON NUT, M6M M6 A280	
420	315105-0124		5	WASHER BRB 3,2X6 RFR	
500	90166-0254	MM	300	TUBE 4 MM PUR BLUE	
510	90166-0254	MM	300	TUBE 4 MM PUR BLUE	
520	90166-0254	MM	200	TUBE 4 MM PUR BLUE	
530	90166-0254	MM	200	TUBE 4 MM PUR BLUE	
540	315103-0136		4	WASHER PLAIN, BRB, 4,3/8,H=0,8 NI PL BR	
550	90055-0154		2	HOSE COUPLING	
1582	90166-0193	MM	4500	TUBE 6 MM PUR BLUE	
1584	90166-0193	MM	4500	TUBE 6 MM PUR BLUE	
C158:2	90459-0503		1	DOUBLE ACTING, SHORT STROKE, CYL 16-10	
C158:1	90459-0503		1	DOUBLE ACTING, SHORT STROKE, CYL 16-10	
C73151	90450-0551		1	DOUBLE ACTING, COMPACT, CYL 20-10	
C73152	90450-0551		1	DOUBLE ACTING, COMPACT, CYL 20-10	

Pos	Part No	UN	Qty	Description	Page No

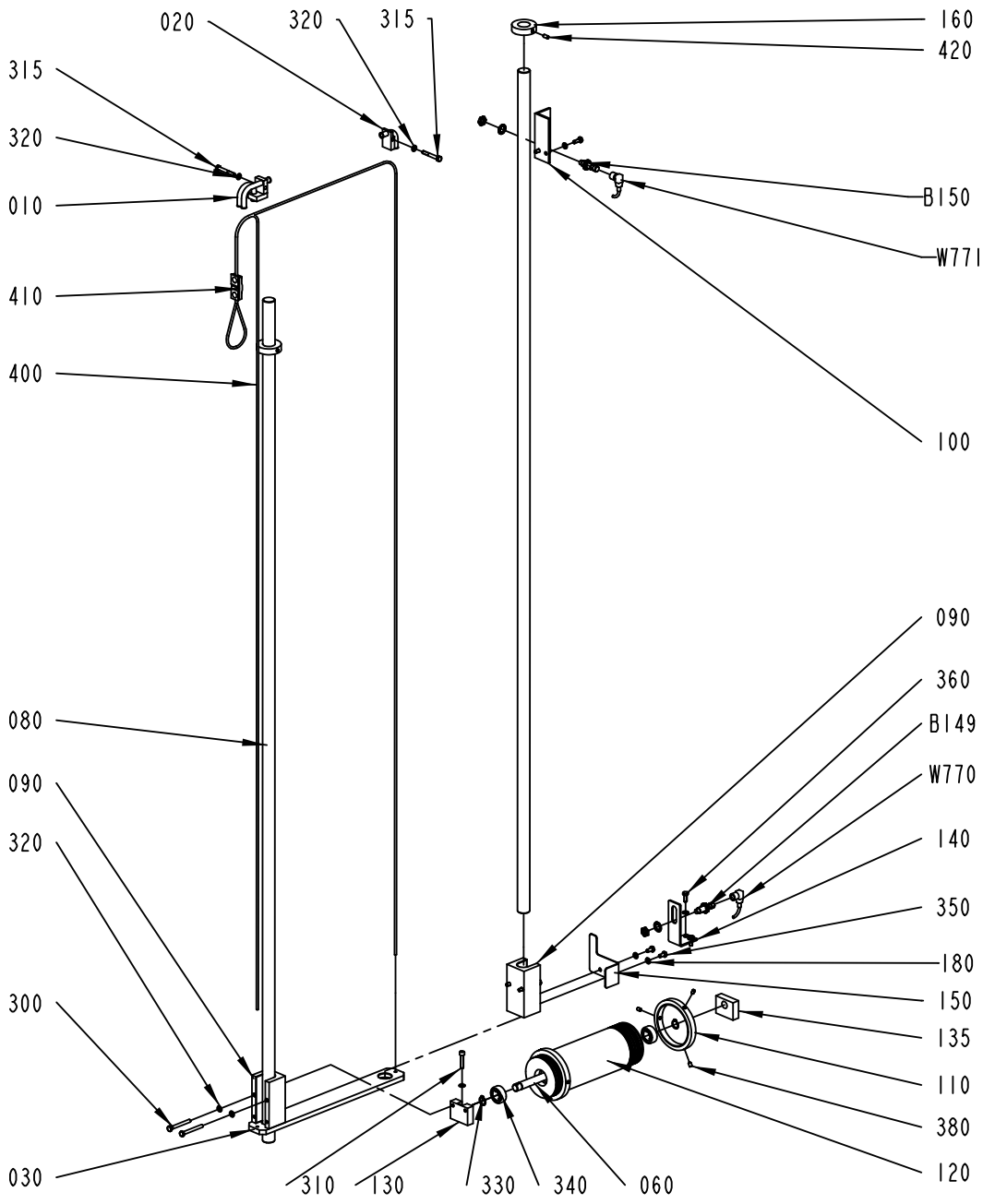

1484735-1
ECM 111566

ECM: 180544 - 20040910
Group number: 1484735-0100
Assembly Drawing: 1484735-1_1_AB

Pos	Part No	UN	Qty	Description	Page No
-					
010	1255511-0000		1	ROPE BRACKET	
020	1255512-0000		1	ROPE BRACKET	
030	1498424-0000		1	PLATE	
060	1519943-0000		1	SHAFT	
080	1487530-0002		2	GUIDE ROD	
090	1484760-0000		2	SLIDER	
100	1498442-0000		1	ANGLE BRACKET	
110	1140996-0000		2	FLANGE	
120	1282621-0000		1	BENDING ROLLER	
130	1519940-0000		1	BRACKET	
135	1519941-0000		1	BRACKET	
140	1558886-0000		1	ANGLE BRACKET	
150	1498443-0000		1	PLATE	
160	1487769-0000		2	SPACER	
300	312105-0381		4	SCREW M6S ISO 4014 M6X55 A480	
310	312115-0374		1	SCREW ISO4762 M6X30 A4 80	
315	312105-0379		2	SCREW M6S ISO 4014 M6X45 A480	
320	315105-0153		13	WASHER BRB 6,4X12 RFR	
330	315751-0112		2	RETAINING RING FOR SHAFT DIN 471 15 SS	
340	321313-0102		2	BALL BEARING 15/35X11	
350	312105-0366		2	SCREW M6S ISO 4017 M6X12 A480	
360	312105-0368		4	SCREW M6S ISO 4017 M6X16 A480	
380	90287-0154		6	SCREW, SOCK.SET DOGPOINT M6X10	
400	90319-0013	MM	4500	POLYESTER-SILKROPE 4MM 3900N, 102079	
410	90211-0002		1	WIRE LOCK, 5 MM	
420	312318-0366		2	SCREW ISO4029 M6X12 A4	
B149	90458-0677		1	PROX.SWITCH E2EG-X5MB1-M1	
B150	90458-0677		1	PROX.SWITCH E2EG-X5MB1-M1	
W770	90458-1076		1	L-SHAPED CONNECTOR CABLE Y92EM12PVC4A5ML	
W771	90458-1076		1	L-SHAPED CONNECTOR CABLE Y92EM12PVC4A5ML	

Pos	Part No	UN	Qty	Description	Page No

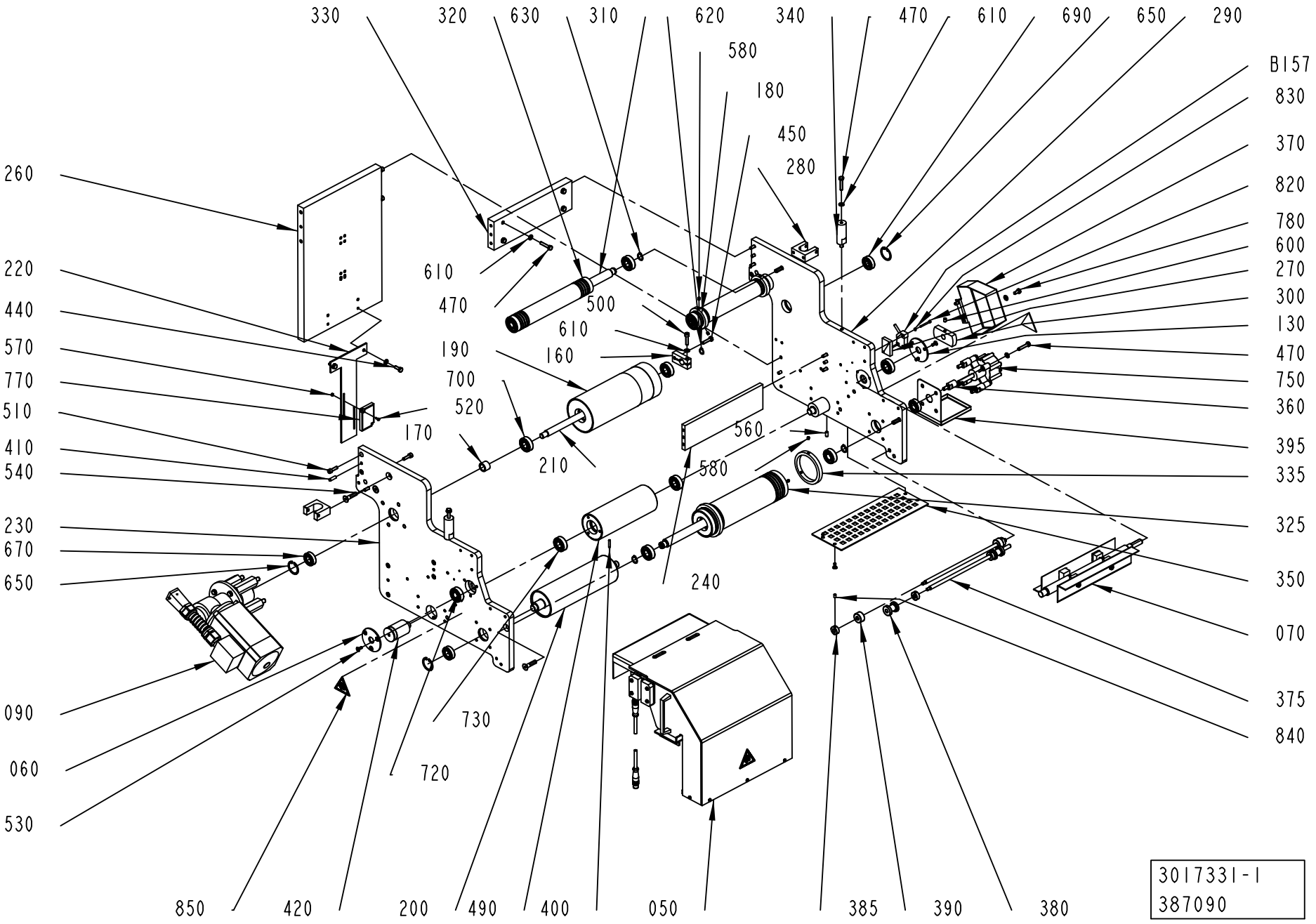
330
320
630
310
620
340
470
610
690
650
290
580
180
450
280
B157
830
370
820
780
600
270
300
130
470
750
360
395
335
325
350
070
375
840
260
220
440
570
770
510
410
540
230
670
650
090
060
530
610
470
500
610
190
160
700
520
170
210
560
580
240
730
720
850
420
200
490
400
050
385
390
380
3017331-1
387090

ECM: 433992 - 20100222
Group number: 3017331-0100
Assembly Drawing: 3017331-1_1_AA

Pos	Part No	UN	Qty	Description	Page No
-					
050	1498444-0300		1	COVER	**2-47**
060	752240-0000		1	LID	
070	2815754-0200		1	CREASE UNIT	**2-49**
090	1512268-0100		1	MOTOR UNIT	**2-51**
130	752240-0000		1	LID	
160	1036232-0000		1	BRACKET	
170	1558277-0000		1	SPACER	
180	979356-0000		2	FLANGE	
190	1282587-0000		1	ROLLER	
200	1282588-0000		1	ROLLER	
210	1282589-0000		1	SHAFT	
220	1334118-0000		1	BRACKET	
230	1484729-0000		1	PLATE	
240	1484731-0000		1	PLATE	
260	1484733-0000		1	PLATE	
270	1105642-0000		1	SPACER	
280	1484738-0000		2	BRACKET	
290	1490801-0000		1	PLATE	
300	1558867-0000		1	CAM	
310	1490824-0000		3	SHAFT	
320	1490825-0000		2	BENDING ROLLER	
325	2519569-0000		1	BENDING ROLLER	
330	1490826-0000		1	PLATE	
335	2519463-0000		2	FLANGE	
340	1490827-0000		2	SPACER	
350	1511581-0000		1	PLATE	
360	1512270-0000		4	SPACER	
370	1558868-0000		1	PROTECTION	
375	1539304-0000		2	BAR	
380	1539573-0000		2	ROLLER	
385	1539574-0000		4	COLLAR	
390	1558996-0000		2	ROLLER	
395	2982064-0000		1	METALCUP	
400	311103-0272		1	PARALLEL PIN ISO 2338 4M6X20 A1	
410	311103-0353		6	PARALLEL PIN ISO 2338 6M6X20 A1	
420	1484734-0003		2	AXLE PIN	
440	312105-0368		2	SCREW M6S ISO 4017 M6X16 A480	
450	312105-0372		1	SCREW M6S ISO 4017 M6X25 A480	
470	312109-0374		10	SCREW M6S ISO 4017 M6X30 A480	
490	752542-0001		1	BENDING ROLLER	
500	312115-0372		1	SCREW ISO4762 M6X25 A4 80	
510	312115-0370		16	SCREW ISO4762 M6X20 A4 80	
520	312125-0222		2	SCREW ISO 1207 M3X8 A4	
530	312155-0327		10	SCREW DIN 7991 MF6S M5X12 A4 70	
540	312155-0457		6	SCREW DIN 7991 MF6S M8X35 A4 70	
560	312318-0366		2	SCREW ISO4029 M6X12 A4	
570	312605-0310		2	HEXAGON NUT, M6M M3 A280	
580	312311-0321		8	SCREW ISO4028 M5X6 FZB	
600	312318-0362		1	SCREW ISO4029 M6X8 A4	
610	315105-0153		15	WASHER BRB 6,4X12 RFR	
620	315751-0109		1	RETAINING RING FOR SHAFT DIN 471 12 SS	
630	315751-0112		6	RETAINING RING FOR SHAFT DIN 471 15 SS	
650	315753-0123		4	RETAINING RING FOR BORE DIN 472 32 SS	
670	321308-0202		3	BALL BEARING 15/32X9	
690	321313-0101		1	BALL BEARING 12/32X10	
700	321313-0102		8	BALL BEARING 15/35X11	
720	90214-0098		2	BALL BEARING, 15X35X11 MM	
730	321309-0102		2	BALL BEARING 15/35X11	
750	90347-0054		1	ROTARY DASHPOT, S-CRD-P277	
770	90232-0333		1	REFLECTOR, E39-R1	
780	312105-0366		2	SCREW M6S ISO 4017 M6X12 A480	
820	312125-0234		2	SCREW ISO 1207 M3X30 A4	
830	315105-0124		2	WASHER BRB 3,2X6 RFR	
840	312318-0323		4	SCREW ISO4029 M5X8 A4	
850	359705-0005		2	WARNING SIGN ISO, MOVING PART	
C.B157	90044-0194		1	INDUCTIVE SENSOR, IN 5329	

Machine Type	Group Description	Used-In	Group Number	Page No

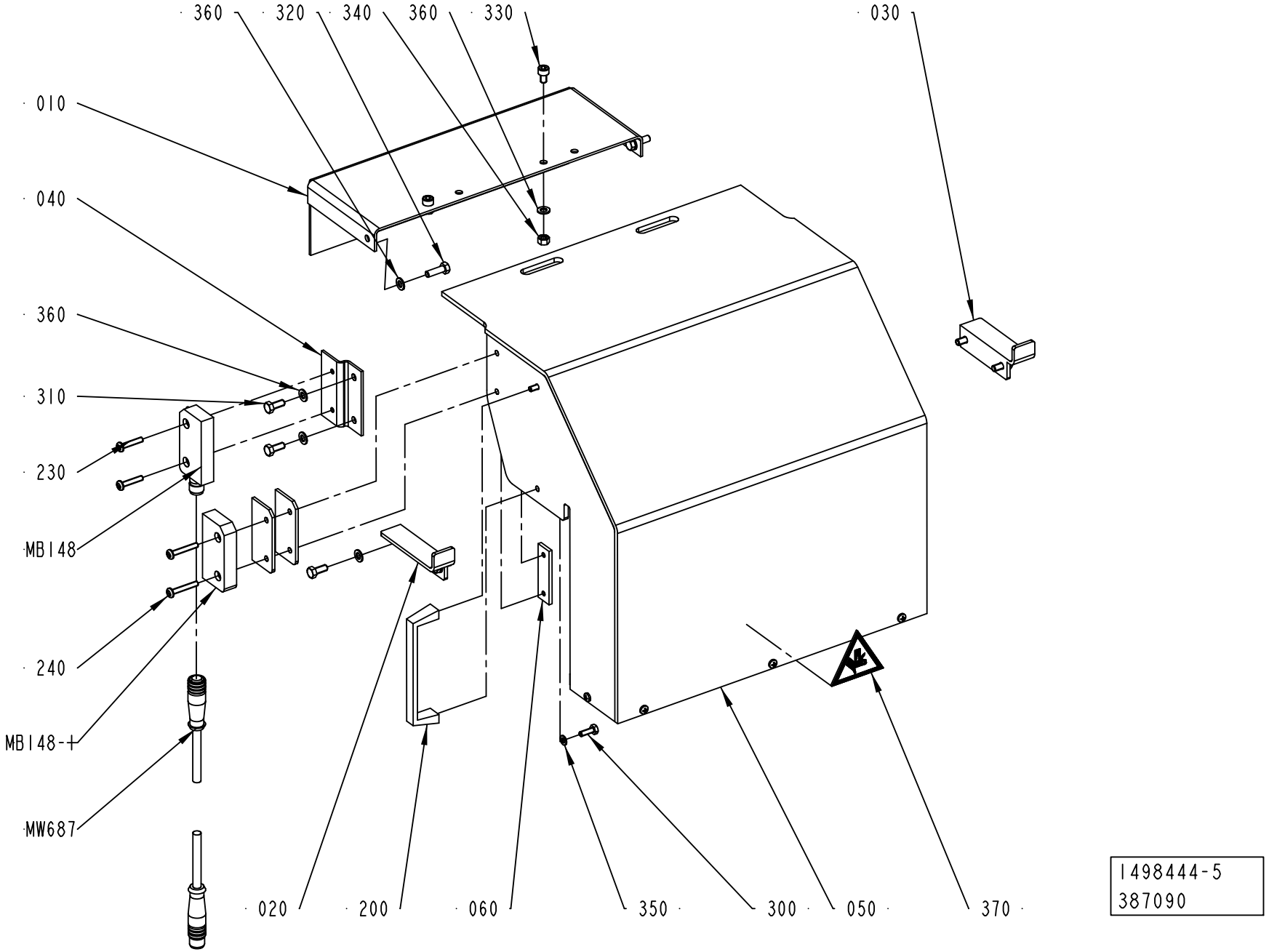
360
320
340
360
330
030
010
040
360
310
230
MB148
240
MB148-+
MW687
020
200
060
350
300
050
370
1498444-5
387090

ECM: 403526 - 20090706
Group number: 1498444-0300
Assembly Drawing: 1498444-5_1_AA

Pos	Part No	UN	Qty	Description	Page No
-					
010	1490822-0000		1	GUIDE PLATE	
020	1517098-0000		1	BRACKET	
030	1519593-0000		1	BRACKET	
040	3017384-0000		1	BRACKET	
050	3017408-0000		1	COVER	
060	3017409-0000		1	WASHER	
200	90458-2633		1	HANDLE, 1045-05	
230	90459-4164		1	SAFETY SCREW SM4X20, 20-053-42	
240	90459-4165		2	SAFETY SCREW SM4X25, 20-053-43	
300	312105-0291		2	SCREW M6S ISO 4017 M4X12 A470	
310	312105-0327		6	SCREW M6S ISO 4017 M5X12 A480	
320	312105-0329		2	SCREW M6S ISO 4017 M5X16 A480	
330	312115-0323		2	SCREW ISO4762 M5X8 A4 80	
340	312605-0314		2	HEXAGON NUT, M6M M5 A280	
350	315105-0136		2	WASHER BRB 4,3X8 RFR	
360	315105-0146		10	WASHER BRB 5,3X10 RFR	
370	359705-0005		1	WARNING SIGN ISO, MOVING PART	
M.W788	351150-0405	MM	3000	CABLE OLFLEX 5X0,75 MM2 LIGHT/GREY	
M.W687	90459-4876		1	FOCUS JUMPER CABLE M12 5P 3M, 20-056-21	
M.B148:1	90458-2794		1	SENSOR, EVA 20-046-00	
M.B148	90459-4142		1	SENSOR, ADAM M12 20-051-00	
M.B108	90459-0472		1	KEY SAF.SW. AZ 16 02ZVRK-M20-2152-2254	

Pos	Part No	UN	Qty	Description	Page No

Machine Type | Group Description | Used-In | Group Number | Page No

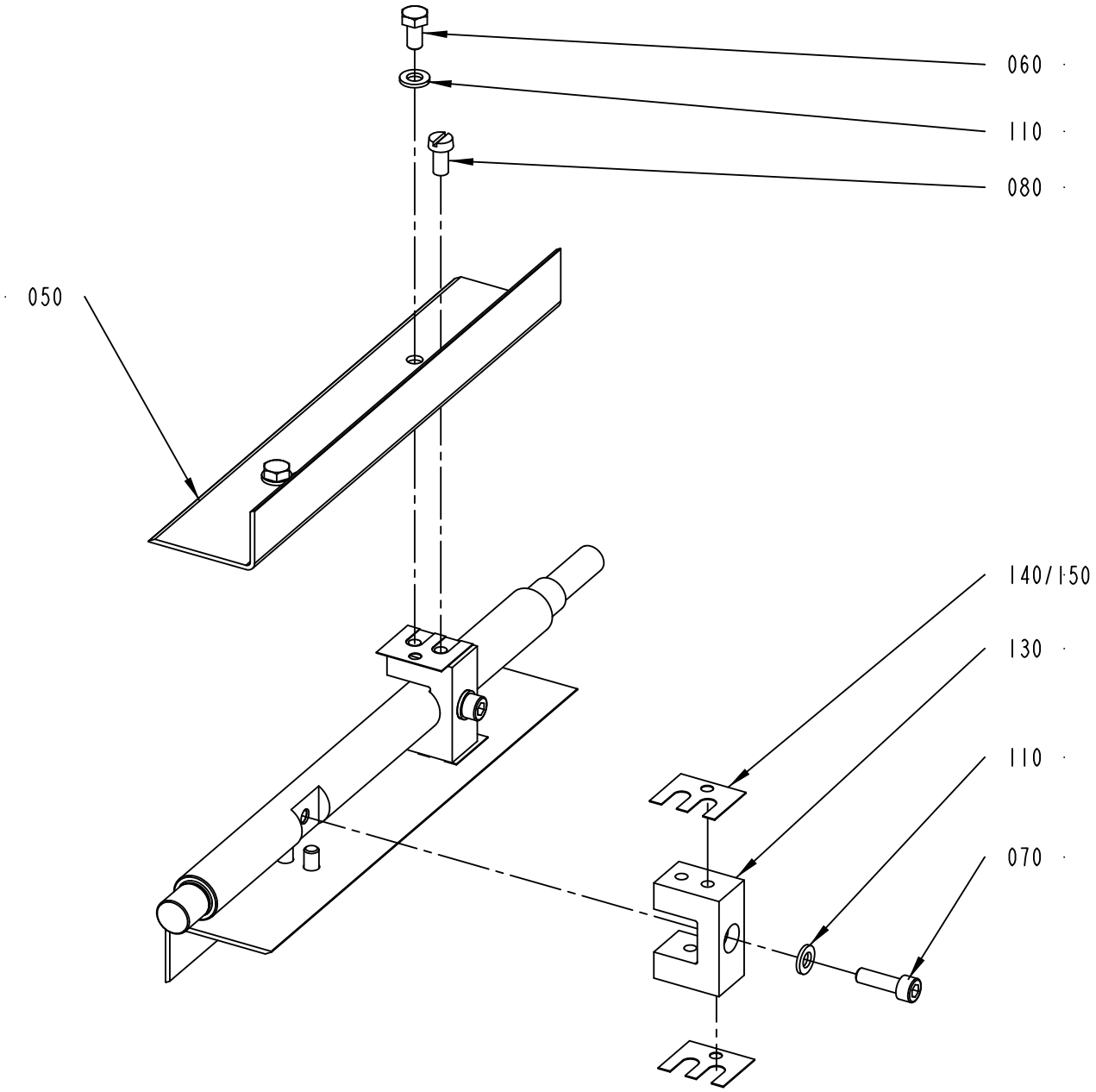

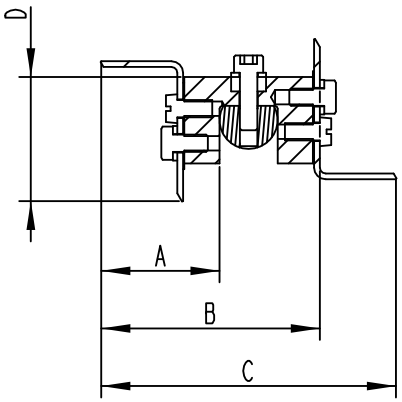

2815754-2
489598

ECM: 509769 - 20110627
Group number: 2815754-0200
Assembly Drawing: 2815754-2_1_AC

Pos	Part No	UN	Qty	Description	Page No
TBA 0200B					
040	3017332-0000		1	SHAFT	
050	1512264-0002		2	CREASE BAR	
060	312105-0366		4	SCREW M6S ISO 4017 M6X12 A480	
080	312125-0366		4	SCREW ISO 1207 M6X12 A4	
110	315105-0153		6	WASHER BRB 6,4X12 RFR	
130	441556-0004		2	SPACER	
140	456817-0002		8	SHIM	
150	456817-0001		6	SHIM	
TBA 0250B					
040	3017332-0000		1	SHAFT	
050	1512264-0002		2	CREASE BAR	
060	312105-0366		4	SCREW M6S ISO 4017 M6X12 A480	
080	312125-0366		4	SCREW ISO 1207 M6X12 A4	
110	315105-0153		6	WASHER BRB 6,4X12 RFR	
130	441556-0002		2	SPACER	
140	456817-0002		8	SHIM	
150	456817-0001		6	SHIM	
TBA 0284B, TBA 0300S					
040	3017332-0000		1	SHAFT	
050	1512264-0002		2	CREASE BAR	
060	312105-0366		4	SCREW M6S ISO 4017 M6X12 A480	
080	312125-0366		4	SCREW ISO 1207 M6X12 A4	
110	315105-0153		6	WASHER BRB 6,4X12 RFR	
130	441556-0001		2	SPACER	
140	456817-0002		8	SHIM	
150	456817-0001		6	SHIM	
TBA 0330S					
040	3017332-0000		1	SHAFT	
050	1512264-0002		2	CREASE BAR	
060	312105-0366		4	SCREW M6S ISO 4017 M6X12 A480	
080	312125-0366		4	SCREW ISO 1207 M6X12 A4	
110	315105-0153		6	WASHER BRB 6,4X12 RFR	
130	441556-0012		2	SPACER	
140	456817-0002		8	SHIM	
150	456817-0001		6	SHIM	
TWA 0125S					
040	3017419-0000		1	SHAFT	
050	1360583-0000		2	CREASE UNIT	
060	90287-0331		4	SCREW ISO 7380 K6S M5X12 A4	
110	315105-0153		2	WASHER BRB 6,4X12 RFR	
130	1360582-0000		2	SPACER	
130	441556-0002		2	SPACER	
150	591567-0000		12	LACE	
TWA 0200S					
040	3017419-0000		1	SHAFT	
050	594952-0000		2	CREASE BAR	
060	90287-0331		4	SCREW ISO 7380 K6S M5X12 A4	
110	315105-0153		2	WASHER BRB 6,4X12 RFR	
130	594953-0000		2	SPACER	
150	591567-0000		12	LACE	
Common Parts					
070	312115-0370		2	SCREW ISO4762 M6X20 A4 80	
100	312318-0287		1	SCREW ISO4029 M4X8 A4	
120	315701-0169		1	PARALLEL KEY W. ROUND ENDS, 4X4X18 MM	

Machine Type Group Description Used-In Group Number Page No

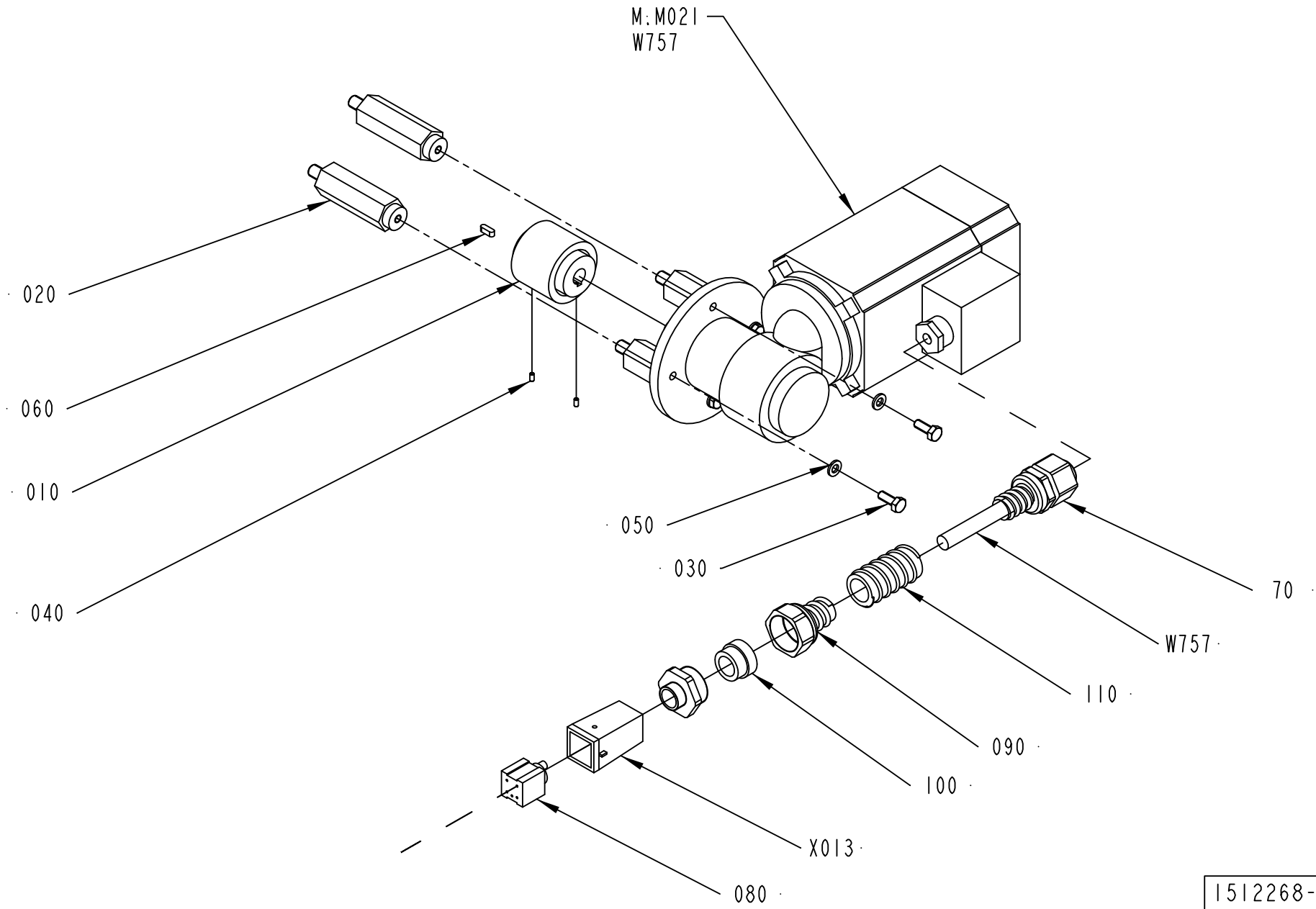

1512268-1
194074

ECM: 469842 - 20100930
Group number: 1512268-0100
Assembly Drawing: 1512268-1_1_AC

Pos	Part No	UN	Qty	Description	Page No
-					
010	979847-0000		1	SHAFT COUPLING	
020	1487788-0000		4	SPACER	
030	312105-0368		4	SCREW M6S ISO 4017 M6X16 A480	
040	312318-0220		2	SCREW ISO4029 M3X6 A4	
050	315105-0153		4	WASHER BRB 6,4X12 RFR	
060	315705-0166		1	PARALLEL KEY W. ROUND ENDS, 4X4X12 MM	
070	90458-0449		1	GLAND FITTING, 2205413S05 UL16	
080	90110-0295		1	CONNECTOR 4 POLE + EARTH	
090	90457-0146		1	GLAND FITTING, VK 15154YUL16	
100	353249-0014		1	INSERT, SINGLE HOLE, EK154 16	
110	90152-0051	MM	2100	HOSE, SPIRAL CONDUIT, 25X18, UL 1816	
M.M021	90459-2328		1	GEARS, WORM MOTOR IGL 80-60 + VE 31GR5	
W757	90220-0104	MM	4250	SCR. CABLE 4X1,5MM2	
X013	90110-0371		1	HOOD, TOP ENTRY, HDC-HA-3-TOVL1/11	

Pos	Part No	UN	Qty	Description	Page No

CONNECTION BOX

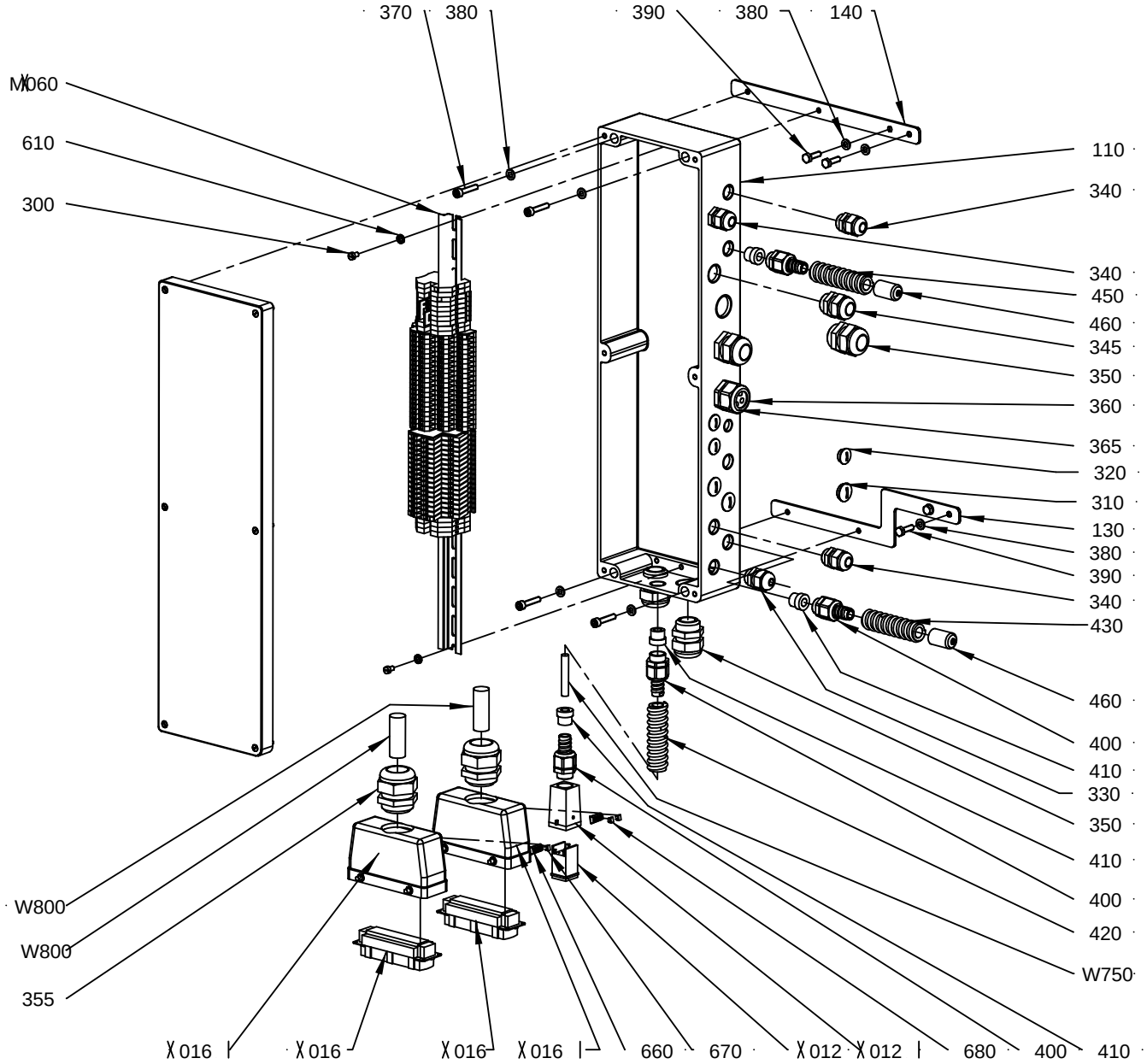

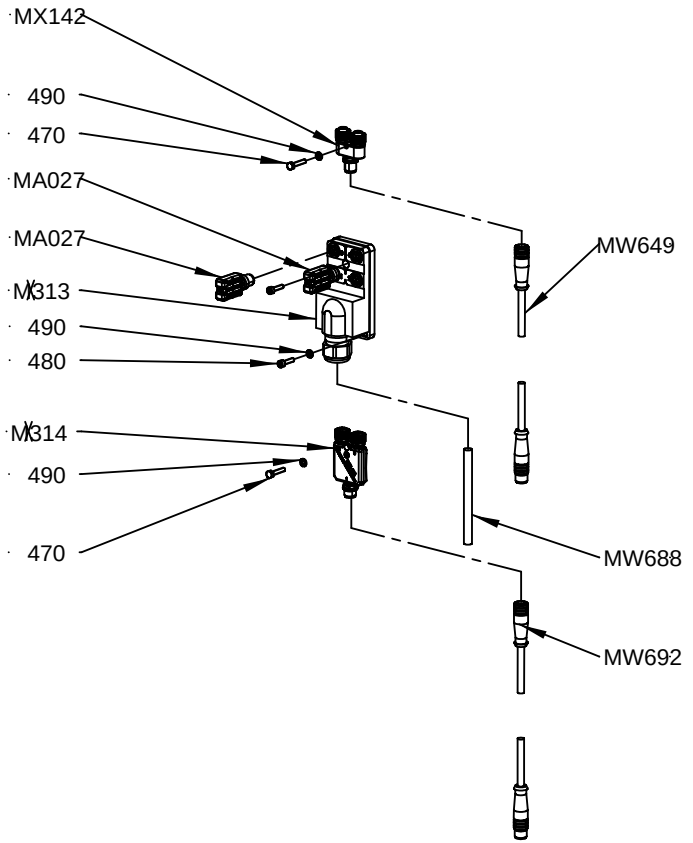

13644 76-3
443800

ECM: 448514 - 20100524
Group number: 1364476-0300
Assembly Drawing: 1364476-3_1_AB

This list covers pages from 2-52 to 2-55

Pos	Part No	UN	Qty	Description	Page No
-					
110	2773927-0000		1	CONNECTION BOX	
130	1558872-0000		1	BRACKET	
140	1558873-0000		1	BRACKET	
300	312125-0323		2	SCREW ISO 1207 M5X8 A4	
310	90002-0009		3	BLANK-OFF PLUG, PR 18.6 SKINDICHT-BLK11	
320	90002-0013		3	BLANK-OFF PLUG, PR 15,2 SKINDICHT-BLK9	
330	352103-0105		1	CABLE GLAND, STR 11, PR 18,6/PG11	
340	352103-0106		3	CABLE GLAND, ST 11, PR18,6/PG11	
345	352103-0111		1	CABLE GLAND, ST 16, PR22,5/PG16	
350	352103-0116		4	CABLE GLAND, ST 21, PR28,3/PG21	
355	352103-0121		2	CABLE GLAND, ST 29, PR37,0/PG29	
360	353240-0005		1	COMPRESSION GLAND, VK 154Y	
365	353249-0051		1	INSERT, MULTI HOLE, E154M 4X6	
370	312115-0374		4	SCREW ISO4762 M6X30 A4 80	
380	315105-0153		8	WASHER BRB 6,4X12 RFR	
390	312105-0370		4	SCREW M6S ISO 4017 M6X20 A480	
400	353243-0002		4	GLAND FITTING, VK 15152YUL11	
410	353249-0009		4	INSERT, SINGLE HOLE, EK152 9	
420	90152-0050	MM	1400	HOSE, SPIRAL CONDUIT, 20X13, UL 1313	
430	90152-0050	MM	1400	HOSE, SPIRAL CONDUIT, 20X13, UL 1313	
450	90152-0050	MM	1900	HOSE, SPIRAL CONDUIT, 20X13, UL 1313	
460	979593-0000		2	CAP	
470	312105-0295		2	SCREW M6S ISO 4017 M4X20 A470	
480	312115-0293		3	SCREW ISO4762 M4X16 A4 80	
490	315105-0136		4	WASHER BRB 4,3X8 RFR	
610	90062-0060		2	LOCK WASHER 5,3/10 H=0,6 FZB	
660	90110-0385		2	MARKING HOLDER, 4.242.3853.0	
670	359005-0010		2	MARKING LABEL KIT 0 - 9, 04.841.2150.0	
680	359005-0050		1	MARKING LABEL KIT X, 04.841.4550.0	
M.X314	90601-0026		1	TINA 11A DISTRIBUTOR BLOCK, 20-054-17	
M.X313	90459-4254		1	CONNECTION BLOCK TINA 4A, 20-054-03	
M.X142	90600-3074		1	Y-CONNECTOR M12-3E, 20-055-02	
M.W692	90459-4876		1	FOCUS JUMPER CABLE M12 5P 3M, 20-056-21	
M.W688	90600-5930	M	1	CABLE C9, 20-057-15	
M.W649	90459-7095		1	FOCUS JUMPER CABLE M12 5P 1M, 20-056-20	
M.A027	90459-5627		1	CONNECTION TINA 1A, 20-054-00	
M.A026	90459-5627		1	CONNECTION TINA 1A, 20-054-00	
M.X060	1364477-0200		1	TERMINAL	**2-57**
W750	351150-0412	MM	1800	CABLE OLFLEX 3X1,5 MM2 LIGHT/GREY	
W759	351150-0425	MM	1400	CABLE OLFLEX 25X0,75 MM2 LIGHT/GREY	
W800	351150-0425	MM	1400	CABLE OLFLEX 25X0,75 MM2 LIGHT/GREY	
X012	90459-2412		1	CONNECTOR, HDC-KITS, HDC-HA-4SS	
X012.1	90110-0371		1	HOOD, TOP ENTRY, HDC-HA-3-TOVL1/11	
X015	90110-0150		1	MALE INSERT, HDC HE 24 MS, 1211 1000 00	
X015.1	90110-0152		1	CABLE HOOD 24-POL 70.352.2428.1	
X016	90110-0150		1	MALE INSERT, HDC HE 24 MS, 1211 1000 00	
X016.1	90110-0152		1	CABLE HOOD 24-POL 70.352.2428.1	

Machine Type | Group Description | Used-In | Group Number | Page No

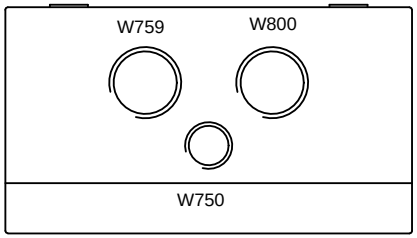

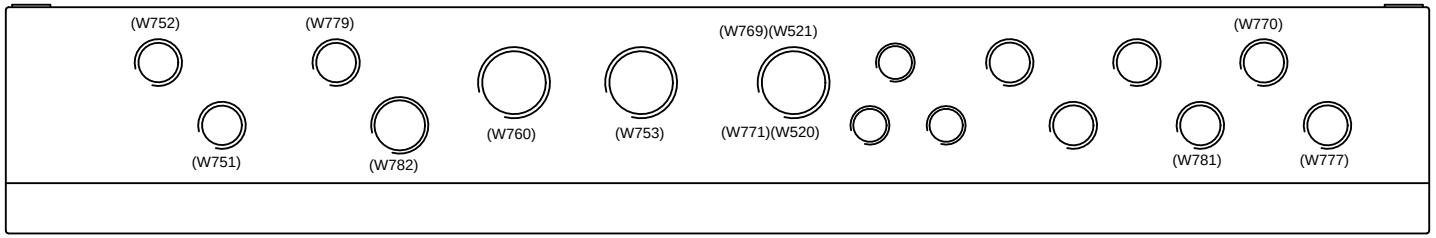

CL R (W762 W763W764 W765W783 ANDW788)

THIS PAGE
3 TOTAL

ECM: 448514 - 20100524
Group number: 1364476-0300
Assembly Drawing: 1364476-3_2_AB

This list covers pages from 2-52 to 2-55

Pos	Part No	UN	Qty	Description	Page No
-					
110	2773927-0000		1	CONNECTION BOX	
130	1558872-0000		1	BRACKET	
140	1558873-0000		1	BRACKET	
300	312125-0323		2	SCREW ISO 1207 M5X8 A4	
310	90002-0009		3	BLANK-OFF PLUG, PR 18.6 SKINDICHT-BLK11	
320	90002-0013		3	BLANK-OFF PLUG, PR 15,2 SKINDICHT-BLK9	
330	352103-0105		1	CABLE GLAND, STR 11, PR 18,6/PG11	
340	352103-0106		3	CABLE GLAND, ST 11, PR18,6/PG11	
345	352103-0111		1	CABLE GLAND, ST 16, PR22,5/PG16	
350	352103-0116		4	CABLE GLAND, ST 21, PR28,3/PG21	
355	352103-0121		2	CABLE GLAND, ST 29, PR37,0/PG29	
360	353240-0005		1	COMPRESSION GLAND, VK 154Y	
365	353249-0051		1	INSERT, MULTI HOLE, E154M 4X6	
370	312115-0374		4	SCREW ISO4762 M6X30 A4 80	
380	315105-0153		8	WASHER BRB 6,4X12 RFR	
390	312105-0370		4	SCREW M6S ISO 4017 M6X20 A480	
400	353243-0002		4	GLAND FITTING, VK 15152YUL11	
410	353249-0009		4	INSERT, SINGLE HOLE, EK152 9	
420	90152-0050	MM	1400	HOSE, SPIRAL CONDUIT, 20X13, UL 1313	
430	90152-0050	MM	1400	HOSE, SPIRAL CONDUIT, 20X13, UL 1313	
450	90152-0050	MM	1900	HOSE, SPIRAL CONDUIT, 20X13, UL 1313	
460	979593-0000		2	CAP	
470	312105-0295		2	SCREW M6S ISO 4017 M4X20 A470	
480	312115-0293		3	SCREW ISO4762 M4X16 A4 80	
490	315105-0136		4	WASHER BRB 4,3X8 RFR	
610	90062-0060		2	LOCK WASHER 5,3/10 H=0,6 FZB	
660	90110-0385		2	MARKING HOLDER, 4.242.3853.0	
670	359005-0010		2	MARKING LABEL KIT 0 - 9, 04.841.2150.0	
680	359005-0050		1	MARKING LABEL KIT X, 04.841.4550.0	
M.X314	90601-0026		1	TINA 11A DISTRIBUTOR BLOCK, 20-054-17	
M.X313	90459-4254		1	CONNECTION BLOCK TINA 4A, 20-054-03	
M.X142	90600-3074		1	Y-CONNECTOR M12-3E, 20-055-02	
M.W692	90459-4876		1	FOCUS JUMPER CABLE M12 5P 3M, 20-056-21	
M.W688	90600-5930	M	1	CABLE C9, 20-057-15	
M.W649	90459-7095		1	FOCUS JUMPER CABLE M12 5P 1M, 20-056-20	
M.A027	90459-5627		1	CONNECTION TINA 1A, 20-054-00	
M.A026	90459-5627		1	CONNECTION TINA 1A, 20-054-00	
M.X060	1364477-0200		1	TERMINAL	**2-57**
W750	351150-0412	MM	1800	CABLE OLFLEX 3X1,5 MM2 LIGHT/GREY	
W759	351150-0425	MM	1400	CABLE OLFLEX 25X0,75 MM2 LIGHT/GREY	
W800	351150-0425	MM	1400	CABLE OLFLEX 25X0,75 MM2 LIGHT/GREY	

Pos	Part No	UN	Qty	Description	Page No
X012	90459-2412		1	CONNECTOR, HDC-KITS, HDC-HA-4SS	
X012.1	90110-0371		1	HOOD, TOP ENTRY, HDC-HA-3-TOVL1/11	
X015	90110-0150		1	MALE INSERT, HDC HE 24 MS, 1211 1000 00	
X015.1	90110-0152		1	CABLE HOOD 24-POL 70.352.2428.1	
X016	90110-0150		1	MALE INSERT, HDC HE 24 MS, 1211 1000 00	
X016.1	90110-0152		1	CABLE HOOD 24-POL 70.352.2428.1	

Machine Type | Group Description | Used-In | Group Number | Page No

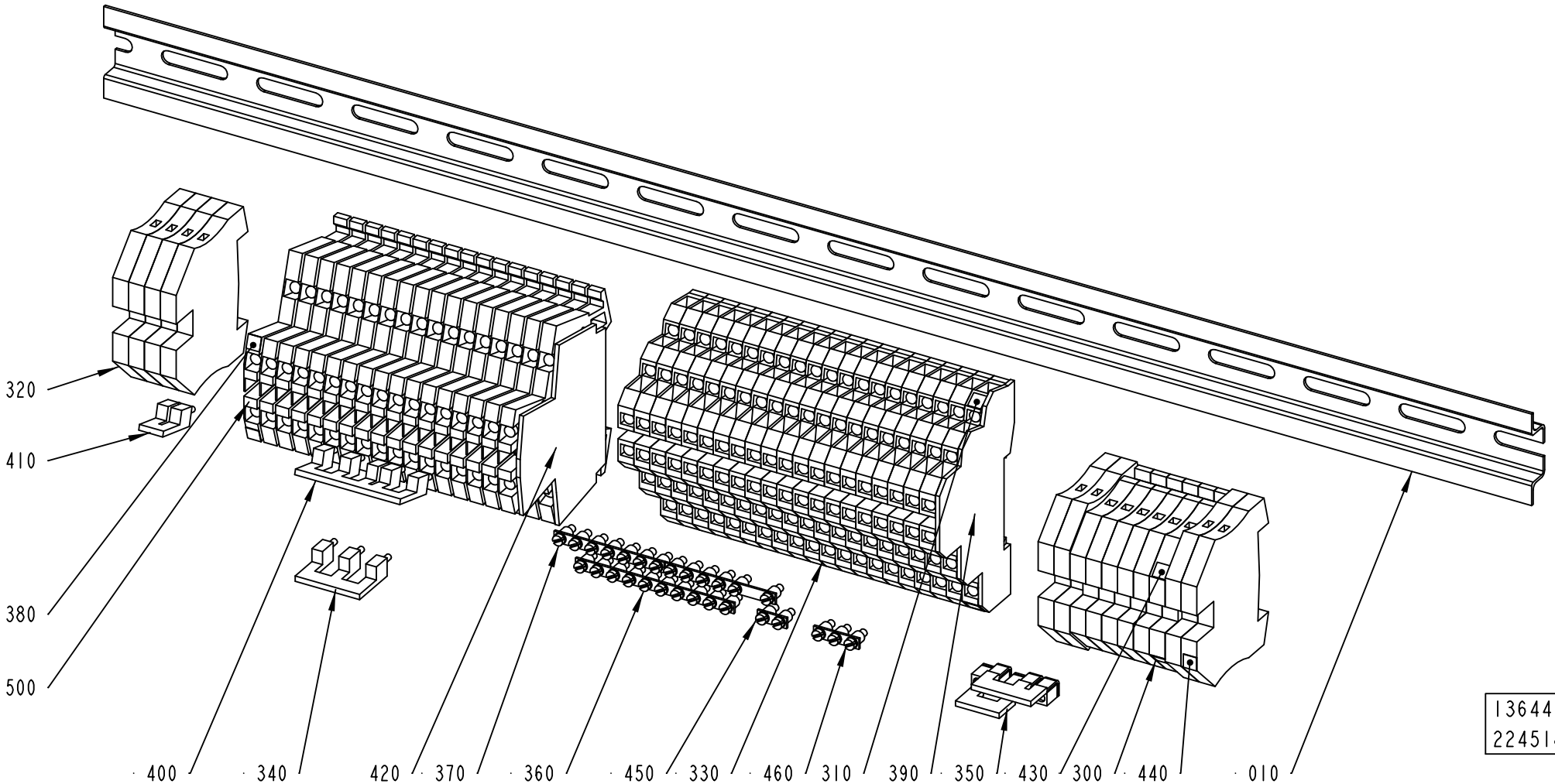
320
410
380
500
400
340
420
370
360
450
330
460
310
390
350
430
300
440
010
1364477-2
224518

ECM: 238420 - 20060112
Group number: 1364477-0200
Assembly Drawing: 1364477-2_1_AA

Pos	Part No	UN	Qty	Description	Page No
-					
010	1558810-0000		1	RAIL	
300	353021-0213		6	FEED THROUGH TERMINAL, WDU 4	
310	359011-0808		2	MARKING, DEK 5FW 51-100	
320	353024-0205		8	EARTH TERMINAL WPE 4	
330	353021-0302		20	TERMINAL, DLD 2,5/35	
340	353034-0030		1	BRIDGE CONNECTOR WQV 2,5/10	
350	353034-0039		2	BRIDGE CONNECTOR WQV 4/4	
360	353034-0404		1	BRIDGE CONNECTOR Q 10 DLI	
370	353034-0404		2	BRIDGE CONNECTOR Q 10 DLI	
380	359011-0807		2	MARKING, DEK 5 FW 1-50	
390	353032-0302		1	END PLATE, AP DLD2,5 DB	
400	353034-0030		1	BRIDGE CONNECTOR WQV 2,5/10	
410	353034-0030		1	BRIDGE CONNECTOR WQV 2,5/10	
420	353032-0009		1	END PLATE, WAP WDK 2,5	
430	359011-0809		2	MARKING, DEK 5 FW 101-150	
440	359011-0819		1	MARKING, EARTH, DEK 5 GW ERDE I.KR.	
450	353034-0401		1	BRIDGE CONNECTOR Q 2 DLI	
460	353034-0402		1	BRIDGE CONNECTOR Q 3 DLI	
500	90077-0113		17	TERMINAL BLOCK WDK 2.5	

Pos	Part No	UN	Qty	Description	Page No

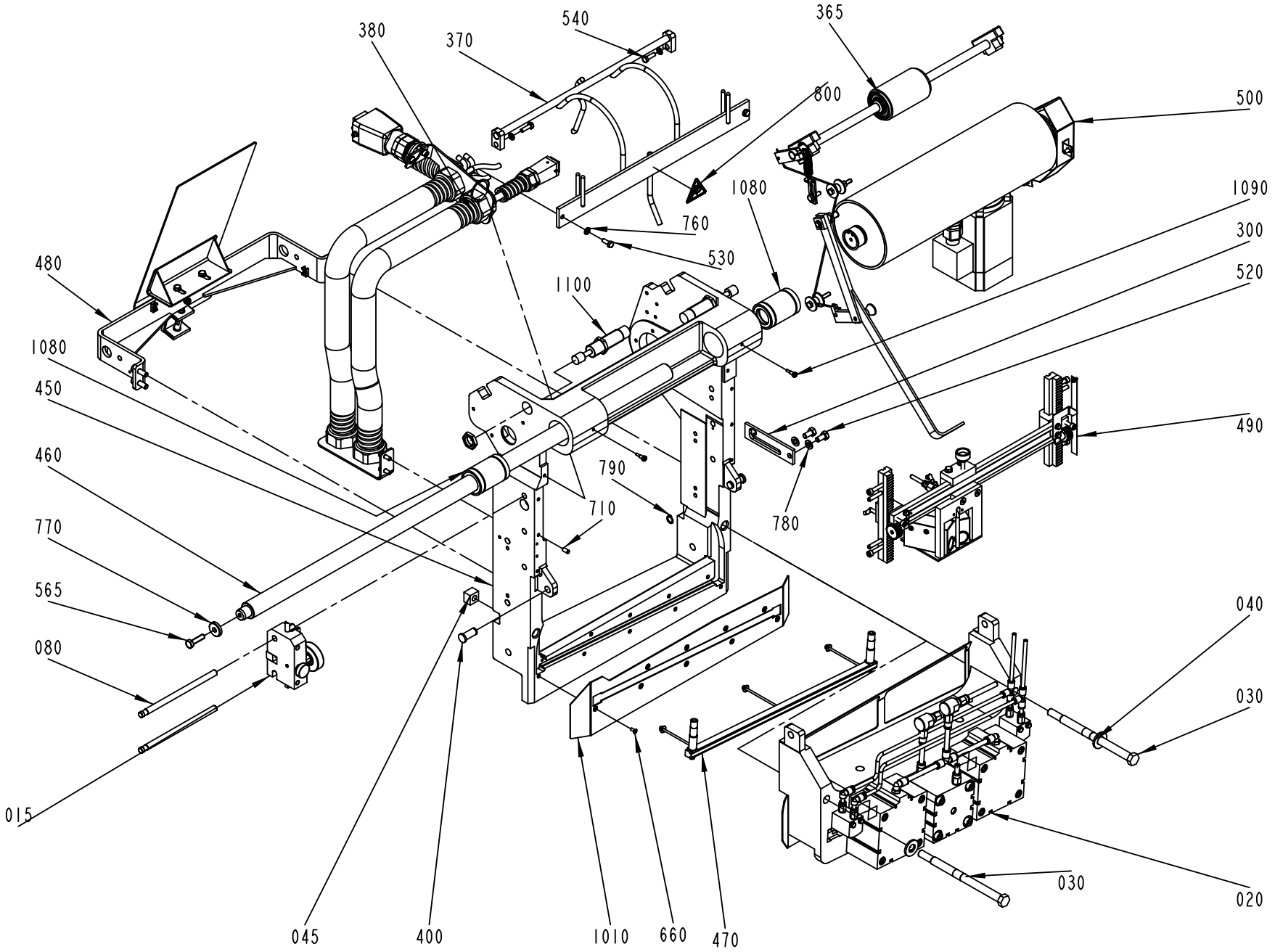

1484688-4
ECM 424097

ECM: 430821 - 20091221
Group number: 1484688-0300
Assembly Drawing: 1484688-4_1_AB

Pos	Part No	UN	Qty	Description	Page No
-					
0015	1484745-0100		1	WEB GUIDE	**2-61**
0020	1484690-0300		1	PRESSURE JAW	**2-63**
0030	1484703-0000		2	TIE ROD	
0040	1519955-0000		2	WASHER	
0045	1519956-0000		2	WASHER	
0080	1484704-0000		2	SHAFT	
0300	1487517-0000		1	CATCH	
0365	2524600-0100		1	PRESSURE ROLLER	**2-65**
0370	1517114-0100		1	RAIL	**2-67**
0380	1499578-0100		1	CABLE CONDUIT	**2-69**
0400	1484781-0000		2	PIN	
0450	1484689-0000		1	BRACKET	
0460	1490820-0000		1	SHAFT	
0470	1524389-0100		1	TPO-BAR	**2-71**
0480	1524386-0100		1	BOW CLAMP	**2-73**
0490	1524387-0100		1	BAR CODE READER	**2-75**
0500	1524388-0100		1	DRIVE UNIT REAR	**2-77**
0520	312105-0449		2	SCREW M6S ISO 4017 M8X16 A480	
0530	312105-0368		2	SCREW M6S ISO 4017 M6X16 A480	
0540	312105-0370		2	SCREW M6S ISO 4017 M6X20 A480	
0565	312105-0455		1	SCREW M6S ISO 4017 M8X30 A480	
0660	312155-0289		10	SCREW DIN 7991 MF6S M4X10 A4 70	
0710	312318-0366		2	SCREW ISO4029 M6X12 A4	
0760	315105-0153		4	WASHER BRB 6,4X12 RFR	
0770	315125-0165		1	WASHER TBRSB 8,4X26X5 A4	
0780	315105-0165		2	WASHER BRB 8,4X16 RFR	
0790	315751-0109		2	RETAINING RING FOR SHAFT DIN 471 12 SS	
0800	359705-0001		1	WARNING SIGN ISO, ENTANGLEMENT	
1010	1498439-0000		1	RULE PLATE	
1080	90189-0005		2	BALL BUSHING, 30X47X68 MM	
1090	90287-0313		2	CENTERING SCREW	
1100	90347-0182		2	SHOCK ABSORBER, YSR-16-20-C	

Pos	Part No	UN	Qty	Description	Page No

Machine Type | Group Description | Used-In | Group Number | Page No

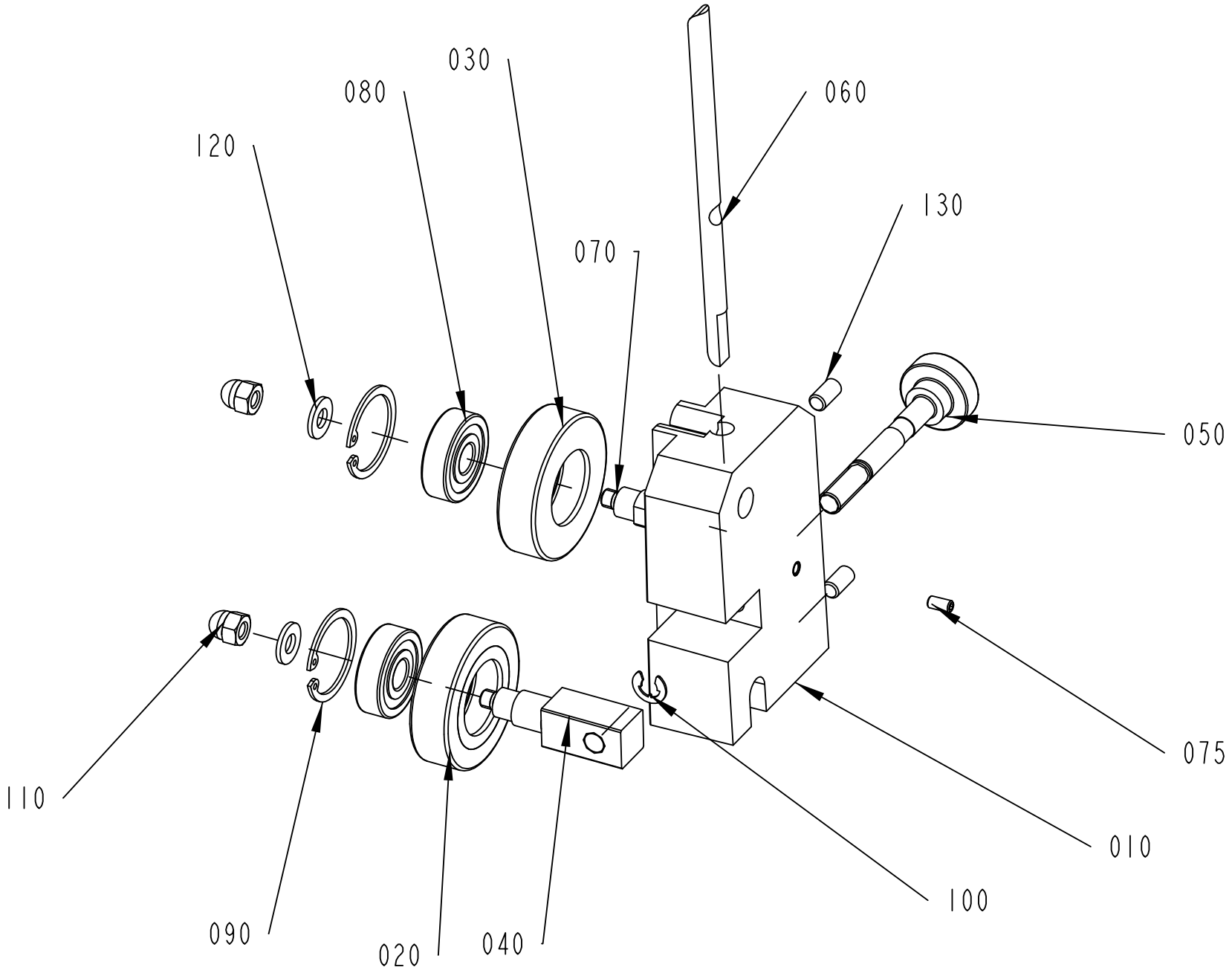

1484745-1
267558

ECM: 385846 - 20090404
Group number: 1484745-0100
Assembly Drawing: 1484745-1_1_AE

Pos	Part No	UN	Qty	Description	Page No
TBA/19					
010	2831675-0000		1	BRACKET	
Common Parts					
020	1036623-0000		1	GUIDE ROLLER	
030	1036622-0000		1	GUIDE ROLLER	
040	1317711-0000		1	SHAFT	
050	1317712-0000		1	SHAFT	
060	1512526-0000		1	STEERING	
070	583727-0000		1	SHAFT	
075	312318-0287		1	SCREW ISO4029 M4X8 A4	
080	321313-0100		2	BALL BEARING 10/30X9	
090	315753-0122		2	RETAINING RING FOR BORE DIN 472 30 SS	
100	315755-0108		1	RETAINING RING SHAFT DIN 6799 6 SS	
110	312705-0316		2	HEX. DOMED CAP MHM-6 M6 A280	
120	315105-0156		2	WASHER BRB 6,7X14 RFR	
130	312318-0366		2	SCREW ISO4029 M6X12 A4	

Pos	Part No	UN	Qty	Description	Page No

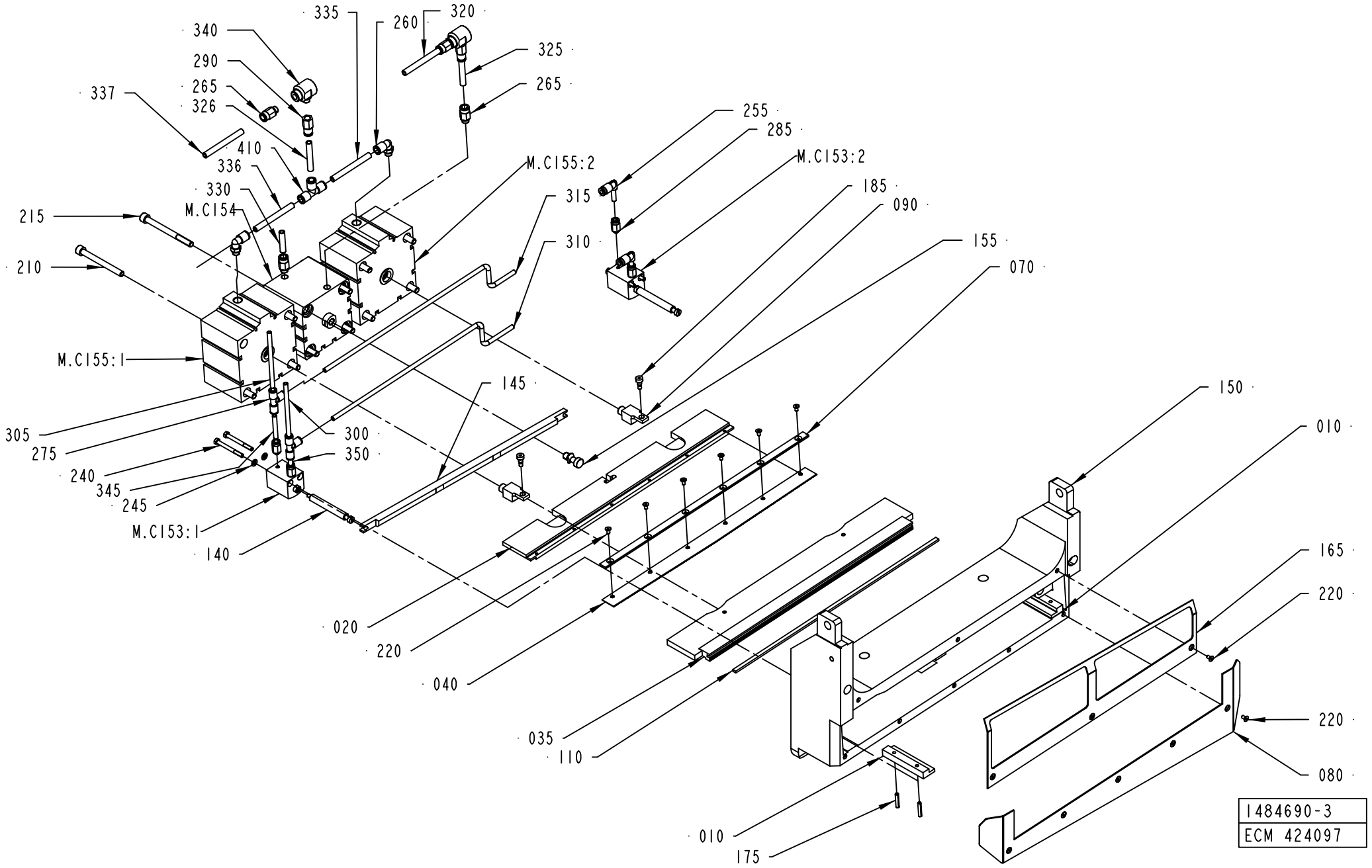
335
260
320
340
325
290
265
265
337
326
255
285
410
M.C153:2
336
185
330
315
090
M.C154
215
310
155
070
210
M.C155:2
M.C155:1
145
150
010
305
300
275
350
240
345
245
165
M.C153:1
220
140
020
220
040
035
110
220
080
010
175
1484690-3
ECM 424097

ECM: 483824 - 20110103
Group number: 1484690-0300
Assembly Drawing: 1484690-3_1_AD

Pos	Part No	UN	Qty	Description	Page No
-					
010	1484692-0000		2	SLIDING STRIP	
020	1484693-0000		1	KNIFE HOLDER	
035	3062144-0000		1	PRESSURE RAIL	
040	1484695-0000		1	KNIFE	
070	1519967-0000		1	CLAMP	
080	1487525-0000		1	RULE PLATE	
090	2549829-0000		2	SPACER	
110	2592780-0000		1	DOLLY	
140	2552798-0000		2	COMPRESSION ROD	
145	1487526-0000		1	RAIL	
150	1484691-0000		1	PRESSURE JAW	
155	2921891-0000		1	COUPLING BOLT	
165	1487524-0000		1	PLATE	
175	311112-0258		4	SPRING PIN, ISO 8752 4X24-C	
185	1558801-0000		2	SHOULDER SCREW	
210	312115-0467		8	SCREW ISO4762 M8X80 A4 80	
215	90287-0335		4	SCREW MC6S M8X90 A280	
220	312155-0287		14	SCREW DIN 7991 MF6S M4X8 A4 70	
240	312105-0341		4	SCREW M6S ISO 4014 M5X50 A480	
245	315105-0146		4	WASHER BRB 5,3X10 RFR	
255	90055-0222		2	ELBOW WITH TAILPIECE 6/6 MM	
260	350002-0007		2	PUSH-IN L-FITTING QSL-F-G1/8-8	
265	350001-0007		4	PUSH-IN FITTING QS-F-G1/8-8	
275	350005-0002		2	PUSH-IN T-FITTING QST-F-6	
285	350001-0002		4	PUSH-IN FITTING QS-F-M5-6	
290	342770-0107		2	STRAIGHT COUPLING INT, D=8 MM - G1/8	
300	315400-0001	MM	4500	TUBE PUN-H-6X1-BL	
305	315400-0001	MM	4500	TUBE PUN-H-6X1-BL	
310	315400-0001	MM	410	TUBE PUN-H-6X1-BL	
315	315400-0001	MM	410	TUBE PUN-H-6X1-BL	
320	315400-0004	MM	4500	TUBE PUN-H-8X1,25-BL	
325	315400-0004	MM	50	TUBE PUN-H-8X1,25-BL	
326	315400-0004	MM	50	TUBE PUN-H-8X1,25-BL	
330	315400-0004	MM	4500	TUBE PUN-H-8X1,25-BL	
335	315400-0004	MM	100	TUBE PUN-H-8X1,25-BL	
336	315400-0004	MM	100	TUBE PUN-H-8X1,25-BL	
337	315400-0004	MM	4500	TUBE PUN-H-8X1,25-BL	
340	90235-0206		2	QUICK EXHAUST VALVE, SEU-1/8	
345	315400-0001	MM	40	TUBE PUN-H-6X1-BL	
350	315400-0001	MM	40	TUBE PUN-H-6X1-BL	
400	90157-0016	ML	1	THREAD LOCKING, LOCTITE 242 50 ML	
410	350005-0003		1	PUSH-IN T-FITTING QST-F-8	
MC154	90600-4233		1	DOUBLE ACTING, COMPACT, 80-25	
MC155.1	90459-2102		1	SINGLE ACTING, SHORT STROKE, CYL 100-25	
MC153.1	90459-1509		1	DOUBLE ACTING, SHORT STROKE, CYL 20-20	
MC155.2	90459-2102		1	SINGLE ACTING, SHORT STROKE, CYL 100-25	
MC153.2	90459-1509		1	DOUBLE ACTING, SHORT STROKE, CYL 20-20	

Machine Type	Group Description	Used-In	Group Number	Page No

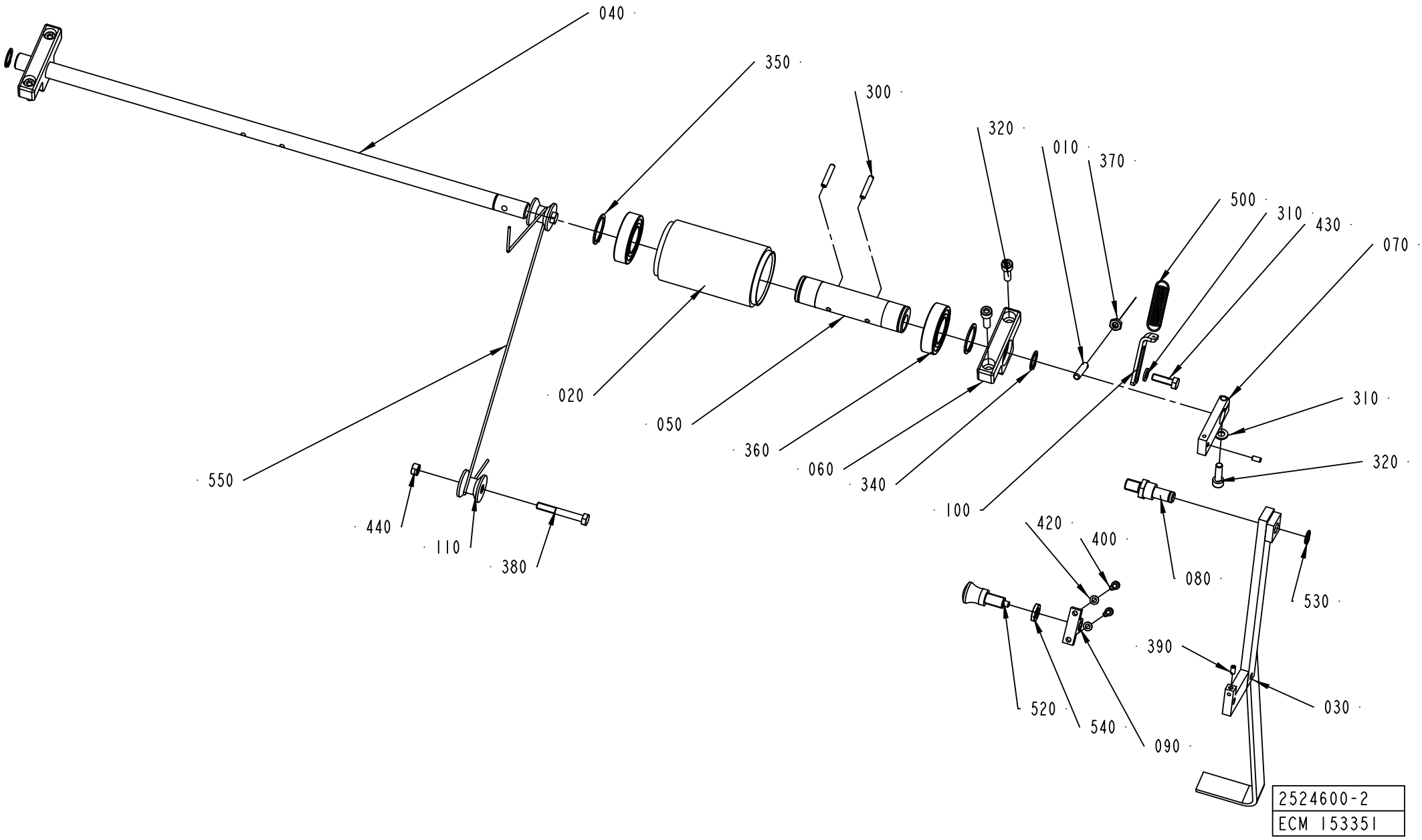
040
350
300
320
010
370
500
310
430
070
020
050
360
060
340
100
550
440
110
380
310
320
420
400
080
530
390
030
520
540
090
2524600-2
ECM 153351

ECM: 392560 - 20090405
Group number: 2524600-0100
Assembly Drawing: 2524600-2_1_AB

Pos	Part No	UN	Qty	Description	Page No
TBA/19					
010	578684-0000		1	SPRING BRACKET	
020	906254-0000		1	ROLLER	
030	2538077-0000		1	HANDLE	
040	1487763-0000		1	SHAFT	
050	1512267-0000		1	ECCENTRIC BUSHING	
060	1519583-0000		2	BRACKET	
070	2538078-0000		1	ROCKER ARM	
080	2524601-0000		1	AXLE PIN	
090	2524603-0000		1	HOLDER	
100	2529549-0000		1	PLATE	
110	1548197-0000		2	ROLL	
300	311112-0258		2	SPRING PIN, ISO 8752 4X24-C	
310	315105-0153		2	WASHER BRB 6,4X12 RFR	
320	312115-0370		5	SCREW ISO4762 M6X20 A4 80	
350	315751-0119		2	RETAINING RING FOR SHAFT DIN 471 25 SS	
360	321308-0205		2	BALL BEARING 25/47X12	
370	312625-0316		1	HEXAGON THIN NUT, EN 24035 ML6M M6 A4	
380	312105-0379		2	SCREW M6S ISO 4014 M6X45 A480	
390	312318-0287		2	SCREW ISO4029 M4X8 A4	
400	312115-0291		2	SCREW ISO4762 M4X12 A4 80	
420	315105-0136		2	WASHER BRB 4,3X8 RFR	
430	312105-0370		1	SCREW M6S ISO 4017 M6X20 A480	
440	312605-0316		3	HEXAGON NUT, M6M M6 A280	
500	90335-0091		1	TENSION SPRING 41890, 1,2X13X48,2	
520	90051-0087		1	LOCK KNOB, NO. GN 617 A5	
530	90141-0016		1	RETAINING RING FOR SHAFT DIN 471 10 SS	
540	90099-0007		1	HEXAGON NUT, M10X1, E 63 137 10	
550	90223-0002	MM	600	WIRE STAINLESS D=2MM	
Common Parts					
340	315751-0112		2	RETAINING RING FOR SHAFT DIN 471 15 SS	

Pos	Part No	UN	Qty	Description	Page No

Machine Type | Group Description | Used-In | Group Number | Page No

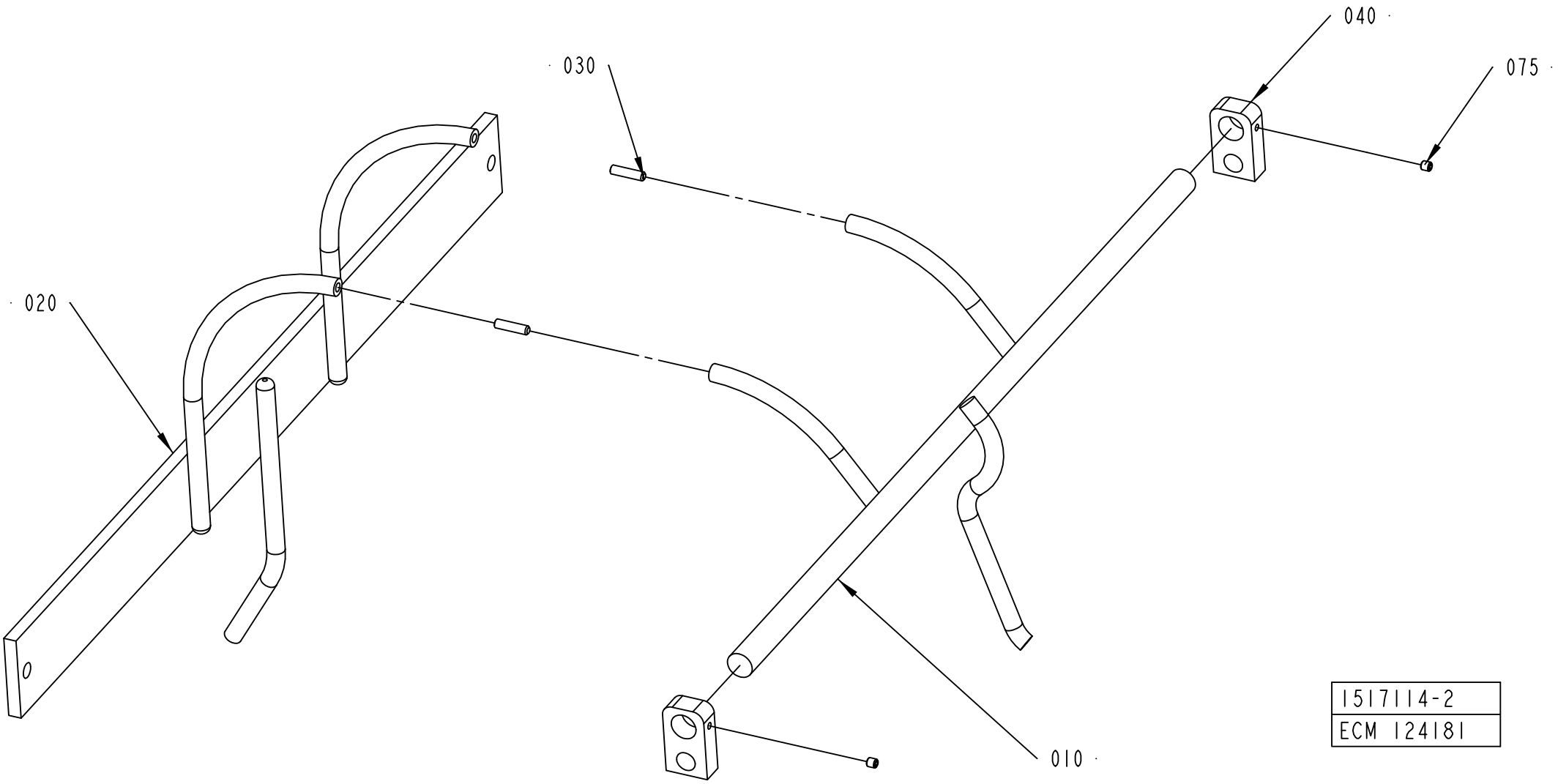
040
075
030
020
010
1517114-2
ECM 124181

ECM: 180680 - 20040910
Group number: 1517114-0100
Assembly Drawing: 1517114-2_1_AB

Pos	Part No	UN	Qty	Description	Page No
TBA/19					
010	1558992-0000		1	RAIL	
Common Parts					
020	1517113-0000		1	RAIL	
030	311103-0270		2	PARALLEL PIN ISO 2338 4M6X16 A1	
040	1519578-0000		2	MOUNTING BLOCK	
075	312318-0283		2	SCREW ISO4029 M4X4 A4	

Pos	Part No	UN	Qty	Description	Page No

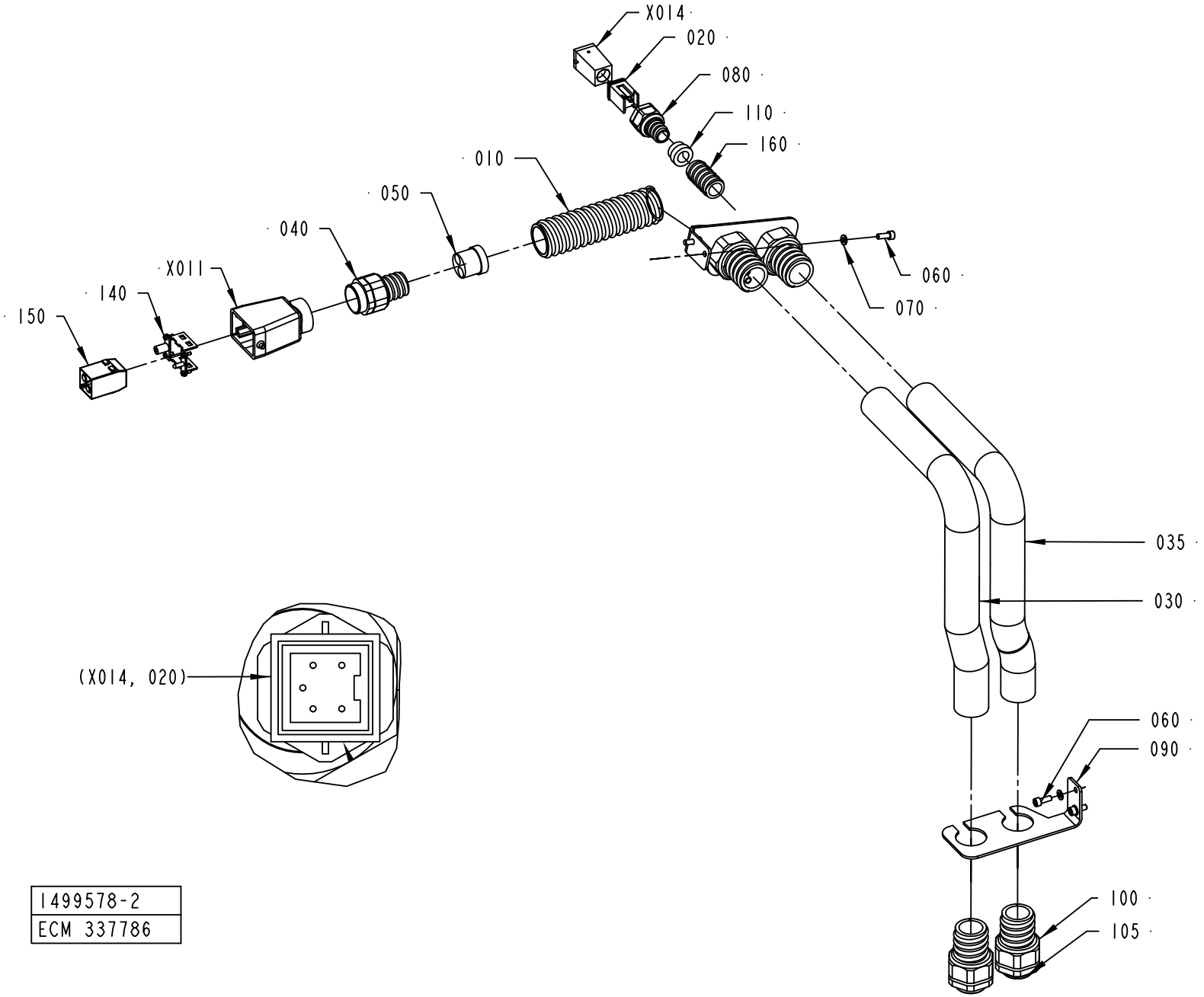

1499578-2
ECM 337786

ECM: 337786 - 20080207
Group number: 1499578-0100
Assembly Drawing: 1499578-2_1_AF

Pos	Part No	UN	Qty	Description	Page No
-					
010	90152-0070	MM	2100	HOSE, SPIRAL CONDUIT, 32,5X26, UL 2621	
020	90459-2412		1	CONNECTOR, HDC-KITS, HDC-HA-4SS	
030	90152-0060	MM	1160	HOSE, SPIRAL CONDUIT, 42X35, UL3529	
035	90152-0060	MM	1160	HOSE, SPIRAL CONDUIT, 42X35, UL3529	
040	353242-0003		1	COMPRESSION GLAND, VK 155YUL21	
050	353249-0060		1	INSERT, MULTI HOLE, E155M 2X13	
060	312115-0368		4	SCREW ISO4762 M6X16 A4 80	
070	315105-0153		4	WASHER BRB 6,4X12 RFR	
080	90457-0146		1	GLAND FITTING, VK 15154YUL16	
090	2944459-0000		2	BRACKET	
100	353243-0008		4	GLAND FITTING, VK 15556YUL29	
105	90099-0120		4	PLUG PR 37 (PG29)	
110	353249-0014		1	INSERT, SINGLE HOLE, EK154 16	
140	90458-0878		1	HINGED FRAME, 09 14 006 0303	
150	90458-0879		1	MALE INSERT, HAN MODULAR 2 MODULE	
160	90152-0051	MM	2100	HOSE, SPIRAL CONDUIT, 25X18, UL 1816	
W758	90220-0104	MM	5000	SCR. CABLE 4X1,5MM2	
X011	90458-0877		1	HOOD, TOP ENTRY, HAN 6B-GG-PG29	
X014	90110-0371		1	HOOD, TOP ENTRY, HDC-HA-3-TOVL1/11	

Pos	Part No	UN	Qty	Description	Page No

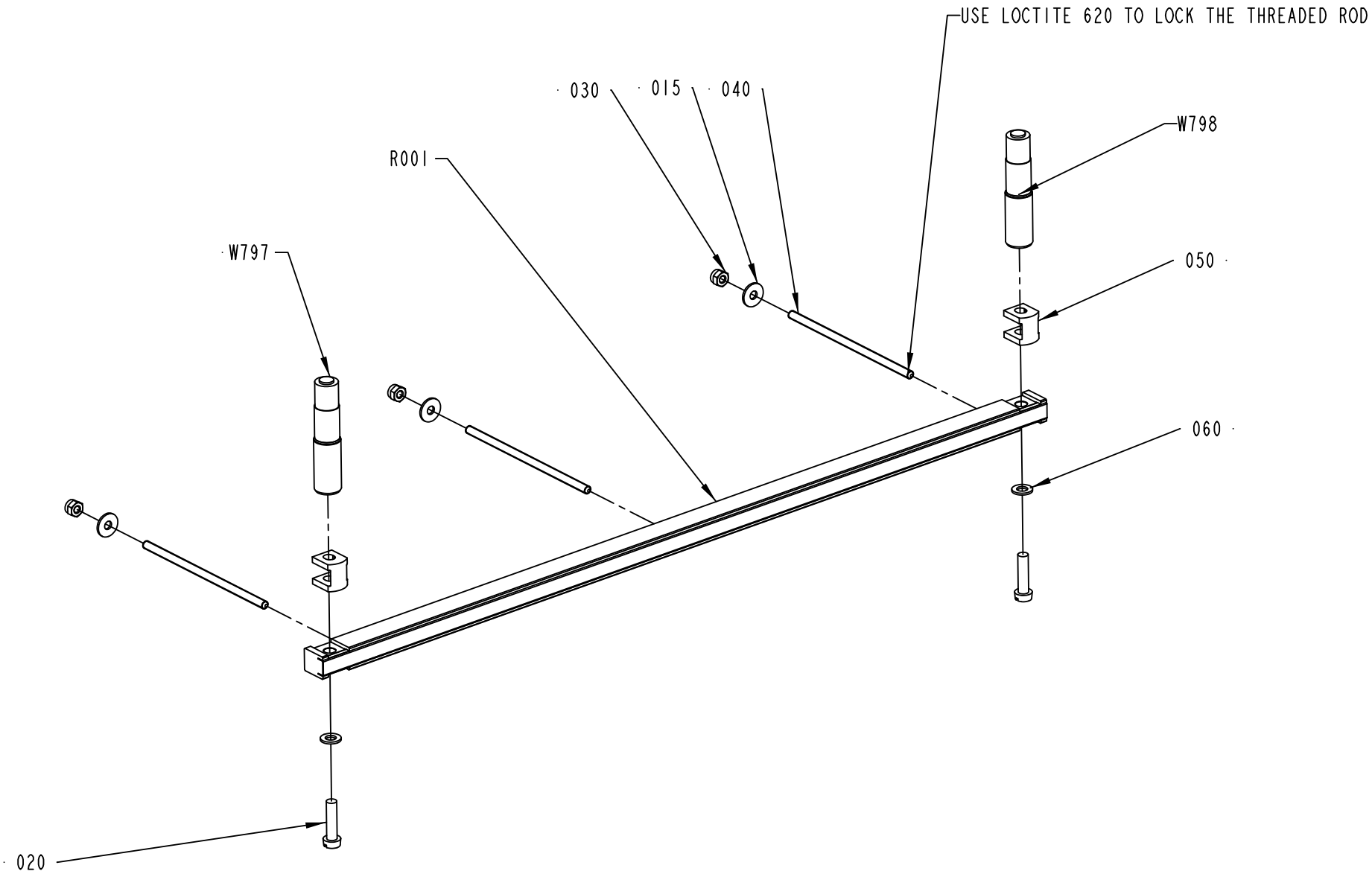

1524389-2
ECM 109336

ECM: 180693 - 20040910
Group number: 1524389-0100
Assembly Drawing: 1524389-2_1_AB

Pos	Part No	UN	Qty	Description	Page No
TBA/19					
020	312122-0331		2	SCREW ISO 1207 M5X20 NI PL BRASS	
050	1558797-0000		2	WASHER	
R001	1520972-0000		1	TPO-BAR	
W797	1498433-0000		1	CABLE	
W798	1498433-0000		1	CABLE	
Common Parts					
015	90005-0082		3	WASHER PLAIN ROUND 4,3(M4)/12,H=1	
030	312812-0312		3	HEXAGON NUT, NY-LOCK M4 A480	
040	1549328-0000		3	THREADED ROD	
060	315103-0146		2	WASHER, BRB, 5,3/10,H=1 NI PL BR	

Pos	Part No	UN	Qty	Description	Page No

BOW CLAMP

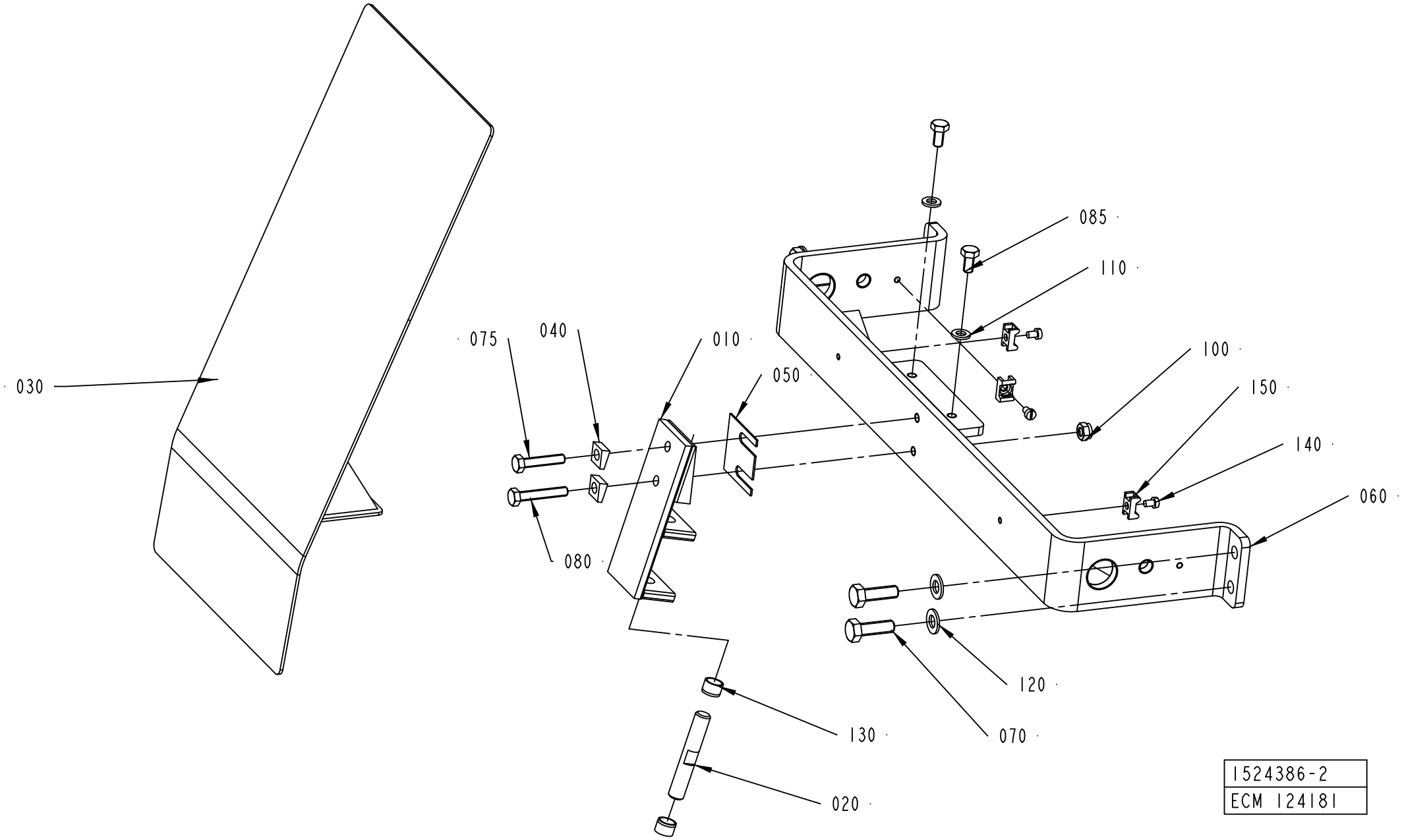
030
075
040
010
050
085
110
100
150
140
060
080
120
130
070
020
1524386-2
ECM 124181

ECM: 180684 - 20040910
Group number: 1524386-0100
Assembly Drawing: 1524386-2_1_AD

Pos	Part No	UN	Qty	Description	Page No
TBA/19					
030	1558991-0000		1	PLATE	
Common Parts					
010	1490220-0000		1	ANGLE BRACKET	
020	1494664-0000		1	AXLE LINK	
040	1499566-0000		2	WASHER	
050	1512430-0000		1	VOLUME SHIM	
060	1519944-0000		1	BRACKET	
070	312105-0453		4	SCREW M6S ISO 4017 M8X25 A480	
075	312109-0374		1	SCREW M6S ISO 4017 M6X30 A480	
080	312109-0376		1	SCREW M6S ISO 4017 M6X35 A480	
085	312105-0366		2	SCREW M6S ISO 4017 M6X12 A480	
100	312812-0316		2	HEXAGON NUT, NY-LOCK M6 A480	
110	315105-0153		2	WASHER BRB 6,4X12 RFR	
120	315105-0165		4	WASHER BRB 8,4X16 RFR	
130	321120-0098		2	BEARING BUSH W/O FLANGE, 10X12X8 MM	
140	312125-0285		4	SCREW ISO 1207 M4X6 A4	
150	352113-0205		4	ANCHOR PLATES FOR STRIPS, TM2S8-C100	

Pos	Part No	UN	Qty	Description	Page No

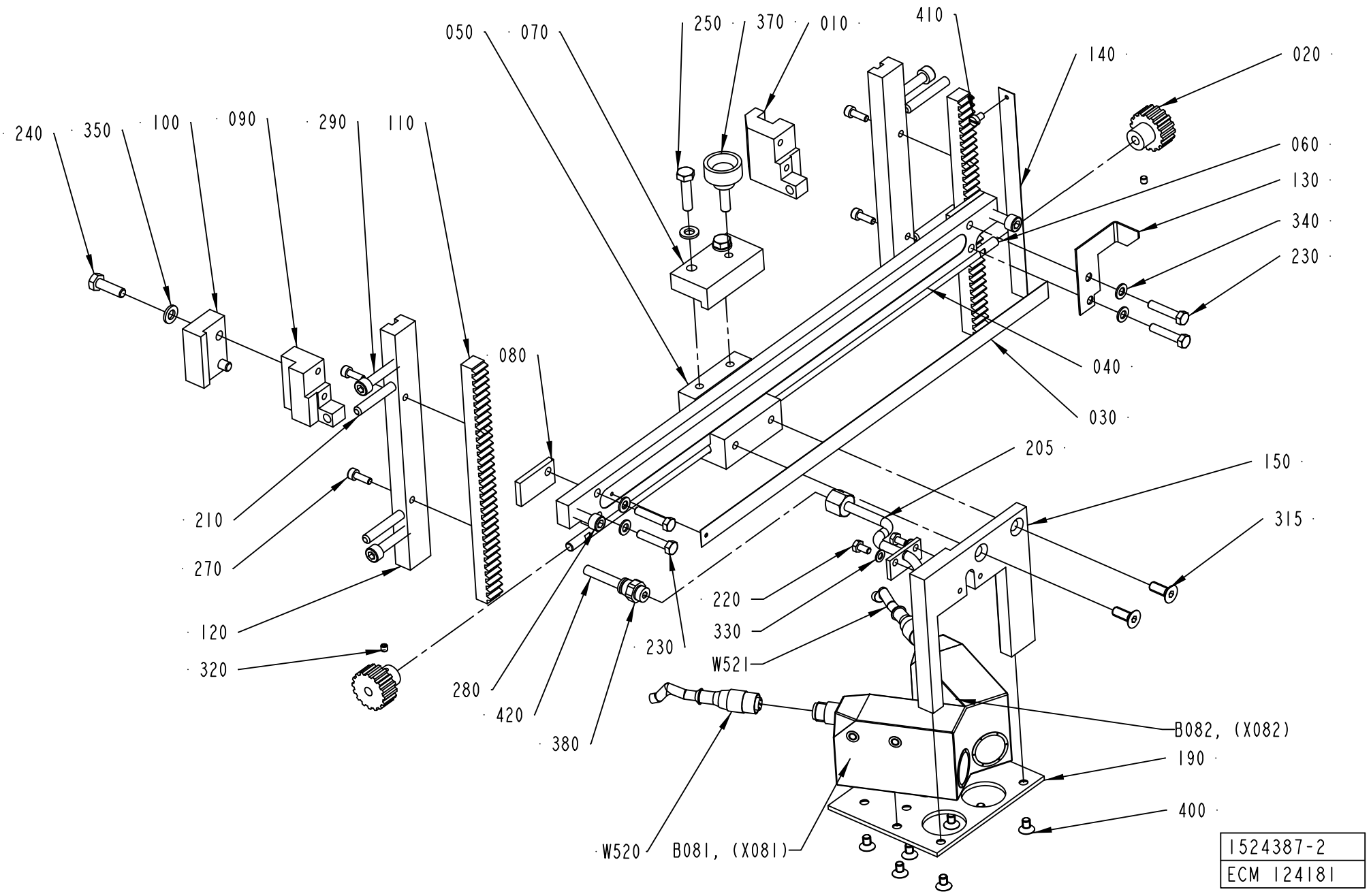
050
070
250
370
010
410
140
020
240
350
100
090
290
110
060
130
340
230
080
040
030
205
150
315
210
270
120
320
220
330
W521
230
280
420
380
B082, (X082)
190
400
W520
B081, (X081)
1524387-2
ECM 124181

ECM: 257756 - 20060707
Group number: 1524387-0100
Assembly Drawing: 1524387-2_1_AC

Pos	Part No	UN	Qty	Description	Page No
TBA/19					
400	312155-0323		8	SCREW DIN 7991 MF6S M5X8 A4 70	
B081	90458-0602		1	CONTRAST SCANNER, KT15W-P2213S02	
B082	90458-0602		1	CONTRAST SCANNER, KT15W-P2213S02	
W520	90458-0603		1	CONNECTOR, CABLE RECEPTACLES	
W521	90458-0603		1	CONNECTOR, CABLE RECEPTACLES	
Common Parts					
010	1484705-0000		1	SLIDER	
020	1484706-0000		2	GEAR WHEEL	
030	1484762-0000		1	MEASURING TAPE	
040	1484776-0000		1	RAIL	
050	1484777-0000		1	SLIDER	
060	1484779-0000		1	ROD	
070	1484782-0000		1	CLAMP BLOCK	
080	1484783-0000		2	CLAMPING ELEMENT	
090	1484784-0000		1	LOCATING PIECE	
100	1484785-0000		1	LOCATING PIECE	
110	1487510-0000		2	RACK GEAR	
120	1487511-0000		2	BRACKET	
130	1487515-0000		1	INDICATION	
140	1487516-0000		1	MEASURING TAPE	
150	1487554-0000		1	BRACKET	
190	1487558-0000		1	FASTENING PLATE	
210	311103-0361		4	PARALLEL PIN ISO 2338 6M6X40 A1	
230	312105-0333		4	SCREW M6S ISO 4017 M5X25 A480	
240	312105-0370		2	SCREW M6S ISO 4017 M6X20 A480	
250	312105-0372		2	SCREW M6S ISO 4017 M6X25 A480	
270	312115-0291		4	SCREW ISO4762 M4X12 A4 80	
280	312115-0370		2	SCREW ISO4762 M6X20 A4 80	
290	312115-0374		4	SCREW ISO4762 M6X30 A4 80	
315	312155-0368		2	SCREW DIN 7991 MF6S M6X16 A4 70	
320	312318-0283		2	SCREW ISO4029 M4X4 A4	
340	315105-0146		4	WASHER BRB 5,3X10 RFR	
350	315105-0153		4	WASHER BRB 6,4X12 RFR	
370	90051-0083		1	KNOB, EXTERNAL THREAD. NO. 8308-1321	
410	312125-0285		1	SCREW ISO 1207 M4X6 A4	

Pos	Part No	UN	Qty	Description	Page No

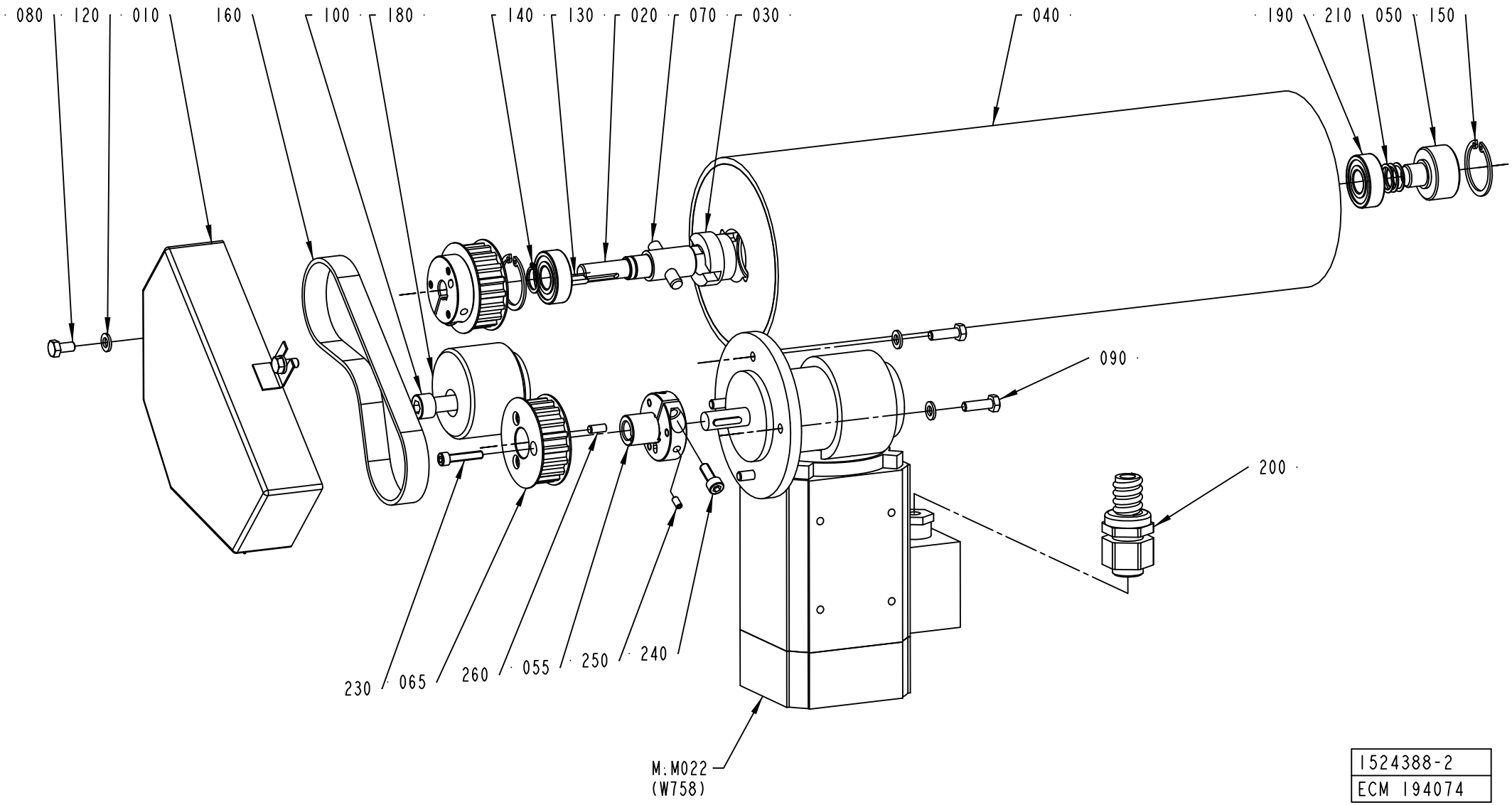

1524388-2
ECM 194074

ECM: 206037 - 20050427
Group number: 1524388-0100
Assembly Drawing: 1524388-2_1_AD

Pos	Part No	UN	Qty	Description	Page No
TBA/19					
130	315701-0170		1	PARALLEL KEY W. ROUND ENDS, 4X4X20 MM	
200	90458-0449		1	GLAND FITTING, 2205413S05 UL16	
M.M022	90459-2328		1	GEARS, WORM MOTOR IGL 80-60 + VE 31GR5	
Common Parts					
010	1487512-0000		1	COVER	
020	1487762-0000		1	SHAFT	
030	1487787-0000		1	BUSHING	
040	1519584-0000		1	BENDING ROLLER	
050	1519597-0000		1	AXLE PIN	
055	2540770-0000		2	BUSHING	
065	2540769-0000		2	TOOTHED PULLEY	
070	311103-0409		1	PARALLEL PIN ISO 2338 8M6X40 A1	
080	312105-0366		3	SCREW M6S ISO 4017 M6X12 A480	
090	312105-0370		4	SCREW M6S ISO 4017 M6X20 A480	
100	312115-0501		1	SCREW ISO4762 M10X50 A4 80	
120	315105-0153		7	WASHER BRB 6,4X12 RFR	
130	315701-0170		1	PARALLEL KEY W. ROUND ENDS, 4X4X20 MM	
140	315751-0112		1	RETAINING RING FOR SHAFT DIN 471 15 SS	
150	315753-0124		2	RETAINING RING FOR BORE DIN 472 35 SS	
160	90417-0311		1	TIMING BELT 16T10/440 PU	
180	90344-0078		1	PULLEY	
190	321313-0102		2	BALL BEARING 15/35X11	
210	1558989-0000		3	SHIMS	
230	312115-0333		6	SCREW ISO4762 M5X25 A4 80	
240	312115-0368		2	SCREW ISO4762 M6X16 A4 80	
250	312318-0287		2	SCREW ISO4029 M4X8 A4	
260	311103-0306		2	PARALLEL PIN ISO 2338 5M6X12 A1	

Pos	Part No	UN	Qty	Description	Page No

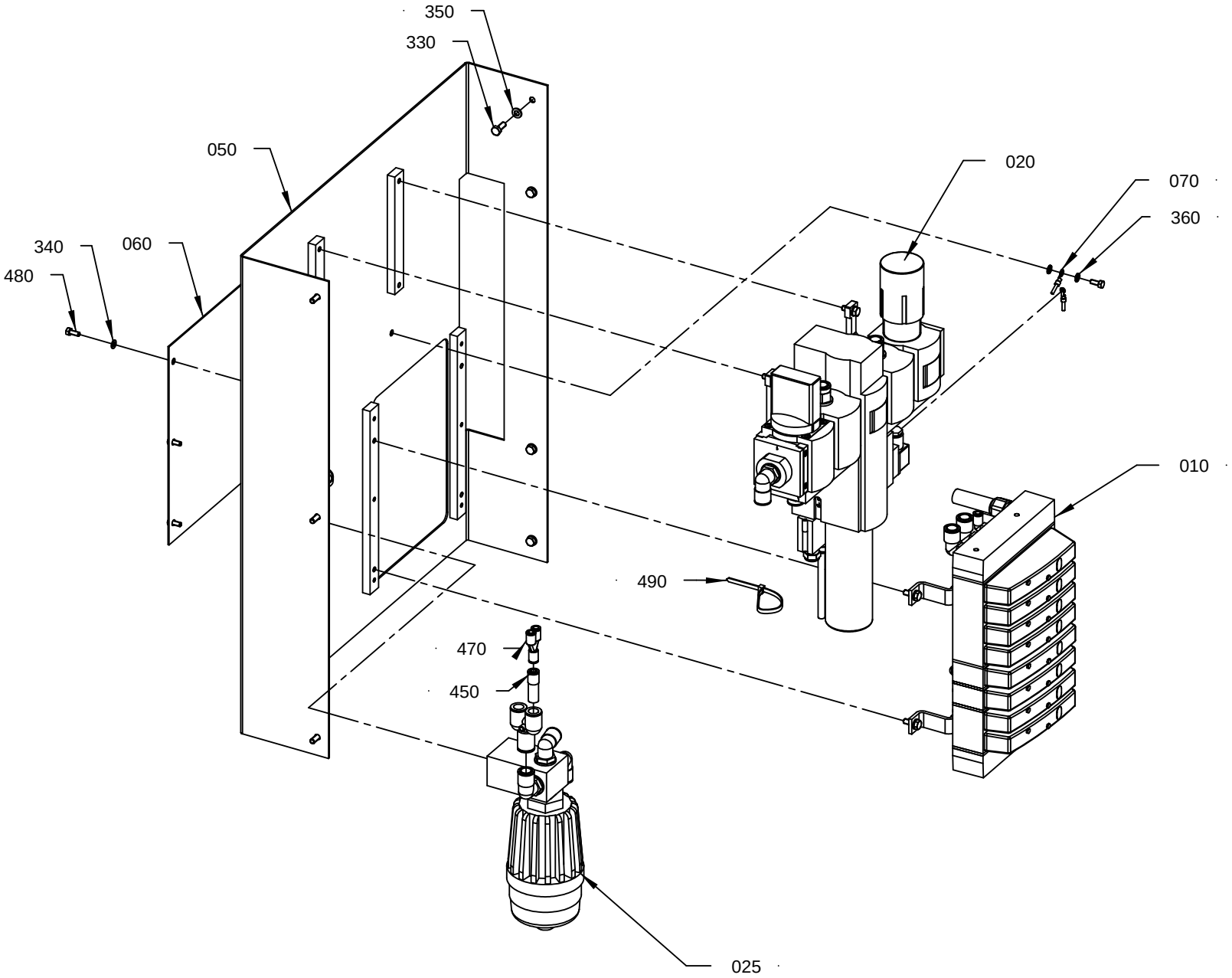

15115 71-3
471630

ECM: 471778 - 20101006
Group number: 1511571-0300
Assembly Drawing: 1511571-3_1_AE

Pos	Part No	UN	Qty	Description	Page No
-					
010	2774506-0200		1	VALVE GROUP	**2-81**
020	2774507-0200		1	AIR INLET	**2-83**
025	2832786-0200		1	SILENCER	**2-85**
050	3017387-0000		1	PLATE	
060	3017411-0000		1	PLATE	
070	3072114-0000		1	EARTH WIRE	
330	312105-0368		7	SCREW M6S ISO 4017 M6X16 A480	
340	315106-0146		7	WASHER ISO 7089-5-200 HV A4	
350	315103-0153		7	WASHER, BRB, 6,4/12,H=1,5 NIPL BR	
360	90062-0040		2	LOCK WASHER SERRAT.INT.GEAR,5,3/10 H=0,6	
370	312605-0314		1	HEXAGON NUT, M6M M5 A280	
400	90055-0147		1	PUSH-IN Y-CONNECTOR QSY-12	
450	350006-0007		1	PUSH-IN FITTING QS-F-12H-6	
460	350004-0002		1	PUSH-IN L-FITTING QSL-F-6	
470	350015-0001		1	PUSH-IN Y-CONNECTOR QSY-F-6	
480	312105-0327		7	SCREW M6S ISO 4017 M5X12 A480	
490	352113-0102		2	CABLE TIE, BLACK 188X4,8 MM	
M.A303	90459-2425		1	PRESSURE REGULATOR IN-LINE, BSP-1/4	

Pos	Part No	UN	Qty	Description	Page No

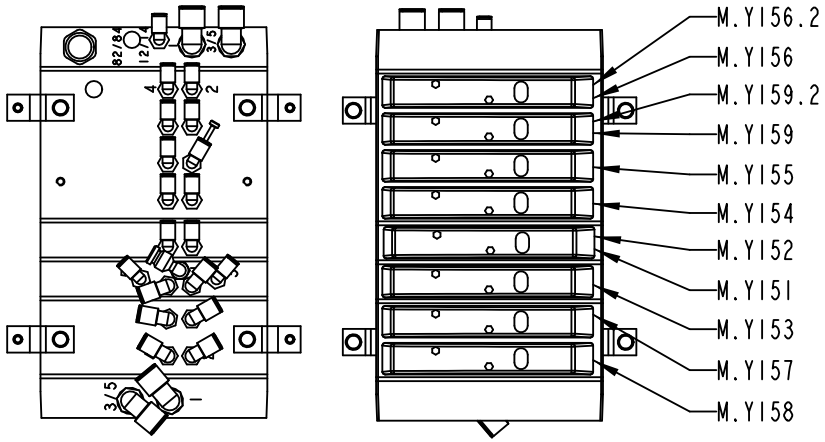
M.Y156.2
M.Y156
M.Y159.2
M.Y159
M.Y155
M.Y154
M.Y152
M.Y151
M.Y153
M.Y157
M.Y158

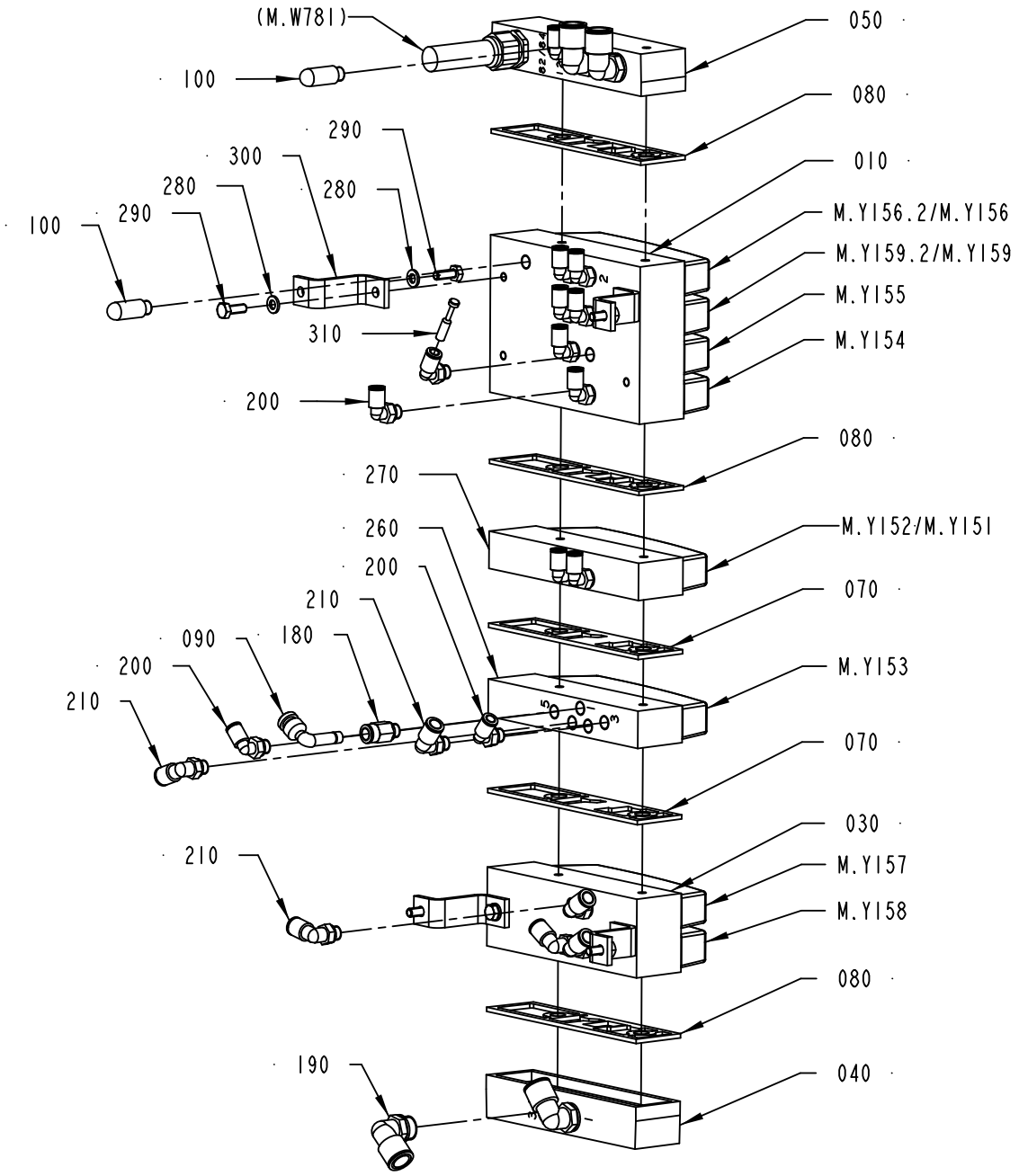
(M.W781)
100
050
080
290
300
280
280
010
100
290
M.Y156.2/M.Y156
M.Y159.2/M.Y159
M.Y155
M.Y154
310
200
080
270
260
200
M.Y152/M.Y151
070
210
090
180
200
210
M.Y153
070
030
210
M.Y157
M.Y158
080
190
040

ECM: 438709 - 20100222
Group number: 2774506-0200
Assembly Drawing: 2774506-2_1_AB

Pos	Part No	UN	Qty	Description	Page No
-					
010	90458-1204		1	BASIC SUB-BASE 4 VALVES, CDVI5.0-GB4-MP	
030	90458-1206		1	EXP. SUB-BASE 2 VALVES, CDVI5.0-EB	
040	90458-1214		1	RIGHT ENDPL EXT. PILOT AIR,CDVI5.0-EPR-S	
050	90458-1212		1	LEFT ENDPLATE INCL. 10M CABLE	
070	90458-1208		2	SEALING, CHANNEL 1 BLOCKED	
080	90458-1207		3	SEALING, STANDARD	
090	90055-0204		1	ELBOW WITH TAILPIECE 8/8 MM LONG	
100	90328-0047		2	SILENCER G1/8"	
180	350001-0007		1	PUSH-IN FITTING QS-F-G1/8-8	
190	350002-0014		4	PUSH-IN L-FITTING QSL-F-G3/8-12	
200	350002-0006		13	PUSH-IN L-FITTING QSL-F-G1/8-6	
210	350002-0007		6	PUSH-IN L-FITTING QSL-F-G1/8-8	
230	350006-0008		1	PUSH-IN FITTING QS-F-12H-8	
240	350005-0005		1	PUSH-IN T-FITTING QST-F-12	
250	315400-0004	MM	100	TUBE PUN-H-8X1,25-BL	
260	90600-5129		1	EXP. SUB-BASE 1 VALVE,CDVI5.0-EB1X-BI-MP	
270	90600-5249		1	FERRITE, B64290L616X38	
280	315105-0153		8	WASHER BRB 6,4X12 RFR	
290	312105-0368		1	SCREW M6S ISO 4017 M6X16 A480	
300	3017388-0000		4	BRACKET	
310	350013-0002		1	PLUG QSC-6H	
M.Y159	90458-1199		1	VALVE CLOSED IN MID-POSITION, 5/3	
M.Y158	90458-1194		1	VALVE, 5/2 MONOSTABLE	
M.Y157	90458-1194		1	VALVE, 5/2 MONOSTABLE	
M.Y156	90458-1199		1	VALVE CLOSED IN MID-POSITION, 5/3	
M.Y155	90458-1194		1	VALVE, 5/2 MONOSTABLE	
M.Y154	90458-1194		1	VALVE, 5/2 MONOSTABLE	
M.Y153	90458-1194		1	VALVE, 5/2 MONOSTABLE	
M.Y151/152	90458-1197		1	VALVE, 5/2 BISTABLE	

Pos	Part No	UN	Qty	Description	Page No

Machine Type | Group Description | Used-In | Group Number | Page No

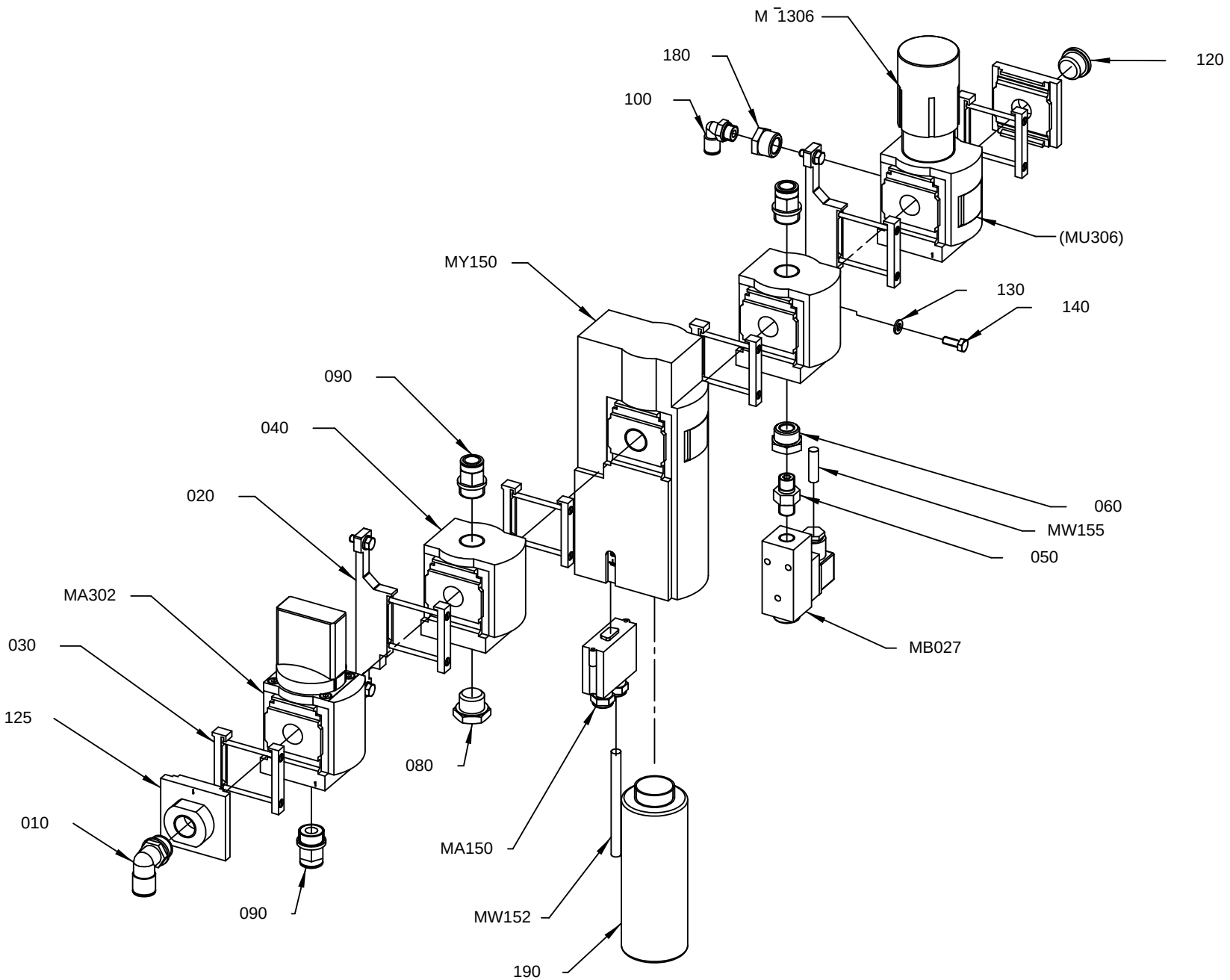

2774 507-2
443800

ECM: 450901 - 20100524
Group number: 2774507-0200
Assembly Drawing: 2774507-2_1_AD

Pos	Part No	UN	Qty	Description	Page No
-					
010	350002-0016		1	PUSH-IN L-FITTING QSL-F-G1/2-12	
020	90459-1858		2	BRACKET, MS6-WP	
030	90459-1859		4	BRACKET, MS6-MV	
	90459-4787		*1*	*SENSOR BRACKET, WSM-12-J-M5*	
040	90459-1856		2	DISTRIBUTOR, MS6-FRM-1/2	
050	90224-0372		1	NIPPLE, EXT.THREAD, HEXAGON, R1/4-R1/4	
060	90459-2216		1	BUSHING, INT/EXT, G1/4-G1/2	
080	90330-0037		1	PLUG, G1/2EXT, G1/2	
090	350001-0016		3	PUSH-IN FITTING QS-F-G1/2-12	
100	350002-0009		1	PUSH-IN L-FITTING QSL-F-G1/4-8	
120	342713-0213		1	PLUG, EXT THREAD HEX SOCKET 8638-00-120	
125	90459-2617		2	END PLATE, MS6-AGD	
130	315105-0153		4	WASHER BRB 6,4X12 RFR	
140	312105-0368		4	SCREW M6S ISO 4017 M6X16 A480	
180	342701-0205		1	BUSHING, INT/EXT, G1/2-G1/4	
190	90601-1586		1	SILENCER, G1"	
M.Y150	90601-1126		1	SAFETY VALVE, MS6-SV-1/2-E-10V24-AG	
M.W155	351150-0403	M	1.5	CABLE OLFLEX 3X0,75 MM2 LIGHT/GREY	
M.W152	90600-5930	M	2.5	CABLE C9, 20-057-15	
M.T306	90459-1850		1	REGULATOR, MS6-LRB-1/2-D5-AS	
M.B027	90600-1385		1	PRESSURE GUARD, PEV-1/4-B SA234332	
M.A302	90459-1852		1	SHUT OFF VALVE, MS6-EM1-1/2	
M.A150	90601-1168		1	SOCKET CONNECTOR, NECA-S1G9-P9-MP3	

Pos	Part No	UN	Qty	Description	Page No

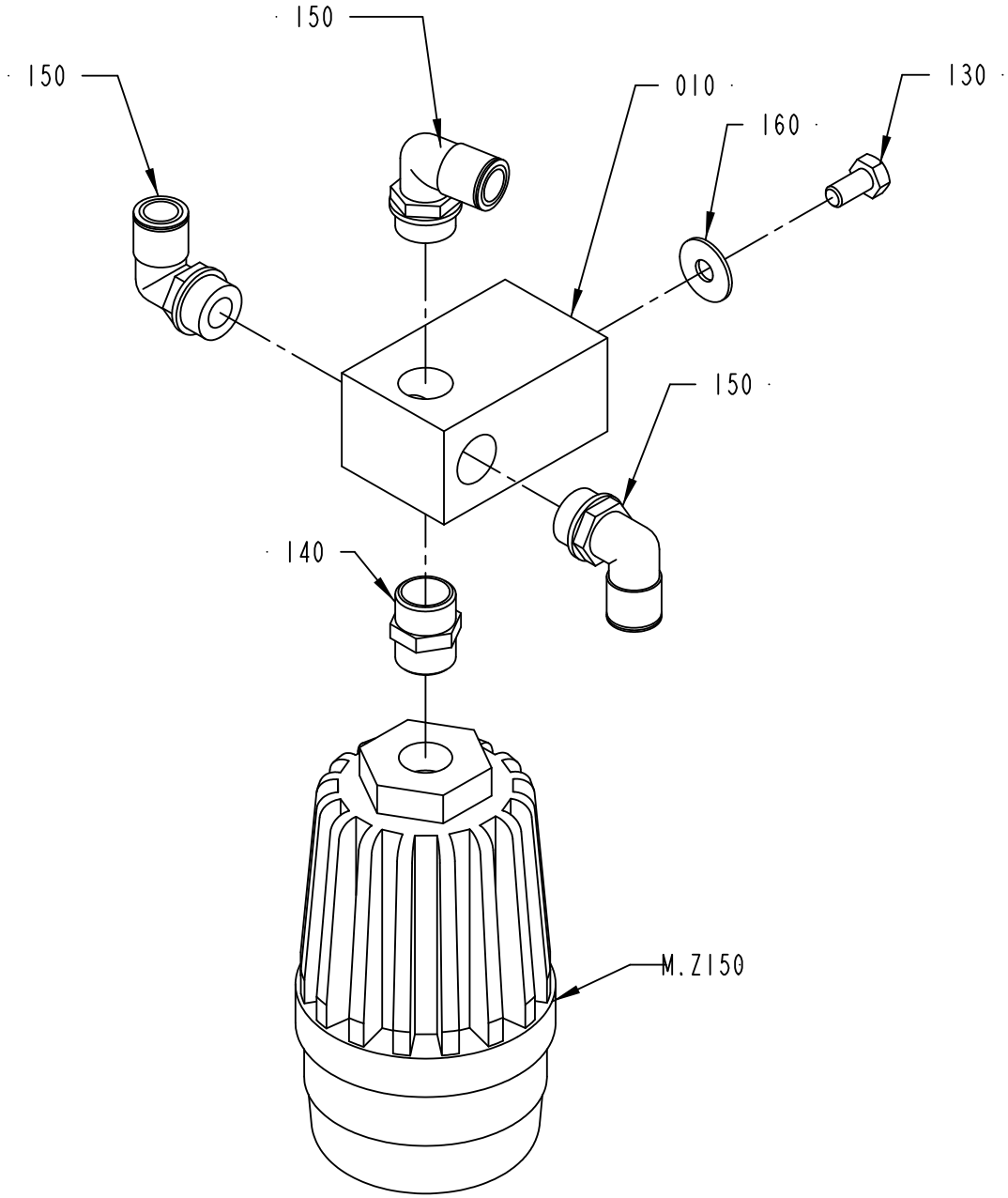

2832786-2
435602

ECM: 436995 - 20100222
Group number: 2832786-0200
Assembly Drawing: 2832786-2_1_AB

Pos	Part No	UN	Qty	Description	Page No
-					
010	3017389-0000		1	SEPARATION BLOCK	
130	312105-0449		1	SCREW M6S ISO 4017 M8X16 A480	
140	342700-0113		1	NIPPLE, EXT.THREAD, HEXAGON, G1/2-G1/2	
150	350002-0016		3	PUSH-IN L-FITTING QSL-F-G1/2-12	
160	90005-0105		1	WASHER PLAIN ROUND 8,4(M8)/24, H=1,5	
M.Z150	90459-5786		1	FILTERED SILENCER, 10494 LFU-1/2	
	90459-7294		*1*	*FILTER CARTRIDGE, 10496 LFPU-1/2*	

Pos	Part No	UN	Qty	Description	Page No

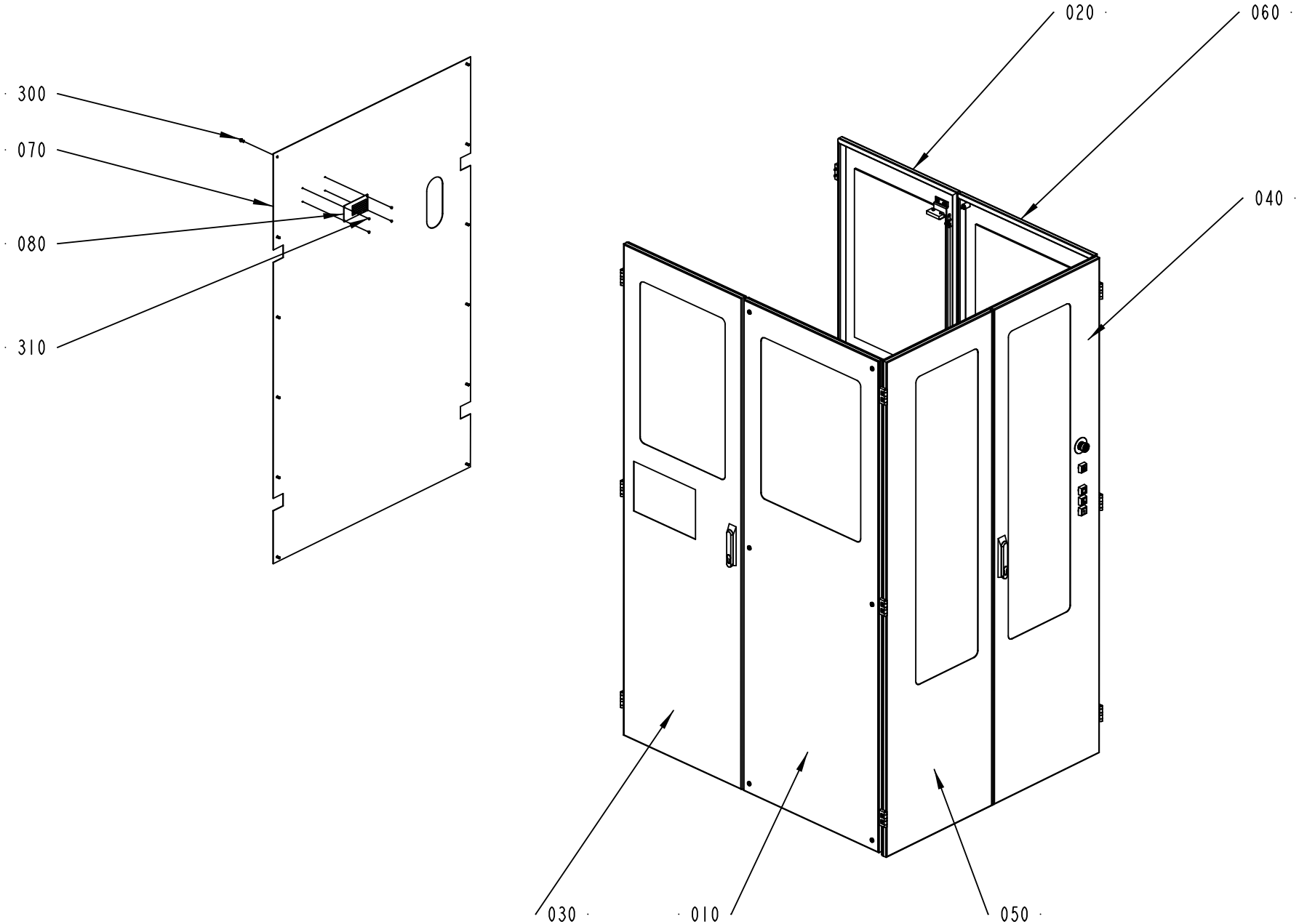

1519953-3
387090

ECM: 403531 - 20090706
Group number: 1519953-0300
Assembly Drawing: 1519953-3_1_AA

Pos	Part No	UN	Qty	Description	Page No
-					
010	1498415-0100		1	HATCH	**2-89**
020	1498413-0200		1	LEFT DOORSIDE	**2-91**
030	1498414-0200		1	RIGHT SIDEDOOR	**2-93**
040	1498419-0200		1	LEFT BACKDOOR	**2-95**
050	1498420-0200		1	RIGHT BACKDOOR	**2-99**
060	1498428-0100		1	HATCH	**2-101**
070	1487541-0000		1	COVER PLATE	
080	579765-0000		1	MACHINE SIGN CE	
300	90458-0072		12	SCREW ISO 7380 S M6X12 A2	
310	311521-0143		4	RIVET, BLANK 3,2X8	

Pos	Part No	UN	Qty	Description	Page No

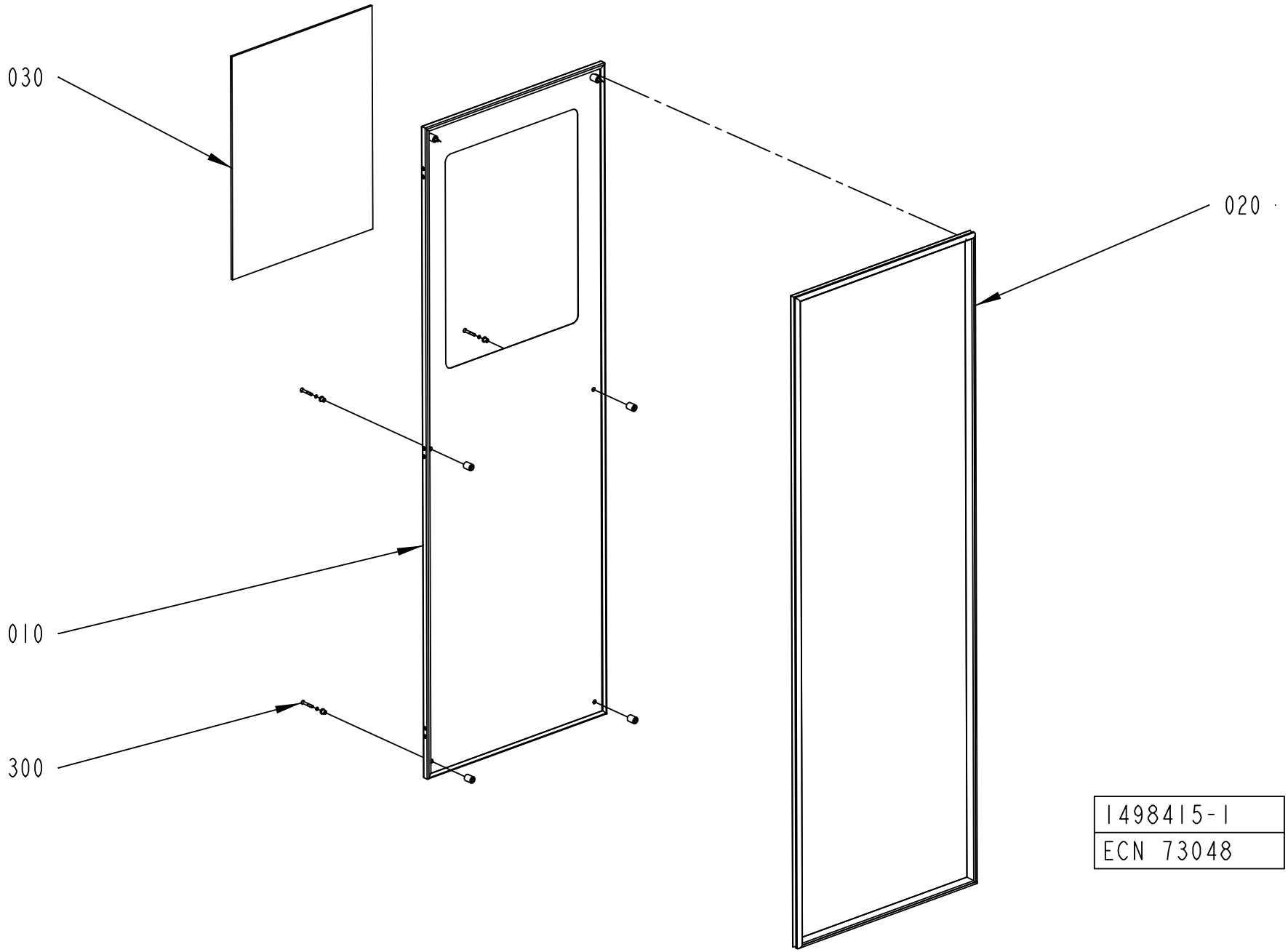
030
020
010
300
1498415-1
ECN 73048

ECM: 180628 - 20040910
Group number: 1498415-0100
Assembly Drawing: 1498415-1_1_AA

Pos	Part No	UN	Qty	Description	Page No
-					
010	1487540-0000		1	HATCH	
020	1499575-0001		1	SEALING STRIP	
030	1499563-0003		1	GLASS PANE	
300	90226-0458		6	MOUNTING SCREW	

Pos	Part No	UN	Qty	Description	Page No

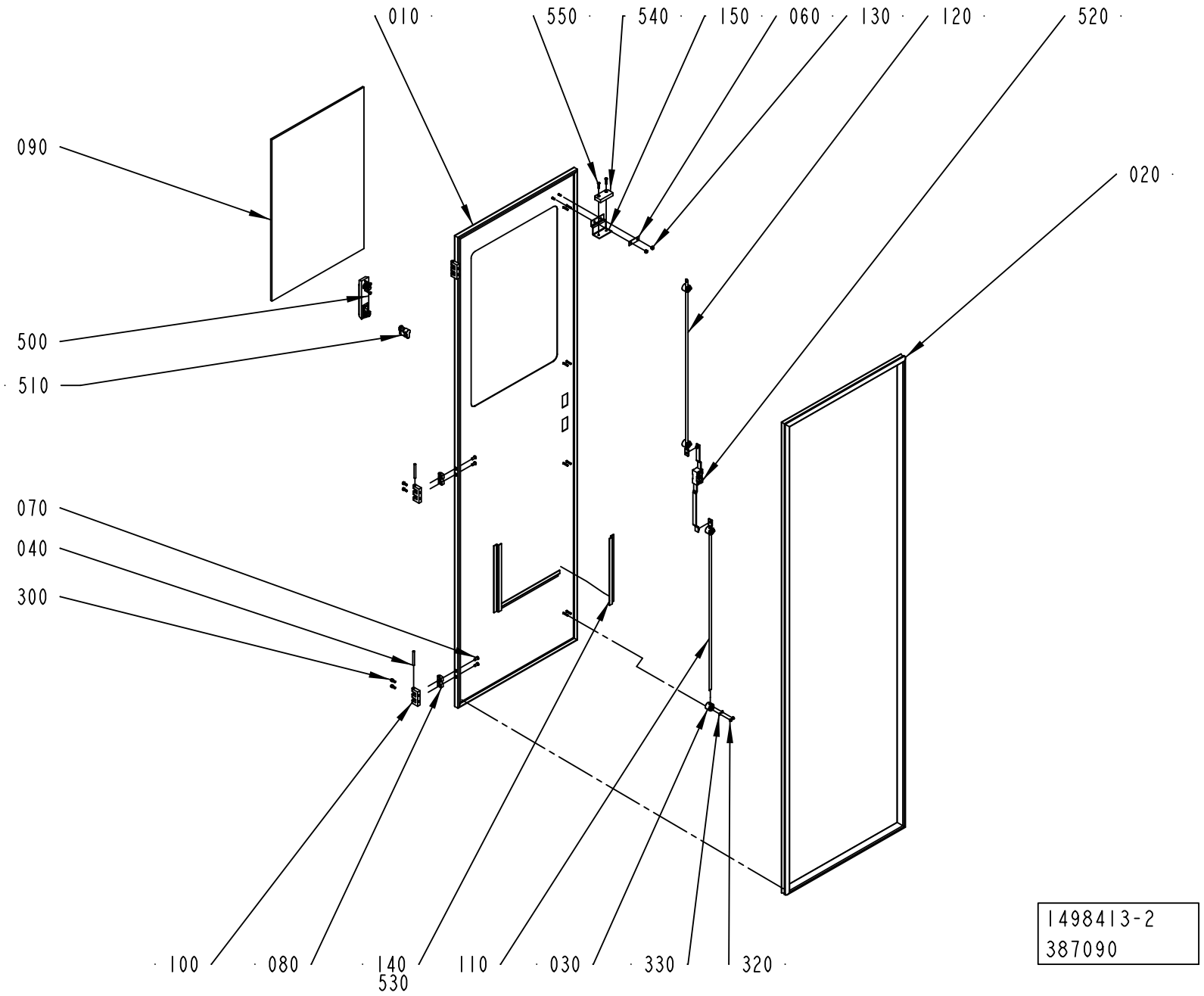
010
550
540
150
060
130
120
520
090
020
500
510
070
040
300
100
080
140
530
110
030
330
320
1498413-2
387090

ECM: 403532 - 20090706
Group number: 1498413-0200
Assembly Drawing: 1498413-2_1_AA

Pos	Part No	UN	Qty	Description	Page No
-					
010	1487539-0000		1	LEFT SIDEDOOR	
020	1499575-0003		1	SEALING STRIP	
030	1129274-0000		4	GUIDE LUG	
040	988685-0000		3	PIN	
060	1036563-0000		1	WASHER	
070	1129767-0000		6	SCREW	
080	1129770-0000		6	BLOCKING PIECE	
090	1499563-0002		1	GLASS PANE	
100	1035792-0000		3	E-HINGE	
110	1490198-0005		1	LOCKING ARM	
120	1490198-0006		1	LOCKING ARM	
130	1539391-0000		2	ROUND NUT	
140	988690-0000		3	RIM	
150	3017381-0000		1	BRACKET	
300	312115-0327		6	SCREW ISO4762 M5X12 A4 80	
320	312705-0312		8	NUT HEX. DOMED CAP MHM-6 M4 A280	
330	315105-0136		8	WASHER BRB 4,3X8 RFR	
500	90237-0175		1	TURNING HANDLE, 1125-U185-0A	
510	90237-0128		1	LOCK CYLINDER, 1109-SU125	
520	90237-0153		1	LOCK HOUSING, 1121-U26-0B	
530	90144-0072	MM	840	TAPE SCOTCH VHBS 4945 W=12,7MM	
550	90459-4164		2	SAFETY SCREW SM4X20, 20-053-42	
M.B141:1	90458-2794		1	SENSOR, EVA 20-046-00	

Pos	Part No	UN	Qty	Description	Page No

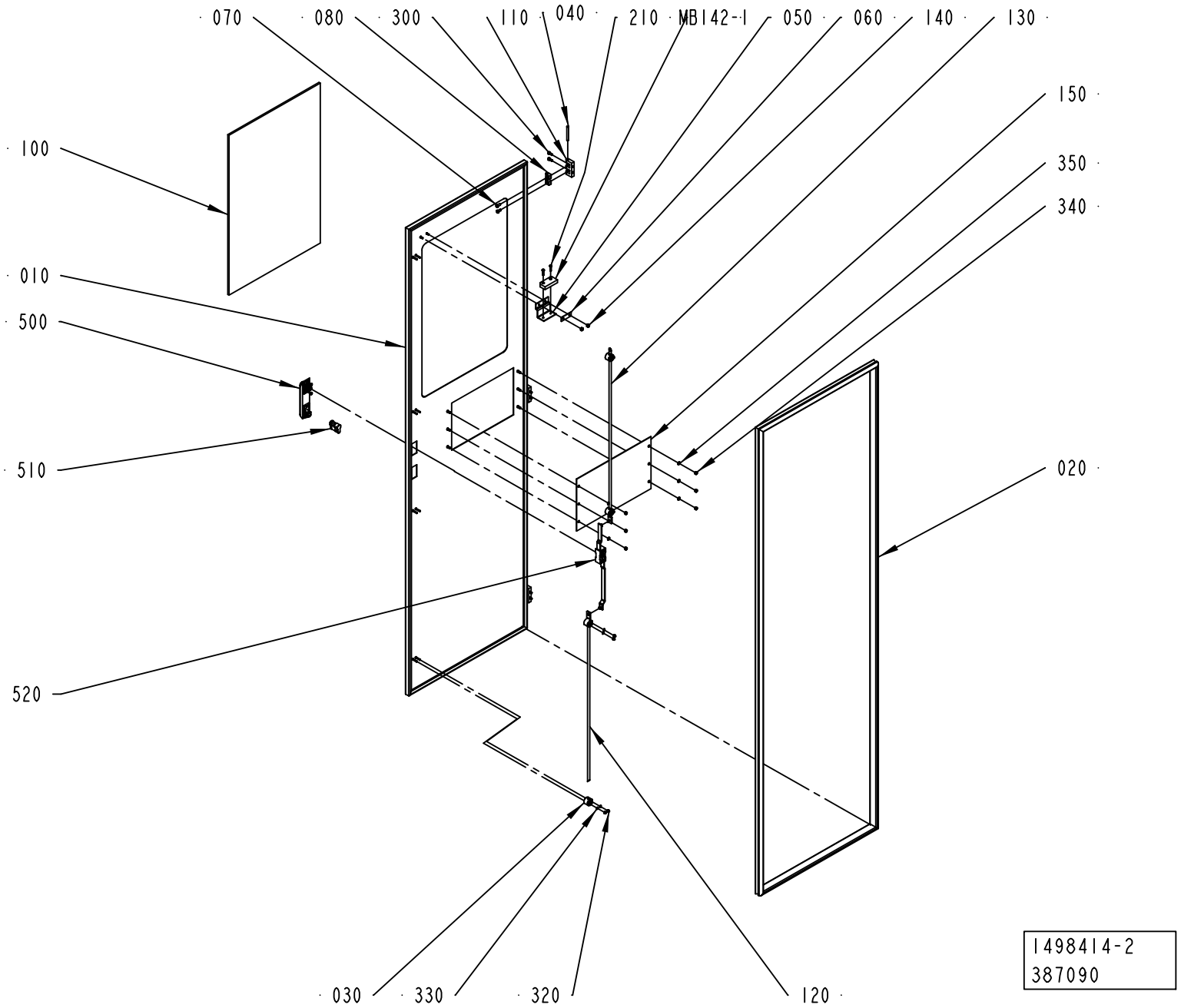
070
080
300
110
040
210
MB142-1
050
060
140
130
150
350
340
100
010
500
510
020
520
030
330
320
120
1498414-2
387090

ECM: 415989 - 20090916
Group number: 1498414-0200
Assembly Drawing: 1498414-2_1_AA

Pos	Part No	UN	Qty	Description	Page No
NOPT					
150	3017397-0000		1	PLATE	
Common Parts					
010	3017393-0000		1	RIGHT SIDEDOOR	
020	1499575-0003		1	SEALING STRIP	
030	1129274-0000		4	GUIDE LUG	
040	988685-0000		3	PIN	
050	3017381-0000		1	BRACKET	
060	1036563-0000		1	WASHER	
070	1129767-0000		6	SCREW	
080	1129770-0000		6	BLOCKING PIECE	
100	1499563-0002		1	GLASS PANE	
110	1035792-0000		3	E-HINGE	
120	1490198-0005		1	LOCKING ARM	
130	1490198-0006		1	LOCKING ARM	
140	1539391-0000		2	ROUND NUT	
210	90459-4164		2	SAFETY SCREW SM4X20, 20-053-42	
300	312115-0327		6	SCREW ISO4762 M5X12 A4 80	
320	312705-0312		8	NUT HEX. DOMED CAP MHM-6 M4 A280	
330	315105-0136		8	WASHER BRB 4,3X8 RFR	
340	312605-0314		6	HEXAGON NUT, M6M M5 A280	
350	315106-0146		6	WASHER ISO 7089-5-200 HV A4	
500	90237-0175		1	TURNING HANDLE, 1125-U185-0A	
510	90237-0128		1	LOCK CYLINDER, 1109-SU125	
520	90237-0153		1	LOCK HOUSING, 1121-U26-0B	
M.B142:1	90458-2794		1	SENSOR, EVA 20-046-00	

Pos	Part No	UN	Qty	Description	Page No

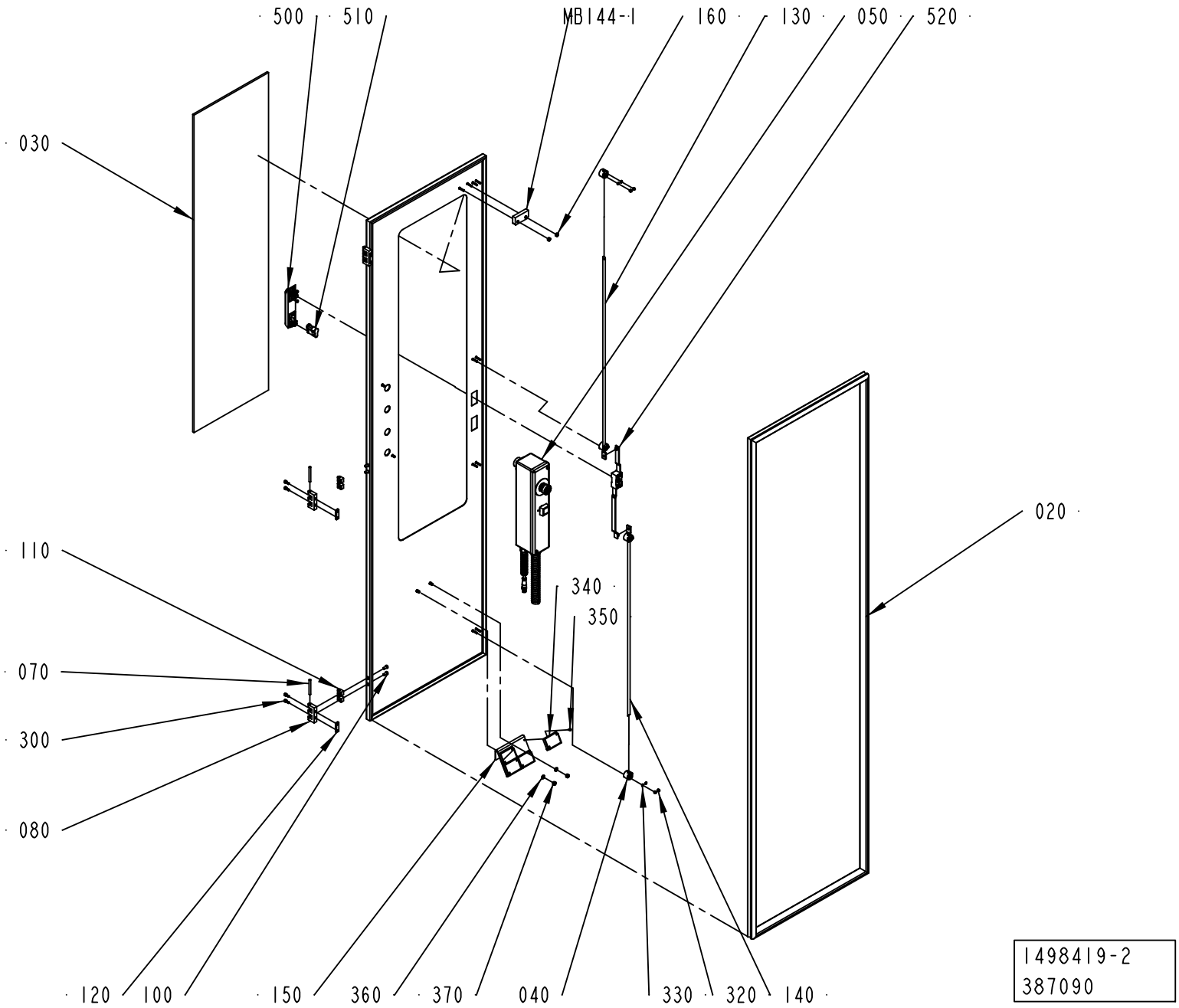
500
510
MB144-1
160
130
050
520
030
020
110
340
350
070
300
080
120
100
150
360
370
040
330
320
140
1498419-2
387090

ECM: 403534 - 20090706
Group number: 1498419-0200
Assembly Drawing: 1498419-2_1_AA

Pos	Part No	UN	Qty	Description	Page No
-					
010	3017382-0000		1	LEFT BACKDOOR	
020	1499575-0002		1	SEALING STRIP	
030	1499563-0001		1	GLASS PANE	
040	1129274-0000		4	GUIDE LUG	
050	1517088-0300		1	CONTROL PANEL	**2-97**
070	988685-0000		3	PIN	
080	1035792-0000		3	E-HINGE	
100	1129767-0000		6	SCREW	
110	1129770-0000		6	BLOCKING PIECE	
120	1147253-0000		3	NUT	
130	1490198-0003		1	LOCKING ARM	
140	1490198-0004		1	LOCKING ARM	
150	1538204-0000		1	BRACKET	
160	1539391-0000		2	ROUND NUT	
300	312115-0327		6	SCREW ISO4762 M5X12 A4 80	
320	312705-0312		8	NUT HEX. DOMED CAP MHM-6 M4 A280	
330	315105-0136		8	WASHER BRB 4,3X8 RFR	
340	90232-0333		4	REFLECTOR, E39-R1	
350	312125-0222		8	SCREW ISO 1207 M3X8 A4	
360	315105-0153		2	WASHER BRB 6,4X12 RFR	
370	312605-0316		2	HEXAGON NUT, M6M M6 A280	
500	90237-0175		1	TURNING HANDLE, 1125-U185-0A	
510	90237-0128		1	LOCK CYLINDER, 1109-SU125	
520	90237-0153		1	LOCK HOUSING, 1121-U26-0B	
M.B144:1	90458-2794		1	SENSOR, EVA 20-046-00	

Pos	Part No	UN	Qty	Description	Page No

Machine Type | Group Description | Used-In | Group Number | Page No

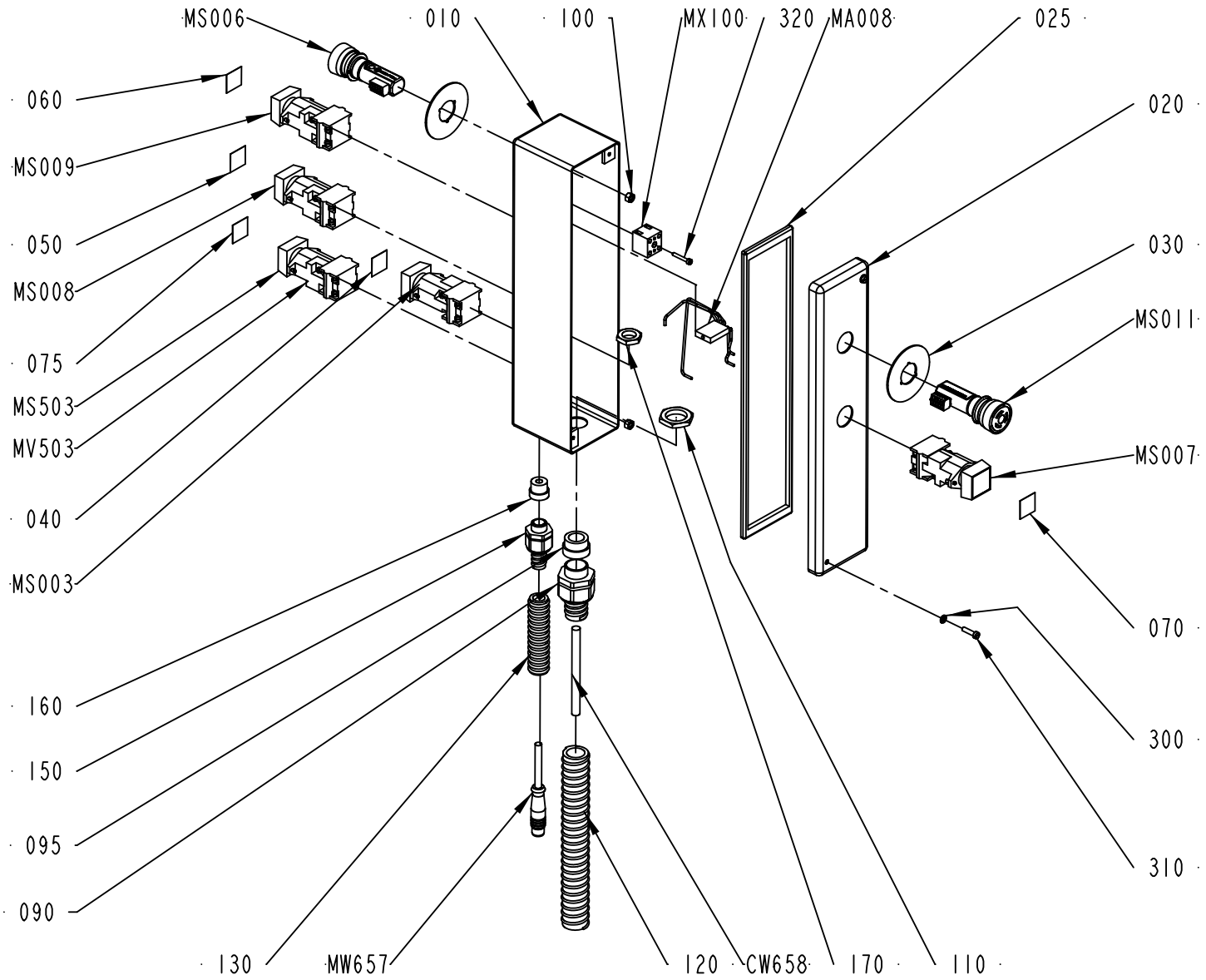

1517088-4
435602

ECM: 471296 - 20101006
Group number: 1517088-0300
Assembly Drawing: 1517088-4_1_AD

Pos	Part No	UN	Qty	Description	Page No
-					
010	3017386-0000		1	PUSH BUTTON BOX	
020	3017385-0000		1	COVER	
025	90143-0069	MM	850	RUBBER STRIP	
030	90600-9809		2	ES SIGN FOR INCA, 30-054-09	
040	90457-0920		1	BUTTON SIGN, ROTATION OF MATERIAL HOLDER	
050	359301-0110		1	BUTTON SIGN, SHORT STOP	
060	359301-0100		1	BUTTON SIGN, SPLICING	
070	359301-0488		1	BUTTON SIGN, MATERIAL LOCKING	
075	359301-0504		1	BUTTON SIGN, RESET	
090	353243-0005		1	GLAND FITTING, VK 15354YUL16	
095	353249-0014		1	INSERT, SINGLE HOLE, EK154 16	
100	312605-0314		2	HEXAGON NUT, M6M M5 A280	
110	90099-0110		1	PLUG, PR 22,5 (PG16)	
120	90152-0051	MM	2000	HOSE, SPIRAL CONDUIT, 25X18, UL 1816	
130	90152-0059	MM	2000	HOSE, SPIRAL CONDUIT, 18X12, UL 1211	
150	353243-0001		1	GLAND FITTING, VK 15052YUL11	
160	353249-0008		1	INSERT, SINGLE HOLE, EK152 7	
170	90099-0104		1	PLUG, PR 15,2 (PG9)	
300	315105-0136		2	WASHER BRB 4,3X8 RFR	
310	312125-0293		2	SCREW ISO 1207 M4X16 A4	
320	312115-0230		1	SCREW ISO4762 M3X20 A4 80	
C.W658	312115-0230		1	SCREW ISO4762 M3X20 A4 80	
M.X100	90195-0020		1	TERMINAL BLOCK, BK 2CRN, 0624 7200 00	
M.W657	90600-0934		1	CABLE M12-C62 5 POLE MALE, 20-056-02	
M.V503	90038-0021		1	DIODE, 1A 800V	
M.S503	90064-0082		1	PUSH BUTTON, WHITE	
	90036-0057		*1*	*LIGHT BULB, BA9S 28V*	
M.S011	90600-6050		1	EMERGENCY STOP INCA 1 TINA, 30-054-00	
M.S009	90064-0082		1	PUSH BUTTON, WHITE	
	90036-0057		*1*	*LIGHT BULB, BA9S 28V*	
M.S008	90064-0082		1	PUSH BUTTON, WHITE	
	90036-0057		*1*	*LIGHT BULB, BA9S 28V*	
M.S007	90064-0082		1	PUSH BUTTON, WHITE	
	90036-0057		*1*	*LIGHT BULB, BA9S 28V*	
M.S006	90600-6050		1	EMERGENCY STOP INCA 1 TINA, 30-054-00	
M.S003	90064-0082		1	PUSH BUTTON, WHITE	
	90036-0057		*1*	*LIGHT BULB, BA9S 28V*	
M.A008	90600-0933		1	CONVERTER TINA 2-B, 20-054-11	

Pos	Part No	UN	Qty	Description	Page No

Machine Type | Group Description | Used-In | Group Number | Page No

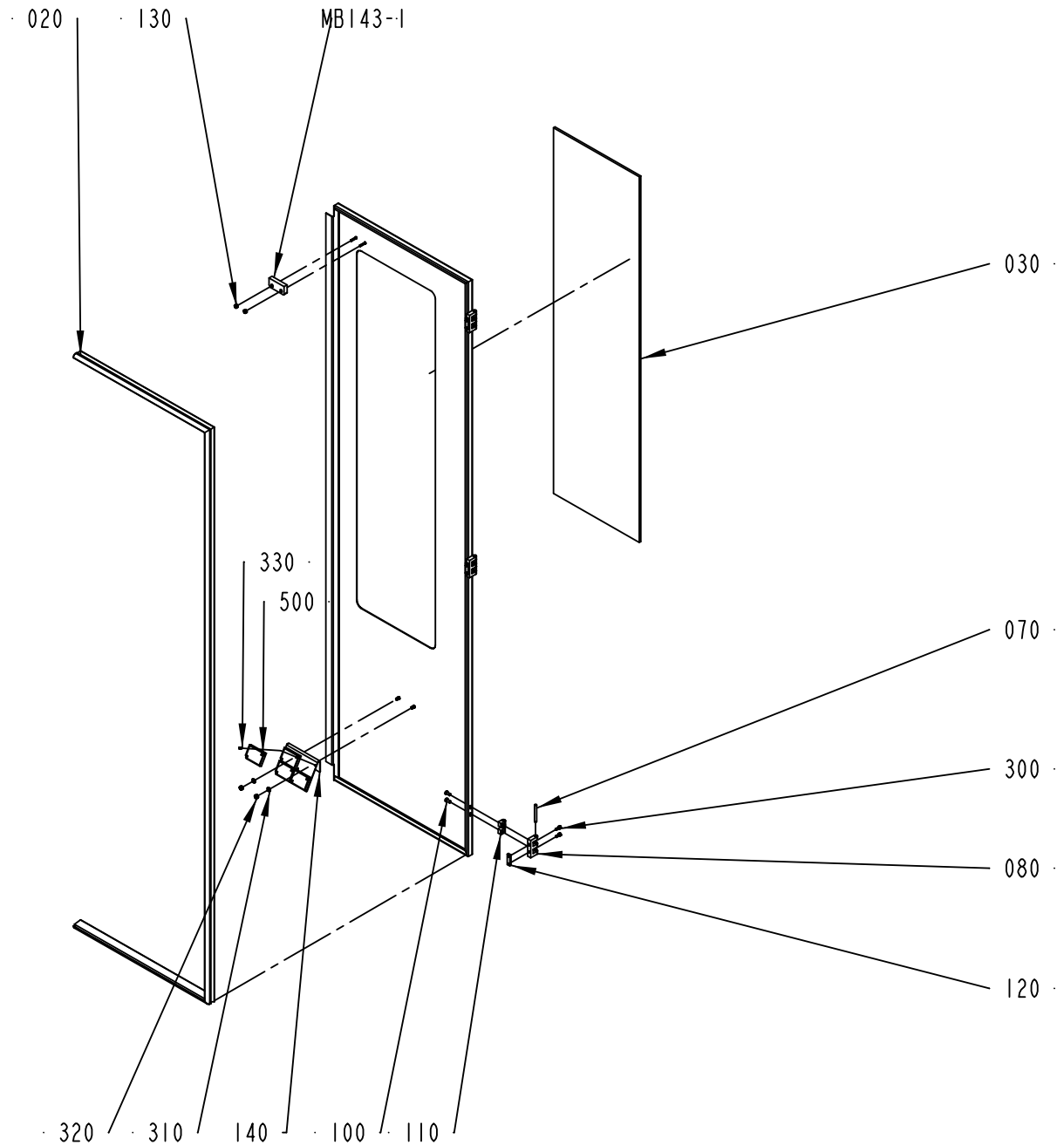
020
130
MB143-1
030
330
500
070
300
080
120
320
310
140
100
110
1498420-2
387090

ECM: 403536 - 20090706
Group number: 1498420-0200
Assembly Drawing: 1498420-2_1_AA

Pos	Part No	UN	Qty	Description	Page No
-					
010	3017383-0000		1	RIGHT BACKDOOR	
020	1499576-0000		1	SEALING STRIP	
030	1499563-0001		1	GLASS PANE	
070	988685-0000		3	PIN	
080	1035792-0000		3	E-HINGE	
100	1129767-0000		6	SCREW	
110	1129770-0000		6	BLOCKING PIECE	
120	1147253-0000		3	NUT	
130	1539391-0000		2	ROUND NUT	
140	1538204-0000		1	BRACKET	
300	312115-0327		6	SCREW ISO4762 M5X12 A4 80	
310	315105-0153		2	WASHER BRB 6,4X12 RFR	
320	312605-0316		2	HEXAGON NUT, M6M M6 A280	
330	312125-0222		8	SCREW ISO 1207 M3X8 A4	
500	90232-0333		4	REFLECTOR, E39-R1	
M.B143:1	90458-2794		1	SENSOR, EVA 20-046-00	

Pos	Part No	UN	Qty	Description	Page No

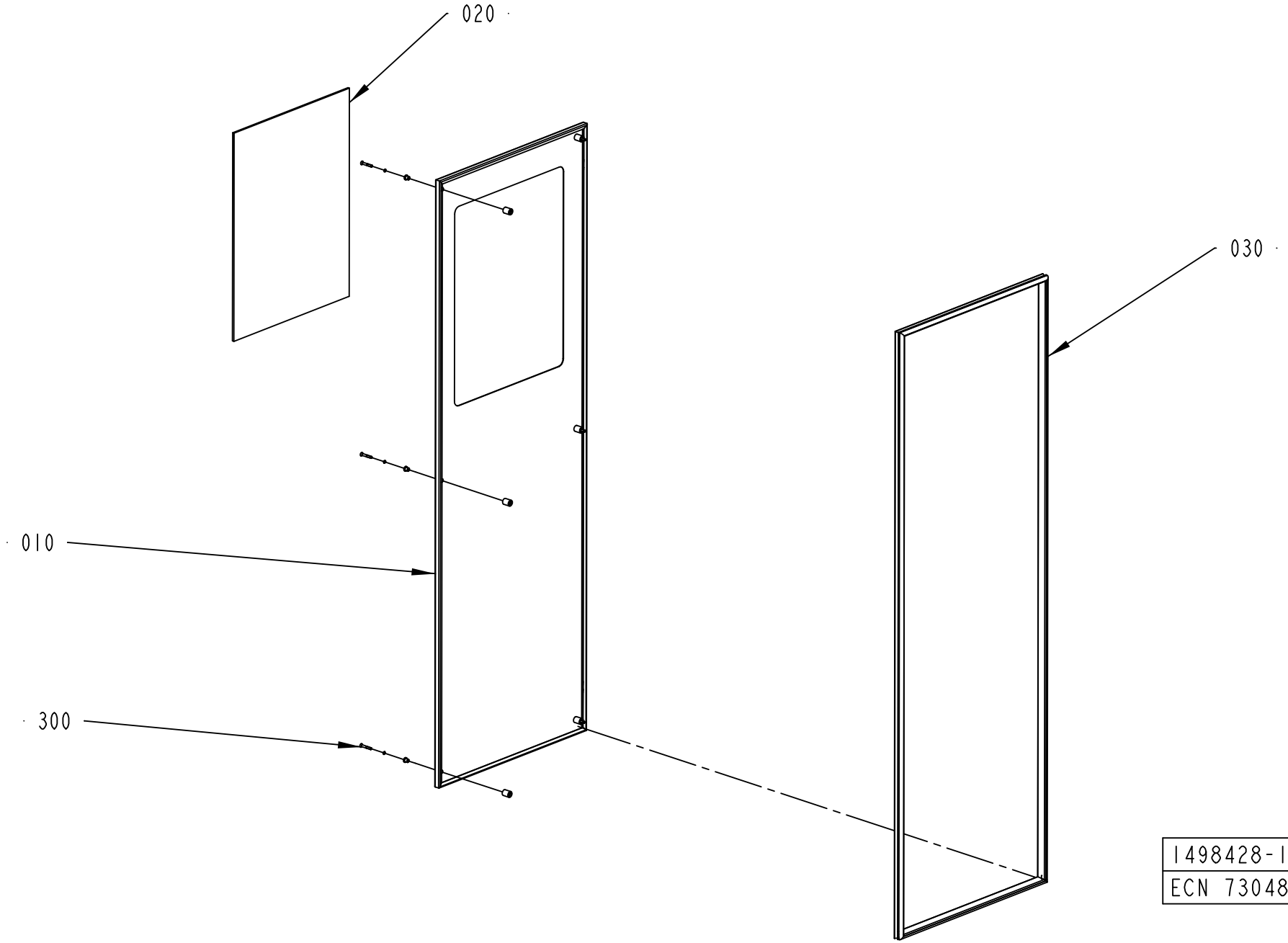
020
030
010
300
1498428-1
ECN 73048

ECM: 180631 - 20040910
Group number: 1498428-0100
Assembly Drawing: 1498428-1_1_AA

Pos	Part No	UN	Qty	Description	Page No
-					
010	1498427-0000		1	HATCH	
020	1499563-0003		1	GLASS PANE	
030	1499575-0001		1	SEALING STRIP	
300	90226-0458		6	MOUNTING SCREW	

Pos	Part No	UN	Qty	Description	Page No

Tetra Pak

SPC
Spare Parts Catalogue

HEAD SPACE BY INJECTION

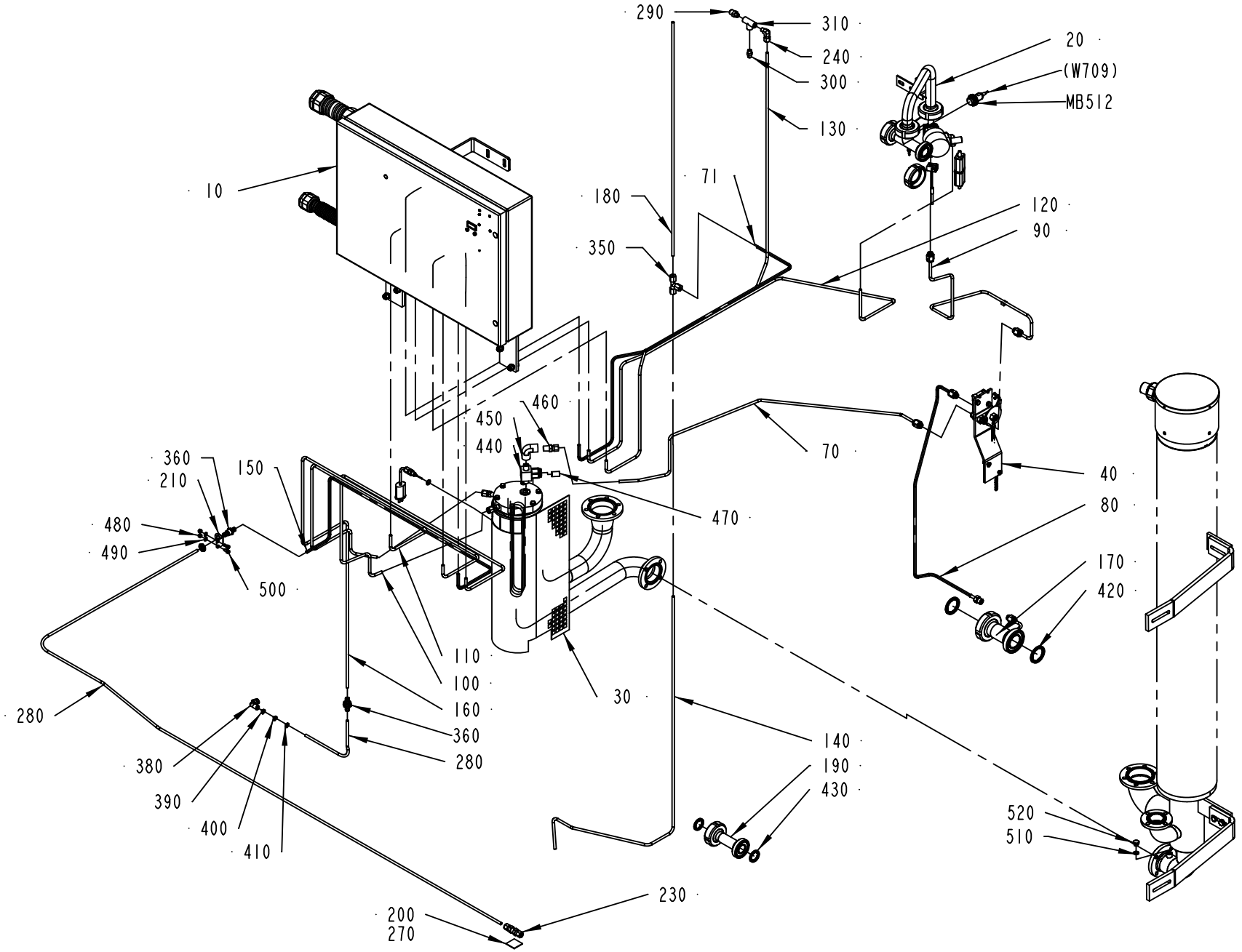

2545082-2
434906

ECM: 438832 - 20100222
Group number: 2545082-0300
Assembly Drawing: 2545082-2_1_AA

This list covers pages from 3-2 to 3-5

Pos	Part No	UN	Qty	Description	Page No
-					
	2831583-0101		1	REBUILDING MANUAL	
	2568779-0000		1	DIAGRAM	
	2610792-0100		1	TOWER CABLE INLETS	**3-7, 3-9**
	559468-0100		1	ELECTRIC EQUIPMENT	**3-11**
	2637726-0100		1	EL. CABINET	**3-17**
010	2545083-0200		1	CONTROL CABINET	**3-33, 3-35, 3-37**
020	2545080-0200		1	INJECTION SYSTEM	**3-43**
030	1539599-0100		1	HEAT EXCHANGER	**3-45**
040	1539602-0100		1	CONNECTION SYSTEM	**3-47**
070	1539604-0000		1	PIPE	
071	2546472-0000		1	PIPE	
080	2545432-0000		1	CLEANING PIPE	
090	1539605-0000		1	COOLING PIPE	
100	2546444-0000		1	PIPE	
110	2546447-0000		1	SPRAY PIPE	
120	2546471-0000		1	AIR PIPE	
130	2546473-0000		1	FILLING PIPE	
140	2547007-0000		1	RETURN PIPE	
150	2546446-0000		1	PIPE	
160	2546445-0000		1	AIR PIPE	
170	2545062-0000		1	CLEANING PIPE	
180	2547006-0000		1	RETURN PIPE	
190	1539601-0000		1	CLEANING PIPE	
200	978010-0000		1	SIGN BOARD	
210	2613035-0000		1	SUPPORT	
230	90030-0230		1	CONN. BULKHEAD BCM6-316	
240	90030-0234		1	CONN. ELBOW, M6MSEL1/8K-316	
260	90144-0073		1	TREBOFLON-TAPE W=13MM	
270	90153-0043		1	ADHESIVE, LOCTITE 495 20G	
280	90166-0132	M	5	TUBE 6 MM PA,TRANSP.	
290	90330-0013		1	NIPPLE, EXT.THREAD, HEXAGON, R1/4-R1/8	
300	90330-0032		2	NIPPLE, EXT.THREAD, HEXAGON, R1/8-R1/8	
310	90330-0095		1	T-PIPE, INT. THREAD, R-221-R1/8	
340	342706-0130		1	STIFFNER SLEEVE FOR HOSE 6X1	
350	90030-0076		1	CONN. T-PIPE T06L71	
360	90457-0086		2	BULKHEAD CONNECTOR 6MM	
380	350002-0008		1	PUSH-IN L-FITTING QSL-F-G1/4-6	
390	359000-0400		1	WIRE MARKING, YELLOW, PA2/4"0"	
400	359000-0401		1	WIRE MARKING, YELLOW, PA2/4"1"	
410	359000-0405		1	WIRE MARKING, YELLOW, PA2/4"5"	
420	90217-0348		2	GASKET 35,4X46,8X4 MM	
430	90217-0347		2	GASKET 32X22,6X3,6 MM	
440	90277-0062		1	FILTER HOUSING SS-4TF2-60	
	90277-0347		*1*	*FILTER*	
450	90330-0169		1	ELBOW, 90 INT. THREAD, 4-4FE. SS	
460	90030-0062		1	CONN. STR. GE06L1/4NPT71	
470	90277-0407		1	FILTER ELEMENT 60Âµ, SS-4F-K4-60	
480	312605-0314		2	HEXAGON NUT, M6M M5 A280	
490	315105-0146		2	WASHER BRB 5,3X10 RFR	
500	312115-0325		2	SCREW ISO4762 M5X10 A4 80	
505	315205-0505		1	O-RING 6,07X1,78 MM	
510	315234-0109		1	WASHER,PL.RND.CU.10,3/13,5 H=1,0	
520	90136-0001		1	PLUG, EXT. THREAD, NO. 100727	
MB512	90600-0467		1	INDUCTIVE SWITCH,E2A-M18KS05-WP-B1-TP 6M	

Machine Type	Group Description	Used-In	Group Number	Page No

HEAD SPACE BY INJECTION

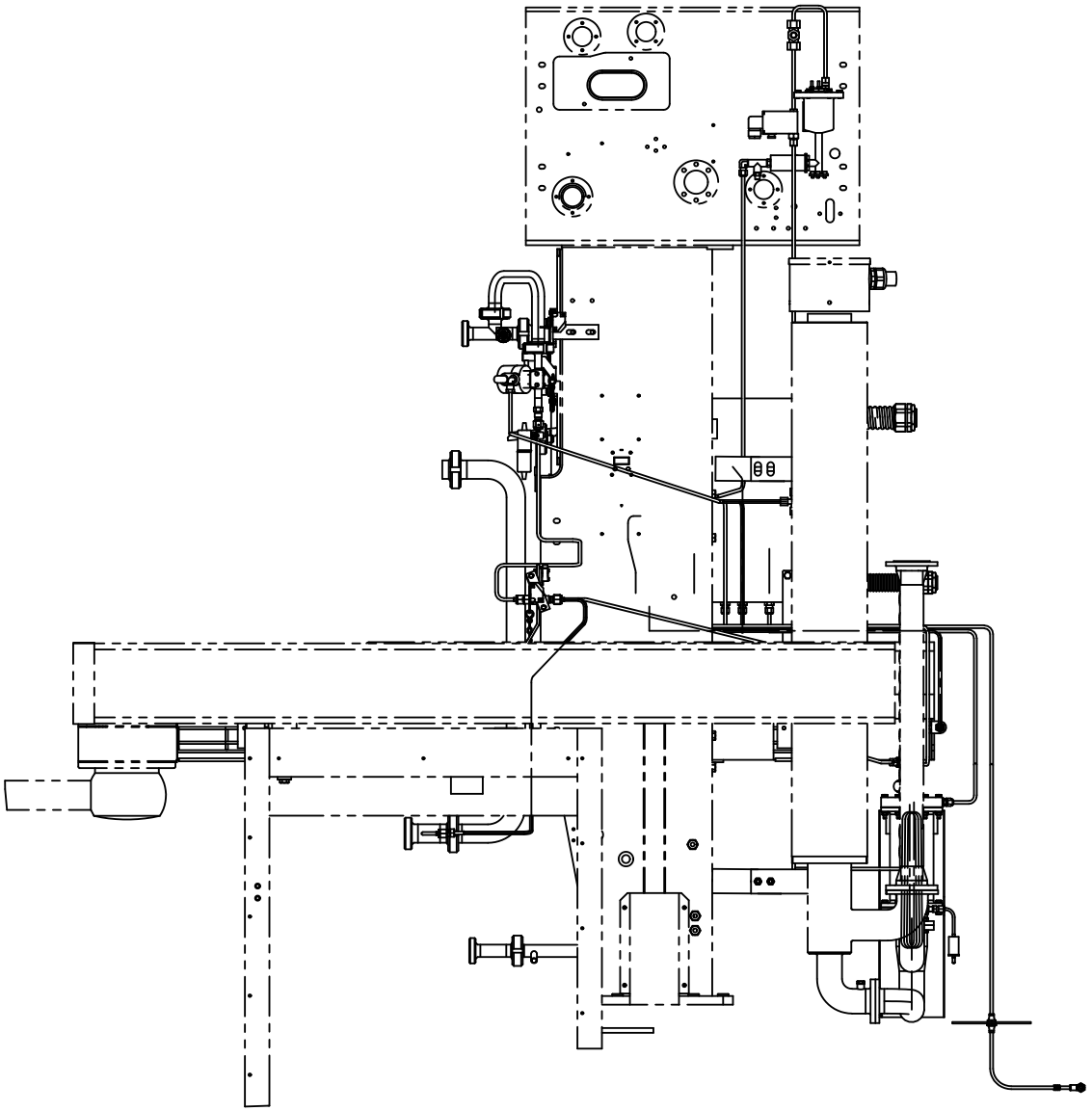

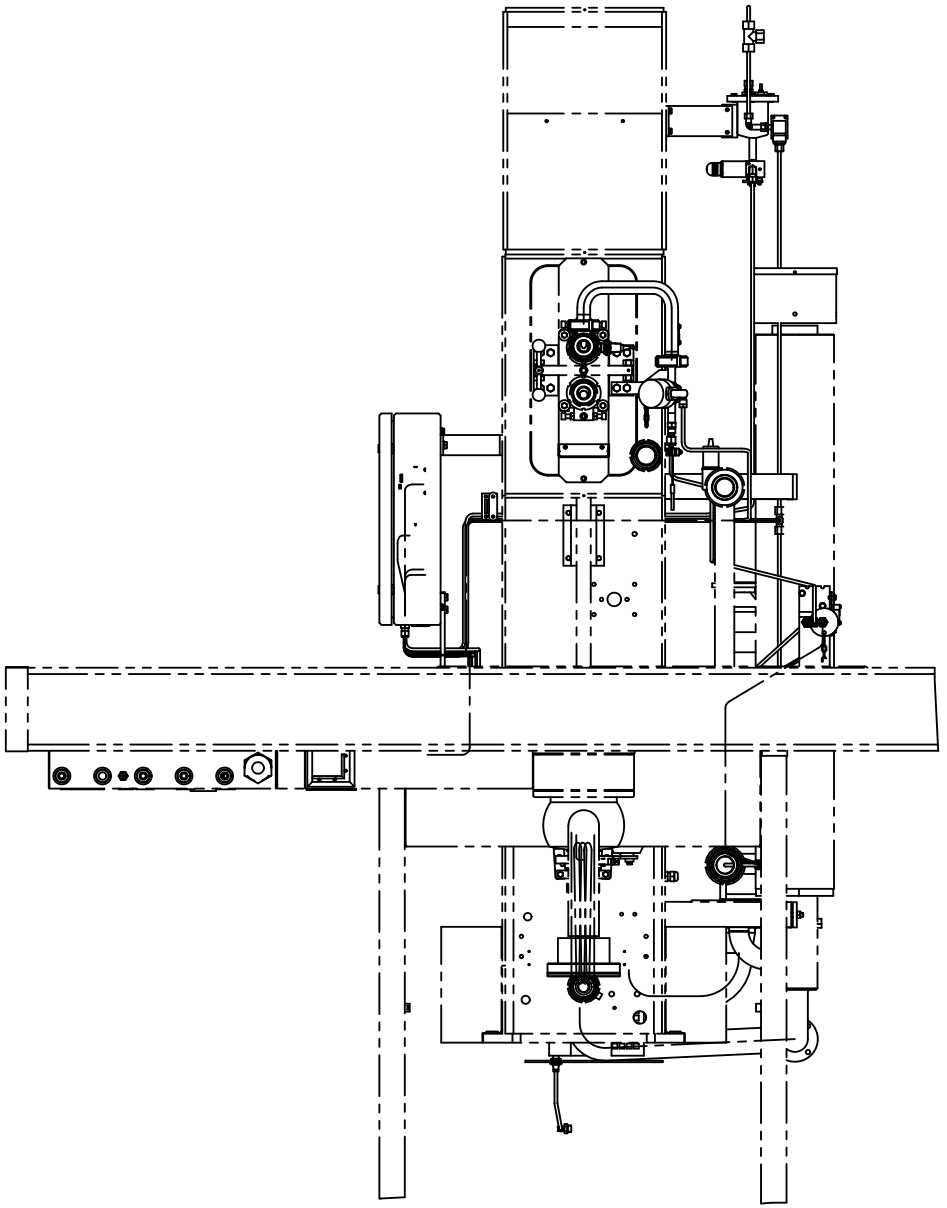

ECM: 438832 - 20100222
Group number: 2545082-0300
Assembly Drawing: 2545082-2_2_AA

This list covers pages from 3-2 to 3-5

Pos	Part No	UN	Qty	Description	Page No
-					
	2831583-0101		1	REBUILDING MANUAL	
	2568779-0000		1	DIAGRAM	
	2610792-0100		1	TOWER CABLE INLETS	**3-7, 3-9**
	559468-0100		1	ELECTRIC EQUIPMENT	**3-11**
	2637726-0100		1	EL. CABINET	**3-17**
010	2545083-0200		1	CONTROL CABINET	**3-33, 3-35, 3-37**
020	2545080-0200		1	INJECTION SYSTEM	**3-43**
030	1539599-0100		1	HEAT EXCHANGER	**3-45**
040	1539602-0100		1	CONNECTION SYSTEM	**3-47**
070	1539604-0000		1	PIPE	
071	2546472-0000		1	PIPE	
080	2545432-0000		1	CLEANING PIPE	
090	1539605-0000		1	COOLING PIPE	
100	2546444-0000		1	PIPE	
110	2546447-0000		1	SPRAY PIPE	
120	2546471-0000		1	AIR PIPE	
130	2546473-0000		1	FILLING PIPE	
140	2547007-0000		1	RETURN PIPE	
150	2546446-0000		1	PIPE	
160	2546445-0000		1	AIR PIPE	
170	2545062-0000		1	CLEANING PIPE	
180	2547006-0000		1	RETURN PIPE	
190	1539601-0000		1	CLEANING PIPE	
200	978010-0000		1	SIGN BOARD	
210	2613035-0000		1	SUPPORT	
230	90030-0230		1	CONN. BULKHEAD BCM6-316	
240	90030-0234		1	CONN. ELBOW, M6MSEL1/8K-316	
260	90144-0073		1	TREBOFLON-TAPE W=13MM	
270	90153-0043		1	ADHESIVE, LOCTITE 495 20G	
280	90166-0132	M	5	TUBE 6 MM PA,TRANSP.	
290	90330-0013		1	NIPPLE, EXT.THREAD, HEXAGON, R1/4-R1/8	
300	90330-0032		2	NIPPLE, EXT.THREAD, HEXAGON, R1/8-R1/8	
310	90330-0095		1	T-PIPE, INT. THREAD, R-221-R1/8	
340	342706-0130		1	STIFFNER SLEEVE FOR HOSE 6X1	
350	90030-0076		1	CONN. T-PIPE T06L71	
360	90457-0086		2	BULKHEAD CONNECTOR 6MM	
380	350002-0008		1	PUSH-IN L-FITTING QSL-F-G1/4-6	
390	359000-0400		1	WIRE MARKING, YELLOW, PA2/4"0"	
400	359000-0401		1	WIRE MARKING, YELLOW, PA2/4"1"	
410	359000-0405		1	WIRE MARKING, YELLOW, PA2/4"5"	
420	90217-0348		2	GASKET 35,4X46,8X4 MM	
430	90217-0347		2	GASKET 32X22,6X3,6 MM	
440	90277-0062		1	FILTER HOUSING SS-4TF2-60	
	90277-0347		*1*	*FILTER*	
450	90330-0169		1	ELBOW, 90 INT. THREAD, 4-4FE. SS	
460	90030-0062		1	CONN. STR. GE06L1/4NPT71	
470	90277-0407		1	FILTER ELEMENT 60Âµ, SS-4F-K4-60	
480	312605-0314		2	HEXAGON NUT, M6M M5 A280	
490	315105-0146		2	WASHER BRB 5,3X10 RFR	
500	312115-0325		2	SCREW ISO4762 M5X10 A4 80	
505	315205-0505		1	O-RING 6,07X1,78 MM	
510	315234-0109		1	WASHER,PL.RND.CU.10,3/13,5 H=1,0	
520	90136-0001		1	PLUG, EXT. THREAD, NO. 100727	
MB512	90600-0467		1	INDUCTIVE SWITCH,E2A-M18KS05-WP-B1-TP 6M	

Machine Type	Group Description	Used-In	Group Number	Page No

TOWER CABLE INLETS

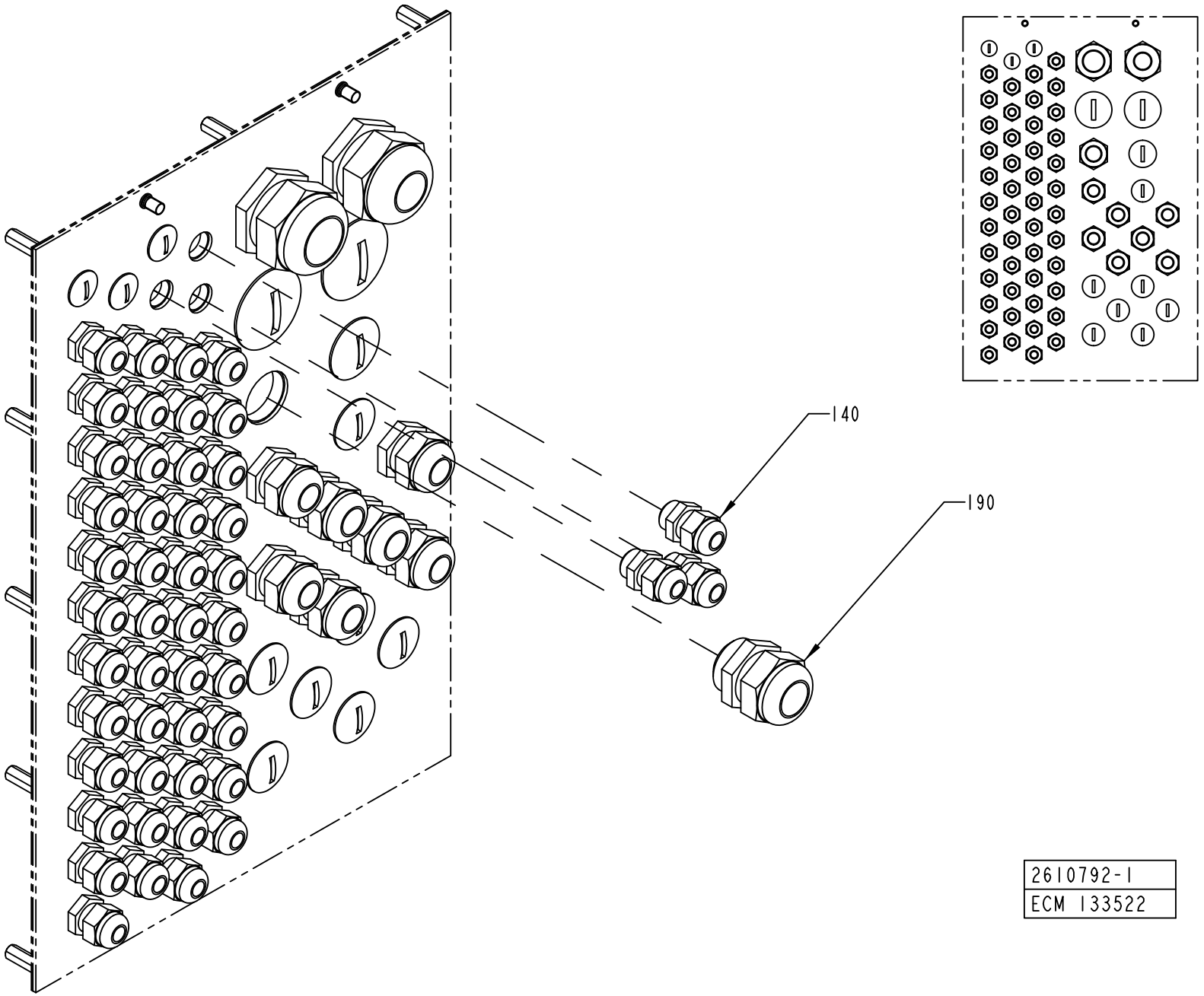

ECM: 139809 - 20031001
Group number: 2610792-0100
Assembly Drawing: 2610792-1_1_AA

This list covers pages from 3-6 to 3-9

Pos	Part No	UN	Qty	Description	Page No
-					
140	352103-0101		3	CABLE GLAND, ST 9, PR15,2/PG9	
190	352103-0116		1	CABLE GLAND, ST 21, PR28,3/PG21	

Pos	Part No	UN	Qty	Description	Page No

TOWER CABLE INLETS

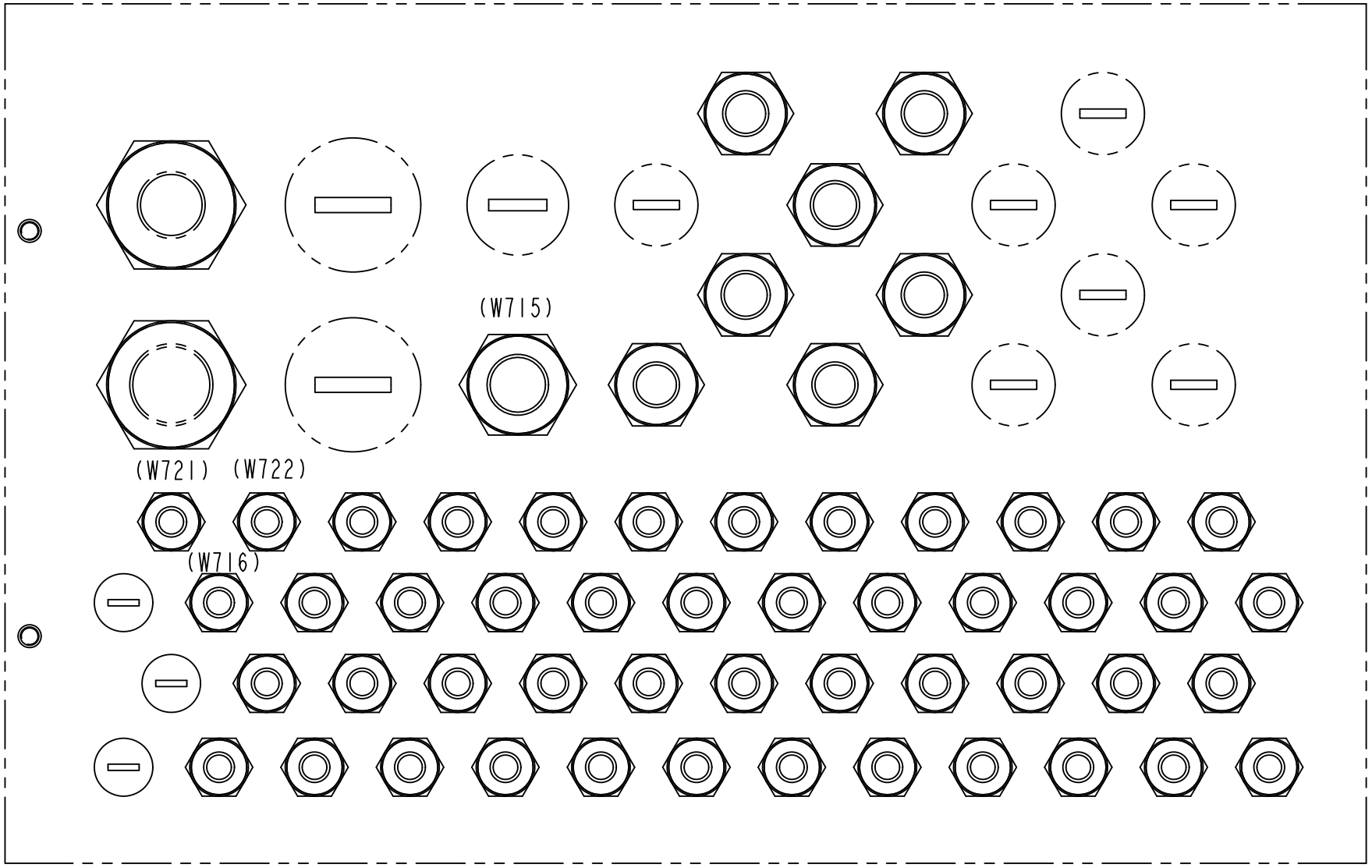

2610792-1
ECM 133522

ECM: 139809 - 20031001
Group number: 2610792-0100
Assembly Drawing: 2610792-1_2_AA

This list covers pages from 3-6 to 3-9

Pos	Part No	UN	Qty	Description	Page No
-					
140	352103-0101		3	CABLE GLAND, ST 9, PR15,2/PG9	
190	352103-0116		1	CABLE GLAND, ST 21, PR28,3/PG21	

Pos	Part No	UN	Qty	Description	Page No

This page is intentionally left blank.

ECM: 139896 - 20030929
Group number: 559468-0100
Assembly Drawing:

Pos	Part No	UN	Qty	Description	Page No
-					
010	559469-0100		1	ELECTRICAL DOCUMENT	
020	2640136-0100		1	SOFTWARE	**3-13**

Pos	Part No	UN	Qty	Description	Page No

This page is intentionally left blank.

ECM: 139899 - 20030929
Group number: 2640136-0100
Assembly Drawing:

Pos	Part No	UN	Qty	Description	Page No
-					
0010	2640964-0001		1	PROGRAMME	**3-15**

Pos	Part No	UN	Qty	Description	Page No

Machine Type | Group Description | Used-In | Group Number | Page No

This page is intentionally left blank.

ECM: 140538 - 20030929
Group number: 2640964-0001
Assembly Drawing:

Pos	Part No	UN	Qty	Description	Page No
-					
0010	2640964-1001		1	PROGRAM OBJECT CODE	
0020	2640965-0001		1	LABEL DISKETTE	
0030	90458-2027		1	FLOPPY DISK, 3,5" 1,44MB FOR PC	

Pos	Part No	UN	Qty	Description	Page No

This page is intentionally left blank.

ECM: 138799 - 20030929
Group number: 2637726-0100
Assembly Drawing:

Pos	Part No	UN	Qty	Description	Page No
-					
10	2610785-0100		1	PLC RACK 1	**3-19**
20	2610784-0100		1	PLC RACK 3	**3-21**
30	2610782-0100		1	INTERNAL DOOR TERMOREGULATORS	**3-23**
40	2610781-0100		1	LEVEL RELAYS RAIL	**3-27**
50	2637715-0100		1	EARTH BAR X008	**3-29**
60	2638046-0100		1	ELECTRICAL MATERIALS	**3-31**

Pos	Part No	UN	Qty	Description	Page No

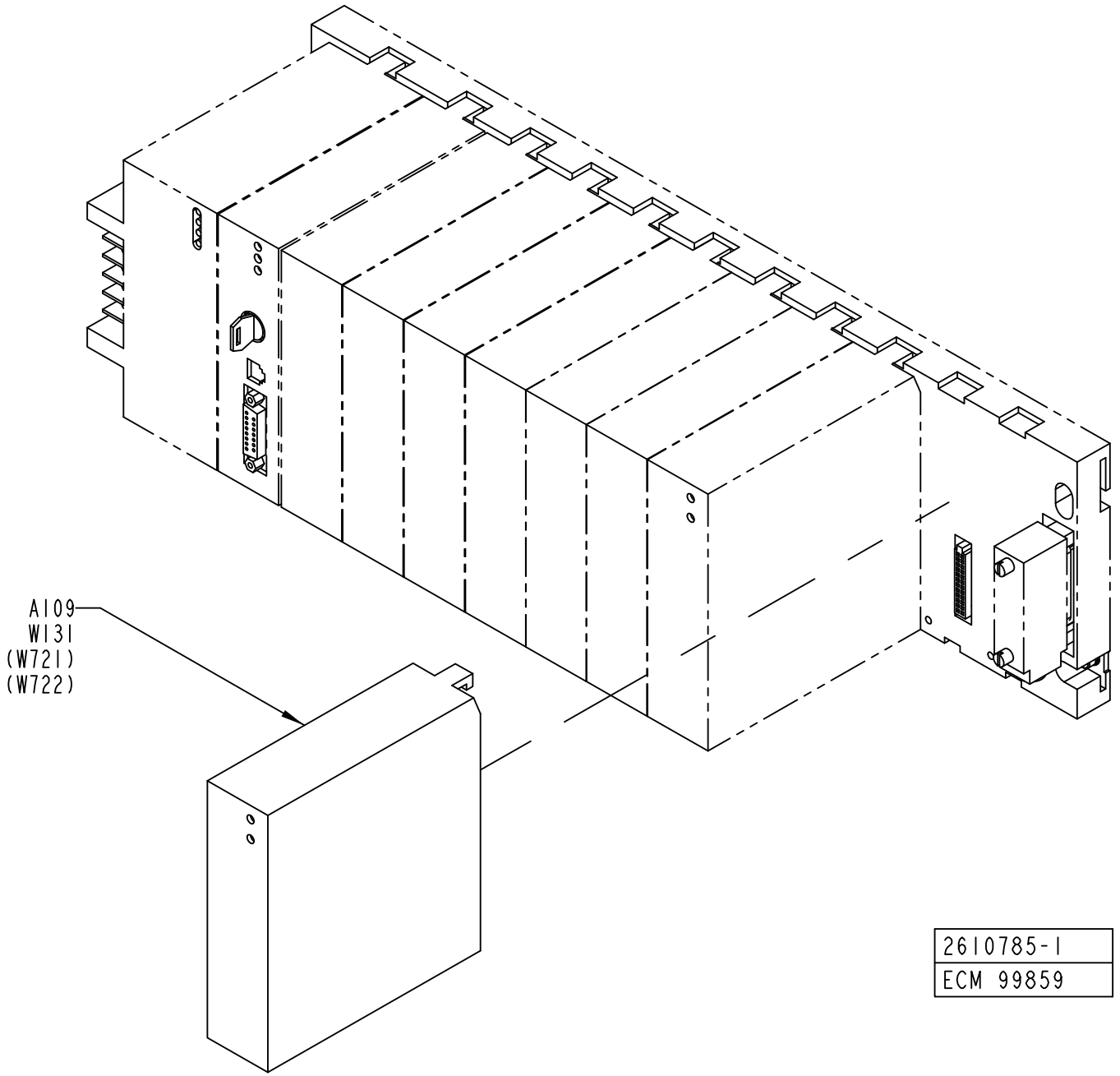
A109
W131
(W721)
(W722)
2610785-1
ECM 99859

ECM: 227695 - 20051011
Group number: 2610785-0100
Assembly Drawing: 2610785-1_1_AA

Pos	Part No	UN	Qty	Description	Page No
TBA NOPT HI					
A109	90031-0063		1	PLC,ANALOG COMBO MODULE,IN-4PT/OUT-2PT	
W131	1512322-0000		1	COPPER BRAID	

Pos	Part No	UN	Qty	Description	Page No

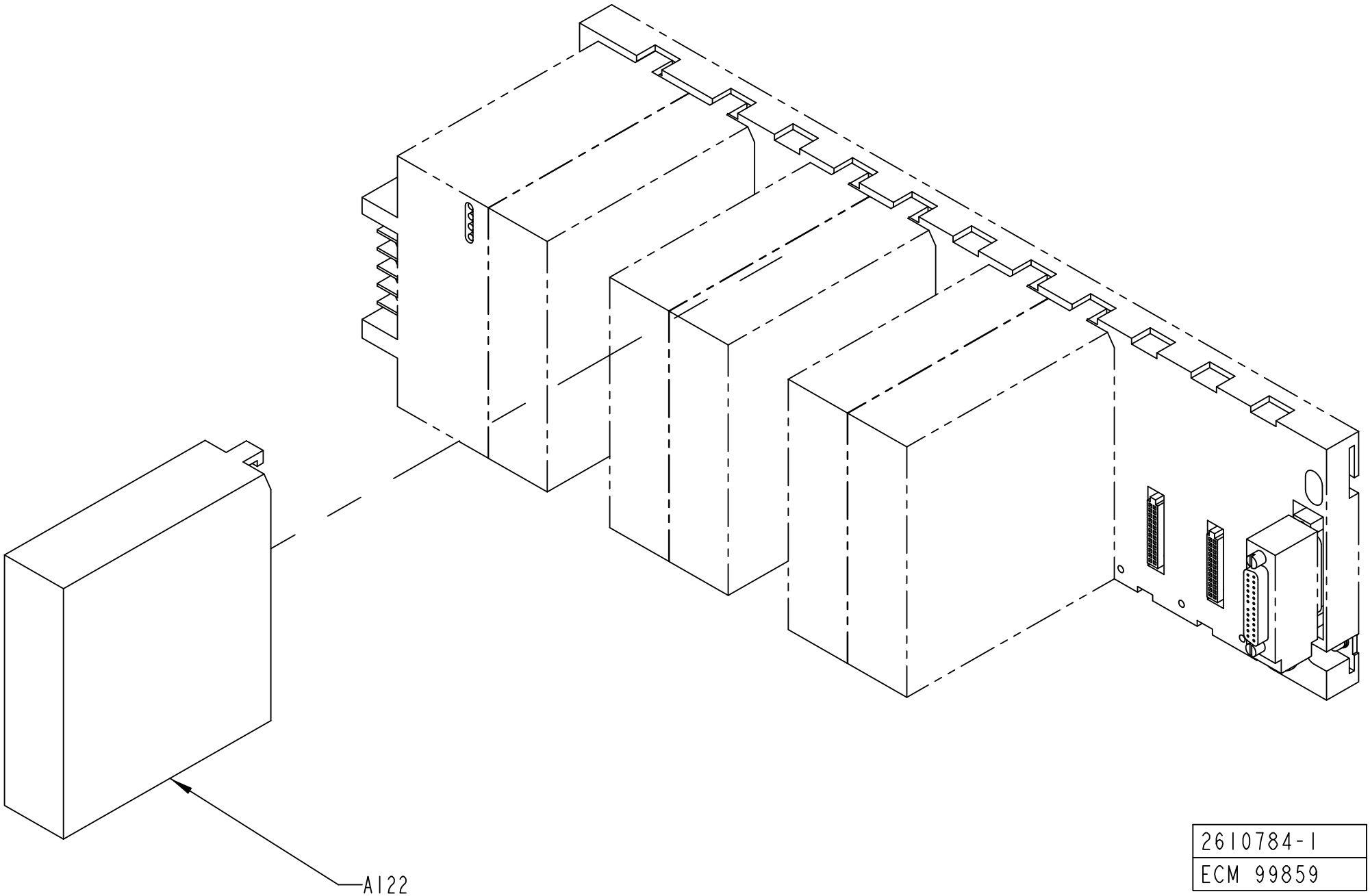

2610784-1
ECM 99859

ECM: 227694 - 20051011
Group number: 2610784-0100
Assembly Drawing: 2610784-1_1_AA

Pos	Part No	UN	Qty	Description	Page No	Pos	Part No	UN	Qty	Description	Page No
-											
A122	90031-0059		1	PLC, DIGITAL OUTPUT MODULE							

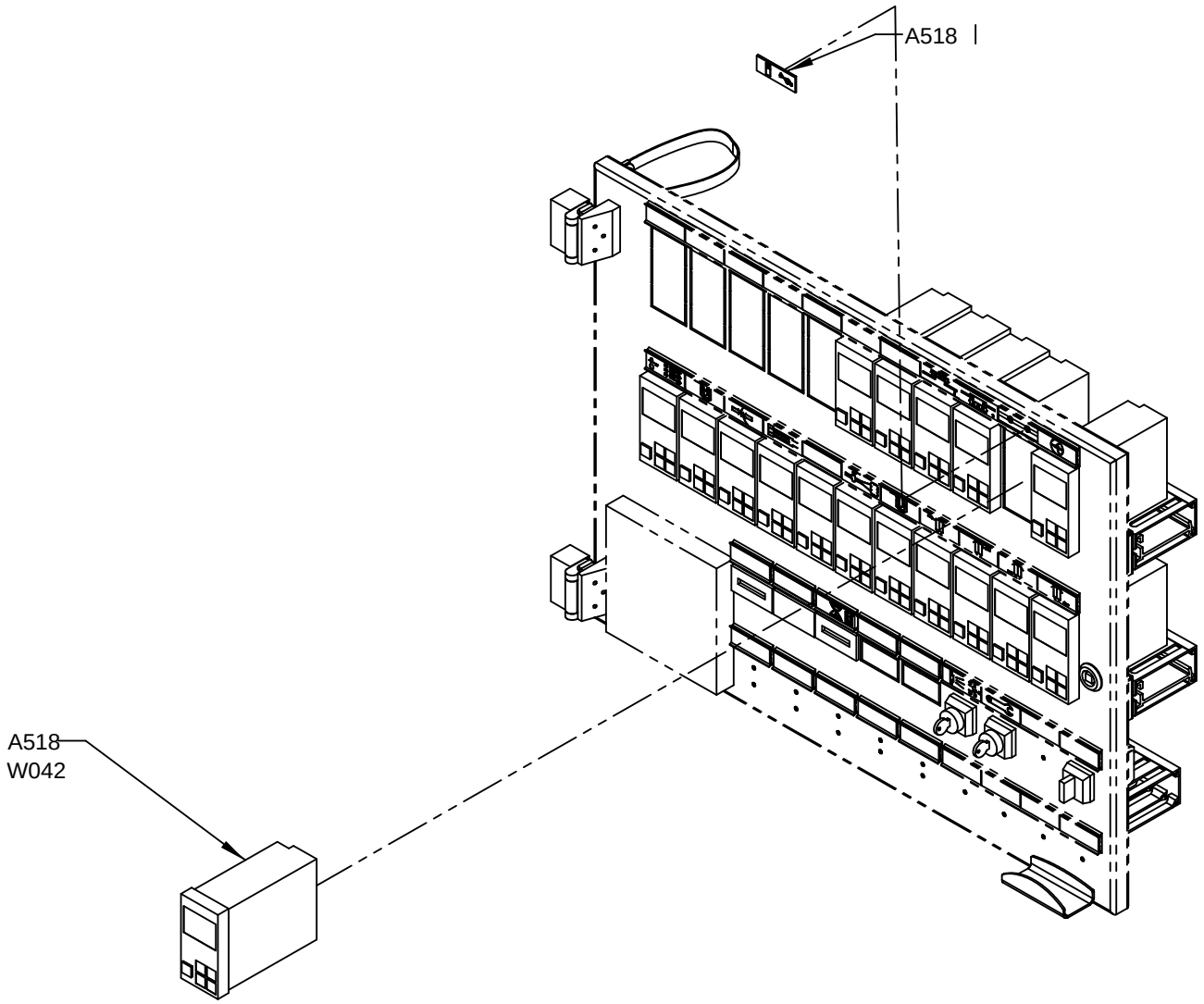

2610 782-1
ECM 4513 68

ECM: 451368 - 20100622
Group number: 2610782-0100
Assembly Drawing: 2610782-1_1_AB

Pos	Part No	UN	Qty	Description	Page No
-					
A518	90600-6032		1	TEMPERATURE CONTROLLER, KS50	
A518.1	359241-0268		1	SIGN: SPRAYING, HEAD SPACE	
W042	90220-0059	M	3.5	THERMOCOUPLE CABLE, K/PVC/20AWG 2X0,5MM2	
	2610783-0001		1	MODIFICATION DRAWING	**3-25**

Pos	Part No	UN	Qty	Description	Page No

Machine Type | Group Description | Used-In | Group Number | Page No

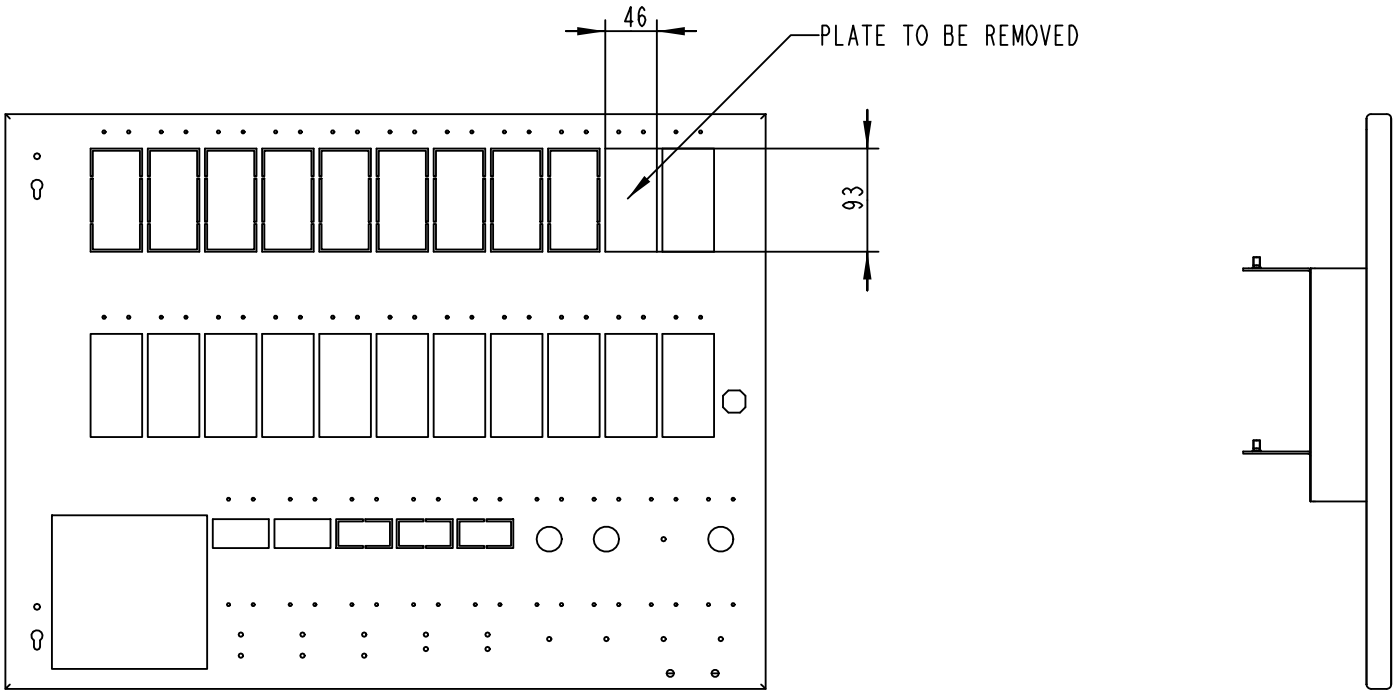
46
PLATE TO BE REMOVED
93

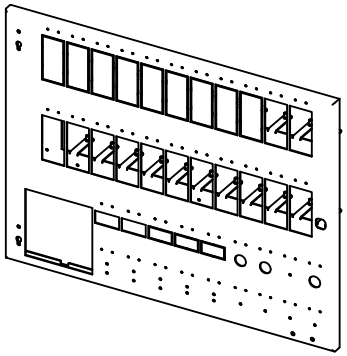

ECM: 99859 -
Group number: 2610783-0001
Assembly Drawing: 2610783-1_1_AA

Pos	Part No	UN	Qty	Description	Page No	Pos	Part No	UN	Qty	Description	Page No

Machine Type	Group Description	Used-In	Group Number	Page No

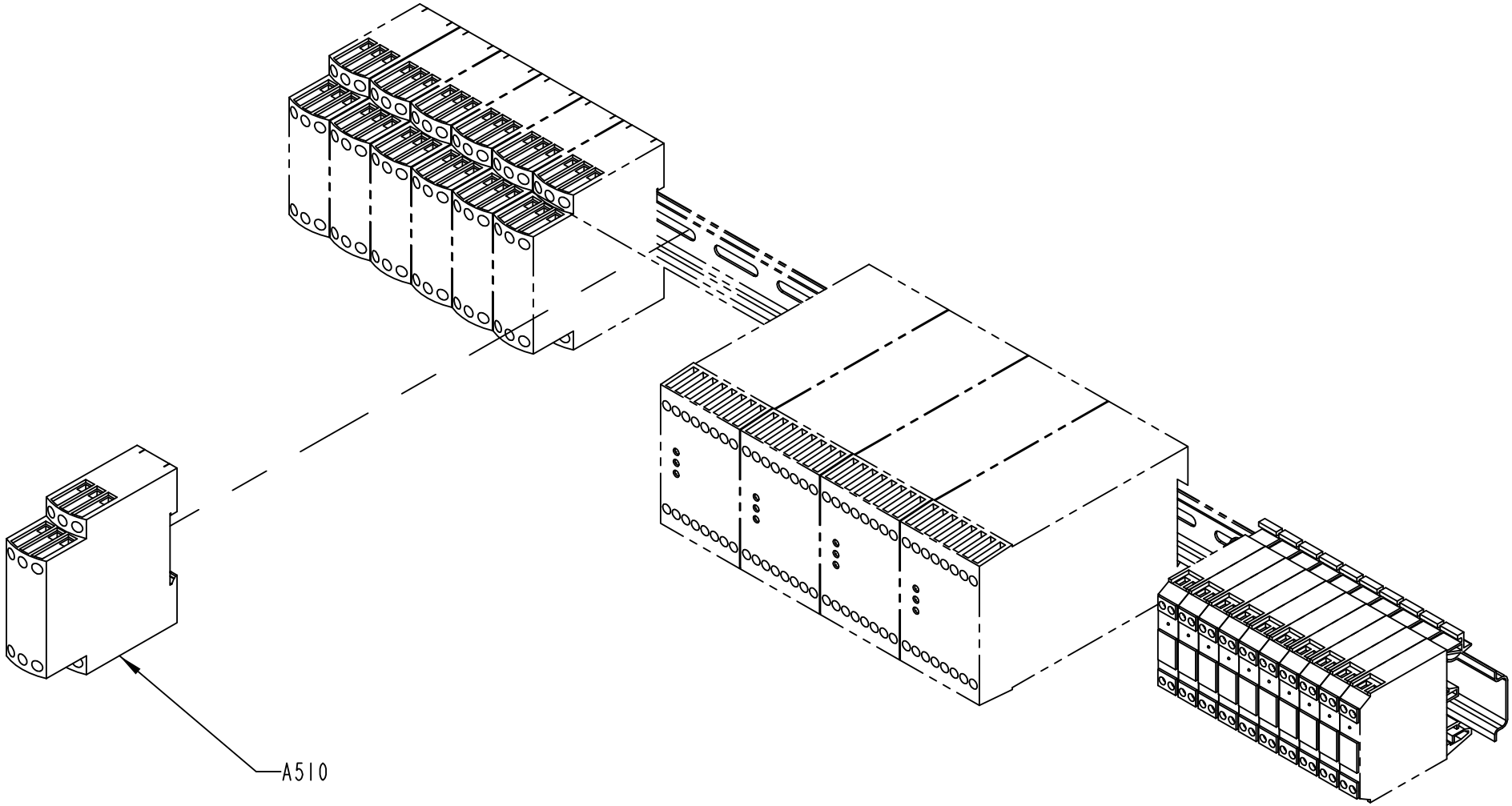

2610781-1
ECM 99859

ECM: 227692 - 20051011
Group number: 2610781-0100
Assembly Drawing: 2610781-1_1_AA

Pos	Part No	UN	Qty	Description	Page No
-					
A510	90458-2580		1	LEVEL CONTROL RELAY, RM4-LA32M	

Pos	Part No	UN	Qty	Description	Page No

Machine Type	Group Description	Used-In	Group Number	Page No

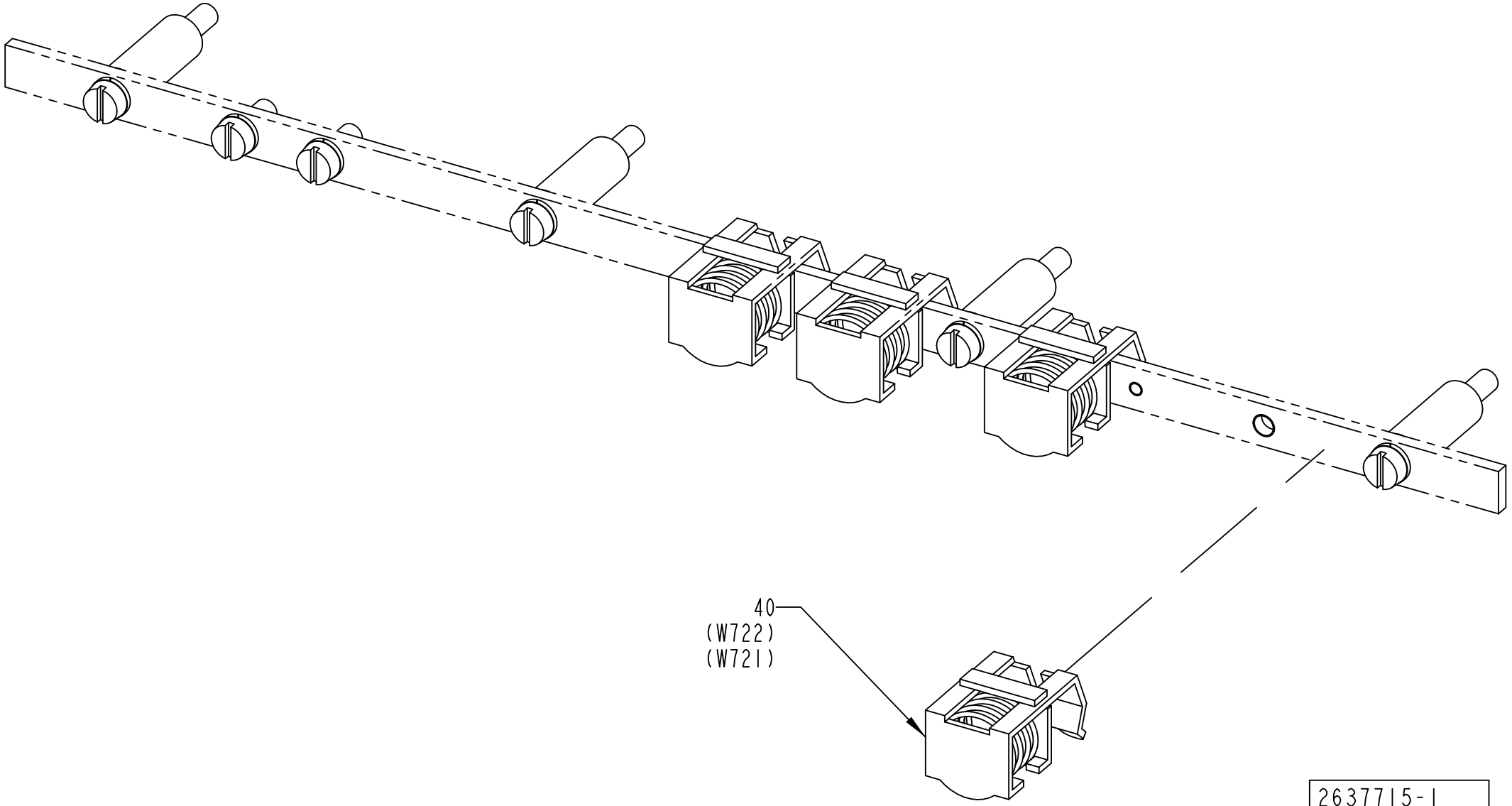
40
(W722)
(W721)
2637715-1
ECM 99859

ECM: 227696 - 20051011
Group number: 2637715-0100
Assembly Drawing: 2637715-1_1_AA

Pos	Part No	UN	Qty	Description	Page No
-					
40	90135-0039		1	CLAMPING YOKE, KLBU 4-13.5	

Pos	Part No	UN	Qty	Description	Page No

Machine Type | Group Description | Used-In | Group Number | Page No

This page is intentionally left blank.

ECM: 138830 - 20030929
Group number: 2638046-0100
Assembly Drawing:

Pos	Part No	UN	Qty	Description	Page No
-					
010	351160-0102	M	50	WIRE AWM 1X0,75 MM2 DARKBLUE	
030	351161-0104	M	4	WIRE AWM 1X1,5 MM2 LIGHTBLUE	
050	351164-0104	M	4	WIRE AWM 1X1,5 MM2 BLACK	
060	90194-0302		1	MARKING LABELS REBUILDING KIT	
330	90097-0017		5	FLAT PIN PLUG 6,3MM	
490	90097-0019		7	FLAT PIN PLUG 2,8MM	

Pos	Part No	UN	Qty	Description	Page No

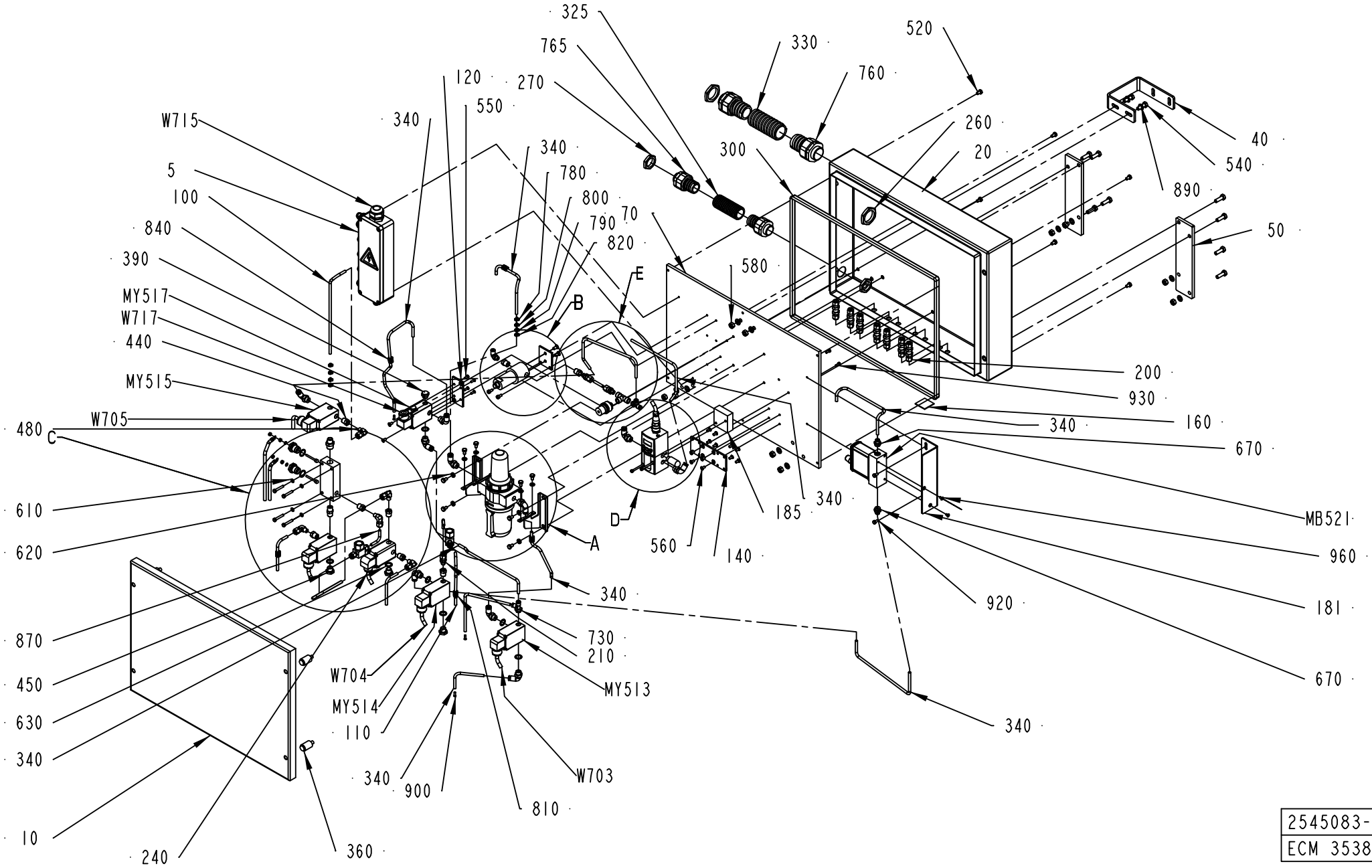

2545083-2
ECM 353842

ECM: 368331 - 20080925
Group number: 2545083-0200
Assembly Drawing: 2545083-2_1_AC

This list covers pages from 3-32 to 3-37

Pos	Part No	UN	Qty	Description	Page No
-					
005	2623674-0100		1	CONNECTION BOX	**3-39, 3-41**
010	2800353-0000		1	COVER	
020	2800352-0000		1	CABINET	
030	2565736-0000		1	RESERVOIR	
040	2546448-0000		1	SUPPORT	
050	2547315-0000		2	SUPPORT	
070	2545426-0000		1	MOUNTING PLATE	
080	2545425-0000		1	SPRAY PIPE	
090	2545427-0000		1	FILLING PIPE	
100	2545428-0000		1	RETURN PIPE	
110	2545429-0000		1	PIPE	
120	978235-0000		1	VALVE PLATE	
140	2574348-0000		1	VALVE BRACKET	
150	979474-0000		1	BRACKET	
160	520072-0000		1	SIGN BOARD	
170	560931-0000		2	BRACKET	
181	2873064-0000		1	BRACKET	
182	2570391-0000		1	PIPE	
185	2511330-0000		1	SPACER	
190	2558744-0000		1	PIPE	
195	2558745-0000		2	PIPE	
200	90030-0230		7	CONN. BULKHEAD BCM6-316	
210	90030-0233		1	CONN. STR., M6MSC1/8BR-316	
220	90030-0234		1	CONN. ELBOW, M6MSEL1/8K-316	
260	90099-0120		2	PLUG PR 37 (PG29)	
270	90099-0119		2	PLUG, PR 28,3 (PG21)	
290	90140-0015		1	T-PIPE, INT. THREAD, 2003-1/8	
300	90143-0097	M	2	SELF GRIPPING GASKET, 1011-24	
310	90144-0073		1	TREBOFLON-TAPE W=13MM	
325	90152-0070	MM	1200	HOSE, SPIRAL CONDUIT, 32,5X26, UL 2621	
330	90152-0060	MM	1200	HOSE, SPIRAL CONDUIT, 42X35, UL3529	
335	90153-0043		1	ADHESIVE, LOCTITE 495 20G	
340	90166-0132	M	10	TUBE 6 MM PA,TRANSP.	
350	90458-2957		10	ELBOW PIPE JOINT, EXT.THREAD, D=6MM-G1/4	
360	90226-0452		4	MOUNTING SCREW	
370	90236-0041		1	BRACKET, 74504-50	
380	350002-0006		1	PUSH-IN L-FITTING QSL-F-G1/8-6	
390	90257-0001		1	FILTER PLUG ART.NO.8145-00-140 TYPE F14	
410	90277-0104		1	FILTER F64B-2GN-ARO	
	90113-0458		*1*	*FILTER ELEMENTS, 5350-99*	
	90113-0457		*1*	*FILTER ELEMENTS*	
420	90277-0323		1	FILTER HOUSING / ART.NO 95S6-1/4 S 5430	
430	90277-0324		1	FILTER CARTRIDGE 050-11-A	
440	90330-0025		8	BUSHING, INT/EXT. THR. R1/4-RP1/8	
450	90330-0026		3	PLUG, EXT. G-THREAD, G1/4	
470	90330-0043		1	NIPPLE, EXT.THREAD, HEXAGON, R1/4-R1/4	
480	90030-0234		5	CONN. ELBOW, M6MSEL1/8K-316	
490	90330-0083		1	NIPPLE, EXT.THREAD, HEXAGON, R3/8-R1/4	
510	312105-0335		4	SCREW M6S ISO 4014 M5X30 A480	
520	312105-0364		14	SCREW M6S ISO 4017 M6X10 A480	
530	312115-0325		2	SCREW ISO4762 M5X10 A4 80	
540	312105-0453		10	SCREW M6S ISO 4017 M8X25 A480	
550	312145-0291		12	SCREW ISO 2009 MFS M4X12 A4	
560	312145-0325		14	SCREW ISO 2009 MFS M5X10 A4	
570	312145-0366		2	SCREW ISO 2009 MFS M6X12 A4	
580	312605-0318		10	HEXAGON NUT, M6M M8 A280	
585	312605-0312		4	HEXAGON NUT, M6M M4 A280	
590	312605-0314		8	HEXAGON NUT, M6M M5 A280	
595	315105-0136		4	WASHER BRB 4,3X8 RFR	
600	315105-0153		12	WASHER BRB 6,4X12 RFR	
610	315105-0146		12	WASHER BRB 5,3X10 RFR	
630	315237-0110		6	WASHER,PL.RND.AL.13,5/18,H=1,5	
660	342713-0210		1	PLUG, EXT THREAD HEX SOCKET	
670	342722-0203		2	STRAIGHT COUPLING	
730	342772-0114		1	ELBOW FITTING, 6 - G1/4	
735	342772-0113		1	ELBOW FITTING, 6 - G1/8	
760	353243-0008		2	GLAND FITTING, VK 15556YUL29	
765	353243-0007		2	GLAND FITTING, VK 15455YUL21	
780	359000-0400		6	WIRE MARKING, YELLOW, PA2/4"0"	
790	359000-0401		8	WIRE MARKING, YELLOW, PA2/4"1"	
800	359000-0403		3	WIRE MARKING, YELLOW, PA2/4"3"	
810	359000-0404		8	WIRE MARKING, YELLOW, PA2/4"4"	
820	359000-0405		8	WIRE MARKING, YELLOW, PA2/4"5"	
830	359000-0406		1	WIRE MARKING, YELLOW, PA2/4"6"	
840	359000-0407		1	WIRE MARKING, YELLOW, PA2/4"7"	
850	315204-0213		2	O-RING 15,3X2,4 MM	
860	90230-0064		2	CHECK VALVE, 6 MM HIGH TEMP.	
890	315105-0165		12	WASHER BRB 8,4X16 RFR	
900	342706-0130		3	STIFFNER SLEEVE FOR HOSE 6X1	
916	353249-0017		2	INSERT, SINGLE HOLE, HI.TEMP, EK152 I 7	
920	312105-0325		2	SCREW M6S ISO 4017 M5X10 A480	
930	312115-0289		2	SCREW ISO4762 M4X10 A4 80	
940	312115-0305		2	SCREW ISO4762 M4X50 A4 80	

Machine Type | Group Description | Used-In | Group Number | Page No

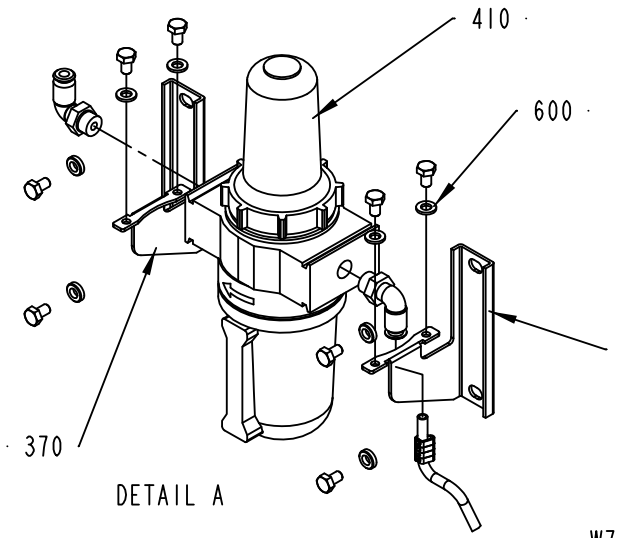

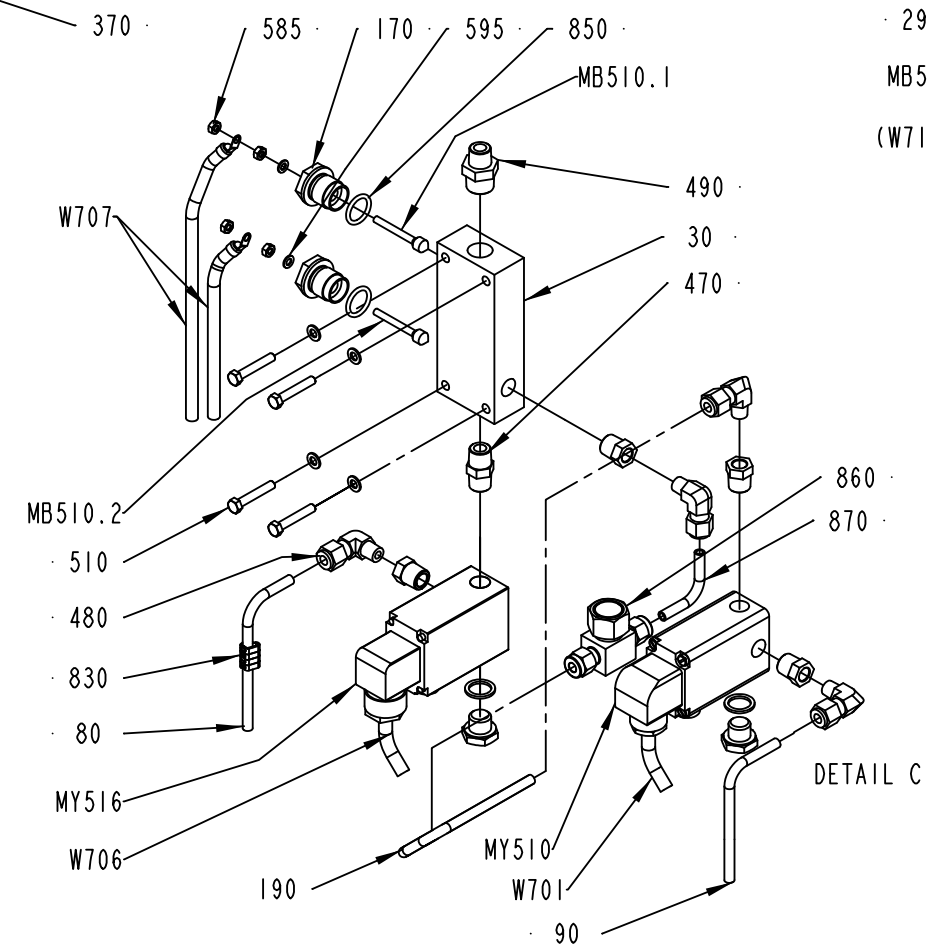

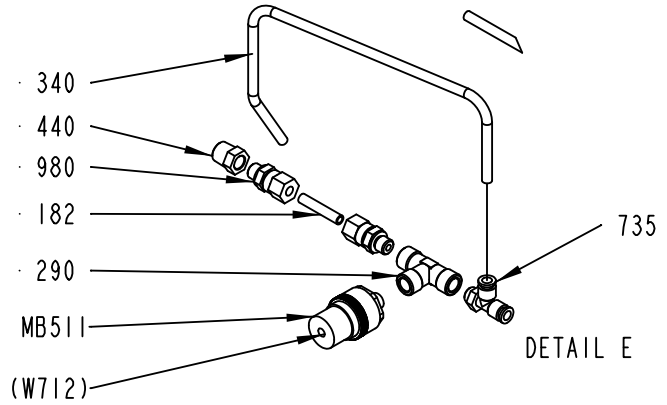

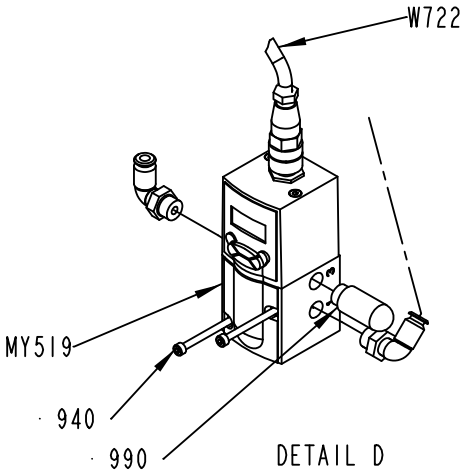

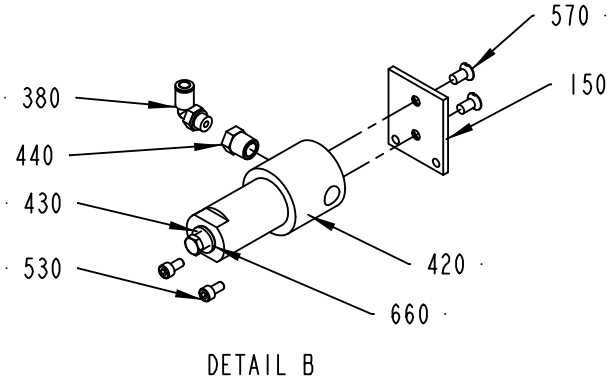

2545083-2
ECM 353842

Pos	Part No	UN	Qty	Description	Page No
- (Cont'd)					
960	312155-0287		2	SCREW DIN 7991 MF6S M4X8 A4 70	
980	90030-0184		2	CONN. STR., GE06LRED71	
990	90328-0026		1	SILENCER G1/4"	
MY519	90459-1420		1	PROPORTIONAL VALVE 0 - 10V/0-6 BAR	
	90458-1262		*1*	*CONNECTOR 131028001 FOR PROP. VALVE*	
MY517	90042-0171		1	SOLENOID VALVE TYPE 330 3/2 NC	
	90042-0466		*1*	*DIAPHRAGM 330.95.2 VITON*	
MY516	90042-0171		1	SOLENOID VALVE TYPE 330 3/2 NC	
	90042-0466		*1*	*DIAPHRAGM 330.95.2 VITON*	
MY515	90042-0171		1	SOLENOID VALVE TYPE 330 3/2 NC	
	90042-0466		*1*	*DIAPHRAGM 330.95.2 VITON*	
MY514	90042-0171		1	SOLENOID VALVE TYPE 330 3/2 NC	
	90042-0466		*1*	*DIAPHRAGM 330.95.2 VITON*	
MY513	90042-0171		1	SOLENOID VALVE TYPE 330 3/2 NC	
	90042-0466		*1*	*DIAPHRAGM 330.95.2 VITON*	
MY510	979956-0000		1	SOLENOID VALVE	
MB521	90600-1154		1	FLOW METER,D-6230-HGB-BB-AV-99-0-N2/IP65	
MB511	90274-0066		1	PRESSURE SWITCH, 5,516 - 689,5 KPA	
MB510.1	567070-0014		2	ELECTRODE	
MB510.2	567070-0014		1	ELECTRODE	
W701	351150-0403	MM	720	CABLE OLFLEX 3X0,75 MM2 LIGHT/GREY	
W703	351150-0403	MM	980	CABLE OLFLEX 3X0,75 MM2 LIGHT/GREY	
W704	351150-0403	MM	780	CABLE OLFLEX 3X0,75 MM2 LIGHT/GREY	
W705	351150-0403	MM	780	CABLE OLFLEX 3X0,75 MM2 LIGHT/GREY	
W706	351150-0403	MM	580	CABLE OLFLEX 3X0,75 MM2 LIGHT/GREY	
W707	351150-0404	MM	630	CABLE OLFLEX 4X0,75 MM2 LIGHT/GREY	
W715	351150-0425	M	4	CABLE OLFLEX 25X0,75 MM2 LIGHT/GREY	
W717	351150-0403	MM	860	CABLE OLFLEX 3X0,75 MM2 LIGHT/GREY	
W721	90220-0072	M	7	SCR. CABLE 4X0,34MM2	
W721.1	353300-0006	MM	150	HEATSHRINK TUBING	
W722	90220-0072	M	7	SCR. CABLE 4X0,34MM2	
W722.1	353300-0006	MM	150	HEATSHRINK TUBING	

Pos	Part No	UN	Qty	Description	Page No

2545083-2
ECM 353842

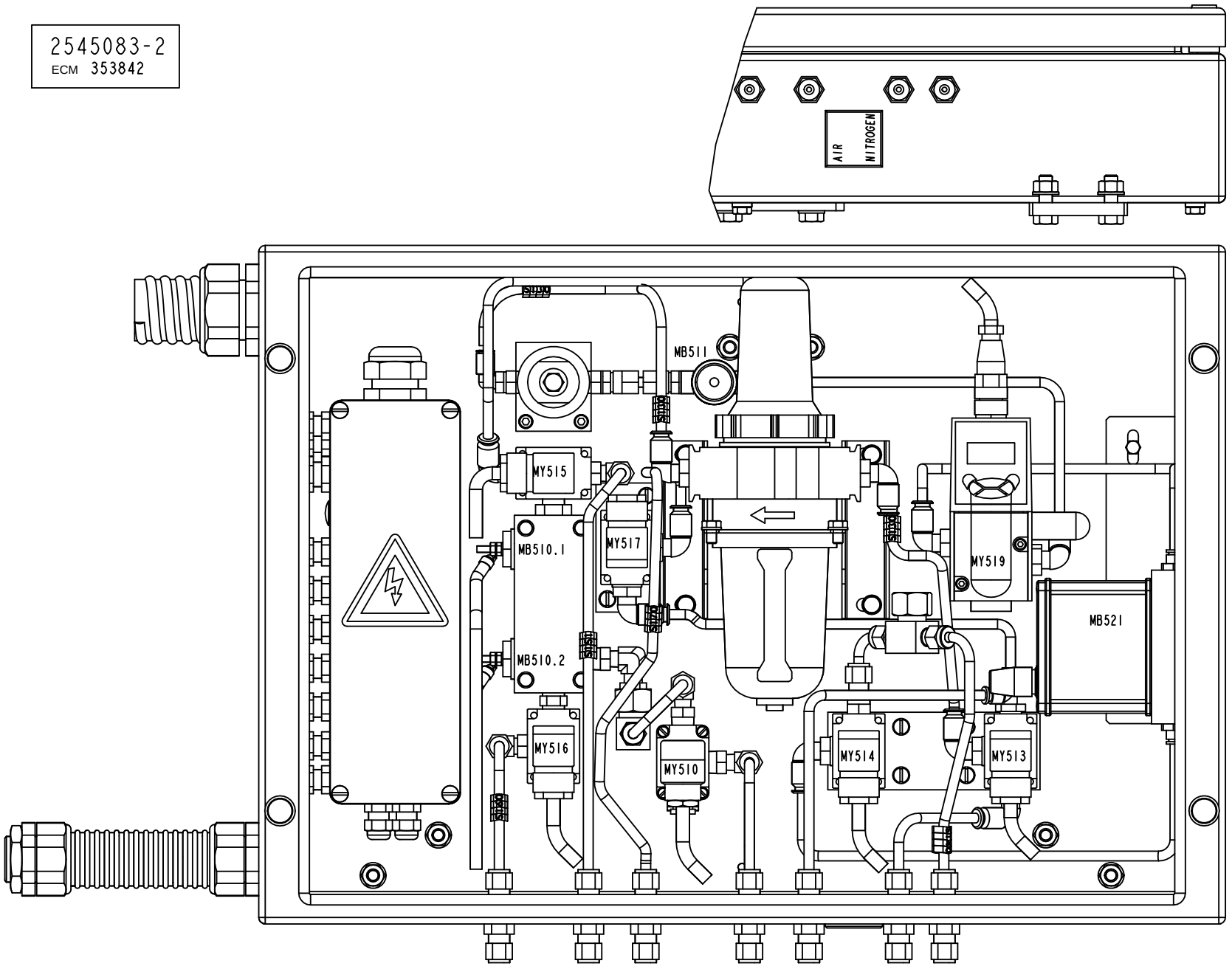

Pos	Part No	UN	Qty	Description	Page No
SEE PREVIOUS LISTS PAGES: 3-33, 3-35.					

Pos	Part No	UN	Qty	Description	Page No

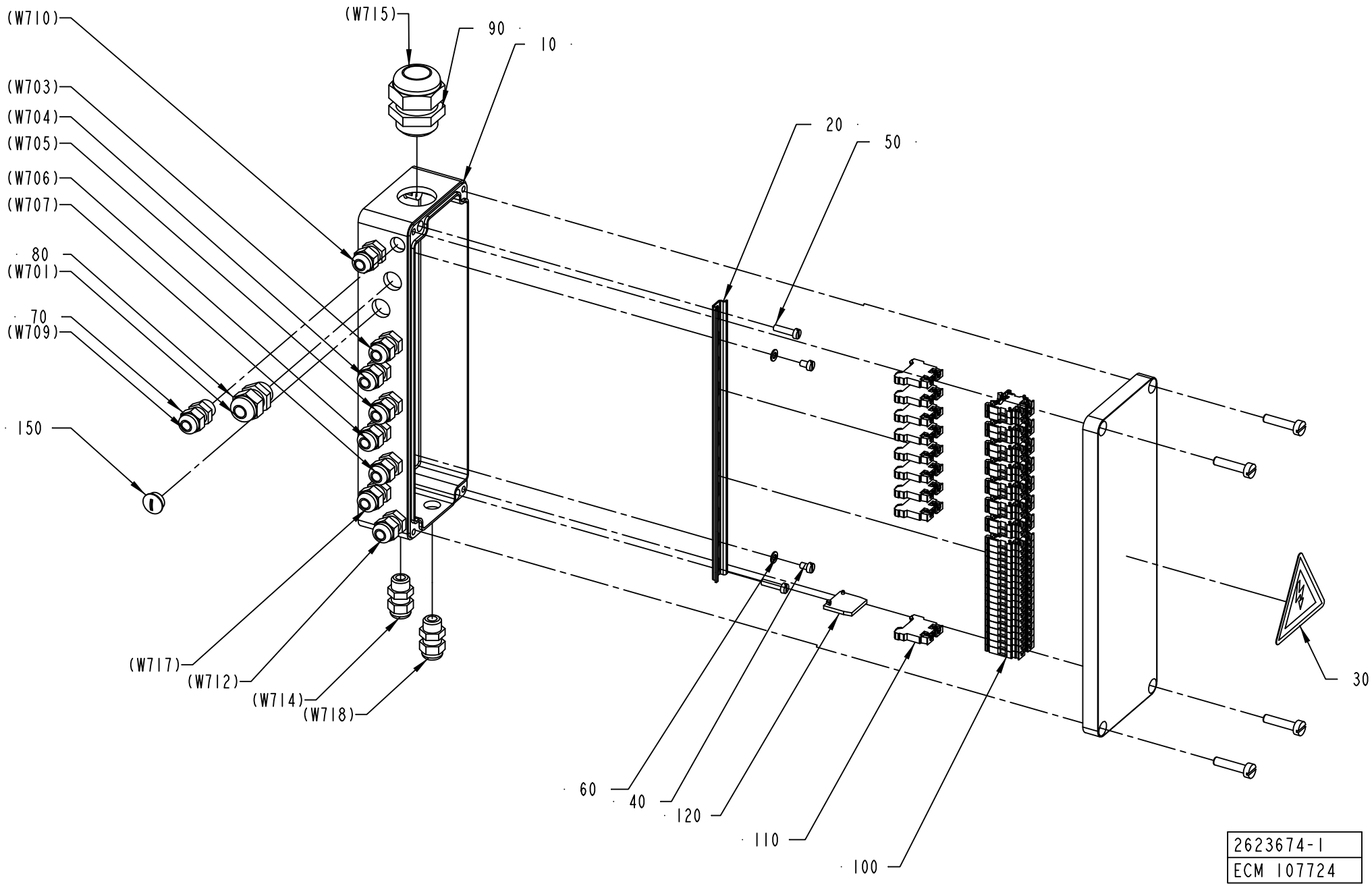
(W710)
(W715)
90
10
(W703)
(W704)
(W705)
(W706)
(W707)
20
50
80
(W701)
70
(W709)
150
(W717)
(W712)
(W714)
(W718)
30
60
40
120
110
100
2623674-1
ECM 107724

ECM: 227627 - 20051011
Group number: 2623674-0100
Assembly Drawing: 2623674-1_1_AA

This list covers pages from 3-38 to 3-41

Pos	Part No	UN	Qty	Description	Page No
-					
010	979475-0000		1	CONNECTION BOX	
020	979476-0000		1	RAIL	
030	90194-0016		1	WARNING SIGN, RISK OF ELECTRIC SHOCK	
040	312125-0285		2	SCREW ISO 1207 M4X6 A4	
050	312125-0293		2	SCREW ISO 1207 M4X16 A4	
060	315105-0136		2	WASHER BRB 4,3X8 RFR	
070	352103-0096		5	CABLE GLAND, ST 7, PR 12,5/PG7	
080	352103-0101		7	CABLE GLAND, ST 9, PR15,2/PG9	
090	352103-0116		1	CABLE GLAND, ST 21, PR28,3/PG21	
100	90077-0123		32	TERMINAL FEED THROUGH	
110	90135-0042		9	EARTH TERMINAL AKE 2,5	
120	90077-0122		1	END PLATE, AP AKZ 2,5	
130	359011-0807		2	MARKING, DEK 5 FW 1-50	
140	359011-0819		1	MARKING, EARTH, DEK 5 GW ERDE I.KR.	
150	90002-0018		1	BLANK-OFF PLUG, PR 12,5 SKINDICHT-BLK7	
160	351160-0102	MM	1200	WIRE AWM 1X0,75 MM2 DARKBLUE	

Pos	Part No	UN	Qty	Description	Page No

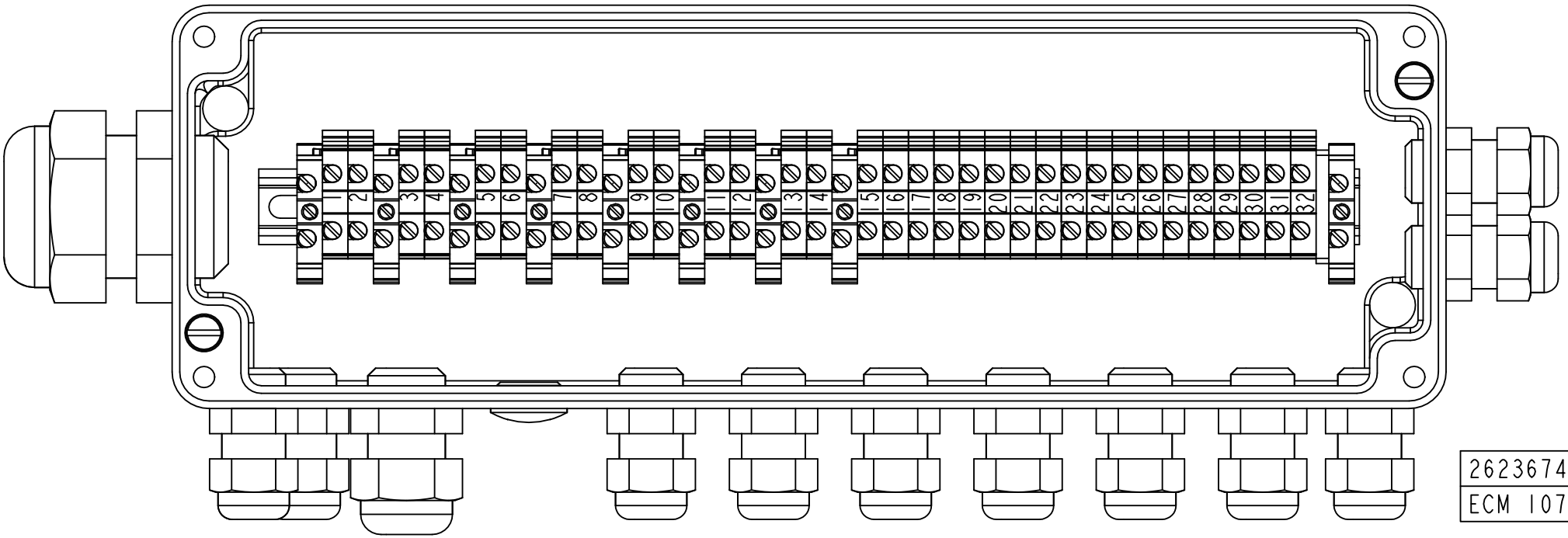
1 2 3 4 5 6 7 8 9 10 11 12 13 14 15 16 17 18 19 20 21 22 23 24 25 26 27 28 29 30 31 32
2623674-1
ECM 107724

ECM: 227627 - 20051011
Group number: 2623674-0100
Assembly Drawing: 2623674-1_2_AA

This list covers pages from 3-38 to 3-41

Pos	Part No	UN	Qty	Description	Page No
-					
010	979475-0000		1	CONNECTION BOX	
020	979476-0000		1	RAIL	
030	90194-0016		1	WARNING SIGN, RISK OF ELECTRIC SHOCK	
040	312125-0285		2	SCREW ISO 1207 M4X6 A4	
050	312125-0293		2	SCREW ISO 1207 M4X16 A4	
060	315105-0136		2	WASHER BRB 4,3X8 RFR	
070	352103-0096		5	CABLE GLAND, ST 7, PR 12,5/PG7	
080	352103-0101		7	CABLE GLAND, ST 9, PR15,2/PG9	
090	352103-0116		1	CABLE GLAND, ST 21, PR28,3/PG21	
100	90077-0123		32	TERMINAL FEED THROUGH	
110	90135-0042		9	EARTH TERMINAL AKE 2,5	
120	90077-0122		1	END PLATE, AP AKZ 2,5	
130	359011-0807		2	MARKING, DEK 5 FW 1-50	
140	359011-0819		1	MARKING, EARTH, DEK 5 GW ERDE I.KR.	
150	90002-0018		1	BLANK-OFF PLUG, PR 12,5 SKINDICHT-BLK7	
160	351160-0102	MM	1200	WIRE AWM 1X0,75 MM2 DARKBLUE	

Pos	Part No	UN	Qty	Description	Page No

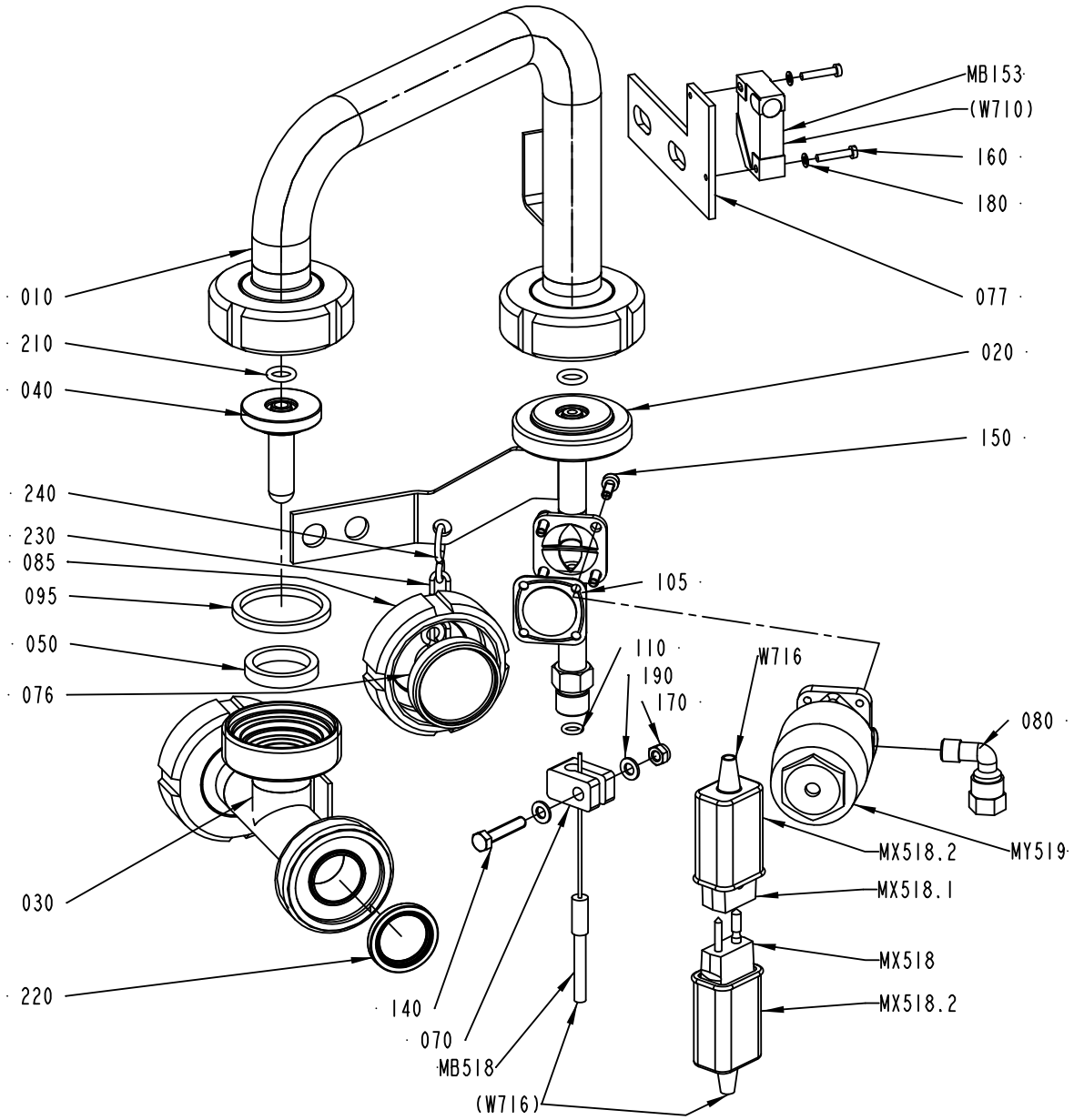
MB153
(W710)
160
180
077
010
210
040
020
150
240
230
085
095
105
050
076
110
190
170
W716
080
030
MX518.2
MY519
MX518.1
MX518
MX518.2
220
140
070
MB518
(W716)
2545080-2
ECM 254456

ECM: 291010 - 20061205
Group number: 2545080-0200
Assembly Drawing: 2545080-2_1_AA

Pos	Part No	UN	Qty	Description	Page No
-					
010	2545132-0000		1	TRANSITION PIPE	
020	2814877-0000		1	VALVE BODY	
030	1539597-0000		1	T-PIECE	
040	1539606-0002		1	SPRAY NOZZLE	
040	1539606-0003		1	SPRAY NOZZLE	
040	1539606-0004		1	SPRAY NOZZLE	
040	1539606-0005		1	SPRAY NOZZLE	
040	2545134-0000		1	SPRAY NOZZLE	
050	12242-0001		1	GASKET 32X25X5,5	
070	978440-0000		1	CRAMP	
076	2545155-0000		1	PLUG	
077	979814-0000		1	BRACKET	
080	90030-0137		1	CONN. ELBOW, WE06LR71	
085	90217-0203		1	UNION NUT, 1 APV, 07-01-276/17	
095	315229-0104		1	SQUARE RING, 35,8X42,8X3,7 MM 1"1/2 FD	
105	90600-0493		1	DIAPHRAGM 3A, 600-8M-5AD	
110	315205-0505		1	O-RING 6,07X1,78 MM	
140	312105-0333		1	SCREW M6S ISO 4017 M5X25 A480	
150	312115-0291		4	SCREW ISO4762 M4X12 A4 80	
160	312125-0228		2	SCREW ISO 1207 M3X16 A4	
170	312812-0314		1	HEXAGON NUT, NY-LOCK M5 A480	
180	315105-0124		2	WASHER BRB 3,2X6 RFR	
190	315105-0146		2	WASHER BRB 5,3X10 RFR	
210	315204-0207		2	O-RING 8,3X2,4 MM	
220	90217-0347		1	GASKET 32X22,6X3,6 MM	
230	90155-0008	MM	200	HANGER CHAIN, 18	
240	209183-0000		2	RING	
MY519	90600-0491		1	ACTUATOR, 9650-0089-Z-I-OTI	
MX518	90326-0022		1	PLUG, MALE YELLOW CR-AL	
MB518	90326-0060		1	THERMOCOUPLE, CR-AL	
MB153	90044-0194		1	INDUCTIVE SENSOR, IN 5329	
MX518.1	90326-0020		1	PLUG, FEMALE YELLOW CR-AL	
MX518.2	90326-0012		2	PROTECTIVE COVER, T31A4618	
W716	90220-0059	MM	4500	THERMOCOUPLE CABLE, K/PVC/20AWG 2X0,5MM2	

Pos	Part No	UN	Qty	Description	Page No

Machine Type | Group Description | Used-In | Group Number | Page No

HEAT EXCHANGER

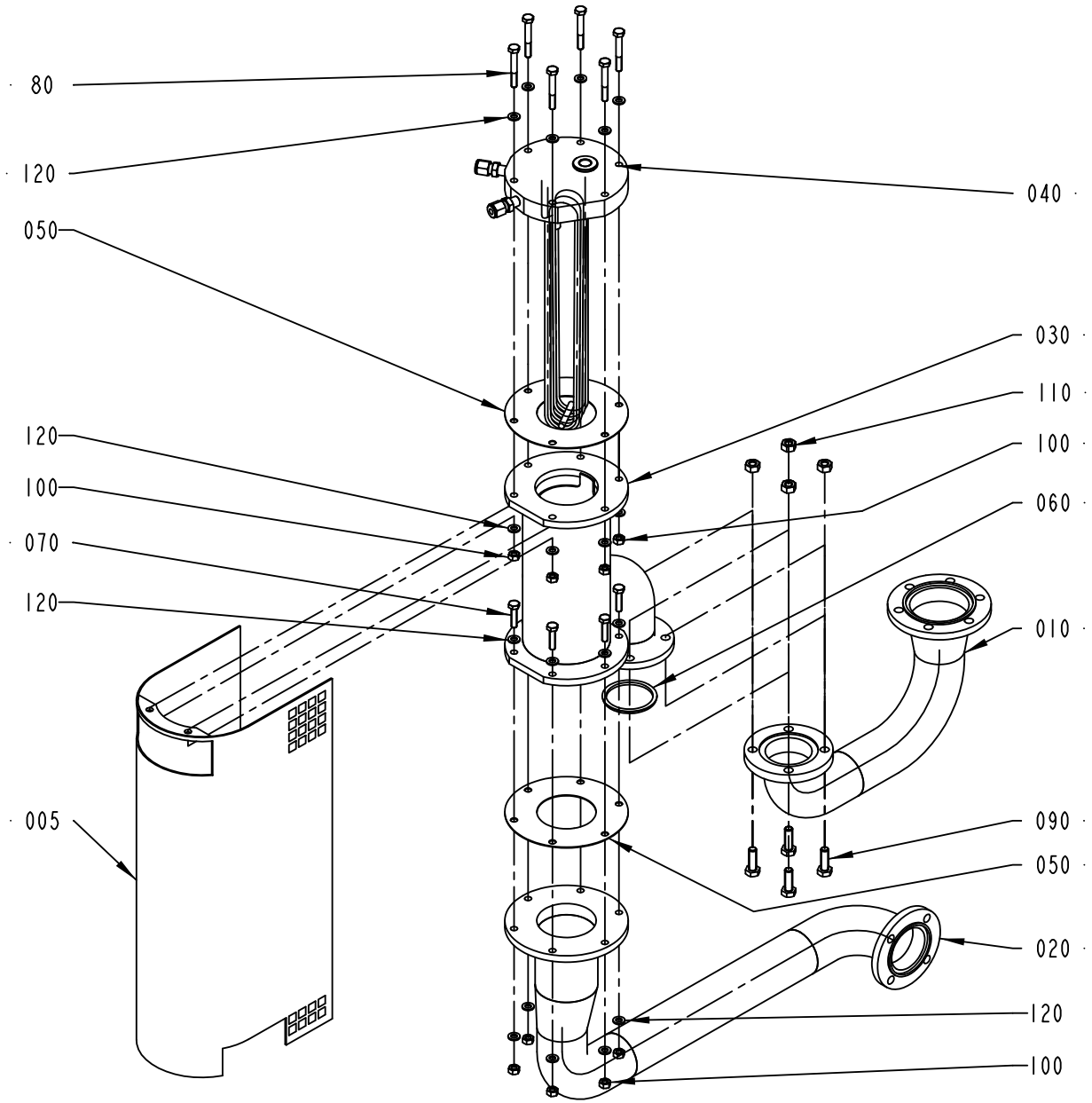

1539599-1
ECM 107724

ECM: 227634 - 20051011
Group number: 1539599-0100
Assembly Drawing: 1539599-1_1_AA

Pos	Part No	UN	Qty	Description	Page No
-					
005	581341-0000		1	TOUCH GUARD	
010	1539603-0000		1	PIPE	
020	1539596-0000		1	PIPE	
030	979247-0000		1	HOUSE	
040	2555310-0000		1	COIL	
050	751016-0000		2	GASKET	
060	315229-0205		1	GASKET 47,5X55,5X3,7 MM 2 INCH	
070	312105-0372		6	SCREW M6S ISO 4017 M6X25 A480	
080	312105-0378		6	SCREW M6S ISO 4014 M6X40 A480	
090	312105-0453		4	SCREW M6S ISO 4017 M8X25 A480	
100	312605-0316		12	HEXAGON NUT, M6M M6 A280	
110	312605-0318		4	HEXAGON NUT, M6M M8 A280	
120	315105-0153		24	WASHER BRB 6,4X12 RFR	

Pos	Part No	UN	Qty	Description	Page No

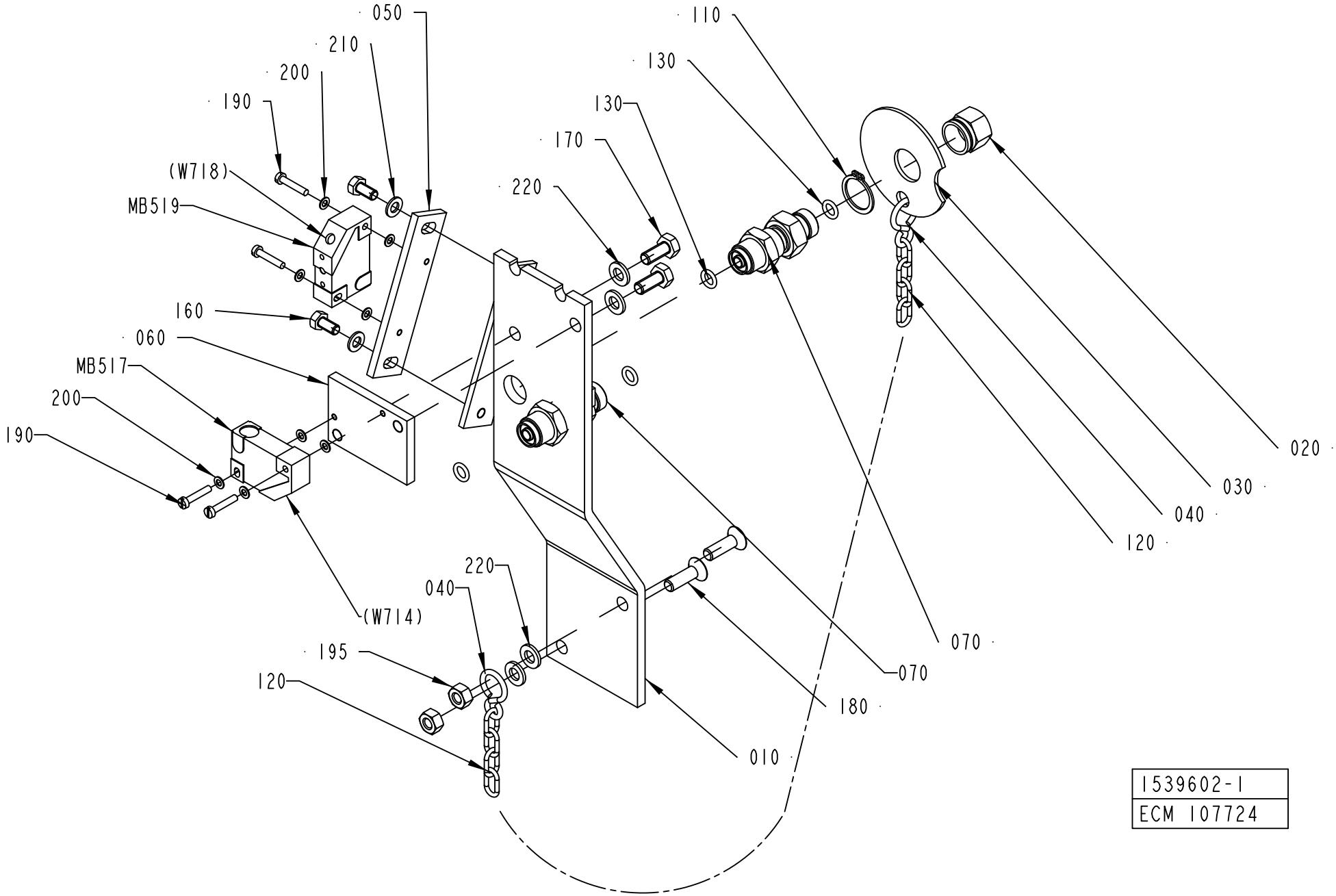

1539602-1
ECM 107724

ECM: 189532 - 20051011
Group number: 1539602-0100
Assembly Drawing: 1539602-1_1_AA

Pos	Part No	UN	Qty	Description	Page No
-					
010	1539600-0000		1	SUPPORT	
020	978380-0000		1	BLIND PLUG	
030	978381-0000		1	WASHER 56X2MM	
040	209183-0000		2	RING	
050	927081-0000		1	SUPPORT	
060	979254-0000		1	SUPPORT	
070	90030-0549		2	CONN. STRAIGHT, BULKHEAD, SS-4-VCO-61	
110	90141-0017		1	RETAINING RING FOR SHAFT DIN 471 17 SS	
120	90155-0008	MM	200	HANGER CHAIN, 18	
130	315205-0505		4	O-RING 6,07X1,78 MM	
160	312105-0325		2	SCREW M6S ISO 4017 M5X10 A480	
170	312105-0367		2	REW M6S ISO 4017 M6X14 A480	
180	312155-0370		2	SCREW DIN 7991 MF6S M6X20 A4 70	
190	312125-0228		4	SCREW ISO 1207 M3X16 A4	
195	312605-0316		2	HEXAGON NUT, M6M M6 A280	
200	315105-0124		4	WASHER BRB 3,2X6 RFR	
210	315105-0146		2	WASHER BRB 5,3X10 RFR	
220	315105-0153		4	WASHER BRB 6,4X12 RFR	
MB519	90044-0104		1	INDUCTIVE SENSOR IN5227S	
MB517	90044-0104		1	INDUCTIVE SENSOR IN5227S	

Pos	Part No	UN	Qty	Description	Page No

Tetra Pak

SPC
Spare Parts Catalogue

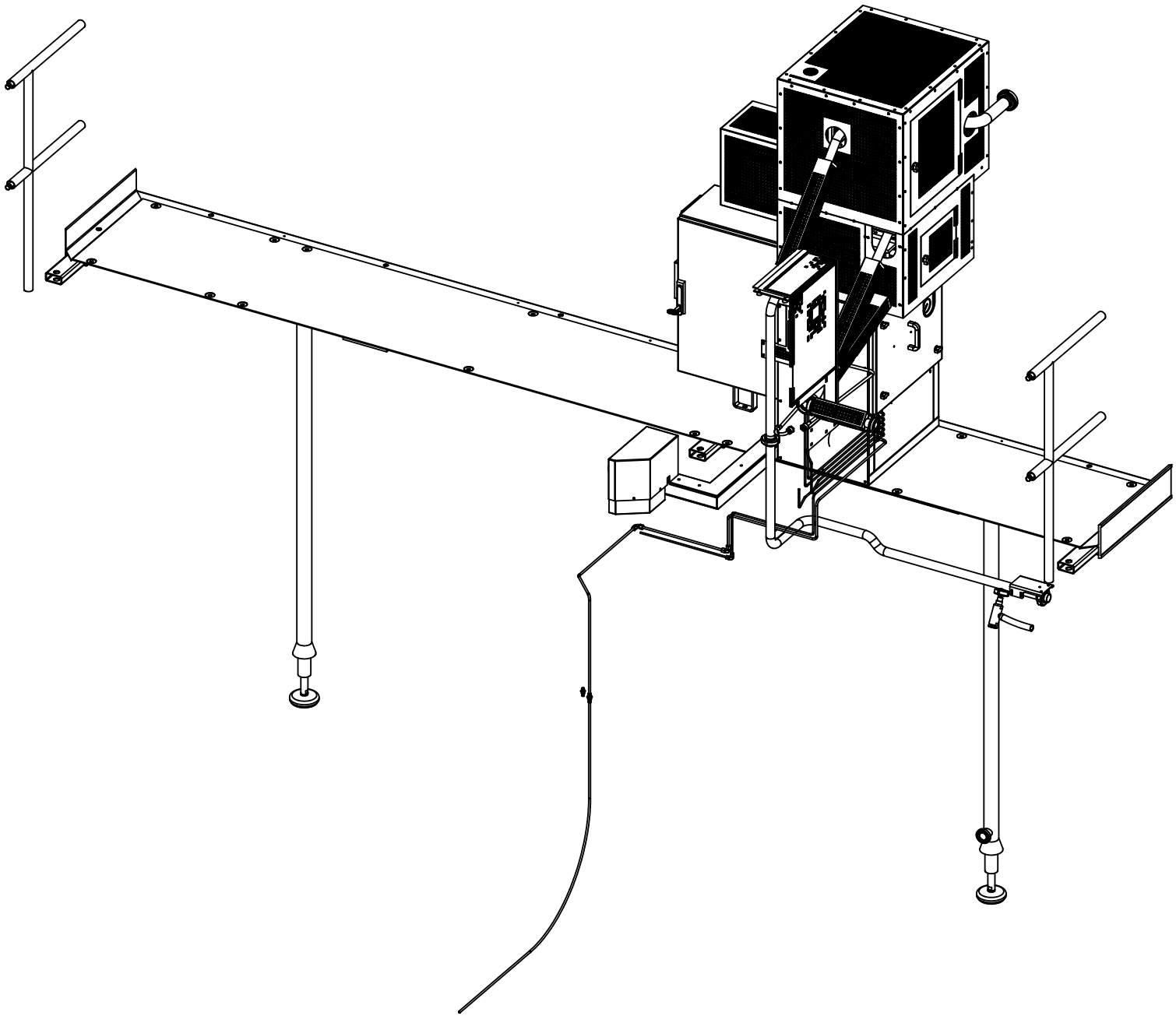

2924212-2
403443

ECM: 406296 - 20090709
Group number: 2924212-0200
Assembly Drawing: 2924212-2_1_AA

Pos	Part No	UN	Qty	Description	Page No
-					
010	2879200-0200		1	HIGH VISCOSITY ASEPTIC HVA	**4-5**
020	925419-0100		1	BED	**4-83**

Pos	Part No	UN	Qty	Description	Page No

Machine Type | Group Description | Used-In | Group Number | Page No

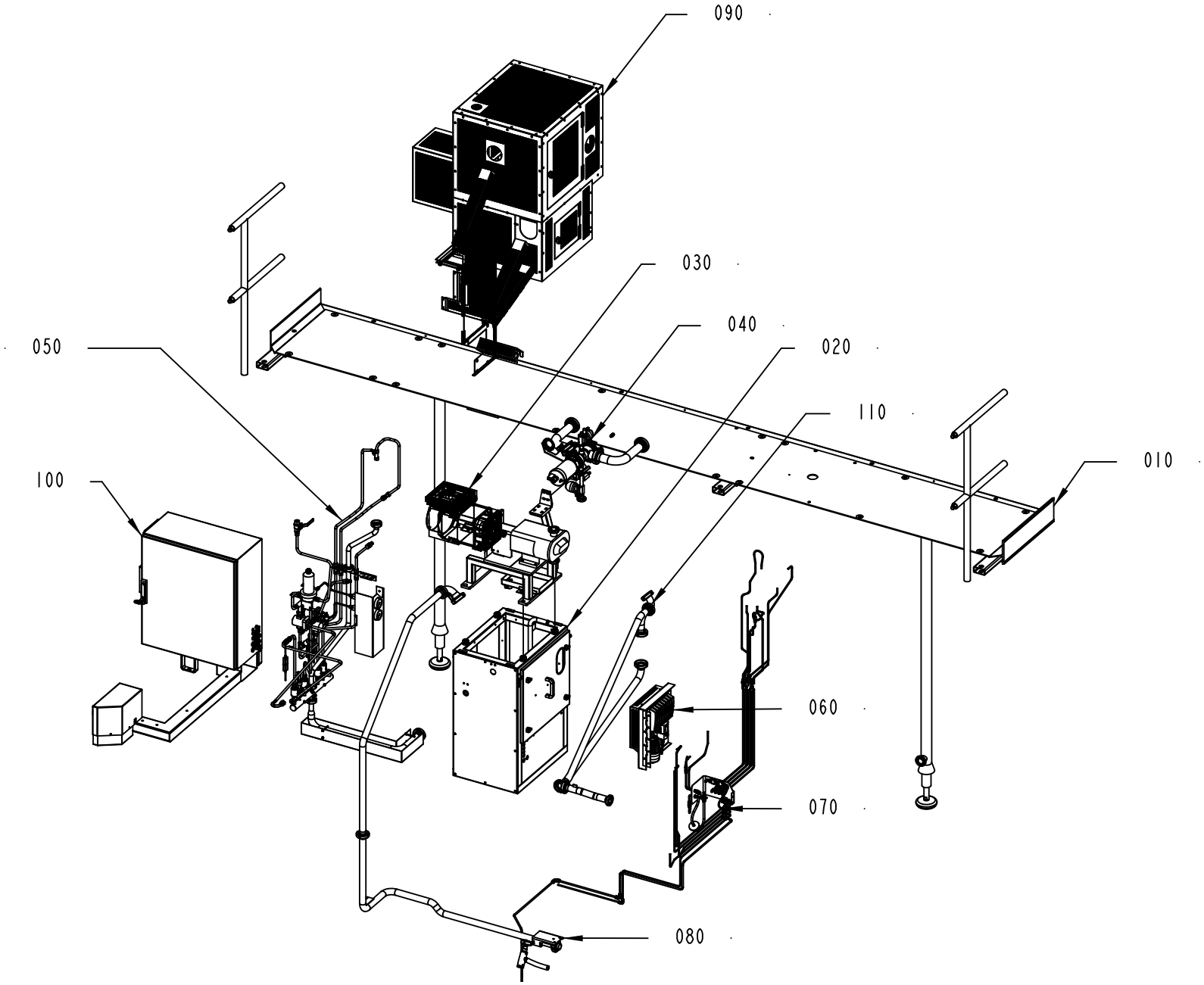

2879200-2
403443

ECM: 406236 - 20090709
Group number: 2879200-0200
Assembly Drawing: 2879200-2_1_AA

Pos	Part No	UN	Qty	Description	Page No
-					
010	2854828-0100		1	PLATFORM	**4-7**
020	1317202-0200		1	FRAME	**4-17**
030	1317200-0200		1	PUMP GROUP	**4-21**
040	925405-0200		1	EXT. PRODUCT VALVE	**4-23**
050	1317203-0200		1	STEAM CIRCUIT	**4-29**
060	925409-0200		1	VALVE PANEL	**4-37, 4-39**
070	1317204-0200		1	PNEUMATIC CIRCUIT	**4-45**
080	1317205-0200		1	CLEANING CIRCUIT	**4-47**
090	2919239-0200		1	TOUCH GUARD	**4-51**
100	2901831-0100		1	ELECTRICAL CABINET	**4-53**
110	2898192-0100		1	PRODUCT PIPES	**4-81**

Pos	Part No	UN	Qty	Description	Page No

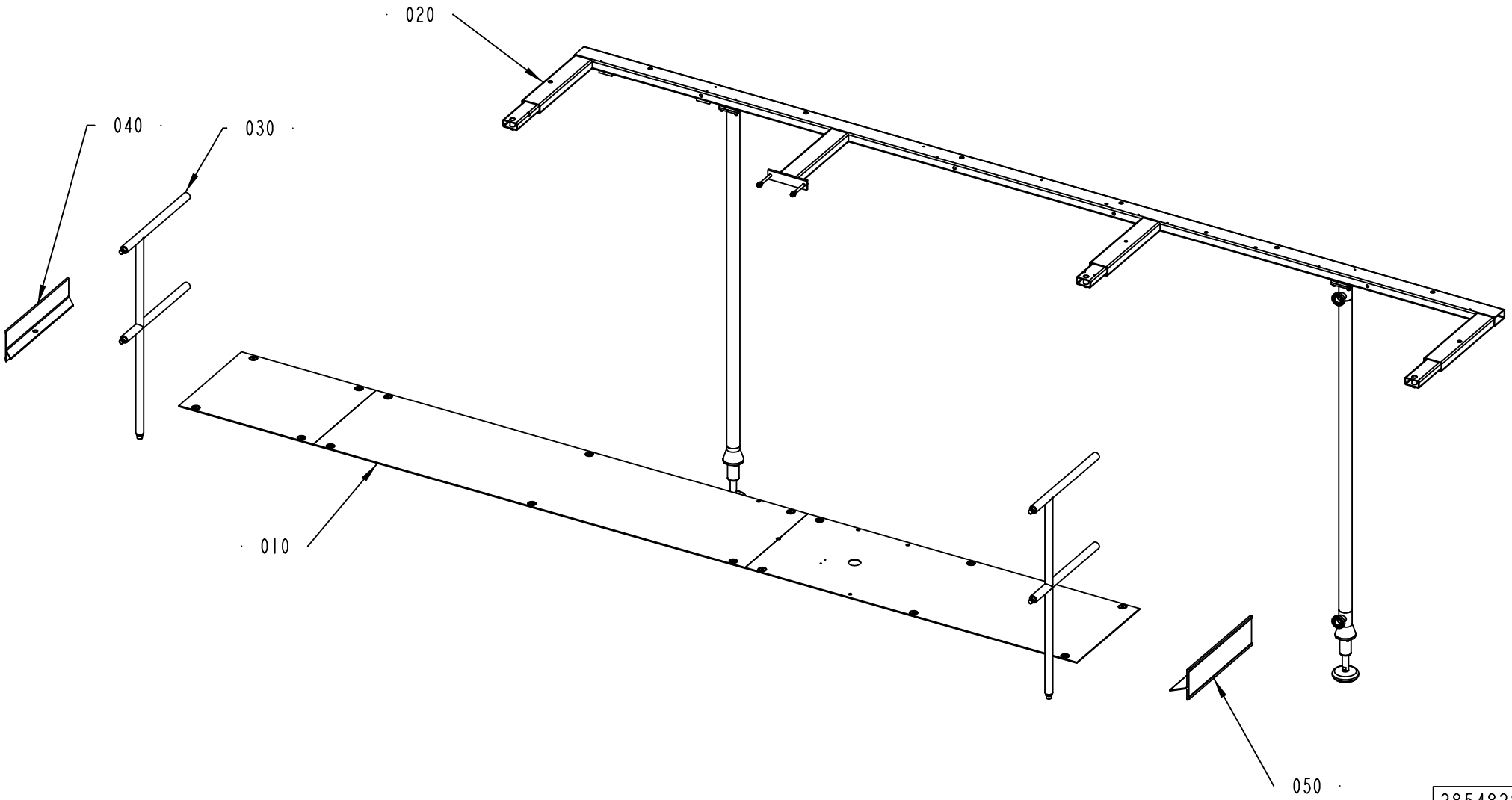
020
040
030
010
050
2854828-1
323207

ECM: 323328 - 20071102
Group number: 2854828-0100
Assembly Drawing: 2854828-1_1_AA

Pos	Part No	UN	Qty	Description	Page No
-					
010	2893294-0100		1	CHECKER PLATE	**4-9**
020	2893298-0100		1	PLATFORM	**4-11**
030	2893301-0100		2	RAILING	**4-15**
040	2893295-0000		1	TOE PLATE	
050	2893296-0000		1	TOE PLATE	

Pos	Part No	UN	Qty	Description	Page No

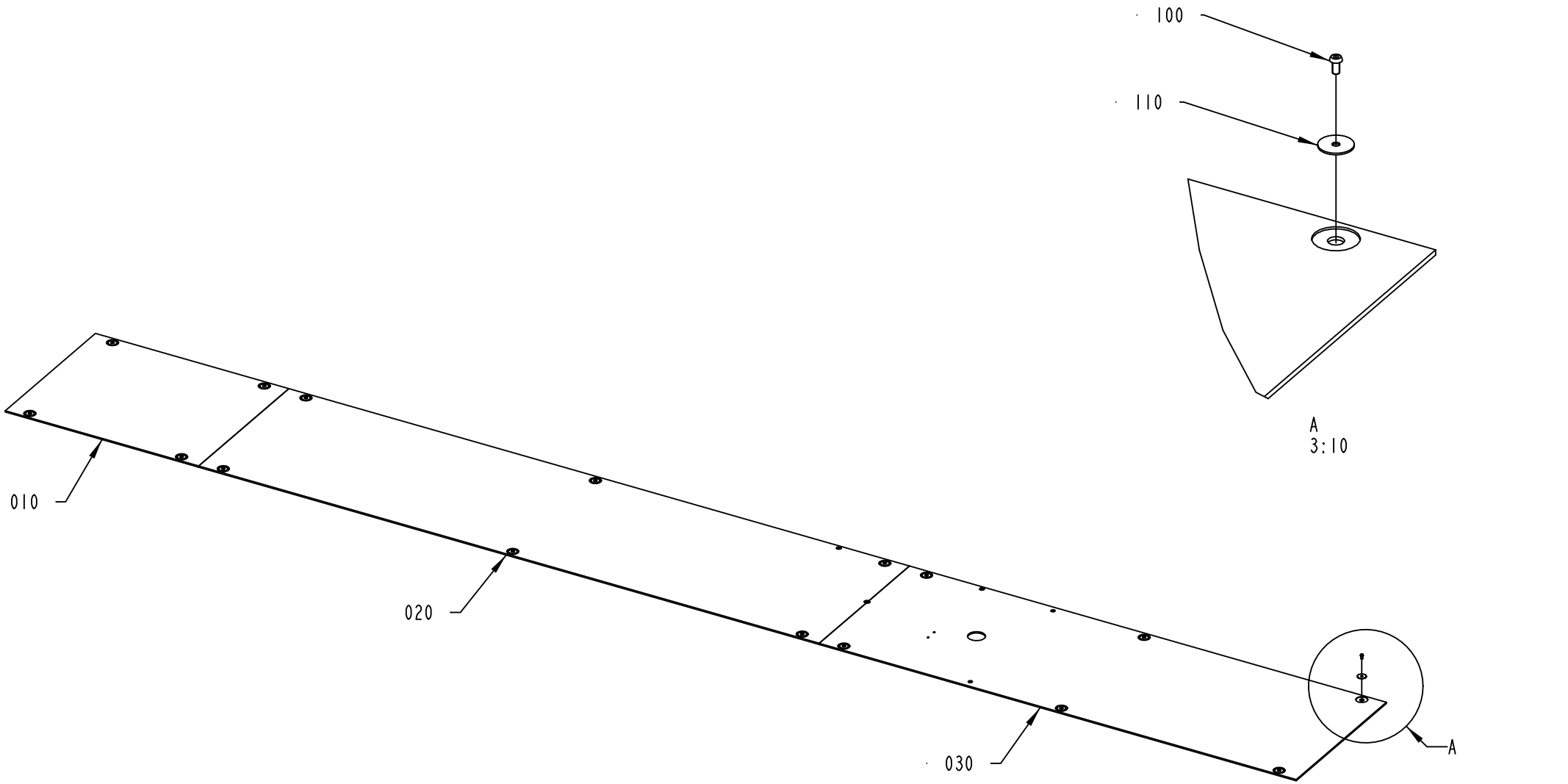

2893294-1
323207

ECM: 323326 - 20071102
Group number: 2893294-0100
Assembly Drawing: 2893294-1_1_AA

Pos	Part No	UN	Qty	Description	Page No
-					
010	2854830-0000		1	CHECKER PLATE	
020	2854832-0000		1	CHECKER PLATE	
030	2854833-0000		1	CHECKER PLATE	
040	90458-0072		16	SCREW ISO 7380 S M6X12 A2	
050	90458-0073		16	WASHER 6,4/30, H=1,5	

Pos	Part No	UN	Qty	Description	Page No

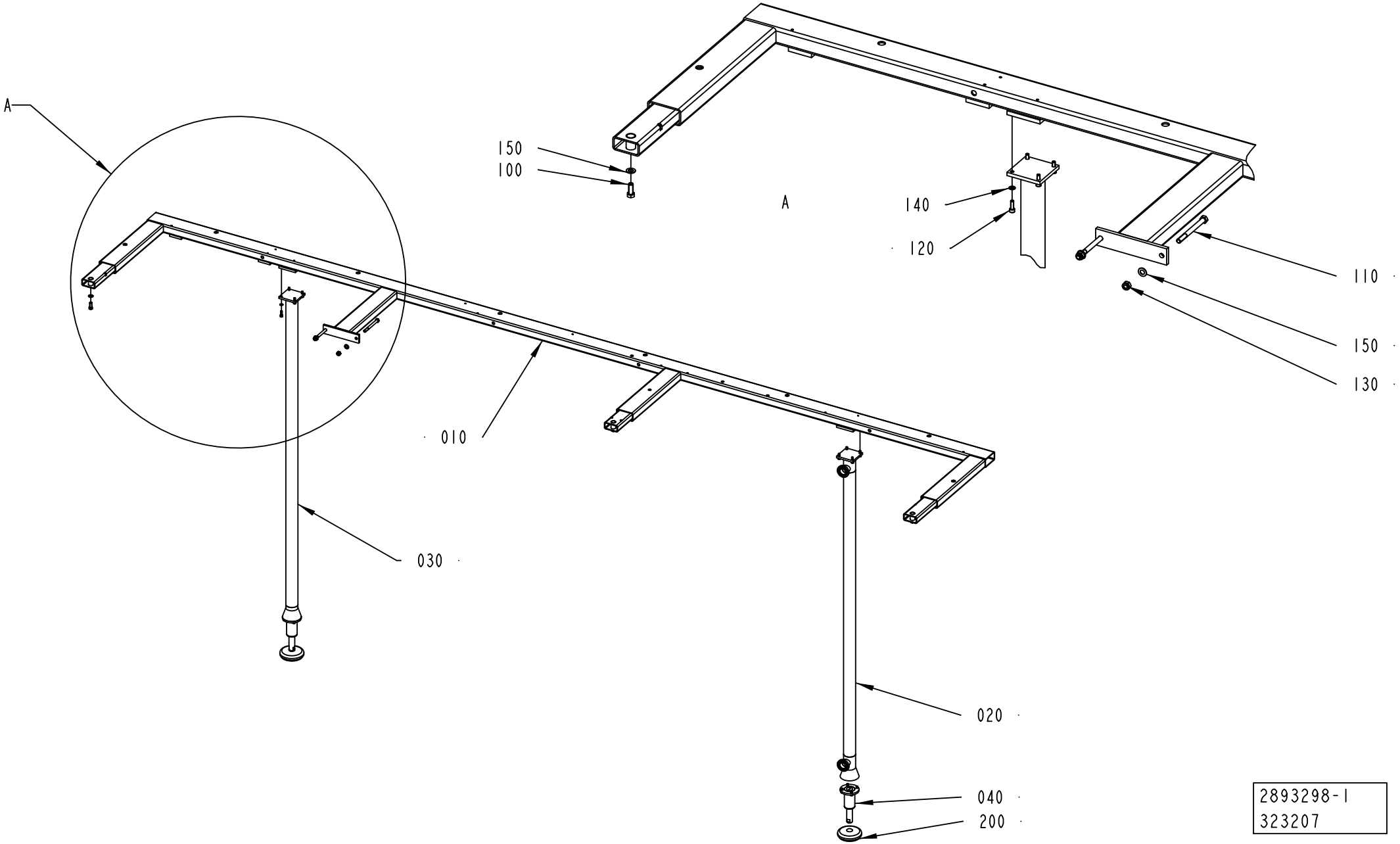
A
150
100
A
140
120
110
150
130
010
030
020
040
200
2893298-1
323207

ECM: 323325 - 20071102
Group number: 2893298-0100
Assembly Drawing: 2893298-1_1_AA

Pos	Part No	UN	Qty	Description	Page No
-					
010	2854831-0000		1	PLATFORM	
020	2893299-0000		1	COLUMN	
030	2893300-0000		1	COLUMN	
040	2773926-0100		2	LEG	**4-13**
100	312105-0536		3	SCREW M6S ISO 4017 M12X30 A480	
110	312105-0558		2	SCREW M6S ISO 4014 M12X130 A480	
120	312115-0453		8	SCREW ISO4762 M8X25 A4 80	
130	312812-0322		2	HEXAGON NUT, NY-LOCK M12 A480	
140	315105-0165		8	WASHER BRB 8,4X16 RFR	
150	315105-0178		7	WASHER BRB 13X24 RFR	
200	90347-0175		2	MACHINE SHOE BRIK T 125	

Pos	Part No	UN	Qty	Description	Page No

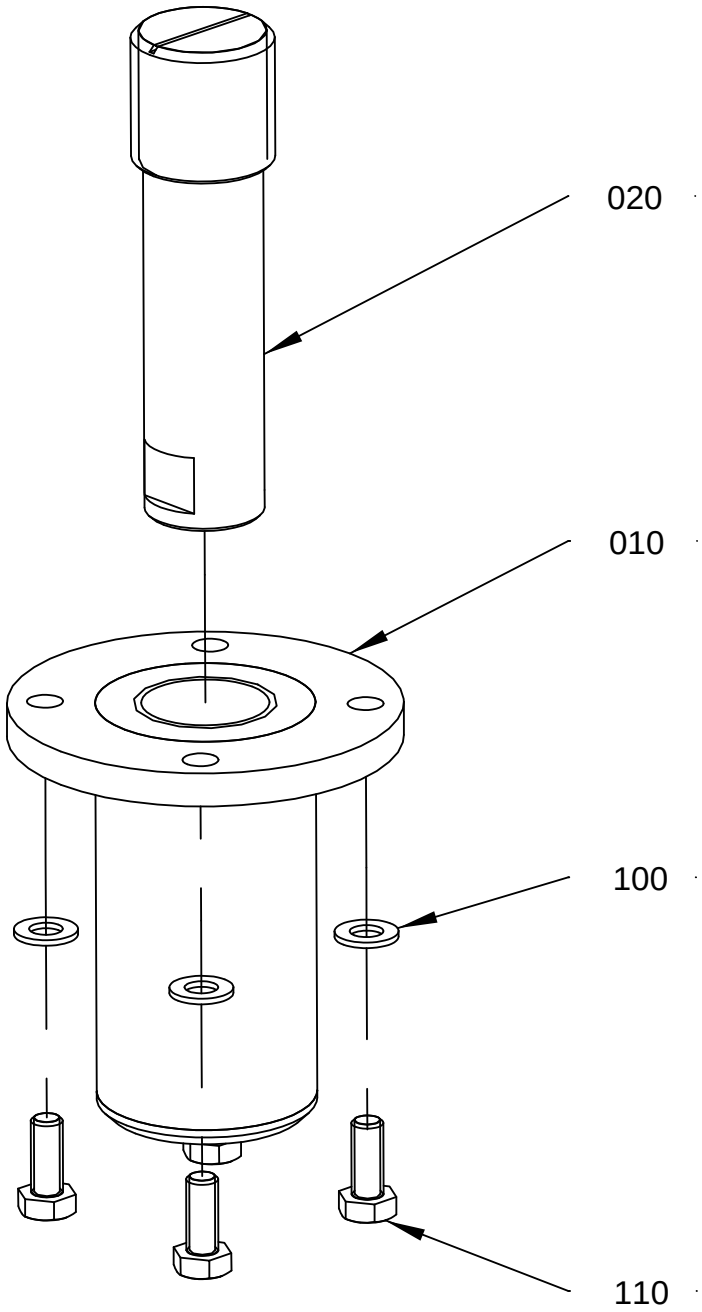

2773 926-1
224525

ECM: 224529 - 20051114
Group number: 2773926-0100
Assembly Drawing: 2773926-1_1_AA

Pos	Part No	UN	Qty	Description	Page No
-					
010	2773925-0000		1	LEG	
020	598148-0000		1	LEG	
100	315105-0165		4	WASHER BRB 8,4X16 RFR	
110	312105-0451		4	SCREW M6S ISO 4017 M8X20 A480	

Pos	Part No	UN	Qty	Description	Page No

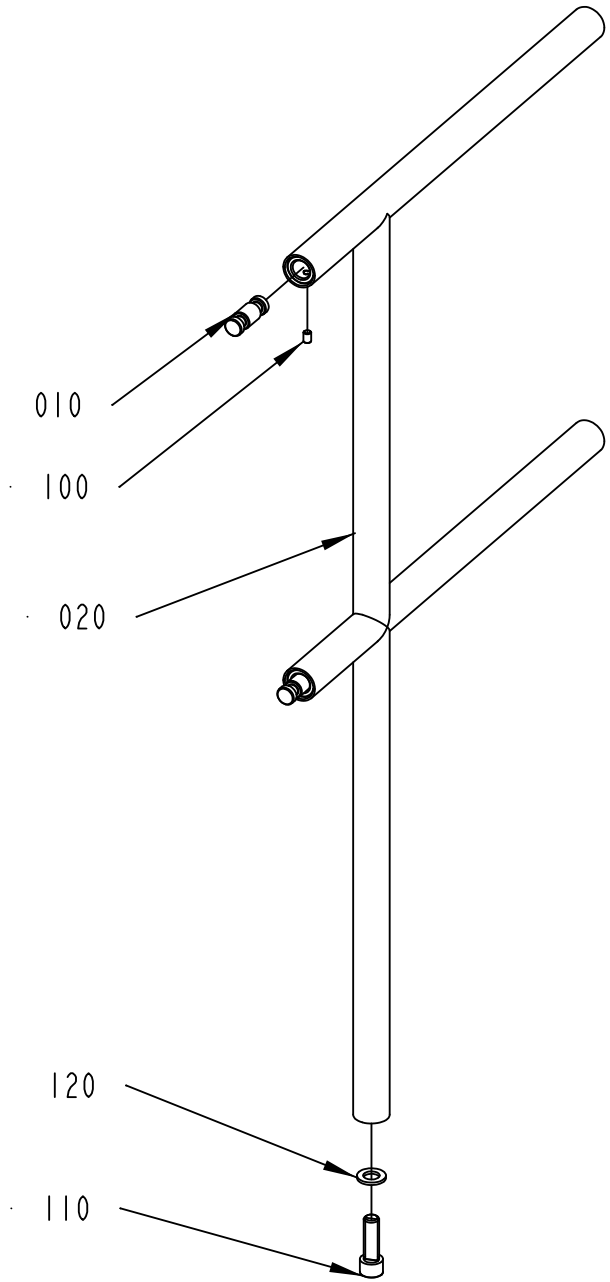

2893301-1
323207

ECM: 323327 - 20071102
Group number: 2893301-0100
Assembly Drawing: 2893301-1_1_AA

Pos	Part No	UN	Qty	Description	Page No
-					
010	2555063-0000		2	PIN	
020	2893297-0000		1	RAILING	
100	312318-0447		2	SCREW ISO4029 M8X12 A4	
110	312115-0630		1	SCREW ISO4762 M16X50 A4 80	
120	315105-0186		1	WASHER BRB 17X30 RFR	

Pos	Part No	UN	Qty	Description	Page No

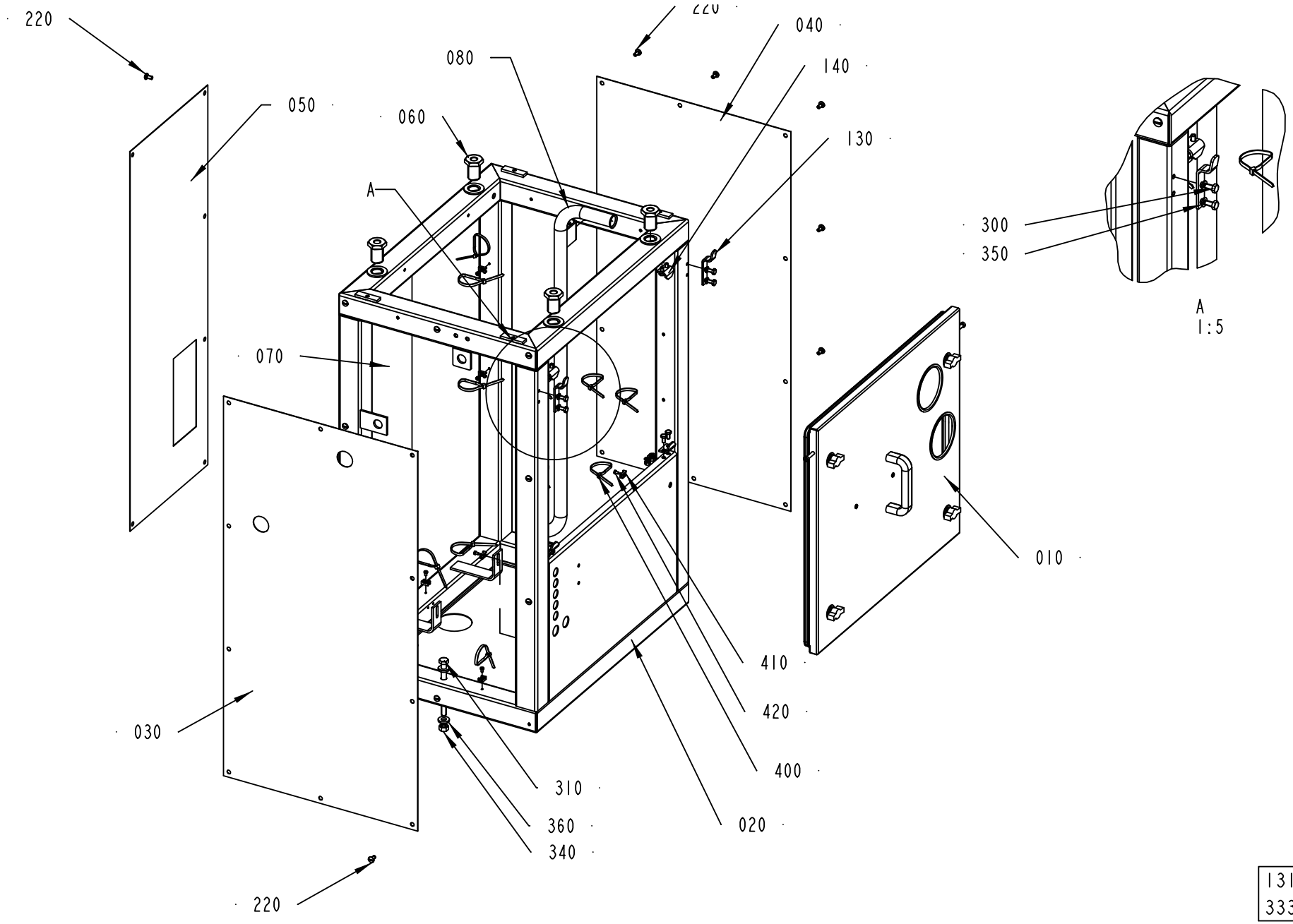

1317202-2
333922

ECM: 334767 - 20071203
Group number: 1317202-0200
Assembly Drawing: 1317202-2_1_AB

Pos	Part No	UN	Qty	Description	Page No
-					
010	2846029-0100		1	HATCH	**4-19**
020	2846026-0000		1	FRAME	
030	2879231-0000		1	PANEL	
040	925090-0000		1	PANEL	
050	2826639-0000		1	PANEL	
060	735921-0000		4	SCREW	
070	2913542-0000		1	PANEL	
080	2924202-0000		1	CABLE CONDUIT	
130	2887598-0000		2	BRACKET	
140	2846027-0000		4	CLAMP LUG	
220	90287-0075		32	SCREW SLOT. PAN HEAD LKCS M6X12	
300	312105-0366		19	SCREW M6S ISO 4017 M6X12 A480	
310	312105-0515		2	SCREW M6S ISO 4014 M10X120 A480	
330	312605-0316		4	HEXAGON NUT, M6M M6 A280	
340	312605-0320		2	HEXAGON NUT, M6M M10 A280	
350	315105-0153		14	WASHER BRB 6,4X12 RFR	
360	315115-0173		4	WASHER PLAIN, TBRB 10,5/22 H=4	
400	352113-0102		13	CABLE TIE, BLACK 188X4,8 MM	
410	352113-0205		8	ANCHOR PLATES FOR STRIPS, TM2S8-C100	
420	312122-0285		8	SCREW ISO 1207 M4X6 NI PL BRASS	

Pos	Part No	UN	Qty	Description	Page No

Machine Type | Group Description | Used-In | Group Number | Page No

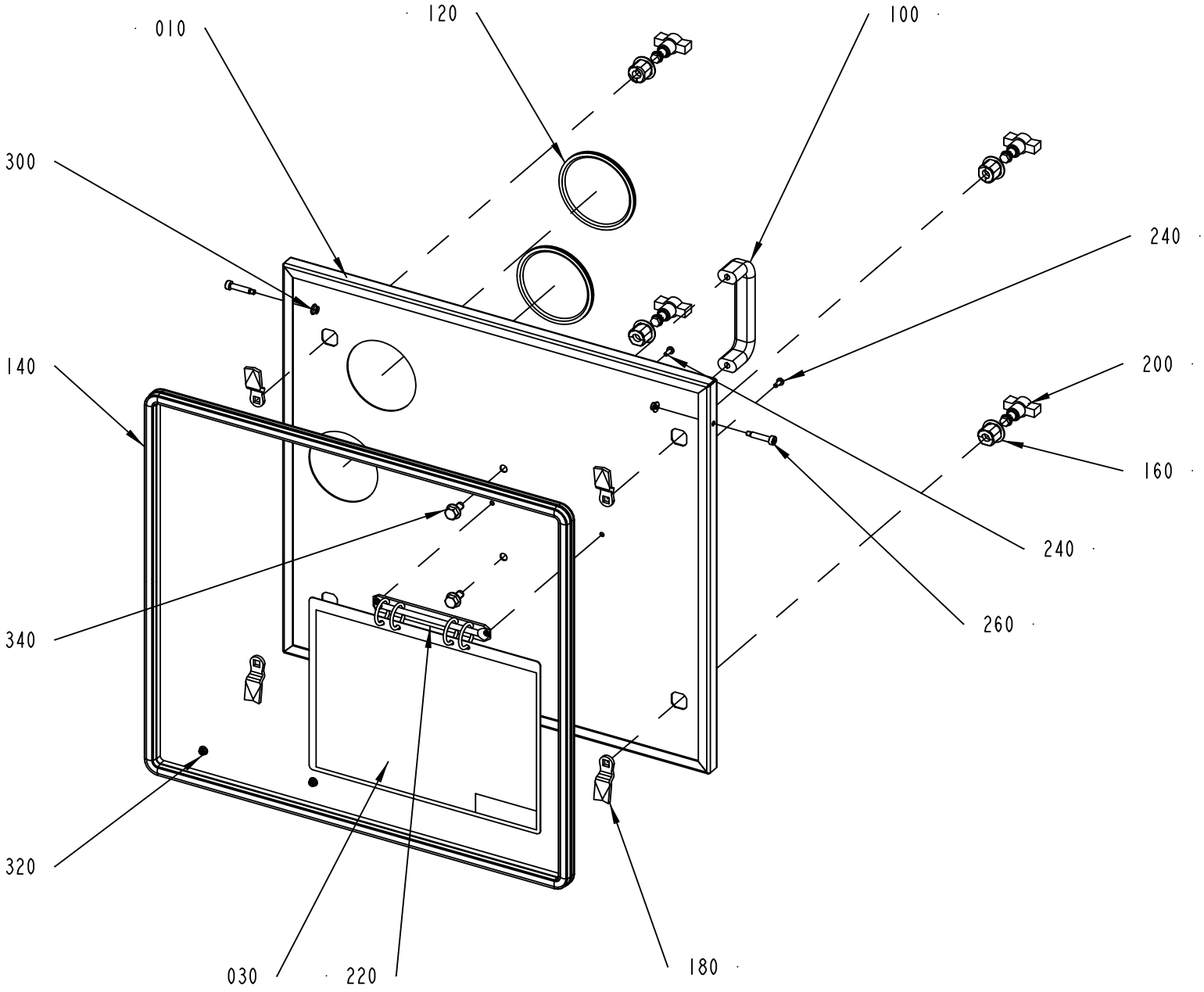

2846029-1
354935

ECM: 366329 - 20080924
Group number: 2846029-0100
Assembly Drawing: 2846029-1_1_AB

Pos	Part No	UN	Qty	Description	Page No
-					
010	2846028-0000		1	HATCH	
030	2879201-0000		1	DIAGRAM AIR/WATER	
100	90017-0022		1	HANDLE, NO. EL-037311	
120	90143-0060	M	0.3	EDGE STRIP 9,5X6,3MM BLACK PVC	
140	90143-0068	M	2.1	RUBBER STRIP EMKA 1011-06	
160	90237-0142		4	LOCK HOUSING, 1000-U45	
180	90237-0335		4	LOCKING CATCH	
200	90237-0337		4	LOCK HANDLE FOR 90237-319	
220	90243-0169		1	BINDER CLIP, DIAM.29 MM, NO. 4670819	
240	312132-0289		2	SLOTTED HEAD, PAN SCREW, MSCS M4X10	
260	90287-0238		2	SCREW, HEX.SOCK.HEAD SHOULD. M5X6	
300	312107-0314		2	HEXAGON FLANGE NUT ISO 4161 M5 A2	
320	312107-0312		2	HEXAGON FLANGE NUT ISO 4161 M4 A2	
340	312108-0449		2	SCREW EN 1665 TYPE F M8X16 A270	

Pos	Part No	UN	Qty	Description	Page No

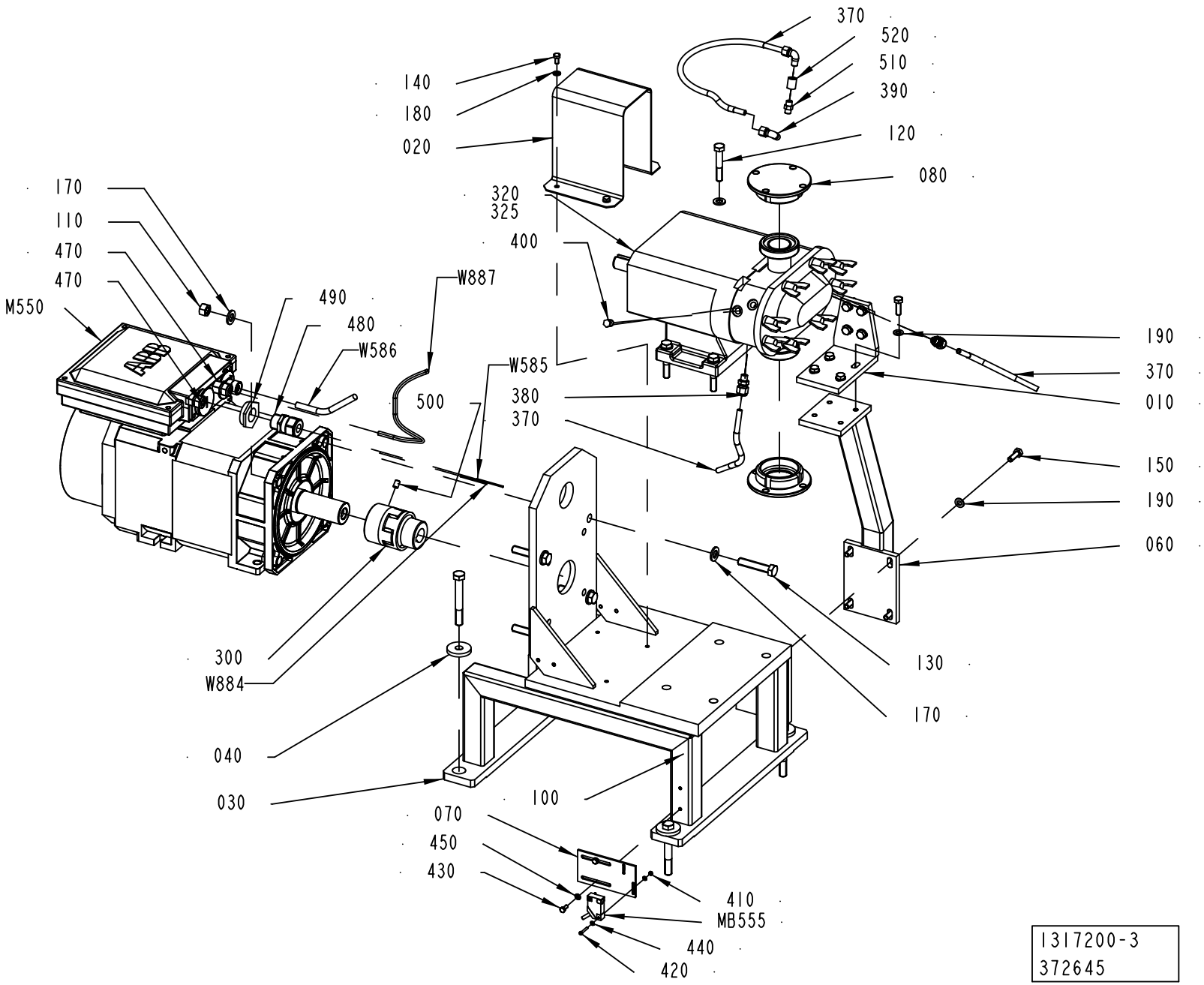
370
520
510
390
120
080
140
180
020
320
325
400
170
110
470
470
M550
490
480
W586
W887
W585
500
380
370
190
370
010
150
190
060
300
W884
040
030
130
170
100
070
450
430
410
MB555
440
420
1317200-3
372645

ECM: 372647 - 20091208
Group number: 1317200-0200
Assembly Drawing: 1317200-3_1_AE

Pos	Part No	UN	Qty	Description	Page No
-					
010	2913723-0000		1	BRACKET	
020	2910398-0000		1	PROTECTION	
030	2887594-0000		1	SUPPORT	
040	735922-0000		4	WASHER	
060	2913722-0000		1	BRACKET	
070	2925074-0000		1	BRACKET	
080	2924205-0000		2	BLANK NUT	
100	312605-0320		4	HEXAGON NUT, M6M M10 A280	
110	312605-0322		4	HEXAGON NUT, M6M M12 A280	
120	312105-0503		4	SCREW M6S ISO 4014 M10X60 A480	
130	312109-0544		4	SCREW M6S ISO 4017 M12X60 A480	
140	312105-0366		4	SCREW M6S ISO 4017 M6X12 A480	
150	312105-0453		12	SCREW M6S ISO 4017 M8X25 A480	
160	315106-0173		8	WASHER ISO 7089-10-200 HV A4	
170	315106-0178		8	WASHER ISO 7089-12-200 HV A4	
180	315106-0153		4	WASHER ISO 7089-6-200 HV A4	
190	315106-0165		12	WASHER ISO 7089-8-200 HV A4	
200	312105-0550		4	SCREW M6S ISO 4014 M12X90 A480	
300	90600-3233		1	FLEXIBLE COUPLING, 24X38 MM	
320	90600-4437		1	ROT. LOBE PUMP AVMXT 3500DA	
325	90459-0340		1	SHELL CASSIDA GREASE HDS 2	
370	925646-0000		3	HOSE	
380	90600-3668		2	CONN. STR SS-8MO-1-2RT	
390	90030-0257		2	CONN. ELBOW, WE08LLR71	
400	90087-0046		2	PLUG, EXT. 1/8 NPT-THREAD, 2PH-SS	
410	312601-0310		2	HEXAGON NUT, DIN 934 M3 8 FZB	
420	312125-0230		2	SCREW ISO 1207 M3X20 A4	
430	312105-0327		2	SCREW M6S ISO 4017 M5X12 A480	
440	315106-0124		4	WASHER ISO 7089-3-200 HV A4	
450	315106-0153		2	WASHER ISO 7089-6-200 HV A4	
470	90459-3656		2	GLAND,EXTENDED WITH INSERT, M16X1,5-LONG	
480	90459-3660		1	GLAND,EXTENDED WITH INSERT, M25X1,5-LONG	
490	90600-3778		1	REDUCER, M25/M40	
500	312318-0447		2	SCREW ISO4029 M8X12 A4	
510	90330-0032		1	NIPPLE, EXT.THREAD, HEXAGON, R1/8-R1/8	
520	90330-0094		1	SLEEVE, INT, THREAD, NO., R-2011/8	
M.B555	90044-0194		1	INDUCTIVE SENSOR, IN 5329	
M550	90600-3228		1	MOTOR CH21302002002A000	
W585	90220-0104	M	2.5	SCR. CABLE 4X1,5MM2	
W586	90220-0131	M	2.5	PAIR TWISTED CABLE 3X2X0,25MM2	
W884	351150-0413	M	2.2	CABLE OLFLEX 4GX1,5 MM2 LIGHT/GREY	
W887	90220-0091	M	2.2	PAIR TWISTED CABLE 2X2X0,25MM2	

Machine Type	Group Description	Used-In	Group Number	Page No

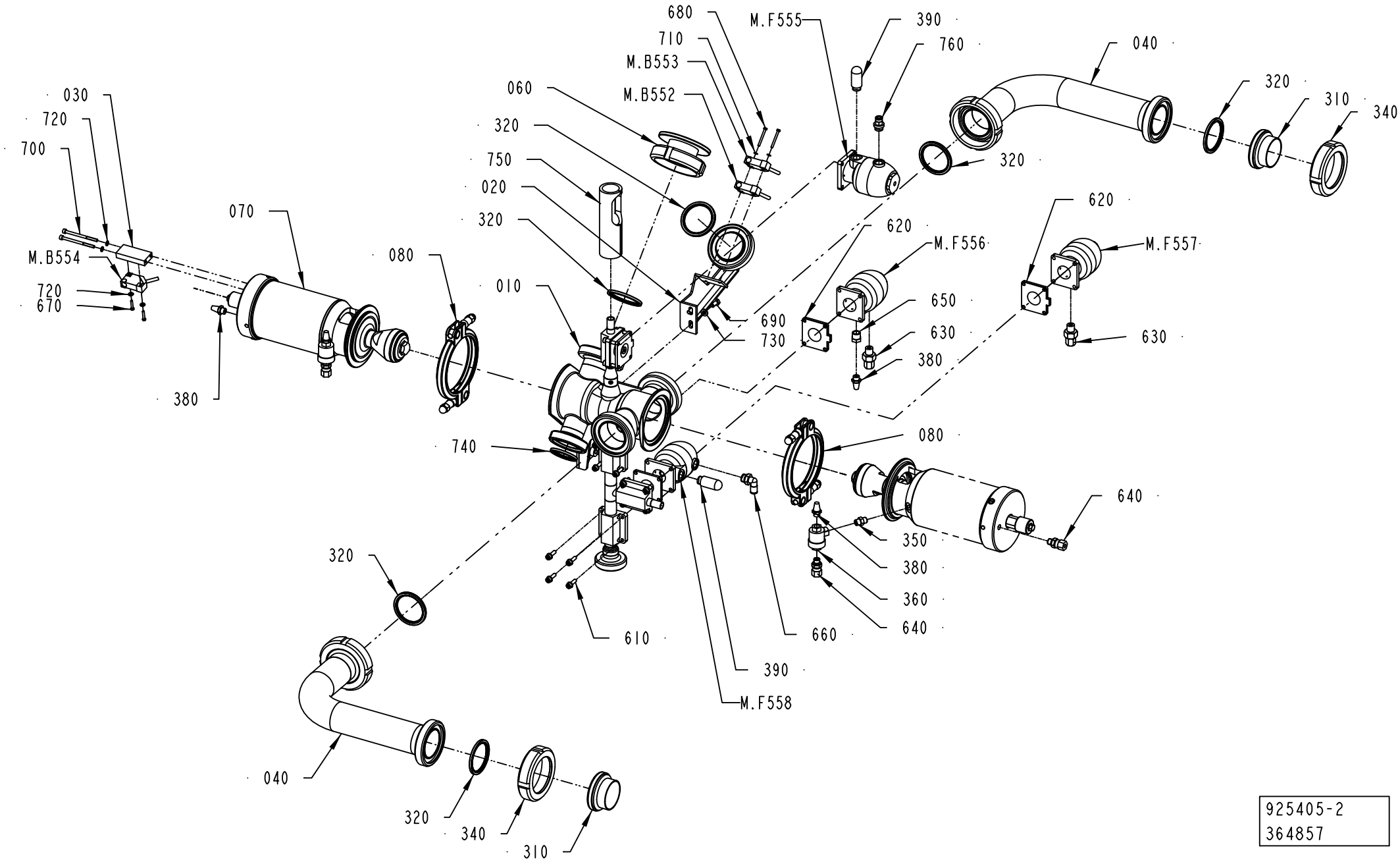

925405-2
364857

ECM: 366317 - 20080924
Group number: 925405-0200
Assembly Drawing: 925405-2_1_AC

Pos	Part No	UN	Qty	Description	Page No
-					
010	2898184-0000		1	VALVE BODY	
020	2898185-0000		1	SUPPORT	
030	2832787-0000		1	PLATE	
040	1519936-0000		2	PIPE	
060	2898190-0000		1	BLANK NUT	
070	2898200-0100		1	A-CYLINDER	**4-25**
080	541163-0200		2	CLAMP RING	**4-27**
310	90217-0207		2	ASEPT. MALE FITTING ISO, 03-32-456/42	
320	90217-0349		6	GASKET 48,4X59,8X4 MM	
340	90217-0209		2	UNION NUT, 2 APV, 07-01-426/17	
350	90030-0207		2	NIPPLE	
360	90235-0259		2	VALVE	
380	90328-0003		4	SILENCER, 338/110	
390	90328-0026		2	SILENCER G1/4"	
610	342800-1502		4	VALVE ASSEMBLING KIT, SEAT S. 10	
620	342800-1102		4	DIAPHRAGM FDA PTFE/EPDM 5E, SEAT S. 10	
630	90030-0202		2	CONN. STR., 6-G1/4, EXT. THREAD	
640	90030-0184		3	CONN. STR., GE06LRED71	
650	342701-0201		1	BUSHING, INT/EXT, G1/4-G1/8	
660	350002-0008		2	PUSH-IN L-FITTING QSL-F-G1/4-6	
670	312125-0228		2	SCREW ISO 1207 M3X16 A4	
680	312125-0234		2	SCREW ISO 1207 M3X30 A4	
690	312105-0366		2	SCREW M6S ISO 4017 M6X12 A480	
700	90287-0314		2	SCREW MC6S M4X60 A470	
710	315105-0124		2	WASHER BRB 3,2X6 RFR	
720	315105-0136		4	WASHER BRB 4,3X8 RFR	
730	315105-0153		2	WASHER BRB 6,4X12 RFR	
740	90217-0348		1	GASKET 35,4X46,8X4 MM	
750	90459-1774	MM	125	INSULATING TUBE Ã¸28, 1627-0028	
760	350001-0008		1	PUSH-IN FITTING QS-F-G1/4-6	
M.F558	342800-1302		1	ACTUATOR, SS, N.O. SEAT S. 10	
M.F557	342800-1202		1	ACTUATOR, SS, N.C. SEAT S. 10	
M.F556	342800-1302		1	ACTUATOR, SS, N.O. SEAT S. 10	
M.F555	342800-1302		1	ACTUATOR, SS, N.O. SEAT S. 10	
M.B554	90044-0194		1	INDUCTIVE SENSOR, IN 5329	
M.B553	90044-0194		1	INDUCTIVE SENSOR, IN 5329	
M.B552	90044-0194		1	INDUCTIVE SENSOR, IN 5329	

Pos	Part No	UN	Qty	Description	Page No

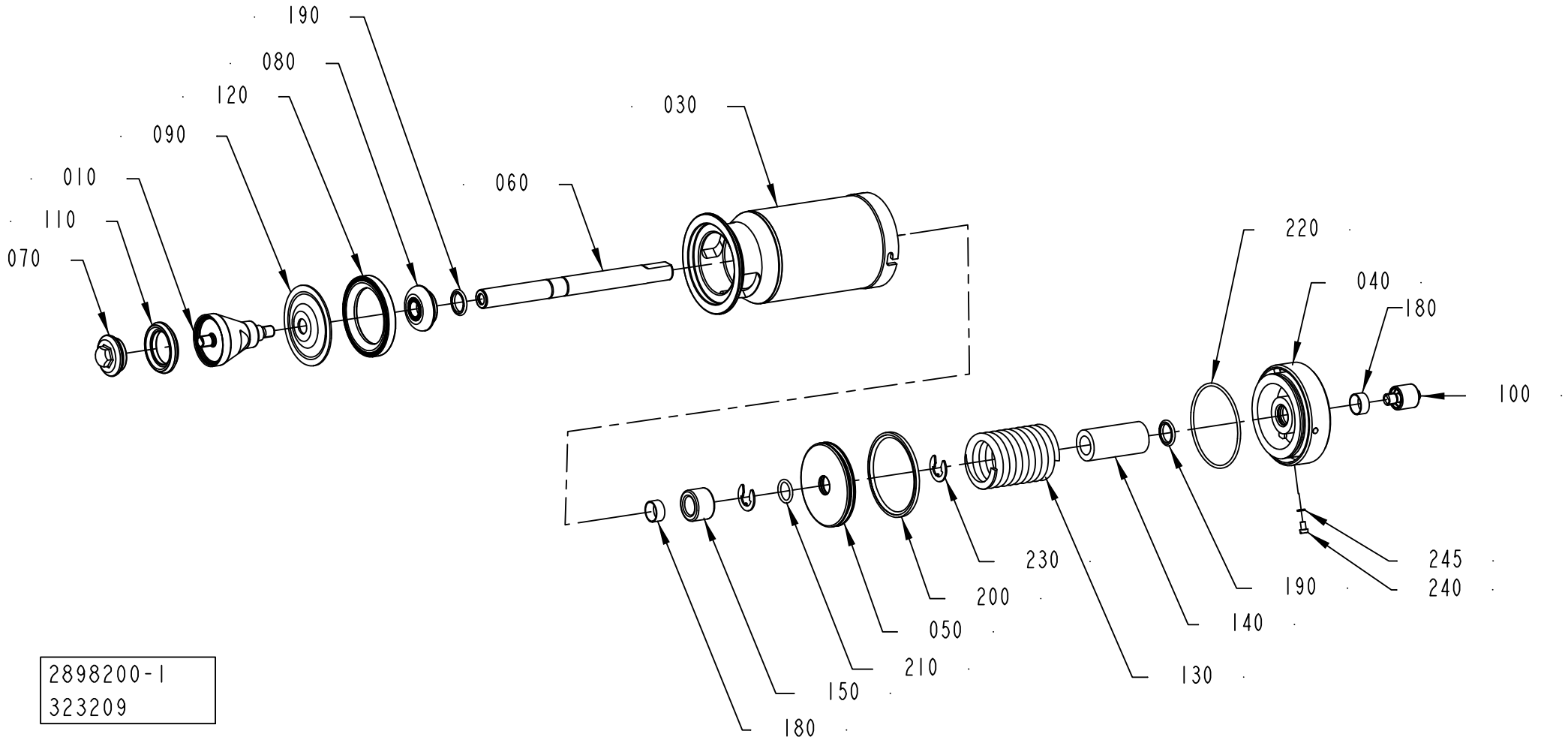

2898200-1
323209

ECM: 324558 - 20071102
Group number: 2898200-0100
Assembly Drawing: 2898200-1_1_AA

Pos	Part No	UN	Qty	Description	Page No
-					
010	2833037-0000		1	SEAL RING	
030	576439-0000		1	CYLINDER HOUSING	
040	576440-0000		1	END SECTION	
050	576441-0000		1	PISTON	
060	576446-0000		1	PISTON ROD	
070	2898203-0000		1	VALVE CONE	
080	541166-0000		1	WASHER	
090	533169-0000		1	DIAPHRAGM	
100	553607-0000		1	SLEEVE	
110	2826441-0000		1	SEAL RING	
120	440655-0000		1	RING	
130	440663-0000		1	COMPRESSION SPRING	
140	576448-0000		1	SPACER	
150	576449-0000		1	SPACER	
180	90091-0238		2	WEAR RING 20X22X10 MM	
190	90091-0237		2	ROD SEAL GLYD RING 20X27,5X3 MM	
200	90091-0336		1	PISTON SEAL GLYD RING 79X90X4,2 MM	
210	315204-0215		1	O-RING 19,2X3 MM	
220	315204-0308		1	O-RING 84,5X3 MM	
230	315754-0113		2	RETAINING RING SHAFT DIN 6799 15	
240	312125-0323		1	SCREW ISO 1207 M5X8 A4	
245	315233-0101		1	WASHER CAPTIVE SEALING M5(NEW315239-101)	

Pos	Part No	UN	Qty	Description	Page No

CLAMP RING

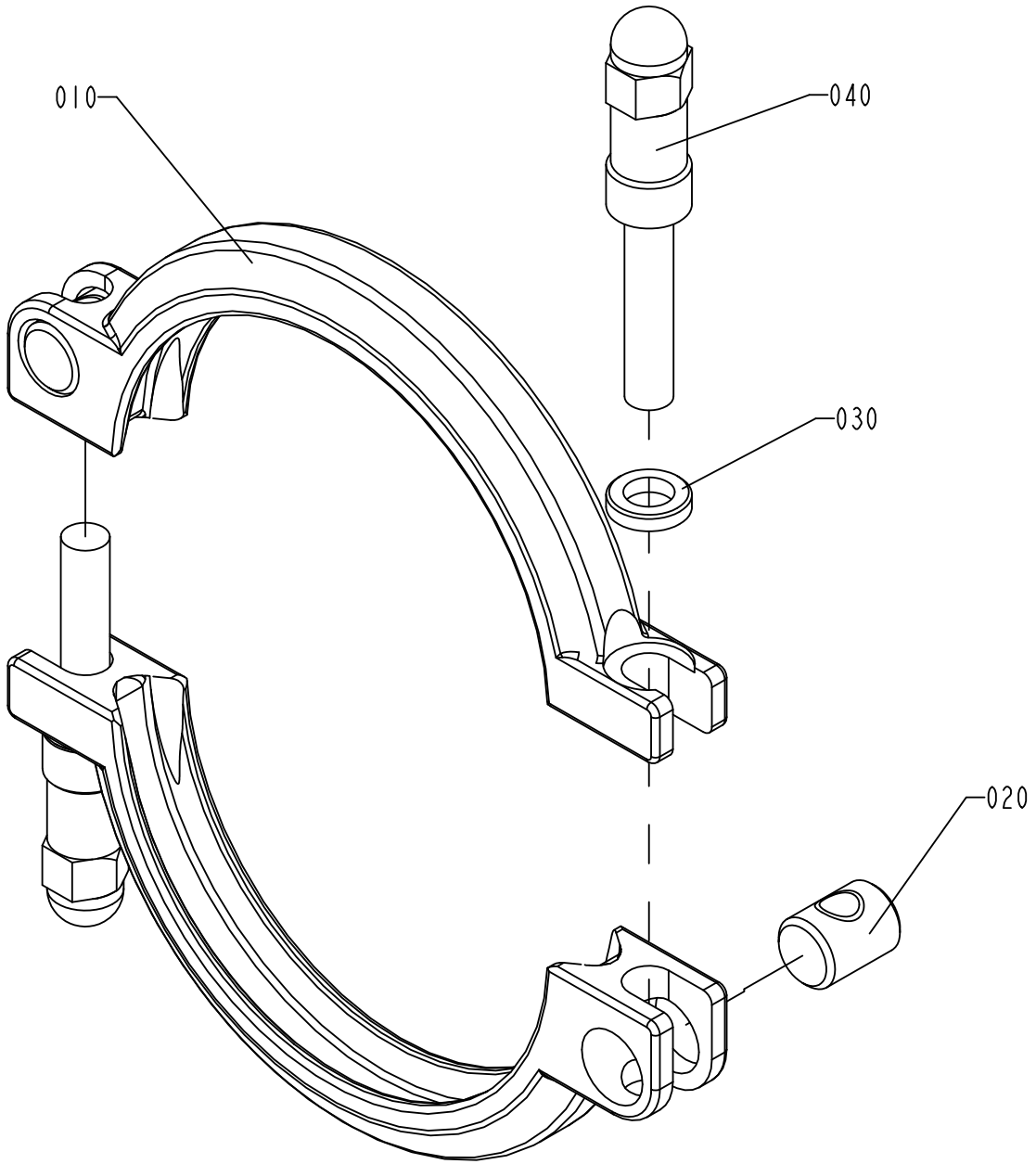

S-541163-2
ECN 71956

ECM: 343597 - 20080402
Group number: 541163-0200
Assembly Drawing: 541163-2_1_AB

Pos	Part No	UN	Qty	Description	Page No
-					
010	532117-0000		2	CLAMP RING	
020	497748-0000		2	PIN	
030	541165-0000		2	WASHER	
040	554162-0000		2	SCREW	

Pos	Part No	UN	Qty	Description	Page No

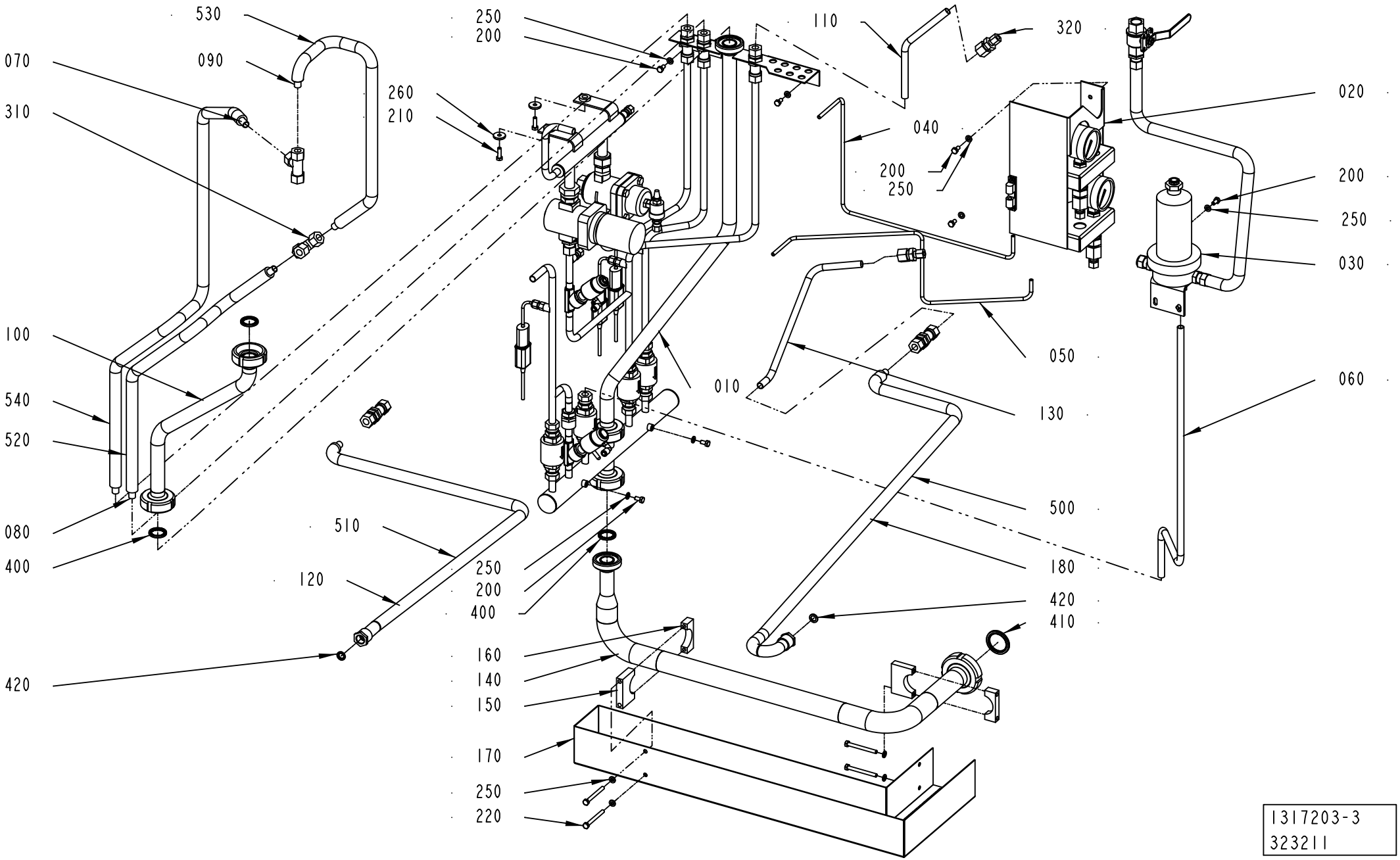
530
070
090
310
260
210
250
200
110
320
020
040
200
250
200
250
030
100
050
060
540
010
130
520
500
080
510
180
400
120
250
200
400
420
410
160
140
150
170
250
220
420
1317203-3
323211

ECM: 323329 - 20071102
Group number: 1317203-0200
Assembly Drawing: 1317203-3_1_AA

Pos	Part No	UN	Qty	Description	Page No
-					
010	2879230-0100		1	STEAM UNIT	**4-31**
020	2879225-0100		1	PRESSURE GAUGE	**4-33**
030	2879229-0100		1	STEAM UNIT	**4-35**
040	2879222-0000		1	PIPE	
050	2879223-0000		1	PIPE	
060	2879209-0000		1	STEAM PIPE	
070	2879218-0000		1	STEAM PIPE	
080	2879216-0000		1	STEAM PIPE	
090	2879217-0000		1	STEAM PIPE	
100	2879215-0000		1	WASTE PIPE	
110	2915061-0000		1	STEAM PIPE	
120	2879224-0000		1	STEAM PIPE	
130	2915062-0000		1	STEAM PIPE	
140	2879219-0000		1	WASTE PIPE	
150	926762-0000		2	LAMP HOLDER	
160	926763-0000		2	CLAMP HOLDER	
170	2879221-0000		1	TOUCH GUARD	
180	2914125-0000		1	STEAM PIPE	
200	312105-0366		9	SCREW M6S ISO 4017 M6X12 A480	
210	312105-0370		2	SCREW M6S ISO 4017 M6X20 A480	
220	312105-0382		4	SCREW M6S ISO 4014 M6X60 A480	
250	315105-0153		13	WASHER BRB 6,4X12 RFR	
260	315125-0153		2	WASHER TBRSB 6,4X22X4 A4	
300	90030-0030		2	CONN. BULKHEAD SV12L71	
310	90030-0058		2	CONN. T-PIPE T12L71	
320	90600-0937		2	PIPE CONNECTION 12-8	
400	90217-0347		3	GASKET 32X22,6X3,6 MM	
410	90217-0348		1	GASKET 35,4X46,8X4 MM	
420	90091-0266		2	SEAL RING 10,4X16,3X2,5 MM	
500-540	90600-0190		1	INSULATION TUBE Ã˜21/13 MM, 1627-0013	

Pos	Part No	UN	Qty	Description	Page No

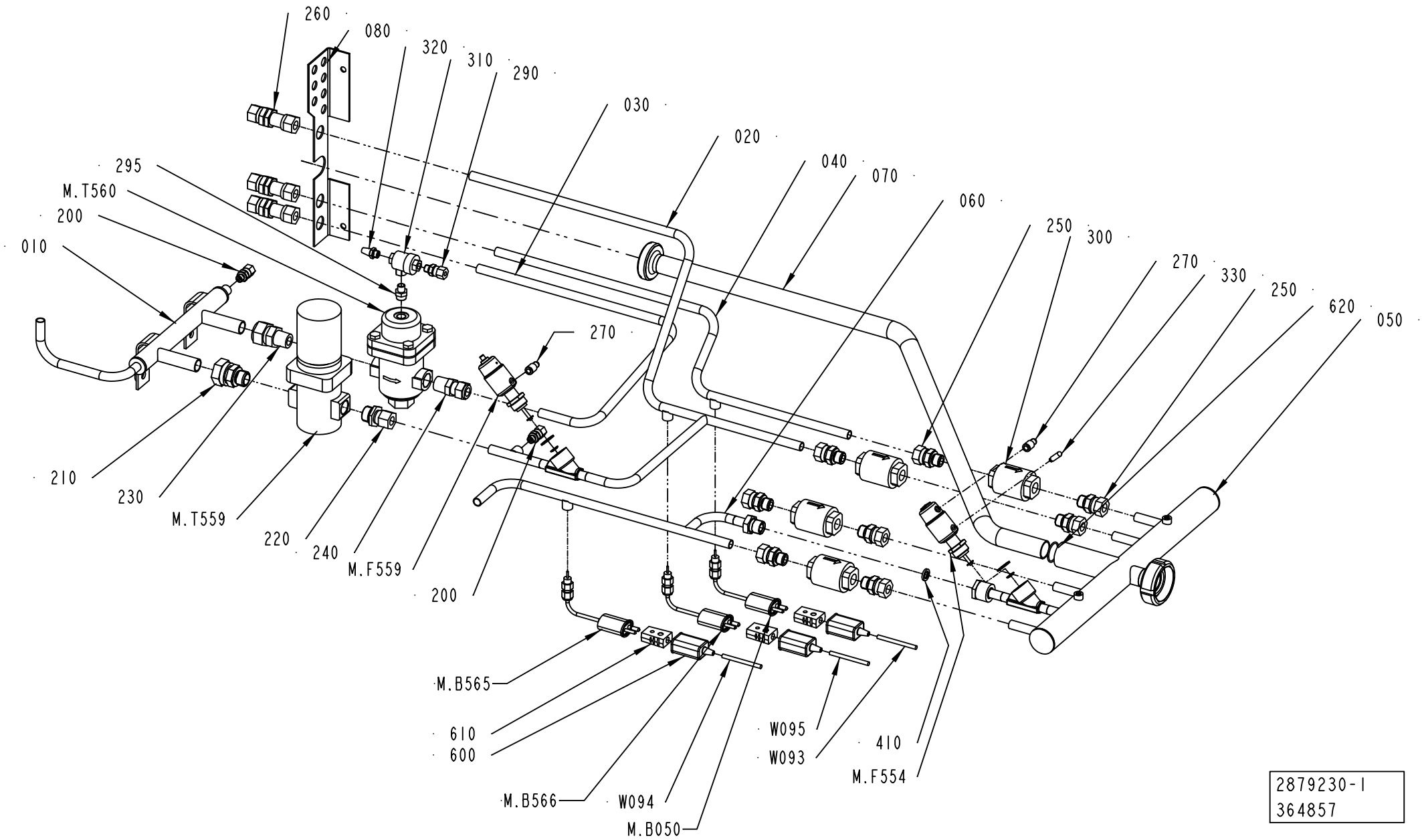
260
080
320
310
290
030
020
040
070
060
250
300
270
330
250
620
050
295
M.T560
200
010
270
210
230
M.T559
220
240
M.F559
200
M.B565
610
600
M.B566
W094
M.B050
W095
W093
410
M.F554
2879230-1
364857

ECM: 364863 - 20080924
Group number: 2879230-0100
Assembly Drawing: 2879230-1_1_AB

Pos	Part No	UN	Qty	Description	Page No
-					
010	2879204-0000		1	STEAM DISTRIBUTOR	
020	2879208-0000		1	STEAM PIPE	
030	2879214-0000		1	STEAM PIPE	
040	2879213-0000		1	STEAM PIPE	
050	2879205-0000		1	WASTE BOX	
060	2879207-0000		1	STEAM PIPE	
070	2879212-0000		1	WASTE PIPE	
080	2879211-0000		1	LEAD-IN PLATE	
200	90030-0184		2	CONN. STR., GE06LRED71	
210	90030-0191		1	CONN. STR. GE18LRED71	
220	90030-0109		1	STRAIGHT PIPE CONN. GE12LR1/271	
230	90030-0416		1	CONN. STR. M12MSC1/2K-316	
240	90030-0213		1	CONN. STR. M12MSC1/2K-316	
250	90030-0187		8	CONN. STR. GE12LRED71	
260	90030-0030		3	CONN. BULKHEAD SV12L71	
270	350002-0002		2	PUSH-IN L-FITTING QSL-F-M5-6	
290	90030-0184		1	CONN. STR., GE06LRED71	
295	342700-0201		1	NIPPLE, EXT.THREAD, HEXAGON, G1/4-G1/8	
300	90360-0020		4	STEAM TRAP / MK36/51 3/8 INCH	
	90360-0309		*1*	*STRAINER, FOR STEAM TRAP 90360-20*	
	90360-0310		*1*	*CAPSULE, FOR STEAM TRAP 90360-20*	
310	90235-0259		1	VALVE	
320	90328-0003		1	SILENCER, 338/110	
330	90328-0029		1	SILENCER M5	
410	90091-0266		1	SEAL RING 10,4X16,3X2,5 MM	
600	90326-0012		3	PROTECTIVE COVER, T31A4618	
610	90326-0020		3	PLUG, FEMALE YELLOW CR-AL	
620	315206-0710		1	O-RING 25,12X1,78 MM	
M.T560	90458-2264		1	PRESSURE REGULATOR ARC-30-1/2"	
	90458-2655		*1*	*STRAINER FOR ARC-30-1/2"*	
	90458-2654		*1*	*GASKET KIT FOR ARC-30-1/2"*	
	90458-2653		*1*	*BELLOWS AISI 316L FOR ARC-30-1/2"*	
M.T559	2558133-0000		1	PRESSURE REGULATOR	
M.F559	90600-3198		1	ACTUATOR, NC, 9550 10Z 510G1	
010	*90600-3201*		*1*	*SEAL KIT, 550000SVS500*	
M.F554	90600-3199		1	ACTUATOR, NO, 9550 10Z 520G1	
010	*90600-3201*		*1*	*SEAL KIT, 550000SVS500*	
M.B566	90326-0089		1	THERMOCOUPLE, 5110-089-000	
M.B565	90326-0089		1	THERMOCOUPLE, 5110-089-000	
M.B050	90326-0089		1	THERMOCOUPLE, 5110-089-000	
W093	90220-0059	M	2	THERMOCOUPLE CABLE, K/PVC/20AWG 2X0,5MM2	
W094	90220-0059	M	2	THERMOCOUPLE CABLE, K/PVC/20AWG 2X0,5MM2	
W095	90220-0059	M	2	THERMOCOUPLE CABLE, K/PVC/20AWG 2X0,5MM2	

Machine Type Group Description Used-In Group Number Page No

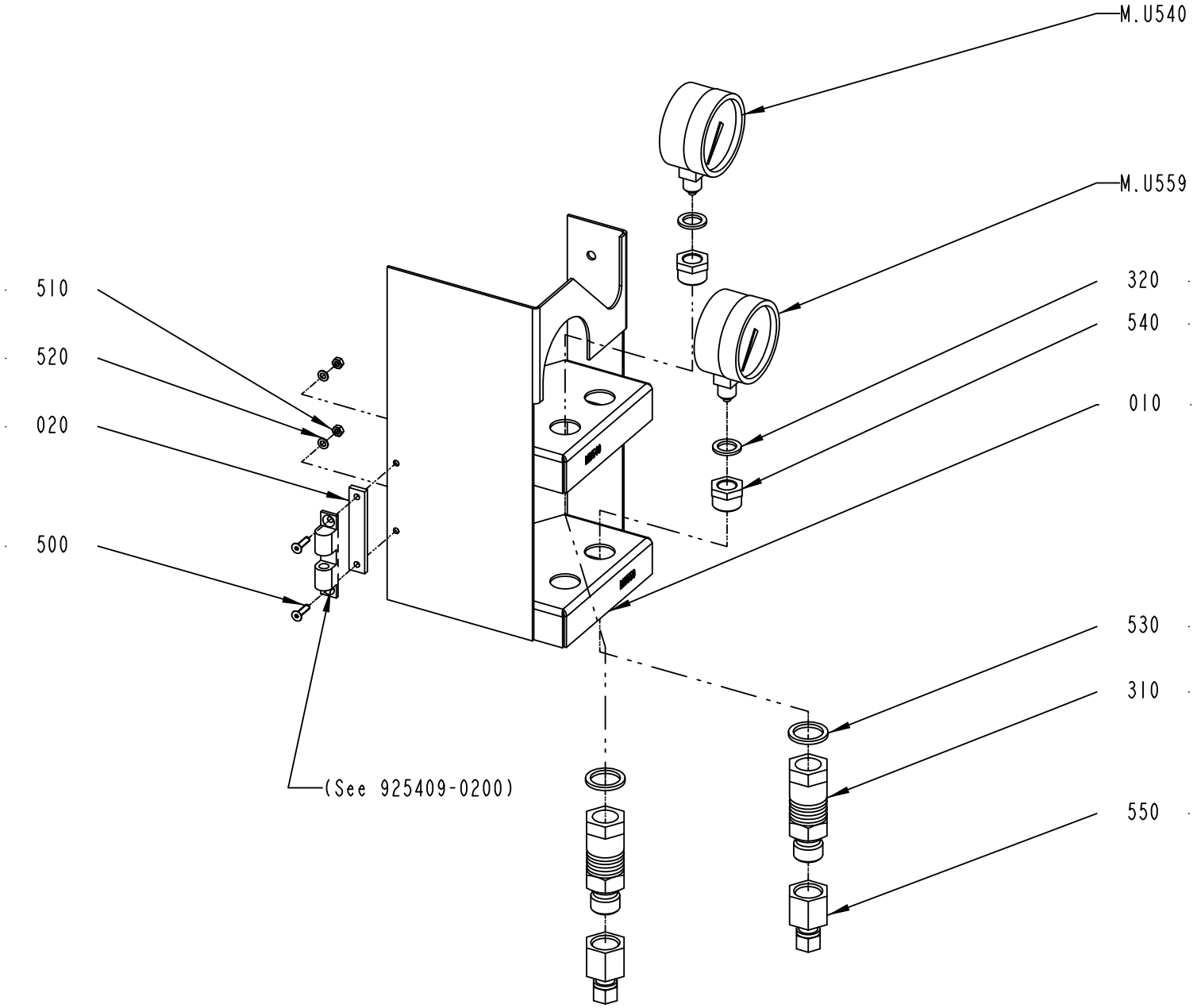

2879225-1
323211

ECM: 323331 - 20071102
Group number: 2879225-0100
Assembly Drawing: 2879225-1_1_AA

Pos	Part No	UN	Qty	Description	Page No
-					
010	2887591-0000		1	GAUGE BRACKET	
020	2915064-0000		1	BRACKET	
310	90458-2385		2	COOLER FOR MANOMETER, HIGH TEMP. G1/2	
320	90459-1948		2	BONDED SEAL SS/VITON G1/4	
500	312155-0293		2	SCREW DIN 7991 MF6S M4X16 A4 70	
510	312605-0312		2	HEXAGON NUT, M6M M4 A280	
520	315105-0136		2	WASHER BRB 4,3X8 RFR	
530	315217-0111		2	BONDED SEAL SS/VITON G1/2	
540	342701-0205		2	BUSHING, INT/EXT, G1/2-G1/4	
550	342790-0302		2	MAV PRESSURE GAUGE CONNECTOR 6	
M.U559	90043-0082		1	PRESSURE GAUGE, 2740, D=63 MM	
M.U540	90043-0082		1	PRESSURE GAUGE, 2740, D=63 MM	

Pos	Part No	UN	Qty	Description	Page No

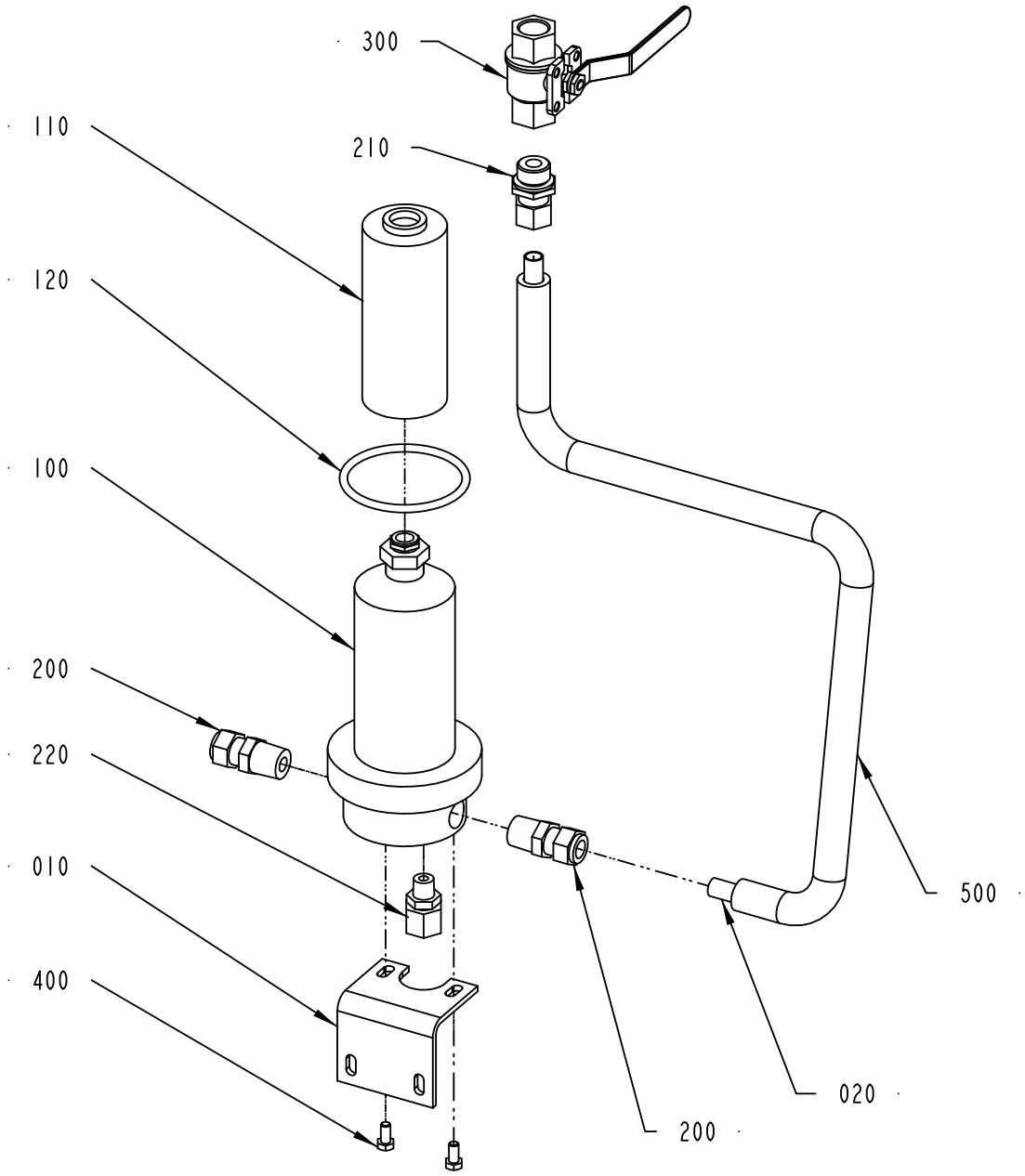

2879229-1
323211

ECM: 323332 - 20071102
Group number: 2879229-0100
Assembly Drawing: 2879229-1_1_AA

Pos	Part No	UN	Qty	Description	Page No
-					
010	2924214-0000		1	SUPPORT	
020	2915063-0000		1	STEAM PIPE	
100	90277-0055		1	FILTER HOUSING / MDS 4463 G 08 H	
	90277-0339		*1*	*O-RING, ACS0272 EU FOR PALL FILTER*	
110	90337-0315		1	FILTER INSERT / MCS 4463	
	90458-2549		*1*	*O-RING 72,69X2,62 MM*	
120	90277-0333		1	GASKET KIT / ART.NO ACS 0325 EH	
200	90030-0213		2	CONN. STR. M12MSC1/2K-316	
210	90030-0109		1	STRAIGHT PIPE CONN. GE12LR1/271	
220	90030-0088		1	CONN. STR. GE12LR1/4KEG71	
300	90600-3779		1	BALL VALVE, LOCKABLE G1/2	
400	312205-0107		2	SCREW U6S1/4X13RFR	
500	90600-0190		1	INSULATION TUBE Ã˜21/13 MM, 1627-0013	

Pos	Part No	UN	Qty	Description	Page No

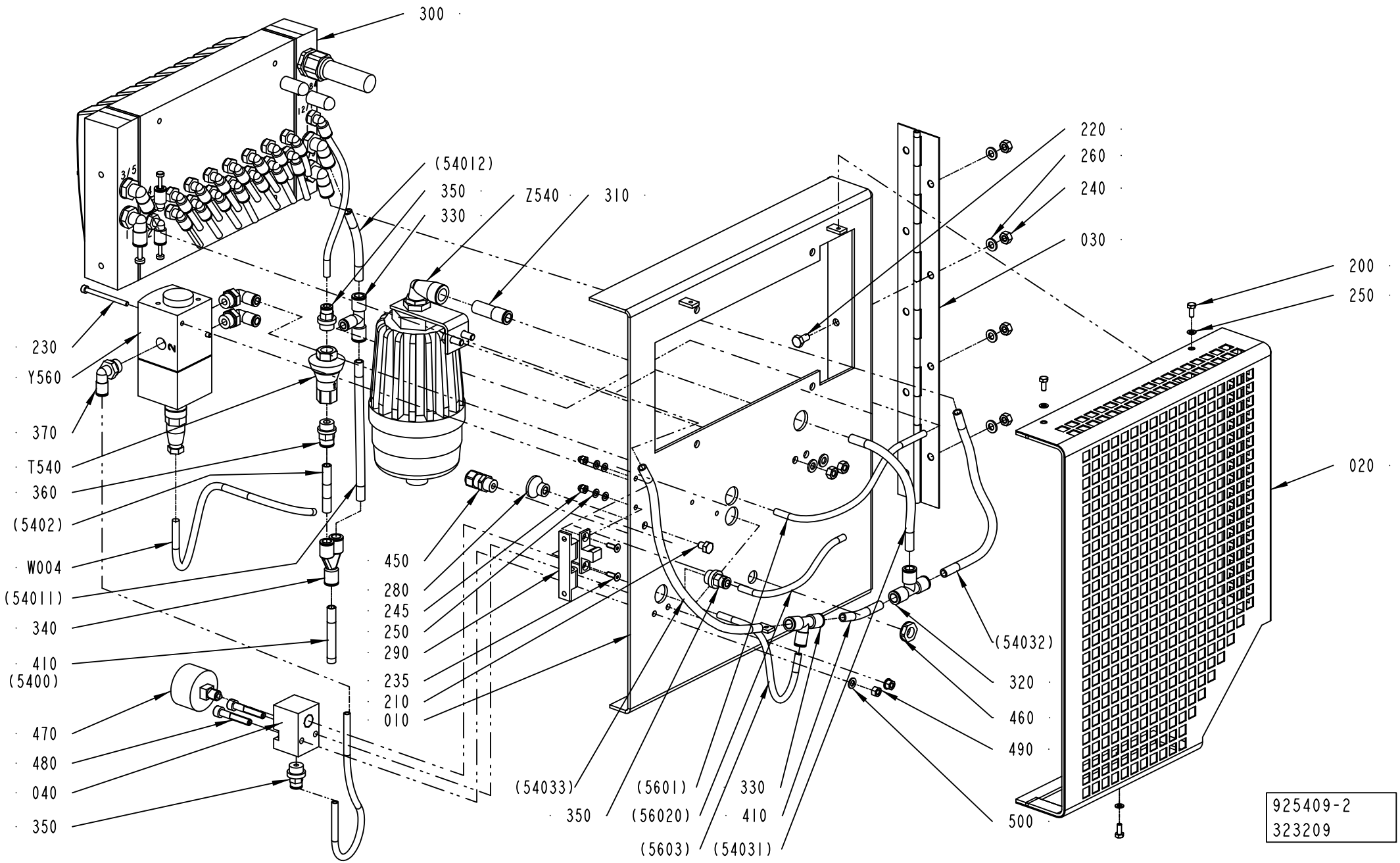
300
(54012)
350
330
Z540
310
220
260
240
030
200
250
020
230
Y560
370
T540
360
(5402)
W004
(54011)
340
410
(5400)
470
480
040
350
450
280
245
250
290
235
210
010
(54032)
320
460
490
500
(54033)
350
(5601)
(56020)
(5603)
330
410
(54031)
925409-2
323209

ECM: 325894 - 20071102
Group number: 925409-0200
Assembly Drawing: 925409-2_1_AA

This list covers pages from 4-36 to 4-39

Pos	Part No	UN	Qty	Description	Page No
-					
010	2887593-0000		1	VALVE PLATE	
020	925457-0000		1	TOUCH GUARD	
030	735503-0000		1	HINGE	
040	2913729-0000		1	BLOCK	
200	312105-0289		3	SCREW M6S H4X10 A4 70 ISO4017/DIN933	
210	312105-0362		1	SCREW M6S ISO 4017 M6X8 A480	
220	312105-0366		4	SCREW M6S ISO 4017 M6X12 A480	
230	312115-0305		2	SCREW ISO4762 M4X50 A4 80	
235	312155-0291		2	SCREW DIN 7991 MF6S M4X12 A4 70	
240	312605-0316		4	HEXAGON NUT, M6M M6 A280	
245	312705-0312		2	NUT HEX. DOMED CAP MHM-6 M4 A280	
250	315105-0136		7	WASHER BRB 4,3X8 RFR	
260	315105-0153		4	WASHER BRB 6,4X12 RFR	
280	318873-0103		1	KNOB, CIRCUL, THREADED BUSH, M6 21X17 MM	
290	90237-0070		1	SNAP-IN BALL LOCK, 69X19 MM	
300	2879210-0100		1	VALVE GROUP	**4-41**
310	350006-0008		1	PUSH-IN FITTING QS-F-12H-8	
320	350005-0003		1	PUSH-IN T-FITTING QST-F-8	
330	350011-0002		2	PUSH-IN T-FITTING QST-F-8-6	
340	350015-0003		1	PUSH-IN Y-CONNECTOR QSY-F-8	
350	350001-0008		3	PUSH-IN FITTING QS-F-G1/4-6	
360	350001-0009		1	PUSH-IN FITTING QS-F-G1/4-8	
370	350002-0008		3	PUSH-IN L-FITTING QSL-F-G1/4-6	
400	315400-0001	MM	1500	TUBE PUN-H-6X1-BL	
410	315400-0004	MM	1800	TUBE PUN-H-8X1,25-BL	
450	90458-0305		1	CABLE GLAND, M12X1,5, 5311 1000	
460	90458-0321		1	NUT, M12X1,5	
480	312115-0376		2	SCREW ISO4762 M6X35 A4 80	
490	312605-0314		2	HEXAGON NUT, M6M M5 A280	
500	315106-0146		2	WASHER ISO 7089-5-200 HV A4	
T540	90459-2425		1	PRESSURE REGULATOR IN-LINE, BSP-1/4	
U560	90043-0069		1	PRESSURE GAUGE 0-4BAR WIEGAND 2040	
W004	90220-0091	M	2	PAIR TWISTED CABLE 2X2X0,25MM2	
Y560	90458-1092		1	PROPORTIONAL VALVE 0 - 10V/0-6 BAR	
	90458-1262		*1*	*CONNECTOR 131028001 FOR PROP. VALVE*	
Z540	2814874-0100		1	SILENCER	**4-43**

Pos	Part No	UN	Qty	Description	Page No

Machine Type | Group Description | Used-In | Group Number | Page No

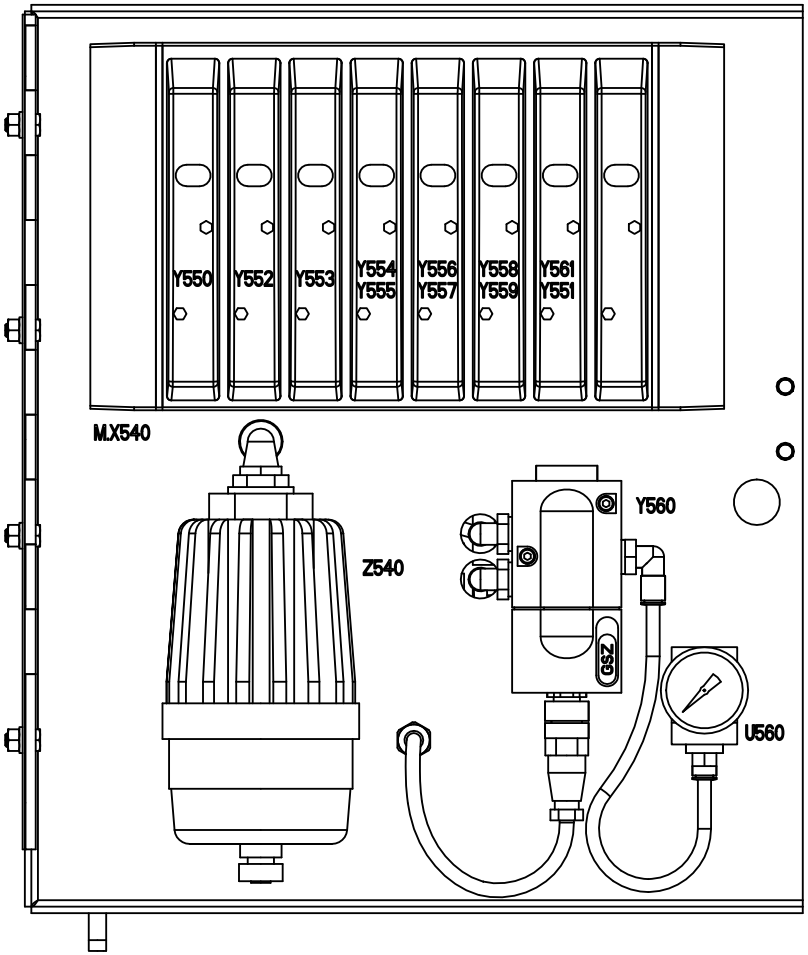

VALVE PANEL FRONT SIDE

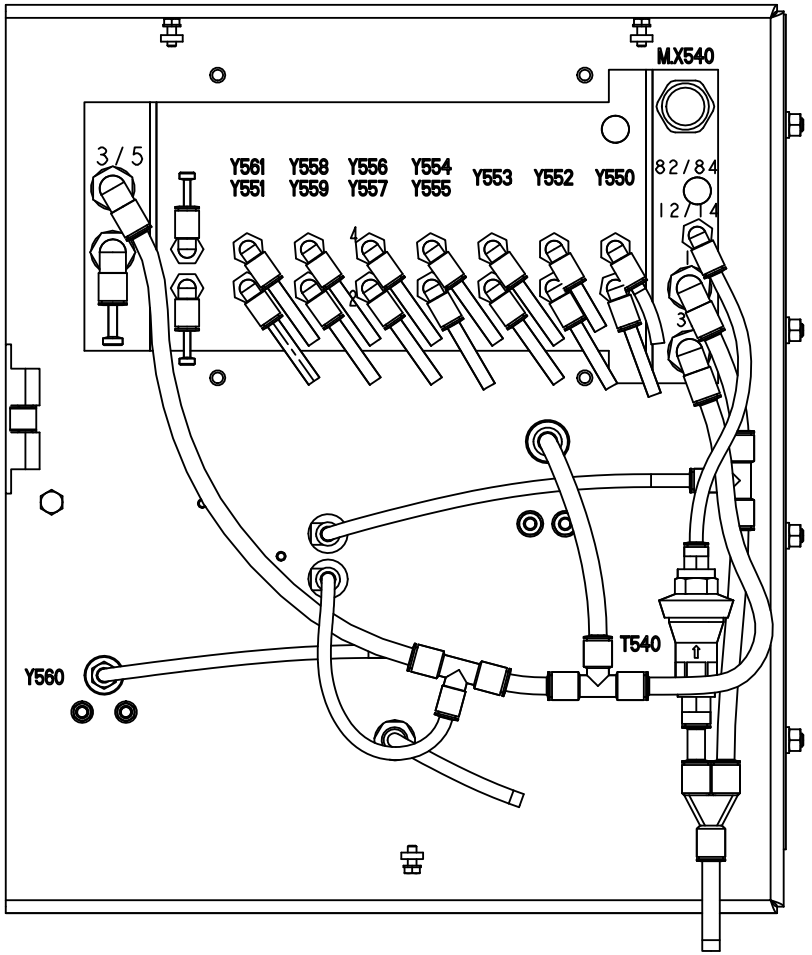

VALVE PANEL BACK SIDE

ECM: 325894 - 20071102
Group number: 925409-0200
Assembly Drawing: 925409-2_2_AA

This list covers pages from 4-36 to 4-39

Pos	Part No	UN	Qty	Description	Page No
-					
010	2887593-0000		1	VALVE PLATE	
020	925457-0000		1	TOUCH GUARD	
030	735503-0000		1	HINGE	
040	2913729-0000		1	BLOCK	
200	312105-0289		3	SCREW M6S H4X10 A4 70 ISO4017/DIN933	
210	312105-0362		1	SCREW M6S ISO 4017 M6X8 A480	
220	312105-0366		4	SCREW M6S ISO 4017 M6X12 A480	
230	312115-0305		2	SCREW ISO4762 M4X50 A4 80	
235	312155-0291		2	SCREW DIN 7991 MF6S M4X12 A4 70	
240	312605-0316		4	HEXAGON NUT, M6M M6 A280	
245	312705-0312		2	NUT HEX. DOMED CAP MHM-6 M4 A280	
250	315105-0136		7	WASHER BRB 4,3X8 RFR	
260	315105-0153		4	WASHER BRB 6,4X12 RFR	
280	318873-0103		1	KNOB, CIRCUL, THREADED BUSH, M6 21X17 MM	
290	90237-0070		1	SNAP-IN BALL LOCK, 69X19 MM	
300	2879210-0100		1	VALVE GROUP	**4-41**
310	350006-0008		1	PUSH-IN FITTING QS-F-12H-8	
320	350005-0003		1	PUSH-IN T-FITTING QST-F-8	
330	350011-0002		2	PUSH-IN T-FITTING QST-F-8-6	
340	350015-0003		1	PUSH-IN Y-CONNECTOR QSY-F-8	
350	350001-0008		3	PUSH-IN FITTING QS-F-G1/4-6	
360	350001-0009		1	PUSH-IN FITTING QS-F-G1/4-8	
370	350002-0008		3	PUSH-IN L-FITTING QSL-F-G1/4-6	
400	315400-0001	MM	1500	TUBE PUN-H-6X1-BL	
410	315400-0004	MM	1800	TUBE PUN-H-8X1,25-BL	
450	90458-0305		1	CABLE GLAND, M12X1,5, 5311 1000	
460	90458-0321		1	NUT, M12X1,5	
480	312115-0376		2	SCREW ISO4762 M6X35 A4 80	
490	312605-0314		2	HEXAGON NUT, M6M M5 A280	
500	315106-0146		2	WASHER ISO 7089-5-200 HV A4	
T540	90459-2425		1	PRESSURE REGULATOR IN-LINE, BSP-1/4	
U560	90043-0069		1	PRESSURE GAUGE 0-4BAR WIEGAND 2040	
W004	90220-0091	M	2	PAIR TWISTED CABLE 2X2X0,25MM2	
Y560	90458-1092		1	PROPORTIONAL VALVE 0 - 10V/0-6 BAR	
	90458-1262		*1*	*CONNECTOR 131028001 FOR PROP. VALVE*	
Z540	2814874-0100		1	SILENCER	**4-43**

Pos	Part No	UN	Qty	Description	Page No

Machine Type | Group Description | Used-In | Group Number | Page No

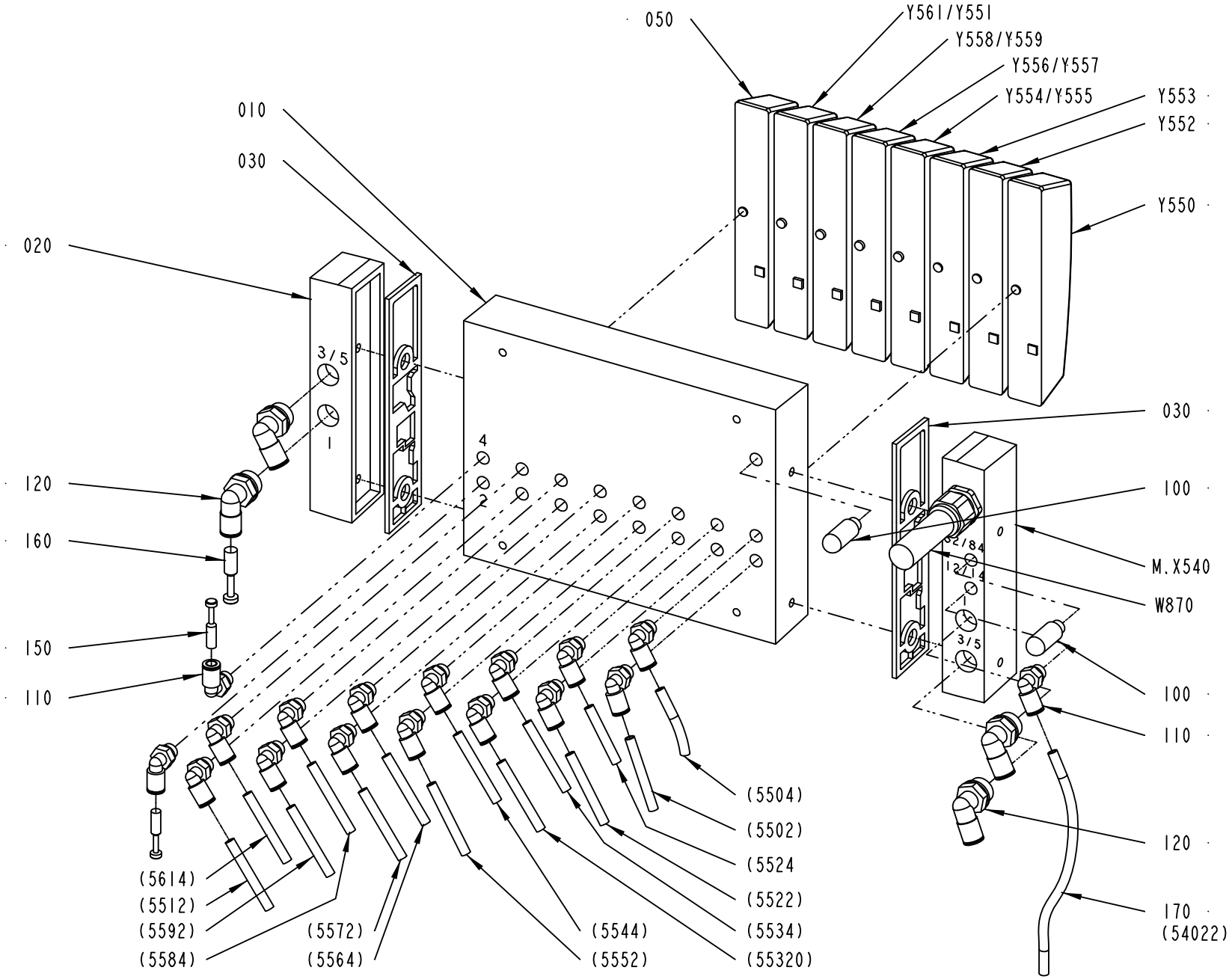
050
Y561/Y551
Y558/Y559
Y556/Y557
Y554/Y555
Y553
Y552
Y550
010
030
020
3/5
1
4
2
120
160
150
110
030
100
M.X540
W870
100
110
120
170
(54022)
(5614)
(5512)
(5592)
(5584)
(5572)
(5564)
(5544)
(5552)
(5504)
(5502)
(5524
(5522)
(5534)
(55320)
2879210-1
323209

ECM: 325895 - 20071102
Group number: 2879210-0100
Assembly Drawing: 2879210-1_1_AA

Pos	Part No	UN	Qty	Description	Page No
-					
010	90458-1205		1	BASIC SUB-BASE 8 VALVES, CDVI5.0-GB8-MP	
020	90458-1214		1	RIGHT ENDPL EXT. PILOT AIR,CDVI5.0-EPR-S	
030	90458-1207		2	SEALING, STANDARD	
050	90458-1215		1	COVER PLATE, EMPTY VALVE POSITION	
100	90328-0047		2	SILENCER G1/8"	
110	350002-0006		17	PUSH-IN L-FITTING QSL-F-G1/8-6	
120	350002-0012		4	PUSH-IN L-FITTING QSL-F-G3/8-8	
150	350013-0002		2	PLUG QSC-6H	
160	350013-0003		1	PLUG QSC-8H	
170	315400-0001	M	10	TUBE PUN-H-6X1-BL	
490	359000-0400		38	WIRE MARKING, YELLOW, PA2/4"0"	
491	359000-0401		6	WIRE MARKING, YELLOW, PA2/4"1"	
492	359000-0402		4	WIRE MARKING, YELLOW, PA2/4"2"	
493	359000-0403		2	WIRE MARKING, YELLOW, PA2/4"3"	
494	359000-0404		8	WIRE MARKING, YELLOW, PA2/4"4"	
495	359000-0405		60	WIRE MARKING, YELLOW, PA2/4"5"	
496	359000-0406		4	WIRE MARKING, YELLOW, PA2/4"6"	
497	359000-0407		2	WIRE MARKING, YELLOW, PA2/4"7"	
498	359000-0408		2	WIRE MARKING, YELLOW, PA2/4"8"	
499	359000-0409		2	WIRE MARKING, YELLOW, PA2/4"9"	
MX540	90458-1212		1	LEFT ENDPLATE INCL. 10M CABLE	
Y550	90458-1194		1	VALVE, 5/2 MONOSTABLE	
Y552	90458-1194		1	VALVE, 5/2 MONOSTABLE	
Y553	90458-1194		1	VALVE, 5/2 MONOSTABLE	
Y554/Y555	90458-1202		1	VALVES 2X3/2, CLOSED	
Y556/Y557	90458-1202		1	VALVES 2X3/2, CLOSED	
Y558/Y559	90458-1202		1	VALVES 2X3/2, CLOSED	
Y561/Y551	90458-1202		1	VALVES 2X3/2, CLOSED	

Pos	Part No	UN	Qty	Description	Page No

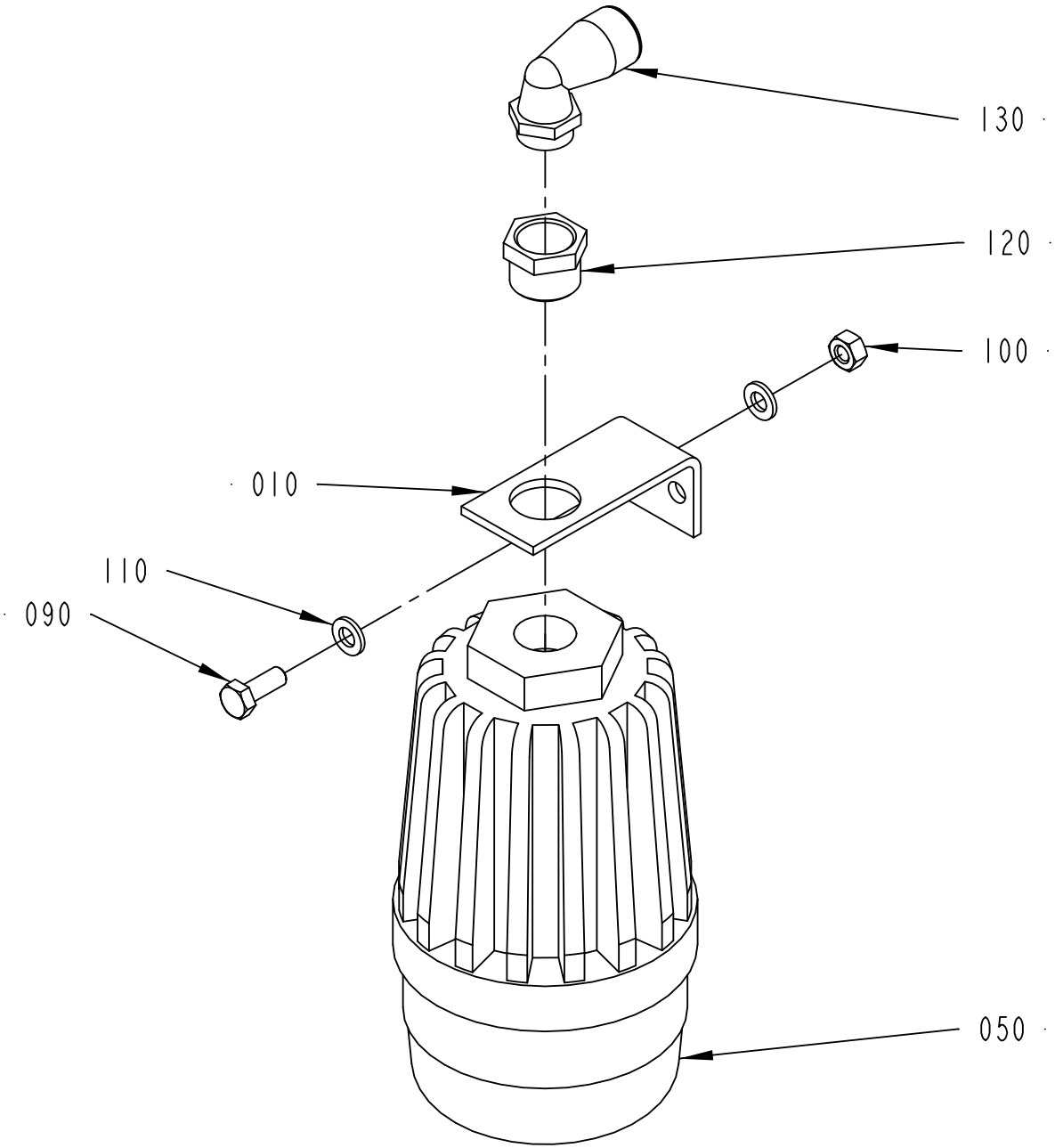

2814874-1
ECN 255871

ECM: 255889 - 20060303
Group number: 2814874-0100
Assembly Drawing: 2814874-1_1_AA

Pos	Part No	UN	Qty	Description	Page No
-					
010	1074209-0000		1	BRACKET	
050	90459-5786		1	FILTERED SILENCER, 10494 LFU-1/2	
	90459-7294		*1*	*FILTER CARTRIDGE, 10496 LFPU-1/2*	
090	312105-0368		2	SCREW M6S ISO 4017 M6X16 A480	
100	312605-0316		2	HEXAGON NUT, M6M M6 A280	
110	315105-0153		4	WASHER BRB 6,4X12 RFR	
120	342701-0206		1	BUSHING, INT/EXT, G1/2-G3/8	
130	90458-2960		1	ELBOW PIPE JOINT, EXT.THREAD,D=12MM-G3/8	

Pos	Part No	UN	Qty	Description	Page No

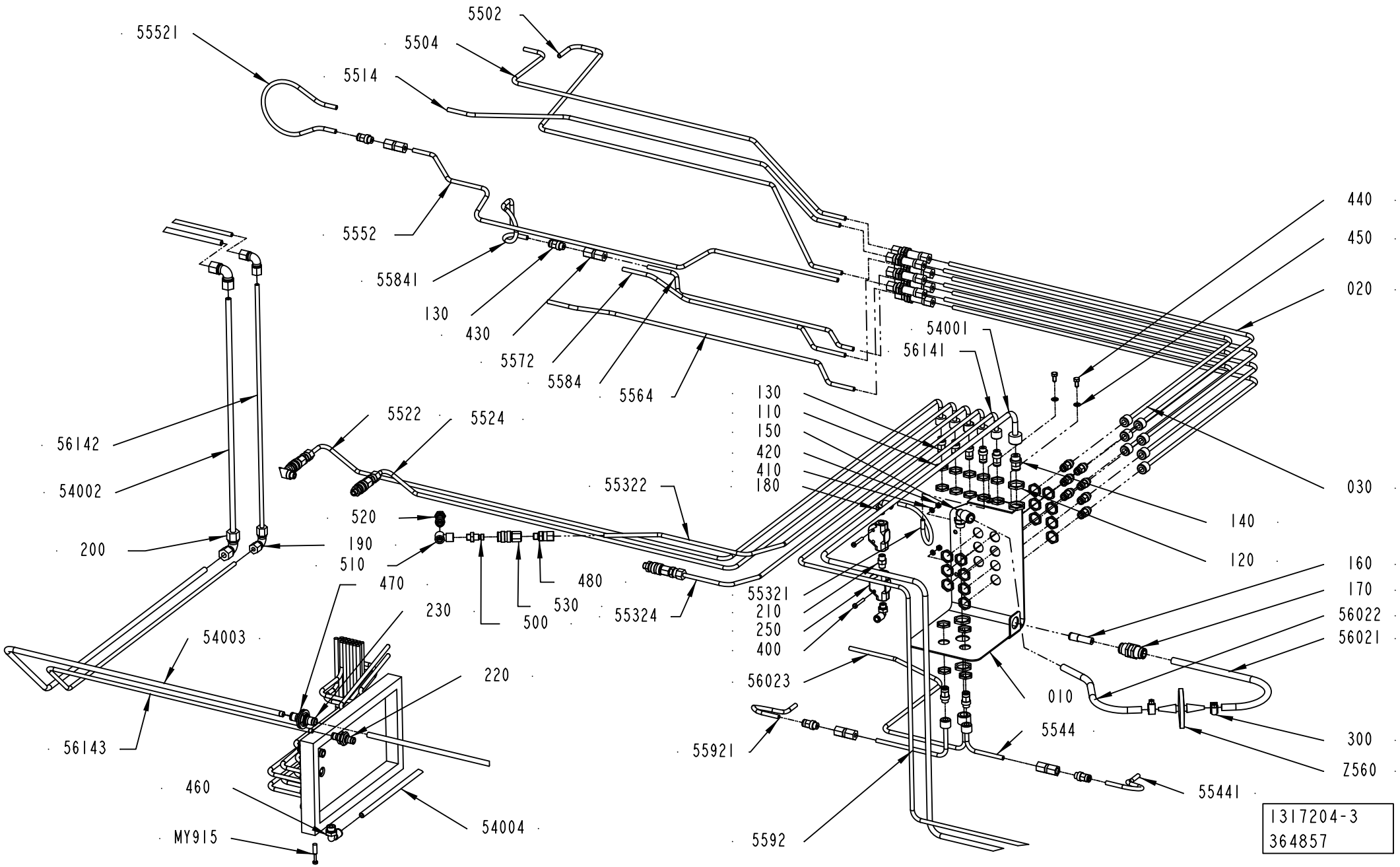
55521
5502
5504
5514
5552
55841
130
430
5572
5584
5564
440
450
020
54001
56141
030
140
120
160
170
56022
56021
010
5544
300
Z560
55441
5592
55921
56023
400
250
210
55321
55322
130
110
150
420
410
180
5522
5524
56142
54002
200
190
520
510
470
480
530
500
230
55324
54003
220
56143
460
MY915
54004
1317204-3
364857

ECM: 471833 - 20100930
Group number: 1317204-0200
Assembly Drawing: 1317204-3_1_AC

Pos	Part No	UN	Qty	Description	Page No
-					
010	2905926-0000		1	BRACKET	
020	2879186-0000		4	PIPE	
030	2879189-0000		3	PIPE	
100	90030-0066		7	CONN. BULKHEAD SV06L71	
110	353250-0016		28	GLAND LOCK NUT, M16X1,5	
120	353250-0020		4	GLAND LOCK NUT, M20X1,5	
130	350001-0006		18	PUSH-IN FITTING QS-F-G1/8-6	
140	350001-0009		1	PUSH-IN FITTING QS-F-G1/4-8	
150	350001-0010		1	PUSH-IN FITTING QS-F-G1/4-10	
160	350006-0005		1	PUSH-IN FITTING QS-F-10H-6	
170	350010-0004		1	PUSH-IN BULKHEAD FITTING QSS-F-10	
180	350002-0006		2	PUSH-IN L-FITTING QSL-F-G1/8-6	
190	342737-0204		2	ELBOW CONNECTION 6, W06L71	
200	342737-0208		2	ELBOW CONNECTION 8, W08L71	
210	90330-0032		1	NIPPLE, EXT.THREAD, HEXAGON, R1/8-R1/8	
220	90457-0086		1	BULKHEAD CONNECTOR 6MM	
230	90457-0141		1	BULKHEAD CONNECTOR, 8MM	
250	90235-0048		2	VALVE	
300	342991-0100		2	HOSE CLIP,WORM DRIVE TYPE (8)-14	
400	312125-0297		2	SCREW ISO 1207 M4X25 A4	
410	315105-0136		2	WASHER BRB 4,3X8 RFR	
420	312605-0312		2	HEXAGON NUT, M6M M4 A280	
430	342725-0102		4	CONN. STR. PIPE GAI06LR71	
440	312105-0325		2	SCREW M6S ISO 4017 M5X10 A480	
450	315105-0146		2	WASHER BRB 5,3X10 RFR	
460	350002-0009		1	PUSH-IN L-FITTING QSL-F-G1/4-8	
470	315106-0186		2	WASHER ISO 7089-16-200 HV A4	
480	90030-0184		4	CONN. STR., GE06LRED71	
490	359000-0400		18	WIRE MARKING, YELLOW, PA2/4"0"	
491	359000-0401		12	WIRE MARKING, YELLOW, PA2/4"1"	
492	359000-0402		26	WIRE MARKING, YELLOW, PA2/4"2"	
493	359000-0403		6	WIRE MARKING, YELLOW, PA2/4"3"	
494	359000-0404		28	WIRE MARKING, YELLOW, PA2/4"4"	
495	359000-0405		62	WIRE MARKING, YELLOW, PA2/4"5"	
496	359000-0406		8	WIRE MARKING, YELLOW, PA2/4"6"	
497	359000-0407		2	WIRE MARKING, YELLOW, PA2/4"7"	
498	359000-0408		2	WIRE MARKING, YELLOW, PA2/4"8"	
499	359000-0409		2	WIRE MARKING, YELLOW, PA2/4"9"	
500	90163-0057	MM	4	QUICK COUPLING, (M) 5150-1/8	
510	90224-0308		2	CONN. BANJO, ART. NO. 2023-1/8-1/8	
520	342980-0303		2	BANJO-HOLLOW BOLT COUPL,EXT.THR.01-G1/8	
530	90163-0062		4	QUICK COUPLING, (F) 5053-1/8	
5502	2879233-0000		1	PIPE	
5504	2879232-0000		1	PIPE	
5514	2879197-0000		1	PIPE	
5522	2905929-0000		1	PIPE	
5524	2905928-0000		1	PIPE	
5544	2879228-0000		1	PIPE	
5552	2944458-0000		1	PIPE	
5564	2905925-0000		1	PIPE	
5572	2905924-0000		1	PIPE	
5584	2905923-0000		1	PIPE	
5592	2879227-0000		1	PIPE	
54001	2905932-0000		1	PIPE	
54002	2905933-0000		1	PIPE	
54003	2905935-0000		1	PIPE	
54004	315400-0007	M	2.5	TUBE PUN-H-10X1,5-BL	
55321	315400-0001	MM	200	TUBE PUN-H-6X1-BL	
55322	2913731-0000		1	PIPE	
55324	2905927-0000		1	PIPE	
55441	315400-0001	MM	175	TUBE PUN-H-6X1-BL	
55521	315400-0001	MM	230	TUBE PUN-H-6X1-BL	
55841	315400-0001	MM	230	TUBE PUN-H-6X1-BL	
55921	315400-0001	MM	175	TUBE PUN-H-6X1-BL	
56021	315400-0007	MM	300	TUBE PUN-H-10X1,5-BL	
56022	315400-0007	MM	230	TUBE PUN-H-10X1,5-BL	
56023	2879226-0000		1	PIPE	
56141	2905931-0000		1	PIPE	
56142	2905934-0000		1	PIPE	
56143	2905936-0000		1	PIPE	
M.Y915	350013-0002		1	PLUG QSC-6H	
Z560	90458-2554		1	STERILE GRADE MEMBRANE FILTER 0,2ÂµM	

Machine Type	Group Description	Used-In	Group Number	Page No

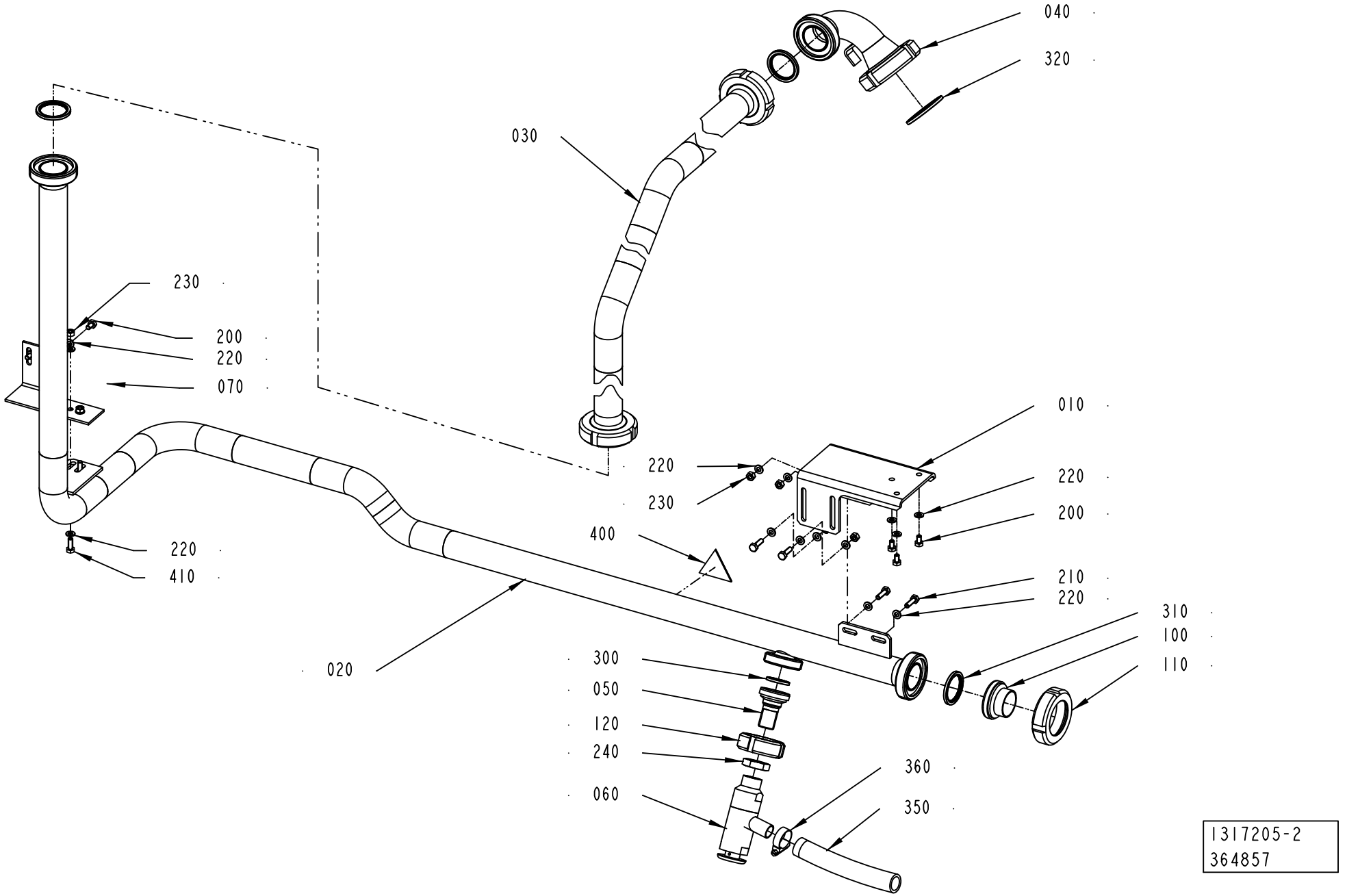
040
320
030
230
200
220
070
010
220
220
230
200
400
220
410
210
220
310
100
020
110
300
050
120
240
360
060
350
1317205-2
364857

ECM: 364864 - 20080924
Group number: 1317205-0200
Assembly Drawing: 1317205-2_1_AB

Pos	Part No	UN	Qty	Description	Page No
-					
010	2905944-0000		1	BRACKET	
020	2905941-0000		1	CLEANING PIPE	
030	2905943-0000		1	CLEANING PIPE	
040	2905942-0000		1	CLEANING PIPE	
050	2905946-0000		1	REDUCING NIPPLE	
060	2745185-0000		1	VALVE	**4-49**
070	2944456-0000		1	BRACKET	
100	90217-0204		1	ASEPT. MALE FITTING ISO, 03-32-406/42	
110	90217-0206		1	UNION NUT, 1 1/2 APV, 07-01-376/17	
120	90217-0203		1	UNION NUT, 1 APV, 07-01-276/17	
200	312105-0364		5	SCREW M6S ISO 4017 M6X10 A480	
210	312105-0370		4	SCREW M6S ISO 4017 M6X20 A480	
220	315105-0153		17	WASHER BRB 6,4X12 RFR	
230	312605-0316		6	HEXAGON NUT, M6M M6 A280	
240	90330-0093		1	NUT, HEXAGON SS, G1/2	
300	90217-0347		1	GASKET 32X22,6X3,6 MM	
310	90217-0348		3	GASKET 35,4X46,8X4 MM	
320	90217-0349		1	GASKET 48,4X59,8X4 MM	
350	90166-0060	M	4	HOSE 19/26-27 REINF.PVC	
360	342991-0104		1	HOSE CLIP,WORM DRIVE TYPE (19)-28	
400	359705-0003		1	WARNING SIGN ISO, DANGEROUS CHEMICALS	
410	312105-0368		2	SCREW M6S ISO 4017 M6X16 A480	

Pos	Part No	UN	Qty	Description	Page No

Machine Type | Group Description | Used-In | Group Number | Page No

This page is intentionally left blank.

ECM: 214155 - 20050512
Group number: 2745185-0000
Assembly Drawing:

Pos	Part No	UN	Qty	Description	Page No
-					
010	90335-0024		1	COMP. SPRING 22250, 1,25X13,75X27	
020	315202-0505		1	O-RING 6,07X1,78 MM	
030	315202-0513		1	O-RING 17,12X2,62 MM	
040	315202-0714		1	O-RING 31,47X1,78 MM	

Pos	Part No	UN	Qty	Description	Page No

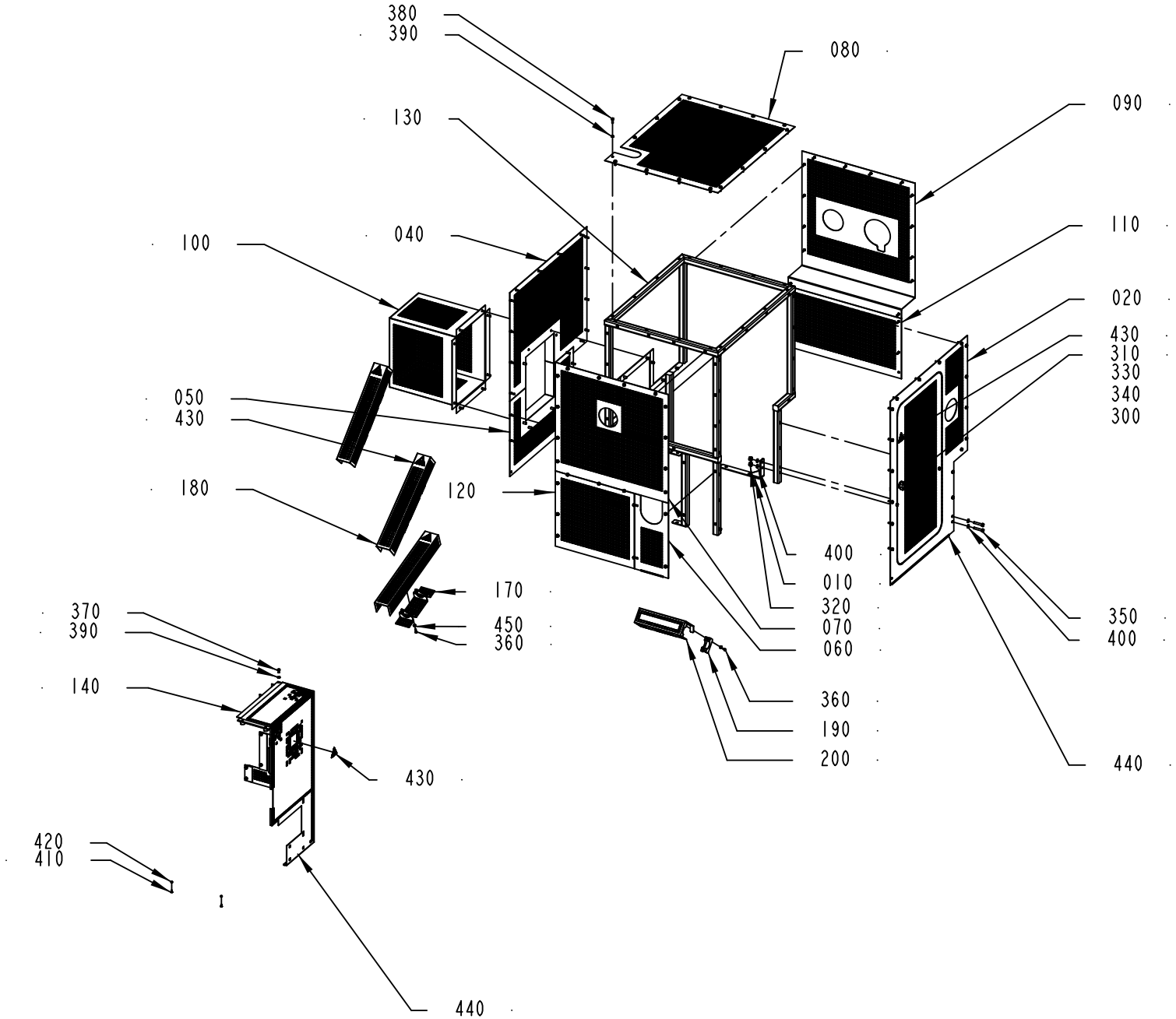

2919239-2
403443

ECM: 406234 - 20090709
Group number: 2919239-0200
Assembly Drawing: 2919239-2_1_AA

Pos	Part No	UN	Qty	Description	Page No
-					
010	2914121-0000		1	BRACKET	
020	2919241-0000		1	COVER	
040	2919243-0000		1	COVER	
050	2919244-0000		1	COVER	
060	2914127-0000		1	COVER	
070	2919245-0000		1	COVER	
080	2919246-0000		1	COVER	
090	2919247-0000		1	COVER	
100	2919248-0000		1	COVER	
110	2919249-0000		1	COVER	
120	2919250-0000		1	COVER	
130	2919240-0000		1	FRAME	
140	2914844-0000		1	TOUCH GUARD	
170	2919251-0000		3	TOUCH GUARD	
180	2919252-0000		3	TOUCH GUARD	
190	2913734-0000		2	CLAMPING PART	
200	2913733-0000		1	TOUCH GUARD	
300	90237-0319		1	LOCK HOUSING, 1000-U134	
310	90237-0337		1	LOCK HANDLE FOR 90237-319	
320	312812-0320		2	HEXAGON NUT, NY-LOCK M10 A480	
330	90237-0156		1	LOCK BOLT, 1000-16	
340	90237-0323		1	LOCK O-RING, 1000-24	
350	312105-0460		2	SCREW M6S ISO 4014 M8X45 A480	
360	312105-0329		16	SCREW M6S ISO 4017 M5X16 A480	
370	312105-0366		7	SCREW M6S ISO 4017 M6X12 A480	
380	312105-0370		108	SCREW M6S ISO 4017 M6X20 A480	
390	315105-0153		119	WASHER BRB 6,4X12 RFR	
400	315106-0165		4	WASHER ISO 7089-8-200 HV A4	
410	312155-0289		2	SCREW DIN 7991 MF6S M4X10 A4 70	
420	312605-0312		2	HEXAGON NUT, M6M M4 A280	
430	359710-0001		5	WARNING SIGN ISO, HOT SURFACE	
440	90143-0060	M	3	EDGE STRIP 9,5X6,3MM BLACK PVC	
450	315105-0153		12	WASHER BRB 6,4X12 RFR	

Pos	Part No	UN	Qty	Description	Page No

Machine Type	Group Description	Used-In	Group Number	Page No

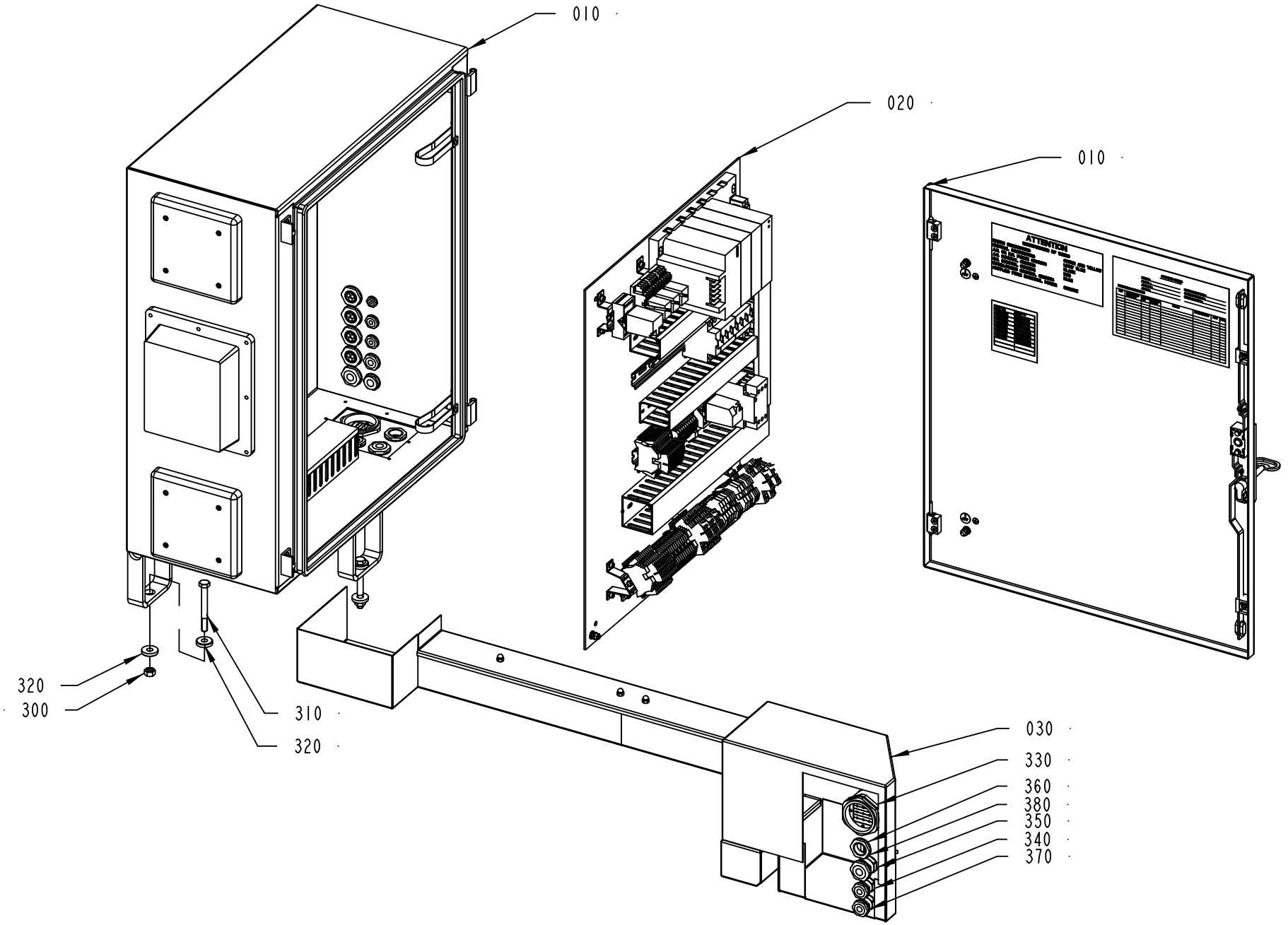

2901831-1
323809

ECM: 326664 - 20071102
Group number: 2901831-0100
Assembly Drawing: 2901831-1_1_AA

Pos	Part No	UN	Qty	Description	Page No
-					
010	2898126-0100		1	ELECTRICAL CABINET	**4-55**
020	2902954-0100		1	ASSEMBLY PLATE	**4-63**
030	2901830-0100		1	CABLE DUCT	**4-79**
300	312605-0320		3	HEXAGON NUT, M6M M10 A280	
310	312105-0509		3	SCREW M6S ISO 4014 M10X90 A480	
320	315125-0173		6	WASHER TBRSB 10,5X28X6 A4	
330	90458-2926		1	CABLE GLAND, RG M63/9	
340	90458-0307		2	CABLE GLAND, M20X1,5, 5311 1020	
350	90458-0308		1	CABLE GLAND, M25X1,5, 5311 1030	
360	90458-1309		1	BLIND PLUG CIRCULAR, M25X1,5 514GFK/225	
370	90458-0323		2	NUT, M20X1,5	
380	90458-0324		2	NUT, M25X1,5	

Pos	Part No	UN	Qty	Description	Page No

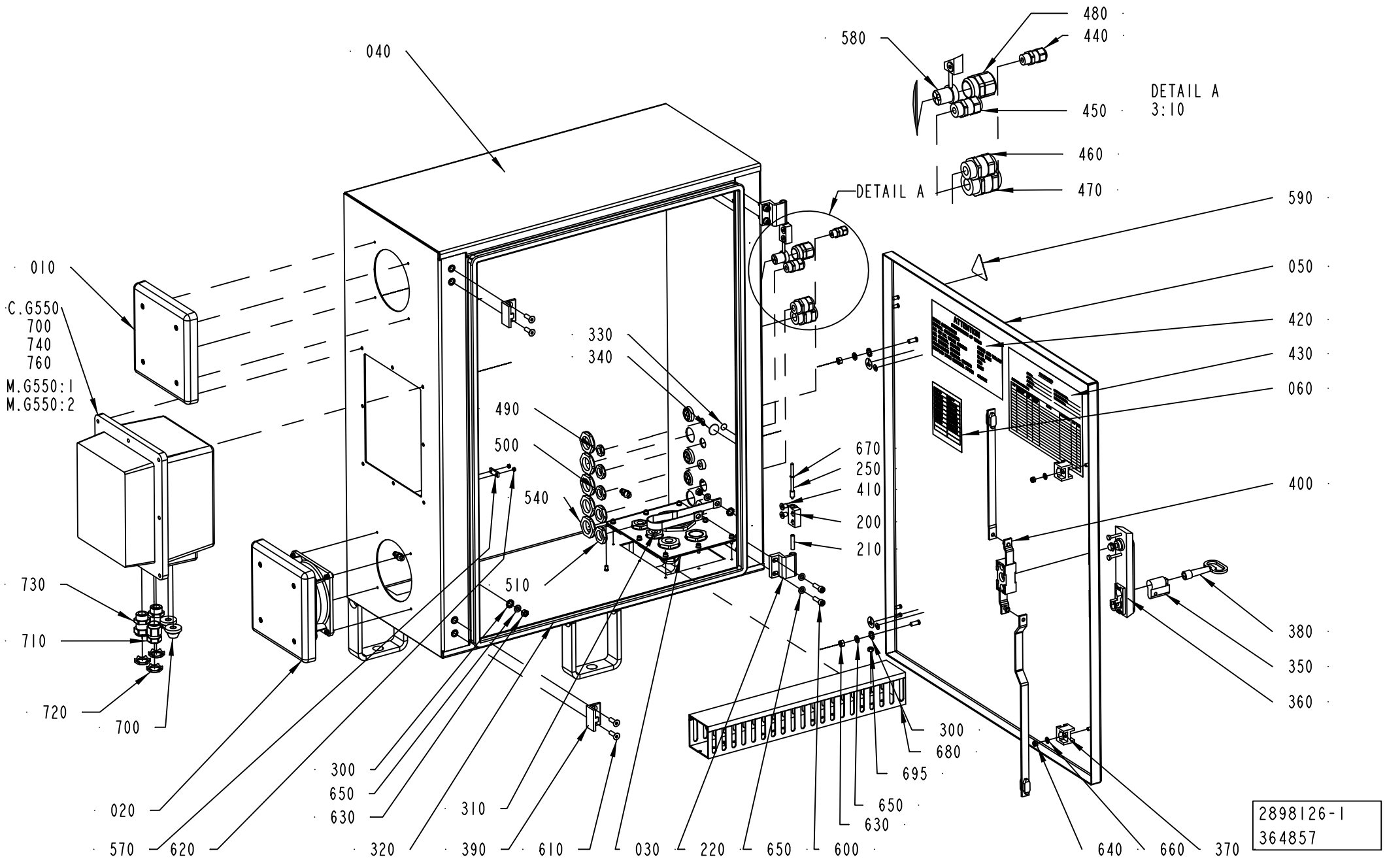
040
580
480
440
450
460
470
DETAIL A
3:10
DETAIL A
590
050
420
430
060
400
380
350
360
010
C.G550
700
740
760
M.G550:1
M.G550:2
330
340
490
500
540
510
670
250
410
200
210
730
710
720
700
020
570
620
300
650
630
310
320
390
610
030
220
650
600
300
680
695
650
630
640
660
370
2898126-1
364857

ECM: 366316 - 20080924
Group number: 2898126-0100
Assembly Drawing: 2898126-1_1_AD

Pos	Part No	UN	Qty	Description	Page No
-					
010	599749-0100		1	COOLING AIR OUTLET	**4-57**
020	2582040-0100		1	COOLING AIR INTAKE	**4-59**
030	2902950-0100		1	CABLE LEAD-IN PLATE	**4-61**
040	2898127-0000		1	EL-CABINET CHASSIE	
050	2898128-0000		1	EL-CABINET DOOR	
060	2914108-0000		1	SIGN	
200	959657-0000		2	HINGE FLANGE	
210	959658-0000		2	SPRING	
220	975880-0000		2	HINGE FLANGE	
230	975888-0012		1	STRUT	
240	975889-0016		1	STRUT	
250	959656-0000		2	COTTER	
300	90062-0016		5	LOCK WASHER SERRAT.EXT.GEAR,8,4/15 H=0,8	
310	90135-0035		2	EARTH WIRE, L=250 MM 16 MM2	
320	90143-0057	M	1	STRIP EMKA 1011-05 21X11MM	
330	90194-0163		4	SIGN, EARTH WITHIN CIRCLE	
340	90194-0164		4	SIGN, FRAME/CHASSIS WITHIN CIRCLE	
350	90237-0129		1	LOCK CYLINDER, 1109-U6	
360	90237-0175		1	TURNING HANDLE, 1125-U185-0A	
370	90237-0144		2	GUIDE, 1121-SU540	
380	90237-0324		1	KEY, 1104-02 FOR SQUARE 8 MM	
390	90237-0145		2	CATCH, 1121-53-01P	
400	90237-0123		1	LOCK, 1121-U10C	
410	90287-0205		4	SCREW	
420	90194-0080		1	SIGN, IDENTIFICATION OF WIRING	
430	90194-0133		1	SIGN DELIVERED DESIGN	
440	90458-0305		1	CABLE GLAND, M12X1,5, 5311 1000	
450	90458-0306		2	CABLE GLAND, M16X1,5, 5311 1010	
460	90458-0307		1	CABLE GLAND, M20X1,5, 5311 1020	
470	90458-0308		2	CABLE GLAND, M25X1,5, 5311 1030	
480	90458-0407		5	CABLE GLAND, VK 22553Y	
490	90458-0321		1	NUT, M12X1,5	
500	90458-0322		2	NUT, M16X1,5	
510	90458-0323		2	NUT, M20X1,5	
540	90458-0324		5	NUT, M25X1,5	
570	90220-0305		1	CLAMP FOR SCR.CABLE, 16MM,	
580	353249-0027		5	INSERT, MULTI HOLE, E153M 3X7	
590	359705-0015		1	WARNING SIGN ISO, RISK OF ELECTRIC SHOCK	
600	312115-0370		4	SCREW ISO4762 M6X20 A4 80	
610	312155-0370		4	SCREW DIN 7991 MF6S M6X20 A4 70	
620	312605-0310		2	HEXAGON NUT, M6M M3 A280	
630	312605-0316		13	HEXAGON NUT, M6M M6 A280	
640	312812-0314		2	HEXAGON NUT, NY-LOCK M5 A480	
650	315105-0153		13	WASHER BRB 6,4X12 RFR	
660	315105-0146		2	WASHER BRB 5,3X10 RFR	
670	315755-0105		2	RETAINING RING SHAFT DIN 6799 3,2 SS	
680	90181-0039	MM	130	CABLE DUCT, PLASTIC, 60X40	
695	312605-0314		2	HEXAGON NUT, M6M M5 A280	
700	90121-0098		1	RESISTANCE FIXED, 3,9 KOHM, 2 W	
700	90015-0021		2	LEAD-IN, TET 10-14, E1458023	
710	90458-0438		1	GLAND, EXTENDED WITH INSERT, M20X1,5	
720	90458-0461		3	GLAND, LOCK NUT, M20X1,5	
730	90459-2424		2	GLAND, EXTENDED WITH INSERT, M20X1,5	
740	90600-3020	M	1	CABLE	
760	90600-3019		1	HIM POWERFLEX 7-CLASS, 20-HIM-A3	
C.G550	90600-3738		1	FREQ. CONV., 20AC8P7F0AYNANC0	
M.G550:2	90600-2962		1	SAFE-OFF OPTION POWERFLEX 70, 20A-DG01	
M.G550:1	90600-2961		1	ENCODERFEEDBACK POWERFLEX 70, 20A-ENC-1	

Machine Type	Group Description	Used-In	Group Number	Page No

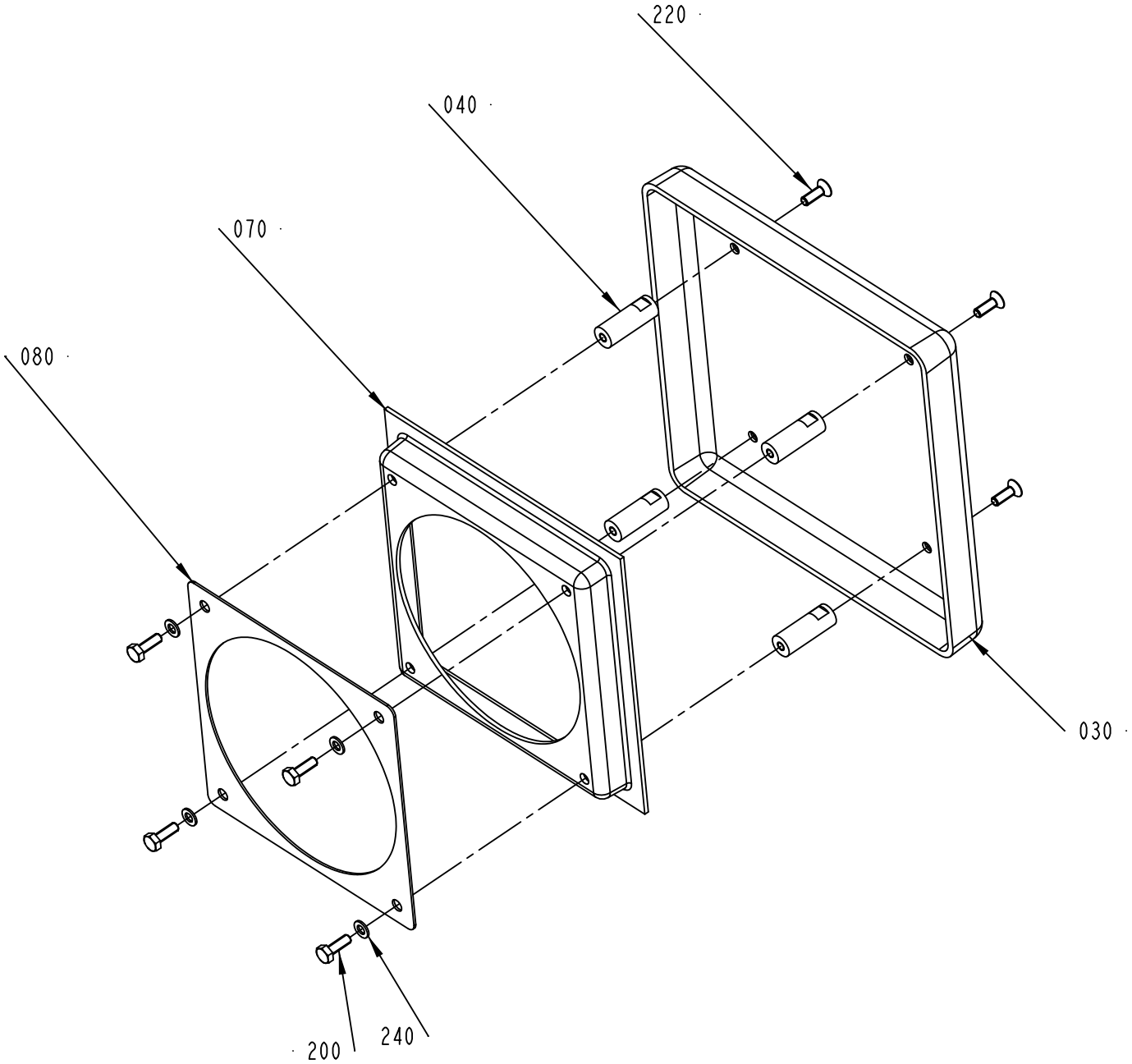

599749-1
478946

ECM: 479130 - 20110531
Group number: 599749-0100
Assembly Drawing: 599749-1_1_AC

Pos	Part No	UN	Qty	Description	Page No
-					
030	599752-0000		1	COVER	
040	599753-0000		4	SPACER	
070	599751-0000		1	INSERT	
080	599755-0000		1	GASKET	
200	312105-0291		4	SCREW M6S ISO 4017 M4X12 A470	
220	312155-0291		4	SCREW DIN 7991 MF6S M4X12 A4 70	
240	315105-0136		4	WASHER BRB 4,3X8 RFR	

Pos	Part No	UN	Qty	Description	Page No

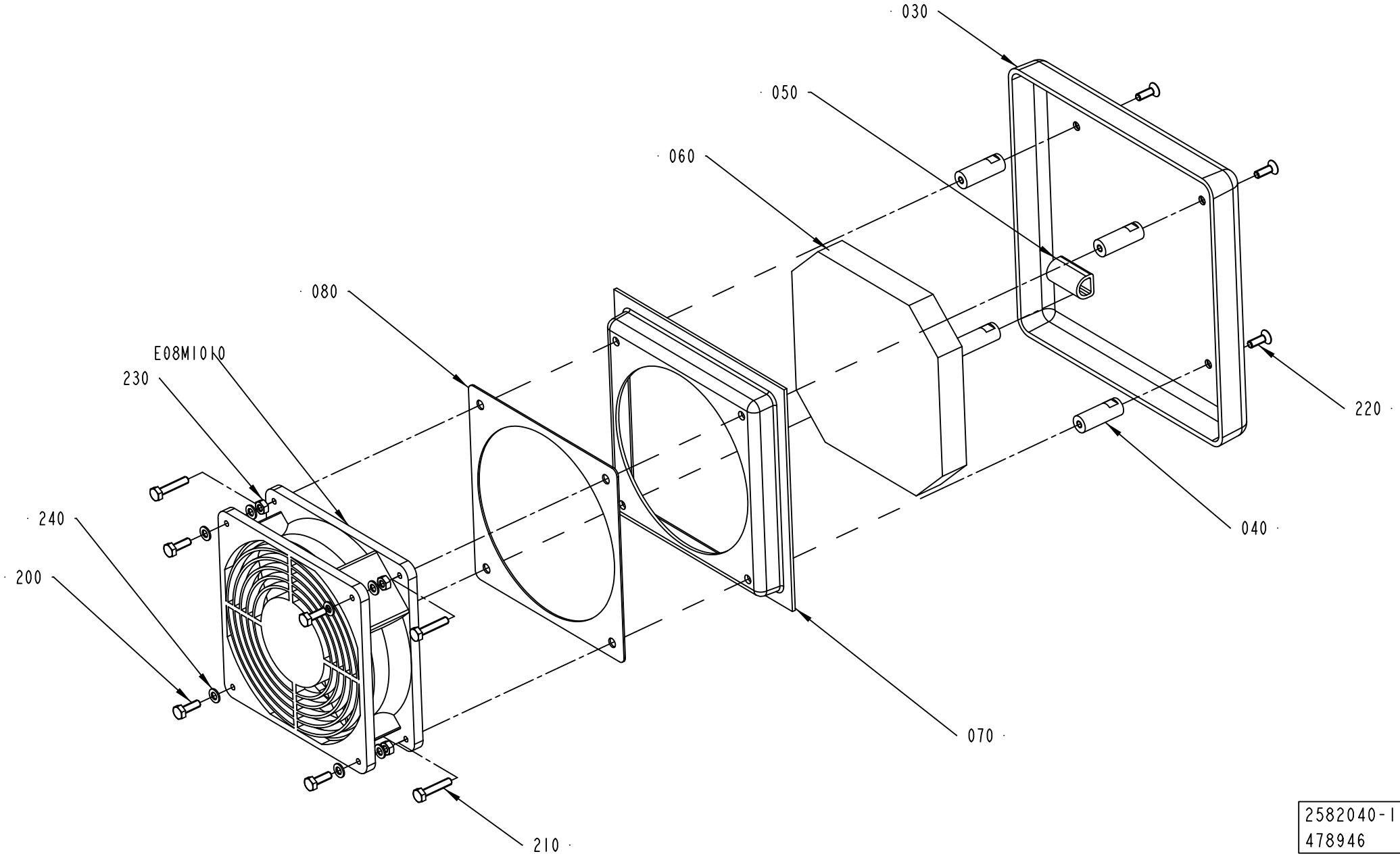

2582040-1
478946

ECM: 479131 - 20110531
Group number: 2582040-0100
Assembly Drawing: 2582040-1_1_AC

Pos	Part No	UN	Qty	Description	Page No
-					
030	599752-0000		1	COVER	
040	599753-0000		4	SPACER	
050	599760-0000		1	SPACER	
060	599750-0000		1	FILTER	
070	599751-0000		1	INSERT	
080	599755-0000		1	GASKET	
200	312105-0291		4	SCREW M6S ISO 4017 M4X12 A470	
210	312105-0295		4	SCREW M6S ISO 4017 M4X20 A470	
220	312155-0291		4	SCREW DIN 7991 MF6S M4X12 A4 70	
230	312605-0312		4	HEXAGON NUT, M6M M4 A280	
240	315105-0136		8	WASHER BRB 4,3X8 RFR	
E08M1010	90264-0032		1	FAN, 4656N+LZ30+LZ 120,220V 50HZ	

Pos	Part No	UN	Qty	Description	Page No

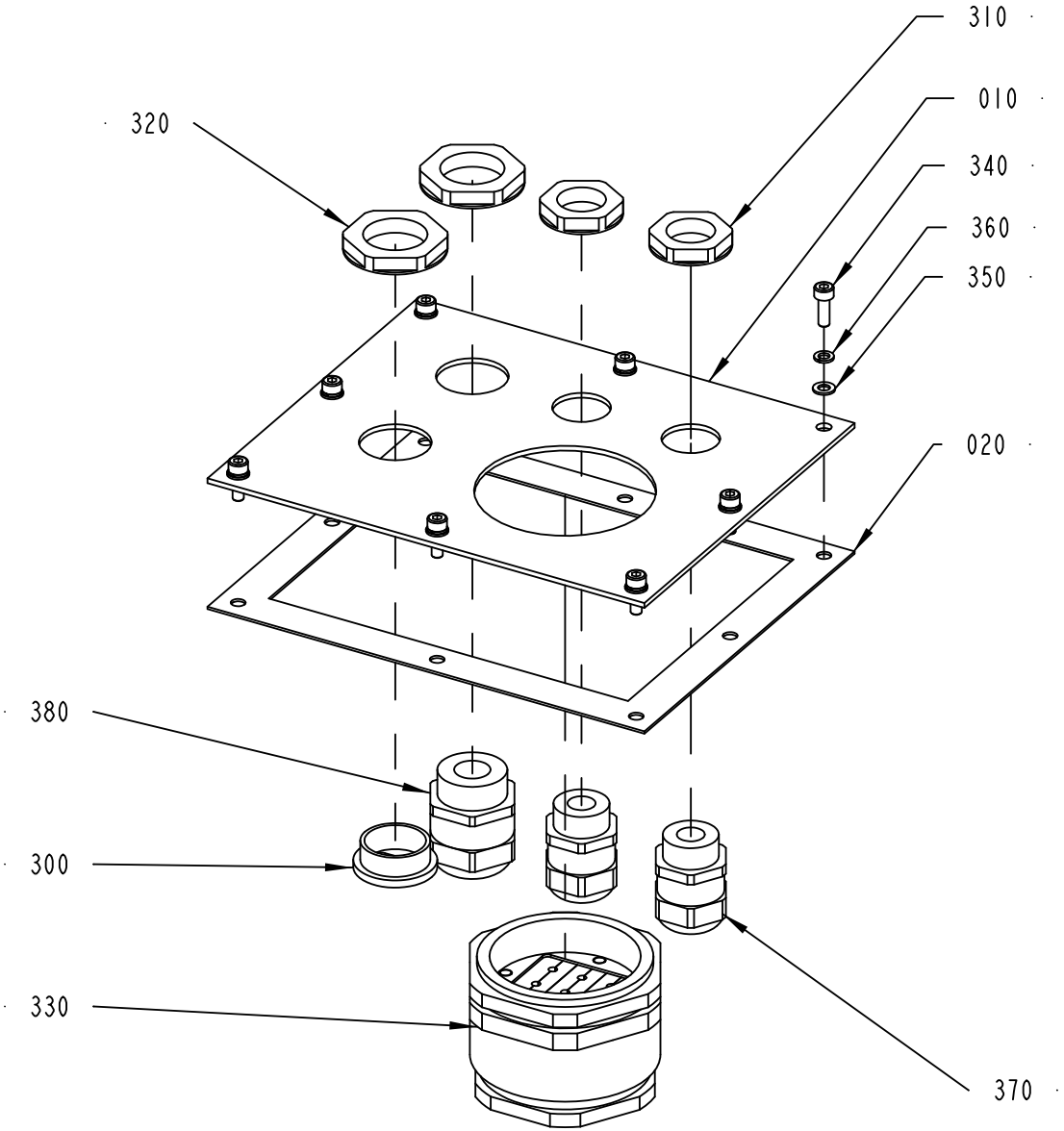

2902950-1
364857

ECM: 364866 - 20080924
Group number: 2902950-0100
Assembly Drawing: 2902950-1_1_AB

Pos	Part No	UN	Qty	Description	Page No
-					
010	2902951-0000		1	CABLE LEAD-IN PLATE	
020	2902952-0000		1	GASKET	
300	90458-1309		1	BLIND PLUG CIRCULAR, M25X1,5 514GFK/225	
310	90458-0323		2	NUT, M20X1,5	
320	90458-0324		2	NUT, M25X1,5	
330	90458-2926		1	CABLE GLAND, RG M63/9	
340	312115-0291		8	SCREW ISO4762 M4X12 A4 80	
350	315105-0136		8	WASHER BRB 4,3X8 RFR	
360	315402-0136		8	LOCK WASHER, DIN127B 4,1 A4, M4-5/32	
370	90458-0307		2	CABLE GLAND, M20X1,5, 5311 1020	
380	90458-0308		1	CABLE GLAND, M25X1,5, 5311 1030	

Pos	Part No	UN	Qty	Description	Page No

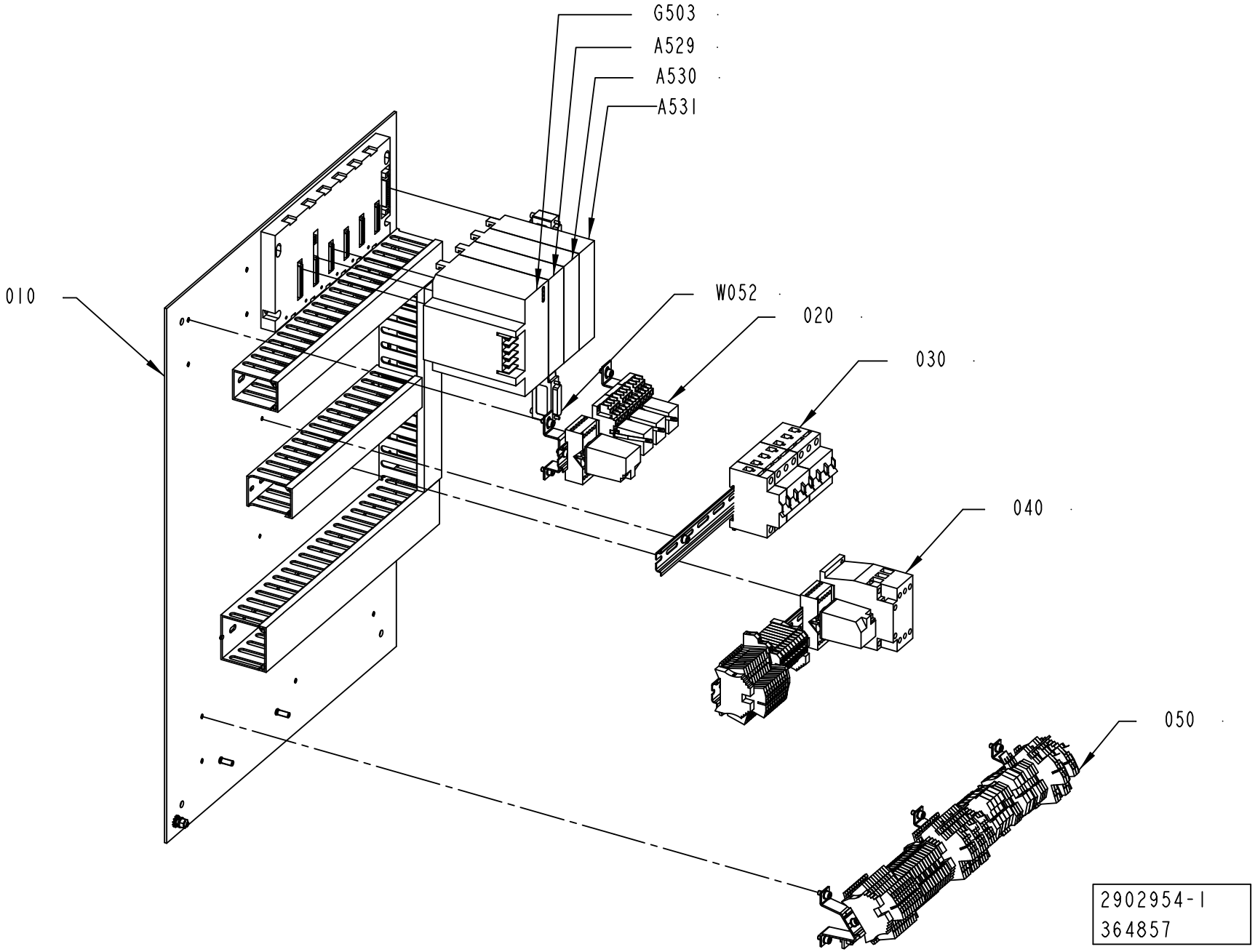
G503
A529
A530
A531
010
W052
020
030
040
050
2902954-1
364857

ECM: 366319 - 20080924
Group number: 2902954-0100
Assembly Drawing: 2902954-1_1_AB

Pos	Part No	UN	Qty	Description	Page No
-					
010	2898129-0100		1	ASSEMBLY PLATE	**4-65**
020	2898188-0100		1	TERMINAL BLOCK	**4-67**
030	2898191-0100		1	TERMINAL BLOCK	**4-69**
040	2898201-0100		1	TERMINAL BLOCK	**4-71, 4-73**
050	2898202-0100		1	TERMINAL BLOCK	**4-75, 4-77**
A529	90031-0057		1	PLC, DIGITAL INPUT MODULE	
A530	90031-0059		1	PLC, DIGITAL OUTPUT MODULE	
A531	90031-0059		1	PLC, DIGITAL OUTPUT MODULE	
G503	90031-0068		1	PLC, POWER SUPPLY	
	352551-0134		*1*	*FINE-WIRE FUSE 2 A SLOW,5X20MM*	
	90031-0301		*1*	*SPARE BATTERY CPU PCM 2PCS*	
W052	90459-2633		1	I/O BUS EXPANSION CABLE 8M	

Pos	Part No	UN	Qty	Description	Page No

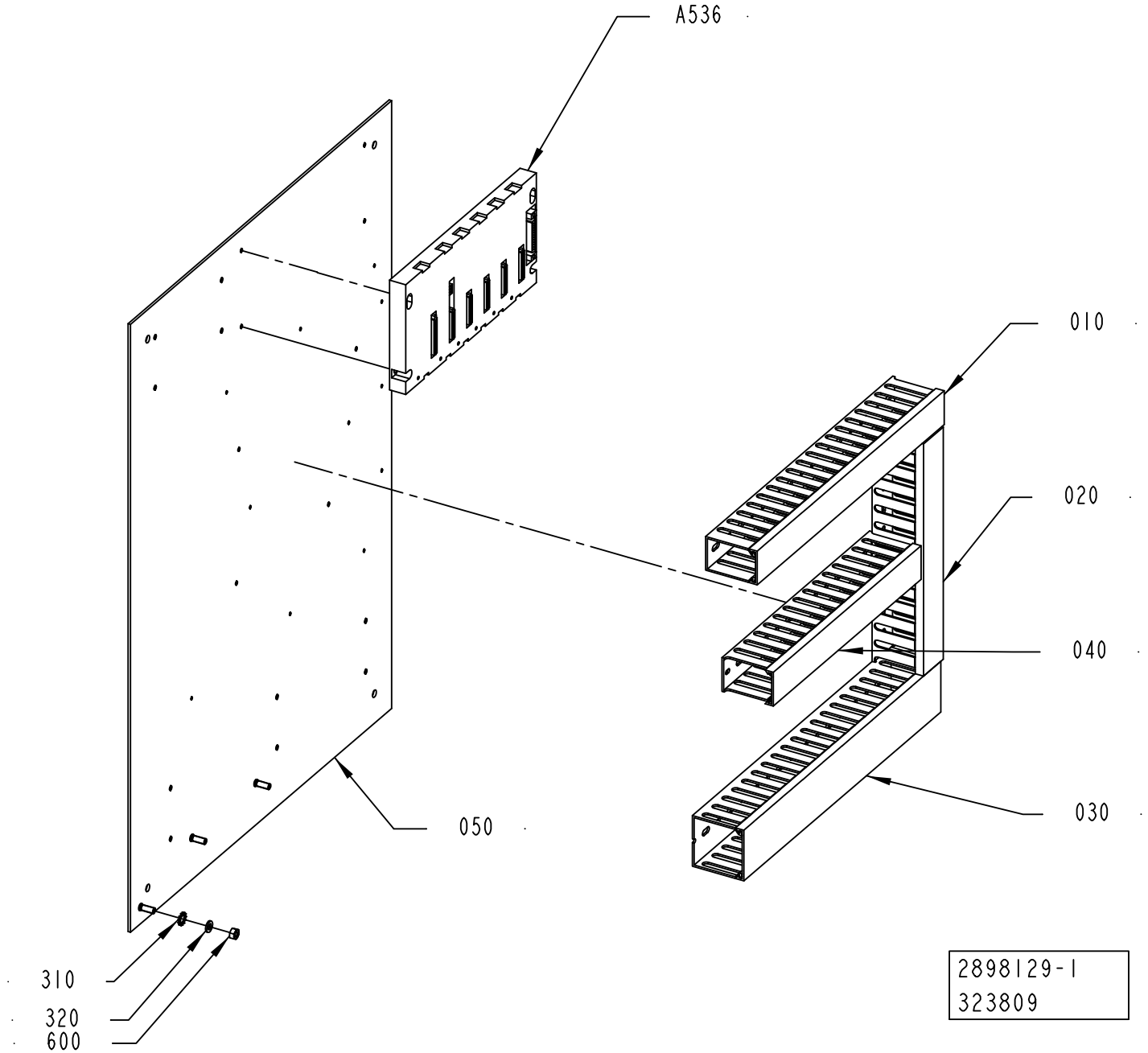
A536
010
020
040
030
050
310
320
600
2898129-1
323809

ECM: 326342 - 20071102
Group number: 2898129-0100
Assembly Drawing: 2898129-1_1_AA

Pos	Part No	UN	Qty	Description	Page No
-					
010	90181-0045	MM	380	CABLE DUCT, PLASTIC, 40X60	
020	90181-0045	MM	275	CABLE DUCT, PLASTIC, 40X60	
030	90181-0046	MM	480	CABLE DUCT, PLASTIC, 60X60	
040	90181-0045	MM	300	CABLE DUCT, PLASTIC, 40X60	
050	2898132-0000		1	MOUNTING PLATE	
310	90062-0016		1	LOCK WASHER SERRAT.EXT.GEAR,8,4/15 H=0,8	
320	315105-0153		1	WASHER BRB 6,4X12 RFR	
600	312605-0316		1	HEXAGON NUT, M6M M6 A280	
A536	90031-0052		1	BASEPLATE, 5-SLOT	
	90031-0302		*1*	*I/O BUS TERMINATION PLUG*	

Pos	Part No	UN	Qty	Description	Page No

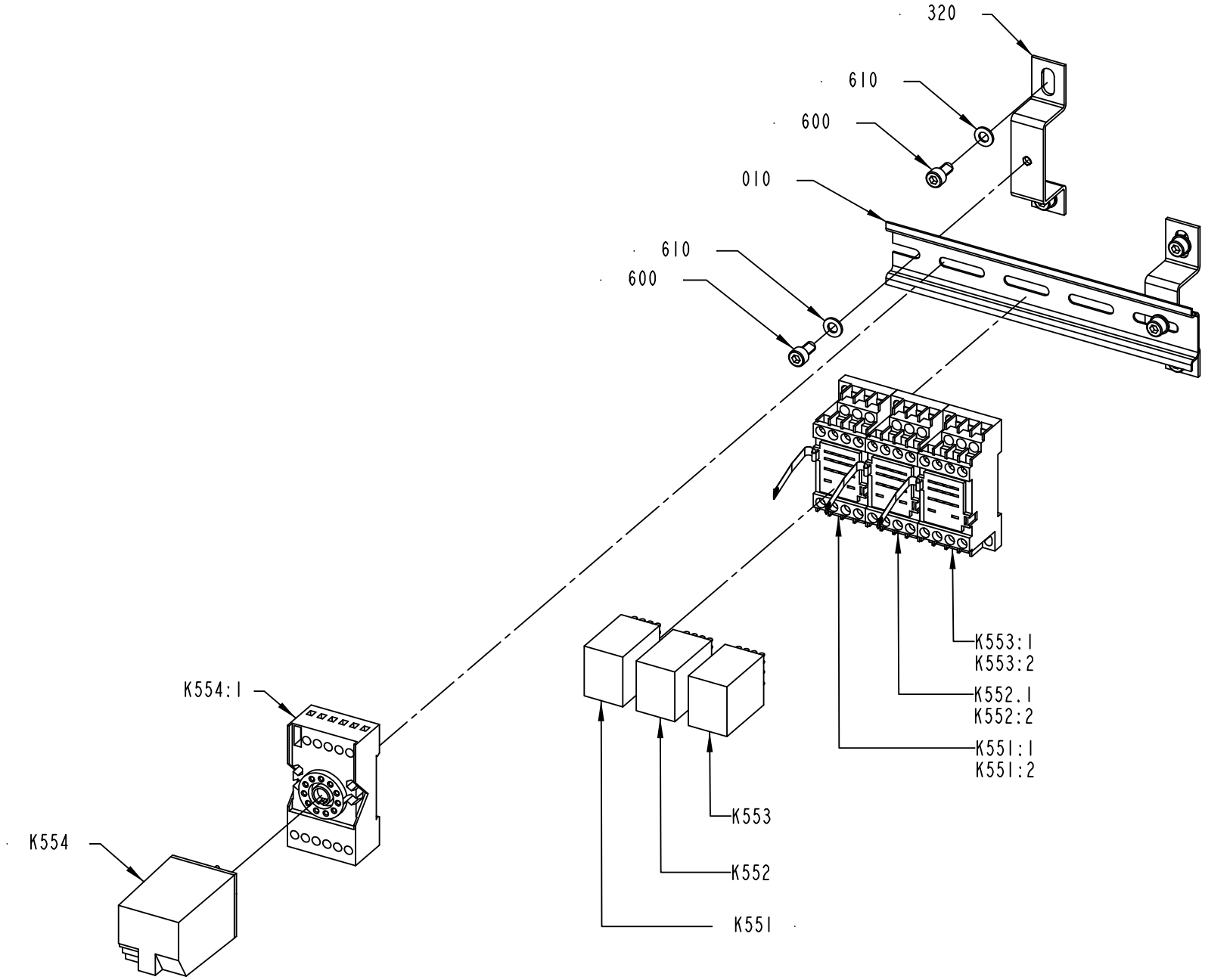

2898188-1
323809

ECM: 326341 - 20071102
Group number: 2898188-0100
Assembly Drawing: 2898188-1_1_AA

Pos	Part No	UN	Qty	Description	Page No
-					
010	353042-0004	MM	300	RAIL, TS 35/7,5	
320	90458-1447		2	MOUNTING RAIL SUPPORT, TST 128660	
600	312115-0325		6	SCREW ISO4762 M5X10 A4 80	
610	315105-0146		6	WASHER BRB 5,3X10 RFR	
K551	90119-0109		1	RELAY OMRON 24VDC MY4H	
K551.1	90119-0309		1	SOCKET, PYF14A-E	
K551.2	90119-0310		1	CLAMP, TYPE PYC-A1	
K552	90119-0109		1	RELAY OMRON 24VDC MY4H	
K552.1	90119-0309		1	SOCKET, PYF14A-E	
K552.2	90119-0310		1	CLAMP, TYPE PYC-A1	
K553	90119-0109		1	RELAY OMRON 24VDC MY4H	
K553.1	90119-0309		1	SOCKET, PYF14A-E	
K553.2	90119-0310		1	CLAMP, TYPE PYC-A1	
K554	90119-0056		1	RELAY, AUXILIARY MK3P5-S 24VDC	
K554.1	90129-0006		1	BASE, S3-B	

Pos	Part No	UN	Qty	Description	Page No

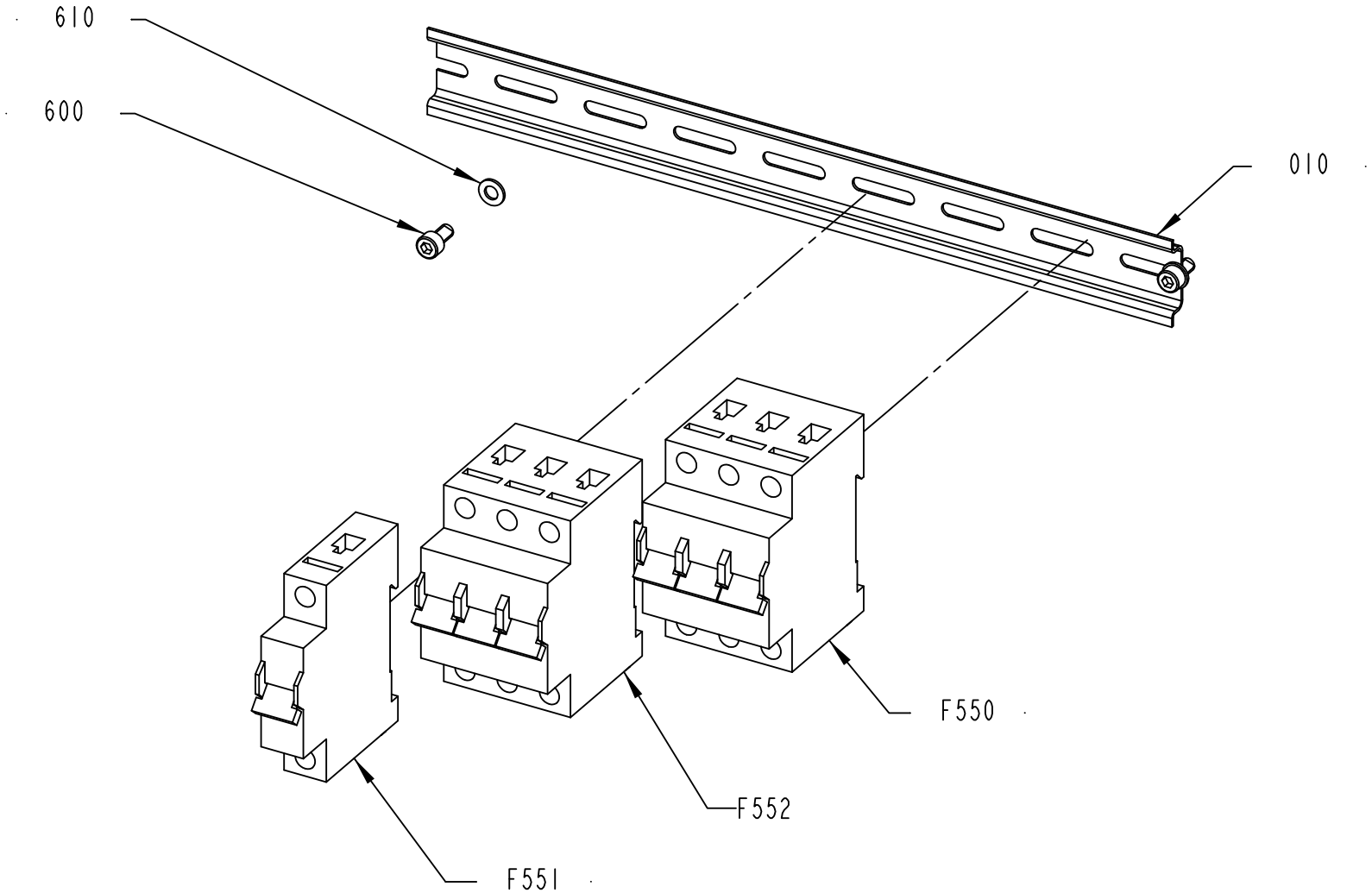

2898191-1
323809

ECM: 326340 - 20071102
Group number: 2898191-0100
Assembly Drawing: 2898191-1_1_AA

Pos	Part No	UN	Qty	Description	Page No
-					
010	353042-0004	MM	300	RAIL, TS 35/7,5	
600	312115-0325		2	SCREW ISO4762 M5X10 A4 80	
610	315105-0146		2	WASHER BRB 5,3X10 RFR	
F550	351418-0200		1	MINIATURE CIRC. BREAK.,FAZ-D20/3 3-POLE	
F551	351416-0100		1	MINIATURE CIRC. BREAK., FAZ -D10 1-POLE	
F552	351418-0005		1	MINIATURE CIRC. BREAK., FAZ-D0,5 3-POLE	

Pos	Part No	UN	Qty	Description	Page No

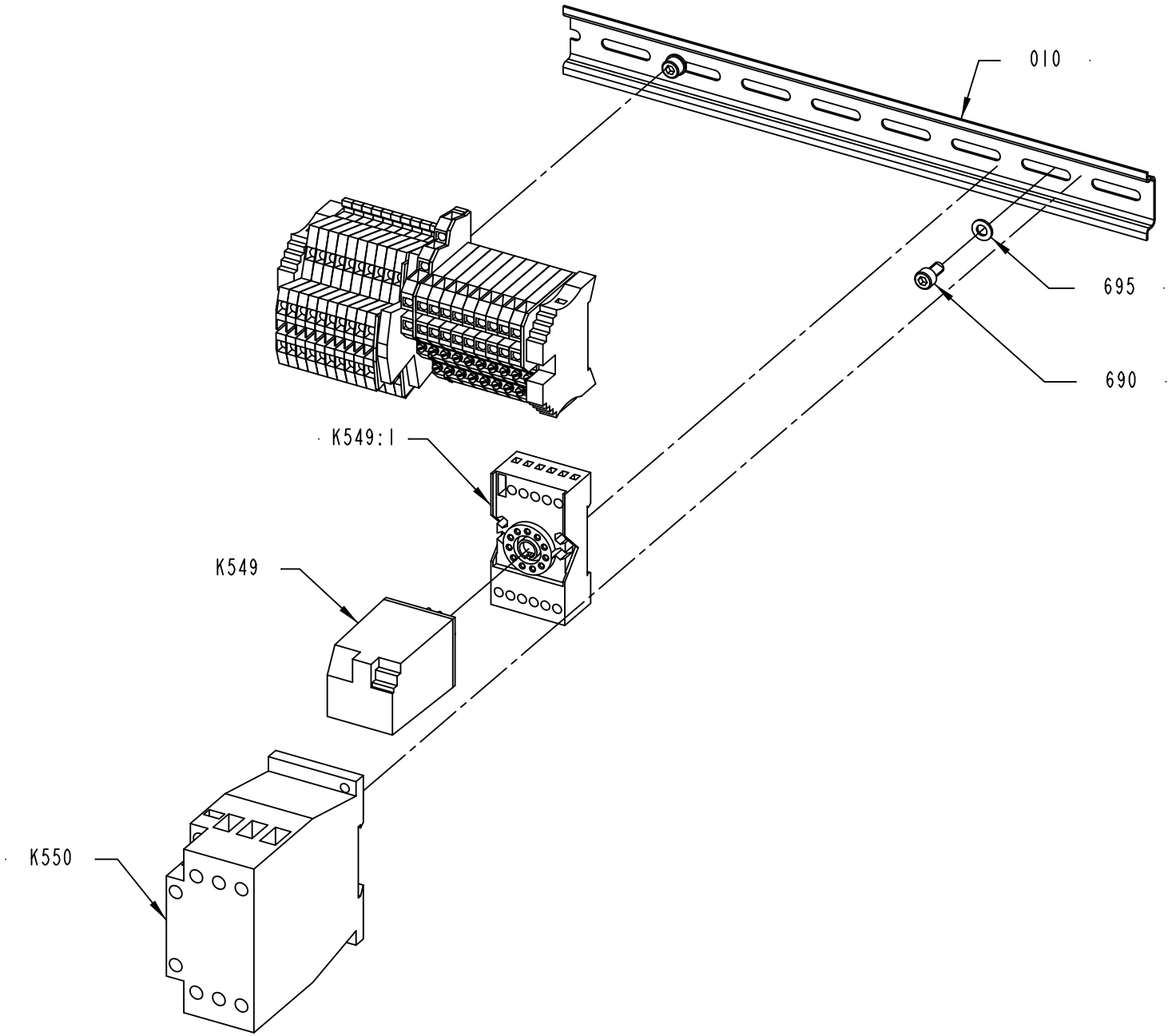

2898201-1
323809

ECM: 326339 - 20071102
Group number: 2898201-0100
Assembly Drawing: 2898201-1_1_AA

This list covers pages from 4-70 to 4-73

Pos	Part No	UN	Qty	Description	Page No
-					
010	353042-0004	MM	300	RAIL, TS 35/7,5	
300	90077-0113		10	TERMINAL BLOCK WDK 2.5	
600	353034-0404		2	BRIDGE CONNECTOR Q 10 DLI	
610	353024-0212		1	EARTH TERMINAL WDK 2,5 PE	
620	353032-0301		1	END PLATE, AP/DLI, 131 326	
630	353032-0302		1	END PLATE, AP DLD2,5 DB	
640	353032-0009		1	END PLATE, WAP WDK 2,5	
650	353021-0301		9	TERMINAL, DLI 2,5/35	
660	353021-0302		1	TERMINAL, DLD 2,5/35	
670	359011-0807		1	MARKING, DEK 5 FW 1-50	
680	359011-0821		2	MARKING, DEK 6 FW 1-50	
690	312115-0325		2	SCREW ISO4762 M5X10 A4 80	
695	315105-0146		2	WASHER BRB 5,3X10 RFR	
700	359011-0819		1	MARKING, EARTH, DEK 5 GW ERDE I.KR.	
710	353031-0203		2	END BRACKET, WEW 35/2	
K549:1	90129-0006		1	BASE, S3-B	
K549	90119-0056		1	RELAY, AUXILIARY MK3P5-S 24VDC	
K550	90459-5309		1	CONTACTOR 7,5KW 24VDC, DILM17-10	

Pos	Part No	UN	Qty	Description	Page No

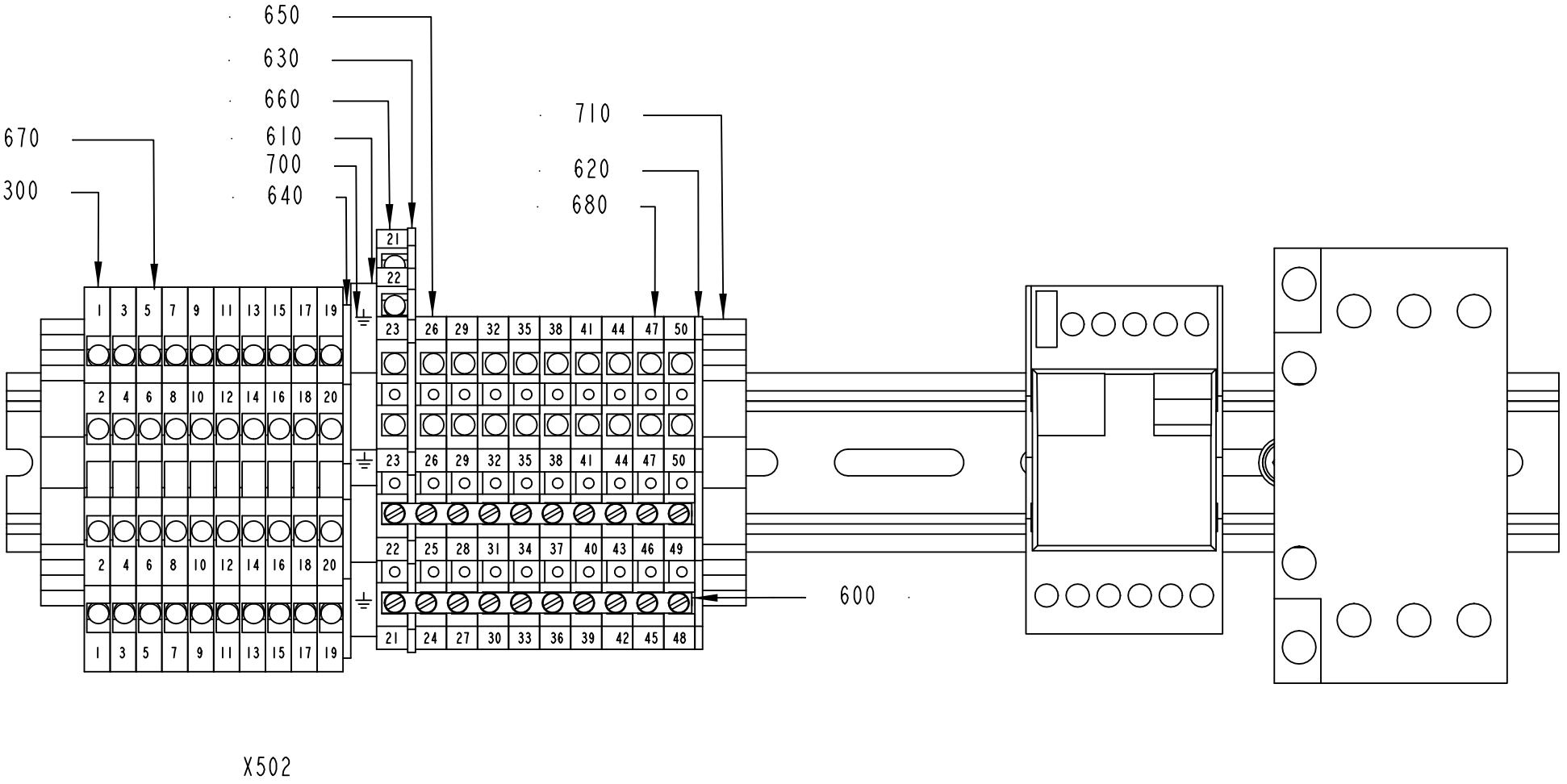
650
630
660
610
700
640
670
300
710
620
680
600
X502
2898201-1
323809

ECM: 326339 - 20071102
Group number: 2898201-0100
Assembly Drawing: 2898201-1_2_AA

This list covers pages from 4-70 to 4-73

Pos	Part No	UN	Qty	Description	Page No
-					
010	353042-0004	MM	300	RAIL, TS 35/7,5	
300	90077-0113		10	TERMINAL BLOCK WDK 2.5	
600	353034-0404		2	BRIDGE CONNECTOR Q 10 DLI	
610	353024-0212		1	EARTH TERMINAL WDK 2,5 PE	
620	353032-0301		1	END PLATE, AP/DLI, 131 326	
630	353032-0302		1	END PLATE, AP DLD2,5 DB	
640	353032-0009		1	END PLATE, WAP WDK 2,5	
650	353021-0301		9	TERMINAL, DLI 2,5/35	
660	353021-0302		1	TERMINAL, DLD 2,5/35	
670	359011-0807		1	MARKING, DEK 5 FW 1-50	
680	359011-0821		2	MARKING, DEK 6 FW 1-50	
690	312115-0325		2	SCREW ISO4762 M5X10 A4 80	
695	315105-0146		2	WASHER BRB 5,3X10 RFR	
700	359011-0819		1	MARKING, EARTH, DEK 5 GW ERDE I.KR.	
710	353031-0203		2	END BRACKET, WEW 35/2	
K549:1	90129-0006		1	BASE, S3-B	
K549	90119-0056		1	RELAY, AUXILIARY MK3P5-S 24VDC	
K550	90459-5309		1	CONTACTOR 7,5KW 24VDC, DILM17-10	

Pos	Part No	UN	Qty	Description	Page No

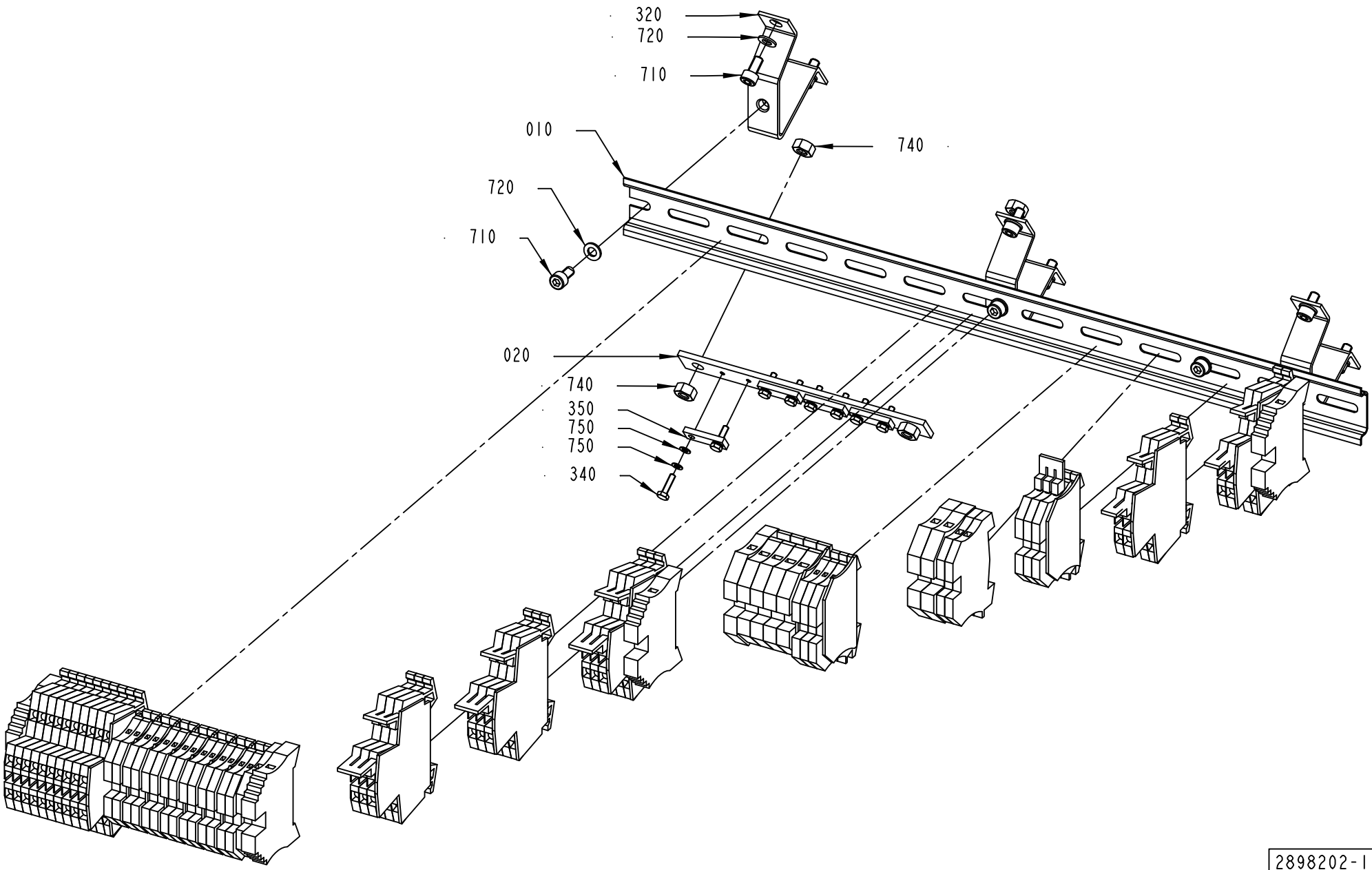

2898202-1
323809

ECM: 326338 - 20071102
Group number: 2898202-0100
Assembly Drawing: 2898202-1_1_AA

This list covers pages from 4-74 to 4-77

Pos	Part No	UN	Qty	Description	Page No
-					
010	353042-0004	MM	300	RAIL, TS 35/7,5	
020	2924203-0000		1	PLATE	
310	90077-0113		23	TERMINAL BLOCK WDK 2.5	
320	90094-0005		3	RAIL BRACKET, TSTW 5/5M	
330	353021-0214		4	FEED THROUGH TERMINAL, WDU 6	
340	90287-0175		8	SCREW M6S M3X12 A480	
350	90220-0305		4	CLAMP FOR SCR.CABLE, 16MM,	
600	353034-0030		7	BRIDGE CONNECTOR WQV 2,5/10	
610	353034-0030		4	BRIDGE CONNECTOR WQV 2,5/10	
620	353024-0204		3	EARTH TERMINAL WPE 2,5	
630	353024-0206		3	EARTH TERMINAL WPE 6	
640	353031-0203		4	END BRACKET, WEW 35/2	
650	353032-0004		8	END PLATE, WAP 2,5-10, BEIGE	
660	353032-0005		1	END PLATE, WAP 2,5-10, BLUE	
670	353032-0009		6	END PLATE, WAP WDK 2,5	
680	353021-0212		17	FEED THROUGH TERMINAL, WDU 2,5	
690	353021-0216		3	FEED THROUGH TERMINAL, WDU 2,5	
700	359011-0807		10	MARKING, DEK 5 FW 1-50	
710	312115-0325		9	SCREW ISO4762 M5X10 A4 80	
720	315105-0146		9	WASHER BRB 5,3X10 RFR	
730	359011-0819		1	MARKING, EARTH, DEK 5 GW ERDE I.KR.	
740	312605-0316		4	HEXAGON NUT, M6M M6 A280	
750	315103-0124		16	WASHER, BRB, 3,2/6,H=0,5 NI PL BR	

Pos	Part No	UN	Qty	Description	Page No

Machine Type | Group Description | Used-In | Group Number | Page No

TERMINAL BLOCK

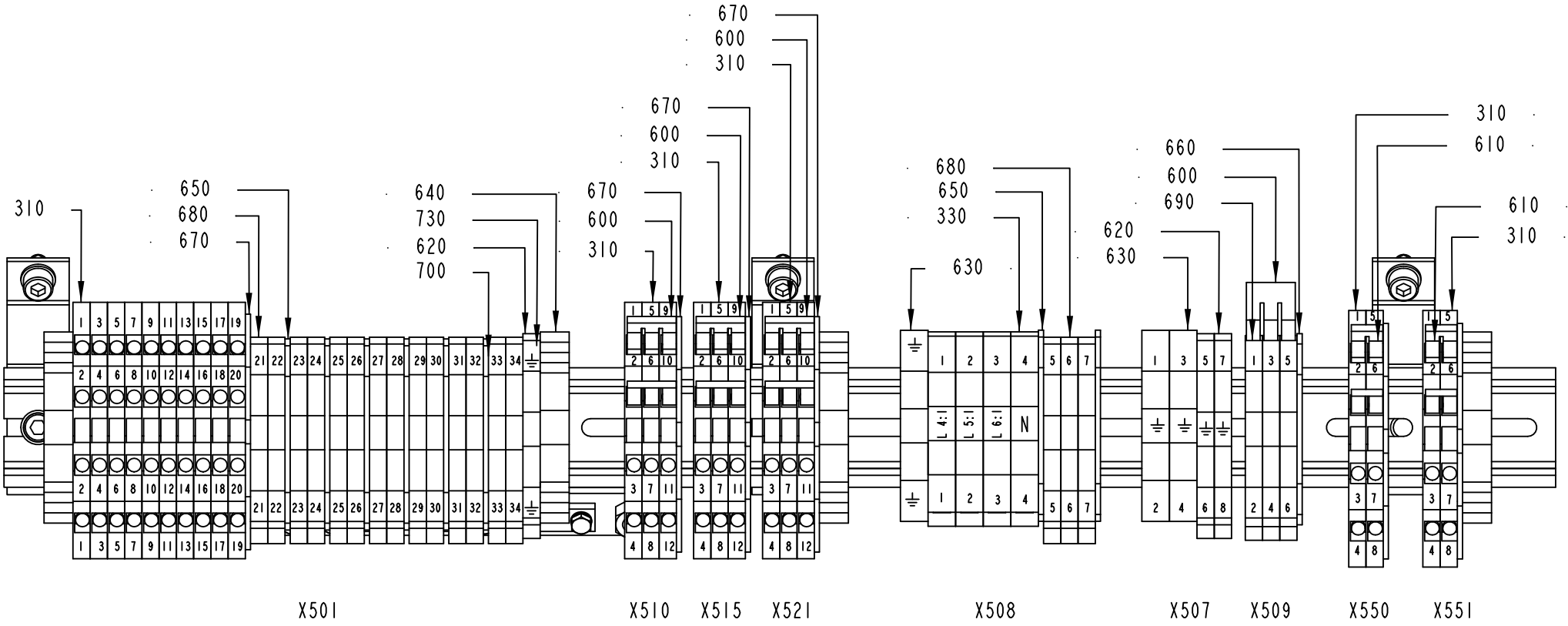

2898202-1
323809

ECM: 326338 - 20071102
Group number: 2898202-0100
Assembly Drawing: 2898202-1_2_AA

This list covers pages from 4-74 to 4-77

Pos	Part No	UN	Qty	Description	Page No
-					
010	353042-0004	MM	300	RAIL, TS 35/7,5	
020	2924203-0000		1	PLATE	
310	90077-0113		23	TERMINAL BLOCK WDK 2.5	
320	90094-0005		3	RAIL BRACKET, TSTW 5/5M	
330	353021-0214		4	FEED THROUGH TERMINAL, WDU 6	
340	90287-0175		8	SCREW M6S M3X12 A480	
350	90220-0305		4	CLAMP FOR SCR.CABLE, 16MM,	
600	353034-0030		7	BRIDGE CONNECTOR WQV 2,5/10	
610	353034-0030		4	BRIDGE CONNECTOR WQV 2,5/10	
620	353024-0204		3	EARTH TERMINAL WPE 2,5	
630	353024-0206		3	EARTH TERMINAL WPE 6	
640	353031-0203		4	END BRACKET, WEW 35/2	
650	353032-0004		8	END PLATE, WAP 2,5-10, BEIGE	
660	353032-0005		1	END PLATE, WAP 2,5-10, BLUE	
670	353032-0009		6	END PLATE, WAP WDK 2,5	
680	353021-0212		17	FEED THROUGH TERMINAL, WDU 2,5	
690	353021-0216		3	FEED THROUGH TERMINAL, WDU 2,5	
700	359011-0807		10	MARKING, DEK 5 FW 1-50	
710	312115-0325		9	SCREW ISO4762 M5X10 A4 80	
720	315105-0146		9	WASHER BRB 5,3X10 RFR	
730	359011-0819		1	MARKING, EARTH, DEK 5 GW ERDE I.KR.	
740	312605-0316		4	HEXAGON NUT, M6M M6 A280	
750	315103-0124		16	WASHER, BRB, 3,2/6,H=0,5 NI PL BR	

Pos	Part No	UN	Qty	Description	Page No

Machine Type | Group Description | Used-In | Group Number | Page No

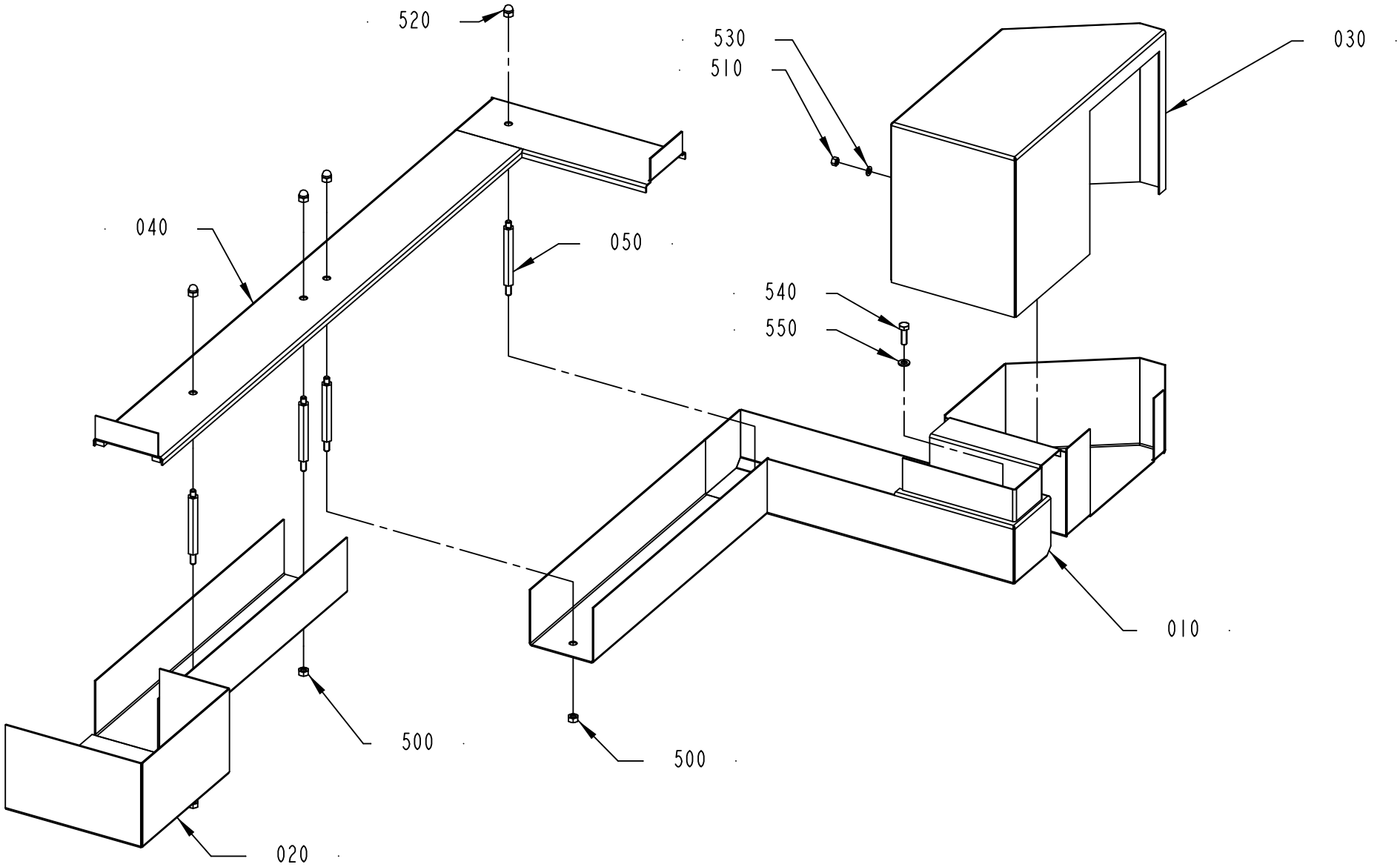

2901830-1
323809

ECM: 326515 - 20071102
Group number: 2901830-0100
Assembly Drawing: 2901830-1_1_AA

Pos	Part No	UN	Qty	Description	Page No
-					
010	2898189-0000		1	CABLE DUCT	
020	2901823-0000		1	CABLE DUCT	
030	2901832-0000		1	COVER	
040	2901827-0000		1	COVERING PLATE	
050	451085-0005		4	SPACER SCREW	
500	312605-0316		3	HEXAGON NUT, M6M M6 A280	
510	312607-0314		2	HEXAGON NUT, EN 24032 M6M M5 A480	
520	312705-0316		4	HEX. DOMED CAP MHM-6 M6 A280	
530	315106-0146		2	WASHER ISO 7089-5-200 HV A4	
540	312105-0370		1	SCREW M6S ISO 4017 M6X20 A480	
550	315106-0153		1	WASHER ISO 7089-6-200 HV A4	

Pos	Part No	UN	Qty	Description	Page No

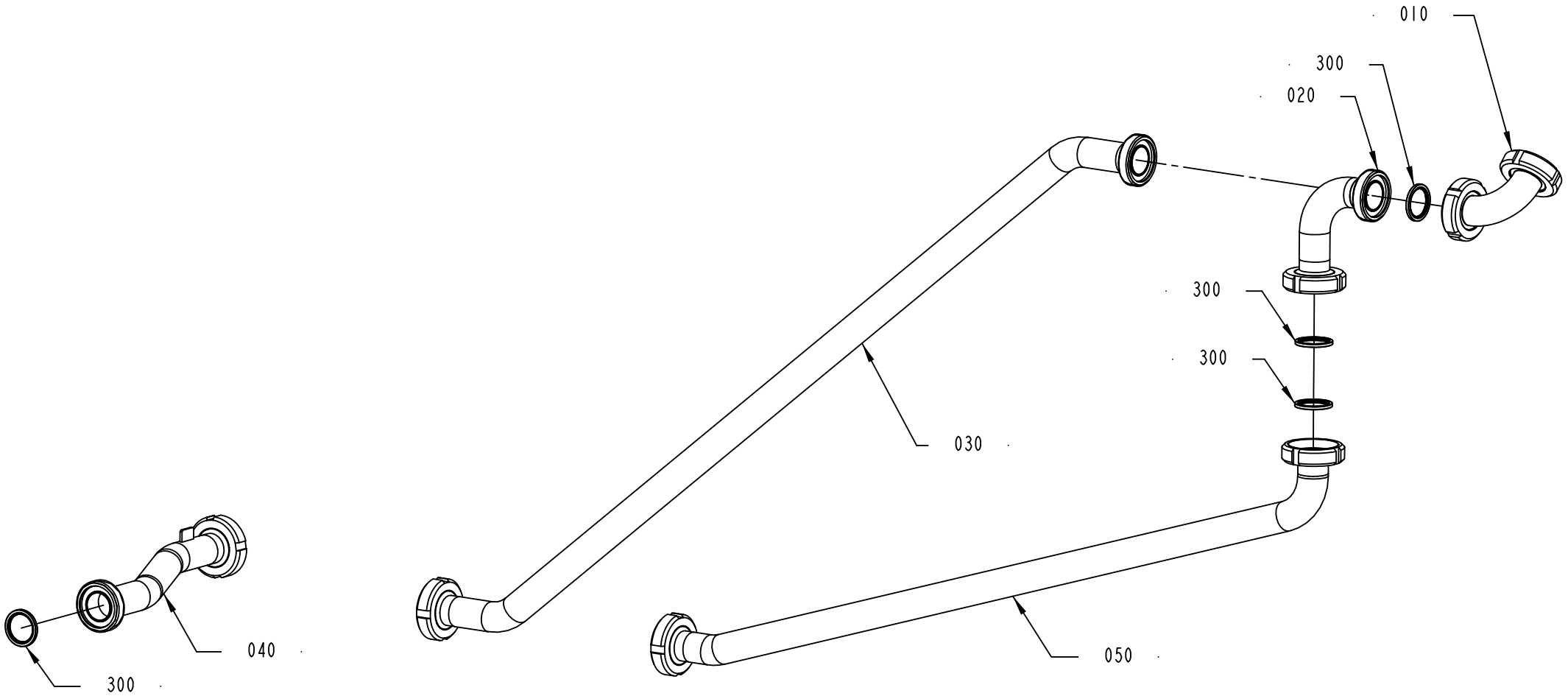

2898192-1
323207

ECM: 323324 - 20071102
Group number: 2898192-0100
Assembly Drawing: 2898192-1_1_AA

Pos	Part No	UN	Qty	Description	Page No
-					
010	2898186-0000		1	PIPE	
020	2898187-0000		1	PIPE	
030	2898194-0000		1	PIPE	
040	2898195-0000		1	PIPE	
050	2898193-0000		1	PRODUCT PIPE	
300	90217-0348		1	GASKET 35,4X46,8X4 MM	

Pos	Part No	UN	Qty	Description	Page No

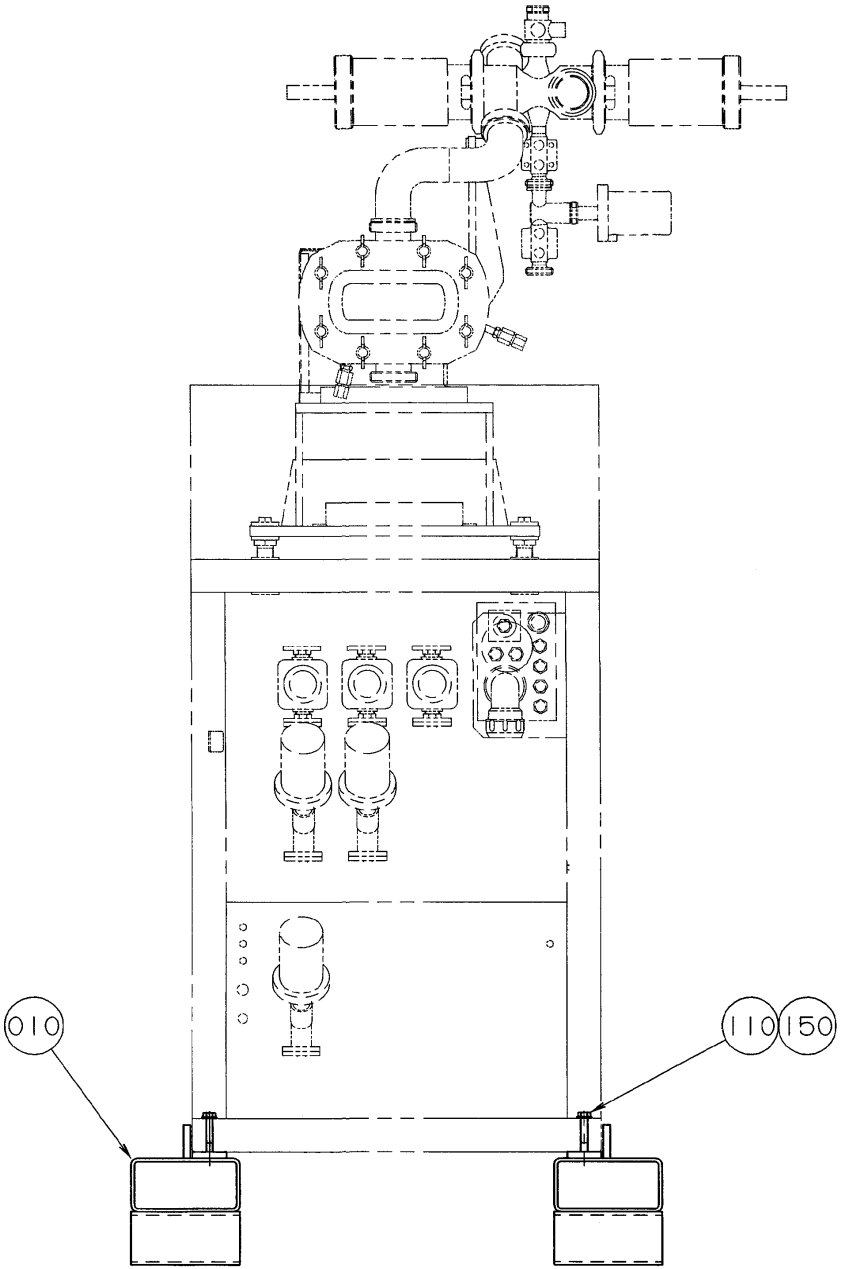
010
110
150

ECM: - -
Group number: 925419-0100
Assembly Drawing: 925419-1_1_AA

Pos	Part No	UN	Qty	Description	Page No
-					
010	925765-0000		2	BED	
110	312101-0504		2	SCREW M6S M10X65 FZB	
150	315101-0173		2	WASHER PLAIN, BRB, 10,5/22 H=2	

Pos	Part No	UN	Qty	Description	Page No

Tetra Pak

SPC
Spare Parts Catalogue

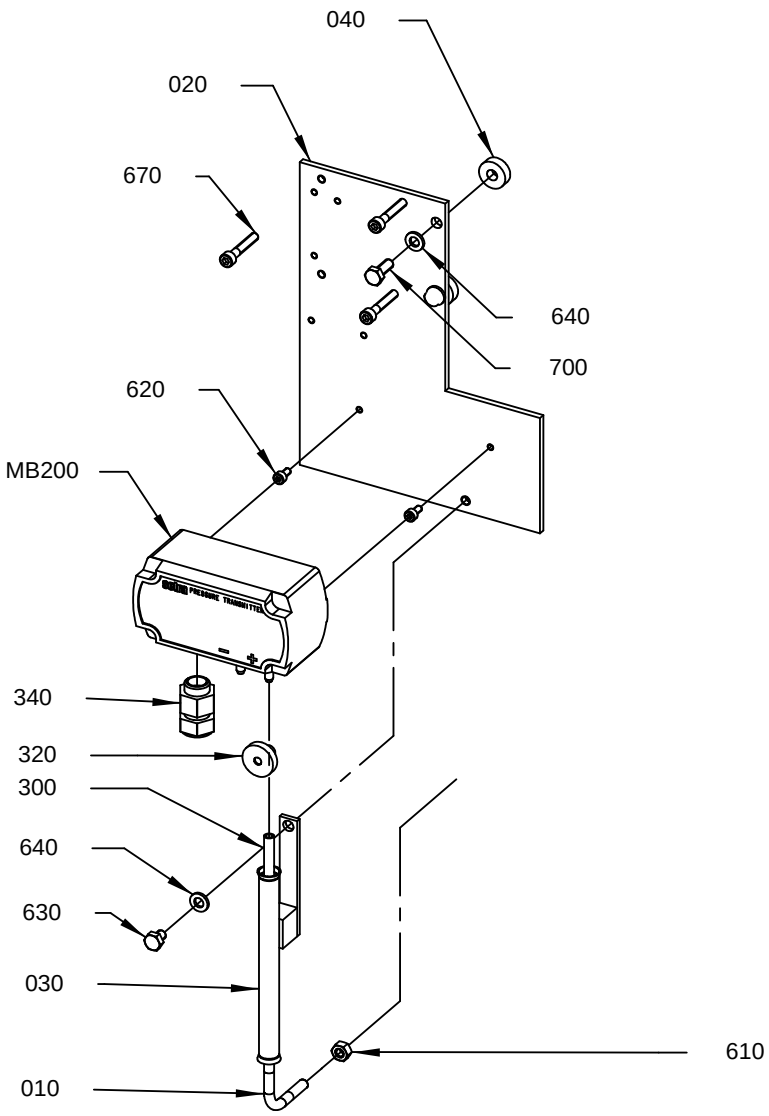

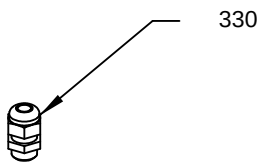

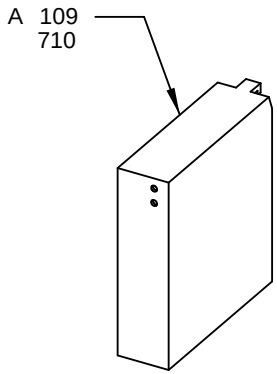

3024358-1
4356 02

ECM: 438707 - 20100222
Group number: 3024358-0100
Assembly Drawing: 3024358-1_1_AB

Pos	Part No	UN	Qty	Description	Page No
-					
010	2983241-0000		1	PIPE	
020	2971535-0000		1	PLATE	
030	2983240-0000		1	CABLE DUCT	
040	3006055-0000		2	DISTANCE	
300	90166-0176	MM	500	RUBBER HOSE	
320	90015-0020		1	LEAD-IN, TET5-7, E-1458016	
330	352103-0101		1	CABLE GLAND, ST 9, PR15,2/PG9	
340	353245-0009		1	CABLE GLAND, EXTENDED WITH INSERT, PG9	
610	312605-0316		1	HEXAGON NUT, M6M M6 A280	
620	312115-0287		2	SCREW ISO4762 M4X8 A4 80	
630	312105-0362		1	SCREW M6S ISO 4017 M6X8 A480	
640	315106-0153		3	WASHER ISO 7089-6-200 HV A4	
650	351160-0102	M	10	WIRE AWM 1X0,75 MM2 DARKBLUE	
670	312115-0335		2	SCREW ISO4762 M5X30 A4 80	
700	312105-0368		2	SCREW M6S ISO 4017 M6X16 A480	
710	599895-0000		1	COPPER BRAID	
720	90194-0302		1	MARKING LABELS REBUILDING KIT	
A109	90031-0063		1	PLC,ANALOG COMBO MODULE,IN-4PT/OUT-2PT	
M.B200	90459-4810		1	PRESS TRANSD (DIFF) 0 - 2000PA, 2681-20C	
W202	90220-0183	M	10	SCR. CABLE 2X0,34MM2	

Pos	Part No	UN	Qty	Description	Page No

Machine Type | Group Description | Used-In | Group Number | Page No

Tetra Pak

SPC
Spare Parts Catalogue

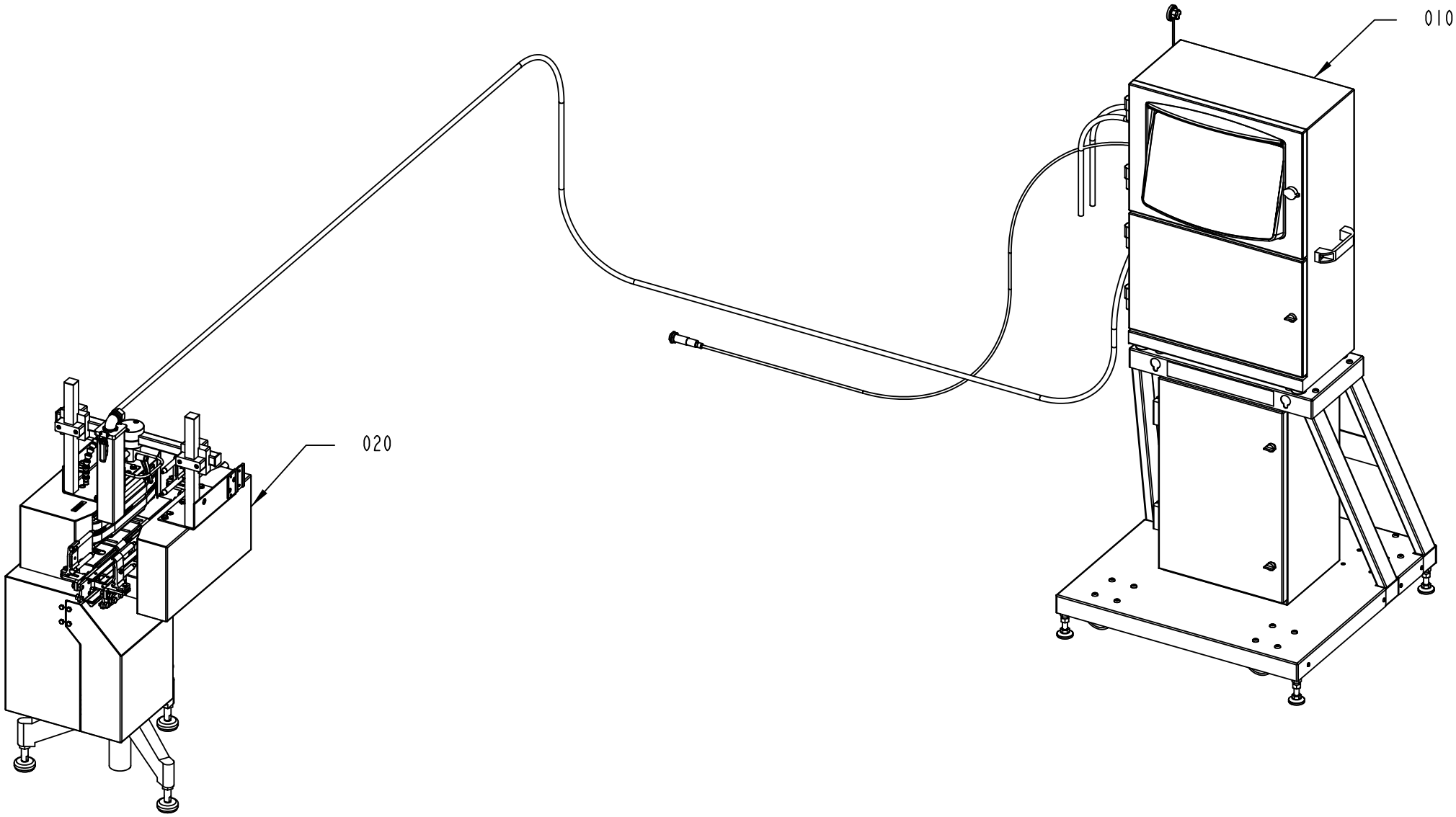

2889144-1
414784

ECM: 415729 - 20090916
Group number: 2889144-0200
Assembly Drawing: 2889144-1_1_AA

This list covers pages from 6-2 to 6-5

Pos	Part No	UN	Qty	Description	Page No
TBA, TPA (See drawing on page: 6-2)					
020	3046772-0100		1	ACCESSORIES	**6-7**
TWA (See drawing on page: 6-4)					
020	3046773-0100		1	ACCESSORIES	**6-41**
Common Parts					
010	3046771-0100		1	EXTERNAL DATING UNIT	**6-67**

Pos	Part No	UN	Qty	Description	Page No

Machine Type | Group Description | Used-In | Group Number | Page No

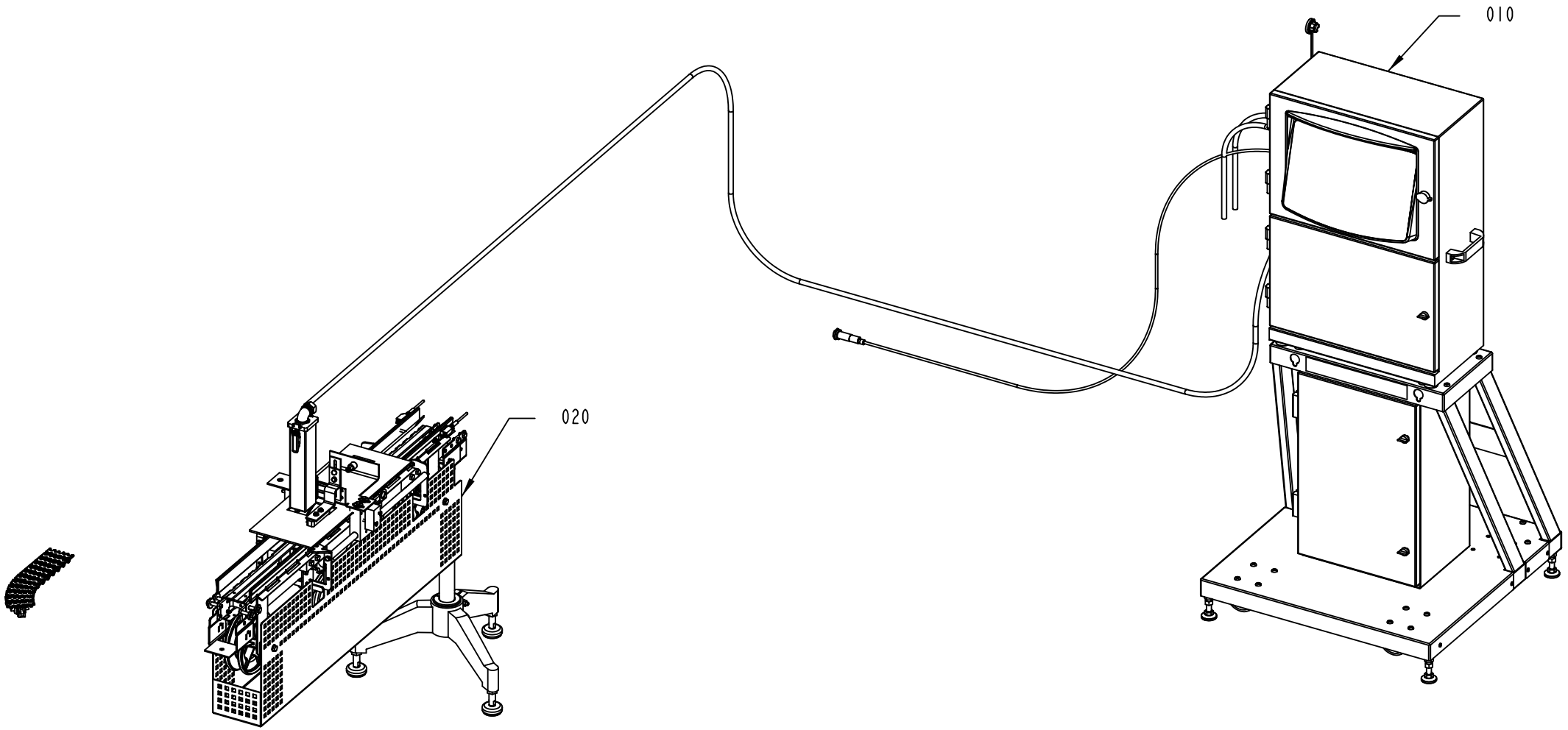

2889144-2
414784

ECM: 415729 - 20090916
Group number: 2889144-0200
Assembly Drawing: 2889144-2_1_AA

This list covers pages from 6-2 to 6-5

Pos	Part No	UN	Qty	Description	Page No
TBA, TPA (See drawing on page: 6-2)					
020	3046772-0100		1	ACCESSORIES	**6-7**
TWA (See drawing on page: 6-4)					
020	3046773-0100		1	ACCESSORIES	**6-41**
Common Parts					
010	3046771-0100		1	EXTERNAL DATING UNIT	**6-67**

Pos	Part No	UN	Qty	Description	Page No

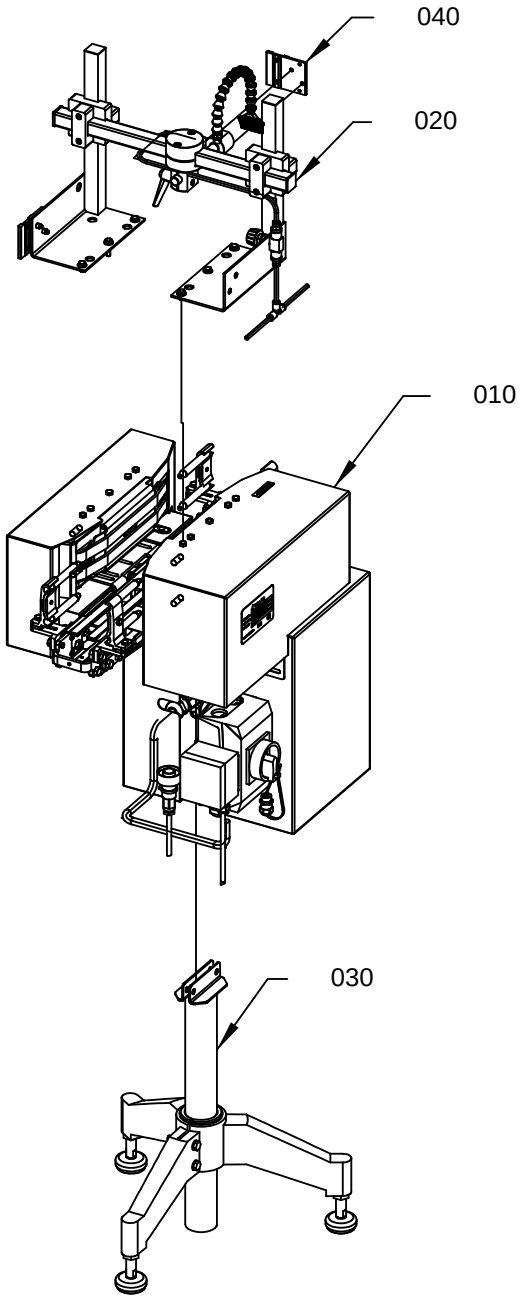

3046 772-1
4356 02

ECM: 438708 - 20100222
Group number: 3046772-0100
Assembly Drawing: 3046772-1_1_AB

Pos	Part No	UN	Qty	Description	Page No
-					
010	2590050-0300		1	BELT BRAKE	**6-9**
020	2763557-0200		1	BRACKET	**6-35**
030	1020164-0200		1	LEG, MOTOR, 3 ARMS	**6-37**
040	90600-7506		1	SUPPORT PLATE, 26798	

Pos	Part No	UN	Qty	Description	Page No

BELT BRAKE

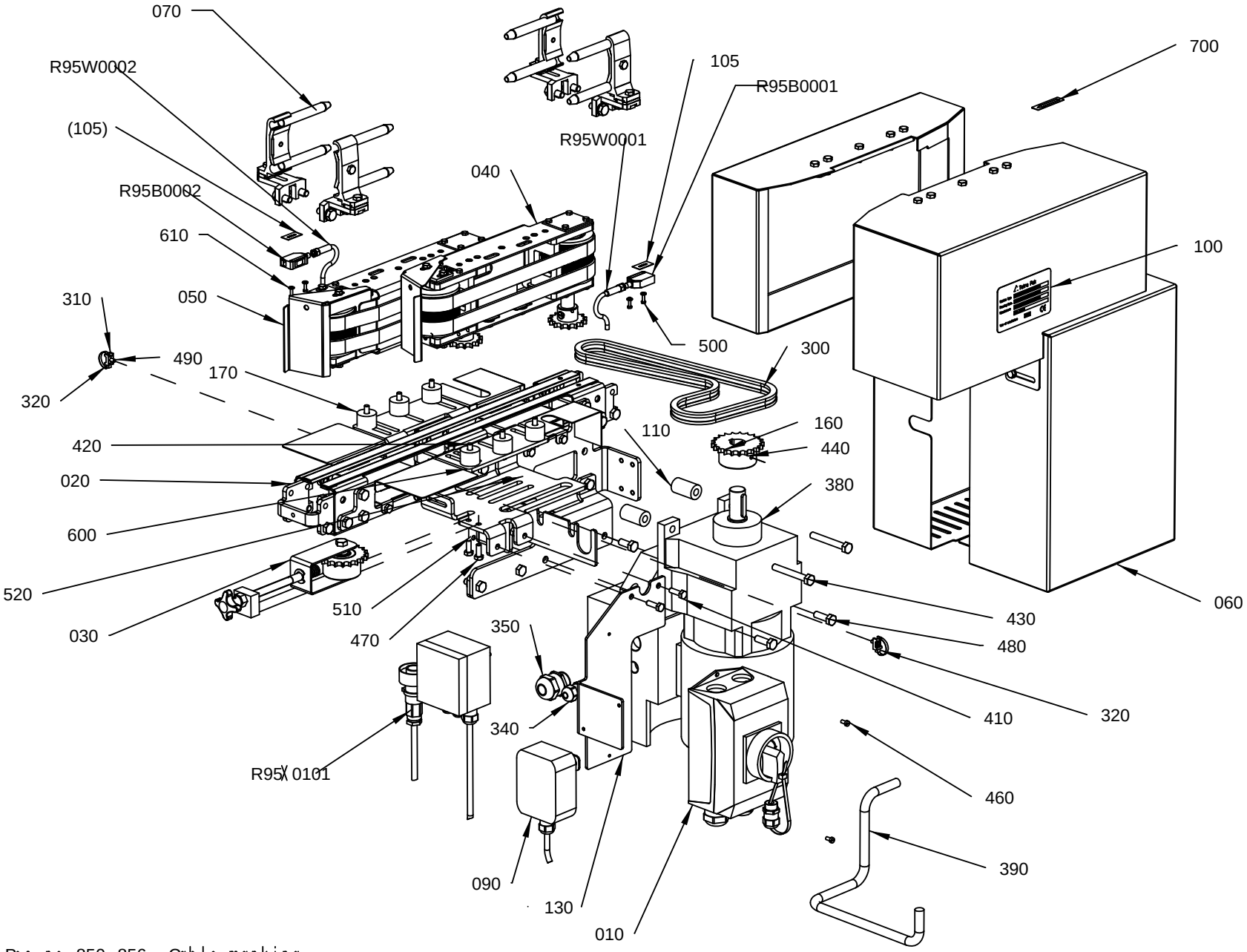

Pos no 850-856: Cable marking

25900 50-4
ECM 425688

ECM: 476715 - 20101103
Group number: 2590050-0300
Assembly Drawing: 2590050-4_1_AB

Pos	Part No	UN	Qty	Description	Page No
PC040-100					
070	2590040-0100		1	RAILING KIT	**6-11**
Common Parts					
010	1359581-0300		1	SWITCH GEAR	**6-15**
020	1550880-0200		1	CONVEYOR BODY	**6-17, 6-19**
030	1550957-0100		1	CHAIN TENSIONER	**6-21**
040	1550977-0300		1	BELT UNIT	**6-23**
050	1550997-0300		1	BELT UNIT	**6-25**
060	2589838-0300		1	COVER	**6-27**
090	2590048-0100		1	OPERATION DEVICE	**6-29**
100	1359055-0000		1	SIGN	
105	2859497-0000		1	SET OF SIGNS	
110	1550995-0000		2	SPACER	
130	1359938-0000		1	MOUNTING SHEET	
160	1550973-0000		1	SPROCKET	
170	2862606-0000		6	SPACER	
300	2656374-0086		1	ROLLER CHAIN	
310	352113-0205		2	ANCHOR PLATES FOR STRIPS, TM2S8-C100	
320	352113-0101		2	CABLE TIE, BLACK 92X2,5 MM	
340	90458-0306		1	CABLE GLAND, M16X1,5, 5311 1010	
350	90458-0308		1	CABLE GLAND, M25X1,5, 5311 1030	
380	90601-1808		1	GEARS, HELICAL MOTOR R17DT71D4MM05/MLU/B	
	90458-1328		*1*	*TRANSFORMER, SEW MLU 11A NO: 823 3837*	
390	90220-0104	M	0.8	SCR. CABLE 4X1,5MM2	
410	312105-0370		2	SCREW M6S ISO 4017 M6X20 A480	
420	312105-0376		6	SCREW M6S ISO 4014 M6X35 A480	
430	312105-0463		2	SCREW M6S ISO 4014 M8X60 A480	
440	312318-0362		1	SCREW ISO4029 M6X8 A4	
460	312125-0287		2	SCREW ISO 1207 M4X8 A4	
470	312105-0368		2	SCREW M6S ISO 4017 M6X16 A480	
480	312105-0453		2	SCREW M6S ISO 4017 M8X25 A480	
490	312115-0287		2	SCREW ISO4762 M4X8 A4 80	
500	312125-0226		4	SCREW ISO 1207 M3X12 A4	
510	312605-0316		2	HEXAGON NUT, M6M M6 A280	
520	312605-0318		4	HEXAGON NUT, M6M M8 A280	
600	315105-0153		6	WASHER BRB 6,4X12 RFR	
610	315106-0124		8	WASHER ISO 7089-3-200 HV A4	
700	1359885-0000		1	SIGN	
820	2590258-0100		1	PACKING DESCRIPTION	**6-31**
R95B0001	90459-7274		1	PHOTOCELL E3Z-T81C-G0SR L-CN	
R95B0002	90459-7273		1	PHOTOCELL E3Z-T81C-G0SR D-CN	
R95W0001	351305-0020		1	ACTUATOR/SENSOR CABLE PRKMV 4-07/2M	
R95W0002	351305-0020		1	ACTUATOR/SENSOR CABLE PRKMV 4-07/2M	
R95X0101	2590054-0100		1	CONNECTION BOX	**6-33**

Machine Type | Group Description | Used-In | Group Number | Page No

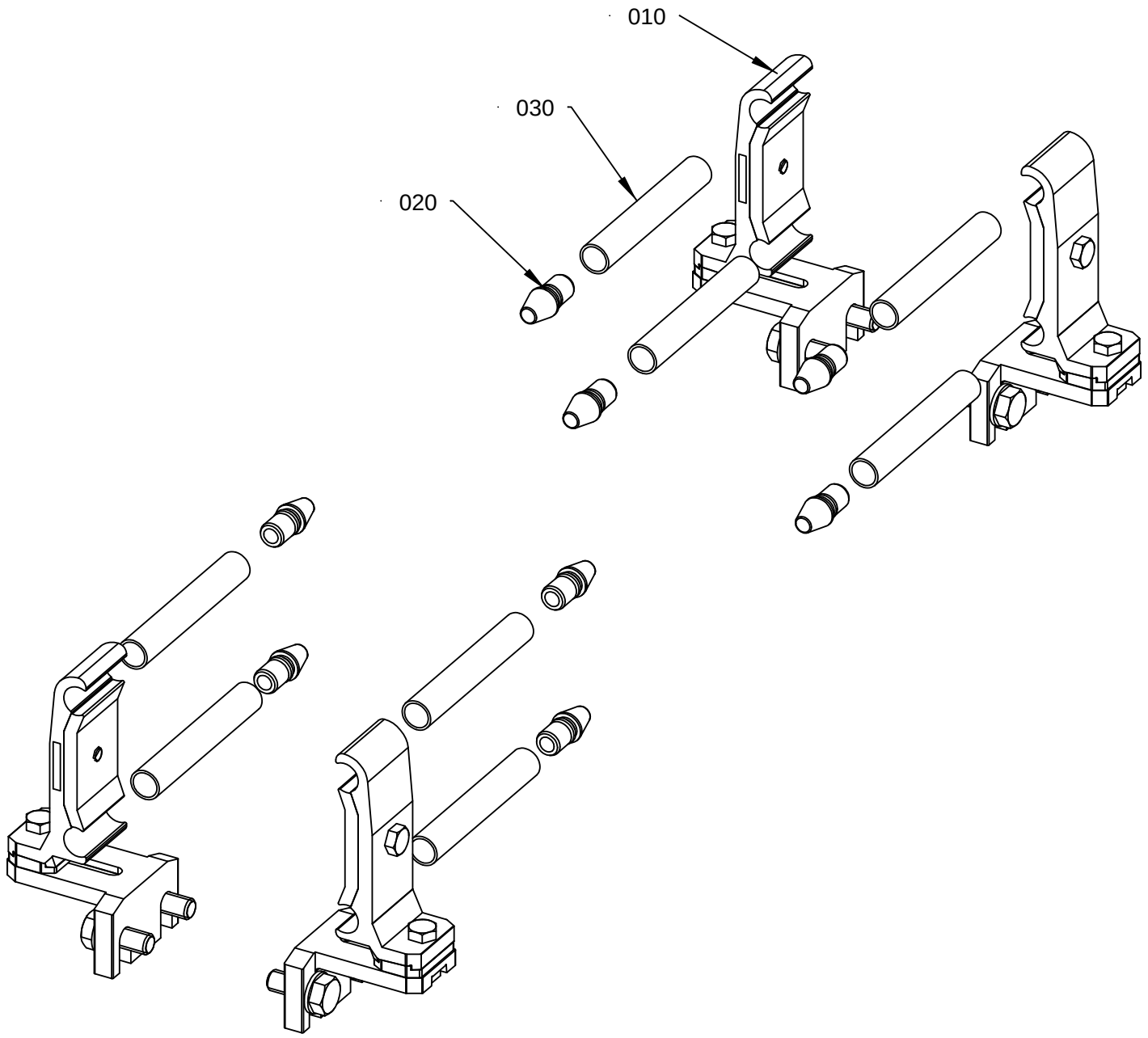

2590040-1
ECM 222162

ECM: 228041 - 20051222
Group number: 2590040-0100
Assembly Drawing: 2590040-1_1_AB

Pos	Part No	UN	Qty	Description	Page No
-					
010	1550743-0200		4	RAIL HOLDER	**6-13**
020	540169-0000		8	DOWEL	
030	2590051-0000		8	PIPE	

Pos	Part No	UN	Qty	Description	Page No

RAIL HOLDER

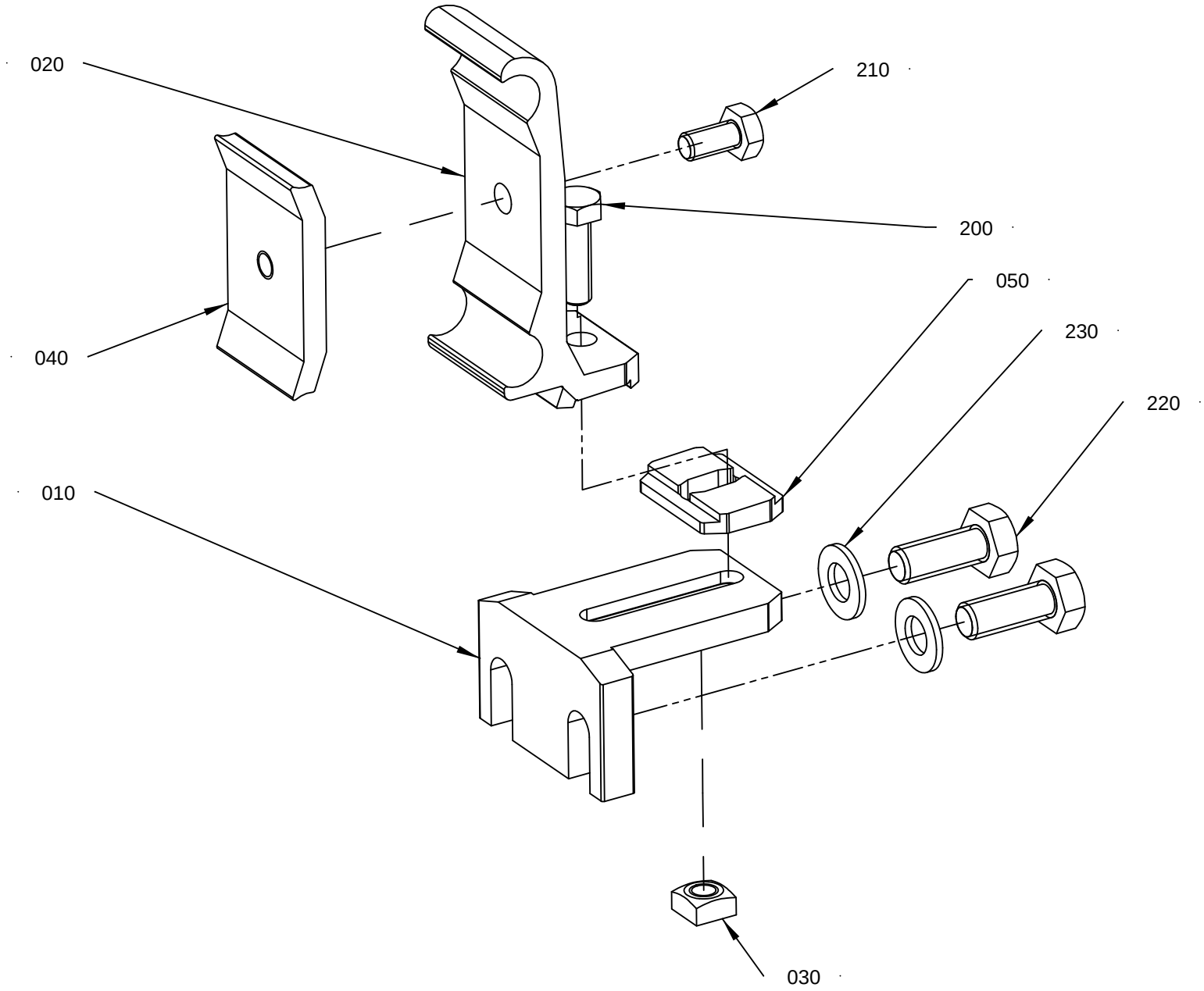

ECM: 429045 - 20091201
Group number: 1550743-0200
Assembly Drawing: 1550743-2_1_AA

Pos	Part No	UN	Qty	Description	Page No
-					
010	1550772-0000		1	HOLDER	
020	2699437-0000		1	RAIL HOLDER	
030	1359565-0000		1	NUT	
040	1366727-0000		1	CLAMP	
050	2699436-0000		1	SPACER	
200	312105-0370		1	SCREW M6S ISO 4017 M6X20 A480	
210	312105-0366		1	SCREW M6S ISO 4017 M6X12 A480	
220	312105-0451		2	SCREW M6S ISO 4017 M8X20 A480	
230	315105-0165		2	WASHER BRB 8,4X16 RFR	

Pos	Part No	UN	Qty	Description	Page No

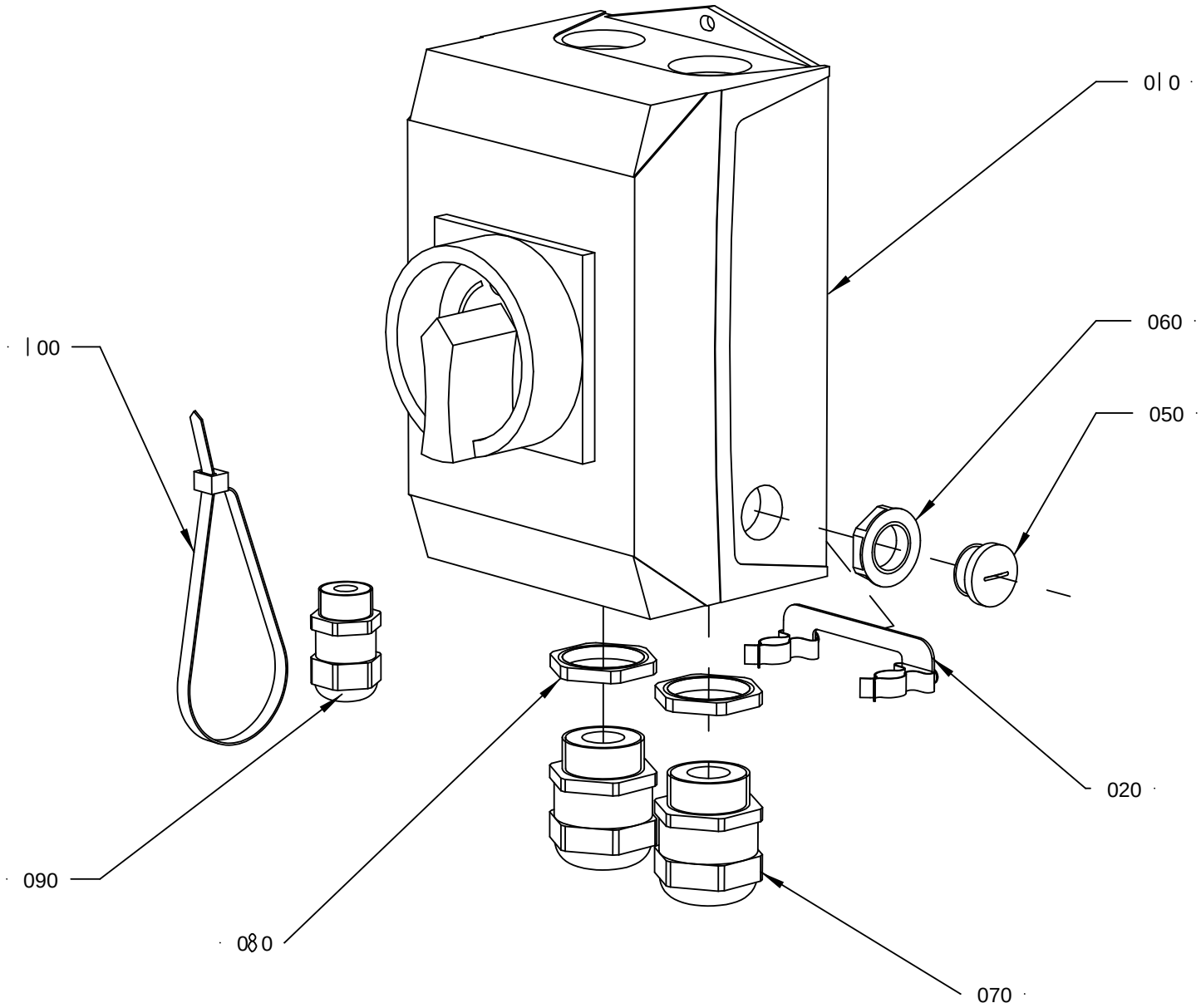

13595 8 1 -3
ECM 403051

ECM: 486880 - 20110704
Group number: 1359581-0300
Assembly Drawing: 1359581-3_1_AA

Pos	Part No	UN	Qty	Description	Page No
-					
010	1359831-0000		1	SWITCH GEAR	
020	3042019-0000		1	BRACKET	
050	90458-1307		1	BLIND PLUG CIRCULAR, M16X1,5 514GFK/216	
060	90458-0322		1	NUT, M16X1,5	
070	90458-0316		2	CABLE GLAND, M25X1,5, 5311 1130	
080	353250-0025		2	GLAND LOCK NUT, M25X1,5	
090	90458-0306		1	CABLE GLAND, M16X1,5, 5311 1010	
100	352113-0102		1	CABLE TIE, BLACK 188X4,8 MM	

Pos	Part No	UN	Qty	Description	Page No

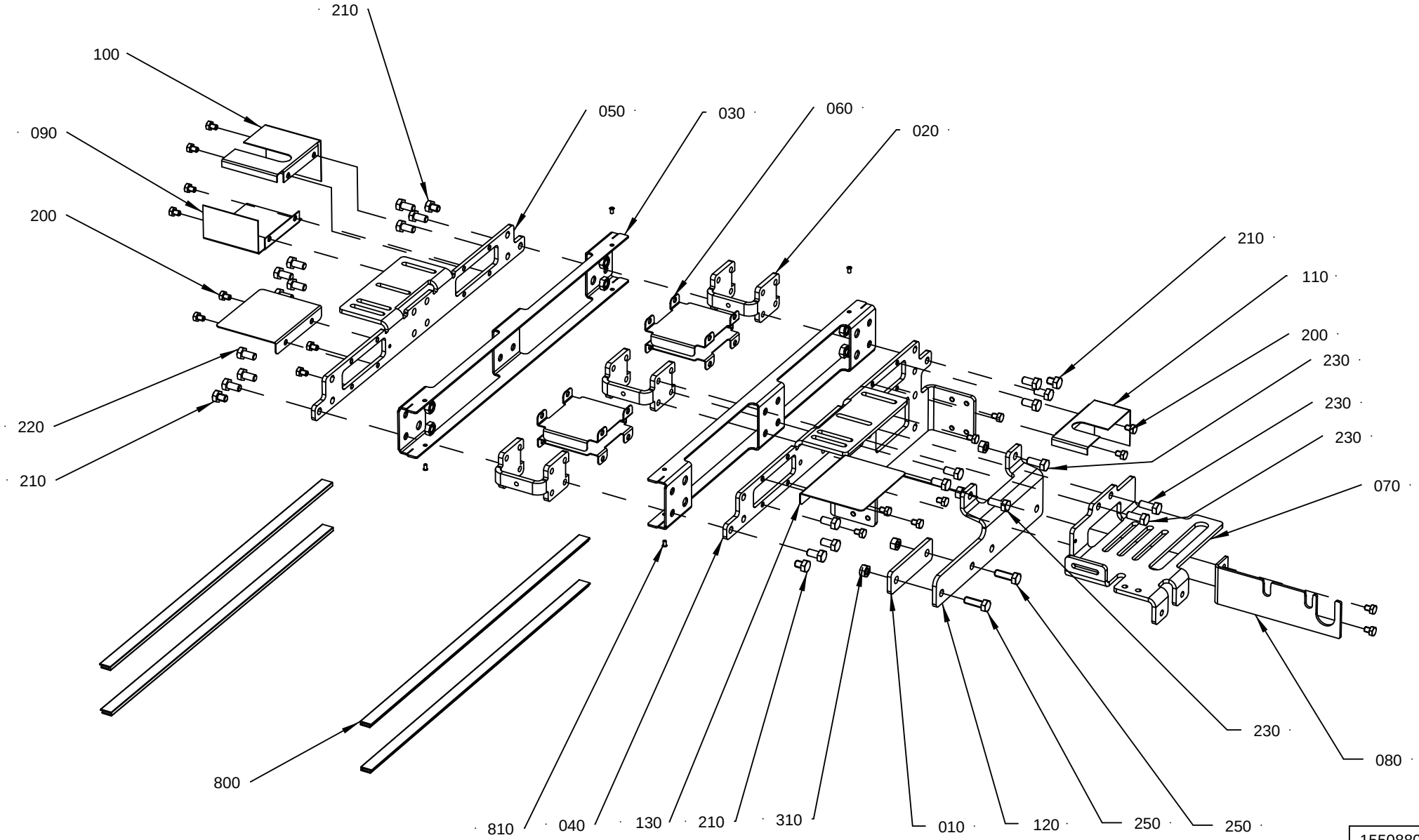

1550880-2
ECM 425688

ECM: 429153 - 20091217
Group number: 1550880-0200
Assembly Drawing: 1550880-2_1_AB

This list covers pages from 6-16 to 6-19

Pos	Part No	UN	Qty	Description	Page No
-					
010Â	1550199-0000		1	SPACER	
020Â	2561206-0000		3	SPACER	
030Â	3075957-0000		2	SIDE PLATE	
040Â	1550912-0000		1	PLATE	
050Â	1550913-0000		1	PLATE	
060Â	1550956-0000		4	PLATE	
070Â	3037105-0000		1	BRACKET	
080Â	2561609-0000		1	BRACKET	
090Â	2590044-0000		1	PLATE	
100Â	2590045-0000		1	PLATE	
110Â	2590046-0000		1	PLATE	
120Â	2590047-0000		1	BRACKET	
130Â	2590275-0000		2	COVER	
200Â	312105-0362		18	SCREW M6S ISO 4017 M6X8 A480	
210Â	90459-4735		4	SCREW M6S ISO 4017 M8X10 A480	
220Â	312105-0449		14	SCREW M6S ISO 4017 M8X16 A480	
230Â	312105-0451		4	SCREW M6S ISO 4017 M8X20 A480	
250Â	312105-0453		2	SCREW M6S ISO 4017 M8X25 A480	
310Â	312605-0318		4	HEXAGON NUT, M6M M8 A280	
800Â	1550595-4960		4	SLIDING STRIP	
810Â	90600-6183		4	TUBULAR RIVET 3,5X6,2	

Pos	Part No	UN	Qty	Description	Page No

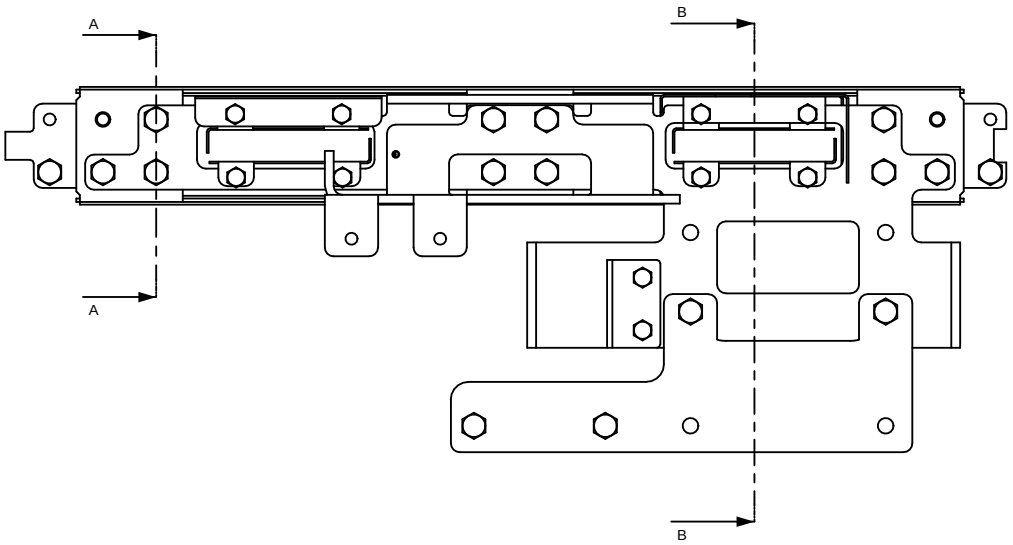

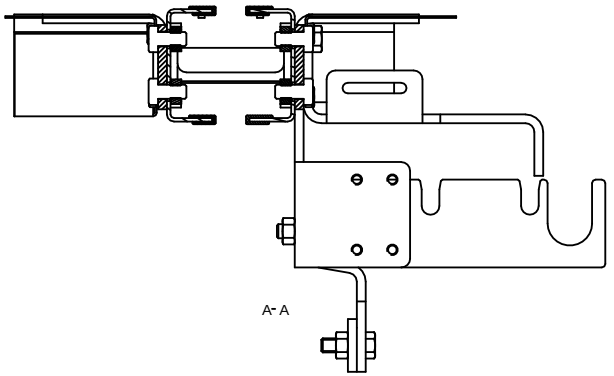

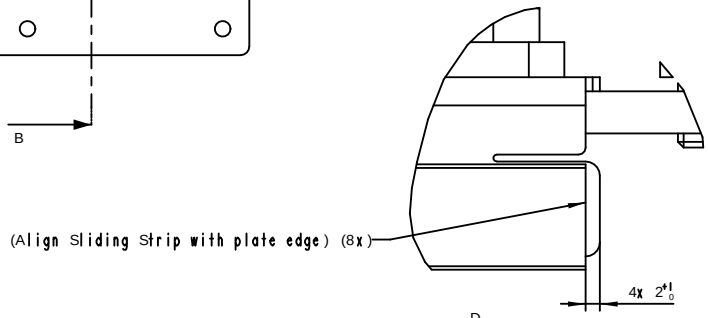

D
2:1

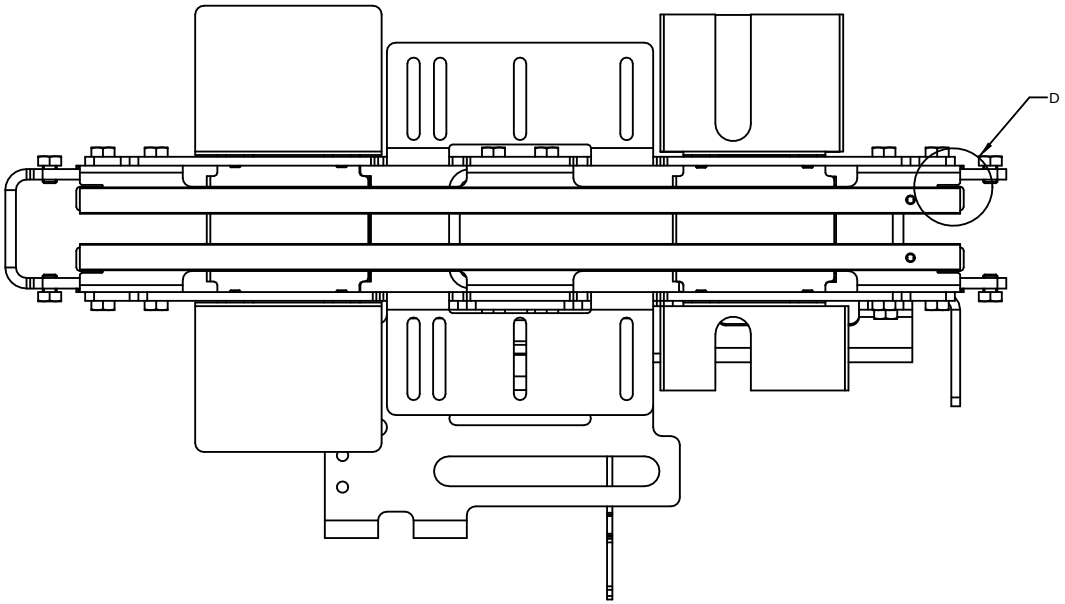

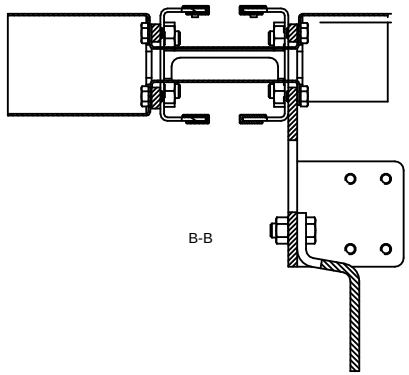

ECM: 429153 - 20091217
Group number: 1550880-0200
Assembly Drawing: 1550880-2_3_AB

This list covers pages from 6-16 to 6-19

Pos	Part No	UN	Qty	Description	Page No
-					
010Â	1550199-0000		1	SPACER	
020Â	2561206-0000		3	SPACER	
030Â	3075957-0000		2	SIDE PLATE	
040Â	1550912-0000		1	PLATE	
050Â	1550913-0000		1	PLATE	
060Â	1550956-0000		4	PLATE	
070Â	3037105-0000		1	BRACKET	
080Â	2561609-0000		1	BRACKET	
090Â	2590044-0000		1	PLATE	
100Â	2590045-0000		1	PLATE	
110Â	2590046-0000		1	PLATE	
120Â	2590047-0000		1	BRACKET	
130Â	2590275-0000		2	COVER	
200Â	312105-0362		18	SCREW M6S ISO 4017 M6X8 A480	
210Â	90459-4735		4	SCREW M6S ISO 4017 M8X10 A480	
220Â	312105-0449		14	SCREW M6S ISO 4017 M8X16 A480	
230Â	312105-0451		4	SCREW M6S ISO 4017 M8X20 A480	
250Â	312105-0453		2	SCREW M6S ISO 4017 M8X25 A480	
310Â	312605-0318		4	HEXAGON NUT, M6M M8 A280	
800Â	1550595-4960		4	SLIDING STRIP	
810Â	90600-6183		4	TUBULAR RIVET 3,5X6,2	

Pos	Part No	UN	Qty	Description	Page No

CHAIN TENSIONER

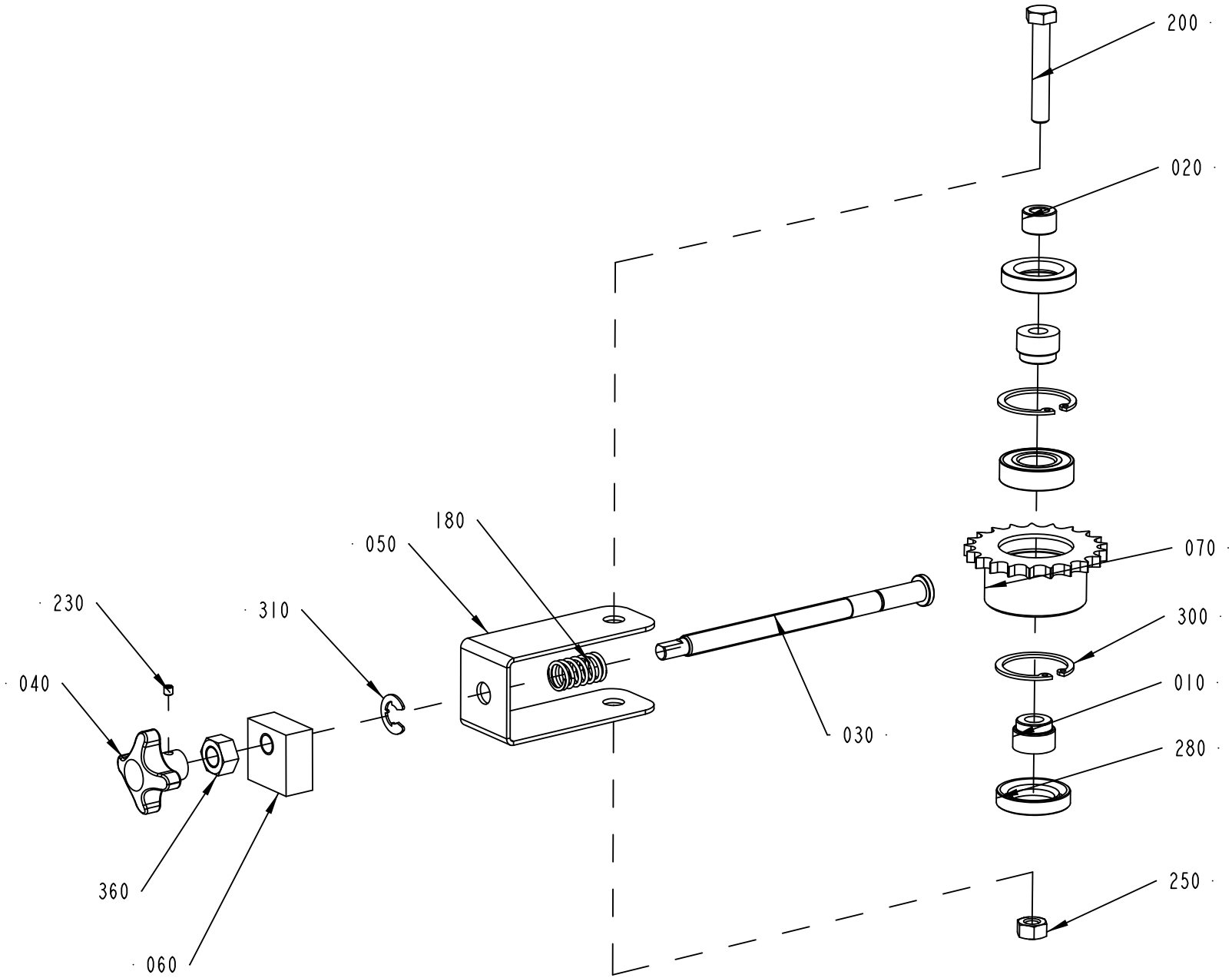

1550957-1
ECM 429598

ECM: 430827 - 20091216
Group number: 1550957-0100
Assembly Drawing: 1550957-1_1_AC

Pos	Part No	UN	Qty	Description	Page No
-					
010	533237-0000		2	AXLE PIN	
020	2561613-0000		1	SPACER	
030	2590266-0000		1	PIN	
040	1550185-0000		1	COCK HANDLE	
050	1550959-0000		1	CLAMP	
060	1550960-0000		1	BLOCK	
070	1550971-0000		1	SPROCKET	
180	90335-0036		1	COMP. SPRING 22450, 1,6X14,1X24	
200	312105-0461		1	SCREW M6S ISO 4014 M8X50 A480	
230	312318-0283		1	SCREW ISO4029 M4X4 A4	
250	312605-0318		1	HEXAGON NUT, M6M M8 A280	
280	315221-0145		2	RADIAL SEAL 20X35X7 MM	
300	315753-0124		2	RETAINING RING FOR BORE DIN 472 35 SS	
310	315755-0110		1	RETAINING RING SHAFT DIN 6799 9 SS	
350	1550348-0001		1	BALL BEARING 17/35X10	
360	312607-0320		1	HEXAGON NUT, EN 24032 M6M M10 A480	

Pos	Part No	UN	Qty	Description	Page No

BELT UNIT

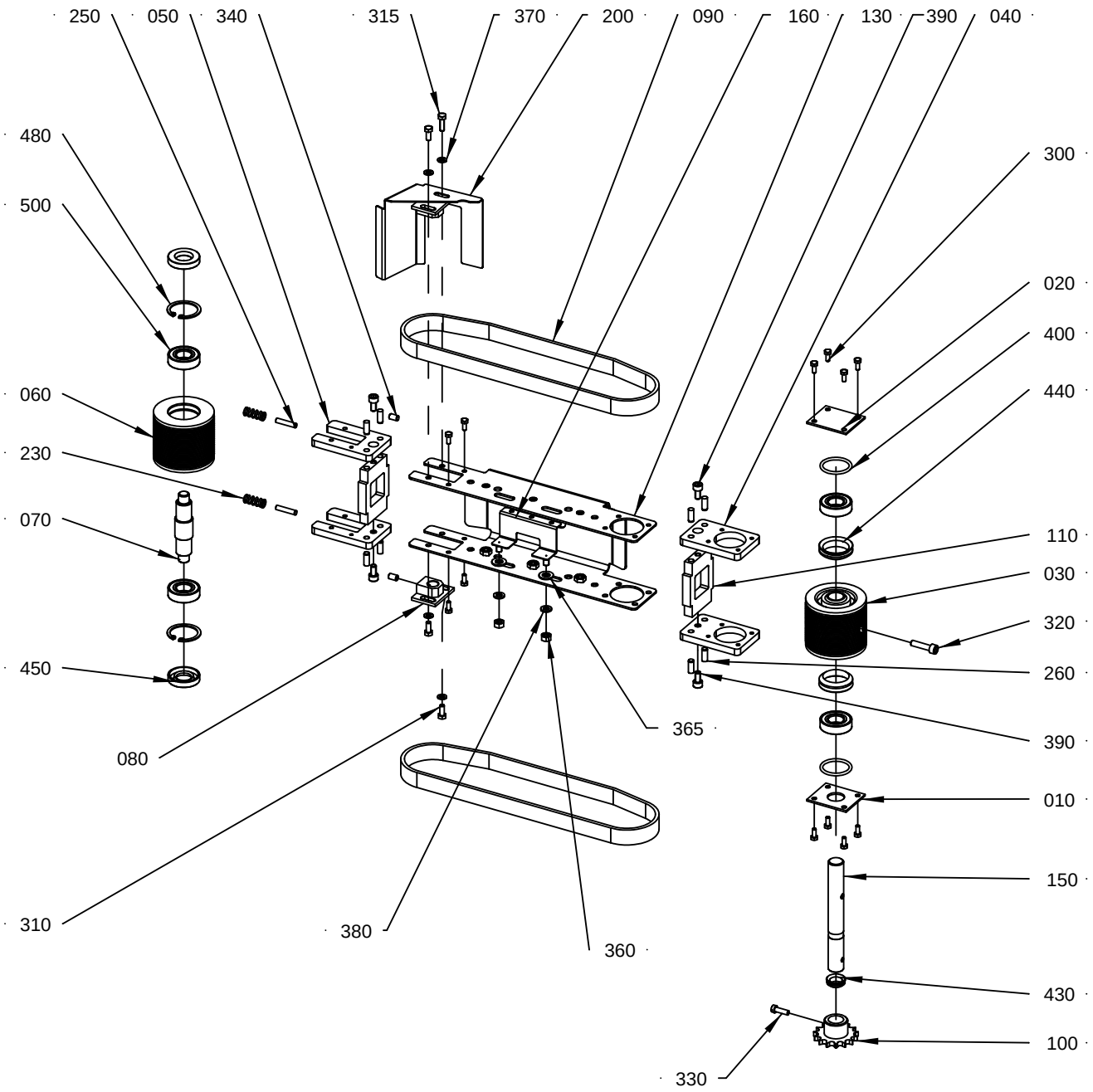

15509 77-3
429598

ECM: 429813 - 20091216
Group number: 1550977-0300
Assembly Drawing: 1550977-3_1_AB

Pos	Part No	UN	Qty	Description	Page No
-					
010Â	533234-0000		1	LID	
020Â	533235-0000		1	LID	
030Â	561652-0000		1	WHEEL	
040Â	2656425-0000		2	PLATE	
050Â	2656426-0000		2	PLATE	
060Â	1359389-0000		1	ROLL	
070Â	1359390-0000		1	SHAFT	
080Â	1359391-0000		1	MOUNTING BLOCK	
090Â	1359776-0000		2	BELT	
100Â	1550972-0000		1	SPROCKET	
110Â	3042014-0000		2	PLATE	
130Â	3019347-0000		1	PLATE	
150Â	2862607-0000		1	SHAFT	
160Â	1550999-0000		1	PHOTOCELL BRACKET	
200	3068377-0000		1	TOUCH GUARD	
230Â	90335-0067		2	COMP. SPRING 22370, 1,6X9,6X31,75	
250Â	311103-1312		2	PARALLEL PIN ISO 2338 5M6X24 A1	
260Â	311103-0351		8	PARALLEL PIN ISO 2338 6M6X16 A1	
300Â	312105-0289		12	SCREW M6S H4X10 A4 70 ISO4017/DIN933	
310Â	312105-0327		3	SCREW M6S ISO 4017 M5X12 A480	
315	312105-0329		1	SCREW M6S ISO 4017 M5X16 A480	
320Â	312115-0372		1	SCREW ISO4762 M6X25 A4 80	
330Â	312125-0329		1	SCREW ISO 1207 M5X16 A4	
340Â	312318-0364		2	SCREW ISO4029 M6X10 A4	
360Â	312605-0316		2	HEXAGON NUT, M6M M6 A280	
365Â	315105-0165		2	WASHER BRB 8,4X16 RFR	
370Â	315105-0146		4	WASHER BRB 5,3X10 RFR	
380Â	315105-0153		2	WASHER BRB 6,4X12 RFR	
390Â	312115-0366		4	SCREW ISO4762 M6X12 A4 80	
400Â	315202-0219		2	O-RING 29,2X3 MM	
430Â	315220-0130		1	V-RING 14X20X7,7 MM V-16S	
440Â	315220-0172		2	V-RING 29X37X10,5 MM V-32S	
450Â	315221-0137		2	RADIAL SEAL 17X35X7 MM	
480Â	315753-0124		2	RETAINING RING FOR BORE DIN 472 35 SS	
500Â	1550348-0001		4	BALL BEARING 17/35X10	

Pos	Part No	UN	Qty	Description	Page No

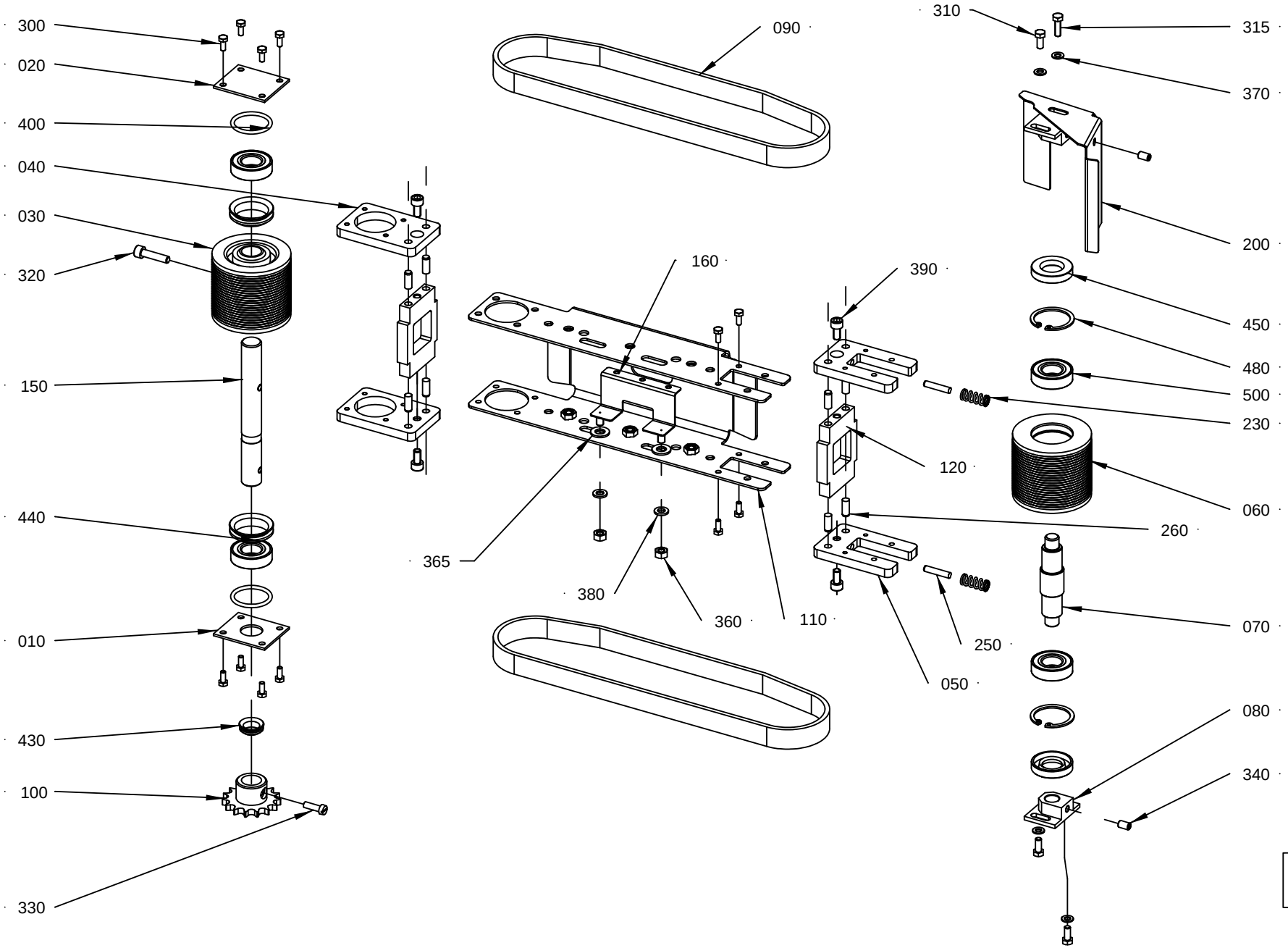

15509 97-3
429598

ECM: 429814 - 20091216
Group number: 1550997-0300
Assembly Drawing: 1550997-3_1_AB

Pos	Part No	UN	Qty	Description	Page No
-					
010Â	533234-0000		1	LID	
020Â	533235-0000		1	LID	
030Â	561652-0000		1	WHEEL	
040Â	2656425-0000		2	PLATE	
050Â	2656426-0000		2	PLATE	
060Â	1359389-0000		1	ROLL	
070Â	1359390-0000		1	SHAFT	
080Â	1359391-0000		1	MOUNTING BLOCK	
090Â	1359776-0000		2	BELT	
100Â	1550972-0000		1	SPROCKET	
110Â	3019347-0000		1	PLATE	
120	3042014-0000		2	PLATE	
150Â	2862607-0000		1	SHAFT	
160Â	1550999-0000		1	PHOTOCELL BRACKET	
200	3068379-0000		1	TOUCH GUARD	
230Â	90335-0067		2	COMP. SPRING 22370, 1,6X9,6X31,75	
250Â	311103-1312		2	PARALLEL PIN ISO 2338 5M6X24 A1	
260Â	311103-0351		8	PARALLEL PIN ISO 2338 6M6X16 A1	
300Â	312105-0289		12	SCREW M6S H4X10 A4 70 ISO4017/DIN933	
310Â	312105-0327		4	SCREW M6S ISO 4017 M5X12 A480	
315	312105-0329		1	SCREW M6S ISO 4017 M5X16 A480	
320Â	312115-0372		1	SCREW ISO4762 M6X25 A4 80	
330Â	312125-0329		1	SCREW ISO 1207 M5X16 A4	
340Â	312318-0364		2	SCREW ISO4029 M6X10 A4	
360Â	312605-0316		2	HEXAGON NUT, M6M M6 A280	
365Â	315105-0165		2	WASHER BRB 8,4X16 RFR	
370Â	315105-0146		4	WASHER BRB 5,3X10 RFR	
380Â	315105-0153		2	WASHER BRB 6,4X12 RFR	
390Â	312115-0366		4	SCREW ISO4762 M6X12 A4 80	
400Â	315202-0219		2	O-RING 29,2X3 MM	
430Â	315220-0130		1	V-RING 14X20X7,7 MM V-16S	
440Â	315220-0172		2	V-RING 29X37X10,5 MM V-32S	
450Â	315221-0137		2	RADIAL SEAL 17X35X7 MM	
480Â	315753-0124		2	RETAINING RING FOR BORE DIN 472 35 SS	
500Â	1550348-0001		4	BALL BEARING 17/35X10	

Pos	Part No	UN	Qty	Description	Page No

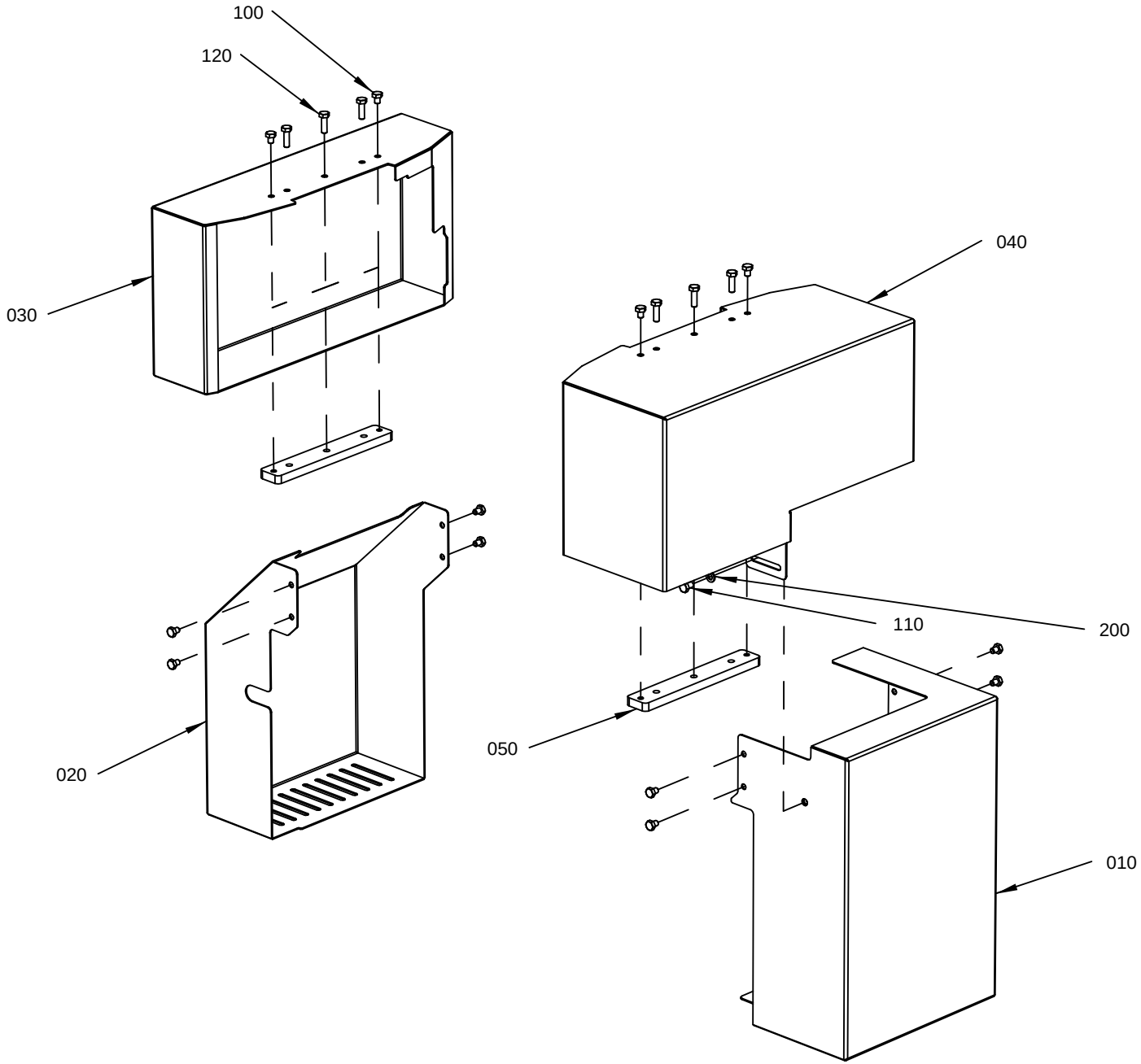

2589838-3
ECM 429598

ECM: 431442 - 20091217
Group number: 2589838-0300
Assembly Drawing: 2589838-3_1_AB

Pos	Part No	UN	Qty	Description	Page No
-					
010Â	2561620-0000		1	COVER	
020Â	2561622-0000		1	COVER	
030Â	3068380-0000		1	COVER	
040Â	3068375-0000		1	COVER	
050Â	2561625-0000		2	PLATE	
100Â	312105-0362		12	SCREW M6S ISO 4017 M6X8 A480	
110Â	312105-0364		1	SCREW M6S ISO 4017 M6X10 A480	
120Â	312105-0370		6	SCREW M6S ISO 4017 M6X20 A480	
200Â	315105-0153		1	WASHER BRB 6,4X12 RFR	

Pos	Part No	UN	Qty	Description	Page No

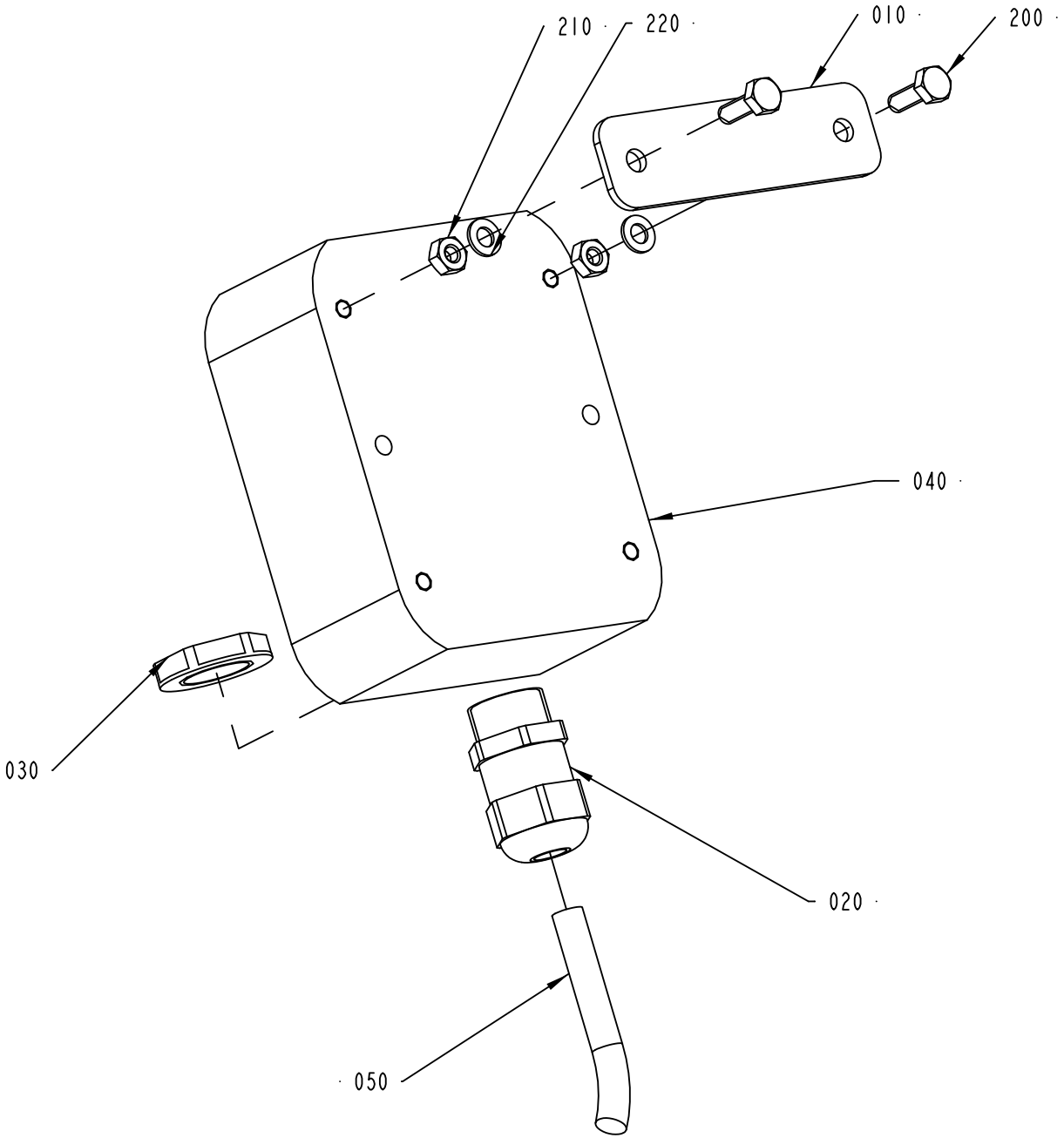

2590048-1
ECM 235328

ECM: 415017 - 20091113
Group number: 2590048-0100
Assembly Drawing: 2590048-1_1_AB

Pos	Part No	UN	Qty	Description	Page No
-					
010	2590049-0000		1	PLATE	
020	90458-0306		1	CABLE GLAND, M16X1,5, 5311 1010	
030	90458-0322		1	NUT, M16X1,5	
040	90458-1330		1	OPERATION DEVICE, MBG 22X, 823 8871	
050	90220-0091	CM	150	PAIR TWISTED CABLE 2X2X0,25MM2	
200	312105-0291		2	SCREW M6S ISO 4017 M4X12 A470	
210	312605-0312		2	HEXAGON NUT, M6M M4 A280	
220	315105-0136		2	WASHER BRB 4,3X8 RFR	

Pos	Part No	UN	Qty	Description	Page No

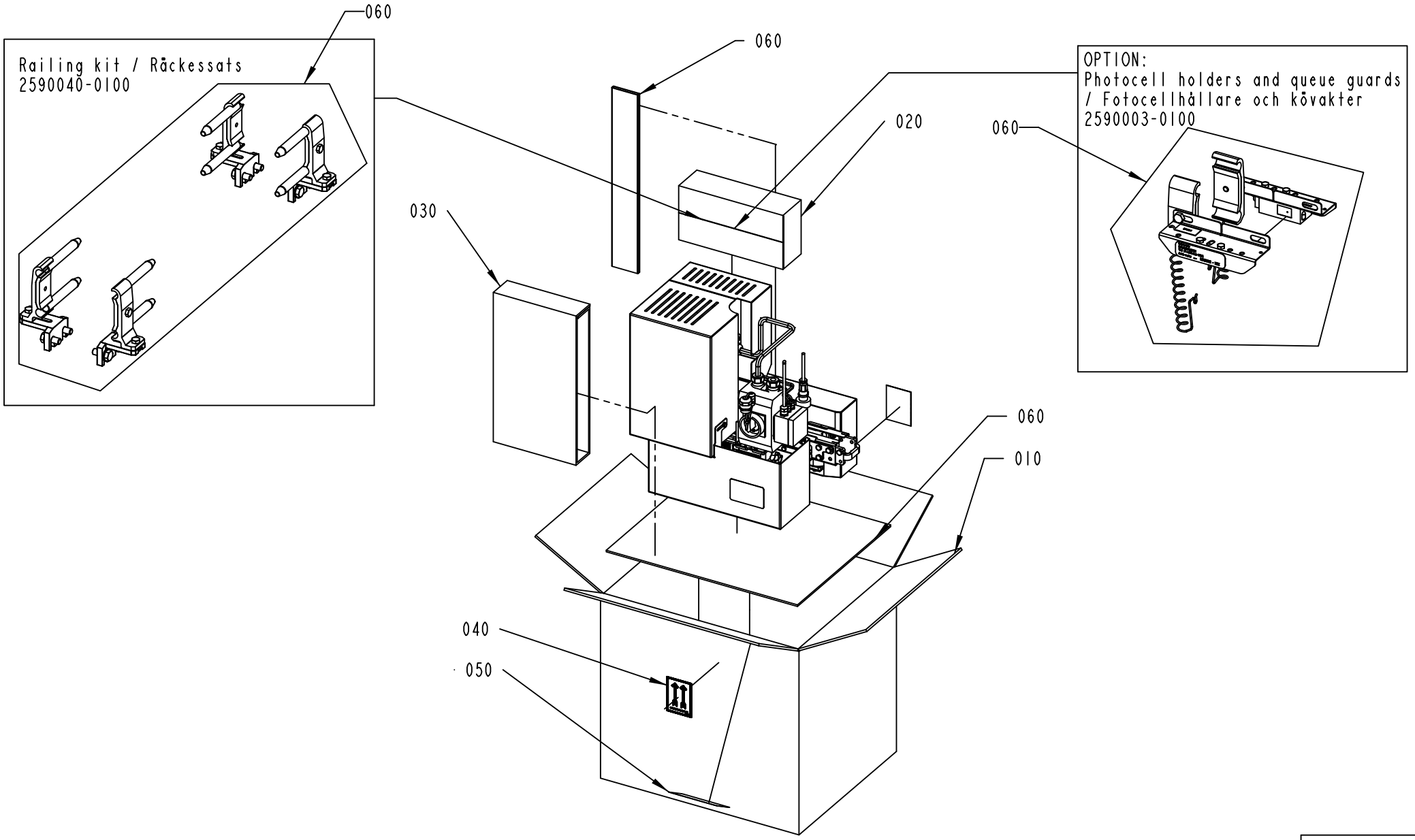

2590258-1
ECM 111510

ECM: 139005 - 20040212
Group number: 2590258-0100
Assembly Drawing: 2590258-1_1_AA

Pos	Part No	UN	Qty	Description	Page No
-					
010	2590259-0000		1	CORRUGATED CARDBOARD BOX	
020	2590260-0000		1	CORRUGATED CARDBOARD BOX	
030	2590261-0000		1	FILLING	
040	543267-0000		2	LABEL TAPE	
050	1086871-0000		1	LABEL TAPE	
060	90003-0474		1	PACKING	

Pos	Part No	UN	Qty	Description	Page No

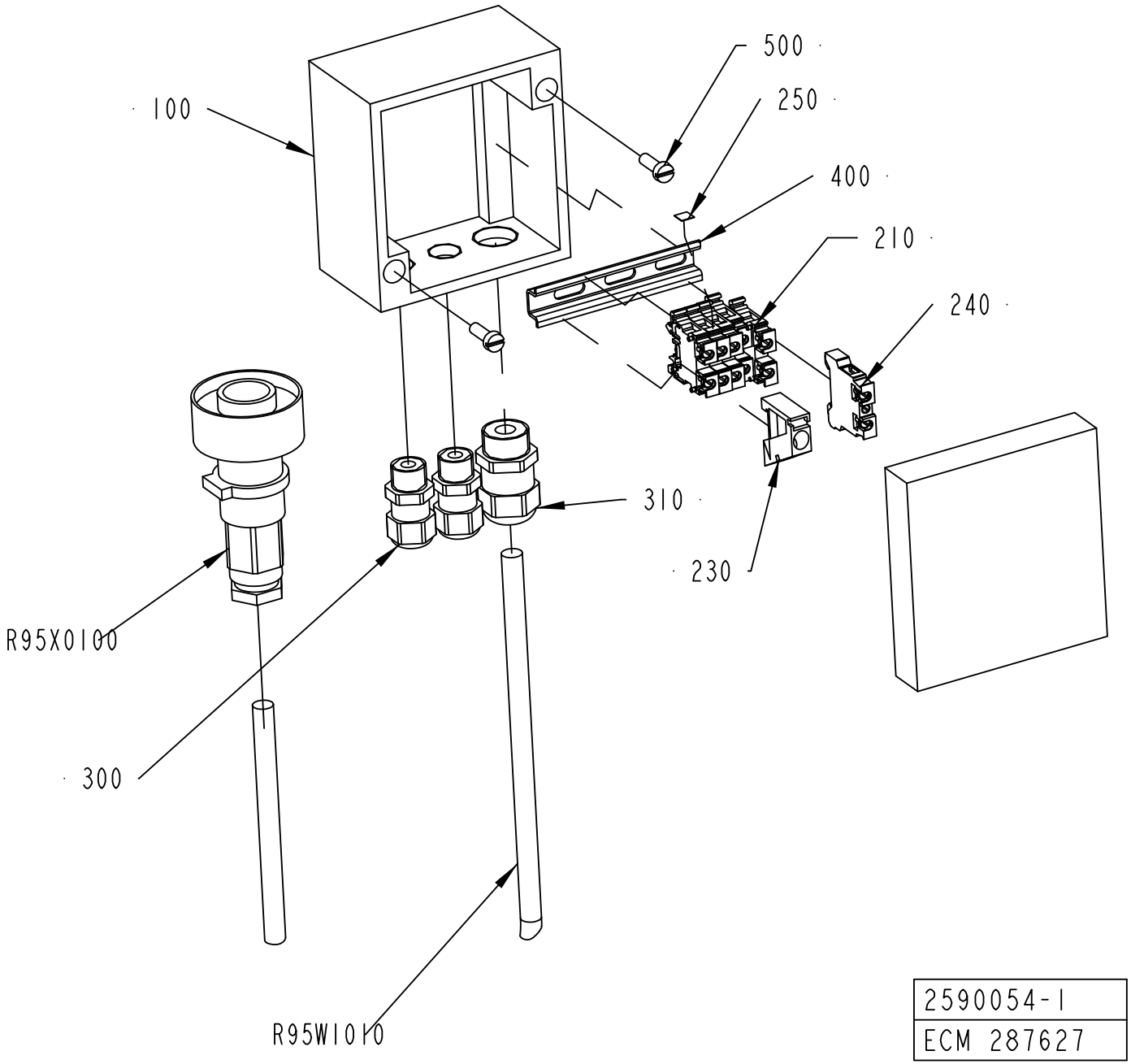

2590054-1
ECM 287627

ECM: 289538 - 20070516
Group number: 2590054-0100
Assembly Drawing: 2590054-1_1_AB

Pos	Part No	UN	Qty	Description	Page No
-					
100	2590053-0000		1	CONNECTION BOX	
210	90077-0123		5	TERMINAL FEED THROUGH	
230	90077-0308		1	END PLATE, 10-00038286-1	
240	90135-0042		1	EARTH TERMINAL AKE 2,5	
250	359011-0807		1	MARKING, DEK 5 FW 1-50	
300	90458-0305		2	CABLE GLAND, M12X1,5, 5311 1000	
310	90458-0306		1	CABLE GLAND, M16X1,5, 5311 1010	
400	90077-0328	M	0.06	RAIL, TS15/5	
500	312125-0291		2	SCREW ISO 1207 M4X12 A4	
600	351160-0102		1	WIRE AWM 1X0,75 MM2 DARKBLUE	
605	351162-0102	M	1	WIRE AWM 1X0,75 MM2 YELLOW-GREEN	
610	353001-0113		1	END SLEEVE 0,75MM2	
615	353101-0122		1	CABLE SHOE 0,5-1,5MM2 M5 RED	
620	359000-0201		1	WIRE MARKING, YELLOW, PA02/3"1"	
630	359000-0202		1	WIRE MARKING, YELLOW, PA02/3"2"	
640	359000-0203		1	YELLOW, PWIRE MARKING, YELLOW, PA02/3"3"	
650	359000-0204		1	WIRE MARKING, YELLOW, PA02/3"4"	
660	359000-0205		1	WIRE MARKING, YELLOW, PA02/3"5"	
670	359000-0654		1	WIRE MARKING, YELLOW, PA02/3"E"	
R95W1010	351150-0404	M	5	CABLE OLFLEX 4X0,75 MM2 LIGHT/GREY	
R95X0100	90110-0235		1	CABLE CONTACT, PX0739/P	

Pos	Part No	UN	Qty	Description	Page No

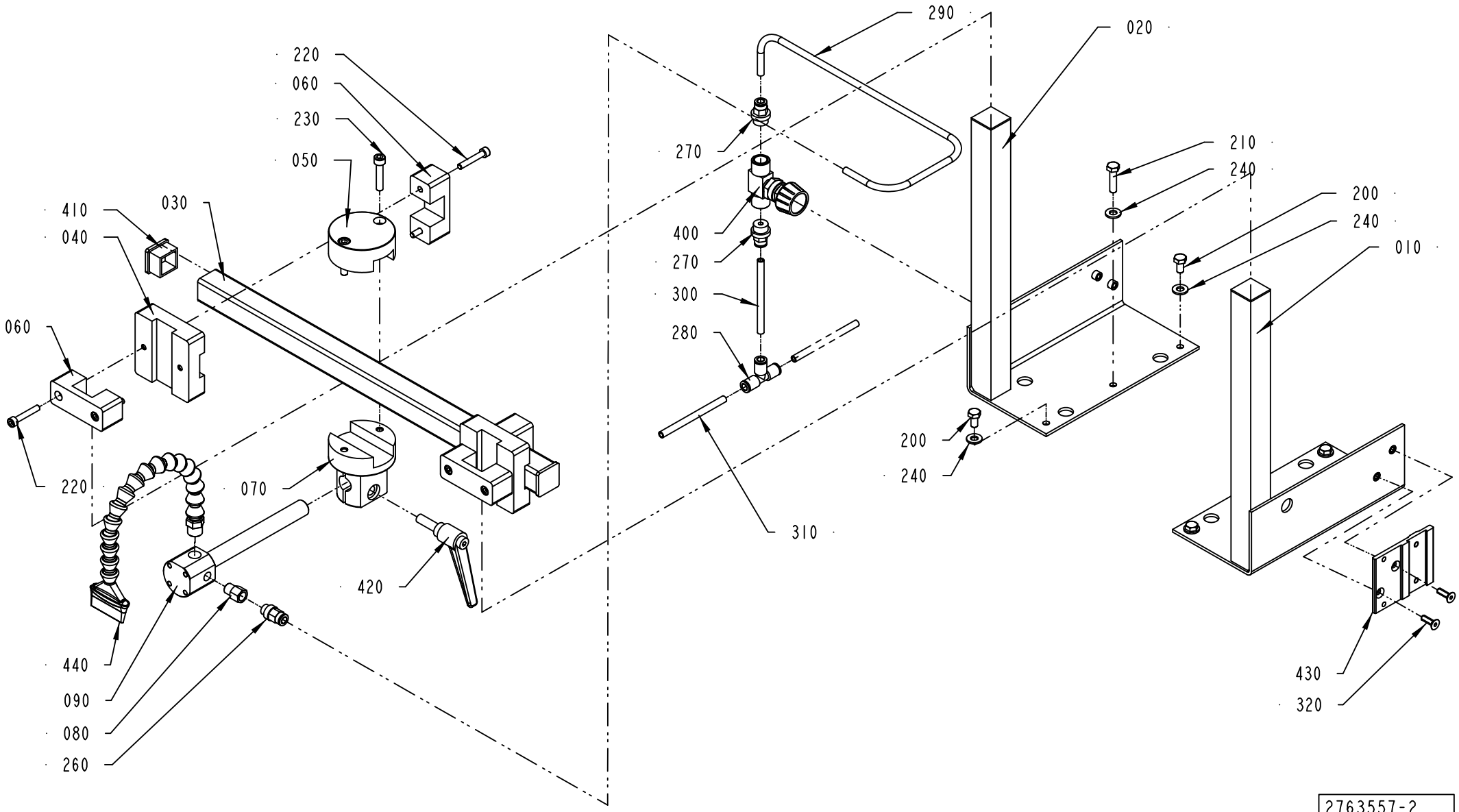
290
020
220
060
230
050
270
210
240
200
240
410
040
030
400
270
300
280
010
060
200
240
220
070
310
420
430
320
440
090
080
260
2763557-2
399024

ECM: 405068 - 20081201
Group number: 2763557-0200
Assembly Drawing: 2763557-2_1_AB

Pos	Part No	UN	Qty	Description	Page No
-					
010	2559041-0000		1	BRACKET	
020	2562468-0000		1	BRACKET	
030	3004384-0000		1	BEAM	
040	3004387-0000		2	BLOCK	
050	3004385-0000		1	BLOCK	
060	2763628-0000		4	BRACKET	
070	3004388-0000		1	CLAMPING PIECE	
080	3004389-0000		1	REDUCER	
090	3004386-0000		1	SUPPORT	
200	312105-0366		4	SCREW M6S ISO 4017 M6X12 A480	
210	312105-0372		2	SCREW M6S ISO 4017 M6X25 A480	
220	312115-0335		8	SCREW ISO4762 M5X30 A4 80	
230	312115-0374		2	SCREW ISO4762 M6X30 A4 80	
240	315105-0156		6	WASHER BRB 6,7X14 RFR	
260	350001-0006		1	PUSH-IN FITTING QS-F-G1/8-6	
270	350001-0008		2	PUSH-IN FITTING QS-F-G1/4-6	
280	350005-0002		1	PUSH-IN T-FITTING QST-F-6	
290	315400-0001	MM	700	TUBE PUN-H-6X1-BL	
300	315400-0001	MM	80	TUBE PUN-H-6X1-BL	
310	315400-0001	MM	3000	TUBE PUN-H-6X1-BL	
320	312155-0329		2	SCREW DIN 7991 MF6S M5X16 A4 70	
400	90187-0149		1	THROTTLE VALVE, G1/4, G1/4, MALE	
410	90261-0048		2	SQUARE PLUG GPN 260/Q2525	
420	90459-2596		1	LOCKING HANDLE, M8X25M	
430	90600-7506		1	SUPPORT PLATE, 26798	
440	90600-8708		1	AIR KNIFE, LL40100	

Pos	Part No	UN	Qty	Description	Page No

LEG, MOTOR, 3 ARMS

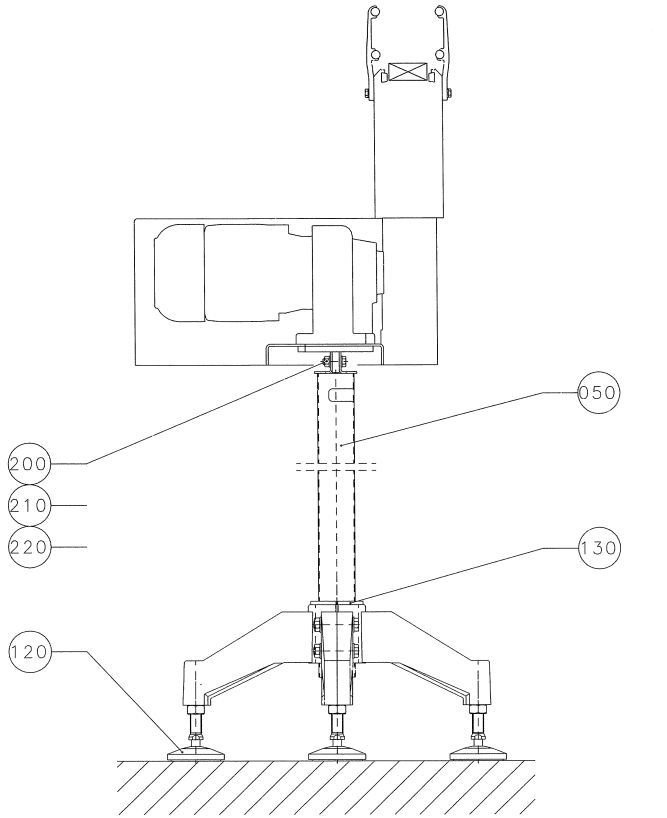

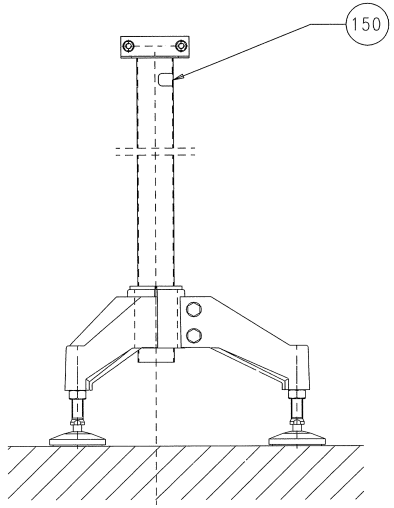

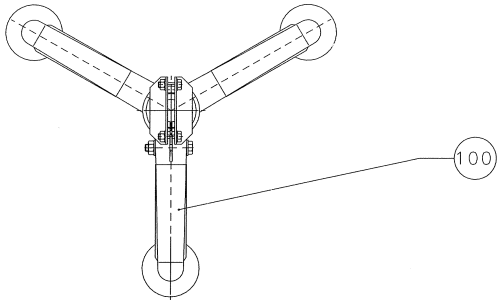

ECM: 134913 - 20031125
Group number: 1020164-0200
Assembly Drawing: 1020164-2_1_AB

Pos	Part No	UN	Qty	Description	Page No
CH1000-1400					
050 2	1020391-0002		1	PIPE	
CH655-1000					
050 1	1020391-0001		1	PIPE	
Common Parts					
010	1020418-0200		1	PACKING DESCRIPTION	**6-39**
100	90068-0016		1	FOOT, 3 LEGS. NO 15511	
120	90458-2581		3	FOOT PLATE, M50-16-70	
130	562015-0000		1	REDUCTION CASING	
150	1086870-0000		1	SIGN	
200	312105-0453		2	SCREW M6S ISO 4017 M8X25 A480	
210	312605-0318		2	HEXAGON NUT, M6M M8 A280	
220	315105-0165		4	WASHER BRB 8,4X16 RFR	

Pos	Part No	UN	Qty	Description	Page No

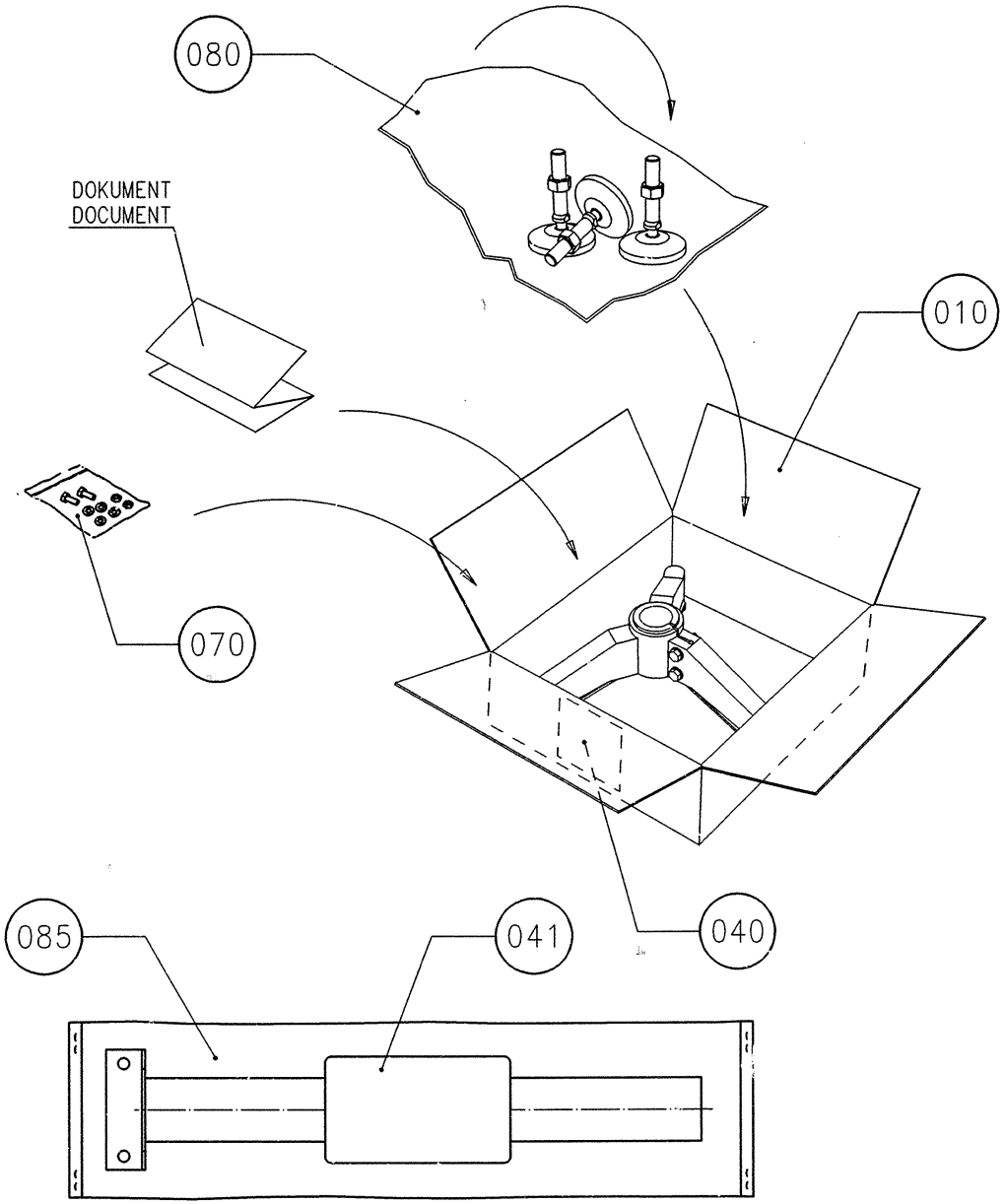
080
DOKUMENT
DOCUMENT
010
070
085
041
040

ECM: 221812 - 20050713
Group number: 1020418-0200
Assembly Drawing: 1020418-2_1_AA

Pos	Part No	UN	Qty	Description	Page No
-					
010	1020462-0000		1	CORRUGATED CARDBOARD BOX	
040	1086871-0000		1	LABEL TAPE	
070	90003-0019		1	BAG	
080	90003-0474			PACKING	

Pos	Part No	UN	Qty	Description	Page No

Machine Type	Group Description	Used-In	Group Number	Page No

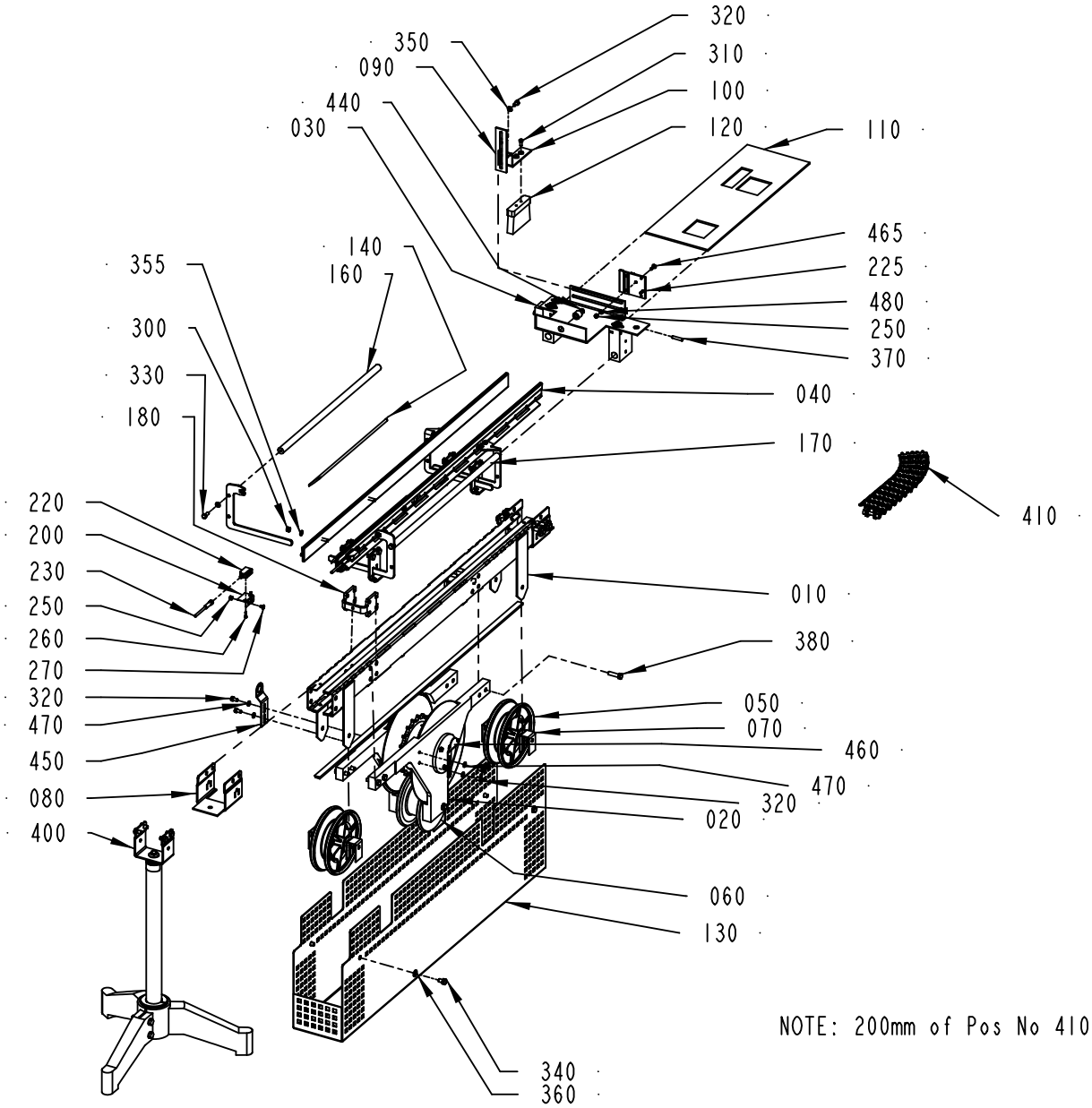

NOTE: 200mm of Pos No 410 should be packed with the equipment

3046773-1
506333

ECM: 506333 - 20110609
Group number: 3046773-0100
Assembly Drawing: 3046773-1_1_AB

Pos	Part No	UN	Qty	Description	Page No
-					
005	1531340-0102		1	TECHNICAL MANUAL	
010	2796013-0100		1	CONVEYOR BODY	**6-43**
020	2787449-0100		1	DRIVE WHEEL	**6-45**
030	2810603-0100		1	HOLDER	**6-47**
040	2829706-0100		1	RAILING	**6-49, 6-51**
050	2796008-0100		2	WHEEL	**6-53**
060	2796015-0100		1	WHEEL	**6-55**
070	2829696-0000		4	BRACKET	
080	2829605-0000		2	BRACKET	
090	2829692-0000		1	BRACKET	
100	2829694-0000		1	BRACKET	
110	2829697-0000		1	BRACKET	
120	2738222-0000		1	BRUSH	
130	2982050-0000		1	COVER	
140	2787447-0000		2	GUIDE	
160	2787436-0000		1	SHAFT	
170	2787437-0000		1	SHAFT	
180	2561206-0000		1	SPACER	
200	2815759-0000		2	BRACKET	
220	90459-5529		1	PHOTOCELL E3Z-T86A, SENDER+RECIEVER	
225	90600-7506		1	SUPPORT PLATE, 26798	
230	351305-0050		2	ACTUATOR/SENSOR CABLE PRKMV 4-07/5M	
250	312605-0314		6	HEXAGON NUT, M6M M5 A280	
260	312115-0226		4	SCREW ISO4762 M3X12 A4 80	
270	312155-0323		4	SCREW DIN 7991 MF6S M5X8 A4 70	
300	312812-0316		2	HEXAGON NUT, NY-LOCK M6 A480	
310	312105-0327		2	SCREW M6S ISO 4017 M5X12 A480	
320	312105-0366		2	SCREW M6S ISO 4017 M6X12 A480	
330	312105-0368		4	SCREW M6S ISO 4017 M6X16 A480	
340	312105-0447		4	SCREW M6S ISO 4017 M8X12 A480	
350	315103-0153		4	WASHER, BRB, 6,4/12,H=1,5 NIPL BR	
355	315105-0153		6	WASHER BRB 6,4X12 RFR	
360	315105-0165		4	WASHER BRB 8,4X16 RFR	
370	90287-0043		1	SCREW HEX.SOCK.SET CONEPT. MS6SS M6X30	
380	312105-0455		8	SCREW M6S ISO 4017 M8X30 A480	
400	1020162-0200		1	LEG CONVEYOR, 3 ARMS	**6-57**
410	1550700-0200		1	CONVEYOR CHAIN	**6-63**
440	350008-0004		1	PUSH-IN FITTING QSF-F-G1/4-6	
450	2982048-0000		1	HOLDER	
460	2982049-0000		1	HOLDER	
465	312155-0329		2	SCREW DIN 7991 MF6S M5X16 A4 70	
470	315106-0153		4	WASHER ISO 7089-6-200 HV A4	
480	315106-0146		2	WASHER ISO 7089-5-200 HV A4	

Machine Type | Group Description | Used-In | Group Number | Page No

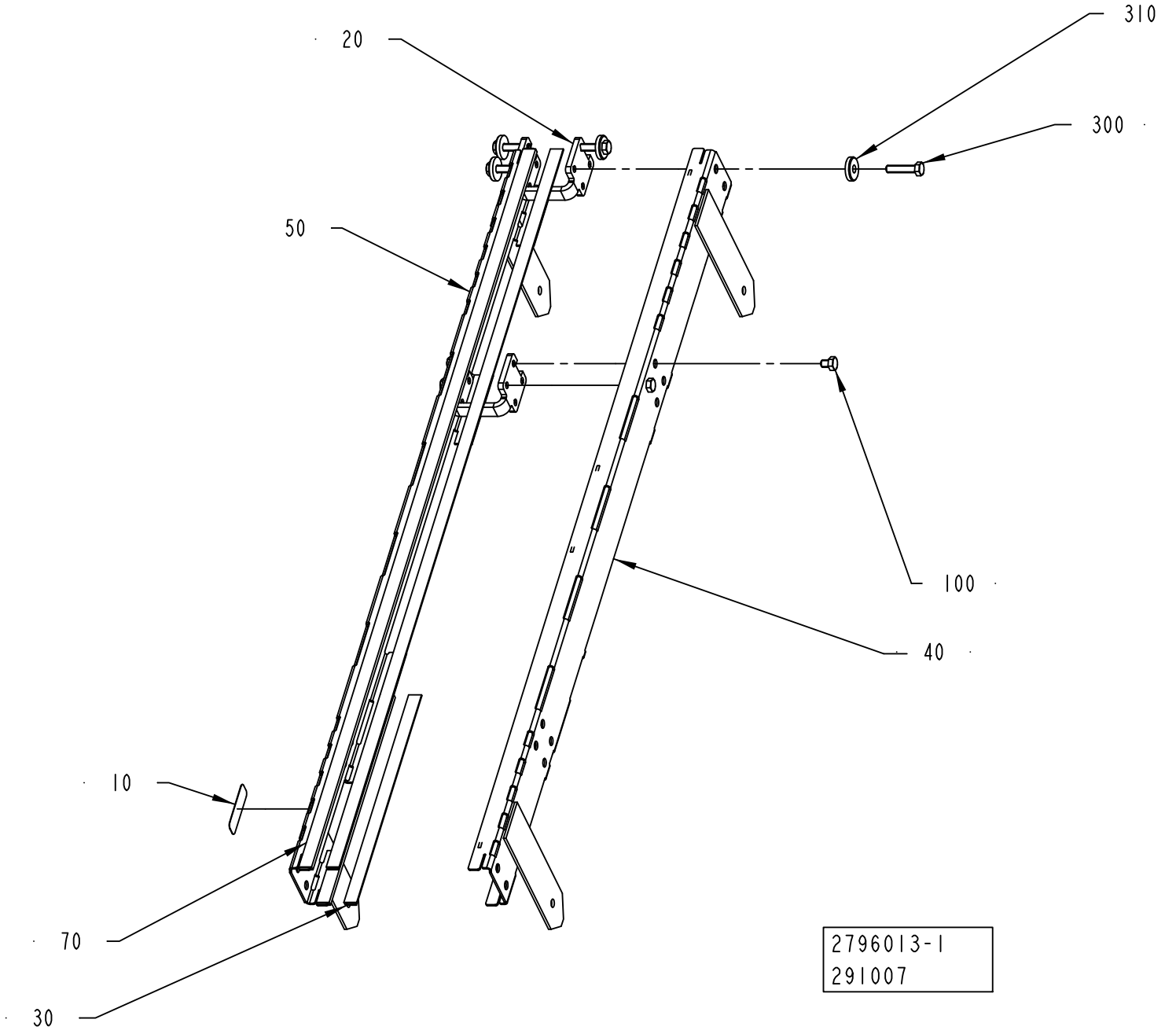
20
310
300
50
100
40
10
70
30
2796013-1
291007

ECM: 291689 - 20061222
Group number: 2796013-0100
Assembly Drawing: 2796013-1_1_AA

Pos	Part No	UN	Qty	Description	Page No
-					
0010	1086870-0000		1	SIGN	
0020	2561206-0000		2	SPACER	
0030	2797437-0000		2	SLIDING STRIP	
0040	2797438-0000		1	SIDE PLATE	
0050	2797501-0000		1	SIDE PLATE	
0070	2810567-0000		2	SLIDING STRIP	
0100	90459-4735		4	SCREW M6S ISO 4017 M8X10 A480	
0300	312109-0457		4	SCREW M6S ISO 4017 M8X35 A480	
0310	315125-0165		4	WASHER TBRSB 8,4X26X5 A4	

Pos	Part No	UN	Qty	Description	Page No

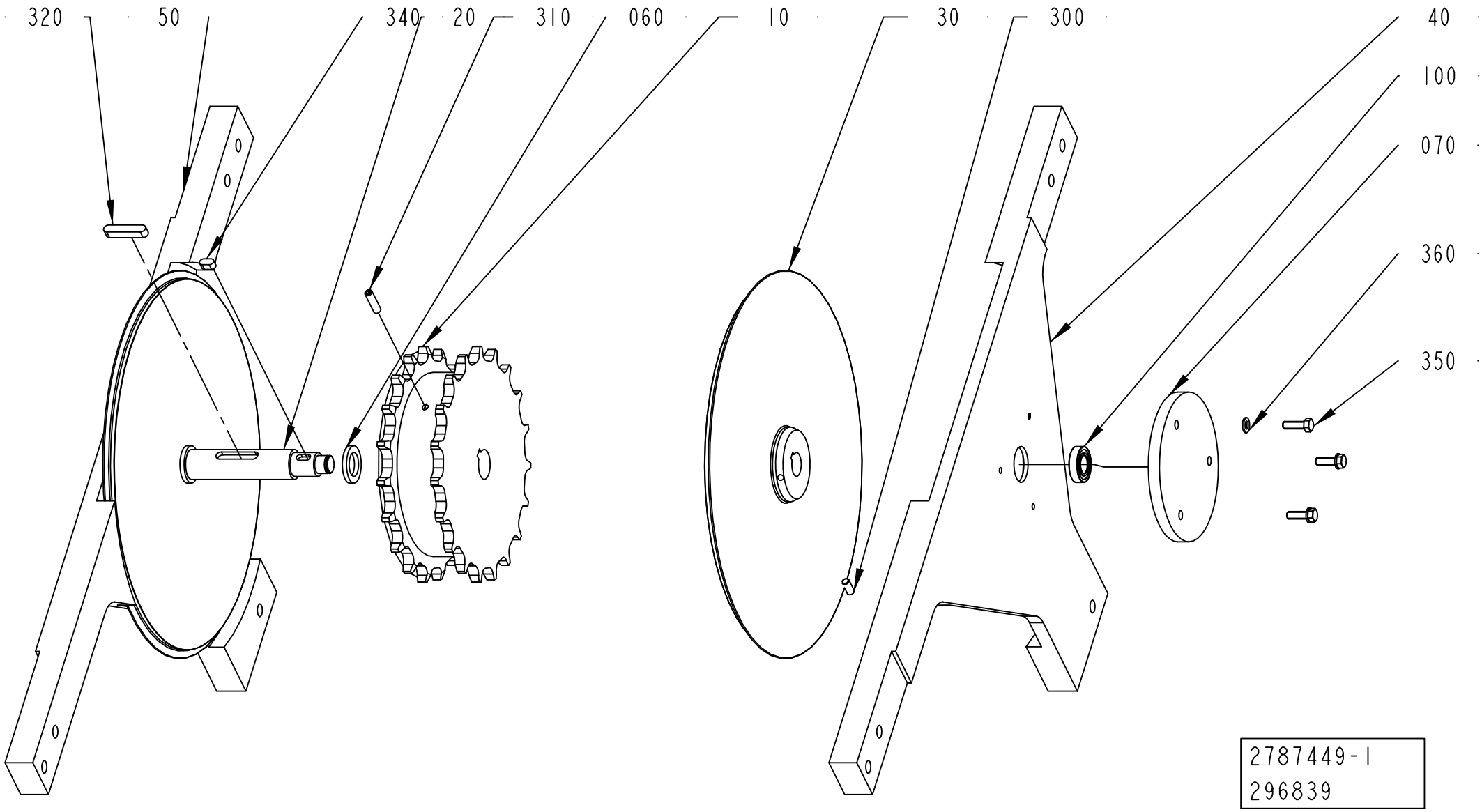
320
50
340
20
310
060
10
30
300
40
100
070
360
350
2787449-1
296839

ECM: 506699 - 20110609
Group number: 2787449-0100
Assembly Drawing: 2787449-1_1_AB

Pos	Part No	UN	Qty	Description	Page No
-					
010	2787442-0000		1	SPROCKET	
020	2796006-0000		1	SHAFT	
030	2796007-0000		2	WHEEL	
040	2796012-0000		1	PLATE	
050	2798025-0000		1	PLATE	
060	2829715-0000		2	WASHER	
070	2829698-0000		2	BEARING HOUSING	
100	90214-0112		2	BALL BEARING 12/24X6	
300	312318-0327		2	SCREW ISO4029 M5X12 A4	
310	312318-0331		1	SCREW ISO4029 M5X20 A4	
320	315705-0236		1	PARALLEL KEY W. ROUND ENDS, 6X6X30 MM	
330	315751-0109		2	RETAINING RING FOR SHAFT DIN 471 12 SS	
340	315705-0196		2	PARALLEL KEY W. ROUND ENDS, 5X5X10 MM	
350	312105-0329		6	SCREW M6S ISO 4017 M5X16 A480	
360	315106-0146		6	WASHER ISO 7089-5-200 HV A4	

Pos	Part No	UN	Qty	Description	Page No

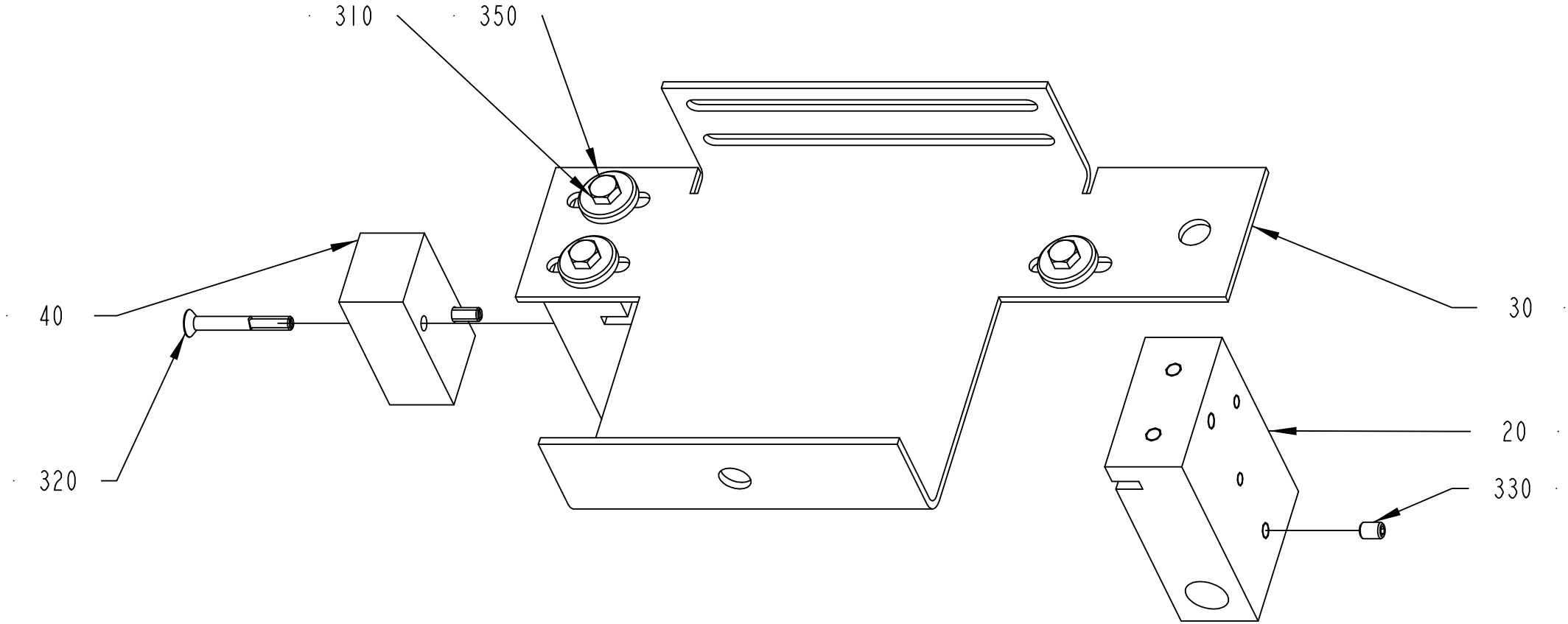

2810603-1
291007

ECM: 291411 - 20061222
Group number: 2810603-0100
Assembly Drawing: 2810603-1_1_AA

Pos	Part No	UN	Qty	Description	Page No
-					
0020	2787438-0000		2	BRACKET	
0030	2787439-0000		1	HOLDER	
0040	2787441-0000		1	SPACER	
0310	312105-0370		4	SCREW M6S ISO 4017 M6X20 A480	
0320	312155-0339		2	SCREW DIN 7991 MF6S M5X40 A4 70	
0330	312318-0362		1	SCREW ISO4029 M6X8 A4	
0350	315125-0153		4	WASHER TBRSB 6,4X22X4 A4	

Pos	Part No	UN	Qty	Description	Page No

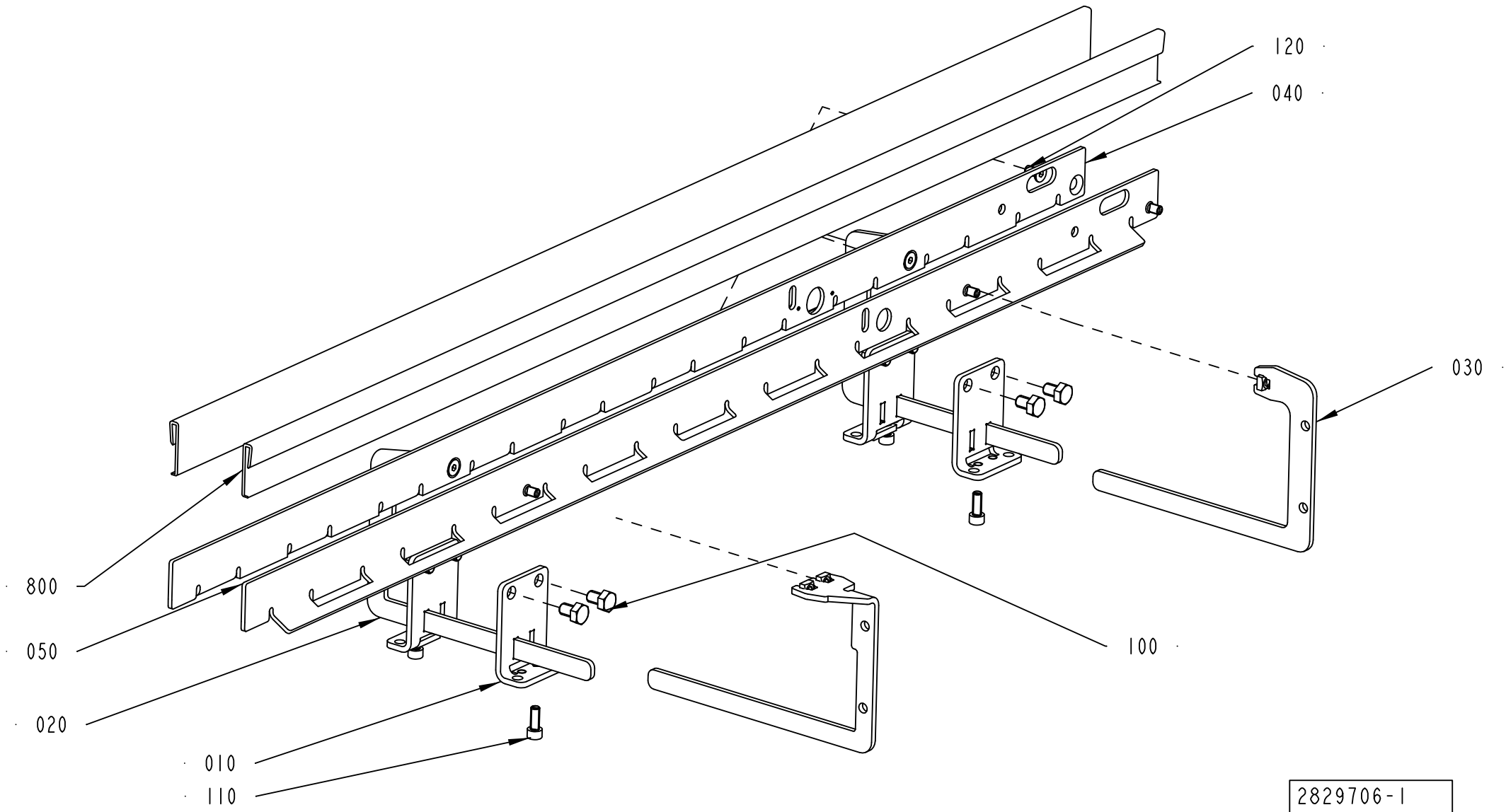
120
040
030
800
050
020
010
110
100
2829706-1
291007

ECM: 291412 - 20061222
Group number: 2829706-0100
Assembly Drawing: 2829706-1_1_AA

This list covers pages from 6-48 to 6-51

Pos	Part No	UN	Qty	Description	Page No
-					
0010	2699603-0000		4	PLATE	
0020	2699607-0000		2	HOLDER	
0030	2699610-0000		2	HOLDER	
0040	2787445-0000		1	RAIL	
0050	2787446-0000		1	RAIL	
0100	312105-0447		8	SCREW M6S ISO 4017 M8X12 A480	
0110	312115-0368		4	SCREW ISO4762 M6X16 A4 80	
0120	312155-0366		6	SCREW DIN 7991 MF6S M6X12 A4 70	
0800	2763303-0000	MM	2	STRIP	

Pos	Part No	UN	Qty	Description	Page No

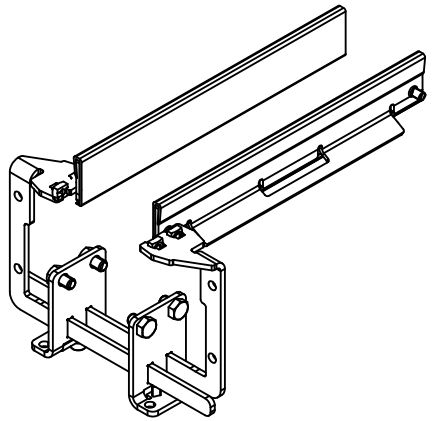

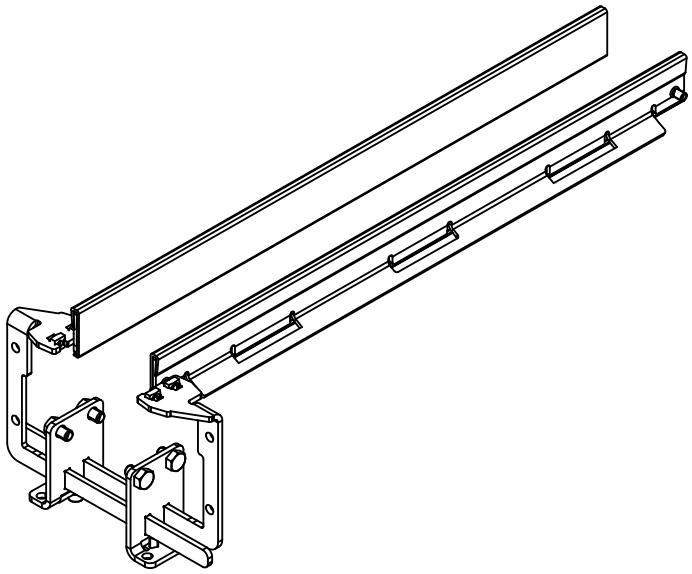

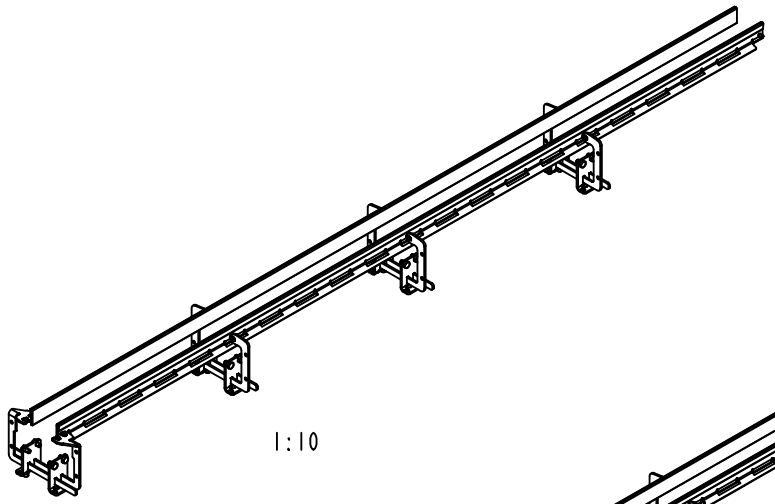
1:10

1:10

ECM: 291412 - 20061222
Group number: 2829706-0100
Assembly Drawing: 2829706-1_2_AA

This list covers pages from 6-48 to 6-51

Pos	Part No	UN	Qty	Description	Page No
-					
0010	2699603-0000		4	PLATE	
0020	2699607-0000		2	HOLDER	
0030	2699610-0000		2	HOLDER	
0040	2787445-0000		1	RAIL	
0050	2787446-0000		1	RAIL	
0100	312105-0447		8	SCREW M6S ISO 4017 M8X12 A480	
0110	312115-0368		4	SCREW ISO4762 M6X16 A4 80	
0120	312155-0366		6	SCREW DIN 7991 MF6S M6X12 A4 70	
0800	2763303-0000	MM	2	STRIP	

Pos	Part No	UN	Qty	Description	Page No

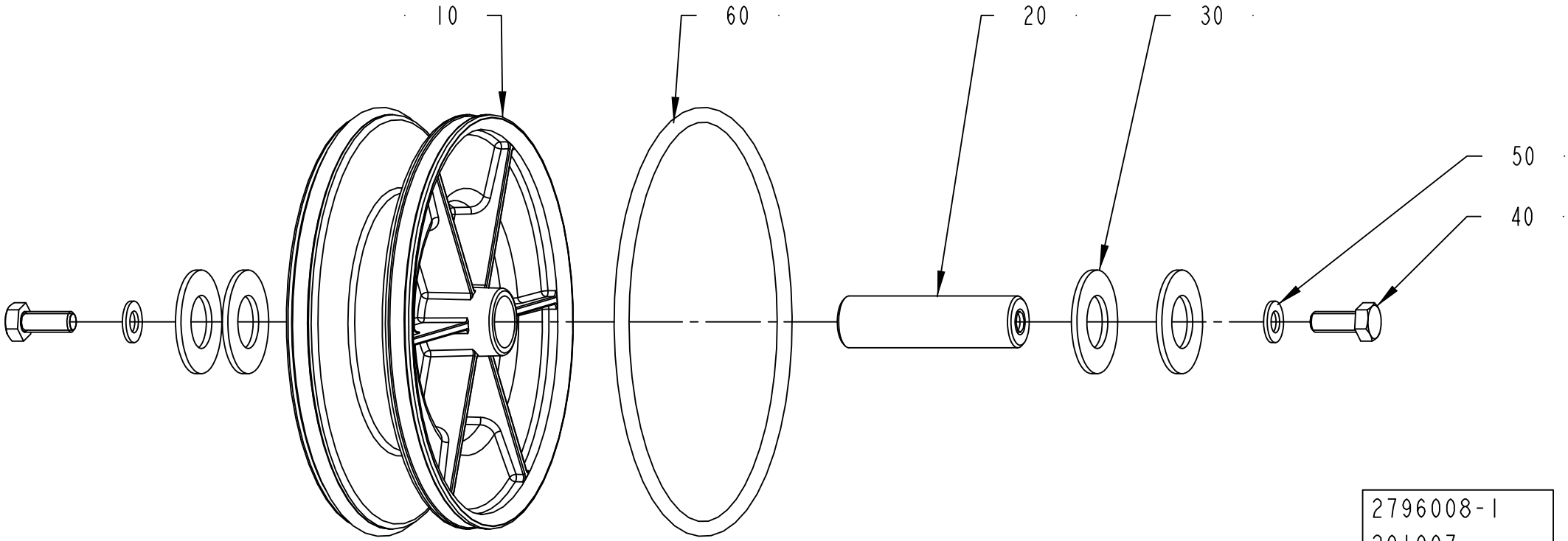
10
60
20
30
50
40
2796008-1
291007

ECM: 291409 - 20061222
Group number: 2796008-0100
Assembly Drawing: 2796008-1_1_AA

Pos	Part No	UN	Qty	Description	Page No
-					
0010	2656679-0000		1	WHEEL	
0020	2796009-0000		1	SHAFT	
0030	2796011-0000		4	SPACER	
0040	312105-0451		2	SCREW M6S ISO 4017 M8X20 A480	
0050	315105-0165		2	WASHER BRB 8,4X16 RFR	
0060	315202-0246		2	O-RING 144,3X5,7 MM	

Pos	Part No	UN	Qty	Description	Page No

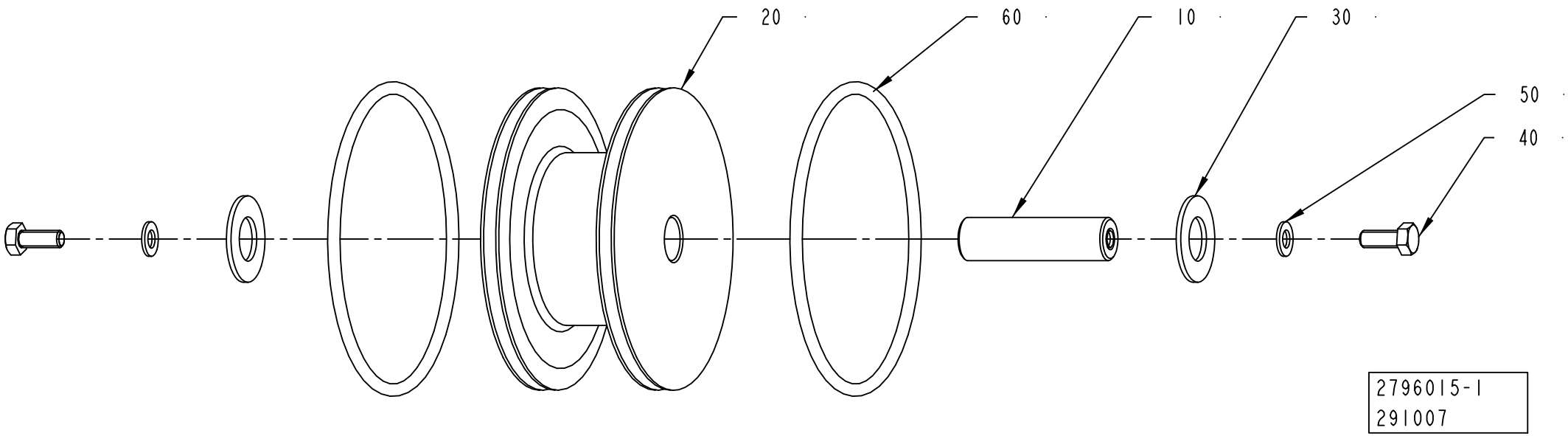
20
60
10
30
50
40
2796015-1
291007

ECM: 291410 - 20061222
Group number: 2796015-0100
Assembly Drawing: 2796015-1_1_AA

Pos	Part No	UN	Qty	Description	Page No
-					
0010	2796009-0000		1	SHAFT	
0020	2796010-0000		1	WHEEL	
0030	2796011-0000		2	SPACER	
0040	312105-0451		2	SCREW M6S ISO 4017 M8X20 A480	
0050	315105-0165		2	WASHER BRB 8,4X16 RFR	
0060	315202-0242		2	O-RING 124,3X5,7 MM	

Pos	Part No	UN	Qty	Description	Page No

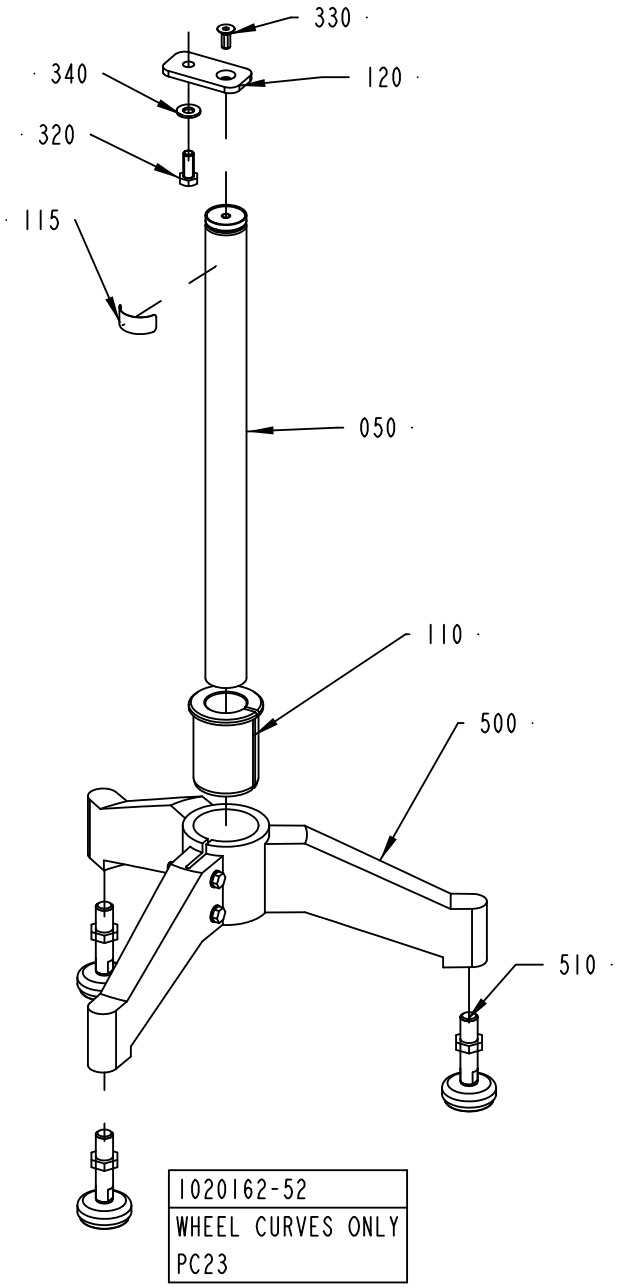

1020162-52
WHEEL CURVES ONLY
PC23

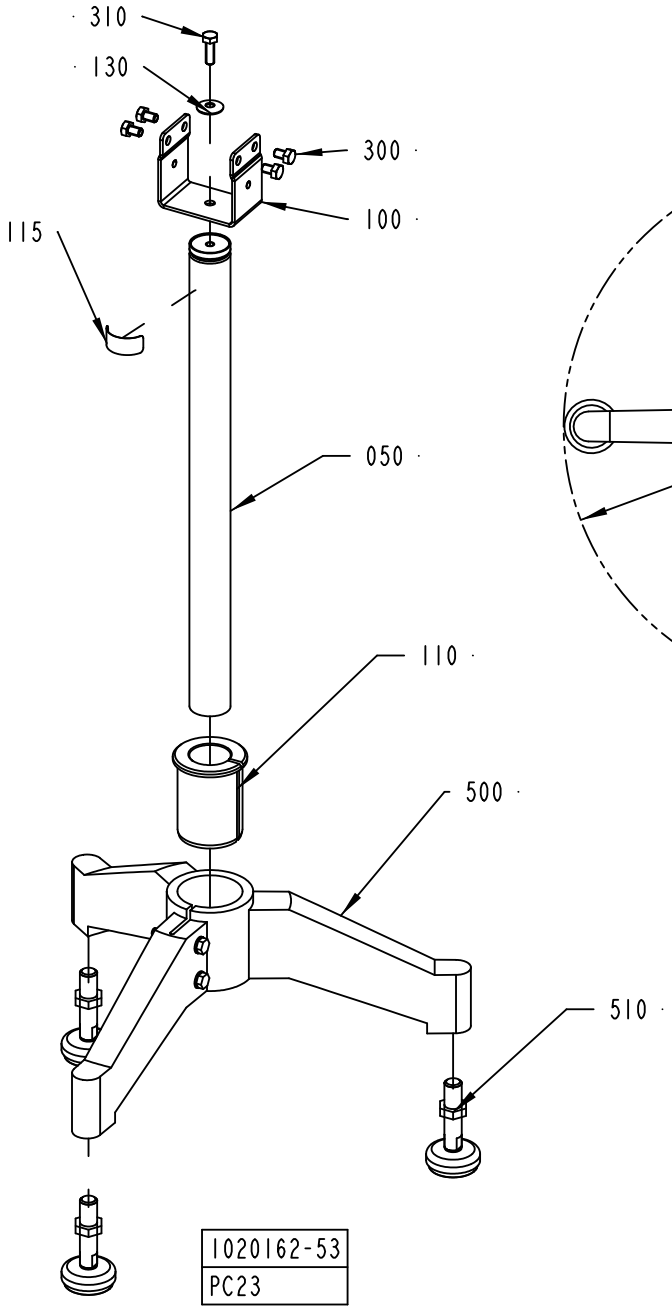

1020162-53
PC23

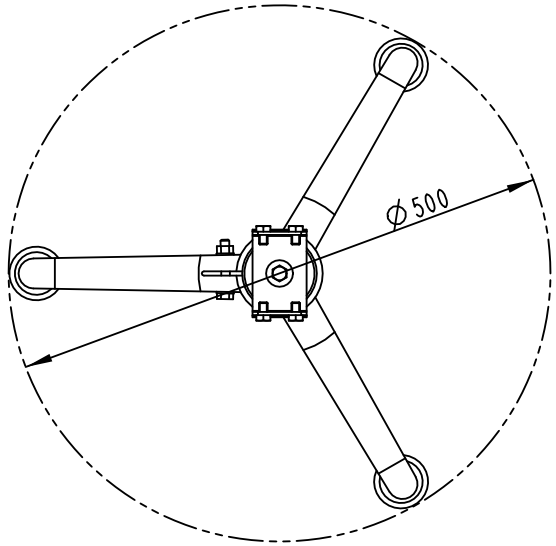

1020162-2
491753

ECM: 492150 - 20110304
Group number: 1020162-0200
Assembly Drawing: 1020162-2_1_AE

Pos	Part No	UN	Qty	Description	Page No
PC23/TPC21/TPC53 WHEEL CURVE CH1000-1400, PC23/TPC21/TPC53 WHEEL CURVE CH400-600, PC23/TPC21/TPC53 WHEEL CURVE CH600-1000					
120	1359224-0000		1	FASTENING PLATE	
320	312105-0493		1	SCREW M6S ISO 4017 M10X25 A480	
330	312155-0451		1	SCREW DIN 7991 MF6S M8X20 A4 70	
340	315105-0173		1	WASHER BRB 10,5X22 RFR	
PC23 CH1000-1400					
050	484171-0007		1	LEG	
100	1550874-0000		1	BRACKET FOR LEG PC23	
PC23 CH400-600					
050	484171-0004		1	LEG	
100	1550874-0000		1	BRACKET FOR LEG PC23	
PC23 CH600-1000					
050	484171-0006		1	LEG	
100	1550874-0000		1	BRACKET FOR LEG PC23	
PC23 STRAIGHT CONVEYOR CH400-600, PC23 STRAIGHT CONVEYOR CH1000-1400, PC23 STRAIGHT CONVEYOR CH600-1000					
130	529076-0000		1	WASHER	
300	312105-0447		4	SCREW M6S ISO 4017 M8X12 A480	
310	312105-0453		1	SCREW M6S ISO 4017 M8X25 A480	
Common Parts					
010	1020416-0200		1	PACKING DESCRIPTION	**6-59, 6-61**
110	562016-0000		1	REDUCTION CASING	
115	1086870-0000		1	SIGN	
500	90068-0016		1	FOOT, 3 LEGS. NO 15511	
510	90458-2581		3	FOOT PLATE, M50-16-70	

Pos	Part No	UN	Qty	Description	Page No

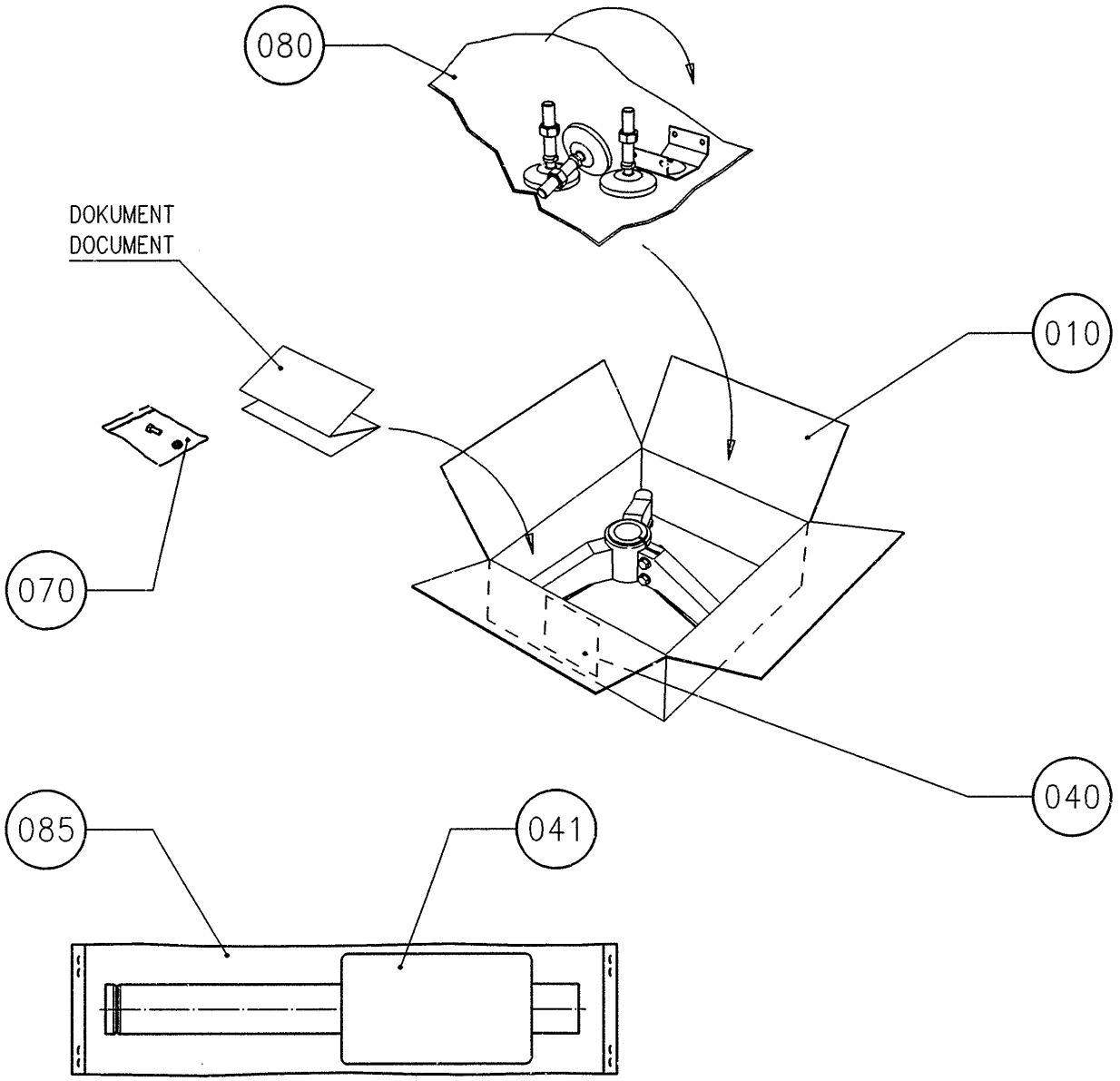
080
DOKUMENT
DOCUMENT
010
070
040
085
041

ECM: 389270 - 20090602
Group number: 1020416-0200
Assembly Drawing: 1020416-2_1_AA

This list covers pages from 6-58 to 6-61

Pos	Part No	UN	Qty	Description	Page No
-					
010	3002543-0000		1	CORRUGATED CARDBOARD BOX	
040	1086871-0000		1	LABEL TAPE	
041	1086872-0000		1	LABEL TAPE	
070	90003-0019		1	BAG	
080	90003-0474			PACKING	
085	90003-0483	M		HOSE	

Pos	Part No	UN	Qty	Description	Page No

Machine Type | Group Description | Used-In | Group Number | Page No

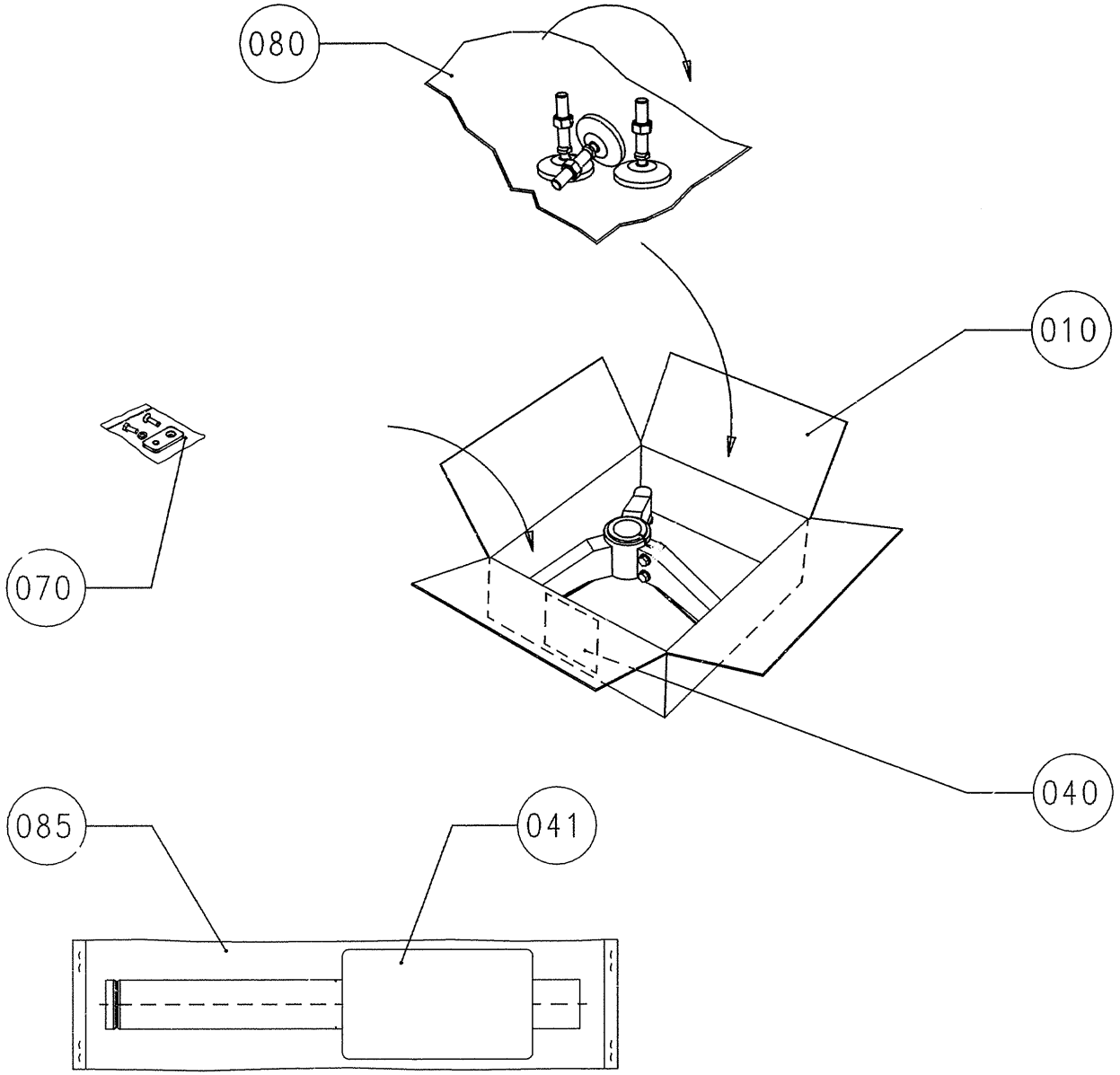
080
010
070
040
085
041

ECM: 389270 - 20090602
Group number: 1020416-0200
Assembly Drawing: 1020416-3_1_AA

This list covers pages from 6-58 to 6-61

Pos	Part No	UN	Qty	Description	Page No
-					
010	3002543-0000		1	CORRUGATED CARDBOARD BOX	
040	1086871-0000		1	LABEL TAPE	
041	1086872-0000		1	LABEL TAPE	
070	90003-0019		1	BAG	
080	90003-0474			PACKING	
085	90003-0483	M		HOSE	

Pos	Part No	UN	Qty	Description	Page No

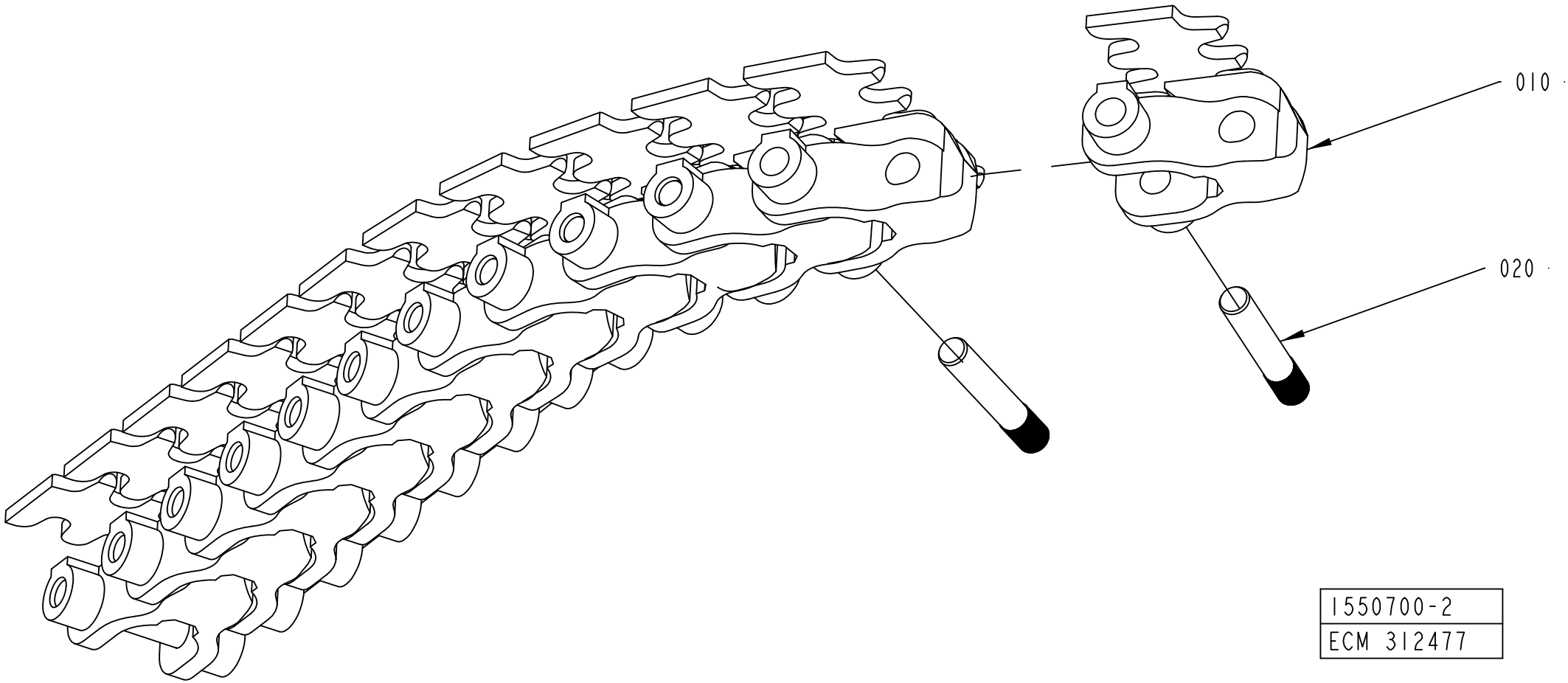
010
020
1550700-2
ECM 312477

ECM: 356139 - 20090209
Group number: 1550700-0200
Assembly Drawing: 1550700-2_1_AB

Pos	Part No	UN	Qty	Description	Page No
-					
010	2656670-0000		400	LINK	
020	2656671-0000		400	RIVET	
100	2589951-0200		1	PACKING DESCRIPTION	**6-65**

Pos	Part No	UN	Qty	Description	Page No

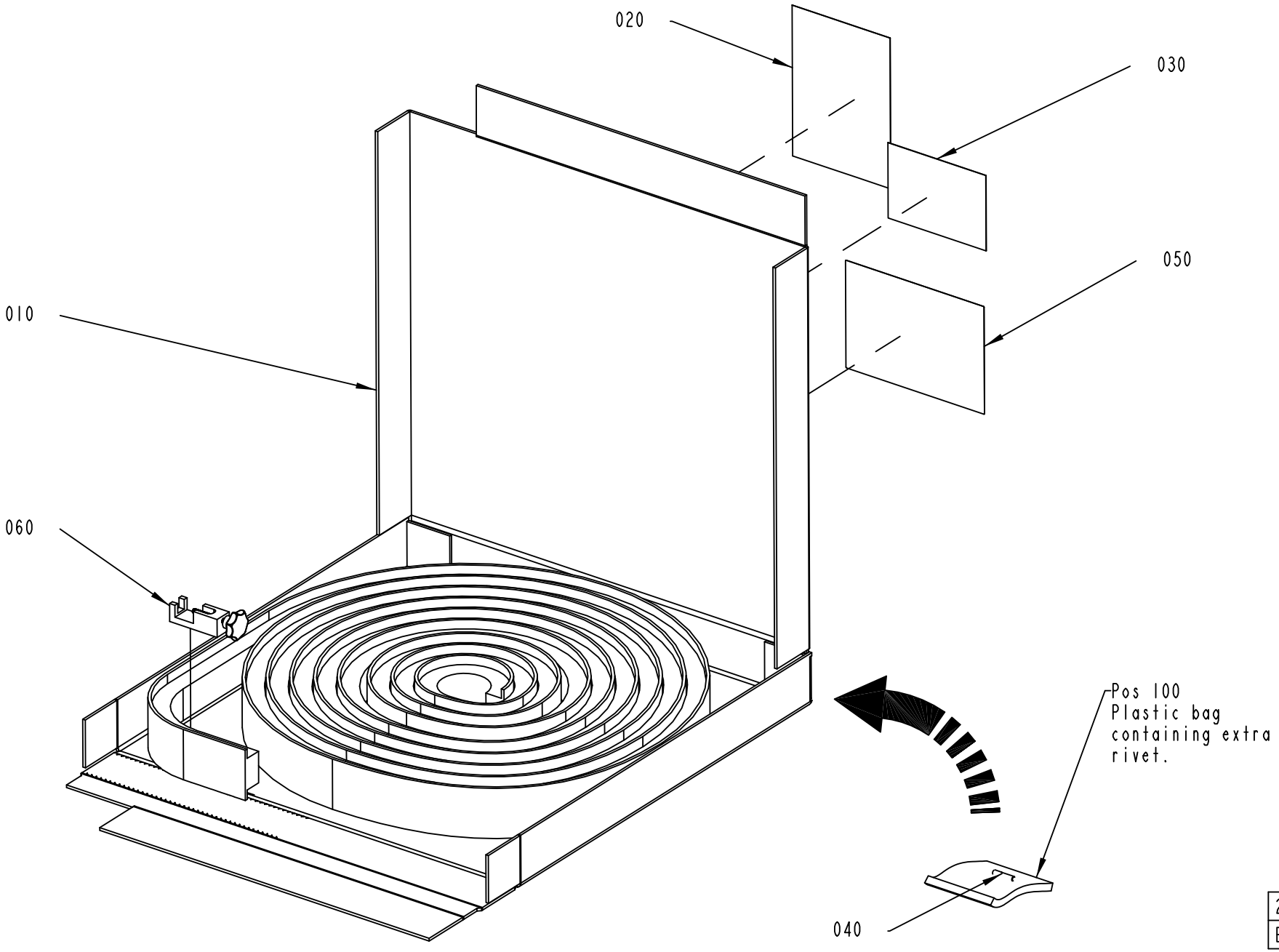
020
030
050
010
060
Pos 100
Plastic bag
containing extra
rivet.
040
2589951-2
ECM 348167

ECM: 348167 - 20081030
Group number: 2589951-0200
Assembly Drawing: 2589951-2_1_AB

Pos	Part No	UN	Qty	Description	Page No
-					
010	2589955-0000		1	CORRUGATED CARDBOARD BOX	
020	2589953-0000		1	INSTRUCTION	
030	2589952-0000		1	LABEL	
040	2590181-0000		1	RIVET	
050	2934966-0000		1	LABEL TAPE	
060	2561208-0000		1	TOOL	
100	90003-0018		1	BAG	
110	90003-0474		1	PACKING	

Pos	Part No	UN	Qty	Description	Page No

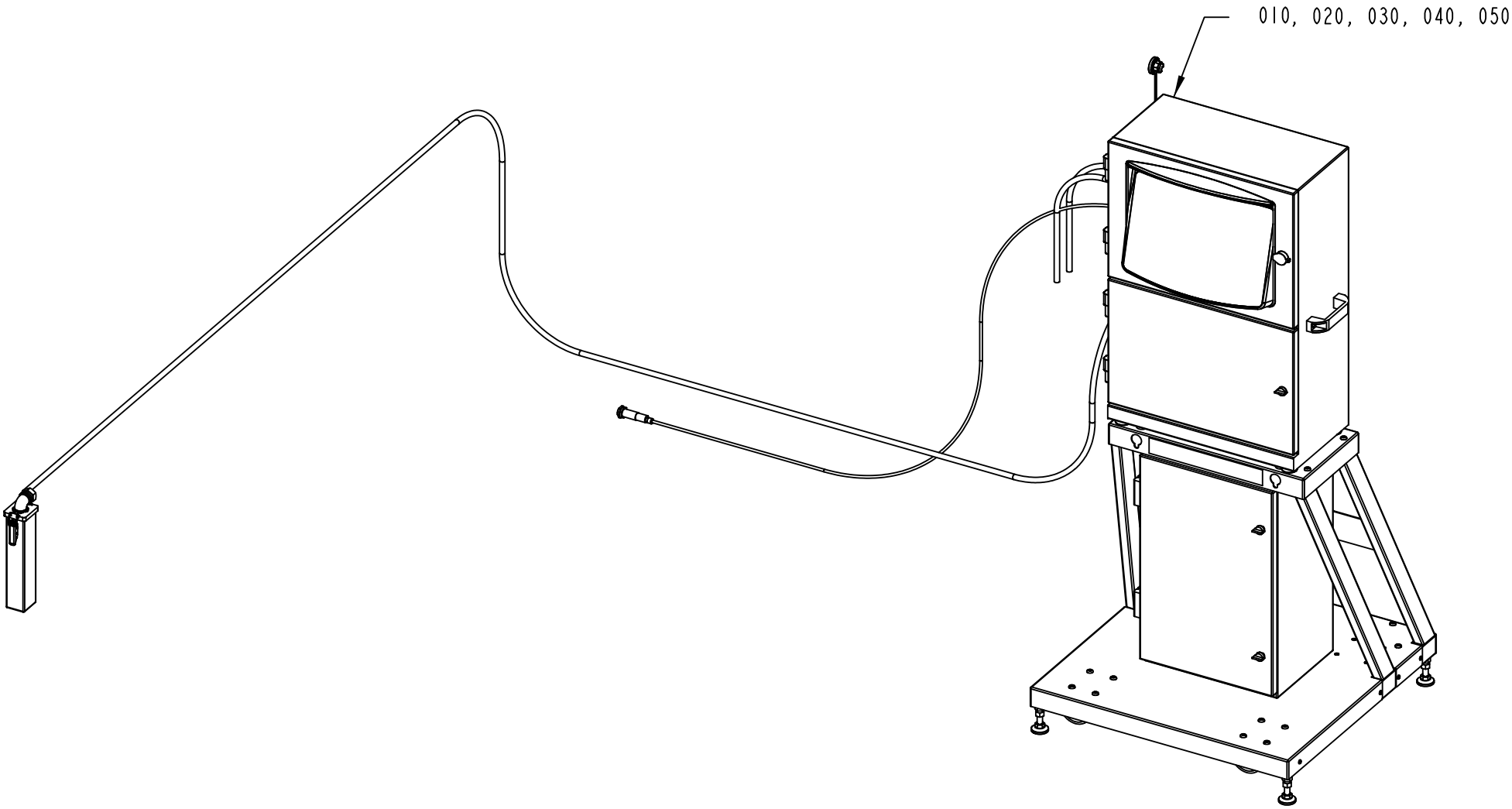

3046771-1
414784

ECM: 423411 - 20091221
Group number: 3046771-0100
Assembly Drawing: 3046771-1_1_AA

Pos	Part No	UN	Qty	Description	Page No
PRINTER LANG ARABIC					
020	90600-5584		1	INK JET PRINTER A300+ARAB, TP 90600-5584	
PRINTER LANG EUROPEAN					
010	90600-5583		1	INK JET PRINTER A300+EUR, TP 90600-5583	
PRINTER LANG GREEK, PRINTER LANG RUSSIAN					
050	90600-5587		1	INK JET PRI. A300+GR/RUSS, TP 90600-5587	
PRINTER LANG JAPANESE					
040	90600-5586		1	INK JET PRINTER A300+JAPA, TP 90600-5586	
PRINTER LANG TRAD CHINESE					
030	90600-5585		1	INK JET PRINTER A300+CHIN, TP 90600-5585	

Pos	Part No	UN	Qty	Description	Page No

Tetra Pak

SPC
Spare Parts Catalogue

Part No	Description	Page No
2033-0009	WASHER	1-7, 1-9, 1-157, 1-159
2033-0013	WASHER	1-17, 1-73, 1-81, 1-83, 1-141, 1-143, 1-153, 1-155, 1-163, 1-165, 1-195, 1-197, 1-199, 1-201
12242-0001	GASKET 32X25X5,5	3-43
32644-0000	WASHER	1-135
67380-0208	TRANSFORMER	1-135
90002-0009	BLANK-OFF PLUG, PR 18.6 SKINDICHT-BLK11	2-53, 2-55
90002-0010	BLANK-OFF PLUG, PR 37 SKINDICHT-BLK29	2-7, 2-9
90002-0013	BLANK-OFF PLUG, PR 15,2 SKINDICHT-BLK9	2-53, 2-55
90002-0018	BLANK-OFF PLUG, PR 12,5 SKINDICHT-BLK7	3-39, 3-41
90003-0018	BAG	6-65
90003-0019	BAG	6-39, 6-59, 6-61
90003-0474	PACKING	6-31, 6-39, 6-59, 6-61, 6-65
90003-0483	HOSE	6-59, 6-61
90005-0060	WASHER PLAIN, RBS 6,4/M6)/18,H=1,5	1-67, 1-69, 1-73, 1-81, 1-83, 1-101, 1-103, 1-123, 1-149
90005-0082	WASHER PLAIN ROUND 4,3(M4)/12,H=1	1-73, 1-81, 1-83, 1-101, 1-103, 1-121, 1-129, 1-131 1-133, 1-135, 1-141, 1-143, 1-185, 1-187, 1-191, 1-195, 1-197, 1-199, 1-201, 2-71
90005-0105	WASHER PLAIN ROUND 8,4(M8)/24, H=1,5	2-85
90005-0116	WASHER PLAIN ROUND 8,4(M8)/24, H=2	1-47, 1-49, 1-241, 1-243
90015-0020	LEAD-IN, TET5-7, E-1458016	1-129, 1-131, 1-195, 1-197, 1-199, 1-201, 5-3
90015-0021	LEAD-IN, TET 10-14, E1458023	2-15, 2-17, 4-55
90015-0023	LEAD-IN, TET 7-10, E1458019	2-15, 2-17
90017-0022	HANDLE, NO. EL-037311	1-129, 1-131, 1-203, 1-217, 1-219, 1-229, 1-231, 1-241, 1-243, 4-19
90030-0030	CONN. BULKHEAD SV12L71	4-29, 4-31
90030-0058	CONN. T-PIPE T12L71	4-29
90030-0062	CONN. STR. GE06L1/4NPT71	3-3, 3-5
90030-0066	CONN. BULKHEAD SV06L71	4-45
90030-0076	CONN. T-PIPE T06L71	3-3, 3-5
90030-0088	CONN. STR. GE12LR1/4KEG71	4-35
90030-0109	STRAIGHT PIPE CONN. GE12LR1/271	4-31, 4-35
90030-0137	CONN. ELBOW, WE06LR71	3-43
90030-0184	CONN. STR., GE06LRED71	1-245, 3-33, 3-35, 4-23, 4-31, 4-45
90030-0187	CONN. STR. GE12LRED71	1-245, 4-31
90030-0188	CONN. STR. GE15LRED71	1-167, 1-169
90030-0191	CONN. STR. GE18LRED71	4-31
90030-0202	CONN. STR., 6-G1/4, EXT. THREAD	4-23
90030-0207	NIPPLE	4-23
90030-0213	CONN. STR. M12MSC1/2K-316	4-31, 4-35
90030-0230	CONN. BULKHEAD BCM6-316	3-3, 3-5, 3-33, 3-35
90030-0233	CONN. STR., M6MSC1/8BR-316	3-33, 3-35
90030-0234	CONN. ELBOW, M6MSEL1/8K-316	3-3, 3-5, 3-33, 3-35
90030-0257	CONN. ELBOW, WE08LLR71	4-21
90030-0416	CONN. STR. M12MSC1/2K-316	4-31
90030-0549	CONN. STRAIGHT, BULKHEAD, SS-4-VCO-61	3-47
90031-0052	BASEPLATE, 5-SLOT	4-65
90031-0057	PLC, DIGITAL INPUT MODULE	4-63
90031-0059	PLC, DIGITAL OUTPUT MODULE	3-21, 4-63
90031-0063	PLC,ANALOG COMBO MODULE,IN-4PT/OUT-2PT	3-19, 5-3
90031-0068	PLC, POWER SUPPLY	4-63
90036-0057	LIGHT BULB, BA9S 28V	1-189
90038-0021	DIODE, 1A 800V	2-97
90042-0171	SOLENOID VALVE TYPE 330 3/2 NC	3-33, 3-35
90042-0602	DISTRIBUTOR BLOCK, FR-4-1/2-B	1-167, 1-169
90043-0069	PRESSURE GAUGE 0-4BAR WIEGAND 2040	4-37, 4-39
90043-0082	PRESSURE GAUGE, 2740, D=63 MM	4-33
90044-0104	INDUCTIVE SENSOR IN5227S	3-47
90044-0165	PROX. SENSOR, SME-8-K5-LED-24	1-67, 1-69, 2-11
90044-0194	INDUCTIVE SENSOR, IN 5329	1-7, 1-9, 1-17, 1-43, 1-45, 1-129, 1-131, 1-157, 1-159, 1-195 1-197, 1-199, 1-201, 2-45, 3-43, 4-21, 4-23
90051-0007	STELLAR KNOB, INT. THREAD, NO. 40	1-73, 1-81, 1-83, 1-101, 1-103
90051-0035	KNOB, EXTERNAL THREAD. NO. 8308-1135	1-193
90051-0082	KNOB, CIRCUL, THREADED BUSH, M6 25X21 MM	1-217, 1-219, 2-27, 2-37
90051-0083	KNOB, EXTERNAL THREAD. NO. 8308-1321	2-75
90051-0087	LOCK KNOB, NO. GN 617 A5	2-27, 2-37, 2-65
90051-0112	LOCK KNOB, NO. GN 617 NIK5	1-217, 1-219
90055-0100	Y-CONNECTION, 6-6	1-75, 1-85, 1-97, 1-99, 1-105, 1-107, 1-247
90055-0147	PUSH-IN Y-CONNECTOR QSY-12	2-79
90055-0154	HOSE COUPLING	2-29, 2-41
90055-0204	ELBOW WITH TAILPIECE 8/8 MM LONG	2-81
90055-0217	ELBOW PIPE JOINT	1-63, 1-67, 1-69, 1-97, 1-99
90055-0218	STRAIGHT COUPLING, D=6 MM - M5	1-75, 1-85, 1-97, 1-99
90055-0222	ELBOW WITH TAILPIECE 6/6 MM	2-63
90062-0016	LOCK WASHER SERRAT.EXT.GEAR,8,4/15 H=0,8	4-55, 4-65
90062-0031	"LOCK WASHER 8,2X12,8; T=2 DIN 7980"	1-105, 1-107
90062-0040	LOCK WASHER SERRAT.INT.GEAR,5,3/10 H=0,6	1-167, 1-169, 2-79
90062-0060	LOCK WASHER 5,3/10 H=0,6 FZB	2-53, 2-55
90064-0082	PUSH BUTTON, WHITE	2-97
90064-0085	PUSH BUTTON, RED	1-189
90064-0098	PUSH BUTTON, WHITE	1-189
90068-0016	FOOT, 3 LEGS. NO 15511	6-37, 6-57
90077-0079	TERMINAL PLINTH, AKZ 4	2-21
90077-0113	TERMINAL BLOCK WDK 2.5	2-57, 4-71, 4-73, 4-75, 4-77
90077-0122	END PLATE, AP AKZ 2,5	3-39, 3-41
90077-0123	TERMINAL FEED THROUGH	3-39, 3-41, 6-33
90077-0307	END PLATE, AP AKZ4	2-21

Part No	Description	Page No
90077-0308	END PLATE, 10-00038286-1	6-33
90077-0328	RAIL, TS15/5	6-33
90087-0046	PLUG, EXT. 1/8 NPT-THREAD, 2PH-SS	4-21
90091-0237	ROD SEAL GLYD RING 20X27,5X3 MM	4-25
90091-0238	WEAR RING 20X22X10 MM	4-25
90091-0266	SEAL RING 10,4X16,3X2,5 MM	4-29, 4-31
90091-0336	PISTON SEAL GLYD RING 79X90X4,2 MM	4-25
90094-0005	RAIL BRACKET, TSTW 5/5M	4-75, 4-77
90097-0017	FLAT PIN PLUG 6,3MM	3-31
90097-0019	FLAT PIN PLUG 2,8MM	3-31
90099-0007	HEXAGON NUT, M10X1, E 63 137 10	2-65
90099-0104	PLUG, PR 15,2 (PG9)	2-97
90099-0110	PLUG, PR 22,5 (PG16)	2-97
90099-0119	PLUG, PR 28,3 (PG21)	3-33, 3-35
90099-0120	PLUG PR 37 (PG29)	2-69, 3-33, 3-35
90099-0131	NUT HEX. M16X2 SS	1-19, 1-21, 1-23, 1-25
90110-0150	MALE INSERT, HDC HE 24 MS, 1211 1000 00	1-31, 1-33, 1-35, 1-37, 1-205, 1-207, 2-53, 2-55
90110-0152	CABLE HOOD 24-POL 70.352.2428.1	2-53, 2-55
90110-0156	MALE INSERT 70.210.0653.0	1-205, 1-207
90110-0159	MALE INSERT 70.310.0640.0	1-27, 1-29
90110-0163	FEMALE INSERT 70 300 0640 0	1-27, 1-29
90110-0221	CHASSIS HOUSING 310162-33	1-27, 1-29
90110-0226	CABLE HOOD 6-POL 70.350.0628.0	1-27, 1-29
90110-0235	CABLE CONTACT, PX0739/P	6-33
90110-0244	CABLE HOOD 6-POL 70.350.1628.0	1-31, 1-33, 1-35, 1-37, 1-205, 1-207
90110-0295	CONNECTOR 4 POLE + EARTH	2-51
90110-0296	FEMALE INSERT, HDC-HA-4BS 149840-B/2	1-27, 1-29
90110-0346	HOOD, SIDE ENTRY, 12 11220 00 00	1-31, 1-33, 1-35, 1-37, 1-205, 1-207
90110-0370	BASE HOUSING, HDC-HA-3-SVL1/11	1-27, 1-29
90110-0371	HOOD, TOP ENTRY, HDC-HA-3-TOVL1/11	1-27, 1-29, 1-217, 1-219, 2-51, 2-53, 2-55, 2-69
90110-0385	MARKING HOLDER, 4.242.3853.0	2-53, 2-55
90115-0156	ROD END, ID=8 MM, M8X1,25	1-217, 1-219
90115-0157	ROD END, ID=8 MM, M8X1,25 LH	1-217, 1-219
90119-0056	RELAY, AUXILIARY MK3P5-S 24VDC	4-67, 4-71, 4-73
90119-0109	RELAY OMRON 24VDC MY4H	4-67
90119-0309	SOCKET, PYF14A-E	4-67
90119-0310	CLAMP, TYPE PYC-A1	4-67
90121-0098	RESISTANCE FIXED, 3,9 KOHM, 2 W	4-55
90129-0006	BASE, S3-B	4-67, 4-71, 4-73
90135-0035	EARTH WIRE, L=250 MM 16 MM2	4-55
90135-0039	CLAMPING YOKE, KLBU 4-13.5	3-29
90135-0042	EARTH TERMINAL AKE 2,5	3-39, 3-41, 6-33
90135-0045	EARTH TERMINAL AKE 2,5	2-21
90136-0001	PLUG, EXT. THREAD, NO. 100727	3-3, 3-5
90140-0015	T-PIPE, INT. THREAD, 2003-1/8	3-33, 3-35
90141-0015	RETAINING RING FOR SHAFT DIN 471 8 SS	1-105, 1-107, 1-117, 1-123, 1-137, 1-141, 1-143, 1-185
90141-0016	RETAINING RING FOR SHAFT DIN 471 10 SS	1-185, 1-191, 1-193, 1-195, 1-197, 1-199, 1-201, 2-65
90141-0017	RETAINING RING FOR SHAFT DIN 471 17 SS	1-109, 1-113, 3-47
90143-0057	STRIP EMKA 1011-05 21X11MM	4-55
90143-0060	EDGE STRIP 9,5X6,3MM BLACK PVC	2-15, 2-17, 4-19, 4-51
90143-0068	RUBBER STRIP EMKA 1011-06	4-19
90143-0069	RUBBER STRIP	2-97
90143-0097	SELF GRIPPING GASKET, 1011-24	3-33, 3-35
90144-0072	TAPE SCOTCH VHBS 4945 W=12,7MM	2-91
90144-0073	TREBOFLON-TAPE W=13MM	3-3, 3-5, 3-33, 3-35
90152-0026	FLEXIBLE CONDUIT	1-63
90152-0033	SPIRAL CONDUIT FOR PR 15,2(PG 9)	1-209, 1-211
90152-0050	HOSE, SPIRAL CONDUIT, 20X13, UL 1313	1-27, 1-29, 1-31, 1-33, 1-35, 1-37, 1-217, 1-219, 2-15, 2-17, 2-53, 2-55
90152-0051	HOSE, SPIRAL CONDUIT, 25X18, UL 1816	1-27, 1-29, 1-149, 1-189, 1-205, 1-207, 2-15, 2-17, 2-51, 2-69, 2-97
90152-0059	HOSE, SPIRAL CONDUIT, 18X12, UL 1211	1-31, 1-33, 1-35, 1-37, 1-127, 2-97
90152-0060	HOSE, SPIRAL CONDUIT, 42X35, UL3529	2-69, 3-33, 3-35
90152-0070	HOSE, SPIRAL CONDUIT, 32,5X26, UL 2621	1-31, 1-33, 1-35, 1-37, 1-205, 1-207, 2-69, 3-33, 3-35
90153-0043	ADHESIVE, LOCTITE 495 20G	3-3, 3-5, 3-33, 3-35
90155-0008	HANGER CHAIN, 18	3-43, 3-47
90157-0016	THREAD LOCKING, LOCTITE 242 50 ML	1-67, 1-69, 1-183, 2-27, 2-37, 2-63
90163-0057	QUICK COUPLING, (M) 5150-1/8	4-45
90163-0062	QUICK COUPLING, (F) 5053-1/8	4-45
90164-0015	LIGHT FIXTURE, RL70CV-111 / 230V 50HZ	1-217, 1-219, 2-7, 2-9
90164-0303	LIGHT FIXTURE, BRACKET 70MM	1-217, 1-219, 2-7, 2-9
90165-0060	PIPE CLIP FOR TUBE D=5 MM	1-127
90166-0013	TUBE 8 MM PA BLUE	2-7, 2-9
90166-0060	HOSE 19/26-27 REINF.PVC	4-47
90166-0068	TUBE 12 MM PA BLUE	1-247
90166-0081	TUBE 6 MM PA BLUE	1-247, 2-39
90166-0089	TUBE, 6,2 MM PE BLUE	1-65
90166-0095	TUBE 4 MM PA BLUE (50M)	1-191, 1-247
90166-0132	TUBE 6 MM PA,TRANSP.	3-3, 3-5, 3-33, 3-35
90166-0176	RUBBER HOSE	5-3
90166-0193	TUBE 6 MM PUR BLUE	1-191, 2-29, 2-31, 2-41
90166-0254	TUBE 4 MM PUR BLUE	2-29, 2-41
90181-0039	CABLE DUCT, PLASTIC, 60X40	4-55
90181-0045	CABLE DUCT, PLASTIC, 40X60	4-65

Machine Type Group Description Page No

Part No	Description	Page No
90181-0046	CABLE DUCT, PLASTIC, 60X60	4-65
90187-0149	THROTTLE VALVE, G1/4, G1/4, MALE	6-35
90189-0005	BALL BUSHING, 30X47X68 MM	2-59
90194-0016	WARNING SIGN, RISK OF ELECTRIC SHOCK	3-39, 3-41
90194-0080	SIGN, IDENTIFICATION OF WIRING	4-55
90194-0133	SIGN DELIVERED DESIGN	4-55
90194-0163	SIGN, EARTH WITHIN CIRCLE	4-55
90194-0164	SIGN, FRAME/CHASSIS WITHIN CIRCLE	4-55
90194-0302	MARKING LABELS REBUILDING KIT	3-31, 5-3
90195-0020	TERMINAL BLOCK, BK 2CRN, 0624 7200 00	2-97
90208-0078	CLAMPING ELEMENT WITH SLEEVE, 20X28 MM	1-105, 1-107
90208-0080	CLAMPING ELEMENT WITH SLEEVE, 25X34 MM	1-105, 1-107
90211-0002	WIRE LOCK, 5 MM	2-43
90214-0098	BALL BEARING, 15X35X11 MM	2-45
90214-0112	BALL BEARING 12/24X6	6-45
90214-0138	BALL BEARING 5/19X6	1-43, 1-45, 1-129, 1-131
90214-0207	BALL BEARING 15/32X9	1-183
90217-0203	UNION NUT, 1 APV, 07-01-276/17	3-43, 4-47
90217-0204	ASEPT. MALE FITTING ISO, 03-32-406/42	4-47
90217-0206	UNION NUT, 1 1/2 APV, 07-01-376/17	4-47
90217-0207	ASEPT. MALE FITTING ISO, 03-32-456/42	4-23
90217-0209	UNION NUT, 2 APV, 07-01-426/17	4-23
90217-0347	GASKET 32X22,6X3,6 MM	3-3, 3-5, 3-43, 4-29, 4-47
90217-0348	GASKET 35,4X46,8X4 MM	3-3, 3-5, 4-23, 4-29, 4-47, 4-81
90217-0349	GASKET 48,4X59,8X4 MM	4-23, 4-47
90220-0059	THERMOCOUPLE CABLE, K/PVC/20AWG 2X0,5MM2	1-27, 1-29, 3-23, 3-43, 4-31
90220-0072	SCR. CABLE 4X0,34MM2	3-33, 3-35
90220-0091	PAIR TWISTED CABLE 2X2X0,25MM2	4-21, 4-37, 4-39, 6-29
90220-0104	SCR. CABLE 4X1,5MM2	2-51, 2-69, 4-21, 6-9
90220-0107	SCR. CABLE 5X0,75MM2	1-27, 1-29
90220-0131	PAIR TWISTED CABLE 3X2X0,25MM2	4-21
90220-0183	SCR. CABLE 2X0,34MM2	5-3
90220-0305	CLAMP FOR SCR.CABLE, 16MM,	4-55, 4-75, 4-77
90223-0002	WIRE STAINLESS D=2MM	2-65
90224-0308	CONN. BANJO, ART. NO. 2023-1/8-1/8	4-45
90224-0372	NIPPLE, EXT.THREAD, HEXAGON, R1/4-R1/4	1-171, 2-83
90226-0452	MOUNTING SCREW	3-33, 3-35
90226-0458	MOUNTING SCREW	2-89, 2-101
90230-0064	CHECK VALVE, 6 MM HIGH TEMP.	3-33, 3-35
90232-0106	PH.CELL E3S-CR11-5M	1-19, 1-21, 1-23, 1-25, 1-127
90232-0123	PH.CELL WLL170-P135-6011723	1-17, 1-209, 1-211
90232-0129	PH.CELL E3S-CR61-5M	2-7, 2-9
90232-0333	REFLECTOR, E39-R1	1-19, 1-21, 1-23, 1-25, 1-127, 2-45, 2-95, 2-99
90232-0346	FIBRE, LL3-DB01, 5308 074	1-17, 1-209, 1-211
90232-0347	FIBRE, LL3-TB01, 5308 050	1-209, 1-211
90235-0048	VALVE	4-45
90235-0206	QUICK EXHAUST VALVE, SEU-1/8	1-63, 2-7, 2-9, 2-63
90235-0259	VALVE	1-247, 4-23, 4-31
90235-0289	FLOW CONTROL VALVE, GRLA-M5	1-185, 1-191
90235-0451	SELECTOR ACTUATOR, N-22-SW	1-167, 1-169
90235-0723	FLOW CONTROL VALVE, GR-M5	1-47, 1-49
90235-0804	FRONT PANEL VALVE 3/2, SV-3-M5	1-167, 1-169
90235-0846	THROTTLE CHECK VALVE G1/8", MANUAL, 6	2-31, 2-39
90236-0041	BRACKET, 74504-50	3-33, 3-35
90237-0046	MAGNETIC LOCK, 46X33X15 MM	1-129, 1-131, 1-145, 1-203, 1-217, 1-219
90237-0070	SNAP-IN BALL LOCK, 69X19 MM	4-37, 4-39
90237-0123	LOCK, 1121-U10C	4-55
90237-0128	LOCK CYLINDER, 1109-SU125	2-91, 2-93, 2-95
90237-0129	LOCK CYLINDER, 1109-U6	4-55
90237-0142	LOCK HOUSING, 1000-U45	4-19
90237-0143	LOCK CAM, 1000-26	1-145
90237-0144	GUIDE, 1121-SU540	4-55
90237-0145	CATCH, 1121-53-01P	4-55
90237-0153	LOCK HOUSING, 1121-U26-0B	2-91, 2-93, 2-95
90237-0156	LOCK BOLT, 1000-16	1-167, 1-169, 4-51
90237-0175	TURNING HANDLE, 1125-U185-0A	2-91, 2-93, 2-95, 4-55
90237-0319	LOCK HOUSING, 1000-U134	1-145, 1-167, 1-169, 4-51
90237-0320	LOCK HOUSING, 1000-U136	1-145
90237-0323	LOCK O-RING, 1000-24	4-51
90237-0324	KEY, 1104-02 FOR SQUARE 8 MM	1-145, 4-55
90237-0335	LOCKING CATCH	4-19
90237-0337	LOCK HANDLE FOR 90237-319	1-167, 1-169, 4-19, 4-51
90239-0405	ROD END,BALL JOINT EYE M10X1,25	2-31, 2-39
90239-0487	REAR, CLEVIS, MINI-ISO 20-25	2-31, 2-39
90239-0491	ROD END, BALL JOINT EYE, MINI-ISO M6	1-191
90239-0516	ROD END, CLEVIS WITH AXLE M10X1,25	1-105, 1-107, 1-117, 1-123
90239-0819	DOUBLE ACTING, MINI-ISO, CYL.16-100	1-185
90239-0832	DOUBLE ACTING, MINI-ISO, CYL. 25-125	2-31, 2-39
90239-0863	SINGLE ACTING, MINI-ISO, CYL 25-25	1-105, 1-107, 1-117, 1-123
90243-0169	BINDER CLIP, DIAM.29 MM, NO. 4670819	4-19
90257-0001	FILTER PLUG ART.NO.8145-00-140 TYPE F14	3-33, 3-35
90258-0031	PIN, STRAIGHT SLOTTED SPRING FRP 3X20	1-7, 1-9, 1-157, 1-159, 2-23, 2-25, 2-33, 2-35
90261-0048	SQUARE PLUG GPN 260/Q2525	6-35
90261-0049	PLUG, BLIND, PLASTIC, NO. SR1750	1-183

Part No	Description	Page No
90264-0032	FAN, 4656N+LZ30+LZ 120,220V 50HZ	4-59
90274-0066	PRESSURE SWITCH, 5,516 - 689,5 KPA	3-33, 3-35
90274-0103	PRESSURE SWITTCH PEV-1/4-B	1-171
90277-0055	FILTER HOUSING / MDS 4463 G 08 H	4-35
90277-0062	FILTER HOUSING SS-4TF2-60	3-3, 3-5
90277-0104	FILTER F64B-2GN-ARO	3-33, 3-35
90277-0323	FILTER HOUSING / ART.NO 95S6-1/4 S 5430	3-33, 3-35
90277-0324	FILTER CARTRIDGE 050-11-A	3-33, 3-35
90277-0333	GASKET KIT / ART.NO ACS 0325 EH	4-35
90277-0407	FILTER ELEMENT 60Âµ, SS-4F-K4-60	3-3, 3-5
90287-0043	SCREW HEX.SOCK.SET CONEPT. MS6SS M6X30	6-41
90287-0062	SCREW M6	1-217, 1-219, 1-233
90287-0075	SCREW SLOT. PAN HEAD LKCS M6X12	1-243, 4-17
90287-0106	SCREW SPRINGLOAD. SLOTTED HEAD M10X21	1-11, 1-183
90287-0112	SCREW SPRINGLOAD. SLOTTED HEAD M8X16	1-7, 1-9, 1-157, 1-159, 1-193
90287-0148	SCREW SPRINGLOAD. SLOTTED HEAD M5X12	1-119, 1-215
90287-0154	SCREW, SOCK.SET DOGPOINT M6X10	1-11, 2-43
90287-0175	SCREW M6S M3X12 A480	4-75, 4-77
90287-0205	SCREW	4-55
90287-0238	SCREW, HEX.SOCK.HEAD SHOULD. M5X6	4-19
90287-0313	CENTERING SCREW	2-59
90287-0314	SCREW MC6S M4X60 A470	4-23
90287-0331	SCREW ISO 7380 K6S M5X12 A4	2-49
90287-0335	SCREW MC6S M8X90 A280	2-63
90296-0091	LUBRICATION GREASE	1-67, 1-69
90298-0033	WATLUBE HEAT LIQUID	1-251
90319-0013	POLYESTER-SILKROPE 4MM 3900N, 102079	2-43
90326-0012	PROTECTIVE COVER, T31A4618	3-43, 4-31
90326-0020	PLUG, FEMALE YELLOW CR-AL	3-43, 4-31
90326-0022	PLUG, MALE YELLOW CR-AL	3-43
90326-0060	THERMOCOUPLE, CR-AL	1-73, 1-81, 1-83, 1-91, 1-101, 1-103, 1-251, 3-43
90326-0089	THERMOCOUPLE, 5110-089-000	4-31
90328-0003	SILENCER, 338/110	4-23, 4-31
90328-0026	SILENCER G1/4"	3-33, 3-35, 4-23
90328-0029	SILENCER M5	1-167, 1-169, 1-185, 4-31
90328-0047	SILENCER G1/8"	1-105, 1-107, 1-117, 1-123, 1-173, 1-175, 2-81, 4-41
90330-0013	NIPPLE, EXT.THREAD, HEXAGON, R1/4-R1/8	3-3, 3-5
90330-0025	BUSHING, INT/EXT. THR. R1/4-RP1/8	3-33, 3-35
90330-0026	PLUG, EXT. G-THREAD, G1/4	3-33, 3-35
90330-0032	NIPPLE, EXT.THREAD, HEXAGON, R1/8-R1/8	3-3, 3-5, 4-21, 4-45
90330-0037	PLUG, G1/2EXT, G1/2	1-171, 2-83
90330-0043	NIPPLE, EXT.THREAD, HEXAGON, R1/4-R1/4	3-33, 3-35
90330-0083	NIPPLE, EXT.THREAD, HEXAGON, R3/8-R1/4	3-33, 3-35
90330-0093	NUT, HEXAGON SS, G1/2	4-47
90330-0094	SLEEVE, INT, THREAD, NO., R-2011/8	4-21
90330-0095	T-PIPE, INT. THREAD, R-221-R1/8	3-3, 3-5
90330-0169	ELBOW, 90 INT. THREAD, 4-4FE. SS	3-3, 3-5
90335-0005	SPRING	1-63, 1-67, 1-69, 1-251
90335-0024	COMP. SPRING 22250, 1,25X13,75X27	4-49
90335-0025	COMP. SPRING 22010, 1X11X26	2-13
90335-0027	COMP. SPRING 22170, 1,25X9,25X33	1-141, 1-143
90335-0036	COMP. SPRING 22450, 1,6X14,1X24	6-21
90335-0067	COMP. SPRING 22370, 1,6X9,6X31,75	1-73, 1-81, 1-83, 1-101, 1-103, 6-23, 6-25
90335-0091	TENSION SPRING 41890, 1,2X13X48,2	2-65
90335-0146	COMP. SPRING, 0,6X7,2X20	1-121, 1-133
90335-0216	TENSION SPRING 40910, 0,5X5,5X27,7	1-43, 1-45, 1-119, 1-129, 1-131, 1-215
90337-0315	FILTER INSERT / MCS 4463	4-35
90342-0013	BELLOWS	1-185
90344-0078	PULLEY	2-77
90347-0004	VIBRATION DAMPER D=30 TH=M8 H=17 H2=21MM	1-217, 1-219
90347-0054	ROTARY DASHPOT, S-CRD-P277	2-45
90347-0113	DAMPER	1-217, 1-219
90347-0175	MACHINE SHOE BRIK T 125	4-11
90347-0182	SHOCK ABSORBER, YSR-16-20-C	2-59
90348-0031	FREE-WHEEL COUPLING, 8X12 MM	1-73, 1-81, 1-83, 1-101, 1-103
90360-0020	STEAM TRAP / MK36/51 3/8 INCH	4-31
90417-0074	TIMING BELT 25T10/610 PU	1-105, 1-107
90417-0311	TIMING BELT 16T10/440 PU	2-77
90432-0012	EL.MAGNETIC POWDER BRAKE	1-109, 1-113
90450-0306	DOUBLE ACTING, MINI-ISO, CYL. 12-25	1-191
90450-0397	CYLINDER	1-63, 1-73, 1-81, 1-83, 1-91, 1-101, 1-103
90450-0398	SINGLE ACTING, PANCAKE EV-63/15-4	1-75, 1-85, 1-97, 1-99
90450-0551	DOUBLE ACTING, COMPACT, CYL 20-10	2-41
90450-0552	CYLINDER, RODLESS MECH. 40-520	2-11
90457-0086	BULKHEAD CONNECTOR 6MM	3-3, 3-5, 4-45
90457-0141	BULKHEAD CONNECTOR, 8MM	4-45
90457-0146	GLAND FITTING, VK 15154YUL16	1-27, 1-29, 2-15, 2-17, 2-51, 2-69
90457-0147	INSERT, MULTI HOLE, EK154M 2X7	1-149, 2-15, 2-17
90457-0920	BUTTON SIGN, ROTATION OF MATERIAL HOLDER	2-97
90457-0950	ULTRASONIC SENSOR, E4B-TS 50F4 5M	1-151
90458-0072	SCREW ISO 7380 S M6X12 A2	2-87, 4-9
90458-0073	WASHER 6,4/30, H=1,5	4-9
90458-0146	GLAND FITTING, VK 154YUL16	1-205, 1-207
90458-0188	INSERT, MULTI HOLE, EK154M 1X7, 1X10,5	1-27, 1-29

Part No	Description	Page No
90458-0254	PRECISION PRESSURE REGULATOR,LRP-1/4-0,7	1-167, 1-169
90458-0273	SLOT COVER, ABP-5-S	2-11
90458-0305	CABLE GLAND, M12X1,5, 5311 1000	1-205, 1-207, 4-37, 4-39, 4-55, 6-33
90458-0306	CABLE GLAND, M16X1,5, 5311 1016	1-31, 1-33, 1-35, 1-37, 1-167, 1-169, 4-55, 6-9, 6-15, 6-29, 6-33
90458-0307	CABLE GLAND, M20X1,5, 5311 1020	4-53, 4-55, 4-61
90458-0308	CABLE GLAND, M25X1,5, 5311 1030	4-53, 4-55, 4-61, 6-9
90458-0316	CABLE GLAND, M25X1,5, 5311 1130	1-167, 1-169, 6-15
90458-0321	NUT, M12X1,5	4-37, 4-39, 4-55
90458-0322	NUT, M16X1,5	1-7, 1-9, 1-19, 1-21, 1-23, 1-25, 1-157, 1-159, 1-167, 1-169, 4-55, 6-15, 6-29
90458-0323	NUT, M20X1,5	1-127, 1-149, 4-53, 4-55, 4-61
90458-0324	NUT, M25X1,5	1-167, 1-169, 4-53, 4-55, 4-61
90458-0373	KEY FOR SAFETY SWITCH AZM-161-B1	1-217, 1-219
90458-0407	CABLE GLAND, VK 22553Y	4-55
90458-0422	CABLE GLAND, VK 22053Y	1-205, 1-207
90458-0427	GLAND FITTING, VK 21652YUL11	1-7, 1-9, 1-19, 1-21, 1-23, 1-25, 1-31, 1-33, 1-35, 1-37, 1-157, 1-159
90458-0428	GLAND FITTING, VK 22052YUL11	1-127
90458-0429	GLAND FITTING, VK 22053YUL13	1-31, 1-33, 1-35, 1-37
90458-0430	GLAND FITTING, VK 22054YUL16	1-27, 1-29, 1-149, 1-205, 1-207, 2-7, 2-9
90458-0431	GLAND FITTING, VK 22554YUL16	1-189, 1-205, 1-207
90458-0433	GLAND FITTING, VK 23255YUL21	1-31, 1-33, 1-35, 1-37, 1-205, 1-207
90458-0438	GLAND, EXTENDED WITH INSERT, M20X1,5	1-73, 1-81, 1-83, 1-101, 1-103, 4-55
90458-0449	GLAND FITTING, 2205413S05 UL16	1-123, 2-51, 2-77
90458-0461	GLAND, LOCK NUT, M20X1,5	4-55
90458-0523	STEP MOTOR, SM 56.2.18J3 Z(202)	1-73, 1-81, 1-83, 1-101, 1-103
90458-0602	CONTRAST SCANNER, KT15W-P2213S02	1-149, 2-75
90458-0603	CONNECTOR, CABLE RECEPTACLES	1-149, 2-75
90458-0677	PROX.SWITCH E2EG-X5MB1-M1	2-43
90458-0877	HOOD, TOP ENTRY, HAN 6B-GG-PG29	2-69
90458-0878	HINGED FRAME, 09 14 006 0303	2-69
90458-0879	MALE INSERT, HAN MODULAR 2 MODULE	2-69
90458-1076	L-SHAPED CONNECTOR CABLE Y92EM12PVC4A5ML	2-7, 2-9, 2-43
90458-1092	PROPORTIONAL VALVE 0 - 10V/0-6 BAR	4-37, 4-39
90458-1194	VALVE, 5/2 MONOSTABLE	1-173, 1-175, 2-81, 4-41
90458-1197	VALVE, 5/2 BISTABLE	1-173, 1-175, 2-81
90458-1199	VALVE CLOSED IN MID-POSITION, 5/3	2-81
90458-1202	VALVES 2X3/2, CLOSED	4-41
90458-1204	BASIC SUB-BASE 4 VALVES, CDVI5.0-GB4-MP	1-173, 1-175, 2-81
90458-1205	BASIC SUB-BASE 8 VALVES, CDVI5.0-GB8-MP	4-41
90458-1206	EXP. SUB-BASE 2 VALVES, CDVI5.0-EB	1-173, 1-175, 2-81
90458-1207	SEALING, STANDARD	1-173, 1-175, 2-81, 4-41
90458-1208	SEALING, CHANNEL 1 BLOCKED	1-173, 1-175, 2-81
90458-1212	LEFT ENDPLATE INCL. 10M CABLE	1-173, 1-175, 2-81, 4-41
90458-1214	RIGHT ENDPL EXT. PILOT AIR,CDVI5.0-EPR-S	1-173, 1-175, 2-81, 4-41
90458-1215	COVER PLATE, EMPTY VALVE POSITION	1-173, 1-175, 4-41
90458-1306	BLIND PLUG CIRCULAR, M12X1,5 514GFK/212	1-205, 1-207
90458-1307	BLIND PLUG CIRCULAR, M16X1,5 514GFK/216	1-31, 1-33, 1-35, 1-37, 1-205, 1-207, 6-15
90458-1309	BLIND PLUG CIRCULAR, M25X1,5 514GFK/225	1-31, 1-33, 1-35, 1-37, 4-53, 4-61
90458-1330	OPERATION DEVICE, MBG 22X, 823 8871	6-29
90458-1405	MALE INSERT, HDC HE 16 MS, 1207 5000 00	1-31, 1-33, 1-35, 1-37
90458-1447	MOUNTING RAIL SUPPORT, TST 128660	4-67
90458-2027	FLOPPY DISK, 3,5" 1,44MB FOR PC	3-15
90458-2264	PRESSURE REGULATOR ARC-30-1/2"	4-31
90458-2385	COOLER FOR MANOMETER, HIGH TEMP. G1/2	4-33
90458-2554	STERILE GRADE MEMBRANE FILTER 0,2ÂµM	4-45
90458-2580	LEVEL CONTROL RELAY, RM4-LA32M	3-27
90458-2581	FOOT PLATE, M50-16-70	6-37, 6-57
90458-2633	HANDLE, 1045-05	2-47
90458-2794	SENSOR, EVA 20-046-00	1-167, 1-169, 1-203, 1-217, 1-219, 1-235, 2-47, 2-91, 2-93, 2-95, 2-99
90458-2926	CABLE GLAND, RG M63/9	4-53, 4-61
90458-2954	ELBOW PIPE JOINT, EXT.THREAD, D=4MM M5	1-73, 1-101, 1-103
90458-2956	ELBOW PIPE JOINT, EXT.THREAD, D=6MM-G1/8	1-63, 1-65, 1-67, 1-69, 1-73, 1-81, 1-83, 1-91, 1-101, 1-103, 1-105, 1-107, 1-117, 1-123
90458-2957	ELBOW PIPE JOINT, EXT.THREAD, D=6MM-G1/4	3-33, 3-35
90458-2960	ELBOW PIPE JOINT, EXT.THREAD,D=12MM-G3/8	4-43
90458-2969	PRESSURE GAUGE, MAP-40-1-1/8-EN	1-167, 1-169
90458-2971	BRACKET, HR-1/4-P FOR LRP-1/4-0,7	1-167, 1-169
90459-0075	HINGE, 1056-U30	1-129, 1-131
90459-0340	SHELL CASSIDA GREASE HDS 2	4-21
90459-0472	KEY SAF.SW. AZ 16 02ZVRK-M20-2152-2254	2-47
90459-0494	COMP. SPRING 21920, 1X7,3X21,5	1-149
90459-0503	DOUBLE ACTING, SHORT STROKE, CYL 16-10	2-29, 2-41
90459-0691	SIGN, STRIP SPLICE/ RESET ALARM	1-189
90459-1212	DOUBLE ACTING, COMPACT, 40-40	1-67, 1-69
90459-1213	BRACKET, REAR, EYE WITH AXLE 40	1-67, 1-69
90459-1420	PROPORTIONAL VALVE 0 - 10V/0-6 BAR	3-33, 3-35
90459-1509	DOUBLE ACTING, SHORT STROKE, CYL 20-20	2-63
90459-1681	SCREW HEX.SOCK.SET CONEPT.MS6SS M4X12 A2	1-67, 1-69
90459-1774	INSULATING TUBE Ã¸28, 1627-0028	4-23
90459-1848	TAPE, SAFETY WALK R25MM X 18,3M	2-7, 2-9
90459-1850	REGULATOR, MS6-LRB-1/2-D5-AS	2-83
90459-1852	SHUT OFF VALVE, MS6-EM1-1/2	1-171, 2-83
90459-1855	SOFT START VALVE, MS6-DL-1/2	1-171
90459-1856	DISTRIBUTOR, MS6-FRM-1/2	1-171, 2-83
90459-1858	BRACKET, MS6-WP	1-171, 2-83

Part No	Description	Page No
90459-1859	BRACKET, MS6-MV	1-171, 2-83
90459-1919	PUSH BUTTON VALVE 550-053-000-0	1-65
90459-1920	"NON-RETURN VALVE, G1/8""""	1-65
90459-1921	SPHERICAL KNOB TRANSPARENT CAP, Ã¸35	1-75, 1-81, 1-83, 1-91, 1-97, 1-99
90459-1922	LABEL, ELESA MA.20-P17	1-75, 1-81, 1-83, 1-91, 1-97, 1-99
90459-1948	BONDED SEAL SS/VITON G1/4	4-33
90459-2102	SINGLE ACTING, SHORT STROKE, CYL 100-25	2-63
90459-2216	BUSHING, INT/EXT, G1/4-G1/2	1-171, 2-83
90459-2241	REGULATOR, MS4-LRB-1/4-D5-AS	1-167, 1-169
90459-2290	LIFTING EYE BOLT, LBG M16 RS 1T	1-19, 1-21, 1-23, 1-25
90459-2327	GEARS, WORM MOTOR IGL 80-60 + VE 31GR5	1-123
90459-2328	GEARS, WORM MOTOR IGL 80-60 + VE 31GR5	2-51, 2-77
90459-2389	BRACKET, MS4-LR-WR	1-167, 1-169
90459-2412	CONNECTOR, HDC-KITS, HDC-HA-4SS	1-27, 1-29, 1-217, 1-219, 2-53, 2-55, 2-69
90459-2424	GLAND, EXTENDED WITH INSERT, M20X1,5	4-55
90459-2425	PRESSURE REGULATOR IN-LINE, BSP-1/4	2-79, 4-37, 4-39
90459-2596	LOCKING HANDLE, M8X25M	6-35
90459-2617	END PLATE, MS6-AGD	1-171, 2-83
90459-2633	I/O BUS EXPANSION CABLE 8M	4-63
90459-2755	GUIDE BUSHING, ST7403 19X060X063	1-67, 1-69
90459-2756	GUIDE PILLAR, ST7120. 19X112X135	1-67, 1-69
90459-2758	BUSHING, IGLIDUR Z 12X14X15	1-67, 1-69
90459-2772	FILTER, MS6-LFM-1/2-ARV	1-171
90459-2773	FILTER, MS6-LFM-1/2-BRV	1-171
90459-3041	ULTRASONIC SENSOR, SM657A-A08-01	1-213
90459-3042	SENSOR CABLE AC117	1-213
90459-3636	GAS SPRING NO. 08 39 17	1-217, 1-219
90459-3644	REDUCER, M20X1,5/M16X1,5	1-217, 1-219
90459-3656	GLAND,EXTENDED WITH INSERT, M16X1,5-LONG	4-21
90459-3660	GLAND,EXTENDED WITH INSERT, M25X1,5-LONG	4-21
90459-3685	THROTTLE VALVE GRLA-1/4-QS-8-D	2-11
90459-3832	VENTING BOX, P9852	2-7, 2-9
90459-3887	PUSH-IN Y-CONNECTOR QSY-G1/2-12	1-167, 1-169
90459-4142	SENSOR, ADAM M12 20-051-00	1-167, 1-169, 1-203, 1-217, 1-219, 1-235, 2-7, 2-9, 2-47
90459-4164	SAFETY SCREW SM4X20, 20-053-42	1-167, 1-169, 1-203, 1-217, 1-219, 1-235, 2-7, 2-9, 2-47, 2-91, 2-93
90459-4165	SAFETY SCREW SM4X25, 20-053-43	1-217, 1-219, 2-47
90459-4254	CONNECTION BLOCK TINA 4A, 20-054-03	1-19, 1-21, 1-23, 1-25, 2-53, 2-55
90459-4617	SCREW, SZ8512.08X020	1-67, 1-69
90459-4618	WASHER 8,5/25/6, ST7387.20	1-67, 1-69
90459-4735	SCREW M6S ISO 4017 M8X10 A480	6-17, 6-19, 6-43
90459-4783	BREAKOUT BOARD FOR CN2, 2090-UXBB-DM15	1-105, 1-107
90459-4810	PRESS TRANSD (DIFF) 0 - 2000PA, 2681-20C	5-3
90459-4876	FOCUS JUMPER CABLE M12 5P 3M, 20-056-21	1-167, 1-169, 1-203, 1-217, 1-219, 2-7, 2-9, 2-47, 2-53, 2-55
90459-5309	CONTACTOR 7,5KW 24VDC, DILM17-10	4-71, 4-73
90459-5529	PHOTOCELL E3Z-T86A, SENDER+RECIEVER	6-41
90459-5627	CONNECTION TINA 1A, 20-054-00	1-19, 1-21, 1-23, 1-25, 2-53, 2-55
90459-5786	FILTERED SILENCER, 10494 LFU-1/2	1-167, 1-169, 2-85, 4-43
90459-6554	FILTER REGULATOR, MS6-LFR-1/2-D7-CRV-AS	1-171
90459-7095	FOCUS JUMPER CABLE M12 5P 1M, 20-056-20	1-203, 2-7, 2-9, 2-53, 2-55
90459-7273	PHOTOCELL E3Z-T81C-G0SR D-CN	6-9
90459-7274	PHOTOCELL E3Z-T81C-G0SR L-CN	6-9
90600-0190	INSULATION TUBE Ã˜21/13 MM, 1627-0013	4-29, 4-35
90600-0460	INDUCTIVE SWITCH, E2A-M12KN05-M1-B1-TP	2-7, 2-9
90600-0467	INDUCTIVE SWITCH,E2A-M18KS05-WP-B1-TP 6M	3-3, 3-5
90600-0473	INDUCTIVE SWITCH E2A-S08KS01-WP-B1-TP 5M	1-19, 1-21, 1-23, 1-25
90600-0491	ACTUATOR, 9650-0089-Z-I-OTI	3-43
90600-0493	DIAPHRAGM 3A, 600-8M-5AD	3-43
90600-0933	CONVERTER TINA 2-B, 20-054-11	2-97
90600-0934	CABLE M12-C62 5 POLE MALE, 20-056-02	1-189, 2-97
90600-0937	PIPE CONNECTION 12-8	4-29
90600-1056	KEY SAF.SW. AZM 161SK-12/12RKA 024	1-217, 1-219
90600-1154	FLOW METER,D-6230-HGB-BB-AV-99-0-N2/IP65	3-33, 3-35
90600-1385	PRESSURE GUARD, PEV-1/4-B SA234332	2-83
90600-2961	ENCODERFEEDBACK POWERFLEX 70, 20A-ENC-1	4-55
90600-2962	SAFE-OFF OPTION POWERFLEX 70, 20A-DG01	4-55
90600-3019	HIM POWERFLEX 7-CLASS, 20-HIM-A3	4-55
90600-3020	CABLE	4-55
90600-3074	Y-CONNECTOR M12-3E, 20-055-02	2-53, 2-55
90600-3198	ACTUATOR, NC, 9550 10Z 510G1	4-31
90600-3199	ACTUATOR, NO, 9550 10Z 520G1	4-31
90600-3228	MOTOR CH21302002002A000	4-21
90600-3233	FLEXIBLE COUPLING, 24X38 MM	4-21
90600-3668	CONN. STR SS-8MO-1-2RT	4-21
90600-3738	FREQ. CONV., 20AC8P7F0AYNANC0	4-55
90600-3778	REDUCER, M25/M40	4-21
90600-3779	BALL VALVE, LOCKABLE G1/2	4-35
90600-4233	DOUBLE ACTING, COMPACT, 80-25	2-63
90600-4437	ROT. LOBE PUMP AVMXT 3500DA	4-21
90600-5129	EXP. SUB-BASE 1 VALVE,CDVI5.0-EB1X-BI-MP	2-81
90600-5249	FERRITE, B64290L616X38	2-81
90600-5583	INK JET PRINTER A300+EUR, TP 90600-5583	6-67
90600-5584	INK JET PRINTER A300+ARAB, TP 90600-5584	6-67

Part No	Description	Page No
90600-5585	INK JET PRINTER A300+CHIN, TP 90600-5585	6-67
90600-5586	INK JET PRINTER A300+JAPA, TP 90600-5586	6-67
90600-5587	INK JET PRI. A300+GR/RUSS, TP 90600-5587	6-67
90600-5930	CABLE C9, 20-057-15	1-19, 1-21, 1-23, 1-25, 1-171, 2-53, 2-55, 2-83
90600-6032	TEMPERATURE CONTROLLER, KS50	3-23
90600-6050	EMERGENCY STOP INCA 1 TINA, 30-054-00	1-189, 2-97
90600-6183	TUBULAR RIVET 3,5X6,2	6-17, 6-19
90600-7506	SUPPORT PLATE, 26798	6-7, 6-35, 6-41
90600-8267	DOOR LOCKING DEV., DALTON M126 20-038-12	1-235
90600-8708	AIR KNIFE, LL40100	6-35
90600-9528	TRANSFER CABLE M12-CT0214, 20-060-01	1-235
90600-9809	ES SIGN FOR INCA, 30-054-09	1-189, 2-97
90601-0026	TINA 11A DISTRIBUTOR BLOCK, 20-054-17	1-203, 2-53, 2-55
90601-1126	SAFETY VALVE, MS6-SV-1/2-E-10V24-AG	1-171, 2-83
90601-1168	SOCKET CONNECTOR, NECA-S1G9-P9-MP3	1-171, 2-83
90601-1586	SILENCER, G1"	2-83
90601-1808	GEARS, HELICAL MOTOR R17DT71D4MM05/MLU/B	6-9
90602-2814	MOTOR FEEDBACK CABLE 2090-XXNFMF-S03,A	1-105, 1-107
90602-3351	MOTOR POWER CABLE 2090-XXNPMF-16S03,A	1-105, 1-107
90602-8227	SERVO MOTOR MPL-A430H-HJ72AA SERIES A	1-105, 1-107
209183-0000	RING	3-43, 3-47
263150-0000	BRACKET	1-111
263152-0000	SHAFT	1-111
263153-0000	NUT	1-111, 1-115
266710-0000	WHEEL	1-111
266737-0000	WASHER	1-43, 1-45, 1-129, 1-131
272728-0000	BARRIER	2-13
283551-0000	SCREW	1-73, 1-81, 1-83, 1-101, 1-103
294734-0000	WASHER	1-217, 1-219, 1-233
311102-0185	PARALLEL PIN ISO 2338 2M6X6 ST	1-75, 1-85, 1-97, 1-99
311102-0214	PARALLEL PIN ISO 2338 2,5M6X25 ST	1-149
311103-0236	PARALLEL PIN ISO 2338 3M6X16 A1	1-215
311103-0238	PARALLEL PIN ISO 2338 3M6X20 A1	1-73, 1-81, 1-83, 1-101, 1-103
311103-0270	PARALLEL PIN ISO 2338 4M6X16 A1	1-67, 1-69, 2-67
311103-0272	PARALLEL PIN ISO 2338 4M6X20 A1	1-19, 1-21, 1-23, 1-25, 1-39, 1-41, 2-45
311103-0274	PARALLEL PIN ISO 2338 4M6X25 A1	1-109, 1-113, 2-13
311103-0306	PARALLEL PIN ISO 2338 5M6X12 A1	2-77
311103-0309	PARALLEL PIN ISO 2338 5M6X18 A1	1-123
311103-0310	PARALLEL PIN ISO 2338 5M6X20 A1	1-73, 1-81, 1-83, 1-101, 1-103
311103-0349	PARALLEL PIN ISO 2338 6M6X12 A1	1-71, 1-77, 1-79, 1-87, 1-89, 1-93, 1-95
311103-0351	PARALLEL PIN ISO 2338 6M6X16 A1	1-73, 1-101, 1-103, 1-149, 6-23, 6-25
311103-0353	PARALLEL PIN ISO 2338 6M6X20 A1	1-67, 1-69, 2-45
311103-0361	PARALLEL PIN ISO 2338 6M6X40 A1	2-75
311103-0409	PARALLEL PIN ISO 2338 8M6X40 A1	2-77
311103-1274	PARALLEL PIN ISO 2338 4M6X24 A1	2-7, 2-9
311103-1312	PARALLEL PIN ISO 2338 5M6X24 A1	1-105, 1-107, 6-23, 6-25
311103-1355	PARALLEL PIN ISO 2338 6M6X24 A1	2-23, 2-25, 2-33, 2-35
311112-0258	SPRING PIN, ISO 8752 4X24-C	2-63, 2-65
311521-0143	RIVET, BLANK 3,2X8	1-19, 1-21, 1-23, 1-25, 2-87
312101-0344	SCREW M6S M5X65 FZB	1-135
312101-0504	SCREW M6S M10X65 FZB	4-83
312104-0499	SCREW M6S M10X40H FZB	1-105, 1-107
312105-0287	SCREW M6S ISO 4017 M4X8 A470	1-7, 1-9, 1-17, 1-73, 1-81, 1-83, 1-101, 1-103, 1-119, 1-127, 1-153, 1-155, 1-157, 1-159, 1-209, 1-211, 2-23, 2-25, 2-33, 2-35
312105-0289	SCREW M6S H4X10 A4 70 ISO4017/DIN933	4-37, 4-39, 6-23, 6-25
312105-0291	SCREW M6S ISO 4017 M4X12 A470	1-127, 1-151, 2-23, 2-25, 2-33, 2-35, 2-47, 4-57, 4-59, 6-29
312105-0293	SCREW M6S ISO 4017 M4X16 A470	1-17, 1-47, 1-49, 1-187, 1-195, 1-197, 1-199, 1-201, 2-7, 2-9
312105-0295	SCREW M6S ISO 4017 M4X20 A470	1-43, 1-45, 2-53, 2-55, 4-59
312105-0297	SCREW M6S ISO 4017 M4X25 A470	1-47, 1-49
312105-0299	SCREW M6S ISO 4017 M4X30 A470	1-65, 1-135
312105-0301	SCREW M6S ISO 4017 M4X35 A470	2-29, 2-41
312105-0323	SCREW M6S ISO 4017 M5X8 A480	1-7, 1-9, 1-157, 1-159, 1-215
312105-0325	SCREW M6S ISO 4017 M5X10 A480	1-19, 1-21, 1-23, 1-25, 1-129, 1-131, 1-149, 1-209, 1-211, 3-33, 3-35, 3-47, 4-45
312105-0327	SCREW M6S ISO 4017 M5X12 A480	1-7, 1-9, 1-73, 1-81, 1-83, 1-91, 1-101, 1-103, 1-105, 1-107, 1-117, 1-121, 1-123, 1-157, 1-159, 1-213, 1-217, 1-219, 2-7, 2-9, 2-47, 2-79, 4-21, 6-23, 6-25, 6-41
312105-0328	SCREW M6S ISO 4017 M5X14 A480	1-43, 1-45, 1-129, 1-131
312105-0329	SCREW M6S ISO 4017 M5X16 A480	1-19, 1-21, 1-23, 1-25, 1-167, 1-169, 1-195, 1-197, 1-199, 1-201, 1-213, 1-243, 2-47, 4-51, 6-23, 6-25, 6-45
312105-0331	SCREW M6S ISO 4017 M5X20 A480	1-7, 1-9, 1-141, 1-143, 1-157, 1-159, 2-23, 2-25, 2-33, 2-35
312105-0333	SCREW M6S ISO 4017 M5X25 A480	1-119, 1-127, 1-139, 1-215, 2-75, 3-43
312105-0335	SCREW M6S ISO 4014 M5X30 A480	1-7, 1-9, 1-157, 1-159, 3-33, 3-35
312105-0337	SCREW M6S ISO 4014 M5X35 A480	1-105, 1-107
312105-0339	SCREW M6S ISO 4014 M5X40 A480	1-75, 1-85, 1-97, 1-99, 1-105, 1-107, 1-129, 1-131
312105-0341	SCREW M6S ISO 4014 M5X50 A480	2-63
312105-0362	SCREW M6S ISO 4017 M6X8 A480	1-13, 1-161, 4-37, 4-39, 5-3, 6-17, 6-19, 6-27
312105-0364	SCREW M6S ISO 4017 M6X10 A480	1-19, 1-21, 1-23, 1-25, 1-215, 1-217, 1-219, 1-239, 2-7, 2-9, 2-31, 2-39, 3-33, 3-35, 4-47, 6-27
312105-0366	SCREW M6S ISO 4017 M6X12 A480	1-17, 1-105, 1-107, 1-129, 1-131, 1-135, 1-137, 1-139, 1-141, 1-143, 1-149, 1-153, 1-155, 1-163, 1-165, 1-167, 1-169, 1-217, 1-219, 2-7, 2-9, 2-23, 2-25, 2-33, 2-35, 2-43, 2-45, 2-49, 2-73, 2-77, 4-17, 4-21, 4-23, 4-29, 4-37, 4-39, 4-51, 6-13, 6-35, 6-41
312105-0367	REW M6S ISO 4017 M6X14 A480	1-137, 1-195, 1-197, 1-199, 1-201, 1-209, 1-211, 3-47
312105-0368	SCREW M6S ISO 4017 M6X16 A480	1-13, 1-81, 1-83, 1-105, 1-107, 1-119, 1-127, 1-129, 1-131

Part No	Description	Page No
		1-137, 1-151, 1-161, 1-163, 1-165, 1-195, 1-197, 1-199, 1-201, 1-217, 1-219, 2-23, 2-25, 2-29, 2-33
		2-35, 2-41, 2-43, 2-45, 2-51, 2-59, 2-79, 2-81, 2-83, 4-43, 4-47, 5-3, 6-9, 6-41
312105-0370 ..	SCREW M6S ISO 4017 M6X20 A480	1-139, 1-141, 1-143, 1-149, 1-181, 1-191, 1-193, 1-213
		2-7, 2-9, 2-29, 2-41, 2-53, 2-55, 2-59, 2-65, 2-75, 2-77, 4-29, 4-47, 4-51, 4-79, 6-9, 6-13, 6-27, 6-47
312105-0372 ..	SCREW M6S ISO 4017 M6X25 A480	1-19, 1-21, 1-23, 1-25, 1-139, 2-7, 2-9, 2-29, 2-41, 2-45
		2-75, 3-45, 6-35
312105-0374 ..	SCREW M6S ISO 4014 M6X30 A480	1-141, 1-143, 1-195, 1-197, 1-199, 1-201
312105-0376 ..	SCREW M6S ISO 4014 M6X35 A480	1-123, 1-141, 1-143, 1-149, 6-9
312105-0378 ..	SCREW M6S ISO 4014 M6X40 A480	1-187, 1-217, 1-219, 1-233, 3-45
312105-0379 ..	SCREW M6S ISO 4014 M6X45 A480	2-43, 2-65
312105-0381 ..	SCREW M6S ISO 4014 M6X55 A480	1-139, 2-43
312105-0382 ..	SCREW M6S ISO 4014 M6X60 A480	2-13, 4-29
312105-0447 ..	SCREW M6S ISO 4017 M8X12 A480	1-65, 1-203, 1-217, 1-219, 1-229, 1-231, 6-41, 6-49, 6-51, 6-57
312105-0449 ..	SCREW M6S ISO 4017 M8X16 A480	1-43, 1-45, 1-73, 1-81, 1-83, 1-91, 1-101, 1-103, 1-129
		1-131, 1-187, 1-241, 1-243, 2-59, 2-85, 6-17, 6-19
312105-0451 ..	SCREW M6S ISO 4017 M8X20 A480	1-7, 1-9, 1-19, 1-21, 1-23, 1-25, 1-77, 1-79, 1-87, 1-89
		1-129, 1-131, 1-157, 1-159, 2-19, 4-13, 6-13, 6-17, 6-19, 6-53, 6-55
312105-0453 ..	SCREW M6S ISO 4017 M8X25 A480	1-47, 1-49, 1-63, 1-67, 1-69, 1-71, 1-73, 1-93, 1-95, 1-101
		1-103, 1-123, 1-137, 2-23, 2-25, 2-33, 2-35, 2-73, 3-33, 3-35, 3-45, 4-21, 6-9, 6-17, 6-19, 6-37, 6-57
312105-0455 ..	SCREW M6S ISO 4017 M8X30 A480	1-63, 1-71, 1-73, 1-75, 1-77, 1-79, 1-81, 1-83, 1-85, 1-87
		1-89, 1-91, 1-93, 1-95, 1-97, 1-99, 1-101, 1-103, 1-117, 1-151, 1-217, 1-219, 2-59, 6-41
312105-0457 ..	SCREW M6S ISO 4014 M8X35 A480	1-47, 1-49, 1-93, 1-95
312105-0459 ..	SCREW M6S ISO 4014 M8X40 A480	1-17, 1-47, 1-49, 1-61, 1-71, 1-77, 1-79, 1-87, 1-89, 1-91
		1-93, 1-95, 1-105, 1-107
312105-0460 ..	SCREW M6S ISO 4014 M8X45 A480	4-51
312105-0461 ..	SCREW M6S ISO 4014 M8X50 A480	6-21
312105-0463 ..	SCREW M6S ISO 4014 M8X60 A480	6-9
312105-0493 ..	SCREW M6S ISO 4017 M10X25 A480	1-105, 1-107, 6-57
312105-0495 ..	SCREW M6S ISO 4017 M10X30 A480	1-145
312105-0497 ..	SCREW M6S ISO 4017 M10X35 A480	2-31, 2-39
312105-0503 ..	SCREW M6S ISO 4014 M10X60 A480	4-21
312105-0506 ..	FITTED BOLT M10X75MM	1-121
312105-0509 ..	SCREW M6S ISO 4014 M10X90 A480	4-53
312105-0515 ..	SCREW M6S ISO 4014 M10X120 A480	4-17
312105-0536 ..	SCREW M6S ISO 4017 M12X30 A480	1-145, 4-11
312105-0550 ..	SCREW M6S ISO 4014 M12X90 A480	4-21
312105-0556 ..	SCREW M6S ISO 4014 M12X120 A480	2-7, 2-9
312105-0558 ..	SCREW M6S ISO 4014 M12X130 A480	4-11
312107-0312 ..	HEXAGON FLANGE NUT ISO 4161 M4 A2	4-19
312107-0314 ..	HEXAGON FLANGE NUT ISO 4161 M5 A2	4-19
312108-0449 ..	SCREW EN 1665 TYPE F M8X16 A270	4-19
312109-0374 ..	SCREW M6S ISO 4017 M6X30 A480	2-45, 2-73
312109-0376 ..	SCREW M6S ISO 4017 M6X35 A480	2-73
312109-0378 ..	SCREW M6S ISO 4017 M6X40 A480	2-29, 2-41
312109-0457 ..	SCREW M6S ISO 4017 M8X35 A480	6-43
312109-0467 ..	SCREW M6S ISO 4017 M8X80 A480	1-123
312109-0544 ..	SCREW M6S ISO 4017 M12X60 A480	4-21
312115-0220 ..	SCREW ISO4762 M3X6 A4 80	1-129, 1-131
312115-0226 ..	SCREW ISO4762 M3X12 A4 80	1-13, 1-127, 1-161, 6-41
312115-0228 ..	SCREW ISO4762 M3X16 A4 80	1-43, 1-45, 1-121, 1-129, 1-131, 1-133
312115-0230 ..	SCREW ISO4762 M3X20 A4 80	1-195, 1-197, 1-199, 1-201, 2-97
312115-0285 ..	SCREW ISO4762 M4X6 A4 80	1-97, 1-99
312115-0287 ..	SCREW ISO4762 M4X8 A4 80	1-7, 1-9, 1-73, 1-81, 1-83, 1-91, 1-101, 1-103, 1-157, 1-159
		1-193, 5-3, 6-9
312115-0289 ..	SCREW ISO4762 M4X10 A4 80	1-123, 3-33, 3-35
312115-0291 ..	SCREW ISO4762 M4X12 A4 80	1-19, 1-21, 1-23, 1-25, 2-21, 2-65, 2-75, 3-43, 4-61
312115-0293 ..	SCREW ISO4762 M4X16 A4 80	1-73, 1-81, 1-83, 1-101, 1-103, 2-53, 2-55
312115-0295 ..	SCREW ISO4762 M4X20 A4 80	1-63, 1-119, 1-127, 2-29, 2-41
312115-0304 ..	SCREW ISO4762 M4X45 A4 80	1-151
312115-0305 ..	SCREW ISO4762 M4X50 A4 80	3-33, 3-35, 4-37, 4-39
312115-0323 ..	SCREW ISO4762 M5X8 A4 80	1-19, 1-21, 1-23, 1-25, 1-121, 1-133, 1-191, 1-193, 2-47
312115-0325 ..	SCREW ISO4762 M5X10 A4 80	1-217, 1-219, 3-3, 3-5, 3-33, 3-35, 4-67, 4-69, 4-71, 4-73, 4-75, 4-77
312115-0327 ..	SCREW ISO4762 M5X12 A4 80	1-7, 1-9, 1-67, 1-69, 1-133, 1-145, 1-149, 1-157, 1-159, 1-195
		1-197, 1-199, 1-201, 1-217, 1-219, 1-229, 1-231, 2-7, 2-9, 2-23, 2-25, 2-33, 2-35, 2-91, 2-93, 2-95, 2-99
312115-0329 ..	SCREW ISO4762 M5X16 A4 80	1-63, 1-67, 1-69, 1-167, 1-169, 1-217, 1-219, 2-23, 2-25, 2-33, 2-35
312115-0331 ..	SCREW ISO4762 M5X20 A4 80	1-117
312115-0332 ..	SCREW ISO4762 M5X22 A4 80	1-15
312115-0333 ..	SCREW ISO4762 M5X25 A4 80	2-77
312115-0335 ..	SCREW ISO4762 M5X30 A4 80	1-193, 1-245, 5-3, 6-35
312115-0337 ..	SCREW ISO4762 M5X35 A4 80	1-217, 1-219
312115-0366 ..	SCREW ISO4762 M6X12 A4 80	1-11, 1-129, 1-131, 1-235, 1-243, 2-15, 2-17, 6-23, 6-25
312115-0367 ..	SCREW ISO4762 M6X14 A4 80	1-195, 1-197, 1-199, 1-201
312115-0368 ..	SCREW ISO4762 M6X16 A4 80	1-13, 1-27, 1-29, 1-39, 1-41, 1-67, 1-69, 1-123, 1-149, 1-161
		1-217, 1-219, 1-235, 2-69, 2-77, 6-49, 6-51
312115-0370 ..	SCREW ISO4762 M6X20 A4 80	1-125, 1-149, 2-45, 2-49, 2-65, 2-75, 4-55
312115-0372 ..	SCREW ISO4762 M6X25 A4 80	1-63, 1-67, 1-69, 1-105, 1-107, 1-189, 1-205, 1-207, 2-45, 6-23, 6-25
312115-0374 ..	SCREW ISO4762 M6X30 A4 80	2-43, 2-53, 2-55, 2-75, 6-35
312115-0376 ..	SCREW ISO4762 M6X35 A4 80	1-63, 1-67, 1-69, 4-37, 4-39
312115-0378 ..	SCREW ISO4762 M6X40 A4 80	1-31, 1-33, 1-35, 1-37, 1-129, 1-131
312115-0379 ..	SCREW ISO4762 M6X45 A4 80	1-7, 1-9, 1-157, 1-159
312115-0449 ..	SCREW ISO4762 M8X16 A4 80	2-23, 2-25, 2-33, 2-35
312115-0451 ..	SCREW ISO4762 M8X20 A4 80	1-61, 1-105, 1-107
312115-0453 ..	SCREW ISO4762 M8X25 A4 80	1-117, 4-11
312115-0455 ..	SCREW ISO4762 M8X30 A4 80	1-61, 1-117

Part No	Description	Page No
312115-0459 ..	SCREW ISO4762 M8X40 A4 80	1-245
312115-0463 ..	SCREW ISO4762 M8X60 A4 80	2-7, 2-9
312115-0467 ..	SCREW ISO4762 M8X80 A4 80	2-63
312115-0501 ..	SCREW ISO4762 M10X50 A4 80	2-77
312115-0630 ..	SCREW ISO4762 M16X50 A4 80	4-15
312121-0295 ..	SCREW ISO 1207 M4X20 4.8-5.8 Z.PL.	1-75, 1-85, 1-97, 1-99
312122-0285 ..	SCREW ISO 1207 M4X6 NI PL BRASS	4-17
312122-0331 ..	SCREW ISO 1207 M5X20 NI PL BRASS	2-71
312125-0220 ..	SCREW ISO 1207 M3X6 A4	1-17
312125-0222 ..	SCREW ISO 1207 M3X8 A4	1-27, 1-29, 1-129, 1-131, 1-145, 1-203, 1-217, 1-219, 2-45, 2-95, 2-99
312125-0226 ..	SCREW ISO 1207 M3X12 A4	1-19, 1-21, 1-23, 1-25, 1-217, 1-219, 6-9
312125-0228 ..	SCREW ISO 1207 M3X16 A4	3-43, 3-47, 4-23
312125-0230 ..	SCREW ISO 1207 M3X20 A4	1-17, 4-21
312125-0232 ..	SCREW ISO 1207 M3X25 A4	1-7, 1-9, 1-157, 1-159, 1-195, 1-197, 1-199, 1-201
312125-0234 ..	SCREW ISO 1207 M3X30 A4	1-129, 1-131, 2-29, 2-41, 2-45, 4-23
312125-0285 ..	SCREW ISO 1207 M4X6 A4	1-187, 2-15, 2-17, 2-73, 2-75, 3-39, 3-41
312125-0287 ..	SCREW ISO 1207 M4X8 A4	1-27, 1-29, 1-75, 1-85, 1-121, 1-127, 1-129, 1-131, 1-133, 1-141, 1-143, 1-185, 1-191, 1-195, 1-197, 1-199, 1-201, 6-9
312125-0289 ..	SCREW ISO 1207 M4X10 A4	1-73, 1-81, 1-83, 1-91, 1-101, 1-103
312125-0291 ..	SCREW ISO 1207 M4X12 A4	1-151, 1-191, 1-193, 1-209, 1-211, 6-33
312125-0293 ..	SCREW ISO 1207 M4X16 A4	1-19, 1-21, 1-23, 1-25, 1-193, 2-97, 3-39, 3-41
312125-0297 ..	SCREW ISO 1207 M4X25 A4	4-45
312125-0323 ..	SCREW ISO 1207 M5X8 A4	2-53, 2-55, 4-25
312125-0329 ..	SCREW ISO 1207 M5X16 A4	6-23, 6-25
312125-0364 ..	SCREW ISO 1207 M6X10 A4	1-205, 1-207
312125-0366 ..	SCREW ISO 1207 M6X12 A4	1-19, 1-21, 1-23, 1-25, 1-31, 1-33, 1-35, 1-37, 2-49
312132-0289 ..	SLOTTED HEAD, PAN SCREW, MSCS M4X10	4-19
312141-0293 ..	SCREW ISO 2009 MFS M4X16 4.8 EL.PL	1-97, 1-99
312145-0287 ..	SCREW ISO 2009 MFS M4X8 A4	1-73, 1-81, 1-83, 1-91, 1-101, 1-103, 2-23, 2-25, 2-33, 2-35
312145-0291 ..	SCREW ISO 2009 MFS M4X12 A4	1-73, 1-101, 1-103, 3-33, 3-35
312145-0293 ..	SCREW ISO 2009 MFS M4X16 A4	1-81, 1-83
312145-0325 ..	SCREW ISO 2009 MFS M5X10 A4	3-33, 3-35
312145-0327 ..	SCREW ISO 2009 MFS M5X12 A4	2-7, 2-9
312145-0366 ..	SCREW ISO 2009 MFS M6X12 A4	3-33, 3-35
312155-0226 ..	SCREW DIN 7991 MF6S M3X12 A4 70	1-15, 1-193
312155-0285 ..	SCREW DIN 7991 MF6S M4X6 A4 70	2-23, 2-25, 2-33, 2-35
312155-0287 ..	SCREW DIN 7991 MF6S M4X8 A4 70	1-19, 1-21, 1-23, 1-25, 1-195, 1-197, 1-199, 1-201, 2-63, 3-33, 3-35
312155-0289 ..	SCREW DIN 7991 MF6S M4X10 A4 70	2-59, 4-51
312155-0291 ..	SCREW DIN 7991 MF6S M4X12 A4 70	4-37, 4-39, 4-57, 4-59
312155-0293 ..	SCREW DIN 7991 MF6S M4X16 A4 70	1-67, 1-69, 1-119, 2-23, 2-25, 2-33, 2-35, 4-33
312155-0323 ..	SCREW DIN 7991 MF6S M5X8 A4 70	2-75, 6-41
312155-0325 ..	SCREW DIN 7991 MF6S M5X10 A4 70	1-7, 1-9, 1-129, 1-131, 1-157, 1-159, 1-235
312155-0327 ..	SCREW DIN 7991 MF6S M5X12 A4 70	1-129, 1-131, 1-217, 1-219, 2-45
312155-0329 ..	SCREW DIN 7991 MF6S M5X16 A4 70	1-7, 1-9, 1-157, 1-159, 1-217, 1-219, 6-35, 6-41
312155-0331 ..	SCREW DIN 7991 MF6S M5X20 A4 70	2-7, 2-9, 2-11
312155-0335 ..	SCREW DIN 7991 MF6S M5X30 A4 70	1-145
312155-0339 ..	SCREW DIN 7991 MF6S M5X40 A4 70	6-47
312155-0364 ..	SCREW DIN 7991 MF6S M6X10 A4 70	2-27, 2-37
312155-0366 ..	SCREW DIN 7991 MF6S M6X12 A4 70	2-7, 2-9, 6-49, 6-51
312155-0368 ..	SCREW DIN 7991 MF6S M6X16 A4 70	1-11, 1-181, 2-75
312155-0370 ..	SCREW DIN 7991 MF6S M6X20 A4 70	1-137, 2-11, 3-47, 4-55
312155-0372 ..	SCREW DIN 7991 MF6S M6X25 A4 70	1-217, 1-219
312155-0374 ..	SCREW DIN 7991 MF6S M6X30 A4 70	1-187
312155-0451 ..	SCREW DIN 7991 MF6S M8X20 A4 70	6-57
312155-0457 ..	SCREW DIN 7991 MF6S M8X35 A4 70	2-45
312180-0364 ..	SCREW ISO7379 H6X10	1-229, 1-231
312180-0374 ..	SCREW ISO7379 H6X30	1-7, 1-9, 1-157, 1-159
312205-0107 ..	SCREW U6S1/4X13RFR	4-35
312311-0321 ..	SCREW ISO4028 M5X6 FZB	2-45
312311-0325 ..	SCREW ISO4028 M5X10 FZB	1-15
312311-0368 ..	SCREW ISO4028 M6X16 FZB	1-123
312311-0451 ..	SCREW ISO4028 M8X20 FZB	1-7, 1-9, 1-157, 1-159
312318-0220 ..	SCREW ISO4029 M3X6 A4	2-51
312318-0283 ..	SCREW ISO4029 M4X4 A4	1-73, 1-101, 1-103, 1-117, 1-137, 2-67, 2-75, 6-21
312318-0285 ..	SCREW ISO4029 M4X6 A4	1-67, 1-69, 1-71, 1-77, 1-79, 1-81, 1-83, 1-87, 1-89, 1-93, 1-95, 1-105, 1-107, 1-195, 1-197, 1-199, 1-201
312318-0287 ..	SCREW ISO4029 M4X8 A4	1-67, 1-69, 1-73, 1-81, 1-83, 1-101, 1-103, 2-49, 2-61, 2-65, 2-77
312318-0289 ..	SCREW ISO4029 M4X10 A4	1-67, 1-69
312318-0323 ..	SCREW ISO4029 M5X8 A4	1-105, 1-107, 2-45
312318-0325 ..	SCREW ISO4029 M5X10 A4	1-113
312318-0327 ..	SCREW ISO4029 M5X12 A4	6-45
312318-0329 ..	SCREW ISO4029 M5X16 A4	1-149
312318-0331 ..	SCREW ISO4029 M5X20 A4	6-45
312318-0362 ..	SCREW ISO4029 M6X8 A4	1-39, 1-129, 1-131, 2-23, 2-25, 2-33, 2-35, 2-45, 6-9, 6-47
312318-0364 ..	SCREW ISO4029 M6X10 A4	6-23, 6-25
312318-0366 ..	SCREW ISO4029 M6X12 A4	1-39, 1-41, 1-105, 1-107, 1-117, 1-123, 1-125, 1-139, 2-43, 2-45, 2-59, 2-61
312318-0370 ..	SCREW ISO4029 M6X20 A4	2-7, 2-9
312318-0443 ..	SCREW ISO4029 M8X8 A4	1-11
312318-0447 ..	SCREW ISO4029 M8X12 A4	4-15, 4-21
312502-0120 ..	DRIVE SCREW ROUND HEAD KDS 0X5	1-167, 1-169
312504-0281 ..	TAPPING SCREW ISO 7049-A4-ST3,5X13-C-Z	1-241
312601-0310 ..	HEXAGON NUT, DIN 934 M3 8 FZB	4-21

Part No	Description	Page No
312605-0310 ..	HEXAGON NUT, M6M M3 A280	1-17, 1-19, 1-21, 1-23, 1-25, 1-43, 1-45, 1-129, 1-131, 1-195, 1-197, 1-199, 1-201, 1-203, 1-217, 1-219, 2-45, 4-55
312605-0312 ..	HEXAGON NUT, M6M M4 A280	1-43, 1-45, 1-135, 1-209, 1-211, 2-29, 2-41, 3-33, 3-35, 4-33, 4-45, 4-51, 4-59, 6-29
312605-0314 ..	HEXAGON NUT, M6M M5 A280	1-73, 1-81, 1-83, 1-101, 1-103, 1-105, 1-107, 1-119, 1-129, 1-131, 1-135, 1-145, 1-149, 1-167, 1-169, 1-193, 1-203, 1-215, 1-217, 1-219, 1-229, 1-231, 1-243, 2-23, 2-25, 2-33, 2-35, 2-47, 2-79, 2-93, 2-97, 3-3, 3-5, 3-33, 3-35, 4-37, 4-39, 4-55, 6-41
312605-0316 ..	HEXAGON NUT, M6M M6 A280	1-7, 1-9, 1-17, 1-19, 1-21, 1-23, 1-25, 1-73, 1-81, 1-83, 1-101, 1-103, 1-105, 1-107, 1-119, 1-121, 1-127, 1-133, 1-137, 1-141, 1-143, 1-149, 1-153, 1-155, 1-157, 1-159, 1-163, 1-165, 1-185, 1-187, 1-193, 1-195, 1-197, 1-199, 1-201, 1-215, 2-15, 2-17, 2-23, 2-25, 2-29, 2-33, 2-35, 2-41, 2-65, 2-95, 2-99, 3-45, 3-47, 4-17, 4-37, 4-39, 4-43, 4-47, 4-55, 4-65, 4-75, 4-77, 4-79, 5-3, 6-9, 6-23, 6-25
312605-0318 ..	HEXAGON NUT, M6M M8 A280	1-17, 1-73, 1-81, 1-83, 1-101, 1-103, 1-123, 1-129, 1-131, 1-151, 1-217, 1-219, 2-23, 2-25, 2-27, 2-33, 2-35, 2-37, 3-33, 3-35, 3-45, 6-9, 6-17, 6-19, 6-21, 6-37
312605-0320 ..	HEXAGON NUT, M6M M10 A280	1-183, 4-17, 4-21, 4-53
312605-0322 ..	HEXAGON NUT, M6M M12 A280	4-21
312605-0324 ..	HEXAGON NUT, M6M M16 A280	1-19, 1-21, 1-23, 1-25
312607-0314 ..	HEXAGON NUT, EN 24032 M6M M5 A480	4-79
312607-0320 ..	HEXAGON NUT, EN 24032 M6M M10 A480	6-21
312625-0316 ..	HEXAGON THIN NUT, EN 24035 ML6M M6 A4	1-185, 1-187, 2-65
312625-0318 ..	HEXAGON THIN NUT, EN 24035 ML6M M8 A4	1-193
312705-0312 ..	NUT HEX. DOMED CAP MHM-6 M4 A280	2-91, 2-93, 2-95, 4-37, 4-39
312705-0316 ..	HEX. DOMED CAP MHM-6 M6 A280	1-73, 1-81, 1-83, 1-101, 1-103, 1-139, 1-185, 2-61, 4-79
312805-0103 ..	NUT ROUND WITH SLOTS M17X1 FE	1-109
312812-0312 ..	HEXAGON NUT, NY-LOCK M4 A480	1-151, 2-71
312812-0314 ..	HEXAGON NUT, NY-LOCK M5 A480	1-129, 1-131, 3-43, 4-55
312812-0316 ..	HEXAGON NUT, NY-LOCK M6 A480	1-73, 1-81, 1-83, 1-101, 1-103, 1-191, 1-217, 1-219, 2-13, 2-73, 6-41
312812-0320 ..	HEXAGON NUT, NY-LOCK M10 A480	4-51
312812-0322 ..	HEXAGON NUT, NY-LOCK M12 A480	1-109, 1-113, 1-215, 4-11
315101-0146 ..	WASHER PLAIN, BRB, 5,3/10 H=1	1-97, 1-99
315101-0153 ..	WASHER PLAIN, BRB, 6,4/12 H=1,5	1-193
315101-0173 ..	WASHER PLAIN, BRB, 10,5/22 H=2	4-83
315103-0124 ..	WASHER, BRB, 3,2/6,H=0,5 NI PL BR	4-75, 4-77
315103-0136 ..	WASHER PLAIN, BRB, 4,3/8,H=0,8 NI PL BR	2-29, 2-41
315103-0146 ..	WASHER, BRB, 5,3/10,H=1 NI PL BR	2-71
315103-0153 ..	WASHER, BRB, 6,4/12,H=1,5 NIPL BR	2-79, 6-41
315105-0124 ..	WASHER BRB 3,2X6 RFR	1-7, 1-9, 1-17, 1-19, 1-21, 1-23, 1-25, 1-27, 1-29, 1-43, 1-45, 1-129, 1-131, 1-145, 1-157, 1-159, 1-195, 1-197, 1-199, 1-201, 1-203, 1-217, 1-219, 2-29, 2-41, 2-45, 3-43, 3-47, 4-23
315105-0136 ..	WASHER BRB 4,3X8 RFR	1-7, 1-9, 1-17, 1-19, 1-21, 1-23, 1-25, 1-27, 1-29, 1-47, 1-49, 1-63, 1-65, 1-73, 1-81, 1-83, 1-101, 1-103, 1-123, 1-127, 1-151, 1-153, 1-155, 1-157, 1-159, 1-167, 1-169, 1-187, 1-195, 1-197, 1-199, 1-201, 1-203, 1-209, 1-211, 2-7, 2-9, 2-23, 2-25, 2-33, 2-35, 2-47, 2-53, 2-55, 2-65, 2-91, 2-93, 2-95, 2-97, 3-33, 3-35, 3-39, 3-41, 4-23, 4-33, 4-37, 4-39, 4-45, 4-57, 4-59, 4-61, 6-29
315105-0146 ..	WASHER BRB 5,3X10 RFR	1-7, 1-9, 1-15, 1-19, 1-21, 1-23, 1-25, 1-43, 1-45, 1-67, 1-69, 1-73, 1-75, 1-81, 1-83, 1-85, 1-91, 1-101, 1-103, 1-105, 1-107, 1-117, 1-119, 1-121, 1-123, 1-129, 1-131, 1-133, 1-135, 1-139, 1-141, 1-143, 1-145, 1-149, 1-157, 1-159, 1-167, 1-169, 1-195, 1-197, 1-199, 1-201, 1-203, 1-209, 1-211, 1-213, 1-215, 1-217, 1-219, 1-229, 1-231, 1-243, 2-7, 2-9, 2-23, 2-25, 2-33, 2-35, 2-47, 2-63, 2-75, 3-3, 3-5, 3-33, 3-35, 3-43, 3-47, 4-45, 4-55, 4-67, 4-69, 4-71, 4-73, 4-75, 4-77, 6-23, 6-25
315105-0153 ..	WASHER BRB 6,4X12 RFR	1-7, 1-9, 1-11, 1-13, 1-17, 1-19, 1-21, 1-23, 1-25, 1-27, 1-29, 1-31, 1-33, 1-35, 1-37, 1-63, 1-67, 1-69, 1-73, 1-81, 1-83, 1-101, 1-103, 1-105, 1-107, 1-119, 1-121, 1-123, 1-127, 1-129, 1-131, 1-133, 1-135, 1-137, 1-139, 1-141, 1-143, 1-149, 1-151, 1-153, 1-155, 1-157, 1-159, 1-161, 1-163, 1-165, 1-167, 1-169, 1-181, 1-185, 1-187, 1-195, 1-197, 1-199, 1-201, 1-205, 1-207, 1-209, 1-211, 1-213, 1-215, 1-217, 1-219, 2-7, 2-9, 2-13, 2-15, 2-17, 2-23, 2-25, 2-29, 2-33, 2-35, 2-41, 2-43, 2-45, 2-49, 2-51, 2-53, 2-55, 2-59, 2-65, 2-69, 2-73, 2-75, 2-77, 2-81, 2-83, 2-95, 2-99, 3-33, 3-35, 3-45, 3-47, 4-17, 4-23, 4-29, 4-37, 4-39, 4-43, 4-47, 4-51, 4-55, 4-65, 6-9, 6-23, 6-25, 6-27, 6-41
315105-0156 ..	WASHER BRB 6,7X14 RFR	1-13, 1-137, 1-139, 1-161, 2-61, 6-35
315105-0165 ..	WASHER BRB 8,4X16 RFR	1-7, 1-9, 1-19, 1-21, 1-23, 1-25, 1-43, 1-45, 1-47, 1-49, 1-61, 1-63, 1-65, 1-71, 1-73, 1-75, 1-77, 1-79, 1-81, 1-83, 1-85, 1-87, 1-89, 1-91, 1-93, 1-95, 1-97, 1-99, 1-101, 1-103, 1-105, 1-107, 1-117, 1-123, 1-129, 1-131, 1-137, 1-141, 1-143, 1-151, 1-157, 1-159, 1-187, 1-217, 1-219, 2-19, 2-27, 2-37, 2-59, 2-73, 3-33, 3-35, 4-11, 4-13, 6-13, 6-23, 6-25, 6-37, 6-41, 6-53, 6-55
315105-0173 ..	WASHER BRB 10,5X22 RFR	1-15, 1-105, 1-107, 1-121, 1-183, 6-57
315105-0178 ..	WASHER BRB 13X24 RFR	1-109, 1-113, 1-145, 1-215, 2-7, 2-9, 4-11
315105-0186 ..	WASHER BRB 17X30 RFR	1-19, 1-21, 1-23, 1-25, 1-109, 4-15
315105-0192 ..	WASHER BRB 21X36 RFR	2-7, 2-9
315106-0124 ..	WASHER ISO 7089-3-200 HV A4	1-129, 1-131, 4-21, 6-9
315106-0146 ..	WASHER ISO 7089-5-200 HV A4	1-147, 2-7, 2-9, 2-79, 2-93, 4-37, 4-39, 4-79, 6-41, 6-45
315106-0153 ..	WASHER ISO 7089-6-200 HV A4	1-235, 1-239, 4-21, 4-79, 5-3, 6-41
315106-0165 ..	WASHER ISO 7089-8-200 HV A4	4-21, 4-51
315106-0173 ..	WASHER ISO 7089-10-200 HV A4	4-21
315106-0178 ..	WASHER ISO 7089-12-200 HV A4	4-21
315106-0186 ..	WASHER ISO 7089-16-200 HV A4	4-45
315115-0153 ..	WASHER PLAIN, TBRB 6,4/12 H=3	1-119, 2-23, 2-25, 2-33, 2-35
315115-0165 ..	WASHER PLAIN, TBRB 8,4/16 H=3	1-17, 1-61
315115-0173 ..	WASHER PLAIN, TBRB 10,5/22 H=4	1-145, 4-17
315125-0146 ..	WASHER TBRSB 5.3X15X1 A4	1-213
315125-0153 ..	WASHER TBRSB 6,4X22X4 A4	1-81, 1-83, 1-217, 1-219, 1-235, 2-23, 2-25, 2-33, 2-35, 4-29, 6-47
315125-0165 ..	WASHER TBRSB 8,4X26X5 A4	1-61, 1-71, 1-77, 1-79, 1-87, 1-89, 1-129, 1-131, 2-59, 6-43
315125-0173 ..	WASHER TBRSB 10,5X28X6 A4	4-53
315202-0219 ..	O-RING 29,2X3 MM	6-23, 6-25

Part No	Description	Page No
315202-0242 ..	O-RING 124,3X5,7 MM	6-55
315202-0246 ..	O-RING 144,3X5,7 MM	6-53
315202-0505 ..	O-RING 6,07X1,78 MM	4-49
315202-0513 ..	O-RING 17,12X2,62 MM	4-49
315202-0714 ..	O-RING 31,47X1,78 MM	4-49
315204-0207 ..	O-RING 8,3X2,4 MM	3-43
315204-0213 ..	O-RING 15,3X2,4 MM	3-33, 3-35
315204-0215 ..	O-RING 19,2X3 MM	4-25
315204-0308 ..	O-RING 84,5X3 MM	4-25
315205-0505 ..	O-RING 6,07X1,78 MM	3-3, 3-5, 3-43, 3-47
315206-0710 ..	O-RING 25,12X1,78 MM	4-31
315217-0111 ..	BONDED SEAL SS/VITON G1/2	4-33
315220-0130 ..	V-RING 14X20X7,7 MM V-16S	6-23, 6-25
315220-0172 ..	V-RING 29X37X10,5 MM V-32S	6-23, 6-25
315221-0137 ..	RADIAL SEAL 17X35X7 MM	6-23, 6-25
315221-0145 ..	RADIAL SEAL 20X35X7 MM	6-21
315229-0104 ..	SQUARE RING, 35,8X42,8X3,7 MM 1"1/2 FD	3-43
315229-0205 ..	GASKET 47,5X55,5X3,7 MM 2 INCH	3-45
315233-0101 ..	WASHER CAPTIVE SEALING M5(NEW315239-101)	4-25
315234-0109 ..	WASHER,PL.RND.CU.10,3/13,5 H=1,0	3-3, 3-5
315237-0110 ..	WASHER,PL.RND.AL.13,5/18,H=1,5	3-33, 3-35
315239-0110 ..	NYLON WASHER G1/4, 1/4RRP	1-171
315239-0113 ..	NYLON WASHER G1/2, 1/2RRP	1-171
315400-0001 ..	TUBE PUN-H-6X1-BL	2-63, 4-37, 4-39, 4-41, 4-45, 6-35
315400-0004 ..	TUBE PUN-H-8X1,25-BL	2-63, 2-81, 4-37, 4-39
315400-0007 ..	TUBE PUN-H-10X1,5-BL	4-45
315400-0010 ..	TUBE PUN-H-12X2-BL	1-245
315402-0136 ..	LOCK WASHER, DIN127B 4,1 A4, M4-5/32	1-7, 1-9, 1-73, 1-81, 1-83, 1-101, 1-103, 1-157, 1-159, 4-61
315402-0146 ..	LOCK WASHER, DIN127B 5,1 A4, M5-3/16	1-145, 1-217, 1-219
315410-0103 ..	LOCK WASHER MB 3 D=17 H=1	1-109
315701-0138 ..	PARALLEL KEY W. ROUND ENDS, 3X3X18 MM	1-109, 1-113
315701-0169 ..	PARALLEL KEY W. ROUND ENDS, 4X4X18 MM	2-49
315701-0170 ..	PARALLEL KEY W. ROUND ENDS, 4X4X20 MM	2-77
315705-0166 ..	PARALLEL KEY W. ROUND ENDS, 4X4X12 MM	2-51
315705-0196 ..	PARALLEL KEY W. ROUND ENDS, 5X5X10 MM	6-45
315705-0236 ..	PARALLEL KEY W. ROUND ENDS, 6X6X30 MM	6-45
315705-0238 ..	PARALLEL KEY W. ROUND ENDS, 6X6X36 MM	1-61, 1-71, 1-75, 1-77, 1-79, 1-85, 1-87, 1-89, 1-93, 1-95, 1-97, 1-99, 1-149
315705-0307 ..	PARALLEL KEY W. ROUND ENDS, 10X8X70 MM	1-61, 1-71, 1-77, 1-79, 1-87, 1-89, 1-93, 1-95
315742-0111 ..	RETAINING RING 15 SMS 199 RFR	1-39
315751-0103 ..	RETAINING RING FOR SHAFT DIN 471 6X 0.7C	1-119, 1-215
315751-0109 ..	RETAINING RING FOR SHAFT DIN 471 12 SS	1-11, 1-43, 1-45, 1-129, 1-131, 1-187, 2-27, 2-37, 2-45, 2-59, 6-45
315751-0112 ..	RETAINING RING FOR SHAFT DIN 471 15 SS	1-41, 1-109, 1-111, 1-113, 1-115, 1-125, 1-183, 2-43, 2-45, 2-65, 2-77
315751-0116 ..	RETAINING RING FOR SHAFT DIN 471 20 SS	1-105, 1-107
315751-0119 ..	RETAINING RING FOR SHAFT DIN 471 25 SS	2-65
315752-0120 ..	RETAINING RING FOR BORE DIN 472 26	1-119, 1-215
315753-0122 ..	RETAINING RING FOR BORE DIN 472 30 SS	1-11, 1-139, 1-215, 2-61
315753-0123 ..	RETAINING RING FOR BORE DIN 472 32 SS	2-45
315753-0124 ..	RETAINING RING FOR BORE DIN 472 35 SS	2-77, 6-21, 6-23, 6-25
315753-0127 ..	RETAINING RING FOR BORE DIN 472 40X1.75C	1-109
315754-0113 ..	RETAINING RING SHAFT DIN 6799 15	4-25
315755-0105 ..	RETAINING RING SHAFT DIN 6799 3,2 SS	1-71, 1-77, 1-79, 1-87, 1-89, 1-93, 1-95, 4-55
315755-0106 ..	RETAINING RING SHAFT DIN 6799 4 SS	1-17, 1-153, 1-155, 1-163, 1-165, 1-195, 1-197, 1-199, 1-201, 1-217, 1-219, 1-229, 1-231
315755-0107 ..	RETAINING RING SHAFT DIN 6799 5 SS	1-195, 1-197, 1-199, 1-201
315755-0108 ..	RETAINING RING SHAFT DIN 6799 6 SS	1-15, 1-149, 2-61
315755-0109 ..	RETAINING RING SHAFT DIN 6799 7 SS	1-7, 1-9, 1-15, 1-157, 1-159
315755-0110 ..	RETAINING RING SHAFT DIN 6799 9 SS	1-141, 1-143, 6-21
315755-0112 ..	RETAINING RING SHAFT DIN 6799 12 SS	2-7, 2-9
315755-0801 ..	RETAINING RING SHAFT DIN 6799 8 SS	1-137
318172-0139 ..	TIMING BELT 16T10/630 PU	1-123
318800-0104 ..	HANDLE,SPHERICAL KNOB,INT.THRE.,D.30-M8	1-137
318871-0102 ..	KNOB CIRCULAR, EXT THREAD, NO. 8302-6037	2-23, 2-25, 2-33, 2-35
318873-0103 ..	KNOB, CIRCUL, THREADED BUSH, M6 21X17 MM	4-37, 4-39
321105-0185 ..	BUSHING W/O FLANGE, 14/20X20 MM	1-105, 1-107, 1-117, 1-123
321105-0224 ..	BUSHING W/O FLANGE, 18/25X20 MM	1-109
321105-0253 ..	BUSHING W/O FLANGE, 25X35X25 MM	1-105, 1-107
321111-0097 ..	FLANGE BUSHING, 8/12X12-16X2 MM	1-141, 1-143, 1-185
321111-0135 ..	FLANGE BUSHING, 10/16X10-22X3 MM	1-185
321116-0202 ..	BUSHING W/O FLANGE, 15/19X10 MM	1-123
321120-0098 ..	BEARING BUSH W/O FLANGE, 10X12X8 MM	2-73
321120-0100 ..	BEARING BUSH W/O FLANGE, 8X10X12 MM	2-23, 2-25, 2-33, 2-35
321120-0109 ..	BEARING BUSH W/O FLANGE, 12X14X10 MM	2-23, 2-25, 2-33, 2-35
321120-0123 ..	BEARING BUSH W/O FLANGE, 16X18X12 MM	2-23, 2-25, 2-33, 2-35
321130-0180 ..	THRUST WASHER, 12X24X1,5 MM	1-187
321130-0200 ..	THRUST WASHER, 14X26X1,5 MM	1-105, 1-107, 1-117, 1-123
321141-0060 ..	BEARING BUSH W/O FLANGE, 6X8X6 MM	1-73, 1-81, 1-83, 1-101, 1-103
321141-0064 ..	BEARING BUSH W/O FLANGE, 6X8X10 MM	1-7, 1-9, 1-73, 1-81, 1-83, 1-101, 1-103, 1-157, 1-159, 1-163, 1-165
321141-0140 ..	BEARING BUSH W/O FLANGE, 10X12X10 MM	1-73, 1-81, 1-83, 1-101, 1-103, 1-139
321141-0183 ..	BEARING BUSH W/O FLANGE, 12X14X15 MM	1-43, 1-45, 1-129, 1-131

Part No	Description	Page No
321141-0193	BEARING BUSH W/O FLANGE, 12X14X25 MM	1-187
321161-0180	FLANGE BUSHING, 12X14X12MM	1-67, 1-69
321308-0200	BALL BEARING 10/26X8	1-119, 1-215
321308-0202	BALL BEARING 15/32X9	1-109, 1-111, 1-113, 1-115, 2-45
321308-0205	BALL BEARING 25/47X12	2-65
321309-0100	BALL BEARING 10/30X9	1-11
321309-0101	BALL BEARING 12/32X10	1-11
321309-0102	BALL BEARING 15/35X11	2-45
321313-0100	BALL BEARING 10/30X9	1-139, 1-215, 2-61
321313-0101	BALL BEARING 12/32X10	2-45
321313-0102	BALL BEARING 15/35X11	1-39, 1-41, 1-125, 2-23, 2-25, 2-33, 2-35, 2-43, 2-45, 2-77
321313-0103	BALL BEARING 17/40X12	1-109, 1-113
321313-0104	BALL BEARING 20/47X14	1-105, 1-107
321330-0100	ANG. BALL BEAR 10/30X14	1-119
341001-0228	COPPER TUBE	1-167, 1-169
342700-0113	NIPPLE, EXT.THREAD, HEXAGON, G1/2-G1/2	2-85
342700-0201	NIPPLE, EXT.THREAD, HEXAGON, G1/4-G1/8	4-31
342701-0201	BUSHING, INT/EXT, G1/4-G1/8	4-23
342701-0205	BUSHING, INT/EXT, G1/2-G1/4	1-171, 2-83, 4-33
342701-0206	BUSHING, INT/EXT, G1/2-G3/8	4-43
342701-0214	BUSHING, INT/EXT, G1-G1/2	1-167, 1-169
342706-0130	STIFFNER SLEEVE FOR HOSE 6X1	3-3, 3-5, 3-33, 3-35
342713-0210	PLUG, EXT THREAD HEX SOCKET	1-167, 1-169, 3-33, 3-35
342713-0213	PLUG, EXT THREAD HEX SOCKET 8638-00-120	2-83
342716-0210	REDUCER 6-12	1-247
342722-0198	STRAIGHT COUPLING	2-29, 2-41
342722-0199	STRAIGHT COUPLING	1-247
342722-0202	PIPE COUPLING 1/8" D=6MM	1-63, 1-245, 1-247
342722-0203	STRAIGHT COUPLING	3-33, 3-35
342725-0102	CONN. STR. PIPE GAI06LR71	4-45
342731-0221	CONN. ELBOW, WE15LR71	1-167, 1-169
342732-0099	ELBOW PIPE JOINT, (REEMP. 90458-2954)	1-191
342737-0204	ELBOW CONNECTION 6, W06L71	4-45
342737-0208	ELBOW CONNECTION 8, W08L71	4-45
342737-0221	ELBOW CONNECTION 15, W15L71	1-167, 1-169
342738-0221	ADJUSTABLE ELBOW CONNECTION 15-G1/2	1-167, 1-169
342748-0109	T-CONNECTION 12MM	1-247
342770-0105	STRAIGHT COUPLING INT, D=6 MM - G1/8	1-63, 1-67, 1-69
342770-0107	STRAIGHT COUPLING INT, D=8 MM - G1/8	2-63
342772-0113	ELBOW FITTING, 6 - G1/8	1-247, 3-33, 3-35
342772-0114	ELBOW FITTING, 6 - G1/4	3-33, 3-35
342790-0302	MAV PRESSURE GAUGE CONNECTOR 6	4-33
342800-1102	DIAPHRAGM FDA PTFE/EPDM 5E, SEAT S. 10	4-23
342800-1202	ACTUATOR, SS, N.C. SEAT S. 10	4-23
342800-1302	ACTUATOR, SS, N.O. SEAT S. 10	4-23
342800-1502	VALVE ASSEMBLING KIT, SEAT S. 10	4-23
342921-0111	STRAIGHT COUPLING,EXT.THREAD 6/4-M5	1-185, 1-191
342980-0111	BANJO-CONNECTION,RING 6/4-M5	1-47, 1-49
342980-0301	BANJO-HOLLOW BOLT COUPL.,EXT.THREA.01-M5	1-47, 1-49
342980-0303	BANJO-HOLLOW BOLT COUPL,EXT.THR.01-G1/8	4-45
342991-0100	HOSE CLIP,WORM DRIVE TYPE (8)-14	4-45
342991-0104	HOSE CLIP,WORM DRIVE TYPE (19)-28	4-47
346800-0109	SILENCER FILTER R1/8"	1-65
350001-0002	PUSH-IN FITTING QS-F-M5-6	2-63
350001-0006	PUSH-IN FITTING QS-F-G1/8-6	1-173, 1-175, 4-45, 6-35
350001-0007	PUSH-IN FITTING QS-F-G1/8-8	2-7, 2-9, 2-63, 2-81
350001-0008	PUSH-IN FITTING QS-F-G1/4-6	1-167, 1-169, 4-23, 4-37, 4-39, 6-35
350001-0009	PUSH-IN FITTING QS-F-G1/4-8	4-37, 4-39, 4-45
350001-0010	PUSH-IN FITTING QS-F-G1/4-10	4-45
350001-0014	PUSH-IN FITTING QS-F-G3/8-12	1-245
350001-0016	PUSH-IN FITTING QS-F-G1/2-12	1-167, 1-169, 2-83
350002-0002	PUSH-IN L-FITTING QSL-F-M5-6	1-167, 1-169, 4-31
350002-0006	PUSH-IN L-FITTING QSL-F-G1/8-6	1-173, 1-175, 2-81, 3-33, 3-35, 4-41, 4-45
350002-0007	PUSH-IN L-FITTING QSL-F-G1/8-8	2-63, 2-81
350002-0008	PUSH-IN L-FITTING QSL-F-G1/4-6	1-167, 1-169, 1-171, 3-3, 3-5, 4-23, 4-37, 4-39
350002-0009	PUSH-IN L-FITTING QSL-F-G1/4-8	2-83, 4-45
350002-0012	PUSH-IN L-FITTING QSL-F-G3/8-8	4-41
350002-0014	PUSH-IN L-FITTING QSL-F-G3/8-12	1-173, 1-175, 2-81
350002-0016	PUSH-IN L-FITTING QSL-F-G1/2-12	1-171, 2-83, 2-85
350004-0002	PUSH-IN L-FITTING QSL-F-6	2-79
350004-0005	PUSH-IN L-FITTING QSL-F-12	1-167, 1-169
350005-0002	PUSH-IN T-FITTING QST-F-6	2-63, 6-35
350005-0003	PUSH-IN T-FITTING QST-F-8	2-63, 4-37, 4-39
350005-0005	PUSH-IN T-FITTING QST-F-12	2-81
350006-0003	PUSH-IN FITTING QS-F-8H-6	1-167, 1-169
350006-0005	PUSH-IN FITTING QS-F-10H-6	4-45
350006-0007	PUSH-IN FITTING QS-F-12H-6	2-79
350006-0008	PUSH-IN FITTING QS-F-12H-8	2-81, 4-37, 4-39
350008-0004	PUSH-IN FITTING QSF-F-G1/4-6	6-41
350008-0005	PUSH-IN FITTING QSF-F-G1/8-8	2-7, 2-9
350009-0003	PUSH-IN FITTING QS-F-8	1-167, 1-169
350010-0004	PUSH-IN BULKHEAD FITTING QSS-F-10	4-45
350011-0002	PUSH-IN T-FITTING QST-F-8-6	4-37, 4-39
350013-0002	PLUG QSC-6H	1-173, 1-175, 2-81, 4-41, 4-45

Part No	Description	Page No
350013-0003 ..	PLUG QSC-8H	4-41
350015-0001 ..	PUSH-IN Y-CONNECTOR QSY-F-6	1-167, 1-169, 2-79
350015-0003 ..	PUSH-IN Y-CONNECTOR QSY-F-8	4-37, 4-39
351120-0145 ..	CABLE Ã–LFLEX HEAT 180 SIHF 3X2,5	1-193
351120-0146 ..	CABLE Ã–LFLEX HEAT 180 SIHF 3X4	1-191
351121-0213 ..	CABLE RADOX 155 1X1,5 MMÂ² YELLOW/GREEN	1-27, 1-29
351150-0403 ..	CABLE OLFLEX 3X0,75 MM2 LIGHT/GREY	1-171, 2-83, 3-33, 3-35
351150-0404 ..	CABLE OLFLEX 4X0,75 MM2 LIGHT/GREY	3-33, 3-35, 6-33
351150-0405 ..	CABLE OLFLEX 5X0,75 MM2 LIGHT/GREY	2-47
351150-0406 ..	CABLE OLFLEX 7X0,75 MM2 LIGHT/GREY	1-31, 1-33, 1-35, 1-37
351150-0407 ..	CABLE OLFLEX 12X0,75 MM2 LIGHT/GREY	1-189, 1-205, 1-207, 2-21
351150-0412 ..	CABLE OLFLEX 3X1,5 MM2 LIGHT/GREY	1-27, 1-29, 1-217, 1-219, 2-53, 2-55
351150-0413 ..	CABLE OLFLEX 4GX1,5 MM2 LIGHT/GREY	4-21
351150-0422 ..	CABLE OLFLEX 3X4 MM2 LIGHT/GREY	1-205, 1-207
351150-0425 ..	CABLE OLFLEX 25X0,75 MM2 LIGHT/GREY	1-31, 1-33, 1-35, 1-37, 1-205, 1-207, 2-53, 2-55, 3-33, 3-35
351160-0102 ..	WIRE AWM 1X0,75 MM2 DARKBLUE	3-31, 3-39, 3-41, 5-3, 6-33
351161-0104 ..	WIRE AWM 1X1,5 MM2 LIGHTBLUE	3-31
351162-0102 ..	WIRE AWM 1X0,75 MM2 YELLOW-GREEN	6-33
351164-0104 ..	WIRE AWM 1X1,5 MM2 BLACK	3-31
351305-0020 ..	ACTUATOR/SENSOR CABLE PRKMV 4-07/2M	6-9
351305-0050 ..	ACTUATOR/SENSOR CABLE PRKMV 4-07/5M	6-41
351416-0100 ..	MINIATURE CIRC. BREAK., FAZ -D10 1-POLE	4-69
351418-0005 ..	MINIATURE CIRC. BREAK., FAZ-D0,5 3-POLE	4-69
351418-0200 ..	MINIATURE CIRC. BREAK.,FAZ-D20/3 3-POLE	4-69
351422-0203 ..	CABLE Ã–LFLEX 150CY QUATTRO 4X1,5	1-123
352103-0095 ..	CABLE GLAND, STR 7, PR 12,5/PG7	2-21
352103-0096 ..	CABLE GLAND, ST 7, PR 12,5/PG7	3-39, 3-41
352103-0101 ..	CABLE GLAND, ST 9, PR15,2/PG9	1-189, 3-7, 3-9, 3-39, 3-41, 5-3
352103-0105 ..	CABLE GLAND, STR 11, PR 18,6/PG11	2-53, 2-55
352103-0106 ..	CABLE GLAND, ST 11, PR18,6/PG11	2-53, 2-55
352103-0108 ..	CABLE GLAND, ST 13,5 , PR20,4/PG13,5	1-27, 1-29
352103-0111 ..	CABLE GLAND, ST 16, PR22,5/PG16	2-53, 2-55
352103-0116 ..	CABLE GLAND, ST 21, PR28,3/PG21	2-53, 2-55, 3-7, 3-9, 3-39, 3-41
352103-0121 ..	CABLE GLAND, ST 29, PR37,0/PG29	2-53, 2-55
352113-0101 ..	CABLE TIE, BLACK 92X2,5 MM	6-9
352113-0102 ..	CABLE TIE, BLACK 188X4,8 MM	2-79, 4-17, 6-15
352113-0203 ..	ANCHOR PLATES FOR STRIPS, TM3S8-M0	1-151, 2-15, 2-17
352113-0205 ..	ANCHOR PLATES FOR STRIPS, TM2S8-C100	1-129, 1-131, 1-191, 2-15, 2-17, 2-73, 4-17, 6-9
352113-0206 ..	ANCHOR PLATES FOR STRIPS, ABM100-AT	1-19, 1-21, 1-23, 1-25, 1-195, 1-197, 1-199, 1-201
353001-0113 ..	END SLEEVE 0,75MM2	6-33
353021-0212 ..	FEED THROUGH TERMINAL, WDU 2,5	1-31, 1-33, 1-35, 1-37, 1-205, 1-207, 4-75, 4-77
353021-0213 ..	FEED THROUGH TERMINAL, WDU 4	1-205, 1-207, 2-57
353021-0214 ..	FEED THROUGH TERMINAL, WDU 6	4-75, 4-77
353021-0216 ..	FEED THROUGH TERMINAL, WDU 2,5	4-75, 4-77
353021-0301 ..	TERMINAL, DLI 2,5/35	4-71, 4-73
353021-0302 ..	TERMINAL, DLD 2,5/35	1-31, 1-33, 1-35, 1-37, 2-57, 4-71, 4-73
353024-0204 ..	EARTH TERMINAL WPE 2,5	4-75, 4-77
353024-0205 ..	EARTH TERMINAL WPE 4	1-31, 1-33, 1-35, 1-37, 1-205, 1-207, 2-57
353024-0206 ..	EARTH TERMINAL WPE 6	4-75, 4-77
353024-0212 ..	EARTH TERMINAL WDK 2,5 PE	4-71, 4-73
353031-0203 ..	END BRACKET, WEW 35/2	1-31, 1-33, 1-35, 1-37, 4-71, 4-73, 4-75, 4-77
353032-0004 ..	END PLATE, WAP 2,5-10, BEIGE	1-31, 1-33, 1-35, 1-37, 4-75, 4-77
353032-0005 ..	END PLATE, WAP 2,5-10, BLUE	4-75, 4-77
353032-0009 ..	END PLATE, WAP WDK 2,5	2-57, 4-71, 4-73, 4-75, 4-77
353032-0301 ..	END PLATE, AP/DLI, 131 326	4-71, 4-73
353032-0302 ..	END PLATE, AP DLD2,5 DB	1-31, 1-33, 1-35, 1-37, 2-57, 4-71, 4-73
353034-0030 ..	BRIDGE CONNECTOR WQV 2,5/10	1-205, 1-207, 2-57, 4-75, 4-77
353034-0039 ..	BRIDGE CONNECTOR WQV 4/4	1-205, 1-207, 2-57
353034-0401 ..	BRIDGE CONNECTOR Q 2 DLI	1-31, 1-33, 1-35, 1-37, 2-57
353034-0402 ..	BRIDGE CONNECTOR Q 3 DLI	2-57
353034-0404 ..	BRIDGE CONNECTOR Q 10 DLI	1-31, 1-33, 1-35, 1-37, 2-57, 4-71, 4-73
353042-0004 ..	RAIL, TS 35/7,5	4-67, 4-69, 4-71, 4-73, 4-75, 4-77
353101-0122 ..	CABLE SHOE 0,5-1,5MM2 M5 RED	6-33
353101-0130 ..	CABLE SHOE 1,5-2,5MM2 M4 BLUE	1-193
353101-0132 ..	CABLE SHOE 1,5-2,5MM2 M5 BLUE	1-191, 1-193
353104-0140 ..	CABLE SHOE, RING UNINS., YAV 06 M 4	1-191
353240-0005 ..	COMPRESSION GLAND, VK 154Y	2-53, 2-55
353242-0003 ..	COMPRESSION GLAND, VK 155YUL21	1-31, 1-33, 1-35, 1-37, 1-205, 1-207, 2-69
353243-0001 ..	GLAND FITTING, VK 15052YUL11	2-97
353243-0002 ..	GLAND FITTING, VK 15152YUL11	1-27, 1-29, 1-217, 1-219, 2-15, 2-17, 2-53, 2-55
353243-0003 ..	GLAND FITTING, VK 15153YUL13	1-217, 1-219
353243-0005 ..	GLAND FITTING, VK 15354YUL16	1-27, 1-29, 2-15, 2-17, 2-21, 2-97
353243-0007 ..	GLAND FITTING, VK 15455YUL21	1-31, 1-33, 1-35, 1-37, 3-33, 3-35
353243-0008 ..	GLAND FITTING, VK 15556YUL29	2-69, 3-33, 3-35
353245-0009 ..	CABLE GLAND, EXTENDED WITH INSERT, PG9	5-3
353249-0008 ..	INSERT, SINGLE HOLE, EK152 7	1-7, 1-9, 1-19, 1-21, 1-23, 1-25, 1-31, 1-33, 1-35, 1-37, 1-157, 1-159, 1-167, 1-169, 2-97
353249-0009 ..	INSERT, SINGLE HOLE, EK152 9	2-15, 2-17, 2-53, 2-55
353249-0010 ..	INSERT, SINGLE HOLE, EK152 11	1-31, 1-33, 1-35, 1-37, 1-217, 1-219
353249-0011 ..	INSERT, SINGLE HOLE, EK153 11	1-31, 1-33, 1-35, 1-37, 1-217, 1-219, 2-15, 2-17
353249-0013 ..	INSERT, SINGLE HOLE, EK154 13	1-27, 1-29, 1-205, 1-207
353249-0014 ..	INSERT, SINGLE HOLE, EK154 16	1-189, 1-205, 1-207, 2-7, 2-9, 2-21, 2-51, 2-69, 2-97
353249-0017 ..	INSERT, SINGLE HOLE, HI.TEMP, EK152 I 7	3-33, 3-35

Part No	Description	Page No
353249-0027 ..	INSERT, MULTI HOLE, E153M 3X7	4-55
353249-0036 ..	INSERT, MULTI HOLE, EK152M 2X4	1-19, 1-21, 1-23, 1-25, 1-27, 1-29, 1-127
353249-0051 ..	INSERT, MULTI HOLE, E154M 4X6	2-53, 2-55
353249-0060 ..	INSERT, MULTI HOLE, E155M 2X13	2-69
353249-0061 ..	INSERT, SINGLE HOLE, EK155 20	1-31, 1-33, 1-35, 1-37, 1-205, 1-207
353249-0070 ..	INSERT, SINGLE HOLE, E154 16	1-205, 1-207
353249-0072 ..	INSERT, SINGLE HOLE, E155 20	1-31, 1-33, 1-35, 1-37, 1-205, 1-207
353249-0075 ..	INSERT, SINGLE HOLE, EK153 13	1-205, 1-207
353250-0016 ..	GLAND LOCK NUT, M16X1,5	4-45
353250-0020 ..	GLAND LOCK NUT, M20X1,5	4-45
353250-0025 ..	GLAND LOCK NUT, M25X1,5	6-15
353300-0006 ..	HEATSHRINK TUBING	3-33, 3-35
359000-0201 ..	WIRE MARKING, YELLOW, PA02/3"1"	6-33
359000-0202 ..	WIRE MARKING, YELLOW, PA02/3"2"	6-33
359000-0203 ..	YELLOW, PWIRE MARKING, YELLOW, PA02/3"3"	6-33
359000-0204 ..	WIRE MARKING, YELLOW, PA02/3"4"	6-33
359000-0205 ..	WIRE MARKING, YELLOW, PA02/3"5"	6-33
359000-0400 ..	WIRE MARKING, YELLOW, PA2/4"0"	1-245, 1-247, 3-3, 3-5, 3-33, 3-35, 4-41, 4-45
359000-0401 ..	WIRE MARKING, YELLOW, PA2/4"1"	1-245, 1-247, 3-3, 3-5, 3-33, 3-35, 4-41, 4-45
359000-0402 ..	WIRE MARKING, YELLOW, PA2/4"2"	1-127, 1-245, 1-247, 4-41, 4-45
359000-0403 ..	WIRE MARKING, YELLOW, PA2/4"3"	1-127, 3-33, 3-35, 4-41, 4-45
359000-0404 ..	WIRE MARKING, YELLOW, PA2/4"4"	1-245, 1-247, 3-33, 3-35, 4-41, 4-45
359000-0405 ..	WIRE MARKING, YELLOW, PA2/4"5"	1-127, 1-245, 1-247, 3-3, 3-5, 3-33, 3-35, 4-41, 4-45
359000-0406 ..	WIRE MARKING, YELLOW, PA2/4"6"	3-33, 3-35, 4-41, 4-45
359000-0407 ..	WIRE MARKING, YELLOW, PA2/4"7"	3-33, 3-35, 4-41, 4-45
359000-0408 ..	WIRE MARKING, YELLOW, PA2/4"8"	4-41, 4-45
359000-0409 ..	WIRE MARKING, YELLOW, PA2/4"9"	4-41, 4-45
359000-0654 ..	WIRE MARKING, YELLOW, PA02/3"E"	6-33
359005-0010 ..	MARKING LABEL KIT 0 - 9, 04.841.2150.0	2-53, 2-55
359005-0050 ..	MARKING LABEL KIT X, 04.841.4550.0	2-53, 2-55
359011-0807 ..	MARKING, DEK 5 FW 1-50	1-31, 1-33, 1-35, 1-37, 1-205, 1-207, 2-57, 3-39, 3-41, 4-71, 4-73, 4-75, 4-77, 6-33
359011-0808 ..	MARKING, DEK 5FW 51-100	1-31, 1-33, 1-35, 1-37, 2-57
359011-0809 ..	MARKING, DEK 5 FW 101-150	2-57
359011-0819 ..	MARKING, EARTH, DEK 5 GW ERDE I.KR.	1-205, 1-207, 2-57, 3-39, 3-41, 4-71, 4-73, 4-75, 4-77
359011-0821 ..	MARKING, DEK 6 FW 1-50	2-21, 4-71, 4-73
359241-0268 ..	SIGN: SPRAYING, HEAD SPACE	3-23
359301-0100 ..	BUTTON SIGN, SPLICING	2-97
359301-0110 ..	BUTTON SIGN, SHORT STOP	1-189, 2-97
359301-0488 ..	BUTTON SIGN, MATERIAL LOCKING	2-97
359301-0504 ..	BUTTON SIGN, RESET	2-97
359705-0001 ..	WARNING SIGN ISO, ENTANGLEMENT	2-59
359705-0003 ..	WARNING SIGN ISO, DANGEROUS CHEMICALS	4-47
359705-0005 ..	WARNING SIGN ISO, MOVING PART	1-63, 1-67, 1-69, 2-7, 2-9, 2-45, 2-47
359705-0007 ..	WARNING SIGN ISO, HOT SURFACE	1-73, 1-81, 1-83, 1-91, 1-101, 1-103
359705-0015 ..	WARNING SIGN ISO, RISK OF ELECTRIC SHOCK	1-189, 1-205, 1-207, 4-55
359710-0001 ..	WARNING SIGN ISO, HOT SURFACE	4-51
400800-0000 ..	SPRING	1-185
400828-0000 ..	SPRING	1-191
400833-0000 ..	PLUNGER	1-191
401183-0000 ..	GUIDE AXLE	1-185
401186-0000 ..	HEX NUT	1-185
401370-0000 ..	BUSHING	1-185
401371-0000 ..	BUSHING	1-185
401372-0000 ..	BUSHING	1-185
440655-0000 ..	RING	4-25
440663-0000 ..	COMPRESSION SPRING	4-25
441556-0001 ..	SPACER	2-49
441556-0002 ..	SPACER	2-49
441556-0004 ..	SPACER	2-49
441556-0012 ..	SPACER	2-49
451085-0005 ..	SPACER SCREW	4-79
456817-0001 ..	SHIM	2-49
456817-0002 ..	SHIM	2-49
469159-0000 ..	PIN	1-195, 1-197, 1-199, 1-201
469644-0000 ..	LID	1-105, 1-107
469645-0000 ..	LID	1-105, 1-107
469647-0000 ..	LID	1-105, 1-107
484171-0004 ..	LEG	6-57
484171-0006 ..	LEG	6-57
484171-0007 ..	LEG	6-57
497748-0000 ..	PIN	4-27
520072-0000 ..	SIGN BOARD	3-33, 3-35
522376-0000 ..	KNIFE HOLDER	1-7, 1-9, 1-157, 1-159
522388-0002 ..	KNIFE	1-7, 1-9, 1-157, 1-159
522393-0000 ..	NUT	1-7, 1-9, 1-157, 1-159
522394-0000 ..	SPRING	1-7, 1-9, 1-157, 1-159
522395-0000 ..	SCREW	1-7, 1-9, 1-157, 1-159
529076-0000 ..	WASHER	6-57
532017-0000 ..	MOUNTING LUG	1-7, 1-9, 1-157, 1-159
532021-0000 ..	LOCKING LOOP	1-7, 1-9, 1-157, 1-159
532022-0000 ..	LOCK BAR	1-7, 1-9, 1-157, 1-159
532117-0000 ..	CLAMP RING	4-27
533169-0000 ..	DIAPHRAGM	4-25

Part No	Description	Page No
533234-0000 ..	LID	6-23, 6-25
533235-0000 ..	LID	6-23, 6-25
533237-0000 ..	AXLE PIN	6-21
536374-0000 ..	WASHER	1-149
536913-0000 ..	HUB	1-183
536917-0000 ..	AXLE PIN	1-187
537327-0000 ..	SHAFT	1-183
540169-0000 ..	DOWEL	6-11
541070-0000 ..	SHAFT	1-187
541163-0200 ..	CLAMP RING	4-23
541165-0000 ..	WASHER	4-27
541166-0000 ..	WASHER	4-25
541751-0000 ..	CONICAL BOBBIN	1-183
543267-0000 ..	LABEL TAPE	6-31
544422-0000 ..	KNIFE	1-7, 1-9, 1-157, 1-159
544426-0000 ..	LOCK GRIP	1-7, 1-9, 1-157, 1-159
544427-0000 ..	TURN SPRING	1-7, 1-9, 1-157, 1-159
544428-0000 ..	SHEET	1-7, 1-9, 1-157, 1-159
544726-0000 ..	AXLE PIN	1-187
546298-0000 ..	SHAFT	1-13, 1-161
548770-0006 ..	COAXIAL CABLE L=1200 MM	1-135
552049-0000 ..	LUG	1-7, 1-9, 1-157, 1-159
553607-0000 ..	SLEEVE	4-25
554162-0000 ..	SCREW	4-27
556541-0000 ..	SCREW	1-119, 1-215
559468-0100 ..	ELECTRIC EQUIPMENT	3-3, 3-5
559469-0100 ..	ELECTRICAL DOCUMENT	3-11
560931-0000 ..	BRACKET	3-33, 3-35
561652-0000 ..	WHEEL	6-23, 6-25
562015-0000 ..	REDUCTION CASING	6-37
562016-0000 ..	REDUCTION CASING	6-57
563738-0000 ..	RAIL	1-209, 1-211
567070-0014 ..	ELECTRODE	3-33, 3-35
571929-0000 ..	RAIL	1-31, 1-33, 1-35, 1-37
574932-0000 ..	BENDING ROLLER	1-41, 1-125
574944-0000 ..	TOOTHED PULLEY	1-123
574945-0000 ..	TOOTHED PULLEY	1-123
575002-0000 ..	PLUNGER	2-13
575034-0000 ..	ROUND NUT	1-203
576439-0000 ..	CYLINDER HOUSING	4-25
576440-0000 ..	END SECTION	4-25
576441-0000 ..	PISTON	4-25
576446-0000 ..	PISTON ROD	4-25
576448-0000 ..	SPACER	4-25
576449-0000 ..	SPACER	4-25
578684-0000 ..	SPRING BRACKET	2-65
579384-0300 ..	SERVO DRIVE UNIT	1-3, 1-5
579385-0100 ..	PRESSURE ROLLER	1-105, 1-107, 1-117, 1-123
579553-0000 ..	SHAFT	1-133, 1-141, 1-143, 1-185
579765-0000 ..	MACHINE SIGN CE	1-19, 1-21, 1-23, 1-25, 2-87
580036-0200 ..	STRIP APPLICATOR	1-121
580037-0400 ..	STRIP MAGAZINE	1-3, 1-5
580038-0200 ..	INDUCTOR	1-129, 1-131
580042-0100 ..	HUB JUMBO	1-177, 1-179
580044-0200 ..	SPLICING MAGAZINE	1-177, 1-179
580055-0000 ..	ARM	1-185
580060-0200 ..	BRAKE ARM	1-177, 1-179
580064-0200 ..	CONNECTION BOX	1-177, 1-179
580329-0300 ..	PUSH BUTTON BOX	1-177, 1-179
581341-0000 ..	TOUCH GUARD	3-45
581905-0000 ..	SHAFT	1-111, 1-115
581921-0000 ..	HUB	1-105, 1-107, 1-117, 1-123
581938-0200 ..	BENDING ROLLER PATCH	1-3, 1-5
581939-0200 ..	PATCH MAGAZINE	1-3, 1-5
581942-0200 ..	BENDING ROLLER TAB	1-3, 1-5
581947-0400 ..	AIR INLET	1-167, 1-169
581948-0400 ..	PNEUMATIC UNIT	1-3, 1-5
581950-0300 ..	VALVE GROUP	1-167, 1-169
581952-0100 ..	DETECTOR UNIT	1-3, 1-5
582403-0400 ..	COVER	1-3, 1-5
582420-0000 ..	KNIFE HOLDER	1-73, 1-81, 1-83, 1-101, 1-103
582423-0000 ..	SHAFT	1-73, 1-81, 1-83, 1-101, 1-103
582425-0000 ..	HANDSPIKE	1-73, 1-81, 1-83, 1-101, 1-103
582426-0000 ..	SHAFT	1-73, 1-81, 1-83, 1-101, 1-103
582440-0000 ..	BRACKET	1-73, 1-81, 1-83, 1-101, 1-103
582446-0000 ..	PUNCH	1-63
582447-0000 ..	PUNCH	1-63
582448-0000 ..	PUNCH	1-63
582449-0000 ..	PUNCH	1-63
582450-0000 ..	PUNCH	1-63
582451-0000 ..	DIE	1-63
582452-0000 ..	DIE	1-63
582453-0000 ..	DIE	1-63
582454-0000 ..	DIE	1-63

Part No	Description	Page No
582455-0000 ..	DIE	1-63
582456-0000 ..	HOLDER	1-63
582457-0000 ..	BRACKET	1-63
582459-0001 ..	ROLLER	1-101, 1-103, 1-163, 1-165
582459-0002 ..	ROLLER	1-101, 1-103, 1-163, 1-165
582459-0003 ..	ROLLER	1-101, 1-103, 1-163, 1-165
582460-0000 ..	AXLE PIN	1-163, 1-165
582481-0000 ..	HEATER LOCK	1-73, 1-81, 1-83, 1-101, 1-103
582483-0000 ..	HOLDER	1-73, 1-101, 1-103
582484-0000 ..	SHAFT	1-101, 1-103
582485-0001 ..	SPACER	1-101, 1-103
582485-0002 ..	SPACER	1-101, 1-103
582485-0004 ..	SPACER	1-101, 1-103
582485-0005 ..	SPACER	1-101, 1-103
582485-0006 ..	SPACER	1-101, 1-103
582486-0000 ..	BRACKET	1-85
582487-0000 ..	HOLDER	1-75, 1-85, 1-97, 1-99
582488-0000 ..	BLOCKING PIECE	1-75, 1-85
582489-0000 ..	BLOCKING PIECE	1-97, 1-99
582491-0000 ..	BRACKET	1-97
582494-0000 ..	TINPLATE	1-97, 1-99
582496-0001 ..	OPENING SPECIFICATION	1-249
582496-0002 ..	OPENING SPECIFICATION	1-249
582496-0003 ..	OPENING SPECIFICATION	1-249
582496-0004 ..	OPENING SPECIFICATION	1-249
582496-0005 ..	OPENING SPECIFICATION	1-249
582496-0006 ..	OPENING SPECIFICATION	1-249
582496-0007 ..	OPENING SPECIFICATION	1-249
582496-0008 ..	OPENING SPECIFICATION	1-249
582496-0009 ..	OPENING SPECIFICATION	1-249
582496-0010 ..	OPENING SPECIFICATION	1-249
582496-0011 ..	OPENING SPECIFICATION	1-249
583674-0000 ..	HEATING CHAMBER	1-91, 1-251
583675-0000 ..	BRACKET	1-91
583677-0000 ..	HEATER LOCK	1-91
583682-0200 ..	MOUNTING SHEET	1-3, 1-5
583683-0000 ..	SHAFT	1-39, 1-41
583684-0000 ..	AXLE SUPPORT	1-39, 1-41, 1-125
583685-0000 ..	BEARING SEAT	1-39, 1-41
583686-0000 ..	SHAFT	1-105, 1-107, 1-117
583687-0000 ..	ARM	1-105, 1-107, 1-117, 1-123
583689-0000 ..	DOWEL	1-105, 1-107
583694-0000 ..	CANTILEVER	1-105, 1-107
583700-0000 ..	ARM	1-209, 1-211
583727-0000 ..	SHAFT	2-61
583733-0000 ..	HOLDER	1-215
583735-0000 ..	PIN	1-119
583737-0000 ..	ROLLER	1-119, 1-215
583738-0000 ..	ROLLER	1-119, 1-215
583739-0000 ..	SHAFT	1-215
583740-0100 ..	WEB GUIDE	1-3, 1-5
583749-0000 ..	PIN	1-119, 1-215
583755-0200 ..	PUNCH	1-47, 1-49
583756-0200 ..	SEALING UNIT	1-47, 1-49
583757-0200 ..	SEALING DEVICE	1-47, 1-49
583758-0200 ..	SEALING DEVICE	1-47, 1-49
583878-0000 ..	SPRING BRACKET	1-187
589432-0000 ..	SCREW	1-119, 1-215
589433-0000 ..	PLATE	1-61
589437-0000 ..	SHIM	1-73, 1-81, 1-83, 1-101, 1-103
589438-0000 ..	SPACER	1-73, 1-81, 1-83, 1-101, 1-103
589439-0000 ..	PIN	1-73, 1-81, 1-83, 1-101, 1-103
589440-0000 ..	SHIM	1-73, 1-81, 1-83, 1-101, 1-103
589441-0000 ..	BRACKET	1-81, 1-83
589442-0000 ..	CONNECTION	1-73, 1-81, 1-83, 1-101, 1-103
590980-0000 ..	PIN	1-215
590981-0000 ..	PROTECTION	1-105, 1-107
590985-0000 ..	HOLDER	1-47, 1-49
590986-0000 ..	HOLDER	1-47, 1-49
590987-0000 ..	ECCENTRIC	1-47, 1-49
590988-0000 ..	SHIM	1-63, 1-73, 1-81, 1-83, 1-91, 1-101, 1-103
590989-0000 ..	SHIM	1-63, 1-73, 1-81, 1-83, 1-91, 1-101, 1-103
591567-0000 ..	LACE	2-49
594952-0000 ..	CREASE BAR	2-49
594953-0000 ..	SPACER	2-49
596678-0000 ..	KNIFE	2-23, 2-25, 2-33, 2-35
598148-0000 ..	LEG	4-13
599749-0100 ..	COOLING AIR OUTLET	4-55
599750-0000 ..	FILTER	4-59
599751-0000 ..	INSERT	4-57, 4-59
599752-0000 ..	COVER	4-57, 4-59
599753-0000 ..	SPACER	4-57, 4-59
599755-0000 ..	GASKET	4-57, 4-59
599760-0000 ..	SPACER	4-59

Part No	Description	Page No
599895-0000 ..	COPPER BRAID	5-3
735503-0000 ..	HINGE	4-37, 4-39
735921-0000 ..	SCREW	4-17
735922-0000 ..	WASHER	4-21
751016-0000 ..	GASKET	3-45
752240-0000 ..	LID	2-45
752542-0001 ..	BENDING ROLLER	2-45
905215-0000 ..	BOLT	1-73, 1-81, 1-83, 1-101, 1-103
905285-0000 ..	STRIPPER PIN	1-63, 1-251
905413-0000 ..	SHAFT	1-73, 1-81, 1-83, 1-101, 1-103
905415-0000 ..	SHAFT	1-73, 1-81, 1-83, 1-101, 1-103
905416-0000 ..	PIVOT BRACKET-SWIVEL	1-73, 1-81, 1-83, 1-101, 1-103
905471-0000 ..	ROLLER DRIVE	1-73, 1-81, 1-83, 1-101, 1-103, 1-251
905484-0000 ..	SHIM	1-91
905607-0000 ..	SCREW	1-73, 1-81, 1-83, 1-101, 1-103
906254-0000 ..	ROLLER	2-65
907138-0000 ..	CLAMP	1-73, 1-81, 1-83, 1-91, 1-101, 1-103
907249-0000 ..	CLAMP	1-73, 1-91, 1-101, 1-103
907487-0000 ..	WASHER-CURVED	1-73, 1-81, 1-83, 1-101, 1-103
907719-0000 ..	SPRING	1-73, 1-81, 1-83, 1-101, 1-103
925090-0000 ..	PANEL	4-17
925405-0200 ..	EXT. PRODUCT VALVE	4-5
925409-0200 ..	VALVE PANEL	4-5
925419-0100 ..	BED	4-3
925457-0000 ..	TOUCH GUARD	4-37, 4-39
925646-0000 ..	HOSE	4-21
925765-0000 ..	BED	4-83
926762-0000 ..	LAMP HOLDER	4-29
926763-0000 ..	CLAMP HOLDER	4-29
927081-0000 ..	SUPPORT	3-47
959656-0000 ..	COTTER	4-55
959657-0000 ..	HINGE FLANGE	4-55
959658-0000 ..	SPRING	4-55
975880-0000 ..	HINGE FLANGE	4-55
975888-0012 ..	STRUT	4-55
975889-0016 ..	STRUT	4-55
977527-0000 ..	BRACKET	1-47, 1-49
978010-0000 ..	SIGN BOARD	3-3, 3-5
978235-0000 ..	VALVE PLATE	3-33, 3-35
978380-0000 ..	BLIND PLUG	3-47
978381-0000 ..	WASHER 56X2MM	3-47
978440-0000 ..	CRAMP	3-43
978850-0000 ..	TOOTHED PULLEY	1-105, 1-107
979202-0000 ..	TOOTHED PULLEY	1-105, 1-107
979247-0000 ..	HOUSE	3-45
979254-0000 ..	SUPPORT	3-47
979356-0000 ..	FLANGE	2-45
979426-0000 ..	SIGN	1-167, 1-169
979474-0000 ..	BRACKET	3-33, 3-35
979475-0000 ..	CONNECTION BOX	3-39, 3-41
979476-0000 ..	RAIL	3-39, 3-41
979524-0400 ..	FRAME	1-3, 1-5
979530-0200 ..	SEALING UNIT	1-77, 1-79
979531-0100 ..	COUNTER JAW	1-77, 1-79, 1-87, 1-89
979532-0200 ..	PUNCH UNIT	1-61
979533-0200 ..	PATCH FINAL-SEALER	1-87, 1-89
979534-0200 ..	SEALING UNIT TAB	1-93, 1-95
979549-0100 ..	BENDING ROLLER	1-19, 1-21, 1-23, 1-25
979551-0400 ..	INFEED UNIT	1-3, 1-5
979552-0200 ..	PHOTOCELL UNIT	1-3, 1-5
979564-0000 ..	ADJUSTING SCREW	1-19, 1-21, 1-23, 1-25
979565-0000 ..	ADJUSTING SCREW	1-19, 1-21, 1-23, 1-25
979575-0000 ..	ROLLER PLATE	1-121, 1-133
979576-0000 ..	AXLE PIN	1-185
979578-0000 ..	AXLE PIN	1-185
979582-0000 ..	ROLLER	1-119, 1-215
979584-0000 ..	SHAFT	1-215
979588-0000 ..	ADJUSTING PLATE	1-19, 1-21, 1-23, 1-25
979589-0000 ..	ADJUSTING NUT	1-19, 1-21, 1-23, 1-25
979592-0200 ..	CONNECTION DEVICE	1-19, 1-21, 1-23, 1-25
979593-0000 ..	CAP	1-209, 1-211, 2-53, 2-55
979637-0000 ..	PIVOT BRACKET	1-109
979638-0000 ..	AXLE PIN	1-109, 1-113
979639-0000 ..	ROLL	1-109
979640-0000 ..	SHAFT	1-109
979641-0000 ..	SPACER	1-109
979645-0000 ..	SHAFT	1-125
979647-0000 ..	HEAD PLATE	1-73, 1-81, 1-83, 1-101, 1-103
979651-0100 ..	WEB TENSIONER	1-105, 1-107, 1-117
979659-0000 ..	PHOTOCELL SPACER	1-19, 1-21, 1-23, 1-25
979661-0200 ..	BENDING ROLLER	1-123
979667-0000 ..	ARM	1-195, 1-197, 1-199, 1-201
979668-0000 ..	FINGER	1-195, 1-197, 1-199, 1-201
979669-0000 ..	FORCE PLATE	1-195, 1-197, 1-199, 1-201

Part No	Description	Page No
979691-0100 ..	SPARE PART KIT PT19	1-3, 1-5
979697-0200 ..	TAB MAGAZINE	1-3, 1-5
979699-0000 ..	HEATER	1-73, 1-81, 1-83, 1-91, 1-101, 1-103, 1-251
979814-0000 ..	BRACKET	3-43
979847-0000 ..	SHAFT COUPLING	2-51
979885-0100 ..	OPENING SPECIFICATION	1-3, 1-5
979888-0000 ..	STEERING	1-73, 1-81, 1-83, 1-101, 1-103
979889-0000 ..	SHAFT	1-105, 1-107
979890-0100 ..	BENDING ROLLER	1-19, 1-21, 1-23, 1-25
979899-0000 ..	BRACKET	1-43, 1-45, 1-129, 1-131
979956-0000 ..	SOLENOID VALVE	3-33, 3-35
979990-0000 ..	BELT BRAKE	1-187
979991-0000 ..	BLOCK	1-187
979994-0000 ..	ARM	1-187
981935-0000 ..	BRACKET	1-217, 1-219
988685-0000 ..	PIN	1-7, 1-9, 1-145, 1-157, 1-159, 1-167, 1-169, 1-217, 1-219, 2-91, 2-93, 2-95, 2-99
988690-0000 ..	RIM	2-91
1020162-0200 .	LEG CONVEYOR, 3 ARMS	6-41
1020164-0200 .	LEG, MOTOR, 3 ARMS	6-7
1020391-0001 .	PIPE	6-37
1020391-0002 .	PIPE	6-37
1020416-0200 .	PACKING DESCRIPTION	6-57
1020418-0200 .	PACKING DESCRIPTION	6-37
1020462-0000 .	CORRUGATED CARDBOARD BOX	6-39
1035587-0000 .	INDUCTOR	1-135
1035792-0000 .	E-HINGE	1-7, 1-9, 1-145, 1-157, 1-159, 1-167, 1-169, 1-217, 1-219, 2-91, 2-93, 2-95, 2-99
1035794-0000 .	BLOCKING PIECE	1-7, 1-9, 1-157, 1-159, 1-167, 1-169, 1-195, 1-197, 1-199, 1-201, 1-217, 1-219
1035893-0000 .	ADJUSTING SCREW	1-141, 1-143
1035895-0000 .	SHAFT	1-137
1035897-0000 .	SHAFT	1-43, 1-45, 1-129, 1-131
1036232-0000 .	BRACKET	2-45
1036563-0000 .	WASHER	2-91, 2-93
1036588-0000 .	BRACKET	1-135
1036622-0000 .	GUIDE ROLLER	1-139, 2-61
1036623-0000 .	GUIDE ROLLER	1-139, 2-61
1037120-0000 .	SHAFT	1-191
1037121-0000 .	SHAFT	1-191
1037124-0000 .	HOLDER	1-191
1038016-0000 .	SPACER	1-135
1074209-0000 .	BRACKET	4-43
1086870-0000 .	SIGN	6-37, 6-43, 6-57
1086871-0000 .	LABEL TAPE	6-31, 6-39, 6-59, 6-61
1086872-0000 .	LABEL TAPE	6-59, 6-61
1105642-0000 .	SPACER	2-45
1129274-0000 .	GUIDE LUG	2-91, 2-93, 2-95
1129767-0000 .	SCREW	1-145, 2-91, 2-93, 2-95, 2-99
1129770-0000 .	BLOCKING PIECE	1-145, 2-91, 2-93, 2-95, 2-99
1140293-0000 .	SPACER	1-63
1140294-0001 .	PIN DISTANCE 30	1-63
1140996-0000 .	FLANGE	2-43
1145219-0000 .	SIGN	1-167, 1-169
1145221-0000 .	SIGN	1-167, 1-169
1147253-0000 .	NUT	2-95, 2-99
1255270-0000 .	OPENING SPECIFICATION	1-249
1255511-0000 .	ROPE BRACKET	2-43
1255512-0000 .	ROPE BRACKET	2-43
1255573-0000 .	DIE	1-67, 1-69
1255730-0200 .	SEALING UNIT OUTER PATCH	1-47, 1-49
1255731-0200 .	SEALING UNIT OUTER PATCH	1-71
1255736-0200 .	COUNTER JAW	1-93, 1-95
1255737-0200 .	COUNTER JAW	1-93, 1-95
1255742-0000 .	SPACER ROLLER	1-105, 1-107, 1-117
1255745-0001 .	ROLL	1-105, 1-107
1255745-0002 .	ROLL	1-105, 1-107
1255745-0003 .	ROLL	1-105, 1-107
1255748-0001 .	ROLLER	1-39
1255748-0002 .	ROLLER	1-39
1255748-0003 .	ROLLER	1-39
1255821-0000 .	ROLL	1-17, 1-73
1255822-0000 .	ROLLER	1-101, 1-103
1255825-0000 .	WASTE PIPE	1-63, 1-67, 1-69
1255827-0000 .	CLAMP	1-63, 1-67, 1-69
1255950-0000 .	TAPER ROLLER	1-17
1255964-0000 .	PLATE	1-17
1260678-0000 .	ARM	1-187
1260966-0000 .	AXLE BOLT	1-17
1279624-0200 .	SPLICE DETECTOR	1-19, 1-21, 1-23, 1-25, 1-129, 1-131
1282587-0000 .	ROLLER	2-45
1282588-0000 .	ROLLER	2-45
1282589-0000 .	SHAFT	2-45
1282621-0000 .	BENDING ROLLER	2-43
1282988-0000 .	RAIL	1-129, 1-131
1282989-0000 .	AXLE PIN	1-129, 1-131

Part No	Description	Page No
1282991-0001	.ROLL	1-81, 1-83, 1-153, 1-155
1282991-0002	.ROLL	1-81, 1-83, 1-153, 1-155
1282991-0003	.ROLL	1-81, 1-83, 1-153, 1-155
1285546-0000	.ROLL	1-141, 1-143
1296766-0000	.HOLDER	1-163, 1-165
1296785-0000	.AXLE PINAXLE PIN	1-17, 1-81, 1-83, 1-153, 1-155
1296993-0000	.DIE	1-67, 1-69
1317200-0200	.PUMP GROUP	4-5
1317202-0200	.FRAME	4-5
1317203-0200	.STEAM CIRCUIT	4-5
1317204-0200	.PNEUMATIC CIRCUIT	4-5
1317205-0200	.CLEANING CIRCUIT	4-5
1317255-0000	.PUNCH	1-67, 1-69
1317382-0000	.ARM	1-105, 1-107
1317383-0000	.PUNCH	1-67, 1-69
1317457-0000	.PUNCH	1-67, 1-69
1317458-0000	.DIE	1-67, 1-69
1317497-0000	.OPENING SPECIFICATION	1-249
1317711-0000	.SHAFT	2-61
1317712-0000	.SHAFT	2-61
1317796-0000	.SHIM	1-73, 1-81, 1-83, 1-101, 1-103
1334118-0000	.BRACKET	2-45
1334123-0000	.BRACKET	1-105, 1-107
1334124-0000	.ARM	1-215
1334192-0000	.NUT	1-73, 1-81, 1-83, 1-101, 1-103
1334247-0000	.BRACKET	1-215
1334255-0000	.BOW CLAMP	1-215
1334256-0000	.SHAFT	1-119, 1-215
1334331-0000	.FLANGE	1-129, 1-131
1346217-0000	.HOLDER	1-73, 1-81, 1-83, 1-101, 1-103
1346612-0000	.SHAFT	1-119, 1-139, 1-215
1346746-0000	.LEVER	1-141, 1-143
1346988-0000	.ROLL	1-137
1349014-0000	.PAD	1-193
1350233-0000	.OPENING SPECIFICATION	1-249
1350234-0000	.SETTING RING	1-251
1350679-0000	.SHAFT	1-73, 1-101, 1-103
1359055-0000	.SIGN	6-9
1359224-0000	.FASTENING PLATE	6-57
1359389-0000	.ROLL	6-23, 6-25
1359390-0000	.SHAFT	6-23, 6-25
1359391-0000	.MOUNTING BLOCK	6-23, 6-25
1359565-0000	.NUT	6-13
1359581-0300	.SWITCH GEAR	6-9
1359776-0000	.BELT	6-23, 6-25
1359831-0000	.SWITCH GEAR	6-15
1359885-0000	.SIGN	6-9
1359938-0000	.MOUNTING SHEET	6-9
1360582-0000	.SPACER	2-49
1360583-0000	.CREASE UNIT	2-49
1364476-0300	.CONNECTION BOX	2-3
1364477-0200	.TERMINAL	2-53, 2-55
1366727-0000	.CLAMP	6-13
1367022-0000	.ALIGNMENT SCREW	2-7, 2-9
1478303-0000	.TENSION SPRING	1-137
1478572-0000	.SPRING	1-67, 1-69
1484486-0000	.SPRING	1-187
1484688-0300	.SPLICING DEVICE	2-3
1484689-0000	.BRACKET	2-59
1484690-0300	.PRESSURE JAW	2-59
1484691-0000	.PRESSURE JAW	2-63
1484692-0000	.SLIDING STRIP	2-63
1484693-0000	.KNIFE HOLDER	2-63
1484695-0000	.KNIFE	2-63
1484699-0300	.MATERIAL HOLDER L2	2-3
1484703-0000	.TIE ROD	2-59
1484704-0000	.SHAFT	2-59
1484705-0000	.SLIDER	2-75
1484706-0000	.GEAR WHEEL	2-75
1484727-0000	.FRAME	2-15, 2-17
1484729-0000	.PLATE	2-45
1484730-0000	.BRACKET	2-7, 2-9
1484731-0000	.PLATE	2-45
1484733-0000	.PLATE	2-45
1484734-0003	.AXLE PIN	2-45
1484735-0100	.WEB MAGAZINE	2-3
1484736-0000	.SHAFT	2-7, 2-9
1484737-0000	.AXLE	2-13
1484738-0000	.BRACKET	2-45
1484742-0100	.CABLE DUCTS	2-7, 2-9
1484745-0100	.WEB GUIDE	2-59
1484760-0000	.SLIDER	2-43
1484762-0000	.MEASURING TAPE	2-75
1484776-0000	.RAIL	2-75

Part No	Description	Page No
1484777-0000	.SLIDER	2-75
1484779-0000	.ROD	2-75
1484781-0000	.PIN	2-59
1484782-0000	.CLAMP BLOCK	2-75
1484783-0000	.CLAMPING ELEMENT	2-75
1484784-0000	.LOCATING PIECE	2-75
1484785-0000	.LOCATING PIECE	2-75
1487510-0000	.RACK GEAR	2-75
1487511-0000	.BRACKET	2-75
1487512-0000	.COVER	2-77
1487515-0000	.INDICATION	2-75
1487516-0000	.MEASURING TAPE	2-75
1487517-0000	.CATCH	2-59
1487518-0000	.RULER	2-23, 2-25, 2-33, 2-35
1487524-0000	.PLATE	2-63
1487525-0000	.RULE PLATE	2-63
1487526-0000	.RAIL	2-63
1487528-0200	.CYLINDER	2-33, 2-35
1487530-0002	.GUIDE ROD	2-43
1487539-0000	.LEFT SIDEDOOR	2-91
1487540-0000	.HATCH	2-89
1487541-0000	.COVER PLATE	2-87
1487544-0100	.SIDE FEEDER	2-7, 2-9
1487554-0000	.BRACKET	2-75
1487558-0000	.FASTENING PLATE	2-75
1487762-0000	.SHAFT	2-77
1487763-0000	.SHAFT	2-65
1487769-0000	.SPACER	2-43
1487770-0000	.BRACKET	2-23, 2-25, 2-33, 2-35
1487772-0000	.ROCKER ARM	2-33, 2-35
1487774-0000	.ROCKER ARM	2-23, 2-25
1487775-0000	.ROCKER ARM	2-23, 2-25
1487776-0000	.CUTTING TABLE	2-23, 2-25, 2-33, 2-35
1487777-0000	.ROCKER ARM	2-33, 2-35
1487779-0000	.SHAFT	2-23, 2-25, 2-33, 2-35
1487782-0000	.SHAFT	2-23, 2-25, 2-33, 2-35
1487785-0300	.MATERIAL HOLDER L1	2-3
1487787-0000	.BUSHING	2-77
1487788-0000	.SPACER	2-51
1488005-0000	.BEARING BLOCK	2-7, 2-9
1490198-0003	.LOCKING ARM	2-95
1490198-0004	.LOCKING ARM	2-95
1490198-0005	.LOCKING ARM	2-91, 2-93
1490198-0006	.LOCKING ARM	2-91, 2-93
1490199-0000	.BRACKET	2-23, 2-25, 2-33, 2-35
1490203-0000	.SPACER	2-29
1490219-0000	.BRACKET	2-7, 2-9
1490220-0000	.ANGLE BRACKET	2-73
1490801-0000	.PLATE	2-45
1490804-0000	.HOLDER	1-191
1490809-0000	.ARM	2-27, 2-37
1490810-0000	.ARM	2-27, 2-37
1490812-0000	.AXLE	2-27, 2-37
1490813-0000	.SCREW	2-27, 2-37
1490820-0000	.SHAFT	2-59
1490821-0000	.ANGLE PIECE	2-23, 2-25, 2-33, 2-35
1490822-0000	.GUIDE PLATE	2-47
1490824-0000	.SHAFT	2-45
1490825-0000	.BENDING ROLLER	2-45
1490826-0000	.PLATE	2-45
1490827-0000	.SPACER	2-45
1490832-0000	.SCREW	2-23, 2-25, 2-33, 2-35
1494664-0000	.AXLE LINK	2-73
1498141-0000	.BRACKET	1-209, 1-211
1498142-0000	.BRACKET	1-209, 1-211
1498413-0200	.LEFT DOORSIDE	2-87
1498414-0200	.RIGHT SIDEDOOR	2-87
1498415-0100	.HATCH	2-87
1498419-0200	.LEFT BACKDOOR	2-87
1498420-0200	.RIGHT BACKDOOR	2-87
1498424-0000	.PLATE	2-43
1498427-0000	.HATCH	2-101
1498428-0100	.HATCH	2-87
1498433-0000	.CABLE	2-71
1498439-0000	.RULE PLATE	2-59
1498442-0000	.ANGLE BRACKET	2-43
1498443-0000	.PLATE	2-43
1498444-0300	.COVER	2-45
1498457-0000	.BRACKET	2-11
1498751-0300	.DOORS	1-177, 1-179
1498753-0100	.MAGAZINE HOLDER	1-177, 1-179
1498757-0000	.FLANGE	1-181
1498758-0000	.AXLE PIN	1-181
1498761-0000	.MAGAZINE HOLDER	1-181

Part No	Description	Page No
1498762-0000	.AXLE PIN	1-195, 1-197, 1-199, 1-201
1498764-0000	.COVER	1-195, 1-197, 1-199, 1-201
1498765-0000	.AXLE PIN	1-129, 1-131
1498773-0000	.CANTILEVER	1-129, 1-131
1498775-0000	.BOX BRACKET	1-195, 1-197, 1-199, 1-201
1498777-0000	.GUIDE HOLDER	1-129, 1-131
1498778-0000	.SHAFT	1-129, 1-131
1499024-0000	.BAR	1-139
1499026-0000	.SHAFT	1-139
1499027-0000	.BRACKET	1-139
1499480-0200	.MOUNTING PLATE	1-177, 1-179
1499481-0000	.ROLLER	1-195, 1-197, 1-199, 1-201
1499483-0000	.PANE	1-129, 1-131
1499511-0000	.PANEL	1-203
1499512-0000	.PIN	1-195, 1-197, 1-199, 1-201, 1-217, 1-219, 1-229, 1-231
1499514-0000	.E-HINGE	1-195, 1-197, 1-199, 1-201, 1-217, 1-219, 1-229, 1-231
1499515-0000	.SHAFT	1-185
1499563-0001	.GLASS PANE	2-95, 2-99
1499563-0002	.GLASS PANE	2-91, 2-93
1499563-0003	.GLASS PANE	2-89, 2-101
1499566-0000	.WASHER	2-73
1499571-0100	.PAPER REEL HOLDER	2-7, 2-9
1499573-0000	.PIN	2-7, 2-9
1499575-0001	.SEALING STRIP	2-89, 2-101
1499575-0002	.SEALING STRIP	2-95
1499575-0003	.SEALING STRIP	2-91, 2-93
1499576-0000	.SEALING STRIP	2-99
1499577-0000	.ARM	2-33, 2-35
1499578-0100	.CABLE CONDUIT	2-59
1499582-0000	.AXLE PIN	2-23, 2-25, 2-33, 2-35
1499588-0000	.BENDING ROLLER	2-23, 2-25, 2-33, 2-35
1511000-0000	.PLATE	1-139
1511001-0000	.SHAFT	1-139
1511002-0000	.HOLDER	1-139
1511003-0000	.WEIGHT	1-139
1511323-0000	.STRIP ADHESIVE	1-203
1511464-0000	.PIPE HOLDER	1-245
1511566-0000	.CABLE DUCT	2-15, 2-17
1511568-0000	.PIN	2-23, 2-25, 2-33, 2-35
1511571-0300	.VALVE PANEL	2-3
1511575-0000	.ARM	2-23, 2-25
1511577-0000	.SPACER	2-41
1511581-0000	.PLATE	2-45
1512264-0002	.CREASE BAR	2-49
1512265-0000	.SLEEVE	2-13
1512266-0000	.SLEEVE	2-13
1512267-0000	.ECCENTRIC BUSHING	2-65
1512268-0100	.MOTOR UNIT	2-45
1512270-0000	.SPACER	2-45
1512276-0000	.PROTECTION PLATE	2-23, 2-25, 2-33, 2-35
1512283-0000	.CONNECTION BOX	1-205, 1-207
1512322-0000	.COPPER BRAID	3-19
1512352-0000	.RAIL	1-205, 1-207
1512420-0000	.PLATE	2-7, 2-9
1512430-0000	.VOLUME SHIM	2-73
1512526-0000	.STEERING	2-61
1512583-0000	.ROLLER	1-129, 1-131, 1-133, 1-141, 1-143, 1-185, 1-187, 1-195, 1-197, 1-199, 1-201
1517065-0100	.WEB GUIDE	1-117
1517066-0000	.PIVOT ARM	1-119
1517067-0000	.SPRING HOLDER	1-119
1517068-0000	.PILLAR	1-119
1517069-0000	.CLAMP PLATE	1-119
1517070-0000	.BEARING SEAT	1-119
1517071-0000	.BOW CLAMP	1-119
1517088-0300	.CONTROL PANEL	2-95
1517098-0000	.BRACKET	2-47
1517113-0000	.RAIL	2-67
1517114-0100	.RAIL	2-59
1517293-0000	.ROLLER	1-195, 1-197, 1-199, 1-201
1517464-0000	.SIGN	1-195, 1-197, 1-199, 1-201
1517534-0000	.RUNNER RING	1-129, 1-131
1517535-0000	.STEERING	1-129, 1-131
1517744-0000	.PHOTOCELL CURSOR	1-127
1517751-0000	.SHAFT	1-193
1517753-0000	.ADJUSTING NUT	1-119
1519142-0000	.ROLLER	1-7, 1-9, 1-13
1519145-0000	.ROLLER	1-157, 1-159, 1-161
1519378-0000	.WINDOW KNIFE	1-73, 1-81, 1-83, 1-101, 1-103
1519379-0000	.FLAT KNIFE	1-73, 1-81, 1-83, 1-101, 1-103
1519578-0000	.MOUNTING BLOCK	2-67
1519583-0000	.BRACKET	2-65
1519584-0000	.BENDING ROLLER	2-77
1519589-0100	.HANDLE	2-33, 2-35
1519593-0000	.BRACKET	2-47

Part No	Description	Page No
1519597-0000	.AXLE PIN	2-77
1519936-0000	.PIPE	4-23
1519940-0000	.BRACKET	2-43
1519941-0000	.BRACKET	2-43
1519943-0000	.SHAFT	2-43
1519944-0000	.BRACKET	2-73
1519948-0300	.MACHINE BODY	2-3
1519949-0000	.BRACKET	2-7, 2-9
1519953-0300	.COVERING PANEL	2-3
1519955-0000	.WASHER	2-59
1519956-0000	.WASHER	2-59
1519961-0100	.START UP KIT	2-3
1519967-0000	.CLAMP	2-63
1520972-0000	.TPO-BAR	2-5, 2-71
1524386-0100	.BOW CLAMP	2-59
1524387-0100	.BAR CODE READER	2-59
1524388-0100	.DRIVE UNIT REAR	2-59
1524389-0100	.TPO-BAR	2-59
1524394-0200	.CYLINDER	2-23, 2-25
1524397-0200	.MATERIAL HOLDER	2-23, 2-25
1524398-0100	.HANDLE	2-23, 2-25
1524477-0100	.CUTTING TABLE	1-177, 1-179
1524481-0000	.SEALING BLOCK	1-193
1524729-0200	.MATERIAL HOLDER	2-33, 2-35
1524746-0000	.KNIFE HOLDER	2-23, 2-25, 2-33, 2-35
1531340-0102	.TECHNICAL MANUAL	6-41
1538107-0000	.SHAFT	1-119
1538204-0000	.BRACKET	2-95, 2-99
1538219-0000	.SWITCH BRACKET	1-195, 1-197, 1-199, 1-201
1538473-0000	.SEALING BLOCK	1-191
1538868-0000	.BRACKET	2-7, 2-9
1539304-0000	.BAR	2-45
1539391-0000	.ROUND NUT	2-91, 2-93, 2-95, 2-99
1539573-0000	.ROLLER	2-45
1539574-0000	.COLLAR	2-45
1539596-0000	.PIPE	3-45
1539597-0000	.T-PIECE	3-43
1539599-0100	.HEAT EXCHANGER	3-3, 3-5
1539600-0000	.SUPPORT	3-47
1539601-0000	.CLEANING PIPE	3-3, 3-5
1539602-0100	.CONNECTION SYSTEM	3-3, 3-5
1539603-0000	.PIPE	3-45
1539604-0000	.PIPE	3-3, 3-5
1539605-0000	.COOLING PIPE	3-3, 3-5
1539606-0002	.SPRAY NOZZLE	3-43
1539606-0003	.SPRAY NOZZLE	3-43
1539606-0004	.SPRAY NOZZLE	3-43
1539606-0005	.SPRAY NOZZLE	3-43
1548197-0000	.ROLL	2-65
1548788-0000	.HEATING CHAMBER	1-73, 1-81, 1-83, 1-101, 1-103, 1-251
1548917-0000	.GLASS PANE	1-217, 1-219
1549328-0000	.THREADED ROD	2-71
1549418-0000	.FRAME LOWER, INFEED	1-121
1549419-0000	.PLATE	1-7, 1-9, 1-157, 1-159
1549420-0100	.BOBBIN HOLDER	1-7, 1-9, 1-157, 1-159
1549421-0000	.SHAFT	1-11
1549422-0000	.BOBBIN HOLDER	1-11
1549423-0000	.WASHER	1-11
1549424-0000	.FLANGE	1-11
1549425-0000	.PLATE	1-7, 1-9, 1-157, 1-159
1549432-0000	.ARM	1-15
1549433-0000	.PIN	1-15
1549436-0000	.PIN	1-15
1549440-0000	.AXLE PIN	1-7, 1-9, 1-157, 1-159
1549441-0000	.FORCE PLATE	1-7, 1-9, 1-157, 1-159
1550185-0000	.COCK HANDLE	6-21
1550199-0000	.SPACER	6-17, 6-19
1550348-0001	.BALL BEARING 17/35X10	6-21, 6-23, 6-25
1550595-4960	.SLIDING STRIP	6-17, 6-19
1550700-0200	.CONVEYOR CHAIN	6-41
1550743-0200	.RAIL HOLDER	6-11
1550772-0000	.HOLDER	6-13
1550874-0000	.BRACKET FOR LEG PC23	6-57
1550880-0200	.CONVEYOR BODY	6-9
1550912-0000	.PLATE	6-17, 6-19
1550913-0000	.PLATE	6-17, 6-19
1550956-0000	.PLATE	6-17, 6-19
1550957-0100	.CHAIN TENSIONER	6-9
1550959-0000	.CLAMP	6-21
1550960-0000	.BLOCK	6-21
1550971-0000	.SPROCKET	6-21
1550972-0000	.SPROCKET	6-23, 6-25
1550973-0000	.SPROCKET	6-9
1550977-0300	.BELT UNIT	6-9

Part No	Description	Page No
1550995-0000	.SPACER	6-9
1550997-0300	.BELT UNIT	6-9
1550999-0000	.PHOTOCELL BRACKET	6-23, 6-25
1558277-0000	.SPACER	2-45
1558484-0000	.PROTECTION PLATE	2-7, 2-9
1558797-0000	.WASHER	2-71
1558799-0000	.ANGLE BRACKET	2-7, 2-9
1558801-0000	.SHOULDER SCREW	2-63
1558810-0000	.RAIL	2-57
1558867-0000	.CAM	2-45
1558868-0000	.PROTECTION	2-45
1558872-0000	.BRACKET	2-53, 2-55
1558873-0000	.BRACKET	2-53, 2-55
1558886-0000	.ANGLE BRACKET	2-43
1558897-0100	.HEATING DEVICE	1-177, 1-179
1558987-0000	.GUIDE	2-7, 2-9
1558989-0000	.SHIMS	2-77
1558991-0000	.PLATE	2-73
1558992-0000	.RAIL	2-67
1558996-0000	.ROLLER	2-45
2500029-0000	.HEATING RAIL	1-73
2500030-0000	.HEATING RAIL	1-91
2500031-0000	.HEATING RAIL	1-91
2500032-0000	.HEATING RAIL	1-91
2500034-0000	.HEATING RAIL	1-91
2500035-0000	.HEATING RAIL	1-91
2500036-0000	.HEATING RAIL	1-81, 1-83
2500037-0000	.HEATING RAIL	1-81, 1-83
2500038-0000	.HEATING RAIL	1-81, 1-83
2500039-0000	.HEATING RAIL	1-81, 1-83
2500040-0000	.HEATING RAIL	1-81, 1-83
2500041-0000	.HEATING RAIL	1-101, 1-103
2500042-0000	.HEATING RAIL	1-101, 1-103
2500043-0000	.HEATING RAIL	1-101, 1-103
2500044-0000	.HEATING RAIL	1-101, 1-103
2500045-0000	.HEATING RAIL	1-101, 1-103
2506471-0000	.BRACKET	1-137
2506472-0000	.HOLDER	1-137
2506473-0000	.BRACKET	1-137
2506474-0000	.FASTENING BRACKET	1-137
2506475-0100	.PRESSURE ROLLER	1-129, 1-131
2506477-0000	.FRAME	1-19, 1-21, 1-23, 1-25
2506478-0000	.COVER	1-195, 1-197, 1-199, 1-201
2511330-0000	.SPACER	3-33, 3-35
2519463-0000	.FLANGE	2-45
2519569-0000	.BENDING ROLLER	2-45
2519628-0000	.MOUNTING SHEET	1-47, 1-49
2519629-0000	.PIN	1-77, 1-79, 1-87, 1-89
2519630-0000	.BRACKET	1-65
2519631-0000	.SCREW	1-7, 1-9, 1-71, 1-77, 1-79, 1-87, 1-89, 1-93, 1-95, 1-157, 1-159
2519632-0000	.PIN	1-71, 1-77, 1-79, 1-87, 1-89, 1-93, 1-95
2519633-0000	.SHIM	1-77, 1-79
2519634-0000	.HINGE	1-77, 1-79, 1-87, 1-89
2519635-0000	.HINGE	1-71, 1-93, 1-95
2519636-0000	.PLATE	1-77, 1-79
2519637-0000	.PLATE	1-87, 1-89
2519638-0000	.PLATE	1-71, 1-93, 1-95
2519639-0000	.CANTILEVER	1-81, 1-83
2519640-0000	.BRACKET	1-75, 1-97, 1-99
2519641-0000	.BRACKET	1-91
2519642-0000	.CANTILEVER	1-73, 1-101, 1-103
2519644-0000	.BRACKET	1-195, 1-197, 1-199, 1-201
2523585-0000	.FASTENER	1-145
2523586-0000	.FASTENER	1-145
2523587-0000	.COVER	1-145
2523589-0000	.COVER	1-217, 1-219
2523592-0100	.INFEED BRAKE	1-3, 1-5
2523593-0000	.BRACKET	1-117
2523594-0000	.PLATE	1-117
2523595-0000	.PLATE	1-117
2523596-0000	.COVER	1-191
2523597-0000	.SLIDER	1-193
2523598-0000	.SPLICING TABLE	1-193
2523599-0000	.SUPPORT	1-193
2523600-0000	.PIN	1-193
2523601-0000	.PAD	1-193
2523602-0000	.PLATE	1-117
2524369-0000	.BRACKET	2-7, 2-9
2524475-0000	.AXLE PIN	1-117
2524476-0100	.WEB GUIDE	1-129, 1-131
2524477-0000	.ROLLER	1-139
2524478-0000	.BRACKET	1-43, 1-45, 1-129, 1-131
2524479-0000	.PLATE	1-137
2524480-0000	.PIN	1-137

Part No	Description	Page No
2524482-0000	.BRACKET	1-137
2524484-0000	.PIN	1-137
2524485-0000	.PIN	1-137
2524490-0000	.BRACKET	1-149
2524491-0000	.HOLDER	1-149
2524492-0000	.PLATE	1-149
2524494-0000	.SCREW	1-149
2524600-0100	.PRESSURE ROLLER	2-59
2524601-0000	.AXLE PIN	2-65
2524603-0000	.HOLDER	2-65
2529549-0000	.PLATE	2-65
2529551-0000	.PROTECTION PLATE	2-7, 2-9
2529611-0000	.BAR	1-149
2529613-0000	.PLATE	1-149
2529614-0200	.CONNECTION BOX	1-19, 1-21, 1-23, 1-25
2529615-0000	.CONNECTION BOX	1-31, 1-33, 1-35, 1-37
2529616-0000	.HOLDER	1-27, 1-29
2529617-0000	.HATCH	1-217, 1-219
2529619-0000	.COVER	1-217, 1-219
2529621-0000	.BLOCKING PIECE	1-217, 1-219, 1-229, 1-231
2529623-0000	.GLASS PANE	1-217, 1-219
2529627-0000	.COVER	1-217, 1-219
2529628-0000	.SPACER	1-19, 1-21, 1-23, 1-25
2529643-0000	.PROTECTION	1-19, 1-21, 1-23, 1-25
2529645-0200	.PUNCH UNIT	1-47, 1-49
2529646-0000	.SHAFT	1-137
2529647-0000	.WASHER	1-71, 1-77, 1-79, 1-87, 1-89, 1-93, 1-95
2529649-0000	.GUIDE	1-127
2529650-0000	.LEVER	1-71, 1-77, 1-79, 1-87, 1-89, 1-93, 1-95
2538071-0000	.ANGLE PIECE	2-23, 2-25, 2-33, 2-35
2538073-0001	.SHIMS	2-7, 2-9
2538073-0002	.SHIMS	2-7, 2-9
2538075-0000	.BRACKET	2-7, 2-9
2538076-0000	.BRACKET	2-7, 2-9
2538077-0000	.HANDLE	2-65
2538078-0000	.ROCKER ARM	2-65
2540718-0000	.COVER	1-19, 1-21, 1-23, 1-25
2540719-0000	.PIN	1-71, 1-77, 1-79, 1-87, 1-89, 1-93, 1-95
2540725-0000	.PLATE	1-15
2540726-0000	.FINGER	1-193
2540727-0000	.BRACKET	1-123
2540731-0000	.HOLDER	1-27, 1-29
2540732-0000	.HOLDER	1-7, 1-9, 1-19, 1-21, 1-23, 1-25, 1-127, 1-149, 1-157, 1-159
2540734-0000	.PLATE	1-67, 1-69
2540769-0000	.TOOTHED PULLEY	2-77
2540770-0000	.BUSHING	2-77
2545062-0000	.CLEANING PIPE	3-3, 3-5
2545080-0200	.INJECTION SYSTEM	3-3, 3-5
2545083-0200	.CONTROL CABINET	3-3, 3-5
2545132-0000	.TRANSITION PIPE	3-43
2545134-0000	.SPRAY NOZZLE	3-43
2545155-0000	.PLUG	3-43
2545425-0000	.SPRAY PIPE	3-33, 3-35
2545426-0000	.MOUNTING PLATE	3-33, 3-35
2545427-0000	.FILLING PIPE	3-33, 3-35
2545428-0000	.RETURN PIPE	3-33, 3-35
2545429-0000	.PIPE	3-33, 3-35
2545432-0000	.CLEANING PIPE	3-3, 3-5
2546444-0000	.PIPE	3-3, 3-5
2546445-0000	.AIR PIPE	3-3, 3-5
2546446-0000	.PIPE	3-3, 3-5
2546447-0000	.SPRAY PIPE	3-3, 3-5
2546448-0000	.SUPPORT	3-33, 3-35
2546471-0000	.AIR PIPE	3-3, 3-5
2546472-0000	.PIPE	3-3, 3-5
2546473-0000	.FILLING PIPE	3-3, 3-5
2547006-0000	.RETURN PIPE	3-3, 3-5
2547007-0000	.RETURN PIPE	3-3, 3-5
2547217-0000	.AXLE PIN	1-195, 1-197, 1-199, 1-201
2547218-0000	.AXLE PIN	1-195, 1-197, 1-199, 1-201
2547219-0000	.AXLE PIN	1-195, 1-197, 1-199, 1-201
2547315-0000	.SUPPORT	3-33, 3-35
2549829-0000	.SPACER	2-63
2552619-0000	.COVER	1-129, 1-131
2552620-0000	.DOOR	1-129, 1-131
2552621-0000	.HOLDER	1-129, 1-131
2552622-0000	.HOLDER	1-129, 1-131
2552623-0100	.PAPER MAGAZINE	1-121
2552624-0000	.BOX BRACKET	1-195, 1-197, 1-199, 1-201
2552625-0000	.BRACKET	1-127
2552626-0000	.BRACKET	1-127
2552627-0000	.BRACKET	1-127
2552628-0000	.PIN	1-139
2552629-0000	.BUSHING	1-15

Part No	Description	Page No
2552630-0000	.MOUNTING PLATE	1-129, 1-131
2552631-0000	.AXLE PIN	1-121, 1-133
2552632-0000	.ROLLER	1-121, 1-133
2552633-0000	.ROLLER	1-121, 1-133
2552634-0000	.FRAME	1-123
2552635-0200	.INFEED TENSION DEVICE	1-121
2552636-0000	.COVER	1-123
2552637-0000	.COVER	1-123
2552798-0000	.COMPRESSION ROD	2-63
2553275-0000	.SLIDE PLATE	2-23, 2-25, 2-33, 2-35
2555063-0000	.PIN	4-15
2555310-0000	.COIL	3-45
2555478-0000	.ROLLER	1-113
2555479-0100	.PRESSURE ROLLER	1-105, 1-107
2555480-0000	.SHAFT	1-113
2555481-0000	.PIVOT BRACKET	1-113
2555482-0000	.BRACKET	1-115
2555483-0000	.WHEEL	1-115
2555484-0100	.WEB TENSION ROLLER	1-105, 1-107
2555485-0000	.SHAFT	1-115
2555486-0000	.TENSION ARM	1-123
2555487-0200	.COVER	1-121
2555488-0000	.REFLECTOR PLATE	1-127
2555489-0000	.HOLDER	1-153, 1-155
2555491-0000	.HOLDER	1-153, 1-155
2555492-0000	.AXLE PIN	1-153, 1-155
2555494-0000	.KEY	1-67, 1-69
2555497-0000	.PIN	1-67, 1-69
2557518-0000	.DOLLY	1-99
2557567-0000	.PLUG	1-67, 1-69
2557568-0000	.PIVOT AXLE	1-149
2557569-0000	.PIN	1-149
2557578-0000	.SUPPORT	1-149
2557579-0100	.PIPE WORK-PNEUMATIC	1-3, 1-5
2557583-0000	.HOLDER	1-217, 1-219
2557584-0000	.BAR	1-217, 1-219
2557585-0000	.HINGE	1-217, 1-219
2557586-0000	.BAR	1-217, 1-219
2558133-0000	.PRESSURE REGULATOR	4-31
2558744-0000	.PIPE	3-33, 3-35
2558745-0000	.PIPE	3-33, 3-35
2559041-0000	.BRACKET	6-35
2561206-0000	.SPACER	6-17, 6-19, 6-41, 6-43
2561208-0000	.TOOL	6-65
2561609-0000	.BRACKET	6-17, 6-19
2561613-0000	.SPACER	6-21
2561620-0000	.COVER	6-27
2561622-0000	.COVER	6-27
2561625-0000	.PLATE	6-27
2562321-0000	.DOLLY	1-75, 1-85, 1-251
2562468-0000	.BRACKET	6-35
2565736-0000	.RESERVOIR	3-33, 3-35
2568779-0000	.DIAGRAM	3-3, 3-5
2569876-0000	.BRACKET	1-99
2569877-0000	.DOLLY	1-99
2569878-0000	.DOLLY	1-97
2570391-0000	.PIPE	3-33, 3-35
2570395-0000	.PIPE	1-245
2570396-0000	.PIPE	1-245
2570398-0000	.PIPE HOLDER	1-245
2570399-0100	.PIPE WORK	1-3, 1-5
2570400-0000	.ROD	1-141, 1-143
2570401-0000	.ROD	1-141, 1-143
2574348-0000	.VALVE BRACKET	3-33, 3-35
2574384-0000	.BRACKET	1-65
2574385-0000	.PIN	1-75, 1-81, 1-83, 1-91, 1-97, 1-99
2574386-0100	.HOLDING DEVICE	1-61, 1-77, 1-79, 1-87, 1-89
2574388-0000	.SLIDE	1-15
2574396-0000	.HOOK	1-243
2574397-0000	.BRACKET	1-243
2574398-0000	.BRACKET	1-243
2575480-0000	.HOLDER	1-141, 1-143
2575482-0000	.PIN	1-141, 1-143
2575484-0000	.HOLDER	1-141, 1-143
2576239-0000	.HOLDER	1-141, 1-143
2576240-0100	.STRIP GUIDE	1-129, 1-131
2576243-0100	.STRIP GUIDE	1-129, 1-131
2582040-0100	.COOLING AIR INTAKE	4-55
2587250-0000	.ARM	2-23, 2-25, 2-33, 2-35
2588000-0000	.BRACKET	1-195, 1-197, 1-199, 1-201
2588001-0000	.AXLE PIN	1-195, 1-197, 1-199, 1-201
2589838-0300	.COVER	6-9
2589951-0200	.PACKING DESCRIPTION	6-63
2589952-0000	.LABEL	6-65

Part No	Description	Page No
2589953-0000	.INSTRUCTION	6-65
2589955-0000	.CORRUGATED CARDBOARD BOX	6-65
2590040-0100	.RAILING KIT	6-9
2590044-0000	.PLATE	6-17, 6-19
2590045-0000	.PLATE	6-17, 6-19
2590046-0000	.PLATE	6-17, 6-19
2590047-0000	.BRACKET	6-17, 6-19
2590048-0100	.OPERATION DEVICE	6-9
2590049-0000	.PLATE	6-29
2590050-0300	.BELT BRAKE	6-7
2590051-0000	.PIPE	6-11
2590053-0000	.CONNECTION BOX	6-33
2590054-0100	.CONNECTION BOX	6-9
2590181-0000	.RIVET	6-65
2590258-0100	.PACKING DESCRIPTION	6-9
2590259-0000	.CORRUGATED CARDBOARD BOX	6-31
2590260-0000	.CORRUGATED CARDBOARD BOX	6-31
2590261-0000	.FILLING	6-31
2590266-0000	.PIN	6-21
2590275-0000	.COVER	6-17, 6-19
2592560-0200	.WASTE BOX	1-3, 1-5
2592562-0000	.AXLE PIN	1-123
2592563-0000	.BRACKET	1-121
2592564-0000	.BRACKET	1-19, 1-21, 1-23, 1-25
2592565-0000	.PHOTOCELL BRACKET	1-19, 1-21, 1-23, 1-25
2592566-0000	.HOLDER	1-19, 1-21, 1-23, 1-25
2592780-0000	.DOLLY	2-5, 2-63
2594264-0000	.PIPE	1-245
2597096-0000	.CONNECTION BOX	2-21
2597097-0100	.CONNECTION BOX	2-7, 2-9
2597171-0000	.RAIL	2-21
2598217-0000	.RAILING	2-7, 2-9
2602664-0000	.CABLE DUCT	2-15, 2-17
2603013-0000	.BOX	1-243
2603016-0000	.BRACKET	1-133
2609928-0000	.SHAFT	1-67, 1-69
2609929-0000	.SHAFT	1-67, 1-69
2609930-0000	.LEVER	1-67, 1-69
2609931-0000	.LEVER	1-67, 1-69
2609932-0000	.FORK	1-67, 1-69
2609933-0000	.SPACER	1-67, 1-69
2609934-0000	.SPACER	1-67, 1-69
2609935-0000	.PLATE	1-67, 1-69
2609936-0000	.BRACKET	1-67, 1-69
2609937-0000	.WASHER	1-67, 1-69
2609940-0000	.FRAME	1-67, 1-69
2609945-0000	.PLATE	1-151
2609946-0000	.COVER	1-151
2610781-0100	.LEVEL RELAYS RAIL	3-17
2610782-0100	.INTERNAL DOOR TERMOREGULATORS	3-17
2610783-0001	.MODIFICATION DRAWING	3-23
2610784-0100	.PLC RACK 3	3-17
2610785-0100	.PLC RACK 1	3-17
2610792-0100	.TOWER CABLE INLETS	3-3, 3-5
2611466-0000	.COVER	1-217, 1-219
2613035-0000	.SUPPORT	3-3, 3-5
2613780-0000	.ROLL	1-163, 1-165
2613781-0000	.AXLE PIN	1-163, 1-165
2614876-0000	.LINEAR UNIT	1-13, 1-161
2615470-0000	.COVER	1-67, 1-69
2615471-0000	.PLATE	1-213
2615472-0000	.HOLDER	1-213
2615473-0000	.BRACKET	1-213
2618993-0100	.STRIP SPLICE DETECTOR	1-3, 1-5
2623674-0100	.CONNECTION BOX	3-33, 3-35
2633445-0000	.HOLDER	1-163, 1-165
2637715-0100	.EARTH BAR X008	3-17
2637726-0100	.EL. CABINET	3-3, 3-5
2638046-0100	.ELECTRICAL MATERIALS	3-17
2640136-0100	.SOFTWARE	3-11
2640964-0001	.PROGRAMME	3-13
2640964-1001	.PROGRAM OBJECT CODE	3-15
2640965-0001	.LABEL DISKETTE	3-15
2655635-0000	.CLAMP	1-81, 1-83
2656374-0086	.ROLLER CHAIN	6-9
2656425-0000	.PLATE	6-23, 6-25
2656426-0000	.PLATE	6-23, 6-25
2656670-0000	.LINK	6-63
2656671-0000	.RIVET	6-63
2656679-0000	.WHEEL	6-53
2660748-0000	.KEY	1-47, 1-49
2677792-0000	.STRIPPER PIN	1-67, 1-69
2680070-0000	.HEATING RAIL	1-73
2699025-0000	.SHAFT	1-67, 1-69

Part No	Description	Page No
2699436-0000	.SPACER	6-13
2699437-0000	.RAIL HOLDER	6-13
2699603-0000	.PLATE	6-49, 6-51
2699607-0000	.HOLDER	6-49, 6-51
2699610-0000	.HOLDER	6-49, 6-51
2738222-0000	.BRUSH	6-41
2745185-0000	.VALVE	4-47
2763303-0000	.STRIP	6-49, 6-51
2763557-0200	.BRACKET	6-7
2763628-0000	.BRACKET	6-35
2769986-0000	.BRACKET	1-217, 1-219
2773925-0000	.LEG	4-13
2773926-0100	.LEG	4-11
2773927-0000	.CONNECTION BOX	2-53, 2-55
2774506-0200	.VALVE GROUP	2-79
2774507-0200	.AIR INLET	2-79
2781021-0000	.LEG	2-19
2781217-0000	.LEG	2-19
2781219-0100	.LEG	2-7, 2-9
2787436-0000	.SHAFT	6-41
2787437-0000	.SHAFT	6-41
2787438-0000	.BRACKET	6-47
2787439-0000	.HOLDER	6-47
2787441-0000	.SPACER	6-47
2787442-0000	.SPROCKET	6-45
2787445-0000	.RAIL	6-49, 6-51
2787446-0000	.RAIL	6-49, 6-51
2787447-0000	.GUIDE	6-41
2787449-0100	.DRIVE WHEEL	6-41
2788125-0000	.CYLINDER BRACKET	2-29, 2-41
2796006-0000	.SHAFT	6-45
2796007-0000	.WHEEL	6-45
2796008-0100	.WHEEL	6-41
2796009-0000	.SHAFT	6-53, 6-55
2796010-0000	.WHEEL	6-55
2796011-0000	.SPACER	6-53, 6-55
2796012-0000	.PLATE	6-45
2796013-0100	.CONVEYOR BODY	6-41
2796015-0100	.WHEEL	6-41
2797437-0000	.SLIDING STRIP	6-43
2797438-0000	.SIDE PLATE	6-43
2797501-0000	.SIDE PLATE	6-43
2798025-0000	.PLATE	6-45
2800352-0000	.CABINET	3-33, 3-35
2800353-0000	.COVER	3-33, 3-35
2810422-0000	.BRACKET	1-153, 1-155
2810423-0000	.BRACKET	1-153, 1-155
2810424-0000	.BRACKET	1-17
2810425-0000	.AXLE PIN	1-17
2810426-0000	.BRACKET	1-17
2810427-0000	.BRACKET	1-17
2810567-0000	.SLIDING STRIP	6-43
2810603-0100	.HOLDER	6-41
2810988-0000	.FRAME	1-19, 1-21, 1-23, 1-25
2810989-0000	.COVER	1-217, 1-219
2810991-0000	.HINGE	1-77, 1-79, 1-87, 1-89
2813989-0000	.SPACER	1-93, 1-95
2813990-0000	.SPACER	1-87, 1-89
2813991-0000	.SPACER	1-77, 1-79
2813992-0000	.SPACER	1-87, 1-89
2813994-0000	.MOUNTING SHEET	1-47, 1-49
2813995-0000	.SPACER	1-73, 1-101, 1-103
2813997-0100	.COUNTER JAW	1-71
2813998-0000	.SPACER	1-71
2814874-0100	.SILENCER	4-37, 4-39
2814877-0000	.VALVE BODY	3-43
2815754-0200	.CREASE UNIT	2-45
2815755-0000	.STOP	1-13, 1-161
2815757-0000	.PLATE	1-13, 1-161
2815758-0000	.SPACER	1-13, 1-161
2815759-0000	.BRACKET	6-41
2816489-0100	.BENDING ROLLER OUTER PATCH	1-3, 1-5
2816490-0000	.ROLLER	1-163, 1-165
2816491-0000	.ROLLER	1-163, 1-165
2816492-0000	.BRACKET	1-17
2816493-0000	.BRACKET	1-17
2816494-0000	.WASHER	1-47, 1-49
2826441-0000	.SEAL RING	4-25
2826639-0000	.PANEL	4-17
2828676-0000	.SPACER	1-77, 1-79
2829605-0000	.BRACKET	6-41
2829692-0000	.BRACKET	6-41
2829694-0000	.BRACKET	6-41
2829696-0000	.BRACKET	6-41

Part No	Description	Page No
2829697-0000	.BRACKET	6-41
2829698-0000	.BEARING HOUSING	6-45
2829706-0100	.RAILING	6-41
2829715-0000	.WASHER	6-45
2831583-0101	.REBUILDING MANUAL	3-3, 3-5
2831675-0000	.BRACKET	2-61
2832786-0200	.SILENCER	2-79
2832787-0000	.PLATE	4-23
2833037-0000	.SEAL RING	4-25
2839810-0000	.BRACKET	1-141, 1-143
2846026-0000	.FRAME	4-17
2846027-0000	.CLAMP LUG	4-17
2846028-0000	.HATCH	4-19
2846029-0100	.HATCH	4-17
2848876-0000	.HEATING RAIL	1-101, 1-103
2850445-0000	.GUIDE WHEEL	1-141, 1-143
2854654-0000	.COVER	1-19, 1-21, 1-23, 1-25
2854828-0100	.PLATFORM	4-5
2854830-0000	.CHECKER PLATE	4-9
2854831-0000	.PLATFORM	4-11
2854832-0000	.CHECKER PLATE	4-9
2854833-0000	.CHECKER PLATE	4-9
2859497-0000	.SET OF SIGNS	6-9
2862606-0000	.SPACER	6-9
2862607-0000	.SHAFT	6-23, 6-25
2871576-0100	.ULTRASOUND UNIT	1-3, 1-5
2871742-0000	.BRACKET	1-151
2871743-0000	.BRACKET	1-151
2873064-0000	.BRACKET	3-33, 3-35
2879186-0000	.PIPE	4-45
2879189-0000	.PIPE	4-45
2879197-0000	.PIPE	4-45
2879200-0200	.HIGH VISCOSITY ASEPTIC HVA	4-3
2879201-0000	.DIAGRAM AIR/WATER	4-19
2879204-0000	.STEAM DISTRIBUTOR	4-31
2879205-0000	.WASTE BOX	4-31
2879207-0000	.STEAM PIPE	4-31
2879208-0000	.STEAM PIPE	4-31
2879209-0000	.STEAM PIPE	4-29
2879210-0100	.VALVE GROUP	4-37, 4-39
2879211-0000	.LEAD-IN PLATE	4-31
2879212-0000	.WASTE PIPE	4-31
2879213-0000	.STEAM PIPE	4-31
2879214-0000	.STEAM PIPE	4-31
2879215-0000	.WASTE PIPE	4-29
2879216-0000	.STEAM PIPE	4-29
2879217-0000	.STEAM PIPE	4-29
2879218-0000	.STEAM PIPE	4-29
2879219-0000	.WASTE PIPE	4-29
2879221-0000	.TOUCH GUARD	4-29
2879222-0000	.PIPE	4-29
2879223-0000	.PIPE	4-29
2879224-0000	.STEAM PIPE	4-29
2879225-0100	.PRESSURE GAUGE	4-29
2879226-0000	.PIPE	4-45
2879227-0000	.PIPE	4-45
2879228-0000	.PIPE	4-45
2879229-0100	.STEAM UNIT	4-29
2879230-0100	.STEAM UNIT	4-29
2879231-0000	.PANEL	4-17
2879232-0000	.PIPE	4-45
2879233-0000	.PIPE	4-45
2887591-0000	.GAUGE BRACKET	4-33
2887593-0000	.VALVE PLATE	4-37, 4-39
2887594-0000	.SUPPORT	4-21
2887598-0000	.BRACKET	4-17
2893294-0100	.CHECKER PLATE	4-7
2893295-0000	.TOE PLATE	4-7
2893296-0000	.TOE PLATE	4-7
2893297-0000	.RAILING	4-15
2893298-0100	.PLATFORM	4-7
2893299-0000	.COLUMN	4-11
2893300-0000	.COLUMN	4-11
2893301-0100	.RAILING	4-7
2898126-0100	.ELECTRICAL CABINET	4-53
2898127-0000	.EL-CABINET CHASSIE	4-55
2898128-0000	.EL-CABINET DOOR	4-55
2898129-0100	.ASSEMBLY PLATE	4-63
2898132-0000	.MOUNTING PLATE	4-65
2898184-0000	.VALVE BODY	4-23
2898185-0000	.SUPPORT	4-23
2898186-0000	.PIPE	4-81
2898187-0000	.PIPE	4-81
2898188-0100	.TERMINAL BLOCK	4-63

Part No	Description	Page No
2898189-0000	.CABLE DUCT	4-79
2898190-0000	.BLANK NUT	4-23
2898191-0100	.TERMINAL BLOCK	4-63
2898192-0100	.PRODUCT PIPES	4-5
2898193-0000	.PRODUCT PIPE	4-81
2898194-0000	.PIPE	4-81
2898195-0000	.PIPE	4-81
2898200-0100	.A-CYLINDER	4-23
2898201-0100	.TERMINAL BLOCK	4-63
2898202-0100	.TERMINAL BLOCK	4-63
2898203-0000	.VALVE CONE	4-25
2901823-0000	.CABLE DUCT	4-79
2901827-0000	.COVERING PLATE	4-79
2901830-0100	.CABLE DUCT	4-53
2901831-0100	.ELECTRICAL CABINET	4-5
2901832-0000	.COVER	4-79
2902950-0100	.CABLE LEAD-IN PLATE	4-55
2902951-0000	.CABLE LEAD-IN PLATE	4-61
2902952-0000	.GASKET	4-61
2902954-0100	.ASSEMBLY PLATE	4-53
2903587-0000	.END SECTION	1-15
2903588-0000	.WEIGHT	1-15
2903589-0100	.MAGAZINE	1-7, 1-9
2903590-0100	.MAGAZINE	1-157, 1-159
2903591-0100	.BRAKE	1-7, 1-9, 1-157, 1-159
2905923-0000	.PIPE	4-45
2905924-0000	.PIPE	4-45
2905925-0000	.PIPE	4-45
2905926-0000	.BRACKET	4-45
2905927-0000	.PIPE	4-45
2905928-0000	.PIPE	4-45
2905929-0000	.PIPE	4-45
2905931-0000	.PIPE	4-45
2905932-0000	.PIPE	4-45
2905933-0000	.PIPE	4-45
2905934-0000	.PIPE	4-45
2905935-0000	.PIPE	4-45
2905936-0000	.PIPE	4-45
2905941-0000	.CLEANING PIPE	4-47
2905942-0000	.CLEANING PIPE	4-47
2905943-0000	.CLEANING PIPE	4-47
2905944-0000	.BRACKET	4-47
2905946-0000	.REDUCING NIPPLE	4-47
2910398-0000	.PROTECTION	4-21
2913542-0000	.PANEL	4-17
2913722-0000	.BRACKET	4-21
2913723-0000	.BRACKET	4-21
2913729-0000	.BLOCK	4-37, 4-39
2913731-0000	.PIPE	4-45
2913733-0000	.TOUCH GUARD	4-51
2913734-0000	.CLAMPING PART	4-51
2914108-0000	.SIGN	4-55
2914121-0000	.BRACKET	4-51
2914125-0000	.STEAM PIPE	4-29
2914127-0000	.COVER	4-51
2914844-0000	.TOUCH GUARD	4-51
2915061-0000	.STEAM PIPE	4-29
2915062-0000	.STEAM PIPE	4-29
2915063-0000	.STEAM PIPE	4-35
2915064-0000	.BRACKET	4-33
2919239-0200	.TOUCH GUARD	4-5
2919240-0000	.FRAME	4-51
2919241-0000	.COVER	4-51
2919243-0000	.COVER	4-51
2919244-0000	.COVER	4-51
2919245-0000	.COVER	4-51
2919246-0000	.COVER	4-51
2919247-0000	.COVER	4-51
2919248-0000	.COVER	4-51
2919249-0000	.COVER	4-51
2919250-0000	.COVER	4-51
2919251-0000	.TOUCH GUARD	4-51
2919252-0000	.TOUCH GUARD	4-51
2921891-0000	.COUPLING BOLT	2-63
2924202-0000	.CABLE CONDUIT	4-17
2924203-0000	.PLATE	4-75, 4-77
2924205-0000	.BLANK NUT	4-21
2924214-0000	.SUPPORT	4-35
2925074-0000	.BRACKET	4-21
2934966-0000	.LABEL TAPE	6-65
2944456-0000	.BRACKET	4-47
2944458-0000	.PIPE	4-45
2944459-0000	.BRACKET	2-69
2971535-0000	.PLATE	5-3

Part No	Description	Page No
2982048-0000	.HOLDER	6-41
2982049-0000	.HOLDER	6-41
2982050-0000	.COVER	6-41
2982051-0000	.HOLDER	1-117
2982064-0000	.METALCUP	2-45
2983240-0000	.CABLE DUCT	5-3
2983241-0000	.PIPE	5-3
3002543-0000	.CORRUGATED CARDBOARD BOX	6-59, 6-61
3004384-0000	.BEAM	6-35
3004385-0000	.BLOCK	6-35
3004386-0000	.SUPPORT	6-35
3004387-0000	.BLOCK	6-35
3004388-0000	.CLAMPING PIECE	6-35
3004389-0000	.REDUCER	6-35
3006055-0000	.DISTANCE	5-3
3017331-0100	.INFEED UNIT	2-3
3017332-0000	.SHAFT	2-49
3017340-0100	.BOX	1-239
3017341-0000	.BOX	1-239
3017342-0000	.COVER	1-233
3017343-0000	.GLASS PANE	1-233
3017344-0100	.COVER	1-217, 1-219
3017345-0000	.PLATE	1-167, 1-169
3017346-0000	.PLATE	1-19, 1-21, 1-23, 1-25
3017347-0000	.COVER	1-19, 1-21, 1-23, 1-25
3017348-0000	.COVER	1-217, 1-219
3017349-0000	.PROTECTION	1-217, 1-219
3017351-0000	.BRACKET	1-203
3017352-0000	.MOUNTING PLATE	1-195, 1-197, 1-199, 1-201
3017353-0000	.DOOR	1-203
3017354-0000	.DOOR	1-203
3017355-0000	.BRACKET	1-167, 1-169
3017356-0000	.DOOR	1-145
3017357-0000	.GLASS PANE	1-145
3017358-0000	.HANDLE	1-145, 1-217, 1-219
3017359-0000	.HATCH	1-147
3017360-0100	.COVER	1-145
3017361-0000	.SCREW	1-147
3017362-0000	.PLATE	1-105, 1-107
3017363-0000	.DOOR	1-217, 1-219
3017365-0000	.DOOR	1-217, 1-219
3017366-0100	.HATCH	1-217, 1-219
3017367-0000	.HATCH	1-231
3017368-0000	.BRACKET	1-229, 1-231
3017369-0000	.BARRIER ARM	1-229, 1-231
3017370-0000	.SPACER	1-229, 1-231
3017380-0000	.BRACKET	2-7, 2-9
3017381-0000	.BRACKET	2-91, 2-93
3017382-0000	.LEFT BACKDOOR	2-95
3017383-0000	.RIGHT BACKDOOR	2-99
3017384-0000	.BRACKET	2-7, 2-9, 2-47
3017385-0000	.COVER	2-97
3017386-0000	.PUSH BUTTON BOX	2-97
3017387-0000	.PLATE	2-79
3017388-0000	.BRACKET	2-81
3017389-0000	.SEPARATION BLOCK	2-85
3017391-0000	.PLATE	2-7, 2-9
3017393-0000	.RIGHT SIDEDOOR	2-93
3017394-0000	.PLATE	1-241
3017395-0000	.PLATE	1-241
3017396-0000	.PLATE	1-241
3017397-0000	.PLATE	2-93
3017398-0000	.COVER	1-19, 1-21, 1-23, 1-25
3017399-0000	.COVER	1-19, 1-21, 1-23, 1-25
3017400-0100	.DOOR SAFETY SWITCH	1-217, 1-219
3017401-0000	.ANGLE BRACKET	1-235
3017402-0000	.ANGLE BRACKET	1-235
3017403-0000	.SPACER	2-31, 2-39
3017404-0000	.SPACER	2-31, 2-39
3017405-0000	.BRACKET	2-23, 2-25, 2-33, 2-35
3017406-0000	.REFLECTOR	2-33, 2-35
3017407-0000	.REFLECTOR	2-23, 2-25
3017408-0000	.COVER	2-47
3017409-0000	.WASHER	2-47
3017410-0000	.LOCK PLATE	2-7, 2-9
3017411-0000	.PLATE	2-79
3017414-0000	.COVER	1-19, 1-21, 1-23, 1-25
3017415-0100	.WASTE BOX	1-237
3017416-0100	.WASTE BOX	1-237
3017417-0100	.HATCH	1-217, 1-219
3017418-0000	.HATCH	1-229
3017419-0000	.SHAFT	2-49
3017421-0000	.CROSS BAR	1-241
3019347-0000	.PLATE	6-23, 6-25

Machine Type Group Description Page No

Tetra Pak

SPC
Spare Parts Catalogue

Part No	Description	Page No
90062-0031	"LOCK WASHER 8,2X12,8; T=2 DIN 7980"	1-105, 1-107
90459-1920	"NON-RETURN VALVE, G1/8""""	1-65
2898200-0100 ..	A-CYLINDER	4-23
3046772-0100 ..	ACCESSORIES	6-3, 6-5
3046773-0100 ..	ACCESSORIES	6-3, 6-5
90600-0491	ACTUATOR, 9650-0089-Z-I-OTI	3-43
90600-3198	ACTUATOR, NC, 9550 10Z 510G1	4-31
90600-3199	ACTUATOR, NO, 9550 10Z 520G1	4-31
342800-1202 ..	ACTUATOR, SS, N.C. SEAT S. 10	4-23
342800-1302 ..	ACTUATOR, SS, N.O. SEAT S. 10	4-23
351305-0020 ..	ACTUATOR/SENSOR CABLE PRKMV 4-07/2M	6-9
351305-0050 ..	ACTUATOR/SENSOR CABLE PRKMV 4-07/5M	6-41
90153-0043	ADHESIVE, LOCTITE 495 20G	3-3, 3-5, 3-33, 3-35
342738-0221 ..	ADJUSTABLE ELBOW CONNECTION 15-G1/2	1-167, 1-169
979589-0000 ..	ADJUSTING NUT	1-19, 1-21, 1-23, 1-25
1517753-0000 .	ADJUSTING NUT	1-119
979588-0000 ..	ADJUSTING PLATE	1-19, 1-21, 1-23, 1-25
979564-0000 ..	ADJUSTING SCREW	1-19, 1-21, 1-23, 1-25
979565-0000 ..	ADJUSTING SCREW	1-19, 1-21, 1-23, 1-25
1035893-0000 .	ADJUSTING SCREW	1-141, 1-143
581947-0400 ..	AIR INLET	1-167, 1-169
2774507-0200 .	AIR INLET	2-79
90600-8708	AIR KNIFE, LL40100	6-35
2546445-0000 .	AIR PIPE	3-3, 3-5
2546471-0000 .	AIR PIPE	3-3, 3-5
1367022-0000 .	ALIGNMENT SCREW	2-7, 2-9
352113-0206 ..	ANCHOR PLATES FOR STRIPS, ABM100-AT	1-19, 1-21, 1-23, 1-25, 1-195, 1-197, 1-199, 1-201
352113-0205 ..	ANCHOR PLATES FOR STRIPS, TM2S8-C100	1-129, 1-131, 1-191, 2-15, 2-17, 2-73, 4-17, 6-9
352113-0203 ..	ANCHOR PLATES FOR STRIPS, TM3S8-M0	1-151, 2-15, 2-17
321330-0100 ..	ANG. BALL BEAR 10/30X14	1-119
1490220-0000 .	ANGLE BRACKET	2-73
1498442-0000 .	ANGLE BRACKET	2-43
1558799-0000 .	ANGLE BRACKET	2-7, 2-9
1558886-0000 .	ANGLE BRACKET	2-43
3017401-0000 .	ANGLE BRACKET	1-235
3017402-0000 .	ANGLE BRACKET	1-235
1490821-0000 .	ANGLE PIECE	2-23, 2-25, 2-33, 2-35
2538071-0000 .	ANGLE PIECE	2-23, 2-25, 2-33, 2-35
580055-0000 ..	ARM	1-185
583687-0000 ..	ARM	1-105, 1-107, 1-117, 1-123
583700-0000 ..	ARM	1-209, 1-211
979667-0000 ..	ARM	1-195, 1-197, 1-199, 1-201
979994-0000 ..	ARM	1-187
1260678-0000 .	ARM	1-187
1317382-0000 .	ARM	1-105, 1-107
1334124-0000 .	ARM	1-215
1490809-0000 .	ARM	2-27, 2-37
1490810-0000 .	ARM	2-27, 2-37
1499577-0000 .	ARM	2-33, 2-35
1511575-0000 .	ARM	2-23, 2-25
1549432-0000 .	ARM	1-15
2587250-0000 .	ARM	2-23, 2-25, 2-33, 2-35
90217-0204	ASEPT. MALE FITTING ISO, 03-32-406/42	4-47
90217-0207	ASEPT. MALE FITTING ISO, 03-32-456/42	4-23
2898129-0100 .	ASSEMBLY PLATE	4-63
2902954-0100 .	ASSEMBLY PLATE	4-53
1484737-0000 .	AXLE	2-13
1490812-0000 .	AXLE	2-27, 2-37
1260966-0000 .	AXLE BOLT	1-17
1494664-0000 .	AXLE LINK	2-73
533237-0000 ..	AXLE PIN	6-21
536917-0000 ..	AXLE PIN	1-187
544726-0000 ..	AXLE PIN	1-187
582460-0000 ..	AXLE PIN	1-163, 1-165
979576-0000 ..	AXLE PIN	1-185
979578-0000 ..	AXLE PIN	1-185
979638-0000 ..	AXLE PIN	1-109, 1-113
1282989-0000 .	AXLE PIN	1-129, 1-131
1484734-0003 .	AXLE PIN	2-45
1498758-0000 .	AXLE PIN	1-181
1498762-0000 .	AXLE PIN	1-195, 1-197, 1-199, 1-201
1498765-0000 .	AXLE PIN	1-129, 1-131
1499582-0000 .	AXLE PIN	2-23, 2-25, 2-33, 2-35
1519597-0000 .	AXLE PIN	2-77
1549440-0000 .	AXLE PIN	1-7, 1-9, 1-157, 1-159
2524475-0000 .	AXLE PIN	1-117
2524601-0000 .	AXLE PIN	2-65
2547217-0000 .	AXLE PIN	1-195, 1-197, 1-199, 1-201
2547218-0000 .	AXLE PIN	1-195, 1-197, 1-199, 1-201
2547219-0000 .	AXLE PIN	1-195, 1-197, 1-199, 1-201
2552631-0000 .	AXLE PIN	1-121, 1-133
2555492-0000 .	AXLE PIN	1-153, 1-155
2588001-0000 .	AXLE PIN	1-195, 1-197, 1-199, 1-201
2592562-0000 .	AXLE PIN	1-123

Part No	Description	Page No
2613781-0000	AXLE PIN	1-163, 1-165
2810425-0000	AXLE PIN	1-17
1296785-0000	AXLE PINAXLE PIN	1-17, 1-81, 1-83, 1-153, 1-155
583684-0000	AXLE SUPPORT	1-39, 1-41, 1-125
90003-0018	BAG	6-65
90003-0019	BAG	6-39, 6-59, 6-61
321308-0200	BALL BEARING 10/26X8	1-119, 1-215
321309-0100	BALL BEARING 10/30X9	1-11
321313-0100	BALL BEARING 10/30X9	1-139, 1-215, 2-61
90214-0112	BALL BEARING 12/24X6	6-45
321309-0101	BALL BEARING 12/32X10	1-11
321313-0101	BALL BEARING 12/32X10	2-45
90214-0207	BALL BEARING 15/32X9	1-183
321308-0202	BALL BEARING 15/32X9	1-109, 1-111, 1-113, 1-115, 2-45
321309-0102	BALL BEARING 15/35X11	2-45
321313-0102	BALL BEARING 15/35X11	1-39, 1-41, 1-125, 2-23, 2-25, 2-33, 2-35, 2-43, 2-45, 2-77
1550348-0001	BALL BEARING 17/35X10	6-21, 6-23, 6-25
321313-0103	BALL BEARING 17/40X12	1-109, 1-113
321313-0104	BALL BEARING 20/47X14	1-105, 1-107
321308-0205	BALL BEARING 25/47X12	2-65
90214-0138	BALL BEARING 5/19X6	1-43, 1-45, 1-129, 1-131
90214-0098	BALL BEARING, 15X35X11 MM	2-45
90189-0005	BALL BUSHING, 30X47X68 MM	2-59
90600-3779	BALL VALVE, LOCKABLE G1/2	4-35
342980-0111	BANJO-CONNECTION,RING 6/4-M5	1-47, 1-49
342980-0303	BANJO-HOLLOW BOLT COUPL,EXT.THR.01-G1/8	4-45
342980-0301	BANJO-HOLLOW BOLT COUPL.,EXT.THREA.01-M5	1-47, 1-49
1499024-0000	BAR	1-139
1539304-0000	BAR	2-45
2529611-0000	BAR	1-149
2557584-0000	BAR	1-217, 1-219
2557586-0000	BAR	1-217, 1-219
1524387-0100	BAR CODE READER	2-59
272728-0000	BARRIER	2-13
3017369-0000	BARRIER ARM	1-229, 1-231
90110-0370	BASE HOUSING, HDC-HA-3-SVL1/11	1-27, 1-29
90129-0006	BASE, S3-B	4-67, 4-71, 4-73
90031-0052	BASEPLATE, 5-SLOT	4-65
90458-1204	BASIC SUB-BASE 4 VALVES, CDVI5.0-GB4-MP	1-173, 1-175, 2-81
90458-1205	BASIC SUB-BASE 8 VALVES, CDVI5.0-GB8-MP	4-41
3004384-0000	BEAM	6-35
1488005-0000	BEARING BLOCK	2-7, 2-9
321141-0140	BEARING BUSH W/O FLANGE, 10X12X10 MM	1-73, 1-81, 1-83, 1-101, 1-103, 1-139
321120-0098	BEARING BUSH W/O FLANGE, 10X12X8 MM	2-73
321120-0109	BEARING BUSH W/O FLANGE, 12X14X10 MM	2-23, 2-25, 2-33, 2-35
321141-0183	BEARING BUSH W/O FLANGE, 12X14X15 MM	1-43, 1-45, 1-129, 1-131
321141-0193	BEARING BUSH W/O FLANGE, 12X14X25 MM	1-187
321120-0123	BEARING BUSH W/O FLANGE, 16X18X12 MM	2-23, 2-25, 2-33, 2-35
321141-0064	BEARING BUSH W/O FLANGE, 6X8X10 MM	1-7, 1-9, 1-73, 1-81, 1-83, 1-101, 1-103, 1-157, 1-159, 1-163, 1-165
321141-0060	BEARING BUSH W/O FLANGE, 6X8X6 MM	1-73, 1-81, 1-83, 1-101, 1-103
321120-0100	BEARING BUSH W/O FLANGE, 8X10X12 MM	2-23, 2-25, 2-33, 2-35
2829698-0000	BEARING HOUSING	6-45
583685-0000	BEARING SEAT	1-39, 1-41
1517070-0000	BEARING SEAT	1-119
925419-0100	BED	4-3
925765-0000	BED	4-83
90342-0013	BELLOWS	1-185
1359776-0000	BELT	6-23, 6-25
979990-0000	BELT BRAKE	1-187
2590050-0300	BELT BRAKE	6-7
1550977-0300	BELT UNIT	6-9
1550997-0300	BELT UNIT	6-9
574932-0000	BENDING ROLLER	1-41, 1-125
752542-0001	BENDING ROLLER	2-45
979549-0100	BENDING ROLLER	1-19, 1-21, 1-23, 1-25
979661-0200	BENDING ROLLER	1-123
979890-0100	BENDING ROLLER	1-19, 1-21, 1-23, 1-25
1282621-0000	BENDING ROLLER	2-43
1490825-0000	BENDING ROLLER	2-45
1499588-0000	BENDING ROLLER	2-23, 2-25, 2-33, 2-35
1519584-0000	BENDING ROLLER	2-77
2519569-0000	BENDING ROLLER	2-45
2816489-0100	BENDING ROLLER OUTER PATCH	1-3, 1-5
581938-0200	BENDING ROLLER PATCH	1-3, 1-5
581942-0200	BENDING ROLLER TAB	1-3, 1-5
90243-0169	BINDER CLIP, DIAM.29 MM, NO. 4670819	4-19
2898190-0000	BLANK NUT	4-23
2924205-0000	BLANK NUT	4-21
90002-0018	BLANK-OFF PLUG, PR 12,5 SKINDICHT-BLK7	3-39, 3-41
90002-0013	BLANK-OFF PLUG, PR 15,2 SKINDICHT-BLK9	2-53, 2-55
90002-0009	BLANK-OFF PLUG, PR 18.6 SKINDICHT-BLK11	2-53, 2-55
90002-0010	BLANK-OFF PLUG, PR 37 SKINDICHT-BLK29	2-7, 2-9
978380-0000	BLIND PLUG	3-47

Part No	Description	Page No
90458-1306	BLIND PLUG CIRCULAR, M12X1,5 514GFK/212	1-205, 1-207
90458-1307	BLIND PLUG CIRCULAR, M16X1,5 514GFK/216	1-31, 1-33, 1-35, 1-37, 1-205, 1-207, 6-15
90458-1309	BLIND PLUG CIRCULAR, M25X1,5 514GFK/225	1-31, 1-33, 1-35, 1-37, 4-53, 4-61
979991-0000 ..	BLOCK	1-187
1550960-0000 .	BLOCK	6-21
2913729-0000 .	BLOCK	4-37, 4-39
3004385-0000 .	BLOCK	6-35
3004387-0000 .	BLOCK	6-35
582488-0000 ..	BLOCKING PIECE	1-75, 1-85
582489-0000 ..	BLOCKING PIECE	1-97, 1-99
1035794-0000 .	BLOCKING PIECE	1-7, 1-9, 1-157, 1-159, 1-167, 1-169, 1-195, 1-197, 1-199, 1-201, 1-217, 1-219
1129770-0000 .	BLOCKING PIECE	1-145, 2-91, 2-93, 2-95, 2-99
2529621-0000 .	BLOCKING PIECE	1-217, 1-219, 1-229, 1-231
1549420-0100 .	BOBBIN HOLDER	1-7, 1-9, 1-157, 1-159
1549422-0000 .	BOBBIN HOLDER	1-11
905215-0000 ..	BOLT	1-73, 1-81, 1-83, 1-101, 1-103
315217-0111 ..	BONDED SEAL SS/VITON G1/2	4-33
90459-1948	BONDED SEAL SS/VITON G1/4	4-33
1334255-0000 .	BOW CLAMP	1-215
1517071-0000 .	BOW CLAMP	1-119
1524386-0100 .	BOW CLAMP	2-59
2603013-0000 .	BOX	1-243
3017340-0100 .	BOX	1-239
3017341-0000 .	BOX	1-239
1498775-0000 .	BOX BRACKET	1-195, 1-197, 1-199, 1-201
2552624-0000 .	BOX BRACKET	1-195, 1-197, 1-199, 1-201
263150-0000 ..	BRACKET	1-111
560931-0000 ..	BRACKET	3-33, 3-35
582440-0000 ..	BRACKET	1-73, 1-81, 1-83, 1-101, 1-103
582457-0000 ..	BRACKET	1-63
582486-0000 ..	BRACKET	1-85
582491-0000 ..	BRACKET	1-97
583675-0000 ..	BRACKET	1-91
589441-0000 ..	BRACKET	1-81, 1-83
977527-0000 ..	BRACKET	1-47, 1-49
979474-0000 ..	BRACKET	3-33, 3-35
979814-0000 ..	BRACKET	3-43
979899-0000 ..	BRACKET	1-43, 1-45, 1-129, 1-131
981935-0000 ..	BRACKET	1-217, 1-219
1036232-0000 .	BRACKET	2-45
1036588-0000 .	BRACKET	1-135
1074209-0000 .	BRACKET	4-43
1334118-0000 .	BRACKET	2-45
1334123-0000 .	BRACKET	1-105, 1-107
1334247-0000 .	BRACKET	1-215
1484689-0000 .	BRACKET	2-59
1484730-0000 .	BRACKET	2-7, 2-9
1484738-0000 .	BRACKET	2-45
1487511-0000 .	BRACKET	2-75
1487554-0000 .	BRACKET	2-75
1487770-0000 .	BRACKET	2-23, 2-25, 2-33, 2-35
1490199-0000 .	BRACKET	2-23, 2-25, 2-33, 2-35
1490219-0000 .	BRACKET	2-7, 2-9
1498141-0000 .	BRACKET	1-209, 1-211
1498142-0000 .	BRACKET	1-209, 1-211
1498457-0000 .	BRACKET	2-11
1499027-0000 .	BRACKET	1-139
1517098-0000 .	BRACKET	2-47
1519583-0000 .	BRACKET	2-65
1519593-0000 .	BRACKET	2-47
1519940-0000 .	BRACKET	2-43
1519941-0000 .	BRACKET	2-43
1519944-0000 .	BRACKET	2-73
1519949-0000 .	BRACKET	2-7, 2-9
1538204-0000 .	BRACKET	2-95, 2-99
1538868-0000 .	BRACKET	2-7, 2-9
1558872-0000 .	BRACKET	2-53, 2-55
1558873-0000 .	BRACKET	2-53, 2-55
2506471-0000 .	BRACKET	1-137
2506473-0000 .	BRACKET	1-137
2519630-0000 .	BRACKET	1-65
2519640-0000 .	BRACKET	1-75, 1-97, 1-99
2519641-0000 .	BRACKET	1-91
2519644-0000 .	BRACKET	1-195, 1-197, 1-199, 1-201
2523593-0000 .	BRACKET	1-117
2524369-0000 .	BRACKET	2-7, 2-9
2524478-0000 .	BRACKET	1-43, 1-45, 1-129, 1-131
2524482-0000 .	BRACKET	1-137
2524490-0000 .	BRACKET	1-149
2538075-0000 .	BRACKET	2-7, 2-9
2538076-0000 .	BRACKET	2-7, 2-9
2540727-0000 .	BRACKET	1-123
2552625-0000 .	BRACKET	1-127

Part No	Description	Page No
2552626-0000	.BRACKET	1-127
2552627-0000	.BRACKET	1-127
2555482-0000	.BRACKET	1-115
2559041-0000	.BRACKET	6-35
2561609-0000	.BRACKET	6-17, 6-19
2562468-0000	.BRACKET	6-35
2569876-0000	.BRACKET	1-99
2574384-0000	.BRACKET	1-65
2574397-0000	.BRACKET	1-243
2574398-0000	.BRACKET	1-243
2588000-0000	.BRACKET	1-195, 1-197, 1-199, 1-201
2590047-0000	.BRACKET	6-17, 6-19
2592563-0000	.BRACKET	1-121
2592564-0000	.BRACKET	1-19, 1-21, 1-23, 1-25
2603016-0000	.BRACKET	1-133
2609936-0000	.BRACKET	1-67, 1-69
2615473-0000	.BRACKET	1-213
2763557-0200	.BRACKET	6-7
2763628-0000	.BRACKET	6-35
2769986-0000	.BRACKET	1-217, 1-219
2787438-0000	.BRACKET	6-47
2810422-0000	.BRACKET	1-153, 1-155
2810423-0000	.BRACKET	1-153, 1-155
2810424-0000	.BRACKET	1-17
2810426-0000	.BRACKET	1-17
2810427-0000	.BRACKET	1-17
2815759-0000	.BRACKET	6-41
2816492-0000	.BRACKET	1-17
2816493-0000	.BRACKET	1-17
2829605-0000	.BRACKET	6-41
2829692-0000	.BRACKET	6-41
2829694-0000	.BRACKET	6-41
2829696-0000	.BRACKET	6-41
2829697-0000	.BRACKET	6-41
2831675-0000	.BRACKET	2-61
2839810-0000	.BRACKET	1-141, 1-143
2871742-0000	.BRACKET	1-151
2871743-0000	.BRACKET	1-151
2873064-0000	.BRACKET	3-33, 3-35
2887598-0000	.BRACKET	4-17
2905926-0000	.BRACKET	4-45
2905944-0000	.BRACKET	4-47
2913722-0000	.BRACKET	4-21
2913723-0000	.BRACKET	4-21
2914121-0000	.BRACKET	4-51
2915064-0000	.BRACKET	4-33
2925074-0000	.BRACKET	4-21
2944456-0000	.BRACKET	4-47
2944459-0000	.BRACKET	2-69
3017351-0000	.BRACKET	1-203
3017355-0000	.BRACKET	1-167, 1-169
3017368-0000	.BRACKET	1-229, 1-231
3017380-0000	.BRACKET	2-7, 2-9
3017381-0000	.BRACKET	2-91, 2-93
3017384-0000	.BRACKET	2-7, 2-9, 2-47
3017388-0000	.BRACKET	2-81
3017405-0000	.BRACKET	2-23, 2-25, 2-33, 2-35
3037105-0000	.BRACKET	6-17, 6-19
3042019-0000	.BRACKET	6-15
1550874-0000	.BRACKET FOR LEG PC23	6-57
90236-0041	.... BRACKET, 74504-50	3-33, 3-35
90458-2971	.... BRACKET, HR-1/4-P FOR LRP-1/4-0,7	1-167, 1-169
90459-2389	.... BRACKET, MS4-LR-WR	1-167, 1-169
90459-1859	.... BRACKET, MS6-MV	1-171, 2-83
90459-1858	.... BRACKET, MS6-WP	1-171, 2-83
90459-1213	.... BRACKET, REAR, EYE WITH AXLE 40	1-67, 1-69
2903591-0100	.BRAKE	1-7, 1-9, 1-157, 1-159
580060-0200	.. BRAKE ARM	1-177, 1-179
90459-4783	.... BREAKOUT BOARD FOR CN2, 2090-UXBB-DM15	1-105, 1-107
353034-0404	.. BRIDGE CONNECTOR Q 10 DLI	1-31, 1-33, 1-35, 1-37, 2-57, 4-71, 4-73
353034-0401	.. BRIDGE CONNECTOR Q 2 DLI	1-31, 1-33, 1-35, 1-37, 2-57
353034-0402	.. BRIDGE CONNECTOR Q 3 DLI	2-57
353034-0030	.. BRIDGE CONNECTOR WQV 2,5/10	1-205, 1-207, 2-57, 4-75, 4-77
353034-0039	.. BRIDGE CONNECTOR WQV 4/4	1-205, 1-207, 2-57
2738222-0000	.BRUSH	6-41
90457-0086	.... BULKHEAD CONNECTOR 6MM	3-3, 3-5, 4-45
90457-0141	.... BULKHEAD CONNECTOR, 8MM	4-45
401370-0000	.. BUSHING	1-185
401371-0000	.. BUSHING	1-185
401372-0000	.. BUSHING	1-185
1487787-0000	.BUSHING	2-77
2540770-0000	.BUSHING	2-77
2552629-0000	.BUSHING	1-15
321105-0185	.. BUSHING W/O FLANGE, 14/20X20 MM	1-105, 1-107, 1-117, 1-123

Part No	Description	Page No
321116-0202 ..	BUSHING W/O FLANGE, 15/19X10 MM	1-123
321105-0224 ..	BUSHING W/O FLANGE, 18/25X20 MM	1-109
321105-0253 ..	BUSHING W/O FLANGE, 25X35X25 MM	1-105, 1-107
90459-2758	BUSHING, IGLIDUR Z 12X14X15	1-67, 1-69
342701-0205 ..	BUSHING, INT/EXT, G1/2-G1/4	1-171, 2-83, 4-33
342701-0214 ..	BUSHING, INT/EXT, G1-G1/2	1-167, 1-169
342701-0206 ..	BUSHING, INT/EXT, G1/2-G3/8	4-43
90459-2216	BUSHING, INT/EXT, G1/4-G1/2	1-171, 2-83
342701-0201 ..	BUSHING, INT/EXT, G1/4-G1/8	4-23
90330-0025	BUSHING, INT/EXT. THR. R1/4-RP1/8	3-33, 3-35
359301-0488 ..	BUTTON SIGN, MATERIAL LOCKING	2-97
359301-0504 ..	BUTTON SIGN, RESET	2-97
90457-0920	BUTTON SIGN, ROTATION OF MATERIAL HOLDER	2-97
359301-0110 ..	BUTTON SIGN, SHORT STOP	1-189, 2-97
359301-0100 ..	BUTTON SIGN, SPLICING	2-97
2800352-0000 .	CABINET	3-33, 3-35
90600-3020	CABLE	4-55
1498433-0000 .	CABLE	2-71
90600-5930	CABLE C9, 20-057-15	1-19, 1-21, 1-23, 1-25, 1-171, 2-53, 2-55, 2-83
1499578-0100 .	CABLE CONDUIT	2-59
2924202-0000 .	CABLE CONDUIT	4-17
90110-0235	CABLE CONTACT, PX0739/P	6-33
1511566-0000 .	CABLE DUCT	2-15, 2-17
2602664-0000 .	CABLE DUCT	2-15, 2-17
2898189-0000 .	CABLE DUCT	4-79
2901823-0000 .	CABLE DUCT	4-79
2901830-0100 .	CABLE DUCT	4-53
2983240-0000 .	CABLE DUCT	5-3
90181-0045	CABLE DUCT, PLASTIC, 40X60	4-65
90181-0039	CABLE DUCT, PLASTIC, 60X40	4-55
90181-0046	CABLE DUCT, PLASTIC, 60X60	4-65
1484742-0100 .	CABLE DUCTS	2-7, 2-9
353245-0009 ..	CABLE GLAND, EXTENDED WITH INSERT, PG9	5-3
90458-0305	CABLE GLAND, M12X1,5, 5311 1000	1-205, 1-207, 4-37, 4-39, 4-55, 6-33
90458-0306	CABLE GLAND, M16X1,5, 5311 1010	1-31, 1-33, 1-35, 1-37, 1-167, 1-169, 4-55, 6-9, 6-15, 6-29, 6-33
90458-0307	CABLE GLAND, M20X1,5, 5311 1020	4-53, 4-55, 4-61
90458-0308	CABLE GLAND, M25X1,5, 5311 1030	4-53, 4-55, 4-61, 6-9
90458-0316	CABLE GLAND, M25X1,5, 5311 1130	1-167, 1-169, 6-15
90458-2926	CABLE GLAND, RG M63/9	4-53, 4-61
352103-0106 ..	CABLE GLAND, ST 11, PR18,6/PG11	2-53, 2-55
352103-0108 ..	CABLE GLAND, ST 13,5 , PR20,4/PG13,5	1-27, 1-29
352103-0111 ..	CABLE GLAND, ST 16, PR22,5/PG16	2-53, 2-55
352103-0116 ..	CABLE GLAND, ST 21, PR28,3/PG21	2-53, 2-55, 3-7, 3-9, 3-39, 3-41
352103-0121 ..	CABLE GLAND, ST 29, PR37,0/PG29	2-53, 2-55
352103-0096 ..	CABLE GLAND, ST 7, PR 12,5/PG7	3-39, 3-41
352103-0101 ..	CABLE GLAND, ST 9, PR15,2/PG9	1-189, 3-7, 3-9, 3-39, 3-41, 5-3
352103-0105 ..	CABLE GLAND, STR 11, PR 18,6/PG11	2-53, 2-55
352103-0095 ..	CABLE GLAND, STR 7, PR 12,5/PG7	2-21
90458-0422	CABLE GLAND, VK 22053Y	1-205, 1-207
90458-0407	CABLE GLAND, VK 22553Y	4-55
90110-0152	CABLE HOOD 24-POL 70.352.2428.1	2-53, 2-55
90110-0226	CABLE HOOD 6-POL 70.350.0628.0	1-27, 1-29
90110-0244	CABLE HOOD 6-POL 70.350.1628.0	1-31, 1-33, 1-35, 1-37, 1-205, 1-207
2902950-0100 .	CABLE LEAD-IN PLATE	4-55
2902951-0000 .	CABLE LEAD-IN PLATE	4-61
90600-0934	CABLE M12-C62 5 POLE MALE, 20-056-02	1-189, 2-97
351150-0407 ..	CABLE OLFLEX 12X0,75 MM2 LIGHT/GREY	1-189, 1-205, 1-207, 2-21
351150-0425 ..	CABLE OLFLEX 25X0,75 MM2 LIGHT/GREY	1-31, 1-33, 1-35, 1-37, 1-205, 1-207, 2-53, 2-55 3-33, 3-35
351150-0403 ..	CABLE OLFLEX 3X0,75 MM2 LIGHT/GREY	1-171, 2-83, 3-33, 3-35
351150-0412 ..	CABLE OLFLEX 3X1,5 MM2 LIGHT/GREY	1-27, 1-29, 1-217, 1-219, 2-53, 2-55
351150-0422 ..	CABLE OLFLEX 3X4 MM2 LIGHT/GREY	1-205, 1-207
351150-0413 ..	CABLE OLFLEX 4GX1,5 MM2 LIGHT/GREY	4-21
351150-0404 ..	CABLE OLFLEX 4X0,75 MM2 LIGHT/GREY	3-33, 3-35, 6-33
351150-0405 ..	CABLE OLFLEX 5X0,75 MM2 LIGHT/GREY	2-47
351150-0406 ..	CABLE OLFLEX 7X0,75 MM2 LIGHT/GREY	1-31, 1-33, 1-35, 1-37
351121-0213 ..	CABLE RADOX 155 1X1,5 MMÂ² YELLOW/GREEN	1-27, 1-29
353101-0122 ..	CABLE SHOE 0,5-1,5MM2 M5 RED	6-33
353101-0130 ..	CABLE SHOE 1,5-2,5MM2 M4 BLUE	1-193
353101-0132 ..	CABLE SHOE 1,5-2,5MM2 M5 BLUE	1-191, 1-193
353104-0140 ..	CABLE SHOE, RING UNINS., YAV 06 M 4	1-191
352113-0102 ..	CABLE TIE, BLACK 188X4,8 MM	2-79, 4-17, 6-15
352113-0101 ..	CABLE TIE, BLACK 92X2,5 MM	6-9
351422-0203 ..	CABLE Ã–LFLEX 150CY QUATTRO 4X1,5	1-123
351120-0145 ..	CABLE Ã–LFLEX HEAT 180 SIHF 3X2,5	1-193
351120-0146 ..	CABLE Ã–LFLEX HEAT 180 SIHF 3X4	1-191
1558867-0000 .	CAM	2-45
583694-0000 ..	CANTILEVER	1-105, 1-107
1498773-0000 .	CANTILEVER	1-129, 1-131
2519639-0000 .	CANTILEVER	1-81, 1-83
2519642-0000 .	CANTILEVER	1-73, 1-101, 1-103
979593-0000 ..	CAP	1-209, 1-211, 2-53, 2-55
1487517-0000 .	CATCH	2-59
90237-0145	CATCH, 1121-53-01P	4-55

Part No	Description	Page No
90287-0313	CENTERING SCREW	2-59
1550957-0100 .	CHAIN TENSIONER	6-9
90110-0221	CHASSIS HOUSING 310162-33	1-27, 1-29
90230-0064	CHECK VALVE, 6 MM HIGH TEMP.	3-33, 3-35
2854830-0000 .	CHECKER PLATE	4-9
2854832-0000 .	CHECKER PLATE	4-9
2854833-0000 .	CHECKER PLATE	4-9
2893294-0100 .	CHECKER PLATE	4-7
907138-0000 ..	CLAMP	1-73, 1-81, 1-83, 1-91, 1-101, 1-103
907249-0000 ..	CLAMP	1-73, 1-91, 1-101, 1-103
1255827-0000 .	CLAMP	1-63, 1-67, 1-69
1366727-0000 .	CLAMP	6-13
1519967-0000 .	CLAMP	2-63
1550959-0000 .	CLAMP	6-21
2655635-0000 .	CLAMP	1-81, 1-83
1484782-0000 .	CLAMP BLOCK	2-75
90220-0305	CLAMP FOR SCR.CABLE, 16MM,	4-55, 4-75, 4-77
926763-0000 ..	CLAMP HOLDER	4-29
2846027-0000 .	CLAMP LUG	4-17
1517069-0000 .	CLAMP PLATE	1-119
532117-0000 ..	CLAMP RING	4-27
541163-0200 ..	CLAMP RING	4-23
90119-0310	CLAMP, TYPE PYC-A1	4-67
1484783-0000 .	CLAMPING ELEMENT	2-75
90208-0078	CLAMPING ELEMENT WITH SLEEVE, 20X28 MM	1-105, 1-107
90208-0080	CLAMPING ELEMENT WITH SLEEVE, 25X34 MM	1-105, 1-107
2913734-0000 .	CLAMPING PART	4-51
3004388-0000 .	CLAMPING PIECE	6-35
90135-0039	CLAMPING YOKE, KLBU 4-13.5	3-29
1317205-0200 .	CLEANING CIRCUIT	4-5
1539601-0000 .	CLEANING PIPE	3-3, 3-5
2545062-0000 .	CLEANING PIPE	3-3, 3-5
2545432-0000 .	CLEANING PIPE	3-3, 3-5
2905941-0000 .	CLEANING PIPE	4-47
2905942-0000 .	CLEANING PIPE	4-47
2905943-0000 .	CLEANING PIPE	4-47
548770-0006 ..	COAXIAL CABLE L=1200 MM	1-135
1550185-0000 .	COCK HANDLE	6-21
2555310-0000 .	COIL	3-45
1539574-0000 .	COLLAR	2-45
2893299-0000 .	COLUMN	4-11
2893300-0000 .	COLUMN	4-11
90459-0494	COMP. SPRING 21920, 1X7,3X21,5	1-149
90335-0025	COMP. SPRING 22010, 1X11X26	2-13
90335-0027	COMP. SPRING 22170, 1,25X9,25X33	1-141, 1-143
90335-0024	COMP. SPRING 22250, 1,25X13,75X27	4-49
90335-0067	COMP. SPRING 22370, 1,6X9,6X31,75	1-73, 1-81, 1-83, 1-101, 1-103, 6-23, 6-25
90335-0036	COMP. SPRING 22450, 1,6X14,1X24	6-21
90335-0146	COMP. SPRING, 0,6X7,2X20	1-121, 1-133
353240-0005 ..	COMPRESSION GLAND, VK 154Y	2-53, 2-55
353242-0003 ..	COMPRESSION GLAND, VK 155YUL21	1-31, 1-33, 1-35, 1-37, 1-205, 1-207, 2-69
2552798-0000 .	COMPRESSION ROD	2-63
440663-0000 ..	COMPRESSION SPRING	4-25
541751-0000 ..	CONICAL BOBBIN	1-183
90224-0308	CONN. BANJO, ART. NO. 2023-1/8-1/8	4-45
90030-0230	CONN. BULKHEAD BCM6-316	3-3, 3-5, 3-33, 3-35
90030-0066	CONN. BULKHEAD SV06L71	4-45
90030-0030	CONN. BULKHEAD SV12L71	4-29, 4-31
90030-0234	CONN. ELBOW, M6MSEL1/8K-316	3-3, 3-5, 3-33, 3-35
90030-0137	CONN. ELBOW, WE06LR71	3-43
90030-0257	CONN. ELBOW, WE08LLR71	4-21
342731-0221 ..	CONN. ELBOW, WE15LR71	1-167, 1-169
90600-3668	CONN. STR SS-8MO-1-2RT	4-21
90030-0062	CONN. STR. GE06L1/4NPT71	3-3, 3-5
90030-0088	CONN. STR. GE12LR1/4KEG71	4-35
90030-0187	CONN. STR. GE12LRED71	1-245, 4-31
90030-0188	CONN. STR. GE15LRED71	1-167, 1-169
90030-0191	CONN. STR. GE18LRED71	4-31
90030-0213	CONN. STR. M12MSC1/2K-316	4-31, 4-35
90030-0416	CONN. STR. M12MSC1/2K-316	4-31
342725-0102 ..	CONN. STR. PIPE GAI06LR71	4-45
90030-0202	CONN. STR., 6-G1/4, EXT. THREAD	4-23
90030-0184	CONN. STR., GE06LRED71	1-245, 3-33, 3-35, 4-23, 4-31, 4-45
90030-0233	CONN. STR., M6MSC1/8BR-316	3-33, 3-35
90030-0549	CONN. STRAIGHT, BULKHEAD, SS-4-VCO-61	3-47
90030-0076	CONN. T-PIPE T06L71	3-3, 3-5
90030-0058	CONN. T-PIPE T12L71	4-29
589442-0000 ..	CONNECTION	1-73, 1-81, 1-83, 1-101, 1-103
90459-4254	CONNECTION BLOCK TINA 4A, 20-054-03	1-19, 1-21, 1-23, 1-25, 2-53, 2-55
580064-0200 ..	CONNECTION BOX	1-177, 1-179
979475-0000 ..	CONNECTION BOX	3-39, 3-41
1364476-0300 .	CONNECTION BOX	2-3
1512283-0000 .	CONNECTION BOX	1-205, 1-207
2529614-0200 .	CONNECTION BOX	1-19, 1-21, 1-23, 1-25

Part No	Description	Page No
2529615-0000	.CONNECTION BOX	1-31, 1-33, 1-35, 1-37
2590053-0000	.CONNECTION BOX	6-33
2590054-0100	.CONNECTION BOX	6-9
2597096-0000	.CONNECTION BOX	2-21
2597097-0100	.CONNECTION BOX	2-7, 2-9
2623674-0100	.CONNECTION BOX	3-33, 3-35
2773927-0000	.CONNECTION BOX	2-53, 2-55
3040340-0000	.CONNECTION BOX	1-189
979592-0200	.. CONNECTION DEVICE	1-19, 1-21, 1-23, 1-25
1539602-0100	.CONNECTION SYSTEM	3-3, 3-5
90459-5627	.... CONNECTION TINA 1A, 20-054-00	1-19, 1-21, 1-23, 1-25, 2-53, 2-55
90110-0295	.... CONNECTOR 4 POLE + EARTH	2-51
90458-0603	.... CONNECTOR, CABLE RECEPTACLES	1-149, 2-75
90459-2412	.... CONNECTOR, HDC-KITS, HDC-HA-4SS	1-27, 1-29, 1-217, 1-219, 2-53, 2-55, 2-69
90459-5309	.... CONTACTOR 7,5KW 24VDC, DILM17-10	4-71, 4-73
90458-0602	.... CONTRAST SCANNER, KT15W-P2213S02	1-149, 2-75
2545083-0200	.CONTROL CABINET	3-3, 3-5
1517088-0300	.CONTROL PANEL	2-95
90600-0933	.... CONVERTER TINA 2-B, 20-054-11	2-97
1550880-0200	.CONVEYOR BODY	6-9
2796013-0100	.CONVEYOR BODY	6-41
1550700-0200	.CONVEYOR CHAIN	6-41
90458-2385	.... COOLER FOR MANOMETER, HIGH TEMP. G1/2	4-33
2582040-0100	.COOLING AIR INTAKE	4-55
599749-0100	.. COOLING AIR OUTLET	4-55
1539605-0000	.COOLING PIPE	3-3, 3-5
599895-0000	.. COPPER BRAID	5-3
1512322-0000	.COPPER BRAID	3-19
341001-0228	.. COPPER TUBE	1-167, 1-169
1020462-0000	.CORRUGATED CARDBOARD BOX	6-39
2589955-0000	.CORRUGATED CARDBOARD BOX	6-65
2590259-0000	.CORRUGATED CARDBOARD BOX	6-31
2590260-0000	.CORRUGATED CARDBOARD BOX	6-31
3002543-0000	.CORRUGATED CARDBOARD BOX	6-59, 6-61
959656-0000	.. COTTER	4-55
979531-0100	.. COUNTER JAW	1-77, 1-79, 1-87, 1-89
1255736-0200	.COUNTER JAW	1-93, 1-95
1255737-0200	.COUNTER JAW	1-93, 1-95
2813997-0100	.COUNTER JAW	1-71
2921891-0000	.COUPLING BOLT	2-63
582403-0400	.. COVER	1-3, 1-5
599752-0000	.. COVER	4-57, 4-59
1487512-0000	.COVER	2-77
1498444-0300	.COVER	2-45
1498764-0000	.COVER	1-195, 1-197, 1-199, 1-201
2506478-0000	.COVER	1-195, 1-197, 1-199, 1-201
2523587-0000	.COVER	1-145
2523589-0000	.COVER	1-217, 1-219
2523596-0000	.COVER	1-191
2529619-0000	.COVER	1-217, 1-219
2529627-0000	.COVER	1-217, 1-219
2540718-0000	.COVER	1-19, 1-21, 1-23, 1-25
2552619-0000	.COVER	1-129, 1-131
2552636-0000	.COVER	1-123
2552637-0000	.COVER	1-123
2555487-0200	.COVER	1-121
2561620-0000	.COVER	6-27
2561622-0000	.COVER	6-27
2589838-0300	.COVER	6-9
2590275-0000	.COVER	6-17, 6-19
2609946-0000	.COVER	1-151
2611466-0000	.COVER	1-217, 1-219
2615470-0000	.COVER	1-67, 1-69
2800353-0000	.COVER	3-33, 3-35
2810989-0000	.COVER	1-217, 1-219
2854654-0000	.COVER	1-19, 1-21, 1-23, 1-25
2901832-0000	.COVER	4-79
2914127-0000	.COVER	4-51
2919241-0000	.COVER	4-51
2919243-0000	.COVER	4-51
2919244-0000	.COVER	4-51
2919245-0000	.COVER	4-51
2919246-0000	.COVER	4-51
2919247-0000	.COVER	4-51
2919248-0000	.COVER	4-51
2919249-0000	.COVER	4-51
2919250-0000	.COVER	4-51
2982050-0000	.COVER	6-41
3017342-0000	.COVER	1-233
3017344-0100	.COVER	1-217, 1-219
3017347-0000	.COVER	1-19, 1-21, 1-23, 1-25
3017348-0000	.COVER	1-217, 1-219
3017360-0100	.COVER	1-145
3017385-0000	.COVER	2-97

Part No	Description	Page No
3017398-0000	.COVER	1-19, 1-21, 1-23, 1-25
3017399-0000	.COVER	1-19, 1-21, 1-23, 1-25
3017408-0000	.COVER	2-47
3017414-0000	.COVER	1-19, 1-21, 1-23, 1-25
3068375-0000	.COVER	6-27
3068380-0000	.COVER	6-27
3081887-0000	.COVER	1-19, 1-21, 1-23, 1-25
1487541-0000	.COVER PLATE	2-87
90458-1215	.... COVER PLATE, EMPTY VALVE POSITION	1-173, 1-175, 4-41
1519953-0300	.COVERING PANEL	2-3
2901827-0000	.COVERING PLATE	4-79
978440-0000	.. CRAMP	3-43
594952-0000	.. CREASE BAR	2-49
1512264-0002	.CREASE BAR	2-49
1360583-0000	.CREASE UNIT	2-49
2815754-0200	.CREASE UNIT	2-45
3017421-0000	.CROSS BAR	1-241
1487776-0000	.CUTTING TABLE	2-23, 2-25, 2-33, 2-35
1524477-0100	.CUTTING TABLE	1-177, 1-179
90450-0397	.... CYLINDER	1-63, 1-73, 1-81, 1-83, 1-91, 1-101, 1-103
1487528-0200	.CYLINDER	2-33, 2-35
1524394-0200	.CYLINDER	2-23, 2-25
2788125-0000	.CYLINDER BRACKET	2-29, 2-41
576439-0000	.. CYLINDER HOUSING	4-25
90450-0552	.... CYLINDER, RODLESS MECH. 40-520	2-11
90347-0113	.... DAMPER	1-217, 1-219
581952-0100	.. DETECTOR UNIT	1-3, 1-5
2568779-0000	.DIAGRAM	3-3, 3-5
2879201-0000	.DIAGRAM AIR/WATER	4-19
533169-0000	.. DIAPHRAGM	4-25
90600-0493	.... DIAPHRAGM 3A, 600-8M-5AD	3-43
342800-1102	.. DIAPHRAGM FDA PTFE/EPDM 5E, SEAT S. 10	4-23
582451-0000	.. DIE	1-63
582452-0000	.. DIE	1-63
582453-0000	.. DIE	1-63
582454-0000	.. DIE	1-63
582455-0000	.. DIE	1-63
1255573-0000	.DIE	1-67, 1-69
1296993-0000	.DIE	1-67, 1-69
1317458-0000	.DIE	1-67, 1-69
90038-0021	.... DIODE, 1A 800V	2-97
3006055-0000	.DISTANCE	5-3
90042-0602	.... DISTRIBUTOR BLOCK, FR-4-1/2-B	1-167, 1-169
90459-1856	.... DISTRIBUTOR, MS6-FRM-1/2	1-171, 2-83
2557518-0000	.DOLLY	1-99
2562321-0000	.DOLLY	1-75, 1-85, 1-251
2569877-0000	.DOLLY	1-99
2569878-0000	.DOLLY	1-97
2592780-0000	.DOLLY	2-5, 2-63
2552620-0000	.DOOR	1-129, 1-131
3017353-0000	.DOOR	1-203
3017354-0000	.DOOR	1-203
3017356-0000	.DOOR	1-145
3017363-0000	.DOOR	1-217, 1-219
3017365-0000	.DOOR	1-217, 1-219
90600-8267	.... DOOR LOCKING DEV., DALTON M126 20-038-12	1-235
3017400-0100	.DOOR SAFETY SWITCH	1-217, 1-219
1498751-0300	.DOORS	1-177, 1-179
90459-1212	.... DOUBLE ACTING, COMPACT, 40-40	1-67, 1-69
90600-4233	.... DOUBLE ACTING, COMPACT, 80-25	2-63
90450-0551	.... DOUBLE ACTING, COMPACT, CYL 20-10	2-41
90450-0306	.... DOUBLE ACTING, MINI-ISO, CYL. 12-25	1-191
90239-0832	.... DOUBLE ACTING, MINI-ISO, CYL. 25-125	2-31, 2-39
90239-0819	.... DOUBLE ACTING, MINI-ISO, CYL.16-100	1-185
90459-0503	.... DOUBLE ACTING, SHORT STROKE, CYL 16-10	2-29, 2-41
90459-1509	.... DOUBLE ACTING, SHORT STROKE, CYL 20-20	2-63
540169-0000	.. DOWEL	6-11
583689-0000	.. DOWEL	1-105, 1-107
312502-0120	.. DRIVE SCREW ROUND HEAD KDS 0X5	1-167, 1-169
1524388-0100	.DRIVE UNIT REAR	2-59
2787449-0100	.DRIVE WHEEL	6-41
1035792-0000	.E-HINGE	1-7, 1-9, 1-145, 1-157, 1-159, 1-167, 1-169, 1-217, 1-219, 2-91, 2-93, 2-95, 2-99
1499514-0000	.E-HINGE	1-195, 1-197, 1-199, 1-201, 1-217, 1-219, 1-229, 1-231
2637715-0100	.EARTH BAR X008	3-17
90135-0042	.... EARTH TERMINAL AKE 2,5	3-39, 3-41, 6-33
90135-0045	.... EARTH TERMINAL AKE 2,5	2-21
353024-0212	.. EARTH TERMINAL WDK 2,5 PE	4-71, 4-73
353024-0204	.. EARTH TERMINAL WPE 2,5	4-75, 4-77
353024-0205	.. EARTH TERMINAL WPE 4	1-31, 1-33, 1-35, 1-37, 1-205, 1-207, 2-57
353024-0206	.. EARTH TERMINAL WPE 6	4-75, 4-77
3072114-0000	.EARTH WIRE	1-167, 1-169, 2-79
90135-0035	.... EARTH WIRE, L=250 MM 16 MM2	4-55
590987-0000	.. ECCENTRIC	1-47, 1-49
1512267-0000	.ECCENTRIC BUSHING	2-65

Part No	Description	Page No
90143-0060	EDGE STRIP 9,5X6,3MM BLACK PVC	2-15, 2-17, 4-19, 4-51
2898127-0000 .	EL-CABINET CHASSIE	4-55
2898128-0000 .	EL-CABINET DOOR	4-55
2637726-0100 .	EL. CABINET	3-3, 3-5
90432-0012	EL.MAGNETIC POWDER BRAKE	1-109, 1-113
342737-0221 ..	ELBOW CONNECTION 15, W15L71	1-167, 1-169
342737-0204 ..	ELBOW CONNECTION 6, W06L71	4-45
342737-0208 ..	ELBOW CONNECTION 8, W08L71	4-45
342772-0114 ..	ELBOW FITTING, 6 - G1/4	3-33, 3-35
342772-0113 ..	ELBOW FITTING, 6 - G1/8	1-247, 3-33, 3-35
90055-0217	ELBOW PIPE JOINT	1-63, 1-67, 1-69, 1-97, 1-99
342732-0099 ..	ELBOW PIPE JOINT, (REEMP. 90458-2954)	1-191
90458-2954	ELBOW PIPE JOINT, EXT.THREAD, D=4MM M5	1-73, 1-101, 1-103
90458-2957	ELBOW PIPE JOINT, EXT.THREAD, D=6MM-G1/4	3-33, 3-35
90458-2956	ELBOW PIPE JOINT, EXT.THREAD, D=6MM-G1/8	1-63, 1-65, 1-67, 1-69, 1-73, 1-81, 1-83, 1-91, 1-101, 1-103, 1-105, 1-107, 1-117, 1-123
90458-2960	ELBOW PIPE JOINT, EXT.THREAD,D=12MM-G3/8	4-43
90055-0222	ELBOW WITH TAILPIECE 6/6 MM	2-63
90055-0204	ELBOW WITH TAILPIECE 8/8 MM LONG	2-81
90330-0169	ELBOW, 90 INT. THREAD, 4-4FE. SS	3-3, 3-5
559468-0100 ..	ELECTRIC EQUIPMENT	3-3, 3-5
2898126-0100 .	ELECTRICAL CABINET	4-53
2901831-0100 .	ELECTRICAL CABINET	4-5
559469-0100 ..	ELECTRICAL DOCUMENT	3-11
2638046-0100 .	ELECTRICAL MATERIALS	3-17
567070-0014 ..	ELECTRODE	3-33, 3-35
90600-6050	EMERGENCY STOP INCA 1 TINA, 30-054-00	1-189, 2-97
90600-2961	ENCODERFEEDBACK POWERFLEX 70, 20A-ENC-1	4-55
353031-0203 ..	END BRACKET, WEW 35/2	1-31, 1-33, 1-35, 1-37, 4-71, 4-73, 4-75, 4-77
90077-0308	END PLATE, 10-00038286-1	6-33
90077-0122	END PLATE, AP AKZ 2,5	3-39, 3-41
90077-0307	END PLATE, AP AKZ4	2-21
353032-0302 ..	END PLATE, AP DLD2,5 DB	1-31, 1-33, 1-35, 1-37, 2-57, 4-71, 4-73
353032-0301 ..	END PLATE, AP/DLI, 131 326	4-71, 4-73
90459-2617	END PLATE, MS6-AGD	1-171, 2-83
353032-0004 ..	END PLATE, WAP 2,5-10, BEIGE	1-31, 1-33, 1-35, 1-37, 4-75, 4-77
353032-0005 ..	END PLATE, WAP 2,5-10, BLUE	4-75, 4-77
353032-0009 ..	END PLATE, WAP WDK 2,5	2-57, 4-71, 4-73, 4-75, 4-77
576440-0000 ..	END SECTION	4-25
2903587-0000 .	END SECTION	1-15
353001-0113 ..	END SLEEVE 0,75MM2	6-33
90600-9809	ES SIGN FOR INCA, 30-054-09	1-189, 2-97
90600-5129	EXP. SUB-BASE 1 VALVE,CDVI5.0-EB1X-BI-MP	2-81
90458-1206	EXP. SUB-BASE 2 VALVES, CDVI5.0-EB	1-173, 1-175, 2-81
925405-0200 ..	EXT. PRODUCT VALVE	4-5
3046771-0100 .	EXTERNAL DATING UNIT	6-3, 6-5
90264-0032	FAN, 4656N+LZ30+LZ 120,220V 50HZ	4-59
2523585-0000 .	FASTENER	1-145
2523586-0000 .	FASTENER	1-145
2506474-0000 .	FASTENING BRACKET	1-137
1359224-0000 .	FASTENING PLATE	6-57
1487558-0000 .	FASTENING PLATE	2-75
353021-0212 ..	FEED THROUGH TERMINAL, WDU 2,5	1-31, 1-33, 1-35, 1-37, 1-205, 1-207, 4-75, 4-77
353021-0216 ..	FEED THROUGH TERMINAL, WDU 2,5	4-75, 4-77
353021-0213 ..	FEED THROUGH TERMINAL, WDU 4	1-205, 1-207, 2-57
353021-0214 ..	FEED THROUGH TERMINAL, WDU 6	4-75, 4-77
90110-0163	FEMALE INSERT 70 300 0640 0	1-27, 1-29
90110-0296	FEMALE INSERT, HDC-HA-4BS 149840-B/2	1-27, 1-29
90600-5249	FERRITE, B64290L616X38	2-81
90232-0346	FIBRE, LL3-DB01, 5308 074	1-17, 1-209, 1-211
90232-0347	FIBRE, LL3-TB01, 5308 050	1-209, 1-211
2590261-0000 .	FILLING	6-31
2545427-0000 .	FILLING PIPE	3-33, 3-35
2546473-0000 .	FILLING PIPE	3-3, 3-5
599750-0000 ..	FILTER	4-59
90277-0324	FILTER CARTRIDGE 050-11-A	3-33, 3-35
90277-0407	FILTER ELEMENT 60Âµ, SS-4F-K4-60	3-3, 3-5
90277-0104	FILTER F64B-2GN-ARO	3-33, 3-35
90277-0323	FILTER HOUSING / ART.NO 95S6-1/4 S 5430	3-33, 3-35
90277-0055	FILTER HOUSING / MDS 4463 G 08 H	4-35
90277-0062	FILTER HOUSING SS-4TF2-60	3-3, 3-5
90337-0315	FILTER INSERT / MCS 4463	4-35
90257-0001	FILTER PLUG ART.NO.8145-00-140 TYPE F14	3-33, 3-35
90459-6554	FILTER REGULATOR, MS6-LFR-1/2-D7-CRV-AS	1-171
90459-2772	FILTER, MS6-LFM-1/2-ARV	1-171
90459-2773	FILTER, MS6-LFM-1/2-BRV	1-171
90459-5786	FILTERED SILENCER, 10494 LFU-1/2	1-167, 1-169, 2-85, 4-43
979668-0000 ..	FINGER	1-195, 1-197, 1-199, 1-201
2540726-0000 .	FINGER	1-193
312105-0506 ..	FITTED BOLT M10X75MM	1-121
979356-0000 ..	FLANGE	2-45
1140996-0000 .	FLANGE	2-43
1334331-0000 .	FLANGE	1-129, 1-131
1498757-0000 .	FLANGE	1-181

Part No	Description	Page No
1549424-0000	FLANGE	1-11
2519463-0000	FLANGE	2-45
321111-0135	FLANGE BUSHING, 10/16X10-22X3 MM	1-185
321161-0180	FLANGE BUSHING, 12X14X12MM	1-67, 1-69
321111-0097	FLANGE BUSHING, 8/12X12-16X2 MM	1-141, 1-143, 1-185
1519379-0000	FLAT KNIFE	1-73, 1-81, 1-83, 1-101, 1-103
90097-0019	FLAT PIN PLUG 2,8MM	3-31
90097-0017	FLAT PIN PLUG 6,3MM	3-31
90152-0026	FLEXIBLE CONDUIT	1-63
90600-3233	FLEXIBLE COUPLING, 24X38 MM	4-21
90458-2027	FLOPPY DISK, 3,5" 1,44MB FOR PC	3-15
90235-0723	FLOW CONTROL VALVE, GR-M5	1-47, 1-49
90235-0289	FLOW CONTROL VALVE, GRLA-M5	1-185, 1-191
90600-1154	FLOW METER,D-6230-HGB-BB-AV-99-0-N2/IP65	3-33, 3-35
90459-7095	FOCUS JUMPER CABLE M12 5P 1M, 20-056-20	1-203, 2-7, 2-9, 2-53, 2-55
90459-4876	FOCUS JUMPER CABLE M12 5P 3M, 20-056-21	1-167, 1-169, 1-203, 1-217, 1-219, 2-7, 2-9, 2-47, 2-53, 2-55
90458-2581	FOOT PLATE, M50-16-70	6-37, 6-57
90068-0016	FOOT, 3 LEGS. NO 15511	6-37, 6-57
979669-0000	FORCE PLATE	1-195, 1-197, 1-199, 1-201
1549441-0000	FORCE PLATE	1-7, 1-9, 1-157, 1-159
2609932-0000	FORK	1-67, 1-69
979524-0400	FRAME	1-3, 1-5
1317202-0200	FRAME	4-5
1484727-0000	FRAME	2-15, 2-17
2506477-0000	FRAME	1-19, 1-21, 1-23, 1-25
2552634-0000	FRAME	1-123
2609940-0000	FRAME	1-67, 1-69
2810988-0000	FRAME	1-19, 1-21, 1-23, 1-25
2846026-0000	FRAME	4-17
2919240-0000	FRAME	4-51
1549418-0000	FRAME LOWER, INFEED	1-121
90348-0031	FREE-WHEEL COUPLING, 8X12 MM	1-73, 1-81, 1-83, 1-101, 1-103
90600-3738	FREQ. CONV., 20AC8P7F0AYNANC0	4-55
90235-0804	FRONT PANEL VALVE 3/2, SV-3-M5	1-167, 1-169
90459-3636	GAS SPRING NO. 08 39 17	1-217, 1-219
599755-0000	GASKET	4-57, 4-59
751016-0000	GASKET	3-45
2902952-0000	GASKET	4-61
90217-0347	GASKET 32X22,6X3,6 MM	3-3, 3-5, 3-43, 4-29, 4-47
12242-0001	GASKET 32X25X5,5	3-43
90217-0348	GASKET 35,4X46,8X4 MM	3-3, 3-5, 4-23, 4-29, 4-47, 4-81
315229-0205	GASKET 47,5X55,5X3,7 MM 2 INCH	3-45
90217-0349	GASKET 48,4X59,8X4 MM	4-23, 4-47
90277-0333	GASKET KIT / ART.NO ACS 0325 EH	4-35
2887591-0000	GAUGE BRACKET	4-33
1484706-0000	GEAR WHEEL	2-75
90601-1808	GEARS, HELICAL MOTOR R17DT71D4MM05/MLU/B	6-9
90459-2327	GEARS, WORM MOTOR IGL 80-60 + VE 31GR5	1-123
90459-2328	GEARS, WORM MOTOR IGL 80-60 + VE 31GR5	2-51, 2-77
90458-0449	GLAND FITTING, 2205413S05 UL16	1-123, 2-51, 2-77
353243-0001	GLAND FITTING, VK 15052YUL11	2-97
353243-0002	GLAND FITTING, VK 15152YUL11	1-27, 1-29, 1-217, 1-219, 2-15, 2-17, 2-53, 2-55
353243-0003	GLAND FITTING, VK 15153YUL13	1-217, 1-219
90457-0146	GLAND FITTING, VK 15154YUL16	1-27, 1-29, 2-15, 2-17, 2-51, 2-69
353243-0005	GLAND FITTING, VK 15354YUL16	1-27, 1-29, 2-15, 2-17, 2-21, 2-97
353243-0007	GLAND FITTING, VK 15455YUL21	1-31, 1-33, 1-35, 1-37, 3-33, 3-35
90458-0146	GLAND FITTING, VK 154YUL16	1-205, 1-207
353243-0008	GLAND FITTING, VK 15556YUL29	2-69, 3-33, 3-35
90458-0427	GLAND FITTING, VK 21652YUL11	1-7, 1-9, 1-19, 1-21, 1-23, 1-25, 1-31, 1-33, 1-35, 1-37, 1-157, 1-159
90458-0428	GLAND FITTING, VK 22052YUL11	1-127
90458-0429	GLAND FITTING, VK 22053YUL13	1-31, 1-33, 1-35, 1-37
90458-0430	GLAND FITTING, VK 22054YUL16	1-27, 1-29, 1-149, 1-205, 1-207, 2-7, 2-9
90458-0431	GLAND FITTING, VK 22554YUL16	1-189, 1-205, 1-207
90458-0433	GLAND FITTING, VK 23255YUL21	1-31, 1-33, 1-35, 1-37, 1-205, 1-207
353250-0016	GLAND LOCK NUT, M16X1,5	4-45
353250-0020	GLAND LOCK NUT, M20X1,5	4-45
353250-0025	GLAND LOCK NUT, M25X1,5	6-15
90458-0438	GLAND, EXTENDED WITH INSERT, M20X1,5	1-73, 1-81, 1-83, 1-101, 1-103, 4-55
90459-2424	GLAND, EXTENDED WITH INSERT, M20X1,5	4-55
90458-0461	GLAND, LOCK NUT, M20X1,5	4-55
90459-3656	GLAND,EXTENDED WITH INSERT, M16X1,5-LONG	4-21
90459-3660	GLAND,EXTENDED WITH INSERT, M25X1,5-LONG	4-21
1499563-0001	GLASS PANE	2-95, 2-99
1499563-0002	GLASS PANE	2-91, 2-93
1499563-0003	GLASS PANE	2-89, 2-101
1548917-0000	GLASS PANE	1-217, 1-219
2529623-0000	GLASS PANE	1-217, 1-219
3017343-0000	GLASS PANE	1-233
3017357-0000	GLASS PANE	1-145
1558987-0000	GUIDE	2-7, 2-9
2529649-0000	GUIDE	1-127
2787447-0000	GUIDE	6-41

Part No	Description	Page No
401183-0000 ..	GUIDE AXLE	1-185
90459-2755	GUIDE BUSHING, ST7403 19X060X063	1-67, 1-69
1498777-0000 .	GUIDE HOLDER	1-129, 1-131
1129274-0000 .	GUIDE LUG	2-91, 2-93, 2-95
90459-2756	GUIDE PILLAR, ST7120. 19X112X135	1-67, 1-69
1490822-0000 .	GUIDE PLATE	2-47
1487530-0002 .	GUIDE ROD	2-43
1036622-0000 .	GUIDE ROLLER	1-139, 2-61
1036623-0000 .	GUIDE ROLLER	1-139, 2-61
2850445-0000 .	GUIDE WHEEL	1-141, 1-143
90237-0144	GUIDE, 1121-SU540	4-55
1519589-0100 .	HANDLE	2-33, 2-35
1524398-0100 .	HANDLE	2-23, 2-25
2538077-0000 .	HANDLE	2-65
3017358-0000 .	HANDLE	1-145, 1-217, 1-219
90458-2633	HANDLE, 1045-05	2-47
90017-0022	HANDLE, NO. EL-037311 ..	1-129, 1-131, 1-203, 1-217, 1-219, 1-229, 1-231, 1-241, 1-243, 4-19
318800-0104 ..	HANDLE,SPHERICAL KNOB,INT.THRE.,D.30-M8	1-137
582425-0000 ..	HANDSPIKE	1-73, 1-81, 1-83, 1-101, 1-103
90155-0008	HANGER CHAIN, 18	3-43, 3-47
1487540-0000 .	HATCH	2-89
1498415-0100 .	HATCH	2-87
1498427-0000 .	HATCH	2-101
1498428-0100 .	HATCH	2-87
2529617-0000 .	HATCH	1-217, 1-219
2846028-0000 .	HATCH	4-19
2846029-0100 .	HATCH	4-17
3017359-0000 .	HATCH	1-147
3017366-0100 .	HATCH	1-217, 1-219
3017367-0000 .	HATCH	1-231
3017417-0100 .	HATCH	1-217, 1-219
3017418-0000 .	HATCH	1-229
979647-0000 ..	HEAD PLATE	1-73, 1-81, 1-83, 1-101, 1-103
1539599-0100 .	HEAT EXCHANGER	3-3, 3-5
979699-0000 ..	HEATER	1-73, 1-81, 1-83, 1-91, 1-101, 1-103, 1-251
582481-0000 ..	HEATER LOCK	1-73, 1-81, 1-83, 1-101, 1-103
583677-0000 ..	HEATER LOCK	1-91
583674-0000 ..	HEATING CHAMBER	1-91, 1-251
1548788-0000 .	HEATING CHAMBER	1-73, 1-81, 1-83, 1-101, 1-103, 1-251
1558897-0100 .	HEATING DEVICE	1-177, 1-179
2500029-0000 .	HEATING RAIL	1-73
2500030-0000 .	HEATING RAIL	1-91
2500031-0000 .	HEATING RAIL	1-91
2500032-0000 .	HEATING RAIL	1-91
2500034-0000 .	HEATING RAIL	1-91
2500035-0000 .	HEATING RAIL	1-91
2500036-0000 .	HEATING RAIL	1-81, 1-83
2500037-0000 .	HEATING RAIL	1-81, 1-83
2500038-0000 .	HEATING RAIL	1-81, 1-83
2500039-0000 .	HEATING RAIL	1-81, 1-83
2500040-0000 .	HEATING RAIL	1-81, 1-83
2500041-0000 .	HEATING RAIL	1-101, 1-103
2500042-0000 .	HEATING RAIL	1-101, 1-103
2500043-0000 .	HEATING RAIL	1-101, 1-103
2500044-0000 .	HEATING RAIL	1-101, 1-103
2500045-0000 .	HEATING RAIL	1-101, 1-103
2680070-0000 .	HEATING RAIL	1-73
2848876-0000 .	HEATING RAIL	1-101, 1-103
353300-0006 ..	HEATSHRINK TUBING	3-33, 3-35
401186-0000 ..	HEX NUT	1-185
312705-0316 ..	HEX. DOMED CAP MHM-6 M6 A280 ..	1-73, 1-81, 1-83, 1-101, 1-103, 1-139, 1-185, 2-61, 4-79
312107-0312 ..	HEXAGON FLANGE NUT ISO 4161 M4 A2	4-19
312107-0314 ..	HEXAGON FLANGE NUT ISO 4161 M5 A2	4-19
312601-0310 ..	HEXAGON NUT, DIN 934 M3 8 FZB	4-21
312607-0320 ..	HEXAGON NUT, EN 24032 M6M M10 A480	6-21
312607-0314 ..	HEXAGON NUT, EN 24032 M6M M5 A480	4-79
90099-0007	HEXAGON NUT, M10X1, E 63 137 10	2-65
312605-0320 ..	HEXAGON NUT, M6M M10 A280	1-183, 4-17, 4-21, 4-53
312605-0322 ..	HEXAGON NUT, M6M M12 A280	4-21
312605-0324 ..	HEXAGON NUT, M6M M16 A280	1-19, 1-21, 1-23, 1-25
312605-0310 ..	HEXAGON NUT, M6M M3 A280	1-17, 1-19, 1-21, 1-23, 1-25, 1-43, 1-45, 1-129, 1-131, 1-195, 1-197, 1-199, 1-201, 1-203, 1-217, 1-219, 2-45, 4-55
312605-0312 ..	HEXAGON NUT, M6M M4 A280	1-43, 1-45, 1-135, 1-209, 1-211, 2-29, 2-41, 3-33, 3-35, 4-33, 4-45, 4-51, 4-59, 6-29
312605-0314 ..	HEXAGON NUT, M6M M5 A280	1-73, 1-81, 1-83, 1-101, 1-103, 1-105, 1-107, 1-119, 1-129, 1-131, 1-135, 1-145, 1-149, 1-167, 1-169, 1-193, 1-203, 1-215, 1-217, 1-219, 1-229, 1-231, 1-243, 2-23, 2-25, 2-33, 2-35, 2-47, 2-79, 2-93, 2-97, 3-3, 3-5, 3-33, 3-35, 4-37, 4-39, 4-55, 6-41
312605-0316 ..	HEXAGON NUT, M6M M6 A280	1-7, 1-9, 1-17, 1-19, 1-21, 1-23, 1-25, 1-73, 1-81, 1-83, 1-101, 1-103, 1-105, 1-107, 1-119, 1-121, 1-127, 1-133, 1-137, 1-141, 1-143, 1-149, 1-153, 1-155, 1-157, 1-159, 1-163, 1-165, 1-185, 1-187, 1-193, 1-195, 1-197, 1-199, 1-201, 1-215, 2-15, 2-17, 2-23, 2-25, 2-29, 2-33, 2-35, 2-41, 2-65, 2-95, 2-99, 3-45, 3-47, 4-17, 4-37, 4-39, 4-43, 4-47, 4-55, 4-65, 4-75, 4-77, 4-79, 5-3, 6-9, 6-23, 6-25
312605-0318 ..	HEXAGON NUT, M6M M8 A280	1-17, 1-73, 1-81, 1-83, 1-101, 1-103, 1-123, 1-129, 1-131, 1-151, 1-217, 1-219, 2-23, 2-25, 2-27, 2-33, 2-35, 2-37, 3-33, 3-35, 3-45, 6-9, 6-17, 6-19, 6-21, 6-37

Part No	Description	Page No
312812-0320 ..	HEXAGON NUT, NY-LOCK M10 A480	4-51
312812-0322 ..	HEXAGON NUT, NY-LOCK M12 A480	1-109, 1-113, 1-215, 4-11
312812-0312 ..	HEXAGON NUT, NY-LOCK M4 A480	1-151, 2-71
312812-0314 ..	HEXAGON NUT, NY-LOCK M5 A480	1-129, 1-131, 3-43, 4-55
312812-0316 ..	HEXAGON NUT, NY-LOCK M6 A480	1-73, 1-81, 1-83, 1-101, 1-103, 1-191, 1-217, 1-219, 2-13, 2-73, 6-41
312625-0316 ..	HEXAGON THIN NUT, EN 24035 ML6M M6 A4	1-185, 1-187, 2-65
312625-0318 ..	HEXAGON THIN NUT, EN 24035 ML6M M8 A4	1-193
2879200-0200 .	HIGH VISCOSITY ASEPTIC HVA	4-3
90600-3019	HIM POWERFLEX 7-CLASS, 20-HIM-A3	4-55
735503-0000 ..	HINGE	4-37, 4-39
2519634-0000 .	HINGE	1-77, 1-79, 1-87, 1-89
2519635-0000 .	HINGE	1-71, 1-93, 1-95
2557585-0000 .	HINGE	1-217, 1-219
2810991-0000 .	HINGE	1-77, 1-79, 1-87, 1-89
959657-0000 ..	HINGE FLANGE	4-55
975880-0000 ..	HINGE FLANGE	4-55
90459-0075	HINGE, 1056-U30	1-129, 1-131
90458-0878	HINGED FRAME, 09 14 006 0303	2-69
582456-0000 ..	HOLDER	1-63
582483-0000 ..	HOLDER	1-73, 1-101, 1-103
582487-0000 ..	HOLDER	1-75, 1-85, 1-97, 1-99
583733-0000 ..	HOLDER	1-215
590985-0000 ..	HOLDER	1-47, 1-49
590986-0000 ..	HOLDER	1-47, 1-49
1037124-0000 .	HOLDER	1-191
1296766-0000 .	HOLDER	1-163, 1-165
1346217-0000 .	HOLDER	1-73, 1-81, 1-83, 1-101, 1-103
1490804-0000 .	HOLDER	1-191
1511002-0000 .	HOLDER	1-139
1550772-0000 .	HOLDER	6-13
2506472-0000 .	HOLDER	1-137
2524491-0000 .	HOLDER	1-149
2524603-0000 .	HOLDER	2-65
2529616-0000 .	HOLDER	1-27, 1-29
2540731-0000 .	HOLDER	1-27, 1-29
2540732-0000 .	HOLDER	1-7, 1-9, 1-19, 1-21, 1-23, 1-25, 1-127, 1-149, 1-157, 1-159
2552621-0000 .	HOLDER	1-129, 1-131
2552622-0000 .	HOLDER	1-129, 1-131
2555489-0000 .	HOLDER	1-153, 1-155
2555491-0000 .	HOLDER	1-153, 1-155
2557583-0000 .	HOLDER	1-217, 1-219
2575480-0000 .	HOLDER	1-141, 1-143
2575484-0000 .	HOLDER	1-141, 1-143
2576239-0000 .	HOLDER	1-141, 1-143
2592566-0000 .	HOLDER	1-19, 1-21, 1-23, 1-25
2615472-0000 .	HOLDER	1-213
2633445-0000 .	HOLDER	1-163, 1-165
2699607-0000 .	HOLDER	6-49, 6-51
2699610-0000 .	HOLDER	6-49, 6-51
2787439-0000 .	HOLDER	6-47
2810603-0100 .	HOLDER	6-41
2982048-0000 .	HOLDER	6-41
2982049-0000 .	HOLDER	6-41
2982051-0000 .	HOLDER	1-117
3062158-0000 .	HOLDER	1-81, 1-83
2574386-0100 .	HOLDING DEVICE	1-61, 1-77, 1-79, 1-87, 1-89
90110-0346	HOOD, SIDE ENTRY, 12 11220 00 00	1-31, 1-33, 1-35, 1-37, 1-205, 1-207
90458-0877	HOOD, TOP ENTRY, HAN 6B-GG-PG29	2-69
90110-0371	HOOD, TOP ENTRY, HDC-HA-3-TOVL1/11	1-27, 1-29, 1-217, 1-219, 2-51, 2-53, 2-55, 2-69
2574396-0000 .	HOOK	1-243
90003-0483	HOSE	6-59, 6-61
925646-0000 ..	HOSE	4-21
90166-0060	HOSE 19/26-27 REINF.PVC	4-47
342991-0104 ..	HOSE CLIP,WORM DRIVE TYPE (19)-28	4-47
342991-0100 ..	HOSE CLIP,WORM DRIVE TYPE (8)-14	4-45
90055-0154	HOSE COUPLING	2-29, 2-41
90152-0059	HOSE, SPIRAL CONDUIT, 18X12, UL 1211	1-31, 1-33, 1-35, 1-37, 1-127, 2-97
90152-0050	HOSE, SPIRAL CONDUIT, 20X13, UL 1313	1-27, 1-29, 1-31, 1-33, 1-35, 1-37, 1-217, 1-219, 2-15, 2-17, 2-53, 2-55
90152-0051	HOSE, SPIRAL CONDUIT, 25X18, UL 1816	1-27, 1-29, 1-149, 1-189, 1-205, 1-207, 2-15, 2-17, 2-51, 2-69, 2-97
90152-0070	HOSE, SPIRAL CONDUIT, 32,5X26, UL 2621	1-31, 1-33, 1-35, 1-37, 1-205, 1-207, 2-69, 3-33, 3-35
90152-0060	HOSE, SPIRAL CONDUIT, 42X35, UL3529	2-69, 3-33, 3-35
979247-0000 ..	HOUSE	3-45
536913-0000 ..	HUB	1-183
581921-0000 ..	HUB	1-105, 1-107, 1-117, 1-123
580042-0100 ..	HUB JUMBO	1-177, 1-179
90459-2633	I/O BUS EXPANSION CABLE 8M	4-63
1487515-0000 .	INDICATION	2-75
90044-0104	INDUCTIVE SENSOR IN5227S	3-47
90044-0194	INDUCTIVE SENSOR, IN 5329	1-7, 1-9, 1-17, 1-43, 1-45, 1-129, 1-131, 1-157, 1-159, 1-195, 1-197, 1-199, 1-201, 2-45, 3-43, 4-21, 4-23
90600-0473	INDUCTIVE SWITCH E2A-S08KS01-WP-B1-TP 5M	1-19, 1-21, 1-23, 1-25

Part No	Description	Page No
90600-0460	INDUCTIVE SWITCH, E2A-M12KN05-M1-B1-TP	2-7, 2-9
90600-0467	INDUCTIVE SWITCH,E2A-M18KS05-WP-B1-TP 6M	3-3, 3-5
580038-0200 ..	INDUCTOR	1-129, 1-131
1035587-0000 .	INDUCTOR	1-135
2523592-0100 .	INFEED BRAKE	1-3, 1-5
2552635-0200 .	INFEED TENSION DEVICE	1-121
979551-0400 ..	INFEED UNIT	1-3, 1-5
3017331-0100 .	INFEED UNIT	2-3
2545080-0200 .	INJECTION SYSTEM	3-3, 3-5
90600-5587	INK JET PRI. A300+GR/RUSS, TP 90600-5587	6-67
90600-5584	INK JET PRINTER A300+ARAB, TP 90600-5584	6-67
90600-5585	INK JET PRINTER A300+CHIN, TP 90600-5585	6-67
90600-5583	INK JET PRINTER A300+EUR, TP 90600-5583	6-67
90600-5586	INK JET PRINTER A300+JAPA, TP 90600-5586	6-67
599751-0000 ..	INSERT	4-57, 4-59
353249-0027 ..	INSERT, MULTI HOLE, E153M 3X7	4-55
353249-0051 ..	INSERT, MULTI HOLE, E154M 4X6	2-53, 2-55
353249-0060 ..	INSERT, MULTI HOLE, E155M 2X13	2-69
353249-0036 ..	INSERT, MULTI HOLE, EK152M 2X4	1-19, 1-21, 1-23, 1-25, 1-27, 1-29, 1-127
90458-0188	INSERT, MULTI HOLE, EK154M 1X7, 1X10,5	1-27, 1-29
90457-0147	INSERT, MULTI HOLE, EK154M 2X7	1-149, 2-15, 2-17
353249-0070 ..	INSERT, SINGLE HOLE, E154 16	1-205, 1-207
353249-0072 ..	INSERT, SINGLE HOLE, E155 20	1-31, 1-33, 1-35, 1-37, 1-205, 1-207
353249-0010 ..	INSERT, SINGLE HOLE, EK152 11	1-31, 1-33, 1-35, 1-37, 1-217, 1-219
353249-0008 ..	INSERT, SINGLE HOLE, EK152 7	1-7, 1-9, 1-19, 1-21, 1-23, 1-25, 1-31, 1-33, 1-35, 1-37, 1-157, 1-159, 1-167, 1-169, 2-97
353249-0009 ..	INSERT, SINGLE HOLE, EK152 9	2-15, 2-17, 2-53, 2-55
353249-0011 ..	INSERT, SINGLE HOLE, EK153 11	1-31, 1-33, 1-35, 1-37, 1-217, 1-219, 2-15, 2-17
353249-0075 ..	INSERT, SINGLE HOLE, EK153 13	1-205, 1-207
353249-0013 ..	INSERT, SINGLE HOLE, EK154 13	1-27, 1-29, 1-205, 1-207
353249-0014 ..	INSERT, SINGLE HOLE, EK154 16	1-189, 1-205, 1-207, 2-7, 2-9, 2-21, 2-51, 2-69, 2-97
353249-0061 ..	INSERT, SINGLE HOLE, EK155 20	1-31, 1-33, 1-35, 1-37, 1-205, 1-207
353249-0017 ..	INSERT, SINGLE HOLE, HI.TEMP, EK152 I 7	3-33, 3-35
2589953-0000 .	INSTRUCTION	6-65
90459-1774	INSULATING TUBE Ã¸28, 1627-0028	4-23
90600-0190	INSULATION TUBE Ã˜21/13 MM, 1627-0013	4-29, 4-35
2610782-0100 .	INTERNAL DOOR TERMOREGULATORS	3-17
2555494-0000 .	KEY	1-67, 1-69
2660748-0000 .	KEY	1-47, 1-49
90458-0373	KEY FOR SAFETY SWITCH AZM-161-B1	1-217, 1-219
90459-0472	KEY SAF.SW. AZ 16 02ZVRK-M20-2152-2254	2-47
90600-1056	KEY SAF.SW. AZM 161SK-12/12RKA 024	1-217, 1-219
90237-0324	KEY, 1104-02 FOR SQUARE 8 MM	1-145, 4-55
522388-0002 ..	KNIFE	1-7, 1-9, 1-157, 1-159
544422-0000 ..	KNIFE	1-7, 1-9, 1-157, 1-159
596678-0000 ..	KNIFE	2-23, 2-25, 2-33, 2-35
1484695-0000 .	KNIFE	2-63
522376-0000 ..	KNIFE HOLDER	1-7, 1-9, 1-157, 1-159
582420-0000 ..	KNIFE HOLDER	1-73, 1-81, 1-83, 1-101, 1-103
1484693-0000 .	KNIFE HOLDER	2-63
1524746-0000 .	KNIFE HOLDER	2-23, 2-25, 2-33, 2-35
318871-0102 ..	KNOB CIRCULAR, EXT THREAD, NO. 8302-6037	2-23, 2-25, 2-33, 2-35
318873-0103 ..	KNOB, CIRCUL, THREADED BUSH, M6 21X17 MM	4-37, 4-39
90051-0082	KNOB, CIRCUL, THREADED BUSH, M6 25X21 MM	1-217, 1-219, 2-27, 2-37
90051-0035	KNOB, EXTERNAL THREAD. NO. 8308-1135	1-193
90051-0083	KNOB, EXTERNAL THREAD. NO. 8308-1321	2-75
90458-1076	L-SHAPED CONNECTOR CABLE Y92EM12PVC4A5ML	2-7, 2-9, 2-43
2589952-0000 .	LABEL	6-65
2640965-0001 .	LABEL DISKETTE	3-15
543267-0000 ..	LABEL TAPE	6-31
1086871-0000 .	LABEL TAPE	6-31, 6-39, 6-59, 6-61
1086872-0000 .	LABEL TAPE	6-59, 6-61
2934966-0000 .	LABEL TAPE	6-65
90459-1922	LABEL, ELESA MA.20-P17	1-75, 1-81, 1-83, 1-91, 1-97, 1-99
591567-0000 ..	LACE	2-49
926762-0000 ..	LAMP HOLDER	4-29
2879211-0000 .	LEAD-IN PLATE	4-31
90015-0021	LEAD-IN, TET 10-14, E1458023	2-15, 2-17, 4-55
90015-0023	LEAD-IN, TET 7-10, E1458019	2-15, 2-17
90015-0020	LEAD-IN, TET5-7, E-1458016	1-129, 1-131, 1-195, 1-197, 1-199, 1-201, 5-3
1498419-0200 .	LEFT BACKDOOR	2-87
3017382-0000 .	LEFT BACKDOOR	2-95
1498413-0200 .	LEFT DOORSIDE	2-87
90458-1212	LEFT ENDPLATE INCL. 10M CABLE	1-173, 1-175, 2-81, 4-41
1487539-0000 .	LEFT SIDEDOOR	2-91
484171-0004 ..	LEG	6-57
484171-0006 ..	LEG	6-57
484171-0007 ..	LEG	6-57
598148-0000 ..	LEG	4-13
2773925-0000 .	LEG	4-13
2773926-0100 .	LEG	4-11
2781021-0000 .	LEG	2-19
2781217-0000 .	LEG	2-19
2781219-0100 .	LEG	2-7, 2-9

Part No	Description	Page No
1020162-0200	.LEG CONVEYOR, 3 ARMS	6-41
1020164-0200	.LEG, MOTOR, 3 ARMS	6-7
90458-2580	.... LEVEL CONTROL RELAY, RM4-LA32M	3-27
2610781-0100	.LEVEL RELAYS RAIL	3-17
1346746-0000	.LEVER	1-141, 1-143
2529650-0000	.LEVER	1-71, 1-77, 1-79, 1-87, 1-89, 1-93, 1-95
2609930-0000	.LEVER	1-67, 1-69
2609931-0000	.LEVER	1-67, 1-69
469644-0000	.. LID	1-105, 1-107
469645-0000	.. LID	1-105, 1-107
469647-0000	.. LID	1-105, 1-107
533234-0000	.. LID	6-23, 6-25
533235-0000	.. LID	6-23, 6-25
752240-0000	.. LID	2-45
90459-2290	.... LIFTING EYE BOLT, LBG M16 RS 1T	1-19, 1-21, 1-23, 1-25
90036-0057	.... LIGHT BULB, BA9S 28V	1-189
90164-0303	.... LIGHT FIXTURE, BRACKET 70MM	1-217, 1-219, 2-7, 2-9
90164-0015	.... LIGHT FIXTURE, RL70CV-111 / 230V 50HZ	1-217, 1-219, 2-7, 2-9
2614876-0000	.LINEAR UNIT	1-13, 1-161
2656670-0000	.LINK	6-63
1484784-0000	.LOCATING PIECE	2-75
1484785-0000	.LOCATING PIECE	2-75
90237-0337	.... LOCK HANDLE FOR 90237-319	1-167, 1-169, 4-19, 4-51
532022-0000	.. LOCK BAR	1-7, 1-9, 1-157, 1-159
90237-0156	.... LOCK BOLT, 1000-16	1-167, 1-169, 4-51
90237-0143	.... LOCK CAM, 1000-26	1-145
90237-0128	.... LOCK CYLINDER, 1109-SU125	2-91, 2-93, 2-95
90237-0129	.... LOCK CYLINDER, 1109-U6	4-55
544426-0000	.. LOCK GRIP	1-7, 1-9, 1-157, 1-159
90237-0319	.... LOCK HOUSING, 1000-U134	1-145, 1-167, 1-169, 4-51
90237-0320	.... LOCK HOUSING, 1000-U136	1-145
90237-0142	.... LOCK HOUSING, 1000-U45	4-19
90237-0153	.... LOCK HOUSING, 1121-U26-0B	2-91, 2-93, 2-95
90051-0087	.... LOCK KNOB, NO. GN 617 A5	2-27, 2-37, 2-65
90051-0112	.... LOCK KNOB, NO. GN 617 NIK5	1-217, 1-219
90237-0323	.... LOCK O-RING, 1000-24	4-51
3017410-0000	.LOCK PLATE	2-7, 2-9
90062-0060	.... LOCK WASHER 5,3/10 H=0,6 FZB	2-53, 2-55
315410-0103	.. LOCK WASHER MB 3 D=17 H=1	1-109
90062-0016	.... LOCK WASHER SERRAT.EXT.GEAR,8,4/15 H=0,8	4-55, 4-65
90062-0040	.... LOCK WASHER SERRAT.INT.GEAR,5,3/10 H=0,6	1-167, 1-169, 2-79
315402-0136	.. LOCK WASHER, DIN127B 4,1 A4, M4-5/32	1-7, 1-9, 1-73, 1-81, 1-83, 1-101, 1-103, 1-157
		1-159, 4-61
315402-0146	.. LOCK WASHER, DIN127B 5,1 A4, M5-3/16	1-145, 1-217, 1-219
90237-0123	.... LOCK, 1121-U10C	4-55
1490198-0003	.LOCKING ARM	2-95
1490198-0004	.LOCKING ARM	2-95
1490198-0005	.LOCKING ARM	2-91, 2-93
1490198-0006	.LOCKING ARM	2-91, 2-93
90237-0335	.... LOCKING CATCH	4-19
90459-2596	.... LOCKING HANDLE, M8X25M	6-35
532021-0000	.. LOCKING LOOP	1-7, 1-9, 1-157, 1-159
90296-0091	.... LUBRICATION GREASE	1-67, 1-69
552049-0000	.. LUG	1-7, 1-9, 1-157, 1-159
1519948-0300	.MACHINE BODY	2-3
90347-0175	.... MACHINE SHOE BRIK T 125	4-11
579765-0000	.. MACHINE SIGN CE	1-19, 1-21, 1-23, 1-25, 2-87
2903589-0100	.MAGAZINE	1-7, 1-9
2903590-0100	.MAGAZINE	1-157, 1-159
1498753-0100	.MAGAZINE HOLDER	1-177, 1-179
1498761-0000	.MAGAZINE HOLDER	1-181
90237-0046	.... MAGNETIC LOCK, 46X33X15 MM	1-129, 1-131, 1-145, 1-203, 1-217, 1-219
90110-0159	.... MALE INSERT 70.310.0640.0	1-27, 1-29
90110-0156	.... MALE INSERT 70.210.0653.0	1-205, 1-207
90458-0879	.... MALE INSERT, HAN MODULAR 2 MODULE	2-69
90458-1405	.... MALE INSERT, HDC HE 16 MS, 1207 5000 00	1-31, 1-33, 1-35, 1-37
90110-0150	.... MALE INSERT, HDC HE 24 MS, 1211 1000 00	1-31, 1-33, 1-35, 1-37, 1-205, 1-207, 2-53, 2-55
90110-0385	.... MARKING HOLDER, 4.242.3853.0	2-53, 2-55
359005-0010	.. MARKING LABEL KIT 0 - 9, 04.841.2150.0	2-53, 2-55
359005-0050	.. MARKING LABEL KIT X, 04.841.4550.0	2-53, 2-55
90194-0302	.... MARKING LABELS REBUILDING KIT	3-31, 5-3
359011-0807	.. MARKING, DEK 5 FW 1-50	1-31, 1-33, 1-35, 1-37, 1-205, 1-207, 2-57, 3-39, 3-41, 4-71, 4-73, 4-75, 4-77, 6-33
359011-0809	.. MARKING, DEK 5 FW 101-150	2-57
359011-0808	.. MARKING, DEK 5FW 51-100	1-31, 1-33, 1-35, 1-37, 2-57
359011-0821	.. MARKING, DEK 6 FW 1-50	2-21, 4-71, 4-73
359011-0819	.. MARKING, EARTH, DEK 5 GW ERDE I.KR.	1-205, 1-207, 2-57, 3-39, 3-41, 4-71, 4-73, 4-75, 4-77
1524397-0200	.MATERIAL HOLDER	2-23, 2-25
1524729-0200	.MATERIAL HOLDER	2-33, 2-35
1487785-0300	.MATERIAL HOLDER L1	2-3
1484699-0300	.MATERIAL HOLDER L2	2-3
342790-0302	.. MAV PRESSURE GAUGE CONNECTOR 6	4-33
1484762-0000	.MEASURING TAPE	2-75

Part No	Description	Page No
1487516-0000	MEASURING TAPE	2-75
2982064-0000	METALCUP	2-45
351416-0100	MINIATURE CIRC. BREAK., FAZ -D10 1-POLE	4-69
351418-0005	MINIATURE CIRC. BREAK., FAZ-D0,5 3-POLE	4-69
351418-0200	MINIATURE CIRC. BREAK.,FAZ-D20/3 3-POLE	4-69
2610783-0001	MODIFICATION DRAWING	3-23
90600-3228	MOTOR CH21302002002A000	4-21
90602-2814	MOTOR FEEDBACK CABLE 2090-XXNFMF-S03,A	1-105, 1-107
90602-3351	MOTOR POWER CABLE 2090-XXNPMF-16S03,A	1-105, 1-107
1512268-0100	MOTOR UNIT	2-45
1359391-0000	MOUNTING BLOCK	6-23, 6-25
1519578-0000	MOUNTING BLOCK	2-67
532017-0000	MOUNTING LUG	1-7, 1-9, 1-157, 1-159
1499480-0200	MOUNTING PLATE	1-177, 1-179
2545426-0000	MOUNTING PLATE	3-33, 3-35
2552630-0000	MOUNTING PLATE	1-129, 1-131
2898132-0000	MOUNTING PLATE	4-65
3017352-0000	MOUNTING PLATE	1-195, 1-197, 1-199, 1-201
90458-1447	MOUNTING RAIL SUPPORT, TST 128660	4-67
90226-0452	MOUNTING SCREW	3-33, 3-35
90226-0458	MOUNTING SCREW	2-89, 2-101
583682-0200	MOUNTING SHEET	1-3, 1-5
1359938-0000	MOUNTING SHEET	6-9
2519628-0000	MOUNTING SHEET	1-47, 1-49
2813994-0000	MOUNTING SHEET	1-47, 1-49
90030-0207	NIPPLE	4-23
342700-0113	NIPPLE, EXT.THREAD, HEXAGON, G1/2-G1/2	2-85
342700-0201	NIPPLE, EXT.THREAD, HEXAGON, G1/4-G1/8	4-31
90224-0372	NIPPLE, EXT.THREAD, HEXAGON, R1/4-R1/4	1-171, 2-83
90330-0043	NIPPLE, EXT.THREAD, HEXAGON, R1/4-R1/4	3-33, 3-35
90330-0013	NIPPLE, EXT.THREAD, HEXAGON, R1/4-R1/8	3-3, 3-5
90330-0032	NIPPLE, EXT.THREAD, HEXAGON, R1/8-R1/8	3-3, 3-5, 4-21, 4-45
90330-0083	NIPPLE, EXT.THREAD, HEXAGON, R3/8-R1/4	3-33, 3-35
263153-0000	NUT	1-111, 1-115
522393-0000	NUT	1-7, 1-9, 1-157, 1-159
1147253-0000	NUT	2-95, 2-99
1334192-0000	NUT	1-73, 1-81, 1-83, 1-101, 1-103
1359565-0000	NUT	6-13
312705-0312	NUT HEX. DOMED CAP MHM-6 M4 A280	2-91, 2-93, 2-95, 4-37, 4-39
90099-0131	NUT HEX. M16X2 SS	1-19, 1-21, 1-23, 1-25
312805-0103	NUT ROUND WITH SLOTS M17X1 FE	1-109
90330-0093	NUT, HEXAGON SS, G1/2	4-47
90458-0321	NUT, M12X1,5	4-37, 4-39, 4-55
90458-0322	NUT, M16X1,5	1-7, 1-9, 1-19, 1-21, 1-23, 1-25, 1-157, 1-159, 1-167, 1-169, 4-55, 6-15, 6-29
90458-0323	NUT, M20X1,5	1-127, 1-149, 4-53, 4-55, 4-61
90458-0324	NUT, M25X1,5	1-167, 1-169, 4-53, 4-55, 4-61
315239-0113	NYLON WASHER G1/2, 1/2RRP	1-171
315239-0110	NYLON WASHER G1/4, 1/4RRP	1-171
315202-0242	O-RING 124,3X5,7 MM	6-55
315202-0246	O-RING 144,3X5,7 MM	6-53
315204-0213	O-RING 15,3X2,4 MM	3-33, 3-35
315202-0513	O-RING 17,12X2,62 MM	4-49
315204-0215	O-RING 19,2X3 MM	4-25
315206-0710	O-RING 25,12X1,78 MM	4-31
315202-0219	O-RING 29,2X3 MM	6-23, 6-25
315202-0714	O-RING 31,47X1,78 MM	4-49
315202-0505	O-RING 6,07X1,78 MM	4-49
315205-0505	O-RING 6,07X1,78 MM	3-3, 3-5, 3-43, 3-47
315204-0207	O-RING 8,3X2,4 MM	3-43
315204-0308	O-RING 84,5X3 MM	4-25
582496-0001	OPENING SPECIFICATION	1-249
582496-0002	OPENING SPECIFICATION	1-249
582496-0003	OPENING SPECIFICATION	1-249
582496-0004	OPENING SPECIFICATION	1-249
582496-0005	OPENING SPECIFICATION	1-249
582496-0006	OPENING SPECIFICATION	1-249
582496-0007	OPENING SPECIFICATION	1-249
582496-0008	OPENING SPECIFICATION	1-249
582496-0009	OPENING SPECIFICATION	1-249
582496-0010	OPENING SPECIFICATION	1-249
582496-0011	OPENING SPECIFICATION	1-249
979885-0100	OPENING SPECIFICATION	1-3, 1-5
1255270-0000	OPENING SPECIFICATION	1-249
1317497-0000	OPENING SPECIFICATION	1-249
1350233-0000	OPENING SPECIFICATION	1-249
2590048-0100	OPERATION DEVICE	6-9
90458-1330	OPERATION DEVICE, MBG 22X, 823 8871	6-29
90003-0474	PACKING	6-31, 6-39, 6-59, 6-61, 6-65
1020416-0200	PACKING DESCRIPTION	6-57
1020418-0200	PACKING DESCRIPTION	6-37
2589951-0200	PACKING DESCRIPTION	6-63
2590258-0100	PACKING DESCRIPTION	6-9
1349014-0000	PAD	1-193
2523601-0000	PAD	1-193

Part No	Description	Page No
90220-0091	PAIR TWISTED CABLE 2X2X0,25MM2	4-21, 4-37, 4-39, 6-29
90220-0131	PAIR TWISTED CABLE 3X2X0,25MM2	4-21
1499483-0000 .	PANE	1-129, 1-131
925090-0000 ..	PANEL	4-17
1499511-0000 .	PANEL	1-203
2826639-0000 .	PANEL	4-17
2879231-0000 .	PANEL	4-17
2913542-0000 .	PANEL	4-17
2552623-0100 .	PAPER MAGAZINE	1-121
1499571-0100 .	PAPER REEL HOLDER	2-7, 2-9
315705-0307 ..	PARALLEL KEY W. ROUND ENDS, 10X8X70 MM	1-61, 1-71, 1-77, 1-79, 1-87, 1-89, 1-93, 1-95
315701-0138 ..	PARALLEL KEY W. ROUND ENDS, 3X3X18 MM	1-109, 1-113
315705-0166 ..	PARALLEL KEY W. ROUND ENDS, 4X4X12 MM	2-51
315701-0169 ..	PARALLEL KEY W. ROUND ENDS, 4X4X18 MM	2-49
315701-0170 ..	PARALLEL KEY W. ROUND ENDS, 4X4X20 MM	2-77
315705-0196 ..	PARALLEL KEY W. ROUND ENDS, 5X5X10 MM	6-45
315705-0236 ..	PARALLEL KEY W. ROUND ENDS, 6X6X30 MM	6-45
315705-0238 ..	PARALLEL KEY W. ROUND ENDS, 6X6X36 MM	1-61, 1-71, 1-75, 1-77, 1-79, 1-85, 1-87, 1-89, 1-93, 1-95, 1-97, 1-99, 1-149
311102-0214 ..	PARALLEL PIN ISO 2338 2,5M6X25 ST	1-149
311102-0185 ..	PARALLEL PIN ISO 2338 2M6X6 ST	1-75, 1-85, 1-97, 1-99
311103-0236 ..	PARALLEL PIN ISO 2338 3M6X16 A1	1-215
311103-0238 ..	PARALLEL PIN ISO 2338 3M6X20 A1	1-73, 1-81, 1-83, 1-101, 1-103
311103-0270 ..	PARALLEL PIN ISO 2338 4M6X16 A1	1-67, 1-69, 2-67
311103-0272 ..	PARALLEL PIN ISO 2338 4M6X20 A1	1-19, 1-21, 1-23, 1-25, 1-39, 1-41, 2-45
311103-1274 ..	PARALLEL PIN ISO 2338 4M6X24 A1	2-7, 2-9
311103-0274 ..	PARALLEL PIN ISO 2338 4M6X25 A1	1-109, 1-113, 2-13
311103-0306 ..	PARALLEL PIN ISO 2338 5M6X12 A1	2-77
311103-0309 ..	PARALLEL PIN ISO 2338 5M6X18 A1	1-123
311103-0310 ..	PARALLEL PIN ISO 2338 5M6X20 A1	1-73, 1-81, 1-83, 1-101, 1-103
311103-1312 ..	PARALLEL PIN ISO 2338 5M6X24 A1	1-105, 1-107, 6-23, 6-25
311103-0349 ..	PARALLEL PIN ISO 2338 6M6X12 A1	1-71, 1-77, 1-79, 1-87, 1-89, 1-93, 1-95
311103-0351 ..	PARALLEL PIN ISO 2338 6M6X16 A1	1-73, 1-101, 1-103, 1-149, 6-23, 6-25
311103-0353 ..	PARALLEL PIN ISO 2338 6M6X20 A1	1-67, 1-69, 2-45
311103-1355 ..	PARALLEL PIN ISO 2338 6M6X24 A1	2-23, 2-25, 2-33, 2-35
311103-0361 ..	PARALLEL PIN ISO 2338 6M6X40 A1	2-75
311103-0409 ..	PARALLEL PIN ISO 2338 8M6X40 A1	2-77
979533-0200 ..	PATCH FINAL-SEALER	1-87, 1-89
581939-0200 ..	PATCH MAGAZINE	1-3, 1-5
90232-0106	PH.CELL E3S-CR11-5M	1-19, 1-21, 1-23, 1-25, 1-127
90232-0129	PH.CELL E3S-CR61-5M	2-7, 2-9
90232-0123	PH.CELL WLL170-P135-6011723	1-17, 1-209, 1-211
1550999-0000 .	PHOTOCELL BRACKET	6-23, 6-25
2592565-0000 .	PHOTOCELL BRACKET	1-19, 1-21, 1-23, 1-25
1517744-0000 .	PHOTOCELL CURSOR	1-127
90459-7273	PHOTOCELL E3Z-T81C-G0SR D-CN	6-9
90459-7274	PHOTOCELL E3Z-T81C-G0SR L-CN	6-9
90459-5529	PHOTOCELL E3Z-T86A, SENDER+RECIEVER	6-41
979659-0000 ..	PHOTOCELL SPACER	1-19, 1-21, 1-23, 1-25
979552-0200 ..	PHOTOCELL UNIT	1-3, 1-5
1517068-0000 .	PILLAR	1-119
469159-0000 ..	PIN	1-195, 1-197, 1-199, 1-201
497748-0000 ..	PIN	4-27
583735-0000 ..	PIN	1-119
583749-0000 ..	PIN	1-119, 1-215
589439-0000 ..	PIN	1-73, 1-81, 1-83, 1-101, 1-103
590980-0000 ..	PIN	1-215
988685-0000 ..	PIN	1-7, 1-9, 1-145, 1-157, 1-159, 1-167, 1-169, 1-217, 1-219, 2-91, 2-93, 2-95, 2-99
1484781-0000 .	PIN	2-59
1499512-0000 .	PIN	1-195, 1-197, 1-199, 1-201, 1-217, 1-219, 1-229, 1-231
1499573-0000 .	PIN	2-7, 2-9
1511568-0000 .	PIN	2-23, 2-25, 2-33, 2-35
1549433-0000 .	PIN	1-15
1549436-0000 .	PIN	1-15
2519629-0000 .	PIN	1-77, 1-79, 1-87, 1-89
2519632-0000 .	PIN	1-71, 1-77, 1-79, 1-87, 1-89, 1-93, 1-95
2523600-0000 .	PIN	1-193
2524480-0000 .	PIN	1-137
2524484-0000 .	PIN	1-137
2524485-0000 .	PIN	1-137
2540719-0000 .	PIN	1-71, 1-77, 1-79, 1-87, 1-89, 1-93, 1-95
2552628-0000 .	PIN	1-139
2555063-0000 .	PIN	4-15
2555497-0000 .	PIN	1-67, 1-69
2557569-0000 .	PIN	1-149
2574385-0000 .	PIN	1-75, 1-81, 1-83, 1-91, 1-97, 1-99
2575482-0000 .	PIN	1-141, 1-143
2590266-0000 .	PIN	6-21
1140294-0001 .	PIN DISTANCE 30	1-63
90258-0031	PIN, STRAIGHT SLOTTED SPRING FRP 3X20	1-7, 1-9, 1-157, 1-159, 2-23, 2-25, 2-33, 2-35
1020391-0001 .	PIPE	6-37
1020391-0002 .	PIPE	6-37
1519936-0000 .	PIPE	4-23
1539596-0000 .	PIPE	3-45

Part No	Description	Page No
1539603-0000	.PIPE	3-45
1539604-0000	.PIPE	3-3, 3-5
2545429-0000	.PIPE	3-33, 3-35
2546444-0000	.PIPE	3-3, 3-5
2546446-0000	.PIPE	3-3, 3-5
2546472-0000	.PIPE	3-3, 3-5
2558744-0000	.PIPE	3-33, 3-35
2558745-0000	.PIPE	3-33, 3-35
2570391-0000	.PIPE	3-33, 3-35
2570395-0000	.PIPE	1-245
2570396-0000	.PIPE	1-245
2590051-0000	.PIPE	6-11
2594264-0000	.PIPE	1-245
2879186-0000	.PIPE	4-45
2879189-0000	.PIPE	4-45
2879197-0000	.PIPE	4-45
2879222-0000	.PIPE	4-29
2879223-0000	.PIPE	4-29
2879226-0000	.PIPE	4-45
2879227-0000	.PIPE	4-45
2879228-0000	.PIPE	4-45
2879232-0000	.PIPE	4-45
2879233-0000	.PIPE	4-45
2898186-0000	.PIPE	4-81
2898187-0000	.PIPE	4-81
2898194-0000	.PIPE	4-81
2898195-0000	.PIPE	4-81
2905923-0000	.PIPE	4-45
2905924-0000	.PIPE	4-45
2905925-0000	.PIPE	4-45
2905927-0000	.PIPE	4-45
2905928-0000	.PIPE	4-45
2905929-0000	.PIPE	4-45
2905931-0000	.PIPE	4-45
2905932-0000	.PIPE	4-45
2905933-0000	.PIPE	4-45
2905934-0000	.PIPE	4-45
2905935-0000	.PIPE	4-45
2905936-0000	.PIPE	4-45
2913731-0000	.PIPE	4-45
2944458-0000	.PIPE	4-45
2983241-0000	.PIPE	5-3
3024356-0000	.PIPE	1-167, 1-169
3024357-0000	.PIPE	1-167, 1-169
90165-0060	.... PIPE CLIP FOR TUBE D=5 MM	1-127
90600-0937	.... PIPE CONNECTION 12-8	4-29
342722-0202	.. PIPE COUPLING 1/8" D=6MM	1-63, 1-245, 1-247
1511464-0000	.PIPE HOLDER	1-245
2570398-0000	.PIPE HOLDER	1-245
2570399-0100	.PIPE WORK	1-3, 1-5
2557579-0100	.PIPE WORK-PNEUMATIC	1-3, 1-5
576441-0000	.. PISTON	4-25
576446-0000	.. PISTON ROD	4-25
90091-0336	.... PISTON SEAL GLYD RING 79X90X4,2 MM	4-25
1517066-0000	.PIVOT ARM	1-119
2557568-0000	.PIVOT AXLE	1-149
979637-0000	.. PIVOT BRACKET	1-109
2555481-0000	.PIVOT BRACKET	1-113
905416-0000	.. PIVOT BRACKET-SWIVEL	1-73, 1-81, 1-83, 1-101, 1-103
589433-0000	.. PLATE	1-61
1255964-0000	.PLATE	1-17
1484729-0000	.PLATE	2-45
1484731-0000	.PLATE	2-45
1484733-0000	.PLATE	2-45
1487524-0000	.PLATE	2-63
1490801-0000	.PLATE	2-45
1490826-0000	.PLATE	2-45
1498424-0000	.PLATE	2-43
1498443-0000	.PLATE	2-43
1511000-0000	.PLATE	1-139
1511581-0000	.PLATE	2-45
1512420-0000	.PLATE	2-7, 2-9
1549419-0000	.PLATE	1-7, 1-9, 1-157, 1-159
1549425-0000	.PLATE	1-7, 1-9, 1-157, 1-159
1550912-0000	.PLATE	6-17, 6-19
1550913-0000	.PLATE	6-17, 6-19
1550956-0000	.PLATE	6-17, 6-19
1558991-0000	.PLATE	2-73
2519636-0000	.PLATE	1-77, 1-79
2519637-0000	.PLATE	1-87, 1-89
2519638-0000	.PLATE	1-71, 1-93, 1-95
2523594-0000	.PLATE	1-117
2523595-0000	.PLATE	1-117
2523602-0000	.PLATE	1-117

Part No	Description	Page No
2524479-0000	.PLATE	1-137
2524492-0000	.PLATE	1-149
2529549-0000	.PLATE	2-65
2529613-0000	.PLATE	1-149
2540725-0000	.PLATE	1-15
2540734-0000	.PLATE	1-67, 1-69
2561625-0000	.PLATE	6-27
2590044-0000	.PLATE	6-17, 6-19
2590045-0000	.PLATE	6-17, 6-19
2590046-0000	.PLATE	6-17, 6-19
2590049-0000	.PLATE	6-29
2609935-0000	.PLATE	1-67, 1-69
2609945-0000	.PLATE	1-151
2615471-0000	.PLATE	1-213
2656425-0000	.PLATE	6-23, 6-25
2656426-0000	.PLATE	6-23, 6-25
2699603-0000	.PLATE	6-49, 6-51
2796012-0000	.PLATE	6-45
2798025-0000	.PLATE	6-45
2815757-0000	.PLATE	1-13, 1-161
2832787-0000	.PLATE	4-23
2924203-0000	.PLATE	4-75, 4-77
2971535-0000	.PLATE	5-3
3017345-0000	.PLATE	1-167, 1-169
3017346-0000	.PLATE	1-19, 1-21, 1-23, 1-25
3017362-0000	.PLATE	1-105, 1-107
3017387-0000	.PLATE	2-79
3017391-0000	.PLATE	2-7, 2-9
3017394-0000	.PLATE	1-241
3017395-0000	.PLATE	1-241
3017396-0000	.PLATE	1-241
3017397-0000	.PLATE	2-93
3017411-0000	.PLATE	2-79
3019347-0000	.PLATE	6-23, 6-25
3042014-0000	.PLATE	6-23, 6-25
2854828-0100	.PLATFORM	4-5
2854831-0000	.PLATFORM	4-11
2893298-0100	.PLATFORM	4-7
2610785-0100	.PLC RACK 1	3-17
2610784-0100	.PLC RACK 3	3-17
90031-0057	.... PLC, DIGITAL INPUT MODULE	4-63
90031-0059	.... PLC, DIGITAL OUTPUT MODULE	3-21, 4-63
90031-0068	.... PLC, POWER SUPPLY	4-63
90031-0063	.... PLC,ANALOG COMBO MODULE,IN-4PT/OUT-2PT	3-19, 5-3
2545155-0000	.PLUG	3-43
2557567-0000	.PLUG	1-67, 1-69
90099-0120	.... PLUG PR 37 (PG29)	2-69, 3-33, 3-35
350013-0002	.. PLUG QSC-6H	1-173, 1-175, 2-81, 4-41, 4-45
350013-0003	.. PLUG QSC-8H	4-41
90261-0049	.... PLUG, BLIND, PLASTIC, NO. SR1750	1-183
342713-0210	.. PLUG, EXT THREAD HEX SOCKET	1-167, 1-169, 3-33, 3-35
342713-0213	.. PLUG, EXT THREAD HEX SOCKET 8638-00-120	2-83
90087-0046	.... PLUG, EXT. 1/8 NPT-THREAD, 2PH-SS	4-21
90330-0026	.... PLUG, EXT. G-THREAD, G1/4	3-33, 3-35
90136-0001	.... PLUG, EXT. THREAD, NO. 100727	3-3, 3-5
90326-0020	.... PLUG, FEMALE YELLOW CR-AL	3-43, 4-31
90330-0037	.... PLUG, G1/2EXT, G1/2	1-171, 2-83
90326-0022	.... PLUG, MALE YELLOW CR-AL	3-43
90099-0104	.... PLUG, PR 15,2 (PG9)	2-97
90099-0110	.... PLUG, PR 22,5 (PG16)	2-97
90099-0119	.... PLUG, PR 28,3 (PG21)	3-33, 3-35
400833-0000	.. PLUNGER	1-191
575002-0000	.. PLUNGER	2-13
1317204-0200	.PNEUMATIC CIRCUIT	4-5
3038093-0000	.PNEUMATIC DIAGRAM	1-3, 1-5
3038094-0000	.PNEUMATIC DIAGRAM	2-3
581948-0400	.. PNEUMATIC UNIT	1-3, 1-5
90319-0013	.... POLYESTER-SILKROPE 4MM 3900N, 102079	2-43
90458-0254	.... PRECISION PRESSURE REGULATOR,LRP-1/4-0,7	1-167, 1-169
90459-4810	.... PRESS TRANSD (DIFF) 0 - 2000PA, 2681-20C	5-3
2879225-0100	.PRESSURE GAUGE	4-29
90043-0069	.... PRESSURE GAUGE 0-4BAR WIEGAND 2040	4-37, 4-39
90043-0082	.... PRESSURE GAUGE, 2740, D=63 MM	4-33
90458-2969	.... PRESSURE GAUGE, MAP-40-1-1/8-EN	1-167, 1-169
90600-1385	.... PRESSURE GUARD, PEV-1/4-B SA234332	2-83
1484690-0300	.PRESSURE JAW	2-59
1484691-0000	.PRESSURE JAW	2-63
3062144-0000	.PRESSURE RAIL	2-63
2558133-0000	.PRESSURE REGULATOR	4-31
90458-2264	.... PRESSURE REGULATOR ARC-30-1/2"	4-31
90459-2425	.... PRESSURE REGULATOR IN-LINE, BSP-1/4	2-79, 4-37, 4-39
579385-0100	.. PRESSURE ROLLER	1-105, 1-107, 1-117, 1-123
2506475-0100	.PRESSURE ROLLER	1-129, 1-131
2524600-0100	.PRESSURE ROLLER	2-59

Part No	Description	Page No
2555479-0100	PRESSURE ROLLER	1-105, 1-107
90274-0066	PRESSURE SWITCH, 5,516 - 689,5 KPA	3-33, 3-35
90274-0103	PRESSURE SWITTCH PEV-1/4-B	1-171
2898193-0000	PRODUCT PIPE	4-81
2898192-0100	PRODUCT PIPES	4-5
2640964-1001	PROGRAM OBJECT CODE	3-15
2640964-0001	PROGRAMME	3-13
90458-1092	PROPORTIONAL VALVE 0 - 10V/0-6 BAR	4-37, 4-39
90459-1420	PROPORTIONAL VALVE 0 - 10V/0-6 BAR	3-33, 3-35
590981-0000	PROTECTION	1-105, 1-107
1558868-0000	PROTECTION	2-45
2529643-0000	PROTECTION	1-19, 1-21, 1-23, 1-25
2910398-0000	PROTECTION	4-21
3017349-0000	PROTECTION	1-217, 1-219
1512276-0000	PROTECTION PLATE	2-23, 2-25, 2-33, 2-35
1558484-0000	PROTECTION PLATE	2-7, 2-9
2529551-0000	PROTECTION PLATE	2-7, 2-9
90326-0012	PROTECTIVE COVER, T31A4618	3-43, 4-31
90044-0165	PROX. SENSOR, SME-8-K5-LED-24	1-67, 1-69, 2-11
90458-0677	PROX.SWITCH E2EG-X5MB1-M1	2-43
90344-0078	PULLEY	2-77
1317200-0200	PUMP GROUP	4-5
582446-0000	PUNCH	1-63
582447-0000	PUNCH	1-63
582448-0000	PUNCH	1-63
582449-0000	PUNCH	1-63
582450-0000	PUNCH	1-63
583755-0200	PUNCH	1-47, 1-49
1317255-0000	PUNCH	1-67, 1-69
1317383-0000	PUNCH	1-67, 1-69
1317457-0000	PUNCH	1-67, 1-69
979532-0200	PUNCH UNIT	1-61
2529645-0200	PUNCH UNIT	1-47, 1-49
580329-0300	PUSH BUTTON BOX	1-177, 1-179
3017386-0000	PUSH BUTTON BOX	2-97
90459-1919	PUSH BUTTON VALVE 550-053-000-0	1-65
90064-0085	PUSH BUTTON, RED	1-189
90064-0082	PUSH BUTTON, WHITE	2-97
90064-0098	PUSH BUTTON, WHITE	1-189
350015-0003	PUSH-IN Y-CONNECTOR QSY-F-8	4-37, 4-39
350010-0004	PUSH-IN BULKHEAD FITTING QSS-F-10	4-45
350006-0005	PUSH-IN FITTING QS-F-10H-6	4-45
350006-0007	PUSH-IN FITTING QS-F-12H-6	2-79
350006-0008	PUSH-IN FITTING QS-F-12H-8	2-81, 4-37, 4-39
350009-0003	PUSH-IN FITTING QS-F-8	1-167, 1-169
350006-0003	PUSH-IN FITTING QS-F-8H-6	1-167, 1-169
350001-0016	PUSH-IN FITTING QS-F-G1/2-12	1-167, 1-169, 2-83
350001-0010	PUSH-IN FITTING QS-F-G1/4-10	4-45
350001-0008	PUSH-IN FITTING QS-F-G1/4-6	1-167, 1-169, 4-23, 4-37, 4-39, 6-35
350001-0009	PUSH-IN FITTING QS-F-G1/4-8	4-37, 4-39, 4-45
350001-0006	PUSH-IN FITTING QS-F-G1/8-6	1-173, 1-175, 4-45, 6-35
350001-0007	PUSH-IN FITTING QS-F-G1/8-8	2-7, 2-9, 2-63, 2-81
350001-0014	PUSH-IN FITTING QS-F-G3/8-12	1-245
350001-0002	PUSH-IN FITTING QS-F-M5-6	2-63
350008-0004	PUSH-IN FITTING QSF-F-G1/4-6	6-41
350008-0005	PUSH-IN FITTING QSF-F-G1/8-8	2-7, 2-9
350004-0005	PUSH-IN L-FITTING QSL-F-12	1-167, 1-169
350004-0002	PUSH-IN L-FITTING QSL-F-6	2-79
350002-0016	PUSH-IN L-FITTING QSL-F-G1/2-12	1-171, 2-83, 2-85
350002-0008	PUSH-IN L-FITTING QSL-F-G1/4-6	1-167, 1-169, 1-171, 3-3, 3-5, 4-23, 4-37, 4-39
350002-0009	PUSH-IN L-FITTING QSL-F-G1/4-8	2-83, 4-45
350002-0006	PUSH-IN L-FITTING QSL-F-G1/8-6	1-173, 1-175, 2-81, 3-33, 3-35, 4-41, 4-45
350002-0007	PUSH-IN L-FITTING QSL-F-G1/8-8	2-63, 2-81
350002-0014	PUSH-IN L-FITTING QSL-F-G3/8-12	1-173, 1-175, 2-81
350002-0012	PUSH-IN L-FITTING QSL-F-G3/8-8	4-41
350002-0002	PUSH-IN L-FITTING QSL-F-M5-6	1-167, 1-169, 4-31
350005-0005	PUSH-IN T-FITTING QST-F-12	2-81
350005-0002	PUSH-IN T-FITTING QST-F-6	2-63, 6-35
350005-0003	PUSH-IN T-FITTING QST-F-8	2-63, 4-37, 4-39
350011-0002	PUSH-IN T-FITTING QST-F-8-6	4-37, 4-39
350015-0001	PUSH-IN Y-CONNECTOR QSY-F-6	1-167, 1-169, 2-79
90459-3887	PUSH-IN Y-CONNECTOR QSY-G1/2-12	1-167, 1-169
90055-0147	PUSH-IN Y-CONNECTOR QSY-12	2-79
90163-0062	QUICK COUPLING, (F) 5053-1/8	4-45
90163-0057	QUICK COUPLING, (M) 5150-1/8	4-45
90235-0206	QUICK EXHAUST VALVE, SEU-1/8	1-63, 2-7, 2-9, 2-63
1487510-0000	RACK GEAR	2-75
315221-0137	RADIAL SEAL 17X35X7 MM	6-23, 6-25
315221-0145	RADIAL SEAL 20X35X7 MM	6-21
563738-0000	RAIL	1-209, 1-211
571929-0000	RAIL	1-31, 1-33, 1-35, 1-37
979476-0000	RAIL	3-39, 3-41
1282988-0000	RAIL	1-129, 1-131
1484776-0000	RAIL	2-75

Part No	Description	Page No
1487526-0000	RAIL	2-63
1512352-0000	RAIL	1-205, 1-207
1517113-0000	RAIL	2-67
1517114-0100	RAIL	2-59
1558810-0000	RAIL	2-57
1558992-0000	RAIL	2-67
2597171-0000	RAIL	2-21
2787445-0000	RAIL	6-49, 6-51
2787446-0000	RAIL	6-49, 6-51
90094-0005	RAIL BRACKET, TSTW 5/5M	4-75, 4-77
1550743-0200	RAIL HOLDER	6-11
2699437-0000	RAIL HOLDER	6-13
353042-0004	RAIL, TS 35/7,5	4-67, 4-69, 4-71, 4-73, 4-75, 4-77
90077-0328	RAIL, TS15/5	6-33
2598217-0000	RAILING	2-7, 2-9
2829706-0100	RAILING	6-41
2893297-0000	RAILING	4-15
2893301-0100	RAILING	4-7
2590040-0100	RAILING KIT	6-9
90239-0487	REAR, CLEVIS, MINI-ISO 20-25	2-31, 2-39
2831583-0101	REBUILDING MANUAL	3-3, 3-5
3004389-0000	REDUCER	6-35
342716-0210	REDUCER 6-12	1-247
90459-3644	REDUCER, M20X1,5/M16X1,5	1-217, 1-219
90600-3778	REDUCER, M25/M40	4-21
2905946-0000	REDUCING NIPPLE	4-47
562015-0000	REDUCTION CASING	6-37
562016-0000	REDUCTION CASING	6-57
3017406-0000	REFLECTOR	2-33, 2-35
3017407-0000	REFLECTOR	2-23, 2-25
2555488-0000	REFLECTOR PLATE	1-127
90232-0333	REFLECTOR, E39-R1	1-19, 1-21, 1-23, 1-25, 1-127, 2-45, 2-95, 2-99
90459-2241	REGULATOR, MS4-LRB-1/4-D5-AS	1-167, 1-169
90459-1850	REGULATOR, MS6-LRB-1/2-D5-AS	2-83
90119-0109	RELAY OMRON 24VDC MY4H	4-67
90119-0056	RELAY, AUXILIARY MK3P5-S 24VDC	4-67, 4-71, 4-73
2565736-0000	RESERVOIR	3-33, 3-35
90121-0098	RESISTANCE FIXED, 3,9 KOHM, 2 W	4-55
315742-0111	RETAINING RING 15 SMS 199 RFR	1-39
315752-0120	RETAINING RING FOR BORE DIN 472 26	1-119, 1-215
315753-0122	RETAINING RING FOR BORE DIN 472 30 SS	1-11, 1-139, 1-215, 2-61
315753-0123	RETAINING RING FOR BORE DIN 472 32 SS	2-45
315753-0124	RETAINING RING FOR BORE DIN 472 35 SS	2-77, 6-21, 6-23, 6-25
315753-0127	RETAINING RING FOR BORE DIN 472 40X1.75C	1-109
90141-0016	RETAINING RING FOR SHAFT DIN 471 10 SS	1-185, 1-191, 1-193, 1-195, 1-197, 1-199, 1-201, 2-65
315751-0109	RETAINING RING FOR SHAFT DIN 471 12 SS	1-11, 1-43, 1-45, 1-129, 1-131, 1-187, 2-27, 2-37, 2-45, 2-59, 6-45
315751-0112	RETAINING RING FOR SHAFT DIN 471 15 SS	1-41, 1-109, 1-111, 1-113, 1-115, 1-125, 1-183, 2-43, 2-45, 2-65, 2-77
90141-0017	RETAINING RING FOR SHAFT DIN 471 17 SS	1-109, 1-113, 3-47
315751-0116	RETAINING RING FOR SHAFT DIN 471 20 SS	1-105, 1-107
315751-0119	RETAINING RING FOR SHAFT DIN 471 25 SS	2-65
315751-0103	RETAINING RING FOR SHAFT DIN 471 6X 0.7C	1-119, 1-215
90141-0015	RETAINING RING FOR SHAFT DIN 471 8 SS	1-105, 1-107, 1-117, 1-123, 1-137, 1-141, 1-143, 1-185
315755-0112	RETAINING RING SHAFT DIN 6799 12 SS	2-7, 2-9
315754-0113	RETAINING RING SHAFT DIN 6799 15	4-25
315755-0105	RETAINING RING SHAFT DIN 6799 3,2 SS	1-71, 1-77, 1-79, 1-87, 1-89, 1-93, 1-95, 4-55
315755-0106	RETAINING RING SHAFT DIN 6799 4 SS	1-17, 1-153, 1-155, 1-163, 1-165, 1-195, 1-197, 1-199, 1-201, 1-217, 1-219, 1-229, 1-231
315755-0107	RETAINING RING SHAFT DIN 6799 5 SS	1-195, 1-197, 1-199, 1-201
315755-0108	RETAINING RING SHAFT DIN 6799 6 SS	1-15, 1-149, 2-61
315755-0109	RETAINING RING SHAFT DIN 6799 7 SS	1-7, 1-9, 1-15, 1-157, 1-159
315755-0801	RETAINING RING SHAFT DIN 6799 8 SS	1-137
315755-0110	RETAINING RING SHAFT DIN 6799 9 SS	1-141, 1-143, 6-21
2545428-0000	RETURN PIPE	3-33, 3-35
2547006-0000	RETURN PIPE	3-3, 3-5
2547007-0000	RETURN PIPE	3-3, 3-5
312105-0367	REW M6S ISO 4017 M6X14 A480	1-137, 1-195, 1-197, 1-199, 1-201, 1-209, 1-211, 3-47
1498420-0200	RIGHT BACKDOOR	2-87
3017383-0000	RIGHT BACKDOOR	2-99
90458-1214	RIGHT ENDPL EXT. PILOT AIR,CDVI5.0-EPR-S	1-173, 1-175, 2-81, 4-41
1498414-0200	RIGHT SIDEDOOR	2-87
3017393-0000	RIGHT SIDEDOOR	2-93
988690-0000	RIM	2-91
209183-0000	RING	3-43, 3-47
440655-0000	RING	4-25
2590181-0000	RIVET	6-65
2656671-0000	RIVET	6-63
311521-0143	RIVET, BLANK 3,2X8	1-19, 1-21, 1-23, 1-25, 2-87
1487772-0000	ROCKER ARM	2-33, 2-35
1487774-0000	ROCKER ARM	2-23, 2-25
1487775-0000	ROCKER ARM	2-23, 2-25
1487777-0000	ROCKER ARM	2-33, 2-35
2538078-0000	ROCKER ARM	2-65

Part No	Description	Page No
1484779-0000	.ROD	2-75
2570400-0000	.ROD	1-141, 1-143
2570401-0000	.ROD	1-141, 1-143
90239-0491	.... ROD END, BALL JOINT EYE, MINI-ISO M6	1-191
90239-0516	.... ROD END, CLEVIS WITH AXLE M10X1,25	1-105, 1-107, 1-117, 1-123
90115-0156	.... ROD END, ID=8 MM, M8X1,25	1-217, 1-219
90115-0157	.... ROD END, ID=8 MM, M8X1,25 LH	1-217, 1-219
90239-0405	.... ROD END,BALL JOINT EYE M10X1,25	2-31, 2-39
90091-0237	.... ROD SEAL GLYD RING 20X27,5X3 MM	4-25
979639-0000	.. ROLL	1-109
1255745-0001	.ROLL	1-105, 1-107
1255745-0002	.ROLL	1-105, 1-107
1255745-0003	.ROLL	1-105, 1-107
1255821-0000	.ROLL	1-17, 1-73
1282991-0001	.ROLL	1-81, 1-83, 1-153, 1-155
1282991-0002	.ROLL	1-81, 1-83, 1-153, 1-155
1282991-0003	.ROLL	1-81, 1-83, 1-153, 1-155
1285546-0000	.ROLL	1-141, 1-143
1346988-0000	.ROLL	1-137
1359389-0000	.ROLL	6-23, 6-25
1548197-0000	.ROLL	2-65
2613780-0000	.ROLL	1-163, 1-165
582459-0001	.. ROLLER	1-101, 1-103, 1-163, 1-165
582459-0002	.. ROLLER	1-101, 1-103, 1-163, 1-165
582459-0003	.. ROLLER	1-101, 1-103, 1-163, 1-165
583737-0000	.. ROLLER	1-119, 1-215
583738-0000	.. ROLLER	1-119, 1-215
906254-0000	.. ROLLER	2-65
979582-0000	.. ROLLER	1-119, 1-215
1255748-0001	.ROLLER	1-39
1255748-0002	.ROLLER	1-39
1255748-0003	.ROLLER	1-39
1255822-0000	.ROLLER	1-101, 1-103
1282587-0000	.ROLLER	2-45
1282588-0000	.ROLLER	2-45
1499481-0000	.ROLLER	1-195, 1-197, 1-199, 1-201
1512583-0000	.ROLLER	1-129, 1-131, 1-133, 1-141, 1-143, 1-185, 1-187, 1-195, 1-197, 1-199, 1-201
1517293-0000	.ROLLER	1-195, 1-197, 1-199, 1-201
1519142-0000	.ROLLER	1-7, 1-9, 1-13
1519145-0000	.ROLLER	1-157, 1-159, 1-161
1539573-0000	.ROLLER	2-45
1558996-0000	.ROLLER	2-45
2524477-0000	.ROLLER	1-139
2552632-0000	.ROLLER	1-121, 1-133
2552633-0000	.ROLLER	1-121, 1-133
2555478-0000	.ROLLER	1-113
2816490-0000	.ROLLER	1-163, 1-165
2816491-0000	.ROLLER	1-163, 1-165
2656374-0086	.ROLLER CHAIN	6-9
905471-0000	.. ROLLER DRIVE	1-73, 1-81, 1-83, 1-101, 1-103, 1-251
979575-0000	.. ROLLER PLATE	1-121, 1-133
1255511-0000	.ROPE BRACKET	2-43
1255512-0000	.ROPE BRACKET	2-43
90600-4437	.... ROT. LOBE PUMP AVMXT 3500DA	4-21
90347-0054	.... ROTARY DASHPOT, S-CRD-P277	2-45
575034-0000	.. ROUND NUT	1-203
1539391-0000	.ROUND NUT	2-91, 2-93, 2-95, 2-99
90166-0176	.... RUBBER HOSE	5-3
90143-0069	.... RUBBER STRIP	2-97
90143-0068	.... RUBBER STRIP EMKA 1011-06	4-19
1487525-0000	.RULE PLATE	2-63
1498439-0000	.RULE PLATE	2-59
1487518-0000	.RULER	2-23, 2-25, 2-33, 2-35
1517534-0000	.RUNNER RING	1-129, 1-131
90600-2962	.... SAFE-OFF OPTION POWERFLEX 70, 20A-DG01	4-55
90459-4164	.... SAFETY SCREW SM4X20, 20-053-42	1-167, 1-169, 1-203, 1-217, 1-219, 1-235, 2-7, 2-9, 2-47, 2-91, 2-93
90459-4165	.... SAFETY SCREW SM4X25, 20-053-43	1-217, 1-219, 2-47
90601-1126	.... SAFETY VALVE, MS6-SV-1/2-E-10V24-AG	1-171, 2-83
90220-0183	.... SCR. CABLE 2X0,34MM2	5-3
90220-0072	.... SCR. CABLE 4X0,34MM2	3-33, 3-35
90220-0104	.... SCR. CABLE 4X1,5MM2	2-51, 2-69, 4-21, 6-9
90220-0107	.... SCR. CABLE 5X0,75MM2	1-27, 1-29
90287-0205	.... SCREW	4-55
283551-0000	.. SCREW	1-73, 1-81, 1-83, 1-101, 1-103
522395-0000	.. SCREW	1-7, 1-9, 1-157, 1-159
554162-0000	.. SCREW	4-27
556541-0000	.. SCREW	1-119, 1-215
589432-0000	.. SCREW	1-119, 1-215
735921-0000	.. SCREW	4-17
905607-0000	.. SCREW	1-73, 1-81, 1-83, 1-101, 1-103
1129767-0000	.SCREW	1-145, 2-91, 2-93, 2-95, 2-99
1490813-0000	.SCREW	2-27, 2-37
1490832-0000	.SCREW	2-23, 2-25, 2-33, 2-35

Part No	Description	Page No
2519631-0000	SCREW	1-7, 1-9, 1-71, 1-77, 1-79, 1-87, 1-89, 1-93, 1-95, 1-157, 1-159
2524494-0000	SCREW	1-149
3017361-0000	SCREW	1-147
312155-0226	SCREW DIN 7991 MF6S M3X12 A4 70	1-15, 1-193
312155-0289	SCREW DIN 7991 MF6S M4X10 A4 70	2-59, 4-51
312155-0291	SCREW DIN 7991 MF6S M4X12 A4 70	4-37, 4-39, 4-57, 4-59
312155-0293	SCREW DIN 7991 MF6S M4X16 A4 70	1-67, 1-69, 1-119, 2-23, 2-25, 2-33, 2-35, 4-33
312155-0285	SCREW DIN 7991 MF6S M4X6 A4 70	2-23, 2-25, 2-33, 2-35
312155-0287	SCREW DIN 7991 MF6S M4X8 A4 70	1-19, 1-21, 1-23, 1-25, 1-195, 1-197, 1-199, 1-201, 2-63, 3-33, 3-35
312155-0325	SCREW DIN 7991 MF6S M5X10 A4 70	1-7, 1-9, 1-129, 1-131, 1-157, 1-159, 1-235
312155-0327	SCREW DIN 7991 MF6S M5X12 A4 70	1-129, 1-131, 1-217, 1-219, 2-45
312155-0329	SCREW DIN 7991 MF6S M5X16 A4 70	1-7, 1-9, 1-157, 1-159, 1-217, 1-219, 6-35, 6-41
312155-0331	SCREW DIN 7991 MF6S M5X20 A4 70	2-7, 2-9, 2-11
312155-0335	SCREW DIN 7991 MF6S M5X30 A4 70	1-145
312155-0339	SCREW DIN 7991 MF6S M5X40 A4 70	6-47
312155-0323	SCREW DIN 7991 MF6S M5X8 A4 70	2-75, 6-41
312155-0364	SCREW DIN 7991 MF6S M6X10 A4 70	2-27, 2-37
312155-0366	SCREW DIN 7991 MF6S M6X12 A4 70	2-7, 2-9, 6-49, 6-51
312155-0368	SCREW DIN 7991 MF6S M6X16 A4 70	1-11, 1-181, 2-75
312155-0370	SCREW DIN 7991 MF6S M6X20 A4 70	1-137, 2-11, 3-47, 4-55
312155-0372	SCREW DIN 7991 MF6S M6X25 A4 70	1-217, 1-219
312155-0374	SCREW DIN 7991 MF6S M6X30 A4 70	1-187
312155-0451	SCREW DIN 7991 MF6S M8X20 A4 70	6-57
312155-0457	SCREW DIN 7991 MF6S M8X35 A4 70	2-45
312108-0449	SCREW EN 1665 TYPE F M8X16 A270	4-19
90287-0043	SCREW HEX.SOCK.SET CONEPT. MS6SS M6X30	6-41
90459-1681	SCREW HEX.SOCK.SET CONEPT.MS6SS M4X12 A2	1-67, 1-69
312125-0226	SCREW ISO 1207 M3X12 A4	1-19, 1-21, 1-23, 1-25, 1-217, 1-219, 6-9
312125-0228	SCREW ISO 1207 M3X16 A4	3-43, 3-47, 4-23
312125-0230	SCREW ISO 1207 M3X20 A4	1-17, 4-21
312125-0232	SCREW ISO 1207 M3X25 A4	1-7, 1-9, 1-157, 1-159, 1-195, 1-197, 1-199, 1-201
312125-0234	SCREW ISO 1207 M3X30 A4	1-129, 1-131, 2-29, 2-41, 2-45, 4-23
312125-0220	SCREW ISO 1207 M3X6 A4	1-17
312125-0222	SCREW ISO 1207 M3X8 A4	1-27, 1-29, 1-129, 1-131, 1-145, 1-203, 1-217, 1-219, 2-45, 2-95, 2-99
312125-0289	SCREW ISO 1207 M4X10 A4	1-73, 1-81, 1-83, 1-91, 1-101, 1-103
312125-0291	SCREW ISO 1207 M4X12 A4	1-151, 1-191, 1-193, 1-209, 1-211, 6-33
312125-0293	SCREW ISO 1207 M4X16 A4	1-19, 1-21, 1-23, 1-25, 1-193, 2-97, 3-39, 3-41
312121-0295	SCREW ISO 1207 M4X20 4.8-5.8 Z.PL.	1-75, 1-85, 1-97, 1-99
312125-0297	SCREW ISO 1207 M4X25 A4	4-45
312125-0285	SCREW ISO 1207 M4X6 A4	1-187, 2-15, 2-17, 2-73, 2-75, 3-39, 3-41
312122-0285	SCREW ISO 1207 M4X6 NI PL BRASS	4-17
312125-0287	SCREW ISO 1207 M4X8 A4	1-27, 1-29, 1-75, 1-85, 1-121, 1-127, 1-129, 1-131, 1-133, 1-141, 1-143, 1-185, 1-191, 1-195, 1-197, 1-199, 1-201, 6-9
312125-0329	SCREW ISO 1207 M5X16 A4	6-23, 6-25
312122-0331	SCREW ISO 1207 M5X20 NI PL BRASS	2-71
312125-0323	SCREW ISO 1207 M5X8 A4	2-53, 2-55, 4-25
312125-0364	SCREW ISO 1207 M6X10 A4	1-205, 1-207
312125-0366	SCREW ISO 1207 M6X12 A4	1-19, 1-21, 1-23, 1-25, 1-31, 1-33, 1-35, 1-37, 2-49
312145-0291	SCREW ISO 2009 MFS M4X12 A4	1-73, 1-101, 1-103, 3-33, 3-35
312141-0293	SCREW ISO 2009 MFS M4X16 4.8 EL.PL	1-97, 1-99
312145-0293	SCREW ISO 2009 MFS M4X16 A4	1-81, 1-83
312145-0287	SCREW ISO 2009 MFS M4X8 A4	1-73, 1-81, 1-83, 1-91, 1-101, 1-103, 2-23, 2-25, 2-33, 2-35
312145-0325	SCREW ISO 2009 MFS M5X10 A4	3-33, 3-35
312145-0327	SCREW ISO 2009 MFS M5X12 A4	2-7, 2-9
312145-0366	SCREW ISO 2009 MFS M6X12 A4	3-33, 3-35
90287-0331	SCREW ISO 7380 K6S M5X12 A4	2-49
90458-0072	SCREW ISO 7380 S M6X12 A2	2-87, 4-9
312311-0325	SCREW ISO4028 M5X10 FZB	1-15
312311-0321	SCREW ISO4028 M5X6 FZB	2-45
312311-0368	SCREW ISO4028 M6X16 FZB	1-123
312311-0451	SCREW ISO4028 M8X20 FZB	1-7, 1-9, 1-157, 1-159
312318-0220	SCREW ISO4029 M3X6 A4	2-51
312318-0289	SCREW ISO4029 M4X10 A4	1-67, 1-69
312318-0283	SCREW ISO4029 M4X4 A4	1-73, 1-101, 1-103, 1-117, 1-137, 2-67, 2-75, 6-21
312318-0285	SCREW ISO4029 M4X6 A4	1-67, 1-69, 1-71, 1-77, 1-79, 1-81, 1-83, 1-87, 1-89, 1-93, 1-95, 1-105, 1-107, 1-195, 1-197, 1-199, 1-201
312318-0287	SCREW ISO4029 M4X8 A4	1-67, 1-69, 1-73, 1-81, 1-83, 1-101, 1-103, 2-49, 2-61, 2-65, 2-77
312318-0325	SCREW ISO4029 M5X10 A4	1-113
312318-0327	SCREW ISO4029 M5X12 A4	6-45
312318-0329	SCREW ISO4029 M5X16 A4	1-149
312318-0331	SCREW ISO4029 M5X20 A4	6-45
312318-0323	SCREW ISO4029 M5X8 A4	1-105, 1-107, 2-45
312318-0364	SCREW ISO4029 M6X10 A4	6-23, 6-25
312318-0366	SCREW ISO4029 M6X12 A4	1-39, 1-41, 1-105, 1-107, 1-117, 1-123, 1-125, 1-139, 2-43, 2-45, 2-59, 2-61
312318-0370	SCREW ISO4029 M6X20 A4	2-7, 2-9
312318-0362	SCREW ISO4029 M6X8 A4	1-39, 1-129, 1-131, 2-23, 2-25, 2-33, 2-35, 2-45, 6-9, 6-47
312318-0447	SCREW ISO4029 M8X12 A4	4-15, 4-21
312318-0443	SCREW ISO4029 M8X8 A4	1-11
312115-0501	SCREW ISO4762 M10X50 A4 80	2-77
312115-0630	SCREW ISO4762 M16X50 A4 80	4-15
312115-0226	SCREW ISO4762 M3X12 A4 80	1-13, 1-127, 1-161, 6-41
312115-0228	SCREW ISO4762 M3X16 A4 80	1-43, 1-45, 1-121, 1-129, 1-131, 1-133

Part No	Description	Page No
312115-0230 ..	SCREW ISO4762 M3X20 A4 80	1-195, 1-197, 1-199, 1-201, 2-97
312115-0220 ..	SCREW ISO4762 M3X6 A4 80	1-129, 1-131
312115-0289 ..	SCREW ISO4762 M4X10 A4 80	1-123, 3-33, 3-35
312115-0291 ..	SCREW ISO4762 M4X12 A4 80	1-19, 1-21, 1-23, 1-25, 2-21, 2-65, 2-75, 3-43, 4-61
312115-0293 ..	SCREW ISO4762 M4X16 A4 80	1-73, 1-81, 1-83, 1-101, 1-103, 2-53, 2-55
312115-0295 ..	SCREW ISO4762 M4X20 A4 80	1-63, 1-119, 1-127, 2-29, 2-41
312115-0304 ..	SCREW ISO4762 M4X45 A4 80	1-151
312115-0305 ..	SCREW ISO4762 M4X50 A4 80	3-33, 3-35, 4-37, 4-39
312115-0285 ..	SCREW ISO4762 M4X6 A4 80	1-97, 1-99
312115-0287 ..	SCREW ISO4762 M4X8 A4 80	1-7, 1-9, 1-73, 1-81, 1-83, 1-91, 1-101, 1-103, 1-157, 1-159, 1-193, 5-3, 6-9
312115-0325 ..	SCREW ISO4762 M5X10 A4 80	1-217, 1-219, 3-3, 3-5, 3-33, 3-35, 4-67, 4-69, 4-71, 4-73, 4-75, 4-77
312115-0327 ..	SCREW ISO4762 M5X12 A4 80	1-7, 1-9, 1-67, 1-69, 1-133, 1-145, 1-149, 1-157, 1-159, 1-195, 1-197, 1-199, 1-201, 1-217, 1-219, 1-229, 1-231, 2-7, 2-9, 2-23, 2-25, 2-33, 2-35, 2-91, 2-93, 2-95, 2-99
312115-0329 ..	SCREW ISO4762 M5X16 A4 80	1-63, 1-67, 1-69, 1-167, 1-169, 1-217, 1-219, 2-23, 2-25, 2-33, 2-35
312115-0331 ..	SCREW ISO4762 M5X20 A4 80	1-117
312115-0332 ..	SCREW ISO4762 M5X22 A4 80	1-15
312115-0333 ..	SCREW ISO4762 M5X25 A4 80	2-77
312115-0335 ..	SCREW ISO4762 M5X30 A4 80	1-193, 1-245, 5-3, 6-35
312115-0337 ..	SCREW ISO4762 M5X35 A4 80	1-217, 1-219
312115-0323 ..	SCREW ISO4762 M5X8 A4 80	1-19, 1-21, 1-23, 1-25, 1-121, 1-133, 1-191, 1-193, 2-47
312115-0366 ..	SCREW ISO4762 M6X12 A4 80	1-11, 1-129, 1-131, 1-235, 1-243, 2-15, 2-17, 6-23, 6-25
312115-0367 ..	SCREW ISO4762 M6X14 A4 80	1-195, 1-197, 1-199, 1-201
312115-0368 ..	SCREW ISO4762 M6X16 A4 80	1-13, 1-27, 1-29, 1-39, 1-41, 1-67, 1-69, 1-123, 1-149, 1-161, 1-217, 1-219, 1-235, 2-69, 2-77, 6-49, 6-51
312115-0370 ..	SCREW ISO4762 M6X20 A4 80	1-125, 1-149, 2-45, 2-49, 2-65, 2-75, 4-55
312115-0372 ..	SCREW ISO4762 M6X25 A4 80	1-63, 1-67, 1-69, 1-105, 1-107, 1-189, 1-205, 1-207, 2-45, 6-23, 6-25
312115-0374 ..	SCREW ISO4762 M6X30 A4 80	2-43, 2-53, 2-55, 2-75, 6-35
312115-0376 ..	SCREW ISO4762 M6X35 A4 80	1-63, 1-67, 1-69, 4-37, 4-39
312115-0378 ..	SCREW ISO4762 M6X40 A4 80	1-31, 1-33, 1-35, 1-37, 1-129, 1-131
312115-0379 ..	SCREW ISO4762 M6X45 A4 80	1-7, 1-9, 1-157, 1-159
312115-0449 ..	SCREW ISO4762 M8X16 A4 80	2-23, 2-25, 2-33, 2-35
312115-0451 ..	SCREW ISO4762 M8X20 A4 80	1-61, 1-105, 1-107
312115-0453 ..	SCREW ISO4762 M8X25 A4 80	1-117, 4-11
312115-0455 ..	SCREW ISO4762 M8X30 A4 80	1-61, 1-117
312115-0459 ..	SCREW ISO4762 M8X40 A4 80	1-245
312115-0463 ..	SCREW ISO4762 M8X60 A4 80	2-7, 2-9
312115-0467 ..	SCREW ISO4762 M8X80 A4 80	2-63
312180-0364 ..	SCREW ISO7379 H6X10	1-229, 1-231
312180-0374 ..	SCREW ISO7379 H6X30	1-7, 1-9, 1-157, 1-159
90287-0062	SCREW M6	1-217, 1-219, 1-233
312105-0289 ..	SCREW M6S H4X10 A4 70 ISO4017/DIN933	4-37, 4-39, 6-23, 6-25

Part No	Description	Page No
312105-0515 ..	SCREW M6S ISO 4014 M10X120 A480	4-17
312105-0503 ..	SCREW M6S ISO 4014 M10X60 A480	4-21
312105-0509 ..	SCREW M6S ISO 4014 M10X90 A480	4-53
312105-0556 ..	SCREW M6S ISO 4014 M12X120 A480	2-7, 2-9
312105-0558 ..	SCREW M6S ISO 4014 M12X130 A480	4-11
312105-0550 ..	SCREW M6S ISO 4014 M12X90 A480	4-21
312105-0335 ..	SCREW M6S ISO 4014 M5X30 A480	1-7, 1-9, 1-157, 1-159, 3-33, 3-35
312105-0337 ..	SCREW M6S ISO 4014 M5X35 A480	1-105, 1-107
312105-0339 ..	SCREW M6S ISO 4014 M5X40 A480	1-75, 1-85, 1-97, 1-99, 1-105, 1-107, 1-129, 1-131
312105-0341 ..	SCREW M6S ISO 4014 M5X50 A480	2-63
312105-0374 ..	SCREW M6S ISO 4014 M6X30 A480	1-141, 1-143, 1-195, 1-197, 1-199, 1-201
312105-0376 ..	SCREW M6S ISO 4014 M6X35 A480	1-123, 1-141, 1-143, 1-149, 6-9
312105-0378 ..	SCREW M6S ISO 4014 M6X40 A480	1-187, 1-217, 1-219, 1-233, 3-45
312105-0379 ..	SCREW M6S ISO 4014 M6X45 A480	2-43, 2-65
312105-0381 ..	SCREW M6S ISO 4014 M6X55 A480	1-139, 2-43
312105-0382 ..	SCREW M6S ISO 4014 M6X60 A480	2-13, 4-29
312105-0457 ..	SCREW M6S ISO 4014 M8X35 A480	1-47, 1-49, 1-93, 1-95
312105-0459 ..	SCREW M6S ISO 4014 M8X40 A480	1-17, 1-47, 1-49, 1-61, 1-71, 1-77, 1-79, 1-87, 1-89, 1-91, 1-93, 1-95, 1-105, 1-107
312105-0460 ..	SCREW M6S ISO 4014 M8X45 A480	4-51
312105-0461 ..	SCREW M6S ISO 4014 M8X50 A480	6-21
312105-0463 ..	SCREW M6S ISO 4014 M8X60 A480	6-9
312105-0493 ..	SCREW M6S ISO 4017 M10X25 A480	1-105, 1-107, 6-57
312105-0495 ..	SCREW M6S ISO 4017 M10X30 A480	1-145
312105-0497 ..	SCREW M6S ISO 4017 M10X35 A480	2-31, 2-39
312105-0536 ..	SCREW M6S ISO 4017 M12X30 A480	1-145, 4-11
312109-0544 ..	SCREW M6S ISO 4017 M12X60 A480	4-21
312105-0291 ..	SCREW M6S ISO 4017 M4X12 A470	1-127, 1-151, 2-23, 2-25, 2-33, 2-35, 2-47, 4-57, 4-59, 6-29
312105-0293 ..	SCREW M6S ISO 4017 M4X16 A470	1-17, 1-47, 1-49, 1-187, 1-195, 1-197, 1-199, 1-201, 2-7, 2-9
312105-0295 ..	SCREW M6S ISO 4017 M4X20 A470	1-43, 1-45, 2-53, 2-55, 4-59
312105-0297 ..	SCREW M6S ISO 4017 M4X25 A470	1-47, 1-49
312105-0299 ..	SCREW M6S ISO 4017 M4X30 A470	1-65, 1-135
312105-0301 ..	SCREW M6S ISO 4017 M4X35 A470	2-29, 2-41
312105-0287 ..	SCREW M6S ISO 4017 M4X8 A470	1-7, 1-9, 1-17, 1-73, 1-81, 1-83, 1-101, 1-103, 1-119, 1-127, 1-153, 1-155, 1-157, 1-159, 1-209, 1-211, 2-23, 2-25, 2-33, 2-35
312105-0325 ..	SCREW M6S ISO 4017 M5X10 A480	1-19, 1-21, 1-23, 1-25, 1-129, 1-131, 1-149, 1-209, 1-211, 3-33, 3-35, 3-47, 4-45
312105-0327 ..	SCREW M6S ISO 4017 M5X12 A480	1-7, 1-9, 1-73, 1-81, 1-83, 1-91, 1-101, 1-103, 1-105, 1-107, 1-117, 1-121, 1-123, 1-157, 1-159, 1-213, 1-217, 1-219, 2-7, 2-9, 2-47, 2-79, 4-21, 6-23, 6-25, 6-41
312105-0328 ..	SCREW M6S ISO 4017 M5X14 A480	1-43, 1-45, 1-129, 1-131
312105-0329 ..	SCREW M6S ISO 4017 M5X16 A480	1-19, 1-21, 1-23, 1-25, 1-167, 1-169, 1-195, 1-197, 1-199

Part No	Description	Page No
		1-201, 1-213, 1-243, 2-47, 4-51, 6-23, 6-25, 6-45
312105-0331 ..	SCREW M6S ISO 4017 M5X20 A480	1-7, 1-9, 1-141, 1-143, 1-157, 1-159, 2-23, 2-25, 2-33, 2-35
312105-0333 ..	SCREW M6S ISO 4017 M5X25 A480	1-119, 1-127, 1-139, 1-215, 2-75, 3-43
312105-0323 ..	SCREW M6S ISO 4017 M5X8 A480	1-7, 1-9, 1-157, 1-159, 1-215
312105-0364 ..	SCREW M6S ISO 4017 M6X10 A480	1-19, 1-21, 1-23, 1-25, 1-215, 1-217, 1-219, 1-239, 2-7, 2-9
		2-31, 2-39, 3-33, 3-35, 4-47, 6-27
312105-0366 ..	SCREW M6S ISO 4017 M6X12 A480	1-17, 1-105, 1-107, 1-129, 1-131, 1-135, 1-137, 1-139
		1-141, 1-143, 1-149, 1-153, 1-155, 1-163, 1-165, 1-167, 1-169, 1-217, 1-219, 2-7, 2-9, 2-23, 2-25
		2-33, 2-35, 2-43, 2-45, 2-49, 2-73, 2-77, 4-17, 4-21, 4-23, 4-29, 4-37, 4-39, 4-51, 6-13, 6-35, 6-41
312105-0368 ..	SCREW M6S ISO 4017 M6X16 A480	1-13, 1-81, 1-83, 1-105, 1-107, 1-119, 1-127, 1-129, 1-131
		1-137, 1-151, 1-161, 1-163, 1-165, 1-195, 1-197, 1-199, 1-201, 1-217, 1-219, 2-23, 2-25, 2-29, 2-33
		2-35, 2-41, 2-43, 2-45, 2-51, 2-59, 2-79, 2-81, 2-83, 4-43, 4-47, 5-3, 6-9, 6-41
312105-0370 ..	SCREW M6S ISO 4017 M6X20 A480	1-139, 1-141, 1-143, 1-149, 1-181, 1-191, 1-193, 1-213
		2-7, 2-9, 2-29, 2-41, 2-53, 2-55, 2-59, 2-65, 2-75, 2-77, 4-29, 4-47, 4-51, 4-79, 6-9, 6-13, 6-27, 6-47
312105-0372 ..	SCREW M6S ISO 4017 M6X25 A480	1-19, 1-21, 1-23, 1-25, 1-139, 2-7, 2-9, 2-29, 2-41, 2-45
		2-75, 3-45, 6-35
312109-0374 ..	SCREW M6S ISO 4017 M6X30 A480	2-45, 2-73
312109-0376 ..	SCREW M6S ISO 4017 M6X35 A480	2-73
312109-0378 ..	SCREW M6S ISO 4017 M6X40 A480	2-29, 2-41
312105-0362 ..	SCREW M6S ISO 4017 M6X8 A480	1-13, 1-161, 4-37, 4-39, 5-3, 6-17, 6-19, 6-27
90459-4735	SCREW M6S ISO 4017 M8X10 A480	6-17, 6-19, 6-43
312105-0447 ..	SCREW M6S ISO 4017 M8X12 A480	1-65, 1-203, 1-217, 1-219, 1-229, 1-231, 6-41, 6-49, 6-51, 6-57
312105-0449 ..	SCREW M6S ISO 4017 M8X16 A480	1-43, 1-45, 1-73, 1-81, 1-83, 1-91, 1-101, 1-103, 1-129
		1-131, 1-187, 1-241, 1-243, 2-59, 2-85, 6-17, 6-19
312105-0451 ..	SCREW M6S ISO 4017 M8X20 A480	1-7, 1-9, 1-19, 1-21, 1-23, 1-25, 1-77, 1-79, 1-87, 1-89
		1-129, 1-131, 1-157, 1-159, 2-19, 4-13, 6-13, 6-17, 6-19, 6-53, 6-55
312105-0453 ..	SCREW M6S ISO 4017 M8X25 A480	1-47, 1-49, 1-63, 1-67, 1-69, 1-71, 1-73, 1-93, 1-95, 1-101
		1-103, 1-123, 1-137, 2-23, 2-25, 2-33, 2-35, 2-73, 3-33, 3-35, 3-45, 4-21, 6-9, 6-17, 6-19, 6-37, 6-57
312105-0455 ..	SCREW M6S ISO 4017 M8X30 A480	1-63, 1-71, 1-73, 1-75, 1-77, 1-79, 1-81, 1-83, 1-85, 1-87
		1-89, 1-91, 1-93, 1-95, 1-97, 1-99, 1-101, 1-103, 1-117, 1-151, 1-217, 1-219, 2-59, 6-41
312109-0457 ..	SCREW M6S ISO 4017 M8X35 A480	6-43
312109-0467 ..	SCREW M6S ISO 4017 M8X80 A480	1-123
312104-0499 ..	SCREW M6S M10X40H FZB	1-105, 1-107
312101-0504 ..	SCREW M6S M10X65 FZB	4-83
90287-0175	SCREW M6S M3X12 A480	4-75, 4-77
312101-0344 ..	SCREW M6S M5X65 FZB	1-135
90287-0314	SCREW MC6S M4X60 A470	4-23
90287-0335	SCREW MC6S M8X90 A280	2-63
90287-0075	SCREW SLOT. PAN HEAD LKCS M6X12	1-243, 4-17
90287-0106	SCREW SPRINGLOAD. SLOTTED HEAD M10X21	1-11, 1-183
90287-0148	SCREW SPRINGLOAD. SLOTTED HEAD M5X12	1-119, 1-215
90287-0112	SCREW SPRINGLOAD. SLOTTED HEAD M8X16	1-7, 1-9, 1-157, 1-159, 1-193
312205-0107 ..	SCREW U6S1/4X13RFR	4-35
90287-0238	SCREW, HEX.SOCK.HEAD SHOULD. M5X6	4-19
90287-0154	SCREW, SOCK.SET DOGPOINT M6X10	1-11, 2-43
90459-4617	SCREW, SZ8512.08X020	1-67, 1-69
2826441-0000 .	SEAL RING	4-25
2833037-0000 .	SEAL RING	4-25
90091-0266	SEAL RING 10,4X16,3X2,5 MM	4-29, 4-31
1524481-0000 .	SEALING BLOCK	1-193
1538473-0000 .	SEALING BLOCK	1-191
583757-0200 ..	SEALING DEVICE	1-47, 1-49
583758-0200 ..	SEALING DEVICE	1-47, 1-49
1499575-0001 .	SEALING STRIP	2-89, 2-101
1499575-0002 .	SEALING STRIP	2-95
1499575-0003 .	SEALING STRIP	2-91, 2-93
1499576-0000 .	SEALING STRIP	2-99
583756-0200 ..	SEALING UNIT	1-47, 1-49
979530-0200 ..	SEALING UNIT	1-77, 1-79
1255730-0200 .	SEALING UNIT OUTER PATCH	1-47, 1-49
1255731-0200 .	SEALING UNIT OUTER PATCH	1-71
979534-0200 ..	SEALING UNIT TAB	1-93, 1-95
90458-1208	SEALING, CHANNEL 1 BLOCKED	1-173, 1-175, 2-81
90458-1207	SEALING, STANDARD	1-173, 1-175, 2-81, 4-41
90235-0451	SELECTOR ACTUATOR, N-22-SW	1-167, 1-169
90143-0097	SELF GRIPPING GASKET, 1011-24	3-33, 3-35
90459-3042	SENSOR CABLE AC117	1-213
90459-4142	SENSOR, ADAM M12 20-051-00	1-167, 1-169, 1-203, 1-217, 1-219, 1-235, 2-7, 2-9, 2-47
90458-2794	SENSOR, EVA 20-046-00	1-167, 1-169, 1-203, 1-217, 1-219, 1-235, 2-47, 2-91, 2-93, 2-95, 2-99
3017389-0000 .	SEPARATION BLOCK	2-85
579384-0300 ..	SERVO DRIVE UNIT	1-3, 1-5
90602-8227	SERVO MOTOR MPL-A430H-HJ72AA SERIES A	1-105, 1-107
2859497-0000 .	SET OF SIGNS	6-9
1350234-0000 .	SETTING RING	1-251
263152-0000 ..	SHAFT	1-111
537327-0000 ..	SHAFT	1-183
541070-0000 ..	SHAFT	1-187
546298-0000 ..	SHAFT	1-13, 1-161
579553-0000 ..	SHAFT	1-133, 1-141, 1-143, 1-185
581905-0000 ..	SHAFT	1-111, 1-115
582423-0000 ..	SHAFT	1-73, 1-81, 1-83, 1-101, 1-103
582426-0000 ..	SHAFT	1-73, 1-81, 1-83, 1-101, 1-103
582484-0000 ..	SHAFT	1-101, 1-103

Part No	Description	Page No
583683-0000 ..	SHAFT	1-39, 1-41
583686-0000 ..	SHAFT	1-105, 1-107, 1-117
583727-0000 ..	SHAFT	2-61
583739-0000 ..	SHAFT	1-215
905413-0000 ..	SHAFT	1-73, 1-81, 1-83, 1-101, 1-103
905415-0000 ..	SHAFT	1-73, 1-81, 1-83, 1-101, 1-103
979584-0000 ..	SHAFT	1-215
979640-0000 ..	SHAFT	1-109
979645-0000 ..	SHAFT	1-125
979889-0000 ..	SHAFT	1-105, 1-107
1035895-0000 .	SHAFT	1-137
1035897-0000 .	SHAFT	1-43, 1-45, 1-129, 1-131
1037120-0000 .	SHAFT	1-191
1037121-0000 .	SHAFT	1-191
1282589-0000 .	SHAFT	2-45
1317711-0000 .	SHAFT	2-61
1317712-0000 .	SHAFT	2-61
1334256-0000 .	SHAFT	1-119, 1-215
1346612-0000 .	SHAFT	1-119, 1-139, 1-215
1350679-0000 .	SHAFT	1-73, 1-101, 1-103
1359390-0000 .	SHAFT	6-23, 6-25
1484704-0000 .	SHAFT	2-59
1484736-0000 .	SHAFT	2-7, 2-9
1487762-0000 .	SHAFT	2-77
1487763-0000 .	SHAFT	2-65
1487779-0000 .	SHAFT	2-23, 2-25, 2-33, 2-35
1487782-0000 .	SHAFT	2-23, 2-25, 2-33, 2-35
1490820-0000 .	SHAFT	2-59
1490824-0000 .	SHAFT	2-45
1498778-0000 .	SHAFT	1-129, 1-131
1499026-0000 .	SHAFT	1-139
1499515-0000 .	SHAFT	1-185
1511001-0000 .	SHAFT	1-139
1517751-0000 .	SHAFT	1-193
1519943-0000 .	SHAFT	2-43
1538107-0000 .	SHAFT	1-119
1549421-0000 .	SHAFT	1-11
2529646-0000 .	SHAFT	1-137
2555480-0000 .	SHAFT	1-113
2555485-0000 .	SHAFT	1-115
2609928-0000 .	SHAFT	1-67, 1-69
2609929-0000 .	SHAFT	1-67, 1-69
2699025-0000 .	SHAFT	1-67, 1-69
2787436-0000 .	SHAFT	6-41
2787437-0000 .	SHAFT	6-41
2796006-0000 .	SHAFT	6-45
2796009-0000 .	SHAFT	6-53, 6-55
2862607-0000 .	SHAFT	6-23, 6-25
3017332-0000 .	SHAFT	2-49
3017419-0000 .	SHAFT	2-49
979847-0000 ..	SHAFT COUPLING	2-51
544428-0000 ..	SHEET	1-7, 1-9, 1-157, 1-159
90459-0340	SHELL CASSIDA GREASE HDS 2	4-21
456817-0001 ..	SHIM	2-49
456817-0002 ..	SHIM	2-49
589437-0000 ..	SHIM	1-73, 1-81, 1-83, 1-101, 1-103
589440-0000 ..	SHIM	1-73, 1-81, 1-83, 1-101, 1-103
590988-0000 ..	SHIM	1-63, 1-73, 1-81, 1-83, 1-91, 1-101, 1-103
590989-0000 ..	SHIM	1-63, 1-73, 1-81, 1-83, 1-91, 1-101, 1-103
905484-0000 ..	SHIM	1-91
1317796-0000 .	SHIM	1-73, 1-81, 1-83, 1-101, 1-103
2519633-0000 .	SHIM	1-77, 1-79
1558989-0000 .	SHIMS	2-77
2538073-0001 .	SHIMS	2-7, 2-9
2538073-0002 .	SHIMS	2-7, 2-9
90347-0182	SHOCK ABSORBER, YSR-16-20-C	2-59
1558801-0000 .	SHOULDER SCREW	2-63
90459-1852	SHUT OFF VALVE, MS6-EM1-1/2	1-171, 2-83
1487544-0100 .	SIDE FEEDER	2-7, 2-9
2797438-0000 .	SIDE PLATE	6-43
2797501-0000 .	SIDE PLATE	6-43
3075957-0000 .	SIDE PLATE	6-17, 6-19
979426-0000 ..	SIGN	1-167, 1-169
1086870-0000 .	SIGN	6-37, 6-43, 6-57
1145219-0000 .	SIGN	1-167, 1-169
1145221-0000 .	SIGN	1-167, 1-169
1359055-0000 .	SIGN	6-9
1359885-0000 .	SIGN	6-9
1517464-0000 .	SIGN	1-195, 1-197, 1-199, 1-201
2914108-0000 .	SIGN	4-55
520072-0000 ..	SIGN BOARD	3-33, 3-35
978010-0000 ..	SIGN BOARD	3-3, 3-5
90194-0133	SIGN DELIVERED DESIGN	4-55
90194-0163	SIGN, EARTH WITHIN CIRCLE	4-55

Part No	Description	Page No
90194-0164	SIGN, FRAME/CHASSIS WITHIN CIRCLE	4-55
90194-0080	SIGN, IDENTIFICATION OF WIRING	4-55
90459-0691	SIGN, STRIP SPLICE/ RESET ALARM	1-189
359241-0268 ..	SIGN: SPRAYING, HEAD SPACE	3-23
2814874-0100 .	SILENCER	4-37, 4-39
2832786-0200 .	SILENCER	2-79
346800-0109 ..	SILENCER FILTER R1/8"	1-65
90328-0026	SILENCER G1/4"	3-33, 3-35, 4-23
90328-0047	SILENCER G1/8"	1-105, 1-107, 1-117, 1-123, 1-173, 1-175, 2-81, 4-41
90328-0029	SILENCER M5	1-167, 1-169, 1-185, 4-31
90328-0003	SILENCER, 338/110	4-23, 4-31
90601-1586	SILENCER, G1"	2-83
90239-0863	SINGLE ACTING, MINI-ISO, CYL 25-25	1-105, 1-107, 1-117, 1-123
90450-0398	SINGLE ACTING, PANCAKE EV-63/15-4	1-75, 1-85, 1-97, 1-99
90459-2102	SINGLE ACTING, SHORT STROKE, CYL 100-25	2-63
553607-0000 ..	SLEEVE	4-25
1512265-0000 .	SLEEVE	2-13
1512266-0000 .	SLEEVE	2-13
90330-0094	SLEEVE, INT, THREAD, NO., R-2011/8	4-21
2574388-0000 .	SLIDE	1-15
2553275-0000 .	SLIDE PLATE	2-23, 2-25, 2-33, 2-35
1484705-0000 .	SLIDER	2-75
1484760-0000 .	SLIDER	2-43
1484777-0000 .	SLIDER	2-75
2523597-0000 .	SLIDER	1-193
1484692-0000 .	SLIDING STRIP	2-63
1550595-4960 .	SLIDING STRIP	6-17, 6-19
2797437-0000 .	SLIDING STRIP	6-43
2810567-0000 .	SLIDING STRIP	6-43
90458-0273	SLOT COVER, ABP-5-S	2-11
312132-0289 ..	SLOTTED HEAD, PAN SCREW, MSCS M4X10	4-19
90237-0070	SNAP-IN BALL LOCK, 69X19 MM	4-37, 4-39
90601-1168	SOCKET CONNECTOR, NECA-S1G9-P9-MP3	1-171, 2-83
90119-0309	SOCKET, PYF14A-E	4-67
90459-1855	SOFT START VALVE, MS6-DL-1/2	1-171
2640136-0100 .	SOFTWARE	3-11
979956-0000 ..	SOLENOID VALVE	3-33, 3-35
90042-0171	SOLENOID VALVE TYPE 330 3/2 NC	3-33, 3-35
441556-0001 ..	SPACER	2-49
441556-0002 ..	SPACER	2-49
441556-0004 ..	SPACER	2-49
441556-0012 ..	SPACER	2-49
576448-0000 ..	SPACER	4-25
576449-0000 ..	SPACER	4-25
582485-0001 ..	SPACER	1-101, 1-103
582485-0002 ..	SPACER	1-101, 1-103
582485-0004 ..	SPACER	1-101, 1-103
582485-0005 ..	SPACER	1-101, 1-103
582485-0006 ..	SPACER	1-101, 1-103
589438-0000 ..	SPACER	1-73, 1-81, 1-83, 1-101, 1-103
594953-0000 ..	SPACER	2-49
599753-0000 ..	SPACER	4-57, 4-59
599760-0000 ..	SPACER	4-59
979641-0000 ..	SPACER	1-109
1038016-0000 .	SPACER	1-135
1105642-0000 .	SPACER	2-45
1140293-0000 .	SPACER	1-63
1360582-0000 .	SPACER	2-49
1487769-0000 .	SPACER	2-43
1487788-0000 .	SPACER	2-51
1490203-0000 .	SPACER	2-29
1490827-0000 .	SPACER	2-45
1511577-0000 .	SPACER	2-41
1512270-0000 .	SPACER	2-45
1550199-0000 .	SPACER	6-17, 6-19
1550995-0000 .	SPACER	6-9
1558277-0000 .	SPACER	2-45
2511330-0000 .	SPACER	3-33, 3-35
2529628-0000 .	SPACER	1-19, 1-21, 1-23, 1-25
2549829-0000 .	SPACER	2-63
2561206-0000 .	SPACER	6-17, 6-19, 6-41, 6-43
2561613-0000 .	SPACER	6-21
2609933-0000 .	SPACER	1-67, 1-69
2609934-0000 .	SPACER	1-67, 1-69
2699436-0000 .	SPACER	6-13
2787441-0000 .	SPACER	6-47
2796011-0000 .	SPACER	6-53, 6-55
2813989-0000 .	SPACER	1-93, 1-95
2813990-0000 .	SPACER	1-87, 1-89
2813991-0000 .	SPACER	1-77, 1-79
2813992-0000 .	SPACER	1-87, 1-89
2813995-0000 .	SPACER	1-73, 1-101, 1-103
2813998-0000 .	SPACER	1-71
2815758-0000 .	SPACER	1-13, 1-161

Part No	Description	Page No
2828676-0000	.SPACER	1-77, 1-79
2862606-0000	.SPACER	6-9
3017370-0000	.SPACER	1-229, 1-231
3017403-0000	.SPACER	2-31, 2-39
3017404-0000	.SPACER	2-31, 2-39
1255742-0000	.SPACER ROLLER	1-105, 1-107, 1-117
451085-0005	.. SPACER SCREW	4-79
979691-0100	.. SPARE PART KIT PT19	1-3, 1-5
90459-1921	.... SPHERICAL KNOB TRANSPARENT CAP, Ã¸35	1-75, 1-81, 1-83, 1-91, 1-97, 1-99
90152-0033	.... SPIRAL CONDUIT FOR PR 15,2(PG 9)	1-209, 1-211
1279624-0200	.SPLICE DETECTOR	1-19, 1-21, 1-23, 1-25, 1-129, 1-131
1484688-0300	.SPLICING DEVICE	2-3
580044-0200	.. SPLICING MAGAZINE	1-177, 1-179
2523598-0000	.SPLICING TABLE	1-193
1539606-0002	.SPRAY NOZZLE	3-43
1539606-0003	.SPRAY NOZZLE	3-43
1539606-0004	.SPRAY NOZZLE	3-43
1539606-0005	.SPRAY NOZZLE	3-43
2545134-0000	.SPRAY NOZZLE	3-43
2545425-0000	.SPRAY PIPE	3-33, 3-35
2546447-0000	.SPRAY PIPE	3-3, 3-5
90335-0005	.... SPRING	1-63, 1-67, 1-69, 1-251
400800-0000	.. SPRING	1-185
400828-0000	.. SPRING	1-191
522394-0000	.. SPRING	1-7, 1-9, 1-157, 1-159
907719-0000	.. SPRING	1-73, 1-81, 1-83, 1-101, 1-103
959658-0000	.. SPRING	4-55
1478572-0000	.SPRING	1-67, 1-69
1484486-0000	.SPRING	1-187
578684-0000	.. SPRING BRACKET	2-65
583878-0000	.. SPRING BRACKET	1-187
1517067-0000	.SPRING HOLDER	1-119
311112-0258	.. SPRING PIN, ISO 8752 4X24-C	2-63, 2-65
1550971-0000	.SPROCKET	6-21
1550972-0000	.SPROCKET	6-23, 6-25
1550973-0000	.SPROCKET	6-9
2787442-0000	.SPROCKET	6-45
90261-0048	.... SQUARE PLUG GPN 260/Q2525	6-35
315229-0104	.. SQUARE RING, 35,8X42,8X3,7 MM 1"1/2 FD	3-43
1519961-0100	.START UP KIT	2-3
1317203-0200	.STEAM CIRCUIT	4-5
2879204-0000	.STEAM DISTRIBUTOR	4-31
2879207-0000	.STEAM PIPE	4-31
2879208-0000	.STEAM PIPE	4-31
2879209-0000	.STEAM PIPE	4-29
2879213-0000	.STEAM PIPE	4-31
2879214-0000	.STEAM PIPE	4-31
2879216-0000	.STEAM PIPE	4-29
2879217-0000	.STEAM PIPE	4-29
2879218-0000	.STEAM PIPE	4-29
2879224-0000	.STEAM PIPE	4-29
2914125-0000	.STEAM PIPE	4-29
2915061-0000	.STEAM PIPE	4-29
2915062-0000	.STEAM PIPE	4-29
2915063-0000	.STEAM PIPE	4-35
90360-0020	.... STEAM TRAP / MK36/51 3/8 INCH	4-31
2879229-0100	.STEAM UNIT	4-29
2879230-0100	.STEAM UNIT	4-29
979888-0000	.. STEERING	1-73, 1-81, 1-83, 1-101, 1-103
1512526-0000	.STEERING	2-61
1517535-0000	.STEERING	1-129, 1-131
90051-0007	.... STELLAR KNOB, INT. THREAD, NO. 40	1-73, 1-81, 1-83, 1-101, 1-103
90458-0523	.... STEP MOTOR, SM 56.2.18J3 Z(202)	1-73, 1-81, 1-83, 1-101, 1-103
90458-2554	.... STERILE GRADE MEMBRANE FILTER 0,2ÂµM	4-45
342706-0130	.. STIFFNER SLEEVE FOR HOSE 6X1	3-3, 3-5, 3-33, 3-35
2815755-0000	.STOP	1-13, 1-161
342722-0198	.. STRAIGHT COUPLING	2-29, 2-41
342722-0199	.. STRAIGHT COUPLING	1-247
342722-0203	.. STRAIGHT COUPLING	3-33, 3-35
342770-0105	.. STRAIGHT COUPLING INT, D=6 MM - G1/8	1-63, 1-67, 1-69
342770-0107	.. STRAIGHT COUPLING INT, D=8 MM - G1/8	2-63
90055-0218	.... STRAIGHT COUPLING, D=6 MM - M5	1-75, 1-85, 1-97, 1-99
342921-0111	.. STRAIGHT COUPLING,EXT.THREAD 6/4-M5	1-185, 1-191
90030-0109	.... STRAIGHT PIPE CONN. GE12LR1/271	4-31, 4-35
2763303-0000	.STRIP	6-49, 6-51
1511323-0000	.STRIP ADHESIVE	1-203
580036-0200	.. STRIP APPLICATOR	1-121
90143-0057	.... STRIP EMKA 1011-05 21X11MM	4-55
2576240-0100	.STRIP GUIDE	1-129, 1-131
2576243-0100	.STRIP GUIDE	1-129, 1-131
580037-0400	.. STRIP MAGAZINE	1-3, 1-5
2618993-0100	.STRIP SPLICE DETECTOR	1-3, 1-5
905285-0000	.. STRIPPER PIN	1-63, 1-251
2677792-0000	.STRIPPER PIN	1-67, 1-69

Part No	Description	Page No
975888-0012 ..	STRUT	4-55
975889-0016 ..	STRUT	4-55
927081-0000 ..	SUPPORT	3-47
979254-0000 ..	SUPPORT	3-47
1539600-0000 .	SUPPORT	3-47
2523599-0000 .	SUPPORT	1-193
2546448-0000 .	SUPPORT	3-33, 3-35
2547315-0000 .	SUPPORT	3-33, 3-35
2557578-0000 .	SUPPORT	1-149
2613035-0000 .	SUPPORT	3-3, 3-5
2887594-0000 .	SUPPORT	4-21
2898185-0000 .	SUPPORT	4-23
2924214-0000 .	SUPPORT	4-35
3004386-0000 .	SUPPORT	6-35
90600-7506	SUPPORT PLATE, 26798	6-7, 6-35, 6-41
1538219-0000 .	SWITCH BRACKET	1-195, 1-197, 1-199, 1-201
1359581-0300 .	SWITCH GEAR	6-9
1359831-0000 .	SWITCH GEAR	6-15
342748-0109 ..	T-CONNECTION 12MM	1-247
1539597-0000 .	T-PIECE	3-43
90140-0015	T-PIPE, INT. THREAD, 2003-1/8	3-33, 3-35
90330-0095	T-PIPE, INT. THREAD, R-221-R1/8	3-3, 3-5
979697-0200 ..	TAB MAGAZINE	1-3, 1-5
90144-0072	TAPE SCOTCH VHBS 4945 W=12,7MM	2-91
90459-1848	TAPE, SAFETY WALK R25MM X 18,3M	2-7, 2-9
1255950-0000 .	TAPER ROLLER	1-17
312504-0281 ..	TAPPING SCREW ISO 7049-A4-ST3,5X13-C-Z	1-241
1531340-0102 .	TECHNICAL MANUAL	6-41
90600-6032	TEMPERATURE CONTROLLER, KS50	3-23
2555486-0000 .	TENSION ARM	1-123
1478303-0000 .	TENSION SPRING	1-137
90335-0216	TENSION SPRING 40910, 0,5X5,5X27,7	1-43, 1-45, 1-119, 1-129, 1-131, 1-215
90335-0091	TENSION SPRING 41890, 1,2X13X48,2	2-65
1364477-0200 .	TERMINAL	2-53, 2-55
2898188-0100 .	TERMINAL BLOCK	4-63
2898191-0100 .	TERMINAL BLOCK	4-63
2898201-0100 .	TERMINAL BLOCK	4-63
2898202-0100 .	TERMINAL BLOCK	4-63
90077-0113	TERMINAL BLOCK WDK 2.5	2-57, 4-71, 4-73, 4-75, 4-77
90195-0020	TERMINAL BLOCK, BK 2CRN, 0624 7200 00	2-97
90077-0123	TERMINAL FEED THROUGH	3-39, 3-41, 6-33
90077-0079	TERMINAL PLINTH, AKZ 4	2-21
353021-0302 ..	TERMINAL, DLD 2,5/35	1-31, 1-33, 1-35, 1-37, 2-57, 4-71, 4-73
353021-0301 ..	TERMINAL, DLI 2,5/35	4-71, 4-73
90220-0059	THERMOCOUPLE CABLE, K/PVC/20AWG 2X0,5MM2	1-27, 1-29, 3-23, 3-43, 4-31
90326-0089	THERMOCOUPLE, 5110-089-000	4-31
90326-0060	THERMOCOUPLE, CR-AL	1-73, 1-81, 1-83, 1-91, 1-101, 1-103, 1-251, 3-43
90157-0016	THREAD LOCKING, LOCTITE 242 50 ML	1-67, 1-69, 1-183, 2-27, 2-37, 2-63
1549328-0000 .	THREADED ROD	2-71
90235-0846	THROTTLE CHECK VALVE G1/8", MANUAL, 6	2-31, 2-39
90459-3685	THROTTLE VALVE GRLA-1/4-QS-8-D	2-11
90187-0149	THROTTLE VALVE, G1/4, G1/4, MALE	6-35
321130-0180 ..	THRUST WASHER, 12X24X1,5 MM	1-187
321130-0200 ..	THRUST WASHER, 14X26X1,5 MM	1-105, 1-107, 1-117, 1-123
1484703-0000 .	TIE ROD	2-59
90417-0311	TIMING BELT 16T10/440 PU	2-77
318172-0139 ..	TIMING BELT 16T10/630 PU	1-123
90417-0074	TIMING BELT 25T10/610 PU	1-105, 1-107
90601-0026	TINA 11A DISTRIBUTOR BLOCK, 20-054-17	1-203, 2-53, 2-55
582494-0000 ..	TINPLATE	1-97, 1-99
2893295-0000 .	TOE PLATE	4-7
2893296-0000 .	TOE PLATE	4-7
2561208-0000 .	TOOL	6-65
574944-0000 ..	TOOTHED PULLEY	1-123
574945-0000 ..	TOOTHED PULLEY	1-123
978850-0000 ..	TOOTHED PULLEY	1-105, 1-107
979202-0000 ..	TOOTHED PULLEY	1-105, 1-107
2540769-0000 .	TOOTHED PULLEY	2-77
581341-0000 ..	TOUCH GUARD	3-45
925457-0000 ..	TOUCH GUARD	4-37, 4-39
2879221-0000 .	TOUCH GUARD	4-29
2913733-0000 .	TOUCH GUARD	4-51
2914844-0000 .	TOUCH GUARD	4-51
2919239-0200 .	TOUCH GUARD	4-5
2919251-0000 .	TOUCH GUARD	4-51
2919252-0000 .	TOUCH GUARD	4-51
3068377-0000 .	TOUCH GUARD	6-23
3068379-0000 .	TOUCH GUARD	6-25
2610792-0100 .	TOWER CABLE INLETS	3-3, 3-5
1520972-0000 .	TPO-BAR	2-5, 2-71
1524389-0100 .	TPO-BAR	2-59
90600-9528	TRANSFER CABLE M12-CT0214, 20-060-01	1-235
67380-0208	TRANSFORMER	1-135
2545132-0000 .	TRANSITION PIPE	3-43

Part No	Description	Page No
90144-0073	TREBOFLON-TAPE W=13MM	3-3, 3-5, 3-33, 3-35
3099898-0000	TUBE	1-243
3099900-0000	TUBE	1-239
90166-0068	TUBE 12 MM PA BLUE	1-247
90166-0095	TUBE 4 MM PA BLUE (50M)	1-191, 1-247
90166-0254	TUBE 4 MM PUR BLUE	2-29, 2-41
90166-0081	TUBE 6 MM PA BLUE	1-247, 2-39
90166-0132	TUBE 6 MM PA,TRANSP.	3-3, 3-5, 3-33, 3-35
90166-0193	TUBE 6 MM PUR BLUE	1-191, 2-29, 2-31, 2-41
90166-0013	TUBE 8 MM PA BLUE	2-7, 2-9
315400-0007	TUBE PUN-H-10X1,5-BL	4-45
315400-0010	TUBE PUN-H-12X2-BL	1-245
315400-0001	TUBE PUN-H-6X1-BL	2-63, 4-37, 4-39, 4-41, 4-45, 6-35
315400-0004	TUBE PUN-H-8X1,25-BL	2-63, 2-81, 4-37, 4-39
90166-0089	TUBE, 6,2 MM PE BLUE	1-65
90600-6183	TUBULAR RIVET 3,5X6,2	6-17, 6-19
544427-0000	TURN SPRING	1-7, 1-9, 1-157, 1-159
90237-0175	TURNING HANDLE, 1125-U185-0A	2-91, 2-93, 2-95, 4-55
90457-0950	ULTRASONIC SENSOR, E4B-TS 50F4 5M	1-151
90459-3041	ULTRASONIC SENSOR, SM657A-A08-01	1-213
2871576-0100	ULTRASOUND UNIT	1-3, 1-5
90217-0206	UNION NUT, 1 1/2 APV, 07-01-376/17	4-47
90217-0203	UNION NUT, 1 APV, 07-01-276/17	3-43, 4-47
90217-0209	UNION NUT, 2 APV, 07-01-426/17	4-23
315220-0130	V-RING 14X20X7,7 MM V-16S	6-23, 6-25
315220-0172	V-RING 29X37X10,5 MM V-32S	6-23, 6-25
90235-0048	VALVE	4-45
90235-0259	VALVE	1-247, 4-23, 4-31
2745185-0000	VALVE	4-47
342800-1502	VALVE ASSEMBLING KIT, SEAT S. 10	4-23
2814877-0000	VALVE BODY	3-43
2898184-0000	VALVE BODY	4-23
2574348-0000	VALVE BRACKET	3-33, 3-35
90458-1199	VALVE CLOSED IN MID-POSITION, 5/3	2-81
2898203-0000	VALVE CONE	4-25
581950-0300	VALVE GROUP	1-167, 1-169
2774506-0200	VALVE GROUP	2-79
2879210-0100	VALVE GROUP	4-37, 4-39
925409-0200	VALVE PANEL	4-5
1511571-0300	VALVE PANEL	2-3
978235-0000	VALVE PLATE	3-33, 3-35
2887593-0000	VALVE PLATE	4-37, 4-39
90458-1197	VALVE, 5/2 BISTABLE	1-173, 1-175, 2-81
90458-1194	VALVE, 5/2 MONOSTABLE	1-173, 1-175, 2-81, 4-41
90458-1202	VALVES 2X3/2, CLOSED	4-41
90459-3832	VENTING BOX, P9852	2-7, 2-9
90347-0004	VIBRATION DAMPER D=30 TH=M8 H=17 H2=21MM	1-217, 1-219
1512430-0000	VOLUME SHIM	2-73
359705-0003	WARNING SIGN ISO, DANGEROUS CHEMICALS	4-47
359705-0001	WARNING SIGN ISO, ENTANGLEMENT	2-59
359705-0007	WARNING SIGN ISO, HOT SURFACE	1-73, 1-81, 1-83, 1-91, 1-101, 1-103
359710-0001	WARNING SIGN ISO, HOT SURFACE	4-51
359705-0005	WARNING SIGN ISO, MOVING PART	1-63, 1-67, 1-69, 2-7, 2-9, 2-45, 2-47
359705-0015	WARNING SIGN ISO, RISK OF ELECTRIC SHOCK	1-189, 1-205, 1-207, 4-55
90194-0016	WARNING SIGN, RISK OF ELECTRIC SHOCK	3-39, 3-41
2033-0009	WASHER	1-7, 1-9, 1-157, 1-159
2033-0013	WASHER	1-67, 1-73, 1-81, 1-83, 1-141, 1-143, 1-153, 1-155, 1-163, 1-165, 1-195, 1-197, 1-199, 1-201
32644-0000	WASHER	1-135
266737-0000	WASHER	1-43, 1-45, 1-129, 1-131
294734-0000	WASHER	1-217, 1-219, 1-233
529076-0000	WASHER	6-57
536374-0000	WASHER	1-149
541165-0000	WASHER	4-27
541166-0000	WASHER	4-25
735922-0000	WASHER	4-21
1036563-0000	WASHER	2-91, 2-93
1499566-0000	WASHER	2-73
1519955-0000	WASHER	2-59
1519956-0000	WASHER	2-59
1549423-0000	WASHER	1-11
1558797-0000	WASHER	2-71
2529647-0000	WASHER	1-71, 1-77, 1-79, 1-87, 1-89, 1-93, 1-95
2609937-0000	WASHER	1-67, 1-69
2816494-0000	WASHER	1-47, 1-49
2829715-0000	WASHER	6-45
3017409-0000	WASHER	2-47
978381-0000	WASHER 56X2MM	3-47
90458-0073	WASHER 6,4/30, H=1,5	4-9
90459-4618	WASHER 8,5/25/6, ST7387.20	1-67, 1-69
315105-0173	WASHER BRB 10,5X22 RFR	1-15, 1-105, 1-107, 1-121, 1-183, 6-57
315105-0178	WASHER BRB 13X24 RFR	1-109, 1-113, 1-145, 1-215, 2-7, 2-9, 4-11
315105-0186	WASHER BRB 17X30 RFR	1-19, 1-21, 1-23, 1-25, 1-109, 4-15
315105-0192	WASHER BRB 21X36 RFR	2-7, 2-9
315105-0124	WASHER BRB 3,2X6 RFR	1-7, 1-9, 1-17, 1-19, 1-21, 1-23, 1-25, 1-27, 1-29, 1-43, 1-45, 1-129

Part No	Description	Page No
		1-131, 1-145, 1-157, 1-159, 1-195, 1-197, 1-199, 1-201, 1-203, 1-217, 1-219, 2-29, 2-41, 2-45, 3-43
		3-47, 4-23
315105-0136 ..	WASHER BRB 4,3X8 RFR	1-7, 1-9, 1-17, 1-19, 1-21, 1-23, 1-25, 1-27, 1-29, 1-47, 1-49, 1-63
		1-65, 1-73, 1-81, 1-83, 1-101, 1-103, 1-123, 1-127, 1-151, 1-153, 1-155, 1-157, 1-159, 1-167, 1-169
		1-187, 1-195, 1-197, 1-199, 1-201, 1-203, 1-209, 1-211, 2-7, 2-9, 2-23, 2-25, 2-33, 2-35, 2-47, 2-53
		2-55, 2-65, 2-91, 2-93, 2-95, 2-97, 3-33, 3-35, 3-39, 3-41, 4-23, 4-33, 4-37, 4-39, 4-45, 4-57, 4-59
		4-61, 6-29
315105-0146 ..	WASHER BRB 5,3X10 RFR	1-7, 1-9, 1-15, 1-19, 1-21, 1-23, 1-25, 1-43, 1-45, 1-67, 1-69, 1-73
		1-75, 1-81, 1-83, 1-85, 1-91, 1-101, 1-103, 1-105, 1-107, 1-117, 1-119, 1-121, 1-123, 1-129, 1-131
		1-133, 1-135, 1-139, 1-141, 1-143, 1-145, 1-149, 1-157, 1-159, 1-167, 1-169, 1-195, 1-197, 1-199
		1-201, 1-203, 1-209, 1-211, 1-213, 1-215, 1-217, 1-219, 1-229, 1-231, 1-243, 2-7, 2-9, 2-23, 2-25
		2-33, 2-35, 2-47, 2-63, 2-75, 3-3, 3-5, 3-33, 3-35, 3-43, 3-47, 4-45, 4-55, 4-67, 4-69, 4-71, 4-73
		4-75, 4-77, 6-23, 6-25
315105-0153 ..	WASHER BRB 6,4X12 RFR	1-7, 1-9, 1-11, 1-13, 1-17, 1-19, 1-21, 1-23, 1-25, 1-27, 1-29, 1-31
		1-33, 1-35, 1-37, 1-63, 1-67, 1-69, 1-73, 1-81, 1-83, 1-101, 1-103, 1-105, 1-107, 1-119, 1-121
		1-123, 1-127, 1-129, 1-131, 1-133, 1-135, 1-137, 1-139, 1-141, 1-143, 1-149, 1-151, 1-153, 1-155
		1-157, 1-159, 1-161, 1-163, 1-165, 1-167, 1-169, 1-181, 1-185, 1-187, 1-195, 1-197, 1-199, 1-201
		1-205, 1-207, 1-209, 1-211, 1-213, 1-215, 1-217, 1-219, 2-7, 2-9, 2-13, 2-15, 2-17, 2-23, 2-25, 2-29
		2-33, 2-35, 2-41, 2-43, 2-45, 2-49, 2-51, 2-53, 2-55, 2-59, 2-65, 2-69, 2-73, 2-75, 2-77, 2-81, 2-83
		2-95, 2-99, 3-33, 3-35, 3-45, 3-47, 4-17, 4-23, 4-29, 4-37, 4-39, 4-43, 4-47, 4-51, 4-55, 4-65, 6-9
		6-23, 6-25, 6-27, 6-41
315105-0156 ..	WASHER BRB 6,7X14 RFR	1-13, 1-137, 1-139, 1-161, 2-61, 6-35
315105-0165 ..	WASHER BRB 8,4X16 RFR	1-7, 1-9, 1-19, 1-21, 1-23, 1-25, 1-43, 1-45, 1-47, 1-49, 1-61, 1-63
		1-65, 1-71, 1-73, 1-75, 1-77, 1-79, 1-81, 1-83, 1-85, 1-87, 1-89, 1-91, 1-93, 1-95, 1-97, 1-99, 1-101
		1-103, 1-105, 1-107, 1-117, 1-123, 1-129, 1-131, 1-137, 1-141, 1-143, 1-151, 1-157, 1-159, 1-187
		1-217, 1-219, 2-19, 2-27, 2-37, 2-59, 2-73, 3-33, 3-35, 4-11, 4-13, 6-13, 6-23, 6-25, 6-37, 6-41
		6-53, 6-55
315233-0101 ..	WASHER CAPTIVE SEALING M5(NEW315239-101)	4-25
315106-0173 ..	WASHER ISO 7089-10-200 HV A4	4-21
315106-0178 ..	WASHER ISO 7089-12-200 HV A4	4-21
315106-0186 ..	WASHER ISO 7089-16-200 HV A4	4-45
315106-0124 ..	WASHER ISO 7089-3-200 HV A4	1-129, 1-131, 4-21, 6-9
315106-0146 ..	WASHER ISO 7089-5-200 HV A4	1-147, 2-7, 2-9, 2-79, 2-93, 4-37, 4-39, 4-79, 6-41, 6-45
315106-0153 ..	WASHER ISO 7089-6-200 HV A4	1-235, 1-239, 4-21, 4-79, 5-3, 6-41
315106-0165 ..	WASHER ISO 7089-8-200 HV A4	4-21, 4-51
90005-0082	WASHER PLAIN ROUND 4,3(M4)/12,H=1	1-73, 1-81, 1-83, 1-101, 1-103, 1-121, 1-129, 1-131
		1-133, 1-135, 1-141, 1-143, 1-185, 1-187, 1-191, 1-195, 1-197, 1-199, 1-201, 2-71
90005-0105	WASHER PLAIN ROUND 8,4(M8)/24, H=1,5	2-85
90005-0116	WASHER PLAIN ROUND 8,4(M8)/24, H=2	1-47, 1-49, 1-241, 1-243
315101-0173 ..	WASHER PLAIN, BRB, 10,5/22 H=2	4-83
315103-0136 ..	WASHER PLAIN, BRB, 4,3/8,H=0,8 NI PL BR	2-29, 2-41
315101-0146 ..	WASHER PLAIN, BRB, 5,3/10 H=1	1-97, 1-99
315101-0153 ..	WASHER PLAIN, BRB, 6,4/12 H=1,5	1-193
90005-0060	WASHER PLAIN, RBS 6,4/M6)/18,H=1,5	1-67, 1-69, 1-73, 1-81, 1-83, 1-101, 1-103, 1-123, 1-149
315115-0173 ..	WASHER PLAIN, TBRB 10,5/22 H=4	1-145, 4-17
315115-0153 ..	WASHER PLAIN, TBRB 6,4/12 H=3	1-119, 2-23, 2-25, 2-33, 2-35
315115-0165 ..	WASHER PLAIN, TBRB 8,4/16 H=3	1-17, 1-61
315125-0173 ..	WASHER TBRSB 10,5X28X6 A4	4-53
315125-0146 ..	WASHER TBRSB 5.3X15X1 A4	1-213
315125-0153 ..	WASHER TBRSB 6,4X22X4 A4	1-81, 1-83, 1-217, 1-219, 1-235, 2-23, 2-25, 2-33, 2-35, 4-29, 6-47
315125-0165 ..	WASHER TBRSB 8,4X26X5 A4	1-61, 1-71, 1-77, 1-79, 1-87, 1-89, 1-129, 1-131, 2-59, 6-43
315103-0124 ..	WASHER, BRB, 3,2/6,H=0,5 NI PL BR	4-75, 4-77
315103-0146 ..	WASHER, BRB, 5,3/10,H=1 NI PL BR	2-71
315103-0153 ..	WASHER, BRB, 6,4/12,H=1,5 NIPL BR	2-79, 6-41
315237-0110 ..	WASHER,PL.RND.AL.13,5/18,H=1,5	3-33, 3-35
315234-0109 ..	WASHER,PL.RND.CU.10,3/13,5 H=1,0	3-3, 3-5
907487-0000 ..	WASHER-CURVED	1-73, 1-81, 1-83, 1-101, 1-103
2592560-0200 .	WASTE BOX	1-3, 1-5
2879205-0000 .	WASTE BOX	4-31
3017415-0100 .	WASTE BOX	1-237
3017416-0100 .	WASTE BOX	1-237
1255825-0000 .	WASTE PIPE	1-63, 1-67, 1-69
2879212-0000 .	WASTE PIPE	4-31
2879215-0000 .	WASTE PIPE	4-29
2879219-0000 .	WASTE PIPE	4-29
90298-0033	WATLUBE HEAT LIQUID	1-251
90091-0238	WEAR RING 20X22X10 MM	4-25
583740-0100 ..	WEB GUIDE	1-3, 1-5
1484745-0100 .	WEB GUIDE	2-59
1517065-0100 .	WEB GUIDE	1-117
2524476-0100 .	WEB GUIDE	1-129, 1-131
1484735-0100 .	WEB MAGAZINE	2-3
2555484-0100 .	WEB TENSION ROLLER	1-105, 1-107
979651-0100 ..	WEB TENSIONER	1-105, 1-107, 1-117
1511003-0000 .	WEIGHT	1-139
2903588-0000 .	WEIGHT	1-15
266710-0000 ..	WHEEL	1-111
561652-0000 ..	WHEEL	6-23, 6-25
2555483-0000 .	WHEEL	1-115
2656679-0000 .	WHEEL	6-53
2796007-0000 .	WHEEL	6-45
2796008-0100 .	WHEEL	6-41
2796010-0000 .	WHEEL	6-55

Tetra Pak

SPC
Spare Parts Catalogue

Pos	Part No	Description	Page No
0			
01O	3017401-0000	ANGLE BRACKET	1-235
A			
A053	90601-1168	SOCKET CONNECTOR, NECA-S1G9-P9-MP3	1-171
M.A302	90459-1852	SHUT OFF VALVE, MS6-EM1-1/2	2-83
M.A303	90459-2425	PRESSURE REGULATOR IN-LINE, BSP-1/4	2-79
M.A046	90459-5627	CONNECTION TINA 1A, 20-054-00	1-19, 1-21, 1-23, 1-25
M.A027	90459-5627	CONNECTION TINA 1A, 20-054-00	2-53
M.A026	90459-5627	CONNECTION TINA 1A, 20-054-00	2-53
M.A027	90459-5627	CONNECTION TINA 1A, 20-054-00	2-55
M.A026	90459-5627	CONNECTION TINA 1A, 20-054-00	2-55
M.A008	90600-0933	CONVERTER TINA 2-B, 20-054-11	2-97
M.A150	90601-1168	SOCKET CONNECTOR, NECA-S1G9-P9-MP3	2-83
A109	90031-0063	PLC,ANALOG COMBO MODULE,IN-4PT/OUT-2PT	3-19, 5-3
A122	90031-0059	PLC, DIGITAL OUTPUT MODULE	3-21
A510	90458-2580	LEVEL CONTROL RELAY, RM4-LA32M	3-27
A518	90600-6032	TEMPERATURE CONTROLLER, KS50	3-23
A518.1	359241-0268	SIGN: SPRAYING, HEAD SPACE	3-23
A529	90031-0057	PLC, DIGITAL INPUT MODULE	4-63
A530	90031-0059	PLC, DIGITAL OUTPUT MODULE	4-63
A531	90031-0059	PLC, DIGITAL OUTPUT MODULE	4-63
A536	90031-0052	BASEPLATE, 5-SLOT	4-65
B			
C.B157	90044-0194	INDUCTIVE SENSOR, IN 5329	2-45
M.B555	90044-0194	INDUCTIVE SENSOR, IN 5329	4-21
M.B554	90044-0194	INDUCTIVE SENSOR, IN 5329	4-23
M.B553	90044-0194	INDUCTIVE SENSOR, IN 5329	4-23
M.B552	90044-0194	INDUCTIVE SENSOR, IN 5329	4-23
M.B069	90274-0103	PRESSURE SWITTCH PEV-1/4-B	1-171
M.B566	90326-0089	THERMOCOUPLE, 5110-089-000	4-31
M.B565	90326-0089	THERMOCOUPLE, 5110-089-000	4-31
M.B050	90326-0089	THERMOCOUPLE, 5110-089-000	4-31
M.B108	90459-0472	KEY SAF.SW. AZ 16 02ZVRK-M20-2152-2254	2-47
M.B048	90459-4142	SENSOR, ADAM M12 20-051-00	1-167, 1-169
M.B114	90459-4142	SENSOR, ADAM M12 20-051-00	1-203
M.B113	90459-4142	SENSOR, ADAM M12 20-051-00	1-203
M.B649	90459-4142	SENSOR, ADAM M12 20-051-00	1-217, 1-219
M.B042	90459-4142	SENSOR, ADAM M12 20-051-00	1-235
M.B144	90459-4142	SENSOR, ADAM M12 20-051-00	2-7
M.B143	90459-4142	SENSOR, ADAM M12 20-051-00	2-7
M.B142	90459-4142	SENSOR, ADAM M12 20-051-00	2-7
M.B141	90459-4142	SENSOR, ADAM M12 20-051-00	2-7
M.B144	90459-4142	SENSOR, ADAM M12 20-051-00	2-9
M.B143	90459-4142	SENSOR, ADAM M12 20-051-00	2-9
M.B142	90459-4142	SENSOR, ADAM M12 20-051-00	2-9
M.B141	90459-4142	SENSOR, ADAM M12 20-051-00	2-9
M.B148	90459-4142	SENSOR, ADAM M12 20-051-00	2-47
M.B200	90459-4810	PRESS TRANSD (DIFF) 0 - 2000PA, 2681-20C	5-3
M.B059	90600-0473	INDUCTIVE SWITCH E2A-S08KS01-WP-B1-TP 5M	1-19, 1-21, 1-23, 1-25
M.B027	90600-1385	PRESSURE GUARD, PEV-1/4-B SA234332	2-83
B081	90458-0602	CONTRAST SCANNER, KT15W-P2213S02	2-75
B082	90458-0602	CONTRAST SCANNER, KT15W-P2213S02	2-75
B146	90600-0460	INDUCTIVE SWITCH, E2A-M12KN05-M1-B1-TP	2-7, 2-9
B148	90600-0460	INDUCTIVE SWITCH, E2A-M12KN05-M1-B1-TP	2-7, 2-9
B149	90458-0677	PROX.SWITCH E2EG-X5MB1-M1	2-43
B150	90458-0677	PROX.SWITCH E2EG-X5MB1-M1	2-43
B151	90044-0165	PROX. SENSOR, SME-8-K5-LED-24	2-11
B152	90044-0165	PROX. SENSOR, SME-8-K5-LED-24	2-11
B153:1	90232-0129	PH.CELL E3S-CR61-5M	2-7, 2-9
B153:2	90232-0129	PH.CELL E3S-CR61-5M	2-7, 2-9
B154	90232-0129	PH.CELL E3S-CR61-5M	2-7, 2-9
B155	90232-0129	PH.CELL E3S-CR61-5M	2-7, 2-9
C			
C156	90239-0832	DOUBLE ACTING, MINI-ISO, CYL. 25-125	2-39
C157:1	90459-0503	DOUBLE ACTING, SHORT STROKE, CYL 16-10	2-29
C157:2	90459-0503	DOUBLE ACTING, SHORT STROKE, CYL 16-10	2-29
C158:1	90459-0503	DOUBLE ACTING, SHORT STROKE, CYL 16-10	2-41
C158:2	90459-0503	DOUBLE ACTING, SHORT STROKE, CYL 16-10	2-41
C159	90239-0832	DOUBLE ACTING, MINI-ISO, CYL. 25-125	2-31
C73151	90450-0551	DOUBLE ACTING, COMPACT, CYL 20-10	2-41
C73152	90450-0551	DOUBLE ACTING, COMPACT, CYL 20-10	2-41
E			
E003	90164-0015	LIGHT FIXTURE, RL70CV-111 / 230V 50HZ	2-7, 2-9
E005	90164-0015	LIGHT FIXTURE, RL70CV-111 / 230V 50HZ	2-7, 2-9
E08M1010	90264-0032	FAN, 4656N+LZ30+LZ 120,220V 50HZ	4-59
F			
M.F027	90459-1855	SOFT START VALVE, MS6-DL-1/2	1-171
M.F559	90600-3198	ACTUATOR, NC, 9550 10Z 510G1	4-31
M.F554	90600-3199	ACTUATOR, NO, 9550 10Z 520G1	4-31
M.F557	342800-1202	ACTUATOR, SS, N.C. SEAT S. 10	4-23
M.F558	342800-1302	ACTUATOR, SS, N.O. SEAT S. 10	4-23
M.F556	342800-1302	ACTUATOR, SS, N.O. SEAT S. 10	4-23
M.F555	342800-1302	ACTUATOR, SS, N.O. SEAT S. 10	4-23

Pos	Part No	Description	Page No
F			
F550	351418-0200	MINIATURE CIRC. BREAK.,FAZ-D20/3 3-POLE	4-69
F551	351416-0100	MINIATURE CIRC. BREAK., FAZ -D10 1-POLE	4-69
F552	351418-0005	MINIATURE CIRC. BREAK., FAZ-D0,5 3-POLE	4-69
G			
C.G550	90600-3738	FREQ. CONV., 20AC8P7F0AYNANC0	4-55
G503	90031-0068	PLC, POWER SUPPLY	4-63
K			
K549	90119-0056	RELAY, AUXILIARY MK3P5-S 24VDC	4-71, 4-73
K549:1	90129-0006	BASE, S3-B	4-71, 4-73
K550	90459-5309	CONTACTOR 7,5KW 24VDC, DILM17-10	4-71, 4-73
K551	90119-0109	RELAY OMRON 24VDC MY4H	4-67
K551.1	90119-0309	SOCKET, PYF14A-E	4-67
K551.2	90119-0310	CLAMP, TYPE PYC-A1	4-67
K552	90119-0109	RELAY OMRON 24VDC MY4H	4-67
K552.1	90119-0309	SOCKET, PYF14A-E	4-67
K552.2	90119-0310	CLAMP, TYPE PYC-A1	4-67
K553	90119-0109	RELAY OMRON 24VDC MY4H	4-67
K553.1	90119-0309	SOCKET, PYF14A-E	4-67
K553.2	90119-0310	CLAMP, TYPE PYC-A1	4-67
K554	90119-0056	RELAY, AUXILIARY MK3P5-S 24VDC	4-67
K554.1	90129-0006	BASE, S3-B	4-67
M			
M.S033H2	90036-0057	LIGHT BULB, BA9S 28V	1-189
M.S033H	90064-0098	PUSH BUTTON, WHITE	1-189
M.B048.1	90458-2794	SENSOR, EVA 20-046-00	1-167, 1-169
M.S033H1	90459-0691	SIGN, STRIP SPLICE/ RESET ALARM	1-189
M.A1000	90459-1852	SHUT OFF VALVE, MS6-EM1-1/2	1-171
M.T1000	90459-6554	FILTER REGULATOR, MS6-LFR-1/2-D7-CRV-AS	1-171
MX048.1	90110-0159	MALE INSERT 70.310.0640.0	1-27
MX047.1	90110-0159	MALE INSERT 70.310.0640.0	1-27
MX046.1	90110-0159	MALE INSERT 70.310.0640.0	1-27
MX048.1	90110-0159	MALE INSERT 70.310.0640.0	1-29
MX047.1	90110-0159	MALE INSERT 70.310.0640.0	1-29
MX046.1	90110-0159	MALE INSERT 70.310.0640.0	1-29
MX030.1	90110-0296	FEMALE INSERT, HDC-HA-4BS 149840-B/2	1-27
MX029.1	90110-0296	FEMALE INSERT, HDC-HA-4BS 149840-B/2	1-27
MX028.1	90110-0296	FEMALE INSERT, HDC-HA-4BS 149840-B/2	1-27
MX027.1	90110-0296	FEMALE INSERT, HDC-HA-4BS 149840-B/2	1-27
MX030.1	90110-0296	FEMALE INSERT, HDC-HA-4BS 149840-B/2	1-29
MX029.1	90110-0296	FEMALE INSERT, HDC-HA-4BS 149840-B/2	1-29
MX028.1	90110-0296	FEMALE INSERT, HDC-HA-4BS 149840-B/2	1-29
MX027.1	90110-0296	FEMALE INSERT, HDC-HA-4BS 149840-B/2	1-29
MX518.1	90326-0020	PLUG, FEMALE YELLOW CR-AL	3-43
M.B114:1	90458-2794	SENSOR, EVA 20-046-00	1-203
M.B113:1	90458-2794	SENSOR, EVA 20-046-00	1-203
M.B649:1	90458-2794	SENSOR, EVA 20-046-00	1-217, 1-219
M.B042:1	90458-2794	SENSOR, EVA 20-046-00	1-235
M.B148:1	90458-2794	SENSOR, EVA 20-046-00	2-47
M.B141:1	90458-2794	SENSOR, EVA 20-046-00	2-91
M.B142:1	90458-2794	SENSOR, EVA 20-046-00	2-93
M.B144:1	90458-2794	SENSOR, EVA 20-046-00	2-95
M.B143:1	90458-2794	SENSOR, EVA 20-046-00	2-99
MC153.1	90459-1509	DOUBLE ACTING, SHORT STROKE, CYL 20-20	2-63
MC155.1	90459-2102	SINGLE ACTING, SHORT STROKE, CYL 100-25	2-63
M.G550:1	90600-2961	ENCODERFEEDBACK POWERFLEX 70, 20A-ENC-1	4-55
M.S005:1	90600-9809	ES SIGN FOR INCA, 30-054-09	1-189
M.S035:1	359301-0110	BUTTON SIGN, SHORT STOP	1-189
MB510.1	567070-0014	ELECTRODE	3-33, 3-35
MX048.2	90110-0221	CHASSIS HOUSING 310162-33	1-27
MX047.2	90110-0221	CHASSIS HOUSING 310162-33	1-27
MX046.2	90110-0221	CHASSIS HOUSING 310162-33	1-27
MX048.2	90110-0221	CHASSIS HOUSING 310162-33	1-29
MX047.2	90110-0221	CHASSIS HOUSING 310162-33	1-29
MX046.2	90110-0221	CHASSIS HOUSING 310162-33	1-29
MX030.2	90110-0370	BASE HOUSING, HDC-HA-3-SVL1/11	1-27
MX029.2	90110-0370	BASE HOUSING, HDC-HA-3-SVL1/11	1-27
MX028.2	90110-0370	BASE HOUSING, HDC-HA-3-SVL1/11	1-27
MX027.2	90110-0370	BASE HOUSING, HDC-HA-3-SVL1/11	1-27
MX030.2	90110-0370	BASE HOUSING, HDC-HA-3-SVL1/11	1-29
MX029.2	90110-0370	BASE HOUSING, HDC-HA-3-SVL1/11	1-29
MX028.2	90110-0370	BASE HOUSING, HDC-HA-3-SVL1/11	1-29
MX027.2	90110-0370	BASE HOUSING, HDC-HA-3-SVL1/11	1-29
MX518.2	90326-0012	PROTECTIVE COVER, T31A4618	3-43
MC153.2	90459-1509	DOUBLE ACTING, SHORT STROKE, CYL 20-20	2-63
MC155.2	90459-2102	SINGLE ACTING, SHORT STROKE, CYL 100-25	2-63
M.Z1000:2	90459-2773	FILTER, MS6-LFM-1/2-BRV	1-171
M.G550:2	90600-2962	SAFE-OFF OPTION POWERFLEX 70, 20A-DG01	4-55
MB510.2	567070-0014	ELECTRODE	3-33, 3-35
MX048.3	90110-0226	CABLE HOOD 6-POL 70.350.0628.0	1-27
MX047.3	90110-0226	CABLE HOOD 6-POL 70.350.0628.0	1-27
MX046.3	90110-0226	CABLE HOOD 6-POL 70.350.0628.0	1-27
MX048.3	90110-0226	CABLE HOOD 6-POL 70.350.0628.0	1-29

Pos	Part No	Description	Page No
M			
MX047.3	90110-0226	CABLE HOOD 6-POL 70.350.0628.0	1-29
MX046.3	90110-0226	CABLE HOOD 6-POL 70.350.0628.0	1-29
MX030.3	90110-0371	HOOD, TOP ENTRY, HDC-HA-3-TOVL1/11	1-27
MX029.3	90110-0371	HOOD, TOP ENTRY, HDC-HA-3-TOVL1/11	1-27
MX028.3	90110-0371	HOOD, TOP ENTRY, HDC-HA-3-TOVL1/11	1-27
MX027.3	90110-0371	HOOD, TOP ENTRY, HDC-HA-3-TOVL1/11	1-27
MX030.3	90110-0371	HOOD, TOP ENTRY, HDC-HA-3-TOVL1/11	1-29
MX029.3	90110-0371	HOOD, TOP ENTRY, HDC-HA-3-TOVL1/11	1-29
MX028.3	90110-0371	HOOD, TOP ENTRY, HDC-HA-3-TOVL1/11	1-29
MX027.3	90110-0371	HOOD, TOP ENTRY, HDC-HA-3-TOVL1/11	1-29
M.Z1000:3	90459-2772	FILTER, MS6-LFM-1/2-ARV	1-171
MB009	90044-0194	INDUCTIVE SENSOR, IN 5329	1-129, 1-131
MB032	90044-0194	INDUCTIVE SENSOR, IN 5329	1-195, 1-197, 1-199, 1-201
MB066	90232-0123	PH.CELL WLL170-P135-6011723	1-17
MB070	90044-0194	INDUCTIVE SENSOR, IN 5329	1-17
MB081	90458-0602	CONTRAST SCANNER, KT15W-P2213S02	1-149
MB082	90458-0602	CONTRAST SCANNER, KT15W-P2213S02	1-149
MB089	90457-0950	ULTRASONIC SENSOR, E4B-TS 50F4 5M	1-151
MB109	90044-0194	INDUCTIVE SENSOR, IN 5329	1-195, 1-197, 1-199, 1-201
MB111	90044-0194	INDUCTIVE SENSOR, IN 5329	1-195, 1-197, 1-199, 1-201
MB153	90044-0194	INDUCTIVE SENSOR, IN 5329	3-43
MB236	90044-0194	INDUCTIVE SENSOR, IN 5329	1-43, 1-45
MB511	90274-0066	PRESSURE SWITCH, 5,516 - 689,5 KPA	3-33, 3-35
MB512	90600-0467	INDUCTIVE SWITCH,E2A-M18KS05-WP-B1-TP 6M	3-3, 3-5
MB517	90044-0104	INDUCTIVE SENSOR IN5227S	3-47
MB518	90326-0060	THERMOCOUPLE, CR-AL	3-43
MB519	90044-0104	INDUCTIVE SENSOR IN5227S	3-47
MB521	90600-1154	FLOW METER,D-6230-HGB-BB-AV-99-0-N2/IP65	3-33, 3-35
MC154	90600-4233	DOUBLE ACTING, COMPACT, 80-25	2-63
ML003	1035587-0000	INDUCTOR	1-135
M.M021	90459-2328	GEARS, WORM MOTOR IGL 80-60 + VE 31GR5	2-51
M.M022	90459-2328	GEARS, WORM MOTOR IGL 80-60 + VE 31GR5	2-77
MR033	1538473-0000	SEALING BLOCK	1-191
MR034	1524481-0000	SEALING BLOCK	1-193
MX027	90459-2412	CONNECTOR, HDC-KITS, HDC-HA-4SS	1-27, 1-29
MX028	90459-2412	CONNECTOR, HDC-KITS, HDC-HA-4SS	1-27, 1-29
MX029	90459-2412	CONNECTOR, HDC-KITS, HDC-HA-4SS	1-27, 1-29
MX030	90459-2412	CONNECTOR, HDC-KITS, HDC-HA-4SS	1-27, 1-29
MX031	580064-0200	CONNECTION BOX	1-177, 1-179
MX046	90110-0163	FEMALE INSERT 70 300 0640 0	1-27, 1-29
MX047	90110-0163	FEMALE INSERT 70 300 0640 0	1-27, 1-29
MX048	90110-0163	FEMALE INSERT 70 300 0640 0	1-27, 1-29
MX075	67380-0208	TRANSFORMER	1-135
MX518	90326-0022	PLUG, MALE YELLOW CR-AL	3-43
MX540	90458-1212	LEFT ENDPLATE INCL. 10M CABLE	4-41
MY510	979956-0000	SOLENOID VALVE	3-33, 3-35
MY513	90042-0171	SOLENOID VALVE TYPE 330 3/2 NC	3-33, 3-35
MY514	90042-0171	SOLENOID VALVE TYPE 330 3/2 NC	3-33, 3-35
MY515	90042-0171	SOLENOID VALVE TYPE 330 3/2 NC	3-33, 3-35
MY516	90042-0171	SOLENOID VALVE TYPE 330 3/2 NC	3-33, 3-35
MY517	90042-0171	SOLENOID VALVE TYPE 330 3/2 NC	3-33, 3-35
MY519	90459-1420	PROPORTIONAL VALVE 0 - 10V/0-6 BAR	3-33, 3-35
MY519	90600-0491	ACTUATOR, 9650-0089-Z-I-OTI	3-43
M550	90600-3228	MOTOR CH21302002002A000	4-21
R			
R001	1520972-0000	TPO-BAR	2-71
R95X0100	90110-0235	CABLE CONTACT, PX0739/P	6-33
R95B0002	90459-7273	PHOTOCELL E3Z-T81C-G0SR D-CN	6-9
R95B0001	90459-7274	PHOTOCELL E3Z-T81C-G0SR L-CN	6-9
R95W1010	351150-0404	CABLE OLFLEX 4X0,75 MM2 LIGHT/GREY	6-33
R95W0001	351305-0020	ACTUATOR/SENSOR CABLE PRKMV 4-07/2M	6-9
R95W0002	351305-0020	ACTUATOR/SENSOR CABLE PRKMV 4-07/2M	6-9
R95X0101	2590054-0100	CONNECTION BOX	6-9
S			
M.S503	90064-0082	PUSH BUTTON, WHITE	2-97
M.S009	90064-0082	PUSH BUTTON, WHITE	2-97
M.S008	90064-0082	PUSH BUTTON, WHITE	2-97
M.S007	90064-0082	PUSH BUTTON, WHITE	2-97
M.S003	90064-0082	PUSH BUTTON, WHITE	2-97
M.S035	90064-0085	PUSH BUTTON, RED	1-189
M.S130	90235-0804	FRONT PANEL VALVE 3/2, SV-3-M5	1-167, 1-169
M.S005	90600-6050	EMERGENCY STOP INCA 1 TINA, 30-054-00	1-189
M.S011	90600-6050	EMERGENCY STOP INCA 1 TINA, 30-054-00	2-97
M.S006	90600-6050	EMERGENCY STOP INCA 1 TINA, 30-054-00	2-97
T			
M.T048	90458-0254	PRECISION PRESSURE REGULATOR,LRP-1/4-0,7	1-167, 1-169
M.T560	90458-2264	PRESSURE REGULATOR ARC-30-1/2"	4-31
M.T306	90459-1850	REGULATOR, MS6-LRB-1/2-D5-AS	2-83
M.T130	90459-2241	REGULATOR, MS4-LRB-1/4-D5-AS	1-167
M.T120	90459-2241	REGULATOR, MS4-LRB-1/4-D5-AS	1-167
M.T130	90459-2241	REGULATOR, MS4-LRB-1/4-D5-AS	1-169
M.T120	90459-2241	REGULATOR, MS4-LRB-1/4-D5-AS	1-169

Pos	Part No	Description	Page No
T			
M.T559	2558133-0000	PRESSURE REGULATOR	4-31
T540	90459-2425	PRESSURE REGULATOR IN-LINE, BSP-1/4	4-37, 4-39
U			
M.U559	90043-0082	PRESSURE GAUGE, 2740, D=63 MM	4-33
M.U540	90043-0082	PRESSURE GAUGE, 2740, D=63 MM	4-33
M.U048	90458-2969	PRESSURE GAUGE, MAP-40-1-1/8-EN	1-167, 1-169
U560	90043-0069	PRESSURE GAUGE 0-4BAR WIEGAND 2040	4-37, 4-39
V			
M.V503	90038-0021	DIODE, 1A 800V	2-97
W			
W004	90220-0091	PAIR TWISTED CABLE 2X2X0,25MM2	4-37, 4-39
W042	90220-0059	THERMOCOUPLE CABLE, K/PVC/20AWG 2X0,5MM2	3-23
W052	90459-2633	I/O BUS EXPANSION CABLE 8M	4-63
M.W695	90459-4876	FOCUS JUMPER CABLE M12 5P 3M, 20-056-21	1-167, 1-169
M.W665	90459-4876	FOCUS JUMPER CABLE M12 5P 3M, 20-056-21	1-203
M.W696	90459-4876	FOCUS JUMPER CABLE M12 5P 3M, 20-056-21	1-217, 1-219
M.W691	90459-4876	FOCUS JUMPER CABLE M12 5P 3M, 20-056-21	2-7
M.W690	90459-4876	FOCUS JUMPER CABLE M12 5P 3M, 20-056-21	2-7
M.W686	90459-4876	FOCUS JUMPER CABLE M12 5P 3M, 20-056-21	2-7
M.W691	90459-4876	FOCUS JUMPER CABLE M12 5P 3M, 20-056-21	2-9
M.W690	90459-4876	FOCUS JUMPER CABLE M12 5P 3M, 20-056-21	2-9
M.W686	90459-4876	FOCUS JUMPER CABLE M12 5P 3M, 20-056-21	2-9
M.W687	90459-4876	FOCUS JUMPER CABLE M12 5P 3M, 20-056-21	2-47
M.W692	90459-4876	FOCUS JUMPER CABLE M12 5P 3M, 20-056-21	2-53, 2-55
M.W664	90459-7095	FOCUS JUMPER CABLE M12 5P 1M, 20-056-20	1-203
M.W663	90459-7095	FOCUS JUMPER CABLE M12 5P 1M, 20-056-20	1-203
M.W685	90459-7095	FOCUS JUMPER CABLE M12 5P 1M, 20-056-20	2-7, 2-9
M.W649	90459-7095	FOCUS JUMPER CABLE M12 5P 1M, 20-056-20	2-53, 2-55
M.W652	90600-0934	CABLE M12-C62 5 POLE MALE, 20-056-02	1-189
M.W657	90600-0934	CABLE M12-C62 5 POLE MALE, 20-056-02	2-97
M.W697	90600-5930	CABLE C9, 20-057-15	1-19, 1-21, 1-23, 1-25
M.W153	90600-5930	CABLE C9, 20-057-15	1-171
M.W688	90600-5930	CABLE C9, 20-057-15	2-53, 2-55
M.W152	90600-5930	CABLE C9, 20-057-15	2-83
M.W694	90600-9528	TRANSFER CABLE M12-CT0214, 20-060-01	1-235
C.W658	312115-0230	SCREW ISO4762 M3X20 A4 80	2-97
M.W540	351150-0403	CABLE OLFLEX 3X0,75 MM2 LIGHT/GREY	1-171
M.W155	351150-0403	CABLE OLFLEX 3X0,75 MM2 LIGHT/GREY	2-83
M.W788	351150-0405	CABLE OLFLEX 5X0,75 MM2 LIGHT/GREY	2-47
M.W526	351150-0406	CABLE OLFLEX 7X0,75 MM2 LIGHT/GREY	1-31, 1-33, 1-35, 1-37
M.W605	351150-0407	CABLE OLFLEX 12X0,75 MM2 LIGHT/GREY	1-189
M.W541	351150-0425	CABLE OLFLEX 25X0,75 MM2 LIGHT/GREY	1-31
M.W525	351150-0425	CABLE OLFLEX 25X0,75 MM2 LIGHT/GREY	1-31
M.W541	351150-0425	CABLE OLFLEX 25X0,75 MM2 LIGHT/GREY	1-33
M.W525	351150-0425	CABLE OLFLEX 25X0,75 MM2 LIGHT/GREY	1-33
M.W541	351150-0425	CABLE OLFLEX 25X0,75 MM2 LIGHT/GREY	1-35
M.W525	351150-0425	CABLE OLFLEX 25X0,75 MM2 LIGHT/GREY	1-35
M.W541	351150-0425	CABLE OLFLEX 25X0,75 MM2 LIGHT/GREY	1-37
M.W525	351150-0425	CABLE OLFLEX 25X0,75 MM2 LIGHT/GREY	1-37
M.W306	351422-0203	CABLE Ã–LFLEX 150CY QUATTRO 4X1,5	1-123
W093	90220-0059	THERMOCOUPLE CABLE, K/PVC/20AWG 2X0,5MM2	4-31
W094	90220-0059	THERMOCOUPLE CABLE, K/PVC/20AWG 2X0,5MM2	4-31
W095	90220-0059	THERMOCOUPLE CABLE, K/PVC/20AWG 2X0,5MM2	4-31
W131	1512322-0000	COPPER BRAID	3-19
W202	90220-0183	SCR. CABLE 2X0,34MM2	5-3
W500	351150-0412	CABLE OLFLEX 3X1,5 MM2 LIGHT/GREY	1-27, 1-29
W502	351121-0213	CABLE RADOX 155 1X1,5 MMÂ² YELLOW/GREEN	1-27, 1-29
W503	351150-0412	CABLE OLFLEX 3X1,5 MM2 LIGHT/GREY	1-27, 1-29
W505	351121-0213	CABLE RADOX 155 1X1,5 MMÂ² YELLOW/GREEN	1-27, 1-29
W506	351150-0412	CABLE OLFLEX 3X1,5 MM2 LIGHT/GREY	1-27, 1-29
W508	351121-0213	CABLE RADOX 155 1X1,5 MMÂ² YELLOW/GREEN	1-27, 1-29
W509	351150-0412	CABLE OLFLEX 3X1,5 MM2 LIGHT/GREY	1-27, 1-29
W512	90220-0059	THERMOCOUPLE CABLE, K/PVC/20AWG 2X0,5MM2	1-27, 1-29
W514	90220-0059	THERMOCOUPLE CABLE, K/PVC/20AWG 2X0,5MM2	1-27, 1-29
W516	90220-0059	THERMOCOUPLE CABLE, K/PVC/20AWG 2X0,5MM2	1-27, 1-29
W518	90220-0059	THERMOCOUPLE CABLE, K/PVC/20AWG 2X0,5MM2	1-27, 1-29
W519	351121-0213	CABLE RADOX 155 1X1,5 MMÂ² YELLOW/GREEN	1-27, 1-29
W520	90458-0603	CONNECTOR, CABLE RECEPTACLES	1-149, 2-75
W521	90458-0603	CONNECTOR, CABLE RECEPTACLES	1-149, 2-75
W524	351150-0412	CABLE OLFLEX 3X1,5 MM2 LIGHT/GREY	1-217, 1-219
W545	90220-0107	SCR. CABLE 5X0,75MM2	1-27, 1-29
W546	90220-0107	SCR. CABLE 5X0,75MM2	1-27, 1-29
W547	90220-0107	SCR. CABLE 5X0,75MM2	1-27, 1-29
W548	90220-0107	SCR. CABLE 5X0,75MM2	1-27, 1-29
W549	90220-0107	SCR. CABLE 5X0,75MM2	1-27, 1-29
W550	90220-0107	SCR. CABLE 5X0,75MM2	1-27, 1-29
W585	90220-0104	SCR. CABLE 4X1,5MM2	4-21
W586	90220-0131	PAIR TWISTED CABLE 3X2X0,25MM2	4-21
W601	548770-0006	COAXIAL CABLE L=1200 MM	1-135
W602	351150-0422	CABLE OLFLEX 3X4 MM2 LIGHT/GREY	1-205, 1-207
W605	351150-0407	CABLE OLFLEX 12X0,75 MM2 LIGHT/GREY	1-205, 1-207
W615	351150-0425	CABLE OLFLEX 25X0,75 MM2 LIGHT/GREY	1-205, 1-207

Pos	Part No	Description	Page No
W			
W630	351120-0146	CABLE Ã–LFLEX HEAT 180 SIHF 3X4	1-191
W631	351120-0145	CABLE Ã–LFLEX HEAT 180 SIHF 3X2,5	1-193
W701	351150-0403	CABLE OLFLEX 3X0,75 MM2 LIGHT/GREY	3-33, 3-35
W703	351150-0403	CABLE OLFLEX 3X0,75 MM2 LIGHT/GREY	3-33, 3-35
W704	351150-0403	CABLE OLFLEX 3X0,75 MM2 LIGHT/GREY	3-33, 3-35
W705	351150-0403	CABLE OLFLEX 3X0,75 MM2 LIGHT/GREY	3-33, 3-35
W706	351150-0403	CABLE OLFLEX 3X0,75 MM2 LIGHT/GREY	3-33, 3-35
W707	351150-0404	CABLE OLFLEX 4X0,75 MM2 LIGHT/GREY	3-33, 3-35
W715	351150-0425	CABLE OLFLEX 25X0,75 MM2 LIGHT/GREY	3-33, 3-35
W716	90220-0059	THERMOCOUPLE CABLE, K/PVC/20AWG 2X0,5MM2	3-43
W717	351150-0403	CABLE OLFLEX 3X0,75 MM2 LIGHT/GREY	3-33, 3-35
W721	90220-0072	SCR. CABLE 4X0,34MM2	3-33, 3-35
W721.1	353300-0006	HEATSHRINK TUBING	3-33, 3-35
W722	90220-0072	SCR. CABLE 4X0,34MM2	3-33, 3-35
W722.1	353300-0006	HEATSHRINK TUBING	3-33, 3-35
W750	351150-0412	CABLE OLFLEX 3X1,5 MM2 LIGHT/GREY	2-53, 2-55
W757	90220-0104	SCR. CABLE 4X1,5MM2	2-51
W758	90220-0104	SCR. CABLE 4X1,5MM2	2-69
W759	351150-0425	CABLE OLFLEX 25X0,75 MM2 LIGHT/GREY	2-53, 2-55
W767	90458-1076	L-SHAPED CONNECTOR CABLE Y92EM12PVC4A5ML	2-7, 2-9
W768	90458-1076	L-SHAPED CONNECTOR CABLE Y92EM12PVC4A5ML	2-7, 2-9
W770	90458-1076	L-SHAPED CONNECTOR CABLE Y92EM12PVC4A5ML	2-43
W771	90458-1076	L-SHAPED CONNECTOR CABLE Y92EM12PVC4A5ML	2-43
W782	351150-0407	CABLE OLFLEX 12X0,75 MM2 LIGHT/GREY	2-21
W797	1498433-0000	CABLE	2-71
W798	1498433-0000	CABLE	2-71
W800	351150-0425	CABLE OLFLEX 25X0,75 MM2 LIGHT/GREY	2-53, 2-55
W884	351150-0413	CABLE OLFLEX 4GX1,5 MM2 LIGHT/GREY	4-21
W887	90220-0091	PAIR TWISTED CABLE 2X2X0,25MM2	4-21
X			
X011	90458-0877	HOOD, TOP ENTRY, HAN 6B-GG-PG29	2-69
X012	90459-2412	CONNECTOR, HDC-KITS, HDC-HA-4SS	2-53, 2-55
X012.1	90110-0371	HOOD, TOP ENTRY, HDC-HA-3-TOVL1/11	2-53, 2-55
X013	90110-0371	HOOD, TOP ENTRY, HDC-HA-3-TOVL1/11	2-51
X014	90110-0371	HOOD, TOP ENTRY, HDC-HA-3-TOVL1/11	2-69
X015	90110-0150	MALE INSERT, HDC HE 24 MS, 1211 1000 00	2-53, 2-55
X015.1	90110-0152	CABLE HOOD 24-POL 70.352.2428.1	2-53, 2-55
X016	90110-0150	MALE INSERT, HDC HE 24 MS, 1211 1000 00	2-53, 2-55
X016.1	90110-0152	CABLE HOOD 24-POL 70.352.2428.1	2-53, 2-55
X018.2	90110-0150	MALE INSERT, HDC HE 24 MS, 1211 1000 00	1-205, 1-207
X018.3	90110-0346	HOOD, SIDE ENTRY, 12 11220 00 00	1-205, 1-207
X019.2	90110-0156	MALE INSERT 70.210.0653.0	1-205, 1-207
X019.3	90110-0244	CABLE HOOD 6-POL 70.350.1628.0	1-205, 1-207
C.X025	90110-0150	MALE INSERT, HDC HE 24 MS, 1211 1000 00	1-31, 1-33, 1-35, 1-37
M.X100	90195-0020	TERMINAL BLOCK, BK 2CRN, 0624 7200 00	2-97
C.X026	90458-1405	MALE INSERT, HDC HE 16 MS, 1207 5000 00	1-31, 1-33, 1-35, 1-37
M.X315	90459-4254	CONNECTION BLOCK TINA 4A, 20-054-03	1-19, 1-21, 1-23, 1-25
M.X313	90459-4254	CONNECTION BLOCK TINA 4A, 20-054-03	2-53, 2-55
M.X142	90600-3074	Y-CONNECTOR M12-3E, 20-055-02	2-53, 2-55
M.X312	90601-0026	TINA 11A DISTRIBUTOR BLOCK, 20-054-17	1-203
M.X314	90601-0026	TINA 11A DISTRIBUTOR BLOCK, 20-054-17	2-53, 2-55
M.X060	1364477-0200	TERMINAL	2-53, 2-55
M.X025	2529615-0000	CONNECTION BOX	1-31, 1-33, 1-35, 1-37
M.X062	2597097-0100	CONNECTION BOX	2-7, 2-9
Y			
M.Y044	90458-1194	VALVE, 5/2 MONOSTABLE	1-173
M.Y049	90458-1194	VALVE, 5/2 MONOSTABLE	1-173
M.Y048	90458-1194	VALVE, 5/2 MONOSTABLE	1-173
M.Y047	90458-1194	VALVE, 5/2 MONOSTABLE	1-173
M.Y046	90458-1194	VALVE, 5/2 MONOSTABLE	1-173
M.Y045	90458-1194	VALVE, 5/2 MONOSTABLE	1-173
M.Y044	90458-1194	VALVE, 5/2 MONOSTABLE	1-175
M.Y049	90458-1194	VALVE, 5/2 MONOSTABLE	1-175
M.Y048	90458-1194	VALVE, 5/2 MONOSTABLE	1-175
M.Y047	90458-1194	VALVE, 5/2 MONOSTABLE	1-175
M.Y046	90458-1194	VALVE, 5/2 MONOSTABLE	1-175
M.Y045	90458-1194	VALVE, 5/2 MONOSTABLE	1-175
M.Y158	90458-1194	VALVE, 5/2 MONOSTABLE	2-81
M.Y157	90458-1194	VALVE, 5/2 MONOSTABLE	2-81
M.Y155	90458-1194	VALVE, 5/2 MONOSTABLE	2-81
M.Y154	90458-1194	VALVE, 5/2 MONOSTABLE	2-81
M.Y153	90458-1194	VALVE, 5/2 MONOSTABLE	2-81
M.Y042	90458-1197	VALVE, 5/2 BISTABLE	1-173, 1-175
M.Y151/152	90458-1197	VALVE, 5/2 BISTABLE	2-81
M.Y159	90458-1199	VALVE CLOSED IN MID-POSITION, 5/3	2-81
M.Y156	90458-1199	VALVE CLOSED IN MID-POSITION, 5/3	2-81
M.Y049	90458-1215	COVER PLATE, EMPTY VALVE POSITION	1-173
M.Y042	90458-1215	COVER PLATE, EMPTY VALVE POSITION	1-173
M.Y044	90458-1215	COVER PLATE, EMPTY VALVE POSITION	1-173
M.Y049	90458-1215	COVER PLATE, EMPTY VALVE POSITION	1-175
M.Y042	90458-1215	COVER PLATE, EMPTY VALVE POSITION	1-175
M.Y044	90458-1215	COVER PLATE, EMPTY VALVE POSITION	1-175

Pos	Part No	Description	Page No
Y			
M.Y054	90600-8267	DOOR LOCKING DEV., DALTON M126 20-038-12	1-235
M.Y053	90601-1126	SAFETY VALVE, MS6-SV-1/2-E-10V24-AG	1-171
M.Y150	90601-1126	SAFETY VALVE, MS6-SV-1/2-E-10V24-AG	2-83
M.Y915	350013-0002	PLUG QSC-6H	4-45
Y550	90458-1194	VALVE, 5/2 MONOSTABLE	4-41
Y552	90458-1194	VALVE, 5/2 MONOSTABLE	4-41
Y553	90458-1194	VALVE, 5/2 MONOSTABLE	4-41
Y554/Y555	90458-1202	VALVES 2X3/2, CLOSED	4-41
Y556/Y557	90458-1202	VALVES 2X3/2, CLOSED	4-41
Y558/Y559	90458-1202	VALVES 2X3/2, CLOSED	4-41
Y560	90458-1092	PROPORTIONAL VALVE 0 - 10V/0-6 BAR	4-37, 4-39
Y561/Y551	90458-1202	VALVES 2X3/2, CLOSED	4-41
Z			
M.Z040	90459-5786	FILTERED SILENCER, 10494 LFU-1/2	1-167, 1-169
M.Z150	90459-5786	FILTERED SILENCER, 10494 LFU-1/2	2-85
Z540	2814874-0100	SILENCER	4-37, 4-39
Z560	90458-2554	STERILE GRADE MEMBRANE FILTER 0,2ÂµM	4-45

Tetra Pak

SPC binder labels. 40 mm Full width *Note! This page is generated* **automatically.**
using the **variable definitions** *made in the* **front page** *file!!*

TBA/19 0400
648160-0400
Issue: 2011-09 Doc No: SPC-1531321-0105

TBA/19 0400
648160-0400
Issue: 2011-09 Doc No: SPC-1531321-0105

TBA/19 0400
648160-0400
Issue: 2011-09 Doc No: SPC-1531321-0105

TBA/19 0400
648160-0400
Issue: 2011-09 Doc No: SPC-1531321-0105

TBA/19 0400
648160-0400
Issue: 2011-09 Doc No: SPC-1531321-0105

TBA/19 0400
648160-0400
Issue: 2011-09 Doc No: SPC-1531321-0105

TBA/19 0400
648160-0400
Issue: 2011-09 Doc No: SPC-1531321-0105

TBA/19 0400
648160-0400
Issue: 2011-09 Doc No: SPC-1531321-0105

TBA/19 0400
648160-0400
Issue: 2011-09 Doc No: SPC-1531321-0105

TBA/19 0400
648160-0400
Issue: 2011-09 Doc No: SPC-1531321-0105

TBA/19 0400
648160-0400
Issue: 2011-09 Doc No: SPC-1531321-0105