SPC
Spare Parts Catalogue

TBA/9R

648152-6000

(Source -100V/ -110V/ -120V)

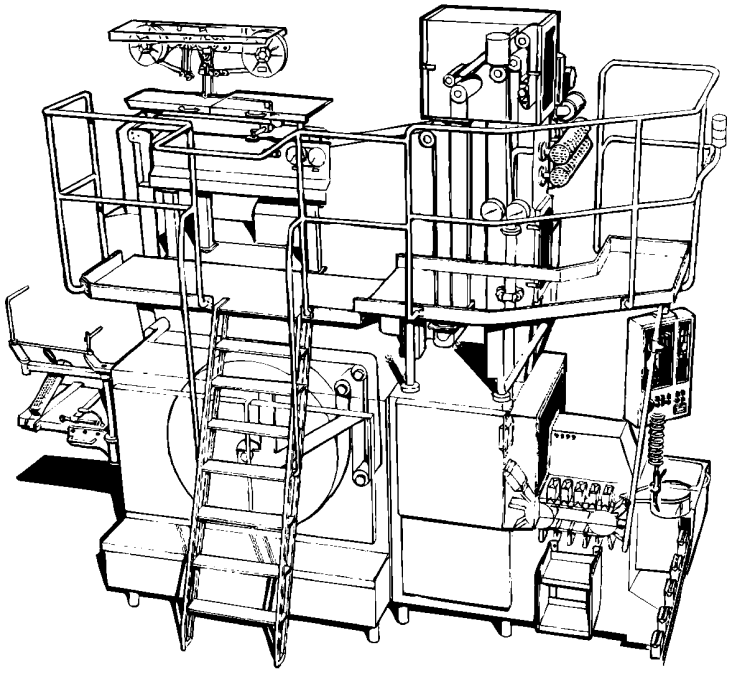

Tetra Pak

Doc. No: SPC-80322-0104

Main Groups of the Machine

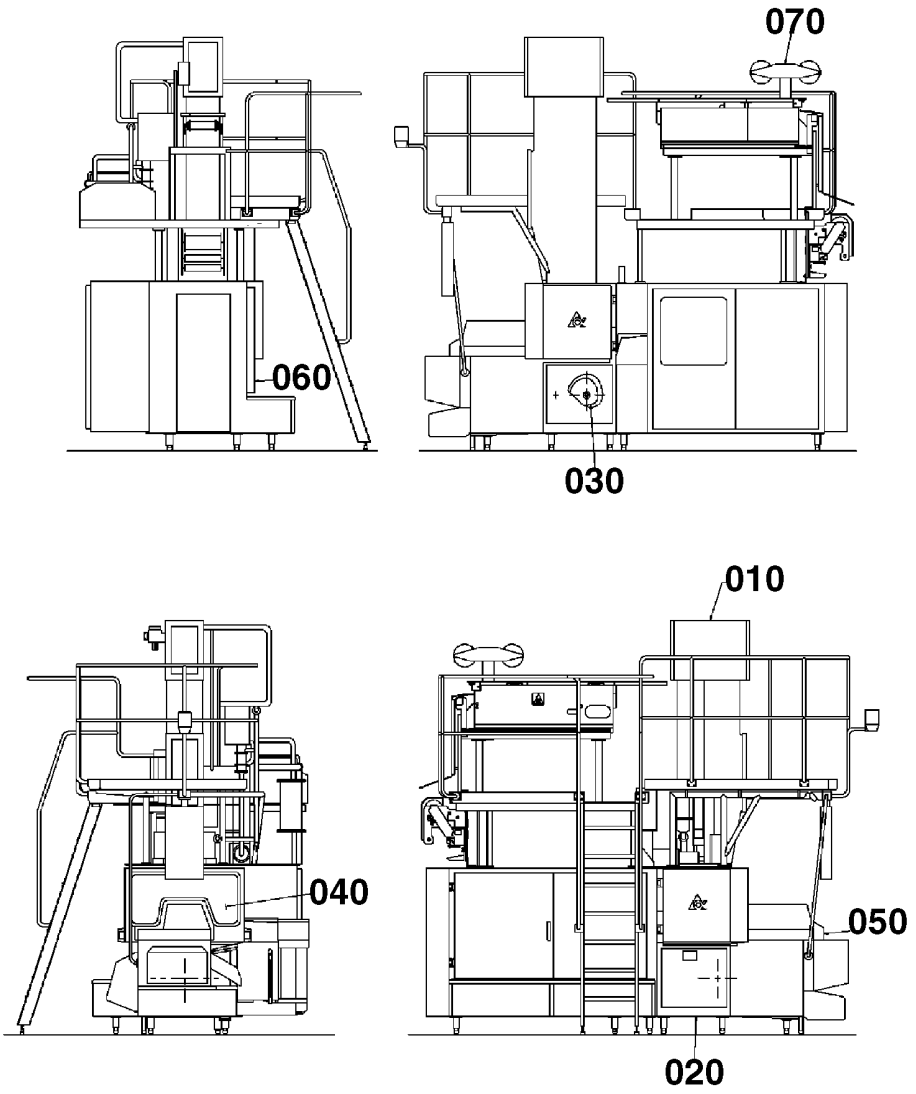

010 - Superstructure TBA/9R
020 - Machine Body TBA/9R
030 - Drive TBA/9R
040 - Jaw System TBA/9R
050 - Final Folder TBA/9R
060 - Service Unit TBA/9R
070 - Strip Applicator TBA/9R
090 - Regular Accessories TBA/9R
100 - Optional Equipment
150 - El-equipment TBA/9R

For the correct machine data, check your machine specification, supplied with the machine!

This document is valid for:

Series No/Machine No Sign.

SPC
Spare Parts Catalogue

Tetra Brik Aseptic
Reconditioned
TBA/9R
648152-6000

Table of Content:

BINDER 1

Introduction ..... , **5**

Superstructure TBA/9R
B- 648143-0100 ..... , **9**

Machine Body TBA/9R
B- 648144-0100 ..... , **237**

Drive TBA/9R
B- 648145-0100 ..... , **315**

Jaw System TBA/9R
B- 648146-0100 ..... , **361**

Final Folder TBA/9R
B- 648147-0100 ..... , **435**

BINDER 2

Service Unit TBA/9R
B- 648148-0100 ..... , **591**

Strip Applicator TBA/9R
B- 648153-0100 ..... , **739**

Regular Accessories TBA/9R
B- 648154-0100 ..... , **849**

Optional Equipment
B- 648168-0100 ..... , **879**

El-equipment TBA/9R
B- 648155-0100 ..... , **947**

Part Number Index ..... , **1007**

Electrical Parts Index ..... , **1075**

Doc. No: SPC-80322-0104

Issue 2002-08-26

Tetra Pak

Tetra Pak Carton Ambient AB

General information

Manufacturer

This machine is produced by:
Tetra Pak Carton Ambient AB
Ruben Rausings gata
S-221 86 Lund
Sweden

Document producer

This document has been produced by:
Tetra Pak Carton Ambient AB
Technical Publications
Ruben Rausings gata
S-221 86 Lund
Sweden

Number of pages

This document contains totally **1080 pages,** including the first **8** introduction pages.

Copyright © 2002 Tetra Pak Carton Ambient AB

All rights reserved. No parts of this document may be reproduced or copied in any forms or by any means, without written permission from Tetra Pak Carton Ambient AB.

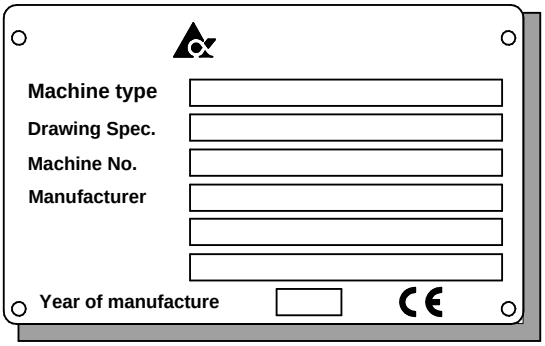

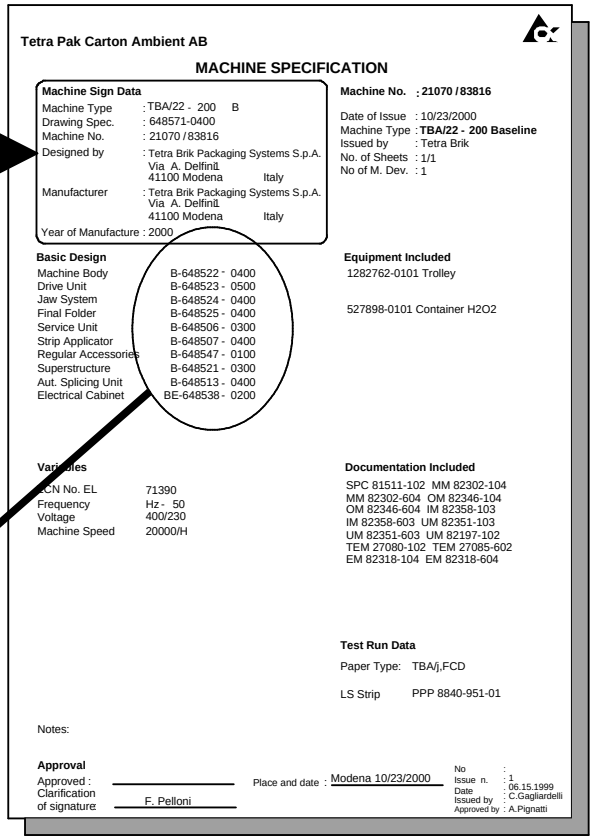

Figure 1

1

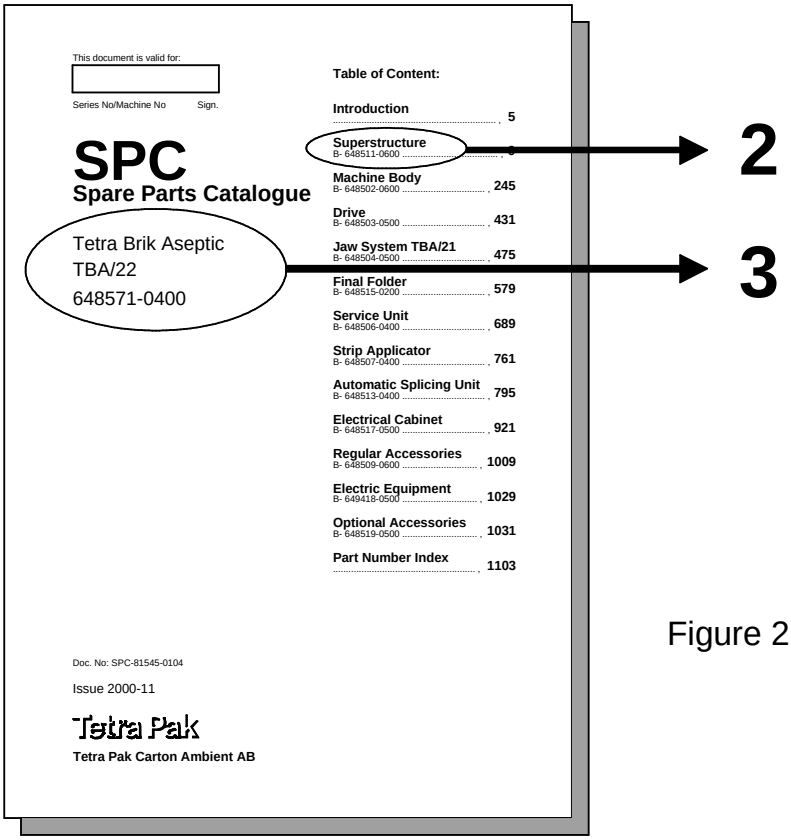

2

3

Figure 2

Figure 3 A-648571-0400

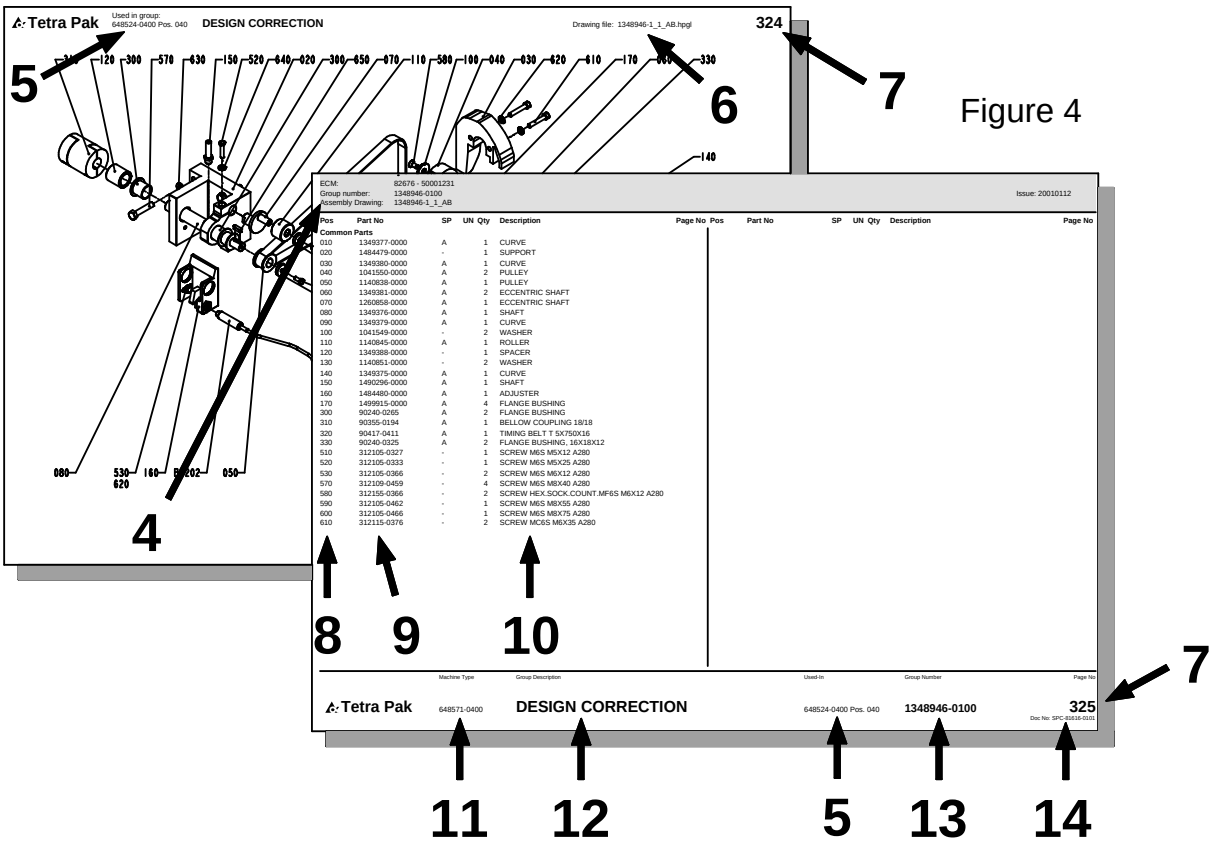

Figure 4

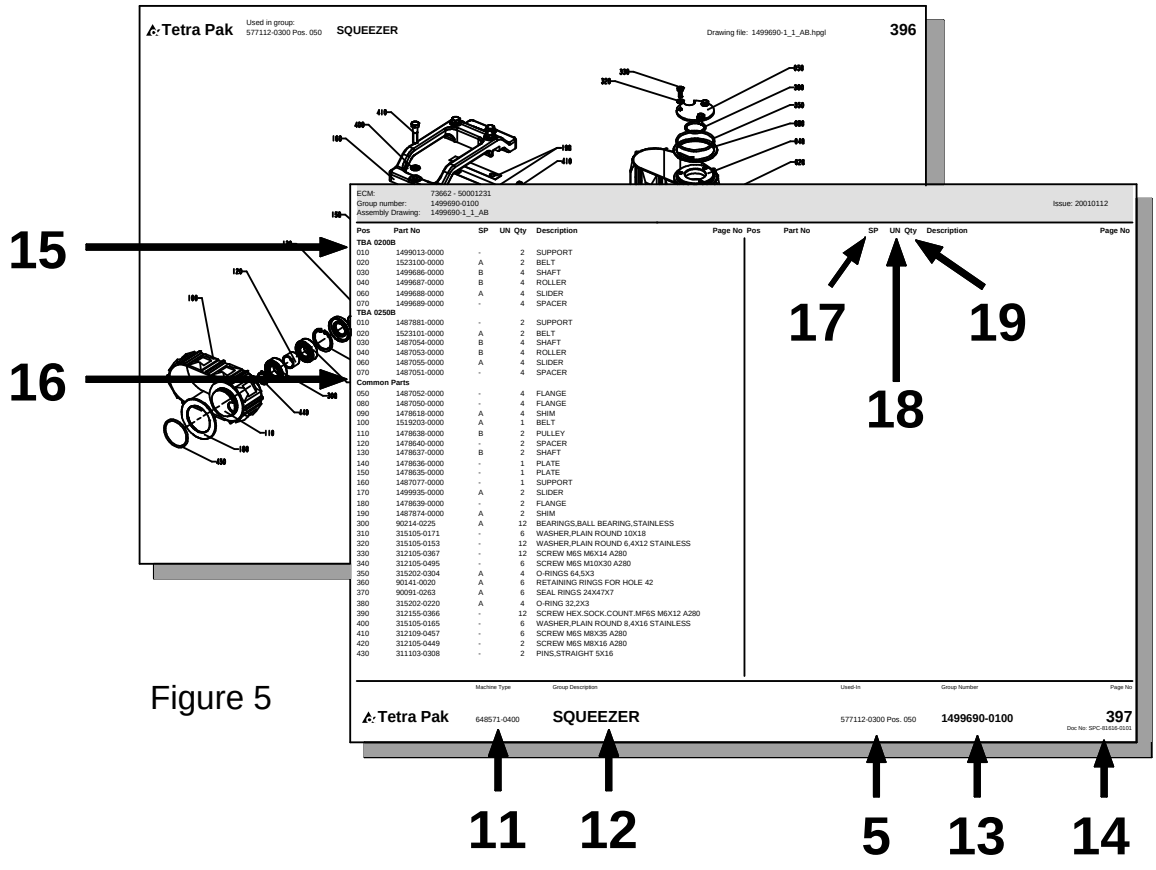

Figure 5

General information

Service

When ordering spare parts for your machine, contact the nearest Tetra Pak service station.

Machine identification

This machine plate is an example of the type of machine plate, attached to the machine frame. The plate carries data needed when contacting Tetra Pak concerning this particular machine **(see Figure 1).**

Purpose of the Spare Parts Catalogue

The purpose of the Spare Parts Catalogue (SPC) is to provide the technicians and contact personnel with information on how to find and order spare parts for maintenance and service of the machine.
For instructions of how to replace parts and adjust machine setup, see the Maintenance Manual (MM).

Delivered documentation

The technical documentation delivered with this machine is started in the Machine Specification.
Note! If any of these documents is missing, it must be reported in the document **Start Up Machine Quality Report**. For more information, see chapter 8 Preparation for Commissioning in the Installation Manual.
It is important that you keep these documents for the life of the equipment, and pass the documents on to any subsequent holder or user of the equipment.

Design modification

The content of this document is in accordance with the design and construction of the machine at the time it was delivered from the Tetra Pak machine production facility.

Further copies

Additional copies can be ordered from the nearst Tetra Pak service station. When ordering technical publications, always quote the document number printed on the front cover of the document concerned.

Tetra Pak Part numbering system

The third and forth digits in the sub-number, specify one unique group which can be ordered. If the forth digit is replaced by a "0", the number combination only points to a bill-of-material document.
The first and second digits in the sub-number, specify the development step (model) of the machine or group. **(see fig. 3)**
Main number of machine /group /article, depending on level.
Prefix, giving information about level, eg.
A = Machine
B = Main section (*)
C = Groups and subgroups
*) Customized distribution machines are registered as B-level as well.

How to find the correct Spare Part Number

A. Check that the data on your machine sign, and/or machine specification, corresponds with the catalogue. **(see fig.1)**

1) Main groups of the machine

B. The second catalogue sheet contains a table of content for the main groups, included in the catalogue. The information regarding machine and main group page status MUST correspond with your machine specification.
Locate and choose the main groups page number (1), in which you want to search for spare parts. **(see fig.2)**

2) Main group
3) Machine type

C. Search in the main group illustration, the item number, which may hold your wanted spare part. Go to the text page below and find the page number for the actual group. **(see fig. 4)**

4) Internal information, such as latest Engineering Change, Bill-of-Material included in the catalogue page and the Assembly Drawing required
5) Used-In reference to next higher level in the machine structure
6) Assembly drawing number including the archive file extension
7) Continuous page numbering through the document
8) Pos number corresponding to illustration
9) Group or article number
10) Group or article description. The letter "B" in front of some article numbers indicates that this article contains other parts, directly listed below the B-article. Letter "A" indicates a subgroup number with an own page directly after the actual page
11) Machine type including development status
12) Group description
13) Group number (bill-of-material) including development status
14) Document number

D. Continue to the found page number, and search in the illustration for your spare part. Go to the text row for the found item number, and read the part number. Take eventual variant headings in consideration; if you are unsure, read your machine specification. **(see fig. 5)**

15) Variant heading, eg volume, left/right etc.
16) Heading for common parts
17) SP = Code for articles, which are included into various spare part kits.
    A = Critical Spare Part
    B = Non Critical Spares Part
    C = Don't stop function, can bypassed
    D = Seldom break, long time production
18) UN = Short code for measure units, eg mm, kg etc.
19) Qty = Number of items needed in the complete assembly.

SPC
Spare Parts Catalogue

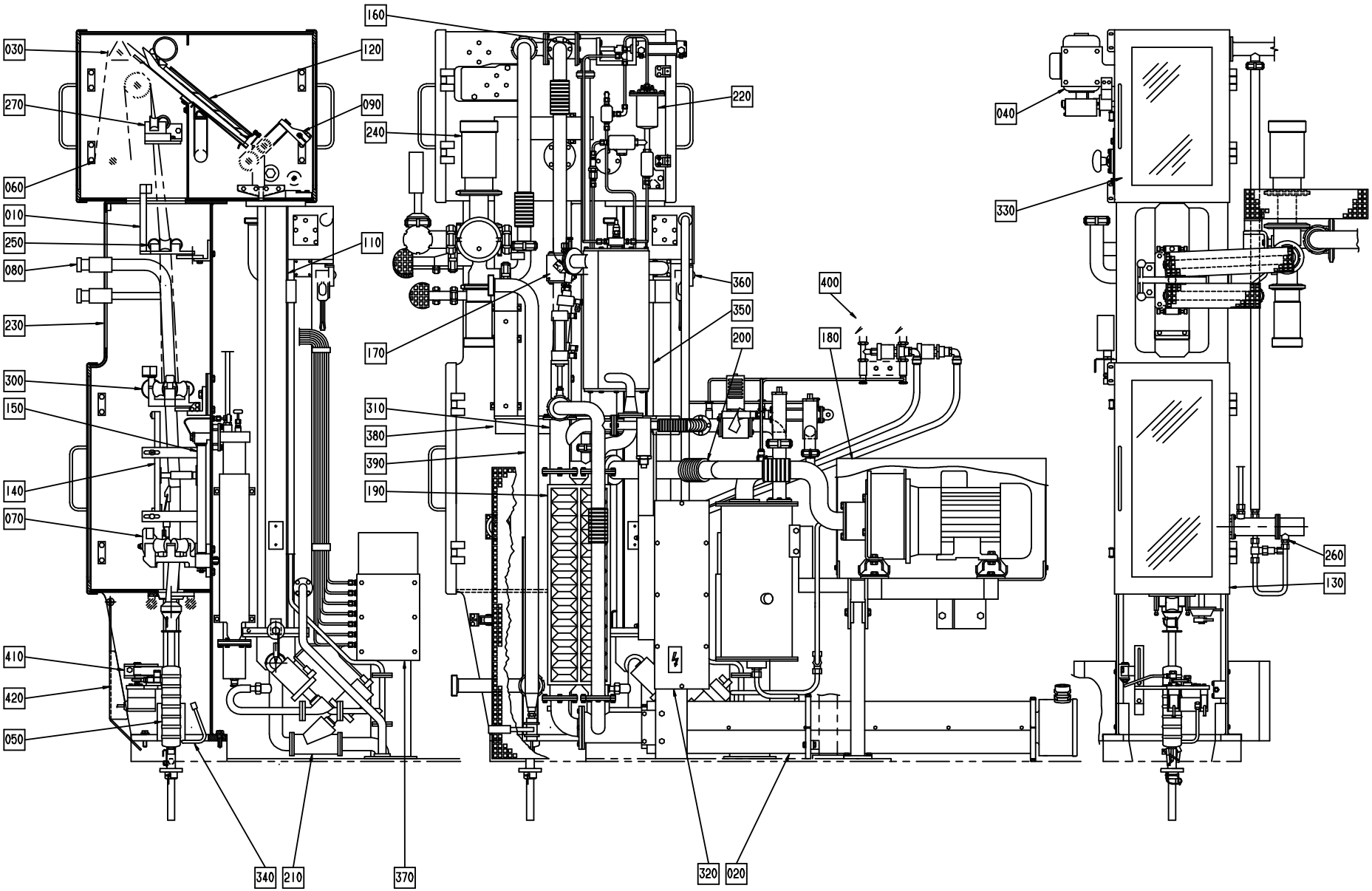
160
030
120
270
090
240
220
040
060
330
010
250
110
080
360
400
350
230
200
180
170
300
310
150
380
390
140
190
070
260
130
410
420
050
340
210
370
320
020

Pos	Part No	SP	UN	Qty	Description	Page No
SOURCE,TBA/9-100V						
010	A257166-0300	-		1	PAPER GUIDE	**15**
020	A271181-0200	-		1	AIR SUPER-HEATER	**17**
030	A272004-0200	-		1	BENDING ROLLER	**19**
040	A1529185-0100	-		1	BENDING ROLLER	**21**
050	A1529338-0100	-		1	LOWER FILLING PIPE	**23, 25**
060	A1529140-0100	-		1	CREASE ROLLER	**27, 857**
070	A456309-0200	-		1	LOWER FORMING RING	**29, 31**
080	A1529243-0100	-		1	UPPER FILLING TUBE	**33, 35**
090	A1529263-0100	-		1	CALENDER ROLLER	**37**
110	A1529171-0100	-		1	BATH	**39, 41, 43**
120	A1529257-0100	-		1	AIR KNIFE	**47**
130	A1529091-0100	-		1	DOOR	**49**
140	A469501-0100	-		1	AIR NOZZLE	**51**
150	A1529173-0100	-		1	HOT AIR ELEMENT	**53, 55**
160	A272337-0200	-		1	VALVE	**57**
170	A1529083-0100	-		1	CHANGE-OVER VALVE	**59**
180	A469452-0100	-		1	COMPRESSOR UNIT	**61, 63**
190	A1529212-0100	-		1	CONDUIT	**65, 67**
200	A1529250-0100	-		1	SUCTION PIPE	**71**
210	A456556-0100	-		1	PEROXIDE PIPE	**73**
220	A1529198-0100	-		1	SPRAY SYSTEM	**75**
230	A1529190-0100	-		1	ASEPTIC CHAMBER	**77, 79**
240	A1529254-0100	-		1	VALVE	**81**
250	A1529350-0100	-		1	MOVABLE FORMING RING	**83, 85**
260	A1529084-0100	-		1	HOT AIR ELEMENT	**87**
270	A441307-0200	-		1	UPPER TUBE SUPPORT	**89, 91**
300	A441486-0200	-		1	DIVIDED FORMING RING	**93, 95**
310	A271169-0200	-		1	VALVE	**97**
320	A1529098-0100	-		1	EL.CONNECTION BOX	**99**
330	A1529092-0100	-		1	DOOR	**101**
330	A1529023-0100	-		1	DOOR	**131**
360	A469074-0100	-		1	SPLICE DETECTOR	**103**
370	A1529238-0100	-		1	PIPE WORK-PNEUMATIC	**105**
380	A1529236-0100	-		1	CABLE TRENCH	**107, 109**
390	A456836-0200	-		1	CLEANING SYSTEM	**111**
400	A1529088-0100	-		1	GAUGE GROUP	**113**
410	A1529266-0100	-		1	PHOTOCELL UNIT	**115, 117, 119, 121**
500	A295778-0200	-		1	START-UP KIT	**123**
SOURCE,TBA/9-110V						
010	A257166-0300	-		1	PAPER GUIDE	**15**
020	A271181-0200	-		1	AIR SUPER-HEATER	**17**
030	A272004-0200	-		1	BENDING ROLLER	**19**
040	A1529185-0100	-		1	BENDING ROLLER	**21**
050	A1529339-0100	-		1	LOWER FILLING PIPE	**125**
060	A1529140-0100	-		1	CREASE ROLLER	**27, 857**
070	A456309-0200	-		1	LOWER FORMING RING	**29, 31**
080	A1529243-0100	-		1	UPPER FILLING TUBE	**33, 35**
090	A1529263-0100	-		1	CALENDER ROLLER	**37**
110	A1529171-0100	-		1	BATH	**39, 41, 43**
120	A1529257-0100	-		1	AIR KNIFE	**47**
130	A1529091-0100	-		1	DOOR	**49**
140	A469501-0200	-		1	AIR NOZZLE	**127**
150	A1529174-0100	-		1	HOT AIR ELEMENT	**129**
160	A272337-0200	-		1	VALVE	**57**
170	A1529083-0100	-		1	CHANGE-OVER VALVE	**59**
180	A469452-0100	-		1	COMPRESSOR UNIT	**61, 63**
190	A1529212-0100	-		1	CONDUIT	**65, 67**
200	A1529250-0100	-		1	SUCTION PIPE	**71**
210	A456556-0100	-		1	PEROXIDE PIPE	**73**
220	A1529198-0100	-		1	SPRAY SYSTEM	**75**
230	A1529190-0100	-		1	ASEPTIC CHAMBER	**77, 79**
240	A1529254-0100	-		1	VALVE	**81**
250	A1529350-0100	-		1	MOVABLE FORMING RING	**83, 85**
260	A1529084-0100	-		1	HOT AIR ELEMENT	**87**
270	A441307-0200	-		1	UPPER TUBE SUPPORT	**89, 91**
300	A441486-0200	-		1	DIVIDED FORMING RING	**93, 95**
310	A271169-0200	-		1	VALVE	**97**
320	A1529098-0100	-		1	EL.CONNECTION BOX	**99**
330	A1529092-0100	-		1	DOOR	**101**
330	A1529023-0100	-		1	DOOR	**131**
360	A469074-0100	-		1	SPLICE DETECTOR	**103**
370	A1529239-0100	-		1	PIPE WORK-PNEUMATIC	**133**
380	A1529236-0100	-		1	CABLE TRENCH	**107, 109**
390	A456836-0200	-		1	CLEANING SYSTEM	**111**
400	A1529088-0100	-		1	GAUGE GROUP	**113**
410	A1529266-0100	-		1	PHOTOCELL UNIT	**115, 117, 119, 121**
500	A295778-0300	-		1	START-UP KIT	**135**
SOURCE,TBA/9-120V						
020	A271181-0300	-		1	AIR SUPER-HEATER	**137**
030	A272004-0300	-		1	BENDING ROLLER	**139**
040	A1529080-0100	-		1	BENDING ROLLER	**141**

Machine Type	Group Description	Used-In	Group Number	Page No

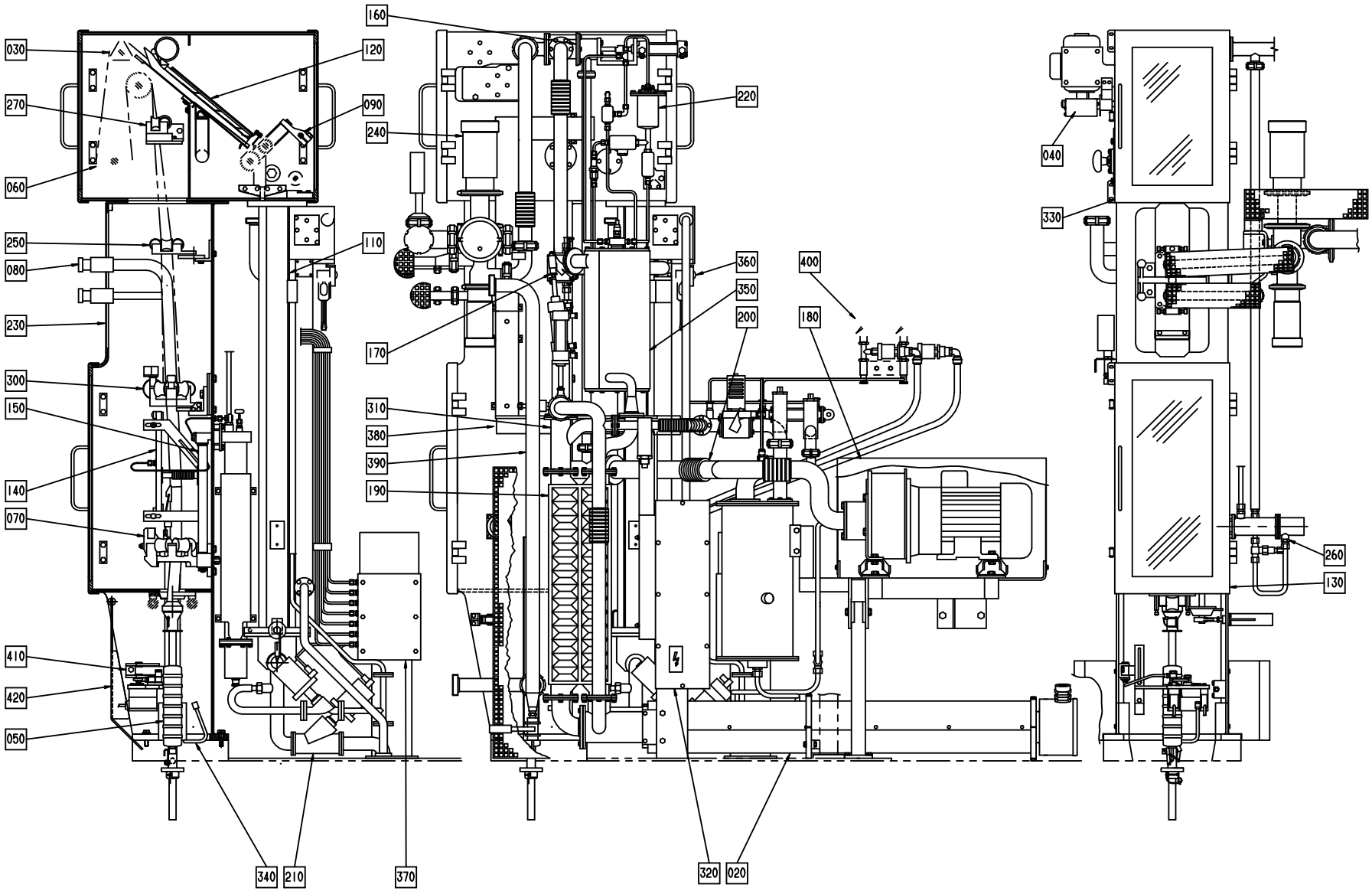
160
030
120
270
090
240
220
040
060
330
250
110
080
360
400
350
230
200
180
170
300
310
150
380
390
140
190
070
260
130
410
420
050
340
210
370
320
020
500 UPPSTARTSATS/START-UP KIT

Pos	Part No	SP	UN	Qty	Description	Page No
SOURCE,TBA/9-120V (Cont'd)						
050	A1529339-0100	-		1	LOWER FILLING PIPE	**125**
060	A1529172-0100	-		1	CREASE ROLLER	**143, 859**
070	A456309-0300	-		1	LOWER FORMING RING	**145, 147**
080	A469091-0200	-		1	FILLER TUBE	**149, 151**
090	A1529264-0100	-		1	CALENDER ROLLER	**153**
110	A1529168-0100	-		1	BATH	**155, 157, 159**
120	A272025-0300	-		1	AIR KNIFE	**161**
130	A1529022-0100	-		1	DOOR	**163**
140	A469501-0300	-		1	AIR NOZZLE	**165**
150	A1529175-0100	-		1	HOT AIR ELEMENT	**167, 169**
160	A272337-0300	-		1	VALVE	**171**
170	A1529178-0100	-		1	CHANGE-OVER VALVE	**173**
180	A469452-0200	-		1	COMPRESSOR UNIT	**175, 177**
190	A1529211-0100	-		1	CONDUIT	**179, 181**
200	A1529251-0100	-		1	SUCTION PIPE	**183**
210	A456556-0200	-		1	PEROXIDE PIPE	**185**
220	A1529085-0100	-		1	SPRAY SYSTEM	**187**
230	A1529120-0100	-		1	ASEPTIC CHAMBER	**189, 191**
240	A1529255-0100	-		1	PRODUCT VALVE	**193**
250	A1529350-0100	-		1	MOVABLE FORMING RING	**83, 85**
260	A1529256-0100	-		1	HOT AIR ELEMENT	**207**
270	A441307-0200	-		1	UPPER TUBE SUPPORT	**89, 91**
300	A441486-0300	-		1	DIVIDED FORMING RING	**209, 211**
310	A271169-0300	-		1	VALVE	**213**
320	A1529098-0100	-		1	EL.CONNECTION BOX	**99**
330	A1529023-0100	-		2	DOOR	**131**
360	A469074-0200	-		1	SPLICE DETECTOR	**215**
370	A1529240-0100	-		1	PIPE WORK-PNEUMATIC	**217**
380	A1529237-0100	-		1	CABLE TRENCH	**219, 221**
390	A456836-0300	-		1	CLEANING SYSTEM	**223**
400	A1529088-0100	-		1	GAUGE GROUP	**113**
410	A1529267-0100	-		1	PHOTOCELL UNIT	**225, 227, 229**
500	A295778-0300	-		1	START-UP KIT	**135**
Common Parts						
	A1529113-0100	-		1	MODIFIED ARTICLES	
340	A2546455-0100	-		1	TUBE FLUSHING DEVICE	**231**
350	A272407-0200	-		1	GENERATOR	**233**
420	A751702-0100	-		1	HATCH	**235**

Machine Type | Group Description | Used-In | Group Number | Page No

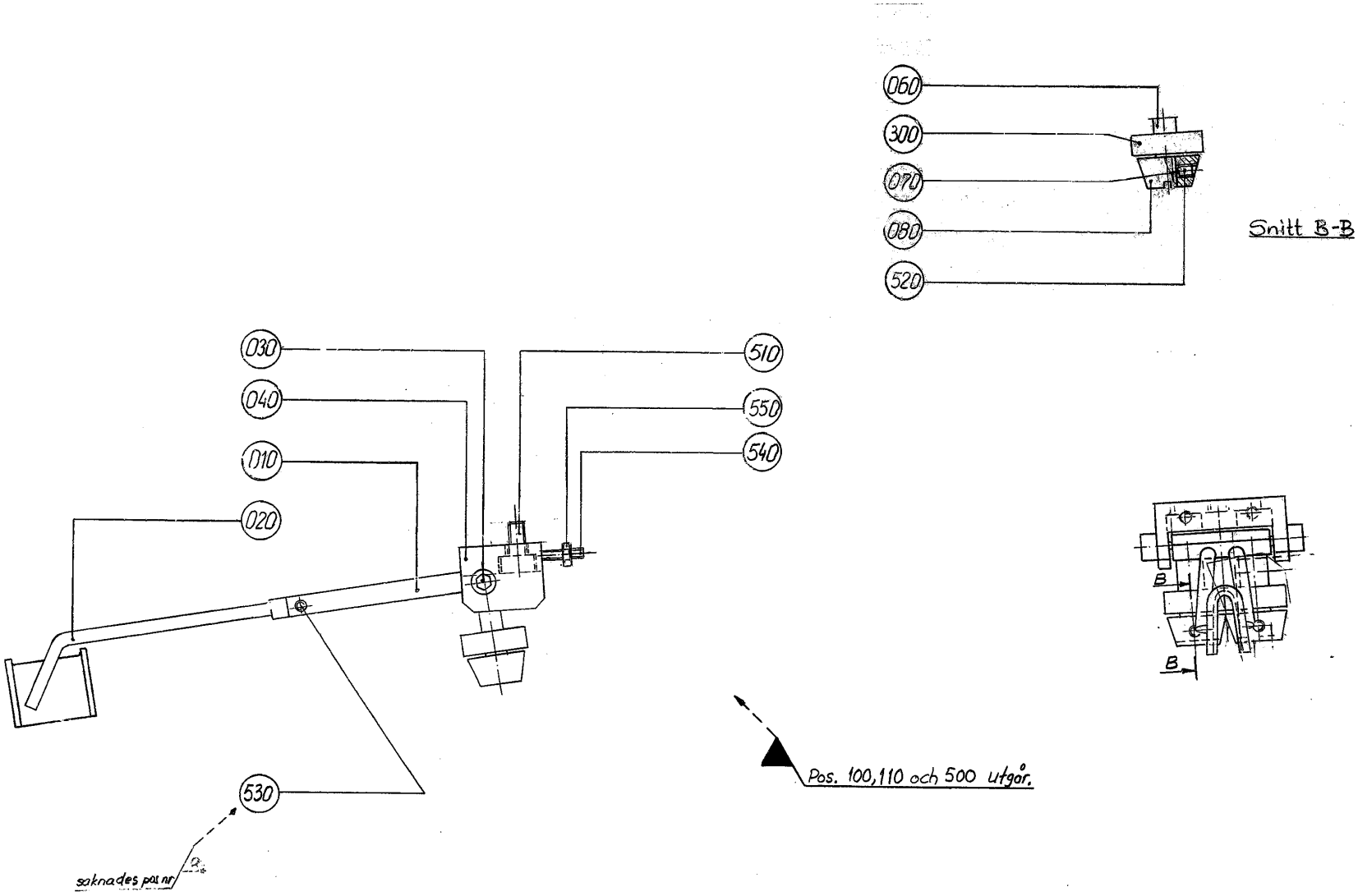
060
300
070
080
520
Snitt B-B
030
040
010
020
510
550
540
B
B
530
saknades på ritn
Pos. 100, 110 och 500 utgår.

ECM: 102781 - 20020207
Group number: 257166-0300
Assembly Drawing: 257166-4_1_AA

Issue: 20020822

Pos	Part No	SP	UN	Qty	Description	Page No
Common Parts						
010	23582-0000	-		1	HOLDER	
020	23583-0000	A		1	GUIDE FINGER	
030	23584-0000	A		2	SCREW	
040	24351-0000	-		1	BOW CLAMP	
060	24355-0000	A		2	DOWEL	
070	24356-0000	A		4	PIECE	
080	111543-0000	A		2	GUIDE CONE	
300	90214-0035	A		2	BALL BEARING REPBY 0090214-0138	
510	312115-0366	-		1	SCREW MC6S M6X12 A280	
520	312318-0283	A		4	SCREW SOCK.SET CUP P MSK6SS M4X4 A4	
530	312318-0285	A		2	SCREW SOCK.SET CUP P MSK6SS M4X6 A4	
540	312318-0291	A		2	SCREW SOCK.SET CUP P MSK6SS M4X12 A4	
550	312605-0312	-		2	HEXAGON NUT, M6M M4 A280	

Pos	Part No	SP	UN	Qty	Description	Page No

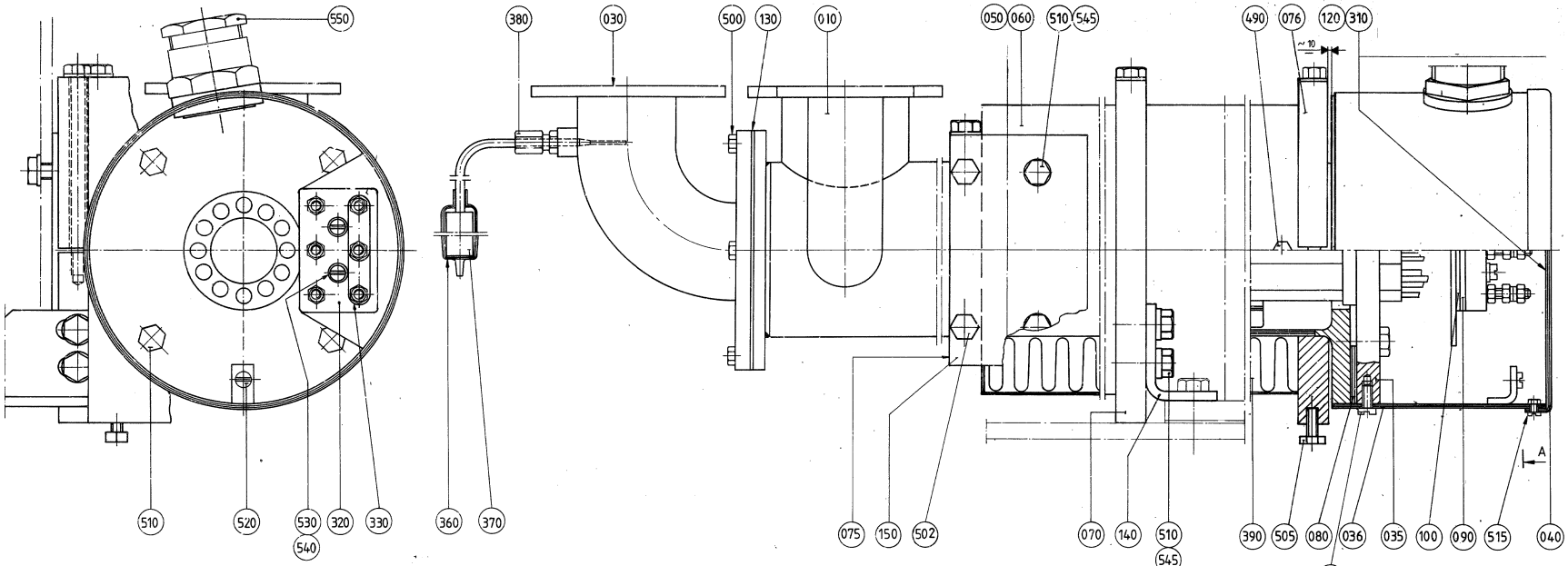
650
380
030
500
130
010
050
060
510
545
490
076
120
310
~10
A
510
520
530
540
320
330
360
370
075
150
502
070
140
510
545
390
505
080
535
036
035
100
090
515
040

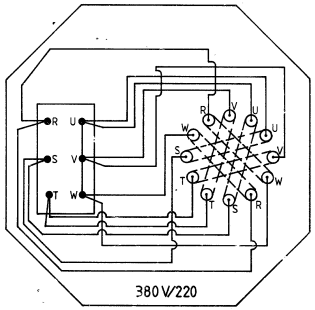
R U
S V
T W
380 V/220

Pos	Part No	SP	UN	Qty	Description	Page No
Common Parts						
010	272792-0000	B		1	HEATING PIPE	
030	271183-0000	-		1	PIPE	
035	B449939-0001	A		1	HEATING ELEMENT 15KW	
	449938-0003	*C*		*2*	*HEATING PIPE*	
	449938-0002	*C*		*2*	*HEATING PIPE*	
	449938-0001	*C*		*2*	*HEATING PIPE*	
036	B451430-0000	-		1	CONNECTION HOUS.(MINOR)	
	312605-0312	*-*		*4*	*HEXAGON NUT, M6M M4 A280*	
040	29876-0000	-		1	COVER	
050	271184-0000	-		1	DISCHARGE TRAY	
060	271185-0000	-		1	DISCHARGE TRAY	
070	272793-0000	-		1	SUPPORT	
075	B272794-0000	-		1	SUPPORT	
	315105-0165	*-*		*2*	*WASHER PLAIN, BRB, 8,4/16,H=1,5*	
	312105-0467	*-*		*2*	*SCREW M6S ISO 4014 M8X80 A480*	
076	B456123-0000	-		1	SUPPORT	
	315105-0165	*-*		*2*	*WASHER PLAIN, BRB, 8,4/16,H=1,5*	
	312105-0471	*-*		*2*	*SCREW M6S ISO 4014 M8X100 A480*	
080	531731-0000	A		1	GASKET	
090	751009-0000	A		1	INSULATION	
100	30298-0000	A		1	INSULATION	
120	469070-0000	-		1	WIRING DIAGRAM	
130	751016-0000	-		1	GASKET	
140	456124-0000	-		1	ANGLE BRACKET	
150	456125-0000	-		1	FASTENING PLATE	
310	90153-0020	A	ML	1	ADHESIVE BOSTIK 1782 125ML	
320	90195-0028	A		1	TERM.BLOCK 6-POLE STEATIT	
330	90195-0029	A		3	CONN. LINK NO324 FOR -28	
360	90326-0012	-		1	PROTECTIVE COVER, T31A4618	
370	90326-0020	-		1	PLUG, FEMALE YELLOW CR-AL	
380	90326-0051	-		1	THERMOCOUPLE, 12826-33	
390	90411-0005	A	MM	1100	INSULATOR	
490	312105-0325	-		12	SCREW M6S ISO 4017 M5X10 A480	
500	312105-0368	-		6	SCREW M6S M6X16 A280	
502	312105-0374	-		2	SCREW M6S ISO 4014 M6X30 A480	
505	312105-0455	-		2	SCREW M6S ISO 4017 M8X30 A480	
510	312105-0453	-		8	SCREW M6S ISO 4017 M8X25 A480	
515	312125-0285	-		4	SCREW SLOT.PAN HD. MCS 4X6 A480	
520	312125-0323	-		1	SCREW PAN HEAD MCS M5X8 SS	
530	312125-0331	-		2	SCREW PAN HEAD MCS M5X20 SS	
535	312125-0366	-		4	SCREW PAN HEAD MCS M6X12 SS	
540	315105-0146	-		2	WASHER PLAIN, BRB, 5,3/10,H=1	
545	315115-0165	-		4	WASHER PLAIN, TBRB 8,4/16 H=3	
550	352100-0121	-		1	CABLE GLANR. 37-23,5	

Machine Type | Group Description | Used-In | Group Number | Page No

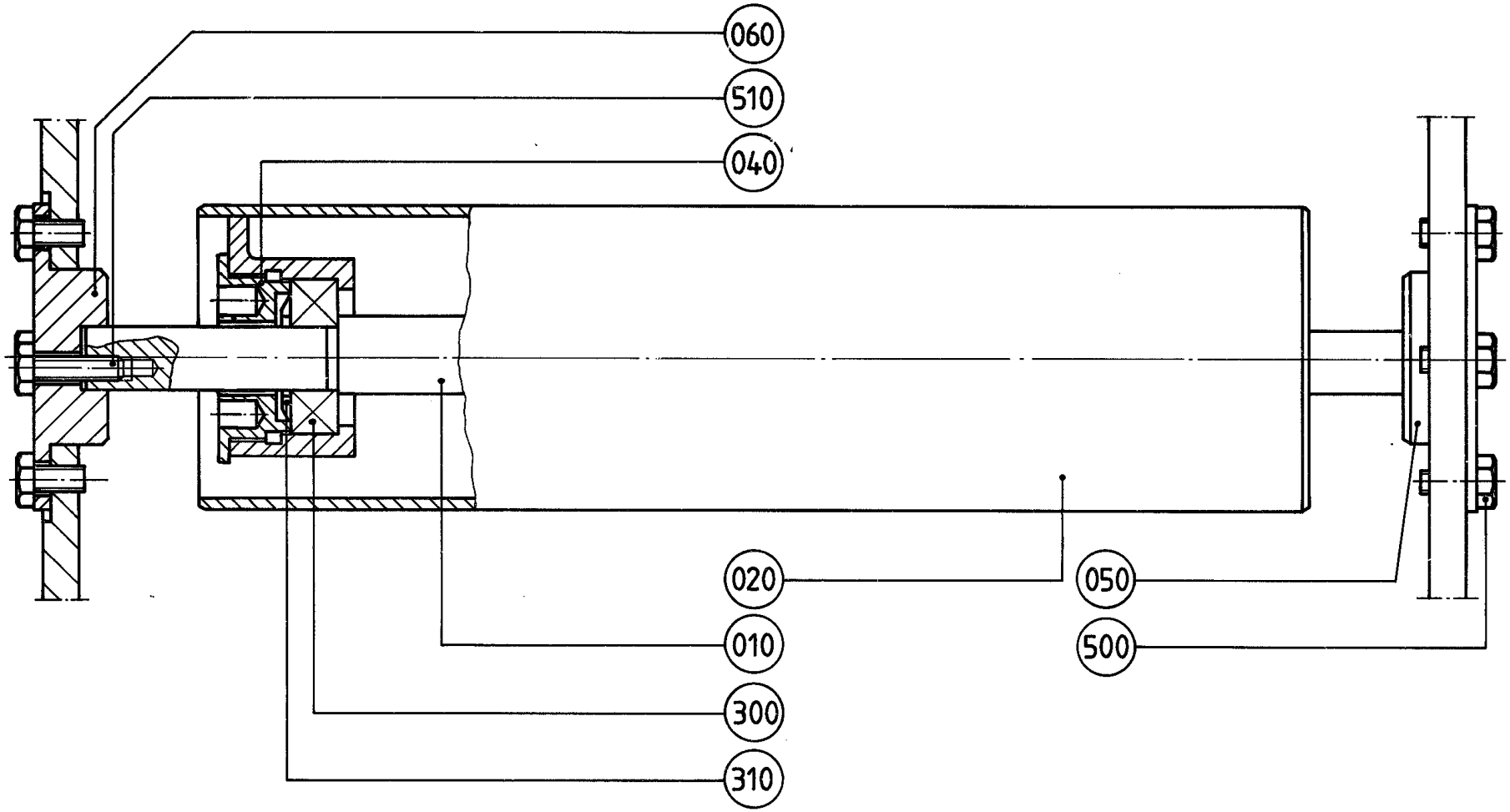
060
510
040
020
050
010
500
300
310

ECM: 102787 - 20020207
Group number: 272004-0200
Assembly Drawing: 272004-2_1_AA

Issue: 20020822

Pos	Part No	SP	UN	Qty	Description	Page No
0200S OR 0200B OR 0250B						
020	272005-0000	A		1	BENDING ROLLER	
Common Parts						
010	255989-0000	A		1	SHAFT	
040	247170-0000	-		2	BEARING COVER	
050	272017-0000	-		1	AXLE SUPPORT	
060	272018-0000	-		1	AXLE SUPPORT	
300	90214-0098	A		2	BALL BEARING, 15X35X11 MM	
310	90214-0303	A		2	SEALING RING, 18,6X35X2 MM	
500	312105-0366	-		8	SCREW M6S M6X12 A280	
510	312105-0370	-		1	SCREW M6S ISO 4017 M6X20 A480	

Pos	Part No	SP	UN	Qty	Description	Page No

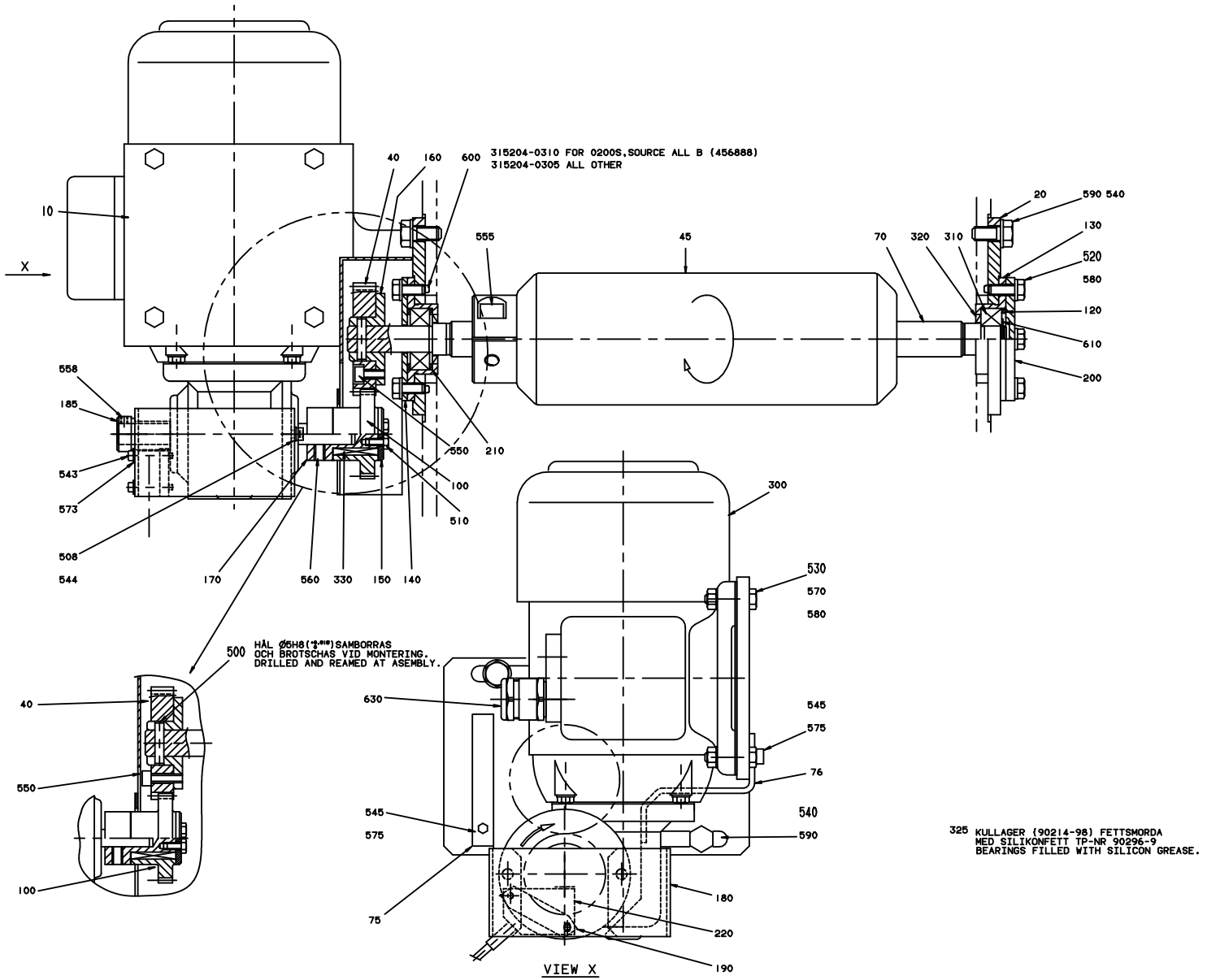
315204-0310 FOR 0200S,SOURCE ALL B (456888)
315204-0305 ALL OTHER
HÅL Ø5H8(.197") SAMBORRAS
OCH BROTSCHAS VID MONTERING.
DRILLED AND REAMED AT ASEMBLY.
325 KULLAGER (90214-98) FETTSMORDA
MED SILIKONFETT TP-NR 90296-9
BEARINGS FILLED WITH SILICON GREASE.
VIEW X

ECM: 102417 - 20020207
Group number: 1529185-0100
Assembly Drawing: 1529185-1_1_AA

Issue: 20020822

Pos	Part No	SP	UN	Qty	Description	Page No
0200B						
040	255897-0004	A		1	GEAR WHEEL	
045	441546-0000	A		1	BENDING ROLLER	
070	456515-0000	A		1	SHAFT	
100	209331-0011	A		1	GEAR WHEEL	
555	312115-0451	-		2	SCREW MC6S M8X20 A280	
600	315204-0305	-		2	O-RING 69,5X3 MM	
0200S						
040	255897-0008	A		1	GEAR WHEEL	
045	456527-0000	A		1	BENDING ROLLER	
100	209331-0009	A		1	GEAR WHEEL	
600	315204-0310	-		2	O-RING 94,5X3 MM	
0250B						
040	255897-0007	A		1	GEAR WHEEL	
045	441546-0000	A		1	BENDING ROLLER	
070	456515-0000	A		1	SHAFT	
100	209331-0001	A		1	GEAR WHEEL	
555	312115-0451	-		2	SCREW MC6S M8X20 A280	
600	315204-0305	-		2	O-RING 69,5X3 MM	
Common Parts						
010	1529215-0000	-		1	MOTOR PLATE	
020	491413-0000	-		1	BEARING PANEL	
075	1529049-0000	-		1	COVER	
076	752568-0000	-		1	PROTECTION	
120	247172-0000	-		1	SPACER RING	
130	247173-0000	B		2	BEARING SEAT	
140	250590-0000	-		1	BEARING COVER	
150	250592-0000	-		1	WASHER	
160	255898-0000	-		1	HUB	
170	1334234-0000	-		1	HUB	
180	1529166-0000	-		1	BRACKET	
185	1529139-0000	-		1	INDICATOR	
190	795581-0000	-		1	PLATE	
200	456516-0000	-		1	BEARING COVER	
210	491333-0000	A		2	SPACER RING	
220	90044-0194	-		1	PROX.SW. IN5329/IN3002-BPKG	
300	B90069-0281	A		1	GEARS, WORM MOTOR OKM87-60E3	
	90069-0359	-		*1*	*CARBON BRUSH*	
310	90214-0098	A		2	BALL BEARING, 15X35X11 MM	
320	90214-0303	A		2	SEALING RING, 18,6X35X2 MM	
325	90296-0009	-	ML	1	SILICONE GREASE TUBE 100 GR.	
330	90348-0007	A		1	FREE WHEEL COUPLING	
500	311103-0310	-		1	PARALLELL PIN, M6, 5X20 MM	
510	312105-0287	-		2	SCREW M6S ISO 4017 M4X8 A480	
520	312105-0367	-		8	SCREW M6S M6X14 A280	
530	312105-0372	-		4	SCREW M6S ISO 4017 M6X25 A480	
540	312105-0451	-		4	SCREW M6S ISO 4017 M8X20 A480	
543	312115-0230	-		2	SCREW MC6S M3X20 A280	
544	312115-0291	-		2	SCREW MC6S M4X12 A280	
545	312115-0323	-		4	SCREW MC6S M5X8 A280	
550	312115-0327	-		3	SCREW MC6S M5X12 A280	
558	312318-0283	-		1	SCREW SOCK.SET CUP P MSK6SS M4X4 A4	
560	312318-0364	-		1	SCREW HEX.SOCK.SET CUP P.MSK6SS6X10 SS	
570	312605-0316	-		4	HEXAGON NUT, M6M M6 A280	
573	315105-0136	-		4	WASHER PLAIN, BRB, 4,3/8,H=0,8	
575	315105-0146	-		4	WASHER PLAIN, BRB, 5,3/10,H=1	
580	315105-0153	-		12	WASHER PLAIN, BRB, 6,4/12,H=1,5	
590	315115-0165	-		4	WASHER PLAIN, TBRB 8,4/16 H=3	
610	315755-0112	-		1	LOCKING WASHER 12	
630	90012-0137	-		1	GLAND, EXTENDED WITH INSERT, PG11	

Machine Type | Group Description | Used-In | Group Number | Page No

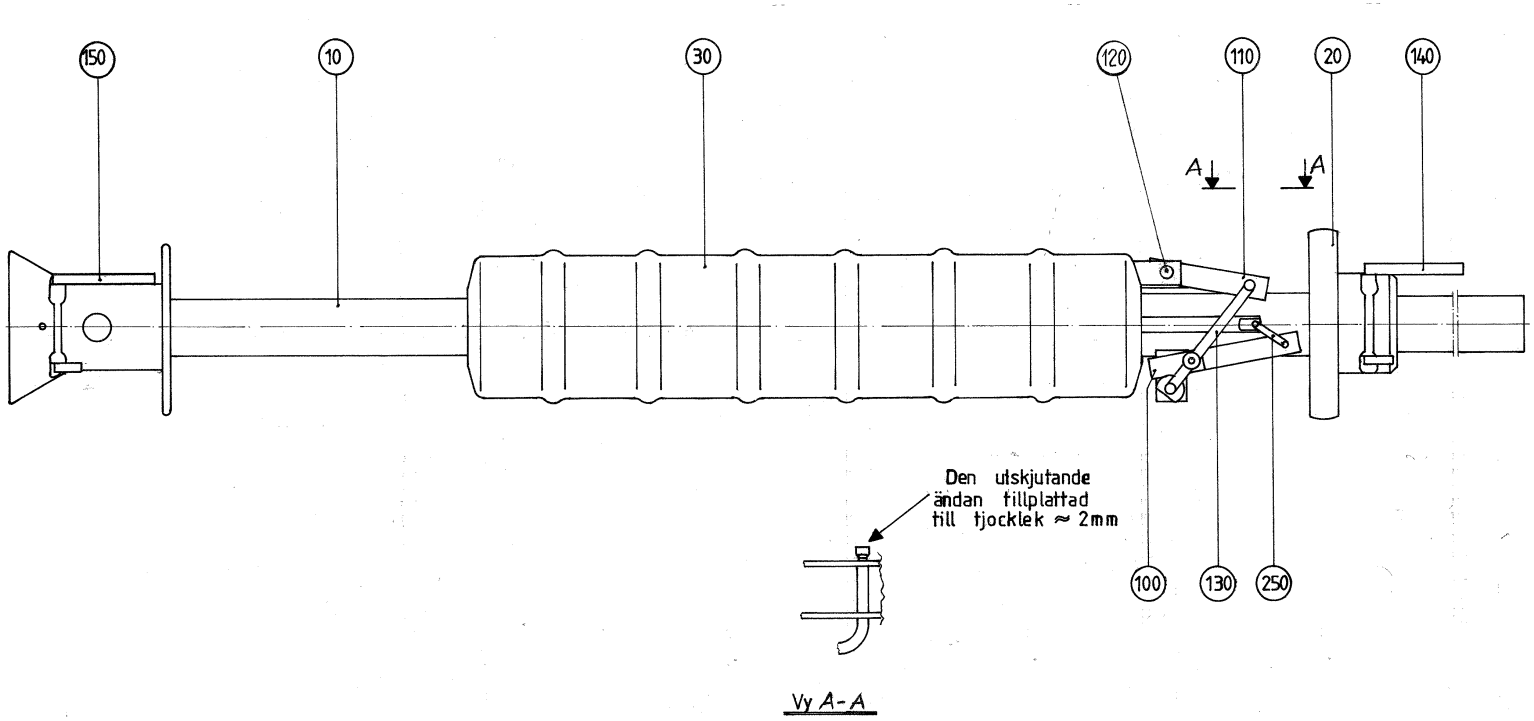
150
10
30
120
110
20
140
A
A
Den utskjutande ändan tillplattad till tjocklek ≈ 2mm
100
130
250
Vy A-A

ECM: 102789 - 20020207
Group number: 1529338-0100
Assembly Drawing: 1529338-1_1_AA

Issue: 20020822

Pos	Part No	SP	UN	Qty	Description	Page No
0200B						
010	441074-0001	A		1	FILLER TUBE	
020	295252-0000	A		1	PRESSURE FLANGE	
030	550487-0000	A		1	FLOAT	
100	36816-0000	A		1	LINK	
110	36817-0000	A		1	CLAMPING ELEMENT	
130	37296-0000	A		1	ARM	
140	38535-0001	A		1	LOCKING FINGER	
250	295987-0000	A		1	THROTTLE	
0200S						
010	491139-0000	A		1	FILLER TUBE	
020	491140-0000	A		1	PRESSURE FLANGE	
030	491142-0000	A		1	FLOAT	
210	257101-0000	A		1	LOCK	
220	271347-0000	A		1	ARM	
230	271348-0000	A		1	LINK	
240	1091813-0000	A		1	LINK	
250	491141-0000	A		1	THROTTLE	
0250B						
010	441074-0002	A		1	FILLER TUBE	
020	295252-0000	A		1	PRESSURE FLANGE	
030	550487-0000	A		1	FLOAT	
100	36816-0000	A		1	LINK	
110	36817-0000	A		1	CLAMPING ELEMENT	
130	37296-0000	A		1	ARM	
140	38535-0001	A		1	LOCKING FINGER	
250	295987-0000	A		1	THROTTLE	
Common Parts						
120	2502976-0000	-		1	PIN	
150	38535-0002	A		1	LOCKING FINGER	

Pos	Part No	SP	UN	Qty	Description	Page No

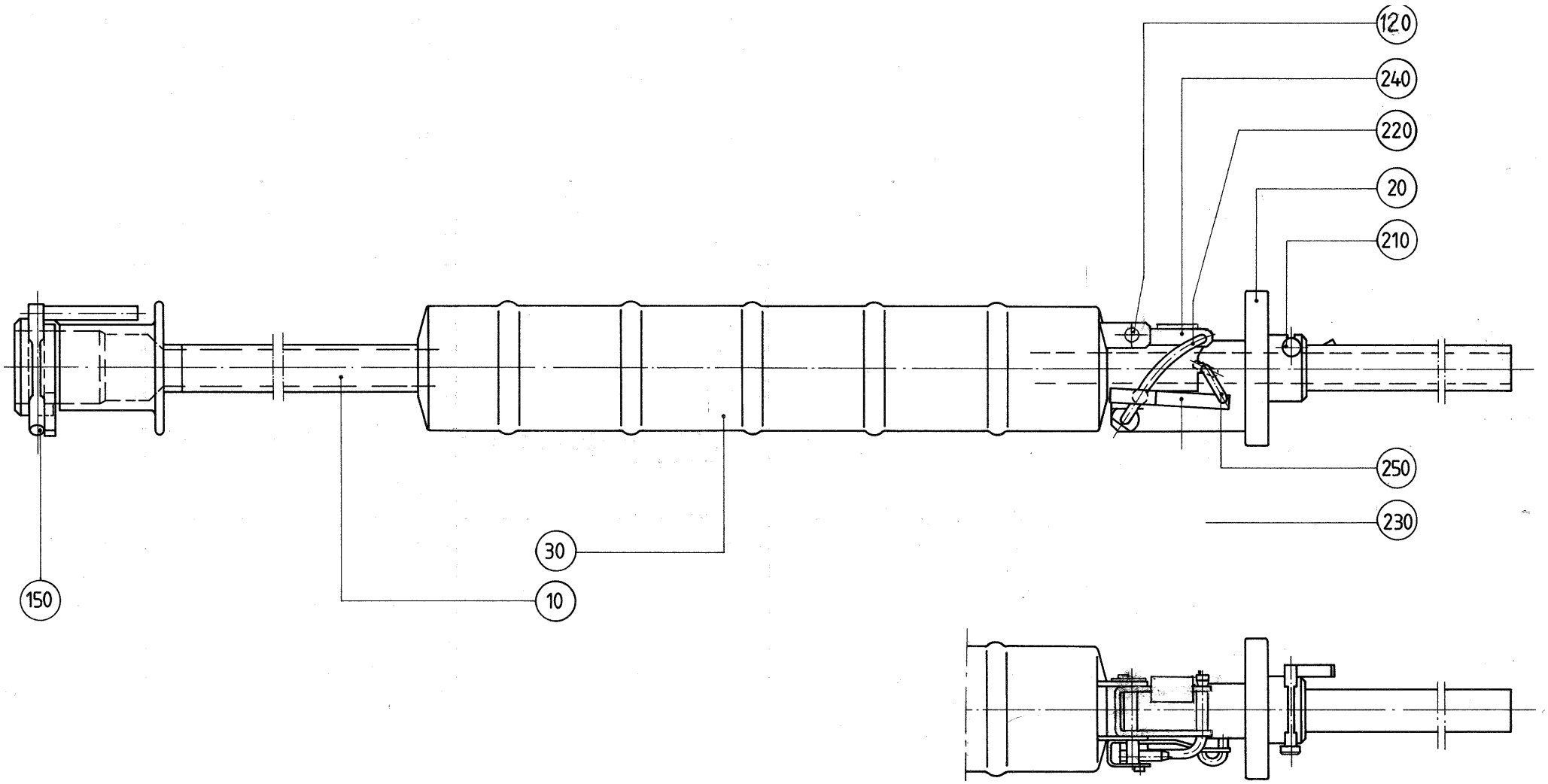
120
240
220
20
210
250
230
30
10
150

ECM: 102789 - 20020207
Group number: 1529338-0100
Assembly Drawing: 1529338-2_1_AA

Issue: 20020822

Pos	Part No	SP	UN	Qty	Description	Page No
0200B						
010	441074-0001	A		1	FILLER TUBE	
020	295252-0000	A		1	PRESSURE FLANGE	
030	550487-0000	A		1	FLOAT	
100	36816-0000	A		1	LINK	
110	36817-0000	A		1	CLAMPING ELEMENT	
130	37296-0000	A		1	ARM	
140	38535-0001	A		1	LOCKING FINGER	
250	295987-0000	A		1	THROTTLE	
0200S						
010	491139-0000	A		1	FILLER TUBE	
020	491140-0000	A		1	PRESSURE FLANGE	
030	491142-0000	A		1	FLOAT	
210	257101-0000	A		1	LOCK	
220	271347-0000	A		1	ARM	
230	271348-0000	A		1	LINK	
240	1091813-0000	A		1	LINK	
250	491141-0000	A		1	THROTTLE	
0250B						
010	441074-0002	A		1	FILLER TUBE	
020	295252-0000	A		1	PRESSURE FLANGE	
030	550487-0000	A		1	FLOAT	
100	36816-0000	A		1	LINK	
110	36817-0000	A		1	CLAMPING ELEMENT	
130	37296-0000	A		1	ARM	
140	38535-0001	A		1	LOCKING FINGER	
250	295987-0000	A		1	THROTTLE	
Common Parts						
120	2502976-0000	-		1	PIN	
150	38535-0002	A		1	LOCKING FINGER	

Pos	Part No	SP	UN	Qty	Description	Page No

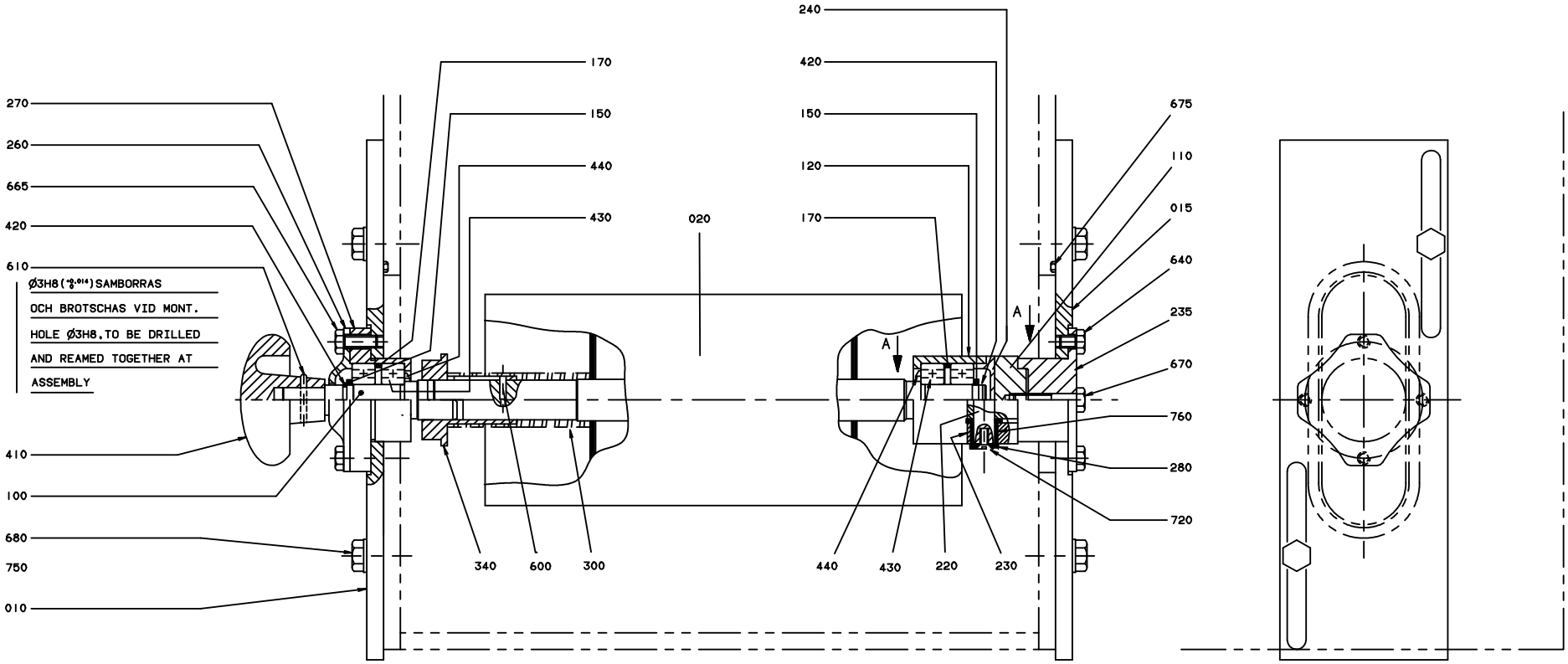

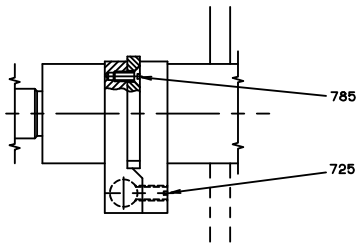

SNITT/SECTION A-A

445 KULLAGER (90214-98) FETTSMORDA
MED SILIKONFETT TP-no:90296-9
BALL BEARINGS (90214-98) GREASED WITH
SILICON-GREASE,TP-No:90296-9

TBA/9R 100V/110V

ECM: 102791 - 20020207
Group number: 1529140-0100
Assembly Drawing: 1529140-1_1_AA

Issue: 20020822

Pos	Part No	SP	UN	Qty	Description	Page No
Common Parts						
010	1529216-0000	-		1	PLATE	
015	1529217-0000	-		1	PLATE	
020	490882-0000	-		1	ROLL	
100	752744-0000	B		1	SHAFT	
110	271837-0000	B		1	BRACKET	
120	456012-0000	A		1	BEARING SEAT	
150	15529-0000	-		2	WASHER	
170	247172-0000	A		2	SPACER RING	
220	751467-0000	A		1	SHAFT	
230	271656-0000	A		2	WASHER	
235	271837-0000	B		1	BRACKET	
240	456013-0000	A		1	BEARING COVER	
260	752745-0000	B		1	BEARING COVER	
270	271841-0000	B		1	BEARING SEAT	
280	271844-0000	-		1	WASHER	
300	272001-0000	A		1	COMPRESSION SPRING	
340	295010-0000	A		1	GUIDE SLEEVE	
410	90051-0045	B		1	STELLAR KNOB, NO. 8323-2575	
420	90141-0011	A		2	RETAIN. RING, SPEC 12,8	
430	90214-0098	A		4	BALL BEARING, 15X35X11 MM	
440	90214-0303	-		2	SEALING RING, 18,6X35X2 MM	
445	90296-0009	-	L	1	SILICONE GREASE TUBE 100 GR.	
600	311103-0234	A		1	PARALLELL PIN, M6, 3X12 MM	
610	311103-0238	A		1	PARALLELL PIN, M6, 3X20 MM	
640	312105-0364	-		4	SCREW M6S ISO 4017 M6X10 A480	
665	312105-0370	-		4	SCREW M6S ISO 4017 M6X20 A480	
670	312105-0374	-		2	SCREW M6S ISO 4014 M6X30 A480	
675	315204-0313	-		2	O-RING 109,5X3 MM	
680	312105-0451	-		4	SCREW M6S ISO 4017 M8X20 A480	
720	312145-0287	-		1	SCREW COUNTERS.SLOT.HD. MFS 4X8 SS	
725	312318-0364	-		1	SCREW HEX.SOCK.SET CUP P.MSK6SS6X10 SS	
750	315115-0165	-		4	WASHER PLAIN, TBRB 8,4/16 H=3	
760	321127-0100	A		2	BEARING BUSHING WITHOUT FL, 10X13X10 MM	
785	312155-0291	-		4	SCREW HEX.SOCK.COUNT.MF6S M4X12 A480	

Pos	Part No	SP	UN	Qty	Description	Page No

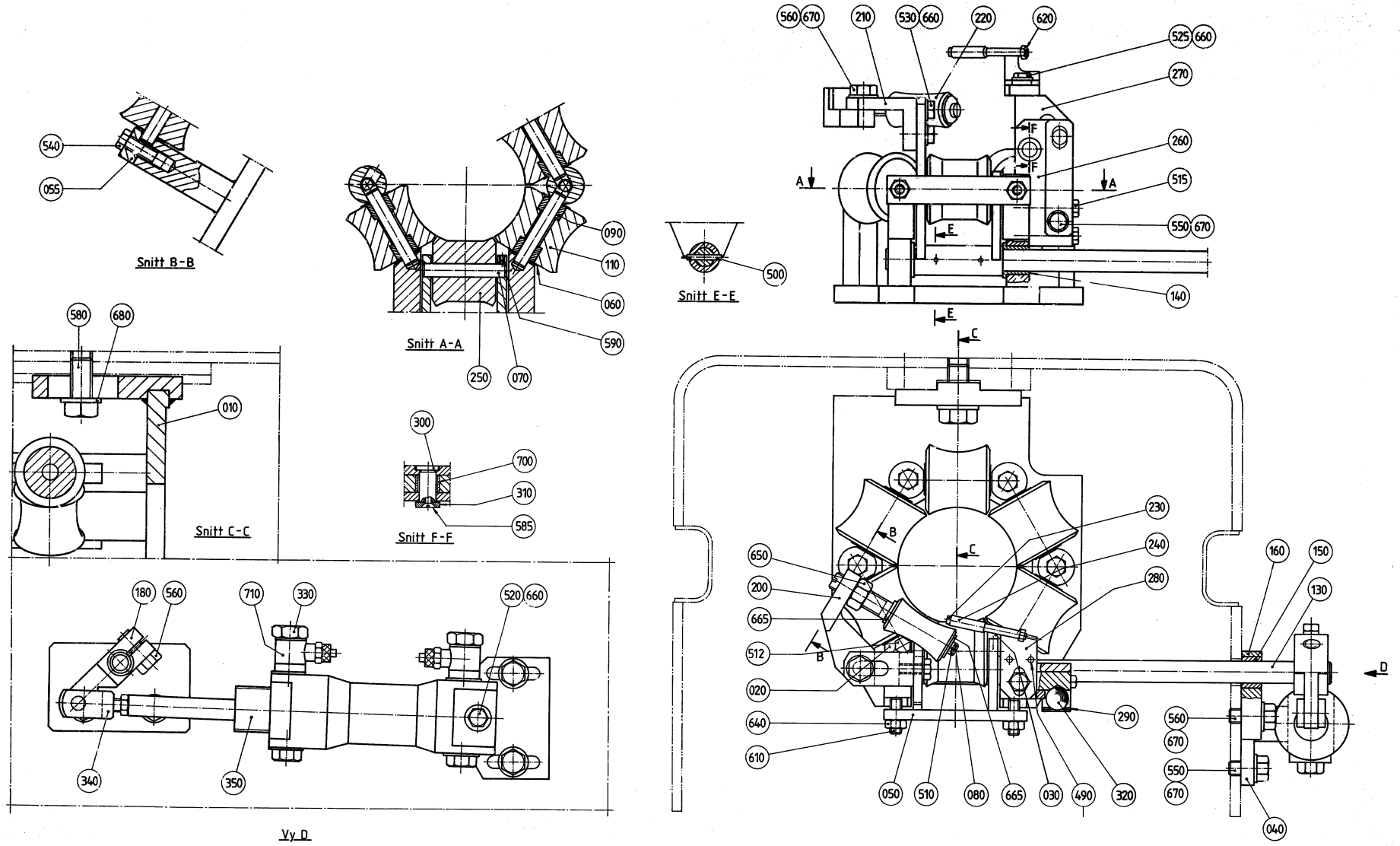
Snitt B-B
Snitt A-A
Snitt C-C
Snitt E-E
Snitt F-F
Vy D
A
B
C
D
E
F

ECM: 102803 - 20020207
Group number: 456309-0200
Assembly Drawing: 456309-1_1_AA

Issue: 20020822

Pos	Part No	SP	UN	Qty	Description	Page No
0200B OR 0250B						
010	456093-0000	-		1	HOLDER	
020	456132-0000	-		1	LOCK PLATE	
030	456131-0000	-		1	LOCK PLATE	
050	257040-0000	-		1	FORK	
055	456130-0000	-		4	LOCK PLATE	
070	263655-0006	A		6	SHAFT	
110	456090-0000	A		5	ROLL	
250	38630-0003	A		1	COUNTER ROLLER	
280	271421-0000	-		1	HOLDER	
610	312318-0451	-		2	SCREW SOCK.SET CUP P MSK6SS M8X20 A4	
640	312605-0318	-		2	HEXAGON NUT, M6M M8 A280	
0200S						
010	456837-0000	-		1	HOLDER	
020	456840-0000	-		1	LOCK PLATE	
030	456839-0000	-		1	LOCK PLATE	
050	257041-0000	-		1	FORK	
055	456838-0000	-		4	LOCK PLATE	
070	2873-0000	A		6	SHAFT	
110	456996-0000	A		5	ROLLER	
250	491222-0000	A		1	COUNTER ROLLER	
280	491587-0000	-		1	HOLDER	
600	312318-0368	-		2	SCREW SOCK.SET CUP P MSK6SS M6X16 A4	
630	312605-0316	-		2	HEXAGON NUT, M6M M6 A280	
Common Parts						
040	256258-0000	-		1	CYLINDER BRACKET	
060	2033-0011	A		24	WASHER	
080	239440-0000	-		1	SHAFT	
090	751230-0000	A		10	PLAIN BEARING	
130	255969-0000	A		1	SHAFT	
140	255970-0000	A		2	BUSHING	
150	255971-0000	A		1	BUSHING	
160	255972-0000	-		1	BEARING PLATE	
180	255974-0000	-		1	BRACKET	
200	257042-0000	-		1	BRACKET	
210	257043-0000	-		1	ANGLE BRACKET	
220	257044-0000	B		1	ROLL	
230	257050-0000	-		1	SHAFT	
240	268059-0000	A		1	ROLL	
260	271419-0000	-		1	FORK	
270	271420-0000	-		1	CANTILEVER	
290	271422-0000	A		2	SPRING	
300	271423-0001	A		1	SHAFT	
310	271844-0000	A		1	WASHER	
320	90090-0003	-		1	BALL, D=12,7 MM	
330	90235-0275	A		2	THROTTLE CHECK VALVES,G1/4"	
340	90239-0127	A		1	BRACKET	
350	B90239-0166	A		1	CYLINDER	
	90285-0094	*C*		*1*	*SEAL KIT*	
490	311103-0233	-		2	PARALLELL PIN, M6, 3X10 MM	
500	311103-0238	-		2	PARALLELL PIN, M6, 3X20 MM	
510	311411-0140	-		1	SPLIT PIN SP1,6X16RFR	
512	312105-0331	-		2	SCREW M6S ISO 4017 M5X20 A480	
515	312105-0337	-		2	SCREW M6S ISO 4014 M5X35 A480	
520	312105-0364	-		1	SCREW M6S ISO 4017 M6X10 A480	
525	312105-0366	-		1	SCREW M6S M6X12 A280	
530	312105-0368	-		2	SCREW M6S M6X16 A280	
540	312105-0370	-		4	SCREW M6S ISO 4017 M6X20 A480	
550	312105-0449	-		3	SCREW M6S ISO 4017 M8X16 A480	
560	312105-0451	-		4	SCREW M6S ISO 4017 M8X20 A480	
580	312105-0536	-		1	SCREW M6S ISO 4017 M12X30 A480	
585	312145-0285	-		1	SCREW COUNTERS.SLOT.HD. MFS 4X6 SS	
590	312318-0285	-		1	SCREW SOCK.SET CUP P MSK6SS M4X6 A4	
620	312605-0310	-		1	HEXAGON NUT, M6M M3 A280	
650	312605-0320	-		1	HEXAGON NUT, M6M M10 A280	
660	315105-0153	-		4	WASHER PLAIN, BRB, 6,4/12,H=1,5	
665	315105-0165	-		2	WASHER PLAIN, BRB, 8,4/16,H=1,5	
670	315115-0165	-		6	WASHER PLAIN, TBRB 8,4/16 H=3	
680	315115-0178	-		1	WASHER PLAIN, TBRB 13/24 H=4	
700	321127-0100	-		1	BEARING BUSHING WITHOUT FL, 10X13X10 MM	
710	342797-0122	A		2	CONN. BANJO, RINGPIECE 6-1/4	

Machine Type | Group Description | Used-In | Group Number | Page No

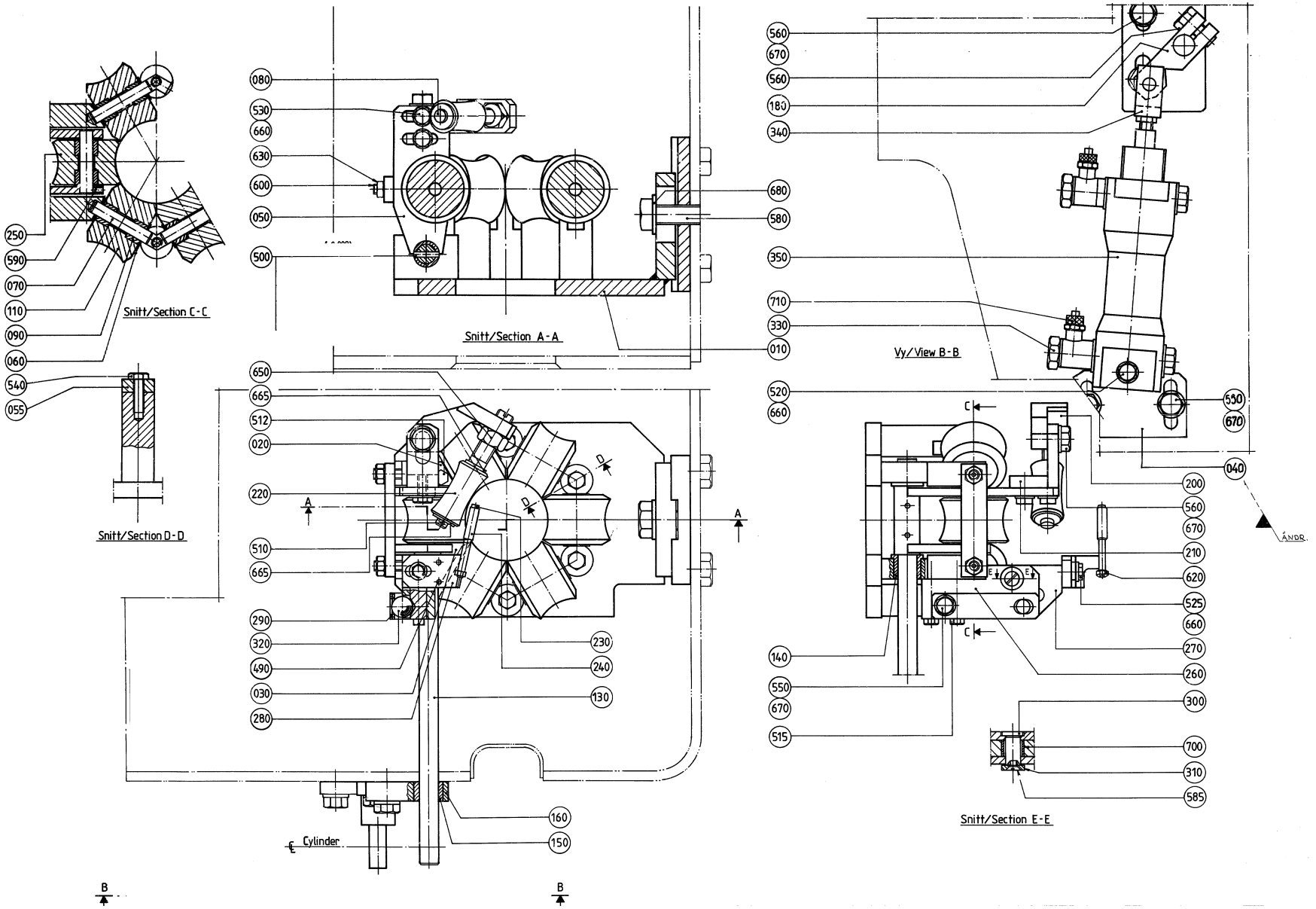
Snitt/Section C-C
Snitt/Section D-D
Snitt/Section A-A
Vy/View B-B
Snitt/Section E-E
Cylinder
ÄNDR
080
530
660
630
600
050
500
250
590
070
110
090
060
540
055
650
665
512
020
220
510
665
290
320
490
030
280
230
240
130
160
150
560
670
560
180
340
680
580
350
710
330
010
520
660
530
670
040
200
560
670
210
620
525
660
270
260
300
700
310
585
140
550
670
515
A
B
C
D
E

ECM: 102803 - 20020207
Group number: 456309-0200
Assembly Drawing: 456309-2_1_AA

Issue: 20020822

Pos	Part No	SP	UN	Qty	Description	Page No
0200B OR 0250B						
010	456093-0000	-		1	HOLDER	
020	456132-0000	-		1	LOCK PLATE	
030	456131-0000	-		1	LOCK PLATE	
050	257040-0000	-		1	FORK	
055	456130-0000	-		4	LOCK PLATE	
070	263655-0006	A		6	SHAFT	
110	456090-0000	A		5	ROLL	
250	38630-0003	A		1	COUNTER ROLLER	
280	271421-0000	-		1	HOLDER	
610	312318-0451	-		2	SCREW SOCK.SET CUP P MSK6SS M8X20 A4	
640	312605-0318	-		2	HEXAGON NUT, M6M M8 A280	
0200S						
010	456837-0000	-		1	HOLDER	
020	456840-0000	-		1	LOCK PLATE	
030	456839-0000	-		1	LOCK PLATE	
050	257041-0000	-		1	FORK	
055	456838-0000	-		4	LOCK PLATE	
070	2873-0000	A		6	SHAFT	
110	456996-0000	A		5	ROLLER	
250	491222-0000	A		1	COUNTER ROLLER	
280	491587-0000	-		1	HOLDER	
600	312318-0368	-		2	SCREW SOCK.SET CUP P MSK6SS M6X16 A4	
630	312605-0316	-		2	HEXAGON NUT, M6M M6 A280	
Common Parts						
040	256258-0000	-		1	CYLINDER BRACKET	
060	2033-0011	A		24	WASHER	
080	239440-0000	-		1	SHAFT	
090	751230-0000	A		10	PLAIN BEARING	
130	255969-0000	A		1	SHAFT	
140	255970-0000	A		2	BUSHING	
150	255971-0000	A		1	BUSHING	
160	255972-0000	-		1	BEARING PLATE	
180	255974-0000	-		1	BRACKET	
200	257042-0000	-		1	BRACKET	
210	257043-0000	-		1	ANGLE BRACKET	
220	257044-0000	B		1	ROLL	
230	257050-0000	-		1	SHAFT	
240	268059-0000	A		1	ROLL	
260	271419-0000	-		1	FORK	
270	271420-0000	-		1	CANTILEVER	
290	271422-0000	A		2	SPRING	
300	271423-0001	A		1	SHAFT	
310	271844-0000	A		1	WASHER	
320	90090-0003	-		1	BALL, D=12,7 MM	
330	90235-0275	A		2	THROTTLE CHECK VALVES,G1/4"	
340	90239-0127	A		1	BRACKET	
350	B90239-0166	A		1	CYLINDER	
	90285-0094	*C*		*1*	*SEAL KIT*	
490	311103-0233	-		2	PARALLELL PIN, M6, 3X10 MM	
500	311103-0238	-		2	PARALLELL PIN, M6, 3X20 MM	
510	311411-0140	-		1	SPLIT PIN SP1,6X16RFR	
512	312105-0331	-		2	SCREW M6S ISO 4017 M5X20 A480	
515	312105-0337	-		2	SCREW M6S ISO 4014 M5X35 A480	
520	312105-0364	-		1	SCREW M6S ISO 4017 M6X10 A480	
525	312105-0366	-		1	SCREW M6S M6X12 A280	
530	312105-0368	-		2	SCREW M6S M6X16 A280	
540	312105-0370	-		4	SCREW M6S ISO 4017 M6X20 A480	
550	312105-0449	-		3	SCREW M6S ISO 4017 M8X16 A480	
560	312105-0451	-		4	SCREW M6S ISO 4017 M8X20 A480	
580	312105-0536	-		1	SCREW M6S ISO 4017 M12X30 A480	
585	312145-0285	-		1	SCREW COUNTERS.SLOT.HD. MFS 4X6 SS	
590	312318-0285	-		1	SCREW SOCK.SET CUP P MSK6SS M4X6 A4	
620	312605-0310	-		1	HEXAGON NUT, M6M M3 A280	
650	312605-0320	-		1	HEXAGON NUT, M6M M10 A280	
660	315105-0153	-		4	WASHER PLAIN, BRB, 6,4/12,H=1,5	
665	315105-0165	-		2	WASHER PLAIN, BRB, 8,4/16,H=1,5	
670	315115-0165	-		6	WASHER PLAIN, TBRB 8,4/16 H=3	
680	315115-0178	-		1	WASHER PLAIN, TBRB 13/24 H=4	
700	321127-0100	-		1	BEARING BUSHING WITHOUT FL, 10X13X10 MM	
710	342797-0122	A		2	CONN. BANJO, RINGPIECE 6-1/4	

Machine Type | Group Description | Used-In | Group Number | Page No

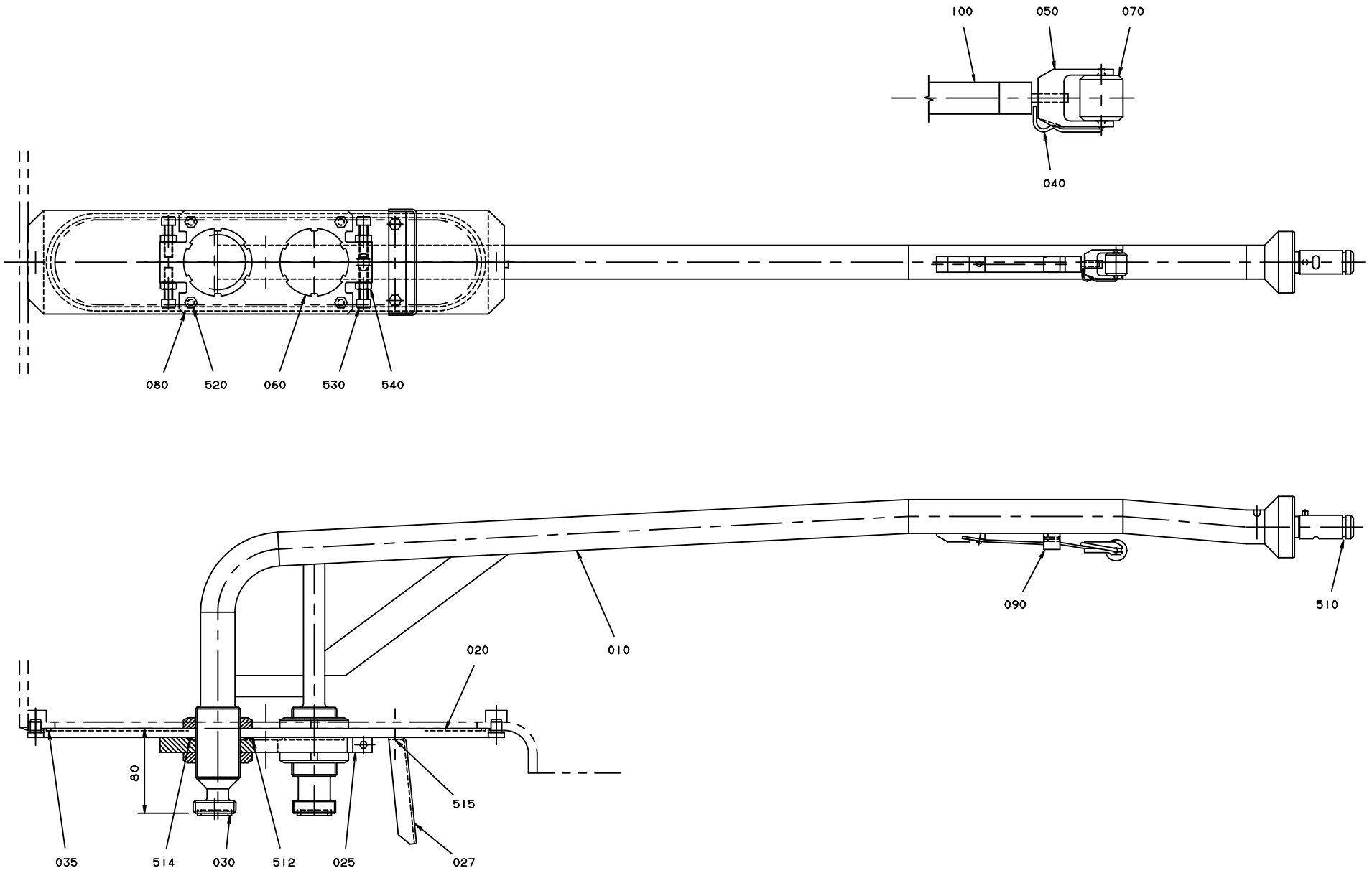
100
050
070
040
080
520
060
530
540
090
510
010
020
80
035
514
030
512
025
515
027

ECM: 102804 - 20020207
Group number: 1529243-0100
Assembly Drawing: 1529243-1_1_AA

Issue: 20020822

Pos	Part No	SP	UN	Qty	Description	Page No
0200B OR 0250B						
010	752694-0000	A		1	FILLING TUBE UPPER	
040	295376-0000	A		1	SHAFT	
050	295375-0000	-		1	FORK	
070	257330-0000	A		1	PRESSURE ROLLER	
090	295377-0002	-		1	HOOD	
100	544894-0000	A		1	SPRING	
0200S						
010	565461-0000	A		1	FILLING TUBE UPPER	
040	255977-0000	A		1	SHAFT	
050	255978-0000	-		1	FORK	
070	272479-0000	A		1	PRESSURE ROLLER	
090	295377-0001	-		1	HOOD	
100	751604-0000	A		1	SPRING	
Common Parts						
020	599035-0000	A		1	PLATE	
025	599037-0000	-		1	FASTENING PLATE	
027	295984-0000	-		1	DRIP GUARD	
030	12242-0001	A		2	GASKET 32X25X5,5	
035	491418-0001	-		1	O-RING	
060	255981-0000	-		4	NUT	
080	315125-0153	-		4	WASHER PLAIN ROUND,CHAMF. 6,4/22, H=4	
510	315204-0214	A		1	O-RING 17,3X2,4 MM	
512	315204-0217	-		1	O-RING 24,2X3 MM	
514	315204-0301	-		2	O-RING 49,5X3 MM	
515	312105-0364	-		2	SCREW M6S ISO 4017 M6X10 A480	
520	312105-0372	-		4	SCREW M6S ISO 4017 M6X25 A480	
530	312115-0455	-		4	SCREW MC6S M8X30 A280	
540	312605-0318	-		4	HEXAGON NUT, M6M M8 A280	

Pos	Part No	SP	UN	Qty	Description	Page No

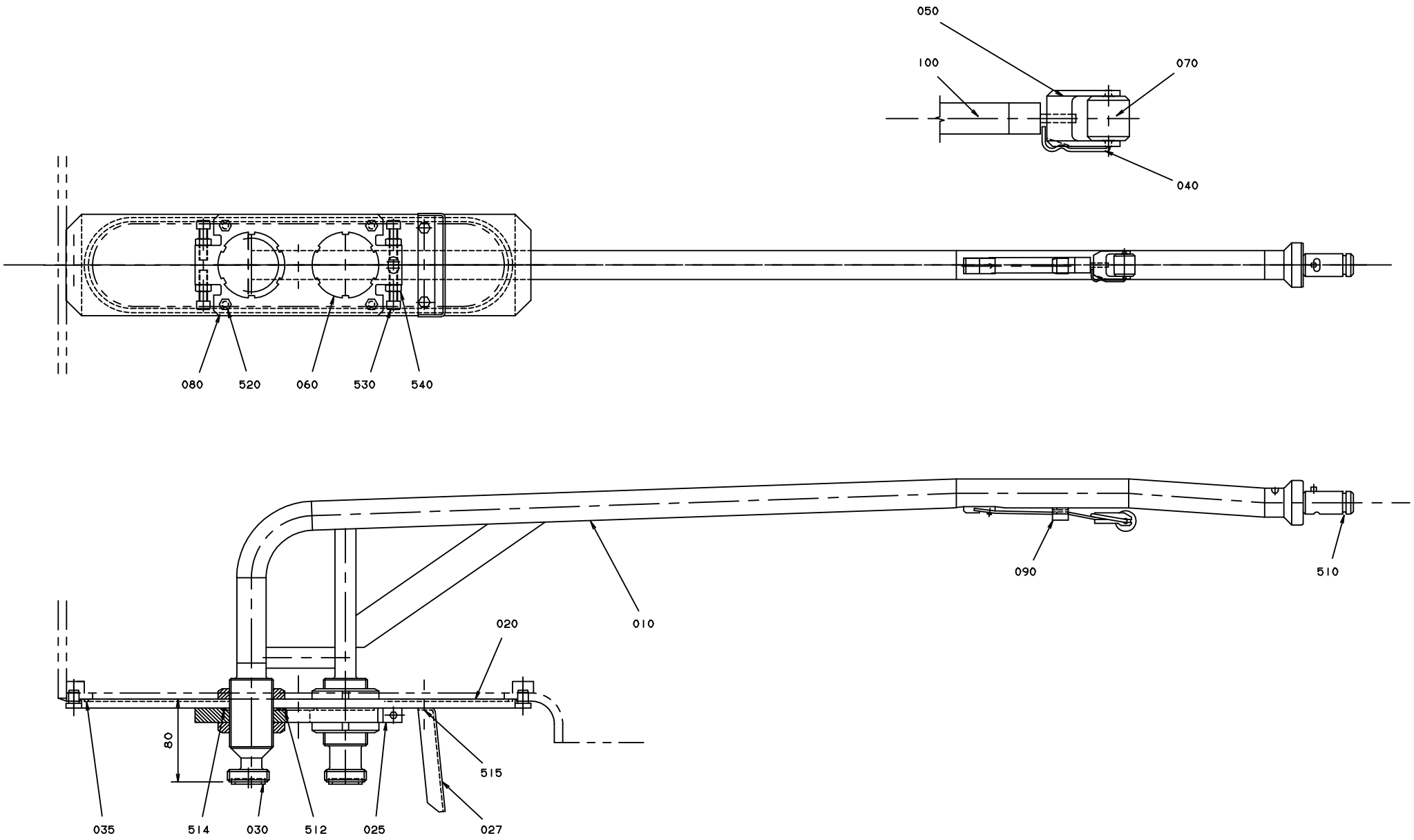
050
100
070
040
080
520
060
530
540
090
510
010
020
80
035
514
030
512
025
515
027

ECM: 102804 - 20020207
Group number: 1529243-0100
Assembly Drawing: 1529243-2_1_AA

Issue: 20020822

Pos	Part No	SP	UN	Qty	Description	Page No
0200B OR 0250B						
010	752694-0000	A		1	FILLING TUBE UPPER	
040	295376-0000	A		1	SHAFT	
050	295375-0000	-		1	FORK	
070	257330-0000	A		1	PRESSURE ROLLER	
090	295377-0002	-		1	HOOD	
100	544894-0000	A		1	SPRING	
0200S						
010	565461-0000	A		1	FILLING TUBE UPPER	
040	255977-0000	A		1	SHAFT	
050	255978-0000	-		1	FORK	
070	272479-0000	A		1	PRESSURE ROLLER	
090	295377-0001	-		1	HOOD	
100	751604-0000	A		1	SPRING	
Common Parts						
020	599035-0000	A		1	PLATE	
025	599037-0000	-		1	FASTENING PLATE	
027	295984-0000	-		1	DRIP GUARD	
030	12242-0001	A		2	GASKET 32X25X5,5	
035	491418-0001	-		1	O-RING	
060	255981-0000	-		4	NUT	
080	315125-0153	-		4	WASHER PLAIN ROUND,CHAMF. 6,4/22, H=4	
510	315204-0214	A		1	O-RING 17,3X2,4 MM	
512	315204-0217	-		1	O-RING 24,2X3 MM	
514	315204-0301	-		2	O-RING 49,5X3 MM	
515	312105-0364	-		2	SCREW M6S ISO 4017 M6X10 A480	
520	312105-0372	-		4	SCREW M6S ISO 4017 M6X25 A480	
530	312115-0455	-		4	SCREW MC6S M8X30 A280	
540	312605-0318	-		4	HEXAGON NUT, M6M M8 A280	

Pos	Part No	SP	UN	Qty	Description	Page No

Machine Type | Group Description | Used-In | Group Number | Page No

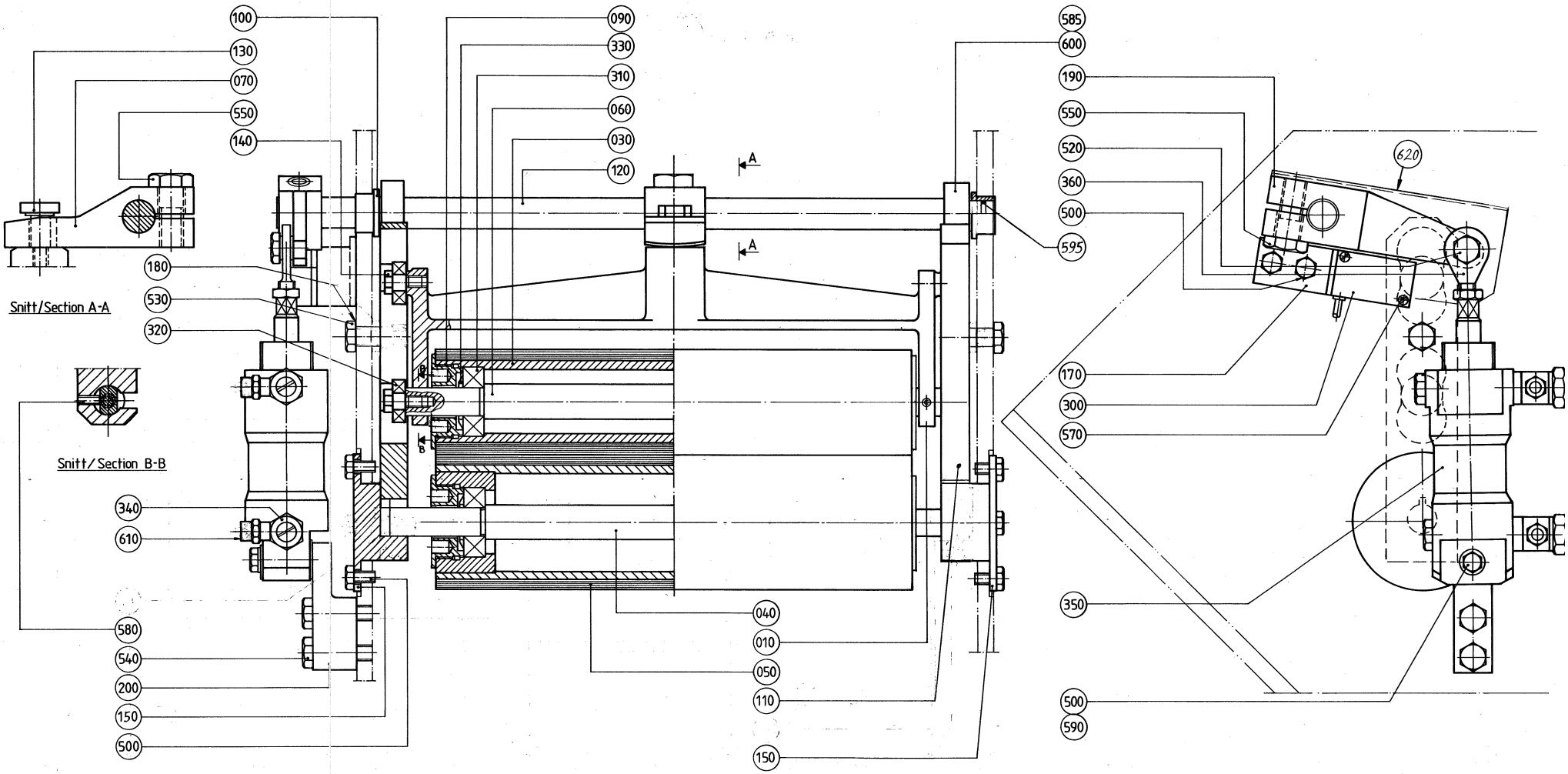

Kullager (90214-98 och 90214-40)
fettsmorda med silikonfett TP nr 90296-0009
Ball bearings (90214-98 and 90214-40)
greased with silikon grease TP no 90296-0009

ECM: 102398 - 20020207
Group number: 1529263-0100
Assembly Drawing: 1529263-1_1_AA

Issue: 20020822

Pos	Part No	SP	UN	Qty	Description	Page No
Common Parts						
010	272926-0000	-		1	FORK	
030	491396-0000	A		1	CALENDER ROLLER	
040	566695-0000	A		1	SHAFT	
050	491397-0000	A		1	CALENDER ROLLER	
060	271893-0000	A		1	SHAFT	
070	272927-0000	-		1	PRESSURE ARM	
090	247170-0000	B		4	BEARING COVER	
100	271269-0000	A		2	BUSHING	
110	566695-0000	-		2	SHAFT	
120	751132-0000	B		1	SHAFT	
130	271898-0000	B		1	SCREW	
140	271899-0000	B		4	SCREW	
150	566697-0000	-		2	AXLE SUPPORT	
170	272033-0000	-		1	BRACKET	
180	315115-0153	-		2	WASHER PLAIN, TBRB 6,4/12 H=3	
190	272928-0000	-		1	ARM	
200	272929-0000	-		1	BRACKET	
300	90044-0104	-		1	PROX.SWITCH IFM IN 3002	
310	90214-0098	A		4	BALL BEARING, 15X35X11 MM	
320	90214-0040	A		4	BALL BEARING, 8X22X7 MM	
330	90214-0303	A		4	SEALING RING, 18,6X35X2 MM	
340	90235-0275	-		2	THROTTLE CHECK VALVES,G1/4"	
350	B90239-0189	A		1	CYLINDER	
	90285-0094	*C*		*1*	*SEAL KIT*	
360	90239-0320	A		1	BRACKET	
500	312105-0364	-		11	SCREW M6S ISO 4017 M6X10 A480	
520	312105-0449	-		1	SCREW M6S ISO 4017 M8X16 A480	
530	312105-0366	-		2	SCREW M6S M6X12 A280	
540	312105-0455	-		2	SCREW M6S ISO 4017 M8X30 A480	
550	312105-0536	-		2	SCREW M6S ISO 4017 M12X30 A480	
570	312125-0228	-		2	SCREW PAN HEAD MCS M3X16 A480	
580	312318-0327	-		2	SCREW SOCK.SET CUP P MSK6SS M5X12 A4	
585	312318-0362	-		4	SCREW SOCK.SET CUP P MSK6SS M6X8 A4	
590	315105-0153	-		1	WASHER PLAIN, BRB, 6,4/12,H=1,5	
595	315204-0111	-		2	O-RING 13,1X1,6 MM	
600	315742-0112	-		2	COLLAR, 16/32, H=12	
610	342797-0122	-		2	CONN. BANJO, RINGPIECE 6-1/4	
620	978462-0000	-		1	PROTECTION PLATE	

Pos	Part No	SP	UN	Qty	Description	Page No

Machine Type | Group Description | Used-In | Group Number | Page No

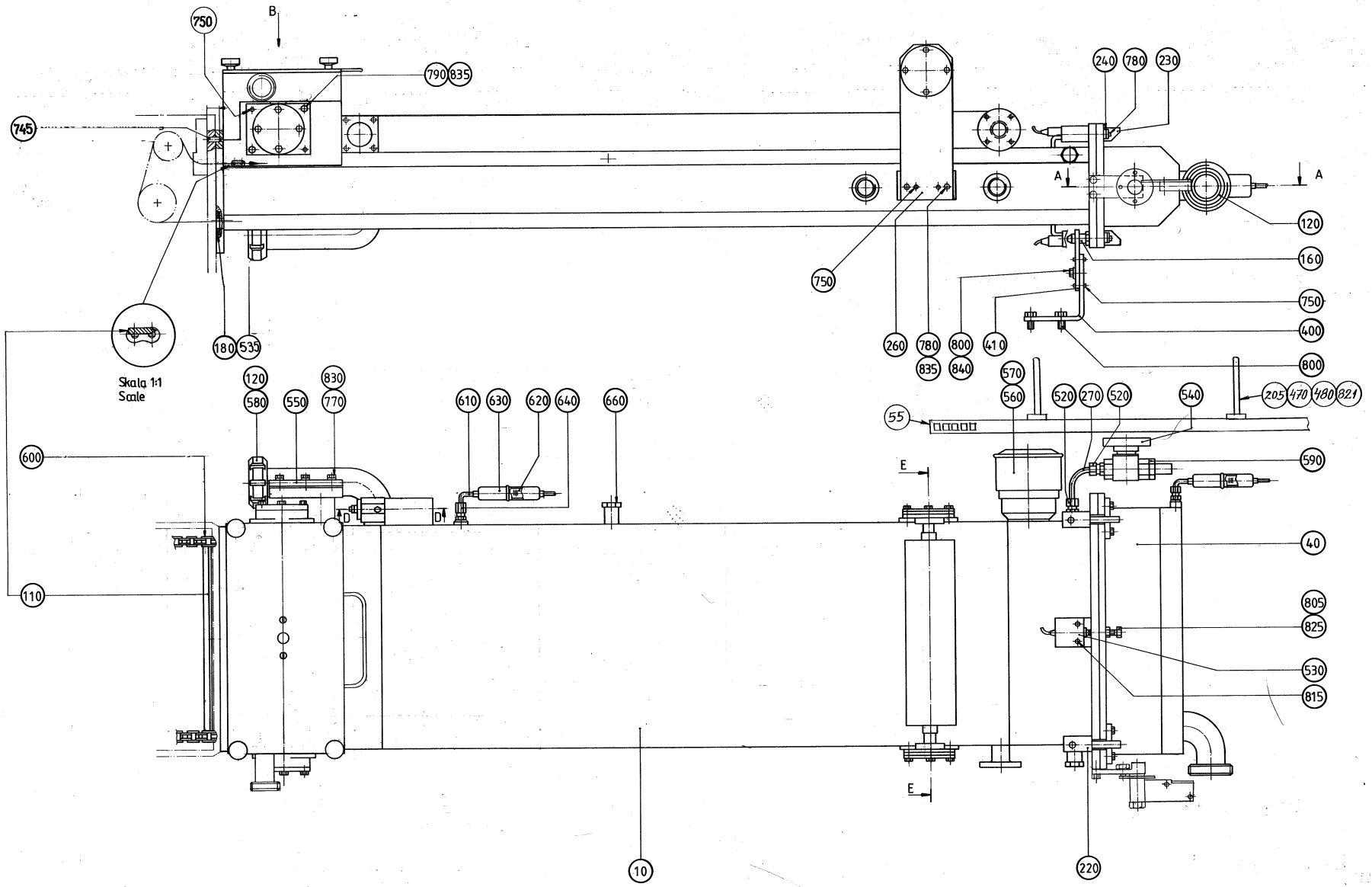
750
B
790
835
745
240
780
230
A
A
120
160
750
400
800
750
260
780
800
410
835
840
180
535
Skala 1:1
Scale
120
580
550
830
770
610
630
620
640
660
570
560
520
270
520
540
205
470
480
821
55
600
590
E
D
D
40
110
805
825
530
815
E
10
220

ECM: 102423 - 20020207
Group number: 1529171-0100
Assembly Drawing: 1529171-1_1_AA

Issue: 20020822

Pos	Part No	SP	UN	Qty	Description	Page No
Common Parts						
010	1529079-0000	-		1	BATH	
015	469962-0000	-		1	BOX	
040	456993-0000	-		1	COVER	
045	273954-0000	A		1	SEAL	
047	491125-0000	-		1	LID	
050	256001-0000	-		2	CANTILEVER	
055	988547-0000	-		1	CABLE DUCT	
060	295111-0000	A		1	BENDING ROLLER	
070	441624-0000	A		1	BENDING ROLLER	
100	456994-0000	A		1	BENDING ROLLER	
110	456995-0000	A		1	CARRIER	
115	456784-0000	-		1	LID	
120	12242-0003	A		2	GASKET 48X38X5,5	
130	247172-0000	A		4	SPACER RING	
140	247173-0000	B		2	BEARING SEAT	
150	247239-0000	A		2	WHEEL	
160	247248-0000	-		2	PIN	
170	491363-0000	A		2	NUT	
173	491364-0000	-		2	BEARING HOLDER	
175	491365-0000	-		2	THRUST BEARING	
180	256005-0000	A		1	GASKET	
184	751761-0000	-		1	ARM	
185	751762-0000	-		1	SHAFT	
190	256006-0000	-		1	AXLE SUPPORT	
195	1529170-0000	-		1	BRACKET	
200	256007-0000	-		1	AXLE SUPPORT	
205	27815-0000	-		4	WASHER	
210	978569-0000	A		1	SHAFT	
220	256010-0000	A		4	NUT	
230	256011-0000	B		4	DOWEL	
240	256012-0000	B		4	SHAFT	
260	271036-0000	-		2	CANTILEVER	
270	271280-0000	-		1	PIPE	
340	295388-0000	A		1	GASKET	
350	441474-0000	-		2	SHIM	
360	441635-0000	B		2	BEARING SEAT	
400	456472-0000	-		2	ANGLE	
410	456474-0000	-		2	ADJUSTMENT PLATE	
420	456516-0000	B		4	BEARING COVER	
425	A567189-0106	A		1	ELECTRODE	**45**
430	B469786-0000	-		1	NIPPLE	
	312605-0312	-		*2*	*HEXAGON NUT, M6M M4 A280*	
440	273937-0000	A		1	DIAPHRAGM	
450	469982-0000	-		1	WASHER	
470	751698-0000	-		2	HOLDER	
480	751699-0000	-		2	WASHER	
515	90044-0194	-		1	PROX.SW. IN5329/IN3002-BPKG	
520	90030-0109	A		2	CONN. STR., 12-R1/2, EXT. THREAD	
530	90044-0084	A		2	LIMIT SW. 14 CE1-4	
533	90051-0053	-		4	KNOB, INTERNAL THREAD, M6 24X17	
535	90153-0016	-	ML	1	ADHESIVE TUBE 100G RHODORSIL CAF 3	
538	90157-0022	-	L	1	SEALING COMPOUND	
540	90187-0029	A		1	BALL VALVE G1/2, NPBR	
550	90199-0010	A		1	LEVEL GLASS	
560	90206-0326	-		1	JUNCTION BOX FOR 90206-56	
570	B90206-0070	A		1	HEATING ELEMENT 6000W 380/220V	
	90206-0326	-		*1*	*JUNCTION BOX FOR 90206-56*	
	90269-0308	-		*1*	*GASKET 59X68X3 MM*	
573	90240-0146	-		2	FLANGE BUSHING,15X21X20 MM	
575	B484190-0000	A		4	BALL BEARING	
	90214-0098	-		*1*	*BALL BEARING, 15X35X11 MM*	
580	90217-0035	-		1	NUT	
590	90224-0078	-		1	PIPE SOCKET, ART.NO RAN 1612	
600	B491130-0000	A		2	ROLLER CHAIN	
	484204-0000	*C*		*1*	*LINK*	
605	90287-0106	-		1	SCREW SPRINGLOAD. SLOTTED HEAD M10X21	
610	90326-0019	A		1	THERMOELEMENT	
620	90326-0020	A		2	PLUG, FEMALE YELLOW CR-AL	
630	90326-0012	-		2	PROTECTIVE COVER, T31A4618	
640	90326-0306	-		1	GLAND FITTING 9041-45-KS-KR.1/8" D=4,5MM	
650	90326-0052	-		1	THERMO ELEMENT	
660	90330-0026	-		2	PLUG, EXT. G-THREAD, G1/4	
745	311103-0308	-		2	PARALLELL PIN, M6, 5X16 MM	
750	311103-0270	-		12	PARALLELL PIN, M6, 4X16 MM	
760	312105-0325	-		9	SCREW M6S ISO 4017 M5X10 A480	
770	312105-0332	-		6	SCREW M6S ISO 4017 M5X22 A480	
780	312105-0366	-		16	SCREW M6S M6X12 A280	
790	312105-0368	-		17	SCREW M6S M6X16 A280	
795	312105-0372	-		4	SCREW M6S ISO 4017 M6X25 A480	
800	312105-0449	-		10	SCREW M6S ISO 4017 M8X16 A480	
805	312109-0463	-		2	SCREW M6S ISO 4017 M8X60 A480	
808	312115-0366	-		6	SCREW MC6S M6X12 A280	
809	312125-0230	-		2	SCREW PAN HEAD MCS M3X20 SS	

Machine Type | Group Description | Used-In | Group Number | Page No

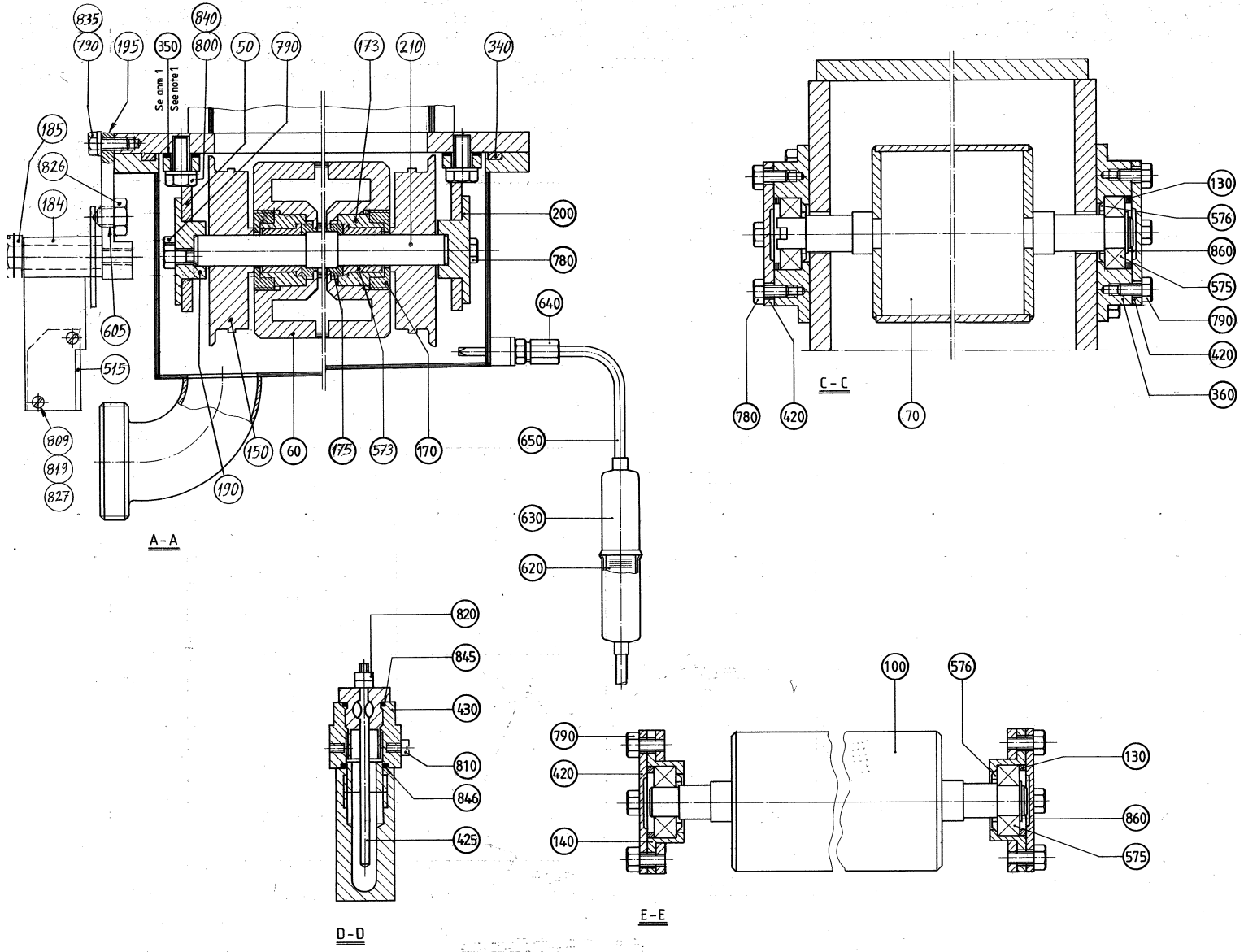
835
790
195
350
840
800
50
790
173
210
340
See anm 1
See note 1
185
826
184
605
515
809
819
827
150
60
175
573
170
190
200
780
640
650
630
620
A-A
C-C
130
576
860
575
790
420
360
780
420
70
820
845
430
810
846
425
D-D
100
576
790
420
140
130
860
575
E-E

Pos	Part No	SP	UN	Qty	Description	Page No
Common Parts (Cont'd)						
810	312125-0285	-		1	SCREW SLOT.PAN HD. MCS 4X6 A480	
812	312125-0331	-		2	SCREW PAN HEAD MCS M5X20 SS	
815	312115-0329	-		4	SCREW MC6S M5X16 A280	
818	312303-0378	-		4	SCREW STUD, METAL END=1D, PS 6X30 SS	
819	312605-0310	-		2	HEXAGON NUT, M6M M3 A280	
820	312605-0312	-		2	HEXAGON NUT, M6M M4 A280	
821	312605-0314	-		4	HEXAGON NUT, M6M M5 A280	
822	312605-0316	-		4	HEXAGON NUT, M6M M6 A280	
825	312605-0318	-		2	HEXAGON NUT, M6M M8 A280	
826	312605-0320	-		1	HEXAGON NUT, M6M M10 A280	
827	315105-0124	-		2	WASHER PLAIN, BRB, 3,2/6,H=0,5	
830	315105-0146	-		6	WASHER PLAIN, BRB, 5,3/10,H=1	
835	315105-0153	-		19	WASHER PLAIN, BRB, 6,4/12,H=1,5	
840	315105-0165	-		6	WASHER PLAIN, BRB, 8,4/16,H=1,5	
845	315204-0213	A		1	O-RING 15,2X2,4 MM	
846	315204-0215	A		1	O-RING 19,2X3 MM	
860	315751-0112	A		2	RETAIN. RING, 15	

Pos	Part No	SP	UN	Qty	Description	Page No

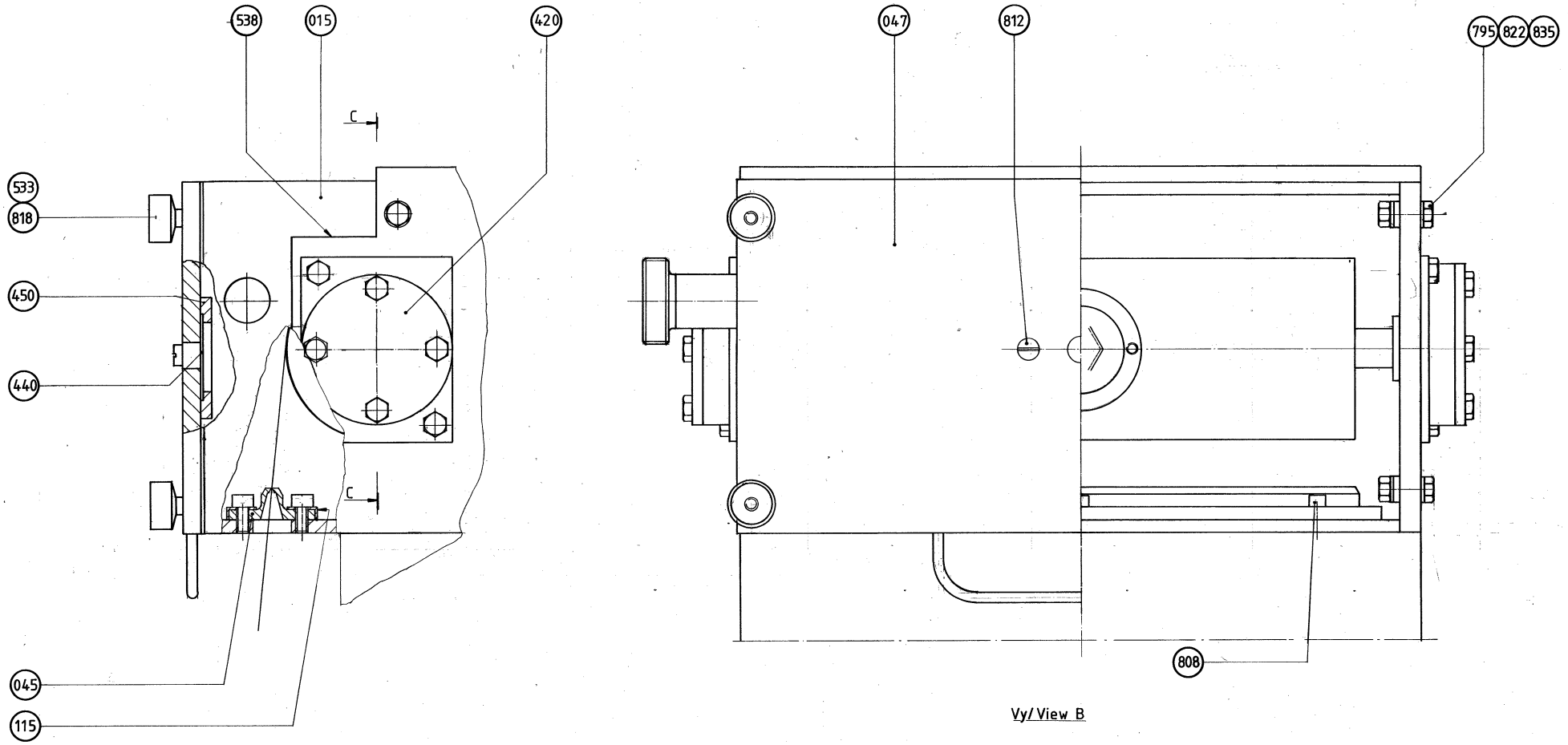
538
015
420
C
533
818
450
440
C
045
115
047
812
795
822
835
808
Vy/View B

Pos	Part No	SP	UN	Qty	Description	Page No
SEE PREVIOUS LISTS PAGES: 39, 41.						

Pos	Part No	SP	UN	Qty	Description	Page No

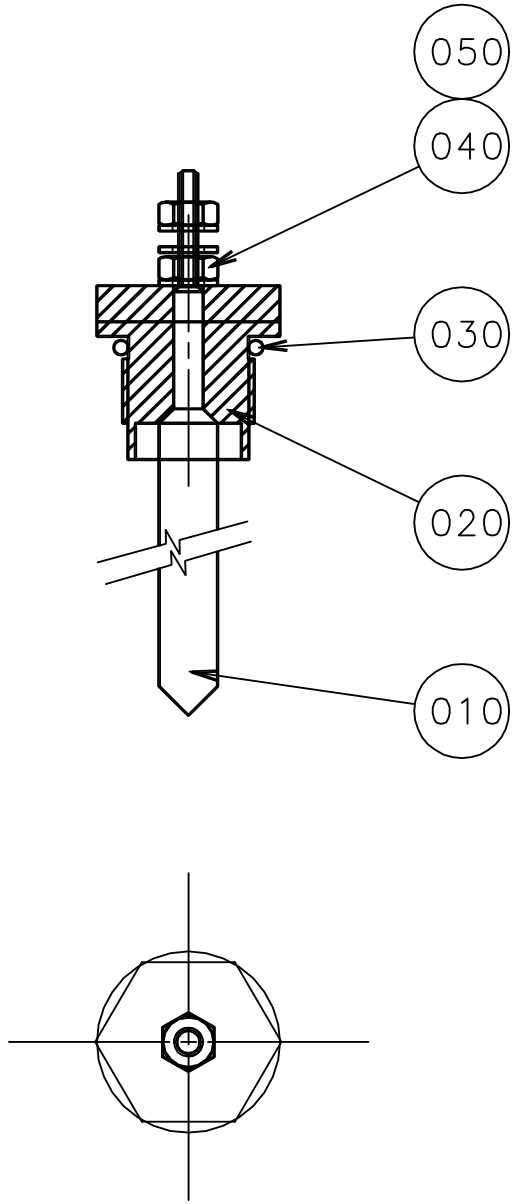
050
040
030
020
010

ECM: - -
Group number: 567189-0106
Assembly Drawing: 567189-1_1_AA

Issue: 20020822

Pos	Part No	SP	UN	Qty	Description	Page No
Common Parts						
010 11	567070-0001	-		1	ELECTRODE	
010 6	567070-0008	-		1	ELECTRODE	
020	560931-0000	-		1	BRACKET	
030	90242-0168	-		1	O-RING	
040	312605-0312	-		2	HEXAGON NUT, M6M M4 A280	
050	315105-0136	-		3	WASHER PLAIN, BRB, 4,3/8,H=0,8	

Pos	Part No	SP	UN	Qty	Description	Page No

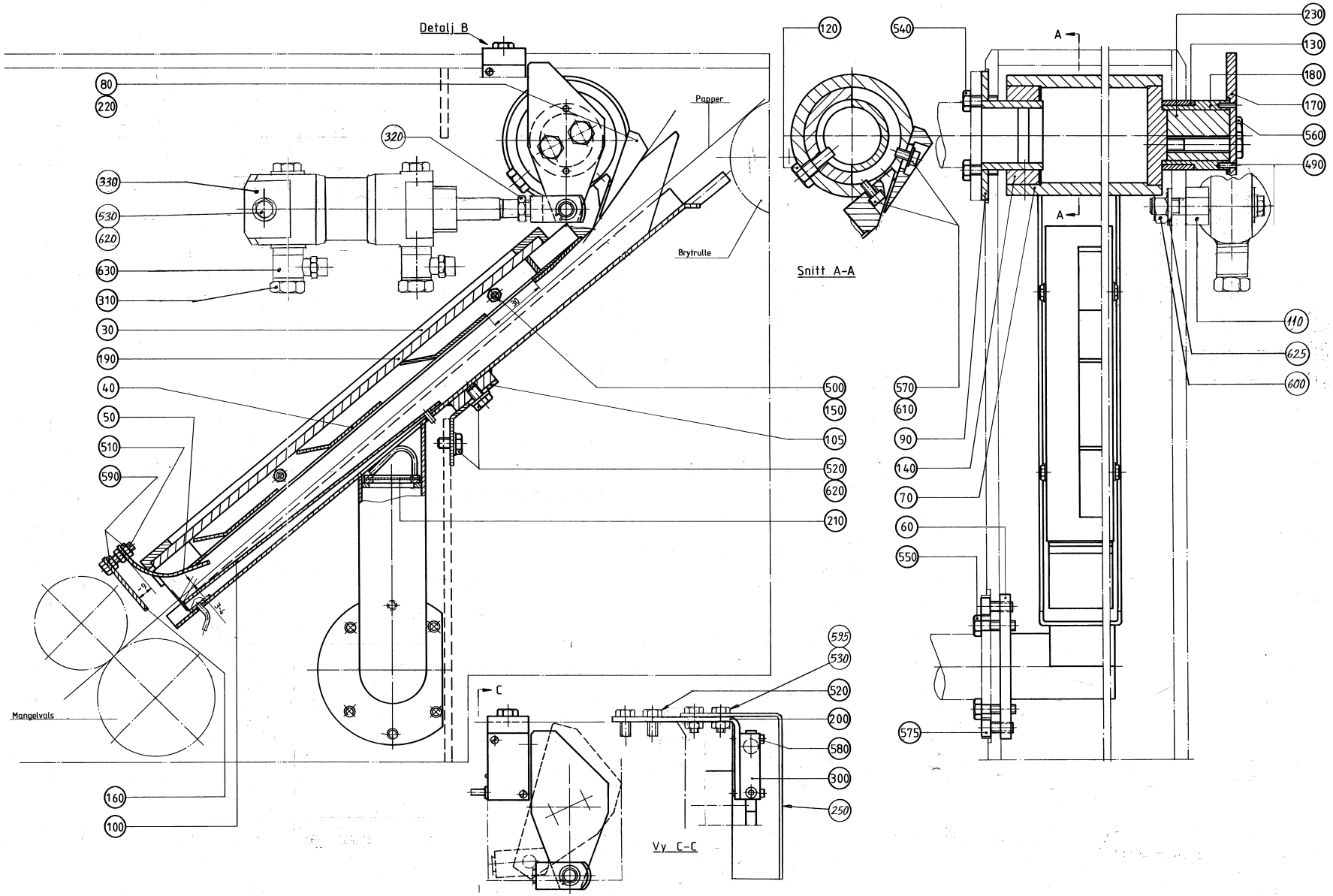
Detalj B
Papper
Brytrulle
Mangelvals
Snitt A-A
Vy C-C
A
A
C
80
220
320
330
530
620
630
310
30
190
40
50
510
590
500
150
105
520
620
210
160
100
120
540
230
130
180
170
560
490
110
625
600
570
610
90
140
70
60
550
575
595
530
520
200
580
300
250

ECM: 102774 - 20020207
Group number: 1529257-0100
Assembly Drawing: 1529257-1_1_AA

Issue: 20020822

Pos	Part No	SP	UN	Qty	Description	Page No
0200B OR 0250B						
080	469991-0000	-		1	RAIL	
0200S						
080	271820-0002	-		1	STEERING RAIL	
Common Parts						
030	271941-0002	-		1	FRAME	
040	271942-0002	-		1	AIR GUIDE	
050	272022-0000	-		1	AIR KNIFE, MOVABLE	
060	272023-0000	-		1	FIXED AIR KNIFE	
070	272026-0002	-		1	AIR DISTRIBUTOR	
090	271858-0000	-		1	FLANGE	
100	272140-0002	-		1	HEAD PLATE	
105	272464-0000	-		1	ANGLE BRACKET	
110	255984-0001	-		1	CYLINDER BRACKET	
120	255995-0000	A		1	SCREW	
130	751165-0000	A		1	BUSHING	
140	256022-0000	A		1	BUSHING	
150	263311-0000	B		4	WASHER	
160	271827-0002	-		1	HEAD PLATE	
170	441903-0000	B		1	ARM	
180	271865-0000	B		1	SLEEVE	
190	272027-0002	A		1	GLASS PANE	
200	490867-0000	B		1	BRACKET	
210	272141-0002	A		1	FILTER	
220	272329-0002	A		2	LACE	
230	295103-0000	-		1	SPACER	
250	978461-0000	-		1	PROTECTION PLATE	
300	90044-0104	-		1	PROX.SWITCH IFM IN 3002	
310	90235-0275	A		2	THROTTLE CHECK VALVES,G1/4"	
320	90239-0127	A		1	BRACKET	
330	B90239-0189	A		1	CYLINDER	
	90285-0094	*C*		*1*	*SEAL KIT*	
490	311103-0233	-		2	PARALLELL PIN, M6, 3X10 MM	
500	312105-0293	-		4	SCREW M6S ISO 4017 M4X16 A480	
510	312105-0331	-		2	SCREW M6S ISO 4017 M5X20 A480	
520	312105-0364	-		6	SCREW M6S ISO 4017 M6X10 A480	
530	312105-0366	-		3	SCREW M6S M6X12 A280	
540	312105-0368	-		4	SCREW M6S M6X16 A280	
550	312105-0370	-		4	SCREW M6S ISO 4017 M6X20 A480	
560	312105-0461	-		2	SCREW M6S ISO 4014 M8X50 A480	
570	312115-0325	-		4	SCREW HEX.SOCK.HD.MC6S-TT 5X10 A480	
575	312115-0366	-		2	SCREW MC6S M6X12 A280	
580	312125-0228	-		2	SCREW PAN HEAD MCS M3X16 A480	
590	312605-0314	-		4	HEXAGON NUT, M6M M5 A280	
595	312605-0316	-		2	HEXAGON NUT, M6M M6 A280	
600	312605-0320	-		1	HEXAGON NUT, M6M M10 A280	
610	315105-0146	-		2	WASHER PLAIN, BRB, 5,3/10,H=1	
620	315105-0153	-		5	WASHER PLAIN, BRB, 6,4/12,H=1,5	
625	315105-0173	-		1	WASHER PLAIN, BRB, 10,5/22,H=2	
630	342797-0122	-		2	CONN. BANJO, RINGPIECE 6-1/4	

Machine Type | Group Description | Used-In | Group Number | Page No

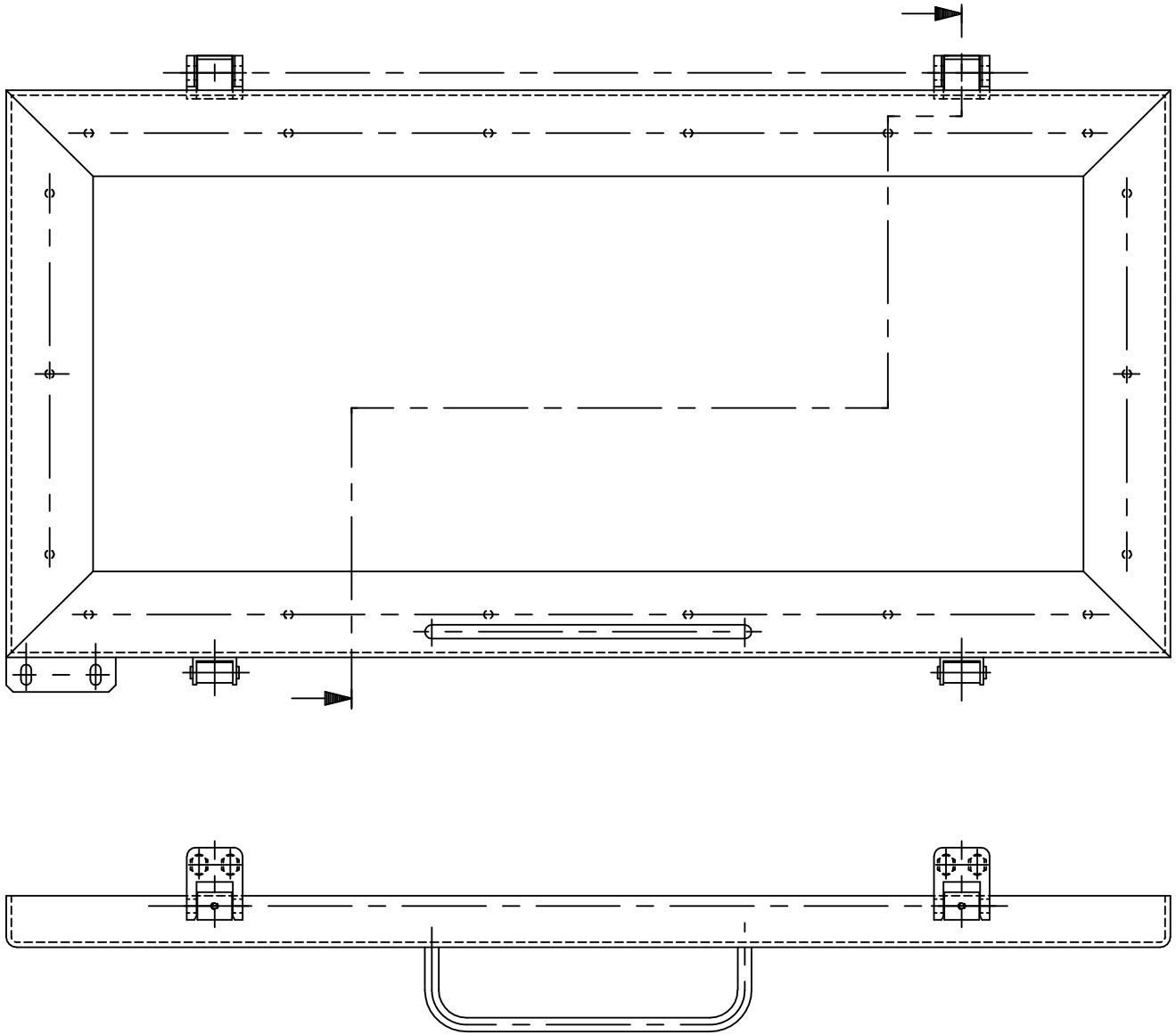

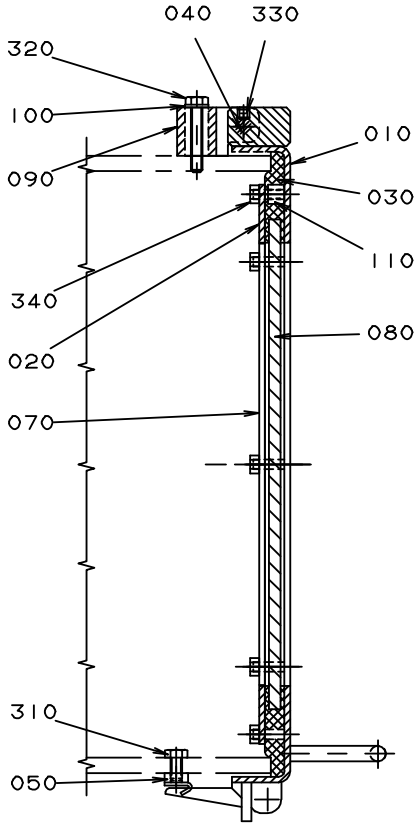
040
330
320
100
010
090
030
110
340
080
020
070
310
050

ECM: 102771 - 20020207
Group number: 1529091-0100
Assembly Drawing: 1529091-1_1_AA

Issue: 20020822

Pos	Part No	SP	UN	Qty	Description	Page No
Common Parts						
010	1529014-0000	-		1	FRAME	
020	272780-0000	-		2	COVER SLIP	
030	272785-0000	A		1	RUBBER STRIP	
040	256031-0000	A		2	SHAFT	
050	271860-0000	A		2	CLAMP BLOCK	
070	272782-0000	-		2	COVER SLIP	
080	272783-0003	A		1	GLASS PANE	
090	272786-0000	A		2	HINGE	
100	272787-0000	A		2	WASHER	
110	441718-0000	B		18	SPACER	
310	312105-0366	-		4	SCREW M6S M6X12 A280	
320	312105-0376	-		4	SCREW M6S ISO 4014 M6X35 A480	
330	312318-0360	-		2	SCREW HEX.SOCK.SET CUP P.MSK6SS6X6 SS	
340	312605-0314	-		18	HEXAGON NUT, M6M M5 A280	

Pos	Part No	SP	UN	Qty	Description	Page No

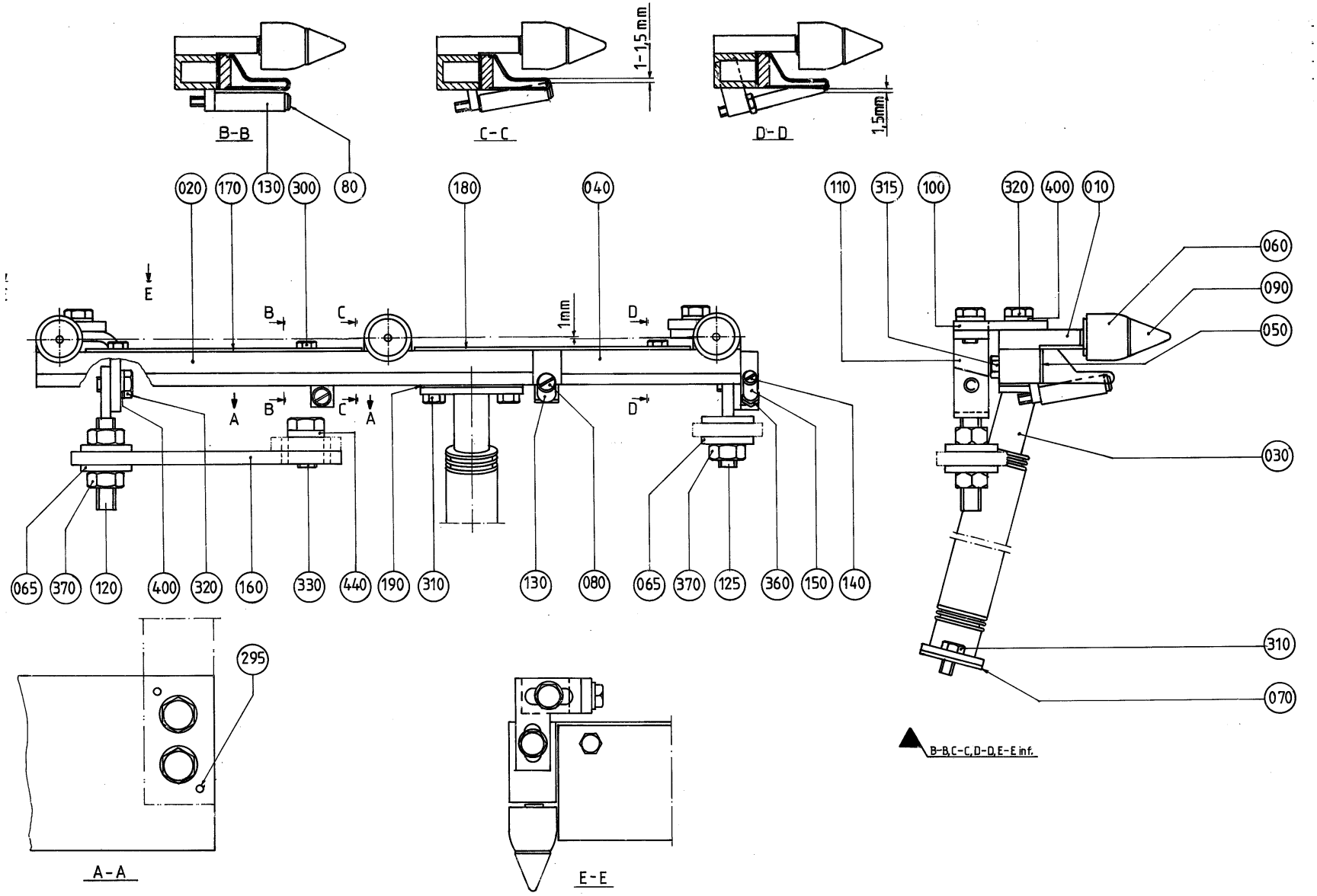
B-B
C-C
D-D
1-1,5 mm
1,5mm
020
170
130
300
80
180
040
110
315
100
320
400
010
060
090
050
030
310
070
E
B
C
D
A
1mm
065
370
120
400
320
160
330
440
190
310
130
080
065
370
125
360
150
140
295
A-A
E-E
B-B,C-C,D-D,E-E inf.

ECM: 102765 - 20020207
Group number: 469501-0100
Assembly Drawing: 469501-1_1_AA

Issue: 20020822

Pos	Part No	SP	UN	Qty	Description	Page No
Common Parts						
010	469416-0000	B		1	ATTACHMENT	
020	469418-0000	A		1	AIR NOZZLE	
030	469792-0000	B		1	PIPE-LINE	
040	469420-0000	B		1	AIR NOZZLE	
050	469796-0000	A		1	GASKET REPBY 0491983-0000	
060	6161-0000	-		3	ROLL	
065	28036-0000	-		4	WASHER	
070	256066-0000	-		1	GASKET REPBY 0751010-0000	
080	256899-0000	A		2	SHAFT	
090	272095-0000	A		3	SHAFT	
100	469458-0000	-		2	BRACKET	
110	469459-0000	-		2	BRACKET	
120	469460-0000	-		1	BRACKET	
125	491143-0000	-		1	BRACKET	
130	469461-0000	A		2	ROLL	
140	469463-0000	A		1	SHAFT	
150	469464-0000	A		1	ROLL	
160	491178-0000	-		1	BRACKET	
170	469466-0000	-		1	PLATE	
180	469467-0000	-		1	PLATE	
190	469791-0000	A		1	GASKET REPBY 0751024-0000	
295	311103-0234	-		2	PARALLELL PIN, M6, 3X12 MM	
300	312105-0287	-		3	SCREW M6S ISO 4017 M4X8 A480	
310	312105-0325	-		4	SCREW M6S ISO 4017 M5X10 A480	
315	312105-0333	-		5	SCREW M6S ISO 4017 M5X25 A480	
320	312105-0366	-		6	SCREW M6S M6X12 A280	
330	312105-0449	-		2	SCREW M6S ISO 4017 M8X16 A480	
360	312605-0312	-		1	HEXAGON NUT, M6M M4 A280	
370	312605-0318	-		3	HEXAGON NUT, M6M M8 A280	
400	315105-0153	-		6	WASHER PLAIN, BRB, 6,4/12,H=1,5	
440	315115-0165	-		2	WASHER PLAIN, TBRB 8,4/16 H=3	

Pos	Part No	SP	UN	Qty	Description	Page No

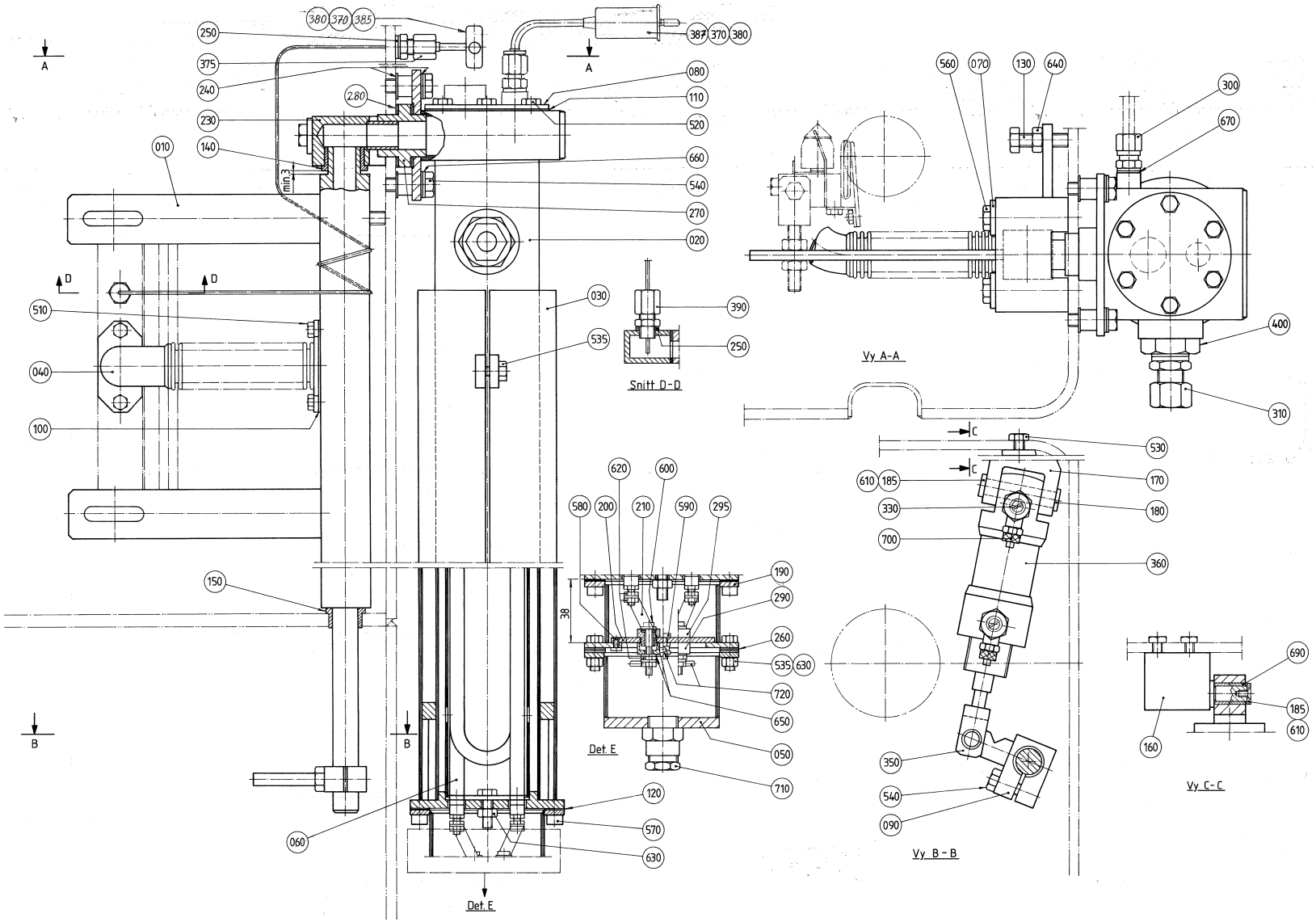
A
A
D
D
B
B
C
C
min 3
38
Snitt D-D
Det. E
Det. E
Vy A-A
Vy B - B
Vy C-C
250
375
240
230
140
010
280
380
370
385
387
370
380
080
110
520
660
540
270
020
030
535
390
250
510
040
100
150
060
120
570
630
620
600
580
200
210
590
295
190
290
260
535
630
720
650
050
710
560
070
130
640
300
670
400
310
530
170
180
360
610
185
330
700
350
540
090
690
185
610
160

ECM: 102756 - 20020207
Group number: 1529173-0100
Assembly Drawing: 1529173-1_1_AA

Issue: 20020822

Pos	Part No	SP	UN	Qty	Description	Page No
0200B OR 0250B						
040	256058-0000	B		1	LEAD	
100	751010-0000	A		2	GASKET	
510	312105-0325	-		4	SCREW M6S ISO 4017 M5X10 A480	
Common Parts						
010	256056-0000	B		1	PIVOT ARM	
020	272284-0000	B		1	HEATING PIPE	
030	272114-0000	-		1	HEAT GUARD	
050	256059-0000	B		1	COVER	
060	267494-0000	A		1	COIL HEATER	
070	315125-0165	-		2	WASHER PLAIN ROUND,CHAMF. 8,4/26, H=5	
080	751734-0000	B		1	LID	
090	256063-0000	B		1	CYLINDER BRACKET	
110	751735-0000	-		1	GASKET	
120	751013-0000	-		1	GASKET	
130	256073-0000	-		1	SCREW	
140	295909-0000	A		1	BUSHING	
150	271269-0000	A		1	BUSHING	
160	271345-0000	B		1	BRACKET	
170	271346-0000	B		1	FORK	
180	271423-0005	A		1	SHAFT	
185	271844-0000	A		2	WASHER	
190	272105-0000	B		1	CONNECTION HOUS.(MINOR)	
200	272145-0000	A		1	CONNECTION DEVICE	
210	272146-0000	A		2	BRIDGE CONNECTOR	
230	272286-0000	-		1	AXLE SUPPORT	
240	751019-0000	A		8	WASHER	
250	273429-0000	A		2	WASHER	
260	751020-0000	A		1	GASKET	
270	295936-0000	A		1	BUSHING	
280	751023-0000	A		2	GASKET	
290	90006-0008	A		2	BUSHING 657	
295	90006-0009	A		2	BUSHING 0002004	
300	90030-0184	-		1	CONN. STR. GA-6-G1/8	
310	90030-0187	-		1	CONN. STR. GA-12-G3/8	
330	90235-0275	A		2	THROTTLE CHECK VALVES,G1/4"	
350	90239-0012	A		1	BRACKET	
360	B90239-0189	A		1	CYLINDER	
	90285-0094	*C*		*1*	*SEAL KIT*	
370	90326-0012	A		2	PROTECTIVE COVER, T31A4618	
375	90326-0306	A		1	GLAND FITTING 9041-45-KS-KR.1/8" D=4,5MM	
380	90326-0020	A		2	PLUG, FEMALE YELLOW CR-AL	
385	B90326-0048	A		1	THERMOCOUPLE, 12826-31	
	90326-0304	*-*		*1*	*LEAD IN, 9041-15-KS-UB60*	
387	90326-0052	-		1	THERMO ELEMENT	
390	90326-0304	A		1	LEAD IN, 9041-15-KS-UB60	
400	90330-0078	A		1	BUSHING, INT/EXT. THR. R3/4-RP3/8	
505	312105-0364	-		6	SCREW M6S ISO 4017 M6X10 A480	
520	312105-0364	-		6	SCREW M6S ISO 4017 M6X10 A480	
530	312105-0366	-		2	SCREW M6S M6X12 A280	
535	312105-0368	-		10	SCREW M6S M6X16 A280	
540	312105-0453	-		5	SCREW M6S ISO 4017 M8X25 A480	
560	312105-0462	-		2	SCREW M6S ISO 4014 M8X55 A480	
570	312115-0366	-		6	SCREW MC6S M6X12 A280	
580	312125-0222	-		3	SCREW PAN HEAD MCS M3X8 SS	
590	312125-0291	-		1	SCREW PAN HEAD MCS M4X12 SS	
600	312125-0299	-		2	SCREW PAN HEAD MCS M4X30 SS	
610	312145-0287	-		2	SCREW COUNTERS.SLOT.HD. MFS 4X8 SS	
620	312605-0312	-		10	HEXAGON NUT, M6M M4 A280	
630	312605-0316	-		7	HEXAGON NUT, M6M M6 A280	
640	312605-0318	-		1	HEXAGON NUT, M6M M8 A280	
650	315105-0136	-		8	WASHER PLAIN, BRB, 4,3/8,H=0,8	
660	315105-0165	-		4	WASHER PLAIN, BRB, 8,4/16,H=1,5	
670	315234-0109	-		1	WASHER,PL.RND.CU.10,3/13,5 H=1,0	
690	321127-0100	-		2	BEARING BUSHING WITHOUT FL, 10X13X10 MM	
700	342980-0114	-		2	BANJO-CONNECTION,RING 6/4-G1/4"	
710	352100-0106	-		1	CABLE GLANR.18,6-10,5	
720	353104-0130	-		3	CABLE SHOEYAV 025 M 4*	

Machine Type | Group Description | Used-In | Group Number | Page No

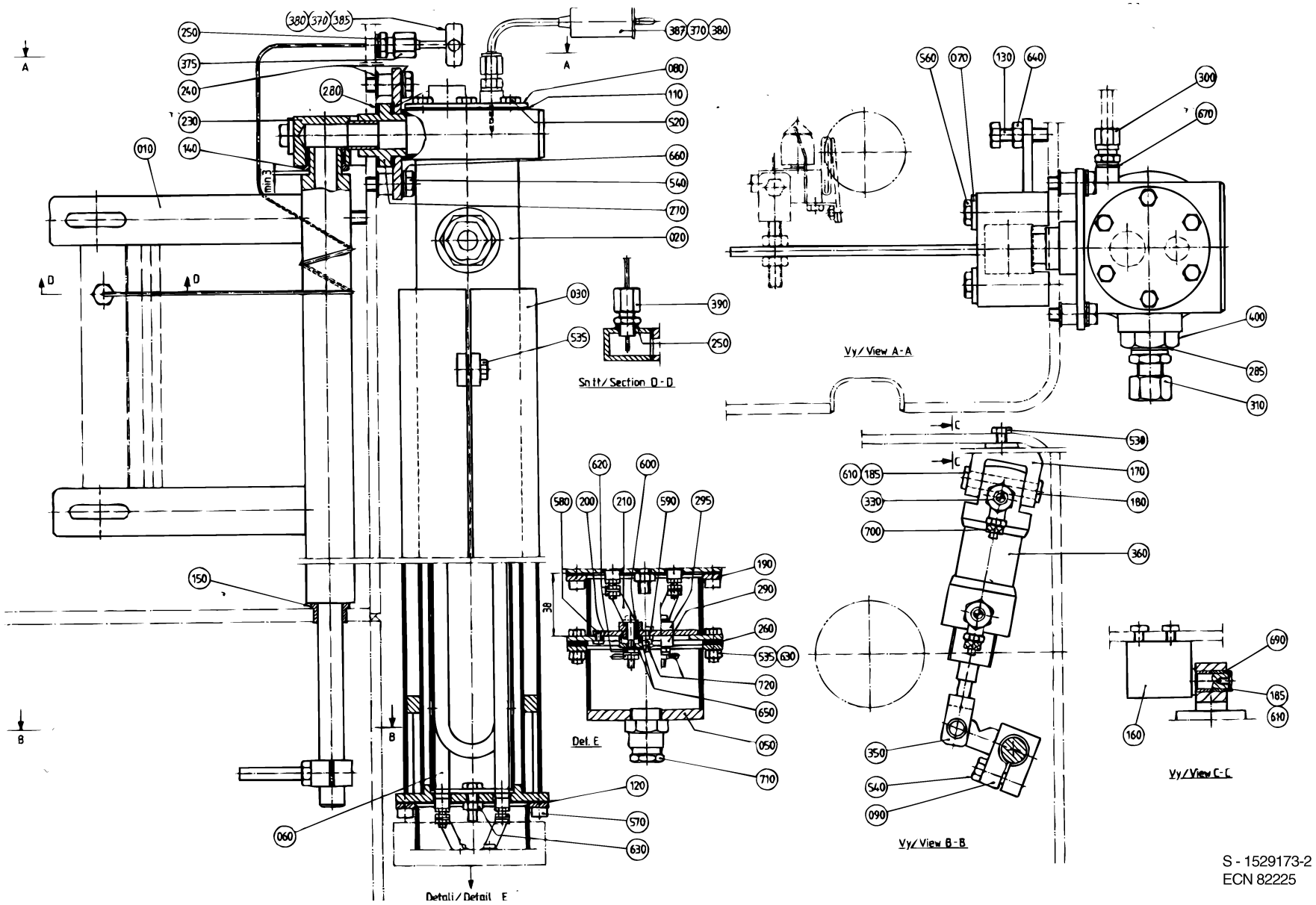
Snitt/Section D-D
Vy/View A-A
Vy/View B-B
Vy/View C-C
Detalj/Detail E
Det. E
S - 1529173-2
ECN 82225

ECM: 102756 - 20020207
Group number: 1529173-0100
Assembly Drawing: 1529173-2_1_AA

Issue: 20020822

Pos	Part No	SP	UN	Qty	Description	Page No
0200B OR 0250B						
040	256058-0000	B		1	LEAD	
100	751010-0000	A		2	GASKET	
510	312105-0325	-		4	SCREW M6S ISO 4017 M5X10 A480	
Common Parts						
010	256056-0000	B		1	PIVOT ARM	
020	272284-0000	B		1	HEATING PIPE	
030	272114-0000	-		1	HEAT GUARD	
050	256059-0000	B		1	COVER	
060	267494-0000	A		1	COIL HEATER	
070	315125-0165	-		2	WASHER PLAIN ROUND,CHAMF. 8,4/26, H=5	
080	751734-0000	B		1	LID	
090	256063-0000	B		1	CYLINDER BRACKET	
110	751735-0000	-		1	GASKET	
120	751013-0000	-		1	GASKET	
130	256073-0000	-		1	SCREW	
140	295909-0000	A		1	BUSHING	
150	271269-0000	A		1	BUSHING	
160	271345-0000	B		1	BRACKET	
170	271346-0000	B		1	FORK	
180	271423-0005	A		1	SHAFT	
185	271844-0000	A		2	WASHER	
190	272105-0000	B		1	CONNECTION HOUS.(MINOR)	
200	272145-0000	A		1	CONNECTION DEVICE	
210	272146-0000	A		2	BRIDGE CONNECTOR	
230	272286-0000	-		1	AXLE SUPPORT	
240	751019-0000	A		8	WASHER	
250	273429-0000	A		2	WASHER	
260	751020-0000	A		1	GASKET	
270	295936-0000	A		1	BUSHING	
280	751023-0000	A		2	GASKET	
290	90006-0008	A		2	BUSHING 657	
295	90006-0009	A		2	BUSHING 0002004	
300	90030-0184	-		1	CONN. STR. GA-6-G1/8	
310	90030-0187	-		1	CONN. STR. GA-12-G3/8	
330	90235-0275	A		2	THROTTLE CHECK VALVES,G1/4"	
350	90239-0012	A		1	BRACKET	
360	B90239-0189	A		1	CYLINDER	
	90285-0094	*C*		*1*	*SEAL KIT*	
370	90326-0012	A		2	PROTECTIVE COVER, T31A4618	
375	90326-0306	A		1	GLAND FITTING 9041-45-KS-KR.1/8" D=4,5MM	
380	90326-0020	A		2	PLUG, FEMALE YELLOW CR-AL	
385	B90326-0048	A		1	THERMOCOUPLE, 12826-31	
	90326-0304	*-*		*1*	*LEAD IN, 9041-15-KS-UB60*	
387	90326-0052	-		1	THERMO ELEMENT	
390	90326-0304	A		1	LEAD IN, 9041-15-KS-UB60	
400	90330-0078	A		1	BUSHING, INT/EXT. THR. R3/4-RP3/8	
505	312105-0364	-		6	SCREW M6S ISO 4017 M6X10 A480	
520	312105-0364	-		6	SCREW M6S ISO 4017 M6X10 A480	
530	312105-0366	-		2	SCREW M6S M6X12 A280	
535	312105-0368	-		10	SCREW M6S M6X16 A280	
540	312105-0453	-		5	SCREW M6S ISO 4017 M8X25 A480	
560	312105-0462	-		2	SCREW M6S ISO 4014 M8X55 A480	
570	312115-0366	-		6	SCREW MC6S M6X12 A280	
580	312125-0222	-		3	SCREW PAN HEAD MCS M3X8 SS	
590	312125-0291	-		1	SCREW PAN HEAD MCS M4X12 SS	
600	312125-0299	-		2	SCREW PAN HEAD MCS M4X30 SS	
610	312145-0287	-		2	SCREW COUNTERS.SLOT.HD. MFS 4X8 SS	
620	312605-0312	-		10	HEXAGON NUT, M6M M4 A280	
630	312605-0316	-		7	HEXAGON NUT, M6M M6 A280	
640	312605-0318	-		1	HEXAGON NUT, M6M M8 A280	
650	315105-0136	-		8	WASHER PLAIN, BRB, 4,3/8,H=0,8	
660	315105-0165	-		4	WASHER PLAIN, BRB, 8,4/16,H=1,5	
670	315234-0109	-		1	WASHER,PL.RND.CU.10,3/13,5 H=1,0	
690	321127-0100	-		2	BEARING BUSHING WITHOUT FL, 10X13X10 MM	
700	342980-0114	-		2	BANJO-CONNECTION,RING 6/4-G1/4"	
710	352100-0106	-		1	CABLE GLANR.18,6-10,5	
720	353104-0130	-		3	CABLE SHOEYAV 025 M 4*	

Machine Type | Group Description | Used-In | Group Number | Page No

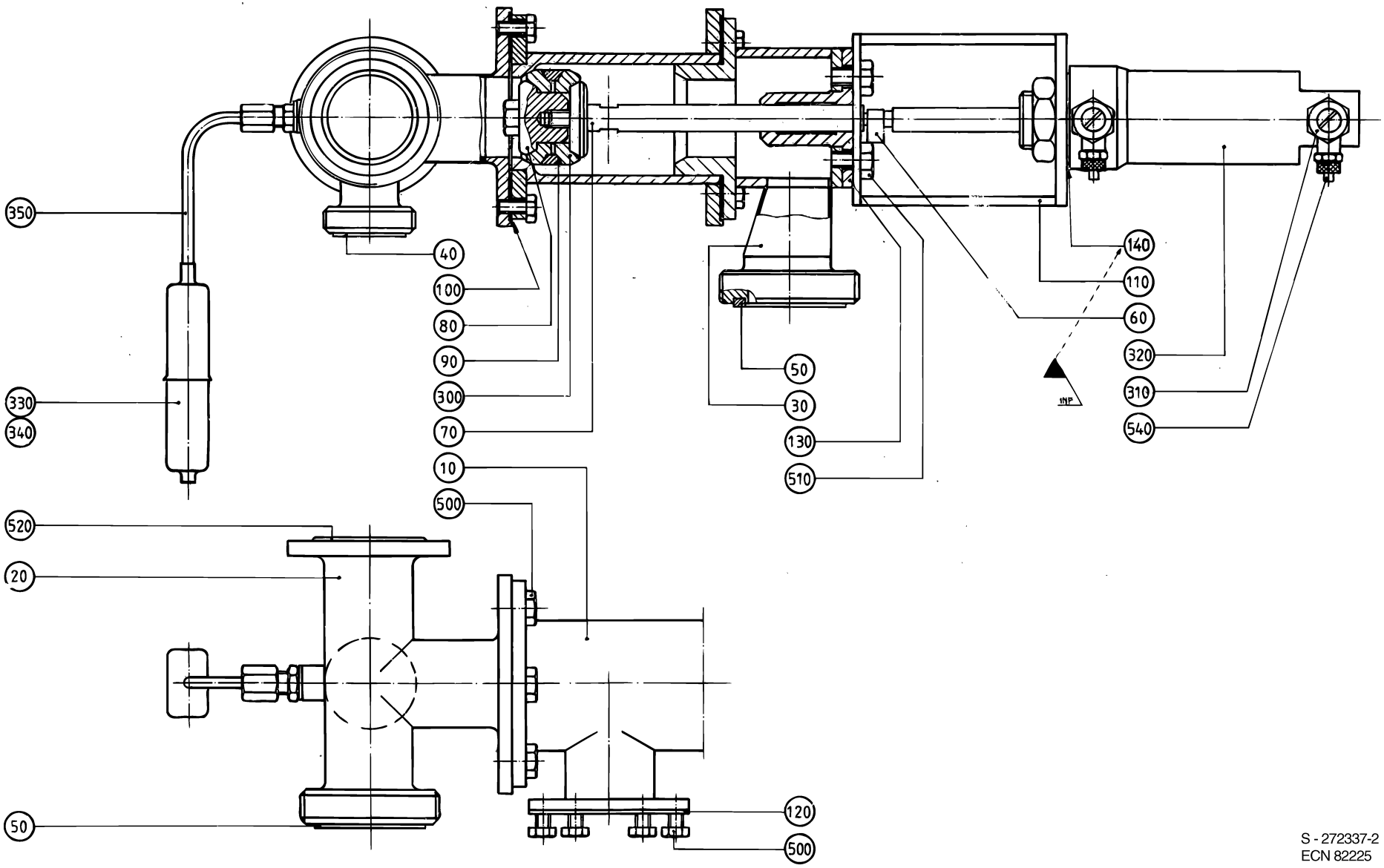

S - 272337-2
ECN 82225

ECM: 102753 - 20020207
Group number: 272337-0200
Assembly Drawing: 272337-2_1_AA

Issue: 20020822

Pos	Part No	SP	UN	Qty	Description	Page No
Common Parts						
010	271167-0000	B		1	VALVE HOUSING	
020	271890-0000	-		1	BRANCH PIPE	
030	269401-0000	B		1	HOUSE	
040	90091-0180	A		1	GASKET 32X25X4,8 MM	
050	90091-0182	A		2	GASKET 48X38X4,8 MM	
060	37638-0000	A		1	PENDULUM SUSPENSION	
070	266389-0000	A		1	PISTON ROD	
080	266390-0000	A		1	NUT	
090	266391-0000	A		1	RING	
100	295160-0000	A		2	GASKET	
110	266394-0000	B		1	BRACKET	
120	531742-0000	A		1	GASKET	
130	272341-0000	A		1	SPINDLE GUIDE	
140	456886-0000	-		1	WASHER	
300	530588-0000	A		2	SEAL RING	
310	90235-0275	-		2	THROTTLE CHECK VALVES,G1/4"	
320	B90239-0166	A		1	CYLINDER	
	90285-0094	*C*		*1*	*SEAL KIT*	
330	90326-0012	A		1	PROTECTIVE COVER, T31A4618	
340	90326-0020	A		1	PLUG, FEMALE YELLOW CR-AL	
350	90326-0051	A		1	THERMOCOUPLE, 12826-33	
500	312105-0366	-		18	SCREW M6S M6X12 A280	
510	312105-0449	-		2	SCREW M6S ISO 4017 M8X16 A480	
520	315204-0223	-		1	O-RING 39,2X3 MM	
540	342797-0122	-		2	CONN. BANJO, RINGPIECE 6-1/4	

Pos	Part No	SP	UN	Qty	Description	Page No

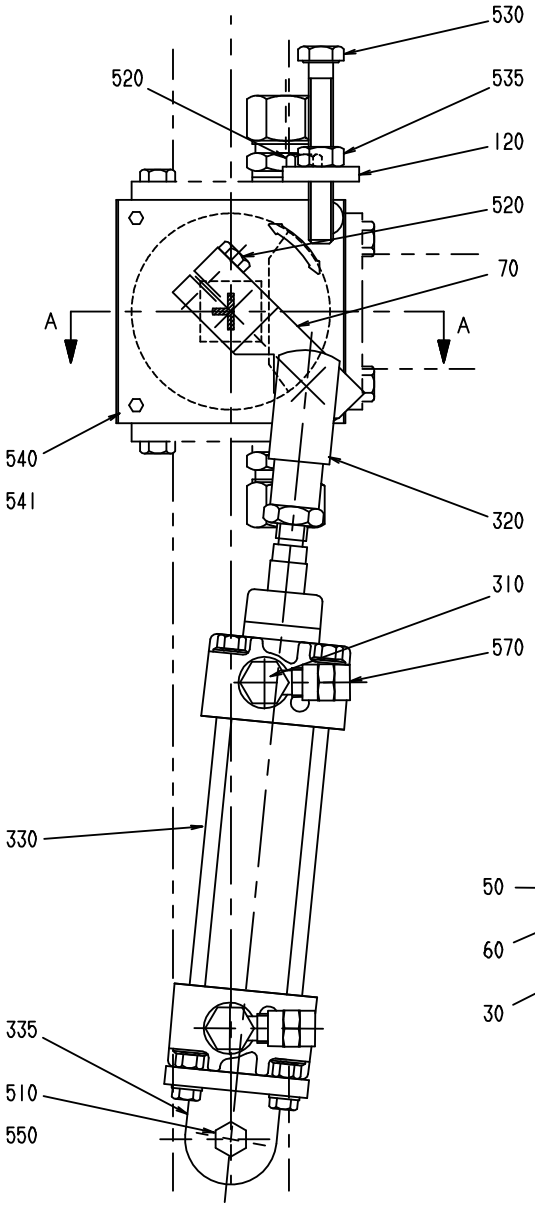
530
520
535
120
520
70
A
A
540
541
320
310
570
330
335
510
550

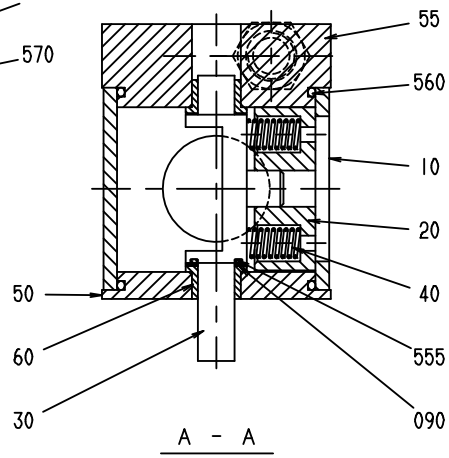
55
560
10
20
40
555
090
50
60
30

A - A

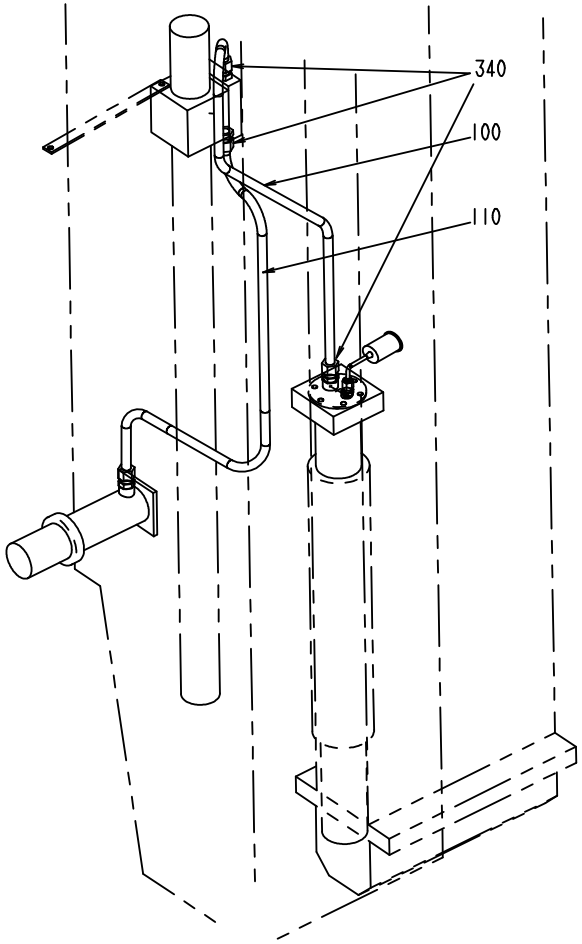
340
100
110

Pos	Part No	SP	UN	Qty	Description	Page No
0200B OR 0250B						
110	751737-0001	-		1	PIPE	
0200S						
110	751737-0002	-		1	PIPE	
Common Parts						
010	B255870-0000	B		1	VALVE HOUSING	
0010	*1282023-0002*	*-*		*1*	*CAST WORKPIECE*	
020	255871-0000	A		1	PIECE	
030	751732-0000	A		1	BRACKET	
040	21521-0000	A		2	COMPRESSION SPRING	
050	255874-0000	A		1	BEARING COVER	
055	751731-0000	-		1	BEARING COVER	
060	255875-0000	A		2	BUSHING	
070	441483-0000	B		1	CYLINDER BRACKET	
090	266737-0000	-		1	WASHER	
100	751736-0000	-		1	PIPE	
120	751740-0000	-		1	STOP	
310	342980-0303	A		2	BANJO-HOLLOW BOLT COUPL,EXT.THR.01-G1/8"	
320	90239-0516	A		1	ROD END,CLEVIS WITH AXLE M10X1,25	
330	B90239-0779	A		1	CYLINDER	
	90239-0442	*C*		*1*	*SEAL KIT*	
335	90239-0453	-		1	BRACKET	
340	90030-0187	-		3	CONN. STR. GA-12-G3/8	
510	312105-0366	-		1	SCREW M6S M6X12 A280	
520	312105-0370	-		3	SCREW M6S ISO 4017 M6X20 A480	
530	312109-0463	-		1	SCREW M6S ISO 4017 M8X60 A480	
535	312605-0318	-		1	HEXAGON NUT, M6M M8 A280	
540	312155-0364	-		4	SCREW HEX.SOCK.COUNT.MF6S M6X10 A280	
541	312155-0374	-		4	SCREW HEX.SOCK.COUNT.MF6S M6X30 A280	
550	315105-0153	-		1	WASHER PLAIN, BRB, 6,4/12,H=1,5	
560	315204-0302	A		2	O-RING 54,5X3 MM	
570	342797-0121	A		2	CONN. BANJO, RINGPIECE 6-1/8	

Pos	Part No	SP	UN	Qty	Description	Page No

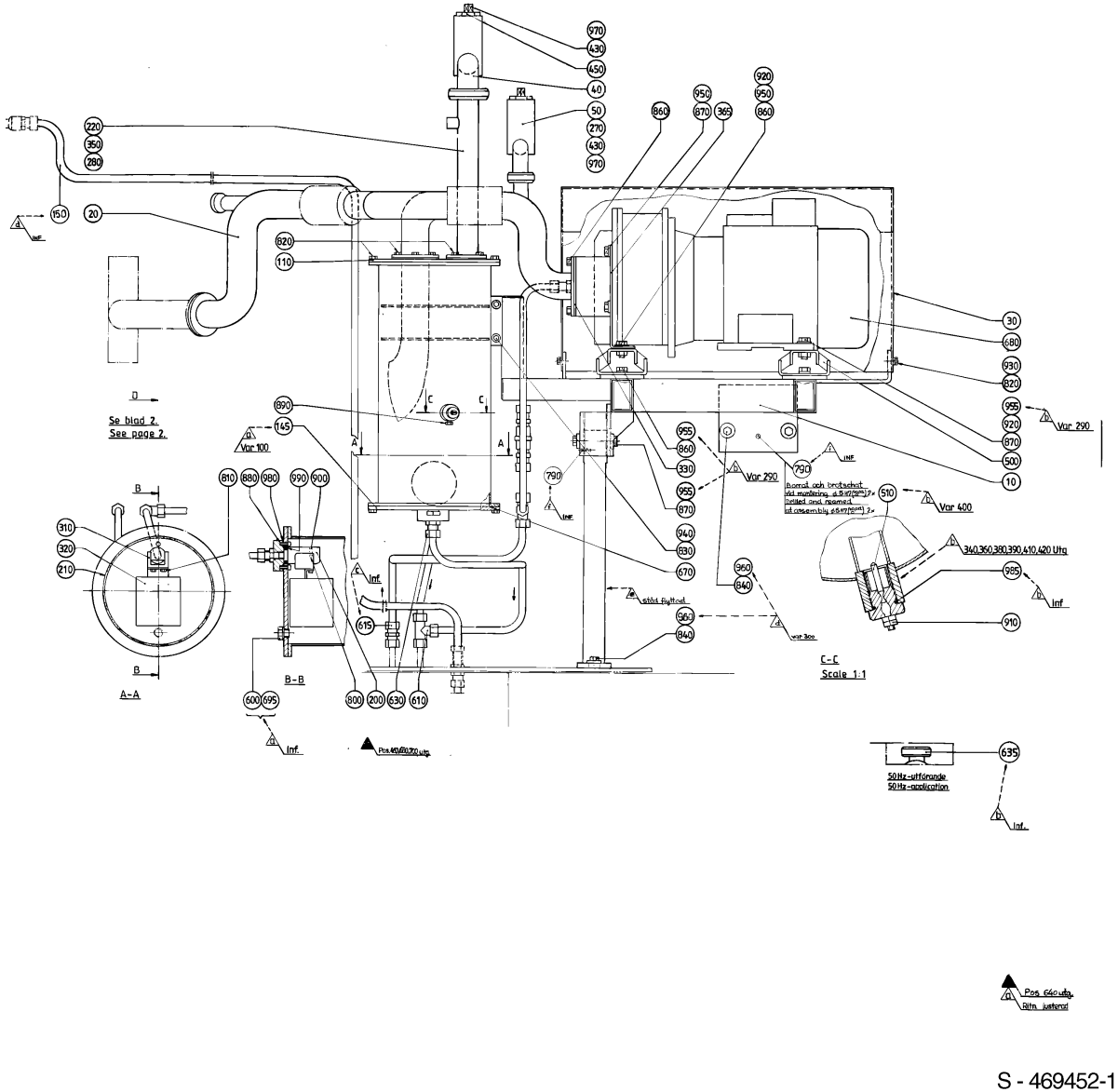

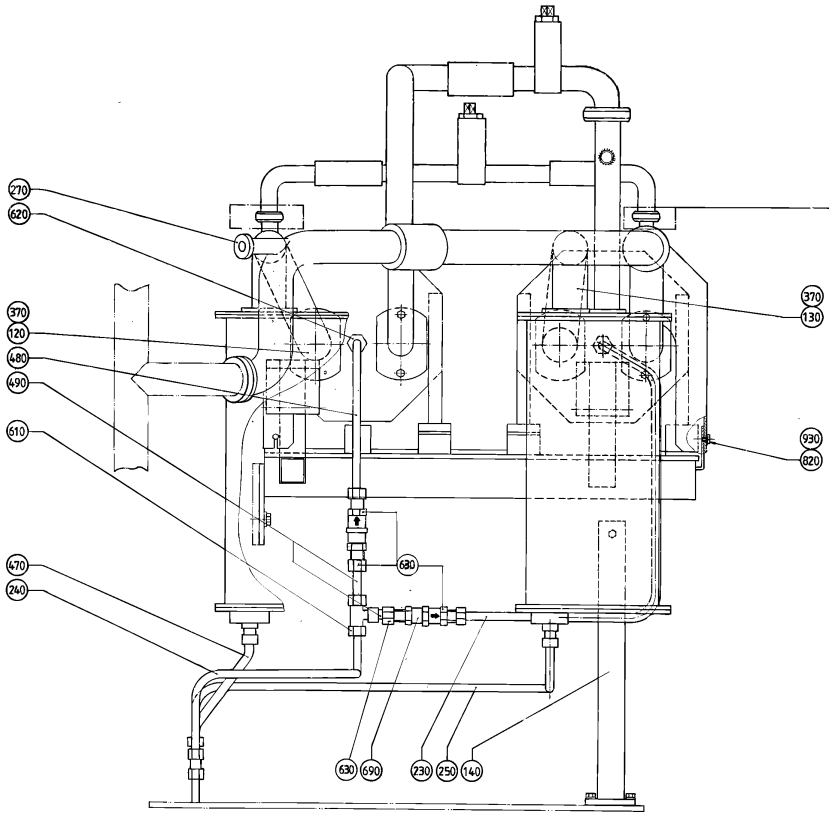

S - 469452-1
FCN 82225

ECM: 102750 - 20020207
Group number: 469452-0100
Assembly Drawing: 469452-1_1_AA

Issue: 20020822

Pos	Part No	SP	UN	Qty	Description	Page No
50HZ						
430	442236-0000	B		1	THROTTLE SCREW	
450	442237-0000	B		1	NUT	
635	90217-0026	-		2	NUT	
970	315202-0119	A		1	O-RING 25,1X1,6 MM	
60HZ						
050	469152-0000	-		1	PIPE	
430-02	442236-0000	B		2	THROTTLE SCREW	
450-02	442237-0000	B		2	NUT	
970-02	315202-0119	A		2	O-RING 25,1X1,6 MM	
Common Parts						
010	469148-0000	-		1	CANTILEVER	
020	469149-0000	-		1	PIPE	
030	469150-0000	-		1	COVER	
040	469151-0000	-		1	PIPE	
110	271640-0000	B		2	LID	
120	469153-0000	-		1	PIPE	
130	469154-0000	-		1	PIPE	
140	469155-0000	-		1	SUPPORT	
145	469511-0000	B		2	BOTTOM COVER	
150	490862-0000	-		1	PIPE	
200	269443-0000	B		2	BRACKET	
210	269461-0000	B		2	CANISTER	
220	456189-0000	-		1	PIPE	
230	469156-0000	-		1	PIPE	
240	469157-0000	-		1	PIPE	
250	469158-0000	-		1	PIPE	
270	12242-0001	A		3	GASKET 32X25X5,5	
280	12242-0003	A		1	GASKET 48X38X5,5	
310	179595-0000	B		2	CLOSING DEVICE	
320	179596-0000	B		2	FLOAT	
330	230551-0000	A		4	GASKET	
350	531742-0000	A		1	GASKET	
365	269859-0000	-		4	BRACKET	
370	271461-0000	A		2	GASKET	
470	456269-0000	-		1	PIPE	
480	456270-0000	-		1	PIPE	
490	456271-0000	-		2	PIPE	
500	B469160-0000	A		8	VIBRATION DAMPER	
	90347-0044	-		*1*	*DAMPER*	
510	458962-0001	A		2	ELECTRODE REPBY 0567189-0101	
600	90005-0006	-		2	GASKET BOLT HEAD 16,7X24X1,5 MM M16	
610	90030-0058	-		2	CONN. T-PIPE T-12	
615	90030-0106	-		1	CONN. PIPE G-12	
620	90030-0109	-		2	CONN. STR., 12-R1/2, EXT. THREAD	
630	90030-0187	-		6	CONN. STR. GA-12-G3/8	
670	90242-0084	A		4	O-RING 203,0X3 MM	
680	90270-0017	-		2	COMPRESSOR NASH/ELMO 112 MB/4-2083	
690	90270-0347	B		2	VALVE	
695	90330-0029	-		2	PLUG, EXT. G-THREAD, R-236R3/8	
790	311103-0310	-		2	PARALLELL PIN, M6, 5X20 MM	
800	311103-0361	-		2	PARALLELL PIN, M6, 6X40 MM	
810	312105-0287	-		4	SCREW M6S ISO 4017 M4X8 A480	
820	312105-0366	-		58	SCREW M6S M6X12 A280	
830	312105-0447	-		8	SCREW M6S ISO 4017 M8X12 A480	
840	312105-0451	-		4	SCREW M6S ISO 4017 M8X20 A480	
860	312105-0491	-		20	SCREW M6S ISO 4017 M10X20 A480	
870	312105-0495	-		14	SCREW M6S ISO 4017 M10X30 A480	
880	312115-0368	-		4	SCREW MC6S M6X16 A280	
890	312125-0285	-		2	SCREW SLOT.PAN HD. MCS 4X6 A480	
900	312318-0323	-		2	SCREW SOCK.SET CUP P MSK6SS M5X8 A4	
910	312605-0312	-		4	HEXAGON NUT, M6M M4 A280	
920	312605-0320	-		8	HEXAGON NUT, M6M M10 A280	
930	315105-0153	-		5	WASHER PLAIN, BRB, 6,4/12,H=1,5	
940	315105-0165	-		8	WASHER PLAIN, BRB, 8,4/16,H=1,5	
950	315105-0173	-		12	WASHER PLAIN, BRB, 10,5/22,H=2	
955	315115-0173	-		14	WASHER PLAIN, TBRB 10,5/22 H=4	
960	315125-0165	-		4	WASHER PLAIN ROUND,CHAMF. 8,4/26, H=5	
980	315204-0103	A		4	O-RING 5,1X1,6 MM	
985	315204-0213	A		2	O-RING 15,2X2,4 MM	
990	315204-0217	A		2	O-RING 24,2X3 MM	

Machine Type | Group Description | Used-In | Group Number | Page No

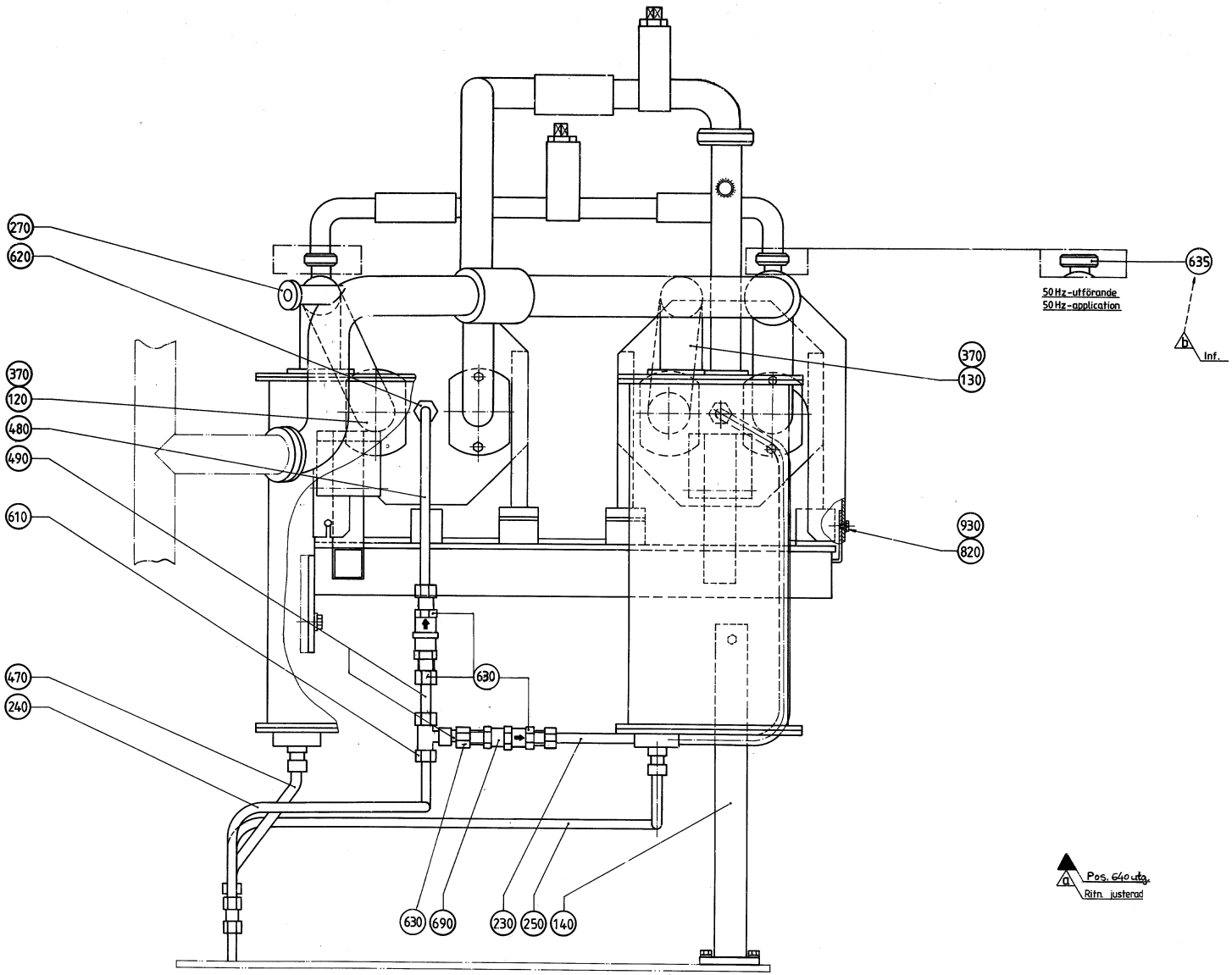
270
620
370
120
480
490
610
470
240
630
690
230
250
140
635
50 Hz-utförande
50 Hz-application
Inf.
370
130
930
820
Pos. 640 utg.
Ritn. justerad

ECM: 102750 - 20020207
Group number: 469452-0100
Assembly Drawing: 469452-2_1_AA

Issue: 20020822

Pos	Part No	SP	UN	Qty	Description	Page No
50HZ						
430	442236-0000	B		1	THROTTLE SCREW	
450	442237-0000	B		1	NUT	
635	90217-0026	-		2	NUT	
970	315202-0119	A		1	O-RING 25,1X1,6 MM	
60HZ						
050	469152-0000	-		1	PIPE	
430-02	442236-0000	B		2	THROTTLE SCREW	
450-02	442237-0000	B		2	NUT	
970-02	315202-0119	A		2	O-RING 25,1X1,6 MM	
Common Parts						
010	469148-0000	-		1	CANTILEVER	
020	469149-0000	-		1	PIPE	
030	469150-0000	-		1	COVER	
040	469151-0000	-		1	PIPE	
110	271640-0000	B		2	LID	
120	469153-0000	-		1	PIPE	
130	469154-0000	-		1	PIPE	
140	469155-0000	-		1	SUPPORT	
145	469511-0000	B		2	BOTTOM COVER	
150	490862-0000	-		1	PIPE	
200	269443-0000	B		2	BRACKET	
210	269461-0000	B		2	CANISTER	
220	456189-0000	-		1	PIPE	
230	469156-0000	-		1	PIPE	
240	469157-0000	-		1	PIPE	
250	469158-0000	-		1	PIPE	
270	12242-0001	A		3	GASKET 32X25X5,5	
280	12242-0003	A		1	GASKET 48X38X5,5	
310	179595-0000	B		2	CLOSING DEVICE	
320	179596-0000	B		2	FLOAT	
330	230551-0000	A		4	GASKET	
350	531742-0000	A		1	GASKET	
365	269859-0000	-		4	BRACKET	
370	271461-0000	A		2	GASKET	
470	456269-0000	-		1	PIPE	
480	456270-0000	-		1	PIPE	
490	456271-0000	-		2	PIPE	
500	B469160-0000	A		8	VIBRATION DAMPER	
	90347-0044	-		*1*	*DAMPER*	
510	458962-0001	A		2	ELECTRODE REPBY 0567189-0101	
600	90005-0006	-		2	GASKET BOLT HEAD 16,7X24X1,5 MM M16	
610	90030-0058	-		2	CONN. T-PIPE T-12	
615	90030-0106	-		1	CONN. PIPE G-12	
620	90030-0109	-		2	CONN. STR., 12-R1/2, EXT. THREAD	
630	90030-0187	-		6	CONN. STR. GA-12-G3/8	
670	90242-0084	A		4	O-RING 203,0X3 MM	
680	90270-0017	-		2	COMPRESSOR NASH/ELMO 112 MB/4-2083	
690	90270-0347	B		2	VALVE	
695	90330-0029	-		2	PLUG, EXT. G-THREAD, R-236R3/8	
790	311103-0310	-		2	PARALLELL PIN, M6, 5X20 MM	
800	311103-0361	-		2	PARALLELL PIN, M6, 6X40 MM	
810	312105-0287	-		4	SCREW M6S ISO 4017 M4X8 A480	
820	312105-0366	-		58	SCREW M6S M6X12 A280	
830	312105-0447	-		8	SCREW M6S ISO 4017 M8X12 A480	
840	312105-0451	-		4	SCREW M6S ISO 4017 M8X20 A480	
860	312105-0491	-		20	SCREW M6S ISO 4017 M10X20 A480	
870	312105-0495	-		14	SCREW M6S ISO 4017 M10X30 A480	
880	312115-0368	-		4	SCREW MC6S M6X16 A280	
890	312125-0285	-		2	SCREW SLOT.PAN HD. MCS 4X6 A480	
900	312318-0323	-		2	SCREW SOCK.SET CUP P MSK6SS M5X8 A4	
910	312605-0312	-		4	HEXAGON NUT, M6M M4 A280	
920	312605-0320	-		8	HEXAGON NUT, M6M M10 A280	
930	315105-0153	-		5	WASHER PLAIN, BRB, 6,4/12,H=1,5	
940	315105-0165	-		8	WASHER PLAIN, BRB, 8,4/16,H=1,5	
950	315105-0173	-		12	WASHER PLAIN, BRB, 10,5/22,H=2	
955	315115-0173	-		14	WASHER PLAIN, TBRB 10,5/22 H=4	
960	315125-0165	-		4	WASHER PLAIN ROUND,CHAMF. 8,4/26, H=5	
980	315204-0103	A		4	O-RING 5,1X1,6 MM	
985	315204-0213	A		2	O-RING 15,2X2,4 MM	
990	315204-0217	A		2	O-RING 24,2X3 MM	

Machine Type | Group Description | Used-In | Group Number | Page No

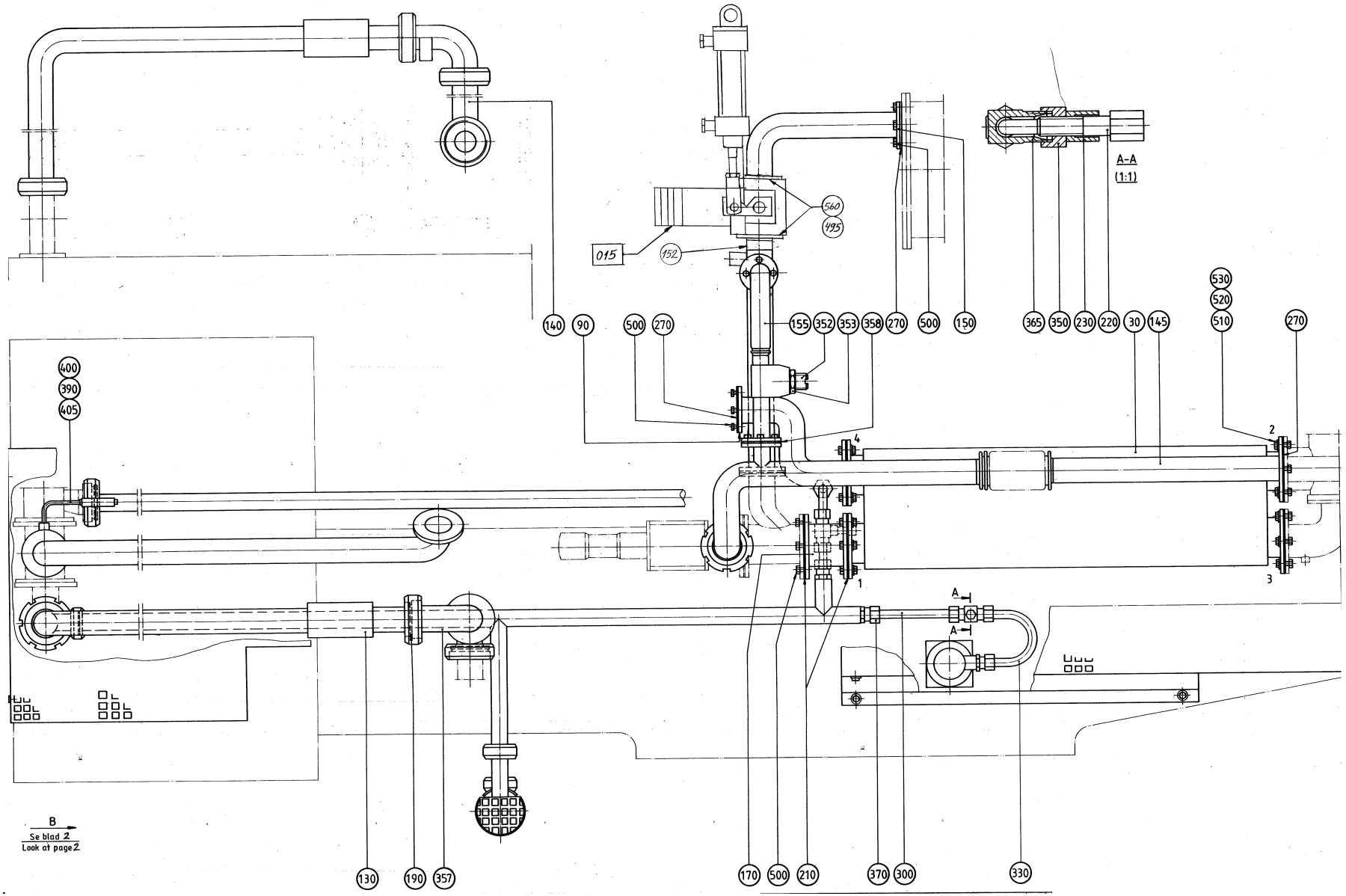
A-A
(1:1)
560
495
015
152
140
90
500
270
155
352
353
358
270
500
150
365
350
230
220
30
145
530
520
510
270
400
390
405
4
2
1
3
A
A
B
Se blad 2
Look at page 2
130
190
357
170
500
210
370
300
330

ECM: 108327 - 20020506
Group number: 1529212-0100
Assembly Drawing: 1529212-1_1_AA

Issue: 20020822

Pos	Part No	SP	UN	Qty	Description	Page No
Common Parts						
010	272308-0003	-		1	PIPE	
020	272356-0000	-		1	PIPE	
030	527705-0000	B		1	HEAT EXCHANGER	
032	B272557-0001	-		1	TOUCH GUARD	
	312605-0314	-		*1*	*HEXAGON NUT, M6M M5 A280*	
034	272586-0000	-		1	TOUCH GUARD	
037	2546320-0000	-		1	TOUCH GUARD	
038	456913-0000	-		1	TOUCH GUARD	
070	469969-0000	-		1	PIPE	
090	272312-0000	-		1	PIPE	
110	272556-0001	-		1	TOUCH GUARD	
130	456591-0002	-		1	PIPE	
140	B456592-0002	-		1	PIPE	
	342812-0103	-		*1*	*FERRULE, SMS 1145, 2333, NO. 190706*	
	342811-0103	-		*1*	*WELD NIPPLE SMS 38 - RD 60-6*	
	342808-0103	-		*1*	*PIPE ELBOW 90 DEGR. SMS3009, D=38 MM*	
	342803-0103	-		*1*	*UNION NUT, RD 60-6 (SMS 38)*	
145	469385-0000	-		1	PIPE	
150	566175-0000	-		1	ELBOW PIPE	
152	566174-0000	-		1	ATTACHMENT PIPE	
155	469387-0000	-		1	PIPE	
160	256840-0002	-		1	PIPE	
170	271251-0000	-		1	DISTANCE SPACER	
180	12242-0001	A		1	GASKET 32X25X5,5	
190	12242-0003	A		1	GASKET 48X38X5,5	
210	531737-0000	A		5	GASKET	
220	209145-0000	-		2	THROTTLE SCREW	
230	209146-0000	-		2	BARRIER NUT	
250	315125-0153	-		1	WASHER PLAIN ROUND,CHAMF. 6,4/22, H=4	
270	531742-0000	A		4	GASKET	
300	272349-0001	-		1	PIPE	
330	272440-0000	-		1	PIPE	
340	272808-0000	-		1	BRACKET	
350	279589-0000	-		2	NUT	
351	295549-0000	-		1	CRAMP	
352	295878-0000	A		1	THROTTLE SCREW	
353	295879-0000	A		1	NUT	
355	441444-0000	-		1	PIPE	
356	441445-0000	-		1	PIPE	
357	B456904-0000	-		1	PIPE	
	342812-0103	-		*1*	*FERRULE, SMS 1145, 2333, NO. 190706*	
	342811-0103	-		*1*	*WELD NIPPLE SMS 38 - RD 60-6*	
	342808-0103	-		*1*	*PIPE ELBOW 90 DEGR. SMS3009, D=38 MM*	
	342803-0103	-		*1*	*UNION NUT, RD 60-6 (SMS 38)*	
358	441721-0000	A		2	GASKET	
359	441735-0000	-		1	BRACKET	
365	90030-0058	-		2	CONN. T-PIPE T-12	
370	90030-0187	-		2	CONN. STR. GA-12-G3/8	
390	90326-0012	A		1	PROTECTIVE COVER, T31A4618	
400	90326-0020	A		1	PLUG, FEMALE YELLOW CR-AL	
405	90326-0051	A		1	THERMOCOUPLE, 12826-33	
490	312105-0364	-		3	SCREW M6S ISO 4017 M6X10 A480	
495	312105-0366	-		8	SCREW M6S M6X12 A280	
500	312105-0367	-		42	SCREW M6S M6X14 A280	
510	312105-0370	-		24	SCREW M6S ISO 4017 M6X20 A480	
513	312105-0372	-		2	SCREW M6S ISO 4017 M6X25 A480	
515	312115-0329	-		4	SCREW MC6S M5X16 A280	
520	312605-0316	-		29	HEXAGON NUT, M6M M6 A280	
530	315105-0153	-		30	WASHER PLAIN, BRB, 6,4/12,H=1,5	
560	315204-0222	-		2	O-RING 36,2X3 MM	
F015	A476859-0200	-		1	CHANGE-OVER VALVE	**69**

Machine Type | Group Description | Used-In | Group Number | Page No

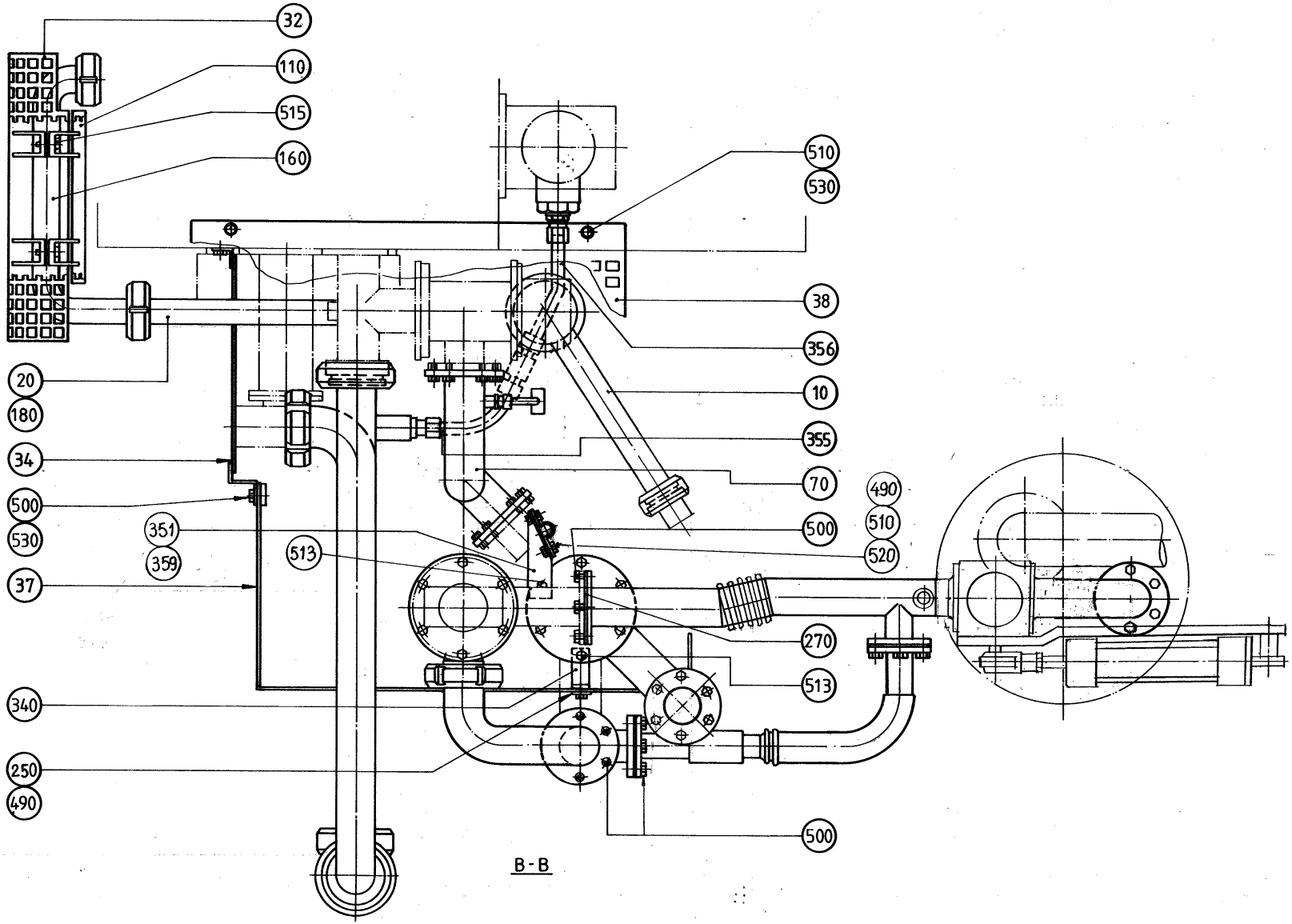
32
110
515
160
510
530
38
356
10
355
70
490
510
500
520
270
513
20
180
34
500
530
37
351
359
513
340
250
490
500
B - B

ECM: 108327 - 20020506
Group number: 1529212-0100
Assembly Drawing: 1529212-2_1_AA

Issue: 20020822

Pos	Part No	SP	UN	Qty	Description	Page No
Common Parts						
010	272308-0003	-		1	PIPE	
020	272356-0000	-		1	PIPE	
030	527705-0000	B		1	HEAT EXCHANGER	
032	B272557-0001	-		1	TOUCH GUARD	
	312605-0314	-		*1*	*HEXAGON NUT, M6M M5 A280*	
034	272586-0000	-		1	TOUCH GUARD	
037	2546320-0000	-		1	TOUCH GUARD	
038	456913-0000	-		1	TOUCH GUARD	
070	469969-0000	-		1	PIPE	
090	272312-0000	-		1	PIPE	
110	272556-0001	-		1	TOUCH GUARD	
130	456591-0002	-		1	PIPE	
140	B456592-0002	-		1	PIPE	
	342812-0103	-		*1*	*FERRULE, SMS 1145, 2333, NO. 190706*	
	342811-0103	-		*1*	*WELD NIPPLE SMS 38 - RD 60-6*	
	342808-0103	-		*1*	*PIPE ELBOW 90 DEGR. SMS3009, D=38 MM*	
	342803-0103	-		*1*	*UNION NUT, RD 60-6 (SMS 38)*	
145	469385-0000	-		1	PIPE	
150	566175-0000	-		1	ELBOW PIPE	
152	566174-0000	-		1	ATTACHMENT PIPE	
155	469387-0000	-		1	PIPE	
160	256840-0002	-		1	PIPE	
170	271251-0000	-		1	DISTANCE SPACER	
180	12242-0001	A		1	GASKET 32X25X5,5	
190	12242-0003	A		1	GASKET 48X38X5,5	
210	531737-0000	A		5	GASKET	
220	209145-0000	-		2	THROTTLE SCREW	
230	209146-0000	-		2	BARRIER NUT	
250	315125-0153	-		1	WASHER PLAIN ROUND,CHAMF. 6,4/22, H=4	
270	531742-0000	A		4	GASKET	
300	272349-0001	-		1	PIPE	
330	272440-0000	-		1	PIPE	
340	272808-0000	-		1	BRACKET	
350	279589-0000	-		2	NUT	
351	295549-0000	-		1	CRAMP	
352	295878-0000	A		1	THROTTLE SCREW	
353	295879-0000	A		1	NUT	
355	441444-0000	-		1	PIPE	
356	441445-0000	-		1	PIPE	
357	B456904-0000	-		1	PIPE	
	342812-0103	-		*1*	*FERRULE, SMS 1145, 2333, NO. 190706*	
	342811-0103	-		*1*	*WELD NIPPLE SMS 38 - RD 60-6*	
	342808-0103	-		*1*	*PIPE ELBOW 90 DEGR. SMS3009, D=38 MM*	
	342803-0103	-		*1*	*UNION NUT, RD 60-6 (SMS 38)*	
358	441721-0000	A		2	GASKET	
359	441735-0000	-		1	BRACKET	
365	90030-0058	-		2	CONN. T-PIPE T-12	
370	90030-0187	-		2	CONN. STR. GA-12-G3/8	
390	90326-0012	A		1	PROTECTIVE COVER, T31A4618	
400	90326-0020	A		1	PLUG, FEMALE YELLOW CR-AL	
405	90326-0051	A		1	THERMOCOUPLE, 12826-33	
490	312105-0364	-		3	SCREW M6S ISO 4017 M6X10 A480	
495	312105-0366	-		8	SCREW M6S M6X12 A280	
500	312105-0367	-		42	SCREW M6S M6X14 A280	
510	312105-0370	-		24	SCREW M6S ISO 4017 M6X20 A480	
513	312105-0372	-		2	SCREW M6S ISO 4017 M6X25 A480	
515	312115-0329	-		4	SCREW MC6S M5X16 A280	
520	312605-0316	-		29	HEXAGON NUT, M6M M6 A280	
530	315105-0153	-		30	WASHER PLAIN, BRB, 6,4/12,H=1,5	
560	315204-0222	-		2	O-RING 36,2X3 MM	
F015	A476859-0200	-		1	CHANGE-OVER VALVE	**69**

Machine Type | Group Description | Used-In | Group Number | Page No

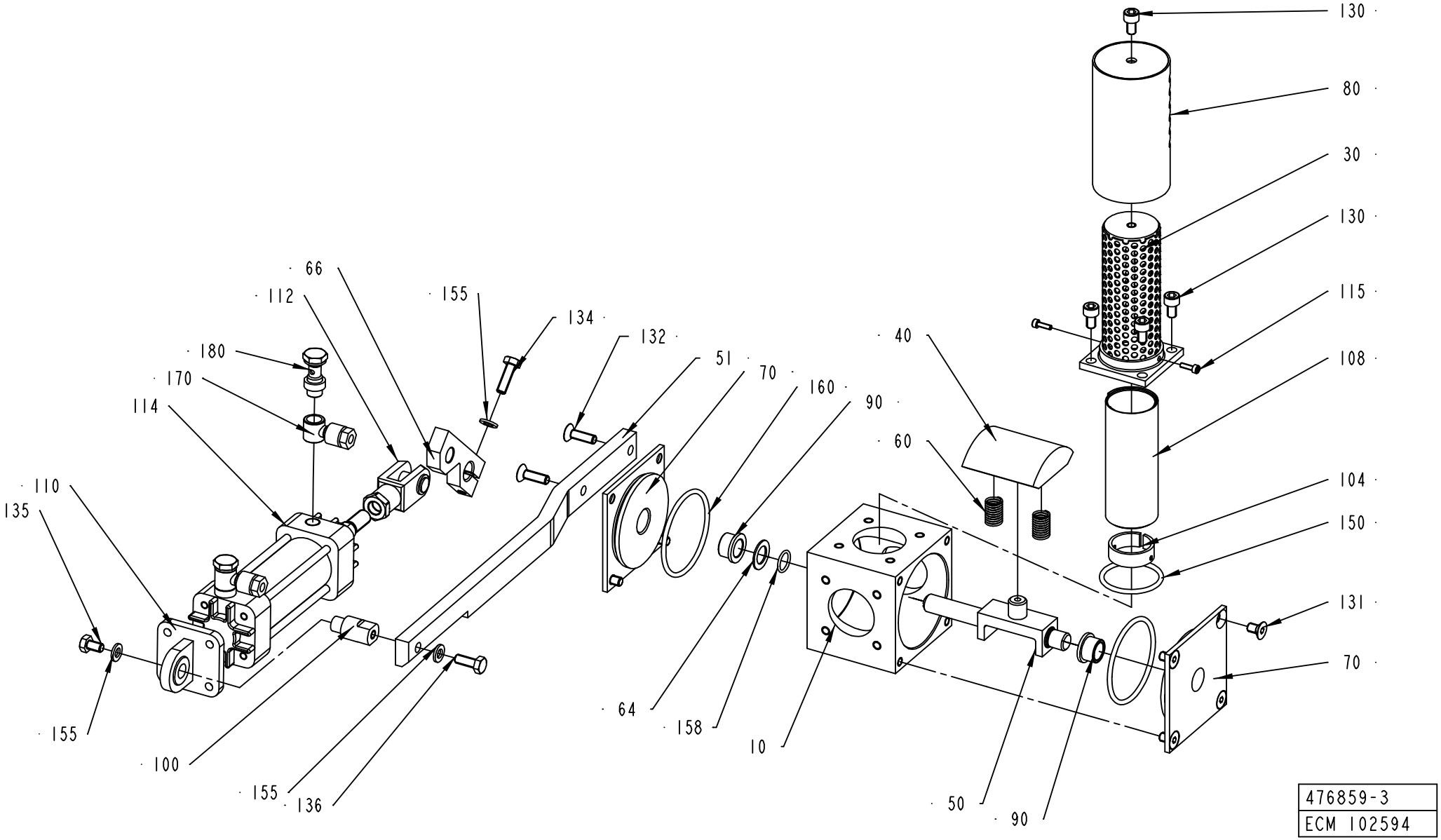
130
80
30
130
115
108
104
150
131
70
40
60
90
160
70
51
132
134
155
66
112
180
170
114
110
135
155
100
155
136
64
158
10
50
90
476859-3
ECM 102594

ECM: 102740 - 20020207
Group number: 476859-0200
Assembly Drawing: 476859-3_1_AD

Issue: 20020822

Pos	Part No	SP	UN	Qty	Description	Page No
Common Parts						
010	B466474-0000	-		1	VALVE HOUSING	
0010	*1282023-0001*	*-*		*1*	*CAST WORKPIECE*	
030	466477-0000	-		1	INNER PIPE	
040	466479-0000	B		1	PIECE	
050	555541-0000	B		1	BRACKET	
051	555542-0000	B		1	BRACKET	
060	21521-0000	A		2	COMPRESSION SPRING	
064	266737-0000	B		1	WASHER	
066	441483-0000	B		1	CYLINDER BRACKET	
070	255874-0000	-		2	BEARING COVER	
080	466478-0000	-		1	OUTER PIPE	
090	255875-0000	A		2	BUSHING	
100	555540-0000	B		1	SPACER	
104	466483-0000	-		1	CLAMPING PIECE	
108	466484-0000	-		1	NET	
110	90239-0453	B		1	BRACKET	
112	90239-0516	B		1	ROD END,CLEVIS WITH AXLE M10X1,25	
114	B90239-0779	A		1	CYLINDER	
	90239-0442	*C*		*1*	*SEAL KIT*	
115	312115-0224	-		2	SCREW HEX.SOCK.HD.MC6S-TT 3X10 A480	
130	312115-0364	-		5	SCREW HEX.SOCK.HD.MC6S-TT 6X10 A480	
131	312155-0364	-		6	SCREW HEX.SOCK.COUNT.MF6S M6X10 A280	
132	312155-0370	-		2	SCREW HEX.SOCK.COUNT.MF6S M6X20 A280	
134	312105-0370	-		1	SCREW M6S ISO 4017 M6X20 A480	
135	312105-0364	-		2	SCREW M6S ISO 4017 M6X10 A480	
136	312105-0368	-		1	SCREW M6S M6X16 A280	
150	315204-0222	A		1	O-RING 36,2X3 MM	
155	315105-0153	-		3	WASHER PLAIN, BRB, 6,4/12,H=1,5	
158	315204-0110	A		1	O-RING 12,1X1,6 MM	
160	315204-0302	A		2	O-RING 54,5X3 MM	
170	342797-0121	-		2	CONN. BANJO, RINGPIECE 6-1/8	
180	342980-0303	-		2	BANJO-HOLLOW BOLT COUPL,EXT.THR.01-G1/8"	

Pos	Part No	SP	UN	Qty	Description	Page No

Machine Type | Group Description | Used-In | Group Number | Page No

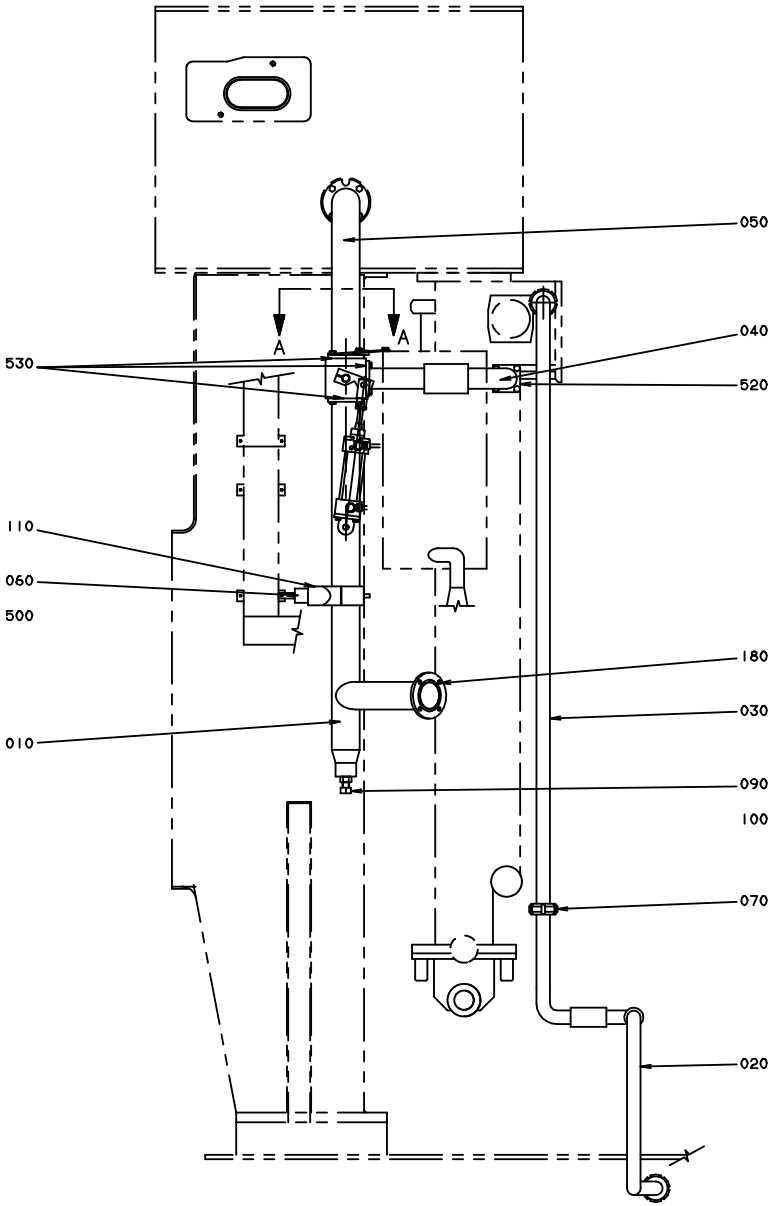
050
040
530
520
110
060
500
180
030
010
090
100
070
020
A
A

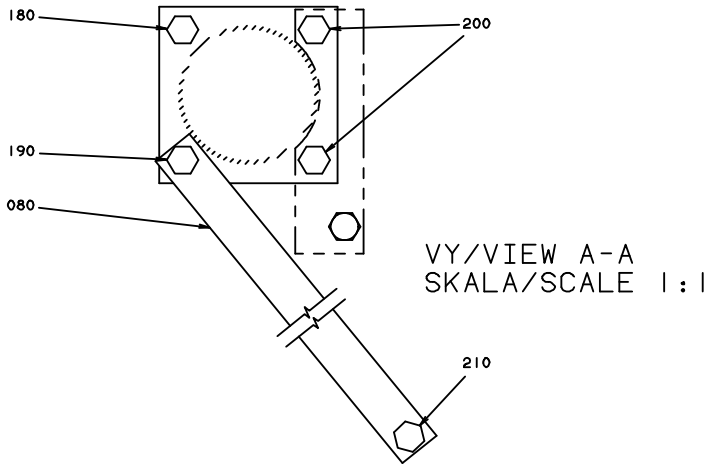
180
200
190
080
210
VY/VIEW A-A
SKALA/SCALE 1:1

ECM: 102738 - 20020207
Group number: 1529250-0100
Assembly Drawing: 1529250-1_1_AA

Issue: 20020822

Pos	Part No	SP	UN	Qty	Description	Page No
Common Parts						
010	1529252-0000	B		1	PIPE	
020	491360-0000	B		1	PIPE	
030	469992-0000	B		1	PIPE	
040	255879-0000	B		1	PIPE	
050	255905-0000	B		1	PIPE	
060	490967-0000	-		1	BRACKET	
070	12242-0001	A		3	GASKET 32X25X5,5	
080	752175-0000	-		1	STRUT	
090	490906-0000	A		1	SCREW	
100	490907-0000	A		1	NUT	
110	1529249-0000	-		1	PIPE HOLDER	
180	312105-0366	-		22	SCREW M6S M6X12 A280	
190	312105-0368	-		1	SCREW M6S M6X16 A280	
200	312105-0370	-		2	SCREW M6S ISO 4017 M6X20 A480	
210	312105-0372	-		1	SCREW M6S ISO 4017 M6X25 A480	
520	315204-0223	A		1	O-RING 39,2X3 MM	
530	315204-0301	A		5	O-RING 49,5X3 MM	

Pos	Part No	SP	UN	Qty	Description	Page No

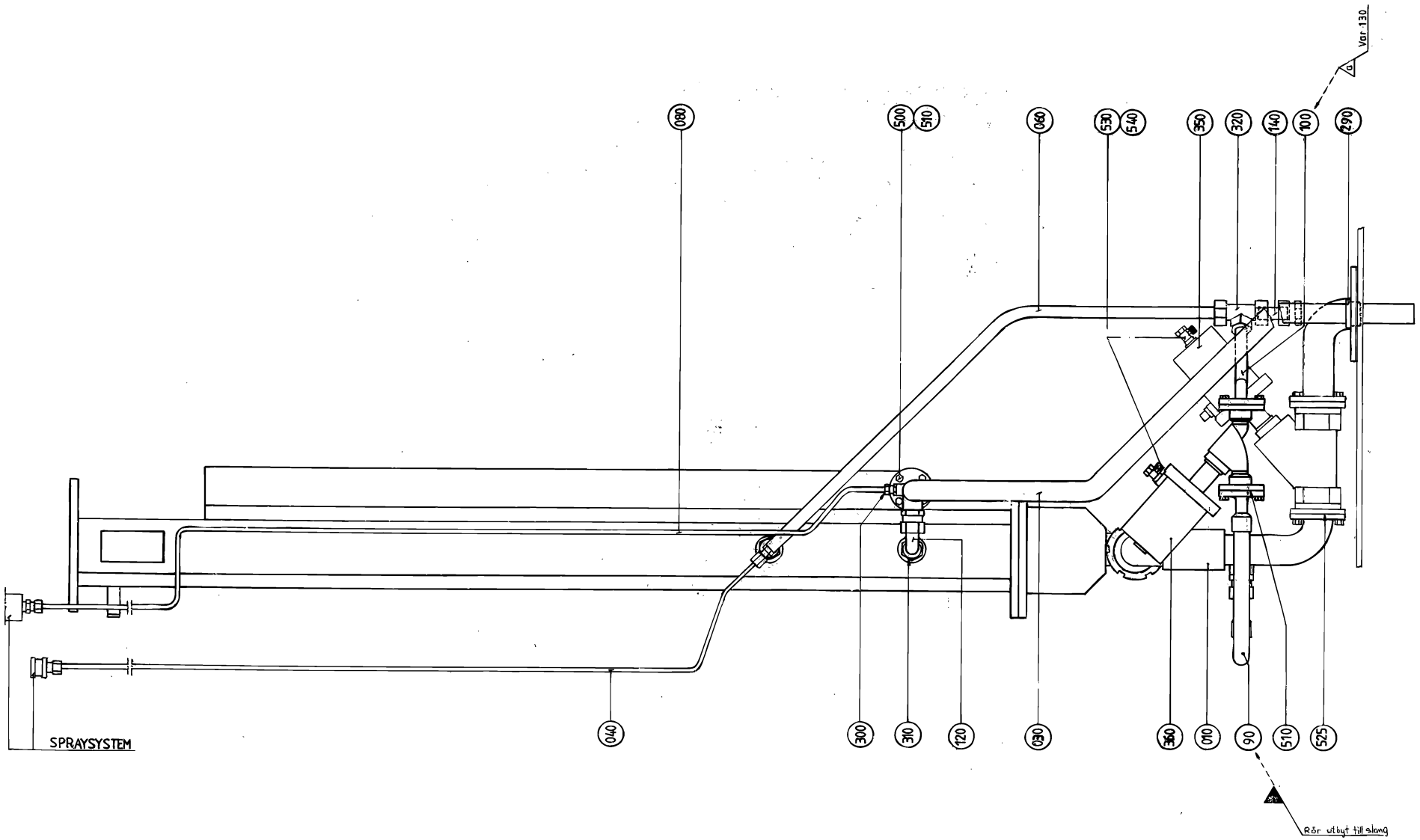
Var 130
080
500
510
060
530
540
350
320
140
100
290
040
300
310
120
030
360
010
90
510
525
SPRAYSYSTEM
Rör utbyt till slang

ECM: 102736 - 20020207
Group number: 456556-0100
Assembly Drawing: 456556-1_1_AA

Issue: 20020822

Pos	Part No	SP	UN	Qty	Description	Page No
Common Parts						
010	456530-0000	-		1	PIPE	
030	295150-0003	-		1	PIPE	
040	456143-0000	-		1	PIPE	
060	295078-0001	-		1	PIPE	
080	295196-0002	-		1	PIPE	
090	490991-0000	B		1	HOSE	
100	469378-0000	-		1	PIPE	
120	295081-0000	-		1	PIPE	
140	295083-0000	-		1	PIPE	
290	90015-0024	A		1	LEAD-IN, TET20-26, E-1458035	
300	90030-0184	-		2	CONN. STR. GA-6-G1/8	
310	90030-0188	-		5	CONN. STR. GA-15-G1/2	
320	90030-0152	-		1	CONN. T-PIPE 15-L/SY	
350	B484538-0000	A		1	VALVE	
	90235-0270	*-*		*1*	*ANGLE SEAT VALVE W. FLANGES, N.C. D=40*	
	90235-0460	*C*		*1*	*WEAR & TEAR PARTS KIT*	
360	B484192-0000	A		1	VALVE	
	90235-0271	*-*		*1*	*ANGLE SEAT VALVE W. FLANGES, N.C. D=13*	
500	312105-0366	-		20	SCREW M6S M6X12 A280	
510	315204-0218	A		3	O-RING 26,2X3 MM	
525	315204-0223	A		2	O-RING 39,2X3 MM	
530	342797-0122	-		2	CONN. BANJO, RINGPIECE 6-1/4	
540	342980-0304	-		2	BANJO-HOLLOW BOLT COUPL,EXT.THR.01-G1/4"	

Pos	Part No	SP	UN	Qty	Description	Page No

Machine Type | Group Description | Used-In | Group Number | Page No

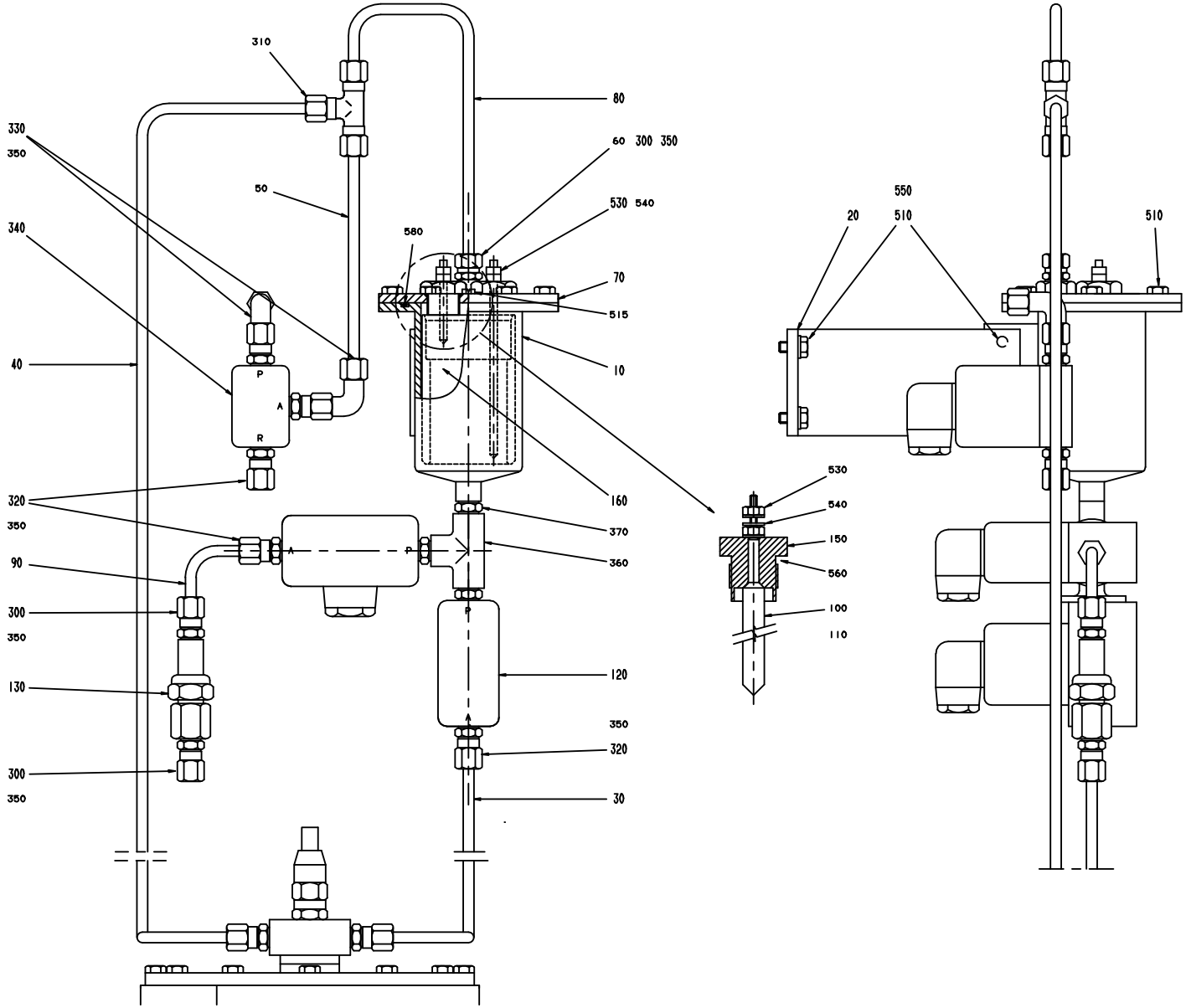
310
80
330
350
60 300 350
50
530 540
340
580
70
515
40
10
P
A
R
320
350
160
370
360
90
300
350
130
120
350
320
300
350
30
550
20
510
510
530
540
150
560
100
110

ECM: 102418 - 20020207
Group number: 1529198-0100
Assembly Drawing: 1529198-1_1_AA

Issue: 20020822

Pos	Part No	SP	UN	Qty	Description	Page No
Common Parts						
010	272157-0000	B		1	CONTAINER	
020	272844-0000	-		1	BRACKET	
030	456897-0000	-		1	PIPE	
040	469515-0000	-		1	PIPE	
050	752676-0000	-		1	PIPE	
060	450833-0000	A		1	FILTER	
070	450837-0000	-		1	LID	
080	752675-0000	-		1	PIPE	
090	456900-0000	-		1	PIPE	
100	567070-0011	A		1	ELECTRODE	
110	567070-0007	A		1	ELECTRODE	
120	B544906-0000	A		2	SOLENOID VALVE	
	90042-0465	*-*		*1*	*O-RING VITON 17,17X1,78*	
	90042-0464	*-*		*1*	*DIAPHRAGM VITON 1211321*	
130	B484196-0000	A		1	FILTER	
	484197-0000	*-*		*1*	*FILTER*	
150	560931-0000	-		2	BRACKET	
160	752501-0000	-		1	SLEEVE	
300	90030-0184	-		3	CONN. STR. GA-6-G1/8	
310	90030-0076	-		1	CONN. T-PIPE T-6	
320	90030-0202	-		3	CONN. STR., 6-G1/4, EXT. THREAD	
330	90030-0203	-		2	ADJUSTABLE ELBOW CONNECTION,EXT 6-G1/4	
340	B90042-0171	A		1	SOLENOID VALVE BUERKERT	
	90042-0466	*C*		*1*	*DIAPHRAGM 330.95.2 VITON*	
350	90144-0073	-	MM	1	TREBOFLON-TAPE W=13MM	
360	90330-0024	-		1	T-PIPE, INT. THREAD, RP1/4	
370	90330-0043	-		3	NIPPLES, EXT. THREAD. R-207R1/4	
510	312105-0366	-		10	SCREW M6S M6X12 A280	
515	312125-0285	-		1	SCREW SLOT.PAN HD. MCS 4X6 A480	
530	312605-0312	-		4	HEXAGON NUT, M6M M4 A280	
540	315105-0136	-		6	WASHER PLAIN, BRB, 4,3/8,H=0,8	
550	315105-0153	-		4	WASHER PLAIN, BRB, 6,4/12,H=1,5	
560	315204-0213	A		2	O-RING 15,2X2,4 MM	
580	315204-0305	A		1	O-RING 69,5X3 MM	

Pos	Part No	SP	UN	Qty	Description	Page No

Machine Type | Group Description | Used-In | Group Number | Page No

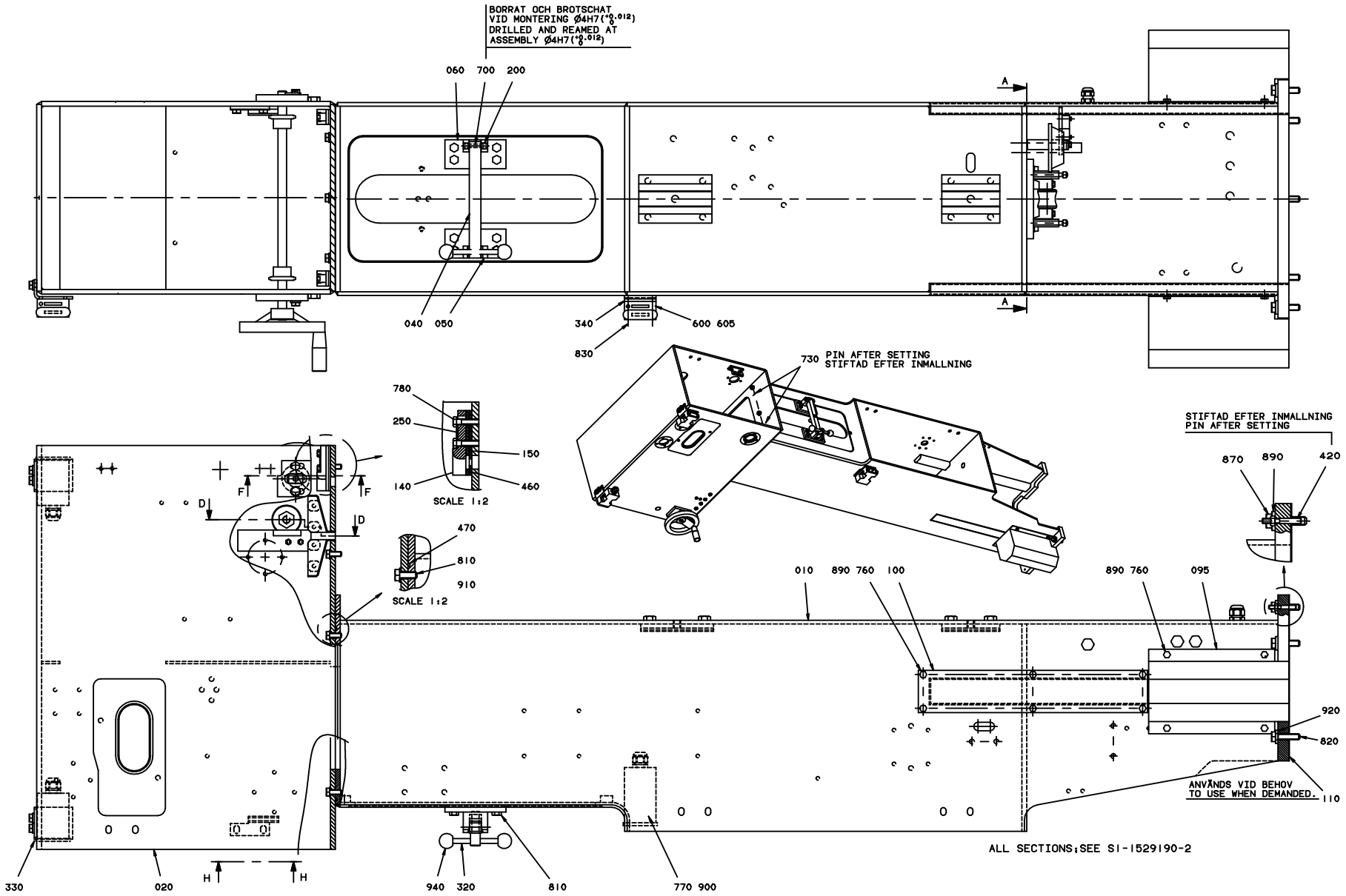
BORRAT OCH BROTSCHAT
VID MONTERING Ø4H7(+0.012 0)
DRILLED AND REAMED AT
ASSEMBLY Ø4H7(+0.012 0)
060 700 200
040 050
340
830
600 605
730 PIN AFTER SETTING
STIFTAD EFTER INMALLNING
780
250
150
140
460
SCALE 1:2
470
810
910
SCALE 1:2
STIFTAD EFTER INMALLNING
PIN AFTER SETTING
870 890 420
010 890 760 100
890 760 095
920
820
110
ANVÄNDS VID BEHOV
TO USE WHEN DEMANDED.
330 020 940 320 810 770 900
ALL SECTIONS; SEE SI-1529190-2

ECM: 102420 - 20020207
Group number: 1529190-0100
Assembly Drawing: 1529190-1_1_AA

Issue: 20020822

Pos	Part No	SP	UN	Qty	Description	Page No
0200B OR 0250B						
010	1529121-0000	-		1	PILLAR	
020	1529191-0000	-		1	HOUSE	
030	273953-0000	A		1	SEAL	
070	456794-0000	-		1	RING	
240	263655-0006	A		2	SHAFT	
360	456796-0000	A		2	ROLLER	
370	456797-0000	-		4	AXLE SUPPORT	
390	456801-0000	-		1	ARM	
0200S						
010	1529122-0000	-		1	PILLAR	
020	1529192-0000	-		1	HOUSE	
030	490901-0000	A		1	SEAL	
070	490899-0000	-		1	RING	
240	490903-0000	A		2	SHAFT	
350	751230-0000	A		4	PLAIN BEARING	
360	456996-0000	A		2	ROLLER	
370	490902-0000	-		4	AXLE SUPPORT	
390	490904-0000	-		1	ARM	
Common Parts						
040	295426-0000	-		1	CAP	
050	295427-0000	-		1	LOCK	
060	295428-0000	-		1	HINGE	
095	456889-0000	B		2	COVER	
100	456890-0000	-		2	COVERING PLATE	
110	469092-0000	-		2	SHIM	
130	2033-0007	-		8	WASHER	
140	247349-0000	A		2	STEERING	
150	247350-0000	-		2	GASKET HOLDER	
170	247355-0000	-		1	LOCK WASHER	
180	247358-0000	B		1	SHIFTER HANDLE	
190	255986-0000	A		2	WHEEL	
200	256163-0000	A		1	SHAFT	
210	256165-0000	A		2	SPROCKET	
220	751131-0000	A		1	SHAFT	
230	256170-0000	-		2	DRIP PLATE	
250	267033-0000	-		2	WASHER	
260	271863-0000	A		2	SHAFT	
270	271864-0000	-		2	WASHER	
280	272002-0000	-		1	PROTECTIVE COVER LEFT	
290	272003-0000	-		1	PROTECTIVE COVER RIGHT	
300	279008-0000	A		2	BUSHING	
310	279010-0000	-		1	BEARING PLATE	
320	295429-0000	B		1	HANDLE	
330	978532-0000	-		2	BRACKET	
340	978531-0000	-		1	BRACKET	
380	456798-0000	-		2	DOWEL	
400	456802-0000	-		1	LOCKING CIRCLIP	
410	456803-0000	B		1	PIVOT PIN	
420	B469159-0000	-		2	PIN	
	311103-0369	-		*1*	*PARALLELL PIN, M6, 6X60 MM*	
430	469521-0000	-		1	BEARING PLATE	
450	491314-0000	-		8	SCREW	
460	491128-0000	A		2	GASKET	
470	491418-0002	-		1	O-RING	
600	90044-0139	A		3	KEY SAF.SW. AZ16-02 ZVR K-2254	
605	90044-0310	-		3	KEY FOR SAFETY SWITCH, AZ 15/16 B1	
610	90044-0194	-		1	PROX.SW. IN5329/IN3002-BPKG	
700	311103-0272	-		1	PARALLELL PIN, M6, 4X20 MM	
710	311103-0276	-		3	PARALLELL PIN, M6, 4X30 MM	
720	311103-0310	-		2	PARALLELL PIN, M6, 5X20 MM	
730	311103-0351	-		2	PARALLELL PIN, M6, 6X16 MM	
750	312105-0327	-		6	SCREW M6S ISO 4017 M5X12 A480	
760	312105-0364	-		20	SCREW M6S ISO 4017 M6X10 A480	
770	312105-0368	-		6	SCREW M6S M6X16 A280	
780	312105-0372	-		4	SCREW M6S ISO 4017 M6X25 A480	
790	312105-0378	-		4	SCREW M6S ISO 4014 M6X40 A480	
800	312105-0384	-		1	SCREW M6S ISO 4014 M6X70 A480	
810	312105-0451	-		24	SCREW M6S ISO 4017 M8X20 A480	
820	312105-0499	-		7	SCREW M6S ISO 4014 M10X40 A480	
830	312115-0329	-		6	SCREW MC6S M5X16 A280	
840	312115-0370	-		2	SCREW MC6S M6X20 A280	
850	312125-0230	-		2	SCREW PAN HEAD MCS M3X20 SS	
860	312125-0287	-		4	SCREW PAN HEAD MCS M4X8 SS	
870	312605-0316	-		8	HEXAGON NUT, M6M M6 A280	
880	315105-0124	-		2	WASHER PLAIN, BRB, 3,2/6,H=0,5	
890	315105-0153	-		1	WASHER PLAIN, BRB, 6,4/12,H=1,5	
900	315115-0153	-		6	WASHER PLAIN, TBRB 6,4/12 H=3	
910	315115-0165	-		16	WASHER PLAIN, TBRB 8,4/16 H=3	
920	315115-0173	-		7	WASHER PLAIN, TBRB 10,5/22 H=4	
930	315125-0153	-		2	WASHER PLAIN ROUND,CHAMF. 6,4/22, H=4	
933	315204-0109	-		2	O-RING 11,1X1,6 MM	

Machine Type | Group Description | Used-In | Group Number | Page No

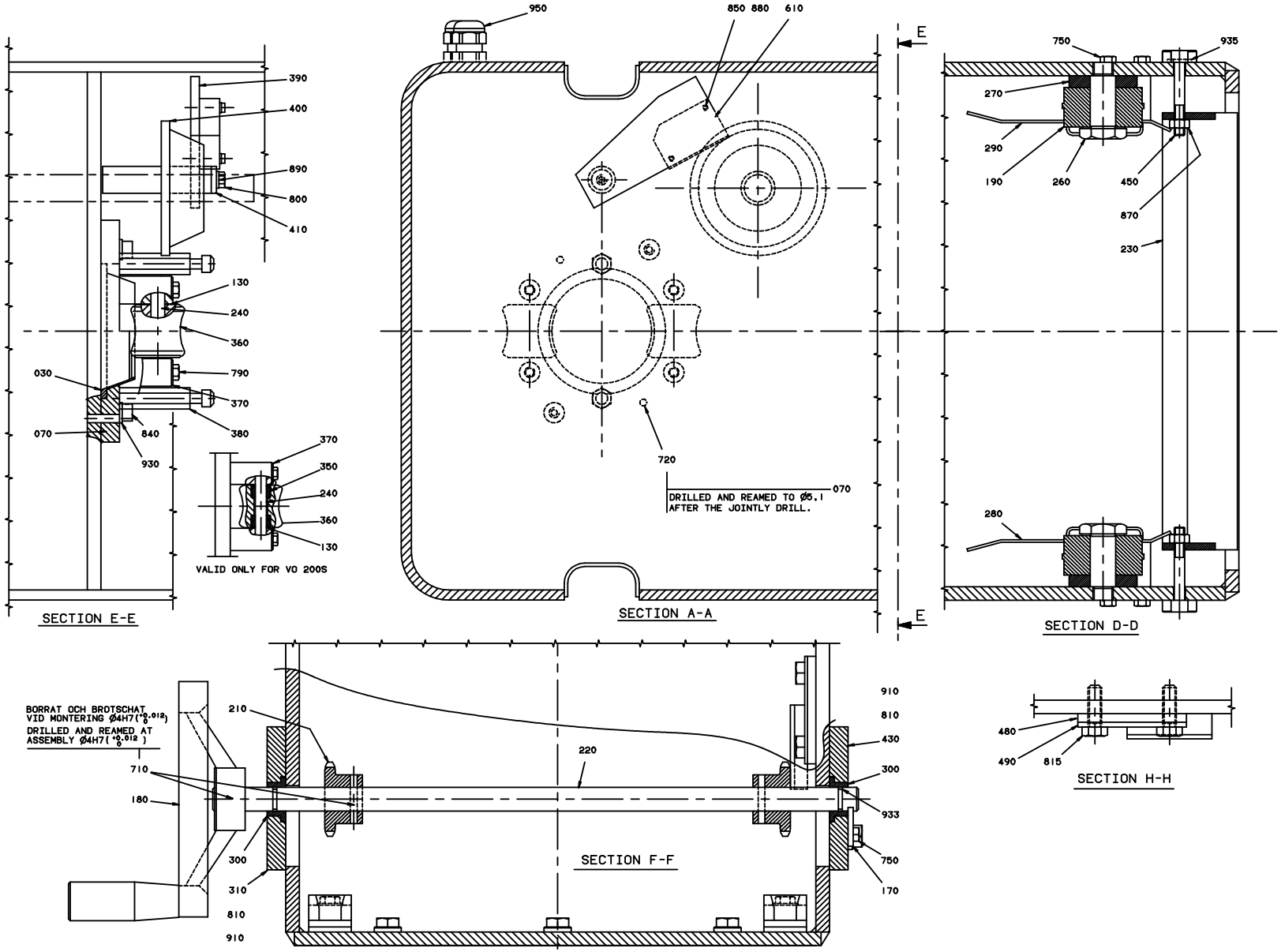
950
850 880 610
E
750
935
270
290
190
260
450
870
230
280
390
400
890
800
410
130
240
360
030
790
370
070
840
380
930
370
350
240
360
130
VALID ONLY FOR VO 200S
720
DRILLED AND REAMED TO Ø5.1 070
AFTER THE JOINTLY DRILL.
SECTION E-E
SECTION A-A
SECTION D-D
BORRAT OCH BROTSCHAT
VID MONTERING Ø4H7(+0.012 0)
DRILLED AND REAMED AT
ASSEMBLY Ø4H7(+0.012 0)
210
220
710
180
300
310
810
910
910
810
430
300
933
750
170
480
490
815
SECTION F-F
SECTION H-H

Pos	Part No	SP	UN	Qty	Description	Page No
Common Parts (Cont'd)						
935	315204-0208	A		8	O-RING 9,3X2,4 MM	
940	318800-0103	A		2	HANDLES,SPHERICAL KNOB,INT.THRE.,D.25-M6	
950	352103-0101	-		3	CABLE GLAND, ST 9, PR15,2/PG9	
960	352110-0100	-		4	CABLE CLIPS, D=5-7 MM	

Pos	Part No	SP	UN	Qty	Description	Page No

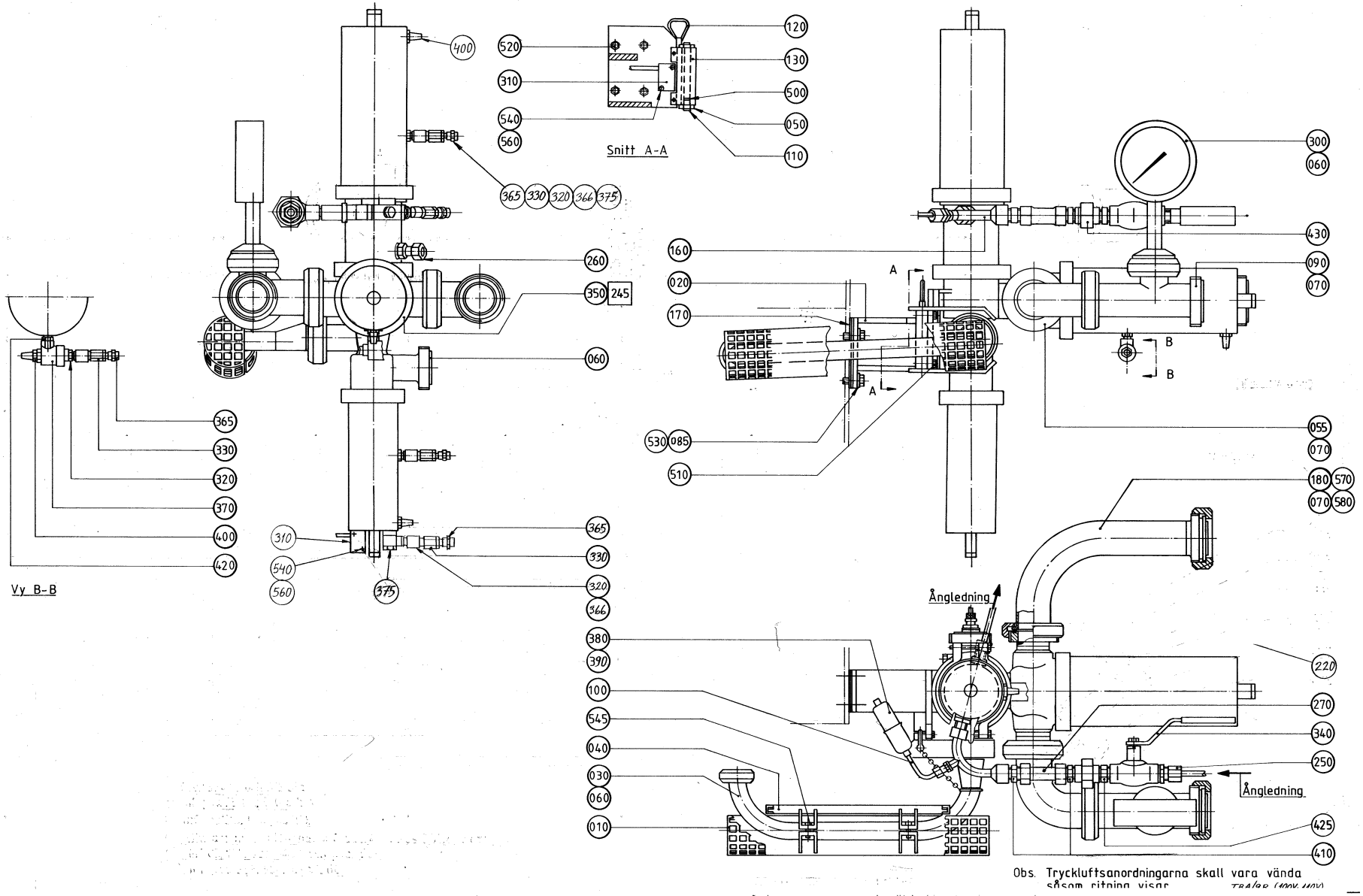
Snitt A-A
Vy B-B
Ångledning
Ångledning
Obs. Tryckluftsanordningarna skall vara vända
400
520
310
540
560
120
130
500
050
110
365 330 320 366 375
260
350 245
060
300
060
430
090
070
160
020
170
A
B
B
A
530 085
510
055
070
180 570
070 580
365
330
320
370
400
420
310
540
560
375
365
330
320
366
380
390
100
545
040
030
060
010
220
270
340
250
425
410

ECM: 102731 - 20020207
Group number: 1529254-0100
Assembly Drawing: 1529254-1_1_AA

Issue: 20020822

Pos	Part No	SP	UN	Qty	Description	Page No
Common Parts						
010	272555-0000	-		1	TOUCH GUARD	
020	256355-0000	-		1	CANTILEVER	
030	272352-0000	B		1	PIPE	
040	272554-0000	-		1	TOUCH GUARD	
050	237871-0000	B		1	BARRIER	
055	440978-0000	-		1	PIPE BEND	
060	12242-0003	A		3	GASKET 48X38X5,5	
070	12242-0005	A		5	GASKET 61X51X5,5	
085	28036-0000	A		4	WASHER	
090	449193-0000	B		1	PRESSURE GAUGE TUBE	
100	90326-0089	-		1	THERMOCOUPLE, 5110-089-000	
110	237873-0000	A		1	SHAFT	
120	271747-0000	A		1	COTTER	
130	271748-0000	B		1	BEARING BLOCK	
160	295250-0000	A		1	PIPE	
170	295730-0000	B		2	SPACER SHEET	
180	469503-0000	-		1	ELBOW PIPE	
220	90030-0132	-		1	ACCESSORIES, PLUG PL-6	
245	440630-0101	-		1	VALVE	
250	90030-0109	-		1	CONN. STR., 12-R1/2, EXT. THREAD	
270	752741-0000	A		1	PIPE	
300	B90043-0050	A		1	PRESSURE GAUGE, 2940.100 MM+2940	
	90043-0301	-		*1*	*DIAPHRAGM*	
310	90044-0104	-		2	PROX.SWITCH IFM IN 3002	
320	90163-0057	B		5	NIPPLE 1/8" BRASS	
330	90163-0062	B		5	QUICK COUPLING, (F) 5053-1/8	
365	90224-0307	-		5	STRAIGHT FITTING, 6MM, 1/8",	
366	90224-0308	-		2	CONN. BANJO, ART. NO. 2023-1/8-1/8	
370	90235-0259	A		1	VALVE	
375	90235-0274	-		2	THROTTLE CHECK VALVES,G1/8"	
380	90326-0012	-		1	PROTECTIVE COVER, T31A4618	
390	90326-0020	-		1	PLUG, FEMALE YELLOW CR-AL	
400	90328-0003	A		4	SILENCER	
410	90030-0187	A		2	CONN. STR. GA-12-G3/8	
420	90330-0032	A		1	NIPPLES, EXT. THREAD. ISO 7/1 R1/8-R1/8	
425	90330-0048	-		1	BUSHING, INT/EXT. THR. R1/2-RP3/8	
430	90330-0062	A		1	STRIGHT COUPLING R3/8" R131U	
500	311411-0181	-		1	SPLIT PIN SP3,2X20RFR	
510	312105-0333	-		2	SCREW M6S ISO 4017 M5X25 A480	
520	312105-0451	-		4	SCREW M6S ISO 4017 M8X20 A480	
530	312105-0453	-		4	SCREW M6S ISO 4017 M8X25 A480	
540	312115-0228	-		4	SCREW MC6S M3X16 A280	
545	312115-0329	-		4	SCREW MC6S M5X16 A280	
560	315105-0124	-		4	WASHER PLAIN, BRB, 3,2/6,H=0,5	
570	342803-0104	-		2	UNION NUT, RD 70-6 (SMS 51)	
580	342812-0104	-		2	FERRULE, SMS 1145, 2333, NO. 190707	

Machine Type | Group Description | Used-In | Group Number | Page No

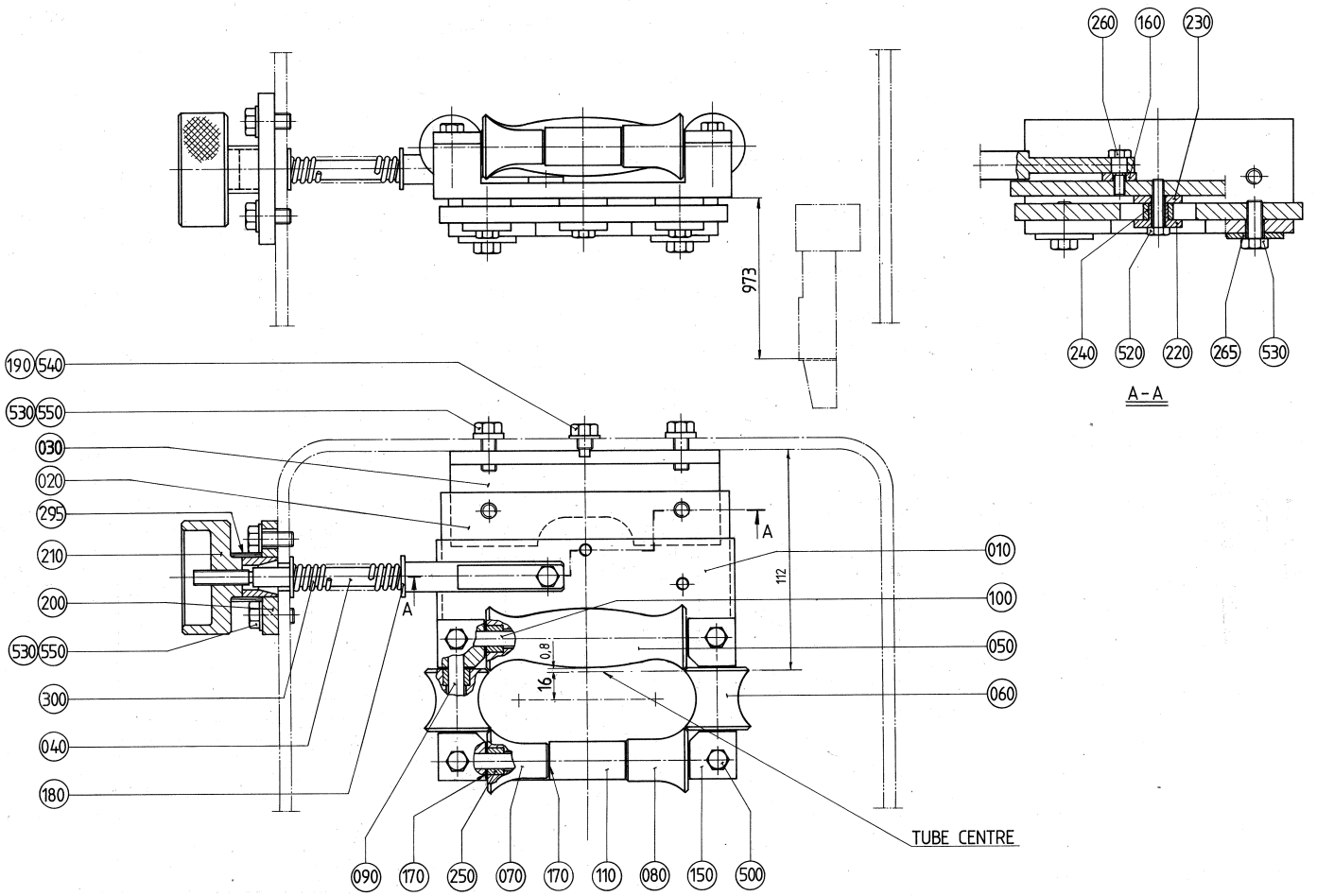
260
160
230
240
520
220
265
530
A-A
973
190
540
530
550
030
020
295
210
200
530
550
300
040
180
A
112
0,8
16
010
100
050
060
TUBE CENTRE
090
170
250
070
170
110
080
150
500

ECM: 102716 - 20020207
Group number: 1529350-0100
Assembly Drawing: 1529350-1_1_AA

Issue: 20020822

Pos	Part No	SP	UN	Qty	Description	Page No
0200B OR 0250B						
010	456138-0000	-		1	PLATE	
050	456078-0000	A		1	ROLL	
060	456079-0000	A		2	ROLL	
070	456080-0000	A		1	ROLL	
080	456081-0000	A		1	ROLL	
090	263655-0005	A		2	SHAFT	
100	456140-0000	A		1	SHAFT	
110	456141-0000	A		1	SHAFT	
150	456139-0000	-		4	LOCK PLATE	
500	312105-0368	-		4	SCREW M6S M6X16 A280	
0200S						
010	B456905-0000	-		1	FASTENING PLATE	
0010	*1282582-0000*	*-*		*1*	*CAST WORKPIECE*	
050	456908-0000	-		1	ROLL	
060	456909-0000	-		2	ROLL	
070	456910-0000	-		1	ROLL	
075	1529351-0000	-		1	ROLL	
090	263655-0002	-		2	SHAFT	
100	263655-0019	-		1	SHAFT	
110	263655-0011	-		2	SHAFT	
140	456907-0000	-		2	LOCK PLATE	
150	456906-0000	-		4	LOCK PLATE	
500	312105-0332	-		6	SCREW M6S ISO 4017 M5X22 A480	
Common Parts						
020	456034-0000	-		1	SETTING PLATE	
030	456035-0000	-		1	CANTILEVER	
040	256309-0000	A		1	SHAFT	
160	256312-0000	-		1	WASHER	
170	2033-0011	A		10	WASHER	
180	26490-0000	-		2	WASHER	
190	256280-0000	A		2	DOWEL	
200	257089-0000	-		1	PLATE	
210	257090-0000	-		1	SHIFTER HANDLE	
220	271717-0000	A		3	SPACER	
230	271718-0000	A		3	WASHER	
240	272797-0000	A		3	ROLL	
250	751230-0000	A		10	PLAIN BEARING	
260	456042-0000	A		1	SCREW	
265	28037-0000	-		2	WASHER	
295	491153-0000	-		1	COMPRESSION GLAND	
300	90335-0008	A		1	SPRING	
520	312105-0372	-		3	SCREW M6S ISO 4017 M6X25 A480	
530	312105-0451	-		6	SCREW M6S ISO 4017 M8X20 A480	
540	315105-0165	-		2	WASHER PLAIN, BRB, 8,4/16,H=1,5	
550	315115-0165	-		4	WASHER PLAIN, TBRB 8,4/16 H=3	

Machine Type | Group Description | Used-In | Group Number | Page No

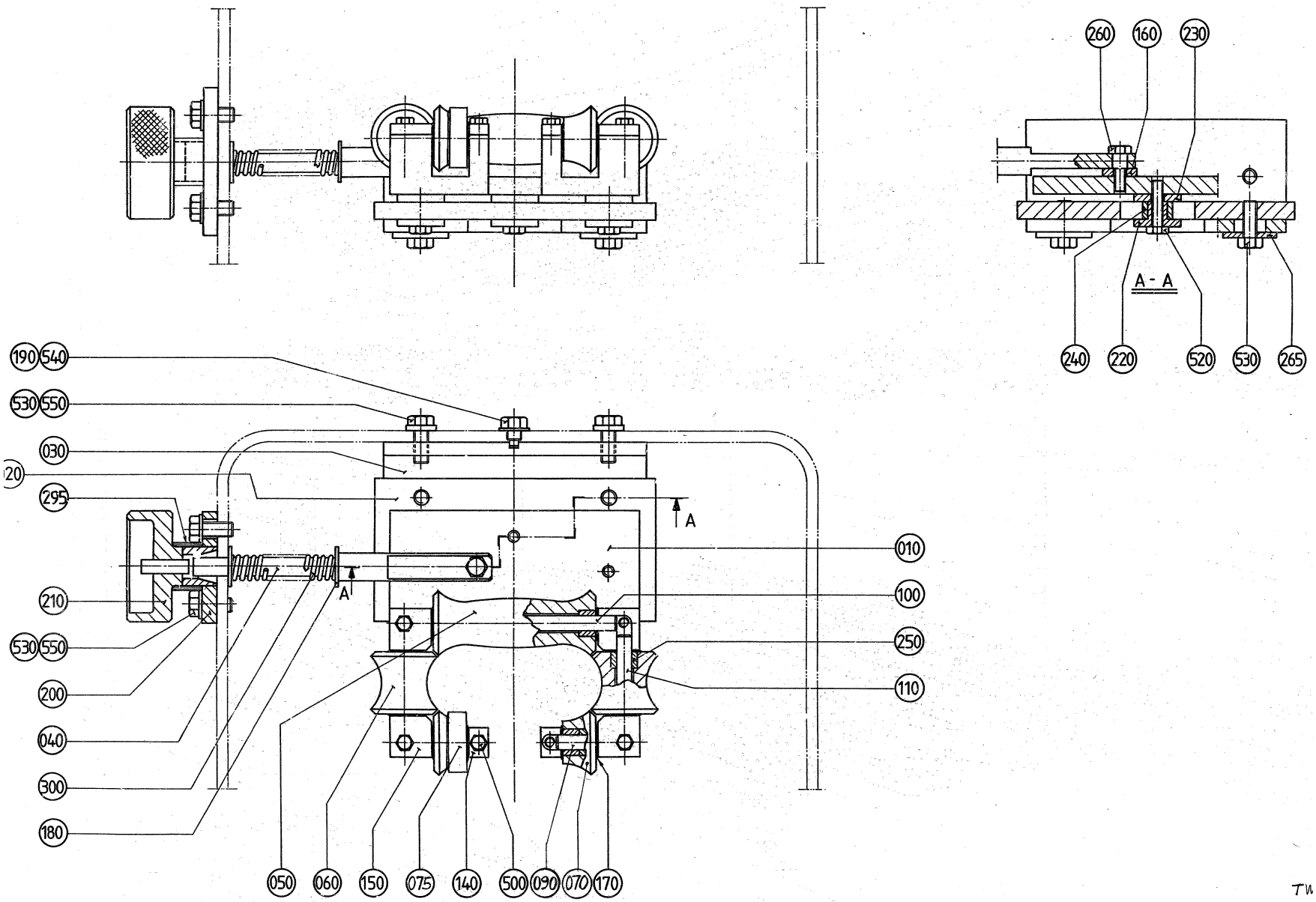
260
160
230
A - A
240
220
520
530
265
190
540
530
550
030
20
295
A
210
530
550
200
040
300
180
010
100
250
110
050
060
150
075
140
500
090
070
170

ECM: 102716 - 20020207
Group number: 1529350-0100
Assembly Drawing: 1529350-2_1_AA

Issue: 20020822

Pos	Part No	SP	UN	Qty	Description	Page No
0200B OR 0250B						
010	456138-0000	-		1	PLATE	
050	456078-0000	A		1	ROLL	
060	456079-0000	A		2	ROLL	
070	456080-0000	A		1	ROLL	
080	456081-0000	A		1	ROLL	
090	263655-0005	A		2	SHAFT	
100	456140-0000	A		1	SHAFT	
110	456141-0000	A		1	SHAFT	
150	456139-0000	-		4	LOCK PLATE	
500	312105-0368	-		4	SCREW M6S M6X16 A280	
0200S						
010	B456905-0000	-		1	FASTENING PLATE	
0010	*1282582-0000*	*-*		*1*	*CAST WORKPIECE*	
050	456908-0000	-		1	ROLL	
060	456909-0000	-		2	ROLL	
070	456910-0000	-		1	ROLL	
075	1529351-0000	-		1	ROLL	
090	263655-0002	-		2	SHAFT	
100	263655-0019	-		1	SHAFT	
110	263655-0011	-		2	SHAFT	
140	456907-0000	-		2	LOCK PLATE	
150	456906-0000	-		4	LOCK PLATE	
500	312105-0332	-		6	SCREW M6S ISO 4017 M5X22 A480	
Common Parts						
020	456034-0000	-		1	SETTING PLATE	
030	456035-0000	-		1	CANTILEVER	
040	256309-0000	A		1	SHAFT	
160	256312-0000	-		1	WASHER	
170	2033-0011	A		10	WASHER	
180	26490-0000	-		2	WASHER	
190	256280-0000	A		2	DOWEL	
200	257089-0000	-		1	PLATE	
210	257090-0000	-		1	SHIFTER HANDLE	
220	271717-0000	A		3	SPACER	
230	271718-0000	A		3	WASHER	
240	272797-0000	A		3	ROLL	
250	751230-0000	A		10	PLAIN BEARING	
260	456042-0000	A		1	SCREW	
265	28037-0000	-		2	WASHER	
295	491153-0000	-		1	COMPRESSION GLAND	
300	90335-0008	A		1	SPRING	
520	312105-0372	-		3	SCREW M6S ISO 4017 M6X25 A480	
530	312105-0451	-		6	SCREW M6S ISO 4017 M8X20 A480	
540	315105-0165	-		2	WASHER PLAIN, BRB, 8,4/16,H=1,5	
550	315115-0165	-		4	WASHER PLAIN, TBRB 8,4/16 H=3	

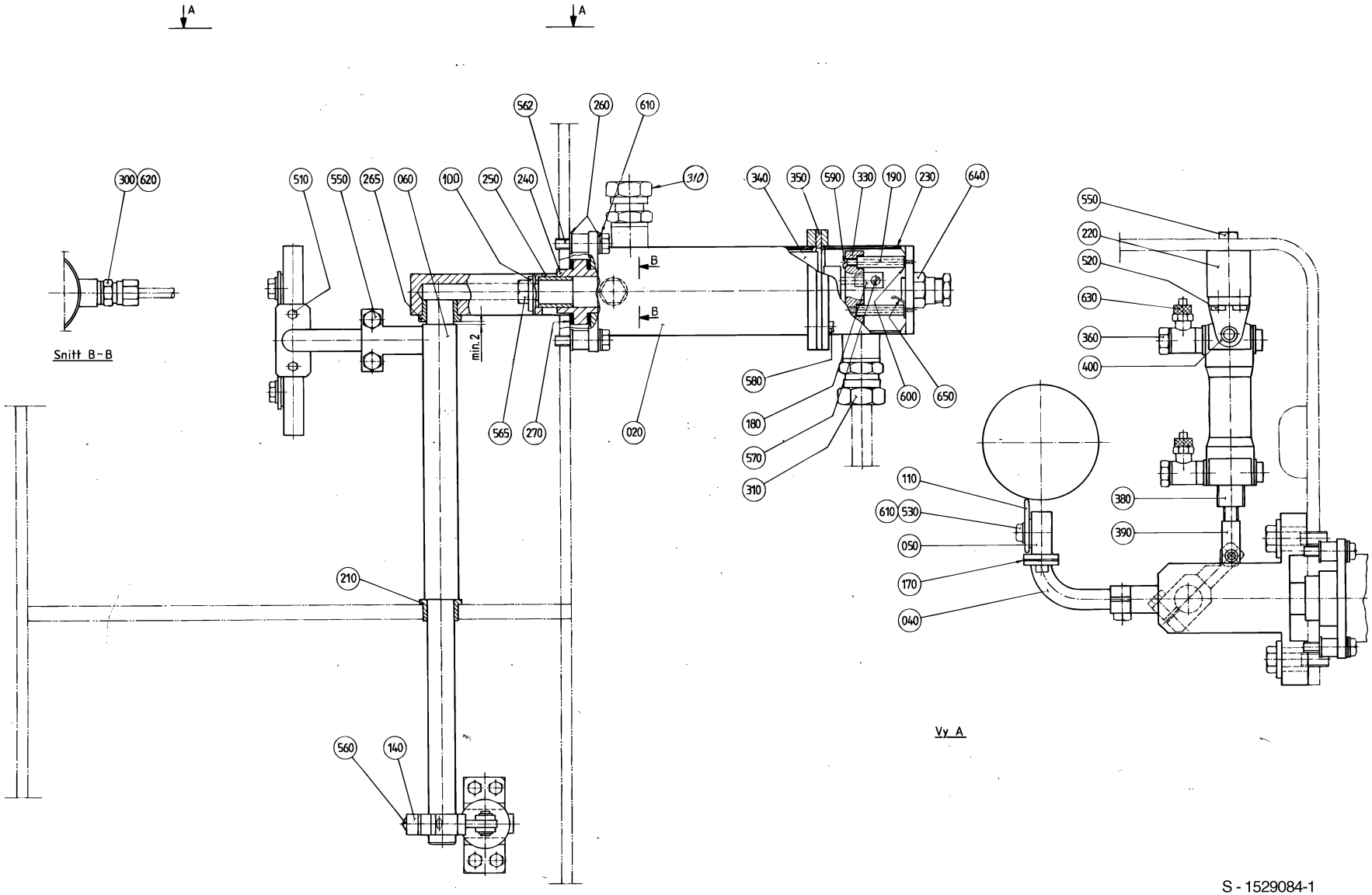

S - 1529084-1
ECN 82225

ECM: 102713 - 20020207
Group number: 1529084-0100
Assembly Drawing: 1529084-1_1_AA

Issue: 20020822

Pos	Part No	SP	UN	Qty	Description	Page No
Common Parts						
020	751733-0000	B		1	HEATING PIPE	
040	256112-0000	B		1	BRACKET	
050	256689-0000	A		1	AIR NOZZLE	
060	272948-0002	-		1	SHAFT	
100	315125-0165	-		2	WASHER PLAIN ROUND,CHAMF. 8,4/26, H=5	
110	491097-0000	A		1	HEAT GUARD	
140	256117-0000	-		1	BRACKET	
170	751015-0000	-		1	GASKET	
180	266739-0000	-		3	CABLE GLAND	
190	266740-0003	-		3	SPACER	
210	271269-0000	A		1	BUSHING	
220	271316-0000	-		1	BRACKET	
230	272083-0000	-		1	COVER	
240	295936-0000	A		1	BUSHING	
250	272287-0000	-		1	AXLE SUPPORT	
260	751018-0000	-		8	WASHER	
265	295910-0000	A		1	BUSHING	
270	751023-0000	-		2	GASKET	
300	90030-0184	-		1	CONN. STR. GA-6-G1/8	
310	90030-0187	-		2	CONN. STR. GA-12-G3/8	
330	B90125-0020	A		1	PLATE	
	294464-0000	*A*		*1*	*BASE PLATE*	
	270927-0000	*A*		*3*	*SCREW*	
	270926-0000	*A*		*6*	*NUT*	
	294464-0000	*A*		*1*	*BASE PLATE*	
	270927-0000	*A*		*3*	*SCREW*	
	270926-0000	*A*		*6*	*NUT*	
340	90206-0031	A		1	HEATING ELEMENT 700+1200W,220V	
350	90206-0322	A		1	GASKET	
360	90235-0274	A		2	THROTTLE CHECK VALVES,G1/8"	
380	B90239-0073	-		1	CYLINDER	
	90285-0087	*C*		*1*	*SEAL*	
390	90239-0088	A		1	BRACKET	
400	90239-0099	A		1	BRACKET	
510	312105-0287	-		2	SCREW M6S ISO 4017 M4X8 A480	
530	312105-0364	-		4	SCREW M6S ISO 4017 M6X10 A480	
540	312105-0366	-		2	SCREW M6S M6X12 A280	
550	312105-0368	-		2	SCREW M6S M6X16 A280	
560	312105-0370	-		1	SCREW M6S ISO 4017 M6X20 A480	
562	312105-0372	-		4	SCREW M6S ISO 4017 M6X25 A480	
565	312105-0455	-		2	SCREW M6S ISO 4017 M8X30 A480	
570	312125-0220	-		3	SCREW SLOT.PAN HD. MCS 3X6 A480	
575	312125-0285	-		1	SCREW SLOT.PAN HD. MCS 4X6 A480	
580	312125-0291	-		4	SCREW PAN HEAD MCS M4X12 SS	
590	312145-0228	-		3	SCREW COUNTERS.SLOT.HD. MFS 3X16 SS	
610	315105-0153	-		6	WASHER PLAIN, BRB, 6,4/12,H=1,5	
620	315234-0109	A		1	WASHER,PL.RND.CU.10,3/13,5 H=1,0	
630	342797-0121	A		2	CONN. BANJO, RINGPIECE 6-1/8	
640	352103-0106	-		1	CABLE GLAND, ST 11, PR18,6/PG11	
650	353104-0130	-		1	CABLE SHOEYAV 025 M 4*	

Machine Type | Group Description | Used-In | Group Number | Page No

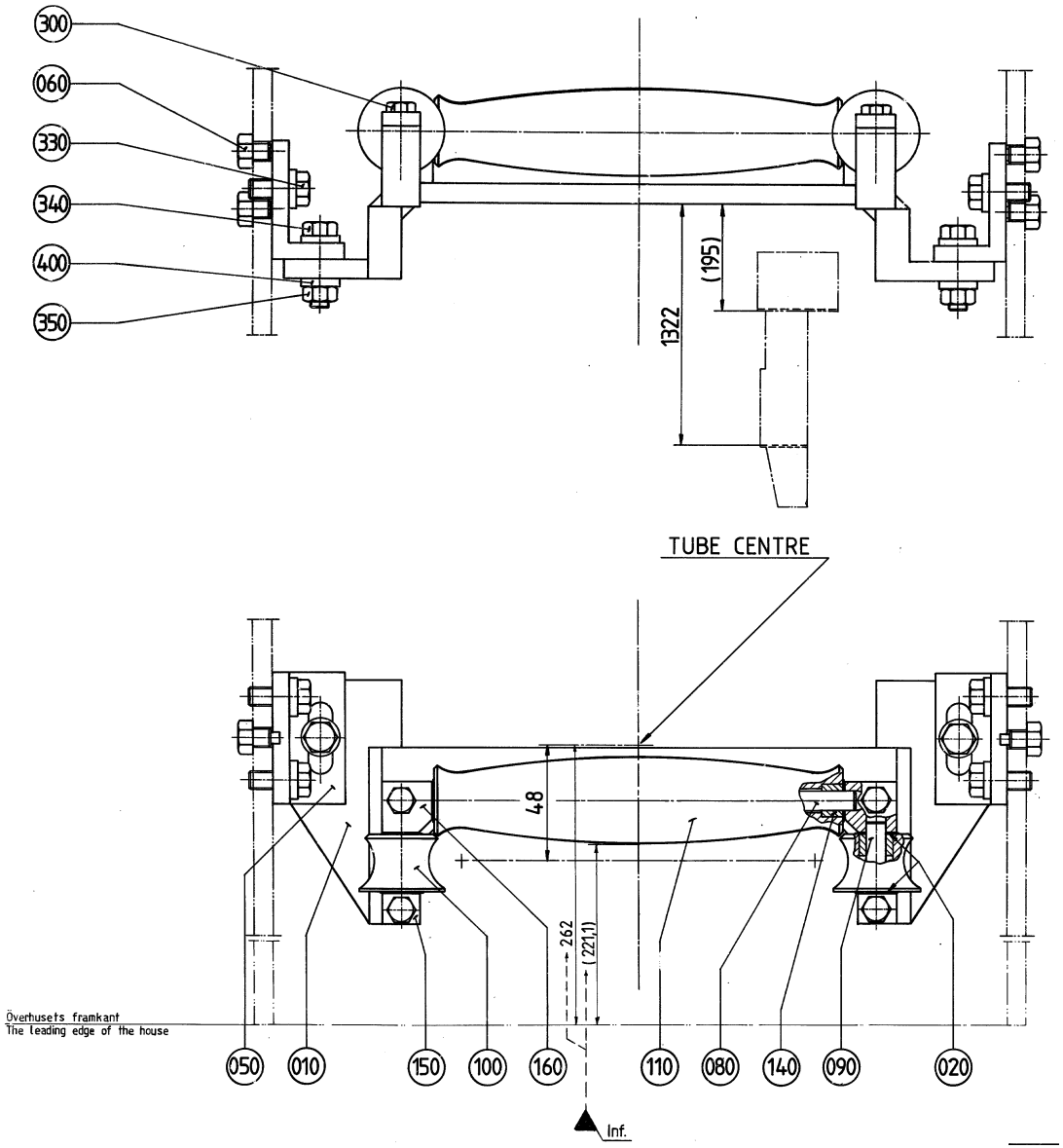
300
060
330
340
400
350
1322
(195)
TUBE CENTRE
48
262
(221,1)
Överhusets framkant
The leading edge of the house
050
010
150
100
160
110
080
140
090
020
Inf.

Pos	Part No	SP	UN	Qty	Description	Page No
0200B OR 0250B						
010	456153-0000	-		1	HOLDER	
050	256279-0000	-		2	ANGLE	
080	456156-0000	A		1	SHAFT	
090	263655-0003	A		2	SHAFT	
100	456077-0000	A		2	ROLL	
110	456076-0000	A		1	ROLL	
150	456154-0000	-		2	LOCK PLATE	
160	456155-0000	-		2	LOCK PLATE	
300	312105-0370	-		4	SCREW M6S ISO 4017 M6X20 A480	
340	312105-0455	-		2	SCREW M6S ISO 4017 M8X30 A480	
0200S						
010	B469041-0000	-		1	HOLDER	
0010	*1282583-0000*	*-*		*1*	*CAST WORKPIECE*	
050	469047-0000	-		2	ANGLE	
080	263655-0016	-		1	SHAFT	
090	263655-0004	-		2	SHAFT	
100	469046-0000	-		2	ROLL	
110	469045-0000	-		1	ROLL	
150	469044-0000	-		2	LOCK PLATE	
160	469042-0000	-		1	LOCK PLATE	
170	469043-0000	-		1	LOCK PLATE	
300	312105-0370	-		4	SCREW M6S ISO 4017 M6X20 A480	
340	312105-0455	-		2	SCREW M6S ISO 4017 M8X30 A480	
Common Parts						
020	2033-0011	A		6	WASHER	
060	256280-0000	A		4	DOWEL	
140	751230-0000	A		6	PLAIN BEARING	
330	312105-0451	-		4	SCREW M6S ISO 4017 M8X20 A480	
350	312605-0318	-		2	HEXAGON NUT, M6M M8 A280	
400	315115-0165	-		8	WASHER PLAIN, TBRB 8,4/16 H=3	

Pos	Part No	SP	UN	Qty	Description	Page No

UPPER TUBE SUPPORT

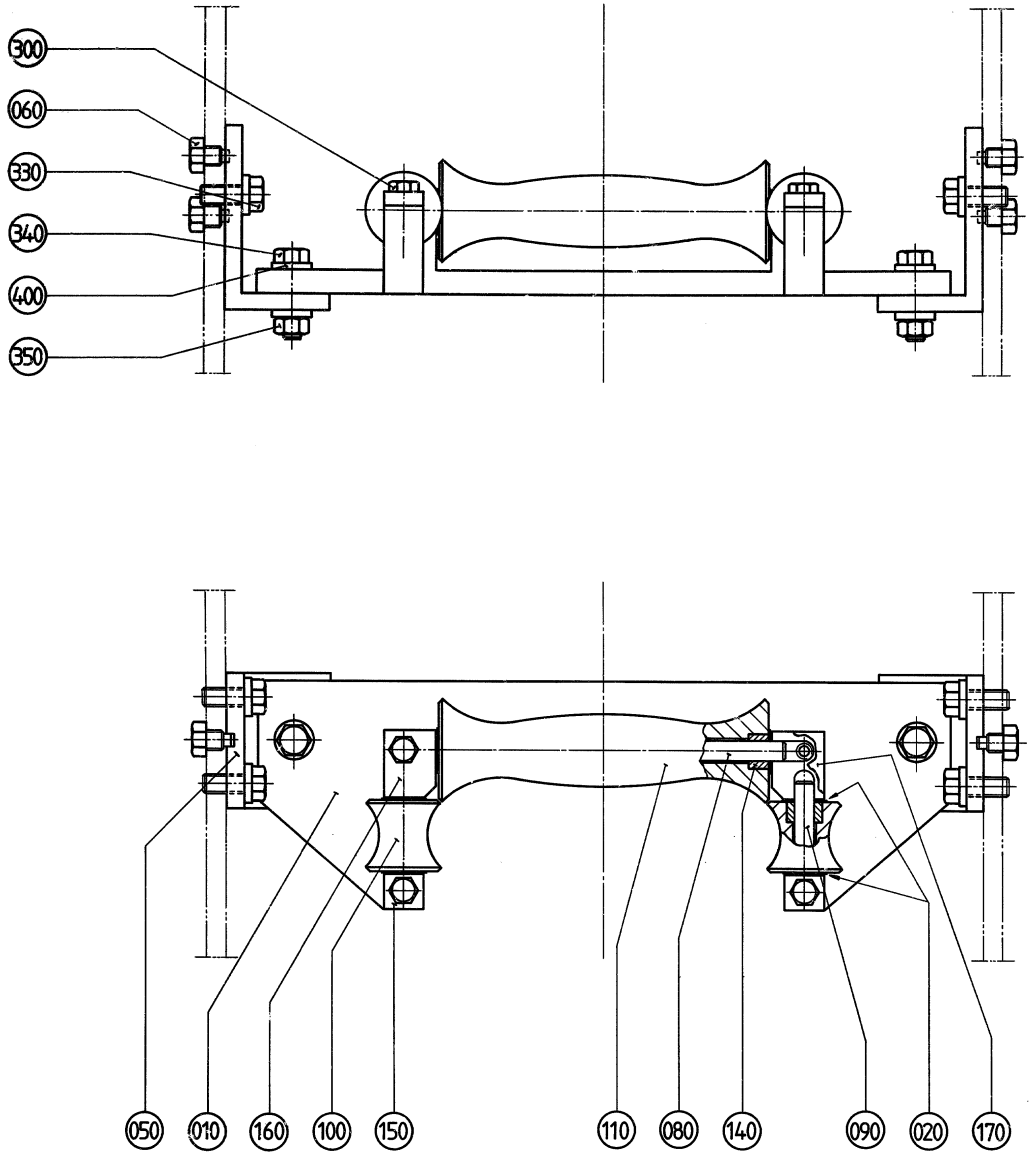

ECM: 102709 - 20020207
Group number: 441307-0200
Assembly Drawing: 441307-3_1_AA

Issue: 20020822

Pos	Part No	SP	UN	Qty	Description	Page No
0200B OR 0250B						
010	456153-0000	-		1	HOLDER	
050	256279-0000	-		2	ANGLE	
080	456156-0000	A		1	SHAFT	
090	263655-0003	A		2	SHAFT	
100	456077-0000	A		2	ROLL	
110	456076-0000	A		1	ROLL	
150	456154-0000	-		2	LOCK PLATE	
160	456155-0000	-		2	LOCK PLATE	
300	312105-0370	-		4	SCREW M6S ISO 4017 M6X20 A480	
340	312105-0455	-		2	SCREW M6S ISO 4017 M8X30 A480	
0200S						
010	B469041-0000	-		1	HOLDER	
0010	*1282583-0000*	*-*		*1*	*CAST WORKPIECE*	
050	469047-0000	-		2	ANGLE	
080	263655-0016	-		1	SHAFT	
090	263655-0004	-		2	SHAFT	
100	469046-0000	-		2	ROLL	
110	469045-0000	-		1	ROLL	
150	469044-0000	-		2	LOCK PLATE	
160	469042-0000	-		1	LOCK PLATE	
170	469043-0000	-		1	LOCK PLATE	
300	312105-0370	-		4	SCREW M6S ISO 4017 M6X20 A480	
340	312105-0455	-		2	SCREW M6S ISO 4017 M8X30 A480	
Common Parts						
020	2033-0011	A		6	WASHER	
060	256280-0000	A		4	DOWEL	
140	751230-0000	A		6	PLAIN BEARING	
330	312105-0451	-		4	SCREW M6S ISO 4017 M8X20 A480	
350	312605-0318	-		2	HEXAGON NUT, M6M M8 A280	
400	315115-0165	-		8	WASHER PLAIN, TBRB 8,4/16 H=3	

Pos	Part No	SP	UN	Qty	Description	Page No

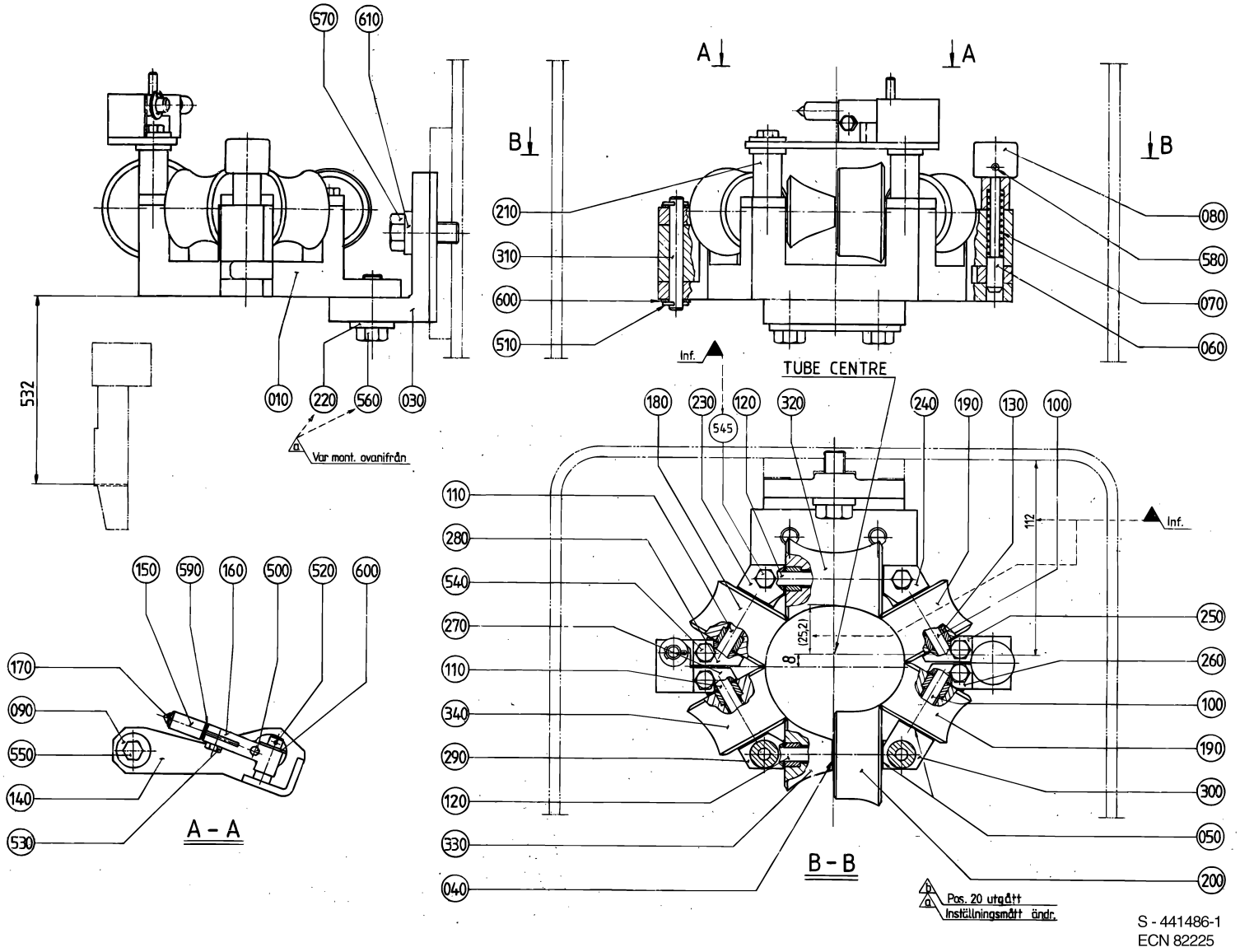
570
610
A
A
B
B
210
310
600
510
080
580
070
060
532
010
220
560
030
Var mont. ovanifrån
Inf.
TUBE CENTRE
180
230
120
320
240
190
130
100
545
110
280
540
270
110
340
290
120
330
040
112
Inf.
(25,2)
8
250
260
100
190
300
050
200
150
590
160
500
520
600
170
090
550
140
530
A - A
B - B
Pos. 20 utgått
Inställningsmått ändr.
S - 441486-1
ECN 82225

ECM: 102468 - 20020207
Group number: 441486-0200
Assembly Drawing: 441486-1_1_AA

Issue: 20020822

Pos	Part No	SP	UN	Qty	Description	Page No
0200B OR 0250B						
010	469524-0000	-		1	BRACKET	
040	2033-0008	A		3	WASHER	
050	2033-0011	A		24	WASHER	
090	257175-0000	-		4	WASHER	
100	263655-0004	A		2	SHAFT	
110	263655-0006	A		2	SHAFT	
120	263655-0009	A		2	SHAFT	
130	751230-0000	A		14	PLAIN BEARING	
140	441918-0000	-		1	BRACKET	
150	451117-0000	A		1	ROLL	
160	451148-0000	-		1	BRACKET	
170	451149-0000	A		1	SHAFT	
180	456082-0000	A		1	ROLL	
190	456085-0000	A		2	ROLL	
200	456086-0000	A		1	ROLL	
210	456181-0000	-		2	SPACER	
230	456183-0000	-		1	LOCKING PLATE	
240	456184-0000	-		1	LOCKING PLATE	
250	456185-0000	-		1	LOCK PLATE	
260	456186-0000	-		1	LOCK PLATE	
270	456187-0000	-		1	LOCK PLATE	
280	456188-0000	-		1	LOCK PLATE	
290	456198-0000	-		1	LOCK PLATE	
300	456199-0000	-		1	LOCK PLATE	
320	456304-0000	A		1	ROLL	
330	456305-0000	A		1	ROLL	
340	456306-0000	A		1	ROLL	
500	311103-0312	-		1	PARALLELL PIN, M6, 5X25 MM	
520	311411-0165	-		1	SPLIT PIN SP2,5X16RFR	
530	312105-0325	-		1	SCREW M6S ISO 4017 M5X10 A480	
540	312105-0368	-		4	SCREW M6S M6X16 A280	
545	312105-0370	-		2	SCREW M6S ISO 4017 M6X20 A480	
550	312105-0381	-		2	SCREW M6S ISO 4014 M6X55 A480	
590	315105-0136	-		1	WASHER PLAIN, BRB, 4,3/8,H=0,8	
600	315105-0165	-		3	WASHER PLAIN, BRB, 8,4/16,H=1,5	
0200S						
010	469745-0000	-		1	BRACKET	
050	2033-0011	A		28	WASHER	
110	263655-0018	A		4	SHAFT	
120	263655-0007	-		1	SHAFT	
125	456881-0000	A		1	SHAFT	
130	751230-0000	A		12	PLAIN BEARING	
180	490549-0000	A		2	ROLL	
190	490548-0000	A		1	ROLL	
195	490550-0000	A		1	ROLL	
200	490551-0000	A		1	ROLL	
230	456869-0000	-		1	LOCKING PLATE	
240	456871-0000	-		1	LOCK PLATE	
250	456873-0000	-		2	LOCK PLATE	
260	456874-0000	-		2	LOCK PLATE	
290	456870-0000	-		1	LOCK PLATE	
300	456872-0000	-		1	LOCK PLATE	
320	490547-0000	A		1	ROLL	
330	490552-0000	A		1	ROLL	
350	751231-0000	A		1	PLAIN BEARING	
535	312105-0329	-		4	SCREW M6S ISO 4017 M5X16 A480	
536	312105-0332	-		4	SCREW M6S ISO 4017 M5X22 A480	
600	315105-0165	-		2	WASHER PLAIN, BRB, 8,4/16,H=1,5	
Common Parts						
030	456230-0000	-		1	ANGLE BRACKET	
060	35918-0000	A		1	SHAFT	
070	35919-0000	A		1	COMPRESSION SPRING	
080	36325-0000	A		1	KNOB	
220	456182-0000	-		1	PLATE	
310	751318-0000	-		1	SHAFT	
510	311411-0150	-		2	SPLIT PIN SP2X12RFR	
560	312105-0495	-		2	SCREW M6S ISO 4017 M10X30 A480	
570	312105-0536	-		1	SCREW M6S ISO 4017 M12X30 A480	
580	312318-0285	-		1	SCREW SOCK.SET CUP P MSK6SS M4X6 A4	
610	315115-0178	-		1	WASHER PLAIN, TBRB 13/24 H=4	

Machine Type | Group Description | Used-In | Group Number | Page No

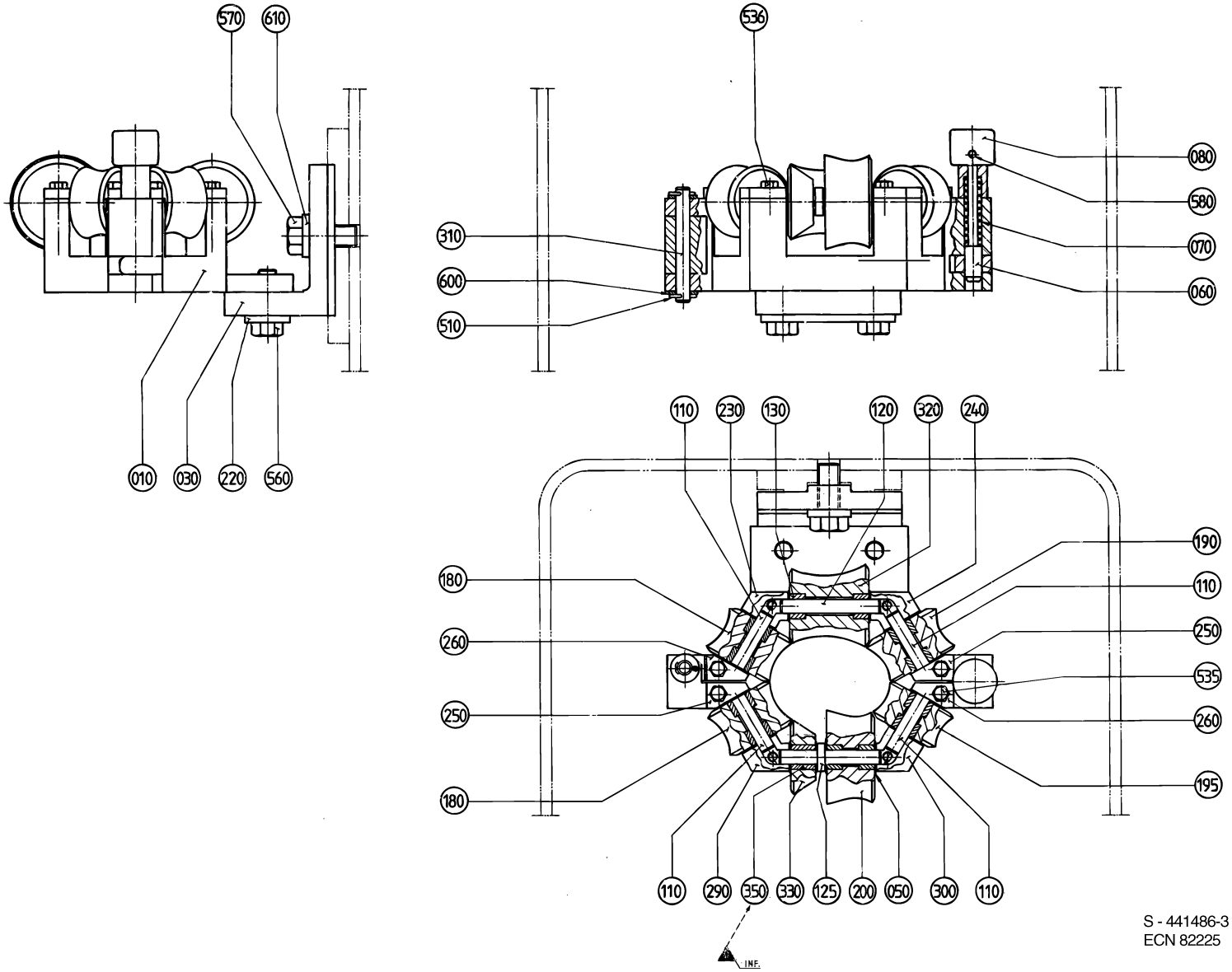

S - 441486-3
ECN 82225

ECM: 102468 - 20020207
Group number: 441486-0200
Assembly Drawing: 441486-3_1_AA

Issue: 20020822

Pos	Part No	SP	UN	Qty	Description	Page No
0200B OR 0250B						
010	469524-0000	-		1	BRACKET	
040	2033-0008	A		3	WASHER	
050	2033-0011	A		24	WASHER	
090	257175-0000	-		4	WASHER	
100	263655-0004	A		2	SHAFT	
110	263655-0006	A		2	SHAFT	
120	263655-0009	A		2	SHAFT	
130	751230-0000	A		14	PLAIN BEARING	
140	441918-0000	-		1	BRACKET	
150	451117-0000	A		1	ROLL	
160	451148-0000	-		1	BRACKET	
170	451149-0000	A		1	SHAFT	
180	456082-0000	A		1	ROLL	
190	456085-0000	A		2	ROLL	
200	456086-0000	A		1	ROLL	
210	456181-0000	-		2	SPACER	
230	456183-0000	-		1	LOCKING PLATE	
240	456184-0000	-		1	LOCKING PLATE	
250	456185-0000	-		1	LOCK PLATE	
260	456186-0000	-		1	LOCK PLATE	
270	456187-0000	-		1	LOCK PLATE	
280	456188-0000	-		1	LOCK PLATE	
290	456198-0000	-		1	LOCK PLATE	
300	456199-0000	-		1	LOCK PLATE	
320	456304-0000	A		1	ROLL	
330	456305-0000	A		1	ROLL	
340	456306-0000	A		1	ROLL	
500	311103-0312	-		1	PARALLELL PIN, M6, 5X25 MM	
520	311411-0165	-		1	SPLIT PIN SP2,5X16RFR	
530	312105-0325	-		1	SCREW M6S ISO 4017 M5X10 A480	
540	312105-0368	-		4	SCREW M6S M6X16 A280	
545	312105-0370	-		2	SCREW M6S ISO 4017 M6X20 A480	
550	312105-0381	-		2	SCREW M6S ISO 4014 M6X55 A480	
590	315105-0136	-		1	WASHER PLAIN, BRB, 4,3/8,H=0,8	
600	315105-0165	-		3	WASHER PLAIN, BRB, 8,4/16,H=1,5	
0200S						
010	469745-0000	-		1	BRACKET	
050	2033-0011	A		28	WASHER	
110	263655-0018	A		4	SHAFT	
120	263655-0007	-		1	SHAFT	
125	456881-0000	A		1	SHAFT	
130	751230-0000	A		12	PLAIN BEARING	
180	490549-0000	A		2	ROLL	
190	490548-0000	A		1	ROLL	
195	490550-0000	A		1	ROLL	
200	490551-0000	A		1	ROLL	
230	456869-0000	-		1	LOCKING PLATE	
240	456871-0000	-		1	LOCK PLATE	
250	456873-0000	-		2	LOCK PLATE	
260	456874-0000	-		2	LOCK PLATE	
290	456870-0000	-		1	LOCK PLATE	
300	456872-0000	-		1	LOCK PLATE	
320	490547-0000	A		1	ROLL	
330	490552-0000	A		1	ROLL	
350	751231-0000	A		1	PLAIN BEARING	
535	312105-0329	-		4	SCREW M6S ISO 4017 M5X16 A480	
536	312105-0332	-		4	SCREW M6S ISO 4017 M5X22 A480	
600	315105-0165	-		2	WASHER PLAIN, BRB, 8,4/16,H=1,5	
Common Parts						
030	456230-0000	-		1	ANGLE BRACKET	
060	35918-0000	A		1	SHAFT	
070	35919-0000	A		1	COMPRESSION SPRING	
080	36325-0000	A		1	KNOB	
220	456182-0000	-		1	PLATE	
310	751318-0000	-		1	SHAFT	
510	311411-0150	-		2	SPLIT PIN SP2X12RFR	
560	312105-0495	-		2	SCREW M6S ISO 4017 M10X30 A480	
570	312105-0536	-		1	SCREW M6S ISO 4017 M12X30 A480	
580	312318-0285	-		1	SCREW SOCK.SET CUP P MSK6SS M4X6 A4	
610	315115-0178	-		1	WASHER PLAIN, TBRB 13/24 H=4	

Machine Type | Group Description | Used-In | Group Number | Page No

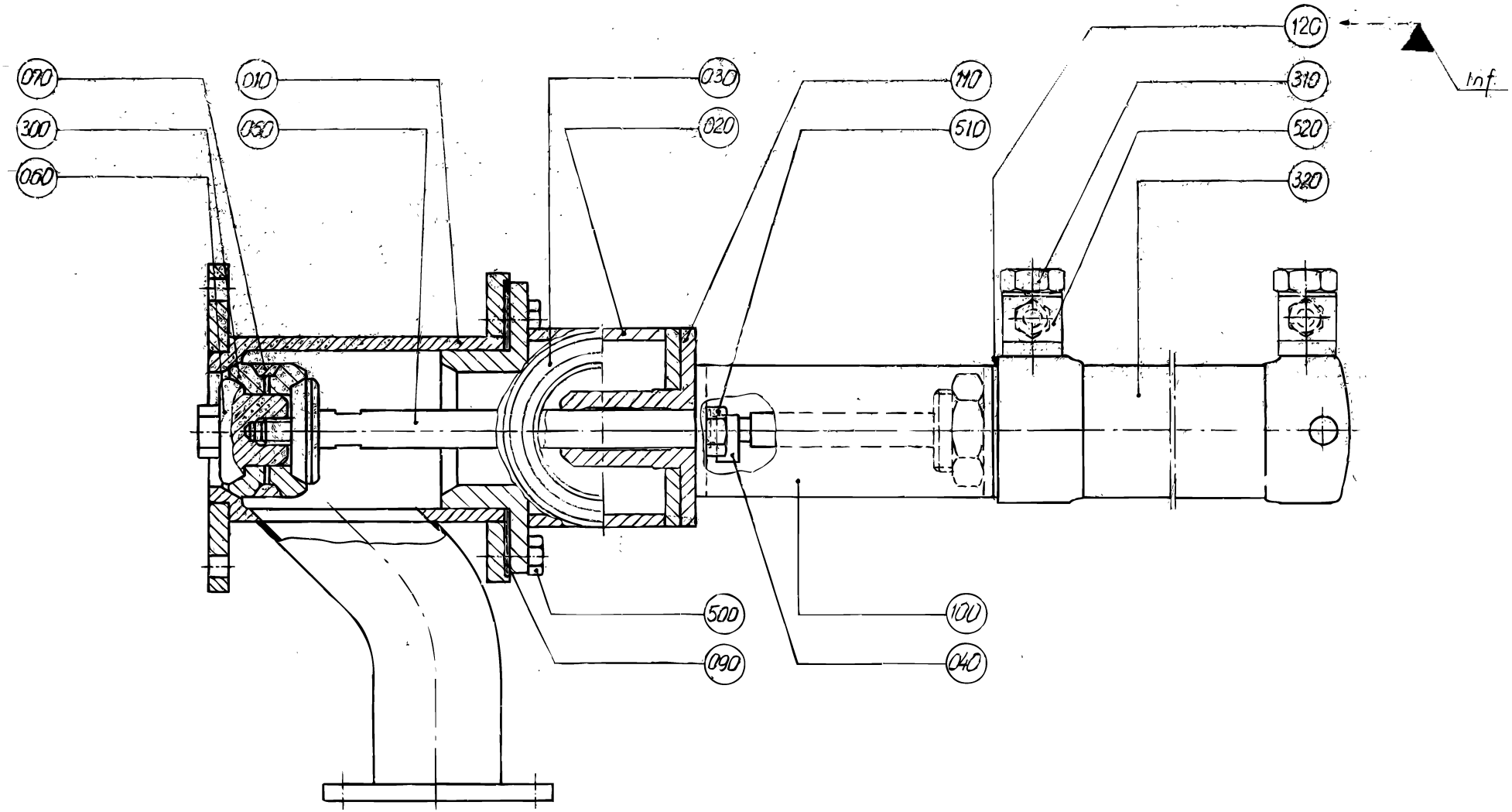

S - 271169-2
ECN 82225

ECM: 102466 - 20020207
Group number: 271169-0200
Assembly Drawing: 271169-2_1_AA

Issue: 20020822

Pos	Part No	SP	UN	Qty	Description	Page No
Common Parts						
010	269400-0000	B		1	VALVE HOUSING	
020	269401-0000	B		1	HOUSE	
030	90091-0182	A		1	GASKET 48X38X4,8 MM	
040	37638-0000	A		1	PENDULUM SUSPENSION	
050	266389-0000	A		1	PISTON ROD	
060	266390-0000	A		1	NUT	
070	266391-0000	A		1	RING	
090	295160-0000	A		1	GASKET	
100	266394-0000	-		1	BRACKET	
110	272341-0000	A		1	SPINDLE GUIDE	
120	456886-0000	-		1	WASHER	
300	530588-0000	-		2	SEAL RING	
310	90235-0275	A		2	THROTTLE CHECK VALVES,G1/4"	
320	B90239-0166	A		1	CYLINDER	
	90285-0094	*C*		*1*	*SEAL KIT*	
500	312105-0366	-		6	SCREW M6S M6X12 A280	
510	312105-0449	-		2	SCREW M6S ISO 4017 M8X16 A480	
520	342797-0122	A		2	CONN. BANJO, RINGPIECE 6-1/4	

Pos	Part No	SP	UN	Qty	Description	Page No

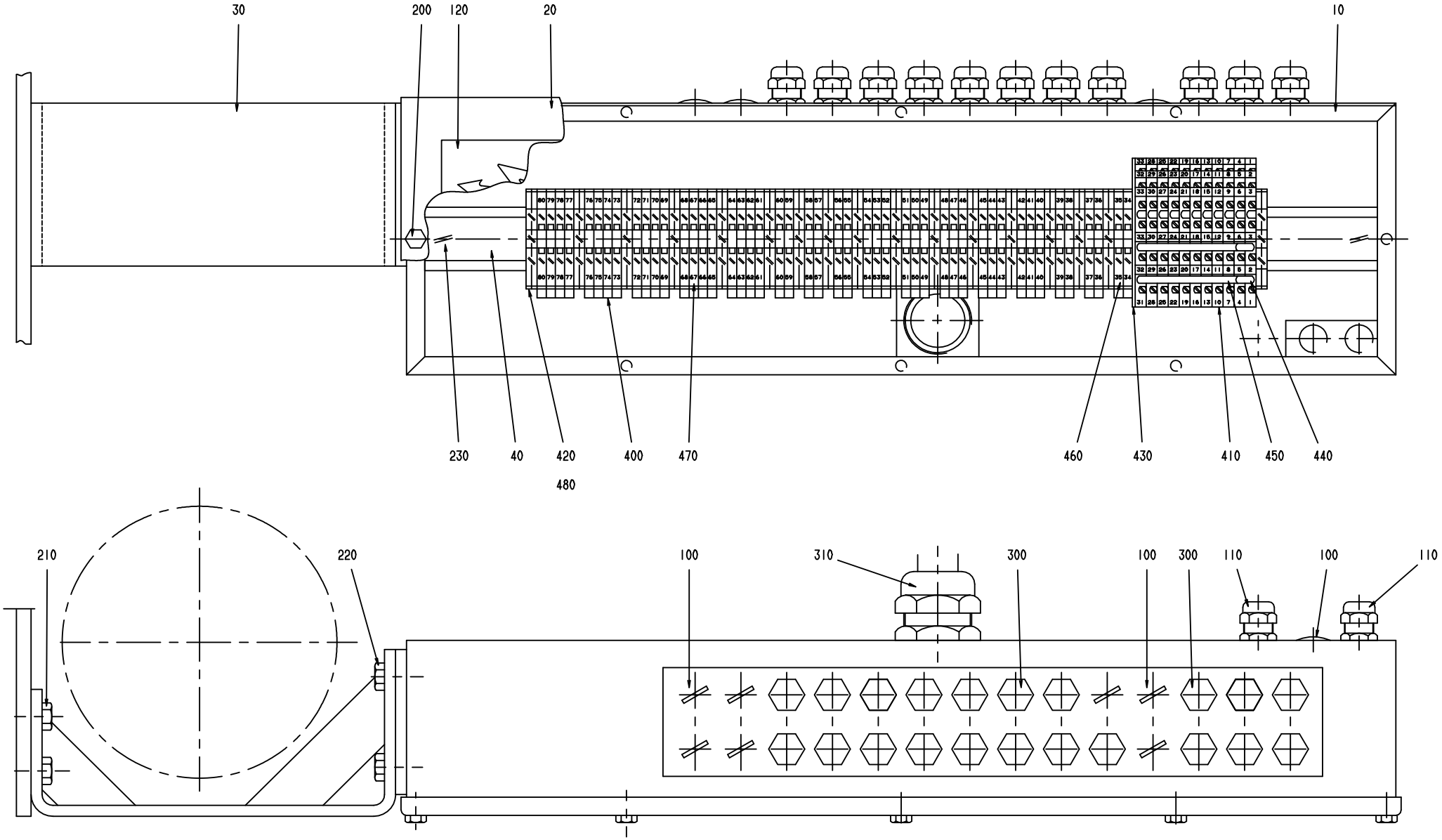
30
200
120
20
10
230
40
420
480
400
470
460
430
410
450
440
210
220
100
310
300
100
300
110
100
110

ECM: 85573 - 20010228
Group number: 1529098-0100
Assembly Drawing: 1529098-1_1_AA

Issue: 20020822

Pos	Part No	SP	UN	Qty	Description	Page No
Common Parts						
010	1529189-0000	-		1	BOX	
020	295624-0000	-		1	LID	
030	456554-0000	-		1	CANTILEVER	
040	10793-0083	-		1	MOUNTING RAIL	
100	90002-0013	-		7	BLANK-OFF PLUG, PR 15,2 SKINDICHT-BLK9	
110	90012-0063	-		2	CABLE GLAND PR 15,2	
120	90194-0016	-		1	SIGN, FLASH, ELECTRIC EQUIPMENT SYMBOL	
200	312105-0366	-		8	SCREW M6S M6X12 A280	
210	312105-0449	-		4	SCREW M6S ISO 4017 M8X16 A480	
220	312105-0451	-		4	SCREW M6S ISO 4017 M8X20 A480	
230	312125-0364	-		2	SCREW SLOT.PAN HD. MCS 6X10 A480	
300	352103-0101	-		21	CABLE GLAND, ST 9, PR15,2/PG9	
310	352103-0121	-		1	CABLE GLAND, ST 29, PR37,0/PG29	
400	353021-0212	-		47	FEED THROUGH TERMINAL, 10200.0	
410	353021-0302	-		11	TERMINALS,TRIPLE-LEVEL, DLD 2,5/35 PA	
420	353024-0205	-		17	EARTH TERMINAL, 1010.1	
430	353032-0302	-		1	END PLATE WAP	
440	353034-0401	-		2	BRIDGE CONNECTOR Q2, 13125.0	
450	353034-0404	-		2	BRIDGE CONNECTOR Q10, 13131.0	
460	359011-0807	-		2	MARKING PLATES 5-FW 1-50	
470	359011-0808	-		2	MARKING PLATES 5-FW 51-100	
480	359011-0834	-		1	SET OF SIGNS 6-GW(EARTH)	

Pos	Part No	SP	UN	Qty	Description	Page No

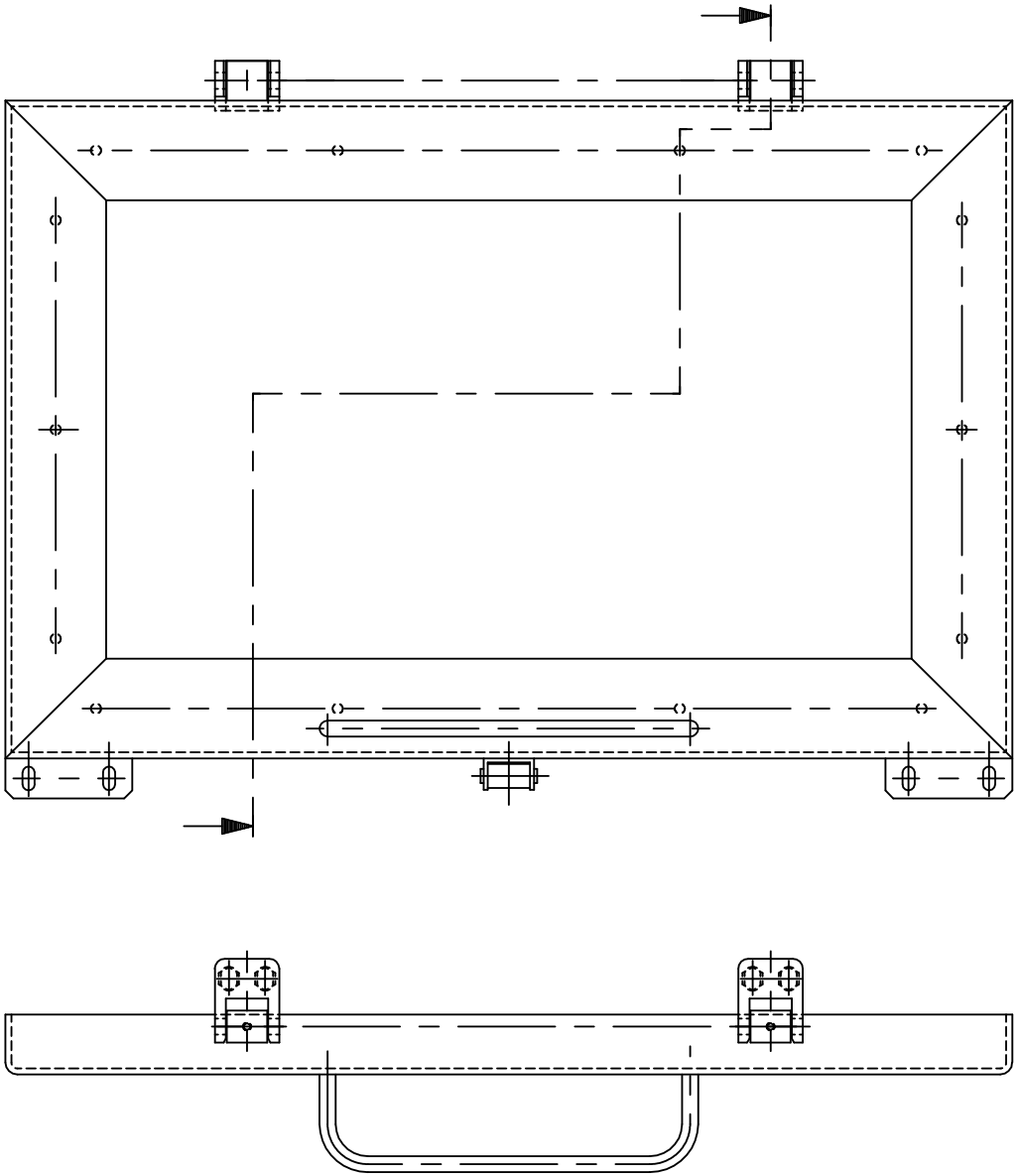

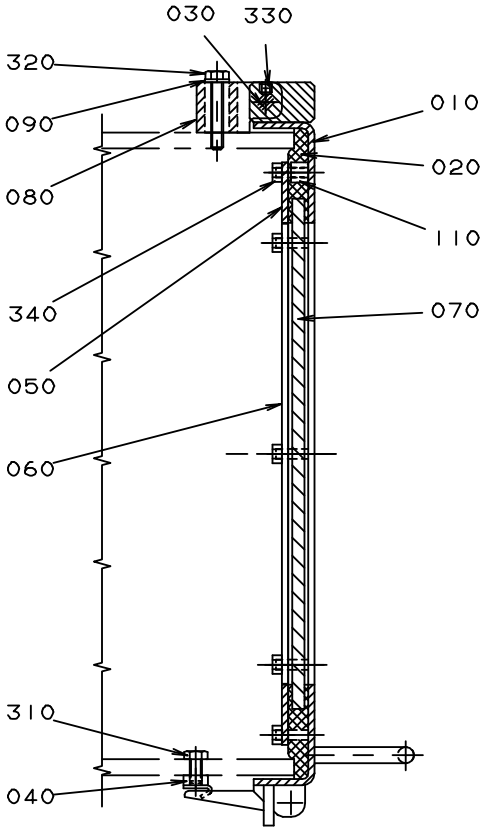
030
330
320
090
080
340
050
060
310
040
010
020
110
070

ECM: 102464 - 20020207
Group number: 1529092-0100
Assembly Drawing: 1529092-1_1_AA

Issue: 20020822

Pos	Part No	SP	UN	Qty	Description	Page No
Common Parts						
010	1529016-0000	-		1	FRAME	
020	272784-0002	A		1	RUBBER STRIP	
030	256031-0000	A		2	SHAFT	
040	271860-0000	A		1	CLAMP BLOCK	
050	272781-0002	-		2	COVER SLIP	
060	272782-0000	-		2	COVER SLIP	
070	272783-0002	A		1	GLASS PANE	
080	272786-0000	A		2	HINGE	
090	272787-0000	A		2	WASHER	
110	441718-0000	B		14	SPACER	
310	312105-0366	-		2	SCREW M6S M6X12 A280	
320	312105-0376	-		4	SCREW M6S ISO 4014 M6X35 A480	
330	312318-0360	-		2	SCREW HEX.SOCK.SET CUP P.MSK6SS6X6 SS	
340	312605-0314	-		14	HEXAGON NUT, M6M M5 A280	

Pos	Part No	SP	UN	Qty	Description	Page No

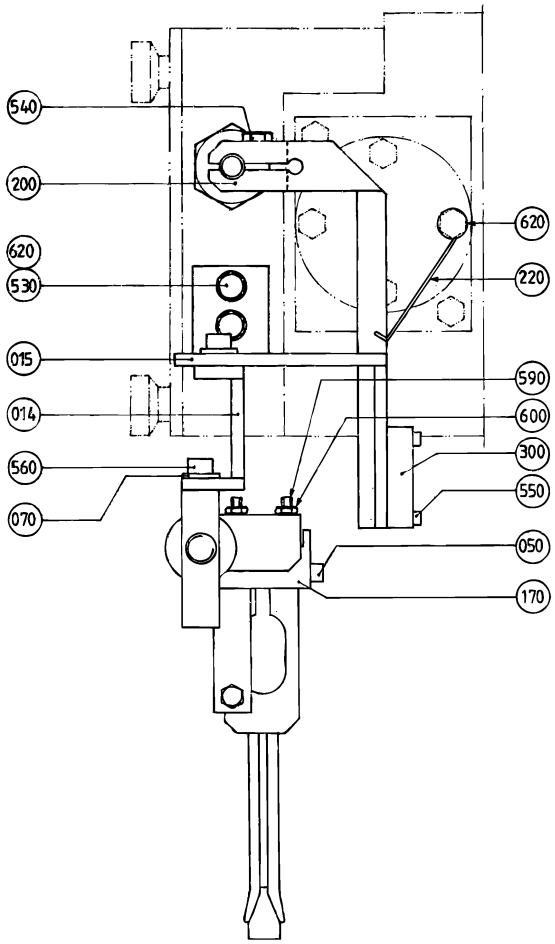

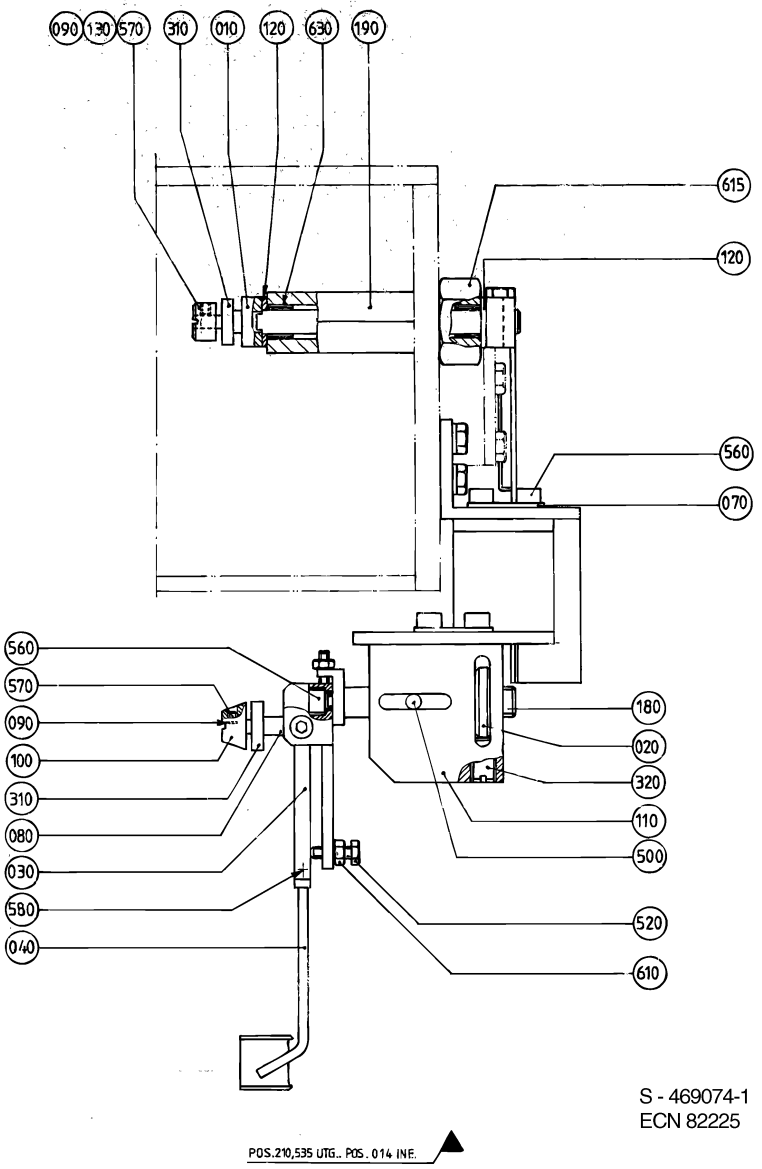

S - 469074-1
ECN 82225

POS.210,535 UTG.. POS. 014 INF.

ECM: 102447 - 20020207
Group number: 469074-0100
Assembly Drawing: 469074-1_1_AA

Issue: 20020822

Pos	Part No	SP	UN	Qty	Description	Page No
Common Parts						
010	469979-0000	-		1	HOLDER	
014	491127-0000	-		1	BRACKET	
015	491148-0000	-		1	BRACKET	
020	23580-0000	-		1	SHIFTER HANDLE	
030	23582-0000	-		1	HOLDER	
040	23583-0000	A		1	GUIDE FINGER	
050	23584-0000	A		2	SCREW	
070	24354-0000	-		2	WASHER	
080	24355-0000	A		2	DOWEL	
090	24356-0000	A		5	PIECE	
100	111543-0000	A		2	GUIDE CONE	
110	245210-0000	-		1	BODY	
120	271211-0000	-		2	WASHER	
130	271654-0000	-		1	RETAINING RING	
170	272467-0000	-		1	BOW CLAMP	
180	456119-0000	-		1	SHAFT	
190	469981-0000	-		1	BRACKET	
200	456121-0000	-		1	ARM	
220	491149-0000	A		1	SPRING	
300	90044-0104	-		1	PROX.SWITCH IFM IN 3002	
310	90214-0138	-		3	BALL BEARING, 5X19X6 MM	
320	90287-0009	A		1	SPRINGLOADED SCREW M10X19	
500	311103-0350	-		1	PARALLELL PIN, CP, M6, 6X14 MM	
520	312105-0331	-		1	SCREW M6S ISO 4017 M5X20 A480	
530	312105-0368	-		2	SCREW M6S M6X16 A280	
540	312105-0370	-		1	SCREW M6S ISO 4017 M6X20 A480	
550	312115-0228	-		2	SCREW MC6S M3X16 A280	
560	312115-0366	-		5	SCREW MC6S M6X12 A280	
570	312318-0283	-		5	SCREW SOCK.SET CUP P MSK6SS M4X4 A4	
580	312318-0285	-		2	SCREW SOCK.SET CUP P MSK6SS M4X6 A4	
590	312318-0291	-		2	SCREW SOCK.SET CUP P MSK6SS M4X12 A4	
600	312605-0312	-		2	HEXAGON NUT, M6M M4 A280	
610	312605-0314	-		1	HEXAGON NUT, M6M M5 A280	
615	312605-0326	-		1	HEXAGON NUT, M6M M20 A280	
620	315105-0153	-		3	WASHER PLAIN, BRB, 6,4/12,H=1,5	
630	321127-0100	-		2	BEARING BUSHING WITHOUT FL, 10X13X10 MM	

Pos	Part No	SP	UN	Qty	Description	Page No

Machine Type	Group Description	Used-In	Group Number	Page No

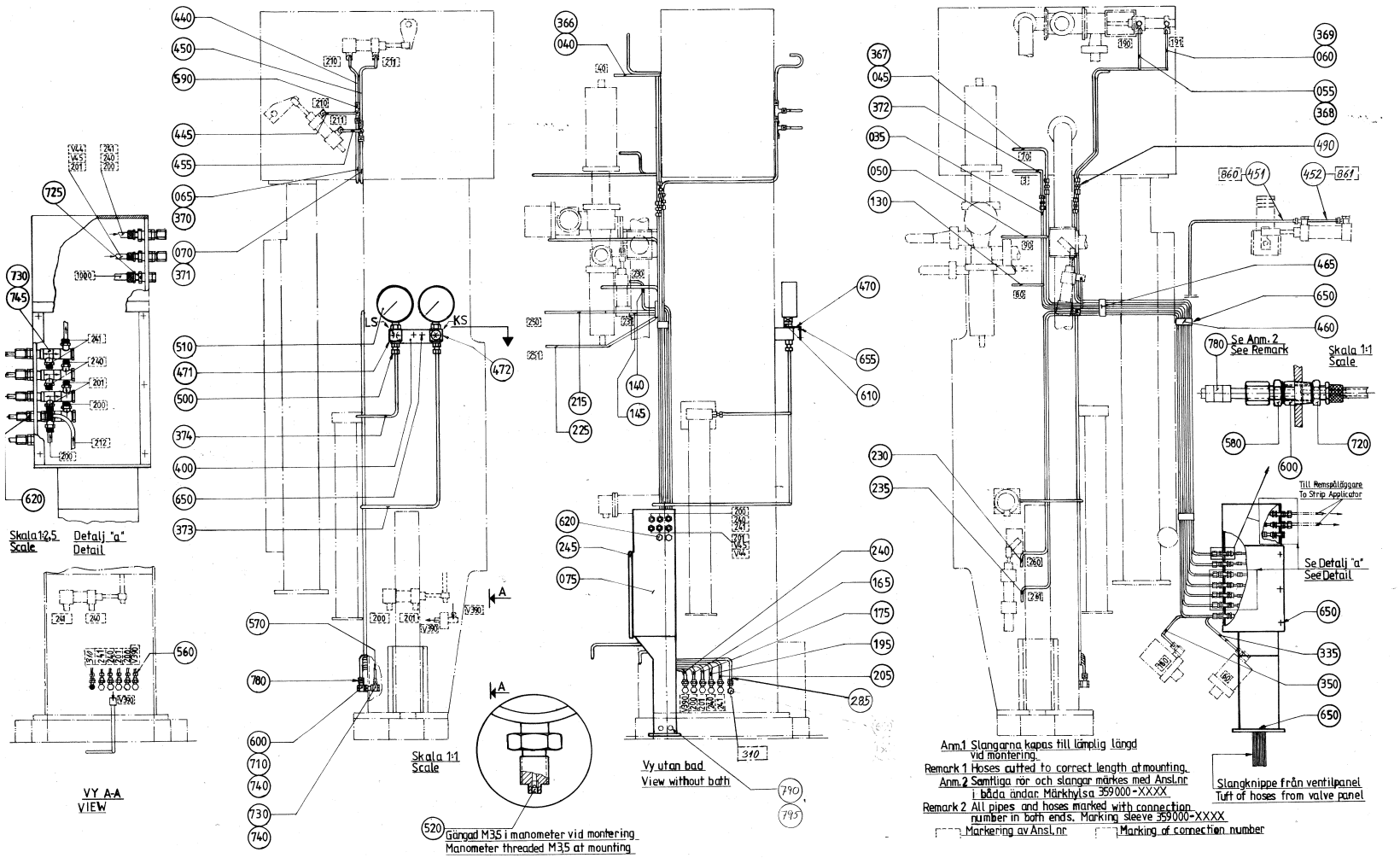
Skala 1:2,5
Scale
Detalj "a"
Detail
VY A-A
VIEW
Skala 1:1
Scale
Vy utan bad
View without bath
Gängad M35 i manometer vid montering
Manometer threaded M35 at mounting
Anm.1 Slangarna kapas till lämplig längd vid montering.
Remark 1 Hoses cutted to correct length at mounting.
Anm.2 Samtliga rör och slangar märkes med Ansi.nr i båda ändar. Märkhylsa 359000-XXXX
Remark 2 All pipes and hoses marked with connection number in both ends. Marking sleeve 359000-XXXX
Markering av Ansi.nr
Marking of connection number
Se Anm. 2
See Remark
Till Remspåläggare
To Strip Applicator
Se Detalj "a"
See Detail
Slangknippe från ventilpanel
Tuft of hoses from valve panel

ECM: 108427 - 20020506
Group number: 1529238-0100
Assembly Drawing: 1529238-1_1_AB

Issue: 20020822

Pos	Part No	SP	UN	Qty	Description	Page No
Common Parts						
035	295557-0000	-		1	PIPE	
040	295734-0000	-		1	PIPE	
045	295735-0000	-		1	PIPE	
050	295560-0000	-		1	PIPE	
055	295736-0000	-		1	PIPE	
060	295737-0000	-		1	PIPE	
065	295738-0000	-		1	PIPE	
070	295739-0000	-		1	PIPE	
075	1529247-0000	-		1	CONNECTION BOX	
130	295568-0000	-		1	PIPE	
140	295570-0000	-		1	PIPE	
145	295571-0000	-		1	PIPE	
165	295575-0000	-		1	PIPE	
175	295577-0000	-		1	PIPE	
195	295581-0000	-		1	PIPE	
205	295583-0000	-		1	PIPE	
215	295585-0000	-		1	PIPE	
225	295587-0000	-		1	PIPE	
230	295588-0000	-		1	PIPE	
235	295589-0000	-		1	PIPE	
240	295590-0000	-		1	PIPE	
245	B456411-0000	-		1	LID	
	90143-0008	-	*M*	*1*	*STRIP*	
285	751071-0000	-		1	PIPE	
335	295591-0000	-		1	PIPE	
350	295594-0000	-		1	PIPE	
366	295740-0000	-		1	PIPE	
367	1529271-0000	-		1	PIPE	
368	295742-0000	-		1	PIPE	
369	295743-0000	-		1	PIPE	
370	295775-0000	-		1	PIPE	
371	295776-0000	-		1	PIPE	
372	441441-0000	-		1	PIPE	
373	469497-0000	-		1	PIPE	
374	469498-0000	-		1	PIPE	
400	33577-0000	-		1	CANTILEVER	
440	295600-0000	-		1	PIPE	
445	295601-0000	-		1	PIPE	
450	295602-0000	-		1	PIPE	
451	1529265-0000	-		1	PIPE	
452	1529272-0000	-		1	PIPE	
455	295603-0000	-		1	PIPE	
460	295604-0000	-		3	CRAMP	
465	295605-0000	-		3	BRACKET	
470	464173-0000	-		2	LABEL HOLDER	
471	464174-0000	-		1	SIGN	
472	464175-0000	-		1	SIGN	
490	90030-0075	A		7	PIPE CONNECTION G-6	
500	90030-0092	A		2	STRAIGHT CONN., 6-R1/4,EXT. TAPPERED	
510	90043-0034	A		2	PRESSURE GAUGE	
520	90043-0302	A		2	SCREW	
560	90166-0119	A	MM	2100	HOSE PUR 4/6 BLACK	
570	90166-0132	A	M	1	TUBE 6 MM PA,TRANSP.	
580	90224-0307	-		31	STRAIGHT FITTING, 6MM, 1/8",	
600	90330-0025	A		40	BUSHING, INT/EXT. THR. R1/4-RP1/8	
610	90330-0105	A		2	NUT, HEXAGON, R3/8	
620	90330-0066	-		3	PLUG, EXT. G-THREAD, G1/8	
650	312105-0366	-		20	SCREW M6S M6X12 A280	
655	312502-0120	-		4	DRIVE SCREW ROUND HEAD KDS 0X5	
710	342797-0121	-		6	CONN. BANJO, RINGPIECE 6-1/8	
720	342921-0113	-		28	STRAIGHT COUPLING,EXT.THREADED 6/4-G1/8"	
725	342921-0121	A		1	STRAIGHT COUPLING,EXT.THREADED 8/6-G1/8"	
730	342980-0113	-		14	BANJO-CONNECTION,RING 6/4-G1/8"	
740	342980-0303	-		12	BANJO-HOLLOW BOLT COUPL,EXT.THR.01-G1/8"	
745	342980-0313	-		4	BANJO-HOLLOW BOLT COUPL,EXT.THR.02-G1/8"	
780	359000-0400	-		53	MARKING CO2/4"0"	
780	359000-0401	-		51	MARKING COLLAR 2/4 "1" YELLOW	
780	359000-0402	-		44	MARKING COLLAR 2/4 "2" YELLOW	
780	359000-0403	-		12	MARKING COLLAR PA2/4 "3" YELLOW	
780	359000-0406	-		6	MARKING COLLAR PA2/4 "6" YELLOW	
780	359000-0407	-		4	MARKING COLLAR PA2/4 "7" YELLOW	
780	359000-0408	-		4	MARKING COLLAR PA2/4 "8" YELLOW	
780	359000-0409	-		14	MARKING COLLAR PA2/4 "9" YELLOW	
780	359000-0404	-		12	MARKING COLLAR PA2/4 "4" YELLOW	
780	359000-0405	-		4	MARKING CO2/4"5"	
780	359000-0771	-		4	MARKING CO2/4"V"	
790	352103-0101	-		2	CABLE GLAND, ST 9, PR15,2/PG9	
795	90099-0104	-		2	NUT, PR 15,2 (PG9)	

Machine Type | Group Description | Used-In | Group Number | Page No

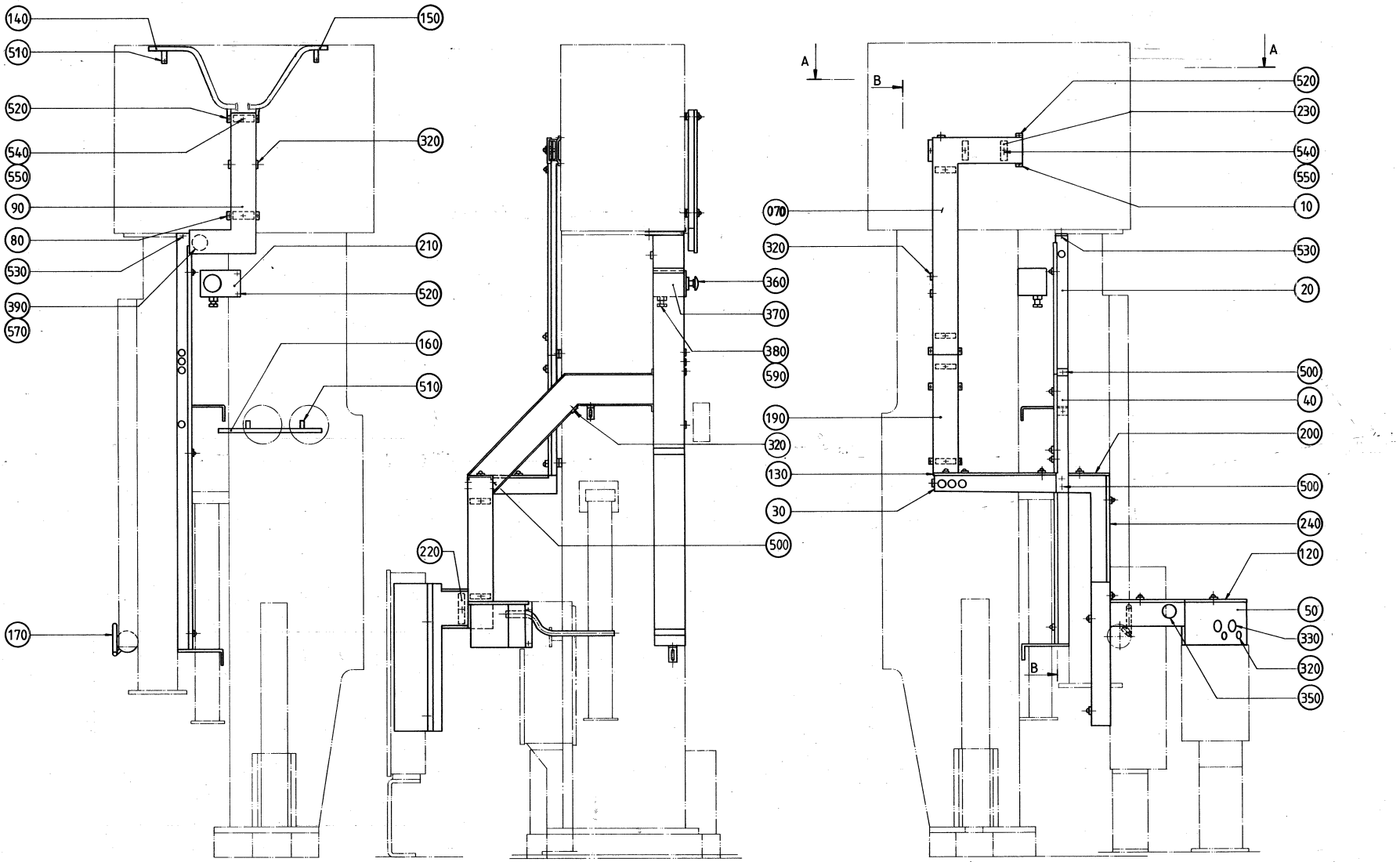

Vy utan bad.
View without bath.

Vy A-A, B-B; se blad 2.
View A-A, B-B; see sheet 2.

ECM: 107689 - 20020506
Group number: 1529236-0100
Assembly Drawing: 1529236-1_1_AA

Issue: 20020822

Pos	Part No	SP	UN	Qty	Description	Page No
Common Parts						
010	295463-0000	-		1	CABLE TRENCH	
020	469343-0000	-		1	CABLE TRENCH	
030	469344-0000	-		1	CABLE TRENCH	
040	469345-0000	-		1	CABLE TRENCH	
050	469346-0000	-		1	CABLE TRENCH	
060	469347-0000	-		1	LID	
070	295465-0002	-		1	LID	
080	295782-0000	-		1	CABLE TRENCH	
090	295783-0000	-		1	LID	
100	469348-0000	-		1	COVER	
110	469349-0000	-		1	CABLE TRENCH	
120	469350-0000	-		1	LID	
130	469351-0000	-		1	LID	
140	1529269-0000	-		1	CABLE DUCT	
150	1529268-0000	-		1	CABLE DUCT	
160	1529233-0000	-		1	CABLE CONDUIT	
170	441312-0000	-		1	CABLE CONDUIT	
180	469352-0000	-		1	LID	
190	469353-0000	-		1	LID	
200	2545666-0000	-		1	LID	
210	271508-0000	-		1	BRACKET	
220	272945-0000	-		7	LOCK	
230	295466-0000	-		15	LOCK	
240	295819-0003	-		1	LID	
250	B469355-0000	-		1	LID	
	90143-0054	-	*M*	*1*	*STRIP*	
300	90002-0009	-		2	BLANK-OFF PLUG, PR 18.6 SKINDICHT-BLK11	
310	90002-0013	-		2	BLANK-OFF PLUG, PR 15,2 SKINDICHT-BLK9	
320	90015-0020	-		21	LEAD-IN, TET5-7, E-1458016	
330	90015-0021	-		2	LEAD-IN, TET10-14, E-1458023	
340	90015-0023	-		1	LEAD-IN, TET7-10, E-1458019	
350	90015-0024	-		1	LEAD-IN, TET20-26, E-1458035	
360	90064-0124	-		1	SWITCH, EM. STOP, ZB2-BS844+ZB2-BZ1045	
370	90066-0021	-		1	PUSH BUTTON BOX XAP-M1501	
380	90089-0003	-		1	REDUCING SLEEVE, PR22,5/PR18,6	
390	90099-0011	-		1	NUT PR 37 BRASS	
500	312105-0362	-		6	SCREW M6S ISO 4017 M6X8 A480	
510	312105-0364	-		10	SCREW M6S ISO 4017 M6X10 A480	
520	312105-0366	-		21	SCREW M6S M6X12 A280	
530	312125-0323	-		2	SCREW PAN HEAD MCS M5X8 SS	
540	312605-0316	-		23	HEXAGON NUT, M6M M6 A280	
550	312705-0316	-		25	NUT HEX. DOMED CAP MHM-6 M6 A280	
560	315105-0153	-		1	WASHER PLAIN, BRB, 6,4/12,H=1,5	
565	352100-0112	-		1	CABLE GLANR.22,5-15	
570	352101-0107	-		1	LEAD-IN, PR37/PG29, E-1457537	
580	352103-0101	-		8	CABLE GLAND, ST 9, PR15,2/PG9	
590	352103-0106	-		3	CABLE GLAND, ST 11, PR18,6/PG11	
600	352103-0111	-		2	CABLE GLAND, ST 16, PR22,5/PG16	
610	352103-0116	-		1	CABLE GLAND, ST 21, PR28,3/PG21	
620	352103-0121	-		1	CABLE GLAND, ST 29, PR37,0/PG29	

Machine Type | Group Description | Used-In | Group Number | Page No

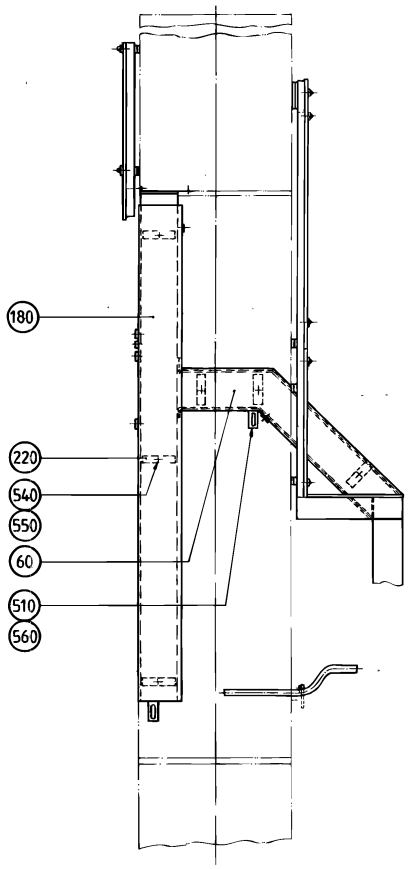

B-B

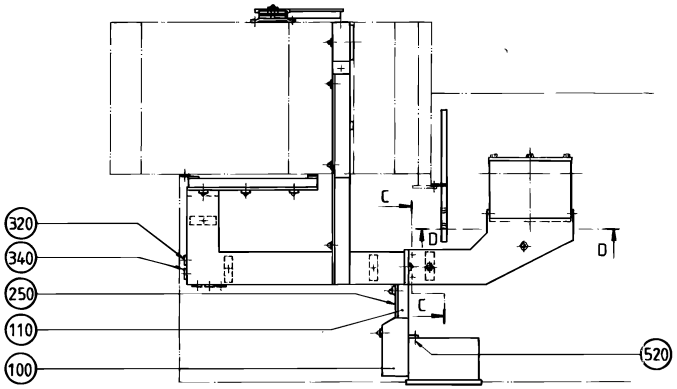

A-A

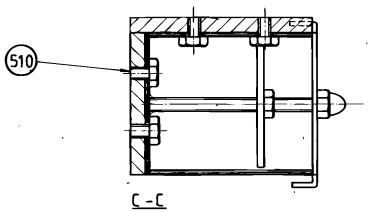

C-C
Scale 1:1

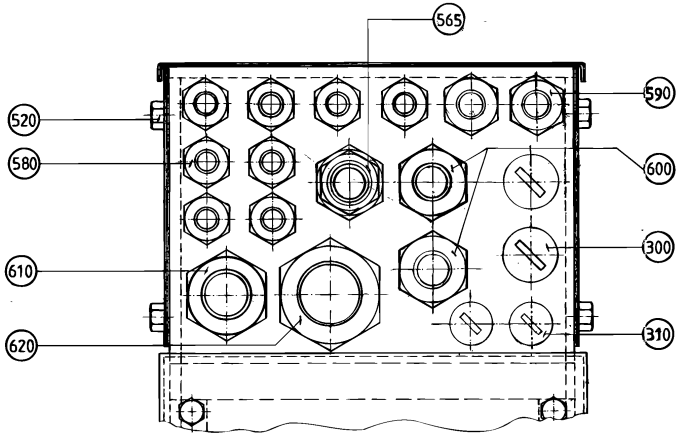

D-D
Scale 1:1

S - 1529236-2
ECN 82225

ECM: 107689 - 20020506
Group number: 1529236-0100
Assembly Drawing: 1529236-2_1_AA

Issue: 20020822

Pos	Part No	SP	UN	Qty	Description	Page No
Common Parts						
010	295463-0000	-		1	CABLE TRENCH	
020	469343-0000	-		1	CABLE TRENCH	
030	469344-0000	-		1	CABLE TRENCH	
040	469345-0000	-		1	CABLE TRENCH	
050	469346-0000	-		1	CABLE TRENCH	
060	469347-0000	-		1	LID	
070	295465-0002	-		1	LID	
080	295782-0000	-		1	CABLE TRENCH	
090	295783-0000	-		1	LID	
100	469348-0000	-		1	COVER	
110	469349-0000	-		1	CABLE TRENCH	
120	469350-0000	-		1	LID	
130	469351-0000	-		1	LID	
140	1529269-0000	-		1	CABLE DUCT	
150	1529268-0000	-		1	CABLE DUCT	
160	1529233-0000	-		1	CABLE CONDUIT	
170	441312-0000	-		1	CABLE CONDUIT	
180	469352-0000	-		1	LID	
190	469353-0000	-		1	LID	
200	2545666-0000	-		1	LID	
210	271508-0000	-		1	BRACKET	
220	272945-0000	-		7	LOCK	
230	295466-0000	-		15	LOCK	
240	295819-0003	-		1	LID	
250	B469355-0000	-		1	LID	
	90143-0054	-	*M*	*1*	*STRIP*	
300	90002-0009	-		2	BLANK-OFF PLUG, PR 18.6 SKINDICHT-BLK11	
310	90002-0013	-		2	BLANK-OFF PLUG, PR 15,2 SKINDICHT-BLK9	
320	90015-0020	-		21	LEAD-IN, TET5-7, E-1458016	
330	90015-0021	-		2	LEAD-IN, TET10-14, E-1458023	
340	90015-0023	-		1	LEAD-IN, TET7-10, E-1458019	
350	90015-0024	-		1	LEAD-IN, TET20-26, E-1458035	
360	90064-0124	-		1	SWITCH, EM. STOP, ZB2-BS844+ZB2-BZ1045	
370	90066-0021	-		1	PUSH BUTTON BOX XAP-M1501	
380	90089-0003	-		1	REDUCING SLEEVE, PR22,5/PR18,6	
390	90099-0011	-		1	NUT PR 37 BRASS	
500	312105-0362	-		6	SCREW M6S ISO 4017 M6X8 A480	
510	312105-0364	-		10	SCREW M6S ISO 4017 M6X10 A480	
520	312105-0366	-		21	SCREW M6S M6X12 A280	
530	312125-0323	-		2	SCREW PAN HEAD MCS M5X8 SS	
540	312605-0316	-		23	HEXAGON NUT, M6M M6 A280	
550	312705-0316	-		25	NUT HEX. DOMED CAP MHM-6 M6 A280	
560	315105-0153	-		1	WASHER PLAIN, BRB, 6,4/12,H=1,5	
565	352100-0112	-		1	CABLE GLANR.22,5-15	
570	352101-0107	-		1	LEAD-IN, PR37/PG29, E-1457537	
580	352103-0101	-		8	CABLE GLAND, ST 9, PR15,2/PG9	
590	352103-0106	-		3	CABLE GLAND, ST 11, PR18,6/PG11	
600	352103-0111	-		2	CABLE GLAND, ST 16, PR22,5/PG16	
610	352103-0116	-		1	CABLE GLAND, ST 21, PR28,3/PG21	
620	352103-0121	-		1	CABLE GLAND, ST 29, PR37,0/PG29	

Machine Type | Group Description | Used-In | Group Number | Page No

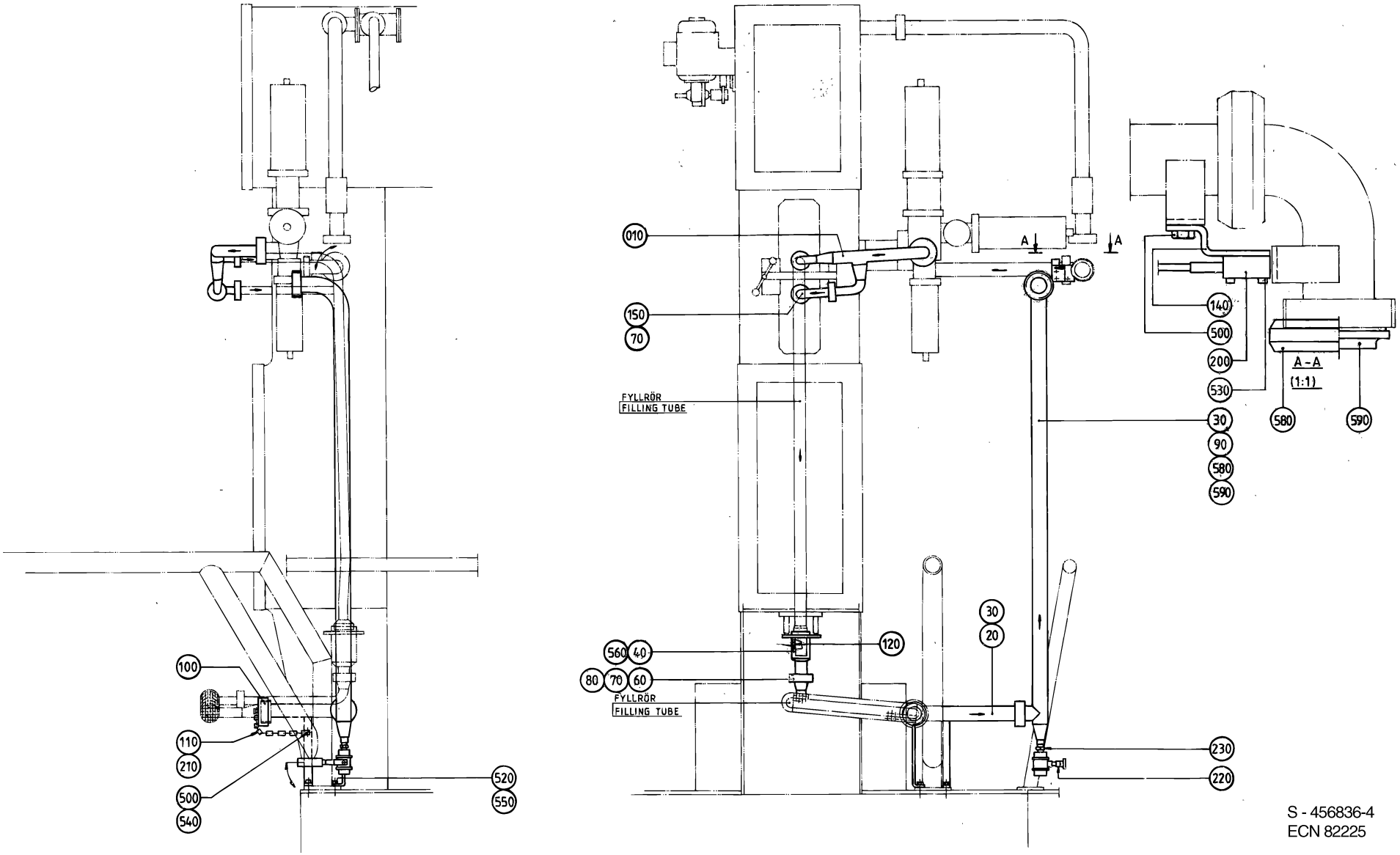

S - 456836-4
ECN 82225

ECM: 102436 - 20020207
Group number: 456836-0200
Assembly Drawing: 456836-4_1_AA

Issue: 20020822

Pos	Part No	SP	UN	Qty	Description	Page No
0200B OR 0250B						
040	469987-0000	-		1	CONTAINER	
120	295301-0000	-		1	FLUSH PIPE	
560	315204-0303	A		1	O-RING 59,5X3 MM	
0200S						
040	490896-0000	-		1	CONTAINER	
120	295300-0000	-		1	FORCE SPRING	
560	315204-0224	A		1	O-RING 42,2X3 MM	
Common Parts						
010	456901-0000	-		1	CLEANING PIPE	
020	456858-0000	-		1	PIPE	
030	456859-0002	-		1	PIPE	
060	456860-0000	-		1	PIPE	
070	12242-0001	A		2	GASKET 32X25X5,5	
080	12242-0002	A		1	GASKET 40X32X5,5	
090	12242-0003	A		4	GASKET 48X38X5,5	
100	209181-0000	-		1	LID	
110	209183-0000	-		1	RING	
140	456857-0000	-		1	BRACKET	
150	456902-0000	-		1	PIPE	
200	90044-0104	-		1	PROX.SWITCH IFM IN 3002	
210	90155-0008	-	MM	200	HANGER CHAIN, 18	
220	90187-0051	-		1	BALL VALVE G3/8 PTFE	
230	90330-0028	-		1	NIPPLES, EXT. THREAD. R-207R3/8	
500	312105-0364	-		3	SCREW M6S ISO 4017 M6X10 A480	
520	312105-0455	-		2	SCREW M6S ISO 4017 M8X30 A480	
530	312125-0228	-		2	SCREW PAN HEAD MCS M3X16 A480	
540	315105-0153	-		1	WASHER PLAIN, BRB, 6,4/12,H=1,5	
550	315105-0165	-		2	WASHER PLAIN, BRB, 8,4/16,H=1,5	
580	342803-0103	-		2	UNION NUT, RD 60-6 (SMS 38)	
590	342812-0103	-		2	FERRULE, SMS 1145, 2333, NO. 190706	

Pos	Part No	SP	UN	Qty	Description	Page No

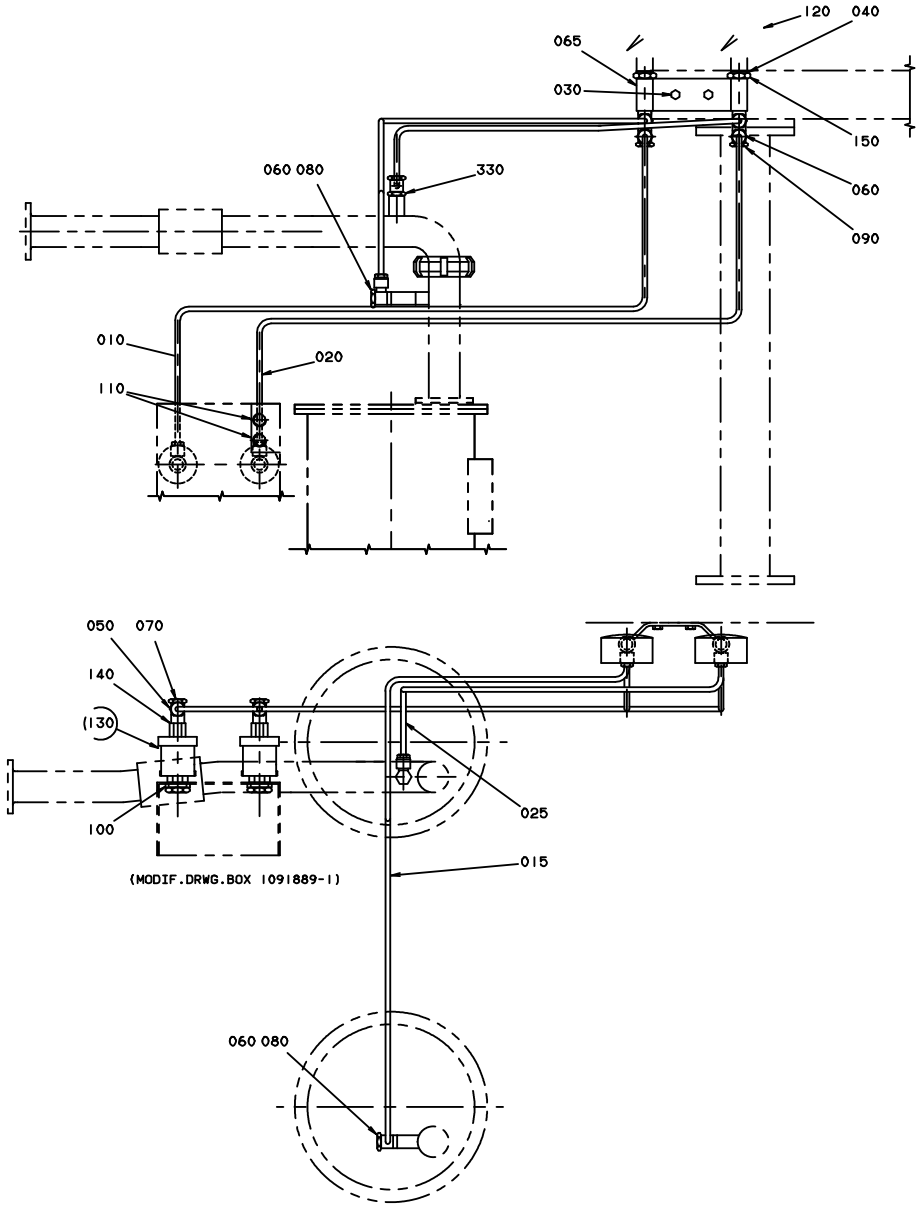
120
040
065
030
150
060
090
060 080
330
010
020
110
050
070
140
130
100
025
015
(MODIF.DRWG.BOX 1091889-1)
060 080

Pos	Part No	SP	UN	Qty	Description	Page No
SOURCE,TBA/9-100V OR SOURCE,TBA/9-110V						
015	491019-0000	-		1	PIPE	
330	90330-0042	-		2	BUSHING, INT/EXT. THR. R3/8-RP1/4	
SOURCE,TBA/9-120V						
015	491778-0000	-		1	PIPE	
Common Parts						
010	1091882-0000	-		1	PIPE	
020	1091883-0000	-		1	PIPE	
025	491020-0000	-		1	PIPE	
030	312105-0366	-		2	SCREW M6S M6X12 A280	
040	315234-0110	-		2	WASHER,PL.RND.CU.13,5/18 H=1,5	
050	342797-0121	-		2	CONN. BANJO, RINGPIECE 6-1/8	
060	342797-0122	-		6	CONN. BANJO, RINGPIECE 6-1/4	
065	978596-0000	-		1	CANTILEVER	
070	342980-0303	-		2	BANJO-HOLLOW BOLT COUPL,EXT.THR.01-G1/8"	
080	342980-0304	-		2	BANJO-HOLLOW BOLT COUPL,EXT.THR.01-G1/4"	
090	342980-0314	-		2	BANJO-HOLLOW BOLT COUPL,EXT.THR.02-G1/4"	
100	479234-0000	-		2	WASHER	
110	90002-0013	-		2	BLANK-OFF PLUG, PR 15,2 SKINDICHT-BLK9	
120	90043-0095	-		2	PRESSURE GAUGE, 2740, D=63 MM, GLYC.	
130	90274-0045	-		2	PRESSURE GUARD, 14 KPA	
140	90330-0012	-		2	SLEEVE, REDUCTION, INT, R-2021/4X1/8	
150	90330-0120	-		2	NUT, HEXAGON, G1/4	

Pos	Part No	SP	UN	Qty	Description	Page No

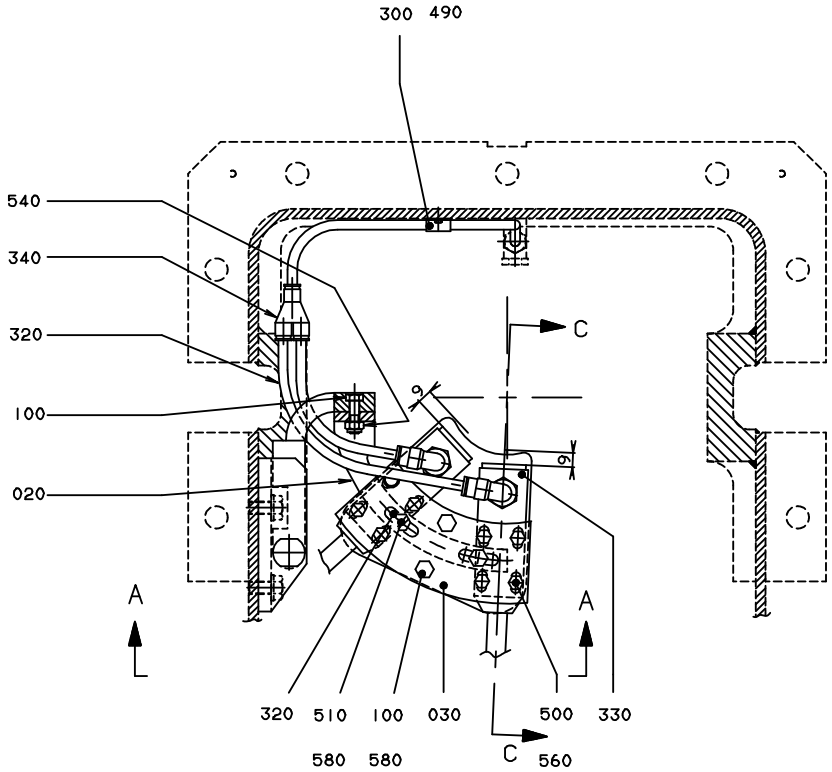

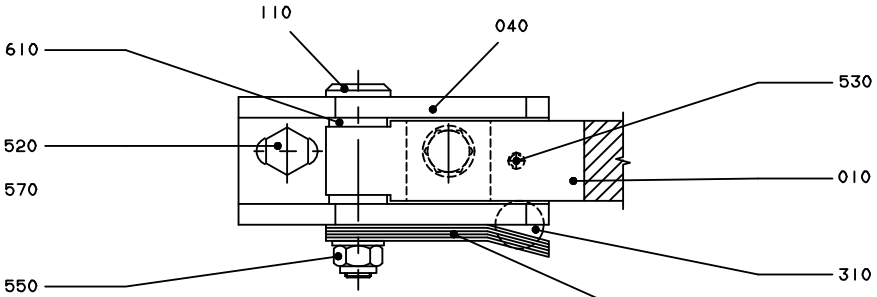

SNITT/SECTION B-B
SKALA/SCALE 1:1

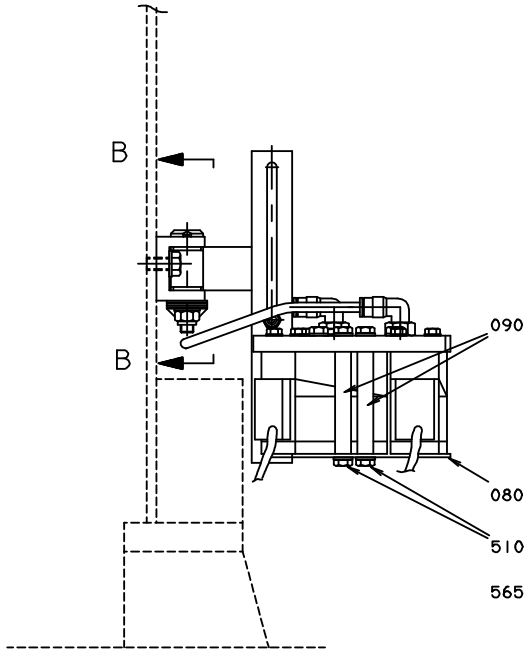

VY/VIEW A-A

SNITT C-C SE BLAD 4
SECTION C-C LOOK SHEET 4

ECM: 102430 - 20020207
Group number: 1529266-0100
Assembly Drawing: 1529266-1_1_AA

Issue: 20020822

Pos	Part No	SP	UN	Qty	Description	Page No
0200B OR 0250B						
020	751457-0000	B		1	CANTILEVER	
030	978735-0000	B		1	FASTENING PLATE	
080	1260486-0000	-		1	PLATE	
090	1260490-0000	-		2	NUT	
150	536374-0000	-		2	WASHER	
500	312105-0329	-		10	SCREW M6S ISO 4017 M5X16 A480	
0200S						
020	751476-0000	-		1	CANTILEVER	
030	491880-0000	-		1	FASTENING PLATE	
060	752554-0000	-		4	SPACER	
080	1260487-0000	-		1	PLATE	
090	1260491-0000	-		2	NUT	
170	312109-0335	-		8	SCREW M6S ISO 4017 M5X30 A480	
500	312105-0329	-		2	SCREW M6S ISO 4017 M5X16 A480	
Common Parts						
010	751456-0000	-		1	HOLDER	
040	490876-0000	-		1	BRACKET	
100	312105-0370	-		4	SCREW M6S ISO 4017 M6X20 A480	
110	457367-0000	A		1	SHAFT	
120	457368-0000	A		5	SPRING	
300	90074-0001	-		1	CABLE CLIPS, D=10 MM	
310	90090-0016	-		1	BALL, D=15 MM	
320	90166-0124	-	MM	750	TUBE 6 MM PA,TRANSP.	
330	B90458-0601	-		2	PHOTOCELL, SICK PHOTOCELL 1	
	342732-0102	*-*		*1*	*ELBOW PIPE JOINT, EXT.THREAD, D=6MM-G1/8*	
340	90055-0100	-		1	Y-CONNECTION, 6-6	
490	312105-0287	-		1	SCREW M6S ISO 4017 M4X8 A480	
510	312105-0366	-		4	SCREW M6S M6X12 A280	
520	312105-0449	-		2	SCREW M6S ISO 4017 M8X16 A480	
530	312318-0325	-		1	SCREW HEX.SOCK.SET CUP P.MSK6SS5X10 SS	
540	312812-0316	-		2	HEXAGON NUT, NY-LOCK M6 A480	
550	312812-0318	-		1	HEXAGON NUT, NY-LOCK M8 A480	
560	315105-0146	-		8	WASHER PLAIN, BRB, 5,3/10,H=1	
565	315105-0153	-		2	WASHER PLAIN, BRB, 6,4/12,H=1,5	
570	315115-0165	-		3	WASHER PLAIN, TBRB 8,4/16 H=3	
580	315115-0153	-		4	WASHER PLAIN, TBRB 6,4/12 H=3	
610	321101-0143	-		2	FLANGE BUS 8F7X8	

Pos	Part No	SP	UN	Qty	Description	Page No

Machine Type | Group Description | Used-In | Group Number | Page No

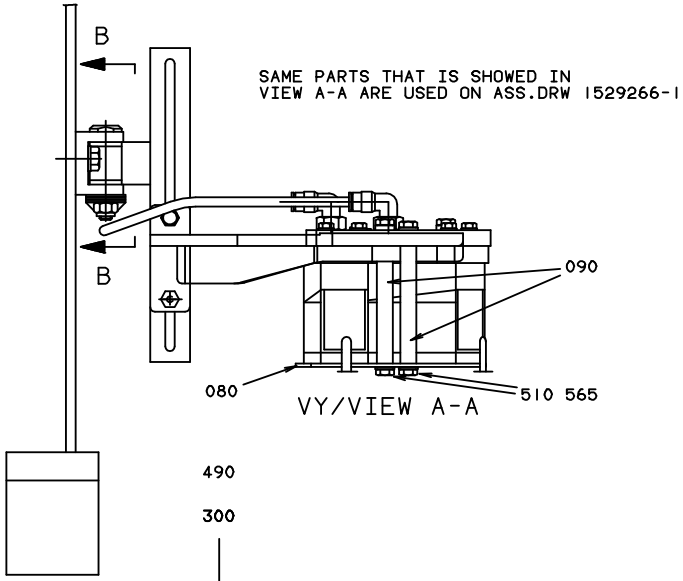

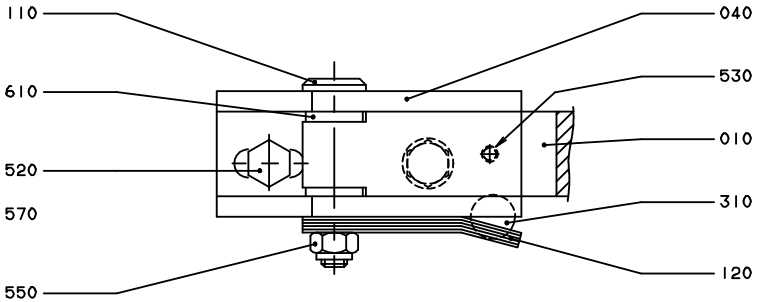

B-B
SKALA/SCALE 1:1

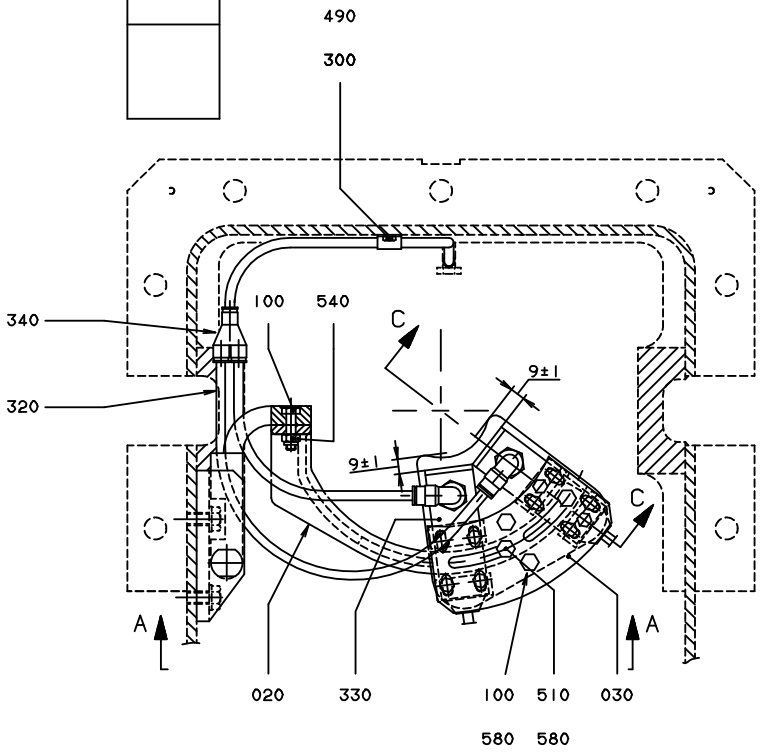

SNITT C-C SE BLAD 3
SECTION C-C LOOK SHEET 3

ECM: 102430 - 20020207
Group number: 1529266-0100
Assembly Drawing: 1529266-2_1_AA

Issue: 20020822

Pos	Part No	SP	UN	Qty	Description	Page No
0200B OR 0250B						
020	751457-0000	B		1	CANTILEVER	
030	978735-0000	B		1	FASTENING PLATE	
080	1260486-0000	-		1	PLATE	
090	1260490-0000	-		2	NUT	
150	536374-0000	-		2	WASHER	
500	312105-0329	-		10	SCREW M6S ISO 4017 M5X16 A480	
0200S						
020	751476-0000	-		1	CANTILEVER	
030	491880-0000	-		1	FASTENING PLATE	
060	752554-0000	-		4	SPACER	
080	1260487-0000	-		1	PLATE	
090	1260491-0000	-		2	NUT	
170	312109-0335	-		8	SCREW M6S ISO 4017 M5X30 A480	
500	312105-0329	-		2	SCREW M6S ISO 4017 M5X16 A480	
Common Parts						
010	751456-0000	-		1	HOLDER	
040	490876-0000	-		1	BRACKET	
100	312105-0370	-		4	SCREW M6S ISO 4017 M6X20 A480	
110	457367-0000	A		1	SHAFT	
120	457368-0000	A		5	SPRING	
300	90074-0001	-		1	CABLE CLIPS, D=10 MM	
310	90090-0016	-		1	BALL, D=15 MM	
320	90166-0124	-	MM	750	TUBE 6 MM PA,TRANSP.	
330	B90458-0601	-		2	PHOTOCELL, SICK PHOTOCELL 1	
	342732-0102	-		*1*	*ELBOW PIPE JOINT, EXT.THREAD, D=6MM-G1/8*	
340	90055-0100	-		1	Y-CONNECTION, 6-6	
490	312105-0287	-		1	SCREW M6S ISO 4017 M4X8 A480	
510	312105-0366	-		4	SCREW M6S M6X12 A280	
520	312105-0449	-		2	SCREW M6S ISO 4017 M8X16 A480	
530	312318-0325	-		1	SCREW HEX.SOCK.SET CUP P.MSK6SS5X10 SS	
540	312812-0316	-		2	HEXAGON NUT, NY-LOCK M6 A480	
550	312812-0318	-		1	HEXAGON NUT, NY-LOCK M8 A480	
560	315105-0146	-		8	WASHER PLAIN, BRB, 5,3/10,H=1	
565	315105-0153	-		2	WASHER PLAIN, BRB, 6,4/12,H=1,5	
570	315115-0165	-		3	WASHER PLAIN, TBRB 8,4/16 H=3	
580	315115-0153	-		4	WASHER PLAIN, TBRB 6,4/12 H=3	
610	321101-0143	-		2	FLANGE BUS 8F7X8	

Pos	Part No	SP	UN	Qty	Description	Page No

Machine Type | Group Description | Used-In | Group Number | Page No

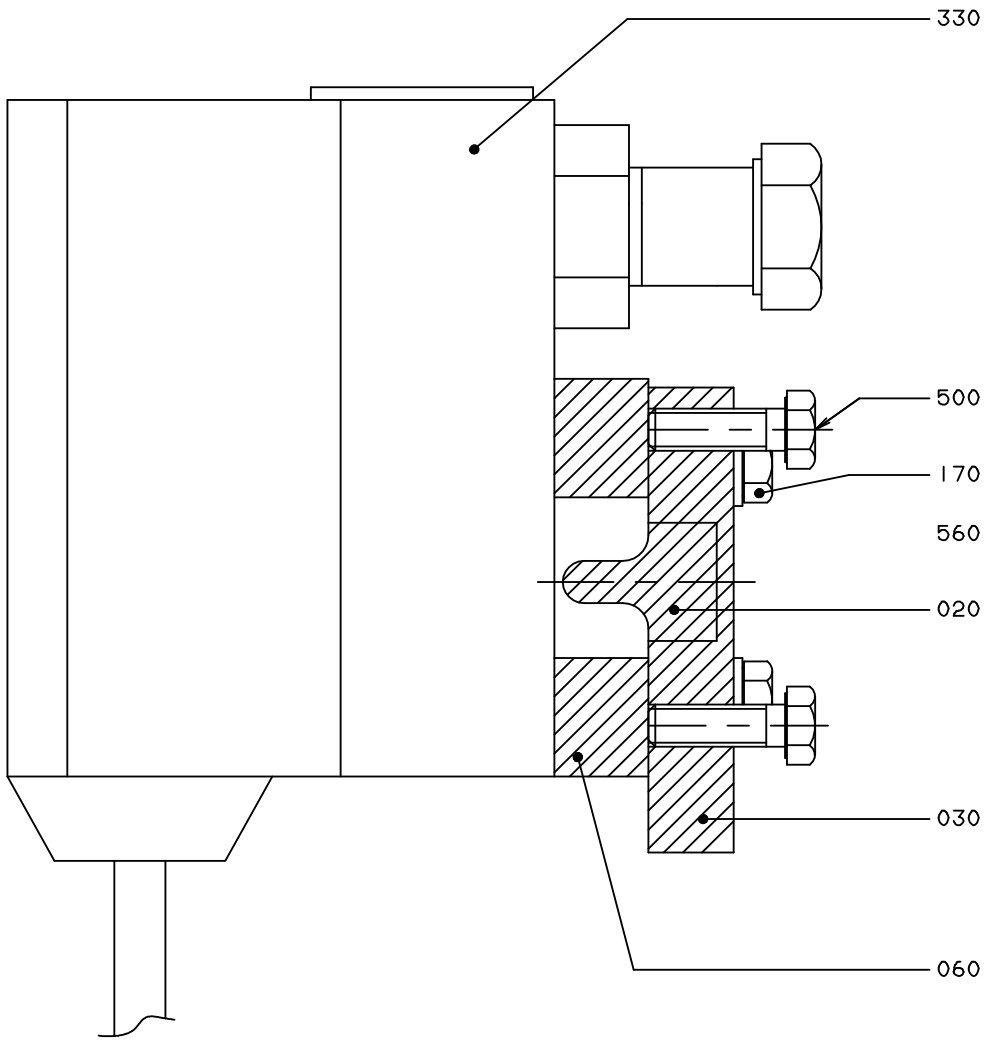

SNITT/SECTION C-C
Volume ,200ML SLIM

T

ECM: 102430 - 20020207
Group number: 1529266-0100
Assembly Drawing: 1529266-3_1_AA

Issue: 20020822

Pos	Part No	SP	UN	Qty	Description	Page No
0200B OR 0250B						
020	751457-0000	B		1	CANTILEVER	
030	978735-0000	B		1	FASTENING PLATE	
080	1260486-0000	-		1	PLATE	
090	1260490-0000	-		2	NUT	
150	536374-0000	-		2	WASHER	
500	312105-0329	-		10	SCREW M6S ISO 4017 M5X16 A480	
0200S						
020	751476-0000	-		1	CANTILEVER	
030	491880-0000	-		1	FASTENING PLATE	
060	752554-0000	-		4	SPACER	
080	1260487-0000	-		1	PLATE	
090	1260491-0000	-		2	NUT	
170	312109-0335	-		8	SCREW M6S ISO 4017 M5X30 A480	
500	312105-0329	-		2	SCREW M6S ISO 4017 M5X16 A480	
Common Parts						
010	751456-0000	-		1	HOLDER	
040	490876-0000	-		1	BRACKET	
100	312105-0370	-		4	SCREW M6S ISO 4017 M6X20 A480	
110	457367-0000	A		1	SHAFT	
120	457368-0000	A		5	SPRING	
300	90074-0001	-		1	CABLE CLIPS, D=10 MM	
310	90090-0016	-		1	BALL, D=15 MM	
320	90166-0124	-	MM	750	TUBE 6 MM PA,TRANSP.	
330	B90458-0601	-		2	PHOTOCELL, SICK PHOTOCELL 1	
	342732-0102	*-*		*1*	*ELBOW PIPE JOINT, EXT.THREAD, D=6MM-G1/8*	
340	90055-0100	-		1	Y-CONNECTION, 6-6	
490	312105-0287	-		1	SCREW M6S ISO 4017 M4X8 A480	
510	312105-0366	-		4	SCREW M6S M6X12 A280	
520	312105-0449	-		2	SCREW M6S ISO 4017 M8X16 A480	
530	312318-0325	-		1	SCREW HEX.SOCK.SET CUP P.MSK6SS5X10 SS	
540	312812-0316	-		2	HEXAGON NUT, NY-LOCK M6 A480	
550	312812-0318	-		1	HEXAGON NUT, NY-LOCK M8 A480	
560	315105-0146	-		8	WASHER PLAIN, BRB, 5,3/10,H=1	
565	315105-0153	-		2	WASHER PLAIN, BRB, 6,4/12,H=1,5	
570	315115-0165	-		3	WASHER PLAIN, TBRB 8,4/16 H=3	
580	315115-0153	-		4	WASHER PLAIN, TBRB 6,4/12 H=3	
610	321101-0143	-		2	FLANGE BUS 8F7X8	

Pos	Part No	SP	UN	Qty	Description	Page No

Machine Type | Group Description | Used-In | Group Number | Page No

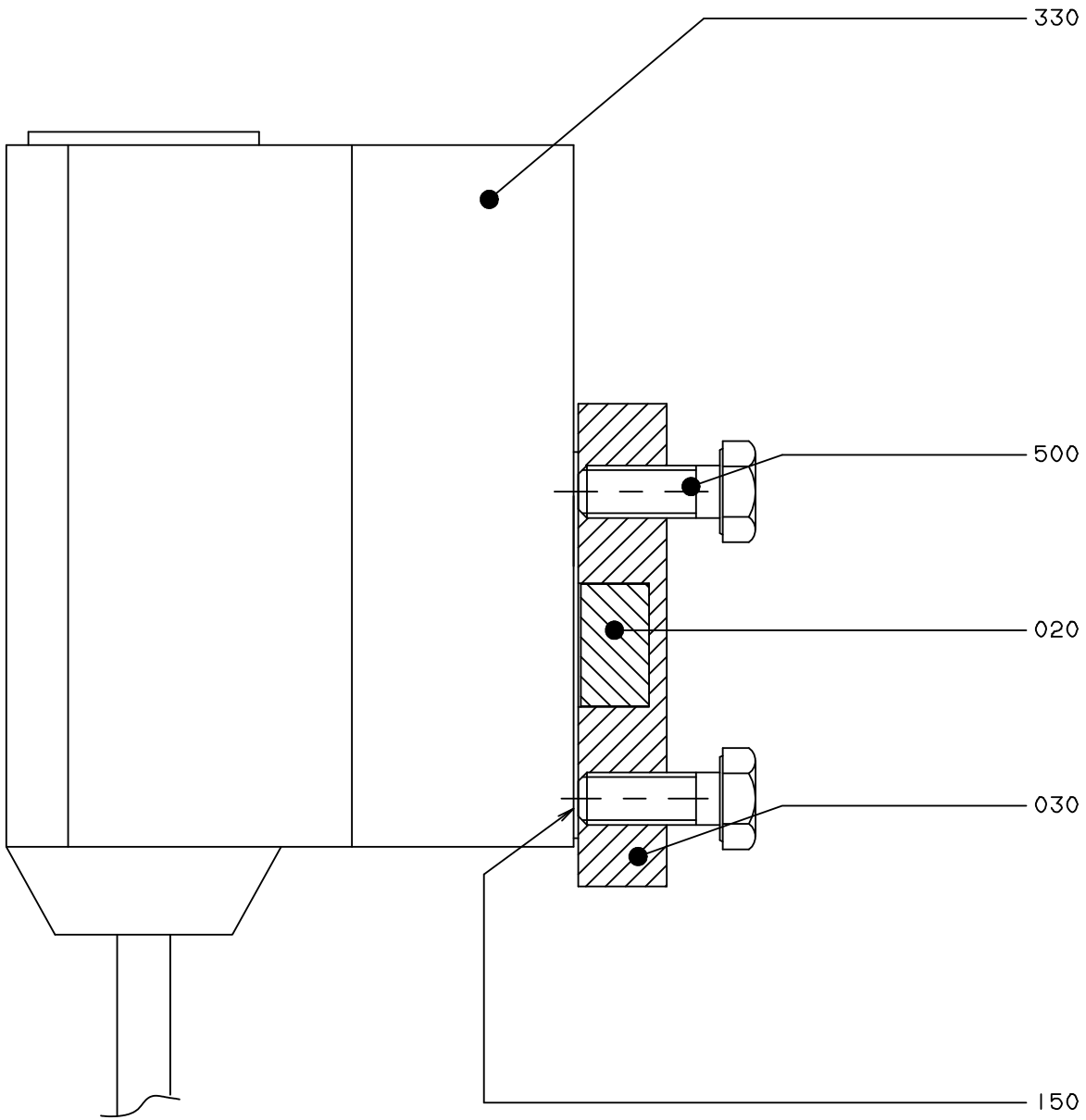
330
500
020
030
150

Pos	Part No	SP	UN	Qty	Description	Page No
0200B OR 0250B						
020	751457-0000	B		1	CANTILEVER	
030	978735-0000	B		1	FASTENING PLATE	
080	1260486-0000	-		1	PLATE	
090	1260490-0000	-		2	NUT	
150	536374-0000	-		2	WASHER	
500	312105-0329	-		10	SCREW M6S ISO 4017 M5X16 A480	
0200S						
020	751476-0000	-		1	CANTILEVER	
030	491880-0000	-		1	FASTENING PLATE	
060	752554-0000	-		4	SPACER	
080	1260487-0000	-		1	PLATE	
090	1260491-0000	-		2	NUT	
170	312109-0335	-		8	SCREW M6S ISO 4017 M5X30 A480	
500	312105-0329	-		2	SCREW M6S ISO 4017 M5X16 A480	
Common Parts						
010	751456-0000	-		1	HOLDER	
040	490876-0000	-		1	BRACKET	
100	312105-0370	-		4	SCREW M6S ISO 4017 M6X20 A480	
110	457367-0000	A		1	SHAFT	
120	457368-0000	A		5	SPRING	
300	90074-0001	-		1	CABLE CLIPS, D=10 MM	
310	90090-0016	-		1	BALL, D=15 MM	
320	90166-0124	-	MM	750	TUBE 6 MM PA,TRANSP.	
330	B90458-0601	-		2	PHOTOCELL, SICK PHOTOCELL 1	
	342732-0102	*-*		*1*	*ELBOW PIPE JOINT, EXT.THREAD, D=6MM-G1/8*	
340	90055-0100	-		1	Y-CONNECTION, 6-6	
490	312105-0287	-		1	SCREW M6S ISO 4017 M4X8 A480	
510	312105-0366	-		4	SCREW M6S M6X12 A280	
520	312105-0449	-		2	SCREW M6S ISO 4017 M8X16 A480	
530	312318-0325	-		1	SCREW HEX.SOCK.SET CUP P.MSK6SS5X10 SS	
540	312812-0316	-		2	HEXAGON NUT, NY-LOCK M6 A480	
550	312812-0318	-		1	HEXAGON NUT, NY-LOCK M8 A480	
560	315105-0146	-		8	WASHER PLAIN, BRB, 5,3/10,H=1	
565	315105-0153	-		2	WASHER PLAIN, BRB, 6,4/12,H=1,5	
570	315115-0165	-		3	WASHER PLAIN, TBRB 8,4/16 H=3	
580	315115-0153	-		4	WASHER PLAIN, TBRB 6,4/12 H=3	
610	321101-0143	-		2	FLANGE BUS 8F7X8	

Pos	Part No	SP	UN	Qty	Description	Page No

Machine Type | Group Description | Used-In | Group Number | Page No

This page is intentionally left blank.

ECM: 72934 - 20020125
Group number: 295778-0200
Assembly Drawing:

Issue: 20020822

Pos	Part No	SP	UN	Qty	Description	Page No
0200S						
120	272479-0000	-		1	PRESSURE ROLLER	
0200B OR 0250B						
070	257330-0000	-		1	PRESSURE ROLLER	
Common Parts						
020	267494-0000	-		1	COIL HEATER	
050	12242-0003	-		2	GASKET 48X38X5,5	
060	230551-0000	-		2	GASKET	
080	531742-0000	-		2	GASKET	
110	271461-0000	-		1	GASKET	
150	295388-0000	-		1	GASKET	
153	441721-0000	-		1	GASKET	
160	90206-0031	-		1	HEATING ELEMENT 700+1200W,220V	
180	B90206-0070	-		1	HEATING ELEMENT 6000W 380/220V	
	90206-0326	*-*		*1*	*JUNCTION BOX FOR 90206-56*	
	90269-0308	*-*		*1*	*GASKET 59X68X3 MM*	
200	315204-0214	-		1	O-RING 17,3X2,4 MM	
210	90242-0084	-		2	O-RING 203,0X3 MM	
220	90415-0316	-		1	FILTER / 6051-200-SS	
230	90424-0304	-		1	GASKET	
240	315204-0218	-		1	O-RING 26,2X3 MM	
260	315204-0223	-		2	O-RING 39,2X3 MM	
F010	499255-0101	-		1	SEAL KIT**	

Pos	Part No	SP	UN	Qty	Description	Page No

Machine Type | Group Description | Used-In | Group Number | Page No

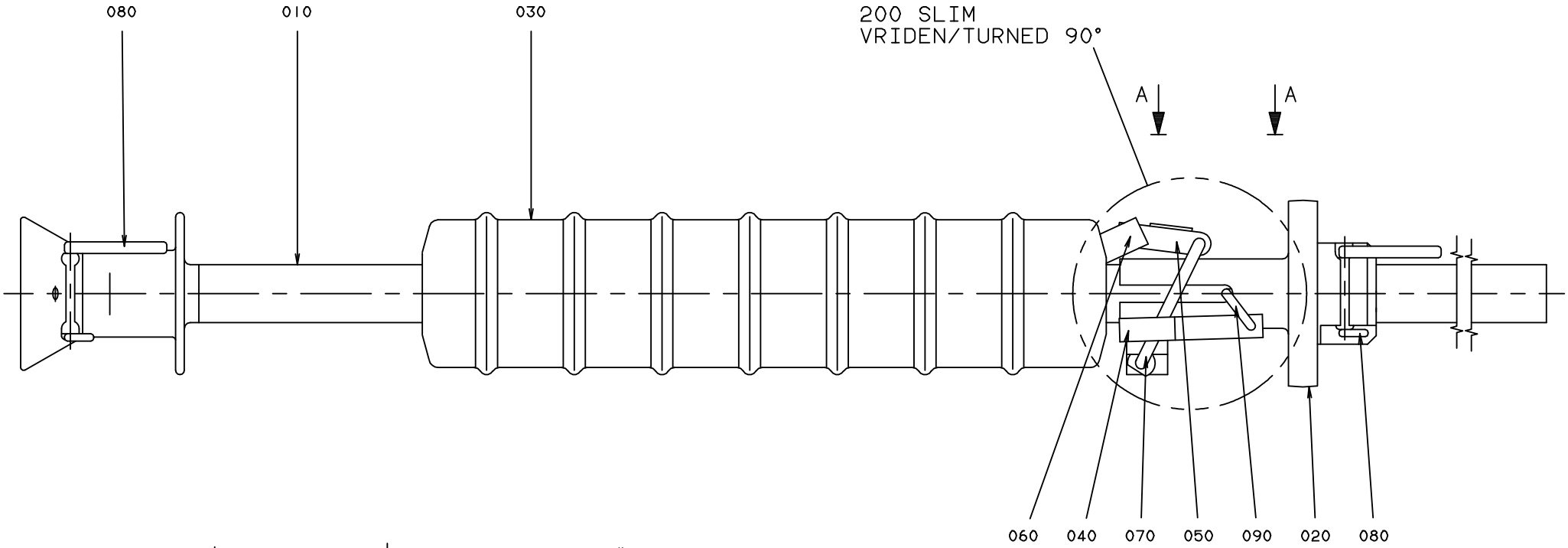

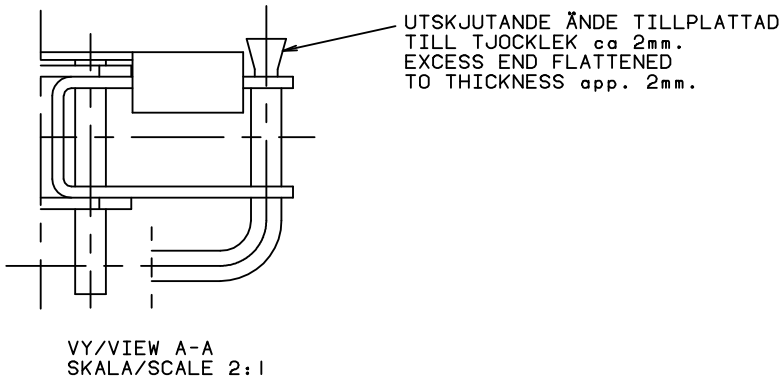

VY/VIEW A-A
SKALA/SCALE 2:1

ECM: 101197 - 20011128
Group number: 1529339-0100
Assembly Drawing: 1529339-1_1_AB

Issue: 20020822

Pos	Part No	SP	UN	Qty	Description	Page No
0200B						
010	469972-0001	-		1	FILLING TUBE LOWER	
020	469973-0000	-		1	PRESSURE FLANGE	
030	550487-0000	-		1	FLOAT	
040	36816-0000	-		1	LINK	
050	36817-0000	-		1	CLAMPING ELEMENT	
070	37296-0000	-		1	ARM	
080	38535-0002	-		2	LOCKING FINGER	
090	295987-0000	-		1	THROTTLE	
0200S						
010	491270-0000	-		1	FILLING TUBE LOWER	
020	491271-0000	-		1	PRESSURE FLANGE	
030	491142-0000	-		1	FLOAT	
040	271348-0000	-		1	LINK	
050	1091813-0000	-		1	LINK	
070	271347-0000	-		1	ARM	
080	978562-0000	-		2	LOCKING FINGER	
090	491141-0000	-		1	THROTTLE	
0250B						
010	469972-0002	-		1	FILLING TUBE LOWER	
020	469973-0000	-		1	PRESSURE FLANGE	
030	550487-0000	-		1	FLOAT	
040	36816-0000	-		1	LINK	
050	36817-0000	-		1	CLAMPING ELEMENT	
070	37296-0000	-		1	ARM	
080	38535-0002	-		2	LOCKING FINGER	
090	295987-0000	-		1	THROTTLE	
Common Parts						
060	2502976-0000	-		1	PIN	

Pos	Part No	SP	UN	Qty	Description	Page No

Machine Type	Group Description	Used-In	Group Number	Page No

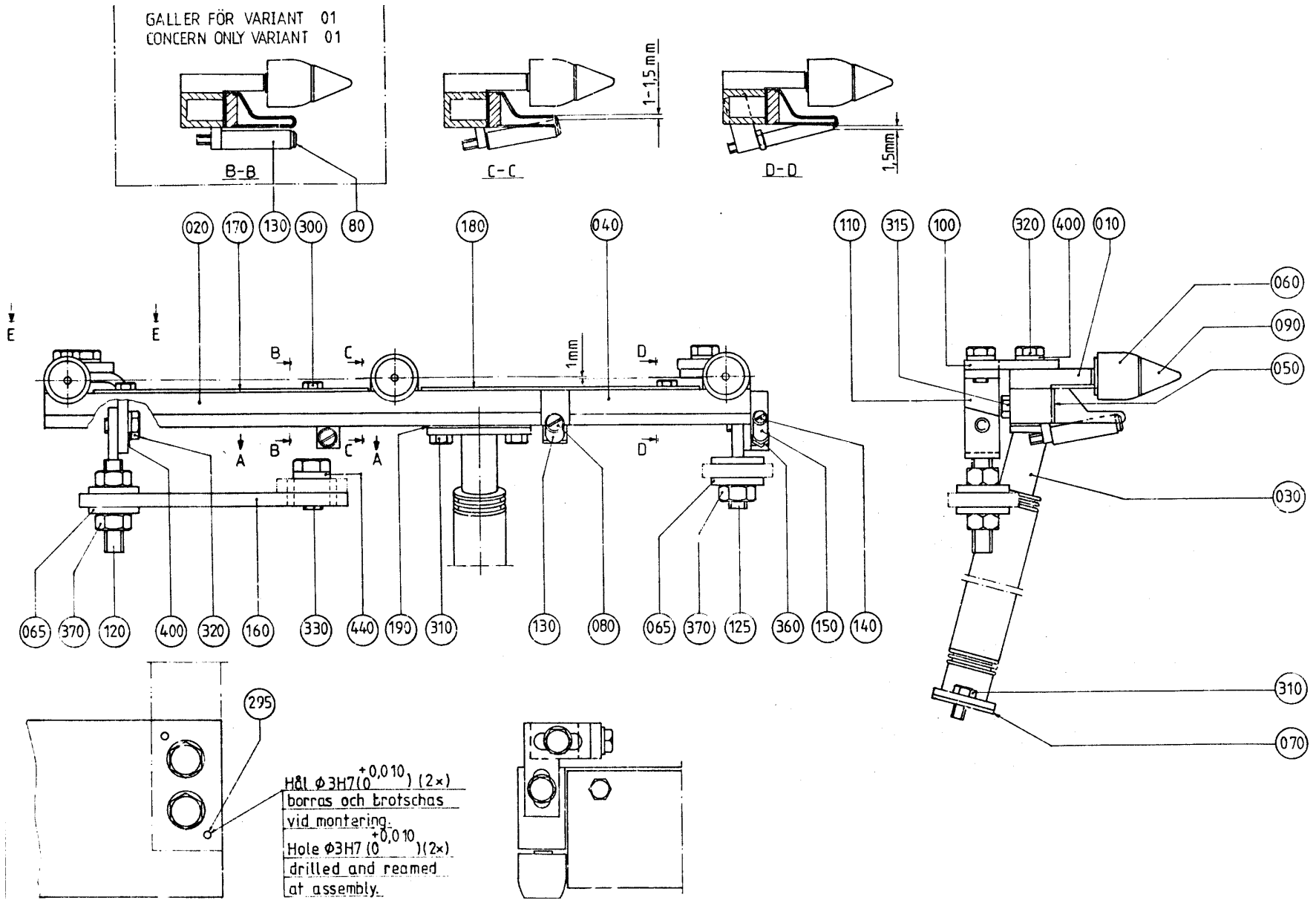
GALLER FÖR VARIANT 01
CONCERN ONLY VARIANT 01
B-B
C-C
D-D
1-1,5 mm
1,5mm
1mm
020 170 130 300 80 180 040
110 315 100 320 400 010
060 090 050 030 310 070
065 370 120 400 320 160 330 440 190 310 130 080 065 370 125 360 150 140
295
Hål Ø3H7(0 +0,010) (2×)
borras och trotschas
vid montering.
Hole Ø3H7 (0 +0,010)(2×)
drilled and reamed
at assembly.

Pos	Part No	SP	UN	Qty	Description	Page No
0200S						
080-02	256899-0000	A		2	SHAFT	
130-02	469461-0000	A		2	ROLL	
0200B OR 0250B						
080	256899-0000	A		1	SHAFT	
130	469461-0000	A		1	ROLL	
Common Parts						
010	469416-0000	B		1	ATTACHMENT	
020	469418-0000	A		1	AIR NOZZLE	
030	469792-0000	B		1	PIPE-LINE	
040	469420-0000	B		1	AIR NOZZLE	
050	491983-0000	A		1	GASKET	
060	6161-0000	A		3	ROLL	
065	28036-0000	-		4	WASHER	
070	751010-0000	A		1	GASKET	
090	272095-0000	A		3	SHAFT	
100	469458-0000	-		2	BRACKET	
110	469459-0000	-		2	BRACKET	
120	469460-0000	-		1	BRACKET	
125	491143-0000	-		1	BRACKET	
140	469463-0000	A		1	SHAFT	
150	469464-0000	A		1	ROLL	
160	491178-0000	-		1	BRACKET	
170	469466-0000	-		1	PLATE	
180	469467-0000	-		1	PLATE	
190	751024-0000	-		1	GASKET	
295	311103-0234	-		2	PARALLELL PIN, M6, 3X12 MM	
300	312105-0287	-		3	SCREW M6S ISO 4017 M4X8 A480	
310	312105-0325	-		4	SCREW M6S ISO 4017 M5X10 A480	
315	312105-0333	-		5	SCREW M6S ISO 4017 M5X25 A480	
320	312105-0366	-		6	SCREW M6S M6X12 A280	
330	312105-0449	-		2	SCREW M6S ISO 4017 M8X16 A480	
360	312605-0312	-		1	HEXAGON NUT, M6M M4 A280	
370	312605-0318	-		3	HEXAGON NUT, M6M M8 A280	
400	315105-0153	-		6	WASHER PLAIN, BRB, 6,4/12,H=1,5	
440	315115-0165	-		2	WASHER PLAIN, TBRB 8,4/16 H=3	

Pos	Part No	SP	UN	Qty	Description	Page No

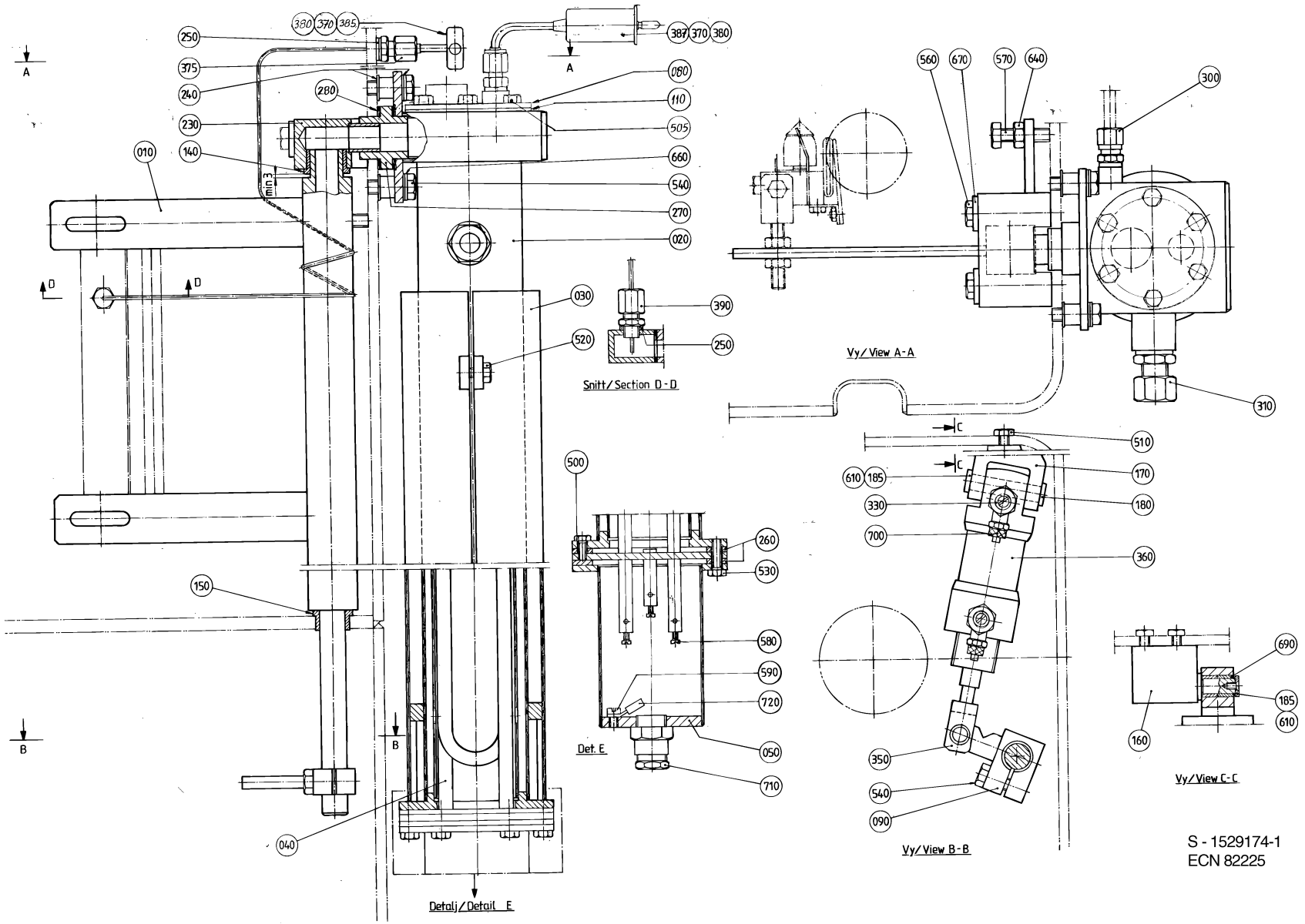
Snitt/Section D-D
Vy/View A-A
Vy/View B-B
Vy/View C-C
Detalj/Detail E
Det. E
S - 1529174-1
ECN 82225

ECM: 102407 - 20020207
Group number: 1529174-0100
Assembly Drawing: 1529174-1_1_AA

Issue: 20020822

Pos	Part No	SP	UN	Qty	Description	Page No
Common Parts						
010	256056-0000	-		1	PIVOT ARM	
020	491643-0000	-		1	HEATING PIPE	
030	272114-0000	-		1	HEAT GUARD	
040	441804-0000	-		1	COIL HEATER	
050	491170-0000	-		1	COVER	
080	751734-0000	-		1	LID	
090	256063-0000	-		1	CYLINDER BRACKET	
110	751735-0000	-		1	GASKET	
140	295909-0000	-		1	BUSHING	
150	271269-0000	-		1	BUSHING	
160	271345-0000	-		1	BRACKET	
170	271346-0000	-		1	FORK	
180	271423-0005	-		1	SHAFT	
185	271844-0000	-		2	WASHER	
230	272286-0000	-		1	AXLE SUPPORT	
240	751019-0000	-		8	WASHER	
250	273429-0000	-		2	WASHER	
260	751020-0000	-		2	GASKET	
270	295936-0000	-		1	BUSHING	
280	751023-0000	-		2	GASKET	
300	90030-0184	-		1	CONN. STR. GA-6-G1/8	
310	90030-0187	-		1	CONN. STR. GA-12-G3/8	
330	90235-0275	-		2	THROTTLE CHECK VALVES,G1/4"	
350	90239-0127	-		1	BRACKET	
360	B90239-0189	-		1	CYLINDER	
	90285-0094	*C*		*1*	*SEAL KIT*	
370	90326-0012	-		2	PROTECTIVE COVER, T31A4618	
375	90326-0306	-		1	GLAND FITTING 9041-45-KS-KR.1/8" D=4,5MM	
380	90326-0020	-		2	PLUG, FEMALE YELLOW CR-AL	
385	B90326-0048	A		1	THERMOCOUPLE, 12826-31	
	90326-0304	*-*		*1*	*LEAD IN, 9041-15-KS-UB60*	
387	90326-0052	-		1	THERMO ELEMENT	
390	90326-0304	-		1	LEAD IN, 9041-15-KS-UB60	
500	312105-0327	-		2	SCREW M6S ISO 4017 M5X12 A480	
505	312105-0364	-		6	SCREW M6S ISO 4017 M6X10 A480	
510	312105-0366	-		2	SCREW M6S M6X12 A280	
520	312105-0368	-		4	SCREW M6S M6X16 A280	
530	312105-0370	-		6	SCREW M6S ISO 4017 M6X20 A480	
540	312105-0453	-		5	SCREW M6S ISO 4017 M8X25 A480	
560	312105-0462	-		2	SCREW M6S ISO 4014 M8X55 A480	
570	312109-0457	-		1	SCREW M6S ISO 4017 M8X35 A480	
580	312125-0226	-		3	SCREW PAN HEAD MCS M3X12 SS	
590	312125-0323	-		1	SCREW PAN HEAD MCS M5X8 SS	
610	312145-0287	-		2	SCREW COUNTERS.SLOT.HD. MFS 4X8 SS	
640	312605-0318	-		1	HEXAGON NUT, M6M M8 A280	
660	315105-0165	-		4	WASHER PLAIN, BRB, 8,4/16,H=1,5	
670	315125-0165	-		2	WASHER PLAIN ROUND,CHAMF. 8,4/26, H=5	
690	321127-0100	-		2	BEARING BUSHING WITHOUT FL, 10X13X10 MM	
700	342980-0114	-		2	BANJO-CONNECTION,RING 6/4-G1/4"	
710	352100-0106	-		1	CABLE GLANR.18,6-10,5	
720	353101-0132	-		1	CABLE SHOE, RING ø5,3MM	

Machine Type | Group Description | Used-In | Group Number | Page No

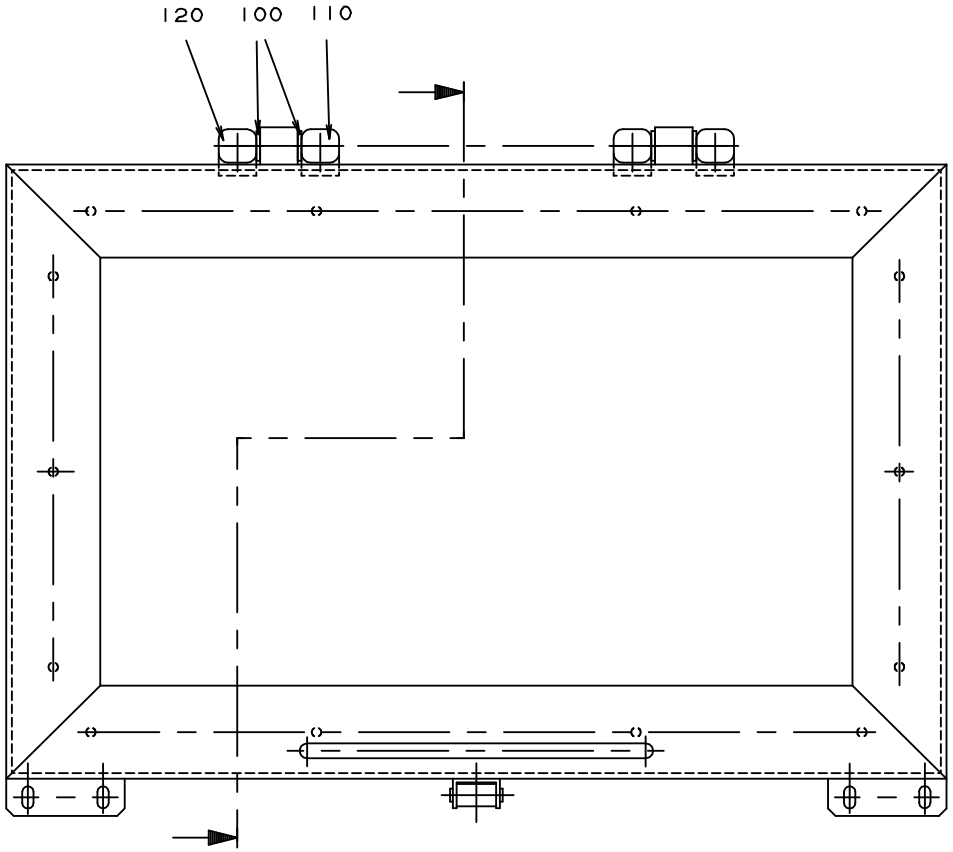
120
100
110

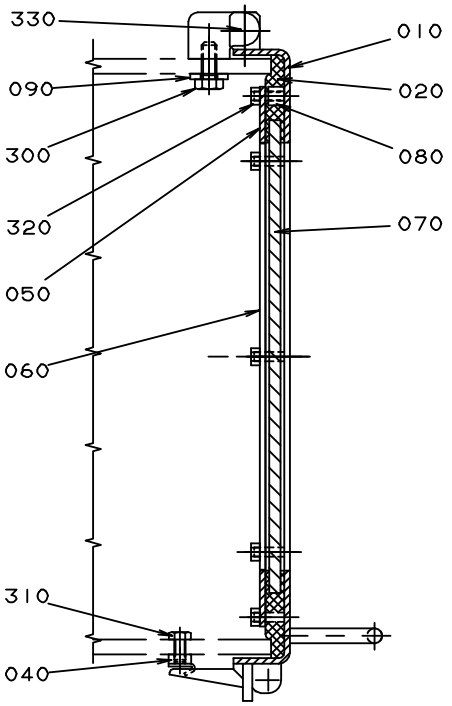
330
010
090
020
300
080
320
070
050
060
310
040

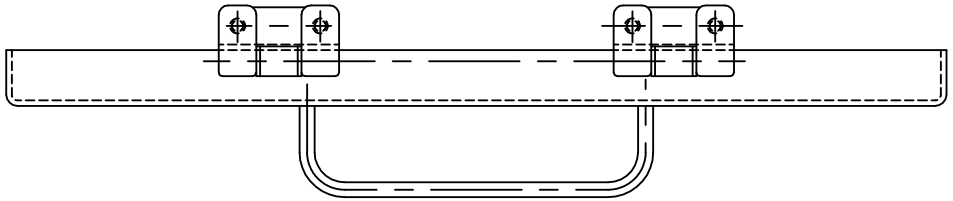

ECM: 102419 - 20020207
Group number: 1529023-0100
Assembly Drawing: 1529023-1_1_AA

Issue: 20020822

Pos	Part No	SP	UN	Qty	Description	Page No
Common Parts						
010	978543-0000	-		1	FRAME	
020	272784-0002	A		1	RUBBER STRIP	
040	271860-0000	A		1	CLAMP BLOCK	
050	272781-0002	-		2	COVER SLIP	
060	272782-0000	-		2	COVER SLIP	
070	272783-0002	A		1	GLASS PANE	
080	441718-0000	A		14	SPACER	
090	441737-0000	A		2	WASHER	
100	441739-0000	A		4	WASHER	
110	441740-0000	A		2	HINGE FLANGE	
120	441741-0000	A		2	HINGE FLANGE	
300	312105-0451	-		4	SCREW M6S ISO 4017 M8X20 A480	
310	312105-0366	-		2	SCREW M6S M6X12 A280	
320	312605-0314	-		14	HEXAGON NUT, M6M M5 A280	
330	311103-0413	-		2	PARALLELL PIN, M6, 8X50 MM	

Pos	Part No	SP	UN	Qty	Description	Page No

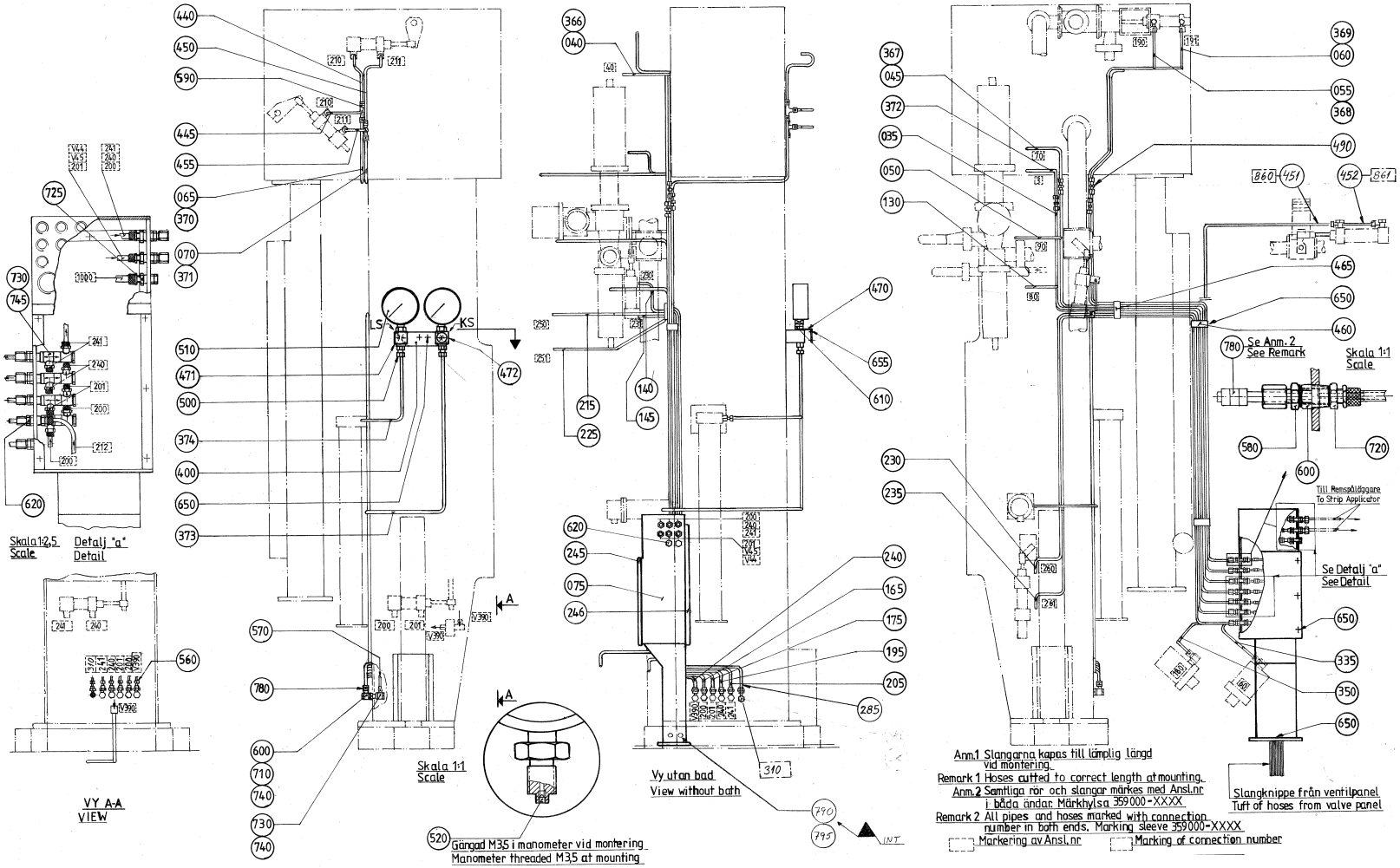
Skala 1:2,5
Scale
Detalj "a"
Detail
VY A-A
VIEW
Skala 1:1
Scale
Vy utan bad
View without bath
Gängad M3,5 i manometer vid montering
Manometer threaded M3,5 at mounting
Se Anm. 2
See Remark
Skala 1:1
Scale
Till Remspåläggare
To Strip Applicator
Se Detalj "a"
See Detail
Slangknippe från ventilpanel
Tuft of hoses from valve panel
Anm.1 Slangarna kapas till lämplig längd vid montering.
Remark 1 Hoses cutted to correct length at mounting.
Anm.2 Samtliga rör och slangar märkes med Ansl.nr i båda ändar. Märkhylsa 359000-XXXX
Remark 2 All pipes and hoses marked with connection number in both ends. Marking sleeve 359000-XXXX
Markering av Ansl.nr
Marking of connection number

ECM: 108432 - 20020506
Group number: 1529239-0100
Assembly Drawing: 1529239-1_1_AB

Issue: 20020822

Pos	Part No	SP	UN	Qty	Description	Page No
Common Parts						
035	295557-0000	-		1	PIPE	
040	295734-0000	-		1	PIPE	
045	295735-0000	-		1	PIPE	
050	295560-0000	-		1	PIPE	
055	295736-0000	-		1	PIPE	
060	295737-0000	-		1	PIPE	
065	295738-0000	-		1	PIPE	
070	295739-0000	-		1	PIPE	
075	1529248-0000	-		1	CONNECTION BOX	
130	295568-0000	-		1	PIPE	
140	295570-0000	-		1	PIPE	
145	295571-0000	-		1	PIPE	
165	295575-0000	-		1	PIPE	
175	295577-0000	-		1	PIPE	
195	295581-0000	-		1	PIPE	
205	295583-0000	-		1	PIPE	
215	295585-0000	-		1	PIPE	
225	295587-0000	-		1	PIPE	
230	295588-0000	-		1	PIPE	
235	295589-0000	-		1	PIPE	
240	295590-0000	-		1	PIPE	
245	B456411-0000	-		1	LID	
	90143-0008	-	*M*	*1*	*STRIP*	
246	B491423-0000	-		1	LID	
	90143-0008	-	*M*	*1*	*STRIP*	
285	751071-0000	-		1	PIPE	
335	295591-0000	-		1	PIPE	
350	295594-0000	-		1	PIPE	
366	295740-0000	-		1	PIPE	
367	1529272-0000	-		1	PIPE	
368	295742-0000	-		1	PIPE	
369	295743-0000	-		1	PIPE	
370	295775-0000	-		1	PIPE	
371	295776-0000	-		1	PIPE	
372	441441-0000	-		1	PIPE	
373	469497-0000	-		1	PIPE	
374	469498-0000	-		1	PIPE	
400	33577-0000	-		1	CANTILEVER	
440	295600-0000	-		1	PIPE	
445	295601-0000	-		1	PIPE	
450	295602-0000	-		1	PIPE	
451	1529265-0000	-		1	PIPE	
452	1529271-0000	-		1	PIPE	
455	295603-0000	-		1	PIPE	
460	295604-0000	-		3	CRAMP	
465	295605-0000	-		3	BRACKET	
470	464173-0000	-		2	LABEL HOLDER	
471	464174-0000	-		1	SIGN	
472	464175-0000	-		1	SIGN	
490	90030-0075	A		7	PIPE CONNECTION G-6	
500	90030-0092	A		2	STRAIGHT CONN., 6-R1/4,EXT. TAPPERED	
510	90043-0034	A		2	PRESSURE GAUGE	
520	90043-0302	A		2	SCREW	
560	90166-0119	A	MM	2100	HOSE PUR 4/6 BLACK	
570	90166-0132	A	M	1	TUBE 6 MM PA,TRANSP.	
580	90224-0307	-		31	STRAIGHT FITTING, 6MM, 1/8",	
600	90330-0025	A		37	BUSHING, INT/EXT. THR. R1/4-RP1/8	
610	90330-0105	A		2	NUT, HEXAGON, R3/8	
620	90330-0066	-		3	PLUG, EXT. G-THREAD, G1/8	
650	312105-0366	-		27	SCREW M6S M6X12 A280	
655	312502-0120	-		4	DRIVE SCREW ROUND HEAD KDS 0X5	
710	342797-0121	-		6	CONN. BANJO, RINGPIECE 6-1/8	
720	342921-0113	-		25	STRAIGHT COUPLING,EXT.THREADED 6/4-G1/8"	
725	342921-0121	A		1	STRAIGHT COUPLING,EXT.THREADED 8/6-G1/8"	
730	342980-0113	-		14	BANJO-CONNECTION,RING 6/4-G1/8"	
740	342980-0303	-		12	BANJO-HOLLOW BOLT COUPL,EXT.THR.01-G1/8"	
745	342980-0313	-		4	BANJO-HOLLOW BOLT COUPL,EXT.THR.02-G1/8"	
780	359000-0400	-		53	MARKING CO2/4"0"	
780	359000-0405	-		4	MARKING CO2/4"5"	
780	359000-0404	-		12	MARKING COLLAR PA2/4 "4" YELLOW	
780	359000-0403	-		12	MARKING COLLAR PA2/4 "3" YELLOW	
780	359000-0402	-		44	MARKING COLLAR 2/4 "2" YELLOW	
780	359000-0401	-		51	MARKING COLLAR 2/4 "1" YELLOW	
780	359000-0406	-		6	MARKING COLLAR PA2/4 "6" YELLOW	
780	359000-0771	-		4	MARKING CO2/4"V"	
780	359000-0409	-		14	MARKING COLLAR PA2/4 "9" YELLOW	
780	359000-0408	-		4	MARKING COLLAR PA2/4 "8" YELLOW	
780	359000-0407	-		4	MARKING COLLAR PA2/4 "7" YELLOW	
790	352103-0101	-		2	CABLE GLAND, ST 9, PR15,2/PG9	
795	90099-0104	-		2	NUT, PR 15,2 (PG9)	

Machine Type | Group Description | Used-In | Group Number | Page No

This page is intentionally left blank.

ECM: 72968 - 20000321
Group number: 295778-0300
Assembly Drawing:

Issue: 20020822

Pos	Part No	SP	UN	Qty	Description	Page No
0200S						
120	272479-0000	-		1	PRESSURE ROLLER	
0200B OR 0250B						
070	257330-0000	-		1	PRESSURE ROLLER	
Common Parts						
010	B499255-0100	-		1	SEAL KIT	
010	*530589-0000*	*-*		*4*	*SEAL RING*	
020	*530588-0000*	*-*		*1*	*SEAL RING*	
030	*554096-0000*	*-*		*1*	*DIAPHRAGM*	
040	*90020-0027*	*-*		*2*	*SLEEVE*	
050	*90020-0028*	*-*		*2*	*SLEEVE*	
060	*90207-0363*	*-*		*1*	*GASKET*	
070	*90207-0365*	*-*		*1*	*GASKET*	
080	*90207-0367*	*-*		*1*	*GASKET*	
090	*315202-0304*	*-*		*1*	*O-RING 64,5X3 MM*	
100	*315204-0215*	*-*		*3*	*O-RING 19,2X3 MM*	
110	*315202-0301*	*-*		*1*	*O-RING 49,5X3 MM*	
120	*315202-0308*	*-*		*2*	*O-RING 84,5X3 MM*	
020	441804-0000	-		1	COIL HEATER	
050	12242-0003	-		2	GASKET 48X38X5,5	
060	230551-0000	-		2	GASKET	
080	531742-0000	-		2	GASKET	
110	271461-0000	-		1	GASKET	
150	295388-0000	-		1	GASKET	
153	441721-0000	-		1	GASKET	
160	90206-0031	-		1	HEATING ELEMENT 700+1200W,220V	
180	B90206-0070	-		1	HEATING ELEMENT 6000W 380/220V	
	90206-0326	*-*		*1*	*JUNCTION BOX FOR 90206-56*	
	90269-0308	*-*		*1*	*GASKET 59X68X3 MM*	
200	315204-0214	-		1	O-RING 17,3X2,4 MM	
210	90242-0084	-		2	O-RING 203,0X3 MM	
220	90415-0316	-		1	FILTER / 6051-200-SS	
230	90424-0304	-		1	GASKET	
240	315204-0218	-		1	O-RING 26,2X3 MM	
260	315204-0223	-		2	O-RING 39,2X3 MM	

Pos	Part No	SP	UN	Qty	Description	Page No

Machine Type | Group Description | Used-In | Group Number | Page No

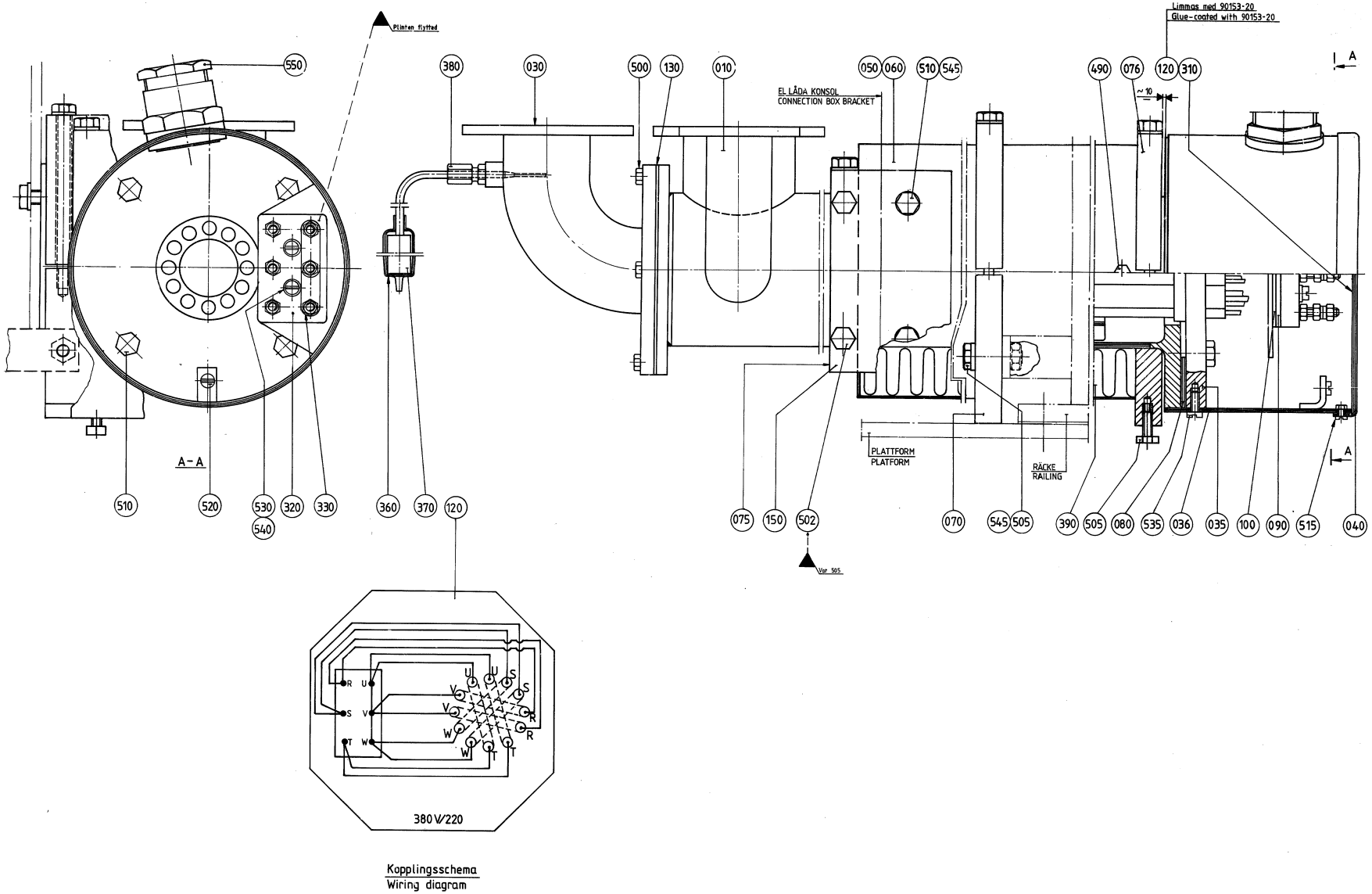
Plinten flyttad
Limmas med 90153-20
Glue-coated with 90153-20
EL LÅDA KONSOL
CONNECTION BOX BRACKET
PLATTFORM
PLATFORM
RÄCKE
RAILING
A-A
Var 505
380 V/220
Kopplingsschema
Wiring diagram

ECM: 102783 - 20020207
Group number: 271181-0300
Assembly Drawing: 271181-3_1_AA

Issue: 20020822

Pos	Part No	SP	UN	Qty	Description	Page No
Common Parts						
010	272792-0000	B		1	HEATING PIPE	
030	271183-0000	-		1	PIPE	
035	B449939-0001	A		1	HEATING ELEMENT 15KW	
	449938-0003	*C*		*2*	*HEATING PIPE*	
	449938-0002	*C*		*2*	*HEATING PIPE*	
	449938-0001	*C*		*2*	*HEATING PIPE*	
036	B451430-0000	-		1	CONNECTION HOUS.(MINOR)	
	312605-0312	*-*		*4*	*HEXAGON NUT, M6M M4 A280*	
040	29876-0000	-		1	COVER	
050	271184-0000	-		1	DISCHARGE TRAY	
060	271185-0000	-		1	DISCHARGE TRAY	
070	B491218-0000	-		1	SUPPORT	
	312105-0475	*-*		*2*	*SCREW M6S ISO 4014 M8X120 A480*	
	315105-0165	*-*		*2*	*WASHER PLAIN, BRB, 8,4/16,H=1,5*	
075	B272794-0000	-		1	SUPPORT	
	315105-0165	*-*		*2*	*WASHER PLAIN, BRB, 8,4/16,H=1,5*	
	312105-0467	*-*		*2*	*SCREW M6S ISO 4014 M8X80 A480*	
076	B456123-0000	-		1	SUPPORT	
	315105-0165	*-*		*2*	*WASHER PLAIN, BRB, 8,4/16,H=1,5*	
	312105-0471	*-*		*2*	*SCREW M6S ISO 4014 M8X100 A480*	
080	531731-0000	A		1	GASKET	
090	751009-0000	A		1	INSULATION	
100	30298-0000	A		1	INSULATION	
120	491305-0000	-		1	CONN.DIAGRAM AIR SUPERH.	
130	751016-0000	-		1	GASKET	
150	456125-0000	-		1	FASTENING PLATE	
310	90153-0020	A	ML	1	ADHESIVE BOSTIK 1782 125ML	
320	90195-0028	A		1	TERM.BLOCK 6-POLE STEATIT	
330	90195-0029	A		3	CONN. LINK NO324 FOR -28	
360	90326-0012	-		1	PROTECTIVE COVER, T31A4618	
370	90326-0020	-		1	PLUG, FEMALE YELLOW CR-AL	
380	90326-0051	-		1	THERMOCOUPLE, 12826-33	
390	90411-0005	A	MM	1100	INSULATOR	
490	312105-0325	-		12	SCREW M6S ISO 4017 M5X10 A480	
500	312105-0368	-		6	SCREW M6S M6X16 A280	
502	312105-0374	-		2	SCREW M6S ISO 4014 M6X30 A480	
505	312105-0455	-		3	SCREW M6S ISO 4017 M8X30 A480	
510	312105-0453	-		6	SCREW M6S ISO 4017 M8X25 A480	
515	312125-0285	-		4	SCREW SLOT.PAN HD. MCS 4X6 A480	
520	312125-0323	-		1	SCREW PAN HEAD MCS M5X8 SS	
530	312125-0331	-		2	SCREW PAN HEAD MCS M5X20 SS	
535	312125-0366	-		4	SCREW PAN HEAD MCS M6X12 SS	
540	315105-0146	-		2	WASHER PLAIN, BRB, 5,3/10,H=1	
545	315125-0165	-		3	WASHER PLAIN ROUND,CHAMF. 8,4/26, H=5	
550	352100-0121	-		1	CABLE GLANR. 37-23,5	

Machine Type Group Description Used-In Group Number Page No

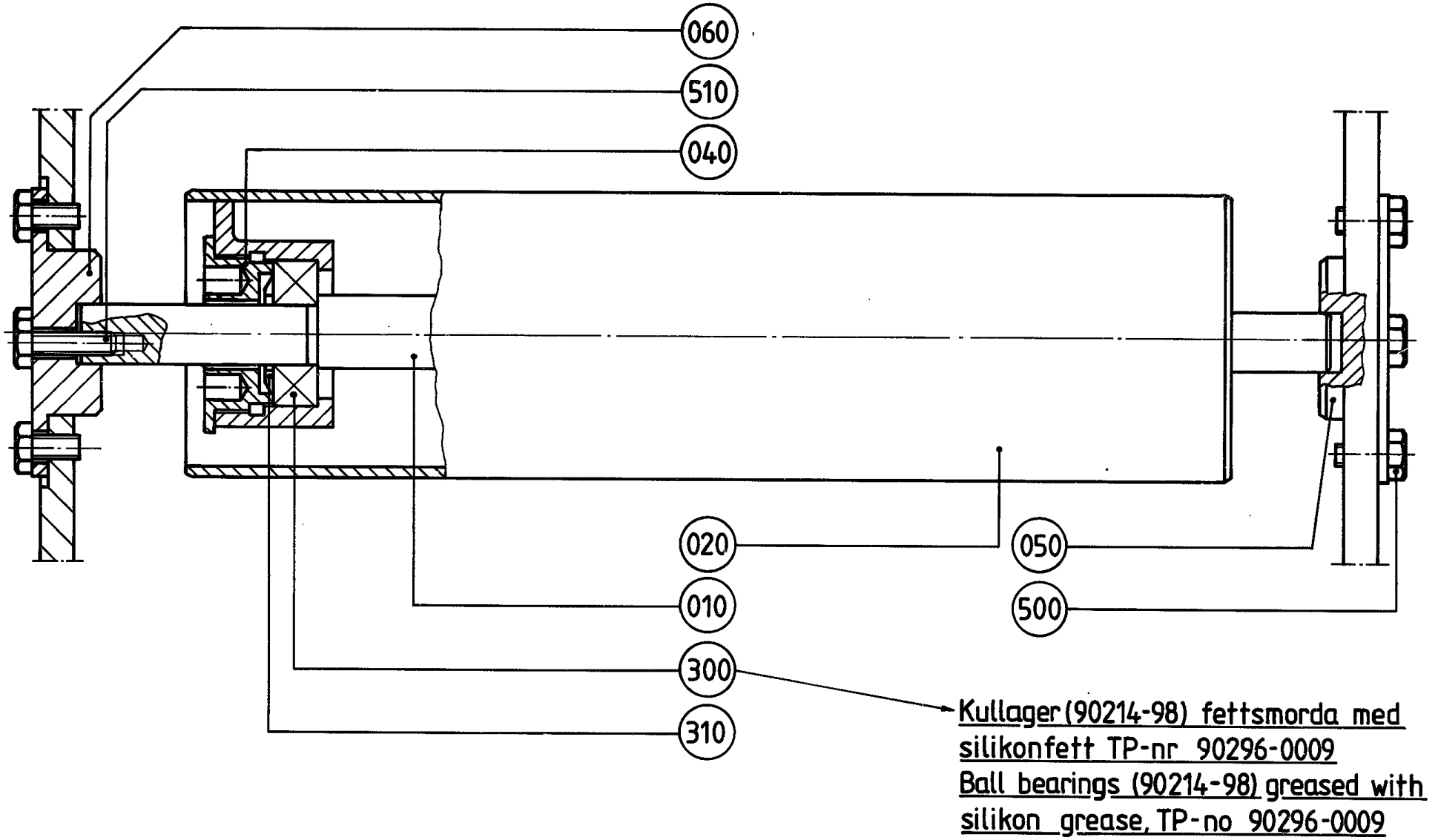
060
510
040
020
050
010
500
300
310
Kullager (90214-98) fettsmorda med silikonfett TP-nr 90296-0009
Ball bearings (90214-98) greased with silikon grease, TP-no 90296-0009

ECM: 102786 - 20020207
Group number: 272004-0300
Assembly Drawing: 272004-3_1_AA

Issue: 20020822

Pos	Part No	SP	UN	Qty	Description	Page No
Common Parts						
010	491392-0000	A		1	SHAFT	
020	272005-0000	A		1	BENDING ROLLER	
040	247170-0000	-		2	BEARING COVER	
050	491393-0000	-		1	AXLE SUPPORT	
060	272018-0000	-		1	AXLE SUPPORT	
300	90214-0098	A		2	BALL BEARING, 15X35X11 MM	
310	90214-0303	A		2	SEALING RING, 18,6X35X2 MM	
500	312105-0366	-		8	SCREW M6S M6X12 A280	
510	312105-0370	-		1	SCREW M6S ISO 4017 M6X20 A480	

Pos	Part No	SP	UN	Qty	Description	Page No

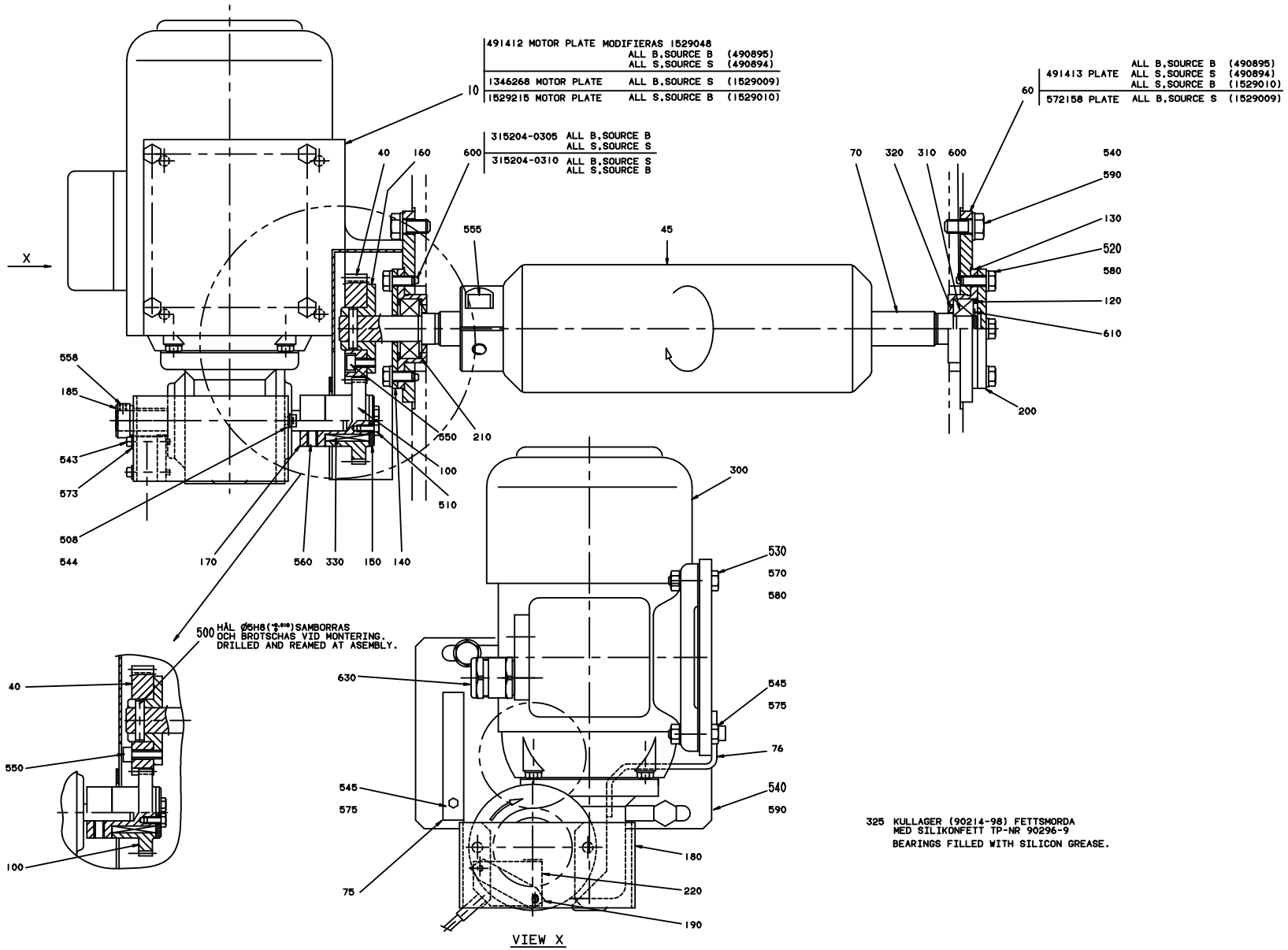
491412 MOTOR PLATE MODIFIERAS 1529048
ALL B,SOURCE B (490895)
ALL S,SOURCE S (490894)
1346268 MOTOR PLATE ALL B,SOURCE S (1529009)
1529215 MOTOR PLATE ALL S,SOURCE B (1529010)
315204-0305 ALL B,SOURCE B
ALL S,SOURCE S
315204-0310 ALL B,SOURCE S
ALL S,SOURCE B
491413 PLATE ALL B,SOURCE B (490895)
ALL S,SOURCE S (490894)
ALL S,SOURCE B (1529010)
572158 PLATE ALL B,SOURCE S (1529009)
500 HÅL Ø5H8(+0,018) SAMBORRAS OCH BROTSCHAS VID MONTERING.
DRILLED AND REAMED AT ASEMBLY.
325 KULLAGER (90214-98) FETTSMORDA MED SILIKONFETT TP-NR 90296-9
BEARINGS FILLED WITH SILICON GREASE.
VIEW X

ECM: 102788 - 20020207
Group number: 1529080-0100
Assembly Drawing: 1529080-1_1_AA

Issue: 20020822

Pos	Part No	SP	UN	Qty	Description	Page No
0200B						
040	255897-0004	A		1	GEAR WHEEL	
045	441546-0000	A		1	BENDING ROLLER	
070	456515-0000	A		1	SHAFT	
100	209331-0011	A		1	GEAR WHEEL	
555	312115-0451	-		2	SCREW MC6S M8X20 A280	
0200S						
040	255897-0008	A		1	GEAR WHEEL	
045	456527-0000	A		1	BENDING ROLLER	
100	209331-0009	A		1	GEAR WHEEL	
0250B						
040	255897-0007	A		1	GEAR WHEEL	
045	441546-0000	A		1	BENDING ROLLER	
070	456515-0000	A		1	SHAFT	
100	209331-0001	A		1	GEAR WHEEL	
555	312115-0451	-		2	SCREW MC6S M8X20 A280	
ALL B, SOURCE B OR ALL S, SOURCE S						
010	1529048-0000	-		1	MOTOR PLATE	
060	491413-0000	-		1	BEARING PANEL	
600	315204-0305	-		2	O-RING 69,5X3 MM	
ALL B, SOURCE S						
010	1346268-0000	-		1	MOTOR PLATE	
060	572158-0000	-		1	BEARING PANEL	
600	315204-0310	-		2	O-RING 94,5X3 MM	
ALL S, SOURCE B						
010	1529215-0000	-		1	MOTOR PLATE	
060	491413-0000	-		1	BEARING PANEL	
600	315204-0310	-		2	O-RING 94,5X3 MM	
Common Parts						
075	1529049-0000	-		1	COVER	
076	752568-0000	-		1	PROTECTION	
120	247172-0000	-		1	SPACER RING	
130	247173-0000	B		2	BEARING SEAT	
140	250590-0000	-		1	BEARING COVER	
150	250592-0000	-		1	WASHER	
160	255898-0000	-		1	HUB	
170	1334234-0000	-		1	HUB	
180	1529166-0000	-		1	BRACKET	
185	1529139-0000	-		1	INDICATOR	
190	795581-0000	-		1	PLATE	
200	456516-0000	-		1	BEARING COVER	
210	491333-0000	A		2	SPACER RING	
220	90044-0194	-		1	PROX.SW. IN5329/IN3002-BPKG	
300	B90069-0281	A		1	GEARS, WORM MOTOR OKM87-60E3	
	90069-0359	*-*		*1*	*CARBON BRUSH*	
310	90214-0098	A		2	BALL BEARING, 15X35X11 MM	
320	90214-0303	A		2	SEALING RING, 18,6X35X2 MM	
325	90296-0009	-	ML	1	SILICONE GREASE TUBE 100 GR.	
330	90348-0007	A		1	FREE WHEEL COUPLING	
500	311103-0310	-		1	PARALLELL PIN, M6, 5X20 MM	
510	312105-0287	-		2	SCREW M6S ISO 4017 M4X8 A480	
520	312105-0367	-		8	SCREW M6S M6X14 A280	
530	312105-0372	-		4	SCREW M6S ISO 4017 M6X25 A480	
540	312105-0451	-		4	SCREW M6S ISO 4017 M8X20 A480	
543	312115-0230	-		2	SCREW MC6S M3X20 A280	
544	312115-0291	-		2	SCREW MC6S M4X12 A280	
545	312115-0323	-		4	SCREW MC6S M5X8 A280	
550	312115-0327	-		3	SCREW MC6S M5X12 A280	
558	312318-0283	-		1	SCREW SOCK.SET CUP P MSK6SS M4X4 A4	
560	312318-0364	-		1	SCREW HEX.SOCK.SET CUP P.MSK6SS6X10 SS	
570	312605-0316	-		4	HEXAGON NUT, M6M M6 A280	
573	315105-0136	-		4	WASHER PLAIN, BRB, 4,3/8,H=0,8	
575	315105-0146	-		4	WASHER PLAIN, BRB, 5,3/10,H=1	
580	315105-0153	-		12	WASHER PLAIN, BRB, 6,4/12,H=1,5	
590	315115-0165	-		4	WASHER PLAIN, TBRB 8,4/16 H=3	
610	315755-0112	-		1	LOCKING WASHER 12	
630	90012-0137	-		1	GLAND, EXTENDED WITH INSERT, PG11	

Machine Type | Group Description | Used-In | Group Number | Page No

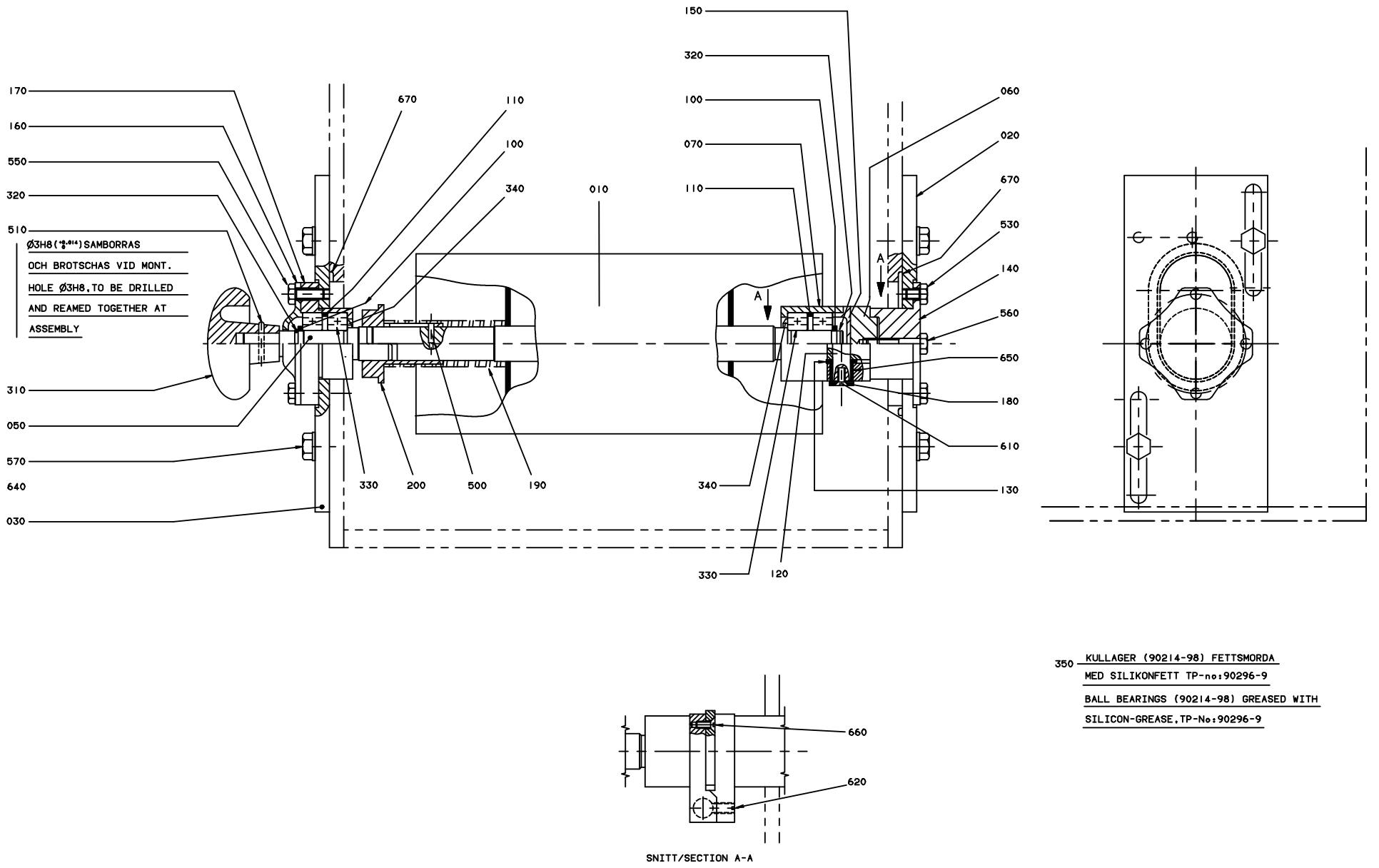
170
160
550
320
510
Ø3H8(⁺⁰·⁰¹⁴)SAMBORRAS
OCH BROTSCHAS VID MONT.
HOLE Ø3H8,TO BE DRILLED
AND REAMED TOGETHER AT
ASSEMBLY
310
050
570
640
030
670
110
100
340
010
330
200
500
190
150
320
100
070
110
060
020
670
530
140
560
650
180
610
130
340
330
120
A
A
660
620
SNITT/SECTION A-A
350 KULLAGER (90214-98) FETTSMORDA
MED SILIKONFETT TP-no:90296-9
BALL BEARINGS (90214-98) GREASED WITH
SILICON-GREASE,TP-No:90296-9

Pos	Part No	SP	UN	Qty	Description	Page No
0200B OR 0250B						
670	315204-0303	-		2	O-RING 59,5X3 MM	
0200S						
670	315204-0306	-		2	O-RING 74,5X3 MM	
Common Parts						
010	490882-0000	-		1	ROLL	
020	491626-0000	-		1	BEARING PANEL	
030	491627-0000	-		1	BEARING PANEL	
050	752744-0000	B		1	SHAFT	
060	271835-0000	B		1	BRACKET	
070	456012-0000	A		1	BEARING SEAT	
100	15529-0000	-		2	WASHER	
110	247172-0000	A		2	SPACER RING	
120	751467-0000	A		1	SHAFT	
130	271656-0000	A		2	WASHER	
140	271837-0000	B		1	BRACKET	
150	456013-0000	A		1	BEARING COVER	
160	752745-0000	B		1	BEARING COVER	
170	271841-0000	B		1	BEARING SEAT	
180	271844-0000	B		1	WASHER	
190	272001-0000	A		1	COMPRESSION SPRING	
200	295010-0000	A		1	GUIDE SLEEVE	
310	90051-0045	B		1	STELLAR KNOB, NO. 8323-2575	
320	90141-0011	A		2	RETAIN. RING, SPEC 12,8	
330	90214-0098	A		4	BALL BEARING, 15X35X11 MM	
340	90214-0303	-		2	SEALING RING, 18,6X35X2 MM	
350	90296-0009	-	L	1	SILICONE GREASE TUBE 100 GR.	
500	311103-0234	A		1	PARALLELL PIN, M6, 3X12 MM	
510	311103-0238	A		1	PARALLELL PIN, M6, 3X20 MM	
530	312105-0362	-		4	SCREW M6S ISO 4017 M6X8 A480	
550	312105-0368	-		4	SCREW M6S M6X16 A280	
560	312105-0374	-		2	SCREW M6S ISO 4014 M6X30 A480	
570	312105-0451	-		4	SCREW M6S ISO 4017 M8X20 A480	
610	312145-0287	-		1	SCREW COUNTERS.SLOT.HD. MFS 4X8 SS	
620	312318-0364	-		1	SCREW HEX.SOCK.SET CUP P.MSK6SS6X10 SS	
640	315115-0165	-		4	WASHER PLAIN, TBRB 8,4/16 H=3	
650	321127-0100	A		2	BEARING BUSHING WITHOUT FL, 10X13X10 MM	
660	312155-0291	-		4	SCREW HEX.SOCK.COUNT.MF6S M4X12 A480	
670	315204-0309	-		2	O-RING 89,5X3 MM	

Machine Type	Group Description	Used-In	Group Number	Page No

LOWER FORMING RING

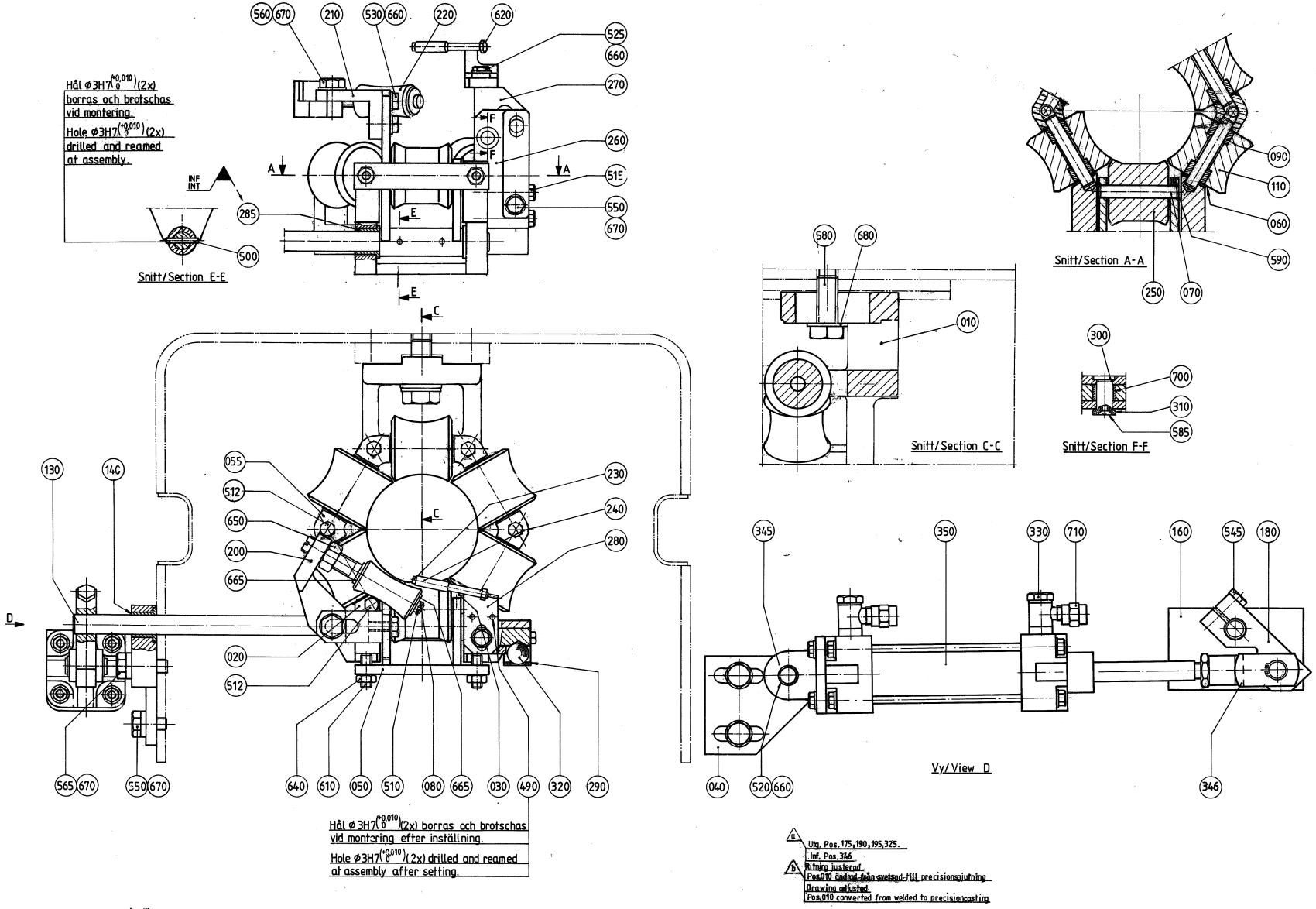

ECM: 102802 - 20020207
Group number: 456309-0300
Assembly Drawing: 456309-3_1_AA

Issue: 20020822

Pos	Part No	SP	UN	Qty	Description	Page No
0200B OR 0250B						
010	490518-0000	-		1	HOLDER	
020	490539-0000	-		1	LOCK PLATE	
030	490540-0000	-		1	LOCK PLATE	
050	257040-0000	-		1	FORK	
055	490538-0000	-		4	LOCKING PLATE	
070	263655-0006	A		6	SHAFT	
110	456090-0000	A		5	ROLL	
140	255970-0000	A		1	BUSHING	
250	38630-0003	A		1	COUNTER ROLLER	
280	271421-0000	-		1	HOLDER	
285	752047-0000	A		2	BUSHING	
512-02	312105-0331	-		6	SCREW M6S ISO 4017 M5X20 A480	
610	312318-0451	-		2	SCREW SOCK.SET CUP P MSK6SS M8X20 A4	
640	312605-0318	-		2	HEXAGON NUT, M6M M8 A280	
0200S						
010	456837-0000	-		1	HOLDER	
020	456840-0000	-		1	LOCK PLATE	
030	456839-0000	-		1	LOCK PLATE	
050	257041-0000	-		1	FORK	
055	456838-0000	-		4	LOCK PLATE	
070	2873-0000	A		6	SHAFT	
110	456996-0000	A		5	ROLLER	
140-02	255970-0000	A		3	BUSHING	
250	491222-0000	A		1	COUNTER ROLLER	
280	491587-0000	-		1	HOLDER	
512	312105-0331	-		2	SCREW M6S ISO 4017 M5X20 A480	
540	312105-0370	-		4	SCREW M6S ISO 4017 M6X20 A480	
600	312318-0368	-		1	SCREW SOCK.SET CUP P MSK6SS M6X16 A4	
605	312318-0372	-		1	SCREW SOCK.SET CUP P MSK6SS M6X25 A4	
630	312605-0316	-		2	HEXAGON NUT, M6M M6 A280	
Common Parts						
040	491022-0000	-		1	CYLINDER BRACKET	
060	2033-0011	A		12	WASHER	
080	239440-0000	-		1	SHAFT	
090	751230-0000	A		10	PLAIN BEARING	
130	255969-0000	A		1	SHAFT	
160	491021-0000	-		1	BEARING PLATE	
180	441483-0000	-		1	CYLINDER BRACKET	
200	257042-0000	-		1	BRACKET	
210	257043-0000	-		1	ANGLE BRACKET	
220	257044-0000	B		1	ROLL	
230	257050-0000	-		1	SHAFT	
240	268059-0000	A		1	ROLL	
260	271419-0000	-		1	FORK	
270	271420-0000	-		1	CANTILEVER	
290	271422-0000	A		2	SPRING	
300	271423-0001	A		1	SHAFT	
310	271844-0000	A		1	WASHER	
320	90090-0003	-		1	BALL, D=12,7 MM	
330	90235-0282	A		2	THROTTLE CHECK VALVES,G1/8	
345	90239-0453	A		1	BRACKET	
346	90239-0516	A		1	ROD END,CLEVIS WITH AXLE M10X1,25	
350	B90239-0779	A		1	CYLINDER	
	90239-0442	*C*		*1*	*SEAL KIT*	
490	311103-0233	-		2	PARALLELL PIN, M6, 3X10 MM	
500	311103-0238	-		2	PARALLELL PIN, M6, 3X20 MM	
510	311411-0140	-		1	SPLIT PIN SP1,6X16RFR	
515	312105-0337	-		2	SCREW M6S ISO 4014 M5X35 A480	
520	312105-0364	-		1	SCREW M6S ISO 4017 M6X10 A480	
525	312105-0366	-		1	SCREW M6S M6X12 A280	
530	312105-0368	-		2	SCREW M6S M6X16 A280	
545	312105-0372	-		1	SCREW M6S ISO 4017 M6X25 A480	
550	312105-0449	-		3	SCREW M6S ISO 4017 M8X16 A480	
560	312105-0451	-		1	SCREW M6S ISO 4017 M8X20 A480	
565	312105-0453	-		2	SCREW M6S ISO 4017 M8X25 A480	
580	312105-0536	-		1	SCREW M6S ISO 4017 M12X30 A480	
585	312145-0285	-		1	SCREW COUNTERS.SLOT.HD. MFS 4X6 SS	
590	312318-0285	-		1	SCREW SOCK.SET CUP P MSK6SS M4X6 A4	
620	312605-0310	-		1	HEXAGON NUT, M6M M3 A280	
650	312605-0320	-		1	HEXAGON NUT, M6M M10 A280	
660	315105-0153	-		4	WASHER PLAIN, BRB, 6,4/12,H=1,5	
665	315105-0165	-		2	WASHER PLAIN, BRB, 8,4/16,H=1,5	
670	315115-0165	-		6	WASHER PLAIN, TBRB 8,4/16 H=3	
680	315115-0178	-		1	WASHER PLAIN, TBRB 13/24 H=4	
700	321127-0100	-		1	BEARING BUSHING WITHOUT FL, 10X13X10 MM	
710	342797-0121	A		2	CONN. BANJO, RINGPIECE 6-1/8	

Machine Type | Group Description | Used-In | Group Number | Page No

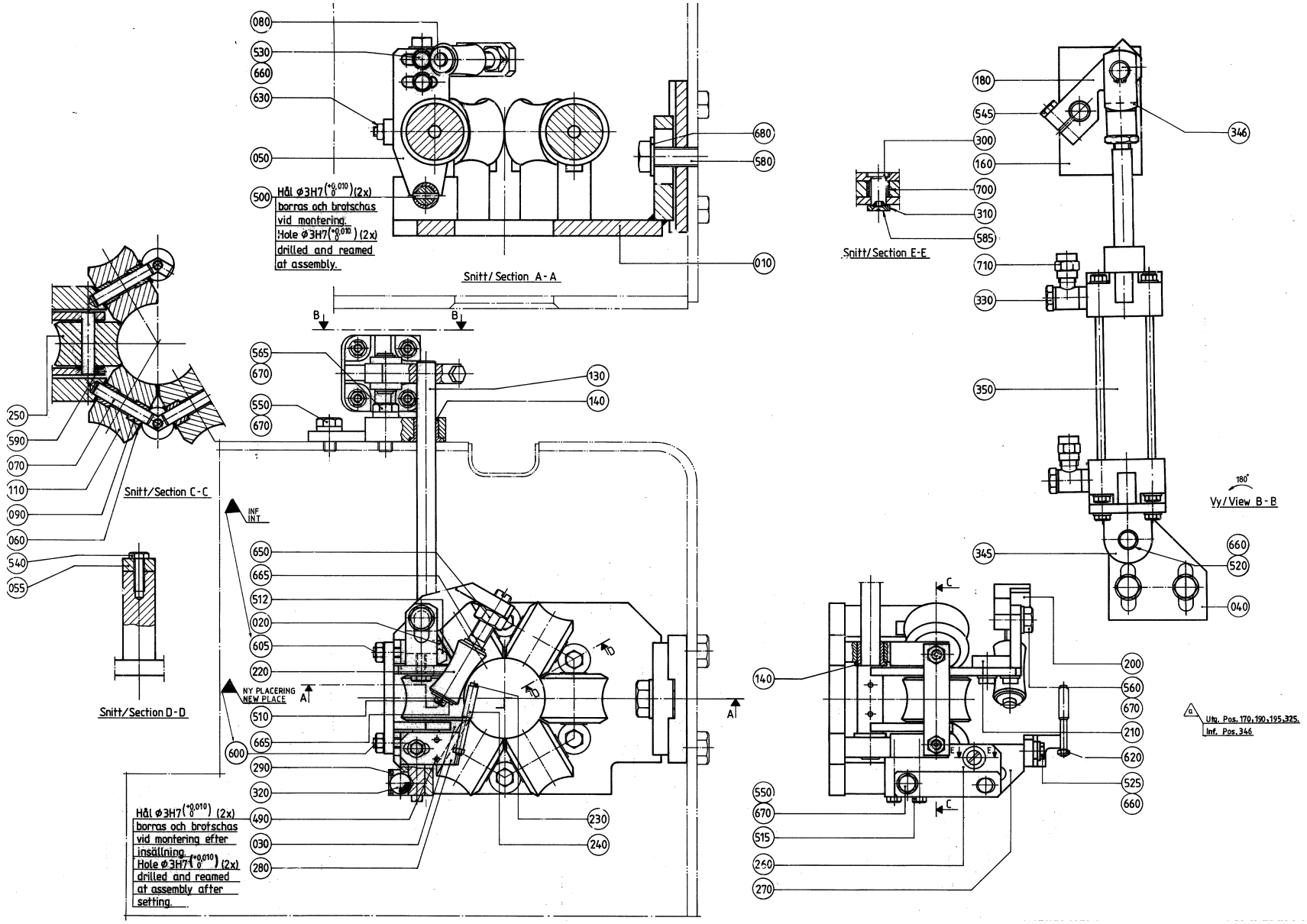
080
530
660
630
050
500
Hål ø3H7 (+0,010 0) (2x) borras och brotschas vid montering.
Hole ø3H7 (+0,010 0) (2x) drilled and reamed at assembly.
680
580
010
Snitt/Section A-A
B
B
565
670
550
670
130
140
250
590
070
110
090
060
540
055
Snitt/Section C-C
Snitt/Section D-D
INF
INT
650
665
512
020
605
220
NY PLACERING
NEW PLACE
A
510
665
600
290
320
490
030
280
Hål ø3H7 (+0,010 0) (2x) borras och brotschas vid montering efter inställning.
Hole ø3H7 (+0,010 0) (2x) drilled and reamed at assembly after setting.
230
240
A
180
545
300
160
700
310
585
Snitt/Section E-E
346
710
330
350
345
180°
Vy/View B-B
660
520
040
C
140
550
670
515
260
270
200
560
670
210
620
525
660
C
Utg. Pos. 170, 190, 195, 325.
Inf. Pos. 346

ECM: 102802 - 20020207
Group number: 456309-0300
Assembly Drawing: 456309-4_1_AA

Issue: 20020822

Pos	Part No	SP	UN	Qty	Description	Page No
0200B OR 0250B						
010	490518-0000	-		1	HOLDER	
020	490539-0000	-		1	LOCK PLATE	
030	490540-0000	-		1	LOCK PLATE	
050	257040-0000	-		1	FORK	
055	490538-0000	-		4	LOCKING PLATE	
070	263655-0006	A		6	SHAFT	
110	456090-0000	A		5	ROLL	
140	255970-0000	A		1	BUSHING	
250	38630-0003	A		1	COUNTER ROLLER	
280	271421-0000	-		1	HOLDER	
285	752047-0000	A		2	BUSHING	
512-02	312105-0331	-		6	SCREW M6S ISO 4017 M5X20 A480	
610	312318-0451	-		2	SCREW SOCK.SET CUP P MSK6SS M8X20 A4	
640	312605-0318	-		2	HEXAGON NUT, M6M M8 A280	
0200S						
010	456837-0000	-		1	HOLDER	
020	456840-0000	-		1	LOCK PLATE	
030	456839-0000	-		1	LOCK PLATE	
050	257041-0000	-		1	FORK	
055	456838-0000	-		4	LOCK PLATE	
070	2873-0000	A		6	SHAFT	
110	456996-0000	A		5	ROLLER	
140-02	255970-0000	A		3	BUSHING	
250	491222-0000	A		1	COUNTER ROLLER	
280	491587-0000	-		1	HOLDER	
512	312105-0331	-		2	SCREW M6S ISO 4017 M5X20 A480	
540	312105-0370	-		4	SCREW M6S ISO 4017 M6X20 A480	
600	312318-0368	-		1	SCREW SOCK.SET CUP P MSK6SS M6X16 A4	
605	312318-0372	-		1	SCREW SOCK.SET CUP P MSK6SS M6X25 A4	
630	312605-0316	-		2	HEXAGON NUT, M6M M6 A280	
Common Parts						
040	491022-0000	-		1	CYLINDER BRACKET	
060	2033-0011	A		12	WASHER	
080	239440-0000	-		1	SHAFT	
090	751230-0000	A		10	PLAIN BEARING	
130	255969-0000	A		1	SHAFT	
160	491021-0000	-		1	BEARING PLATE	
180	441483-0000	-		1	CYLINDER BRACKET	
200	257042-0000	-		1	BRACKET	
210	257043-0000	-		1	ANGLE BRACKET	
220	257044-0000	B		1	ROLL	
230	257050-0000	-		1	SHAFT	
240	268059-0000	A		1	ROLL	
260	271419-0000	-		1	FORK	
270	271420-0000	-		1	CANTILEVER	
290	271422-0000	A		2	SPRING	
300	271423-0001	A		1	SHAFT	
310	271844-0000	A		1	WASHER	
320	90090-0003	-		1	BALL, D=12,7 MM	
330	90235-0282	A		2	THROTTLE CHECK VALVES,G1/8	
345	90239-0453	A		1	BRACKET	
346	90239-0516	A		1	ROD END,CLEVIS WITH AXLE M10X1,25	
350	B90239-0779	A		1	CYLINDER	
	90239-0442	*C*		*1*	*SEAL KIT*	
490	311103-0233	-		2	PARALLELL PIN, M6, 3X10 MM	
500	311103-0238	-		2	PARALLELL PIN, M6, 3X20 MM	
510	311411-0140	-		1	SPLIT PIN SP1,6X16RFR	
515	312105-0337	-		2	SCREW M6S ISO 4014 M5X35 A480	
520	312105-0364	-		1	SCREW M6S ISO 4017 M6X10 A480	
525	312105-0366	-		1	SCREW M6S M6X12 A280	
530	312105-0368	-		2	SCREW M6S M6X16 A280	
545	312105-0372	-		1	SCREW M6S ISO 4017 M6X25 A480	
550	312105-0449	-		3	SCREW M6S ISO 4017 M8X16 A480	
560	312105-0451	-		1	SCREW M6S ISO 4017 M8X20 A480	
565	312105-0453	-		2	SCREW M6S ISO 4017 M8X25 A480	
580	312105-0536	-		1	SCREW M6S ISO 4017 M12X30 A480	
585	312145-0285	-		1	SCREW COUNTERS.SLOT.HD. MFS 4X6 SS	
590	312318-0285	-		1	SCREW SOCK.SET CUP P MSK6SS M4X6 A4	
620	312605-0310	-		1	HEXAGON NUT, M6M M3 A280	
650	312605-0320	-		1	HEXAGON NUT, M6M M10 A280	
660	315105-0153	-		4	WASHER PLAIN, BRB, 6,4/12,H=1,5	
665	315105-0165	-		2	WASHER PLAIN, BRB, 8,4/16,H=1,5	
670	315115-0165	-		6	WASHER PLAIN, TBRB 8,4/16 H=3	
680	315115-0178	-		1	WASHER PLAIN, TBRB 13/24 H=4	
700	321127-0100	-		1	BEARING BUSHING WITHOUT FL, 10X13X10 MM	
710	342797-0121	A		2	CONN. BANJO, RINGPIECE 6-1/8	

Machine Type | Group Description | Used-In | Group Number | Page No

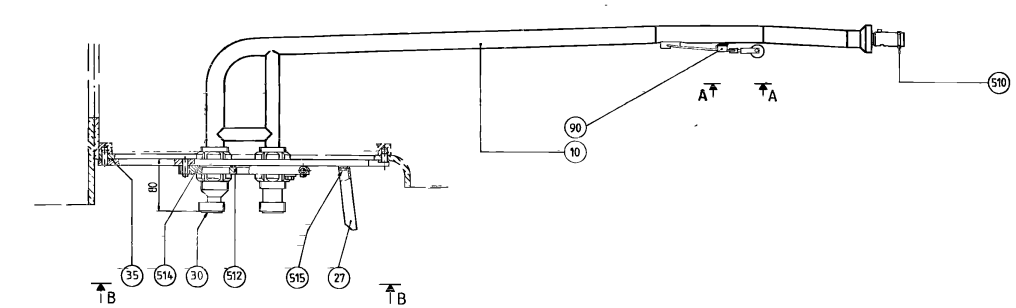

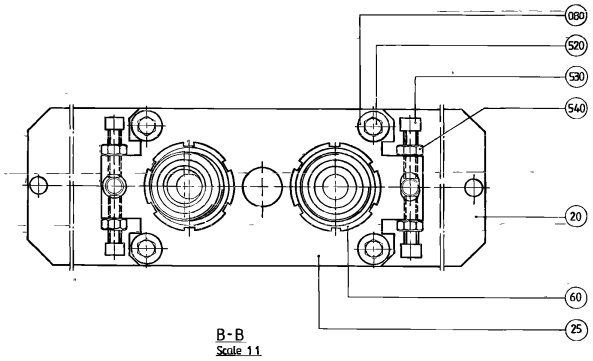

B-B
Scale 1:1

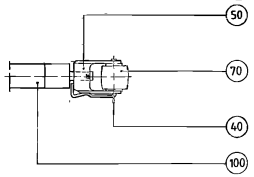

A-A
Scale 1:1

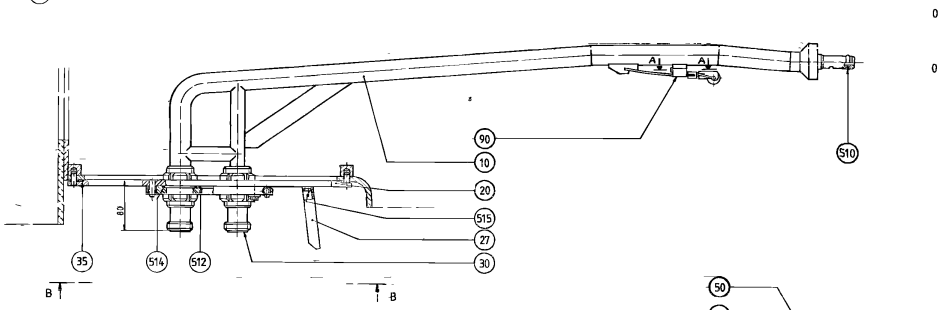

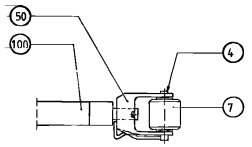

A-A
Scale 1:1

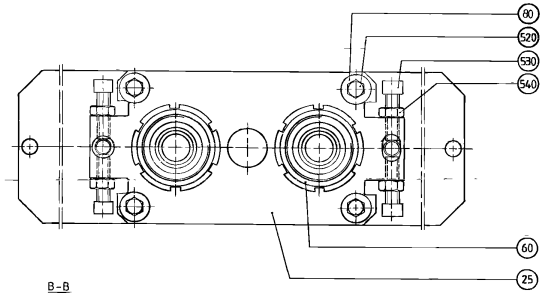

B-B

S - 469091-4, 5
ECN 82225

ECM: 102805 - 20020207
Group number: 469091-0200
Assembly Drawing: 469091-4_1_AA

Issue: 20020822

Pos	Part No	SP	UN	Qty	Description	Page No
0200B OR 0250B						
010	752694-0000	A		1	FILLING TUBE UPPER	
040	295376-0000	A		1	SHAFT	
050	295375-0000	-		1	FORK	
070	257330-0000	A		1	PRESSURE ROLLER	
090	295377-0002	-		1	HOOD	
100	544894-0000	A		1	SPRING	
0200S						
010	565461-0000	A		1	FILLING TUBE UPPER	
040	255977-0000	A		1	SHAFT	
050	255978-0000	-		1	FORK	
070	272479-0000	A		1	PRESSURE ROLLER	
090	295377-0001	-		1	HOOD	
100	751604-0000	A		1	SPRING	
Common Parts						
020	491414-0000	A		1	PLATE	
025	491415-0000	-		1	FASTENING PLATE	
027	295984-0000	-		1	DRIP GUARD	
030	12242-0001	A		2	GASKET 32X25X5,5	
035	491418-0001	A		1	O-RING	
060	255981-0000	-		4	NUT	
080	315125-0153	-		4	WASHER PLAIN ROUND,CHAMF. 6,4/22, H=4	
510	315204-0214	A		1	O-RING 17,3X2,4 MM	
512	315204-0217	A		1	O-RING 24,2X3 MM	
514	315204-0301	A		2	O-RING 49,5X3 MM	
515	312105-0364	-		2	SCREW M6S ISO 4017 M6X10 A480	
520	312105-0372	-		4	SCREW M6S ISO 4017 M6X25 A480	
530	312115-0455	-		4	SCREW MC6S M8X30 A280	
540	312605-0318	-		4	HEXAGON NUT, M6M M8 A280	

Pos	Part No	SP	UN	Qty	Description	Page No

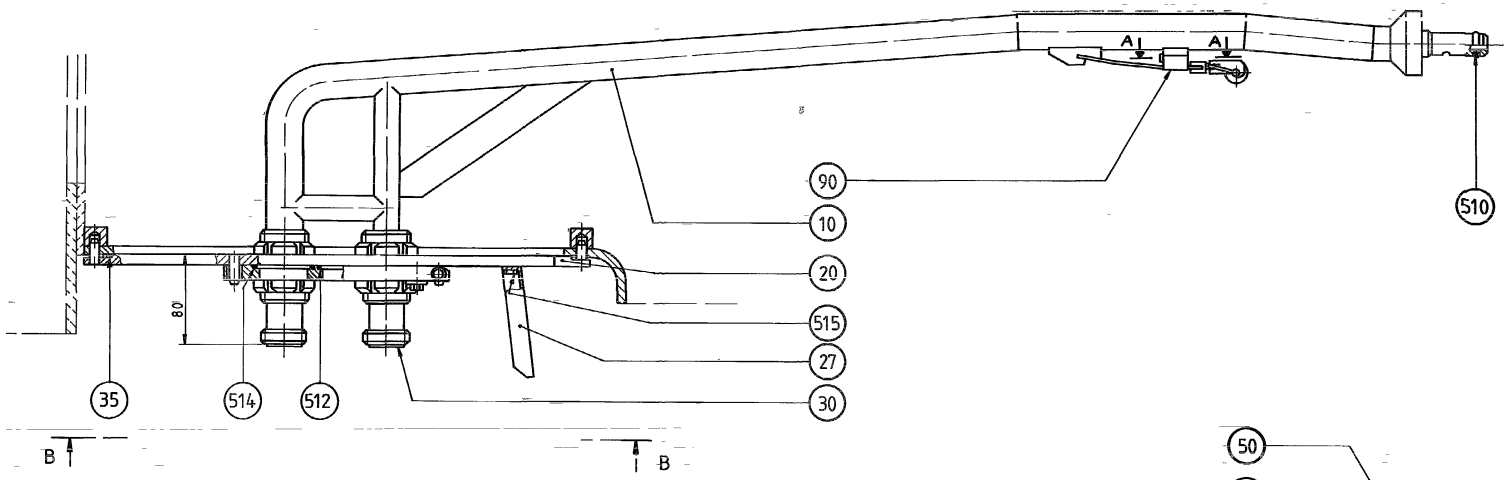

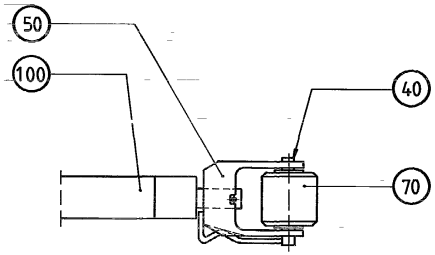

A-A
Scale 1 1

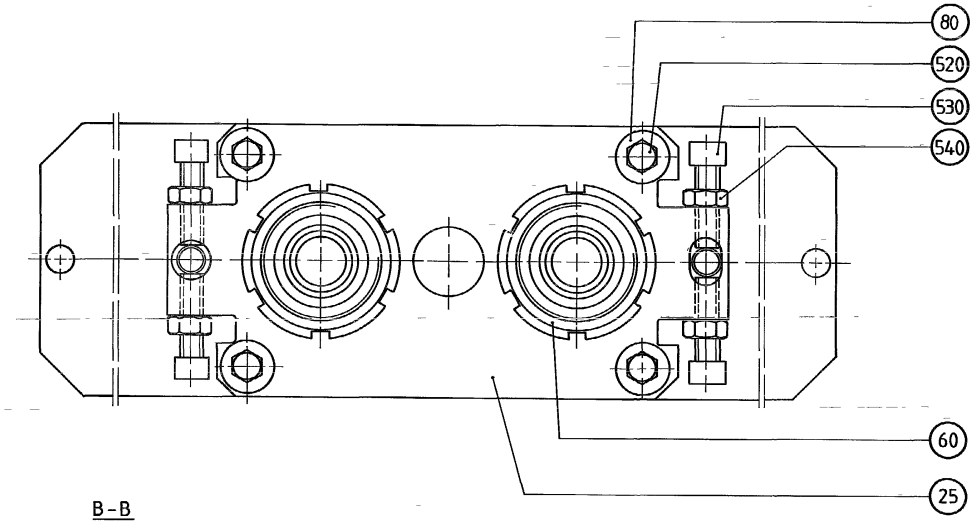

B-B
Scale 1 1

ECM: 102805 - 20020207
Group number: 469091-0200
Assembly Drawing: 469091-5_1_AA

Issue: 20020822

Pos	Part No	SP	UN	Qty	Description	Page No
0200B OR 0250B						
010	752694-0000	A		1	FILLING TUBE UPPER	
040	295376-0000	A		1	SHAFT	
050	295375-0000	-		1	FORK	
070	257330-0000	A		1	PRESSURE ROLLER	
090	295377-0002	-		1	HOOD	
100	544894-0000	A		1	SPRING	
0200S						
010	565461-0000	A		1	FILLING TUBE UPPER	
040	255977-0000	A		1	SHAFT	
050	255978-0000	-		1	FORK	
070	272479-0000	A		1	PRESSURE ROLLER	
090	295377-0001	-		1	HOOD	
100	751604-0000	A		1	SPRING	
Common Parts						
020	491414-0000	A		1	PLATE	
025	491415-0000	-		1	FASTENING PLATE	
027	295984-0000	-		1	DRIP GUARD	
030	12242-0001	A		2	GASKET 32X25X5,5	
035	491418-0001	A		1	O-RING	
060	255981-0000	-		4	NUT	
080	315125-0153	-		4	WASHER PLAIN ROUND,CHAMF. 6,4/22, H=4	
510	315204-0214	A		1	O-RING 17,3X2,4 MM	
512	315204-0217	A		1	O-RING 24,2X3 MM	
514	315204-0301	A		2	O-RING 49,5X3 MM	
515	312105-0364	-		2	SCREW M6S ISO 4017 M6X10 A480	
520	312105-0372	-		4	SCREW M6S ISO 4017 M6X25 A480	
530	312115-0455	-		4	SCREW MC6S M8X30 A280	
540	312605-0318	-		4	HEXAGON NUT, M6M M8 A280	

Pos	Part No	SP	UN	Qty	Description	Page No

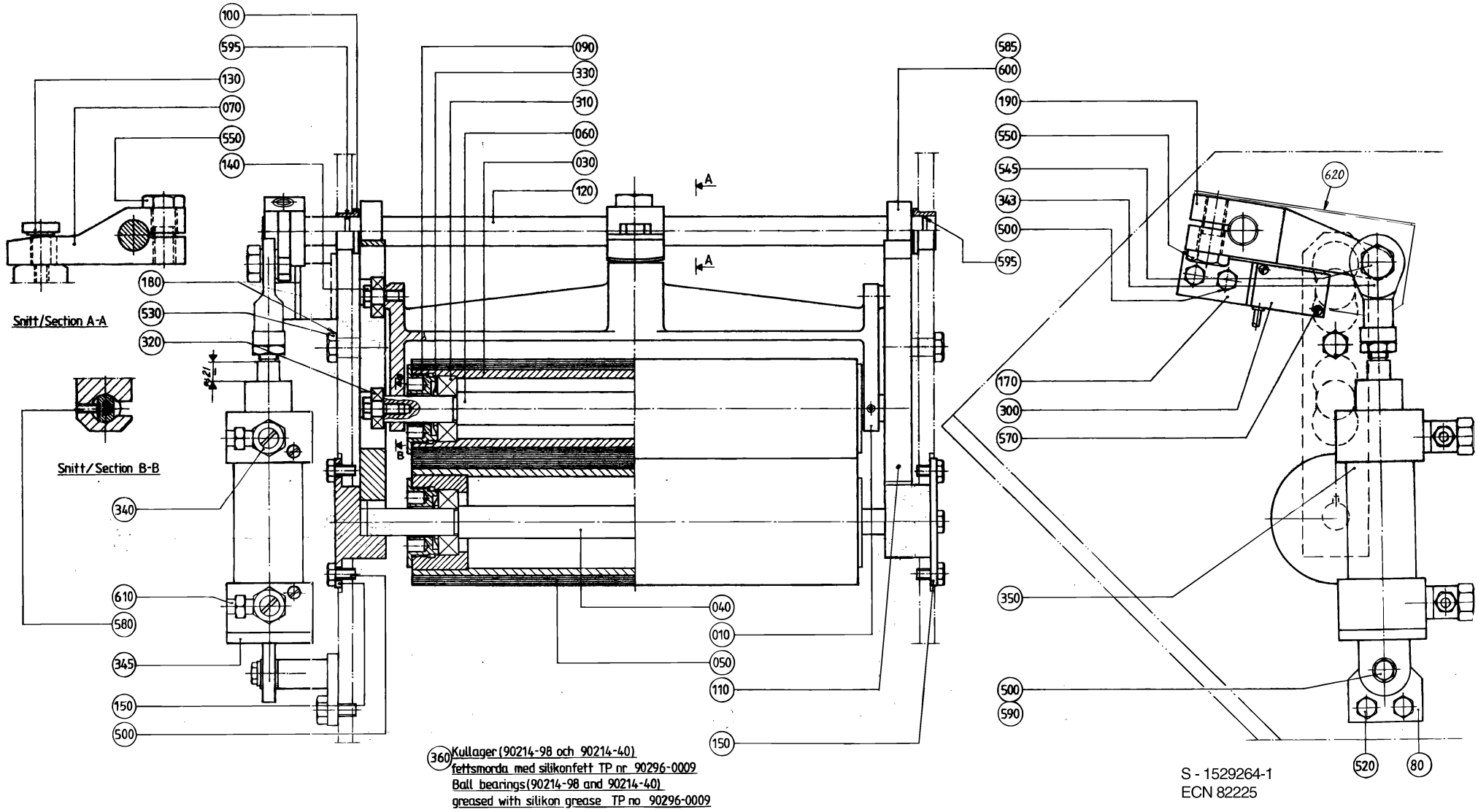
100
595
130
070
550
140
090
330
310
060
030
120
180
530
320
Snitt/Section A-A
Snitt/Section B-B
340
610
580
345
150
500
040
010
050
110
150
360 Kullager (90214-98 och 90214-40) fettsmorda med silikonfett TP nr 90296-0009
Ball bearings (90214-98 and 90214-40) greased with silikon grease TP no 90296-0009
585
600
190
550
545
343
500
595
620
170
300
570
350
500
590
520
80
S - 1529264-1
ECN 82225

ECM: 102402 - 20020207
Group number: 1529264-0100
Assembly Drawing: 1529264-1_1_AA

Issue: 20020822

Pos	Part No	SP	UN	Qty	Description	Page No
Common Parts						
010	272926-0000	-		1	FORK	
030	491396-0000	A		1	CALENDER ROLLER	
040	566695-0000	B		1	SHAFT	
050	491397-0000	A		1	CALENDER ROLLER	
060	271893-0000	A		1	SHAFT	
070	272927-0000	-		1	PRESSURE ARM	
080	441578-0002	-		1	CYLINDER BRACKET	
090	247170-0000	B		4	BEARING COVER	
100	271269-0000	A		2	BUSHING	
110	566696-0000	-		2	GUIDE CONSOLE	
120	751132-0000	B		1	SHAFT	
130	271898-0000	B		1	SCREW	
140	271899-0000	B		4	SCREW	
150	566697-0000	-		2	AXLE SUPPORT	
170	272033-0000	-		1	BRACKET	
180	315115-0153	-		2	WASHER PLAIN, TBRB 6,4/12 H=3	
190	441904-0000	-		1	ARM	
300	90044-0104	-		1	PROX.SWITCH IFM IN 3002	
310	90214-0098	A		4	BALL BEARING, 15X35X11 MM	
320	90214-0040	A		4	BALL BEARING, 8X22X7 MM	
330	90214-0303	A		4	SEALING RING, 18,6X35X2 MM	
340	90235-0282	-		2	THROTTLE CHECK VALVES,G1/8	
343	90239-0405	A		1	ROD END,BALL JOINT EYE,MINI-ISO M10X1,25	
345	90239-0453	A		1	BRACKET	
350	B90239-0773	A		1	CYLINDER	
	90239-0442	*C*		*1*	*SEAL KIT*	
360	90296-0009	-	L	1	SILICONE GREASE TUBE 100 GR.	
500	312105-0364	-		11	SCREW M6S ISO 4017 M6X10 A480	
520	312105-0447	-		2	SCREW M6S ISO 4017 M8X12 A480	
530	312105-0366	-		2	SCREW M6S M6X12 A280	
545	312105-0491	-		1	SCREW M6S ISO 4017 M10X20 A480	
550	312105-0536	-		2	SCREW M6S ISO 4017 M12X30 A480	
570	312125-0228	-		2	SCREW PAN HEAD MCS M3X16 A480	
580	312318-0327	-		2	SCREW SOCK.SET CUP P MSK6SS M5X12 A4	
585	312318-0362	-		4	SCREW SOCK.SET CUP P MSK6SS M6X8 A4	
590	315105-0153	-		1	WASHER PLAIN, BRB, 6,4/12,H=1,5	
595	315204-0111	-		2	O-RING 13,1X1,6 MM	
600	315742-0112	-		2	COLLAR, 16/32, H=12	
610	342797-0121	-		2	CONN. BANJO, RINGPIECE 6-1/8	
620	978462-0000	-		1	PROTECTION PLATE	

Pos	Part No	SP	UN	Qty	Description	Page No

Machine Type	Group Description	Used-In	Group Number	Page No

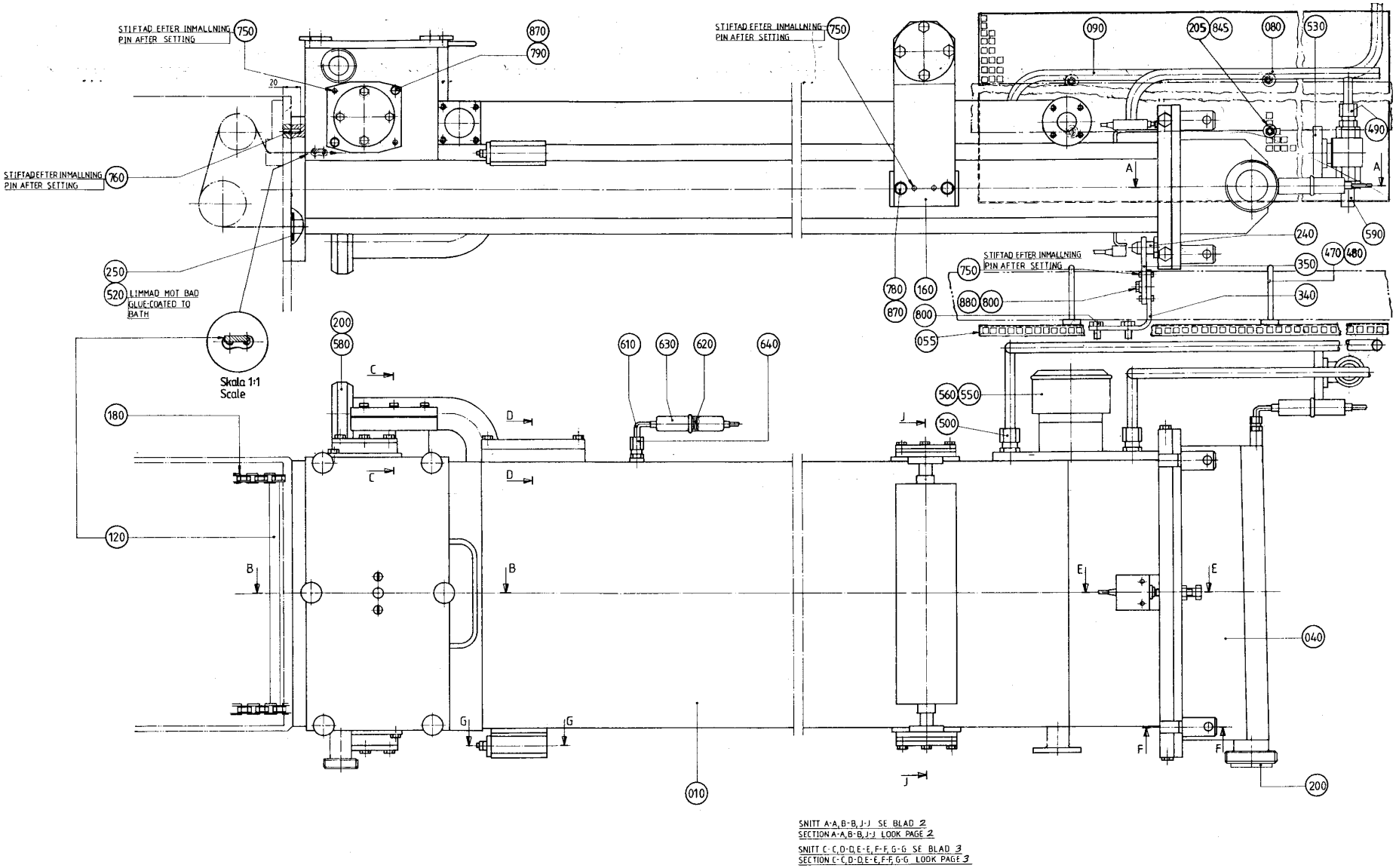
STIFTAD EFTER INMALLNING
PIN AFTER SETTING
750
870
790
760
250
520
LIMMAD MOT BAD
GLUE-COATED TO BATH
Skala 1:1
Scale
200
580
180
120
610
630
620
640
090
205
845
080
530
490
240
590
470
480
350
340
780
160
880
800
870
055
560
550
500
040
010
SNITT A-A, B-B, J-J SE BLAD 2
SECTION A-A, B-B, J-J LOOK PAGE 2
SNITT C-C, D-D, E-E, F-F, G-G SE BLAD 3
SECTION C-C, D-D, E-E, F-F, G-G LOOK PAGE 3

Pos	Part No	SP	UN	Qty	Description	Page No
Common Parts						
010	1529078-0000	-		1	BATH	
040	491593-0000	-		1	COVER	
050	273954-0000	-		1	SEAL	
055	978547-0000	-		1	TOUCH GUARD	
060	491594-0000	-		1	BENDING ROLLER	
070	491595-0000	-		1	LID	
080	491596-0000	-		1	PIPE	
090	491597-0000	-		1	PIPE	
100	295111-0000	A		1	BENDING ROLLER	
110	456994-0000	A		1	BENDING ROLLER	
120	456995-0000	A		1	CARRIER	
130	456784-0000	-		1	LID	
135	978569-0000	B		1	SHAFT	
136	491737-0000	-		1	SHAFT	
140	B484190-0000	A		4	BALL BEARING	
	90214-0098	*-*		*1*	*BALL BEARING, 15X35X11 MM*	
150	491598-0000	-		2	BEARING SEAT	
160	491599-0000	-		2	CANTILEVER	
170	491600-0000	-		2	CANTILEVER	
180	B491601-0000	A		2	ROLLER CHAIN	
	484204-0000	*C*		*1*	*LINK*	
184	751761-0000	-		1	ARM	
185	751762-0000	-		1	SHAFT	
190	751331-0000	-		1	GASKET	
195	751763-0000	-		1	BRACKET	
200	12242-0003	A		2	GASKET 48X38X5,5	
205	27815-0000	A		4	WASHER	
210	247172-0000	A		4	SPACER RING	
220	247173-0000	B		2	BEARING SEAT	
230	247239-0000	A		2	WHEEL	
240	247248-0000	-		2	PIN	
250	256005-0000	A		1	GASKET	
260	256006-0000	-		1	AXLE SUPPORT	
270	256007-0000	-		1	AXLE SUPPORT	
280	256010-0000	A		4	NUT	
290	273937-0000	-		1	DIAPHRAGM	
300	295388-0000	A		1	GASKET	
310	441474-0000	-		2	SHIM	
320	441636-0000	-		4	SHAFT	
330	441637-0000	-		4	DOWEL	
340	456472-0000	-		2	ANGLE	
350	456474-0000	-		2	ADJUSTMENT PLATE	
360	456516-0000	B		4	BEARING COVER	
370	567070-0012	A		1	ELECTRODE	
380	469982-0000	-		1	WASHER	
390	543470-0000	A		2	LEVEL GLASS	
400	476398-0000	-		2	LID	
410	569016-0000	-		2	GASKET	
420	491126-0000	-		6	SCREW	
430	491363-0000	-		2	NUT	
440	491364-0000	-		2	BEARING HOLDER	
450	491365-0000	-		2	THRUST BEARING	
460	560931-0000	-		1	BRACKET	
470	751698-0000	-		2	HOLDER	
480	751699-0000	-		2	WASHER	
490	90030-0109	A		1	CONN. STR., 12-R1/2, EXT. THREAD	
500	90030-0187	A		2	CONN. STR. GA-12-G3/8	
510	90044-0084	-		2	LIMIT SW. 14 CE1-4	
515	90044-0194	-		1	PROX.SW. IN5329/IN3002-BPKG	
520	90153-0016	-	ML	1	ADHESIVE TUBE 100G RHODORSIL CAF 3	
530	90187-0029	A		1	BALL VALVE G1/2, NPBR	
540	90199-0010	A		1	LEVEL GLASS	
550	90206-0326	-		1	JUNCTION BOX FOR 90206-56	
560	B90206-0070	A		1	HEATING ELEMENT 6000W 380/220V	
	90206-0326	*-*		*1*	*JUNCTION BOX FOR 90206-56*	
	90269-0308	*-*		*1*	*GASKET 59X68X3 MM*	
570	90214-0303	-		8	SEALING RING, 18,6X35X2 MM	
580	90217-0035	-		1	NUT	
590	90224-0078	-		1	PIPE SOCKET, ART.NO RAN 1612	
600	90240-0146	A		2	FLANGE BUSHING,15X21X20 MM	
605	90287-0106	-		1	SCREW SPRINGLOAD. SLOTTED HEAD M10X21	
610	90326-0019	-		1	THERMOELEMENT	
620	90326-0020	-		2	PLUG, FEMALE YELLOW CR-AL	
630	90326-0012	A		2	PROTECTIVE COVER, T31A4618	
640	90326-0306	A		1	GLAND FITTING 9041-45-KS-KR.1/8" D=4,5MM	
650	90326-0052	-		1	THERMO ELEMENT	
740	311103-0236	-		4	PARALLELL PIN, M6, 3X16 MM	
750	311103-0270	-		12	PARALLELL PIN, M6, 4X16 MM	
760	311103-0310	-		2	PARALLELL PIN, M6, 5X20 MM	
770	312105-0332	-		6	SCREW M6S ISO 4017 M5X22 A480	
780	312105-0366	-		20	SCREW M6S M6X12 A280	
790	312105-0368	-		14	SCREW M6S M6X16 A280	
795	312105-0370	-		4	SCREW M6S ISO 4017 M6X20 A480	

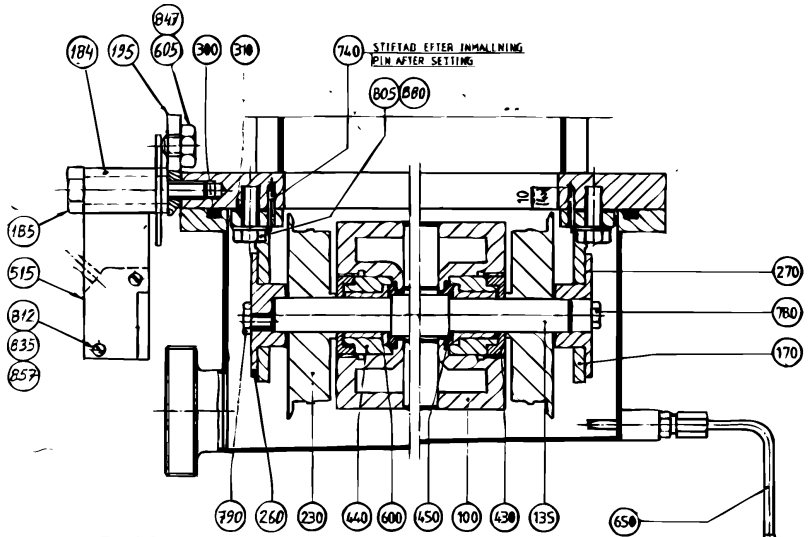

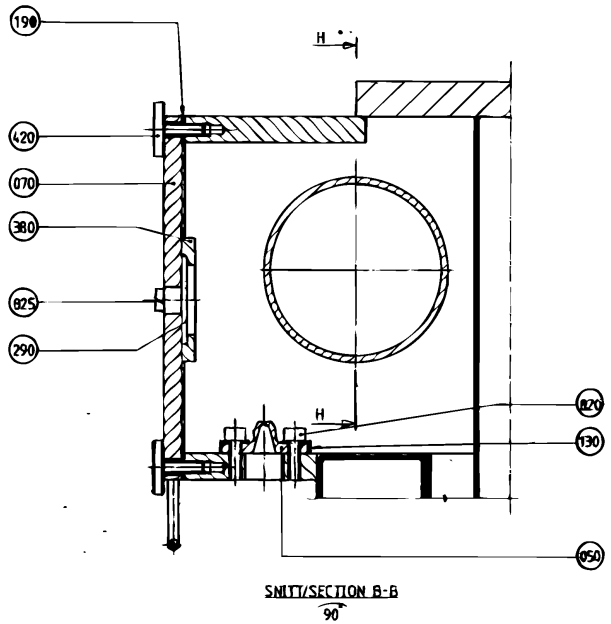

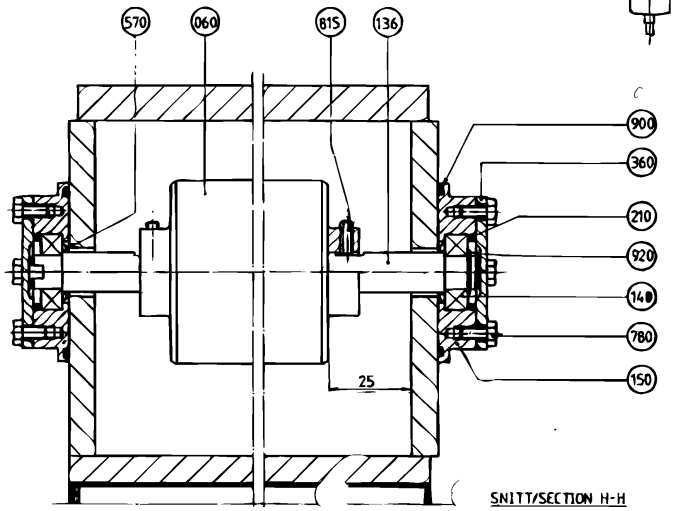

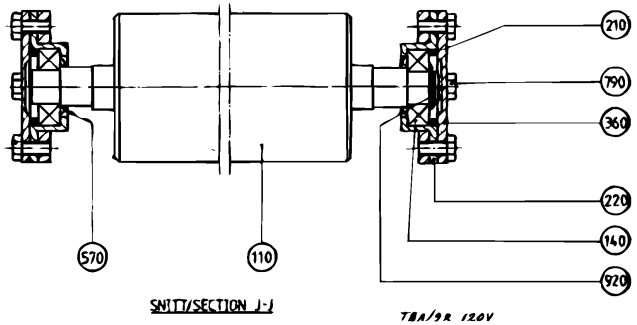

S - 1529168-2
ECN 82225

Pos	Part No	SP	UN	Qty	Description	Page No
Common Parts (Cont'd)						
800	312105-0449	-		10	SCREW M6S ISO 4017 M8X16 A480	
805	312105-0451	-		4	SCREW M6S ISO 4017 M8X20 A480	
810	312109-0463	-		2	SCREW M6S ISO 4017 M8X60 A480	
812	312125-0230	-		2	SCREW PAN HEAD MCS M3X20 SS	
815	312318-0368	-		2	SCREW SOCK.SET CUP P MSK6SS M6X16 A4	
820	312115-0366	-		6	SCREW MC6S M6X12 A280	
822	312125-0285	-		1	SCREW SLOT.PAN HD. MCS 4X6 A480	
825	312125-0331	-		2	SCREW PAN HEAD MCS M5X20 SS	
830	312115-0329	-		4	SCREW MC6S M5X16 A280	
835	312605-0310	-		2	HEXAGON NUT, M6M M3 A280	
840	312605-0312	-		2	HEXAGON NUT, M6M M4 A280	
845	312605-0314	-		4	HEXAGON NUT, M6M M5 A280	
847	312605-0320	-		1	HEXAGON NUT, M6M M10 A280	
850	312605-0318	-		2	HEXAGON NUT, M6M M8 A280	
855	315105-0136	-		3	WASHER PLAIN, BRB, 4,3/8,H=0,8	
857	315105-0124	-		2	WASHER PLAIN, BRB, 3,2/6,H=0,5	
860	315105-0146	-		6	WASHER PLAIN, BRB, 5,3/10,H=1	
870	315105-0153	-		9	WASHER PLAIN, BRB, 6,4/12,H=1,5	
880	315105-0165	-		6	WASHER PLAIN, BRB, 8,4/16,H=1,5	
890	315204-0213	A		1	O-RING 15,2X2,4 MM	
900	315204-0305	A		2	O-RING 69,5X3 MM	
920	315751-0112	A		2	RETAIN. RING, 15	

Pos	Part No	SP	UN	Qty	Description	Page No

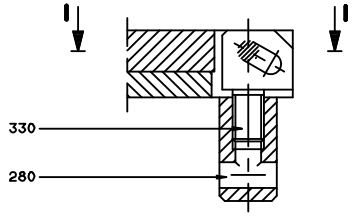

SNITT/SECTION F-F

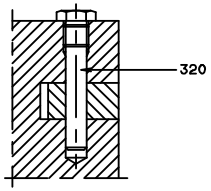

SNITT/SECTION I-I

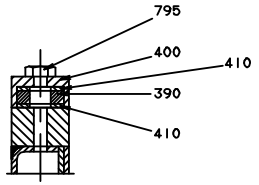

SNITT/SECTION D-D

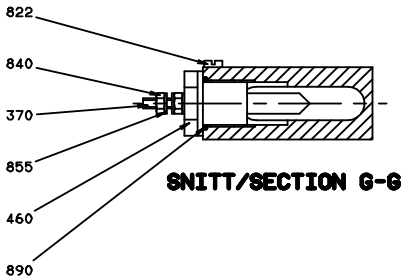

SNITT/SECTION G-G

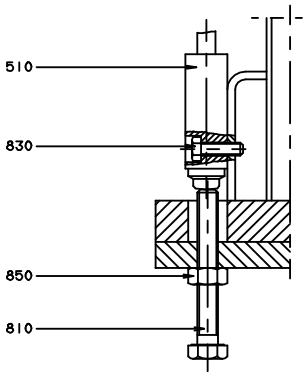

SNITT/SECTION E-E
~90°

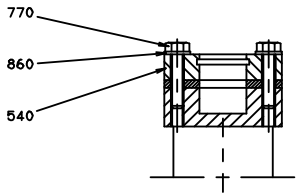

SNITT/SECTION C-C

Pos	Part No	SP	UN	Qty	Description	Page No
SEE PREVIOUS LISTS PAGES: 155, 157.						

Pos	Part No	SP	UN	Qty	Description	Page No

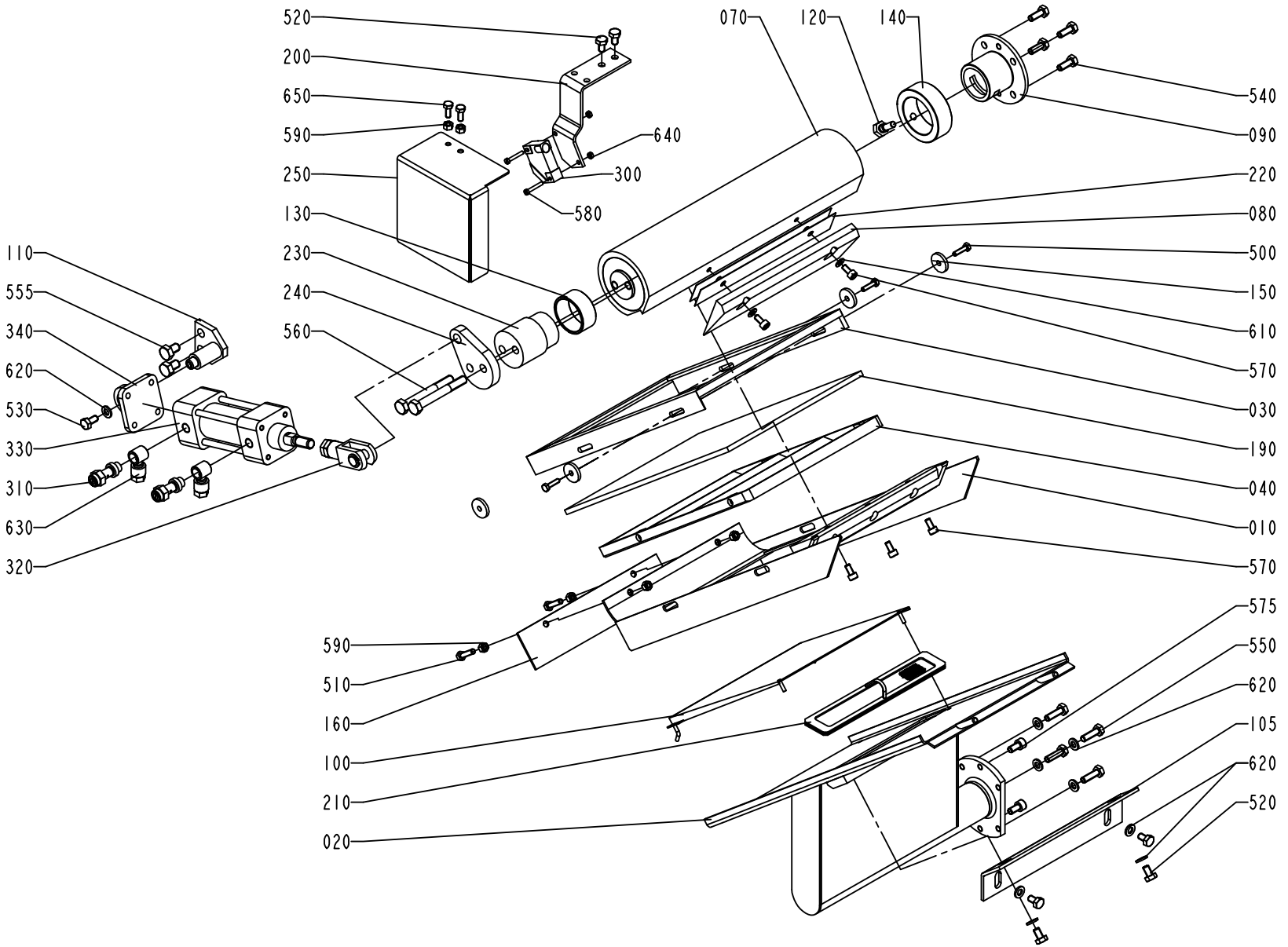
520
200
650
590
250
130
230
240
560
640
300
580
070
120
140
540
090
220
080
500
150
610
570
030
190
040
010
570
575
550
620
105
620
520
110
555
340
620
530
330
310
630
320
590
510
160
100
210
020
272025-4
ECM 73657

ECM: 102776 - 20020207
Group number: 272025-0300
Assembly Drawing: 272025-4_1_AB

Issue: 20020822

Pos	Part No	SP	UN	Qty	Description	Page No
TBA 0200B OR TBA 0200S OR TBA 0250B OR TWA 0200S OR TPA 0250SQ						
010	272022-0000	-		1	AIR KNIFE, MOVABLE	
020	272023-0000	-		1	FIXED AIR KNIFE	
030	271941-0002	-		1	FRAME	
040	271942-0002	-		1	AIR GUIDE	
070	272026-0002	-		1	AIR DISTRIBUTOR	
080	271820-0002	-		1	STEERING RAIL	
100	272140-0002	-		1	HEAD PLATE	
160	271827-0002	-		1	HEAD PLATE	
190	272027-0002	A		1	GLASS PANE	
210	272141-0002	A		1	FILTER	
220	272329-0002	A		3	LACE	
570	312115-0325	-		7	SCREW HEX.SOCK.HD.MC6S-TT 5X10 A480	
Common Parts						
090	271858-0000	-		1	FLANGE	
105	272464-0000	-		1	ANGLE BRACKET	
110	441578-0001	B		1	CYLINDER BRACKET	
120	255995-0000	-		1	SCREW	
130	751165-0000	A		1	BUSHING	
140	256022-0000	A		1	BUSHING	
150	263311-0000	B		4	WASHER	
200	490867-0000	-		1	BRACKET	
230	441576-0000	-		1	SPACER	
240	441903-0000	B		1	ARM	
250	978461-0000	-		1	PROTECTION PLATE	
300	90044-0194	-		1	PROX.SW. IN5329/IN3002-BPKG	
310	90235-0274	A		2	THROTTLE CHECK VALVES,G1/8"	
320	90239-0516	A		1	ROD END,CLEVIS WITH AXLE M10X1,25	
330	B90239-0773	A		1	CYLINDER	
	90239-0442	*C*		*1*	*SEAL KIT*	
340	90239-0453	B		1	BRACKET	
490	311103-0233	-		2	PARALLELL PIN, M6, 3X10 MM	
500	312105-0293	-		4	SCREW M6S ISO 4017 M4X16 A480	
510	312105-0331	-		6	SCREW M6S ISO 4017 M5X20 A480	
520	312105-0364	-		6	SCREW M6S ISO 4017 M6X10 A480	
530	312105-0366	-		3	SCREW M6S M6X12 A280	
540	312105-0368	-		4	SCREW M6S M6X16 A280	
550	312105-0370	-		4	SCREW M6S ISO 4017 M6X20 A480	
555	312105-0447	-		2	SCREW M6S ISO 4017 M8X12 A480	
560	312105-0464	-		2	SCREW M6S ISO 4014 M8X65 A480	
575	312115-0366	-		2	SCREW MC6S M6X12 A280	
580	312125-0228	-		2	SCREW PAN HEAD MCS M3X16 A480	
590	312605-0314	-		8	HEXAGON NUT, M6M M5 A280	
600	312605-0316	-		4	HEXAGON NUT, M6M M6 A280	
610	315105-0146	-		6	WASHER PLAIN, BRB, 5,3/10,H=1	
620	315105-0153	-		9	WASHER PLAIN, BRB, 6,4/12,H=1,5	
630	342797-0121	A		2	CONN. BANJO, RINGPIECE 6-1/8	

Machine Type	Group Description	Used-In	Group Number	Page No

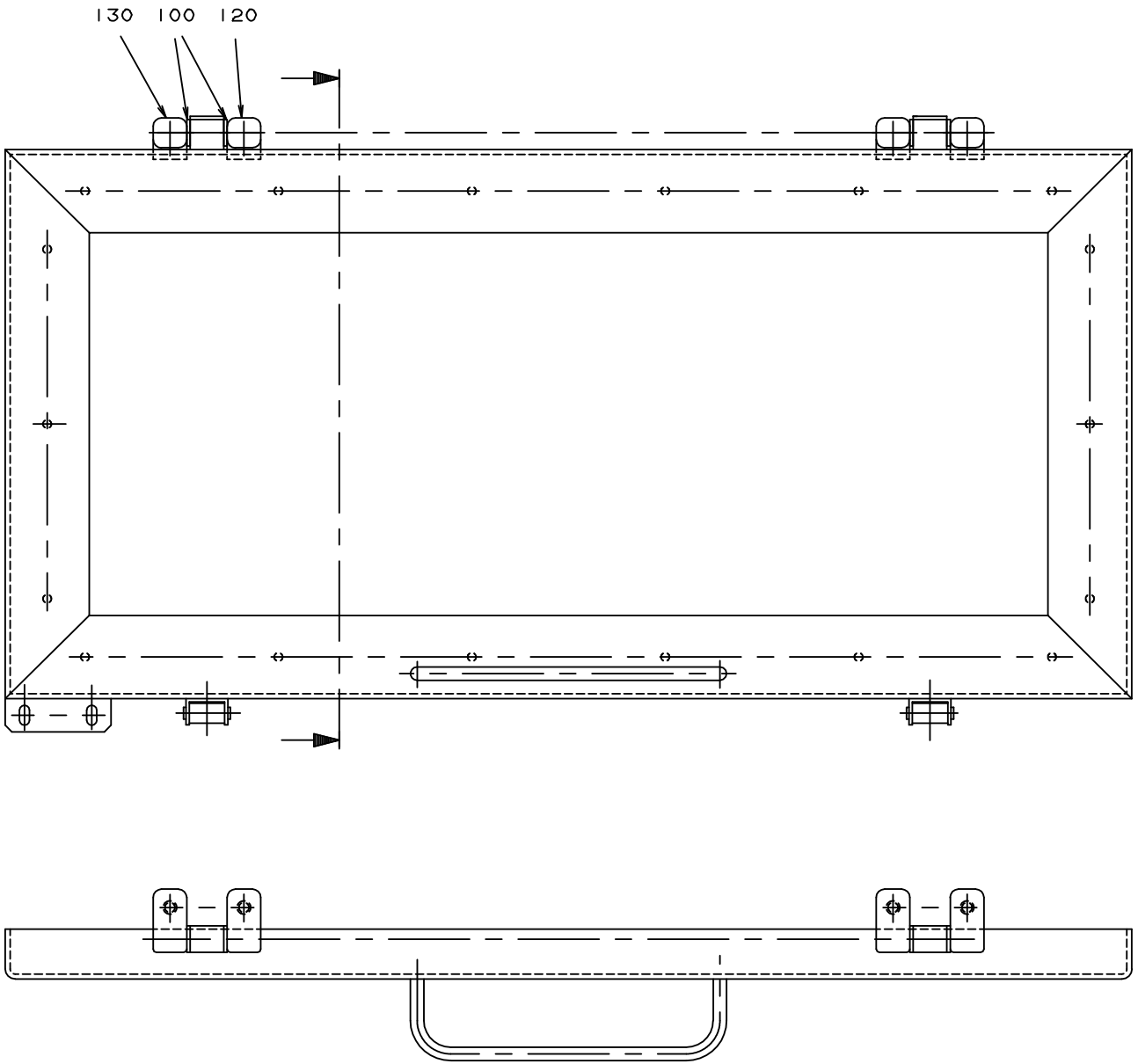
130
100
120

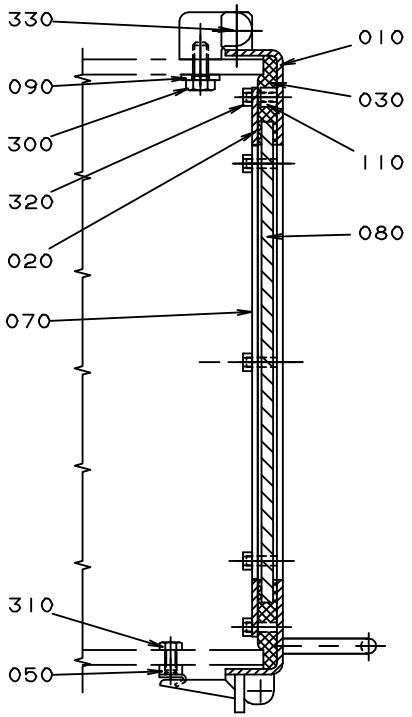
330
010
090
030
300
110
320
080
020
070
310
050

ECM: 102772 - 20020207
Group number: 1529022-0100
Assembly Drawing: 1529022-1_1_AA

Issue: 20020822

Pos	Part No	SP	UN	Qty	Description	Page No
Common Parts						
010	978542-0000	-		1	FRAME	
020	272780-0000	-		2	COVER SLIP	
030	272785-0000	-		1	RUBBER STRIP	
050	271860-0000	A		2	CLAMP BLOCK	
070	272782-0000	-		2	COVER SLIP	
080	272783-0003	-		1	GLASS PANE	
090	441737-0000	A		2	WASHER	
100	441739-0000	A		4	WASHER	
110	441718-0000	B		18	SPACER	
120	441740-0000	A		2	HINGE FLANGE	
130	441741-0000	A		2	HINGE FLANGE	
300	312105-0451	-		4	SCREW M6S ISO 4017 M8X20 A480	
310	312105-0366	-		4	SCREW M6S M6X12 A280	
320	312605-0314	-		18	HEXAGON NUT, M6M M5 A280	
330	311103-0413	-		2	PARALLELL PIN, M6, 8X50 MM	

Pos	Part No	SP	UN	Qty	Description	Page No

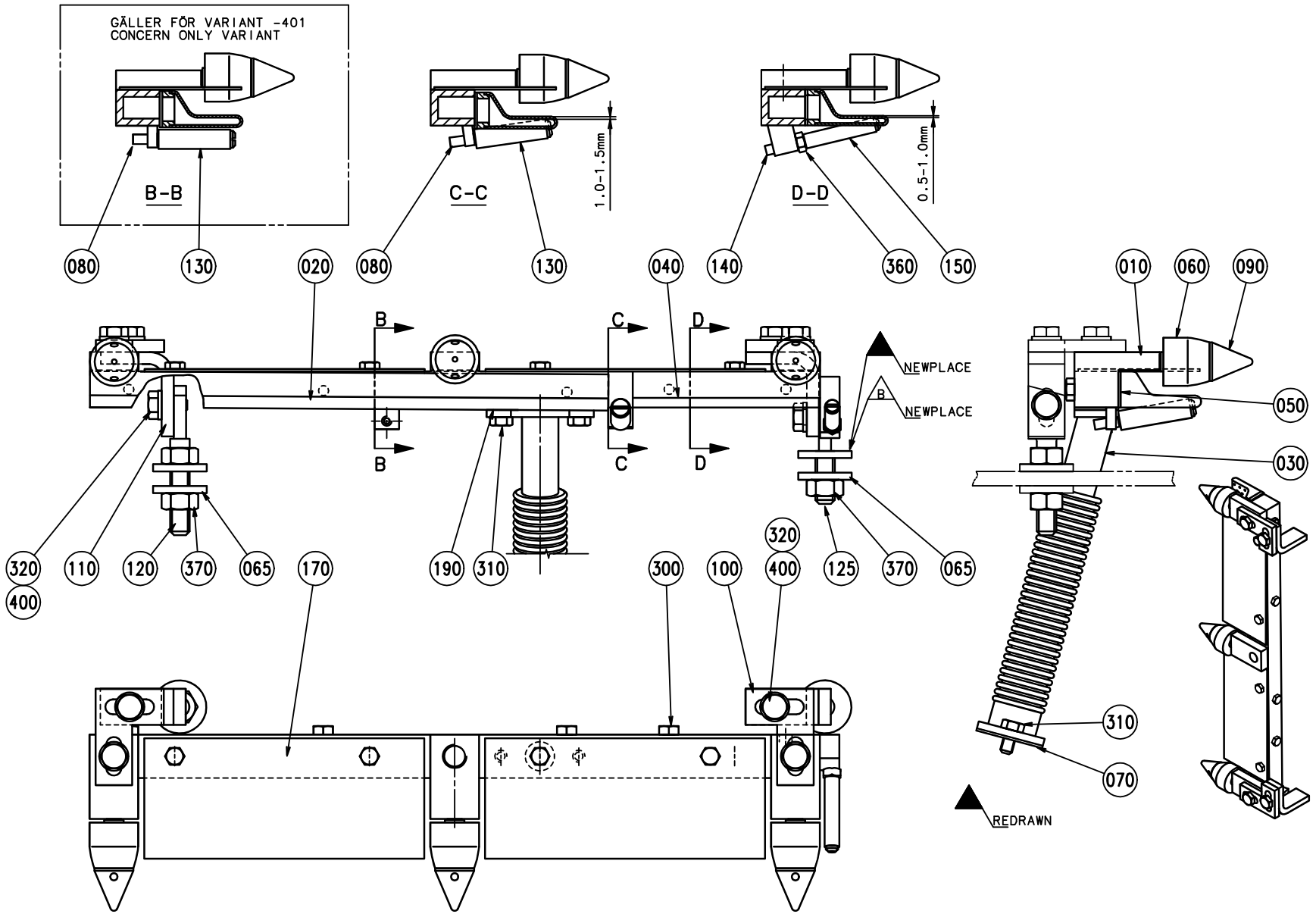
GÄLLER FÖR VARIANT -401
CONCERN ONLY VARIANT
B-B
C-C
D-D
1.0-1.5mm
0.5-1.0mm
080
130
020
080
130
040
140
360
150
010
060
090
050
030
B
C
D
NEWPLACE
NEWPLACE
320
400
110
120
370
065
170
190
310
300
100
320
400
125
370
065
310
070
REDRAWN

ECM: 102769 - 20020207
Group number: 469501-0300
Assembly Drawing: 469501-4_1_AA

Issue: 20020822

Pos	Part No	SP	UN	Qty	Description	Page No
0200S						
080	256899-0000	A		2	SHAFT	
130	469461-0000	A		2	ROLL	
0200B OR 0250B						
080	256899-0000	A		1	SHAFT	
130	469461-0000	A		1	ROLL	
Common Parts						
010	752218-0000	B		1	ATTACHMENT	
020	751459-0000	A		1	AIR NOZZLE	
030	751722-0000	B		1	PIPE-LINE	
040	751282-0000	B		1	AIR NOZZLE	
050	751293-0000	A		1	GASKET	
060	6161-0000	A		3	ROLL	
065	28036-0000	-		4	WASHER	
070	751010-0000	A		1	GASKET	
090	272095-0000	A		3	SHAFT	
100	469458-0000	-		2	BRACKET	
110	469459-0000	-		2	BRACKET	
120	469460-0000	-		1	BRACKET	
125	491143-0000	-		1	BRACKET	
140	469463-0000	A		1	SHAFT	
150	469464-0000	A		1	ROLL	
170	469466-0000	-		2	PLATE	
190	751024-0000	-		1	GASKET	
300	312105-0287	-		4	SCREW M6S ISO 4017 M4X8 A480	
310	312105-0325	-		4	SCREW M6S ISO 4017 M5X10 A480	
315	312105-0333	-		5	SCREW M6S ISO 4017 M5X25 A480	
320	312105-0366	-		6	SCREW M6S M6X12 A280	
360	312605-0312	-		1	HEXAGON NUT, M6M M4 A280	
370	312605-0318	-		3	HEXAGON NUT, M6M M8 A280	
400	315105-0153	-		6	WASHER PLAIN, BRB, 6,4/12,H=1,5	

Pos	Part No	SP	UN	Qty	Description	Page No

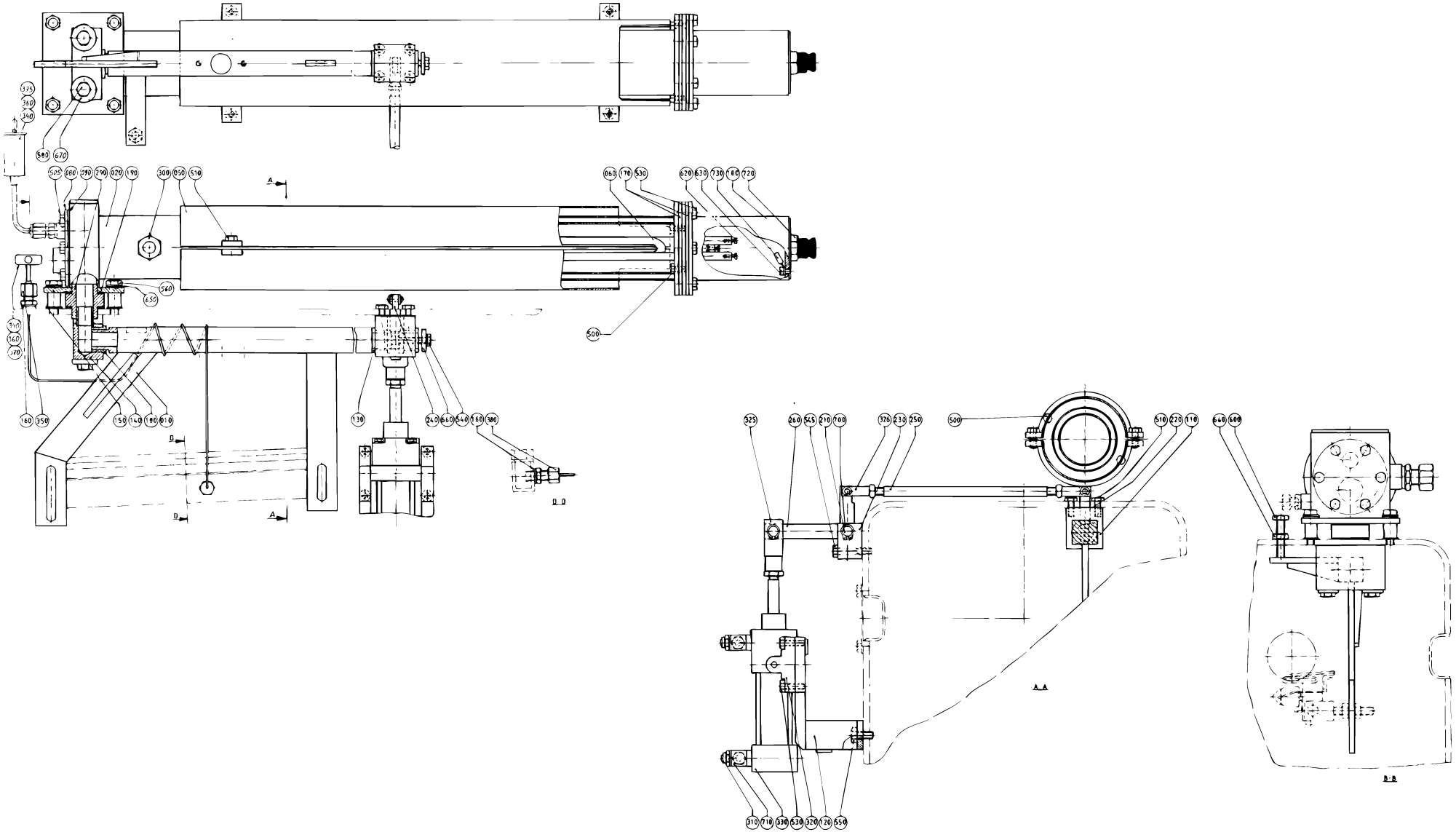

S - 1529175-1
ECN 82225

ECM: 102408 - 20020207
Group number: 1529175-0100
Assembly Drawing: 1529175-1_1_AA

Issue: 20020822

Pos	Part No	SP	UN	Qty	Description	Page No
Common Parts						
010	491169-0000	-		1	PIVOT ARM	
020	1529077-0000	-		1	HEATING PIPE	
050	272114-0000	-		1	HEAT GUARD	
060	441804-0000	-		1	COIL HEATER	
080	751734-0000	-		1	LID	
090	751735-0000	-		1	GASKET	
100	491170-0000	-		1	COVER	
110	491171-0000	-		1	BEARING BLOCK	
120	491176-0000	-		1	BRACKET	
130	271269-0000	-		2	BUSHING	
140	272868-0000	-		1	STOPPER DOWEL	
150	751019-0000	-		8	WASHER	
160	273429-0000	-		2	WASHER	
170	751020-0000	-		2	GASKET	
180	295909-0000	-		1	BUSHING	
190	751023-0000	-		2	GASKET	
210	491931-0000	-		1	SHAFT	
220	491172-0000	-		1	GASKET	
230	491173-0000	-		1	BRACKET	
240	491174-0000	-		1	ARM	
250	491175-0000	-		1	LINK	
260	491177-0000	-		1	ARM	
290	491487-0000	-		1	BUSHING	
300	90030-0187	-		1	CONN. STR. GA-12-G3/8	
310	90235-0282	-		2	THROTTLE CHECK VALVES,G1/8	
320	90239-0460	-		1	BRACKET	
325	90239-0516	-		1	ROD END,CLEVIS WITH AXLE M10X1,25	
326	90239-0532	-		2	ROD END,CLEVIS WITH AXLE M8	
330	B90239-0779	-		1	CYLINDER	
	90239-0442	*C*		*1*	*SEAL KIT*	
340	90326-0012	-		2	PROTECTIVE COVER, T31A4618	
350	90326-0306	-		1	GLAND FITTING 9041-45-KS-KR.1/8" D=4,5MM	
360	90326-0020	-		2	PLUG, FEMALE YELLOW CR-AL	
370	B90326-0048	A		1	THERMOCOUPLE, 12826-31	
	90326-0304	*-*		*1*	*LEAD IN, 9041-15-KS-UB60*	
375	90326-0052	-		1	THERMO ELEMENT	
380	90326-0304	-		1	LEAD IN, 9041-15-KS-UB60	
500	312105-0327	-		2	SCREW M6S ISO 4017 M5X12 A480	
505	312105-0364	-		6	SCREW M6S ISO 4017 M6X10 A480	
510	312105-0368	-		8	SCREW M6S M6X16 A280	
530	312105-0370	-		10	SCREW M6S ISO 4017 M6X20 A480	
540	312105-0372	-		1	SCREW M6S ISO 4017 M6X25 A480	
545	312105-0376	-		1	SCREW M6S ISO 4014 M6X35 A480	
550	312105-0449	-		2	SCREW M6S ISO 4017 M8X16 A480	
560	312105-0455	-		4	SCREW M6S ISO 4017 M8X30 A480	
580	312105-0462	-		2	SCREW M6S ISO 4014 M8X55 A480	
600	312109-0457	-		1	SCREW M6S ISO 4017 M8X35 A480	
620	312125-0226	-		3	SCREW PAN HEAD MCS M3X12 SS	
630	312125-0323	-		1	SCREW PAN HEAD MCS M5X8 SS	
640	312605-0318	-		1	HEXAGON NUT, M6M M8 A280	
650	315105-0165	-		4	WASHER PLAIN, BRB, 8,4/16,H=1,5	
660	315125-0153	-		1	WASHER PLAIN ROUND,CHAMF. 6,4/22, H=4	
670	315125-0165	-		2	WASHER PLAIN ROUND,CHAMF. 8,4/26, H=5	
700	90141-0016	-		2	RETAIN. RING, 10	
710	342797-0121	-		2	CONN. BANJO, RINGPIECE 6-1/8	
720	352100-0106	-		1	CABLE GLANR.18,6-10,5	
730	353101-0132	-		1	CABLE SHOE, RING ø5,3MM	

Machine Type | Group Description | Used-In | Group Number | Page No

HOT AIR ELEMENT

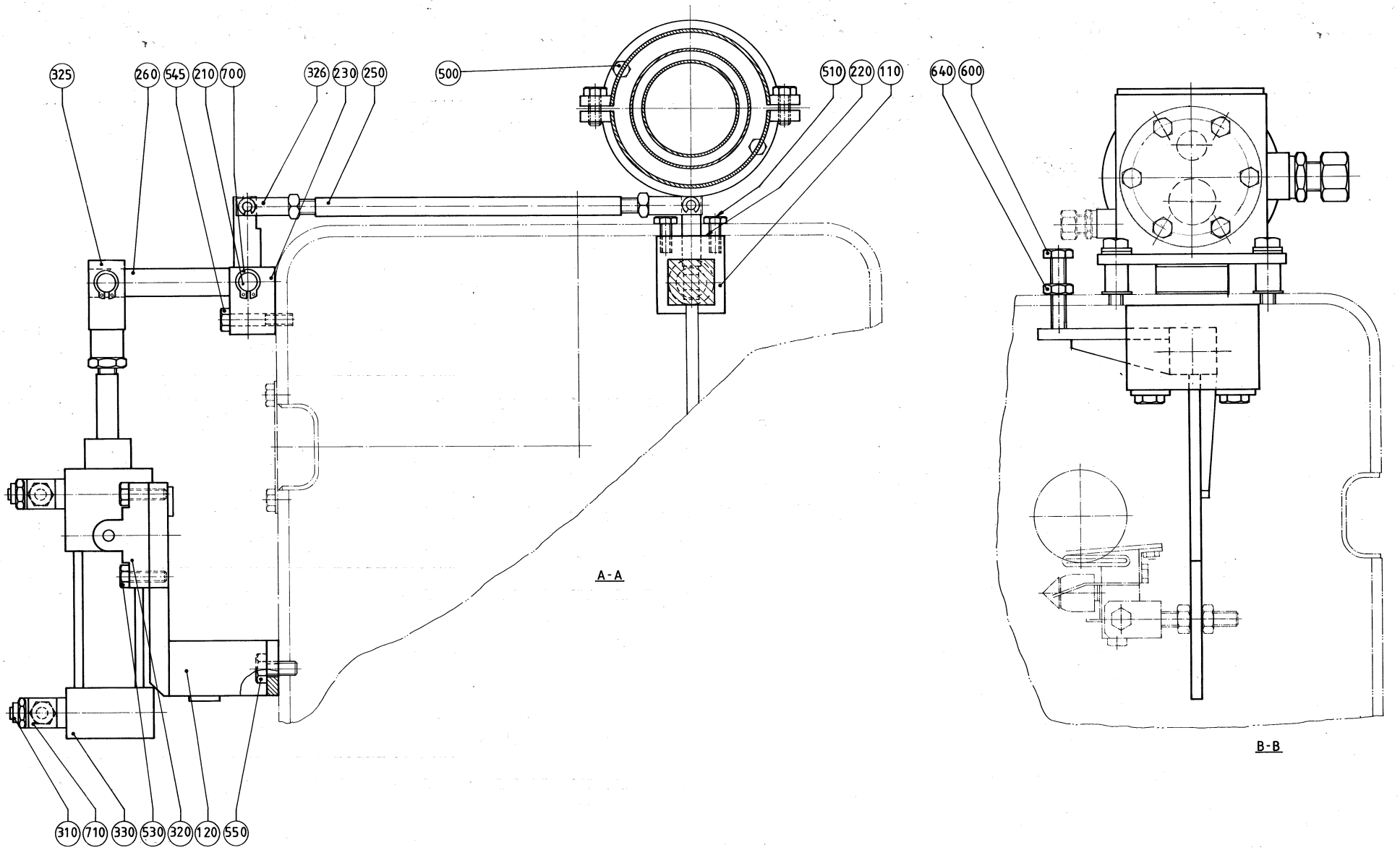

ECM: 102408 - 20020207
Group number: 1529175-0100
Assembly Drawing: 1529175-2_1_AA

Issue: 20020822

Pos	Part No	SP	UN	Qty	Description	Page No
Common Parts						
010	491169-0000	-		1	PIVOT ARM	
020	1529077-0000	-		1	HEATING PIPE	
050	272114-0000	-		1	HEAT GUARD	
060	441804-0000	-		1	COIL HEATER	
080	751734-0000	-		1	LID	
090	751735-0000	-		1	GASKET	
100	491170-0000	-		1	COVER	
110	491171-0000	-		1	BEARING BLOCK	
120	491176-0000	-		1	BRACKET	
130	271269-0000	-		2	BUSHING	
140	272868-0000	-		1	STOPPER DOWEL	
150	751019-0000	-		8	WASHER	
160	273429-0000	-		2	WASHER	
170	751020-0000	-		2	GASKET	
180	295909-0000	-		1	BUSHING	
190	751023-0000	-		2	GASKET	
210	491931-0000	-		1	SHAFT	
220	491172-0000	-		1	GASKET	
230	491173-0000	-		1	BRACKET	
240	491174-0000	-		1	ARM	
250	491175-0000	-		1	LINK	
260	491177-0000	-		1	ARM	
290	491487-0000	-		1	BUSHING	
300	90030-0187	-		1	CONN. STR. GA-12-G3/8	
310	90235-0282	-		2	THROTTLE CHECK VALVES,G1/8	
320	90239-0460	-		1	BRACKET	
325	90239-0516	-		1	ROD END,CLEVIS WITH AXLE M10X1,25	
326	90239-0532	-		2	ROD END,CLEVIS WITH AXLE M8	
330	B90239-0779	-		1	CYLINDER	
	90239-0442	*C*		*1*	*SEAL KIT*	
340	90326-0012	-		2	PROTECTIVE COVER, T31A4618	
350	90326-0306	-		1	GLAND FITTING 9041-45-KS-KR.1/8" D=4,5MM	
360	90326-0020	-		2	PLUG, FEMALE YELLOW CR-AL	
370	B90326-0048	A		1	THERMOCOUPLE, 12826-31	
	90326-0304	*-*		*1*	*LEAD IN, 9041-15-KS-UB60*	
375	90326-0052	-		1	THERMO ELEMENT	
380	90326-0304	-		1	LEAD IN, 9041-15-KS-UB60	
500	312105-0327	-		2	SCREW M6S ISO 4017 M5X12 A480	
505	312105-0364	-		6	SCREW M6S ISO 4017 M6X10 A480	
510	312105-0368	-		8	SCREW M6S M6X16 A280	
530	312105-0370	-		10	SCREW M6S ISO 4017 M6X20 A480	
540	312105-0372	-		1	SCREW M6S ISO 4017 M6X25 A480	
545	312105-0376	-		1	SCREW M6S ISO 4014 M6X35 A480	
550	312105-0449	-		2	SCREW M6S ISO 4017 M8X16 A480	
560	312105-0455	-		4	SCREW M6S ISO 4017 M8X30 A480	
580	312105-0462	-		2	SCREW M6S ISO 4014 M8X55 A480	
600	312109-0457	-		1	SCREW M6S ISO 4017 M8X35 A480	
620	312125-0226	-		3	SCREW PAN HEAD MCS M3X12 SS	
630	312125-0323	-		1	SCREW PAN HEAD MCS M5X8 SS	
640	312605-0318	-		1	HEXAGON NUT, M6M M8 A280	
650	315105-0165	-		4	WASHER PLAIN, BRB, 8,4/16,H=1,5	
660	315125-0153	-		1	WASHER PLAIN ROUND,CHAMF. 6,4/22, H=4	
670	315125-0165	-		2	WASHER PLAIN ROUND,CHAMF. 8,4/26, H=5	
700	90141-0016	-		2	RETAIN. RING, 10	
710	342797-0121	-		2	CONN. BANJO, RINGPIECE 6-1/8	
720	352100-0106	-		1	CABLE GLANR.18,6-10,5	
730	353101-0132	-		1	CABLE SHOE, RING ø5,3MM	

Machine Type | Group Description | Used-In | Group Number | Page No

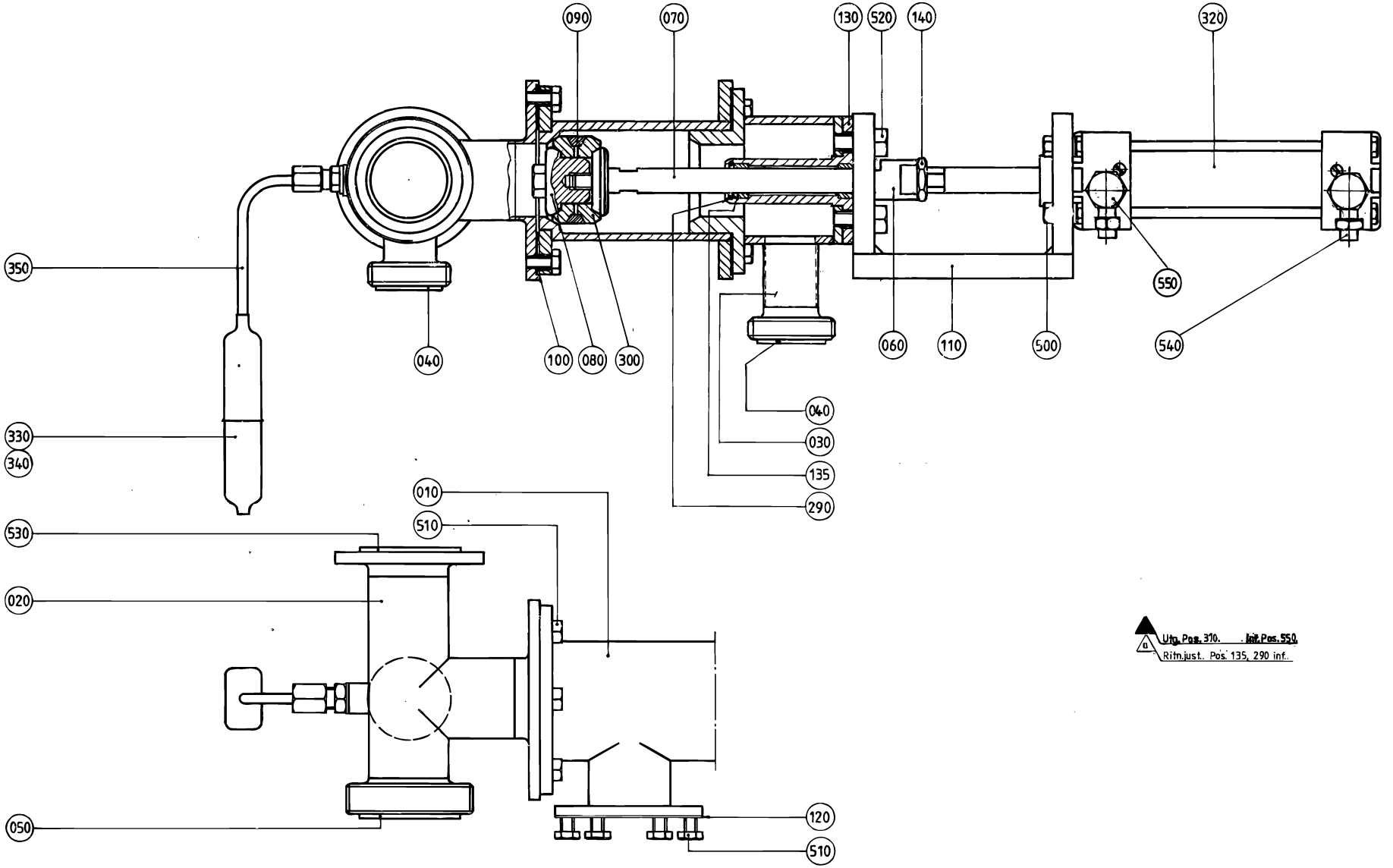

S - 272337-3
ECN 82225

ECM: 102752 - 20020207
Group number: 272337-0300
Assembly Drawing: 272337-3_1_AA

Issue: 20020822

Pos	Part No	SP	UN	Qty	Description	Page No
Common Parts						
010	271167-0000	B		1	VALVE HOUSING	
020	490884-0000	-		1	BRANCH PIPE	
030	491101-0000	B		1	HOUSE	
040	90091-0180	A		2	GASKET 32X25X4,8 MM	
050	90091-0182	A		1	GASKET 48X38X4,8 MM	
060	441871-0000	A		1	PENDULUM SUSPENSION	
070	266389-0000	A		1	PISTON ROD	
080	266390-0000	A		1	NUT	
090	266391-0000	A		1	RING	
100	295160-0000	A		2	GASKET	
110	441843-0000	B		1	BRACKET	
120	531742-0000	A		1	GASKET	
130	532348-0000	A		1	SPINDLE GUIDE	
135	532349-0000	A		2	PLAIN BEARING	
140	441286-0000	B		1	NUT	
290	90141-0022	A		1	SNAP RING B 16	
300	530588-0000	A		2	SEAL RING	
320	B90239-0779	A		1	CYLINDER	
	90239-0442	*C*		*1*	*SEAL KIT*	
330	90326-0012	A		1	PROTECTIVE COVER, T31A4618	
340	90326-0020	A		1	PLUG, FEMALE YELLOW CR-AL	
350	90326-0051	A		1	THERMOCOUPLE, 12826-33	
500	312105-0331	-		4	SCREW M6S ISO 4017 M5X20 A480	
510	312105-0366	-		18	SCREW M6S M6X12 A280	
520	312105-0451	-		2	SCREW M6S ISO 4017 M8X20 A480	
530	315204-0223	-		1	O-RING 39,2X3 MM	
540	342797-0121	A		2	CONN. BANJO, RINGPIECE 6-1/8	
550	342980-0303	-		2	BANJO-HOLLOW BOLT COUPL,EXT.THR.01-G1/8"	

Pos	Part No	SP	UN	Qty	Description	Page No

Machine Type | Group Description | Used-In | Group Number | Page No

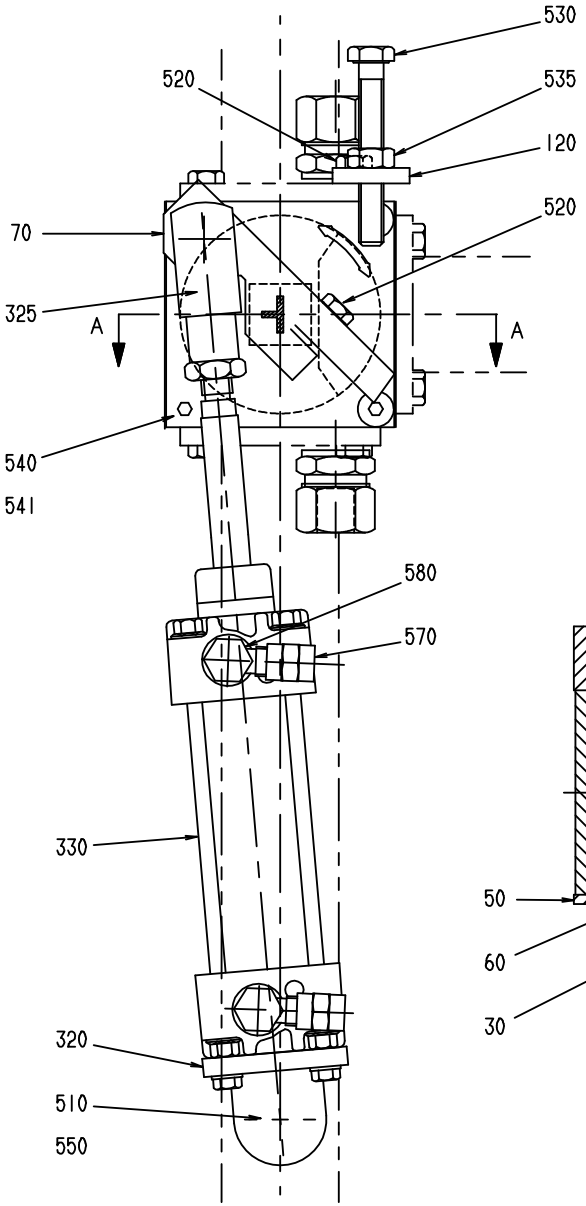
530
520
535
120
520
70
325
A
A
540
541
580
570
330
320
510
550

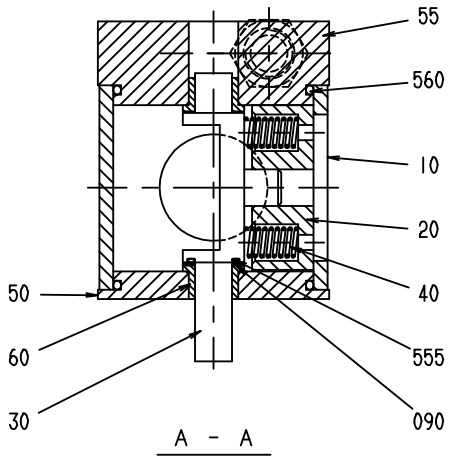
55
560
10
20
40
555
090
50
60
30
A - A

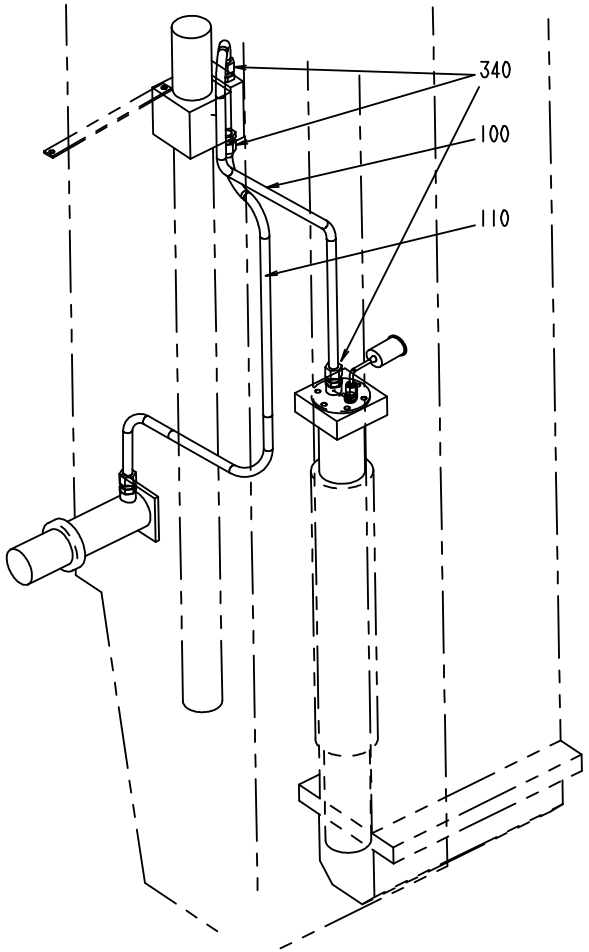
340
100
110

Pos	Part No	SP	UN	Qty	Description	Page No
0200B OR 0250B						
110	751737-0001	-		1	PIPE	
0200S						
110	751737-0002	-		1	PIPE	
Common Parts						
010	B255870-0000	B		1	VALVE HOUSING	
0010	*1282023-0002*	*-*		*1*	*CAST WORKPIECE*	
020	255871-0000	A		1	PIECE	
030	751732-0000	A		1	BRACKET	
040	21521-0000	A		2	COMPRESSION SPRING	
050	255874-0000	A		1	BEARING COVER	
055	751731-0000	A		1	BEARING COVER	
060	255875-0000	A		2	BUSHING	
070	751760-0000	B		1	CYLINDER BRACKET	
090	266737-0000	A		1	WASHER	
100	751736-0000	-		1	PIPE	
120	751740-0000	-		1	STOP	
320	90239-0453	-		1	BRACKET	
325	90239-0516	-		1	ROD END,CLEVIS WITH AXLE M10X1,25	
330	B90239-0779	A		1	CYLINDER	
	90239-0442	*C*		*1*	*SEAL KIT*	
340	90030-0187	-		3	CONN. STR. GA-12-G3/8	
510	312105-0366	-		1	SCREW M6S M6X12 A280	
520	312105-0370	-		3	SCREW M6S ISO 4017 M6X20 A480	
530	312109-0463	-		1	SCREW M6S ISO 4017 M8X60 A480	
535	312605-0318	-		1	HEXAGON NUT, M6M M8 A280	
540	312155-0364	-		4	SCREW HEX.SOCK.COUNT.MF6S M6X10 A280	
541	312155-0374	-		4	SCREW HEX.SOCK.COUNT.MF6S M6X30 A280	
550	315105-0153	-		1	WASHER PLAIN, BRB, 6,4/12,H=1,5	
555	315204-0110	A		1	O-RING 12,1X1,6 MM	
560	315204-0302	A		2	O-RING 54,5X3 MM	
570	342797-0121	A		2	CONN. BANJO, RINGPIECE 6-1/8	
580	342980-0303	-		2	BANJO-HOLLOW BOLT COUPL,EXT.THR.01-G1/8"	

Machine Type	Group Description	Used-In	Group Number	Page No

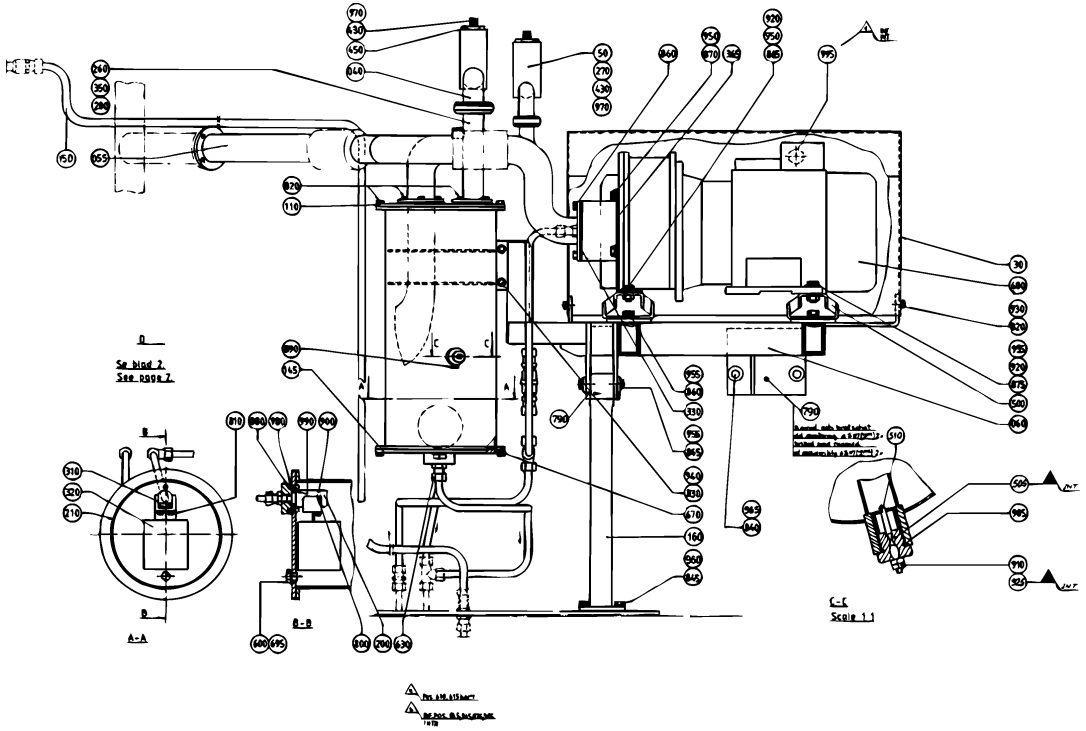

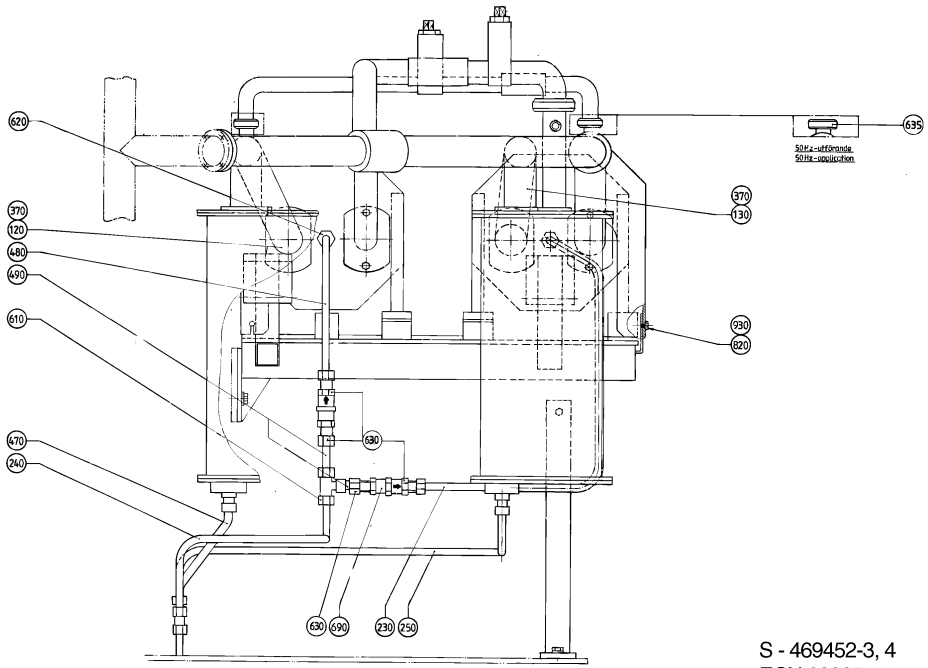

S - 469452-3, 4
ECN 82225

ECM: 102745 - 20020207
Group number: 469452-0200
Assembly Drawing: 469452-3_1_AD

Issue: 20020822

Pos	Part No	SP	UN	Qty	Description	Page No
50HZ						
430	490998-0000	B		1	THROTTLE SCREW	
450	442237-0000	B		1	NUT	
635	90217-0026	-		2	NUT	
970	315202-0119	A		1	O-RING 25,1X1,6 MM	
60HZ						
050	491090-0000	-		1	PIPE	
430	490998-0000	B		2	THROTTLE SCREW	
450	442237-0000	B		2	NUT	
970	315202-0119	A		2	O-RING 25,1X1,6 MM	
Common Parts						
030	469150-0000	-		1	COVER	
040	490997-0000	-		1	PIPE	
055	491748-0000	-		1	PIPE	
060	491749-0000	-		1	CANTILEVER	
110	271640-0000	B		2	LID	
120	469153-0000	-		1	PIPE	
130	469154-0000	-		1	PIPE	
145	469511-0000	B		2	BOTTOM COVER	
150	490862-0000	-		1	PIPE	
160	491750-0000	-		1	SUPPORT	
200	269443-0000	B		2	BRACKET	
210	269461-0000	B		2	CANISTER	
230	469156-0000	-		1	PIPE	
240	469157-0000	-		1	PIPE	
250	469158-0000	-		1	PIPE	
260	491095-0000	-		1	PIPE	
270	12242-0001	A		2	GASKET 32X25X5,5	
280	12242-0003	A		1	GASKET 48X38X5,5	
310	179595-0000	B		2	CLOSING DEVICE	
320	179596-0000	B		2	FLOAT	
330	230551-0000	A		4	GASKET	
350	531742-0000	A		1	GASKET	
365	269859-0000	-		4	BRACKET	
370	271461-0000	A		2	GASKET	
470	456269-0000	-		1	PIPE	
480	456270-0000	-		1	PIPE	
490	456271-0000	-		2	PIPE	
500	B469160-0000	A		8	VIBRATION DAMPER	
	90347-0044	-		*1*	*DAMPER*	
505	560931-0000	-		2	BRACKET	
510	567070-0012	A		2	ELECTRODE	
600	90005-0006	-		2	GASKET BOLT HEAD 16,7X24X1,5 MM M16	
610	90030-0058	-		1	CONN. T-PIPE T-12	
620	90030-0109	-		2	CONN. STR., 12-R1/2, EXT. THREAD	
630	90030-0187	-		6	CONN. STR. GA-12-G3/8	
670	90242-0084	A		4	O-RING 203,0X3 MM	
680	90270-0017	-		2	COMPRESSOR NASH/ELMO 112 MB/4-2083	
690	90270-0347	B		2	VALVE	
695	90330-0029	-		2	PLUG, EXT. G-THREAD, R-236R3/8	
790	311103-0310	-		2	PARALLELL PIN, M6, 5X20 MM	
800	311103-0361	-		2	PARALLELL PIN, M6, 6X40 MM	
810	312105-0287	-		4	SCREW M6S ISO 4017 M4X8 A480	
820	312105-0366	-		58	SCREW M6S M6X12 A280	
830	312105-0447	-		8	SCREW M6S ISO 4017 M8X12 A480	
840	312105-0451	-		2	SCREW M6S ISO 4017 M8X20 A480	
845	312105-0453	-		2	SCREW M6S ISO 4017 M8X25 A480	
860	312105-0491	-		14	SCREW M6S ISO 4017 M10X20 A480	
865	312105-0493	-		6	SCREW M6S ISO 4017 M10X25 A480	
870	312105-0495	-		10	SCREW M6S ISO 4017 M10X30 A480	
875	312105-0497	-		4	SCREW M6S ISO 4017 M10X35 A480	
880	312115-0368	-		4	SCREW MC6S M6X16 A280	
890	312125-0285	-		2	SCREW SLOT.PAN HD. MCS 4X6 A480	
900	312318-0323	-		2	SCREW SOCK.SET CUP P MSK6SS M5X8 A4	
910	312605-0312	-		4	HEXAGON NUT, M6M M4 A280	
920	312605-0320	-		8	HEXAGON NUT, M6M M10 A280	
925	315105-0136	-		6	WASHER PLAIN, BRB, 4,3/8,H=0,8	
930	315105-0153	-		5	WASHER PLAIN, BRB, 6,4/12,H=1,5	
940	315105-0165	-		8	WASHER PLAIN, BRB, 8,4/16,H=1,5	
950	315105-0173	-		12	WASHER PLAIN, BRB, 10,5/22,H=2	
955	315115-0173	-		14	WASHER PLAIN, TBRB 10,5/22 H=4	
960	315115-0165	-		2	WASHER PLAIN, TBRB 8,4/16 H=3	
965	315125-0165	-		2	WASHER PLAIN ROUND,CHAMF. 8,4/26, H=5	
980	315204-0103	A		4	O-RING 5,1X1,6 MM	
985	315204-0213	A		2	O-RING 15,2X2,4 MM	
990	315204-0217	A		2	O-RING 24,2X3 MM	
995	352103-0111	-		2	CABLE GLAND, ST 16, PR22,5/PG16	

Machine Type | Group Description | Used-In | Group Number | Page No

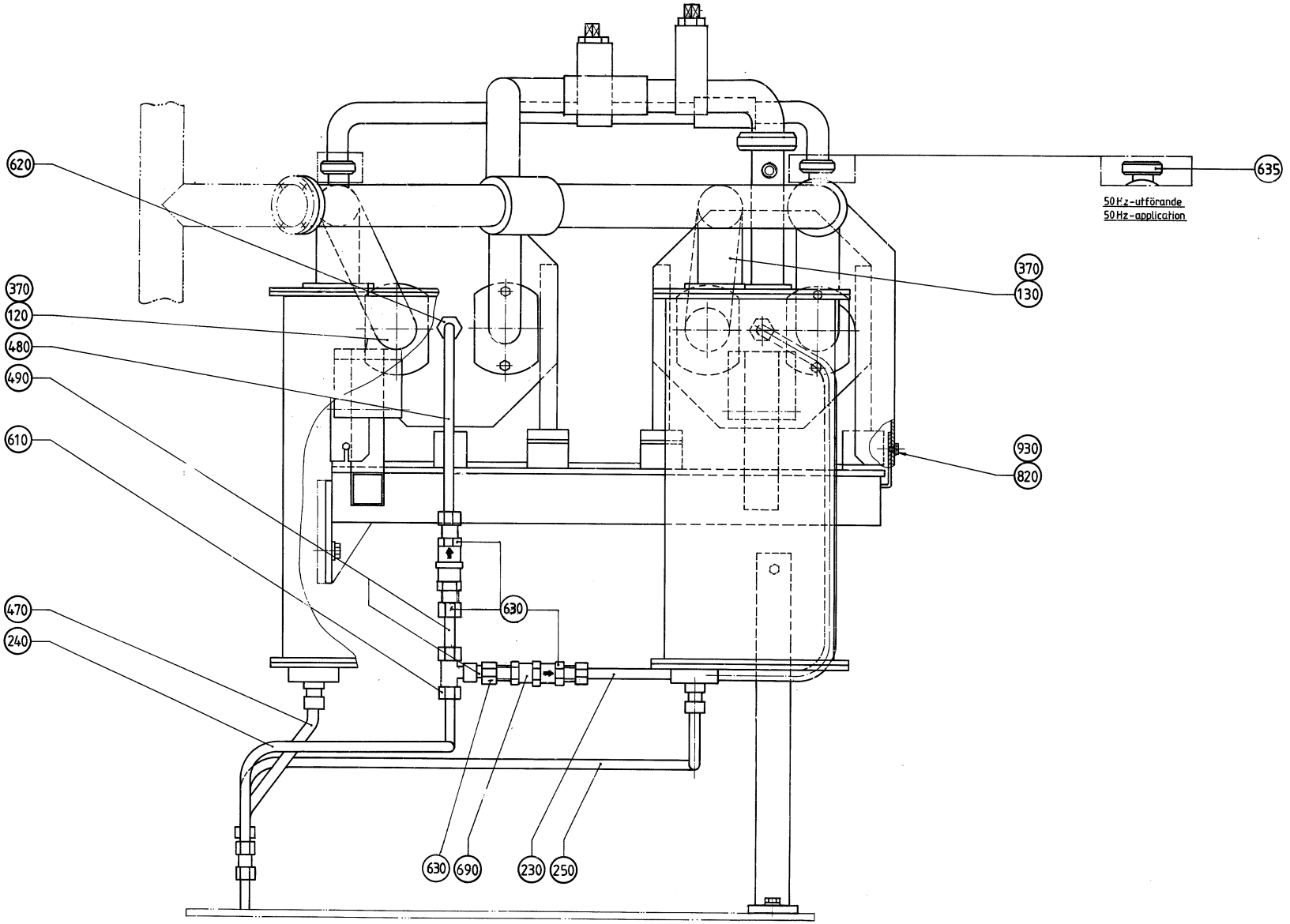
620
370
120
480
490
610
470
240
630
690
630
230
250
635
50 Hz-utförande
50 Hz-application
370
130
930
820

ECM: 102745 - 20020207
Group number: 469452-0200
Assembly Drawing: 469452-4_1_AA

Issue: 20020822

Pos	Part No	SP	UN	Qty	Description	Page No
50HZ						
430	490998-0000	B		1	THROTTLE SCREW	
450	442237-0000	B		1	NUT	
635	90217-0026	-		2	NUT	
970	315202-0119	A		1	O-RING 25,1X1,6 MM	
60HZ						
050	491090-0000	-		1	PIPE	
430	490998-0000	B		2	THROTTLE SCREW	
450	442237-0000	B		2	NUT	
970	315202-0119	A		2	O-RING 25,1X1,6 MM	
Common Parts						
030	469150-0000	-		1	COVER	
040	490997-0000	-		1	PIPE	
055	491748-0000	-		1	PIPE	
060	491749-0000	-		1	CANTILEVER	
110	271640-0000	B		2	LID	
120	469153-0000	-		1	PIPE	
130	469154-0000	-		1	PIPE	
145	469511-0000	B		2	BOTTOM COVER	
150	490862-0000	-		1	PIPE	
160	491750-0000	-		1	SUPPORT	
200	269443-0000	B		2	BRACKET	
210	269461-0000	B		2	CANISTER	
230	469156-0000	-		1	PIPE	
240	469157-0000	-		1	PIPE	
250	469158-0000	-		1	PIPE	
260	491095-0000	-		1	PIPE	
270	12242-0001	A		2	GASKET 32X25X5,5	
280	12242-0003	A		1	GASKET 48X38X5,5	
310	179595-0000	B		2	CLOSING DEVICE	
320	179596-0000	B		2	FLOAT	
330	230551-0000	A		4	GASKET	
350	531742-0000	A		1	GASKET	
365	269859-0000	-		4	BRACKET	
370	271461-0000	A		2	GASKET	
470	456269-0000	-		1	PIPE	
480	456270-0000	-		1	PIPE	
490	456271-0000	-		2	PIPE	
500	B469160-0000	A		8	VIBRATION DAMPER	
	90347-0044	-		*1*	*DAMPER*	
505	560931-0000	-		2	BRACKET	
510	567070-0012	A		2	ELECTRODE	
600	90005-0006	-		2	GASKET BOLT HEAD 16,7X24X1,5 MM M16	
610	90030-0058	-		1	CONN. T-PIPE T-12	
620	90030-0109	-		2	CONN. STR., 12-R1/2, EXT. THREAD	
630	90030-0187	-		6	CONN. STR. GA-12-G3/8	
670	90242-0084	A		4	O-RING 203,0X3 MM	
680	90270-0017	-		2	COMPRESSOR NASH/ELMO 112 MB/4-2083	
690	90270-0347	B		2	VALVE	
695	90330-0029	-		2	PLUG, EXT. G-THREAD, R-236R3/8	
790	311103-0310	-		2	PARALLELL PIN, M6, 5X20 MM	
800	311103-0361	-		2	PARALLELL PIN, M6, 6X40 MM	
810	312105-0287	-		4	SCREW M6S ISO 4017 M4X8 A480	
820	312105-0366	-		58	SCREW M6S M6X12 A280	
830	312105-0447	-		8	SCREW M6S ISO 4017 M8X12 A480	
840	312105-0451	-		2	SCREW M6S ISO 4017 M8X20 A480	
845	312105-0453	-		2	SCREW M6S ISO 4017 M8X25 A480	
860	312105-0491	-		14	SCREW M6S ISO 4017 M10X20 A480	
865	312105-0493	-		6	SCREW M6S ISO 4017 M10X25 A480	
870	312105-0495	-		10	SCREW M6S ISO 4017 M10X30 A480	
875	312105-0497	-		4	SCREW M6S ISO 4017 M10X35 A480	
880	312115-0368	-		4	SCREW MC6S M6X16 A280	
890	312125-0285	-		2	SCREW SLOT.PAN HD. MCS 4X6 A480	
900	312318-0323	-		2	SCREW SOCK.SET CUP P MSK6SS M5X8 A4	
910	312605-0312	-		4	HEXAGON NUT, M6M M4 A280	
920	312605-0320	-		8	HEXAGON NUT, M6M M10 A280	
925	315105-0136	-		6	WASHER PLAIN, BRB, 4,3/8,H=0,8	
930	315105-0153	-		5	WASHER PLAIN, BRB, 6,4/12,H=1,5	
940	315105-0165	-		8	WASHER PLAIN, BRB, 8,4/16,H=1,5	
950	315105-0173	-		12	WASHER PLAIN, BRB, 10,5/22,H=2	
955	315115-0173	-		14	WASHER PLAIN, TBRB 10,5/22 H=4	
960	315115-0165	-		2	WASHER PLAIN, TBRB 8,4/16 H=3	
965	315125-0165	-		2	WASHER PLAIN ROUND,CHAMF. 8,4/26, H=5	
980	315204-0103	A		4	O-RING 5,1X1,6 MM	
985	315204-0213	A		2	O-RING 15,2X2,4 MM	
990	315204-0217	A		2	O-RING 24,2X3 MM	
995	352103-0111	-		2	CABLE GLAND, ST 16, PR22,5/PG16	

Machine Type | Group Description | Used-In | Group Number | Page No

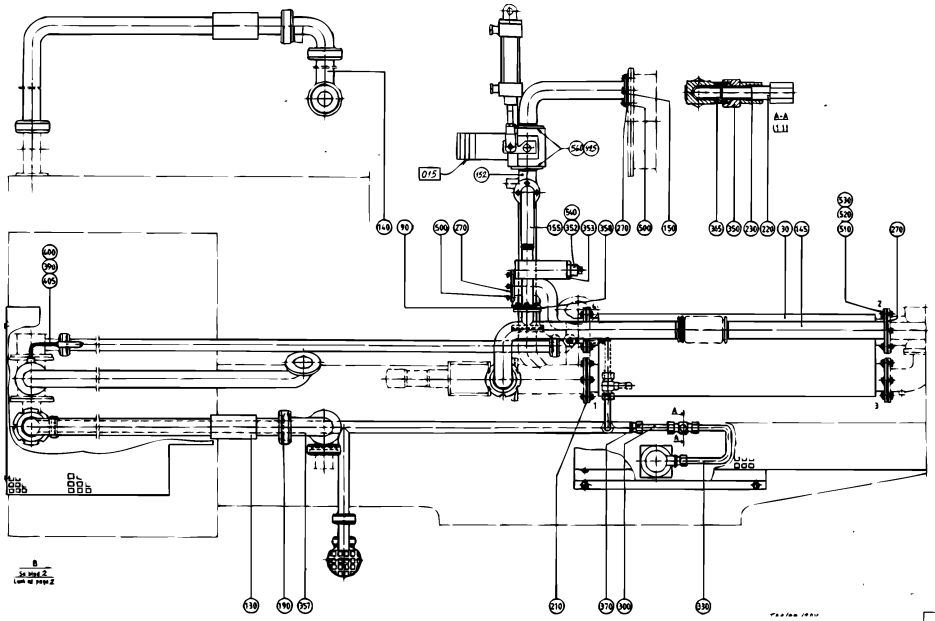

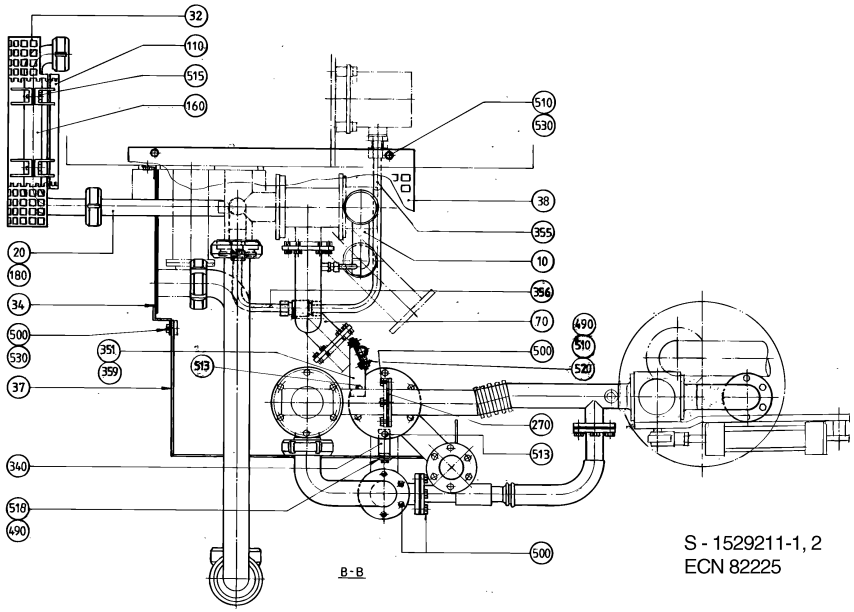

S - 1529211-1, 2
ECN 82225

ECM: 108328 - 20020506
Group number: 1529211-0100
Assembly Drawing: 1529211-1_1_AA

Issue: 20020822

Pos	Part No	SP	UN	Qty	Description	Page No
0200B OR 0250B						
330	491209-0001	-		1	PIPE	
0200S						
330	491209-0002	-		1	PIPE	
Common Parts						
010	491755-0000	-		1	PIPE	
020	491219-0000	-		1	PIPE	
030	527705-0000	B		1	HEAT EXCHANGER	
032	B272557-0001	-		1	TOUCH GUARD	
	312605-0314	-		*1*	*HEXAGON NUT, M6M M5 A280*	
034	491299-0000	-		1	TOUCH GUARD	
037	2546320-0000	-		1	TOUCH GUARD	
038	456913-0000	-		1	TOUCH GUARD	
070	491154-0000	-		1	PIPE	
090	272312-0000	-		1	PIPE	
110	272556-0001	-		1	TOUCH GUARD	
130	456591-0003	-		1	PIPE	
140	B456592-0002	-		1	PIPE	
	342812-0103	-		*1*	*FERRULE, SMS 1145, 2333, NO. 190706*	
	342811-0103	-		*1*	*WELD NIPPLE SMS 38 - RD 60-6*	
	342808-0103	-		*1*	*PIPE ELBOW 90 DEGR. SMS3009, D=38 MM*	
	342803-0103	-		*1*	*UNION NUT, RD 60-6 (SMS 38)*	
145	469385-0000	-		1	PIPE	
150	566175-0000	-		1	ELBOW PIPE	
152	566174-0000	-		1	ATTACHMENT PIPE	
155	491089-0000	-		1	PIPE	
160	256840-0003	-		1	PIPE	
180	12242-0001	A		1	GASKET 32X25X5,5	
190	12242-0003	A		1	GASKET 48X38X5,5	
210	531737-0000	A		4	GASKET	
220	209145-0000	-		2	THROTTLE SCREW	
230	209146-0000	-		2	BARRIER NUT	
270	531742-0000	A		4	GASKET	
300	272349-0004	-		1	PIPE	
340	272808-0000	-		1	BRACKET	
350	279589-0000	-		2	NUT	
351	295549-0000	-		1	CRAMP	
352	490998-0000	A		1	THROTTLE SCREW	
353	442237-0000	-		1	NUT	
355	491220-0000	-		1	PIPE	
356	491221-0000	-		1	PIPE	
357	B456904-0000	-		1	PIPE	
	342812-0103	-		*1*	*FERRULE, SMS 1145, 2333, NO. 190706*	
	342811-0103	-		*1*	*WELD NIPPLE SMS 38 - RD 60-6*	
	342808-0103	-		*1*	*PIPE ELBOW 90 DEGR. SMS3009, D=38 MM*	
	342803-0103	-		*1*	*UNION NUT, RD 60-6 (SMS 38)*	
358	441721-0000	A		2	GASKET	
359	441735-0000	-		1	BRACKET	
365	90030-0058	-		2	CONN. T-PIPE T-12	
370	90030-0187	-		2	CONN. STR. GA-12-G3/8	
390	90326-0012	A		1	PROTECTIVE COVER, T31A4618	
400	90326-0020	A		1	PLUG, FEMALE YELLOW CR-AL	
405	90326-0051	A		1	THERMOCOUPLE, 12826-33	
490	312105-0364	-		3	SCREW M6S ISO 4017 M6X10 A480	
495	312105-0366	-		8	SCREW M6S M6X12 A280	
500	312105-0367	-		42	SCREW M6S M6X14 A280	
510	312105-0370	-		24	SCREW M6S ISO 4017 M6X20 A480	
512	566174-0000	-		1	ATTACHMENT PIPE	
513	312105-0372	-		2	SCREW M6S ISO 4017 M6X25 A480	
515	312115-0329	-		4	SCREW MC6S M5X16 A280	
518	315125-0153	-		1	WASHER PLAIN ROUND,CHAMF. 6,4/22, H=4	
520	312605-0316	-		29	HEXAGON NUT, M6M M6 A280	
530	315105-0153	-		30	WASHER PLAIN, BRB, 6,4/12,H=1,5	
540	315204-0119	A		1	O-RING 25,1X1,6 MM	
560	315204-0222	-		2	O-RING 36,2X3 MM	
F015	A476859-0200	-		1	CHANGE-OVER VALVE	**69**

Machine Type | Group Description | Used-In | Group Number | Page No

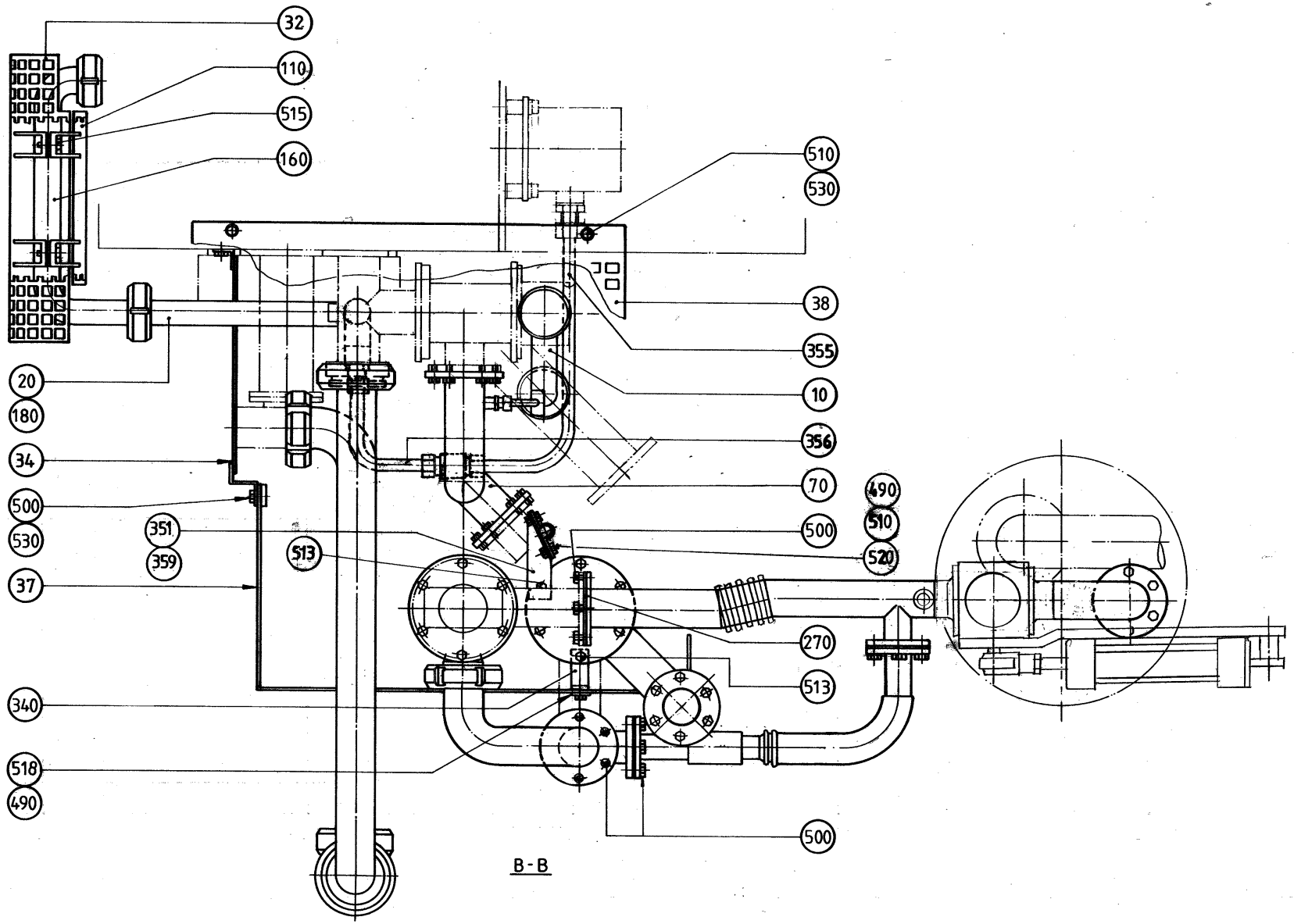
32
110
515
160
510
530
38
355
10
356
70
490
510
500
520
270
513
20
180
34
500
530
351
359
37
340
518
490
513
500
B - B

Pos	Part No	SP	UN	Qty	Description	Page No
0200B OR 0250B						
330	491209-0001	-		1	PIPE	
0200S						
330	491209-0002	-		1	PIPE	
Common Parts						
010	491755-0000	-		1	PIPE	
020	491219-0000	-		1	PIPE	
030	527705-0000	B		1	HEAT EXCHANGER	
032	B272557-0001	-		1	TOUCH GUARD	
	312605-0314	-		*1*	*HEXAGON NUT, M6M M5 A280*	
034	491299-0000	-		1	TOUCH GUARD	
037	2546320-0000	-		1	TOUCH GUARD	
038	456913-0000	-		1	TOUCH GUARD	
070	491154-0000	-		1	PIPE	
090	272312-0000	-		1	PIPE	
110	272556-0001	-		1	TOUCH GUARD	
130	456591-0003	-		1	PIPE	
140	B456592-0002	-		1	PIPE	
	342812-0103	-		*1*	*FERRULE, SMS 1145, 2333, NO. 190706*	
	342811-0103	-		*1*	*WELD NIPPLE SMS 38 - RD 60-6*	
	342808-0103	-		*1*	*PIPE ELBOW 90 DEGR. SMS3009, D=38 MM*	
	342803-0103	-		*1*	*UNION NUT, RD 60-6 (SMS 38)*	
145	469385-0000	-		1	PIPE	
150	566175-0000	-		1	ELBOW PIPE	
152	566174-0000	-		1	ATTACHMENT PIPE	
155	491089-0000	-		1	PIPE	
160	256840-0003	-		1	PIPE	
180	12242-0001	A		1	GASKET 32X25X5,5	
190	12242-0003	A		1	GASKET 48X38X5,5	
210	531737-0000	A		4	GASKET	
220	209145-0000	-		2	THROTTLE SCREW	
230	209146-0000	-		2	BARRIER NUT	
270	531742-0000	A		4	GASKET	
300	272349-0004	-		1	PIPE	
340	272808-0000	-		1	BRACKET	
350	279589-0000	-		2	NUT	
351	295549-0000	-		1	CRAMP	
352	490998-0000	A		1	THROTTLE SCREW	
353	442237-0000	-		1	NUT	
355	491220-0000	-		1	PIPE	
356	491221-0000	-		1	PIPE	
357	B456904-0000	-		1	PIPE	
	342812-0103	-		*1*	*FERRULE, SMS 1145, 2333, NO. 190706*	
	342811-0103	-		*1*	*WELD NIPPLE SMS 38 - RD 60-6*	
	342808-0103	-		*1*	*PIPE ELBOW 90 DEGR. SMS3009, D=38 MM*	
	342803-0103	-		*1*	*UNION NUT, RD 60-6 (SMS 38)*	
358	441721-0000	A		2	GASKET	
359	441735-0000	-		1	BRACKET	
365	90030-0058	-		2	CONN. T-PIPE T-12	
370	90030-0187	-		2	CONN. STR. GA-12-G3/8	
390	90326-0012	A		1	PROTECTIVE COVER, T31A4618	
400	90326-0020	A		1	PLUG, FEMALE YELLOW CR-AL	
405	90326-0051	A		1	THERMOCOUPLE, 12826-33	
490	312105-0364	-		3	SCREW M6S ISO 4017 M6X10 A480	
495	312105-0366	-		8	SCREW M6S M6X12 A280	
500	312105-0367	-		42	SCREW M6S M6X14 A280	
510	312105-0370	-		24	SCREW M6S ISO 4017 M6X20 A480	
512	566174-0000	-		1	ATTACHMENT PIPE	
513	312105-0372	-		2	SCREW M6S ISO 4017 M6X25 A480	
515	312115-0329	-		4	SCREW MC6S M5X16 A280	
518	315125-0153	-		1	WASHER PLAIN ROUND,CHAMF. 6,4/22, H=4	
520	312605-0316	-		29	HEXAGON NUT, M6M M6 A280	
530	315105-0153	-		30	WASHER PLAIN, BRB, 6,4/12,H=1,5	
540	315204-0119	A		1	O-RING 25,1X1,6 MM	
560	315204-0222	-		2	O-RING 36,2X3 MM	
F015	A476859-0200	-		1	CHANGE-OVER VALVE	**69**

Machine Type | Group Description | Used-In | Group Number | Page No

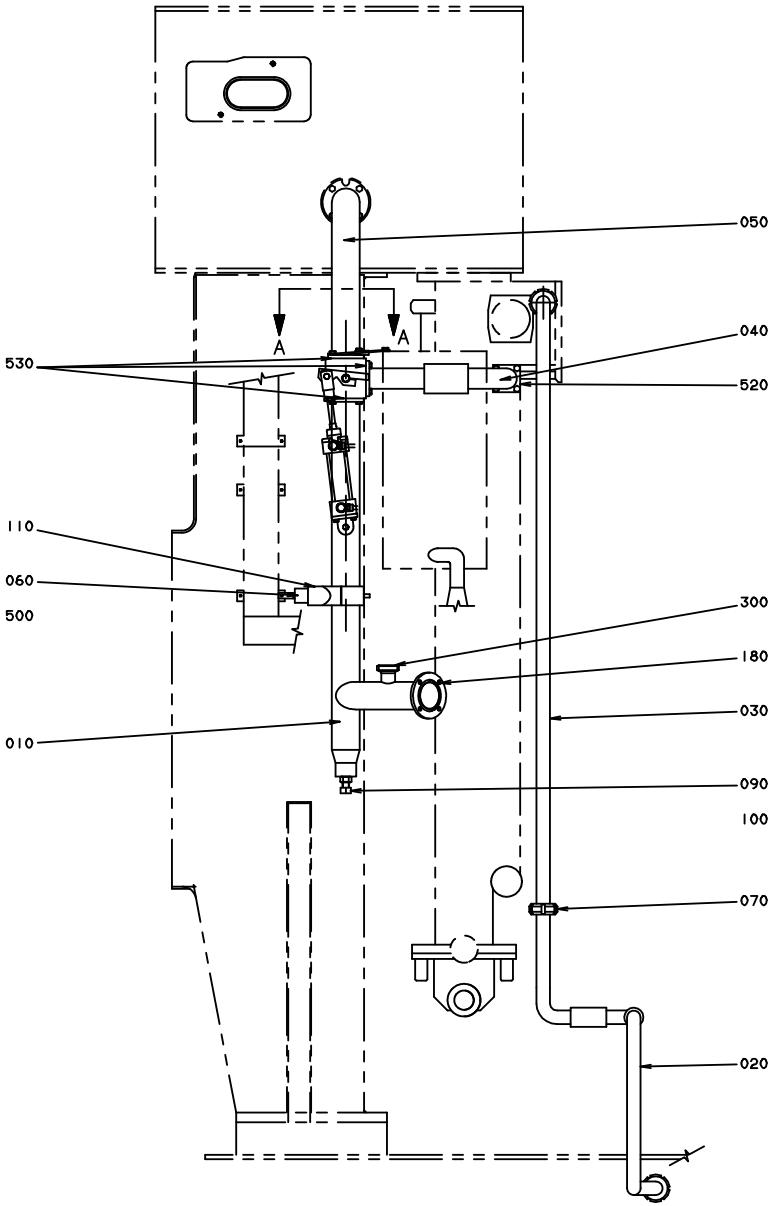
050
040
520
530
110
060
500
300
180
030
010
090
100
070
020
A
A

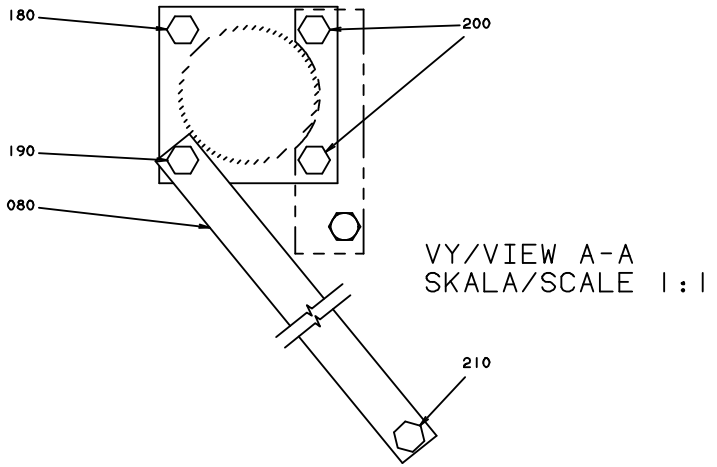
180
200
190
080
210
VY/VIEW A-A
SKALA/SCALE 1:1

ECM: 102737 - 20020207
Group number: 1529251-0100
Assembly Drawing: 1529251-1_1_AA

Issue: 20020822

Pos	Part No	SP	UN	Qty	Description	Page No
Common Parts						
010	491760-0000	B		1	PIPE	
020	491360-0000	B		1	PIPE	
030	469992-0000	B		1	PIPE	
040	255879-0000	B		1	PIPE	
050	255905-0000	B		1	PIPE	
060	490967-0000	-		1	BRACKET	
070	12242-0001	A		3	GASKET 32X25X5,5	
080	752175-0000	-		1	STRUT	
090	490906-0000	A		1	SCREW	
100	490907-0000	A		1	NUT	
110	1529249-0000	-		1	PIPE HOLDER	
180	312105-0366	-		22	SCREW M6S M6X12 A280	
190	312105-0368	-		1	SCREW M6S M6X16 A280	
200	312105-0370	-		2	SCREW M6S ISO 4017 M6X20 A480	
210	312105-0372	-		1	SCREW M6S ISO 4017 M6X25 A480	
300	90091-0180	A		1	GASKET 32X25X4,8 MM	
520	315204-0223	A		1	O-RING 39,2X3 MM	
530	315204-0301	A		5	O-RING 49,5X3 MM	

Pos	Part No	SP	UN	Qty	Description	Page No

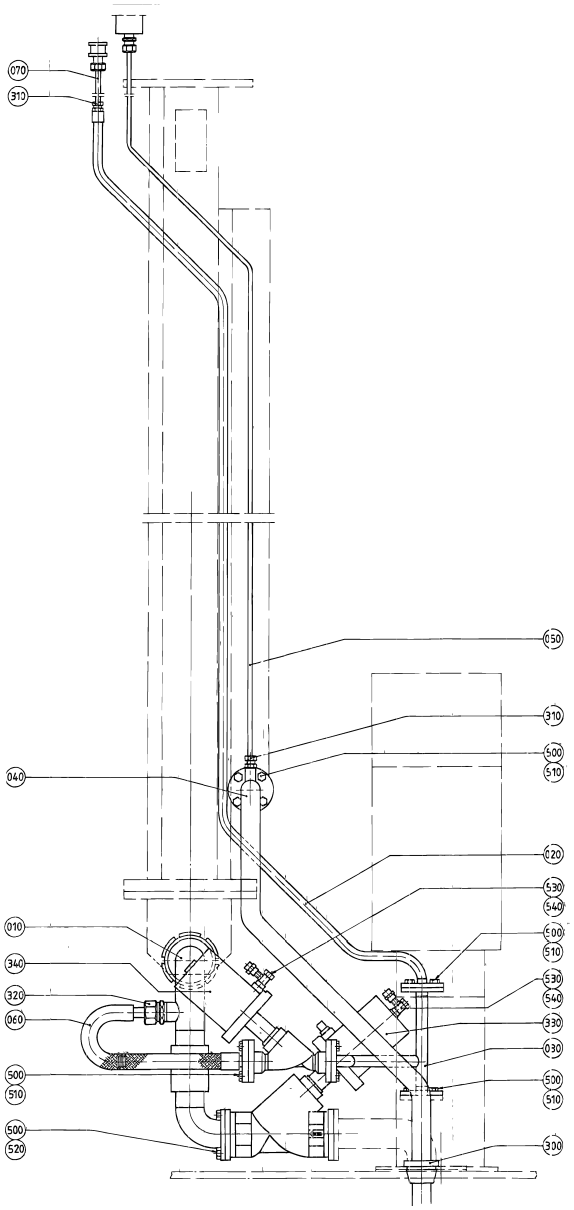
070
310
050
310
600
510
040
020
530
540
010
600
510
340
320
060
530
540
330
030
500
510
500
510
500
520
300

ECM: 102735 - 20020207
Group number: 456556-0200
Assembly Drawing: 456556-2_1_AA

Issue: 20020822

Pos	Part No	SP	UN	Qty	Description	Page No
Common Parts						
010	490966-0000	-		1	PIPE	
020	491398-0000	-		1	PIPE	
030	490994-0000	-		1	PIPE	
040	490996-0000	-		1	PIPE	
050	491399-0000	-		1	PIPE	
060	490991-0000	B		1	HOSE	
070	490979-0000	-		1	PIPE	
300	90015-0024	A		1	LEAD-IN, TET20-26, E-1458035	
310	90030-0184	-		2	CONN. STR. GA-6-G1/8	
320	90030-0188	-		1	CONN. STR. GA-15-G1/2	
330	B484538-0000	A		1	VALVE	
	90235-0270	*-*		*1*	*ANGLE SEAT VALVE W. FLANGES, N.C. D=40*	
	90235-0460	*C*		*1*	*WEAR & TEAR PARTS KIT*	
340	B484192-0000	A		1	VALVE	
	90235-0271	*-*		*1*	*ANGLE SEAT VALVE W. FLANGES, N.C. D=13*	
500	312105-0366	-		24	SCREW M6S M6X12 A280	
510	315204-0218	A		5	O-RING 26,2X3 MM	
520	315204-0223	A		2	O-RING 39,2X3 MM	
530	342797-0122	-		2	CONN. BANJO, RINGPIECE 6-1/4	
540	342980-0304	-		2	BANJO-HOLLOW BOLT COUPL,EXT.THR.01-G1/4"	

Pos	Part No	SP	UN	Qty	Description	Page No

Machine Type | Group Description | Used-In | Group Number | Page No

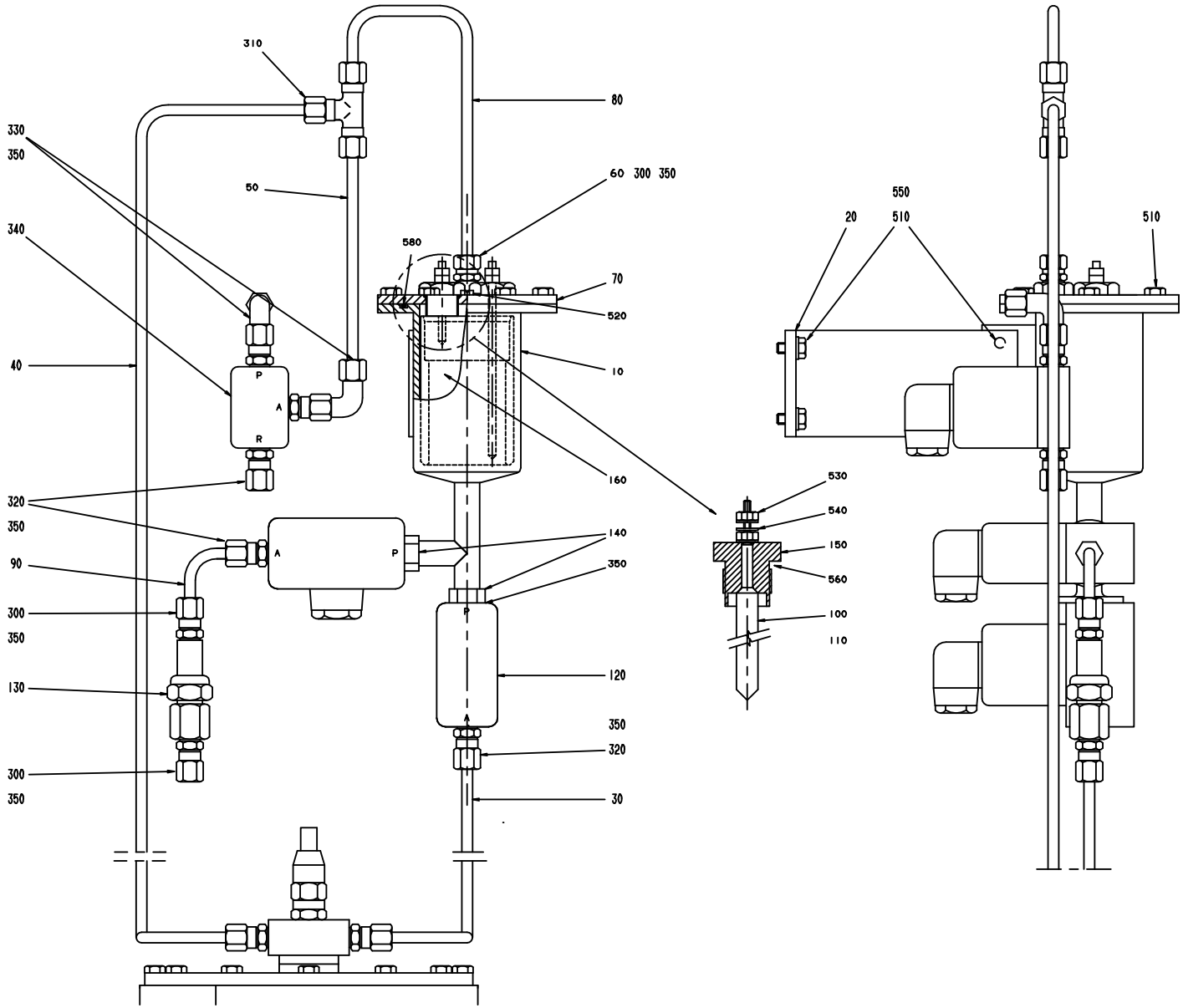
310
80
330
350
50
60 300 350
340
580
70
520
40
10
160
320
350
140
350
90
300
350
120
130
350
320
300
350
30
550
20
510
510
530
540
150
560
100
110

ECM: 102409 - 20020207
Group number: 1529085-0100
Assembly Drawing: 1529085-1_1_AA

Issue: 20020822

Pos	Part No	SP	UN	Qty	Description	Page No
Common Parts						
010	491191-0000	B		1	CONTAINER	
020	272844-0000	-		1	BRACKET	
030	456897-0000	-		1	PIPE	
040	469515-0000	-		1	PIPE	
050	752676-0000	-		1	PIPE	
060	450833-0000	A		1	FILTER	
070	450837-0000	-		1	LID	
080	752675-0000	-		1	PIPE	
090	456900-0000	-		1	PIPE	
100	567070-0011	A		1	ELECTRODE	
110	567070-0007	A		1	ELECTRODE	
120	B544906-0000	A		2	SOLENOID VALVE	
	90042-0465	*-*		*1*	*O-RING VITON 17,17X1,78*	
	90042-0464	*-*		*1*	*DIAPHRAGM VITON 1211321*	
130	B484196-0000	A		1	FILTER	
	484197-0000	*-*		*1*	*FILTER*	
140	491192-0000	A		2	NUT	
150	560931-0000	-		2	BRACKET	
160	752501-0000	-		1	SLEEVE	
300	90030-0184	-		3	CONN. STR. GA-6-G1/8	
310	90030-0076	-		1	CONN. T-PIPE T-6	
320	90030-0202	-		3	CONN. STR., 6-G1/4, EXT. THREAD	
330	90030-0203	-		2	ADJUSTABLE ELBOW CONNECTION,EXT 6-G1/4	
340	B90042-0171	A		1	SOLENOID VALVE BUERKERT	
	90042-0466	*C*		*1*	*DIAPHRAGM 330.95.2 VITON*	
350	90144-0073	-	MM	1	TREBOFLON-TAPE W=13MM	
510	312105-0366	-		10	SCREW M6S M6X12 A280	
520	312125-0285	-		1	SCREW SLOT.PAN HD. MCS 4X6 A480	
530	312605-0312	-		4	HEXAGON NUT, M6M M4 A280	
540	315105-0136	-		6	WASHER PLAIN, BRB, 4,3/8,H=0,8	
550	315105-0153	-		4	WASHER PLAIN, BRB, 6,4/12,H=1,5	
560	315204-0213	A		2	O-RING 15,2X2,4 MM	
580	315204-0305	A		1	O-RING 69,5X3 MM	

Pos	Part No	SP	UN	Qty	Description	Page No

Machine Type | Group Description | Used-In | Group Number | Page No

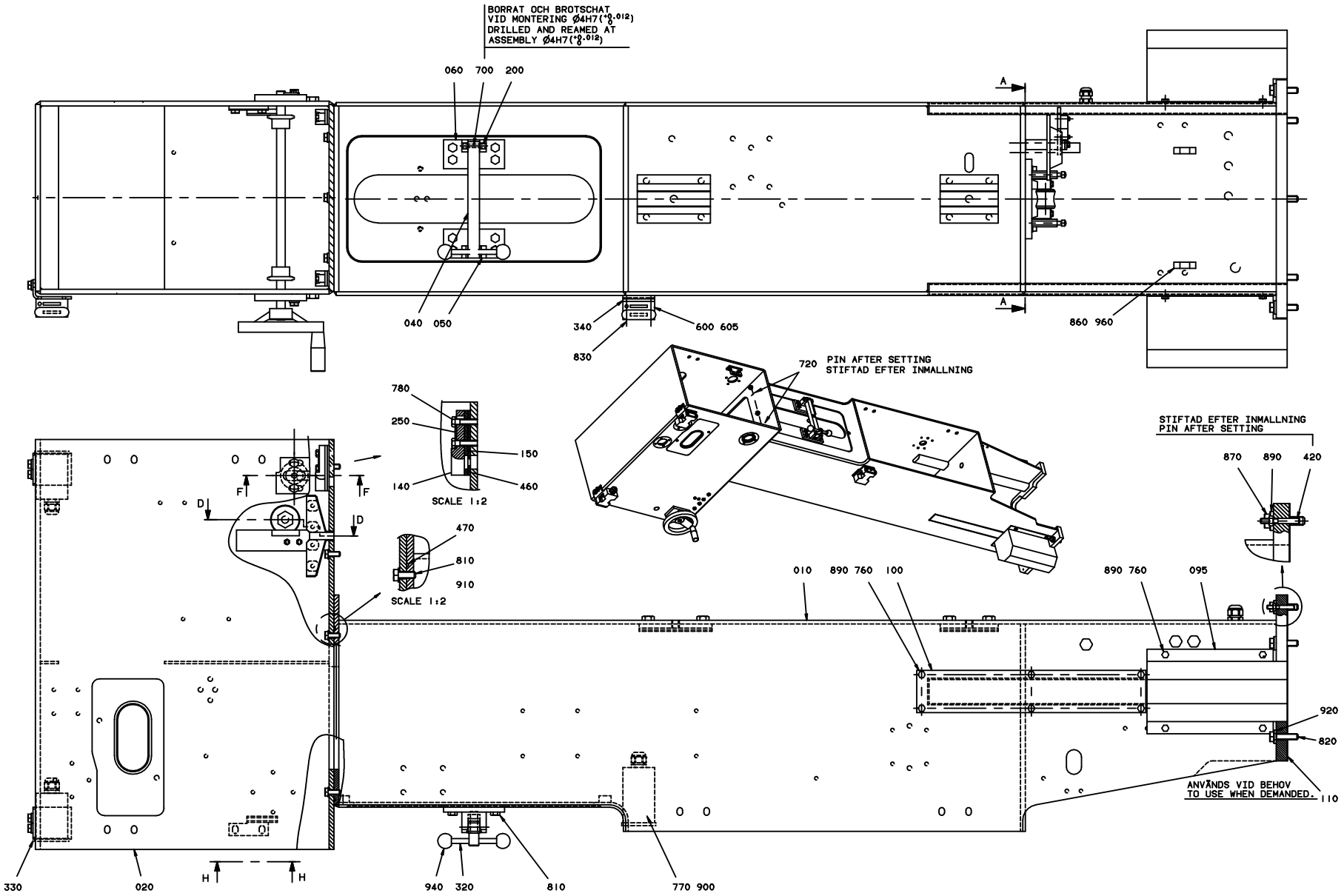
BORRAT OCH BROTSCHAT
VID MONTERING Ø4H7(+0.012 0)
DRILLED AND REAMED AT
ASSEMBLY Ø4H7(+0.012 0)
060 700 200
040 050
340
830
600 605
860 960
A
A
720 PIN AFTER SETTING
STIFTAD EFTER INMALLNING
780
250
150
140
460
SCALE 1:2
470
810
910
SCALE 1:2
STIFTAD EFTER INMALLNING
PIN AFTER SETTING
870 890 420
010 890 760 100
890 760 095
920
820
110
ANVÄNDS VID BEHOV
TO USE WHEN DEMANDED.
330 020
940 320 810
770 900
D D
F F
H H

ECM: 102422 - 20020207
Group number: 1529120-0100
Assembly Drawing: 1529120-1_1_AA

Issue: 20020822

Pos	Part No	SP	UN	Qty	Description	Page No
0200B OR 0250B						
010	B490918-0000	-		1	PILLAR	
	312105-0489	-		*8*	*SCREW M6S ISO 4017 M10X16 A480*	
020	490895-0000	-		1	OVER HOUSE	
020	1529009-0000	-		1	HOUSE	
030	273953-0000	A		1	SEAL	
070	456794-0000	-		1	RING	
240	263655-0006	A		2	SHAFT	
360	456796-0000	A		2	ROLLER	
370	456797-0000	-		4	AXLE SUPPORT	
380	456798-0000	-		2	DOWEL	
390	456801-0000	-		1	ARM	
0200S						
010	B490919-0000	-		1	PILLAR	
	312105-0489	-		*8*	*SCREW M6S ISO 4017 M10X16 A480*	
020	1529010-0000	-		1	HOUSE	
020	490894-0000	-		1	OVER HOUSE	
030	490901-0000	A		1	SEAL	
070	490899-0000	-		1	RING	
240	490903-0000	A		2	SHAFT	
350	751230-0000	A		4	PLAIN BEARING	
360	456996-0000	A		2	ROLLER	
370	490902-0000	-		4	AXLE SUPPORT	
380	751477-0000	-		2	DOWEL	
390	490904-0000	-		1	ARM	
Common Parts						
040	295426-0000	-		1	CAP	
050	295427-0000	-		1	LOCK	
060	295428-0000	-		1	HINGE	
095	490964-0000	B		2	COVER	
100	456890-0000	-		2	COVERING PLATE	
110	469092-0000	-		2	SHIM	
130	2033-0007	-		8	WASHER	
140	247349-0000	A		2	STEERING	
150	491602-0000	-		2	GASKET HOLDER	
170	247355-0000	-		1	LOCK WASHER	
180	247358-0000	B		1	SHIFTER HANDLE	
190	255986-0000	A		2	WHEEL	
200	256163-0000	A		1	SHAFT	
210	247357-0000	A		2	SPROCKET	
220	751131-0000	A		1	SHAFT	
230	256170-0000	-		2	DRIP PLATE	
250	267033-0000	-		2	WASHER	
260	271863-0000	A		2	SHAFT	
270	271864-0000	-		2	WASHER	
280	272002-0000	-		1	PROTECTIVE COVER LEFT	
290	272003-0000	-		1	PROTECTIVE COVER RIGHT	
300	279008-0000	A		2	BUSHING	
310	279010-0000	-		1	BEARING PLATE	
320	295429-0000	B		1	HANDLE	
330	978532-0000	-		2	BRACKET	
340	978531-0000	-		1	BRACKET	
400	751730-0000	B		1	LOCKING CIRCLIP	
410	456803-0000	B		1	PIVOT PIN	
420	B469159-0000	-		2	PIN	
	311103-0369	-		*1*	*PARALLELL PIN, M6, 6X60 MM*	
430	469521-0000	-		1	BEARING PLATE	
450	491314-0000	-		8	SCREW	
460	491128-0000	A		2	GASKET	
470	491418-0002	A		1	O-RING	
480	751684-0000	A		1	STOP LUG	
490	441737-0000	-		1	WASHER	
600	90044-0139	A		3	KEY SAF.SW. AZ16-02 ZVR K-2254	
605	90044-0310	-		3	KEY FOR SAFETY SWITCH, AZ 15/16 B1	
610	90044-0194	-		1	PROX.SW. IN5329/IN3002-BPKG	
700	311103-0272	-		1	PARALLELL PIN, M6, 4X20 MM	
710	311103-0276	-		3	PARALLELL PIN, M6, 4X30 MM	
720	311103-0308	-		2	PARALLELL PIN, M6, 5X16 MM	
730	311103-0310	-		2	PARALLELL PIN, M6, 5X20 MM	
750	312105-0327	-		6	SCREW M6S ISO 4017 M5X12 A480	
760	312105-0364	-		20	SCREW M6S ISO 4017 M6X10 A480	
770	312105-0368	-		6	SCREW M6S M6X16 A280	
780	312105-0372	-		4	SCREW M6S ISO 4017 M6X25 A480	
790	312105-0378	-		4	SCREW M6S ISO 4014 M6X40 A480	
800	312105-0384	-		1	SCREW M6S ISO 4014 M6X70 A480	
810	312105-0451	-		24	SCREW M6S ISO 4017 M8X20 A480	
815	312105-0453	-		2	SCREW M6S ISO 4017 M8X25 A480	
820	312105-0499	-		7	SCREW M6S ISO 4014 M10X40 A480	
830	312115-0329	-		6	SCREW MC6S M5X16 A280	
840	312115-0370	-		2	SCREW MC6S M6X20 A280	
850	312125-0230	-		2	SCREW PAN HEAD MCS M3X20 SS	
860	312125-0287	-		4	SCREW PAN HEAD MCS M4X8 SS	

Machine Type | Group Description | Used-In | Group Number | Page No

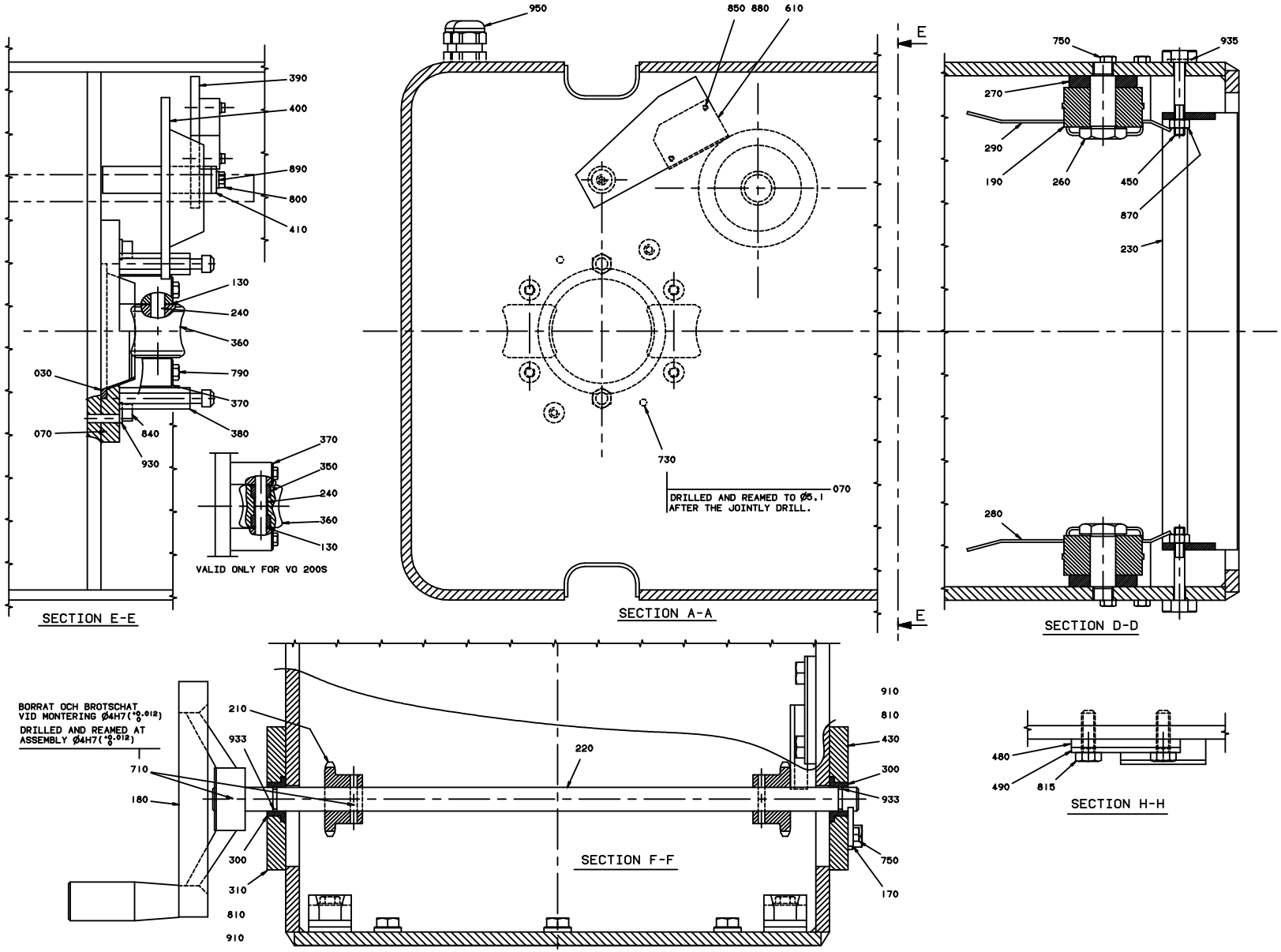
950
850 880 610
E
750
935
270
290
190
260
450
870
230
280
390
400
890
800
410
130
240
360
790
370
380
030
070
840
930
370
350
240
360
130
VALID ONLY FOR VO 200S
730
070
DRILLED AND REAMED TO Ø5.1
AFTER THE JOINTLY DRILL.
SECTION E-E
SECTION A-A
SECTION D-D
BORRAT OCH BROTSCHAT
VID MONTERING Ø4H7(+0.012 0)
DRILLED AND REAMED AT
ASSEMBLY Ø4H7(+0.012 0)
210
933
710
180
300
310
810
910
220
910
810
430
300
933
750
170
480
490
815
SECTION F-F
SECTION H-H

Pos	Part No	SP	UN	Qty	Description	Page No
Common Parts (Cont'd)						
870	312605-0316	-		10	HEXAGON NUT, M6M M6 A280	
880	315105-0124	-		2	WASHER PLAIN, BRB, 3,2/6,H=0,5	
890	315105-0153	-		3	WASHER PLAIN, BRB, 6,4/12,H=1,5	
900	315115-0153	-		6	WASHER PLAIN, TBRB 6,4/12 H=3	
910	315115-0165	-		16	WASHER PLAIN, TBRB 8,4/16 H=3	
920	315115-0173	-		7	WASHER PLAIN, TBRB 10,5/22 H=4	
930	315125-0153	-		2	WASHER PLAIN ROUND,CHAMF. 6,4/22, H=4	
933	315204-0109	A		2	O-RING 11,1X1,6 MM	
935	315204-0208	A		8	O-RING 9,3X2,4 MM	
940	318800-0103	A		2	HANDLES,SPHERICAL KNOB,INT.THRE.,D.25-M6	
950	352103-0101	-		3	CABLE GLAND, ST 9, PR15,2/PG9	
960	352110-0100	-		4	CABLE CLIPS, D=5-7 MM	

Pos	Part No	SP	UN	Qty	Description	Page No

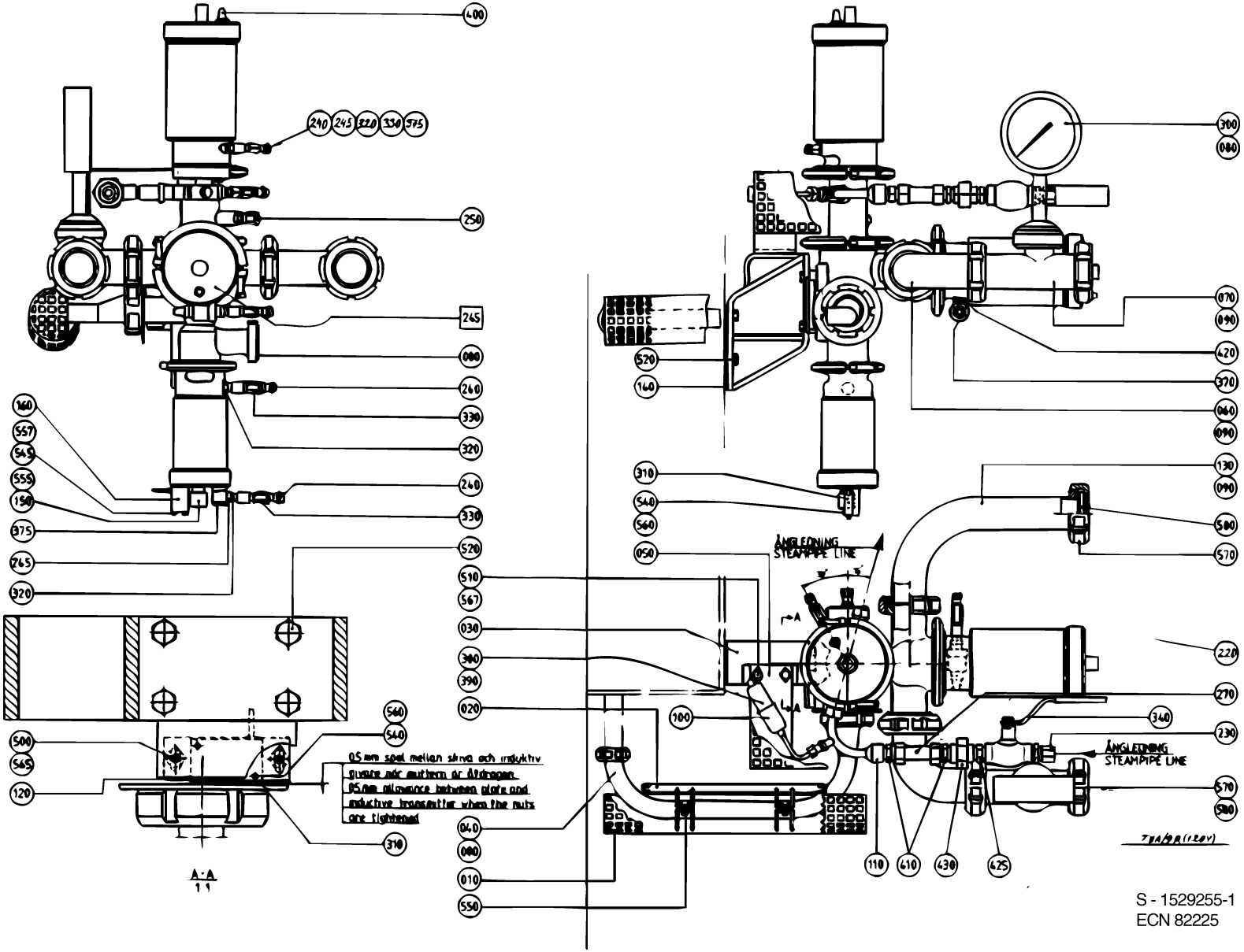
400
240
245
320
330
575
250
245
080
260
330
320
240
330
160
557
549
559
150
375
745
320
520
510
567
030
360
390
020
560
540
500
565
120
310
040
080
010
550
A-A
0,5 mm spel mellan skiva och induktiv givare när mutterm är åtdragen
0,5 mm allowance between plate and inductive transmitter when the nuts are tightened
300
080
870
890
420
370
060
090
520
140
310
540
560
050
130
090
500
570
ÅNGLEDNING
STEAMPIPE LINE
220
270
340
230
100
110
410
430
425
S - 1529255-1
ECN 82225

ECM: 102733 - 20020207
Group number: 1529255-0100
Assembly Drawing: 1529255-1_1_AA

Issue: 20020822

Pos	Part No	SP	UN	Qty	Description	Page No
Common Parts						
010	272555-0000	-		1	TOUCH GUARD	
020	272554-0000	-		1	TOUCH GUARD	
030	441723-0000	-		1	CANTILEVER	
040	490983-0000	-		1	PIPE	
050	490984-0000	-		1	TOUCH GUARD	
060	440978-0000	-		1	PIPE BEND	
070	449193-0000	B		1	PRESSURE GAUGE TUBE	
080	12242-0003	A		3	GASKET 48X38X5,5	
090	12242-0005	A		5	GASKET 61X51X5,5	
100	90326-0089	-		1	THERMOCOUPLE, 5110-089-000	
110	295250-0000	A		1	PIPE	
120	297195-0000	-		1	SPACER	
130	469503-0000	-		1	ELBOW PIPE	
140	490985-0000	B		2	SPACER SHEET	
150	440647-0000	-		1	SLEEVE	
160	440731-0000	-		1	PLATE	
220	90030-0132	-		1	ACCESSORIES, PLUG PL-6	
230	90030-0109	-		1	CONN. STR., 12-R1/2, EXT. THREAD	
240	90224-0307	-		5	STRAIGHT FITTING, 6MM, 1/8",	
245	A440630-0200	-		1	AP-VALVE	**195**
245	90224-0308	B		2	CONN. BANJO, ART. NO. 2023-1/8-1/8	
250	90030-0187	-		2	CONN. STR. GA-12-G3/8	
270	752741-0000	A		1	PIPE	
300	B90043-0050	A		1	PRESSURE GAUGE, 2940.100 MM+2940	
	90043-0301	-		*1*	*DIAPHRAGM*	
310	90044-0104	-		2	PROX.SWITCH IFM IN 3002	
320	90163-0057	B		4	NIPPLE 1/8" BRASS	
330	90163-0062	B		4	QUICK COUPLING, (F) 5053-1/8	
340	90187-0059	A		1	BALL VALVE FOR HYDR.PER. G1/2 3MM HOLE	
370	90235-0259	A		1	VALVE	
375	90235-0274	A		2	THROTTLE CHECK VALVES,G1/8"	
380	90326-0012	-		1	PROTECTIVE COVER, T31A4618	
390	90326-0020	-		1	PLUG, FEMALE YELLOW CR-AL	
400	90328-0003	A		3	SILENCER	
410	90030-0187	A		2	CONN. STR. GA-12-G3/8	
420	90330-0032	A		1	NIPPLES, EXT. THREAD. ISO 7/1 R1/8-R1/8	
425	90330-0048	-		1	BUSHING, INT/EXT. THR. R1/2-RP3/8	
430	90330-0062	A		1	STRIGHT COUPLING R3/8" R131U	
500	312105-0329	-		2	SCREW M6S ISO 4017 M5X16 A480	
510	312105-0364	-		2	SCREW M6S ISO 4017 M6X10 A480	
520	312105-0451	-		8	SCREW M6S ISO 4017 M8X20 A480	
540	312115-0228	-		8	SCREW MC6S M3X16 A280	
545	312115-0305	-		2	SCREW MC6S M4X50 A280	
550	312115-0329	-		4	SCREW MC6S M5X16 A280	
555	312155-0532	-		1	SCREW HEX.SOCK.COUNT.MF6S 12X20 SS	
557	315105-0136	-		2	WASHER PLAIN, BRB, 4,3/8,H=0,8	
560	315105-0124	-		8	WASHER PLAIN, BRB, 3,2/6,H=0,5	
565	315105-0146	-		2	WASHER PLAIN, BRB, 5,3/10,H=1	
567	315115-0153	-		2	WASHER PLAIN, TBRB 6,4/12 H=3	
570	342803-0104	-		2	UNION NUT, RD 70-6 (SMS 51)	
580	342812-0104	-		2	FERRULE, SMS 1145, 2333, NO. 190707	

Machine Type | Group Description | Used-In | Group Number | Page No

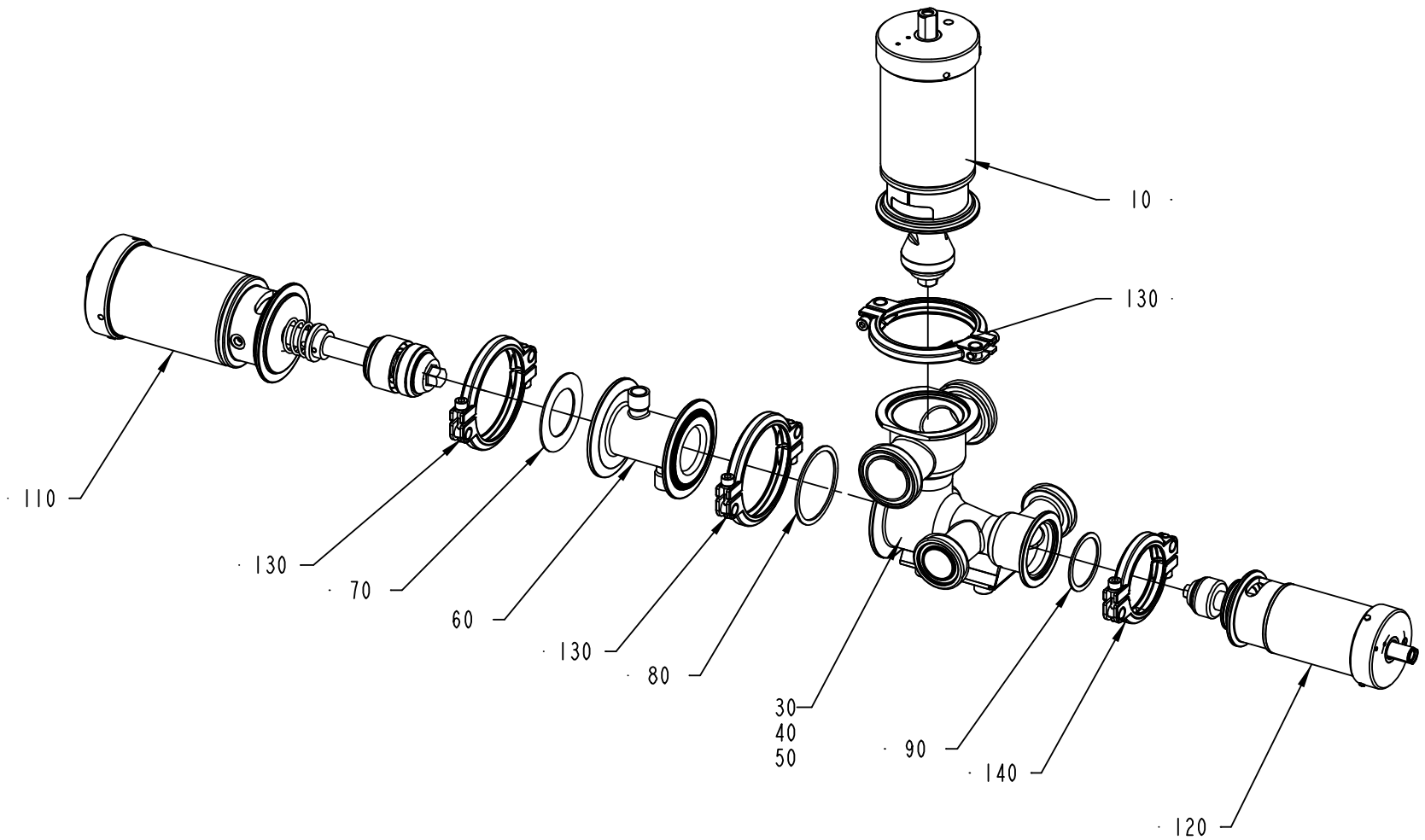

440630-3
ECN 72559

Pos	Part No	SP	UN	Qty	Description	Page No
TBA/9 2" OR TBA/9R 2"						
030	440631-0000	B		1	VALVE BODY 51	
Common Parts						
010	A539209-0100	B		1	A-CYLINDER	**197**
060	440634-0000	B		1	HOUSE	
070	539212-0000	A		1	GASKET	
080	90207-0363	A		1	GASKET	
090	90207-0365	A		1	GASKET	
110	A539210-0100	B		1	C-CYLINDER	**199**
120	A539211-0100	B		1	B-CYLINDER	**201**
130	A541163-0100	B		3	CLAMP RING	**203**
140	A541164-0100	B		1	CLAMP RING	**205**

Pos	Part No	SP	UN	Qty	Description	Page No

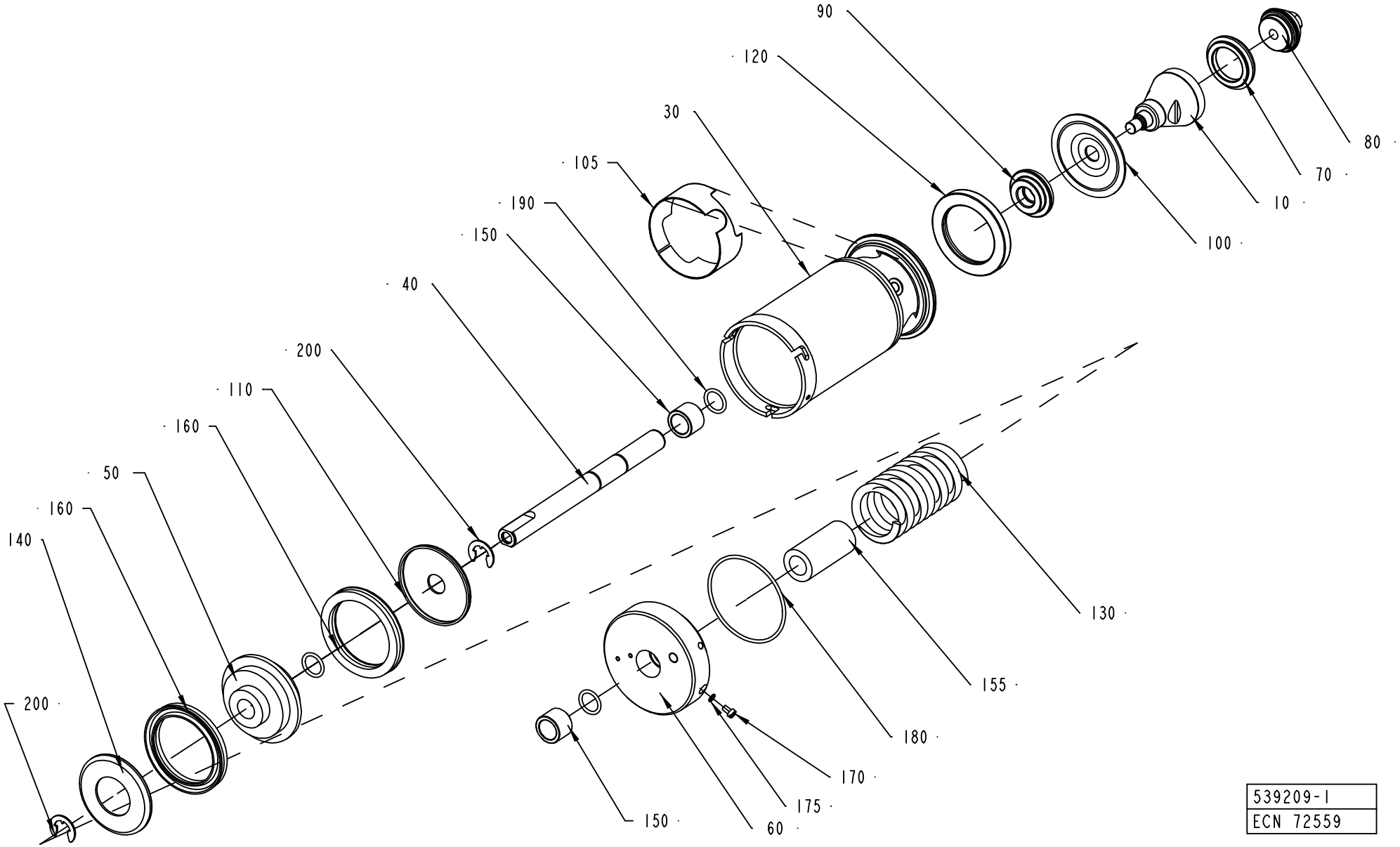
90
120
30
105
190
150
40
200
110
160
50
160
140
200
80
70
10
100
130
155
180
170
175
150
60
539209-1
ECN 72559

Pos	Part No	SP	UN	Qty	Description	Page No
2"						
010	530592-0000	B		1	SEAL RING HOLDER	
3"						
010	530595-0000	B		1	SEAL RING HOLDER	
Common Parts						
030	440632-0000	B		1	CYLINDER HOUSING	
040	440637-0000	B		1	PISTON ROD	
050	440638-0000	B		1	PISTON	
060	484998-0000	B		1	END SECTION	
070	530589-0000	A		1	SEAL RING	
080	530590-0000	A		1	VALVE CONE	
090	541166-0000	B		1	WASHER	
100	533169-0000	A		1	DIAPHRAGM	
105	476203-0000	-		1	PROTECTION	
110	440651-0000	B		1	WASHER	
120	440655-0000	B		1	RING	
130	440663-0000	A		1	COMPRESSION SPRING	
140	484975-0000	B		1	WASHER	
150	497933-0000	A		2	BUSHING	
155	541167-0000	B		1	SPACER SLEEVE	
160	90020-0028	A		2	SLEEVE	
170	312125-0323	-		1	SCREW PAN HEAD MCS M5X8 SS	
175	315233-0101	-		1	WASHER PL.RND.NYL.5,2/8,H=1	
180	315202-0308	A		1	O-RING 84,5X3 MM	
190	315204-0215	A		3	O-RING 19,2X3 MM	
200	315754-0113	-		2	LOCKING WAE 15	

Pos	Part No	SP	UN	Qty	Description	Page No

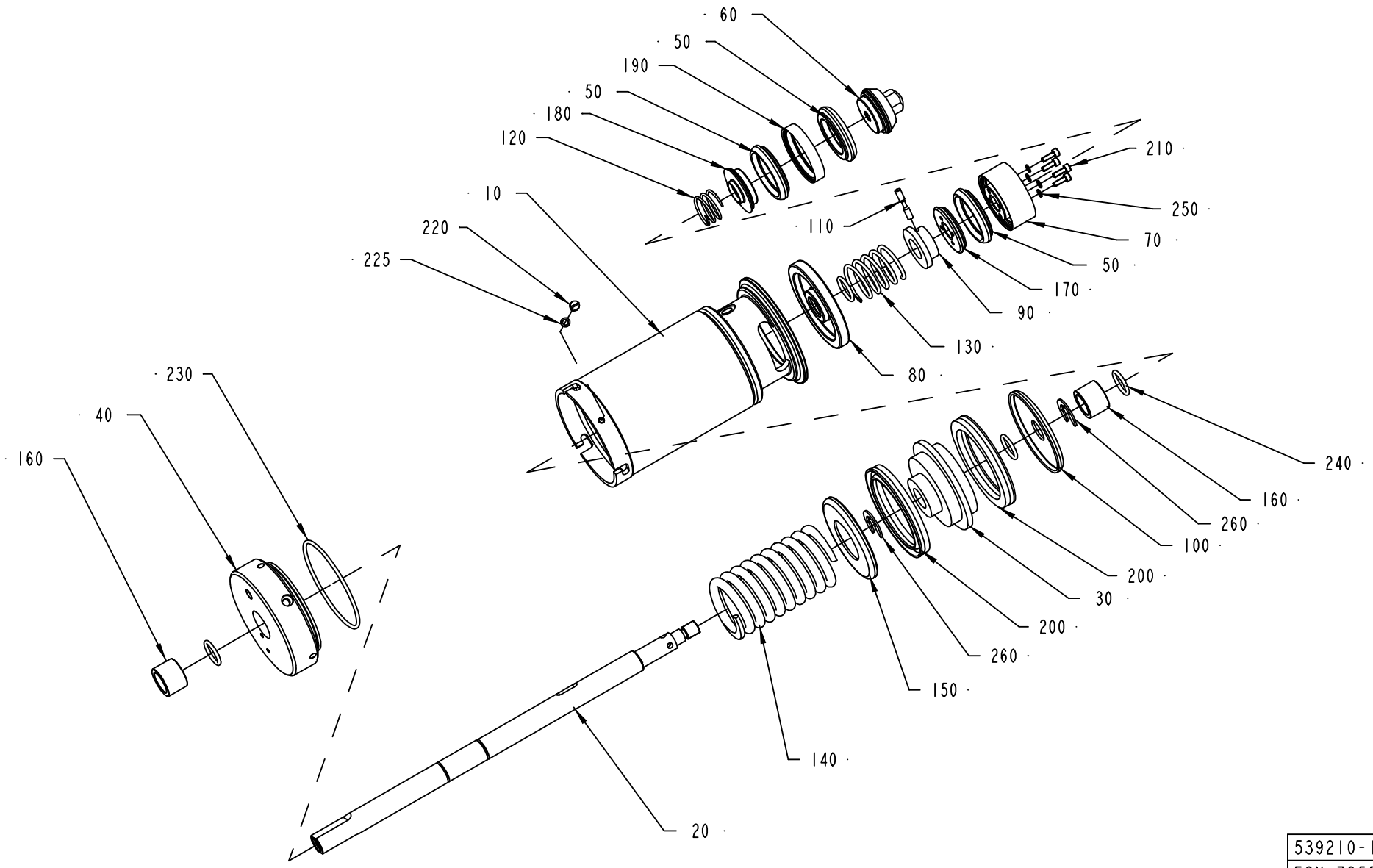

539210-1
ECN 72559

Pos	Part No	SP	UN	Qty	Description	Page No
Common Parts						
010	440632-0000	B		1	CYLINDER HOUSING	
020	440635-0000	B		1	PISTON ROD	
030	440638-0000	B		1	PISTON	
040	484998-0000	B		1	END SECTION	
050	530589-0000	A		3	SEAL RING	
060	530590-0000	A		1	VALVE CONE	
070	530591-0000	B		1	HOLDER	
080	440648-0000	B		1	SEALING WASHER	
090	440650-0000	B		1	WASHER	
100	440651-0000	B		1	WASHER	
110	440659-0000	-		1	CYLINDRICAL PIN	
120	440660-0000	A		1	COMPRESSION SPRING	
130	440661-0000	A		1	COMPRESSION SPRING	
140	440663-0000	A		1	COMPRESSION SPRING	
150	484975-0000	B		1	WASHER	
160	497933-0000	A		2	BUSHING	
170	530597-0000	B		1	WASHER	
180	530598-0000	B		1	WASHER	
190	530599-0000	A		1	RING	
200	90020-0028	A		2	SLEEVE	
210	312115-0291	-		4	SCREW MC6S M4X12 A280	
220	312125-0323	-		1	SCREW PAN HEAD MCS M5X8 SS	
225	315233-0101	-		1	WASHER PL.RND.NYL.5,2/8,H=1	
230	315202-0308	A		1	O-RING 84,5X3 MM	
240	315204-0215	A		4	O-RING 19,2X3 MM	
250	315402-0136	-		4	LOCK WASHER FBB 4,1	
260	315754-0113	-		2	LOCKING WAE 15	

Pos	Part No	SP	UN	Qty	Description	Page No

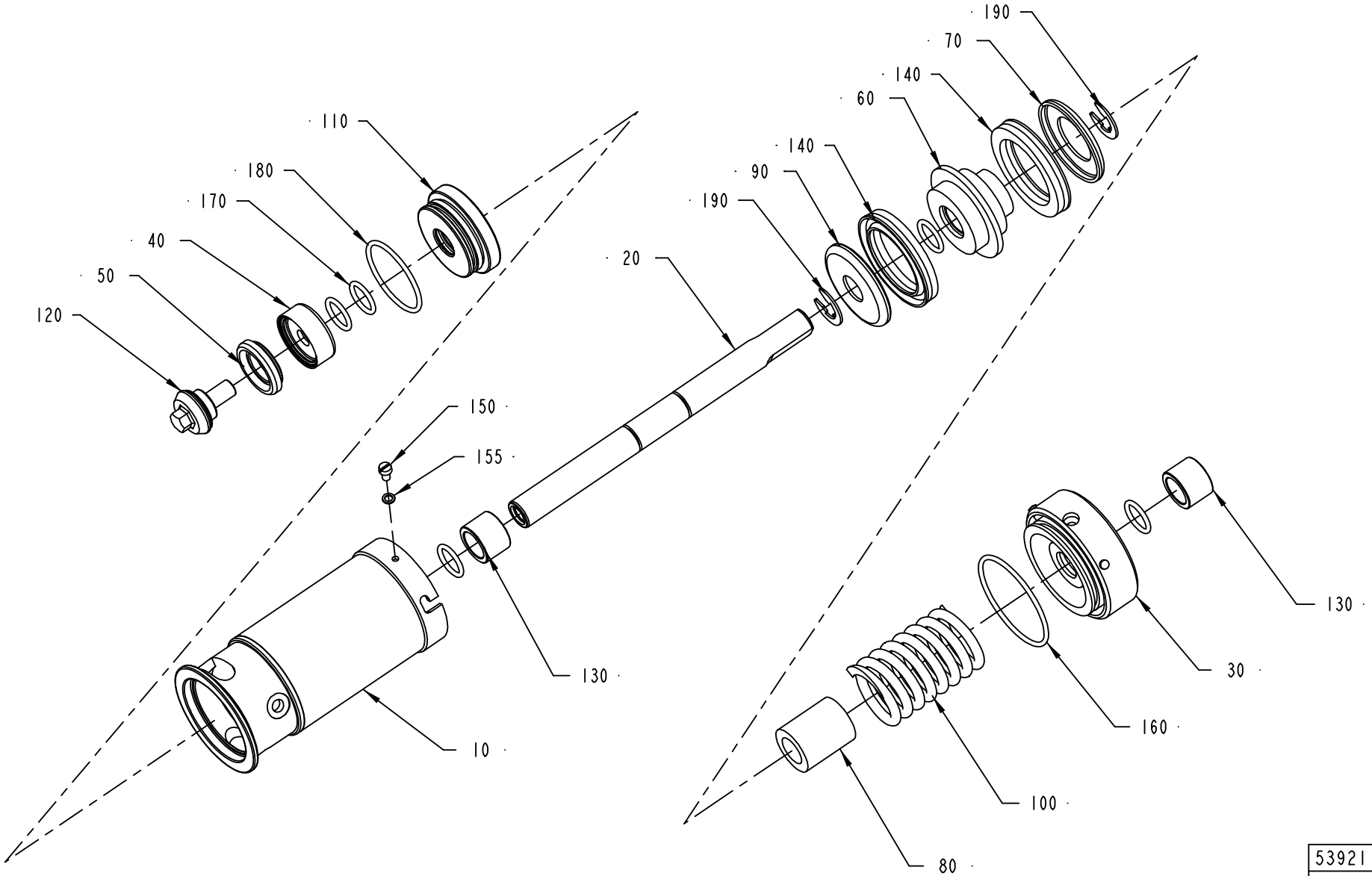

539211-1
ECN 72559

ECM: 105001 - 20020215
Group number: 539211-0100
Assembly Drawing: 539211-1_1_AB

Issue: 20020822

Pos	Part No	SP	UN	Qty	Description	Page No
Common Parts						
010	440633-0000	B		1	CYLINDER HOUSING	
020	440636-0000	B		1	PISTON ROD	
030	440695-0000	B		1	END SECTION	
040	530587-0000	B		1	WASHER	
050	530588-0000	A		1	SEAL RING	
060	440646-0000	B		1	PISTON	
070	440652-0000	B		1	WASHER	
080	440654-0000	B		1	SPACER SLEEVE	
090	440656-0000	B		1	WASHER	
100	440662-0000	A		1	COMPRESSION SPRING	
110	440664-0000	B		1	SEALING WASHER	
120	476185-0000	A		1	VALVE CONE	
130	497933-0000	A		2	BUSHING	
140	90020-0027	A		2	SLEEVE	
150	312125-0323	-		1	SCREW PAN HEAD MCS M5X8 SS	
155	315233-0101	-		1	WASHER PL.RND.NYL.5,2/8,H=1	
160	315202-0304	A		1	O-RING 64,5X3 MM	
170	315204-0215	A		5	O-RING 19,2X3 MM	
180	315204-0301	A		1	O-RING 49,5X3 MM	
190	315754-0113	-		2	LOCKING WAE 15	

Pos	Part No	SP	UN	Qty	Description	Page No

Machine Type | Group Description | Used-In | Group Number | Page No

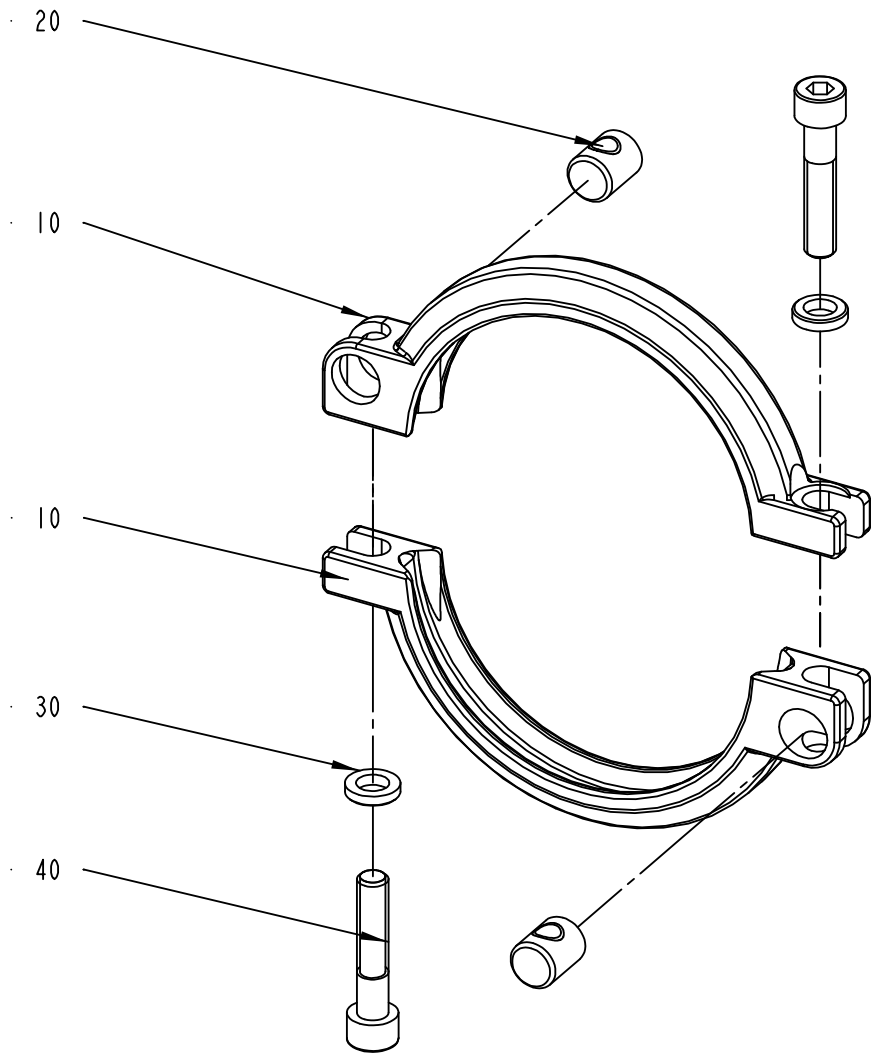

541163-1
ECN 72559

ECM: 105002 - 20020215
Group number: 541163-0100
Assembly Drawing: 541163-1_1_AB

Issue: 20020822

Pos	Part No	SP	UN	Qty	Description	Page No
Common Parts						
010	532117-0000	B		2	CLAMP RING	
020	497748-0000	B		2	PIN	
030	541165-0000	B		2	WASHER	
040	312115-0459	-		2	SCREW MC6S M8X40 A280	

Pos	Part No	SP	UN	Qty	Description	Page No

Machine Type	Group Description	Used-In	Group Number	Page No

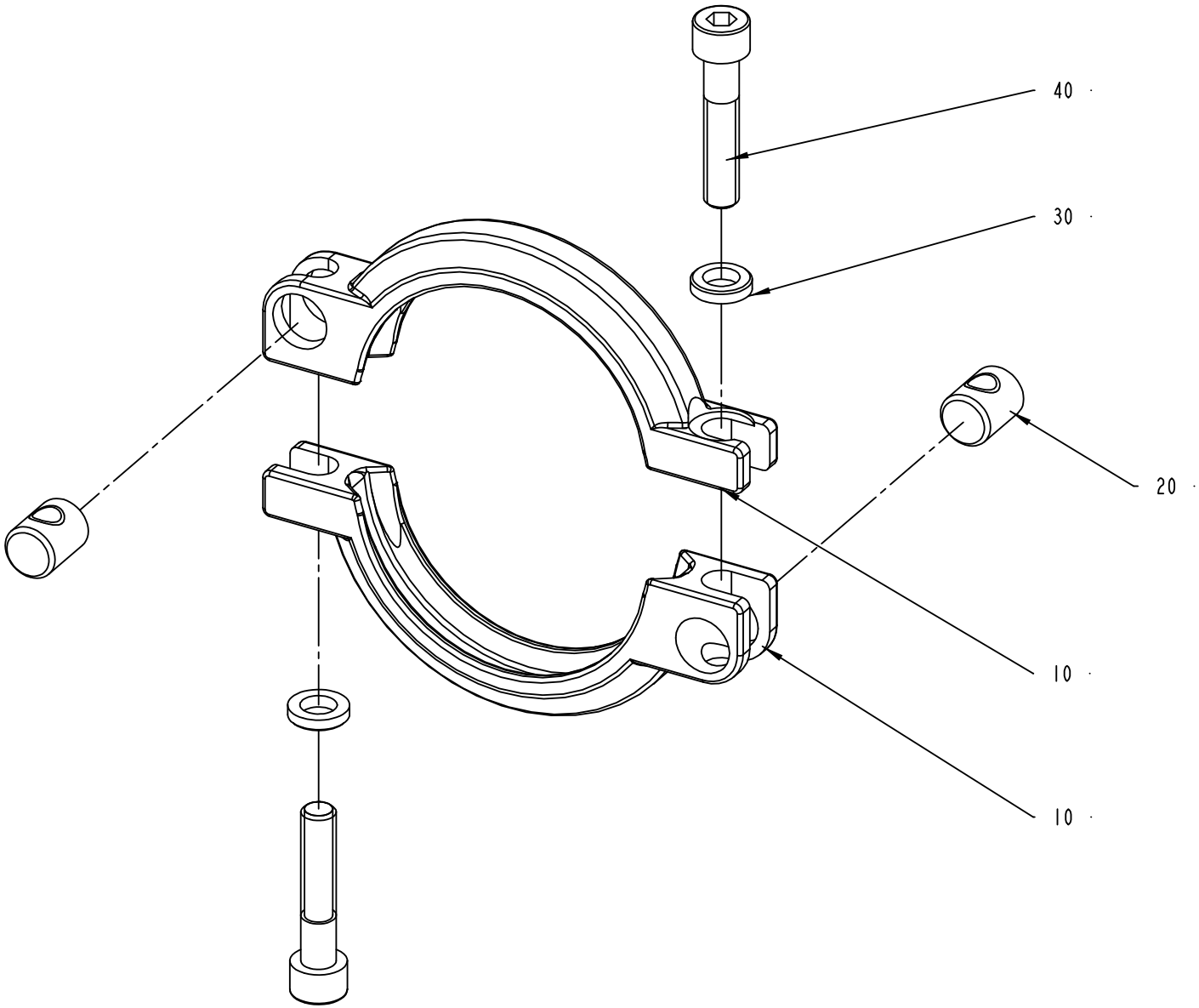

541164-1
ECN 72559

ECM: 102718 - 20020207
Group number: 541164-0100
Assembly Drawing: 541164-1_1_AB

Issue: 20020822

Pos	Part No	SP	UN	Qty	Description	Page No
Common Parts						
010	532118-0000	B		2	CLAMP RING	
020	497748-0000	B		2	PIN	
030	541165-0000	B		2	WASHER	
040	312115-0459	-		2	SCREW MC6S M8X40 A280	

Pos	Part No	SP	UN	Qty	Description	Page No

Machine Type	Group Description	Used-In	Group Number	Page No

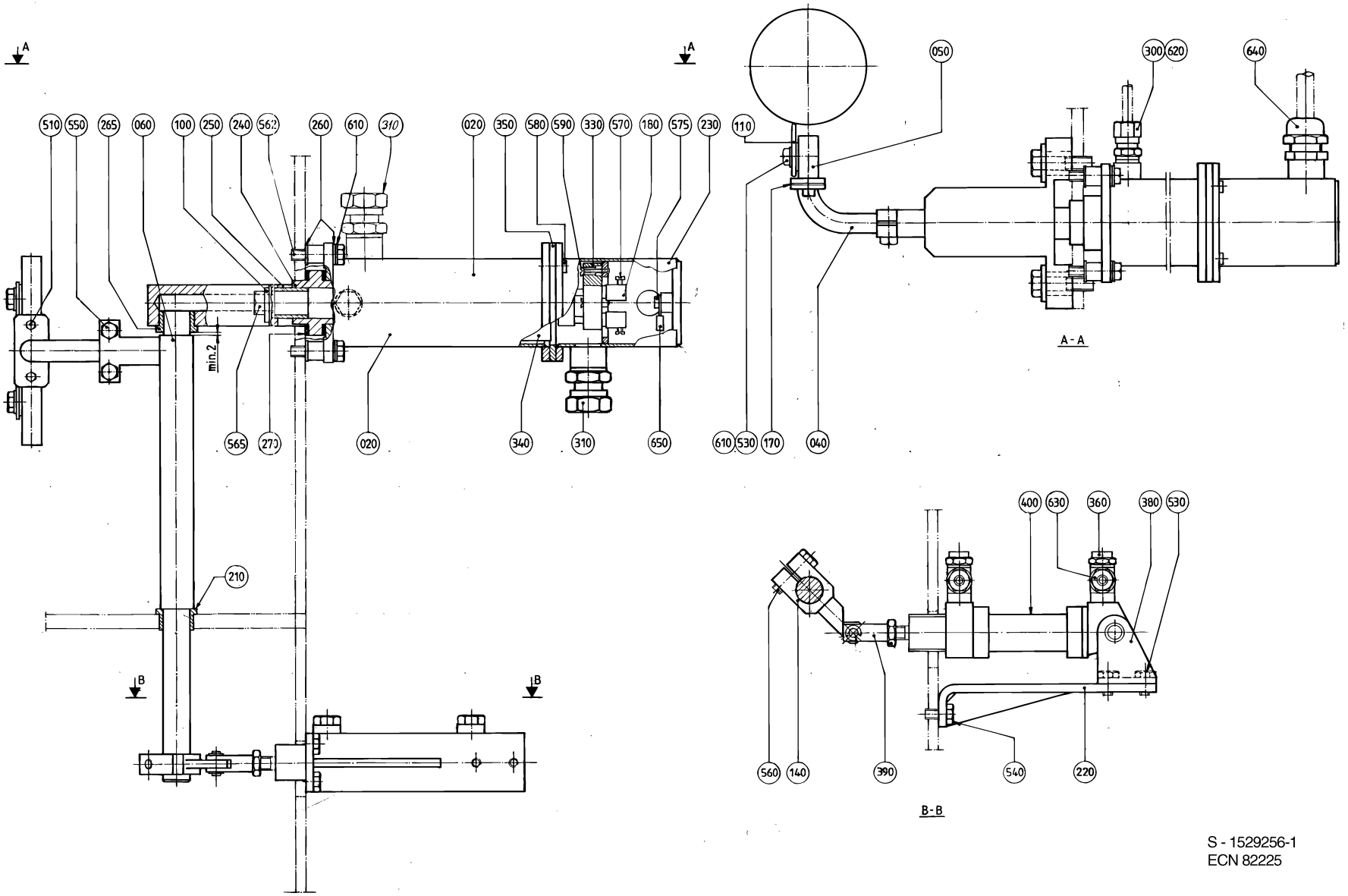

S - 1529256-1
ECN 82225

ECM: 102411 - 20020207
Group number: 1529256-0100
Assembly Drawing: 1529256-1_1_AA

Issue: 20020822

Pos	Part No	SP	UN	Qty	Description	Page No
Common Parts						
020	751733-0000	B		1	HEATING PIPE	
040	256112-0000	B		1	BRACKET	
050	256689-0000	A		1	AIR NOZZLE	
060	272948-0003	A		1	SHAFT	
100	315125-0165	-		2	WASHER PLAIN ROUND,CHAMF. 8,4/26, H=5	
110	491097-0000	A		1	HEAT GUARD	
140	491545-0000	B		1	BRACKET	
170	751015-0000	A		1	GASKET	
180	266739-0000	A		3	CABLE GLAND	
210	271269-0000	A		1	BUSHING	
220	491224-0000	-		1	BRACKET	
230	491223-0000	B		1	COVER	
240	295936-0000	A		1	BUSHING	
250	272287-0000	-		1	AXLE SUPPORT	
260	751018-0000	A		8	WASHER	
265	295910-0000	A		1	BUSHING	
270	751023-0000	A		2	GASKET	
300	90030-0184	-		1	CONN. STR. GA-6-G1/8	
310	90030-0187	-		2	CONN. STR. GA-12-G3/8	
330	B90125-0020	A		1	PLATE	
	294464-0000	*A*		*1*	*BASE PLATE*	
	270927-0000	*A*		*3*	*SCREW*	
	270926-0000	*A*		*6*	*NUT*	
	294464-0000	*A*		*1*	*BASE PLATE*	
	270927-0000	*A*		*3*	*SCREW*	
	270926-0000	*A*		*6*	*NUT*	
340	90206-0031	A		1	HEATING ELEMENT 700+1200W,220V	
350	90206-0322	A		1	GASKET	
360	90235-0282	A		2	THROTTLE CHECK VALVES,G1/8	
380	90239-0487	-		1	REAR,CLEVIS,MINI-ISO 20-25	
390	90239-0532	A		1	ROD END,CLEVIS WITH AXLE M8	
400	90239-0847	A		1	DOUBLE ACTING, MINI-ISO, CYL.20-50	
510	312105-0287	-		2	SCREW M6S ISO 4017 M4X8 A480	
530	312105-0364	-		4	SCREW M6S ISO 4017 M6X10 A480	
540	312105-0366	-		2	SCREW M6S M6X12 A280	
550	312105-0368	-		2	SCREW M6S M6X16 A280	
560	312105-0370	-		1	SCREW M6S ISO 4017 M6X20 A480	
562	312105-0372	-		4	SCREW M6S ISO 4017 M6X25 A480	
565	312105-0455	-		2	SCREW M6S ISO 4017 M8X30 A480	
570	312125-0220	-		3	SCREW SLOT.PAN HD. MCS 3X6 A480	
575	312125-0285	-		1	SCREW SLOT.PAN HD. MCS 4X6 A480	
580	312125-0291	-		4	SCREW PAN HEAD MCS M4X12 SS	
590	312145-0228	-		3	SCREW COUNTERS.SLOT.HD. MFS 3X16 SS	
610	315105-0153	-		6	WASHER PLAIN, BRB, 6,4/12,H=1,5	
620	315234-0109	A		1	WASHER,PL.RND.CU.10,3/13,5 H=1,0	
630	342797-0121	A		2	CONN. BANJO, RINGPIECE 6-1/8	
640	352103-0106	-		1	CABLE GLAND, ST 11, PR18,6/PG11	
650	353104-0130	A		1	CABLE SHOEYAV 025 M 4*	

Machine Type | Group Description | Used-In | Group Number | Page No

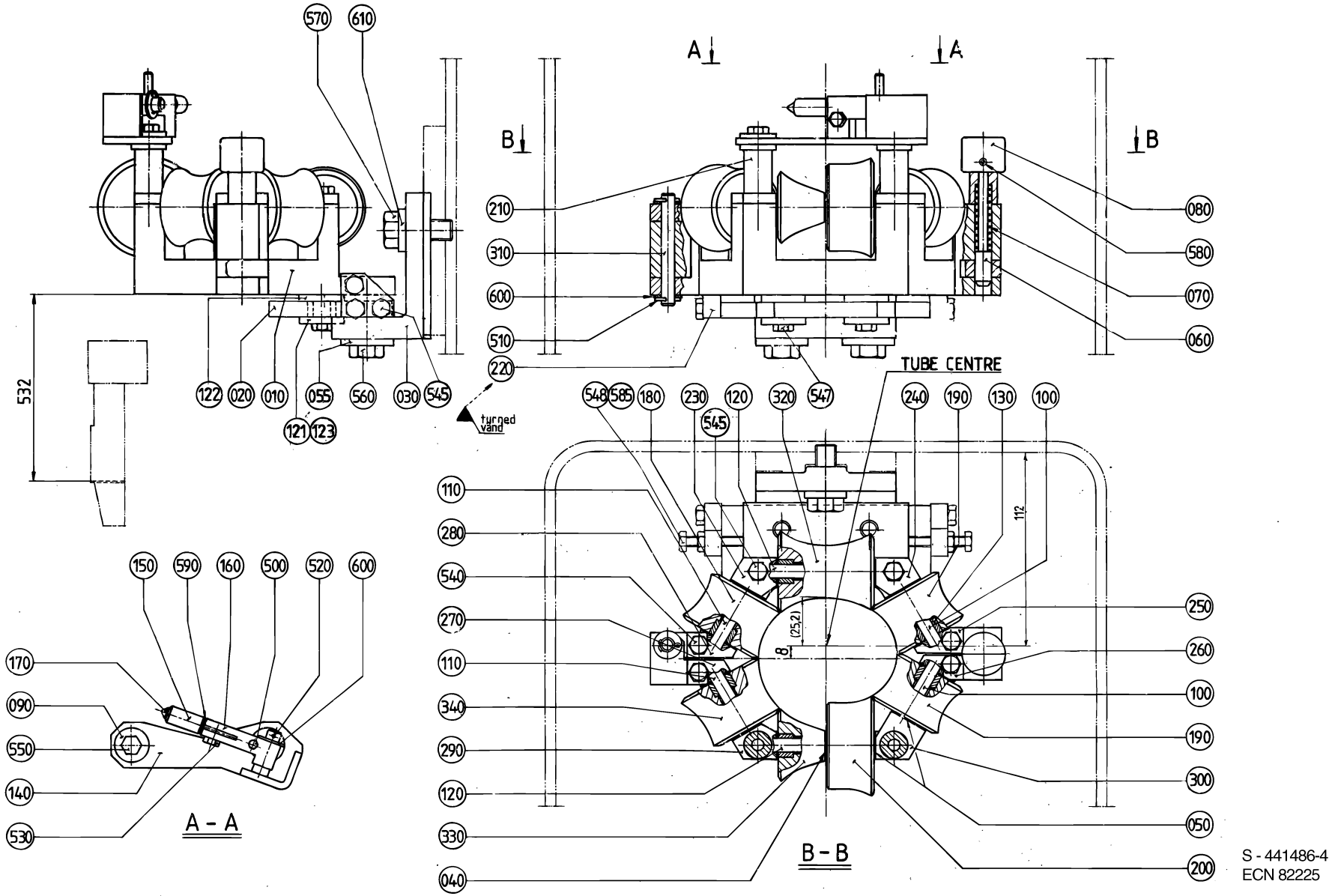

S - 441486-4
ECN 82225

ECM: 102710 - 20020207
Group number: 441486-0300
Assembly Drawing: 441486-4_1_AA

Issue: 20020822

Pos	Part No	SP	UN	Qty	Description	Page No
0200B OR 0250B						
010	469524-0000	-		1	BRACKET	
020	751605-0000	-		1	SETTING PLATE	
030	491987-0000	-		1	ANGLE BRACKET	
040	2033-0008	A		1	WASHER	
050	2033-0011	A		12	WASHER	
090	257175-0000	-		4	WASHER	
100	263655-0004	A		2	SHAFT	
110	263655-0006	A		2	SHAFT	
120	263655-0009	A		2	SHAFT	
130	751230-0000	A		14	PLAIN BEARING	
140	441918-0000	-		1	BRACKET	
150	451117-0000	A		1	ROLL	
160	451148-0000	-		1	BRACKET	
170	451149-0000	A		1	SHAFT	
180	456082-0000	A		1	ROLL	
190	456085-0000	A		2	ROLL	
200	456086-0000	A		1	ROLL	
210	456181-0000	-		2	SPACER	
230	456183-0000	-		1	LOCKING PLATE	
240	456184-0000	-		1	LOCKING PLATE	
250	456185-0000	-		1	LOCK PLATE	
260	456186-0000	-		1	LOCK PLATE	
270	456187-0000	-		1	LOCK PLATE	
280	456188-0000	-		1	LOCK PLATE	
290	456198-0000	-		1	LOCK PLATE	
300	456199-0000	-		1	LOCK PLATE	
320	456304-0000	A		1	ROLL	
330	456305-0000	A		1	ROLL	
340	456306-0000	A		1	ROLL	
500	311103-0312	-		1	PARALLELL PIN, M6, 5X25 MM	
520	311411-0165	-		1	SPLIT PIN SP2,5X16RFR	
530	312105-0325	-		1	SCREW M6S ISO 4017 M5X10 A480	
540	312105-0368	-		4	SCREW M6S M6X16 A280	
545	312105-0370	-		6	SCREW M6S ISO 4017 M6X20 A480	
550	312105-0381	-		2	SCREW M6S ISO 4014 M6X55 A480	
590	315105-0136	-		1	WASHER PLAIN, BRB, 4,3/8,H=0,8	
600	315105-0165	-		3	WASHER PLAIN, BRB, 8,4/16,H=1,5	
0200S						
010	469745-0000	-		1	BRACKET	
020	751603-0000	-		1	SETTING PLATE	
030	491907-0000	-		1	ANGLE BRACKET	
050	2033-0011	A		14	WASHER	
110	263655-0018	A		4	SHAFT	
120	263655-0007	-		1	SHAFT	
125	456881-0000	A		1	SHAFT	
130	751230-0000	A		12	PLAIN BEARING	
180	490549-0000	A		2	ROLL	
190	490548-0000	A		1	ROLL	
195	490550-0000	A		1	ROLL	
200	490551-0000	A		1	ROLL	
230	456869-0000	-		1	LOCKING PLATE	
240	456871-0000	-		1	LOCK PLATE	
250	456873-0000	-		2	LOCK PLATE	
260	456874-0000	-		2	LOCK PLATE	
290	456870-0000	-		1	LOCK PLATE	
300	456872-0000	-		1	LOCK PLATE	
320	490547-0000	A		1	ROLL	
330	490552-0000	A		1	ROLL	
350	751231-0000	A		1	PLAIN BEARING	
535	312105-0329	-		4	SCREW M6S ISO 4017 M5X16 A480	
536	312105-0332	-		4	SCREW M6S ISO 4017 M5X22 A480	
545	312105-0370	-		4	SCREW M6S ISO 4017 M6X20 A480	
600	315105-0165	-		2	WASHER PLAIN, BRB, 8,4/16,H=1,5	
Common Parts						
055	28037-0000	-		2	WASHER	
060	35918-0000	A		1	SHAFT	
070	35919-0000	A		1	COMPRESSION SPRING	
080	36325-0000	A		1	KNOB	
121	271717-0000	-		2	SPACER	
122	271718-0000	-		2	WASHER	
123	272797-0000	-		2	ROLL	
220	751209-0000	-		2	PLATE	
310	751318-0000	-		1	SHAFT	
510	311411-0150	-		2	SPLIT PIN SP2X12RFR	
547	312105-0374	-		2	SCREW M6S ISO 4014 M6X30 A480	
548	312105-0376	-		2	SCREW M6S ISO 4014 M6X35 A480	
560	312105-0453	-		2	SCREW M6S ISO 4017 M8X25 A480	
570	312105-0536	-		1	SCREW M6S ISO 4017 M12X30 A480	
580	312318-0285	-		1	SCREW SOCK.SET CUP P MSK6SS M4X6 A4	
585	312605-0316	-		2	HEXAGON NUT, M6M M6 A280	
610	315115-0178	-		1	WASHER PLAIN, TBRB 13/24 H=4	

Machine Type | Group Description | Used-In | Group Number | Page No

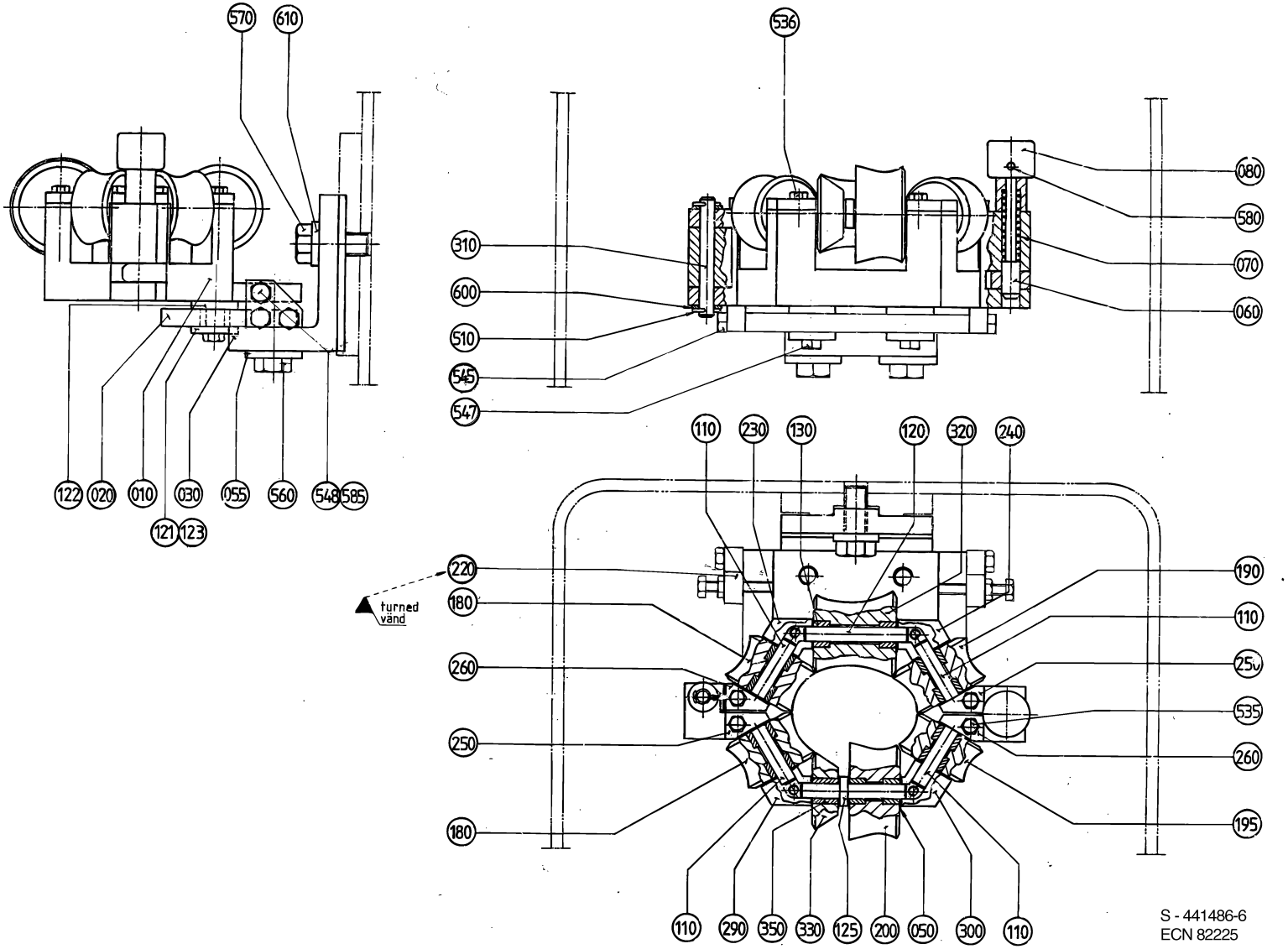
570
610
536
080
580
070
060
310
600
510
545
547
122
020
010
030
055
560
548
585
121
123
110
230
130
120
320
240
220
180
260
250
180
turned
vänd
190
110
25
535
260
195
110
290
350
330
125
200
050
300
110
S - 441486-6
ECN 82225

ECM: 102710 - 20020207
Group number: 441486-0300
Assembly Drawing: 441486-6_1_AA

Issue: 20020822

Pos	Part No	SP	UN	Qty	Description	Page No
0200B OR 0250B						
010	469524-0000	-		1	BRACKET	
020	751605-0000	-		1	SETTING PLATE	
030	491987-0000	-		1	ANGLE BRACKET	
040	2033-0008	A		1	WASHER	
050	2033-0011	A		12	WASHER	
090	257175-0000	-		4	WASHER	
100	263655-0004	A		2	SHAFT	
110	263655-0006	A		2	SHAFT	
120	263655-0009	A		2	SHAFT	
130	751230-0000	A		14	PLAIN BEARING	
140	441918-0000	-		1	BRACKET	
150	451117-0000	A		1	ROLL	
160	451148-0000	-		1	BRACKET	
170	451149-0000	A		1	SHAFT	
180	456082-0000	A		1	ROLL	
190	456085-0000	A		2	ROLL	
200	456086-0000	A		1	ROLL	
210	456181-0000	-		2	SPACER	
230	456183-0000	-		1	LOCKING PLATE	
240	456184-0000	-		1	LOCKING PLATE	
250	456185-0000	-		1	LOCK PLATE	
260	456186-0000	-		1	LOCK PLATE	
270	456187-0000	-		1	LOCK PLATE	
280	456188-0000	-		1	LOCK PLATE	
290	456198-0000	-		1	LOCK PLATE	
300	456199-0000	-		1	LOCK PLATE	
320	456304-0000	A		1	ROLL	
330	456305-0000	A		1	ROLL	
340	456306-0000	A		1	ROLL	
500	311103-0312	-		1	PARALLELL PIN, M6, 5X25 MM	
520	311411-0165	-		1	SPLIT PIN SP2,5X16RFR	
530	312105-0325	-		1	SCREW M6S ISO 4017 M5X10 A480	
540	312105-0368	-		4	SCREW M6S M6X16 A280	
545	312105-0370	-		6	SCREW M6S ISO 4017 M6X20 A480	
550	312105-0381	-		2	SCREW M6S ISO 4014 M6X55 A480	
590	315105-0136	-		1	WASHER PLAIN, BRB, 4,3/8,H=0,8	
600	315105-0165	-		3	WASHER PLAIN, BRB, 8,4/16,H=1,5	
0200S						
010	469745-0000	-		1	BRACKET	
020	751603-0000	-		1	SETTING PLATE	
030	491907-0000	-		1	ANGLE BRACKET	
050	2033-0011	A		14	WASHER	
110	263655-0018	A		4	SHAFT	
120	263655-0007	-		1	SHAFT	
125	456881-0000	A		1	SHAFT	
130	751230-0000	A		12	PLAIN BEARING	
180	490549-0000	A		2	ROLL	
190	490548-0000	A		1	ROLL	
195	490550-0000	A		1	ROLL	
200	490551-0000	A		1	ROLL	
230	456869-0000	-		1	LOCKING PLATE	
240	456871-0000	-		1	LOCK PLATE	
250	456873-0000	-		2	LOCK PLATE	
260	456874-0000	-		2	LOCK PLATE	
290	456870-0000	-		1	LOCK PLATE	
300	456872-0000	-		1	LOCK PLATE	
320	490547-0000	A		1	ROLL	
330	490552-0000	A		1	ROLL	
350	751231-0000	A		1	PLAIN BEARING	
535	312105-0329	-		4	SCREW M6S ISO 4017 M5X16 A480	
536	312105-0332	-		4	SCREW M6S ISO 4017 M5X22 A480	
545	312105-0370	-		4	SCREW M6S ISO 4017 M6X20 A480	
600	315105-0165	-		2	WASHER PLAIN, BRB, 8,4/16,H=1,5	
Common Parts						
055	28037-0000	-		2	WASHER	
060	35918-0000	A		1	SHAFT	
070	35919-0000	A		1	COMPRESSION SPRING	
080	36325-0000	A		1	KNOB	
121	271717-0000	-		2	SPACER	
122	271718-0000	-		2	WASHER	
123	272797-0000	-		2	ROLL	
220	751209-0000	-		2	PLATE	
310	751318-0000	-		1	SHAFT	
510	311411-0150	-		2	SPLIT PIN SP2X12RFR	
547	312105-0374	-		2	SCREW M6S ISO 4014 M6X30 A480	
548	312105-0376	-		2	SCREW M6S ISO 4014 M6X35 A480	
560	312105-0453	-		2	SCREW M6S ISO 4017 M8X25 A480	
570	312105-0536	-		1	SCREW M6S ISO 4017 M12X30 A480	
580	312318-0285	-		1	SCREW SOCK.SET CUP P MSK6SS M4X6 A4	
585	312605-0316	-		2	HEXAGON NUT, M6M M6 A280	
610	315115-0178	-		1	WASHER PLAIN, TBRB 13/24 H=4	

Machine Type | Group Description | Used-In | Group Number | Page No

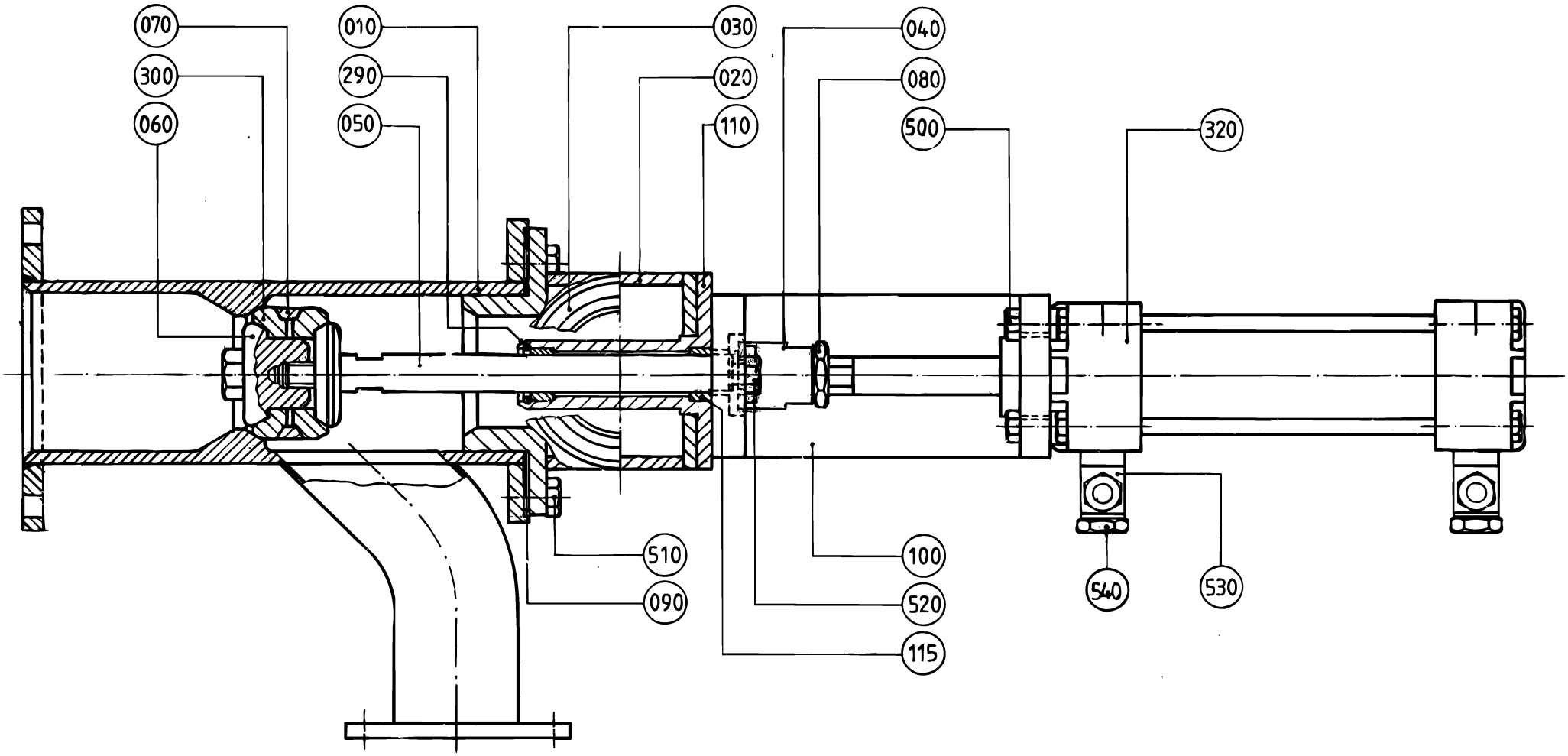

S - 271169-3
ECN 82225

ECM: 102467 - 20020207
Group number: 271169-0300
Assembly Drawing: 271169-3_1_AA

Issue: 20020822

Pos	Part No	SP	UN	Qty	Description	Page No
Common Parts						
010	490976-0000	B		1	VALVE HOUSING	
020	269401-0000	B		1	HOUSE	
030	90091-0182	-		1	GASKET 48X38X4,8 MM	
040	441871-0000	A		1	PENDULUM SUSPENSION	
050	266389-0000	A		1	PISTON ROD	
060	266390-0000	A		1	NUT	
070	266391-0000	A		1	RING	
080	441286-0000	B		1	NUT	
090	295160-0000	A		1	GASKET	
100	441843-0000	B		1	BRACKET	
110	532348-0000	A		1	SPINDLE GUIDE	
115	532349-0000	A		2	PLAIN BEARING	
290	90141-0022	A		1	SNAP RING B 16	
300	530588-0000	-		2	SEAL RING	
320	B90239-0779	A		1	CYLINDER	
	90239-0442	*C*		*1*	*SEAL KIT*	
500	312105-0331	-		4	SCREW M6S ISO 4017 M5X20 A480	
510	312105-0366	-		6	SCREW M6S M6X12 A280	
520	312105-0451	-		2	SCREW M6S ISO 4017 M8X20 A480	
530	342797-0121	A		2	CONN. BANJO, RINGPIECE 6-1/8	
540	342980-0303	-		2	BANJO-HOLLOW BOLT COUPL,EXT.THR.01-G1/8"	

Pos	Part No	SP	UN	Qty	Description	Page No

Machine Type | Group Description | Used-In | Group Number | Page No

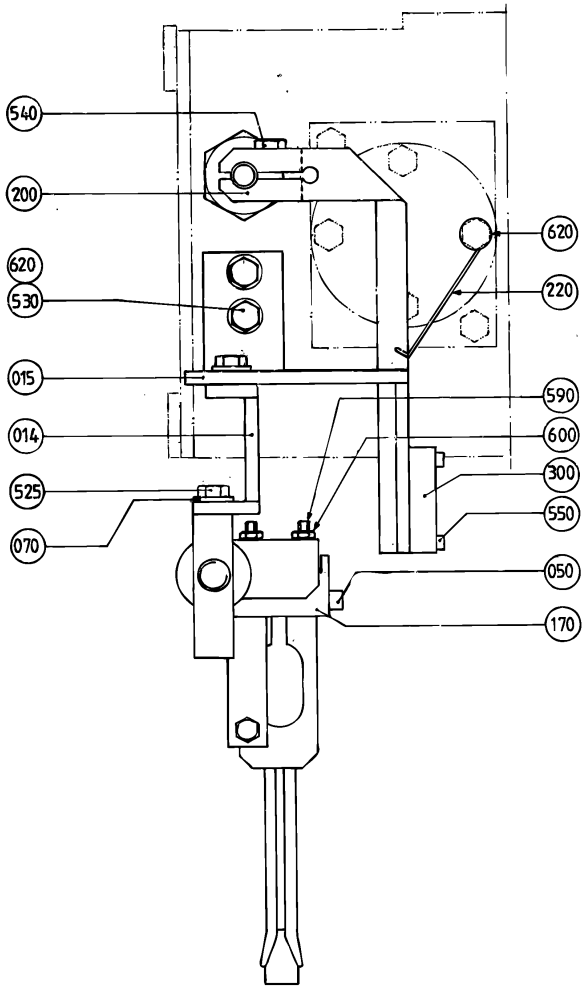
540
200
620
620
530
015
014
525
070
590
600
300
550
050
170

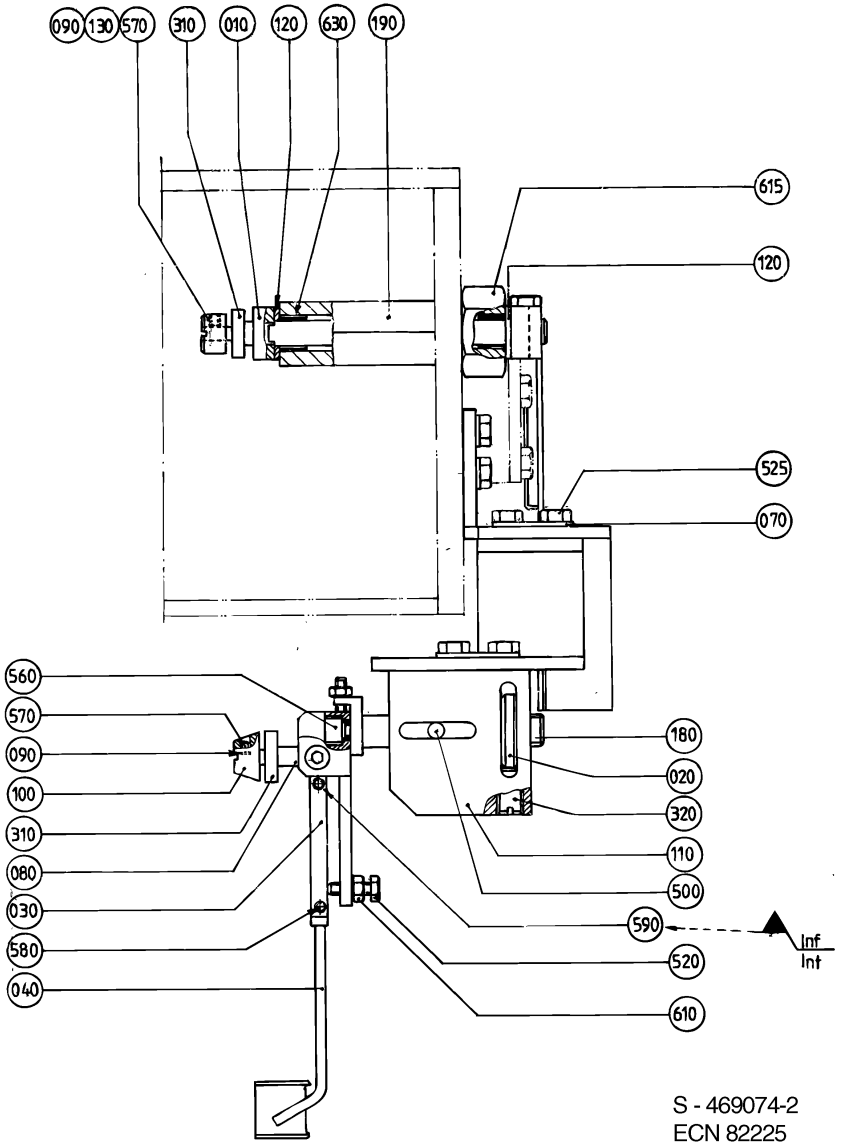
090
130
570
310
010
120
630
190
615
120
525
070
560
570
090
100
310
080
030
580
040
180
020
320
110
500
590
520
610
Inf
Int
S - 469074-2
ECN 82225

Pos	Part No	SP	UN	Qty	Description	Page No
Common Parts						
010	469979-0000	-		1	HOLDER	
014	491127-0000	-		1	BRACKET	
015	491578-0000	-		1	BRACKET	
020	23580-0000	-		1	SHIFTER HANDLE	
030	23582-0000	-		1	HOLDER	
040	23583-0000	A		1	GUIDE FINGER	
050	23584-0000	A		2	SCREW	
070	24354-0000	-		2	WASHER	
080	24355-0000	A		2	DOWEL	
090	24356-0000	A		5	PIECE	
100	111543-0000	A		2	GUIDE CONE	
110	245210-0000	-		1	BODY	
120	271211-0000	-		2	WASHER	
130	271654-0000	-		1	RETAINING RING	
170	272467-0000	-		1	BOW CLAMP	
180	456119-0000	-		1	SHAFT	
190	469981-0000	-		1	BRACKET	
200	456121-0000	-		1	ARM	
220	491149-0000	A		1	SPRING	
300	90044-0104	-		1	PROX.SWITCH IFM IN 3002	
310	90214-0138	-		3	BALL BEARING, 5X19X6 MM	
320	90287-0009	A		1	SPRINGLOADED SCREW M10X19	
500	311103-0350	-		1	PARALLELL PIN, CP, M6, 6X14 MM	
520	312105-0331	-		1	SCREW M6S ISO 4017 M5X20 A480	
525	312105-0366	-		4	SCREW M6S M6X12 A280	
530	312105-0368	-		2	SCREW M6S M6X16 A280	
540	312105-0370	-		1	SCREW M6S ISO 4017 M6X20 A480	
550	312115-0228	-		2	SCREW MC6S M3X16 A280	
560	312115-0366	-		1	SCREW MC6S M6X12 A280	
570	312318-0283	-		5	SCREW SOCK.SET CUP P MSK6SS M4X4 A4	
580	312318-0285	-		3	SCREW SOCK.SET CUP P MSK6SS M4X6 A4	
590	312318-0291	-		3	SCREW SOCK.SET CUP P MSK6SS M4X12 A4	
600	312605-0312	-		2	HEXAGON NUT, M6M M4 A280	
610	312605-0314	-		1	HEXAGON NUT, M6M M5 A280	
615	312605-0326	-		1	HEXAGON NUT, M6M M20 A280	
620	315105-0153	-		3	WASHER PLAIN, BRB, 6,4/12,H=1,5	
630	321127-0100	-		2	BEARING BUSHING WITHOUT FL, 10X13X10 MM	

Pos	Part No	SP	UN	Qty	Description	Page No

Machine Type | Group Description | Used-In | Group Number | Page No

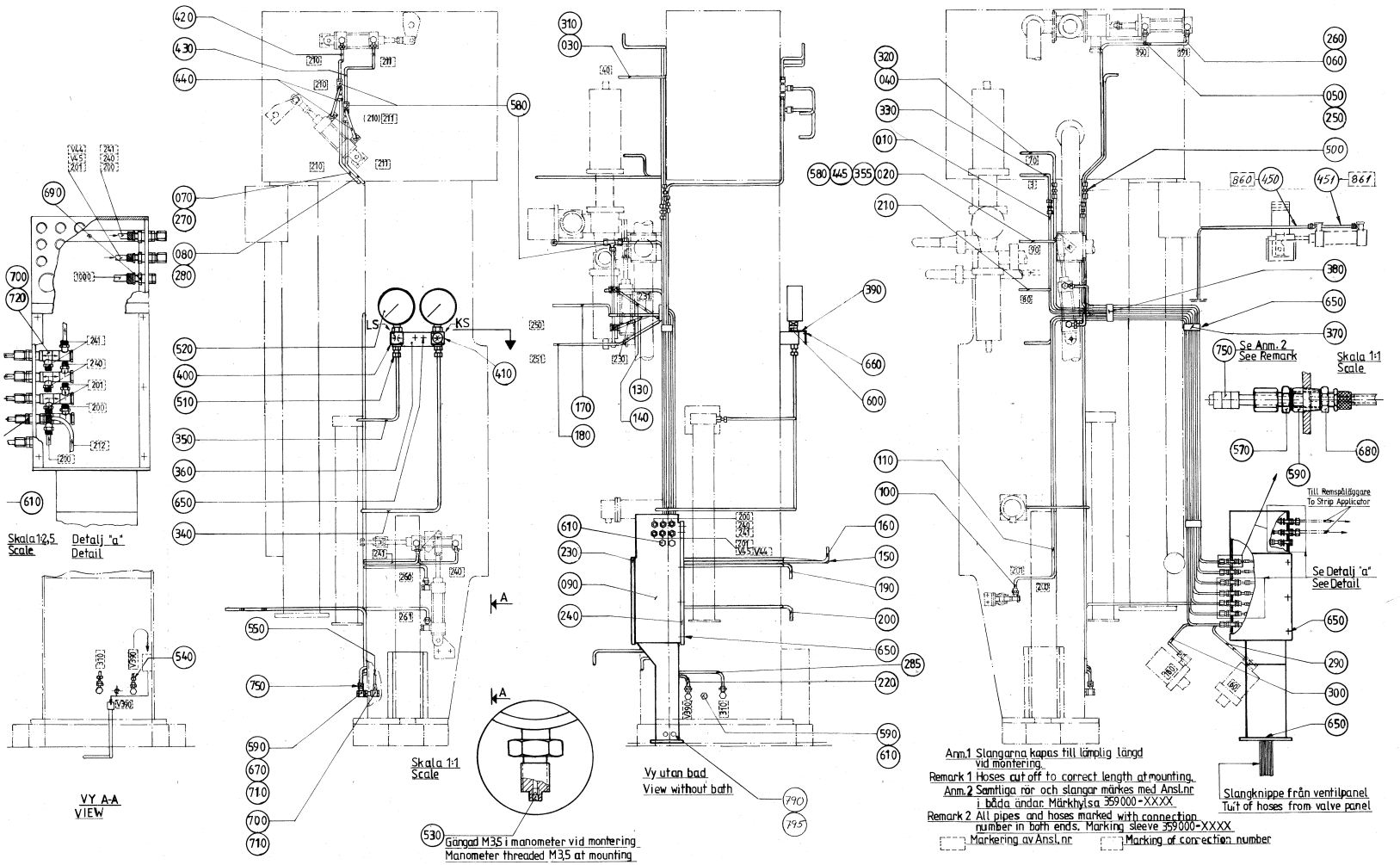
Skala 1:2,5
Scale
Detalj "a"
Detail
VY A-A
VIEW
Skala 1:1
Scale
LS
KS
Vy utan bad
View without bath
Gängad M3,5 i manometer vid montering
Manometer threaded M3,5 at mounting
Skala 1:1
Scale
Se Anm. 2
See Remark
Till Remsapläggare
To Strip Applicator
Se Detalj "a"
See Detail
Slangknippe från ventilpanel
Tuft of hoses from valve panel
Anm.1 Slangarna kapas till lämplig längd vid montering.
Remark 1 Hoses cut off to correct length at mounting.
Anm.2 Samtliga rör och slangar märkes med Ansl.nr i båda ändar. Märkhylsa 359000-XXXX
Remark 2 All pipes and hoses marked with connection number in both ends. Marking sleeve 359000-XXXX
Markering av Ansl.nr
Marking of connection number

ECM: 108450 - 20020506
Group number: 1529240-0100
Assembly Drawing: 1529240-1_1_AB

Issue: 20020822

Pos	Part No	SP	UN	Qty	Description	Page No
Common Parts						
010	295557-0000	-		1	PIPE	
020	751105-0000	-		1	PIPE 90	
030	295734-0000	-		1	PIPE	
040	295735-0000	-		1	PIPE	
050	295736-0000	-		1	PIPE	
060	295737-0000	-		1	PIPE	
070	295738-0000	-		1	PIPE	
080	295739-0000	-		1	PIPE	
090	1529248-0000	-		1	CONNECTION BOX	
100	491657-0000	-		1	PIPE 200	
110	491658-0000	-		1	PIPE 201	
130	491660-0000	-		1	PIPE 230	
140	491661-0000	-		1	PIPE 231	
150	491662-0000	-		1	PIPE 240	
160	491663-0000	-		1	PIPE 241	
170	491664-0000	-		1	PIPE 250	
180	491665-0000	-		1	PIPE 251	
190	491666-0000	-		1	PIPE 260	
200	491667-0000	-		1	PIPE 261	
210	295568-0000	-		1	PIPE	
220	295590-0000	-		1	PIPE	
230	B456411-0000	-		1	LID	
	90143-0008	-	*M*	*1*	*STRIP*	
240	B491423-0000	-		1	LID	
	90143-0008	-	*M*	*1*	*STRIP*	
250	491655-0000	-		1	PIPE 190	
260	491656-0000	-		1	PIPE 191	
270	491668-0000	-		1	PIPE 210	
280	491669-0000	-		1	PIPE 211	
285	751071-0000	-		1	PIPE	
290	295591-0000	-		1	PIPE	
300	295594-0000	-		1	PIPE	
310	295740-0000	-		1	PIPE	
320	1529272-0000	-		1	PIPE	
330	441441-0000	-		1	PIPE	
340	469497-0000	-		1	PIPE	
350	469498-0000	-		1	PIPE	
355	751106-0000	-		1	PIPE 90	
360	33577-0000	-		1	CANTILEVER	
370	295604-0000	-		3	CRAMP	
380	295605-0000	-		3	BRACKET	
390	464173-0000	-		2	LABEL HOLDER	
400	464174-0000	-		1	SIGN	
410	464175-0000	-		1	SIGN	
420	491670-0000	-		1	PIPE 210	
430	491671-0000	-		1	PIPE 211	
440	491672-0000	-		2	PIPE 210 (211)	
445	751107-0000	-		1	PIPE	
450	1529265-0000	-		1	PIPE	
451	1529271-0000	-		1	PIPE	
510	90030-0092	A		2	STRAIGHT CONN., 6-R1/4,EXT. TAPPERED	
520	90043-0034	A		2	PRESSURE GAUGE	
530	90043-0302	A		2	SCREW	
540	90166-0119	A	MM	2100	HOSE PUR 4/6 BLACK	
550	90166-0132	A	M	3	TUBE 6 MM PA,TRANSP.	
570	90224-0307	-		29	STRAIGHT FITTING, 6MM, 1/8",	
590	90330-0025	A		34	BUSHING, INT/EXT. THR. R1/4-RP1/8	
600	90330-0105	A		2	NUT, HEXAGON, R3/8	
610	90330-0066	-		4	PLUG, EXT. G-THREAD, G1/8	
650	312105-0366	-		27	SCREW M6S M6X12 A280	
660	312502-0120	-		4	DRIVE SCREW ROUND HEAD KDS 0X5	
670	342797-0121	-		2	CONN. BANJO, RINGPIECE 6-1/8	
680	342921-0113	-		26	STRAIGHT COUPLING,EXT.THREADED 6/4-G1/8"	
690	342921-0121	A		1	STRAIGHT COUPLING,EXT.THREADED 8/6-G1/8"	
700	342980-0113	-		10	BANJO-CONNECTION,RING 6/4-G1/8"	
710	342980-0303	-		3	BANJO-HOLLOW BOLT COUPL,EXT.THR.01-G1/8"	
720	342980-0313	-		4	BANJO-HOLLOW BOLT COUPL,EXT.THR.02-G1/8"	
750	359000-0404	-		12	MARKING COLLAR PA2/4 "4" YELLOW	
750	359000-0403	-		16	MARKING COLLAR PA2/4 "3" YELLOW	
750	359000-0402	-		44	MARKING COLLAR 2/4 "2" YELLOW	
750	359000-0401	-		55	MARKING COLLAR 2/4 "1" YELLOW	
750	359000-0400	-		57	MARKING CO2/4"0"	
750	359000-0405	-		4	MARKING CO2/4"5"	
750	359000-0771	-		4	MARKING CO2/4"V"	
750	359000-0409	-		14	MARKING COLLAR PA2/4 "9" YELLOW	
750	359000-0408	-		4	MARKING COLLAR PA2/4 "8" YELLOW	
750	359000-0407	-		4	MARKING COLLAR PA2/4 "7" YELLOW	
750	359000-0406	-		6	MARKING COLLAR PA2/4 "6" YELLOW	
790	352103-0101	-		2	CABLE GLAND, ST 9, PR15,2/PG9	
795	90099-0104	-		2	NUT, PR 15,2 (PG9)	

Machine Type | Group Description | Used-In | Group Number | Page No

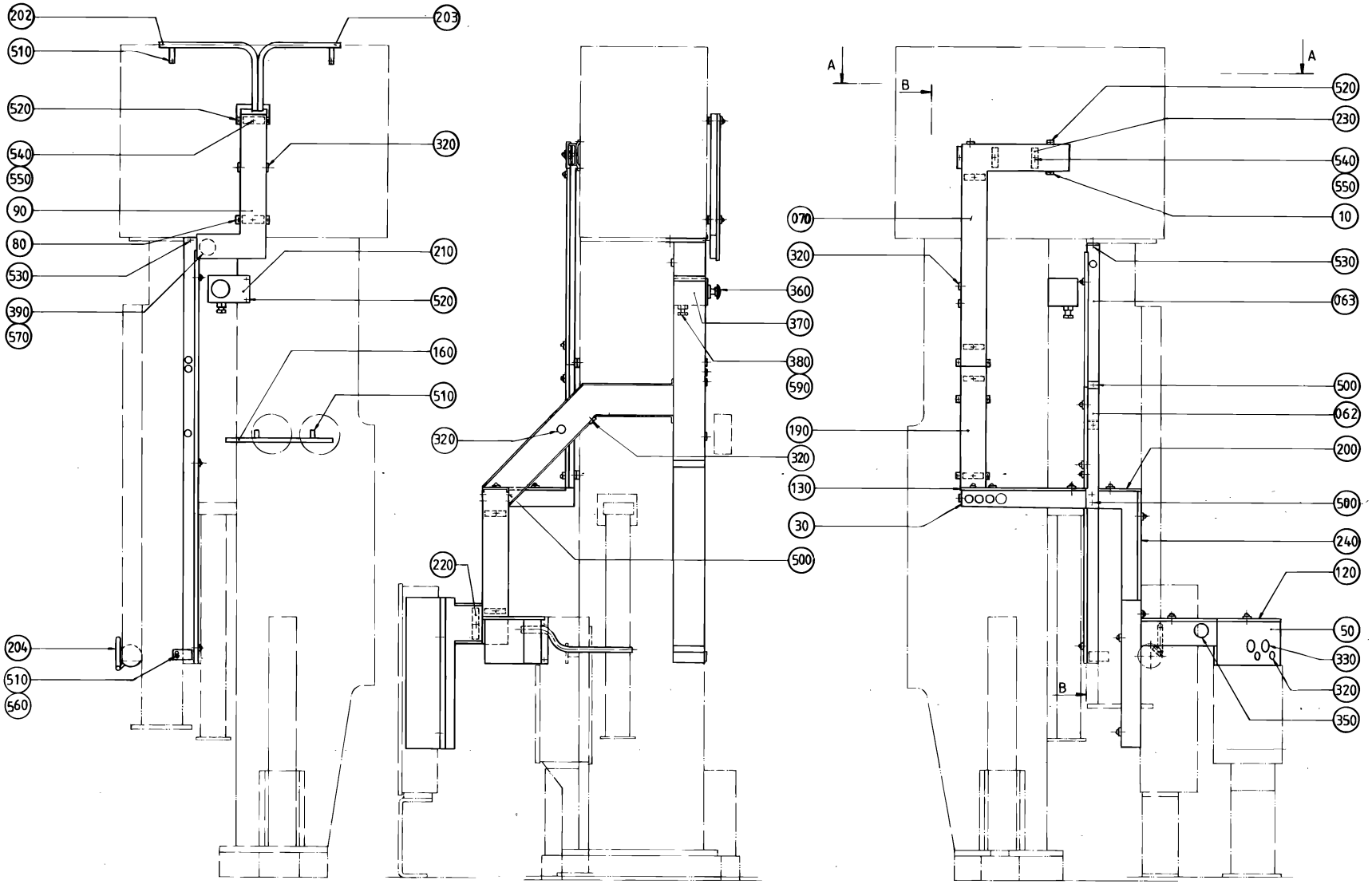

Vy utan bad
View without bath.

S - 1529237-1
ECN 82225

ECM: 107691 - 20020506
Group number: 1529237-0100
Assembly Drawing: 1529237-1_1_AA

Issue: 20020822

Pos	Part No	SP	UN	Qty	Description	Page No
Common Parts						
010	751076-0000	-		1	CABLE TRENCH	
030	751001-0000	-		1	CABLE TRENCH	
050	469346-0000	-		1	CABLE TRENCH	
060	469347-0000	-		1	LID	
062	491836-0000	-		1	CABLE TRENCH	
063	491837-0000	-		1	CABLE TRENCH	
070	751077-0000	-		1	LID	
080	295782-0000	-		1	CABLE TRENCH	
090	295783-0000	-		1	LID	
100	469348-0000	-		1	COVER	
110	469349-0000	-		1	CABLE TRENCH	
120	469350-0000	-		1	LID	
130	469351-0000	-		1	LID	
160	1529233-0000	-		1	CABLE CONDUIT	
180	469352-0000	-		1	LID	
190	469353-0000	-		1	LID	
200	2545666-0000	-		1	LID	
202	1529231-0000	-		1	CABLE CONDUIT	
203	1529232-0000	-		1	CABLE CONDUIT	
204	491838-0000	-		1	CABLE CONDUIT	
210	271508-0000	-		1	BRACKET	
220	272945-0000	-		7	LOCK	
230	295466-0000	-		15	LOCK	
240	295819-0003	-		1	LID	
250	B469355-0000	-		1	LID	
	90143-0054	-	*M*	*1*	*STRIP*	
300	90002-0009	-		2	BLANK-OFF PLUG, PR 18.6 SKINDICHT-BLK11	
310	90002-0013	-		2	BLANK-OFF PLUG, PR 15,2 SKINDICHT-BLK9	
320	90015-0020	-		21	LEAD-IN, TET5-7, E-1458016	
330	90015-0021	-		2	LEAD-IN, TET10-14, E-1458023	
340	90015-0023	-		1	LEAD-IN, TET7-10, E-1458019	
350	90015-0024	-		1	LEAD-IN, TET20-26, E-1458035	
360	90064-0124	-		1	SWITCH, EM. STOP, ZB2-BS844+ZB2-BZ1045	
370	90066-0021	-		1	PUSH BUTTON BOX XAP-M1501	
380	90089-0003	-		1	REDUCING SLEEVE, PR22,5/PR18,6	
390	90099-0011	-		1	NUT PR 37 BRASS	
500	312105-0362	-		6	SCREW M6S ISO 4017 M6X8 A480	
510	312105-0364	-		13	SCREW M6S ISO 4017 M6X10 A480	
520	312105-0366	-		25	SCREW M6S M6X12 A280	
530	312125-0323	-		2	SCREW PAN HEAD MCS M5X8 SS	
540	312605-0316	-		23	HEXAGON NUT, M6M M6 A280	
550	312705-0316	-		25	NUT HEX. DOMED CAP MHM-6 M6 A280	
560	315105-0153	-		10	WASHER PLAIN, BRB, 6,4/12,H=1,5	
565	352100-0112	-		1	CABLE GLANR.22,5-15	
570	352101-0107	-		1	LEAD-IN, PR37/PG29, E-1457537	
580	352103-0101	-		8	CABLE GLAND, ST 9, PR15,2/PG9	
590	352103-0106	-		3	CABLE GLAND, ST 11, PR18,6/PG11	
600	352103-0111	-		2	CABLE GLAND, ST 16, PR22,5/PG16	
610	352103-0116	-		1	CABLE GLAND, ST 21, PR28,3/PG21	
620	352103-0121	-		1	CABLE GLAND, ST 29, PR37,0/PG29	

Machine Type | Group Description | Used-In | Group Number | Page No

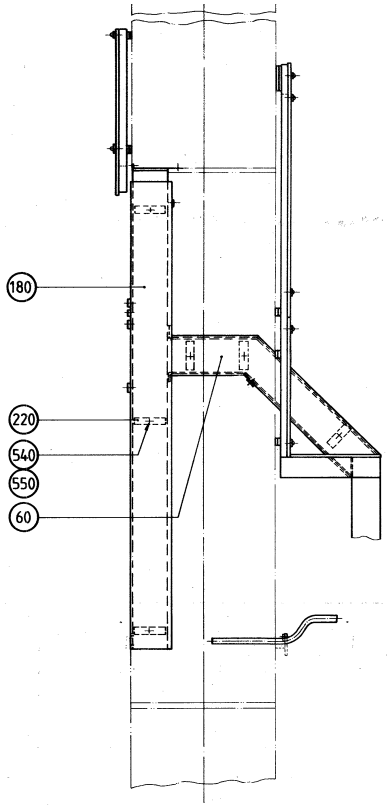

B-B

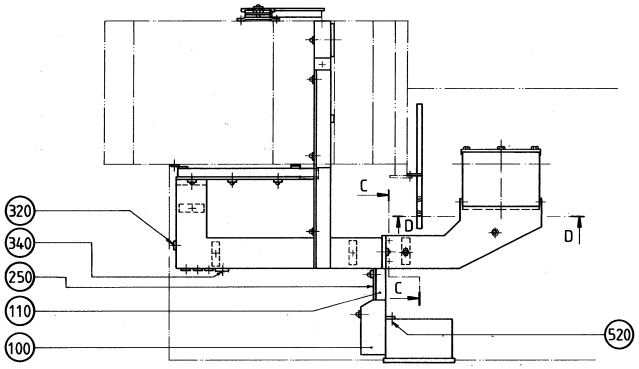

A-A

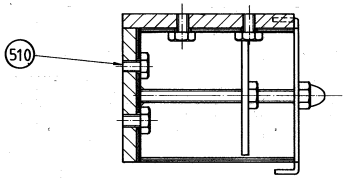

C-C
Scale 1:1

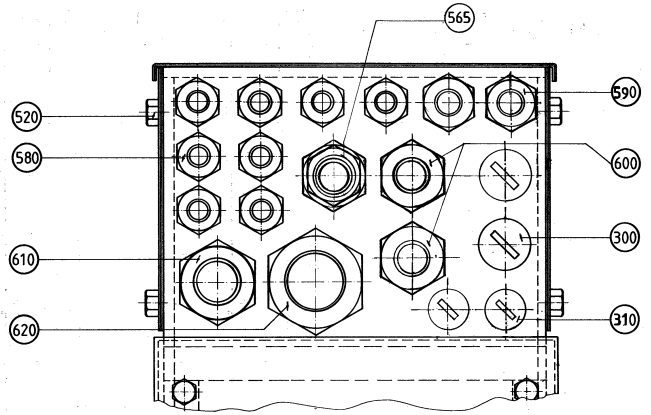

D-D
Scale 1:1

ECM: 107691 - 20020506
Group number: 1529237-0100
Assembly Drawing: 1529237-2_1_AA

Issue: 20020822

Pos	Part No	SP	UN	Qty	Description	Page No
Common Parts						
010	751076-0000	-		1	CABLE TRENCH	
030	751001-0000	-		1	CABLE TRENCH	
050	469346-0000	-		1	CABLE TRENCH	
060	469347-0000	-		1	LID	
062	491836-0000	-		1	CABLE TRENCH	
063	491837-0000	-		1	CABLE TRENCH	
070	751077-0000	-		1	LID	
080	295782-0000	-		1	CABLE TRENCH	
090	295783-0000	-		1	LID	
100	469348-0000	-		1	COVER	
110	469349-0000	-		1	CABLE TRENCH	
120	469350-0000	-		1	LID	
130	469351-0000	-		1	LID	
160	1529233-0000	-		1	CABLE CONDUIT	
180	469352-0000	-		1	LID	
190	469353-0000	-		1	LID	
200	2545666-0000	-		1	LID	
202	1529231-0000	-		1	CABLE CONDUIT	
203	1529232-0000	-		1	CABLE CONDUIT	
204	491838-0000	-		1	CABLE CONDUIT	
210	271508-0000	-		1	BRACKET	
220	272945-0000	-		7	LOCK	
230	295466-0000	-		15	LOCK	
240	295819-0003	-		1	LID	
250	B469355-0000	-		1	LID	
	90143-0054	-	*M*	*1*	*STRIP*	
300	90002-0009	-		2	BLANK-OFF PLUG, PR 18.6 SKINDICHT-BLK11	
310	90002-0013	-		2	BLANK-OFF PLUG, PR 15,2 SKINDICHT-BLK9	
320	90015-0020	-		21	LEAD-IN, TET5-7, E-1458016	
330	90015-0021	-		2	LEAD-IN, TET10-14, E-1458023	
340	90015-0023	-		1	LEAD-IN, TET7-10, E-1458019	
350	90015-0024	-		1	LEAD-IN, TET20-26, E-1458035	
360	90064-0124	-		1	SWITCH, EM. STOP, ZB2-BS844+ZB2-BZ1045	
370	90066-0021	-		1	PUSH BUTTON BOX XAP-M1501	
380	90089-0003	-		1	REDUCING SLEEVE, PR22,5/PR18,6	
390	90099-0011	-		1	NUT PR 37 BRASS	
500	312105-0362	-		6	SCREW M6S ISO 4017 M6X8 A480	
510	312105-0364	-		13	SCREW M6S ISO 4017 M6X10 A480	
520	312105-0366	-		25	SCREW M6S M6X12 A280	
530	312125-0323	-		2	SCREW PAN HEAD MCS M5X8 SS	
540	312605-0316	-		23	HEXAGON NUT, M6M M6 A280	
550	312705-0316	-		25	NUT HEX. DOMED CAP MHM-6 M6 A280	
560	315105-0153	-		10	WASHER PLAIN, BRB, 6,4/12,H=1,5	
565	352100-0112	-		1	CABLE GLANR.22,5-15	
570	352101-0107	-		1	LEAD-IN, PR37/PG29, E-1457537	
580	352103-0101	-		8	CABLE GLAND, ST 9, PR15,2/PG9	
590	352103-0106	-		3	CABLE GLAND, ST 11, PR18,6/PG11	
600	352103-0111	-		2	CABLE GLAND, ST 16, PR22,5/PG16	
610	352103-0116	-		1	CABLE GLAND, ST 21, PR28,3/PG21	
620	352103-0121	-		1	CABLE GLAND, ST 29, PR37,0/PG29	

Machine Type | Group Description | Used-In | Group Number | Page No

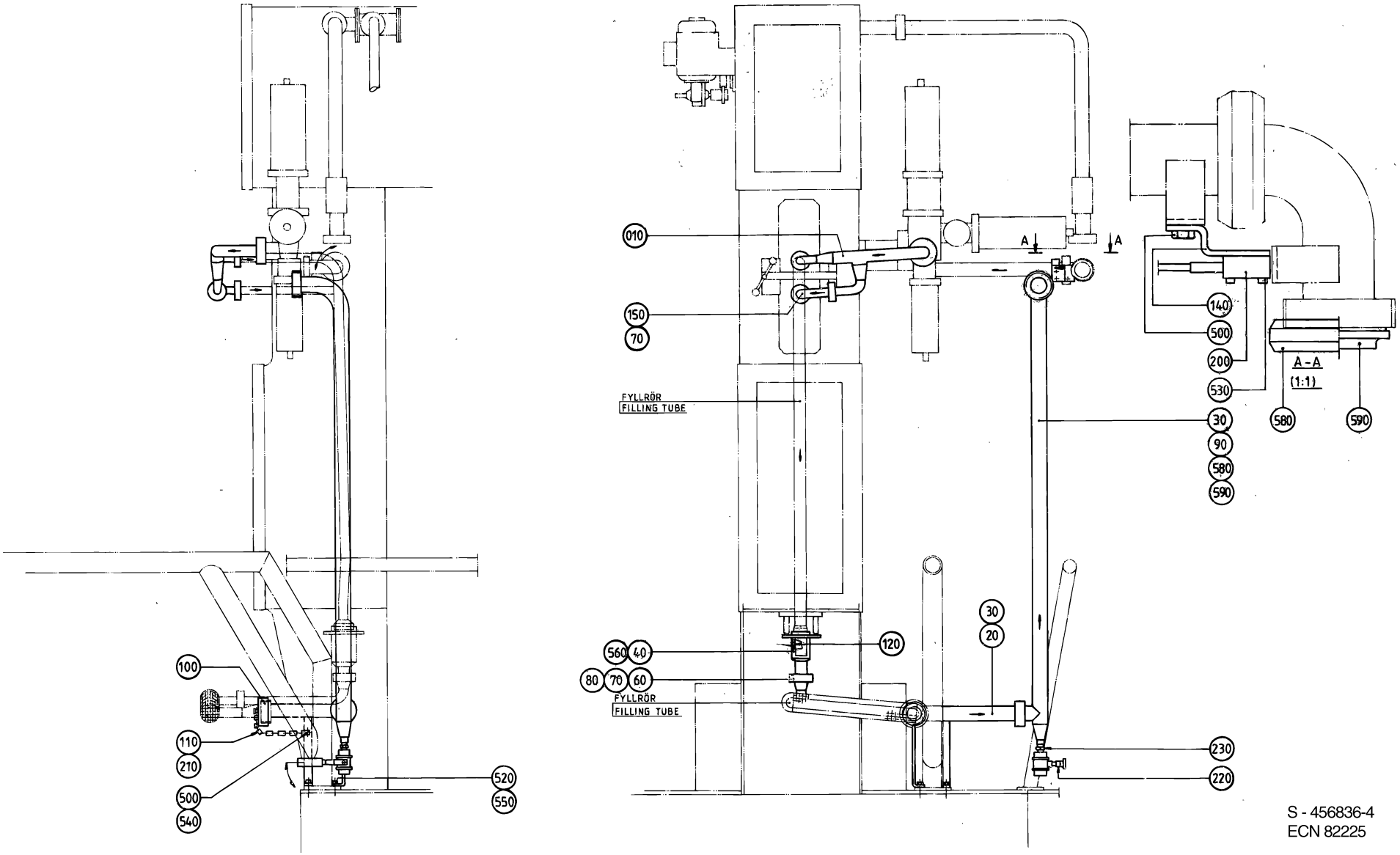

S - 456836-4
ECN 82225

Pos	Part No	SP	UN	Qty	Description	Page No
0200S						
040	490896-0000	-		1	CONTAINER	
120	295300-0000	-		1	FORCE SPRING	
560	315204-0224	A		1	O-RING 42,2X3 MM	
0200B OR 0250B						
040	469987-0000	-		1	CONTAINER	
120	295301-0000	-		1	FLUSH PIPE	
560	315204-0303	A		1	O-RING 59,5X3 MM	
Common Parts						
010	751121-0000	-		1	CLEANING PIPE	
020	456858-0000	-		1	PIPE	
030	456859-0002	-		1	PIPE	
060	564543-0000	-		1	CLEANING PIPE	
070	12242-0001	A		2	GASKET 32X25X5,5	
080	12242-0002	A		1	GASKET 40X32X5,5	
090	12242-0003	A		4	GASKET 48X38X5,5	
100	209181-0000	-		1	LID	
110	209183-0000	-		1	RING	
140	456857-0000	-		1	BRACKET	
150	456902-0000	-		1	PIPE	
200	90044-0104	-		1	PROX.SWITCH IFM IN 3002	
210	90155-0008	-	MM	200	HANGER CHAIN, 18	
220	90187-0051	-		1	BALL VALVE G3/8 PTFE	
230	90330-0028	-		1	NIPPLES, EXT. THREAD. R-207R3/8	
500	312105-0364	-		3	SCREW M6S ISO 4017 M6X10 A480	
520	312105-0455	-		2	SCREW M6S ISO 4017 M8X30 A480	
530	312125-0228	-		2	SCREW PAN HEAD MCS M3X16 A480	
540	315105-0153	-		1	WASHER PLAIN, BRB, 6,4/12,H=1,5	
550	315105-0165	-		2	WASHER PLAIN, BRB, 8,4/16,H=1,5	
580	342803-0103	-		2	UNION NUT, RD 60-6 (SMS 38)	
590	342812-0103	-		2	FERRULE, SMS 1145, 2333, NO. 190706	

Pos	Part No	SP	UN	Qty	Description	Page No

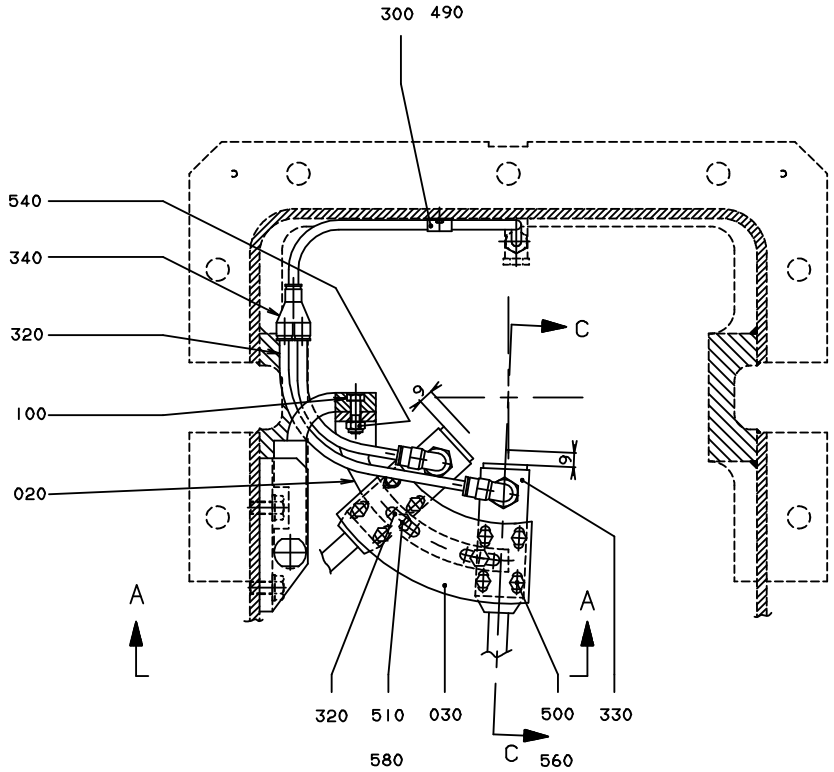

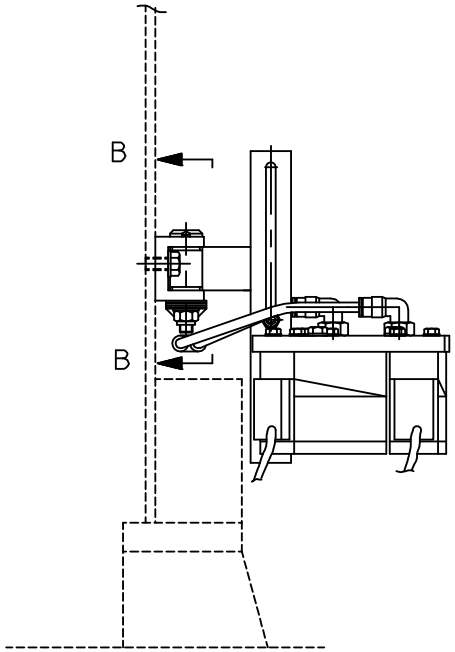

VY/VIEW A-A

SNITT C-C SE BLAD 3
SECTION C-C LOOK SHEET 3

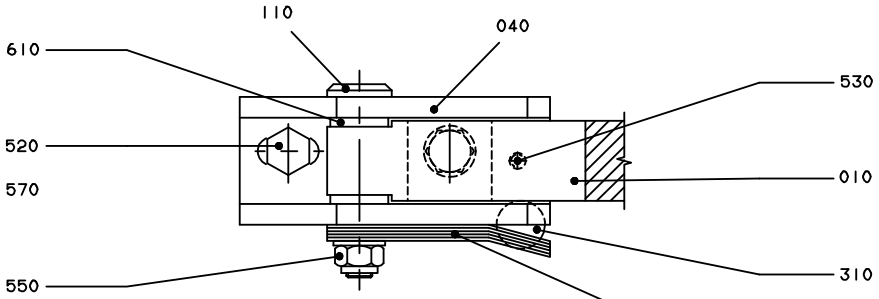

SNITT/SECTION B-B
SKALA/SCALE 1:1

ECM: 102429 - 20020207
Group number: 1529267-0100
Assembly Drawing: 1529267-1_1_AA

Issue: 20020822

Pos	Part No	SP	UN	Qty	Description	Page No
0200B OR 0250B						
020	490874-0000	-		1	CANTILEVER	
030	490875-0000	-		1	FASTENING PLATE	
0200S						
020	491542-0000	-		1	CANTILEVER	
030	491880-0000	-		1	FASTENING PLATE	
Common Parts						
010	490873-0000	-		1	HOLDER	
040	490876-0000	-		1	BRACKET	
100	312105-0370	-		2	SCREW M6S ISO 4017 M6X20 A480	
110	457367-0000	-		1	SHAFT	
120	457368-0000	-		5	SPRING	
150	536374-0000	-		2	WASHER	
300	90074-0001	-		1	CABLE CLIPS, D=10 MM	
310	90090-0016	-		1	BALL, D=15 MM	
320	90166-0124	-	MM	750	TUBE 6 MM PA,TRANSP.	
330	B90458-0601	-		2	PHOTOCELL, SICK PHOTOCELL 1	
	342732-0102	-		*1*	*ELBOW PIPE JOINT, EXT.THREAD, D=6MM-G1/8*	
340	90055-0100	-		1	Y-CONNECTION, 6-6	
490	312105-0287	-		1	SCREW M6S ISO 4017 M4X8 A480	
500	312105-0329	-		10	SCREW M6S ISO 4017 M5X16 A480	
510	312105-0366	-		2	SCREW M6S M6X12 A280	
520	312105-0449	-		2	SCREW M6S ISO 4017 M8X16 A480	
530	312318-0323	-		1	SCREW SOCK.SET CUP P MSK6SS M5X8 A4	
540	312812-0316	-		2	HEXAGON NUT, NY-LOCK M6 A480	
550	312812-0318	-		1	HEXAGON NUT, NY-LOCK M8 A480	
560	315105-0146	-		8	WASHER PLAIN, BRB, 5,3/10,H=1	
570	315115-0165	-		2	WASHER PLAIN, TBRB 8,4/16 H=3	
580	315115-0153	-		2	WASHER PLAIN, TBRB 6,4/12 H=3	
610	321101-0143	-		2	FLANGE BUS 8F7X8	

Pos	Part No	SP	UN	Qty	Description	Page No

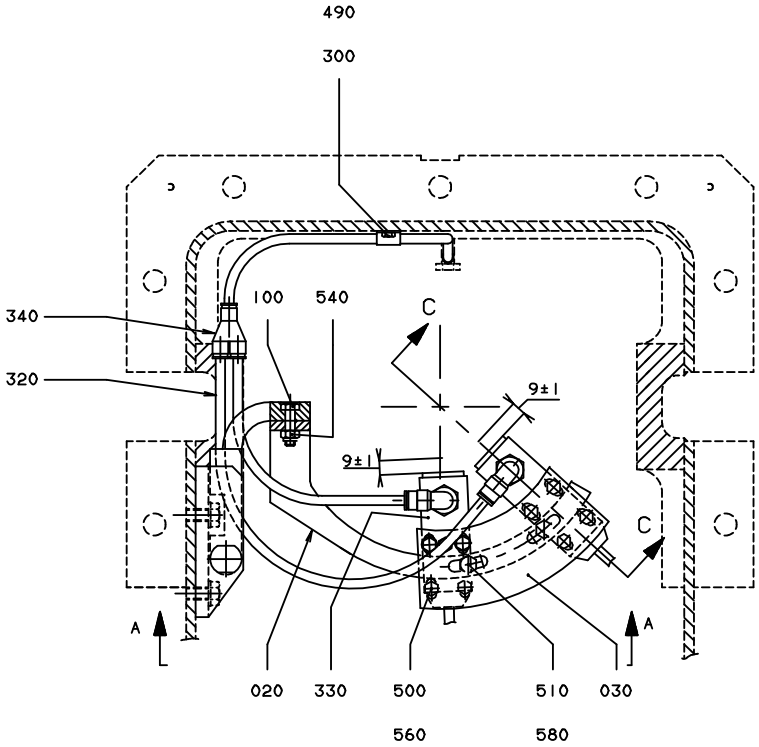

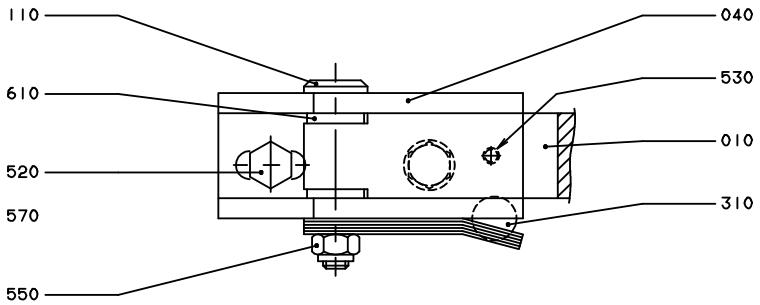

B-B
SKALA/SCALE 1:1

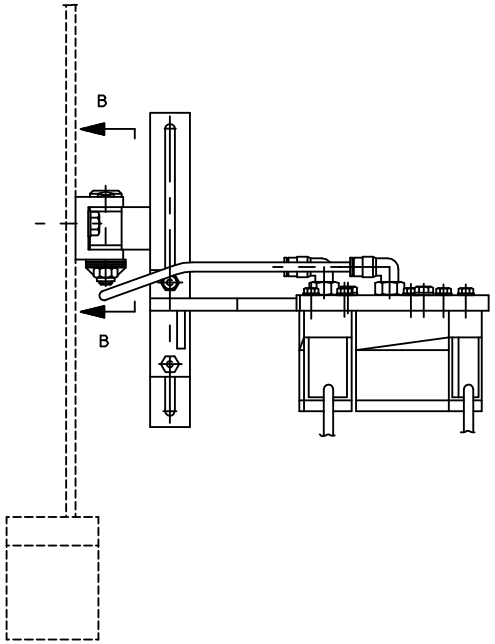

VY/VIEW A-A

SNITT C-C SE BLAD 3
SECTION C-C LOOK SHEET 3

Pos	Part No	SP	UN	Qty	Description	Page No
0200B OR 0250B						
020	490874-0000	-		1	CANTILEVER	
030	490875-0000	-		1	FASTENING PLATE	
0200S						
020	491542-0000	-		1	CANTILEVER	
030	491880-0000	-		1	FASTENING PLATE	
Common Parts						
010	490873-0000	-		1	HOLDER	
040	490876-0000	-		1	BRACKET	
100	312105-0370	-		2	SCREW M6S ISO 4017 M6X20 A480	
110	457367-0000	-		1	SHAFT	
120	457368-0000	-		5	SPRING	
150	536374-0000	-		2	WASHER	
300	90074-0001	-		1	CABLE CLIPS, D=10 MM	
310	90090-0016	-		1	BALL, D=15 MM	
320	90166-0124	-	MM	750	TUBE 6 MM PA,TRANSP.	
330	B90458-0601	-		2	PHOTOCELL, SICK PHOTOCELL 1	
	342732-0102	-		*1*	*ELBOW PIPE JOINT, EXT.THREAD, D=6MM-G1/8*	
340	90055-0100	-		1	Y-CONNECTION, 6-6	
490	312105-0287	-		1	SCREW M6S ISO 4017 M4X8 A480	
500	312105-0329	-		10	SCREW M6S ISO 4017 M5X16 A480	
510	312105-0366	-		2	SCREW M6S M6X12 A280	
520	312105-0449	-		2	SCREW M6S ISO 4017 M8X16 A480	
530	312318-0323	-		1	SCREW SOCK.SET CUP P MSK6SS M5X8 A4	
540	312812-0316	-		2	HEXAGON NUT, NY-LOCK M6 A480	
550	312812-0318	-		1	HEXAGON NUT, NY-LOCK M8 A480	
560	315105-0146	-		8	WASHER PLAIN, BRB, 5,3/10,H=1	
570	315115-0165	-		2	WASHER PLAIN, TBRB 8,4/16 H=3	
580	315115-0153	-		2	WASHER PLAIN, TBRB 6,4/12 H=3	
610	321101-0143	-		2	FLANGE BUS 8F7X8	

Pos	Part No	SP	UN	Qty	Description	Page No

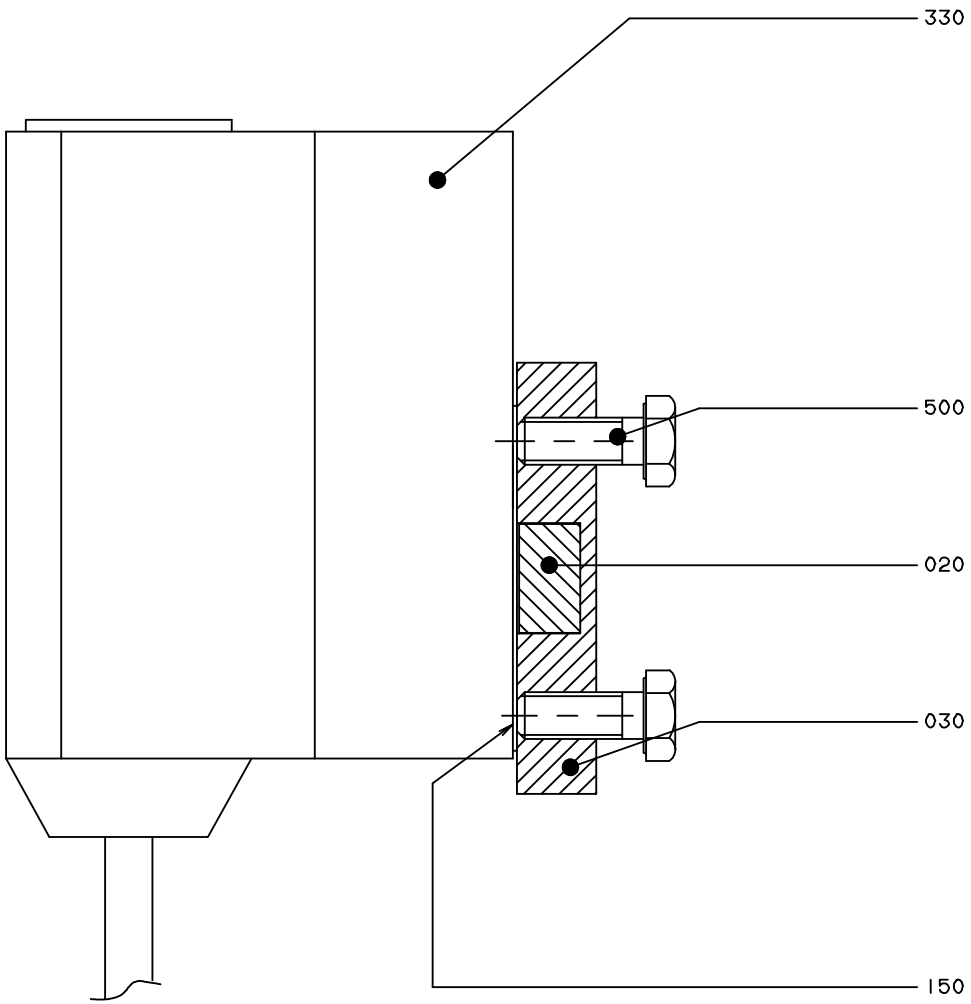

SNITT/SECTION C-C

ECM: 102429 - 20020207
Group number: 1529267-0100
Assembly Drawing: 1529267-3_1_AA

Issue: 20020822

Pos	Part No	SP	UN	Qty	Description	Page No
0200B OR 0250B						
020	490874-0000	-		1	CANTILEVER	
030	490875-0000	-		1	FASTENING PLATE	
0200S						
020	491542-0000	-		1	CANTILEVER	
030	491880-0000	-		1	FASTENING PLATE	
Common Parts						
010	490873-0000	-		1	HOLDER	
040	490876-0000	-		1	BRACKET	
100	312105-0370	-		2	SCREW M6S ISO 4017 M6X20 A480	
110	457367-0000	-		1	SHAFT	
120	457368-0000	-		5	SPRING	
150	536374-0000	-		2	WASHER	
300	90074-0001	-		1	CABLE CLIPS, D=10 MM	
310	90090-0016	-		1	BALL, D=15 MM	
320	90166-0124	-	MM	750	TUBE 6 MM PA,TRANSP.	
330	B90458-0601	-		2	PHOTOCELL, SICK PHOTOCELL 1	
	342732-0102	-		*1*	*ELBOW PIPE JOINT, EXT.THREAD, D=6MM-G1/8*	
340	90055-0100	-		1	Y-CONNECTION, 6-6	
490	312105-0287	-		1	SCREW M6S ISO 4017 M4X8 A480	
500	312105-0329	-		10	SCREW M6S ISO 4017 M5X16 A480	
510	312105-0366	-		2	SCREW M6S M6X12 A280	
520	312105-0449	-		2	SCREW M6S ISO 4017 M8X16 A480	
530	312318-0323	-		1	SCREW SOCK.SET CUP P MSK6SS M5X8 A4	
540	312812-0316	-		2	HEXAGON NUT, NY-LOCK M6 A480	
550	312812-0318	-		1	HEXAGON NUT, NY-LOCK M8 A480	
560	315105-0146	-		8	WASHER PLAIN, BRB, 5,3/10,H=1	
570	315115-0165	-		2	WASHER PLAIN, TBRB 8,4/16 H=3	
580	315115-0153	-		2	WASHER PLAIN, TBRB 6,4/12 H=3	
610	321101-0143	-		2	FLANGE BUS 8F7X8	

Pos	Part No	SP	UN	Qty	Description	Page No

Machine Type | Group Description | Used-In | Group Number | Page No

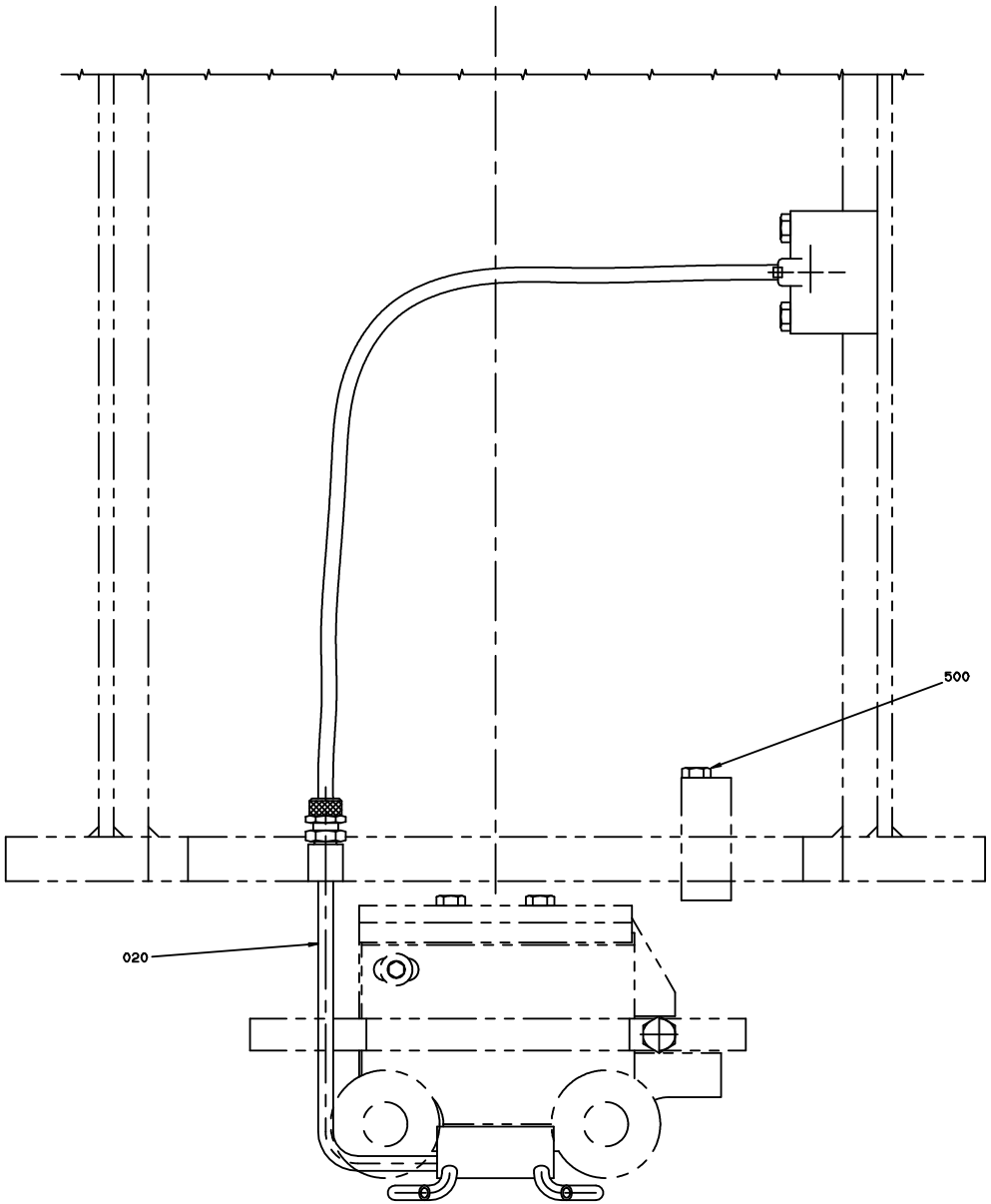
500
020

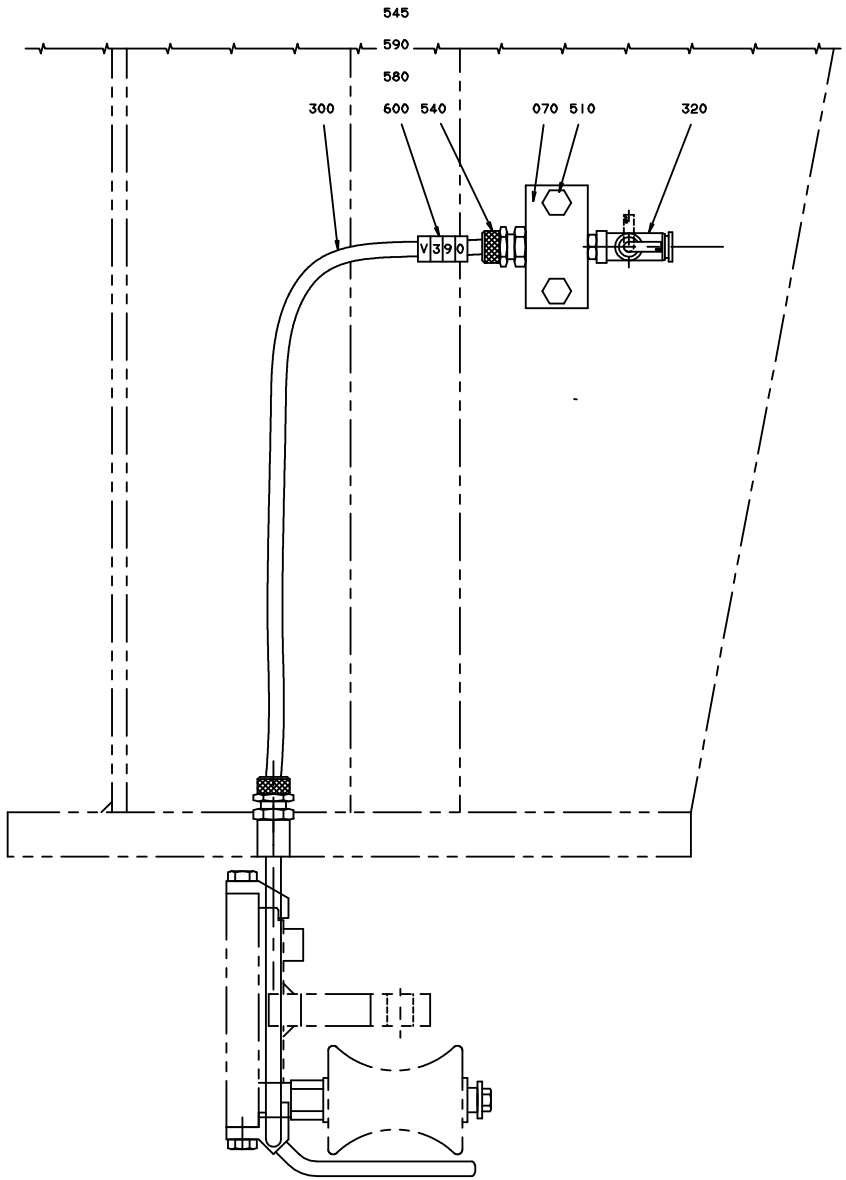
545
590
580
300
600
540
070
510
320
V390

Pos	Part No	SP	UN	Qty	Description	Page No
Common Parts						
020	571103-0000	-		1	NOZZLE	
070	271509-0000	-		1	JUNCTION BLOCK	
300	90166-0119	-	MM	500	HOSE PUR 4/6 BLACK	
320	90187-0191	-		1	BALL VALVE R1/8, 6 MM	
500	312105-0366	-		1	SCREW M6S M6X12 A280	
510	312105-0378	-		2	SCREW M6S ISO 4014 M6X40 A480	
540	342921-0113	-		2	STRAIGHT COUPLING,EXT.THREADED 6/4-G1/8"	
545	359000-0400	-		1	MARKING CO2/4"0"	
580	359000-0403	-		1	MARKING COLLAR PA2/4 "3" YELLOW	
590	359000-0409	-		1	MARKING COLLAR PA2/4 "9" YELLOW	
600	359000-0771	-		1	MARKING CO2/4"V"	

Pos	Part No	SP	UN	Qty	Description	Page No

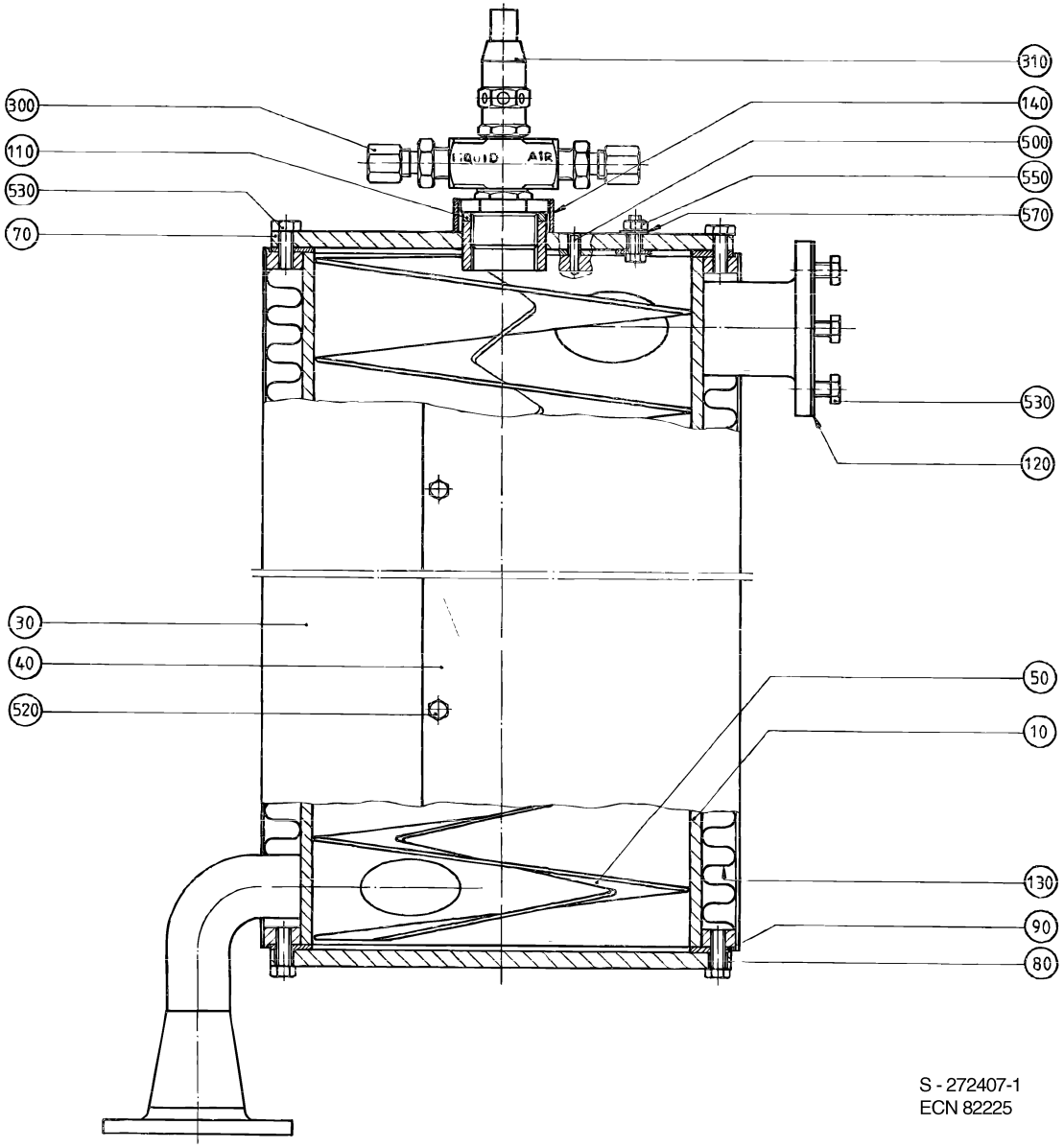
310
300
140
110
500
530
550
570
70
530
120
30
40
50
520
10
130
90
80
LIQUID
AIR
S - 272407-1
ECN 82225

ECM: 102451 - 20020207
Group number: 272407-0200
Assembly Drawing: 272407-1_1_AA

Issue: 20020822

Pos	Part No	SP	UN	Qty	Description	Page No
Common Parts						
010	272274-0000	B		1	CONTAINER	
030	272319-0000	-		1	DISCHARGE TRAY	
040	272320-0000	-		1	DISCHARGE TRAY	
050	272325-0000	B		1	SPIRAL	
070	272275-0000	B		1	LID	
080	272276-0000	B		1	BOTTOM	
090	272277-0000	A		2	GASKET	
110	12242-0001	A		1	GASKET 32X25X5,5	
120	531742-0000	A		1	GASKET	
130	441501-0000	A		1	INSULATION	
140	295993-0000	B		1	GASKET HOLDER	
300	90030-0062	A		2	CONN. STR. GE 6-1/4-18 NPTF	
310	B90424-0017	A		1	SPRAY NOZZLE	
	90424-0304	*C*		*1*	*GASKET*	
	90424-0303	*C*		*1*	*GASKET*	
	90424-0302	*C*		*1*	*GASKET*	
	90424-0301	*C*		*1*	*SLEEVE*	
500	311103-0236	-		1	PARALLELL PIN, M6, 3X16 MM	
520	312105-0325	-		14	SCREW M6S ISO 4017 M5X10 A480	
530	312105-0368	-		30	SCREW M6S M6X16 A280	
550	312605-0314	-		1	HEXAGON NUT, M6M M5 A280	
570	315105-0146	-		1	WASHER PLAIN, BRB, 5,3/10,H=1	

Pos	Part No	SP	UN	Qty	Description	Page No

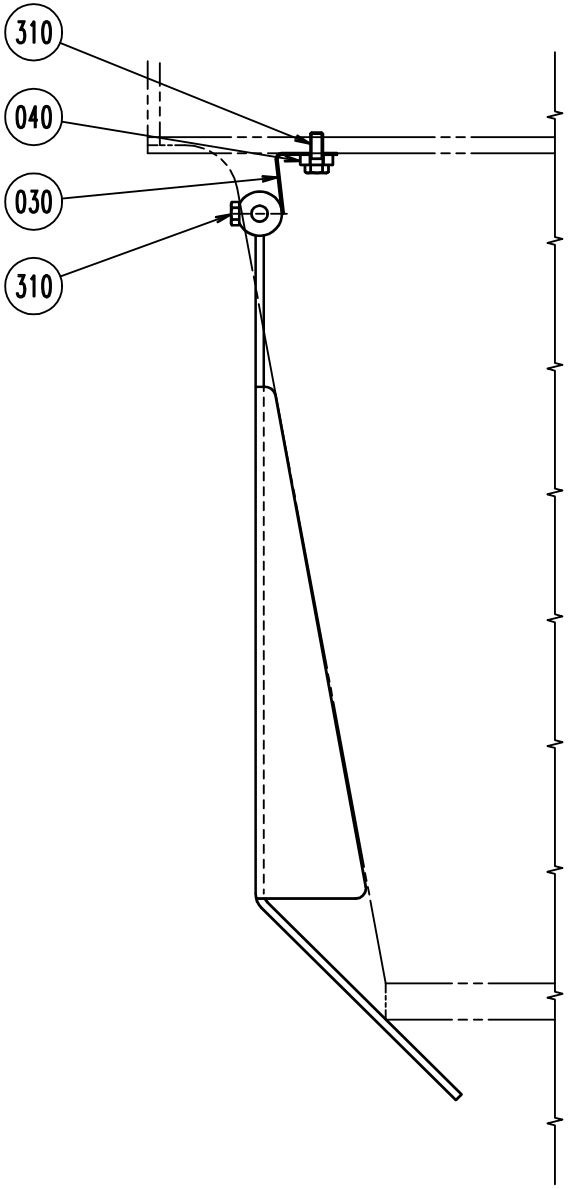
310
040
030
310

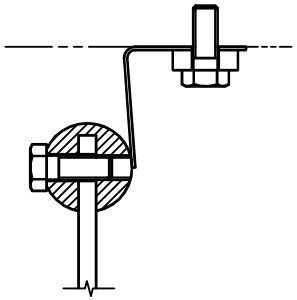
A-A
(1:1)

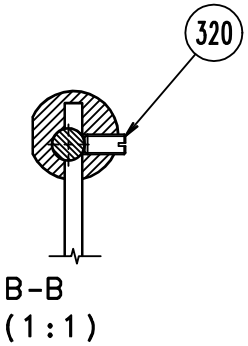
320
B-B
(1:1)

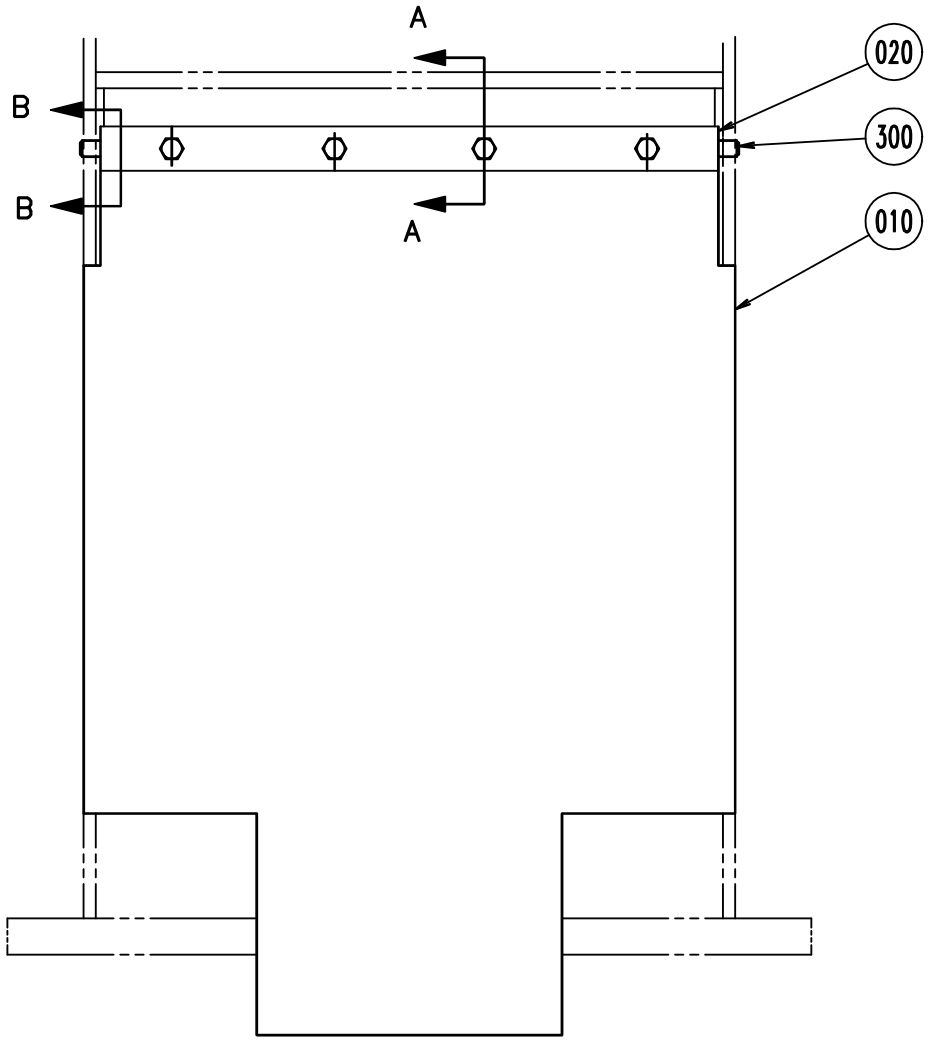
A
B
B
A
020
300
010

ECM: 102428 - 20020207
Group number: 751702-0100
Assembly Drawing: 751702-1_1_AA

Issue: 20020822

Pos	Part No	SP	UN	Qty	Description	Page No
Common Parts						
010	751674-0000	B		1	HATCH	
020	456809-0000	-		1	SHAFT	
030	469922-0000	-		1	SPRING	
040	469927-0000	-		1	RIM	
300	311103-0405	-		2	PARALLELL PIN, M6, 8X30 MM	
310	312105-0368	-		7	SCREW M6S M6X16 A280	
320	312318-0323	-		2	SCREW SOCK.SET CUP P MSK6SS M5X8 A4	

Pos	Part No	SP	UN	Qty	Description	Page No

Tetra Pak

SPC
Spare Parts Catalogue

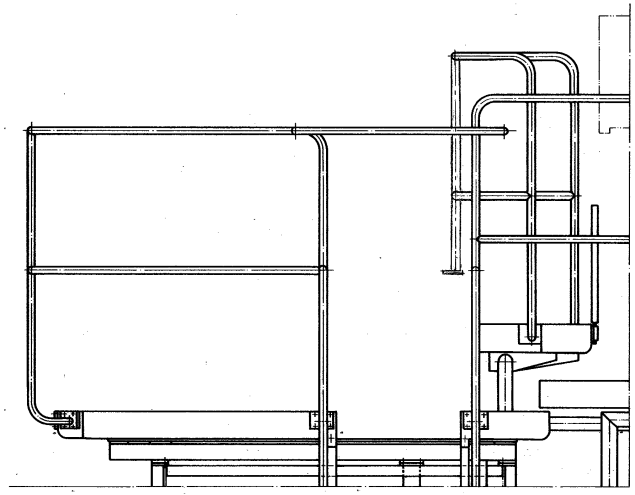

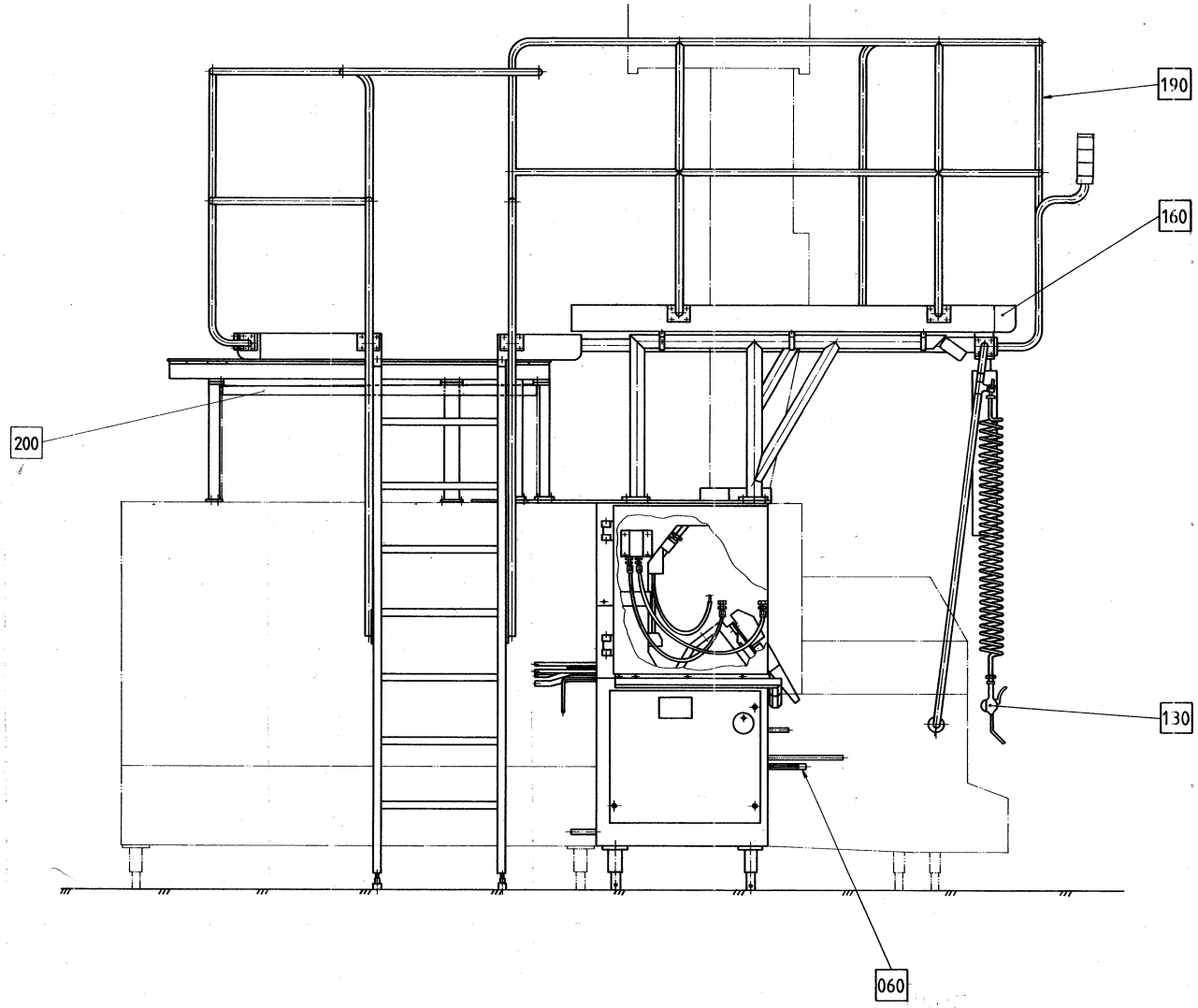
190
160
200
130
060

Pos	Part No	SP	UN	Qty	Description	Page No
TBA,SOURCE,TBA/9-100V OR TBA,SOURCE,TBA/9-110V OR TBA,SOURCE,TBA/9-120V						
010	A1529128-0100	-		1	MACHINE BODY TBA/9R	**243**
040	A456180-0100	-		1	DROP CHUTE	**247, 249, 251**
060	A271562-0600	-		1	PIPE WORK MACHINE BODY	**253, 255, 257, 259**
190	A1529127-0100	-		1	RAILING TBA/9R	**267, 269**
210	A469762-0100	-		1	LADDER	**275**
TWA,SOURCE,TBA/9-100V OR TWA,SOURCE,TBA/9-110V OR TWA,SOURCE,TBA/9-120V						
010	A1529438-0100	-		1	MACHINE BODY	**277**
060	A1529355-0100	-		1	PIPE WORK	**279, 281, 283, 285**
190	A1529421-0100	-		1	RAILING	**291, 293**
210	A469762-0100	-		1	LADDER	**275**
Common Parts						
	A1529162-0100	-		1	MODIFIED ARTICLES:	
050	A1529188-0100	-		2	TRANSMISSION TBA/9R	**297**
090	A1529132-0100	-		1	DOOR TBA/9R	**299**
100	A1529133-0100	-		1	DOOR TBA/9R	**301**
110	A256665-0200	-		1	HATCH	**303**
120	A1296815-0100	-		1	HATCH	**305**
130	A271414-0200	-		1	AIR JET GUN	**307**
160	A1529126-0100	-		1	PLATFORM TBA/9R	**309, 311**

Pos	Part No	SP	UN	Qty	Description	Page No

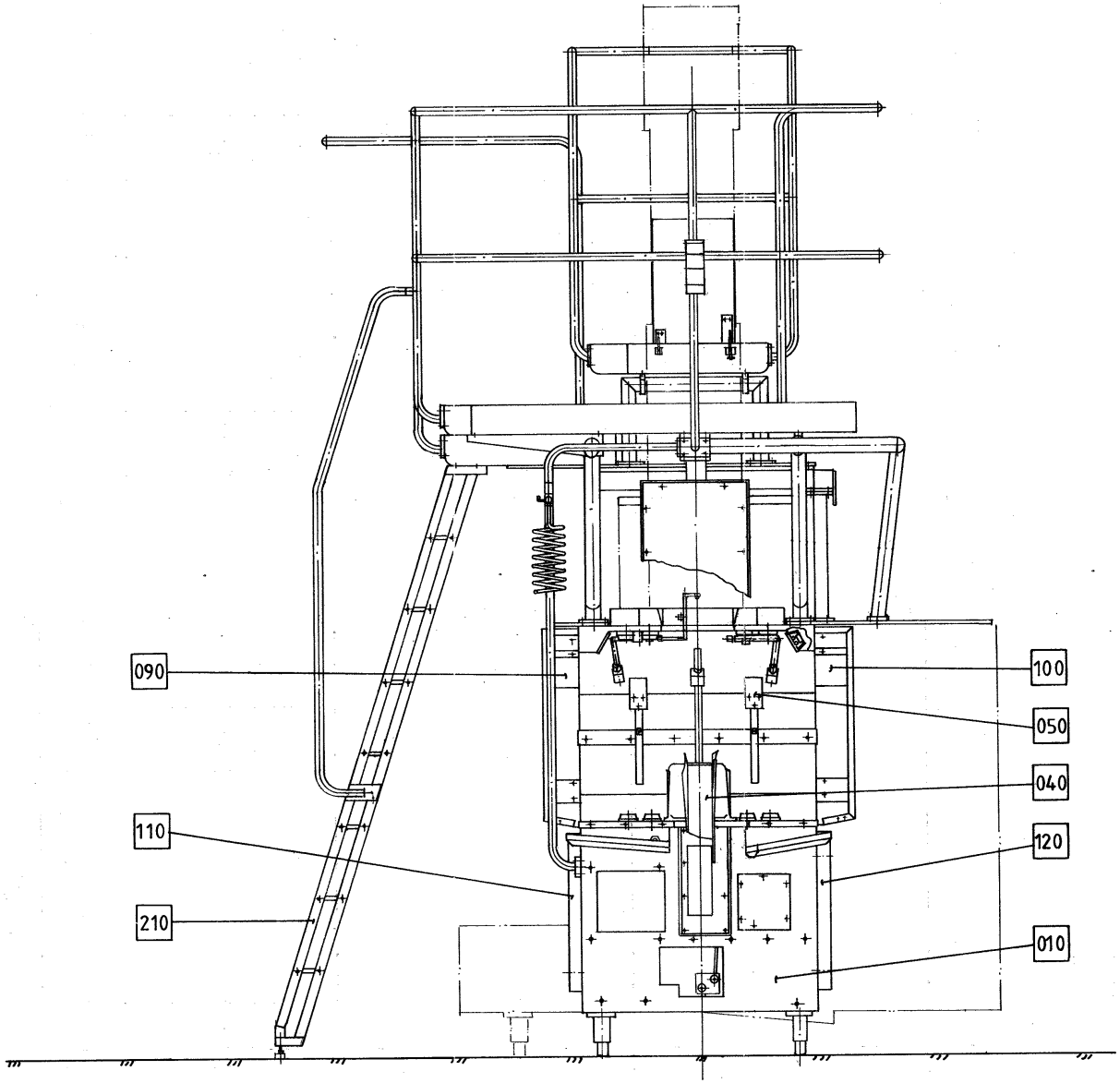
090
110
210
100
050
040
120
010

Pos	Part No	SP	UN	Qty	Description	Page No
TBA,SOURCE,TBA/9-100V OR TBA,SOURCE,TBA/9-110V OR TBA,SOURCE,TBA/9-120V						
010	A1529128-0100	-		1	MACHINE BODY TBA/9R	**243**
040	A456180-0100	-		1	DROP CHUTE	**247, 249, 251**
060	A271562-0600	-		1	PIPE WORK MACHINE BODY	**253, 255, 257, 259**
190	A1529127-0100	-		1	RAILING TBA/9R	**267, 269**
210	A469762-0100	-		1	LADDER	**275**
TWA,SOURCE,TBA/9-100V OR TWA,SOURCE,TBA/9-110V OR TWA,SOURCE,TBA/9-120V						
010	A1529438-0100	-		1	MACHINE BODY	**277**
060	A1529355-0100	-		1	PIPE WORK	**279, 281, 283, 285**
190	A1529421-0100	-		1	RAILING	**291, 293**
210	A469762-0100	-		1	LADDER	**275**
Common Parts						
	A1529162-0100	-		1	MODIFIED ARTICLES:	
050	A1529188-0100	-		2	TRANSMISSION TBA/9R	**297**
090	A1529132-0100	-		1	DOOR TBA/9R	**299**
100	A1529133-0100	-		1	DOOR TBA/9R	**301**
110	A256665-0200	-		1	HATCH	**303**
120	A1296815-0100	-		1	HATCH	**305**
130	A271414-0200	-		1	AIR JET GUN	**307**
160	A1529126-0100	-		1	PLATFORM TBA/9R	**309, 311**

Pos	Part No	SP	UN	Qty	Description	Page No

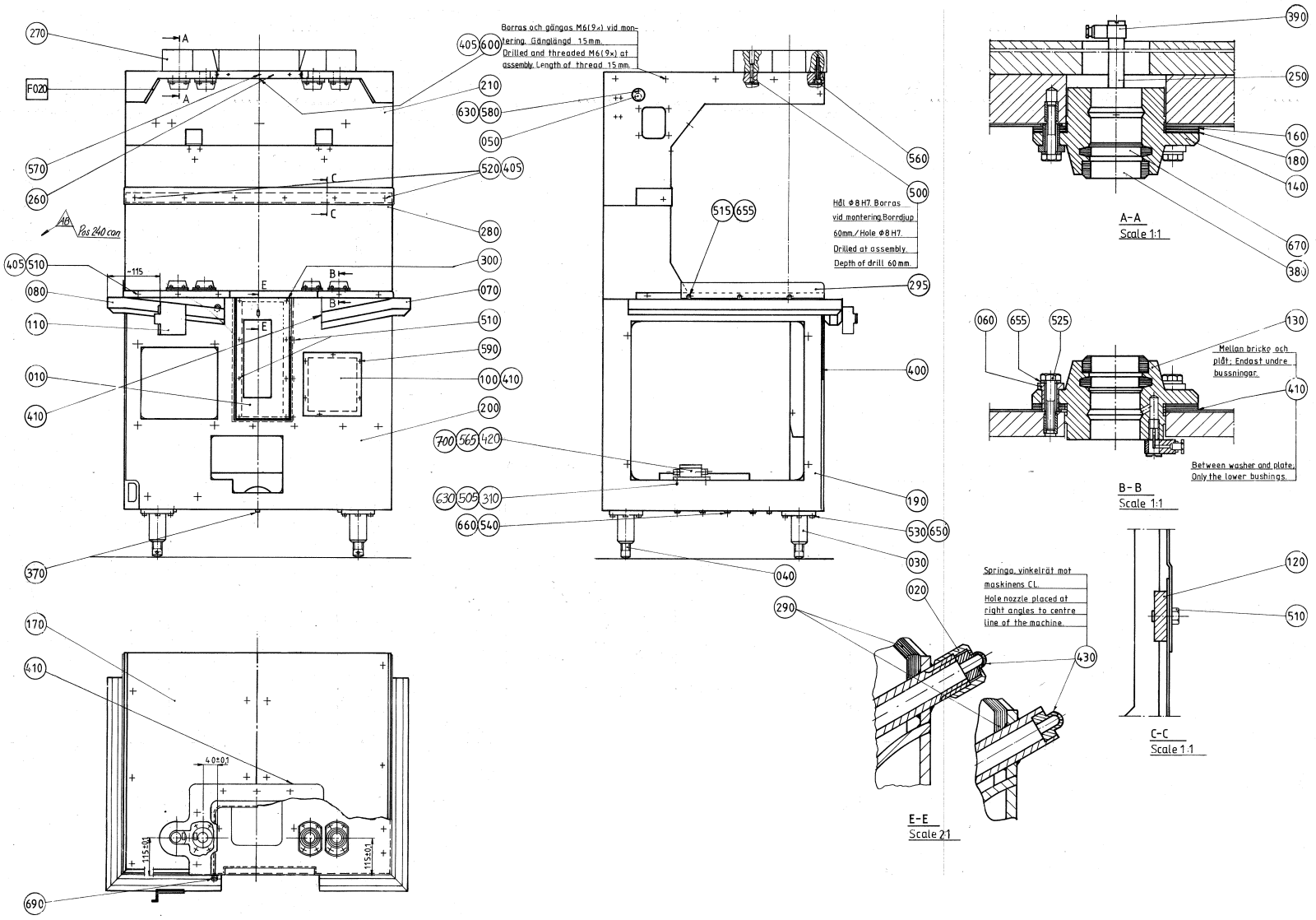
Borras och gängas M6(9x) vid montering. Gänglängd 15mm.
Drilled and threaded M6(9x) at assembly. Length of thread 15mm.
Hål Ø8 H7. Borras vid montering. Borrdjup 60mm./Hole Ø8 H7. Drilled at assembly. Depth of drill 60mm.
A-A Scale 1:1
B-B Scale 1:1
Mellan bricka och plåt; Endast undre bussningar.
Between washer and plate. Only the lower bushings.
C-C Scale 1:1
Springa, vinkelrät mot maskinens CL.
Hole nozzle placed at right angles to centre line of the machine.
E-E Scale 2:1
Pos 240 com
40±0,3
115±0,1

ECM: 104275 - 20020402
Group number: 1529128-0100
Assembly Drawing: 1529128-1_1_AC

Issue: 20020822

Pos	Part No	SP	UN	Qty	Description	Page No
0200B						
010	469831-0004	-		1	COVER	
020	441077-0000	-		1	NOZZLE BRACKET	
0200S						
010	469832-0001	-		1	COVER	
0250B						
010	469832-0002	-		1	COVER	
Common Parts						
020	A441534-0100	-		2	LIGHT FIXTURE	**245**
030	469095-0000	B		4	HOLDER	
040	469096-0000	B		4	LEG	
050	272058-0000	-		2	LID	
060	751085-0000	-		32	BUSHING	
070	978413-0000	-		1	CHUTE	
080	272671-0000	-		1	CHUTE	
100	295302-0000	-		1	HATCH	
110	441162-0000	-		1	PROTECTION PLATE	
120	441212-0000	B		1	HOLDER	
130	441217-0000	A		4	BUSHING LOWER	
140	441218-0000	A		4	BUSHING UPPER	
160	441221-0000	-		8	WASHER	
170	1529205-0000	-		1	MACHINE BODY	
180	441593-0000	-		8	GASKET	
190	441658-0000	-		1	FRONT PLATE	
200	456573-0000	-		1	FRONT PLATE	
210	751124-0000	-		1	FRONT PLATE	
250	469937-0000	-		4	PIPE	
260	441677-0000	-		1	FRONT PLATE	
270	441806-0000	-		1	COLLAR	
280	441809-0000	-		1	FRONT PLATE	
290	441810-0000	B		1	GASKET	
295	490986-0000	-		1	SHEET	
300	6278-0000	A		1	WASHER	
310	1529206-0000	-		2	PLATE	
370	90087-0002	-		3	PIPE PLUG	
380	90091-0106	A		8	SCRAPER 30X40X10 MM	
390	90137-0010	-		8	BANJO CONN. M6, D=2,5 MM	
400	90143-0010	-	MM	260	STRIP	
405	90157-0016	-	ML	1	LOCKING FLUID	
410	90157-0022	-	L	1	SEALING COMPOUND	
420	90265-0037	-		2	CONNECTION BOX ROSE	
430	90424-0027	A		1	SPRAY NOZZLE TIP, 8613-8V-TC	
500	311103-0415	-		3	PARALLELL PIN, CP, M6, 8X55 MM	
505	312105-0327	-		4	SCREW M6S ISO 4017 M5X12 A480	
510	312105-0366	-		27	SCREW M6S M6X12 A280	
515	312105-0368	-		3	SCREW M6S M6X16 A280	
520	312105-0370	-		2	SCREW M6S ISO 4017 M6X20 A480	
525	312105-0374	-		32	SCREW M6S ISO 4014 M6X30 A480	
530	312105-0451	-		16	SCREW M6S ISO 4017 M8X20 A480	
540	312105-0489	-		8	SCREW M6S ISO 4017 M10X16 A480	
560	312115-0503	-		10	SCREW MC6S M10X60 A280	
565	312125-0291	-		4	SCREW PAN HEAD MCS M4X12 SS	
570	312125-0323	-		7	SCREW PAN HEAD MCS M5X8 SS	
580	312125-0329	-		2	SCREW PAN HEAD MCS M5X16 SS	
590	312155-0325	-		6	SCREW HEX.SOCK.COUNT.MF6S M5X10 A280	
600	312155-0366	-		9	SCREW HEX.SOCK.COUNT.MF6S M6X12 A280	
630	315105-0146	-		6	WASHER PLAIN, BRB, 5,3/10,H=1	
650	315105-0165	-		16	WASHER PLAIN, BRB, 8,4/16,H=1,5	
655	315105-0153	-		35	WASHER PLAIN, BRB, 6,4/12,H=1,5	
660	315233-0109	A		8	WASHER PL.RND.NYL.10,3/14,H=1	
670	315259-0102	A		8	FELT SEAL 22-47 MM	
690	352103-0100	-		1	CABLE GLAND, STR 9, PR15,2/PG9	
700	352103-0106	-		4	CABLE GLAND, ST 11, PR18,6/PG11	

Machine Type | Group Description | Used-In | Group Number | Page No

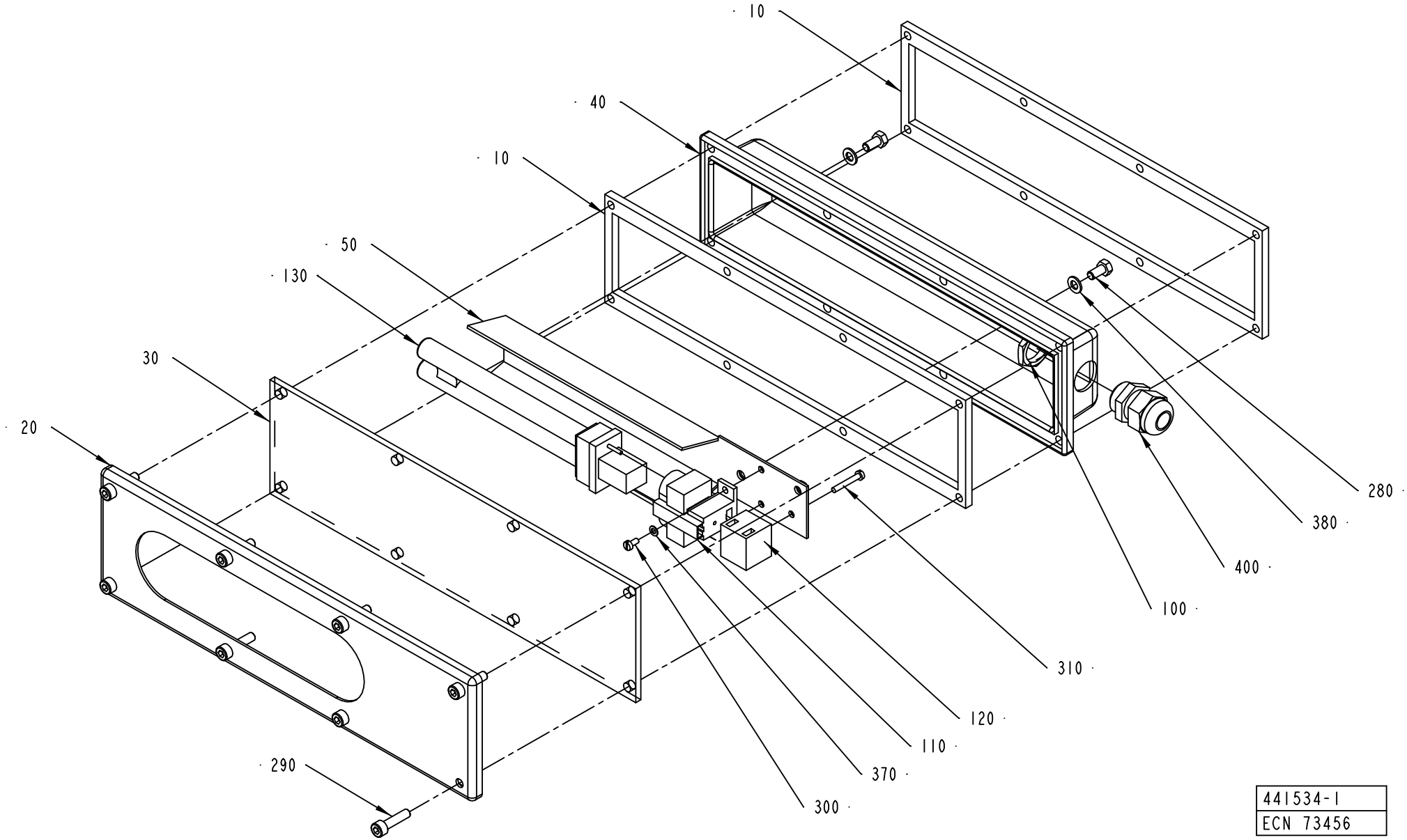

441534-1
ECN 73456

ECM: 102924 - 20020207
Group number: 441534-0100
Assembly Drawing: 441534-1_1_AB

Issue: 20020822

Pos	Part No	SP	UN	Qty	Description	Page No
Common Parts						
010	441536-0000	A		2	GASKET	
020	456263-0000	-		1	SHEET	
030	456264-0000	A		1	GLASS	
040	B469336-0000	B		1	COVER	
	456260-0000	*-*		*1*	*COVER*	
050	B469337-0000	-		1	REFLECTOR	
	312605-0314	*-*		*2*	*HEXAGON NUT, M6M M5 A280*	
100	90099-0002	-		1	NUT PR 18,6 BRASS	
110	90164-0301	A		1	HOLDING FIXTURE	
120	90195-0020	-		1	TERMINAL BLOCK, 1977.2	
130	90297-0006	A		1	FLUORESCENT TUBE, PL9	
280	312105-0325	-		2	SCREW M6S ISO 4017 M5X10 A480	
290	312115-0331	-		8	SCREW MC6S M5X20 A280	
300	312125-0220	-		2	SCREW SLOT.PAN HD. MCS 3X6 A480	
310	312125-0230	-		1	SCREW PAN HEAD MCS M3X20 SS	
370	315105-0124	-		2	WASHER PLAIN, BRB, 3,2/6,H=0,5	
380	315105-0146	-		2	WASHER PLAIN, BRB, 5,3/10,H=1	
400	352103-0106	-		1	CABLE GLAND, ST 11, PR18,6/PG11	

Pos	Part No	SP	UN	Qty	Description	Page No

Machine Type Group Description Used-In Group Number Page No

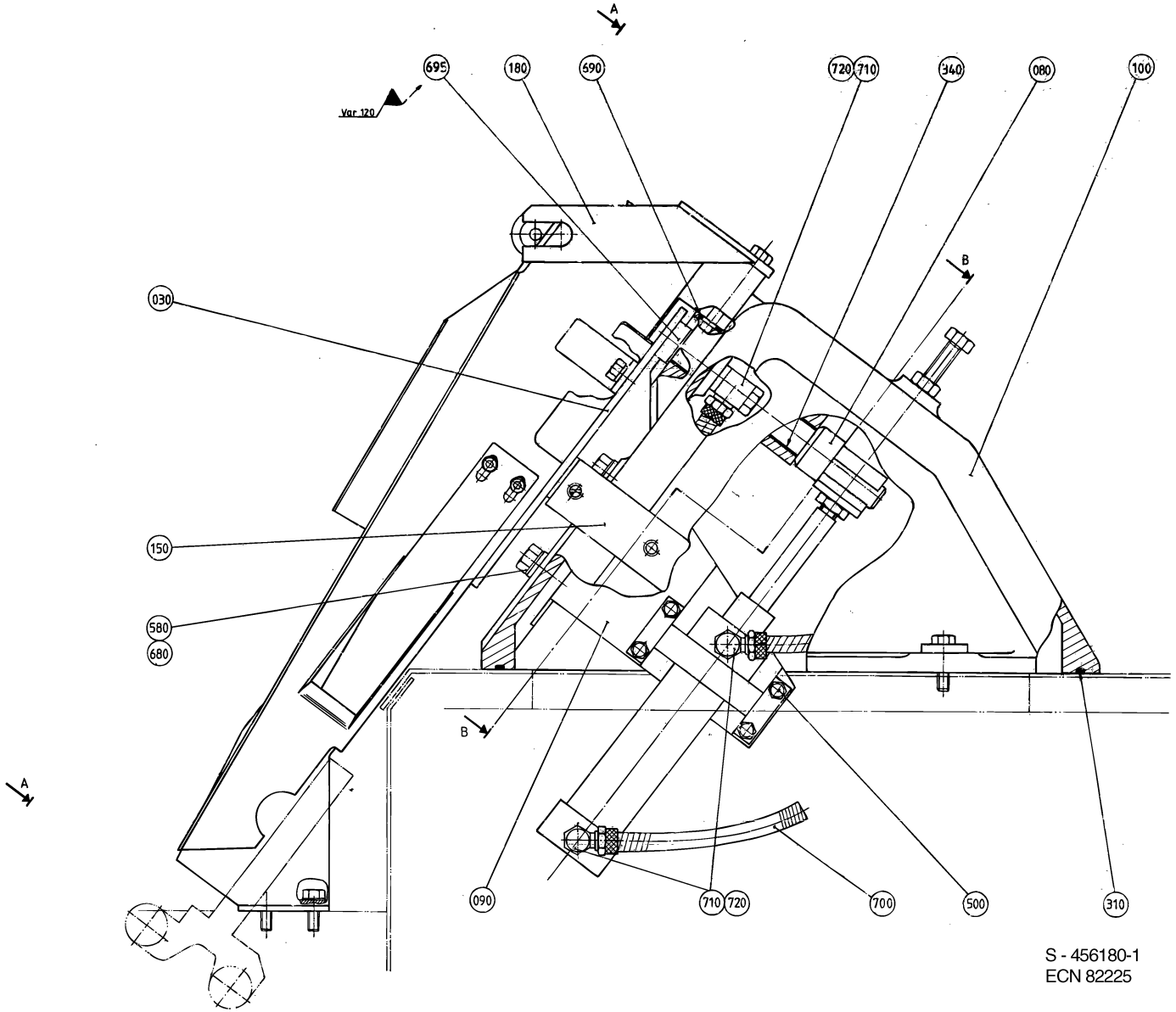

S - 456180-1
ECN 82225

ECM: 107681 - 20020521
Group number: 456180-0100
Assembly Drawing: 456180-1_1_AA

Issue: 20020822

Pos	Part No	SP	UN	Qty	Description	Page No
TBA 0200B						
010	978409-0000	B		1	DROP CHUTE TBA/9 V0200	
020	456149-0000	-		1	HEAD PLATE	
030	491881-0001	B		1	PIVOT ARM	
040	295097-0000	B		1	SLIDER	
050	456165-0000	A		1	LEAF SPRING	
060	456167-0000	A		1	LEAF SPRING	
170	295075-0000	B		1	PROTECTION	
560	312105-0380	-		2	SCREW M6S ISO 4014 M6X50 A480	
590	312115-0285	-		4	SCREW HEX.SOCK.HD.MC6S-TTS 4X6 A480	
600	312125-0323	-		2	SCREW PAN HEAD MCS M5X8 SS	
TBA 0200S						
010	456146-0000	B		1	DROP CHUTE	
020	456152-0000	-		1	HEAD PLATE	
030	491881-0001	B		1	PIVOT ARM	
040	469502-0000	B		1	SLIDER	
050	456164-0000	A		1	LEAF SPRING	
060	456166-0000	A		1	LEAF SPRING	
170	295075-0000	B		1	PROTECTION	
560	312105-0380	-		2	SCREW M6S ISO 4014 M6X50 A480	
590	312115-0285	-		4	SCREW HEX.SOCK.HD.MC6S-TTS 4X6 A480	
600	312125-0323	-		2	SCREW PAN HEAD MCS M5X8 SS	
TBA 0250B						
010	978411-0000	B		1	DROP CHUTE TBA/9 V0250	
020	456147-0000	-		1	HEAD PLATE	
030	491881-0001	B		1	PIVOT ARM	
040	295097-0000	B		1	SLIDER	
050	456165-0000	A		1	LEAF SPRING	
060	456167-0000	A		1	LEAF SPRING	
170	295075-0000	B		1	PROTECTION	
560	312105-0380	-		2	SCREW M6S ISO 4014 M6X50 A480	
590	312115-0285	-		4	SCREW HEX.SOCK.HD.MC6S-TTS 4X6 A480	
600	312125-0323	-		2	SCREW PAN HEAD MCS M5X8 SS	
Common Parts						
070	255939-0000	-		4	WASHER	
080	255940-0000	-		1	SPACER	
090	255943-0000	-		1	HOLDER	
100	271163-0000	-		1	CANTILEVER	
110	272600-0000	B		1	ARM	
130	272602-0000	-		1	SCREW	
140	272742-0000	A		1	FINGER	
150	272852-0000	-		1	HOLDER	
160	272853-0000	-		1	SCREW	
180	295399-0000	B		1	HOLDER	
300	90458-0256	A		1	PROXIMITY SWITCH IIA 3010-BPKG/6M	
310	90161-0001	-	MM	1500	O-RING MATERIAL 3 MM	
320	90450-0033	A		1	CYLINDER	
330	90239-0405	A		1	ROD END,BALL JOINT EYE,MINI-ISO M10X1,25	
340	90240-0073	A		2	RICTION BEARING	
500	312101-0331	-		4	SCREW M6S M5X20 FZB	
510	312101-0499	-		1	SCREW M6S M10X40 FZB	
520	312105-0366	-		1	SCREW M6S M6X12 A280	
530	312105-0368	-		2	SCREW M6S M6X16 A280	
540	312105-0372	-		4	SCREW M6S ISO 4017 M6X25 A480	
550	312105-0376	-		2	SCREW M6S ISO 4014 M6X35 A480	
570	312105-0451	-		2	SCREW M6S ISO 4017 M8X20 A480	
580	312105-0455	-		2	SCREW M6S ISO 4017 M8X30 A480	
610	312155-0368	-		1	SCREW HEX.SOCK.COUNT.MF6S M6X16 A280	
620	312601-0320	-		1	NUT M6M 10-8 FZB	
630	312605-0318	-		4	HEXAGON NUT, M6M M8 A280	
640	315105-0136	-		4	WASHER PLAIN, BRB, 4,3/8,H=0,8	
650	315105-0146	-		2	WASHER PLAIN, BRB, 5,3/10,H=1	
660	315105-0153	-		3	WASHER PLAIN, BRB, 6,4/12,H=1,5	
665	90005-0060	-		2	WASHER PLAIN, RBS 6,4/M6)/18,H=1,5	
670	315105-0165	-		2	WASHER PLAIN, BRB, 8,4/16,H=1,5	
680	315115-0165	-		4	WASHER PLAIN, TBRB 8,4/16 H=3	
690	315202-0206	A		1	O-RING 7,3X2,4 MM	
695	315233-0111	-		1	WASHER PL.RND.NYL.17/22,H=1	
700	342903-0121	A		3	NUT WITH SPRING 8/6-M12X1	
710	342980-0121	-		3	BANJO-CONNECTION,RING 8/6-G1/8"	
720	342980-0303	-		3	BANJO-HOLLOW BOLT COUPL,EXT.THR.01-G1/8"	

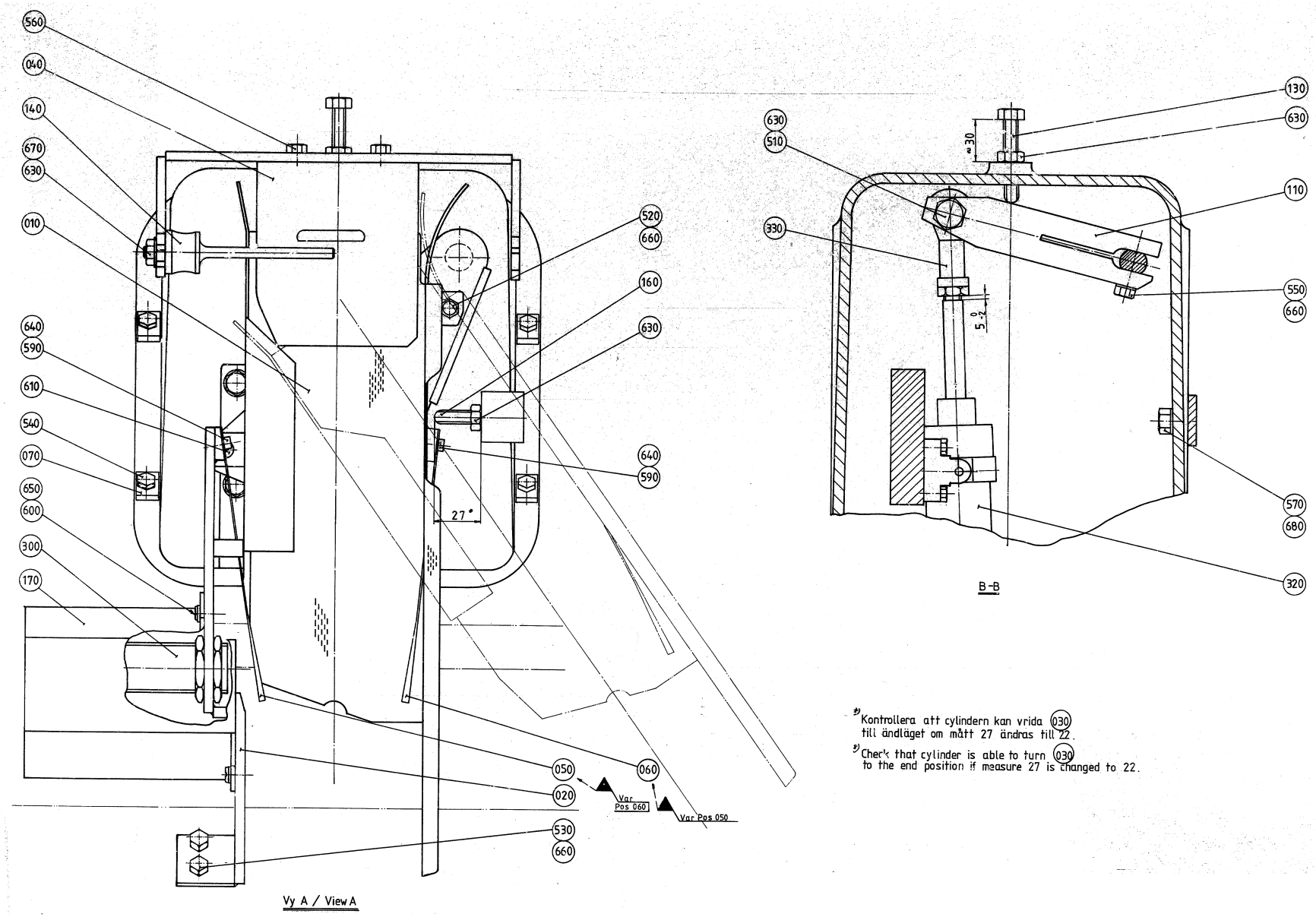

*) Kontrollera att cylindern kan vrida (030) till ändläget om mått 27 ändras till 22.

*) Check that cylinder is able to turn (030) to the end position if measure 27 is changed to 22.

ECM: 107681 - 20020521
Group number: 456180-0100
Assembly Drawing: 456180-2_1_AA

Issue: 20020822

Pos	Part No	SP	UN	Qty	Description	Page No
TBA 0200B						
010	978409-0000	B		1	DROP CHUTE TBA/9 V0200	
020	456149-0000	-		1	HEAD PLATE	
030	491881-0001	B		1	PIVOT ARM	
040	295097-0000	B		1	SLIDER	
050	456165-0000	A		1	LEAF SPRING	
060	456167-0000	A		1	LEAF SPRING	
170	295075-0000	B		1	PROTECTION	
560	312105-0380	-		2	SCREW M6S ISO 4014 M6X50 A480	
590	312115-0285	-		4	SCREW HEX.SOCK.HD.MC6S-TTS 4X6 A480	
600	312125-0323	-		2	SCREW PAN HEAD MCS M5X8 SS	
TBA 0200S						
010	456146-0000	B		1	DROP CHUTE	
020	456152-0000	-		1	HEAD PLATE	
030	491881-0001	B		1	PIVOT ARM	
040	469502-0000	B		1	SLIDER	
050	456164-0000	A		1	LEAF SPRING	
060	456166-0000	A		1	LEAF SPRING	
170	295075-0000	B		1	PROTECTION	
560	312105-0380	-		2	SCREW M6S ISO 4014 M6X50 A480	
590	312115-0285	-		4	SCREW HEX.SOCK.HD.MC6S-TTS 4X6 A480	
600	312125-0323	-		2	SCREW PAN HEAD MCS M5X8 SS	
TBA 0250B						
010	978411-0000	B		1	DROP CHUTE TBA/9 V0250	
020	456147-0000	-		1	HEAD PLATE	
030	491881-0001	B		1	PIVOT ARM	
040	295097-0000	B		1	SLIDER	
050	456165-0000	A		1	LEAF SPRING	
060	456167-0000	A		1	LEAF SPRING	
170	295075-0000	B		1	PROTECTION	
560	312105-0380	-		2	SCREW M6S ISO 4014 M6X50 A480	
590	312115-0285	-		4	SCREW HEX.SOCK.HD.MC6S-TTS 4X6 A480	
600	312125-0323	-		2	SCREW PAN HEAD MCS M5X8 SS	
Common Parts						
070	255939-0000	-		4	WASHER	
080	255940-0000	-		1	SPACER	
090	255943-0000	-		1	HOLDER	
100	271163-0000	-		1	CANTILEVER	
110	272600-0000	B		1	ARM	
130	272602-0000	-		1	SCREW	
140	272742-0000	A		1	FINGER	
150	272852-0000	-		1	HOLDER	
160	272853-0000	-		1	SCREW	
180	295399-0000	B		1	HOLDER	
300	90458-0256	A		1	PROXIMITY SWITCH IIA 3010-BPKG/6M	
310	90161-0001	-	MM	1500	O-RING MATERIAL 3 MM	
320	90450-0033	A		1	CYLINDER	
330	90239-0405	A		1	ROD END,BALL JOINT EYE,MINI-ISO M10X1,25	
340	90240-0073	A		2	RICTION BEARING	
500	312101-0331	-		4	SCREW M6S M5X20 FZB	
510	312101-0499	-		1	SCREW M6S M10X40 FZB	
520	312105-0366	-		1	SCREW M6S M6X12 A280	
530	312105-0368	-		2	SCREW M6S M6X16 A280	
540	312105-0372	-		4	SCREW M6S ISO 4017 M6X25 A480	
550	312105-0376	-		2	SCREW M6S ISO 4014 M6X35 A480	
570	312105-0451	-		2	SCREW M6S ISO 4017 M8X20 A480	
580	312105-0455	-		2	SCREW M6S ISO 4017 M8X30 A480	
610	312155-0368	-		1	SCREW HEX.SOCK.COUNT.MF6S M6X16 A280	
620	312601-0320	-		1	NUT M6M 10-8 FZB	
630	312605-0318	-		4	HEXAGON NUT, M6M M8 A280	
640	315105-0136	-		4	WASHER PLAIN, BRB, 4,3/8,H=0,8	
650	315105-0146	-		2	WASHER PLAIN, BRB, 5,3/10,H=1	
660	315105-0153	-		3	WASHER PLAIN, BRB, 6,4/12,H=1,5	
665	90005-0060	-		2	WASHER PLAIN, RBS 6,4/M6)/18,H=1,5	
670	315105-0165	-		2	WASHER PLAIN, BRB, 8,4/16,H=1,5	
680	315115-0165	-		4	WASHER PLAIN, TBRB 8,4/16 H=3	
690	315202-0206	A		1	O-RING 7,3X2,4 MM	
695	315233-0111	-		1	WASHER PL.RND.NYL.17/22,H=1	
700	342903-0121	A		3	NUT WITH SPRING 8/6-M12X1	
710	342980-0121	-		3	BANJO-CONNECTION,RING 8/6-G1/8"	
720	342980-0303	-		3	BANJO-HOLLOW BOLT COUPL,EXT.THR.01-G1/8"	

Machine Type | Group Description | Used-In | Group Number | Page No

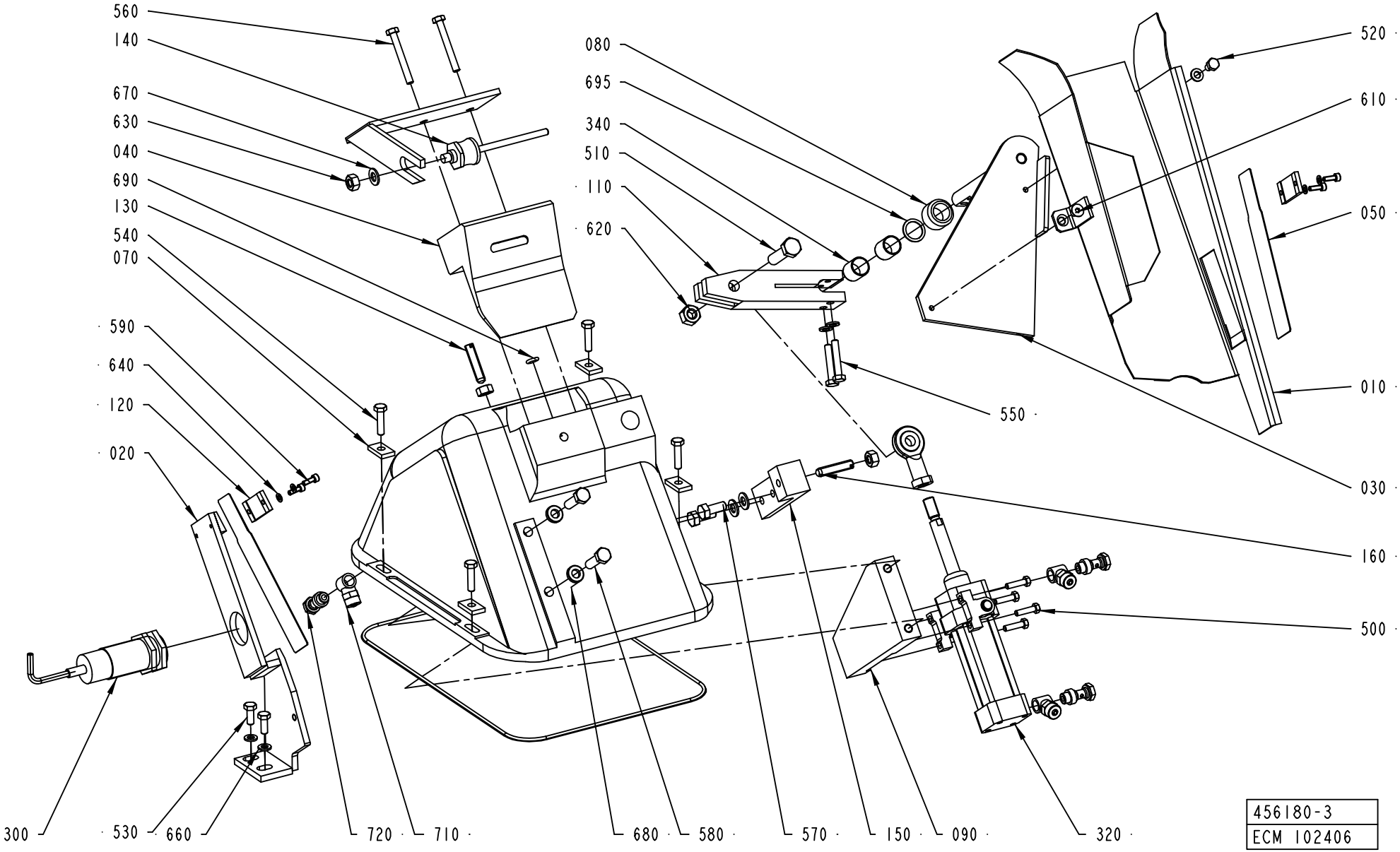
560
140
670
630
040
690
130
540
070
590
640
120
020
080
695
340
510
110
620
520
610
050
010
030
160
500
550
300
530
660
720
710
680
580
570
150
090
320
456180-3
ECM 102406

ECM: 107681 - 20020521
Group number: 456180-0100
Assembly Drawing: 456180-3_1_AB

Issue: 20020822

Pos	Part No	SP	UN	Qty	Description	Page No
TBA 0200B						
010	978409-0000	B		1	DROP CHUTE TBA/9 V0200	
020	456149-0000	-		1	HEAD PLATE	
030	491881-0001	B		1	PIVOT ARM	
040	295097-0000	B		1	SLIDER	
050	456165-0000	A		1	LEAF SPRING	
060	456167-0000	A		1	LEAF SPRING	
170	295075-0000	B		1	PROTECTION	
560	312105-0380	-		2	SCREW M6S ISO 4014 M6X50 A480	
590	312115-0285	-		4	SCREW HEX.SOCK.HD.MC6S-TTS 4X6 A480	
600	312125-0323	-		2	SCREW PAN HEAD MCS M5X8 SS	
TBA 0200S						
010	456146-0000	B		1	DROP CHUTE	
020	456152-0000	-		1	HEAD PLATE	
030	491881-0001	B		1	PIVOT ARM	
040	469502-0000	B		1	SLIDER	
050	456164-0000	A		1	LEAF SPRING	
060	456166-0000	A		1	LEAF SPRING	
170	295075-0000	B		1	PROTECTION	
560	312105-0380	-		2	SCREW M6S ISO 4014 M6X50 A480	
590	312115-0285	-		4	SCREW HEX.SOCK.HD.MC6S-TTS 4X6 A480	
600	312125-0323	-		2	SCREW PAN HEAD MCS M5X8 SS	
TBA 0250B						
010	978411-0000	B		1	DROP CHUTE TBA/9 V0250	
020	456147-0000	-		1	HEAD PLATE	
030	491881-0001	B		1	PIVOT ARM	
040	295097-0000	B		1	SLIDER	
050	456165-0000	A		1	LEAF SPRING	
060	456167-0000	A		1	LEAF SPRING	
170	295075-0000	B		1	PROTECTION	
560	312105-0380	-		2	SCREW M6S ISO 4014 M6X50 A480	
590	312115-0285	-		4	SCREW HEX.SOCK.HD.MC6S-TTS 4X6 A480	
600	312125-0323	-		2	SCREW PAN HEAD MCS M5X8 SS	
Common Parts						
070	255939-0000	-		4	WASHER	
080	255940-0000	-		1	SPACER	
090	255943-0000	-		1	HOLDER	
100	271163-0000	-		1	CANTILEVER	
110	272600-0000	B		1	ARM	
130	272602-0000	-		1	SCREW	
140	272742-0000	A		1	FINGER	
150	272852-0000	-		1	HOLDER	
160	272853-0000	-		1	SCREW	
180	295399-0000	B		1	HOLDER	
300	90458-0256	A		1	PROXIMITY SWITCH IIA 3010-BPKG/6M	
310	90161-0001	-	MM	1500	O-RING MATERIAL 3 MM	
320	90450-0033	A		1	CYLINDER	
330	90239-0405	A		1	ROD END,BALL JOINT EYE,MINI-ISO M10X1,25	
340	90240-0073	A		2	RICTION BEARING	
500	312101-0331	-		4	SCREW M6S M5X20 FZB	
510	312101-0499	-		1	SCREW M6S M10X40 FZB	
520	312105-0366	-		1	SCREW M6S M6X12 A280	
530	312105-0368	-		2	SCREW M6S M6X16 A280	
540	312105-0372	-		4	SCREW M6S ISO 4017 M6X25 A480	
550	312105-0376	-		2	SCREW M6S ISO 4014 M6X35 A480	
570	312105-0451	-		2	SCREW M6S ISO 4017 M8X20 A480	
580	312105-0455	-		2	SCREW M6S ISO 4017 M8X30 A480	
610	312155-0368	-		1	SCREW HEX.SOCK.COUNT.MF6S M6X16 A280	
620	312601-0320	-		1	NUT M6M 10-8 FZB	
630	312605-0318	-		4	HEXAGON NUT, M6M M8 A280	
640	315105-0136	-		4	WASHER PLAIN, BRB, 4,3/8,H=0,8	
650	315105-0146	-		2	WASHER PLAIN, BRB, 5,3/10,H=1	
660	315105-0153	-		3	WASHER PLAIN, BRB, 6,4/12,H=1,5	
665	90005-0060	-		2	WASHER PLAIN, RBS 6,4/M6)/18,H=1,5	
670	315105-0165	-		2	WASHER PLAIN, BRB, 8,4/16,H=1,5	
680	315115-0165	-		4	WASHER PLAIN, TBRB 8,4/16 H=3	
690	315202-0206	A		1	O-RING 7,3X2,4 MM	
695	315233-0111	-		1	WASHER PL.RND.NYL.17/22,H=1	
700	342903-0121	A		3	NUT WITH SPRING 8/6-M12X1	
710	342980-0121	-		3	BANJO-CONNECTION,RING 8/6-G1/8"	
720	342980-0303	-		3	BANJO-HOLLOW BOLT COUPL,EXT.THR.01-G1/8"	

Machine Type | Group Description | Used-In | Group Number | Page No

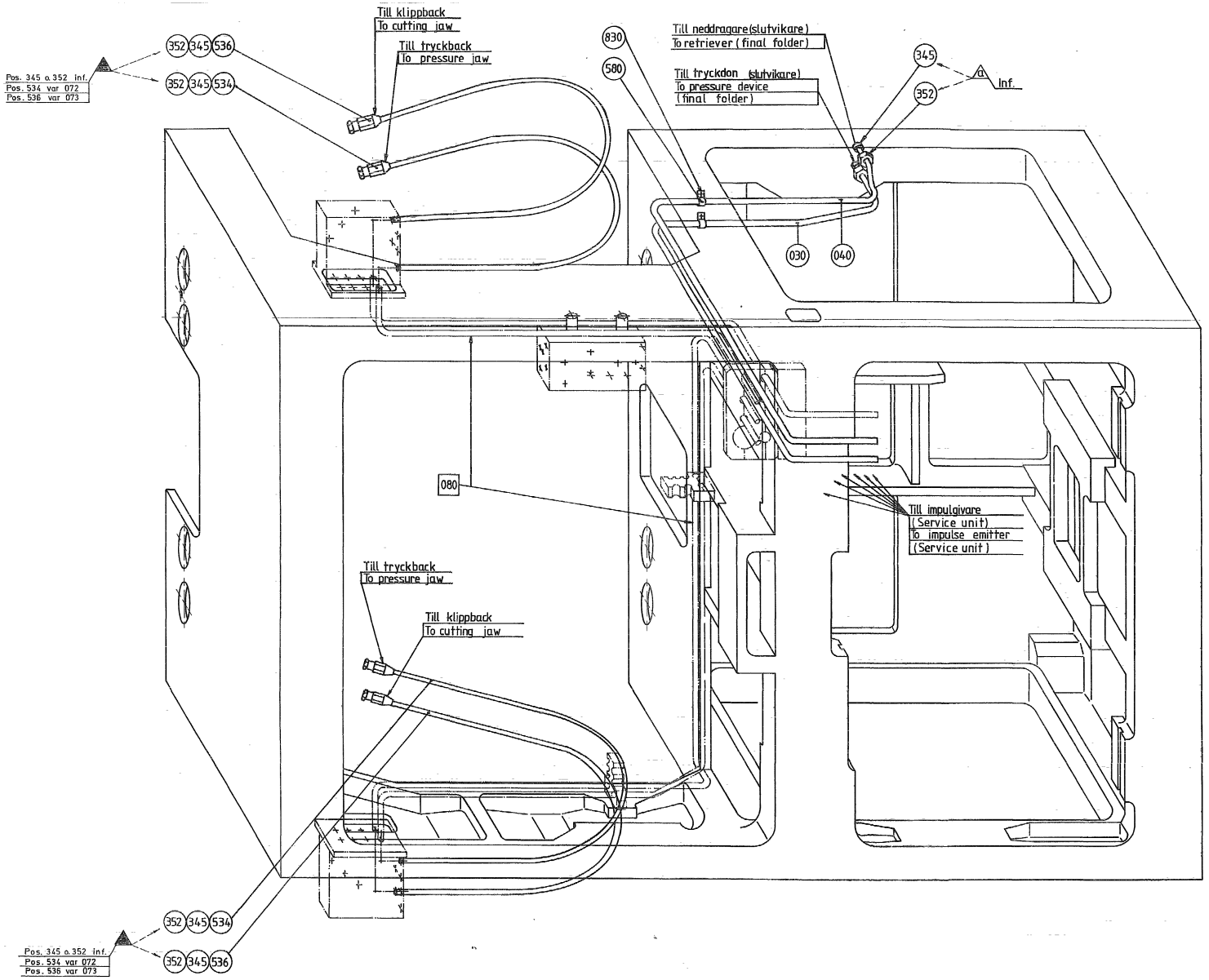
Till klippback
To cutting jaw
Till tryckback
To pressure jaw
352 345 536
352 345 534
Pos. 345 o. 352 inf.
Pos. 534 var 072
Pos. 536 var 073
830
580
Till neddragare (slutvikare)
To retriever (final folder)
Till tryckdon (slutvikare)
To pressure device
(final folder)
345
352
A
Inf.
030
040
080
Till impulsgivare
(Service unit)
To impulse emitter
(Service unit)
Till tryckback
To pressure jaw
Till klippback
To cutting jaw
352 345 534
352 345 536
Pos. 345 o. 352 inf.
Pos. 534 var 072
Pos. 536 var 073

Pos	Part No	SP	UN	Qty	Description	Page No
TBA/9 OR TBA/9 R						
630	90166-0118	-	M	11	TUBE 8 MM PA BLACK	
Common Parts						
010	491854-0000	-		1	PIPE WATER	
020	491855-0000	-		1	PIPE WATER	
030	271742-0000	-		1	PIPE	
040	271743-0000	-		1	PIPE	
050	272346-0000	-		1	PIPE	
060	469133-0000	-		1	PIPE	
070	469132-0000	-		1	PIPE	
075	469131-0000	-		2	LACE	
080	271621-0000	-		1	LACE	
090	271622-0000	-		1	LACE	
100	271623-0000	-		1	LACE	
120	295986-0000	-		1	HOLDER	
130	456407-0000	-		1	LACE	
140	491390-0000	-		1	PIPE CENTRAL LUBRICATION	
150	491859-0000	-		1	HOLDER	
160	491860-0000	-		1	HOLDER	
170	491861-0000	-		1	HOLDER	
180	491862-0000	-		1	HOLDER	
310	90028-0001	A		5	CONE 5/32"	
320	90028-0020	A		23	CONE TUBE 2,5MM	
330	90028-0021	A		6	CONE TUBE 4 MM	
340	90030-0051	A		1	CONN. STR., 6-R1/8, EXT. THREAD	
345	90030-0098	A		10	ACCESSORIES, FERRULE 8	
350	90030-0162	A		4	CONN. STR. 6-M10X1, EXT. THREAD	
352	342703-0208	A		10	NUT, PIPES & CONNECTORS,NUT M-8 SS	
355	90030-0200	-		2	CONN. ELBOW, 6-M10X1, EXT.THREAD	
360	90032-0014	-		1	DISTR. BLOCK & DIST.5/16-24UNF X6	
370	90032-0026	-		1	DISTR. BLOCK, 5/16-24UNF X2	
390	90032-0030	-		1	DISTR. BLOCK, 5/16-24UNF X3	
391	90032-0031	-		1	DISTR. BLOCK, 5/16-24UNF X5	
400	90032-0038	-		2	BLOCK 2 WAYS	
410	90032-0039	-		5	BLOCK 4 WAYS	
420	90090-0008	A		2	BALL, D=7,1 MM	
430	90092-0052	A		10	METERING VALVE 10 MM3	
440	90092-0053	A		13	METERING VALVE 30 MM3	
450	90134-0003	A		5	BUSHING	
470	90134-0030	A		4	SLEEVE FOR PLASTIC TUBE	
480	90134-0031	A		7	SLEEVE FOR PLASTIC TUBE	
490	B90134-0034	A		10	NIPPLE	
	90030-0101	-		*1*	*TAPER*	
500	90134-0038	A		9	BUSHING/NUT INLET/OUTLET 4 MM	
510	90134-0039	A		24	BUSHING VALVE CONNECTION 2,5 MM	
520	90134-0052	A		1	PLUG DOSING BLOCK	
534	90148-0037	A		2	HOSE	
536	90148-0038	A		2	HOSE	
540	90151-0001	-	MM	2200	BRASS PIPE DI=2,6 MM	
550	90266-0019	-	MM	7000	PIPE	
560	90165-0002	-		2	CLIP	
580	90165-0007	-		2	PIPE CLIP FOR TUBE D=8 MM	
590	90165-0022	-		8	PIPE CLIP, FOR TUBE D=2,5 MM, B-3570	
600	90165-0023	-		6	CLIP	
605	90165-0039	-		1	PIPE CLAMP, RSGU 1.15/12, D=15 MM	
610	90166-0108	-	MM	1	TUBE 6 MM PA,TRANSP.	
620	90166-0109	-	MM	1	TUBE 4 MM PA,TRANSP.	
640	90166-0132	-	M	5	TUBE 6 MM PA,TRANSP.	
641	90166-0133	-	M	10	TUBE 8 MM PA,TRANSP.	
650	90266-0006	-	MM	1	TUBE	
660	312101-0337	-		4	SCREW M6S M5X35 FZB	
790	312105-0289	-		2	SCREW M6S ISO 4017 M4X10 A480	
800	312105-0295	-		8	SCREW M6S ISO 4017 M4X20 A480	
810	312105-0297	-		12	SCREW M6S ISO 4017 M4X25 A480	
820	312105-0372	-		2	SCREW M6S ISO 4017 M6X25 A480	
830	312115-0289	-		2	SCREW HEX.SOCK.HD.MC6S-TT 4X10 A480	
840	312125-0287	-		16	SCREW PAN HEAD MCS M4X8 SS	
845	312125-0323	-		1	SCREW PAN HEAD MCS M5X8 SS	
850	312165-0325	-		2	SCREW SLOT.RAIS.COUNT.HD.MKFS 5X10 SS	
854	315101-0146	-		4	WASHER PLAIN, BRB, 5,3/10 H=1	
857	315105-0136	-		8	WASHER PLAIN, BRB, 4,3/8,H=0,8	
860	315234-0109	A		1	WASHER,PL.RND.CU.10,3/13,5 H=1,0	
865	342727-0102	-		1	CONN. PIPE G-6-LFZB	
867	342736-0109	-		1	CONN. ELBOW W-12	
870	342767-0100	A		1	CONN. BULKHEAD G1/8	
880	342797-0121	A		1	CONN. BANJO, RINGPIECE 6-1/8	
890	342980-0303	A		1	BANJO-HOLLOW BOLT COUPL,EXT.THR.01-G1/8"	
900	352113-0101	-		4	CLIP STRIP, 92X2,5 MM	
910	359000-0400	-		22	MARKING CO2/4"0"	
920	359000-0401	-		20	MARKING COLLAR 2/4 "1" YELLOW	
930	359000-0402	-		14	MARKING COLLAR 2/4 "2" YELLOW	
940	359000-0403	-		8	MARKING COLLAR PA2/4 "3" YELLOW	
950	359000-0404	-		2	MARKING COLLAR PA2/4 "4" YELLOW	

Machine Type Group Description Used-In Group Number Page No

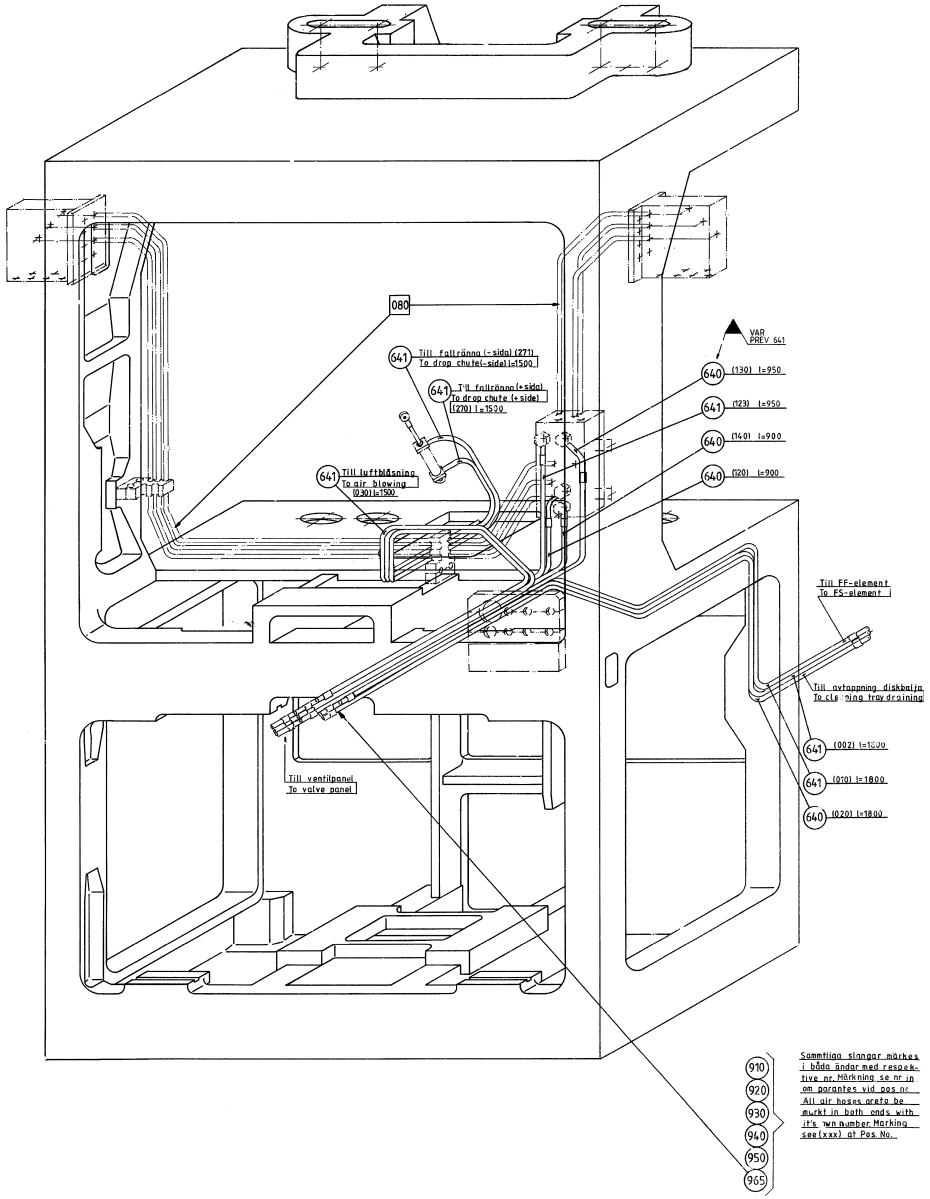
080
641 Till fallränna (-sida) (271) To drop chute(-side) l=1500
641 Till fallränna (+sida) To drop chute (+side) (270) l=1500
641 Till luftblåsning To air blowing (230) l=1500
VAR PREV 641
640 (130) l=950
641 (123) l=950
640 (140) l=900
640 (120) l=900
Till FF-element To FS-element
Till avtappning diskbänk To cleaning tray draining
641 (002) l=1800
641 (010) l=1800
640 (020) l=1800
Till ventilpanel To valve panel
910
920
930
940
950
965
Samtliga slangar märkes i båda ändar med respektive nr. Märkning se nr på ritning för pos nr
All air hoses are to be marked in both ends with it's own number Marking see (xxx) at Pos No.

Pos	Part No	SP	UN	Qty	Description	Page No
Common Parts (Cont'd)						
951	359000-0405	-		4	MARKING CO2/4"5"	
952	359000-0406	-		4	MARKING COLLAR PA2/4 "6" YELLOW	
965	359000-0407	-		8	MARKING COLLAR PA2/4 "7" YELLOW	
990	359000-0771	-		16	MARKING CO2/4"V"	
F070	A271261-0500	-		1	CLEANING SYSTEM	**261**
F080	A491650-0100	-		1	DISTRIBUTOR BLOCK	**263, 265**

Pos	Part No	SP	UN	Qty	Description	Page No

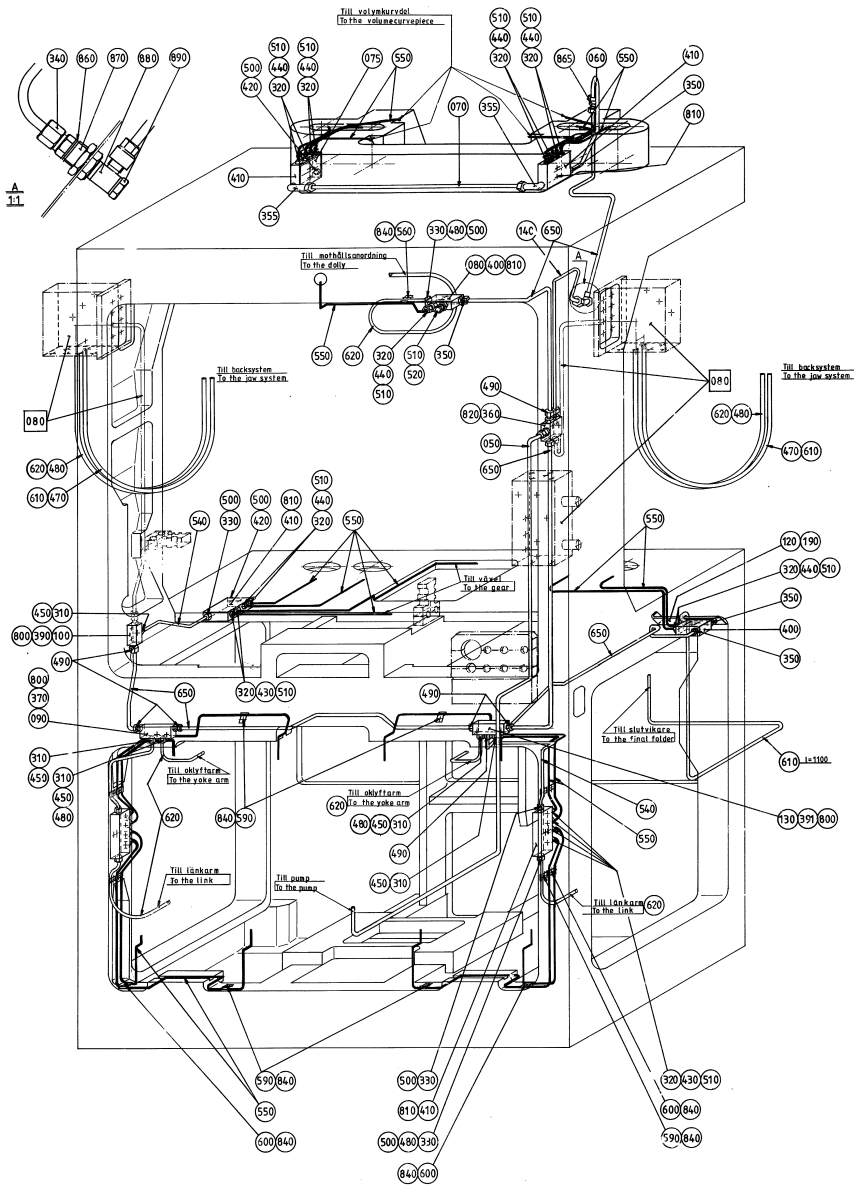
Till volymkurvdel
To the volumecurvepiece
A
1:1
Till mothållsanordning
To the dolly
Till backsystem
To the jaw system
Till backsystem
To the jaw system
Till växel
To the gear
Till oklyftarm
To the yoke arm
Till oklyftarm
To the yoke arm
Till länkarm
To the link
Till pump
To the pump
Till slutvikare
To the final folder
Till länkarm
To the link
L=1100

Pos	Part No	SP	UN	Qty	Description	Page No
SEE PREVIOUS LISTS PAGES: 253, 255.						

Pos	Part No	SP	UN	Qty	Description	Page No

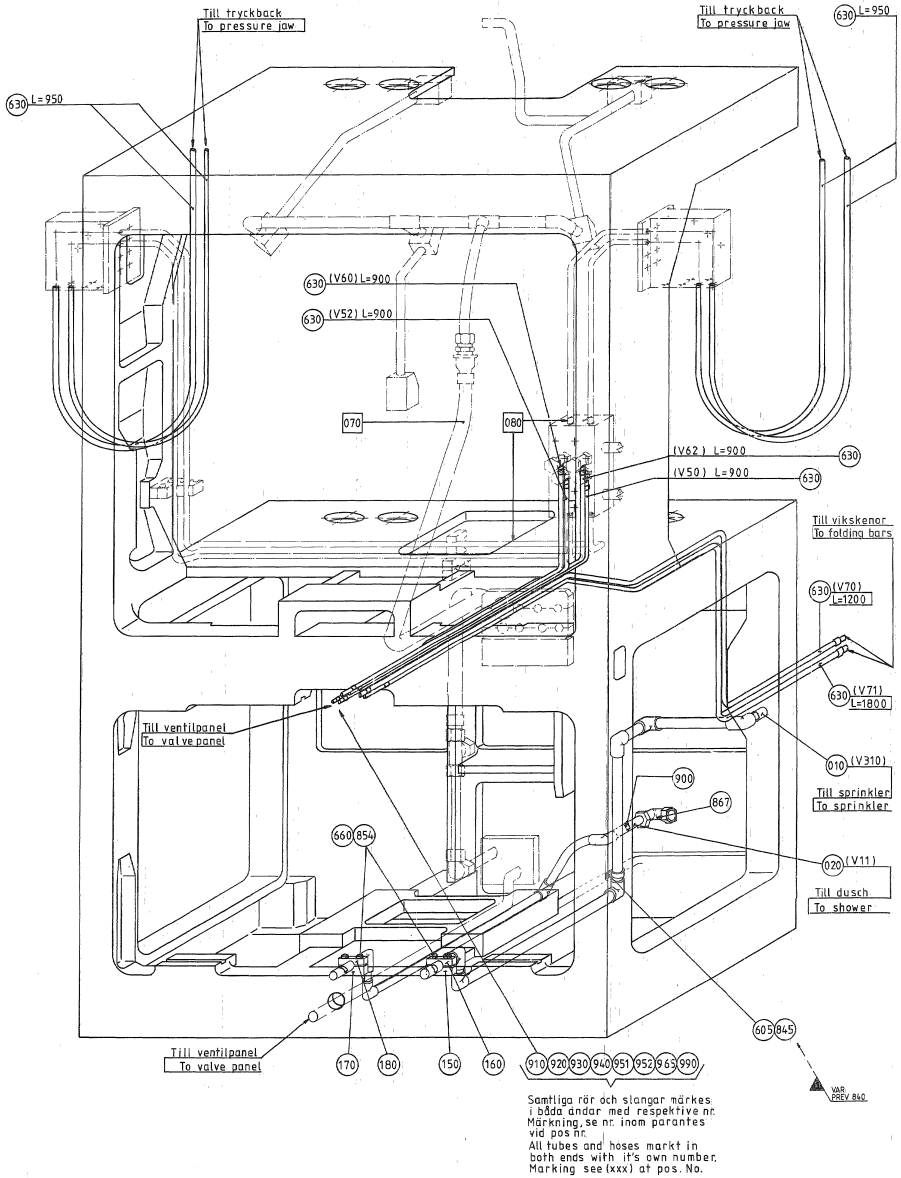
Till tryckback
To pressure jaw
Till tryckback
To pressure jaw
630 L=950
630 L=950
630 (V60) L=900
630 (V52) L=900
070
080
(V62) L=900
(V50) L=900
630
630
Till vikskenor
To folding bars
630 (V70) L=1200
630 (V71) L=1800
Till ventilpanel
To valve panel
010 (V310)
Till sprinkler
To sprinkler
900
867
660 854
020 (V11)
Till dusch
To shower
605 845
Till ventilpanel
To valve panel
170 180 150 160 910 920 930 940 951 952 963 990
VAR PREV 840
Samtliga rör och slangar märkes i båda ändar med respektive nr. Märkning, se nr. inom parantes vid pos nr.
All tubes and hoses markt in both ends with it's own number. Marking see (xxx) at pos. No.

Pos	Part No	SP	UN	Qty	Description	Page No	Pos	Part No	SP	UN	Qty	Description	Page No

SEE PREVIOUS LISTS PAGES: 253, 255.

Machine Type	Group Description	Used-In	Group Number	Page No

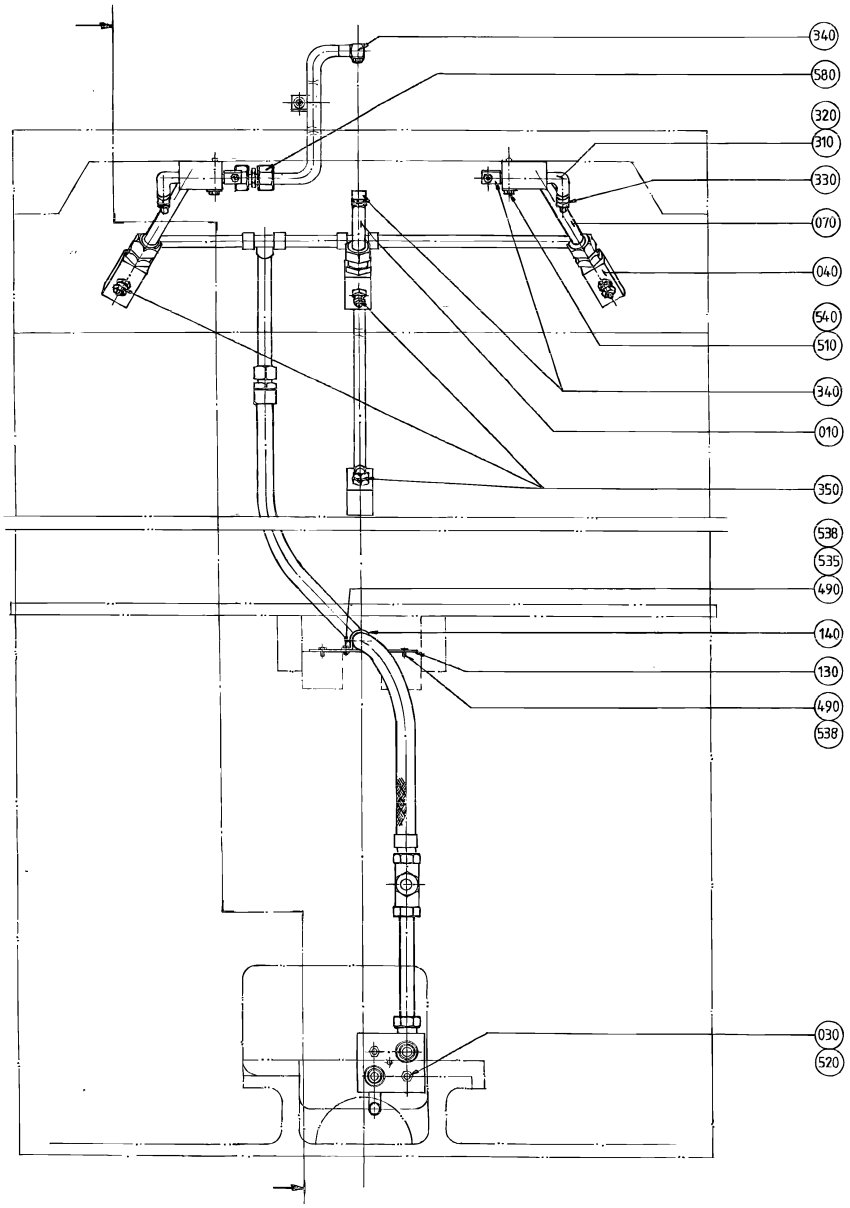

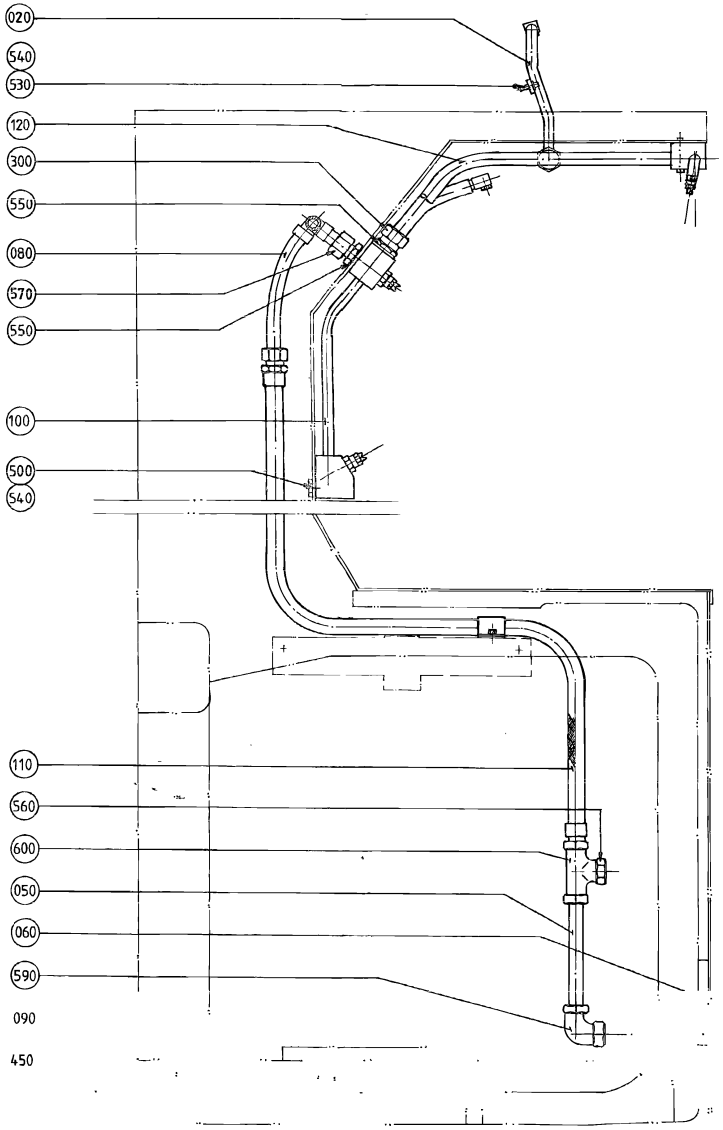

7 S - 271261-6
ECN 82225

Pos	Part No	SP	UN	Qty	Description	Page No
TBA/9 0200S OR TBA/9R 0200S						
010	295985-0000	-		1	FORCE SPRING	
020	456129-0002	-		1	FORCE SPRING	
TBA/9 0200B OR TBA/9 0250B OR TBA/9R 0200B OR TBA/9R 0250B						
010	271121-0000	-		1	FORCE SPRING	
020	456129-0002	-		1	FORCE SPRING	
Common Parts						
030	18542-0000	A		2	WASHER	
040	257190-0000	-		2	SEPARATION BLOCK	
050	272679-0000	-		1	PIPE	
060	295417-0000	-		1	GASKET	
070	295785-0000	-		1	FORCE SPRING	
080	295978-0000	-		1	PIPE	
090	491870-0000	-		1	BRANCH PIPE	
100	441665-0000	-		1	FORCE SPRING	
110	469146-0000	-		1	HOSE	
120	456128-0000	-		1	FORCE SPRING	
130	469134-0000	-		1	BRACKET	
140	469135-0000	-		1	HOLDER	
300	90030-0151	A		3	CONN. STR.,15-R1/2, EXT. THREAD	
310	90330-0097	-		2	NIPPLES, EXT. THREAD, G1/8	
320	90330-0099	-		2	ELBOW, 90 INT. THREAD, R-222R1/8	
330	90424-0032	A		2	SPRAY NOZZLE 95 DEG	
340	90424-0033	A		4	SPRAY NOZZLE 76 DEG	
350	90424-0035	A		4	SPRAY NOZZLE 95 DEG	
450	311103-0272	-		1	PARALLELL PIN, M6, 4X20 MM	
490	312105-0327	-		4	SCREW M6S ISO 4017 M5X12 A480	
500	312105-0364	-		1	SCREW M6S ISO 4017 M6X10 A480	
510	312105-0378	-		2	SCREW M6S ISO 4014 M6X40 A480	
520	312105-0459	-		2	SCREW M6S ISO 4014 M8X40 A480	
530	312115-0364	-		1	SCREW HEX.SOCK.HD.MC6S-TT 6X10 A480	
535	312605-0314	-		2	HEXAGON NUT, M6M M5 A280	
538	315105-0146	-		6	WASHER PLAIN, BRB, 5,3/10,H=1	
540	315105-0153	-		4	WASHER PLAIN, BRB, 6,4/12,H=1,5	
550	315233-0113	A		6	WASHER PL.RND.NYL.21,4/27,H=1,2	
560	342710-0115	A		1	REDUCTION RBM 16/8	
570	342720-0114	A		3	CONN. STR. GA-15-G1/2	
580	342726-0109	A		1	CONN. PIPE G-12	
590	342736-0114	A		1	CONN. ELBOW W-15	
600	342746-0114	A		1	CONN. T-PIPE T-15	

Pos	Part No	SP	UN	Qty	Description	Page No

Machine Type | Group Description | Used-In | Group Number | Page No

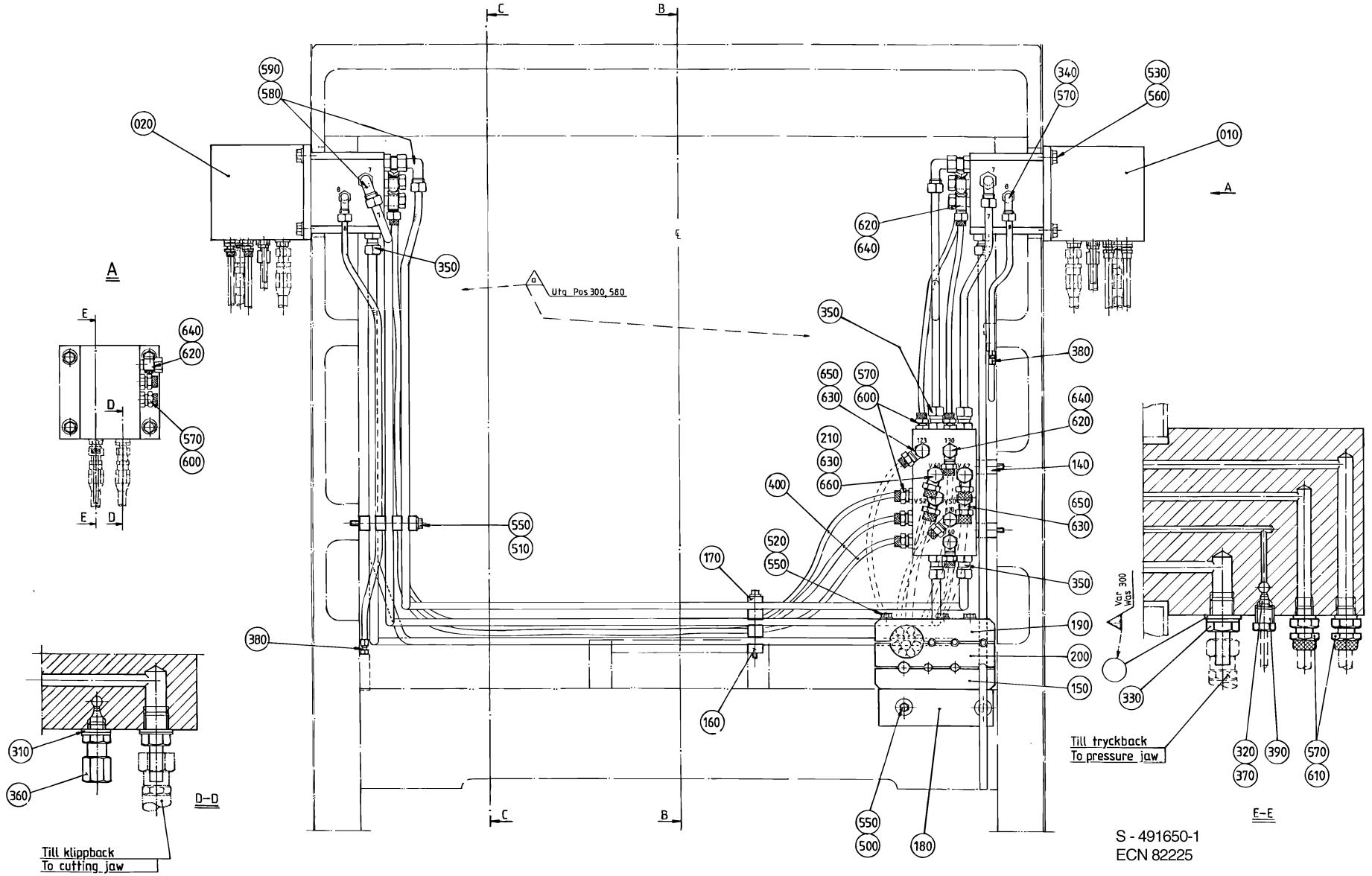
Utg Pos 300, 580
Till klippback
To cutting jaw
Till tryckback
To pressure jaw
Var 300 Vats
D-D
E-E
S - 491650-1
ECN 82225

Pos	Part No	SP	UN	Qty	Description	Page No
TBA OR TWA						
370	90134-0031	A		2	SLEEVE FOR PLASTIC TUBE	
390	90134-0038	-		2	BUSHING/NUT INLET/OUTLET 4 MM	
Common Parts						
010	491255-0000	-		1	DISTRIBUTOR BLOCK LEFT	
020	491254-0000	-		1	DISTRIBUTOR BLOCK RIGHT	
030	491256-0000	-		1	DISTRIBUTOR BLOCK LEFT	
040	491244-0000	-		1	PIPE WATER	
050	491245-0000	-		1	PIPE CENTRAL LUBRICATION	
060	491246-0000	-		1	PIPE CENTRAL LUBRICATION	
070	491247-0000	-		1	PIPE WATER	
080	491248-0000	-		1	PIPE WATER	
090	491249-0000	-		1	PIPE HYDRAULIC	
100	491250-0000	-		1	PIPE HYDRAULIC	
110	491251-0000	-		1	PIPE WATER	
120	491252-0000	-		1	PIPE HYDRAULIC	
130	491253-0000	-		1	PIPE HYDRAULIC	
140	271088-0000	-		2	SPACER	
150	271323-0000	-		1	HOLDER	
160	271343-0000	-		2	HOLDER	
170	271344-0000	-		2	HOLDER	
180	456561-0000	-		1	BRACKET	
190	469000-0000	-		1	HOLDER	
200	469001-0000	-		1	HOLDER	
210	469071-0000	B		2	SPACER	
310	90005-0045	-		2	WASHER PLAIN ROUND 10(3/8)/14,H=2	
320	90028-0021	A		2	CONE TUBE 4 MM	
330	90030-0065	A		4	PIPE CONNECTION	
340	90030-0171	A		2	ADJUSTABLE ELBOW CONNECTION,EXT 6-G1/8	
350	90030-0185	A		8	CONN. STR. GA-8-G1/4	
360	90134-0019	A		2	CONN. STRAIGHT, GE 6-LM FZB	
380	B90134-0034	A		2	NIPPLE	
	90030-0101	*-*		*1*	*TAPER*	
400	90166-0132	-	M	5	TUBE 6 MM PA,TRANSP.	
500	312101-0372	-		2	SCREW M6S M6X25 FZB	
510	312101-0385	-		2	SCREW M6S M6X75 FZB	
520	312101-0388	-		3	SCREW M6S M6X90 FZB	
530	312105-0453	-		8	SCREW M6S ISO 4017 M8X25 A480	
540	312111-0471	-		2	SCREW HEX.SOCK.HD.MC6S-TT 8X100 88 FZ	
550	315101-0153	-		7	WASHER PLAIN, BRB, 6,4/12 H=1,5	
560	315105-0165	-		8	WASHER PLAIN, BRB, 8,4/16,H=1,5	
570	315211-0105	A		6	GASKET BOLT HEAD 10,4X15,9X2 MM G1/8	
580	315211-0108	A		4	GASKET BOLT HEAD 13,7X20,6X2 MM G1/4	
590	342738-0208	A		4	ADJUSTABLE ELBOW CONNECTION,EXT 8-G1/4	
600	342722-0202	A		10	PIPE COUPLING 1/8" D=6MM	
610	342921-0121	A		4	STRAIGHT COUPLING,EXT.THREADED 8/6-G1/8"	
620	342732-0102	A		11	ELBOW PIPE JOINT, EXT.THREAD, D=6MM-G1/8	
630	342980-0122	A		5	BANJO-CONNECTION,RING 8/6-G1/4"	
650	342980-0304	A		3	BANJO-HOLLOW BOLT COUPL,EXT.THR.01-G1/4"	
660	342980-0314	A		2	BANJO-HOLLOW BOLT COUPL,EXT.THR.02-G1/4"	

Machine Type | Group Description | Used-In | Group Number | Page No

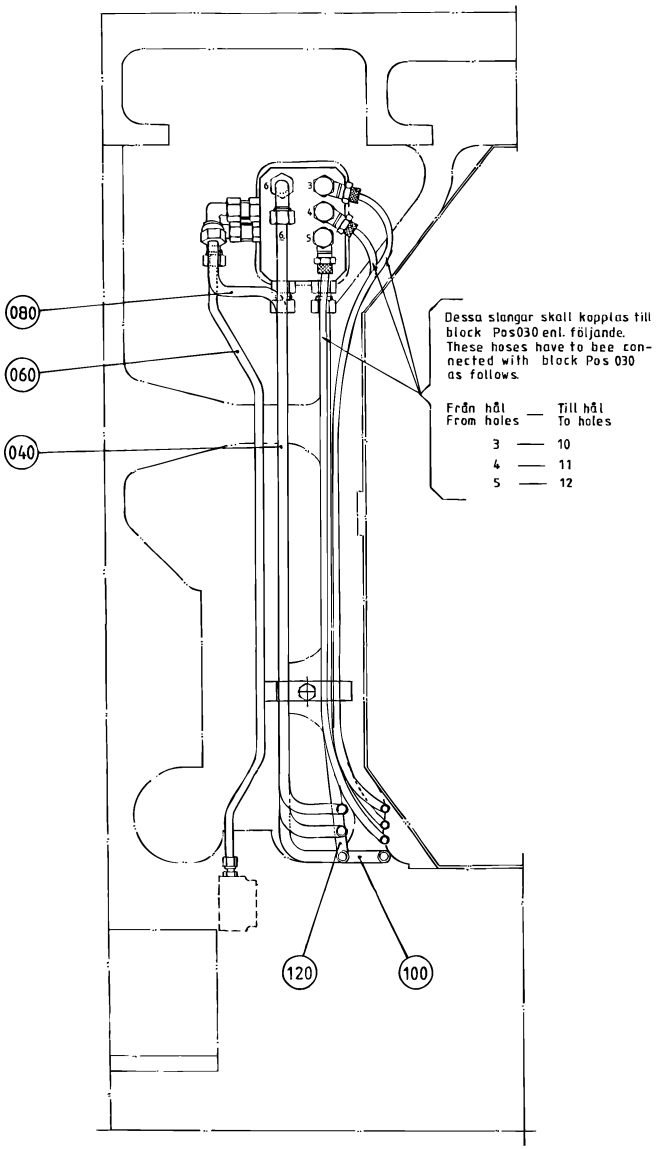

Dessa slangar skall kopplas till block Pos030 enl. följande.
These hoses have to bee connected with block Pos 030 as follows.

Från hål From holes		Till hål To holes
3	—	10
4	—	11
5	—	12

C-C

För att undvika felaktiga monteringar av rör är både rör och hål i blocken märkta med ett nummer vilka skall referera till varandra

To avoid mistakes when assembling pipes both pipes and holes in the blocks are marked with a number, which have to corresponds to each other

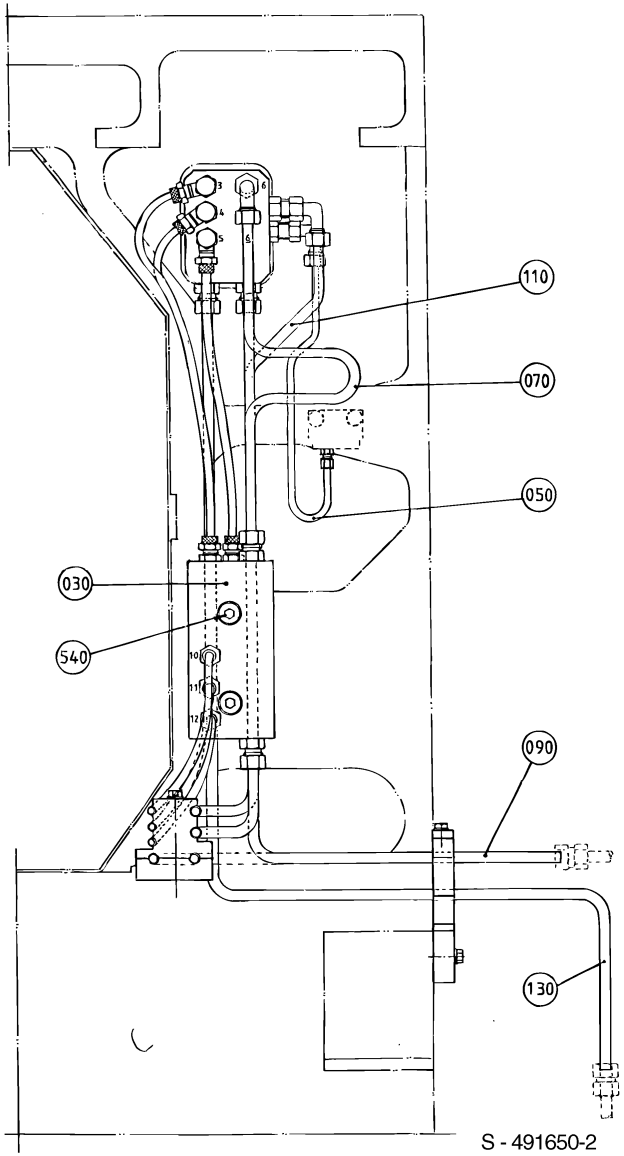

B-B

S - 491650-2
ECN 82225

Pos	Part No	SP	UN	Qty	Description	Page No
TBA OR TWA						
370	90134-0031	A		2	SLEEVE FOR PLASTIC TUBE	
390	90134-0038	-		2	BUSHING/NUT INLET/OUTLET 4 MM	
Common Parts						
010	491255-0000	-		1	DISTRIBUTOR BLOCK LEFT	
020	491254-0000	-		1	DISTRIBUTOR BLOCK RIGHT	
030	491256-0000	-		1	DISTRIBUTOR BLOCK LEFT	
040	491244-0000	-		1	PIPE WATER	
050	491245-0000	-		1	PIPE CENTRAL LUBRICATION	
060	491246-0000	-		1	PIPE CENTRAL LUBRICATION	
070	491247-0000	-		1	PIPE WATER	
080	491248-0000	-		1	PIPE WATER	
090	491249-0000	-		1	PIPE HYDRAULIC	
100	491250-0000	-		1	PIPE HYDRAULIC	
110	491251-0000	-		1	PIPE WATER	
120	491252-0000	-		1	PIPE HYDRAULIC	
130	491253-0000	-		1	PIPE HYDRAULIC	
140	271088-0000	-		2	SPACER	
150	271323-0000	-		1	HOLDER	
160	271343-0000	-		2	HOLDER	
170	271344-0000	-		2	HOLDER	
180	456561-0000	-		1	BRACKET	
190	469000-0000	-		1	HOLDER	
200	469001-0000	-		1	HOLDER	
210	469071-0000	B		2	SPACER	
310	90005-0045	-		2	WASHER PLAIN ROUND 10(3/8)/14,H=2	
320	90028-0021	A		2	CONE TUBE 4 MM	
330	90030-0065	A		4	PIPE CONNECTION	
340	90030-0171	A		2	ADJUSTABLE ELBOW CONNECTION,EXT 6-G1/8	
350	90030-0185	A		8	CONN. STR. GA-8-G1/4	
360	90134-0019	A		2	CONN. STRAIGHT, GE 6-LM FZB	
380	B90134-0034	A		2	NIPPLE	
	90030-0101	*-*		*1*	*TAPER*	
400	90166-0132	-	M	5	TUBE 6 MM PA,TRANSP.	
500	312101-0372	-		2	SCREW M6S M6X25 FZB	
510	312101-0385	-		2	SCREW M6S M6X75 FZB	
520	312101-0388	-		3	SCREW M6S M6X90 FZB	
530	312105-0453	-		8	SCREW M6S ISO 4017 M8X25 A480	
540	312111-0471	-		2	SCREW HEX.SOCK.HD.MC6S-TT 8X100 88 FZ	
550	315101-0153	-		7	WASHER PLAIN, BRB, 6,4/12 H=1,5	
560	315105-0165	-		8	WASHER PLAIN, BRB, 8,4/16,H=1,5	
570	315211-0105	A		6	GASKET BOLT HEAD 10,4X15,9X2 MM G1/8	
580	315211-0108	A		4	GASKET BOLT HEAD 13,7X20,6X2 MM G1/4	
590	342738-0208	A		4	ADJUSTABLE ELBOW CONNECTION,EXT 8-G1/4	
600	342722-0202	A		10	PIPE COUPLING 1/8" D=6MM	
610	342921-0121	A		4	STRAIGHT COUPLING,EXT.THREADED 8/6-G1/8"	
620	342732-0102	A		11	ELBOW PIPE JOINT, EXT.THREAD, D=6MM-G1/8	
630	342980-0122	A		5	BANJO-CONNECTION,RING 8/6-G1/4"	
650	342980-0304	A		3	BANJO-HOLLOW BOLT COUPL,EXT.THR.01-G1/4"	
660	342980-0314	A		2	BANJO-HOLLOW BOLT COUPL,EXT.THR.02-G1/4"	

Machine Type | Group Description | Used-In | Group Number | Page No

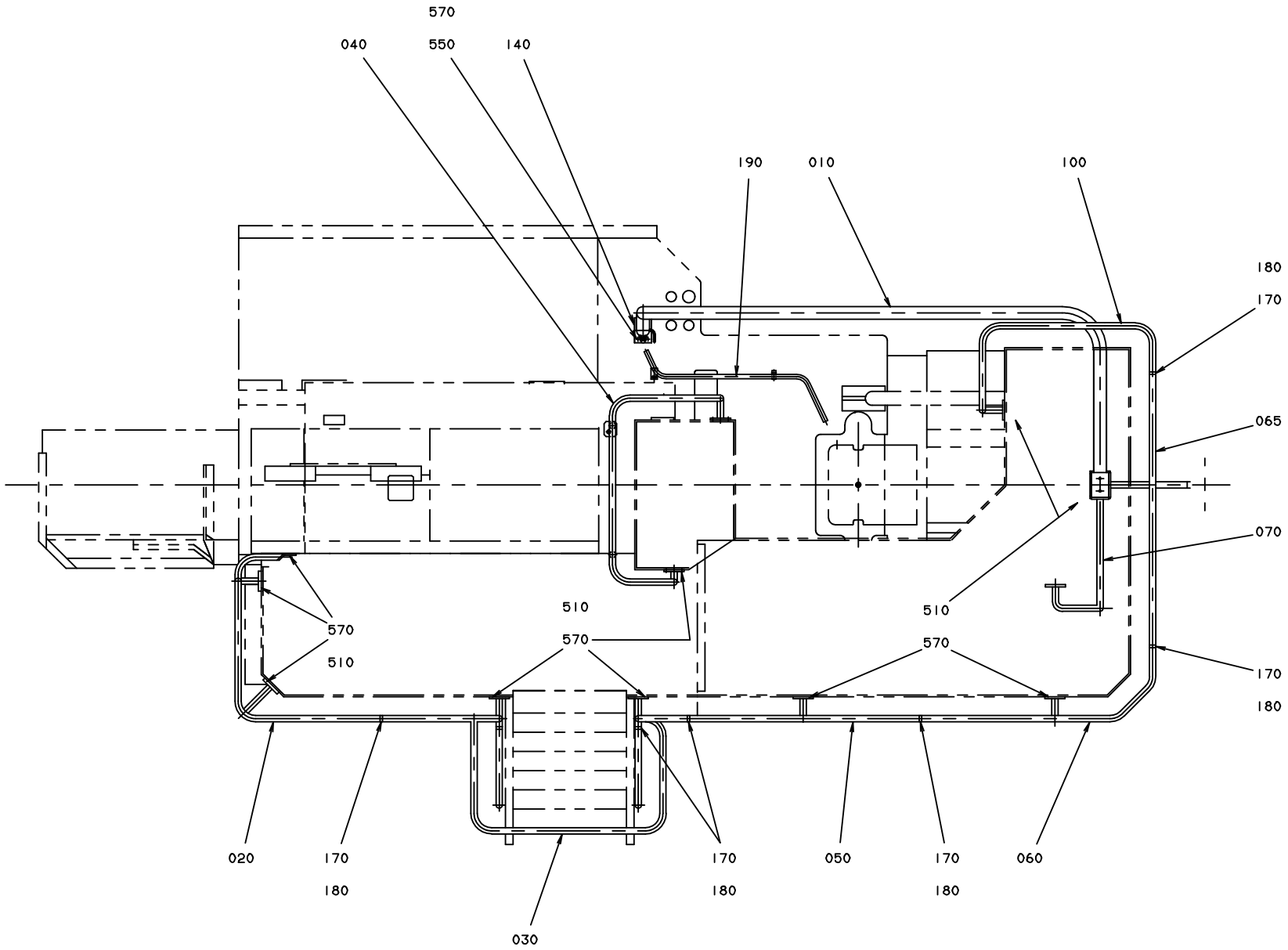
570
040
550
140
190
010
100
180
170
065
070
510
570
510
570
510
570
170
180
020
170
180
030
170
180
050
170
180
060

Pos	Part No	SP	UN	Qty	Description	Page No
SOURCE,TBA/9-100V OR SOURCE,TBA/9-110V						
010	456979-0002	-		1	CABLE CONDUIT	
020	469023-0000	-		1	RAILING	
030	1529031-0000	-		1	RAILING	
040	469025-0000	-		1	RAILING	
070	441512-0000	-		1	STRUT END	
080	441687-0000	-		1	STRUT	
090	491138-0000	-		1	STRUT	
110	469490-0000	-		1	HAND RAIL	
120	469489-0000	-		1	HAND RAIL	
500	311103-0356	-		2	PIN,STRIGHT M6 6X28 RFR	
510	312105-0449	-		44	SCREW M6S ISO 4017 M8X16 A480	
530	312115-0453	-		3	SCREW MC6S M8X25 A280	
535	312115-0457	-		2	SCREW MC6S M8X35 A280	
560	312605-0318	-		4	HEXAGON NUT, M6M M8 A280	
570	315105-0165	-		60	WASHER PLAIN, BRB, 8,4/16,H=1,5	
SOURCE,TBA/9-120V						
010	751075-0002	-		1	CABLE CONDUIT	
020	B469967-0000	-		1	RAILING	
	751483-0000	-		*2*	*NUT*	
030	B469965-0000	-		1	RAILING	
	751482-0000	-		*4*	*NUT*	
040	751309-0000	-		1	RAILING	
050	B751051-0000	-		1	RAILING	
	751483-0000	-		*4*	*NUT*	
060	B751052-0000	-		1	RAILING	
	751482-0000	-		*4*	*NUT*	
065	1529032-0000	-		1	RAILING	
070	751056-0000	-		1	STRUT END	
080	751055-0000	-		1	STRUT	
100	B751057-0000	-		1	RAILING	
	751482-0000	-		*2*	*NUT*	
110	B751050-0000	-		1	HAND RAIL	
	751483-0000	-		*1*	*NUT*	
120	B751049-0000	-		1	HAND RAIL	
	751483-0000	-		*1*	*NUT*	
400	A751332-0100	-		1	BRACKET	**271**
510	312105-0449	-		49	SCREW M6S ISO 4017 M8X16 A480	
530	312115-0453	-		1	SCREW MC6S M8X25 A280	
560	312605-0318	-		10	HEXAGON NUT, M6M M8 A280	
570	315105-0165	-		58	WASHER PLAIN, BRB, 8,4/16,H=1,5	

Pos	Part No	SP	UN	Qty	Description	Page No
Common Parts						
130	469026-0000	-		1	INTERMEDIATE PART	
140	469028-0000	-		1	GASKET	
150	751182-0000	-		1	GASKET	
160	751183-0000	-		1	GASKET	
170	751484-0000	-		12	CLAMPING RING	
180	751485-0000	-		12	SCREW	
190	751745-0000	-		1	CABLE CONDUIT	
320	90224-0234	A		1	BRACKET	
525	312105-0459	-		4	SCREW M6S ISO 4014 M8X40 A480	
550	312105-0455	-		4	SCREW M6S ISO 4017 M8X30 A480	
590	315202-0215	A		1	O-RING 19,2X3 MM	
595	352103-0100	-		2	CABLE GLAND, STR 9, PR15,2/PG9	
600	352103-0108	-		1	CABLE GLAND, ST 13,5 , PR20,4/PG13,5	
700	A1529033-0100	-		1	ALARM DEVICE	**273**

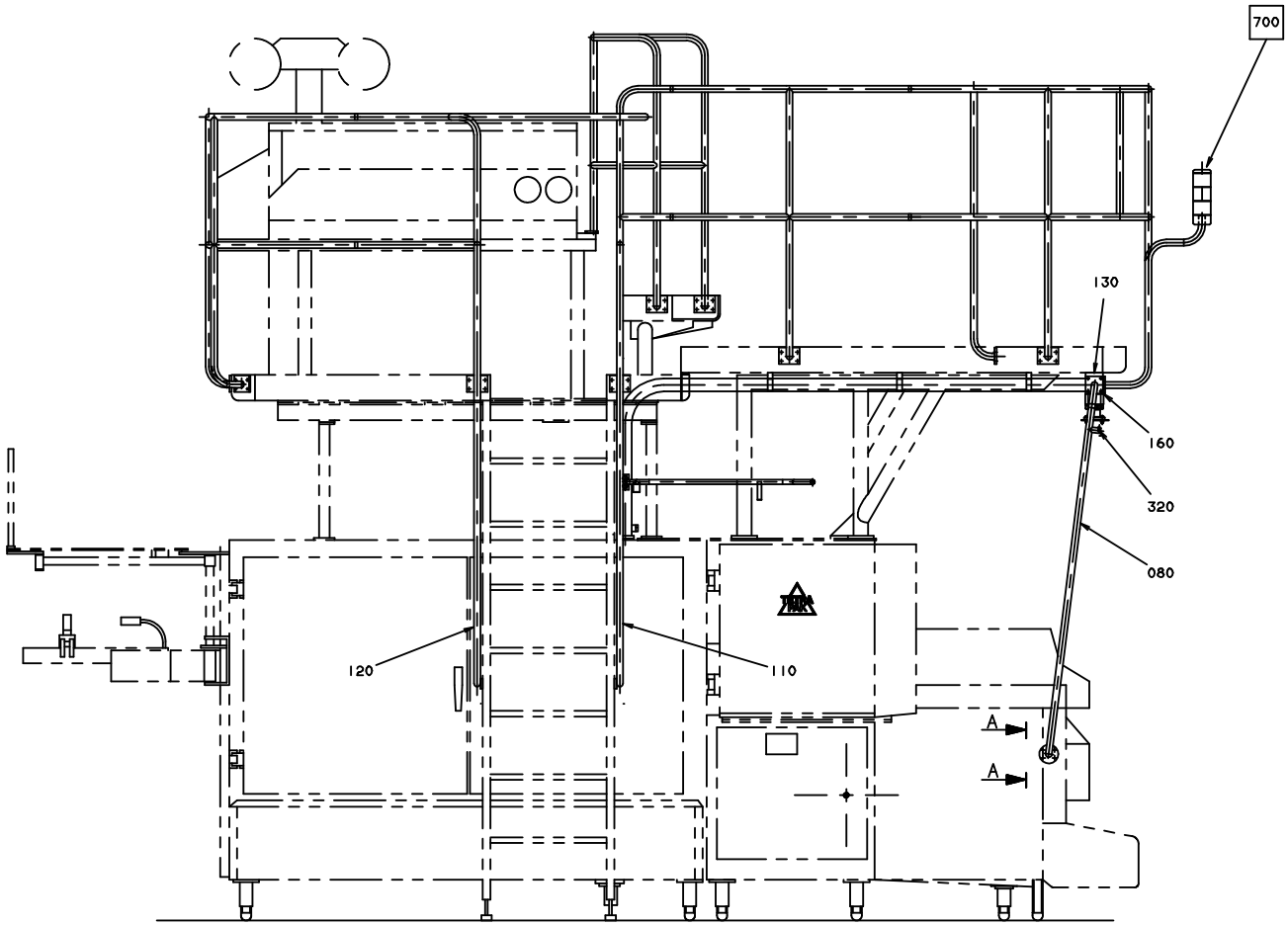

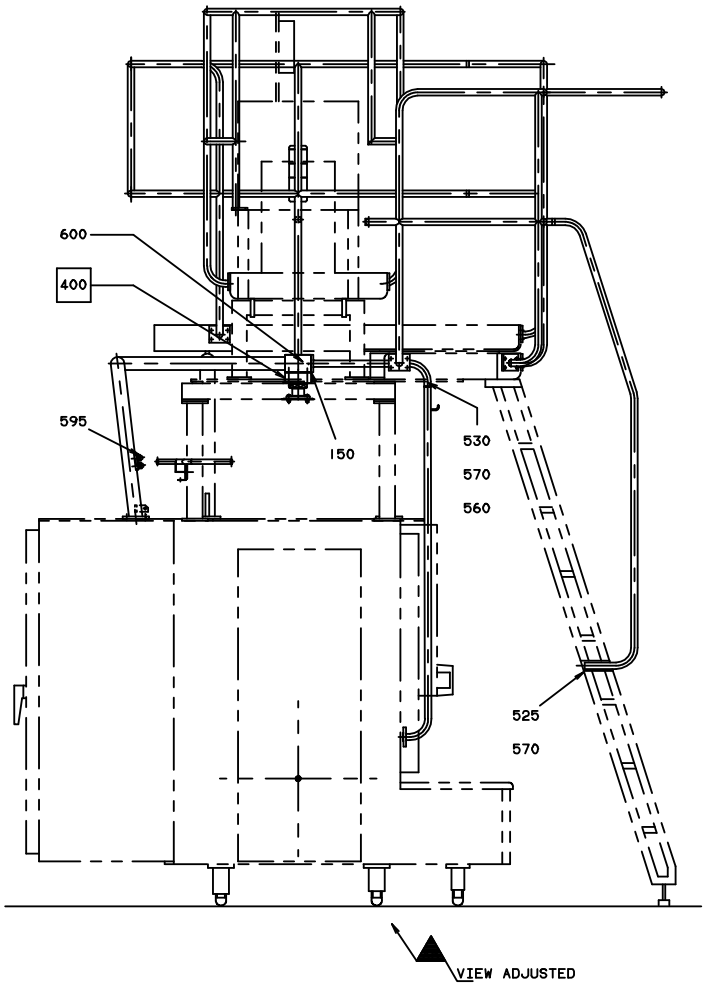

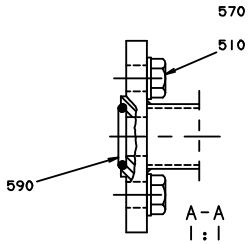

TBA/9R 100V-120V UPTAB

Pos	Part No	SP	UN	Qty	Description	Page No
SOURCE,TBA/9-100V OR SOURCE,TBA/9-110V						
010	456979-0002	-		1	CABLE CONDUIT	
020	469023-0000	-		1	RAILING	
030	1529031-0000	-		1	RAILING	
040	469025-0000	-		1	RAILING	
070	441512-0000	-		1	STRUT END	
080	441687-0000	-		1	STRUT	
090	491138-0000	-		1	STRUT	
110	469490-0000	-		1	HAND RAIL	
120	469489-0000	-		1	HAND RAIL	
500	311103-0356	-		2	PIN,STRIGHT M6 6X28 RFR	
510	312105-0449	-		44	SCREW M6S ISO 4017 M8X16 A480	
530	312115-0453	-		3	SCREW MC6S M8X25 A280	
535	312115-0457	-		2	SCREW MC6S M8X35 A280	
560	312605-0318	-		4	HEXAGON NUT, M6M M8 A280	
570	315105-0165	-		60	WASHER PLAIN, BRB, 8,4/16,H=1,5	
SOURCE,TBA/9-120V						
010	751075-0002	-		1	CABLE CONDUIT	
020	B469967-0000	-		1	RAILING	
	751483-0000	-		*2*	*NUT*	
030	B469965-0000	-		1	RAILING	
	751482-0000	-		*4*	*NUT*	
040	751309-0000	-		1	RAILING	
050	B751051-0000	-		1	RAILING	
	751483-0000	-		*4*	*NUT*	
060	B751052-0000	-		1	RAILING	
	751482-0000	-		*4*	*NUT*	
065	1529032-0000	-		1	RAILING	
070	751056-0000	-		1	STRUT END	
080	751055-0000	-		1	STRUT	
100	B751057-0000	-		1	RAILING	
	751482-0000	-		*2*	*NUT*	
110	B751050-0000	-		1	HAND RAIL	
	751483-0000	-		*1*	*NUT*	
120	B751049-0000	-		1	HAND RAIL	
	751483-0000	-		*1*	*NUT*	
400	A751332-0100	-		1	BRACKET	**271**
510	312105-0449	-		49	SCREW M6S ISO 4017 M8X16 A480	
530	312115-0453	-		1	SCREW MC6S M8X25 A280	
560	312605-0318	-		10	HEXAGON NUT, M6M M8 A280	
570	315105-0165	-		58	WASHER PLAIN, BRB, 8,4/16,H=1,5	

Pos	Part No	SP	UN	Qty	Description	Page No
Common Parts						
130	469026-0000	-		1	INTERMEDIATE PART	
140	469028-0000	-		1	GASKET	
150	751182-0000	-		1	GASKET	
160	751183-0000	-		1	GASKET	
170	751484-0000	-		12	CLAMPING RING	
180	751485-0000	-		12	SCREW	
190	751745-0000	-		1	CABLE CONDUIT	
320	90224-0234	A		1	BRACKET	
525	312105-0459	-		4	SCREW M6S ISO 4014 M8X40 A480	
550	312105-0455	-		4	SCREW M6S ISO 4017 M8X30 A480	
590	315202-0215	A		1	O-RING 19,2X3 MM	
595	352103-0100	-		2	CABLE GLAND, STR 9, PR15,2/PG9	
600	352103-0108	-		1	CABLE GLAND, ST 13,5 , PR20,4/PG13,5	
700	A1529033-0100	-		1	ALARM DEVICE	**273**

Machine Type | Group Description | Used-In | Group Number | Page No

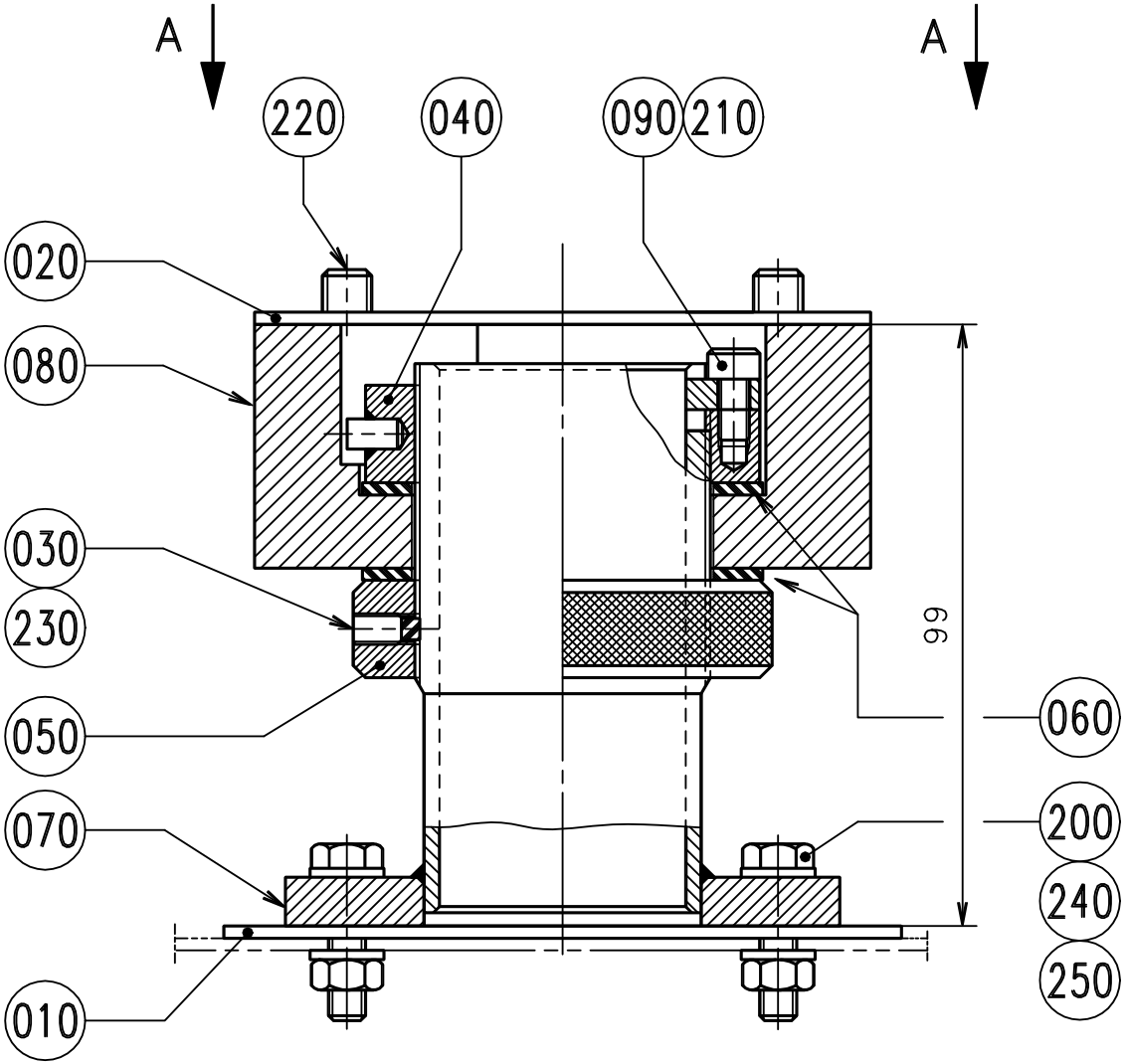

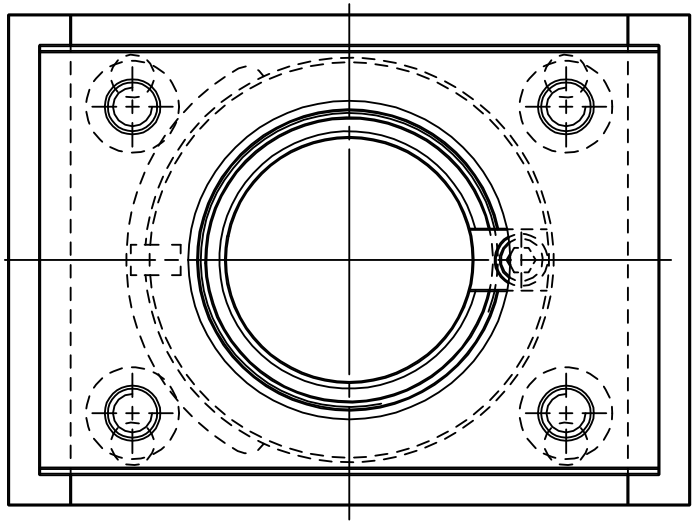

A – A

ECM: 102922 - 20020207
Group number: 751332-0100
Assembly Drawing: 751332-1_1_AA

Issue: 20020822

Pos	Part No	SP	UN	Qty	Description	Page No
Common Parts						
010	441448-0000	B		1	GASKET	
020	490500-0000	B		1	GASKET	
030	751095-0000	B		2	PLUG	
040	751096-0000	B		1	LOCKING CIRCLIP	
050	751097-0000	B		1	BRAKE RING	
060	751098-0000	B		2	FRICTION DISC	
070	751099-0000	B		1	LEAD-IN	
080	751100-0000	B		1	BEARING HOUSING	
090	751108-0000	B		1	SECURING PLATE	
200	312105-0372	-		4	SCREW M6S ISO 4017 M6X25 A480	
210	312115-0325	-		1	SCREW HEX.SOCK.HD.MC6S-TT 5X10 A480	
220	312115-0459	-		4	SCREW MC6S M8X40 A280	
230	312318-0323	-		2	SCREW SOCK.SET CUP P MSK6SS M5X8 A4	
240	312605-0316	-		4	HEXAGON NUT, M6M M6 A280	
250	315105-0153	-		8	WASHER PLAIN, BRB, 6,4/12,H=1,5	

Pos	Part No	SP	UN	Qty	Description	Page No

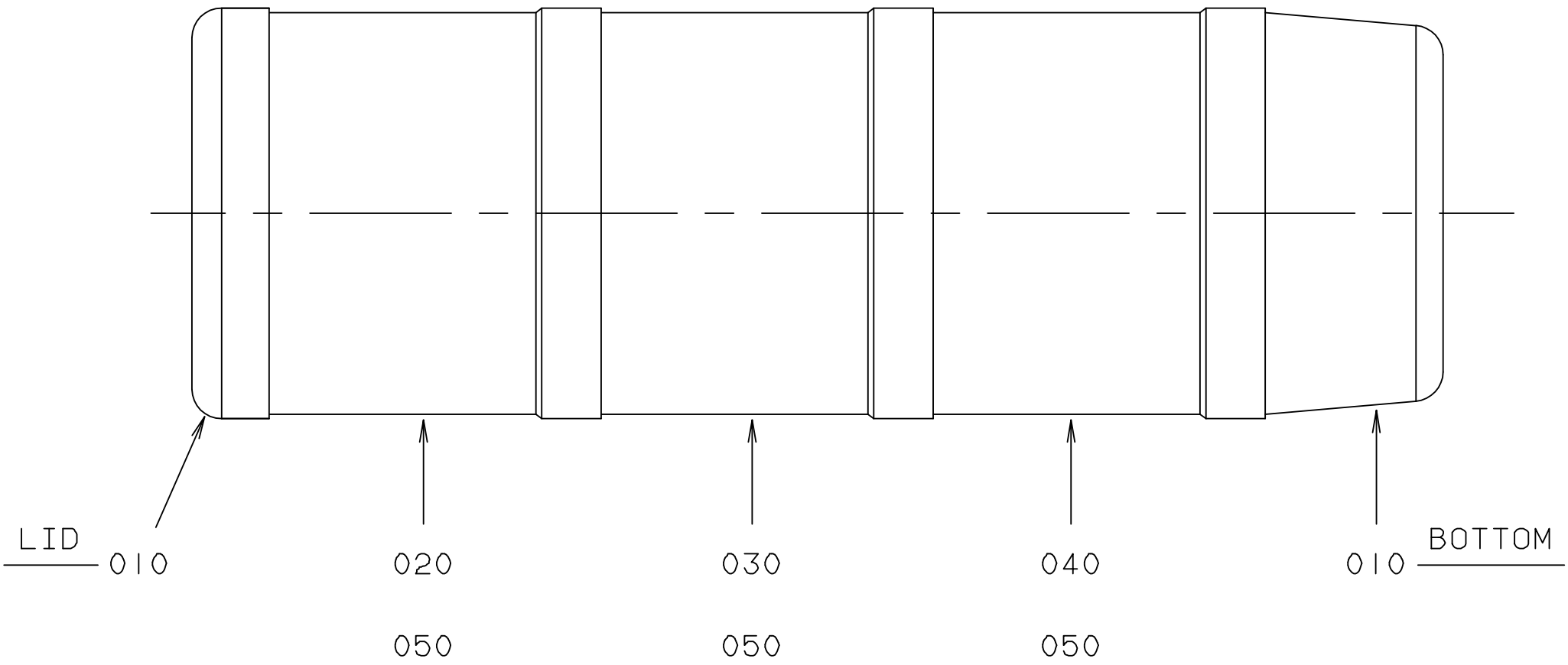
LID
010
020
030
040
010
BOTTOM
050
050
050

ECM: 84187 - 20010226
Group number: 1529033-0100
Assembly Drawing: 1529033-1_1_AA

Issue: 20020822

Pos	Part No	SP	UN	Qty	Description	Page No
Common Parts						
010	90458-0292	-		1	BASE, KT70-1001	
020	90458-0293	-		1	LIGHT ELEMENT, RED, KL70-401R	
030	90458-0294	-		1	LIGHT ELEMENT, YELLOW, KL70-401Y	
040	90458-0295	-		1	LIGHT ELEMENT, BLUE, KL70-401L	
050	90036-0068	-		3	BULB 6.5W 24V	

Pos	Part No	SP	UN	Qty	Description	Page No

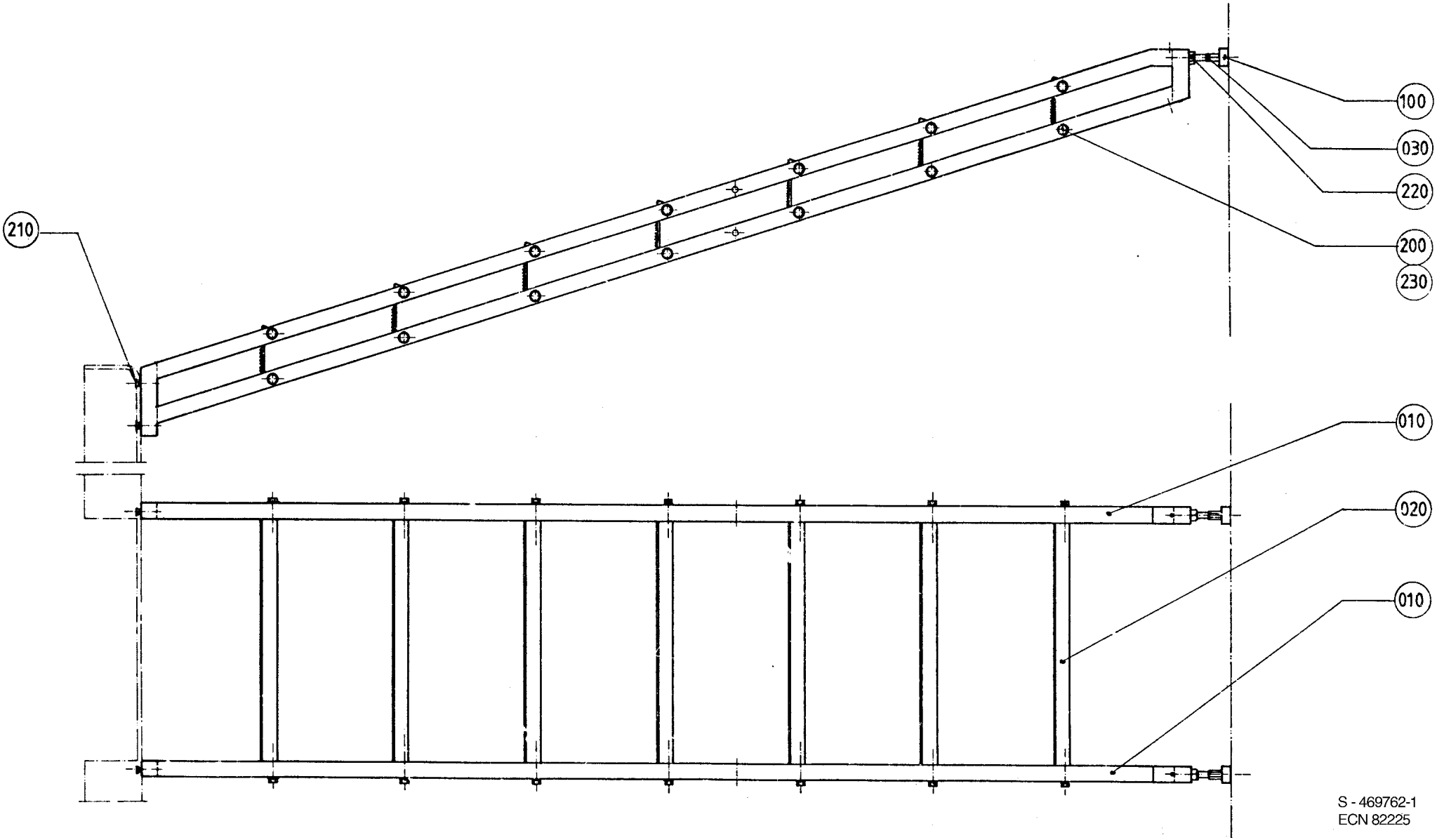
210
100
030
220
200
230
010
020
010
S - 469762-1
ECN 82225

ECM: - -
Group number: 469762-0100
Assembly Drawing: 469762-1_1_AA

Issue: 20020822

Pos	Part No	SP	UN	Qty	Description	Page No
Common Parts						
010	469008-0000	-		2	SIDE PIECE	
020	441679-0000	-		7	STAIR	
030	B441905-0000	-		2	RETARD PIN	
	312911-0126	*-*		*1*	*HELI-COIL M8X1,5D*	
100	90347-0004	-		2	VIBRATION DAMPER D=30 TH=M8 H=17 H2=21MM	
200	312105-0459	-		28	SCREW M6S ISO 4014 M8X40 A480	
210	312155-0449	-		4	SCREW HEX.SOCK.COUNT.MF6S M8X16 A280	
220	312605-0322	-		2	HEXAGON NUT, M6M M12 A280	
230	315105-0165	-		28	WASHER PLAIN, BRB, 8,4/16,H=1,5	

Pos	Part No	SP	UN	Qty	Description	Page No

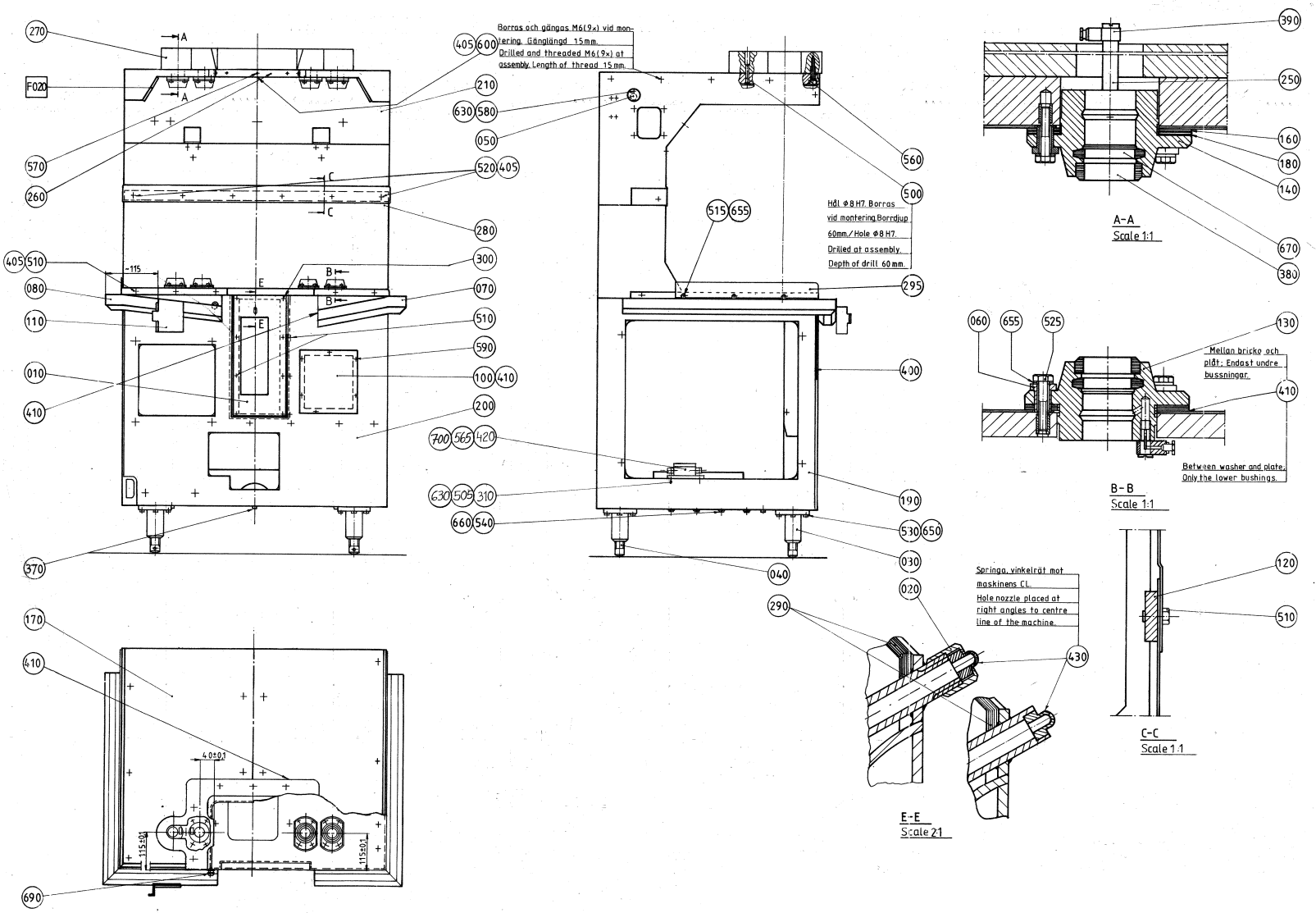
Borras och gängas M6(9x) vid montering. Gänglängd 15mm.
Drilled and threaded M6(9x) at assembly. Length of thread 15mm.
Hål Ø8 H7. Borras vid montering. Borrdjup 60mm./ Hole Ø8 H7. Drilled at assembly. Depth of drill 60mm.
Springa, vinkelrät mot maskinens CL.
Hole nozzle placed at right angles to centre line of the machine.
Mellan bricka och plåt; Endast undre bussningar.
Between washer and plate. Only the lower bushings.
A-A
Scale 1:1
B-B
Scale 1:1
C-C
Scale 1:1
E-E
Scale 2:1

ECM: 104276 - 20020402
Group number: 1529438-0100
Assembly Drawing: 1529438-1_1_AA

Issue: 20020822

Pos	Part No	SP	UN	Qty	Description	Page No
SOURCE,TBA/9-100V OR SOURCE,TBA/9-110V OR SOURCE,TBA/9-120V						
050	272058-0000	-		2	LID	
210	751124-0000	-		1	FRONT PLATE	
580	312125-0329	-		2	SCREW PAN HEAD MCS M5X16 SS	
630	315105-0146	-		6	WASHER PLAIN, BRB, 5,3/10,H=1	
Common Parts						
010	1360742-0000	-		1	PLATE	
020	A441534-0100	-		2	LIGHT FIXTURE	**245**
030	469095-0000	B		4	HOLDER	
040	469096-0000	B		4	LEG	
060	751085-0000	-		32	BUSHING	
070	978413-0000	-		1	CHUTE	
080	272671-0000	-		1	CHUTE	
100	295302-0000	-		1	HATCH	
110	441162-0000	-		1	PROTECTION PLATE	
120	441212-0000	B		1	HOLDER	
130	441217-0000	A		4	BUSHING LOWER	
140	441218-0000	A		4	BUSHING UPPER	
160	441221-0000	-		8	WASHER	
170	1529205-0000	-		1	MACHINE BODY	
180	441593-0000	-		8	GASKET	
190	441658-0000	-		1	FRONT PLATE	
200	456573-0000	-		1	FRONT PLATE	
250	469937-0000	-		4	PIPE	
260	441677-0000	-		1	FRONT PLATE	
270	441806-0000	-		1	COLLAR	
280	441809-0000	-		1	FRONT PLATE	
290	441810-0000	B		1	GASKET	
295	490986-0000	-		1	SHEET	
300	6278-0000	A		1	WASHER	
310	1529206-0000	-		2	PLATE	
370	90087-0002	-		3	PIPE PLUG	
380	90091-0106	A		8	SCRAPER 30X40X10 MM	
390	90137-0010	-		8	BANJO CONN. M6, D=2,5 MM	
400	90143-0010	-	MM	260	STRIP	
405	90157-0016	-	ML	1	LOCKING FLUID	
410	90157-0022	-	L	1	SEALING COMPOUND	
420	90265-0037	-		2	CONNECTION BOX ROSE	
430	90424-0027	A		1	SPRAY NOZZLE TIP, 8613-8V-TC	
500	311103-0415	-		3	PARALLELL PIN, CP, M6, 8X55 MM	
505	312105-0327	-		4	SCREW M6S ISO 4017 M5X12 A480	
510	312105-0366	-		27	SCREW M6S M6X12 A280	
515	312105-0368	-		3	SCREW M6S M6X16 A280	
520	312105-0370	-		2	SCREW M6S ISO 4017 M6X20 A480	
525	312105-0374	-		32	SCREW M6S ISO 4014 M6X30 A480	
530	312105-0451	-		16	SCREW M6S ISO 4017 M8X20 A480	
540	312105-0489	-		8	SCREW M6S ISO 4017 M10X16 A480	
560	312115-0503	-		10	SCREW MC6S M10X60 A280	
565	312125-0291	-		4	SCREW PAN HEAD MCS M4X12 SS	
570	312125-0323	-		7	SCREW PAN HEAD MCS M5X8 SS	
590	312155-0325	-		6	SCREW HEX.SOCK.COUNT.MF6S M5X10 A280	
600	312155-0366	-		9	SCREW HEX.SOCK.COUNT.MF6S M6X12 A280	
650	315105-0165	-		16	WASHER PLAIN, BRB, 8,4/16,H=1,5	
655	315105-0153	-		35	WASHER PLAIN, BRB, 6,4/12,H=1,5	
660	315233-0109	A		8	WASHER PL.RND.NYL.10,3/14,H=1	
670	315259-0102	A		8	FELT SEAL 22-47 MM	
690	352103-0100	-		1	CABLE GLAND, STR 9, PR15,2/PG9	
700	352103-0106	-		4	CABLE GLAND, ST 11, PR18,6/PG11	

Machine Type | Group Description | Used-In | Group Number | Page No

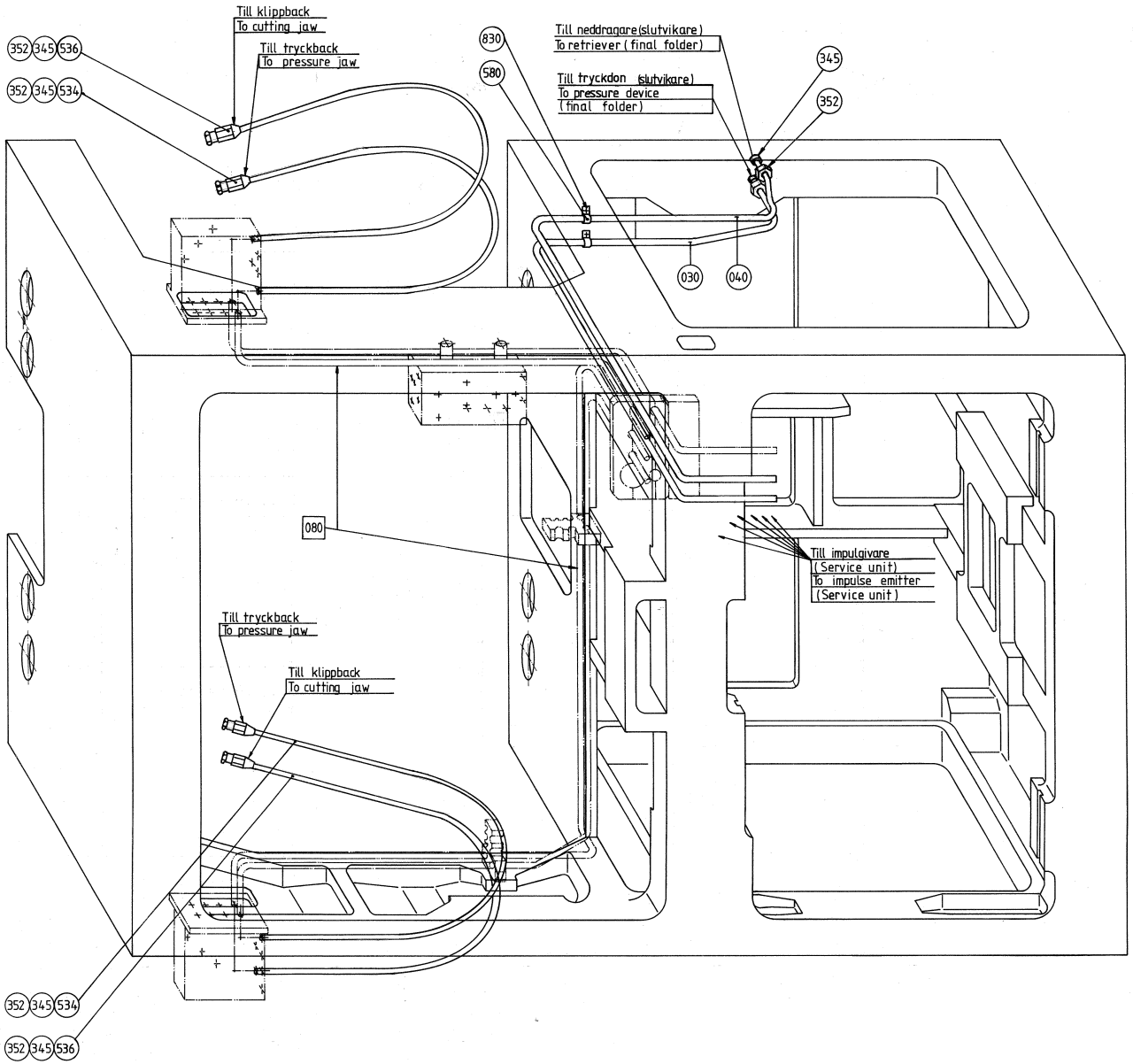
Till klippback
To cutting jaw
Till tryckback
To pressure jaw
352 345 536
352 345 534
830
580
Till neddragare (slutvikare)
To retriever (final folder)
Till tryckdon (slutvikare)
To pressure device
(final folder)
345
352
030
040
080
Till impulgivare
(Service unit)
To impulse emitter
(Service unit)
Till tryckback
To pressure jaw
Till klippback
To cutting jaw
352 345 534
352 345 536

ECM: 108643 - 20020506
Group number: 1529355-0100
Assembly Drawing: 1529355-1_1_AA

Issue: 20020822

Pos	Part No	SP	UN	Qty	Description	Page No
SOURCE,TBA/9-100V OR SOURCE,TBA/9-110V OR SOURCE,TBA/9-120V						
050	272346-0000	-		1	PIPE	
520	90134-0052	A		1	PLUG DOSING BLOCK	
640	90166-0081	-	M	13	TUBE 6 MM PA BLUE	
641	90166-0013	-	M	10	TUBE 8 MM PA BLUE	
650	90266-0006	-	MM	1	TUBE	
Common Parts						
010	B1360667-0000	-		1	PIPE WATER	
	342708-0109	-		*2*	*REINFORCING RING VSH 15X1 MM*	
	90418-0053	-		*6*	*ELBOW, 90, INT. CONN. NO. 7090-15*	
020	1529341-0000	-		1	PIPE	
030	271742-0000	-		1	PIPE	
040	271743-0000	-		1	PIPE	
060	469133-0000	-		1	PIPE	
070	A271261-0500	-		1	CLEANING SYSTEM	**261**
070	469132-0000	-		1	PIPE	
075	469131-0000	-		2	LACE	
080	A1529356-0100	-		1	DISTRIBUTOR BLOCK	**287, 289**
080	271621-0000	-		1	LACE	
090	271622-0000	-		1	LACE	
100	271623-0000	-		1	LACE	
120	295986-0000	-		1	HOLDER	
130	456407-0000	-		1	LACE	
140	491390-0000	-		1	PIPE CENTRAL LUBRICATION	
150	491859-0000	-		1	HOLDER	
160	491860-0000	-		1	HOLDER	
170	491861-0000	-		1	HOLDER	
180	491862-0000	-		1	HOLDER	
310	90028-0001	A		5	CONE 5/32"	
320	90028-0020	A		23	CONE TUBE 2,5MM	
330	90028-0021	A		6	CONE TUBE 4 MM	
340	90030-0051	A		1	CONN. STR., 6-R1/8, EXT. THREAD	
345	90030-0098	A		10	ACCESSORIES, FERRULE 8	
350	90030-0162	A		4	CONN. STR. 6-M10X1, EXT. THREAD	
352	342703-0208	A		10	NUT, PIPES & CONNECTORS,NUT M-8 SS	
355	90030-0200	-		2	CONN. ELBOW, 6-M10X1, EXT.THREAD	
360	90032-0014	-		1	DISTR. BLOCK & DIST.5/16-24UNF X6	
370	90032-0026	-		1	DISTR. BLOCK, 5/16-24UNF X2	
390	90032-0030	-		1	DISTR. BLOCK, 5/16-24UNF X3	
391	90032-0031	-		1	DISTR. BLOCK, 5/16-24UNF X5	
400	90032-0038	-		2	BLOCK 2 WAYS	
410	90032-0039	-		5	BLOCK 4 WAYS	
420	90090-0008	A		2	BALL, D=7,1 MM	
430	90092-0052	A		10	METERING VALVE 10 MM3	
440	90092-0053	A		13	METERING VALVE 30 MM3	
450	90134-0003	A		5	BUSHING	
470	90134-0030	A		4	SLEEVE FOR PLASTIC TUBE	
480	90134-0031	A		7	SLEEVE FOR PLASTIC TUBE	
490	B90134-0034	A		10	NIPPLE	
	90030-0101	-		*1*	*TAPER*	
500	90134-0038	A		9	BUSHING/NUT INLET/OUTLET 4 MM	
510	90134-0039	A		24	BUSHING VALVE CONNECTION 2,5 MM	
534	90148-0037	A		2	HOSE	
536	90148-0038	A		2	HOSE	
540	90151-0001	-	MM	2200	BRASS PIPE DI=2,6 MM	
550	90266-0019	-	MM	7000	PIPE	
560	90165-0002	-		2	CLIP	
580	90165-0007	-		2	PIPE CLIP FOR TUBE D=8 MM	
590	90165-0022	-		8	PIPE CLIP, FOR TUBE D=2,5 MM, B-3570	
600	90165-0023	-		6	CLIP	
605	90165-0039	-		1	PIPE CLAMP, RSGU 1.15/12, D=15 MM	
610	90166-0108	-	MM	1	TUBE 6 MM PA,TRANSP.	
620	90166-0109	-	MM	1	TUBE 4 MM PA,TRANSP.	
630	90166-0118	-	M	11	TUBE 8 MM PA BLACK	
660	312101-0337	-		4	SCREW M6S M5X35 FZB	
790	312105-0289	-		2	SCREW M6S ISO 4017 M4X10 A480	
800	312105-0295	-		8	SCREW M6S ISO 4017 M4X20 A480	
810	312105-0297	-		12	SCREW M6S ISO 4017 M4X25 A480	
820	312105-0372	-		2	SCREW M6S ISO 4017 M6X25 A480	
830	312115-0289	-		2	SCREW HEX.SOCK.HD.MC6S-TT 4X10 A480	
840	312125-0287	-		16	SCREW PAN HEAD MCS M4X8 SS	
845	312125-0323	-		1	SCREW PAN HEAD MCS M5X8 SS	
850	312165-0325	-		2	SCREW SLOT.RAIS.COUNT.HD.MKFS 5X10 SS	
854	315101-0146	-		4	WASHER PLAIN, BRB, 5,3/10 H=1	
857	315105-0136	-		8	WASHER PLAIN, BRB, 4,3/8,H=0,8	
860	315234-0109	A		1	WASHER,PL.RND.CU.10,3/13,5 H=1,0	
865	342727-0102	-		1	CONN. PIPE G-6-LFZB	
867	342736-0109	-		1	CONN. ELBOW W-12	
870	342767-0100	A		1	CONN. BULKHEAD G1/8	
880	342797-0121	A		1	CONN. BANJO, RINGPIECE 6-1/8	
890	342980-0303	A		1	BANJO-HOLLOW BOLT COUPL,EXT.THR.01-G1/8"	
900	352113-0101	-		4	CLIP STRIP, 92X2,5 MM	
910	359000-0400	-		22	MARKING CO2/4"0"	

Machine Type | Group Description | Used-In | Group Number | Page No

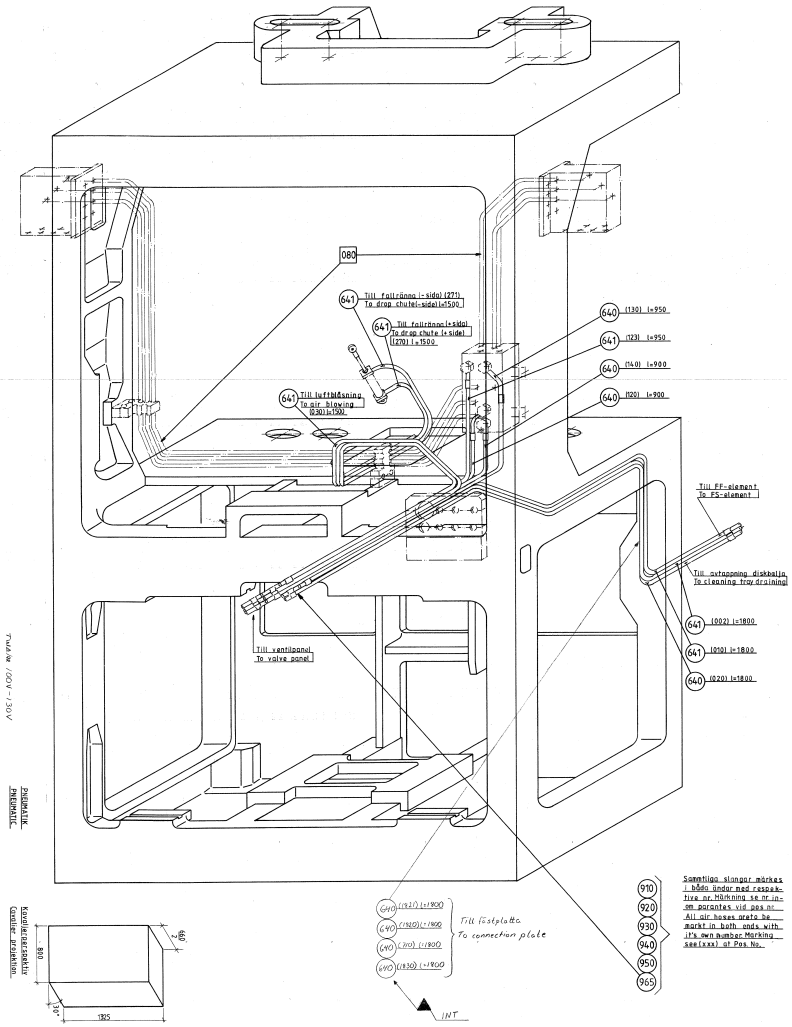
080
641 Till fallränna (-sida) (271)
To drop chute(-side) L=1500
641 Till fallränna(+sida)
To drop chute (+side)
(270) L=1500
640 (130) L=950
641 (123) L=950
640 (140) L=900
640 (120) L=900
641 Till luftblåsning
To air blowing
(230) L=1500
Till PF-elenent
To FS-elenent
Till avtappning diskbalja
To cleaning tray draining
641 (022) L=1800
641 (050) L=1800
640 (020) L=1800
Till ventilpanel
To valve panel
910
920
930
940
950
965
Samtliga slangar märkes i båda ändar med respektive nr. Nämnins se nr inom parantes vid pos nr
All air hoses mrkd to be marki in both ends with it's own number Marking see (xxx) of Pos No.
Till fästplatta
To connection plate
INT
PNEUMATIK
PNEUMATIC
Kopplingsreservskåp
Coupling reservation
800
600
1925

Pos	Part No	SP	UN	Qty	Description	Page No
Common Parts (Cont'd)						
920	359000-0401	-		20	MARKING COLLAR 2/4 "1" YELLOW	
930	359000-0402	-		14	MARKING COLLAR 2/4 "2" YELLOW	
940	359000-0403	-		8	MARKING COLLAR PA2/4 "3" YELLOW	
950	359000-0404	-		2	MARKING COLLAR PA2/4 "4" YELLOW	
951	359000-0405	-		4	MARKING CO2/4"5"	
952	359000-0406	-		4	MARKING COLLAR PA2/4 "6" YELLOW	
965	359000-0407	-		8	MARKING COLLAR PA2/4 "7" YELLOW	
990	359000-0771	-		16	MARKING CO2/4"V"	

Pos	Part No	SP	UN	Qty	Description	Page No

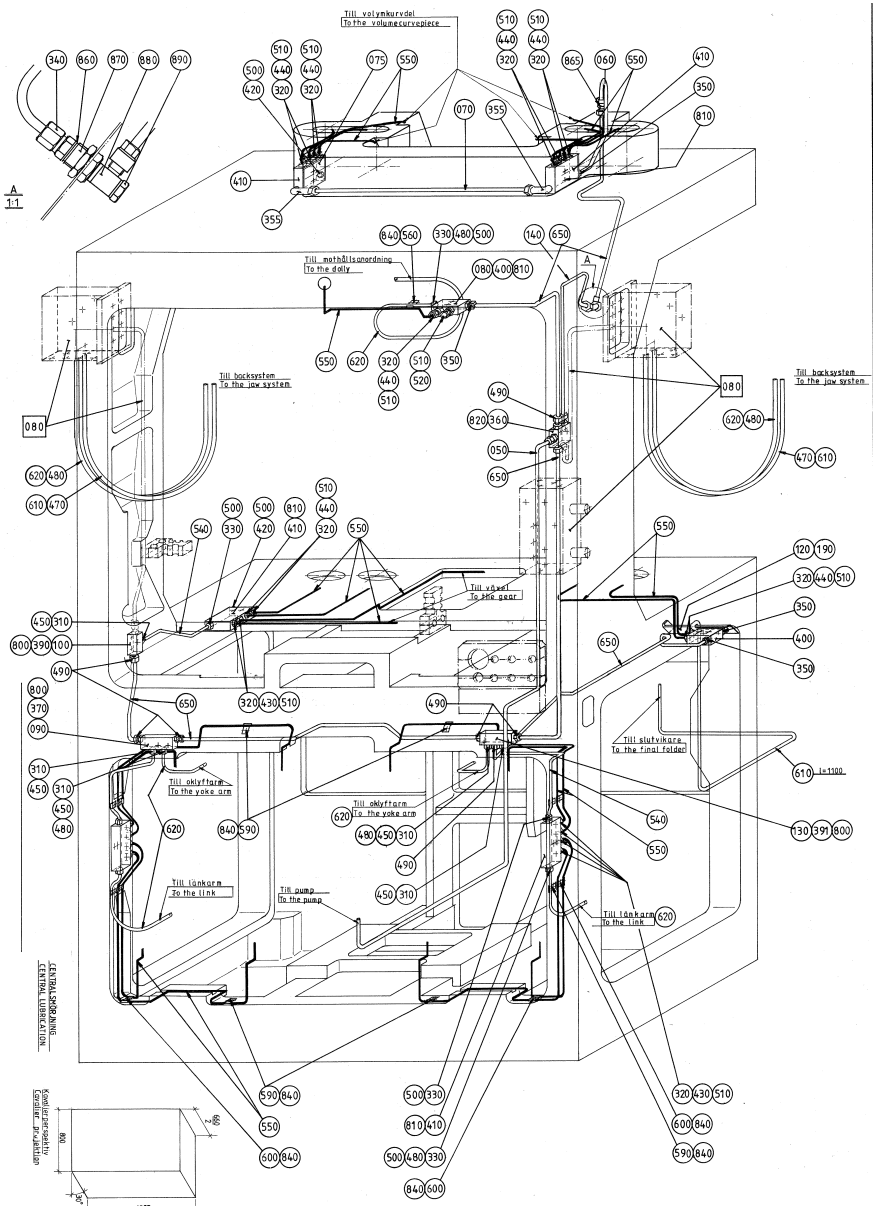
Till volymkurvdel
To the volumecurvepiece
A
1:1
Till mothållsanordning
To the dolly
Till backsystem
To the jaw system
Till backsystem
To the jaw system
Till växel
To the gear
Till slutvikare
To the final folder
Till oklyftarm
To the yoke arm
Till oklyftarm
To the yoke arm
Till länkarm
To the link
Till pump
To the pump
Till länkarm
To the link
CENTRAL SMÖRJNING
CENTRAL LUBRICATION
Kondiserpenetry
Consistency penetration

Pos	Part No	SP	UN	Qty	Description	Page No
SEE PREVIOUS LISTS PAGES: 279, 281.						

Pos	Part No	SP	UN	Qty	Description	Page No

Machine Type	Group Description	Used-In	Group Number	Page No

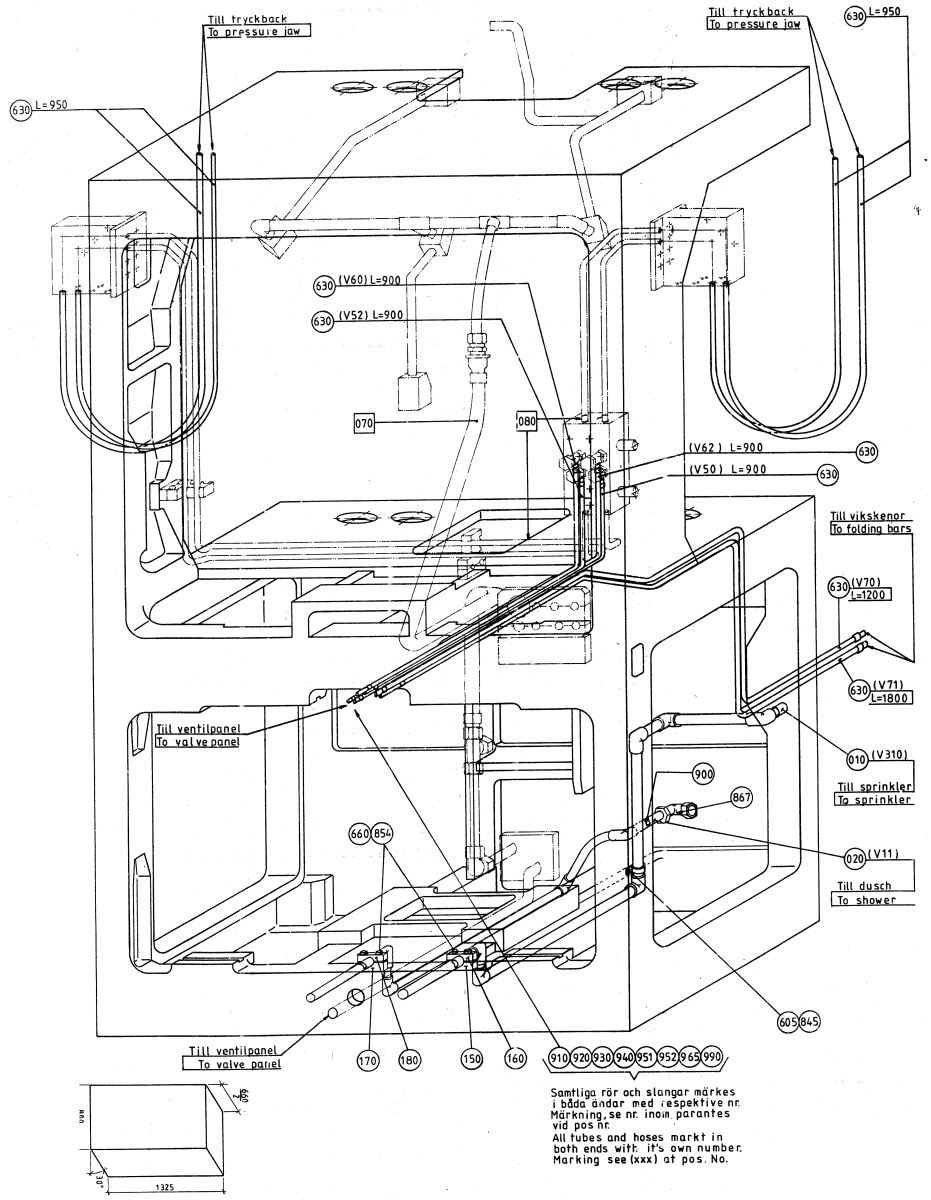
Till tryckback
To pressure jaw
630 L=950
630 (V60) L=900
630 (V52) L=900
070
080
(V62) L=900
(V50) L=900
Till vikskenor
To folding bars
630 (V70) L=1200
630 (V71) L=1800
Till ventilpanel
To valve panel
010 (V310)
Till sprinkler
To sprinkler
900
867
660 854
020 (V11)
Till dusch
To shower
605 845
170 180 150 160 910 920 930 940 951 952 965 990
Samtliga rör och slangar märkes i båda ändar med respektive nr. Märkning, se nr. inom parantes vid pos nr.
All tubes and hoses markt in both ends with it's own number. Marking see (xxx) at pos. No.
1325

Pos	Part No	SP	UN	Qty	Description	Page No
SEE PREVIOUS LISTS PAGES: 279, 281.						

Pos	Part No	SP	UN	Qty	Description	Page No

Machine Type	Group Description	Used-In	Group Number	Page No

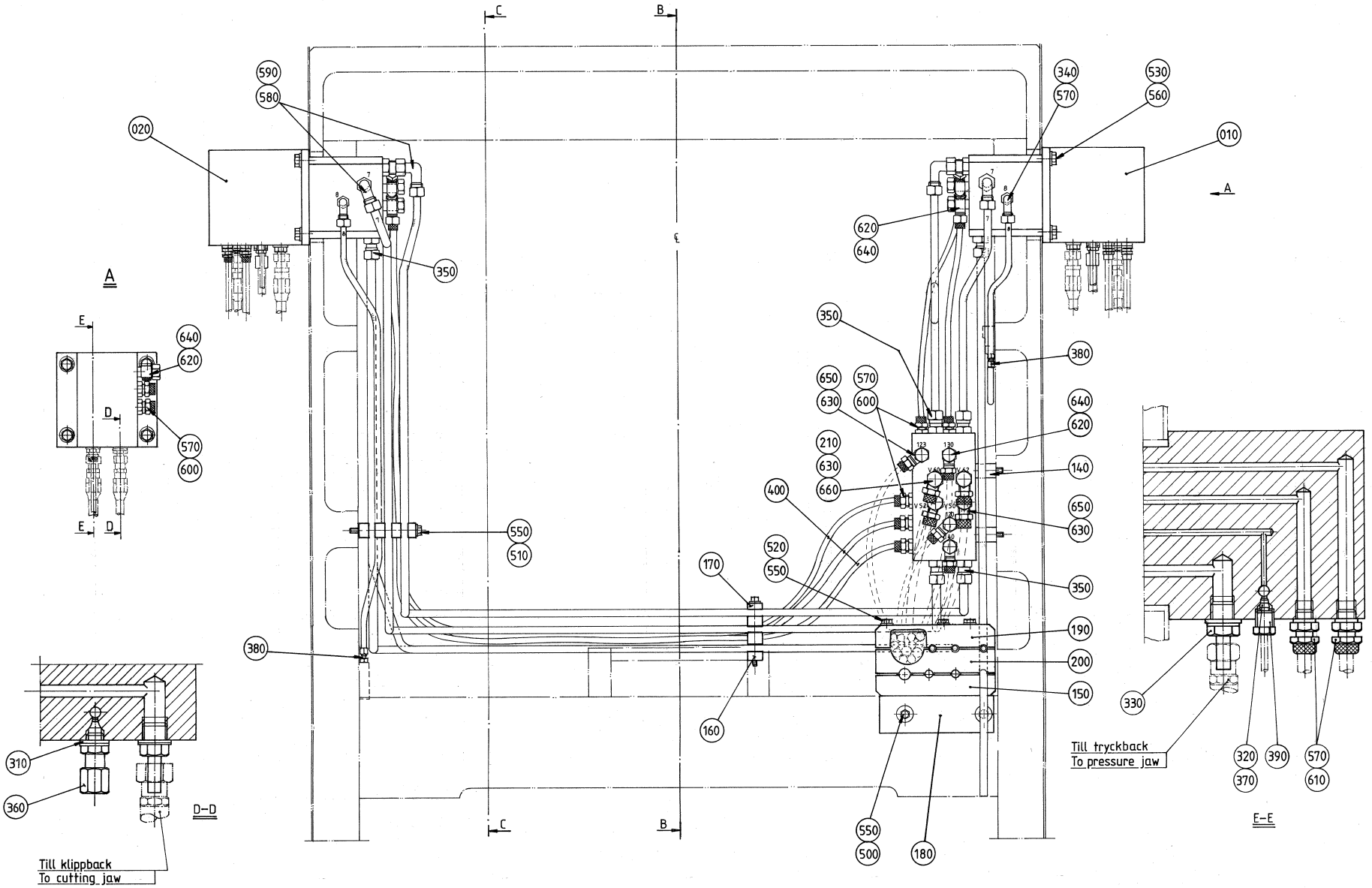
590
580
020
350
340
570
530
560
010
620
640
A
E
D
640
620
570
600
550
510
380
650
630
210
660
400
520
550
170
160
140
190
200
150
330
320
370
390
570
610
E–E
310
360
D–D
Till klippback
To cutting jaw
Till tryckback
To pressure jaw
500
180

ECM: 102918 - 20020207
Group number: 1529356-0100
Assembly Drawing: 1529356-1_1_AA

Issue: 20020822

Pos	Part No	SP	UN	Qty	Description	Page No
Common Parts						
010	491255-0000	-		1	DISTRIBUTOR BLOCK LEFT	
020	491254-0000	-		1	DISTRIBUTOR BLOCK RIGHT	
030	491256-0000	-		1	DISTRIBUTOR BLOCK LEFT	
040	491244-0000	-		1	PIPE WATER	
050	491245-0000	-		1	PIPE CENTRAL LUBRICATION	
060	491246-0000	-		1	PIPE CENTRAL LUBRICATION	
070	491247-0000	-		1	PIPE WATER	
080	491248-0000	-		1	PIPE WATER	
090	491249-0000	-		1	PIPE HYDRAULIC	
100	491250-0000	-		1	PIPE HYDRAULIC	
110	491251-0000	-		1	PIPE WATER	
120	491252-0000	-		1	PIPE HYDRAULIC	
130	491253-0000	-		1	PIPE HYDRAULIC	
140	271088-0000	-		2	SPACER	
150	271323-0000	-		1	HOLDER	
160	271343-0000	-		2	HOLDER	
170	271344-0000	-		2	HOLDER	
180	456561-0000	-		1	BRACKET	
190	1360668-0000	-		1	HOLDER	
200	469001-0000	-		1	HOLDER	
210	469071-0000	B		2	SPACER	
310	90005-0045	-		2	WASHER PLAIN ROUND 10(3/8)/14,H=2	
320	90028-0021	A		2	CONE TUBE 4 MM	
330	90030-0065	A		4	PIPE CONNECTION	
340	90030-0171	A		2	ADJUSTABLE ELBOW CONNECTION,EXT 6-G1/8	
350	90030-0185	A		8	CONN. STR. GA-8-G1/4	
360	90134-0019	A		2	CONN. STRAIGHT, GE 6-LM FZB	
370	90134-0031	A		2	SLEEVE FOR PLASTIC TUBE	
380	B90134-0034	A		2	NIPPLE	
	90030-0101	-		*1*	*TAPER*	
390	90134-0038	-		2	BUSHING/NUT INLET/OUTLET 4 MM	
400	90166-0132	-	M	5	TUBE 6 MM PA,TRANSP.	
500	312101-0372	-		2	SCREW M6S M6X25 FZB	
510	312101-0385	-		2	SCREW M6S M6X75 FZB	
520	312101-0388	-		3	SCREW M6S M6X90 FZB	
530	312105-0453	-		8	SCREW M6S ISO 4017 M8X25 A480	
540	312111-0471	-		2	SCREW HEX.SOCK.HD.MC6S-TT 8X100 88 FZ	
550	315101-0153	-		7	WASHER PLAIN, BRB, 6,4/12 H=1,5	
560	315105-0165	-		8	WASHER PLAIN, BRB, 8,4/16,H=1,5	
570	315211-0105	A		6	GASKET BOLT HEAD 10,4X15,9X2 MM G1/8	
580	315211-0108	A		4	GASKET BOLT HEAD 13,7X20,6X2 MM G1/4	
590	342738-0208	A		4	ADJUSTABLE ELBOW CONNECTION,EXT 8-G1/4	
600	342722-0202	A		10	PIPE COUPLING 1/8" D=6MM	
610	342921-0121	A		4	STRAIGHT COUPLING,EXT.THREADED 8/6-G1/8"	
620	342732-0102	A		11	ELBOW PIPE JOINT, EXT.THREAD, D=6MM-G1/8	
630	342980-0122	A		5	BANJO-CONNECTION,RING 8/6-G1/4"	
650	342980-0304	A		3	BANJO-HOLLOW BOLT COUPL,EXT.THR.01-G1/4"	
660	342980-0314	A		2	BANJO-HOLLOW BOLT COUPL,EXT.THR.02-G1/4"	

Machine Type	Group Description	Used-In	Group Number	Page No

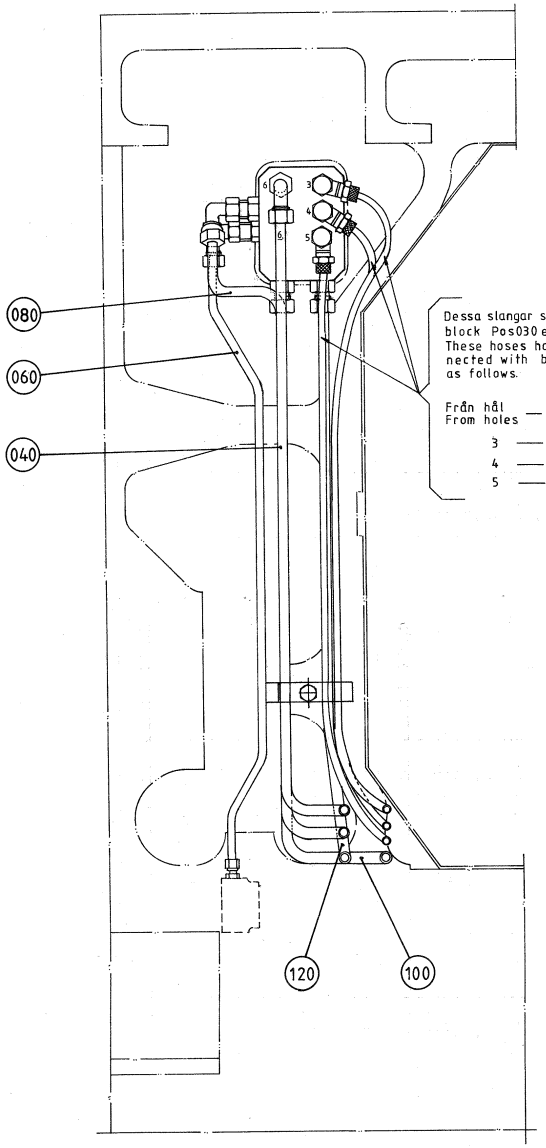

Dessa slangar skall kopplas till block Pos030 enl. följande.
These hoses have to bee connected with block Pos 030 as follows.

Från hål / From holes		Till hål / To holes
3	—	10
4	—	11
5	—	12

C-C

För att undvika felaktiga monteringar av rör är både rör och hål i blocken märkta med ett nummer vilka skall referera till varandra

To avoid mistakes when assembling pipes both pipes and holes in the blocks are marked with a number, which have to corresponds to eachother

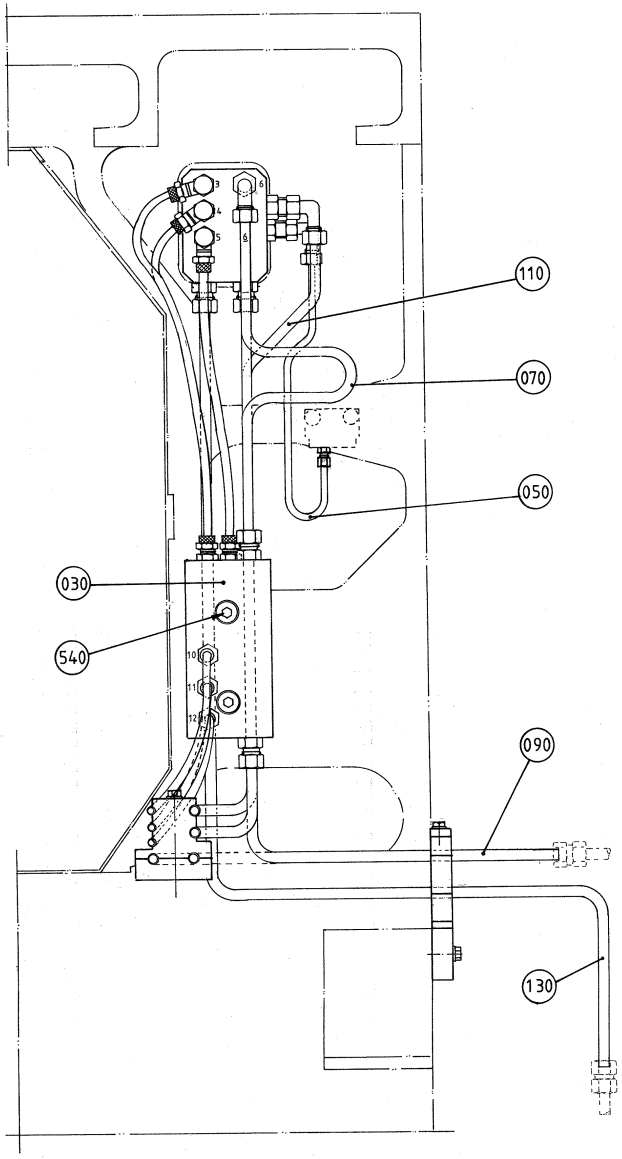

B-B

ECM: 102918 - 20020207
Group number: 1529356-0100
Assembly Drawing: 1529356-2_1_AA

Issue: 20020822

Pos	Part No	SP	UN	Qty	Description	Page No
Common Parts						
010	491255-0000	-		1	DISTRIBUTOR BLOCK LEFT	
020	491254-0000	-		1	DISTRIBUTOR BLOCK RIGHT	
030	491256-0000	-		1	DISTRIBUTOR BLOCK LEFT	
040	491244-0000	-		1	PIPE WATER	
050	491245-0000	-		1	PIPE CENTRAL LUBRICATION	
060	491246-0000	-		1	PIPE CENTRAL LUBRICATION	
070	491247-0000	-		1	PIPE WATER	
080	491248-0000	-		1	PIPE WATER	
090	491249-0000	-		1	PIPE HYDRAULIC	
100	491250-0000	-		1	PIPE HYDRAULIC	
110	491251-0000	-		1	PIPE WATER	
120	491252-0000	-		1	PIPE HYDRAULIC	
130	491253-0000	-		1	PIPE HYDRAULIC	
140	271088-0000	-		2	SPACER	
150	271323-0000	-		1	HOLDER	
160	271343-0000	-		2	HOLDER	
170	271344-0000	-		2	HOLDER	
180	456561-0000	-		1	BRACKET	
190	1360668-0000	-		1	HOLDER	
200	469001-0000	-		1	HOLDER	
210	469071-0000	B		2	SPACER	
310	90005-0045	-		2	WASHER PLAIN ROUND 10(3/8)/14,H=2	
320	90028-0021	A		2	CONE TUBE 4 MM	
330	90030-0065	A		4	PIPE CONNECTION	
340	90030-0171	A		2	ADJUSTABLE ELBOW CONNECTION,EXT 6-G1/8	
350	90030-0185	A		8	CONN. STR. GA-8-G1/4	
360	90134-0019	A		2	CONN. STRAIGHT, GE 6-LM FZB	
370	90134-0031	A		2	SLEEVE FOR PLASTIC TUBE	
380	B90134-0034	A		2	NIPPLE	
	90030-0101	-		*1*	*TAPER*	
390	90134-0038	-		2	BUSHING/NUT INLET/OUTLET 4 MM	
400	90166-0132	-	M	5	TUBE 6 MM PA,TRANSP.	
500	312101-0372	-		2	SCREW M6S M6X25 FZB	
510	312101-0385	-		2	SCREW M6S M6X75 FZB	
520	312101-0388	-		3	SCREW M6S M6X90 FZB	
530	312105-0453	-		8	SCREW M6S ISO 4017 M8X25 A480	
540	312111-0471	-		2	SCREW HEX.SOCK.HD.MC6S-TT 8X100 88 FZ	
550	315101-0153	-		7	WASHER PLAIN, BRB, 6,4/12 H=1,5	
560	315105-0165	-		8	WASHER PLAIN, BRB, 8,4/16,H=1,5	
570	315211-0105	A		6	GASKET BOLT HEAD 10,4X15,9X2 MM G1/8	
580	315211-0108	A		4	GASKET BOLT HEAD 13,7X20,6X2 MM G1/4	
590	342738-0208	A		4	ADJUSTABLE ELBOW CONNECTION,EXT 8-G1/4	
600	342722-0202	A		10	PIPE COUPLING 1/8" D=6MM	
610	342921-0121	A		4	STRAIGHT COUPLING,EXT.THREADED 8/6-G1/8"	
620	342732-0102	A		11	ELBOW PIPE JOINT, EXT.THREAD, D=6MM-G1/8	
630	342980-0122	A		5	BANJO-CONNECTION,RING 8/6-G1/4"	
650	342980-0304	A		3	BANJO-HOLLOW BOLT COUPL,EXT.THR.01-G1/4"	
660	342980-0314	A		2	BANJO-HOLLOW BOLT COUPL,EXT.THR.02-G1/4"	

Machine Type	Group Description	Used-In	Group Number	Page No

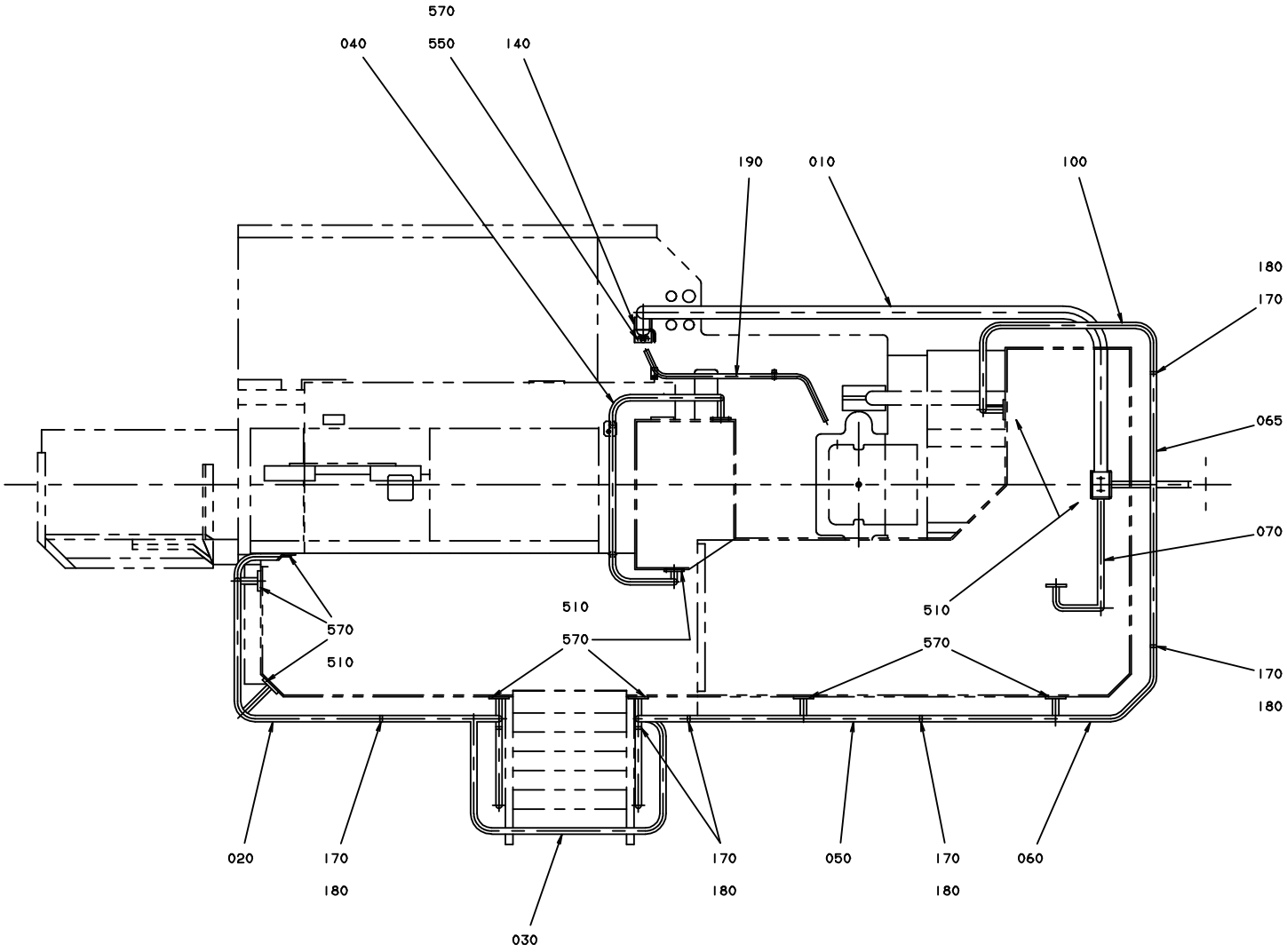

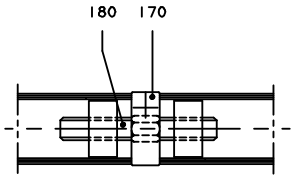

DETALJ AV RÄCKSKARV
DETAIL OF RAILING JOINT
(1:1)

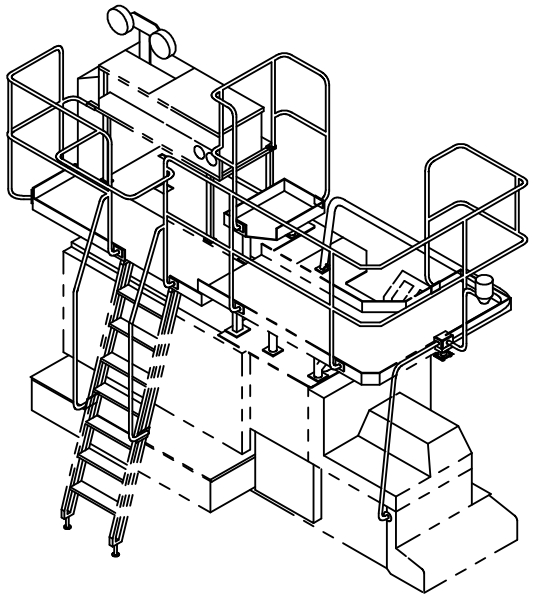

Pos	Part No	SP	UN	Qty	Description	Page No
SOURCE,TBA/9-100V OR SOURCE,TBA/9-110V						
010	456979-0002	-		1	CABLE CONDUIT	
020	469023-0000	-		1	RAILING	
030	1529031-0000	-		1	RAILING	
040	469025-0000	-		1	RAILING	
070	441512-0000	-		1	STRUT END	
080	441687-0000	-		1	STRUT	
090	491138-0000	-		1	STRUT	
110	469490-0000	-		1	HAND RAIL	
120	469489-0000	-		1	HAND RAIL	
500	311103-0356	-		2	PIN,STRIGHT M6 6X28 RFR	
510	312105-0449	-		44	SCREW M6S ISO 4017 M8X16 A480	
525	312105-0459	-		4	SCREW M6S ISO 4014 M8X40 A480	
530	312115-0453	-		3	SCREW MC6S M8X25 A280	
535	312115-0457	-		2	SCREW MC6S M8X35 A280	
560	312605-0318	-		4	HEXAGON NUT, M6M M8 A280	
570	315105-0165	-		60	WASHER PLAIN, BRB, 8,4/16,H=1,5	
SOURCE,TBA/9-120V						
010	751075-0002	-		1	CABLE CONDUIT	
020	B469967-0000	-		1	RAILING	
	751483-0000	-		*2*	*NUT*	
030	B469965-0000	-		1	RAILING	
	751482-0000	-		*4*	*NUT*	
040	751309-0000	-		1	RAILING	
050	B751051-0000	-		1	RAILING	
	751483-0000	-		*4*	*NUT*	
060	B751052-0000	-		1	RAILING	
	751482-0000	-		*4*	*NUT*	
065	1529032-0000	-		1	RAILING	
070	751056-0000	-		1	STRUT END	
080	751055-0000	-		1	STRUT	
100	B751057-0000	-		1	RAILING	
	751482-0000	-		*2*	*NUT*	
110	B751050-0000	-		1	HAND RAIL	
	751483-0000	-		*1*	*NUT*	
120	B751049-0000	-		1	HAND RAIL	
	751483-0000	-		*1*	*NUT*	
400	A1529420-0100	-		1	BRACKET	**295**
510	312105-0449	-		49	SCREW M6S ISO 4017 M8X16 A480	
525	312105-0459	-		4	SCREW M6S ISO 4014 M8X40 A480	
530	312115-0453	-		1	SCREW MC6S M8X25 A280	
560	312605-0318	-		10	HEXAGON NUT, M6M M8 A280	
570	315105-0165	-		58	WASHER PLAIN, BRB, 8,4/16,H=1,5	
Common Parts						
130	469026-0000	-		1	INTERMEDIATE PART	
140	469028-0000	-		1	GASKET	
150	751182-0000	-		1	GASKET	
160	751183-0000	-		1	GASKET	
170	751484-0000	-		12	CLAMPING RING	
180	751485-0000	-		12	SCREW	
190	751745-0000	-		1	CABLE CONDUIT	
320	90224-0234	C		1	BRACKET	
550	312105-0455	-		4	SCREW M6S ISO 4017 M8X30 A480	
590	315202-0215	C		1	O-RING 19,2X3 MM	
595	352103-0100	-		2	CABLE GLAND, STR 9, PR15,2/PG9	
600	352103-0108	-		1	CABLE GLAND, ST 13,5 , PR20,4/PG13,5	
700	A1529033-0100	-		1	ALARM DEVICE	**273**

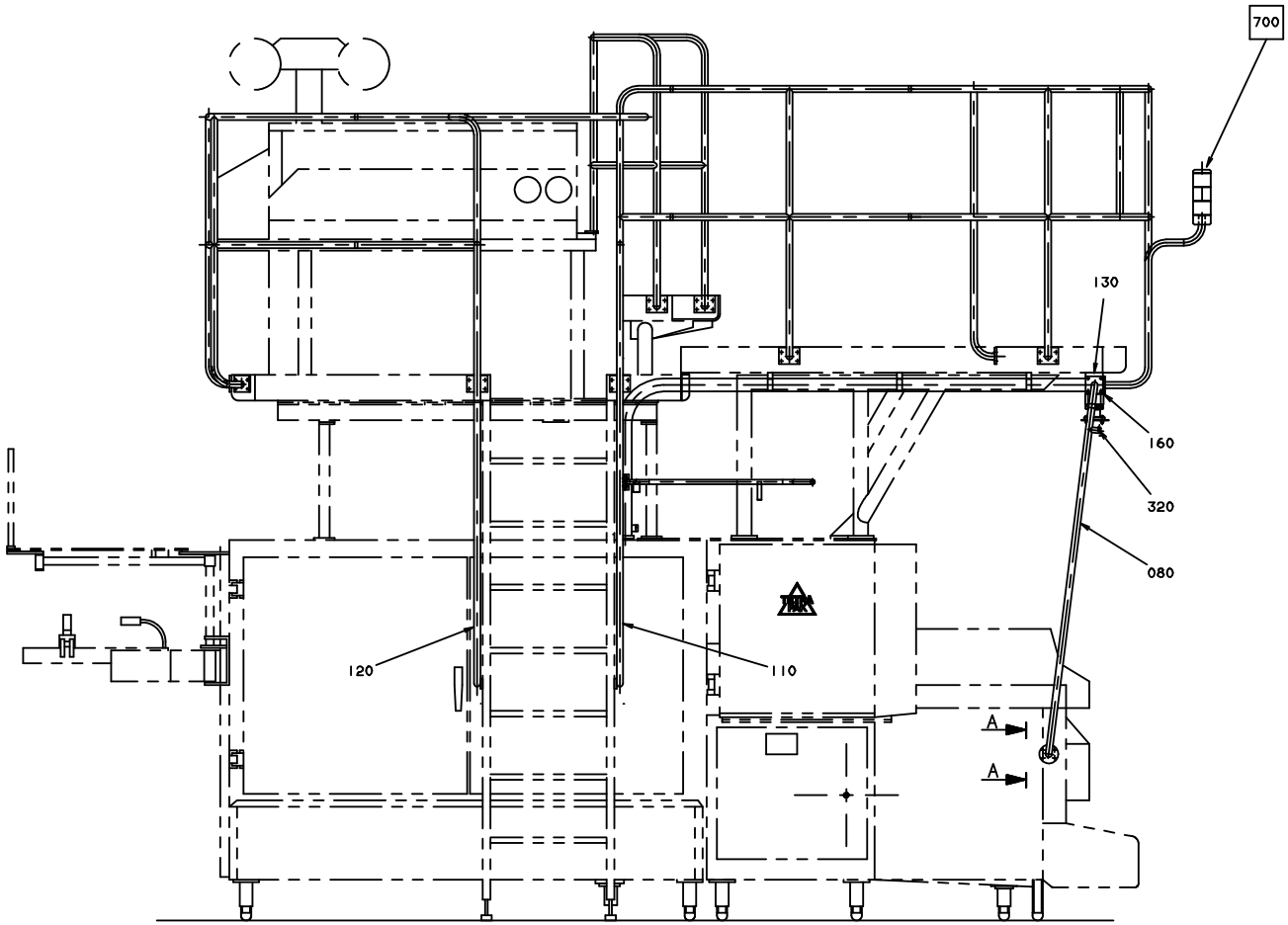
700
130
160
320
080
120
110
A
A

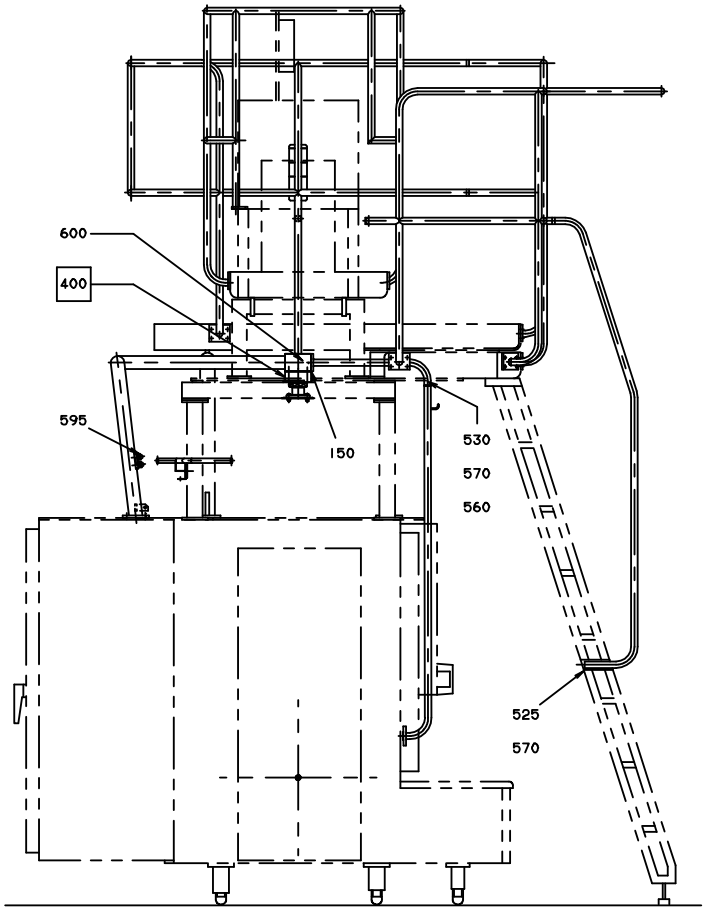
600
400
595
150
530
570
560
525
570

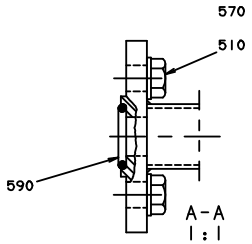
570
510
590
A-A
1:1

Pos	Part No	SP	UN	Qty	Description	Page No
SOURCE,TBA/9-100V OR SOURCE,TBA/9-110V						
010	456979-0002	-		1	CABLE CONDUIT	
020	469023-0000	-		1	RAILING	
030	1529031-0000	-		1	RAILING	
040	469025-0000	-		1	RAILING	
070	441512-0000	-		1	STRUT END	
080	441687-0000	-		1	STRUT	
090	491138-0000	-		1	STRUT	
110	469490-0000	-		1	HAND RAIL	
120	469489-0000	-		1	HAND RAIL	
500	311103-0356	-		2	PIN,STRIGHT M6 6X28 RFR	
510	312105-0449	-		44	SCREW M6S ISO 4017 M8X16 A480	
525	312105-0459	-		4	SCREW M6S ISO 4014 M8X40 A480	
530	312115-0453	-		3	SCREW MC6S M8X25 A280	
535	312115-0457	-		2	SCREW MC6S M8X35 A280	
560	312605-0318	-		4	HEXAGON NUT, M6M M8 A280	
570	315105-0165	-		60	WASHER PLAIN, BRB, 8,4/16,H=1,5	
SOURCE,TBA/9-120V						
010	751075-0002	-		1	CABLE CONDUIT	
020	B469967-0000	-		1	RAILING	
	751483-0000	-		*2*	*NUT*	
030	B469965-0000	-		1	RAILING	
	751482-0000	-		*4*	*NUT*	
040	751309-0000	-		1	RAILING	
050	B751051-0000	-		1	RAILING	
	751483-0000	-		*4*	*NUT*	
060	B751052-0000	-		1	RAILING	
	751482-0000	-		*4*	*NUT*	
065	1529032-0000	-		1	RAILING	
070	751056-0000	-		1	STRUT END	
080	751055-0000	-		1	STRUT	
100	B751057-0000	-		1	RAILING	
	751482-0000	-		*2*	*NUT*	
110	B751050-0000	-		1	HAND RAIL	
	751483-0000	-		*1*	*NUT*	
120	B751049-0000	-		1	HAND RAIL	
	751483-0000	-		*1*	*NUT*	
400	A1529420-0100	-		1	BRACKET	**295**
510	312105-0449	-		49	SCREW M6S ISO 4017 M8X16 A480	
525	312105-0459	-		4	SCREW M6S ISO 4014 M8X40 A480	
530	312115-0453	-		1	SCREW MC6S M8X25 A280	
560	312605-0318	-		10	HEXAGON NUT, M6M M8 A280	
570	315105-0165	-		58	WASHER PLAIN, BRB, 8,4/16,H=1,5	
Common Parts						
130	469026-0000	-		1	INTERMEDIATE PART	
140	469028-0000	-		1	GASKET	
150	751182-0000	-		1	GASKET	
160	751183-0000	-		1	GASKET	
170	751484-0000	-		12	CLAMPING RING	
180	751485-0000	-		12	SCREW	
190	751745-0000	-		1	CABLE CONDUIT	
320	90224-0234	C		1	BRACKET	
550	312105-0455	-		4	SCREW M6S ISO 4017 M8X30 A480	
590	315202-0215	C		1	O-RING 19,2X3 MM	
595	352103-0100	-		2	CABLE GLAND, STR 9, PR15,2/PG9	
600	352103-0108	-		1	CABLE GLAND, ST 13,5 , PR20,4/PG13,5	
700	A1529033-0100	-		1	ALARM DEVICE	**273**

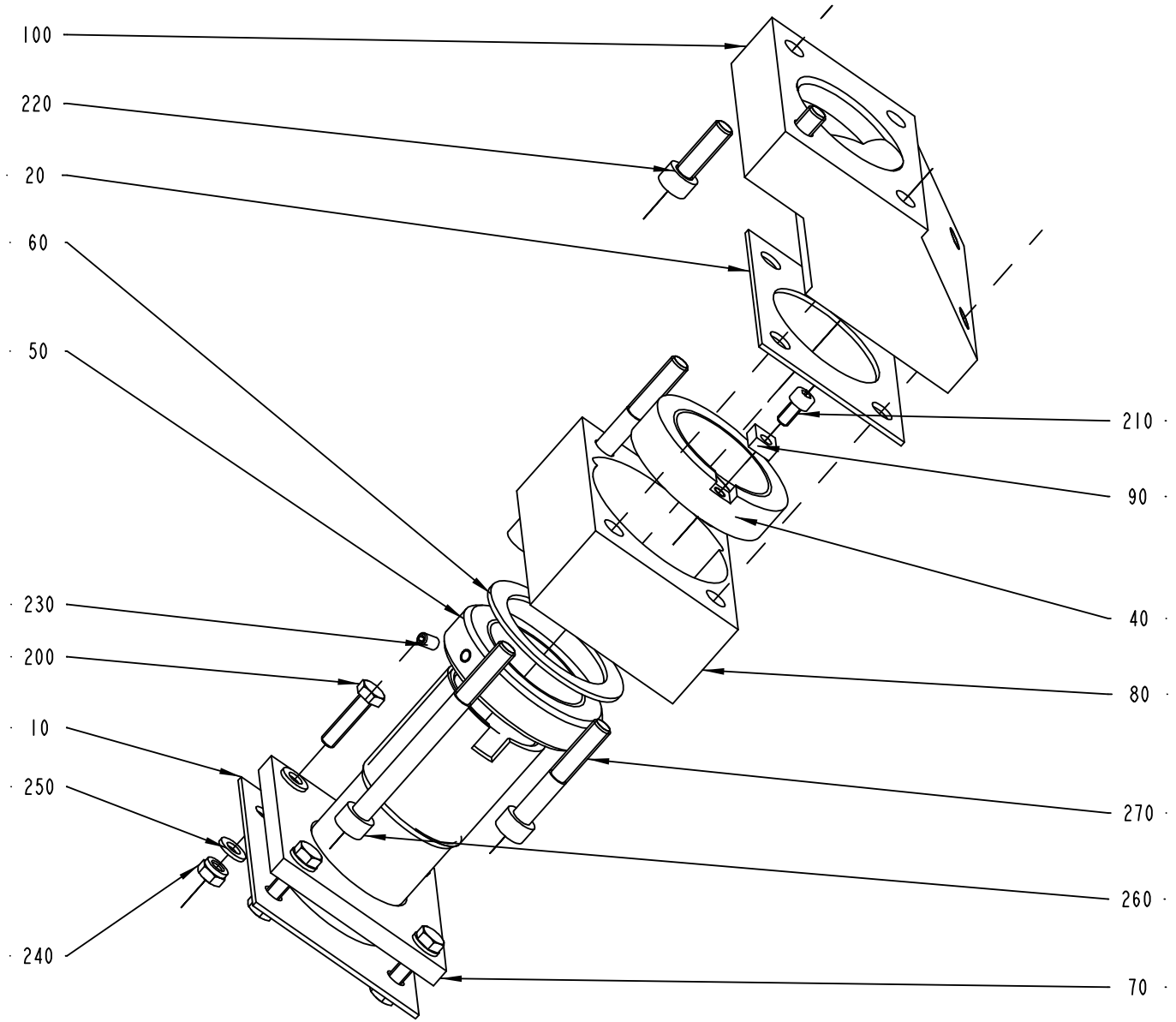

1529420-1
ECM 101028

Pos	Part No	SP	UN	Qty	Description	Page No
Common Parts						
010	441448-0000	B		1	GASKET	
020	490500-0000	B		1	GASKET	
040	751096-0000	B		1	LOCKING CIRCLIP	
050	751097-0000	B		1	BRAKE RING	
060	751098-0000	B		2	FRICTION DISC	
070	751099-0000	B		1	LEAD-IN	
080	751100-0000	B		1	BEARING HOUSING	
090	751108-0000	B		1	SECURING PLATE	
100	1529291-0000	-		1	BLOCK	
200	312105-0372	-		4	SCREW M6S ISO 4017 M6X25 A480	
210	312115-0325	-		1	SCREW HEX.SOCK.HD.MC6S-TT 5X10 A480	
220	312115-0453	-		2	SCREW MC6S M8X25 A280	
230	312318-0323	-		2	SCREW SOCK.SET CUP P MSK6SS M5X8 A4	
240	312812-0316	-		4	HEXAGON NUT, NY-LOCK M6 A480	
250	315105-0153	-		8	WASHER PLAIN, BRB, 6,4/12,H=1,5	
260	90287-0335	-		2	SCREW MC6S M8X90 A280	
270	312115-0461	-		2	SCREW MC6S M8X50 A280	

Pos	Part No	SP	UN	Qty	Description	Page No

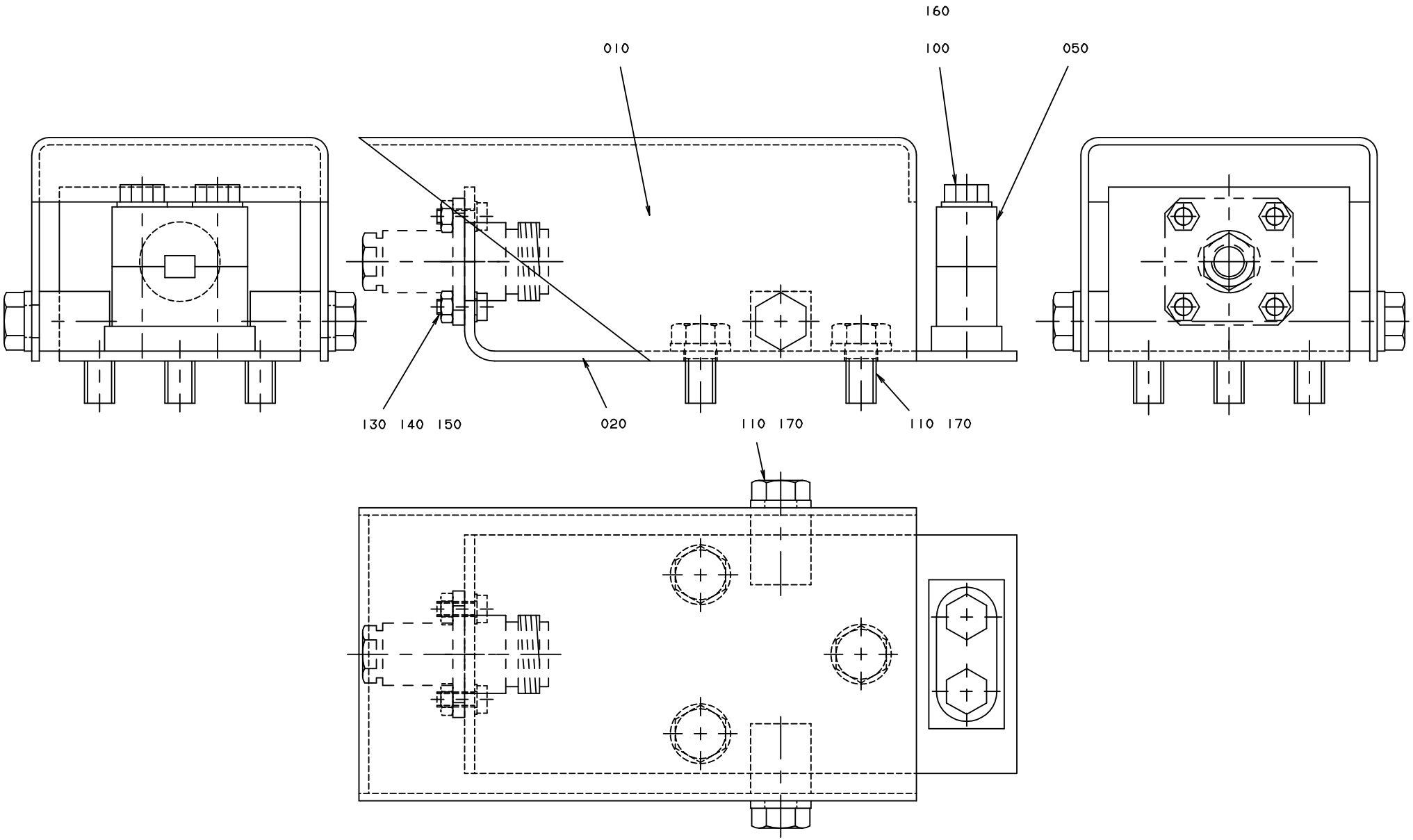
160
010
100
050
130 140 150
020
110 170
110 170

ECM: 85789 - 20010226
Group number: 1529188-0100
Assembly Drawing: 1529188-1_1_AA

Issue: 20020822

Pos	Part No	SP	UN	Qty	Description	Page No
Common Parts						
010	256975-0000	-		1	PROTECTION	
020	1529193-0000	-		1	BRACKET	
050	464368-0000	-		2	CRAMP	
100	312105-0335	-		2	SCREW M6S ISO 4014 M5X30 A480	
110	312105-0364	-		5	SCREW M6S ISO 4017 M6X10 A480	
130	312125-0222	-		4	SCREW PAN HEAD MCS M3X8 SS	
140	312605-0310	-		4	HEXAGON NUT, M6M M3 A280	
150	315105-0124	-		4	WASHER PLAIN, BRB, 3,2/6,H=0,5	
160	315105-0146	-		2	WASHER PLAIN, BRB, 5,3/10,H=1	
170	315105-0153	-		5	WASHER PLAIN, BRB, 6,4/12,H=1,5	

Pos	Part No	SP	UN	Qty	Description	Page No

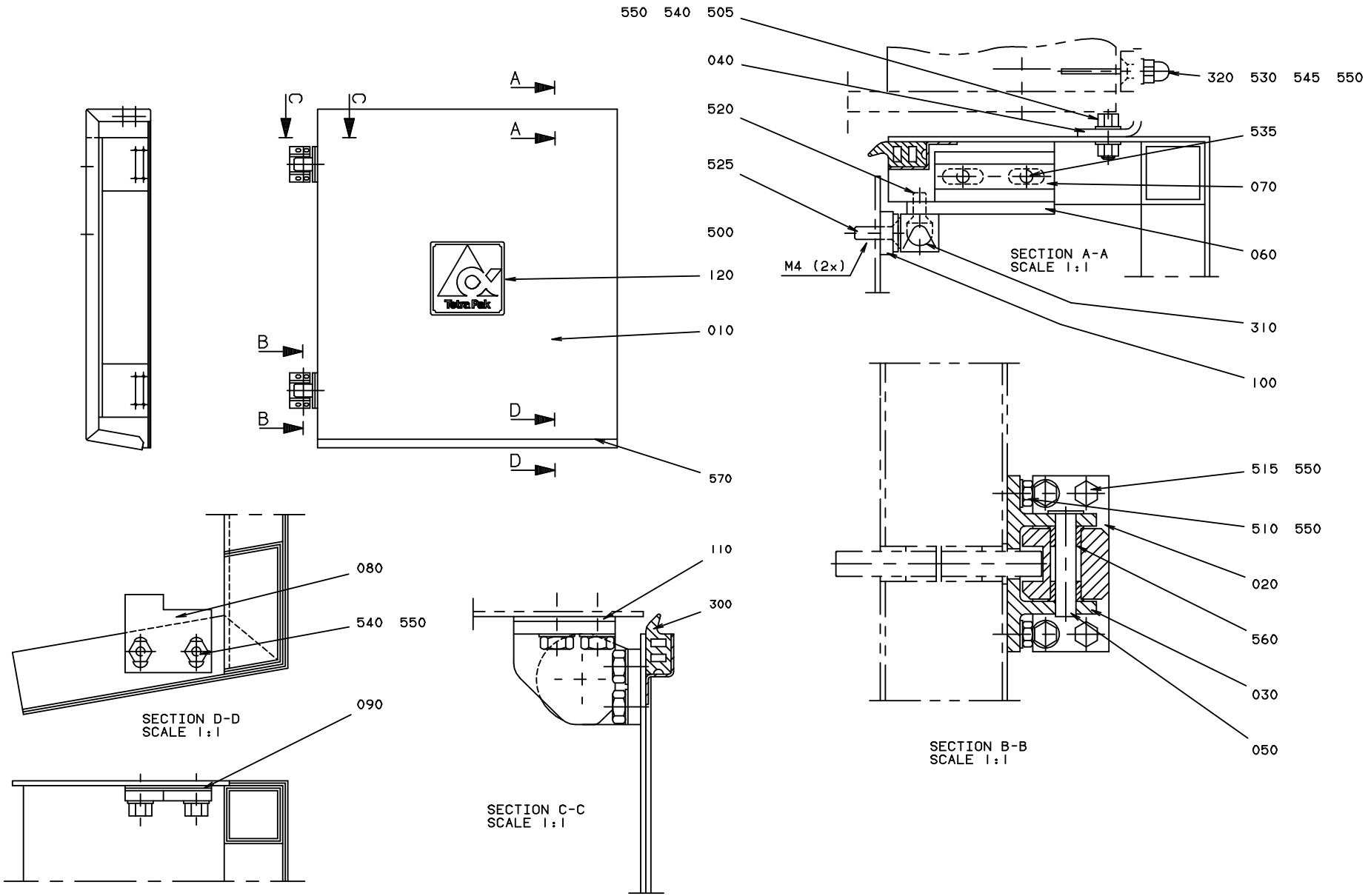
550 540 505
040
520
525
500
120
010
570
320 530 545 550
535
070
060
310
100
M4 (2x)
SECTION A-A
SCALE 1:1
A
A
C
C
B
B
D
D
Tetra Pak
080
540 550
090
SECTION D-D
SCALE 1:1
110
300
SECTION C-C
SCALE 1:1
515 550
510 550
020
560
030
050
SECTION B-B
SCALE 1:1

ECM: 102912 - 20020207
Group number: 1529132-0100
Assembly Drawing: 1529132-1_1_AA

Issue: 20020822

Pos	Part No	SP	UN	Qty	Description	Page No
Common Parts						
005	574658-0000	B		1	LOGOTYPE TP	
010	1529135-0000	B		1	DOOR	
020	271219-0000	B		2	HINGE	
030	271220-0000	B		2	HINGE	
040	1529137-0000	B		1	BRACKET	
050	271221-0000	B		2	PIN	
060	441668-0000	-		1	HOLDER	
070	441691-0000	-		1	PLATE	
080	491233-0000	-		1	GUIDE LUG	
090	456829-0000	-		2	SHIM	
100	469492-0000	-		1	SPACER	
110	491235-0000	-		2	WASHER	
300	90143-0049	-	M	1	RUBBERSTRIP 11X21MM	
310	90237-0071	A		1	MAGNETIC LOCK, 92X16X15,5 MM	
320	90044-0310	-		1	KEY FOR SAFETY SWITCH, AZ 15/16 B1	
500	311520-0435	-		4	RIVET, BLANK 3,2X10	
505	312105-0327	-		2	SCREW M6S ISO 4017 M5X12 A480	
510	312105-0329	-		8	SCREW M6S ISO 4017 M5X16 A480	
515	312105-0331	-		8	SCREW M6S ISO 4017 M5X20 A480	
520	312145-0222	-		2	SCREW COUNTERS.SLOT.HD. MFS 3X8 SS	
525	312145-0291	-		2	SCREW COUNTERS.SLOT.HD. MFS 4X12 A4	
530	312155-0327	-		2	SCREW HEX.SOCK.COUNT.MF6S M5X12 A280	
535	312155-0329	-		2	SCREW HEX.SOCK.COUNT.MF6S M5X16 A280	
540	312605-0314	-		4	HEXAGON NUT, M6M M5 A280	
545	312705-0314	-		2	NUT HEX. DOMED CAP MHM-6 M5 A280	
550	315105-0146	-		22	WASHER PLAIN, BRB, 5,3/10,H=1	
560	321111-0096	A		4	BEAR.BUSHING WITH FLANGE, 8/12X8 MM	
570	90143-0060	-	M	575	EDGE STRIP 9,5X6,3MM BLACK PVC	

Pos	Part No	SP	UN	Qty	Description	Page No

Machine Type | Group Description | Used-In | Group Number | Page No

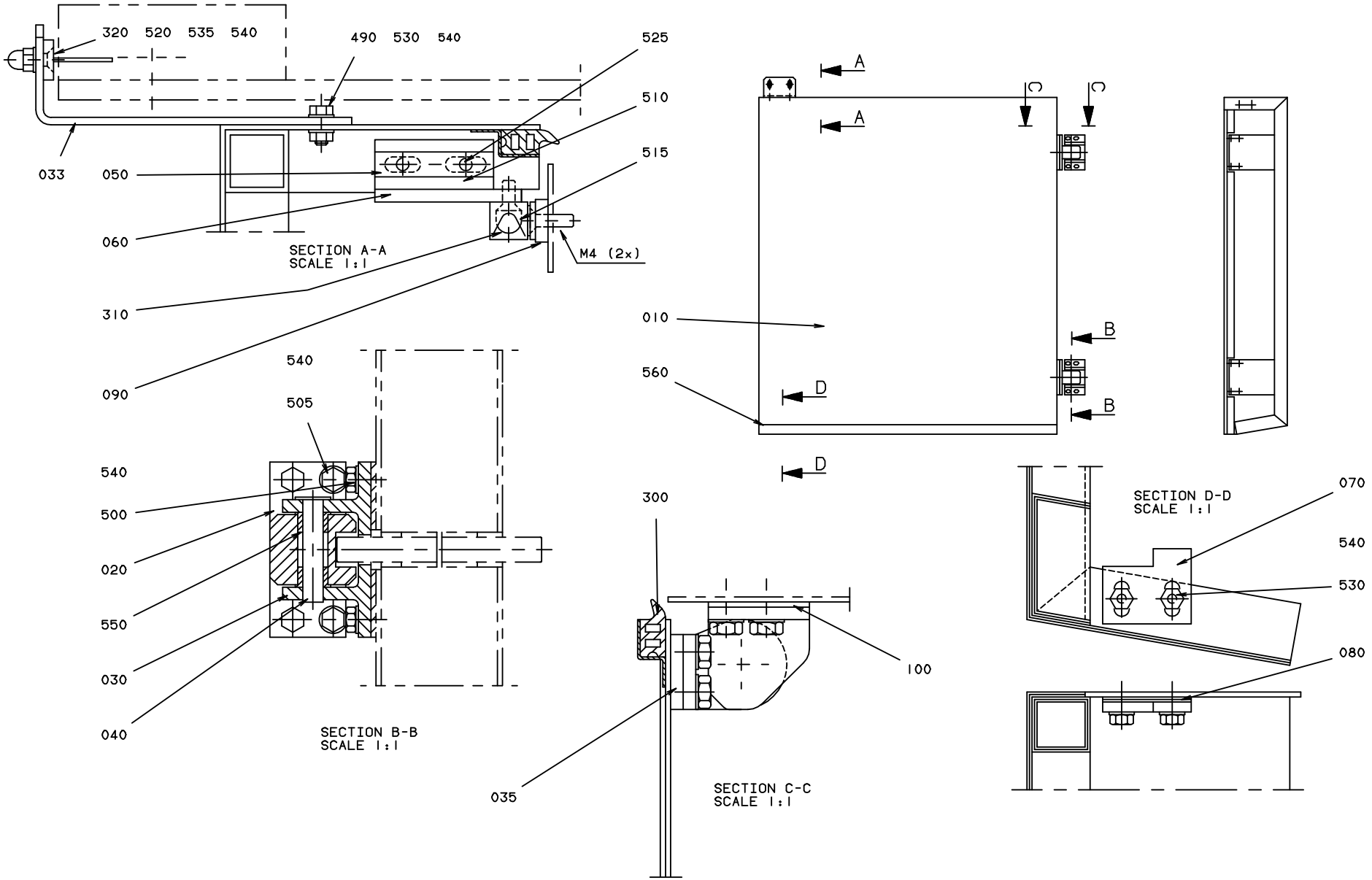
320 520 535 540
490 530 540
525
510
515
033
050
060
310
090
M4 (2x)
SECTION A-A
SCALE 1:1
A
C
010
560
B
D
540
505
500
020
550
030
040
SECTION B-B
SCALE 1:1
300
035
100
SECTION C-C
SCALE 1:1
SECTION D-D
SCALE 1:1
070
080

ECM: 102914 - 20020207
Group number: 1529133-0100
Assembly Drawing: 1529133-1_1_AA

Issue: 20020822

Pos	Part No	SP	UN	Qty	Description	Page No
Common Parts						
010	1529136-0000	B		1	DOOR	
020	271219-0000	B		2	HINGE	
030	271220-0000	B		2	HINGE	
033	1529138-0000	B		1	BRACKET	
035	979719-0000	-		2	SPACER	
040	271221-0000	B		2	PIN	
050	441691-0000	-		1	PLATE	
060	441692-0000	-		1	HOLDER	
070	491233-0000	-		1	GUIDE LUG	
080	456829-0000	-		2	SHIM	
090	469492-0000	-		1	SPACER	
100	491235-0000	-		2	WASHER	
300	90143-0049	-	M	1	RUBBERSTRIP 11X21MM	
310	90237-0071	A		1	MAGNETIC LOCK, 92X16X15,5 MM	
320	90044-0310	-		1	KEY FOR SAFETY SWITCH, AZ 15/16 B1	
490	312105-0327	-		2	SCREW M6S ISO 4017 M5X12 A480	
500	312105-0329	-		8	SCREW M6S ISO 4017 M5X16 A480	
505	312105-0331	-		8	SCREW M6S ISO 4017 M5X20 A480	
510	312145-0222	-		2	SCREW COUNTERS.SLOT.HD. MFS 3X8 SS	
515	312145-0291	-		2	SCREW COUNTERS.SLOT.HD. MFS 4X12 A4	
520	312155-0327	-		2	SCREW HEX.SOCK.COUNT.MF6S M5X12 A280	
525	312155-0329	-		2	SCREW HEX.SOCK.COUNT.MF6S M5X16 A280	
530	312605-0314	-		4	HEXAGON NUT, M6M M5 A280	
535	312705-0314	-		2	NUT HEX. DOMED CAP MHM-6 M5 A280	
540	315105-0146	-		22	WASHER PLAIN, BRB, 5,3/10,H=1	
550	321111-0096	A		4	BEAR.BUSHING WITH FLANGE, 8/12X8 MM	
560	90143-0060	-	MM	600	EDGE STRIP 9,5X6,3MM BLACK PVC	

Pos	Part No	SP	UN	Qty	Description	Page No

Machine Type | Group Description | Used-In | Group Number | Page No

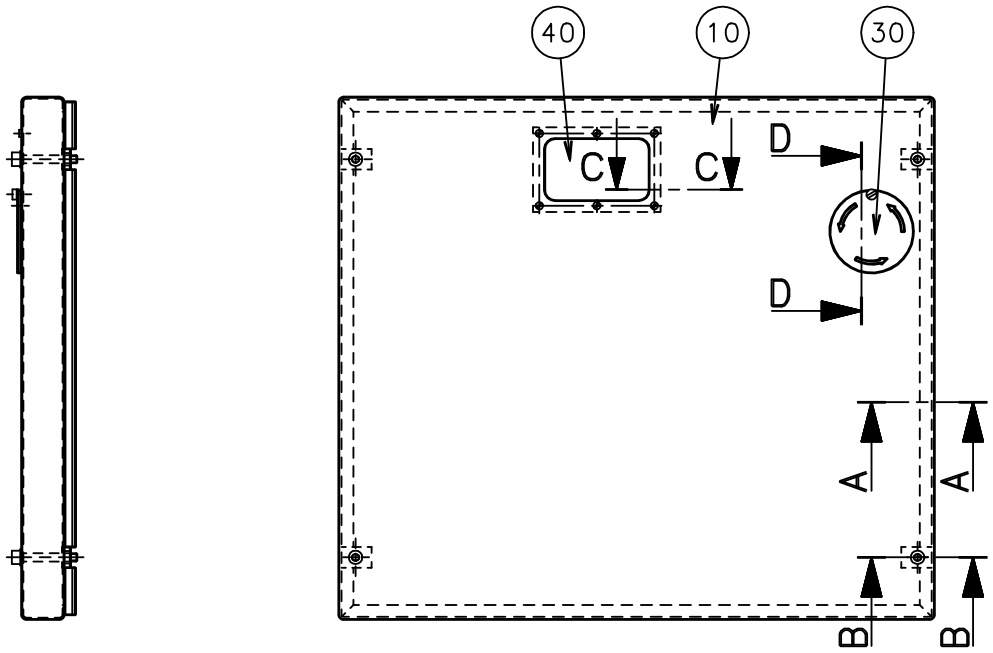

A-A
scale 1:2

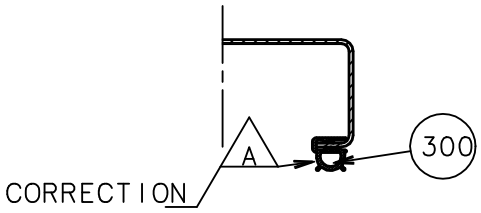

B-B
scale 1:2

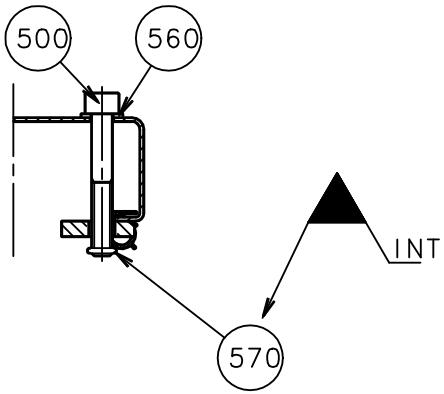

C-C
scale 1:1

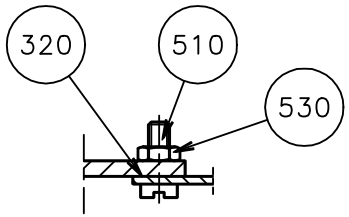

D-D
scale 1:1

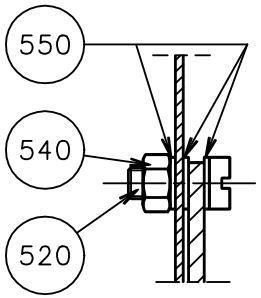

A REDRAWN IN CAD

ECM: 96724 - 20010920
Group number: 256665-0200
Assembly Drawing: 256665-4_1_AA

Issue: 20020822

Pos	Part No	SP	UN	Qty	Description	Page No
Common Parts						
010	1279044-0000	-		1	HATCH	
030	469964-0000	-		1	LID	
040	257231-0000	-		1	WINDOW	
300	90143-0068	B	MM	2200	RUBBERSTRIP EMKA 1011-06	
320	90157-0022	B	L		SEALING COMPOUND	
500	312115-0463	-		4	SCREW MC6S M8X60 A280	
510	312125-0291	-		6	SCREW PAN HEAD MCS M4X12 SS	
520	312125-0329	-		1	SCREW PAN HEAD MCS M5X16 SS	
530	312605-0312	-		6	HEXAGON NUT, M6M M4 A280	
540	312810-0314	-		1	HEXAGON NUT, NY-LOCK M5 FZB	
550	315105-0146	-		3	WASHER PLAIN, BRB, 5,3/10,H=1	
560	315105-0165	-		4	WASHER PLAIN, BRB, 8,4/16,H=1,5	
570	315202-0105	-		4	O-RING 7,1X1,6 MM	

Pos	Part No	SP	UN	Qty	Description	Page No

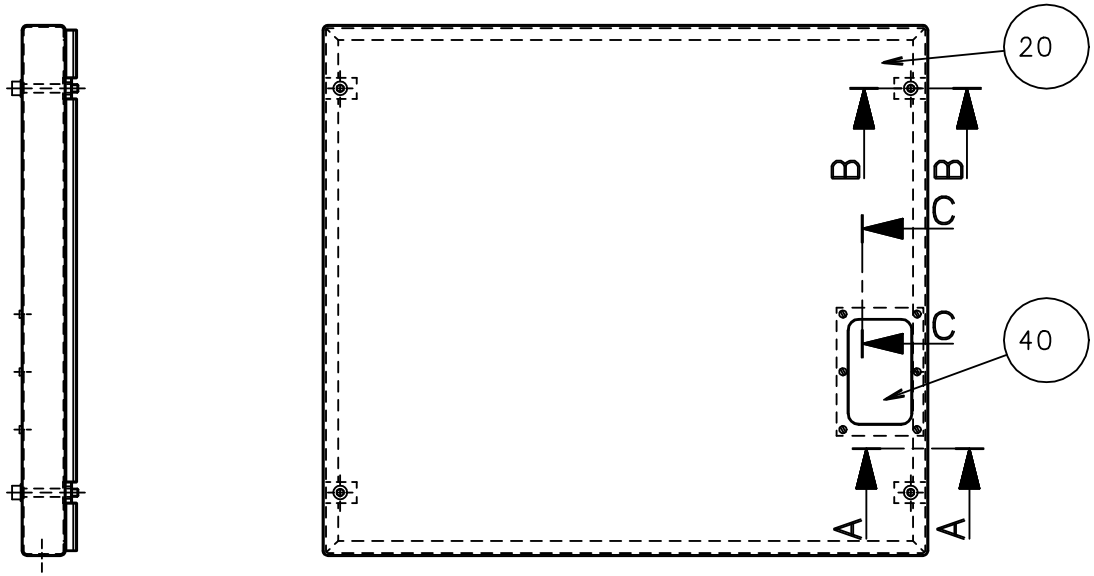
20
B
B
C
C
40
A
A

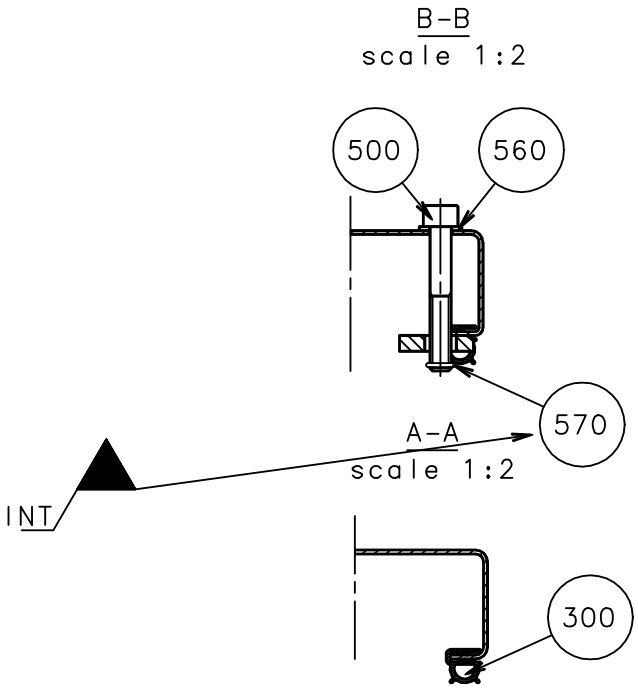
B–B
scale 1:2
500
560
570
A–A
scale 1:2
INT
300

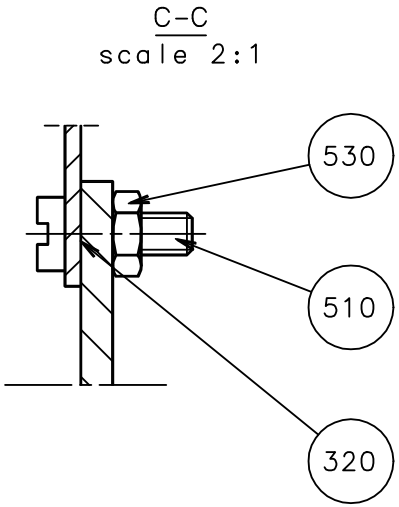
C–C
scale 2:1
530
510
320

ECM: 96725 - 20010920
Group number: 1296815-0100
Assembly Drawing: 1296815-1_1_AA

Issue: 20020822

Pos	Part No	SP	UN	Qty	Description	Page No
Common Parts						
020	1279045-0000	-		1	HATCH	
040	257231-0000	-		1	WINDOW	
300	90143-0068	B	MM	2200	RUBBERSTRIP EMKA 1011-06	
320	90157-0022	B	L		SEALING COMPOUND	
500	312115-0463	-		4	SCREW MC6S M8X60 A280	
510	312125-0291	-		6	SCREW PAN HEAD MCS M4X12 SS	
530	312605-0312	-		6	HEXAGON NUT, M6M M4 A280	
560	315105-0165	-		4	WASHER PLAIN, BRB, 8,4/16,H=1,5	
570	315202-0105	-		4	O-RING 7,1X1,6 MM	

Pos	Part No	SP	UN	Qty	Description	Page No

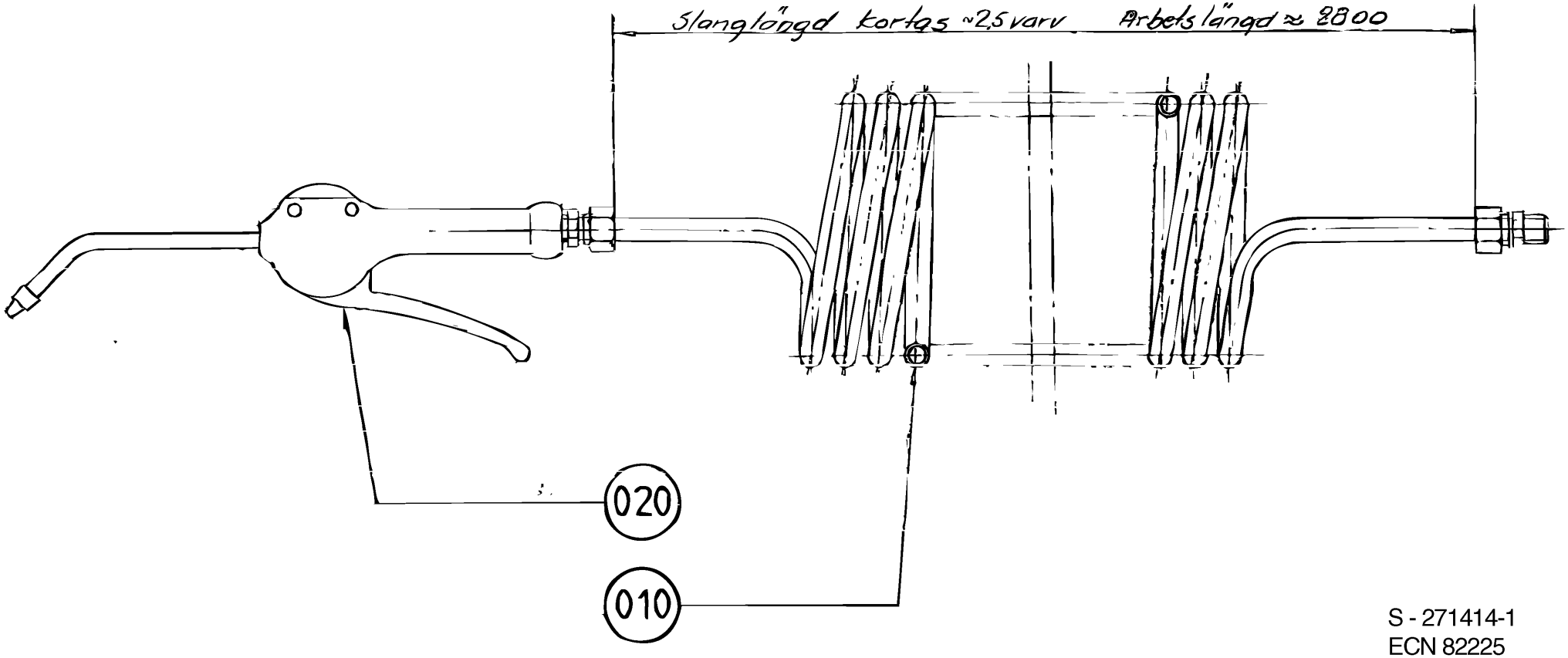

S - 271414-1
ECN 82225

ECM: 102915 - 20020207
Group number: 271414-0200
Assembly Drawing: 271414-1_1_AA

Issue: 20020822

Pos	Part No	SP	UN	Qty	Description	Page No
Common Parts						
010	90152-0016	A		1	HOSE	
020	90243-0061	A		1	AIR GUN, CEJN SERIE 204 ED: 90459-0173	

Pos	Part No	SP	UN	Qty	Description	Page No

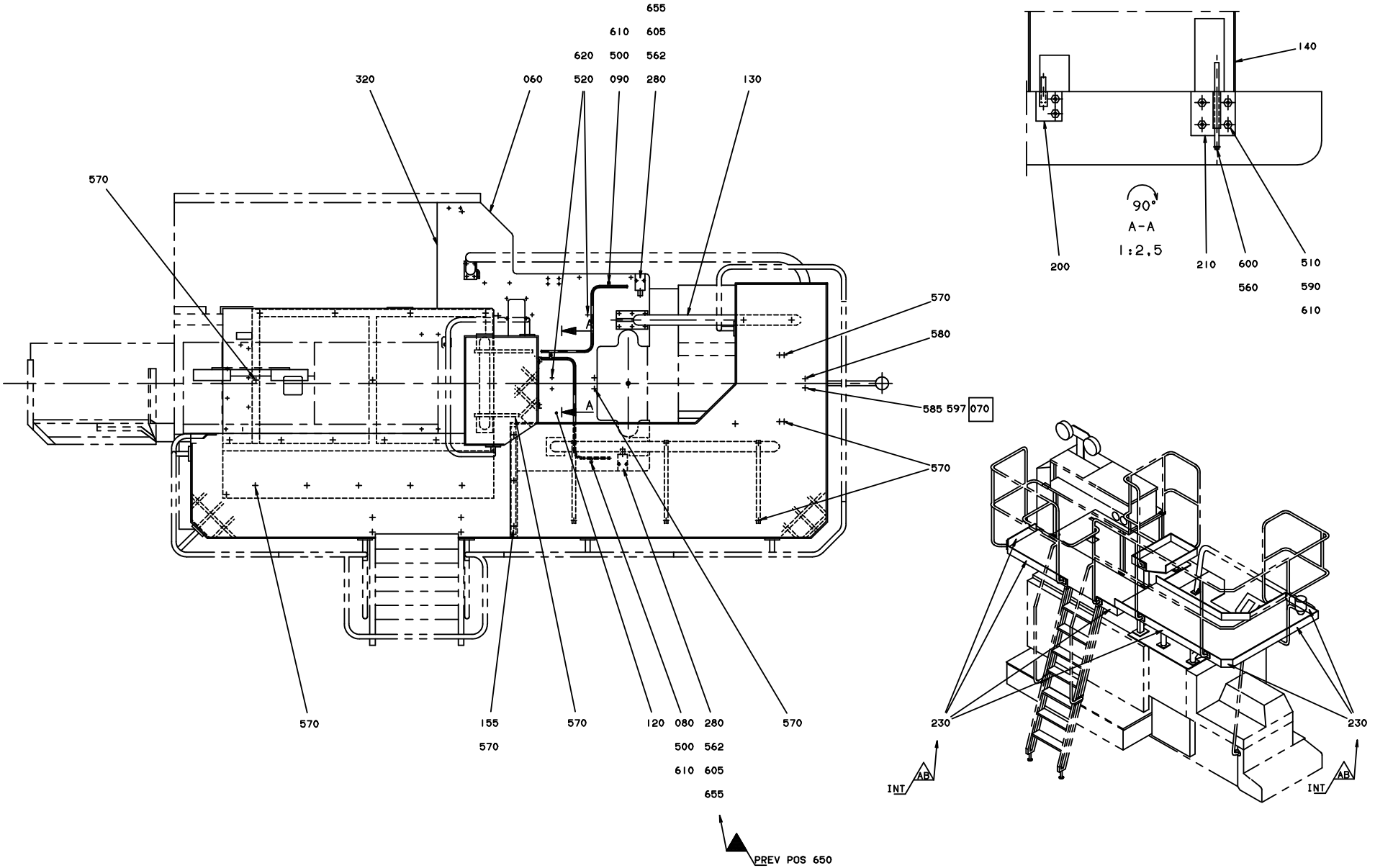
655
610 605
620 500 562
320 060 520 090 280 130
570
580
585 597 070
570
570 155 570 120 080 280 570
500 562
610 605
655
PREV POS 650
140
90°
A-A
1:2,5
200 210 600 510
560 590
610
230 230
INT AB
INT AB

ECM: 104216 - 20020402
Group number: 1529126-0100
Assembly Drawing: 1529126-1_1_AC

Issue: 20020822

Pos	Part No	SP	UN	Qty	Description	Page No
SOURCE,TBA/9-100V OR SOURCE,TBA/9-110V						
010	469004-0000	-		1	PLATFORM	
030	469006-0000	-		1	FRAME	
060	1529183-0000	-		1	SHEET	
100	B469013-0000	-		1	CABLE DUCT	
	90266-0056	-	*M*	*1*	*PIPE 88,9X4*	
110	469014-0000	-		1	LID	
120	1529184-0000	-		1	SHEET	
140	B469017-0000	-		1	SHEET	
	312105-0304	-		*4*	*SCREW M6S M4X45 A280*	
143	469010-0000	-		1	FRAME SHEET	
150	469018-0000	-		1	PLATFORM	
160	469019-0000	-		1	LEG	
170	469020-0000	-		1	LEG	
180	469021-0000	-		2	LEG	
190	469022-0000	-		1	FRAME SECTION	
200	295881-0000	-		1	BRACKET	
210	295882-0000	-		1	BRACKET	
250	469445-0000	-		3	SPACER	
510	312105-0370	-		1	SCREW M6S ISO 4017 M6X20 A480	
520	312105-0449	-		41	SCREW M6S ISO 4017 M8X16 A480	
530	312105-0453	-		13	SCREW M6S ISO 4017 M8X25 A480	
560	312115-0220	-		1	SCREW HEX.SOCK.HD.MC6S-TT 3X6 A480	
570	312155-0449	-		50	SCREW HEX.SOCK.COUNT.MF6S M8X16 A280	
580	312155-0453	-		3	SCREW HEX.SOCK.COUNT.MF6S M8X25 A280	
590	312605-0316	-		6	HEXAGON NUT, M6M M6 A280	
595	312705-0314	-		3	NUT HEX. DOMED CAP MHM-6 M5 A280	
600	315105-0136	-		1	WASHER PLAIN, BRB, 4,3/8,H=0,8	
610	315105-0153	-		15	WASHER PLAIN, BRB, 6,4/12,H=1,5	
620	315105-0165	-		64	WASHER PLAIN, BRB, 8,4/16,H=1,5	
SOURCE,TBA/9-120V						
010	469004-0000	-		1	PLATFORM	
030	469006-0000	-		1	FRAME	
060	1529213-0000	-		1	SHEET	
100	B469013-0000	-		1	CABLE DUCT	
	90266-0056	-	*M*	*1*	*PIPE 88,9X4*	
110	469014-0000	-		1	LID	
120	1529184-0000	-		1	SHEET	
140	B469017-0000	-		1	SHEET	
	312105-0304	-		*4*	*SCREW M6S M4X45 A280*	
143	469010-0000	-		1	FRAME SHEET	
150	469018-0000	-		1	PLATFORM	
160	469019-0000	-		1	LEG	
170	469020-0000	-		1	LEG	
180	469021-0000	-		2	LEG	
190	469022-0000	-		1	FRAME SECTION	
200	295881-0000	-		1	BRACKET	
210	295882-0000	-		1	BRACKET	
250	469445-0000	-		3	SPACER	
510	312105-0370	-		1	SCREW M6S ISO 4017 M6X20 A480	
520	312105-0449	-		41	SCREW M6S ISO 4017 M8X16 A480	
530	312105-0453	-		13	SCREW M6S ISO 4017 M8X25 A480	
560	312115-0220	-		1	SCREW HEX.SOCK.HD.MC6S-TT 3X6 A480	
570	312155-0449	-		50	SCREW HEX.SOCK.COUNT.MF6S M8X16 A280	
580	312155-0453	-		3	SCREW HEX.SOCK.COUNT.MF6S M8X25 A280	
590	312605-0316	-		6	HEXAGON NUT, M6M M6 A280	
595	312705-0314	-		3	NUT HEX. DOMED CAP MHM-6 M5 A280	
600	315105-0136	-		1	WASHER PLAIN, BRB, 4,3/8,H=0,8	
610	315105-0153	-		15	WASHER PLAIN, BRB, 6,4/12,H=1,5	
620	315105-0165	-		64	WASHER PLAIN, BRB, 8,4/16,H=1,5	
Common Parts						
020	1529035-0000	-		1	PLATFORM	
070	A2543297-0100	-		1	CABLE	**313**
080	1529241-0000	-		1	CABLE CONDUIT	
090	1529242-0000	-		1	CABLE CONDUIT	
130	469016-0000	-		1	FRAME SECTION	
155	1529034-0000	-		1	COVER PLATE	
220	1529278-0000	-		2	FILM	
230	1529279-0000	-		1	STRIP	
260	90015-0020	-		2	LEAD-IN, TET5-7, E-1458016	
280	90044-0139	-		2	KEY SAF.SW. AZ16-02 ZVR K-2254	
300	90143-0012	-	M	2	STRIP	
310	90153-0017	-	G	50	ADHESIVE 160 ML	
320	90157-0022	-	L	1	SEALING COMPOUND	
340	B90164-0015	-		1	LIGHT FIXTURE, DWDCV111B/230V 50HZ	
	90297-0007	*C*		*1*	*FLUORESCENT TUBE, PL11*	
350	90164-0302	-		2	BRACKET	
500	312105-0362	-		3	SCREW M6S ISO 4017 M6X8 A480	
562	312115-0329	-		4	SCREW MC6S M5X16 A280	
570	312155-0449	-		50	SCREW HEX.SOCK.COUNT.MF6S M8X16 A280	
585	312155-0501	-		1	SCREW HEX.SOCK.COUNT.MF6S M10X50 A280	
597	315402-0165	-		2	LOCK WASHER FBB 8,2	

Machine Type | Group Description | Used-In | Group Number | Page No

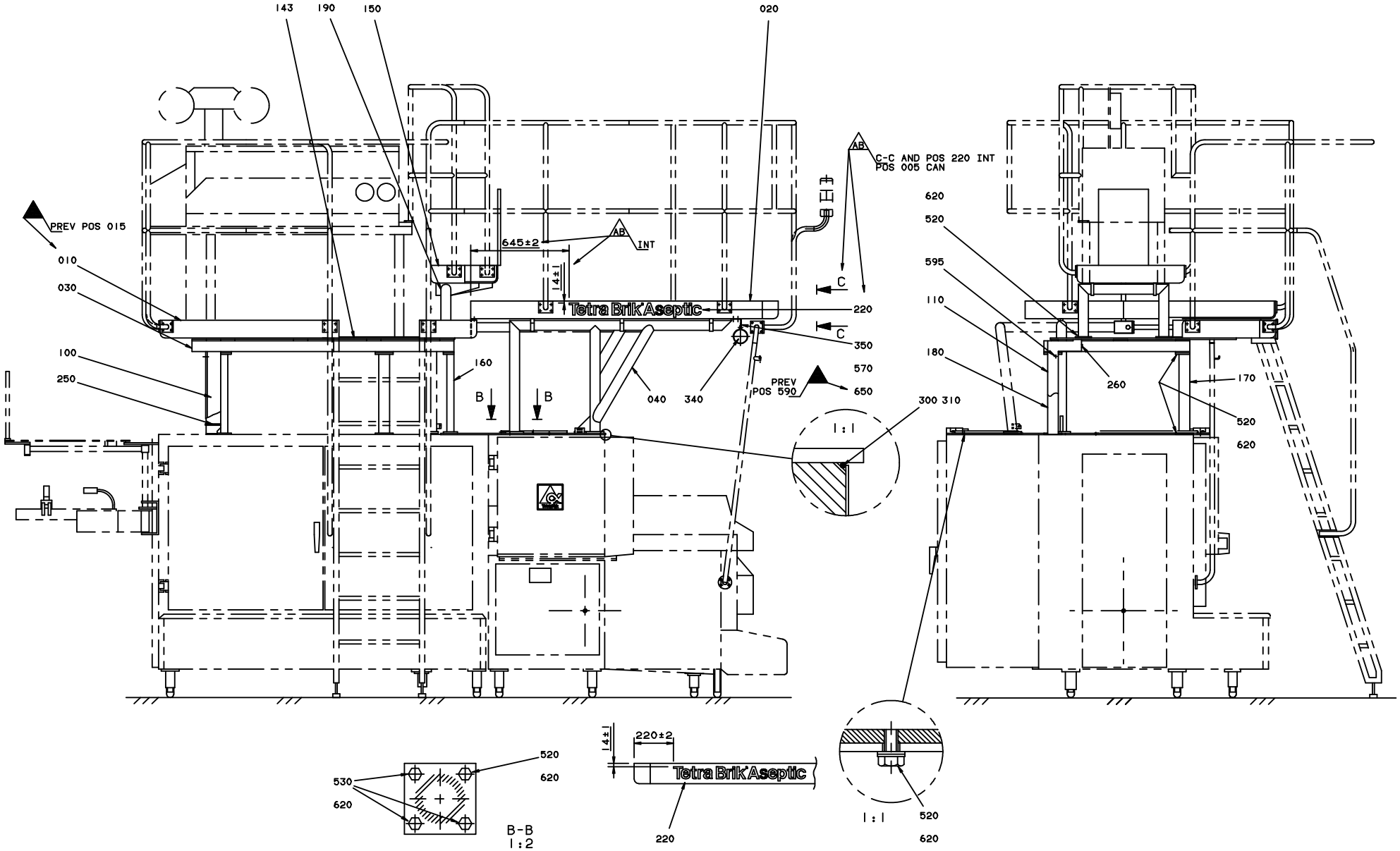
143
190
150
020
PREV POS 015
010
030
100
250
645±2
AB
INT
14±1
Tetra Brik Aseptic
220
350
570
650
160
B
B
040
340
PREV
POS 590
C
C
AB
C-C AND POS 220 INT
POS 005 CAN
620
520
595
110
180
260
170
520
620
300 310
1:1
530
620
520
620
B-B
1:2
14±1
220±2
Tetra Brik Aseptic
220
1:1
520
620

Pos	Part No	SP	UN	Qty	Description	Page No
Common Parts (Cont'd)						
605	315105-0146	-		4	WASHER PLAIN, BRB, 5,3/10,H=1	
640	315105-0153	-		6	WASHER PLAIN, BRB, 6,4/12,H=1,5	
655	352103-0106	-		2	CABLE GLAND, ST 11, PR18,6/PG11	

Pos	Part No	SP	UN	Qty	Description	Page No

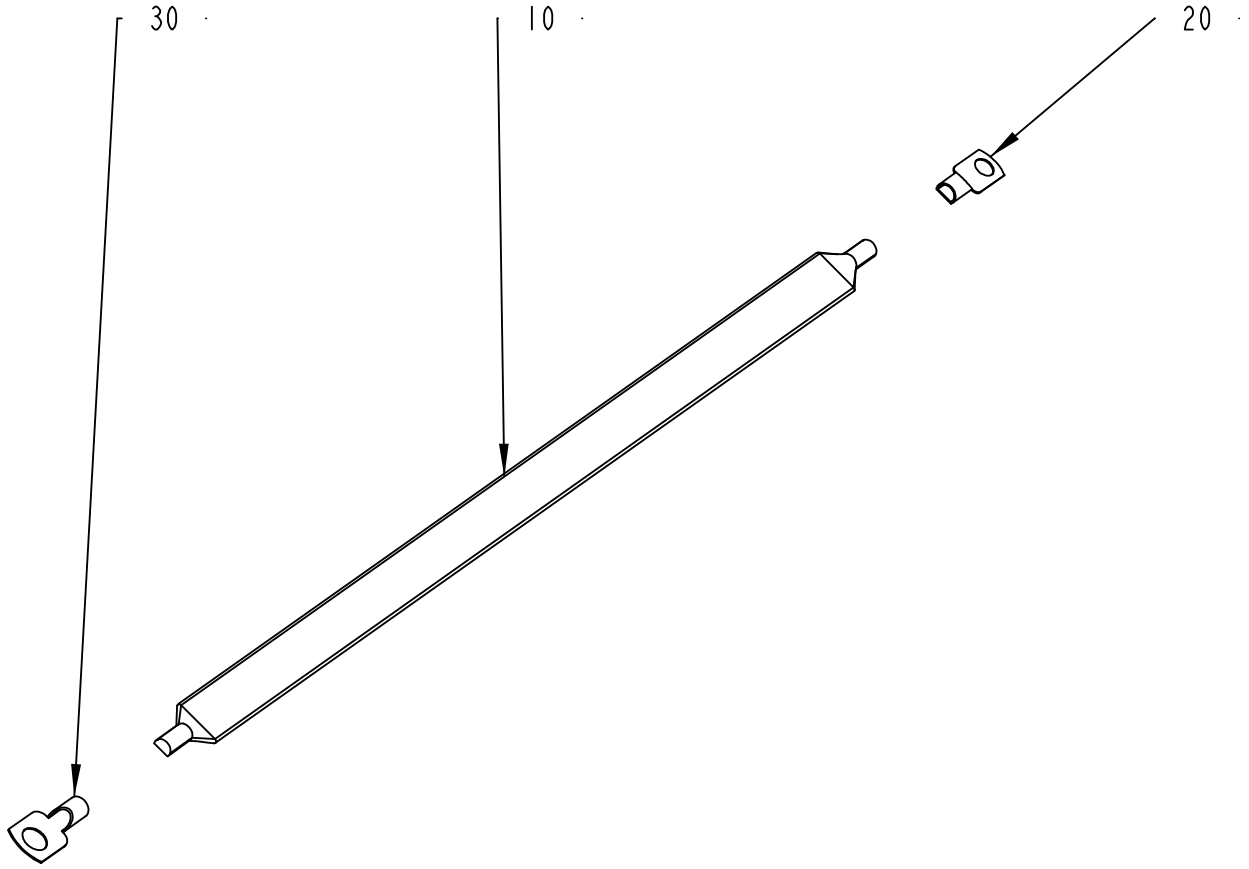

2543297-1
ECM 101028

ECM: 106487 - 20020402
Group number: 2543297-0100
Assembly Drawing: 2543297-1_1_AA

Issue: 20020822

Pos	Part No	SP	UN	Qty	Description	Page No
Common Parts						
010	90203-0002	-	M		RIBBON CABLE 20X1,5MM2	
020	353104-0161	-		1	CABLE SHOEYAV 10 M6*	
030	353104-0162	-		1	CABLE SHOEYAV 10 M8*	

Pos	Part No	SP	UN	Qty	Description	Page No

Tetra Pak

SPC
Spare Parts Catalogue

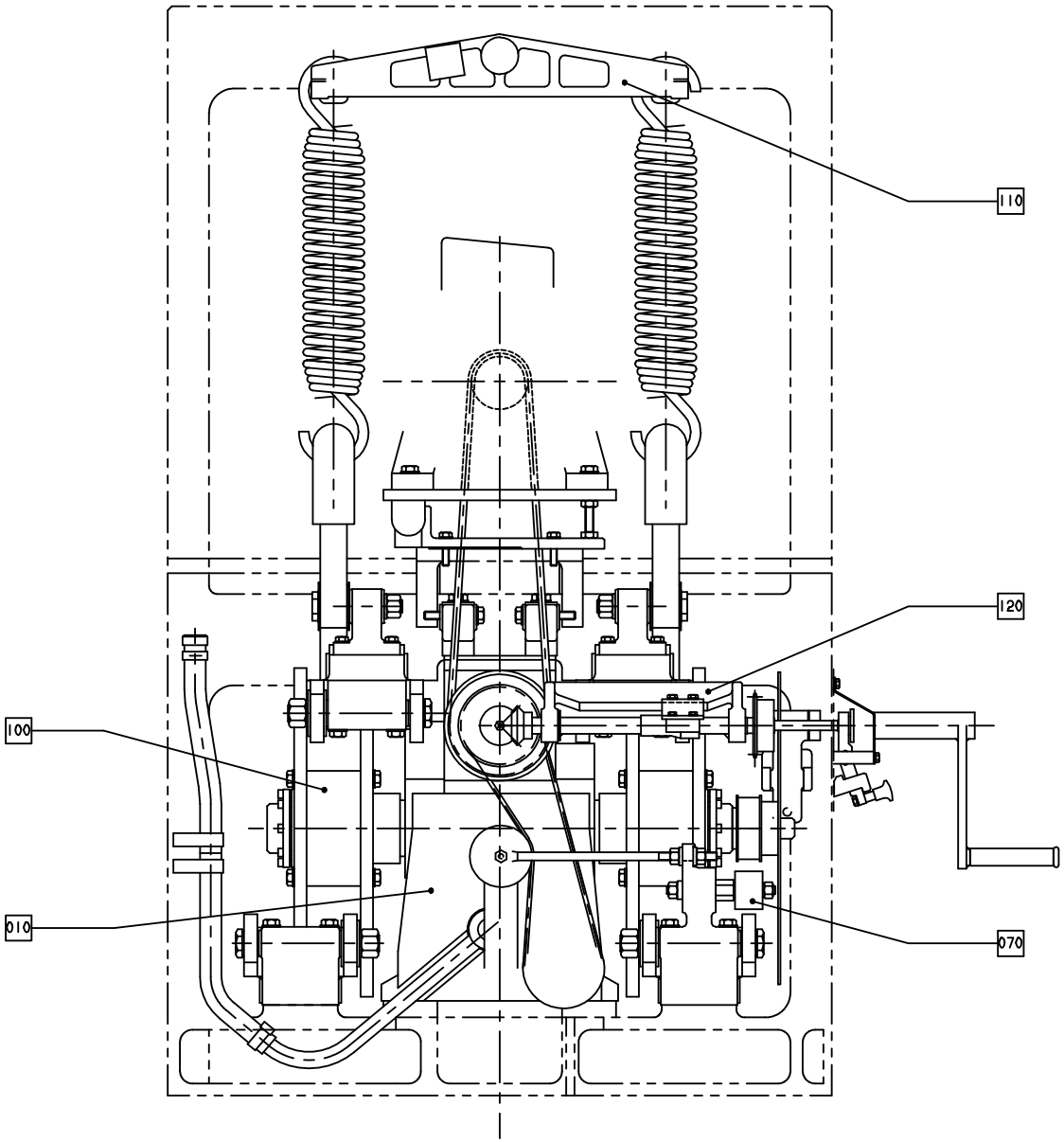
110
120
100
010
070

Pos	Part No	SP	UN	Qty	Description	Page No
SOURCE,TBA/9-100V OR SOURCE,TBA/9-110V OR SOURCE,TBA/9-120V						
020	A271128-0300	-		1	MOTOR	**321**
070	A256199-0300	-		1	BELT STRETCHER	**323**
110	A256203-0300	-		1	HOLD-DOWN DEVICE	**325**
Common Parts						
	A1529110-0100	-		1	MODIFIED ARTICLES	
010	A1529111-0100	-		1	WORM GEAR	**327, 329**
030	A1529114-0100	-		1	ARM	**331, 333, 335, 337**
050	A1529151-0100	-		1	LINK ARM, RIGHT	**339, 341**
060	A1529152-0100	-		1	LINK ARM, LEFT	**343, 345**
080	A256200-0300	-		1	INTERMEDIARY SHAFT	**347, 349**
100	A1529304-0100	-		1	CAM PACKAGE IH	**351, 353**
120	A256806-0300	-		1	CRANK	**355**
130	A1490120-0100	-		1	DISCONNECTION LINK LEFT	**357**
140	A1539766-0100	-		1	DISCONNECTION LINK RIGHT	**359**

Pos	Part No	SP	UN	Qty	Description	Page No

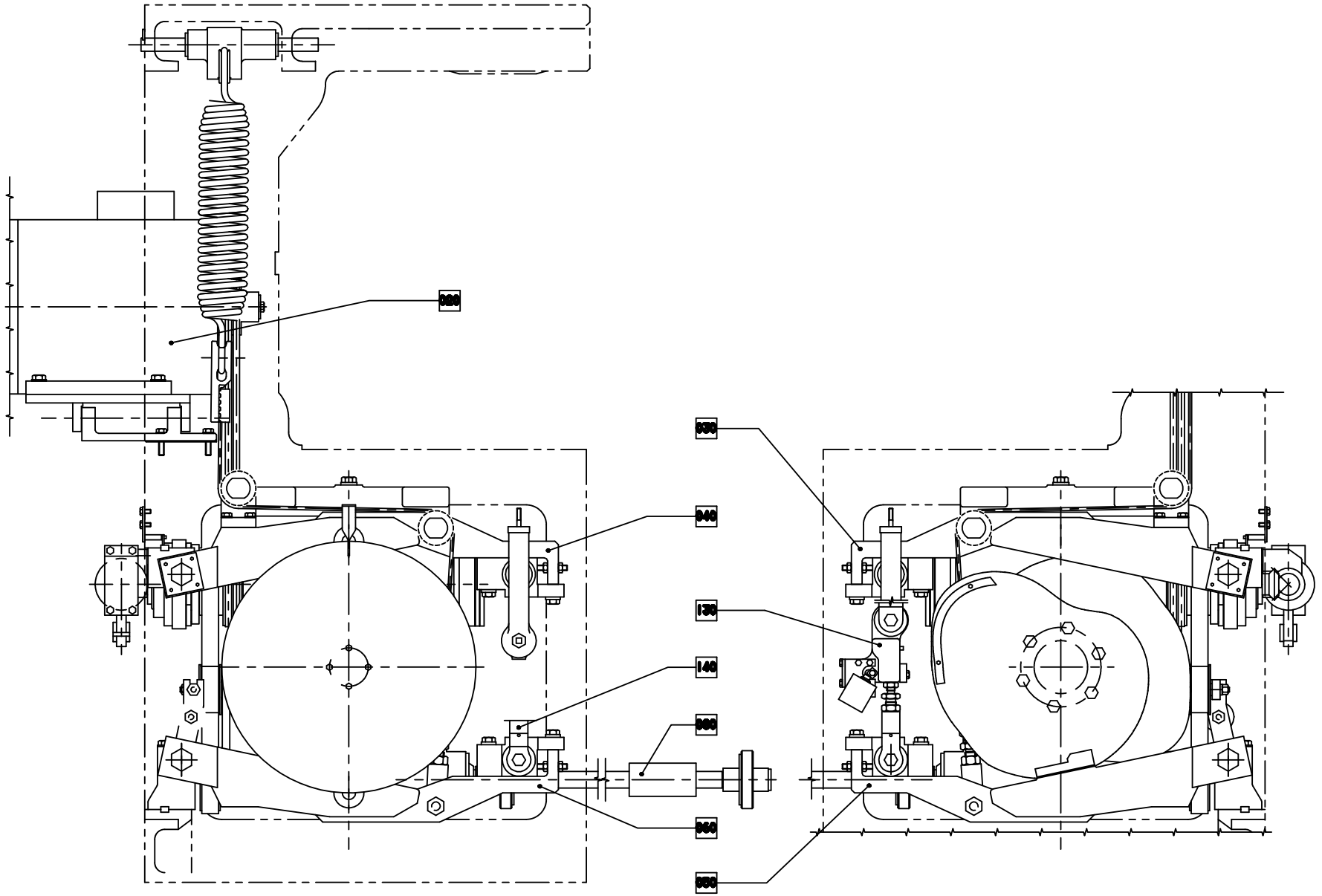
030
040
130
140
080
060
050

Pos	Part No	SP	UN	Qty	Description	Page No
SOURCE,TBA/9-100V OR SOURCE,TBA/9-110V OR SOURCE,TBA/9-120V						
020	A271128-0300	-		1	MOTOR	**321**
070	A256199-0300	-		1	BELT STRETCHER	**323**
110	A256203-0300	-		1	HOLD-DOWN DEVICE	**325**
Common Parts						
	A1529110-0100	-		1	MODIFIED ARTICLES	
010	A1529111-0100	-		1	WORM GEAR	**327, 329**
030	A1529114-0100	-		1	ARM	**331, 333, 335, 337**
050	A1529151-0100	-		1	LINK ARM, RIGHT	**339, 341**
060	A1529152-0100	-		1	LINK ARM, LEFT	**343, 345**
080	A256200-0300	-		1	INTERMEDIARY SHAFT	**347, 349**
100	A1529304-0100	-		1	CAM PACKAGE IH	**351, 353**
120	A256806-0300	-		1	CRANK	**355**
130	A1490120-0100	-		1	DISCONNECTION LINK LEFT	**357**
140	A1539766-0100	-		1	DISCONNECTION LINK RIGHT	**359**

Pos	Part No	SP	UN	Qty	Description	Page No

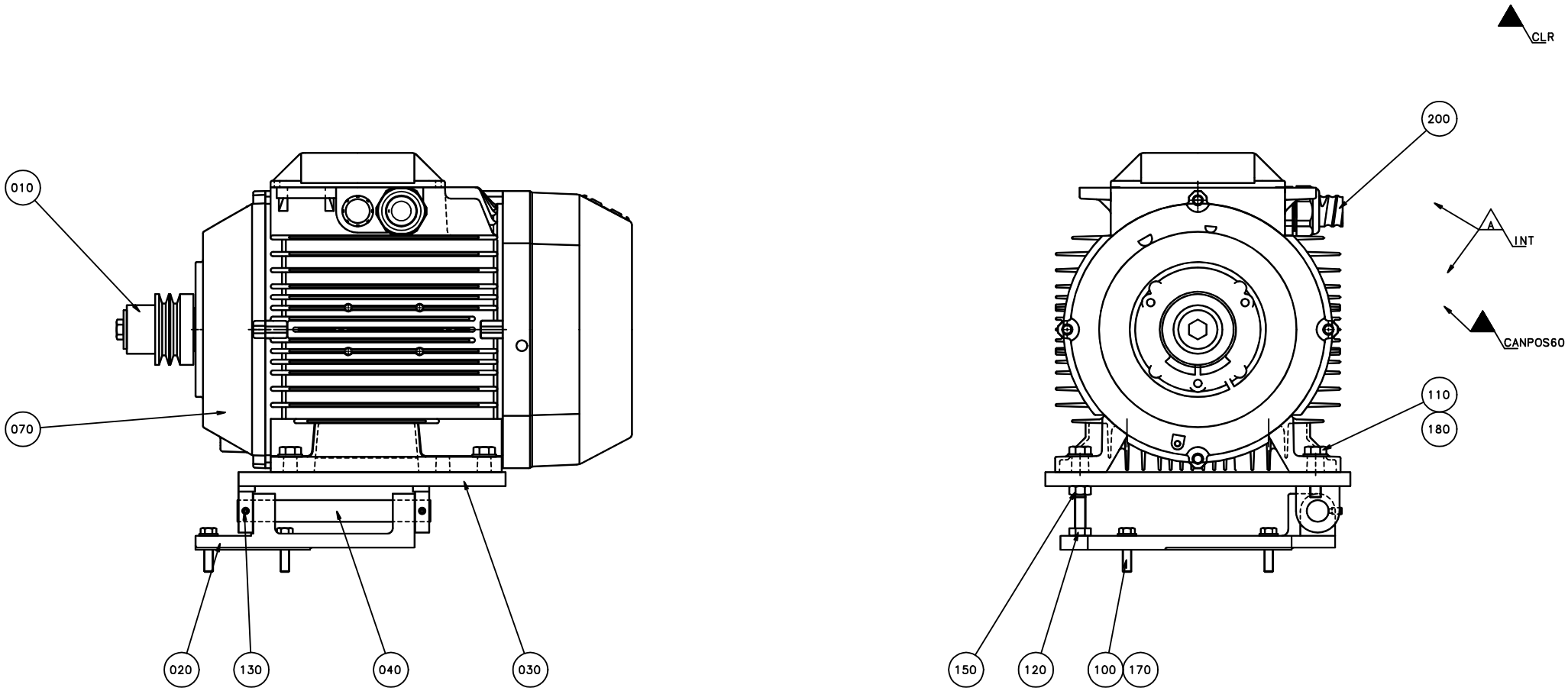
010
070
020
130
040
030
200
CLR
A
INT
CANPOS60
110
180
150
120
100
170

Pos	Part No	SP	UN	Qty	Description	Page No
IH 50HZ UPTAB						
010	456589-0004	A		1	V-BELT PULLEY	
IH 60HZ UPTAB						
010	456589-0003	A		1	V-BELT PULLEY	
Common Parts						
020	272431-0000	B		1	BRACKET	
030	441387-0000	-		1	MOTOR CRADLE	
040	272434-0000	A		1	SHAFT	
060	90002-0012	-		1	BLANK-OFF PLUG, PR 28,3 SKINDICHT-BLK21	
070	90045-0096	-		1	MOTOR ABB REPL.BY 90045-159	
100	312101-0457	-		4	SCREW M6S M8X35 FZB	
110	312101-0499	-		4	SCREW M6S M10X40 FZB	
120	312104-0505	-		1	SCREW M6S M10X70H FZB	
130	312311-0366	-		2	SCREW, SOCK.SET DOGPOINT M6X12	
150	312601-0320	-		1	NUT M6M 10-8 FZB	
170	315111-0165	-		4	WASHER PLAIN, TBRB 8,4/16 H=3	
180	315111-0173	-		4	WASHER PLAIN, TBRB 10,5/22 H=4	
200	352103-0116	-		1	CABLE GLAND, ST 21, PR28,3/PG21	

Pos	Part No	SP	UN	Qty	Description	Page No

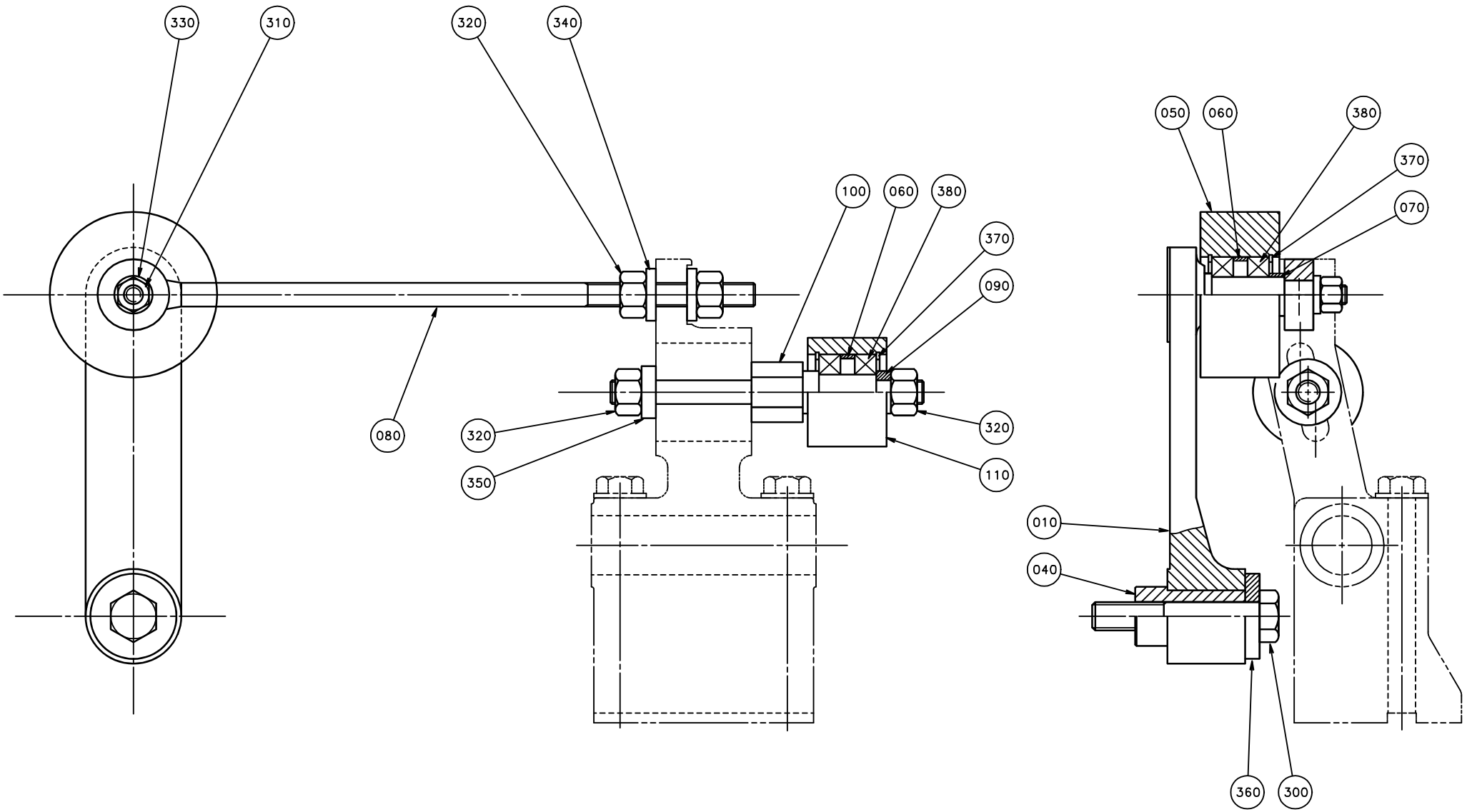
330
310
320
340
100
060
380
370
090
080
320
320
350
110
050
060
380
370
070
010
040
360
300

ECM: 103149 - 20020110
Group number: 256199-0300
Assembly Drawing: 256199-3_1_AA

Issue: 20020822

Pos	Part No	SP	UN	Qty	Description	Page No
Common Parts						
010	272565-0000	B		1	ARM	
040	256912-0000	A		1	DOWEL	
050	751254-0000	A		1	ROLL	
060	256914-0000	A		2	SPACER RING	
070	256915-0000	A		1	SPACER RING	
080	256916-0000	A		1	STRUT	
090	256918-0000	A		1	WASHER	
100	272566-0000	A		1	AXLE PIN	
110	272567-0000	B		1	ROLL	
300	312101-0546	-		1	SCREW M6S M12X70 FZB	
310	312811-0318	A		1	NUT HEX.LOCK HELI COIL MID GRIP M8 SS	
320	312811-0320	A		4	NUT HEX.LOCK HELI COIL MID GRIP M10 SS	
330	315111-0165	-		1	WASHER PLAIN, TBRB 8,4/16 H=3	
340	315111-0173	-		2	WASHER PLAIN, TBRB 10,5/22 H=4	
350	315121-0173	-		1	WASHER PLAIN, TBRSB 10,5/28 H=6	
360	315121-0178	-		1	WASHER PLAIN, TBRSB 13/36 H=6	
370	315752-0123	A		4	RETAIN. RING, 32	
380	321308-0202	A		4	BALL BEARING, 2 SEALS, 15X32X9 MM	

Pos	Part No	SP	UN	Qty	Description	Page No

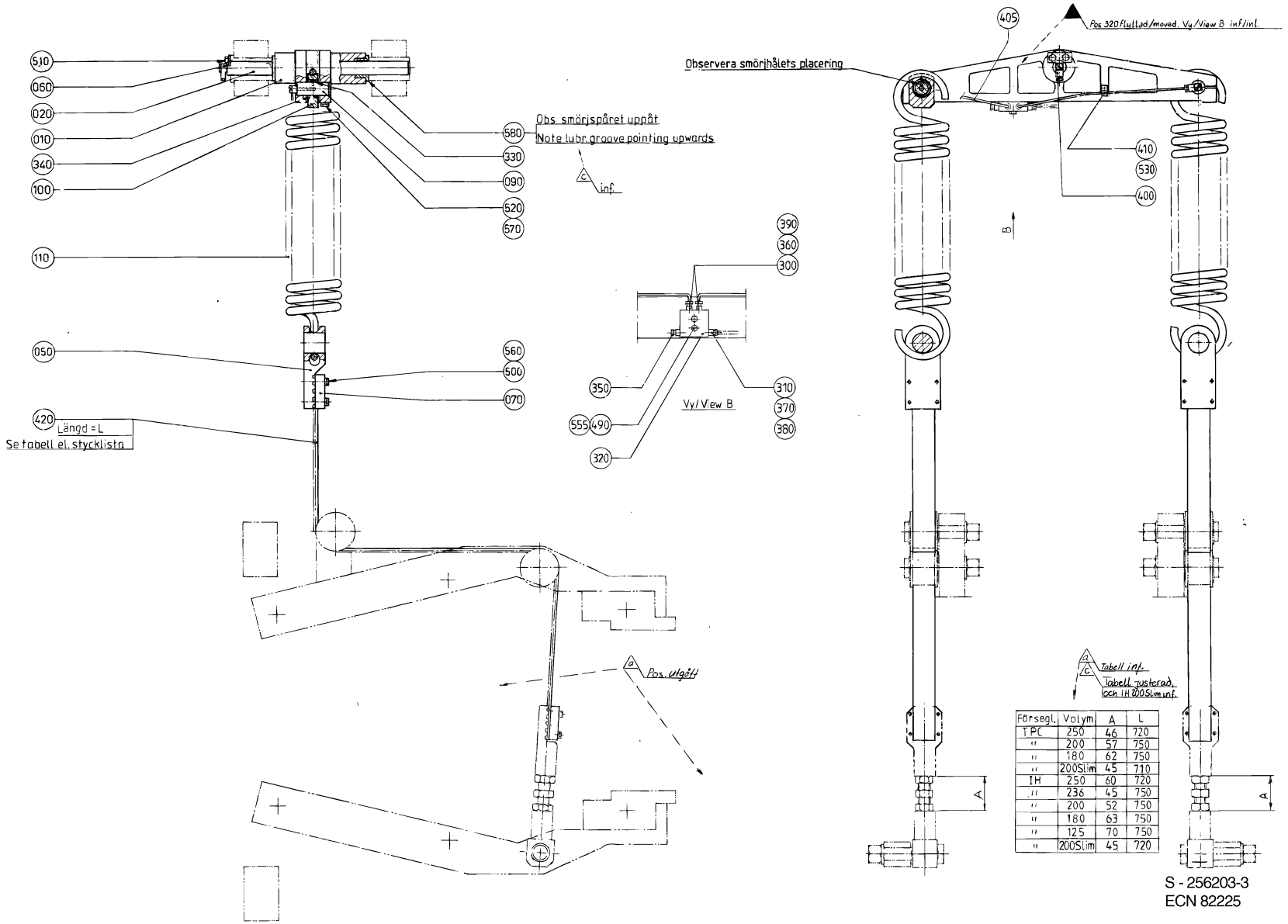

Försegl.	Volym	A	L
TPC	250	46	720
"	200	57	750
"	180	62	750
"	200Slim	45	710
IH	250	60	720
"	236	45	750
"	200	52	750
"	180	63	750
"	125	70	750
"	200Slim	45	720

S - 256203-3
ECN 82225

Pos	Part No	SP	UN	Qty	Description	Page No
0200B IH						
420	B490566-0001	A		2	TIMING BELT	
	90417-0077	-	*M*	*1*	*TIMING BELT T10 POLYURETHANE*	
0200S IH OR 0250B IH						
420	566404-0002	A		2	TIMING BELT	
Common Parts						
010	272606-0000	-		1	CRADLE	
020	256514-0000	B		1	SHAFT	
050	272608-0000	B		2	BELT HOLDER	
060	256472-0000	-		1	WASHER	
070	256516-0000	-		2	CAP	
090	256518-0000	B		2	SHAFT	
100	256519-0000	B		2	SPRING BRACKET	
110	441353-0000	A		2	TENSION SPRING	
300	90028-0020	-		2	CONE TUBE 2,5MM	
310	90028-0021	-		1	CONE TUBE 4 MM	
320	90032-0038	-		1	BLOCK 2 WAYS	
330	321531-0248	A		2	NEEDLE SLEEVE WITHOUT CONE, 20X26X16 MM	
340	90083-0016	A		4	PLATE FOR AXK 2035	
350	90087-0019	-		1	PLUG M10X1 STAINLESS	
360	90092-0052	A		2	METERING VALVE 10 MM3	
370	90134-0031	-		1	SLEEVE FOR PLASTIC TUBE	
380	90134-0038	-		1	BUSHING/NUT INLET/OUTLET 4 MM	
390	90134-0039	-		2	BUSHING VALVE CONNECTION 2,5 MM	
400	90134-0058	-		3	CONNECTION	
405	90266-0019	-	MM	500	PIPE	
410	90165-0022	-		1	PIPE CLIP, FOR TUBE D=2,5 MM, B-3570	
490	312101-0297	-		2	SCREW M6S M4X25 FZB	
500	312101-0333	-		8	SCREW M6S M5X25 FZB	
510	312101-0364	-		2	SCREW M6S M6X10 FZB	
520	312101-0457	-		2	SCREW M6S M8X35 FZB	
530	312121-0287	-		1	SCREW SLOT.PAN HD. MCS 4X8 FZB	
555	315101-0136	-		2	WASHER PLAIN, BRB, 4,3/8 H=0,8	
560	315101-0146	-		8	WASHER PLAIN, BRB, 5,3/10 H=1	
570	315101-0165	-		2	WASHER PLAIN, BRB, 8,4/16 H=1,5	
580	321101-0233	A		2	FLANGE BUS 20F7X20	

Pos	Part No	SP	UN	Qty	Description	Page No

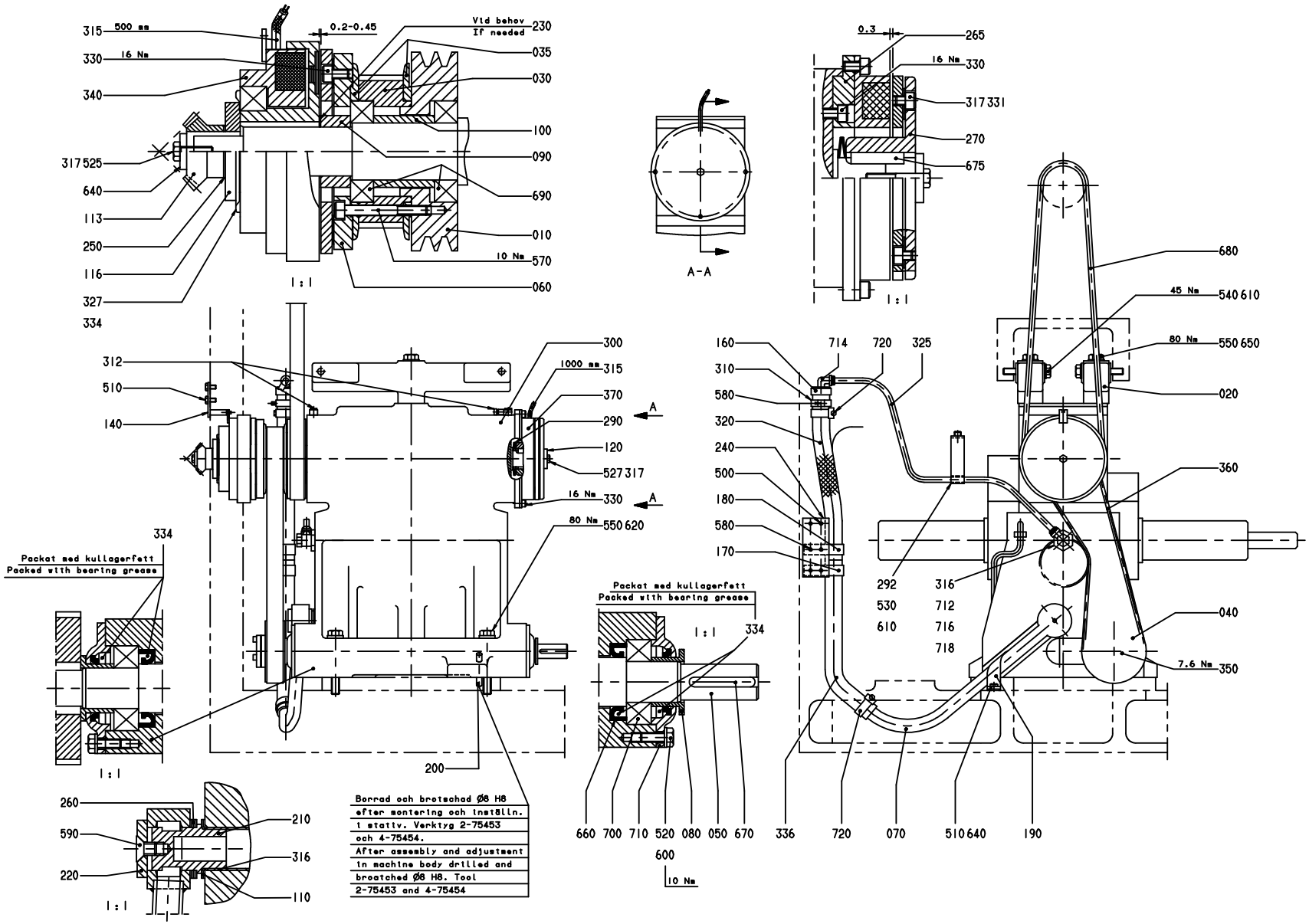
315
500 Nm
330
16 Nm
340
317525
640
113
250
116
327
334
0.2-0.45
Vid behov
If needed
230
035
030
100
090
690
010
10 Nm
570
060
1:1
A-A
0.3
265
16 Nm
330
317331
270
675
1:1
680
45 Nm
540610
80 Nm
550650
020
360
040
7.6 Nm
350
160
310
580
320
240
500
180
580
170
714
720
325
292
530
610
316
712
716
718
312
510
140
300
1000 Nm
315
370
290
120
527317
16 Nm
330
80 Nm
550620
A
334
Packat med kullagerfett
Packed with bearing grease
1:1
200
Borrad och brotschad Ø8 H8
efter montering och inställn.
i stativ. Verktyg 2-75453
och 4-75454.
After assembly and adjustment
in machine body drilled and
broatched Ø8 H8. Tool
2-75453 and 4-75454
260
590
220
210
316
110
660
700
710
520
600
080
050
670
10 Nm
336
720
070
510640
190

ECM: 105673 - 20020315
Group number: 1529111-0100
Assembly Drawing: 1529111-1_1_AA

Issue: 20020822

Pos	Part No	SP	UN	Qty	Description	Page No
SOURCE,TBA/9-100V OR SOURCE,TBA/9-110V OR SOURCE,TBA/9-120V						
010	256174-0002	B		1	PULLEY	
680	318108-0111	A		2	V-BELT SPZ 1137X9,5	
Common Parts						
020	441356-0000	B		2	BRACKET	
030	751243-0000	A		1	TOOTHED PULLY	
035	751245-0000	A		2	FLANGE	
040	256176-0000	A		1	GEAR WHEEL	
050	256177-0000	A		1	SHAFT	
060	256178-0000	A		1	FIXING RING	
070	272372-0000	A		1	HOUSE	
080	256179-0000	-		2	SPACER SLEEVE	
090	256180-0000	-		1	SPACER	
100	256181-0000	-		1	SPACER PIPE	
110	257174-0000	A		1	SEALING WASHER	
113	257179-0000	-		1	GEAR WHEEL	
116	491409-0000	-		1	WASHER	
120	271689-0000	-		1	WASHER	
140	272374-0000	A		1	CARRIER	
160	272376-0000	-		1	SHUTTER	
170	272377-0001	-		1	CRAMP	
180	272377-0002	-		1	CRAMP	
190	272388-0000	-		1	CRAMP	
200	295140-0000	A		2	PIN	
210	295766-0000	A		1	SCREW	
220	295767-0000	A		1	SEALING WASHER	
230	441024-0000	A		1	LACE	
240	441360-0000	-		1	PLATE	
250	491410-0000	A		1	LACE	
260	456934-0000	A		1	SEALING WASHER	
265	469999-0000	-		1	FLANGE	
270	491274-0000	-		1	HUB	
290	90016-0010	A		2	DISC SPRINGS,50X25,4X2	
292	469867-0000	-		1	HOSE HOLDER	
300	B90056-0072	A		1	WORM GEAR	
	321306-0110	*A*		*1*	*BALL BEARING, 50X80X16 MM*	
	315221-0190	*A*		*2*	*SEAL RING CB42X72X8*	
	90214-0151	*A*		*2*	*SPH. ROLLER BEARING, 70X150X35 MM*	
	90056-0521	*A*		*1*	*PLASTIC BAG*	
	90091-0239	*A*		*2*	*RADIAL SEAL 65X90X10 MM*	
	90214-0150	*A*		*1*	*ANG. BALL BEAR, 2 SEALS, 45X100X39,7 MM*	
310	90074-0026	-		1	PIPE CLIP FOR TUBE D=24-35 MM	
312	90134-0058	-		2	CONNECTION	
315	90142-0005	-	MM	1500	HOSE	
316	90144-0073	-	MM	1	TREBOFLON-TAPE W=13MM	
317	90157-0016	-	ML	1	LOCKING FLUID	
320	90166-0060	A	MM	530	HOSE 19/26-27 REINF.PVC	
325	90166-0133	-	MM	500	TUBE 8 MM PA,TRANSP.	
327	90214-0312	A		1	SEALING RING, 50X74,6X2,5 MM	
330	90287-0081	-		11	SCREW MC6S M6X10 129	
331	90287-0149	-		6	SCREW MC6S M6X8 109	
334	90296-0068	-	G	1	GREASE UNIWAY LI 62 CARTRIDGE 400 GR.	
336	90296-0075	-	L	4	OIL 54322-320 ACC TO M 1254.322	
340	90355-0160	A		1	SHAFT COUPLING	
350	90208-0120	A		1	CONE CLAMP. ELEMENT 22/32, L=25	
360	90417-0076	A		1	TIMING BELT T10X920X25 POLYURETHANE	
370	90432-0023	A		1	BRAKE ORTLINGHAUS	
500	312101-0329	-		2	SCREW M6S M5X16 FZB	
510	312101-0366	-		3	SCREW M6S M6X12 FZB	
520	312101-0368	-		6	SCREW M6S M6X16 FZB	
525	312101-0370	-		1	SCREW M6S M6X20 FZB	
527	312101-0376	-		1	SCREW M6S M6X35 FZB	
530	312101-0488	-		1	SCREW M6S M10X14 FZB	
540	312101-0504	-		8	SCREW M6S M10X65 FZB	
550	312101-0550	-		6	SCREW M6S M12X90 FZB	
570	312111-0380	-		3	SCREW HEX.SOCK.HD.MC6S-TT 6X50 88 FZB	
580	312121-0323	-		5	SCREW SLOT.PAN HD. MCS 5X8 FZB	
590	312155-0447	-		1	SCREW HEX.SOCK.COUNT.MF6S 8X12 SS	
600	315101-0153	-		6	WASHER PLAIN, BRB, 6,4/12 H=1,5	
610	315111-0173	-		9	WASHER PLAIN, TBRB 10,5/22 H=4	
620	315111-0178	-		4	WASHER PLAIN, TBRB 13/24 H=4	
640	315121-0153	-		2	WASHER PLAIN, TBRSB 6,4/22 H=4	
650	315121-0178	-		2	WASHER PLAIN, TBRSB 13/36 H=6	
660	315221-0169	A		2	RADIAL SEAL 30X47X7 MM	
670	315701-0239	A		1	PARALLEL KEY W. ROUND ENDS 6X6X40 MM	
675	315701-0268	-		1	PARALLEL KEY W. ROUND ENDS 8X7X32 MM	
690	321308-0207	A		2	BALL BEARING, 2 SEALS, 35X62X14 MM	
700	321313-0105	A		2	BALL BEARING, 2 SEALS, 25X52X15 MM	
710	321600-0114	A		2	OIL SEAL (LL3052	
712	342701-0208	-		1	BUSHING, INT/EXT. G-THREAD NO. 3/4-1/4	
714	342930-0122	-		1	ELBOW 90 COUPL.,EXT.THREAD 8/6-R1/4"	
716	342980-0122	-		1	BANJO-CONNECTION,RING 8/6-G1/4"	
718	342980-0304	-		1	BANJO-HOLLOW BOLT COUPL,EXT.THR.01-G1/4"	

Machine Type | Group Description | Used-In | Group Number | Page No

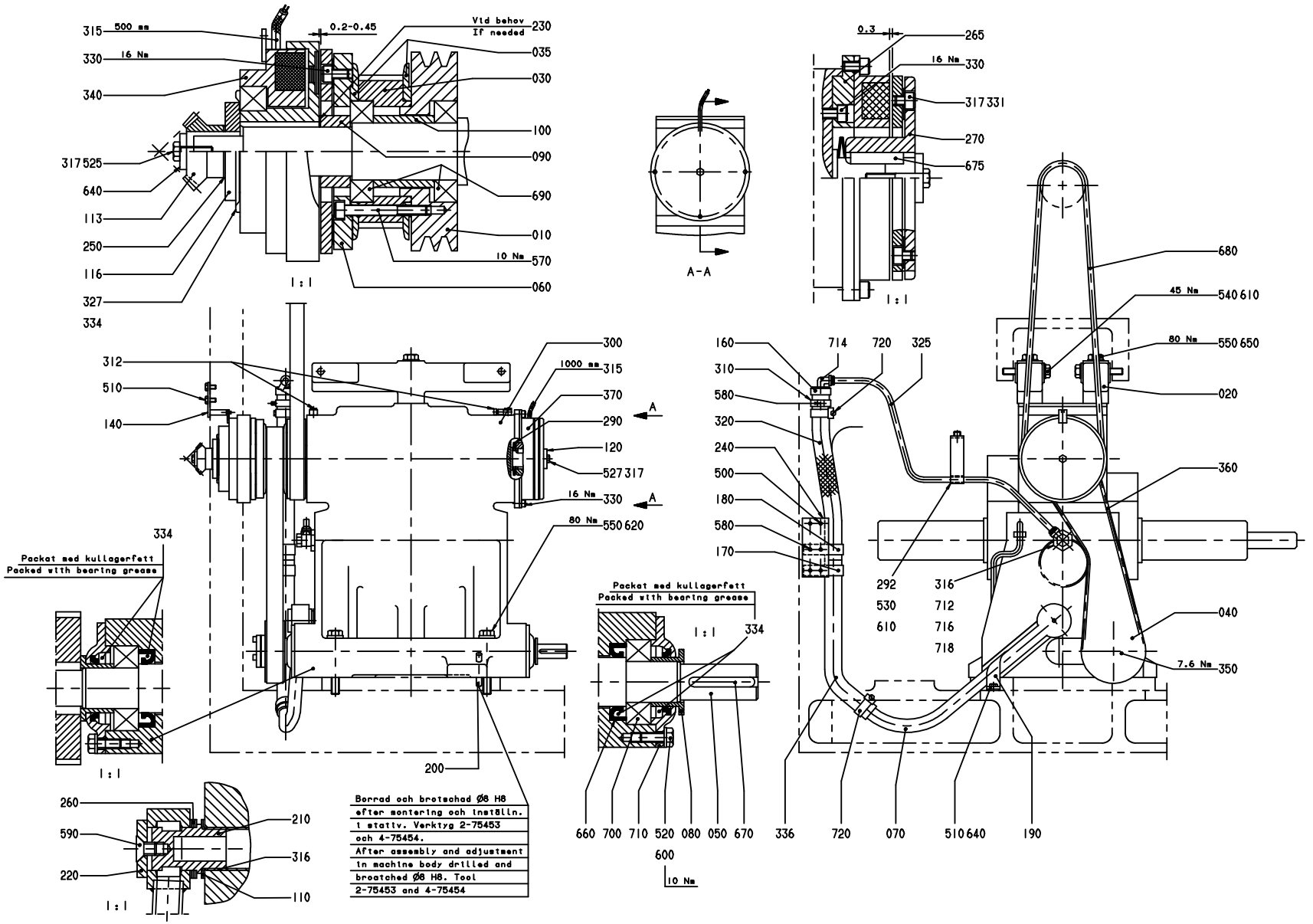
315
500 Nm
330
16 Nm
340
317525
640
113
250
116
327
334
0.2-0.45
Vid behov
If needed
230
035
030
100
090
690
010
10 Nm
570
060
1:1
A-A
0.3
265
16 Nm
330
317331
270
675
1:1
680
45 Nm
540610
80 Nm
550650
020
360
040
7.6 Nm
350
160
310
580
320
240
500
180
580
170
714
720
325
292
530
610
316
712
716
718
312
510
140
300
1000 Nm
315
370
290
120
527317
16 Nm
330
80 Nm
550620
A
334
Packat med kullagerfett
Packed with bearing grease
1:1
200
Borrad och brotschad Ø8 H8
efter montering och inställn.
i stativ. Verktyg 2-75453
och 4-75454.
After assembly and adjustment
in machine body drilled and
broatched Ø8 H8. Tool
2-75453 and 4-75454
260
590
220
210
316
110
660
700
710
520
080
050
670
600
10 Nm
336
720
070
510640
190

Pos	Part No	SP	UN	Qty	Description	Page No
Common Parts (Cont'd)						
720	342991-0104	-		2	HOSE CLIP,WORM DRIVE TYPE (23)-27	

Pos	Part No	SP	UN	Qty	Description	Page No

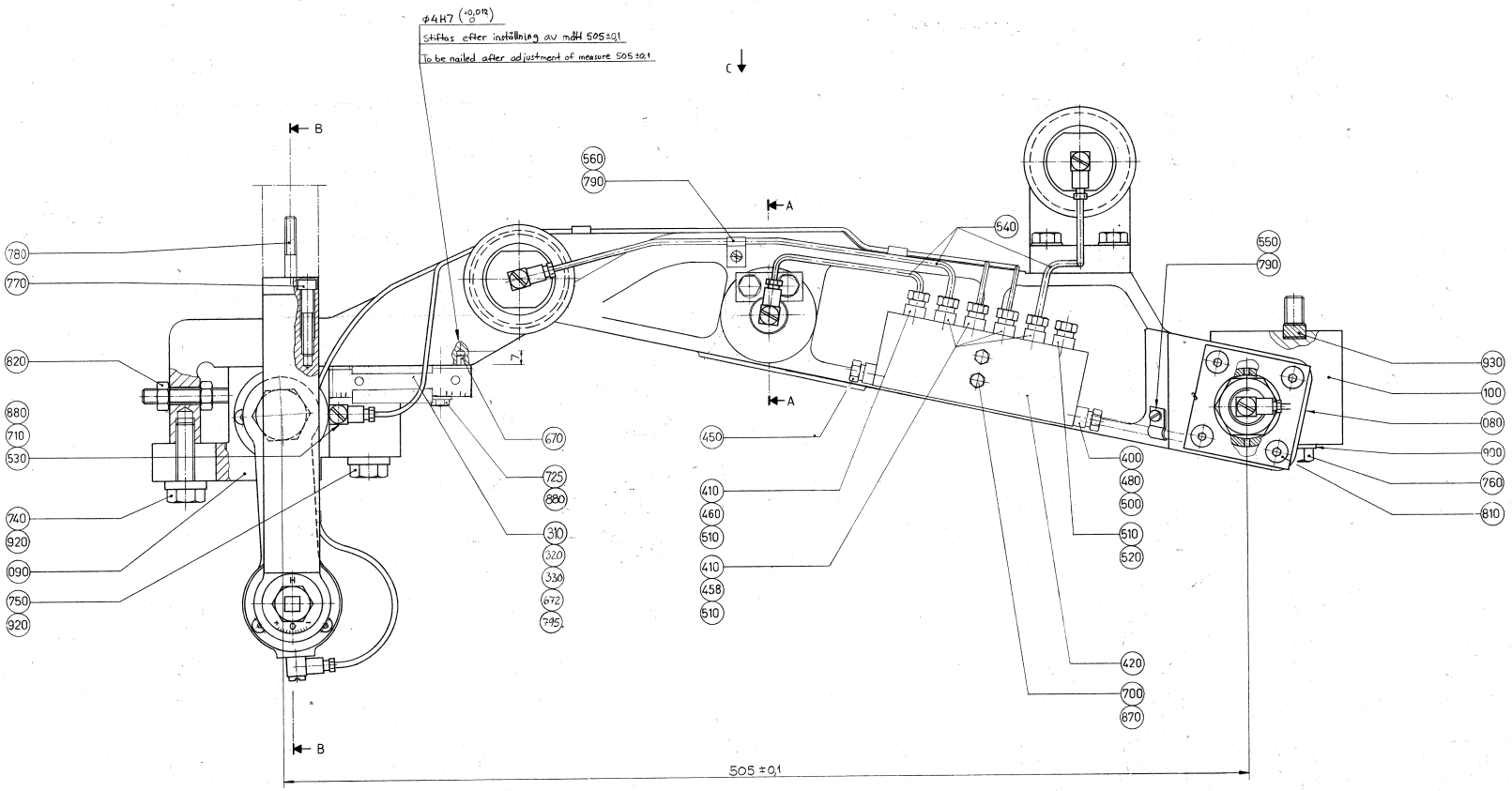
ø4H7 (+0,012 0)
Stiftas efter inställning av mått 505±0,1
To be nailed after adjustment of measure 505±0,1
C
B
A
560
790
540
550
790
780
770
820
880
710
530
740
920
090
750
920
670
725
280
310
320
330
672
795
450
410
460
510
410
458
510
400
480
500
510
520
420
700
870
930
100
080
900
760
810
505±0,1

ECM: 106090 - 20020315
Group number: 1529114-0100
Assembly Drawing: 1529114-1_1_AB

Issue: 20020822

Pos	Part No	SP	UN	Qty	Description	Page No
Common Parts						
030	272459-0000	A		1	WASHER	
040	272460-0000	-		1	WASHER	
080	751212-0000	B		2	ARM	
085	272442-0000	B		2	CANTILEVER	
090	978275-0000	B		2	BEARING HOLDER	
100	272455-0000	-		2	BEARING BRACKET	
110	594975-0000	A		2	LINK	
120	272457-0000	A		4	BOW CLAMP	
130	295770-0000	A		2	AXLE BOLT	
140	256421-0000	A		2	PULLEY	
150	256422-0000	A		4	WASHER	
160	256426-0001	A		2	WASHER	
170	256426-0002	A		4	WASHER	
180	256427-0000	A		2	SHAFT	
190	490916-0000	A		4	AXLE PIN	
200	256472-0000	A		2	WASHER	
210	257306-0000	A		2	ROLL	
220	257308-0000	A		2	SCREW	
230	257309-0000	A		2	SHAFT	
240	257310-0000	A		2	NUT	
250	257311-0000	A		8	CAP	
280	272116-0000	A		2	CAP	
290	272458-0000	A		2	ECCENTRIC SHAFT	
300	272461-0000	A		2	WASHER	
310	978272-0000	-		2	BRACKET	
320	1484791-0000	-		2	SCALE	
330	1484792-0000	-		2	SCALE	
400	90028-0021	A		2	CONE TUBE 4 MM	
410	90028-0020	A		10	CONE TUBE 2,5MM	
420	90032-0040	-		2	BLOCK 6 WAYS	
430	90035-0005	-		2	COVER	
440	321531-0248	-		8	NEEDLE SLEEVE WITHOUT CONE, 20X26X16 MM	
450	90087-0019	-		2	PLUG M10X1 STAINLESS	
458	90092-0052	A		8	METERING VALVE 10 MM3	
460	90092-0053	A		2	METERING VALVE 30 MM3	
480	90134-0031	-		2	SLEEVE FOR PLASTIC TUBE	
500	90134-0038	-		2	BUSHING/NUT INLET/OUTLET 4 MM	
510	90134-0039	-		12	BUSHING VALVE CONNECTION 2,5 MM	
520	90134-0052	-		2	PLUG DOSING BLOCK	
530	90134-0058	-		14	CONNECTION	
540	90266-0019	-	MM	1100	PIPE	
550	90165-0002	-		6	CLIP	
560	90165-0022	-		4	PIPE CLIP, FOR TUBE D=2,5 MM, B-3570	
570	90166-0143	-	MM	2200	TUBE 2,5 MM PA,TRANSP.	
580	90240-0048	A		4	PLAIN BEAR,SELF ADJ.SPHER. 25X42X20 MM	
590	90240-0050	A		4	PLAIN BEAR,SELF ADJ.SPHER. 20X35X24 MM	
670	311101-0267	-		2	PARALLELL PIN, CP, H6, 4X10 MM	
672	311103-0267	-		2	PARALLELL PIN, M6, 4X10 MM	
680	311303-0234	A		2	SLOTTED PIRPB3X12FZB	
700	312101-0297	-		4	SCREW M6S M4X25 FZB	
710	312101-0362	-		6	SCREW M6S M6X8 FZB	
720	312101-0364	-		4	SCREW M6S M6X10 FZB	
725	312105-0374	-		2	SCREW M6S ISO 4014 M6X30 A480	
730	312101-0453	-		8	SCREW M6S M8X25 FZB	
740	312101-0493	-		2	SCREW M6S M10X25 FZB	
750	312101-0504	-		2	SCREW M6S M10X65 FZB	
760	312101-0507	-		4	SCREW M6S M10X80 FZB	
770	312111-0376	-		8	SCREW HEX.SOCK.HD.MC6S-TT 6X35 88 FZB	
780	312111-0378	-		4	SCREW HEX.SOCK.HD.MC6S-TT 6X40 88 FZB	
790	312121-0287	-		10	SCREW SLOT.PAN HD. MCS 4X8 FZB	
795	312145-0220	-		2	SCREW COUNTERS.SLOT.HD. MFS 3X6 SS	
800	312151-0287	-		24	SCREW HEX.SOCK.COUNT.MF6S 4X8 FZB	
810	312151-0364	-		16	SCREW HEX.SOCK.COUNT.MF6S 6X10 FZB	
820	312601-0318	-		4	NUT M6M8FZB	
830	312811-0322	A		4	NUT HEX.LOCK HELI COIL MID GRIP M12 SS	
840	312811-0324	A		4	NUT HEX.LOCK HELI COIL MID GRIP M16 SS	
850	312811-0326	A		2	NUT HEX.LOCK HELI COIL MID GRIP M20 SS	
870	315101-0136	-		4	WASHER PLAIN, BRB, 4,3/8 H=0,8	
880	315101-0153	-		8	WASHER PLAIN, BRB, 6,4/12 H=1,5	
890	315101-0165	-		8	WASHER PLAIN, BRB, 8,4/16 H=1,5	
900	315101-0173	-		4	WASHER PLAIN, BRB, 10,5/22 H=2	
910	315101-0186	-		4	WASHER PLAIN, BRB, 17/30 H=3	
920	315111-0173	-		4	WASHER PLAIN, TBRB 10,5/22 H=4	
930	315701-0335	-		2	PARALLEL KEY W. ROUND ENDS 12X8X56 MM	
940	321129-0137	A		8	THRUST WASHER, 22/38X1,5	
950	321576-0260	A		2	BEARING ROLLER, 2 SEALS, 20X47X25 MM	

Machine Type | Group Description | Used-In | Group Number | Page No

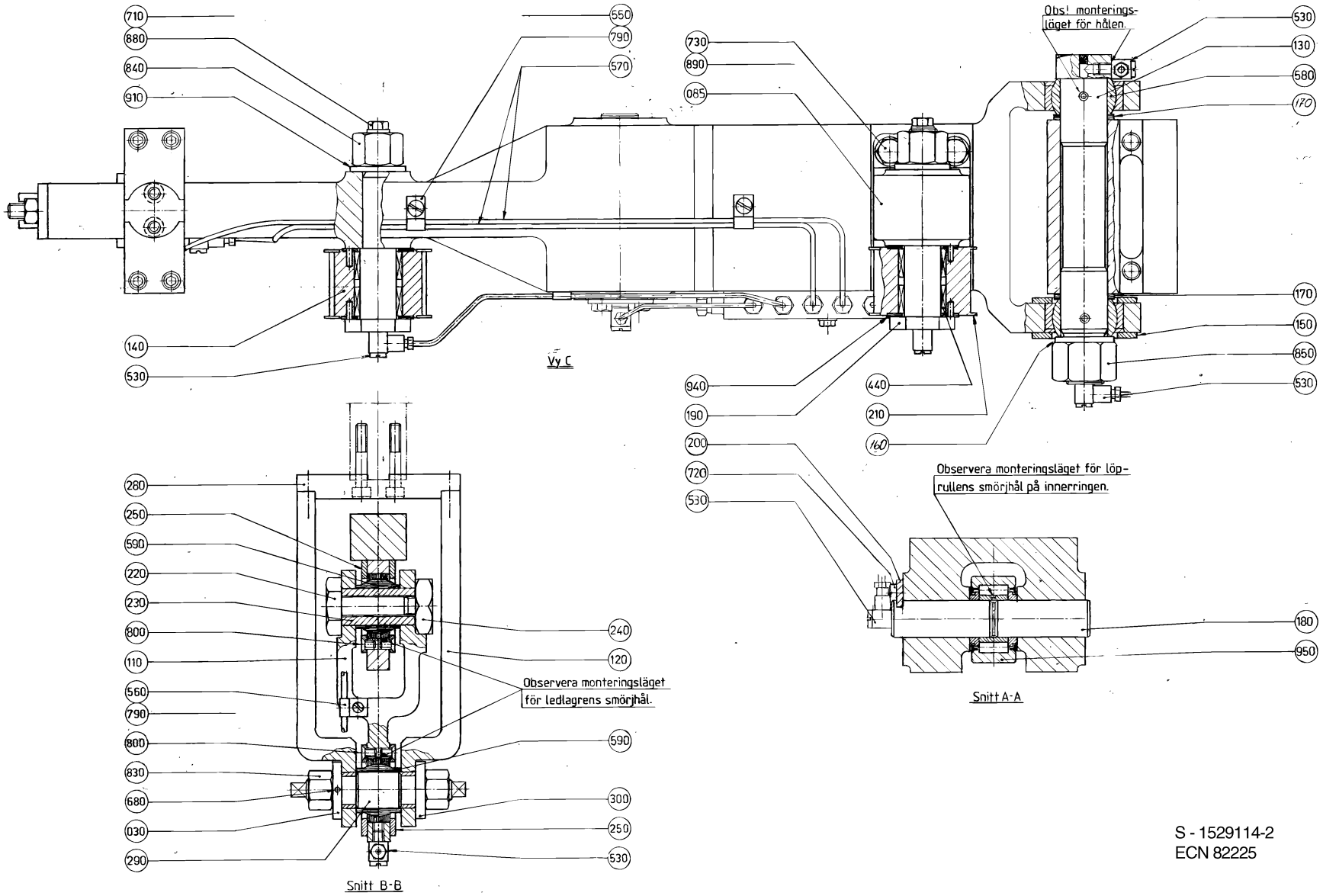

S - 1529114-2
ECN 82225

ECM: 106090 - 20020315
Group number: 1529114-0100
Assembly Drawing: 1529114-2_1_AA

Issue: 20020822

Pos	Part No	SP	UN	Qty	Description	Page No
Common Parts						
030	272459-0000	A		1	WASHER	
040	272460-0000	-		1	WASHER	
080	751212-0000	B		2	ARM	
085	272442-0000	B		2	CANTILEVER	
090	978275-0000	B		2	BEARING HOLDER	
100	272455-0000	-		2	BEARING BRACKET	
110	594975-0000	A		2	LINK	
120	272457-0000	A		4	BOW CLAMP	
130	295770-0000	A		2	AXLE BOLT	
140	256421-0000	A		2	PULLEY	
150	256422-0000	A		4	WASHER	
160	256426-0001	A		2	WASHER	
170	256426-0002	A		4	WASHER	
180	256427-0000	A		2	SHAFT	
190	490916-0000	A		4	AXLE PIN	
200	256472-0000	A		2	WASHER	
210	257306-0000	A		2	ROLL	
220	257308-0000	A		2	SCREW	
230	257309-0000	A		2	SHAFT	
240	257310-0000	A		2	NUT	
250	257311-0000	A		8	CAP	
280	272116-0000	A		2	CAP	
290	272458-0000	A		2	ECCENTRIC SHAFT	
300	272461-0000	A		2	WASHER	
310	978272-0000	-		2	BRACKET	
320	1484791-0000	-		2	SCALE	
330	1484792-0000	-		2	SCALE	
400	90028-0021	A		2	CONE TUBE 4 MM	
410	90028-0020	A		10	CONE TUBE 2,5MM	
420	90032-0040	-		2	BLOCK 6 WAYS	
430	90035-0005	-		2	COVER	
440	321531-0248	-		8	NEEDLE SLEEVE WITHOUT CONE, 20X26X16 MM	
450	90087-0019	-		2	PLUG M10X1 STAINLESS	
458	90092-0052	A		8	METERING VALVE 10 MM3	
460	90092-0053	A		2	METERING VALVE 30 MM3	
480	90134-0031	-		2	SLEEVE FOR PLASTIC TUBE	
500	90134-0038	-		2	BUSHING/NUT INLET/OUTLET 4 MM	
510	90134-0039	-		12	BUSHING VALVE CONNECTION 2,5 MM	
520	90134-0052	-		2	PLUG DOSING BLOCK	
530	90134-0058	-		14	CONNECTION	
540	90266-0019	-	MM	1100	PIPE	
550	90165-0002	-		6	CLIP	
560	90165-0022	-		4	PIPE CLIP, FOR TUBE D=2,5 MM, B-3570	
570	90166-0143	-	MM	2200	TUBE 2,5 MM PA,TRANSP.	
580	90240-0048	A		4	PLAIN BEAR,SELF ADJ.SPHER. 25X42X20 MM	
590	90240-0050	A		4	PLAIN BEAR,SELF ADJ.SPHER. 20X35X24 MM	
670	311101-0267	-		2	PARALLELL PIN, CP, H6, 4X10 MM	
672	311103-0267	-		2	PARALLELL PIN, M6, 4X10 MM	
680	311303-0234	A		2	SLOTTED PIRPB3X12FZB	
700	312101-0297	-		4	SCREW M6S M4X25 FZB	
710	312101-0362	-		6	SCREW M6S M6X8 FZB	
720	312101-0364	-		4	SCREW M6S M6X10 FZB	
725	312105-0374	-		2	SCREW M6S ISO 4014 M6X30 A480	
730	312101-0453	-		8	SCREW M6S M8X25 FZB	
740	312101-0493	-		2	SCREW M6S M10X25 FZB	
750	312101-0504	-		2	SCREW M6S M10X65 FZB	
760	312101-0507	-		4	SCREW M6S M10X80 FZB	
770	312111-0376	-		8	SCREW HEX.SOCK.HD.MC6S-TT 6X35 88 FZB	
780	312111-0378	-		4	SCREW HEX.SOCK.HD.MC6S-TT 6X40 88 FZB	
790	312121-0287	-		10	SCREW SLOT.PAN HD. MCS 4X8 FZB	
795	312145-0220	-		2	SCREW COUNTERS.SLOT.HD. MFS 3X6 SS	
800	312151-0287	-		24	SCREW HEX.SOCK.COUNT.MF6S 4X8 FZB	
810	312151-0364	-		16	SCREW HEX.SOCK.COUNT.MF6S 6X10 FZB	
820	312601-0318	-		4	NUT M6M8FZB	
830	312811-0322	A		4	NUT HEX.LOCK HELI COIL MID GRIP M12 SS	
840	312811-0324	A		4	NUT HEX.LOCK HELI COIL MID GRIP M16 SS	
850	312811-0326	A		2	NUT HEX.LOCK HELI COIL MID GRIP M20 SS	
870	315101-0136	-		4	WASHER PLAIN, BRB, 4,3/8 H=0,8	
880	315101-0153	-		8	WASHER PLAIN, BRB, 6,4/12 H=1,5	
890	315101-0165	-		8	WASHER PLAIN, BRB, 8,4/16 H=1,5	
900	315101-0173	-		4	WASHER PLAIN, BRB, 10,5/22 H=2	
910	315101-0186	-		4	WASHER PLAIN, BRB, 17/30 H=3	
920	315111-0173	-		4	WASHER PLAIN, TBRB 10,5/22 H=4	
930	315701-0335	-		2	PARALLEL KEY W. ROUND ENDS 12X8X56 MM	
940	321129-0137	A		8	THRUST WASHER, 22/38X1,5	
950	321576-0260	A		2	BEARING ROLLER, 2 SEALS, 20X47X25 MM	

Machine Type | Group Description | Used-In | Group Number | Page No

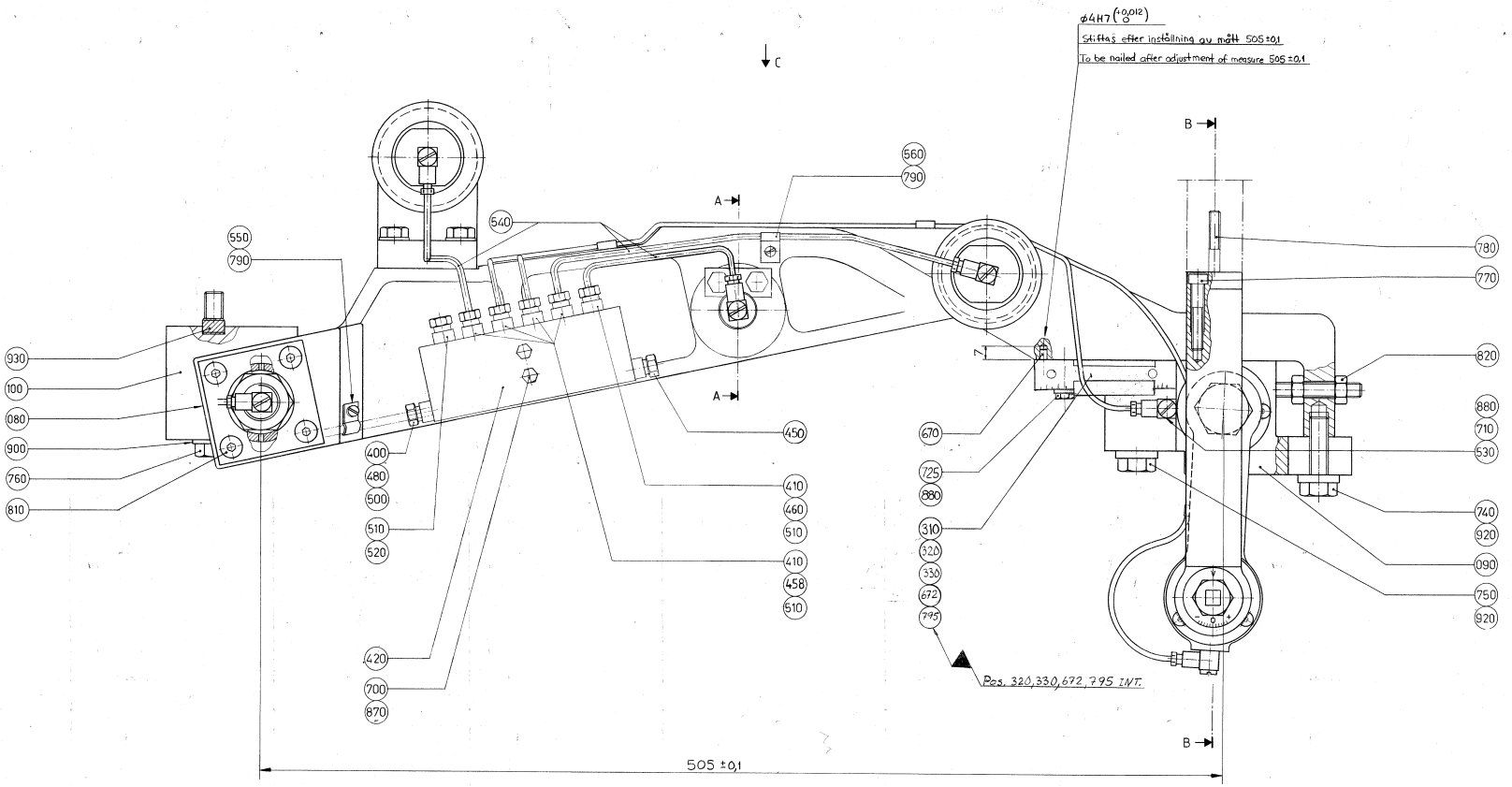
ϕ4H7 (+0,012 0)
Stiftas efter inställning av mått 505 ±0,1
To be nailed after adjustment of measure 505 ±0,1
C
A
B
Z
550
790
540
560
790
930
100
080
900
760
810
400
480
500
510
520
450
410
460
510
410
458
510
420
700
870
670
725
880
310
320
330
672
795
Pos. 320,330,672,795 INT.
780
770
820
880
710
530
740
920
090
750
920
505 ±0,1

ECM: 106090 - 20020315
Group number: 1529114-0100
Assembly Drawing: 1529114-3_1_AB

Issue: 20020822

Pos	Part No	SP	UN	Qty	Description	Page No
Common Parts						
030	272459-0000	A		1	WASHER	
040	272460-0000	-		1	WASHER	
080	751212-0000	B		2	ARM	
085	272442-0000	B		2	CANTILEVER	
090	978275-0000	B		2	BEARING HOLDER	
100	272455-0000	-		2	BEARING BRACKET	
110	594975-0000	A		2	LINK	
120	272457-0000	A		4	BOW CLAMP	
130	295770-0000	A		2	AXLE BOLT	
140	256421-0000	A		2	PULLEY	
150	256422-0000	A		4	WASHER	
160	256426-0001	A		2	WASHER	
170	256426-0002	A		4	WASHER	
180	256427-0000	A		2	SHAFT	
190	490916-0000	A		4	AXLE PIN	
200	256472-0000	A		2	WASHER	
210	257306-0000	A		2	ROLL	
220	257308-0000	A		2	SCREW	
230	257309-0000	A		2	SHAFT	
240	257310-0000	A		2	NUT	
250	257311-0000	A		8	CAP	
280	272116-0000	A		2	CAP	
290	272458-0000	A		2	ECCENTRIC SHAFT	
300	272461-0000	A		2	WASHER	
310	978272-0000	-		2	BRACKET	
320	1484791-0000	-		2	SCALE	
330	1484792-0000	-		2	SCALE	
400	90028-0021	A		2	CONE TUBE 4 MM	
410	90028-0020	A		10	CONE TUBE 2,5MM	
420	90032-0040	-		2	BLOCK 6 WAYS	
430	90035-0005	-		2	COVER	
440	321531-0248	-		8	NEEDLE SLEEVE WITHOUT CONE, 20X26X16 MM	
450	90087-0019	-		2	PLUG M10X1 STAINLESS	
458	90092-0052	A		8	METERING VALVE 10 MM3	
460	90092-0053	A		2	METERING VALVE 30 MM3	
480	90134-0031	-		2	SLEEVE FOR PLASTIC TUBE	
500	90134-0038	-		2	BUSHING/NUT INLET/OUTLET 4 MM	
510	90134-0039	-		12	BUSHING VALVE CONNECTION 2,5 MM	
520	90134-0052	-		2	PLUG DOSING BLOCK	
530	90134-0058	-		14	CONNECTION	
540	90266-0019	-	MM	1100	PIPE	
550	90165-0002	-		6	CLIP	
560	90165-0022	-		4	PIPE CLIP, FOR TUBE D=2,5 MM, B-3570	
570	90166-0143	-	MM	2200	TUBE 2,5 MM PA,TRANSP.	
580	90240-0048	A		4	PLAIN BEAR,SELF ADJ.SPHER. 25X42X20 MM	
590	90240-0050	A		4	PLAIN BEAR,SELF ADJ.SPHER. 20X35X24 MM	
670	311101-0267	-		2	PARALLELL PIN, CP, H6, 4X10 MM	
672	311103-0267	-		2	PARALLELL PIN, M6, 4X10 MM	
680	311303-0234	A		2	SLOTTED PIRPB3X12FZB	
700	312101-0297	-		4	SCREW M6S M4X25 FZB	
710	312101-0362	-		6	SCREW M6S M6X8 FZB	
720	312101-0364	-		4	SCREW M6S M6X10 FZB	
725	312105-0374	-		2	SCREW M6S ISO 4014 M6X30 A480	
730	312101-0453	-		8	SCREW M6S M8X25 FZB	
740	312101-0493	-		2	SCREW M6S M10X25 FZB	
750	312101-0504	-		2	SCREW M6S M10X65 FZB	
760	312101-0507	-		4	SCREW M6S M10X80 FZB	
770	312111-0376	-		8	SCREW HEX.SOCK.HD.MC6S-TT 6X35 88 FZB	
780	312111-0378	-		4	SCREW HEX.SOCK.HD.MC6S-TT 6X40 88 FZB	
790	312121-0287	-		10	SCREW SLOT.PAN HD. MCS 4X8 FZB	
795	312145-0220	-		2	SCREW COUNTERS.SLOT.HD. MFS 3X6 SS	
800	312151-0287	-		24	SCREW HEX.SOCK.COUNT.MF6S 4X8 FZB	
810	312151-0364	-		16	SCREW HEX.SOCK.COUNT.MF6S 6X10 FZB	
820	312601-0318	-		4	NUT M6M8FZB	
830	312811-0322	A		4	NUT HEX.LOCK HELI COIL MID GRIP M12 SS	
840	312811-0324	A		4	NUT HEX.LOCK HELI COIL MID GRIP M16 SS	
850	312811-0326	A		2	NUT HEX.LOCK HELI COIL MID GRIP M20 SS	
870	315101-0136	-		4	WASHER PLAIN, BRB, 4,3/8 H=0,8	
880	315101-0153	-		8	WASHER PLAIN, BRB, 6,4/12 H=1,5	
890	315101-0165	-		8	WASHER PLAIN, BRB, 8,4/16 H=1,5	
900	315101-0173	-		4	WASHER PLAIN, BRB, 10,5/22 H=2	
910	315101-0186	-		4	WASHER PLAIN, BRB, 17/30 H=3	
920	315111-0173	-		4	WASHER PLAIN, TBRB 10,5/22 H=4	
930	315701-0335	-		2	PARALLEL KEY W. ROUND ENDS 12X8X56 MM	
940	321129-0137	A		8	THRUST WASHER, 22/38X1,5	
950	321576-0260	A		2	BEARING ROLLER, 2 SEALS, 20X47X25 MM	

Machine Type | Group Description | Used-In | Group Number | Page No

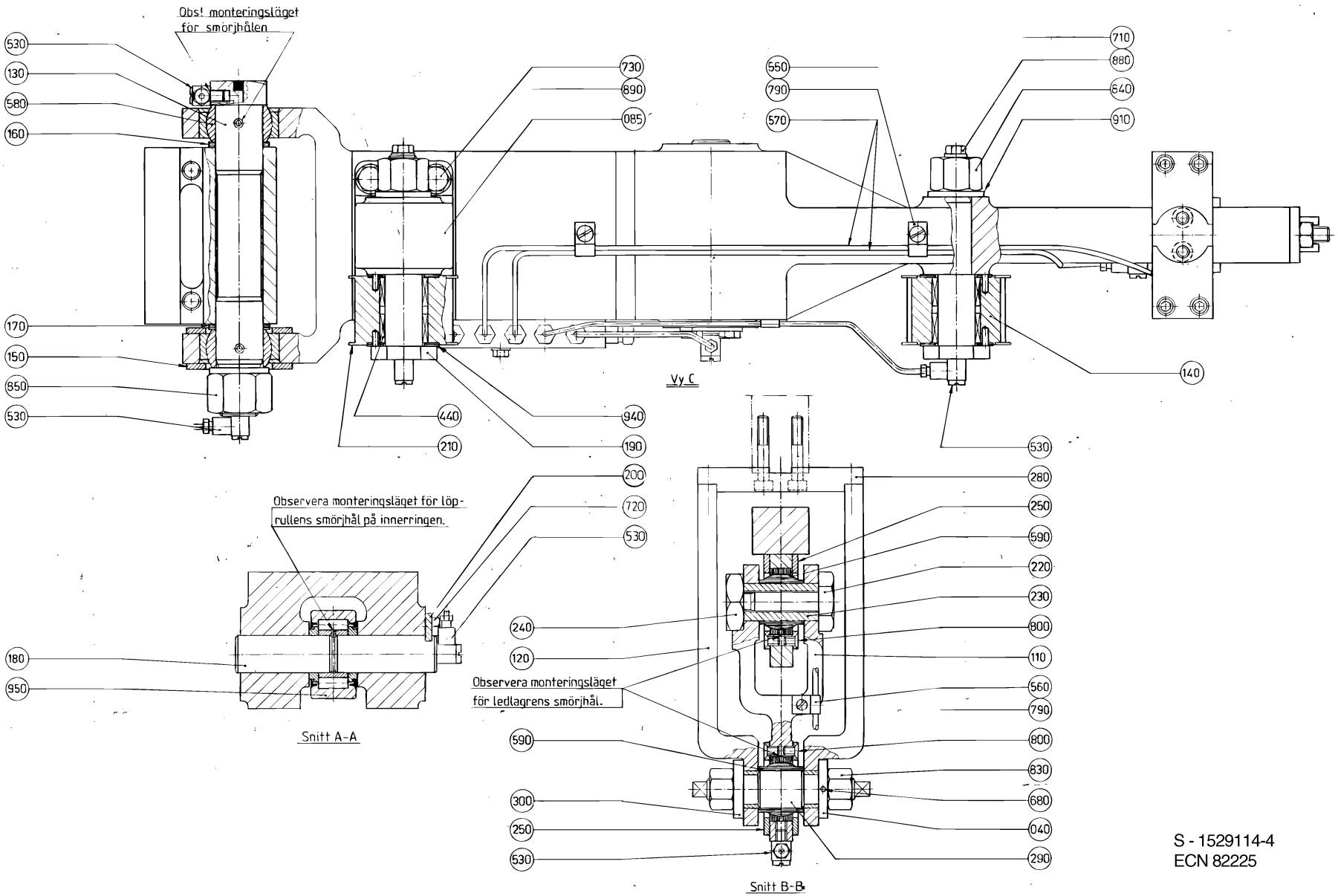

S - 1529114-4
ECN 82225

ECM: 106090 - 20020315
Group number: 1529114-0100
Assembly Drawing: 1529114-4_1_AA

Issue: 20020822

Pos	Part No	SP	UN	Qty	Description	Page No
Common Parts						
030	272459-0000	A		1	WASHER	
040	272460-0000	-		1	WASHER	
080	751212-0000	B		2	ARM	
085	272442-0000	B		2	CANTILEVER	
090	978275-0000	B		2	BEARING HOLDER	
100	272455-0000	-		2	BEARING BRACKET	
110	594975-0000	A		2	LINK	
120	272457-0000	A		4	BOW CLAMP	
130	295770-0000	A		2	AXLE BOLT	
140	256421-0000	A		2	PULLEY	
150	256422-0000	A		4	WASHER	
160	256426-0001	A		2	WASHER	
170	256426-0002	A		4	WASHER	
180	256427-0000	A		2	SHAFT	
190	490916-0000	A		4	AXLE PIN	
200	256472-0000	A		2	WASHER	
210	257306-0000	A		2	ROLL	
220	257308-0000	A		2	SCREW	
230	257309-0000	A		2	SHAFT	
240	257310-0000	A		2	NUT	
250	257311-0000	A		8	CAP	
280	272116-0000	A		2	CAP	
290	272458-0000	A		2	ECCENTRIC SHAFT	
300	272461-0000	A		2	WASHER	
310	978272-0000	-		2	BRACKET	
320	1484791-0000	-		2	SCALE	
330	1484792-0000	-		2	SCALE	
400	90028-0021	A		2	CONE TUBE 4 MM	
410	90028-0020	A		10	CONE TUBE 2,5MM	
420	90032-0040	-		2	BLOCK 6 WAYS	
430	90035-0005	-		2	COVER	
440	321531-0248	-		8	NEEDLE SLEEVE WITHOUT CONE, 20X26X16 MM	
450	90087-0019	-		2	PLUG M10X1 STAINLESS	
458	90092-0052	A		8	METERING VALVE 10 MM3	
460	90092-0053	A		2	METERING VALVE 30 MM3	
480	90134-0031	-		2	SLEEVE FOR PLASTIC TUBE	
500	90134-0038	-		2	BUSHING/NUT INLET/OUTLET 4 MM	
510	90134-0039	-		12	BUSHING VALVE CONNECTION 2,5 MM	
520	90134-0052	-		2	PLUG DOSING BLOCK	
530	90134-0058	-		14	CONNECTION	
540	90266-0019	-	MM	1100	PIPE	
550	90165-0002	-		6	CLIP	
560	90165-0022	-		4	PIPE CLIP, FOR TUBE D=2,5 MM, B-3570	
570	90166-0143	-	MM	2200	TUBE 2,5 MM PA,TRANSP.	
580	90240-0048	A		4	PLAIN BEAR,SELF ADJ.SPHER. 25X42X20 MM	
590	90240-0050	A		4	PLAIN BEAR,SELF ADJ.SPHER. 20X35X24 MM	
670	311101-0267	-		2	PARALLELL PIN, CP, H6, 4X10 MM	
672	311103-0267	-		2	PARALLELL PIN, M6, 4X10 MM	
680	311303-0234	A		2	SLOTTED PIRPB3X12FZB	
700	312101-0297	-		4	SCREW M6S M4X25 FZB	
710	312101-0362	-		6	SCREW M6S M6X8 FZB	
720	312101-0364	-		4	SCREW M6S M6X10 FZB	
725	312105-0374	-		2	SCREW M6S ISO 4014 M6X30 A480	
730	312101-0453	-		8	SCREW M6S M8X25 FZB	
740	312101-0493	-		2	SCREW M6S M10X25 FZB	
750	312101-0504	-		2	SCREW M6S M10X65 FZB	
760	312101-0507	-		4	SCREW M6S M10X80 FZB	
770	312111-0376	-		8	SCREW HEX.SOCK.HD.MC6S-TT 6X35 88 FZB	
780	312111-0378	-		4	SCREW HEX.SOCK.HD.MC6S-TT 6X40 88 FZB	
790	312121-0287	-		10	SCREW SLOT.PAN HD. MCS 4X8 FZB	
795	312145-0220	-		2	SCREW COUNTERS.SLOT.HD. MFS 3X6 SS	
800	312151-0287	-		24	SCREW HEX.SOCK.COUNT.MF6S 4X8 FZB	
810	312151-0364	-		16	SCREW HEX.SOCK.COUNT.MF6S 6X10 FZB	
820	312601-0318	-		4	NUT M6M8FZB	
830	312811-0322	A		4	NUT HEX.LOCK HELI COIL MID GRIP M12 SS	
840	312811-0324	A		4	NUT HEX.LOCK HELI COIL MID GRIP M16 SS	
850	312811-0326	A		2	NUT HEX.LOCK HELI COIL MID GRIP M20 SS	
870	315101-0136	-		4	WASHER PLAIN, BRB, 4,3/8 H=0,8	
880	315101-0153	-		8	WASHER PLAIN, BRB, 6,4/12 H=1,5	
890	315101-0165	-		8	WASHER PLAIN, BRB, 8,4/16 H=1,5	
900	315101-0173	-		4	WASHER PLAIN, BRB, 10,5/22 H=2	
910	315101-0186	-		4	WASHER PLAIN, BRB, 17/30 H=3	
920	315111-0173	-		4	WASHER PLAIN, TBRB 10,5/22 H=4	
930	315701-0335	-		2	PARALLEL KEY W. ROUND ENDS 12X8X56 MM	
940	321129-0137	A		8	THRUST WASHER, 22/38X1,5	
950	321576-0260	A		2	BEARING ROLLER, 2 SEALS, 20X47X25 MM	

Machine Type | Group Description | Used-In | Group Number | Page No

LINK ARM, RIGHT

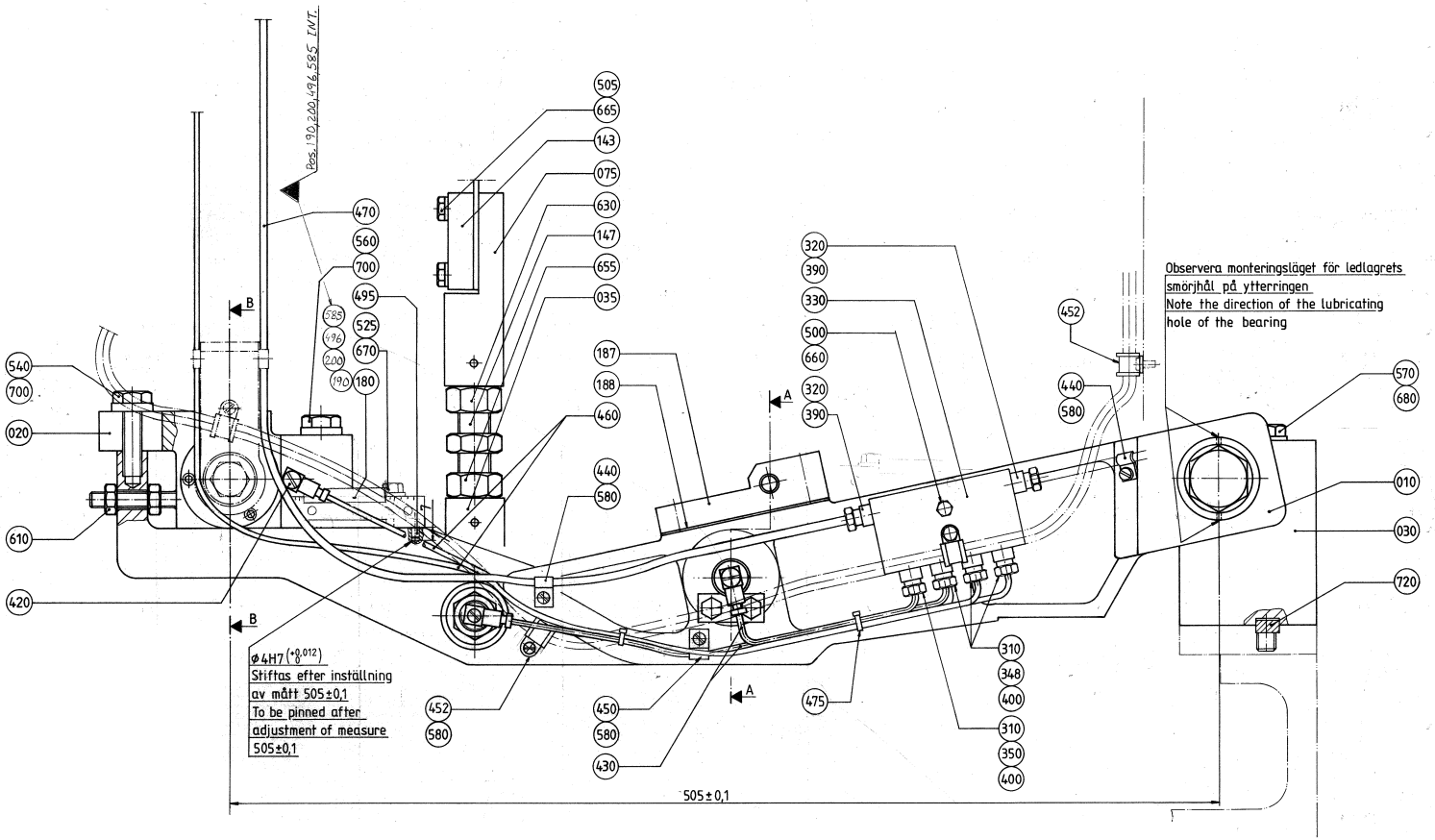

ECM: 106074 - 20020315
Group number: 1529151-0100
Assembly Drawing: 1529151-1_1_AB

Issue: 20020822

Pos	Part No	SP	UN	Qty	Description	Page No
Common Parts						
010	751212-0000	B		1	ARM	
020	978275-0000	B		1	BEARING HOLDER	
030	256418-0000	B		1	BEARING BRACKET	
035	256515-0000	A		1	END PIECE	
040	272462-0000	A		1	AXLE BOLT	
075	272607-0000	B		1	BELT HOLDER	
080	256422-0000	A		2	WASHER	
090	256426-0001	A		1	WASHER	
100	256426-0002	A		2	WASHER	
110	256427-0000	B		1	SHAFT	
120	490916-0000	A		1	AXLE PIN	
130	256472-0000	A		1	WASHER	
143	256516-0000	B		1	CAP	
147	256517-0000	B		1	SCREW	
160	257311-0000	A		2	CAP	
180	978272-0000	-		1	BRACKET	
182	491165-0000	A		1	ROLL	
183	491166-0000	A		1	SHAFT	
187	751078-0000	A		1	BRACKET RIGHT	
188	491319-0000	A		2	LACE	
190	1484791-0000	-		1	SCALE	
200	1484792-0000	-		1	SCALE	
310	90028-0020	A		4	CONE TUBE 2,5MM	
320	90028-0021	A		2	CONE TUBE 4 MM	
330	90032-0039	-		1	BLOCK 4 WAYS	
335	321531-0248	A		2	NEEDLE SLEEVE WITHOUT CONE, 20X26X16 MM	
340	90083-0016	A		2	PLATE FOR AXK 2035	
348	90092-0052	A		3	METERING VALVE 10 MM3	
350	90092-0053	A		1	METERING VALVE 30 MM3	
390	90134-0038	A		2	BUSHING/NUT INLET/OUTLET 4 MM	
400	90134-0039	A		4	BUSHING VALVE CONNECTION 2,5 MM	
420	90134-0058	-		5	CONNECTION	
430	90266-0019	-	MM	350	PIPE	
440	90165-0002	-		2	CLIP	
450	90165-0022	-		1	PIPE CLIP, FOR TUBE D=2,5 MM, B-3570	
452	90165-0065	-		3	PIPE CLAMP, RSGU 1.8/9, D=8 MM	
460	90166-0143	-	MM	1100	TUBE 2,5 MM PA,TRANSP.	
470	90166-0109	A	MM	700	TUBE 4 MM PA,TRANSP.	
475	352113-0101	-		2	CLIP STRIP, 92X2,5 MM	
480	90240-0048	A		2	PLAIN BEAR,SELF ADJ.SPHER. 25X42X20 MM	
490	90240-0050	A		1	PLAIN BEAR,SELF ADJ.SPHER. 20X35X24 MM	
492	90287-0143	-		1	SCREW MC6S M6X25 129	
493	90287-0144	-		1	SCREW MC6S M6X35 129	
495	311101-0267	-		1	PARALLELL PIN, CP, H6, 4X10 MM	
496	311103-0267	-		1	PARALLELL PIN, M6, 4X10 MM	
500	312101-0297	-		2	SCREW M6S M4X25 FZB	
505	312101-0333	-		4	SCREW M6S M5X25 FZB	
510	312101-0362	-		2	SCREW M6S M6X8 FZB	
520	312101-0364	-		2	SCREW M6S M6X10 FZB	
525	312105-0374	-		1	SCREW M6S ISO 4014 M6X30 A480	
540	312101-0493	-		1	SCREW M6S M10X25 FZB	
560	312101-0504	-		1	SCREW M6S M10X65 FZB	
570	312101-0515	-		2	SCREW M6S M10X120 FZB	
580	312121-0287	A		4	SCREW SLOT.PAN HD. MCS 4X8 FZB	
585	312145-0220	-		1	SCREW COUNTERS.SLOT.HD. MFS 3X6 SS	
590	312151-0287	-		6	SCREW HEX.SOCK.COUNT.MF6S 4X8 FZB	
600	312151-0364	-		8	SCREW HEX.SOCK.COUNT.MF6S 6X10 FZB	
605	312311-0321	-		1	SCREW, SOCK.SET DOGPOINT M5X6	
610	312601-0318	-		2	NUT M6M8FZB	
630	312601-0324	-		1	NUT M6M 16-8 FZB	
640	312811-0324	A		1	NUT HEX.LOCK HELI COIL MID GRIP M16 SS	
650	312811-0326	A		1	NUT HEX.LOCK HELI COIL MID GRIP M20 SS	
655	312901-0324	-		1	NUT M6M16VFZB	
660	315101-0136	-		2	WASHER PLAIN, BRB, 4,3/8 H=0,8	
665	315101-0146	-		4	WASHER PLAIN, BRB, 5,3/10 H=1	
670	315101-0153	-		3	WASHER PLAIN, BRB, 6,4/12 H=1,5	
680	315101-0173	-		2	WASHER PLAIN, BRB, 10,5/22 H=2	
690	315101-0186	-		1	WASHER PLAIN, BRB, 17/30 H=3	
700	315111-0173	-		2	WASHER PLAIN, TBRB 10,5/22 H=4	
720	315701-0335	-		1	PARALLEL KEY W. ROUND ENDS 12X8X56 MM	
730	321576-0260	A		1	BEARING ROLLER, 2 SEALS, 20X47X25 MM	

Machine Type | Group Description | Used-In | Group Number | Page No

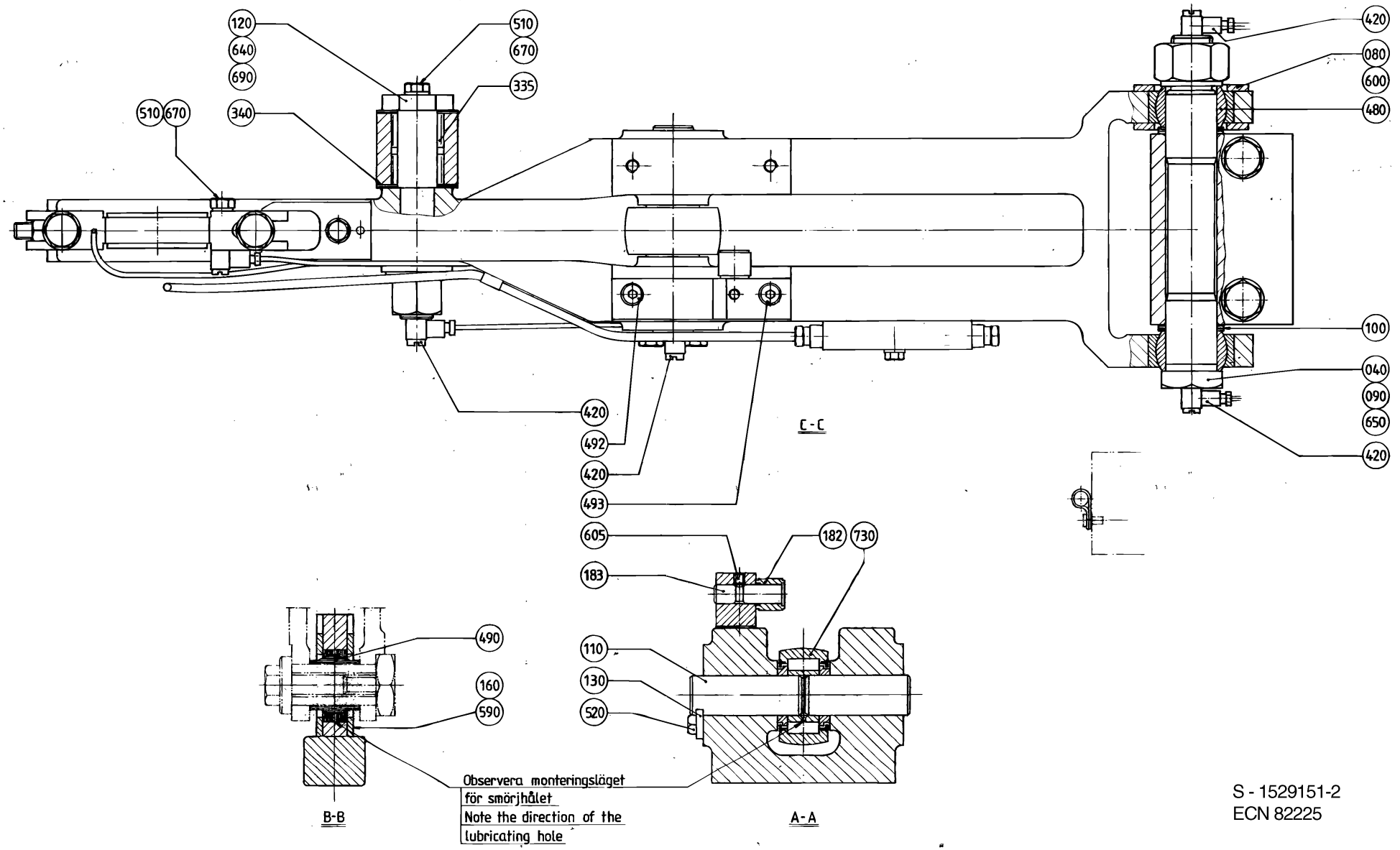

S - 1529151-2
ECN 82225

ECM: 106074 - 20020315
Group number: 1529151-0100
Assembly Drawing: 1529151-2_1_AA

Issue: 20020822

Pos	Part No	SP	UN	Qty	Description	Page No
Common Parts						
010	751212-0000	B		1	ARM	
020	978275-0000	B		1	BEARING HOLDER	
030	256418-0000	B		1	BEARING BRACKET	
035	256515-0000	A		1	END PIECE	
040	272462-0000	A		1	AXLE BOLT	
075	272607-0000	B		1	BELT HOLDER	
080	256422-0000	A		2	WASHER	
090	256426-0001	A		1	WASHER	
100	256426-0002	A		2	WASHER	
110	256427-0000	B		1	SHAFT	
120	490916-0000	A		1	AXLE PIN	
130	256472-0000	A		1	WASHER	
143	256516-0000	B		1	CAP	
147	256517-0000	B		1	SCREW	
160	257311-0000	A		2	CAP	
180	978272-0000	-		1	BRACKET	
182	491165-0000	A		1	ROLL	
183	491166-0000	A		1	SHAFT	
187	751078-0000	A		1	BRACKET RIGHT	
188	491319-0000	A		2	LACE	
190	1484791-0000	-		1	SCALE	
200	1484792-0000	-		1	SCALE	
310	90028-0020	A		4	CONE TUBE 2,5MM	
320	90028-0021	A		2	CONE TUBE 4 MM	
330	90032-0039	-		1	BLOCK 4 WAYS	
335	321531-0248	A		2	NEEDLE SLEEVE WITHOUT CONE, 20X26X16 MM	
340	90083-0016	A		2	PLATE FOR AXK 2035	
348	90092-0052	A		3	METERING VALVE 10 MM3	
350	90092-0053	A		1	METERING VALVE 30 MM3	
390	90134-0038	A		2	BUSHING/NUT INLET/OUTLET 4 MM	
400	90134-0039	A		4	BUSHING VALVE CONNECTION 2,5 MM	
420	90134-0058	-		5	CONNECTION	
430	90266-0019	-	MM	350	PIPE	
440	90165-0002	-		2	CLIP	
450	90165-0022	-		1	PIPE CLIP, FOR TUBE D=2,5 MM, B-3570	
452	90165-0065	-		3	PIPE CLAMP, RSGU 1.8/9, D=8 MM	
460	90166-0143	-	MM	1100	TUBE 2,5 MM PA,TRANSP.	
470	90166-0109	A	MM	700	TUBE 4 MM PA,TRANSP.	
475	352113-0101	-		2	CLIP STRIP, 92X2,5 MM	
480	90240-0048	A		2	PLAIN BEAR,SELF ADJ.SPHER. 25X42X20 MM	
490	90240-0050	A		1	PLAIN BEAR,SELF ADJ.SPHER. 20X35X24 MM	
492	90287-0143	-		1	SCREW MC6S M6X25 129	
493	90287-0144	-		1	SCREW MC6S M6X35 129	
495	311101-0267	-		1	PARALLELL PIN, CP, H6, 4X10 MM	
496	311103-0267	-		1	PARALLELL PIN, M6, 4X10 MM	
500	312101-0297	-		2	SCREW M6S M4X25 FZB	
505	312101-0333	-		4	SCREW M6S M5X25 FZB	
510	312101-0362	-		2	SCREW M6S M6X8 FZB	
520	312101-0364	-		2	SCREW M6S M6X10 FZB	
525	312105-0374	-		1	SCREW M6S ISO 4014 M6X30 A480	
540	312101-0493	-		1	SCREW M6S M10X25 FZB	
560	312101-0504	-		1	SCREW M6S M10X65 FZB	
570	312101-0515	-		2	SCREW M6S M10X120 FZB	
580	312121-0287	A		4	SCREW SLOT.PAN HD. MCS 4X8 FZB	
585	312145-0220	-		1	SCREW COUNTERS.SLOT.HD. MFS 3X6 SS	
590	312151-0287	-		6	SCREW HEX.SOCK.COUNT.MF6S 4X8 FZB	
600	312151-0364	-		8	SCREW HEX.SOCK.COUNT.MF6S 6X10 FZB	
605	312311-0321	-		1	SCREW, SOCK.SET DOGPOINT M5X6	
610	312601-0318	-		2	NUT M6M8FZB	
630	312601-0324	-		1	NUT M6M 16-8 FZB	
640	312811-0324	A		1	NUT HEX.LOCK HELI COIL MID GRIP M16 SS	
650	312811-0326	A		1	NUT HEX.LOCK HELI COIL MID GRIP M20 SS	
655	312901-0324	-		1	NUT M6M16VFZB	
660	315101-0136	-		2	WASHER PLAIN, BRB, 4,3/8 H=0,8	
665	315101-0146	-		4	WASHER PLAIN, BRB, 5,3/10 H=1	
670	315101-0153	-		3	WASHER PLAIN, BRB, 6,4/12 H=1,5	
680	315101-0173	-		2	WASHER PLAIN, BRB, 10,5/22 H=2	
690	315101-0186	-		1	WASHER PLAIN, BRB, 17/30 H=3	
700	315111-0173	-		2	WASHER PLAIN, TBRB 10,5/22 H=4	
720	315701-0335	-		1	PARALLEL KEY W. ROUND ENDS 12X8X56 MM	
730	321576-0260	A		1	BEARING ROLLER, 2 SEALS, 20X47X25 MM	

Machine Type | Group Description | Used-In | Group Number | Page No

LINK ARM, LEFT

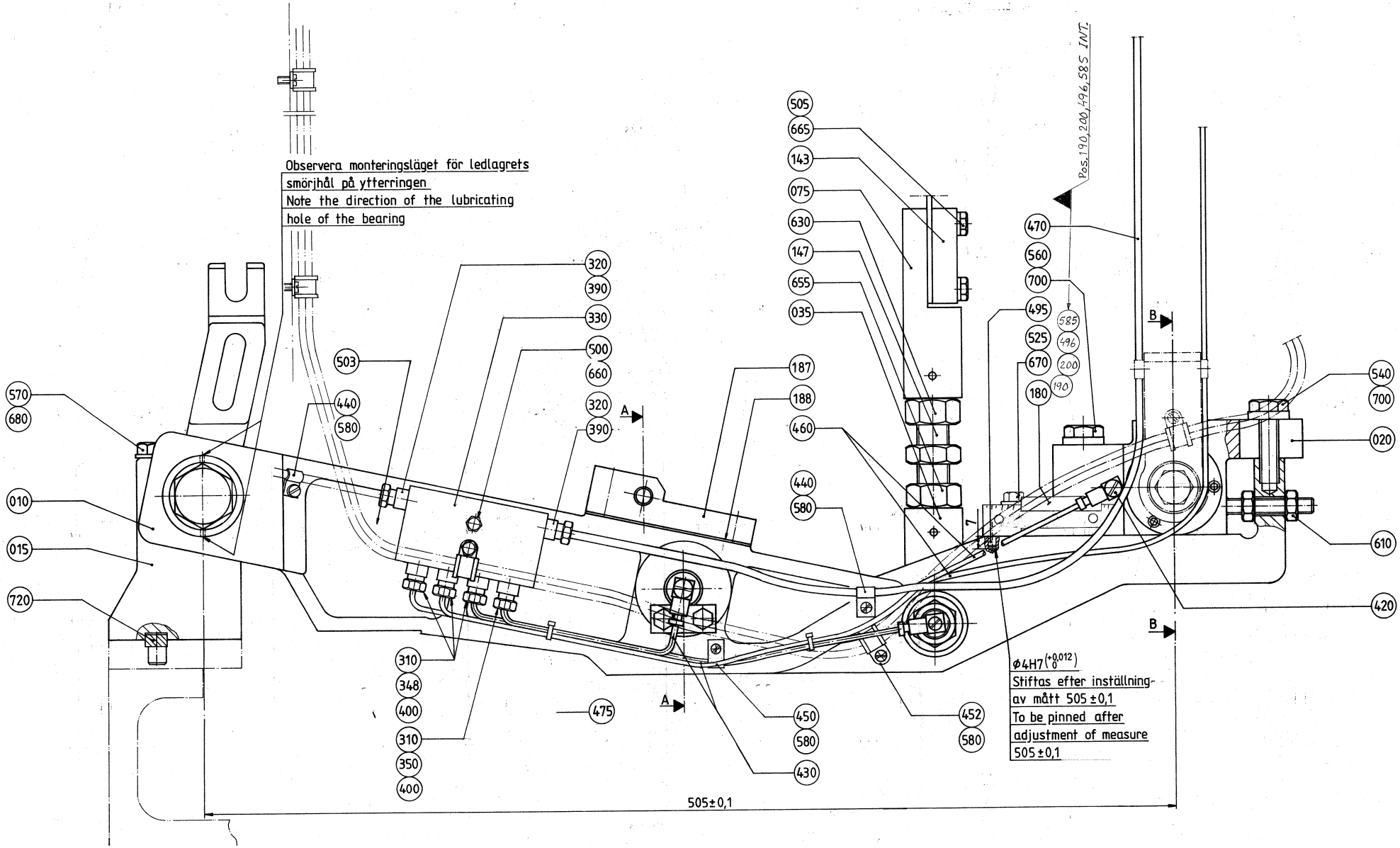

ECM: 106088 - 20020315
Group number: 1529152-0100
Assembly Drawing: 1529152-1_1_AB

Issue: 20020822

Pos	Part No	SP	UN	Qty	Description	Page No
Common Parts						
010	751212-0000	B		1	ARM	
015	751213-0000	B		1	BEARING BRACKET	
020	978275-0000	B		1	BEARING HOLDER	
035	256515-0000	A		1	END PIECE	
040	272462-0000	A		1	AXLE BOLT	
075	272607-0000	B		1	BELT HOLDER	
080	256422-0000	A		2	WASHER	
090	256426-0001	A		1	WASHER	
100	256426-0002	A		2	WASHER	
110	256427-0000	B		1	SHAFT	
120	490916-0000	A		1	AXLE PIN	
130	256472-0000	A		1	WASHER	
143	256516-0000	B		1	CAP	
147	256517-0000	B		1	SCREW	
160	257311-0000	A		2	CAP	
180	978272-0000	-		1	BRACKET	
182	491165-0000	A		1	ROLL	
183	491166-0000	A		1	SHAFT	
187	751079-0000	A		1	BRACKET LEFT	
188	491319-0000	A		2	LACE	
190	1484791-0000	-		1	SCALE	
200	1484792-0000	-		1	SCALE	
310	90028-0020	A		4	CONE TUBE 2,5MM	
320	90028-0021	A		2	CONE TUBE 4 MM	
330	90032-0039	-		1	BLOCK 4 WAYS	
335	321531-0248	A		2	NEEDLE SLEEVE WITHOUT CONE, 20X26X16 MM	
340	90083-0016	A		2	PLATE FOR AXK 2035	
348	90092-0052	A		3	METERING VALVE 10 MM3	
350	90092-0053	A		1	METERING VALVE 30 MM3	
390	90134-0038	A		2	BUSHING/NUT INLET/OUTLET 4 MM	
400	90134-0039	A		4	BUSHING VALVE CONNECTION 2,5 MM	
420	90134-0058	-		5	CONNECTION	
430	90266-0019	-	MM	350	PIPE	
440	90165-0002	-		2	CLIP	
450	90165-0022	-		1	PIPE CLIP, FOR TUBE D=2,5 MM, B-3570	
452	90165-0065	-		4	PIPE CLAMP, RSGU 1.8/9, D=8 MM	
460	90166-0143	-	MM	1100	TUBE 2,5 MM PA,TRANSP.	
470	90166-0109	A	MM	700	TUBE 4 MM PA,TRANSP.	
475	352113-0101	-		2	CLIP STRIP, 92X2,5 MM	
480	90240-0048	A		2	PLAIN BEAR,SELF ADJ.SPHER. 25X42X20 MM	
490	90240-0050	A		1	PLAIN BEAR,SELF ADJ.SPHER. 20X35X24 MM	
492	90287-0143	-		1	SCREW MC6S M6X25 129	
493	90287-0144	-		1	SCREW MC6S M6X35 129	
495	311101-0267	-		1	PARALLELL PIN, CP, H6, 4X10 MM	
496	311103-0267	-		1	PARALLELL PIN, M6, 4X10 MM	
500	312101-0297	-		2	SCREW M6S M4X25 FZB	
505	312101-0333	-		4	SCREW M6S M5X25 FZB	
510	312101-0362	-		2	SCREW M6S M6X8 FZB	
520	312101-0364	-		2	SCREW M6S M6X10 FZB	
525	312105-0374	-		1	SCREW M6S ISO 4014 M6X30 A480	
540	312101-0493	-		1	SCREW M6S M10X25 FZB	
560	312101-0504	-		1	SCREW M6S M10X65 FZB	
570	312101-0515	-		2	SCREW M6S M10X120 FZB	
580	312121-0287	A		6	SCREW SLOT.PAN HD. MCS 4X8 FZB	
585	312145-0220	-		1	SCREW COUNTERS.SLOT.HD. MFS 3X6 SS	
590	312151-0287	-		6	SCREW HEX.SOCK.COUNT.MF6S 4X8 FZB	
600	312151-0364	-		8	SCREW HEX.SOCK.COUNT.MF6S 6X10 FZB	
605	312311-0321	-		1	SCREW, SOCK.SET DOGPOINT M5X6	
610	312601-0318	-		2	NUT M6M8FZB	
630	312601-0324	-		1	NUT M6M 16-8 FZB	
640	312811-0324	A		1	NUT HEX.LOCK HELI COIL MID GRIP M16 SS	
650	312811-0326	A		1	NUT HEX.LOCK HELI COIL MID GRIP M20 SS	
655	312901-0324	-		1	NUT M6M16VFZB	
660	315101-0136	-		2	WASHER PLAIN, BRB, 4,3/8 H=0,8	
665	315101-0146	-		4	WASHER PLAIN, BRB, 5,3/10 H=1	
670	315101-0153	-		3	WASHER PLAIN, BRB, 6,4/12 H=1,5	
680	315101-0173	-		2	WASHER PLAIN, BRB, 10,5/22 H=2	
690	315101-0186	-		1	WASHER PLAIN, BRB, 17/30 H=3	
700	315111-0173	-		2	WASHER PLAIN, TBRB 10,5/22 H=4	
720	315701-0335	-		1	PARALLEL KEY W. ROUND ENDS 12X8X56 MM	
730	321576-0260	A		1	BEARING ROLLER, 2 SEALS, 20X47X25 MM	

Machine Type | Group Description | Used-In | Group Number | Page No

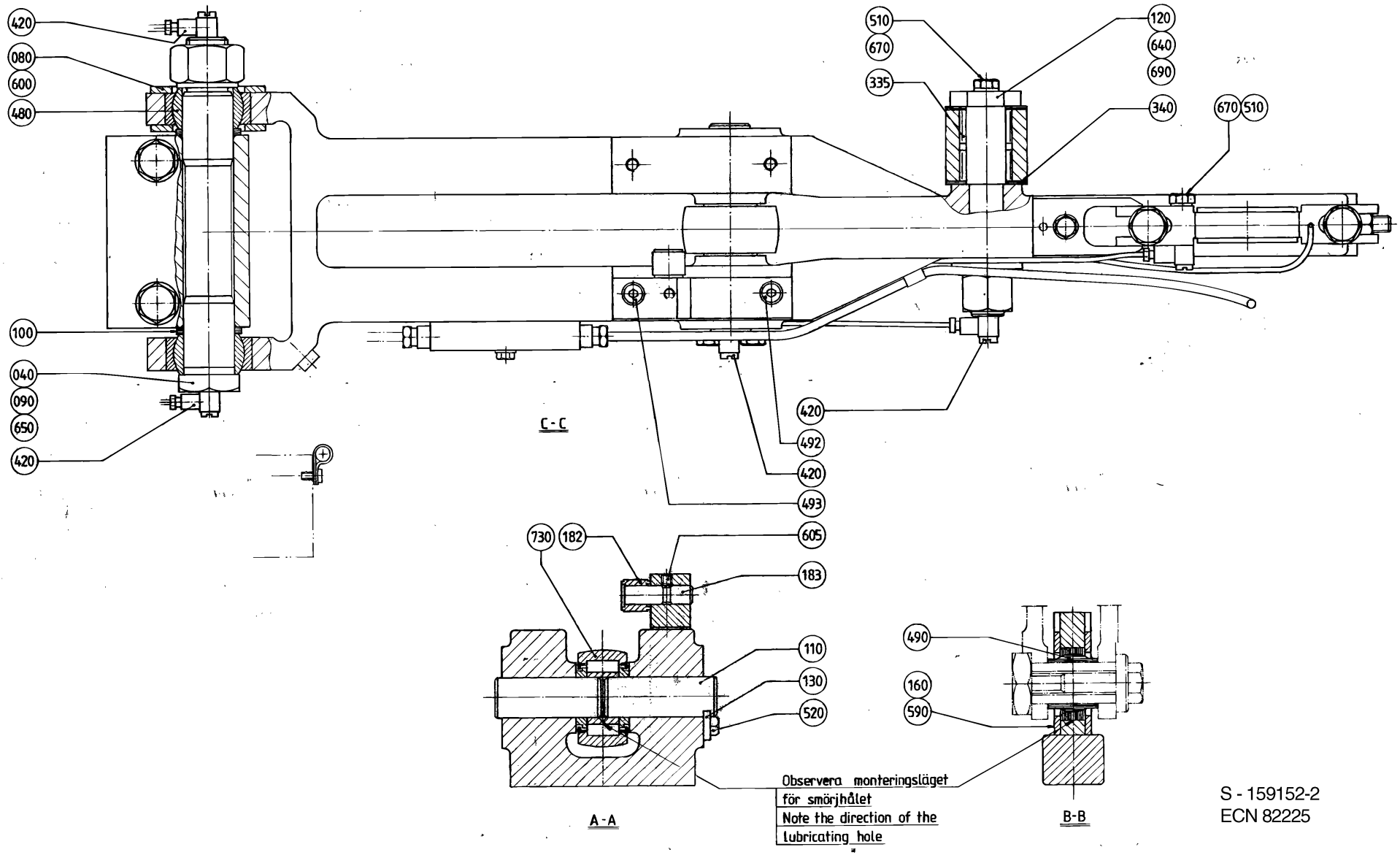

S - 159152-2
ECN 82225

ECM: 106088 - 20020315
Group number: 1529152-0100
Assembly Drawing: 1529152-2_1_AA

Issue: 20020822

Pos	Part No	SP	UN	Qty	Description	Page No
Common Parts						
010	751212-0000	B		1	ARM	
015	751213-0000	B		1	BEARING BRACKET	
020	978275-0000	B		1	BEARING HOLDER	
035	256515-0000	A		1	END PIECE	
040	272462-0000	A		1	AXLE BOLT	
075	272607-0000	B		1	BELT HOLDER	
080	256422-0000	A		2	WASHER	
090	256426-0001	A		1	WASHER	
100	256426-0002	A		2	WASHER	
110	256427-0000	B		1	SHAFT	
120	490916-0000	A		1	AXLE PIN	
130	256472-0000	A		1	WASHER	
143	256516-0000	B		1	CAP	
147	256517-0000	B		1	SCREW	
160	257311-0000	A		2	CAP	
180	978272-0000	-		1	BRACKET	
182	491165-0000	A		1	ROLL	
183	491166-0000	A		1	SHAFT	
187	751079-0000	A		1	BRACKET LEFT	
188	491319-0000	A		2	LACE	
190	1484791-0000	-		1	SCALE	
200	1484792-0000	-		1	SCALE	
310	90028-0020	A		4	CONE TUBE 2,5MM	
320	90028-0021	A		2	CONE TUBE 4 MM	
330	90032-0039	-		1	BLOCK 4 WAYS	
335	321531-0248	A		2	NEEDLE SLEEVE WITHOUT CONE, 20X26X16 MM	
340	90083-0016	A		2	PLATE FOR AXK 2035	
348	90092-0052	A		3	METERING VALVE 10 MM3	
350	90092-0053	A		1	METERING VALVE 30 MM3	
390	90134-0038	A		2	BUSHING/NUT INLET/OUTLET 4 MM	
400	90134-0039	A		4	BUSHING VALVE CONNECTION 2,5 MM	
420	90134-0058	-		5	CONNECTION	
430	90266-0019	-	MM	350	PIPE	
440	90165-0002	-		2	CLIP	
450	90165-0022	-		1	PIPE CLIP, FOR TUBE D=2,5 MM, B-3570	
452	90165-0065	-		4	PIPE CLAMP, RSGU 1.8/9, D=8 MM	
460	90166-0143	-	MM	1100	TUBE 2,5 MM PA,TRANSP.	
470	90166-0109	A	MM	700	TUBE 4 MM PA,TRANSP.	
475	352113-0101	-		2	CLIP STRIP, 92X2,5 MM	
480	90240-0048	A		2	PLAIN BEAR,SELF ADJ.SPHER. 25X42X20 MM	
490	90240-0050	A		1	PLAIN BEAR,SELF ADJ.SPHER. 20X35X24 MM	
492	90287-0143	-		1	SCREW MC6S M6X25 129	
493	90287-0144	-		1	SCREW MC6S M6X35 129	
495	311101-0267	-		1	PARALLELL PIN, CP, H6, 4X10 MM	
496	311103-0267	-		1	PARALLELL PIN, M6, 4X10 MM	
500	312101-0297	-		2	SCREW M6S M4X25 FZB	
505	312101-0333	-		4	SCREW M6S M5X25 FZB	
510	312101-0362	-		2	SCREW M6S M6X8 FZB	
520	312101-0364	-		2	SCREW M6S M6X10 FZB	
525	312105-0374	-		1	SCREW M6S ISO 4014 M6X30 A480	
540	312101-0493	-		1	SCREW M6S M10X25 FZB	
560	312101-0504	-		1	SCREW M6S M10X65 FZB	
570	312101-0515	-		2	SCREW M6S M10X120 FZB	
580	312121-0287	A		6	SCREW SLOT.PAN HD. MCS 4X8 FZB	
585	312145-0220	-		1	SCREW COUNTERS.SLOT.HD. MFS 3X6 SS	
590	312151-0287	-		6	SCREW HEX.SOCK.COUNT.MF6S 4X8 FZB	
600	312151-0364	-		8	SCREW HEX.SOCK.COUNT.MF6S 6X10 FZB	
605	312311-0321	-		1	SCREW, SOCK.SET DOGPOINT M5X6	
610	312601-0318	-		2	NUT M6M8FZB	
630	312601-0324	-		1	NUT M6M 16-8 FZB	
640	312811-0324	A		1	NUT HEX.LOCK HELI COIL MID GRIP M16 SS	
650	312811-0326	A		1	NUT HEX.LOCK HELI COIL MID GRIP M20 SS	
655	312901-0324	-		1	NUT M6M16VFZB	
660	315101-0136	-		2	WASHER PLAIN, BRB, 4,3/8 H=0,8	
665	315101-0146	-		4	WASHER PLAIN, BRB, 5,3/10 H=1	
670	315101-0153	-		3	WASHER PLAIN, BRB, 6,4/12 H=1,5	
680	315101-0173	-		2	WASHER PLAIN, BRB, 10,5/22 H=2	
690	315101-0186	-		1	WASHER PLAIN, BRB, 17/30 H=3	
700	315111-0173	-		2	WASHER PLAIN, TBRB 10,5/22 H=4	
720	315701-0335	-		1	PARALLEL KEY W. ROUND ENDS 12X8X56 MM	
730	321576-0260	A		1	BEARING ROLLER, 2 SEALS, 20X47X25 MM	

Machine Type | Group Description | Used-In | Group Number | Page No

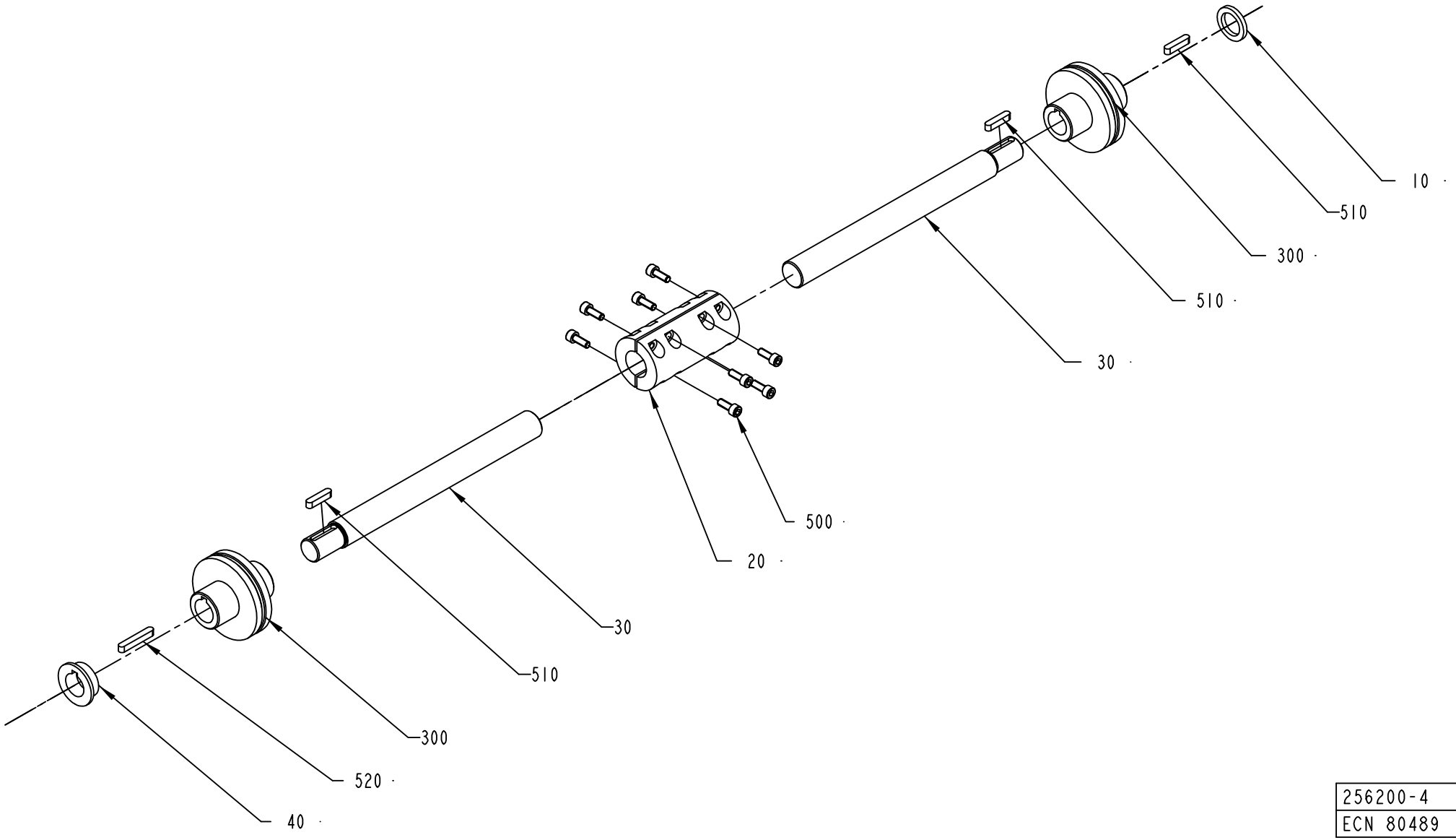

256200-4
ECN 80489

ECM: 99746 - 20011105
Group number: 256200-0300
Assembly Drawing: 256200-4_1_AB

Issue: 20020822

Pos	Part No	SP	UN	Qty	Description	Page No
TBA						
030	441339-0000	B		2	SHAFT	
TWA						
030	441339-0000	-		1	SHAFT	
050	591440-0000	-		1	SHAFT	
Common Parts						
010	272857-0000	B		1	RING	
020	295983-0000	-		1	CONNECTION	
040	441720-0000	B		1	SPACER	
300	90355-0048	A		2	TORQUE RIGID COUPLING, 22X22 MM	
500	312111-0368	-		8	SCREW HEX.SOCK.HD.MC6S-TT 6X16 88 FZB	
510	315701-0235	-		3	PARALLEL KEY W. ROUND ENDS 6X6X28 MM	
520	315701-0239	-		1	PARALLEL KEY W. ROUND ENDS 6X6X40 MM	

Pos	Part No	SP	UN	Qty	Description	Page No

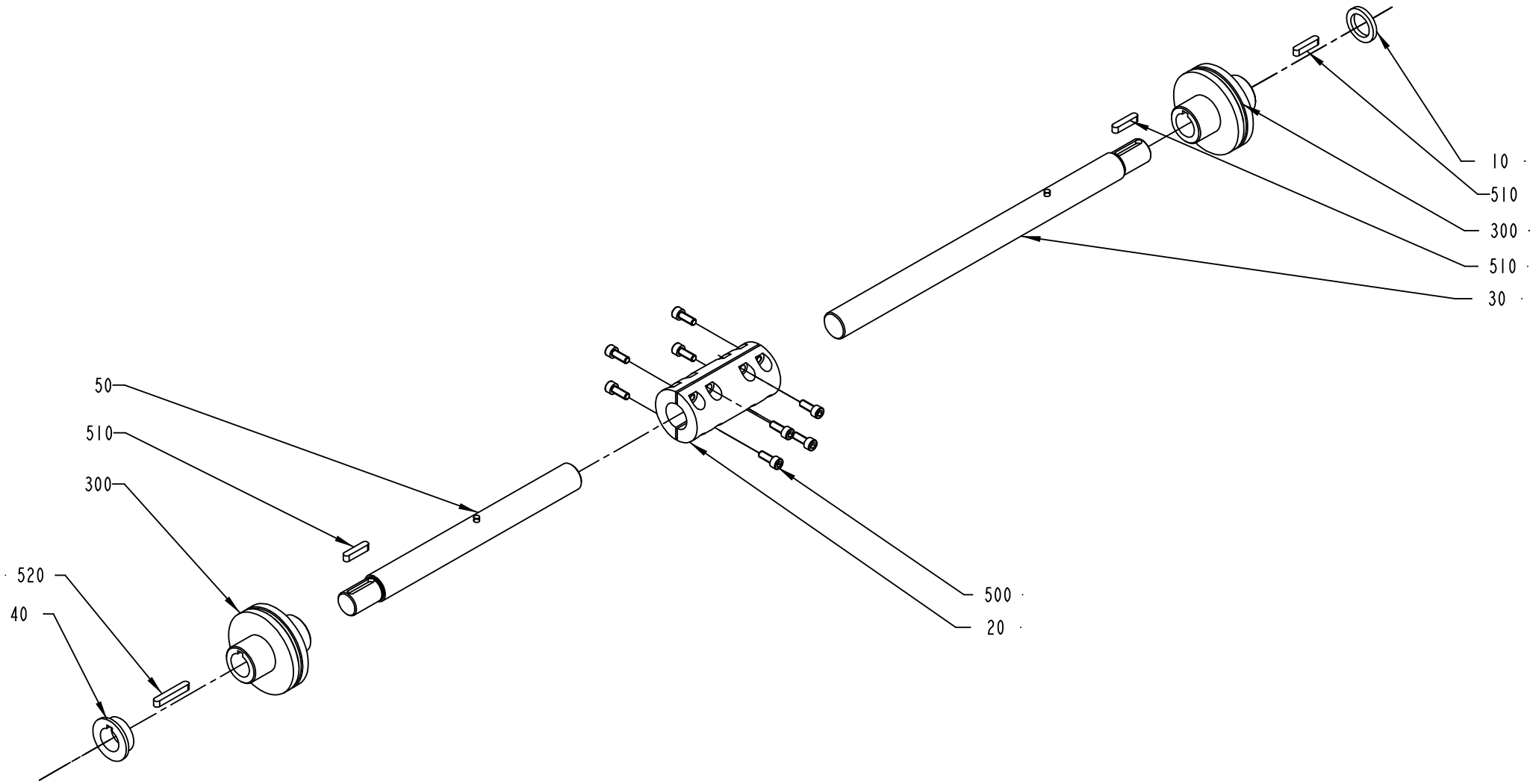

256200-5
ECN 87929

ECM: 99746 - 20011105
Group number: 256200-0300
Assembly Drawing: 256200-5_1_AA

Issue: 20020822

Pos	Part No	SP	UN	Qty	Description	Page No
TBA						
030	441339-0000	B		2	SHAFT	
TWA						
030	441339-0000	-		1	SHAFT	
050	591440-0000	-		1	SHAFT	
Common Parts						
010	272857-0000	B		1	RING	
020	295983-0000	-		1	CONNECTION	
040	441720-0000	B		1	SPACER	
300	90355-0048	A		2	TORQUE RIGID COUPLING, 22X22 MM	
500	312111-0368	-		8	SCREW HEX.SOCK.HD.MC6S-TT 6X16 88 FZB	
510	315701-0235	-		3	PARALLEL KEY W. ROUND ENDS 6X6X28 MM	
520	315701-0239	-		1	PARALLEL KEY W. ROUND ENDS 6X6X40 MM	

Pos	Part No	SP	UN	Qty	Description	Page No

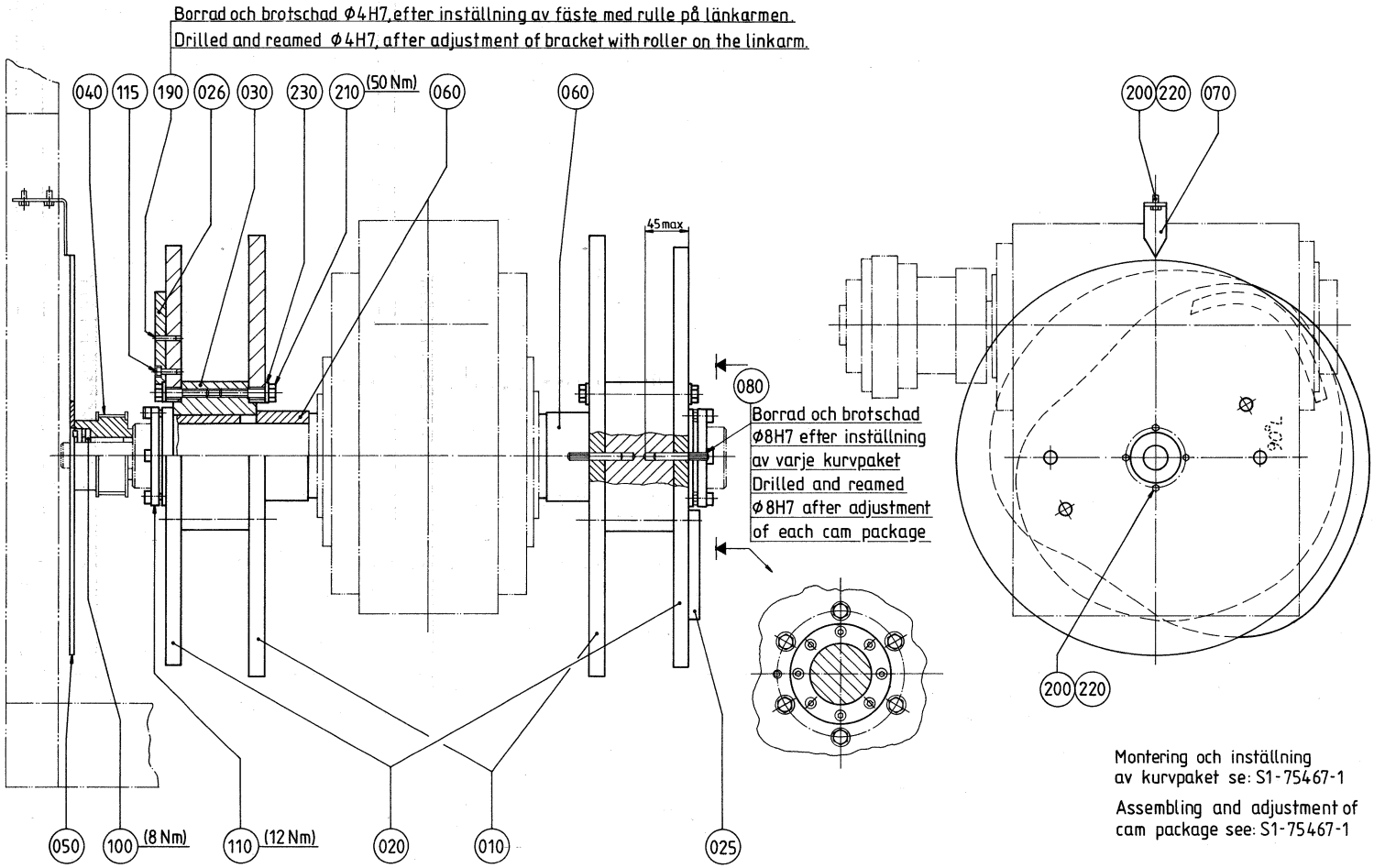
Borrad och brotschad Φ4H7, efter inställning av fäste med rulle på länkarmen.
Drilled and reamed Φ4H7, after adjustment of bracket with roller on the linkarm.
040
115
190
026
030
230
210
(50 Nm)
060
060
45max
080
Borrad och brotschad Φ8H7 efter inställning av varje kurvpaket
Drilled and reamed Φ8H7 after adjustment of each cam package
200
220
070
200
220
050
100
(8 Nm)
110
(12 Nm)
020
010
025
Montering och inställning av kurvpaket se: S1-75467-1
Assembling and adjustment of cam package see: S1-75467-1

ECM: 103150 - 20020110
Group number: 1529304-0100
Assembly Drawing: 1529304-1_1_AA

Issue: 20020822

Pos	Part No	SP	UN	Qty	Description	Page No
TBA 0200B						
010	456373-0000	B		2	CURVE	
020	456374-0000	B		2	CURVE	
025	491345-0000	A		1	CURVE SEGMENT	
026	491346-0000	A		1	CURVE SEGMENT	
060	256653-0000	-		2	SPACER	
210	312101-0500	-		24	SCREW M6S M10X45 FZB	
230	315101-0173	-		24	WASHER PLAIN, BRB, 10,5/22 H=2	
TBA 0200S						
010	441411-0000	B		2	CURVE	
020	441412-0000	B		2	CURVE	
025	491461-0000	A		1	CURVE SEGMENT	
026	491462-0000	A		1	CURVE SEGMENT	
060	256653-0000	-		2	SPACER	
230	315101-0173	-		23	WASHER PLAIN, BRB, 10,5/22 H=2	
TBA 0250B						
010	271759-0000	B		2	CURVE	
020	271760-0000	B		2	CURVE	
025	491459-0000	A		1	CURVE SEGMENT	
026	491460-0000	A		1	CURVE SEGMENT	
060	256653-0000	-		2	SPACER	
210	312101-0500	-		24	SCREW M6S M10X45 FZB	
230	315101-0173	-		24	WASHER PLAIN, BRB, 10,5/22 H=2	
TWA 0200S						
010	1549881-0000	-		2	CURVE	
020	1549880-0000	-		2	CURVE	
025	1549878-0000	-		1	CURVE SEGMENT	
026	1549879-0000	-		1	CURVE SEGMENT	
062	752774-0000	-		4	PLUNGER	
064	978262-0000	-		2	GUIDE PIN	
065	978609-0000	-		2	ALIGNMENT TEMPLATE	
210	312101-0500	-		23	SCREW M6S M10X45 FZB	
230	315101-0173	-		23	WASHER PLAIN, BRB, 10,5/22 H=2	
240	312105-0492	-		4	SCREW M6S ISO 4017 M10X22 A480	
250	312105-0492	-		2	SCREW M6S ISO 4017 M10X22 A480	
300	90157-0016	-		1	LOCKING FLUID	
Common Parts						
030	456744-0000	A		2	HUB	
040	272820-0000	B		1	TIMING BELT PULLEY	
050	272821-0000	B		1	PROTRACTOR	
070	271007-0000	B		1	POINTER	
080	295140-0000	A		4	PIN	
100	90208-0121	A		1	CONE CLAMP. ELEMENT 25/34, L=25	
110	90208-0128	A		2	CONE CLAMP. ELEMENT 60/77, L=55	
115	90287-0145	-		4	SCREW MC6S M5X16 129	
190	311103-0272	-		6	PARALLELL PIN, M6, 4X20 MM	
200	312101-0325	-		6	SCREW M6S M5X10 FZB	
220	315101-0146	-		6	WASHER PLAIN, BRB, 5,3/10 H=1	

Machine Type | Group Description | Used-In | Group Number | Page No

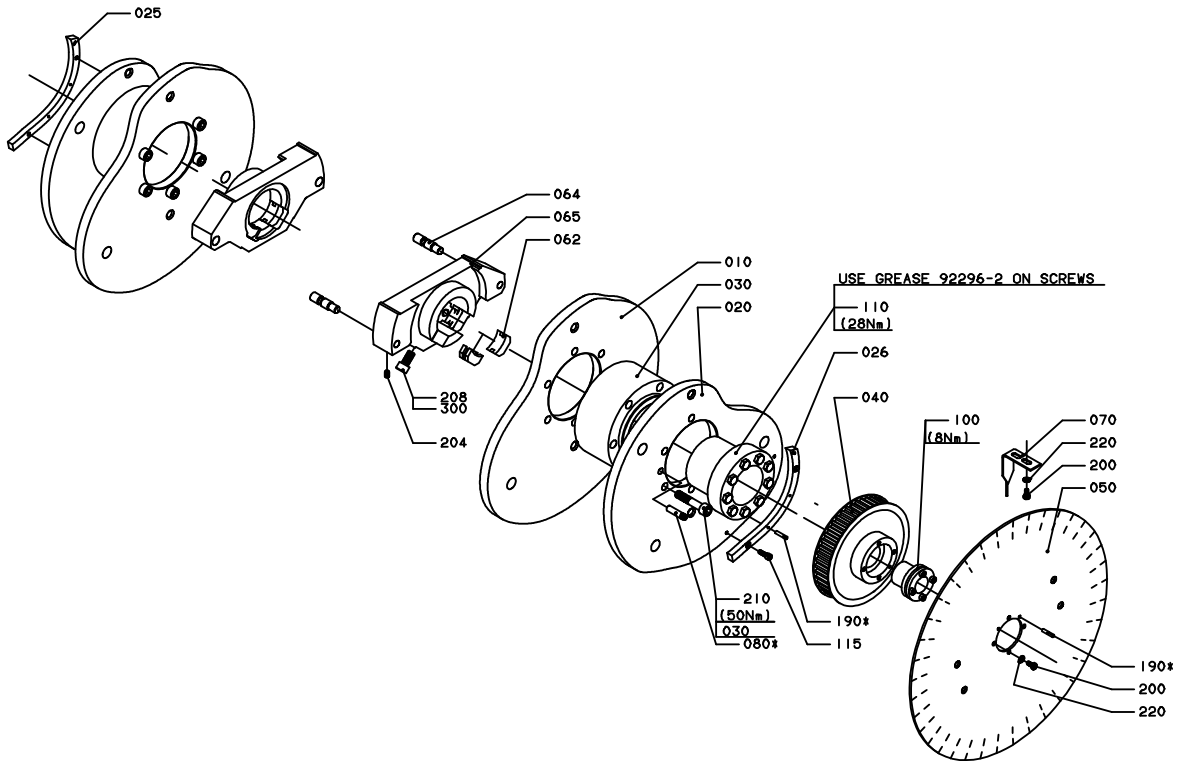

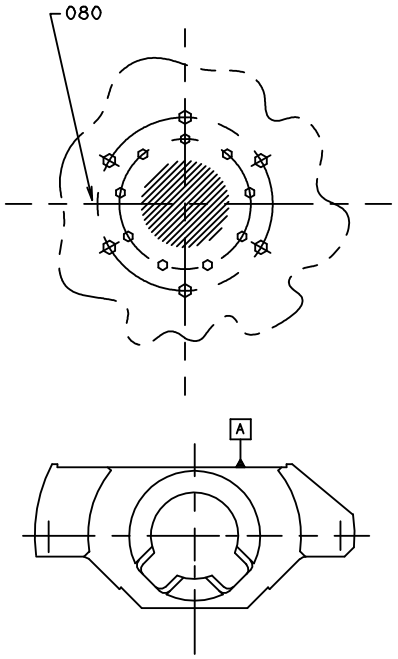

*POS 080. BORRAD OCH BROTSCHAD Ø8H7,EFTER INSTÄLLNING AV VARJE KURVPAKET.
DRILLED AND REAMED Ø4H7,AFTER ADJUSTMENT OF EACH CAM PACKAGE.
*POS 190. BORRAD OCH BROTSCHAD Ø4H7,EFTER INSTÄLLNING AV FÄSTE
MED RULLE PÅ LÄNKARMEN.
DRILLED AND REAMED Ø4H7,AFTER ADJUSTMENT OF BRACKET
WITH ROLLER ON THE LINKARM.
MONTERING OCH INSTÄLLNING AV KURVPAKET SE:SI-75467-1
ASSEMBLING AND ADJUSTMENT OF CAMPACKAGE SEE:SI-75467-1

MONTERING OCH INSTÄLLNING(SE ÄVEN SI-75467-1)
-MONTERA RIKTMALLARNA(POS.060)PÅ AXLARNA OCH VÄG IN SÅ PLAN A ÄR
HORISONTELLT ±3 SKALDELAR.LÅS SKRUVARNA(POS.208)MED LÅSVÄTSKA(POS.300).
-MONTERA KAMPAKET OCH SÄKRA MED SPÄNNELEMENT(POS.110)
-MONTERA DISTANS(POS.090),REMHJUL(POS.040)OCH BUSSNING(POS.100)
SE TILL ATT ETT SKRUVHÅL I BUSSNINGEN KOMMER MITT FÖR STIFTHÅLET I REMHJULET
OCH DISTANSEN.SPÄNN ÅT BUSSNINGEN MED DE TRE ÅTERSTÅENDE SKRUVARNA SÅ
ATT DET PRECIS GÅR ATT DRA RUNT FÖR HAND.
-MONTERA GRADSKIVA(POS.050) OCH STÄLL IN DET I 0°.
KONTROLLERA ATT KAMPAKETET STÅR I 0°.
-BORRA OCH BROTSCHA Ø4H7 VIA BUSSNINGEN(POS.100)OCH REMHJULET(POS.040)
GENOM BRICKA(POS.090) IN I AXELN CA 10MM DJUPT.
VAR NOGA ATT INTE SKADA GÅNGAN I BUSSNINGEN!
-DEMONTERA GRADSKIVA(POS.050)OCH BUSSNING(POS.100)
-STIFTA DISTANS(POS.090) OCH REMHJUL(POS.040) MED STIFT(POS.192) I AXELN.
-MONTERA BUSSNING(POS.100)(ATDRAGNINGSMOMENT 8NM.)OCH GRADSKIVA(POS.050)
OCH STIFTA MED STIFT(POS.190)(2X) SÅ ATT GRADSKIVANINDIKERAR 0°

ASSEMBLING AND ADJUSTMENT
-FIT THE TEMPLATES(POS.060) ON THE SHAFTS AND LEVEL THE TEMPLATES
UNTIL PLANE A IS HORIZONTAL ±3 SCALE DIVISION.
LOCK THE SCREWS(POS.208) WITH LOCKING FLUID(POS.300).
-FIT THE CAM PACK AND LOCK WITH THE CLAMP FITTING(POS.110)
-FIT THE SPACER(POS.090),PULLEY(POS.040)AND CLAMP FITTING(POS.100)
CHECK THAT THE PINHOLE ON THE PULLEY IS IN LINE WITH THE SCREWHOLE
IN THE CLAMP FITTING.TIGHTEN THE SCREWS ON THE CLAMP FITTING LIGHTLY.
-FIT THE DEGREE SCALE(POS.050)SO THAT 0°IS INDICATED.
CHECK THAT THE CAM PACK IS HORIZONTAL 0°!
-DRILL AND REAM Ø4H7 THROUGH THE CLAMP FITTING(POS.100),PULLEY(POS.040)
AND SPACER(POS.090) IN THE SHAFT(10MM DEEP).
DO NOT DAMAGE THE THREADS IN THE SCREWHOLE!
-UNDO THE DEGREE SCALE(POS.050) AND CLAMP FITTING(POS.100)
-PIN THE SPACER(POS.090) AND THE PULLEY(POS.040) WITH PIN(POS.192).
-FIT THE CLAMP FITTING(POS.100)(TIGHTENING TORQUE 8.0NM) AND SECURE THE
DEGREE SCALE(POS.050) SO THAT 0° IS INDICATED.WITH PIN(POS.190)(2X)

TWA 200S/IH

ECM: 103150 - 20020110
Group number: 1529304-0100
Assembly Drawing: 1529304-2_1_AA

Issue: 20020822

Pos	Part No	SP	UN	Qty	Description	Page No
TBA 0200B						
010	456373-0000	B		2	CURVE	
020	456374-0000	B		2	CURVE	
025	491345-0000	A		1	CURVE SEGMENT	
026	491346-0000	A		1	CURVE SEGMENT	
060	256653-0000	-		2	SPACER	
210	312101-0500	-		24	SCREW M6S M10X45 FZB	
230	315101-0173	-		24	WASHER PLAIN, BRB, 10,5/22 H=2	
TBA 0200S						
010	441411-0000	B		2	CURVE	
020	441412-0000	B		2	CURVE	
025	491461-0000	A		1	CURVE SEGMENT	
026	491462-0000	A		1	CURVE SEGMENT	
060	256653-0000	-		2	SPACER	
230	315101-0173	-		23	WASHER PLAIN, BRB, 10,5/22 H=2	
TBA 0250B						
010	271759-0000	B		2	CURVE	
020	271760-0000	B		2	CURVE	
025	491459-0000	A		1	CURVE SEGMENT	
026	491460-0000	A		1	CURVE SEGMENT	
060	256653-0000	-		2	SPACER	
210	312101-0500	-		24	SCREW M6S M10X45 FZB	
230	315101-0173	-		24	WASHER PLAIN, BRB, 10,5/22 H=2	
TWA 0200S						
010	1549881-0000	-		2	CURVE	
020	1549880-0000	-		2	CURVE	
025	1549878-0000	-		1	CURVE SEGMENT	
026	1549879-0000	-		1	CURVE SEGMENT	
062	752774-0000	-		4	PLUNGER	
064	978262-0000	-		2	GUIDE PIN	
065	978609-0000	-		2	ALIGNMENT TEMPLATE	
210	312101-0500	-		23	SCREW M6S M10X45 FZB	
230	315101-0173	-		23	WASHER PLAIN, BRB, 10,5/22 H=2	
240	312105-0492	-		4	SCREW M6S ISO 4017 M10X22 A480	
250	312105-0492	-		2	SCREW M6S ISO 4017 M10X22 A480	
300	90157-0016	-		1	LOCKING FLUID	
Common Parts						
030	456744-0000	A		2	HUB	
040	272820-0000	B		1	TIMING BELT PULLEY	
050	272821-0000	B		1	PROTRACTOR	
070	271007-0000	B		1	POINTER	
080	295140-0000	A		4	PIN	
100	90208-0121	A		1	CONE CLAMP. ELEMENT 25/34, L=25	
110	90208-0128	A		2	CONE CLAMP. ELEMENT 60/77, L=55	
115	90287-0145	-		4	SCREW MC6S M5X16 129	
190	311103-0272	-		6	PARALLELL PIN, M6, 4X20 MM	
200	312101-0325	-		6	SCREW M6S M5X10 FZB	
220	315101-0146	-		6	WASHER PLAIN, BRB, 5,3/10 H=1	

Machine Type | Group Description | Used-In | Group Number | Page No

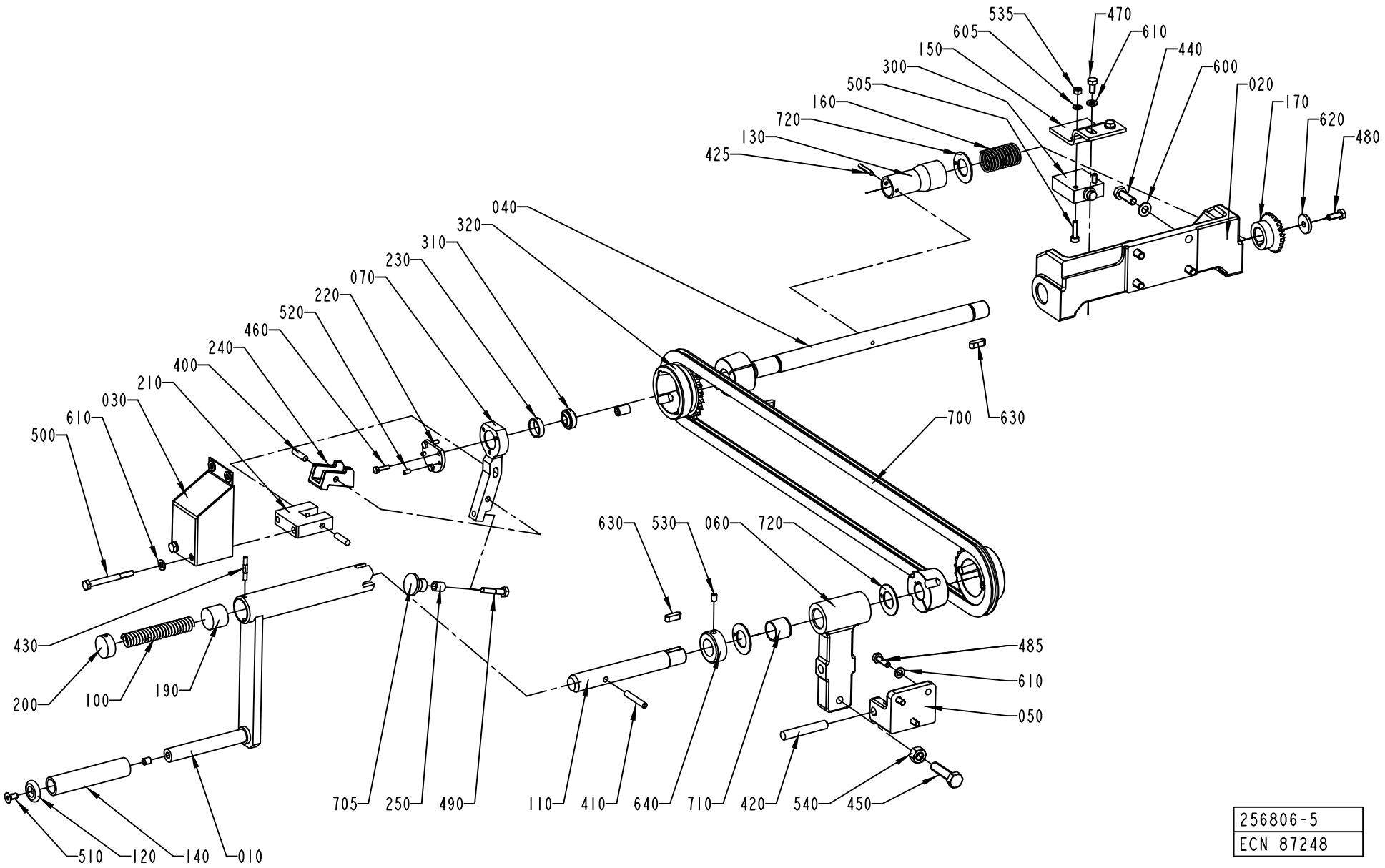

256806-5
ECN 87248

ECM: 103154 - 20020110
Group number: 256806-0300
Assembly Drawing: 256806-5_1_AB

Issue: 20020822

Pos	Part No	SP	UN	Qty	Description	Page No
Common Parts						
010	257326-0000	B		1	CRANK	
020	272664-0000	B		1	CANTILEVER	
030	272690-0000	-		1	COVER	
040	456343-0000	B		1	SHAFT	
050	272736-0000	B		1	CANTILEVER	
060	272737-0000	B		1	BRACKET	
070	272772-0000	B		1	ARM	
100	12228-0000	B		1	COMPRESSION SPRING	
110	256812-0000	B		1	SHAFT	
120	256814-0000	-		1	WASHER	
130	456344-0000	-		1	SLEEVE	
140	256816-0000	-		1	PIPE	
150	456345-0000	-		1	BRACKET	
160	256828-0000	A		1	SPRING	
170	257179-0000	A		1	GEAR WHEEL	
190	257327-0000	B		1	SLIDER	
200	257328-0000	B		1	END PIECE	
210	272691-0000	B		1	BRACKET	
220	272692-0000	B		1	LID	
230	272693-0000	B		1	RING	
240	272694-0000	-		1	BARRIER	
250	295773-0000	B		1	SPACER	
300	90044-0084	A		1	LIMIT SW. 14 CE1-4	
310	90240-0093	A		1	PLAIN BEAR,SELF ADJ.SPHER. 10X26X12 MM	
320	90344-0022	A		2	SPROCKET	
400	311103-0355	-		2	PARALLELL PIN, M6, 6X25 MM	
410	311103-0361	-		1	PARALLELL PIN, M6, 6X40 MM	
420	311103-0470	-		1	PARALLELL PIN, M6, 10X60 MM	
425	311305-0274	-		1	SLOTTED PIRPC4X25FZB	
430	311307-0275	-		1	SLOTTED PIRPD4X28FZB	
440	312101-0453	-		4	SCREW M6S M8X25 FZB	
450	312104-0499	-		1	SCREW M6S M10X40H FZB	
460	312105-0293	-		3	SCREW M6S ISO 4017 M4X16 A480	
470	312105-0366	-		4	SCREW M6S M6X12 A280	
480	312105-0368	-		1	SCREW M6S M6X16 A280	
485	312105-0370	-		3	SCREW M6S ISO 4017 M6X20 A480	
490	312105-0374	-		1	SCREW M6S ISO 4014 M6X30 A480	
500	312105-0382	-		2	SCREW M6S ISO 4014 M6X60 A480	
505	312115-0331	-		2	SCREW MC6S M5X20 A280	
510	312151-0366	-		1	SCREW HEX.SOCK.COUNT.MF6S 6X12 FZB	
520	312318-0287	-		2	SCREW SOCK.SET CUP P MSK6SS M4X8 A4	
530	312318-0362	-		3	SCREW SOCK.SET CUP P MSK6SS M6X8 A4	
535	312605-0314	-		2	HEXAGON NUT, M6M M5 A280	
540	312605-0320	-		1	HEXAGON NUT, M6M M10 A280	
600	315101-0165	-		4	WASHER PLAIN, BRB, 8,4/16 H=1,5	
605	315105-0146	-		2	WASHER PLAIN, BRB, 5,3/10,H=1	
610	315105-0153	-		10	WASHER PLAIN, BRB, 6,4/12,H=1,5	
620	315121-0153	-		1	WASHER PLAIN, TBRSB 6,4/22 H=4	
630	315701-0232	-		3	PARALLEL KEY W. ROUND ENDS 6X6X20 MM	
640	315742-0116	-		1	COLLAR, 20/36, H=13	
700	318201-0150	A		1	ROLLER CHAIN, SINGLE 3/8 -150	
705	90051-0082	-		1	KNOB, CIRCUL, THREADED BUSH, M6 25X21 MM	
710	321120-0138	-		4	BEARING BUSHING WITHOUT FLANGE,20/23X20	
720	321129-0131	-		4	THRUST WASHER, 20/36X1,5	

Machine Type | Group Description | Used-In | Group Number | Page No

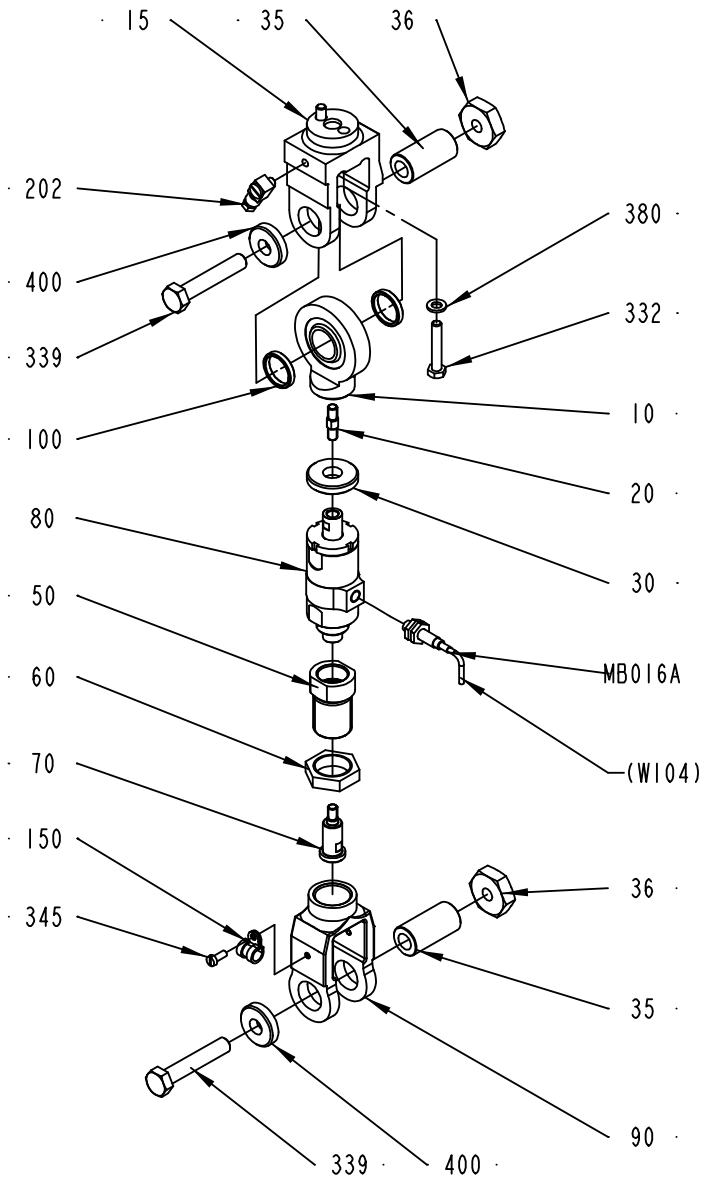

1490120-1
ECN 98301

ECM: 106706 - 20020313
Group number: 1490120-0100
Assembly Drawing: 1490120-1_1_AA

Issue: 20020822

Pos	Part No	SP	UN	Qty	Description	Page No
Common Parts						
010	1490113-0000	B		1	LINK HEAD	
015	272472-0000	-		1	END PIECE	
020	1490114-0000	-		1	PIN	
030	1498194-0000	-		1	SPACER	
035	257309-0000	-		2	SHAFT	
036	257310-0000	-		2	NUT	
050	1490116-0000	-		1	SPACER	
060	1490117-0000	-		1	NUT	
070	1490119-0000	-		1	SHAFT	
080	1548313-0000	B		1	FORCE LIMITING DEVICE	
090	1490118-0000	-		1	LINK	
100	1490133-0000	-		2	SPACER	
150	90165-0065	-		1	PIPE CLAMP, RSGU 1.8/9, D=8 MM	
202	90134-0068	-		1	CONNECTION	
332	312101-0376	-		2	SCREW M6S M6X35 FZB	
339	312101-0502	-		2	SCREW M6S M10X55 FZB	
345	312101-0289	-		1	SCREW M6S M4X10 FZB	
380	315101-0153	-		2	WASHER PLAIN, BRB, 6,4/12 H=1,5	
400	315121-0173	-		2	WASHER PLAIN, TBRSB 10,5/28 H=6	
MB016A	90458-0138	A		1	PROX.SW. E2EG-X1R5B1-5M	

Pos	Part No	SP	UN	Qty	Description	Page No

DISCONNECTION LINK RIGHT

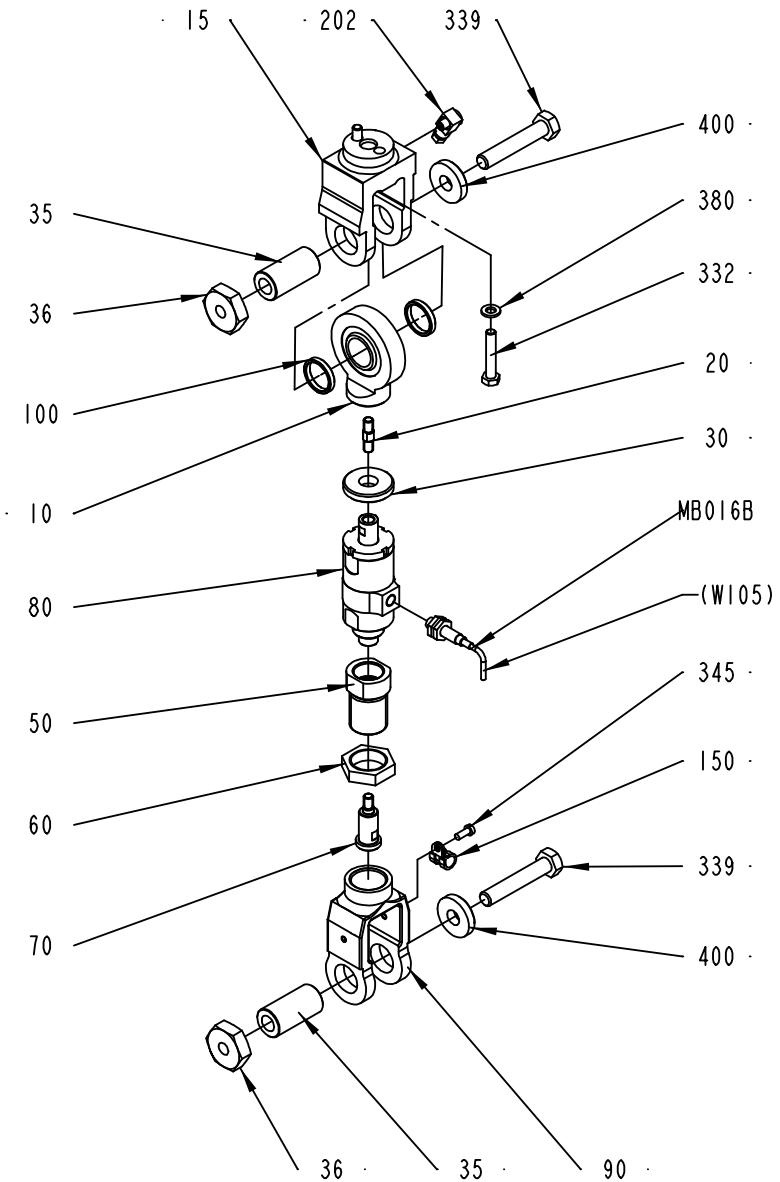

1539766-1
ECN 98301

ECM: 106707 - 20020313
Group number: 1539766-0100
Assembly Drawing: 1539766-1_1_AA

Issue: 20020822

Pos	Part No	SP	UN	Qty	Description	Page No
Common Parts						
010	1490113-0000	B		1	LINK HEAD	
015	272472-0000	-		1	END PIECE	
020	1490114-0000	-		1	PIN	
030	1498194-0000	-		1	SPACER	
035	257309-0000	-		2	SHAFT	
036	257310-0000	-		2	NUT	
050	1490116-0000	-		1	SPACER	
060	1490117-0000	-		1	NUT	
070	1490119-0000	-		1	SHAFT	
080	1548313-0000	B		1	FORCE LIMITING DEVICE	
090	1490118-0000	-		1	LINK	
100	1490133-0000	-		2	SPACER	
150	90165-0065	-		1	PIPE CLAMP, RSGU 1.8/9, D=8 MM	
202	90134-0068	-		1	CONNECTION	
332	312101-0376	-		2	SCREW M6S M6X35 FZB	
339	312101-0502	-		2	SCREW M6S M10X55 FZB	
345	312101-0289	-		1	SCREW M6S M4X10 FZB	
380	315101-0153	-		2	WASHER PLAIN, BRB, 6,4/12 H=1,5	
400	315121-0173	-		2	WASHER PLAIN, TBRSB 10,5/28 H=6	
MB016B	90458-0138	A		1	PROX.SW. E2EG-X1R5B1-5M	

Pos	Part No	SP	UN	Qty	Description	Page No

Tetra Pak

SPC
Spare Parts Catalogue

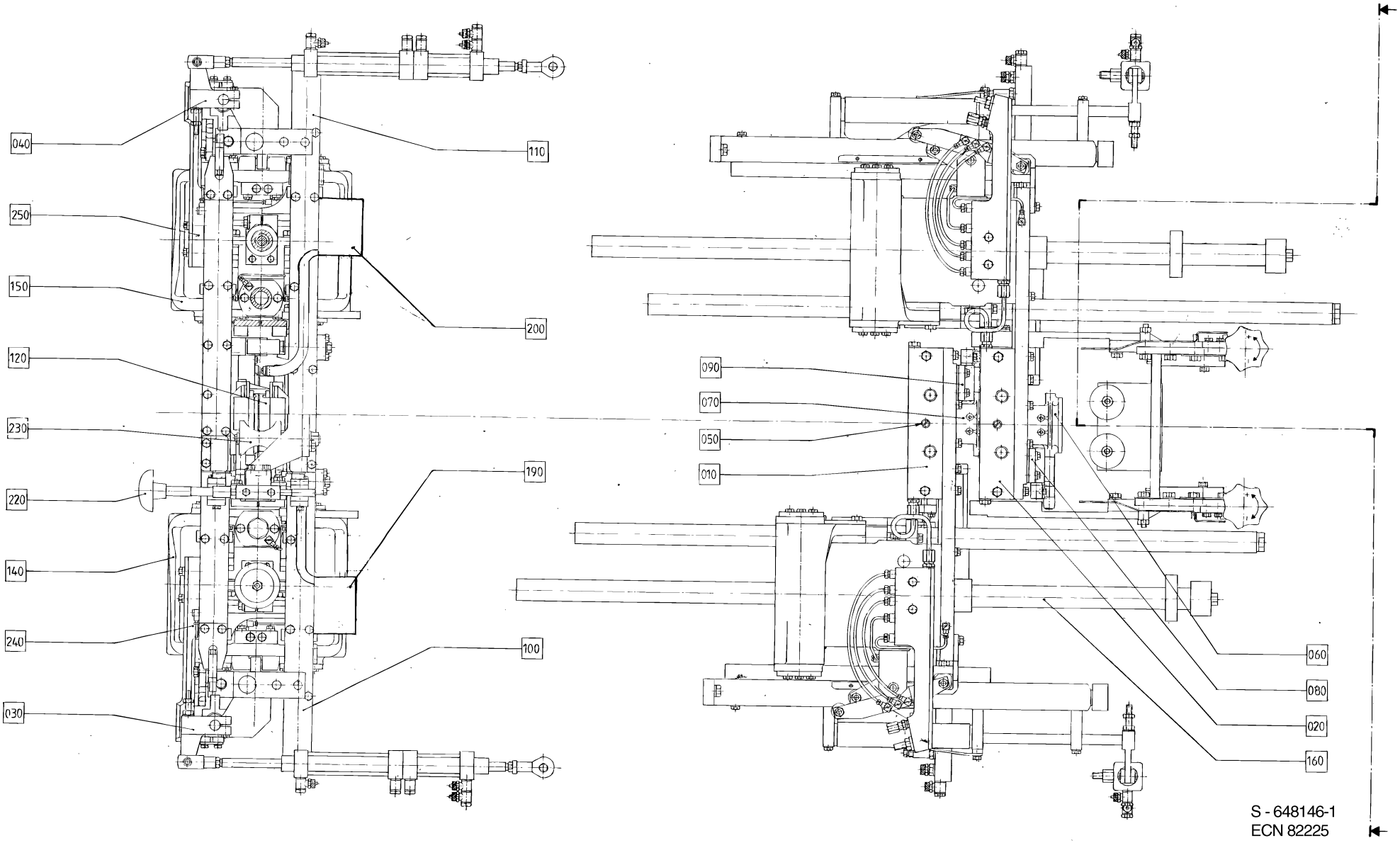
040
250
150
120
230
220
140
240
030
110
200
190
100
090
070
050
010
060
080
020
160
S - 648146-1
ECN 82225

ECM: 106319 - 20020315
Group number: 648146-0100
Assembly Drawing: 648146-1_1_AA

Issue: 20020822

Pos	Part No	SP	UN	Qty	Description	Page No
SOURCE,TBA/9-100V						
010	A1529103-0100	-		1	CUTTING JAW RIGHT	**365, 367**
020	A1529104-0100	-		1	CUTTING JAW LEFT	**369, 371**
100	A1529153-0100	-		1	PRESSURE JAW RIGHT	**373, 375, 377**
110	A1529154-0100	-		1	PRESSURE JAW LEFT	**379, 381, 383**
140	A1529106-0100	-		1	YOKE RIGHT	**385**
150	A1529107-0100	-		1	YOKE LEFT	**387**
190	A1529108-0100	-		1	TRANSFER RIGHT	**389**
200	A1529109-0100	-		1	TRANSFER LEFT	**391**
SOURCE,TBA/9-110V OR SOURCE,TBA/9-120V						
010	A1529103-0100	-		1	CUTTING JAW RIGHT	**365, 367**
020	A1529104-0100	-		1	CUTTING JAW LEFT	**369, 371**
100	A1529153-0200	-		1	PRESSURE JAW RIGHT	**393**
110	A1529154-0200	-		1	PRESSURE JAW LEFT	**395**
140	A1529106-0100	-		1	YOKE RIGHT	**385**
150	A1529107-0100	-		1	YOKE LEFT	**387**
190	A1529108-0100	-		1	TRANSFER RIGHT	**389**
200	A1529109-0100	-		1	TRANSFER LEFT	**391**
Common Parts						
	B1529105-0100	-		1	MODIFIED ARTICLES	
	1529303-0000	-		*1*	*CARRIER LEFT*	
	1529302-0000	-		*1*	*CARRIER RIGHT*	
	594949-0000	-		*1*	*CARRIER LEFT*	
	594948-0000	-		*1*	*CARRIER RIGHT*	
030	A1529346-0100	-		1	DESIGN CORRECTION DEVICE RIGHT	**397, 399**
040	A1529347-0100	-		1	DESIGN CORRECTION DEVICE LEFT	**401, 403**
050	A256208-0400	-		2	KNIFE HOLDER	**405, 407**
060	A256209-0300	-		2	VOLUME FLAP VERSION 01	**409**
070	A256210-0300	-		2	VOLUME FLAP VERSION 02	**411**
080	A1529352-0100	-		2	SHOCK ABSORBER	**413, 415**
090	A1529353-0100	-		2	SHOCK ABSORBER	**417, 419**
120	A256214-0400	-		2	PRESSURE RAIL	**421**
160	A256217-0400	-		1	GUIDES	**423**
220	A256222-0200	-		1	VOLUME CURVE PIECE IH	**425**
230	A256223-0400	-		1	SUPPORT ROLLER	**427, 429**
240	A257381-0300	-		1	MANIFOLD RIGHT	**431**
250	A257382-0300	-		1	MANIFOLD LEFT	**433**
300	B1529348-0100	-		1	START-UP KIT	
010	*1110534-0000*	-		*2*	*INDUCTOR*	
060	*1282646-0000*	-		*2*	*KNIFE*	
010	*1110532-0000*	-		*2*	*INDUCTOR*	
060	*1282647-0000*	-		*2*	*KNIFE*	
050	*1110391-0000*	-		*4*	*DOLLY*	
080	*456011-0000*	-		*6*	*PIN*	

Machine Type | Group Description | Used-In | Group Number | Page No

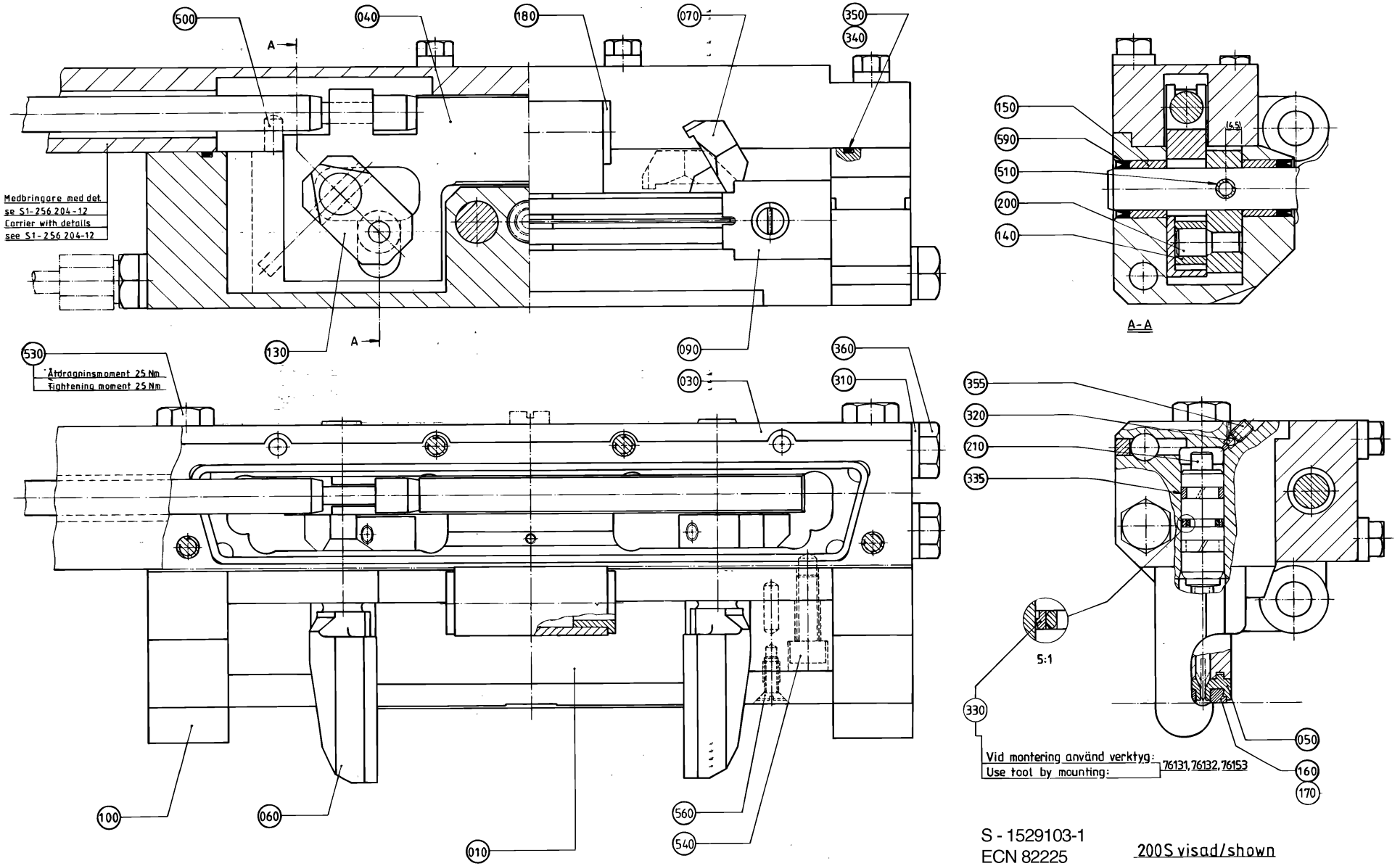

S - 1529103-1
ECN 82225

200S visad/shown

ECM: 106140 - 20020315
Group number: 1529103-0100
Assembly Drawing: 1529103-1_1_AA

Issue: 20020822

Pos	Part No	SP	UN	Qty	Description	Page No
TBA 0200B OR TBA 0250B						
010	256769-0000	A		1	CUTTING JAW	
030	256770-0000	A		1	BEARING HOUSING	
040	751575-0000	A		1	RULERPART R	
045	751577-0000	A		1	RULERPART R	
060	272422-0000	A		1	FOLDING FLAP	
070	272423-0000	A		1	FOLDING FLAP	
093	256693-0000	A		1	CARRIER	
TBA 0200S						
010	441727-0000	A		1	CUTTING JAW	
030	272263-0000	A		1	BEARING HOUSING	
040	752009-0000	A		1	RULERPART R	
045	752010-0000	A		1	RULERPART R	
060	272424-0000	A		1	FOLDING FLAP	
070	272425-0000	A		1	FOLDING FLAP	
093	256693-0000	A		1	CARRIER	
170	752574-0000	A		4	END PIECE	
TWA 0200S						
010	441727-0000	A		1	CUTTING JAW	
030	272263-0000	A		1	BEARING HOUSING	
040	752009-0000	A		1	RULERPART R	
045	752010-0000	A		1	RULERPART R	
0520	312105-0367	-		2	SCREW M6S M6X14 A280	
0533	312115-0329	-		1	SCREW MC6S M5X16 A280	
060	591445-0000	A		1	FOLDING FLAP RIGHT	
070	591446-0000	A		1	FOLDING FLAP LEFT	
093	594939-0000	A		1	CARRIER RIGHT	
170	752574-0000	A		4	END PIECE	
Common Parts						
050	1110820-0000	A		2	CUTTING RAIL	
090	1348053-0000	A		2	BRACKET	
096	256659-0000	A		1	OPERATING ROD	
100	978745-0000	A		2	CATCH	
130	272419-0000	A		2	CARRIER	
140	22463-0000	A		2	ROLL	
150	33408-0000	A		4	BEARING	
160	1110391-0000	A		2	DOLLY	
180	1517641-0000	A		2	FLANGE BUSHING	
193	255742-0000	A		1	COMPRESSION SPRING	
196	255801-0000	A		1	RETAINING RING	
200	256607-0000	A		2	AXLE PIN	
204	256626-0000	A		1	EAR	
206	256706-0000	A		1	BEARING PLATE	
208	257362-0000	A		2	LACE	
210	490944-0000	A		2	PLUNGER	
230	441355-0000	-		2	BLEEDING SCREW	
240	751579-0000	-		1	ADJUSTING SCREW	
250	751580-0000	-		1	SHIM	
305	315237-0106	-		2	WASHER,PL.RND.AL.6/10,H=1	
310	315237-0109	B		3	WASHER,PL.RND.AL.10/14,H=1,5	
320	90090-0005	A		2	BALL, D=3 MM	
330	90091-0216	A		2	PISTON SEAL, GLIDORING 7,1X12X2,2 MM	
333	90091-0091	B		1	ROD SEAL, GLIDORING 10X14X1,7 MM	
335	90091-0169	A		4	WEAR RING 12X15X3,2 MM	
336	90134-0058	-		1	CONNECTION	
340	90153-0015	-	KG	1	ADHESIVE LOCTITE IS 496/CYANOLIT 303	
350	90242-0093	B	MM	450	O-RING MATERIAL 1,5 MM	
355	90287-0128	-		2	SCREW, SOCK.SET DOGPOINT M4X6	
360	90330-0066	-		3	PLUG, EXT. G-THREAD, G1/8	
500	311103-0312	-		1	PARALLELL PIN, M6, 5X25 MM	
505	311111-0207	A		1	PIN, STRAIGHT SLOTTED SPRING FRP 3X14	
510	311111-0308	A		2	PIN, STRAIGHT SLOTTED SPRING FRP 5X20	
523	312105-0376	-		8	SCREW M6S ISO 4014 M6X35 A480	
530	312105-0462	-		2	SCREW M6S ISO 4014 M8X55 A480	
535	312115-0366	-		2	SCREW MC6S M6X12 A280	
540	312115-0370	-		2	SCREW MC6S M6X20 A280	
560	312145-0291	-		2	SCREW COUNTERS.SLOT.HD. MFS 4X12 A4	
582	312605-0318	-		1	HEXAGON NUT, M6M M8 A280	
585	315115-0153	-		8	WASHER PLAIN, TBRB 6,4/12 H=3	
587	315202-0265	A		1	O-RING 12,3X2,4 MM	
590	315230-0157	B		4	BEARING SEAL 12X16X3 MM	

Machine Type | Group Description | Used-In | Group Number | Page No

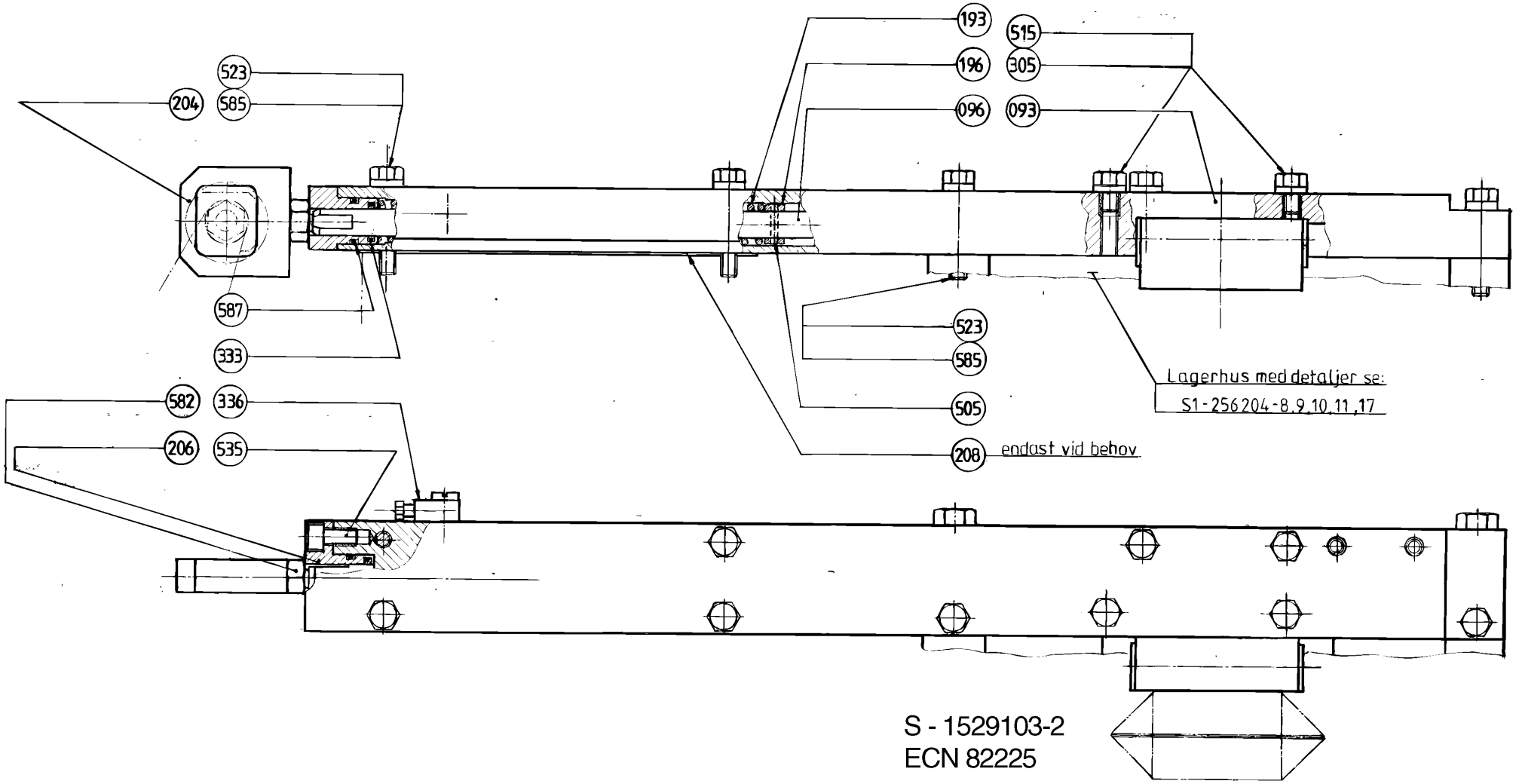
193
515
523
196
305
204
585
096
093
587
523
333
585
582
336
505
206
535
208
endast vid behov
Lagerhus med detaljer se:
S1-256204-8,9,10,11,17
S - 1529103-2
ECN 82225

ECM: 106140 - 20020315
Group number: 1529103-0100
Assembly Drawing: 1529103-2_1_AA

Issue: 20020822

Pos	Part No	SP	UN	Qty	Description	Page No
TBA 0200B OR TBA 0250B						
010	256769-0000	A		1	CUTTING JAW	
030	256770-0000	A		1	BEARING HOUSING	
040	751575-0000	A		1	RULERPART R	
045	751577-0000	A		1	RULERPART R	
060	272422-0000	A		1	FOLDING FLAP	
070	272423-0000	A		1	FOLDING FLAP	
093	256693-0000	A		1	CARRIER	
TBA 0200S						
010	441727-0000	A		1	CUTTING JAW	
030	272263-0000	A		1	BEARING HOUSING	
040	752009-0000	A		1	RULERPART R	
045	752010-0000	A		1	RULERPART R	
060	272424-0000	A		1	FOLDING FLAP	
070	272425-0000	A		1	FOLDING FLAP	
093	256693-0000	A		1	CARRIER	
170	752574-0000	A		4	END PIECE	
TWA 0200S						
010	441727-0000	A		1	CUTTING JAW	
030	272263-0000	A		1	BEARING HOUSING	
040	752009-0000	A		1	RULERPART R	
045	752010-0000	A		1	RULERPART R	
0520	312105-0367	-		2	SCREW M6S M6X14 A280	
0533	312115-0329	-		1	SCREW MC6S M5X16 A280	
060	591445-0000	A		1	FOLDING FLAP RIGHT	
070	591446-0000	A		1	FOLDING FLAP LEFT	
093	594939-0000	A		1	CARRIER RIGHT	
170	752574-0000	A		4	END PIECE	
Common Parts						
050	1110820-0000	A		2	CUTTING RAIL	
090	1348053-0000	A		2	BRACKET	
096	256659-0000	A		1	OPERATING ROD	
100	978745-0000	A		2	CATCH	
130	272419-0000	A		2	CARRIER	
140	22463-0000	A		2	ROLL	
150	33408-0000	A		4	BEARING	
160	1110391-0000	A		2	DOLLY	
180	1517641-0000	A		2	FLANGE BUSHING	
193	255742-0000	A		1	COMPRESSION SPRING	
196	255801-0000	A		1	RETAINING RING	
200	256607-0000	A		2	AXLE PIN	
204	256626-0000	A		1	EAR	
206	256706-0000	A		1	BEARING PLATE	
208	257362-0000	A		2	LACE	
210	490944-0000	A		2	PLUNGER	
230	441355-0000	-		2	BLEEDING SCREW	
240	751579-0000	-		1	ADJUSTING SCREW	
250	751580-0000	-		1	SHIM	
305	315237-0106	-		2	WASHER,PL.RND.AL.6/10,H=1	
310	315237-0109	B		3	WASHER,PL.RND.AL.10/14,H=1,5	
320	90090-0005	A		2	BALL, D=3 MM	
330	90091-0216	A		2	PISTON SEAL, GLIDORING 7,1X12X2,2 MM	
333	90091-0091	B		1	ROD SEAL, GLIDORING 10X14X1,7 MM	
335	90091-0169	A		4	WEAR RING 12X15X3,2 MM	
336	90134-0058	-		1	CONNECTION	
340	90153-0015	-	KG	1	ADHESIVE LOCTITE IS 496/CYANOLIT 303	
350	90242-0093	B	MM	450	O-RING MATERIAL 1,5 MM	
355	90287-0128	-		2	SCREW, SOCK.SET DOGPOINT M4X6	
360	90330-0066	-		3	PLUG, EXT. G-THREAD, G1/8	
500	311103-0312	-		1	PARALLELL PIN, M6, 5X25 MM	
505	311111-0207	A		1	PIN, STRAIGHT SLOTTED SPRING FRP 3X14	
510	311111-0308	A		2	PIN, STRAIGHT SLOTTED SPRING FRP 5X20	
523	312105-0376	-		8	SCREW M6S ISO 4014 M6X35 A480	
530	312105-0462	-		2	SCREW M6S ISO 4014 M8X55 A480	
535	312115-0366	-		2	SCREW MC6S M6X12 A280	
540	312115-0370	-		2	SCREW MC6S M6X20 A280	
560	312145-0291	-		2	SCREW COUNTERS.SLOT.HD. MFS 4X12 A4	
582	312605-0318	-		1	HEXAGON NUT, M6M M8 A280	
585	315115-0153	-		8	WASHER PLAIN, TBRB 6,4/12 H=3	
587	315202-0265	A		1	O-RING 12,3X2,4 MM	
590	315230-0157	B		4	BEARING SEAL 12X16X3 MM	

Machine Type | Group Description | Used-In | Group Number | Page No

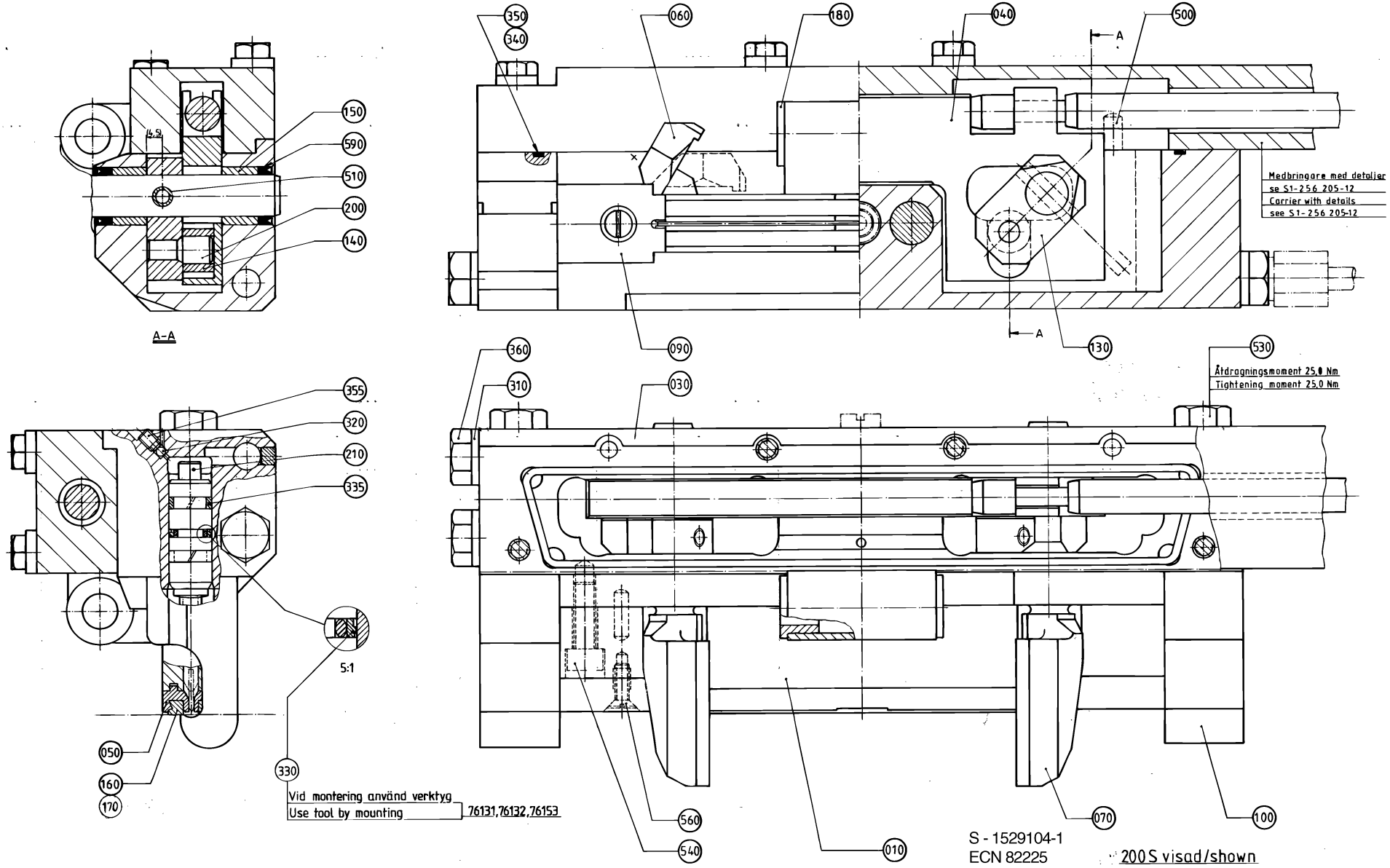
A-A
5:1
Vid montering använd verktyg
Use tool by mounting
76131,76132,76153
Medbringare med detaljer
se S1-256 205-12
Carrier with details
see S1-256 205-12
Åtdragningsmoment 25,0 Nm
Tightening moment 25,0 Nm
S - 1529104-1
ECN 82225
200 S visad/shown

ECM: 106153 - 20020315
Group number: 1529104-0100
Assembly Drawing: 1529104-1_1_AA

Issue: 20020822

Pos	Part No	SP	UN	Qty	Description	Page No
TBA 0200B OR TBA 0250B						
010	256769-0000	A		1	CUTTING JAW	
030	256770-0000	A		1	BEARING HOUSING	
040	751576-0000	A		1	RULERPART L	
045	751578-0000	A		1	RULERPART L	
060	272422-0000	A		1	FOLDING FLAP	
070	272423-0000	A		1	FOLDING FLAP	
093	256692-0000	A		1	CARRIER	
TBA 0200S						
010	441727-0000	A		1	CUTTING JAW	
030	272263-0000	A		1	BEARING HOUSING	
040	752011-0000	A		1	RULERPART L	
045	752012-0000	A		1	RULERPART L	
060	272424-0000	A		1	FOLDING FLAP	
070	272425-0000	A		1	FOLDING FLAP	
093	256692-0000	A		1	CARRIER	
170	752574-0000	A		4	END PIECE	
TWA 0200S						
010	441727-0000	A		1	CUTTING JAW	
030	272263-0000	A		1	BEARING HOUSING	
040	752011-0000	A		1	RULERPART L	
045	752012-0000	A		1	RULERPART L	
060	591445-0000	A		1	FOLDING FLAP RIGHT	
070	591446-0000	A		1	FOLDING FLAP LEFT	
093	594940-0000	A		1	CARRIER LEFT	
520	312105-0367	-		2	SCREW M6S M6X14 A280	
533	312115-0329	-		1	SCREW MC6S M5X16 A280	
Common Parts						
050	1110820-0000	A		2	CUTTING RAIL	
090	1348053-0000	A		2	BRACKET	
096	256659-0000	A		1	OPERATING ROD	
100	978745-0000	A		2	CATCH	
130	272419-0000	A		2	CARRIER	
140	22463-0000	A		2	ROLL	
150	33408-0000	A		4	BEARING	
160	1110391-0000	A		2	DOLLY	
180	1517641-0000	A		2	FLANGE BUSHING	
193	255742-0000	A		1	COMPRESSION SPRING	
196	255801-0000	A		1	RETAINING RING	
200	256607-0000	A		2	AXLE PIN	
204	256626-0000	A		1	EAR	
206	256706-0000	A		1	BEARING PLATE	
208	257362-0000	A		2	LACE	
210	490944-0000	A		2	PLUNGER	
230	441355-0000	-		2	BLEEDING SCREW	
240	751579-0000	-		1	ADJUSTING SCREW	
250	751580-0000	-		1	SHIM	
305	315237-0106	-		2	WASHER,PL.RND.AL.6/10,H=1	
310	315237-0109	B		3	WASHER,PL.RND.AL.10/14,H=1,5	
320	90090-0005	A		2	BALL, D=3 MM	
330	90091-0216	A		2	PISTON SEAL, GLIDORING 7,1X12X2,2 MM	
333	90091-0091	B		1	ROD SEAL, GLIDORING 10X14X1,7 MM	
335	90091-0169	A		4	WEAR RING 12X15X3,2 MM	
336	90134-0058	-		1	CONNECTION	
340	90153-0015	-	KG	1	ADHESIVE LOCTITE IS 496/CYANOLIT 303	
350	90242-0093	B	MM	450	O-RING MATERIAL 1,5 MM	
355	90287-0128	-		2	SCREW, SOCK.SET DOGPOINT M4X6	
360	90330-0066	-		3	PLUG, EXT. G-THREAD, G1/8	
500	311103-0312	-		1	PARALLELL PIN, M6, 5X25 MM	
505	311111-0207	A		1	PIN, STRAIGHT SLOTTED SPRING FRP 3X14	
510	311111-0308	A		2	PIN, STRAIGHT SLOTTED SPRING FRP 5X20	
523	312105-0376	-		8	SCREW M6S ISO 4014 M6X35 A480	
530	312105-0462	-		2	SCREW M6S ISO 4014 M8X55 A480	
535	312115-0366	-		2	SCREW MC6S M6X12 A280	
540	312115-0370	-		2	SCREW MC6S M6X20 A280	
560	312145-0291	-		2	SCREW COUNTERS.SLOT.HD. MFS 4X12 A4	
582	312605-0318	-		1	HEXAGON NUT, M6M M8 A280	
585	315115-0153	-		8	WASHER PLAIN, TBRB 6,4/12 H=3	
587	315202-0265	A		1	O-RING 12,3X2,4 MM	
590	315230-0157	B		4	BEARING SEAL 12X16X3 MM	

Machine Type	Group Description	Used-In	Group Number	Page No

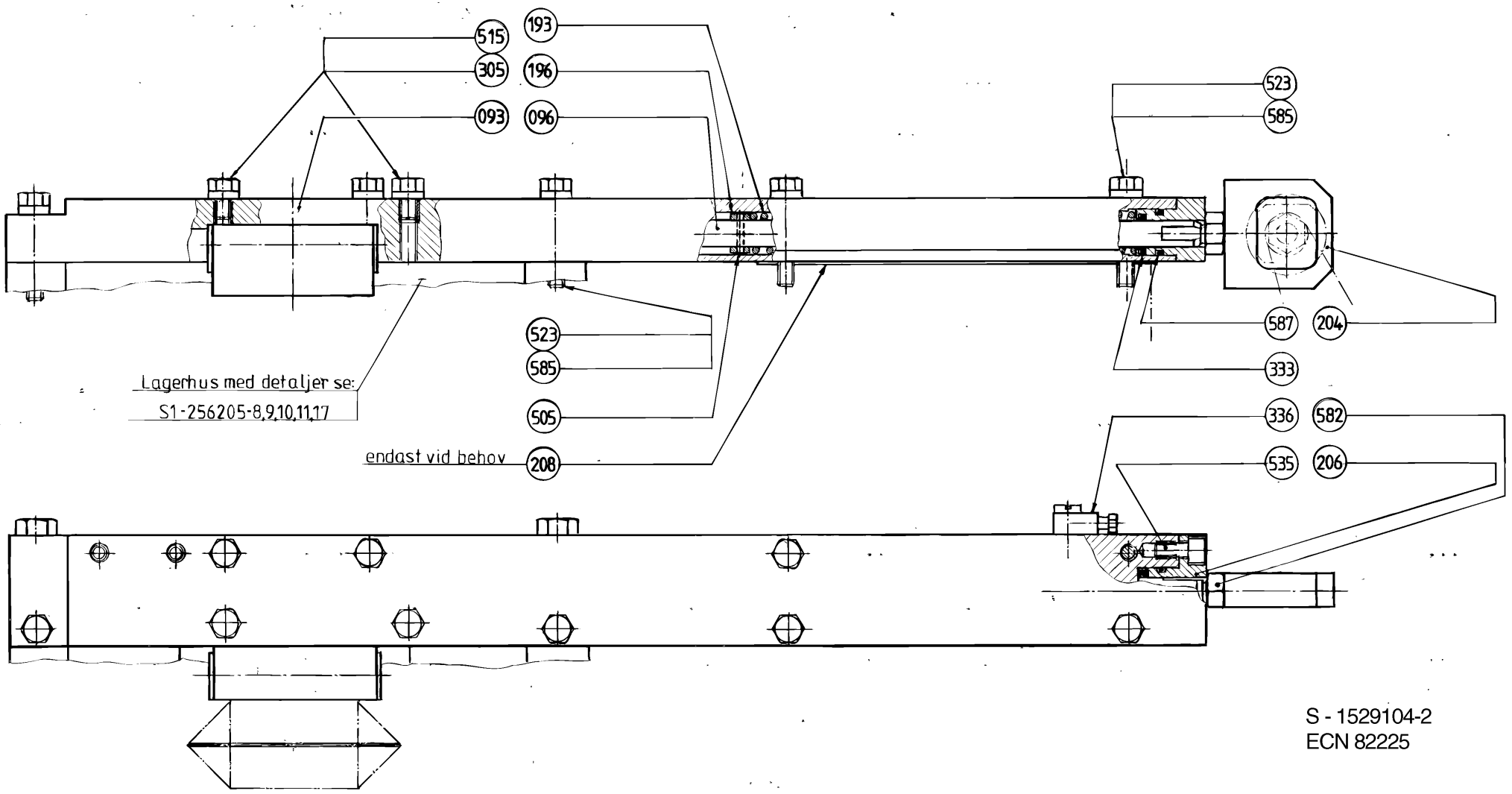
515
193
305
196
093
096
523
585
505
208
523
585
587
204
333
336
582
535
206
Lagerhus med detaljer se:
S1-256205-8,9,10,11,17
endast vid behov
S - 1529104-2
ECN 82225

ECM: 106153 - 20020315
Group number: 1529104-0100
Assembly Drawing: 1529104-2_1_AA

Issue: 20020822

Pos	Part No	SP	UN	Qty	Description	Page No
TBA 0200B OR TBA 0250B						
010	256769-0000	A		1	CUTTING JAW	
030	256770-0000	A		1	BEARING HOUSING	
040	751576-0000	A		1	RULERPART L	
045	751578-0000	A		1	RULERPART L	
060	272422-0000	A		1	FOLDING FLAP	
070	272423-0000	A		1	FOLDING FLAP	
093	256692-0000	A		1	CARRIER	
TBA 0200S						
010	441727-0000	A		1	CUTTING JAW	
030	272263-0000	A		1	BEARING HOUSING	
040	752011-0000	A		1	RULERPART L	
045	752012-0000	A		1	RULERPART L	
060	272424-0000	A		1	FOLDING FLAP	
070	272425-0000	A		1	FOLDING FLAP	
093	256692-0000	A		1	CARRIER	
170	752574-0000	A		4	END PIECE	
TWA 0200S						
010	441727-0000	A		1	CUTTING JAW	
030	272263-0000	A		1	BEARING HOUSING	
040	752011-0000	A		1	RULERPART L	
045	752012-0000	A		1	RULERPART L	
060	591445-0000	A		1	FOLDING FLAP RIGHT	
070	591446-0000	A		1	FOLDING FLAP LEFT	
093	594940-0000	A		1	CARRIER LEFT	
520	312105-0367	-		2	SCREW M6S M6X14 A280	
533	312115-0329	-		1	SCREW MC6S M5X16 A280	
Common Parts						
050	1110820-0000	A		2	CUTTING RAIL	
090	1348053-0000	A		2	BRACKET	
096	256659-0000	A		1	OPERATING ROD	
100	978745-0000	A		2	CATCH	
130	272419-0000	A		2	CARRIER	
140	22463-0000	A		2	ROLL	
150	33408-0000	A		4	BEARING	
160	1110391-0000	A		2	DOLLY	
180	1517641-0000	A		2	FLANGE BUSHING	
193	255742-0000	A		1	COMPRESSION SPRING	
196	255801-0000	A		1	RETAINING RING	
200	256607-0000	A		2	AXLE PIN	
204	256626-0000	A		1	EAR	
206	256706-0000	A		1	BEARING PLATE	
208	257362-0000	A		2	LACE	
210	490944-0000	A		2	PLUNGER	
230	441355-0000	-		2	BLEEDING SCREW	
240	751579-0000	-		1	ADJUSTING SCREW	
250	751580-0000	-		1	SHIM	
305	315237-0106	-		2	WASHER,PL.RND.AL.6/10,H=1	
310	315237-0109	B		3	WASHER,PL.RND.AL.10/14,H=1,5	
320	90090-0005	A		2	BALL, D=3 MM	
330	90091-0216	A		2	PISTON SEAL, GLIDORING 7,1X12X2,2 MM	
333	90091-0091	B		1	ROD SEAL, GLIDORING 10X14X1,7 MM	
335	90091-0169	A		4	WEAR RING 12X15X3,2 MM	
336	90134-0058	-		1	CONNECTION	
340	90153-0015	-	KG	1	ADHESIVE LOCTITE IS 496/CYANOLIT 303	
350	90242-0093	B	MM	450	O-RING MATERIAL 1,5 MM	
355	90287-0128	-		2	SCREW, SOCK.SET DOGPOINT M4X6	
360	90330-0066	-		3	PLUG, EXT. G-THREAD, G1/8	
500	311103-0312	-		1	PARALLELL PIN, M6, 5X25 MM	
505	311111-0207	A		1	PIN, STRAIGHT SLOTTED SPRING FRP 3X14	
510	311111-0308	A		2	PIN, STRAIGHT SLOTTED SPRING FRP 5X20	
523	312105-0376	-		8	SCREW M6S ISO 4014 M6X35 A480	
530	312105-0462	-		2	SCREW M6S ISO 4014 M8X55 A480	
535	312115-0366	-		2	SCREW MC6S M6X12 A280	
540	312115-0370	-		2	SCREW MC6S M6X20 A280	
560	312145-0291	-		2	SCREW COUNTERS.SLOT.HD. MFS 4X12 A4	
582	312605-0318	-		1	HEXAGON NUT, M6M M8 A280	
585	315115-0153	-		8	WASHER PLAIN, TBRB 6,4/12 H=3	
587	315202-0265	A		1	O-RING 12,3X2,4 MM	
590	315230-0157	B		4	BEARING SEAL 12X16X3 MM	

Machine Type	Group Description	Used-In	Group Number	Page No

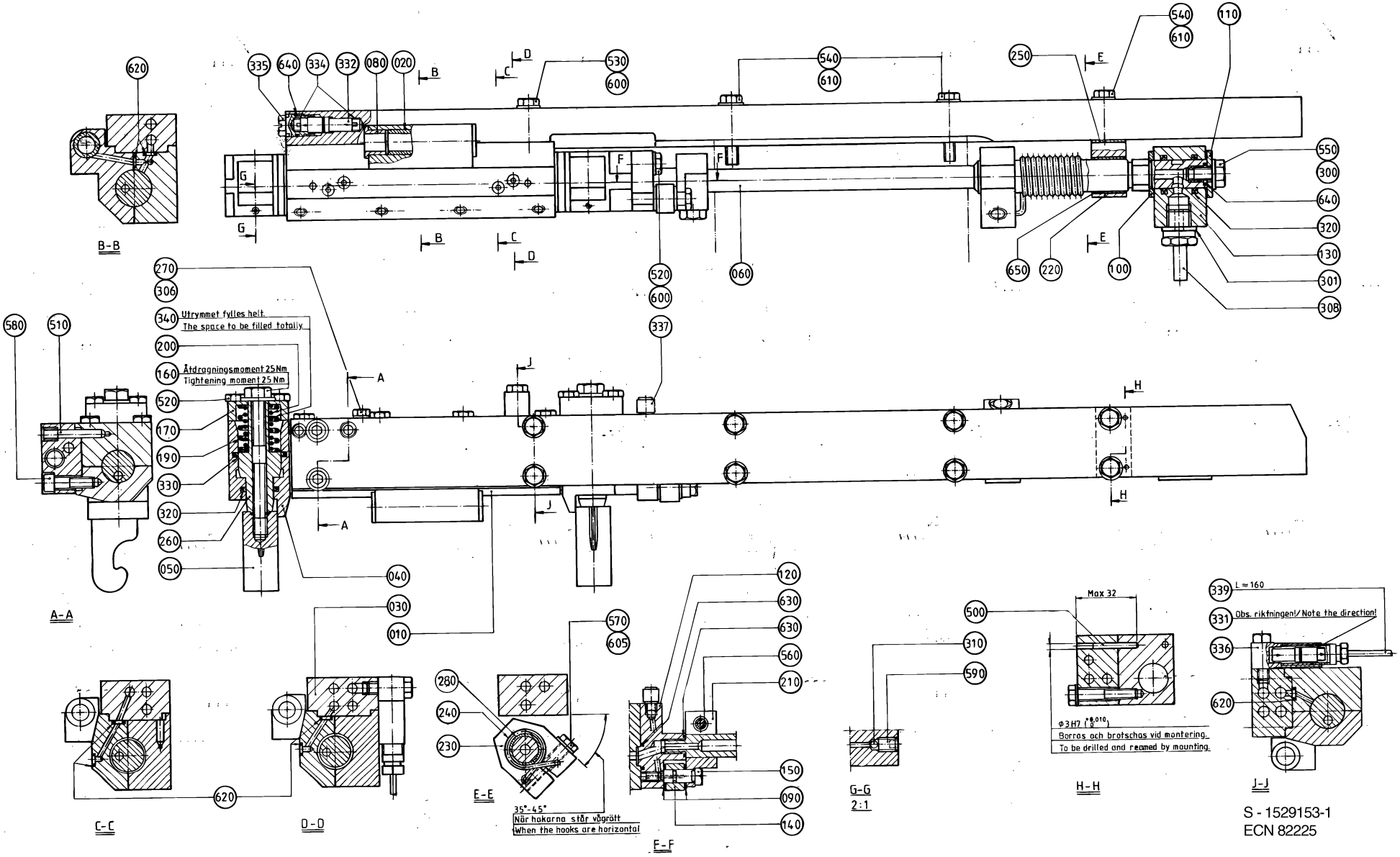
Utrymmet fylles helt.
The space to be filled totally
Åtdragningsmoment 25 Nm
Tightening moment 25 Nm
35°-45°
När hakarna står vågrätt
When the hooks are horizontal
Max 32
Obs. riktningen!/Note the direction!
Borras och brotschas vid montering.
To be drilled and reamed by mounting.
B-B
A-A
C-C
D-D
E-E
F-F
G-G
2:1
H-H
J-J
S - 1529153-1
ECN 82225

ECM: 101880 - 20011203
Group number: 1529153-0100
Assembly Drawing: 1529153-1_1_AA

Issue: 20020822

Pos	Part No	SP	UN	Qty	Description	Page No
TBA 0200B OR TBA 0250B						
010	B441710-0000	A		1	BEARING HOUSING	
	312105-0376	-		*8*	*SCREW M6S ISO 4014 M6X35 A480*	
020	255697-0002	B		1	INTERMEDIATE PIPE	
030	B441349-0000	A		1	CARRIER RIGHT	
	312911-0117	-		*2*	*THREADED INSERTS M6X1,0D*	
TBA 0200S						
010	B441712-0000	A		1	BEARING HOUSING	
	312105-0376	-		*8*	*SCREW M6S ISO 4014 M6X35 A480*	
020	255697-0001	B		1	INTERMEDIATE PIPE	
030	B441349-0000	A		1	CARRIER RIGHT	
	312911-0117	-		*2*	*THREADED INSERTS M6X1,0D*	
TWA 0200S						
010	B441712-0000	A		1	BEARING HOUSING	
	312105-0376	-		*8*	*SCREW M6S ISO 4014 M6X35 A480*	
020	255697-0001	B		1	INTERMEDIATE PIPE	
030	1529302-0000	A		1	CARRIER RIGHT	
Common Parts						
040	441709-0000	B		1	CYLINDER	
050	978746-0000	A		2	CATCH	
060	B272500-0000	A		1	SHAFT	
	312911-0125	-		*1*	*THREADED INSERTS M8X1,0D*	
080	1517641-0000	A		2	FLANGE BUSHING	
090	256557-0001	A		2	WASHER	
100	256557-0002	A		1	WASHER	
110	256557-0003	A		1	WASHER	
120	441762-0000	A		1	CONNECTION RIGHT	
130	441385-0000	A		1	HUB	
140	256576-0000	A		1	ROLL	
150	441764-0000	A		1	SHAFT	
160	257249-0000	A		2	SCREW	
170	257250-0000	-		2	LID	
190	490974-0000	A		2	COMPRESSION SPRING	
200	490975-0000	A		2	COMPRESSION SPRING	
210	272488-0000	-		1	CLAMP RIGHT	
220	272501-0000	A		1	BRACKET RIGHT	
230	272503-0000	-		1	CLAMPING PIECE	
240	456311-0000	A		1	TORSION SPRING RIGHT	
250	272506-0000	-		2	LACE	
260	272644-0000	A		2	PISTON	
270	441355-0000	-		1	BLEEDING SCREW	
280	456320-0000	A		1	SLEEVE	
300	90005-0007	A		1	GASKET BOLT HEAD 8,7X14X1 MM M8	
301	315237-0110	A		1	WASHER,PL.RND.AL.13,5/18,H=1,5	
306	90005-0003	-		1	GASKET BOLT HEAD 6,7X11X1 MM M6	
308	90030-0065	A		1	PIPE CONNECTION	
310	90090-0005	A		4	BALL, D=3 MM	
320	90091-0089	A		4	ROD SEAL, GLIDORING 16X22X2,5 MM	
330	90091-0107	A		2	ROD SEAL, GLIDORING 25X32X2,7 MM	
331	90092-0052	-		1	METERING VALVE 10 MM3	
332	90092-0053	-		1	METERING VALVE 30 MM3	
334	90134-0042	-		2	SPACER DOSING VALVE	
335	90134-0045	-		1	PLUG M12X1	
336	90134-0047	-		1	CONNECTION FOR DOSING VALVE	
337	90134-0058	-		1	CONNECTION	
339	90166-0143	-	MM	160	TUBE 2,5 MM PA,TRANSP.	
340	90296-0068	-	G	25	GREASE UNIWAY LI 62 CARTRIDGE 400 GR.	
500	311103-0240	A		2	PARALLELL PIN, M6, 3X25 MM	
510	311103-0312	A		1	PARALLELL PIN, M6, 5X25 MM	
520	312105-0370	-		11	SCREW M6S ISO 4017 M6X20 A480	
530	312105-0374	-		2	SCREW M6S ISO 4014 M6X30 A480	
540	312105-0376	-		6	SCREW M6S ISO 4014 M6X35 A480	
550	312105-0447	-		1	SCREW M6S ISO 4017 M8X12 A480	
560	312105-0453	-		1	SCREW M6S ISO 4017 M8X25 A480	
570	312105-0455	-		1	SCREW M6S ISO 4017 M8X30 A480	
580	312115-0371	-		2	SCREW HEX.SOCK.HD.MC6S-TT 6X22 A480	
590	90287-0128	-		4	SCREW, SOCK.SET DOGPOINT M4X6	
600	315105-0153	-		5	WASHER PLAIN, BRB, 6,4/12,H=1,5	
605	315105-0165	-		1	WASHER PLAIN, BRB, 8,4/16,H=1,5	
610	315115-0153	-		6	WASHER PLAIN, TBRB 6,4/12 H=3	
620	315202-0102	A		8	O-RING 4,1X1,6 MM	
630	315202-0106	A		2	O-RING 8,1X1,6 MM	
640	315202-0108	A		2	O-RING 10,1X1,6 MM	
650	321120-0132	A		1	BEARING BUSHING WITHOUT FL, 18X20X20 MM	

Machine Type | Group Description | Used-In | Group Number | Page No

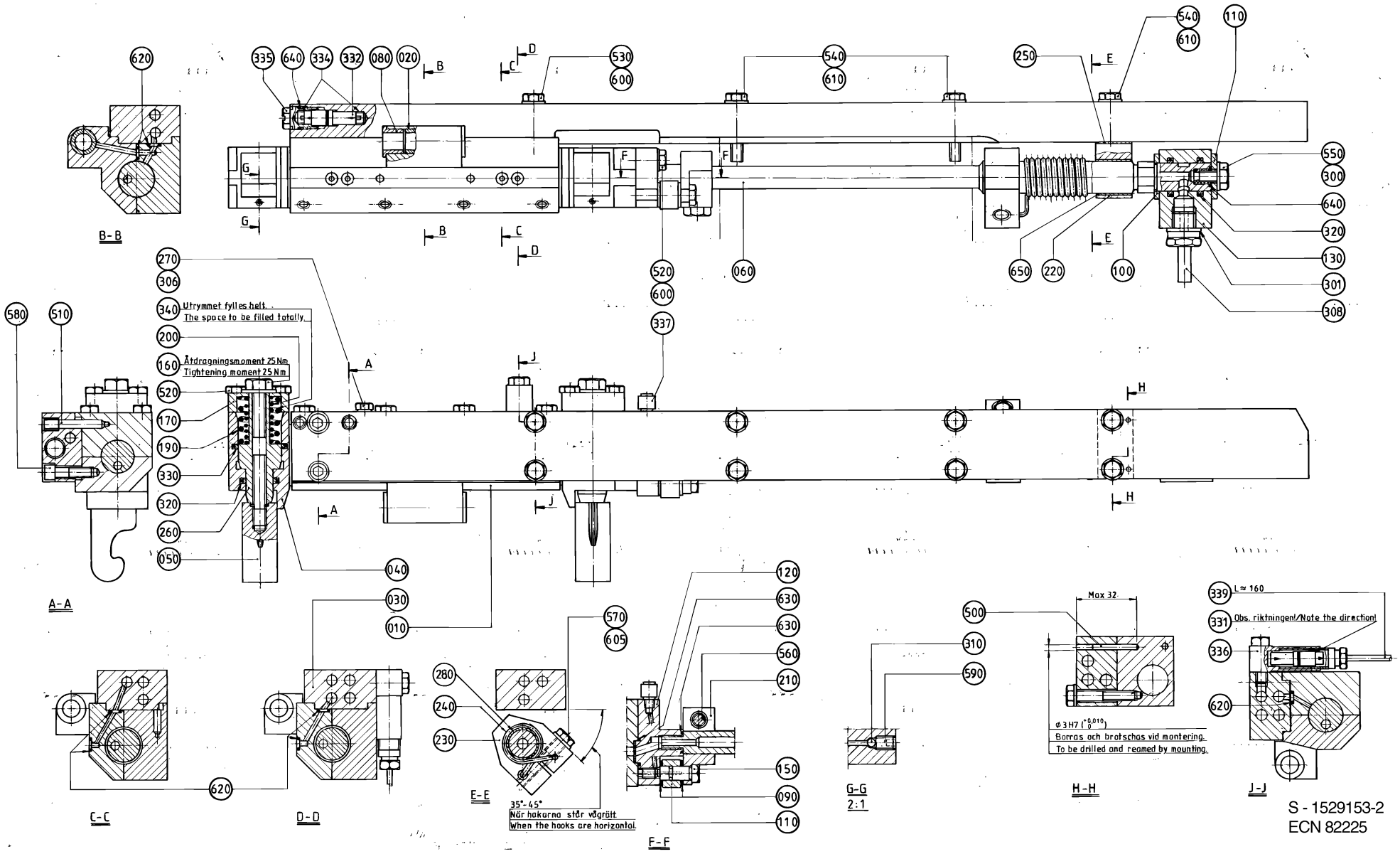

S - 1529153-2
ECN 82225

ECM: 101880 - 20011203
Group number: 1529153-0100
Assembly Drawing: 1529153-2_1_AA

Issue: 20020822

Pos	Part No	SP	UN	Qty	Description	Page No
TBA 0200B OR TBA 0250B						
010	B441710-0000	A		1	BEARING HOUSING	
	312105-0376	-		*8*	*SCREW M6S ISO 4014 M6X35 A480*	
020	255697-0002	B		1	INTERMEDIATE PIPE	
030	B441349-0000	A		1	CARRIER RIGHT	
	312911-0117	-		*2*	*THREADED INSERTS M6X1,0D*	
TBA 0200S						
010	B441712-0000	A		1	BEARING HOUSING	
	312105-0376	-		*8*	*SCREW M6S ISO 4014 M6X35 A480*	
020	255697-0001	B		1	INTERMEDIATE PIPE	
030	B441349-0000	A		1	CARRIER RIGHT	
	312911-0117	-		*2*	*THREADED INSERTS M6X1,0D*	
TWA 0200S						
010	B441712-0000	A		1	BEARING HOUSING	
	312105-0376	-		*8*	*SCREW M6S ISO 4014 M6X35 A480*	
020	255697-0001	B		1	INTERMEDIATE PIPE	
030	1529302-0000	A		1	CARRIER RIGHT	
Common Parts						
040	441709-0000	B		1	CYLINDER	
050	978746-0000	A		2	CATCH	
060	B272500-0000	A		1	SHAFT	
	312911-0125	-		*1*	*THREADED INSERTS M8X1,0D*	
080	1517641-0000	A		2	FLANGE BUSHING	
090	256557-0001	A		2	WASHER	
100	256557-0002	A		1	WASHER	
110	256557-0003	A		1	WASHER	
120	441762-0000	A		1	CONNECTION RIGHT	
130	441385-0000	A		1	HUB	
140	256576-0000	A		1	ROLL	
150	441764-0000	A		1	SHAFT	
160	257249-0000	A		2	SCREW	
170	257250-0000	-		2	LID	
190	490974-0000	A		2	COMPRESSION SPRING	
200	490975-0000	A		2	COMPRESSION SPRING	
210	272488-0000	-		1	CLAMP RIGHT	
220	272501-0000	A		1	BRACKET RIGHT	
230	272503-0000	-		1	CLAMPING PIECE	
240	456311-0000	A		1	TORSION SPRING RIGHT	
250	272506-0000	-		2	LACE	
260	272644-0000	A		2	PISTON	
270	441355-0000	-		1	BLEEDING SCREW	
280	456320-0000	A		1	SLEEVE	
300	90005-0007	A		1	GASKET BOLT HEAD 8,7X14X1 MM M8	
301	315237-0110	A		1	WASHER,PL.RND.AL.13,5/18,H=1,5	
306	90005-0003	-		1	GASKET BOLT HEAD 6,7X11X1 MM M6	
308	90030-0065	A		1	PIPE CONNECTION	
310	90090-0005	A		4	BALL, D=3 MM	
320	90091-0089	A		4	ROD SEAL, GLIDORING 16X22X2,5 MM	
330	90091-0107	A		2	ROD SEAL, GLIDORING 25X32X2,7 MM	
331	90092-0052	-		1	METERING VALVE 10 MM3	
332	90092-0053	-		1	METERING VALVE 30 MM3	
334	90134-0042	-		2	SPACER DOSING VALVE	
335	90134-0045	-		1	PLUG M12X1	
336	90134-0047	-		1	CONNECTION FOR DOSING VALVE	
337	90134-0058	-		1	CONNECTION	
339	90166-0143	-	MM	160	TUBE 2,5 MM PA,TRANSP.	
340	90296-0068	-	G	25	GREASE UNIWAY LI 62 CARTRIDGE 400 GR.	
500	311103-0240	A		2	PARALLELL PIN, M6, 3X25 MM	
510	311103-0312	A		1	PARALLELL PIN, M6, 5X25 MM	
520	312105-0370	-		11	SCREW M6S ISO 4017 M6X20 A480	
530	312105-0374	-		2	SCREW M6S ISO 4014 M6X30 A480	
540	312105-0376	-		6	SCREW M6S ISO 4014 M6X35 A480	
550	312105-0447	-		1	SCREW M6S ISO 4017 M8X12 A480	
560	312105-0453	-		1	SCREW M6S ISO 4017 M8X25 A480	
570	312105-0455	-		1	SCREW M6S ISO 4017 M8X30 A480	
580	312115-0371	-		2	SCREW HEX.SOCK.HD.MC6S-TT 6X22 A480	
590	90287-0128	-		4	SCREW, SOCK.SET DOGPOINT M4X6	
600	315105-0153	-		5	WASHER PLAIN, BRB, 6,4/12,H=1,5	
605	315105-0165	-		1	WASHER PLAIN, BRB, 8,4/16,H=1,5	
610	315115-0153	-		6	WASHER PLAIN, TBRB 6,4/12 H=3	
620	315202-0102	A		8	O-RING 4,1X1,6 MM	
630	315202-0106	A		2	O-RING 8,1X1,6 MM	
640	315202-0108	A		2	O-RING 10,1X1,6 MM	
650	321120-0132	A		1	BEARING BUSHING WITHOUT FL, 18X20X20 MM	

Machine Type | Group Description | Used-In | Group Number | Page No

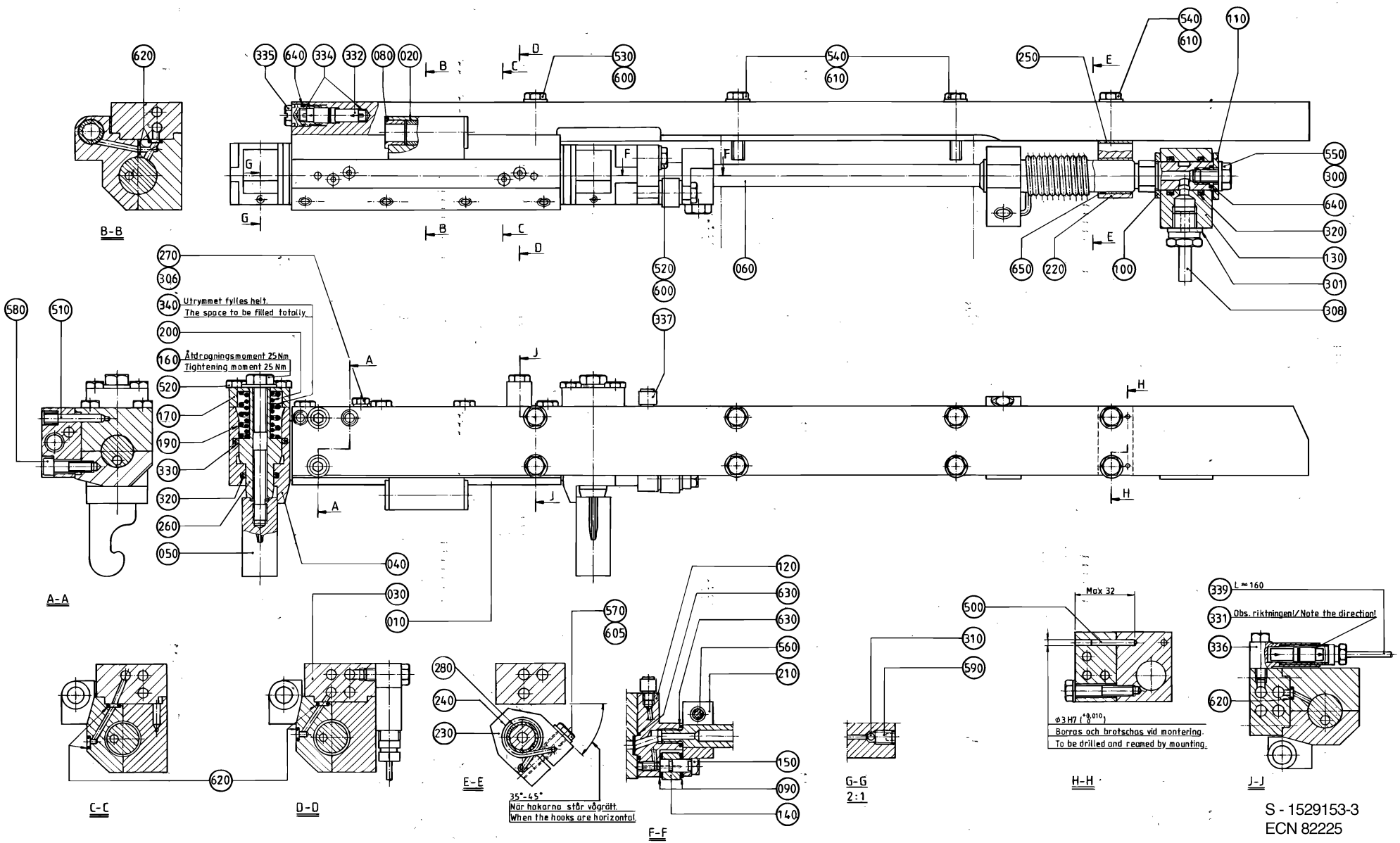

S - 1529153-3
ECN 82225

Pos	Part No	SP	UN	Qty	Description	Page No
TBA 0200B OR TBA 0250B						
010	B441710-0000	A		1	BEARING HOUSING	
	312105-0376	-		*8*	*SCREW M6S ISO 4014 M6X35 A480*	
020	255697-0002	B		1	INTERMEDIATE PIPE	
030	B441349-0000	A		1	CARRIER RIGHT	
	312911-0117	-		*2*	*THREADED INSERTS M6X1,0D*	
TBA 0200S						
010	B441712-0000	A		1	BEARING HOUSING	
	312105-0376	-		*8*	*SCREW M6S ISO 4014 M6X35 A480*	
020	255697-0001	B		1	INTERMEDIATE PIPE	
030	B441349-0000	A		1	CARRIER RIGHT	
	312911-0117	-		*2*	*THREADED INSERTS M6X1,0D*	
TWA 0200S						
010	B441712-0000	A		1	BEARING HOUSING	
	312105-0376	-		*8*	*SCREW M6S ISO 4014 M6X35 A480*	
020	255697-0001	B		1	INTERMEDIATE PIPE	
030	1529302-0000	A		1	CARRIER RIGHT	
Common Parts						
040	441709-0000	B		1	CYLINDER	
050	978746-0000	A		2	CATCH	
060	B272500-0000	A		1	SHAFT	
	312911-0125	-		*1*	*THREADED INSERTS M8X1,0D*	
080	1517641-0000	A		2	FLANGE BUSHING	
090	256557-0001	A		2	WASHER	
100	256557-0002	A		1	WASHER	
110	256557-0003	A		1	WASHER	
120	441762-0000	A		1	CONNECTION RIGHT	
130	441385-0000	A		1	HUB	
140	256576-0000	A		1	ROLL	
150	441764-0000	A		1	SHAFT	
160	257249-0000	A		2	SCREW	
170	257250-0000	-		2	LID	
190	490974-0000	A		2	COMPRESSION SPRING	
200	490975-0000	A		2	COMPRESSION SPRING	
210	272488-0000	-		1	CLAMP RIGHT	
220	272501-0000	A		1	BRACKET RIGHT	
230	272503-0000	-		1	CLAMPING PIECE	
240	456311-0000	A		1	TORSION SPRING RIGHT	
250	272506-0000	-		2	LACE	
260	272644-0000	A		2	PISTON	
270	441355-0000	-		1	BLEEDING SCREW	
280	456320-0000	A		1	SLEEVE	
300	90005-0007	A		1	GASKET BOLT HEAD 8,7X14X1 MM M8	
301	315237-0110	A		1	WASHER,PL.RND.AL.13,5/18,H=1,5	
306	90005-0003	-		1	GASKET BOLT HEAD 6,7X11X1 MM M6	
308	90030-0065	A		1	PIPE CONNECTION	
310	90090-0005	A		4	BALL, D=3 MM	
320	90091-0089	A		4	ROD SEAL, GLIDORING 16X22X2,5 MM	
330	90091-0107	A		2	ROD SEAL, GLIDORING 25X32X2,7 MM	
331	90092-0052	-		1	METERING VALVE 10 MM3	
332	90092-0053	-		1	METERING VALVE 30 MM3	
334	90134-0042	-		2	SPACER DOSING VALVE	
335	90134-0045	-		1	PLUG M12X1	
336	90134-0047	-		1	CONNECTION FOR DOSING VALVE	
337	90134-0058	-		1	CONNECTION	
339	90166-0143	-	MM	160	TUBE 2,5 MM PA,TRANSP.	
340	90296-0068	-	G	25	GREASE UNIWAY LI 62 CARTRIDGE 400 GR.	
500	311103-0240	A		2	PARALLELL PIN, M6, 3X25 MM	
510	311103-0312	A		1	PARALLELL PIN, M6, 5X25 MM	
520	312105-0370	-		11	SCREW M6S ISO 4017 M6X20 A480	
530	312105-0374	-		2	SCREW M6S ISO 4014 M6X30 A480	
540	312105-0376	-		6	SCREW M6S ISO 4014 M6X35 A480	
550	312105-0447	-		1	SCREW M6S ISO 4017 M8X12 A480	
560	312105-0453	-		1	SCREW M6S ISO 4017 M8X25 A480	
570	312105-0455	-		1	SCREW M6S ISO 4017 M8X30 A480	
580	312115-0371	-		2	SCREW HEX.SOCK.HD.MC6S-TT 6X22 A480	
590	90287-0128	-		4	SCREW, SOCK.SET DOGPOINT M4X6	
600	315105-0153	-		5	WASHER PLAIN, BRB, 6,4/12,H=1,5	
605	315105-0165	-		1	WASHER PLAIN, BRB, 8,4/16,H=1,5	
610	315115-0153	-		6	WASHER PLAIN, TBRB 6,4/12 H=3	
620	315202-0102	A		8	O-RING 4,1X1,6 MM	
630	315202-0106	A		2	O-RING 8,1X1,6 MM	
640	315202-0108	A		2	O-RING 10,1X1,6 MM	
650	321120-0132	A		1	BEARING BUSHING WITHOUT FL, 18X20X20 MM	

Machine Type | Group Description | Used-In | Group Number | Page No

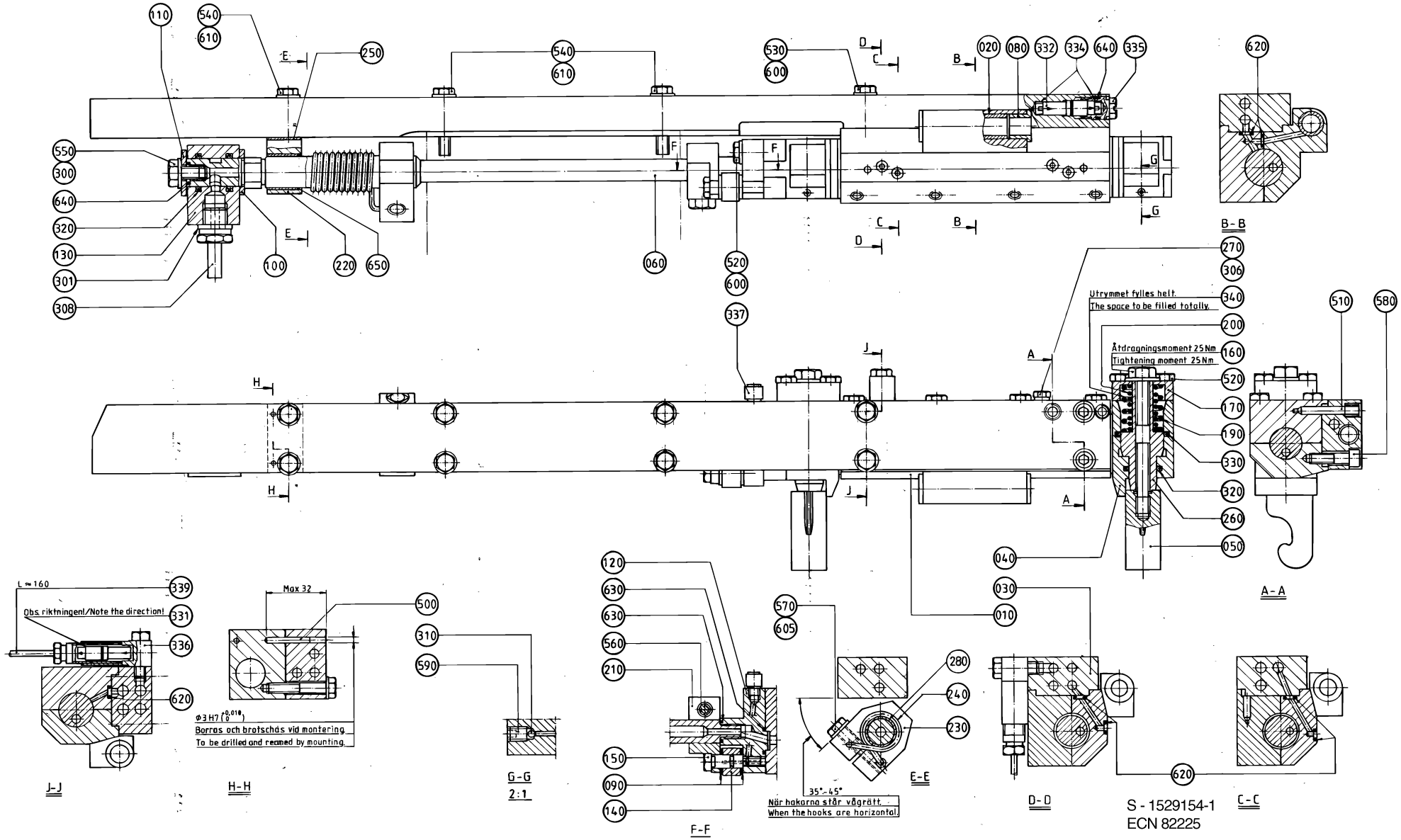
Utrymmet fylles helt.
The space to be filled totally.
Åtdragningsmoment 25 Nm
Tightening moment 25 Nm
L ≈ 160
Obs. riktningen!/Note the direction!
Max 32
Ø3 H7 (0 +0,010)
Borras och brotschas vid montering.
To be drilled and reamed by mounting.
35°-45°
När hakarna står vågrätt.
When the hooks are horizontal.
B-B
A-A
J-J
H-H
G-G
2:1
E-E
F-F
D-D
C-C
S - 1529154-1
ECN 82225

Pos	Part No	SP	UN	Qty	Description	Page No
TBA 0200B OR TBA 0250B						
010	B441710-0000	A		1	BEARING HOUSING	
	312105-0376	-		*8*	*SCREW M6S ISO 4014 M6X35 A480*	
020	255697-0002	B		1	INTERMEDIATE PIPE	
030	B441350-0000	A		1	CARRIER LEFT	
	312911-0117	-		*2*	*THREADED INSERTS M6X1,0D*	
TBA 0200S						
010	B441712-0000	A		1	BEARING HOUSING	
	312105-0376	-		*8*	*SCREW M6S ISO 4014 M6X35 A480*	
020	255697-0001	B		1	INTERMEDIATE PIPE	
030	B441350-0000	A		1	CARRIER LEFT	
	312911-0117	-		*2*	*THREADED INSERTS M6X1,0D*	
TWA 0200S						
010	B441712-0000	A		1	BEARING HOUSING	
	312105-0376	-		*8*	*SCREW M6S ISO 4014 M6X35 A480*	
020	255697-0001	B		1	INTERMEDIATE PIPE	
030	1529303-0000	A		1	CARRIER LEFT	
Common Parts						
040	441709-0000	B		1	CYLINDER	
050	978746-0000	A		2	CATCH	
060	B272500-0000	A		1	SHAFT	
	312911-0125	-		*1*	*THREADED INSERTS M8X1,0D*	
080	1517641-0000	A		2	FLANGE BUSHING	
090	256557-0001	A		2	WASHER	
100	256557-0002	A		1	WASHER	
110	256557-0003	A		1	WASHER	
120	441763-0000	A		1	CONNECTION LEFT	
130	441385-0000	A		1	HUB	
140	256576-0000	A		1	ROLL	
150	441764-0000	A		1	SHAFT	
160	257249-0000	A		2	SCREW	
170	257250-0000	-		2	LID	
190	490974-0000	A		2	COMPRESSION SPRING	
200	490975-0000	A		2	COMPRESSION SPRING	
210	272489-0000	-		1	CLAMP LEFT	
220	272502-0000	A		1	BRACKET LEFT	
230	272503-0000	-		1	CLAMPING PIECE	
240	456312-0000	A		1	TORSION SPRING LEFT	
250	272506-0000	-		2	LACE	
260	272644-0000	A		2	PISTON	
270	441355-0000	-		1	BLEEDING SCREW	
280	456320-0000	A		1	SLEEVE	
300	90005-0007	A		1	GASKET BOLT HEAD 8,7X14X1 MM M8	
301	315237-0110	A		1	WASHER,PL.RND.AL.13,5/18,H=1,5	
306	90005-0003	-		1	GASKET BOLT HEAD 6,7X11X1 MM M6	
308	90030-0065	A		1	PIPE CONNECTION	
310	90090-0005	A		4	BALL, D=3 MM	
320	90091-0089	A		4	ROD SEAL, GLIDORING 16X22X2,5 MM	
330	90091-0107	A		2	ROD SEAL, GLIDORING 25X32X2,7 MM	
331	90092-0052	-		1	METERING VALVE 10 MM3	
332	90092-0053	-		1	METERING VALVE 30 MM3	
334	90134-0042	-		2	SPACER DOSING VALVE	
335	90134-0045	-		1	PLUG M12X1	
336	90134-0047	-		1	CONNECTION FOR DOSING VALVE	
337	90134-0058	-		1	CONNECTION	
339	90166-0143	-	MM	160	TUBE 2,5 MM PA,TRANSP.	
340	90296-0068	-	G	25	GREASE UNIWAY LI 62 CARTRIDGE 400 GR.	
500	311103-0240	A		2	PARALLELL PIN, M6, 3X25 MM	
510	311103-0312	A		1	PARALLELL PIN, M6, 5X25 MM	
520	312105-0370	-		11	SCREW M6S ISO 4017 M6X20 A480	
530	312105-0374	-		2	SCREW M6S ISO 4014 M6X30 A480	
540	312105-0376	-		6	SCREW M6S ISO 4014 M6X35 A480	
550	312105-0447	-		1	SCREW M6S ISO 4017 M8X12 A480	
560	312105-0453	-		1	SCREW M6S ISO 4017 M8X25 A480	
570	312105-0455	-		1	SCREW M6S ISO 4017 M8X30 A480	
580	312115-0371	-		2	SCREW HEX.SOCK.HD.MC6S-TT 6X22 A480	
590	90287-0128	-		4	SCREW, SOCK.SET DOGPOINT M4X6	
600	315105-0153	-		5	WASHER PLAIN, BRB, 6,4/12,H=1,5	
605	315105-0165	-		1	WASHER PLAIN, BRB, 8,4/16,H=1,5	
610	315115-0153	-		6	WASHER PLAIN, TBRB 6,4/12 H=3	
620	315202-0102	A		8	O-RING 4,1X1,6 MM	
630	315202-0106	A		2	O-RING 8,1X1,6 MM	
640	315202-0108	A		2	O-RING 10,1X1,6 MM	
650	321120-0132	A		1	BEARING BUSHING WITHOUT FL, 18X20X20 MM	

Machine Type | Group Description | Used-In | Group Number | Page No

PRESSURE JAW LEFT

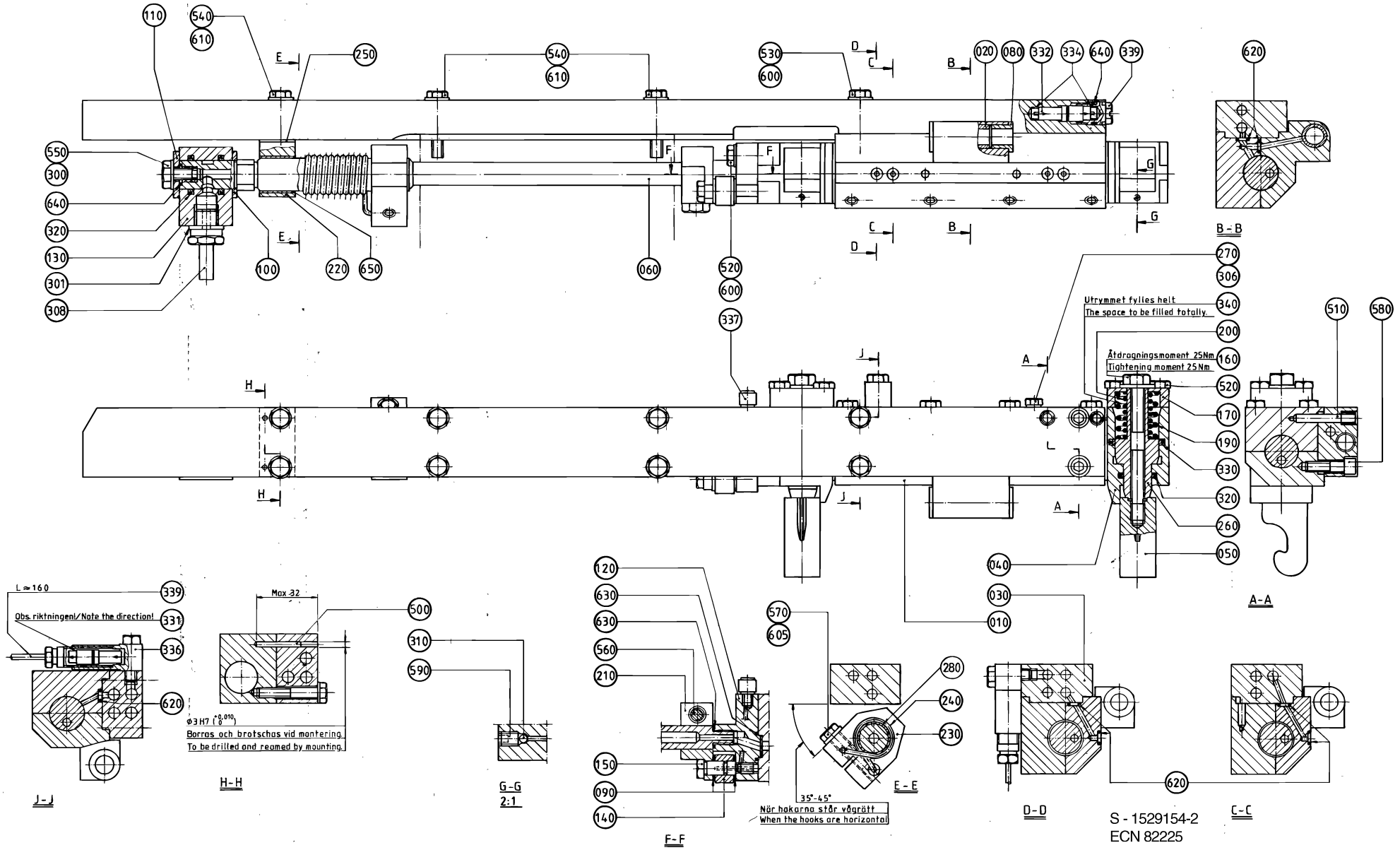

ECM: 101889 - 20011203
Group number: 1529154-0100
Assembly Drawing: 1529154-2_1_AA

Issue: 20020822

Pos	Part No	SP	UN	Qty	Description	Page No
TBA 0200B OR TBA 0250B						
010	B441710-0000	A		1	BEARING HOUSING	
	312105-0376	-		*8*	*SCREW M6S ISO 4014 M6X35 A480*	
020	255697-0002	B		1	INTERMEDIATE PIPE	
030	B441350-0000	A		1	CARRIER LEFT	
	312911-0117	-		*2*	*THREADED INSERTS M6X1,0D*	
TBA 0200S						
010	B441712-0000	A		1	BEARING HOUSING	
	312105-0376	-		*8*	*SCREW M6S ISO 4014 M6X35 A480*	
020	255697-0001	B		1	INTERMEDIATE PIPE	
030	B441350-0000	A		1	CARRIER LEFT	
	312911-0117	-		*2*	*THREADED INSERTS M6X1,0D*	
TWA 0200S						
010	B441712-0000	A		1	BEARING HOUSING	
	312105-0376	-		*8*	*SCREW M6S ISO 4014 M6X35 A480*	
020	255697-0001	B		1	INTERMEDIATE PIPE	
030	1529303-0000	A		1	CARRIER LEFT	
Common Parts						
040	441709-0000	B		1	CYLINDER	
050	978746-0000	A		2	CATCH	
060	B272500-0000	A		1	SHAFT	
	312911-0125	-		*1*	*THREADED INSERTS M8X1,0D*	
080	1517641-0000	A		2	FLANGE BUSHING	
090	256557-0001	A		2	WASHER	
100	256557-0002	A		1	WASHER	
110	256557-0003	A		1	WASHER	
120	441763-0000	A		1	CONNECTION LEFT	
130	441385-0000	A		1	HUB	
140	256576-0000	A		1	ROLL	
150	441764-0000	A		1	SHAFT	
160	257249-0000	A		2	SCREW	
170	257250-0000	-		2	LID	
190	490974-0000	A		2	COMPRESSION SPRING	
200	490975-0000	A		2	COMPRESSION SPRING	
210	272489-0000	-		1	CLAMP LEFT	
220	272502-0000	A		1	BRACKET LEFT	
230	272503-0000	-		1	CLAMPING PIECE	
240	456312-0000	A		1	TORSION SPRING LEFT	
250	272506-0000	-		2	LACE	
260	272644-0000	A		2	PISTON	
270	441355-0000	-		1	BLEEDING SCREW	
280	456320-0000	A		1	SLEEVE	
300	90005-0007	A		1	GASKET BOLT HEAD 8,7X14X1 MM M8	
301	315237-0110	A		1	WASHER,PL.RND.AL.13,5/18,H=1,5	
306	90005-0003	-		1	GASKET BOLT HEAD 6,7X11X1 MM M6	
308	90030-0065	A		1	PIPE CONNECTION	
310	90090-0005	A		4	BALL, D=3 MM	
320	90091-0089	A		4	ROD SEAL, GLIDORING 16X22X2,5 MM	
330	90091-0107	A		2	ROD SEAL, GLIDORING 25X32X2,7 MM	
331	90092-0052	-		1	METERING VALVE 10 MM3	
332	90092-0053	-		1	METERING VALVE 30 MM3	
334	90134-0042	-		2	SPACER DOSING VALVE	
335	90134-0045	-		1	PLUG M12X1	
336	90134-0047	-		1	CONNECTION FOR DOSING VALVE	
337	90134-0058	-		1	CONNECTION	
339	90166-0143	-	MM	160	TUBE 2,5 MM PA,TRANSP.	
340	90296-0068	-	G	25	GREASE UNIWAY LI 62 CARTRIDGE 400 GR.	
500	311103-0240	A		2	PARALLELL PIN, M6, 3X25 MM	
510	311103-0312	A		1	PARALLELL PIN, M6, 5X25 MM	
520	312105-0370	-		11	SCREW M6S ISO 4017 M6X20 A480	
530	312105-0374	-		2	SCREW M6S ISO 4014 M6X30 A480	
540	312105-0376	-		6	SCREW M6S ISO 4014 M6X35 A480	
550	312105-0447	-		1	SCREW M6S ISO 4017 M8X12 A480	
560	312105-0453	-		1	SCREW M6S ISO 4017 M8X25 A480	
570	312105-0455	-		1	SCREW M6S ISO 4017 M8X30 A480	
580	312115-0371	-		2	SCREW HEX.SOCK.HD.MC6S-TT 6X22 A480	
590	90287-0128	-		4	SCREW, SOCK.SET DOGPOINT M4X6	
600	315105-0153	-		5	WASHER PLAIN, BRB, 6,4/12,H=1,5	
605	315105-0165	-		1	WASHER PLAIN, BRB, 8,4/16,H=1,5	
610	315115-0153	-		6	WASHER PLAIN, TBRB 6,4/12 H=3	
620	315202-0102	A		8	O-RING 4,1X1,6 MM	
630	315202-0106	A		2	O-RING 8,1X1,6 MM	
640	315202-0108	A		2	O-RING 10,1X1,6 MM	
650	321120-0132	A		1	BEARING BUSHING WITHOUT FL, 18X20X20 MM	

Machine Type | Group Description | Used-In | Group Number | Page No

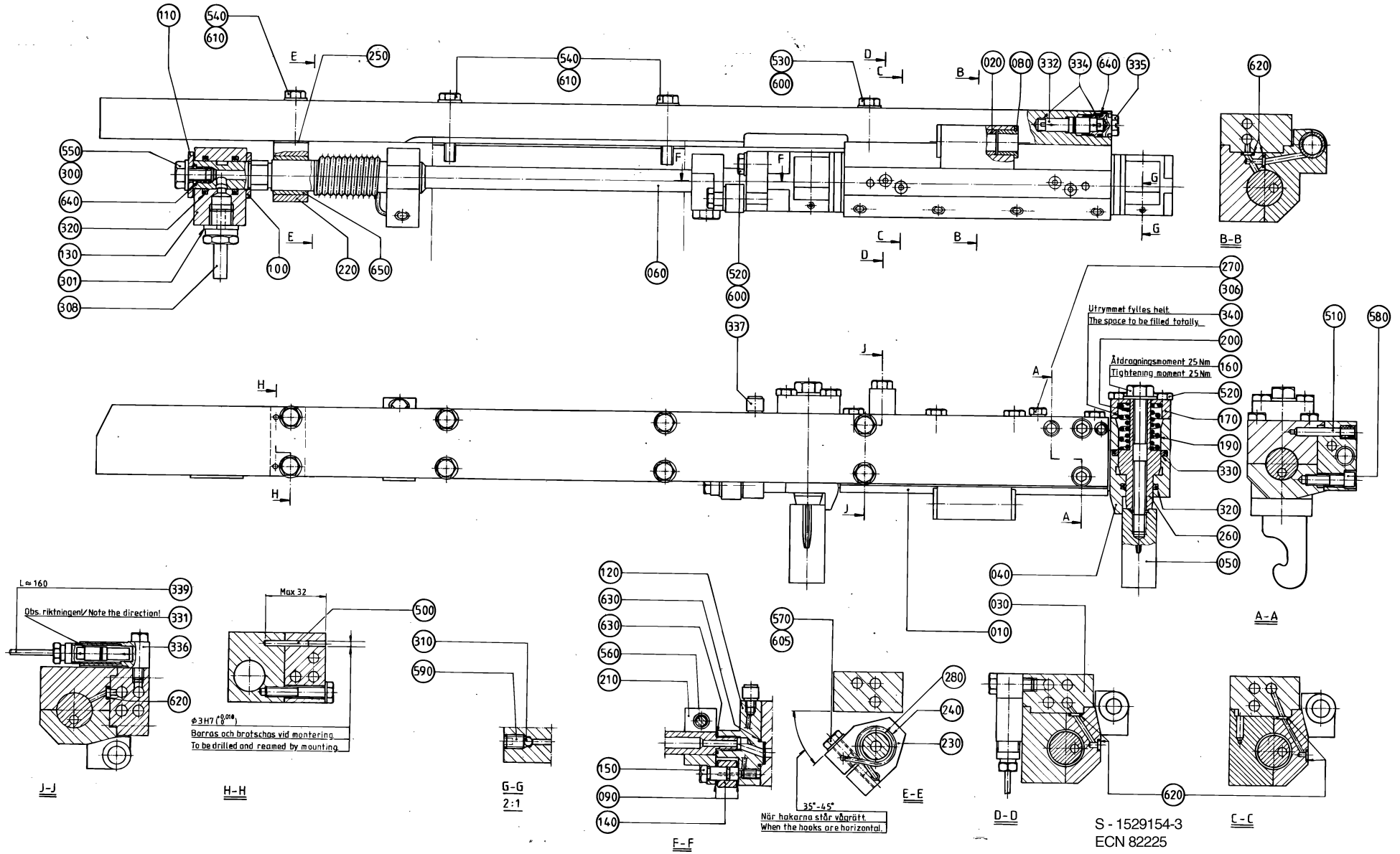
Utrymmet fylles helt.
The space to be filled totally.
Åtdragningsmoment 25 Nm
Tightening moment 25 Nm
Obs. riktningen! / Note the direction!
Max 32
Borras och brotschas vid montering.
To be drilled and reamed by mounting.
35°-45°
När hakarna står vågrätt.
When the hooks are horizontal.
B-B
A-A
J-J
H-H
G-G
2:1
E-E
F-F
D-D
C-C
S - 1529154-3
ECN 82225

ECM: 101889 - 20011203
Group number: 1529154-0100
Assembly Drawing: 1529154-3_1_AA

Issue: 20020822

Pos	Part No	SP	UN	Qty	Description	Page No
TBA 0200B OR TBA 0250B						
010	B441710-0000	A		1	BEARING HOUSING	
	312105-0376	-		*8*	*SCREW M6S ISO 4014 M6X35 A480*	
020	255697-0002	B		1	INTERMEDIATE PIPE	
030	B441350-0000	A		1	CARRIER LEFT	
	312911-0117	-		*2*	*THREADED INSERTS M6X1,0D*	
TBA 0200S						
010	B441712-0000	A		1	BEARING HOUSING	
	312105-0376	-		*8*	*SCREW M6S ISO 4014 M6X35 A480*	
020	255697-0001	B		1	INTERMEDIATE PIPE	
030	B441350-0000	A		1	CARRIER LEFT	
	312911-0117	-		*2*	*THREADED INSERTS M6X1,0D*	
TWA 0200S						
010	B441712-0000	A		1	BEARING HOUSING	
	312105-0376	-		*8*	*SCREW M6S ISO 4014 M6X35 A480*	
020	255697-0001	B		1	INTERMEDIATE PIPE	
030	1529303-0000	A		1	CARRIER LEFT	
Common Parts						
040	441709-0000	B		1	CYLINDER	
050	978746-0000	A		2	CATCH	
060	B272500-0000	A		1	SHAFT	
	312911-0125	-		*1*	*THREADED INSERTS M8X1,0D*	
080	1517641-0000	A		2	FLANGE BUSHING	
090	256557-0001	A		2	WASHER	
100	256557-0002	A		1	WASHER	
110	256557-0003	A		1	WASHER	
120	441763-0000	A		1	CONNECTION LEFT	
130	441385-0000	A		1	HUB	
140	256576-0000	A		1	ROLL	
150	441764-0000	A		1	SHAFT	
160	257249-0000	A		2	SCREW	
170	257250-0000	-		2	LID	
190	490974-0000	A		2	COMPRESSION SPRING	
200	490975-0000	A		2	COMPRESSION SPRING	
210	272489-0000	-		1	CLAMP LEFT	
220	272502-0000	A		1	BRACKET LEFT	
230	272503-0000	-		1	CLAMPING PIECE	
240	456312-0000	A		1	TORSION SPRING LEFT	
250	272506-0000	-		2	LACE	
260	272644-0000	A		2	PISTON	
270	441355-0000	-		1	BLEEDING SCREW	
280	456320-0000	A		1	SLEEVE	
300	90005-0007	A		1	GASKET BOLT HEAD 8,7X14X1 MM M8	
301	315237-0110	A		1	WASHER,PL.RND.AL.13,5/18,H=1,5	
306	90005-0003	-		1	GASKET BOLT HEAD 6,7X11X1 MM M6	
308	90030-0065	A		1	PIPE CONNECTION	
310	90090-0005	A		4	BALL, D=3 MM	
320	90091-0089	A		4	ROD SEAL, GLIDORING 16X22X2,5 MM	
330	90091-0107	A		2	ROD SEAL, GLIDORING 25X32X2,7 MM	
331	90092-0052	-		1	METERING VALVE 10 MM3	
332	90092-0053	-		1	METERING VALVE 30 MM3	
334	90134-0042	-		2	SPACER DOSING VALVE	
335	90134-0045	-		1	PLUG M12X1	
336	90134-0047	-		1	CONNECTION FOR DOSING VALVE	
337	90134-0058	-		1	CONNECTION	
339	90166-0143	-	MM	160	TUBE 2,5 MM PA,TRANSP.	
340	90296-0068	-	G	25	GREASE UNIWAY LI 62 CARTRIDGE 400 GR.	
500	311103-0240	A		2	PARALLELL PIN, M6, 3X25 MM	
510	311103-0312	A		1	PARALLELL PIN, M6, 5X25 MM	
520	312105-0370	-		11	SCREW M6S ISO 4017 M6X20 A480	
530	312105-0374	-		2	SCREW M6S ISO 4014 M6X30 A480	
540	312105-0376	-		6	SCREW M6S ISO 4014 M6X35 A480	
550	312105-0447	-		1	SCREW M6S ISO 4017 M8X12 A480	
560	312105-0453	-		1	SCREW M6S ISO 4017 M8X25 A480	
570	312105-0455	-		1	SCREW M6S ISO 4017 M8X30 A480	
580	312115-0371	-		2	SCREW HEX.SOCK.HD.MC6S-TT 6X22 A480	
590	90287-0128	-		4	SCREW, SOCK.SET DOGPOINT M4X6	
600	315105-0153	-		5	WASHER PLAIN, BRB, 6,4/12,H=1,5	
605	315105-0165	-		1	WASHER PLAIN, BRB, 8,4/16,H=1,5	
610	315115-0153	-		6	WASHER PLAIN, TBRB 6,4/12 H=3	
620	315202-0102	A		8	O-RING 4,1X1,6 MM	
630	315202-0106	A		2	O-RING 8,1X1,6 MM	
640	315202-0108	A		2	O-RING 10,1X1,6 MM	
650	321120-0132	A		1	BEARING BUSHING WITHOUT FL, 18X20X20 MM	

Machine Type | Group Description | Used-In | Group Number | Page No

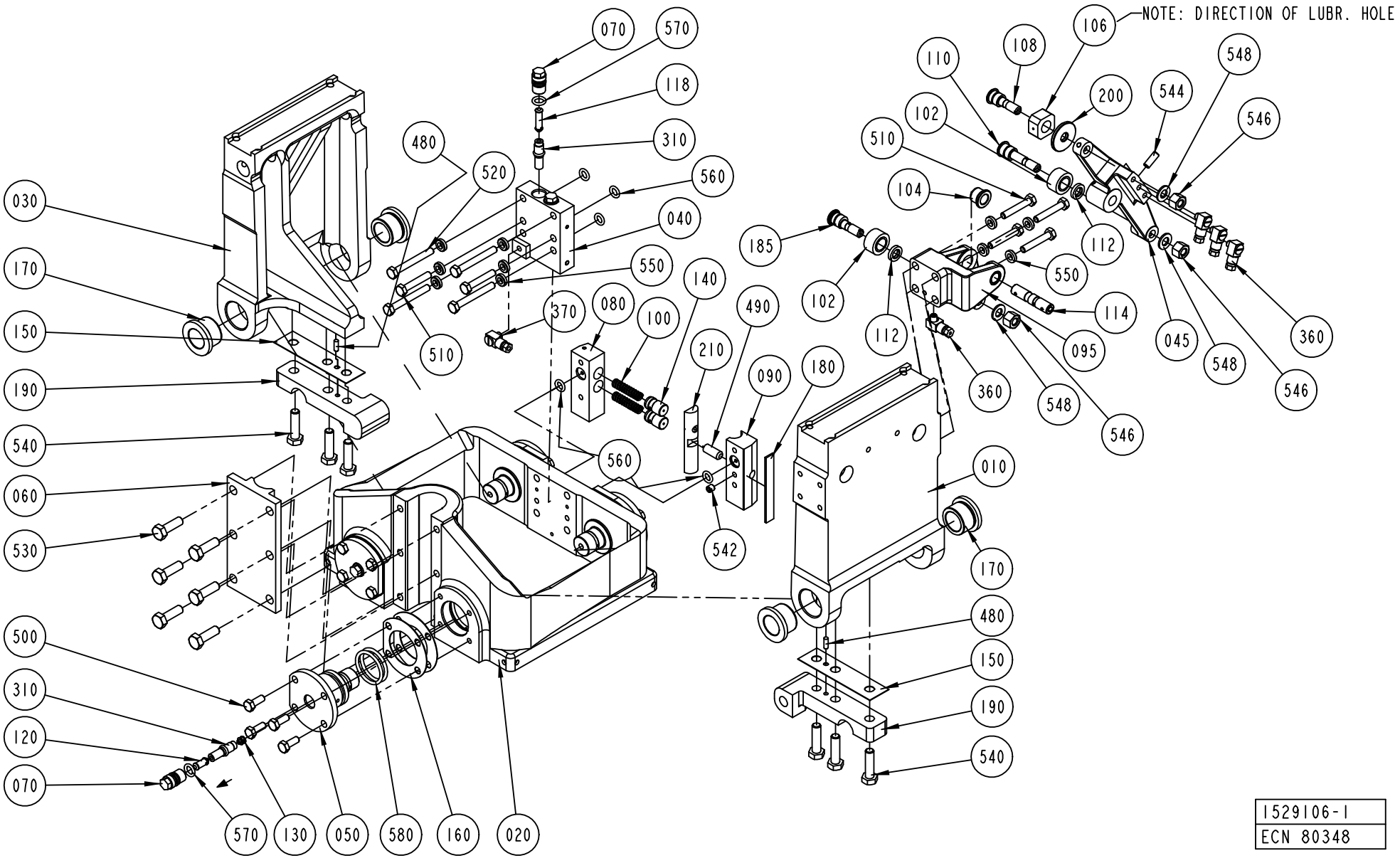
NOTE: DIRECTION OF LUBR. HOLE
070
570
118
310
560
040
550
140
490
210
090
180
080
100
370
480
520
510
030
170
150
190
540
060
530
500
310
120
070
570
130
050
580
160
020
542
560
010
170
480
150
190
540
106
108
110
102
510
104
185
102
112
200
544
548
546
550
114
095
360
548
546
112
045
548
360
546
1529106-1
ECN 80348

ECM: 101871 - 20011203
Group number: 1529106-0100
Assembly Drawing: 1529106-1_1_AA

Issue: 20020822

Pos	Part No	SP	UN	Qty	Description	Page No
Common Parts						
010	255609-0000	A		1	ARM CUTTING JAW	
020	B256834-0000	A		1	YOKE	
	312911-0118	*-*		*18*	*HELI-COIL M6X1,5D*	
	312911-0126	*-*		*6*	*HELI-COIL M8X1,5D*	
030	1529057-0000	A		1	ARM	
040	256953-0000	A		1	BLOCK RIGHT	
045	272492-0000	B		1	ARM RIGHT	
050	272454-0000	A		4	PIVOT PIN	
060	256082-0000	A		1	CAP	
070	256829-0000	A		6	SCREW	
080	256870-0000	A		1	BRACKET	
090	491349-0000	A		1	BEARING SEAT	
095	272496-0000	B		1	BRACKET RIGHT	
100	20239-0000	A		2	COMPRESSION SPRING	
102	22475-0000	A		2	CURVE ROLLER	
104	1517641-0000	A		2	FLANGE BUSHING	
106	256628-0000	A		1	PIECE	
108	256629-0001	A		1	AXLE PIN	
110	256629-0003	A		1	AXLE PIN	
112	256704-0000	A		2	WASHER	
114	256710-0000	A		1	SHAFT	
118	256831-0001	A		2	SPACER	
120	256831-0002	A		4	SPACER	
130	256831-0003	A		4	SPACER	
140	256889-0000	A		2	PLUNGER	
150	256890-0000	-		2	LACE	
160	256891-0000	-		6	LACE	
170	257213-0000	A		4	BUSHING	
180	257317-0000	-		1	LACE	
185	271100-0000	A		1	DOWEL	
190	272415-0000	A		2	ARM	
200	441706-0000	A		1	WASHER	
210	491350-0000	A		1	SLIDER	
310	90092-0054	A		6	METERING VALVE 50 MM3	
360	90134-0058	-		4	CONNECTION	
370	90134-0068	-		1	CONNECTION	
480	311103-0268	-		2	PARALLELL PIN, M6, 4X12 MM	
490	311103-0401	-		1	PARALLELL PIN, M6, 8X20 MM	
500	312105-0368	-		16	SCREW M6S M6X16 A280	
510	312105-0376	-		6	SCREW M6S ISO 4014 M6X35 A480	
520	312105-0380	-		4	SCREW M6S ISO 4014 M6X50 A480	
530	312105-0453	-		6	SCREW M6S ISO 4017 M8X25 A480	
540	312105-0455	-		6	SCREW M6S ISO 4017 M8X30 A480	
542	312318-0360	-		1	SCREW HEX.SOCK.SET CUP P.MSK6SS6X6 SS	
544	312318-0368	-		1	SCREW SOCK.SET CUP P MSK6SS M6X16 A4	
546	312811-0318	-		3	NUT HEX.LOCK HELI COIL MID GRIP M8 SS	
548	315105-0165	-		3	WASHER PLAIN, BRB, 8,4/16,H=1,5	
550	315115-0153	-		10	WASHER PLAIN, TBRB 6,4/12 H=3	
560	315202-0206	A		5	O-RING 7,3X2,4 MM	
570	315202-0207	A		6	O-RING 8,3X2,4 MM	
580	315202-0219	A		8	O-RING 29,2X3 MM	

Machine Type | Group Description | Used-In | Group Number | Page No

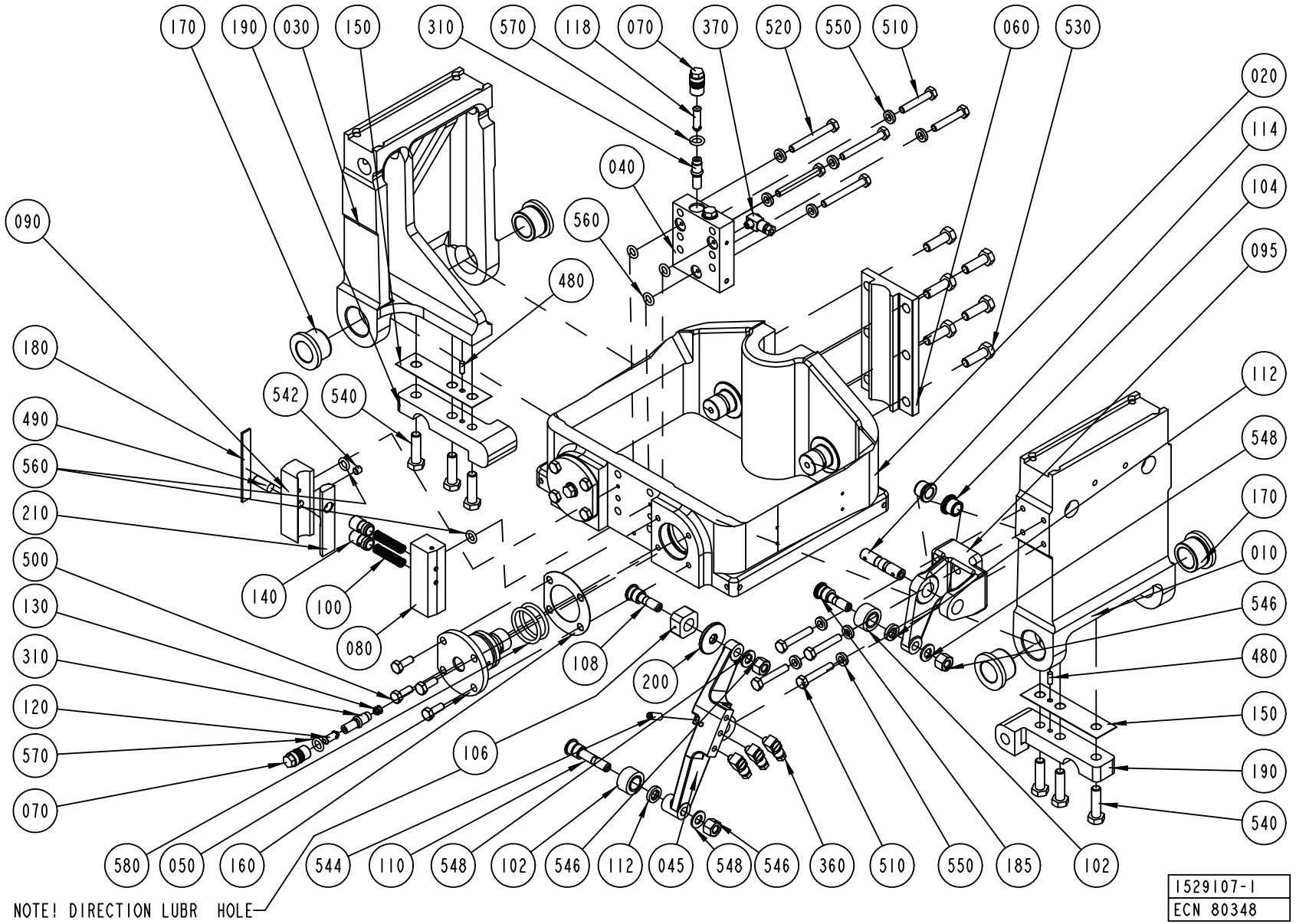
170
190
030
150
310
570
118
070
370
520
550
510
060
530
020
114
104
095
040
560
480
090
180
542
540
490
560
210
500
130
310
120
570
070
140
100
080
108
200
106
112
548
170
010
546
480
150
190
540
580
050
160
544
110
548
102
546
112
045
548
546
360
510
550
185
102
NOTE! DIRECTION LUBR HOLE
1529107-1
ECN 80348

ECM: 101870 - 20011203
Group number: 1529107-0100
Assembly Drawing: 1529107-1_1_AA

Issue: 20020822

Pos	Part No	SP	UN	Qty	Description	Page No
Common Parts						
010	255609-0000	A		1	ARM CUTTING JAW	
020	B256834-0000	A		1	YOKE	
	312911-0118	*-*		*18*	*HELI-COIL M6X1,5D*	
	312911-0126	*-*		*6*	*HELI-COIL M8X1,5D*	
030	1529057-0000	A		1	ARM	
040	256954-0000	A		1	BLOCK LEFT	
045	272493-0000	B		1	ARM LEFT	
050	272454-0000	A		4	PIVOT PIN	
060	256082-0000	A		1	CAP	
070	256829-0000	A		6	SCREW	
080	256870-0000	A		1	BRACKET	
090	491349-0000	A		1	BEARING SEAT	
095	272497-0000	B		1	BRACKET LEFT	
100	20239-0000	A		2	COMPRESSION SPRING	
102	22475-0000	A		2	CURVE ROLLER	
104	1517641-0000	A		2	FLANGE BUSHING	
106	256628-0000	A		1	PIECE	
108	256629-0001	A		1	AXLE PIN	
110	256629-0003	A		1	AXLE PIN	
112	256704-0000	A		2	WASHER	
114	256710-0000	A		1	SHAFT	
118	256831-0001	A		2	SPACER	
120	256831-0002	A		4	SPACER	
130	256831-0003	A		4	SPACER	
140	256889-0000	A		2	PLUNGER	
150	256890-0000	-		2	LACE	
160	256891-0000	-		6	LACE	
170	257213-0000	A		4	BUSHING	
180	257317-0000	-		1	LACE	
185	271100-0000	A		1	DOWEL	
190	272415-0000	A		2	ARM	
200	441706-0000	A		1	WASHER	
210	491350-0000	A		1	SLIDER	
310	90092-0054	A		6	METERING VALVE 50 MM3	
360	90134-0058	-		4	CONNECTION	
370	90134-0068	-		1	CONNECTION	
480	311103-0268	-		2	PARALLELL PIN, M6, 4X12 MM	
490	311103-0401	-		1	PARALLELL PIN, M6, 8X20 MM	
500	312105-0368	-		16	SCREW M6S M6X16 A280	
510	312105-0376	-		6	SCREW M6S ISO 4014 M6X35 A480	
520	312105-0380	-		4	SCREW M6S ISO 4014 M6X50 A480	
530	312105-0453	-		6	SCREW M6S ISO 4017 M8X25 A480	
540	312105-0455	-		6	SCREW M6S ISO 4017 M8X30 A480	
542	312318-0360	-		1	SCREW HEX.SOCK.SET CUP P.MSK6SS6X6 SS	
544	312318-0368	-		1	SCREW SOCK.SET CUP P MSK6SS M6X16 A4	
546	312811-0318	-		3	NUT HEX.LOCK HELI COIL MID GRIP M8 SS	
548	315105-0165	-		3	WASHER PLAIN, BRB, 8,4/16,H=1,5	
550	315115-0153	-		10	WASHER PLAIN, TBRB 6,4/12 H=3	
560	315202-0206	A		5	O-RING 7,3X2,4 MM	
570	315202-0207	A		6	O-RING 8,3X2,4 MM	
580	315202-0219	A		8	O-RING 29,2X3 MM	

Machine Type | Group Description | Used-In | Group Number | Page No

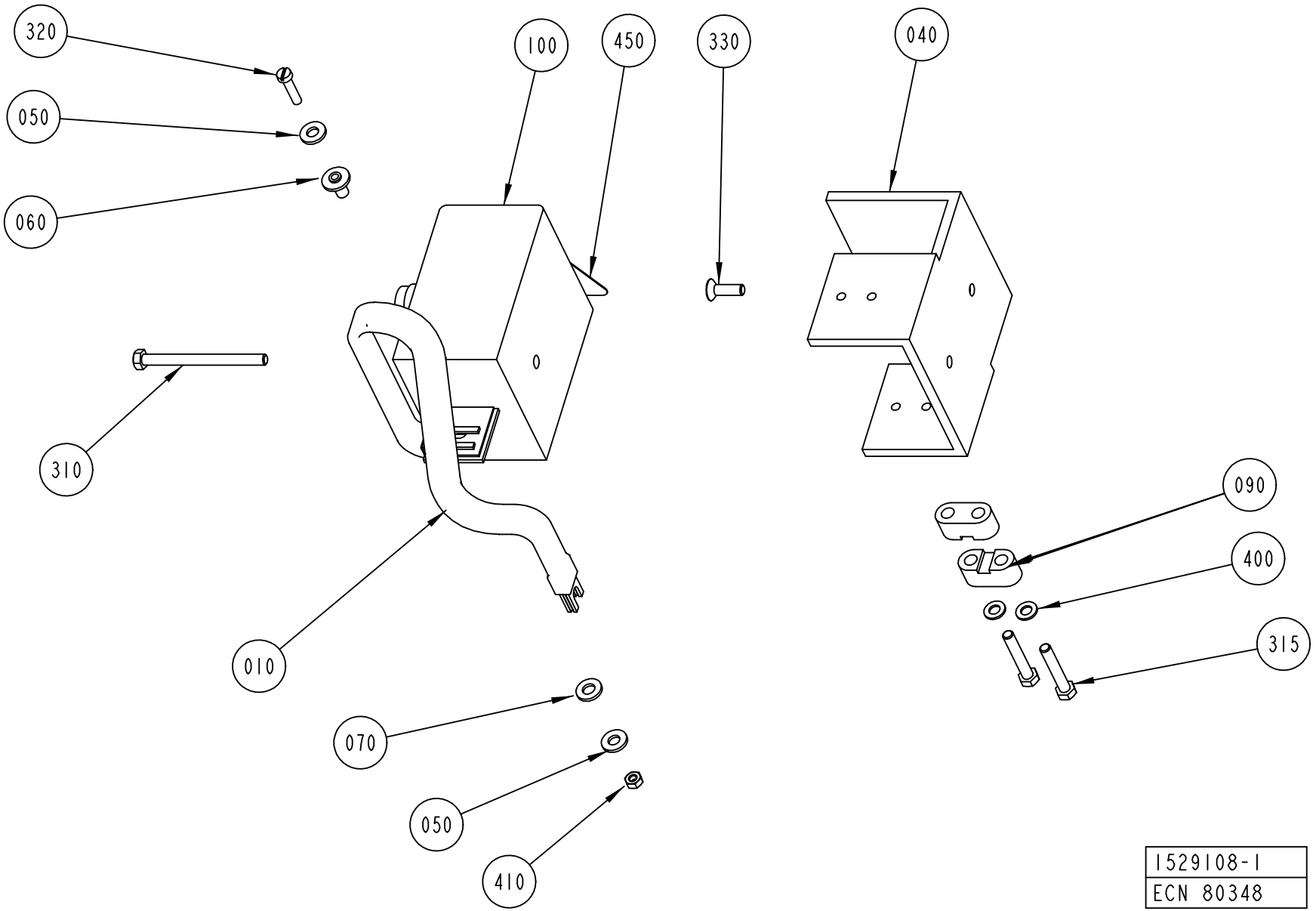

1529108-1
ECN 80348

ECM: 101843 - 20011203
Group number: 1529108-0100
Assembly Drawing: 1529108-1_1_AA

Issue: 20020822

Pos	Part No	SP	UN	Qty	Description	Page No
0200B OR 0250B						
100	67379-0114	A		1	IMPEDANCE TRANSFORMER	
0200S						
100	67379-0105	A		1	IMPEDANCE TRANSFORMER	
Common Parts						
010	571871-0000	A		1	BUSBAR,RIGHT	
040	579944-0000	-		1	HOLDER	
050	28509-0000	A		2	WASHER	
060	32544-0000	A		1	INSULATION NUT	
070	32079-0000	A		1	WASHER	
090	464368-0000	A		2	CRAMP	
310	312101-0343	-		1	SCREW M6S M5X60 FZB	
315	312105-0335	-		2	SCREW M6S ISO 4014 M5X30 A480	
320	312122-0294	-		1	SCREW SLOT.PAN HD. MCS 4X18 BR NP	
330	312155-0329	-		1	SCREW HEX.SOCK.COUNT.MF6S M5X16 A280	
400	315105-0146	-		2	WASHER PLAIN, BRB, 5,3/10,H=1	
410	312602-0312	-		1	HEXAGON NUT, M6M M4 BR	
450	90194-0016	-		1	SIGN, FLASH, ELECTRIC EQUIPMENT SYMBOL	

Pos	Part No	SP	UN	Qty	Description	Page No

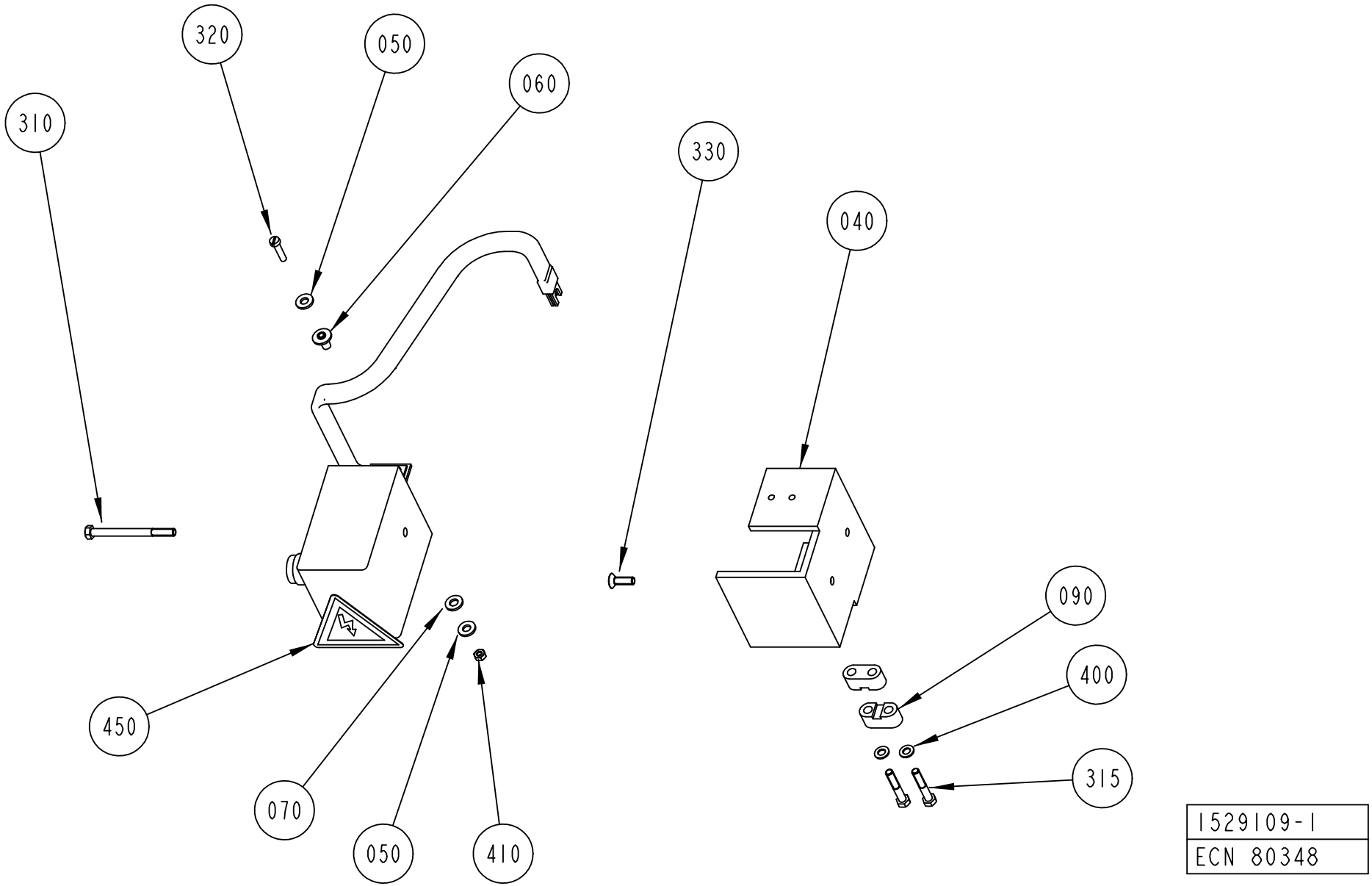
320
050
060
310
330
040
090
400
315
450
070
050
410
1529109-1
ECN 80348

Pos	Part No	SP	UN	Qty	Description	Page No
0200B OR 0250B						
100	67379-0114	A		1	IMPEDANCE TRANSFORMER	
0200S						
100	67379-0105	A		1	IMPEDANCE TRANSFORMER	
Common Parts						
010	571872-0000	A		1	BUSBAR,LEFT	
040	579944-0000	-		1	HOLDER	
050	28509-0000	A		2	WASHER	
060	32544-0000	A		1	INSULATION NUT	
070	32079-0000	A		1	WASHER	
090	464368-0000	A		2	CRAMP	
310	312101-0343	-		1	SCREW M6S M5X60 FZB	
315	312105-0335	-		2	SCREW M6S ISO 4014 M5X30 A480	
320	312122-0294	-		1	SCREW SLOT.PAN HD. MCS 4X18 BR NP	
330	312155-0329	-		1	SCREW HEX.SOCK.COUNT.MF6S M5X16 A280	
400	315105-0146	-		2	WASHER PLAIN, BRB, 5,3/10,H=1	
410	312602-0312	-		1	HEXAGON NUT, M6M M4 BR	
450	90194-0016	-		1	SIGN, FLASH, ELECTRIC EQUIPMENT SYMBOL	

Pos	Part No	SP	UN	Qty	Description	Page No

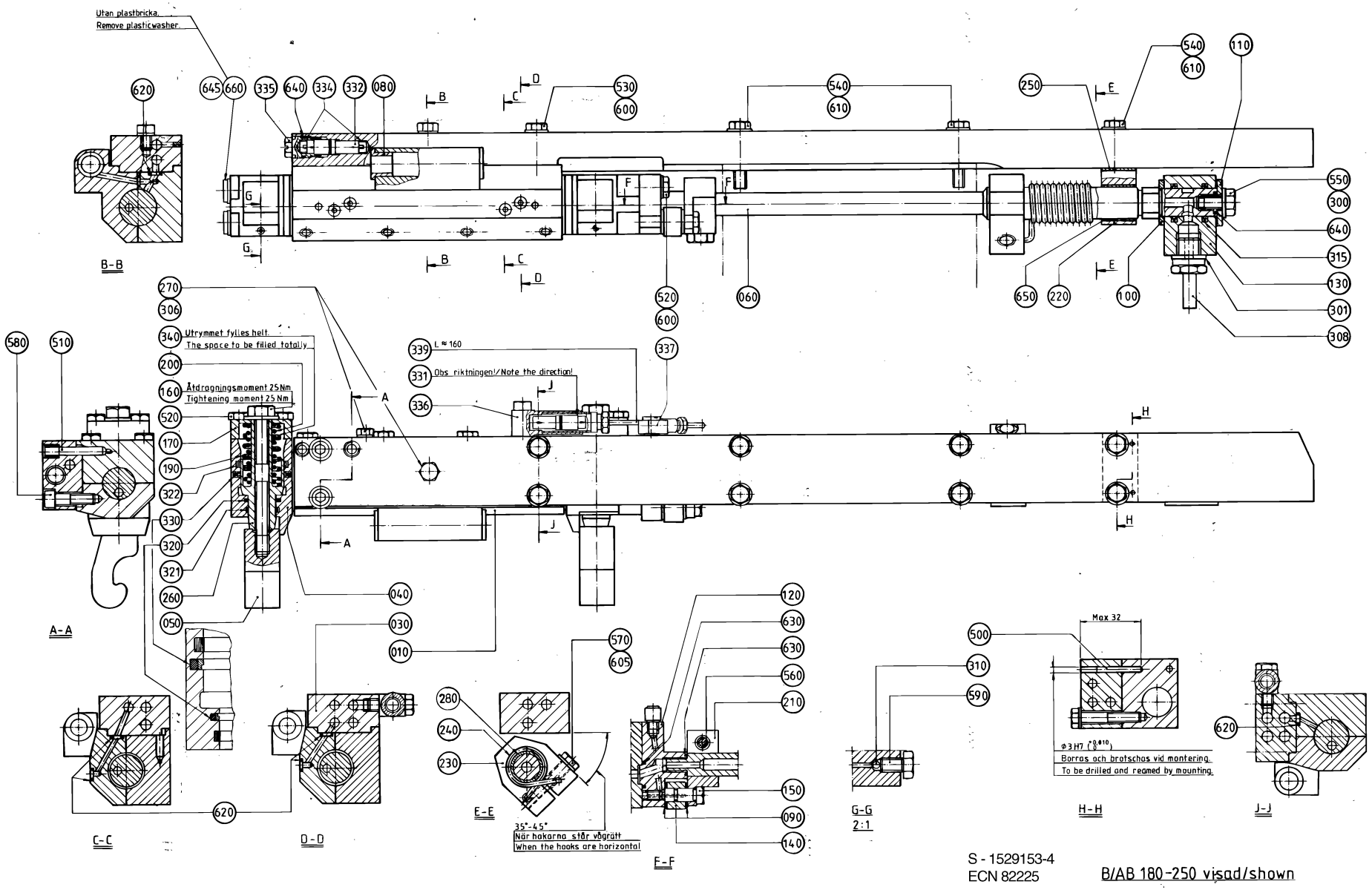
Utan plastbricka.
Remove plasticwasher.
Utrymmet fylles helt.
The space to be filled totally.
Åtdragningsmoment 25 Nm
Tightening moment 25 Nm
L ≈ 160
Obs riktningen!/Note the direction!
B-B
A-A
C-C
D-D
E-E
F-F
G-G
2:1
H-H
J-J
35°-45°
När hakarna står vågrätt
When the hooks are horizontal
Max 32
Borras och brotschas vid montering.
To be drilled and reamed by mounting.
S - 1529153-4
ECN 82225
B/AB 180-250 visad/shown

ECM: 101903 - 20011203
Group number: 1529153-0200
Assembly Drawing: 1529153-4_1_AA

Issue: 20020822

Pos	Part No	SP	UN	Qty	Description	Page No
TBA 0200B OR TBA 0250B						
010	B441710-0000	A		1	BEARING HOUSING	
	312105-0376	-		*8*	*SCREW M6S ISO 4014 M6X35 A480*	
030	491297-0000	A		1	CARRIER RIGHT	
TBA 0200S						
010	B441712-0000	A		1	BEARING HOUSING	
	312105-0376	-		*8*	*SCREW M6S ISO 4014 M6X35 A480*	
030	491297-0000	A		1	CARRIER RIGHT	
TWA 0200S						
010	B441712-0000	A		1	BEARING HOUSING	
	312105-0376	-		*8*	*SCREW M6S ISO 4014 M6X35 A480*	
030	594948-0000	A		1	CARRIER RIGHT	
Common Parts						
040	490940-0000	B		1	CYLINDER	
050	978746-0000	A		2	CATCH	
060	B272500-0000	A		1	SHAFT	
	312911-0125	-		*1*	*THREADED INSERTS M8X1,0D*	
080	1517641-0000	A		2	FLANGE BUSHING	
090	256557-0001	A		2	WASHER	
100	256557-0002	A		1	WASHER	
110	256557-0003	A		1	WASHER	
120	441762-0000	A		1	CONNECTION RIGHT	
130	441385-0000	A		1	HUB	
140	256576-0000	A		1	ROLL	
150	441764-0000	A		1	SHAFT	
160	257249-0000	A		2	SCREW	
170	257250-0000	-		2	LID	
190	490942-0000	A		2	COMPRESSION SPRING	
200	490943-0000	A		2	COMPRESSION SPRING	
210	272488-0000	-		1	CLAMP RIGHT	
220	272501-0000	A		1	BRACKET RIGHT	
230	272503-0000	-		1	CLAMPING PIECE	
240	456311-0000	A		1	TORSION SPRING RIGHT	
250	272506-0000	-		2	LACE	
260	751743-0000	A		2	PISTON	
270	441355-0000	-		2	BLEEDING SCREW	
280	751769-0000	A		2	SLEEVE	
300	315237-0107	A		1	WASHER,PL.RND.AL.8/14,H=1	
301	315237-0110	A		1	WASHER,PL.RND.AL.13,5/18,H=1,5	
306	315237-0106	-		2	WASHER,PL.RND.AL.6/10,H=1	
308	90030-0065	A		1	PIPE CONNECTION	
310	90090-0005	A		4	BALL, D=3 MM	
315	90091-0089	A		2	ROD SEAL, GLIDORING 16X22X2,5 MM	
320	90091-0214	A		2	ROD SEAL, GLIDORING 16X20,9X2,2 MM	
321	90091-0162	A		2	WEAR RING 16X19X3,2 MM	
322	90091-0170	A		2	WEAR RING 25X30X4,2 MM	
330	90091-0215	A		2	ROD SEAL, GLIDORING 25X32,5X3,2 MM	
331	90092-0052	-		1	METERING VALVE 10 MM3	
332	90092-0053	-		1	METERING VALVE 30 MM3	
334	90134-0042	-		2	SPACER DOSING VALVE	
335	90134-0045	-		1	PLUG M12X1	
336	90134-0047	-		1	CONNECTION FOR DOSING VALVE	
337	90134-0058	-		1	CONNECTION	
339	90166-0143	-	MM	160	TUBE 2,5 MM PA,TRANSP.	
340	90296-0068	-	G	25	GREASE UNIWAY LI 62 CARTRIDGE 400 GR.	
500	311103-0242	A		2	PARALLELL PIN, M6, 3X30 MM	
510	311103-0312	A		1	PARALLELL PIN, M6, 5X25 MM	
520	312105-0370	-		11	SCREW M6S ISO 4017 M6X20 A480	
530	312105-0374	-		2	SCREW M6S ISO 4014 M6X30 A480	
540	312105-0376	-		6	SCREW M6S ISO 4014 M6X35 A480	
550	312105-0447	-		1	SCREW M6S ISO 4017 M8X12 A480	
560	312105-0453	-		1	SCREW M6S ISO 4017 M8X25 A480	
570	312105-0455	-		1	SCREW M6S ISO 4017 M8X30 A480	
580	312115-0371	-		2	SCREW HEX.SOCK.HD.MC6S-TT 6X22 A480	
590	491555-0000	A		4	SCREW	
600	315105-0153	-		5	WASHER PLAIN, BRB, 6,4/12,H=1,5	
605	315105-0165	-		1	WASHER PLAIN, BRB, 8,4/16,H=1,5	
610	315115-0153	-		6	WASHER PLAIN, TBRB 6,4/12 H=3	
620	315202-0102	A		8	O-RING 4,1X1,6 MM	
630	315202-0106	A		2	O-RING 8,1X1,6 MM	
640	315202-0108	A		2	O-RING 10,1X1,6 MM	
645	315234-0109	A		2	WASHER,PL.RND.CU.10,3/13,5 H=1,0	
650	321120-0132	A		1	BEARING BUSHING WITHOUT FL, 18X20X20 MM	
660	342713-0209	-		2	PLUG, EXT THREAD HEX SOCKET 8638-00-180	

Machine Type	Group Description	Used-In	Group Number	Page No

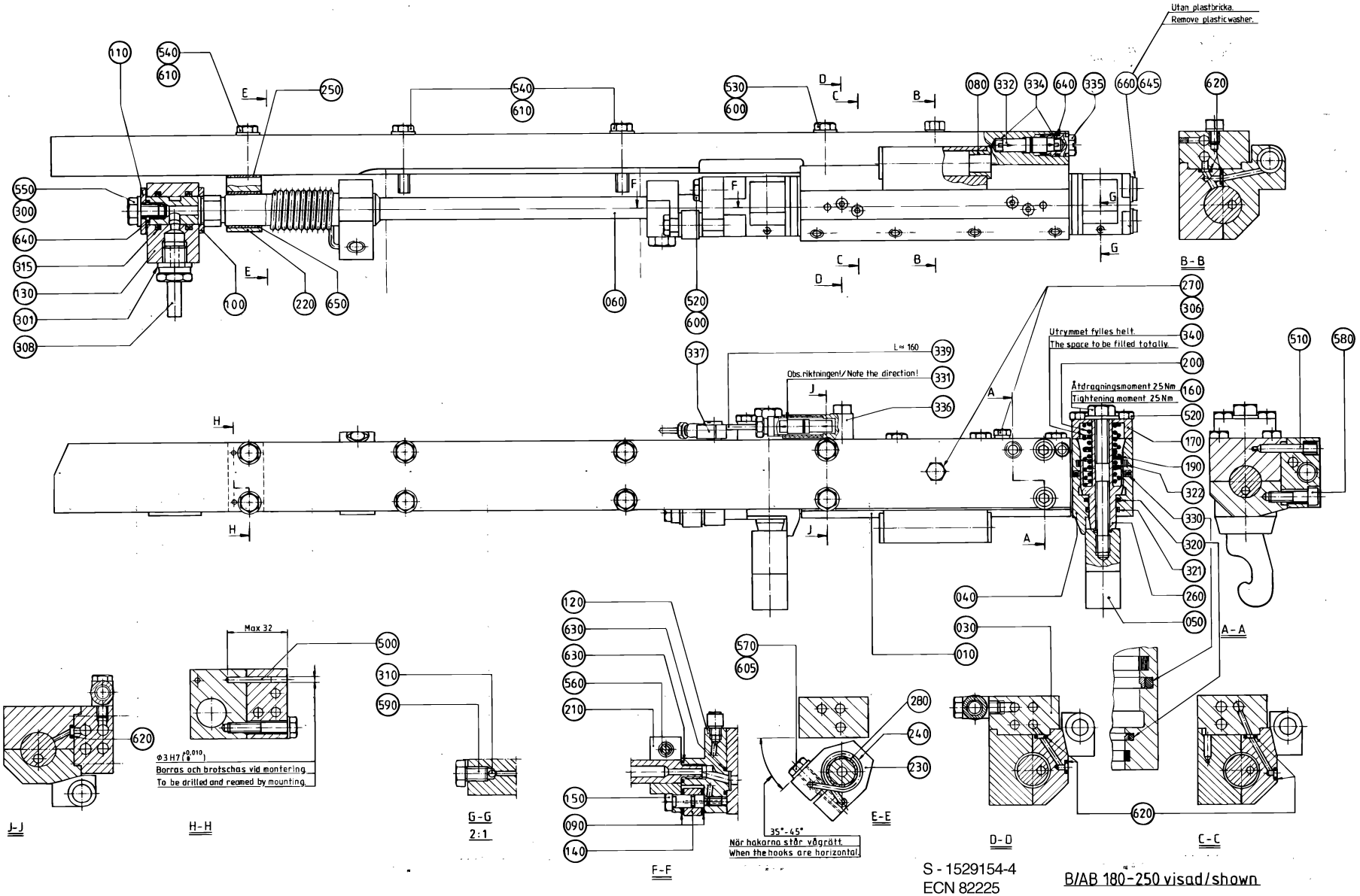

S - 1529154-4
ECN 82225

B/AB 180-250 visad/shown

ECM: 101895 - 20011203
Group number: 1529154-0200
Assembly Drawing: 1529154-4_1_AA

Issue: 20020822

Pos	Part No	SP	UN	Qty	Description	Page No
TBA 0200B OR TBA 0250B						
010	B441710-0000	A		1	BEARING HOUSING	
	312105-0376	-		*8*	*SCREW M6S ISO 4014 M6X35 A480*	
030	491298-0000	A		1	CARRIER LEFT	
TBA 0200S						
010	B441712-0000	A		1	BEARING HOUSING	
	312105-0376	-		*8*	*SCREW M6S ISO 4014 M6X35 A480*	
030	491298-0000	A		1	CARRIER LEFT	
TWA 0200S						
010	B441712-0000	A		1	BEARING HOUSING	
	312105-0376	-		*8*	*SCREW M6S ISO 4014 M6X35 A480*	
030	594949-0000	A		1	CARRIER LEFT	
Common Parts						
040	490940-0000	B		1	CYLINDER	
050	978746-0000	A		2	CATCH	
060	B272500-0000	A		1	SHAFT	
	312911-0125	-		*1*	*THREADED INSERTS M8X1,0D*	
080	1517641-0000	A		2	FLANGE BUSHING	
090	256557-0001	A		2	WASHER	
100	256557-0002	A		1	WASHER	
110	256557-0003	A		1	WASHER	
120	441763-0000	A		1	CONNECTION LEFT	
130	441385-0000	A		1	HUB	
140	256576-0000	A		1	ROLL	
150	441764-0000	A		1	SHAFT	
160	257249-0000	A		2	SCREW	
170	257250-0000	-		2	LID	
190	490942-0000	A		2	COMPRESSION SPRING	
200	490943-0000	A		2	COMPRESSION SPRING	
210	272489-0000	-		1	CLAMP LEFT	
220	272502-0000	A		1	BRACKET LEFT	
230	272503-0000	-		1	CLAMPING PIECE	
240	456312-0000	A		1	TORSION SPRING LEFT	
250	272506-0000	-		2	LACE	
260	751743-0000	A		2	PISTON	
270	441355-0000	-		2	BLEEDING SCREW	
280	751769-0000	A		2	SLEEVE	
300	315237-0107	A		1	WASHER,PL.RND.AL.8/14,H=1	
301	315237-0110	A		1	WASHER,PL.RND.AL.13,5/18,H=1,5	
306	315237-0106	-		2	WASHER,PL.RND.AL.6/10,H=1	
308	90030-0065	A		1	PIPE CONNECTION	
310	90090-0005	A		4	BALL, D=3 MM	
315	90091-0089	A		2	ROD SEAL, GLIDORING 16X22X2,5 MM	
320	90091-0214	A		2	ROD SEAL, GLIDORING 16X20,9X2,2 MM	
321	90091-0162	A		2	WEAR RING 16X19X3,2 MM	
322	90091-0170	A		2	WEAR RING 25X30X4,2 MM	
330	90091-0215	A		2	ROD SEAL, GLIDORING 25X32,5X3,2 MM	
331	90092-0052	-		1	METERING VALVE 10 MM3	
332	90092-0053	-		1	METERING VALVE 30 MM3	
334	90134-0042	-		2	SPACER DOSING VALVE	
335	90134-0045	-		1	PLUG M12X1	
336	90134-0047	-		1	CONNECTION FOR DOSING VALVE	
337	90134-0058	-		1	CONNECTION	
339	90166-0143	-	MM	160	TUBE 2,5 MM PA,TRANSP.	
340	90296-0068	-	G	25	GREASE UNIWAY LI 62 CARTRIDGE 400 GR.	
500	311103-0242	A		2	PARALLELL PIN, M6, 3X30 MM	
510	311103-0312	A		1	PARALLELL PIN, M6, 5X25 MM	
520	312105-0370	-		11	SCREW M6S ISO 4017 M6X20 A480	
530	312105-0374	-		2	SCREW M6S ISO 4014 M6X30 A480	
540	312105-0376	-		6	SCREW M6S ISO 4014 M6X35 A480	
550	312105-0447	-		1	SCREW M6S ISO 4017 M8X12 A480	
560	312105-0453	-		1	SCREW M6S ISO 4017 M8X25 A480	
570	312105-0455	-		1	SCREW M6S ISO 4017 M8X30 A480	
580	312115-0371	-		2	SCREW HEX.SOCK.HD.MC6S-TT 6X22 A480	
590	491555-0000	A		4	SCREW	
600	315105-0153	-		5	WASHER PLAIN, BRB, 6,4/12,H=1,5	
605	315105-0165	-		1	WASHER PLAIN, BRB, 8,4/16,H=1,5	
610	315115-0153	-		6	WASHER PLAIN, TBRB 6,4/12 H=3	
620	315202-0102	A		8	O-RING 4,1X1,6 MM	
630	315202-0106	A		2	O-RING 8,1X1,6 MM	
640	315202-0108	A		2	O-RING 10,1X1,6 MM	
645	315234-0109	A		2	WASHER,PL.RND.CU.10,3/13,5 H=1,0	
650	321120-0132	A		1	BEARING BUSHING WITHOUT FL, 18X20X20 MM	
660	342713-0209	-		2	PLUG, EXT THREAD HEX SOCKET 8638-00-180	

Machine Type | Group Description | Used-In | Group Number | Page No

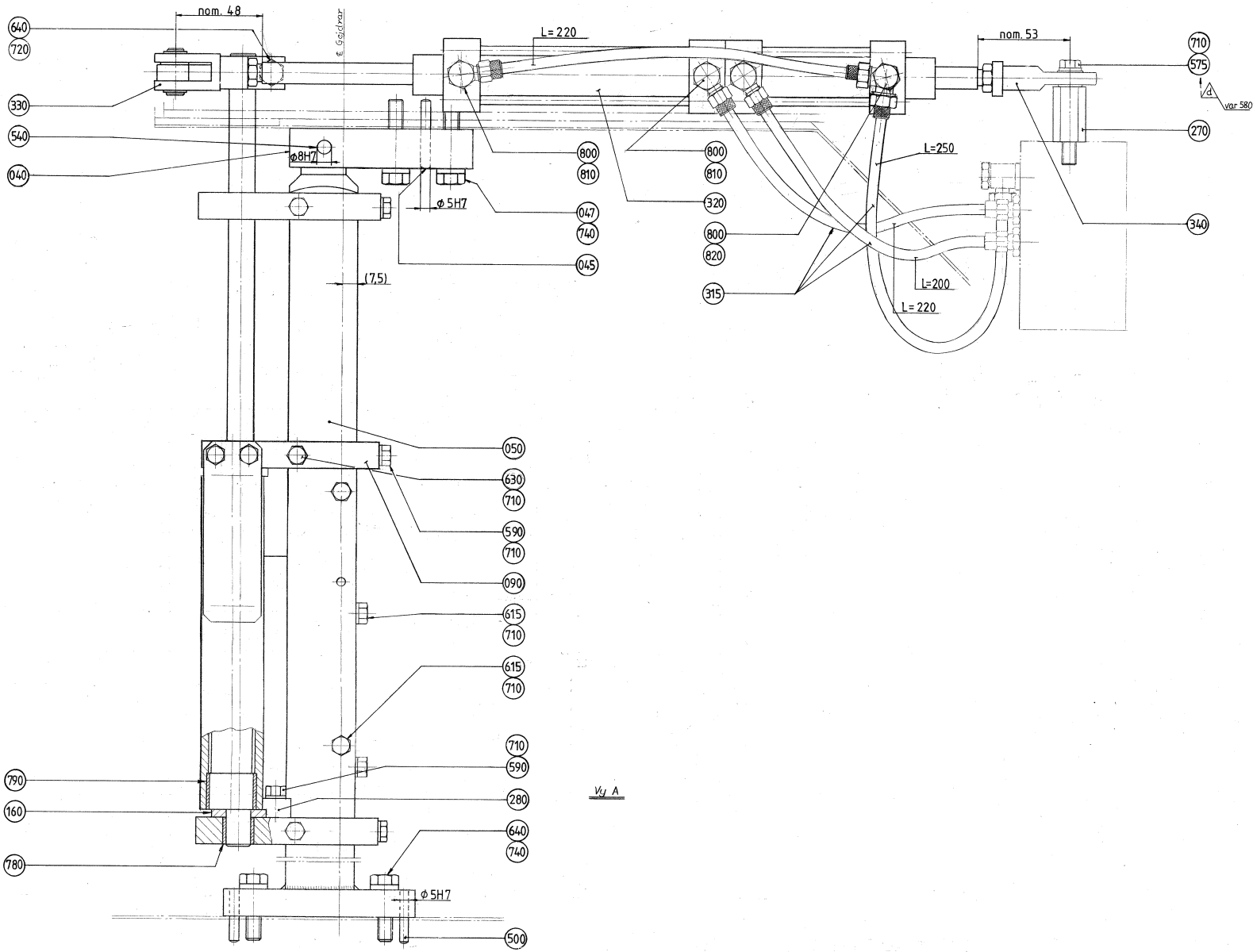
nom. 48
L=220
nom. 53
640
720
330
540
040
ø8H7
ø 5H7
800
810
047
740
045
(7,5)
800
810
320
800
820
315
L=250
L=200
L=220
710
575
270
340
var 580
050
630
710
590
710
090
615
710
615
710
710
590
790
160
280
640
740
780
ø 5H7
500
Vy A

ECM: 104254 - 20020315
Group number: 1529346-0100
Assembly Drawing: 1529346-1_1_AA

Issue: 20020822

Pos	Part No	SP	UN	Qty	Description	Page No
TBA 0200B						
010	456760-0010	A		1	FOLDING FLAP CAM 200B & 125S	
020	272640-0005	A		1	COUNTER CAM	
TBA 0200S						
010	456760-0003	A		1	FOLDING FLAP CAM 200S	
020	272640-0009	A		1	COUNTER CAM	
TBA 0250B						
010	456760-0011	-		1	FOLDING FLAP CAM 250B	
020	272640-0002	A		1	COUNTER CAM	
TWA 0200S						
010	1360633-0000	A		1	FOLDING FLAP CAM 200S	
020	1360634-0000	A		1	COUNTER CAM	
Common Parts						
040	256707-0000	-		1	BRACKET	
045	311103-0316	A		2	PARALLELL PIN, M6, 5X35 MM	
047	312105-0459	-		2	SCREW M6S ISO 4014 M8X40 A480	
050	272641-0000	-		1	PILLAR	
070	272654-0000	A		1	ECCENTRIC SHAFT	
080	272429-0000	A		1	ARM	
090	272491-0000	-		3	BRACKET	
110	272645-0000	A		1	RAIL	
160	256621-0000	A		2	WASHER	
225	256705-0000	A		6	LACE	
255	257334-0000	A		3	LEAF SPRING	
270	271132-0000	-		1	SPACER	
280	271284-0000	-		1	BLOCKING PIECE	
290	978184-0000	-		1	STOPPER	
300	978185-0000	-		1	SHIM	
315	90166-0132	B	MM	890	TUBE 6 MM PA,TRANSP.	
320	90450-0096	A		1	CYLINDER	
330	90239-0357	A		1	ROD END,CLEVIS WITH AXLE M10X1,25	
340	90239-0405	A		1	ROD END,BALL JOINT EYE,MINI-ISO M10X1,25	
500	311103-0314	-		2	PARALLELL PIN, M6, 5X30 MM	
520	311103-0320	-		2	PARALLELL PIN, CP, M6, 5X45 MM	
540	311103-0409	-		1	PARALLELL PIN, M6, 8X40 MM	
575	312105-0368	-		3	SCREW M6S M6X16 A280	
590	312105-0372	-		5	SCREW M6S ISO 4017 M6X25 A480	
615	312105-0379	-		5	SCREW M6S ISO 4014 M6X45 A480	
630	312105-0384	-		3	SCREW M6S ISO 4014 M6X70 A480	
640	312105-0455	-		3	SCREW M6S ISO 4017 M8X30 A480	
650	312115-0453	-		1	SCREW MC6S M8X25 A280	
710	315105-0153	-		16	WASHER PLAIN, BRB, 6,4/12,H=1,5	
720	315105-0165	-		3	WASHER PLAIN, BRB, 8,4/16,H=1,5	
740	315115-0165	-		4	WASHER PLAIN, TBRB 8,4/16 H=3	
750	315233-0109	A		1	WASHER PL.RND.NYL.10,3/14,H=1	
760	315742-0102	-		2	COLLAR, 6/16, H=8	
770	321120-0098	A		1	BEARING BUSHING WITHOUT FLANG,10/12X8	
780	321120-0118	A		3	BEARING BUSHING WITHOUT FL, 14X16X15 MM	
790	321120-0153	A		2	BEARING BUSHING WITHOUT FL, 24X27X20 MM	
800	342980-0113	A		5	BANJO-CONNECTION,RING 6/4-G1/8"	
810	342980-0303	A		3	BANJO-HOLLOW BOLT COUPL,EXT.THR.01-G1/8"	
820	342980-0313	A		1	BANJO-HOLLOW BOLT COUPL,EXT.THR.02-G1/8"	

Machine Type | Group Description | Used-In | Group Number | Page No

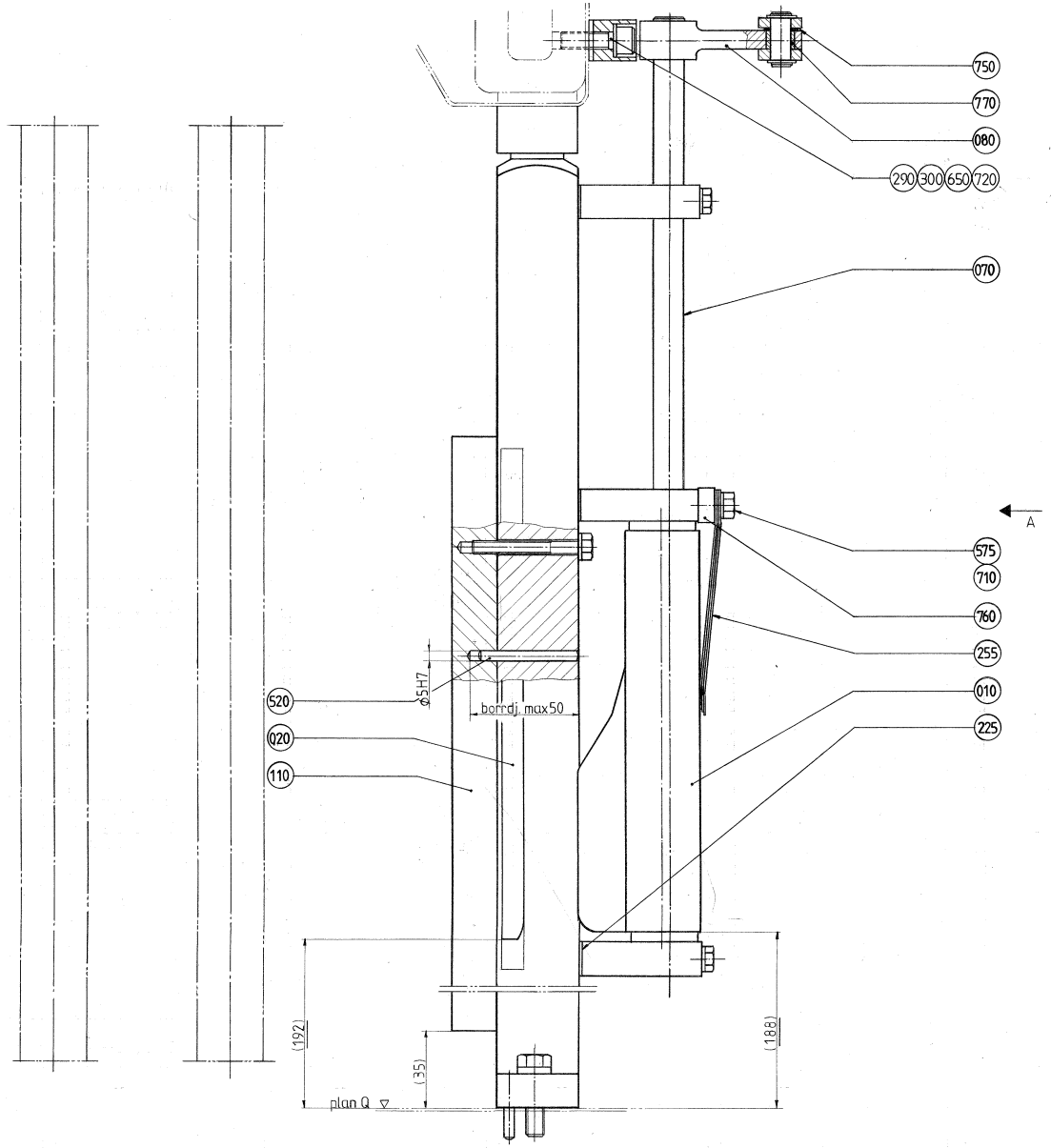
750
770
080
290
300
650
720
070
A
575
710
760
255
010
225
520
020
110
ΦSH7
borrdj. max50
(192)
(35)
plan Q
(188)

ECM: 104254 - 20020315
Group number: 1529346-0100
Assembly Drawing: 1529346-2_1_AA

Issue: 20020822

Pos	Part No	SP	UN	Qty	Description	Page No
TBA 0200B						
010	456760-0010	A		1	FOLDING FLAP CAM 200B & 125S	
020	272640-0005	A		1	COUNTER CAM	
TBA 0200S						
010	456760-0003	A		1	FOLDING FLAP CAM 200S	
020	272640-0009	A		1	COUNTER CAM	
TBA 0250B						
010	456760-0011	-		1	FOLDING FLAP CAM 250B	
020	272640-0002	A		1	COUNTER CAM	
TWA 0200S						
010	1360633-0000	A		1	FOLDING FLAP CAM 200S	
020	1360634-0000	A		1	COUNTER CAM	
Common Parts						
040	256707-0000	-		1	BRACKET	
045	311103-0316	A		2	PARALLELL PIN, M6, 5X35 MM	
047	312105-0459	-		2	SCREW M6S ISO 4014 M8X40 A480	
050	272641-0000	-		1	PILLAR	
070	272654-0000	A		1	ECCENTRIC SHAFT	
080	272429-0000	A		1	ARM	
090	272491-0000	-		3	BRACKET	
110	272645-0000	A		1	RAIL	
160	256621-0000	A		2	WASHER	
225	256705-0000	A		6	LACE	
255	257334-0000	A		3	LEAF SPRING	
270	271132-0000	-		1	SPACER	
280	271284-0000	-		1	BLOCKING PIECE	
290	978184-0000	-		1	STOPPER	
300	978185-0000	-		1	SHIM	
315	90166-0132	B	MM	890	TUBE 6 MM PA,TRANSP.	
320	90450-0096	A		1	CYLINDER	
330	90239-0357	A		1	ROD END,CLEVIS WITH AXLE M10X1,25	
340	90239-0405	A		1	ROD END,BALL JOINT EYE,MINI-ISO M10X1,25	
500	311103-0314	-		2	PARALLELL PIN, M6, 5X30 MM	
520	311103-0320	-		2	PARALLELL PIN, CP, M6, 5X45 MM	
540	311103-0409	-		1	PARALLELL PIN, M6, 8X40 MM	
575	312105-0368	-		3	SCREW M6S M6X16 A280	
590	312105-0372	-		5	SCREW M6S ISO 4017 M6X25 A480	
615	312105-0379	-		5	SCREW M6S ISO 4014 M6X45 A480	
630	312105-0384	-		3	SCREW M6S ISO 4014 M6X70 A480	
640	312105-0455	-		3	SCREW M6S ISO 4017 M8X30 A480	
650	312115-0453	-		1	SCREW MC6S M8X25 A280	
710	315105-0153	-		16	WASHER PLAIN, BRB, 6,4/12,H=1,5	
720	315105-0165	-		3	WASHER PLAIN, BRB, 8,4/16,H=1,5	
740	315115-0165	-		4	WASHER PLAIN, TBRB 8,4/16 H=3	
750	315233-0109	A		1	WASHER PL.RND.NYL.10,3/14,H=1	
760	315742-0102	-		2	COLLAR, 6/16, H=8	
770	321120-0098	A		1	BEARING BUSHING WITHOUT FLANG,10/12X8	
780	321120-0118	A		3	BEARING BUSHING WITHOUT FL, 14X16X15 MM	
790	321120-0153	A		2	BEARING BUSHING WITHOUT FL, 24X27X20 MM	
800	342980-0113	A		5	BANJO-CONNECTION,RING 6/4-G1/8"	
810	342980-0303	A		3	BANJO-HOLLOW BOLT COUPL,EXT.THR.01-G1/8"	
820	342980-0313	A		1	BANJO-HOLLOW BOLT COUPL,EXT.THR.02-G1/8"	

Machine Type | Group Description | Used-In | Group Number | Page No

DESIGN CORRECTION DEVICE LEFT

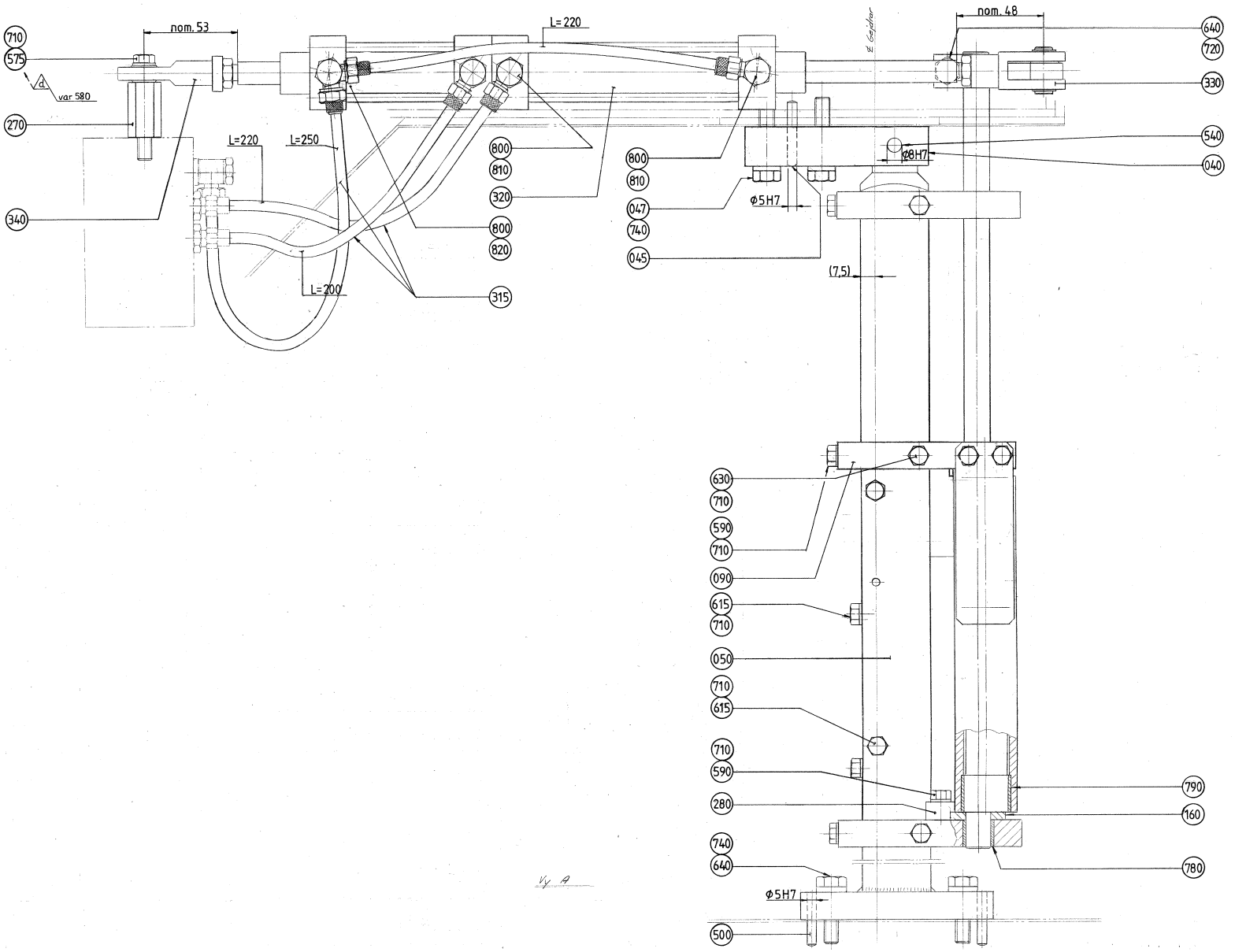

ECM: 104256 - 20020315
Group number: 1529347-0100
Assembly Drawing: 1529347-1_1_AA

Issue: 20020822

Pos	Part No	SP	UN	Qty	Description	Page No
TBA 0200B						
010	456760-0010	A		1	FOLDING FLAP CAM 200B & 125S	
020	272640-0005	A		1	COUNTER CAM	
TBA 0200S						
010	456760-0003	A		1	FOLDING FLAP CAM 200S	
020	272640-0009	A		1	COUNTER CAM	
TBA 0250B						
010	456760-0011	-		1	FOLDING FLAP CAM 250B	
020	272640-0002	A		1	COUNTER CAM	
TWA 0200S						
010	1360633-0000	A		1	FOLDING FLAP CAM 200S	
020	1360634-0000	A		1	COUNTER CAM	
Common Parts						
040	256707-0000	-		1	BRACKET	
045	311103-0316	A		2	PARALLELL PIN, M6, 5X35 MM	
047	312105-0459	-		2	SCREW M6S ISO 4014 M8X40 A480	
050	272642-0000	-		1	PILLAR	
070	272654-0000	A		1	ECCENTRIC SHAFT	
080	272429-0000	A		1	ARM	
090	272491-0000	-		3	BRACKET	
110	272645-0000	A		1	RAIL	
160	256621-0000	A		2	WASHER	
225	256705-0000	A		6	LACE	
255	257334-0000	A		3	LEAF SPRING	
270	271132-0000	-		1	SPACER	
280	271284-0000	-		1	BLOCKING PIECE	
290	978184-0000	-		1	STOPPER	
300	978185-0000	-		1	SHIM	
315	90166-0132	B	MM	890	TUBE 6 MM PA,TRANSP.	
320	90450-0096	A		1	CYLINDER	
330	90239-0357	A		1	ROD END,CLEVIS WITH AXLE M10X1,25	
340	90239-0405	A		1	ROD END,BALL JOINT EYE,MINI-ISO M10X1,25	
500	311103-0314	-		2	PARALLELL PIN, M6, 5X30 MM	
520	311103-0320	-		2	PARALLELL PIN, CP, M6, 5X45 MM	
540	311103-0409	-		1	PARALLELL PIN, M6, 8X40 MM	
575	312105-0368	-		3	SCREW M6S M6X16 A280	
590	312105-0372	-		5	SCREW M6S ISO 4017 M6X25 A480	
615	312105-0379	-		5	SCREW M6S ISO 4014 M6X45 A480	
630	312105-0384	-		3	SCREW M6S ISO 4014 M6X70 A480	
640	312105-0455	-		3	SCREW M6S ISO 4017 M8X30 A480	
650	312115-0453	-		1	SCREW MC6S M8X25 A280	
710	315105-0153	-		16	WASHER PLAIN, BRB, 6,4/12,H=1,5	
720	315105-0165	-		3	WASHER PLAIN, BRB, 8,4/16,H=1,5	
740	315115-0165	-		4	WASHER PLAIN, TBRB 8,4/16 H=3	
750	315233-0109	A		1	WASHER PL.RND.NYL.10,3/14,H=1	
760	315742-0102	-		2	COLLAR, 6/16, H=8	
770	321120-0098	A		1	BEARING BUSHING WITHOUT FLANG,10/12X8	
780	321120-0118	A		3	BEARING BUSHING WITHOUT FL, 14X16X15 MM	
790	321120-0153	A		2	BEARING BUSHING WITHOUT FL, 24X27X20 MM	
800	342980-0113	A		5	BANJO-CONNECTION,RING 6/4-G1/8"	
810	342980-0303	A		3	BANJO-HOLLOW BOLT COUPL,EXT.THR.01-G1/8"	
820	342980-0313	A		1	BANJO-HOLLOW BOLT COUPL,EXT.THR.02-G1/8"	

Machine Type | Group Description | Used-In | Group Number | Page No

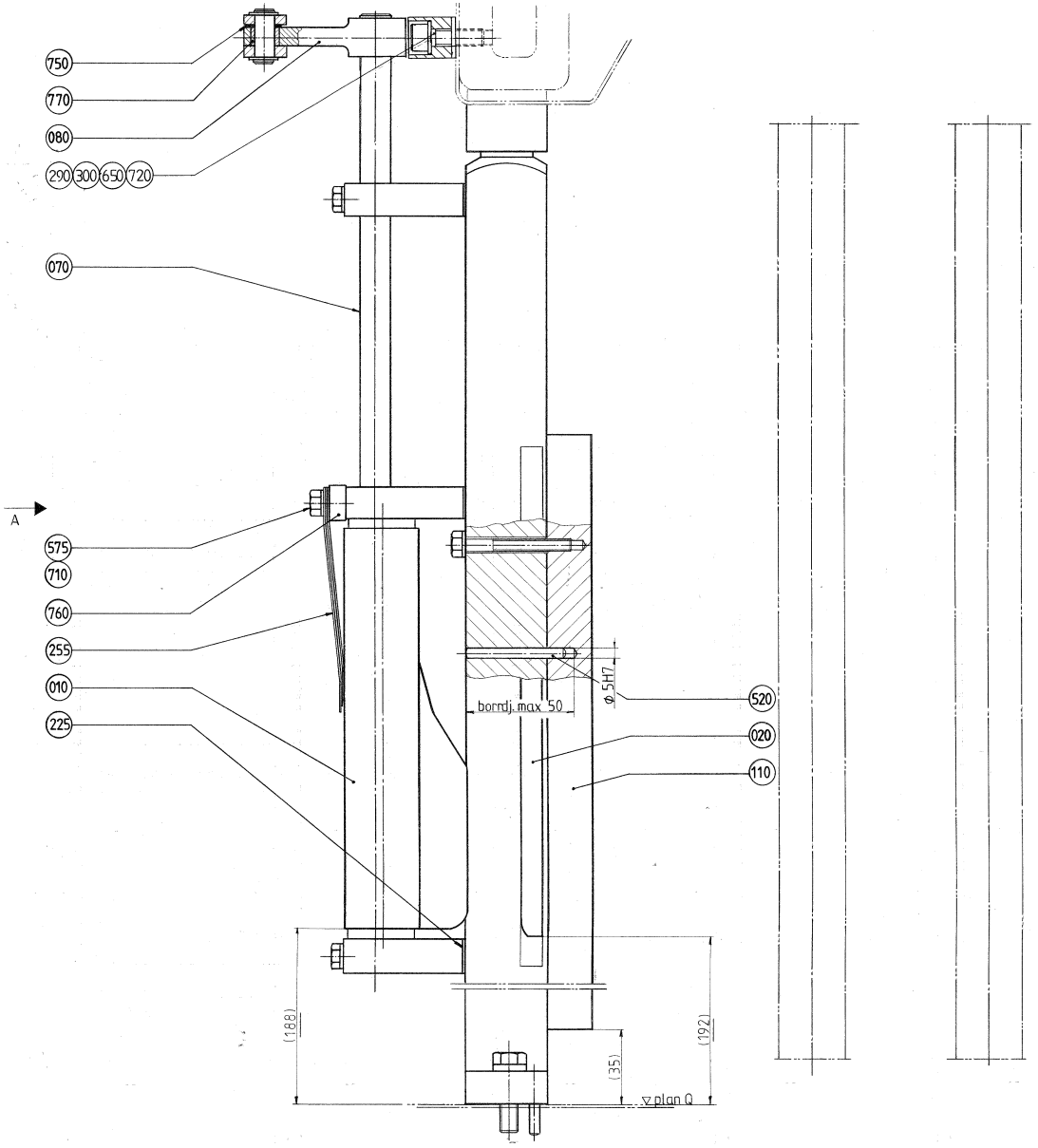
750
770
080
290
300
650
720
070
A
575
710
760
255
010
225
borrdj. max 50
Ø 5H7
520
020
110
(188)
(35)
(192)
▽plan Q

ECM: 104256 - 20020315
Group number: 1529347-0100
Assembly Drawing: 1529347-2_1_AA

Issue: 20020822

Pos	Part No	SP	UN	Qty	Description	Page No
TBA 0200B						
010	456760-0010	A		1	FOLDING FLAP CAM 200B & 125S	
020	272640-0005	A		1	COUNTER CAM	
TBA 0200S						
010	456760-0003	A		1	FOLDING FLAP CAM 200S	
020	272640-0009	A		1	COUNTER CAM	
TBA 0250B						
010	456760-0011	-		1	FOLDING FLAP CAM 250B	
020	272640-0002	A		1	COUNTER CAM	
TWA 0200S						
010	1360633-0000	A		1	FOLDING FLAP CAM 200S	
020	1360634-0000	A		1	COUNTER CAM	
Common Parts						
040	256707-0000	-		1	BRACKET	
045	311103-0316	A		2	PARALLELL PIN, M6, 5X35 MM	
047	312105-0459	-		2	SCREW M6S ISO 4014 M8X40 A480	
050	272642-0000	-		1	PILLAR	
070	272654-0000	A		1	ECCENTRIC SHAFT	
080	272429-0000	A		1	ARM	
090	272491-0000	-		3	BRACKET	
110	272645-0000	A		1	RAIL	
160	256621-0000	A		2	WASHER	
225	256705-0000	A		6	LACE	
255	257334-0000	A		3	LEAF SPRING	
270	271132-0000	-		1	SPACER	
280	271284-0000	-		1	BLOCKING PIECE	
290	978184-0000	-		1	STOPPER	
300	978185-0000	-		1	SHIM	
315	90166-0132	B	MM	890	TUBE 6 MM PA,TRANSP.	
320	90450-0096	A		1	CYLINDER	
330	90239-0357	A		1	ROD END,CLEVIS WITH AXLE M10X1,25	
340	90239-0405	A		1	ROD END,BALL JOINT EYE,MINI-ISO M10X1,25	
500	311103-0314	-		2	PARALLELL PIN, M6, 5X30 MM	
520	311103-0320	-		2	PARALLELL PIN, CP, M6, 5X45 MM	
540	311103-0409	-		1	PARALLELL PIN, M6, 8X40 MM	
575	312105-0368	-		3	SCREW M6S M6X16 A280	
590	312105-0372	-		5	SCREW M6S ISO 4017 M6X25 A480	
615	312105-0379	-		5	SCREW M6S ISO 4014 M6X45 A480	
630	312105-0384	-		3	SCREW M6S ISO 4014 M6X70 A480	
640	312105-0455	-		3	SCREW M6S ISO 4017 M8X30 A480	
650	312115-0453	-		1	SCREW MC6S M8X25 A280	
710	315105-0153	-		16	WASHER PLAIN, BRB, 6,4/12,H=1,5	
720	315105-0165	-		3	WASHER PLAIN, BRB, 8,4/16,H=1,5	
740	315115-0165	-		4	WASHER PLAIN, TBRB 8,4/16 H=3	
750	315233-0109	A		1	WASHER PL.RND.NYL.10,3/14,H=1	
760	315742-0102	-		2	COLLAR, 6/16, H=8	
770	321120-0098	A		1	BEARING BUSHING WITHOUT FLANG,10/12X8	
780	321120-0118	A		3	BEARING BUSHING WITHOUT FL, 14X16X15 MM	
790	321120-0153	A		2	BEARING BUSHING WITHOUT FL, 24X27X20 MM	
800	342980-0113	A		5	BANJO-CONNECTION,RING 6/4-G1/8"	
810	342980-0303	A		3	BANJO-HOLLOW BOLT COUPL,EXT.THR.01-G1/8"	
820	342980-0313	A		1	BANJO-HOLLOW BOLT COUPL,EXT.THR.02-G1/8"	

Machine Type | Group Description | Used-In | Group Number | Page No

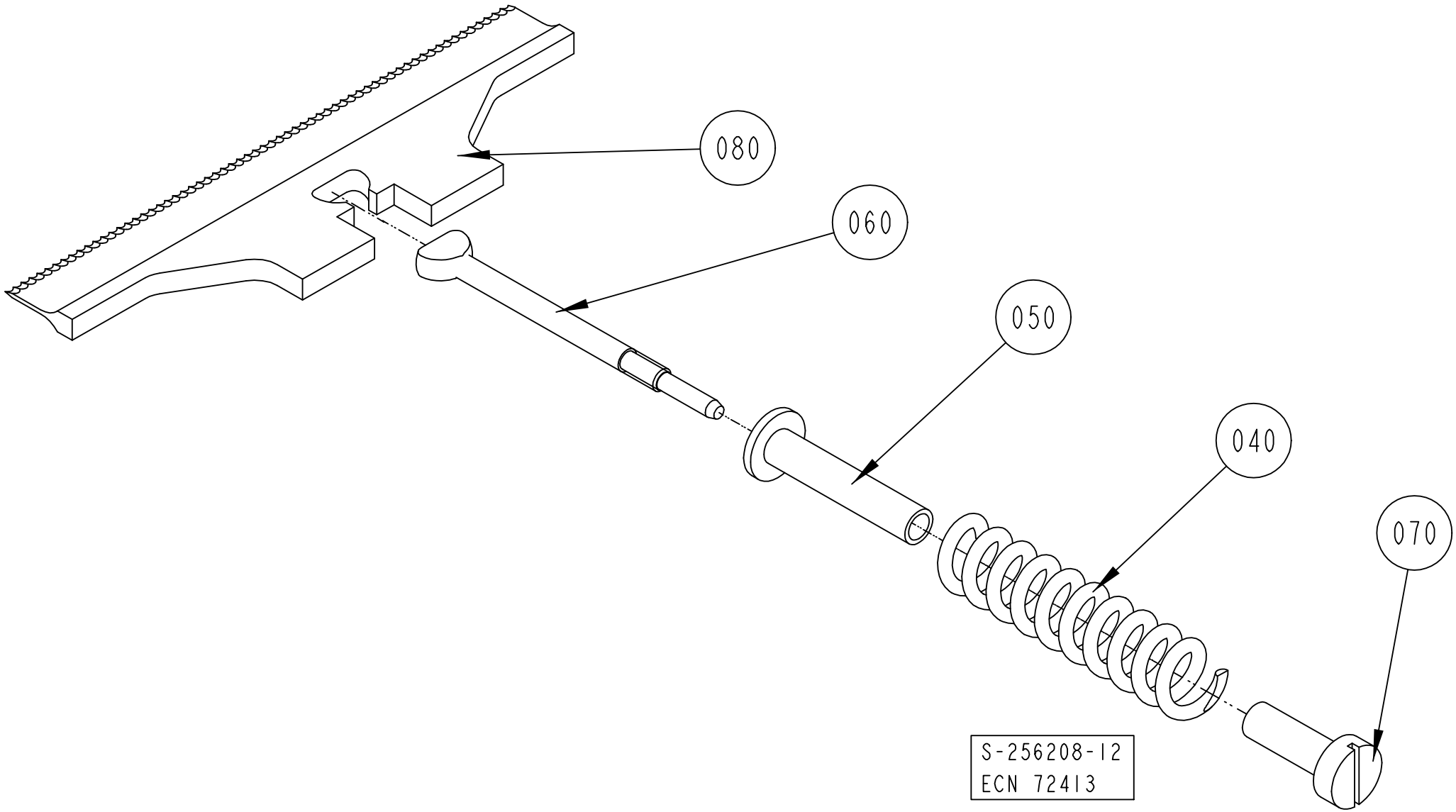
080
060
050
040
070
S-256208-12
ECN 72413

Pos	Part No	SP	UN	Qty	Description	Page No
TBA 0200S IH OR TWA 0200S IH						
080	1282647-0000	A		1	KNIFE	
TBA 0250B IH OR TBA 0200B IH						
080	1282646-0000	A		1	KNIFE	
Common Parts						
040	441726-0000	A		1	COMPRESSION SPRING	
050	272753-0000	A		1	STEERING	
060	456009-0000	A		1	LINK	
070	272755-0000	A		1	NUT	

Pos	Part No	SP	UN	Qty	Description	Page No

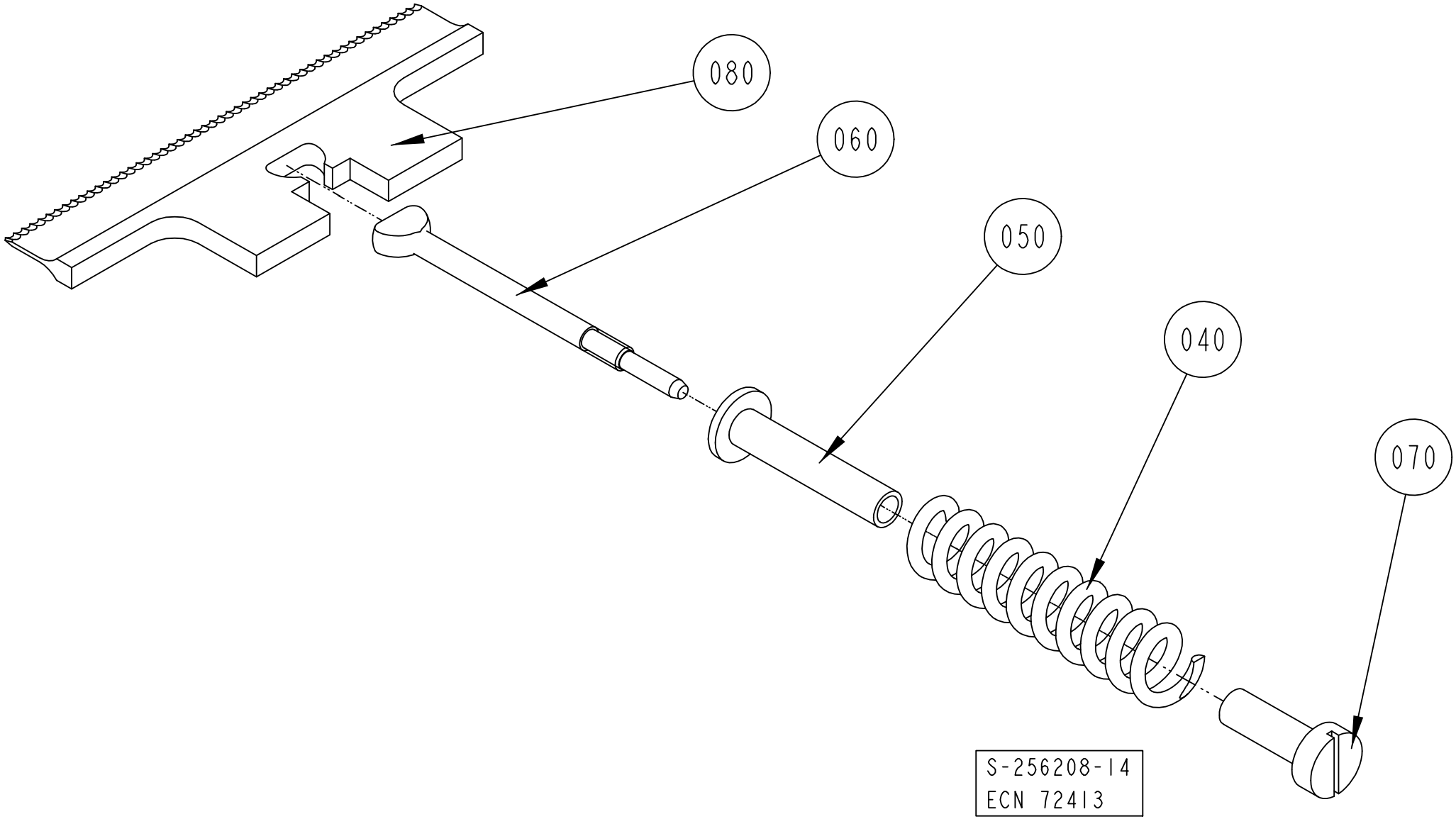
080
060
050
040
070
S-256208-14
ECN 72413

Pos	Part No	SP	UN	Qty	Description	Page No
TBA 0200S IH OR TWA 0200S IH						
080	1282647-0000	A		1	KNIFE	
TBA 0250B IH OR TBA 0200B IH						
080	1282646-0000	A		1	KNIFE	
Common Parts						
040	441726-0000	A		1	COMPRESSION SPRING	
050	272753-0000	A		1	STEERING	
060	456009-0000	A		1	LINK	
070	272755-0000	A		1	NUT	

Pos	Part No	SP	UN	Qty	Description	Page No

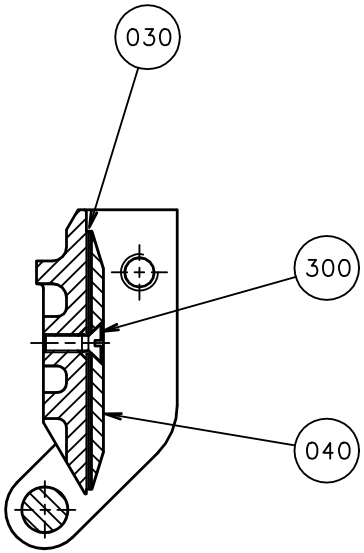
030
300
040

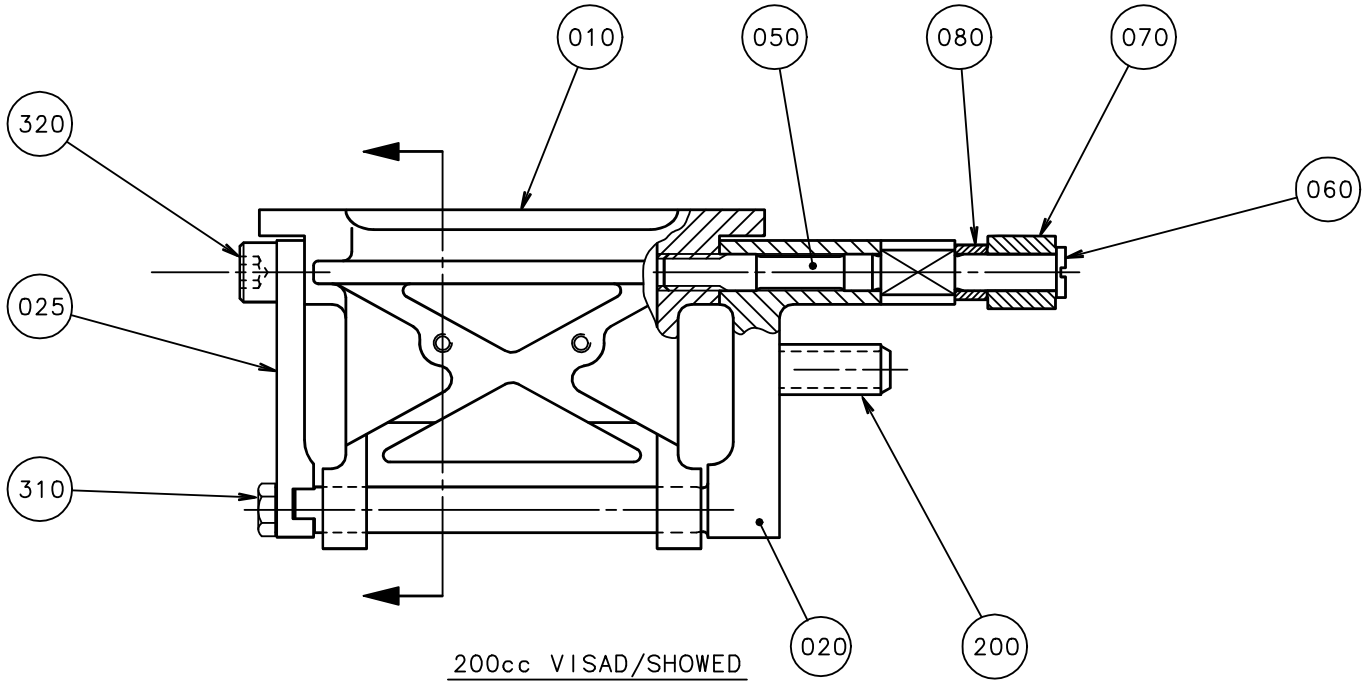
010
050
080
070
320
060
025
310
020
200
200cc VISAD/SHOWED

Pos	Part No	SP	UN	Qty	Description	Page No
TBA 0200B						
010	752212-0000	A		1	VOLUME FLAP 200 ML	
020	752612-0001	A		1	CARRIER	
025	272985-0001	A		1	ARM	
030	272986-0003	A		3	VOLUME SHIM	
040	456005-0003	A		1	VOLUME BULGE	
050	752598-0000	A		1	SHAFT	
TBA 0200S						
010	752999-0000	A		1	VOLUME FLAP 200S	
020	752612-0001	A		1	CARRIER	
025	272985-0001	A		1	ARM	
030	272991-0000	A		3	VOLUME SHIM	
040	272990-0000	A		1	VOLUME BULGE	
050	752598-0000	A		1	SHAFT	
TBA 0250B						
010	978366-0000	A		1	VOLUME FLAP 250 ML	
020	752612-0001	A		1	CARRIER	
025	272985-0001	A		1	ARM	
030	272986-0001	A		3	VOLUME SHIM	
040	456005-0001	A		1	VOLUME BULGE	
050	752598-0000	A		1	SHAFT	
TWA 0200S						
010	591439-0000	-		1	VOLUME FLAP	
020	591435-0000	-		1	CARRIER	
025	272985-0001	A		1	ARM	
030	591560-0000	-		3	VOLUME SHIM	
040	591559-0000	-		1	VOLUME BULGE	
045	591436-0000	-		1	SHAFT	
050	591438-0000	-		1	SHAFT	
090	591437-0000	-		1	DOWEL	
260	312812-0316	-		1	HEXAGON NUT, NY-LOCK M6 A480	
Common Parts						
060	256859-0000	A		1	SCREW	
070	256860-0000	A		1	ROLL	
080	752615-0000	-		1	SPACER	
200	90166-0159	B	MM	21	RUBBER HOSE	
300	312145-0291	A		2	SCREW COUNTERS.SLOT.HD. MFS 4X12 A4	
310	312105-0376	-		2	SCREW M6S ISO 4014 M6X35 A480	
320	312115-0449	-		1	SCREW MC6S M8X16 A280	

Machine Type | Group Description | Used-In | Group Number | Page No

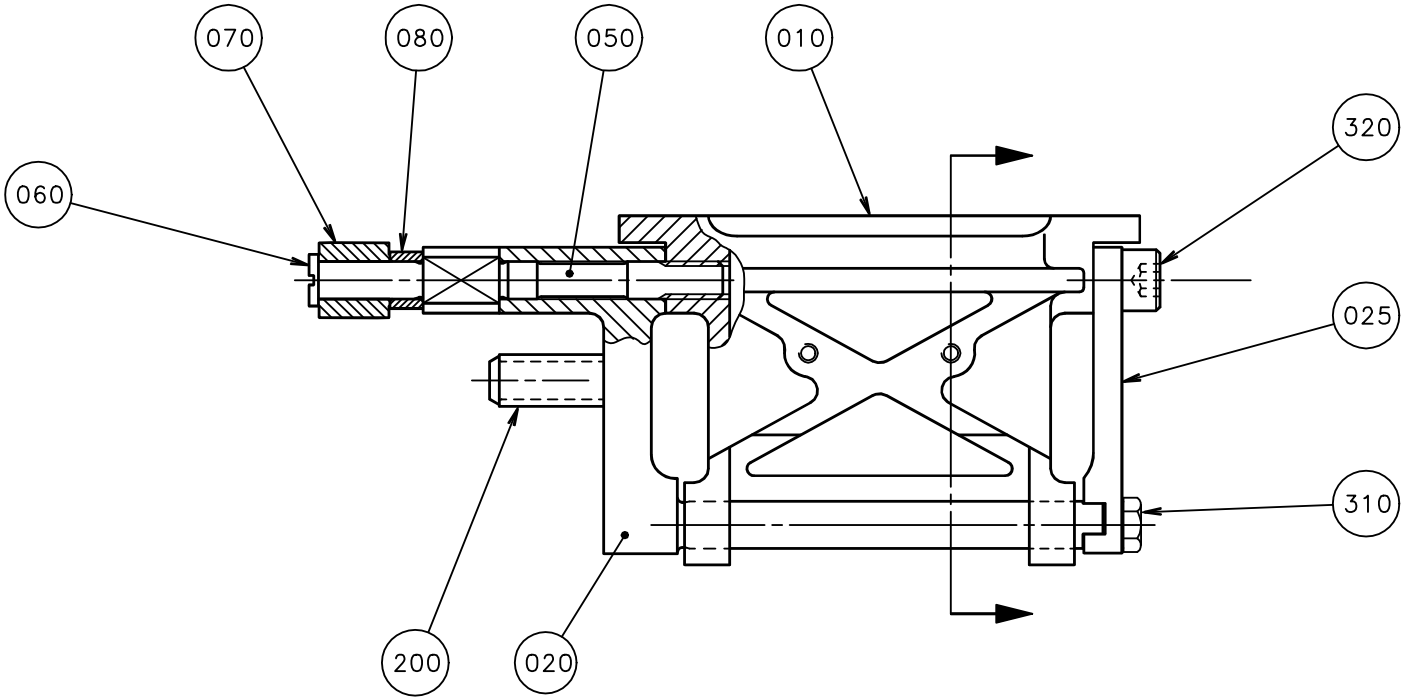

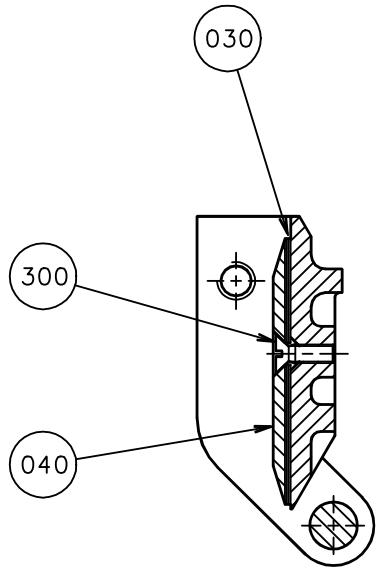

200cc VISAD/SHOWED

Pos	Part No	SP	UN	Qty	Description	Page No
TBA 0200B						
010	752212-0000	A		1	VOLUME FLAP 200 ML	
020	752612-0001	A		1	CARRIER	
025	272985-0001	A		1	ARM	
030	272986-0003	A		3	VOLUME SHIM	
040	456005-0003	A		1	VOLUME BULGE	
050	752598-0000	A		1	SHAFT	
TBA 0200S						
010	752999-0000	A		1	VOLUME FLAP 200S	
020	752612-0001	A		1	CARRIER	
025	272985-0001	A		1	ARM	
030	272991-0000	A		3	VOLUME SHIM	
040	272990-0000	A		1	VOLUME BULGE	
050	752598-0000	A		1	SHAFT	
TBA 0250B						
010	978366-0000	A		1	VOLUME FLAP 250 ML	
020	752612-0001	A		1	CARRIER	
025	272985-0001	A		1	ARM	
030	272986-0001	A		3	VOLUME SHIM	
040	456005-0001	A		1	VOLUME BULGE	
050	752598-0000	A		1	SHAFT	
TWA 0200S						
010	591439-0000	-		1	VOLUME FLAP	
020	591435-0000	-		1	CARRIER	
025	272985-0001	A		1	ARM	
030	591560-0000	-		3	VOLUME SHIM	
040	591559-0000	-		1	VOLUME BULGE	
045	591436-0000	-		1	SHAFT	
050	591438-0000	-		1	SHAFT	
090	591437-0000	-		1	DOWEL	
260	312812-0316	-		1	HEXAGON NUT, NY-LOCK M6 A480	
Common Parts						
060	256859-0000	A		1	SCREW	
070	256860-0000	A		1	ROLL	
080	752615-0000	-		1	SPACER	
200	90166-0159	B	MM	21	RUBBER HOSE	
300	312145-0291	A		2	SCREW COUNTERS.SLOT.HD. MFS 4X12 A4	
310	312105-0376	-		2	SCREW M6S ISO 4014 M6X35 A480	
320	312115-0449	-		1	SCREW MC6S M8X16 A280	

Machine Type | Group Description | Used-In | Group Number | Page No

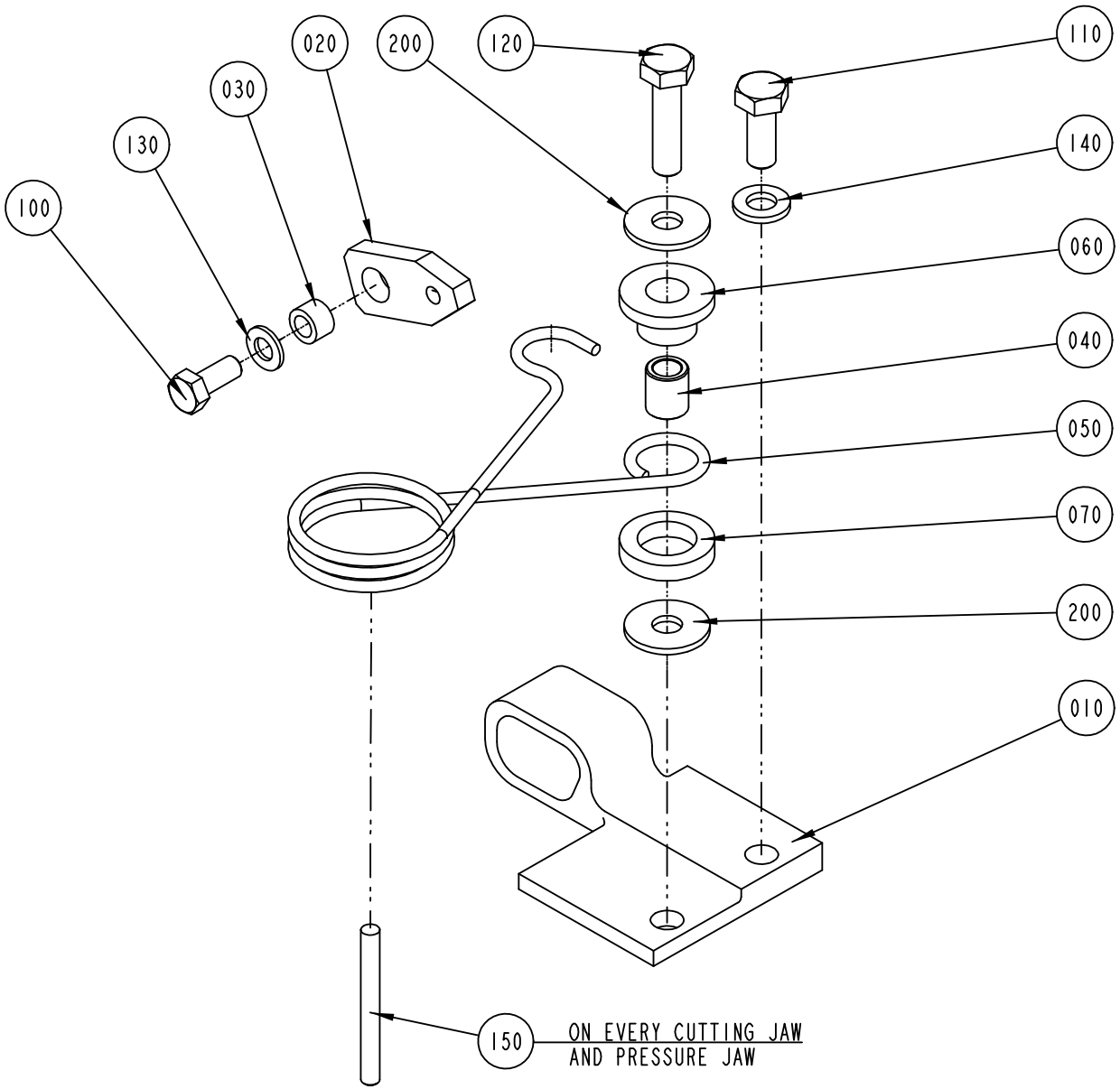

1529352-1
ECN 90753

ECM: 101931 - 20011203
Group number: 1529352-0100
Assembly Drawing: 1529352-1_1_AA

Issue: 20020822

Pos	Part No	SP	UN	Qty	Description	Page No
TBA 0200B OR TBA 0200S OR TBA 0250B						
010	752559-0000	A		1	STOP PERF 1	
030	752556-0000	B		1	SPACER	
040	752673-0000	B		1	SPACER	
050	752678-0000	A		1	SPRING PERF 1	
060	752680-0000	B		1	SLEEVE	
100	312105-0327	-		1	SCREW M6S ISO 4017 M5X12 A480	
110	312105-0368	-		1	SCREW M6S M6X16 A280	
120	312105-0372	-		1	SCREW M6S ISO 4017 M6X25 A480	
130	315105-0146	-		1	WASHER PLAIN, BRB, 5,3/10,H=1	
200	90005-0060	B		2	WASHER PLAIN, RBS 6,4/M6)/18,H=1,5	
TWA 0200S						
010	591427-0000	-		1	STOPPER	
040	591432-0000	-		1	SPACER	
050	591429-0000	-		1	SPRING	
060	591433-0000	-		1	SLEEVE	
070	591434-0000	B		1	WASHER	
110	312155-0368	-		2	SCREW HEX.SOCK.COUNT.MF6S M6X16 A280	
160	312155-0366	-		1	SCREW HEX.SOCK.COUNT.MF6S M6X12 A280	
200	90005-0060	-		1	WASHER PLAIN, RBS 6,4/M6)/18,H=1,5	
220	90157-0016	-	ML	1	LOCKING FLUID	
Common Parts						
020	752425-0000	A		1	LINK	
070	752681-0000	B		1	WASHER	
140	315105-0153	-		1	WASHER PLAIN, BRB, 6,4/12,H=1,5	
150	311103-0280	-		1	PARALLELL PIN, M6, 4X40 MM	

Pos	Part No	SP	UN	Qty	Description	Page No

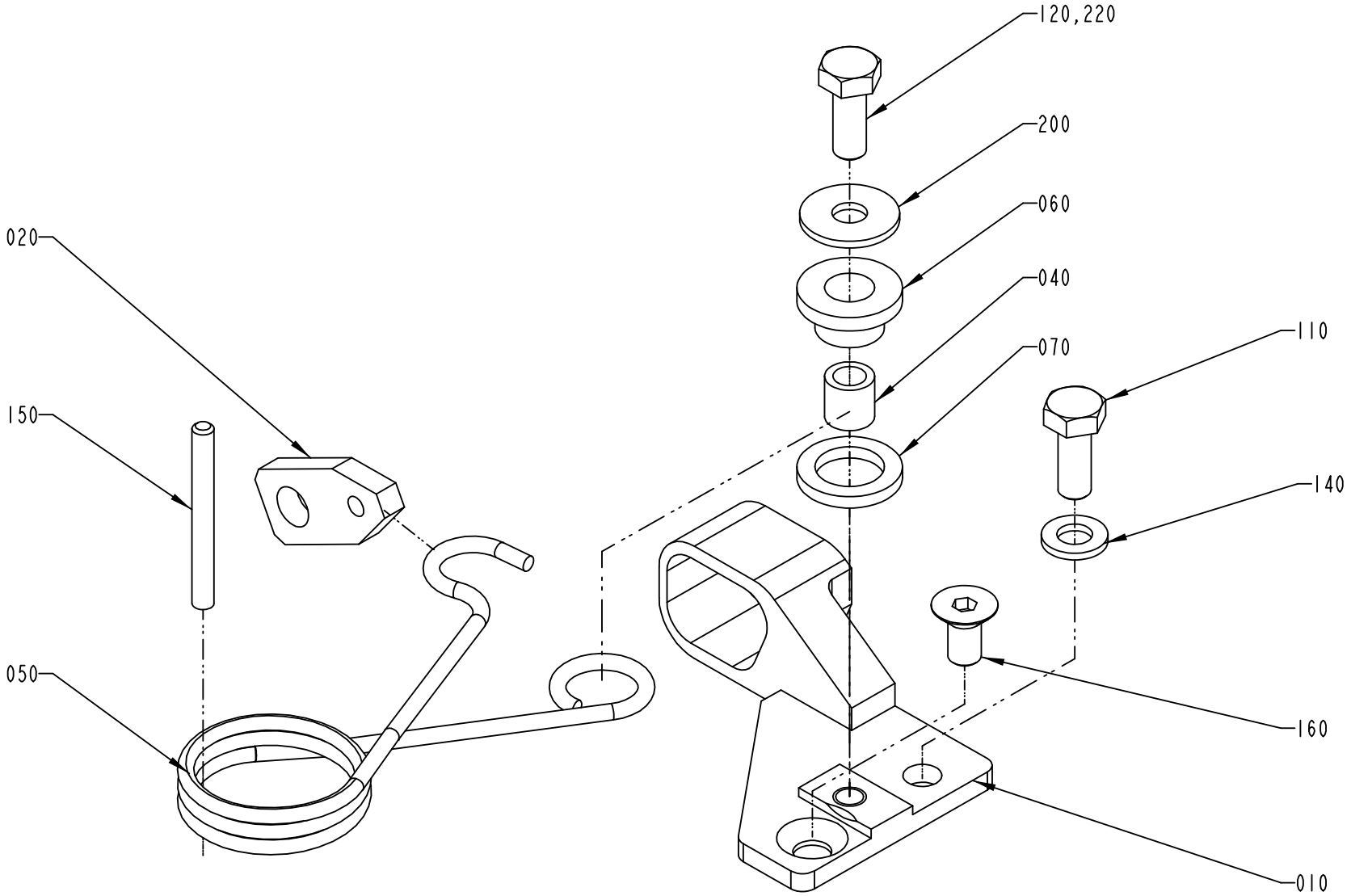
120,220
200
060
040
070
110
140
020
150
050
160
010

ECM: 101931 - 20011203
Group number: 1529352-0100
Assembly Drawing: 1529352-3_1_AA

Issue: 20020822

Pos	Part No	SP	UN	Qty	Description	Page No
TBA 0200B OR TBA 0200S OR TBA 0250B						
010	752559-0000	A		1	STOP PERF 1	
030	752556-0000	B		1	SPACER	
040	752673-0000	B		1	SPACER	
050	752678-0000	A		1	SPRING PERF 1	
060	752680-0000	B		1	SLEEVE	
100	312105-0327	-		1	SCREW M6S ISO 4017 M5X12 A480	
110	312105-0368	-		1	SCREW M6S M6X16 A280	
120	312105-0372	-		1	SCREW M6S ISO 4017 M6X25 A480	
130	315105-0146	-		1	WASHER PLAIN, BRB, 5,3/10,H=1	
200	90005-0060	B		2	WASHER PLAIN, RBS 6,4/M6)/18,H=1,5	
TWA 0200S						
010	591427-0000	-		1	STOPPER	
040	591432-0000	-		1	SPACER	
050	591429-0000	-		1	SPRING	
060	591433-0000	-		1	SLEEVE	
070	591434-0000	B		1	WASHER	
110	312155-0368	-		2	SCREW HEX.SOCK.COUNT.MF6S M6X16 A280	
160	312155-0366	-		1	SCREW HEX.SOCK.COUNT.MF6S M6X12 A280	
200	90005-0060	-		1	WASHER PLAIN, RBS 6,4/M6)/18,H=1,5	
220	90157-0016	-	ML	1	LOCKING FLUID	
Common Parts						
020	752425-0000	A		1	LINK	
070	752681-0000	B		1	WASHER	
140	315105-0153	-		1	WASHER PLAIN, BRB, 6,4/12,H=1,5	
150	311103-0280	-		1	PARALLELL PIN, M6, 4X40 MM	

Pos	Part No	SP	UN	Qty	Description	Page No

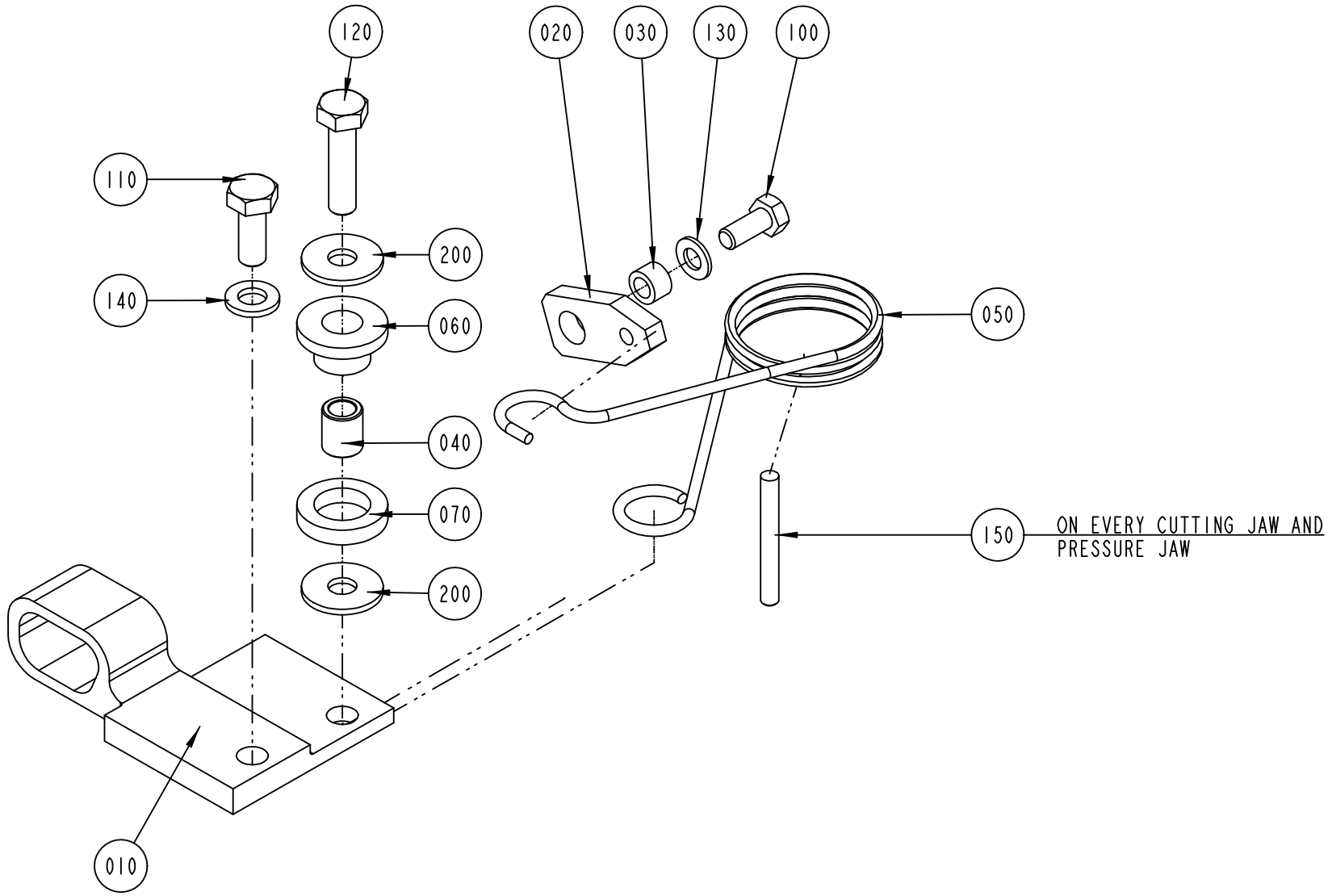

1529353-1
ECN 90753

Pos	Part No	SP	UN	Qty	Description	Page No
TBA 0200B OR TBA 0200S OR TBA 0250B						
010	752560-0000	A		1	STOP PERF 2	
030	752556-0000	B		1	SPACER	
040	752673-0000	B		1	SPACER	
050	752679-0000	A		1	SPRING PERF 2	
060	752680-0000	B		1	SLEEVE	
070	752681-0000	B		1	WASHER	
100	312105-0327	-		1	SCREW M6S ISO 4017 M5X12 A480	
110	312105-0368	-		1	SCREW M6S M6X16 A280	
120	312105-0372	-		1	SCREW M6S ISO 4017 M6X25 A480	
130	315105-0146	-		1	WASHER PLAIN, BRB, 5,3/10,H=1	
200	90005-0060	B		2	WASHER PLAIN, RBS 6,4/M6)/18,H=1,5	
TWA 0200S						
010	591428-0000	-		1	STOPPER	
040	591432-0000	-		1	SPACER	
050	591430-0000	-		1	SPRING	
060	591433-0000	-		1	SLEEVE	
070	591434-0000	B		1	WASHER	
110	312155-0368	-		2	SCREW HEX.SOCK.COUNT.MF6S M6X16 A280	
160	312155-0366	-		1	SCREW HEX.SOCK.COUNT.MF6S M6X12 A280	
200	90005-0060	-		1	WASHER PLAIN, RBS 6,4/M6)/18,H=1,5	
220	90157-0016	-	ML	1	LOCKING FLUID	
Common Parts						
020	752425-0000	A		1	LINK	
140	315105-0153	-		1	WASHER PLAIN, BRB, 6,4/12,H=1,5	
150	311103-0280	-		1	PARALLELL PIN, M6, 4X40 MM	

Pos	Part No	SP	UN	Qty	Description	Page No

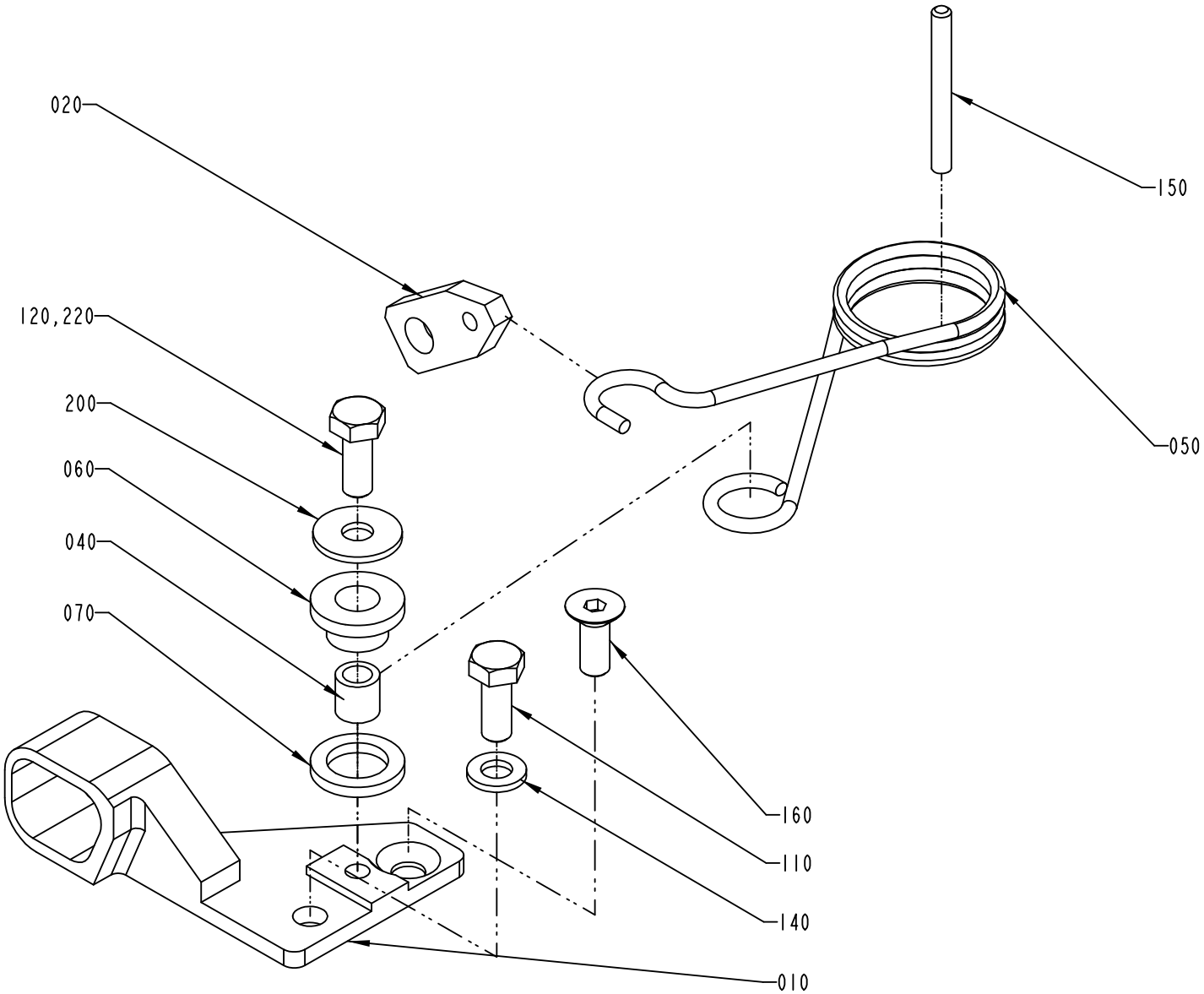
020
150
120,220
200
060
040
070
050
160
110
140
010

Pos	Part No	SP	UN	Qty	Description	Page No
TBA 0200B OR TBA 0200S OR TBA 0250B						
010	752560-0000	A		1	STOP PERF 2	
030	752556-0000	B		1	SPACER	
040	752673-0000	B		1	SPACER	
050	752679-0000	A		1	SPRING PERF 2	
060	752680-0000	B		1	SLEEVE	
070	752681-0000	B		1	WASHER	
100	312105-0327	-		1	SCREW M6S ISO 4017 M5X12 A480	
110	312105-0368	-		1	SCREW M6S M6X16 A280	
120	312105-0372	-		1	SCREW M6S ISO 4017 M6X25 A480	
130	315105-0146	-		1	WASHER PLAIN, BRB, 5,3/10,H=1	
200	90005-0060	B		2	WASHER PLAIN, RBS 6,4/M6)/18,H=1,5	
TWA 0200S						
010	591428-0000	-		1	STOPPER	
040	591432-0000	-		1	SPACER	
050	591430-0000	-		1	SPRING	
060	591433-0000	-		1	SLEEVE	
070	591434-0000	B		1	WASHER	
110	312155-0368	-		2	SCREW HEX.SOCK.COUNT.MF6S M6X16 A280	
160	312155-0366	-		1	SCREW HEX.SOCK.COUNT.MF6S M6X12 A280	
200	90005-0060	-		1	WASHER PLAIN, RBS 6,4/M6)/18,H=1,5	
220	90157-0016	-	ML	1	LOCKING FLUID	
Common Parts						
020	752425-0000	A		1	LINK	
140	315105-0153	-		1	WASHER PLAIN, BRB, 6,4/12,H=1,5	
150	311103-0280	-		1	PARALLELL PIN, M6, 4X40 MM	

Pos	Part No	SP	UN	Qty	Description	Page No

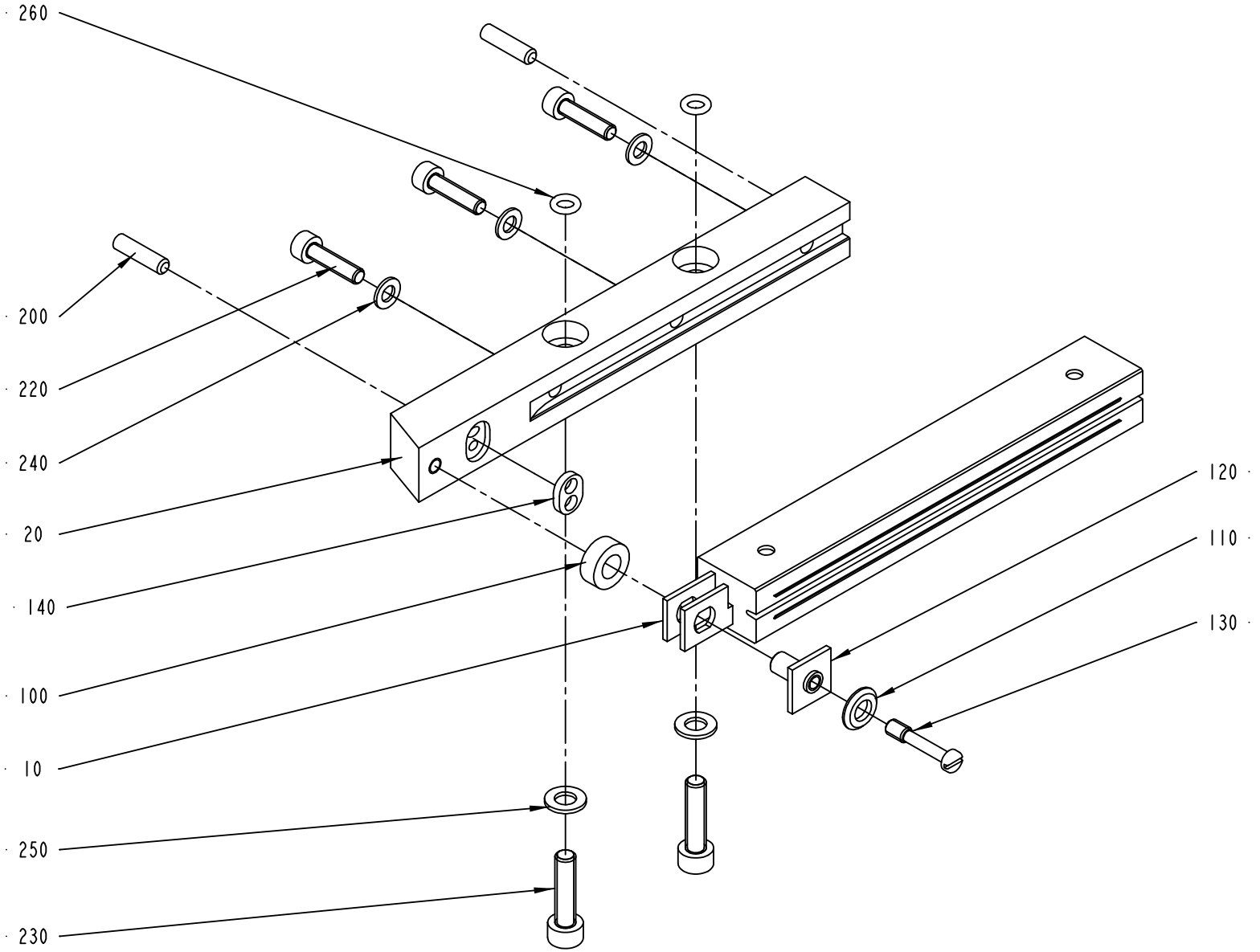

256214-6
ECM 107735

Pos	Part No	SP	UN	Qty	Description	Page No
TBA 0200S OR TWA 0200S						
010	1110532-0000	A		1	INDUCTOR	
020	2527137-0000	B		1	RAIL (TITANIUM)	
220	312115-0293	-		2	SCREW MC6S M4X16 A280	
230	312115-0331	-		2	SCREW MC6S M5X20 A280	
240	315105-0136	B		2	WASHER PLAIN, BRB, 4,3/8,H=0,8	
250	315105-0146	-		2	WASHER PLAIN, BRB, 5,3/10,H=1	
260	315202-0102	B		2	O-RING 4,1X1,6 MM	
TBA 0200B OR TBA 0250B						
010	1110534-0000	A		1	INDUCTOR	
020	2527136-0000	B		1	RAIL	
220	312115-0293	-		3	SCREW MC6S M4X16 A280	
230	312115-0331	-		2	SCREW MC6S M5X20 A280	
240	315105-0136	B		3	WASHER PLAIN, BRB, 4,3/8,H=0,8	
250	315105-0146	-		2	WASHER PLAIN, BRB, 5,3/10,H=1	
260	315202-0102	B		2	O-RING 4,1X1,6 MM	
Common Parts						
100	32644-0000	B		1	WASHER	
110	256882-0000	B		1	WASHER	
120	271846-0000	B		1	INSULATION NUT	
130	271848-0000	B		1	SCREW	
140	491681-0000	B		1	GASKET	
200	311103-0270	-		2	PARALLELL PIN, M6, 4X16 MM	

Pos	Part No	SP	UN	Qty	Description	Page No

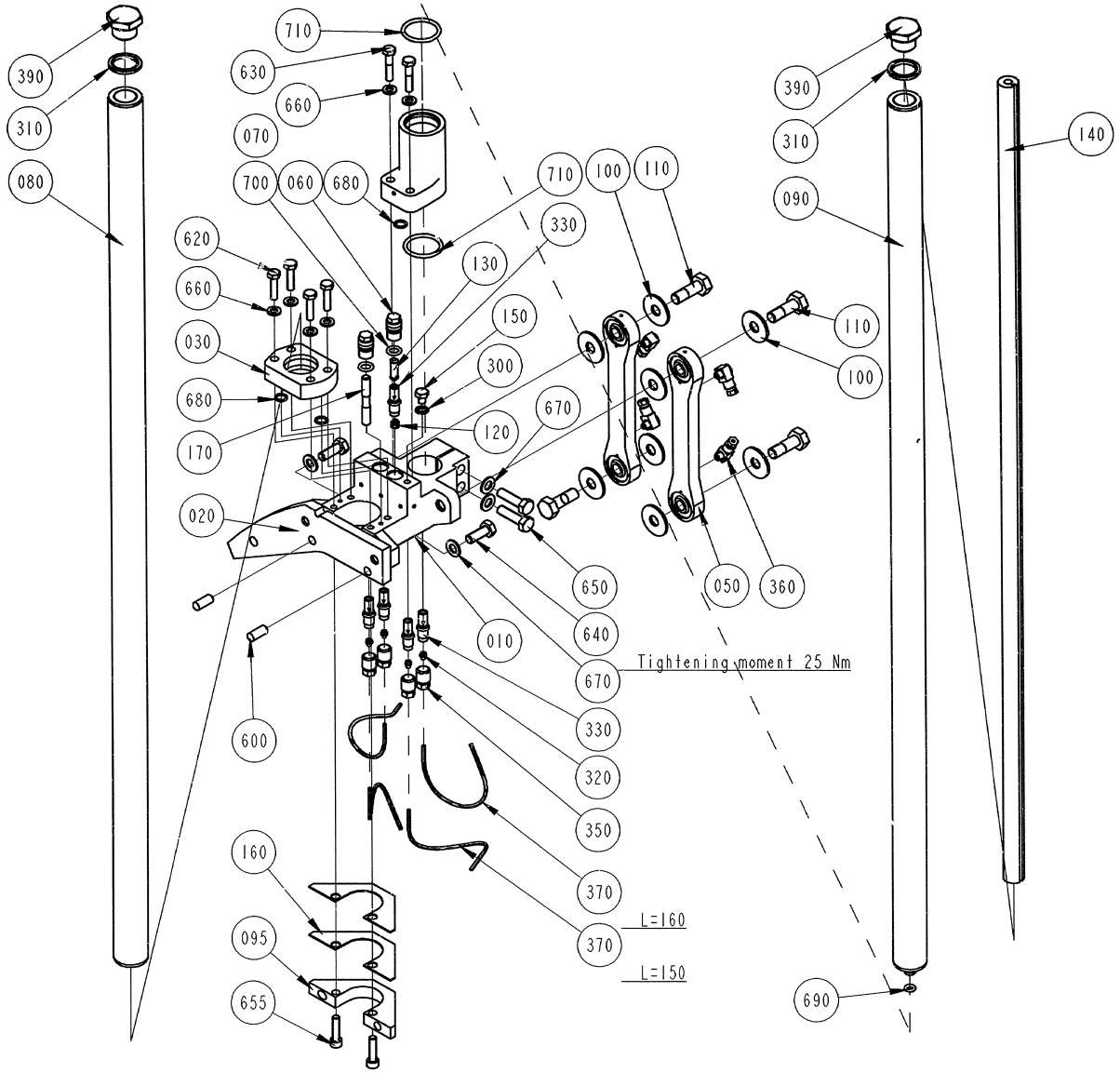
390
310
080
710
630
660
070
700
060
680
620
660
030
680
170
020
600
160
095
655
710
100
110
330
130
150
300
120
670
650
640
010
670
330
320
350
370
370
L=160
L=150
Tightening moment 25 Nm
390
310
090
140
110
100
050
360
690

Pos	Part No	SP	UN	Qty	Description	Page No
Common Parts						
010	B272689-0000	B		2	BRACKET	
	312910-0118	-		*1*	*HELI-COIL M6X1,5D*	
	312911-0129	-		*2*	*THREADED INSERTS M10X1,0D*	
020	B441749-0000	A		2	CURVE	
	312911-0125	-		*2*	*THREADED INSERTS M8X1,0D*	
030	456002-0000	A		2	BEARING	
050	441031-0000	A		4	LINK BEARING	
060	256829-0000	A		4	SCREW	
070	272490-0000	B		2	SLEEVE	
080	441269-0000	B		2	GUIDE	
090	441268-0000	B		2	GUIDE	
095	441750-0000	A		2	YOKE	
100	256738-0000	A		16	WASHER	
110	256739-0000	A		8	SCREW	
120	256831-0003	A		2	SPACER	
130	256831-0004	A		2	SPACER	
140	272840-0000	-		2	ROD	
150	441355-0000	-		2	BLEEDING SCREW	
160	441751-0000	A		4	LACE	
170	456004-0000	-		2	SPACER	
300	90005-0003	A		2	GASKET BOLT HEAD 6,7X11X1 MM M6	
310	90005-0014	A		4	GASKET BOLT HEAD 21,5X28,6X2,5 MM G1/2"	
320	90028-0020	A		8	CONE TUBE 2,5MM	
330	90092-0052	A		10	METERING VALVE 10 MM3	
350	90134-0039	-		8	BUSHING VALVE CONNECTION 2,5 MM	
360	90134-0058	-		8	CONNECTION	
370	90166-0143	-	MM	1240	TUBE 2,5 MM PA,TRANSP.	
390	90330-0037	-		4	PLUG, EXT. G-THREAD, G1/2	
600	311103-0401	-		4	PARALLELL PIN, M6, 8X20 MM	
620	312105-0372	-		6	SCREW M6S ISO 4017 M6X25 A480	
630	312105-0374	-		4	SCREW M6S ISO 4014 M6X30 A480	
640	312105-0452	-		4	SCREW M6S ISO 4017 M8X22 A480	
650	312105-0455	-		4	SCREW M6S ISO 4017 M8X30 A480	
655	312115-0372	-		4	SCREW MC6S M6X25 A280	
660	315105-0153	-		10	WASHER PLAIN, BRB, 6,4/12,H=1,5	
670	315105-0165	-		8	WASHER PLAIN, BRB, 8,4/16,H=1,5	
680	315202-0106	A		6	O-RING 8,1X1,6 MM	
690	315202-0204	A		2	O-RING 5,3X2,4 MM	
700	315202-0207	A		4	O-RING 8,3X2,4 MM	
710	315202-0219	A		4	O-RING 29,2X3 MM	

Pos	Part No	SP	UN	Qty	Description	Page No

Machine Type	Group Description	Used-In	Group Number	Page No

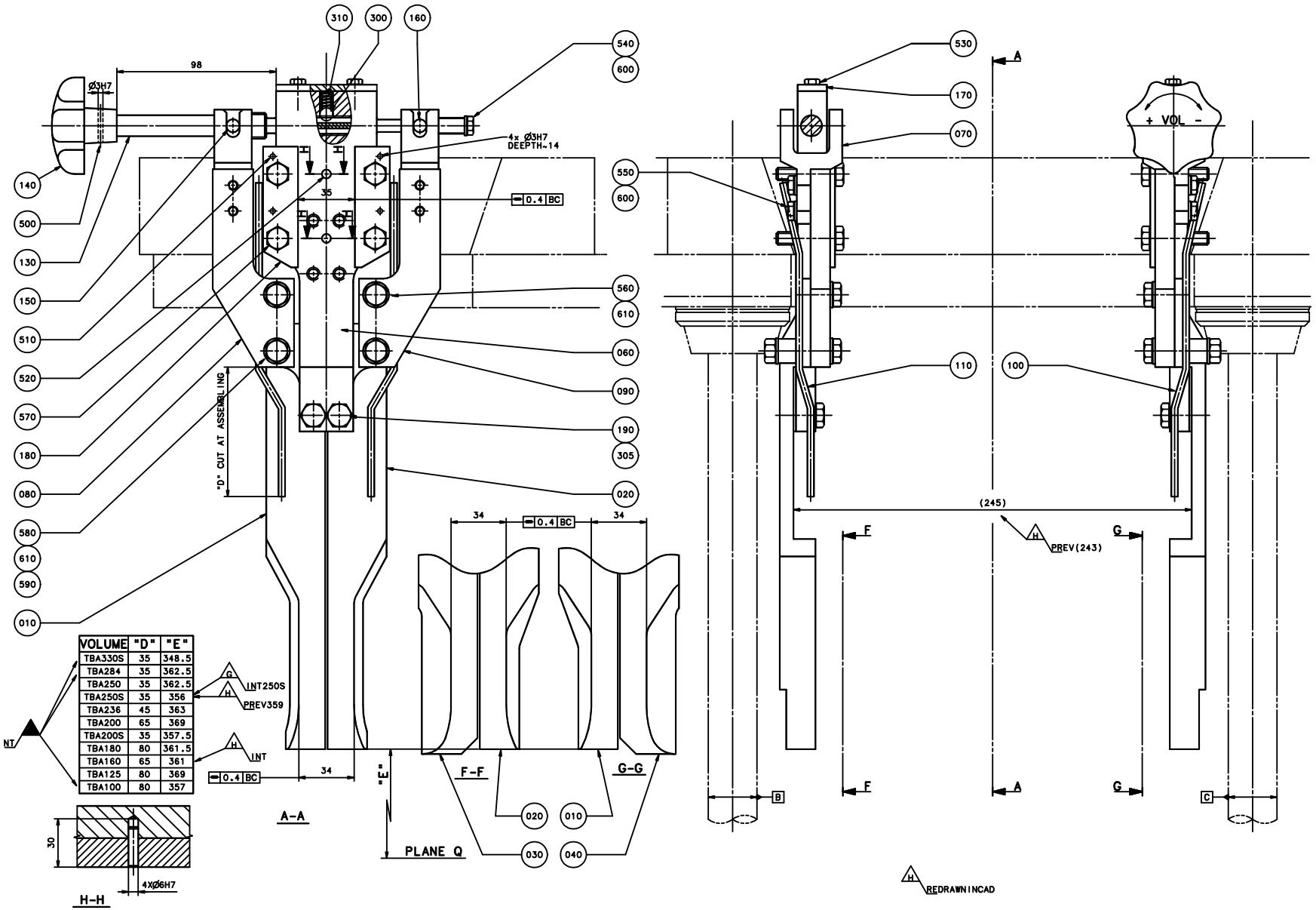
310
300
160
540
600
98
Ø3H7
4x Ø3H7 DEEPTH~14
0.4 BC
35
140
500
130
150
510
520
570
180
080
580
610
590
010
550
600
560
610
060
090
190
305
020
"D" CUT AT ASSEMBLING
34
0.4 BC
34
VOLUME "D" "E"
TBA330S 35 348.5
TBA284 35 362.5
TBA250 35 362.5
TBA250S 35 356
TBA236 45 363
TBA200 65 369
TBA200S 35 357.5
TBA180 80 361.5
TBA160 65 361
TBA125 80 369
TBA100 80 357
G INT250S
H PREV359
H INT
0.4 BC
34
"E"
A-A
F-F
G-G
020
010
030
040
PLANE Q
30
4XØ6H7
H-H
530
A
170
070
+ VOL -
110
100
(245)
F
H PREV(243)
G
B
F
A
G
C
H REDRAWN IN CAD

ECM: 101845 - 20011203
Group number: 256222-0200
Assembly Drawing: 256222-3_1_AA

Issue: 20020822

Pos	Part No	SP	UN	Qty	Description	Page No
TBA 0200B						
010	272955-0000	A		2	VOLUME CAM LEFT	
020	272963-0000	A		2	VOLUME CAM RIGHT	
060	272969-0000	-		2	BRACKET	
100	441758-0000	A		2	PIPE RIGHT	
110	441759-0000	A		2	PIPE LEFT	
TBA 0200S						
010	491436-0000	A		1	VOLUME CAM LEFT	
020	491434-0000	A		1	VOLUME CAM RIGHT	
030	491433-0000	A		1	VOLUME CAM LEFT, WIDE	
040	491435-0000	A		1	VOLUME CAM RIGHT, WIDE	
060	272969-0000	-		2	BRACKET	
100	441758-0000	A		2	PIPE RIGHT	
110	441759-0000	A		2	PIPE LEFT	
TBA 0250B						
010	272953-0000	A		2	VOLUME CAM LEFT	
020	272961-0000	A		2	VOLUME CAM RIGHT	
060	272969-0000	-		2	BRACKET	
100	441758-0000	A		2	PIPE RIGHT	
110	441759-0000	A		2	PIPE LEFT	
TWA 0200S						
010	1360586-0000	A		2	VOLUME CAM LEFT	
020	1360587-0000	A		2	VOLUME CAM RIGHT	
060	1360585-0000	-		2	BRACKET	
100	594969-0000	A		2	PIPE RIGHT	
110	594970-0000	A		2	PIPE LEFT	
Common Parts						
070	272761-0000	A		4	FORK	
080	272970-0000	-		2	ARM LEFT	
090	272971-0000	-		2	ARM RIGHT	
130	272978-0000	A		2	SPINDLE	
140	240797-0000	-		2	HANDLE	
150	257393-0001	A		2	NUT	
160	257393-0002	A		2	NUT	
170	257395-0000	-		2	WASHER	
180	272972-0000	-		4	RULER	
190	272973-0000	A		4	DOWEL	
300	90090-0014	A		2	BALL, D=7,938 MM	
305	90157-0021	-	KG	1	LOCKING FLUID	
310	90335-0011	A		2	SPRING	
500	311103-0238	-		2	PARALLELL PIN, M6, 3X20 MM	
510	311103-0234	-		8	PARALLELL PIN, M6, 3X12 MM	
520	311103-0355	-		4	PARALLELL PIN, M6, 6X25 MM	
530	312105-0325	-		4	SCREW M6S ISO 4017 M5X10 A480	
540	312105-0366	-		2	SCREW M6S M6X12 A280	
550	312105-0370	-		8	SCREW M6S ISO 4017 M6X20 A480	
560	312105-0451	-		4	SCREW M6S ISO 4017 M8X20 A480	
570	312105-0457	-		8	SCREW M6S ISO 4014 M8X35 A480	
580	312109-0459	-		4	SCREW M6S ISO 4017 M8X40 A480	
590	312605-0318	-		4	HEXAGON NUT, M6M M8 A280	
600	315105-0153	-		10	WASHER PLAIN, BRB, 6,4/12,H=1,5	
610	315105-0165	-		12	WASHER PLAIN, BRB, 8,4/16,H=1,5	

Machine Type | Group Description | Used-In | Group Number | Page No

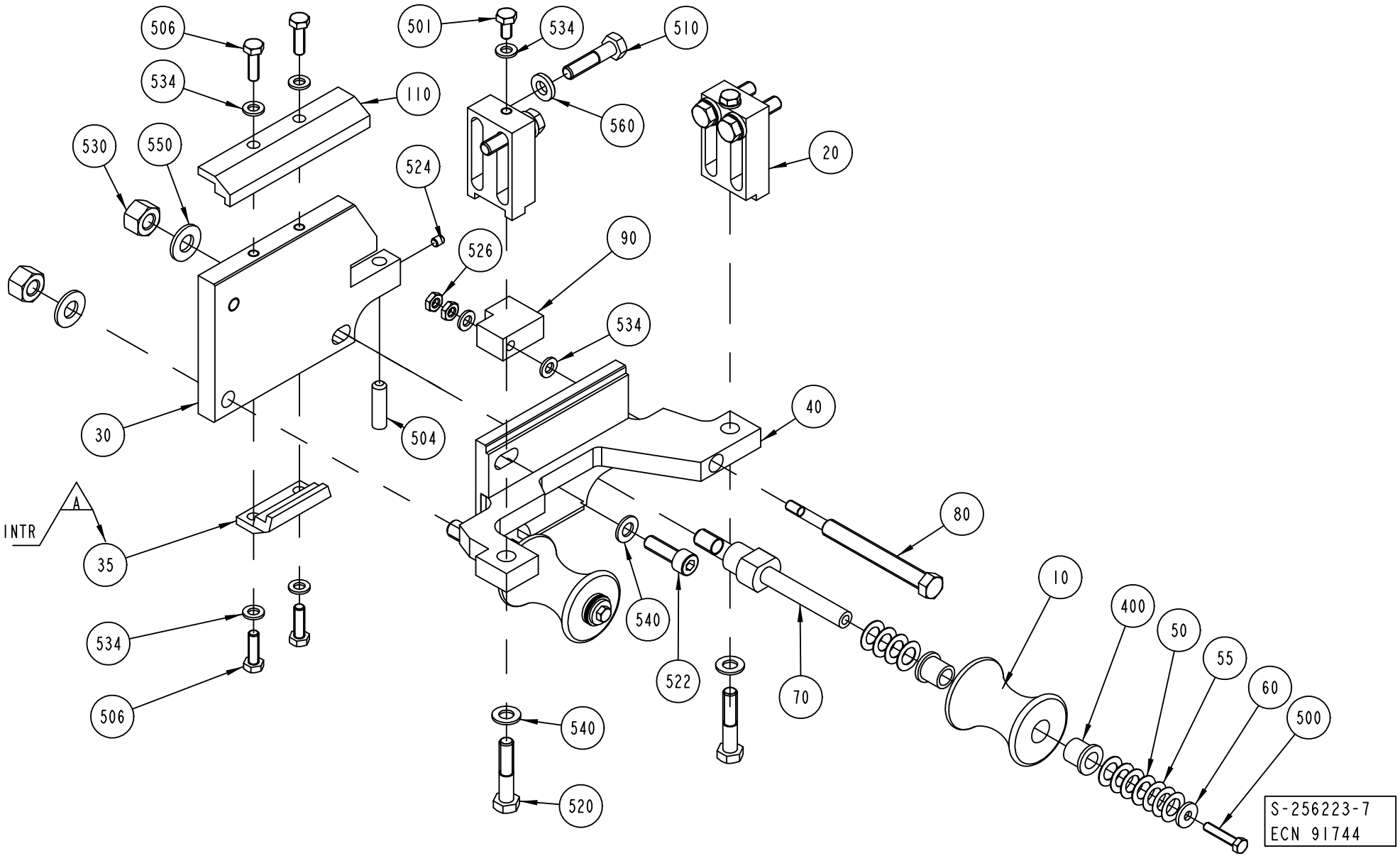
506
534
110
501
534
510
560
20
530
550
524
526
90
534
30
504
40
A
INTR
35
80
10
400
50
55
60
500
534
506
540
522
70
540
520
S-256223-7
ECN 91744

ECM: 101840 - 20011203
Group number: 256223-0400
Assembly Drawing: 256223-7_1_AB

Issue: 20020822

Pos	Part No	SP	UN	Qty	Description	Page No
NOPT TWA 0200S IH						
010	978760-0000	A		2	ROLLER TBA200SL	
020	272974-0001	-		2	BRACKET	
030	295748-0003	-		1	BACK PIECE	
NOPT TBA 0200B IH OR NOPT TBA 0250B IH						
010	978757-0000	A		2	ROLLER 180-284ML	
020	272974-0001	-		2	BRACKET	
030	295748-0001	-		1	BACK PIECE	
Common Parts						
040	752649-0000	-		1	CANTILEVER	
050	2033-0009	-		16	WASHER	
055	2033-0014	-		6	WASHER	
060	27815-0000	-		2	WASHER	
070	978756-0000	B		2	PIN	
080	295744-0000	B		1	SCREW	
090	295749-0000	-		1	ADJUSTING BLOCK	
110	295750-0002	-		1	STEERING RAIL	
400	90240-0180	B		4	FLANGE BUSHING,10X14X15 MM NFB	
500	312105-0333	-		2	SCREW M6S ISO 4017 M5X25 A480	
501	312105-0366	-		2	SCREW M6S M6X12 A280	
504	311103-0405	-		1	PARALLELL PIN, M6, 8X30 MM	
506	312105-0370	-		4	SCREW M6S ISO 4017 M6X20 A480	
510	312105-0457	-		4	SCREW M6S ISO 4014 M8X35 A480	
520	312105-0459	-		2	SCREW M6S ISO 4014 M8X40 A480	
522	312115-0453	-		1	SCREW MC6S M8X25 A280	
524	312318-0321	-		1	SCREW HEX.SOCK.SET CUP P.MSK6SS 5X6 SS	
526	312625-0316	-		2	NUT HEX. M6 SS	
530	312811-0320	-		2	NUT HEX.LOCK HELI COIL MID GRIP M10 SS	
534	315105-0153	-		8	WASHER PLAIN, BRB, 6,4/12,H=1,5	
540	315105-0165	-		3	WASHER PLAIN, BRB, 8,4/16,H=1,5	
550	315105-0173	-		2	WASHER PLAIN, BRB, 10,5/22,H=2	
560	315115-0165	-		4	WASHER PLAIN, TBRB 8,4/16 H=3	

Pos	Part No	SP	UN	Qty	Description	Page No

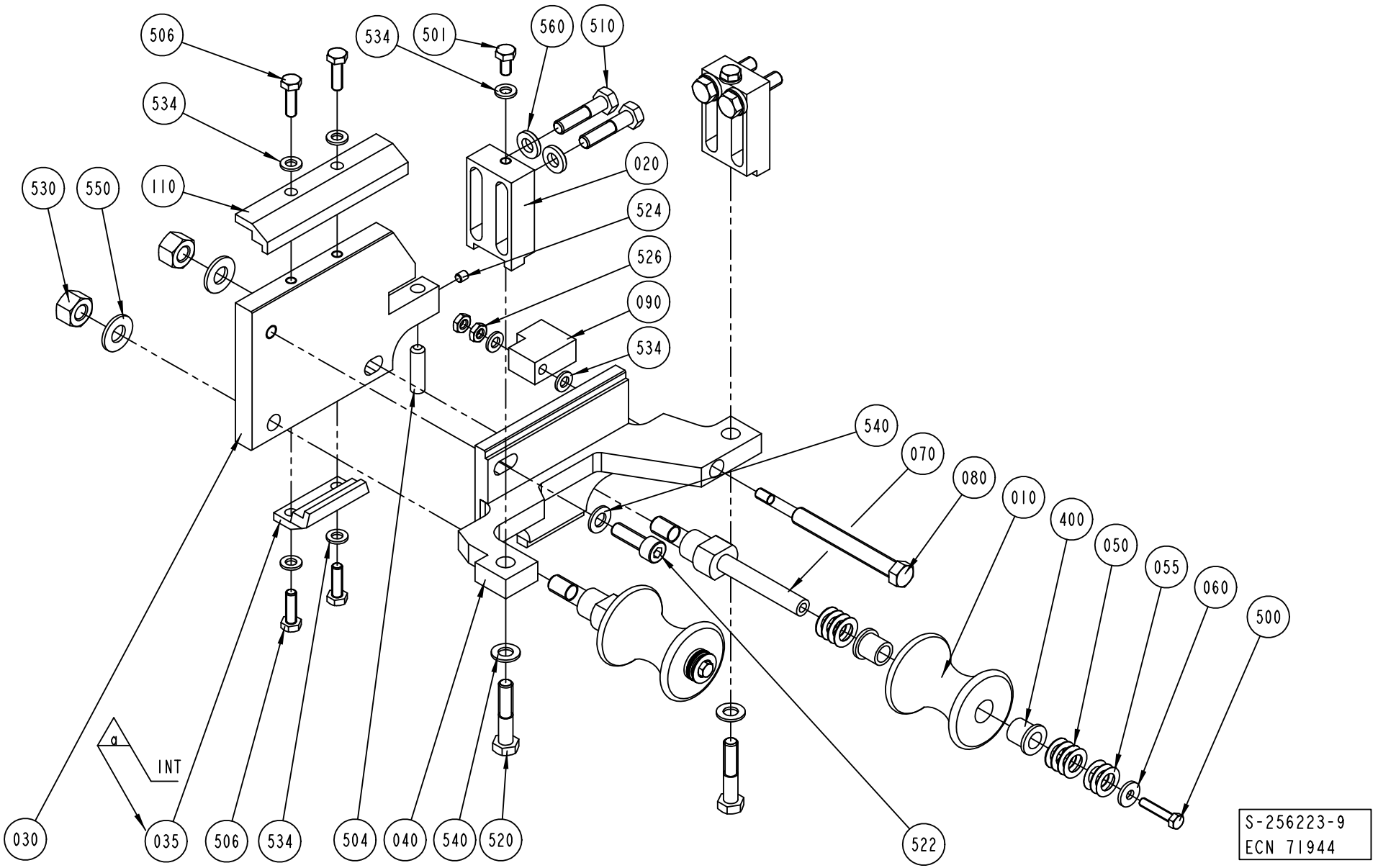
506
534
501
560
510
534
530
550
110
020
524
526
090
534
540
070
080
010
400
050
055
060
500
INT
030
035
506
534
504
040
540
520
522
S-256223-9
ECN 71944

ECM: 101840 - 20011203
Group number: 256223-0400
Assembly Drawing: 256223-9_1_AB

Issue: 20020822

Pos	Part No	SP	UN	Qty	Description	Page No
NOPT TWA 0200S IH						
010	978760-0000	A		2	ROLLER TBA200SL	
020	272974-0001	-		2	BRACKET	
030	295748-0003	-		1	BACK PIECE	
NOPT TBA 0200B IH OR NOPT TBA 0250B IH						
010	978757-0000	A		2	ROLLER 180-284ML	
020	272974-0001	-		2	BRACKET	
030	295748-0001	-		1	BACK PIECE	
Common Parts						
040	752649-0000	-		1	CANTILEVER	
050	2033-0009	-		16	WASHER	
055	2033-0014	-		6	WASHER	
060	27815-0000	-		2	WASHER	
070	978756-0000	B		2	PIN	
080	295744-0000	B		1	SCREW	
090	295749-0000	-		1	ADJUSTING BLOCK	
110	295750-0002	-		1	STEERING RAIL	
400	90240-0180	B		4	FLANGE BUSHING,10X14X15 MM NFB	
500	312105-0333	-		2	SCREW M6S ISO 4017 M5X25 A480	
501	312105-0366	-		2	SCREW M6S M6X12 A280	
504	311103-0405	-		1	PARALLELL PIN, M6, 8X30 MM	
506	312105-0370	-		4	SCREW M6S ISO 4017 M6X20 A480	
510	312105-0457	-		4	SCREW M6S ISO 4014 M8X35 A480	
520	312105-0459	-		2	SCREW M6S ISO 4014 M8X40 A480	
522	312115-0453	-		1	SCREW MC6S M8X25 A280	
524	312318-0321	-		1	SCREW HEX.SOCK.SET CUP P.MSK6SS 5X6 SS	
526	312625-0316	-		2	NUT HEX. M6 SS	
530	312811-0320	-		2	NUT HEX.LOCK HELI COIL MID GRIP M10 SS	
534	315105-0153	-		8	WASHER PLAIN, BRB, 6,4/12,H=1,5	
540	315105-0165	-		3	WASHER PLAIN, BRB, 8,4/16,H=1,5	
550	315105-0173	-		2	WASHER PLAIN, BRB, 10,5/22,H=2	
560	315115-0165	-		4	WASHER PLAIN, TBRB 8,4/16 H=3	

Pos	Part No	SP	UN	Qty	Description	Page No

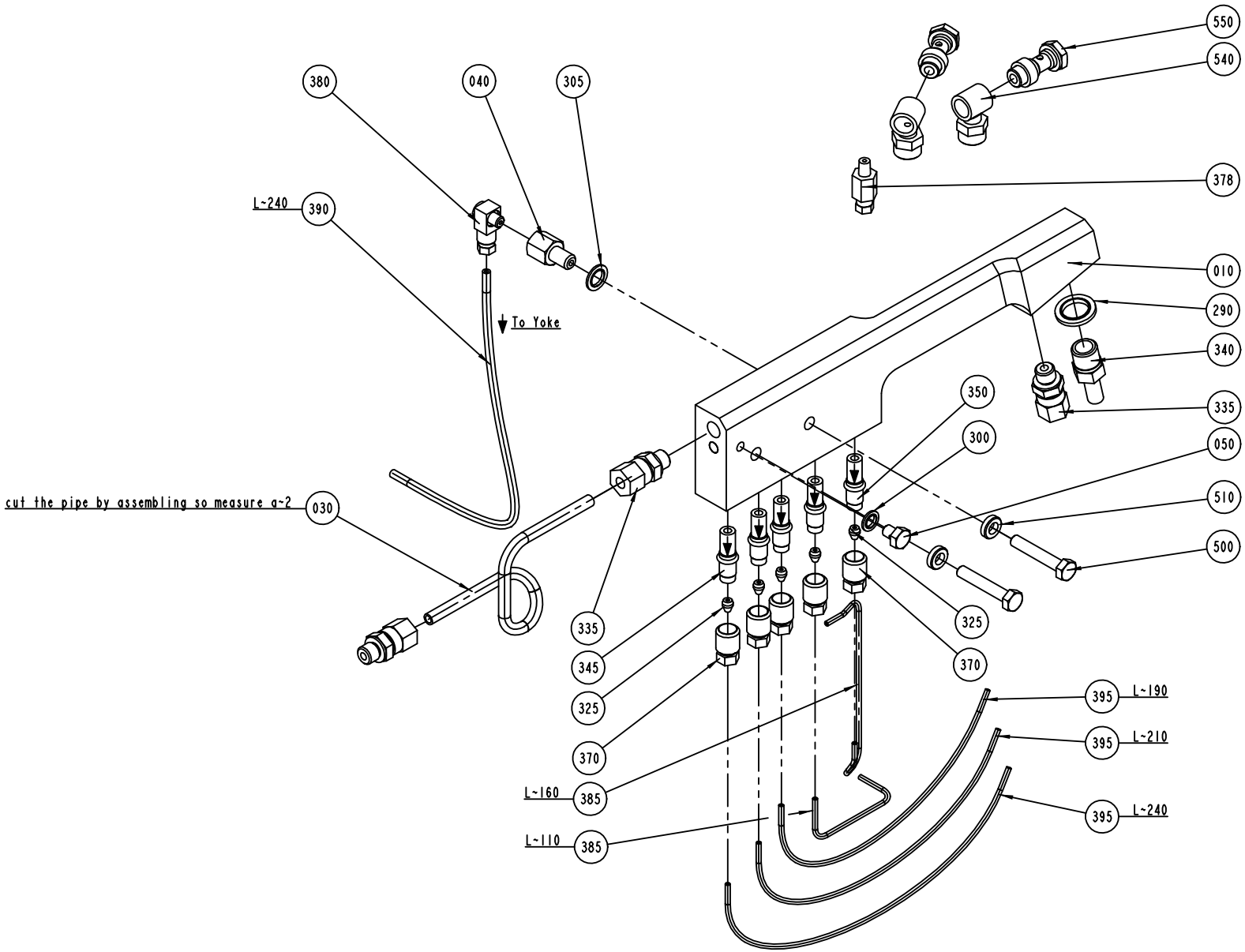

S-257381-3
ECN 71944

ECM: 101838 - 20011203
Group number: 257381-0300
Assembly Drawing: 257381-3_1_AB

Issue: 20020822

Pos	Part No	SP	UN	Qty	Description	Page No
Common Parts						
010	456017-0000	B		1	HOSE HOLDER RIGHT	
030	257379-0000	B		1	HYDRAULIC PIPE RIGHT	
040	257000-0000	B		1	NIPPLE	
050	441355-0000	A		1	BLEEDING SCREW	
290	90005-0003	A		1	GASKET BOLT HEAD 6,7X11X1 MM M6	
300	90005-0005	A		1	GASKET BOLT HEAD 13,7X20,6X2,1 MM G1/4"	
305	90005-0007	A		1	GASKET BOLT HEAD 8,7X14X1 MM M8	
325	90028-0020	A		5	CONE TUBE 2,5MM	
335	90030-0184	A		3	CONN. STR. GA-6-G1/8	
340	90030-0065	A		1	PIPE CONNECTION	
345	90092-0052	A		4	METERING VALVE 10 MM3	
350	90092-0053	A		1	METERING VALVE 30 MM3	
370	90134-0039	A		5	BUSHING VALVE CONNECTION 2,5 MM	
378	90134-0066	-		1	CONNECTION M6 TUBE 4 MM	
380	90134-0068	-		1	CONNECTION	
385	90266-0019	-	MM	270	PIPE	
390	90166-0109	-	MM	240	TUBE 4 MM PA,TRANSP.	
395	90166-0143	-	MM	580	TUBE 2,5 MM PA,TRANSP.	
500	312105-0376	-		2	SCREW M6S ISO 4014 M6X35 A480	
510	315115-0153	-		2	WASHER PLAIN, TBRB 6,4/12 H=3	
540	342980-0121	-		2	BANJO-CONNECTION,RING 8/6-G1/8"	
550	342980-0303	-		2	BANJO-HOLLOW BOLT COUPL,EXT.THR.01-G1/8"	

Pos	Part No	SP	UN	Qty	Description	Page No

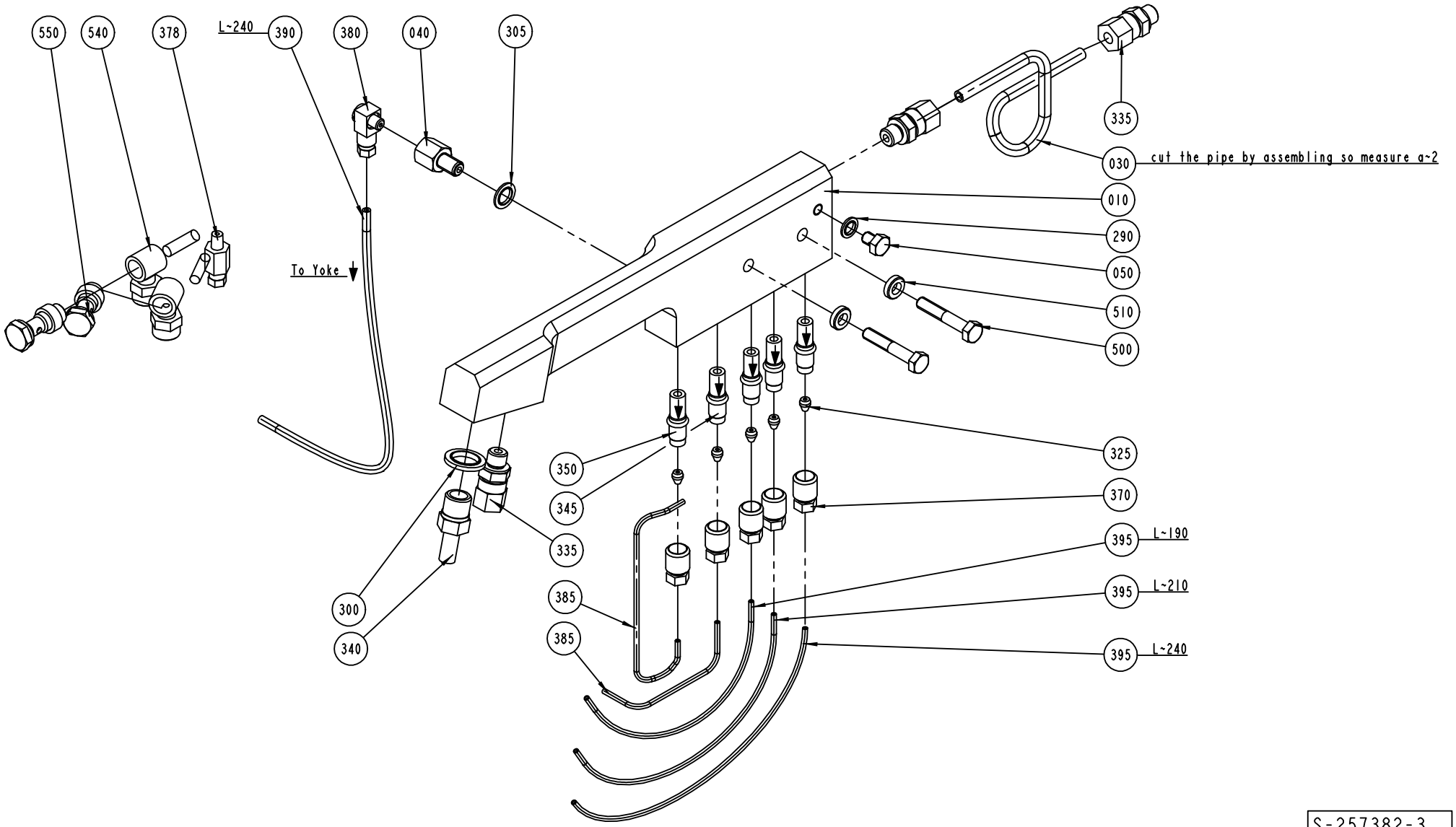

S-257382-3
ECN 71944

ECM: 101438 - 20011203
Group number: 257382-0300
Assembly Drawing: 257382-3_1_AB

Issue: 20020822

Pos	Part No	SP	UN	Qty	Description	Page No
Common Parts						
010	456018-0000	B		1	HOSE HOLDER LEFT	
030	257380-0000	B		1	HYDRAULIC PIPE LEFT	
040	257000-0000	B		1	NIPPLE	
050	441355-0000	A		1	BLEEDING SCREW	
290	90005-0003	A		1	GASKET BOLT HEAD 6,7X11X1 MM M6	
300	90005-0005	A		1	GASKET BOLT HEAD 13,7X20,6X2,1 MM G1/4"	
305	90005-0007	A		1	GASKET BOLT HEAD 8,7X14X1 MM M8	
325	90028-0020	A		5	CONE TUBE 2,5MM	
335	90030-0184	A		3	CONN. STR. GA-6-G1/8	
340	90030-0065	A		1	PIPE CONNECTION	
345	90092-0052	A		4	METERING VALVE 10 MM3	
350	90092-0053	A		1	METERING VALVE 30 MM3	
370	90134-0039	A		5	BUSHING VALVE CONNECTION 2,5 MM	
378	90134-0066	-		1	CONNECTION M6 TUBE 4 MM	
380	90134-0068	-		1	CONNECTION	
385	90266-0019	-	MM	270	PIPE	
390	90166-0109	-	MM	240	TUBE 4 MM PA,TRANSP.	
395	90166-0143	-	MM	580	TUBE 2,5 MM PA,TRANSP.	
500	312105-0376	-		2	SCREW M6S ISO 4014 M6X35 A480	
510	315115-0153	-		2	WASHER PLAIN, TBRB 6,4/12 H=3	
540	342980-0121	-		2	BANJO-CONNECTION,RING 8/6-G1/8"	
550	342980-0303	-		2	BANJO-HOLLOW BOLT COUPL,EXT.THR.01-G1/8"	

Pos	Part No	SP	UN	Qty	Description	Page No

Tetra Pak

SPC
Spare Parts Catalogue

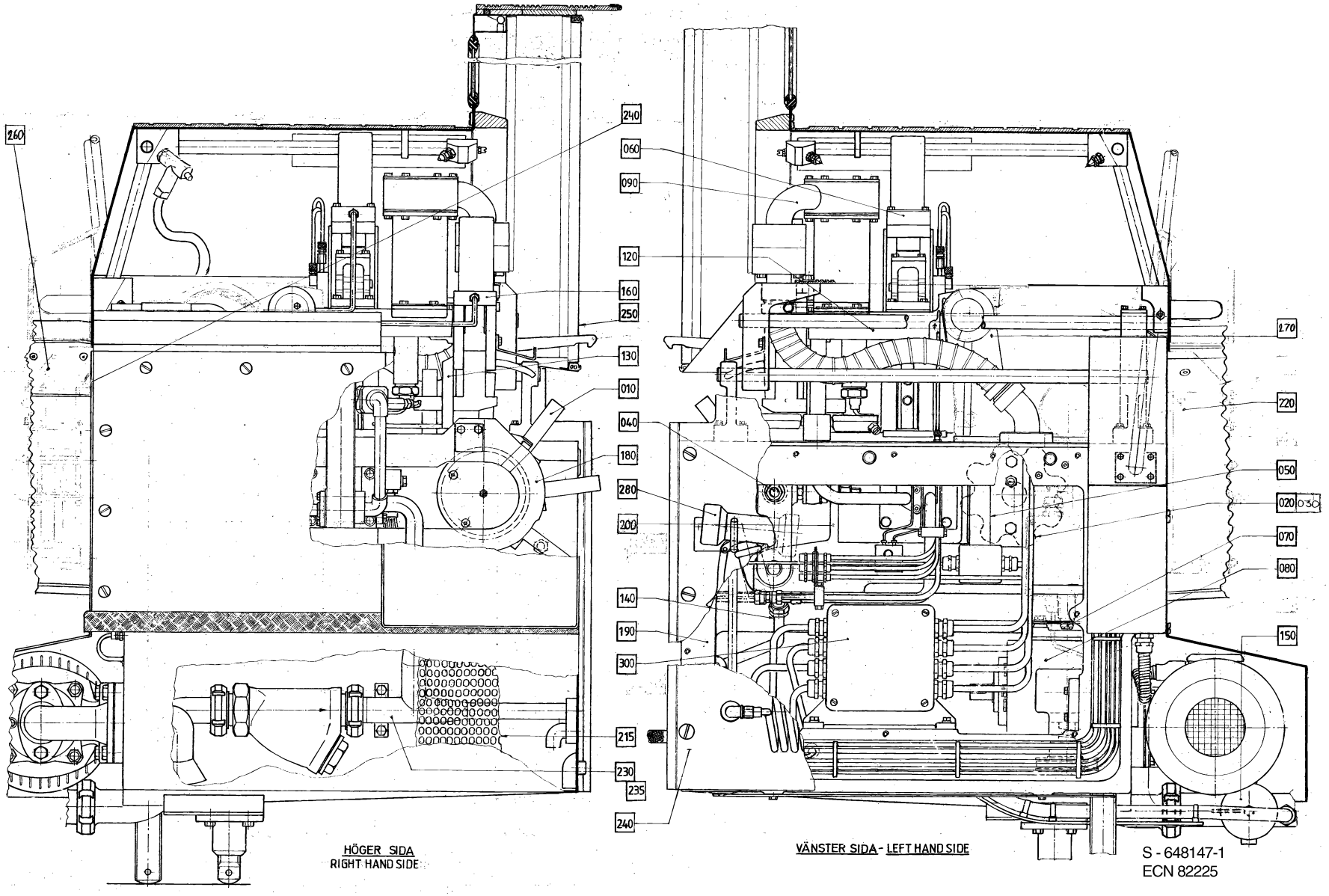
260
240
060
090
120
160
250
130
010
040
180
280
200
140
190
300
215
230
235
240
270
220
050
020
030
070
080
150
HÖGER SIDA
RIGHT HAND SIDE
VÄNSTER SIDA - LEFT HAND SIDE
S - 648147-1
ECN 82225

Pos	Part No	SP	UN	Qty	Description	Page No
TBA,SOURCE,TBA/9-100V OR TBA,SOURCE,TBA/9-110V						
010	A491225-0100	C		1	STATION CHAIN	**441**
020	A491850-0100	-		1	DRIVE WHEEL	**443, 445**
040	A441594-0100	-		1	TENSION SPROCKET	**447**
050	A256410-0300	-		1	INDEXING UNIT	**449**
060	A256436-0500	-		1	PRESSURE DEVICE	**451**
090	A256547-0300	-		1	ELEMENT	**453**
120	A1529397-0100	-		1	FRAME	**459**
130	A295218-0100	-		1	FOLDING BAR	**461**
140	A1529134-0100	-		1	PIPE WORK	**463**
150	A256674-0200	-		1	BOTTOM VALVE	**465**
160	A256712-0400	-		1	PULL-DOWN DEVICE	**467, 469**
180	A491259-0100	-		1	GUIDE	**471**
190	A441695-0100	-		1	MACHINE BODY	**473**
200	A1529142-0100	-		1	CANTILEVER	**475**
215	A456567-0100	-		1	SEPARATION INSERT	**481**
220	A1529147-0100	-		1	OUTFEED TRANSFER	**483**
230	A456588-0300	-		1	CLEANING SYSTEM	**491**
240	A1529149-0100	-		1	COVERING PANEL	**495**
250	A1529055-0100	-		1	PROTECTIVE COVER	**499, 501**
260	A1091733-0100	-		1	PROTECTION	**509**
270	A1529148-0100	-		1	MOUNTING PLATE	**513**
TBA,SOURCE,TBA/9-120V						
010	A491225-0100	C		1	STATION CHAIN	**441**
040	A491846-0100	-		1	TENSION SPROCKET	**525**
050	A256410-0400	-		1	INDEXING UNIT	**527**
060	A256436-0500	-		1	PRESSURE DEVICE	**451**
090	A256547-0300	-		1	ELEMENT	**453**
120	A1529397-0100	-		1	FRAME	**459**
130	A295218-0100	-		1	FOLDING BAR	**461**
140	A1529134-0100	-		1	PIPE WORK	**463**
150	A256674-0200	-		1	BOTTOM VALVE	**465**
160	A256712-0400	-		1	PULL-DOWN DEVICE	**467, 469**
180	A491259-0100	-		1	GUIDE	**471**
190	A441695-0100	-		1	MACHINE BODY	**473**
200	A1529142-0100	-		1	CANTILEVER	**475**
215	A456567-0100	-		1	SEPARATION INSERT	**481**
220	A1529147-0100	-		1	OUTFEED TRANSFER	**483**
230	A456588-0300	-		1	CLEANING SYSTEM	**491**
240	A1529149-0100	-		1	COVERING PANEL	**495**
250	A1529055-0100	-		1	PROTECTIVE COVER	**499, 501**
260	A1091733-0100	-		1	PROTECTION	**509**
270	A1529148-0100	-		1	MOUNTING PLATE	**513**
TWA,SOURCE,TBA/9-100V OR TWA,SOURCE,TBA/9-110V						
010	A591634-0100	C		1	STATION CHAIN	**529**
015	A1529403-0100	-		1	GUIDE RAIL	**531**
020	A491850-0100	-		1	DRIVE WHEEL	**443, 445**
040	A1360718-0100	-		1	TENSION SPROCKET	**533**
050	A256410-0300	-		1	INDEXING UNIT	**449**
060	A2547176-0100	-		1	PRESSURE DEVICE	**535**
090	A1529390-0100	-		1	SEALING UNIT	**537**
120	A2549232-0100	-		1	FRAME	**539**
130	A591678-0100	-		1	FOLDING BAR	**541**
140	A1529337-0100	-		1	PIPE WORK	**543**
150	A2552501-0100	-		1	BOTTOM VALVE	**545**
160	A591677-0100	-		1	PULL DOWN DEVICE	**547**
180	A591680-0100	-		1	GUIDE	**549**
190	A1529310-0100	-		1	MACHINE BODY	**551**
200	A1529329-0100	-		1	CANTILEVER	**553**
230	A1529324-0100	-		1	CLEANING SYSTEM	**557**
240	A1529430-0100	-		1	COVERING PANEL	**559**
250	A1529311-0100	-		1	PROTECTIVE COVER	**563, 565, 567**
310	A591514-0100	-		1	TURNING DEVICE	**571**
320	A2545018-0100	-		1	FINGER	**573**
TWA,SOURCE,TBA/9-120V						
010	A591634-0100	C		1	STATION CHAIN	**529**
015	A1529403-0100	-		1	GUIDE RAIL	**531**
020	A491850-0100	-		1	DRIVE WHEEL	**443, 445**
040	A1360718-0100	-		1	TENSION SPROCKET	**533**
050	A256410-0400	-		1	INDEXING UNIT	**527**
060	A2547176-0100	-		1	PRESSURE DEVICE	**535**
090	A1529390-0100	-		1	SEALING UNIT	**537**
120	A2549232-0100	-		1	FRAME	**539**
130	A591678-0100	-		1	FOLDING BAR	**541**
140	A1529337-0100	-		1	PIPE WORK	**543**
150	A2552501-0100	-		1	BOTTOM VALVE	**545**
160	A591677-0100	-		1	PULL DOWN DEVICE	**547**
180	A591680-0100	-		1	GUIDE	**549**
190	A1529310-0100	-		1	MACHINE BODY	**551**
200	A1529329-0100	-		1	CANTILEVER	**553**
230	A1529324-0100	-		1	CLEANING SYSTEM	**557**

Machine Type | Group Description | Used-In | Group Number | Page No

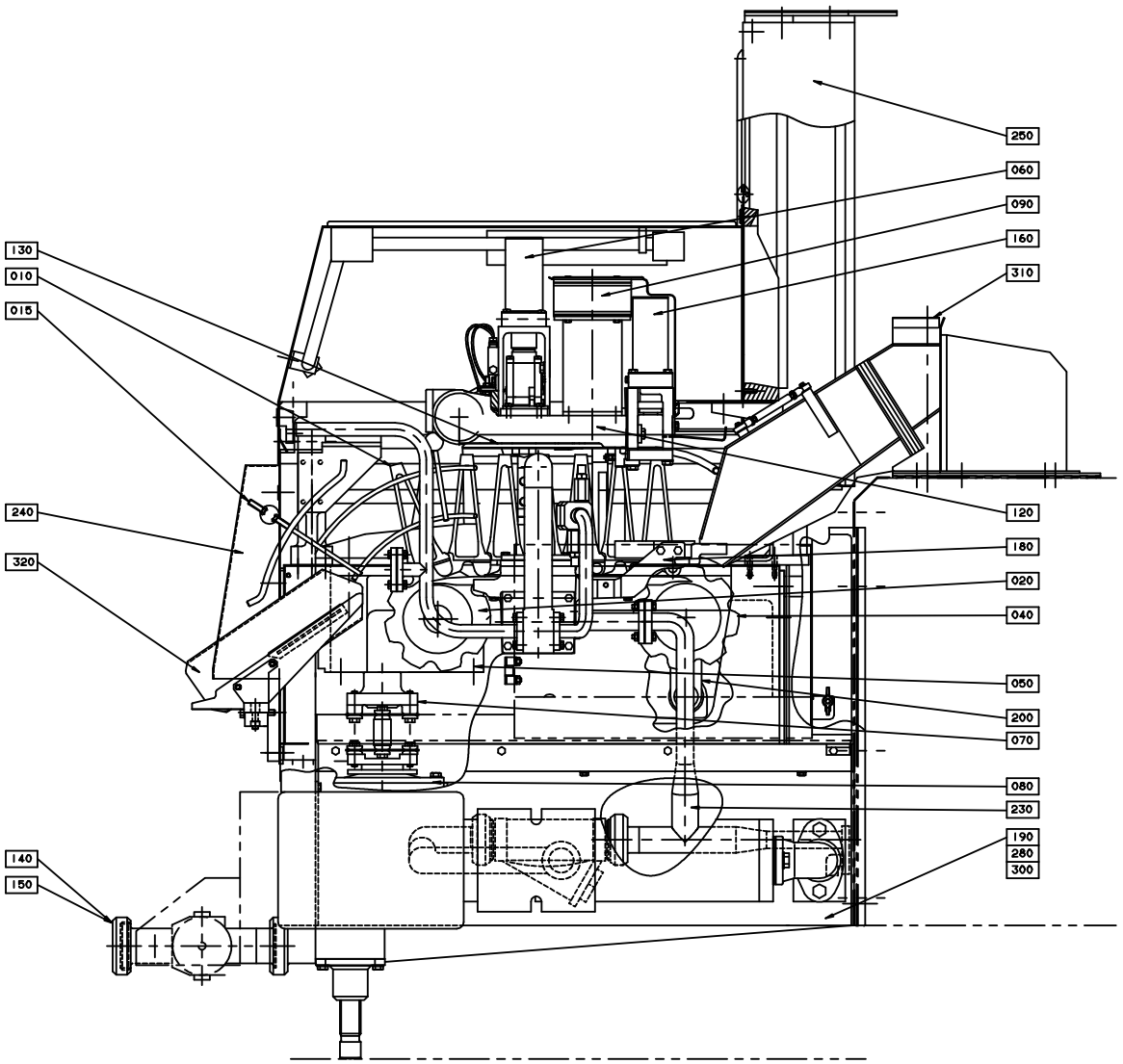
250
060
090
160
310
130
010
015
120
240
180
320
020
040
050
200
070
080
230
190
280
300
140
150

Pos	Part No	SP	UN	Qty	Description	Page No
TWA,SOURCE,TBA/9-120V (Cont'd)						
240	A1529430-0100	-		1	COVERING PANEL	**559**
250	A1529311-0100	-		1	PROTECTIVE COVER	**563, 565, 567**
310	A591514-0100	-		1	TURNING DEVICE	**571**
320	A2545018-0100	-		1	FINGER	**573**
Common Parts						
	A1529359-0100	-		1	MODIFIED ARTICLES:	
070	A256437-0200	-		1	DISC COUPLING	**575**
080	A256438-0200	-		1	WORM GEAR	**577, 579**
280	A271387-0300	-		1	SPRAY GUN	**581**
300	A1529141-0100	-		1	CABLE CONNECTION	**583, 585**

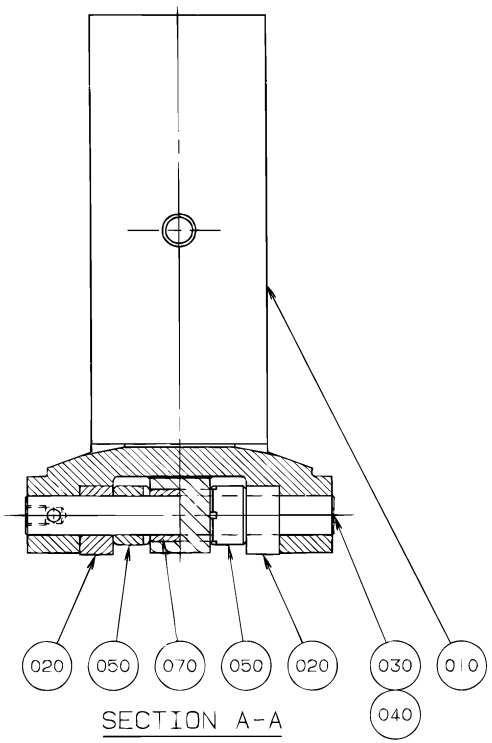

SECTION A-A

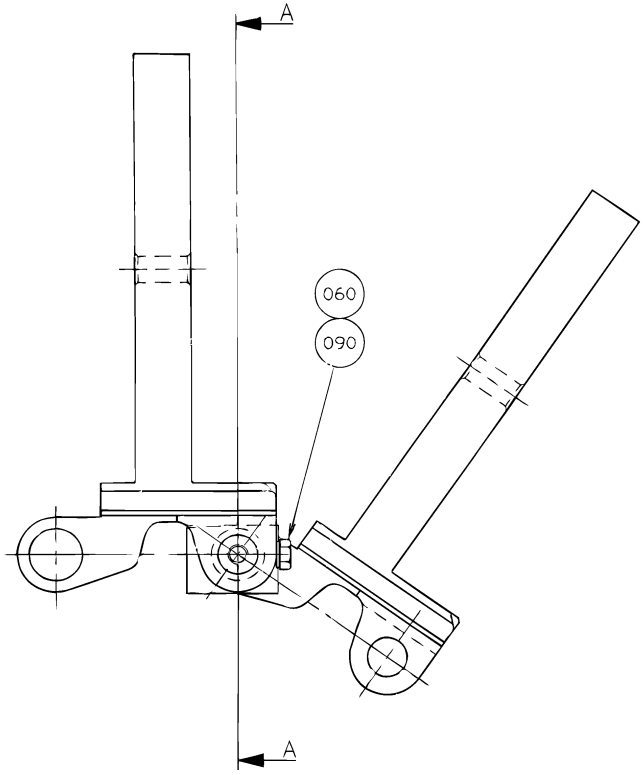

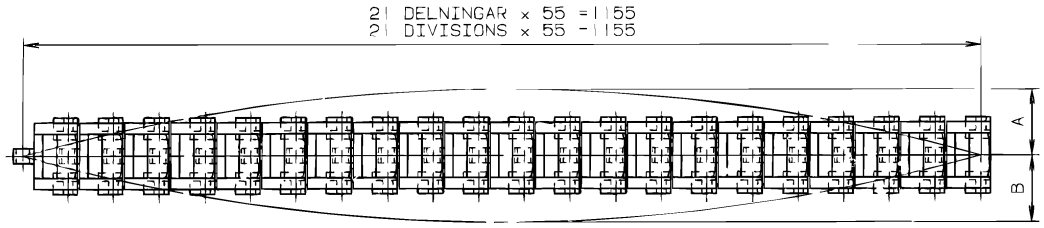

Skillnaden mellan A och B skall vara mindre än 3mm.
Vridningstoleransen skall vara densamma.

The difference between A and B has to be less than 3mm.
The torsional tolerance has to be the same.

S - 491225-1
ECN 82225

ECM: 96837 - 20010901
Group number: 491225-0100
Assembly Drawing: 491225-1_1_AA

Issue: 20020822

Pos	Part No	SP	UN	Qty	Description	Page No
0200B						
010	752048-0004	A		21	CARTON STATION WITH BEVEL	
0200S						
010	1282444-0000	A		21	CARTON STATION WITH BEVEL	
0250B						
010	752048-0002	A		21	CARTON STATION WITH BEVEL	
Common Parts						
020	491227-0000	A		42	SLIDER	
030	491228-0001	A		18	SHAFT	
040	491228-0002	A		3	SHAFT	
050	491229-0000	A		42	BUSHING	
060	491230-0000	A		21	GRUB SCREW	
070	491231-0000	A		21	BUSHING	
090	315233-0101	A		21	WASHER PL.RND.NYL.5,2/8,H=1	

Pos	Part No	SP	UN	Qty	Description	Page No

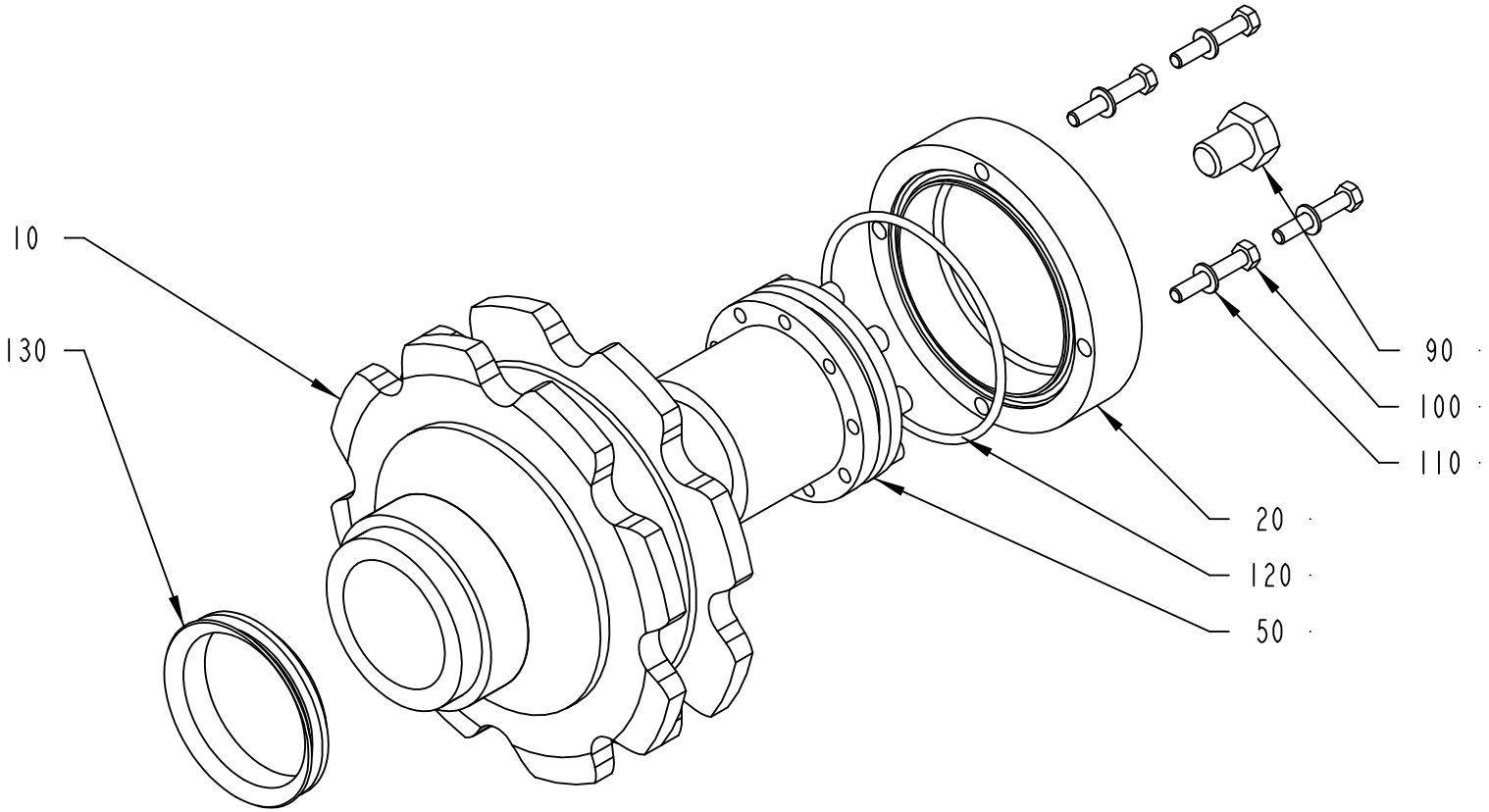

491850-1
ECM 73145

Pos	Part No	SP	UN	Qty	Description	Page No
TPA 0250SQ						
010	1143975-0000	A		1	DRIVE WHEEL	
TBA 0200B OR TBA 0200S OR TBA 0250B OR TWA 0200S						
010	491258-0000	A		1	DRIVE WHEEL	
Common Parts						
020	491851-0000	A		1	LID	
050	90208-0031	A		1	BUSHING	
090	312101-0530	-		1	SCREW M6S M12X16 FZB	
100	312105-0335	-		4	SCREW M6S ISO 4014 M5X30 A480	
110	315105-0146	-		4	WASHER PLAIN, BRB, 5,3/10,H=1	
120	315202-0306	A		1	O-RING 74,5X3 MM	
130	315220-0210	A		1	V-RINGS 54X64X13 MM V-60S	

Pos	Part No	SP	UN	Qty	Description	Page No

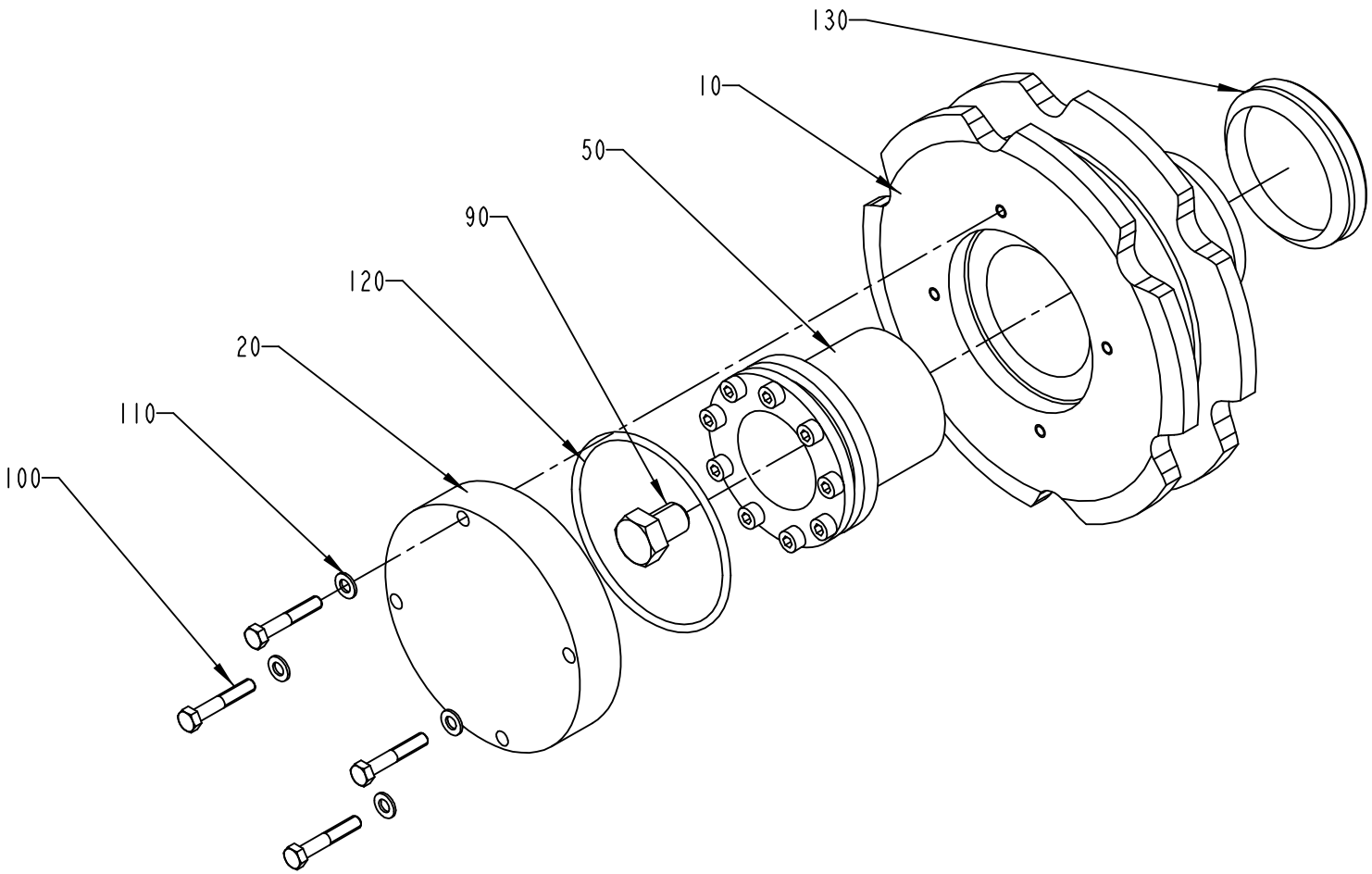

S-491850-2
ECN 725001

ECM: 113156 - 20020731
Group number: 491850-0100
Assembly Drawing: 491850-2_1_AC

Issue: 20020822

Pos	Part No	SP	UN	Qty	Description	Page No
TPA 0250SQ						
010	1143975-0000	A		1	DRIVE WHEEL	
TBA 0200B OR TBA 0200S OR TBA 0250B OR TWA 0200S						
010	491258-0000	A		1	DRIVE WHEEL	
Common Parts						
020	491851-0000	A		1	LID	
050	90208-0031	A		1	BUSHING	
090	312101-0530	-		1	SCREW M6S M12X16 FZB	
100	312105-0335	-		4	SCREW M6S ISO 4014 M5X30 A480	
110	315105-0146	-		4	WASHER PLAIN, BRB, 5,3/10,H=1	
120	315202-0306	A		1	O-RING 74,5X3 MM	
130	315220-0210	A		1	V-RINGS 54X64X13 MM V-60S	

Pos	Part No	SP	UN	Qty	Description	Page No

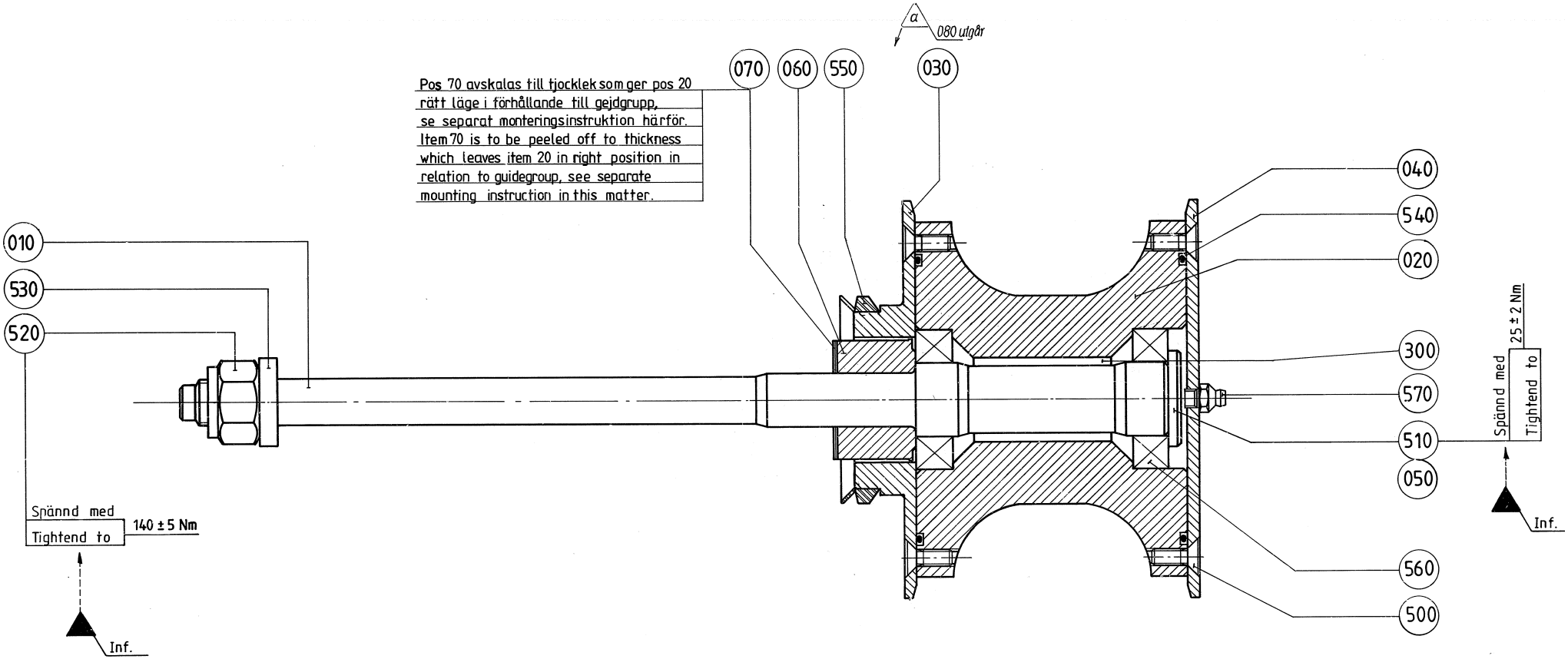
α
080 utgår
070
060
550
030
Pos 70 avskalas till tjocklek som ger pos 20 rätt läge i förhållande till gejdgrupp, se separat monteringsinstruktion härför.
Item 70 is to be peeled off to thickness which leaves item 20 in right position in relation to guidegroup, see separate mounting instruction in this matter.
010
530
520
040
540
020
300
570
510
050
560
500
Spännd med
Tightend to
25 ± 2 Nm
Inf.
Spännd med
Tightend to
140 ± 5 Nm
Inf.

ECM: 102324 - 20011203
Group number: 441594-0100
Assembly Drawing: 441594-1_1_AA

Issue: 20020822

Pos	Part No	SP	UN	Qty	Description	Page No
Common Parts						
010	441583-0000	A		1	SHAFT	
020	441584-0000	A		1	TENSION SPROCKET	
030	491312-0000	A		1	GUIDE FLANGE LEFT	
040	491310-0000	A		1	GUIDING FLANGE RIGHT	
050	441587-0000	A		1	WASHER	
060	441588-0000	A		1	SPACER	
070	441589-0000	A		1	SHIM	
300	90296-0070	-	G	40	GREASE	
500	312155-0368	-		8	SCREW HEX.SOCK.COUNT.MF6S M6X16 A280	
510	312151-0460	-		1	SCREW HEX.SOCK.COUNT.MF6S 8X45 FZB	
520	312810-0324	-		1	HEXAGON NUT, NY-LOCK M16 FZB	
530	315111-0186	-		1	WASHER PLAIN, TBRB 17/30 H=6	
540	315202-0309	A		2	O-RING 89,5X3 MM	
550	315220-0210	A		1	V-RINGS 54X64X13 MM V-60S	
560	321306-0105	A		2	BALL BEARING, 25X47X12 MM	
570	344502-0021	-		1	GREASE NIPPLE STRAIGHT M6	

Pos	Part No	SP	UN	Qty	Description	Page No

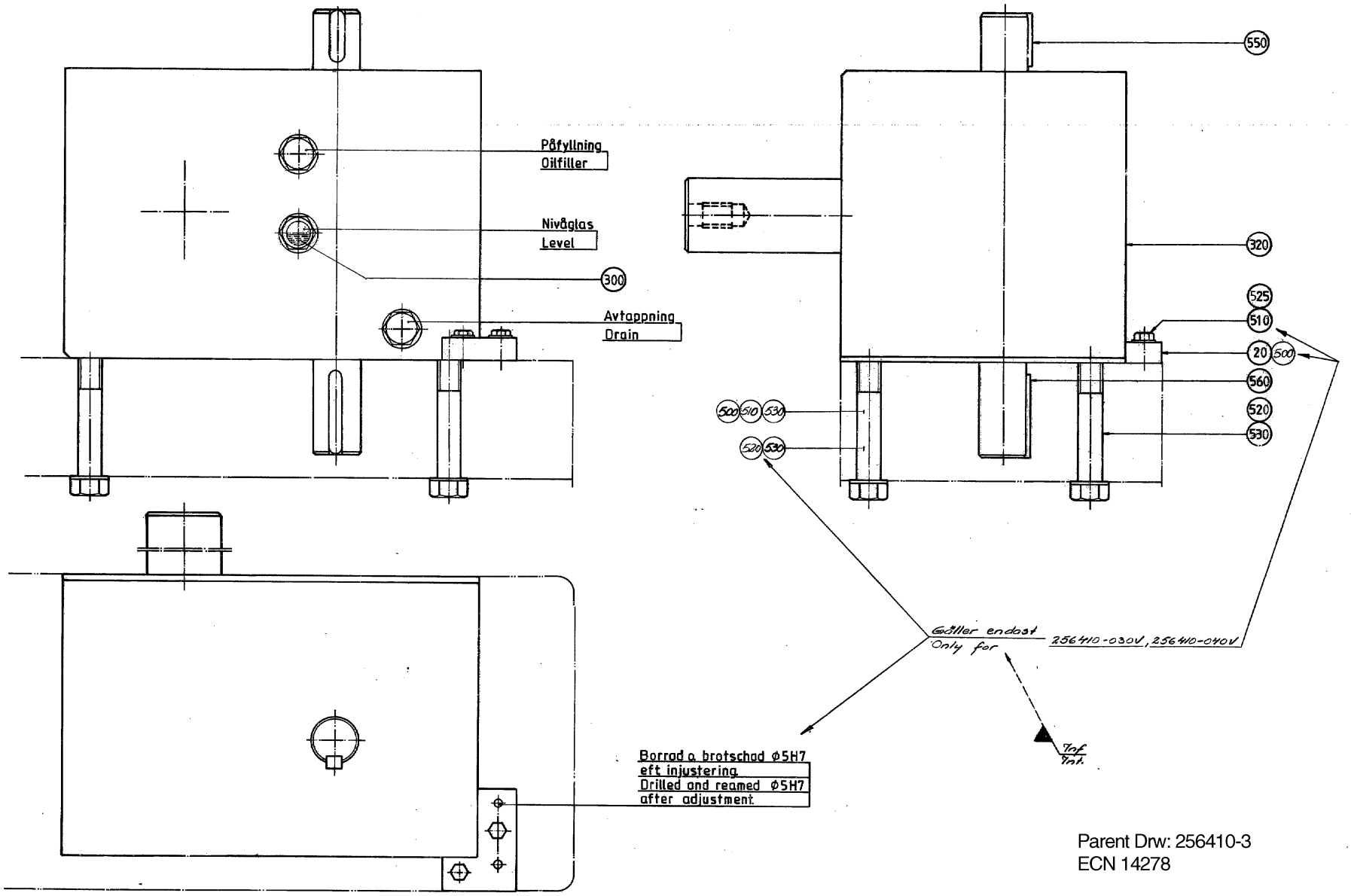

Parent Drw: 256410-3
ECN 14278

Pos	Part No	SP	UN	Qty	Description	Page No
Common Parts						
020	256412-0000	-		1	HEAD PLATE	
300	90296-0028	-	L	4	OIL (QTY OF STOCK REFLECTS LITERS)	
320	B90416-0014	A		1	INDEXING DEVICE	
	90416-0363	*C*		*1*	*RING*	
	90416-0362	*C*		*1*	*RING*	
	90416-0361	*C*		*1*	*O-RING FOR 90416-14*	
	90416-0360	*C*		*1*	*RING*	
	90416-0359	*C*		*1*	*RING*	
	90416-0358	*C*		*1*	*FLANGE*	
500	311103-0308	-		2	PARALLELL PIN, M6, 5X16 MM	
510	312105-0331	-		2	SCREW M6S ISO 4017 M5X20 A480	
520	312105-0547	-		4	SCREW M6S ISO 4014 M12X75 A480	
525	315105-0146	-		2	WASHER PLAIN, BRB, 5,3/10,H=1	
530	315111-0178	-		4	WASHER PLAIN, TBRB 13/24 H=4	
550	315701-0263	-		1	PARALLEL KEY W. ROUND ENDS 8X7X20 MM	
560	315701-0271	-		1	PARALLEL KEY W. ROUND ENDS 8X7X45 MM	

Pos	Part No	SP	UN	Qty	Description	Page No

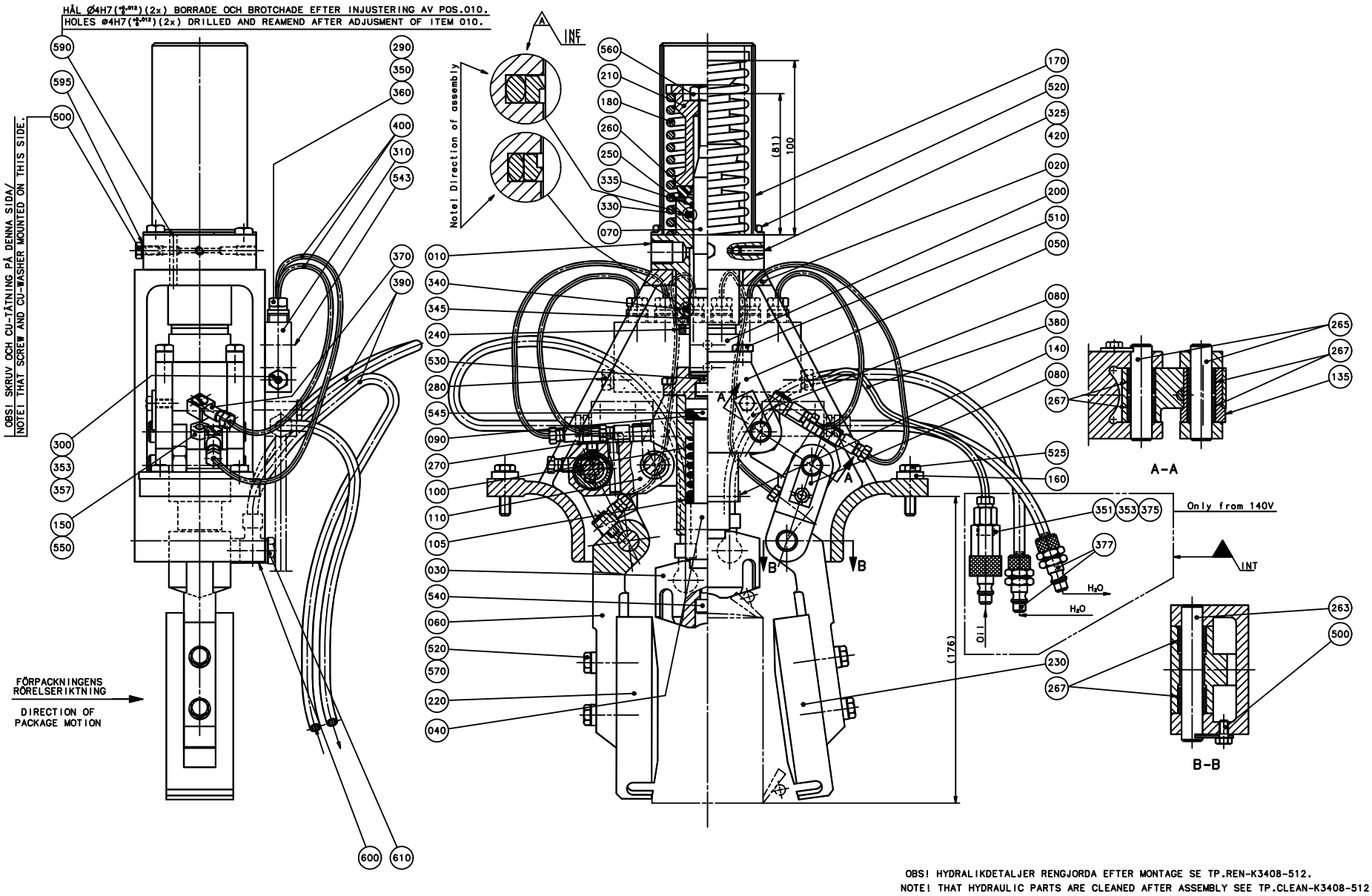

OBS! HYDRAULIKDETALJER RENGJORDA EFTER MONTAGE SE TP.REN-K3408-512.
NOTE! THAT HYDRAULIC PARTS ARE CLEANED AFTER ASSEMBLY SEE TP.CLEAN-K3408-512

ECM: 82452 - 20010226
Group number: 256436-0500
Assembly Drawing: 256436-8_1_AA

Issue: 20020822

Pos	Part No	SP	UN	Qty	Description	Page No
0200B						
030	491798-0000	-		1	BLOCKING PIECE	
040	491772-0004	-		1	SPINDLE	
220	456864-0001	-		1	BLOCK RIGHT	
230	456865-0001	-		1	BLOCK LEFT	
520	312105-0374	-		6	SCREW M6S ISO 4014 M6X30 A480	
570	315115-0153	-		2	WASHER PLAIN, TBRB 6,4/12 H=3	
0200S						
030	491800-0000	-		1	BLOCKING PIECE	
040	491772-0001	-		1	SPINDLE	
220	469406-0000	-		1	BLOCKING PIECE	
230	469405-0000	-		1	BLOCKING PIECE	
520	312105-0374	-		8	SCREW M6S ISO 4014 M6X30 A480	
570	315115-0153	-		4	WASHER PLAIN, TBRB 6,4/12 H=3	
0250B						
030	491798-0000	-		1	BLOCKING PIECE	
040	491772-0002	-		1	SPINDLE	
220	271052-0002	-		1	BLOCK RIGHT	
230	271051-0002	-		1	BLOCK LEFT	
520	312105-0374	-		8	SCREW M6S ISO 4014 M6X30 A480	
570	315115-0153	-		4	WASHER PLAIN, TBRB 6,4/12 H=3	
Common Parts						
010	490980-0000	-		1	CYLINDER	
020	272576-0000	-		1	BRACKET	
050	491803-0000	-		1	HOUSE	
060	751552-0000	-		2	ARM	
070	752083-0000	-		1	PISTON	
080	21047-0000	-		6	LOCK WASHER	
090	491802-0000	-		1	WASHER	
100	490942-0000	-		1	COMPRESSION SPRING	
105	260427-0000	-		2	WASHER	
110	751553-0000	-		2	ARM	
135	751557-0000	-		2	SLEEVE	
140	256461-0000	-		1	DOWEL	
150	256462-0000	-		2	SCREW	
160	256463-0000	-		2	WASHER	
170	751163-0000	-		1	COVER	
180	271731-0000	-		1	COMPRESSION SPRING	
200	491771-0000	-		1	BRACKET	
210	441894-0000	-		1	SLEEVE	
240	295072-0000	-		1	BUFFER RING	
250	441896-0000	-		1	WASHER	
260	441895-0000	-		1	BUFFER RING	
263	751554-0001	-		2	SHAFT	
265	751554-0002	-		4	SHAFT	
267	751555-0000	-		12	BUSHING	
270	90005-0056	-		2	WASHER PL.RND.NYL.6/8,5,H=1	
280	90087-0019	-		1	PLUG M10X1 STAINLESS	
290	90028-0020	-		6	CONE TUBE 2,5MM	
300	90028-0021	-		1	CONE TUBE 4 MM	
310	90032-0040	-		1	BLOCK 6 WAYS	
325	90090-0013	-		1	BALL, D=4 MM	
330	90091-0160	-		1	ROD SEAL, STEPSEAL 16X23,5X3,2 MM	
335	90091-0162	-		1	WEAR RING 16X19X3,2 MM	
340	90091-0165	-		1	ROD SEAL, STEPSEAL 20X27,5X3,2 MM	
345	90091-0163	-		1	WEAR RING 20X23X3,2 MM	
350	90092-0054	-		6	METERING VALVE 50 MM3	
353	90134-0031	-		1	SLEEVE FOR PLASTIC TUBE	
357	90134-0038	-		1	BUSHING/NUT INLET/OUTLET 4 MM	
360	90134-0039	-		6	BUSHING VALVE CONNECTION 2,5 MM	
370	90134-0058	-		6	CONNECTION	
380	90166-0109	-	MM	700	TUBE 4 MM PA,TRANSP.	
390	90166-0117	-	MM	2500	HOSE 4/6 PVC BLUE	
400	90166-0143	-	MM	1500	TUBE 2,5 MM PA,TRANSP.	
420	90287-0119	-		1	SCREW,SOCK.SET FLATPOINT MMP6SS M5X12 A2	
500	312105-0325	-		7	SCREW M6S ISO 4017 M5X10 A480	
510	312105-0368	-		4	SCREW M6S M6X16 A280	
525	312105-0372	-		4	SCREW M6S ISO 4017 M6X25 A480	
530	312115-0449	-		1	SCREW MC6S M8X16 A280	
540	312115-0455	-		1	SCREW MC6S M8X30 A280	
543	312155-0295	-		2	SCREW HEX.SOCK.COUNT.MF6S M4X20 A480	
545	312155-0449	-		1	SCREW HEX.SOCK.COUNT.MF6S M8X16 A280	
550	312605-0316	-		2	HEXAGON NUT, M6M M6 A280	
560	312605-0320	-		1	HEXAGON NUT, M6M M10 A280	
590	311103-0276	-		2	PARALLELL PIN, M6, 4X30 MM	
595	315234-0101	-		1	WASHER,PL.RND.CU.5/8 H=0,8	
600	342980-0113	-		2	BANJO-CONNECTION,RING 6/4-G1/8"	
610	342980-0303	-		2	BANJO-HOLLOW BOLT COUPL,EXT.THR.01-G1/8"	

Machine Type | Group Description | Used-In | Group Number | Page No

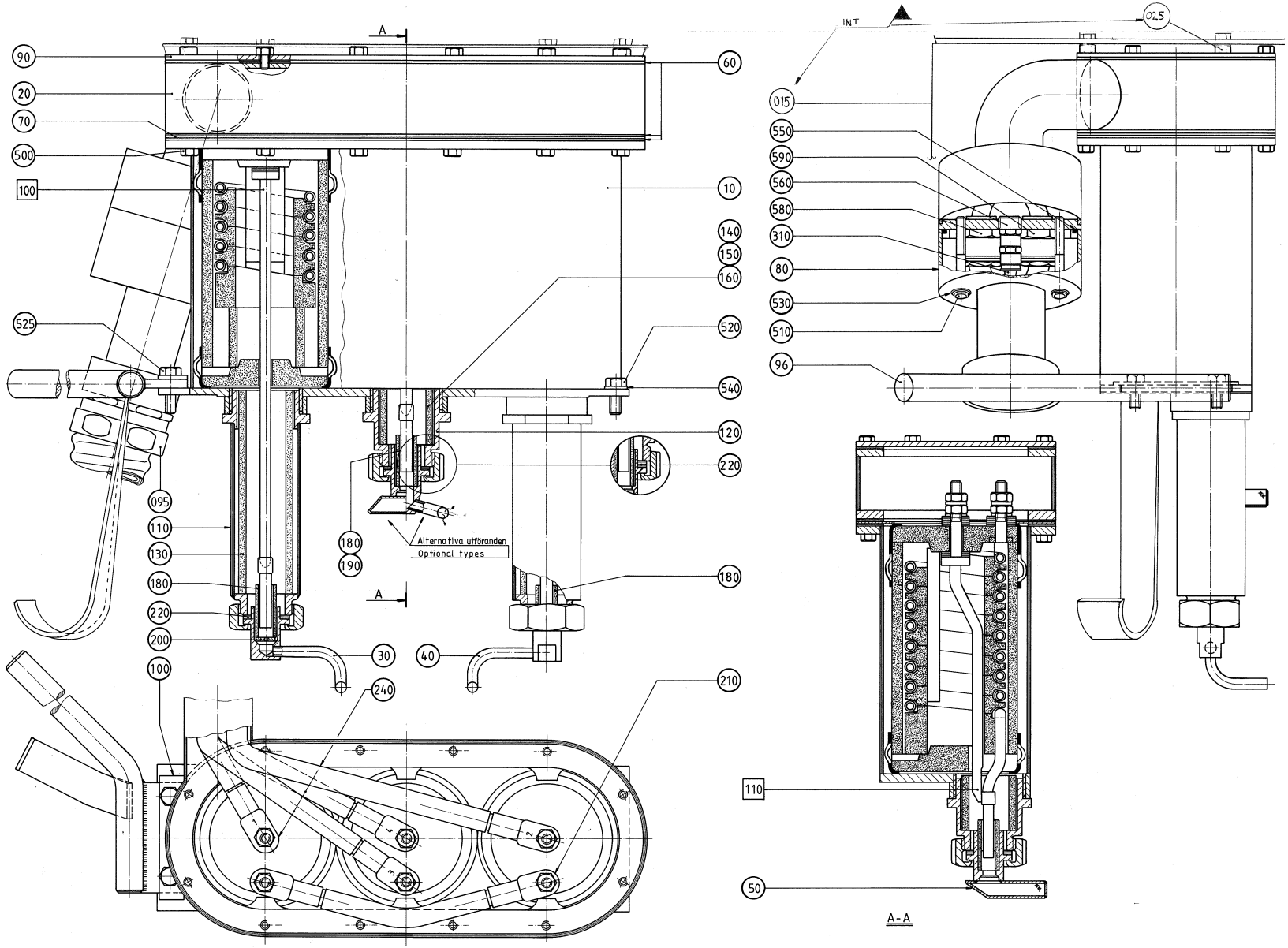
A
90
20
70
500
100
60
10
140
150
160
520
540
120
220
180
525
095
110
130
180
220
200
100
190
Alternativa utföranden
Optional types
30
40
240
210
INT
015
02.5
550
590
560
580
310
80
530
510
96
110
50
A-A

ECM: 102330 - 20011203
Group number: 256547-0300
Assembly Drawing: 256547-3_1_AB

Issue: 20020822

Pos	Part No	SP	UN	Qty	Description	Page No
0200B						
030	B295617-0001	A		1	AIR NOZZLE	
	20704-0000	-		*1*	*NUT*	
040	B295618-0001	A		1	AIR NOZZLE	
	20704-0000	-		*1*	*NUT*	
050	B247227-0001	A		1	AIR NOZZLE	
	20704-0000	-		*1*	*NUT*	
120	23763-0002	B		1	SPACER PIPE	
140	23765-0003	A		1	INSULATING PIPE	
180	252766-0001	A		2	INSULATING PIPE	
190	252766-0002	A		1	INSULATING PIPE	
220	263673-0000	A		6	GASKET	
0200S						
030	B295617-0003	A		1	AIR NOZZLE	
	20704-0000	-		*1*	*NUT*	
040	B295618-0003	A		1	AIR NOZZLE	
	20704-0000	-		*1*	*NUT*	
050	B295622-0000	A		1	AIR NOZZLE	
	272081-0000	-		*1*	*NUT*	
120	23763-0007	B		1	SPACER PIPE	
180	252766-0001	A		3	INSULATING PIPE	
220	263673-0000	A		8	GASKET	
0250B						
030	B295617-0001	A		1	AIR NOZZLE	
	20704-0000	-		*1*	*NUT*	
040	B295618-0001	A		1	AIR NOZZLE	
	20704-0000	-		*1*	*NUT*	
050	B247227-0001	A		1	AIR NOZZLE	
	20704-0000	-		*1*	*NUT*	
120	23763-0006	B		1	SPACER PIPE	
160	23765-0005	A		1	INSULATING PIPE	
180	252766-0001	A		3	INSULATING PIPE	
220	263673-0000	A		6	GASKET	
Common Parts						
010	256548-0000	-		1	HEATING CHAMBER	
015	1317435-0000	-		1	COVER	
020	B441143-0000	-		1	SPACER PIECE	
	342808-0103	-		*1*	*PIPE ELBOW 90 DEGR. SMS3009, D=38 MM*	
025	315115-0153	-		4	WASHER PLAIN, TBRB 6,4/12 H=3	
060	531730-0000	A		3	FLANGE SEAL	
070	23769-0000	A		1	STOP PLATE	
080	295306-0000	-		1	COVER	
090	271191-0000	-		1	LID	
095	B295307-0000	-		1	FLEXIBLE CONDUIT	
	90152-0019	-	*M*	*1*	*FLEXIBLE CONDUIT PG 36*	
	90012-0058	-		*1*	*GLAND*	
096	441693-0000	-		1	HANDLE	
100	A31390-0100	-		2	FF-ELEMENT TOP	**455**
100	20702-0000	-		1	COVERING PLATE	
110	A31390-0110	A		1	FF-ELEMENT BOTTOM	**457**
110	23762-0002	-		2	SIDE PIPE	
130	23765-0002	A		2	INSULATING PIPE	
200	259807-0000	A		2	WASHER	
210	B469977-0000	A		1	ELECTRICAL CONNECTION	
	353104-0175	-		*2*	*CABLE SHOEYAV 25 M6*	
	351121-0110	-	*M*	*1*	*CABLE RHH 25*	
240	B271499-0000	A		4	ELECTRICAL CONNECTION	
	353104-0175	-		*1*	*CABLE SHOEYAV 25 M6*	
	351121-0110	-	*M*	*1*	*CABLE RHH 25*	
310	90166-0133	A	MM	1200	TUBE 8 MM PA,TRANSP.	
500	312105-0327	-		24	SCREW M6S ISO 4017 M5X12 A480	
510	90287-0208	-		2	SCREW M6S M5X70 A480	
520	312105-0368	-		2	SCREW M6S M6X16 A280	
525	312105-0372	-		2	SCREW M6S ISO 4017 M6X25 A480	
530	315105-0146	-		2	WASHER PLAIN, BRB, 5,3/10,H=1	
540	315105-0153	-		2	WASHER PLAIN, BRB, 6,4/12,H=1,5	
550	315204-0305	A		1	O-RING 69,5X3 MM	
560	342920-0122	-		1	STRAIGHT COUPLING,EXT.THREADED 8/6-R1/4"	
590	352100-0107	-		4	CABLE GLANR.18,6-12	

Machine Type | Group Description | Used-In | Group Number | Page No

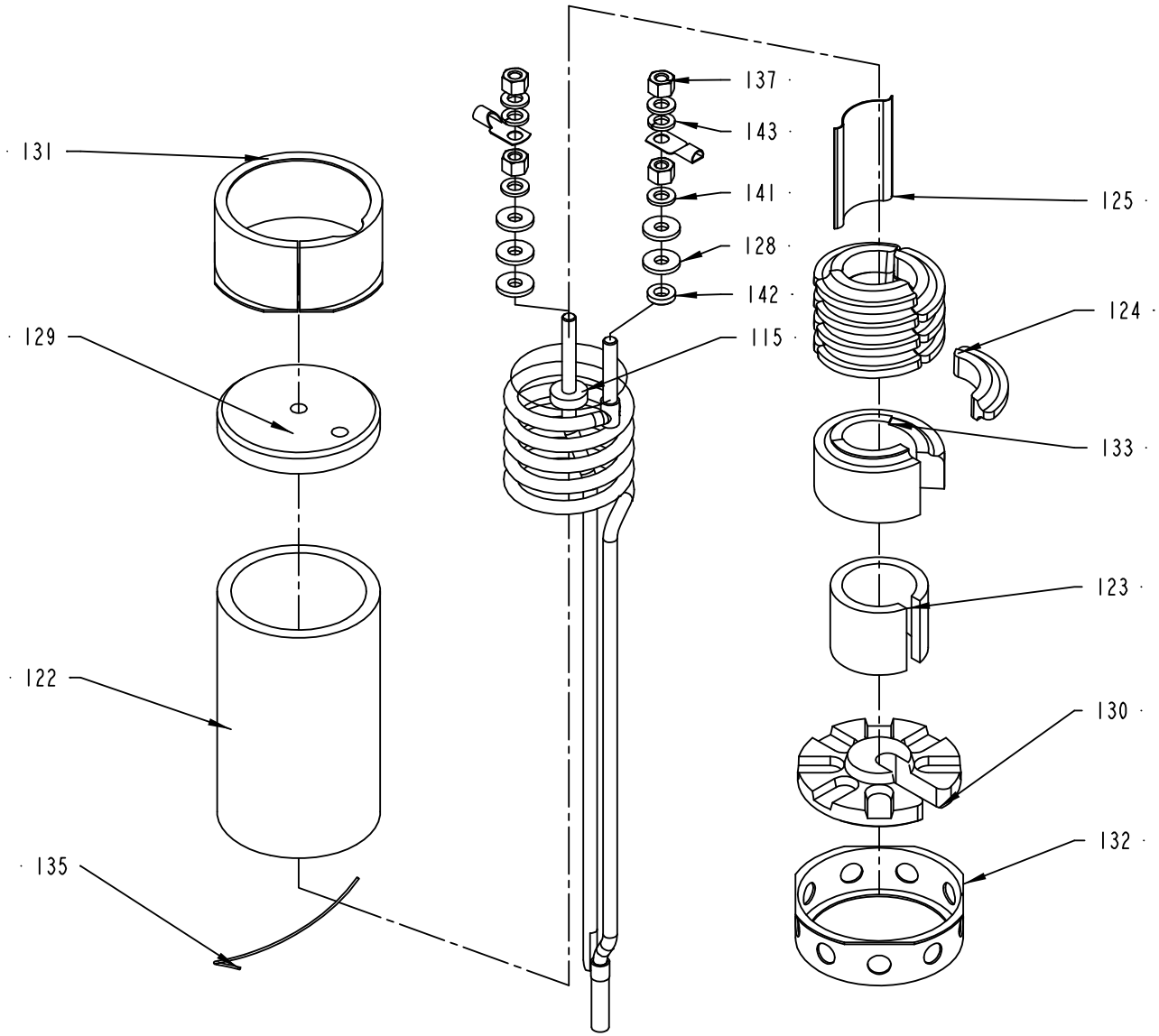

31390-1
ECN 94512

Pos	Part No	SP	UN	Qty	Description	Page No
TBA 0200B 648105 OR TBA 0250B 648105 OR TBA 0200S 648105 OR TBA 0200SQ 648105						
115	30310-0002	A		1	FF HEATING ELEMENT TOP	
Common Parts						
122	20705-0001	A		1	INSULATING PIPE	
123	29411-0000	A		1	SPACER PIPE	
124	29413-0000	A		12	LACE	
125	31653-0001	A		1	SHEET	
128	525233-0000	A		5	GASKET 16X2X6MM	
129	20772-0000	A		1	INSULATOR BODY 70X70X15MM	
130	37536-0000	A		1	INSULATOR BODY LOWER 70X70X15MM	
131	23771-0000	A		1	SPACER RING 4X78X1MM	
132	37537-0000	A		1	SPACER RING LOWER 72X78X1MM	
133	37535-0000	A		1	SUPPORTING PART 56X56X31,5MM	
135	90145-0005	-	M	1	WIRE	
137	312811-0316	-		4	NUT HEX.LOCK HELI COIL MID GRIP M6 SS	
141	315105-0153	-		4	WASHER PLAIN, BRB, 6,4/12,H=1,5	
142	315115-0153	-		1	WASHER PLAIN, TBRB 6,4/12 H=3	
143	315402-0156	-		2	LOCK WASHER FBB 6,5	

Pos	Part No	SP	UN	Qty	Description	Page No

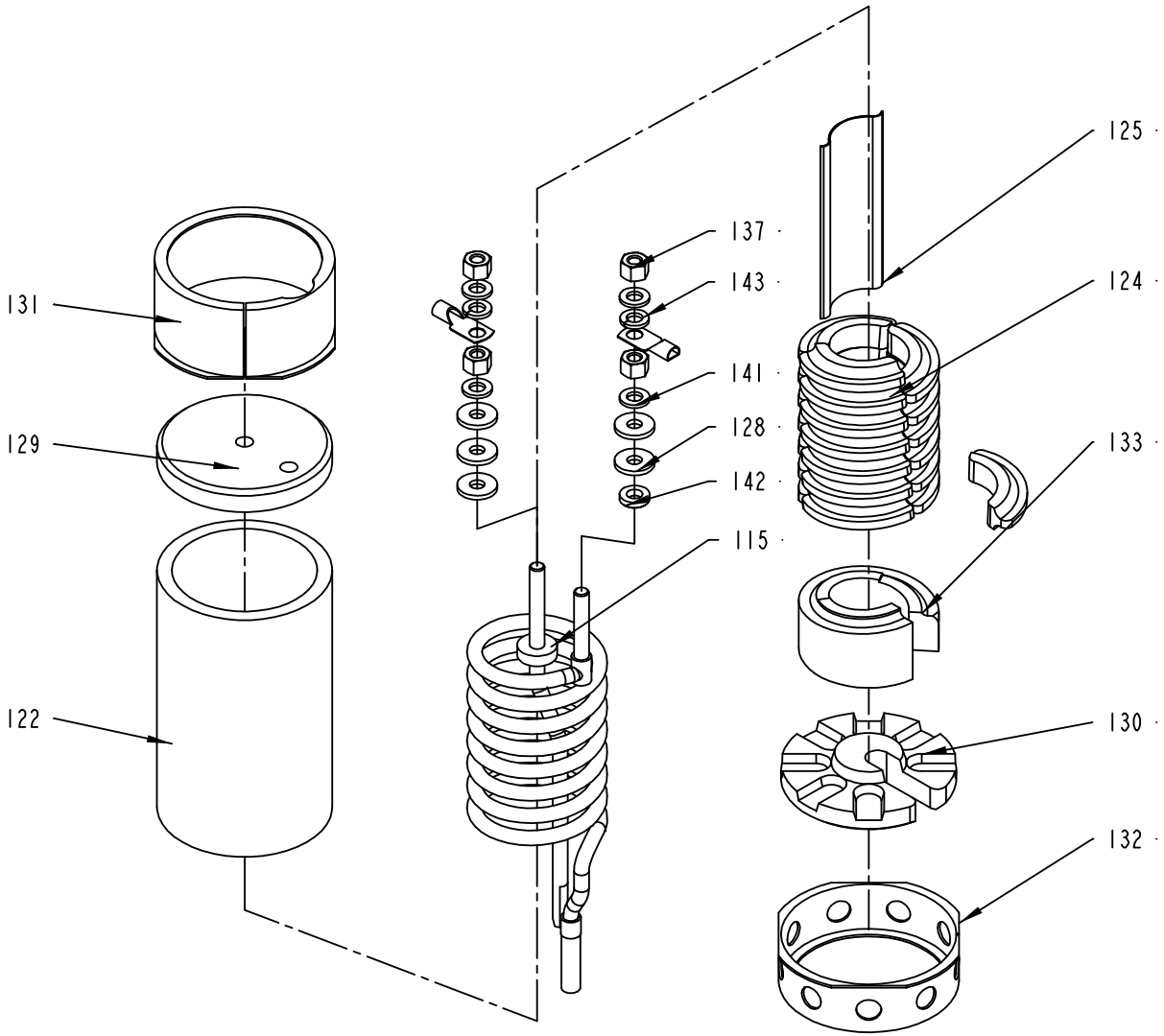

31390-2
ECN 94512

Pos	Part No	SP	UN	Qty	Description	Page No
TBA 0200B 648105 OR TBA 0189B 648105 OR TBA 0250B 648105 OR TBA 0200S 648105 OR TWA						
115	30311-0001	A		1	FF HEATINGELEMENT BUTTOM KANTHAL 2333-02	
Common Parts						
122	20705-0001	A		1	INSULATING PIPE	
124	29413-0000	A		21	LACE	
125	31653-0002	A		1	FIX PLATE 39X85X0,5MM	
128	525233-0000	A		5	GASKET 16X2X6MM	
129	20772-0000	A		1	INSULATOR BODY 70X70X15MM	
130	37536-0000	-		1	INSULATOR BODY LOWER 70X70X15MM	
131	23771-0000	-		1	SPACER RING 4X78X1MM	
132	37537-0000	-		1	SPACER RING LOWER 72X78X1MM	
133	37535-0000	-		1	SUPPORTING PART 56X56X31,5MM	
137	312811-0316	-		4	NUT HEX.LOCK HELI COIL MID GRIP M6 SS	
141	315105-0153	-		4	WASHER PLAIN, BRB, 6,4/12,H=1,5	
142	315115-0153	-		1	WASHER PLAIN, TBRB 6,4/12 H=3	
143	315402-0156	-		2	LOCK WASHER FBB 6,5	

Pos	Part No	SP	UN	Qty	Description	Page No

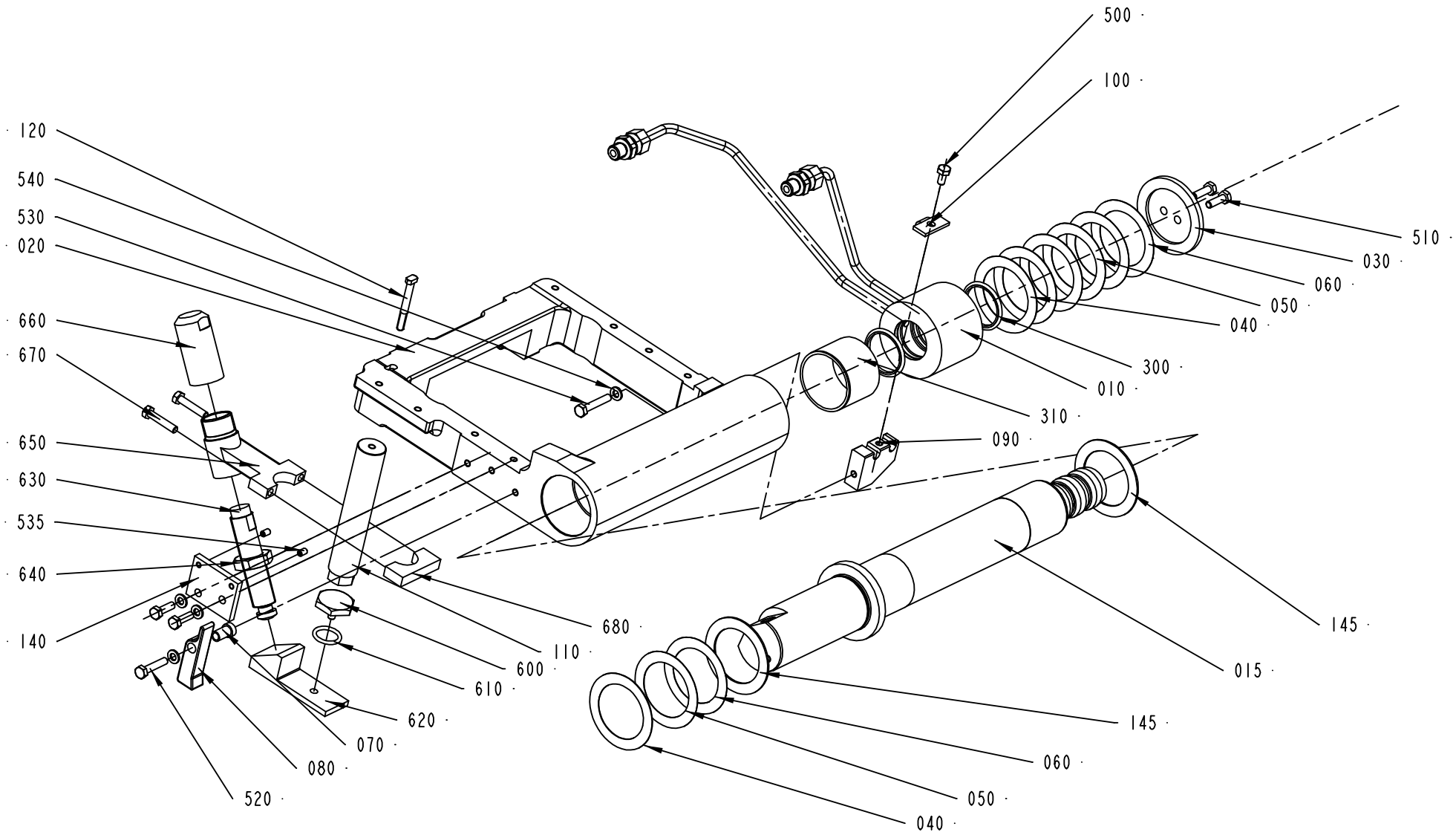

1529397-1
ECM 99656

Pos	Part No	SP	UN	Qty	Description	Page No
TBA 0200B						
010	B295202-0002	D		1	SWIVEL	
	90030-0052	-		*1*	*CONN. STR., 8-R1/4, EXT. THREAD*	
TBA 0200S						
010	B295202-0001	D		1	SWIVEL	
	90030-0052	-		*1*	*CONN. STR., 8-R1/4, EXT. THREAD*	
TBA 0250B						
010	B295202-0001	D		1	SWIVEL	
	90030-0052	-		*1*	*CONN. STR., 8-R1/4, EXT. THREAD*	
Common Parts						
015	295313-0000	-		1	SHAFT	
020	B295201-0000	D		1	FRAME	
	312911-0126	-		*2*	*HELI-COIL M8X1,5D*	
	312911-0118	-		*11*	*HELI-COIL M6X1,5D*	
030	295203-0000	D		1	LID	
040	295204-0001	C		2	SHIM	
050	295204-0002	C		2	SHIM	
060	295204-0003	C		2	SHIM	
070	295205-0000	-		1	SPACER SLEEVE	
080	295206-0000	D		1	FLAP	
090	295207-0000	D		1	HOLDER	
100	295208-0000	D		1	SECURING PLATE	
110	1512132-0000	-		1	SUPPORT	
120	295431-0000	D		1	SCREW	
140	469527-0000	D		1	SETTING PLATE	
145	591588-0000	-		2	SHIM	
300	90091-0136	C		3	ROD SEAL, GLIDORING 36X44X3,1 MM	
310	90240-0094	C		2	BEARING BUSHING WITHOUT FL, 50X55X40 MM	
500	312105-0366	-		1	SCREW M6S M6X12 A280	
510	312105-0370	-		4	SCREW M6S ISO 4017 M6X20 A480	
520	312105-0374	-		1	SCREW M6S ISO 4014 M6X30 A480	
530	312105-0376	-		1	SCREW M6S ISO 4014 M6X35 A480	
535	312318-0323	-		2	SCREW SOCK.SET CUP P MSK6SS M5X8 A4	
540	315105-0153	-		4	WASHER PLAIN, BRB, 6,4/12,H=1,5	
600	272997-0000	-		1	STOPPER	
610	315202-0215	-		1	O-RING 19,2X3 MM	
620	1512133-0000	-		1	STOP	
630	90347-0189	C		1	SHOCK ABSORBER, 370-050-400	
640	90099-0057	-		1	NUT HEX. M20X1,5	
650	1512126-0000	D		1	SUPPORT	
660	1512128-0000	-		1	PLUG	
670	312109-0374	-		2	SCREW M6S ISO 4017 M6X30 A480	
680	1512127-0000	-		1	CLAMP	

Machine Type	Group Description	Used-In	Group Number	Page No

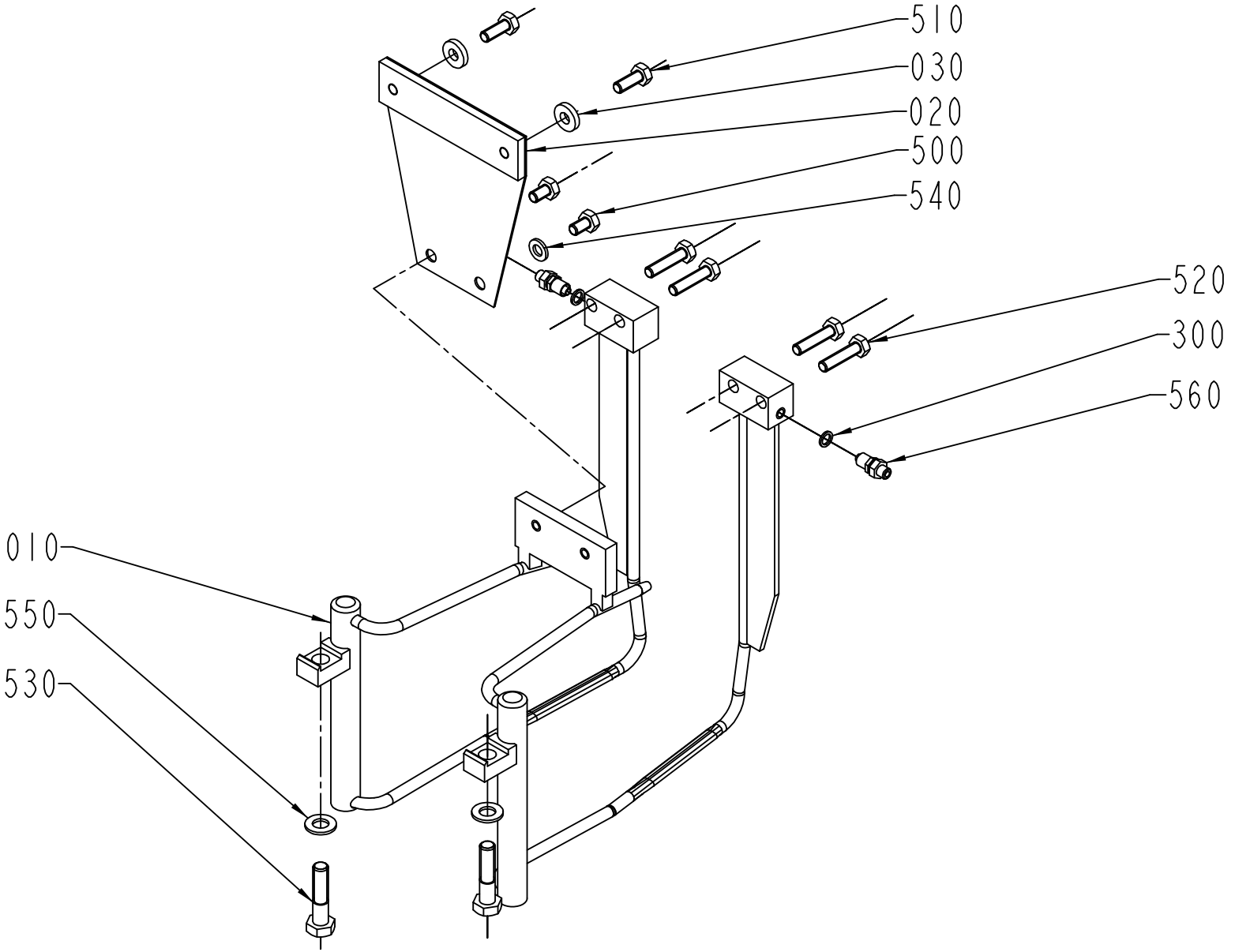

S-295218-4
ECN 72412

ECM: 102030 - 20011203
Group number: 295218-0100
Assembly Drawing: 295218-4_1_AB

Issue: 20020822

Pos	Part No	SP	UN	Qty	Description	Page No
0200B						
010	295862-0003	A		1	FOLDING BAR	
020	295871-0004	B		1	BRACKET	
0200S						
010	295864-0000	A		1	FOLDING BAR	
020	295871-0001	B		1	BRACKET	
0250B						
010	295862-0001	A		1	FOLDING BAR	
020	295871-0002	B		1	BRACKET	
Common Parts						
030	271587-0000	-		2	WASHER	
300	90005-0056	-		2	WASHER PL.RND.NYL.6/8,5,H=1	
500	312105-0364	-		2	SCREW M6S ISO 4017 M6X10 A480	
510	312105-0368	-		2	SCREW M6S M6X16 A280	
520	312105-0372	-		4	SCREW M6S ISO 4017 M6X25 A480	
530	312105-0457	-		2	SCREW M6S ISO 4014 M8X35 A480	
540	315105-0153	-		2	WASHER PLAIN, BRB, 6,4/12,H=1,5	
550	315105-0165	-		2	WASHER PLAIN, BRB, 8,4/16,H=1,5	
560	342921-0112	A		2	STRAIGHT COUPLING,EXT.THREADED 6/4-6M	

Pos	Part No	SP	UN	Qty	Description	Page No

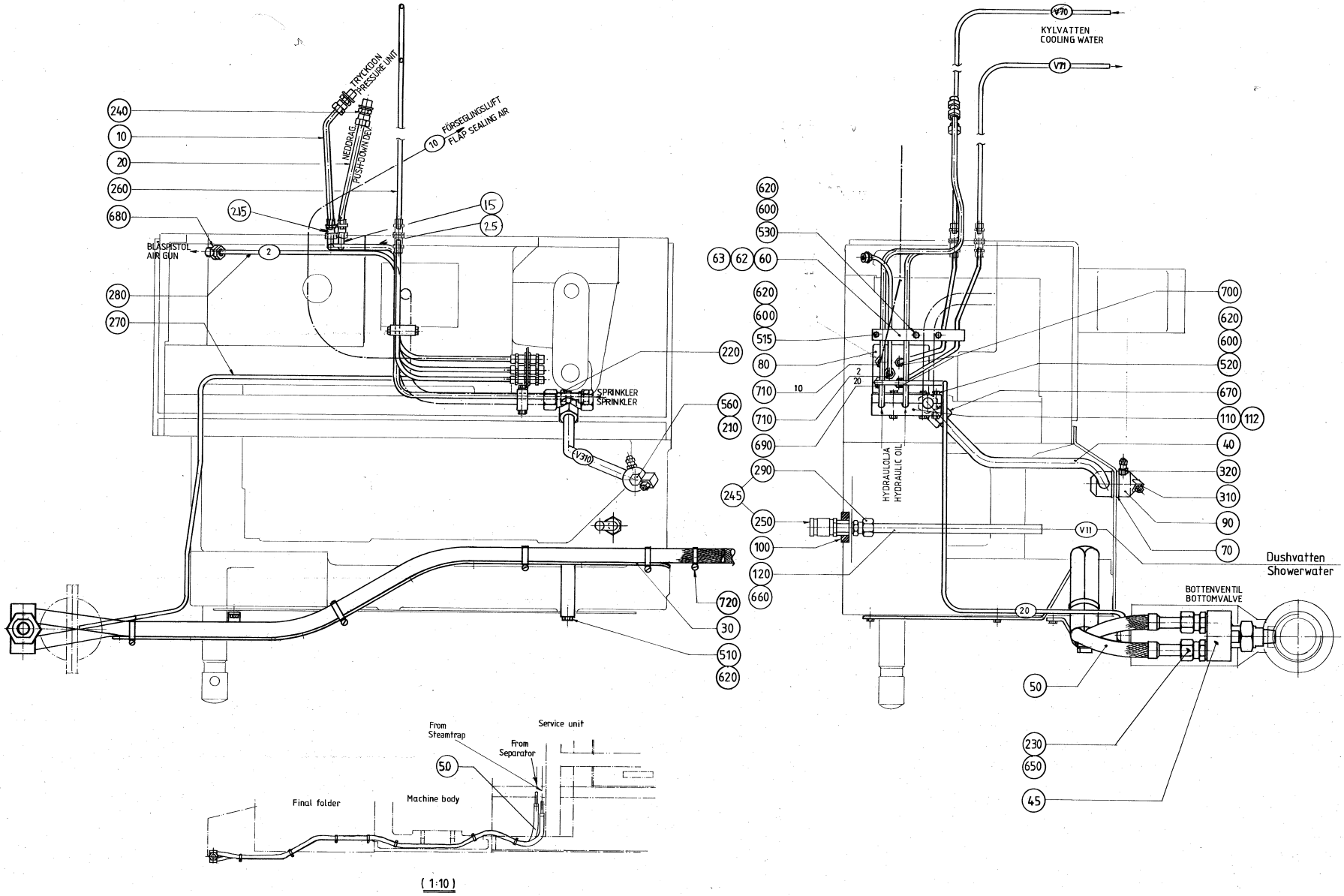
KYLVATTEN
COOLING WATER
TRYCKVAKT
PRESSURE UNIT
MEDDRAG
PUSH-DOWN DEV
FÖRSEGLINGSLUFT
FLAP SEALING AIR
BLÅSPISTOL
AIR GUN
SPRINKLER
SPRINKLER
HYDRAULOLJA
HYDRAULIC OIL
Dushvatten
Showerwater
BOTTENVENTIL
BOTTOMVALVE
From Steamtrap
From Separator
Service unit
Final folder
Machine body
(1:10)

ECM: 102059 - 20011203
Group number: 1529134-0100
Assembly Drawing: 1529134-1_1_AA

Issue: 20020822

Pos	Part No	SP	UN	Qty	Description	Page No
SOURCE,TBA/9-100V OR SOURCE,TBA/9-110V						
050	441500-0000	-		1	HOSE	
065	B490619-0000	-		1	HOSE	
	90266-0155	-	*M*	*1*	*TUBE 15X1,5 SS 2333-22*	
300	90330-0081	-		1	ELBOW, 90 INT. THREAD, R-222R1/4	
640	315233-0110	-		3	WASHER PL.RND.NYL.13,3/17,H=1	
SOURCE,TBA/9-120V						
050	441500-0000	-		2	HOSE	
245	90157-0034	-	L	1	SEALING COMPOUND LOCTITE 572 50 ML	
Common Parts						
010	1091748-0000	-		1	TUBE	
015	1091750-0000	-		1	TUBE	
020	1091749-0000	-		1	TUBE	
025	1091751-0000	-		1	TUBE	
030	441499-0000	-		1	HOLDER	
040	456852-0000	-		1	DISTRIBUTOR	
045	B490618-0000	-		1	BRANCH	
	90330-0106	-		*1*	*PIPE COUPLING*	
060	456853-0001	-		1	PIPE CLAMP	
062	456853-0002	-		1	PIPE CLAMP	
063	456853-0003	-		1	PIPE CLAMP	
070	256907-0000	-		2	WASHER	
080	271478-0000	-		1	PLATE	
090	272191-0000	-		1	DISTRIBUTOR	
100	272741-0000	A		1	SEAL	
110	456854-0001	-		1	CRAMP	
112	456854-0002	-		1	CRAMP	
120	491807-0000	-		1	PIPE	
210	90005-0007	A		1	GASKET BOLT HEAD 8,7X14X1 MM M8	
215	90030-0067	-		2	CONN. BULKHEAD SV 8-L/SY	
220	90030-0091	-		2	CONN. PIPE G-8	
230	90030-0151	-		2	CONN. STR.,15-R1/2, EXT. THREAD	
240	90030-0185	-		2	CONN. STR. GA-8-G1/4	
250	90163-0028	-		1	QUICK COUPLING, LP 006-0-WR513	
260	90166-0117	A	MM	1640	HOSE 4/6 PVC BLUE	
270	90166-0132	A	MM	1800	TUBE 6 MM PA,TRANSP.	
280	90166-0133	A	MM	520	TUBE 8 MM PA,TRANSP.	
290	90224-0186	-		1	NIPPLE	
310	90424-0009	A		1	SPRAY NOZZLE 103 DEG	
320	90424-0016	A		1	SPRAY NOZZLE 103 DEG R 1/8 GG8W	
510	312105-0372	-		4	SCREW M6S ISO 4017 M6X25 A480	
515	312105-0374	-		1	SCREW M6S ISO 4014 M6X30 A480	
520	312105-0378	-		3	SCREW M6S ISO 4014 M6X40 A480	
530	312105-0380	-		2	SCREW M6S ISO 4014 M6X50 A480	
560	312105-0463	-		1	SCREW M6S ISO 4014 M8X60 A480	
600	312605-0316	-		6	HEXAGON NUT, M6M M6 A280	
620	315105-0153	-		12	WASHER PLAIN, BRB, 6,4/12,H=1,5	
650	315233-0113	-		2	WASHER PL.RND.NYL.21,4/27,H=1,2	
660	342708-0107	-		2	REINFORCING RING VSH 12X1 MM	
670	342746-0114	-		1	CONN. T-PIPE T-15	
680	342920-0122	-		1	STRAIGHT COUPLING,EXT.THREADED 8/6-R1/4"	
690	342960-0112	-		1	BULKHEAD COUPLING 6/4	
700	342960-0121	-		3	BULKHEAD COUPLING 8/6-6/4	
710	342960-0122	-		2	BULKHEAD COUPLING 8/6	
720	342991-0106	-		7	HOSE CLIP,WORM DRIVE TYPE (30)-36	

Machine Type | Group Description | Used-In | Group Number | Page No

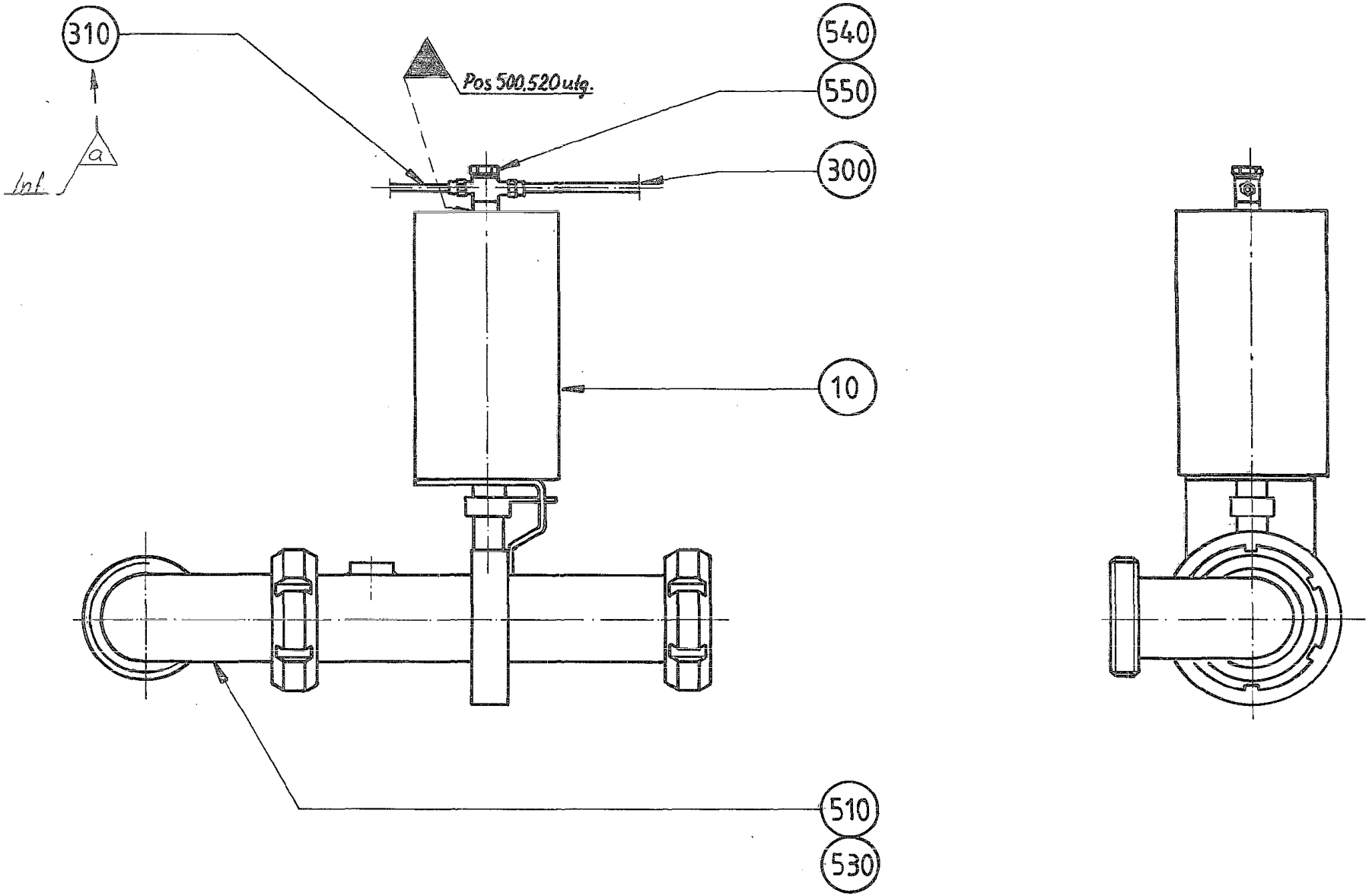
310
a
Inf
Pos 500,520 ulg.
540
550
300
10
510
530

ECM: 101956 - 20011203
Group number: 256674-0200
Assembly Drawing: 256674-3_1_AA

Issue: 20020822

Pos	Part No	SP	UN	Qty	Description	Page No
Common Parts						
010	272751-0000	B		1	BOTTOM VALVE	
300	90166-0089	-	MM	1100	HOSE 4/6.2 PE BLUE	
310	90166-0089	-	MM	420	HOSE 4/6.2 PE BLUE	
510	315250-0104	-		1	GASKET 61X51X5,5 MM	
530	342807-0104	-		1	PIPE ELBOW 90 DEGR. SMS1220, D=51 MM	
540	342980-0213	-		1	BANJO-CONNECTION,T-RING 6/4-G1/8"	
550	342980-0303	-		1	BANJO-HOLLOW BOLT COUPL,EXT.THR.01-G1/8"	

Pos	Part No	SP	UN	Qty	Description	Page No

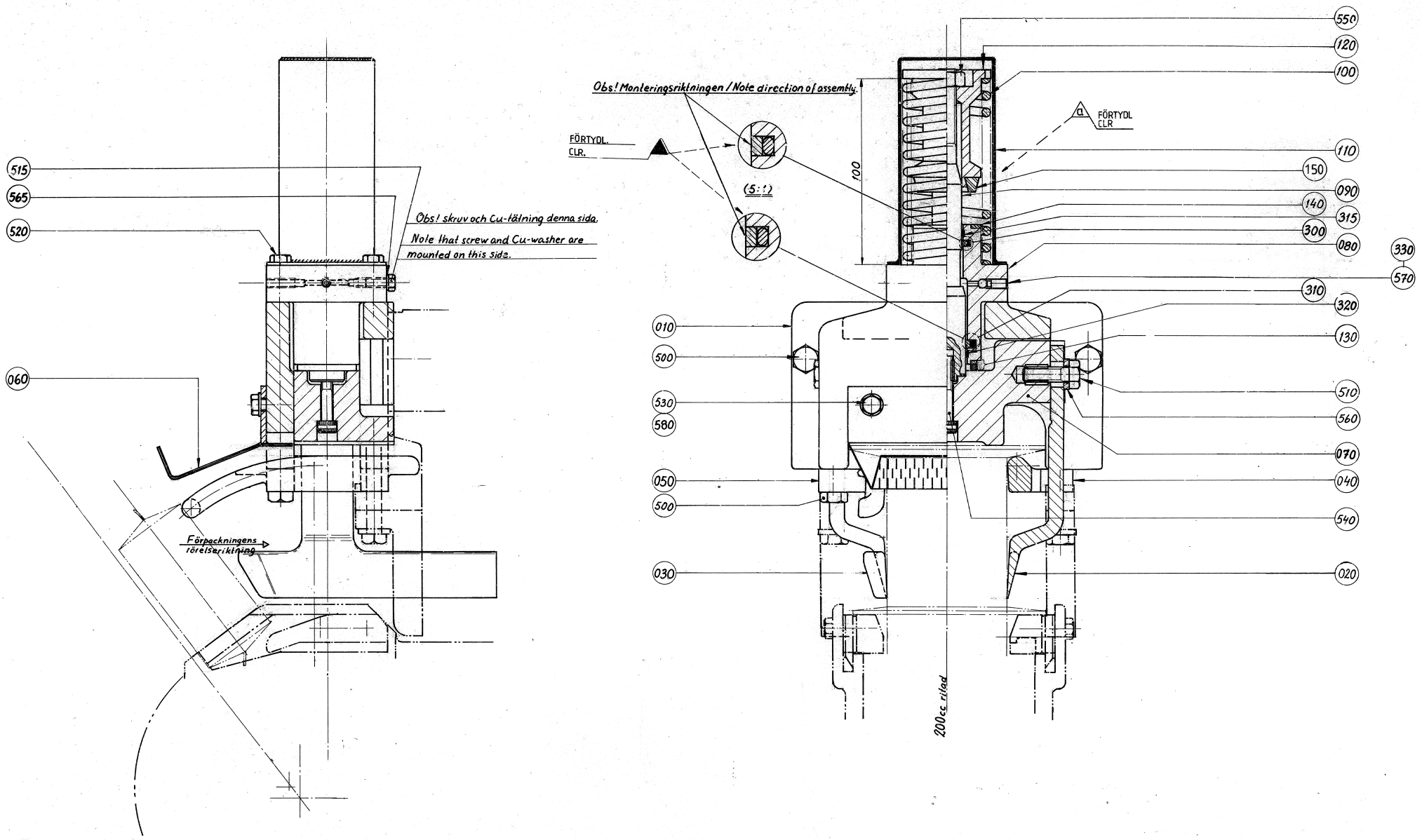
Obs! Monteringsriktningen / Note direction of assembly.
FÖRTYDL. CLR.
(5:1)
100
FÖRTYDL CLR
Obs! skruv och Cu-tätning denna sida.
Note that screw and Cu-washer are mounted on this side.
Förpackningens rörelseriktning
200cc rilad
515
565
520
060
550
120
100
110
150
090
140
315
300
080
330
570
310
320
130
010
500
530
580
510
560
070
050
500
040
540
030
020

ECM: 102084 - 20011203
Group number: 256712-0400
Assembly Drawing: 256712-7_1_AA

Issue: 20020822

Pos	Part No	SP	UN	Qty	Description	Page No
0200B						
010	295843-0003	A		1	BRACKET	
020	272905-0003	A		1	ARM	
030	272906-0003	A		1	ARM	
040	295057-0002	B		1	RAIL	
050	295058-0002	B		1	RAIL	
060	272045-0003	A		1	SLIDE SHEET	
070	491804-0000	A		1	BLOCKING PIECE	
0200S						
010	295843-0006	A		1	BRACKET	
020	272905-0006	A		1	ARM	
030	272906-0006	A		1	ARM	
040	295061-0000	B		1	RAIL	
050	295062-0000	B		1	RAIL	
060	272045-0001	A		1	SLIDE SHEET	
070	491806-0000	A		1	BLOCKING PIECE	
0250B						
010	295843-0001	A		1	BRACKET	
020	272905-0001	A		1	ARM	
030	272906-0001	A		1	ARM	
040	295057-0001	B		1	RAIL	
050	295058-0001	B		1	RAIL	
060	272045-0002	A		1	SLIDE SHEET	
070	491804-0000	A		1	BLOCKING PIECE	
Common Parts						
080	490980-0000	A		1	CYLINDER	
090	752083-0000	A		1	PISTON	
100	271731-0000	A		1	COMPRESSION SPRING	
110	751163-0000	B		1	COVER	
120	441894-0000	A		1	SLEEVE	
130	295072-0000	A		1	BUFFER RING	
140	441896-0000	B		1	WASHER	
150	441895-0000	A		1	BUFFER RING	
300	90091-0160	A		1	ROD SEAL, STEPSEAL 16X23,5X3,2 MM	
310	90091-0165	A		1	ROD SEAL, STEPSEAL 20X27,5X3,2 MM	
315	90091-0162	A		1	WEAR RING 16X19X3,2 MM	
320	90091-0163	A		1	WEAR RING 20X23X3,2 MM	
330	90090-0013	A		1	BALL, D=4 MM	
500	312105-0455	-		4	SCREW M6S ISO 4017 M8X30 A480	
510	312105-0453	-		2	SCREW M6S ISO 4017 M8X25 A480	
515	312105-0325	-		1	SCREW M6S ISO 4017 M5X10 A480	
520	312105-0374	-		4	SCREW M6S ISO 4014 M6X30 A480	
530	312105-0368	-		2	SCREW M6S M6X16 A280	
540	312115-0455	-		1	SCREW MC6S M8X30 A280	
550	312605-0320	-		1	HEXAGON NUT, M6M M10 A280	
560	315115-0165	-		2	WASHER PLAIN, TBRB 8,4/16 H=3	
565	315234-0101	-		1	WASHER,PL.RND.CU.5/8 H=0,8	
570	312311-0327	-		1	SCREW, SOCK.SET DOGPOINT M5X12	
580	315105-0153	-		2	WASHER PLAIN, BRB, 6,4/12,H=1,5	

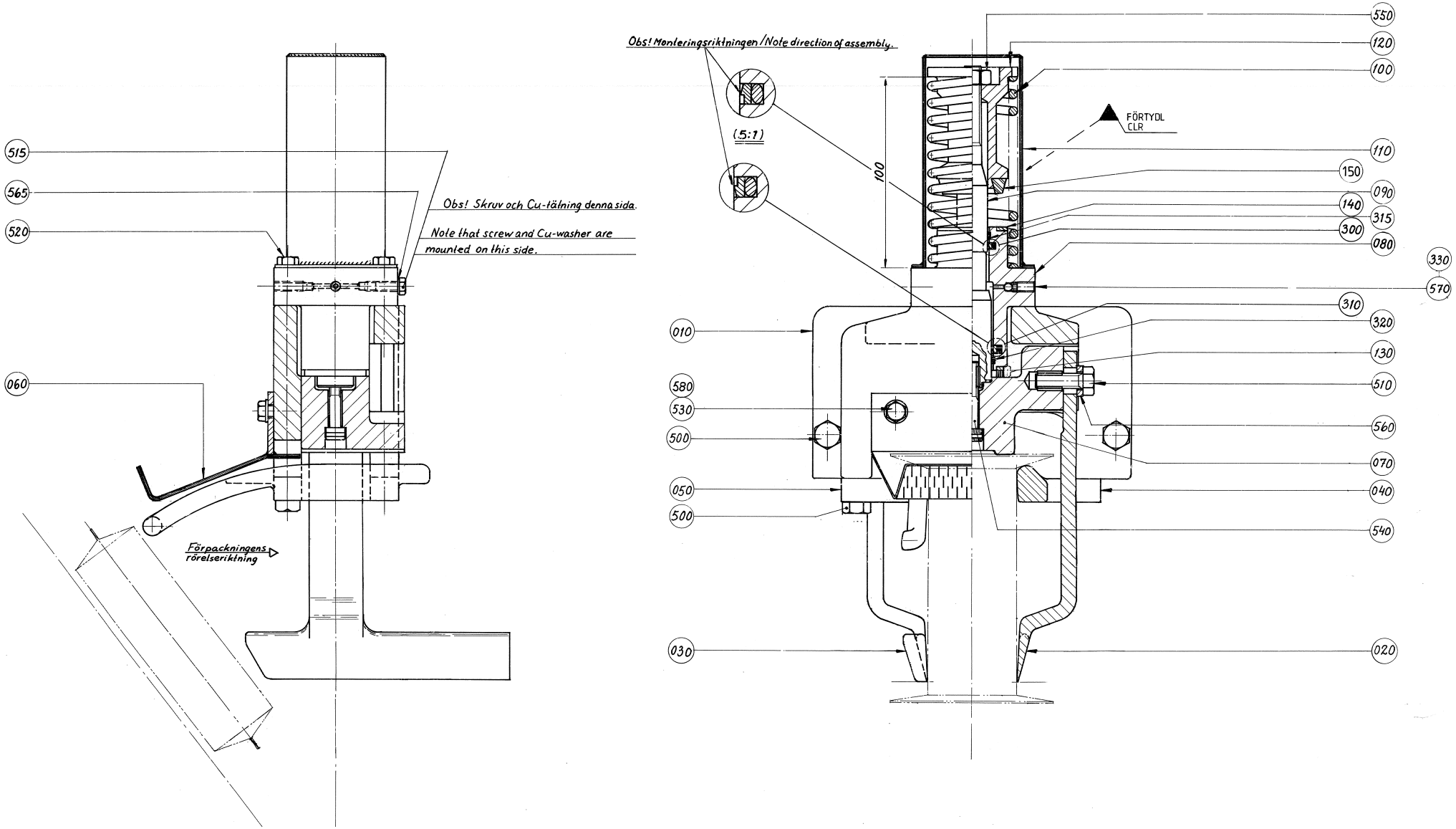
Obs! Monteringsriktningen / Note direction of assembly.
(5:1)
100
FÖRTYDL
CLR
550
120
100
110
150
090
140
315
300
080
330
570
310
320
130
510
560
070
040
540
020
515
565
520
060
Obs! Skruv och Cu-tätning denna sida.
Note that screw and Cu-washer are mounted on this side.
Förpackningens rörelseriktning
010
580
530
500
050
500
030

ECM: 102084 - 20011203
Group number: 256712-0400
Assembly Drawing: 256712-9_1_AA

Issue: 20020822

Pos	Part No	SP	UN	Qty	Description	Page No
0200B						
010	295843-0003	A		1	BRACKET	
020	272905-0003	A		1	ARM	
030	272906-0003	A		1	ARM	
040	295057-0002	B		1	RAIL	
050	295058-0002	B		1	RAIL	
060	272045-0003	A		1	SLIDE SHEET	
070	491804-0000	A		1	BLOCKING PIECE	
0200S						
010	295843-0006	A		1	BRACKET	
020	272905-0006	A		1	ARM	
030	272906-0006	A		1	ARM	
040	295061-0000	B		1	RAIL	
050	295062-0000	B		1	RAIL	
060	272045-0001	A		1	SLIDE SHEET	
070	491806-0000	A		1	BLOCKING PIECE	
0250B						
010	295843-0001	A		1	BRACKET	
020	272905-0001	A		1	ARM	
030	272906-0001	A		1	ARM	
040	295057-0001	B		1	RAIL	
050	295058-0001	B		1	RAIL	
060	272045-0002	A		1	SLIDE SHEET	
070	491804-0000	A		1	BLOCKING PIECE	
Common Parts						
080	490980-0000	A		1	CYLINDER	
090	752083-0000	A		1	PISTON	
100	271731-0000	A		1	COMPRESSION SPRING	
110	751163-0000	B		1	COVER	
120	441894-0000	A		1	SLEEVE	
130	295072-0000	A		1	BUFFER RING	
140	441896-0000	B		1	WASHER	
150	441895-0000	A		1	BUFFER RING	
300	90091-0160	A		1	ROD SEAL, STEPSEAL 16X23,5X3,2 MM	
310	90091-0165	A		1	ROD SEAL, STEPSEAL 20X27,5X3,2 MM	
315	90091-0162	A		1	WEAR RING 16X19X3,2 MM	
320	90091-0163	A		1	WEAR RING 20X23X3,2 MM	
330	90090-0013	A		1	BALL, D=4 MM	
500	312105-0455	-		4	SCREW M6S ISO 4017 M8X30 A480	
510	312105-0453	-		2	SCREW M6S ISO 4017 M8X25 A480	
515	312105-0325	-		1	SCREW M6S ISO 4017 M5X10 A480	
520	312105-0374	-		4	SCREW M6S ISO 4014 M6X30 A480	
530	312105-0368	-		2	SCREW M6S M6X16 A280	
540	312115-0455	-		1	SCREW MC6S M8X30 A280	
550	312605-0320	-		1	HEXAGON NUT, M6M M10 A280	
560	315115-0165	-		2	WASHER PLAIN, TBRB 8,4/16 H=3	
565	315234-0101	-		1	WASHER,PL.RND.CU.5/8 H=0,8	
570	312311-0327	-		1	SCREW, SOCK.SET DOGPOINT M5X12	
580	315105-0153	-		2	WASHER PLAIN, BRB, 6,4/12,H=1,5	

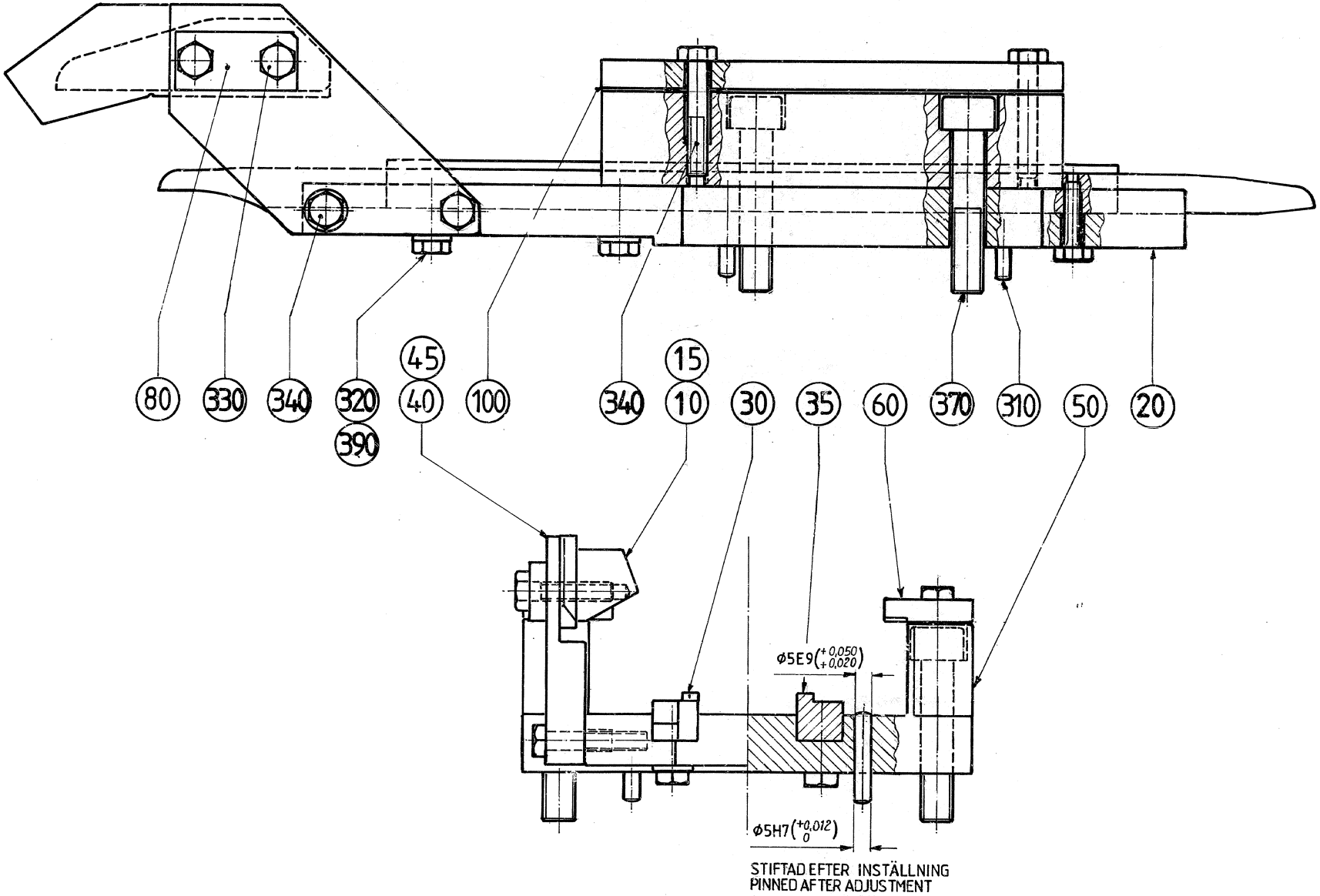
80
330
340
320
390
45
40
100
340
15
10
30
35
60
370
310
50
20
ϕ5E9(+0,050 +0,020)
ϕ5H7(+0,012 0)
STIFTAD EFTER INSTÄLLNING
PINNED AFTER ADJUSTMENT

Pos	Part No	SP	UN	Qty	Description	Page No
0200B OR 0250B						
010	751707-0000	A		1	FOLDING BAR RIGHT	
015	751708-0000	A		1	FOLDING BAR LEFT	
0200S						
010	751709-0000	A		1	FOLDING BAR RIGHT	
015	751710-0000	A		1	FOLDING BAR LEFT	
Common Parts						
020	491260-0000	B		1	RAIL BRACKET	
030	751109-0000	A		1	RAIL RIGHT	
035	751110-0000	A		1	RAIL LEFT	
040	751119-0000	B		1	BRACKET RIGHT	
045	751120-0000	B		1	BRACKET LEFT	
050	491264-0000	B		2	SPACER BLOCK	
060	491265-0000	A		2	PLATE	
080	295729-0000	B		2	WASHER	
100	491266-0000	A		4	SHIM	
310	311103-0312	A		2	PARALLELL PIN, M6, 5X25 MM	
320	312105-0370	A		6	SCREW M6S ISO 4017 M6X20 A480	
330	312105-0372	A		4	SCREW M6S ISO 4017 M6X25 A480	
340	312105-0374	A		8	SCREW M6S ISO 4014 M6X30 A480	
370	312115-0501	A		4	SCREW MC6S M10X50 A280	
390	315105-0153	A		4	WASHER PLAIN, BRB, 6,4/12,H=1,5	

Pos	Part No	SP	UN	Qty	Description	Page No

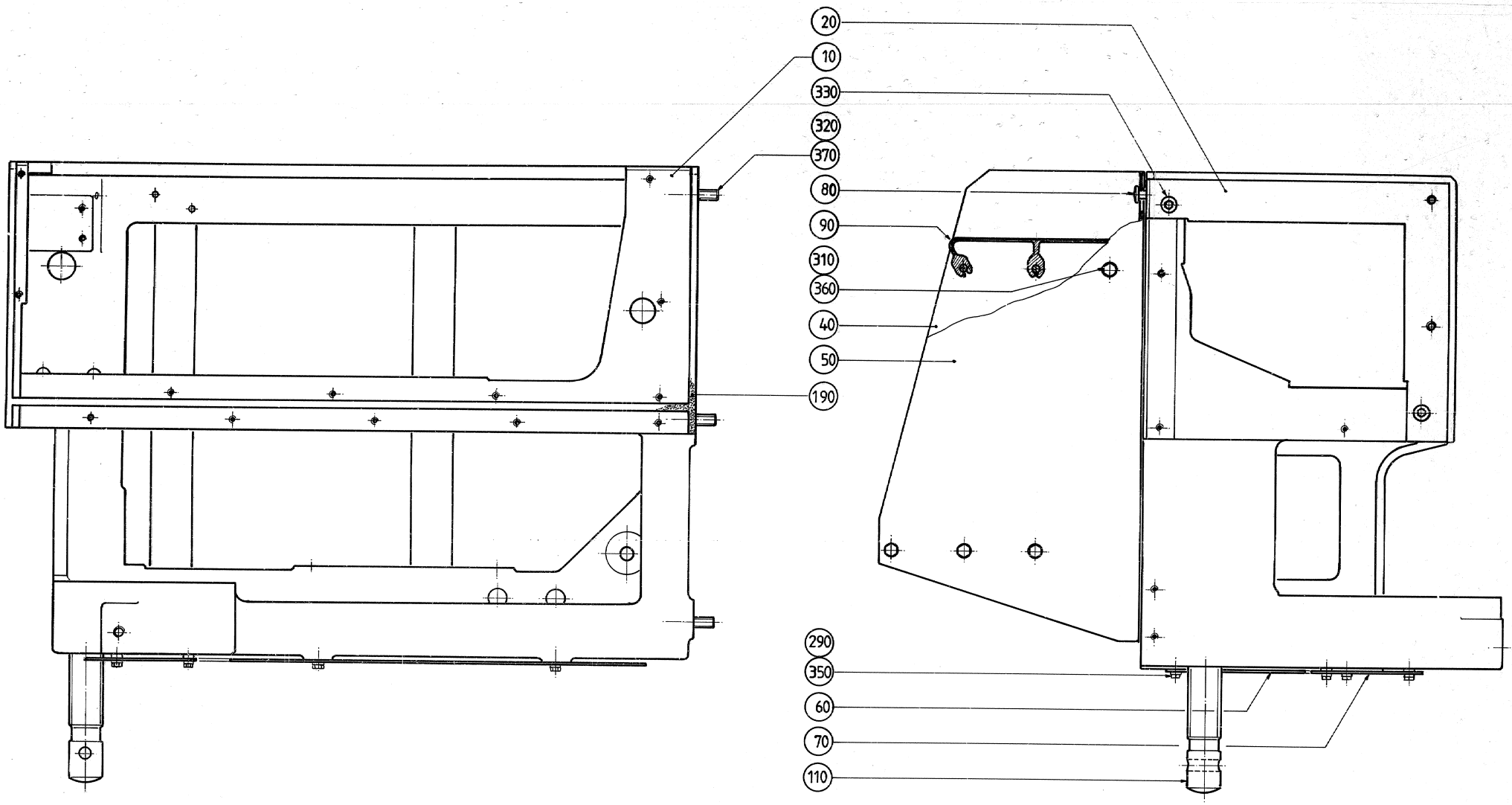
20
10
330
320
370
80
90
310
360
40
50
190
290
350
60
70
110

ECM: 102140 - 20011203
Group number: 441695-0100
Assembly Drawing: 441695-1_1_AA

Issue: 20020822

Pos	Part No	SP	UN	Qty	Description	Page No
Common Parts						
010	441595-0000	-		1	MACHINE BODY	
020	441596-0000	-		1	CANTILEVER	
040	272659-0000	-		1	SIDE PIECE	
050	272660-0000	-		1	SIDE PIECE	
060	272745-0000	-		1	HATCH	
070	272743-0000	-		1	LID	
080	271591-0000	-		2	BUTTON	
090	272661-0000	-		2	STAIR	
110	272673-0000	-		1	LEG	
190	90143-0056	A	MM	2700	STRIP	
290	312105-0370	-		5	SCREW M6S ISO 4017 M6X20 A480	
310	312105-0451	-		12	SCREW M6S ISO 4017 M8X20 A480	
320	312105-0544	-		6	SCREW M6S ISO 4014 M12X60 A480	
330	312115-0491	-		2	SCREW MC6S M10X20 A280	
350	315105-0153	-		8	WASHER PLAIN, BRB, 6,4/12,H=1,5	
360	315105-0165	-		12	WASHER PLAIN, BRB, 8,4/16,H=1,5	
370	315105-0178	-		6	WASHER PLAIN, BRB, 13/24,H=2	

Pos	Part No	SP	UN	Qty	Description	Page No

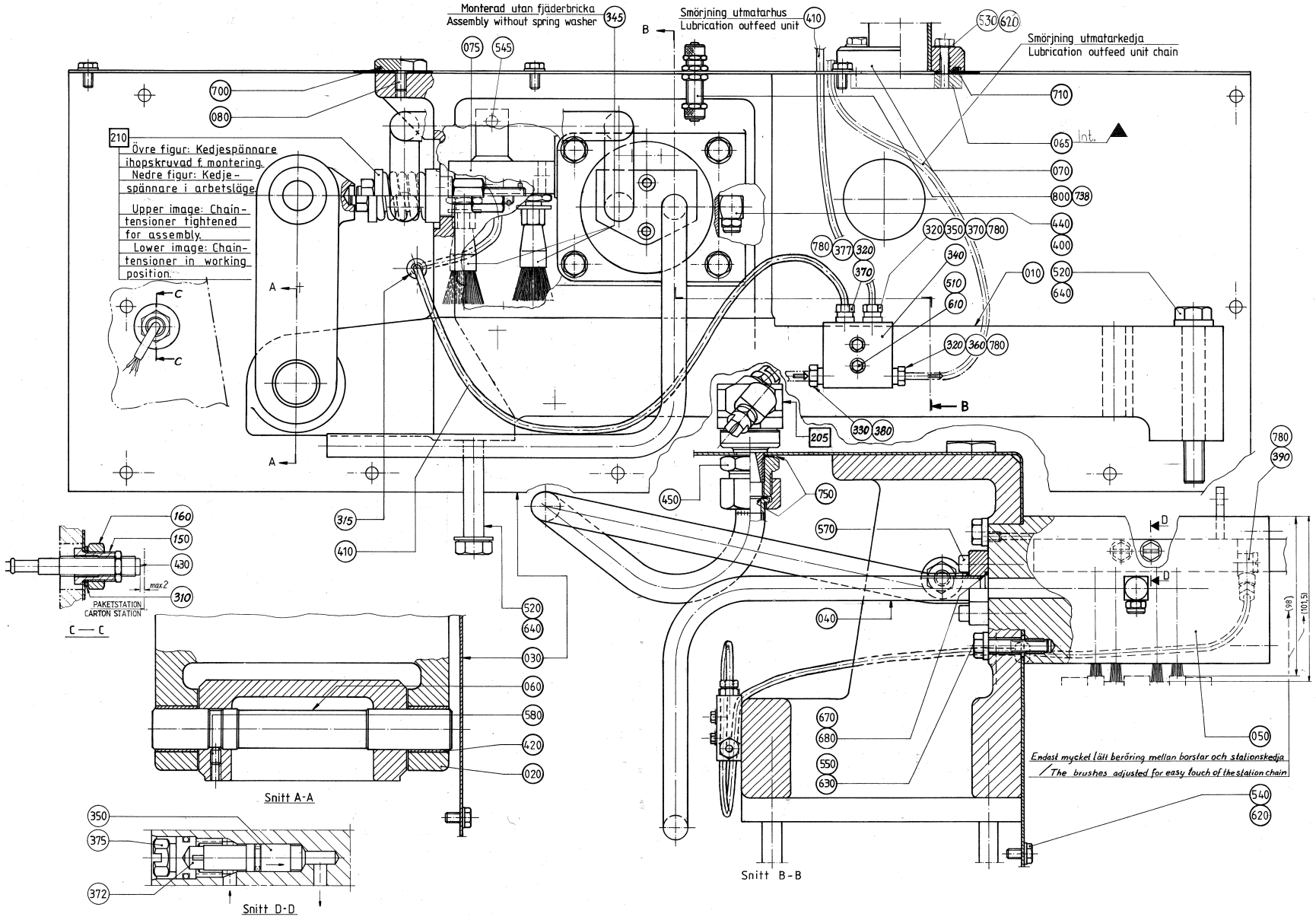
Monterad utan fjäderbricka
Assembly without spring washer
Smörjning utmatarhus
Lubrication outfeed unit
Smörjning utmatarkedja
Lubrication outfeed unit chain
Övre figur: Kedjespännare ihopskruvad f montering.
Nedre figur: Kedjespännare i arbetsläge.
Upper image: Chain-tensioner tightened for assembly.
Lower image: Chain-tensioner in working position.
PAKETSTATION
CARTON STATION
C — C
Snitt A-A
Snitt B-B
Snitt D-D
Endast mycket lätt beröring mellan borstar och stationskedja
The brushes adjusted for easy touch of the station chain

ECM: 102310 - 20011203
Group number: 1529142-0100
Assembly Drawing: 1529142-1_1_AB

Issue: 20020822

Pos	Part No	SP	UN	Qty	Description	Page No
Common Parts						
010	441599-0000	B		1	BED	
020	441600-0000	B		1	LINK ARM	
030	1529143-0000	-		1	SHIELD PLATE	
040	978191-0000	B		1	LEAD-IN	
050	B441598-0000	B		1	SUPPORTING ARM	
	312911-0130	-		*6*	*HELI-COIL M10X1,5D*	
	312911-0126	-		*8*	*HELI-COIL M8X1,5D*	
	312911-0125	-		*1*	*THREADED INSERTS M8X1,0D*	
	312911-0118	-		*2*	*HELI-COIL M6X1,5D*	
060	256276-0000	B		1	SHAFT	
065	978190-0000	-		1	WASHER	
070	469143-0000	-		1	LEAD-IN	
075	751070-0000	B		1	DISTRIBUTOR BLOCK	
080	272997-0000	-		1	STOPPER	
150	490932-0000	-		1	SLEEVE	
160	490933-0000	-		1	NUT	
205	A441798-0100	-		1	ROTOR	**477**
210	A272652-0300	-		1	CHAIN TENSIONER	**479**
310	90005-0048	-		1	WASHER,PL.RND.CU.18,2/23,9 H=1,5	
315	90015-0028	-		1	LEAD-IN BUSHING	
320	90028-0021	A		3	CONE TUBE 4 MM	
330	90028-0025	A		1	CONE TUBE 6 MM	
340	90032-0038	-		1	BLOCK 2 WAYS	
345	90092-0048	A		4	OIL BRUSH, FLAT, 5/16-24 UNF	
350	90092-0054	A		5	METERING VALVE 50 MM3	
360	90134-0038	A		1	BUSHING/NUT INLET/OUTLET 4 MM	
370	90134-0040	A		2	BUSHING VALVE CONNECTION 4 MM	
372	90134-0042	A		4	SPACER DOSING VALVE	
375	90134-0045	A		4	PLUG M12X1	
377	90134-0051	A		1	SPACING COLLAR DOSING BLOCK	
380	90134-0055	A		1	BUSHING/NUT INLET/OUTLET 6 MM	
390	90134-0068	A		1	CONNECTION	
400	90144-0073	-	M	1	TREBOFLON-TAPE W=13MM	
410	90166-0109	-	MM	1600	TUBE 4 MM PA,TRANSP.	
420	90240-0055	A		2	BEARING BUSHING WITHOUT FL, 25X28X25 MM	
430	90458-0672	A		1	PROXIMITY SENSOR E2E2-X5MB1-5M	
440	90424-0009	-		1	SPRAY NOZZLE 103 DEG	
450	90330-0078	-		1	BUSHING, INT/EXT. THR. R3/4-RP3/8	
510	312101-0297	-		2	SCREW M6S M4X25 FZB	
520	312101-0552	-		4	SCREW M6S M12X100 FZB	
530	312105-0372	-		2	SCREW M6S ISO 4017 M6X25 A480	
540	312105-0366	-		15	SCREW M6S M6X12 A280	
545	312105-0370	-		1	SCREW M6S ISO 4017 M6X20 A480	
550	312105-0459	-		4	SCREW M6S ISO 4014 M8X40 A480	
570	312115-0372	-		2	SCREW MC6S M6X25 A280	
580	312318-0325	-		1	SCREW HEX.SOCK.SET CUP P.MSK6SS5X10 SS	
610	315101-0136	-		2	WASHER PLAIN, BRB, 4,3/8 H=0,8	
620	315105-0153	-		17	WASHER PLAIN, BRB, 6,4/12,H=1,5	
630	315111-0165	-		4	WASHER PLAIN, TBRB 8,4/16 H=3	
640	315111-0178	-		4	WASHER PLAIN, TBRB 13/24 H=4	
670	315202-0115	A		1	O-RING 17,1X1,6 MM	
680	315202-0117	A		1	O-RING 19,1X1,6 MM	
700	315202-0215	A		1	O-RING 19,2X3 MM	
710	315202-0304	A		1	O-RING 64,5X3 MM	
738	315233-0109	A		2	WASHER PL.RND.NYL.10,3/14,H=1	
750	315233-0111	A		2	WASHER PL.RND.NYL.17/22,H=1	
780	90134-0031	A		6	SLEEVE FOR PLASTIC TUBE	
800	342960-0112	-		2	BULKHEAD COUPLING 6/4	

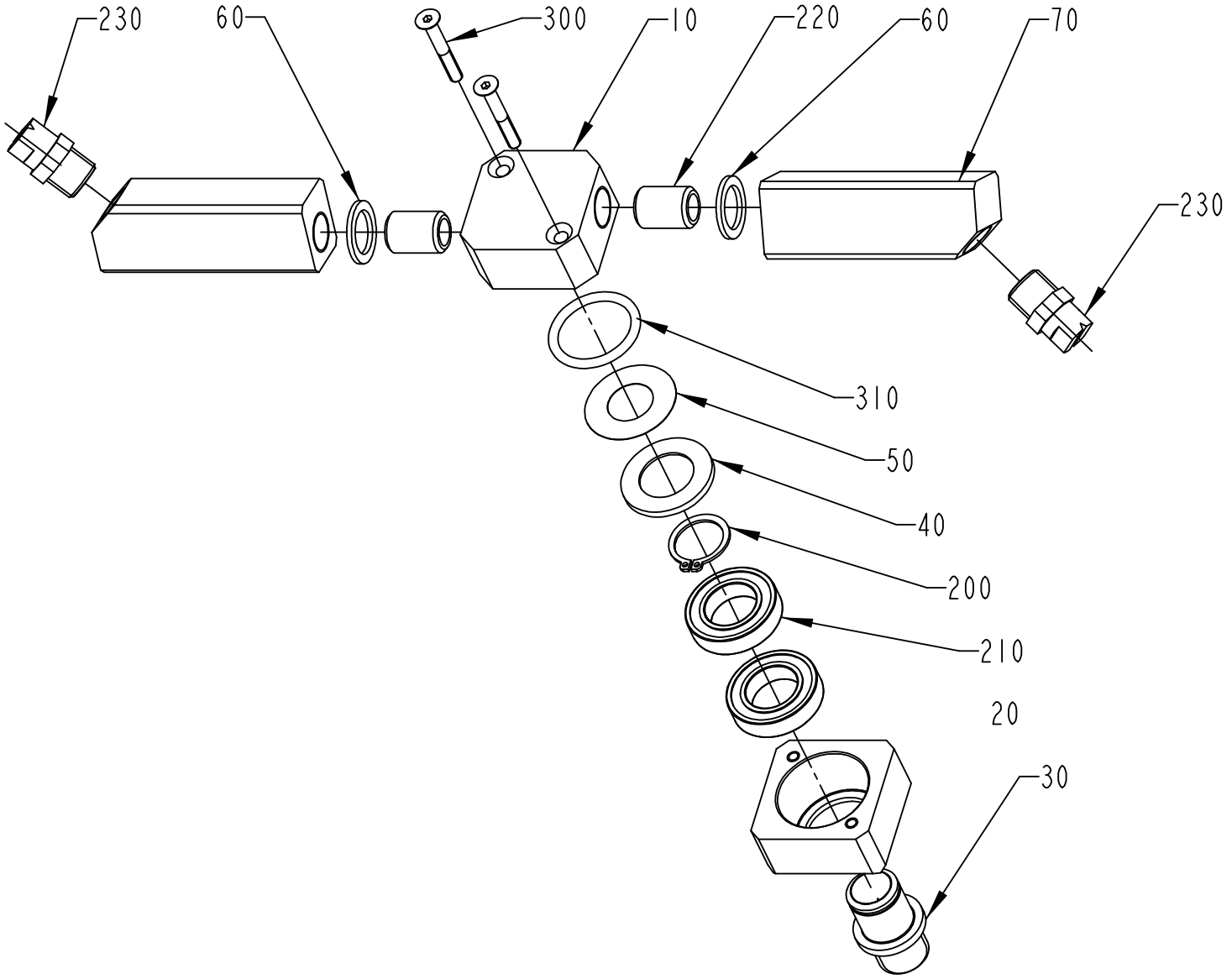

441798-1
ECN 82280

ECM: 102141 - 20011203
Group number: 441798-0100
Assembly Drawing: 441798-1_1_AB

Issue: 20020822

Pos	Part No	SP	UN	Qty	Description	Page No
Common Parts						
010	441792-0000	B		1	HEAD	
020	441793-0000	B		1	BEARING HOUSING	
030	441794-0000	B		1	PIVOT PIN	
040	441795-0000	B		1	WASHER	
050	441796-0000	A		1	SEAL	
060	441797-0000	A		2	SHIM	
070	441799-0000	A		2	ATTACHMENT	
200	90141-0017	-		1	RETAIN. RING, 17	
210	90214-0092	A		2	BALL BEARING, 17X30X7 MM	
220	90330-0101	A		2	NIPPLES, EXT. THREAD, G1/4	
230	90424-0035	A		2	SPRAY NOZZLE 95 DEG	
300	312155-0299	-		2	SCREW HEX.SOCK.COUNT.MF6S M4X30 A480	
310	315202-0217	A		1	O-RING 24,2X3 MM	

Pos	Part No	SP	UN	Qty	Description	Page No

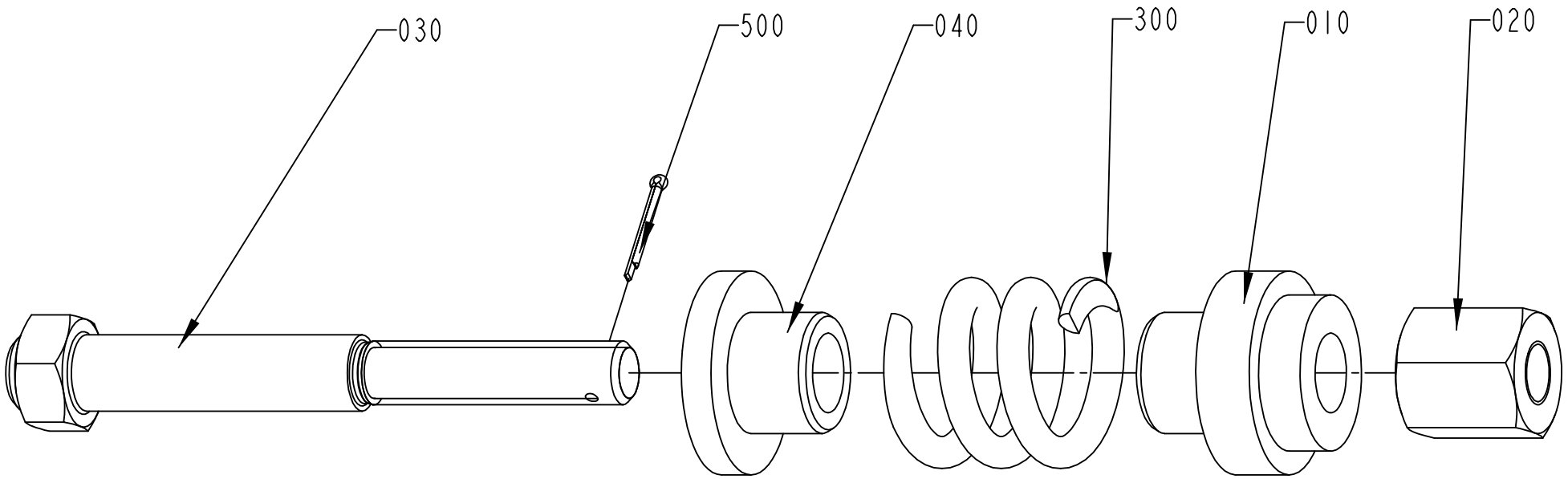

272652-3
ECN 72951

ECM: 99764 - 20011105
Group number: 272652-0300
Assembly Drawing: 272652-3_1_AB

Issue: 20020822

Pos	Part No	SP	UN	Qty	Description	Page No
Common Parts						
010	491731-0000	-		1	WASHER	
020	256190-0000	-		1	NUT	
030	441328-0000	-		1	GUIDE PIN	
040	491732-0000	-		1	WASHER	
300	90335-0096	B		1	SPRING	
500	311411-0152	-		1	SPLIT PIN SP2X16RFR	

Pos	Part No	SP	UN	Qty	Description	Page No

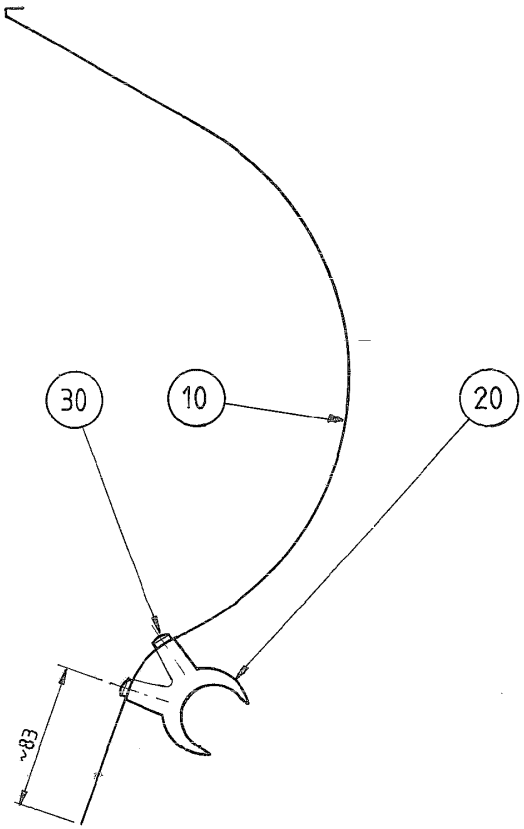
30
10
20
~83

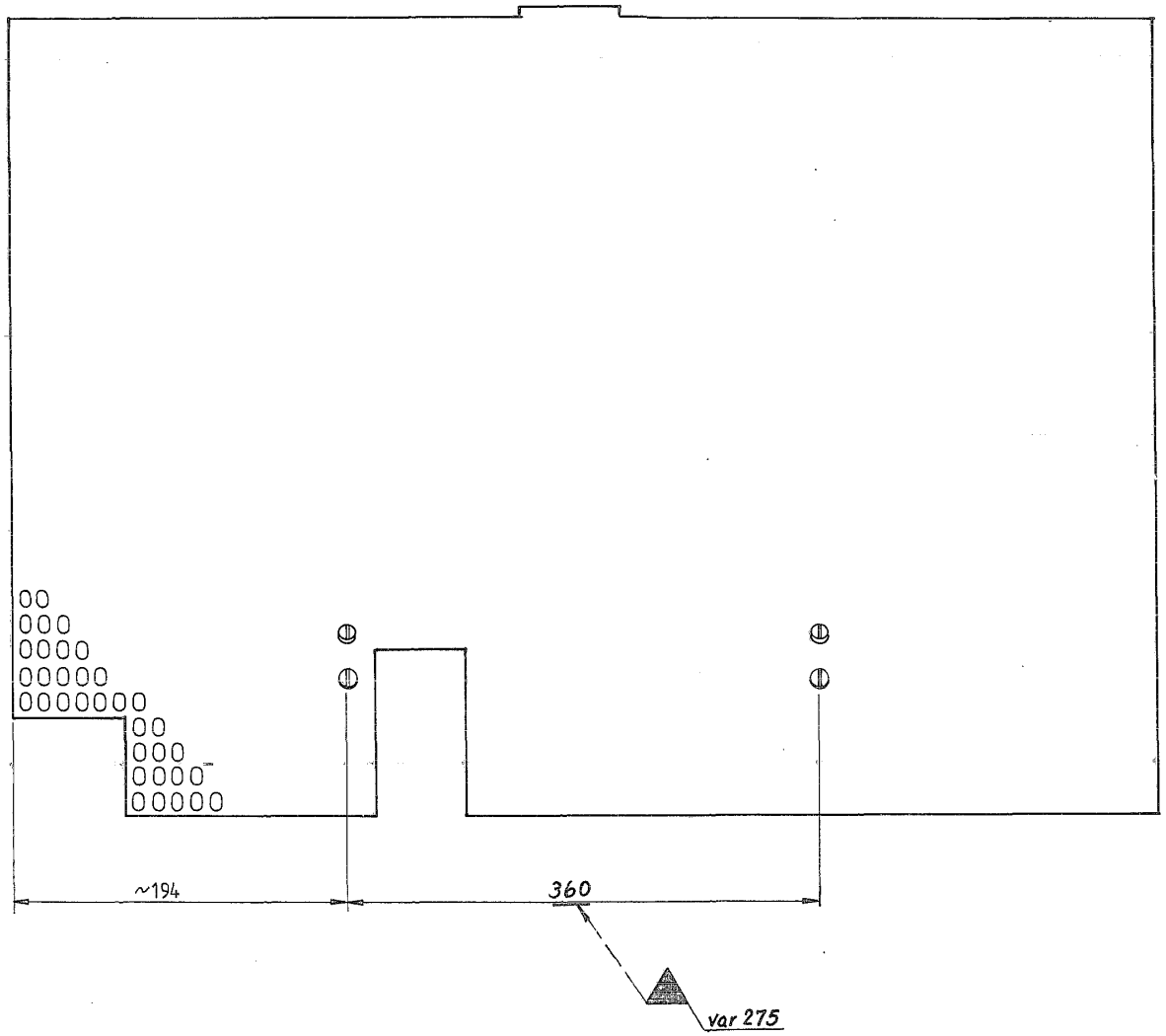
~194
360
var 275

ECM: - -
Group number: 456567-0100
Assembly Drawing: 456567-1_1_AA

Issue: 20020822

Pos	Part No	SP	UN	Qty	Description	Page No
Common Parts						
010	456568-0000	-		1	SHEET	
020	456569-0000	-		2	BRACKET	
030	90287-0134	-		4	SCREW POZIE, RXS B10X13 A4	

Pos	Part No	SP	UN	Qty	Description	Page No

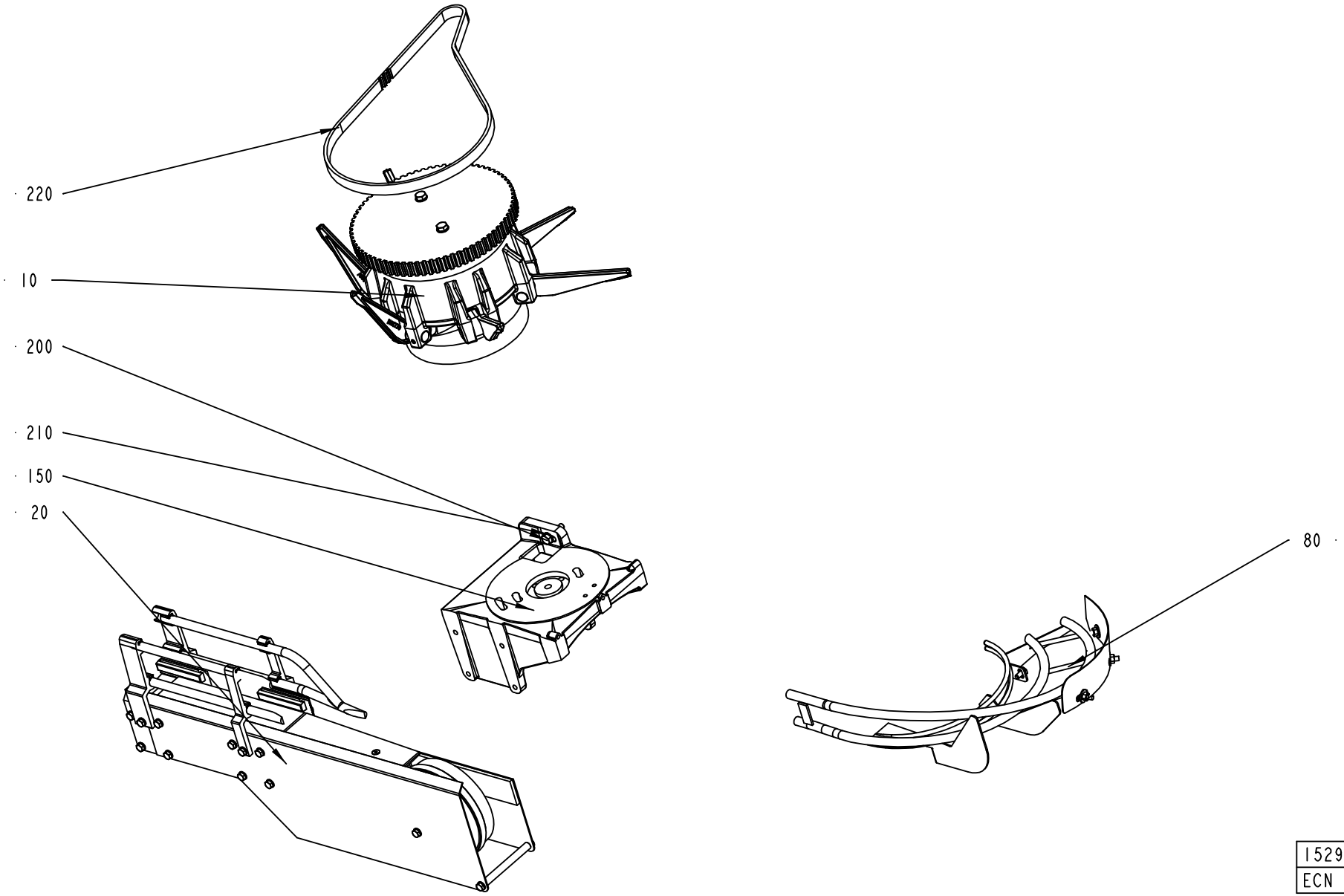

1529147-1
ECN 92695

ECM: 99395 - 20011016
Group number: 1529147-0100
Assembly Drawing: 1529147-1_1_AB

Issue: 20020822

Pos	Part No	SP	UN	Qty	Description	Page No
Common Parts						
010	A1091670-0100	-		1	OUTFEED TRANSFER	**485**
020	A1091679-0100	-		1	CONVEYOR	**487**
080	A1529063-0100	-		1	TURNING DEVICE	**489**
150	1091777-0000	-		1	BRACKET	
200	312105-0455	-		2	SCREW M6S ISO 4017 M8X30 A480	
210	315105-0165	-		2	WASHER PLAIN, BRB, 8,4/16,H=1,5	
220	318172-0156	A		1	TIMING BELT T10X1010X16 POLYURETHANE	

Pos	Part No	SP	UN	Qty	Description	Page No

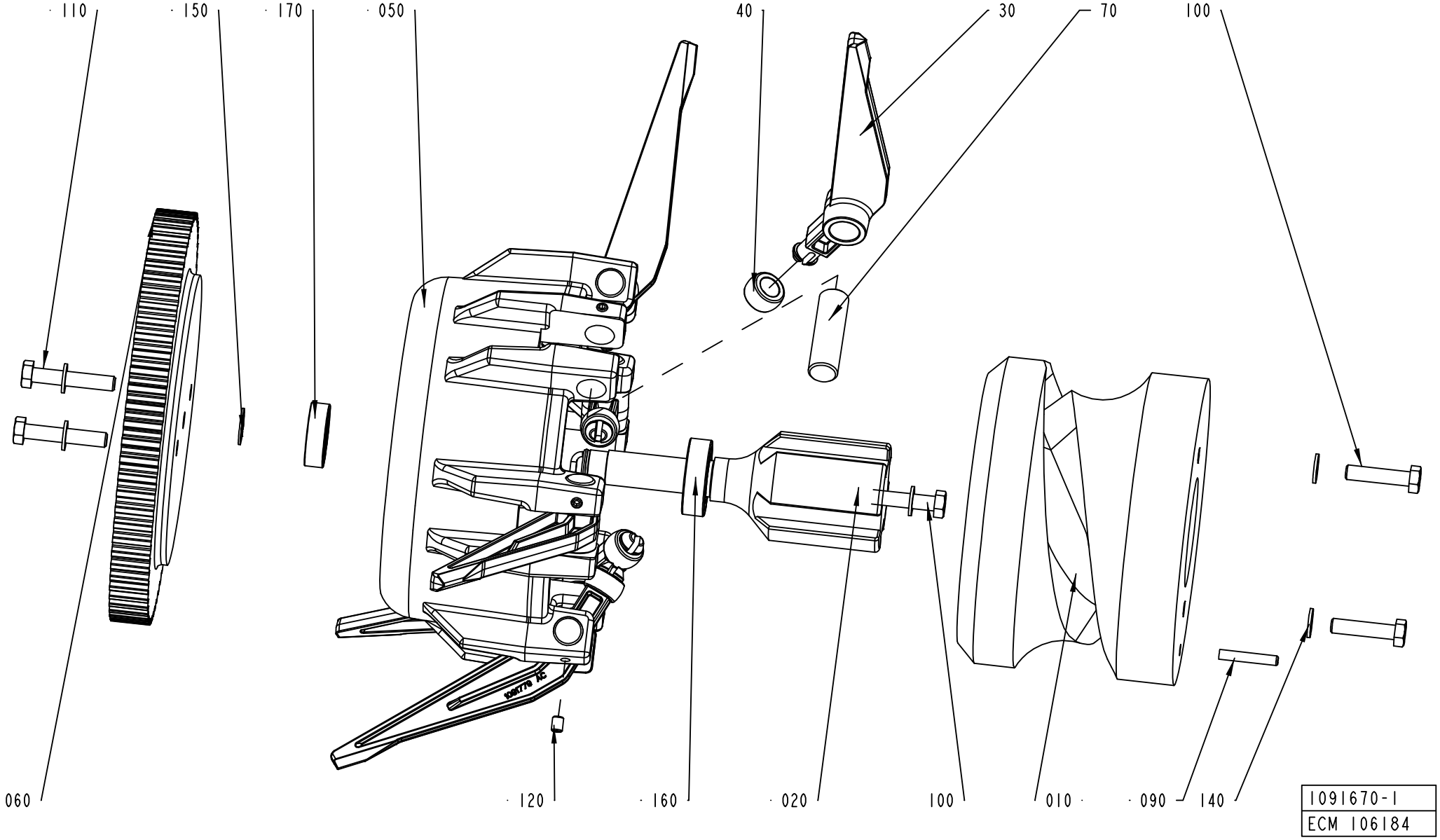
110
150
170
050
40
30
70
100
060
120
160
020
100
010
090
140
1091670-1
ECM 106184

Pos	Part No	SP	UN	Qty	Description	Page No
Common Parts						
010	2527765-0000	-		1	CAM	
020	1091677-0000	-		1	SHAFT	
030	1091779-0000	A		6	CARRIER	
040	1091780-0000	A		6	ROLLER	
050	1091781-0000	-		1	DRUM	
060	2501347-0000	-		1	TOOTHED PULLEY	
070	2501348-0000	-		6	SHAFT	
090	311112-0314	-		1	PIN, STRAIGHT SLOTTED SPRING FRP 5X32	
100	312109-0457	-		3	SCREW M6S ISO 4017 M8X35 A480	
110	312109-0460	-		2	SCREW M6S ISO 4017 M8X45 A480	
120	312318-0362	-		6	SCREW SOCK.SET CUP P MSK6SS M6X8 A4	
140	315105-0165	-		5	WASHER PLAIN, BRB, 8,4/16,H=1,5	
150	90141-0017	-		1	RETAIN. RING, 17	
160	90214-0225	A		1	BALL BEARING SOLID OIL 20X42X12 MM	
170	90458-0533	A		1	BALL BEARING, 17X35X10 MM	

Pos	Part No	SP	UN	Qty	Description	Page No

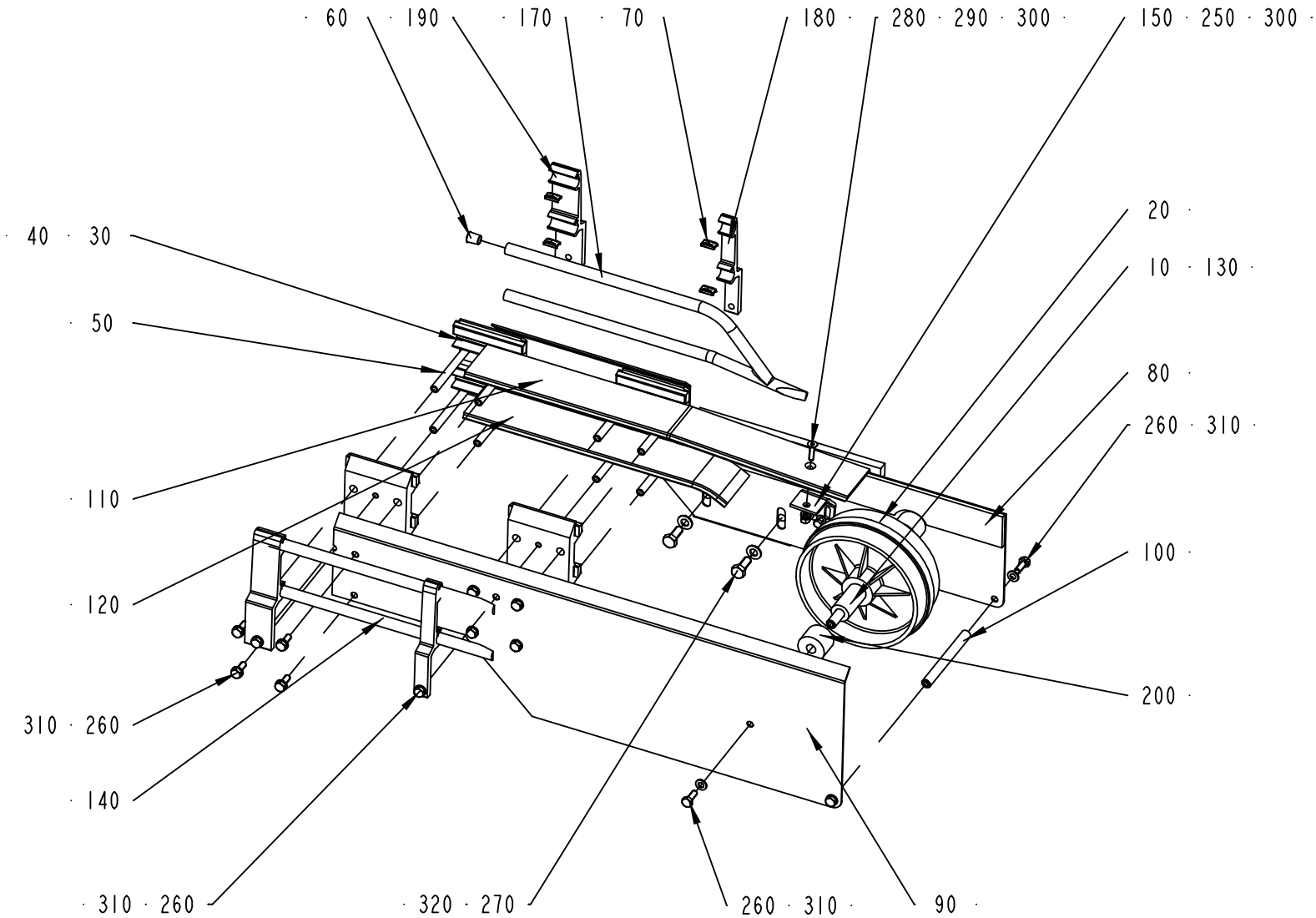

1091679-1
ECN 99557

Pos	Part No	SP	UN	Qty	Description	Page No
Common Parts						
010	229207-0000	-		1	BEARING SLEEVE	
020	245039-0000	-		1	GUIDE WHEEL	
030	457696-0001	-		4	JOINT PIECE	
040	466074-0002	-		8	SLIDER	
050	476220-0000	-		8	SPACER	
060	484701-0000	-		1	SHUTTER	
070	1020146-0000	-		8	LOCKING BLOCK REPL BY 1020290-101	
080	1091681-0000	-		1	PLATE	
090	1091682-0000	-		1	PLATE	
100	1091683-0000	-		1	SPACER	
110	1091684-0000	-		1	RAIL	
120	1091685-0000	-		1	RAIL	
130	1091686-0000	-		1	SPACER	
140	1091688-0000	-		2	RAIL	
150	1091719-0000	-		1	BRACKET	
170	1091746-0000	-		1	RAIL	
180	1138080-0001	-		2	RAIL HOLDER, B50 WIDTH 15 MM	
190	1138080-0002	-		2	RAIL HOLDER, B50 WIDTH 30 MM	
200	1144943-0000	-		2	SPACER	
250	312105-0323	-		2	SCREW M6S ISO 4017 M5X8 A480	
260	312105-0368	-		24	SCREW M6S M6X16 A280	
270	312105-0451	-		4	SCREW M6S ISO 4017 M8X20 A480	
280	312155-0331	-		1	SCREW HEX.SOCK.COUNT.MF6S M5X20 A280	
290	312605-0314	-		1	HEXAGON NUT, M6M M5 A280	
300	315105-0146	-		3	WASHER PLAIN, BRB, 5,3/10,H=1	
310	315105-0153	-		24	WASHER PLAIN, BRB, 6,4/12,H=1,5	
320	315105-0165	-		4	WASHER PLAIN, BRB, 8,4/16,H=1,5	

Pos	Part No	SP	UN	Qty	Description	Page No

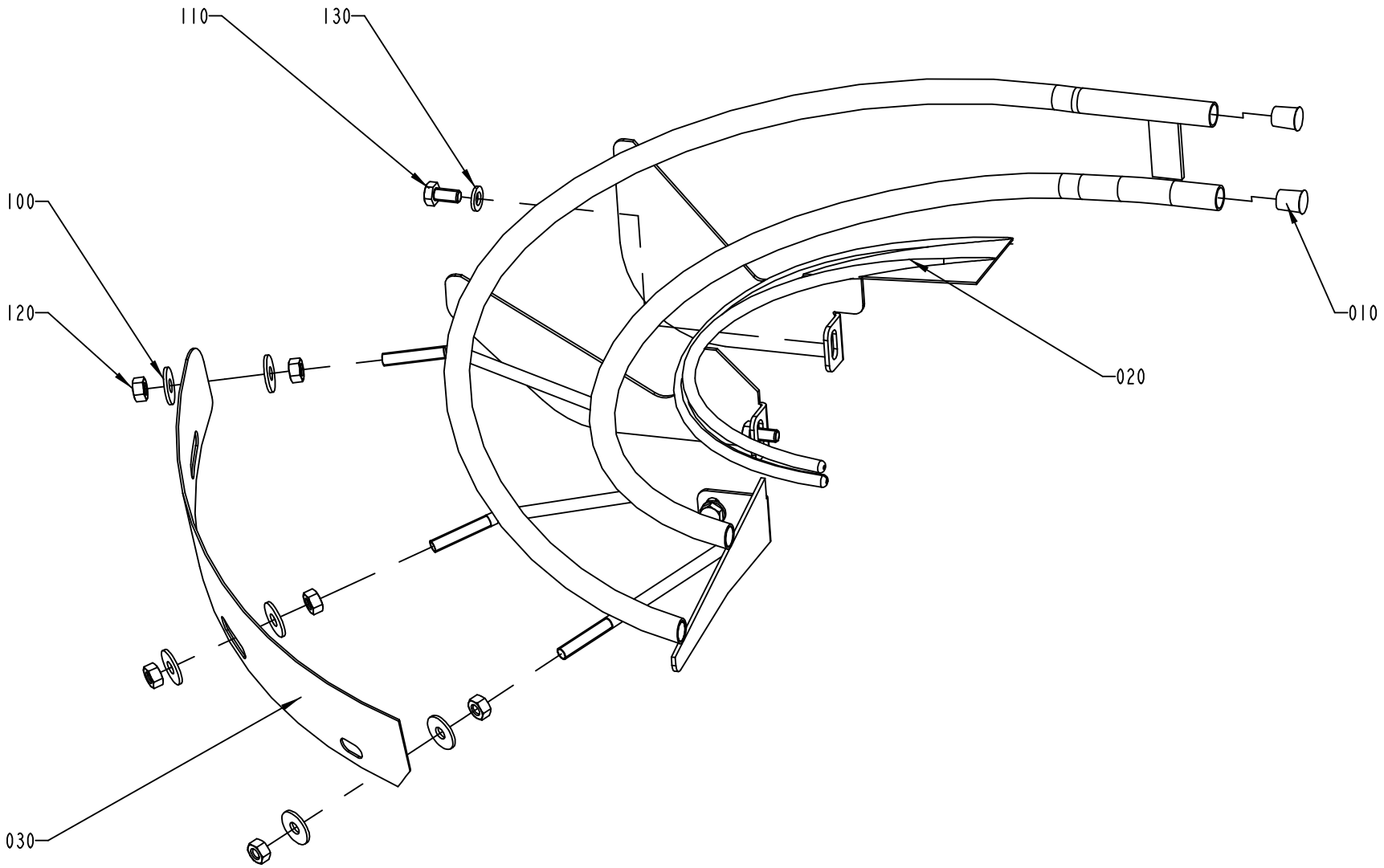

1529063-1
ECN 81979

Pos	Part No	SP	UN	Qty	Description	Page No
0200B						
020	2519434-0000	-		1	GUIDE RAIL	
030	1091766-0000	-		1	GUIDE PLATE	
0200S						
020	1091673-0000	-		1	GUIDE RAIL	
030	1091687-0000	-		1	GUIDE PLATE	
0250B						
020	1091759-0000	-		1	GUIDE RAIL	
030	1091766-0000	-		1	GUIDE PLATE	
Common Parts						
010	484701-0000	-		2	SHUTTER	
100	90005-0060	-		6	WASHER PLAIN, RBS 6,4/M6)/18,H=1,5	
110	312105-0366	-		3	SCREW M6S M6X12 A280	
120	312605-0316	-		6	HEXAGON NUT, M6M M6 A280	
130	315105-0153	-		3	WASHER PLAIN, BRB, 6,4/12,H=1,5	

Pos	Part No	SP	UN	Qty	Description	Page No

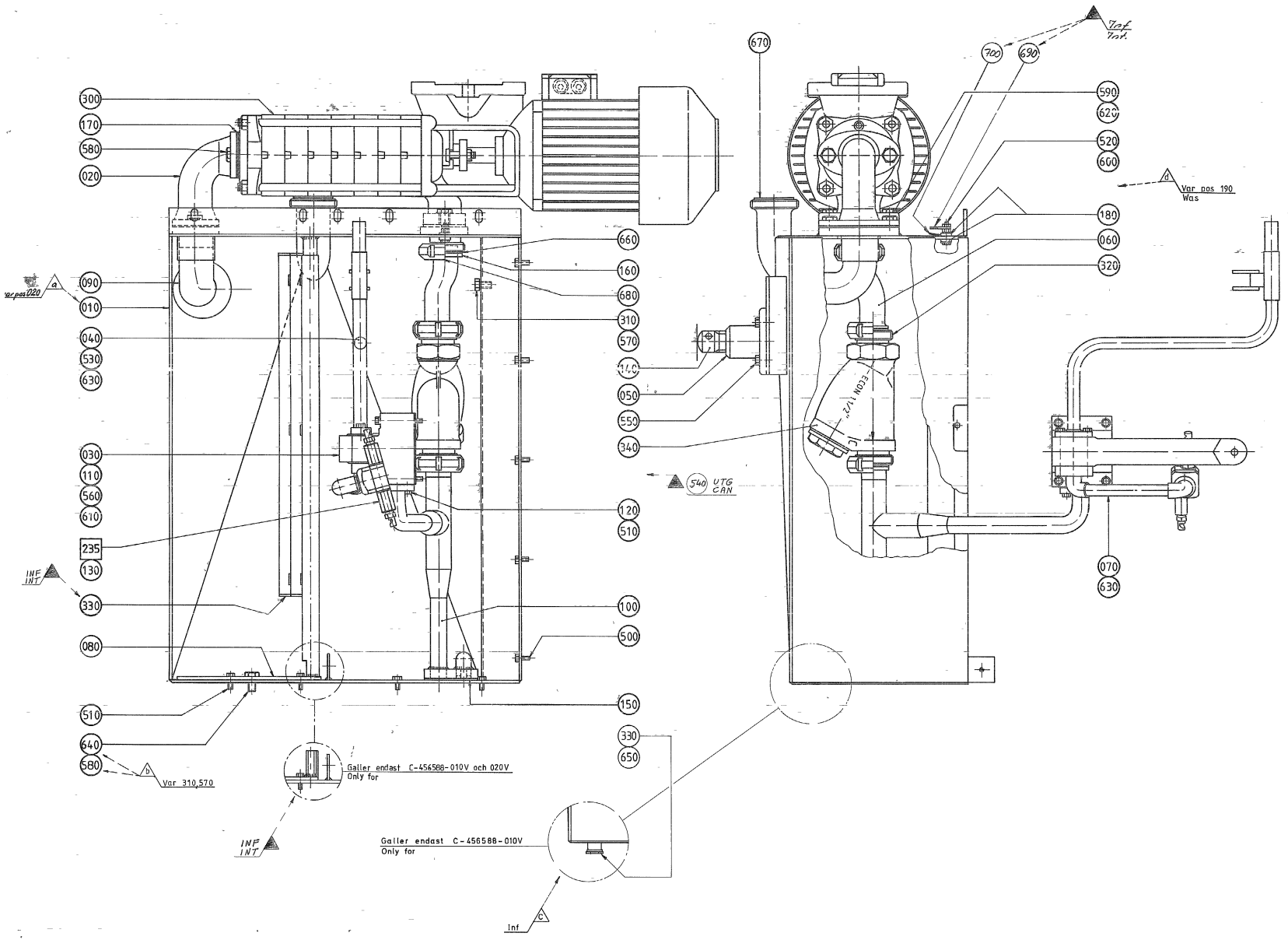
300
170
580
020
090
010
040
530
630
030
110
560
610
235
130
330
080
510
640
580
660
160
680
310
570
050
550
340
120
510
100
500
150
330
650
670
700
690
590
620
520
600
180
060
320
070
630
Var pos 020
Var 310,570
Galler endast C-456588-010V och 020V
Only for
Galler endast C-456588-010V
Only for
INF
INT
Inf
540 UTG
CAN
ECON 1 1/2"
Var pos 190
Was

ECM: 101971 - 20011203
Group number: 456588-0300
Assembly Drawing: 456588-1_1_AA

Issue: 20020822

Pos	Part No	SP	UN	Qty	Description	Page No
50HZ						
300	B90321-0015	B		1	PUMP 502 CFX 7ETV 302 50HZ IP55	
	90321-0481	*C*		*1*	*GASKET*	
	90321-0466	*C*		*1*	*SPARE PART KIT*	
60HZ						
300	B90321-0034	B		1	PUMP 502 CFX 5ETV 362 60HZ IP55	
	90321-0466	*C*		*1*	*SPARE PART KIT*	
	90321-0481	*C*		*1*	*GASKET*	
Common Parts						
010	491808-0000	-		1	CLEANING EQUIPMENT	
020	751162-0000	-		1	INLET PIPE	
030	441603-0000	-		1	BRACKET	
040	441839-0000	B		1	JUNCTION PIPE	
050	256640-0000	-		1	HOLDER	
060	271433-0000	-		1	PIPE	
070	B456393-0000	-		1	PIPE	
	90330-0065	*-*		*1*	*ELBOW, 90 INT. THREAD, R-222R3/8*	
080	525386-0000	B		1	PROTECTIVE GRATING	
090	295412-0000	-		1	PIPE	
100	456293-0000	-		1	PIPE	
110	456395-0000	A		1	GASKET	
120	456396-0000	A		1	GASKET	
130	456394-0000	A		1	SEALING WASHER	
140	256641-0000	-		1	LEG	
150	295417-0000	A		1	GASKET	
160	271435-0000	-		1	WASHER	
170	751017-0000	A		3	GASKET	
180	295434-0000	-		2	BUSHING	
310	90005-0067	-		1	GASKET BOLT HEAD 10X17X1,5 MM M10	
320	90217-0041	-		2	NIPPLE LKBN, RD 60-6 - R1 1/2 M	
330	90261-0033	A		4	PLUG, BLIND, PLASTIC GPN300F182	
340	B90415-0022	-		1	FILTER / R1 1/2" TYP. 1012	
	90415-0320	*C*		*1*	*FILTER INSERT*	
500	312105-0368	-		7	SCREW M6S M6X16 A280	
510	312105-0370	-		4	SCREW M6S ISO 4017 M6X20 A480	
520	312105-0372	-		1	SCREW M6S ISO 4017 M6X25 A480	
530	312105-0384	-		2	SCREW M6S ISO 4014 M6X70 A480	
550	312105-0451	-		4	SCREW M6S ISO 4017 M8X20 A480	
560	312105-0464	-		4	SCREW M6S ISO 4014 M8X65 A480	
570	312105-0491	-		1	SCREW M6S ISO 4017 M10X20 A480	
580	312105-0532	-		5	SCREW M6S ISO 4017 M12X20 A480	
590	312105-0538	-		2	SCREW M6S ISO 4017 M12X35 A480	
600	312605-0316	-		2	HEXAGON NUT, M6M M6 A280	
610	315105-0165	-		4	WASHER PLAIN, BRB, 8,4/16,H=1,5	
620	315105-0178	-		2	WASHER PLAIN, BRB, 13/24,H=2	
630	315202-0215	-		2	O-RING 19,2X3 MM	
640	315211-0107	-		1	GASKET BOLT HEAD 12,7X18X1,5 MM M12	
660	315250-0103	-		3	GASKET 48X38X5,5 MM	
670	315250-0104	-		1	GASKET 61X51X5,5 MM	
680	342803-0103	-		2	UNION NUT, RD 60-6 (SMS 38)	
690	353101-0123	A		1	CABLE SHOE 0,5-1,5MM2 RED	
700	353101-0126	A		1	CABLE SHOE	
F235	A441811-0100	-		1	ROTOR	**493**

Machine Type | Group Description | Used-In | Group Number | Page No

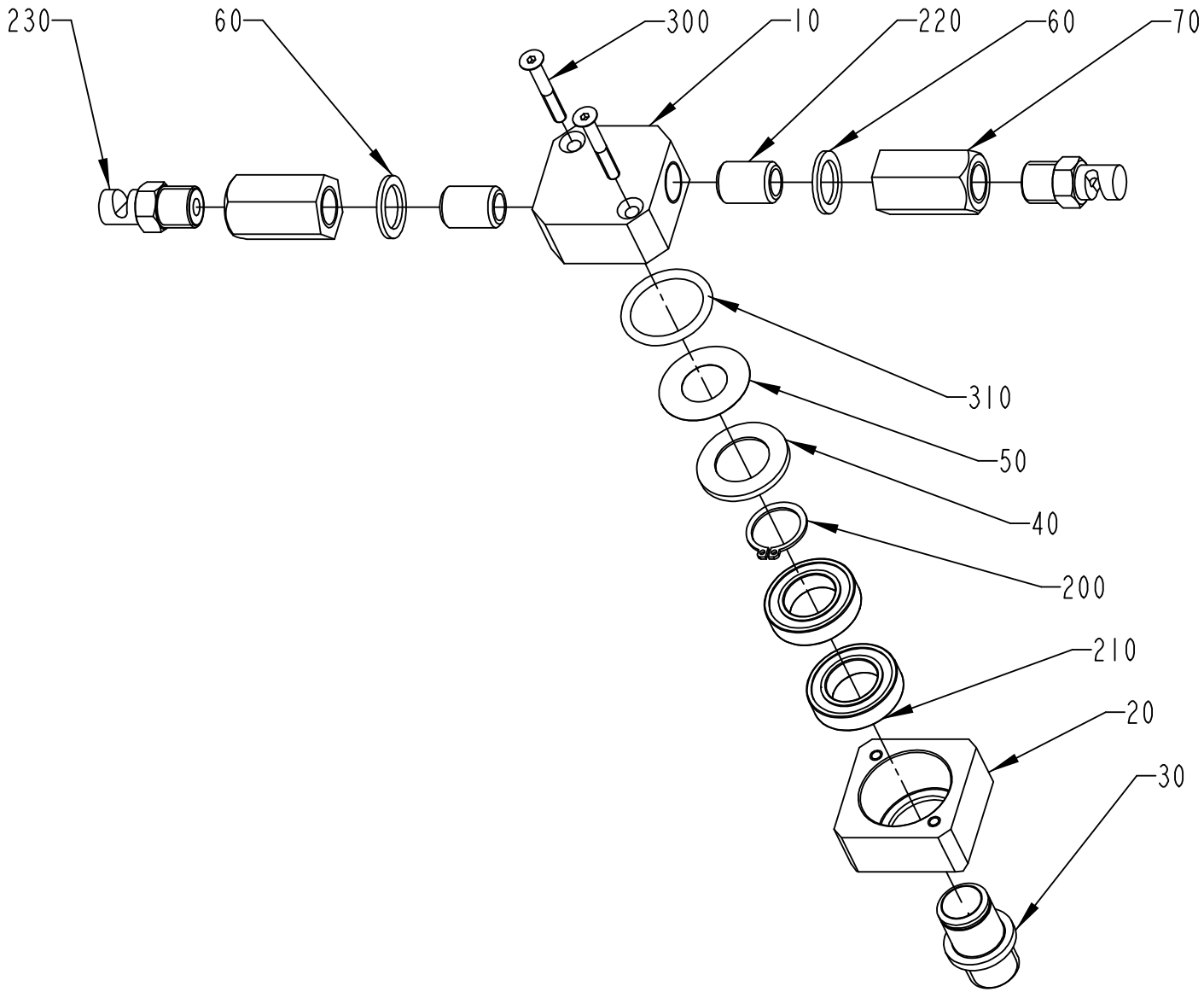

441811-1
ECN 72951

ECM: 113162 - 20020731
Group number: 441811-0100
Assembly Drawing: 441811-1_1_AB

Issue: 20020822

Pos	Part No	SP	UN	Qty	Description	Page No
Common Parts						
010	441792-0000	-		1	HEAD	
020	441793-0000	-		1	BEARING HOUSING	
030	441794-0000	B		1	PIVOT PIN	
040	441795-0000	B		1	WASHER	
050	441796-0000	B		1	SEAL	
060	441797-0000	B		2	SHIM	
070	441800-0000	-		2	STRAIGHT FITTING	
200	90141-0017	-		1	RETAIN. RING, 17	
210	90214-0092	B		2	BALL BEARING, 17X30X7 MM	
220	90330-0101	-		2	NIPPLES, EXT. THREAD, G1/4	
230	90424-0025	A		2	SPRAY NOZZLE 145 DEG	
300	312155-0299	-		2	SCREW HEX.SOCK.COUNT.MF6S M4X30 A480	
310	315202-0217	B		1	O-RING 24,2X3 MM	

Pos	Part No	SP	UN	Qty	Description	Page No

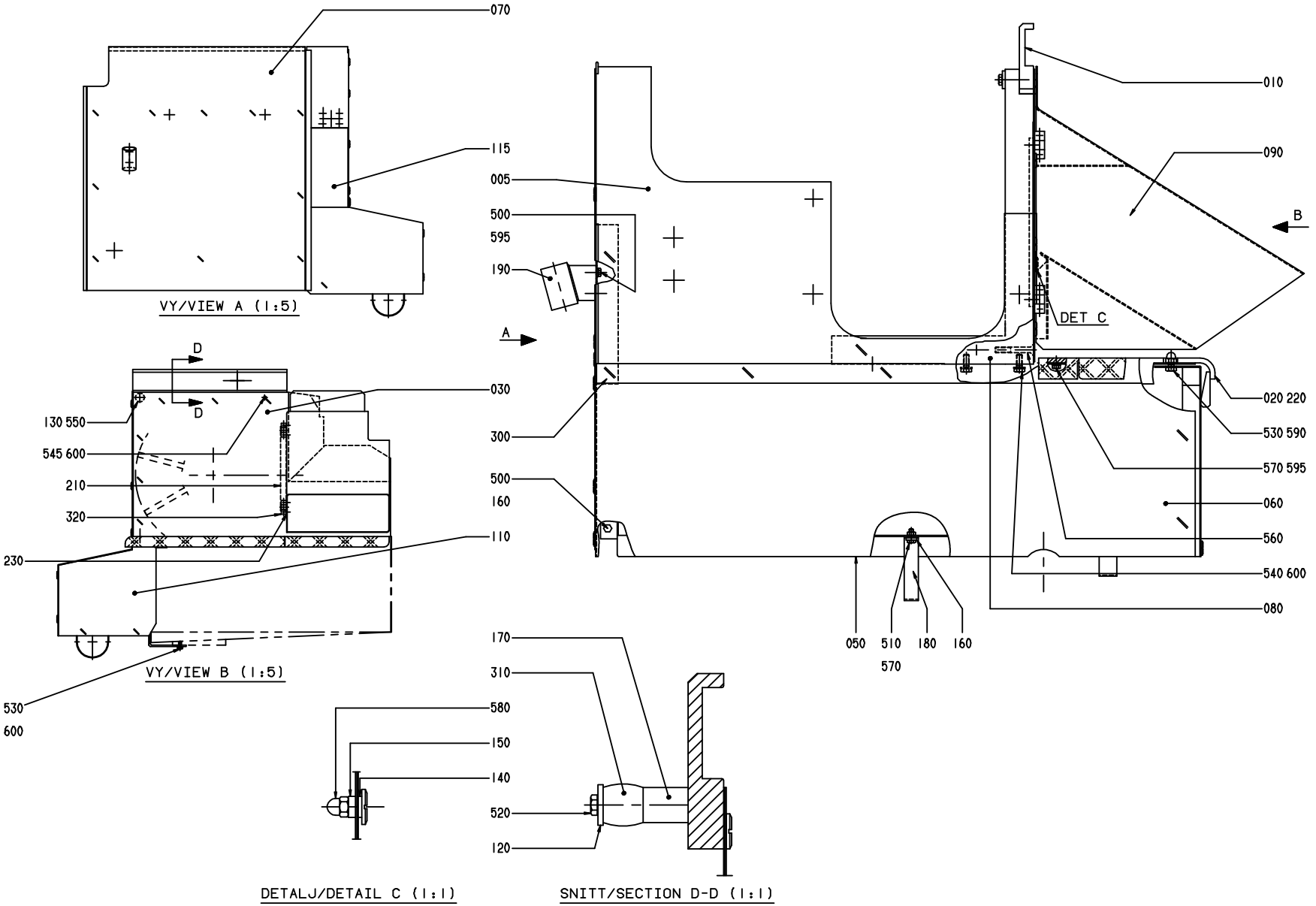
070
115
005
500
595
190
010
090
B
A
DET C
020 220
530 590
570 595
060
560
540 600
080
050
510
180
160
570
D
D
130 550
545 600
210
320
030
300
500
160
110
230
530
600
VY/VIEW A (1:5)
VY/VIEW B (1:5)
170
310
580
150
140
520
120
DETALJ/DETAIL C (1:1)
SNITT/SECTION D-D (1:1)

ECM: 101983 - 20011203
Group number: 1529149-0100
Assembly Drawing: 1529149-1_1_AA

Issue: 20020822

Pos	Part No	SP	UN	Qty	Description	Page No
Common Parts						
005	A1091774-0100	-		1	COVER PLATE	**497**
010	295332-0000	-		1	RAIL	
020	525392-0000	-		1	CHECKER PLATE	
030	295334-0000	-		1	SIDE PLATE	
050	295336-0000	-		1	BOTTOM PANEL	
060	456285-0000	-		1	COVER	
070	978607-0000	-		1	SIDE PLATE, LEFT	
080	B456289-0000	-		1	BLOCKING PIECE	
	312911-0126	-		*3*	*HELI-COIL M8X1,5D*	
	312911-0119	-		*2*	*THREADED INSERTS M6X2,0D*	
090	525387-0000	B		1	WASTE CHUTE	
110	295340-0000	-		1	GABLE PLATE	
115	456290-0000	-		1	GUSSET PLATE	
120	38087-0000	-		1	WASHER	
130	271585-0000	-		1	WASHER	
140	271586-0001	-		2	WASHER	
150	271586-0002	-		2	WASHER	
160	271587-0000	-		6	WASHER	
170	295341-0000	-		1	SPACER	
180	295342-0000	-		1	CRAMP	
190	752093-0000	-		1	HOLDER	
210	525388-0000	-		1	FASTENING IRON	
220	525393-0000	-		1	CHECKER PLATE	
230	566015-0000	-		2	WASHER	
300	90287-0062	-		34	SCREW M6	
310	90347-0035	A		1	DAMPER	
320	90248-0022	-		2	HINGE, 1055-U6 S/S 304	
500	312105-0366	-		4	SCREW M6S M6X12 A280	
510	312105-0368	-		2	SCREW M6S M6X16 A280	
520	312105-0382	-		1	SCREW M6S ISO 4014 M6X60 A480	
530	312105-0449	-		2	SCREW M6S ISO 4017 M8X16 A480	
540	312105-0451	-		3	SCREW M6S ISO 4017 M8X20 A480	
545	312105-0457	-		1	SCREW M6S ISO 4014 M8X35 A480	
550	312105-0459	-		1	SCREW M6S ISO 4014 M8X40 A480	
555	312155-0368	-		1	SCREW HEX.SOCK.COUNT.MF6S M6X16 A280	
560	312155-0461	-		1	SCREW HEX.SOCK.COUNT.MF6S M8X50 A280	
570	312605-0316	-		3	HEXAGON NUT, M6M M6 A280	
580	312705-0316	-		2	NUT HEX. DOMED CAP MHM-6 M6 A280	
590	312705-0318	-		1	NUT HEX. DOMED CAP MHM-6 M8 A280	
595	315105-0153	-		3	WASHER PLAIN, BRB, 6,4/12,H=1,5	
600	315105-0165	-		5	WASHER PLAIN, BRB, 8,4/16,H=1,5	

Machine Type	Group Description	Used-In	Group Number	Page No

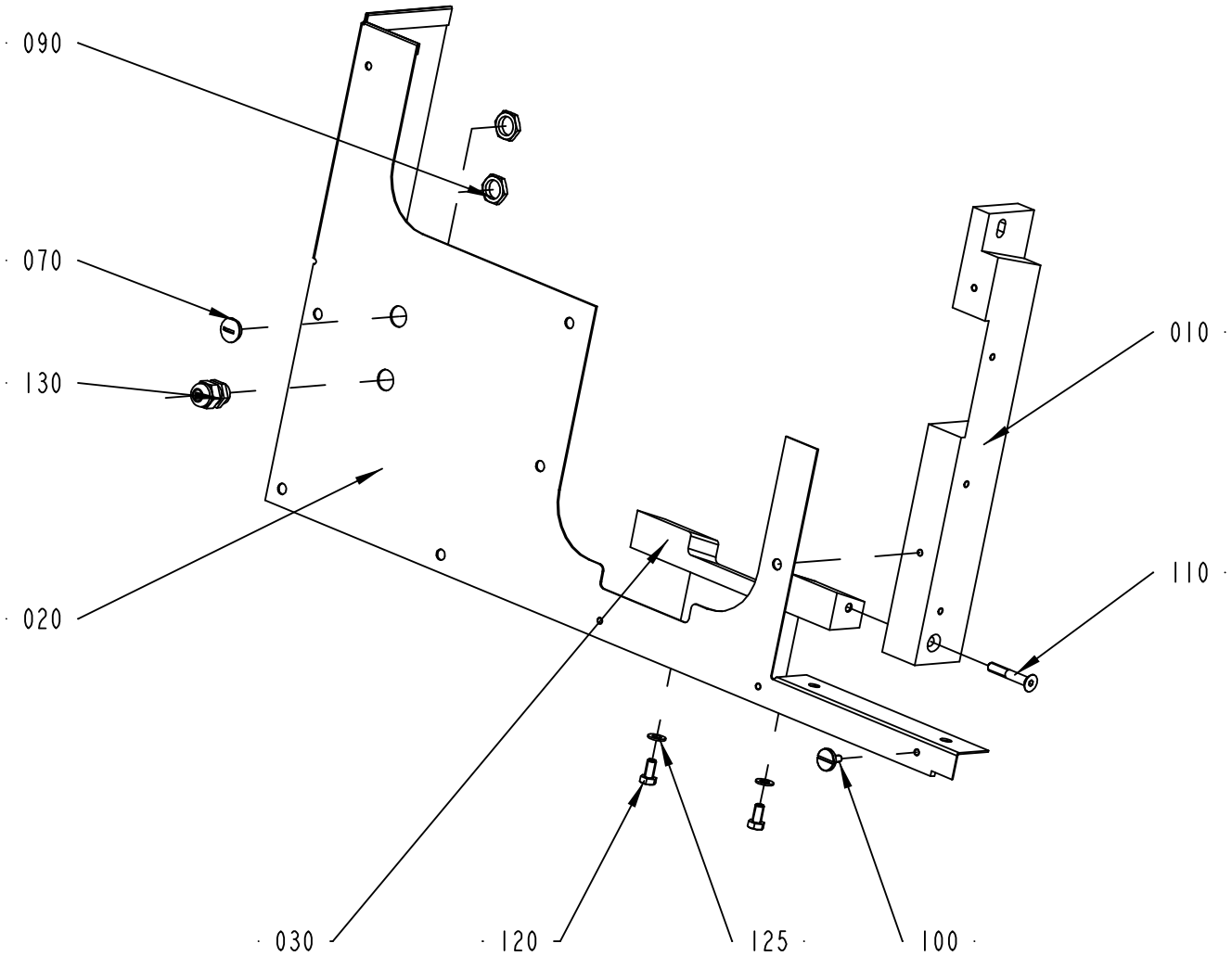

1091774-1
ECN 106184

ECM: 111604 - 20020821
Group number: 1091774-0100
Assembly Drawing: 1091774-1_1_AC

Issue: 20020822

Pos	Part No	SP	UN	Qty	Description	Page No
Common Parts						
010	1091736-0000	-		1	COLUMN	
020	1091738-0000	-		1	FRONT PLATE	
030	2552716-0000	-		1	BLOCK	
070	90002-0009	-		1	BLANK-OFF PLUG, PR 18.6 SKINDICHT-BLK11	
090	90099-0117	-		2	NUT, PR 18,6 (PG11)	
100	90287-0062	-		1	SCREW M6	
110	312155-0461	-		1	SCREW HEX.SOCK.COUNT.MF6S M8X50 A280	
120	312105-0449	-		2	SCREW M6S ISO 4017 M8X16 A480	
125	315105-0165	-		2	WASHER PLAIN, BRB, 8,4/16,H=1,5	
130	352103-0106	-		2	CABLE GLAND, ST 11, PR18,6/PG11	

Pos	Part No	SP	UN	Qty	Description	Page No

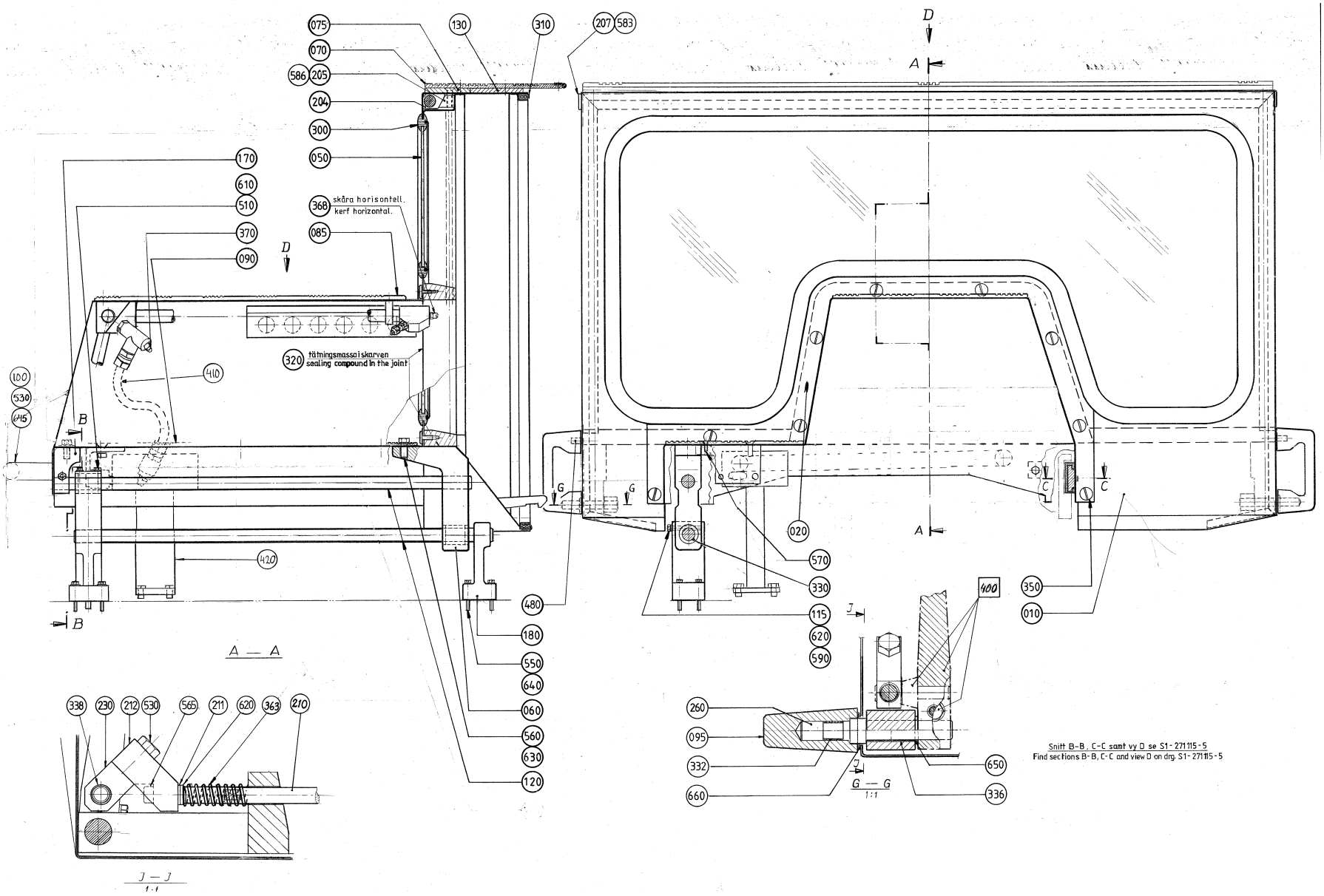
075
130
310
207
583
070
586
205
204
300
050
170
610
510
368
skåra horisontell.
kerf horizontal.
370
085
090
320
fätningsmassa i skarven
sealing compound in the joint
410
100
530
615
420
480
180
550
640
060
560
630
120
A — A
338
230
212
530
565
211
620
363
210
J — J
1:1
D
A
B
G
C
020
570
330
115
620
590
400
350
010
J
260
095
332
660
650
336
G — G
1:1
Snitt B-B, C-C samt vy D se S1-271115-5
Find sections B-B, C-C and view D on drg. S1-271115-5

ECM: 101985 - 20011203
Group number: 1529055-0100
Assembly Drawing: 1529055-1_1_AA

Issue: 20020822

Pos	Part No	SP	UN	Qty	Description	Page No
Common Parts						
010	469050-0000	-		1	FRONT GUARD	
020	1529145-0000	-		1	HOOD	
030	441829-0000	-		1	PIPE	
040	295347-0000	B		1	BEARING BRACKET	
050	295348-0000	A		1	GLASS	
060	295349-0000	B		1	BEARING BRACKET	
070	469053-0000	-		1	CHECKER PLATE	
075	469054-0000	-		1	PLATE	
085	469056-0000	-		1	CHECKER PLATE	
090	1529144-0000	-		1	CHECKER PLATE	
095	469058-0000	B		2	HANDLE	
100	1091778-0000	-		1	HANDLE	
115	271608-0000	A		2	CLAMP SCREW	
120	441359-0000	A		2	GUIDE	
130	469061-0000	-		1	PLATE	
140	271708-0000	-		1	SLIDE RAIL	
150	1529146-0000	-		1	WASHER	
170	295355-0000	-		1	BEARING BRACKET	
180	295356-0000	-		1	HOUSING	
190	295357-0000	A		1	ROD	
200	295358-0000	B		1	RULER	
203	469811-0000	-		1	SHAFT	
204	469812-0000	A		2	BEARING	
205	469813-0000	B		2	CLAMPING PART	
206	469814-0000	B		2	LINK ARM	
207	469815-0000	-		2	END PIECE	
208	469816-0000	B		2	CAP	
209	469817-0000	A		2	PIN	
210	469818-0000	B		2	ROD	
211	469819-0000	A		2	PEEL-OFF SHIM	
212	469820-0000	-		2	BRACKET	
220	295423-0000	A		1	SEAL	
230	469063-0000	-		2	HEAD	
260	469066-0000	-		2	SHAFT	
275	469068-0000	A		1	SLEEVE	
280	469069-0000	-		1	PLATE	
290	469968-0000	-		1	EDGE STRIP	
298	90143-0016	-	MM	300	STRIP	
300	90143-0039	-	MM	3400	STRIP	
310	90143-0049	-	MM	2600	RUBBERSTRIP 11X21MM	
320	90157-0022	-	L	200	SEALING COMPOUND	
330	90189-0019	A		2	BALL BUSHING, 20X30X30 MM	
332	90208-0047	-		2	COLLAR	
336	90240-0052	-		4	BEARING BUSHING WITHOUT FL, 12X14X15 MM	
338	90240-0076	A		2	RICTION BEARING	
340	90240-0083	A		2	BEARING BUSHING WITHOUT FL, 8X10X10 MM	
348	312155-0289	-		5	SCREW HEX.SOCK.COUNT.MF6S M4X10 A480	
350	90287-0062	-		9	SCREW M6	
363	90335-0055	B		2	SPRING	
368	90424-0035	-		2	SPRAY NOZZLE 95 DEG	
370	90424-0036	-		6	SPRAY NOZZLE 95 DEG R 3/8 BD3	
400	A490912-0100	-		2	CATCH	**503**
410	A1091715-0100	-		1	PIPE	**505**
420	A1091771-0100	-		1	SAFETY GUARD	**507**
480	311103-0407	-		2	PARALLELL PIN, M6, 8X35 MM	
500	312105-0327	-		7	SCREW M6S ISO 4017 M5X12 A480	
510	312105-0329	-		2	SCREW M6S ISO 4017 M5X16 A480	
515	312105-0332	-		2	SCREW M6S ISO 4017 M5X22 A480	
520	312105-0362	-		1	SCREW M6S ISO 4017 M6X8 A480	
525	312105-0451	-		2	SCREW M6S ISO 4017 M8X20 A480	
530	312105-0455	-		2	SCREW M6S ISO 4017 M8X30 A480	
550	312105-0378	-		12	SCREW M6S ISO 4014 M6X40 A480	
560	312105-0492	-		2	SCREW M6S ISO 4017 M10X22 A480	
565	312115-0374	-		2	SCREW MC6S M6X30 A280	
570	312155-0368	-		10	SCREW HEX.SOCK.COUNT.MF6S M6X16 A280	
580	312155-0372	-		8	SCREW HEX.SOCK.COUNT.MF6S M6X25 A280	
583	312155-0378	-		2	SCREW HEX.SOCK.COUNT.MF6S M6X40 A280	
586	312155-0455	-		2	SCREW HEX.SOCK.COUNT.MF6S M8X30 A280	
590	312605-0316	-		5	HEXAGON NUT, M6M M6 A280	
600	312812-0316	-		10	HEXAGON NUT, NY-LOCK M6 A480	
610	315105-0146	-		13	WASHER PLAIN, BRB, 5,3/10,H=1	
620	315105-0153	-		18	WASHER PLAIN, BRB, 6,4/12,H=1,5	
630	315105-0173	-		2	WASHER PLAIN, BRB, 10,5/22,H=2	
640	315115-0153	-		4	WASHER PLAIN, TBRB 6,4/12 H=3	
645	315125-0165	-		2	WASHER PLAIN ROUND,CHAMF. 8,4/26, H=5	
650	315233-0110	-		2	WASHER PL.RND.NYL.13,3/17,H=1	
660	315233-0111	-		2	WASHER PL.RND.NYL.17/22,H=1	

Machine Type | Group Description | Used-In | Group Number | Page No

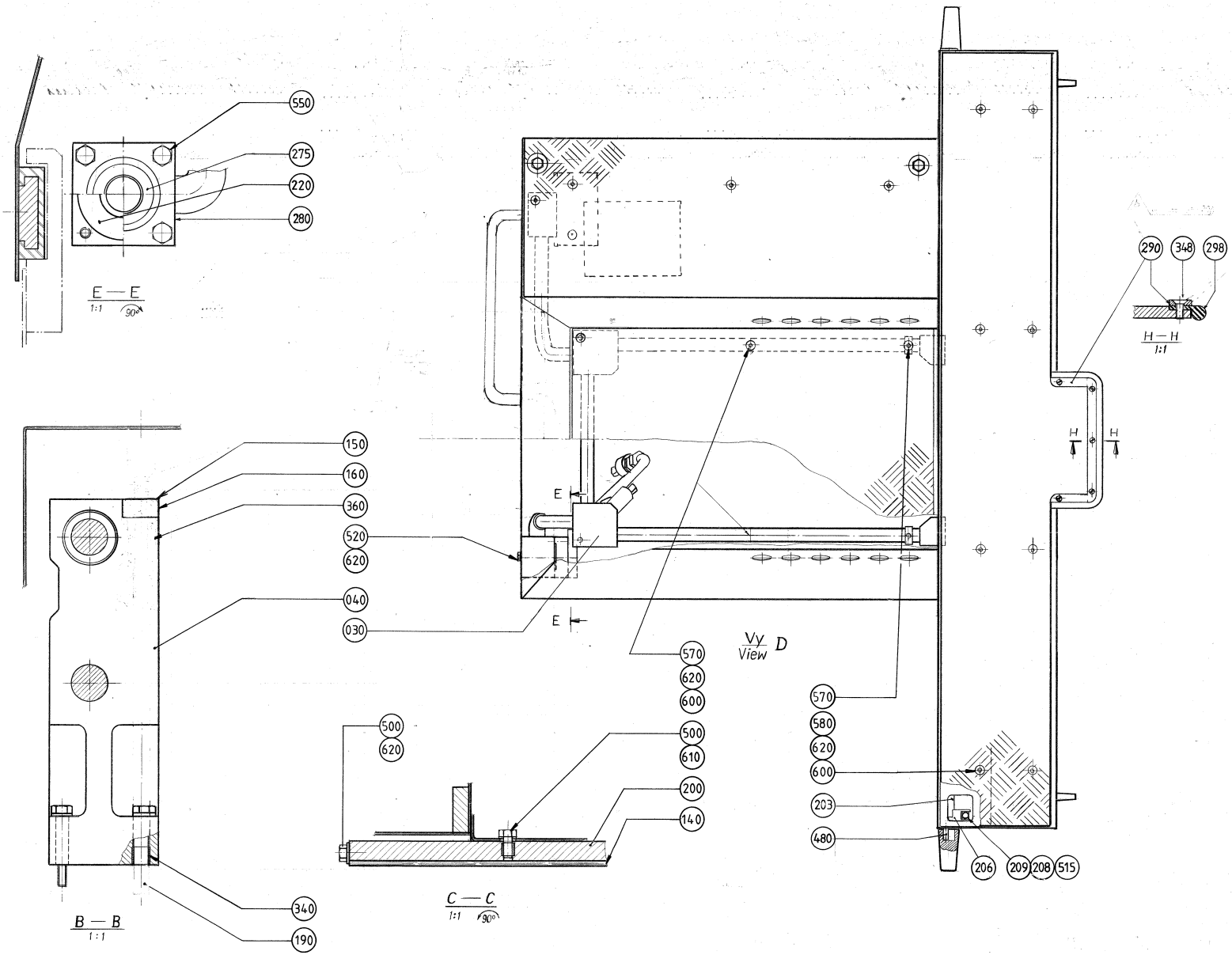
550
275
220
280
E — E
1:1
290
348
298
H — H
1:1
150
160
360
520
620
040
030
E
E
570
620
600
500
620
500
610
200
140
C — C
1:1
Vy
View D
570
580
620
600
203
480
206
209
208
515
340
190
B — B
1:1

ECM: 101985 - 20011203
Group number: 1529055-0100
Assembly Drawing: 1529055-2_1_AA

Issue: 20020822

Pos	Part No	SP	UN	Qty	Description	Page No
Common Parts						
010	469050-0000	-		1	FRONT GUARD	
020	1529145-0000	-		1	HOOD	
030	441829-0000	-		1	PIPE	
040	295347-0000	B		1	BEARING BRACKET	
050	295348-0000	A		1	GLASS	
060	295349-0000	B		1	BEARING BRACKET	
070	469053-0000	-		1	CHECKER PLATE	
075	469054-0000	-		1	PLATE	
085	469056-0000	-		1	CHECKER PLATE	
090	1529144-0000	-		1	CHECKER PLATE	
095	469058-0000	B		2	HANDLE	
100	1091778-0000	-		1	HANDLE	
115	271608-0000	A		2	CLAMP SCREW	
120	441359-0000	A		2	GUIDE	
130	469061-0000	-		1	PLATE	
140	271708-0000	-		1	SLIDE RAIL	
150	1529146-0000	-		1	WASHER	
170	295355-0000	-		1	BEARING BRACKET	
180	295356-0000	-		1	HOUSING	
190	295357-0000	A		1	ROD	
200	295358-0000	B		1	RULER	
203	469811-0000	-		1	SHAFT	
204	469812-0000	A		2	BEARING	
205	469813-0000	B		2	CLAMPING PART	
206	469814-0000	B		2	LINK ARM	
207	469815-0000	-		2	END PIECE	
208	469816-0000	B		2	CAP	
209	469817-0000	A		2	PIN	
210	469818-0000	B		2	ROD	
211	469819-0000	A		2	PEEL-OFF SHIM	
212	469820-0000	-		2	BRACKET	
220	295423-0000	A		1	SEAL	
230	469063-0000	-		2	HEAD	
260	469066-0000	-		2	SHAFT	
275	469068-0000	A		1	SLEEVE	
280	469069-0000	-		1	PLATE	
290	469968-0000	-		1	EDGE STRIP	
298	90143-0016	-	MM	300	STRIP	
300	90143-0039	-	MM	3400	STRIP	
310	90143-0049	-	MM	2600	RUBBERSTRIP 11X21MM	
320	90157-0022	-	L	200	SEALING COMPOUND	
330	90189-0019	A		2	BALL BUSHING, 20X30X30 MM	
332	90208-0047	-		2	COLLAR	
336	90240-0052	-		4	BEARING BUSHING WITHOUT FL, 12X14X15 MM	
338	90240-0076	A		2	RICTION BEARING	
340	90240-0083	A		2	BEARING BUSHING WITHOUT FL, 8X10X10 MM	
348	312155-0289	-		5	SCREW HEX.SOCK.COUNT.MF6S M4X10 A480	
350	90287-0062	-		9	SCREW M6	
363	90335-0055	B		2	SPRING	
368	90424-0035	-		2	SPRAY NOZZLE 95 DEG	
370	90424-0036	-		6	SPRAY NOZZLE 95 DEG R 3/8 BD3	
400	A490912-0100	-		2	CATCH	**503**
410	A1091715-0100	-		1	PIPE	**505**
420	A1091771-0100	-		1	SAFETY GUARD	**507**
480	311103-0407	-		2	PARALLELL PIN, M6, 8X35 MM	
500	312105-0327	-		7	SCREW M6S ISO 4017 M5X12 A480	
510	312105-0329	-		2	SCREW M6S ISO 4017 M5X16 A480	
515	312105-0332	-		2	SCREW M6S ISO 4017 M5X22 A480	
520	312105-0362	-		1	SCREW M6S ISO 4017 M6X8 A480	
525	312105-0451	-		2	SCREW M6S ISO 4017 M8X20 A480	
530	312105-0455	-		2	SCREW M6S ISO 4017 M8X30 A480	
550	312105-0378	-		12	SCREW M6S ISO 4014 M6X40 A480	
560	312105-0492	-		2	SCREW M6S ISO 4017 M10X22 A480	
565	312115-0374	-		2	SCREW MC6S M6X30 A280	
570	312155-0368	-		10	SCREW HEX.SOCK.COUNT.MF6S M6X16 A280	
580	312155-0372	-		8	SCREW HEX.SOCK.COUNT.MF6S M6X25 A280	
583	312155-0378	-		2	SCREW HEX.SOCK.COUNT.MF6S M6X40 A280	
586	312155-0455	-		2	SCREW HEX.SOCK.COUNT.MF6S M8X30 A280	
590	312605-0316	-		5	HEXAGON NUT, M6M M6 A280	
600	312812-0316	-		10	HEXAGON NUT, NY-LOCK M6 A480	
610	315105-0146	-		13	WASHER PLAIN, BRB, 5,3/10,H=1	
620	315105-0153	-		18	WASHER PLAIN, BRB, 6,4/12,H=1,5	
630	315105-0173	-		2	WASHER PLAIN, BRB, 10,5/22,H=2	
640	315115-0153	-		4	WASHER PLAIN, TBRB 6,4/12 H=3	
645	315125-0165	-		2	WASHER PLAIN ROUND,CHAMF. 8,4/26, H=5	
650	315233-0110	-		2	WASHER PL.RND.NYL.13,3/17,H=1	
660	315233-0111	-		2	WASHER PL.RND.NYL.17/22,H=1	

Machine Type | Group Description | Used-In | Group Number | Page No

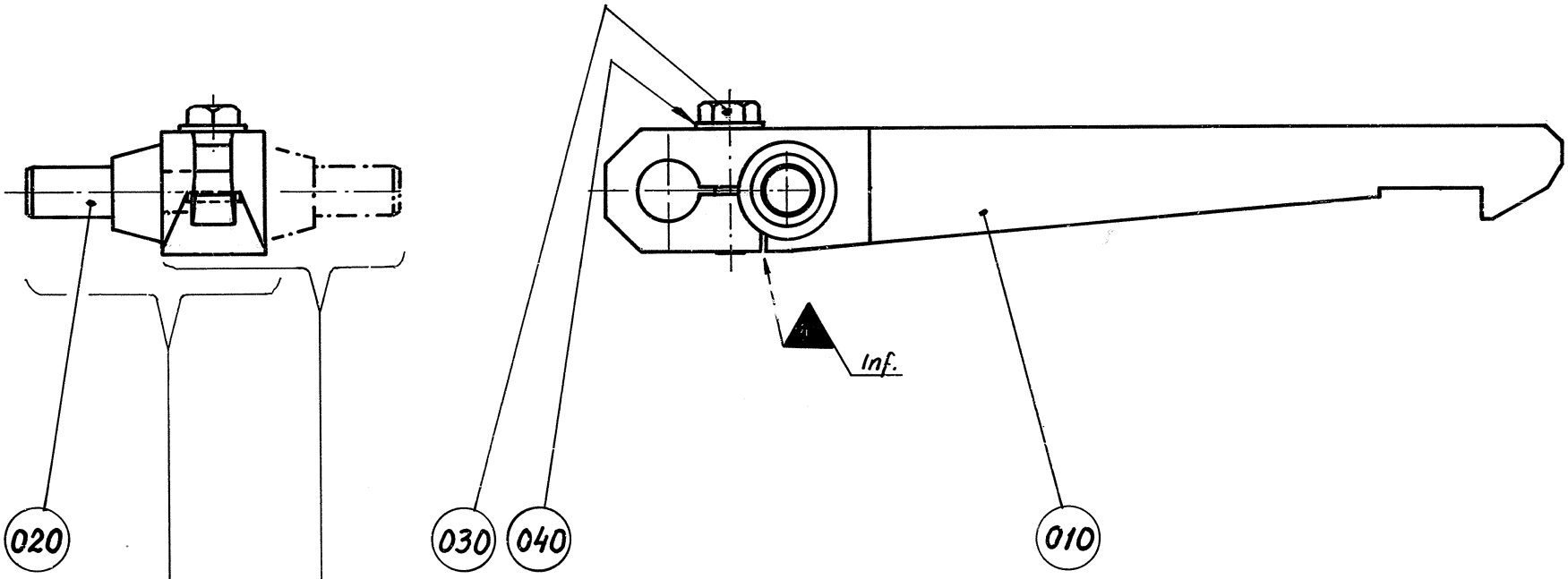

Högerutförande (ritat)
Right hand performance (shown)
1st/sats / 1piece per set

Vänsterutförande
Left hand performance
1st/sats / 1piece per set

ECM: 101986 - 20011203
Group number: 490912-0100
Assembly Drawing: 490912-1_1_AA

Issue: 20020822

Pos	Part No	SP	UN	Qty	Description	Page No
Common Parts						
010	469821-0000	B		1	CATCH	
020	469822-0000	B		1	AXLE PIN	
030	312105-0372	-		1	SCREW M6S ISO 4017 M6X25 A480	
040	315105-0153	-		1	WASHER PLAIN, BRB, 6,4/12,H=1,5	

Pos	Part No	SP	UN	Qty	Description	Page No

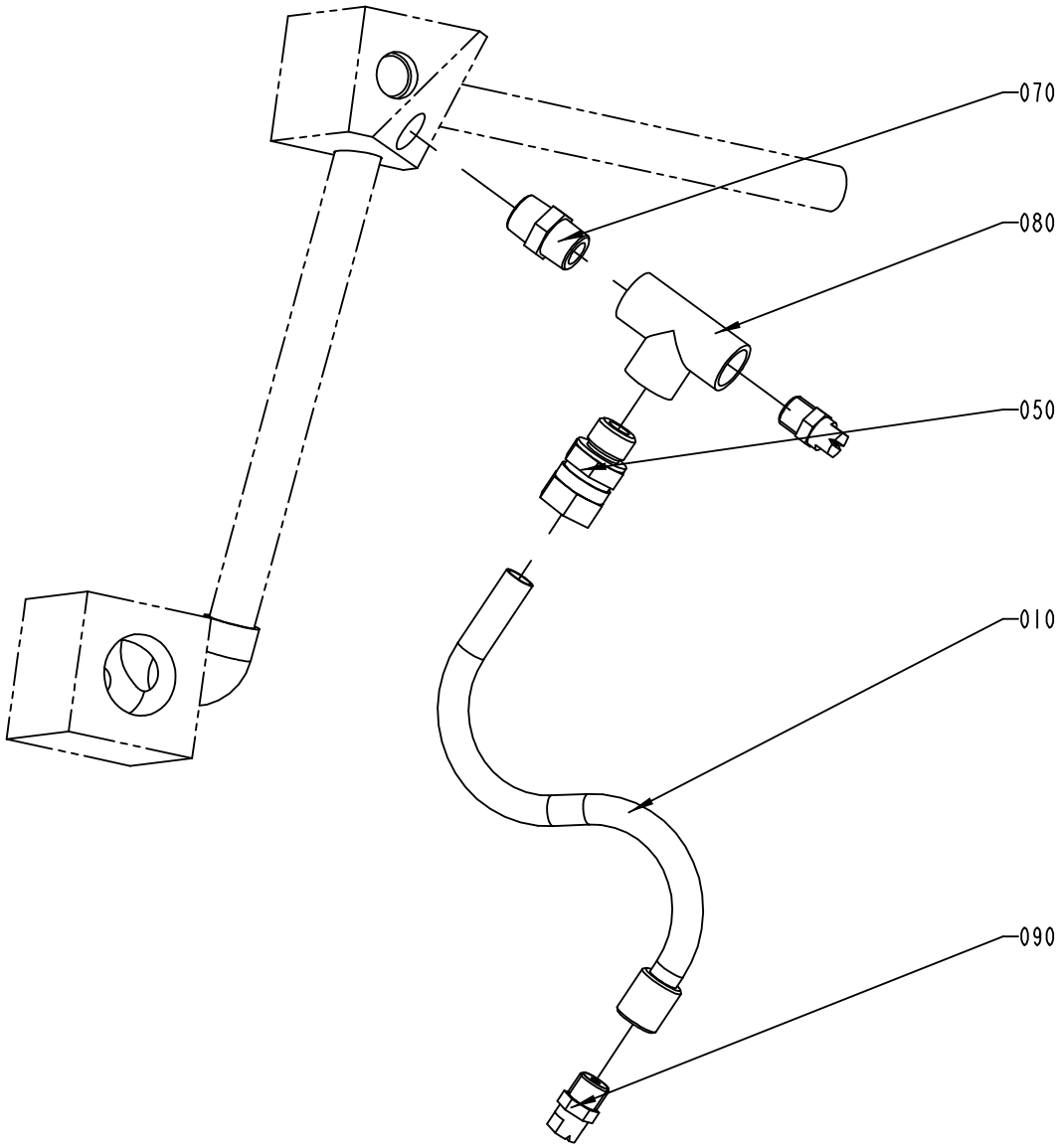

1091715-1
ECN 81979

ECM: 82905 - 20010226
Group number: 1091715-0100
Assembly Drawing: 1091715-1_1_AA

Issue: 20020822

Pos	Part No	SP	UN	Qty	Description	Page No
Common Parts						
010	1091716-0000	-		1	PIPE	
050	90030-0187	-		1	CONN. STR. GA-12-G3/8	
070	90330-0028	-		1	NIPPLES, EXT. THREAD. R-207R3/8	
080	90330-0067	-		1	T-PIPE, INT. THREAD, R-221R3/8	
090	90424-0035	-		1	SPRAY NOZZLE 95 DEG	

Pos	Part No	SP	UN	Qty	Description	Page No

Machine Type | Group Description | Used-In | Group Number | Page No

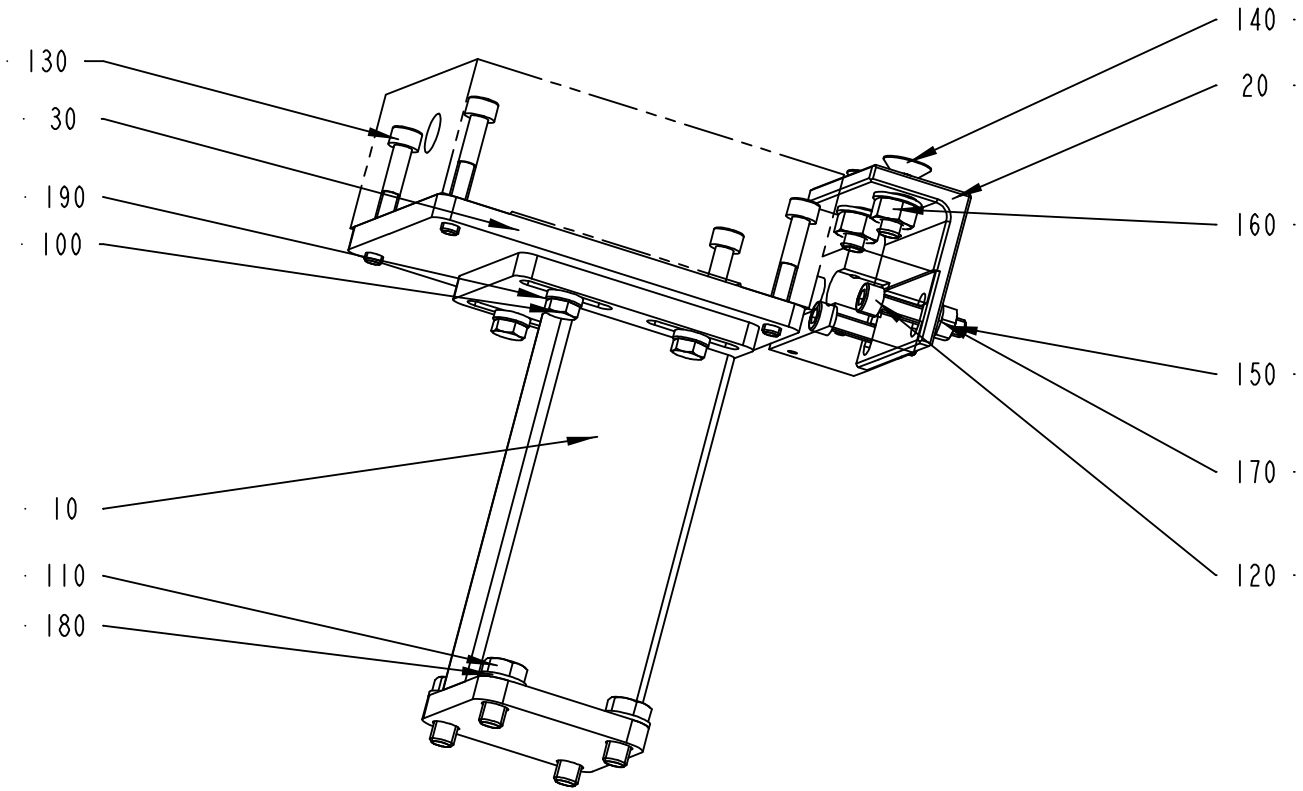

1091771-1
ECN 92695

ECM: 100140 - 20011128
Group number: 1091771-0100
Assembly Drawing: 1091771-1_1_AB

Issue: 20020822

Pos	Part No	SP	UN	Qty	Description	Page No
Common Parts						
010	1091785-0000	-		1	BRACKET	
020	1091773-0000	-		1	BRACKET	
030	2501270-0000	-		1	BRACKET	
100	312105-0368	-		4	SCREW M6S M6X16 A280	
110	312105-0449	-		4	SCREW M6S ISO 4017 M8X16 A480	
120	312115-0374	-		2	SCREW MC6S M6X30 A280	
130	312115-0378	-		4	SCREW MC6S M6X40 A280	
140	312155-0453	-		2	SCREW HEX.SOCK.COUNT.MF6S M8X25 A280	
150	312605-0316	-		2	HEXAGON NUT, M6M M6 A280	
160	312605-0318	-		2	HEXAGON NUT, M6M M8 A280	
170	315105-0153	-		2	WASHER PLAIN, BRB, 6,4/12,H=1,5	
180	315105-0165	-		6	WASHER PLAIN, BRB, 8,4/16,H=1,5	
190	315115-0153	-		4	WASHER PLAIN, TBRB 6,4/12 H=3	

Pos	Part No	SP	UN	Qty	Description	Page No

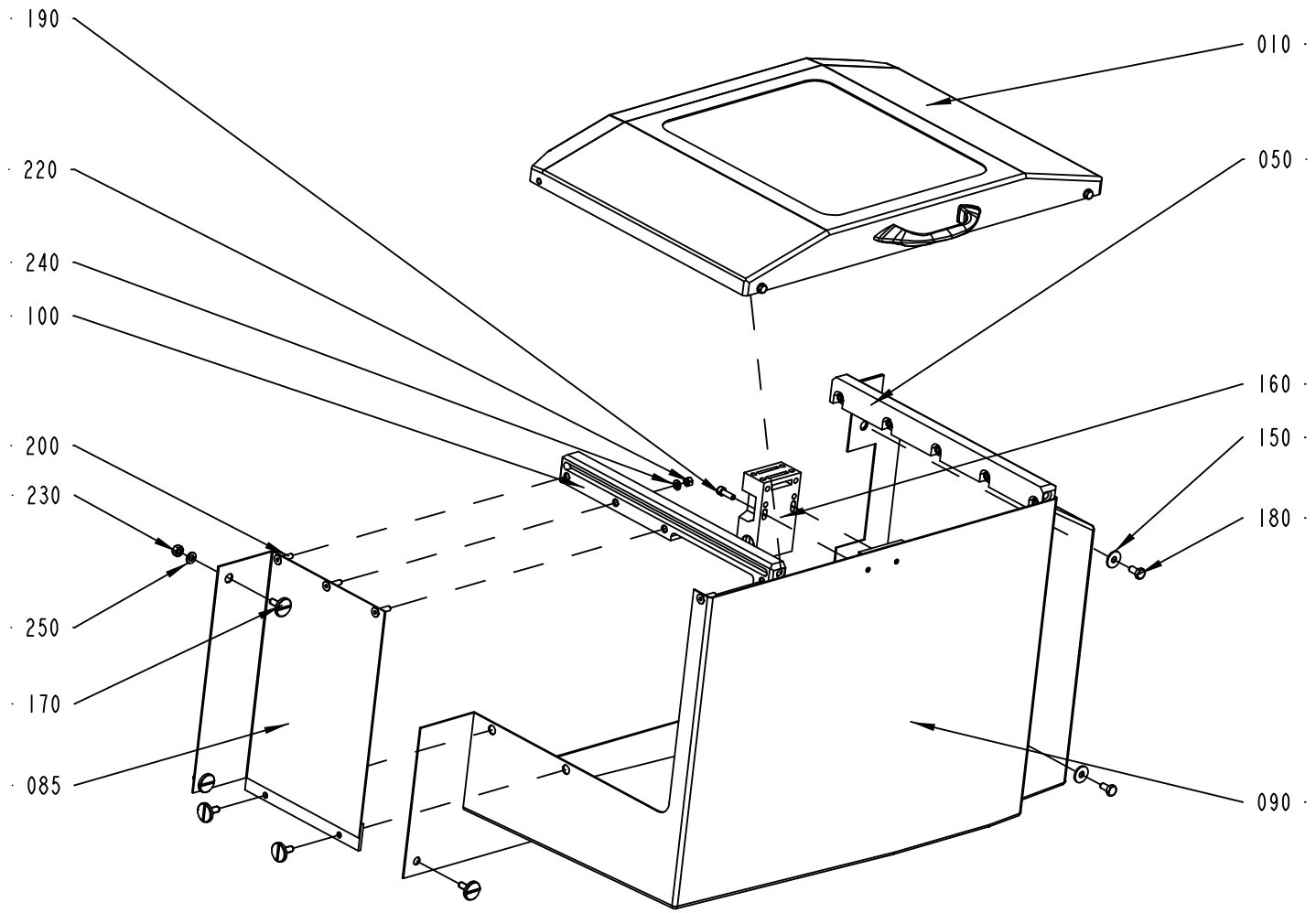

1091733-1
ECN 106184

ECM: 106192 - 20020821
Group number: 1091733-0100
Assembly Drawing: 1091733-1_1_AB

Issue: 20020822

Pos	Part No	SP	UN	Qty	Description	Page No
Common Parts						
010	A1091734-0100	-		1	DOOR	**511**
050	1091735-0000	-		1	GUIDE RAIL	
085	1091740-0000	-		1	COVER	
090	1091743-0000	-		1	PROTECTIVE COVER	
100	1091763-0000	-		1	GUIDE RAIL	
150	90005-0060	-		2	WASHER PLAIN, RBS 6,4/M6)/18,H=1,5	
160	90044-0139	-		1	KEY SAF.SW. AZ16-02 ZVR K-2254	
170	90287-0062	-		10	SCREW M6	
180	312105-0366	-		2	SCREW M6S M6X12 A280	
190	312115-0329	-		2	SCREW MC6S M5X16 A280	
200	312155-0331	-		9	SCREW HEX.SOCK.COUNT.MF6S M5X20 A280	
220	312605-0314	-		9	HEXAGON NUT, M6M M5 A280	
230	312605-0316	-		1	HEXAGON NUT, M6M M6 A280	
240	315105-0146	-		9	WASHER PLAIN, BRB, 5,3/10,H=1	
250	315105-0153	-		1	WASHER PLAIN, BRB, 6,4/12,H=1,5	

Pos	Part No	SP	UN	Qty	Description	Page No

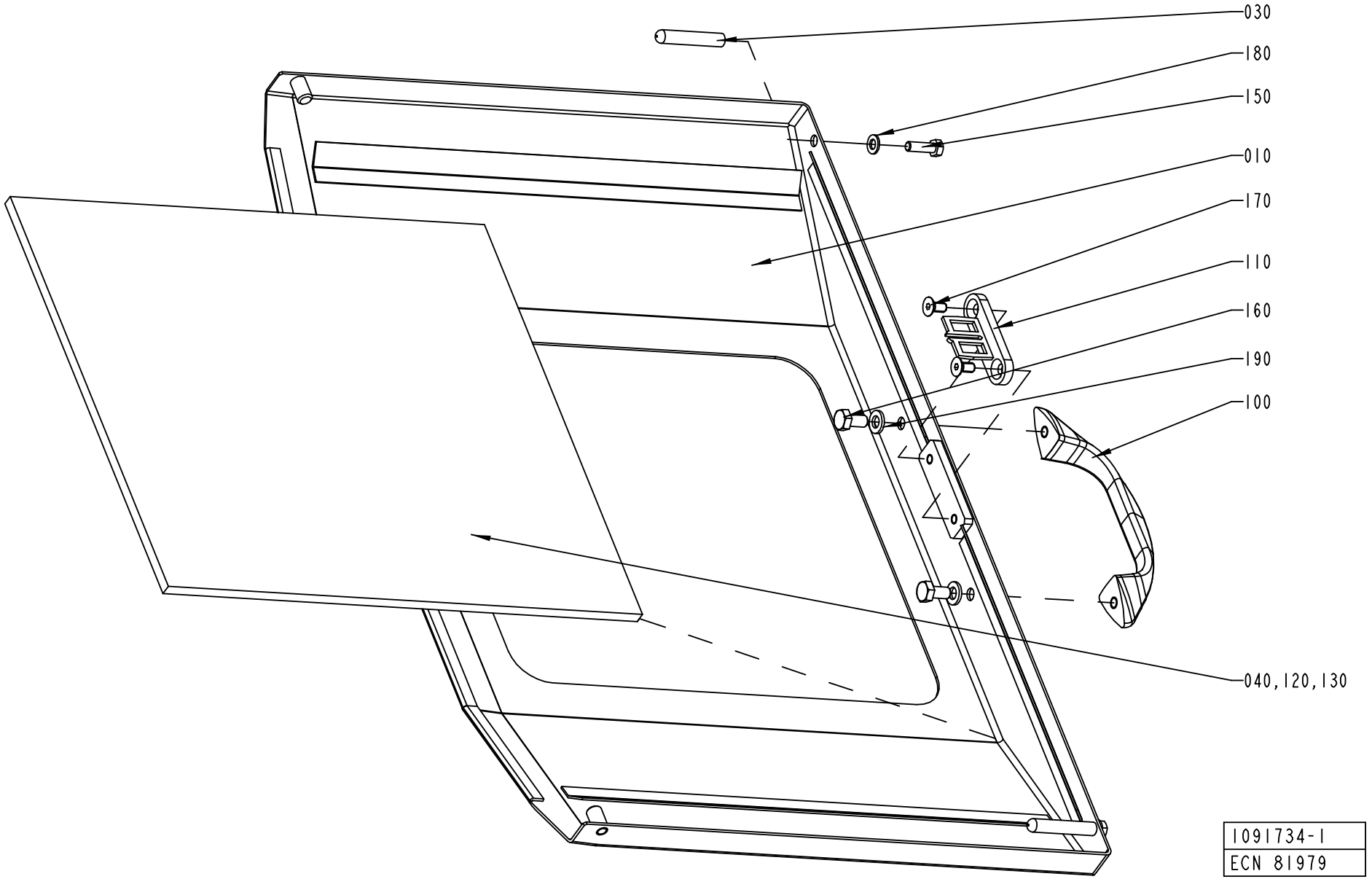
030
180
150
010
170
110
160
190
100
040,120,130
1091734-1
ECN 81979

ECM: 82787 - 20010226
Group number: 1091734-0100
Assembly Drawing: 1091734-1_1_AA

Issue: 20020822

Pos	Part No	SP	UN	Qty	Description	Page No
Common Parts						
010	1091739-0000	-		1	LID	
030	1091741-0000	-		2	PIN	
040	1091742-0000	-		1	GLASS PANE	
100	7309-0000	-		1	HANDLE	
110	90044-0310	-		1	KEY FOR SAFETY SWITCH, AZ 15/16 B1	
120	90153-0049	-	KG	1	ADHESIVE	
130	90157-0041	-	L	1	SEALING COMPOUND	
150	312105-0329	-		2	SCREW M6S ISO 4017 M5X16 A480	
160	312105-0366	-		2	SCREW M6S M6X12 A280	
170	312155-0325	-		2	SCREW HEX.SOCK.COUNT.MF6S M5X10 A280	
180	315105-0146	-		2	WASHER PLAIN, BRB, 5,3/10,H=1	
190	315105-0153	-		2	WASHER PLAIN, BRB, 6,4/12,H=1,5	

Pos	Part No	SP	UN	Qty	Description	Page No

MOUNTING PLATE

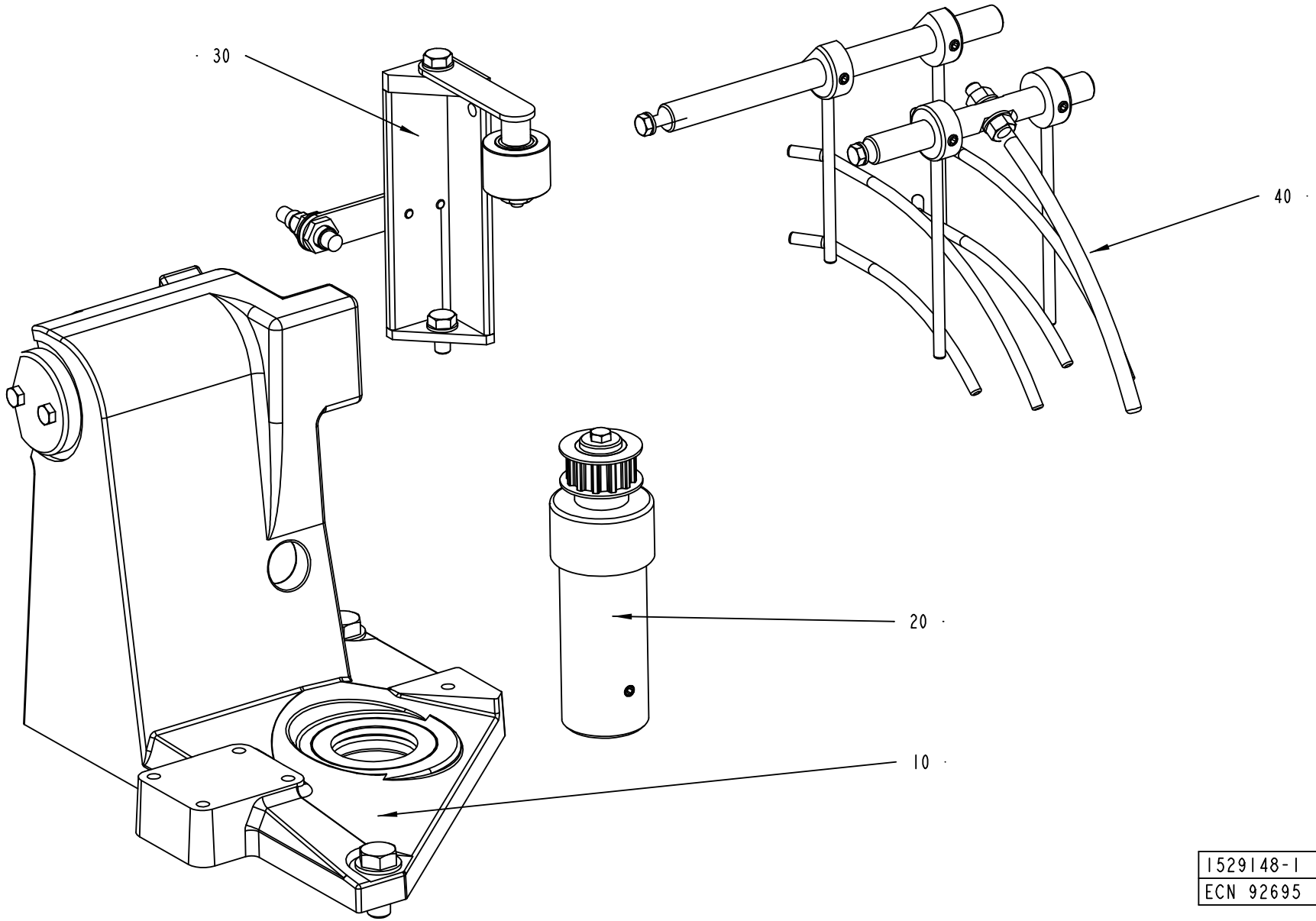

1529148-1
ECN 92695

ECM: 95474 - 20010621
Group number: 1529148-0100
Assembly Drawing: 1529148-1_1_AB

Issue: 20020822

Pos	Part No	SP	UN	Qty	Description	Page No
Common Parts						
010	A1091717-0100	-		1	CANTILEVER	**515**
020	A2501828-0100	-		1	DRIVE SHAFT	**517**
030	A1529164-0100	-		1	BELT STRETCHER	**519**
040	A1529167-0100	-		1	GUIDE	**523**

Pos	Part No	SP	UN	Qty	Description	Page No

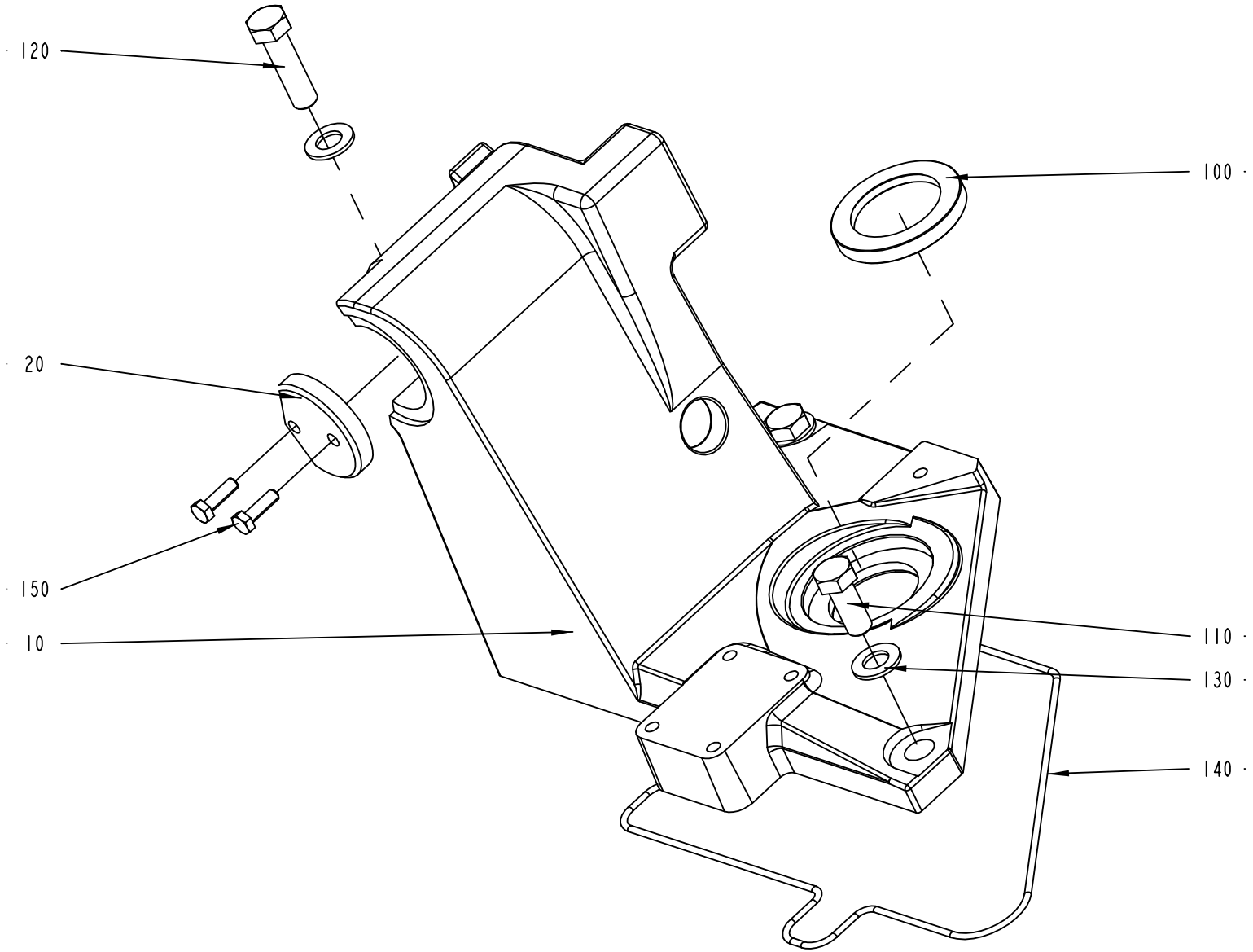

1091717-1
ECN 92695

ECM: 95471 - 20010621
Group number: 1091717-0100
Assembly Drawing: 1091717-1_1_AB

Issue: 20020822

Pos	Part No	SP	UN	Qty	Description	Page No
Common Parts						
010	1091783-0000	-		1	CANTILEVER	
020	1360581-0000	-		1	LID	
100	90091-0304	A		1	RADIAL SEAL 45X65X8 MM DUST LIP	
110	312105-0536	-		2	SCREW M6S ISO 4017 M12X30 A480	
120	312105-0541	-		1	SCREW M6S ISO 4014 M12X45 A480	
130	315105-0178	-		3	WASHER PLAIN, BRB, 13/24,H=2	
140	90161-0001	-	M	1	O-RING MATERIAL 3 MM	
150	312105-0370	-		2	SCREW M6S ISO 4017 M6X20 A480	

Pos	Part No	SP	UN	Qty	Description	Page No

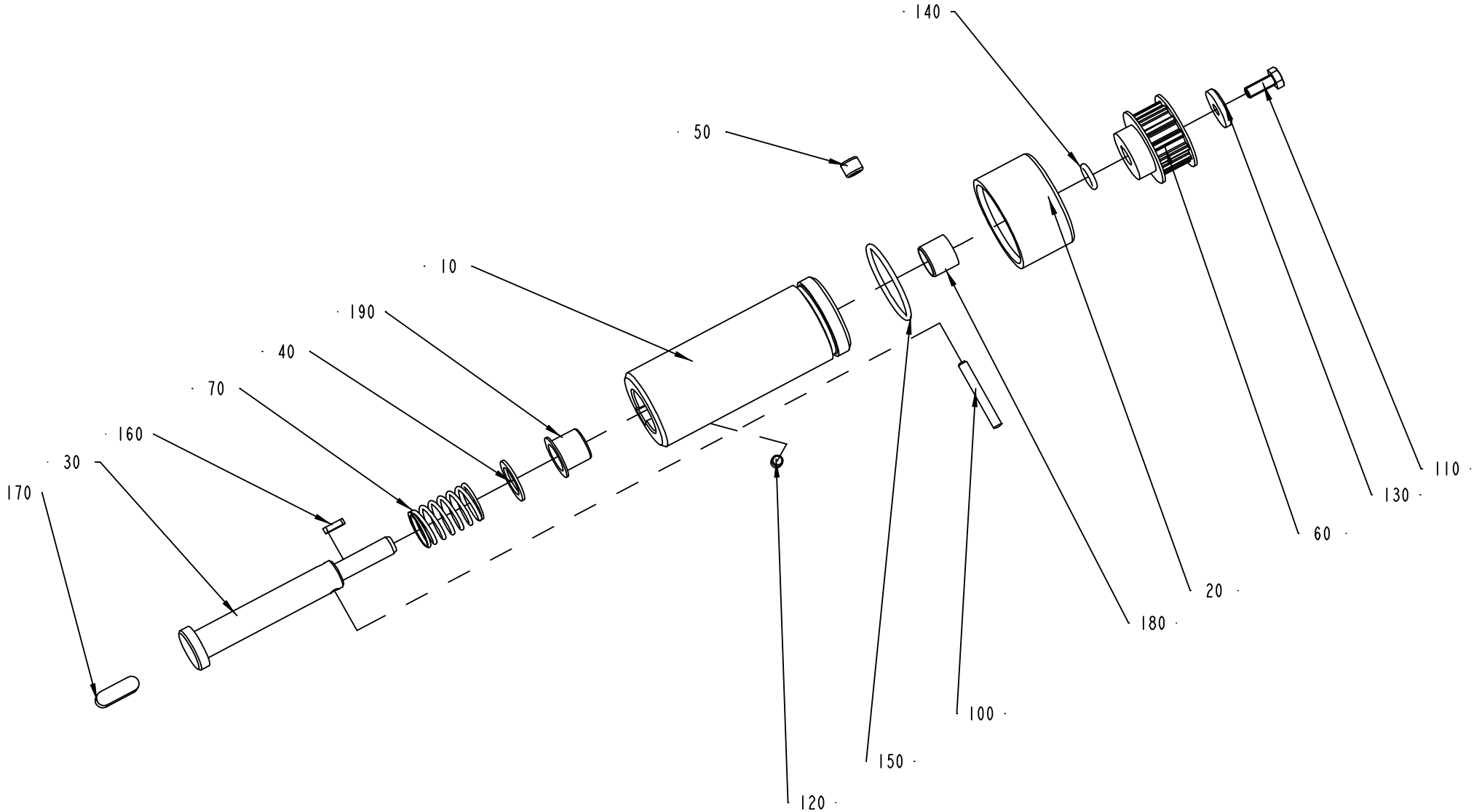

2501828-1
ECN 92695

ECM: 92706 - 20010615
Group number: 2501828-0100
Assembly Drawing: 2501828-1_1_AA

Issue: 20020822

Pos	Part No	SP	UN	Qty	Description	Page No
Common Parts						
010	2501829-0000	-		1	SHAFT	
020	2501830-0000	-		1	COVER	
030	2501831-0000	-		1	SHAFT	
040	2501832-0000	-		1	WASHER	
050	2501833-0000	-		1	ROLLER	
060	2501854-0000	-		1	TOOTHED PULLEY	
070	90458-1548	A		1	COMPRESSION SPRING, 2X20X62	
100	311103-0318	-		1	PARALLELL PIN, M6, 5X40 MM	
110	312105-0368	-		1	SCREW M6S M6X16 A280	
120	312318-0360	-		1	SCREW HEX.SOCK.SET CUP P.MSK6SS6X6 SS	
130	315125-0153	-		1	WASHER PLAIN ROUND,CHAMF. 6,4/22, H=4	
140	315205-0508	B		1	O-RING 9,19X2,62 MM	
150	315205-0729	B		1	O-RING 39,34X2,62 MM	
160	315705-0135	-		1	PARALLEL KEY W. ROUND ENDS 3X3X12 MM	
170	315705-0265	-		1	PARALLEL KEY W. ROUND ENDS 8X7X25 MM	
180	321135-0219	-		1	BUSHING, 16X18X15 MM	
190	321155-0221	-		1	FLANGE BUSHING, 16X18X17 MM	
200	90296-0091	-		1	LUBRICATION GREASE	

Pos	Part No	SP	UN	Qty	Description	Page No

Machine Type | Group Description | Used-In | Group Number | Page No

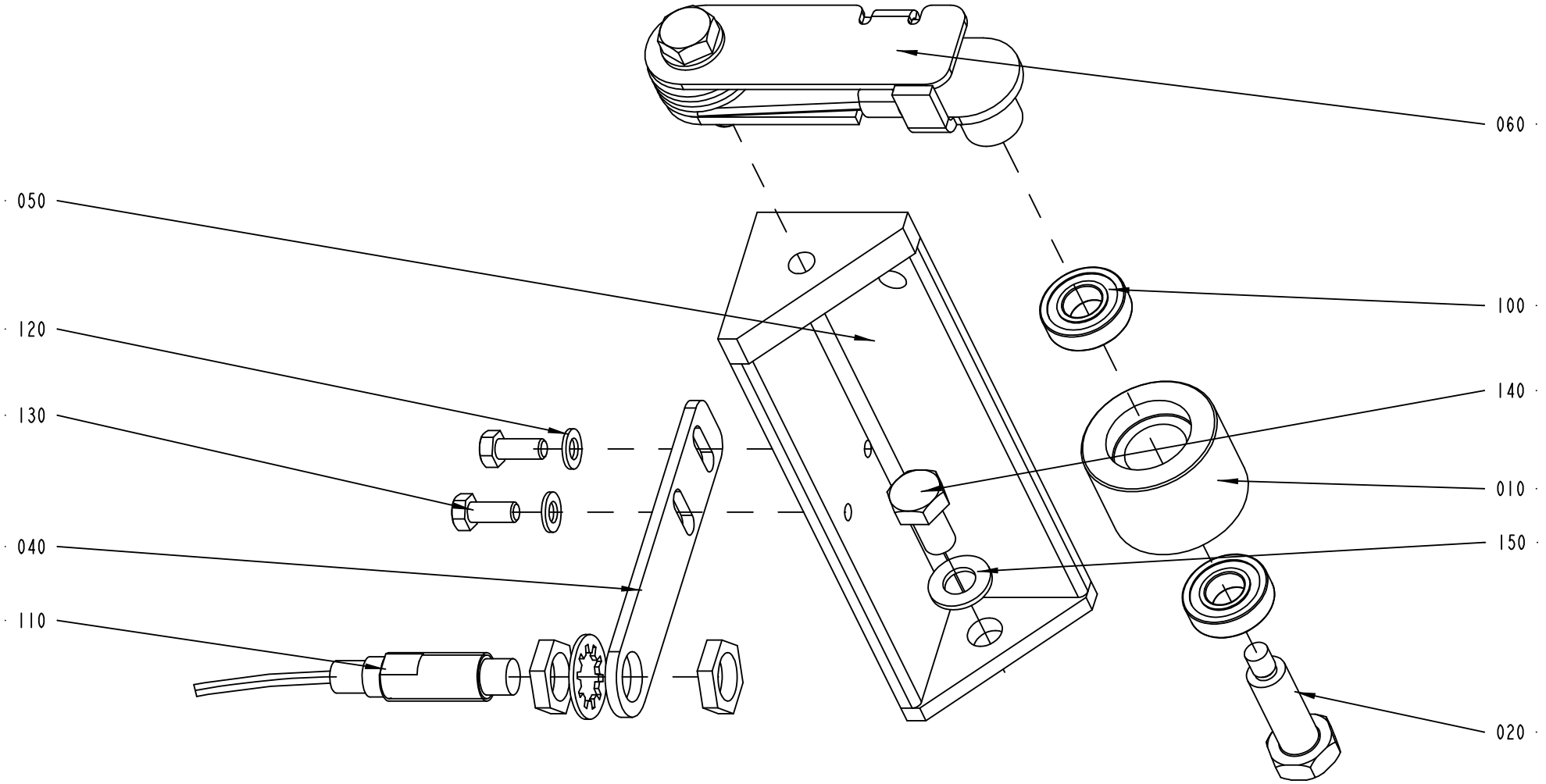

1529164-1
ECM 106184

ECM: 111605 - 20020821
Group number: 1529164-0100
Assembly Drawing: 1529164-1_1_AC

Issue: 20020822

Pos	Part No	SP	UN	Qty	Description	Page No
Common Parts						
010	577747-0000	-		1	ROLL	
020	577748-0000	-		1	FITTING BOLT	
040	1091747-0000	-		1	BRACKET	
050	1091784-0000	-		1	BRACKET	
060	A2552234-0100	-		1	BELT TIGHTENER	**521**
100	90214-0167	A		2	BALL BEARING SOLID OIL 10X22X6 MM	
110	90458-0675	A		1	PROXIMITY SENSOR, E2EG-X5MB1-5M	
120	315105-0146	-		2	WASHER PLAIN, BRB, 5,3/10,H=1	
130	312105-0327	-		2	SCREW M6S ISO 4017 M5X12 A480	
140	312105-0449	-		1	SCREW M6S ISO 4017 M8X16 A480	
150	315105-0165	-		2	WASHER PLAIN, BRB, 8,4/16,H=1,5	

Pos	Part No	SP	UN	Qty	Description	Page No

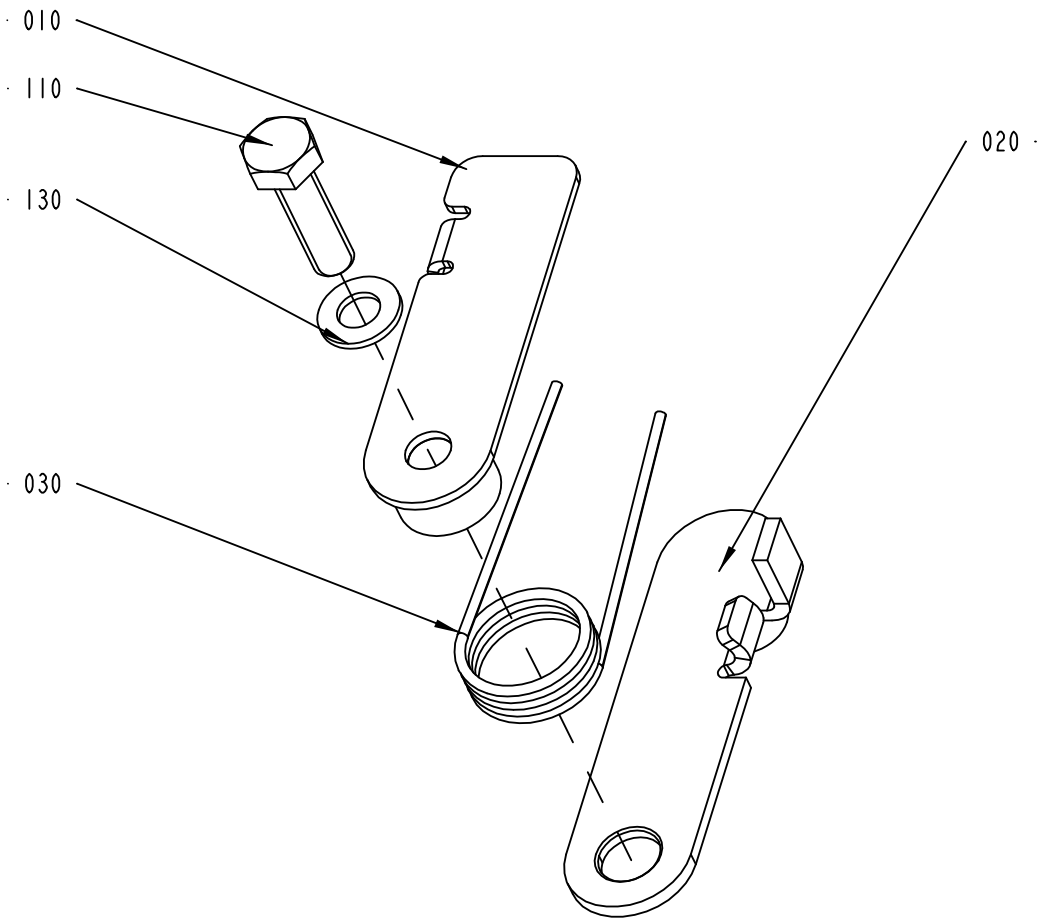

2552234-1
ECM 106184

ECM: 111606 - 20020821
Group number: 2552234-0100
Assembly Drawing: 2552234-1_1_AA

Issue: 20020822

Pos	Part No	SP	UN	Qty	Description	Page No
Common Parts						
010	2552235-0000	-		1	TENSION ARM	
020	2552236-0000	-		1	BRACKET	
030	2552237-0000	-		1	TORSION SPRING	
110	312105-0455	-		1	SCREW M6S ISO 4017 M8X30 A480	
130	315105-0165	-		1	WASHER PLAIN, BRB, 8,4/16,H=1,5	

Pos	Part No	SP	UN	Qty	Description	Page No

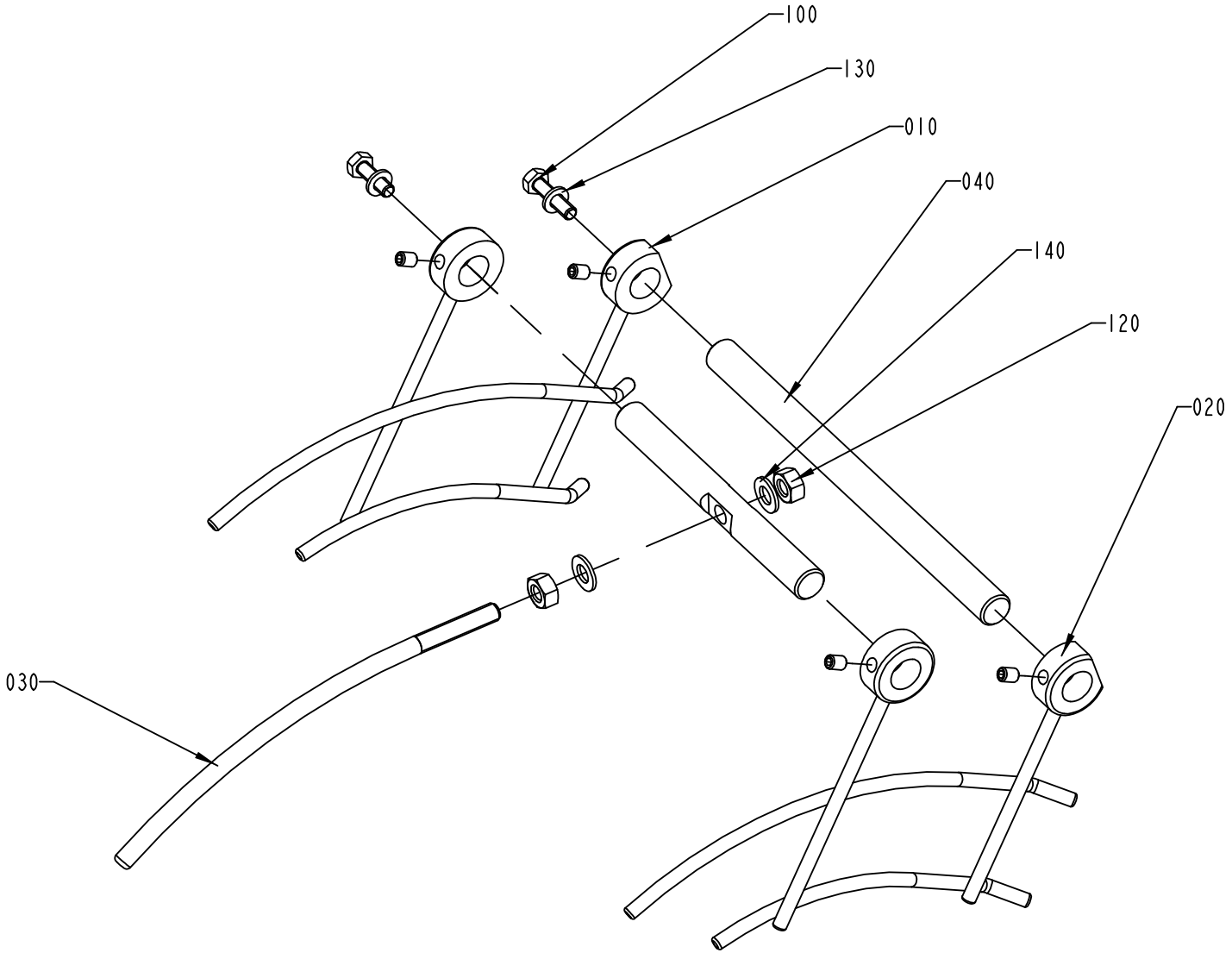

1529167-1
ECN 92695

ECM: 95476 - 20010621
Group number: 1529167-0100
Assembly Drawing: 1529167-1_1_AB

Issue: 20020822

Pos	Part No	SP	UN	Qty	Description	Page No
Common Parts						
010	1091727-0000	-		1	GUIDE	
020	1091728-0000	-		1	GUIDE	
030	1091729-0000	-		1	GUIDE	
040	1091730-0000	-		1	SHAFT	
050	1091731-0000	-		1	SHAFT	
090	312105-0370	-		1	SCREW M6S ISO 4017 M6X20 A480	
100	312105-0372	-		1	SCREW M6S ISO 4017 M6X25 A480	
110	312318-0362	-		4	SCREW SOCK.SET CUP P MSK6SS M6X8 A4	
120	312605-0318	-		2	HEXAGON NUT, M6M M8 A280	
130	315105-0153	-		2	WASHER PLAIN, BRB, 6,4/12,H=1,5	
140	315105-0165	-		2	WASHER PLAIN, BRB, 8,4/16,H=1,5	

Pos	Part No	SP	UN	Qty	Description	Page No

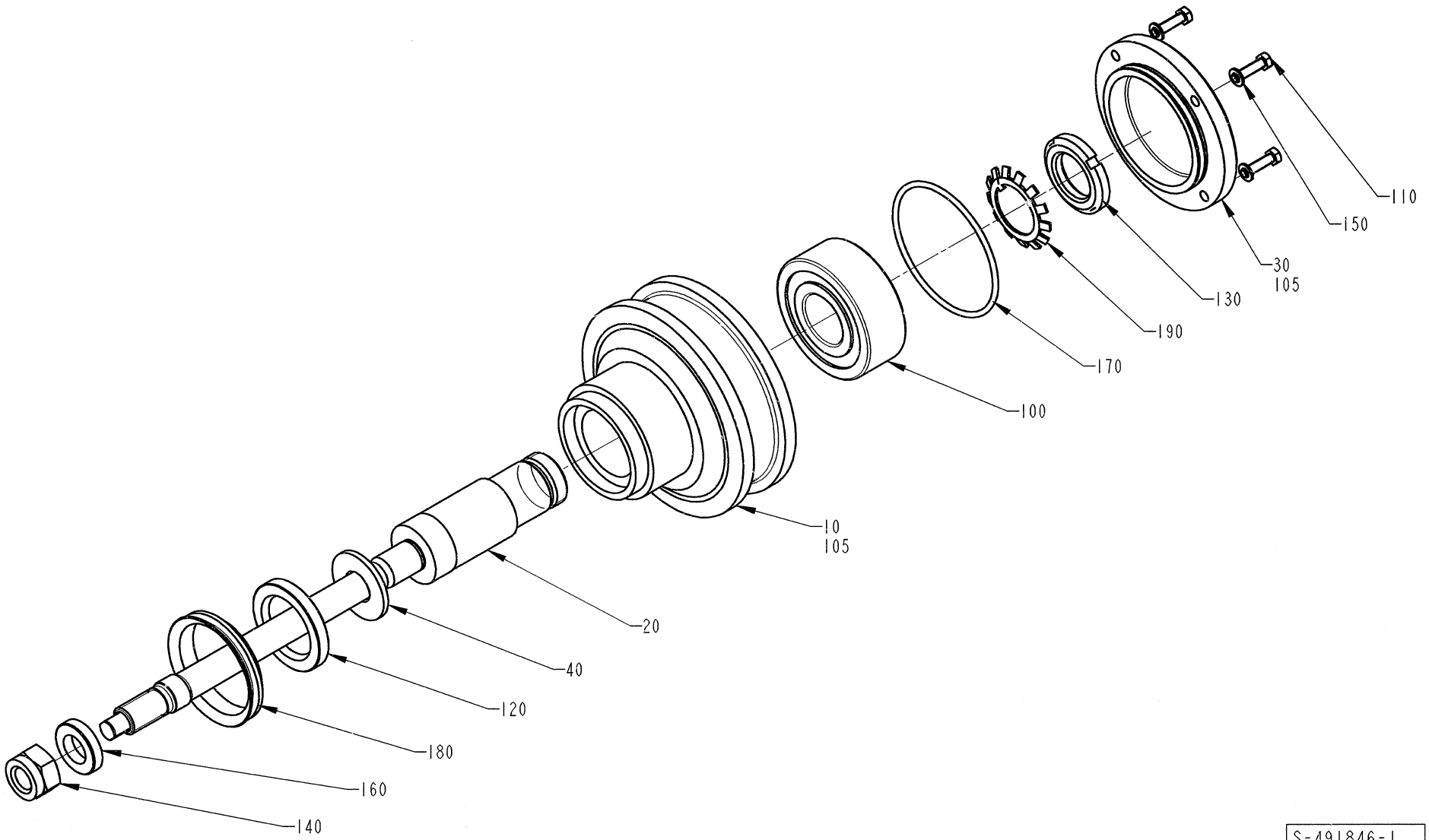

S-491846-I
ECN 72501

ECM: 102326 - 20011203
Group number: 491846-0100
Assembly Drawing: 491846-1_1_AA

Issue: 20020822

Pos	Part No	SP	UN	Qty	Description	Page No
Common Parts						
010	B491847-0000	A		1	TENSION SPROCKET	
	491289-0000	-		*1*	*TENSION SPROCKET*	
020	491848-0000	A		1	SHAFT	
030	491291-0000	B		1	LID	
040	491849-0000	A		1	ADJUSTING SHIM	
100	90214-0122	A		1	BALL BEARING, 30X72X27 MM	
105	90296-0070	A	G	40	GREASE	
110	312105-0331	A		4	SCREW M6S ISO 4017 M5X20 A480	
120	315221-0177	A		1	RADIAL SEAL 35X52X7 MM	
130	312805-0106	B		1	NUT ROUND WITH SLOTS M30X1,5 FE	
140	312810-0324	A		1	HEXAGON NUT, NY-LOCK M16 FZB	
150	315105-0146	A		4	WASHER PLAIN, BRB, 5,3/10,H=1	
160	315111-0186	A		1	WASHER PLAIN, TBRB 17/30 H=6	
170	315202-0306	A		1	O-RING 74,5X3 MM	
180	315220-0210	A		1	V-RINGS 54X64X13 MM V-60S	
190	315410-0106	B		1	LOCK WASHER MB 6 D=30 H=1,25	

Pos	Part No	SP	UN	Qty	Description	Page No

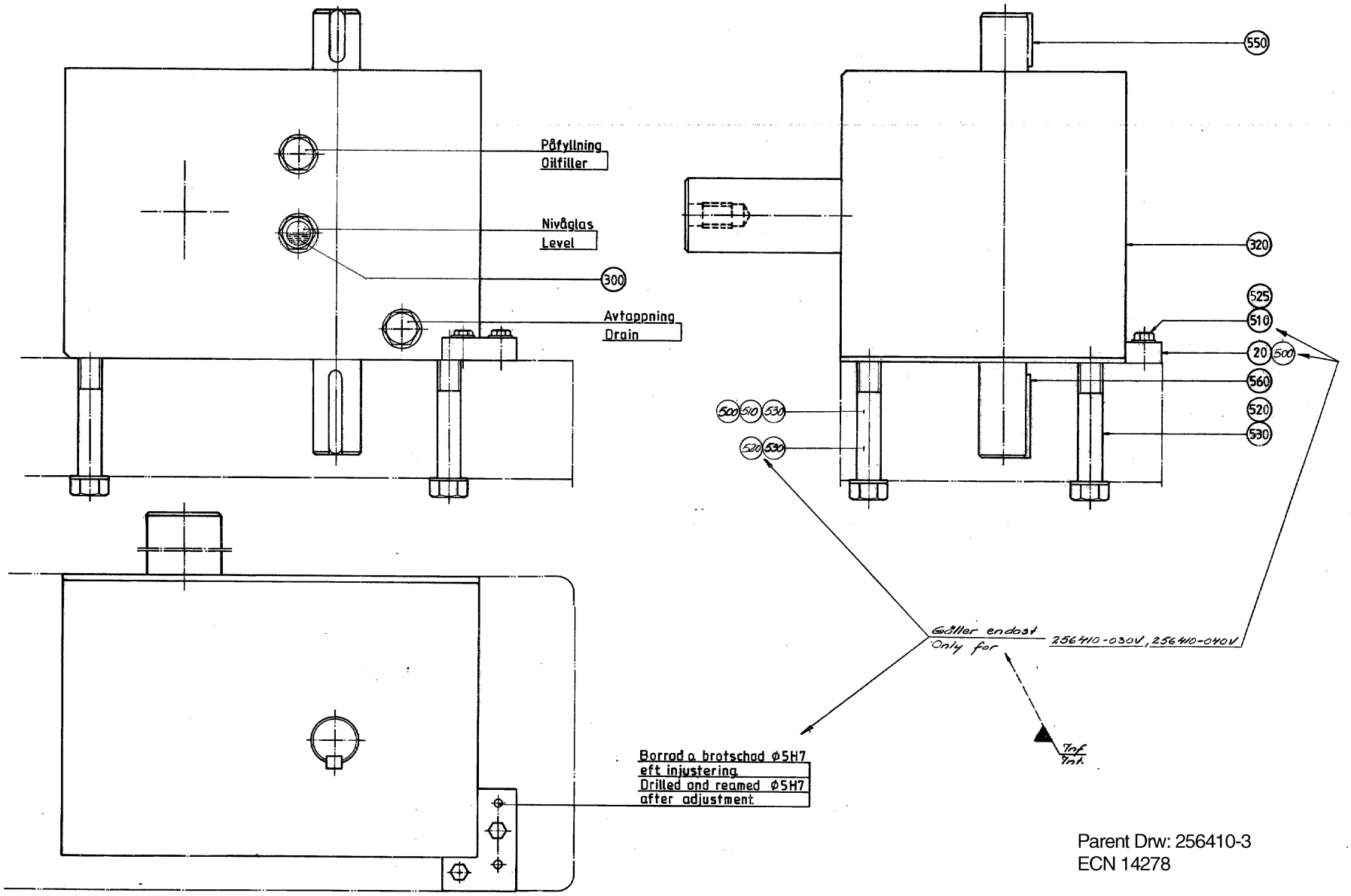

Parent Drw: 256410-3
ECN 14278

ECM: 102329 - 20011203
Group number: 256410-0400
Assembly Drawing: 256410-3_1_AA

Issue: 20020822

Pos	Part No	SP	UN	Qty	Description	Page No
Common Parts						
020	256412-0000	-		1	HEAD PLATE	
300	90296-0028	-	L	4	OIL (QTY OF STOCK REFLECTS LITERS)	
320	B90416-0021	A		1	INDEXING DEVICE	
	90416-0375	*C*		*1*	*CAM*	
	90416-0374	*C*		*1*	*PROTECTIVE RING FOR90416-21*	
	90416-0373	*C*		*1*	*CAM ROLLER*	
500	311103-0308	-		2	PARALLELL PIN, M6, 5X16 MM	
510	312105-0331	-		2	SCREW M6S ISO 4017 M5X20 A480	
520	312105-0547	-		4	SCREW M6S ISO 4014 M12X75 A480	
525	315105-0146	-		2	WASHER PLAIN, BRB, 5,3/10,H=1	
530	315111-0178	-		4	WASHER PLAIN, TBRB 13/24 H=4	
550	315701-0263	-		1	PARALLEL KEY W. ROUND ENDS 8X7X20 MM	
560	315701-0271	-		1	PARALLEL KEY W. ROUND ENDS 8X7X45 MM	

Pos	Part No	SP	UN	Qty	Description	Page No

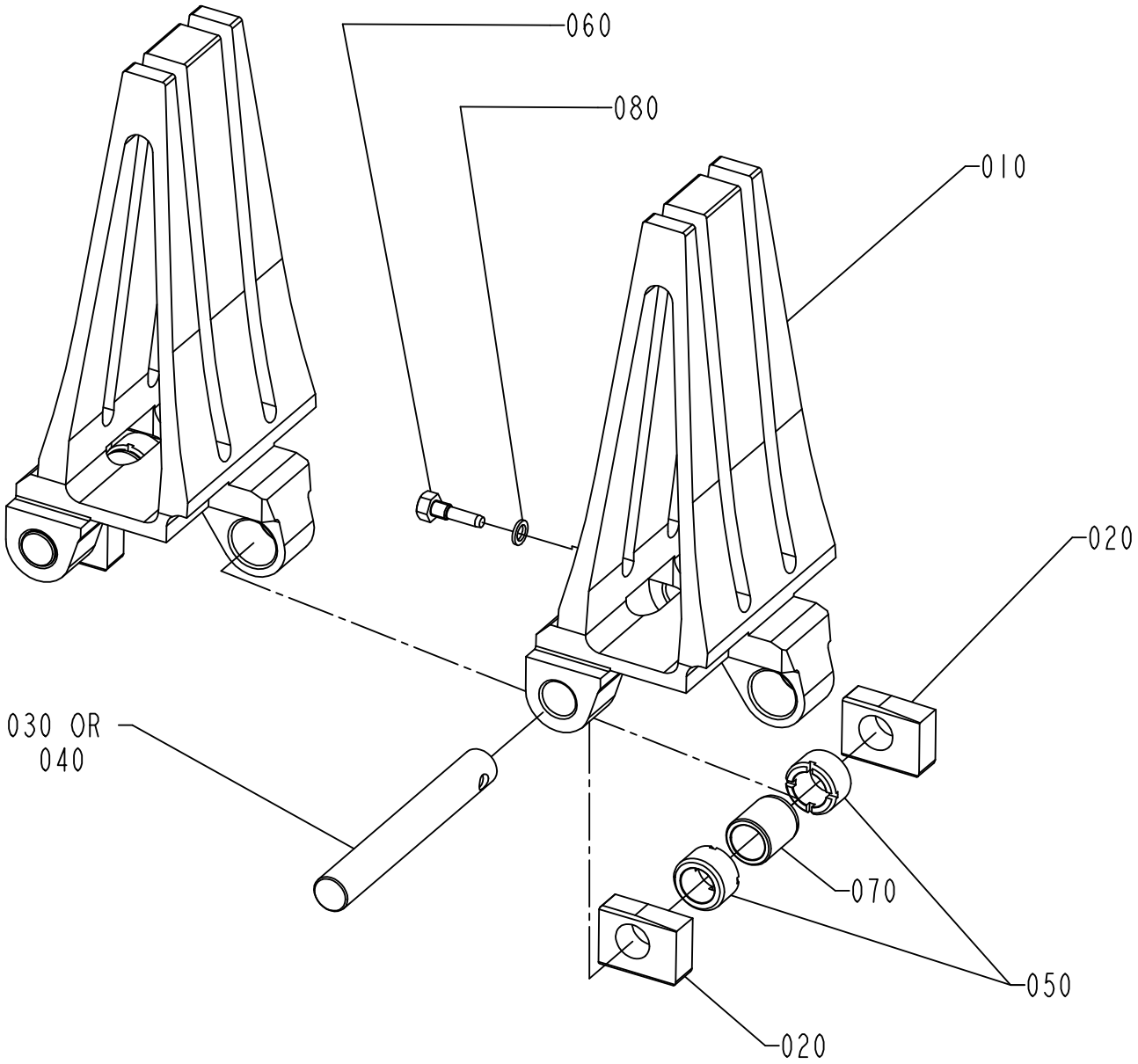

591634-1
ECN 86090

ECM: 102318 - 20011203
Group number: 591634-0100
Assembly Drawing: 591634-1_1_AB

Issue: 20020822

Pos	Part No	SP	UN	Qty	Description	Page No
Common Parts						
010	591417-0000	A		21	CARTON STATION	
020	491227-0000	A		42	SLIDER	
030	491228-0001	A		18	SHAFT	
040	491228-0002	A		3	SHAFT	
050	491229-0000	A		42	BUSHING	
060	491230-0000	A		21	GRUB SCREW	
070	491231-0000	A		21	BUSHING	
080	315233-0101	A		21	WASHER PL.RND.NYL.5,2/8,H=1	

Pos	Part No	SP	UN	Qty	Description	Page No

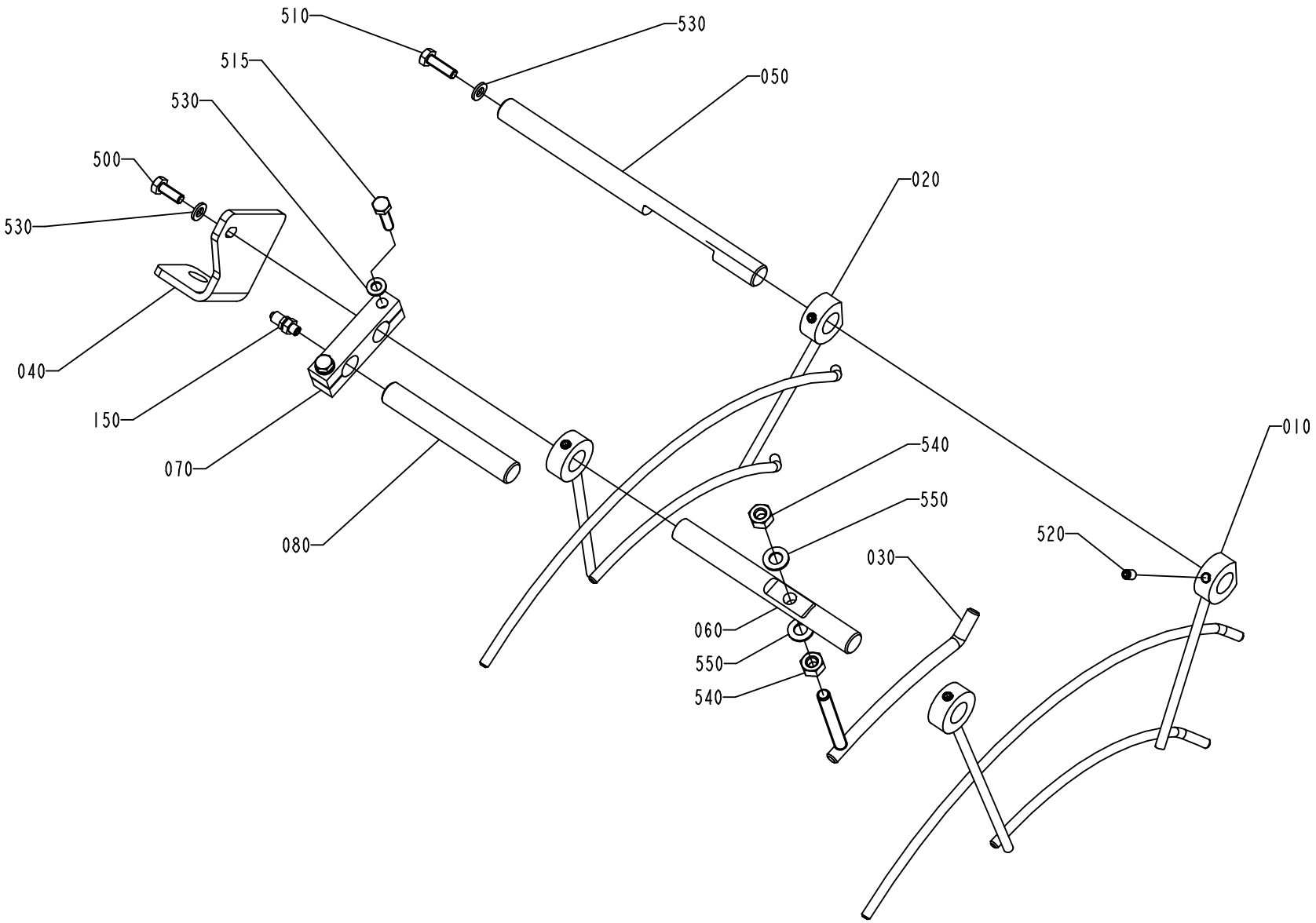

1529403-1
ECN 99656

Pos	Part No	SP	UN	Qty	Description	Page No
TWA 0200S						
010	1538933-0000	-		1	GUIDE RAIL	
020	1538934-0000	-		1	GUIDE RAIL	
040	2541977-0000	-		1	BRACKET	
Common Parts						
030	1538935-0000	-		1	GUIDE	
050	591542-0000	-		1	SHAFT	
060	591649-0000	-		1	SHAFT	
070	1511409-0000	-		1	CLAMPING PIECE	
080	2526424-0000	-		1	NOZZLE	
150	342931-0113	-		1	ELBOW 90 COUPL.,EXT.THREAD 6/4-G1/8"	
500	312105-0368	-		1	SCREW M6S M6X16 A280	
510	312105-0370	-		1	SCREW M6S ISO 4017 M6X20 A480	
515	312105-0372	-		2	SCREW M6S ISO 4017 M6X25 A480	
520	312318-0362	-		4	SCREW SOCK.SET CUP P MSK6SS M6X8 A4	
530	315105-0153	-		4	WASHER PLAIN, BRB, 6,4/12,H=1,5	
540	312605-0318	-		2	HEXAGON NUT, M6M M8 A280	
550	315105-0165	-		2	WASHER PLAIN, BRB, 8,4/16,H=1,5	

Pos	Part No	SP	UN	Qty	Description	Page No

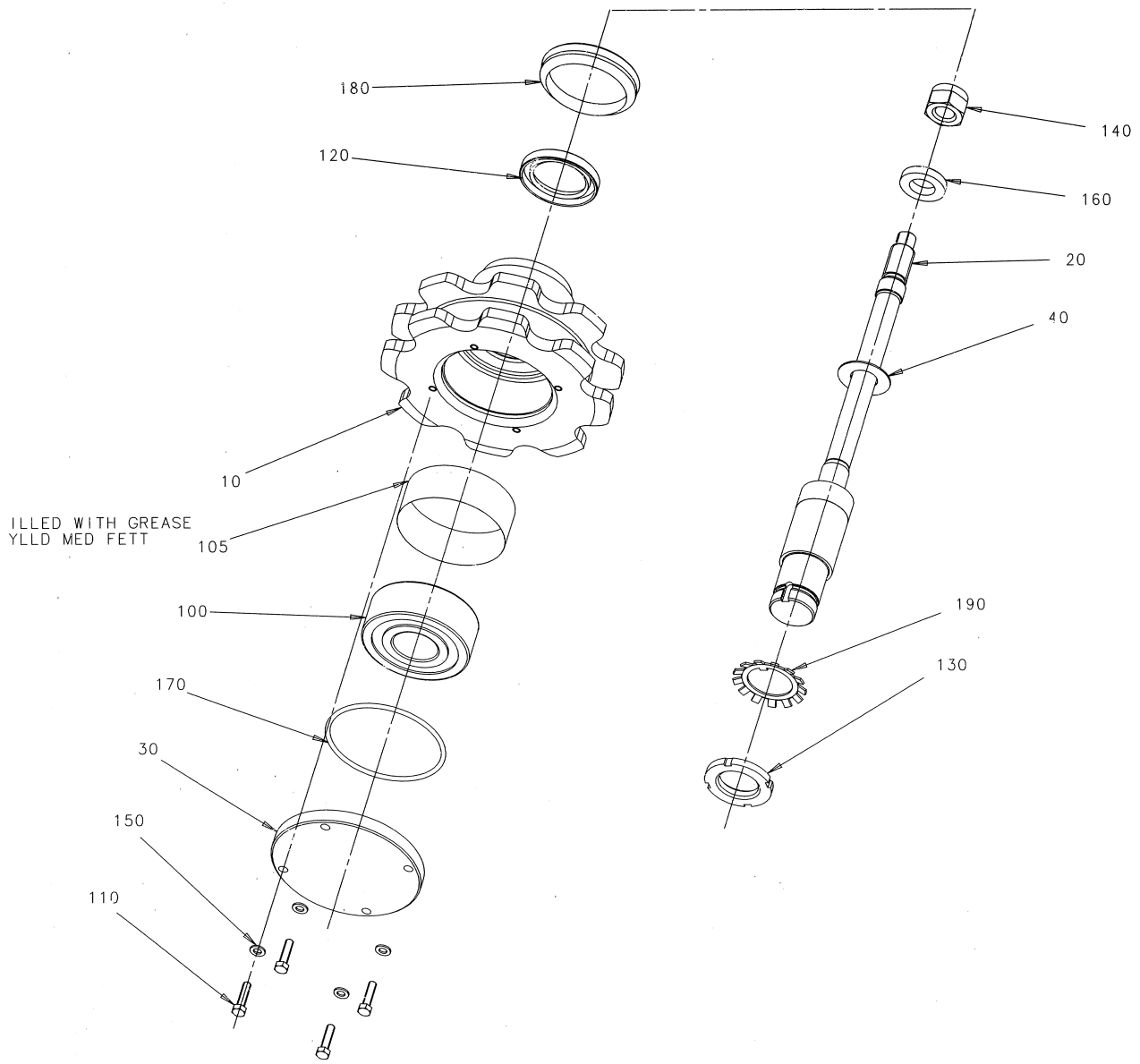
180
120
140
160
20
40
10
ILLED WITH GREASE
YLLD MED FETT
105
100
190
130
170
30
150
110

ECM: 102327 - 20011203
Group number: 1360718-0100
Assembly Drawing: 1360718-1_1_AA

Issue: 20020822

Pos	Part No	SP	UN	Qty	Description	Page No
Common Parts						
010	B1360719-0000	A		1	TENSION SPROCKET	
	491289-0000	-		*1*	*TENSION SPROCKET*	
020	491848-0000	A		1	SHAFT	
030	491291-0000	B		1	LID	
040	441589-0000	A		1	SHIM	
100	90214-0122	A		1	BALL BEARING, 30X72X27 MM	
105	90296-0070	A		1	GREASE	
110	312105-0331	A		4	SCREW M6S ISO 4017 M5X20 A480	
120	315221-0177	A		1	RADIAL SEAL 35X52X7 MM	
130	312805-0106	B		1	NUT ROUND WITH SLOTS M30X1,5 FE	
140	312810-0324	A		1	HEXAGON NUT, NY-LOCK M16 FZB	
150	315105-0146	A		4	WASHER PLAIN, BRB, 5,3/10,H=1	
160	315111-0186	A		1	WASHER PLAIN, TBRB 17/30 H=6	
170	315202-0306	A		1	O-RING 74,5X3 MM	
180	315220-0210	A		1	V-RINGS 54X64X13 MM V-60S	
190	315410-0106	B		1	LOCK WASHER MB 6 D=30 H=1,25	

Pos	Part No	SP	UN	Qty	Description	Page No

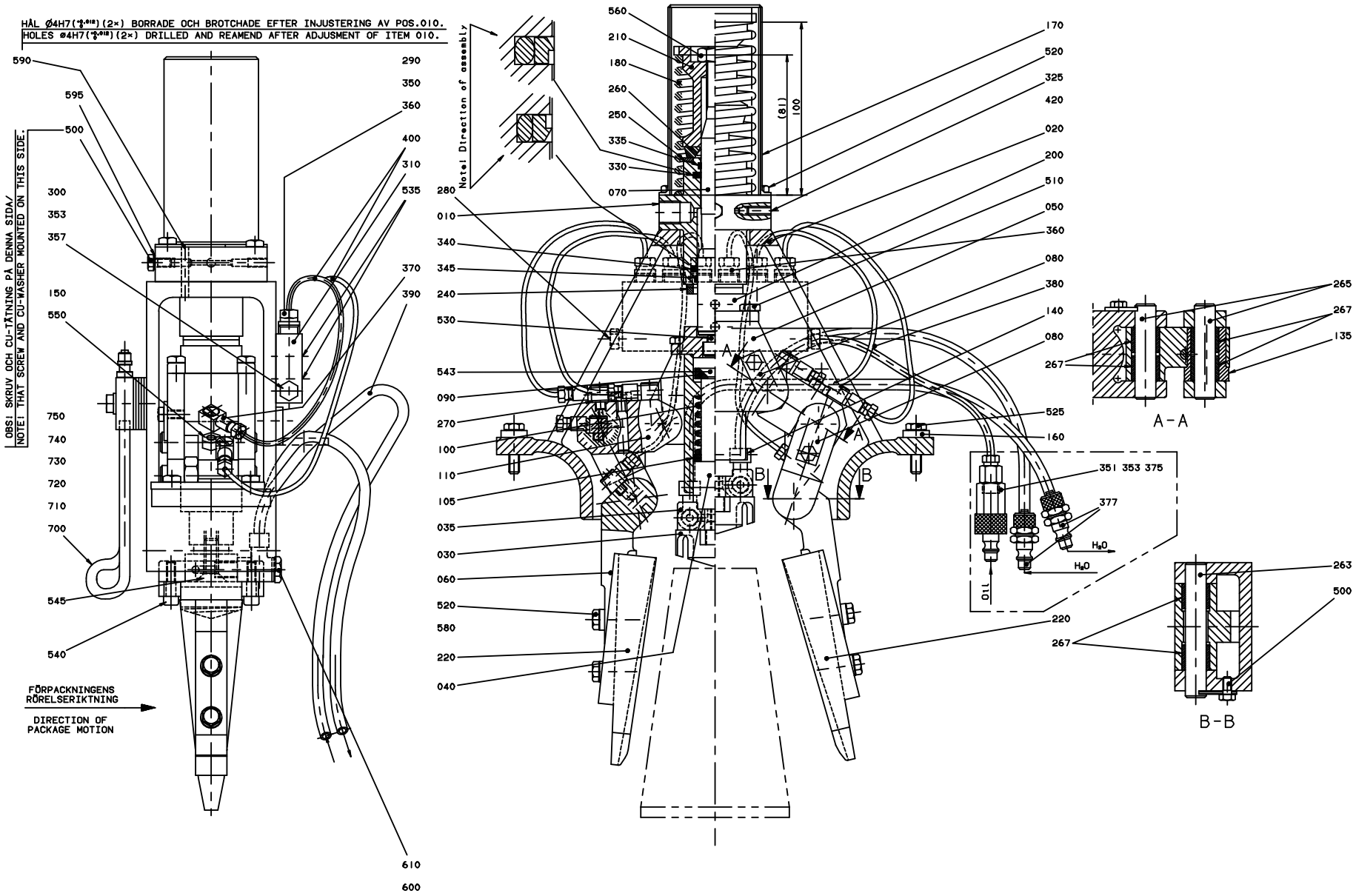
HÅL Ø4H7(+0.012)(2×) BORRADE OCH BROTCHADE EFTER INJUSTERING AV POS.010.
HOLES Ø4H7(+0.012)(2×) DRILLED AND REAMEND AFTER ADJUSMENT OF ITEM 010.
OBS! SKRUV OCH CU-TÄTNING PÅ DENNA SIDA/
NOTE! THAT SCREW AND CU-WASHER MOUNTED ON THIS SIDE.
Note! Direction of assembly
FÖRPACKNINGENS RÖRELSERIKTNING
DIRECTION OF PACKAGE MOTION
A-A
B-B
590
595
500
300
353
357
150
550
750
740
730
720
710
700
545
540
290
350
360
400
310
535
370
390
610
600
560
210
180
260
250
335
330
070
280
010
340
345
240
530
543
090
270
100
110
105
035
030
060
520
580
220
040
(81)
100
170
520
325
420
020
200
510
050
360
080
380
140
080
525
160
351 353 375
377
H₂O
H₂O
110
220
265
267
135
263
500

ECM: 108220 - 20020515
Group number: 2547176-0100
Assembly Drawing: 2547176-1_1_AA

Issue: 20020822

Pos	Part No	SP	UN	Qty	Description	Page No
Common Parts						
010	490980-0000	A		1	CYLINDER	
020	1380574-0000	B		1	BRACKET	
030	591667-0000	B		1	BLOCKING PIECE	
035	591657-0000	A		1	HOLDER PRESSURE BLOCK	
040	491772-0001	A		1	SPINDLE	
050	491803-0000	B		1	HOUSE	
060	751552-0000	A		2	ARM	
070	752083-0000	A		1	PISTON	
080	21047-0000	-		6	LOCK WASHER	
090	491802-0000	-		1	WASHER	
100	490942-0000	A		1	COMPRESSION SPRING	
105	260427-0000	A		2	WASHER	
110	751553-0000	A		2	ARM	
135	751557-0000	A		2	SLEEVE	
140	256461-0000	A		1	DOWEL	
150	256462-0000	A		2	SCREW	
160	256463-0000	B		2	WASHER	
170	751163-0000	B		1	COVER	
180	271731-0000	A		1	COMPRESSION SPRING	
200	491771-0000	A		1	BRACKET	
210	441894-0000	A		1	SLEEVE	
220	591529-0000	A		2	BLOCK	
240	295072-0000	A		1	BUFFER RING	
250	441896-0000	B		1	WASHER	
260	441895-0000	A		1	BUFFER RING	
263	751554-0001	A		2	SHAFT	
265	751554-0002	A		4	SHAFT	
267	751555-0000	A		12	BUSHING	
270	90005-0056	-		2	WASHER PL.RND.NYL.6/8,5,H=1	
280	90087-0019	-		1	PLUG M10X1 STAINLESS	
290	90028-0020	-		6	CONE TUBE 2,5MM	
300	90028-0021	-		1	CONE TUBE 4 MM	
310	90032-0040	-		1	BLOCK 6 WAYS	
325	90090-0013	A		1	BALL, D=4 MM	
330	90091-0160	A		1	ROD SEAL, STEPSEAL 16X23,5X3,2 MM	
335	90091-0162	-		1	WEAR RING 16X19X3,2 MM	
340	90091-0165	A		1	ROD SEAL, STEPSEAL 20X27,5X3,2 MM	
345	90091-0163	A		1	WEAR RING 20X23X3,2 MM	
350	90092-0054	-		6	METERING VALVE 50 MM3	
351	90134-0004	A		1	PIPE CONNECTION R1/8	
353	90134-0031	-		2	SLEEVE FOR PLASTIC TUBE	
357	90134-0038	-		1	BUSHING/NUT INLET/OUTLET 4 MM	
360	90134-0039	-		6	BUSHING VALVE CONNECTION 2,5 MM	
370	90134-0058	-		6	CONNECTION	
375	90163-0048	A		1	NIPPLE LP-004-2-WR 510-23-1	
377	90163-0063	A		2	QUICK COUPLING, (M) 5450-6/4	
380	90166-0109	-	MM	700	TUBE 4 MM PA,TRANSP.	
390	90166-0117	-	MM	2500	HOSE 4/6 PVC BLUE	
400	90166-0143	-	MM	1500	TUBE 2,5 MM PA,TRANSP.	
420	90287-0119	A		1	SCREW,SOCK.SET FLATPOINT MMP6SS M5X12 A2	
500	312105-0325	-		7	SCREW M6S ISO 4017 M5X10 A480	
510	312105-0368	-		4	SCREW M6S M6X16 A280	
520	312105-0374	-		8	SCREW M6S ISO 4014 M6X30 A480	
525	312105-0372	-		4	SCREW M6S ISO 4017 M6X25 A480	
530	312115-0449	-		1	SCREW MC6S M8X16 A280	
535	312155-0295	-		2	SCREW HEX.SOCK.COUNT.MF6S M4X20 A480	
540	312115-0331	-		2	SCREW MC6S M5X20 A280	
543	312155-0449	-		1	SCREW HEX.SOCK.COUNT.MF6S M8X16 A280	
545	312155-0453	-		1	SCREW HEX.SOCK.COUNT.MF6S M8X25 A280	
550	312605-0316	-		2	HEXAGON NUT, M6M M6 A280	
560	312605-0320	-		1	HEXAGON NUT, M6M M10 A280	
580	315115-0153	-		4	WASHER PLAIN, TBRB 6,4/12 H=3	
590	311103-0276	-		2	PARALLELL PIN, M6, 4X30 MM	
595	315234-0101	-		1	WASHER,PL.RND.CU.5/8 H=0,8	
600	342980-0113	-		2	BANJO-CONNECTION,RING 6/4-G1/8"	
610	342980-0303	-		2	BANJO-HOLLOW BOLT COUPL,EXT.THR.01-G1/8"	
700	1380572-0000	B		1	PRESSURE FINGER	
710	1380573-0000	-		5	SHIM	
720	315105-0153	-		2	WASHER PLAIN, BRB, 6,4/12,H=1,5	
730	312105-0371	-		2	SCREW M6S ISO 4017 M6X22 A480	
740	342921-0112	-		2	STRAIGHT COUPLING,EXT.THREADED 6/4-6M	
750	90166-0117	-	M		HOSE 4/6 PVC BLUE	

Machine Type | Group Description | Used-In | Group Number | Page No

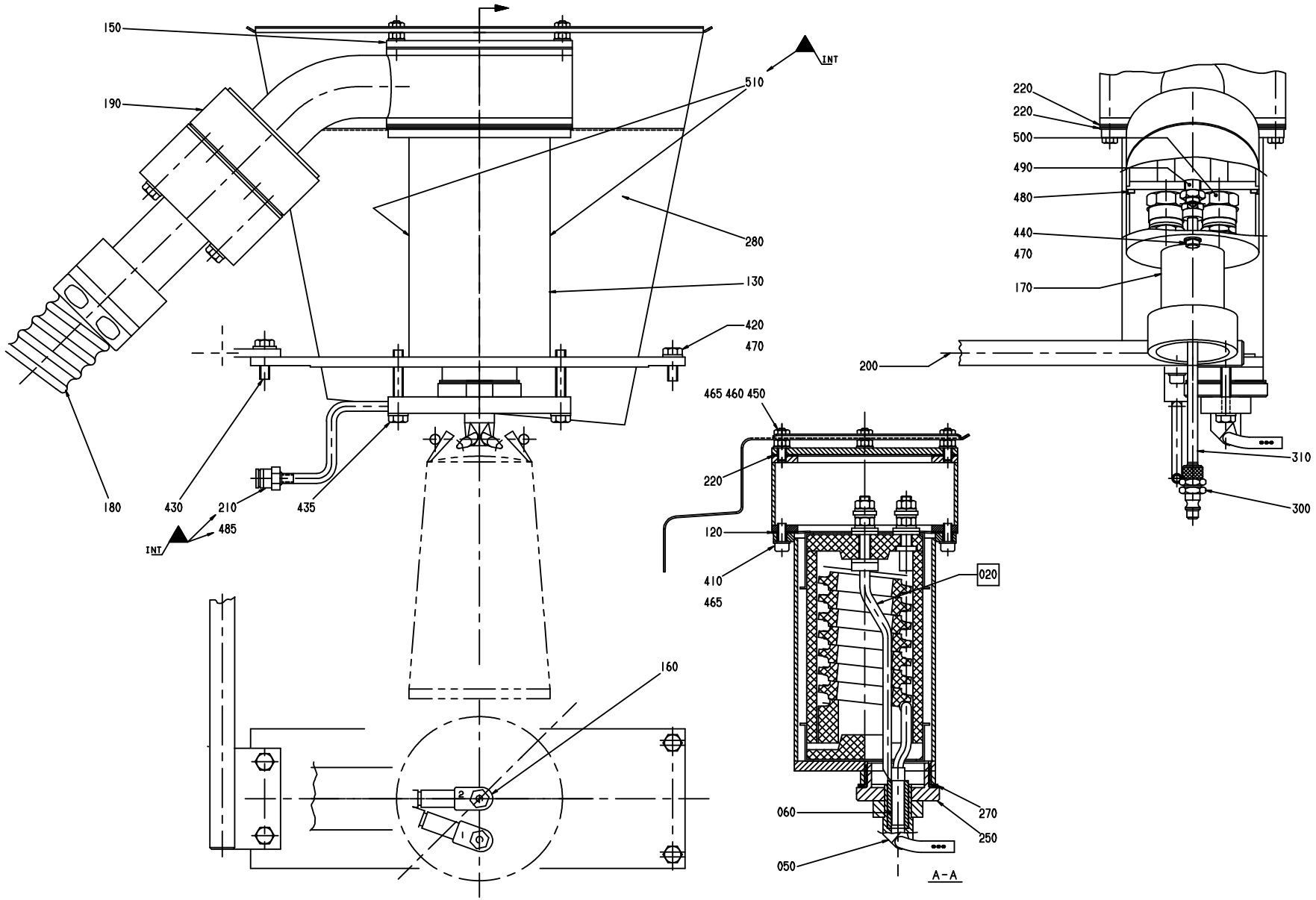
150
190
510
INT
280
130
420
470
180
430
210
435
485
INT
160
220
220
500
490
480
440
470
170
200
310
300
465 460 450
220
120
410
465
020
060
270
250
050
A-A

Pos	Part No	SP	UN	Qty	Description	Page No
Common Parts						
050	591661-0000	A		1	AIR NOZZLE	
060	252766-0001	A		1	INSULATING PIPE	
120	591554-0000	A		1	STOP PLATE	
130	591550-0000	A		1	HEATING CHAMBER	
150	591552-0000	A		1	LID	
160	B271499-0000	A		2	ELECTRICAL CONNECTION	
	353104-0175	-		*1*	*CABLE SHOEYAV 25 M6*	
	351121-0110	-	*M*	*1*	*CABLE RHH 25*	
170	295306-0000	-		1	COVER	
180	B2547665-0000	-		1	FLEXIBLE CONDUIT	
	90012-0058	-		*1*	*GLAND*	
	90152-0019	-	*MM*	*500*	*FLEXIBLE CONDUIT PG 36*	
190	1529465-0000	A		1	SPACER PIECE	
200	591688-0000	B		1	HANDLE	
210	1478843-0000	-		1	TUBE	
220	591553-0000	A		3	FLANGE SEAL	
250	591662-0000	B		1	NUT	
270	978527-0000	-		2	GASKET	
280	1529388-0000	-		1	COVER	
300	90163-0080	-		1	QUICK COUPLING, (M) 5450-8/6	
310	90166-0133	-	MM	1200	TUBE 8 MM PA,TRANSP.	
410	312115-0327	-		4	SCREW MC6S M5X12 A280	
420	312105-0368	-		2	SCREW M6S M6X16 A280	
430	312105-0370	-		2	SCREW M6S ISO 4017 M6X20 A480	
435	312105-0378	-		2	SCREW M6S ISO 4014 M6X40 A480	
440	312105-0380	-		2	SCREW M6S ISO 4014 M6X50 A480	
450	312318-0331	-		4	SCREW SOCK.SET CUP P MSK6SS M5X20 A4	
455	312105-0366	-		2	SCREW M6S M6X12 A280	
460	312605-0314	-		8	HEXAGON NUT, M6M M5 A280	
465	315105-0146	-		12	WASHER PLAIN, BRB, 5,3/10,H=1	
470	315105-0153	-		10	WASHER PLAIN, BRB, 6,4/12,H=1,5	
480	315204-0305	-		1	O-RING 69,5X3 MM	
485	342722-0197	-		1	STRAIGHT COUPLING	
490	342920-0122	-		1	STRAIGHT COUPLING,EXT.THREADED 8/6-R1/4"	
500	352100-0107	-		2	CABLE GLANR.18,6-12	
510	359710-0001	-		2	WARNING SIGN ISO, HOT SURFACE	
F020	A31390-0110	-		1	FF-ELEMENT BOTTOM	**457**

Pos	Part No	SP	UN	Qty	Description	Page No

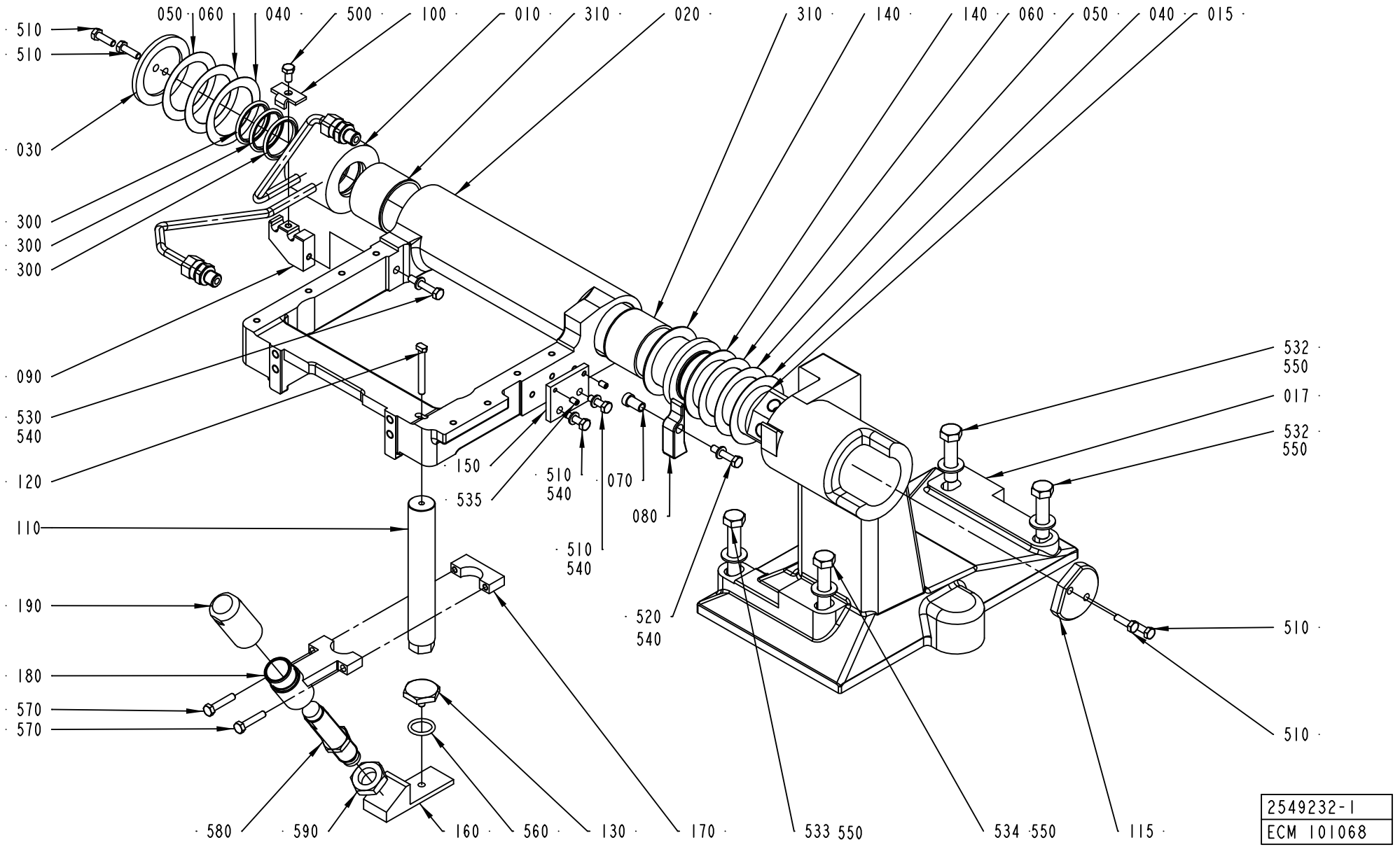
050
060
040
500
100
010
310
020
310
140
140
060
050
040
015
510
510
030
300
300
300
090
530
540
120
110
190
180
570
570
150
535
510
540
070
080
510
540
520
540
532
550
017
532
550
510
510
580
590
160
560
130
170
533 550
534 550
115
2549232-1
ECM 101068

ECM: 108832 - 20020515
Group number: 2549232-0100
Assembly Drawing: 2549232-1_1_AA

Issue: 20020822

Pos	Part No	SP	UN	Qty	Description	Page No
Common Parts						
010	B295202-0001	B		1	SWIVEL	
	90030-0052	*-*		*1*	*CONN. STR., 8-R1/4, EXT. THREAD*	
015	295313-0000	-		1	SHAFT	
017	1360653-0000	B		1	CANTILEVER	
020	B295201-0000	B		1	FRAME	
	312911-0126	*-*		*2*	*HELI-COIL M8X1,5D*	
	312911-0118	*-*		*11*	*HELI-COIL M6X1,5D*	
030	295203-0000	B		1	LID	
040	295204-0001	A		2	SHIM	
050	295204-0002	A		2	SHIM	
060	295204-0003	A		2	SHIM	
070	295205-0000	-		1	SPACER SLEEVE	
080	1529467-0000	-		1	FLAP	
090	295207-0000	-		1	HOLDER	
100	295208-0000	-		1	SECURING PLATE	
110	1538925-0000	B		1	SUPPORT	
115	1360581-0000	-		1	LID	
120	295431-0000	-		1	SCREW	
130	272997-0000	-		1	STOPPER	
140	591588-0000	-		2	SHIM	
150	469527-0000	-		1	SETTING PLATE	
160	1512133-0000	-		1	STOP	
170	1512127-0000	-		1	CLAMP	
180	1512126-0000	-		1	SUPPORT	
190	1512128-0000	-		1	PLUG	
300	90091-0136	A		3	ROD SEAL, GLIDORING 36X44X3,1 MM	
310	90240-0094	A		2	BEARING BUSHING WITHOUT FL, 50X55X40 MM	
500	312105-0366	-		1	SCREW M6S M6X12 A280	
510	312105-0370	-		6	SCREW M6S ISO 4017 M6X20 A480	
520	312105-0374	-		1	SCREW M6S ISO 4014 M6X30 A480	
530	312105-0376	-		1	SCREW M6S ISO 4014 M6X35 A480	
532	312105-0542	-		2	SCREW M6S ISO 4014 M12X50 A480	
533	312105-0544	-		1	SCREW M6S ISO 4014 M12X60 A480	
534	312105-0548	-		1	SCREW M6S ISO 4014 M12X80 A480	
535	312318-0323	-		2	SCREW SOCK.SET CUP P MSK6SS M5X8 A4	
540	315105-0153	-		4	WASHER PLAIN, BRB, 6,4/12,H=1,5	
550	315105-0178	-		4	WASHER PLAIN, BRB, 13/24,H=2	
560	315202-0215	-		1	O-RING 19,2X3 MM	
570	312109-0374	-		1	SCREW M6S ISO 4017 M6X30 A480	
580	90347-0189	-		1	SHOCK ABSORBER, 370-050-400	
590	90099-0057	-		1	NUT HEX. M20X1,5	

Pos	Part No	SP	UN	Qty	Description	Page No

Machine Type | Group Description | Used-In | Group Number | Page No

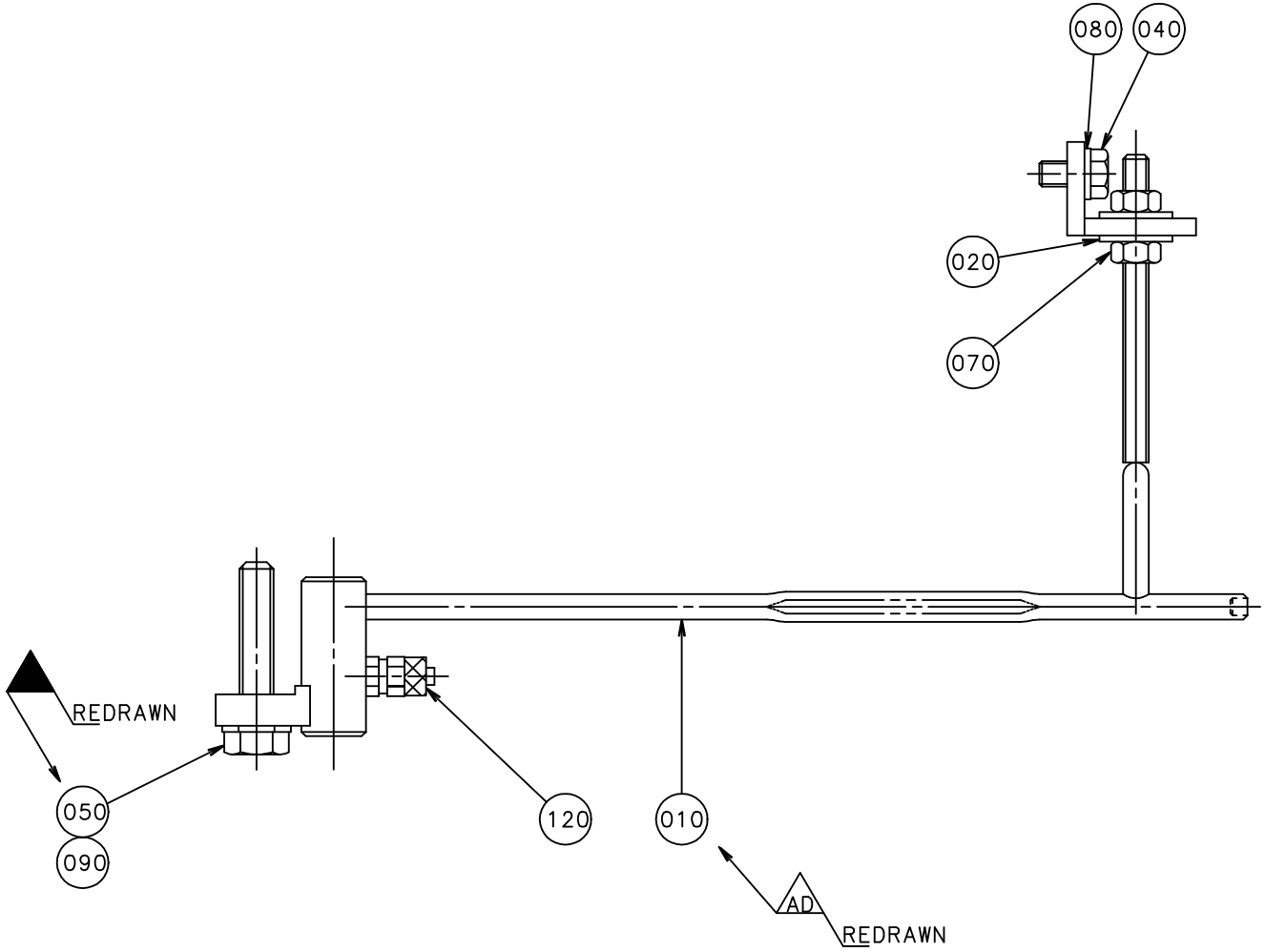
080
040
020
070
050
090
120
010
REDRAWN
AD
REDRAWN

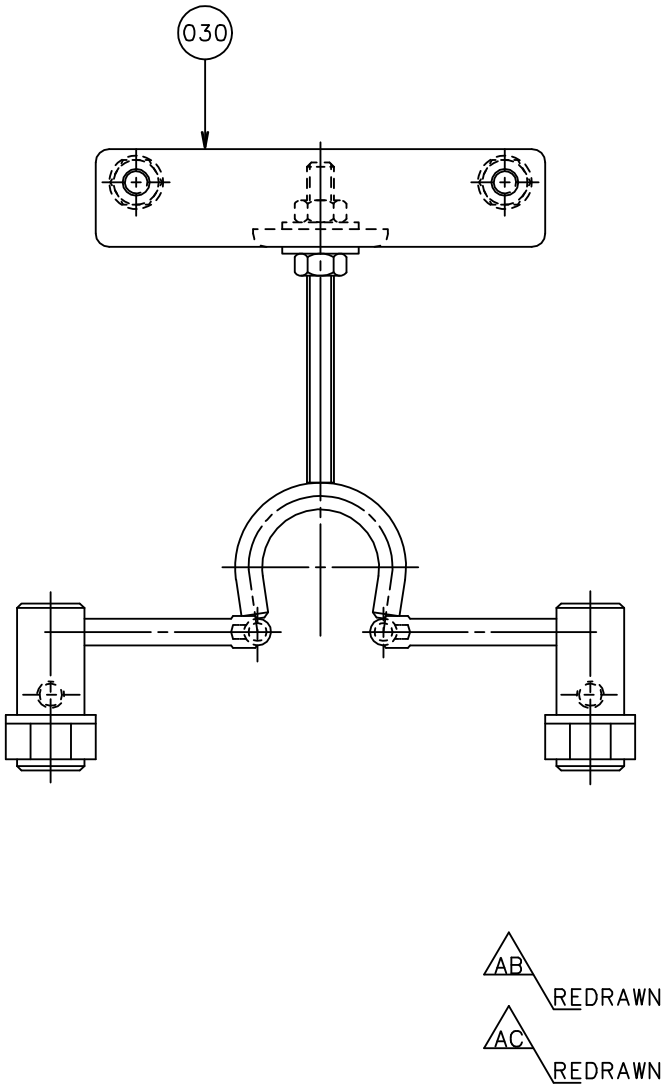
030
AB
REDRAWN
AC
REDRAWN

ECM: 102057 - 20011203
Group number: 591678-0100
Assembly Drawing: 591678-1_1_AE

Issue: 20020822

Pos	Part No	SP	UN	Qty	Description	Page No
Common Parts						
010	591666-0000	A		1	FOLDING BAR	
020	6278-0000	-		2	WASHER	
030	594978-0000	-		1	MOUNTING PLATE	
040	312105-0366	-		2	SCREW M6S M6X12 A280	
050	312105-0459	-		2	SCREW M6S ISO 4014 M8X40 A480	
070	312605-0316	-		2	HEXAGON NUT, M6M M6 A280	
080	315105-0153	-		2	WASHER PLAIN, BRB, 6,4/12,H=1,5	
090	315105-0165	-		2	WASHER PLAIN, BRB, 8,4/16,H=1,5	
120	342921-0112	A		2	STRAIGHT COUPLING,EXT.THREADED 6/4-6M	

Pos	Part No	SP	UN	Qty	Description	Page No

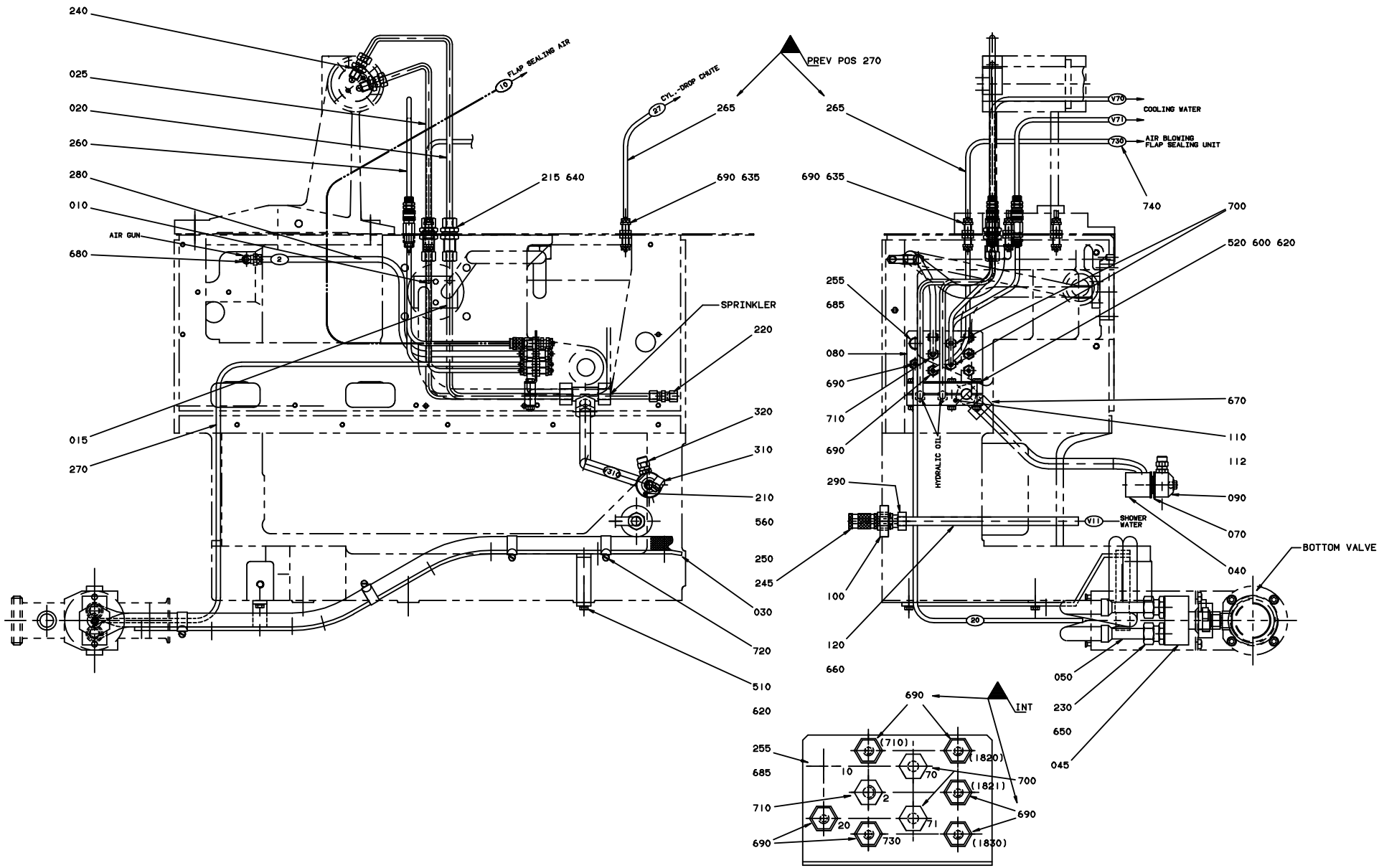
240
025
020
260
280
010
AIR GUN
680
015
270
FLAP SEALING AIR
CYL. - DROP CHUTE
265
215 640
690 635
SPRINKLER
220
320
310
210
560
250
245
030
720
510
620
PREV POS 270
265
690 635
V70
COOLING WATER
V71
730
AIR BLOWING
FLAP SEALING UNIT
740
700
520 600 620
255
685
080
690
710
690
HYDRAULIC OIL
670
110
112
090
070
040
290
V11
SHOWER
WATER
BOTTOM VALVE
100
120
660
050
230
650
045
690
INT
255
685
710
690
(710)
(1820)
10
70
700
(1821)
2
690
20
71
730
(1830)

ECM: 108009 - 20020515
Group number: 1529337-0100
Assembly Drawing: 1529337-1_1_AB

Issue: 20020822

Pos	Part No	SP	UN	Qty	Description	Page No
Common Parts						
010	591579-0000	-		1	PIPE	
015	591578-0000	A		1	PIPE	
020	591577-0000	A		1	PIPE	
025	591576-0000	A		1	PIPE	
030	441499-0000	-		1	HOLDER	
040	591630-0000	-		1	DISTRIBUTOR	
045	B490618-0000	-		1	BRANCH	
	90330-0106	*-*		*1*	*PIPE COUPLING*	
050	441500-0000	-		2	HOSE	
070	256907-0000	-		2	WASHER	
080	2546477-0000	B		1	PLATE	
090	272191-0000	A		1	DISTRIBUTOR	
100	272741-0000	A		1	SEAL	
110	456854-0001	-		1	CRAMP	
112	456854-0002	-		1	CRAMP	
120	491807-0000	-		1	PIPE	
210	90005-0007	A		1	GASKET BOLT HEAD 8,7X14X1 MM M8	
215	90030-0067	-		2	CONN. BULKHEAD SV 8-L/SY	
220	90030-0091	-		2	CONN. PIPE G-8	
230	90030-0151	-		2	CONN. STR.,15-R1/2, EXT. THREAD	
240	90030-0185	-		2	CONN. STR. GA-8-G1/4	
245	90157-0034	-		1	SEALING COMPOUND LOCTITE 572 50 ML	
250	90163-0028	-		1	QUICK COUPLING, LP 006-0-WR513	
255	90163-0062	A		1	QUICK COUPLING, (F) 5053-1/8	
260	90166-0117	A	MM	1640	HOSE 4/6 PVC BLUE	
265	90166-0081	A	MM	2000	TUBE 6 MM PA BLUE	
270	90166-0132	A	MM	2000	TUBE 6 MM PA,TRANSP.	
280	90166-0133	-	MM	520	TUBE 8 MM PA,TRANSP.	
290	90224-0186	-		1	NIPPLE	
310	90424-0009	A		1	SPRAY NOZZLE 103 DEG	
320	90424-0016	A		1	SPRAY NOZZLE 103 DEG R 1/8 GG8W	
510	312105-0372	-		4	SCREW M6S ISO 4017 M6X25 A480	
520	312105-0378	-		3	SCREW M6S ISO 4014 M6X40 A480	
560	312105-0463	-		1	SCREW M6S ISO 4014 M8X60 A480	
600	312605-0316	-		3	HEXAGON NUT, M6M M6 A280	
620	315105-0153	-		7	WASHER PLAIN, BRB, 6,4/12,H=1,5	
635	315233-0109	-		3	WASHER PL.RND.NYL.10,3/14,H=1	
640	315233-0111	-		2	WASHER PL.RND.NYL.17/22,H=1	
650	315233-0113	-		2	WASHER PL.RND.NYL.21,4/27,H=1,2	
660	342708-0107	-		2	REINFORCING RING VSH 12X1 MM	
670	342746-0114	-		1	CONN. T-PIPE T-15	
680	342732-0104	-		1	ELBOW PIPE JOINT, EXT.THREAD, D=8MM-G1/4	
685	342921-0121	A		1	STRAIGHT COUPLING,EXT.THREADED 8/6-G1/8"	
690	342960-0112	-		9	BULKHEAD COUPLING 6/4	
700	342960-0121	-		2	BULKHEAD COUPLING 8/6-6/4	
710	342960-0122	-		1	BULKHEAD COUPLING 8/6	
720	342991-0106	-		7	HOSE CLIP,WORM DRIVE TYPE (30)-36	
740	359000-0400	-		1	MARKING CO2/4"0"	
740	359000-0401	-		1	MARKING COLLAR 2/4 "1" YELLOW	
740	359000-0403	-		1	MARKING COLLAR PA2/4 "3" YELLOW	
740	359000-0407	-		1	MARKING COLLAR PA2/4 "7" YELLOW	

Machine Type	Group Description	Used-In	Group Number	Page No

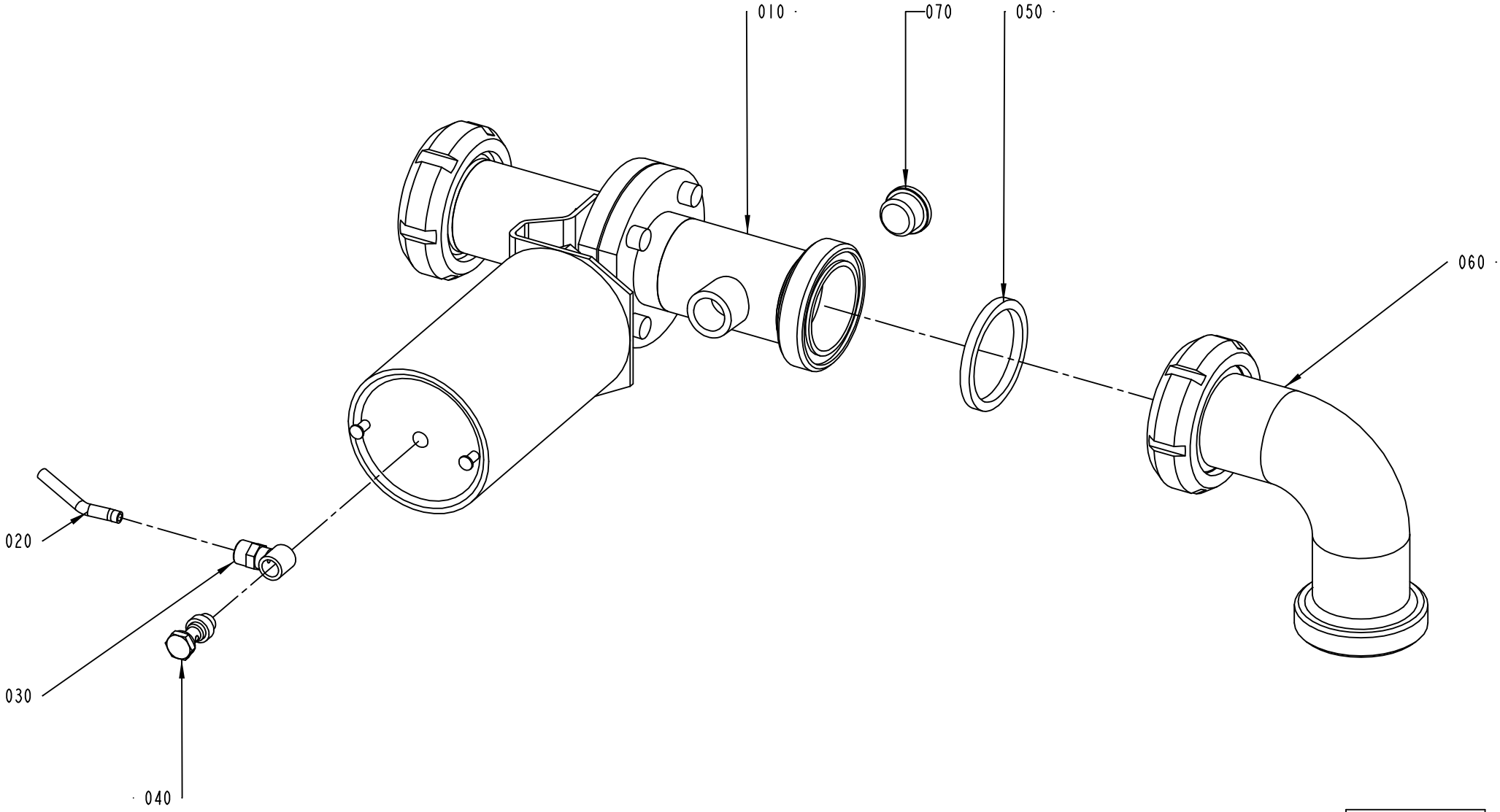

2552501-1
ECM 106713

ECM: 109934 - 20020614
Group number: 2552501-0100
Assembly Drawing: 2552501-1_1_AA

Issue: 20020822

Pos	Part No	SP	UN	Qty	Description	Page No
Common Parts						
010	2552042-0000	-		1	BOTTOM VALVE	
020	90166-0089	-	MM	1100	HOSE 4/6.2 PE BLUE	
030	342980-0113	-		1	BANJO-CONNECTION,RING 6/4-G1/8"	
040	342980-0303	-		1	BANJO-HOLLOW BOLT COUPL,EXT.THR.01-G1/8"	
050	315250-0104	-		1	GASKET 61X51X5,5 MM	
060	342807-0104	-		1	PIPE ELBOW 90 DEGR. SMS1220, D=51 MM	
070	342713-0213	-		1	PLUG, EXT THREAD HEX SOCKET 8638-00-120	

Pos	Part No	SP	UN	Qty	Description	Page No

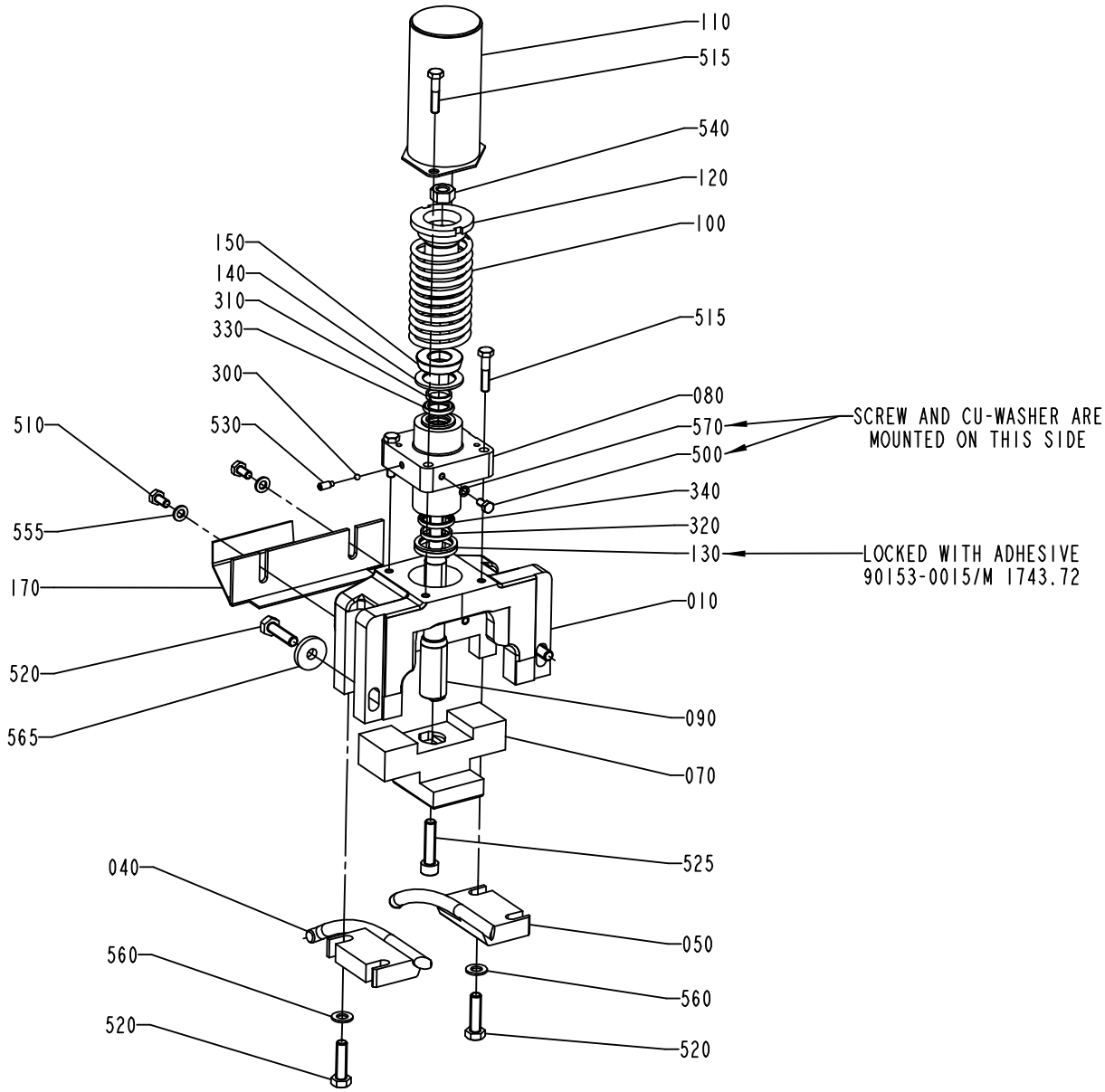

591677-1
ECN 86090

Pos	Part No	SP	UN	Qty	Description	Page No
Common Parts						
010	591525-0000	B		1	BRACKET	
040	591443-0000	B		1	RAIL LEFT	
050	591444-0000	B		1	RAIL RIGHT	
070	1360748-0000	B		1	BLOCKING PIECE	
080	490980-0000	-		1	CYLINDER	
090	752083-0000	-		1	PISTON	
100	271731-0000	-		1	COMPRESSION SPRING	
110	751163-0000	-		1	COVER	
120	441894-0000	-		1	SLEEVE	
130	295072-0000	-		1	BUFFER RING	
140	441896-0000	-		1	WASHER	
150	441895-0000	-		1	BUFFER RING	
170	594977-0000	A		1	SPLASH PLATE	
300	90090-0013	A		1	BALL, D=4 MM	
310	90091-0162	A		1	WEAR RING 16X19X3,2 MM	
320	90091-0163	A		1	WEAR RING 20X23X3,2 MM	
330	90091-0160	A		1	ROD SEAL, STEPSEAL 16X23,5X3,2 MM	
340	90091-0165	A		1	ROD SEAL, STEPSEAL 20X27,5X3,2 MM	
500	312105-0325	-		1	SCREW M6S ISO 4017 M5X10 A480	
510	312105-0366	-		2	SCREW M6S M6X12 A280	
515	312105-0374	-		4	SCREW M6S ISO 4014 M6X30 A480	
520	312105-0455	-		4	SCREW M6S ISO 4017 M8X30 A480	
525	312115-0457	-		1	SCREW MC6S M8X35 A280	
530	312311-0327	-		1	SCREW, SOCK.SET DOGPOINT M5X12	
540	312605-0320	-		1	HEXAGON NUT, M6M M10 A280	
555	315105-0153	-		2	WASHER PLAIN, BRB, 6,4/12,H=1,5	
560	315105-0165	-		3	WASHER PLAIN, BRB, 8,4/16,H=1,5	
565	315125-0165	-		2	WASHER PLAIN ROUND,CHAMF. 8,4/26, H=5	
570	315234-0101	-		1	WASHER,PL.RND.CU.5/8 H=0,8	

Pos	Part No	SP	UN	Qty	Description	Page No

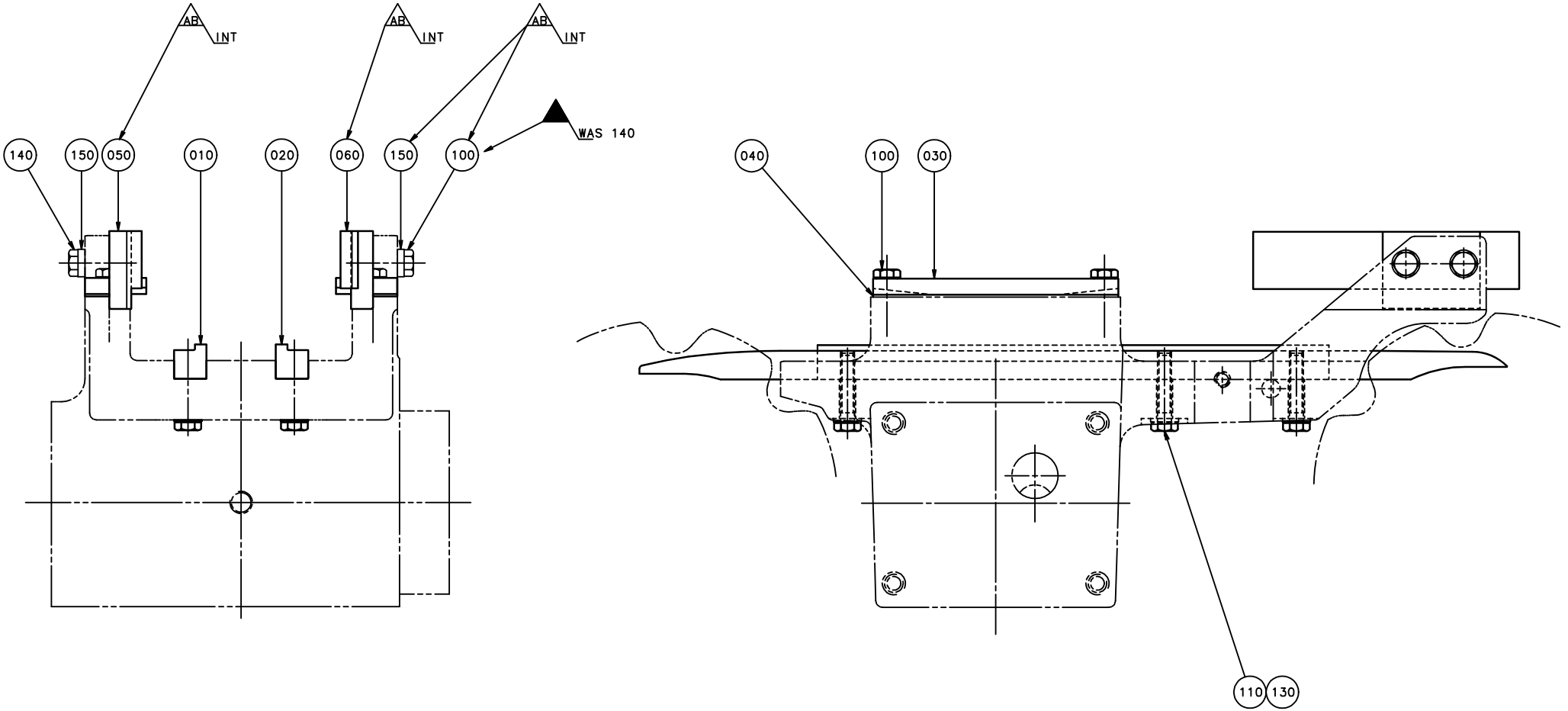
AB
INT
AB
INT
AB
INT
WAS 140
140
150
050
010
020
060
150
100
040
100
030
110
130

ECM: 102139 - 20011203
Group number: 591680-0100
Assembly Drawing: 591680-1_1_AD

Issue: 20020822

Pos	Part No	SP	UN	Qty	Description	Page No
Common Parts						
010	751109-0000	A		1	RAIL RIGHT	
020	751110-0000	A		1	RAIL LEFT	
030	491265-0000	A		2	PLATE	
040	491266-0000	A		4	SHIM	
050	594973-0000	-		1	STEERING RAIL L	
060	594974-0000	-		1	STEERING RAIL R	
100	312105-0370	-		8	SCREW M6S ISO 4017 M6X20 A480	
110	312105-0374	-		6	SCREW M6S ISO 4014 M6X30 A480	
130	315105-0153	-		10	WASHER PLAIN, BRB, 6,4/12,H=1,5	
150	315115-0153	-		4	WASHER PLAIN, TBRB 6,4/12 H=3	

Pos	Part No	SP	UN	Qty	Description	Page No

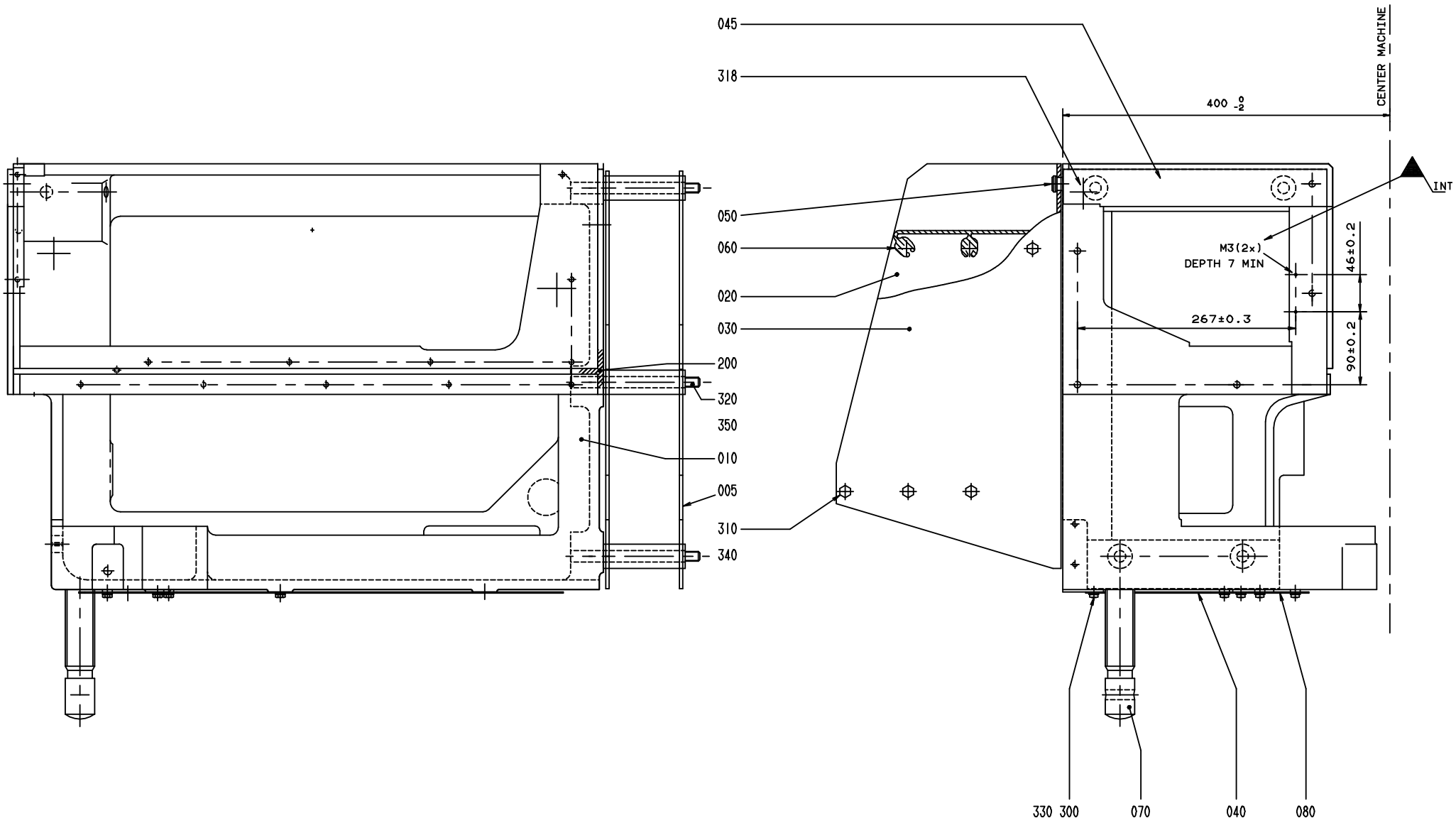
045
318
400 -2
CENTER MACHINE
INT
050
060
020
030
200
320
350
010
005
310
340
M3(2x)
DEPTH 7 MIN
46±0.2
267±0.3
90±0.2
330 300
070
040
080

ECM: 106667 - 20020515
Group number: 1529310-0100
Assembly Drawing: 1529310-1_1_AB

Issue: 20020822

Pos	Part No	SP	UN	Qty	Description	Page No
Common Parts						
005	591455-0000	-		1	SPACER FRAME	
010	1529305-0000	-		1	MACHINE BODY	
020	272659-0000	-		1	SIDE PIECE	
030	272660-0000	-		1	SIDE PIECE	
040	272745-0000	-		1	HATCH	
045	441596-0000	-		1	CANTILEVER	
050	271591-0000	-		2	BUTTON	
060	272661-0000	-		2	STAIR	
070	272673-0000	-		1	LEG	
080	272743-0000	-		1	LID	
200	90143-0028	-	MM	2700	STRIP	
300	312105-0367	-		7	SCREW M6S M6X14 A280	
310	312105-0451	-		12	SCREW M6S ISO 4017 M8X20 A480	
318	312115-0491	-		2	SCREW MC6S M10X20 A280	
320	90287-0328	-		6	SCREW M6S M12X160 A280	
330	315105-0153	-		7	WASHER PLAIN, BRB, 6,4/12,H=1,5	
340	315105-0165	-		12	WASHER PLAIN, BRB, 8,4/16,H=1,5	
350	315105-0178	-		6	WASHER PLAIN, BRB, 13/24,H=2	

Pos	Part No	SP	UN	Qty	Description	Page No

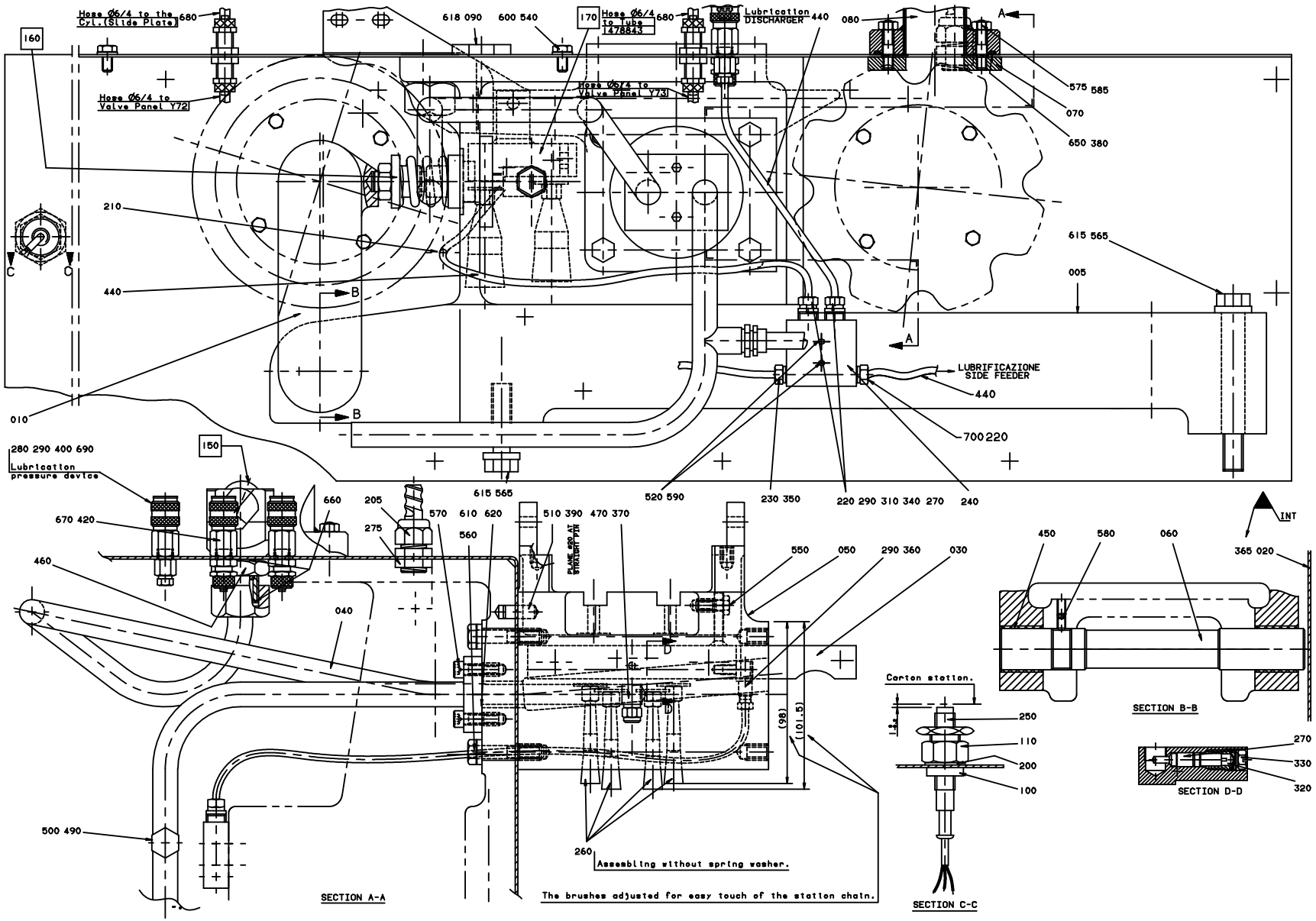
Hose Ø6/4 to the Cyl.(Slide Plate)
Hose Ø6/4 to Valve Panel Y72
Hose Ø6/4 to Valve Panel Y73
Hose Ø6/4 to Tube 1478843
Lubricatton DISCHARGER
LUBRIFICAZIONE SIDE FEEDER
Lubricatton pressure device
PLANE 699 AT STRAIGHT PIN
Carton station.
Assembling without spring washer.
The brushes adjusted for easy touch of the station chain.
SECTION A-A
SECTION B-B
SECTION C-C
SECTION D-D
INT

ECM: 108487 - 20020515
Group number: 1529329-0100
Assembly Drawing: 1529329-1_1_AB

Issue: 20020822

Pos	Part No	SP	UN	Qty	Description	Page No
Common Parts						
005	1529343-0000	-		1	BED	
010	441600-0000	-		1	LINK ARM	
020	1529306-0000	-		1	SHIELD PLATE	
030	751070-0000	-		1	DISTRIBUTOR BLOCK	
040	1511441-0000	-		1	PIPE CONNECTION	
050	752485-0000	-		1	SUPPORTING ARM	
060	256276-0000	-		1	SHAFT	
070	978190-0000	-		1	WASHER	
080	979459-0000	-		1	LEAD-IN	
090	272997-0000	-		1	STOPPER	
100	490932-0000	-		1	SLEEVE	
110	490933-0000	-		1	NUT	
150	A441798-0100	-		1	ROTOR	**477**
160	A272652-0300	-		1	CHAIN TENSIONER	**479**
170	A978048-0100	-		1	CLAMPING ELEMENT	**555**
200	90005-0048	-		1	WASHER,PL.RND.CU.18,2/23,9 H=1,5	
205	353243-0001	-		1	EXTENDED WITHOUT INSERT, PG9	
210	90015-0028	-		1	LEAD-IN BUSHING	
220	90028-0021	-		3	CONE TUBE 4 MM	
230	90028-0025	-		1	CONE TUBE 6 MM	
240	90032-0038	-		1	BLOCK 2 WAYS	
250	90458-0675	-		1	PROXIMITY SENSOR, E2EG-X5MB1-5M	
260	90092-0048	-		4	OIL BRUSH, FLAT, 5/16-24 UNF	
270	90092-0054	-		4	METERING VALVE 50 MM3	
275	90099-0104	-		1	NUT, PR 15,2 (PG9)	
280	90134-0004	-		1	PIPE CONNECTION R1/8	
290	90134-0031	-		2	SLEEVE FOR PLASTIC TUBE	
310	90134-0040	-		2	BUSHING VALVE CONNECTION 4 MM	
320	90134-0042	-		4	SPACER DOSING VALVE	
330	90134-0045	-		4	PLUG M12X1	
340	90134-0051	-		2	SPACING COLLAR DOSING BLOCK	
350	90134-0055	-		1	BUSHING/NUT INLET/OUTLET 6 MM	
360	90134-0068	-		1	CONNECTION	
365	90143-0028	-	MM	700	STRIP	
370	90144-0073	-		1	TREBOFLON-TAPE W=13MM	
380	90153-0020	-	L	1	ADHESIVE BOSTIK 1782 125ML	
390	90157-0022	-		1	SEALING COMPOUND	
400	90163-0046	-		1	SLEEVE LP-004-0-WR 0510-21-1 BRASS	
420	90163-0062	-		2	QUICK COUPLING, (F) 5053-1/8	
440	90166-0109	-	MM	2000	TUBE 4 MM PA,TRANSP.	
450	90240-0055	-		2	BEARING BUSHING WITHOUT FL, 25X28X25 MM	
460	90330-0078	-		1	BUSHING, INT/EXT. THR. R3/4-RP3/8	
470	90424-0009	-		1	SPRAY NOZZLE 103 DEG	
490	342921-0114	-		1	STRAIGHT COUPLING,EXT.THREADED 6/4-G1/4"	
500	90166-0193	-	M	1	TUBE 6 MM PUR BLUE	
510	311103-0401	-		1	PARALLELL PIN, M6, 8X20 MM	
520	312105-0297	-		2	SCREW M6S ISO 4017 M4X25 A480	
540	312105-0366	-		15	SCREW M6S M6X12 A280	
550	312105-0368	-		1	SCREW M6S M6X16 A280	
560	312105-0459	-		4	SCREW M6S ISO 4014 M8X40 A480	
565	312105-0552	-		4	SCREW M6S ISO 4014 M12X100 A480	
570	312115-0372	-		2	SCREW MC6S M6X25 A280	
575	312303-0374	-		2	SCREW STUD, METAL END=1D, PS 6X25 SS	
580	312318-0325	-		1	SCREW HEX.SOCK.SET CUP P.MSK6SS5X10 SS	
585	312605-0316	-		2	HEXAGON NUT, M6M M6 A280	
590	315105-0136	-		2	WASHER PLAIN, BRB, 4,3/8,H=0,8	
600	315105-0153	-		17	WASHER PLAIN, BRB, 6,4/12,H=1,5	
610	315111-0165	-		4	WASHER PLAIN, TBRB 8,4/16 H=3	
615	315111-0178	-		4	WASHER PLAIN, TBRB 13/24 H=4	
618	315202-0215	-		1	O-RING 19,2X3 MM	
620	315202-0118	-		2	O-RING 22,1X1,6 MM	
650	315202-0304	-		1	O-RING 64,5X3 MM	
660	315233-0111	-		2	WASHER PL.RND.NYL.17/22,H=1	
670	342921-0113	-		2	STRAIGHT COUPLING,EXT.THREADED 6/4-G1/8"	
680	342960-0112	-		3	BULKHEAD COUPLING 6/4	
690	315234-0109	-		1	WASHER,PL.RND.CU.10,3/13,5 H=1,0	
700	90134-0038	-		1	BUSHING/NUT INLET/OUTLET 4 MM	

Machine Type | Group Description | Used-In | Group Number | Page No

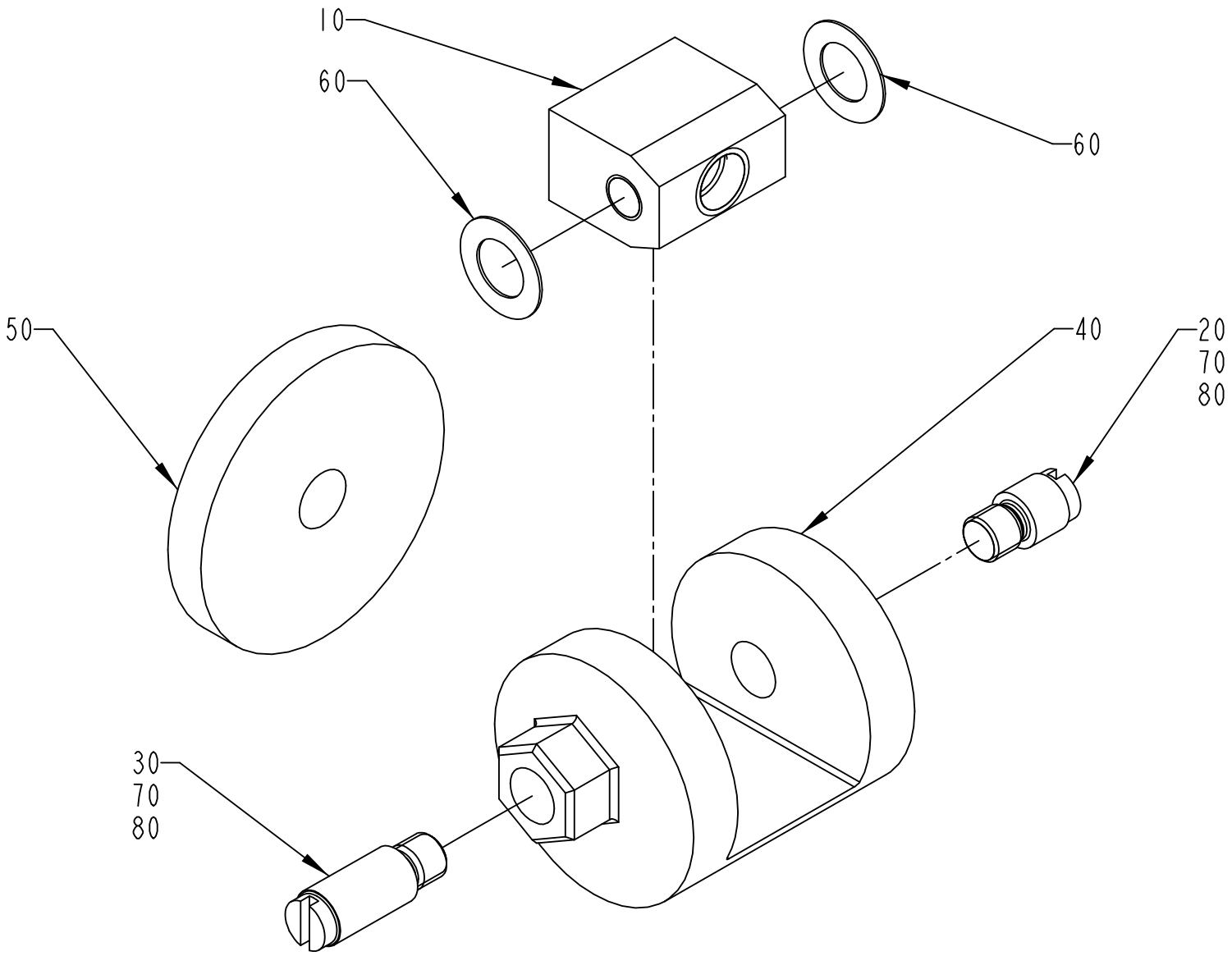

978048-1
ECN 7295I

ECM: 99765 - 20011105
Group number: 978048-0100
Assembly Drawing: 978048-1_1_AB

Issue: 20020822

Pos	Part No	SP	UN	Qty	Description	Page No
Common Parts						
010	978049-0000	B		1	NUT	
020	978050-0001	B		1	SCREW	
030	978050-0002	B		1	SCREW	
040	978051-0000	B		1	ECCENTRIC	
050	978052-0000	B		1	WASHER	
060	2033-0009	B		2	WASHER	
070	90157-0016	-		1	LOCKING FLUID	
080	90296-0012	-	KG	1	LUBRICANT	

Pos	Part No	SP	UN	Qty	Description	Page No

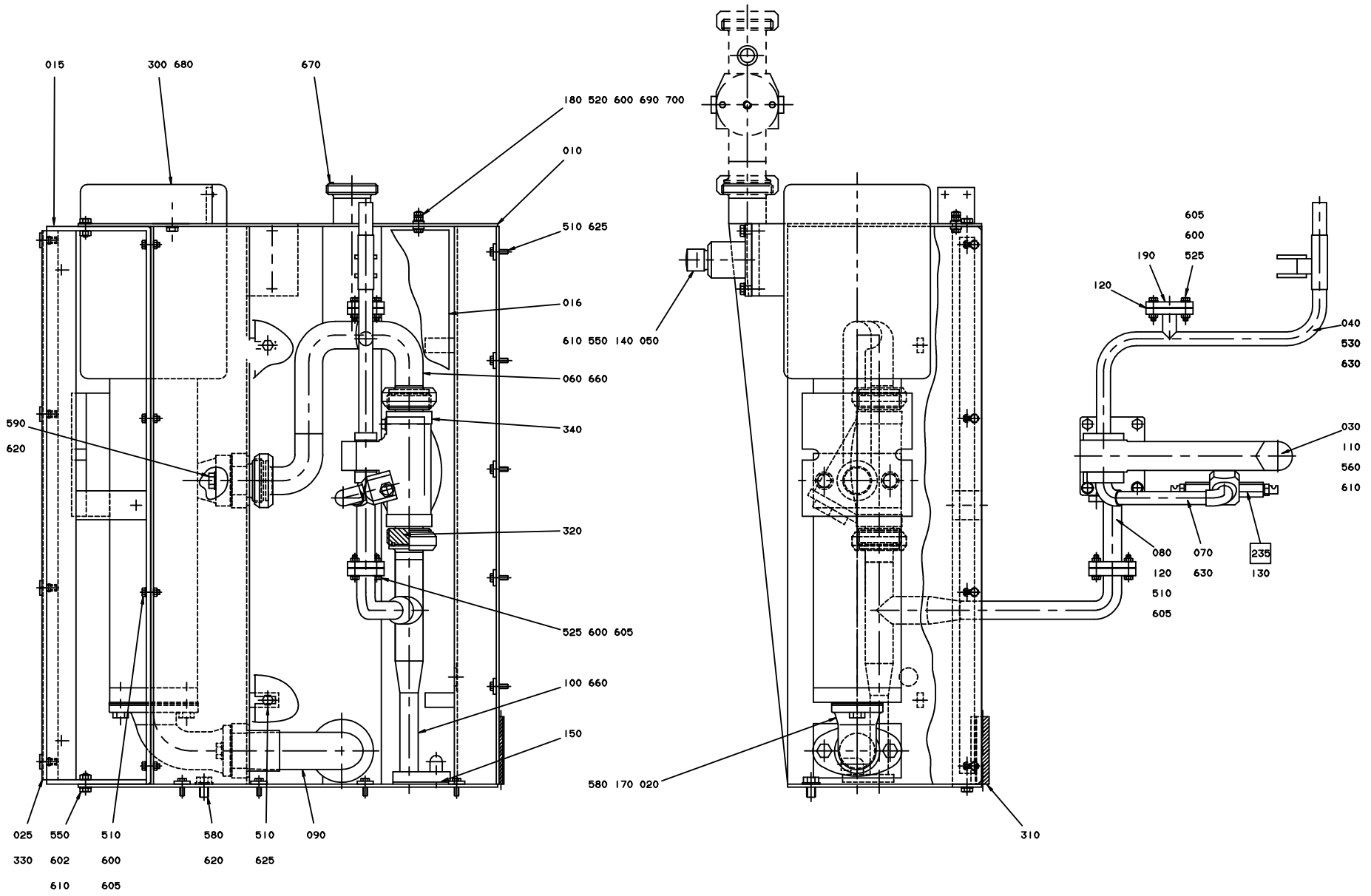
015
300 680
670
180 520 600 690 700
010
510 625
016
610 550 140 050
060 660
590
620
340
320
525 600 605
100 660
150
580 170 020
025
330
550
602
610
510
600
605
580
620
510
625
090
310
605
600
190
525
120
040
530
630
030
110
560
610
080
120
510
605
070
630
235
130

ECM: 110792 - 20020614
Group number: 1529324-0100
Assembly Drawing: 1529324-1_1_AA

Issue: 20020822

Pos	Part No	SP	UN	Qty	Description	Page No
50HZ						
300	B90321-0015	B		1	PUMP 502 CFX 7ETV 302 50HZ IP55	
	90321-0481	*C*		*1*	*GASKET*	
	90321-0466	*C*		*1*	*SPARE PART KIT*	
60HZ						
300	B90321-0034	B		1	PUMP 502 CFX 5ETV 362 60HZ IP55	
	90321-0466	*C*		*1*	*SPARE PART KIT*	
	90321-0481	*C*		*1*	*GASKET*	
Common Parts						
010	1529325-0000	-		1	CLEANING EQUIPMENT	
015	591493-0000	-		1	FRAME	
016	591494-0000	-		1	SEPARATION INSERT	
020	751162-0000	-		1	INLET PIPE	
025	1360672-0000	-		1	COVERING PLATE	
030	441603-0000	-		1	BRACKET	
040	1529281-0000	B		1	JUNCTION PIPE	
050	1529354-0000	-		1	BRACKET	
060	591627-0000	-		1	PIPE	
070	B456393-0000	-		1	PIPE	
	90330-0065	*-*		*1*	*ELBOW, 90 INT. THREAD, R-222R3/8*	
080	591489-0000	B		1	EXTENSION PIPE	
090	591575-0000	-		1	PIPE	
100	456293-0000	-		1	PIPE	
110	456395-0000	A		1	GASKET	
120	456396-0000	A		3	GASKET	
130	456394-0000	A		1	SEALING WASHER	
140	256641-0000	-		1	LEG	
150	295417-0000	A		1	GASKET	
170	751017-0000	A		3	GASKET	
180	295434-0000	-		2	BUSHING	
190	1529392-0000	-		1	LID	
235	A441811-0100	-		1	ROTOR	**493**
310	90143-0028	-	MM	100	STRIP	
320	90217-0041	-		2	NIPPLE LKBN, RD 60-6 - R1 1/2 M	
330	90287-0062	-		4	SCREW M6	
340	B90415-0022	-		1	FILTER / R1 1/2" TYP. 1012	
	90415-0320	*C*		*1*	*FILTER INSERT*	
510	312105-0370	-		20	SCREW M6S ISO 4017 M6X20 A480	
520	312105-0372	-		1	SCREW M6S ISO 4017 M6X25 A480	
525	312105-0374	-		4	SCREW M6S ISO 4014 M6X30 A480	
530	312105-0384	-		2	SCREW M6S ISO 4014 M6X70 A480	
550	312105-0451	-		4	SCREW M6S ISO 4017 M8X20 A480	
560	312105-0464	-		4	SCREW M6S ISO 4014 M8X65 A480	
570	312105-0491	-		1	SCREW M6S ISO 4017 M10X20 A480	
580	312105-0532	-		5	SCREW M6S ISO 4017 M12X20 A480	
590	312105-0538	-		2	SCREW M6S ISO 4017 M12X35 A480	
600	312605-0316	-		8	HEXAGON NUT, M6M M6 A280	
602	312605-0318	-		2	HEXAGON NUT, M6M M8 A280	
605	315105-0153	-		10	WASHER PLAIN, BRB, 6,4/12,H=1,5	
610	315105-0165	-		4	WASHER PLAIN, BRB, 8,4/16,H=1,5	
620	315105-0178	-		2	WASHER PLAIN, BRB, 13/24,H=2	
625	315121-0153	-		11	WASHER PLAIN, TBRSB 6,4/22 H=4	
630	315202-0215	-		2	O-RING 19,2X3 MM	
660	315250-0103	-		3	GASKET 48X38X5,5 MM	
670	315250-0104	-		1	GASKET 61X51X5,5 MM	
680	352103-0110	-		2	CABLE GLAND, STR 16, PR22,5/PG16	
690	353101-0123	A		1	CABLE SHOE 0,5-1,5MM2 RED	
700	353101-0126	A		1	CABLE SHOE	

Machine Type | Group Description | Used-In | Group Number | Page No

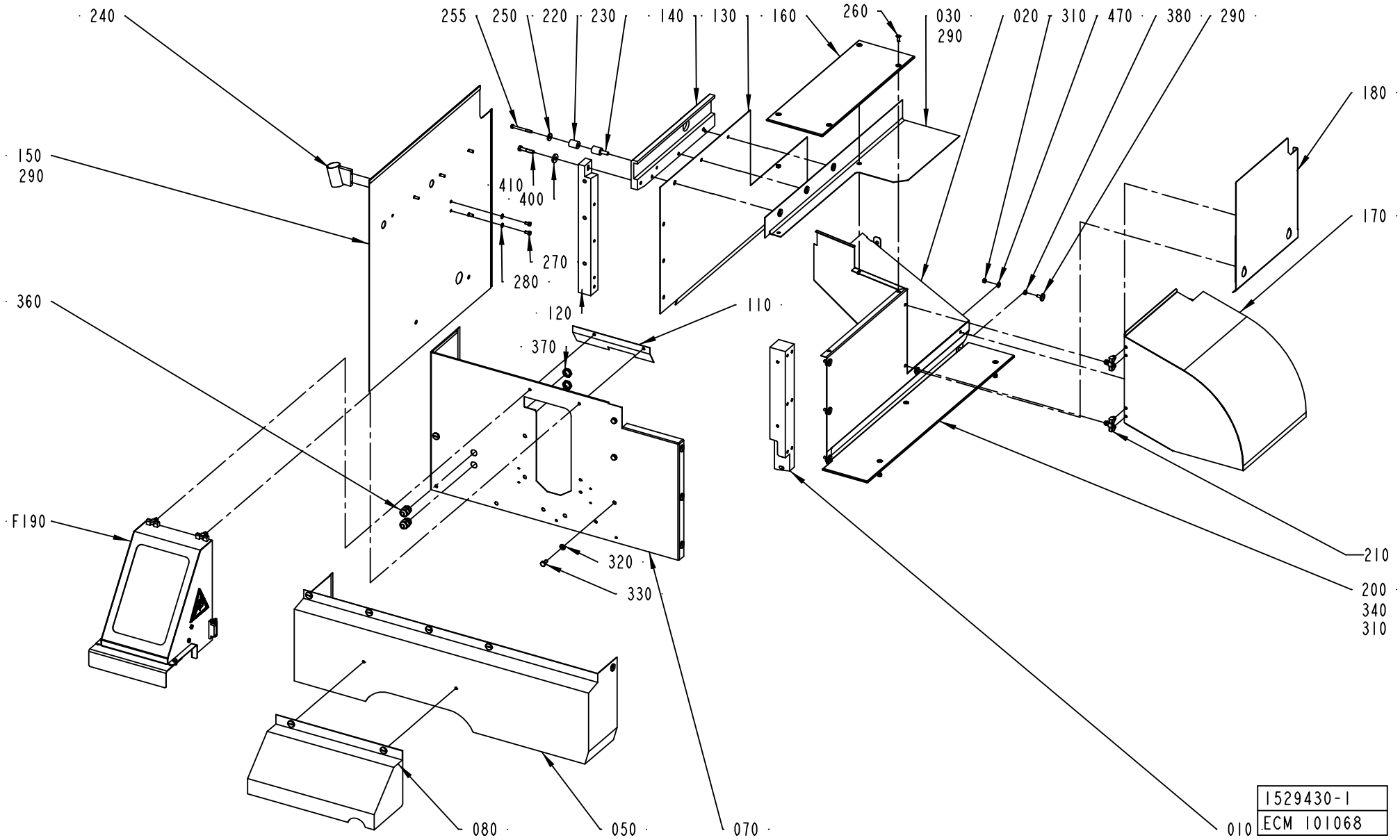
240
255
250
220
230
140
130
160
260
030
290
020
310
470
380
290
180
150
290
410
400
270
280
170
360
120
110
370
F190
320
330
210
200
340
310
080
050
070
010
1529430-1
ECM 101068

ECM: 106850 - 20020515
Group number: 1529430-0100
Assembly Drawing: 1529430-1_1_AA

Issue: 20020822

Pos	Part No	SP	UN	Qty	Description	Page No
Common Parts						
010	1529369-0000	-		1	PILLAR	
020	1529371-0000	-		1	SIDE PLATE	
030	1529374-0000	-		1	COVER PLATE	
050	1529428-0000	-		1	FRONT PLATE	
060	1529429-0000	-		1	BRACKET	
070	1529432-0000	-		1	FRONT PLATE	
080	1529437-0000	-		1	COVER	
100	1529440-0000	-		1	BLOCK	
110	1529442-0000	-		1	PLATE	
120	1529443-0000	-		1	COLUMN	
130	1529444-0000	-		1	SIDE PLATE	
140	1529446-0000	-		1	RAIL	
150	1529447-0000	-		1	SIDE PLATE	
160	1529448-0000	-		1	CHECKER PLATE	
170	1529450-0000	-		1	WASTE CHUTE	
180	1529458-0000	-		1	COVER PLATE	
190	A1529451-0100	-		1	HOOD	**561**
200	1529449-0000	-		1	CHECKER PLATE	
210	90248-0022	-		2	HINGE, 1055-U6 S/S 304	
220	90347-0035	A		1	DAMPER	
230	295341-0000	-		1	SPACER	
240	752093-0000	-		1	HOLDER	
250	38087-0000	-		1	WASHER	
255	312105-0382	-		1	SCREW M6S ISO 4014 M6X60 A480	
260	312155-0368	-		4	SCREW HEX.SOCK.COUNT.MF6S M6X16 A280	
270	312105-0366	-		2	SCREW M6S M6X12 A280	
280	315105-0153	-		2	WASHER PLAIN, BRB, 6,4/12,H=1,5	
290	90287-0062	-		27	SCREW M6	
310	312605-0316	-		7	HEXAGON NUT, M6M M6 A280	
320	315105-0165	-		5	WASHER PLAIN, BRB, 8,4/16,H=1,5	
330	312105-0449	-		3	SCREW M6S ISO 4017 M8X16 A480	
340	312155-0380	-		3	SCREW HEX.SOCK.COUNT.MF6S M6X50 A280	
360	352103-0106	-		2	CABLE GLAND, ST 11, PR18,6/PG11	
370	90099-0117	-		2	NUT, PR 18,6 (PG11)	
380	2542344-0000	-		2	SPACER	
400	271585-0000	-		1	WASHER	
410	312105-0459	-		1	SCREW M6S ISO 4014 M8X40 A480	
430	312105-0451	-		2	SCREW M6S ISO 4017 M8X20 A480	
470	315111-0156	-		2	WASHER PLAIN, TBRB 6,7/14 H=3	

Pos	Part No	SP	UN	Qty	Description	Page No

Machine Type | Group Description | Used-In | Group Number | Page No

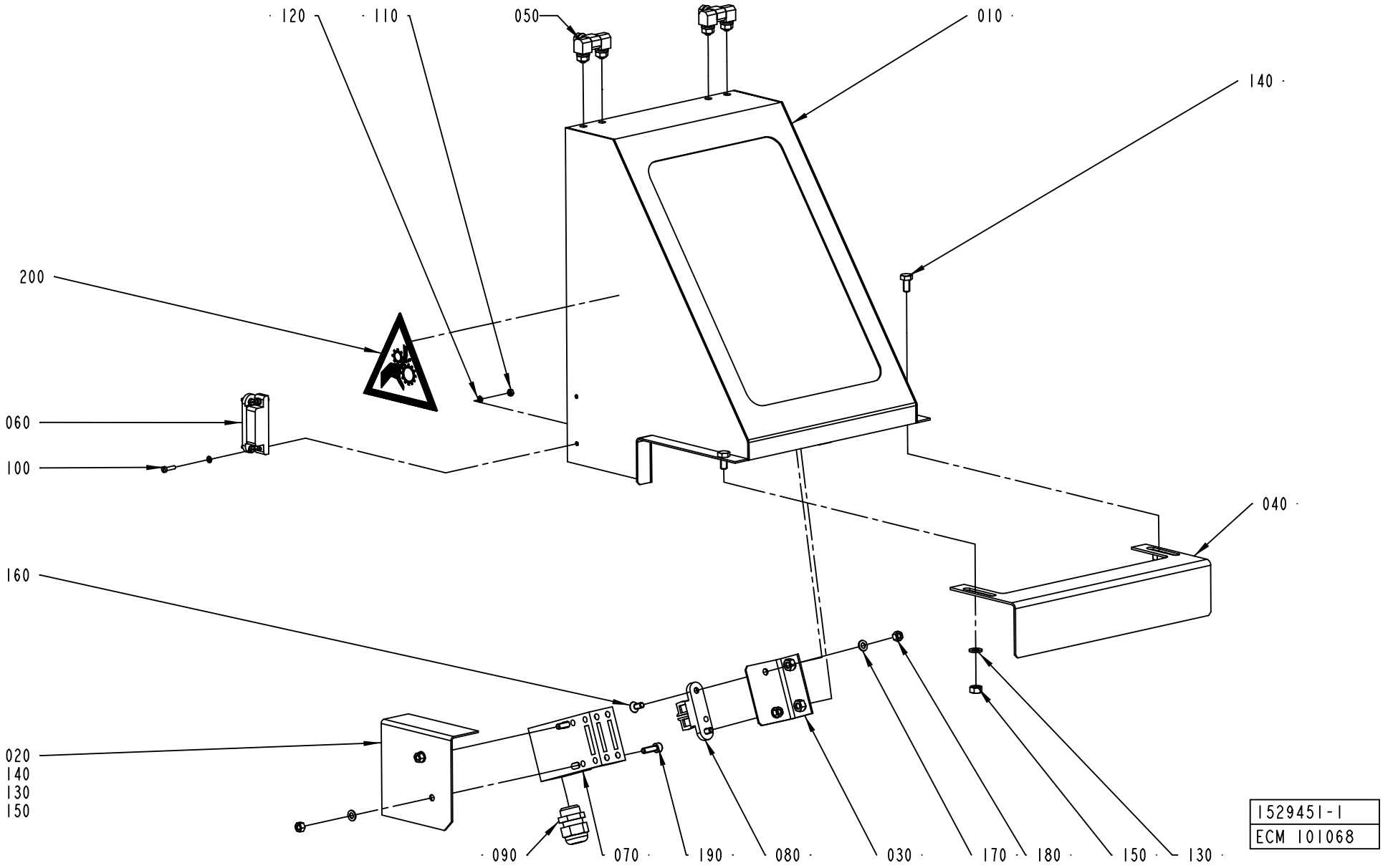
120
110
050
010
140
200
060
100
040
160
020
140
130
150
090
070
190
080
030
170
180
150
130
1529451-1
ECM 101068

ECM: 106461 - 20020515
Group number: 1529451-0100
Assembly Drawing: 1529451-1_1_AA

Issue: 20020822

Pos	Part No	SP	UN	Qty	Description	Page No
Common Parts						
010	1529431-0000	-		1	COVER	
020	1529439-0000	-		1	BRACKET	
030	1529441-0000	-		1	BRACKET	
040	1529433-0000	-		1	PLATE	
050	90248-0022	-		2	HINGE, 1055-U6 S/S 304	
060	90339-0004	-		2	MAGNETIC LOCK, 57X16X19 MM	
070	90044-0139	-		1	KEY SAF.SW. AZ16-02 ZVR K-2254	
080	90044-0311	-		1	KEY FOR SAFETY SWITCH, AZ15/16 B2	
090	352103-0106	-		1	CABLE GLAND, ST 11, PR18,6/PG11	
100	312125-0226	-		8	SCREW PAN HEAD MCS M3X12 SS	
110	312605-0310	-		6	HEXAGON NUT, M6M M3 A280	
120	315105-0124	-		14	WASHER PLAIN, BRB, 3,2/6,H=0,5	
130	315105-0153	-		4	WASHER PLAIN, BRB, 6,4/12,H=1,5	
140	312105-0366	-		6	SCREW M6S M6X12 A280	
150	312605-0316	-		6	HEXAGON NUT, M6M M6 A280	
160	312155-0327	-		2	SCREW HEX.SOCK.COUNT.MF6S M5X12 A280	
170	315105-0146	-		2	WASHER PLAIN, BRB, 5,3/10,H=1	
180	312605-0314	-		4	HEXAGON NUT, M6M M5 A280	
190	312115-0329	-		2	SCREW MC6S M5X16 A280	
200	359705-0002	-		2	WARNING SIGN ISO, ENTAGLEMENT	

Pos	Part No	SP	UN	Qty	Description	Page No

Machine Type Group Description Used-In Group Number Page No

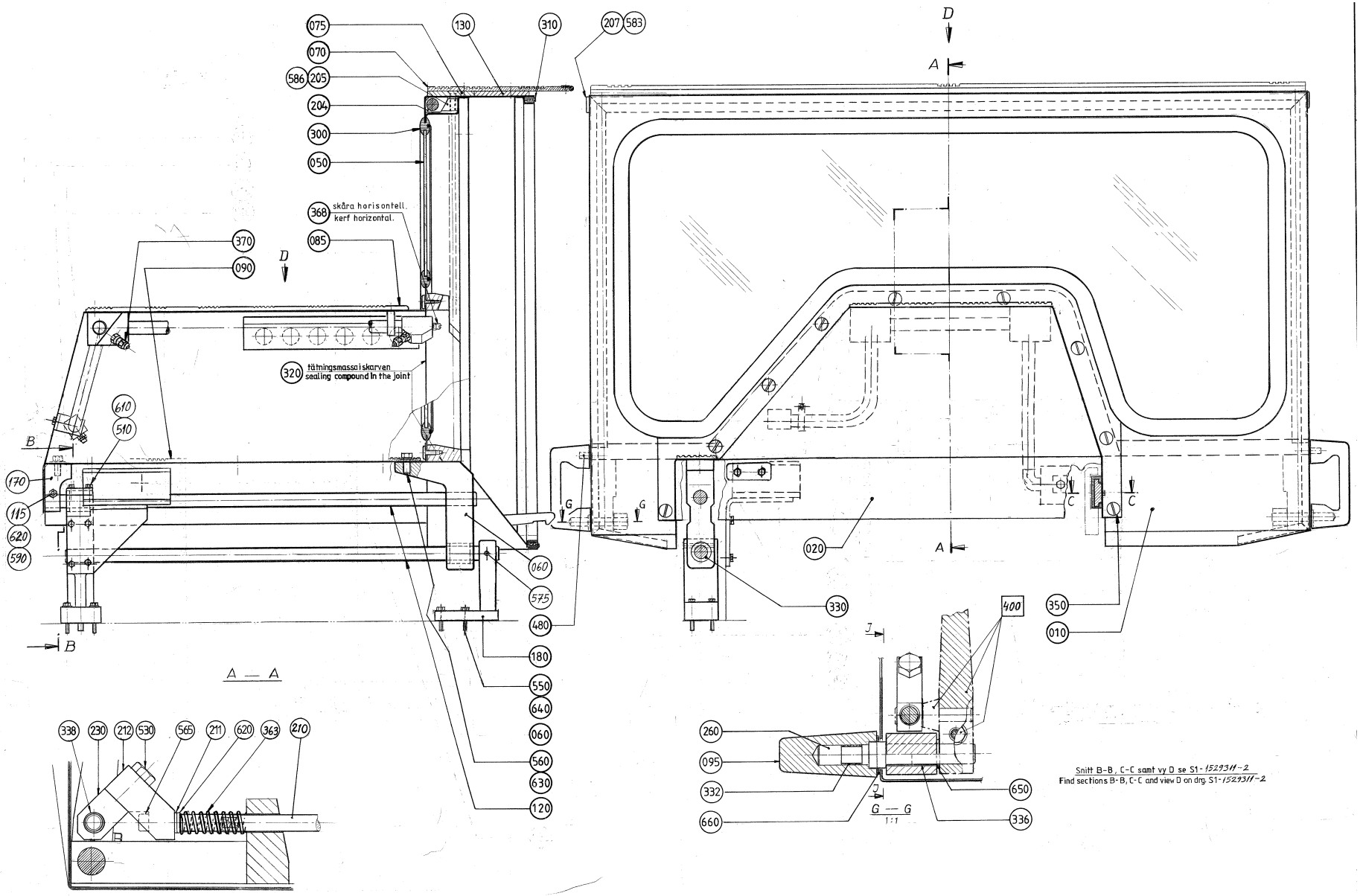
075
070
586
205
204
300
050
130
310
207
583
368
skära horisontell.
kerf horizontal.
085
370
090
320
tätningsmassa i skarven
sealing compound in the joint
610
510
170
115
620
590
060
575
480
180
550
640
060
560
630
120
020
330
400
350
010
260
095
332
660
650
336
338
230
212
530
565
211
620
363
210
A — A
G — G
1:1
Snitt B-B, C-C samt vy D se S1-1529311-2
Find sections B-B, C-C and view D on drg. S1-1529311-2

ECM: 106592 - 20020515
Group number: 1529311-0100
Assembly Drawing: 1529311-1_1_AA

Issue: 20020822

Pos	Part No	SP	UN	Qty	Description	Page No
Common Parts						
010	1529307-0000	-		1	FRONT GUARD	
020	1529308-0000	-		1	HOOD	
030	1529315-0000	-		1	PIPE	
040	1529344-0000	-		1	BEARING BRACKET	
050	1529312-0000	-		1	GLASS	
060	295349-0000	-		1	BEARING BRACKET	
070	469053-0000	-		1	CHECKER PLATE	
075	469054-0000	-		1	PLATE	
085	1529313-0000	-		1	CHECKER PLATE	
090	1529314-0000	-		1	CHECKER PLATE	
095	469058-0000	-		2	HANDLE	
110	1529463-0000	-		1	GUIDE	
115	271608-0000	-		1	CLAMP SCREW	
120	1529331-0000	-		2	GUIDE	
130	469061-0000	-		1	PLATE	
140	271708-0000	-		1	SLIDE RAIL	
150	1529146-0000	-		1	WASHER	
170	295355-0000	-		1	BEARING BRACKET	
180	1529316-0000	-		1	BRACKET	
200	295358-0000	-		1	RULER	
203	469811-0000	-		1	SHAFT	
204	469812-0000	-		2	BEARING	
205	469813-0000	-		2	CLAMPING PART	
206	469814-0000	-		2	LINK ARM	
207	469815-0000	-		2	END PIECE	
208	469816-0000	-		2	CAP	
209	469817-0000	-		2	PIN	
210	469818-0000	-		2	ROD	
211	469819-0000	-		2	PEEL-OFF SHIM	
212	469820-0000	-		2	BRACKET	
220	295423-0000	-		1	SEAL	
230	469063-0000	-		2	HEAD	
260	469066-0000	-		2	SHAFT	
275	469068-0000	-		1	SLEEVE	
280	469069-0000	-		1	PLATE	
290	469968-0000	-		1	EDGE STRIP	
293	1529464-0000	-		1	PLATE	
298	90143-0016	-	MM	300	STRIP	
300	90143-0039	-	MM	3400	STRIP	
310	90143-0049	-	MM	2600	RUBBERSTRIP 11X21MM	
320	90157-0022	-	L	200	SEALING COMPOUND	
330	90189-0019	-		2	BALL BUSHING, 20X30X30 MM	
332	90208-0047	-		2	COLLAR	
336	90240-0052	-		4	BEARING BUSHING WITHOUT FL, 12X14X15 MM	
338	90240-0076	-		2	RICTION BEARING	
348	312155-0289	-		5	SCREW HEX.SOCK.COUNT.MF6S M4X10 A480	
350	90287-0062	-		9	SCREW M6	
363	90335-0055	-		2	SPRING	
368	90424-0035	-		2	SPRAY NOZZLE 95 DEG	
370	90424-0036	-		6	SPRAY NOZZLE 95 DEG R 3/8 BD3	
400	A490912-0100	-		2	CATCH	**503**
420	A2506889-0100	-		1	SAFETY GUARD	**569**
480	311103-0407	-		2	PARALLELL PIN, M6, 8X35 MM	
500	312105-0327	-		7	SCREW M6S ISO 4017 M5X12 A480	
510	312105-0329	-		2	SCREW M6S ISO 4017 M5X16 A480	
515	312105-0332	-		2	SCREW M6S ISO 4017 M5X22 A480	
520	312105-0362	-		1	SCREW M6S ISO 4017 M6X8 A480	
530	312105-0455	-		3	SCREW M6S ISO 4017 M8X30 A480	
550	312105-0378	-		12	SCREW M6S ISO 4014 M6X40 A480	
560	312105-0492	-		2	SCREW M6S ISO 4017 M10X22 A480	
565	312115-0374	-		4	SCREW MC6S M6X30 A280	
570	312155-0368	-		11	SCREW HEX.SOCK.COUNT.MF6S M6X16 A280	
575	312318-0364	-		1	SCREW HEX.SOCK.SET CUP P.MSK6SS6X10 SS	
580	312155-0372	-		8	SCREW HEX.SOCK.COUNT.MF6S M6X25 A280	
583	312155-0378	-		2	SCREW HEX.SOCK.COUNT.MF6S M6X40 A280	
586	312155-0455	-		2	SCREW HEX.SOCK.COUNT.MF6S M8X30 A280	
590	312605-0316	-		7	HEXAGON NUT, M6M M6 A280	
595	312605-0318	-		1	HEXAGON NUT, M6M M8 A280	
600	312812-0316	-		15	HEXAGON NUT, NY-LOCK M6 A480	
610	315105-0146	-		13	WASHER PLAIN, BRB, 5,3/10,H=1	
620	315105-0153	-		25	WASHER PLAIN, BRB, 6,4/12,H=1,5	
630	315105-0173	-		2	WASHER PLAIN, BRB, 10,5/22,H=2	
640	315115-0153	-		4	WASHER PLAIN, TBRB 6,4/12 H=3	
650	315233-0110	-		2	WASHER PL.RND.NYL.13,3/17,H=1	
660	315233-0111	-		2	WASHER PL.RND.NYL.17/22,H=1	

Machine Type | Group Description | Used-In | Group Number | Page No

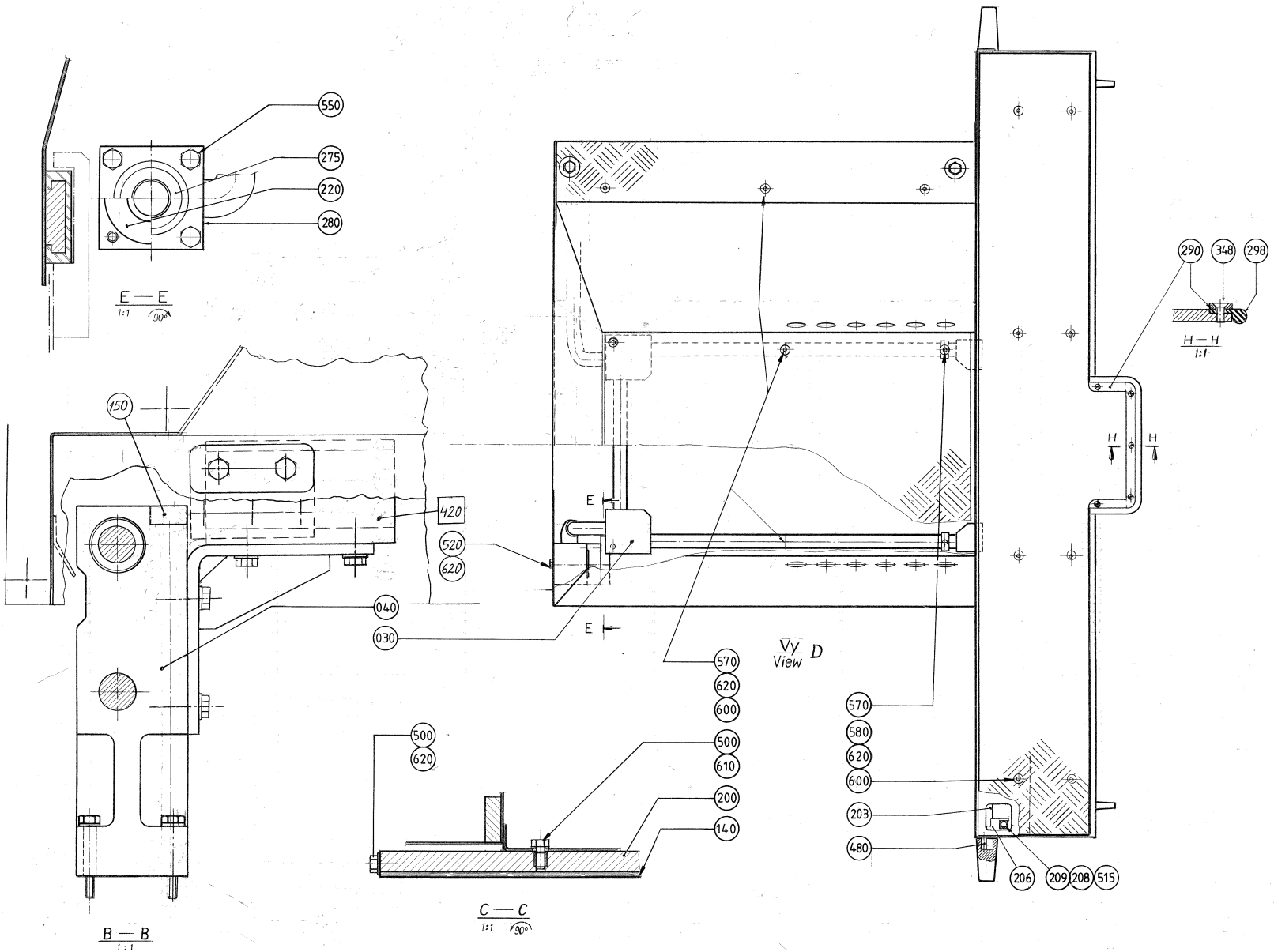
550
275
220
280
E — E
1:1
90°
150
420
520
620
040
030
E
E
570
620
600
500
620
500
610
200
140
C — C
1:1
90°
B — B
1:1
Vy
View D
570
580
620
600
203
480
206
209
208
515
290
348
298
H — H
1:1
H
H

ECM: 106592 - 20020515
Group number: 1529311-0100
Assembly Drawing: 1529311-2_1_AA

Issue: 20020822

Pos	Part No	SP	UN	Qty	Description	Page No
Common Parts						
010	1529307-0000	-		1	FRONT GUARD	
020	1529308-0000	-		1	HOOD	
030	1529315-0000	-		1	PIPE	
040	1529344-0000	-		1	BEARING BRACKET	
050	1529312-0000	-		1	GLASS	
060	295349-0000	-		1	BEARING BRACKET	
070	469053-0000	-		1	CHECKER PLATE	
075	469054-0000	-		1	PLATE	
085	1529313-0000	-		1	CHECKER PLATE	
090	1529314-0000	-		1	CHECKER PLATE	
095	469058-0000	-		2	HANDLE	
110	1529463-0000	-		1	GUIDE	
115	271608-0000	-		1	CLAMP SCREW	
120	1529331-0000	-		2	GUIDE	
130	469061-0000	-		1	PLATE	
140	271708-0000	-		1	SLIDE RAIL	
150	1529146-0000	-		1	WASHER	
170	295355-0000	-		1	BEARING BRACKET	
180	1529316-0000	-		1	BRACKET	
200	295358-0000	-		1	RULER	
203	469811-0000	-		1	SHAFT	
204	469812-0000	-		2	BEARING	
205	469813-0000	-		2	CLAMPING PART	
206	469814-0000	-		2	LINK ARM	
207	469815-0000	-		2	END PIECE	
208	469816-0000	-		2	CAP	
209	469817-0000	-		2	PIN	
210	469818-0000	-		2	ROD	
211	469819-0000	-		2	PEEL-OFF SHIM	
212	469820-0000	-		2	BRACKET	
220	295423-0000	-		1	SEAL	
230	469063-0000	-		2	HEAD	
260	469066-0000	-		2	SHAFT	
275	469068-0000	-		1	SLEEVE	
280	469069-0000	-		1	PLATE	
290	469968-0000	-		1	EDGE STRIP	
293	1529464-0000	-		1	PLATE	
298	90143-0016	-	MM	300	STRIP	
300	90143-0039	-	MM	3400	STRIP	
310	90143-0049	-	MM	2600	RUBBERSTRIP 11X21MM	
320	90157-0022	-	L	200	SEALING COMPOUND	
330	90189-0019	-		2	BALL BUSHING, 20X30X30 MM	
332	90208-0047	-		2	COLLAR	
336	90240-0052	-		4	BEARING BUSHING WITHOUT FL, 12X14X15 MM	
338	90240-0076	-		2	RICTION BEARING	
348	312155-0289	-		5	SCREW HEX.SOCK.COUNT.MF6S M4X10 A480	
350	90287-0062	-		9	SCREW M6	
363	90335-0055	-		2	SPRING	
368	90424-0035	-		2	SPRAY NOZZLE 95 DEG	
370	90424-0036	-		6	SPRAY NOZZLE 95 DEG R 3/8 BD3	
400	A490912-0100	-		2	CATCH	**503**
420	A2506889-0100	-		1	SAFETY GUARD	**569**
480	311103-0407	-		2	PARALLELL PIN, M6, 8X35 MM	
500	312105-0327	-		7	SCREW M6S ISO 4017 M5X12 A480	
510	312105-0329	-		2	SCREW M6S ISO 4017 M5X16 A480	
515	312105-0332	-		2	SCREW M6S ISO 4017 M5X22 A480	
520	312105-0362	-		1	SCREW M6S ISO 4017 M6X8 A480	
530	312105-0455	-		3	SCREW M6S ISO 4017 M8X30 A480	
550	312105-0378	-		12	SCREW M6S ISO 4014 M6X40 A480	
560	312105-0492	-		2	SCREW M6S ISO 4017 M10X22 A480	
565	312115-0374	-		4	SCREW MC6S M6X30 A280	
570	312155-0368	-		11	SCREW HEX.SOCK.COUNT.MF6S M6X16 A280	
575	312318-0364	-		1	SCREW HEX.SOCK.SET CUP P.MSK6SS6X10 SS	
580	312155-0372	-		8	SCREW HEX.SOCK.COUNT.MF6S M6X25 A280	
583	312155-0378	-		2	SCREW HEX.SOCK.COUNT.MF6S M6X40 A280	
586	312155-0455	-		2	SCREW HEX.SOCK.COUNT.MF6S M8X30 A280	
590	312605-0316	-		7	HEXAGON NUT, M6M M6 A280	
595	312605-0318	-		1	HEXAGON NUT, M6M M8 A280	
600	312812-0316	-		15	HEXAGON NUT, NY-LOCK M6 A480	
610	315105-0146	-		13	WASHER PLAIN, BRB, 5,3/10,H=1	
620	315105-0153	-		25	WASHER PLAIN, BRB, 6,4/12,H=1,5	
630	315105-0173	-		2	WASHER PLAIN, BRB, 10,5/22,H=2	
640	315115-0153	-		4	WASHER PLAIN, TBRB 6,4/12 H=3	
650	315233-0110	-		2	WASHER PL.RND.NYL.13,3/17,H=1	
660	315233-0111	-		2	WASHER PL.RND.NYL.17/22,H=1	

Machine Type | Group Description | Used-In | Group Number | Page No

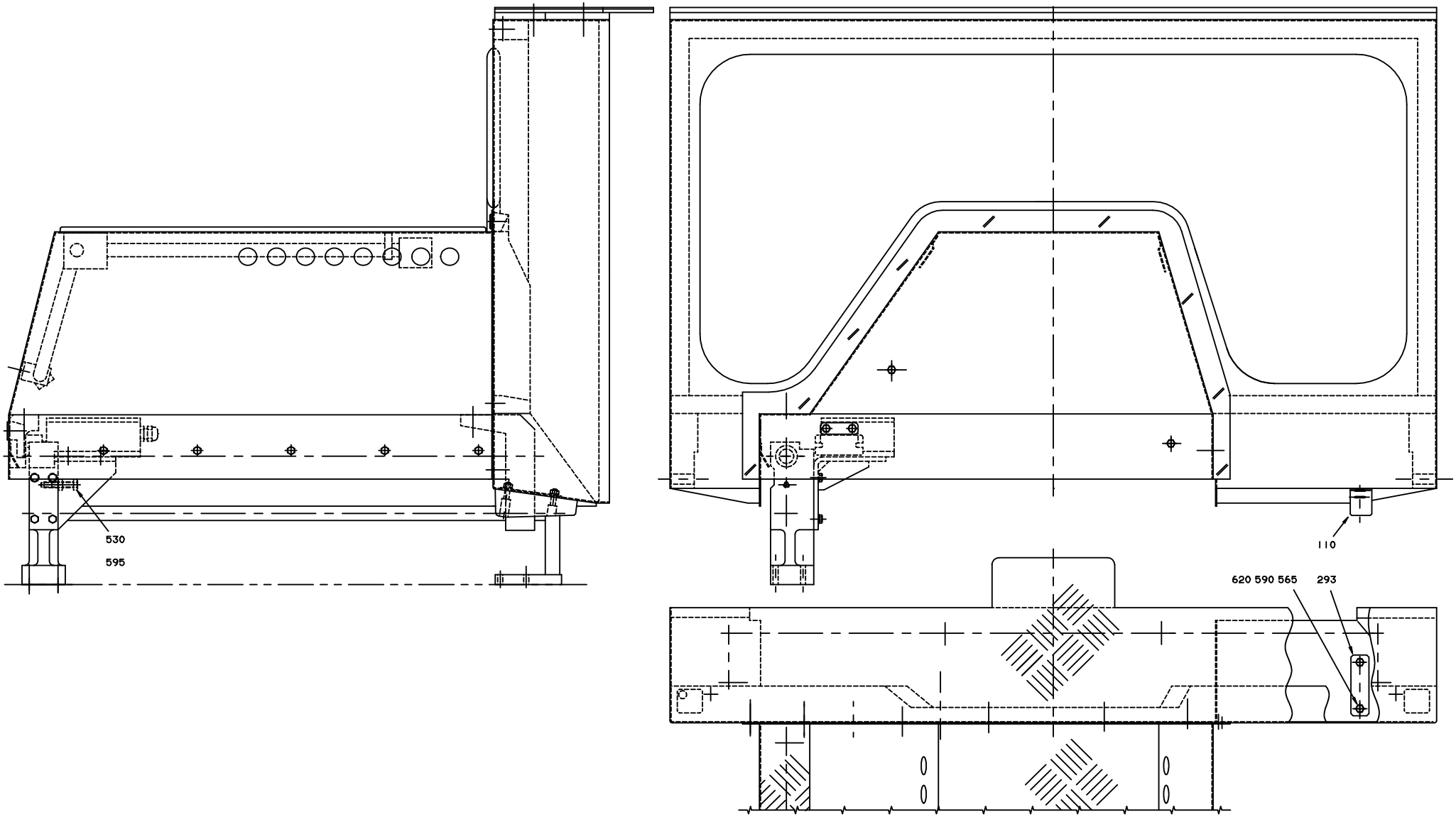
530
595
110
620 590 565
293

ECM: 106592 - 20020515
Group number: 1529311-0100
Assembly Drawing: 1529311-3_1_AA

Issue: 20020822

Pos	Part No	SP	UN	Qty	Description	Page No
Common Parts						
010	1529307-0000	-		1	FRONT GUARD	
020	1529308-0000	-		1	HOOD	
030	1529315-0000	-		1	PIPE	
040	1529344-0000	-		1	BEARING BRACKET	
050	1529312-0000	-		1	GLASS	
060	295349-0000	-		1	BEARING BRACKET	
070	469053-0000	-		1	CHECKER PLATE	
075	469054-0000	-		1	PLATE	
085	1529313-0000	-		1	CHECKER PLATE	
090	1529314-0000	-		1	CHECKER PLATE	
095	469058-0000	-		2	HANDLE	
110	1529463-0000	-		1	GUIDE	
115	271608-0000	-		1	CLAMP SCREW	
120	1529331-0000	-		2	GUIDE	
130	469061-0000	-		1	PLATE	
140	271708-0000	-		1	SLIDE RAIL	
150	1529146-0000	-		1	WASHER	
170	295355-0000	-		1	BEARING BRACKET	
180	1529316-0000	-		1	BRACKET	
200	295358-0000	-		1	RULER	
203	469811-0000	-		1	SHAFT	
204	469812-0000	-		2	BEARING	
205	469813-0000	-		2	CLAMPING PART	
206	469814-0000	-		2	LINK ARM	
207	469815-0000	-		2	END PIECE	
208	469816-0000	-		2	CAP	
209	469817-0000	-		2	PIN	
210	469818-0000	-		2	ROD	
211	469819-0000	-		2	PEEL-OFF SHIM	
212	469820-0000	-		2	BRACKET	
220	295423-0000	-		1	SEAL	
230	469063-0000	-		2	HEAD	
260	469066-0000	-		2	SHAFT	
275	469068-0000	-		1	SLEEVE	
280	469069-0000	-		1	PLATE	
290	469968-0000	-		1	EDGE STRIP	
293	1529464-0000	-		1	PLATE	
298	90143-0016	-	MM	300	STRIP	
300	90143-0039	-	MM	3400	STRIP	
310	90143-0049	-	MM	2600	RUBBERSTRIP 11X21MM	
320	90157-0022	-	L	200	SEALING COMPOUND	
330	90189-0019	-		2	BALL BUSHING, 20X30X30 MM	
332	90208-0047	-		2	COLLAR	
336	90240-0052	-		4	BEARING BUSHING WITHOUT FL, 12X14X15 MM	
338	90240-0076	-		2	RICTION BEARING	
348	312155-0289	-		5	SCREW HEX.SOCK.COUNT.MF6S M4X10 A480	
350	90287-0062	-		9	SCREW M6	
363	90335-0055	-		2	SPRING	
368	90424-0035	-		2	SPRAY NOZZLE 95 DEG	
370	90424-0036	-		6	SPRAY NOZZLE 95 DEG R 3/8 BD3	
400	A490912-0100	-		2	CATCH	**503**
420	A2506889-0100	-		1	SAFETY GUARD	**569**
480	311103-0407	-		2	PARALLELL PIN, M6, 8X35 MM	
500	312105-0327	-		7	SCREW M6S ISO 4017 M5X12 A480	
510	312105-0329	-		2	SCREW M6S ISO 4017 M5X16 A480	
515	312105-0332	-		2	SCREW M6S ISO 4017 M5X22 A480	
520	312105-0362	-		1	SCREW M6S ISO 4017 M6X8 A480	
530	312105-0455	-		3	SCREW M6S ISO 4017 M8X30 A480	
550	312105-0378	-		12	SCREW M6S ISO 4014 M6X40 A480	
560	312105-0492	-		2	SCREW M6S ISO 4017 M10X22 A480	
565	312115-0374	-		4	SCREW MC6S M6X30 A280	
570	312155-0368	-		11	SCREW HEX.SOCK.COUNT.MF6S M6X16 A280	
575	312318-0364	-		1	SCREW HEX.SOCK.SET CUP P.MSK6SS6X10 SS	
580	312155-0372	-		8	SCREW HEX.SOCK.COUNT.MF6S M6X25 A280	
583	312155-0378	-		2	SCREW HEX.SOCK.COUNT.MF6S M6X40 A280	
586	312155-0455	-		2	SCREW HEX.SOCK.COUNT.MF6S M8X30 A280	
590	312605-0316	-		7	HEXAGON NUT, M6M M6 A280	
595	312605-0318	-		1	HEXAGON NUT, M6M M8 A280	
600	312812-0316	-		15	HEXAGON NUT, NY-LOCK M6 A480	
610	315105-0146	-		13	WASHER PLAIN, BRB, 5,3/10,H=1	
620	315105-0153	-		25	WASHER PLAIN, BRB, 6,4/12,H=1,5	
630	315105-0173	-		2	WASHER PLAIN, BRB, 10,5/22,H=2	
640	315115-0153	-		4	WASHER PLAIN, TBRB 6,4/12 H=3	
650	315233-0110	-		2	WASHER PL.RND.NYL.13,3/17,H=1	
660	315233-0111	-		2	WASHER PL.RND.NYL.17/22,H=1	

Machine Type | Group Description | Used-In | Group Number | Page No

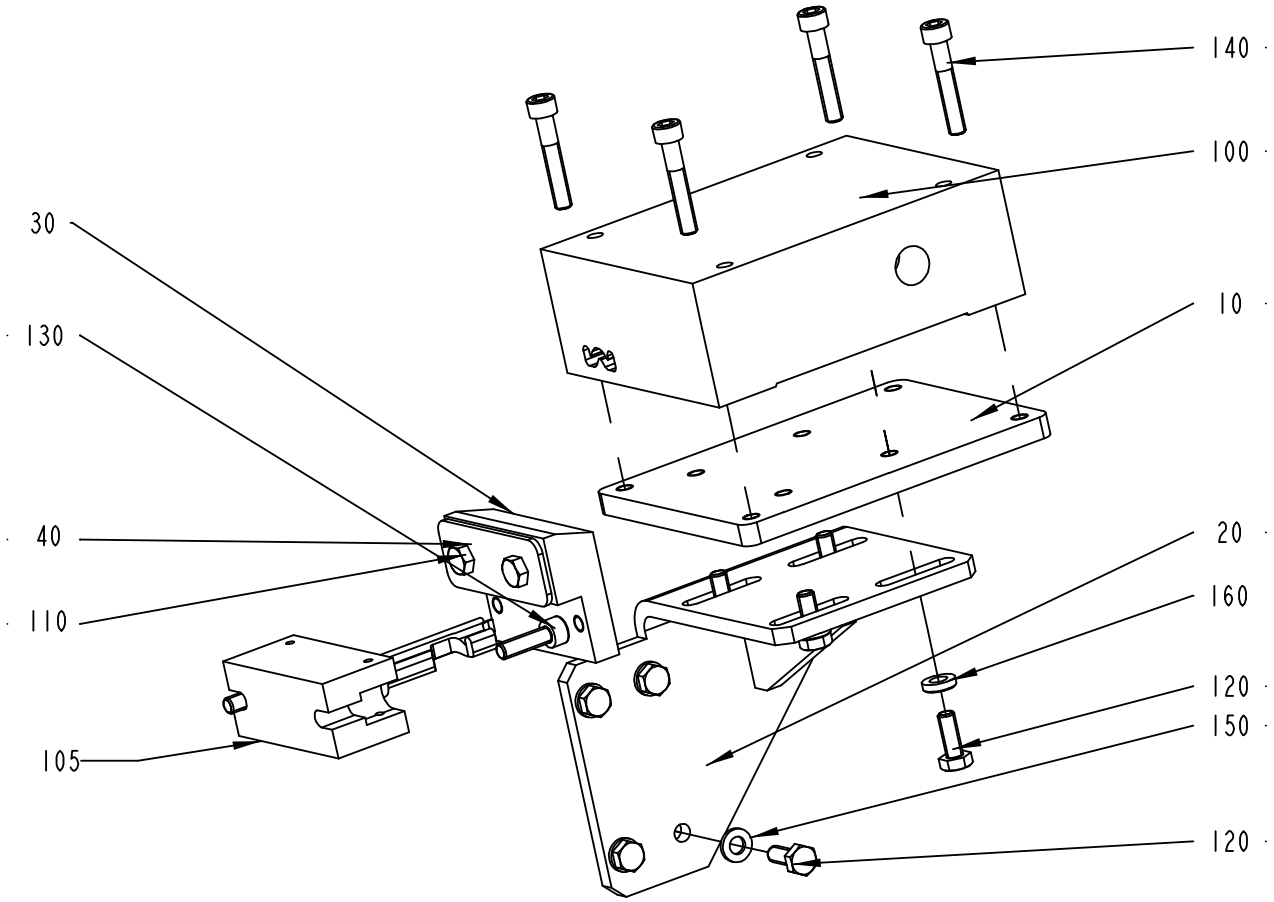

2506889-1
ECN 93700

ECM: 97682 - 20011016
Group number: 2506889-0100
Assembly Drawing: 2506889-1_1_AA

Issue: 20020822

Pos	Part No	SP	UN	Qty	Description	Page No
Common Parts						
010	2501270-0000	-		1	BRACKET	
020	2506890-0000	-		1	BRACKET	
030	2506891-0000	-		1	BRACKET	
040	2506892-0000	-		1	BRACKET	
100	90458-1854	-		1	KEY SAF.SW. AZM 415-11/02 ZPKA 24V AC/DC	
105	90458-1855	-		1	KEY FOR SAFETY SWITCH, AZM 415-B2	
110	312105-0366	-		2	SCREW M6S M6X12 A280	
120	312105-0368	-		8	SCREW M6S M6X16 A280	
130	312115-0370	-		2	SCREW MC6S M6X20 A280	
140	312115-0376	-		4	SCREW MC6S M6X35 A280	
150	315105-0153	-		4	WASHER PLAIN, BRB, 6,4/12,H=1,5	
160	315115-0153	-		4	WASHER PLAIN, TBRB 6,4/12 H=3	

Pos	Part No	SP	UN	Qty	Description	Page No

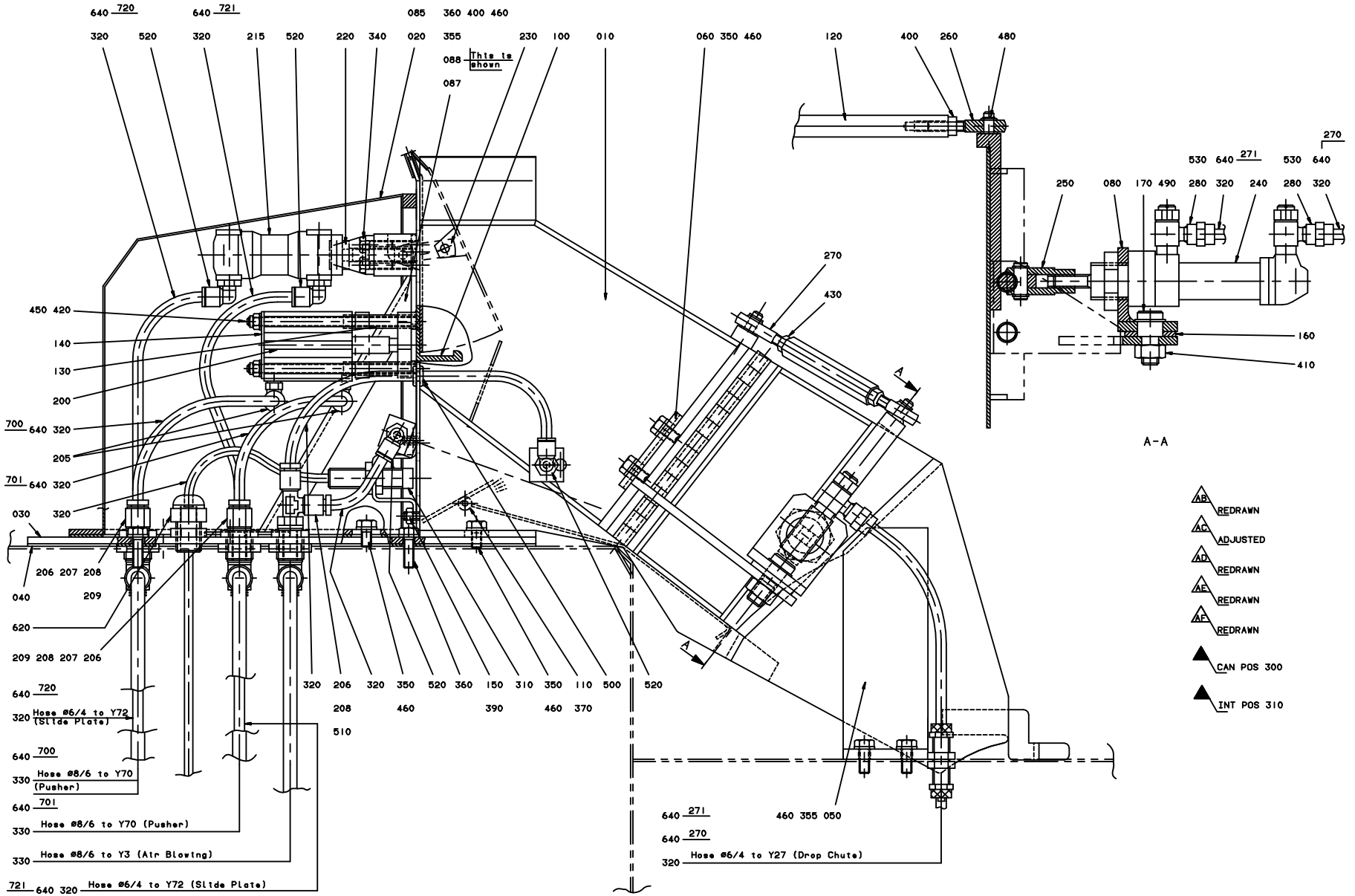
640 720
320
640 721
320
520
320
215
520
220
340
020
085
355
360 400 460
230
100
010
088 This is shown
087
060 350 460
120
400
260
480
270
530 640 271
530 640
250
080
170 490
280 320
240
280 320
160
410
A-A
450 420
140
130
200
700 640 320
205
701 640 320
030 320
206 207 208
209
040
620
209 208 207 206
640 720
320 Hose ø6/4 to Y72 (Slide Plate)
640 700
330 Hose ø8/6 to Y70 (Pusher)
640 701
330 Hose ø8/6 to Y70 (Pusher)
330 Hose ø8/6 to Y3 (Air Blowing)
721 640 320 Hose ø6/4 to Y72 (Slide Plate)
320 206 320 350 520 360 150 310 350 110 500 520
208
460 390 460 370
510
640 271
640 270
320 Hose ø6/4 to Y27 (Drop Chute)
460 355 050
AB REDRAWN
AC ADJUSTED
AD REDRAWN
AE REDRAWN
AF REDRAWN
CAN POS 300
INT POS 310

ECM: 101961 - 20011203
Group number: 591514-0100
Assembly Drawing: 591514-1_1_AG

Issue: 20020822

Pos	Part No	SP	UN	Qty	Description	Page No
Common Parts						
010	591418-0000	B		1	TURNING DEVICE	
020	594996-0000	-		1	PROTECTIVE COVER	
030	591453-0000	-		1	COVERING PLATE	
040	591454-0000	A		1	GASKET	
050	594994-0000	-		1	SIDE PLATE	
060	1360607-0000	-		1	BRACKET	
080	591509-0000	-		1	BRACKET	
085	594995-0000	A		1	GASKET	
087	594998-0000	-		1	STRUT RIGHT	
088	594999-0000	-		1	STRUT LEFT	
100	591419-0000	B		1	PUSHER	
110	1360696-0000	A		1	GUIDE PLATE	
120	591422-0000	-		1	RIGGING SCREW	
130	591451-0000	-		2	SPACER	
140	591452-0000	-		1	MOUNTING PLATE	
150	591457-0000	-		1	BRACKET	
160	591510-0000	B		1	WASHER	
170	591512-0000	B		1	SHAFT	
200	90450-0438	A		1	DOUBLE ACTING, COMPACT, CYL 25-25	
205	90055-0207	-		2	ELBOW PIPE JOINT,EXT.THREAD,D=6 MM M5	
206	90055-0209	-		5	BULKHEAD LEAD-IN	
207	90055-0210	-		2	ELBOW PIPE JOINT,EXT.THREAD,D=6 MM G1/8	
208	90055-0211	-		3	ELBOW PIPE JOINT,EXT.THREAD,D=8 MM G1/8	
209	90055-0212	-		4	STRAIGHT COUPLING, D=6 MM - G1/8"	
215	B90239-0084	A		1	CYLINDER	
	90239-0348	*C*		*1*	*SEAL KIT*	
220	90239-0130	B		1	BRACKET	
230	90239-0088	B		1	BRACKET	
240	90239-0847	A		1	DOUBLE ACTING, MINI-ISO, CYL.20-50	
250	90239-0532	-		1	ROD END,CLEVIS WITH AXLE M8	
260	90115-0009	-		1	ROD END, ID=6 MM, M6X1	
270	90115-0010	-		1	ROD ENDS,RE-LUBRICATEABLE	
280	90235-0282	-		2	THROTTLE CHECK VALVES,G1/8	
290	90030-0137	-		2	CONN. ELBOW WA 6-R1/8	
310	90458-0672	-		1	PROXIMITY SENSOR E2E2-X5MB1-5M	
320	90166-0081	-	M	11	TUBE 6 MM PA BLUE	
330	90166-0013	-	M	7	TUBE 8 MM PA BLUE	
340	312105-0329	-		4	SCREW M6S ISO 4017 M5X16 A480	
350	312105-0366	-		8	SCREW M6S M6X12 A280	
355	312105-0368	-		4	SCREW M6S M6X16 A280	
360	312105-0370	-		4	SCREW M6S ISO 4017 M6X20 A480	
370	312115-0291	-		2	SCREW MC6S M4X12 A280	
390	312605-0314	-		2	HEXAGON NUT, M6M M5 A280	
400	312605-0316	-		4	HEXAGON NUT, M6M M6 A280	
410	312605-0320	-		1	HEXAGON NUT, M6M M10 A280	
420	312812-0314	-		2	HEXAGON NUT, NY-LOCK M5 A480	
430	312902-0316	-		1	NUT HEX. LEFT THREAD, M6 A280	
450	315105-0146	-		2	WASHER PLAIN, BRB, 5,3/10,H=1	
460	315105-0153	-		14	WASHER PLAIN, BRB, 6,4/12,H=1,5	
480	315751-0103	-		2	RETAIN. RING, 6	
490	315751-0112	-		1	RETAIN. RING, 15	
500	90015-0010	-		1	BUSHING	
510	342772-0113	-		1	ELBOW FITTING, 6 - G1/8	
520	342732-0102	-		4	ELBOW PIPE JOINT, EXT.THREAD, D=6MM-G1/8	
530	342797-0121	-		2	CONN. BANJO, RINGPIECE 6-1/8	
620	352103-0100	-		1	CABLE GLAND, STR 9, PR15,2/PG9	
640	359000-0400	-		12	MARKING CO2/4"0"	
640	359000-0407	-		16	MARKING COLLAR PA2/4 "7" YELLOW	
640	359000-0402	-		12	MARKING COLLAR 2/4 "2" YELLOW	
640	359000-0401	-		8	MARKING COLLAR 2/4 "1" YELLOW	

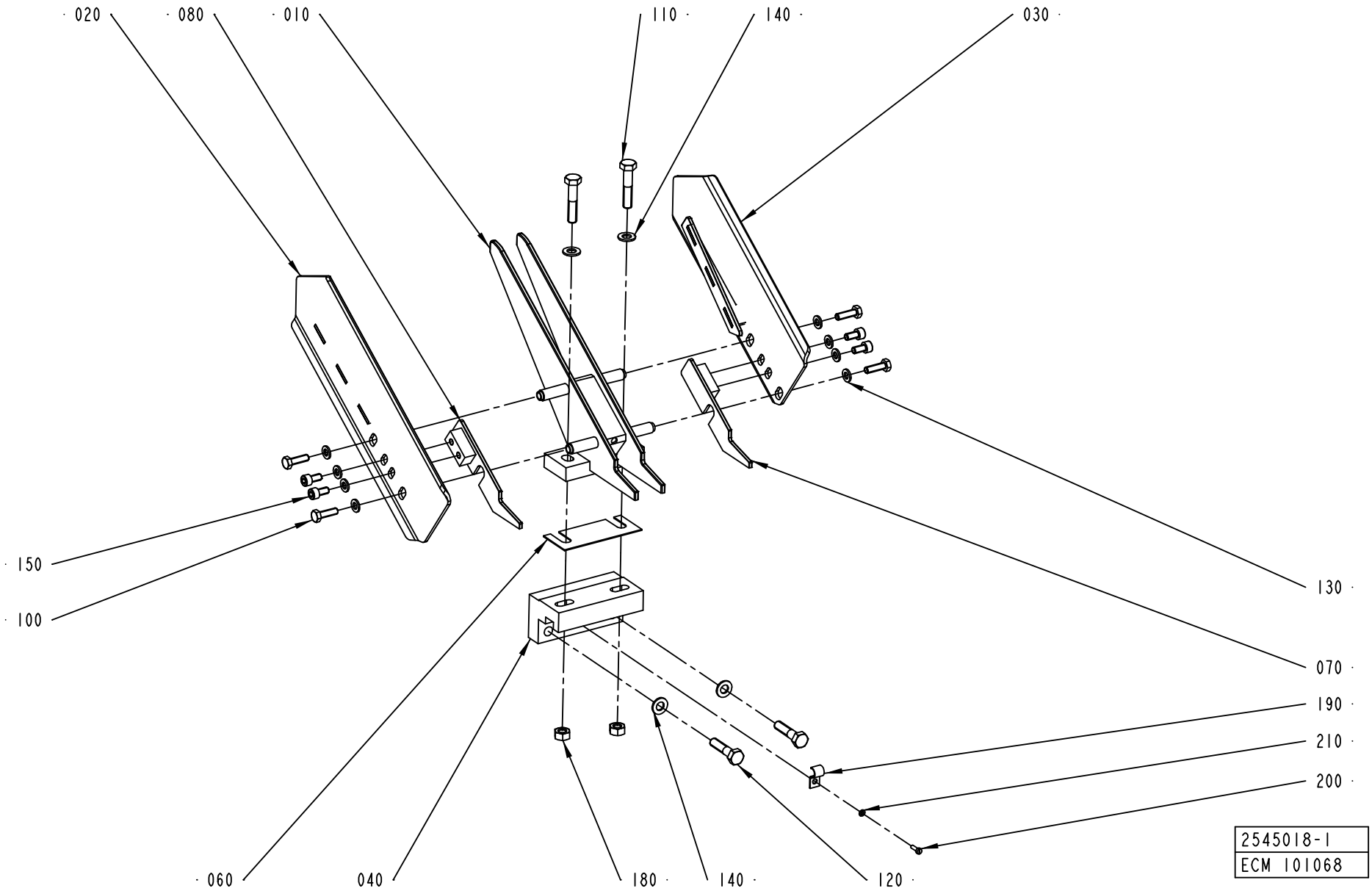
020
080
010
110
140
030
150
100
130
070
190
210
200
060
040
180
140
120
2545018-1
ECM 101068

ECM: 107438 - 20020515
Group number: 2545018-0100
Assembly Drawing: 2545018-1_1_AA

Issue: 20020822

Pos	Part No	SP	UN	Qty	Description	Page No
Common Parts						
010	1511444-0000	-		1	FINGER	
020	1538914-0000	-		1	SIDE PLATE	
030	1538913-0000	-		1	SIDE PLATE	
040	1529427-0000	-		1	HOLDER	
060	594933-0000	-		3	SHIM	
070	1538910-0000	-		1	GUIDE	
080	1538911-0000	-		1	GUIDE	
100	312105-0370	-		4	SCREW M6S ISO 4017 M6X20 A480	
110	312105-0459	-		2	SCREW M6S ISO 4014 M8X40 A480	
120	312105-0457	-		2	SCREW M6S ISO 4014 M8X35 A480	
130	315105-0153	-		8	WASHER PLAIN, BRB, 6,4/12,H=1,5	
140	315105-0165	-		4	WASHER PLAIN, BRB, 8,4/16,H=1,5	
150	312115-0366	-		4	SCREW MC6S M6X12 A280	
180	312605-0318	-		2	HEXAGON NUT, M6M M8 A280	
190	90165-0007	-		1	PIPE CLIP FOR TUBE D=8 MM	
200	312125-0224	-		1	SCREW SLOT.PAN HD. MCS 3X10 A480	
210	315105-0124	-		1	WASHER PLAIN, BRB, 3,2/6,H=0,5	

Pos	Part No	SP	UN	Qty	Description	Page No

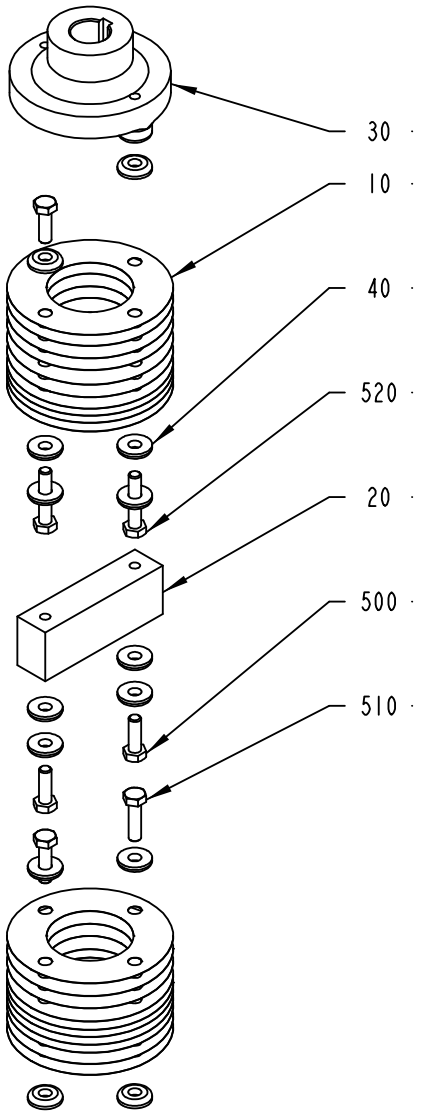

256437-2
ECM 73145

ECM: 102661 - 20020109
Group number: 256437-0200
Assembly Drawing: 256437-2_1_AC

Issue: 20020822

Pos	Part No	SP	UN	Qty	Description	Page No
Common Parts						
010	31559-0000	A		20	SPRING PLATE	
020	272746-0000	B		1	ROD	
030	272747-0000	B		1	CONNECTION	
040	31553-0001	-		14	WASHER	
500	312101-0453	-		4	SCREW M6S M8X25 FZB	
510	312101-0455	-		2	SCREW M6S M8X30 FZB	
520	312101-0459	-		2	SCREW M6S M8X40 FZB	

Pos	Part No	SP	UN	Qty	Description	Page No

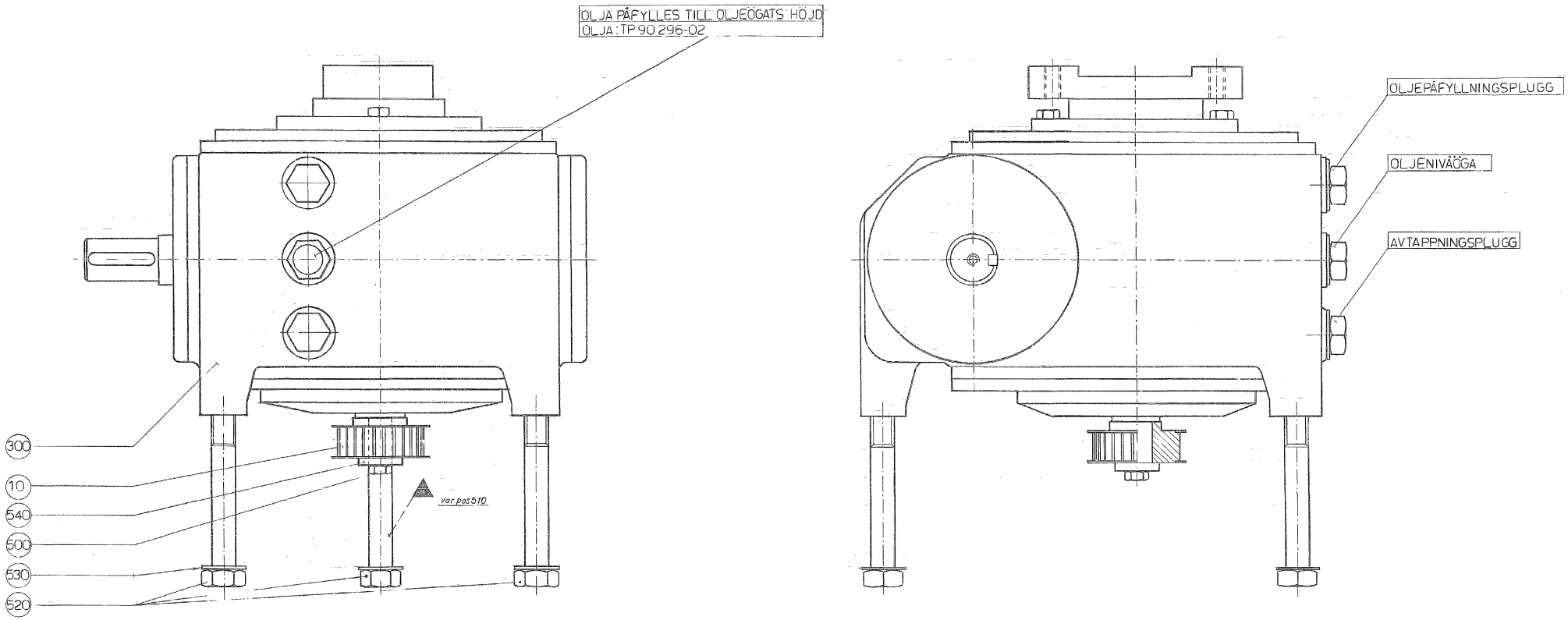
OLJA PÅFYLLES TILL OLJEÖGATS HÖJD
OLJA: TP 90 296-02
300
10
540
500
530
520
var pos 510
OLJEPÅFYLLNINGSPLUGG
OLJENIVÅGGA
AVTAPPNINGSPLUGG

ECM: 99759 - 20011105
Group number: 256438-0200
Assembly Drawing: 256438-3_1_AA

Issue: 20020822

Pos	Part No	SP	UN	Qty	Description	Page No
Common Parts						
010	272758-0000	A		1	TIMING BELT PULLEY	
300	90056-0071	A		1	WORM GEAR	
303	90163-0052	-		1	HOSE NIPPLE, EXT.THR. 1/4-12 MM	
305	90166-0113	-	MM	500	HOSE	
308	90257-0002	-		1	FILTER PLUG, NO. 8145-00-120 TYP F12	
309	90261-0018	-		1	PLUG, BLIND, PLASTIC GPN300F-183	
310	90296-0076	-	L	2	OIL	
320	90330-0085	-		1	BUSHING, INT/EXT. THR. R1/2-RP1/4	
500	312101-0329	-		1	SCREW M6S M5X16 FZB	
520	312101-0552	-		3	SCREW M6S M12X100 FZB	
530	315101-0178	-		3	WASHER PLAIN, BRB, 13/24 H=2	
540	315121-0153	-		1	WASHER PLAIN, TBRSB 6,4/22 H=4	
550	315234-0110	-		1	WASHER,PL.RND.CU.13,5/18 H=1,5	
560	315234-0113	-		1	WASHER PL.RND.CU.21,3//26 H=1,5	
570	342991-0101	-		1	HOSE CLIP,WORM DRIVE TYPE (13)-16	
580	352110-0103	-		1	CABLE CLIPS, D=14-20 MM	

Pos	Part No	SP	UN	Qty	Description	Page No

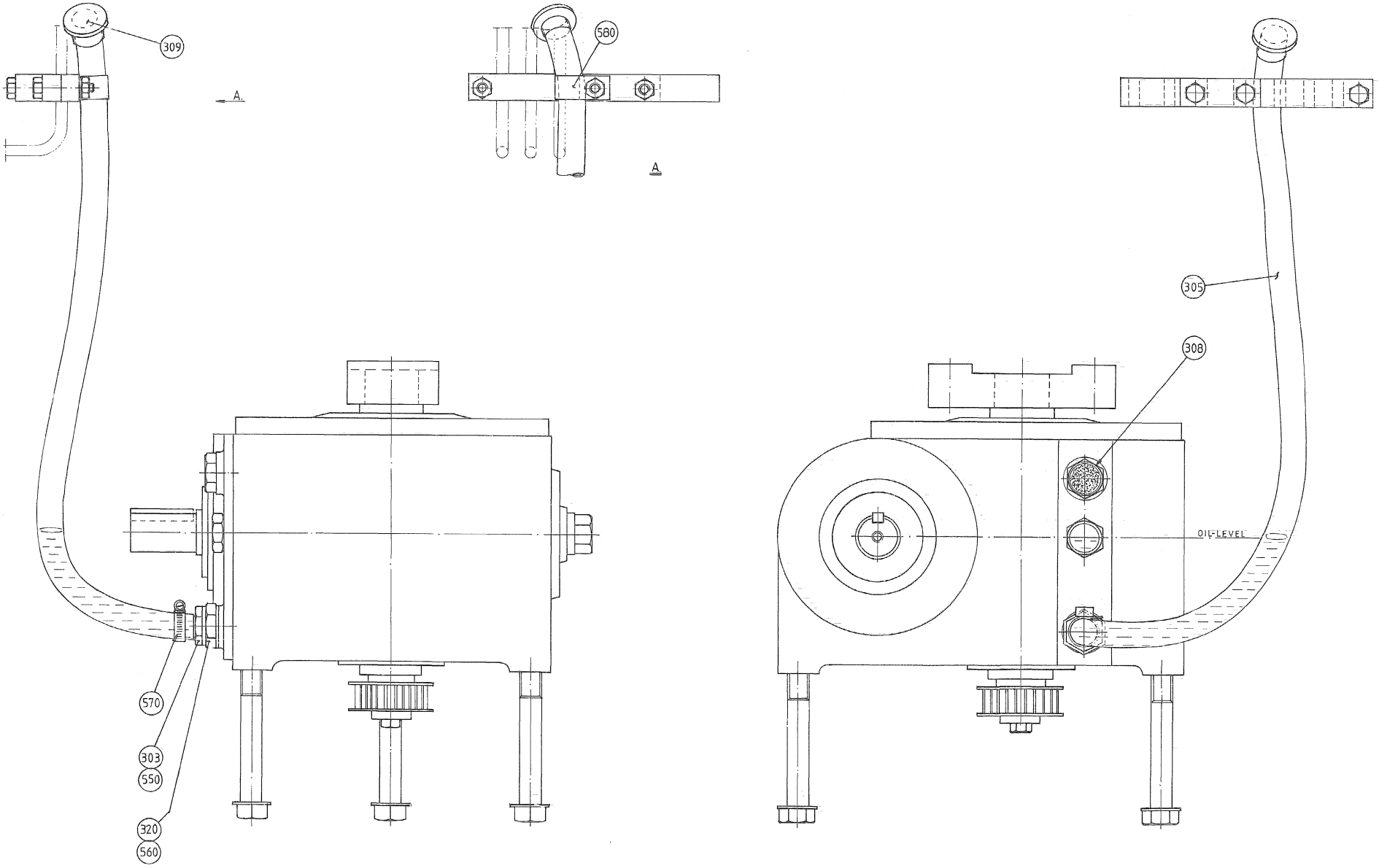
309
A
580
A
305
308
OIL LEVEL
570
303
550
320
560

ECM: 99759 - 20011105
Group number: 256438-0200
Assembly Drawing: 256438-4_1_AA

Issue: 20020822

Pos	Part No	SP	UN	Qty	Description	Page No
Common Parts						
010	272758-0000	A		1	TIMING BELT PULLEY	
300	90056-0071	A		1	WORM GEAR	
303	90163-0052	-		1	HOSE NIPPLE, EXT.THR. 1/4-12 MM	
305	90166-0113	-	MM	500	HOSE	
308	90257-0002	-		1	FILTER PLUG, NO. 8145-00-120 TYP F12	
309	90261-0018	-		1	PLUG, BLIND, PLASTIC GPN300F-183	
310	90296-0076	-	L	2	OIL	
320	90330-0085	-		1	BUSHING, INT/EXT. THR. R1/2-RP1/4	
500	312101-0329	-		1	SCREW M6S M5X16 FZB	
520	312101-0552	-		3	SCREW M6S M12X100 FZB	
530	315101-0178	-		3	WASHER PLAIN, BRB, 13/24 H=2	
540	315121-0153	-		1	WASHER PLAIN, TBRSB 6,4/22 H=4	
550	315234-0110	-		1	WASHER,PL.RND.CU.13,5/18 H=1,5	
560	315234-0113	-		1	WASHER PL.RND.CU.21,3//26 H=1,5	
570	342991-0101	-		1	HOSE CLIP,WORM DRIVE TYPE (13)-16	
580	352110-0103	-		1	CABLE CLIPS, D=14-20 MM	

Pos	Part No	SP	UN	Qty	Description	Page No

SPRAY GUN

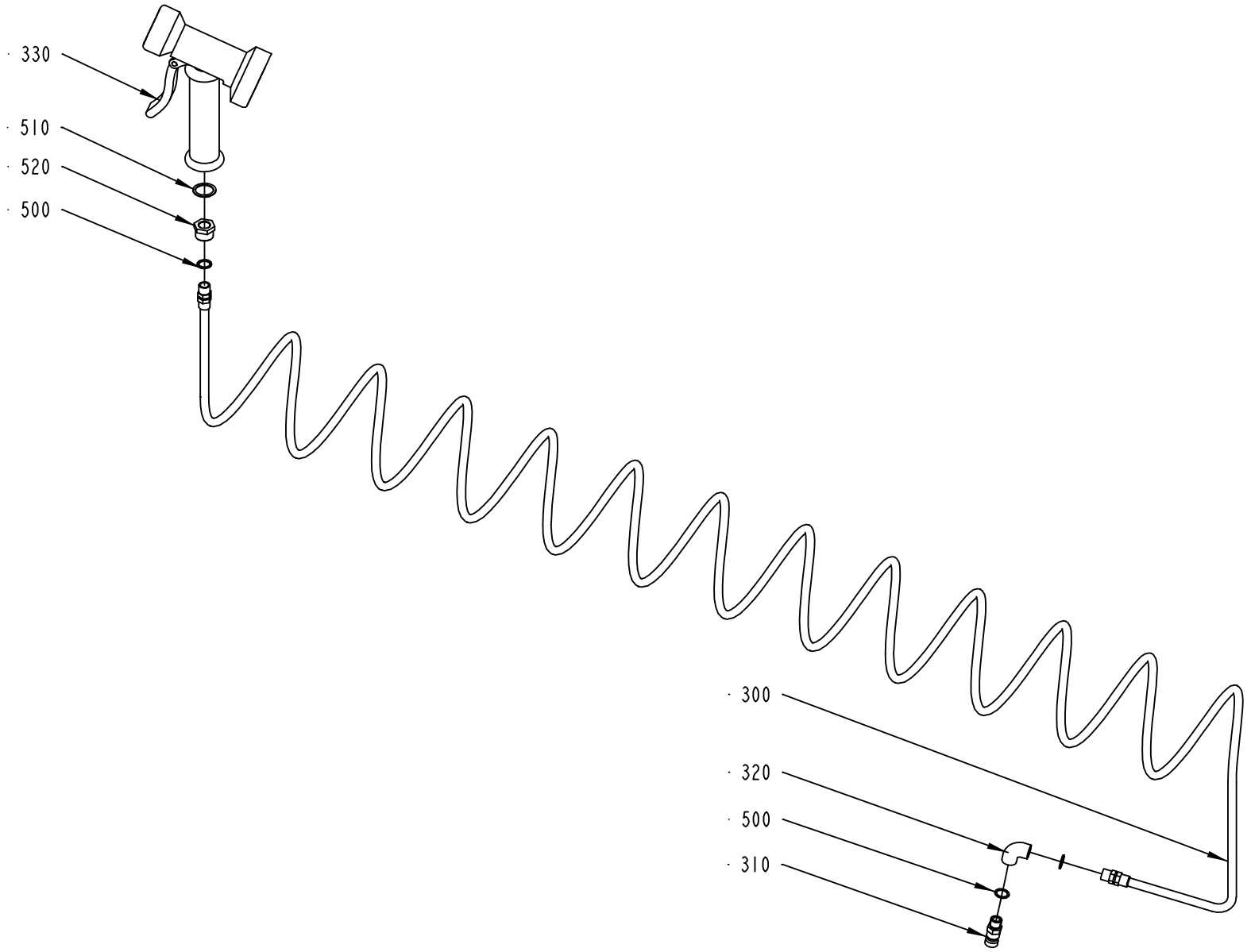

271387-2
ECN 82760

ECM: 88891 - 20011025
Group number: 271387-0300
Assembly Drawing: 271387-2_1_AB

Issue: 20020822

Pos	Part No	SP	UN	Qty	Description	Page No
Common Parts						
300	90152-0017	-		1	HOSE	
310	90163-0014	-		1	QUICK COUPLING, (M) LP-006-1-WR013	
320	90330-0081	-		1	ELBOW, 90 INT. THREAD, R-222R1/4	
330	90426-0003	-		1	HAND SHOWER	
500	315233-0110	-		3	WASHER PL.RND.NYL.13,3/17,H=1	
510	315233-0113	-		1	WASHER PL.RND.NYL.21,4/27,H=1,2	
520	342701-0205	-		1	BUSHING,INT./EXT.G-THREAD G1/2"-G1/4"	

Pos	Part No	SP	UN	Qty	Description	Page No

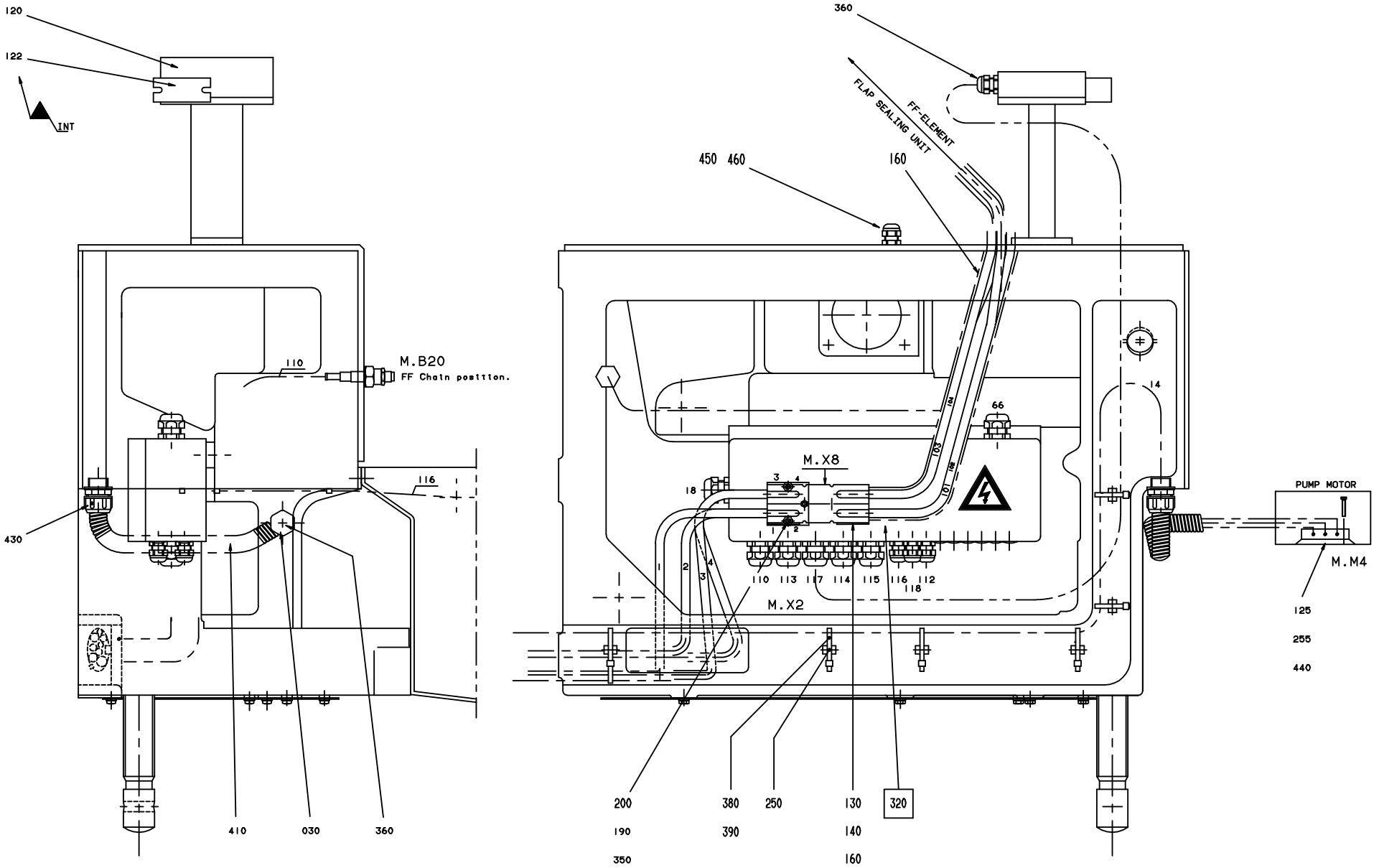
120
122
INT
110
M.B20
FF Chain position.
116
430
410
030
360
360
FLAP SEALING UNIT
FF-ELEMENT
450 460
160
14
66
M.X8
18
PUMP MOTOR
M.M4
110 113 117 114 115 116 112
118
M.X2
125
255
440
200
190
350
380
390
250
130
140
160
320

Pos	Part No	SP	UN	Qty	Description	Page No
TBA						
030	456249-0000	A		1	PROTECTIVE COVER	
130	90110-0114	-		8	CONTACT HOUSING, 1321 G1	
140	90110-0116	-		8	CONTACT PIN, AWG 2-8	
250	312125-0287	-		10	SCREW PAN HEAD MCS M4X8 SS	
320	A1529095-0100	-		1	CONNECTION BOX	**587**
380	352113-0102	-		8	CLIP-STRIP, BLACK 188X4,8 MM	
390	352113-0205	-		8	ANCHOR PLATES FOR STRIPS, TYPE TM2S8-C10	
410	352135-0106	-	MM	1200	SPIRAL CONDUIT DI=16 MM	
430	352136-0129	-		1	GLAND FITTING PR22,5/PG16 DI=16MM	
TWA						
130	90110-0114	-		4	CONTACT HOUSING, 1321 G1	
140	90110-0116	-		4	CONTACT PIN, AWG 2-8	
320	A1529335-0100	-		1	CONNECTION BOX	**589**
Common Parts						
120	90458-1854	-		1	KEY SAF.SW. AZM 415-11/02 ZPKA 24V AC/DC	
122	90458-1855	-		1	KEY FOR SAFETY SWITCH, AZM 415-B2	
125	90077-0102	-		2	TERMINAL BLOCK, 1952.2	
160	90166-0023	-	MM	1100	SHRINKABLE HOSE 38MM	
190	978193-0000	-		1	FASTENING PLATE	
200	312105-0366	-		2	SCREW M6S M6X12 A280	
240	312115-0374	-		2	SCREW MC6S M6X30 A280	
255	312125-0230	-		4	SCREW PAN HEAD MCS M3X20 SS	
350	315101-0136	-		1	WASHER PLAIN, BRB, 4,3/8 H=0,8	
360	352103-0108	-		3	CABLE GLAND, ST 13,5 , PR20,4/PG13,5	
440	353001-0102	-		6	END SLEEVE 0,75MM2	
450	352103-0095	-		1	CABLE GLAND, STR 7, PR 12,5/PG7	
460	90099-0116	-		1	NUT, PR 12,5 (PG7)	

Pos	Part No	SP	UN	Qty	Description	Page No

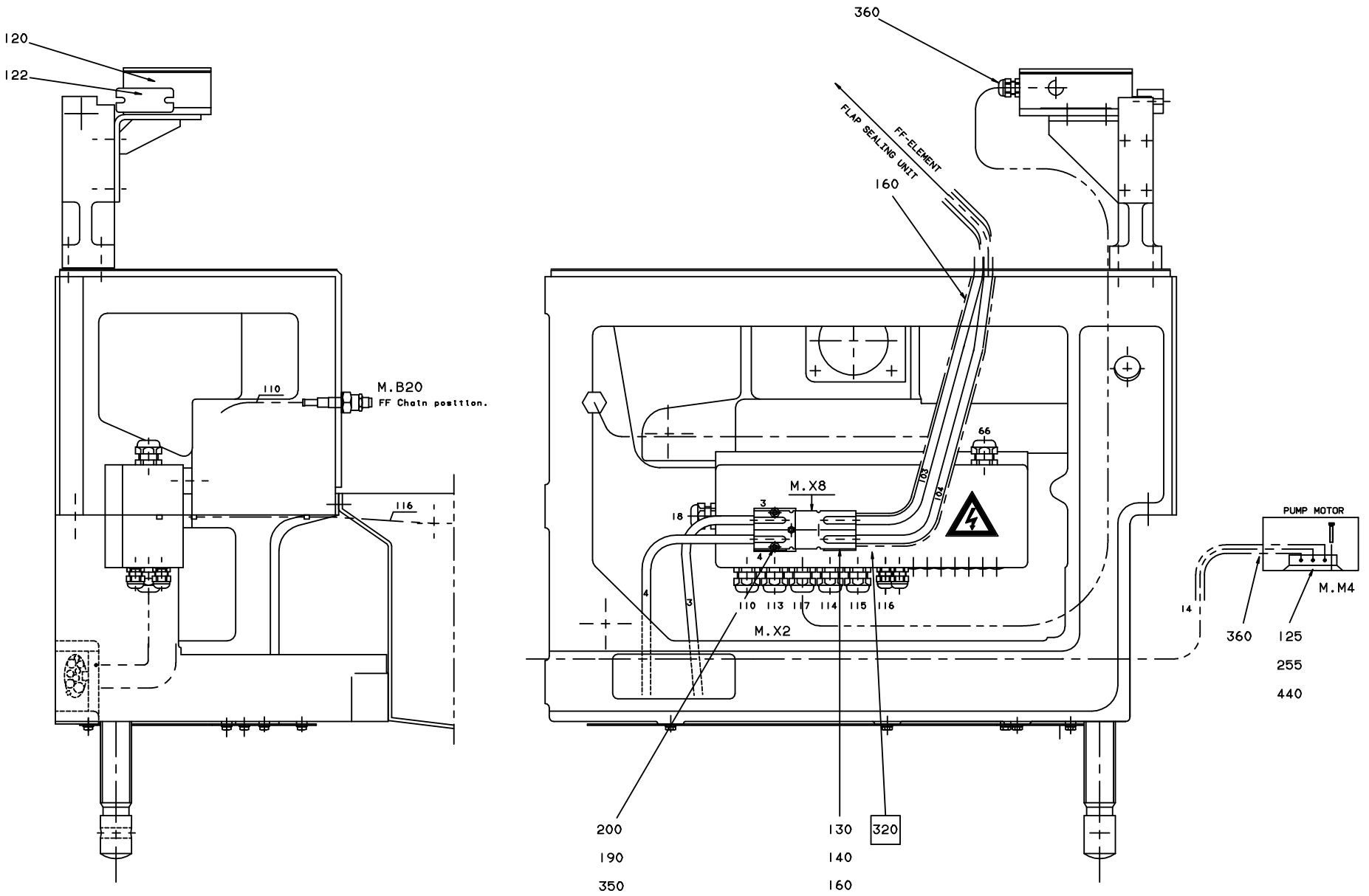
120
122
110
M.B20
FF Chain position.
116
360
FLAP SEALING UNIT
FF-ELEMENT
160
66
M.X8
3
18
4
110 113 117 114 115 116
M.X2
200
190
350
130
140
160
320
PUMP MOTOR
M.M4
14
360
125
255
440

ECM: 106687 - 20020515
Group number: 1529141-0100
Assembly Drawing: 1529141-2_1_AA

Issue: 20020822

Pos	Part No	SP	UN	Qty	Description	Page No
TBA						
030	456249-0000	A		1	PROTECTIVE COVER	
130	90110-0114	-		8	CONTACT HOUSING, 1321 G1	
140	90110-0116	-		8	CONTACT PIN, AWG 2-8	
250	312125-0287	-		10	SCREW PAN HEAD MCS M4X8 SS	
320	A1529095-0100	-		1	CONNECTION BOX	**587**
380	352113-0102	-		8	CLIP-STRIP, BLACK 188X4,8 MM	
390	352113-0205	-		8	ANCHOR PLATES FOR STRIPS, TYPE TM2S8-C10	
410	352135-0106	-	MM	1200	SPIRAL CONDUIT DI=16 MM	
430	352136-0129	-		1	GLAND FITTING PR22,5/PG16 DI=16MM	
TWA						
130	90110-0114	-		4	CONTACT HOUSING, 1321 G1	
140	90110-0116	-		4	CONTACT PIN, AWG 2-8	
320	A1529335-0100	-		1	CONNECTION BOX	**589**
Common Parts						
120	90458-1854	-		1	KEY SAF.SW. AZM 415-11/02 ZPKA 24V AC/DC	
122	90458-1855	-		1	KEY FOR SAFETY SWITCH, AZM 415-B2	
125	90077-0102	-		2	TERMINAL BLOCK, 1952.2	
160	90166-0023	-	MM	1100	SHRINKABLE HOSE 38MM	
190	978193-0000	-		1	FASTENING PLATE	
200	312105-0366	-		2	SCREW M6S M6X12 A280	
240	312115-0374	-		2	SCREW MC6S M6X30 A280	
255	312125-0230	-		4	SCREW PAN HEAD MCS M3X20 SS	
350	315101-0136	-		1	WASHER PLAIN, BRB, 4,3/8 H=0,8	
360	352103-0108	-		3	CABLE GLAND, ST 13,5 , PR20,4/PG13,5	
440	353001-0102	-		6	END SLEEVE 0,75MM2	
450	352103-0095	-		1	CABLE GLAND, STR 7, PR 12,5/PG7	
460	90099-0116	-		1	NUT, PR 12,5 (PG7)	

Pos	Part No	SP	UN	Qty	Description	Page No

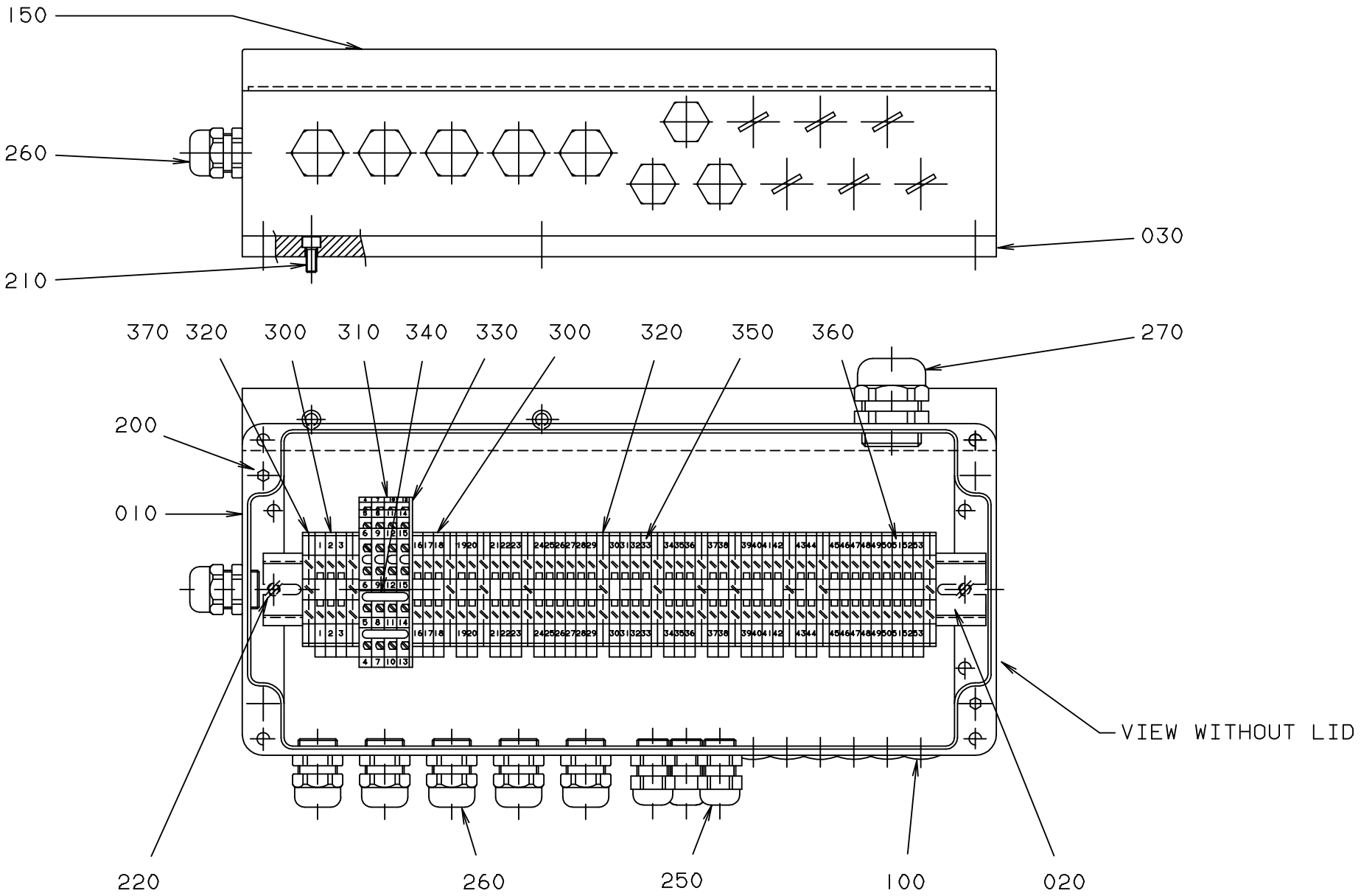
150
260
210
030
370
320
300
310
340
330
300
320
350
360
270
200
010
VIEW WITHOUT LID
220
260
250
100
020

ECM: 101959 - 20011203
Group number: 1529095-0100
Assembly Drawing: 1529095-1_1_AA

Issue: 20020822

Pos	Part No	SP	UN	Qty	Description	Page No
Common Parts						
010	1529096-0000	B		1	CONNECTION BOX	
020	571929-0000	B		1	RAIL	
030	1529097-0000	B		1	SPACER	
100	90002-0013	-		6	BLANK-OFF PLUG, PR 15,2 SKINDICHT-BLK9	
150	90194-0016	A		1	SIGN, FLASH, ELECTRIC EQUIPMENT SYMBOL	
200	312111-0372	A		2	SCREW HEX.SOCK.HD.MC6S-TT 6X25 88 FZB	
210	312115-0327	A		2	SCREW MC6S M5X12 A280	
220	312125-0364	A		2	SCREW SLOT.PAN HD. MCS 6X10 A480	
250	352103-0101	A		3	CABLE GLAND, ST 9, PR15,2/PG9	
260	352103-0106	A		6	CABLE GLAND, ST 11, PR18,6/PG11	
270	352103-0121	A		1	CABLE GLAND, ST 29, PR37,0/PG29	
300	353021-0212	A		41	FEED THROUGH TERMINAL, 10200.0	
310	353021-0302	A		4	TERMINALS,TRIPLE-LEVEL, DLD 2,5/35 PA	
320	353024-0205	A		12	EARTH TERMINAL, 1010.1	
330	353032-0302	-		1	END PLATE WAP	
340	353034-0403	-		2	BRIDGE CONNECTOR Q4, 13127,0	
350	359011-0807	A		2	MARKING PLATES 5-FW 1-50	
360	359011-0808	A		2	MARKING PLATES 5-FW 51-100	
370	359011-0834	-		1	SET OF SIGNS 6-GW(EARTH)	

Pos	Part No	SP	UN	Qty	Description	Page No

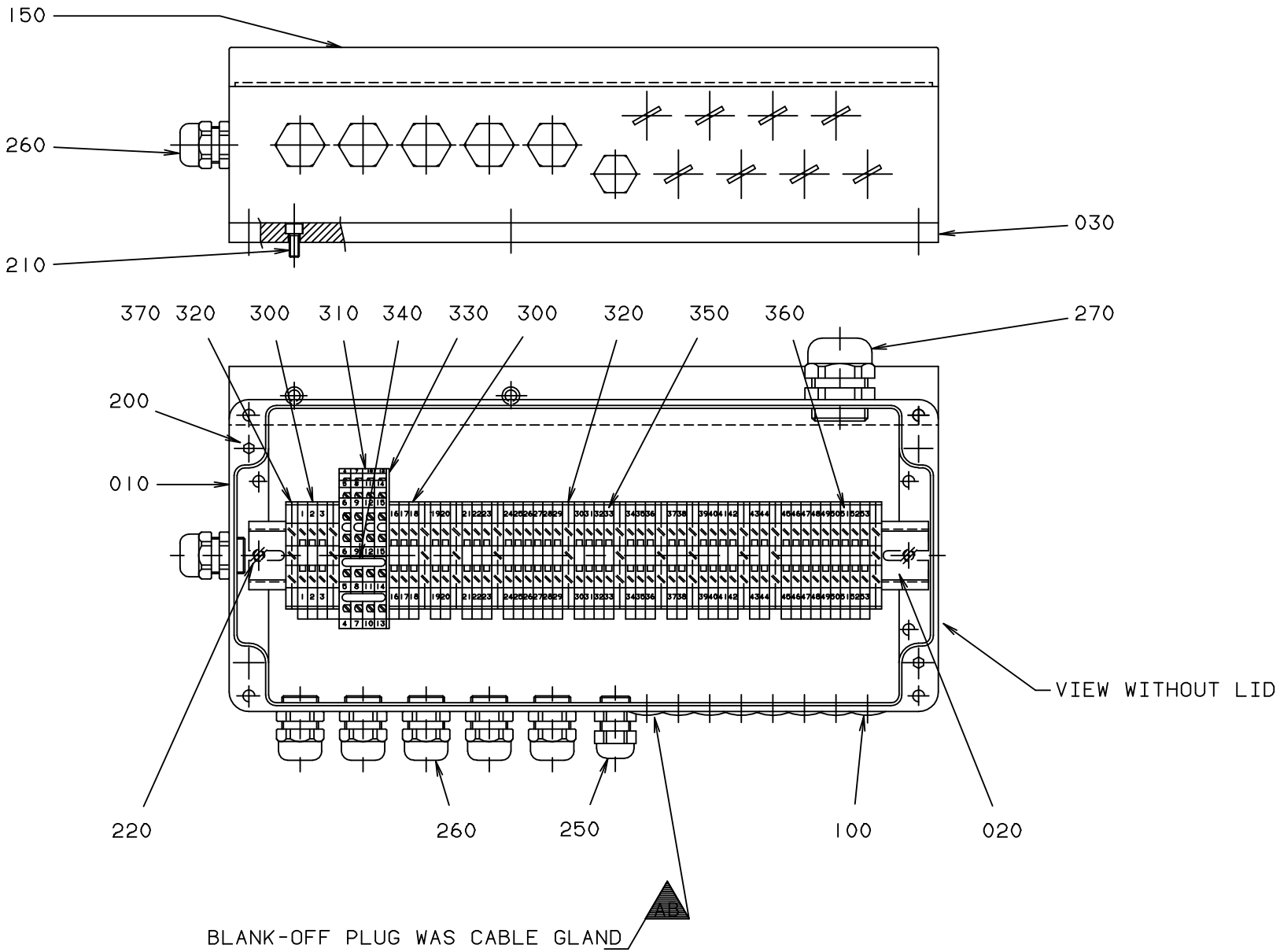
150
260
210
030
370
320
300
310
340
330
300
320
350
360
270
200
010
VIEW WITHOUT LID
220
260
250
100
020
AB
BLANK-OFF PLUG WAS CABLE GLAND

ECM: 108710 - 20020515
Group number: 1529335-0100
Assembly Drawing: 1529335-1_1_AB

Issue: 20020822

Pos	Part No	SP	UN	Qty	Description	Page No
Common Parts						
010	1529096-0000	B		1	CONNECTION BOX	
020	571929-0000	B		1	RAIL	
030	1529097-0000	B		1	SPACER	
100	90002-0013	-		8	BLANK-OFF PLUG, PR 15,2 SKINDICHT-BLK9	
150	90194-0016	A		1	SIGN, FLASH, ELECTRIC EQUIPMENT SYMBOL	
200	312111-0372	A		2	SCREW HEX.SOCK.HD.MC6S-TT 6X25 88 FZB	
210	312115-0327	A		2	SCREW MC6S M5X12 A280	
220	312125-0364	A		2	SCREW SLOT.PAN HD. MCS 6X10 A480	
250	352103-0101	A		1	CABLE GLAND, ST 9, PR15,2/PG9	
260	352103-0106	A		6	CABLE GLAND, ST 11, PR18,6/PG11	
270	352103-0121	A		1	CABLE GLAND, ST 29, PR37,0/PG29	
300	353021-0212	A		41	FEED THROUGH TERMINAL, 10200.0	
310	353021-0302	A		4	TERMINALS,TRIPLE-LEVEL, DLD 2,5/35 PA	
320	353024-0205	A		12	EARTH TERMINAL, 1010.1	
330	353032-0302	-		1	END PLATE WAP	
340	353034-0403	-		2	BRIDGE CONNECTOR Q4, 13127,0	
350	359011-0807	A		2	MARKING PLATES 5-FW 1-50	
360	359011-0808	A		2	MARKING PLATES 5-FW 51-100	
370	359011-0834	-		1	SET OF SIGNS 6-GW(EARTH)	

Pos	Part No	SP	UN	Qty	Description	Page No

Machine Type | Group Description | Used-In | Group Number | Page No

Tetra Pak

SPC
Spare Parts Catalogue

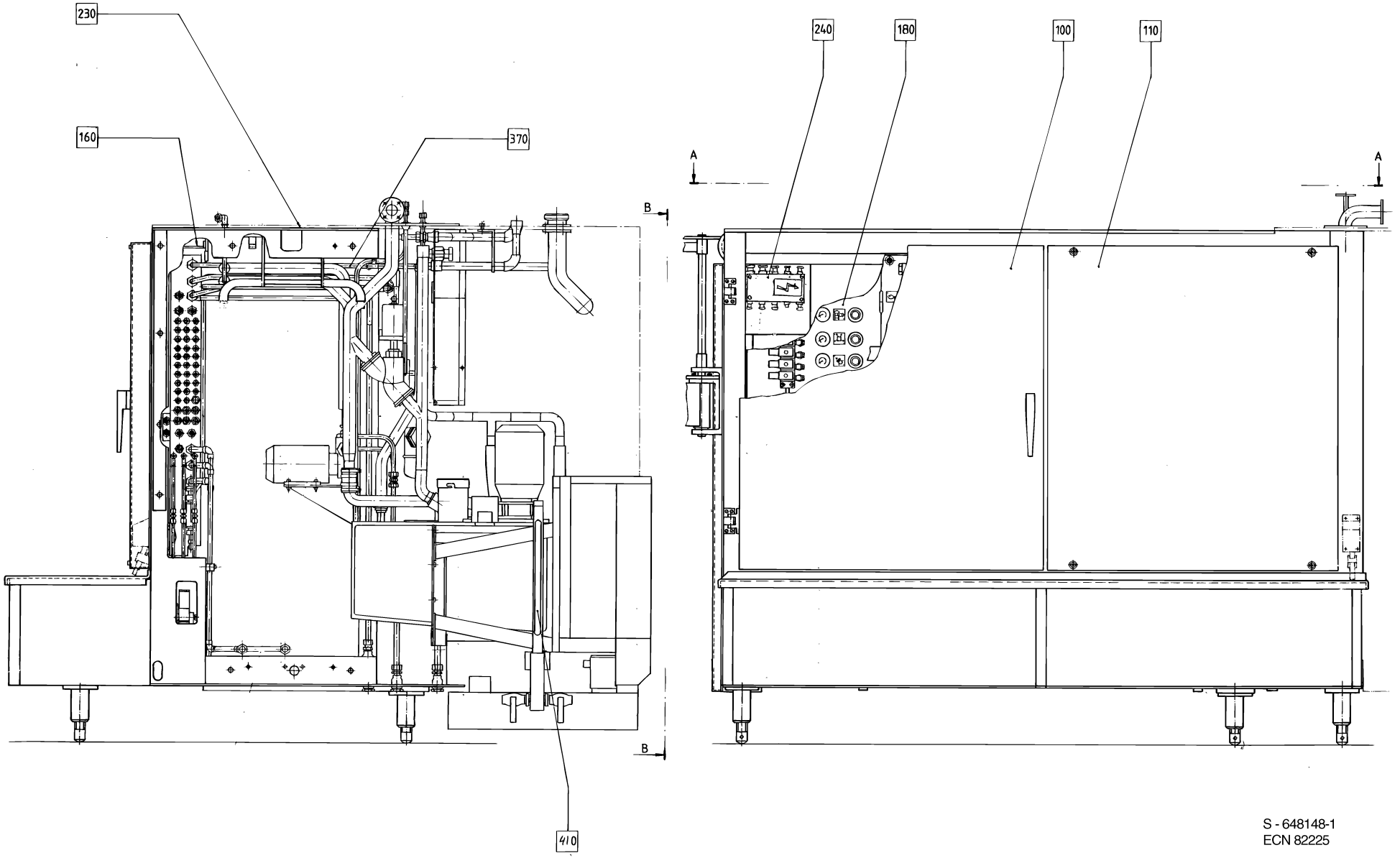

S - 648148-1
ECN 82225

ECM: 107668 - 20020506
Group number: 648148-0100
Assembly Drawing: 648148-1_1_AA

Issue: 20020822

Pos	Part No	SP	UN	Qty	Description	Page No
SOURCE,TBA/9-100V OR SOURCE,TBA/9-110V						
010	A272359-0200	-		1	BENDING ROLLER	**597**
100	A256873-0200	-		1	DOOR	**599**
130	A1529209-0100	-		1	COVERING PLATE	**601**
140	A271699-0300	-		1	SPLICING APPARATUS	**603**
160	A1529221-0100	-		1	CABLE TRACK	**615**
170	A271452-0200	-		1	DETERGENT PUMP	**617**
230	A1529207-0100	-		1	MACHINE BODY	**619**
280	A451348-0100	-		1	CONNECTION BOX	**621**
320	A271468-0200	-		1	GUIDE	**623**
SOURCE,TBA/9-120V						
010	A272359-0200	-		1	BENDING ROLLER	**597**
100	A256873-0200	-		1	DOOR	**599**
130	A1529223-0100	-		1	COVERING PLATE	**625**
140	A271699-0300	-		1	SPLICING APPARATUS	**603**
160	A1529222-0100	-		1	CABLE TRACK	**627**
170	A490761-0100	-		1	DETERGENT PUMP	**629**
230	A1529230-0100	-		1	MACHINE BODY	**631**
280	A451348-0100	-		1	CONNECTION BOX	**621**
320	A271468-0200	-		1	GUIDE	**623**
Common Parts						
	A1529161-0100	-		1	MODIFIED ARTICLES:	
020	A1529225-0100	-		1	CARRIAGE	**633**
090	A257146-0200	-		1	LID	**653**
110	A256875-0200	-		1	HATCH	**655**
120	A469535-0100	-		1	DOOR	**657**
150	A271992-0200	-		1	PAPER HOLDER	**659**
180	A1529116-0100	-		1	VALVE PANEL	**661, 663, 665, 667**
240	A1529066-0100	-		1	CONNECTION BOX	**693**
290	A751691-0100	-		1	IMPULSE TRANSMITTER	**695**
330	A271469-0200	-		1	GUIDE	**701**
350	A491890-0100	-		1	OIL TANK	**703**
360	A491894-0100	-		1	HYDRAULIC SYSTEM	**705, 707**
370	A1529150-0100	-		1	PIPE WORK	**709, 711, 713**
400	A1529047-0100	-		1	PROTECTION	**715**
410	A1529158-0100	-		1	HYDROGEN PEROXIDE	**717**
600	B469384-0100	-		1	START-UP KIT	
010	*90296-0053*	-	*L*	*10*	*OIL*	
020	*90296-0075*	-	*ML*	*2500*	*OIL 54322-320 ACC TO M 1254.322*	
030	*90298-0019*	-		*1*	*DETERGENT*	
040	*90144-0003*	-		*1*	*TAPE*	

Machine Type	Group Description	Used-In	Group Number	Page No

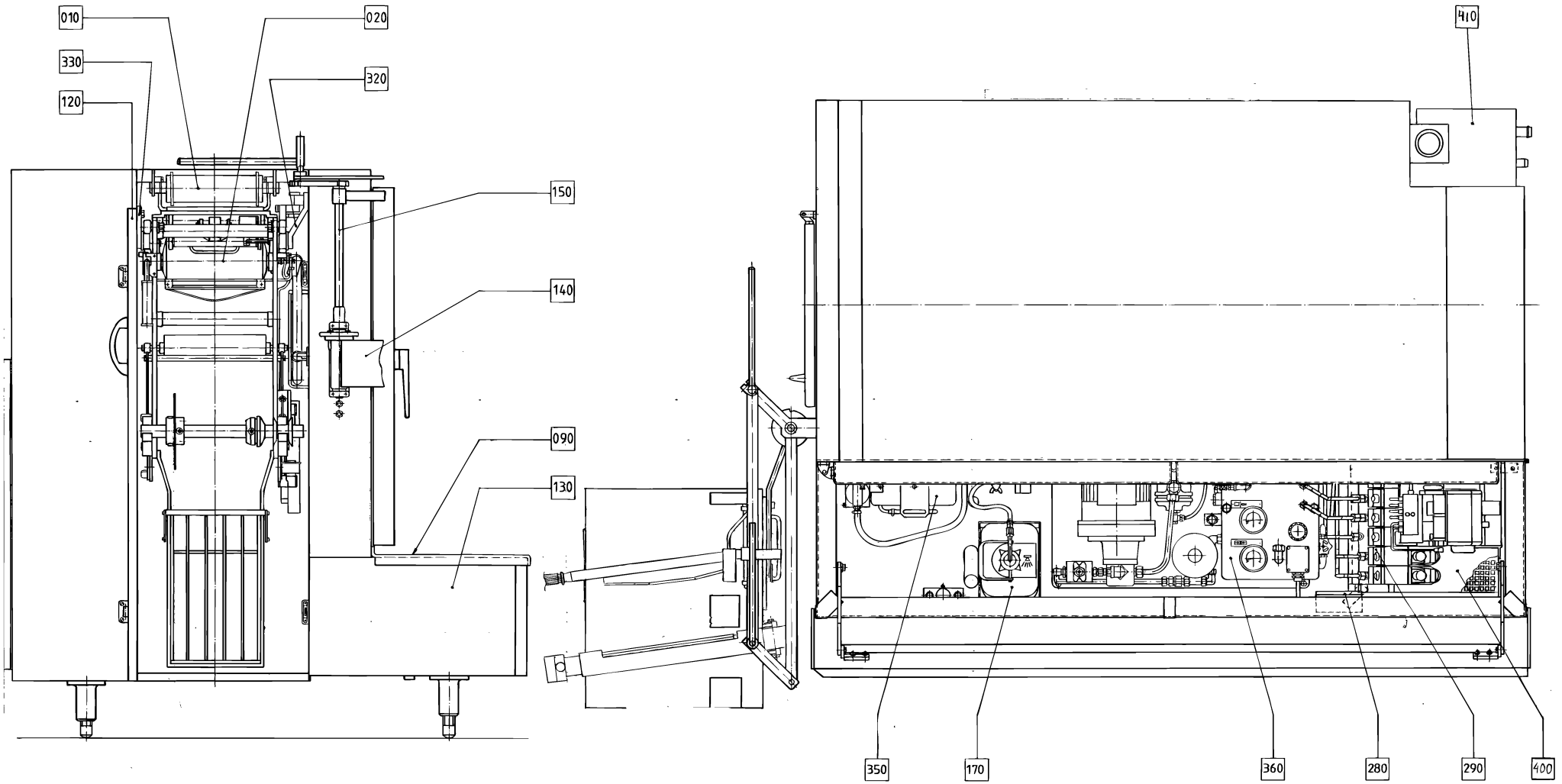

VY B-B MED ÖPPEN KASSETTDÖRR.
VIEW B-B WITH OPEN DOOR.

VY A-A MED ÖPPET LOCK.
VIEW A-A WITH OPEN LID.

S - 648148-2
ECN 82225

ECM: 107668 - 20020506
Group number: 648148-0100
Assembly Drawing: 648148-2_1_AA

Issue: 20020822

Pos	Part No	SP	UN	Qty	Description	Page No
SOURCE,TBA/9-100V OR SOURCE,TBA/9-110V						
010	A272359-0200	-		1	BENDING ROLLER	**597**
100	A256873-0200	-		1	DOOR	**599**
130	A1529209-0100	-		1	COVERING PLATE	**601**
140	A271699-0300	-		1	SPLICING APPARATUS	**603**
160	A1529221-0100	-		1	CABLE TRACK	**615**
170	A271452-0200	-		1	DETERGENT PUMP	**617**
230	A1529207-0100	-		1	MACHINE BODY	**619**
280	A451348-0100	-		1	CONNECTION BOX	**621**
320	A271468-0200	-		1	GUIDE	**623**
SOURCE,TBA/9-120V						
010	A272359-0200	-		1	BENDING ROLLER	**597**
100	A256873-0200	-		1	DOOR	**599**
130	A1529223-0100	-		1	COVERING PLATE	**625**
140	A271699-0300	-		1	SPLICING APPARATUS	**603**
160	A1529222-0100	-		1	CABLE TRACK	**627**
170	A490761-0100	-		1	DETERGENT PUMP	**629**
230	A1529230-0100	-		1	MACHINE BODY	**631**
280	A451348-0100	-		1	CONNECTION BOX	**621**
320	A271468-0200	-		1	GUIDE	**623**
Common Parts						
	A1529161-0100	-		1	MODIFIED ARTICLES:	
020	A1529225-0100	-		1	CARRIAGE	**633**
090	A257146-0200	-		1	LID	**653**
110	A256875-0200	-		1	HATCH	**655**
120	A469535-0100	-		1	DOOR	**657**
150	A271992-0200	-		1	PAPER HOLDER	**659**
180	A1529116-0100	-		1	VALVE PANEL	**661, 663, 665, 667**
240	A1529066-0100	-		1	CONNECTION BOX	**693**
290	A751691-0100	-		1	IMPULSE TRANSMITTER	**695**
330	A271469-0200	-		1	GUIDE	**701**
350	A491890-0100	-		1	OIL TANK	**703**
360	A491894-0100	-		1	HYDRAULIC SYSTEM	**705, 707**
370	A1529150-0100	-		1	PIPE WORK	**709, 711, 713**
400	A1529047-0100	-		1	PROTECTION	**715**
410	A1529158-0100	-		1	HYDROGEN PEROXIDE	**717**
600	B469384-0100	-		1	START-UP KIT	
010	*90296-0053*	-	*L*	*10*	*OIL*	
020	*90296-0075*	-	*ML*	*2500*	*OIL 54322-320 ACC TO M 1254.322*	
030	*90298-0019*	-		*1*	*DETERGENT*	
040	*90144-0003*	-		*1*	*TAPE*	

Machine Type	Group Description	Used-In	Group Number	Page No

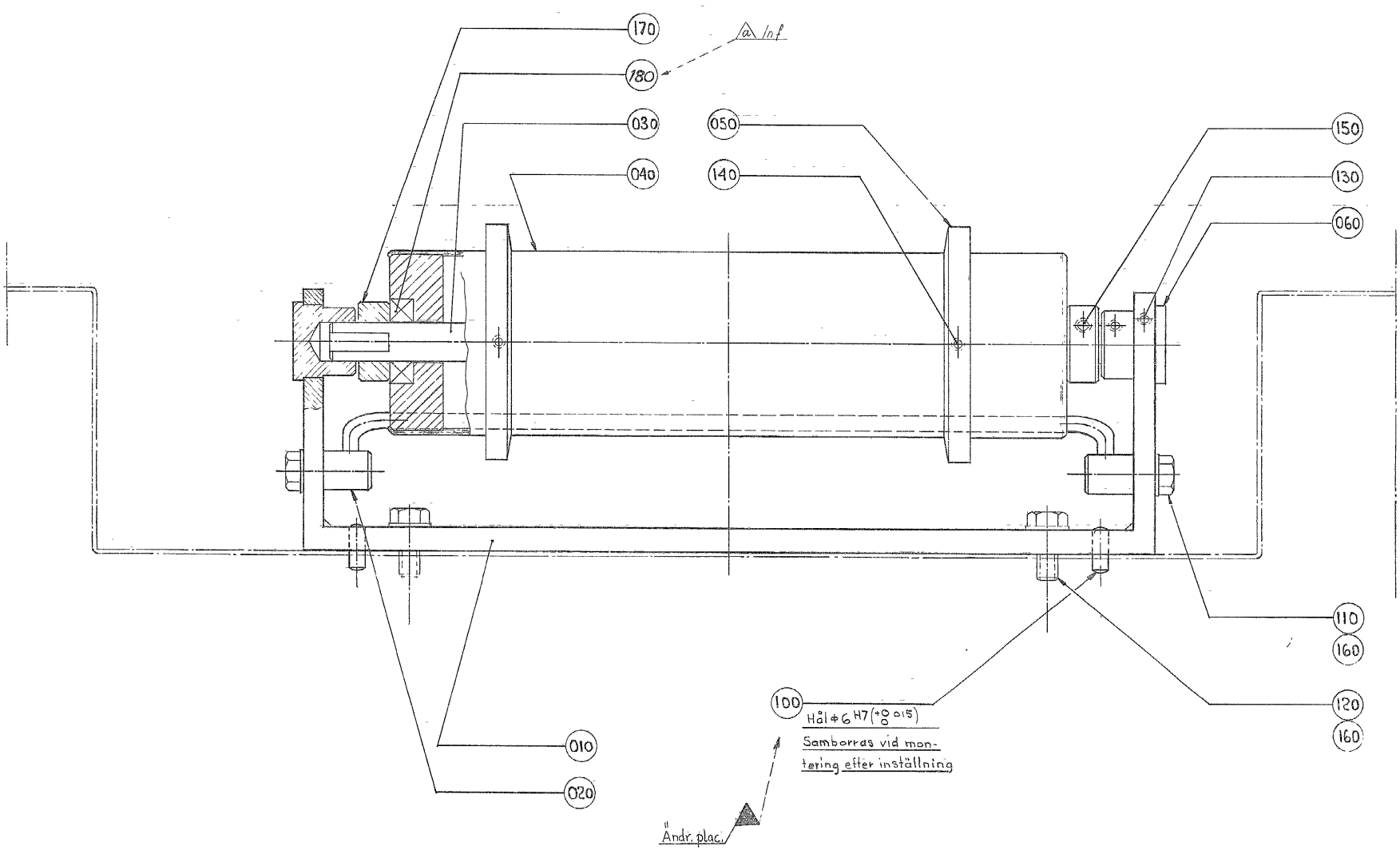
170
180
030
040
050
140
150
130
060
110
160
120
160
100
010
020
a Inf
Hål ⌀6 H7 (+0,015 0)
Samborras vid mon-
tering efter inställning
Ändr. plac.

ECM: 102833 - 20020110
Group number: 272359-0200
Assembly Drawing: 272359-2_1_AA

Issue: 20020822

Pos	Part No	SP	UN	Qty	Description	Page No
Common Parts						
010	272360-0000	-		1	CANTILEVER	
020	272361-0000	B		1	BOW CLAMP	
030	271753-0000	A		1	SHAFT	
040	456544-0000	A		1	BENDING ROLLER	
050	456545-0000	-		2	FLANGE	
060	272362-0000	A		2	BEARING	
100	311103-0351	-		2	PARALLELL PIN, M6, 6X16 MM	
110	312105-0449	-		2	SCREW M6S ISO 4017 M8X16 A480	
120	312105-0451	-		2	SCREW M6S ISO 4017 M8X20 A480	
130	312318-0321	-		4	SCREW HEX.SOCK.SET CUP P.MSK6SS 5X6 SS	
140	312318-0323	-		4	SCREW SOCK.SET CUP P MSK6SS M5X8 A4	
150	312318-0360	-		2	SCREW HEX.SOCK.SET CUP P.MSK6SS6X6 SS	
160	315105-0165	-		4	WASHER PLAIN, BRB, 8,4/16,H=1,5	
170	315742-0111	-		2	COLLAR, 15/30, H=12	
180	321308-0202	A		2	BALL BEARING, 2 SEALS, 15X32X9 MM	

Pos	Part No	SP	UN	Qty	Description	Page No

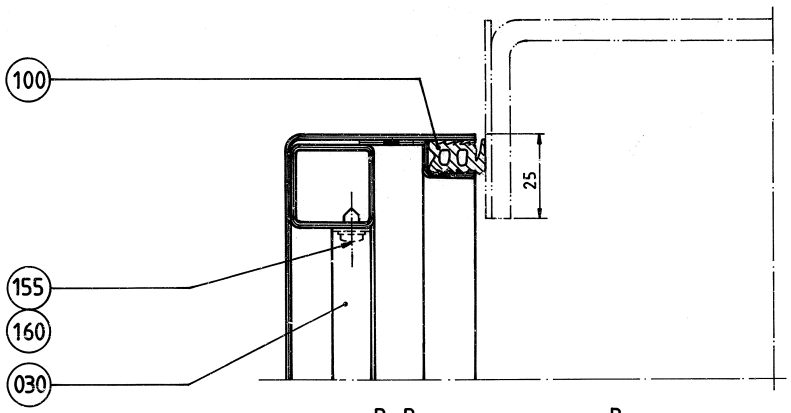
100
155
160
030
25

B-B

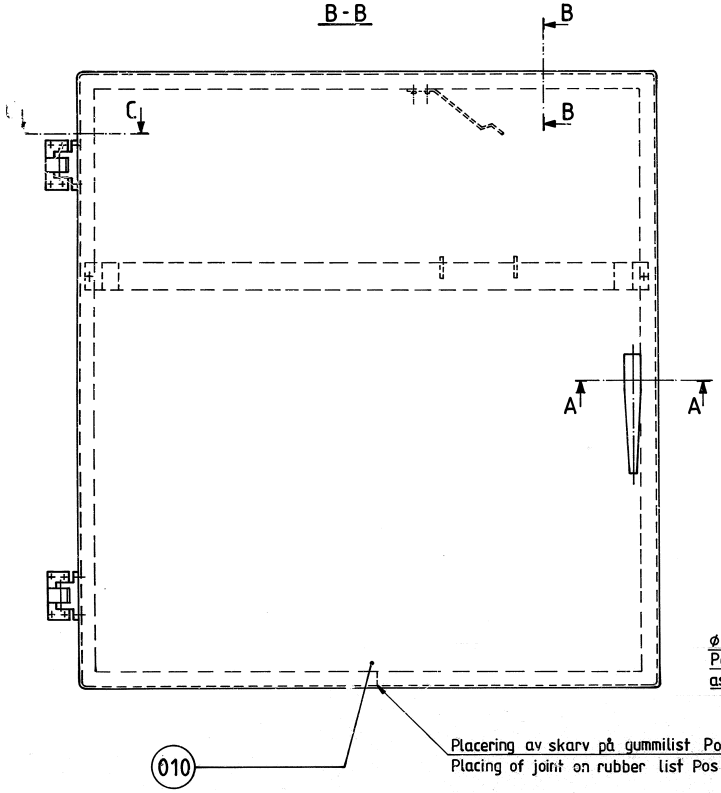
B
B
C
A
A
010
Placering av skarv på gummilist Pos 100
Placing of joint on rubber list Pos 100

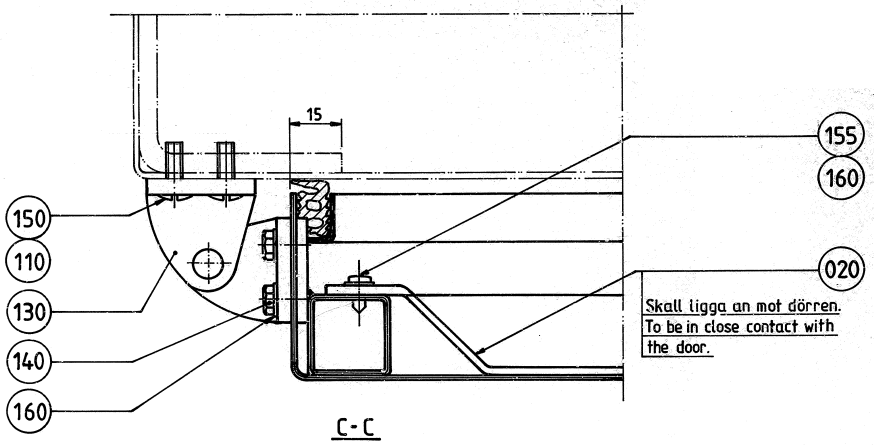
15
155
160
150
110
130
140
160
020
Skall ligga an mot dörren.
To be in close contact with
the door.

C-C

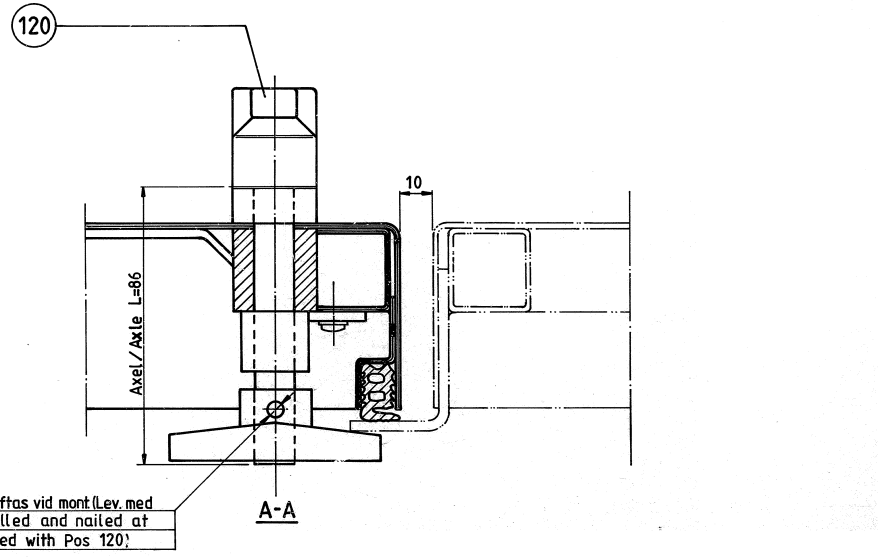
120
10
Axel/Axle L=86
ø5 Borras och stiftas vid mont (Lev. med
Pos 120) / ø5 Drilled and nailed at
assembly (Delivered with Pos 120)

A-A

ECM: - -
Group number: 256873-0200
Assembly Drawing: 256873-2_1_AA

Issue: 20020822

Pos	Part No	SP	UN	Qty	Description	Page No
Common Parts						
010	295158-0000	-		1	DOOR	
020	295246-0000	-		1	HOLDER	
030	295247-0000	-		1	LEAF SPRING	
100	90143-0049	-	MM	3700	RUBBERSTRIP 11X21MM	
110	90157-0016	-	ML	1	LOCKING FLUID	
120	B90237-0044	-		1	LOCK HANDLE, 3-26689-01	
	90237-0311	-		*1*	*LATCH, 3-32429*	
	90237-0310	-		*1*	*HANDLE PLATE FOR 90237-309*	
130	90248-0013	-		2	HINGE 3562E STUV	
140	312105-0325	-		8	SCREW M6S ISO 4017 M5X10 A480	
150	312165-0329	-		8	SCREW SLOT.RAIS.COUNT.HD.MKFS 5X16 SS	
155	312503-0410	-		4	SCREW CROSS RECES.RND.HD.TAPP. B10X13	
160	315105-0146	-		12	WASHER PLAIN, BRB, 5,3/10,H=1	

Pos	Part No	SP	UN	Qty	Description	Page No

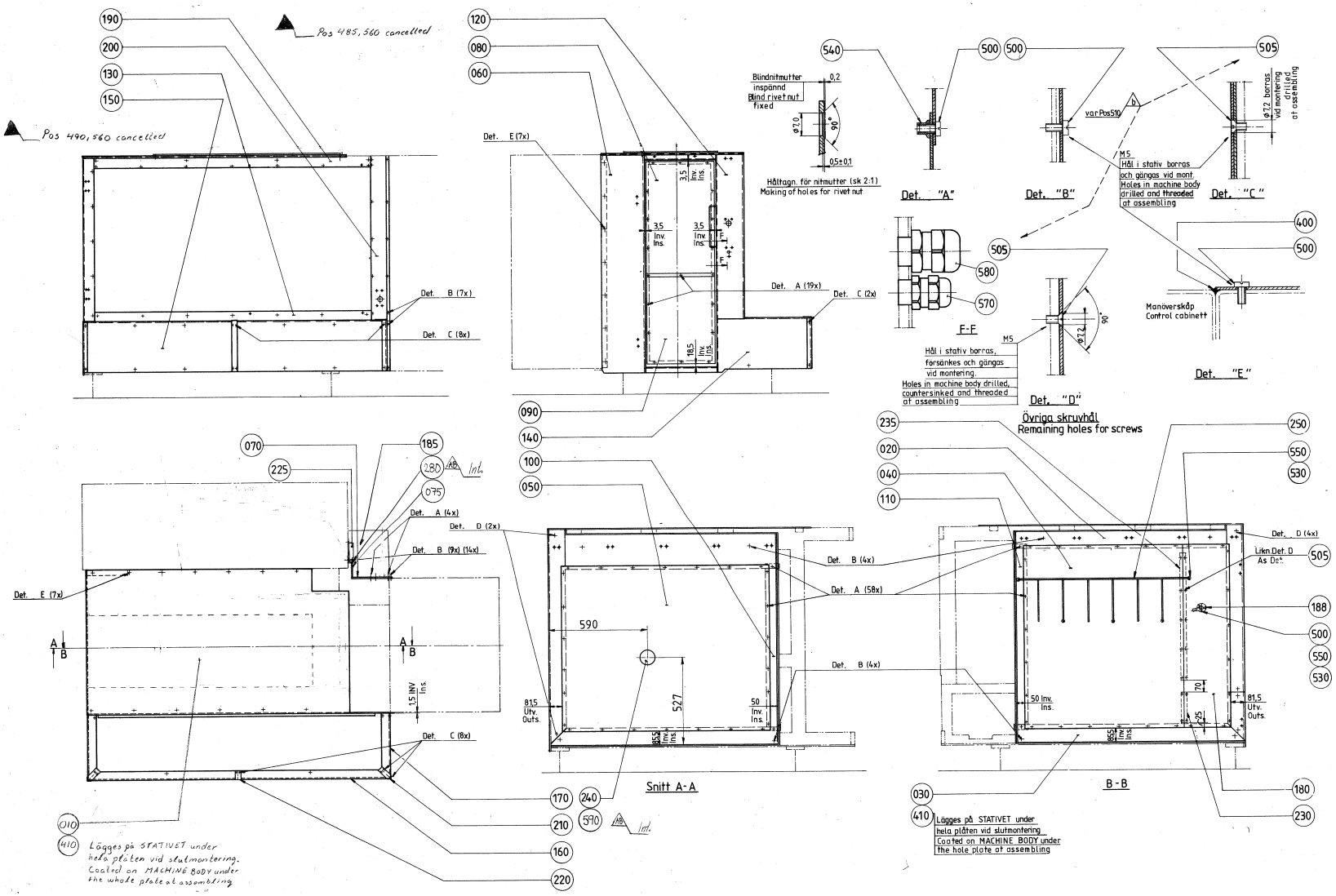
Pos 485, 560 cancelled
Pos 490, 560 cancelled
Det. B (7x)
Det. C (8x)
Det. E (7x)
Det. A (19x)
Det. C (2x)
Blindnitmutter inspänd
Blind rivet nut fixed
Håltagn. för nitmutter (sk 2:1)
Making of holes for rivet nut
Det. "A"
Det. "B"
Det. "C"
Det. "D"
Det. "E"
F-F
M5
Hål i stativ borras och gängas vid mont.
Holes in machine body drilled and threaded at assembling
Hål i stativ borras, försänkes och gängas vid montering.
Holes in machine body drilled, countersinked and threaded at assembling
Ø12 borras vid montering
drilling at assembling
Manöverskåp
Control cabinett
Övriga skruvhål
Remaining holes for screws
Det. A (4x)
Det. D (2x)
Det. B (9x) (14x)
Det. B (4x)
Det. A (58x)
Det. D (4x)
Liksn Det. D
As Det.
Snitt A-A
B-B
590
527
81,5 Utv. Outs.
50 Inv. Ins.
Lägges på STATIVET under hela plåten vid slutmontering.
Coated on MACHINE BODY under the whole plate at assembling
Lägges på STATIVET under hela plåten vid slutmontering
Coated on MACHINE BODY under the hole plate at assembling

ECM: 107706 - 20020506
Group number: 1529209-0100
Assembly Drawing: 1529209-1_1_AC

Issue: 20020822

Pos	Part No	SP	UN	Qty	Description	Page No
Common Parts						
010	1529051-0001	-		1	COVER PLATE	
020	469033-0000	-		1	COVERING PLATE	
030	295639-0000	-		1	BOTTOM PANEL	
040	441067-0000	-		1	SIDE COVER LEFT	
050	469516-0000	-		1	SIDE PLATE RIGHT	
060	469034-0000	-		1	GUSSET PLATE	
070	752502-0000	-		1	PROTECTIVE CASING	
075	752504-0000	-		1	COVERING PLATE	
080	295645-0000	-		1	COVER, UPPER	
090	295646-0000	-		1	COVER, LOWER	
100	295647-0000	-		1	CORNER STRIP	
110	295648-0000	-		1	CORNER STRIP	
120	469035-0000	-		1	GUSSET PLATE	
130	295650-0000	-		1	COVERING PLATE	
140	295651-0000	-		1	COVERING PLATE	
150	295652-0000	-		1	COVERING PLATE	
160	295653-0000	-		1	COVERING PLATE	
170	295654-0000	-		1	COVERING PLATE	
180	441068-0000	-		1	SIDE PLATE	
185	752503-0000	-		1	PROTECTIVE CASING	
188	272698-0000	-		1	BRACKET	
190	469038-0000	-		1	COVERING PLATE	
200	469039-0000	-		1	COVERING PLATE	
210	295658-0000	-		2	COVER SLIP	
220	295659-0000	-		1	COVER SLIP	
225	491186-0000	-		1	COVER SLIP	
230	441069-0001	-		1	BRACKET	
235	441069-0002	-		1	BRACKET	
240	90232-0304	-		1	REFLECTOR MIRROR VISOLUX C110	
250	272696-0000	-		1	HOLDER	
280	752505-0000	-		1	BRACKET	
400	90157-0022	-	L	1	SEALING COMPOUND	
410	90298-0012	-		1	INHIBITOR	
500	312125-0325	-		122	SCREW SLOT.PAN HD. MCS 5X10 A480	
505	312145-0323	-		89	SCREW COUNTERS.SLOT.HD. MFS 5X8 SS	
530	312605-0314	-		8	HEXAGON NUT, M6M M5 A280	
540	312923-0122	-		81	NUT BLIND RIVET PO M5X12,6 SS	
550	315105-0146	-		8	WASHER PLAIN, BRB, 5,3/10,H=1	
570	352103-0101	-		1	CABLE GLAND, ST 9, PR15,2/PG9	
580	352103-0106	-		1	CABLE GLAND, ST 11, PR18,6/PG11	
590	90153-0001	-		1	ADHESIVE	

Pos	Part No	SP	UN	Qty	Description	Page No

Machine Type | Group Description | Used-In | Group Number | Page No

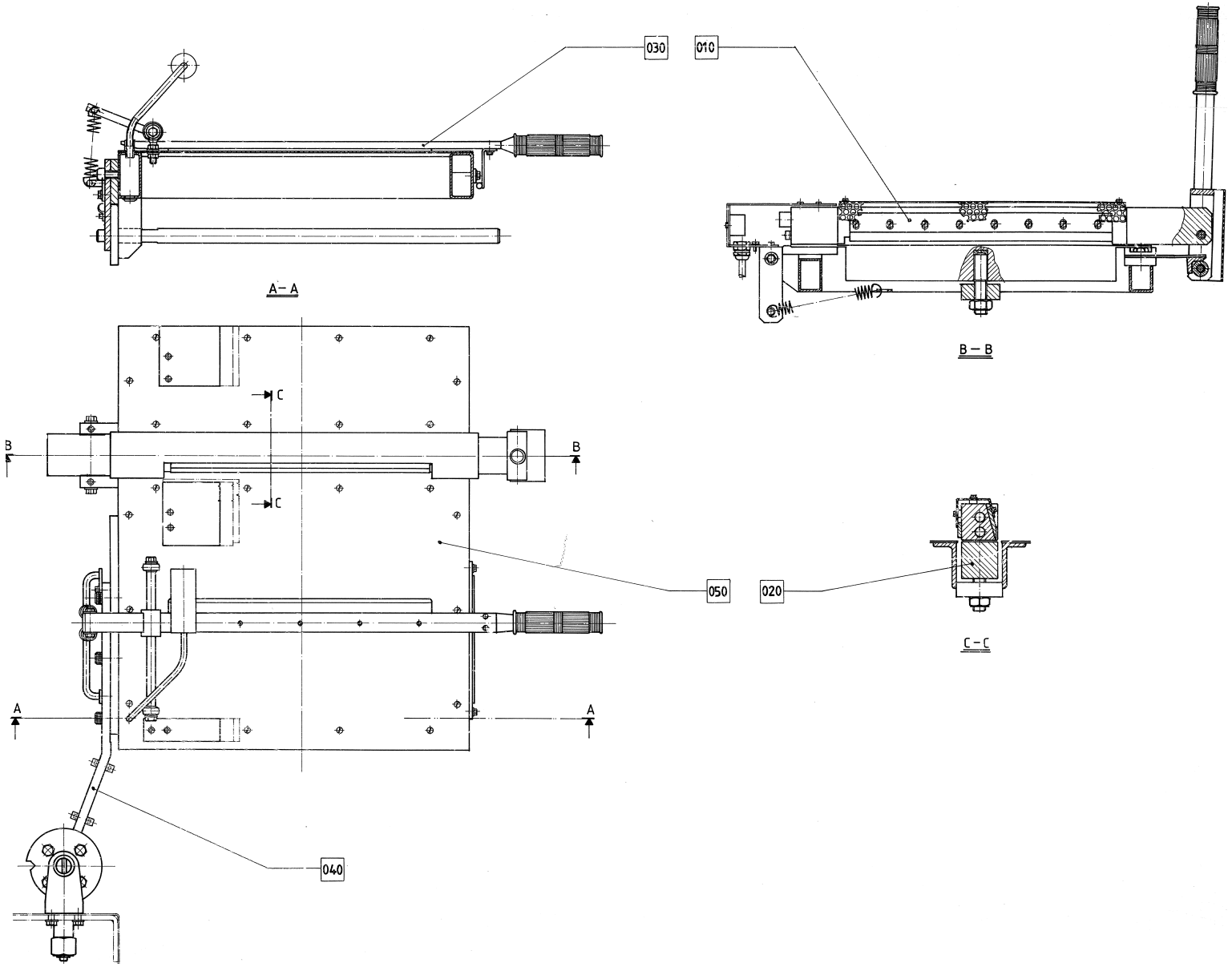
030
010
A – A
B – B
C
C
B
B
050
020
C – C
A
A
040

ECM: 72974 - 20000321
Group number: 271699-0300
Assembly Drawing: 271699-3_1_AA

Issue: 20020822

Pos	Part No	SP	UN	Qty	Description	Page No
Common Parts						
010	A37877-0300	-		1	HEATING BLOCK	**605**
020	A37894-0100	-		1	COUNTER RAIL	**607**
030	A450101-0100	-		1	TEARING DEVICE	**609**
040	A271626-0300	-		1	SUSPENSION ARM	**611**
050	A271641-0300	-		1	TABLE	**613**

Pos	Part No	SP	UN	Qty	Description	Page No

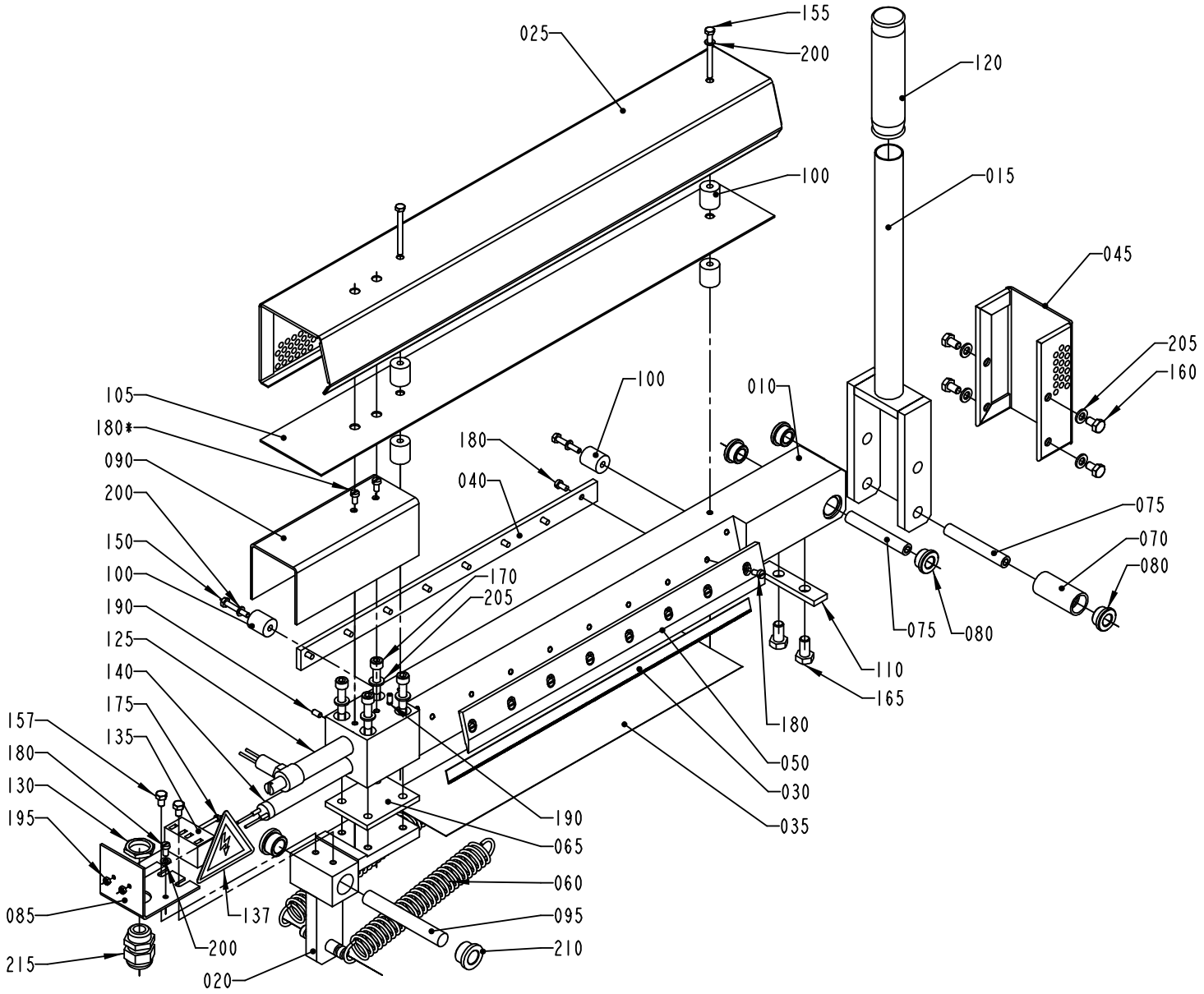

37877-2
ECN 89888

ECM: 112928 - 20020731
Group number: 37877-0300
Assembly Drawing: 37877-2_1_AB

Issue: 20020822

Pos	Part No	SP	UN	Qty	Description	Page No
Common Parts						
010	255301-0000	-		1	HEATING RAIL	
015	37879-0000	-		1	LOCKING ARM	
020	37880-0000	-		1	HINGE	
025	243132-0000	-		1	PROTECTION PLATE	
030	31017-0000	B		1	KNIFE	
035	31723-0000	B		1	TEFLON STRIP	
040	31724-0000	-		1	LOCK BAR	
045	37882-0000	-		1	PROTECTION PLATE	
050	37883-0000	-		1	LOCK BAR	
055	37884-0000	-		1	SHAFT	
060	37885-0000	-		2	TENSION SPRING	
065	37886-0000	-		1	INSULATING DISK	
070	37888-0000	-		1	ROLL	
075	37889-0000	-		2	SHAFT	
080	37890-0000	-		4	FLANGE ROLLER	
085	37892-0000	-		1	CONNECTION BOX	
090	37893-0000	-		1	LID	
095	208173-0000	-		1	SHAFT	
100	229775-0000	-		6	SPACER	
105	243133-0000	-		1	SHIELD PLATE	
110	245221-0000	-		1	STOP	
120	90017-0001	-		1	BIKE HANDLE	
125	90059-0001	A		1	THERMOSTAT	
130	90099-0002	-		1	NUT PR 18,6 BRASS	
135	90077-0102	-		1	TERMINAL BLOCK, 1952.2	
137	90194-0016	A		1	SIGN, FLASH, ELECTRIC EQUIPMENT SYMBOL	
140	90206-0053	A		1	HEATING ELEMENT 230V 1200W	
150	312105-0297	-		2	SCREW M6S ISO 4017 M4X25 A480	
155	312105-0304	-		2	SCREW M6S M4X45 A280	
157	312105-0323	-		2	SCREW M6S ISO 4017 M5X8 A480	
160	312105-0364	-		4	SCREW M6S ISO 4017 M6X10 A480	
165	312105-0449	-		2	SCREW M6S ISO 4017 M8X16 A480	
170	312115-0380	-		4	SCREW MC6S M6X50 A280	
175	312125-0230	-		2	SCREW PAN HEAD MCS M3X20 SS	
180	312125-0287	-		19	SCREW PAN HEAD MCS M4X8 SS	
190	312318-0287	-		2	SCREW SOCK.SET CUP P MSK6SS M4X8 A4	
195	312605-0310	-		2	HEXAGON NUT, M6M M3 A280	
200	315105-0136	-		5	WASHER PLAIN, BRB, 4,3/8,H=0,8	
205	315105-0153	-		8	WASHER PLAIN, BRB, 6,4/12,H=1,5	
210	321101-0173	-		2	FLANGE BUS 12F7X12	
215	352103-0106	-		1	CABLE GLAND, ST 11, PR18,6/PG11	

Pos	Part No	SP	UN	Qty	Description	Page No

Machine Type Group Description Used-In Group Number Page No

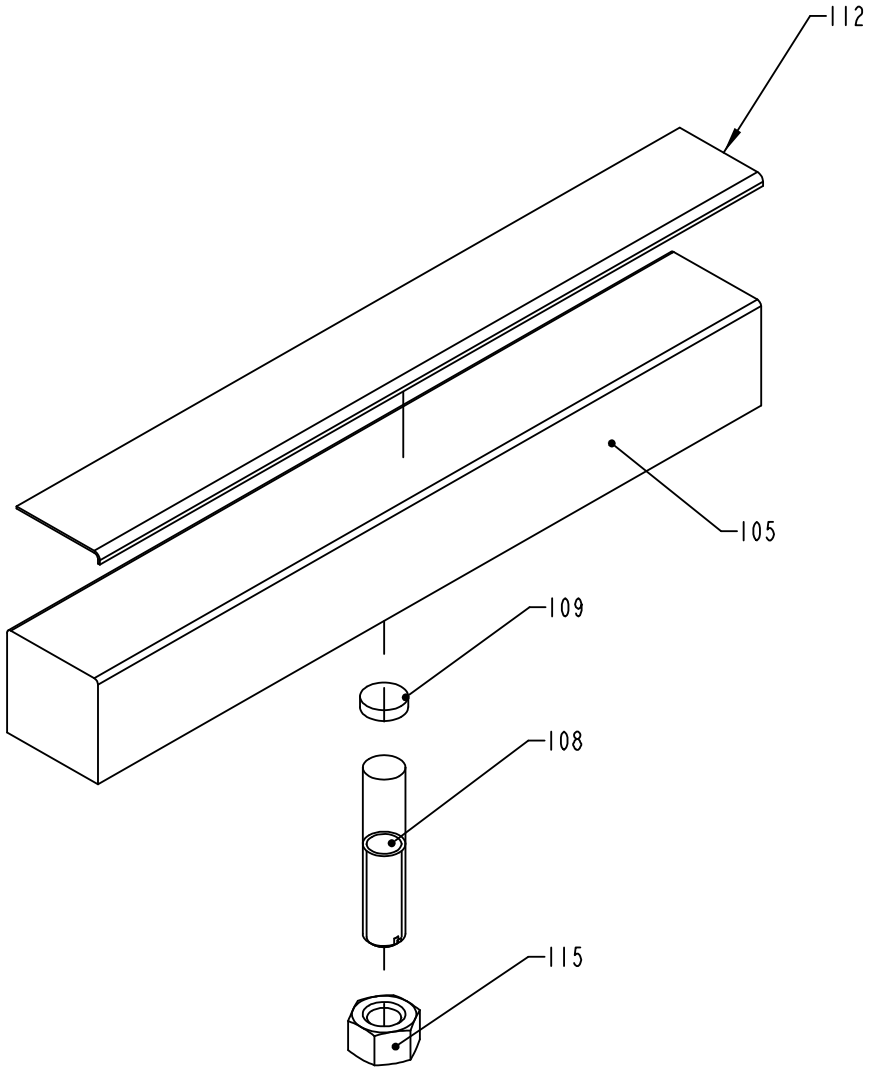

37894-1
ECN 89888

ECM: 102864 - 20020110
Group number: 37894-0100
Assembly Drawing: 37894-1_1_AB

Issue: 20020822

Pos	Part No	SP	UN	Qty	Description	Page No
Common Parts						
105	37895-0000	-		1	RAIL	
108	37896-0000	-		1	DOWEL	
109	37897-0000	-		1	WASHER	
112	90144-0030	A	MM	360	TAPE	
115	312605-0324	-		1	HEXAGON NUT, M6M M16 A280	

Pos	Part No	SP	UN	Qty	Description	Page No

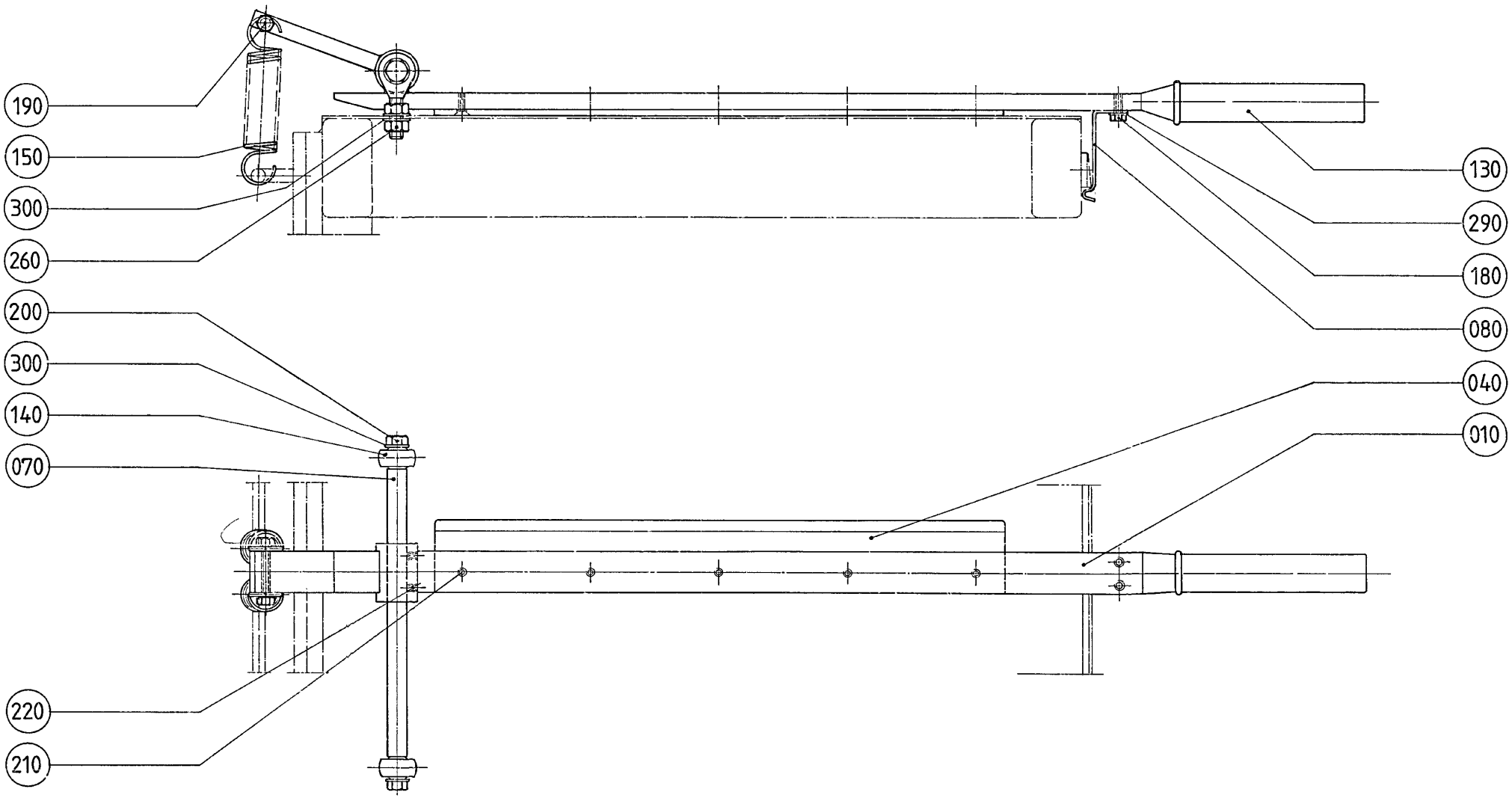
190
150
300
260
200
300
140
070
220
210
130
290
180
080
040
010

ECM: 102865 - 20020110
Group number: 450101-0100
Assembly Drawing: 450101-1_1_AA

Issue: 20020822

Pos	Part No	SP	UN	Qty	Description	Page No
Common Parts						
010	450102-0000	-		1	PRESSURE ARM	
040	450103-0000	-		1	KNIFE	
070	37901-0000	-		1	SHAFT	
080	206913-0000	-		1	LOCKING LOOP	
130	90017-0001	-		1	BIKE HANDLE	
140	90115-0054	-		2	ROD END, ID=8 MM, M8X1,25	
150	90335-0004	A		2	SPRING	
180	312105-0327	-		2	SCREW M6S ISO 4017 M5X12 A480	
190	312105-0329	-		2	SCREW M6S ISO 4017 M5X16 A480	
200	312105-0455	-		2	SCREW M6S ISO 4017 M8X30 A480	
210	312145-0291	-		5	SCREW COUNTERS.SLOT.HD. MFS 4X12 A4	
220	312318-0321	-		2	SCREW HEX.SOCK.SET CUP P.MSK6SS 5X6 SS	
260	312605-0318	-		4	HEXAGON NUT, M6M M8 A280	
290	315105-0146	-		2	WASHER PLAIN, BRB, 5,3/10,H=1	
300	315105-0165	-		6	WASHER PLAIN, BRB, 8,4/16,H=1,5	

Pos	Part No	SP	UN	Qty	Description	Page No

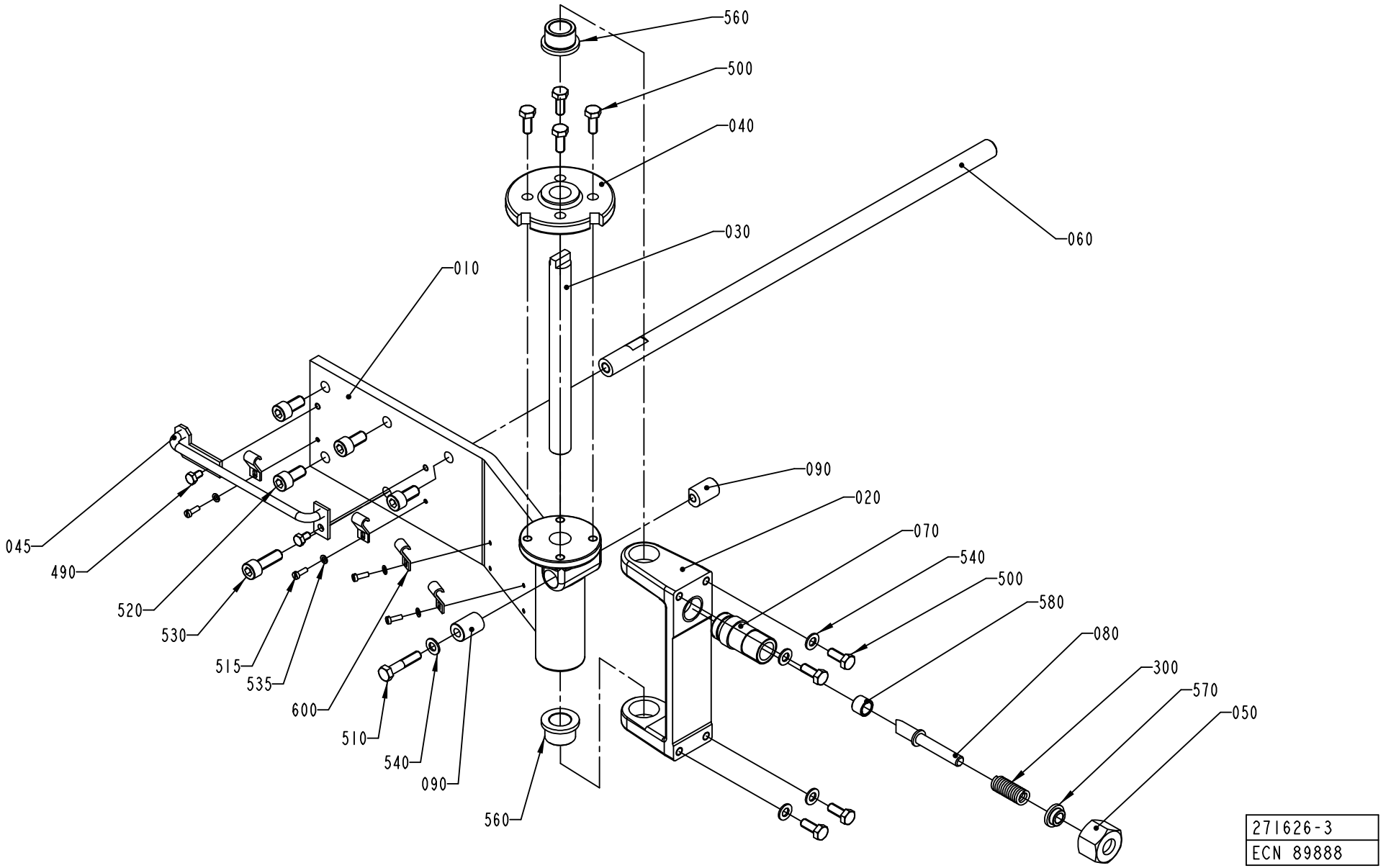
560
500
040
030
060
010
090
020
070
540
500
580
080
300
570
050
045
490
520
530
515
535
600
510
540
090
560
271626-3
ECN 89888

ECM: 112930 - 20020731
Group number: 271626-0300
Assembly Drawing: 271626-3_1_AB

Issue: 20020822

Pos	Part No	SP	UN	Qty	Description	Page No
Common Parts						
010	469076-0000	-		1	ARM	
020	272864-0000	-		1	BRACKET	
030	272865-0000	-		1	SHAFT	
040	272866-0000	-		1	LOCKING FLANGE	
045	979782-0000	-		1	BOW CLAMP	
050	271632-0000	-		1	HOOD	
060	272862-0000	-		1	HOLDER	
070	272867-0000	-		1	SPRING HOUSING	
080	272868-0000	-		1	STOPPER DOWEL	
090	272869-0002	-		1	FLAP	
090	272869-0001	-		1	FLAP	
300	37927-0000	B		1	COMPRESSION SPRING	
490	312105-0364	-		2	SCREW M6S ISO 4017 M6X10 A480	
500	312105-0451	-		8	SCREW M6S ISO 4017 M8X20 A480	
510	312105-0459	-		1	SCREW M6S ISO 4014 M8X40 A480	
515	312125-0291	-		4	SCREW PAN HEAD MCS M4X12 SS	
520	312115-0491	-		4	SCREW MC6S M10X20 A280	
530	312115-0495	-		1	SCREW MC6S M10X30 A280	
535	315105-0136	-		4	WASHER PLAIN, BRB, 4,3/8,H=0,8	
540	315105-0165	-		5	WASHER PLAIN, BRB, 8,4/16,H=1,5	
560	321101-0233	-		2	FLANGE BUS 20F7X20	
570	321111-0134	-		1	BEAR.BUSHING WITH FLANGE, 10/16X8 MM	
580	321116-0151	-		1	BEAR. BUSH. WITHOUT FL, 12X16X12	
600	352110-0102	-		4	CABLE CLIPS, D=10-14 MM	

Pos	Part No	SP	UN	Qty	Description	Page No

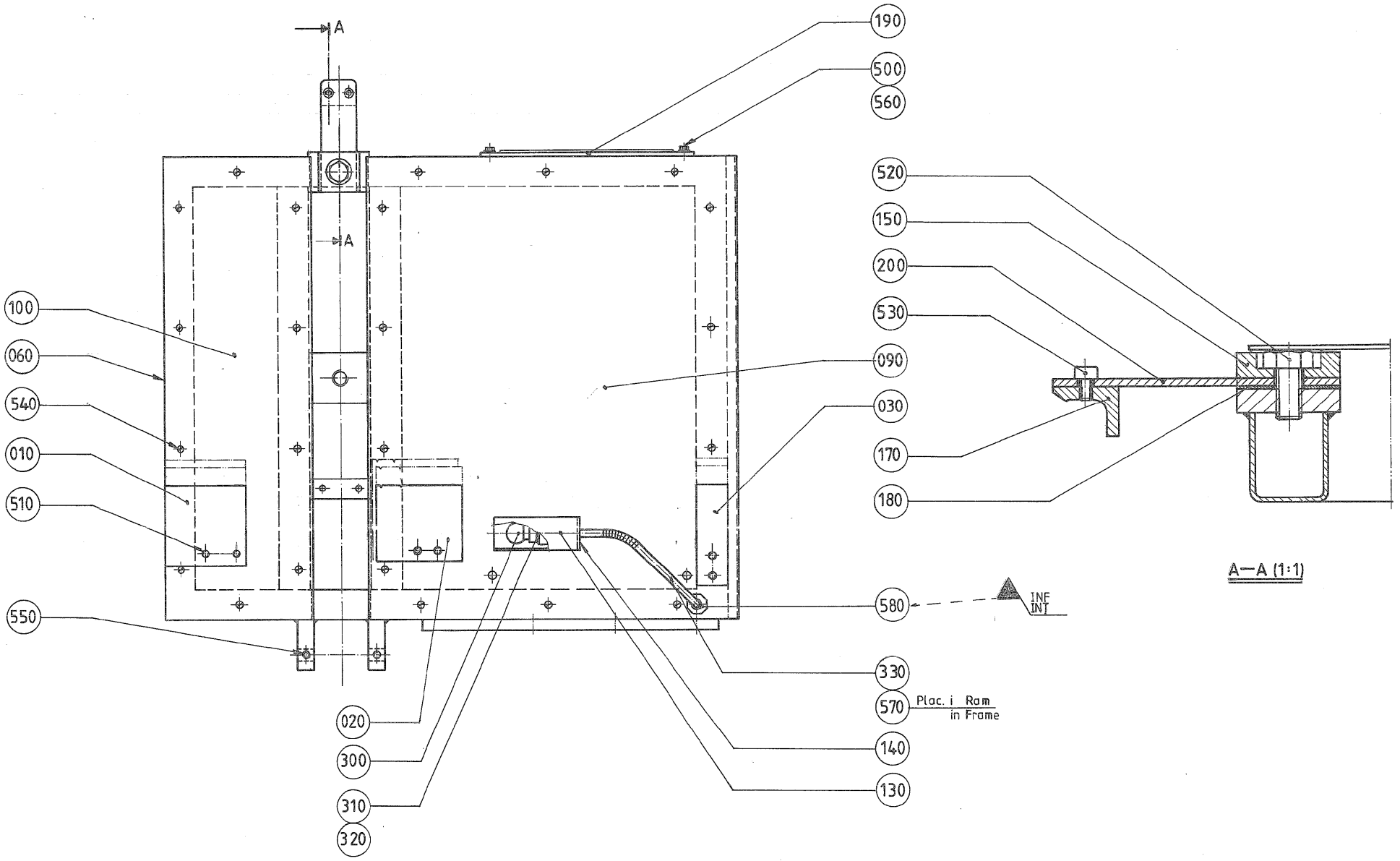
A
A
190
500
560
520
150
200
530
090
030
170
180
100
060
540
010
510
550
580
INF
INT
330
570
Plac. i Ram
in Frame
140
130
020
300
310
320
A—A (1:1)

Pos	Part No	SP	UN	Qty	Description	Page No
0200B OR 0250B						
010	37913-0000	-		1	RULER	
020	450278-0000	-		1	RULER	
030	37917-0000	-		1	RULER	
0200S						
010	272886-0000	-		1	RULER	
020	469085-0000	-		1	RULER	
030	272888-0000	-		1	RULER	
Common Parts						
060	458379-0000	-		1	FRAME	
090	450098-0000	-		1	SHEET	
100	450099-0000	-		1	SHEET	
130	37774-0000	-		1	PROTECTIVE COVER	
140	37775-0000	-		1	LAMP HOLDER	
150	37908-0000	-		1	PLATE	
170	37910-0000	-		1	LOCK	
180	37911-0000	A		1	LACE	
190	37912-0000	-		1	LOCK PLATE	
200	450100-0000	A		1	SPRING	
300	90036-0009	B		1	LIGHT BULB, BA15D 24V	
310	90037-0001	-		1	LAMPHOLDER	
320	90086-0001	-		1	NIPPLE, M10X1	
330	90152-0001	-		1	HOSE L=280MM THREAD M10X1	
500	312105-0325	-		2	SCREW M6S ISO 4017 M5X10 A480	
510	312105-0362	-		6	SCREW M6S ISO 4017 M6X8 A480	
520	312105-0491	-		1	SCREW M6S ISO 4017 M10X20 A480	
530	312115-0323	-		2	SCREW MC6S M5X8 A280	
540	312145-0220	-		23	SCREW COUNTERS.SLOT.HD. MFS 3X6 SS	
550	312318-0362	-		2	SCREW SOCK.SET CUP P MSK6SS M6X8 A4	
560	315105-0146	-		2	WASHER PLAIN, BRB, 5,3/10,H=1	
570	352101-0102	-		1	LEAD-IN, PR15,2/PG9, E-1457515	
580	352103-0105	-		1	CABLE GLAND, STR 11, PR 18,6/PG11	

Pos	Part No	SP	UN	Qty	Description	Page No

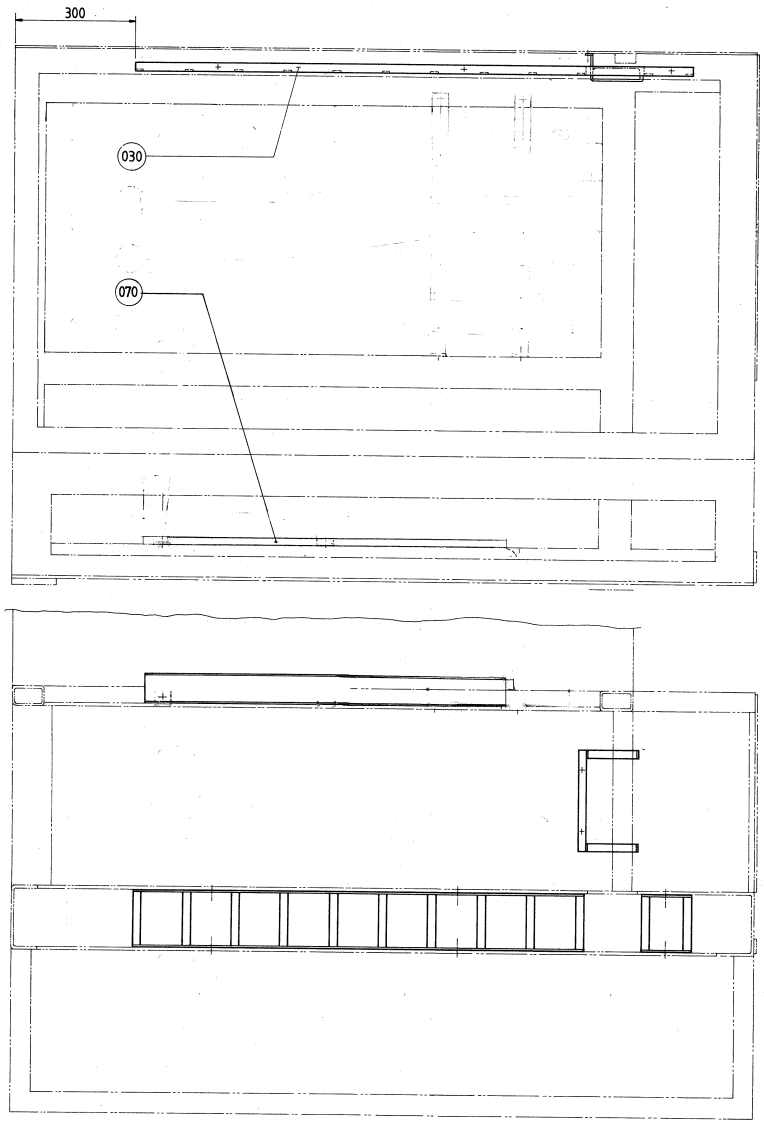
300
030
070

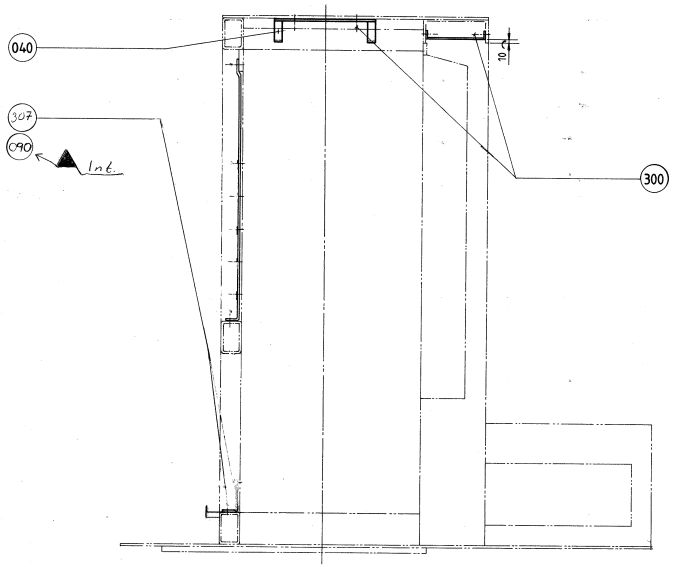
040
307
090
Ink
10
300

ECM: 107456 - 20020506
Group number: 1529221-0100
Assembly Drawing: 1529221-1_1_AB

Issue: 20020822

Pos	Part No	SP	UN	Qty	Description	Page No
Common Parts						
030	272559-0000	-		1	CABLE TRACK	
040	295296-0000	-		1	CABLE TRACK	
070	1529220-0000	-		1	CABLE TRENCH	
090	2545290-0000	-		2	SPACER SLEEVE	
300	312105-0364	-		20	SCREW M6S ISO 4017 M6X10 A480	
307	312105-0629	-		2	SCREW M6S ISO 4017 M16X45 A480	

Pos	Part No	SP	UN	Qty	Description	Page No

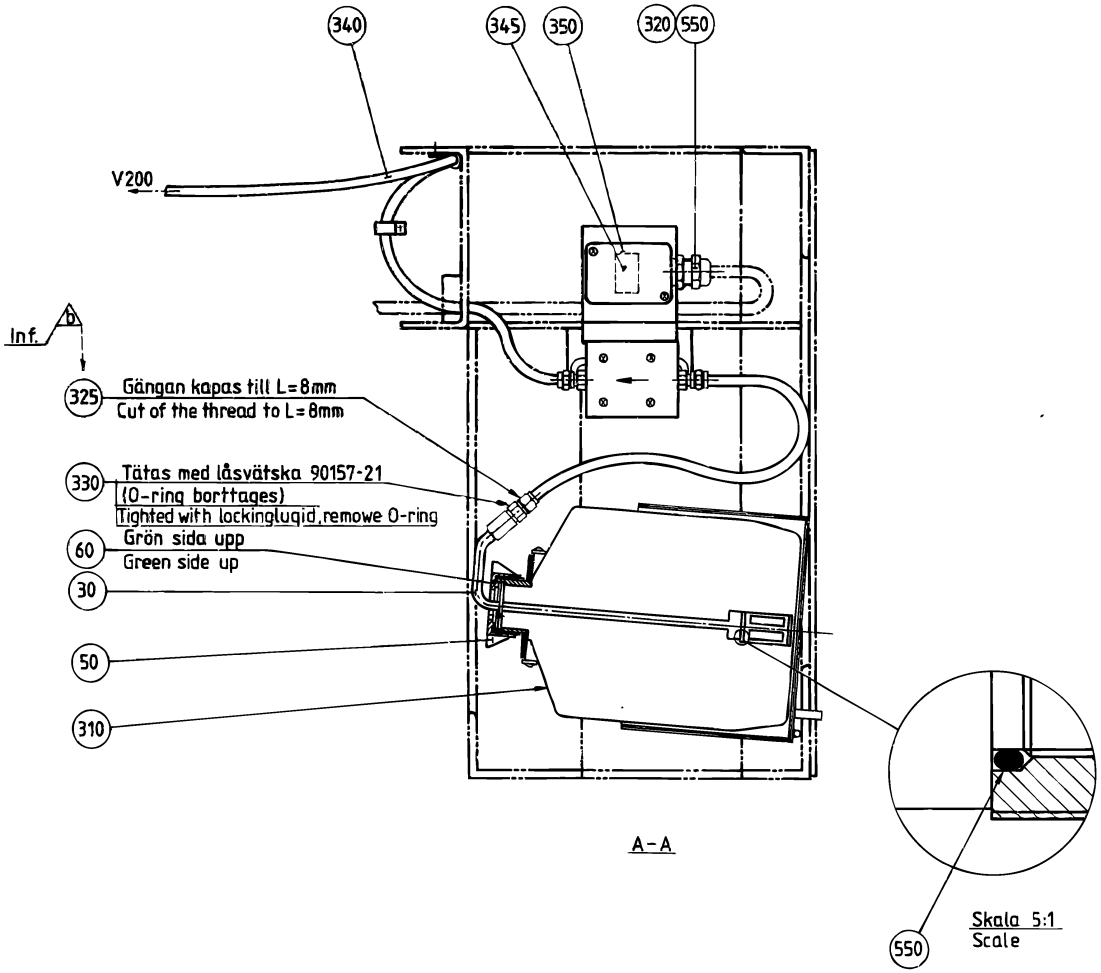

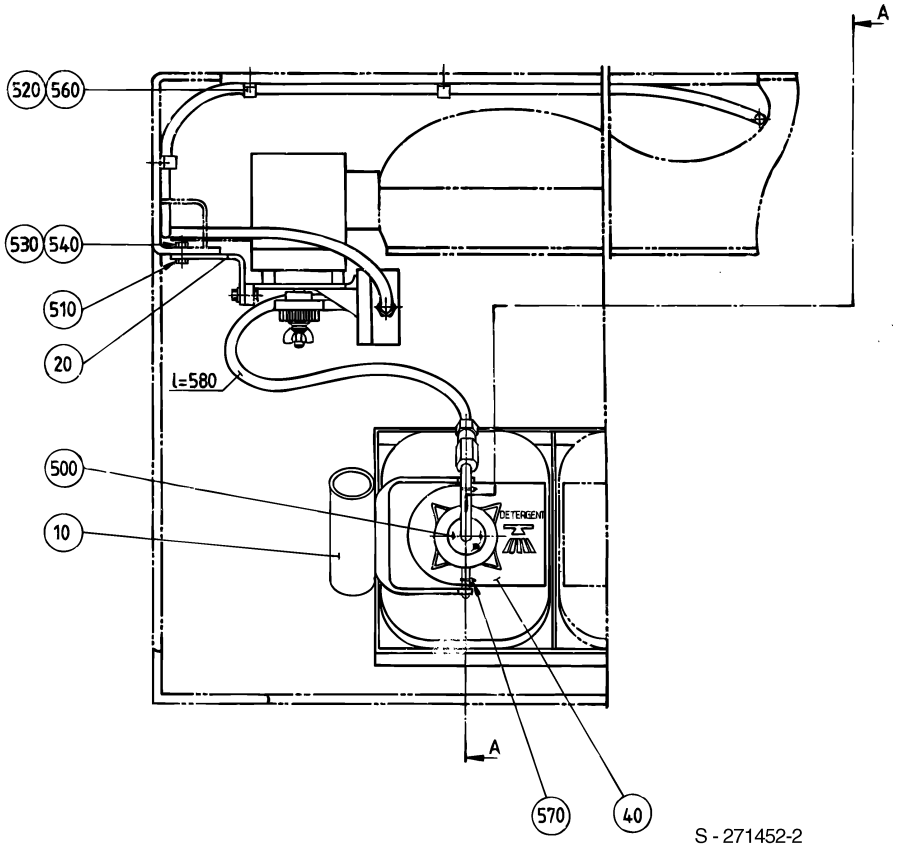

S - 271452-2
ECN 82225

ECM: 102806 - 20020110
Group number: 271452-0200
Assembly Drawing: 271452-2_1_AA

Issue: 20020822

Pos	Part No	SP	UN	Qty	Description	Page No
Common Parts						
010	271229-0000	-		1	BOX	
020	271451-0000	-		1	BRACKET	
030	295384-0000	-		1	SUCTION PIPE	
040	295387-0000	-		1	SIGN BOARD	
050	35962-0000	A		1	LID	
060	295390-0000	-		1	SIGN	
310	90050-0011	A		1	BOTTLE	
320	90099-0003	-		1	NUT	
325	90224-0094	-		1	NIPPLE	
330	90157-0021	-	G	1	LOCKING FLUID	
340	90166-0008	-	MM	2000	HOSE 7/10 PVC TRANSP.	
345	90195-0020	-		1	TERMINAL BLOCK, 1977.2	
350	B90321-0017	A		1	PUMP C660P 220V 50HZ;50W	
	90321-0380	*C*		*1*	*DIAPHRAGM*	
	90321-0396	*C*		*1*	*FILTER*	
500	311520-0329	-		1	RIVET, BLANK 2,4X8	
510	312101-0370	-		4	SCREW M6S M6X20 FZB	
520	312125-0285	-		4	SCREW SLOT.PAN HD. MCS 4X6 A480	
530	312601-0316	-		4	NUT M6M 6-8 FZB	
540	315101-0153	-		4	WASHER PLAIN, BRB, 6,4/12 H=1,5	
550	315202-0109	-		1	O-RING 11,1X1,6 MM	
555	352103-0110	-		1	CABLE GLAND, STR 16, PR22,5/PG16	
560	352110-0102	-		4	CABLE CLIPS, D=10-14 MM	
570	352113-0101	-		2	CLIP STRIP, 92X2,5 MM	

Pos	Part No	SP	UN	Qty	Description	Page No

Machine Type | Group Description | Used-In | Group Number | Page No

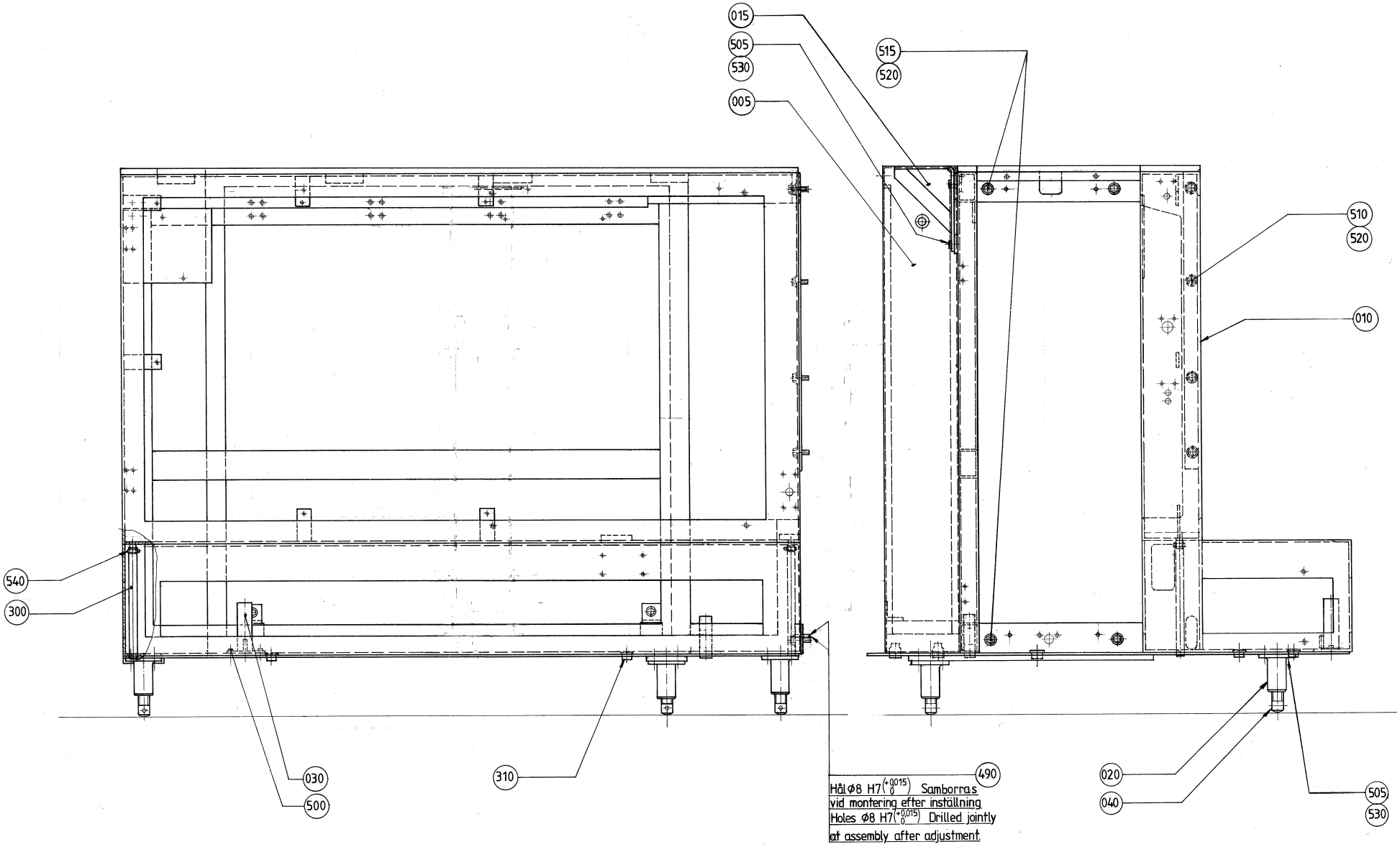
015
505
530
005
515
520
510
520
010
540
300
030
500
310
490
Hål ø8 H7 (+0.015 0) Samborras
vid montering efter inställning
Holes ø8 H7 (+0.015 0) Drilled jointly
at assembly after adjustment.
020
040
505
530

ECM: 86336 - 20010226
Group number: 1529207-0100
Assembly Drawing: 1529207-1_1_AA

Issue: 20020822

Pos	Part No	SP	UN	Qty	Description	Page No
Common Parts						
005	1529050-0000	-		1	SPACER PIECE	
010	1529210-0000	-		1	MACHINE BODY	
020	469095-0000	-		4	HOLDER	
030	295259-0000	-		1	HOLDER	
040	469096-0000	-		4	LEG	
300	90166-0087	-	MM	630	HOSE 15/23 REINF.PVC TRANSP.	
310	90261-0008	-		3	PLUG, BLIND, PLASTIC GPN300F26	
490	311103-0407	-		4	PARALLELL PIN, M6, 8X35 MM	
500	312105-0368	-		2	SCREW M6S M6X16 A280	
505	312105-0453	-		16	SCREW M6S ISO 4017 M8X25 A480	
510	312105-0536	-		4	SCREW M6S ISO 4017 M12X30 A480	
515	312105-0540	-		4	SCREW M6S ISO 4017 M12X40 A480	
520	315105-0178	-		8	WASHER PLAIN, BRB, 13/24,H=2	
530	315115-0165	-		16	WASHER PLAIN, TBRB 8,4/16 H=3	
540	342991-0104	-		2	HOSE CLIP,WORM DRIVE TYPE (23)-27	

Pos	Part No	SP	UN	Qty	Description	Page No

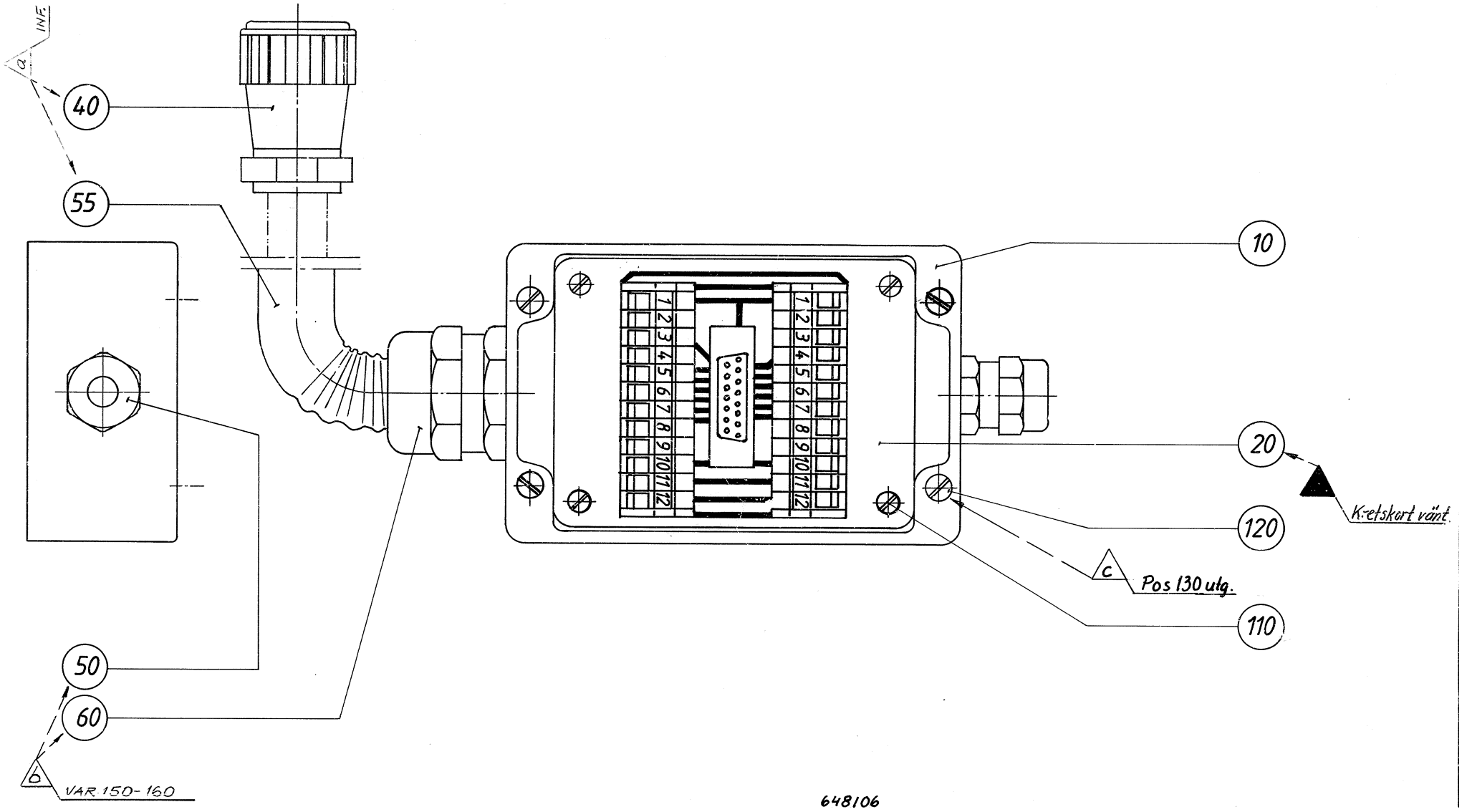
INF.
40
55
50
60
VAR. 150-160
10
20
120
110
Kretskort vänt
Pos 130 ulg.
1 2 3 4 5 6 7 8 9 10 11 12
1 2 3 4 5 6 7 8 9 10 11 12
648106

ECM: 90181 - 20010226
Group number: 451348-0100
Assembly Drawing: 451348-1_1_AA

Issue: 20020822

Pos	Part No	SP	UN	Qty	Description	Page No
TBA/9 OR TBA/9 R						
050	352103-0106	-		2	CABLE GLAND, ST 11, PR18,6/PG11	
Common Parts						
010	464297-0000	-		1	CONNECTION BOX	
020	451423-0000	-		1	CIRCUIT BOARD	
110	312125-0220	-		4	SCREW SLOT.PAN HD. MCS 3X6 A480	
120	312125-0291	-		4	SCREW PAN HEAD MCS M4X12 SS	

Pos	Part No	SP	UN	Qty	Description	Page No

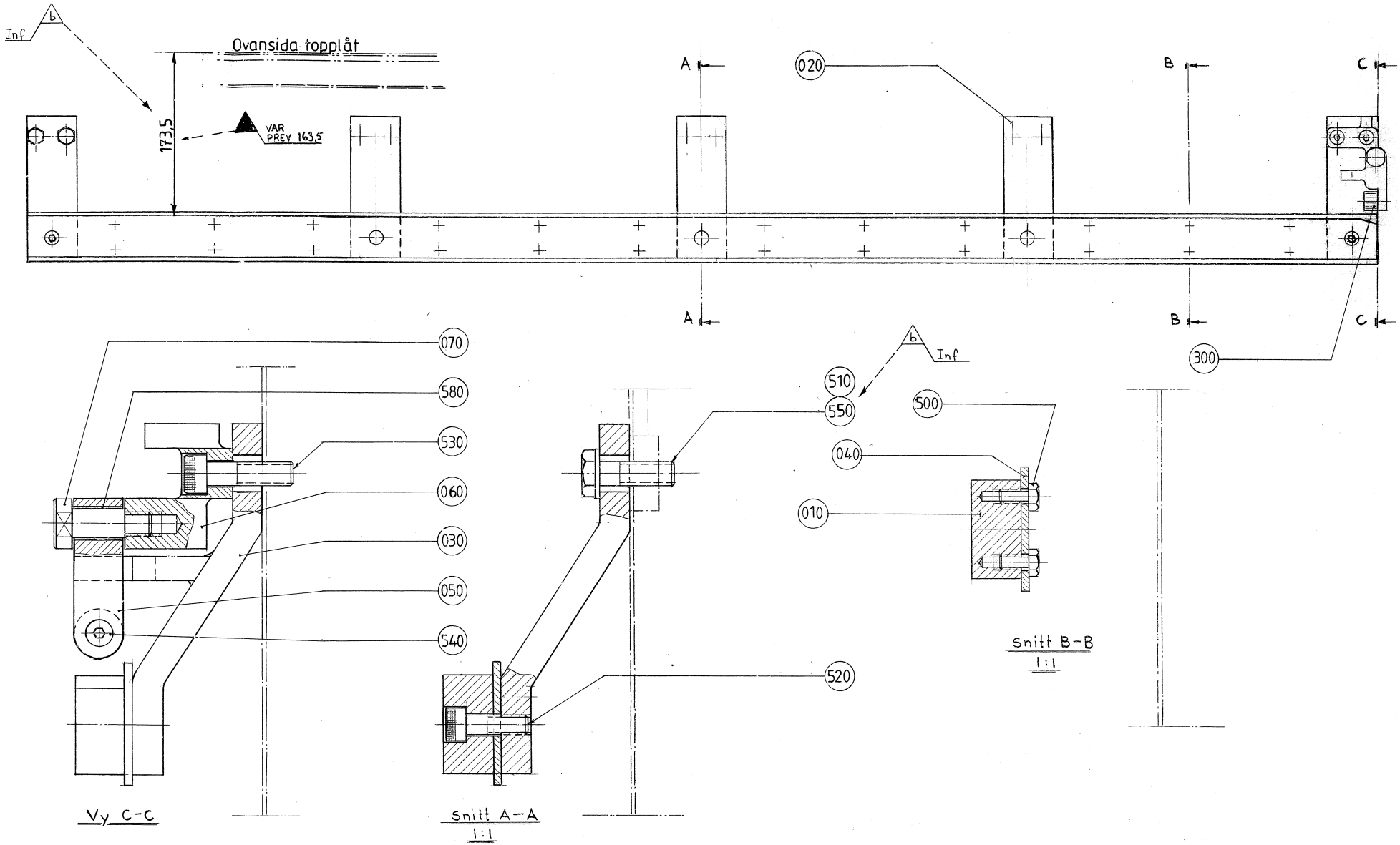
Inf
b
Ovansida topplåt
173,5
VAR PREV 163,5
A
020
B
C
300
070
580
530
060
030
050
540
510
550
520
500
040
010
Vy C-C
Snitt A–A
1:1
Snitt B–B
1:1

ECM: 102877 - 20020110
Group number: 271468-0200
Assembly Drawing: 271468-2_1_AA

Issue: 20020822

Pos	Part No	SP	UN	Qty	Description	Page No
Common Parts						
010	272620-0000	A		1	GUIDE	
020	271472-0000	-		4	BRACKET	
030	271959-0000	-		1	BRACKET	
040	272621-0000	A		1	STEERING RAIL	
050	272630-0000	A		1	BARRIER	
060	272631-0000	A		1	BRACKET	
070	271961-0000	A		1	SCREW	
300	90347-0011	B		1	VIBRATION DAMPER MEGI 781056	
500	312105-0366	-		24	SCREW M6S M6X12 A280	
510	312105-0495	-		8	SCREW M6S ISO 4017 M10X30 A480	
520	312115-0453	-		5	SCREW MC6S M8X25 A280	
530	312115-0497	-		2	SCREW MC6S M10X35 A280	
540	312155-0366	-		1	SCREW HEX.SOCK.COUNT.MF6S M6X12 A280	
550	315105-0173	-		8	WASHER PLAIN, BRB, 10,5/22,H=2	
580	321120-0112	A		1	BEARING BUSHING WITHOUT FLANGE,12/14X20	

Pos	Part No	SP	UN	Qty	Description	Page No

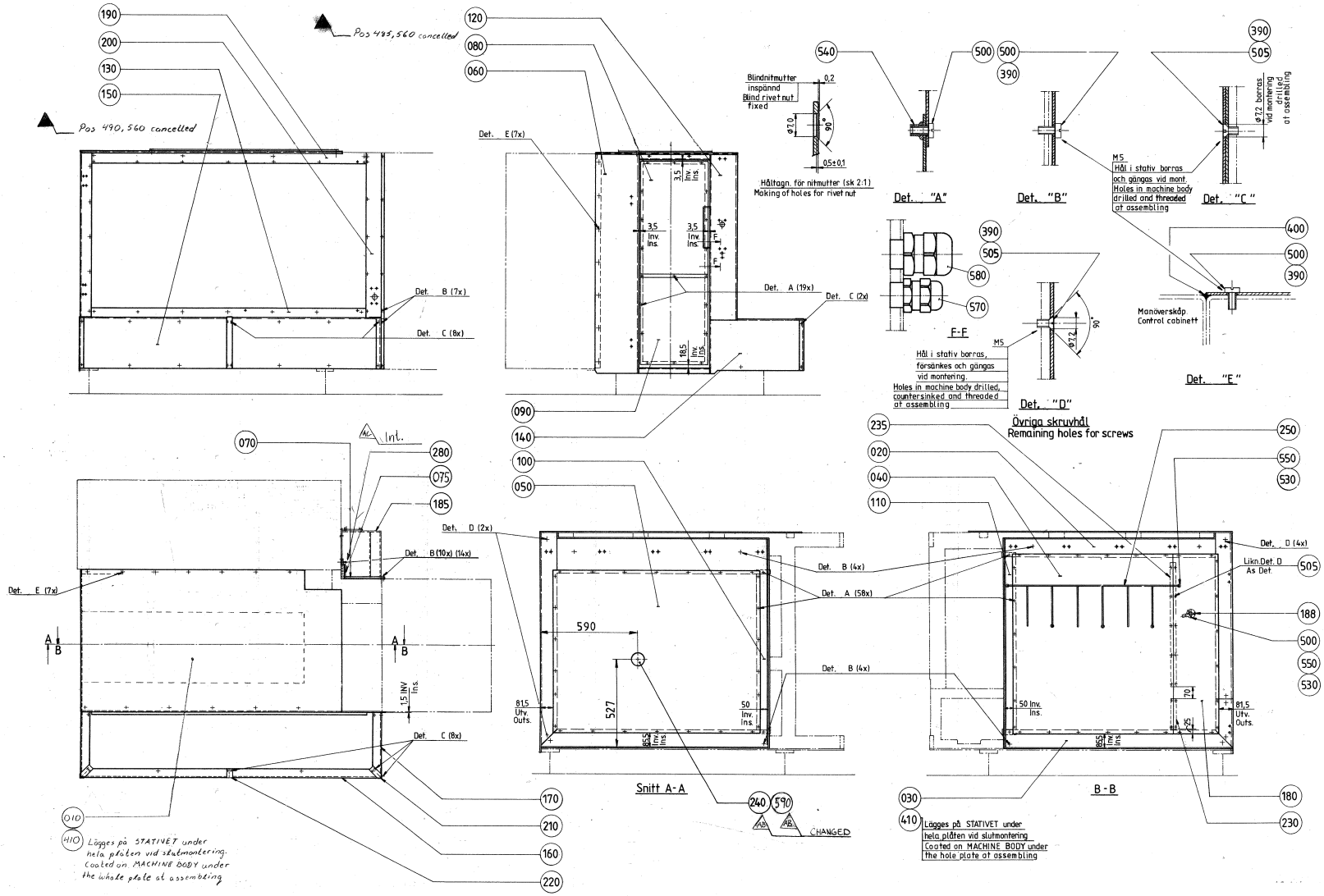
Pos 485, 560 cancelled
Pos 490, 560 cancelled
Det. B (7x)
Det. C (8x)
Det. E (7x)
Det. A (19x)
Det. C (2x)
Håltagn. för nitmutter (sk 2:1)
Making of holes for rivet nut
Det. "A"
Det. "B"
Det. "C"
F-F
Det. "D"
Det. "E"
Manöverskåp
Control cabinett
Övriga skruvhål
Remaining holes for screws
Det. D (2x)
Det. B (10x) (14x)
Det. B (4x)
Det. A (58x)
Det. D (4x)
Likn. Det. D
As Det.
Snitt A-A
B-B
CHANGED
Lägges på STATIVET under hela plåten vid slutmontering.
Coated on MACHINE BODY under the whole plate at assembling
Lägges på STATIVET under hela plåten vid slutmontering
Coated on MACHINE BODY under the hole plate at assembling

ECM: 107707 - 20020506
Group number: 1529223-0100
Assembly Drawing: 1529223-1_1_AD

Issue: 20020822

Pos	Part No	SP	UN	Qty	Description	Page No
Common Parts						
010	1529051-0001	-		1	COVER PLATE	
020	469033-0000	-		1	COVERING PLATE	
030	295639-0000	-		1	BOTTOM PANEL	
040	441067-0000	-		1	SIDE COVER LEFT	
050	469516-0000	-		1	SIDE PLATE RIGHT	
060	469034-0000	-		1	GUSSET PLATE	
070	752502-0000	-		1	PROTECTIVE CASING	
075	752504-0000	-		1	COVERING PLATE	
080	295645-0000	-		1	COVER, UPPER	
090	295646-0000	-		1	COVER, LOWER	
100	295647-0000	-		1	CORNER STRIP	
110	295648-0000	-		1	CORNER STRIP	
120	469035-0000	-		1	GUSSET PLATE	
130	295650-0000	-		1	COVERING PLATE	
140	295651-0000	-		1	COVERING PLATE	
150	295652-0000	-		1	COVERING PLATE	
160	295653-0000	-		1	COVERING PLATE	
170	295654-0000	-		1	COVERING PLATE	
180	441068-0000	-		1	SIDE PLATE	
185	752503-0000	-		1	PROTECTIVE CASING	
188	272698-0000	-		1	BRACKET	
190	469038-0000	-		1	COVERING PLATE	
200	469039-0000	-		1	COVERING PLATE	
210	295658-0000	-		2	COVER SLIP	
220	295659-0000	-		1	COVER SLIP	
230	441069-0001	-		1	BRACKET	
235	441069-0002	-		1	BRACKET	
240	90232-0304	-		1	REFLECTOR MIRROR VISOLUX C110	
250	272696-0000	-		1	HOLDER	
280	752505-0000	-		1	BRACKET	
390	90157-0016	-	ML	1	LOCKING FLUID	
400	90157-0022	-	L	1	SEALING COMPOUND	
410	90298-0012	-		1	INHIBITOR	
500	312125-0325	-		123	SCREW SLOT.PAN HD. MCS 5X10 A480	
505	312145-0323	-		89	SCREW COUNTERS.SLOT.HD. MFS 5X8 SS	
530	312605-0314	-		8	HEXAGON NUT, M6M M5 A280	
540	312923-0122	-		77	NUT BLIND RIVET PO M5X12,6 SS	
550	315105-0146	-		8	WASHER PLAIN, BRB, 5,3/10,H=1	
570	352103-0101	-		1	CABLE GLAND, ST 9, PR15,2/PG9	
580	352103-0106	-		1	CABLE GLAND, ST 11, PR18,6/PG11	
590	90153-0001	-		1	ADHESIVE	

Machine Type	Group Description	Used-In	Group Number	Page No

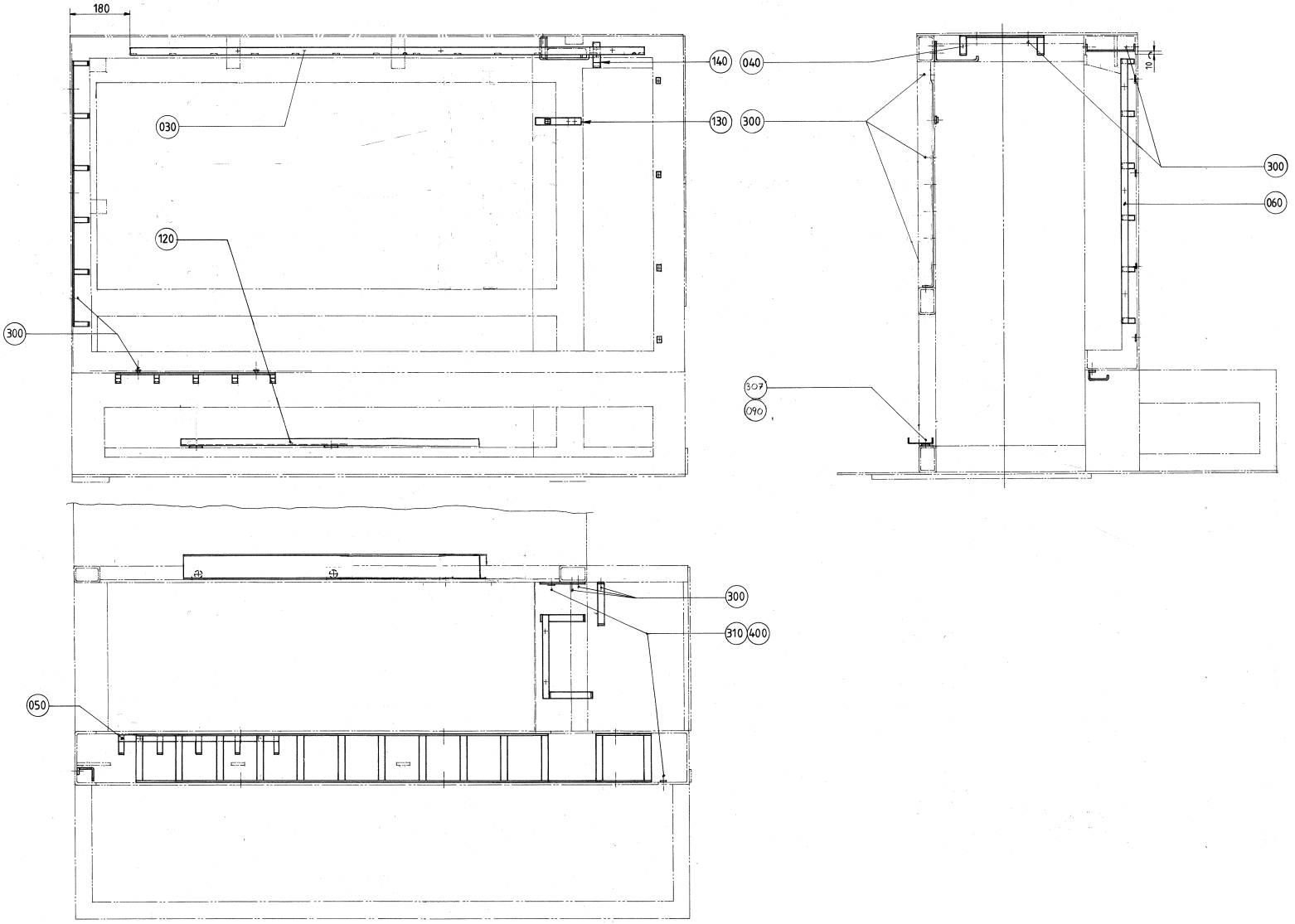
180
140
040
130
300
030
120
300
300
060
307
090
300
310
400
050

ECM: 108073 - 20020506
Group number: 1529222-0100
Assembly Drawing: 1529222-1_1_AB

Issue: 20020822

Pos	Part No	SP	UN	Qty	Description	Page No
Common Parts						
030	272559-0000	-		1	CABLE TRACK	
040	295296-0000	-		1	CABLE TRACK	
050	491945-0000	-		1	CABLE TRACK	
060	491946-0000	-		1	CABLE TRACK	
090	2545290-0000	-		2	SPACER SLEEVE	
120	1529220-0000	-		1	CABLE TRENCH	
130	751059-0000	-		1	BRACKET	
140	751060-0000	-		1	BRACKET	
300	312101-0364	-		20	SCREW M6S M6X10 FZB	
307	312101-0629	-		2	SCREW M6S M16X45 FZB	
310	312121-0285	-		5	SCREW SLOT.PAN HD. MCS 4X6 FZB	
400	352113-0205	-		5	ANCHOR PLATES FOR STRIPS, TYPE TM2S8-C10	

Pos	Part No	SP	UN	Qty	Description	Page No

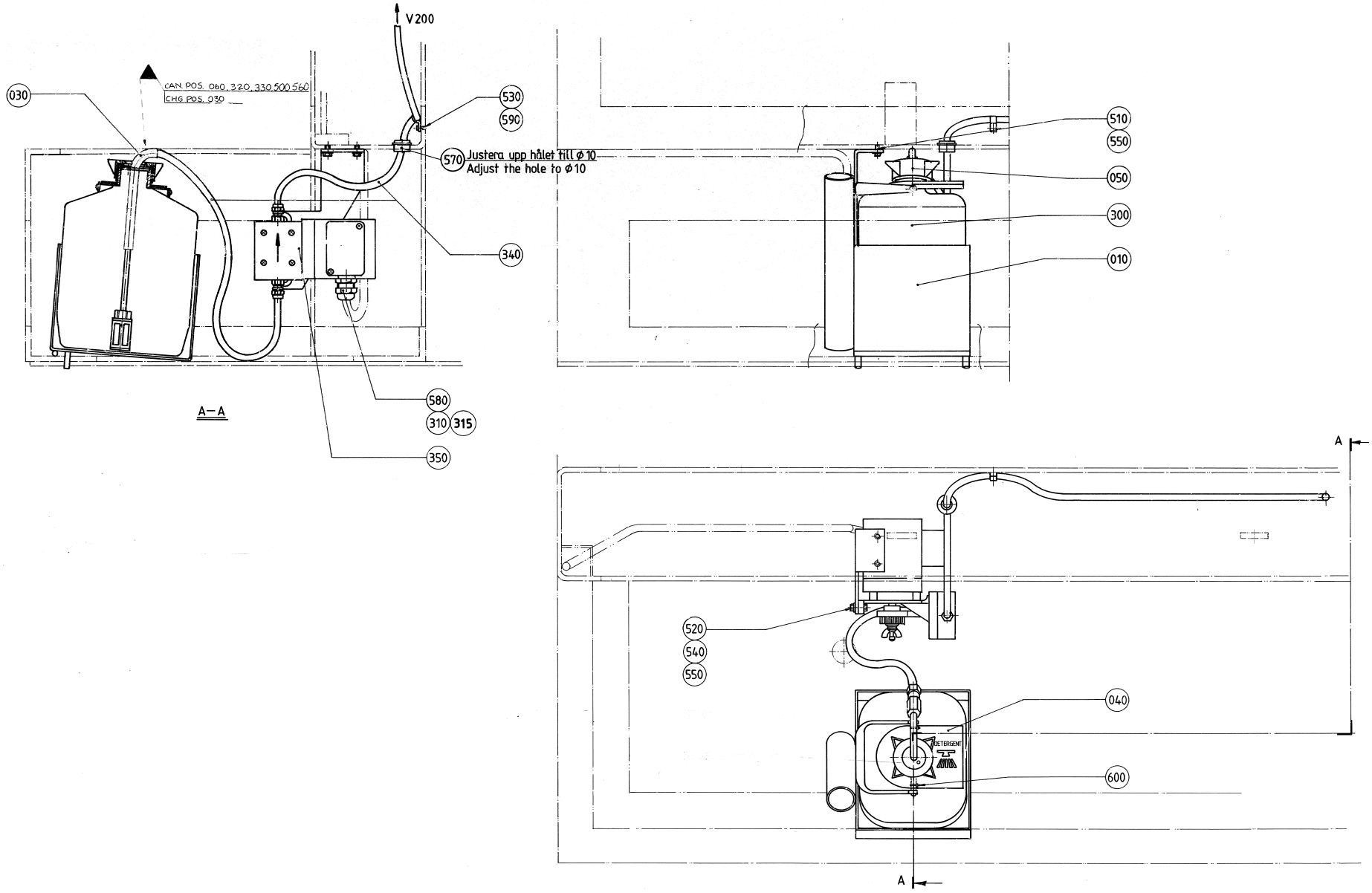
V200
CAN POS. 060, 320, 330, 500, 560
CHG POS. 030
030
530
590
570
Justera upp hålet till ø10
Adjust the hole to ø10
340
580
310
315
350
A–A
510
550
050
300
010
A
520
540
550
040
600
DETERGENT
A

Pos	Part No	SP	UN	Qty	Description	Page No
Common Parts						
010	490768-0000	-		1	BOX	
020	490769-0000	-		1	BRACKET	
030	979217-0000	-		1	PIPE	
040	295387-0000	-		1	SIGN BOARD	
050	35962-0000	A		1	LID	
300	90050-0011	A		1	BOTTLE	
310	90099-0003	-		1	NUT	
315	90195-0020	-		1	TERMINAL BLOCK, 1977.2	
340	90166-0008	-	MM	2000	HOSE 7/10 PVC TRANSP.	
350	B90321-0037	B		1	"PUMP C-6125P EP 220V;50HZ"	
	90321-0396	*C*		*1*	*FILTER*	
	90321-0380	*C*		*1*	*DIAPHRAGM*	
	90166-0157	*C*	*MM*	*1500*	*HOSE*	
510	312105-0366	-		2	SCREW M6S M6X12 A280	
520	312105-0370	-		2	SCREW M6S ISO 4017 M6X20 A480	
530	312125-0285	-		1	SCREW SLOT.PAN HD. MCS 4X6 A480	
540	312605-0316	-		2	HEXAGON NUT, M6M M6 A280	
550	315105-0153	-		4	WASHER PLAIN, BRB, 6,4/12,H=1,5	
570	352101-0105	-		1	LEAD-IN, PR22,5/PG16, E-1457522	
580	352103-0110	-		1	CABLE GLAND, STR 16, PR22,5/PG16	
590	352110-0102	-		1	CABLE CLIPS, D=10-14 MM	
600	352113-0101	-		2	CLIP STRIP, 92X2,5 MM	

Pos	Part No	SP	UN	Qty	Description	Page No

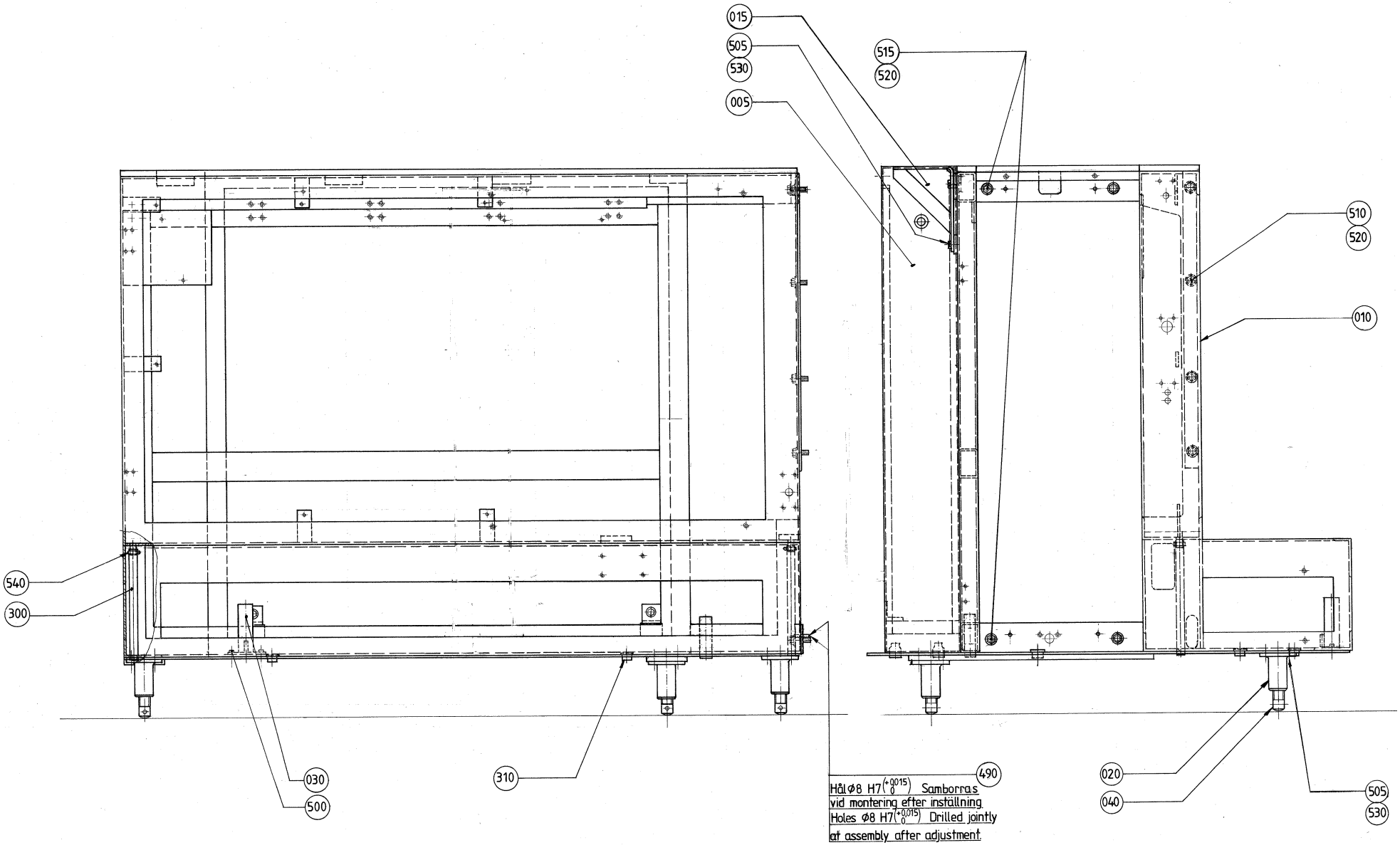
015
505
530
005
515
520
510
520
010
540
300
030
500
310
490
020
040
505
530
Hål Ø8 H7 (+0.015 0) Samborras
vid montering efter inställning
Holes Ø8 H7 (+0.015 0) Drilled jointly
at assembly after adjustment

ECM: 86319 - 20010226
Group number: 1529230-0100
Assembly Drawing: 1529230-1_1_AA

Issue: 20020822

Pos	Part No	SP	UN	Qty	Description	Page No
Common Parts						
005	1529050-0000	-		1	SPACER PIECE	
010	1529210-0000	-		1	MACHINE BODY	
020	469095-0000	-		4	HOLDER	
030	295259-0000	-		1	HOLDER	
040	469096-0000	-		4	LEG	
300	90166-0087	-	MM	630	HOSE 15/23 REINF.PVC TRANSP.	
310	90261-0008	-		3	PLUG, BLIND, PLASTIC GPN300F26	
490	311103-0407	-		4	PARALLELL PIN, M6, 8X35 MM	
500	312105-0368	-		2	SCREW M6S M6X16 A280	
505	312105-0453	-		16	SCREW M6S ISO 4017 M8X25 A480	
510	312105-0536	-		4	SCREW M6S ISO 4017 M12X30 A480	
515	312105-0540	-		4	SCREW M6S ISO 4017 M12X40 A480	
520	315105-0178	-		8	WASHER PLAIN, BRB, 13/24,H=2	
530	315115-0165	-		16	WASHER PLAIN, TBRB 8,4/16 H=3	
540	342991-0104	-		2	HOSE CLIP,WORM DRIVE TYPE (23)-27	

Pos	Part No	SP	UN	Qty	Description	Page No

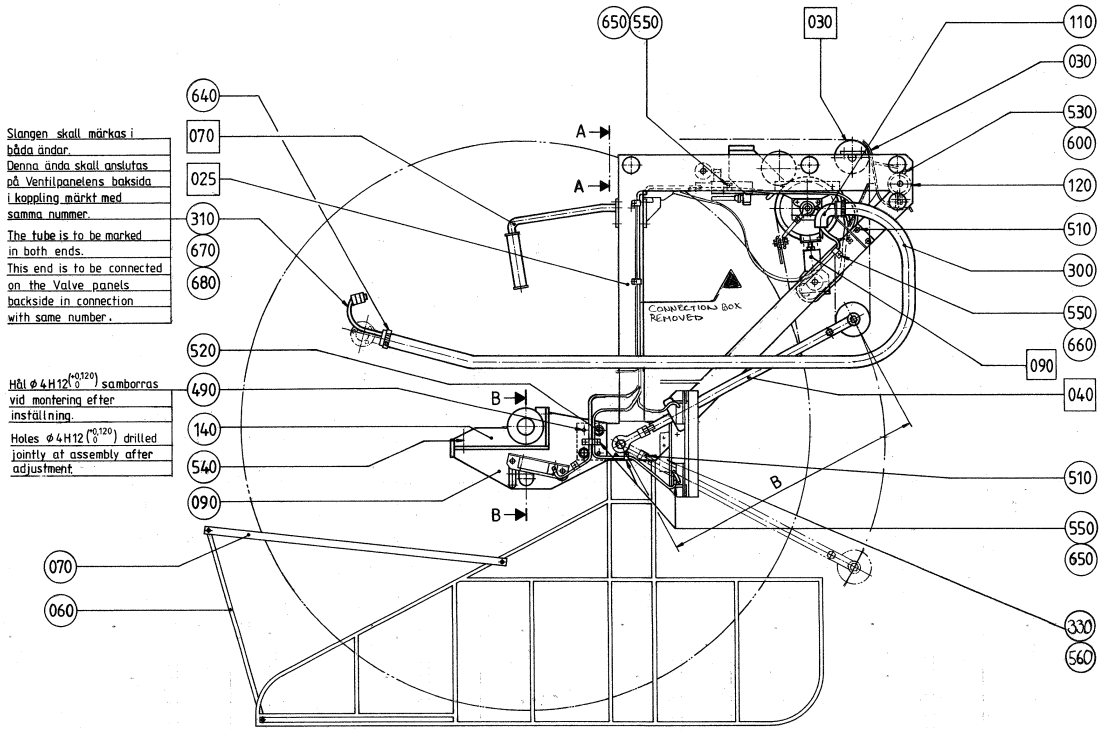

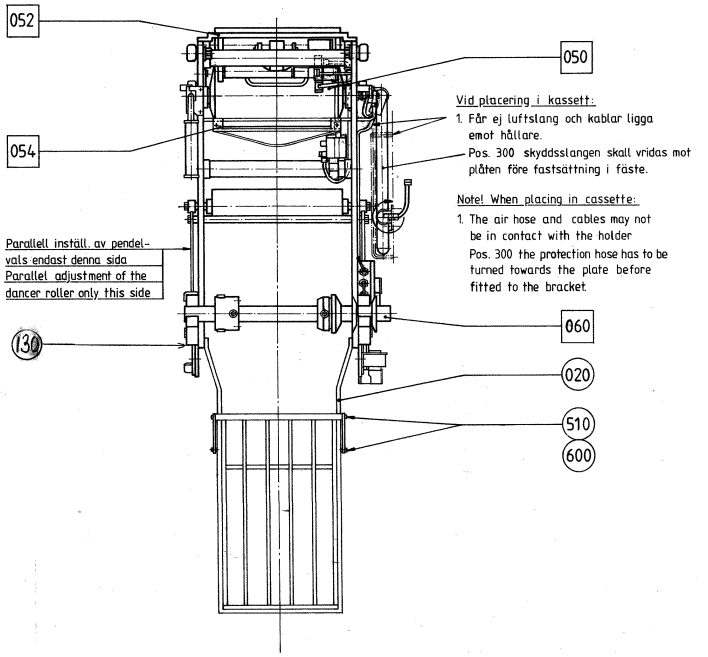

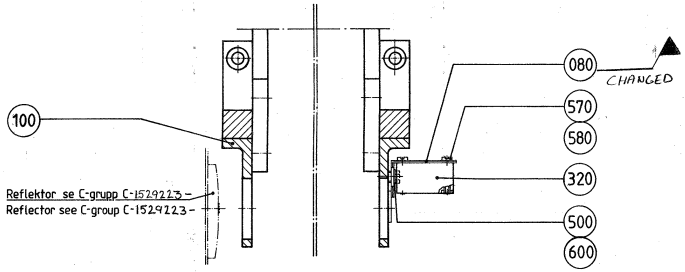

Snitt/Section B-B 1:2

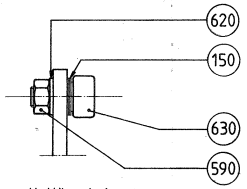

Vy/View A-A
1:2

INSTÄLLNING AV KASSETTVAGN

Ställ in mått B=534±1mm på armarna 040 Montera därefter Kassettvagnen komplett. Kontrollera att Brytrullen 030 ligger i våg och är vinkelrätt mot utsidan på Rullar 630 Ställ Driven brytrulle 050 i våg och parallellt ± 0,2mm med Brytrullen 030 Placera en rak axel ⌀32mm i Lagringarna 140 och ställ axeln i våg och parallellt ±0,2mm med Brytrullen 030 Ställ Pendelvalsen 040 parallellt ±1mm med axeln i Lagringarna 140

SETTING OF CARRIAGE

On arms 040 Set measure B=534±1mm. Make a complete assembling on the Carriage. Check that Bending roller 030 is in balance and at right angle to outside Rollers 630 Set Driven bending roller 050 in balance and in parallel ±0,2mm with Bending roller 030 Put a straight axle ⌀32mm in Bearings 140 and set the axle in balance and in parallel ±0,2mm with Bending roller 030 Set Dancer roller 040 in parallel ±1mm with the axle in Bearings 140

ECM: 101539 - 20020506
Group number: 1529225-0100
Assembly Drawing: 1529225-1_1_AB

Issue: 20020822

Pos	Part No	SP	UN	Qty	Description	Page No
Common Parts						
020	271546-0000	B		1	BASKET	
025	A1529226-0100	-		1	CARRIAGE	**635**
030	A272473-0100	-		1	BENDING ROLLER	**637**
030	B441907-0000	-		1	RULING GUIDE	
	312605-0316	-		*4*	*HEXAGON NUT, M6M M6 A280*	
040	A272084-0200	-		1	STRETCHER	**639**
050	A271017-0300	-		1	BENDING ROLLER	**641**
052	A271934-0300	-		1	PAPER GUIDE PLATE	**643**
054	A1529410-0100	-		1	PAPER GUIDE	**645**
060	A458383-0200	-		2	PAPER REEL HOLDER	**647**
060	271547-0000	B		1	DOOR	
070	A271454-0200	-		1	CATCH HANDLE	**649**
070	271548-0000	B		2	LINK	
080	271558-0000	B		1	BRACKET	
090	A751478-0200	-		1	BRAKE	**651**
090	490779-0000	B		1	BRACKET LEFT	
100	490780-0000	B		1	BRACKET RIGHT	
110	272697-0000	B		1	BRACKET	
120	441908-0000	-		2	BOW CLAMP	
130	1529041-0000	-		1	PROTECTION	
140	272564-0000	-		2	BEARING	
150	456072-0000	A		24	WASHER	
300	90166-0060	A	MM	1350	HOSE 19/26-27 REINF.PVC	
310	90166-0132	-	M	3	TUBE 6 MM PA,TRANSP.	
320	90232-0129	-		1	PH.CELL E3S-CR61-5M	
330	1529039-0000	-		1	PROTECTION	
490	311112-0255	-		4	PIN, STRAIGHT SLOTTED SPRING FRP 4X18	
500	312105-0364	-		2	SCREW M6S ISO 4017 M6X10 A480	
510	312105-0368	-		10	SCREW M6S M6X16 A280	
520	312105-0491	-		4	SCREW M6S ISO 4017 M10X20 A480	
530	312115-0368	-		4	SCREW MC6S M6X16 A280	
540	312115-0449	-		4	SCREW MC6S M8X16 A280	
550	312125-0285	-		14	SCREW SLOT.PAN HD. MCS 4X6 A480	
560	312155-0327	-		2	SCREW HEX.SOCK.COUNT.MF6S M5X12 A280	
570	312125-0297	-		2	SCREW PAN HEAD MCS M4X25 SS	
580	312605-0312	-		2	HEXAGON NUT, M6M M4 A280	
590	312631-0324	-		8	NUT HEX. M16X1,5 FE FZB	
600	315105-0153	-		10	WASHER PLAIN, BRB, 6,4/12,H=1,5	
620	315105-0186	-		8	WASHER PLAIN, BRB, 17/30,H=3	
630	321582-0212	A		8	CAM ROLLER, 2 SEALS, 16X35X52 MM	
640	342991-0105	-		2	HOSE CLIP,WORM DRIVE TYPE (27)-30	
650	352110-0100	-		12	CABLE CLIPS, D=5-7 MM	
660	352110-0101	-		3	CABLE CLIPS, D=7-10 MM	
670	359000-0400	-		4	MARKING CO2/4"0"	
680	359000-0404	-		2	MARKING COLLAR PA2/4 "4" YELLOW	

Machine Type | Group Description | Used-In | Group Number | Page No

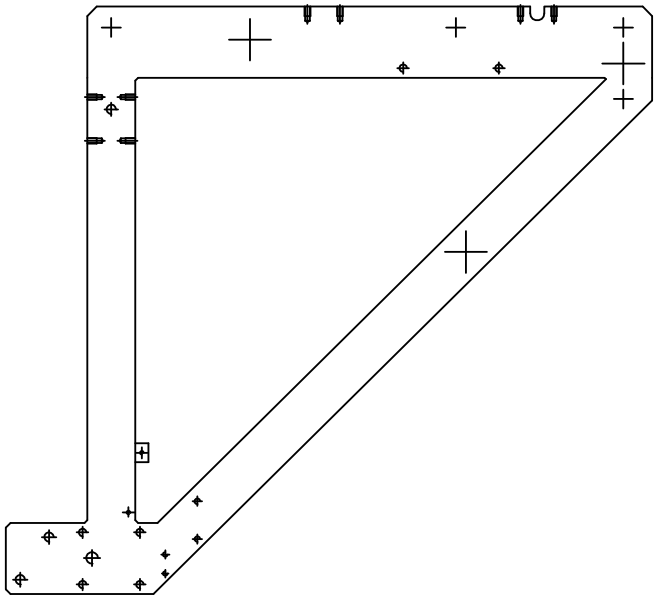

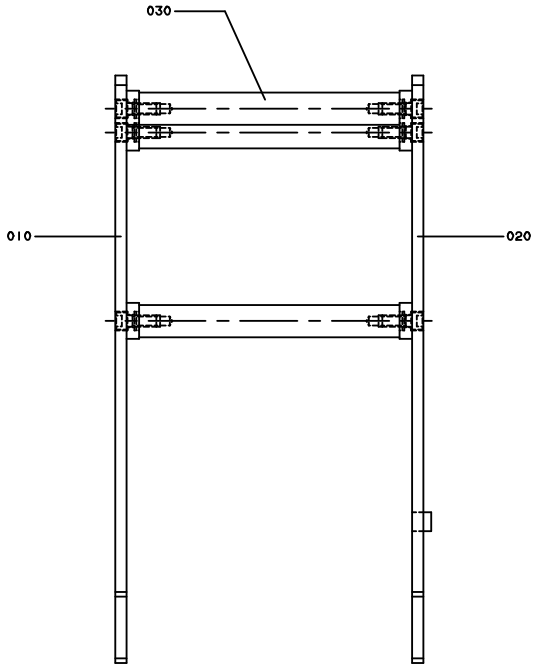
030
010
020

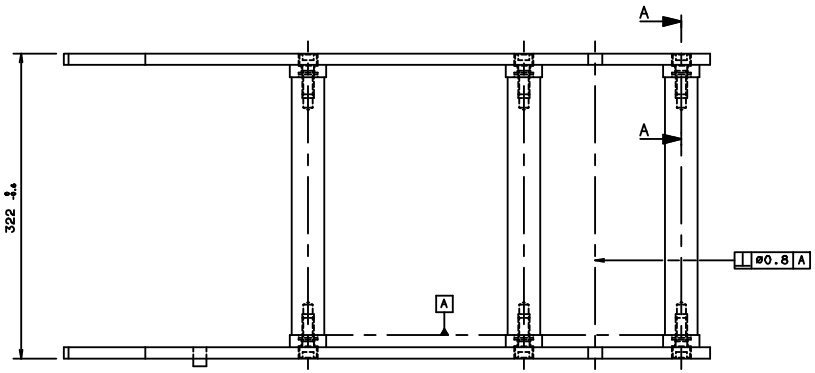
A
A
322 ±0.4
⌖ ⌀0.8 A
A

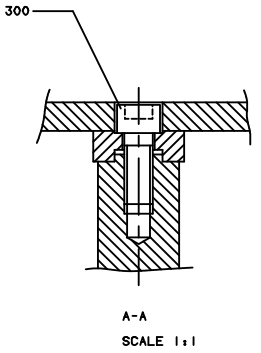
300
A-A
SCALE 1:1

ECM: 102844 - 20020110
Group number: 1529226-0100
Assembly Drawing: 1529226-1_1_AA

Issue: 20020822

Pos	Part No	SP	UN	Qty	Description	Page No
Common Parts						
010	1529046-0000	-		1	SIDE PIECE	
020	272790-0000	-		1	SIDE PIECE	
030	272791-0000	B		3	SPACER ROD	
300	312115-0536	-		6	SCREW MC6S M12X30 A280	

Pos	Part No	SP	UN	Qty	Description	Page No

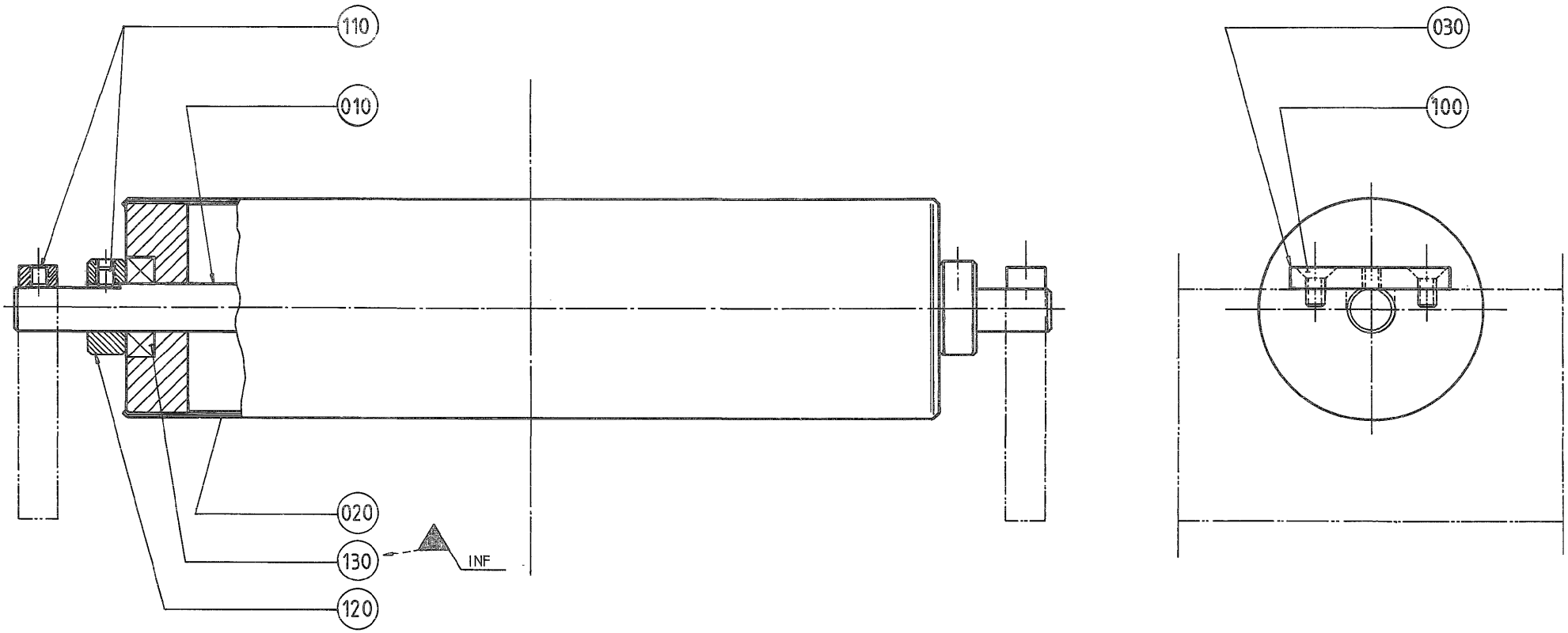
110
010
020
130
120
INF
030
100

ECM: 102845 - 20020110
Group number: 272473-0100
Assembly Drawing: 272473-1_1_AA

Issue: 20020822

Pos	Part No	SP	UN	Qty	Description	Page No
Common Parts						
010	272474-0000	A		1	SHAFT	
020	456544-0000	A		1	BENDING ROLLER	
030	272475-0000	-		2	CAP	
100	312155-0366	-		4	SCREW HEX.SOCK.COUNT.MF6S M6X12 A280	
110	312318-0360	-		4	SCREW HEX.SOCK.SET CUP P.MSK6SS6X6 SS	
120	315742-0111	-		2	COLLAR, 15/30, H=12	
130	321308-0202	A		2	BALL BEARING, 2 SEALS, 15X32X9 MM	

Pos	Part No	SP	UN	Qty	Description	Page No

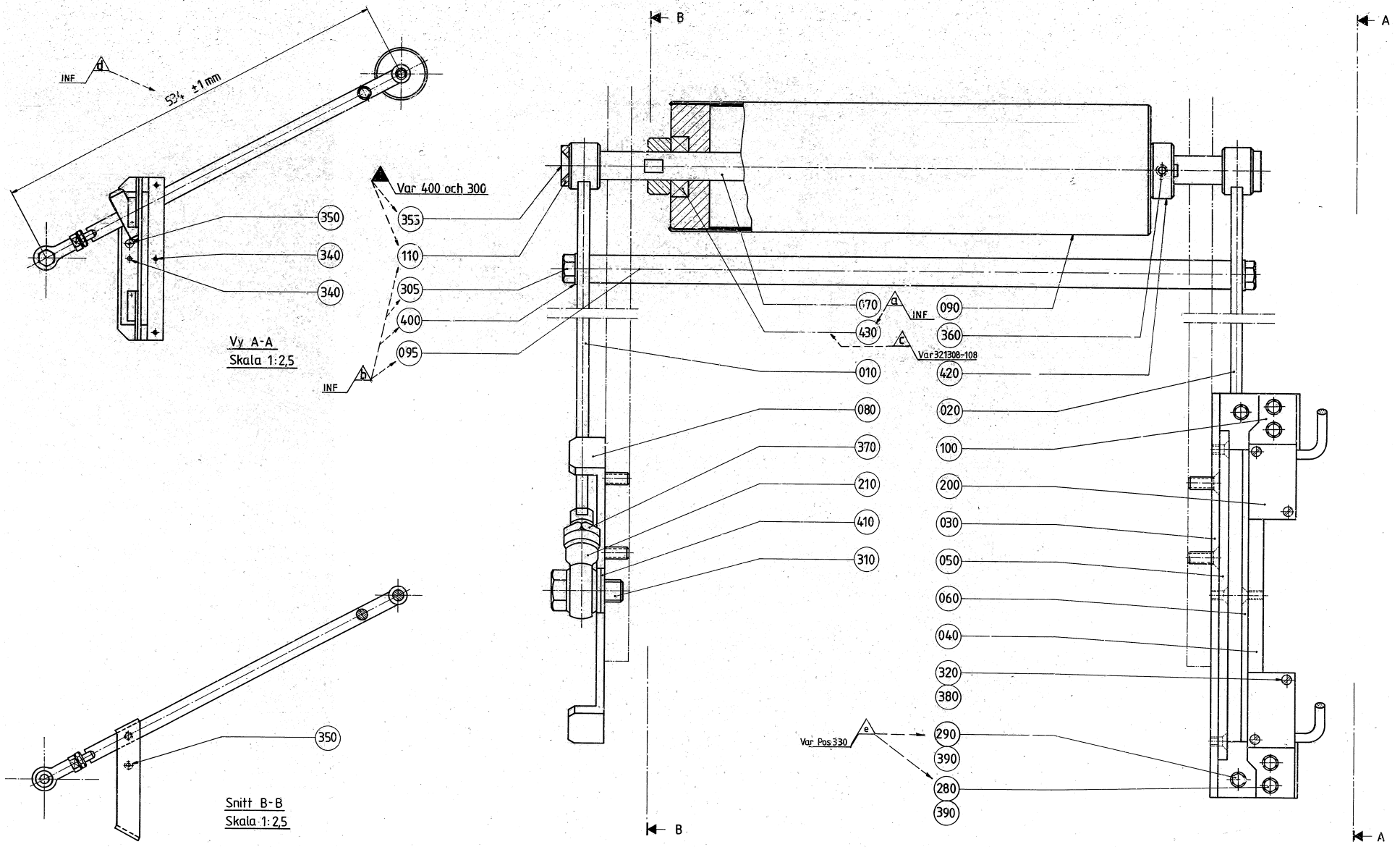
INF
534 ±1 mm
Var 400 och 300
350
340
340
353
110
305
400
095
INF
Vy A-A
Skala 1:2,5
B
A
070
INF
090
430
360
Var 321308-108
010
420
080
020
370
100
210
200
410
030
310
050
060
040
320
380
Var Pos 330
290
390
280
390
B
A
350
Snitt B-B
Skala 1:2,5

Pos	Part No	SP	UN	Qty	Description	Page No
Common Parts						
010	272085-0000	B		1	PENDULUM ARM	
020	469518-0000	B		1	PENDULUM ARM	
030	272087-0000	-		1	HOLDER	
040	272088-0000	-		1	GUIDE	
050	272089-0000	A		1	SLIDE RAIL	
060	272090-0000	A		1	SLIDE RAIL	
070	272476-0000	A		1	SHAFT	
080	272477-0000	B		1	HOLDER	
090	456544-0000	A		1	BENDING ROLLER	
095	295110-0000	-		1	SPACER	
100	272091-0000	-		2	BRACKET	
110	230918-0000	-		2	WASHER	
200	90044-0087	A		2	PROXIMITY SWITCH REPL.BY 90044-104	
210	90115-0006	A		2	ROD ENDS,RE-LUBRICATEABLE	
280	312105-0287	-		4	SCREW M6S ISO 4017 M4X8 A480	
290	312105-0291	-		2	SCREW M6S ISO 4017 M4X12 A480	
305	312105-0452	-		2	SCREW M6S ISO 4017 M8X22 A480	
310	312105-0536	-		2	SCREW M6S ISO 4017 M12X30 A480	
320	312125-0228	-		4	SCREW PAN HEAD MCS M3X16 A480	
340	312145-0287	-		6	SCREW COUNTERS.SLOT.HD. MFS 4X8 SS	
350	312155-0368	-		4	SCREW HEX.SOCK.COUNT.MF6S M6X16 A280	
355	312155-0449	-		2	SCREW HEX.SOCK.COUNT.MF6S M8X16 A280	
360	312318-0360	-		2	SCREW HEX.SOCK.SET CUP P.MSK6SS6X6 SS	
370	312605-0322	-		2	HEXAGON NUT, M6M M12 A280	
380	315105-0124	-		4	WASHER PLAIN, BRB, 3,2/6,H=0,5	
390	315105-0136	-		6	WASHER PLAIN, BRB, 4,3/8,H=0,8	
400	315105-0165	-		2	WASHER PLAIN, BRB, 8,4/16,H=1,5	
410	315105-0178	-		4	WASHER PLAIN, BRB, 13/24,H=2	
420	315742-0111	-		2	COLLAR, 15/30, H=12	
430	321308-0202	A		2	BALL BEARING, 2 SEALS, 15X32X9 MM	

Pos	Part No	SP	UN	Qty	Description	Page No

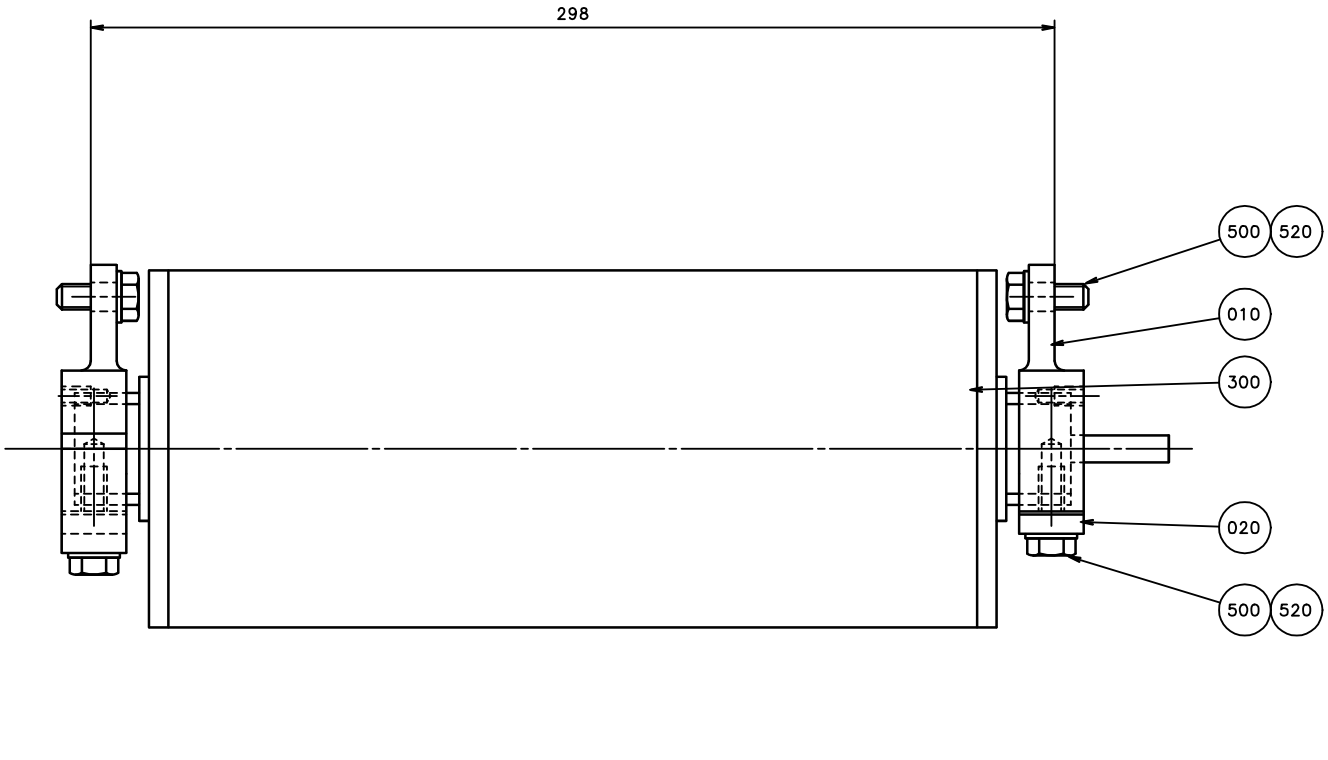
298
500
520
010
300
020
500
520

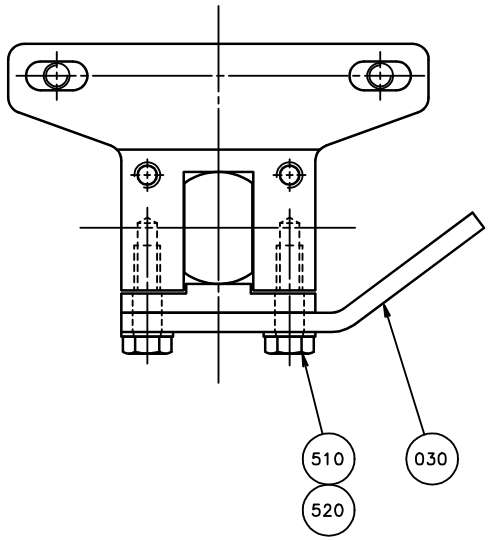
510
520
030

ECM: 102852 - 20020110
Group number: 271017-0300
Assembly Drawing: 271017-4_1_AA

Issue: 20020822

Pos	Part No	SP	UN	Qty	Description	Page No
Common Parts						
010	570524-0000	A		2	BEARING	
020	570523-0000	A		2	CAP	
030	752057-0000	A		1	STOP	
300	90045-0134	A		1	ROLL MOTOR 113X250	
500	312105-0451	-		6	SCREW M6S ISO 4017 M8X20 A480	
510	312105-0453	-		2	SCREW M6S ISO 4017 M8X25 A480	
520	315105-0165	-		8	WASHER PLAIN, BRB, 8,4/16,H=1,5	

Pos	Part No	SP	UN	Qty	Description	Page No

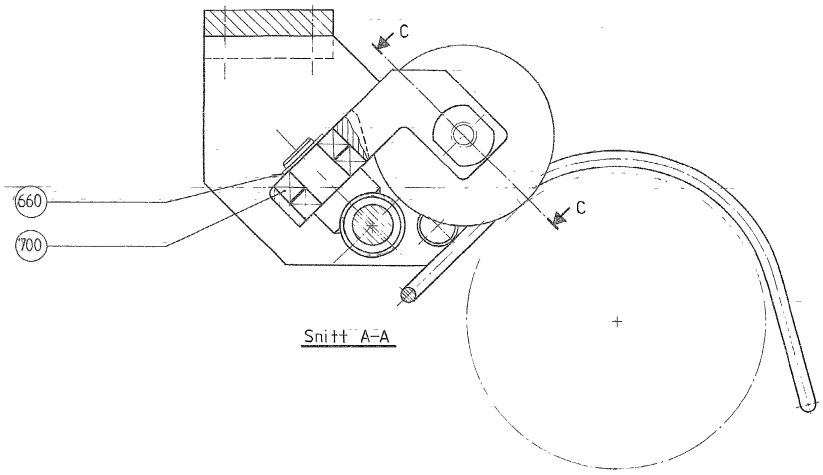
C
C
660
700
Snitt A-A

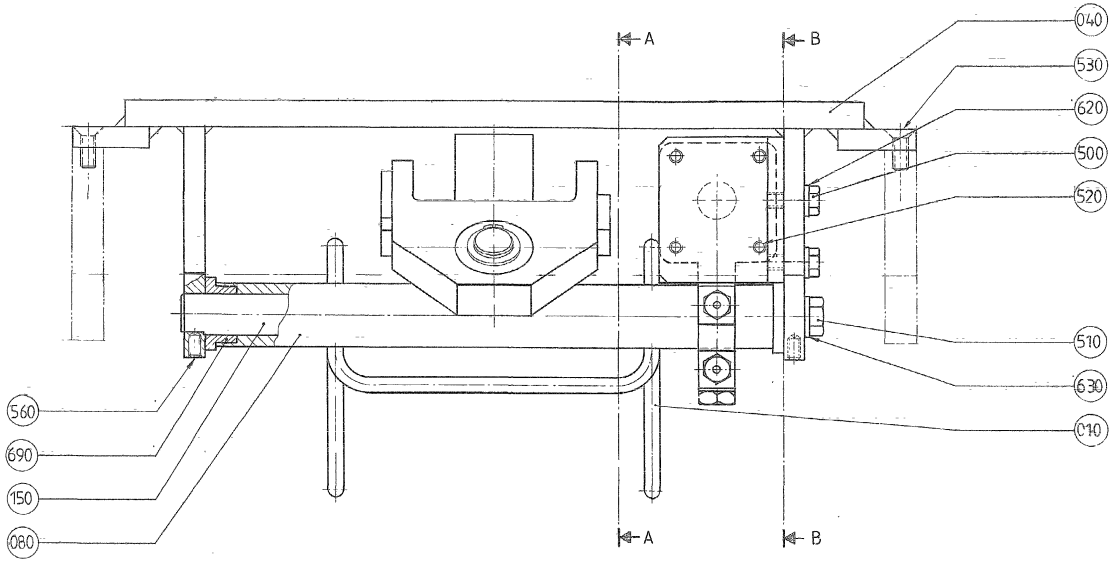
A
B
040
530
620
500
520
510
630
010
560
690
150
080
A
B

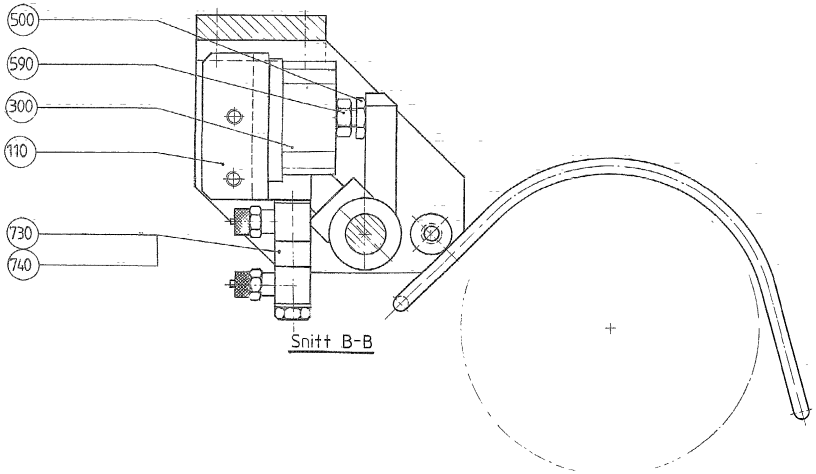
500
590
300
110
730
740
Snitt B-B

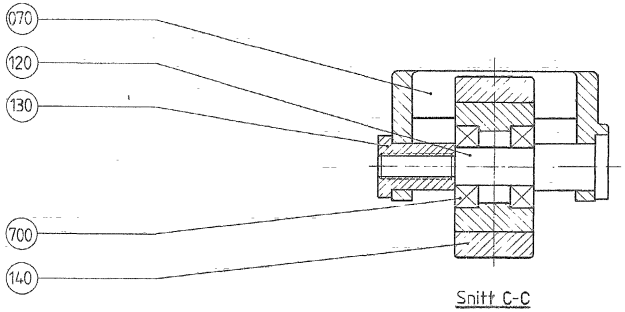
070
120
130
700
140
Snitt C-C

ECM: 102853 - 20020110
Group number: 271934-0300
Assembly Drawing: 271934-3_1_AA

Issue: 20020822

Pos	Part No	SP	UN	Qty	Description	Page No
Common Parts						
010	295716-0000	B		1	BOW CLAMP	
040	295717-0000	B		1	CANTILEVER	
070	263150-0000	B		1	BRACKET	
080	271911-0000	B		1	SHAFT	
110	295873-0000	B		1	BRACKET	
120	263152-0000	A		1	SHAFT	
130	263153-0000	A		1	NUT	
140	266710-0000	A		1	WHEEL	
150	271912-0000	A		1	SHAFT	
300	90239-0750	B		1	CYLINDER	
500	312105-0368	-		3	SCREW M6S M6X16 A280	
510	312105-0451	-		2	SCREW M6S ISO 4017 M8X20 A480	
520	312115-0327	-		4	SCREW MC6S M5X12 A280	
530	312155-0368	-		4	SCREW HEX.SOCK.COUNT.MF6S M6X16 A280	
560	312318-0323	-		2	SCREW SOCK.SET CUP P MSK6SS M5X8 A4	
590	312605-0316	-		1	HEXAGON NUT, M6M M6 A280	
620	315105-0153	-		2	WASHER PLAIN, BRB, 6,4/12,H=1,5	
630	315105-0165	-		2	WASHER PLAIN, BRB, 8,4/16,H=1,5	
660	315750-0112	A		1	RETAIN. RING, 15	
690	321101-0202	A		2	FLANGE BUS 16F7X12	
700	321308-0202	A		4	BALL BEARING, 2 SEALS, 15X32X9 MM	
730	342980-0113	-		2	BANJO-CONNECTION,RING 6/4-G1/8"	
740	342980-0313	-		1	BANJO-HOLLOW BOLT COUPL,EXT.THR.02-G1/8"	

Pos	Part No	SP	UN	Qty	Description	Page No

Machine Type | Group Description | Used-In | Group Number | Page No

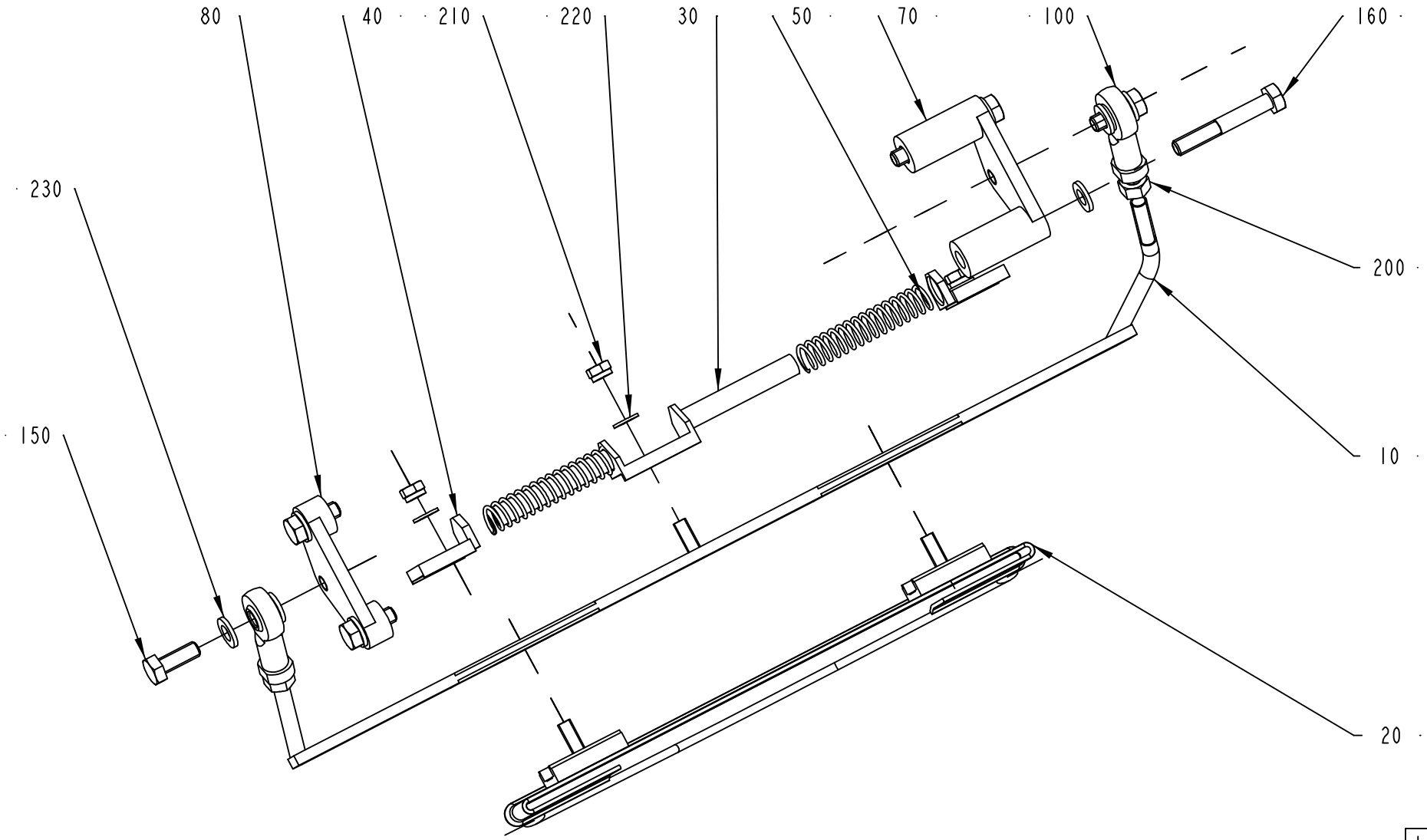

1529410-1
ECM 101110

ECM: 101520 - 20020506
Group number: 1529410-0100
Assembly Drawing: 1529410-1_1_AA

Issue: 20020822

Pos	Part No	SP	UN	Qty	Description	Page No
0200B OR 0250B						
010	752178-0000	-		1	BOW CLAMP	
020	752180-0000	-		1	GUIDING ARBOR	
030	752183-0000	-		1	SPRING HOLDER	
050	752084-0000	-		2	SPRING	
0200S						
010	752179-0000	-		1	BOW CLAMP	
020	752181-0000	-		1	GUIDING ARBOR	
030	752184-0000	-		1	SPRING HOLDER	
050	752085-0000	-		2	SPRING	
Common Parts						
040	751972-0000	-		2	SPRING HOLDER	
070	295015-0000	-		1	BRACKET	
080	295016-0000	-		1	BRACKET	
100	90115-0068	-		2	ROD END, ID=6 MM, M6X1	
150	312105-0368	-		4	SCREW M6S M6X16 A280	
160	312105-0378	-		2	SCREW M6S ISO 4014 M6X40 A480	
200	312605-0316	-		2	HEXAGON NUT, M6M M6 A280	
210	312812-0314	-		3	HEXAGON NUT, NY-LOCK M5 A480	
220	315105-0146	-		3	WASHER PLAIN, BRB, 5,3/10,H=1	
230	315105-0153	-		8	WASHER PLAIN, BRB, 6,4/12,H=1,5	

Pos	Part No	SP	UN	Qty	Description	Page No

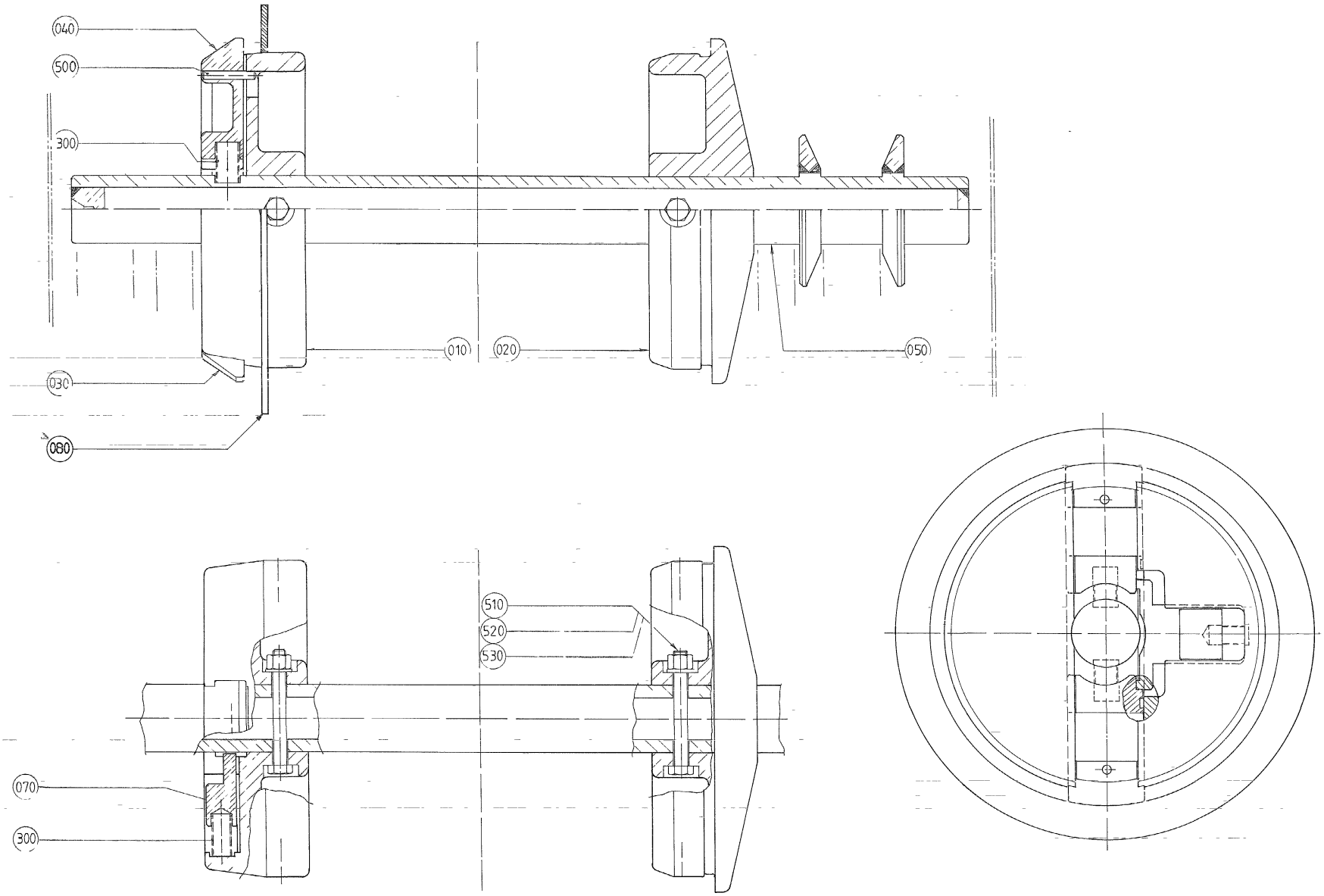
040
500
300
010
020
050
030
080
510
520
530
070
300

Pos	Part No	SP	UN	Qty	Description	Page No
0200B OR 0250B						
020	272815-0001	A		1	SLEEVE	
050	272816-0001	A		1	SHAFT	
0200S						
020	272815-0003	A		1	SLEEVE	
050	272816-0003	A		1	SHAFT	
Common Parts						
010	272814-0000	A		1	SLEEVE	
030	575002-0000	A		1	PLUNGER	
040	575002-0000	A		1	PLUNGER	
070	272728-0000	A		1	BARRIER	
080	752001-0000	-		1	GUIDE RING	
300	90335-0025	A		3	SPRING BARNES 22010	
500	311103-0274	A		2	PARALLELL PIN, M6, 4X25 MM	
510	312101-0381	-		2	SCREW M6S M6X55 FZB	
520	312812-0316	-		2	HEXAGON NUT, NY-LOCK M6 A480	
530	315101-0153	-		2	WASHER PLAIN, BRB, 6,4/12 H=1,5	

Pos	Part No	SP	UN	Qty	Description	Page No

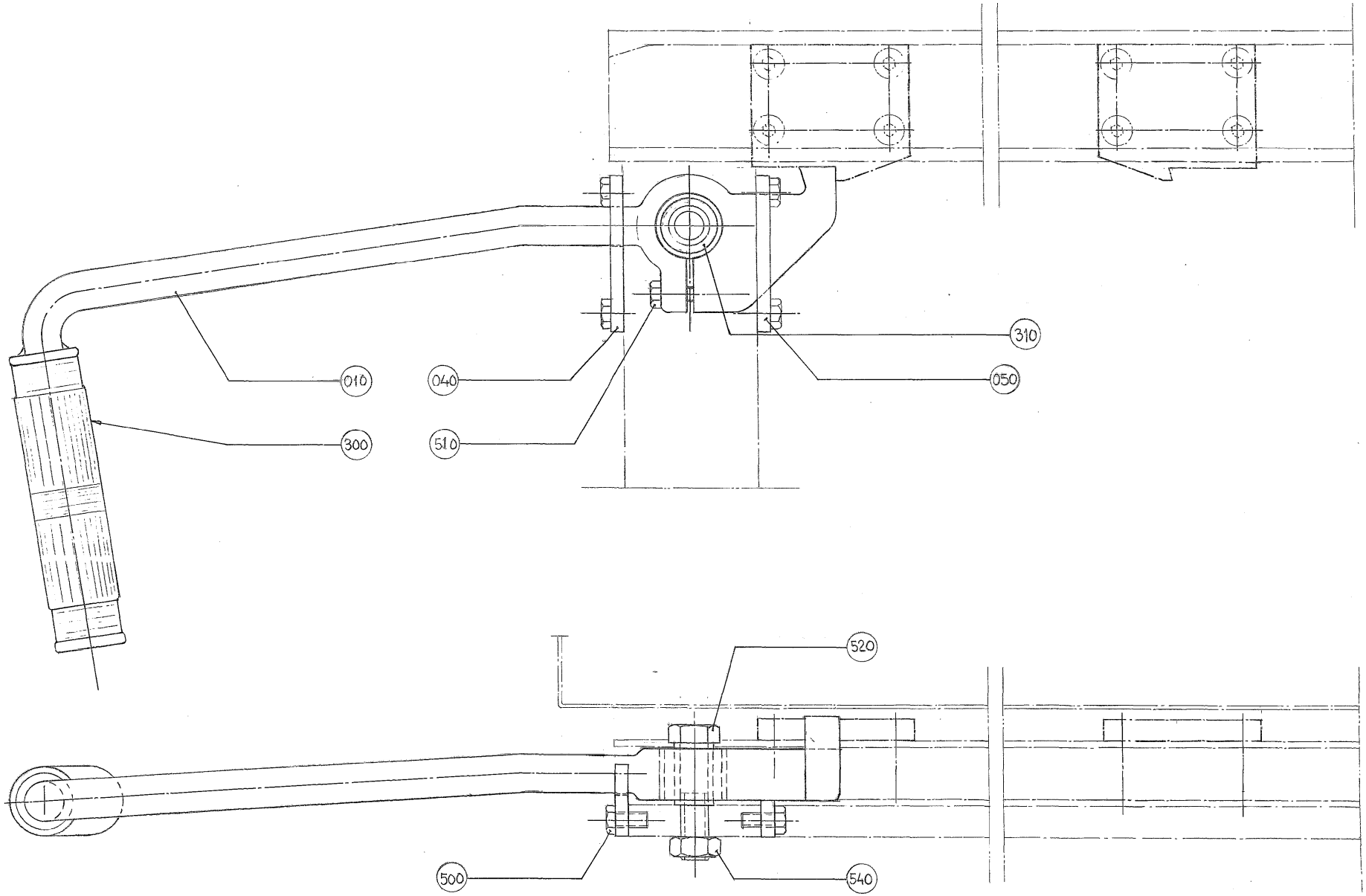
010
040
310
050
300
510
520
500
540

ECM: 102859 - 20020110
Group number: 271454-0200
Assembly Drawing: 271454-2_1_AA

Issue: 20020822

Pos	Part No	SP	UN	Qty	Description	Page No
Common Parts						
010	272569-0000	-		1	CATCH HANDLE	
040	272603-0000	-		1	STOP LUG	
050	272604-0000	-		1	GUIDE LUG	
300	90017-0001	-		1	BIKE HANDLE	
310	90347-0012	A		1	DAMPER	
500	312105-0366	-		4	SCREW M6S M6X12 A280	
510	312105-0370	-		1	SCREW M6S ISO 4017 M6X20 A480	
520	312105-0500	-		1	SCREW M6S ISO 4014 M10X45 A480	
540	312605-0320	-		1	HEXAGON NUT, M6M M10 A280	

Pos	Part No	SP	UN	Qty	Description	Page No

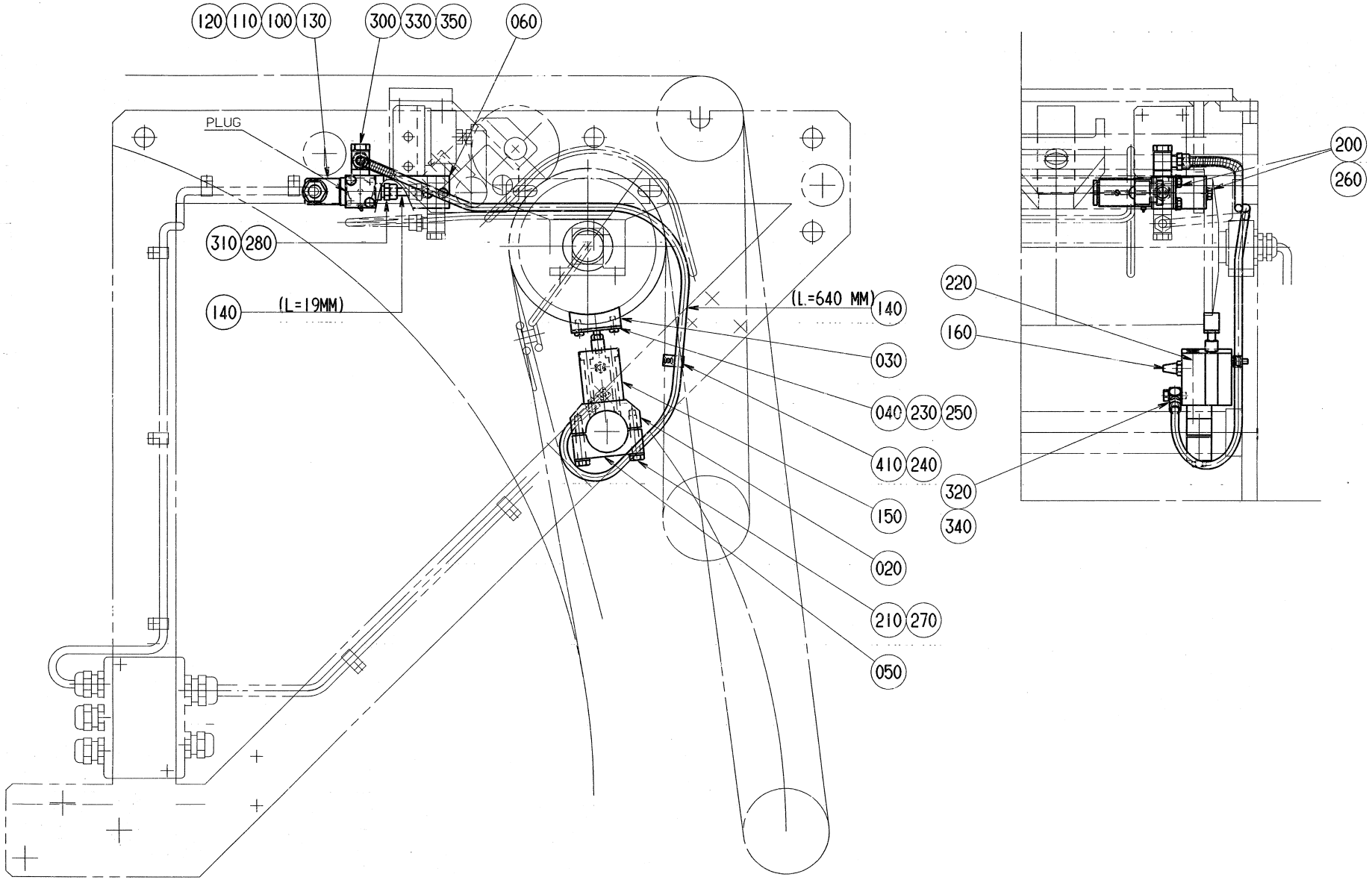
120
110
100
130
300
330
350
060
PLUG
310
280
140
(L=19MM)
(L=640 MM)
140
030
040
230
250
410
240
150
020
210
270
050
220
160
320
340
200
260

ECM: 87630 - 20010226
Group number: 751478-0200
Assembly Drawing: 751478-1_1_AA

Issue: 20020822

Pos	Part No	SP	UN	Qty	Description	Page No
Common Parts						
020	751322-0000	-		1	BRACKET	
030	751323-0000	-		1	BRAKE BLOCK	
040	751324-0000	-		1	HOLDER	
050	751325-0000	-		1	BRACKET	
060	751326-0000	-		1	BRACKET	
100	90042-0109	-		1	SOLENOID VALVE 553-121-000	
110	90042-0345	-		1	COIL 24V DC	
120	90042-0366	-		1	CONTACT, 2-POLE+EARTH	
130	90042-0438	-		1	CONNECTION RAMP 553-400-001	
140	90166-0132	-	M	1	TUBE 6 MM PA,TRANSP.	
150	90239-0983	-		1	CYLINDER	
160	90328-0020	-		1	SILENCER	
200	312105-0325	-		4	SCREW M6S ISO 4017 M5X10 A480	
210	312105-0374	-		2	SCREW M6S ISO 4014 M6X30 A480	
220	312111-0340	-		2	SCREW HEX.SOCK.HD.MC6S-TT 5X45 88 FZB	
230	312122-0287	-		2	SCREW PAN HEAD MCS M4X8 NL. PL.	
240	312125-0285	-		1	SCREW SLOT.PAN HD. MCS 4X6 A480	
250	312605-0314	-		1	HEXAGON NUT, M6M M5 A280	
260	315105-0146	-		4	WASHER PLAIN, BRB, 5,3/10,H=1	
270	315105-0153	-		2	WASHER PLAIN, BRB, 6,4/12,H=1,5	
280	315233-0109	-		1	WASHER PL.RND.NYL.10,3/14,H=1	
300	342903-0111	-		1	NUT WITH SPRING 6/4-M10X1	
310	342921-0113	-		1	STRAIGHT COUPLING,EXT.THREADED 6/4-G1/8"	
320	342980-0111	-		1	BANJO-CONNECTION,RING 6/4-M5	
330	342980-0113	-		1	BANJO-CONNECTION,RING 6/4-G1/8"	
340	B342980-0301	-		1	BANJO-HOLLOW BOLT COUPL.,EXT.THREA.01-M5	
	315233-0101	*C*		*1*	*WASHER PL.RND.NYL.5,2/8,H=1*	
350	342980-0303	-		1	BANJO-HOLLOW BOLT COUPL,EXT.THR.01-G1/8"	
410	352110-0100	-		1	CABLE CLIPS, D=5-7 MM	

Pos	Part No	SP	UN	Qty	Description	Page No

Machine Type	Group Description	Used-In	Group Number	Page No

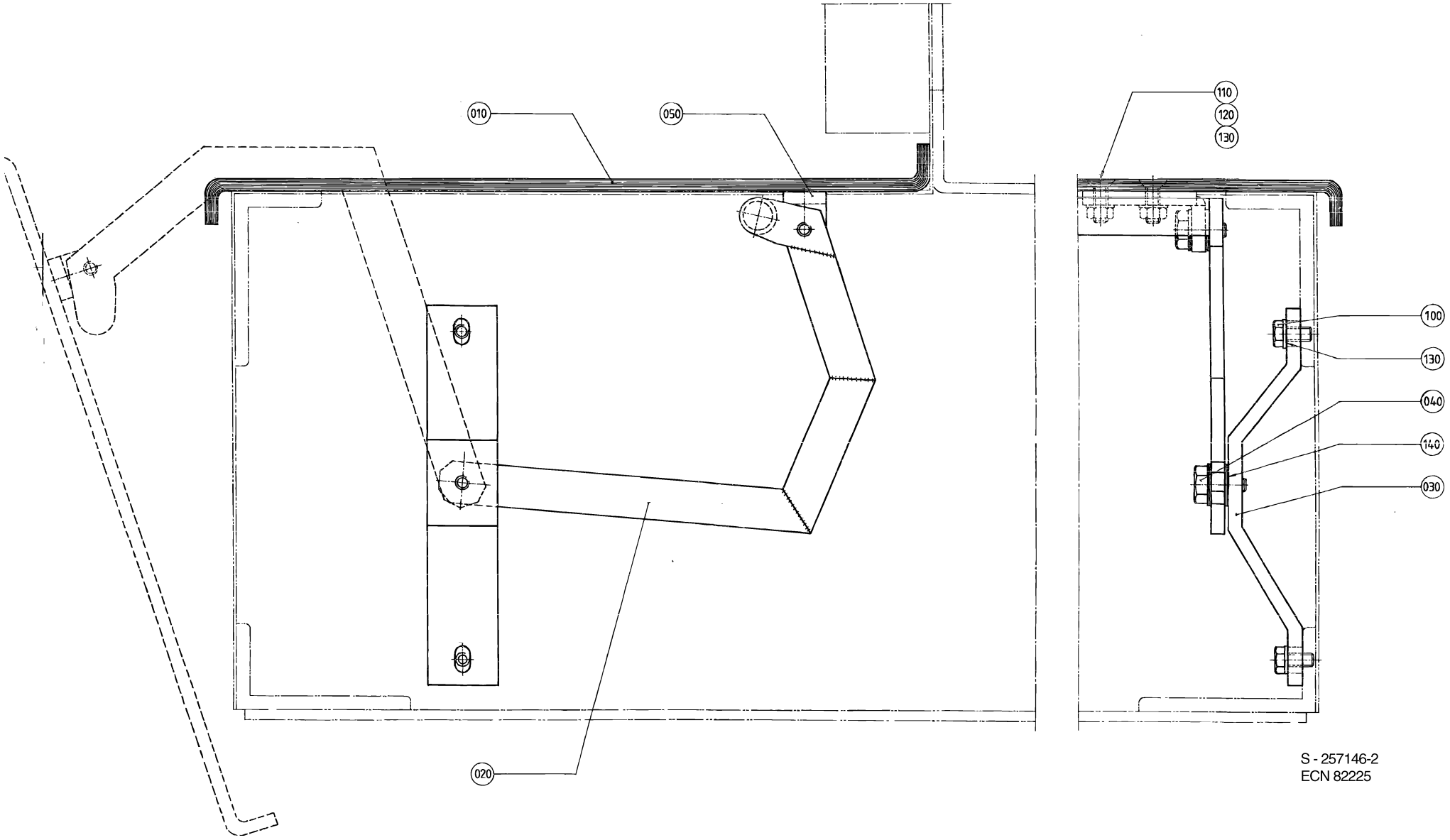

S - 257146-2
ECN 82225

ECM: - -
Group number: 257146-0200
Assembly Drawing: 257146-2_1_AA

Issue: 20020822

Pos	Part No	SP	UN	Qty	Description	Page No
Common Parts						
010	295156-0000	-		1	LID	
020	295157-0000	-		1	ARM	
030	256148-0000	-		2	HOLDER	
040	256150-0000	-		4	SCREW	
050	272552-0000	-		2	BRACKET	
100	312105-0449	-		4	SCREW M6S ISO 4017 M8X16 A480	
110	312145-0453	-		4	SCREW COUNTERS.SLOT.HD. MFS 8X25 SS	
120	312605-0318	-		4	HEXAGON NUT, M6M M8 A280	
130	315105-0165	-		8	WASHER PLAIN, BRB, 8,4/16,H=1,5	
140	90005-0126	-		8	WASHER PLAIN ROUND 13(M12)/24, H=2	

Pos	Part No	SP	UN	Qty	Description	Page No

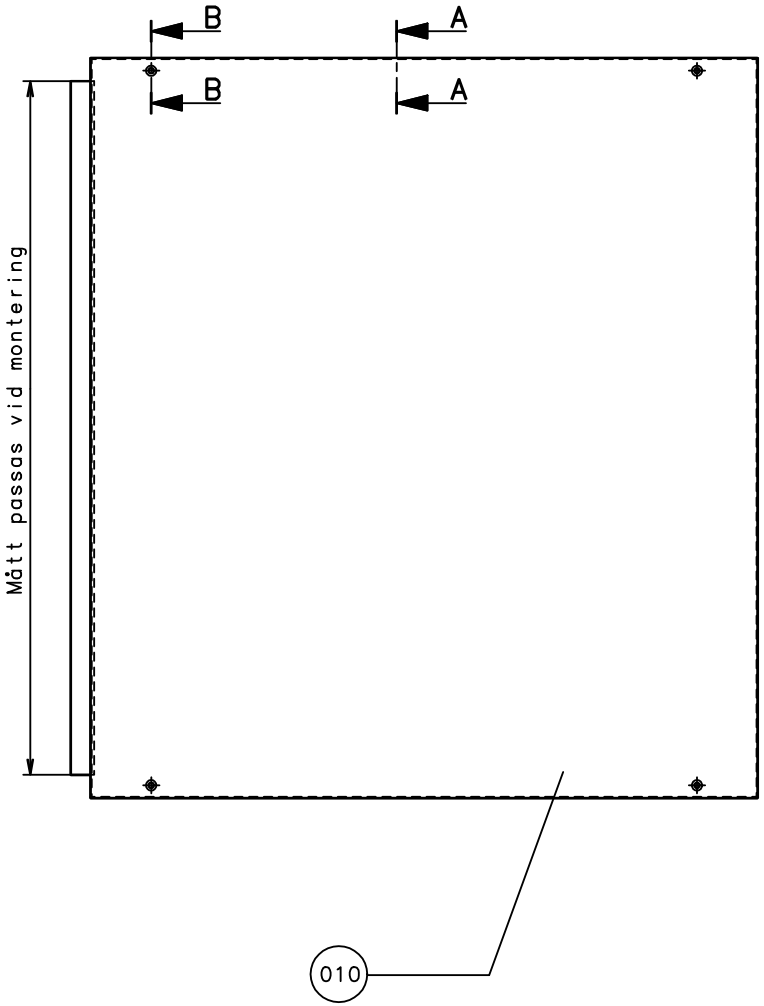

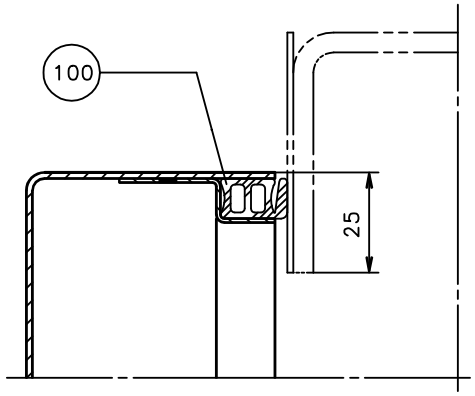

A-A
SCALE 1:1

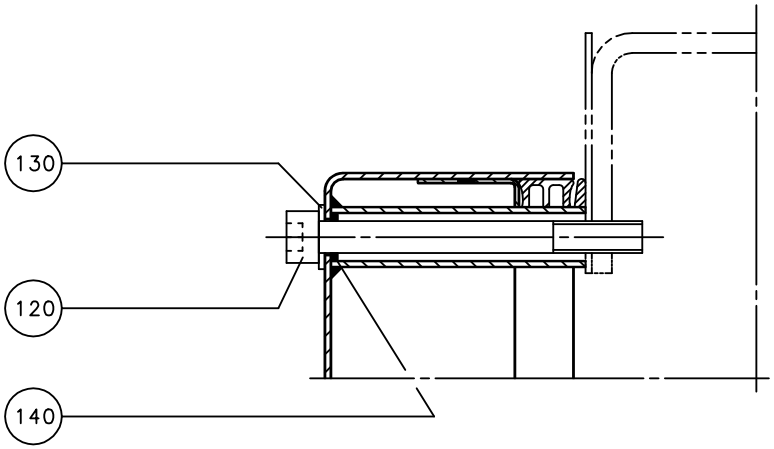

B-B
SCALE 1:1

ECM: - -
Group number: 256875-0200
Assembly Drawing: 256875-4_1_AA

Issue: 20020822

Pos	Part No	SP	UN	Qty	Description	Page No
Common Parts						
010	572345-0000	-		1	HATCH	
100	90143-0049	-	MM	2300	RUBBERSTRIP 11X21MM	
120	312115-0467	-		4	SCREW MC6S M8X80 A280	
130	315105-0165	-		4	WASHER PLAIN, BRB, 8,4/16,H=1,5	
140	315202-0104	-		4	O-RING 6,1X1,6 MM	

Pos	Part No	SP	UN	Qty	Description	Page No

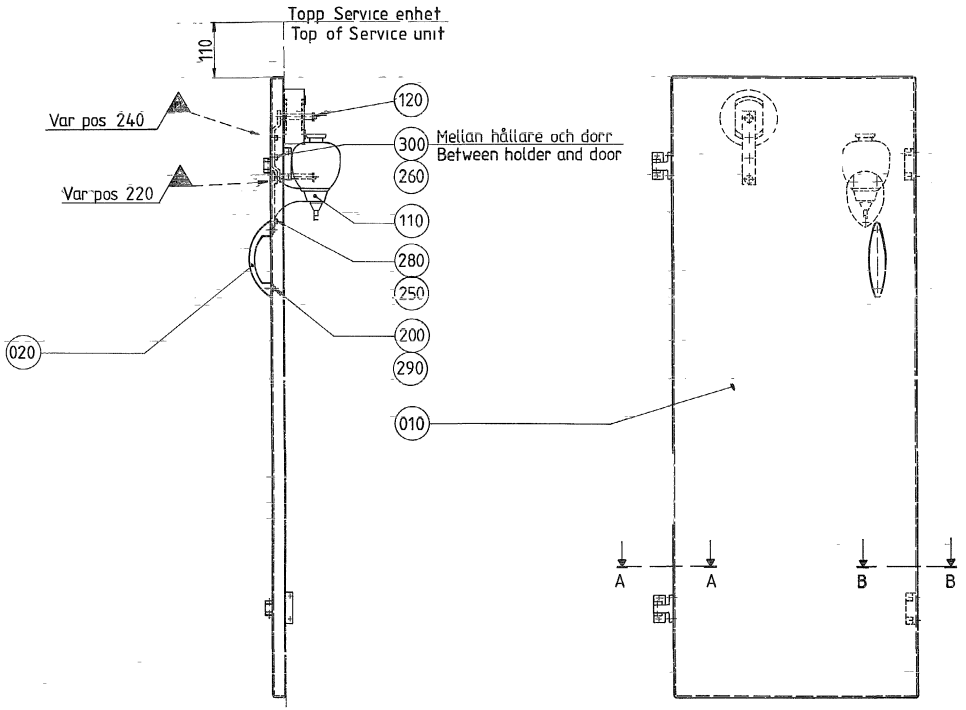
Topp Service enhet
Top of Service unit
110
Var pos 240
Var pos 220
120
300
Mellan hållare och dörr
Between holder and door
260
110
280
250
200
290
020
010
A
A
B
B

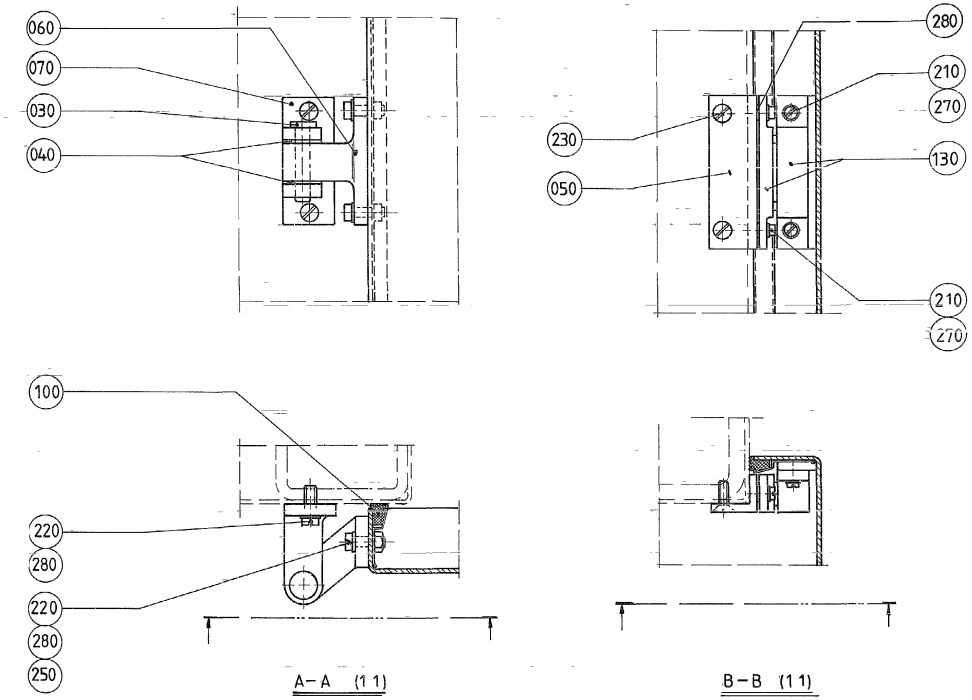
060
070
030
040
280
210
270
230
130
050
210
270
100
220
280
220
280
250
A–A (1 1)
B–B (1 1)

ECM: 102860 - 20020110
Group number: 469535-0100
Assembly Drawing: 469535-1_1_AA

Issue: 20020822

Pos	Part No	SP	UN	Qty	Description	Page No
Common Parts						
010	469526-0000	-		1	DOOR	
020	7309-0000	-		1	HANDLE	
030	257397-0000	-		2	PIN	
040	271011-0000	-		4	WASHER	
050	272453-0000	-		2	SPACER	
060	272510-0000	-		2	HINGE	
070	272511-0000	-		2	HINGE	
100	90143-0047	-	MM	3500	RUBBER STRIP	
105	90157-0016	-		1	LOCKING FLUID	
110	90243-0133	-		1	CONTAINER	
120	90256-0001	A		1	TAPE SUPPLY HOLDER, TYPE 2000	
130	90339-0004	-		2	MAGNETIC LOCK, 57X16X19 MM	
200	312105-0364	-		2	SCREW M6S ISO 4017 M6X10 A480	
210	312125-0222	-		8	SCREW PAN HEAD MCS M3X8 SS	
220	312125-0291	-		8	SCREW PAN HEAD MCS M4X12 SS	
230	312145-0291	-		4	SCREW COUNTERS.SLOT.HD. MFS 4X12 A4	
250	312605-0312	-		7	HEXAGON NUT, M6M M4 A280	
260	312605-0314	-		2	HEXAGON NUT, M6M M5 A280	
270	315105-0124	-		8	WASHER PLAIN, BRB, 3,2/6,H=0,5	
280	315105-0136	-		15	WASHER PLAIN, BRB, 4,3/8,H=0,8	
290	315105-0153	-		2	WASHER PLAIN, BRB, 6,4/12,H=1,5	
300	315115-0153	-		2	WASHER PLAIN, TBRB 6,4/12 H=3	

Pos	Part No	SP	UN	Qty	Description	Page No

Machine Type | Group Description | Used-In | Group Number | Page No

PAPER HOLDER

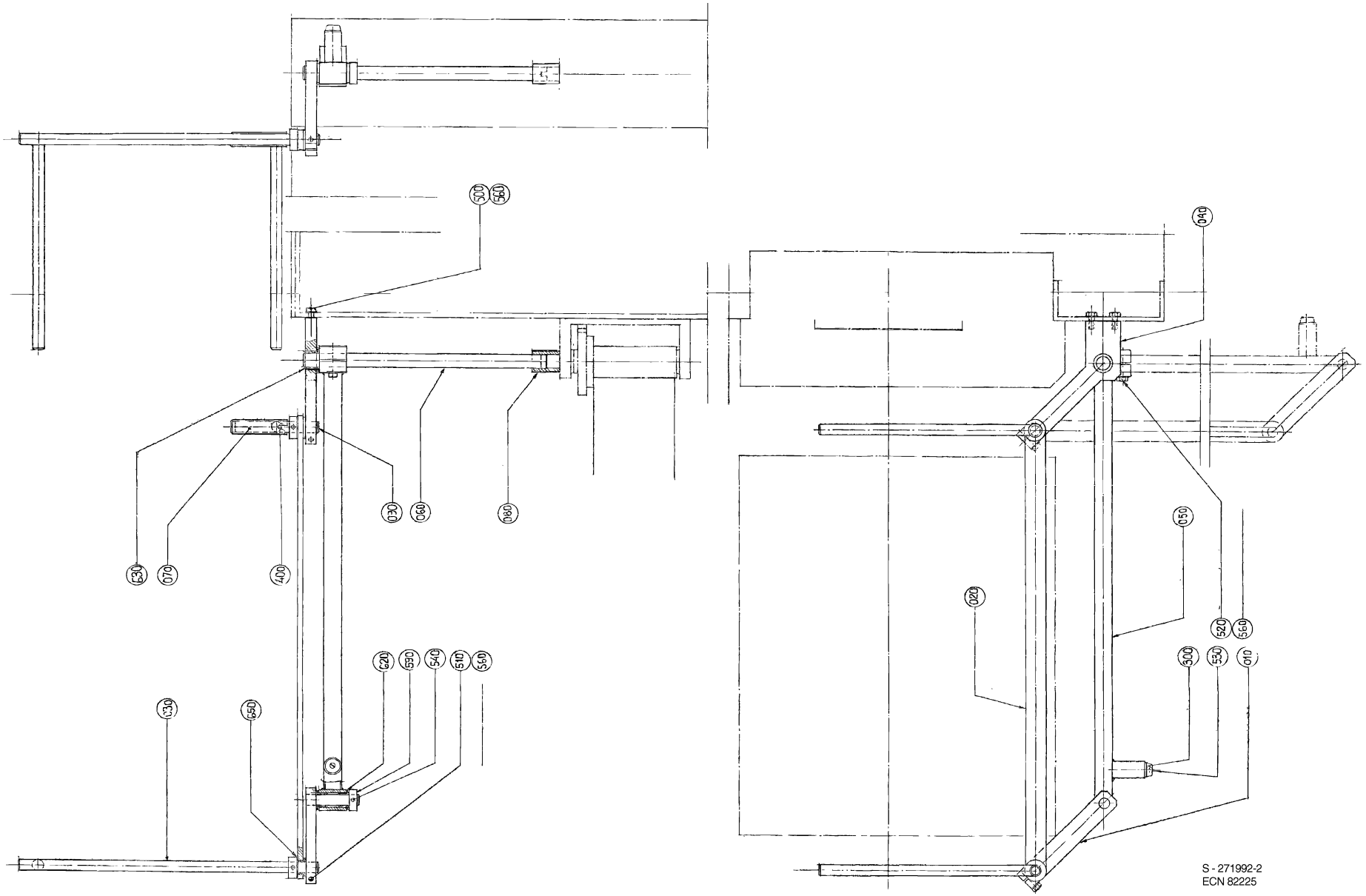

ECM: 102867 - 20020110
Group number: 271992-0200
Assembly Drawing: 271992-2_1_AA

Issue: 20020822

Pos	Part No	SP	UN	Qty	Description	Page No
Common Parts						
010	271380-0000	-		1	LINK	
020	271381-0000	-		1	STRUT	
030	271428-0000	-		1	HOLDER	
040	271993-0000	-		1	BEARING	
050	295408-0000	-		1	ARM	
060	295409-0000	-		1	SHAFT	
070	469141-0000	-		1	HOLDER	
080	271995-0000	-		1	SLEEVE	
090	295661-0000	-		1	SHAFT	
300	90347-0005	A		1	DAMPER, NO. F 1006 B	
400	311103-0267	A		1	PARALLELL PIN, M6, 4X10 MM	
500	312105-0451	-		2	SCREW M6S ISO 4017 M8X20 A480	
510	312105-0455	-		2	SCREW M6S ISO 4017 M8X30 A480	
520	312105-0459	-		1	SCREW M6S ISO 4014 M8X40 A480	
530	312125-0291	-		1	SCREW PAN HEAD MCS M4X12 SS	
540	312318-0362	-		3	SCREW SOCK.SET CUP P MSK6SS M6X8 A4	
560	315105-0165	-		5	WASHER PLAIN, BRB, 8,4/16,H=1,5	
590	315742-0112	-		3	COLLAR, 16/32, H=12	
620	321101-0202	A		4	FLANGE BUS 16F7X12	
630	321101-0233	A		1	FLANGE BUS 20F7X20	
650	321129-0117	A		2	THRUST WASHER, 16/30X1,5	

Pos	Part No	SP	UN	Qty	Description	Page No

Machine Type | Group Description | Used-In | Group Number | Page No

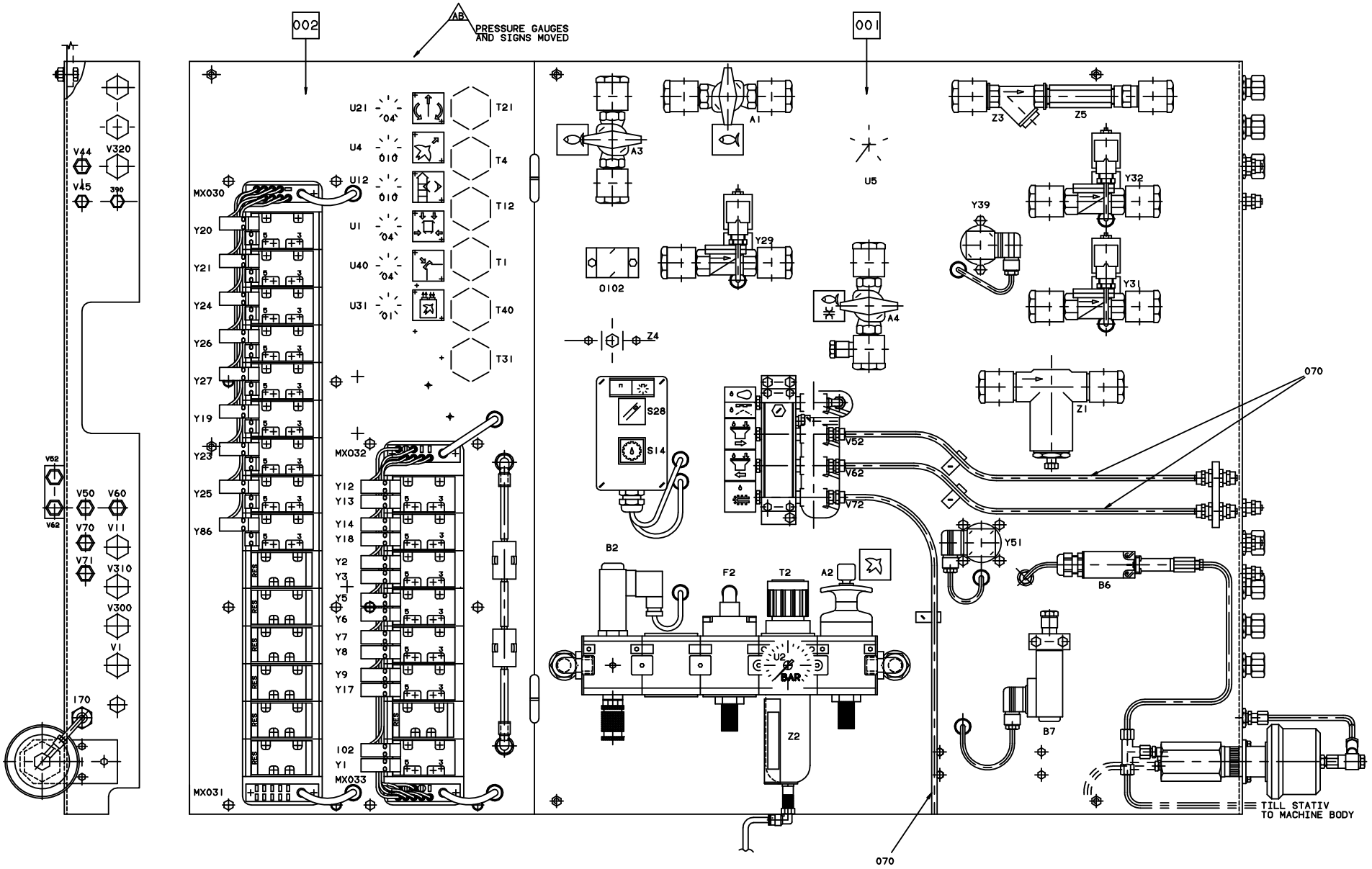
002
AB
PRESSURE GAUGES AND SIGNS MOVED
001
MX030
MX031
MX032
MX033
U21
U4
U12
U1
U40
U31
T21
T4
T12
T1
T40
T31
Y20
Y21
Y24
Y26
Y27
Y19
Y23
Y25
Y86
Y12
Y13
Y14
Y18
Y2
Y3
Y5
Y6
Y7
Y8
Y9
Y17
102
Y1
V44
V320
V45
390
V62
V50
V60
V70
V11
V71
V310
V300
V1
170
A1
A3
A4
U5
0102
Y29
Z3
Z5
Y32
Y39
Y31
Z4
S28
S14
Z1
V52
V62
V72
070
B2
F2
T2
A2
U2
BAR
Z2
Y51
B6
B7
TILL STATIV
TO MACHINE BODY

ECM: 108635 - 20020506
Group number: 1529116-0100
Assembly Drawing: 1529116-1_1_AC

Issue: 20020822

Pos	Part No	SP	UN	Qty	Description	Page No
Common Parts						
001	A1529117-0100	-		1	VALVE PANEL	**669, 671, 673**
002	A1529100-0100	-		1	AIR PANEL	**685, 687, 689, 691**
050	90166-0013	-	M	4	TUBE 8 MM PA BLUE	
060	90166-0068	-	M	2	TUBE 12 MM PA BLUE	
065	90166-0081	-	M	1	TUBE 6 MM PA BLUE	
070	90166-0118	-	M	4	TUBE 8 MM PA BLACK	
080	90166-0119	-	M	2	HOSE PUR 4/6 BLACK	
100	90230-0028	-		1	NON-RETURN VALVE H 151 R 3/8"	
210	342921-0115	-		1	STRAIGHT COUPLING,EXT.THREADED 6/4-G3/8"	
215	342735-0103	-		1	ELBOW PIPE JOINT	
220	342735-0109	-		2	ELBOW PIPE JOINT	
230	342940-0115	-		1	T-COUPLING,EXT.THREAD 6/4-R3/8"	
240	342748-0102	-		1	T-CONNECTION 6MM	
260	352113-0101	-		20	CLIP STRIP, 92X2,5 MM	
270	352113-0102	-		20	CLIP-STRIP, BLACK 188X4,8 MM	
280	352113-0104	-		20	CLIP STRIP, 300X4,8 MM	
290	359000-0406	-		5	MARKING COLLAR PA2/4 "6" YELLOW	
290	359000-0407	-		5	MARKING COLLAR PA2/4 "7" YELLOW	
290	359000-0409	-		4	MARKING COLLAR PA2/4 "9" YELLOW	
290	359000-0771	-		28	MARKING CO2/4"V"	
290	359000-0401	-		16	MARKING COLLAR 2/4 "1" YELLOW	
290	359000-0402	-		22	MARKING COLLAR 2/4 "2" YELLOW	
290	359000-0403	-		7	MARKING COLLAR PA2/4 "3" YELLOW	
290	359000-0405	-		9	MARKING CO2/4"5"	
290-02	359000-0400	-		32	MARKING CO2/4"0"	
290-03	359000-0404	-		10	MARKING COLLAR PA2/4 "4" YELLOW	

Pos	Part No	SP	UN	Qty	Description	Page No

Machine Type | Group Description | Used-In | Group Number | Page No

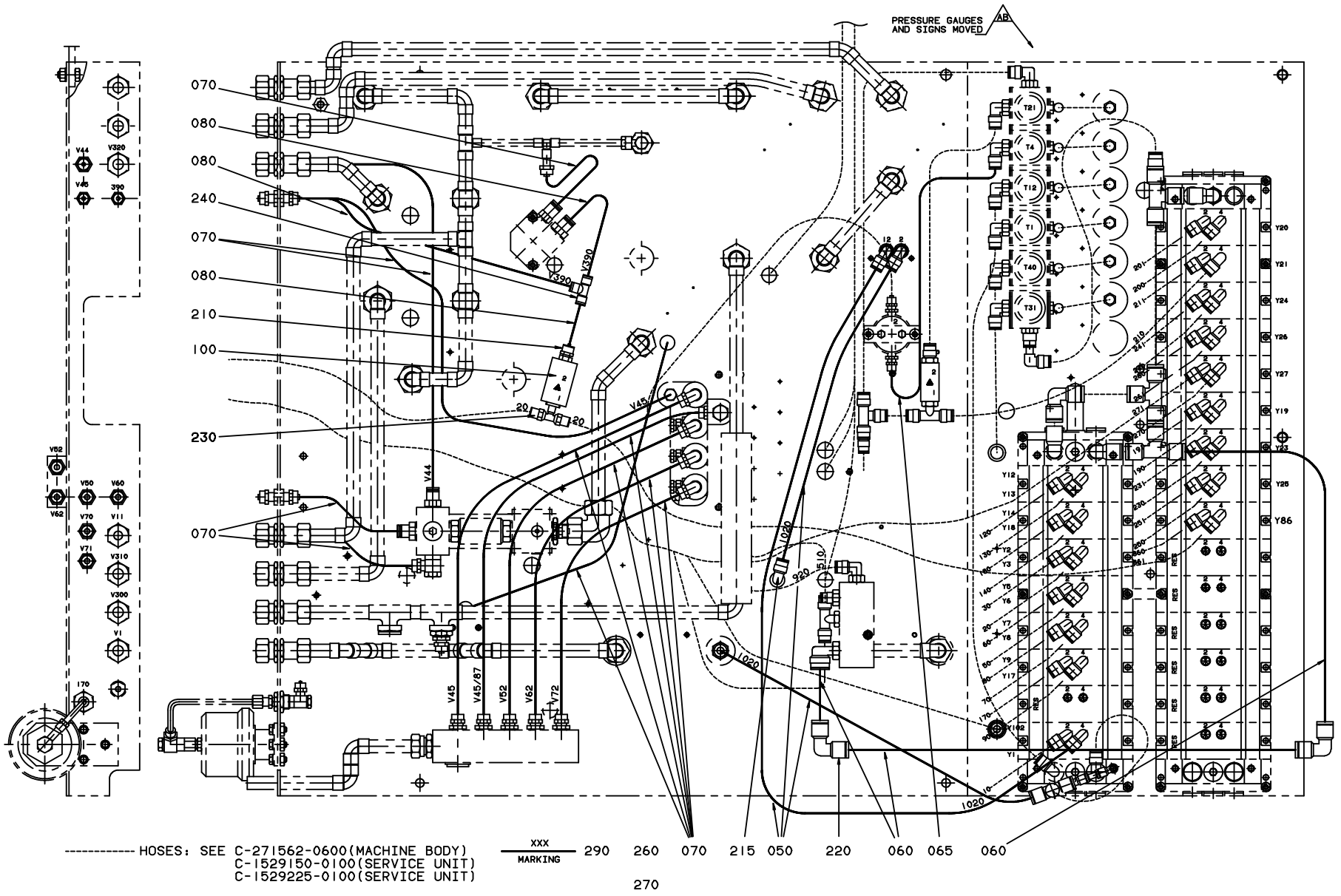
PRESSURE GAUGES AND SIGNS MOVED AB
070
080
080
240
070
080
210
100
230
070
V44
V320
V45
390
V62
V50
V60
V70
V11
V71
V310
V300
V1
170
V45
V45/87
V52
V62
V72
V320
390
V44
V45
20
80
1020
320
1510
T21
T4
T12
T1
T40
T31
Y20
Y21
Y24
Y26
Y27
Y19
Y23
Y25
Y86
Y12
Y13
Y14
Y18
Y2
Y3
Y5
Y6
Y7
Y8
Y9
Y17
Y10
Y1
RES
HOSES: SEE C-271562-0600(MACHINE BODY)
C-1529150-0100(SERVICE UNIT)
C-1529225-0100(SERVICE UNIT)
XXX
MARKING
290
260
070
215
050
220
060
065
060
270

ECM: 108635 - 20020506
Group number: 1529116-0100
Assembly Drawing: 1529116-2_1_AC

Issue: 20020822

Pos	Part No	SP	UN	Qty	Description	Page No
Common Parts						
001	A1529117-0100	-		1	VALVE PANEL	**669, 671, 673**
002	A1529100-0100	-		1	AIR PANEL	**685, 687, 689, 691**
050	90166-0013	-	M	4	TUBE 8 MM PA BLUE	
060	90166-0068	-	M	2	TUBE 12 MM PA BLUE	
065	90166-0081	-	M	1	TUBE 6 MM PA BLUE	
070	90166-0118	-	M	4	TUBE 8 MM PA BLACK	
080	90166-0119	-	M	2	HOSE PUR 4/6 BLACK	
100	90230-0028	-		1	NON-RETURN VALVE H 151 R 3/8"	
210	342921-0115	-		1	STRAIGHT COUPLING,EXT.THREADED 6/4-G3/8"	
215	342735-0103	-		1	ELBOW PIPE JOINT	
220	342735-0109	-		2	ELBOW PIPE JOINT	
230	342940-0115	-		1	T-COUPLING,EXT.THREAD 6/4-R3/8"	
240	342748-0102	-		1	T-CONNECTION 6MM	
260	352113-0101	-		20	CLIP STRIP, 92X2,5 MM	
270	352113-0102	-		20	CLIP-STRIP, BLACK 188X4,8 MM	
280	352113-0104	-		20	CLIP STRIP, 300X4,8 MM	
290	359000-0406	-		5	MARKING COLLAR PA2/4 "6" YELLOW	
290	359000-0407	-		5	MARKING COLLAR PA2/4 "7" YELLOW	
290	359000-0409	-		4	MARKING COLLAR PA2/4 "9" YELLOW	
290	359000-0771	-		28	MARKING CO2/4"V"	
290	359000-0401	-		16	MARKING COLLAR 2/4 "1" YELLOW	
290	359000-0402	-		22	MARKING COLLAR 2/4 "2" YELLOW	
290	359000-0403	-		7	MARKING COLLAR PA2/4 "3" YELLOW	
290	359000-0405	-		9	MARKING CO2/4"5"	
290-02	359000-0400	-		32	MARKING CO2/4"0"	
290-03	359000-0404	-		10	MARKING COLLAR PA2/4 "4" YELLOW	

Pos	Part No	SP	UN	Qty	Description	Page No

Machine Type | Group Description | Used-In | Group Number | Page No

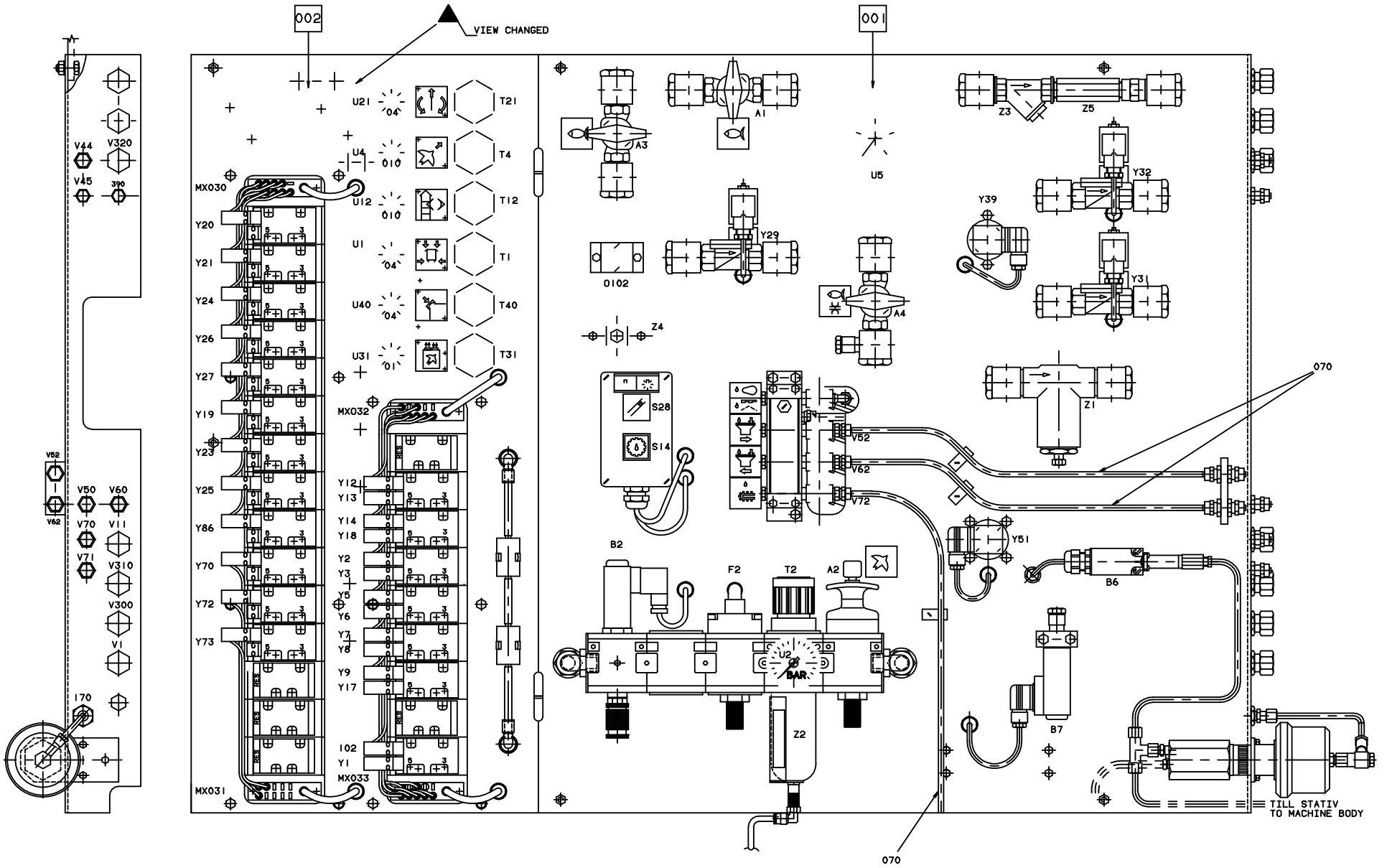
002
VIEW CHANGED
001
U21
T21
U4
T4
U12
T12
U1
T1
U40
T40
U31
T31
MX030
MX032
MX031
MX033
Y20
Y21
Y24
Y26
Y27
Y19
Y23
Y25
Y86
Y70
Y72
Y73
Y12
Y13
Y14
Y18
Y2
Y3
Y5
Y6
Y7
Y8
Y9
Y17
102
Y1
V44
V320
V45
390
V62
V50
V60
V70
V11
V71
V310
V300
V1
170
A3
A1
U5
Z3
Z5
Y32
Y39
Y29
Y31
0102
A4
Z4
S28
S14
V62
V62
V72
Z1
070
B2
F2
T2
A2
U2
BAR
Z2
Y51
B6
B7
TILL STATIV
TO MACHINE BODY
070

ECM: 108635 - 20020506
Group number: 1529116-0100
Assembly Drawing: 1529116-3_1_AC

Issue: 20020822

Pos	Part No	SP	UN	Qty	Description	Page No
Common Parts						
001	A1529117-0100	-		1	VALVE PANEL	**669, 671, 673**
002	A1529100-0100	-		1	AIR PANEL	**685, 687, 689, 691**
050	90166-0013	-	M	4	TUBE 8 MM PA BLUE	
060	90166-0068	-	M	2	TUBE 12 MM PA BLUE	
065	90166-0081	-	M	1	TUBE 6 MM PA BLUE	
070	90166-0118	-	M	4	TUBE 8 MM PA BLACK	
080	90166-0119	-	M	2	HOSE PUR 4/6 BLACK	
100	90230-0028	-		1	NON-RETURN VALVE H 151 R 3/8"	
210	342921-0115	-		1	STRAIGHT COUPLING,EXT.THREADED 6/4-G3/8"	
215	342735-0103	-		1	ELBOW PIPE JOINT	
220	342735-0109	-		2	ELBOW PIPE JOINT	
230	342940-0115	-		1	T-COUPLING,EXT.THREAD 6/4-R3/8"	
240	342748-0102	-		1	T-CONNECTION 6MM	
260	352113-0101	-		20	CLIP STRIP, 92X2,5 MM	
270	352113-0102	-		20	CLIP-STRIP, BLACK 188X4,8 MM	
280	352113-0104	-		20	CLIP STRIP, 300X4,8 MM	
290	359000-0406	-		5	MARKING COLLAR PA2/4 "6" YELLOW	
290	359000-0407	-		5	MARKING COLLAR PA2/4 "7" YELLOW	
290	359000-0409	-		4	MARKING COLLAR PA2/4 "9" YELLOW	
290	359000-0771	-		28	MARKING CO2/4"V"	
290	359000-0401	-		16	MARKING COLLAR 2/4 "1" YELLOW	
290	359000-0402	-		22	MARKING COLLAR 2/4 "2" YELLOW	
290	359000-0403	-		7	MARKING COLLAR PA2/4 "3" YELLOW	
290	359000-0405	-		9	MARKING CO2/4"5"	
290-02	359000-0400	-		32	MARKING CO2/4"0"	
290-03	359000-0404	-		10	MARKING COLLAR PA2/4 "4" YELLOW	

Pos	Part No	SP	UN	Qty	Description	Page No

Machine Type | Group Description | Used-In | Group Number | Page No

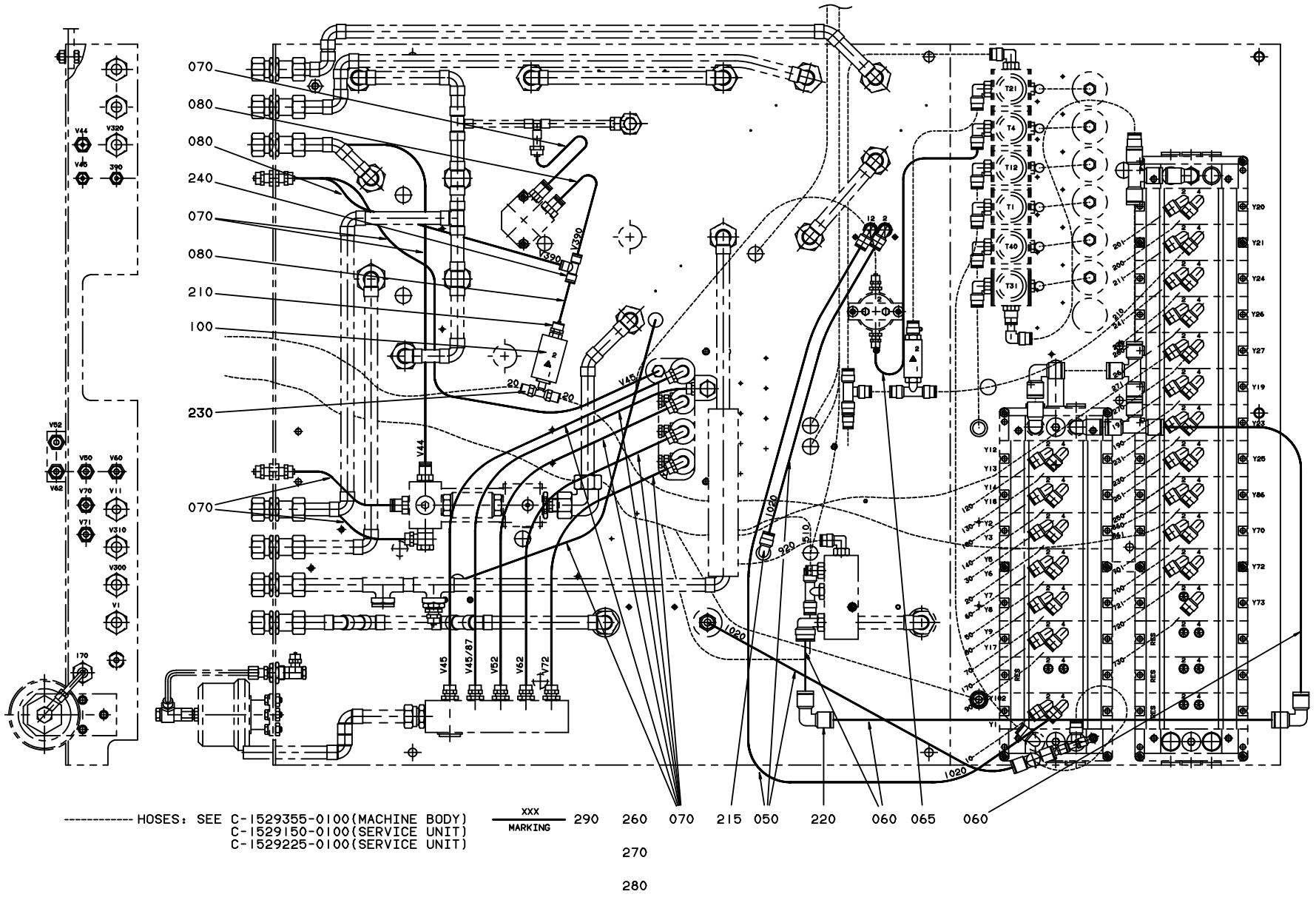
070
080
080
240
070
080
210
100
230
070
HOSES: SEE C-1529355-0100(MACHINE BODY)
C-1529150-0100(SERVICE UNIT)
C-1529225-0100(SERVICE UNIT)
XXX
MARKING
290
260
070
215
050
220
060
065
060
270
280

ECM: 108635 - 20020506
Group number: 1529116-0100
Assembly Drawing: 1529116-4_1_AB

Issue: 20020822

Pos	Part No	SP	UN	Qty	Description	Page No
Common Parts						
001	A1529117-0100	-		1	VALVE PANEL	**669, 671, 673**
002	A1529100-0100	-		1	AIR PANEL	**685, 687, 689, 691**
050	90166-0013	-	M	4	TUBE 8 MM PA BLUE	
060	90166-0068	-	M	2	TUBE 12 MM PA BLUE	
065	90166-0081	-	M	1	TUBE 6 MM PA BLUE	
070	90166-0118	-	M	4	TUBE 8 MM PA BLACK	
080	90166-0119	-	M	2	HOSE PUR 4/6 BLACK	
100	90230-0028	-		1	NON-RETURN VALVE H 151 R 3/8"	
210	342921-0115	-		1	STRAIGHT COUPLING,EXT.THREADED 6/4-G3/8"	
215	342735-0103	-		1	ELBOW PIPE JOINT	
220	342735-0109	-		2	ELBOW PIPE JOINT	
230	342940-0115	-		1	T-COUPLING,EXT.THREAD 6/4-R3/8"	
240	342748-0102	-		1	T-CONNECTION 6MM	
260	352113-0101	-		20	CLIP STRIP, 92X2,5 MM	
270	352113-0102	-		20	CLIP-STRIP, BLACK 188X4,8 MM	
280	352113-0104	-		20	CLIP STRIP, 300X4,8 MM	
290	359000-0406	-		5	MARKING COLLAR PA2/4 "6" YELLOW	
290	359000-0407	-		5	MARKING COLLAR PA2/4 "7" YELLOW	
290	359000-0409	-		4	MARKING COLLAR PA2/4 "9" YELLOW	
290	359000-0771	-		28	MARKING CO2/4"V"	
290	359000-0401	-		16	MARKING COLLAR 2/4 "1" YELLOW	
290	359000-0402	-		22	MARKING COLLAR 2/4 "2" YELLOW	
290	359000-0403	-		7	MARKING COLLAR PA2/4 "3" YELLOW	
290	359000-0405	-		9	MARKING CO2/4"5"	
290-02	359000-0400	-		32	MARKING CO2/4"0"	
290-03	359000-0404	-		10	MARKING COLLAR PA2/4 "4" YELLOW	

Pos	Part No	SP	UN	Qty	Description	Page No

Machine Type | Group Description | Used-In | Group Number | Page No

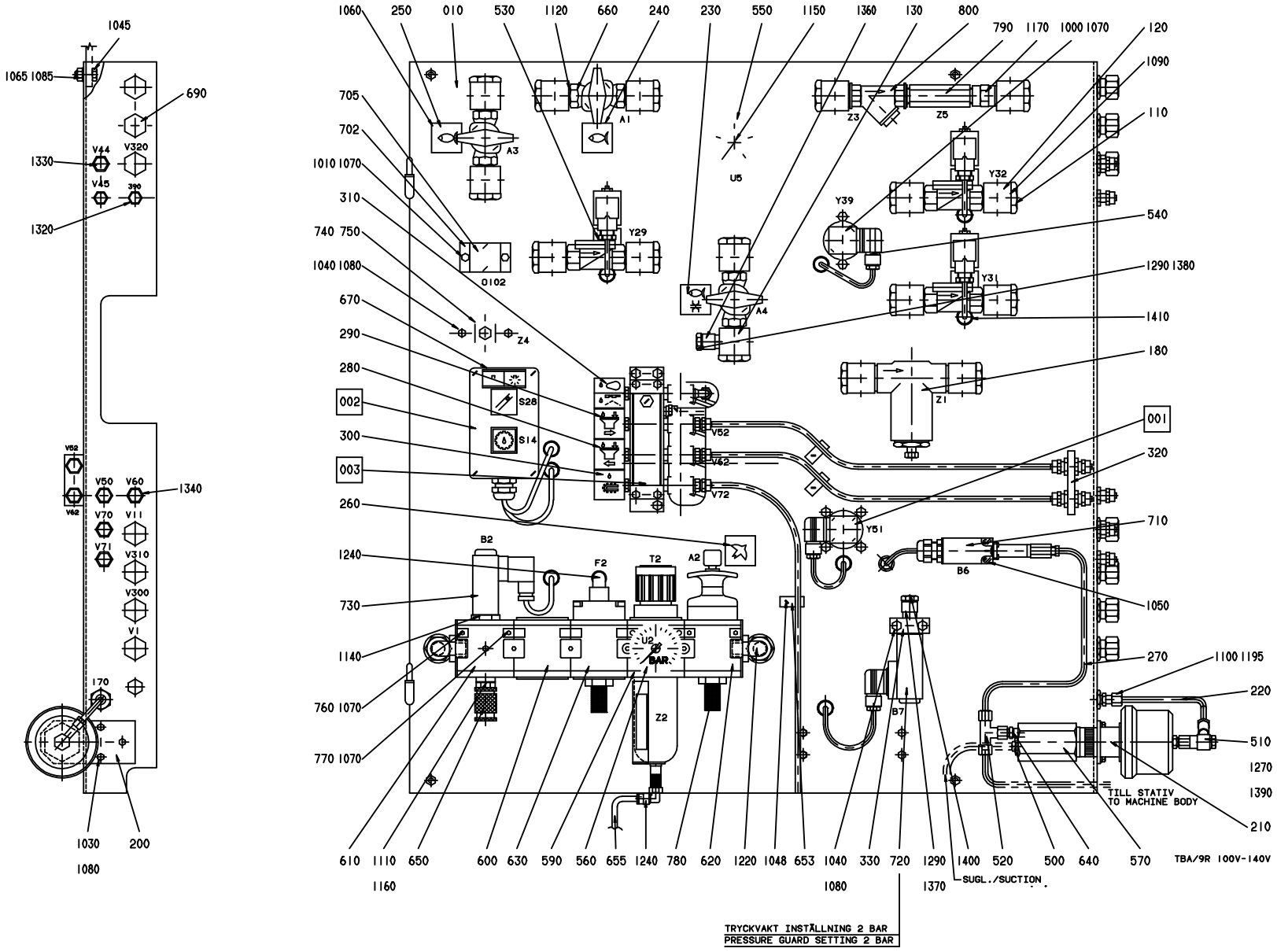
1045
1065 1085
690
V44
V320
1330
V45
390
1320
V52
V50
V60
1340
V62
V70
V11
V71
V310
V300
V1
170
1030
200
1080
1060 250 010 530 1120 660 240 230 550 1150 1360 130 800
790 1170 1000 1070 120
1090
110
705
702
1010 1070
310
740 750
1040 1080
670
290
280
002
300
003
260
1240
730
1140
760 1070
770 1070
A3
A1
U5
Z3
Z5
Y32
Y39
Y29
0102
Z4
S28
S14
A4
Y31
540
1290 1380
1410
180
Z1
001
320
V52
V62
V72
Y51
710
B6
1050
B2
F2
T2
A2
U2
BAR
Z2
B7
270
1100 1195
220
510
1270
1390
210
TILL STATIV
TO MACHINE BODY
610 1110 650 600 630 590 560 655 1240 780 620 1220 1048 653 1040 330 720 1290 1400 520 500 640 570
1160
1080
1370
SUGL./SUCTION
TBA/9R 100V-140V
TRYCKVAKT INSTÄLLNING 2 BAR
PRESSURE GUARD SETTING 2 BAR

ECM: 102868 - 20020110
Group number: 1529117-0100
Assembly Drawing: 1529117-1_1_AA

Issue: 20020822

Pos	Part No	SP	UN	Qty	Description	Page No
Common Parts						
001	A1529204-0100	-		1	AIR INJECTOR	**675**
002	A456882-0100	-		1	PUSH BUTTON BOX	**679**
003	A469118-0200	-		1	FLOW METER	**681**
004	A469121-0200	-		1	JUNCTION BLOCK	**683**
010	1529118-0000	-		1	SHEET	
020	B978583-0000	-		1	PIPE	
	342708-0109	-		*1*	*REINFORCING RING VSH 15X1 MM*	
	271762-0000	-		*1*	*NUT*	
	271761-0000	-		*1*	*NIPPLE*	
030	B978584-0000	-		1	PIPE	
	342708-0109	-		*1*	*REINFORCING RING VSH 15X1 MM*	
	271762-0000	-		*1*	*NUT*	
	271761-0000	-		*1*	*NIPPLE*	
040	B978587-0000	-		1	PIPE	
	342708-0109	-		*1*	*REINFORCING RING VSH 15X1 MM*	
	271762-0000	-		*1*	*NUT*	
	271761-0000	-		*1*	*NIPPLE*	
050	B978588-0000	-		1	PIPE	
	342708-0109	-		*1*	*REINFORCING RING VSH 15X1 MM*	
	271762-0000	-		*1*	*NUT*	
	271761-0000	-		*1*	*NIPPLE*	
060	B978589-0000	-		1	PIPE	
	342708-0109	-		*1*	*REINFORCING RING VSH 15X1 MM*	
	342708-0103	-		*1*	*REINFORCING RING VSH 8X1 MM*	
	271762-0000	-		*4*	*NUT*	
	271761-0000	-		*4*	*NIPPLE*	
070	B978590-0000	-		1	PIPE	
	342708-0109	-		*2*	*REINFORCING RING VSH 15X1 MM*	
090	B978592-0000	-		1	PIPE	
	342708-0109	-		*1*	*REINFORCING RING VSH 15X1 MM*	
	271762-0000	-		*1*	*NUT*	
	271761-0000	-		*1*	*NIPPLE*	
100	978593-0000	-		1	JUNCTION BLOCK	
1000	312105-0327	-		2	SCREW M6S ISO 4017 M5X12 A480	
1010	312105-0329	-		4	SCREW M6S ISO 4017 M5X16 A480	
1020	312105-0366	-		2	SCREW M6S M6X12 A280	
1030	312105-0368	-		3	SCREW M6S M6X16 A280	
1040	312105-0380	-		4	SCREW M6S ISO 4014 M6X50 A480	
1045	312105-0451	-		4	SCREW M6S ISO 4017 M8X20 A480	
1048	312125-0287	-		3	SCREW PAN HEAD MCS M4X8 SS	
1050	312125-0291	-		2	SCREW PAN HEAD MCS M4X12 SS	
1060	312502-0120	-		16	DRIVE SCREW ROUND HEAD KDS 0X5	
1065	312605-0318	-		5	HEXAGON NUT, M6M M8 A280	
1070	315105-0146	-		10	WASHER PLAIN, BRB, 5,3/10,H=1	
1080	315105-0153	-		9	WASHER PLAIN, BRB, 6,4/12,H=1,5	
1085	315105-0165	-		5	WASHER PLAIN, BRB, 8,4/16,H=1,5	
1090	315202-0710	-		16	O-RING 25,12X1,78 MM	
110	271950-0000	-		16	HOLLOW SCREW	
1100	315233-0109	-		3	WASHER PL.RND.NYL.10,3/14,H=1	
1110	315233-0110	-		1	WASHER PL.RND.NYL.13,3/17,H=1	
1120	315233-0113	-		17	WASHER PL.RND.NYL.21,4/27,H=1,2	
1130	315233-0115	-		32	WASHER PL.RND.NYL.26,6/34,H=1,2	
1135	341001-0148	-	MM	17	COPPER TUBE	
1140	342700-0205	-		1	NIPPLES,HEXAGON,EXT.G-THREAD G1/2"-G1/4"	
115	295496-0000	-		1	BLOCKING PIECE	
1150	342701-0201	-		1	BUSHING,INT./EXT.G-THREAD G1/4"-G1/8"	
1160	342701-0205	-		2	BUSHING,INT./EXT.G-THREAD G1/2"-G1/4"	
117	456137-0000	-		1	HOSE	
1170	342707-0113	-		1	SLEEVE, INT. THREAD, NO. 2543-1/2	
1190	342713-0213	-		1	PLUG, EXT THREAD HEX SOCKET 8638-00-120	
1195	342720-0102	-		1	CONN. STR. GA-6-G1/8	
120	469328-0000	-		15	BANJO CONNECTION	
1200	342722-0204	-		2	PIPE COUPLING	
1210	342722-0205	-		2	STRAIGHT COUPLING D=8-G1/4"	
1220	342730-0114	-		2	CONN. ELBOW WA-15-1/2	
1225	342732-0103	-		1	ELBOW PIPE JOINT, EXT.THREAD, D=6MM-G1/4	
1230	342732-0110	-		1	ELBOW PIPE JOINT, EXT.THREAD,D=12MM-G3/8	
1240	342732-0801	-		2	ELBOW PIPE JOINT, EXT.THREAD, D=8MM-G1/8	
1242	342735-0103	-		2	ELBOW PIPE JOINT	
1245	342742-0104	-		1	T-COUPLING,ADJUST,F.PLASTIC TUBE 8-G1/4"	
1250	342767-0100	-		1	CONN. BULKHEAD G1/8	
1260	342767-0104	-		1	CONN. BULKHEAD G1/4	
1265	342767-0114	-		1	CONN. BULKHEAD G1/2	
1270	342797-0122	-		1	CONN. BANJO, RINGPIECE 6-1/4	
1280	342797-0132	-		1	CONN. BANJO, RINGPIECE 8-1/4	
1290	342903-0121	-		2	NUT WITH SPRING 8/6-M12X1	
1295	342920-0114	-		2	STRAIGHT COUPLING,EXT.THREADED 6/4-R1/4"	
130	491951-0000	-		1	BANJO CONNECTION	
1300	342722-0202	-		1	PIPE COUPLING 1/8" D=6MM	
1310	342722-0204	-		1	PIPE COUPLING	
1320	342960-0112	-		2	BULKHEAD COUPLING 6/4	
1330	342960-0121	-		1	BULKHEAD COUPLING 8/6-6/4	
1340	342960-0122	-		6	BULKHEAD COUPLING 8/6	

Machine Type | Group Description | Used-In | Group Number | Page No

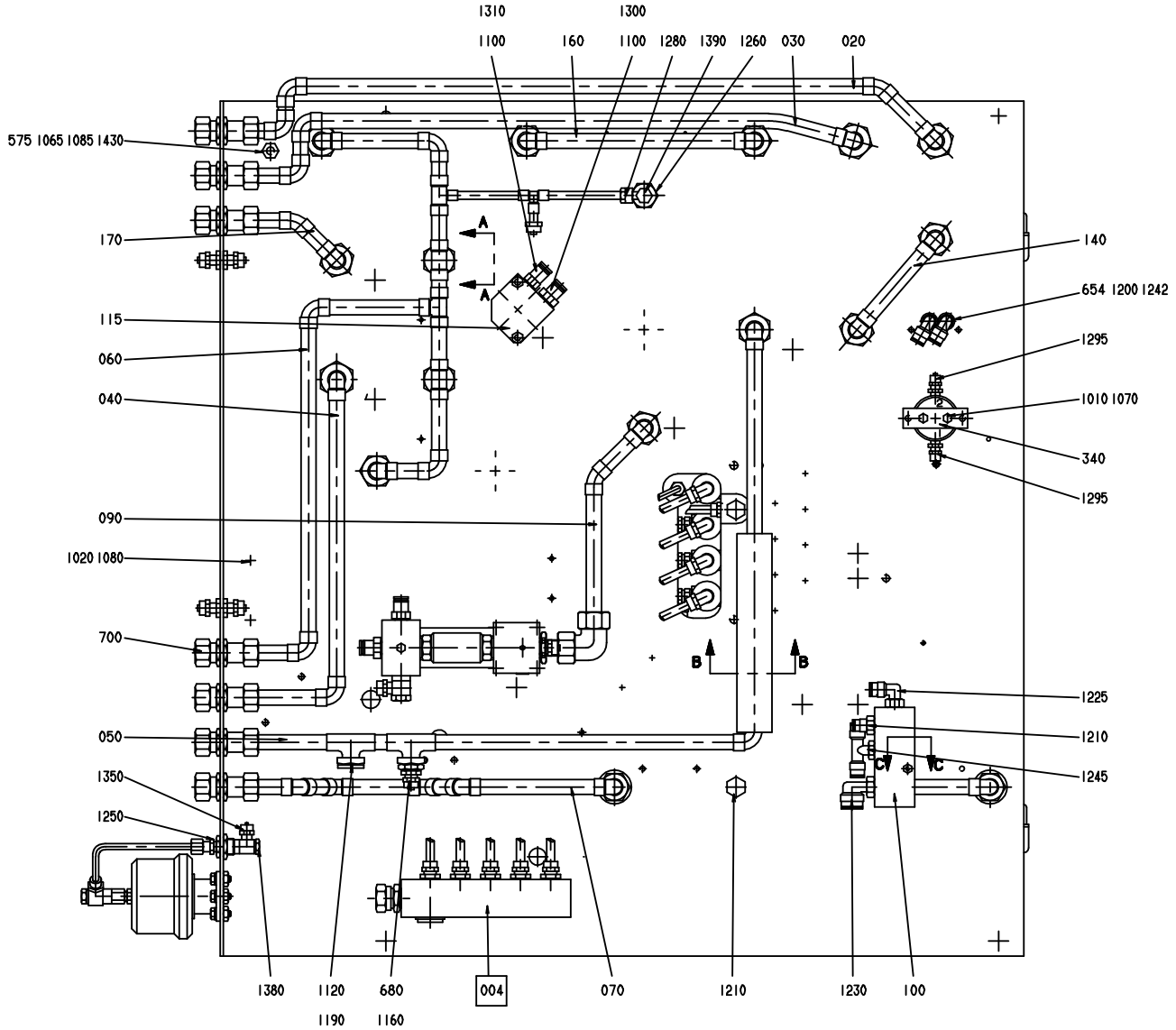

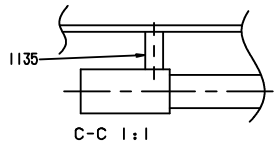

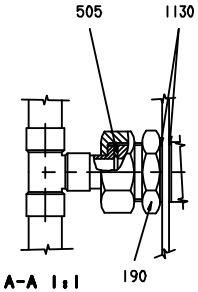

Muttern 190 låses med Loc-tite 542.
Muttern åtdragen för hand och därefter lossad ungefär 30°.

The nut 190 is fixed by Loc-tite 542.
The nut shall be tightened by hand and after tightening the nut is turned back 30°.

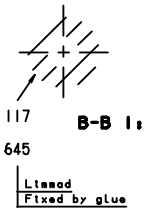

NOT:
Alla rör,slangar och koppl. tåthetsprovade med luft 1.0 Mpa(10kp/cm²)efter mont. Alla koppl. med koniska eller cylindriska gängor utan packningar tätas med Loc-tite 542. Ritad enl schema 1-978020

REMARK:
All pipes,hoses and joints airtightteated after assembly.Press.1.0 Mpa(10kp/cm²).All joints with conical or cylindrical threads locking washers packed with Loc-tite 542.Drawn acc to diag 1-978020

Pos	Part No	SP	UN	Qty	Description	Page No
Common Parts (Cont'd)						
1350	342980-0113	-		1	BANJO-CONNECTION,RING 6/4-G1/8"	
1360	342980-0121	-		1	BANJO-CONNECTION,RING 8/6-G1/8"	
1370	342980-0122	-		1	BANJO-CONNECTION,RING 8/6-G1/4"	
1380	342980-0303	-		2	BANJO-HOLLOW BOLT COUPL,EXT.THR.01-G1/8"	
1390	342980-0304	-		2	BANJO-HOLLOW BOLT COUPL,EXT.THR.01-G1/4"	
140	B978585-0001	-		1	PIPE	
	271761-0000	*-*		*2*	*NIPPLE*	
	271762-0000	*-*		*2*	*NUT*	
1400	342980-0314	-		1	BANJO-HOLLOW BOLT COUPL,EXT.THR.02-G1/4"	
1410	352101-0103	-		10	LEAD-IN, PR18,6/PG11, E-1457518	
1430	353104-0144	-		1	CABLE SHOEYAV 06 M 8*	
160	B978585-0003	-		1	PIPE	
	271762-0000	*-*		*2*	*NUT*	
	271761-0000	*-*		*2*	*NIPPLE*	
170	B978586-0000	-		1	PIPE	
	342708-0109	*-*		*1*	*REINFORCING RING VSH 15X1 MM*	
	271762-0000	*-*		*1*	*NUT*	
	271761-0000	*-*		*1*	*NIPPLE*	
180	B271823-0000	B		1	FILTER	
	90415-0325	*B*		*1*	*GASKET*	
	90415-0314	*B*		*1*	*FILTER INSERT / 5594-36*	
190	271949-0000	-		16	NUT	
200	272129-0000	-		1	BRACKET	
210	272130-0000	-		1	SPACER	
220	272340-0000	-		1	PIPE	
230	273454-0000	-		1	SIGN	
240	273455-0000	-		1	LABEL (COLD WATER)	
250	273456-0000	-		1	SIGN	
260	273458-0000	-		1	LABEL (AIR)	
270	979133-0000	-		1	PIPE	
280	445533-0000	-		1	SIGN	
290	445534-0000	-		1	SIGN	
300	445535-0000	-		1	SIGN	
310	469330-0000	-		1	SIGN	
320	469331-0000	-		1	HOLDER	
330	469332-0000	-		1	ATTACHMENT	
340	491649-0000	-		1	BRACKET	
500	90005-0045	-		1	WASHER PLAIN ROUND 10(3/8)/14,H=2	
505	90005-0061	-		16	WASHER PL.RND.FIBRE 14/24,H=1,5	
510	90030-0116	-		1	NIPPLES, REDUCING, EXT. THR. NO. 2520	
520	90030-0127	-		1	CONN. T-PIPE ADJ. ,EVT,INT.T-6	
530	B90042-0172	A		3	SOLENOID VALVE 4023/1005/1032 24VDC	
	90042-0467	*A*		*1*	*COIL 24VDC GSR*	
540	90042-0173	-		1	SOLENOID VALVE BURKERT	
550	90043-0006	-		1	PRESSURE GAUGE, 2041 D=63 MM	
560	90043-0036	-		1	PRESSURE GAUGE, 2041 D=63 MM	
570	B90048-0041	-		1	OIL PUMP NO CONTAINER	
	90048-0528	*-*		*1*	*PISTON SEAL*	
	90048-0527	*-*		*1*	*SEALING RING*	
	90048-0526	*-*		*1*	*O-RING*	
	90048-0525	*-*		*1*	*PUMP HOUSING*	
	90048-0523	*-*		*1*	*COMPRESSION SPRING*	
	90048-0452	*-*		*1*	*SEALING KIT*	
	90048-0450	*-*		*1*	*SPARE PARTS KIT*	
575	90062-0016	-		1	LOCK WASHER SERRAT.EXT.GEAR,8,4/15 H=0,8	
590	B90113-0072	-		1	PRESSURE REGULATOR	
	90113-0459	*A*		*1*	*O-RING*	
	90113-0387	*A*		*1*	*FILTER ELEMENT 40æM FOR 90113-0094*	
600	90113-0374	-		1	SLOW STARTING VALVE	
610	90113-0375	-		1	PRESSURE DISTRIBUTION	
620	90113-0377	-		1	SHUT-OFF VALVE	
630	90113-0378	-		1	SHUT-OFF VALVE	
640	90134-0019	-		1	CONN. STRAIGHT, GE 6-LM FZB	
645	90153-0035	-	L	1	ADHESIVE	
650	90163-0016	-		1	QUICK COUPLING, (F) LP 006-0-WR013	
653	90165-0044	-		3	CLIP	
654	90166-0013	A	MM	100	TUBE 8 MM PA BLUE	
655	90166-0081	A	M	2	TUBE 6 MM PA BLUE	
660	90187-0029	-		3	BALL VALVE G1/2, NPBR	
670	90194-0016	-		2	SIGN, FLASH, ELECTRIC EQUIPMENT SYMBOL	
680	342722-0203	-		1	STRAIGHT COUPLING	
690	90224-0296	-		7	CONN. BULKHEAD, ART.NO. 116 1500	
700	90224-0297	-		1	REDUCER, ART. NO 166 1215	
702	90235-0450	-		1	PLATE	
705	90235-0766	-		1	VALVE	
710	90274-0084	-		1	PRESSURE GUARD, 1800 KPA	
720	90274-0056	-		1	PRESSURE SWITCH, 100 - 1200 KPA	
730	90274-0074	-		1	PRESSURE GUARD, 530 KPA	
740	90277-0323	-		1	FILTER HOUSING / ART.NO 95S6-1/4 S 5430	
750	90277-0324	-		1	FILTER CARTRIDGE / 050-11-A	
760	90287-0212	-		3	SCREW MC6S M5X85 129	
770	90287-0215	-		1	SCREW MC6S M5X130 129	
780	90328-0001	-		1	SILENCER	

See previous drawings pages: 668, 670.

Pos	Part No	SP	UN	Qty	Description	Page No
Common Parts (Cont'd)						
790	90415-0018	-		1	FILTER FOR LIME SEPARATING / D MOD.AD	
800	90415-0019	-		1	FILTER / ART.NO. HH-M15-RG	

Pos	Part No	SP	UN	Qty	Description	Page No

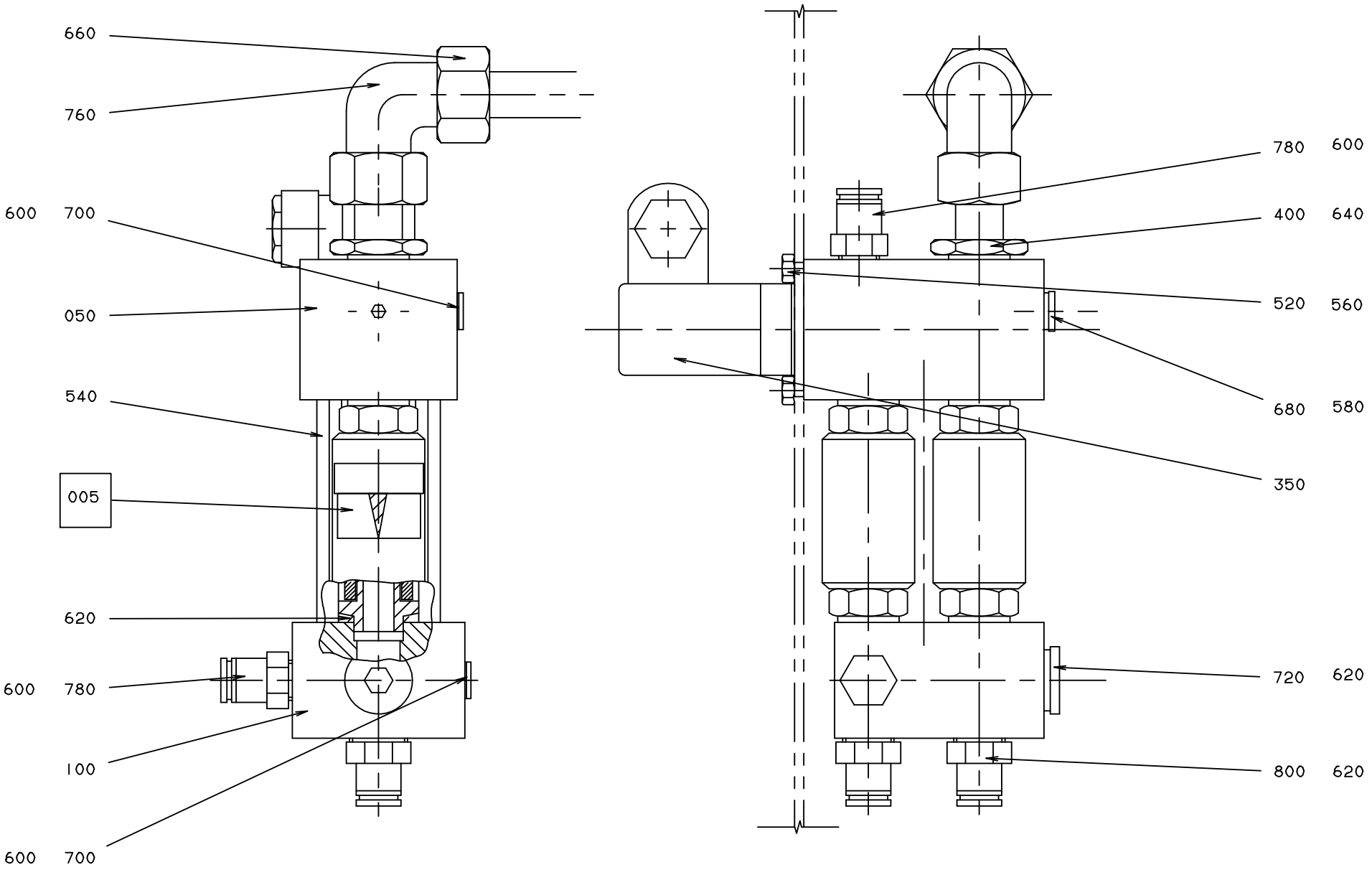
660
760
600 700
050
540
005
620
600 780
100
600 700
780 600
400 640
520 560
680 580
350
720 620
800 620

ECM: 102869 - 20020110
Group number: 1529204-0100
Assembly Drawing: 1529204-1_1_AA

Issue: 20020822

Pos	Part No	SP	UN	Qty	Description	Page No
Common Parts						
005	A491536-0100	-		2	NON-RETURN VALVE	**677**
050	456756-0000	-		1	BLOCK	
100	456755-0000	-		1	BLOCK	
350	90042-0173	B		1	SOLENOID VALVE BURKERT	
400	90224-0078	-		1	PIPE SOCKET, ART.NO RAN 1612	
520	312101-0327	-		4	SCREW M6S M5X12 FZB	
540	312111-0471	-		2	SCREW HEX.SOCK.HD.MC6S-TT 8X100 88 FZ	
560	315101-0146	-		4	WASHER PLAIN, BRB, 5,3/10 H=1	
580	315233-0109	-		1	WASHER PL.RND.NYL.10,3/14,H=1	
600	315233-0110	-		4	WASHER PL.RND.NYL.13,3/17,H=1	
620	315233-0111	-		7	WASHER PL.RND.NYL.17/22,H=1	
640	315233-0113	-		1	WASHER PL.RND.NYL.21,4/27,H=1,2	
660	342704-0114	-		1	ACCESSORIES, FERRULE 15-MSG	
680	342713-0209	-		1	PLUG, EXT THREAD HEX SOCKET 8638-00-180	
700	342713-0210	-		2	PLUG, EXT THREAD HEX SOCKET 8638-00-140	
720	342713-0211	-		1	PLUG, EXT THREAD HEX SOCKET 8638-00-380	
760	342736-0115	-		1	CONN. ELBOW W-16	
780	342722-0205	-		2	STRAIGHT COUPLING D=8-G1/4"	
800	342722-0206	-		2	STRAIGHT COUPLING D=8-G3/8"	

Pos	Part No	SP	UN	Qty	Description	Page No

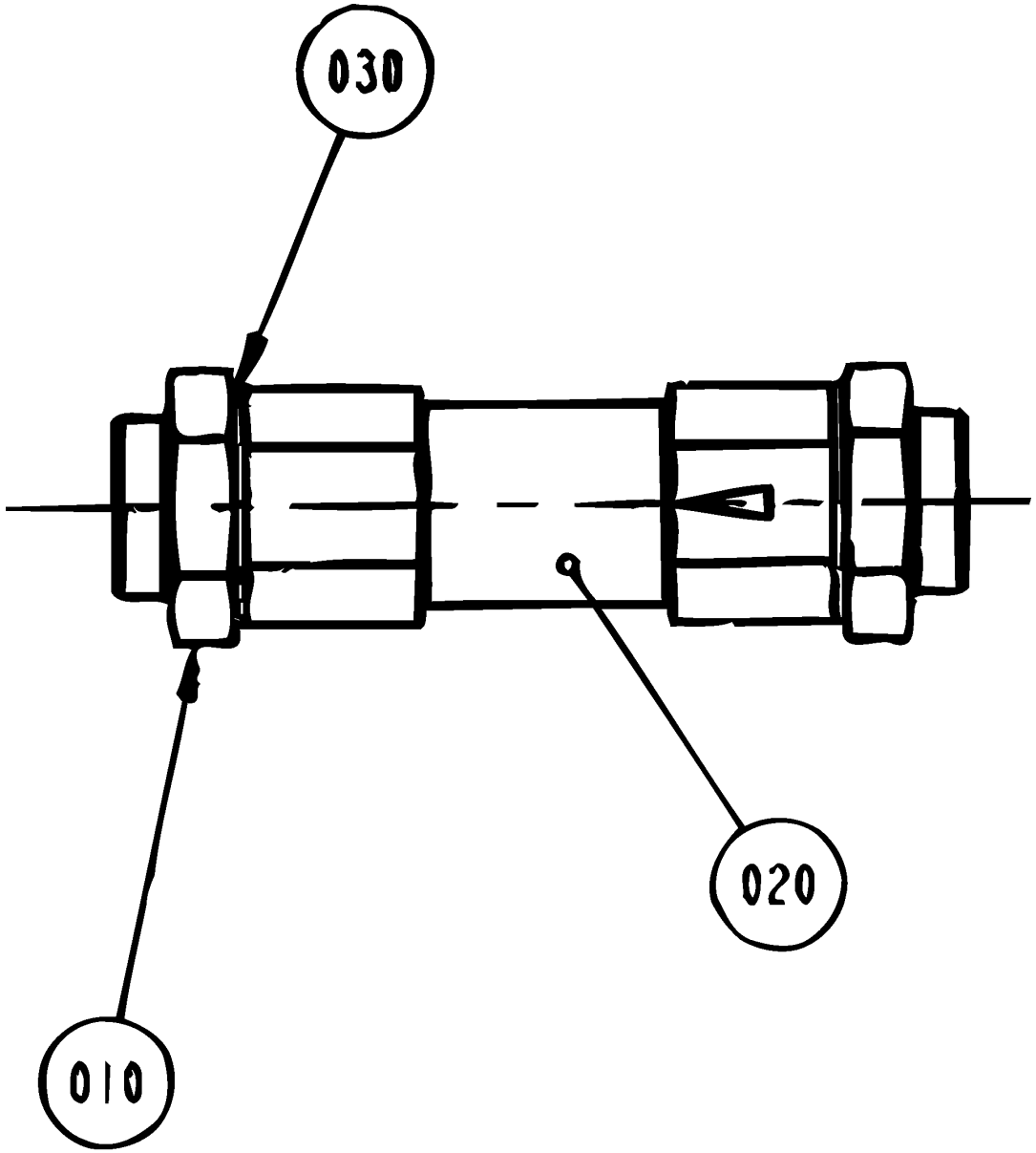

S - 491536-1
ECN 82225

ECM: 102870 - 20020110
Group number: 491536-0100
Assembly Drawing: 491536-1_1_AA

Issue: 20020822

Pos	Part No	SP	UN	Qty	Description	Page No
Common Parts						
010	751086-0000	B		2	NIPPLE	
020	90230-0028	A		1	NON-RETURN VALVE H 151 R 3/8"	
030	315233-0111	-		2	WASHER PL.RND.NYL.17/22,H=1	

Pos	Part No	SP	UN	Qty	Description	Page No

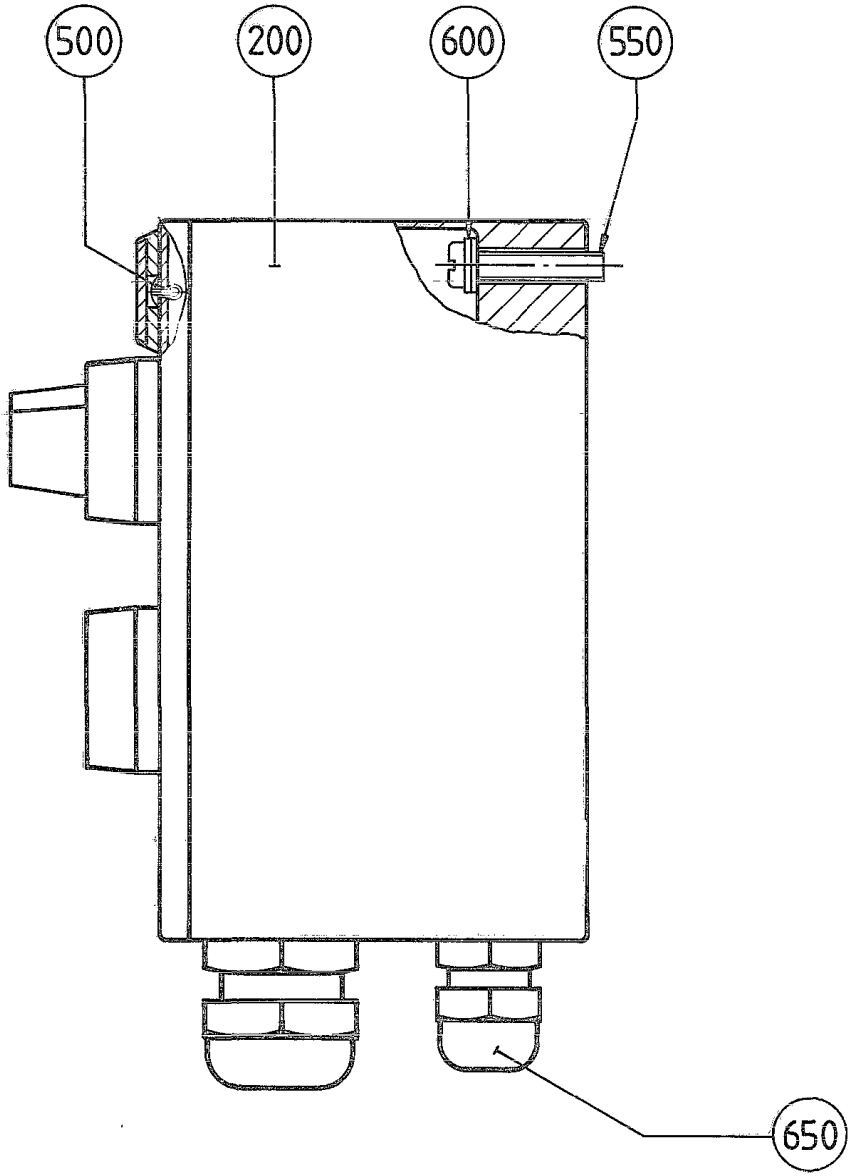
500
200
600
550
650

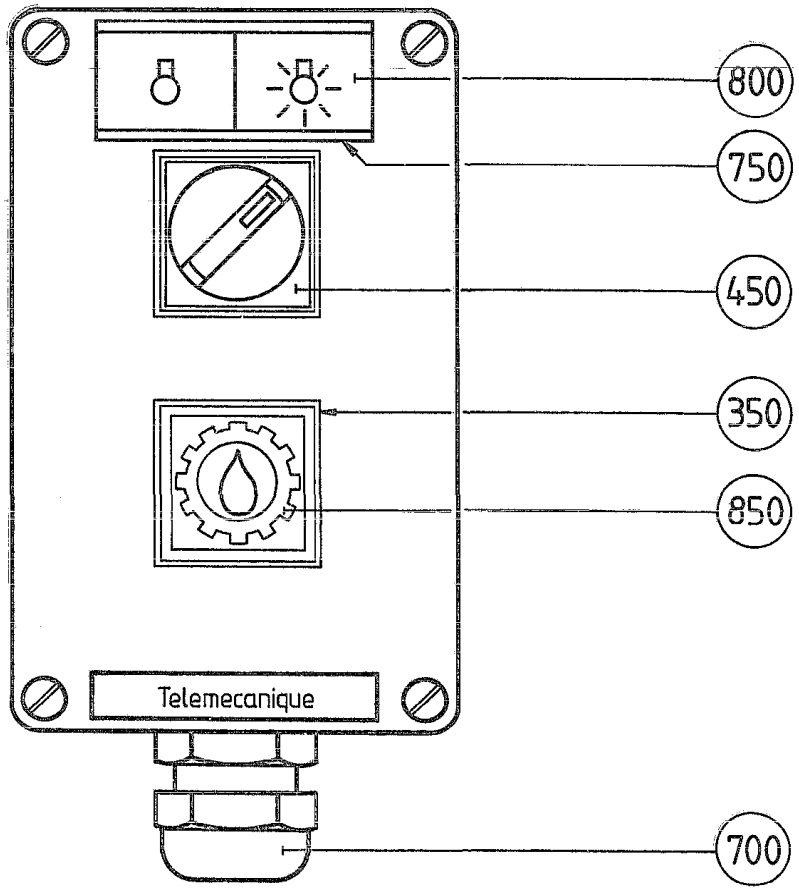
800
750
450
350
850
Telemecanique
700

ECM: 99773 - 20011105
Group number: 456882-0100
Assembly Drawing: 456882-1_1_AA

Issue: 20020822

Pos	Part No	SP	UN	Qty	Description	Page No
Common Parts						
200	B456883-0000	-		1	PUSH BUTTON BOX	
	90066-0022	*-*		*1*	*PUSH BUTTON BOX XAP-M2400*	
350	90064-0084	A		1	PUSH BUTTON, YELLOW	
450	90111-0120	A		1	SWITCH, 2 POS.704.510 .0A+704.901.5/A	
500	311520-0329	-		2	RIVET, BLANK 2,4X8	
550	312121-0333	-		2	SCREW SLOT.PAN HD. MCS 5X25 FZB	
600	315101-0146	-		2	WASHER PLAIN, BRB, 5,3/10 H=1	
650	352103-0101	-		1	CABLE GLAND, ST 9, PR15,2/PG9	
700	352103-0110	-		1	CABLE GLAND, STR 16, PR22,5/PG16	
750	359240-0100	-		1	SIGN HOLDER FOR 359240-0001	
800	359241-0140	-		1	SIGN "LIGHTING MACHINE"	
850	359301-0125	-		1	SIGN "LUBRICATION"	

Pos	Part No	SP	UN	Qty	Description	Page No

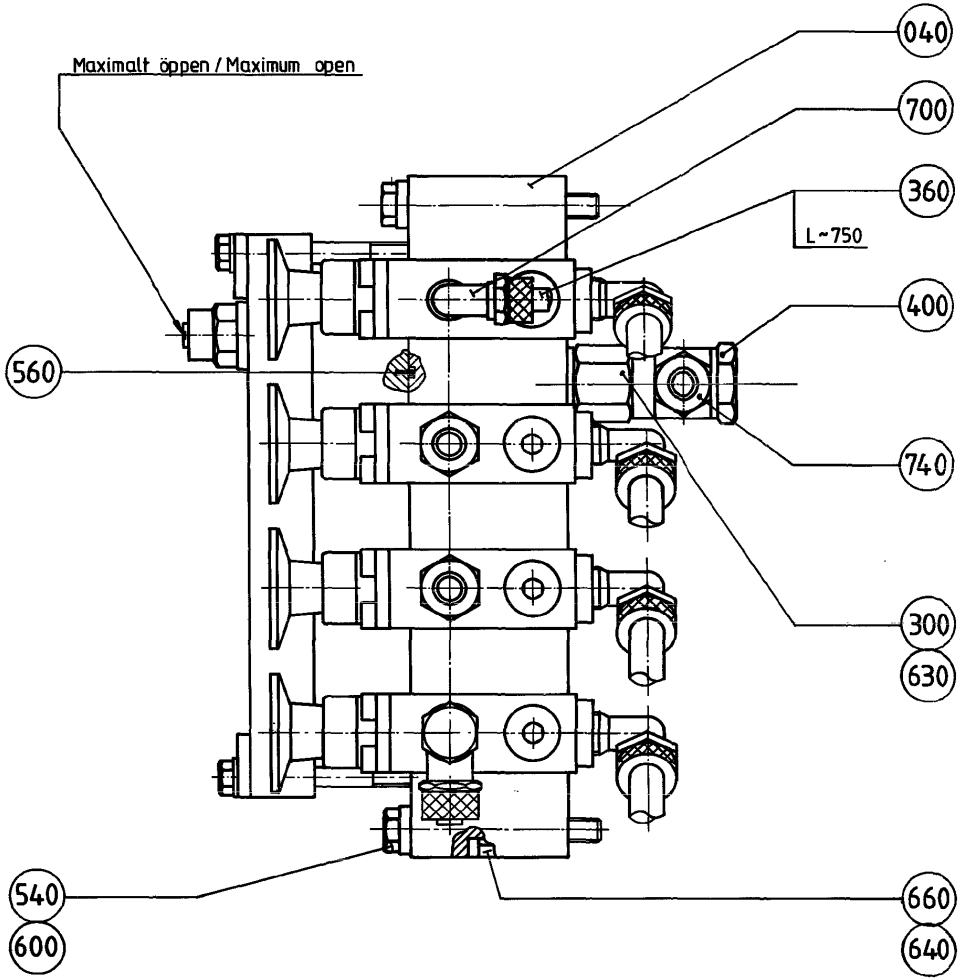
Maximalt öppen / Maximum open
040
700
360
L~750
400
560
740
300
630
540
600
660
640

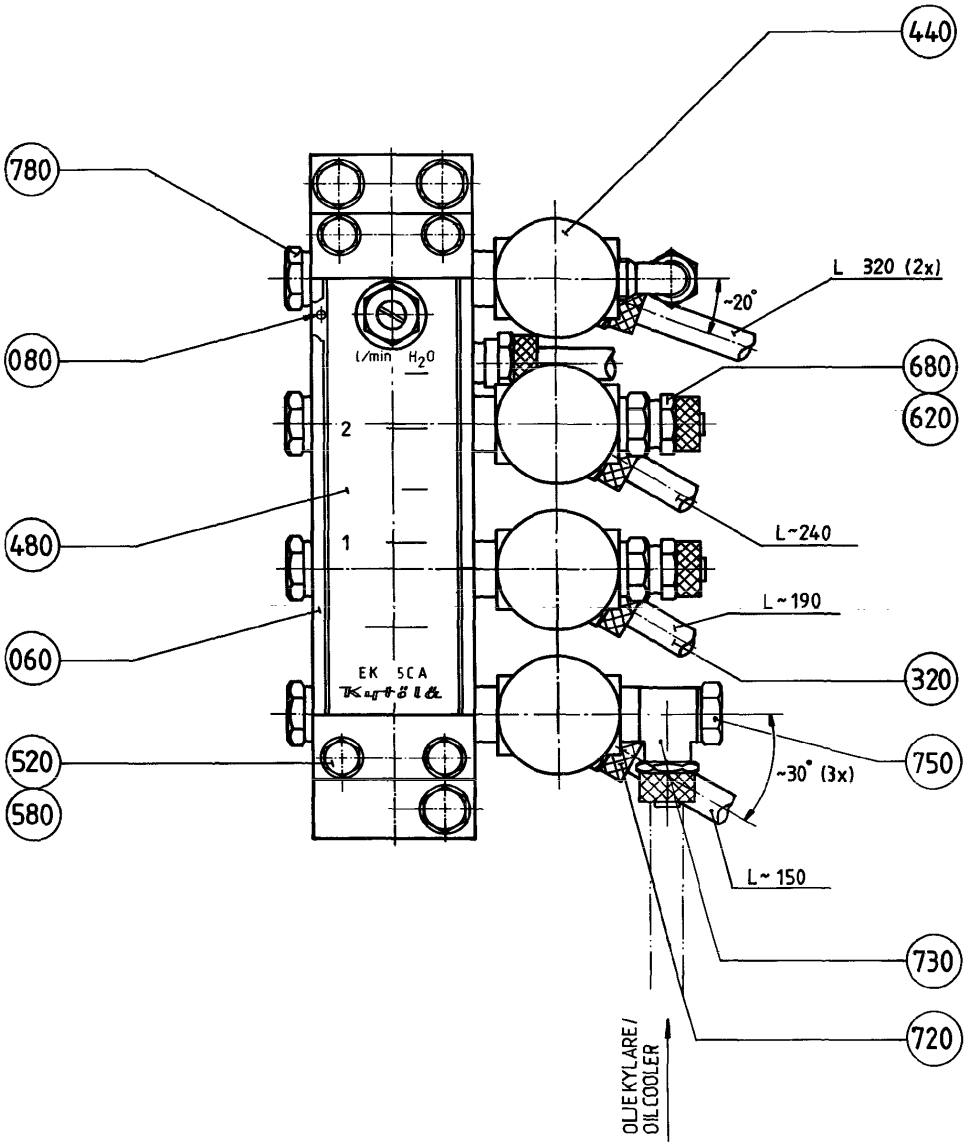
440
780
L 320 (2x)
~20°
080
l/min H2O
680
620
2
480
1
L~240
L~190
060
EK 5CA
320
520
580
~30° (3x)
750
L~150
730
720
OLJEKYLARE/
OIL COOLER

ECM: 102874 - 20020110
Group number: 469118-0200
Assembly Drawing: 469118-2_1_AA

Issue: 20020822

Pos	Part No	SP	UN	Qty	Description	Page No
Common Parts						
040	469119-0000	-		1	BLOCK	
060	469120-0000	-		1	HOLDER	
080	456011-0000	B		6	PIN	
300	90030-0166	-		1	NIPPLE,REDUCING G1/4"-G1/4"	
320	90166-0118	-	MM	1250	TUBE 8 MM PA BLACK	
360	90166-0119	-	MM	750	HOSE PUR 4/6 BLACK	
400	90230-0018	B		1	NON RETURN VALVE VCR-844-1/4"-04	
440	B90235-0064	B		4	VALVE	
	90235-0311	*C*		*1*	*WEAR & TEAR PARTS KIT*	
480	90243-0134	B		1	FLOW METER	
520	312105-0341	-		4	SCREW M6S ISO 4014 M5X50 A480	
540	312105-0380	-		4	SCREW M6S ISO 4014 M6X50 A480	
560	315202-0116	-		2	O-RING 18,1X1,6 MM	
580	315105-0146	-		4	WASHER PLAIN, BRB, 5,3/10,H=1	
600	315115-0153	-		3	WASHER PLAIN, TBRB 6,4/12 H=3	
620	315233-0109	B		2	WASHER PL.RND.NYL.10,3/14,H=1	
630	315233-0110	B		1	WASHER PL.RND.NYL.13,3/17,H=1	
640	315233-0111	B		1	WASHER PL.RND.NYL.17/22,H=1	
660	342713-0211	-		1	PLUG, EXT THREAD HEX SOCKET 8638-00-380	
680	342921-0121	B		2	STRAIGHT COUPLING,EXT.THREADED 8/6-G1/8"	
700	342930-0113	B		1	ELBOW 90 COUPL.,EXT.THREAD 6/4-R1/8"	
720	342930-0121	-		4	ELBOW 90 COUPL.,EXT.THREAD 8/6-R1/8"	
730	342980-0121	-		1	BANJO-CONNECTION,RING 8/6-G1/8"	
740	342980-0122	-		1	BANJO-CONNECTION,RING 8/6-G1/4"	
750	342980-0303	B		1	BANJO-HOLLOW BOLT COUPL,EXT.THR.01-G1/8"	
780	342980-0313	B		8	BANJO-HOLLOW BOLT COUPL,EXT.THR.02-G1/8"	

Pos	Part No	SP	UN	Qty	Description	Page No

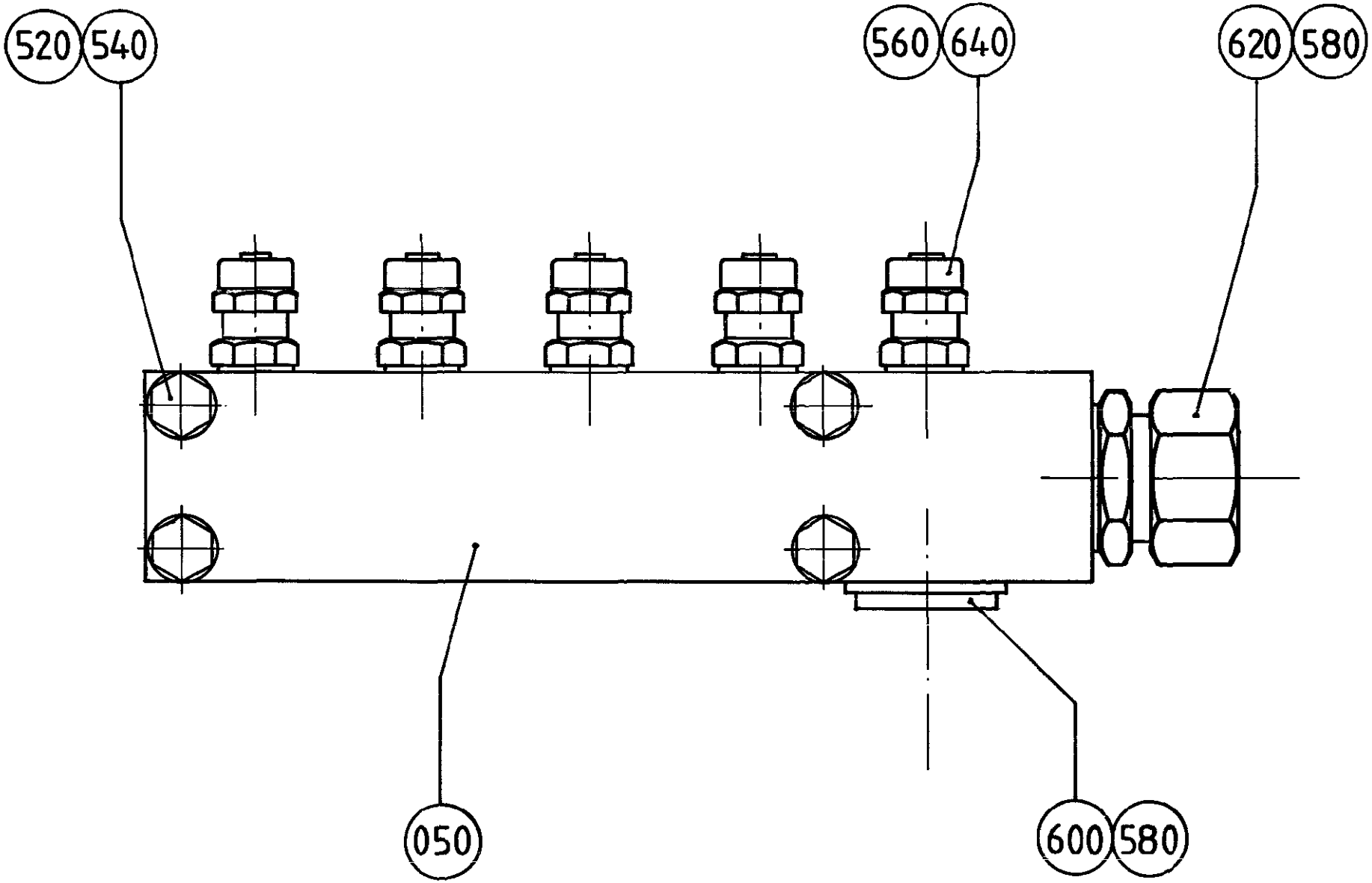
520
540
560
640
620
580
050
600
580

ECM: 102875 - 20020110
Group number: 469121-0200
Assembly Drawing: 469121-2_1_AA

Issue: 20020822

Pos	Part No	SP	UN	Qty	Description	Page No
Common Parts						
050	469122-0000	-		1	BLOCK	
520	312105-0368	-		4	SCREW M6S M6X16 A280	
540	315105-0153	-		4	WASHER PLAIN, BRB, 6,4/12,H=1,5	
560	315233-0109	A		5	WASHER PL.RND.NYL.10,3/14,H=1	
580	315233-0113	A		1	WASHER PL.RND.NYL.21,4/27,H=1,2	
600	342713-0213	-		1	PLUG, EXT THREAD HEX SOCKET 8638-00-120	
620	342720-0114	-		1	CONN. STR. GA-15-G1/2	
640	342921-0121	-		5	STRAIGHT COUPLING,EXT.THREADED 8/6-G1/8"	

Pos	Part No	SP	UN	Qty	Description	Page No

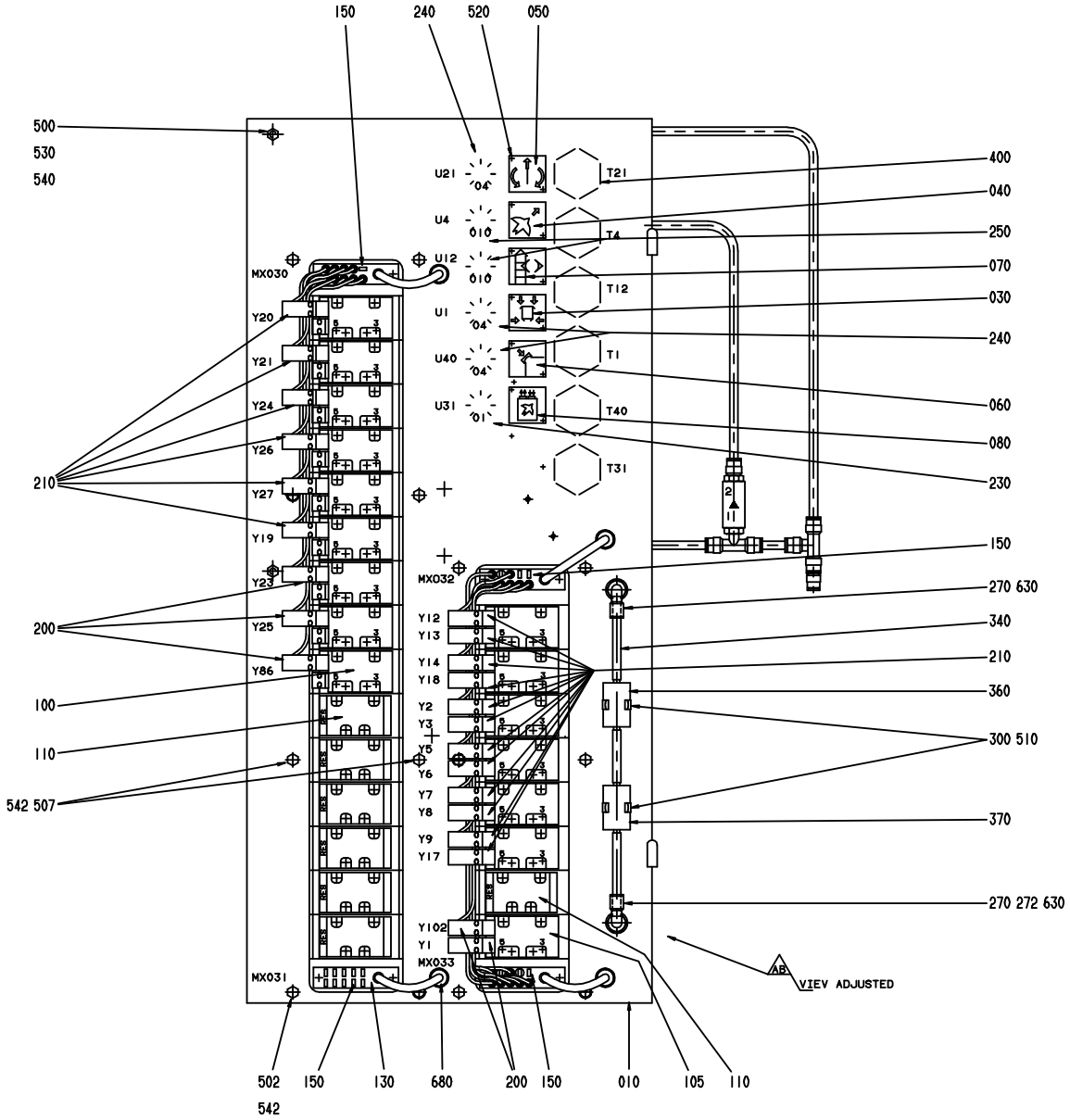
150
240
520
050
500
530
540
U21
04
T21
U4
010
T4
U12
010
T12
U1
04
T1
U40
04
T40
U31
01
T31
MX030
Y20
Y21
Y24
Y26
Y27
Y19
Y23
Y25
Y86
210
200
100
110
542 507
MX032
Y12
Y13
Y14
Y18
Y2
Y3
Y5
Y6
Y7
Y8
Y9
Y17
Y102
Y1
MX033
MX031
400
040
250
070
030
240
060
080
230
150
270 630
340
210
360
300 510
370
270 272 630
AB
VIEV ADJUSTED
502
542
150
130
680
200
150
010
105
110

ECM: 107839 - 20020506
Group number: 1529100-0100
Assembly Drawing: 1529100-1_1_AC

Issue: 20020822

Pos	Part No	SP	UN	Qty	Description	Page No
TBA						
100	90042-0215	-		9	VALVE BODY 5/2 UNISTABLE	
110	90042-0519	-		7	BLANK PLATE ISO SIZE 1	
150	90042-0526	-		17	PROTECTIVE SLEEVE MECMAN	
210	90042-0539	-		18	PILOT VALVE L=350MM	
270	90055-0118	-		4	ELBOW PIPE JOINT -8MM	
272	90055-0173	-		28	ELBOW WITH TAILPIECE 8/6 MM	
555	342715-0103	-		14	BLIND PLUG 8 MM	
TWA						
100	90042-0215	-		12	VALVE BODY 5/2 UNISTABLE	
110	90042-0519	-		5	BLANK PLATE ISO SIZE 1	
150	90042-0526	-		14	PROTECTIVE SLEEVE MECMAN	
210	90042-0539	-		21	PILOT VALVE L=350MM	
270	90055-0118	-		6	ELBOW PIPE JOINT -8MM	
272	90055-0173	-		31	ELBOW WITH TAILPIECE 8/6 MM	
555	342715-0103	-		11	BLIND PLUG 8 MM	
Common Parts						
010	1529101-0000	-		1	SHEET	
030	273449-0000	-		1	SIGN	
040	273450-0000	-		1	SIGN	
050	273452-0000	-		1	SIGN	
060	295424-0000	-		1	SIGN	
070	295425-0000	-		1	SIGN	
080	978603-0000	-		1	SIGN	
090	979219-0000	-		14	SPACER PIPE	
105	90042-0271	-		7	VALVE BODY 2X3/2	
130	90042-0521	-		4	EL.CONNECTION MECMAN 04938 278 04	
140	90042-0522	-		4	PORTED END PIECE ISO SIZE 1	
160	90042-0528	-		1	BLANKING KIT SEALS ISO SIZE 1	
180	90042-0532	-		24	BASE PLATE ISO SIZE 1	
200	90042-0538	-		5	PILOT VALVE L=500MM	
230	90043-0090	-		1	PRESSURE GAUGE, 2048 D=40 MM	
240	90043-0064	-		3	PRESSURE GAUGE, 2048 D=40 MM	
250	90043-0065	-		2	PRESSURE GAUGE, 2048 D=40 MM	
275	90087-0036	-		1	PLUG	
280	90457-0144	-		1	REGULATOR 0,3-2 BAR	
283	90113-0140	-		5	QUICK CLAMP	
285	90113-0469	-		3	MANIFOLD REGULATOR 4 BAR	
290	90113-0470	-		2	MANIFOLD REGULATOR 10 BAR	
300	90165-0019	-		2	TOOL CLIP, 81/3, OPEN, 20 - 30 MM	
310	90166-0013	-	M	3	TUBE 8 MM PA BLUE	
320	90166-0195	-	M	1	TUBE 12 MM PA BLUE	
330	90166-0081	-	M	1	TUBE 6 MM PA BLUE	
340	90166-0194	-	M	1	TUBE 8 MM PUR BLUE	
350	90235-0151	-		1	NON-RETURN VALVE	
360	90277-0045	A		1	FILTER / 9900-05-BK	
370	90277-0046	A		1	FILTER / 9933-05-101	
380	90328-0017	-		1	SILENCER, D=6 MM	
390	90328-0024	-		3	SILENCER G3/8	
400	90457-0078	-		6	PANEL NUT	
500	312101-0451	-		2	SCREW M6S M8X20 FZB	
502	312105-0376	-		14	SCREW M6S ISO 4014 M6X35 A480	
507	312105-0382	-		2	SCREW M6S ISO 4014 M6X60 A480	
510	312125-0220	-		2	SCREW SLOT.PAN HD. MCS 3X6 A480	
520	312502-0120	-		12	DRIVE SCREW ROUND HEAD KDS 0X5	
530	312601-0318	-		2	NUT M6M8FZB	
535	312605-0316	-		14	HEXAGON NUT, M6M M6 A280	
540	315101-0165	-		2	WASHER PLAIN, BRB, 8,4/16 H=1,5	
542	315105-0153	-		28	WASHER PLAIN, BRB, 6,4/12,H=1,5	
550	342713-0211	-		13	PLUG, EXT THREAD HEX SOCKET 8638-00-380	
554	342715-0102	-		2	BLIND PLUG 6 MM	
560	342716-0203	-		2	REDUCER 6-8	
565	342716-0209	-		1	REDUCER 8-12	
569	90458-2964	-		1	ELBOW PIPE JOINT, EXT.THREAD, D=8MM-G1/8	
570	342722-0205	-		1	STRAIGHT COUPLING D=8-G1/4"	
575	342732-0102	-		6	ELBOW PIPE JOINT, EXT.THREAD, D=6MM-G1/8	
580	342732-0103	-		2	ELBOW PIPE JOINT, EXT.THREAD, D=6MM-G1/4	
590	342732-0104	-		5	ELBOW PIPE JOINT, EXT.THREAD, D=8MM-G1/4	
600	342732-0105	-		2	ELBOW PIPE D8-R3/8"	
610	342732-0110	-		3	ELBOW PIPE JOINT, EXT.THREAD,D=12MM-G3/8	
620	342735-0102	-		1	ELBOW PIPE JOINT	
630	342735-0103	-		2	ELBOW PIPE JOINT	
635	342735-0109	-		1	ELBOW PIPE JOINT	
640	342742-0104	-		1	T-COUPLING,ADJUST,F.PLASTIC TUBE 8-G1/4"	
650	342748-0103	-		1	T-CONNECTION 8MM	
655	342748-0104	-		1	T-CONNECTION 10MM	
660	342748-0109	-		3	T-CONNECTION 12MM	
670	342770-0105	-		6	STRAIGHT COUPLING INT, D=6 MM - G1/8	
675	342772-0121	-		1	ELBOW FITTING	
680	352101-0103	-		4	LEAD-IN, PR18,6/PG11, E-1457518	
690	359000-0400	-		4	MARKING CO2/4"0"	
690	359000-0403	-		2	MARKING COLLAR PA2/4 "3" YELLOW	

Machine Type Group Description Used-In Group Number Page No

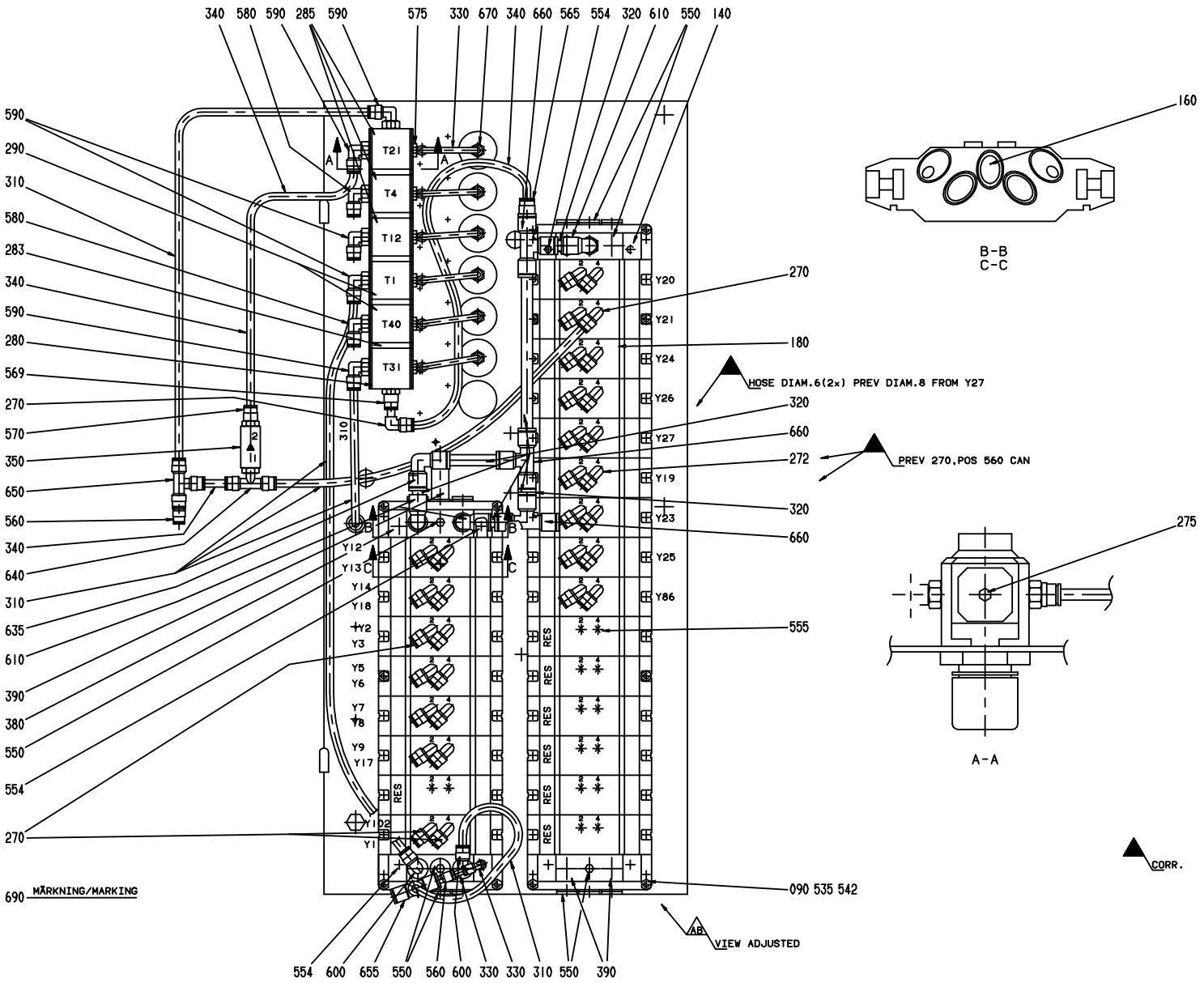
340 580 590 285 590 575 330 670 340 660 565 554 320 610 550 140
590 290 310 580 283 340 590 280 569 270 570 350 650 560 340 640 310 635 610 390 380 550 554 270
690 MÄRKNING/MARKING
554 600 655 550 560 600 330 330 310 550 390
T21 T4 T12 T1 T40 T31
Y20 Y21 Y24 Y26 Y27 Y19 Y23 Y25 Y86
Y12 Y13 Y14 Y18 Y2 Y3 Y5 Y6 Y7 Y8 Y9 Y17 Y102 Y1
RES
270 180 320 660 272 320 660 555 090 535 542
HOSE DIAM.6(2x) PREV DIAM.8 FROM Y27
PREV 270,POS 560 CAN
AB VIEW ADJUSTED
160
B-B
C-C
275
A-A
CORR.

Pos	Part No	SP	UN	Qty	Description	Page No
Common Parts (Cont'd)						
690	359000-0402	-		5	MARKING COLLAR 2/4 "2" YELLOW	
690	359000-0401	-		8	MARKING COLLAR 2/4 "1" YELLOW	

Pos	Part No	SP	UN	Qty	Description	Page No

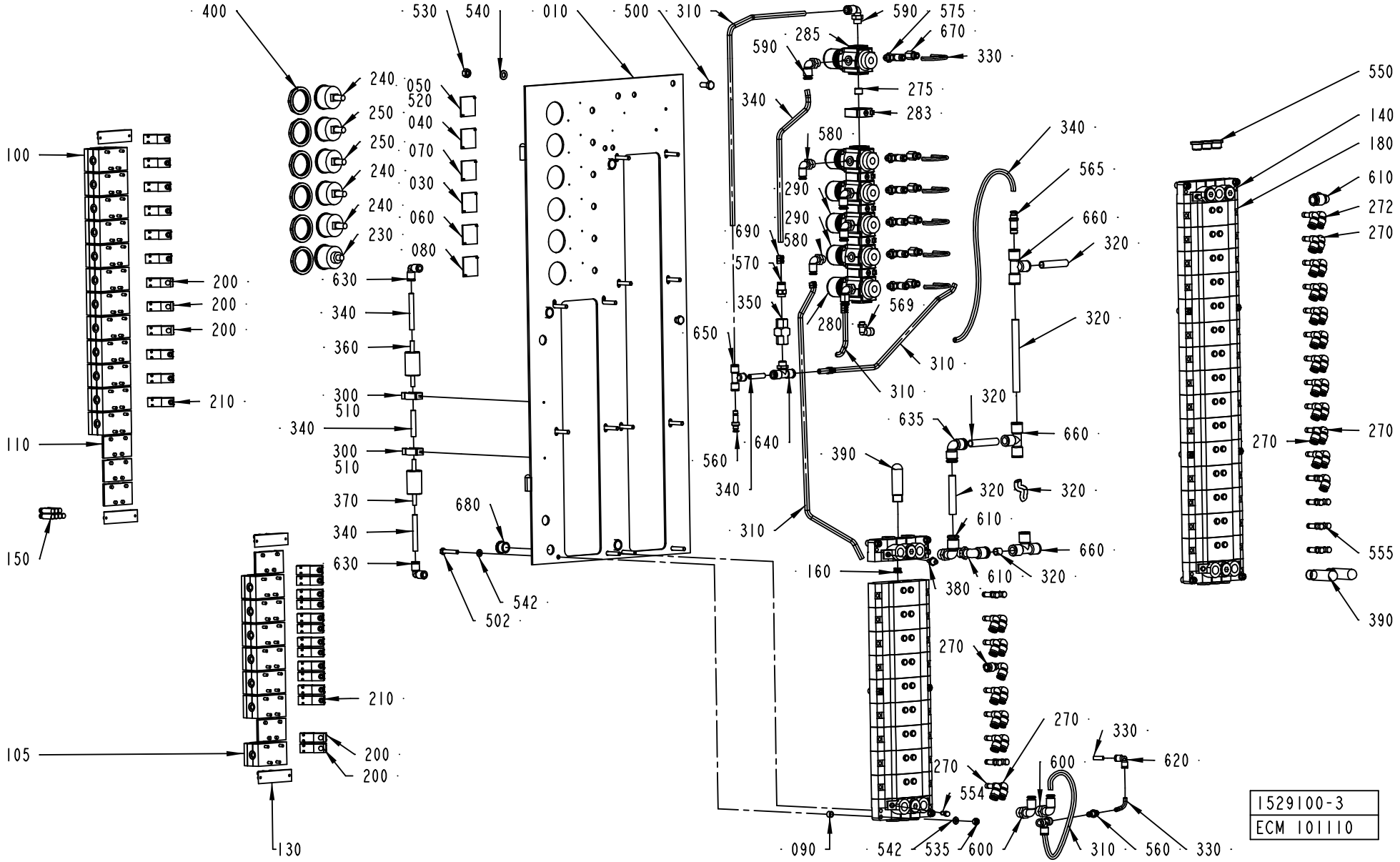
400
530
540
010
500
310
590
575
590
285
670
330
240
050
520
250
040
250
070
240
030
240
060
230
080
275
283
340
580
340
565
660
320
290
290
580
690
570
350
280
569
650
310
320
310
635
320
660
560
640
340
390
320
320
610
660
610
320
680
160
380
270
542
502
270
270
330
600
620
554
270
105
210
200
200
130
090
542
535
600
310
560
330
100
200
200
200
210
110
150
630
340
360
300
510
340
300
510
370
340
630
140
180
610
272
270
270
270
555
390
550
1529100-3
ECM 101110

Pos	Part No	SP	UN	Qty	Description	Page No	Pos	Part No	SP	UN	Qty	Description	Page No

SEE PREVIOUS LISTS PAGES: 685, 687.

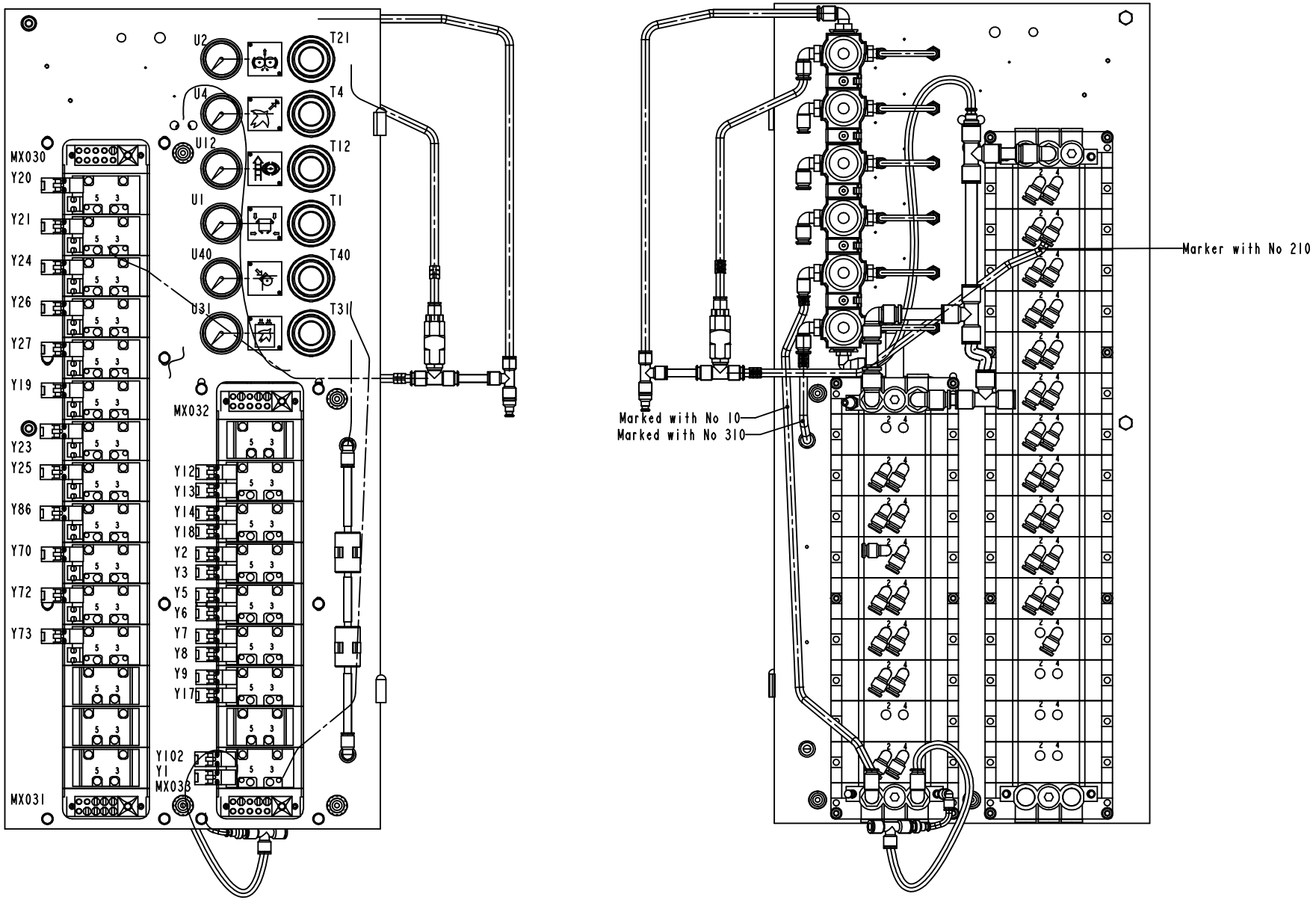
U2
T21
U4
T4
U12
T12
U1
T1
U40
T40
U31
T31
MX030
Y20
Y21
Y24
Y26
Y27
Y19
Y23
Y25
Y86
Y70
Y72
Y73
MX031
MX032
Y12
Y13
Y14
Y18
Y2
Y3
Y5
Y6
Y7
Y8
Y9
Y17
Y102
Y1
MX033
Marker with No 210
Marked with No 10
Marked with No 310

Pos	Part No	SP	UN	Qty	Description	Page No	Pos	Part No	SP	UN	Qty	Description	Page No

SEE PREVIOUS LISTS PAGES: 685, 687.

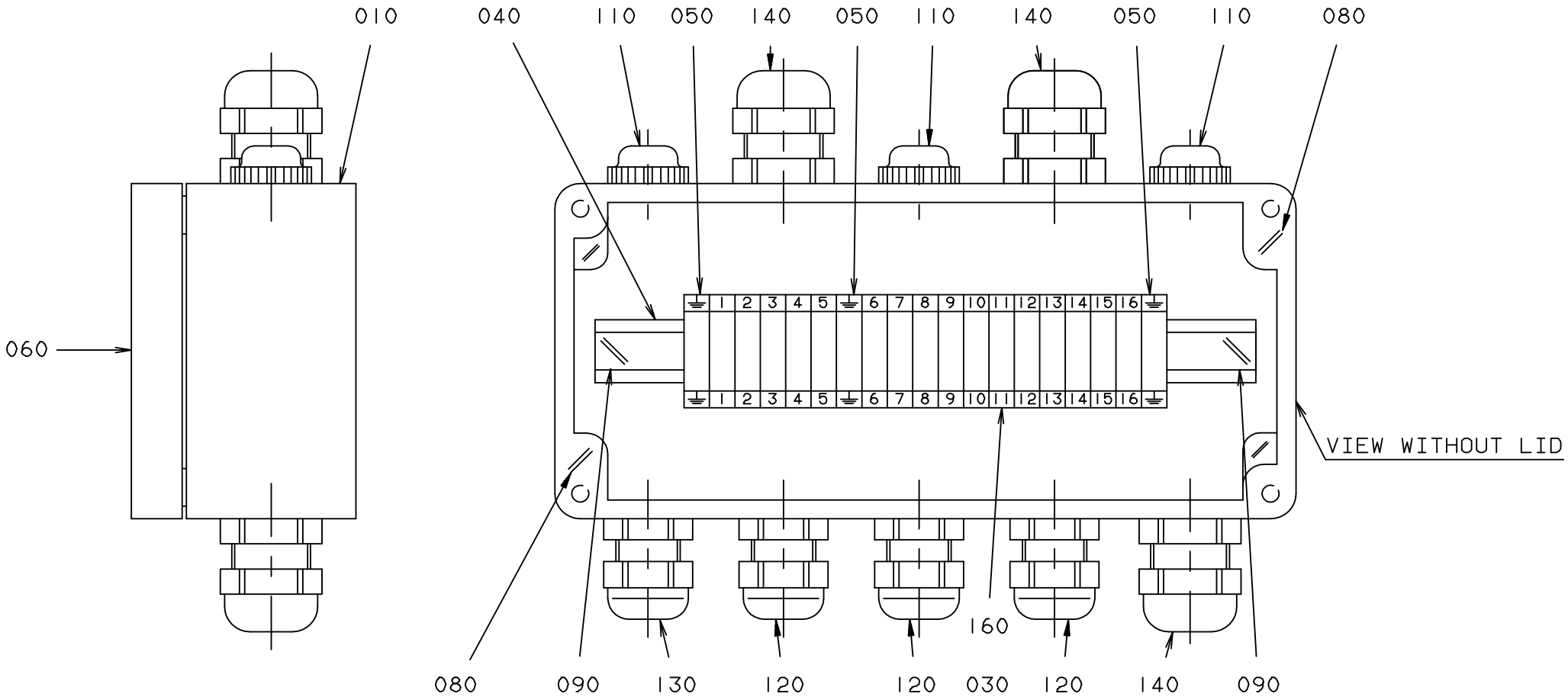
010
040
110
050
140
050
110
140
050
110
080
060
1 2 3 4 5 6 7 8 9 10 11 12 13 14 15 16
1 2 3 4 5 6 7 8 9 10 11 12 13 14 15 16
VIEW WITHOUT LID
160
080
090
130
120
120
030
120
140
090

ECM: 82379 - 20010226
Group number: 1529066-0100
Assembly Drawing: 1529066-1_1_AA

Issue: 20020822

Pos	Part No	SP	UN	Qty	Description	Page No
Common Parts						
010	1529068-0000	-		1	CONNECTION BOX	
030	90077-0079	-		16	FEED THROUGH TERMINAL, 02943.6	
040	90077-0328	-	MM	156	RAIL TS15/5	
050	90135-0026	-		3	EARTH TERMINAL, 3802.6	
060	90194-0016	-		1	SIGN, FLASH, ELECTRIC EQUIPMENT SYMBOL	
080	312125-0293	-		2	SCREW PAN HEAD MCS M4X16 SS	
090	312132-0284	-		2	SCREW SLOT. PAN HEAD MSCS M4X5	
110	352101-0102	-		3	LEAD-IN, PR15,2/PG9, E-1457515	
120	352103-0100	-		3	CABLE GLAND, STR 9, PR15,2/PG9	
130	352103-0101	-		1	CABLE GLAND, ST 9, PR15,2/PG9	
140	352103-0106	-		3	CABLE GLAND, ST 11, PR18,6/PG11	
160	359011-0807	-		2	MARKING PLATES 5-FW 1-50	

Pos	Part No	SP	UN	Qty	Description	Page No

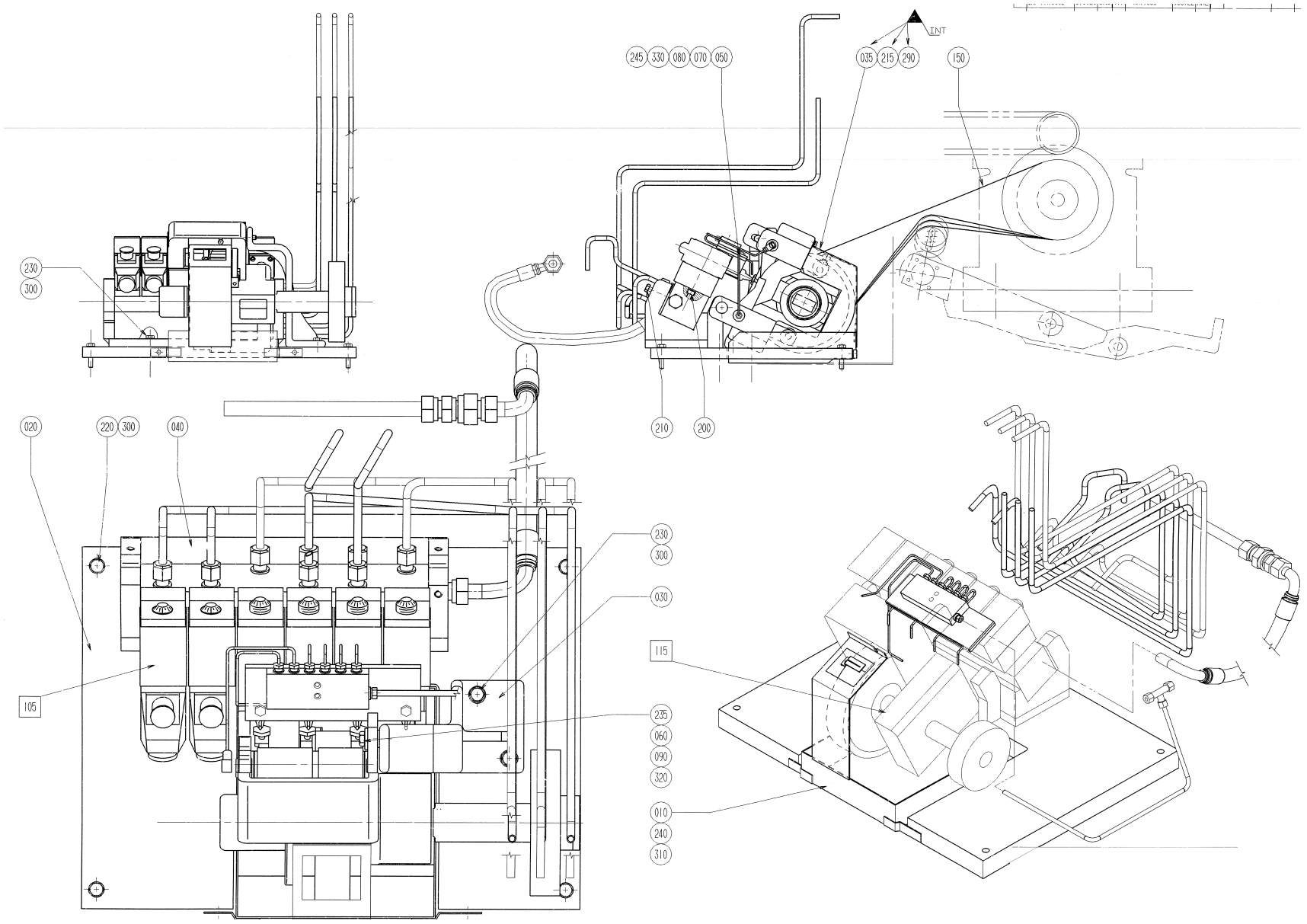
INT
245
330
080
070
050
035
215
290
150
230
300
210
200
020
220
300
040
230
300
030
115
105
235
060
090
320
010
240
310

Pos	Part No	SP	UN	Qty	Description	Page No
Common Parts						
010	751667-0000	-		1	TROUGH	
020	751668-0000	-		1	FASTENING PLATE	
030	751669-0000	-		1	ARM	
035	567684-0000	-		1	PROTECTION	
040	751670-0000	-		1	BRACKET	
050	752603-0000	-		1	WASHER	
060	28036-0000	-		1	WASHER	
070	752604-0000	-		1	PIPE HOLDER	
080	752491-0000	-		2	TIGHTENING PIECE	
090	752622-0000	-		1	STOP	
105	A271168-0400	-		1	BLOCK	**697**
115	A751689-0100	-		1	CURVE PACK	**699**
150	90417-0139	-		1	TIMING BELT T10X1560X25 POLYURETHANE	
200	312115-0465	-		2	SCREW MC6S M8X70 A280	
210	312109-0459	-		2	SCREW M6S ISO 4017 M8X40 A480	
215	312105-0325	-		1	SCREW M6S ISO 4017 M5X10 A480	
220	312105-0459	-		4	SCREW M6S ISO 4014 M8X40 A480	
230	312105-0455	-		4	SCREW M6S ISO 4017 M8X30 A480	
235	312105-0453	-		1	SCREW M6S ISO 4017 M8X25 A480	
240	312105-0366	-		2	SCREW M6S M6X12 A280	
245	312318-0360	-		2	SCREW HEX.SOCK.SET CUP P.MSK6SS6X6 SS	
290	315105-0146	-		1	WASHER PLAIN, BRB, 5,3/10,H=1	
300	315105-0165	-		8	WASHER PLAIN, BRB, 8,4/16,H=1,5	
310	315105-0153	-		2	WASHER PLAIN, BRB, 6,4/12,H=1,5	
320	315105-0171	-		1	WASHER PLAIN, BRB, 10/18,H=2	
330	312105-0368	-		2	SCREW M6S M6X16 A280	

Pos	Part No	SP	UN	Qty	Description	Page No

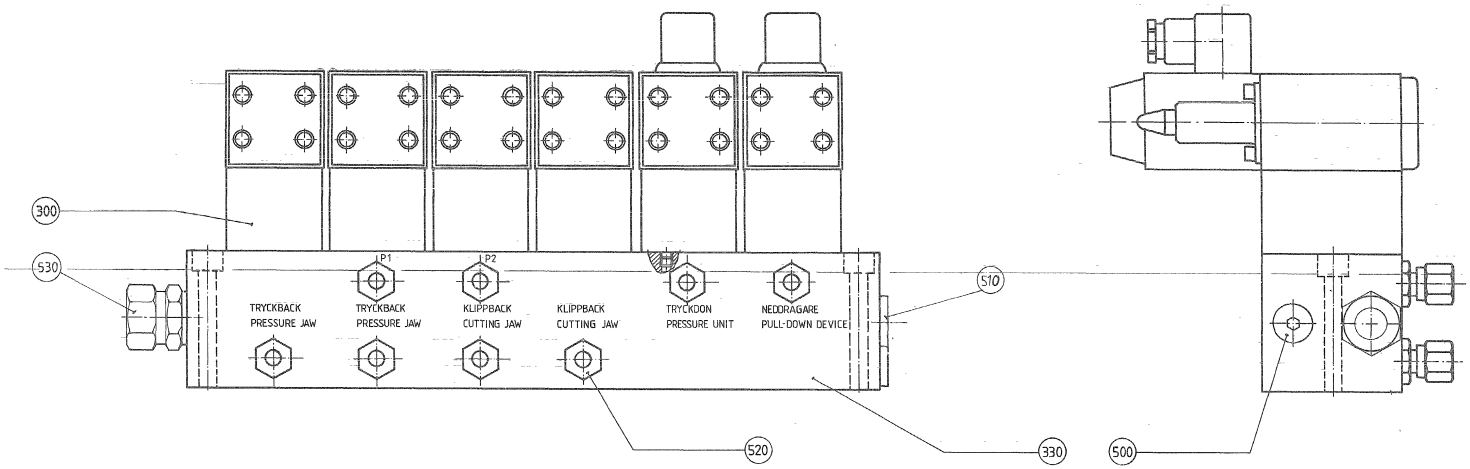
300
530
P1
P2
TRYCKBACK PRESSURE JAW
TRYCKBACK PRESSURE JAW
KLIPPBACK CUTTING JAW
KLIPPBACK CUTTING JAW
TRYCKDON PRESSURE UNIT
NEDDRAGARE PULL-DOWN DEVICE
510
520
330
500

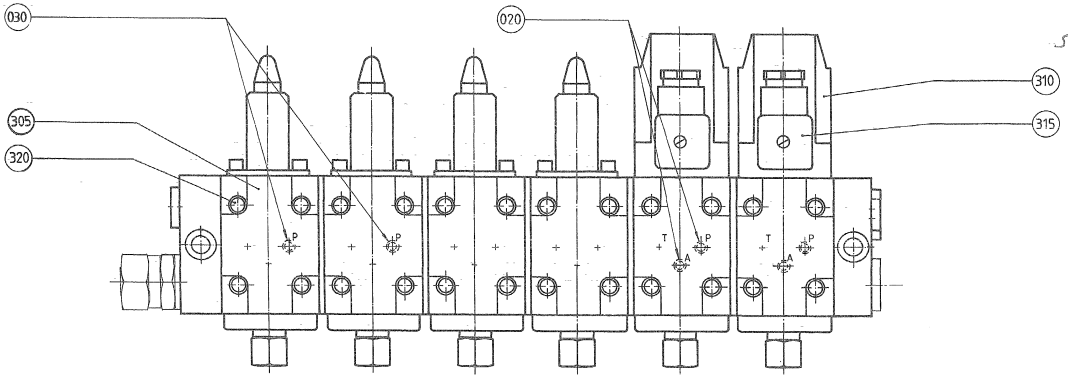
030
020
310
305
315
320
P
T
A

Pos	Part No	SP	UN	Qty	Description	Page No
TBA OR TWA						
020-1	295391-0002	B		4	THROTTLE SCREW	
030	295391-0003	B		2	THROTTLE SCREW	
300-1	B90201-0010	A		6	VALVE	
	90201-0303	-		*1*	*SPARE PARTS KIT*	
	90201-0302	-		*1*	*WASHER*	
	90201-0301	-		*1*	*SPRING*	
	90201-0300	-		*1*	*MOUNTING PLATE, NO. A1-89 57B*	
305-1	90201-0057	A		4	VALVE	
310	B90201-0058	A		2	SOLENOID VALVE	
	90201-0334	-		*1*	*SOL. COIL, 24VDC,NO 507848, F.90201-0058*	
315	90110-0095	-		2	CONNECTOR 3 POLE + EARTH	
320-1	90201-0303	A		6	SPARE PARTS KIT	
330	90201-0306	-		1	BLOCK	
500	342713-0310	-		3	PLUG, EXT. THREAD HEX. SOCKET. BPS14	
520-1	342752-0103	-		8	CONN. STR. GA-8-G1/4	
Common Parts						
510	342713-0313	-		1	PLUG, EXT. THREAD HEX. SOCKET. BPS12	
530	342752-0114	-		1	CONN. STR. GA-15-G1/2	

Pos	Part No	SP	UN	Qty	Description	Page No

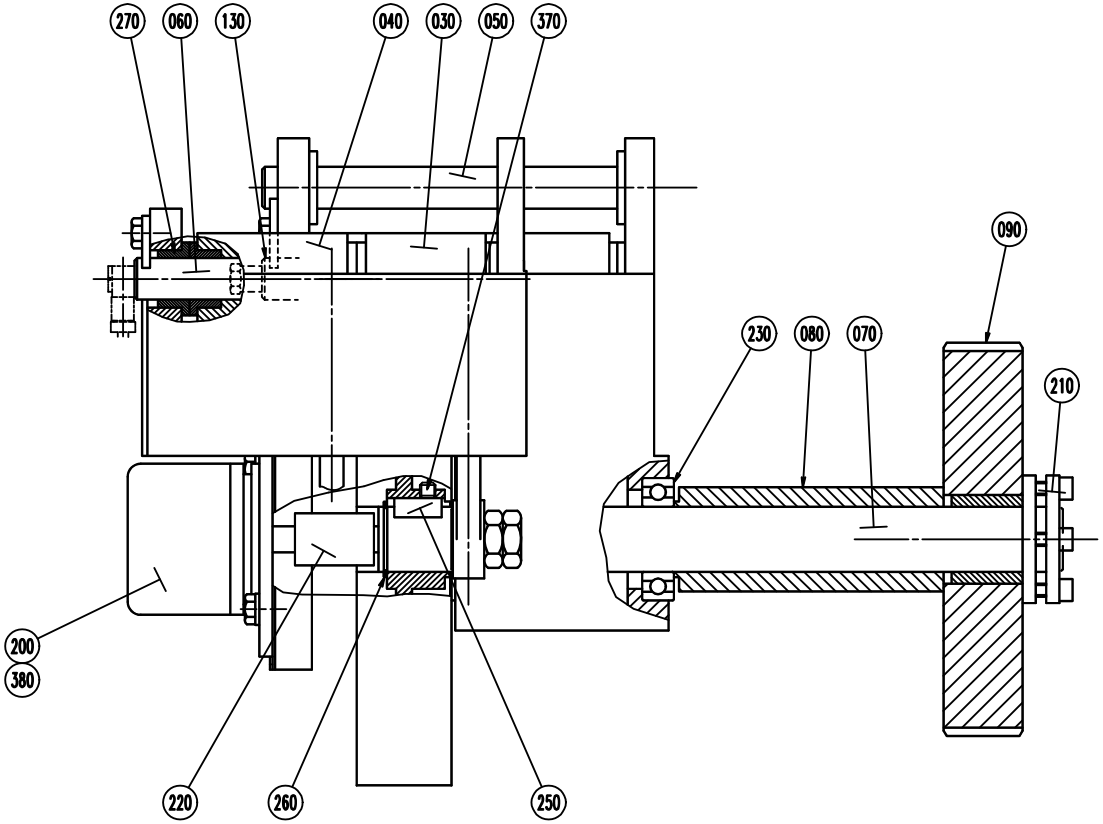
270
060
130
040
030
050
370
090
230
080
070
210
200
380
220
260
250

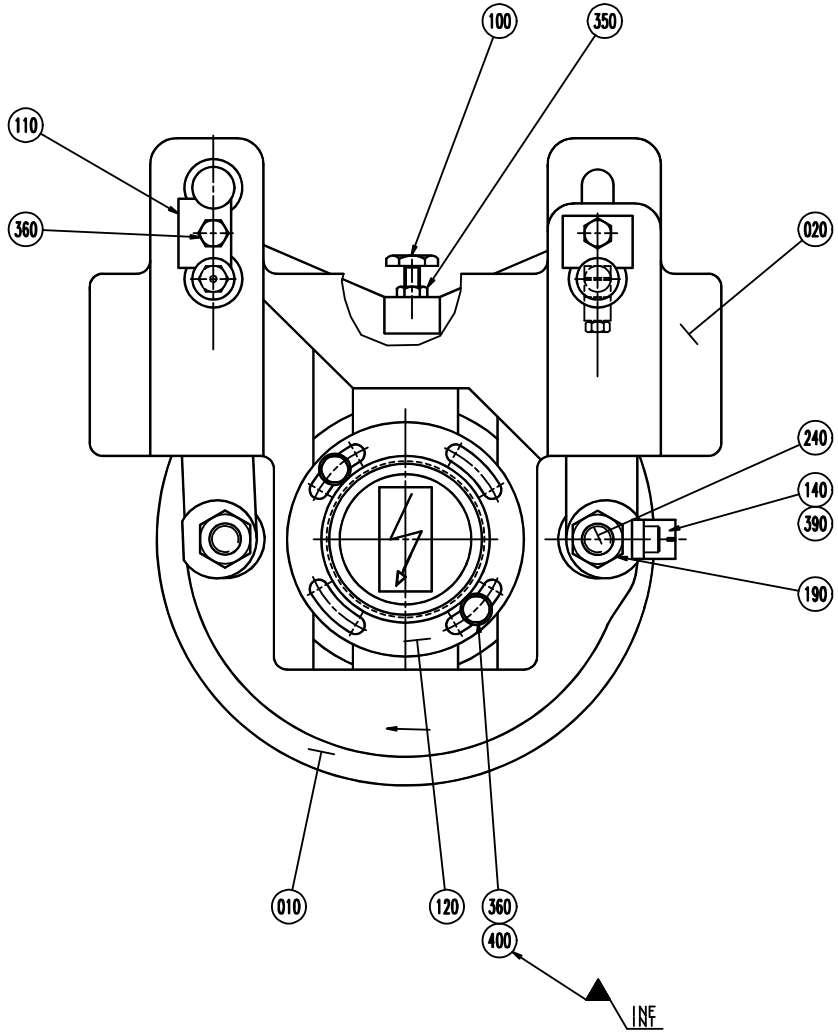
100
350
110
360
020
240
140
390
190
010
120
360
400
INF

Pos	Part No	SP	UN	Qty	Description	Page No
0200S IH OR 0200B IH						
010	751171-0000	-		1	CAM DISC	
0250B						
010	751171-0000	-		1	CAM DISC	
010	752690-0000	-		1	CAM DISC	
Common Parts						
020	292473-0000	-		1	CANTILEVER	
030	297091-0000	-		2	ARM	
040	297092-0000	-		2	ARM	
050	292477-0000	-		1	SHAFT	
060	751682-0000	-		1	SHAFT	
070	751671-0000	-		1	SHAFT	
080	751672-0000	-		1	SPACER SLEEVE	
090	751177-0000	-		1	TIMING BELT PULLEY	
100	479354-0000	-		4	SCREW	
110	292482-0000	-		2	WASHER	
120	542063-0000	-		1	FLANGE	
130	751703-0000	-		1	SHAFT	
140	752767-0000	-		1	SETTING SHEET	
190	90099-0015	-		8	NUT HEX. ML6M, M12X1,5, FE	
200	90061-0027	-		1	ANGLE ENCODER 670900035	
210	90208-0080	-		1	CLAMPING ELEMENT WITH SLEEVE, 25X34 MM	
220	90355-0031	-		1	TORQUE RIGID COUPLING, 10X10 MM	
230	321308-0205	-		2	BALL BEARING, 2 SEALS, 25X47X12 MM	
240	321580-0165	-		4	CAM ROLLER, 12X30X40 MM	
250	315701-0262	-		1	PARALLEL KEY W. ROUND ENDS 8X7X18 MM	
260	315750-0119	-		1	RETAIN. RING, 25	
270	321111-0240	-		14	BEAR.BUSHING WITH FLANGE, 16/22X12 MM	
350	312601-0316	-		4	NUT M6M 6-8 FZB	
360	312101-0366	-		4	SCREW M6S M6X12 FZB	
370	312316-0362	-		1	SCREW HEX.SOCK.SET CUP P.MSK6SS6X8 FZB	
380	312151-0287	-		3	SCREW HEX.SOCK.COUNT.MF6S 4X8 FZB	
390	312115-0364	-		1	SCREW HEX.SOCK.HD.MC6S-TT 6X10 A480	
400	315101-0153	-		2	WASHER PLAIN, BRB, 6,4/12 H=1,5	

Pos	Part No	SP	UN	Qty	Description	Page No

Machine Type | Group Description | Used-In | Group Number | Page No

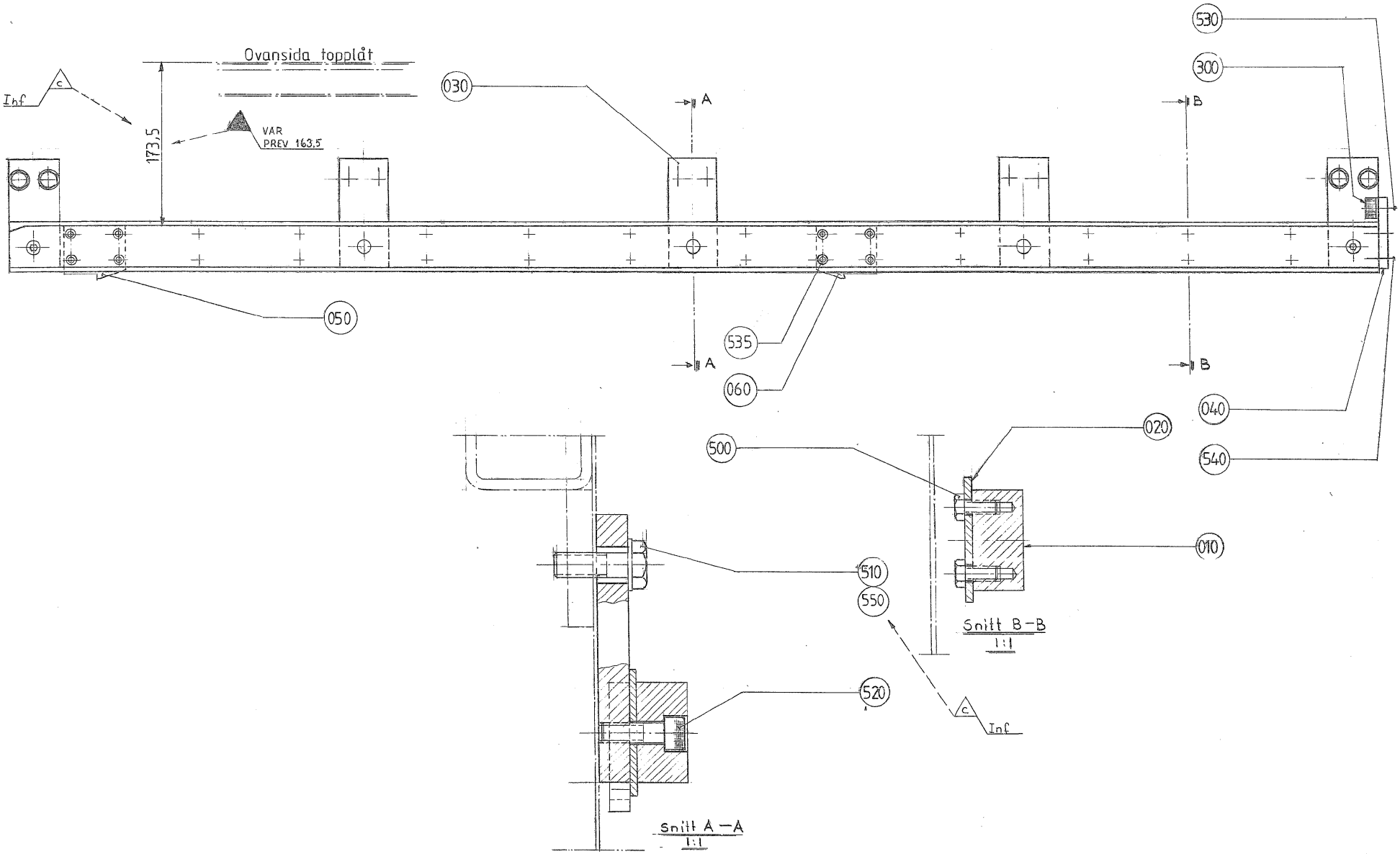
Ovansida topplåt
Inf
c
VAR
PREV 163,5
173,5
030
A
B
530
300
050
535
060
040
020
500
540
010
510
550
520
Snitt B–B
1:1
Snitt A–A
1:1

ECM: 102878 - 20020110
Group number: 271469-0200
Assembly Drawing: 271469-1_1_AA

Issue: 20020822

Pos	Part No	SP	UN	Qty	Description	Page No
Common Parts						
010	272596-0000	B		1	GUIDE	
020	272597-0000	-		1	STEERING RAIL	
030	257151-0000	-		5	BRACKET	
040	257271-0000	B		1	STOP	
050	271456-0000	B		1	CATCH LEVER	
060	271457-0000	B		1	CATCH LEVER	
300	90347-0011	B		1	VIBRATION DAMPER MEGI 781056	
500	312105-0366	-		20	SCREW M6S M6X12 A280	
510	312105-0493	-		10	SCREW M6S ISO 4017 M10X25 A480	
520	312115-0453	-		5	SCREW MC6S M8X25 A280	
530	312155-0366	-		1	SCREW HEX.SOCK.COUNT.MF6S M6X12 A280	
535	312155-0374	-		8	SCREW HEX.SOCK.COUNT.MF6S M6X30 A280	
540	312155-0449	-		2	SCREW HEX.SOCK.COUNT.MF6S M8X16 A280	
550	315105-0173	-		10	WASHER PLAIN, BRB, 10,5/22,H=2	

Pos	Part No	SP	UN	Qty	Description	Page No

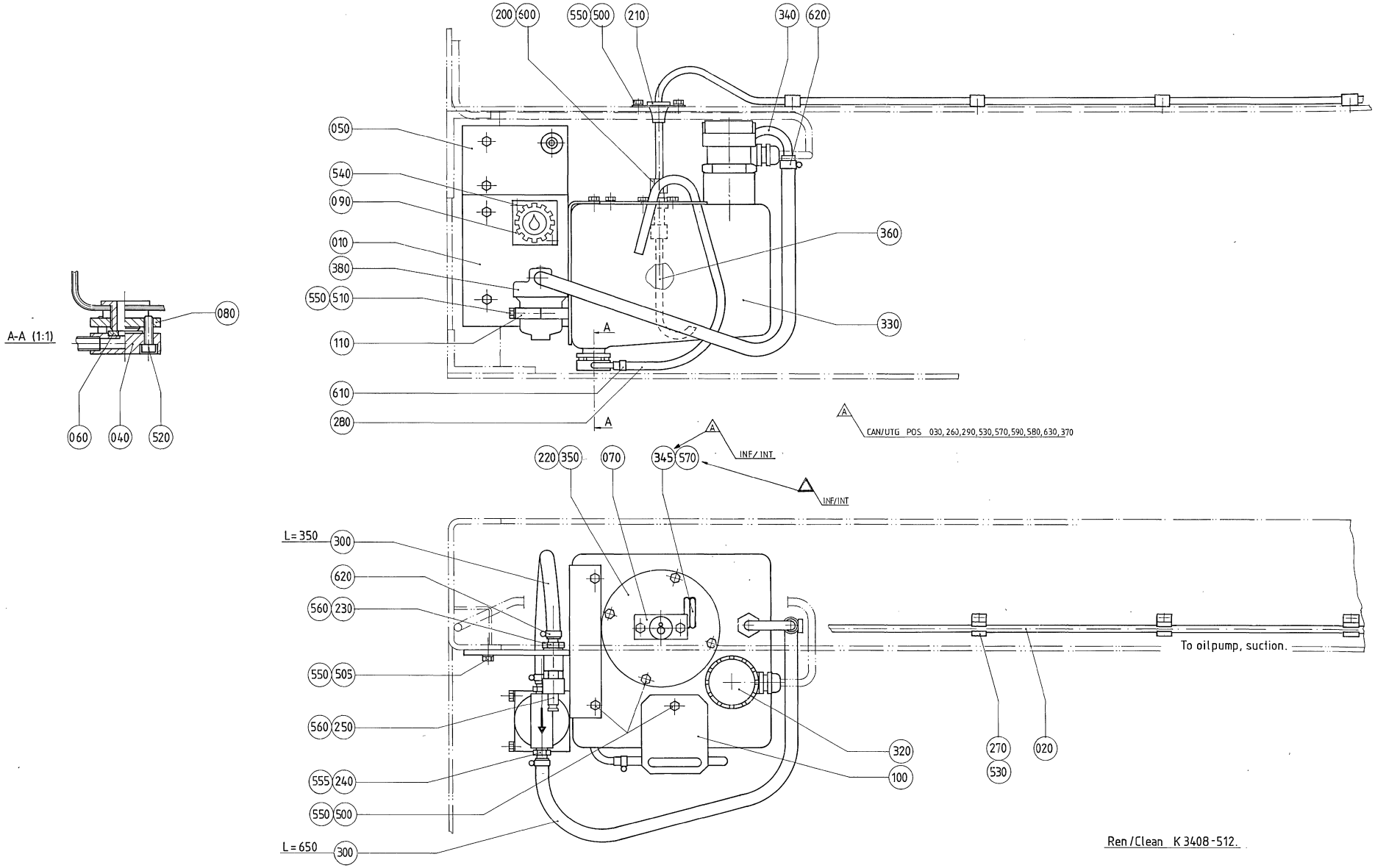
200 600
550 500
210
340 620
050
540
090
010
380
550 510
110
610
280
360
330
A
A-A (1:1)
080
060
040
520
A
CAN/UTG POS 030,260,290,530,570,590,580,630,370
220 350
070
345 570
INF/INT
INF/INT
L=350
300
620
560 230
550 505
560 250
555 240
550 500
L=650
300
320
100
270
530
020
To oilpump, suction.
Ren/Clean K 3408-512.

ECM: 102830 - 20020110
Group number: 491890-0100
Assembly Drawing: 491890-1_1_AA

Issue: 20020822

Pos	Part No	SP	UN	Qty	Description	Page No
Common Parts						
010	491889-0000	-		1	HOLDER	
020	491892-0000	-		1	HOSE	
040	469410-0000	-		1	HOSE ATTACHMENT	
050	490777-0000	-		1	BRACKET	
060	279515-0000	-		1	WASHER	
070	456272-0000	-		1	PLATE	
080	469409-0000	-		1	PLATE	
090	469523-0000	-		1	SIGN	
100	469761-0000	-		1	HOLDER	
110	491891-0000	-		1	BOW CLAMP	
200	90005-0044	-		2	WASHER,PL.RND.CU.15/19,H=1,5	
210	90015-0021	-		1	LEAD-IN, TET10-14, E-1458023	
220	90048-0440	A		1	GASKET	
230	90163-0050	-		1	QUICK COUPLING, (M) 5089 / 9	
240	90163-0052	-		2	HOSE NIPPLE, EXT.THR. 1/4-12 MM	
250	90163-0066	-		1	NIPPLE 3/8"	
270	90165-0044	-		4	CLIP	
280	90166-0008	-	MM	400	HOSE 7/10 PVC TRANSP.	
300	90166-0113	-	MM	1100	HOSE	
320	90274-0029	A		1	LEVEL GUARD, 60VA/250V	
330	90304-0013	-		1	CONTAINER	
340	90304-0301	-		1	PIPE	
345	90304-0302	-		1	PIPE FITTING	
350	90304-0303	-		1	COVER	
360	90304-0305	-		1	PIPE	
380	B90415-0033	-		1	OIL FILTER REFILLING UC-HP-1229-25	
	90415-0330	*C*		*1*	*FILTER INSERT / ART NO HR-1229-25 UCC*	
500	312105-0366	-		9	SCREW M6S M6X12 A280	
505	312105-0368	-		4	SCREW M6S M6X16 A280	
510	312105-0378	-		2	SCREW M6S ISO 4014 M6X40 A480	
520	312115-0329	-		4	SCREW MC6S M5X16 A280	
530	312125-0287	-		4	SCREW PAN HEAD MCS M4X8 SS	
540	312502-0221	-		2	DRIVE SCREW ROUND HEAD KDS 4X6	
550	315105-0153	-		15	WASHER PLAIN, BRB, 6,4/12,H=1,5	
555	315233-0110	A		2	WASHER PL.RND.NYL.13,3/17,H=1	
560	315233-0111	A		2	WASHER PL.RND.NYL.17/22,H=1	
570	342701-0201	-		1	BUSHING,INT./EXT.G-THREAD G1/4"-G1/8"	
600	342762-0103	-		1	CONN. BULKHEAD SV 8-LFZB	
610	342991-0100	-		1	HOSE CLIP,WORM DRIVE TYPE 10-13	
620	342991-0101	-		4	HOSE CLIP,WORM DRIVE TYPE (13)-16	

Pos	Part No	SP	UN	Qty	Description	Page No

Machine Type | Group Description | Used-In | Group Number | Page No

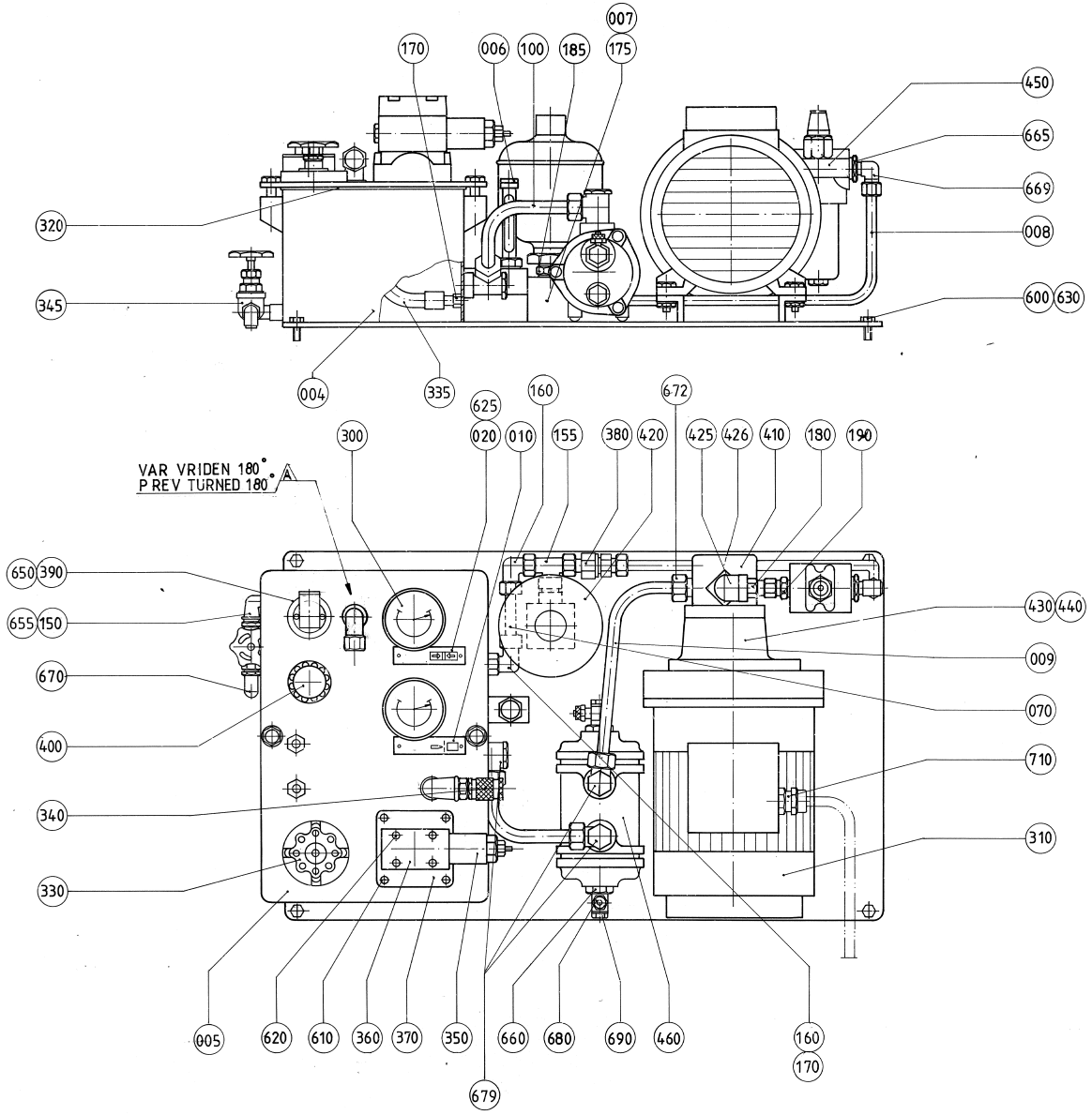
007
170
006
100
185
175
450
665
669
320
008
345
600
630
004
335
625
160
672
300
020
010
155
380
420
425
426
410
180
190
VAR VRIDEN 180°
PREV TURNED 180°
A
650
390
655
150
670
400
340
330
430
440
009
070
710
310
005
620
610
360
370
350
660
680
690
460
160
170
679

Pos	Part No	SP	UN	Qty	Description	Page No
Common Parts						
004	978478-0000	-		1	TANK	
005	978479-0000	-		1	LID	
006	978480-0000	-		1	LEVEL TUBE	
007	978481-0000	-		1	BLOCK	
008	568932-0000	-		1	PIPE	
009	568933-0000	-		1	PIPE	
010	247385-0000	-		1	SIGN	
020	247386-0000	-		1	SIGN	
030	568921-0000	-		1	PIPE	
040	568922-0000	-		1	PIPE	
050	568923-0000	-		1	PIPE	
060	568924-0000	-		1	PIPE	
070	568926-0000	-		1	PIPE	
080	568927-0000	-		1	PIPE	
090	568928-0000	-		1	PIPE	
100	568929-0000	-		1	PIPE	
110	568930-0000	-		1	PIPE	
120	568931-0000	-		1	PIPE	
150	90030-0112	-		1	NIPPLE	
155	90030-0120	-		3	ADJ. L-PIPE CONNECTION EVL, INT.T-10	
160	90030-0121	-		2	CONN. ELBOW ADJ.,INT 10	
165	90030-0140	-		2	CONN. ELBOW ADJ.,INT 8	
170	90030-0157	-		5	CONN. STR. 10-R3/8, EXT. THREAD	
175	90030-0178	-		1	CONN. STR., 10-R1/4, EXT. THREAD	
180	90030-0339	-		1	CONN. STR., 12-G3/8, EXT. THREAD	
185	90030-0340	-		1	NIPPLES, EXT. THREAD, HEXAGON, RA-G1/2A3	
190	90030-0341	-		1	CONN. STR., 12-G1/2, EXT. THREAD	
300	90043-0062	A		2	MANOMETER	
310	90045-0079	A		1	MOTOR 3GAA 092001-HSA	
315	90087-0023	-		1	PLUG, EXT. THREAD HEX. SOCKET VSTI 3/8-E	
320	90091-0159	A		1	GASKET 330X308X9 MM	
330	90113-0044	A		1	PRESSURE REGULATOR	
335	90148-0036	A		1	HOSE	
340	90163-0076	-		1	QUICK COUPLING, (F) LP-006-0-WR021	
345	90187-0120	-		1	FLAP VALVE, G1/4, L=38	
350	90201-0014	A		1	VALVE	
360	90201-0307	-		1	BLANKING, NO. DGMA-3-C1-10	
370	90201-0308	-		1	BLANKING, NO. DGVM-3-10-R	
380	90230-0017	A		1	NON RETURN VALVE RHD 10-L	
390	90274-0053	A		1	LEVEL GUARD, 40VA/250V AC/DC	
400	90277-0041	A		1	TANK BREATH. FILTER / UC-SAB-3101 UCC	
410	90321-0018	A		1	GEAR PUMP MLPS/T124D	
420	90321-0381	A		1	HYDR.ACCUMULATOR, SBO-210-0.75E1/112-0/1	
425	90321-0382	-		1	FLANGE, RG 26/12-3/8 FOR 90321-18	
426	90321-0383	-		1	PUMP CONN. ELBOW FLANGE RG 26/12-1/2	
430	90321-0384	-		1	DISTANCE PIECE	
440	90321-0385	A		1	COUPLING	
450	B90415-0029	A		1	FULL PR. FILTER / MDF BN 30 G 10 B1-BYP	
	90415-0323	*-*		*1*	*FILTER INSERT / 0030D010 BN*	
460	B90422-0008	A		1	COOLER	
	315202-0612	*C*		*1*	*O-RING 75,80X3,53 MM*	
600	312101-0451	-		4	SCREW M6S M8X20 FZB	
610	312111-0333	-		4	SCREW HEX.SOCK.HD.MC6S-TT 5X25 88 FZB	
620	312111-0343	-		4	SCREW HEX.SOCK.HD.MC6S-TT 5X60 88 FZB	
625	312502-0171	-		4	DRIVE SCREW ROUND HEAD KDS 2X6	
630	315101-0165	-		4	WASHER PLAIN, BRB, 8,4/16 H=1,5	
650	315202-0225	A		1	O-RING 44,2X3 MM	
655	342221-0110	-		1	ELBOW, 90, INT/EXT. THREAD, SIZE. 8	
658	342221-0113	-		1	ELBOW, 90, INT/EXT. THREAD, SIZE. 15	
660	342701-0208	A		2	BUSHING, INT/EXT. G-THREAD NO. 3/4-1/4	
665	342712-0205	-		1	BUSHING, INT/EXT. G-THREAD NO. 1/2X1/4	
667	342714-0201	-		2	REDUCTION KOR 8/6-LFZB	
668	342714-0203	-		2	REDUCTION KOR 10/8-LFZB	
669	342731-0108	-		3	CONN. ELBOW WE 10-LRFZB	
670	342732-0104	-		1	ELBOW PIPE JOINT, EXT.THREAD, D=8MM-G1/4	
671	342744-0102	-		2	CONN. ELBOW ADJ.,INT 6	
672	342752-0114	-		1	CONN. STR. GA-15-G1/2	
674	342761-0103	-		2	ADJ. L-PIPE CONNECTION EVL, INT.T-8	
675	342762-0103	-		2	CONN. BULKHEAD SV 8-LFZB	
676	342764-0114	-		1	CONN. ELBOW BULKHEAD LWSV15-LFZB	
678	342790-0102	-		2	CONN. PRESS. GAUGE MAV6-LRFZB	
679	342792-0114	-		3	CONN. BANJO,WH 15-G1/2	
680	342980-0122	A		2	BANJO-CONNECTION,RING 8/6-G1/4"	
690	342980-0304	A		2	BANJO-HOLLOW BOLT COUPL,EXT.THR.01-G1/4"	
710	352103-0111	-		1	CABLE GLAND, ST 16, PR22,5/PG16	

Machine Type | Group Description | Used-In | Group Number | Page No

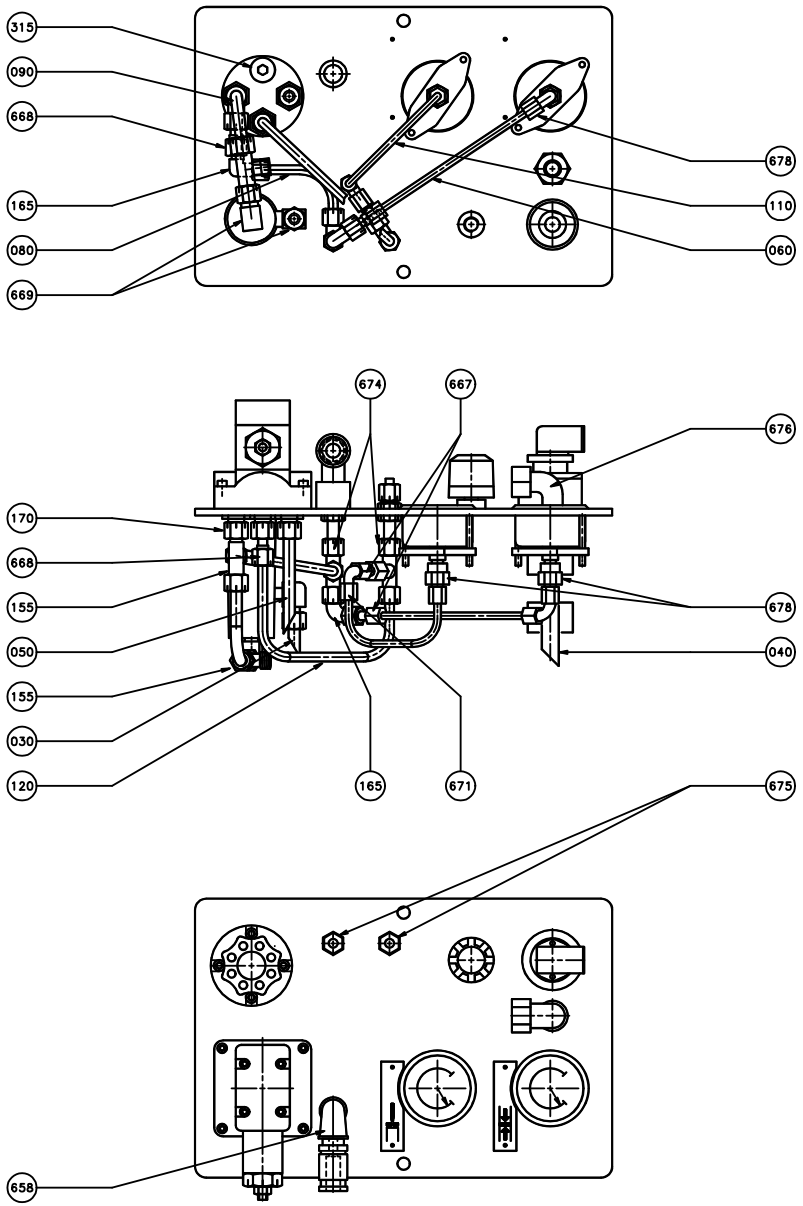
315
090
668
165
080
669
678
110
060
674
667
676
170
668
155
050
155
030
120
165
671
678
040
675
658

ECM: 102832 - 20020110
Group number: 491894-0100
Assembly Drawing: 491894-2_1_AA

Issue: 20020822

Pos	Part No	SP	UN	Qty	Description	Page No
Common Parts						
004	978478-0000	-		1	TANK	
005	978479-0000	-		1	LID	
006	978480-0000	-		1	LEVEL TUBE	
007	978481-0000	-		1	BLOCK	
008	568932-0000	-		1	PIPE	
009	568933-0000	-		1	PIPE	
010	247385-0000	-		1	SIGN	
020	247386-0000	-		1	SIGN	
030	568921-0000	-		1	PIPE	
040	568922-0000	-		1	PIPE	
050	568923-0000	-		1	PIPE	
060	568924-0000	-		1	PIPE	
070	568926-0000	-		1	PIPE	
080	568927-0000	-		1	PIPE	
090	568928-0000	-		1	PIPE	
100	568929-0000	-		1	PIPE	
110	568930-0000	-		1	PIPE	
120	568931-0000	-		1	PIPE	
150	90030-0112	-		1	NIPPLE	
155	90030-0120	-		3	ADJ. L-PIPE CONNECTION EVL, INT.T-10	
160	90030-0121	-		2	CONN. ELBOW ADJ.,INT 10	
165	90030-0140	-		2	CONN. ELBOW ADJ.,INT 8	
170	90030-0157	-		5	CONN. STR. 10-R3/8, EXT. THREAD	
175	90030-0178	-		1	CONN. STR., 10-R1/4, EXT. THREAD	
180	90030-0339	-		1	CONN. STR., 12-G3/8, EXT. THREAD	
185	90030-0340	-		1	NIPPLES, EXT. THREAD, HEXAGON, RA-G1/2A3	
190	90030-0341	-		1	CONN. STR., 12-G1/2, EXT. THREAD	
300	90043-0062	A		2	MANOMETER	
310	90045-0079	A		1	MOTOR 3GAA 092001-HSA	
315	90087-0023	-		1	PLUG, EXT. THREAD HEX. SOCKET VSTI 3/8-E	
320	90091-0159	A		1	GASKET 330X308X9 MM	
330	90113-0044	A		1	PRESSURE REGULATOR	
335	90148-0036	A		1	HOSE	
340	90163-0076	-		1	QUICK COUPLING, (F) LP-006-0-WR021	
345	90187-0120	-		1	FLAP VALVE, G1/4, L=38	
350	90201-0014	A		1	VALVE	
360	90201-0307	-		1	BLANKING, NO. DGMA-3-C1-10	
370	90201-0308	-		1	BLANKING, NO. DGVM-3-10-R	
380	90230-0017	A		1	NON RETURN VALVE RHD 10-L	
390	90274-0053	A		1	LEVEL GUARD, 40VA/250V AC/DC	
400	90277-0041	A		1	TANK BREATH. FILTER / UC-SAB-3101 UCC	
410	90321-0018	A		1	GEAR PUMP MLPS/T124D	
420	90321-0381	A		1	HYDR.ACCUMULATOR, SBO-210-0.75E1/112-0/1	
425	90321-0382	-		1	FLANGE, RG 26/12-3/8 FOR 90321-18	
426	90321-0383	-		1	PUMP CONN. ELBOW FLANGE RG 26/12-1/2	
430	90321-0384	-		1	DISTANCE PIECE	
440	90321-0385	A		1	COUPLING	
450	B90415-0029	A		1	FULL PR. FILTER / MDF BN 30 G 10 B1-BYP	
	90415-0323	*-*		*1*	*FILTER INSERT / 0030D010 BN*	
460	B90422-0008	A		1	COOLER	
	315202-0612	*C*		*1*	*O-RING 75,80X3,53 MM*	
600	312101-0451	-		4	SCREW M6S M8X20 FZB	
610	312111-0333	-		4	SCREW HEX.SOCK.HD.MC6S-TT 5X25 88 FZB	
620	312111-0343	-		4	SCREW HEX.SOCK.HD.MC6S-TT 5X60 88 FZB	
625	312502-0171	-		4	DRIVE SCREW ROUND HEAD KDS 2X6	
630	315101-0165	-		4	WASHER PLAIN, BRB, 8,4/16 H=1,5	
650	315202-0225	A		1	O-RING 44,2X3 MM	
655	342221-0110	-		1	ELBOW, 90, INT/EXT. THREAD, SIZE. 8	
658	342221-0113	-		1	ELBOW, 90, INT/EXT. THREAD, SIZE. 15	
660	342701-0208	A		2	BUSHING, INT/EXT. G-THREAD NO. 3/4-1/4	
665	342712-0205	-		1	BUSHING, INT/EXT. G-THREAD NO. 1/2X1/4	
667	342714-0201	-		2	REDUCTION KOR 8/6-LFZB	
668	342714-0203	-		2	REDUCTION KOR 10/8-LFZB	
669	342731-0108	-		3	CONN. ELBOW WE 10-LRFZB	
670	342732-0104	-		1	ELBOW PIPE JOINT, EXT.THREAD, D=8MM-G1/4	
671	342744-0102	-		2	CONN. ELBOW ADJ.,INT 6	
672	342752-0114	-		1	CONN. STR. GA-15-G1/2	
674	342761-0103	-		2	ADJ. L-PIPE CONNECTION EVL, INT.T-8	
675	342762-0103	-		2	CONN. BULKHEAD SV 8-LFZB	
676	342764-0114	-		1	CONN. ELBOW BULKHEAD LWSV15-LFZB	
678	342790-0102	-		2	CONN. PRESS. GAUGE MAV6-LRFZB	
679	342792-0114	-		3	CONN. BANJO,WH 15-G1/2	
680	342980-0122	A		2	BANJO-CONNECTION,RING 8/6-G1/4"	
690	342980-0304	A		2	BANJO-HOLLOW BOLT COUPL,EXT.THR.01-G1/4"	
710	352103-0111	-		1	CABLE GLAND, ST 16, PR22,5/PG16	

Machine Type | Group Description | Used-In | Group Number | Page No

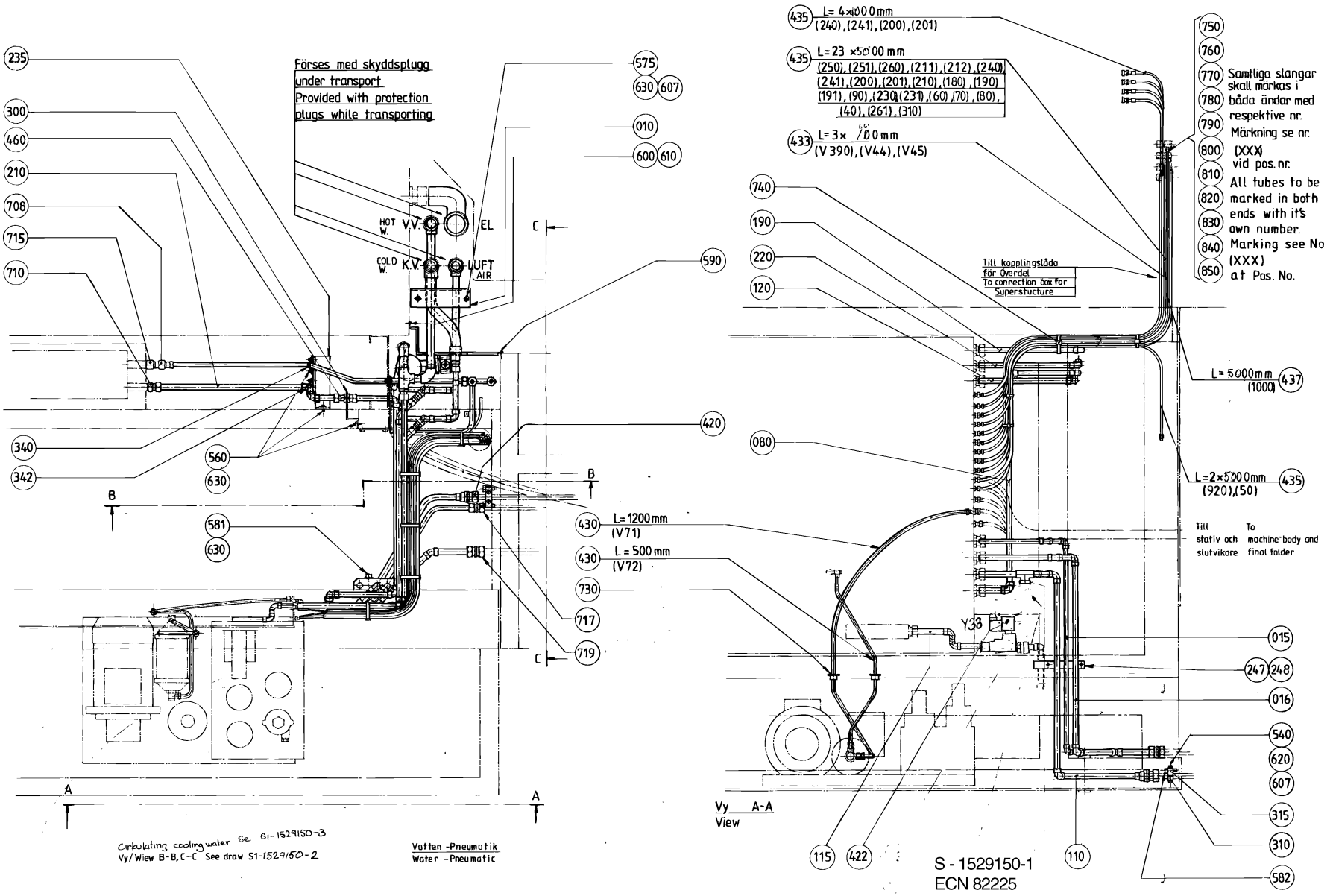
Förses med skyddsplugg under transport
Provided with protection plugs while transporting
HOT W. V.V.
EL
COLD W. K.V.
LUFT AIR
L=1200mm (V71)
L=500mm (V72)
Till kopplingslåda för Överdel
To connection box for Superstructure
L=5000mm (1000)
L=2x5000mm (920),(50)
Till stativ och slutvikare
To machine body and final folder
L=4x1000mm (240),(241),(200),(201)
L=23 x5000 mm (250),(251),(260),(211),(212),(240),(241),(200),(201),(210),(180),(190),(191),(90),(230),(231),(60),(70),(80),(40),(261),(310)
L=3x 700mm (V390),(V44),(V45)
Samtliga slangar skall märkas i båda ändar med respektive nr. Märkning se nr. (XXX) vid pos.nr.
All tubes to be marked in both ends with it's own number. Marking see No (XXX) at Pos. No.
Vy A-A View
Circulating cooling water See S1-1529150-3
Vy/View B-B, C-C See draw. S1-1529150-2
Vatten -Pneumatik
Water -Pneumatic
S - 1529150-1
ECN 82225

ECM: 107442 - 20020506
Group number: 1529150-0100
Assembly Drawing: 1529150-1_1_AA

Issue: 20020822

Pos	Part No	SP	UN	Qty	Description	Page No
Common Parts						
000	491768-0000	-		1	DOCUMENT FOLDER	
005	491576-0000	-		1	WATER DIAGRAM TBA/9	
010	456597-0000	-		1	ATTACHMENT PIPE	
015	491187-0000	-		1	PIPE	
016	491866-0000	-		1	PIPE	
020	271867-0000	-		1	PIPE	
030	271868-0000	-		1	PIPE	
040	271869-0000	-		1	PIPE	
050	271870-0000	-		1	PIPE	
060	271871-0000	-		1	PIPE	
070	271872-0000	-		1	PIPE	
080	B295529-0000	-		1	PIPE	
	342708-0109	-		*2*	*REINFORCING RING VSH 15X1 MM*	
	90418-0054	-		*1*	*ELBOW, 45, INT. CONN. NO. 7041-15*	
	90418-0053	-		*3*	*ELBOW, 90, INT. CONN. NO. 7090-15*	
090	B295530-0000	-		1	PIPE	
	342708-0109	-		*2*	*REINFORCING RING VSH 15X1 MM*	
	90418-0065	-		*1*	*T&X-PIPE, INT, CONN. NO. 7132-15X1/2*	
	90418-0054	-		*2*	*ELBOW, 45, INT. CONN. NO. 7041-15*	
	90418-0053	-		*2*	*ELBOW, 90, INT. CONN. NO. 7090-15*	
100	B295531-0000	-		1	PIPE	
	342708-0109	-		*2*	*REINFORCING RING VSH 15X1 MM*	
	90418-0065	-		*1*	*T&X-PIPE, INT, CONN. NO. 7132-15X1/2*	
	90418-0054	-		*2*	*ELBOW, 45, INT. CONN. NO. 7041-15*	
	90418-0053	-		*2*	*ELBOW, 90, INT. CONN. NO. 7090-15*	
110	491183-0000	-		1	PIPE	
115	1529227-0000	-		1	PIPE	
120	B295533-0000	-		1	PIPE	
	342708-0109	-		*2*	*REINFORCING RING VSH 15X1 MM*	
	90418-0053	-		*2*	*ELBOW, 90, INT. CONN. NO. 7090-15*	
130	456599-0000	-		1	PIPE	
132	B490506-0000	-		1	HOSE	
	271762-0000	-		*1*	*NUT*	
134	491185-0000	-		1	HOSE	
136	490508-0000	-		1	PROTECTION	
145	491455-0000	-		1	PIPE	
147	B456598-0000	-		1	CABLE CONDUIT	
	342808-0104	-		*1*	*PIPE ELBOW 90 DEGR. SMS 3009, D=51 MM*	
148	490608-0000	-		1	SIGN	
149	491190-0000	-		1	PIPE	
150	491864-0000	-		2	PIPE	
160	491865-0000	-		1	HOSE	
170	1529228-0000	-		1	PIPE	
180	456824-0000	-		1	PIPE	
190	B295536-0000	-		1	PIPE	
	342708-0109	-		*2*	*REINFORCING RING VSH 15X1 MM*	
	90418-0053	-		*1*	*ELBOW, 90, INT. CONN. NO. 7090-15*	
200	B456978-0000	-		1	PIPE	
	342708-0109	-		*2*	*REINFORCING RING VSH 15X1 MM*	
210	1529229-0000	-		1	PIPE	
220	B295539-0000	-		1	PIPE	
	342708-0109	-		*2*	*REINFORCING RING VSH 15X1 MM*	
	90418-0054	-		*1*	*ELBOW, 45, INT. CONN. NO. 7041-15*	
	90418-0053	-		*1*	*ELBOW, 90, INT. CONN. NO. 7090-15*	
230	B456758-0000	-		1	ATTACHMENT	
	342811-0104	-		*1*	*WELD NIPPLE SMS 51 - RD 70-6*	
235	456825-0000	-		1	BRACKET	
247	491241-0000	-		1	HOLDER	
248	491242-0000	-		1	HOLDER	
250	315125-0153	A		2	WASHER PLAIN ROUND,CHAMF. 6,4/22, H=4	
260	271320-0000	-		1	HOLDER	
270	271321-0000	-		1	HOLDER	
280	271322-0000	-		1	HOLDER	
284	273455-0000	-		1	LABEL (COLD WATER)	
286	273456-0000	-		1	SIGN	
288	273458-0000	-		1	LABEL (AIR)	
290	295540-0000	-		1	FASTENING PLATE	
300	295541-0000	-		1	BRACKET	
310	441295-0000	-		1	HOLDER	
315	441296-0000	-		1	HOLDER	
320	90165-0009	-		3	PIPE CLIP FOR TUBE D=12 MM	
340	295549-0000	-		1	CRAMP	
342	456826-0000	-		1	PIPE CLAMP	
350	441449-0001	-		1	PIPE	
365	491453-0000	-		1	HOLDER	
368	B469550-0000	-		2	SLEEVE	
	90266-0155	-	*M*	*1*	*TUBE 15X1,5 SS 2333-22*	
370	271762-0000	-		1	NUT	
371	490509-0000	-		2	SPACER	
372	490510-0000	-		1	SECURING PLATE	
373	490512-0000	-		1	HOLDER	
374	490513-0000	-		1	HOLDER	
375	490514-0000	-		1	HOLDER	

Machine Type | Group Description | Used-In | Group Number | Page No

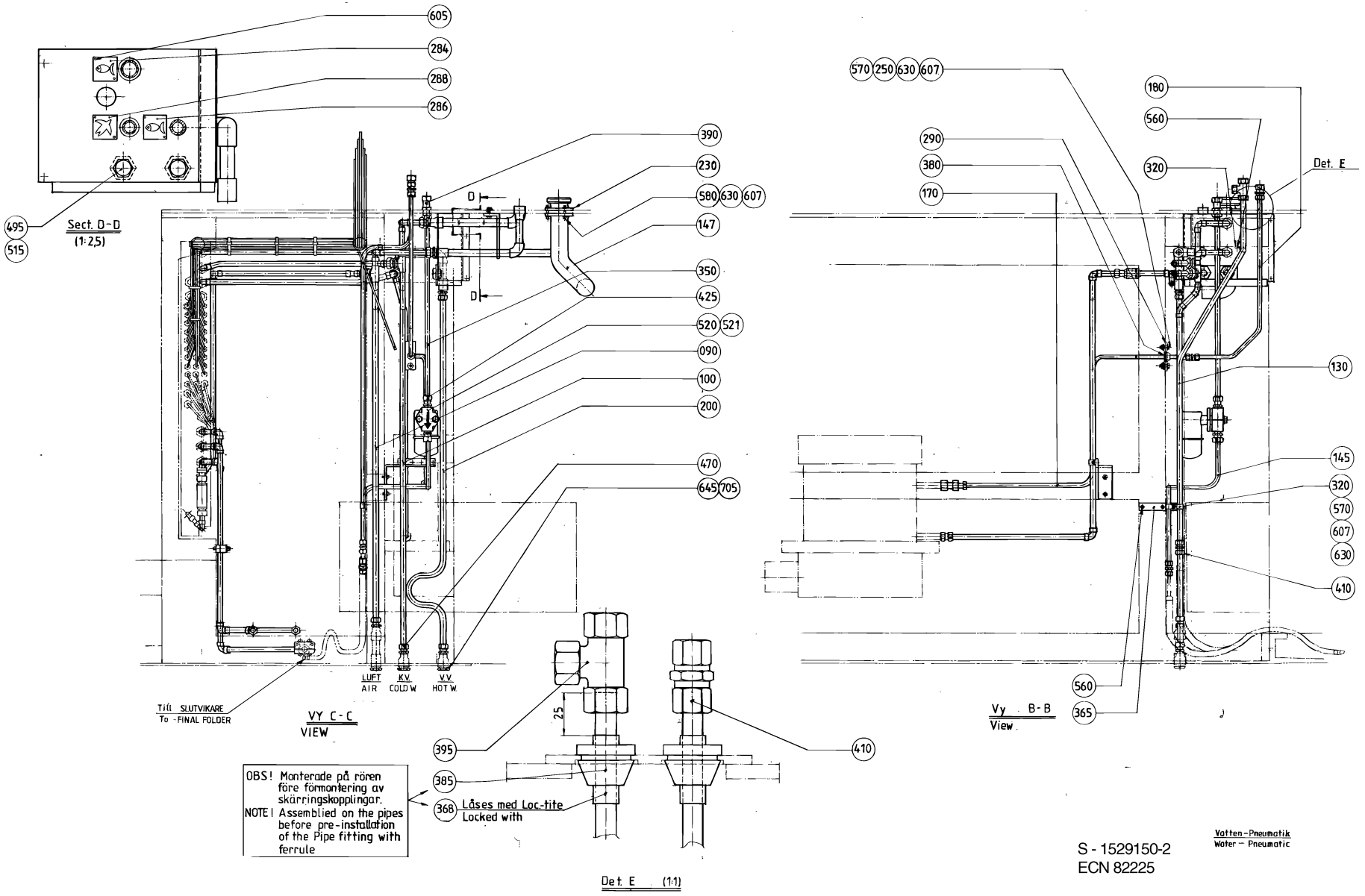

S - 1529150-2
ECN 82225

ECM: 107442 - 20020506
Group number: 1529150-0100
Assembly Drawing: 1529150-2_1_AA

Issue: 20020822

Pos	Part No	SP	UN	Qty	Description	Page No
Common Parts (Cont'd)						
376	490609-0000	-		1	SEALING WASHER	
380	90015-0021	-		1	LEAD-IN, TET10-14, E-1458023	
385	90015-0022	-		2	LEAD-IN, TET14-20, E-1458029	
390	90030-0030	-		1	CONN. BULKHEAD SV 12-L/SY	
395	90030-0058	-		1	CONN. T-PIPE T-12	
400	90030-0091	-		6	CONN. PIPE G-8	
410	90030-0106	-		4	CONN. PIPE G-12	
420	90030-0188	-		1	CONN. STR. GA-15-G1/2	
422	B90042-0134	A		1	SOLENOID VALVE ASCO SCG 210 802 24VDC	
	90042-0428	*C*		*1*	*COIL ASCO 24VDC*	
425	90330-0061	-		2	CONN. STRAIGHT. R 1/2X12MM R-1322	
430	90166-0118	-	MM	1700	TUBE 8 MM PA BLACK	
433	90166-0119	-	M	8	HOSE PUR 4/6 BLACK	
435	90166-0081	-	M	129	TUBE 6 MM PA BLUE	
437	90166-0013	-	M	5	TUBE 8 MM PA BLUE	
460	90224-0296	-		1	CONN. BULKHEAD, ART.NO. 116 1500	
470	90224-0305	-		9	PIPE CONNECTION	
495	90330-0037	-		2	PLUG, EXT. G-THREAD, G1/2	
515	90330-0093	-		2	NUT, HEXAGON, G1/2	
520	90360-0005	B		1	STEAM TRAP / TYPE 2010	
521	90360-0006	B		1	ATTACHMENT FOR STEAM TRAP 2010	
526	90005-0061	-		2	WASHER PL.RND.FIBRE 14/24,H=1,5	
528	90030-0159	-		2	CONN. BULKHEAD SV 15-L/SY	
530	90030-0188	-		1	CONN. STR. GA-15-G1/2	
532	90074-0005	-		2	CABLE CLIPS, D=18 MM	
540	312101-0378	-		2	SCREW M6S M6X40 FZB	
550	312101-0388	-		2	SCREW M6S M6X90 FZB	
552	312105-0287	-		2	SCREW M6S ISO 4017 M4X8 A480	
554	312105-0366	-		1	SCREW M6S M6X12 A280	
556	312105-0379	-		2	SCREW M6S ISO 4014 M6X45 A480	
558	312502-0120	-		2	DRIVE SCREW ROUND HEAD KDS 0X5	
560	312105-0364	-		13	SCREW M6S ISO 4017 M6X10 A480	
570	312105-0368	-		3	SCREW M6S M6X16 A280	
575	312105-0371	-		2	SCREW M6S ISO 4017 M6X22 A480	
580	312105-0374	-		3	SCREW M6S ISO 4014 M6X30 A480	
581	312105-0378	-		2	SCREW M6S ISO 4014 M6X40 A480	
582	312105-0453	-		2	SCREW M6S ISO 4017 M8X25 A480	
590	312125-0325	-		2	SCREW SLOT.PAN HD. MCS 5X10 A480	
600	312125-0329	-		2	SCREW PAN HEAD MCS M5X16 SS	
605	312502-0120	-		6	DRIVE SCREW ROUND HEAD KDS 0X5	
607	312605-0316	-		11	HEXAGON NUT, M6M M6 A280	
610	312605-0314	-		2	HEXAGON NUT, M6M M5 A280	
612	315105-0136	-		2	WASHER PLAIN, BRB, 4,3/8,H=0,8	
613	315105-0153	-		3	WASHER PLAIN, BRB, 6,4/12,H=1,5	
614	315233-0113	-		3	WASHER PL.RND.NYL.21,4/27,H=1,2	
615	342708-0109	-		1	REINFORCING RING VSH 15X1 MM	
616	342713-0213	-		1	PLUG, EXT THREAD HEX SOCKET 8638-00-120	
617	342720-0114	-		2	CONN. STR. GA-15-G1/2	
618	342738-0221	-		1	ADJUSTABLE ELBOW CONNECTION,EXT 15-G1/2	
620	315101-0153	-		6	WASHER PLAIN, BRB, 6,4/12 H=1,5	
630	315105-0153	-		29	WASHER PLAIN, BRB, 6,4/12,H=1,5	
645	90005-0016	B		3	GASKET BOLT HEAD 27/35X2,5 MM G3/4"	
705	342713-0215	-		3	PLUG, EXT THREAD HEX SOCKET 8638-00-340	
708	342714-0110	-		1	REDUCTION KOR 15/12-L/SY	
710	342723-0114	-		1	CONN. STR. PIPE GI-15-G1/2	
715	342725-0114	-		1	CONN. STR. PIPE GI-15-G1/2	
717	342726-0109	-		1	CONN. PIPE G-12	
719	342726-0114	-		1	CONN. PIPE G-15	
730	352101-0105	-		2	LEAD-IN, PR22,5/PG16, E-1457522	
740	352113-0102	-		12	CLIP-STRIP, BLACK 188X4,8 MM	
750	359000-0400	-		50	MARKING CO2/4"0"	
760	359000-0401	-		36	MARKING COLLAR 2/4 "1" YELLOW	
770	359000-0402	-		38	MARKING COLLAR 2/4 "2" YELLOW	
780	359000-0403	-		10	MARKING COLLAR PA2/4 "3" YELLOW	
790	359000-0404	-		16	MARKING COLLAR PA2/4 "4" YELLOW	
800	359000-0405	-		8	MARKING CO2/4"5"	
810	359000-0406	-		6	MARKING COLLAR PA2/4 "6" YELLOW	
820	359000-0407	-		6	MARKING COLLAR PA2/4 "7" YELLOW	
830	359000-0408	-		4	MARKING COLLAR PA2/4 "8" YELLOW	
840	359000-0409	-		8	MARKING COLLAR PA2/4 "9" YELLOW	
850	359000-0771	-		10	MARKING CO2/4"V"	

Machine Type | Group Description | Used-In | Group Number | Page No

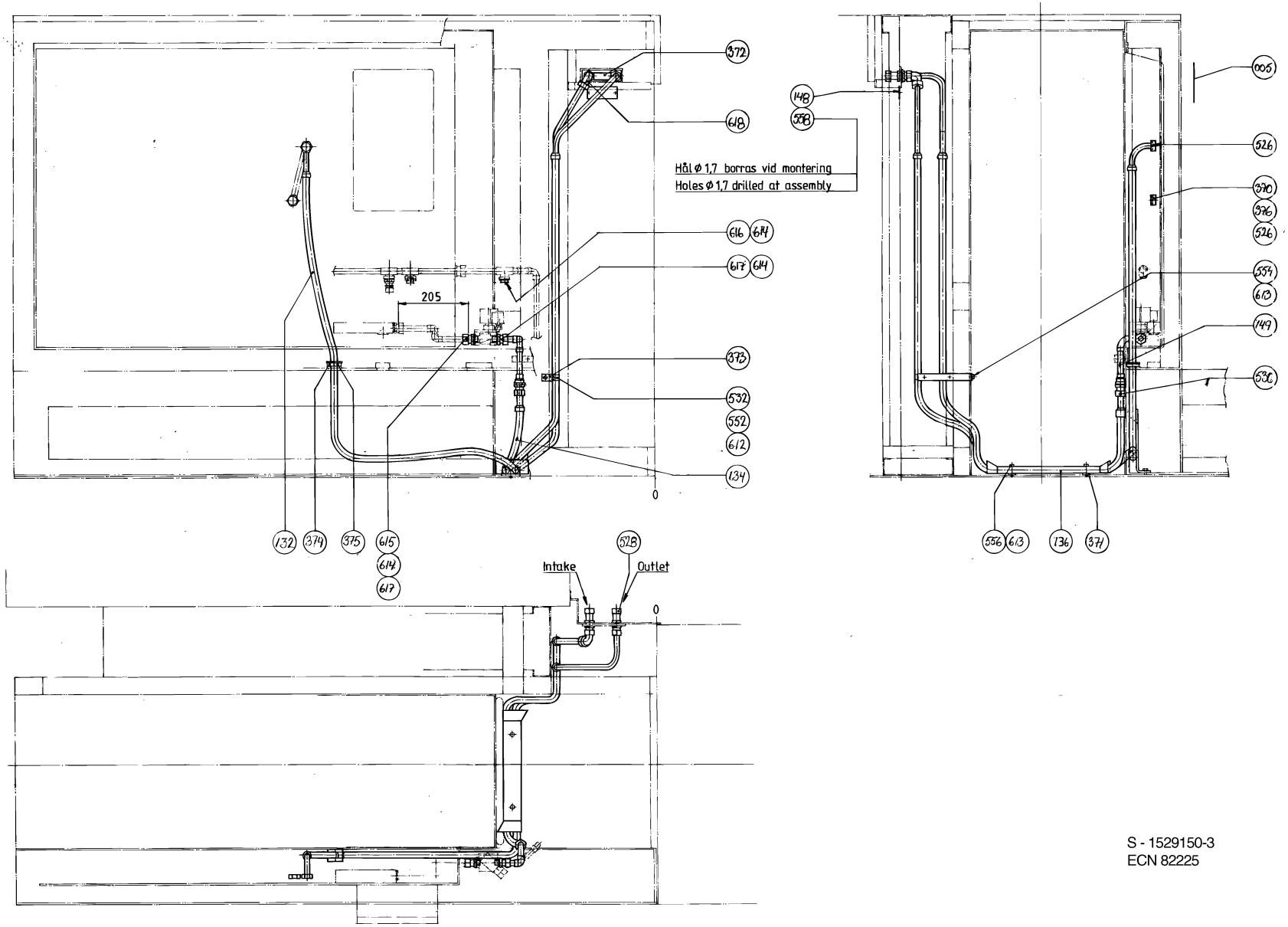

S - 1529150-3
ECN 82225

Pos	Part No	SP	UN	Qty	Description	Page No	Pos	Part No	SP	UN	Qty	Description	Page No

SEE PREVIOUS LISTS PAGES: 709, 711.

Machine Type	Group Description	Used-In	Group Number	Page No

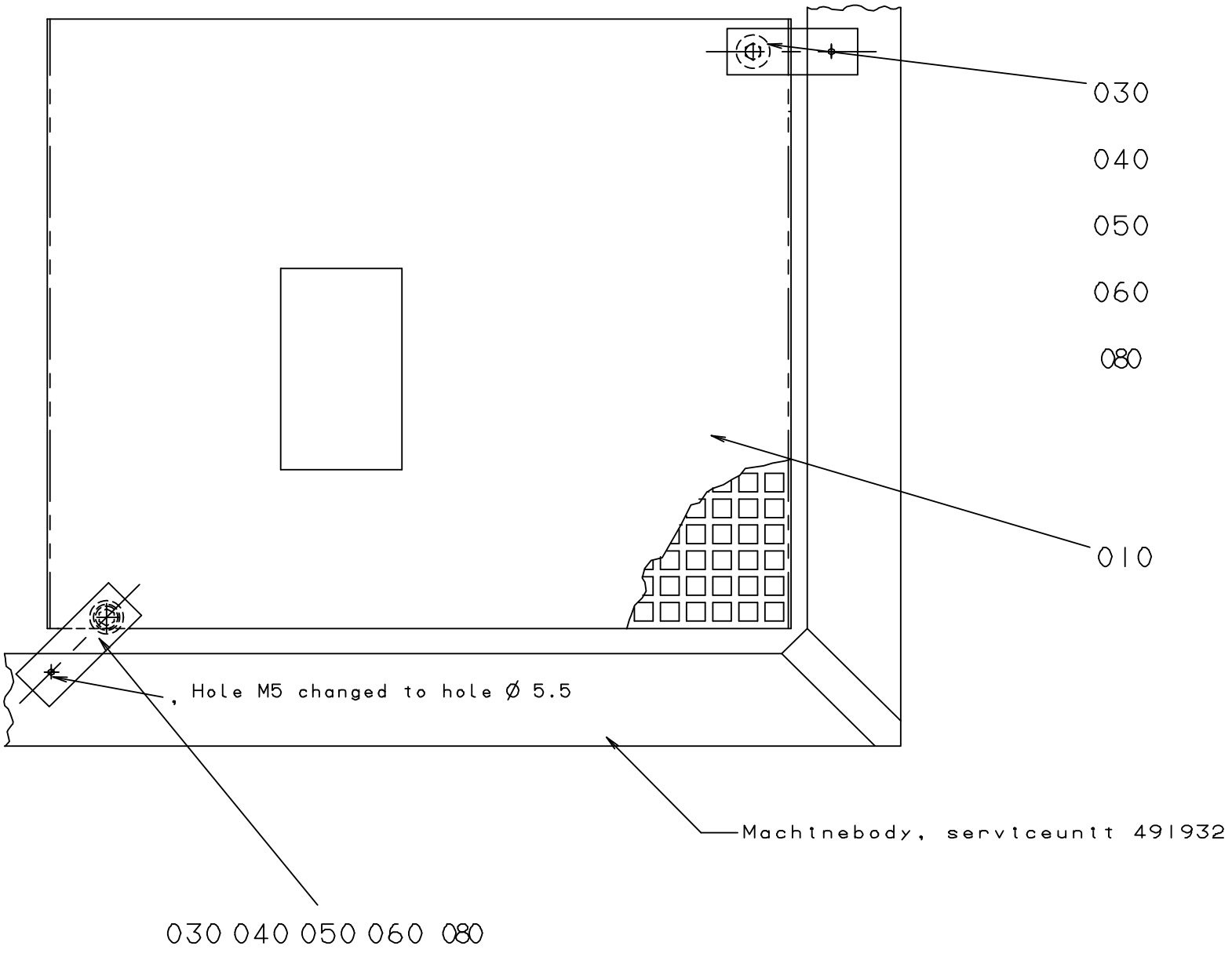
030
040
050
060
080
010
, Hole M5 changed to hole Ø 5.5
Machinebody, serviceunit 491932
030 040 050 060 080

ECM: 84699 - 20010226
Group number: 1529047-0100
Assembly Drawing: 1529047-1_1_AA

Issue: 20020822

Pos	Part No	SP	UN	Qty	Description	Page No
Common Parts						
010	1529044-0000	-		1	PROTECTION	
030	315105-0153	-		1	WASHER PLAIN, BRB, 6,4/12,H=1,5	
040	312155-0331	-		2	SCREW HEX.SOCK.COUNT.MF6S M5X20 A280	
050	90005-0060	-		2	WASHER PLAIN, RBS 6,4/M6)/18,H=1,5	
060	312105-0333	-		2	SCREW M6S ISO 4017 M5X25 A480	
080	1529043-0000	-		2	BRACKET	

Pos	Part No	SP	UN	Qty	Description	Page No

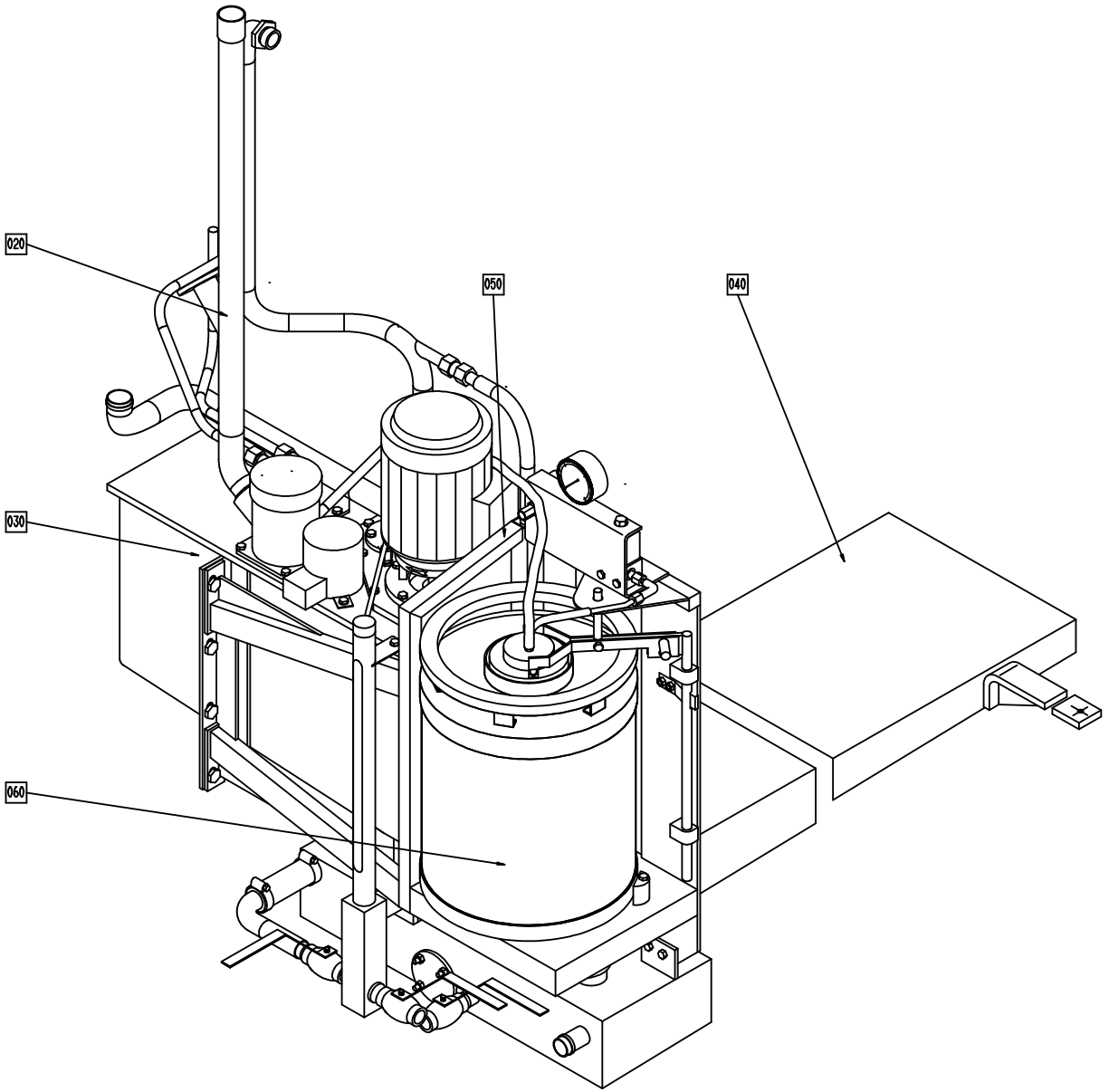
020
050
040
030
060

ECM: 101981 - 20020110
Group number: 1529158-0100
Assembly Drawing: 1529158-1_1_AA

Issue: 20020822

Pos	Part No	SP	UN	Qty	Description	Page No
Common Parts						
F020	A1529180-0100	-		1	PIPE WORK	**719**
F030	A751373-0100	-		1	PEROXIDE TANK	**723, 725**
F040	A1529274-0100	-		1	PEROXIDE TANK	**731**
F050	A751406-0100	-		1	CONNECTION HOUSING	**733, 735**
F060	A527898-0100	-		2	CONTAINER H2O2	**737**

Pos	Part No	SP	UN	Qty	Description	Page No

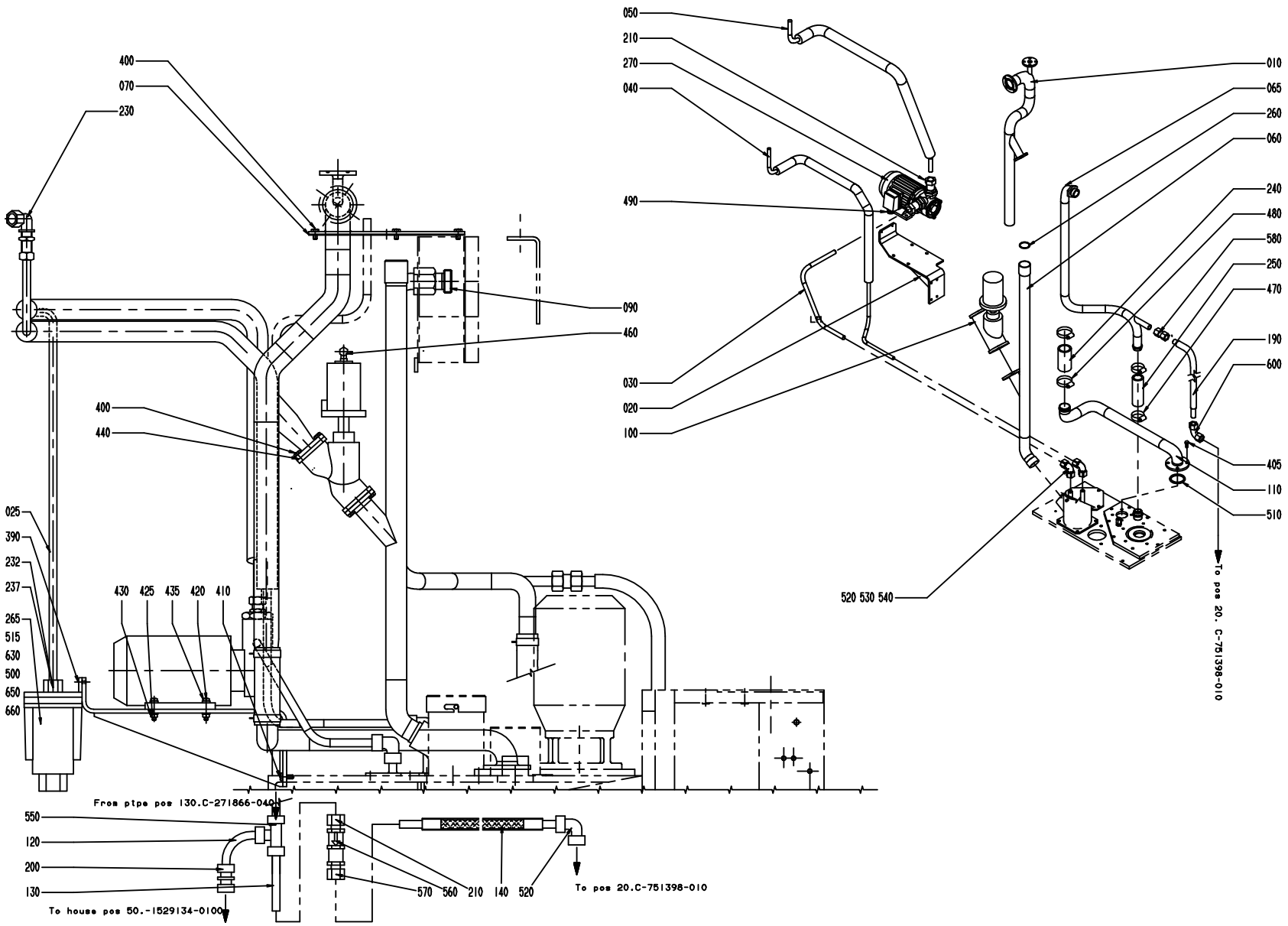
050
210
270
040
490
090
460
030
020
100
400
070
230
400
440
025
390
232
237
265
515
630
500
650
660
430 425 435 420 410
010
065
260
060
240
480
580
250
470
190
600
405
110
510
520 530 540
To pos 20. C-751398-010
From ptpe pos 130.C-271866-040
550
120
200
130
570 560 210 140 520
To pos 20.C-751398-010
To house pos 50.-1529134-0100

ECM: 102883 - 20020110
Group number: 1529180-0100
Assembly Drawing: 1529180-1_1_AA

Issue: 20020822

Pos	Part No	SP	UN	Qty	Description	Page No
Common Parts						
010	491181-0000	-		1	PIPE	
020	552837-0000	-		1	CANTILEVER	
025	552838-0000	-		1	PIPE	
030	751366-0000	-		1	PIPE	
040	752613-0000	-		1	PIPE	
050	751066-0000	-		1	PIPE	
060	751362-0000	-		1	RETURN PIPE	
065	752566-0000	-		1	PIPE	
070	272818-0000	B		1	GASKET	
090	469994-0000	-		1	ATTACHMENT	
100	B499501-0000	B		1	VALVE	
	90235-0279	*-*		*1*	*ANGLE SEAT VALVE W. FLANGES, N.C. D=32*	
110	751364-0000	-		1	PUMP PIPE	
120	752660-0000	-		1	PIPE	
130	752659-0000	-		1	PIPE	
140	752661-0000	-		1	HOSE	
190	752864-0000	-		1	HOSE	
200	90030-0106	-		1	CONN. PIPE G-12	
210	90030-0187	-		4	CONN. STR. GA-12-G3/8	
230	90030-0221	-		3	CONN. ELBOW BULKHEAD WSV 12	
232	90030-0253	-		1	CONN. STR. 12-1/4 NPT, EXT. TAPPERED	
237	90089-0018	-		1	REDUCING SLEEVE, 3/4NPT /PR22,5	
240	90166-0156	A	MM	200	HOSE	
250	90166-0151	A	MM	500	HOSE	
260	90242-0065	A		1	O-RING 24,2X3 MM	
265	90274-0065	-		1	PRESSURE SWITCH, 7 - 200 KPA	
270	A1529160-0100	A		1	PUMP	**721**
390	312105-0327	-		2	SCREW M6S ISO 4017 M5X12 A480	
400	312105-0366	-		14	SCREW M6S M6X12 A280	
405	312101-0368	-		4	SCREW M6S M6X16 FZB	
410	312105-0368	-		4	SCREW M6S M6X16 A280	
420	312105-0374	-		4	SCREW M6S ISO 4014 M6X30 A480	
425	312605-0316	-		4	HEXAGON NUT, M6M M6 A280	
430	315105-0153	-		4	WASHER PLAIN, BRB, 6,4/12,H=1,5	
435	315115-0153	-		4	WASHER PLAIN, TBRB 6,4/12 H=3	
440	315204-0223	A		2	O-RING 39,2X3 MM	
460	342930-0114	-		1	ELBOW 90 COUPL.,EXT.THREAD 6/4-R1/4"	
470	342991-0106	-		2	HOSE CLIP,WORM DRIVE TYPE (30)-36	
480	342991-0107	-		2	HOSE CLIP 32-44MMRFR	
490	352103-0110	-		1	CABLE GLAND, STR 16, PR22,5/PG16	
500	352113-0102	-		2	CLIP-STRIP, BLACK 188X4,8 MM	
510	315204-0224	-		1	O-RING 42,2X3 MM	
515	352136-0129	-		1	GLAND FITTING PR22,5/PG16 DI=16MM	
520	90030-0096	-		3	CONN. ELBOW W-12	
530	90030-0110	-		2	ACCESSORIES, FERRULE 12	
540	342703-0215	-		4	NUT, PIPES & CONNECTORS,NUT M-12 SS	
550	90030-0058	-		1	CONN. T-PIPE T-12	
560	90270-0347	-		1	VALVE	
570	90030-0181	-		1	CONN. STR. GE 12-3/8-18 NPTF	
580	342727-0214	-		1	CONN. PIPE G-15-L/SY	
600	342737-0221	-		1	CONN. ELBOW W-15 LRFR	
630	352113-0205	-		2	ANCHOR PLATES FOR STRIPS, TYPE TM2S8-C10	
650	312125-0291	-		2	SCREW PAN HEAD MCS M4X12 SS	
660	312605-0312	-		2	HEXAGON NUT, M6M M4 A280	

Machine Type | Group Description | Used-In | Group Number | Page No

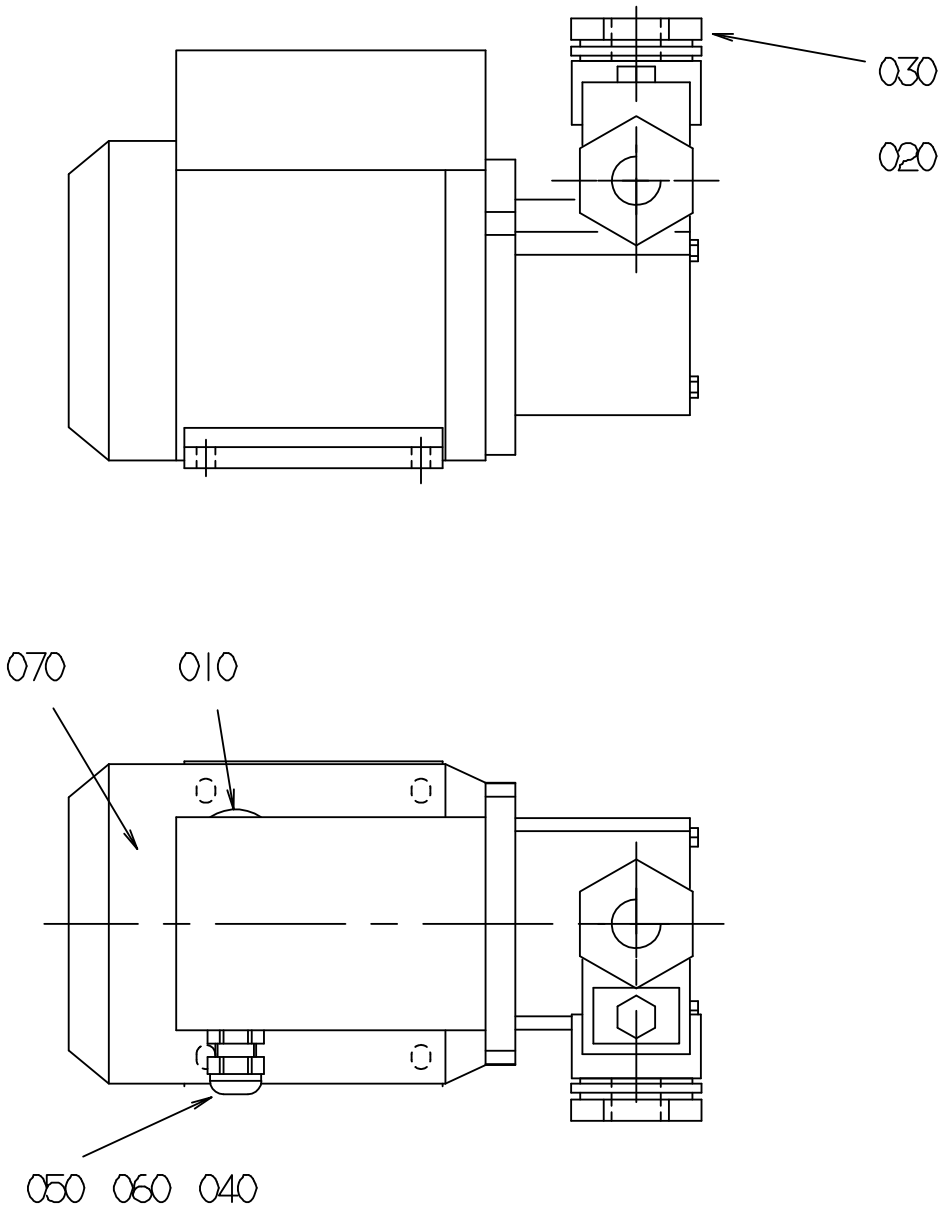
030
020
070
010
050
060
040

ECM: 84818 - 20010226
Group number: 1529160-0100
Assembly Drawing: 1529160-1_1_AA

Issue: 20020822

Pos	Part No	SP	UN	Qty	Description	Page No
Common Parts						
010	90002-0013	-		1	BLANK-OFF PLUG, PR 15,2 SKINDICHT-BLK9	
020	90005-0020	-		2	GASKET BOLT HEAD 33,9X42,9X3,4 MM G1"	
030	90030-0209	-		2	REDUCER	
040	352103-0111	-		1	CABLE GLAND, ST 16, PR22,5/PG16	
050	90099-0001	-		1	NUT PR 15,2 BRASS	
060	90099-0003	-		1	NUT	
070	B90321-0108	-		1	PUMP CALPEDA 7001002003Z NT61	
	90321-0582	-		*1*	*IMPELLER WHEEL*	
	90321-0583	-		*1*	*O-RING*	
	90321-0584	-		*1*	*BALL BEARING, 12X32X10 MM*	

Pos	Part No	SP	UN	Qty	Description	Page No

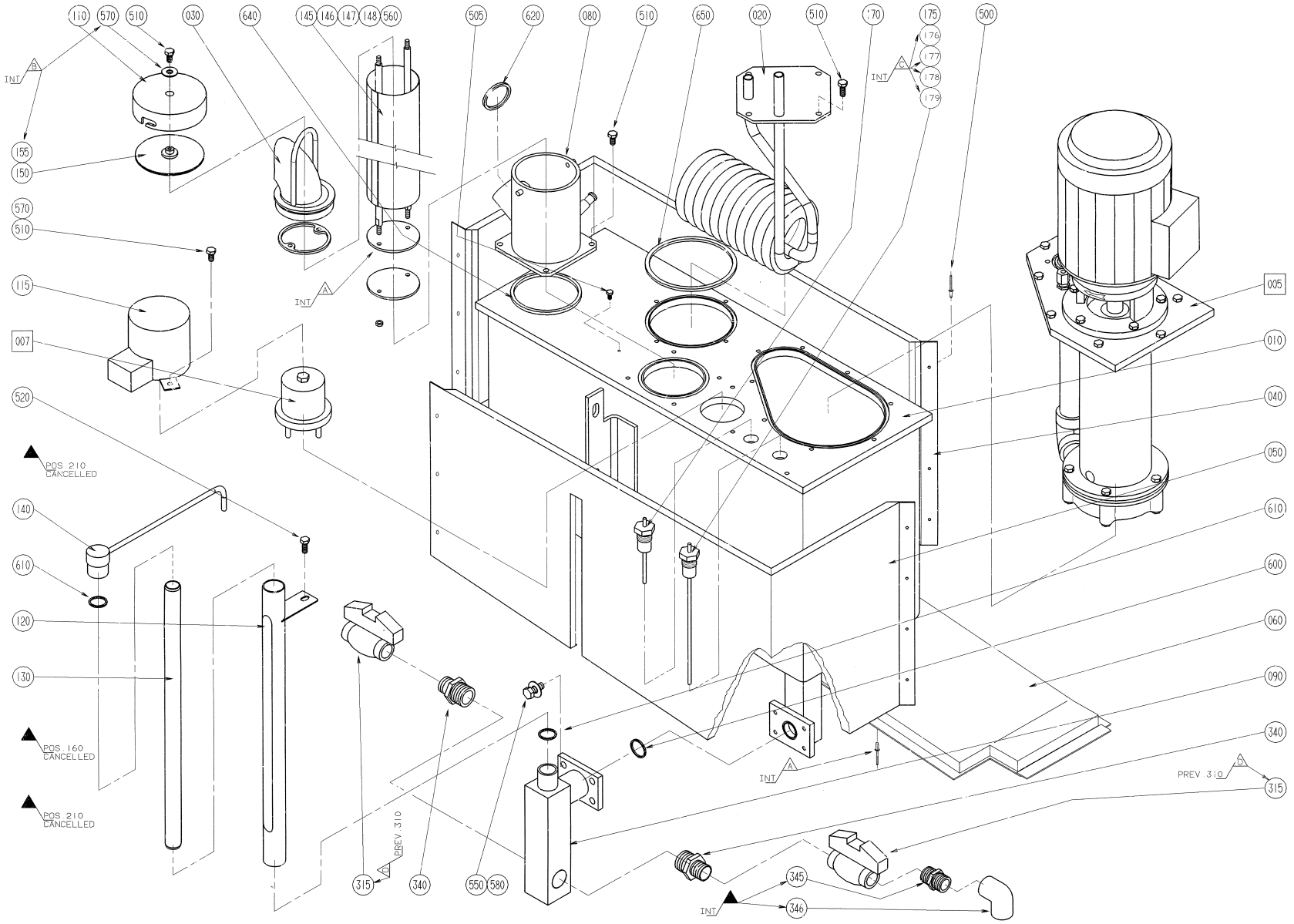
110
570
510
030
640
145
146
147
148
560
505
620
080
510
650
020
510
170
175
176
177
178
179
500
INT
B
155
150
570
510
115
007
520
INT
A
POS. 210 CANCELLED
140
610
120
130
POS. 160 CANCELLED
POS. 210 CANCELLED
315
PREV. 310
340
550
580
INT
345
346
INT
A
005
010
040
050
610
600
060
090
340
PREV. 310
315

ECM: 102889 - 20020110
Group number: 751373-0100
Assembly Drawing: 751373-1_1_AA

Issue: 20020822

Pos	Part No	SP	UN	Qty	Description	Page No
TBA/9 OR TBA/9 R						
010	751374-0000	-		1	PEROXIDE TANK	
060	751378-0000	-		1	INSULATING PLATE	
090	751381-0000	-		1	ATTACHMENT	
140	751221-0000	-		1	PIPE	
Common Parts						
005	A751393-0100	-		1	PEROXIDE PUMP	**727**
007	A493652-0100	-		1	LID	**729**
020	751375-0000	-		1	PIPE COIL	
030	752614-0000	-		1	HOLDER	
040	751376-0000	-		1	INSULATING PLATE	
050	751377-0000	-		1	INSULATING PLATE	
080	751380-0000	-		1	FILLER TUBE	
110	751220-0000	-		1	FILLER CAP	
115	751357-0000	-		1	PROTECTION	
120	751382-0000	-		1	PROTECTION PIPE	
130	751383-0000	-		1	LEVEL TUBE	
145	257202-0000	B		1	STRAINER	
146	491203-0000	-		2	STRUT	
147	491304-0000	-		2	WASHER	
148	491303-0000	-		1	WASHER	
150	563286-0000	-		1	GASKET	
155	563287-0000	-		1	WASHER	
170	567070-0016	B		1	ELECTRODE	
175	567070-0017	B		1	ELECTRODE	
176	560931-0000	-		2	BRACKET	
177	90242-0168	-		2	O-RING	
178	312605-0312	-		4	HEXAGON NUT, M6M M4 A280	
179	315105-0136	-		6	WASHER PLAIN, BRB, 4,3/8,H=0,8	
300	90144-0004	-	MM	1	TREBOFLON-TAPE W=13MM	
315	B484536-0000	-		2	VALVE	
	90187-0059	*-*		*1*	*BALL VALVE FOR HYDR.PER. G1/2 3MM HOLE*	
340	90330-0080	-		2	NIPPLES, EXT. THREAD. R3/4-R1/2	
345	90330-0021	-		1	NIPPLES, EXT. THREAD. R-207R1/2	
346	90330-0020	-		1	ELBOW, 90 INT. THREAD, R-2221/2	
500	311521-0142	-		9	BLANK RIVET 3,2X6	
505	312105-0287	-		1	SCREW M6S ISO 4017 M4X8 A480	
510	312105-0366	-		12	SCREW M6S M6X12 A280	
520	312105-0368	-		1	SCREW M6S M6X16 A280	
550	312105-0451	-		6	SCREW M6S ISO 4017 M8X20 A480	
560	312605-0314	-		2	HEXAGON NUT, M6M M5 A280	
570	315105-0153	-		14	WASHER PLAIN, BRB, 6,4/12,H=1,5	
580	315115-0165	-		6	WASHER PLAIN, TBRB 8,4/16 H=3	
600	90242-0171	A		1	O-RING	
610	315204-0117	A		2	O-RING 19,1X1,6 MM	
620	90242-0186	A		1	O-RING	
640	90242-0188	A		1	O-RING REPBY 0315204-0307	
650	90242-0189	A		1	O-RING	

Machine Type | Group Description | Used-In | Group Number | Page No

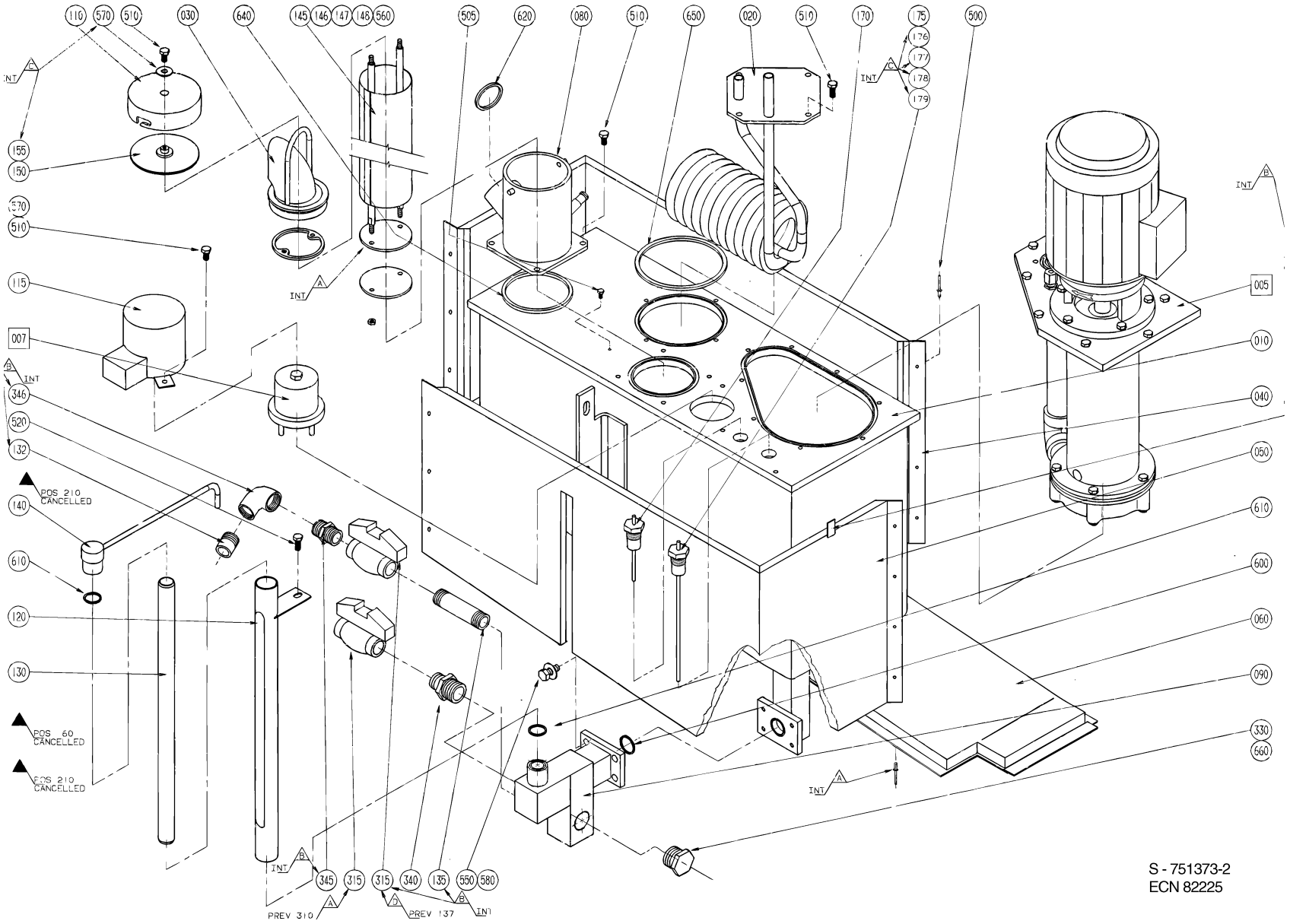
110
570
510
030
640
145
146
147
148
560
505
620
080
510
650
020
510
170
75
176
177
178
179
500
155
150
570
510
115
007
346
520
132
140
610
120
130
005
010
040
050
610
600
060
090
330
560
INT
POS 210 CANCELLED
POS 60 CANCELLED
POS 210 CANCELLED
345
315
315
340
135
550
580
PREV 310
PREV 137
S - 751373-2
ECN 82225

ECM: 102889 - 20020110
Group number: 751373-0100
Assembly Drawing: 751373-2_1_AA

Issue: 20020822

Pos	Part No	SP	UN	Qty	Description	Page No
TBA/9 OR TBA/9 R						
010	751374-0000	-		1	PEROXIDE TANK	
060	751378-0000	-		1	INSULATING PLATE	
090	751381-0000	-		1	ATTACHMENT	
140	751221-0000	-		1	PIPE	
Common Parts						
005	A751393-0100	-		1	PEROXIDE PUMP	**727**
007	A493652-0100	-		1	LID	**729**
020	751375-0000	-		1	PIPE COIL	
030	752614-0000	-		1	HOLDER	
040	751376-0000	-		1	INSULATING PLATE	
050	751377-0000	-		1	INSULATING PLATE	
080	751380-0000	-		1	FILLER TUBE	
110	751220-0000	-		1	FILLER CAP	
115	751357-0000	-		1	PROTECTION	
120	751382-0000	-		1	PROTECTION PIPE	
130	751383-0000	-		1	LEVEL TUBE	
145	257202-0000	B		1	STRAINER	
146	491203-0000	-		2	STRUT	
147	491304-0000	-		2	WASHER	
148	491303-0000	-		1	WASHER	
150	563286-0000	-		1	GASKET	
155	563287-0000	-		1	WASHER	
170	567070-0016	B		1	ELECTRODE	
175	567070-0017	B		1	ELECTRODE	
176	560931-0000	-		2	BRACKET	
177	90242-0168	-		2	O-RING	
178	312605-0312	-		4	HEXAGON NUT, M6M M4 A280	
179	315105-0136	-		6	WASHER PLAIN, BRB, 4,3/8,H=0,8	
300	90144-0004	-	MM	1	TREBOFLON-TAPE W=13MM	
315	B484536-0000	-		2	VALVE	
	90187-0059	*-*		*1*	*BALL VALVE FOR HYDR.PER. G1/2 3MM HOLE*	
340	90330-0080	-		2	NIPPLES, EXT. THREAD. R3/4-R1/2	
345	90330-0021	-		1	NIPPLES, EXT. THREAD. R-207R1/2	
346	90330-0020	-		1	ELBOW, 90 INT. THREAD, R-2221/2	
500	311521-0142	-		9	BLANK RIVET 3,2X6	
505	312105-0287	-		1	SCREW M6S ISO 4017 M4X8 A480	
510	312105-0366	-		12	SCREW M6S M6X12 A280	
520	312105-0368	-		1	SCREW M6S M6X16 A280	
550	312105-0451	-		6	SCREW M6S ISO 4017 M8X20 A480	
560	312605-0314	-		2	HEXAGON NUT, M6M M5 A280	
570	315105-0153	-		14	WASHER PLAIN, BRB, 6,4/12,H=1,5	
580	315115-0165	-		6	WASHER PLAIN, TBRB 8,4/16 H=3	
600	90242-0171	A		1	O-RING	
610	315204-0117	A		2	O-RING 19,1X1,6 MM	
620	90242-0186	A		1	O-RING	
640	90242-0188	A		1	O-RING REPBY 0315204-0307	
650	90242-0189	A		1	O-RING	

Machine Type | Group Description | Used-In | Group Number | Page No

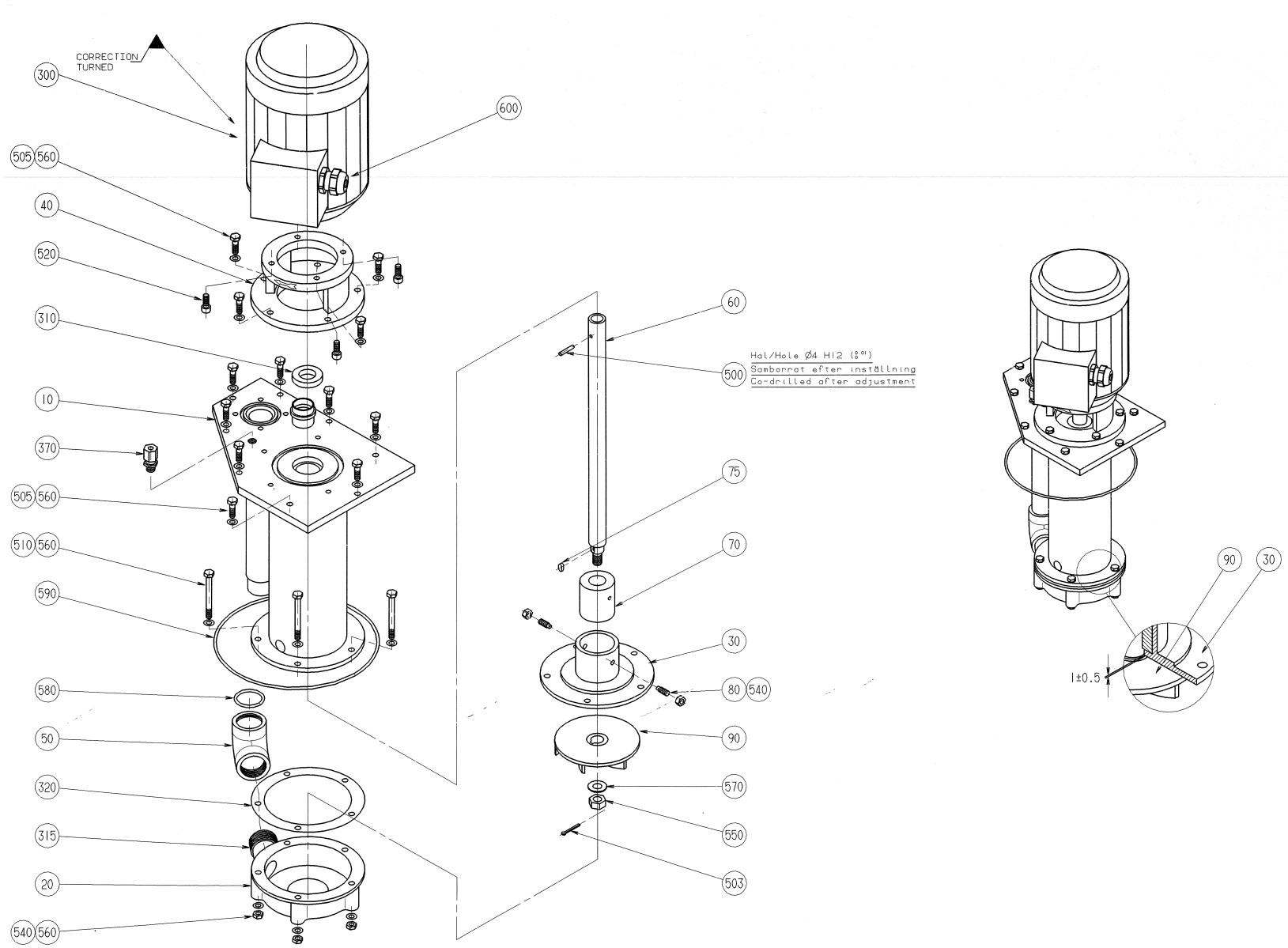
CORRECTION TURNED
300
600
505 560
40
520
310
10
370
505 560
510 560
590
580
50
320
315
20
540 560
60
Hål/Hole Ø4 H12 (↧01)
Samborrat efter inställning
Co-drilled after adjustment
500
75
70
30
80 540
90
570
550
503
90
30
1±0.5

ECM: 102892 - 20020110
Group number: 751393-0100
Assembly Drawing: 751393-1_1_AA

Issue: 20020822

Pos	Part No	SP	UN	Qty	Description	Page No
Common Parts						
010	751394-0000	-		1	EXTENSION PIPE	
020	292449-0000	-		1	PUMP HOUSING	
030	292456-0000	-		1	BEARING COVER	
040	751395-0000	-		1	FLANGE	
050	751316-0000	-		1	ELBOW PIPE	
060	978561-0000	A		1	SHAFT	
070	491770-0000	A		1	BUSHING	
075	315705-0196	A		1	PARALLEL KEY W. ROUND ENDS 5X5X10 MM	
080	90287-0159	-		2	SCREW, SOCK.SET DOGPOINT M6X16	
090	491929-0000	-		1	IMPELLER WHEEL	
300	90045-0087	A		1	MOTOR 3GAA 071002-CSA M2AA 71B	
310	90091-0137	A		1	RADIAL SEAL TYPE VARILIP 20X35X7 MM	
315	90144-0004	-	MM	1	TREBOFLON-TAPE W=13MM	
320	90321-0411	A		1	GASKET	
370	90030-0184	-		1	CONN. STR. GA-6-G1/8	
500	311112-0256	-		1	PIN, STRAIGHT SLOTTED SPRING FRP 4X20	
503	311411-0169	A		1	SPLIT PIN SP2,5X25RFR	
505	312105-0370	-		13	SCREW M6S ISO 4017 M6X20 A480	
510	312105-0382	-		5	SCREW M6S ISO 4014 M6X60 A480	
520	312115-0368	-		4	SCREW MC6S M6X16 A280	
540	312811-0316	-		7	NUT HEX.LOCK HELI COIL MID GRIP M6 SS	
550	312605-0320	-		1	HEXAGON NUT, M6M M10 A280	
560	315105-0153	-		23	WASHER PLAIN, BRB, 6,4/12,H=1,5	
570	315105-0173	-		1	WASHER PLAIN, BRB, 10,5/22,H=2	
580	90242-0173	A		1	O-RING	
590	90242-0153	B		1	O-RING	
600	352103-0110	-		1	CABLE GLAND, STR 16, PR22,5/PG16	

Pos	Part No	SP	UN	Qty	Description	Page No

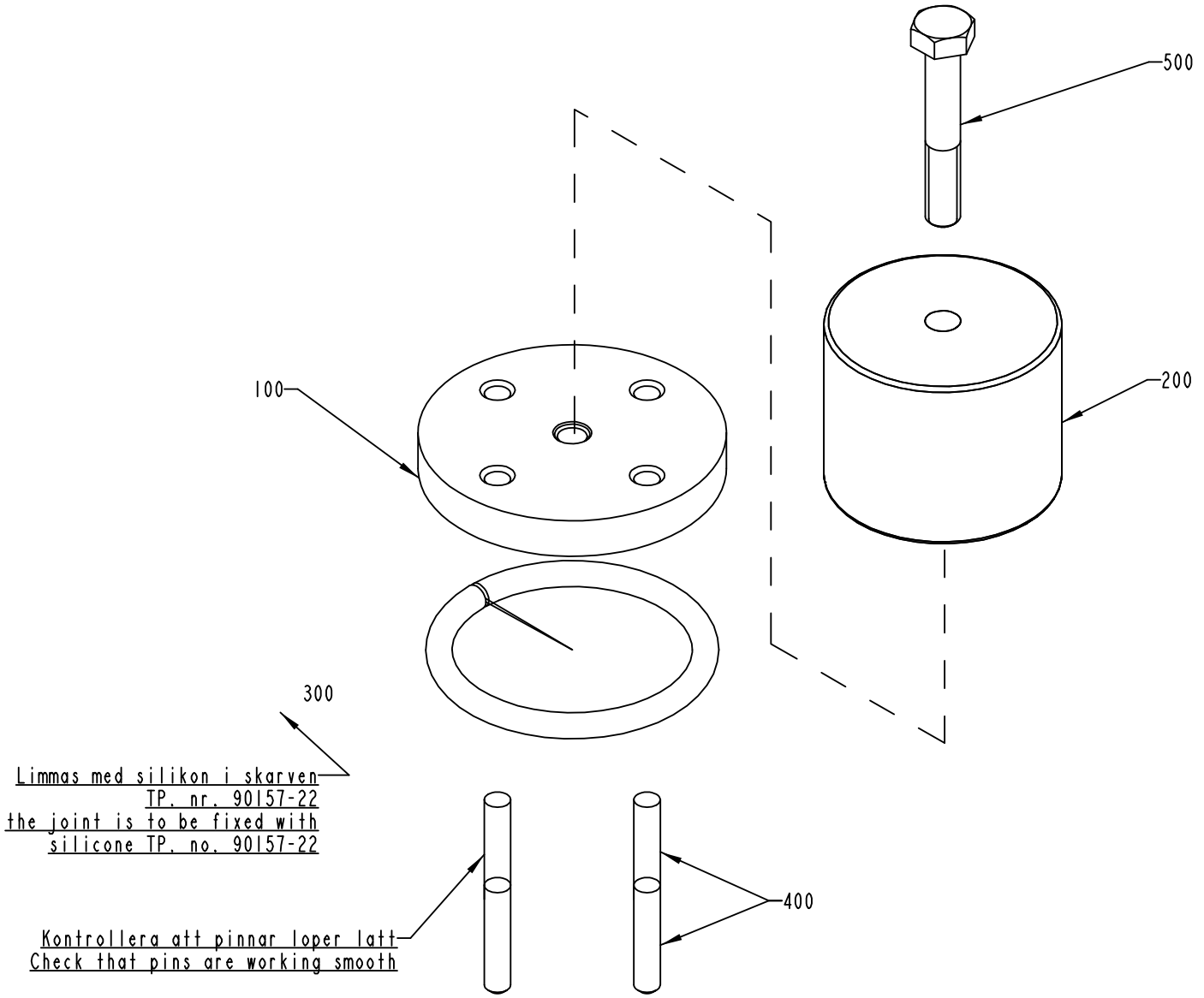

S-493652-2
ECN 73163

ECM: 73163 - 20000421
Group number: 493652-0100
Assembly Drawing: 493652-2_1_AB

Issue: 20020822

Pos	Part No	SP	UN	Qty	Description	Page No
Common Parts						
100	273964-0000	-		1	LID	
200	273965-0001	-		1	WEIGHT	
300	90143-0020	-	MM	190	STRIP	
400	311103-0357	-		4	PARALLELL PIN, M6, 6X30 MM	
500	312105-0461	-		1	SCREW M6S ISO 4014 M8X50 A480	

Pos	Part No	SP	UN	Qty	Description	Page No

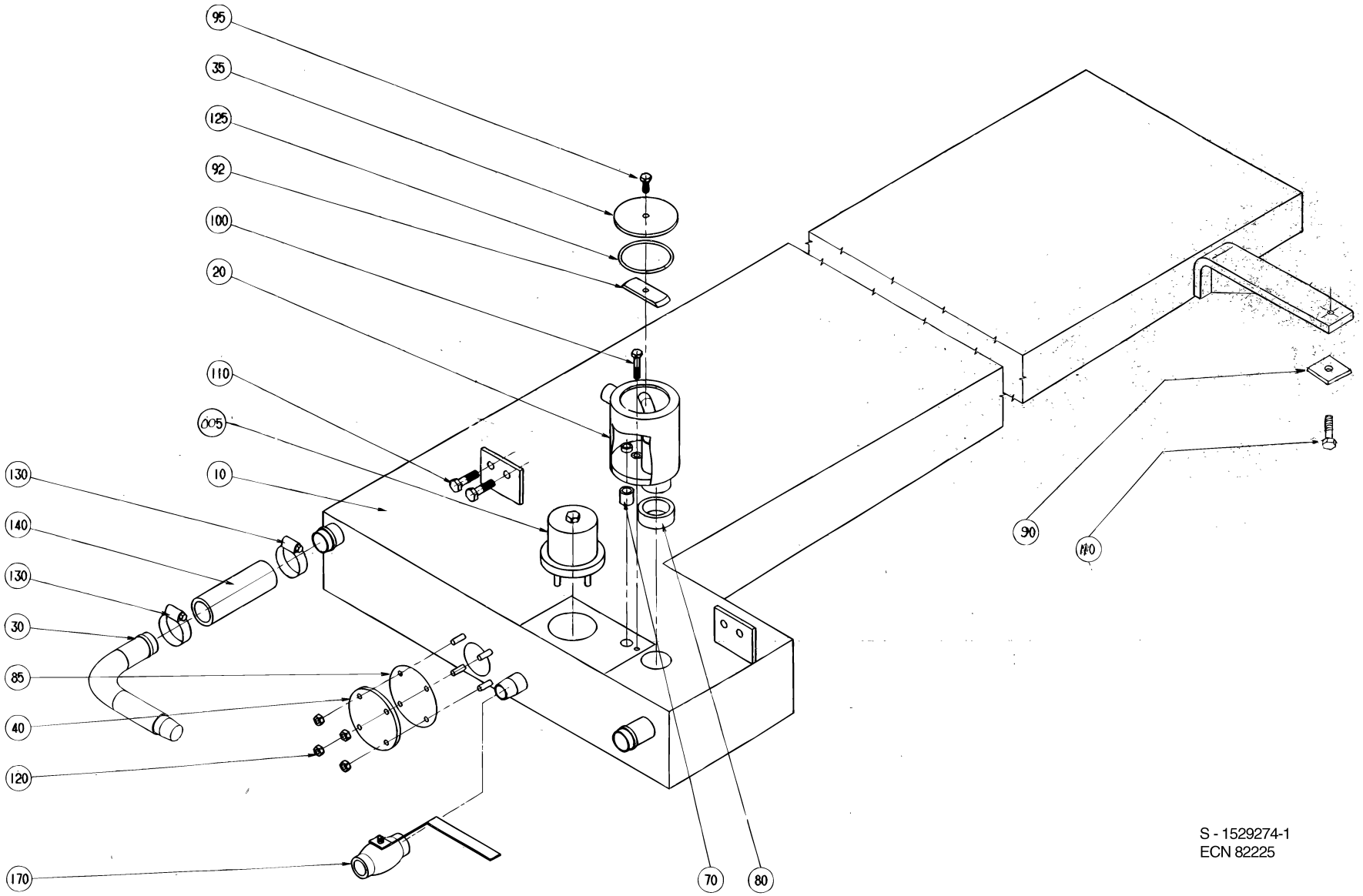
95
35
125
92
100
20
110
005
10
130
140
130
30
85
40
120
170
70
80
90
110
S - 1529274-1
ECN 82225

ECM: 102896 - 20020110
Group number: 1529274-0100
Assembly Drawing: 1529274-1_1_AA

Issue: 20020822

Pos	Part No	SP	UN	Qty	Description	Page No
Common Parts						
005	A493652-0100	-		1	LID	**729**
010	1529273-0000	-		1	TANK	
020	752810-0000	-		1	METERING DEVICE	
030	751400-0000	-		1	ATTACHMENT PIPE	
035	751223-0000	-		1	LID	
040	532205-0000	-		1	LID	
070	527906-0000	B		1	GASKET	
080	527905-0000	B		1	GASKET	
085	532206-0000	A		1	GASKET	
090	751402-0000	-		1	WASHER	
092	751403-0000	-		1	BRACKET	
095	312105-0368	-		1	SCREW M6S M6X16 A280	
100	312105-0374	-		2	SCREW M6S ISO 4014 M6X30 A480	
110	312105-0451	-		3	SCREW M6S ISO 4017 M8X20 A480	
120	312605-0316	-		4	HEXAGON NUT, M6M M6 A280	
125	315204-0302	-		1	O-RING 54,5X3 MM	
130	342991-0106	-		2	HOSE CLIP,WORM DRIVE TYPE (30)-36	
140	90166-0049	-	MM	100	HOSE PVC 25/33-34	
170	90187-0059	-		1	BALL VALVE FOR HYDR.PER. G1/2 3MM HOLE	

Pos	Part No	SP	UN	Qty	Description	Page No

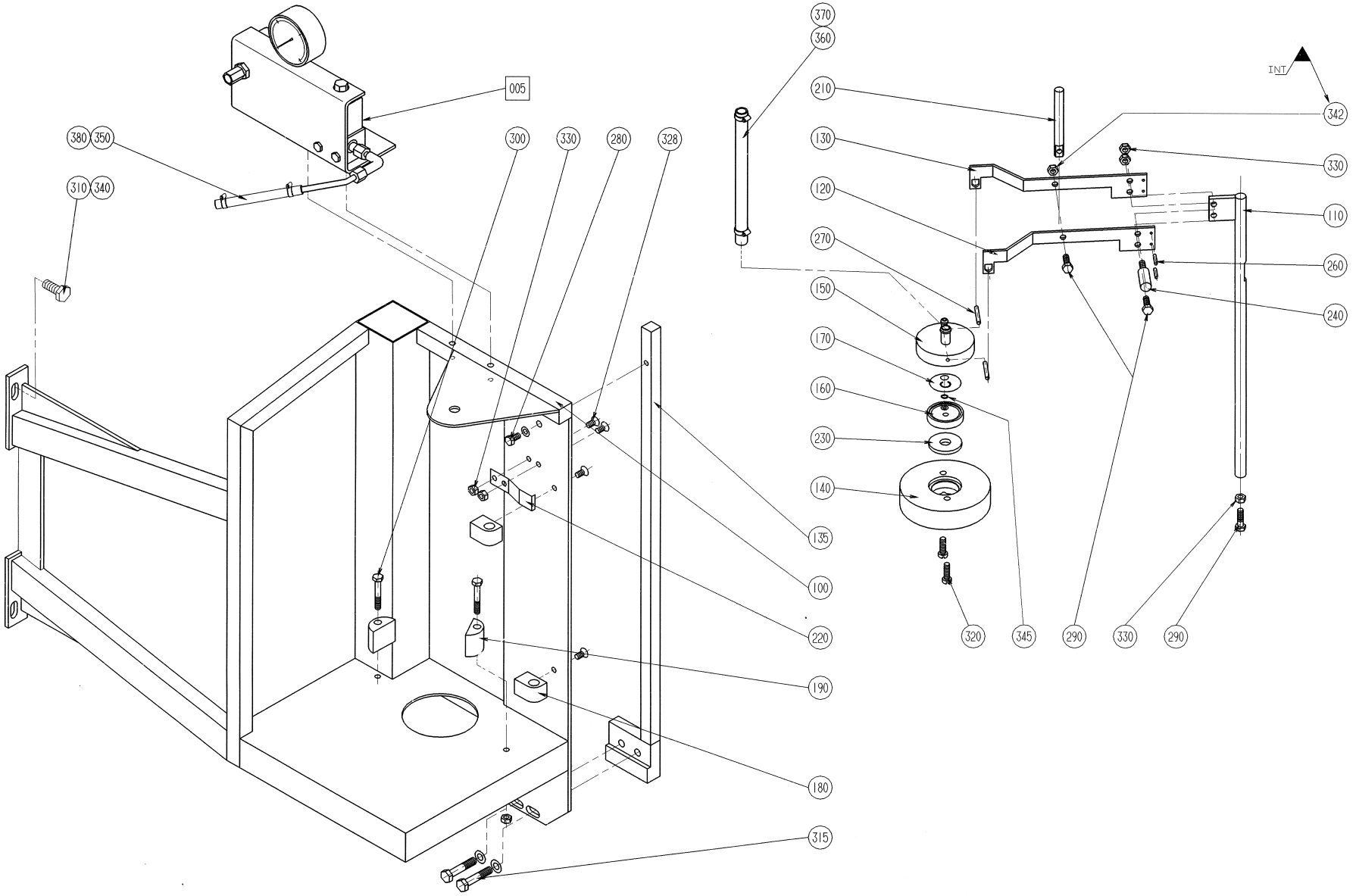
005
380
350
310
340
300
330
280
328
135
100
220
190
180
315
370
360
210
130
120
270
150
170
160
230
140
INT
342
330
110
260
240
320
345
290
330
290

ECM: 102898 - 20020110
Group number: 751406-0100
Assembly Drawing: 751406-1_1_AA

Issue: 20020822

Pos	Part No	SP	UN	Qty	Description	Page No
TBA/9 OR TBA/9 R						
100	751407-0000	-		1	FRAME	
135	751222-0000	-		1	SPACER	
280	312105-0366	-		1	SCREW M6S M6X12 A280	
310	312105-0453	-		2	SCREW M6S ISO 4017 M8X25 A480	
315	312105-0459	-		2	SCREW M6S ISO 4014 M8X40 A480	
328	312155-0364	-		4	SCREW HEX.SOCK.COUNT.MF6S M6X10 A280	
340	315115-0165	-		4	WASHER PLAIN, TBRB 8,4/16 H=3	
350	90166-0101	-	MM	300	HOSE, SILICONE, 60 SHORE, 6/10 MM	
Common Parts						
005	751410-0100	-		1	VALVE PANEL	
110	527120-0000	-		1	STEERING	
120	527121-0001	-		1	BOW CLAMP	
130	527121-0002	-		1	BOW CLAMP	
140	273982-0000	-		1	WEIGHT	
150	527122-0000	-		1	ATTACHMENT	
160	530551-0000	-		1	WASHER	
170	527912-0000	A		1	NON-RETURN VALVE	
180	527124-0000	-		2	BEARING	
190	527125-0000	-		2	STEERING	
210	527128-0000	-		1	GUIDE PIN	
220	527126-0000	B		1	LEAF SPRING	
230	273981-0000	A		1	GASKET	
240	527127-0000	-		1	DOWEL	
260	311103-0234	-		2	PARALLELL PIN, M6, 3X12 MM	
270	311103-0273	-		2	PIN,STRAIGHT M6 4X22 RFR	
290	312105-0370	-		3	SCREW M6S ISO 4017 M6X20 A480	
300	312105-0378	-		2	SCREW M6S ISO 4014 M6X40 A480	
320	312125-0370	-		2	SCREW PAN HEAD MCS M6X20 SS	
330	312605-0316	-		7	HEXAGON NUT, M6M M6 A280	
342	312811-0316	-		1	NUT HEX.LOCK HELI COIL MID GRIP M6 SS	
345	90242-0163	-		1	O-RING	
360	90166-0138	-	MM	800	HOSE	
370	90132-0023	-		2	HOSE CLIP S 15/9	
380	90132-0021	-		2	HOSE CLIP 6-10MM	

Pos	Part No	SP	UN	Qty	Description	Page No

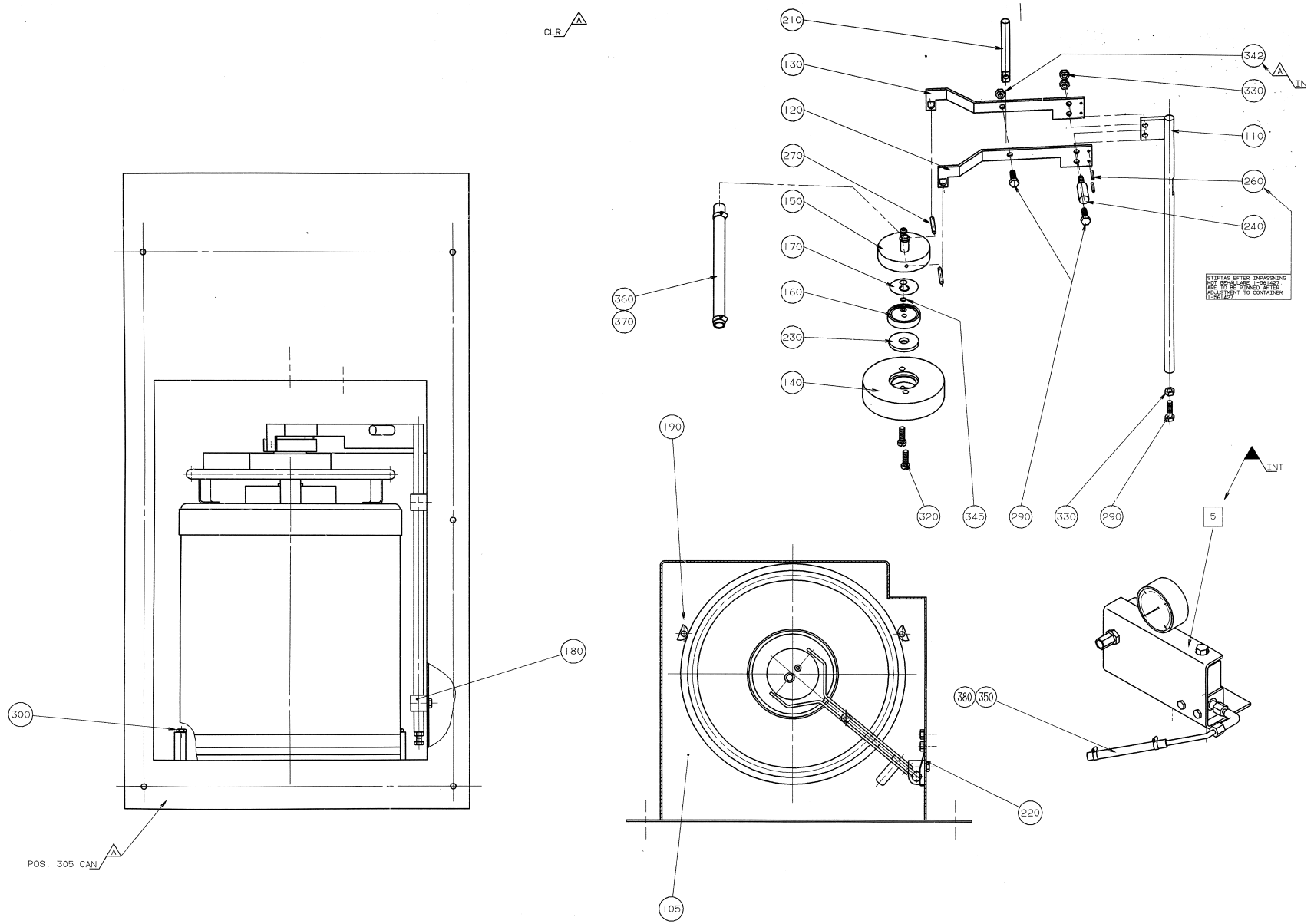
CLR A
210
130
120
270
150
170
160
230
140
360
370
342
A IN
330
110
260
240
STIFTAS EFTER INPASSNING
MOT BEHÅLLARE I-561427
ARE TO BE PINNED AFTER
ADJUSTMENT TO CONTAINER
I-561427
190
320
345
290
330
290
INT
5
180
300
POS. 305 CAN A
380
350
220
105

ECM: 102898 - 20020110
Group number: 751406-0100
Assembly Drawing: 751406-2_1_AA

Issue: 20020822

Pos	Part No	SP	UN	Qty	Description	Page No
TBA/9 OR TBA/9 R						
100	751407-0000	-		1	FRAME	
135	751222-0000	-		1	SPACER	
280	312105-0366	-		1	SCREW M6S M6X12 A280	
310	312105-0453	-		2	SCREW M6S ISO 4017 M8X25 A480	
315	312105-0459	-		2	SCREW M6S ISO 4014 M8X40 A480	
328	312155-0364	-		4	SCREW HEX.SOCK.COUNT.MF6S M6X10 A280	
340	315115-0165	-		4	WASHER PLAIN, TBRB 8,4/16 H=3	
350	90166-0101	-	MM	300	HOSE, SILICONE, 60 SHORE, 6/10 MM	
Common Parts						
005	751410-0100	-		1	VALVE PANEL	
110	527120-0000	-		1	STEERING	
120	527121-0001	-		1	BOW CLAMP	
130	527121-0002	-		1	BOW CLAMP	
140	273982-0000	-		1	WEIGHT	
150	527122-0000	-		1	ATTACHMENT	
160	530551-0000	-		1	WASHER	
170	527912-0000	A		1	NON-RETURN VALVE	
180	527124-0000	-		2	BEARING	
190	527125-0000	-		2	STEERING	
210	527128-0000	-		1	GUIDE PIN	
220	527126-0000	B		1	LEAF SPRING	
230	273981-0000	A		1	GASKET	
240	527127-0000	-		1	DOWEL	
260	311103-0234	-		2	PARALLELL PIN, M6, 3X12 MM	
270	311103-0273	-		2	PIN,STRAIGHT M6 4X22 RFR	
290	312105-0370	-		3	SCREW M6S ISO 4017 M6X20 A480	
300	312105-0378	-		2	SCREW M6S ISO 4014 M6X40 A480	
320	312125-0370	-		2	SCREW PAN HEAD MCS M6X20 SS	
330	312605-0316	-		7	HEXAGON NUT, M6M M6 A280	
342	312811-0316	-		1	NUT HEX.LOCK HELI COIL MID GRIP M6 SS	
345	90242-0163	-		1	O-RING	
360	90166-0138	-	MM	800	HOSE	
370	90132-0023	-		2	HOSE CLIP S 15/9	
380	90132-0021	-		2	HOSE CLIP 6-10MM	

Pos	Part No	SP	UN	Qty	Description	Page No

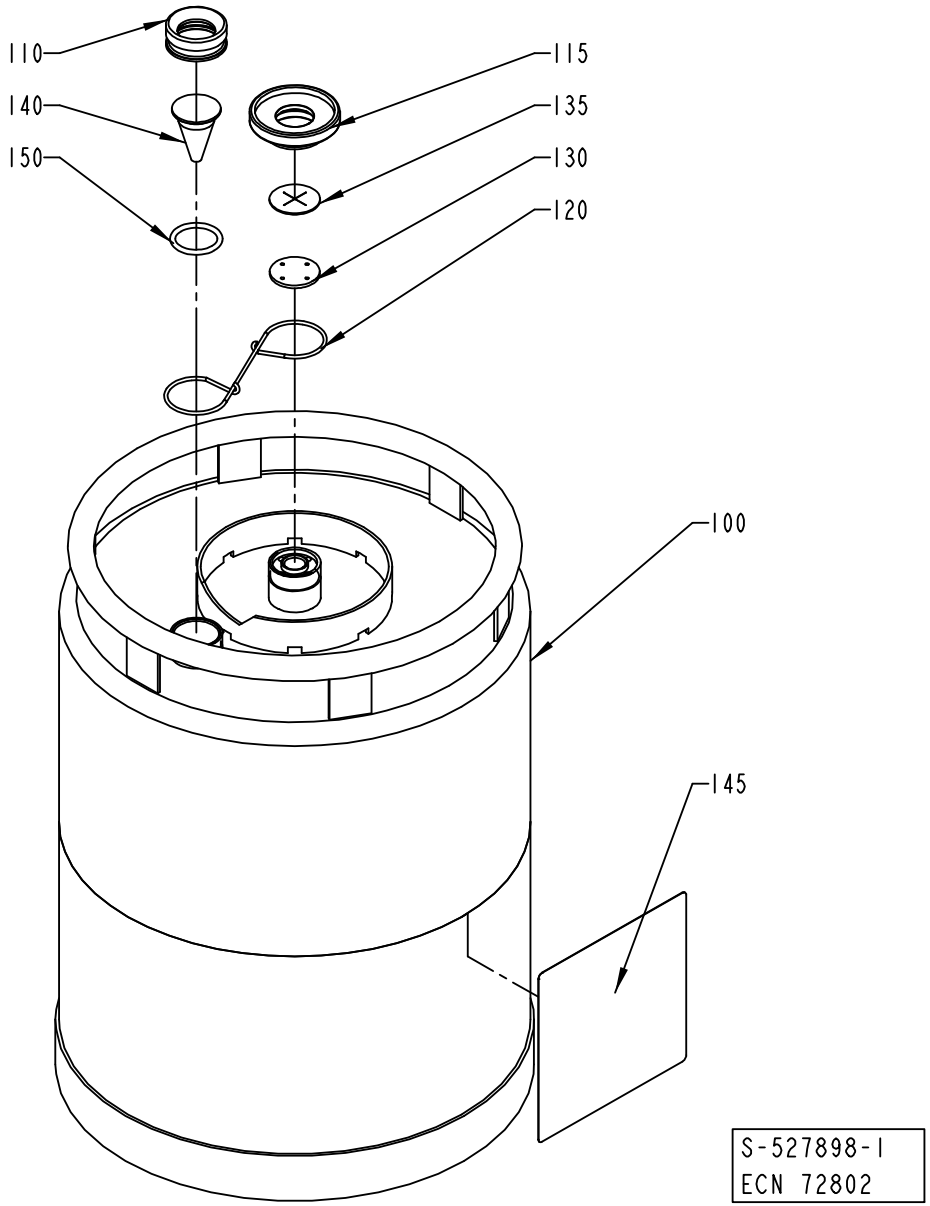
110
140
150
115
135
130
120
100
145
S-527898-I
ECN 72802

ECM: 82106 - 20000814
Group number: 527898-0100
Assembly Drawing: 527898-1_1_AB

Issue: 20020822

Pos	Part No	SP	UN	Qty	Description	Page No
Common Parts						
100	561427-0000	A		1	CONTAINER	
110	273977-0000	A		1	NUT	
115	273996-0000	A		1	NUT	
120	273980-0000	A		1	SPRING	
130	565250-0000	A		1	WASHER	
135	565251-0000	A		1	VALVE	
140	273978-0000	A		1	LEVEL GLASS	
145	532655-0000	B		1	CAUTION SIGN	
150	927422-0003	A		1	O.RING 24.2X3 SILICON	

Pos	Part No	SP	UN	Qty	Description	Page No

Tetra Pak

SPC
Spare Parts Catalogue

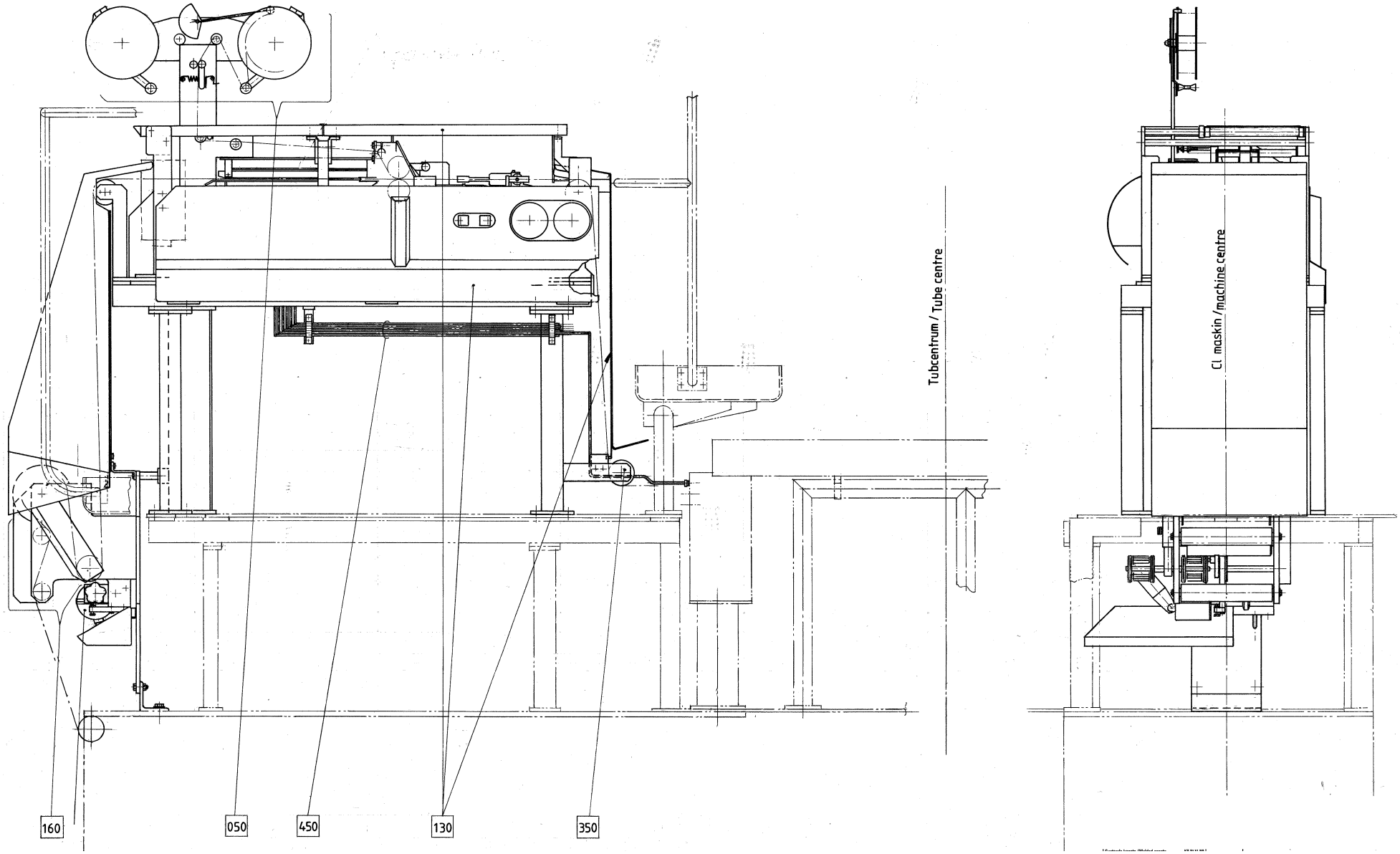
Tubcentrum / Tube centre
CL maskin / machine centre
160
050
450
130
350

Pos	Part No	SP	UN	Qty	Description	Page No
TBA,SOURCE,TBA/9-100V OR TBA,SOURCE,TBA/9-110V						
020	A256966-0200	-		1	BENDING ROLLER BRACKET	**753, 755, 757, 759**
030	A256967-0200	-		1	BENDING ROLLER	**761**
040	A456032-0100	-		1	STRIP GUIDE	**763, 765**
080	A267315-0100	-		1	PAPER GUIDE	**767**
090	A295891-0300	-		1	STRIP APPLICATOR	**769**
110	A272343-0400	-		1	PRESSURE ROLLER	**771**
120	A1529186-0100	-		1	MOUNTING PLATE	**773, 775**
130	A1529025-0100	-		1	PAPER GUARD	**777, 779, 781**
160	A1529406-0100	-		1	DATING UNIT	**785, 787, 789, 791**
350	A456919-0100	-		1	BENDING ROLLER	**803**
450	A1529131-0100	-		1	PIPE WORK	**805**
TBA,SOURCE,TBA/9-120V						
020	A256966-0200	-		1	BENDING ROLLER BRACKET	**753, 755, 757, 759**
030	A256967-0200	-		1	BENDING ROLLER	**761**
040	A456032-0100	-		1	STRIP GUIDE	**763, 765**
080	A267315-0100	-		1	PAPER GUIDE	**767**
090	A295891-0300	-		1	STRIP APPLICATOR	**769**
110	A272343-0400	-		1	PRESSURE ROLLER	**771**
120	A1529186-0100	-		1	MOUNTING PLATE	**773, 775**
130	A1529025-0100	-		1	PAPER GUARD	**777, 779, 781**
160	A1529406-0100	-		1	DATING UNIT	**785, 787, 789, 791**
350	A456919-0100	-		1	BENDING ROLLER	**803**
450	A1529187-0100	-		1	PIPE WORK	**807**
TWA,SOURCE,TBA/9-100V OR TWA,SOURCE,TBA/9-110V						
020	A256966-0200	-		1	BENDING ROLLER BRACKET	**753, 755, 757, 759**
030	A256967-0200	-		1	BENDING ROLLER	**761**
040	A1529358-0100	-		1	STRIP GUIDE	**809**
080	A267315-0100	-		1	PAPER GUIDE	**767**
090	A1529357-0100	-		1	STRIP APPLICATOR	**811**
110	A272343-0400	-		1	PRESSURE ROLLER	**771**
120	A1529186-0100	-		1	MOUNTING PLATE	**773, 775**
130	A1529025-0100	-		1	PAPER GUARD	**777, 779, 781**
160	A1529407-0100	-		1	DATING UNIT	**813, 815, 817, 819**
350	A456919-0100	-		1	BENDING ROLLER	**803**
450	A1529131-0100	-		1	PIPE WORK	**805**
TWA,SOURCE,TBA/9-120V						
020	A256966-0200	-		1	BENDING ROLLER BRACKET	**753, 755, 757, 759**
030	A256967-0200	-		1	BENDING ROLLER	**761**
040	A1529358-0100	-		1	STRIP GUIDE	**809**
080	A267315-0100	-		1	PAPER GUIDE	**767**
090	A1529357-0100	-		1	STRIP APPLICATOR	**811**
110	A272343-0400	-		1	PRESSURE ROLLER	**771**
120	A1529186-0100	-		1	MOUNTING PLATE	**773, 775**
130	A1529025-0100	-		1	PAPER GUARD	**777, 779, 781**
160	A1529407-0100	-		1	DATING UNIT	**813, 815, 817, 819**
350	A456919-0100	-		1	BENDING ROLLER	**803**
450	A1529187-0100	-		1	PIPE WORK	**807**
Common Parts						
	A1529163-0100	-		1	MODIFIED ARTICLES:	
010	A246388-0200	-		1	PRESSURE ROLLER	**827**
050	A1529020-0100	-		1	STRIP MAGAZINE	**829**
400	A1529099-0100	-		1	MACHINE BODY	**843, 845**
500	A295668-0300	-		1	START-UP KIT	**847**

Machine Type | Group Description | Used-In | Group Number | Page No

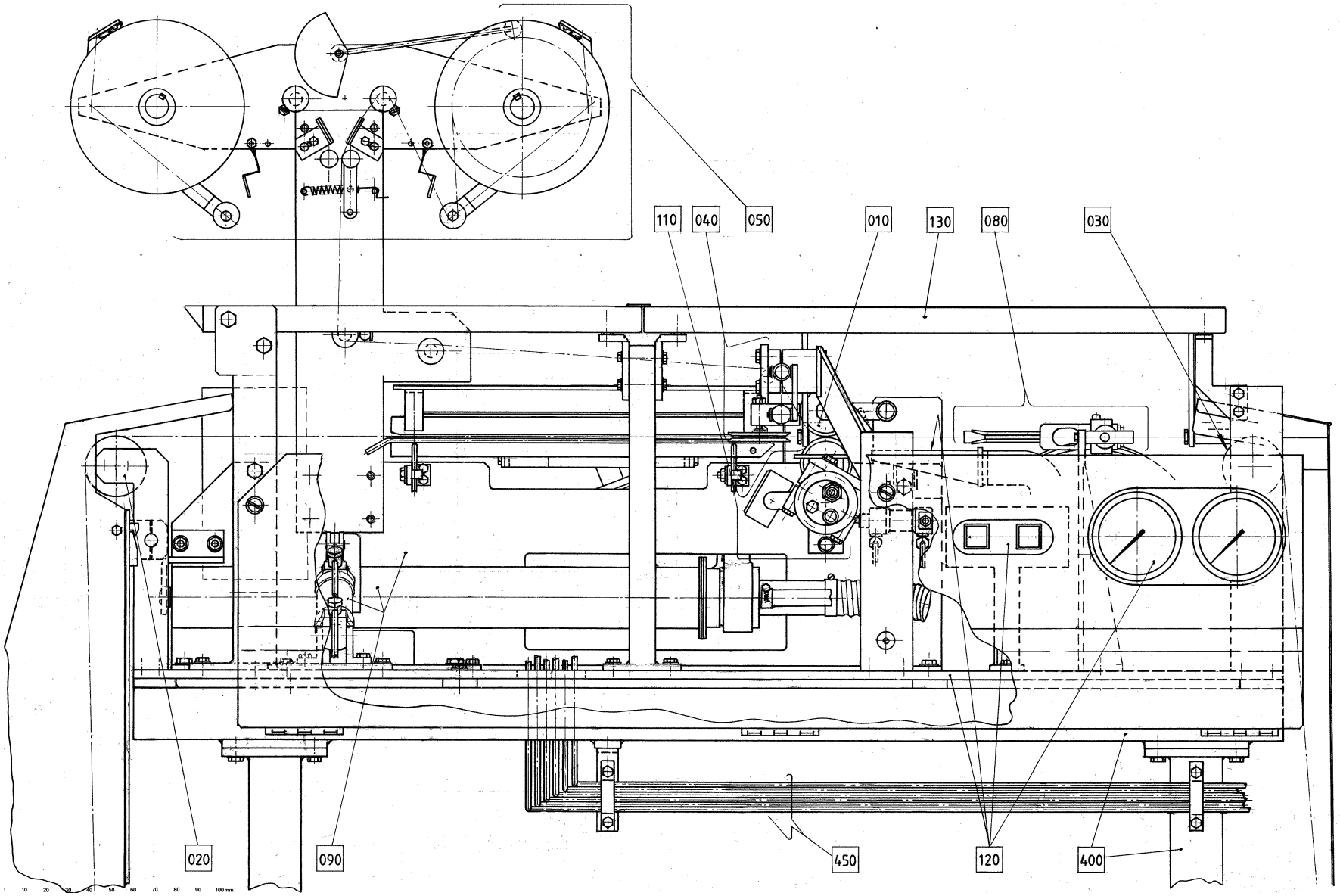
110
040
050
010
130
080
030
020
090
450
120
400

Pos	Part No	SP	UN	Qty	Description	Page No
TBA,SOURCE,TBA/9-100V OR TBA,SOURCE,TBA/9-110V						
020	A256966-0200	-		1	BENDING ROLLER BRACKET	**753, 755, 757, 759**
030	A256967-0200	-		1	BENDING ROLLER	**761**
040	A456032-0100	-		1	STRIP GUIDE	**763, 765**
080	A267315-0100	-		1	PAPER GUIDE	**767**
090	A295891-0300	-		1	STRIP APPLICATOR	**769**
110	A272343-0400	-		1	PRESSURE ROLLER	**771**
120	A1529186-0100	-		1	MOUNTING PLATE	**773, 775**
130	A1529025-0100	-		1	PAPER GUARD	**777, 779, 781**
160	A1529406-0100	-		1	DATING UNIT	**785, 787, 789, 791**
350	A456919-0100	-		1	BENDING ROLLER	**803**
450	A1529131-0100	-		1	PIPE WORK	**805**
TBA,SOURCE,TBA/9-120V						
020	A256966-0200	-		1	BENDING ROLLER BRACKET	**753, 755, 757, 759**
030	A256967-0200	-		1	BENDING ROLLER	**761**
040	A456032-0100	-		1	STRIP GUIDE	**763, 765**
080	A267315-0100	-		1	PAPER GUIDE	**767**
090	A295891-0300	-		1	STRIP APPLICATOR	**769**
110	A272343-0400	-		1	PRESSURE ROLLER	**771**
120	A1529186-0100	-		1	MOUNTING PLATE	**773, 775**
130	A1529025-0100	-		1	PAPER GUARD	**777, 779, 781**
160	A1529406-0100	-		1	DATING UNIT	**785, 787, 789, 791**
350	A456919-0100	-		1	BENDING ROLLER	**803**
450	A1529187-0100	-		1	PIPE WORK	**807**
TWA,SOURCE,TBA/9-100V OR TWA,SOURCE,TBA/9-110V						
020	A256966-0200	-		1	BENDING ROLLER BRACKET	**753, 755, 757, 759**
030	A256967-0200	-		1	BENDING ROLLER	**761**
040	A1529358-0100	-		1	STRIP GUIDE	**809**
080	A267315-0100	-		1	PAPER GUIDE	**767**
090	A1529357-0100	-		1	STRIP APPLICATOR	**811**
110	A272343-0400	-		1	PRESSURE ROLLER	**771**
120	A1529186-0100	-		1	MOUNTING PLATE	**773, 775**
130	A1529025-0100	-		1	PAPER GUARD	**777, 779, 781**
160	A1529407-0100	-		1	DATING UNIT	**813, 815, 817, 819**
350	A456919-0100	-		1	BENDING ROLLER	**803**
450	A1529131-0100	-		1	PIPE WORK	**805**
TWA,SOURCE,TBA/9-120V						
020	A256966-0200	-		1	BENDING ROLLER BRACKET	**753, 755, 757, 759**
030	A256967-0200	-		1	BENDING ROLLER	**761**
040	A1529358-0100	-		1	STRIP GUIDE	**809**
080	A267315-0100	-		1	PAPER GUIDE	**767**
090	A1529357-0100	-		1	STRIP APPLICATOR	**811**
110	A272343-0400	-		1	PRESSURE ROLLER	**771**
120	A1529186-0100	-		1	MOUNTING PLATE	**773, 775**
130	A1529025-0100	-		1	PAPER GUARD	**777, 779, 781**
160	A1529407-0100	-		1	DATING UNIT	**813, 815, 817, 819**
350	A456919-0100	-		1	BENDING ROLLER	**803**
450	A1529187-0100	-		1	PIPE WORK	**807**
Common Parts						
	A1529163-0100	-		1	MODIFIED ARTICLES:	
010	A246388-0200	-		1	PRESSURE ROLLER	**827**
050	A1529020-0100	-		1	STRIP MAGAZINE	**829**
400	A1529099-0100	-		1	MACHINE BODY	**843, 845**
500	A295668-0300	-		1	START-UP KIT	**847**

Machine Type | Group Description | Used-In | Group Number | Page No

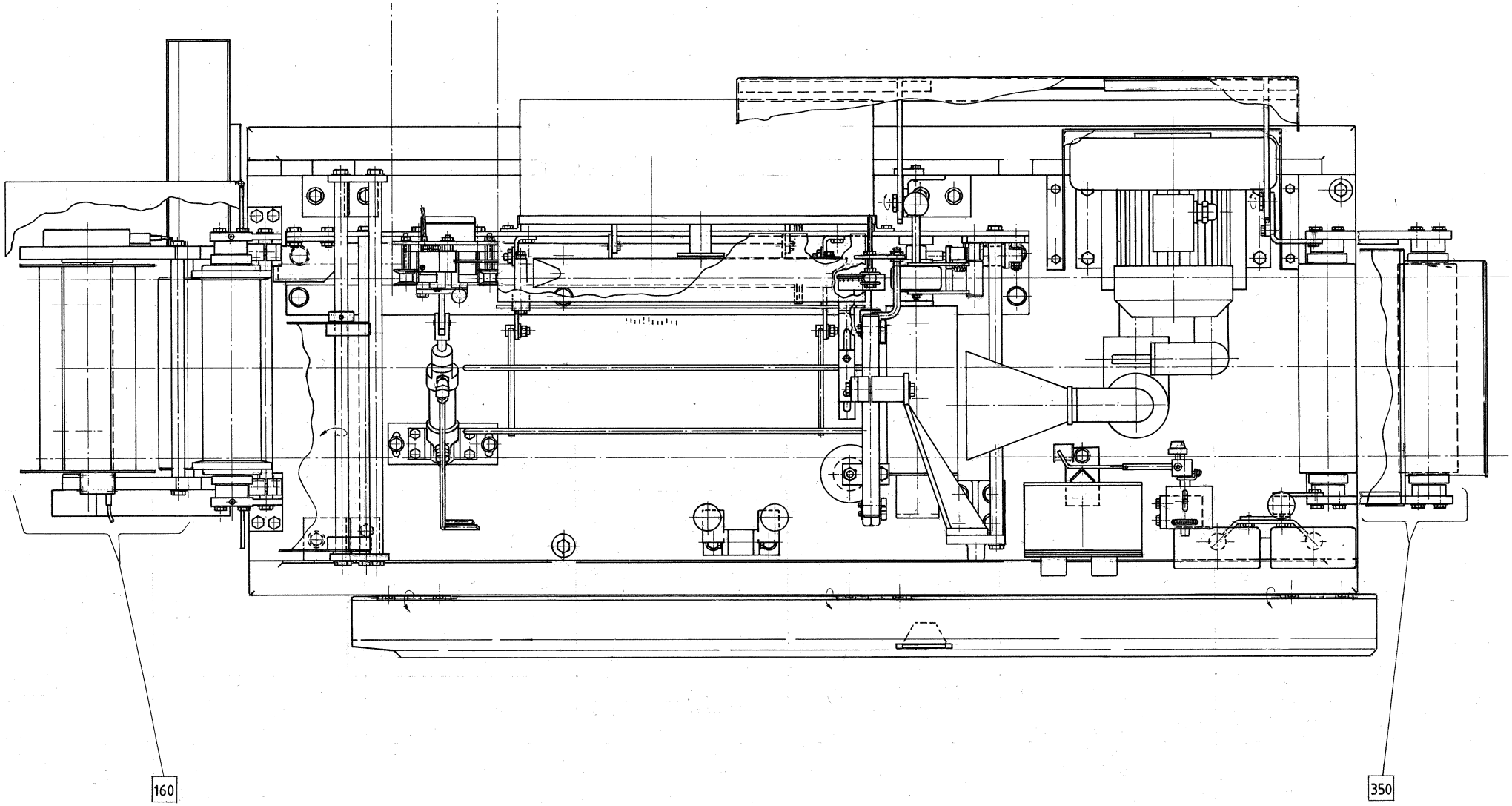
160
350

Pos	Part No	SP	UN	Qty	Description	Page No
TBA,SOURCE,TBA/9-100V OR TBA,SOURCE,TBA/9-110V						
020	A256966-0200	-		1	BENDING ROLLER BRACKET	**753, 755, 757, 759**
030	A256967-0200	-		1	BENDING ROLLER	**761**
040	A456032-0100	-		1	STRIP GUIDE	**763, 765**
080	A267315-0100	-		1	PAPER GUIDE	**767**
090	A295891-0300	-		1	STRIP APPLICATOR	**769**
110	A272343-0400	-		1	PRESSURE ROLLER	**771**
120	A1529186-0100	-		1	MOUNTING PLATE	**773, 775**
130	A1529025-0100	-		1	PAPER GUARD	**777, 779, 781**
160	A1529406-0100	-		1	DATING UNIT	**785, 787, 789, 791**
350	A456919-0100	-		1	BENDING ROLLER	**803**
450	A1529131-0100	-		1	PIPE WORK	**805**
TBA,SOURCE,TBA/9-120V						
020	A256966-0200	-		1	BENDING ROLLER BRACKET	**753, 755, 757, 759**
030	A256967-0200	-		1	BENDING ROLLER	**761**
040	A456032-0100	-		1	STRIP GUIDE	**763, 765**
080	A267315-0100	-		1	PAPER GUIDE	**767**
090	A295891-0300	-		1	STRIP APPLICATOR	**769**
110	A272343-0400	-		1	PRESSURE ROLLER	**771**
120	A1529186-0100	-		1	MOUNTING PLATE	**773, 775**
130	A1529025-0100	-		1	PAPER GUARD	**777, 779, 781**
160	A1529406-0100	-		1	DATING UNIT	**785, 787, 789, 791**
350	A456919-0100	-		1	BENDING ROLLER	**803**
450	A1529187-0100	-		1	PIPE WORK	**807**
TWA,SOURCE,TBA/9-100V OR TWA,SOURCE,TBA/9-110V						
020	A256966-0200	-		1	BENDING ROLLER BRACKET	**753, 755, 757, 759**
030	A256967-0200	-		1	BENDING ROLLER	**761**
040	A1529358-0100	-		1	STRIP GUIDE	**809**
080	A267315-0100	-		1	PAPER GUIDE	**767**
090	A1529357-0100	-		1	STRIP APPLICATOR	**811**
110	A272343-0400	-		1	PRESSURE ROLLER	**771**
120	A1529186-0100	-		1	MOUNTING PLATE	**773, 775**
130	A1529025-0100	-		1	PAPER GUARD	**777, 779, 781**
160	A1529407-0100	-		1	DATING UNIT	**813, 815, 817, 819**
350	A456919-0100	-		1	BENDING ROLLER	**803**
450	A1529131-0100	-		1	PIPE WORK	**805**
TWA,SOURCE,TBA/9-120V						
020	A256966-0200	-		1	BENDING ROLLER BRACKET	**753, 755, 757, 759**
030	A256967-0200	-		1	BENDING ROLLER	**761**
040	A1529358-0100	-		1	STRIP GUIDE	**809**
080	A267315-0100	-		1	PAPER GUIDE	**767**
090	A1529357-0100	-		1	STRIP APPLICATOR	**811**
110	A272343-0400	-		1	PRESSURE ROLLER	**771**
120	A1529186-0100	-		1	MOUNTING PLATE	**773, 775**
130	A1529025-0100	-		1	PAPER GUARD	**777, 779, 781**
160	A1529407-0100	-		1	DATING UNIT	**813, 815, 817, 819**
350	A456919-0100	-		1	BENDING ROLLER	**803**
450	A1529187-0100	-		1	PIPE WORK	**807**
Common Parts						
	A1529163-0100	-		1	MODIFIED ARTICLES:	
010	A246388-0200	-		1	PRESSURE ROLLER	**827**
050	A1529020-0100	-		1	STRIP MAGAZINE	**829**
400	A1529099-0100	-		1	MACHINE BODY	**843, 845**
500	A295668-0300	-		1	START-UP KIT	**847**

Machine Type | Group Description | Used-In | Group Number | Page No

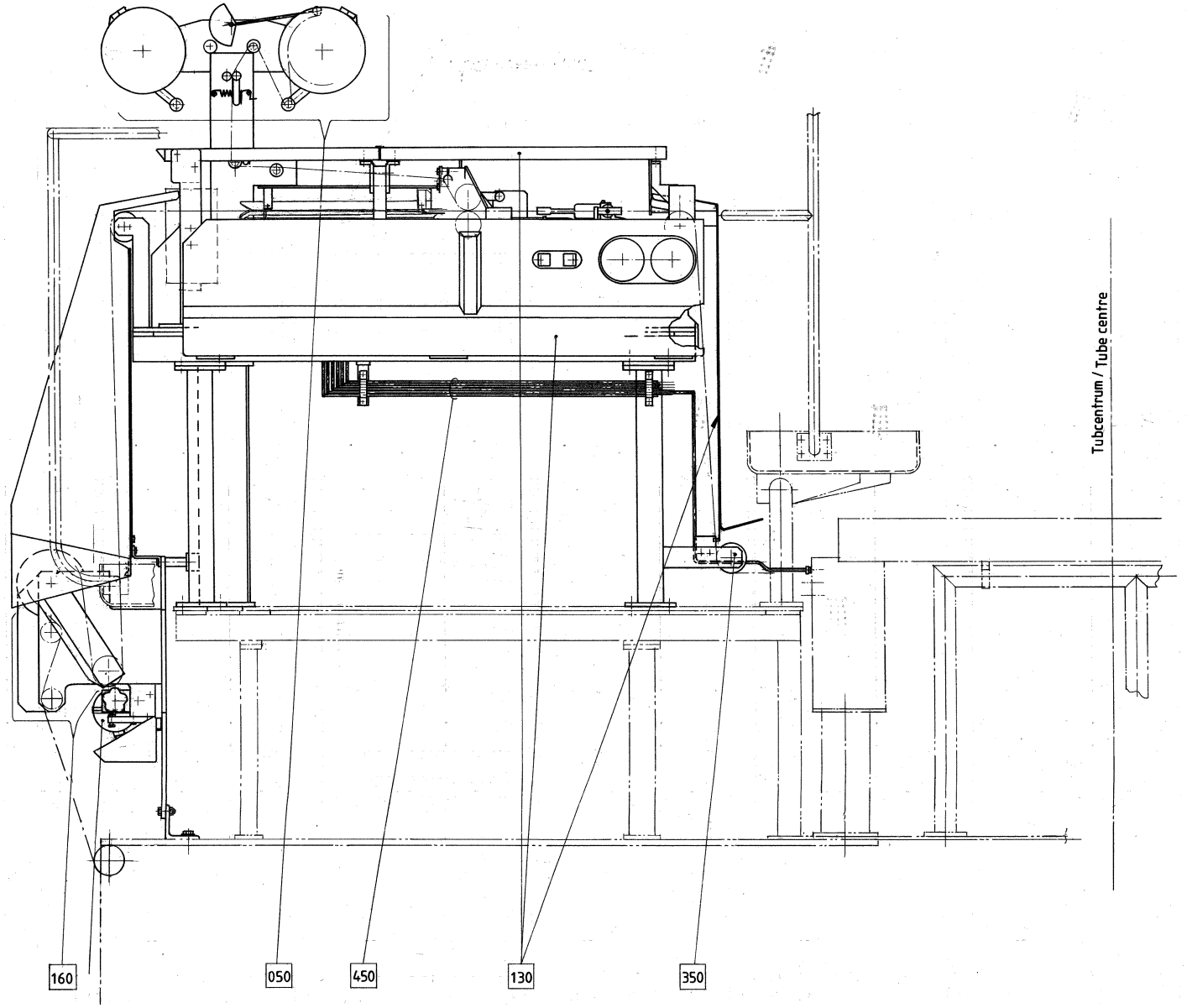
Tubcentrum / Tube centre
160
050
450
130
350

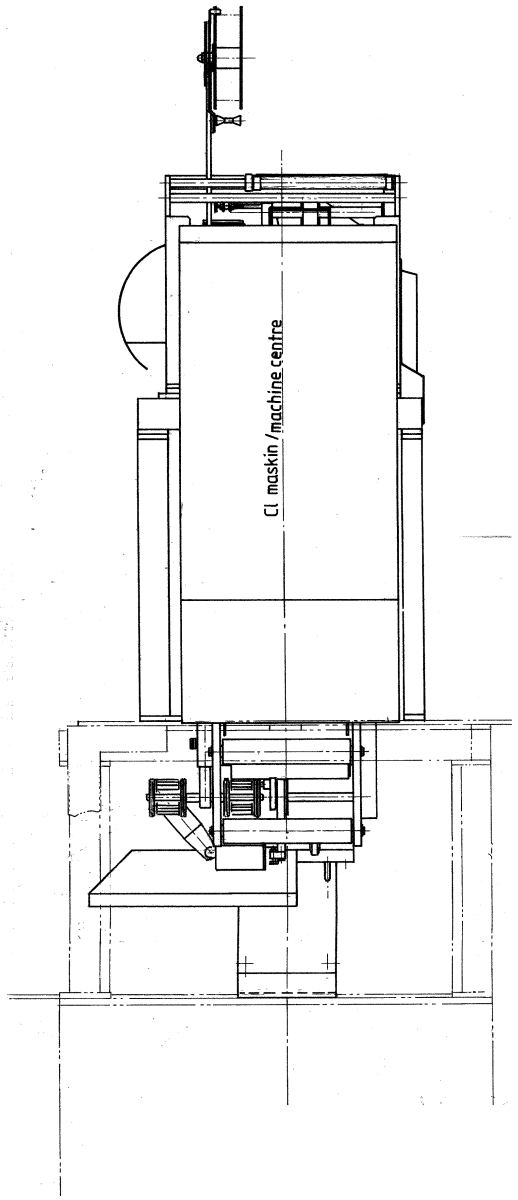
Cl maskin / machine centre

Pos	Part No	SP	UN	Qty	Description	Page No
TBA,SOURCE,TBA/9-100V OR TBA,SOURCE,TBA/9-110V						
020	A256966-0200	-		1	BENDING ROLLER BRACKET	**753, 755, 757, 759**
030	A256967-0200	-		1	BENDING ROLLER	**761**
040	A456032-0100	-		1	STRIP GUIDE	**763, 765**
080	A267315-0100	-		1	PAPER GUIDE	**767**
090	A295891-0300	-		1	STRIP APPLICATOR	**769**
110	A272343-0400	-		1	PRESSURE ROLLER	**771**
120	A1529186-0100	-		1	MOUNTING PLATE	**773, 775**
130	A1529025-0100	-		1	PAPER GUARD	**777, 779, 781**
160	A1529406-0100	-		1	DATING UNIT	**785, 787, 789, 791**
350	A456919-0100	-		1	BENDING ROLLER	**803**
450	A1529131-0100	-		1	PIPE WORK	**805**
TBA,SOURCE,TBA/9-120V						
020	A256966-0200	-		1	BENDING ROLLER BRACKET	**753, 755, 757, 759**
030	A256967-0200	-		1	BENDING ROLLER	**761**
040	A456032-0100	-		1	STRIP GUIDE	**763, 765**
080	A267315-0100	-		1	PAPER GUIDE	**767**
090	A295891-0300	-		1	STRIP APPLICATOR	**769**
110	A272343-0400	-		1	PRESSURE ROLLER	**771**
120	A1529186-0100	-		1	MOUNTING PLATE	**773, 775**
130	A1529025-0100	-		1	PAPER GUARD	**777, 779, 781**
160	A1529406-0100	-		1	DATING UNIT	**785, 787, 789, 791**
350	A456919-0100	-		1	BENDING ROLLER	**803**
450	A1529187-0100	-		1	PIPE WORK	**807**
TWA,SOURCE,TBA/9-100V OR TWA,SOURCE,TBA/9-110V						
020	A256966-0200	-		1	BENDING ROLLER BRACKET	**753, 755, 757, 759**
030	A256967-0200	-		1	BENDING ROLLER	**761**
040	A1529358-0100	-		1	STRIP GUIDE	**809**
080	A267315-0100	-		1	PAPER GUIDE	**767**
090	A1529357-0100	-		1	STRIP APPLICATOR	**811**
110	A272343-0400	-		1	PRESSURE ROLLER	**771**
120	A1529186-0100	-		1	MOUNTING PLATE	**773, 775**
130	A1529025-0100	-		1	PAPER GUARD	**777, 779, 781**
160	A1529407-0100	-		1	DATING UNIT	**813, 815, 817, 819**
350	A456919-0100	-		1	BENDING ROLLER	**803**
450	A1529131-0100	-		1	PIPE WORK	**805**
TWA,SOURCE,TBA/9-120V						
020	A256966-0200	-		1	BENDING ROLLER BRACKET	**753, 755, 757, 759**
030	A256967-0200	-		1	BENDING ROLLER	**761**
040	A1529358-0100	-		1	STRIP GUIDE	**809**
080	A267315-0100	-		1	PAPER GUIDE	**767**
090	A1529357-0100	-		1	STRIP APPLICATOR	**811**
110	A272343-0400	-		1	PRESSURE ROLLER	**771**
120	A1529186-0100	-		1	MOUNTING PLATE	**773, 775**
130	A1529025-0100	-		1	PAPER GUARD	**777, 779, 781**
160	A1529407-0100	-		1	DATING UNIT	**813, 815, 817, 819**
350	A456919-0100	-		1	BENDING ROLLER	**803**
450	A1529187-0100	-		1	PIPE WORK	**807**
Common Parts						
	A1529163-0100	-		1	MODIFIED ARTICLES:	
010	A246388-0200	-		1	PRESSURE ROLLER	**827**
050	A1529020-0100	-		1	STRIP MAGAZINE	**829**
400	A1529099-0100	-		1	MACHINE BODY	**843, 845**
500	A295668-0300	-		1	START-UP KIT	**847**

Machine Type | Group Description | Used-In | Group Number | Page No

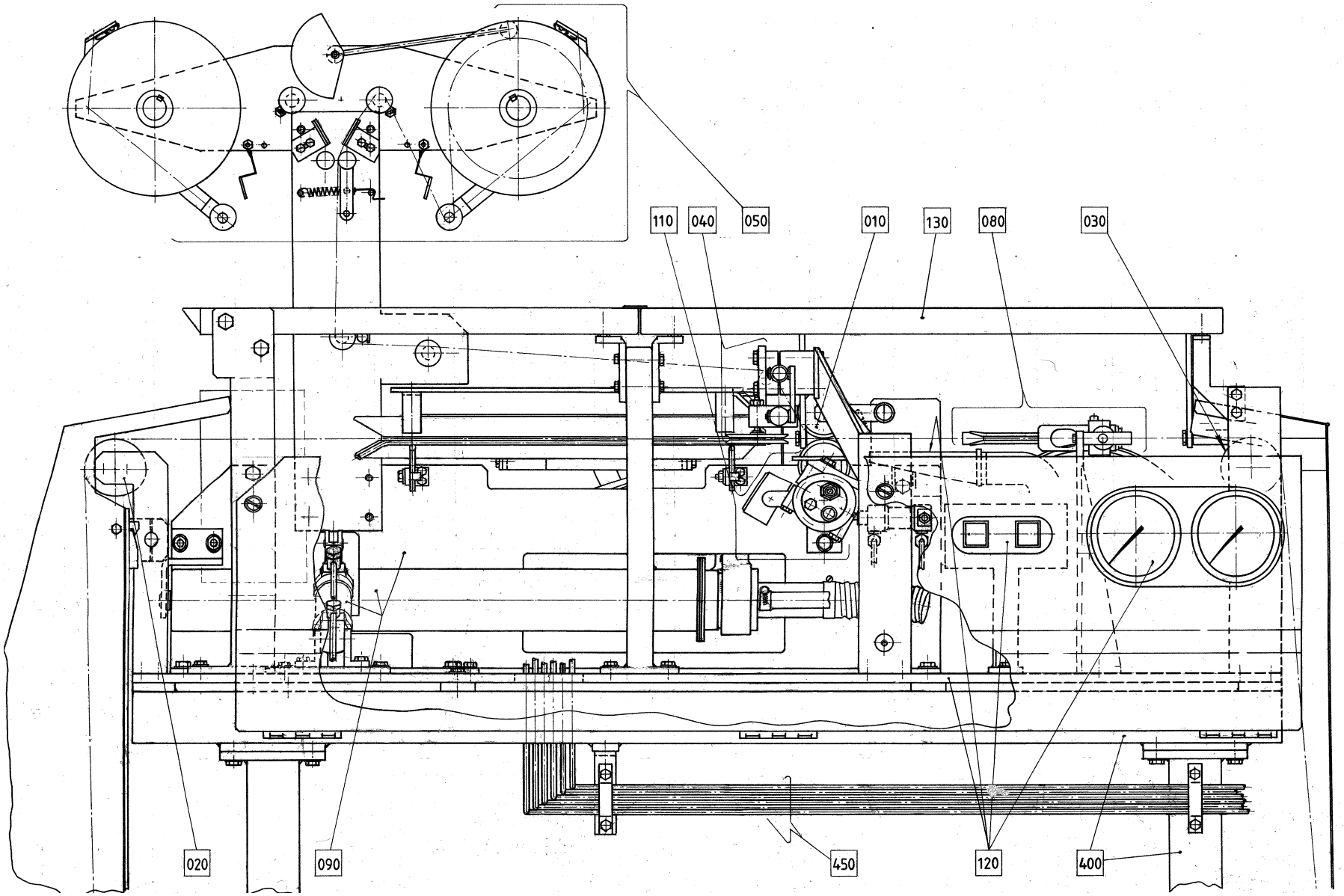
110
040
050
010
130
080
030
020
090
450
120
400

Pos	Part No	SP	UN	Qty	Description	Page No
TBA,SOURCE,TBA/9-100V OR TBA,SOURCE,TBA/9-110V						
020	A256966-0200	-		1	BENDING ROLLER BRACKET	**753, 755, 757, 759**
030	A256967-0200	-		1	BENDING ROLLER	**761**
040	A456032-0100	-		1	STRIP GUIDE	**763, 765**
080	A267315-0100	-		1	PAPER GUIDE	**767**
090	A295891-0300	-		1	STRIP APPLICATOR	**769**
110	A272343-0400	-		1	PRESSURE ROLLER	**771**
120	A1529186-0100	-		1	MOUNTING PLATE	**773, 775**
130	A1529025-0100	-		1	PAPER GUARD	**777, 779, 781**
160	A1529406-0100	-		1	DATING UNIT	**785, 787, 789, 791**
350	A456919-0100	-		1	BENDING ROLLER	**803**
450	A1529131-0100	-		1	PIPE WORK	**805**
TBA,SOURCE,TBA/9-120V						
020	A256966-0200	-		1	BENDING ROLLER BRACKET	**753, 755, 757, 759**
030	A256967-0200	-		1	BENDING ROLLER	**761**
040	A456032-0100	-		1	STRIP GUIDE	**763, 765**
080	A267315-0100	-		1	PAPER GUIDE	**767**
090	A295891-0300	-		1	STRIP APPLICATOR	**769**
110	A272343-0400	-		1	PRESSURE ROLLER	**771**
120	A1529186-0100	-		1	MOUNTING PLATE	**773, 775**
130	A1529025-0100	-		1	PAPER GUARD	**777, 779, 781**
160	A1529406-0100	-		1	DATING UNIT	**785, 787, 789, 791**
350	A456919-0100	-		1	BENDING ROLLER	**803**
450	A1529187-0100	-		1	PIPE WORK	**807**
TWA,SOURCE,TBA/9-100V OR TWA,SOURCE,TBA/9-110V						
020	A256966-0200	-		1	BENDING ROLLER BRACKET	**753, 755, 757, 759**
030	A256967-0200	-		1	BENDING ROLLER	**761**
040	A1529358-0100	-		1	STRIP GUIDE	**809**
080	A267315-0100	-		1	PAPER GUIDE	**767**
090	A1529357-0100	-		1	STRIP APPLICATOR	**811**
110	A272343-0400	-		1	PRESSURE ROLLER	**771**
120	A1529186-0100	-		1	MOUNTING PLATE	**773, 775**
130	A1529025-0100	-		1	PAPER GUARD	**777, 779, 781**
160	A1529407-0100	-		1	DATING UNIT	**813, 815, 817, 819**
350	A456919-0100	-		1	BENDING ROLLER	**803**
450	A1529131-0100	-		1	PIPE WORK	**805**
TWA,SOURCE,TBA/9-120V						
020	A256966-0200	-		1	BENDING ROLLER BRACKET	**753, 755, 757, 759**
030	A256967-0200	-		1	BENDING ROLLER	**761**
040	A1529358-0100	-		1	STRIP GUIDE	**809**
080	A267315-0100	-		1	PAPER GUIDE	**767**
090	A1529357-0100	-		1	STRIP APPLICATOR	**811**
110	A272343-0400	-		1	PRESSURE ROLLER	**771**
120	A1529186-0100	-		1	MOUNTING PLATE	**773, 775**
130	A1529025-0100	-		1	PAPER GUARD	**777, 779, 781**
160	A1529407-0100	-		1	DATING UNIT	**813, 815, 817, 819**
350	A456919-0100	-		1	BENDING ROLLER	**803**
450	A1529187-0100	-		1	PIPE WORK	**807**
Common Parts						
	A1529163-0100	-		1	MODIFIED ARTICLES:	
010	A246388-0200	-		1	PRESSURE ROLLER	**827**
050	A1529020-0100	-		1	STRIP MAGAZINE	**829**
400	A1529099-0100	-		1	MACHINE BODY	**843, 845**
500	A295668-0300	-		1	START-UP KIT	**847**

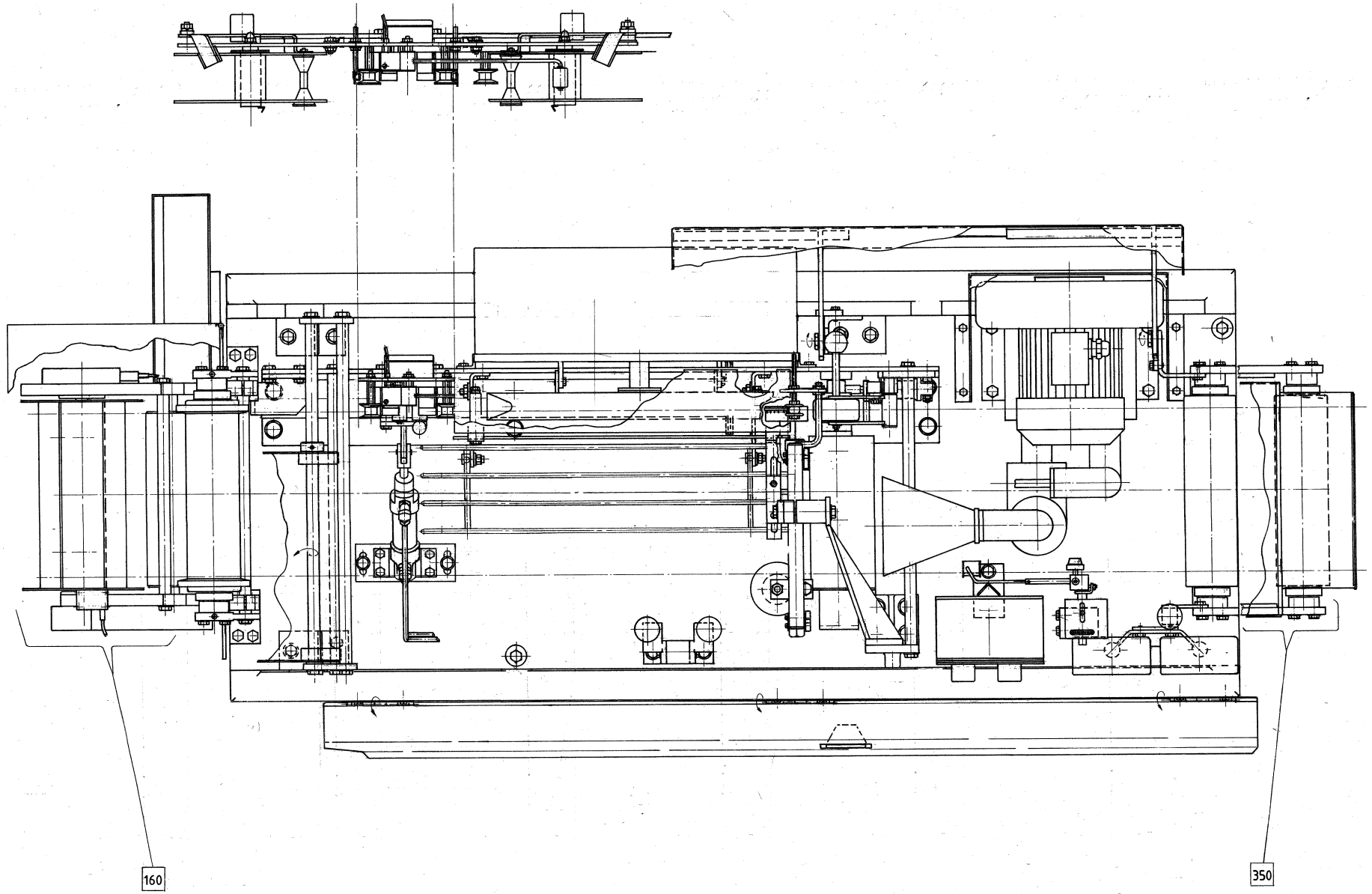
160
350

Pos	Part No	SP	UN	Qty	Description	Page No
TBA,SOURCE,TBA/9-100V OR TBA,SOURCE,TBA/9-110V						
020	A256966-0200	-		1	BENDING ROLLER BRACKET	**753, 755, 757, 759**
030	A256967-0200	-		1	BENDING ROLLER	**761**
040	A456032-0100	-		1	STRIP GUIDE	**763, 765**
080	A267315-0100	-		1	PAPER GUIDE	**767**
090	A295891-0300	-		1	STRIP APPLICATOR	**769**
110	A272343-0400	-		1	PRESSURE ROLLER	**771**
120	A1529186-0100	-		1	MOUNTING PLATE	**773, 775**
130	A1529025-0100	-		1	PAPER GUARD	**777, 779, 781**
160	A1529406-0100	-		1	DATING UNIT	**785, 787, 789, 791**
350	A456919-0100	-		1	BENDING ROLLER	**803**
450	A1529131-0100	-		1	PIPE WORK	**805**
TBA,SOURCE,TBA/9-120V						
020	A256966-0200	-		1	BENDING ROLLER BRACKET	**753, 755, 757, 759**
030	A256967-0200	-		1	BENDING ROLLER	**761**
040	A456032-0100	-		1	STRIP GUIDE	**763, 765**
080	A267315-0100	-		1	PAPER GUIDE	**767**
090	A295891-0300	-		1	STRIP APPLICATOR	**769**
110	A272343-0400	-		1	PRESSURE ROLLER	**771**
120	A1529186-0100	-		1	MOUNTING PLATE	**773, 775**
130	A1529025-0100	-		1	PAPER GUARD	**777, 779, 781**
160	A1529406-0100	-		1	DATING UNIT	**785, 787, 789, 791**
350	A456919-0100	-		1	BENDING ROLLER	**803**
450	A1529187-0100	-		1	PIPE WORK	**807**
TWA,SOURCE,TBA/9-100V OR TWA,SOURCE,TBA/9-110V						
020	A256966-0200	-		1	BENDING ROLLER BRACKET	**753, 755, 757, 759**
030	A256967-0200	-		1	BENDING ROLLER	**761**
040	A1529358-0100	-		1	STRIP GUIDE	**809**
080	A267315-0100	-		1	PAPER GUIDE	**767**
090	A1529357-0100	-		1	STRIP APPLICATOR	**811**
110	A272343-0400	-		1	PRESSURE ROLLER	**771**
120	A1529186-0100	-		1	MOUNTING PLATE	**773, 775**
130	A1529025-0100	-		1	PAPER GUARD	**777, 779, 781**
160	A1529407-0100	-		1	DATING UNIT	**813, 815, 817, 819**
350	A456919-0100	-		1	BENDING ROLLER	**803**
450	A1529131-0100	-		1	PIPE WORK	**805**
TWA,SOURCE,TBA/9-120V						
020	A256966-0200	-		1	BENDING ROLLER BRACKET	**753, 755, 757, 759**
030	A256967-0200	-		1	BENDING ROLLER	**761**
040	A1529358-0100	-		1	STRIP GUIDE	**809**
080	A267315-0100	-		1	PAPER GUIDE	**767**
090	A1529357-0100	-		1	STRIP APPLICATOR	**811**
110	A272343-0400	-		1	PRESSURE ROLLER	**771**
120	A1529186-0100	-		1	MOUNTING PLATE	**773, 775**
130	A1529025-0100	-		1	PAPER GUARD	**777, 779, 781**
160	A1529407-0100	-		1	DATING UNIT	**813, 815, 817, 819**
350	A456919-0100	-		1	BENDING ROLLER	**803**
450	A1529187-0100	-		1	PIPE WORK	**807**
Common Parts						
	A1529163-0100	-		1	MODIFIED ARTICLES:	
010	A246388-0200	-		1	PRESSURE ROLLER	**827**
050	A1529020-0100	-		1	STRIP MAGAZINE	**829**
400	A1529099-0100	-		1	MACHINE BODY	**843, 845**
500	A295668-0300	-		1	START-UP KIT	**847**

Machine Type | Group Description | Used-In | Group Number | Page No

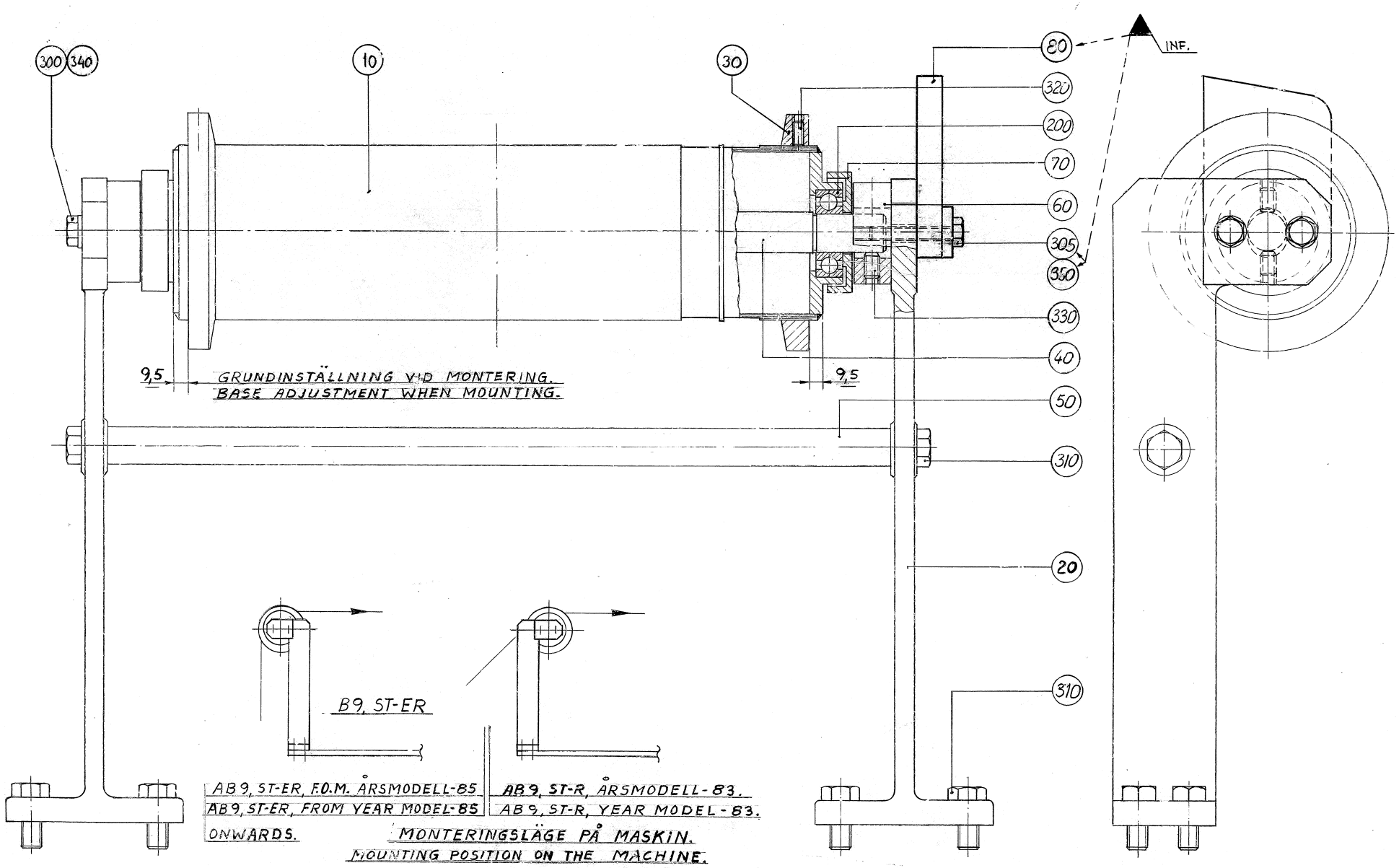
300
340
10
30
80
320
200
70
60
305
350
330
40
50
310
20
310
INF.
9,5
GRUNDINSTÄLLNING VID MONTERING.
BASE ADJUSTMENT WHEN MOUNTING.
9,5
B9, ST-ER
AB 9, ST-ER, F.O.M. ÅRSMODELL-85
AB 9, ST-ER, FROM YEAR MODEL-85
ONWARDS.
AB 9, ST-R, ÅRSMODELL-83.
AB 9, ST-R, YEAR MODEL-83.
MONTERINGSLÄGE PÅ MASKIN.
MOUNTING POSITION ON THE MACHINE.

ECM: 102343 - 20011206
Group number: 256966-0200
Assembly Drawing: 256966-1_1_AA

Issue: 20020822

Pos	Part No	SP	UN	Qty	Description	Page No
0200B ST-ER OR 0200B ST-R OR 0250B ST-ER OR 0250B ST-R						
010	752637-0001	B		1	BENDING ROLLER	
0200S ST-ER						
010	752637-0003	B		1	BENDING ROLLER	
0200S ST-R						
010	752637-0003	B		1	BENDING ROLLER	
Common Parts						
020	546116-0000	-		2	CANTILEVER	
030	250588-0000	B		2	FLANGE	
040	256985-0000	A		1	SHAFT	
050	256986-0001	-		1	STRUT	
060	265567-0000	B		2	BEARING UNIT	
070	265568-0000	-		2	DUST COVER	
080	751048-0000	-		1	SUPPORT	
200	90214-0098	A		2	BALL BEARING, 15X35X11 MM	
300	312105-0370	-		2	SCREW M6S ISO 4017 M6X20 A480	
305	312105-0376	-		2	SCREW M6S ISO 4014 M6X35 A480	
310	312105-0451	-		10	SCREW M6S ISO 4017 M8X20 A480	
320	312318-0325	A		4	SCREW HEX.SOCK.SET CUP P.MSK6SS5X10 SS	
330	312318-0364	A		4	SCREW HEX.SOCK.SET CUP P.MSK6SS6X10 SS	
340	315105-0153	-		2	WASHER PLAIN, BRB, 6,4/12,H=1,5	
350	315125-0153	-		2	WASHER PLAIN ROUND,CHAMF. 6,4/22, H=4	

Pos	Part No	SP	UN	Qty	Description	Page No

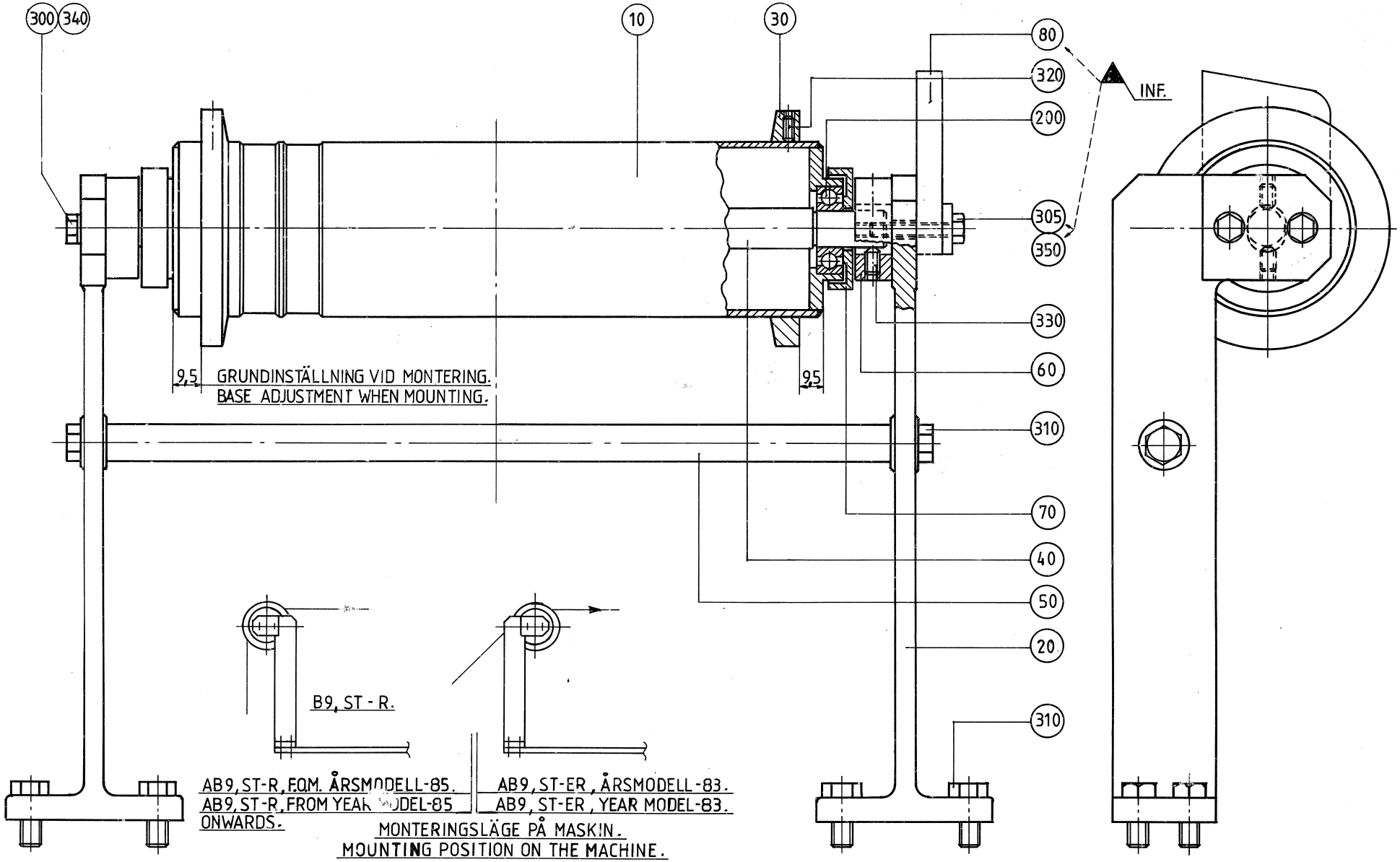
300
340
10
30
80
320
200
INF.
305
350
330
60
310
70
40
50
20
310
9,5
GRUNDINSTÄLLNING VID MONTERING.
BASE ADJUSTMENT WHEN MOUNTING.
9,5
B9, ST - R.
AB9, ST-R, FOM. ÅRSMODELL-85.
AB9, ST-R, FROM YEAR MODEL-85
ONWARDS.
AB9, ST-ER, ÅRSMODELL-83.
AB9, ST-ER, YEAR MODEL-83.
MONTERINGSLÄGE PÅ MASKIN.
MOUNTING POSITION ON THE MACHINE.

Pos	Part No	SP	UN	Qty	Description	Page No
0200B ST-ER OR 0200B ST-R OR 0250B ST-ER OR 0250B ST-R						
010	752637-0001	B		1	BENDING ROLLER	
0200S ST-ER						
010	752637-0003	B		1	BENDING ROLLER	
0200S ST-R						
010	752637-0003	B		1	BENDING ROLLER	
Common Parts						
020	546116-0000	-		2	CANTILEVER	
030	250588-0000	B		2	FLANGE	
040	256985-0000	A		1	SHAFT	
050	256986-0001	-		1	STRUT	
060	265567-0000	B		2	BEARING UNIT	
070	265568-0000	-		2	DUST COVER	
080	751048-0000	-		1	SUPPORT	
200	90214-0098	A		2	BALL BEARING, 15X35X11 MM	
300	312105-0370	-		2	SCREW M6S ISO 4017 M6X20 A480	
305	312105-0376	-		2	SCREW M6S ISO 4014 M6X35 A480	
310	312105-0451	-		10	SCREW M6S ISO 4017 M8X20 A480	
320	312318-0325	A		4	SCREW HEX.SOCK.SET CUP P.MSK6SS5X10 SS	
330	312318-0364	A		4	SCREW HEX.SOCK.SET CUP P.MSK6SS6X10 SS	
340	315105-0153	-		2	WASHER PLAIN, BRB, 6,4/12,H=1,5	
350	315125-0153	-		2	WASHER PLAIN ROUND,CHAMF. 6,4/22, H=4	

Pos	Part No	SP	UN	Qty	Description	Page No

BENDING ROLLER BRACKET

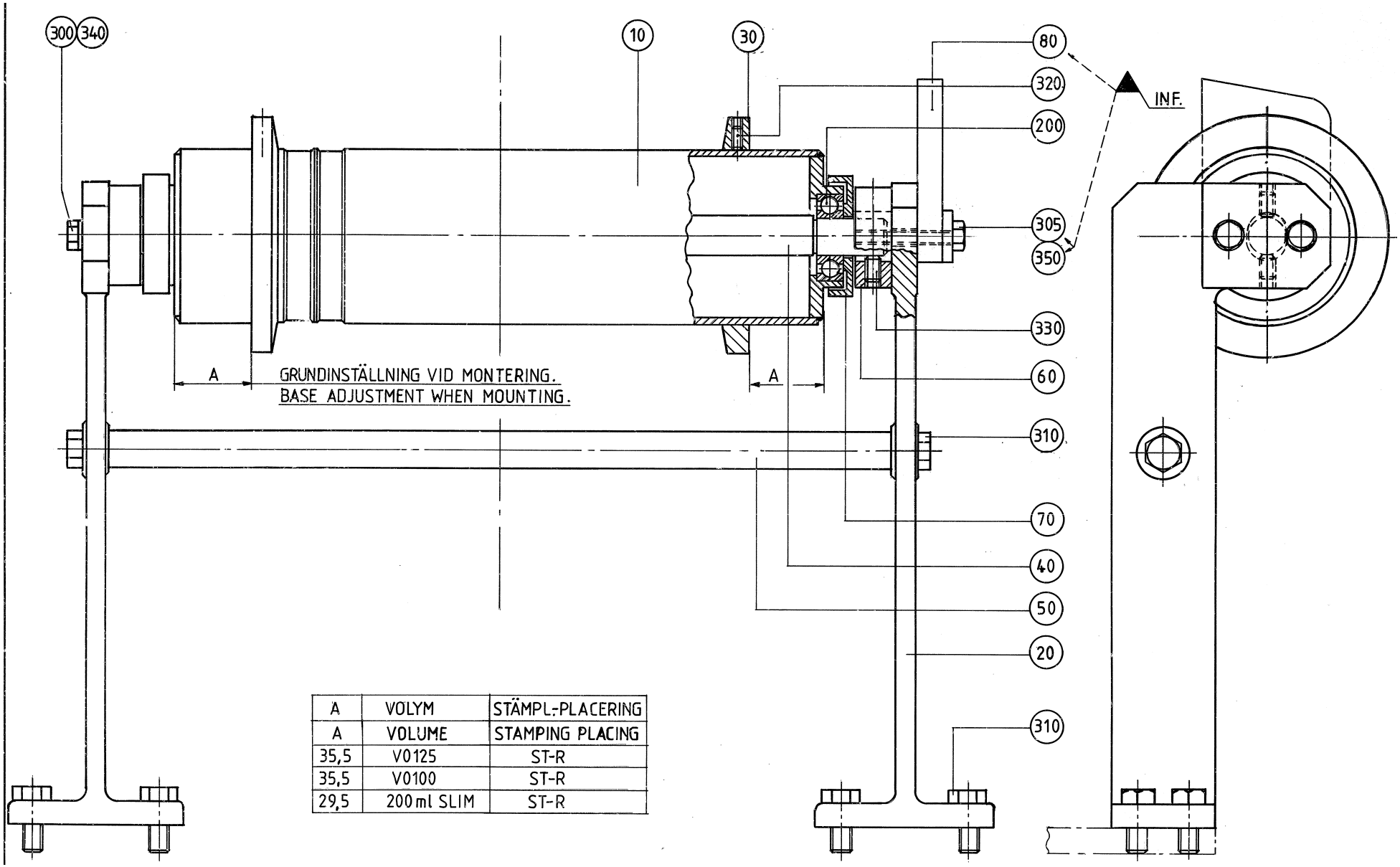

A	VOLYM	STÄMPL.-PLACERING
A	VOLUME	STAMPING PLACING
35,5	V0125	ST-R
35,5	V0100	ST-R
29,5	200 ml SLIM	ST-R

ECM: 102343 - 20011206
Group number: 256966-0200
Assembly Drawing: 256966-3_1_AA

Issue: 20020822

Pos	Part No	SP	UN	Qty	Description	Page No
0200B ST-ER OR 0200B ST-R OR 0250B ST-ER OR 0250B ST-R						
010	752637-0001	B		1	BENDING ROLLER	
0200S ST-ER						
010	752637-0003	B		1	BENDING ROLLER	
0200S ST-R						
010	752637-0003	B		1	BENDING ROLLER	
Common Parts						
020	546116-0000	-		2	CANTILEVER	
030	250588-0000	B		2	FLANGE	
040	256985-0000	A		1	SHAFT	
050	256986-0001	-		1	STRUT	
060	265567-0000	B		2	BEARING UNIT	
070	265568-0000	-		2	DUST COVER	
080	751048-0000	-		1	SUPPORT	
200	90214-0098	A		2	BALL BEARING, 15X35X11 MM	
300	312105-0370	-		2	SCREW M6S ISO 4017 M6X20 A480	
305	312105-0376	-		2	SCREW M6S ISO 4014 M6X35 A480	
310	312105-0451	-		10	SCREW M6S ISO 4017 M8X20 A480	
320	312318-0325	A		4	SCREW HEX.SOCK.SET CUP P.MSK6SS5X10 SS	
330	312318-0364	A		4	SCREW HEX.SOCK.SET CUP P.MSK6SS6X10 SS	
340	315105-0153	-		2	WASHER PLAIN, BRB, 6,4/12,H=1,5	
350	315125-0153	-		2	WASHER PLAIN ROUND,CHAMF. 6,4/22, H=4	

Pos	Part No	SP	UN	Qty	Description	Page No

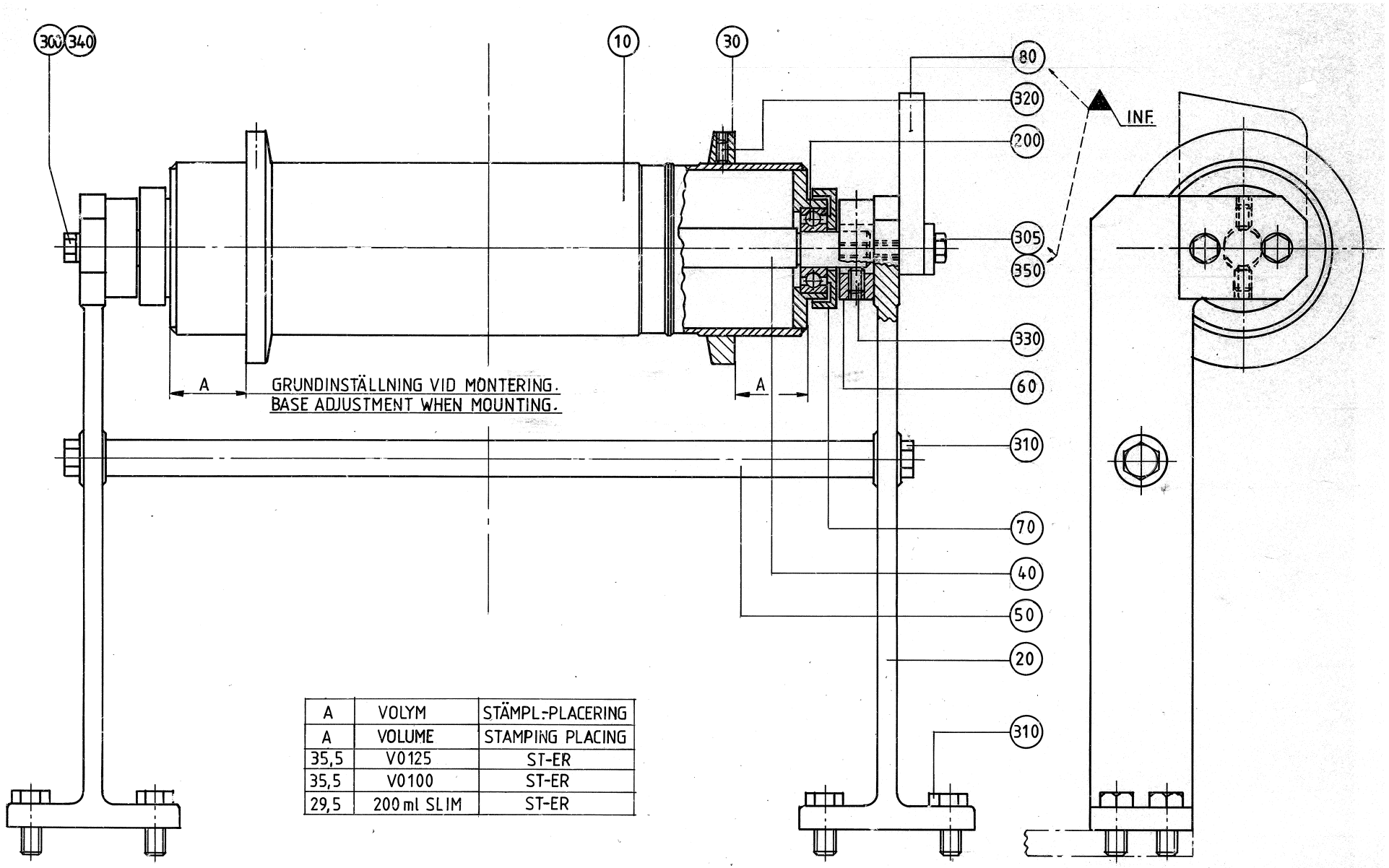

A	VOLYM	STÄMPL.-PLACERING
A	VOLUME	STAMPING PLACING
35,5	V0125	ST-ER
35,5	V0100	ST-ER
29,5	200 ml SLIM	ST-ER

Pos	Part No	SP	UN	Qty	Description	Page No
0200B ST-ER OR 0200B ST-R OR 0250B ST-ER OR 0250B ST-R						
010	752637-0001	B		1	BENDING ROLLER	
0200S ST-ER						
010	752637-0003	B		1	BENDING ROLLER	
0200S ST-R						
010	752637-0003	B		1	BENDING ROLLER	
Common Parts						
020	546116-0000	-		2	CANTILEVER	
030	250588-0000	B		2	FLANGE	
040	256985-0000	A		1	SHAFT	
050	256986-0001	-		1	STRUT	
060	265567-0000	B		2	BEARING UNIT	
070	265568-0000	-		2	DUST COVER	
080	751048-0000	-		1	SUPPORT	
200	90214-0098	A		2	BALL BEARING, 15X35X11 MM	
300	312105-0370	-		2	SCREW M6S ISO 4017 M6X20 A480	
305	312105-0376	-		2	SCREW M6S ISO 4014 M6X35 A480	
310	312105-0451	-		10	SCREW M6S ISO 4017 M8X20 A480	
320	312318-0325	A		4	SCREW HEX.SOCK.SET CUP P.MSK6SS5X10 SS	
330	312318-0364	A		4	SCREW HEX.SOCK.SET CUP P.MSK6SS6X10 SS	
340	315105-0153	-		2	WASHER PLAIN, BRB, 6,4/12,H=1,5	
350	315125-0153	-		2	WASHER PLAIN ROUND,CHAMF. 6,4/22, H=4	

Pos	Part No	SP	UN	Qty	Description	Page No

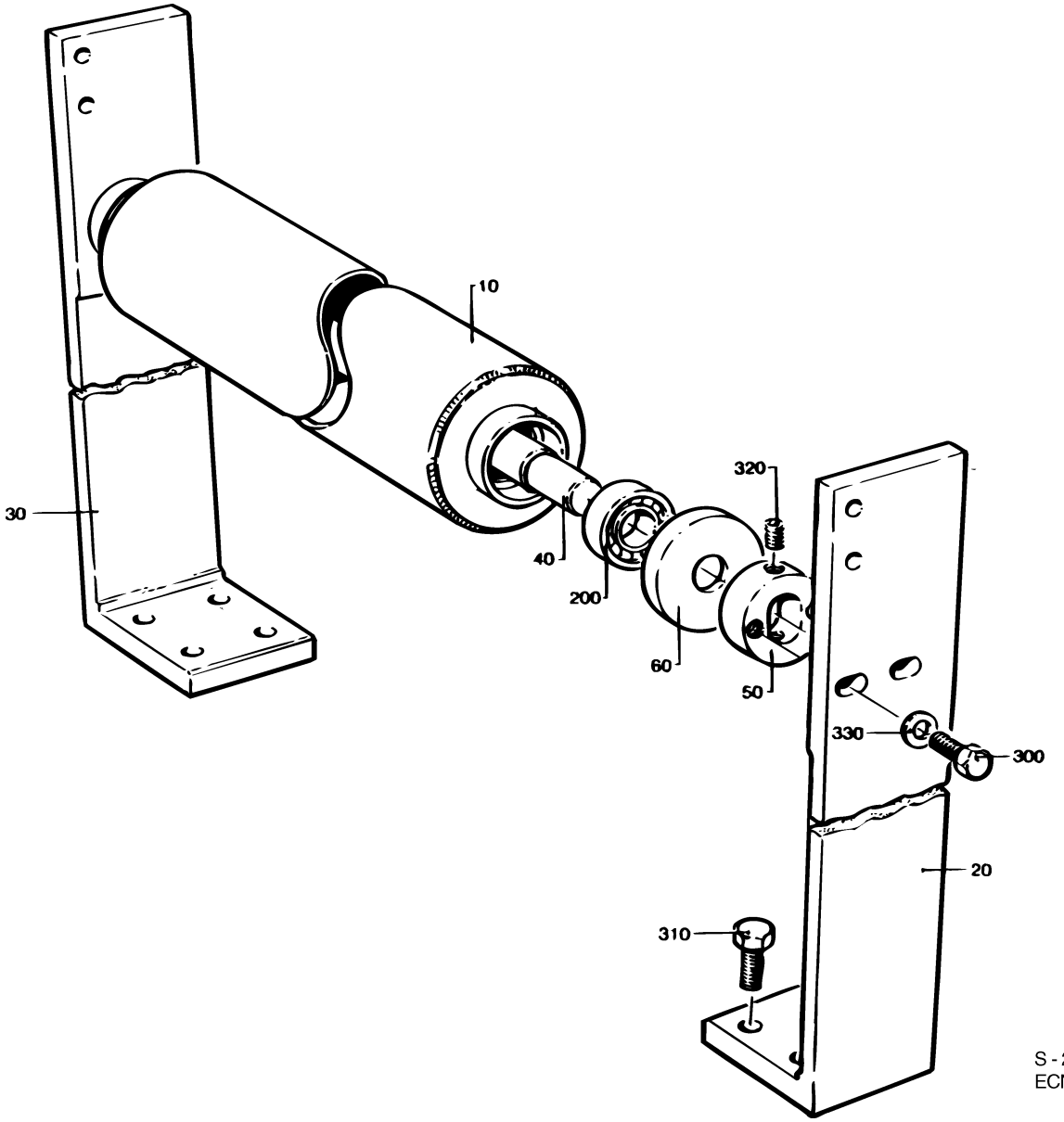
10
30
40
200
320
60
50
330
300
20
310
S - 256967-1
ECN 82225

ECM: 102344 - 20011206
Group number: 256967-0200
Assembly Drawing: 256967-1_1_AA

Issue: 20020822

Pos	Part No	SP	UN	Qty	Description	Page No
Common Parts						
010	256984-0000	B		1	BENDING ROLLER	
020	256992-0000	-		1	CANTILEVER	
030	256993-0000	-		1	CANTILEVER	
040	256985-0000	A		1	SHAFT	
050	265567-0000	B		2	BEARING UNIT	
060	265568-0000	-		2	DUST COVER	
200	90214-0098	A		2	BALL BEARING, 15X35X11 MM	
300	312105-0370	-		4	SCREW M6S ISO 4017 M6X20 A480	
310	312105-0451	-		8	SCREW M6S ISO 4017 M8X20 A480	
320	312318-0364	A		4	SCREW HEX.SOCK.SET CUP P.MSK6SS6X10 SS	
330	315105-0153	-		4	WASHER PLAIN, BRB, 6,4/12,H=1,5	

Pos	Part No	SP	UN	Qty	Description	Page No

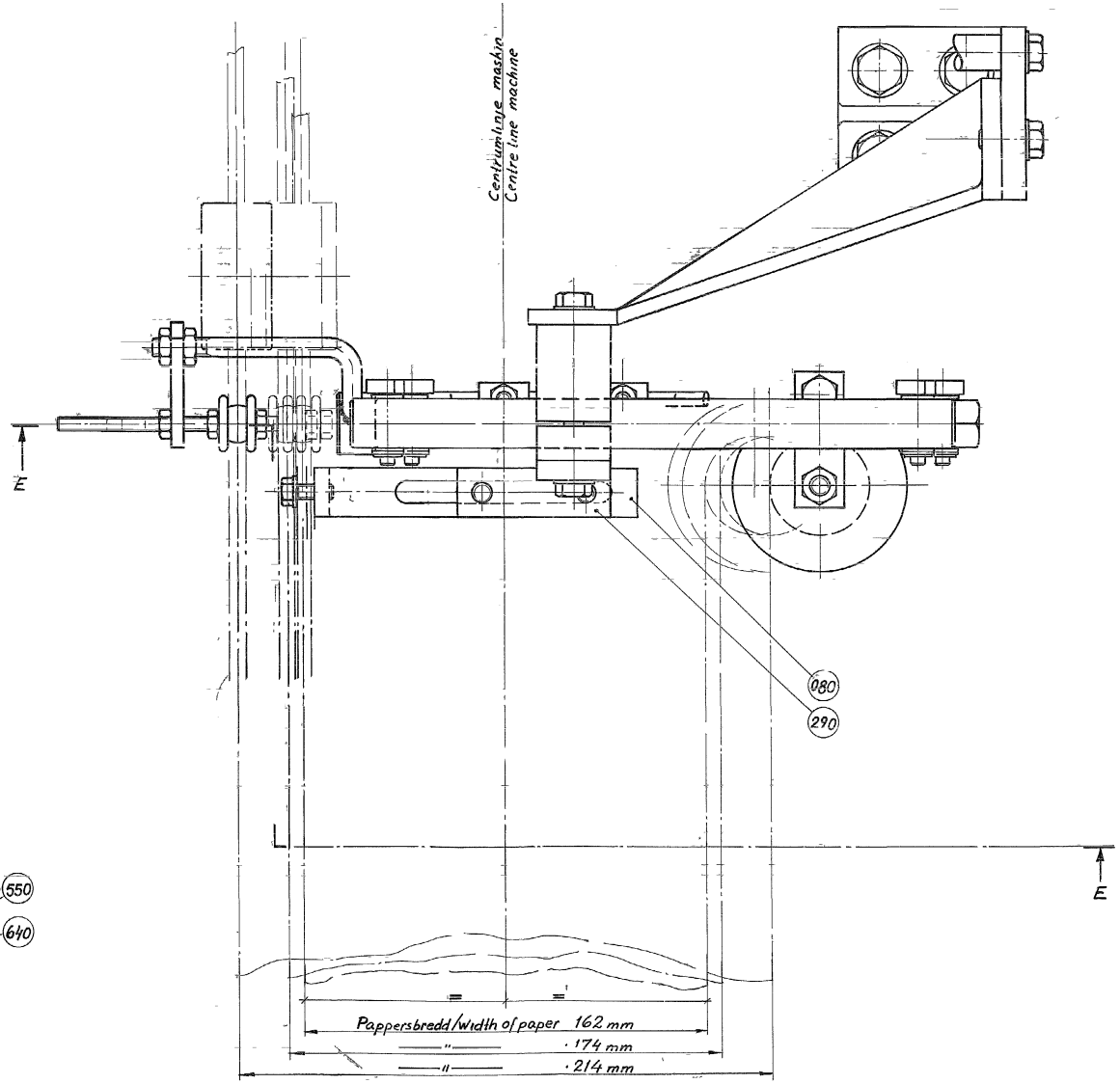
Centrumlinje maskin
Centre line machine
E
080
290
E
Pappersbredd/width of paper 162 mm
" 174 mm
" 214 mm

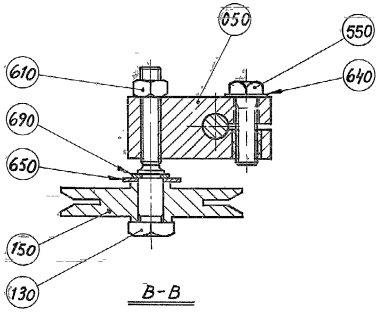
050
550
610
640
690
650
150
130
B-B

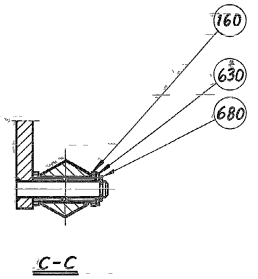
160
630
680
C-C

ECM: 102394 - 20011206
Group number: 456032-0100
Assembly Drawing: 456032-1_1_AA

Issue: 20020822

Pos	Part No	SP	UN	Qty	Description	Page No
0200B OR 0250B						
170	256986-0002	-		1	STRUT	
190	266049-0000	-		1	SUPPORT	
0200S						
170	256986-0003	-		1	STRUT	
190	266049-0000	-		1	SUPPORT	
Common Parts						
010	243218-0000	-		1	CANTILEVER	
020	272173-0000	-		1	CANTILEVER	
030	243151-0000	B		1	SHAFT	
050	456027-0000	B		1	CLAMP HOLDER	
060	456028-0000	B		1	JOINT	
070	456029-0000	B		1	JOINT	
080	456030-0000	-		1	FASTENING BRACKET	
090	456031-0000	-		1	BRACKET	
130	31418-0000	A		1	SHAFT	
140	31423-0000	-		1	MOUNTING LUG	
150	31425-0000	A		1	GUIDE WHEEL	
160	255064-0000	-		8	BUSHING	
180	257923-0000	A		1	GUIDE WHEEL	
210	272177-0000	A		2	LINK	
220	266761-0000	-		1	MOUNTING LUG	
250	456022-0000	A		1	SLEEVE	
260	456023-0000	-		1	JOINT	
270	456024-0000	B		1	GUIDE SHAFT	
280	456025-0000	B		2	CLAMP HOLDER	
290	456026-0000	-		1	BRACKET	
400	90258-0031	-		2	PIN, STRAIGHT SLOTTED SPRING FRP 3X20	
500	311305-0308	-		2	SLOTTED PIRPC5X16FZB	
530	312105-0368	-		1	SCREW M6S M6X16 A280	
540	312105-0451	-		6	SCREW M6S ISO 4017 M8X20 A480	
550	312105-0453	-		3	SCREW M6S ISO 4017 M8X25 A480	
560	312105-0459	-		2	SCREW M6S ISO 4014 M8X40 A480	
570	312105-0491	-		4	SCREW M6S ISO 4017 M10X20 A480	
580	312109-0386	-		1	SCREW M6S ISO 4017 M6X80 A480	
590	312318-0362	-		2	SCREW SOCK.SET CUP P MSK6SS M6X8 A4	
600	312605-0316	-		7	HEXAGON NUT, M6M M6 A280	
610	312605-0318	-		3	HEXAGON NUT, M6M M8 A280	
620	315105-0146	-		2	WASHER PLAIN, BRB, 5,3/10,H=1	
630	315105-0153	-		2	WASHER PLAIN, BRB, 6,4/12,H=1,5	
640	315105-0165	-		9	WASHER PLAIN, BRB, 8,4/16,H=1,5	
650	315105-0173	-		5	WASHER PLAIN, BRB, 10,5/22,H=2	
660	315115-0165	-		2	WASHER PLAIN, TBRB 8,4/16 H=3	
680	315754-0107	-		4	LOCKING WAE 5	
690	315754-0110	-		1	LOCKING WAE 9	

Machine Type | Group Description | Used-In | Group Number | Page No

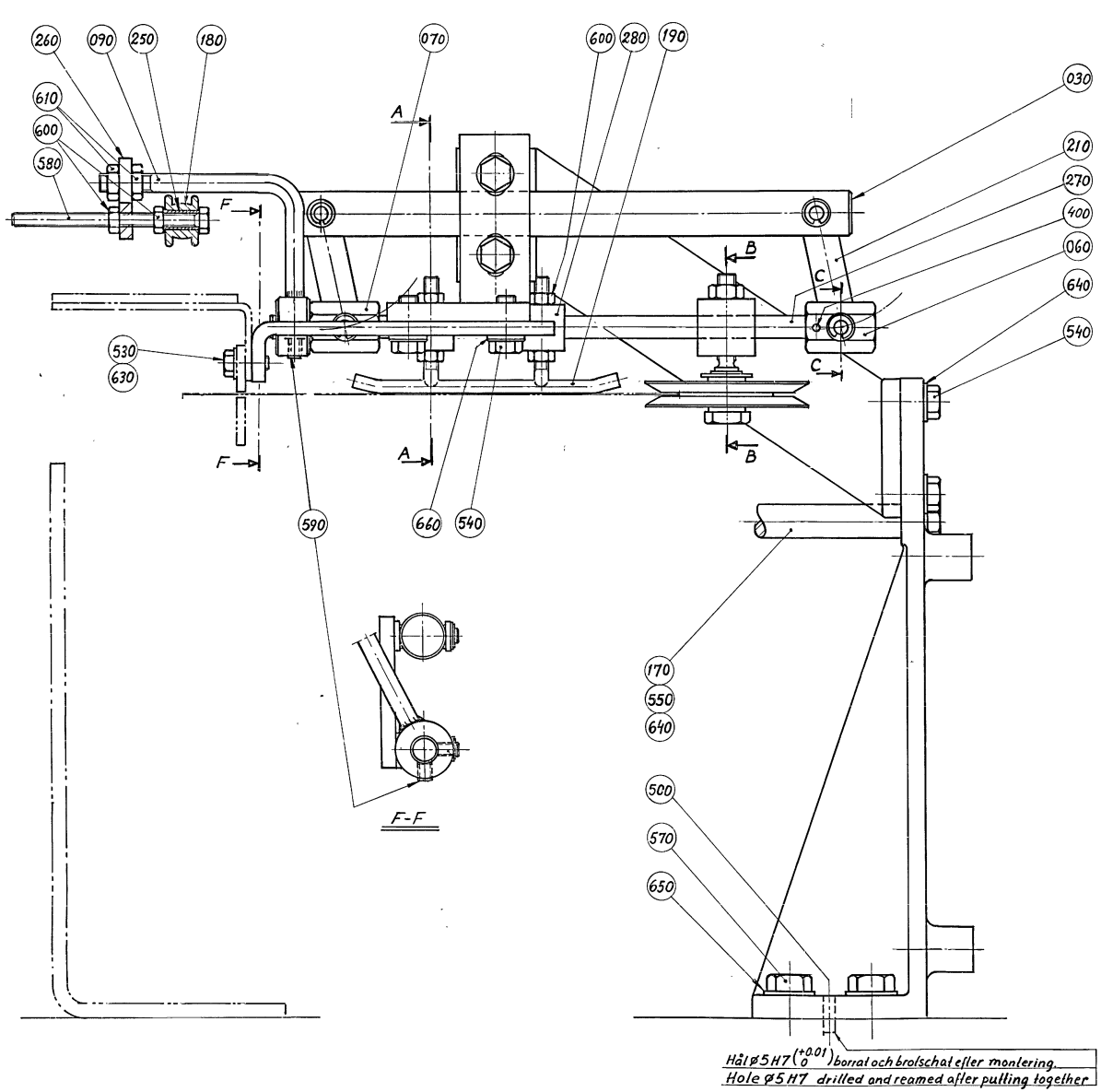
260
090
250
180
070
600
280
190
610
600
580
030
210
270
400
060
640
540
530
630
590
660
540
170
550
640
500
570
650
F-F
Hål ø5 H7 (+0.01 0) borrat och brotschat efter montering.
Hole ø5 H7 drilled and reamed after putting together

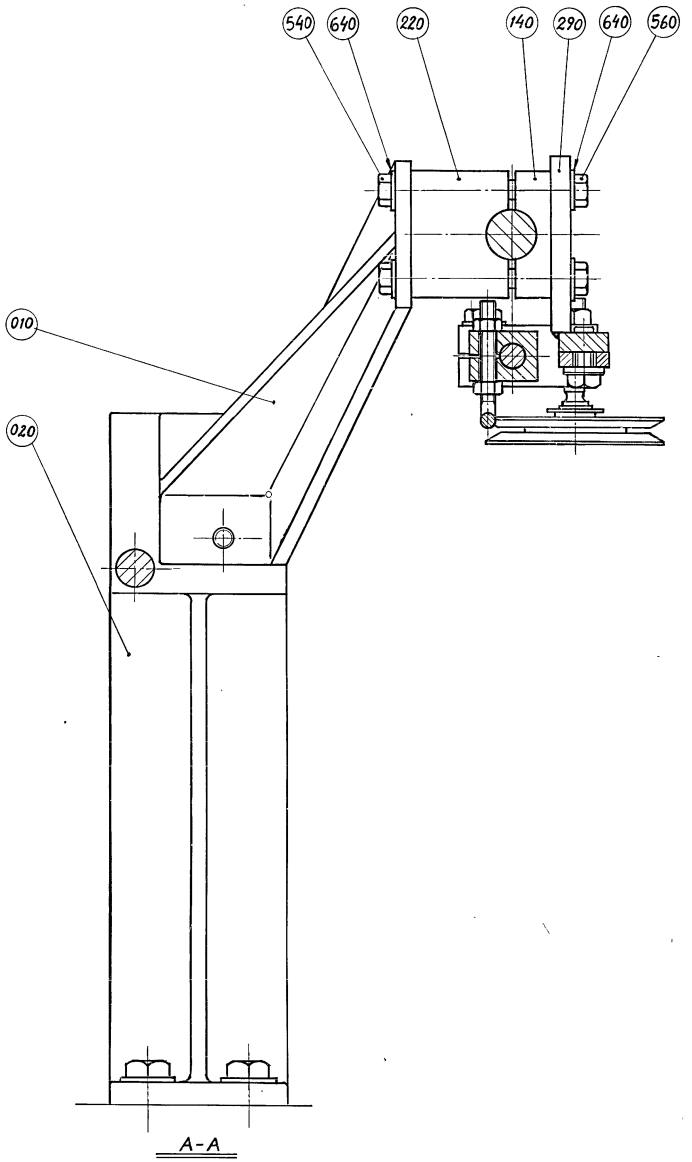
540
640
220
140
290
640
560
010
020
A-A

ECM: 102394 - 20011206
Group number: 456032-0100
Assembly Drawing: 456032-2_1_AA

Issue: 20020822

Pos	Part No	SP	UN	Qty	Description	Page No
0200B OR 0250B						
170	256986-0002	-		1	STRUT	
190	266049-0000	-		1	SUPPORT	
0200S						
170	256986-0003	-		1	STRUT	
190	266049-0000	-		1	SUPPORT	
Common Parts						
010	243218-0000	-		1	CANTILEVER	
020	272173-0000	-		1	CANTILEVER	
030	243151-0000	B		1	SHAFT	
050	456027-0000	B		1	CLAMP HOLDER	
060	456028-0000	B		1	JOINT	
070	456029-0000	B		1	JOINT	
080	456030-0000	-		1	FASTENING BRACKET	
090	456031-0000	-		1	BRACKET	
130	31418-0000	A		1	SHAFT	
140	31423-0000	-		1	MOUNTING LUG	
150	31425-0000	A		1	GUIDE WHEEL	
160	255064-0000	-		8	BUSHING	
180	257923-0000	A		1	GUIDE WHEEL	
210	272177-0000	A		2	LINK	
220	266761-0000	-		1	MOUNTING LUG	
250	456022-0000	A		1	SLEEVE	
260	456023-0000	-		1	JOINT	
270	456024-0000	B		1	GUIDE SHAFT	
280	456025-0000	B		2	CLAMP HOLDER	
290	456026-0000	-		1	BRACKET	
400	90258-0031	-		2	PIN, STRAIGHT SLOTTED SPRING FRP 3X20	
500	311305-0308	-		2	SLOTTED PIRPC5X16FZB	
530	312105-0368	-		1	SCREW M6S M6X16 A280	
540	312105-0451	-		6	SCREW M6S ISO 4017 M8X20 A480	
550	312105-0453	-		3	SCREW M6S ISO 4017 M8X25 A480	
560	312105-0459	-		2	SCREW M6S ISO 4014 M8X40 A480	
570	312105-0491	-		4	SCREW M6S ISO 4017 M10X20 A480	
580	312109-0386	-		1	SCREW M6S ISO 4017 M6X80 A480	
590	312318-0362	-		2	SCREW SOCK.SET CUP P MSK6SS M6X8 A4	
600	312605-0316	-		7	HEXAGON NUT, M6M M6 A280	
610	312605-0318	-		3	HEXAGON NUT, M6M M8 A280	
620	315105-0146	-		2	WASHER PLAIN, BRB, 5,3/10,H=1	
630	315105-0153	-		2	WASHER PLAIN, BRB, 6,4/12,H=1,5	
640	315105-0165	-		9	WASHER PLAIN, BRB, 8,4/16,H=1,5	
650	315105-0173	-		5	WASHER PLAIN, BRB, 10,5/22,H=2	
660	315115-0165	-		2	WASHER PLAIN, TBRB 8,4/16 H=3	
680	315754-0107	-		4	LOCKING WAE 5	
690	315754-0110	-		1	LOCKING WAE 9	

Machine Type | Group Description | Used-In | Group Number | Page No

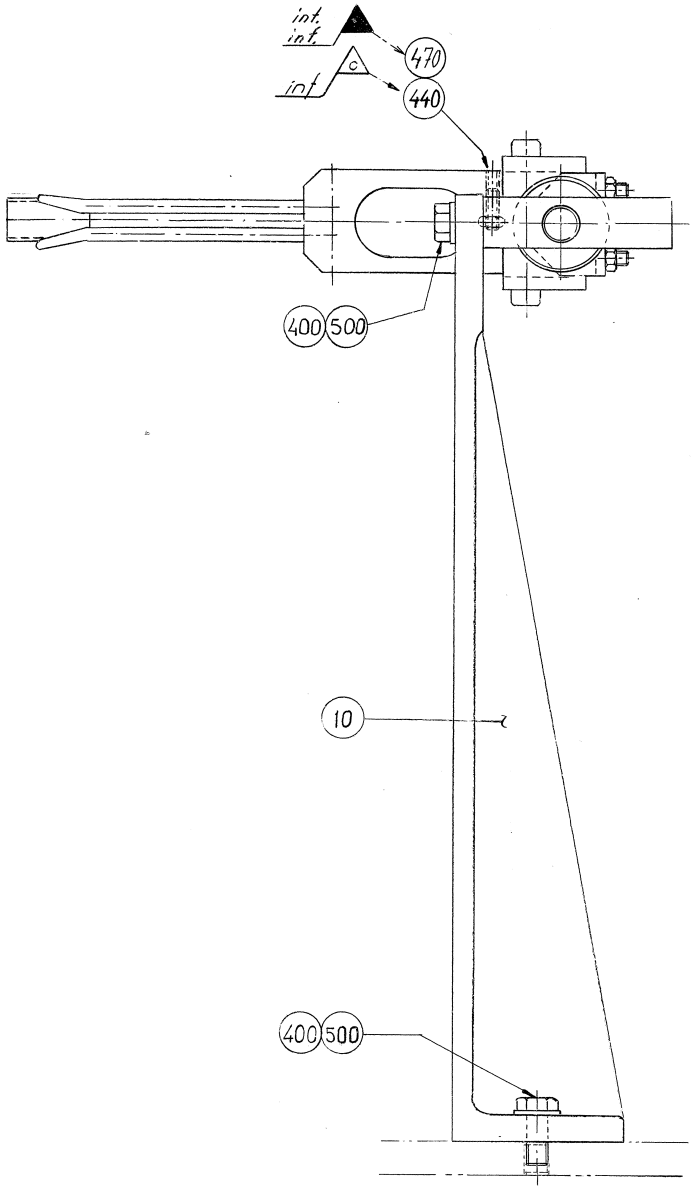
int.
inf.
C
inf
470
440
400
500
10
400
500

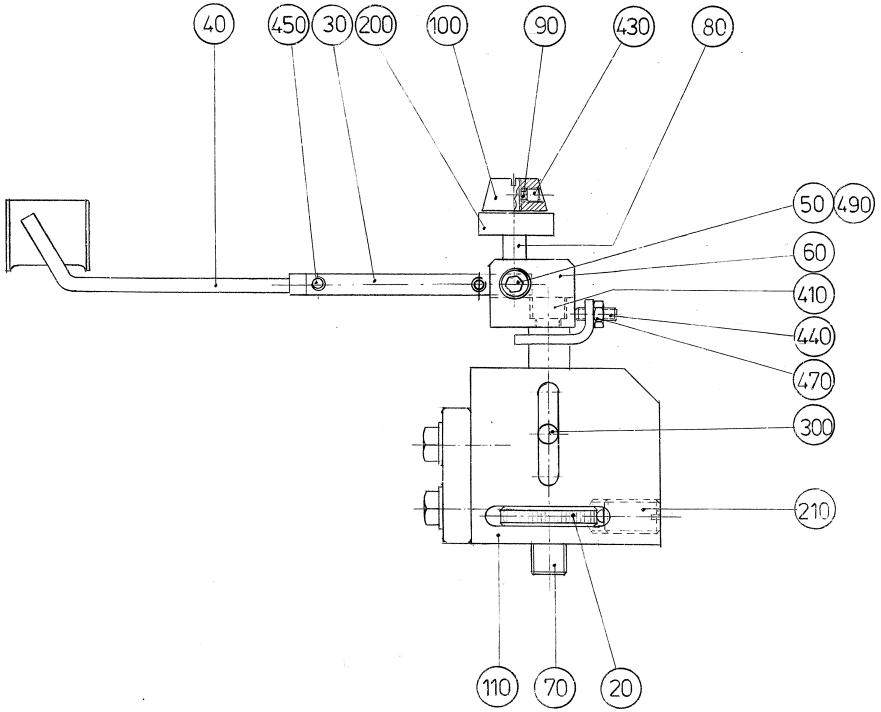
40
450
30
200
100
90
430
80
50
490
60
410
440
470
300
210
110
70
20

Vy A-A

ECM: 102354 - 20011206
Group number: 267315-0100
Assembly Drawing: 267315-1_1_AA

Issue: 20020822

Pos	Part No	SP	UN	Qty	Description	Page No
Common Parts						
010	267316-0000	-		1	CANTILEVER	
020	23580-0000	-		1	SHIFTER HANDLE	
030	23582-0000	B		1	HOLDER	
040	23583-0000	A		1	GUIDE FINGER	
050	23584-0000	-		2	SCREW	
060	24351-0000	-		1	BOW CLAMP	
070	24352-0000	-		1	SHAFT	
080	24355-0000	-		2	DOWEL	
090	24356-0000	-		4	PIECE	
100	111543-0000	A		2	GUIDE CONE	
110	245210-0000	-		1	BODY	
200	90214-0138	A		2	BALL BEARING, 5X19X6 MM	
210	90287-0009	-		1	SPRINGLOADED SCREW M10X19	
300	311103-0350	-		1	PARALLELL PIN, CP, M6, 6X14 MM	
400	312105-0368	-		4	SCREW M6S M6X16 A280	
410	312115-0366	-		1	SCREW MC6S M6X12 A280	
430	312316-0283	-		4	SCREW HEX.SOCK.SET CUP P.MSK6SS4X4 FZB	
440	312316-0291	A		3	SCREW HEX.SOCK.SET CUP P.MSK6SS4X12 FZB	
450	312318-0285	A		2	SCREW SOCK.SET CUP P MSK6SS M4X6 A4	
470	312605-0312	-		3	HEXAGON NUT, M6M M4 A280	
490	315105-0146	-		2	WASHER PLAIN, BRB, 5,3/10,H=1	
500	315105-0153	-		4	WASHER PLAIN, BRB, 6,4/12,H=1,5	

Pos	Part No	SP	UN	Qty	Description	Page No

Machine Type | Group Description | Used-In | Group Number | Page No

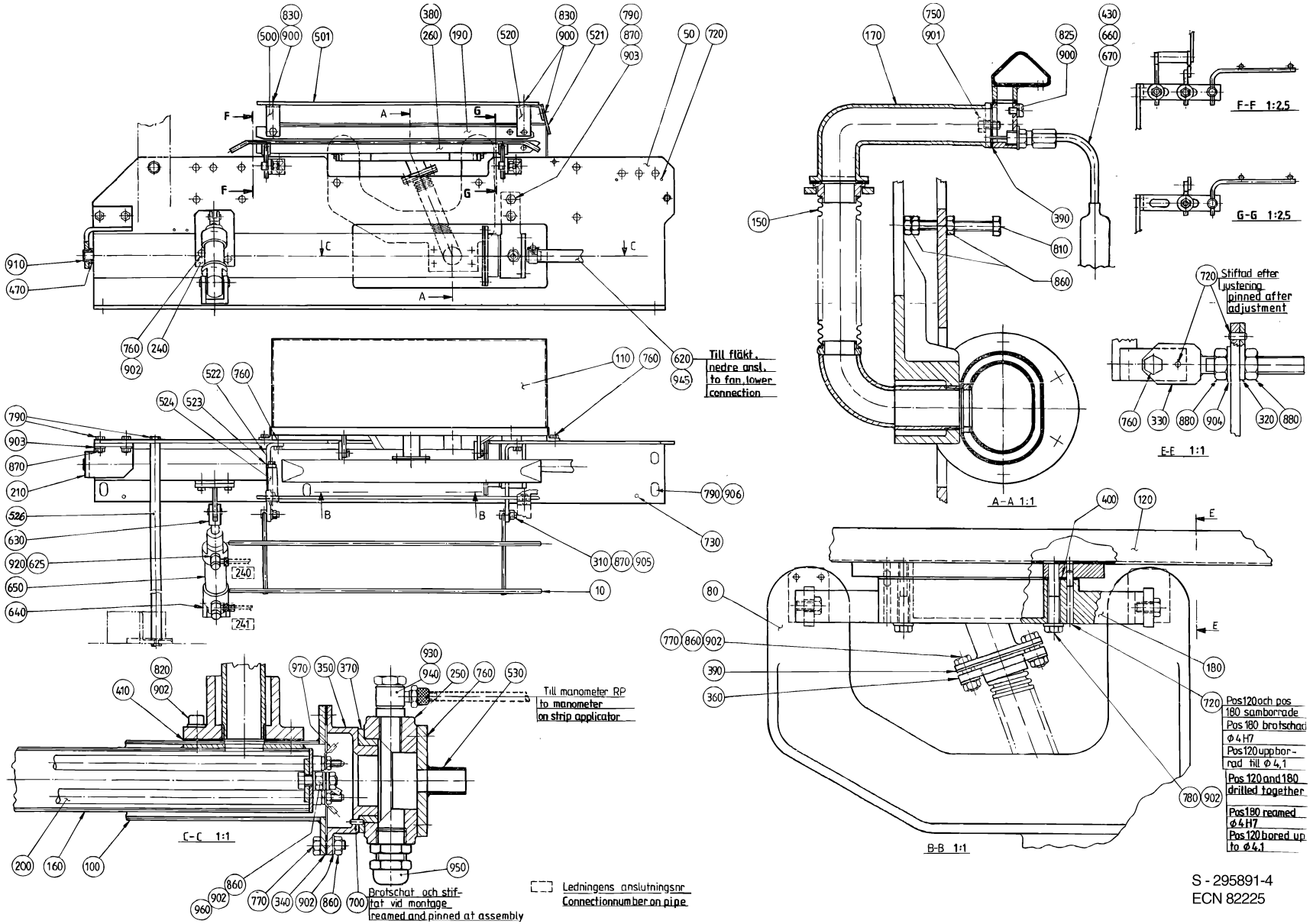
Till fläkt, nedre ansl.
to fan, lower connection
Till manometer RP
to manometer on strip applicator
Brotschat och stiftat vid montage
reamed and pinned at assembly
Ledningens anslutningsnr
Connectionnumber on pipe
F-F 1:2,5
G-G 1:2,5
Stiftad efter justering
pinned after adjustment
E-E 1:1
A-A 1:1
B-B 1:1
C-C 1:1
Pos 120 och pos 180 samborrade
Pos 180 brotschad Φ 4 H7
Pos 120 upp borrad till Φ 4,1
Pos 120 and 180 drilled together
Pos 180 reamed Φ 4 H7
Pos 120 bored up to Φ 4,1
S - 295891-4
ECN 82225

ECM: 102359 - 20011206
Group number: 295891-0300
Assembly Drawing: 295891-4_1_AA

Issue: 20020822

Pos	Part No	SP	UN	Qty	Description	Page No
0200B OR 0250B						
010	36316-0000	A		1	PAPER SUPPORT	
526	256986-0005	-		1	STRUT	
0200S						
010	456918-0000	A		1	PAPER SUPPORT	
526	256986-0006	-		1	STRUT	
Common Parts						
050	751093-0000	-		1	MOUNTING SHEET	
080	32668-0000	-		1	ARM	
100	36749-0000	-		1	MANTLE	
110	267306-0000	-		1	TOUCH GUARD	
120	283361-0000	A		1	AIR NOZZLE	
150	32451-0000	B		1	AIR DUCT	
160	32453-0000	-		1	MANTLE	
170	32474-0000	-		1	ATTACHMENT	
180	245189-0001	-		1	ATTACHMENT	
190	246342-0000	-		1	PAPER SUPPORT	
200	251279-0000	-		1	COIL HEATER	
210	251490-0000	B		1	FASTENING BRACKET	
240	751087-0000	B		1	BRACKET	
250	283172-0000	-		1	BEARING HOUSING	
260	441348-0000	-		1	PAPER SUPPORT	
310	22559-0000	-		5	GRUB SCREW	
320	32213-0000	-		2	WASHER	
330	32215-0000	B		2	HOLDER	
340	531733-0000	-		1	GASKET	
350	32217-0000	-		1	BOTTOM SECTION	
360	32219-0000	-		1	WASHER	
370	32223-0000	A		1	BEARING	
380	32400-0000	-		2	HOLDER	
390	531734-0000	-		2	GASKET	
400	531735-0000	-		1	GASKET	
410	531736-0000	-		1	GASKET	
430	90326-0089	-		1	THERMOCOUPLE, 5110-089-000	
470	230107-0000	-		1	WASHER	
500	246343-0000	-		1	FASTENING BRACKET	
501	246344-0000	-		1	HEAT GUARD	
520	251501-0000	-		1	FASTENING BRACKET	
521	251502-0000	-		1	HEAT GUARD	
522	592586-0000	-		2	HOLDER	
523	251504-0000	-		1	HOLDER	
524	251505-0000	-		1	SPACER	
530	279672-0000	-		1	ATTACHMENT	
620	90166-0087	-	MM	300	HOSE 15/23 REINF.PVC TRANSP.	
625	90235-0274	-		2	THROTTLE CHECK VALVES,G1/8"	
630	90239-0516	A		1	ROD END,CLEVIS WITH AXLE M10X1,25	
640	90239-0488	A		1	REAR,CLEVIS,MINI-ISO 32	
650	90239-0858	A		1	DOUBLE ACTING, MINI-ISO, CYL.32-50	
660	90326-0012	-		1	PROTECTIVE COVER, T31A4618	
670	90326-0020	-		1	PLUG, FEMALE YELLOW CR-AL	
700	311103-0232	-		1	PARALLELL PIN, M6, 3X8 MM	
720	311103-0267	-		10	PARALLELL PIN, M6, 4X10 MM	
730	311305-0308	-		2	SLOTTED PIRPC5X16FZB	
750	312105-0325	-		2	SCREW M6S ISO 4017 M5X10 A480	
760	312105-0366	-		16	SCREW M6S M6X12 A280	
770	312105-0368	-		12	SCREW M6S M6X16 A280	
780	312105-0378	-		2	SCREW M6S ISO 4014 M6X40 A480	
790	312105-0451	-		12	SCREW M6S ISO 4017 M8X20 A480	
810	312109-0381	-		2	SCREW M6S ISO 4017 M6X55 A480	
820	312115-0368	-		4	SCREW MC6S M6X16 A280	
825	312125-0285	-		1	SCREW SLOT.PAN HD. MCS 4X6 A480	
830	312125-0287	-		6	SCREW PAN HEAD MCS M4X8 SS	
860	312605-0316	-		14	HEXAGON NUT, M6M M6 A280	
870	312605-0318	-		9	HEXAGON NUT, M6M M8 A280	
880	312605-0320	-		4	HEXAGON NUT, M6M M10 A280	
900	315105-0136	-		7	WASHER PLAIN, BRB, 4,3/8,H=0,8	
901	315105-0146	-		2	WASHER PLAIN, BRB, 5,3/10,H=1	
902	315105-0153	-		21	WASHER PLAIN, BRB, 6,4/12,H=1,5	
903	315105-0165	-		4	WASHER PLAIN, BRB, 8,4/16,H=1,5	
904	315105-0173	-		2	WASHER PLAIN, BRB, 10,5/22,H=2	
905	315115-0165	-		5	WASHER PLAIN, TBRB 8,4/16 H=3	
906	315125-0165	-		6	WASHER PLAIN ROUND,CHAMF. 8,4/26, H=5	
910	321101-0173	-		1	FLANGE BUS 12F7X12	
920	342797-0121	-		2	CONN. BANJO, RINGPIECE 6-1/8	
930	342797-0122	-		1	CONN. BANJO, RINGPIECE 6-1/4	
940	342980-0304	-		1	BANJO-HOLLOW BOLT COUPL,EXT.THR.01-G1/4"	
945	342991-0103	-		2	HOSE CLIP,WORM DRIVE TYPE (19)-23	
950	352103-0106	-		1	CABLE GLAND, ST 11, PR18,6/PG11	
960	353101-0134	-		1	CABLE SHOE	
970	353104-0130	-		2	CABLE SHOEYAV 025 M 4*	

Machine Type	Group Description	Used-In	Group Number	Page No

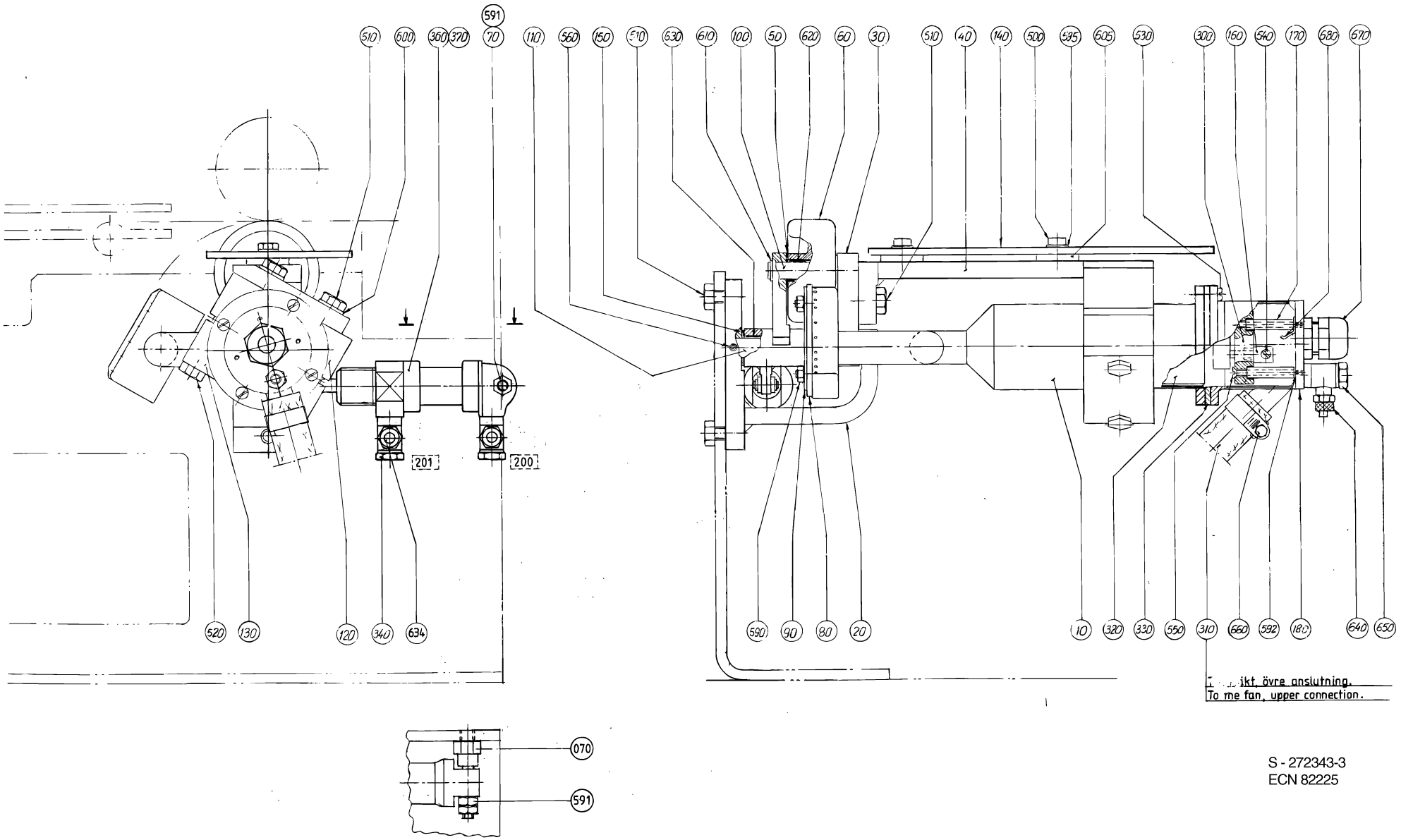

ikt. övre anslutning.
To the fan, upper connection.

S - 272343-3
ECN 82225

ECM: 102356 - 20011206
Group number: 272343-0400
Assembly Drawing: 272343-3_1_AA

Issue: 20020822

Pos	Part No	SP	UN	Qty	Description	Page No
0200S						
140	456917-0000	-		1	HEAT GUARD	
0200B OR 0250B						
140	441354-0000	-		1	HEAT GUARD	
Common Parts						
010	266727-0000	B		1	AIR NOZZLE	
020	266728-0000	-		1	CANTILEVER	
030	456914-0000	-		1	ROCKER ARM	
040	266730-0000	-		1	HOLDER	
050	2033-0009	A		2	WASHER	
060	21903-0000	A		1	ROLL	
070	751143-0000	B		1	CYLINDER BRACKET	
080	255416-0000	A		1	PLATE	
090	255417-0000	A		1	WASHER	
100	266731-0000	B		1	SHAFT	
110	266732-0000	B		1	SHAFT	
120	266733-0000	-		1	MOUNTING BLOCK	
130	266734-0000	-		1	CAP	
150	266737-0000	A		2	WASHER	
160	266739-0000	-		3	CABLE GLAND	
170	266740-0003	-		3	SPACER	
180	456915-0000	-		1	COVER	
300	B90125-0020	A		1	PLATE	
	294464-0000	*A*		*1*	*BASE PLATE*	
	270927-0000	*A*		*3*	*SCREW*	
	270926-0000	*A*		*6*	*NUT*	
	294464-0000	*A*		*1*	*BASE PLATE*	
	270927-0000	*A*		*3*	*SCREW*	
	270926-0000	*A*		*6*	*NUT*	
310	90166-0087	-	MM	300	HOSE 15/23 REINF.PVC TRANSP.	
320	90206-0031	A		1	HEATING ELEMENT 700+1200W,220V	
330	90206-0322	A		1	GASKET	
340	90235-0274	-		2	THROTTLE CHECK VALVES,G1/8"	
360	90239-0846	A		1	DOUBLE ACTING, MINI-ISO, CYL.20-25	
370	90239-0088	A		1	BRACKET	
500	312105-0370	-		2	SCREW M6S ISO 4017 M6X20 A480	
510	312105-0451	-		6	SCREW M6S ISO 4017 M8X20 A480	
520	312105-0459	-		2	SCREW M6S ISO 4014 M8X40 A480	
530	312125-0291	-		4	SCREW PAN HEAD MCS M4X12 SS	
540	312125-0220	-		3	SCREW SLOT.PAN HD. MCS 3X6 A480	
550	312145-0238	-		3	SCREW COUNTERS.SLOT.HD. MFS 3X40 SS	
560	312318-0291	-		1	SCREW SOCK.SET CUP P MSK6SS M4X12 A4	
590	312605-0314	-		2	HEXAGON NUT, M6M M5 A280	
591	312605-0318	-		2	HEXAGON NUT, M6M M8 A280	
592	315105-0124	-		2	WASHER PLAIN, BRB, 3,2/6,H=0,5	
595	315105-0153	-		2	WASHER PLAIN, BRB, 6,4/12,H=1,5	
600	315105-0165	-		2	WASHER PLAIN, BRB, 8,4/16,H=1,5	
605	315121-0153	-		2	WASHER PLAIN, TBRSB 6,4/22 H=4	
610	315750-0107	-		2	RETAIN. RING, 10	
620	321120-0104	A		2	BEARING BUSHING WITHOUT FLANGE,10/12X10	
630	321120-0110	A		2	BEARING BUSHING WITHOUT FL, 12X14X12 MM	
634	342797-0121	-		2	CONN. BANJO, RINGPIECE 6-1/8	
640	342980-0113	A		1	BANJO-CONNECTION,RING 6/4-G1/8"	
650	342980-0303	A		1	BANJO-HOLLOW BOLT COUPL,EXT.THR.01-G1/8"	
660	342991-0103	-		2	HOSE CLIP,WORM DRIVE TYPE (19)-23	
670	352103-0106	-		1	CABLE GLAND, ST 11, PR18,6/PG11	
680	353104-0130	A		1	CABLE SHOEYAV 025 M 4*	

Machine Type | Group Description | Used-In | Group Number | Page No

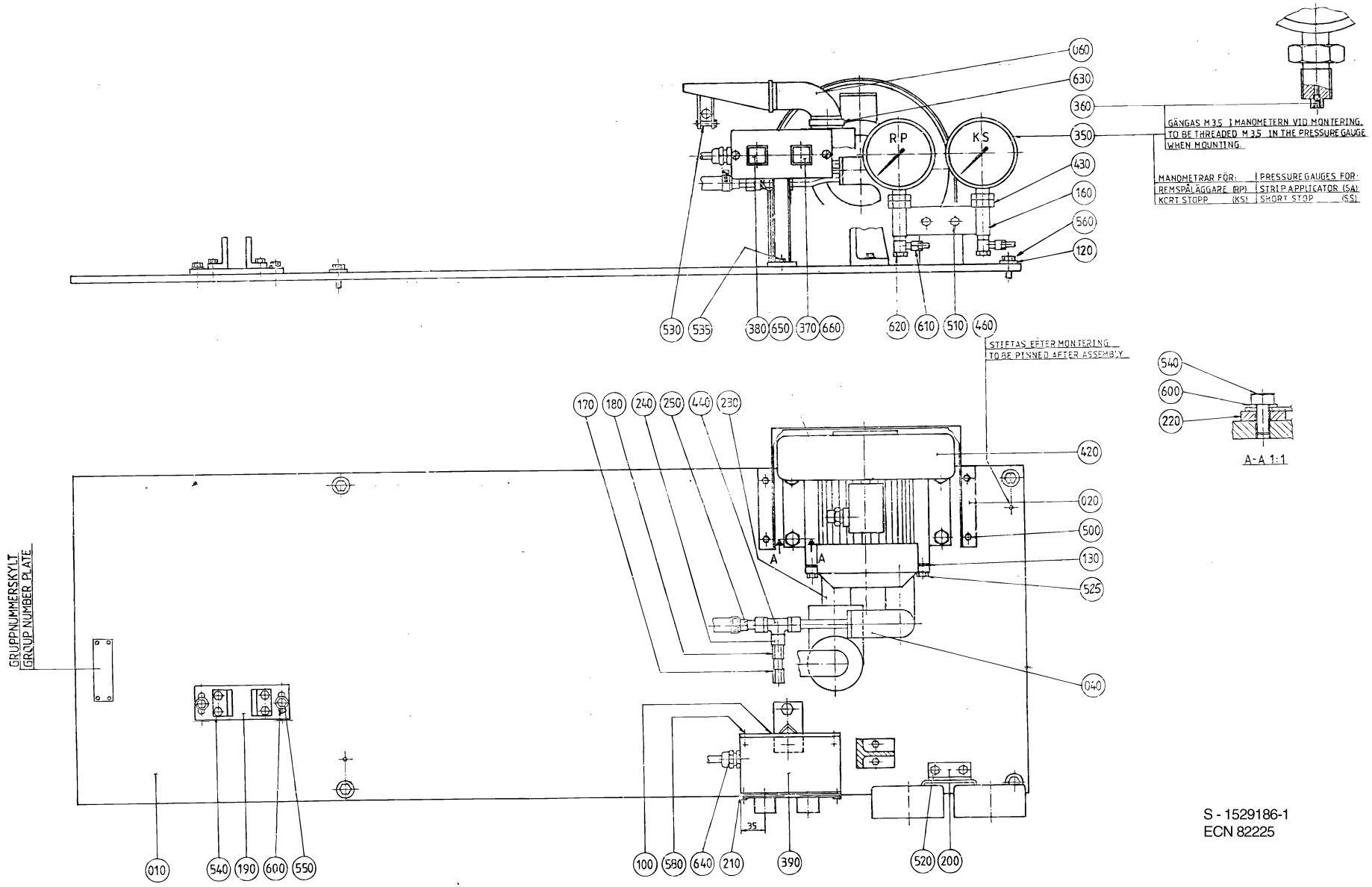

S - 1529186-1
ECN 82225

ECM: 102962 - 20020320
Group number: 1529186-0100
Assembly Drawing: 1529186-1_1_AA

Issue: 20020822

Pos	Part No	SP	UN	Qty	Description	Page No
SOURCE,TBA/9-100V OR SOURCE,TBA/9-110V						
010	1529064-0000	-		1	PLATE	
040	272186-0000	-		1	ATTACHMENT	
190	267311-0000	-		1	FASTENING PLATE	
460	311305-0308	-		2	SLOTTED PIRPC5X16FZB	
520	312105-0366	-		2	SCREW M6S M6X12 A280	
540	312105-0449	-		8	SCREW M6S ISO 4017 M8X16 A480	
SOURCE,TBA/9-120V						
010	1529214-0000	-		1	PLATE	
040	751465-0000	-		1	ATTACHMENT	
190	751083-0000	-		1	FASTENING PLATE	
520	312105-0366	-		4	SCREW M6S M6X12 A280	
540	312105-0449	-		4	SCREW M6S ISO 4017 M8X16 A480	
Common Parts						
020	272184-0000	-		1	COVER	
060	272622-0000	-		1	DRINKING STRAW	
100	456973-0000	-		1	BRACKET	
120	28036-0000	-		4	WASHER	
130	531732-0000	-		2	GASKET	
160	33577-0000	-		1	CANTILEVER	
170	209145-0000	-		2	THROTTLE SCREW	
180	209146-0000	-		2	BARRIER NUT	
200	272188-0000	-		1	BRACKET	
210	272189-0000	-		1	LID	
220	272190-0000	-		2	LACE	
230	272632-0000	A		1	SILENCER	
240	279589-0000	-		2	NUT	
250	279590-0000	-		2	REDUCTION	
350	90043-0034	A		2	PRESSURE GAUGE	
360	90043-0302	-		2	SCREW	
370	90064-0085	-		1	PUSH BUTTON, RED	
380	90064-0084	-		1	PUSH BUTTON, YELLOW	
390	90066-0020	-		1	PUSH BUTTON BOX	
420	90264-0078	B		1	FAN	
430	90330-0038	-		2	NUT, HEXAGON, G3/8	
440	90030-0058	-		2	CONN. T-PIPE T-12	
500	312105-0325	-		4	SCREW M6S ISO 4017 M5X10 A480	
510	312105-0364	-		2	SCREW M6S ISO 4017 M6X10 A480	
525	312105-0370	-		4	SCREW M6S ISO 4017 M6X20 A480	
530	312105-0372	-		1	SCREW M6S ISO 4017 M6X25 A480	
535	312105-0448	-		2	SCREW M6S ISO 4017 M8X14 A480	
550	312105-0451	-		2	SCREW M6S ISO 4017 M8X20 A480	
560	312105-0453	-		4	SCREW M6S ISO 4017 M8X25 A480	
580	312125-0325	-		4	SCREW SLOT.PAN HD. MCS 5X10 A480	
600	315105-0165	-		6	WASHER PLAIN, BRB, 8,4/16,H=1,5	
610	342797-0122	A		2	CONN. BANJO, RINGPIECE 6-1/4	
620	342980-0304	A		2	BANJO-HOLLOW BOLT COUPL,EXT.THR.01-G1/4"	
630	342991-0108	-		1	HOSE CLIP 38-50MMRFR	
640	352103-0110	-		1	CABLE GLAND, STR 16, PR22,5/PG16	
650	359301-0100	-		1	SIGN "SPLICING"	
660	359301-0110	-		1	SIGN "SHORT STOP"	

Machine Type	Group Description	Used-In	Group Number	Page No

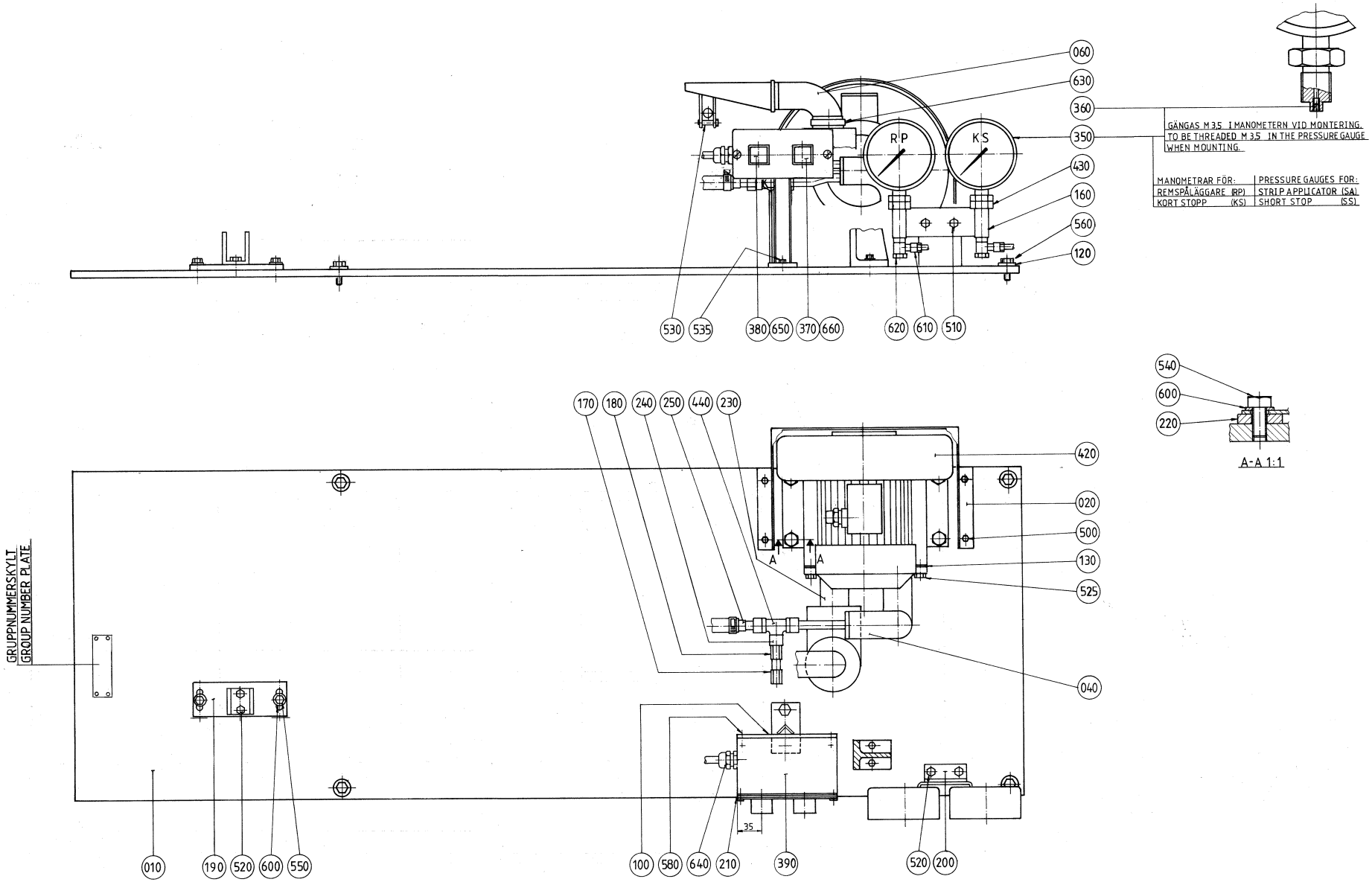
060
630
360
350
430
160
560
120
530
535
380
650
370
660
620
610
510
R P
K S
GÄNGAS M 3,5 I MANOMETERN VID MONTERING.
TO BE THREADED M 3,5 IN THE PRESSURE GAUGE WHEN MOUNTING.
MANOMETRAR FÖR: | PRESSURE GAUGES FOR:
REMSPÅLÄGGARE (RP) | STRIP APPLICATOR (SA)
KORT STOPP (KS) | SHORT STOP (SS)
540
600
220
A-A 1:1
170
180
240
250
440
230
420
020
500
130
525
040
A
A
GRUPPNUMMERSKYLT
GROUP NUMBER PLATE
010
190
520
600
550
100
580
640
210
35
390
520
200

ECM: 102962 - 20020320
Group number: 1529186-0100
Assembly Drawing: 1529186-2_1_AA

Issue: 20020822

Pos	Part No	SP	UN	Qty	Description	Page No
SOURCE,TBA/9-100V OR SOURCE,TBA/9-110V						
010	1529064-0000	-		1	PLATE	
040	272186-0000	-		1	ATTACHMENT	
190	267311-0000	-		1	FASTENING PLATE	
460	311305-0308	-		2	SLOTTED PIRPC5X16FZB	
520	312105-0366	-		2	SCREW M6S M6X12 A280	
540	312105-0449	-		8	SCREW M6S ISO 4017 M8X16 A480	
SOURCE,TBA/9-120V						
010	1529214-0000	-		1	PLATE	
040	751465-0000	-		1	ATTACHMENT	
190	751083-0000	-		1	FASTENING PLATE	
520	312105-0366	-		4	SCREW M6S M6X12 A280	
540	312105-0449	-		4	SCREW M6S ISO 4017 M8X16 A480	
Common Parts						
020	272184-0000	-		1	COVER	
060	272622-0000	-		1	DRINKING STRAW	
100	456973-0000	-		1	BRACKET	
120	28036-0000	-		4	WASHER	
130	531732-0000	-		2	GASKET	
160	33577-0000	-		1	CANTILEVER	
170	209145-0000	-		2	THROTTLE SCREW	
180	209146-0000	-		2	BARRIER NUT	
200	272188-0000	-		1	BRACKET	
210	272189-0000	-		1	LID	
220	272190-0000	-		2	LACE	
230	272632-0000	A		1	SILENCER	
240	279589-0000	-		2	NUT	
250	279590-0000	-		2	REDUCTION	
350	90043-0034	A		2	PRESSURE GAUGE	
360	90043-0302	-		2	SCREW	
370	90064-0085	-		1	PUSH BUTTON, RED	
380	90064-0084	-		1	PUSH BUTTON, YELLOW	
390	90066-0020	-		1	PUSH BUTTON BOX	
420	90264-0078	B		1	FAN	
430	90330-0038	-		2	NUT, HEXAGON, G3/8	
440	90030-0058	-		2	CONN. T-PIPE T-12	
500	312105-0325	-		4	SCREW M6S ISO 4017 M5X10 A480	
510	312105-0364	-		2	SCREW M6S ISO 4017 M6X10 A480	
525	312105-0370	-		4	SCREW M6S ISO 4017 M6X20 A480	
530	312105-0372	-		1	SCREW M6S ISO 4017 M6X25 A480	
535	312105-0448	-		2	SCREW M6S ISO 4017 M8X14 A480	
550	312105-0451	-		2	SCREW M6S ISO 4017 M8X20 A480	
560	312105-0453	-		4	SCREW M6S ISO 4017 M8X25 A480	
580	312125-0325	-		4	SCREW SLOT.PAN HD. MCS 5X10 A480	
600	315105-0165	-		6	WASHER PLAIN, BRB, 8,4/16,H=1,5	
610	342797-0122	A		2	CONN. BANJO, RINGPIECE 6-1/4	
620	342980-0304	A		2	BANJO-HOLLOW BOLT COUPL,EXT.THR.01-G1/4"	
630	342991-0108	-		1	HOSE CLIP 38-50MMRFR	
640	352103-0110	-		1	CABLE GLAND, STR 16, PR22,5/PG16	
650	359301-0100	-		1	SIGN "SPLICING"	
660	359301-0110	-		1	SIGN "SHORT STOP"	

Machine Type	Group Description	Used-In	Group Number	Page No

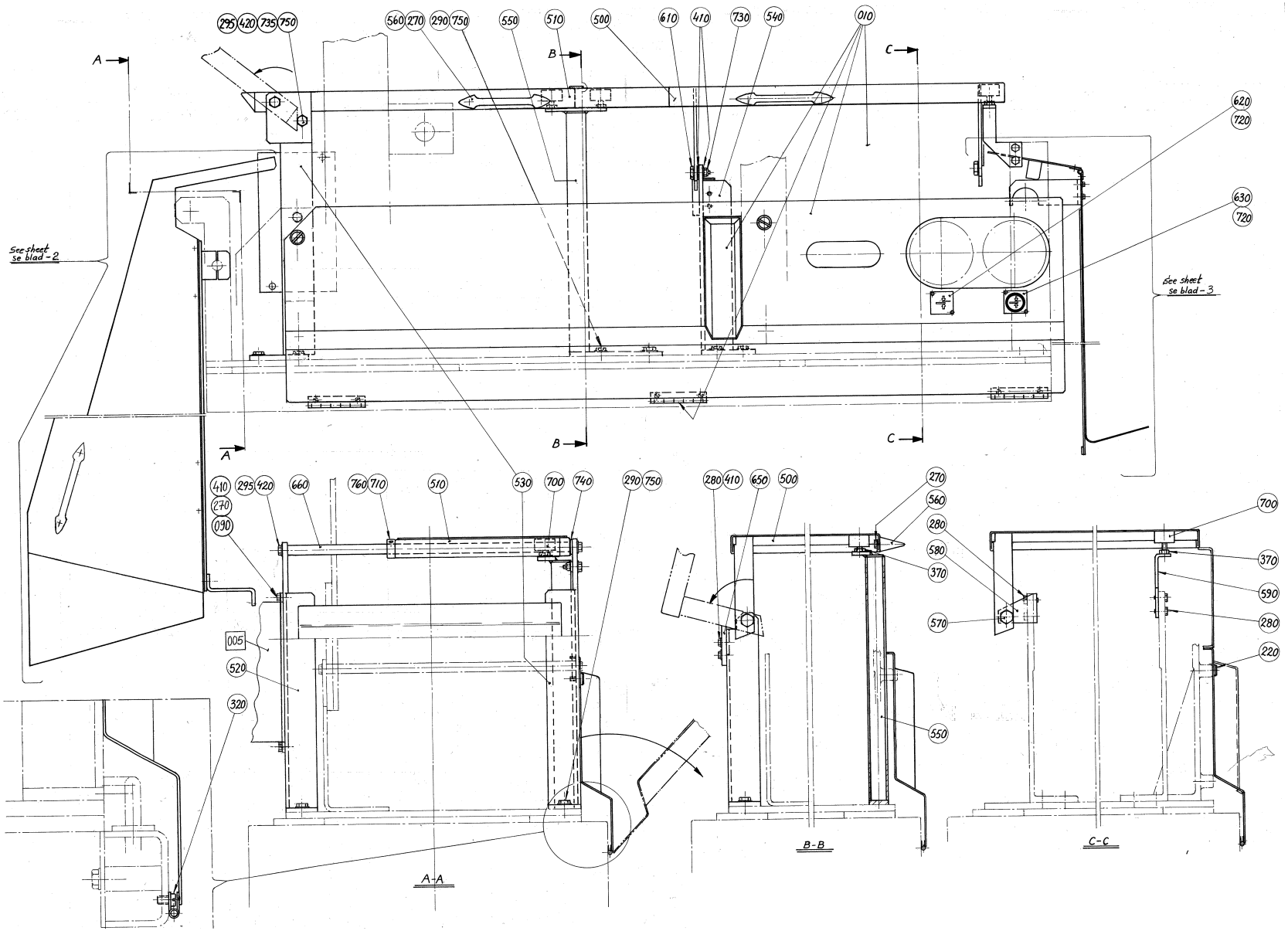
See sheet se blad - 2
See sheet se blad - 3
A-A
B-B
C-C

ECM: 87154 - 20010226
Group number: 1529025-0100
Assembly Drawing: 1529025-1_1_AA

Issue: 20020822

Pos	Part No	SP	UN	Qty	Description	Page No
Common Parts						
005	A1529065-0100	-		1	CONNECTION BOX	**783**
010	1529028-0000	-		1	PROTECTION PLATE	
030	1529280-0000	-		1	COVER	
040	490949-0000	-		1	SHEET	
050	490955-0000	-		1	BACK PLATE	
090	1529246-0000	-		1	FASTENING PLATE	
100	491552-0000	-		1	MOUNTING SHEET	
110	490950-0000	-		1	HINGE	
120	490956-0000	-		1	HINGE	
130	490957-0000	-		1	LID	
145	456964-0000	-		2	CLAMP HOLDER	
150	456965-0000	-		2	CLAMP HALF	
160	490958-0000	-		1	BRACKET	
170	490965-0000	-		1	BRACKET	
210	90237-0071	-		2	MAGNETIC LOCK, 92X16X15,5 MM	
220	90287-0062	-		2	SCREW M6	
250	312155-0291	-		8	SCREW HEX.SOCK.COUNT.MF6S M4X12 A480	
260	312105-0327	-		16	SCREW M6S ISO 4017 M5X12 A480	
270	312105-0366	-		12	SCREW M6S M6X12 A280	
280	312105-0368	-		6	SCREW M6S M6X16 A280	
290	312105-0451	-		10	SCREW M6S ISO 4017 M8X20 A480	
295	312105-0453	-		3	SCREW M6S ISO 4017 M8X25 A480	
300	312105-0459	-		4	SCREW M6S ISO 4014 M8X40 A480	
320	312125-0323	-		6	SCREW PAN HEAD MCS M5X8 SS	
370	312605-0318	-		5	HEXAGON NUT, M6M M8 A280	
380	312812-0312	-		8	HEXAGON NUT, NY-LOCK M4 A480	
390	312812-0314	-		11	HEXAGON NUT, NY-LOCK M5 A480	
400	315105-0136	-		8	WASHER PLAIN, BRB, 4,3/8,H=0,8	
405	315105-0146	-		27	WASHER PLAIN, BRB, 5,3/10,H=1	
410	315105-0153	-		10	WASHER PLAIN, BRB, 6,4/12,H=1,5	
420	315105-0165	-		12	WASHER PLAIN, BRB, 8,4/16,H=1,5	
500	1529026-0000	-		1	LID	
510	1529027-0000	-		1	LID	
520	1529244-0000	-		1	LEG	
530	469842-0000	-		1	LEG	
540	469843-0000	-		1	LEG	
550	1529029-0000	-		1	SUPPORT	
560	7309-0000	-		3	HANDLE	
570	252972-0000	-		1	SHOULDER SCREW	
580	272636-0000	-		1	BRACKET	
590	441027-0000	-		1	BRACKET	
610	456967-0000	-		1	SHOULDER SCREW	
620	464176-0000	-		1	SIGN	
630	464177-0000	-		1	SIGN	
650	469846-0000	-		1	STOP LUG	
660	469847-0000	-		1	SHAFT	
700	90347-0004	-		3	VIBRATION DAMPER D=30 TH=M8 H=17 H2=21MM	
710	312318-0362	-		1	SCREW SOCK.SET CUP P MSK6SS M6X8 A4	
720	312502-0120	-		4	DRIVE SCREW ROUND HEAD KDS 0X5	
730	312812-0316	-		1	HEXAGON NUT, NY-LOCK M6 A480	
735	312812-0318	-		1	HEXAGON NUT, NY-LOCK M8 A480	
740	315105-0186	-		1	WASHER PLAIN, BRB, 17/30,H=3	
750	315115-0165	-		9	WASHER PLAIN, TBRB 8,4/16 H=3	
760	315742-0112	-		1	COLLAR, 16/32, H=12	

Machine Type	Group Description	Used-In	Group Number	Page No

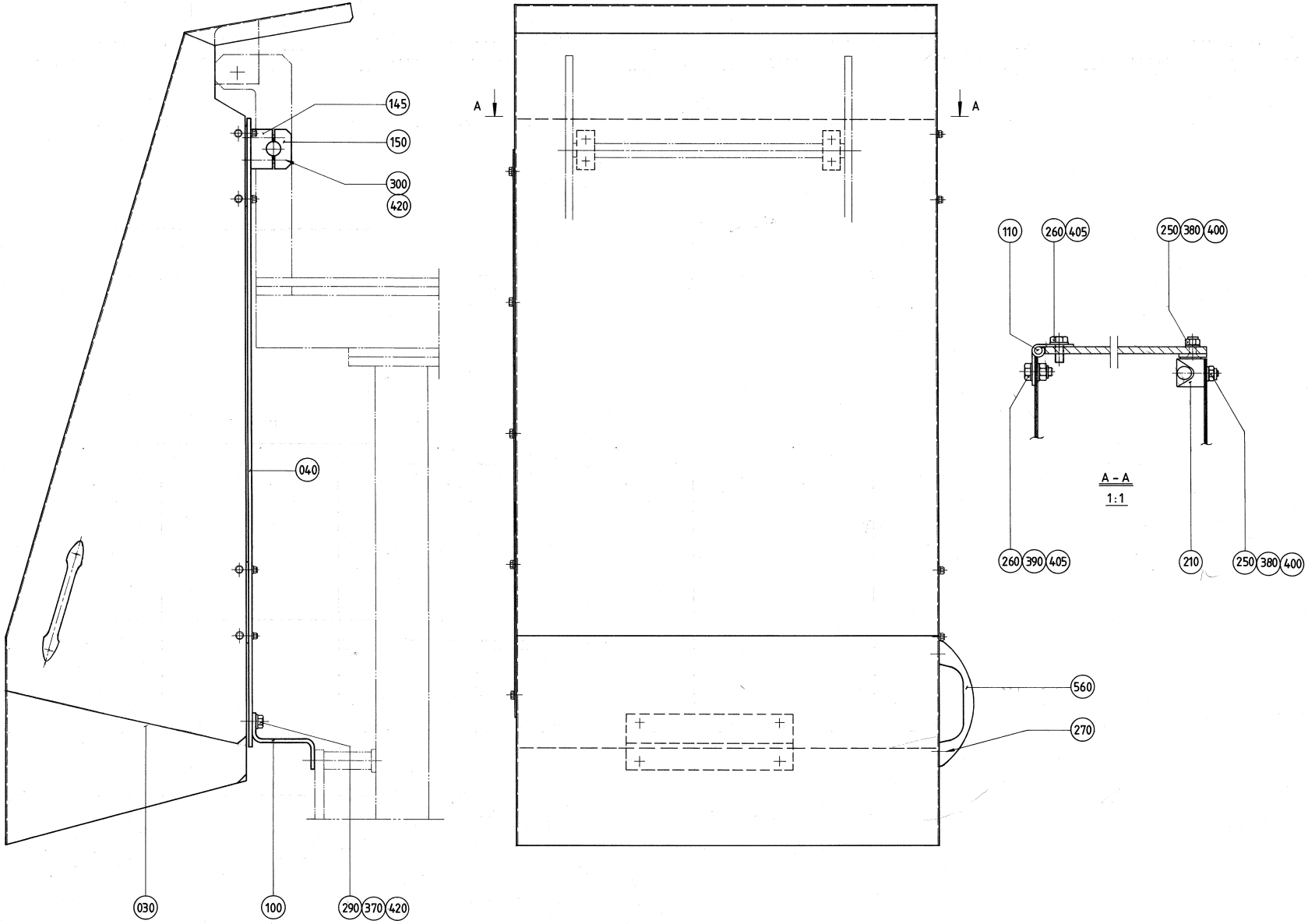
145
150
300
420
040
030
100
290
370
420
A
A
560
270
110
260
405
250
380
400
A - A
1:1
260
390
405
210
250
380
400

ECM: 87154 - 20010226
Group number: 1529025-0100
Assembly Drawing: 1529025-2_1_AA

Issue: 20020822

Pos	Part No	SP	UN	Qty	Description	Page No
Common Parts						
005	A1529065-0100	-		1	CONNECTION BOX	**783**
010	1529028-0000	-		1	PROTECTION PLATE	
030	1529280-0000	-		1	COVER	
040	490949-0000	-		1	SHEET	
050	490955-0000	-		1	BACK PLATE	
090	1529246-0000	-		1	FASTENING PLATE	
100	491552-0000	-		1	MOUNTING SHEET	
110	490950-0000	-		1	HINGE	
120	490956-0000	-		1	HINGE	
130	490957-0000	-		1	LID	
145	456964-0000	-		2	CLAMP HOLDER	
150	456965-0000	-		2	CLAMP HALF	
160	490958-0000	-		1	BRACKET	
170	490965-0000	-		1	BRACKET	
210	90237-0071	-		2	MAGNETIC LOCK, 92X16X15,5 MM	
220	90287-0062	-		2	SCREW M6	
250	312155-0291	-		8	SCREW HEX.SOCK.COUNT.MF6S M4X12 A480	
260	312105-0327	-		16	SCREW M6S ISO 4017 M5X12 A480	
270	312105-0366	-		12	SCREW M6S M6X12 A280	
280	312105-0368	-		6	SCREW M6S M6X16 A280	
290	312105-0451	-		10	SCREW M6S ISO 4017 M8X20 A480	
295	312105-0453	-		3	SCREW M6S ISO 4017 M8X25 A480	
300	312105-0459	-		4	SCREW M6S ISO 4014 M8X40 A480	
320	312125-0323	-		6	SCREW PAN HEAD MCS M5X8 SS	
370	312605-0318	-		5	HEXAGON NUT, M6M M8 A280	
380	312812-0312	-		8	HEXAGON NUT, NY-LOCK M4 A480	
390	312812-0314	-		11	HEXAGON NUT, NY-LOCK M5 A480	
400	315105-0136	-		8	WASHER PLAIN, BRB, 4,3/8,H=0,8	
405	315105-0146	-		27	WASHER PLAIN, BRB, 5,3/10,H=1	
410	315105-0153	-		10	WASHER PLAIN, BRB, 6,4/12,H=1,5	
420	315105-0165	-		12	WASHER PLAIN, BRB, 8,4/16,H=1,5	
500	1529026-0000	-		1	LID	
510	1529027-0000	-		1	LID	
520	1529244-0000	-		1	LEG	
530	469842-0000	-		1	LEG	
540	469843-0000	-		1	LEG	
550	1529029-0000	-		1	SUPPORT	
560	7309-0000	-		3	HANDLE	
570	252972-0000	-		1	SHOULDER SCREW	
580	272636-0000	-		1	BRACKET	
590	441027-0000	-		1	BRACKET	
610	456967-0000	-		1	SHOULDER SCREW	
620	464176-0000	-		1	SIGN	
630	464177-0000	-		1	SIGN	
650	469846-0000	-		1	STOP LUG	
660	469847-0000	-		1	SHAFT	
700	90347-0004	-		3	VIBRATION DAMPER D=30 TH=M8 H=17 H2=21MM	
710	312318-0362	-		1	SCREW SOCK.SET CUP P MSK6SS M6X8 A4	
720	312502-0120	-		4	DRIVE SCREW ROUND HEAD KDS 0X5	
730	312812-0316	-		1	HEXAGON NUT, NY-LOCK M6 A480	
735	312812-0318	-		1	HEXAGON NUT, NY-LOCK M8 A480	
740	315105-0186	-		1	WASHER PLAIN, BRB, 17/30,H=3	
750	315115-0165	-		9	WASHER PLAIN, TBRB 8,4/16 H=3	
760	315742-0112	-		1	COLLAR, 16/32, H=12	

PAPER GUARD

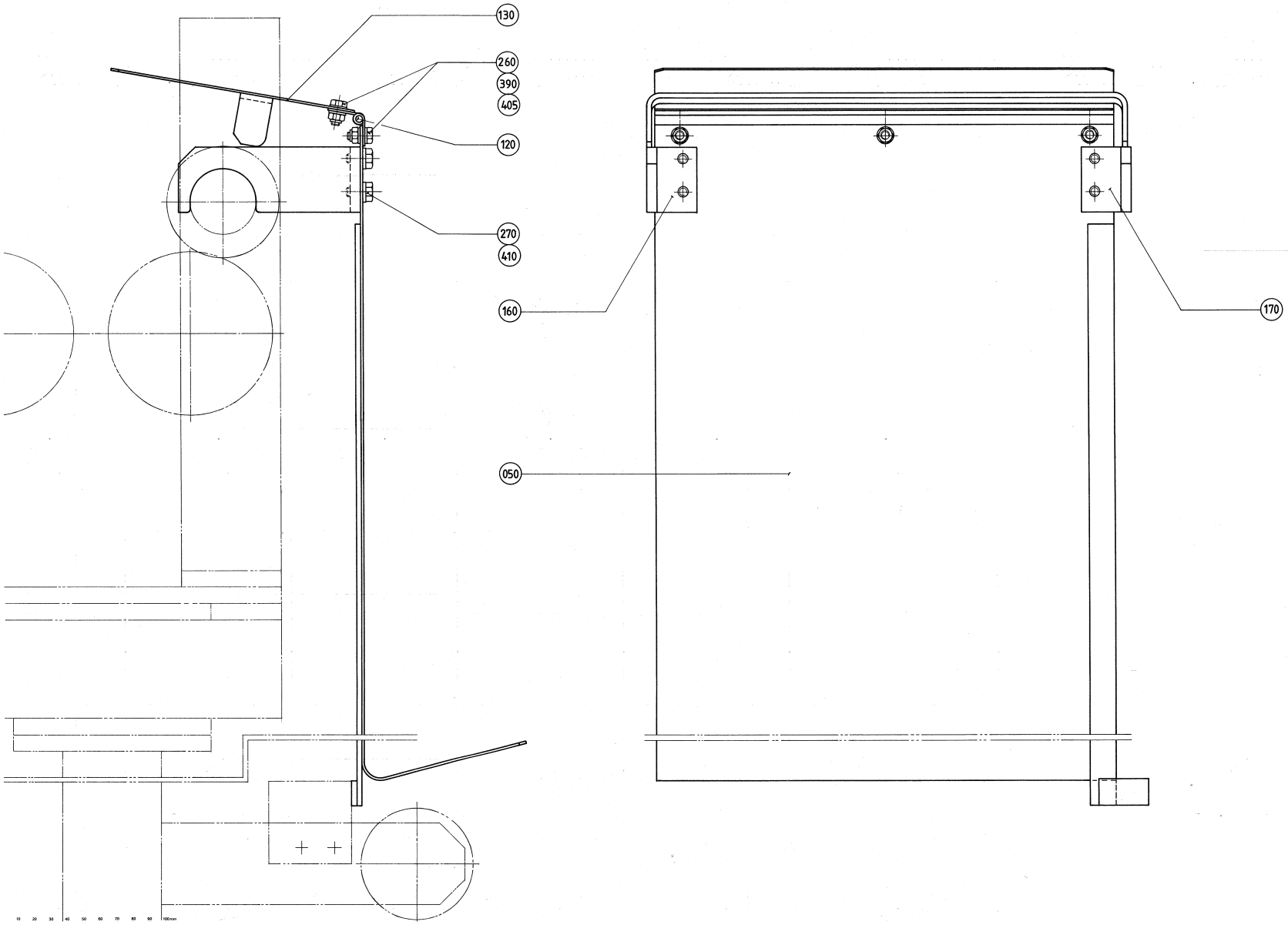

ECM: 87154 - 20010226
Group number: 1529025-0100
Assembly Drawing: 1529025-3_1_AA

Issue: 20020822

Pos	Part No	SP	UN	Qty	Description	Page No
Common Parts						
005	A1529065-0100	-		1	CONNECTION BOX	**783**
010	1529028-0000	-		1	PROTECTION PLATE	
030	1529280-0000	-		1	COVER	
040	490949-0000	-		1	SHEET	
050	490955-0000	-		1	BACK PLATE	
090	1529246-0000	-		1	FASTENING PLATE	
100	491552-0000	-		1	MOUNTING SHEET	
110	490950-0000	-		1	HINGE	
120	490956-0000	-		1	HINGE	
130	490957-0000	-		1	LID	
145	456964-0000	-		2	CLAMP HOLDER	
150	456965-0000	-		2	CLAMP HALF	
160	490958-0000	-		1	BRACKET	
170	490965-0000	-		1	BRACKET	
210	90237-0071	-		2	MAGNETIC LOCK, 92X16X15,5 MM	
220	90287-0062	-		2	SCREW M6	
250	312155-0291	-		8	SCREW HEX.SOCK.COUNT.MF6S M4X12 A480	
260	312105-0327	-		16	SCREW M6S ISO 4017 M5X12 A480	
270	312105-0366	-		12	SCREW M6S M6X12 A280	
280	312105-0368	-		6	SCREW M6S M6X16 A280	
290	312105-0451	-		10	SCREW M6S ISO 4017 M8X20 A480	
295	312105-0453	-		3	SCREW M6S ISO 4017 M8X25 A480	
300	312105-0459	-		4	SCREW M6S ISO 4014 M8X40 A480	
320	312125-0323	-		6	SCREW PAN HEAD MCS M5X8 SS	
370	312605-0318	-		5	HEXAGON NUT, M6M M8 A280	
380	312812-0312	-		8	HEXAGON NUT, NY-LOCK M4 A480	
390	312812-0314	-		11	HEXAGON NUT, NY-LOCK M5 A480	
400	315105-0136	-		8	WASHER PLAIN, BRB, 4,3/8,H=0,8	
405	315105-0146	-		27	WASHER PLAIN, BRB, 5,3/10,H=1	
410	315105-0153	-		10	WASHER PLAIN, BRB, 6,4/12,H=1,5	
420	315105-0165	-		12	WASHER PLAIN, BRB, 8,4/16,H=1,5	
500	1529026-0000	-		1	LID	
510	1529027-0000	-		1	LID	
520	1529244-0000	-		1	LEG	
530	469842-0000	-		1	LEG	
540	469843-0000	-		1	LEG	
550	1529029-0000	-		1	SUPPORT	
560	7309-0000	-		3	HANDLE	
570	252972-0000	-		1	SHOULDER SCREW	
580	272636-0000	-		1	BRACKET	
590	441027-0000	-		1	BRACKET	
610	456967-0000	-		1	SHOULDER SCREW	
620	464176-0000	-		1	SIGN	
630	464177-0000	-		1	SIGN	
650	469846-0000	-		1	STOP LUG	
660	469847-0000	-		1	SHAFT	
700	90347-0004	-		3	VIBRATION DAMPER D=30 TH=M8 H=17 H2=21MM	
710	312318-0362	-		1	SCREW SOCK.SET CUP P MSK6SS M6X8 A4	
720	312502-0120	-		4	DRIVE SCREW ROUND HEAD KDS 0X5	
730	312812-0316	-		1	HEXAGON NUT, NY-LOCK M6 A480	
735	312812-0318	-		1	HEXAGON NUT, NY-LOCK M8 A480	
740	315105-0186	-		1	WASHER PLAIN, BRB, 17/30,H=3	
750	315115-0165	-		9	WASHER PLAIN, TBRB 8,4/16 H=3	
760	315742-0112	-		1	COLLAR, 16/32, H=12	

Machine Type | Group Description | Used-In | Group Number | Page No

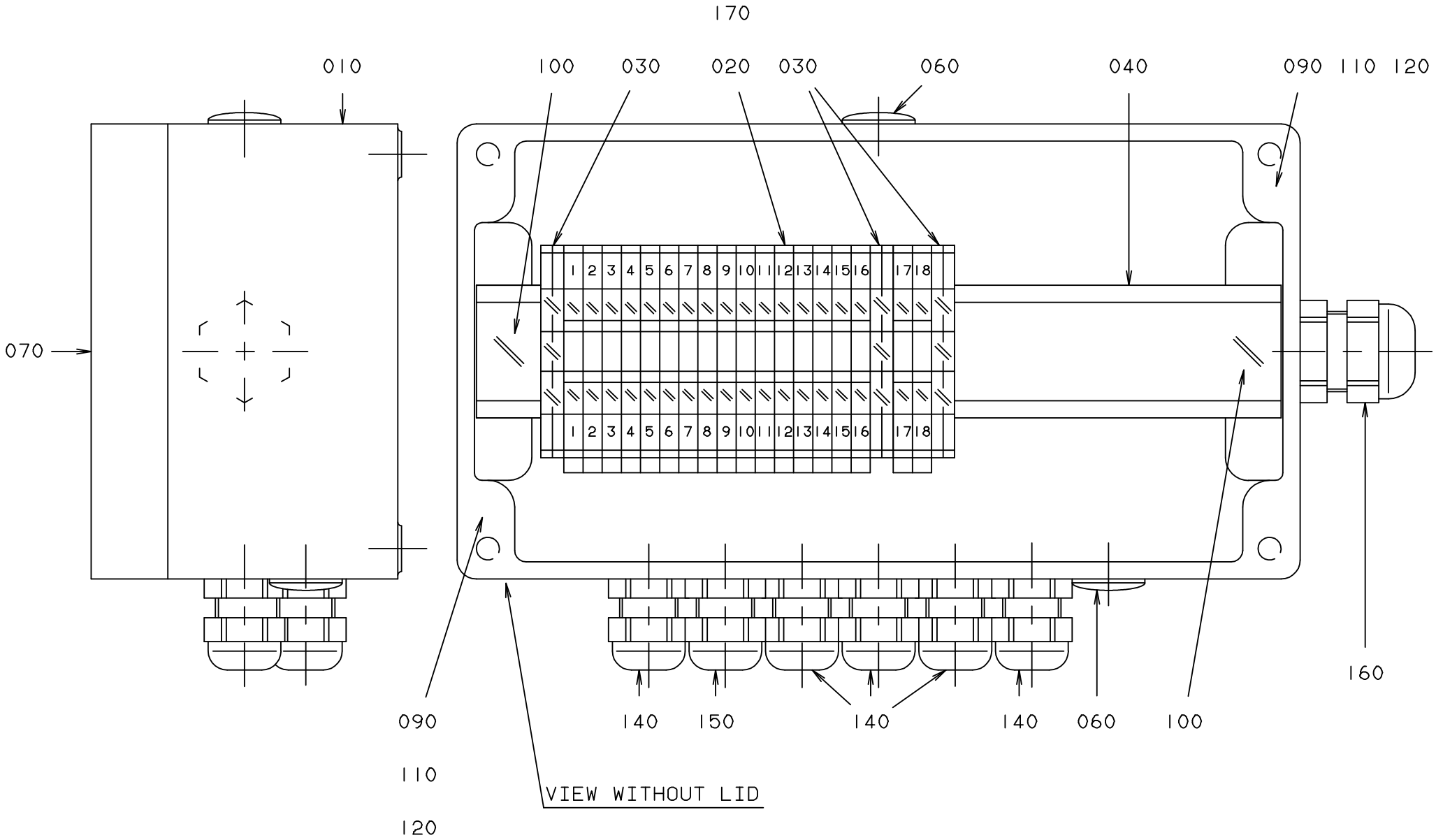
170
010
100
030
020
030
060
040
090
110
120
070
1 2 3 4 5 6 7 8 9 10 11 12 13 14 15 16 17 18
1 2 3 4 5 6 7 8 9 10 11 12 13 14 15 16 17 18
160
090
110
120
140
150
140
140
060
100
VIEW WITHOUT LID

ECM: 82321 - 20010226
Group number: 1529065-0100
Assembly Drawing: 1529065-1_1_AA

Issue: 20020822

Pos	Part No	SP	UN	Qty	Description	Page No
Common Parts						
010	1529087-0000	-		1	CONNECTION BOX	
020	353021-0212	-		18	FEED THROUGH TERMINAL, 10200.0	
030	353024-0205	-		3	EARTH TERMINAL, 1010.1	
040	353042-0004	-	MM	210	RAIL TS 35/7,5	
060	90002-0013	-		2	BLANK-OFF PLUG, PR 15,2 SKINDICHT-BLK9	
070	90194-0016	-		1	SIGN, FLASH, ELECTRIC EQUIPMENT SYMBOL	
090	312125-0374	-		2	SCREW PAN HEAD MCS M6X30 SS	
100	312132-0323	-		2	SCREW SLOT. PAN HEAD MSCS M5X8	
110	312605-0316	-		2	HEXAGON NUT, M6M M6 A280	
120	315105-0153	-		4	WASHER PLAIN, BRB, 6,4/12,H=1,5	
140	352103-0100	-		5	CABLE GLAND, STR 9, PR15,2/PG9	
150	352103-0101	-		1	CABLE GLAND, ST 9, PR15,2/PG9	
160	352103-0111	-		1	CABLE GLAND, ST 16, PR22,5/PG16	
170	359011-0807	-		2	MARKING PLATES 5-FW 1-50	

Pos	Part No	SP	UN	Qty	Description	Page No

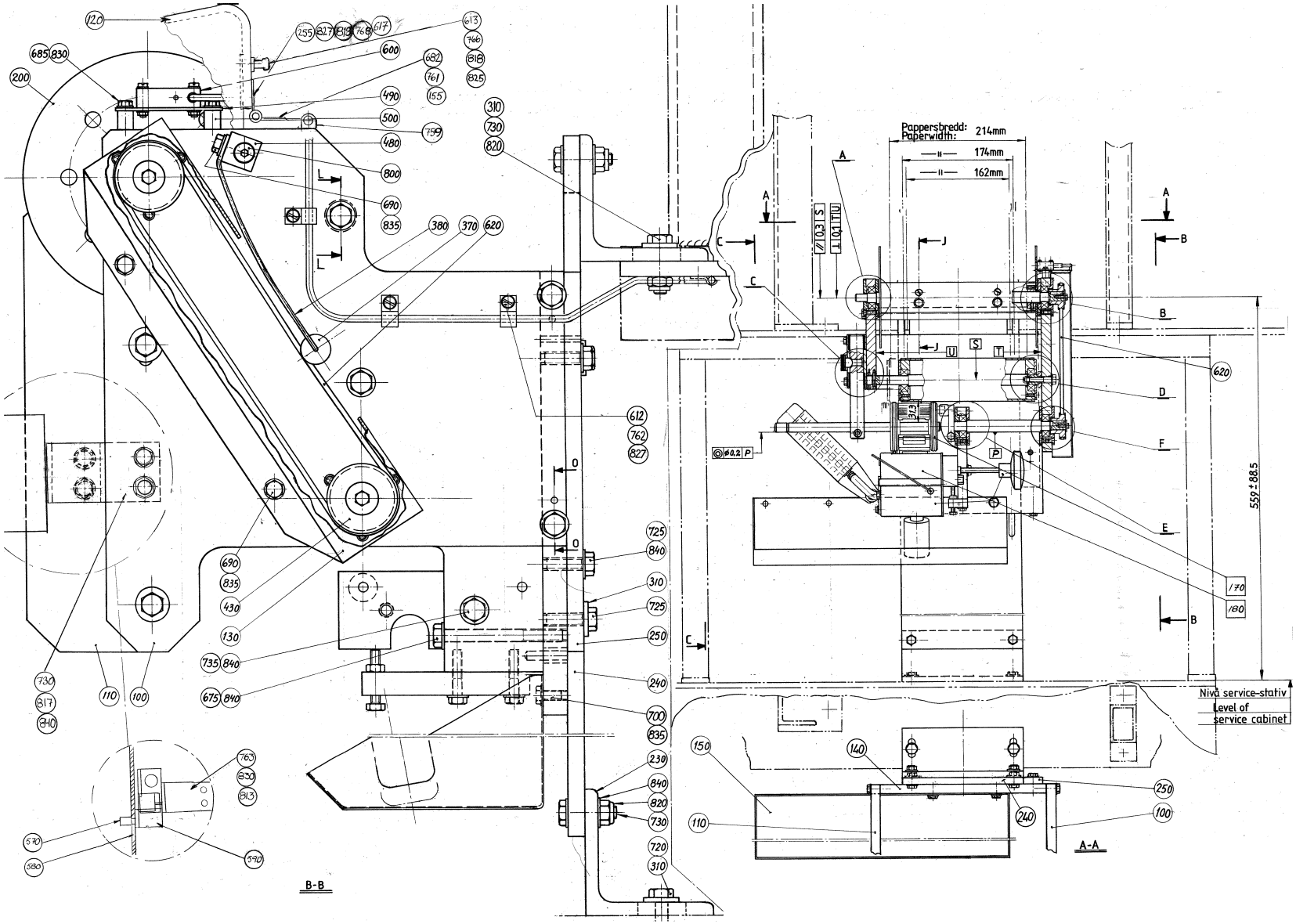
Pappersbredd:
Paperwidth:
214mm
174mm
162mm
559±88.5
Nivå service-stativ
Level of
service cabinet
B-B
A-A

ECM: 102688 - 20020320
Group number: 1529406-0100
Assembly Drawing: 1529406-1_1_AA

Issue: 20020822

Pos	Part No	SP	UN	Qty	Description	Page No
ST-ER						
120	1529176-0000	-		1	COVER	
170	A293684-0200	-		2	PRINTING WHEEL NSS	**793, 795**
510	456336-0000	-		1	BRACKET	
ST-R						
120	1528036-0000	-		1	SPACER	
170	A293685-0200	-		2	PRINTING WHEEL SS	**797, 799**
510	456335-0000	-		1	BRACKET	
TBA 0200B						
010	256391-0001	B		1	BENDING ROLLER	
020	256392-0001	B		1	SHAFT	
030	456767-0000	B		2	CREASE BAR	
040	441556-0004	B		2	SPACER	
050	256399-0001	B		1	SHAFT	
060	256400-0000	B		1	SHAFT	
070	90166-0059	-	MM	28	HOSE PVC 12/16MM TRANSP.	
075	90166-0059	-	MM	28	HOSE PVC 12/16MM TRANSP.	
300	B456813-0000	B		1	SHAFT	
	312911-0119	-		*2*	*THREADED INSERTS M6X2,0D*	
	312911-0115	-		*1*	*THREADED INSERTS M5X2,0D*	
560	456817-0001	A		8	SHIM	
705	312105-0368	-		2	SCREW M6S M6X16 A280	
765	312125-0366	-		4	SCREW PAN HEAD MCS M6X12 SS	
835	315105-0153	-		15	WASHER PLAIN, BRB, 6,4/12,H=1,5	
TBA 0200S						
010	456328-0000	B		1	BENDING ROLLER	
020	256392-0003	B		1	SHAFT	
030	441554-0000	B		2	CREASE BAR	
040	441556-0009	B		2	SPACER	
050	456811-0000	B		1	SHAFT	
060	456334-0000	B		1	SHAFT	
070-02	90166-0059	-	MM	41	HOSE PVC 12/16MM TRANSP.	
075-02	90166-0059	-	MM	41	HOSE PVC 12/16MM TRANSP.	
300	B456813-0000	B		1	SHAFT	
	312911-0119	-		*2*	*THREADED INSERTS M6X2,0D*	
	312911-0115	-		*1*	*THREADED INSERTS M5X2,0D*	
560	456817-0001	A		8	SHIM	
705	312105-0368	-		2	SCREW M6S M6X16 A280	
765	312125-0366	-		4	SCREW PAN HEAD MCS M6X12 SS	
835	315105-0153	-		15	WASHER PLAIN, BRB, 6,4/12,H=1,5	
TBA 0250B						
010	256391-0001	B		1	BENDING ROLLER	
020	256392-0001	B		1	SHAFT	
030	456767-0000	B		2	CREASE BAR	
040	441556-0002	B		2	SPACER	
050	256399-0001	B		1	SHAFT	
060	256400-0000	B		1	SHAFT	
070	90166-0059	-	MM	28	HOSE PVC 12/16MM TRANSP.	
075	90166-0059	-	MM	28	HOSE PVC 12/16MM TRANSP.	
300	B456813-0000	B		1	SHAFT	
	312911-0119	-		*2*	*THREADED INSERTS M6X2,0D*	
	312911-0115	-		*1*	*THREADED INSERTS M5X2,0D*	
560	456817-0001	A		8	SHIM	
705	312105-0368	-		2	SCREW M6S M6X16 A280	
765	312125-0366	-		4	SCREW PAN HEAD MCS M6X12 SS	
835	315105-0153	-		15	WASHER PLAIN, BRB, 6,4/12,H=1,5	
TWA 0200S						
010	456328-0000	B		1	BENDING ROLLER	
020	256392-0003	B		1	SHAFT	
030	594952-0000	B		2	CREASE BAR	
040	B594953-0000	B		2	SPACER	
	312911-0115	-		*2*	*THREADED INSERTS M5X2,0D*	
050	456811-0000	B		1	SHAFT	
060	456334-0000	B		1	SHAFT	
070-02	90166-0059	-	MM	41	HOSE PVC 12/16MM TRANSP.	
075-02	90166-0059	-	MM	41	HOSE PVC 12/16MM TRANSP.	
300	2526428-0000	B		1	SHAFT	
560	591567-0000	A		12	LACE	
705	312105-0370	-		2	SCREW M6S ISO 4017 M6X20 A480	
765	90287-0331	-		4	SCREW SOCK. BUT. HEAD K6S M5X12 A4	
835	315105-0153	-		17	WASHER PLAIN, BRB, 6,4/12,H=1,5	
Common Parts						
100	1529060-0000	-		1	END SECTION	
110	1529059-0000	-		1	END SECTION	
130	441572-0000	-		1	COVER	
140	491722-0000	-		1	PLATE	
150	491723-0000	-		1	SPLASH PLATE	
155	572252-0000	-		1	BRACKET	

Machine Type | Group Description | Used-In | Group Number | Page No

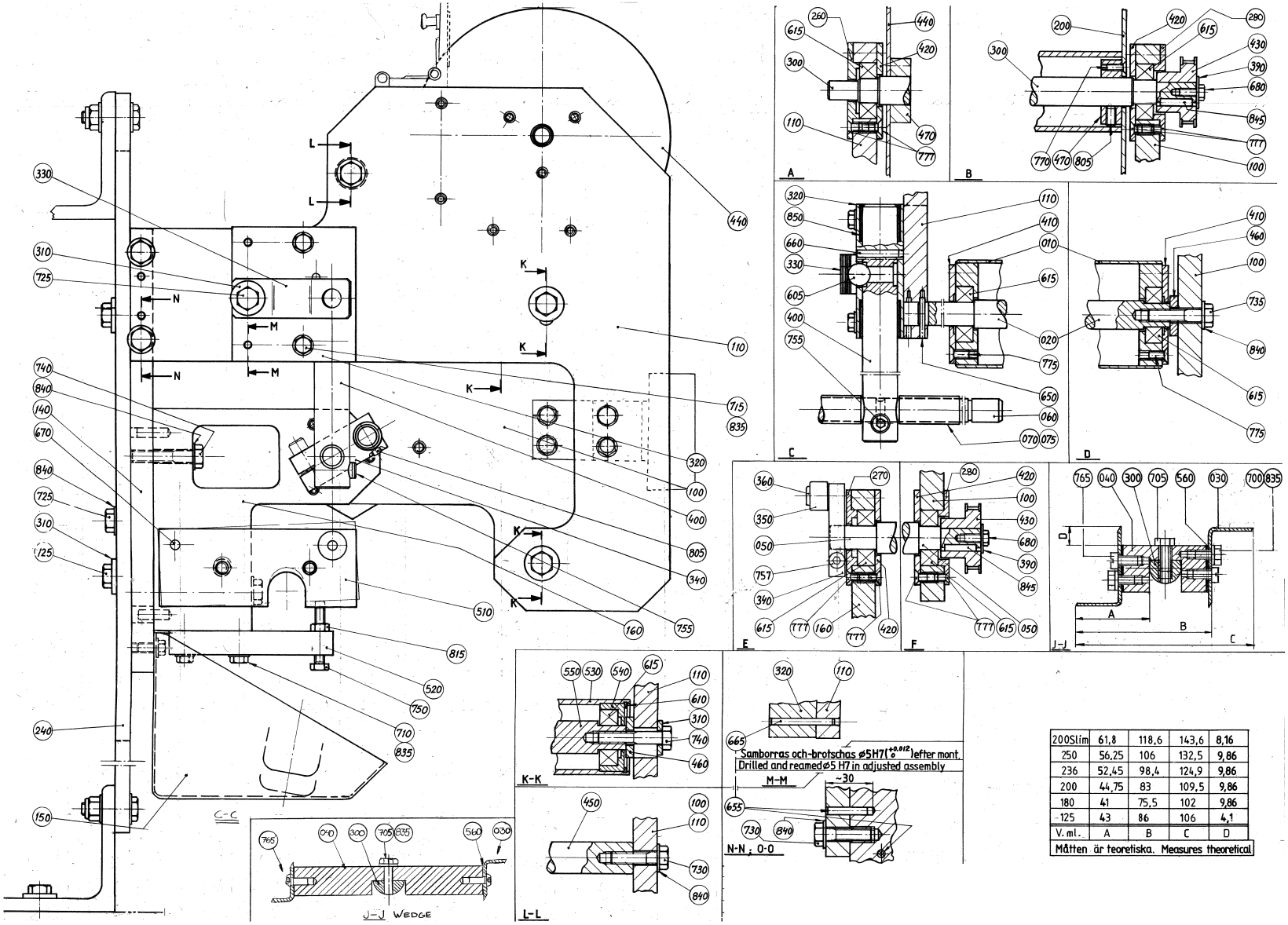

200Slim	61,8	118,6	143,6	8,16
250	56,25	106	132,5	9,86
236	52,45	98,4	124,9	9,86
200	44,75	83	109,5	9,86
180	41	75,5	102	9,86
125	43	86	106	4,1
V. ml.	A	B	C	D

Måtten är teoretiska. Measures theoretical

Pos	Part No	SP	UN	Qty	Description	Page No
Common Parts (Cont'd)						
160	752512-0000	B		1	BEARING CONSOLE	
165	1529061-0000	-		1	BRACKET	
180	A434774-0300	-		1	INK UNIT	**801**
200	441752-0000	-		1	GABLE PLATE	
230	456331-0000	-		2	ANGLE BRACKET	
240	491724-0000	-		1	PLATE	
250	456333-0000	-		1	RAIL	
255	572253-0000	-		1	SHEET	
260	752250-0000	-		1	BEARING COVER	
270	752251-0000	-		1	BEARING COVER	
280	752252-0000	-		2	BEARING COVER	
310	28036-0000	-		15	WASHER	
320	B32919-0000	B		1	BEARING BLOCK	
	312911-0126	*-*		*1*	*HELI-COIL M8X1,5D*	
330	32923-0000	A		7	SPRING	
340	32925-0000	B		1	CARRIER	
350	544392-0000	B		1	ROLL	
360	32927-0000	B		1	SHAFT	
370	33182-0000	A		1	ROLL	
380	33183-0000	A		1	SPRING	
390	106758-0000	-		2	WASHER	
400	228652-0000	B		1	STOPPER DOWEL	
410	256248-0001	B		2	LID	
420	256398-0000	B		4	LID	
430	256403-0000	B		2	TOOTHED WHEEL	
440	256406-0000	-		1	GABLE PLATE	
450	256408-0001	-		1	SPACER	
460	256409-0000	-		5	WASHER	
470	257141-0000	-		2	RETAINING RING	
480	271441-0000	-		1	BRACKET	
490	441753-0000	-		1	FASTENING PLATE	
500	441754-0000	-		2	SPACER	
520	456337-0000	-		1	CANTILEVER	
530	456776-0000	B		2	MANTLE	
540	456777-0000	B		4	SLEEVE	
550	456778-0000	B		2	SHAFT	
570	572254-0000	-		1	HANDLE	
580	572255-0000	-		2	SPACER	
590	90044-0139	-		1	KEY SAF.SW. AZ16-02 ZVR K-2254	
600	90044-0194	-		1	PROX.SW. IN5329/IN3002-BPKG	
605	90090-0001	A		1	BALL, D=15,081 MM	
610	90141-0020	B		4	RETAIN. RING, 42	
612	90165-0024	-		6	PIPE CLIP FOR TUBE D=5 MM	
613	90184-0001	-		1	SNAP-IN BALL LOCK, 49X9 MM	
615	90214-0098	-		10	BALL BEARING, 15X35X11 MM	
617	90248-0026	-		2	HINGE, 1703-80X32	
620	90417-0081	-		1	TIMING BELT T5X610X6 POLYURETHANE	
650	311103-0240	-		1	PARALLELL PIN, M6, 3X25 MM	
655	311103-0312	-		6	PARALLELL PIN, M6, 5X25 MM	
660	311103-0314	-		1	PARALLELL PIN, M6, 5X30 MM	
665	311103-0318	-		2	PARALLELL PIN, M6, 5X40 MM	
670	311103-0357	-		1	PARALLELL PIN, M6, 6X30 MM	
675	312101-0466	-		1	SCREW M6S M8X75 FZB	
680	312105-0327	-		2	SCREW M6S ISO 4017 M5X12 A480	
682	312105-0329	-		2	SCREW M6S ISO 4017 M5X16 A480	
685	312105-0332	-		2	SCREW M6S ISO 4017 M5X22 A480	
690	312105-0364	-		3	SCREW M6S ISO 4017 M6X10 A480	
700	312105-0366	-		8	SCREW M6S M6X12 A280	
710	312105-0374	-		2	SCREW M6S ISO 4014 M6X30 A480	
715	312105-0378	-		2	SCREW M6S ISO 4014 M6X40 A480	
720	312105-0451	-		4	SCREW M6S ISO 4017 M8X20 A480	
725	312105-0453	-		5	SCREW M6S ISO 4017 M8X25 A480	
730	312105-0455	-		16	SCREW M6S ISO 4017 M8X30 A480	
735	312105-0457	-		2	SCREW M6S ISO 4014 M8X35 A480	
740	312105-0459	-		5	SCREW M6S ISO 4014 M8X40 A480	
750	312109-0376	-		1	SCREW M6S ISO 4017 M6X35 A480	
755	312115-0370	-		1	SCREW MC6S M6X20 A280	
757	312115-0372	-		1	SCREW MC6S M6X25 A280	
759	312125-0224	-		2	SCREW SLOT.PAN HD. MCS 3X10 A480	
760	312125-0230	-		2	SCREW PAN HEAD MCS M3X20 SS	
762	312125-0289	-		6	SCREW SLOT.PAN HD. MCS 4X10 A480	
763	312125-0329	-		2	SCREW PAN HEAD MCS M5X16 SS	
766	312145-0228	-		2	SCREW COUNTERS.SLOT.HD. MFS 3X16 SS	
767	312145-0285	-		6	SCREW COUNTERS.SLOT.HD. MFS 4X6 SS	
768	312145-0293	-		6	SCREW COUNTERS.SLOT.HD. MFS 4X16 SS	
770	312155-0291	-		6	SCREW HEX.SOCK.COUNT.MF6S M4X12 A480	
775	312155-0327	-		6	SCREW HEX.SOCK.COUNT.MF6S M5X12 A280	
777	312155-0323	-		24	SCREW HEX.SOCK.COUNT.MF6S M5X8 A280	
800	312155-0376	-		1	SCREW HEX.SOCK.COUNT.MF6S M6X35 A280	
805	312318-0362	-		3	SCREW SOCK.SET CUP P MSK6SS M6X8 A4	
810	312605-0310	-		2	HEXAGON NUT, M6M M3 A280	
813	312605-0314	-		2	HEXAGON NUT, M6M M5 A280	
815	312605-0316	-		1	HEXAGON NUT, M6M M6 A280	

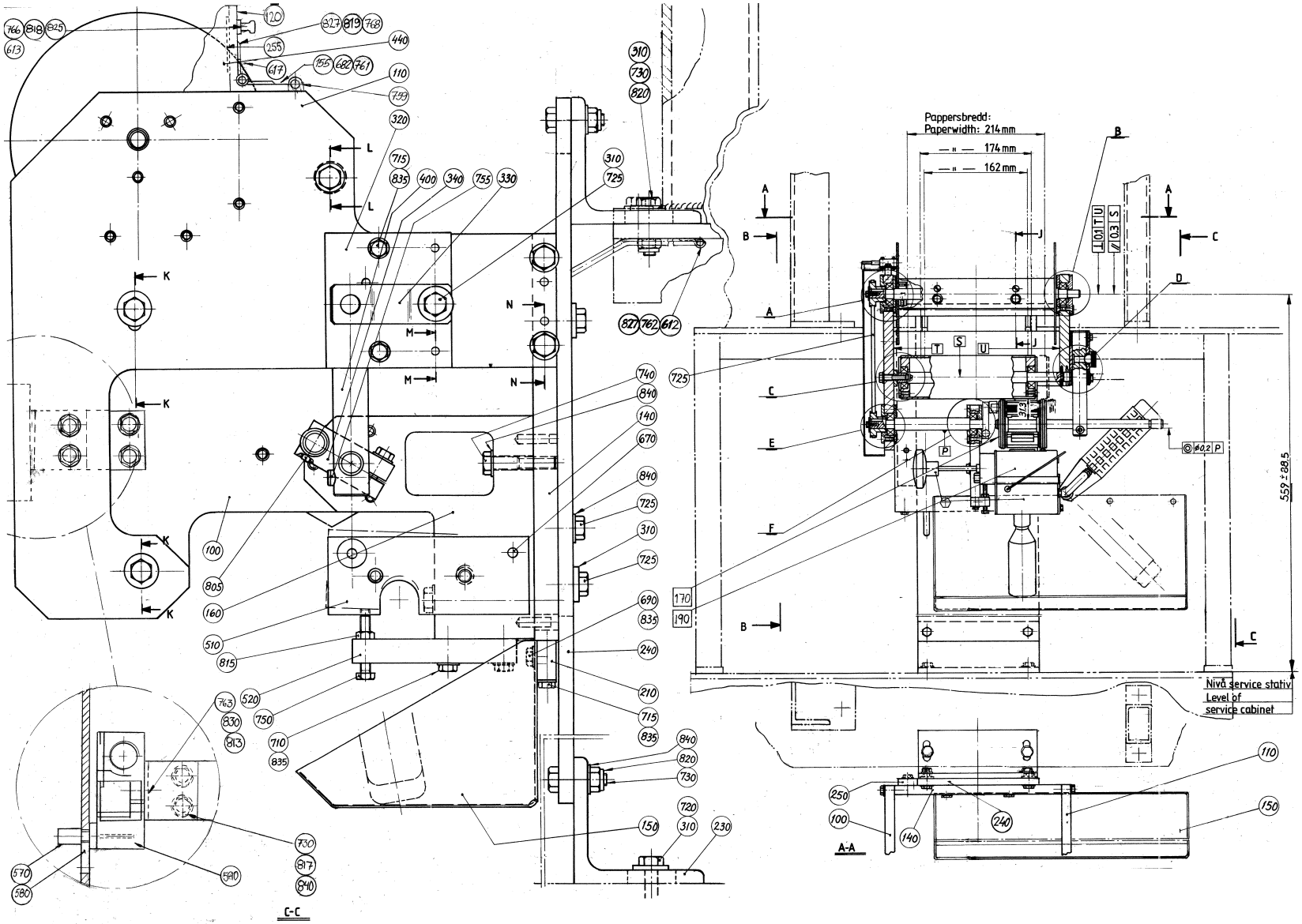
Pappersbredd:
Paperwidth: 214 mm
174 mm
162 mm
Nivå service stativ
Level of
service cabinet
559 ± 0.85
A-A
C-C

Pos	Part No	SP	UN	Qty	Description	Page No
Common Parts (Cont'd)						
817	312605-0318	-		4	HEXAGON NUT, M6M M8 A280	
818	312812-0310	-		2	HEXAGON NUT, NY-LOCK M3 A480	
819	312812-0312	-		6	HEXAGON NUT, NY-LOCK M4 A480	
820	312812-0318	-		6	HEXAGON NUT, NY-LOCK M8 A480	
825	315105-0124	-		6	WASHER PLAIN, BRB, 3,2/6,H=0,5	
827	315105-0136	-		12	WASHER PLAIN, BRB, 4,3/8,H=0,8	
830	315105-0146	-		6	WASHER PLAIN, BRB, 5,3/10,H=1	
840	315105-0165	-		24	WASHER PLAIN, BRB, 8,4/16,H=1,5	
845	315701-0170	-		2	PARALLEL KEY W. ROUND ENDS 4X4X20 MM	
850	321120-0147	-		2	BEARING BUSHING WITHOUT FL, 22X25X25 MM	

Pos	Part No	SP	UN	Qty	Description	Page No

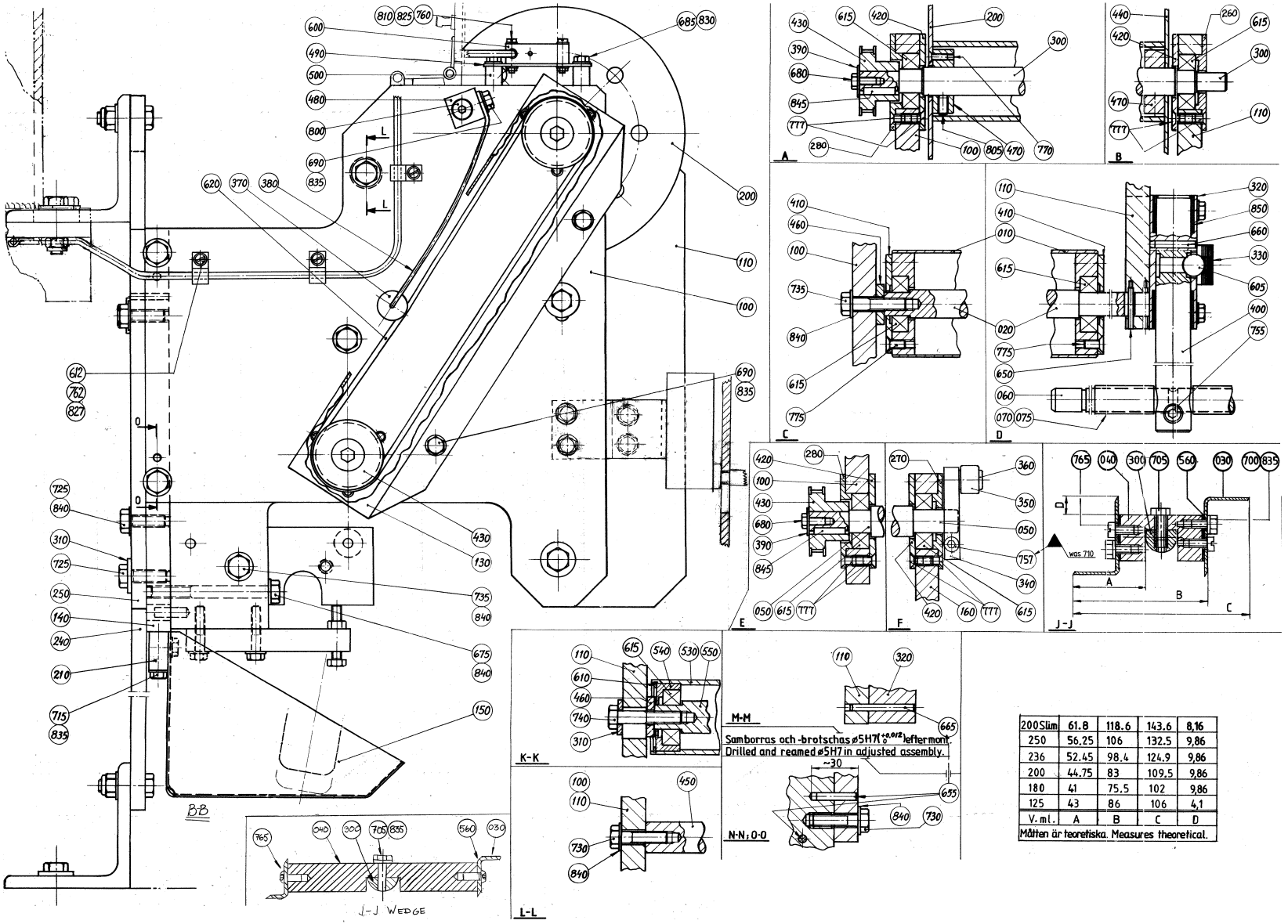

200Slim	61.8	118.6	143.6	8,16
250	56.25	106	132.5	9,86
236	52.45	98.4	124.9	9,86
200	44.75	83	109.5	9,86
180	41	75.5	102	9,86
125	43	86	106	4,1
V. ml.	A	B	C	D

Måtten är teoretiska. Measures theoretical.

Pos	Part No	SP	UN	Qty	Description	Page No
SEE PREVIOUS LISTS PAGES: 785, 787, 789.						

Pos	Part No	SP	UN	Qty	Description	Page No

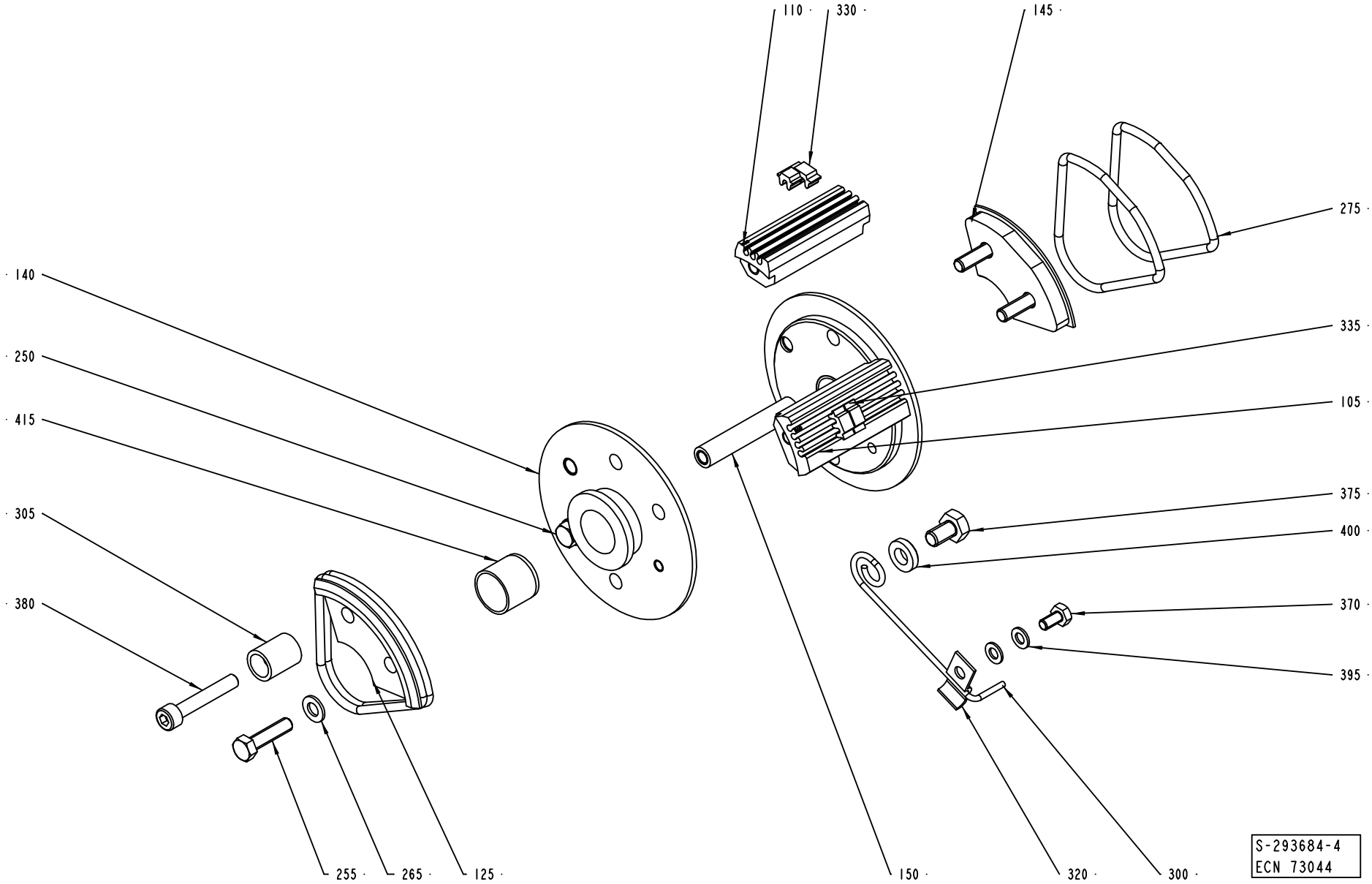
110
330
145
275
140
250
415
335
105
305
375
400
380
370
395
255
265
125
150
320
300
S-293684-4
ECN 73044

Pos	Part No	SP	UN	Qty	Description	Page No
TBA 0200B OR TBA 0200S OR TBA 0250B OR TPA 0250SQ						
105	293395-0002	A		2	TYPE HOLDER	
110	293395-0001	A		2	TYPE HOLDER	
130	292412-0000	B		1	END SECTION	
135	292413-0000	B		1	END SECTION	
145	293659-0000	B		1	CARRIER	
255	312101-0331	-		7	SCREW M6S M5X20 FZB	
265	315101-0146	-		7	WASHER PLAIN, BRB, 5,3/10 H=1	
285	315202-0304	A		2	O-RING 64,5X3 MM	
410	315202-0305	A		2	O-RING 69,5X3 MM	
Common Parts						
300	32691-0000	A		1	LOCKING SPRING	
305	33011-0000	A		1	SLEEVE	
320	1511572-0000	-		1	CLIP	
330	90413-0033	A		1	CODE INSERT SET 0-9	
330	90413-0043	A		1	CODE INSERT SET	
335	90413-0044	A		1	CODE INSERT SET	
335	90413-0047	A		1	CODE INSERT SET	
370	312101-0287	-		1	SCREW M6S M4X8 FZB	
375	312101-0364	-		1	SCREW M6S M6X10 FZB	
380	312111-0335	-		1	SCREW HEX.SOCK.HD.MC6S-TT 5X30 88 FZB	
395	315101-0136	-		2	WASHER PLAIN, BRB, 4,3/8 H=0,8	
400	315111-0153	-		1	WASHER PLAIN, TBRB 6,4/12 H=3	
415	321120-0122	A		2	BEARING BUSHING WITHOUT FL, 15X17X15 MM	

Pos	Part No	SP	UN	Qty	Description	Page No

Machine Type | Group Description | Used-In | Group Number | Page No

Volume: TB- 180B. 200B. 200M. 200S. 236B. 250S. 300B.ml
TBA- 100B. 125S. 160S. 180B. 189B. 200B. 200M.
TBA- 200S. 236B. 250B. 250S. 284B. 300S. 330S.ml
TPA- 250SQ. 330SQ.ml

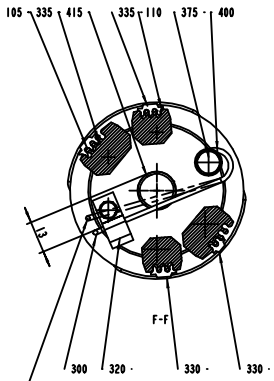

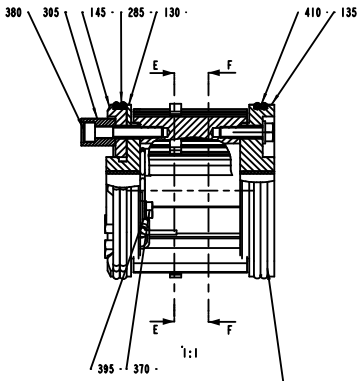

Spärrfjäderns läge innan klammer 320 är monterad.
The position of the locking spring before clip 320 is mounted.

Typhållarna monteras i normal läge. Efter montering stämplas variantnr. och ritn.nr. på gaveln, t.ex. 293684-204 (300-180ml).
Mall 293692 användes vid kontrollmätning.
Mount the typeholders in normal position. Stamp the variantno. and the drawingno. on the gable after mounting, for example 293684-204 (300-180ml). Use gauge 293692 to control measure.

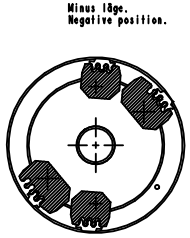

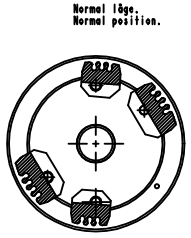

E-E
1:1

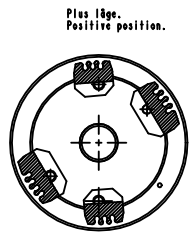

Volume: TB- 500S.ml
TBA- 355B. 375S. 400B. 500S. 750S.ml

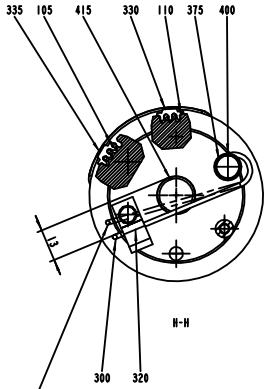

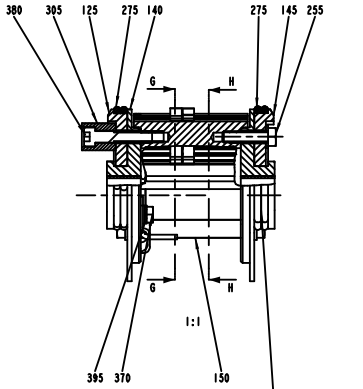

Spärrfjäderns läge innan klammer 320 är monterad.
The position of the locking spring before clip 320 is mounted.

Typhållarna monteras i normal läge. Efter montering stämplas variantnr. och ritn.nr. på gaveln, t.ex. 293684-203 (500ml-Slim375ml).
Mall 293692 användes vid kontrollmätning.
Mount the typeholders in normal position. Stamp the variantno. and the drawingno. on the gable after mounting, for example 293684-203 (500ml-Slim 375ml). Use gauge 293692 to control measure.





G-G
1:1



REDRAWN IN PRO/E

Pos	Part No	SP	UN	Qty	Description	Page No
TBA 0200B OR TBA 0200S OR TBA 0250B OR TPA 0250SQ						
105	293395-0002	A		2	TYPE HOLDER	
110	293395-0001	A		2	TYPE HOLDER	
130	292412-0000	B		1	END SECTION	
135	292413-0000	B		1	END SECTION	
145	293659-0000	B		1	CARRIER	
255	312101-0331	-		7	SCREW M6S M5X20 FZB	
265	315101-0146	-		7	WASHER PLAIN, BRB, 5,3/10 H=1	
285	315202-0304	A		2	O-RING 64,5X3 MM	
410	315202-0305	A		2	O-RING 69,5X3 MM	
Common Parts						
300	32691-0000	A		1	LOCKING SPRING	
305	33011-0000	A		1	SLEEVE	
320	1511572-0000	-		1	CLIP	
330	90413-0033	A		1	CODE INSERT SET 0-9	
330	90413-0043	A		1	CODE INSERT SET	
335	90413-0044	A		1	CODE INSERT SET	
335	90413-0047	A		1	CODE INSERT SET	
370	312101-0287	-		1	SCREW M6S M4X8 FZB	
375	312101-0364	-		1	SCREW M6S M6X10 FZB	
380	312111-0335	-		1	SCREW HEX.SOCK.HD.MC6S-TT 5X30 88 FZB	
395	315101-0136	-		2	WASHER PLAIN, BRB, 4,3/8 H=0,8	
400	315111-0153	-		1	WASHER PLAIN, TBRB 6,4/12 H=3	
415	321120-0122	A		2	BEARING BUSHING WITHOUT FL, 15X17X15 MM	

Pos	Part No	SP	UN	Qty	Description	Page No

Machine Type | Group Description | Used-In | Group Number | Page No

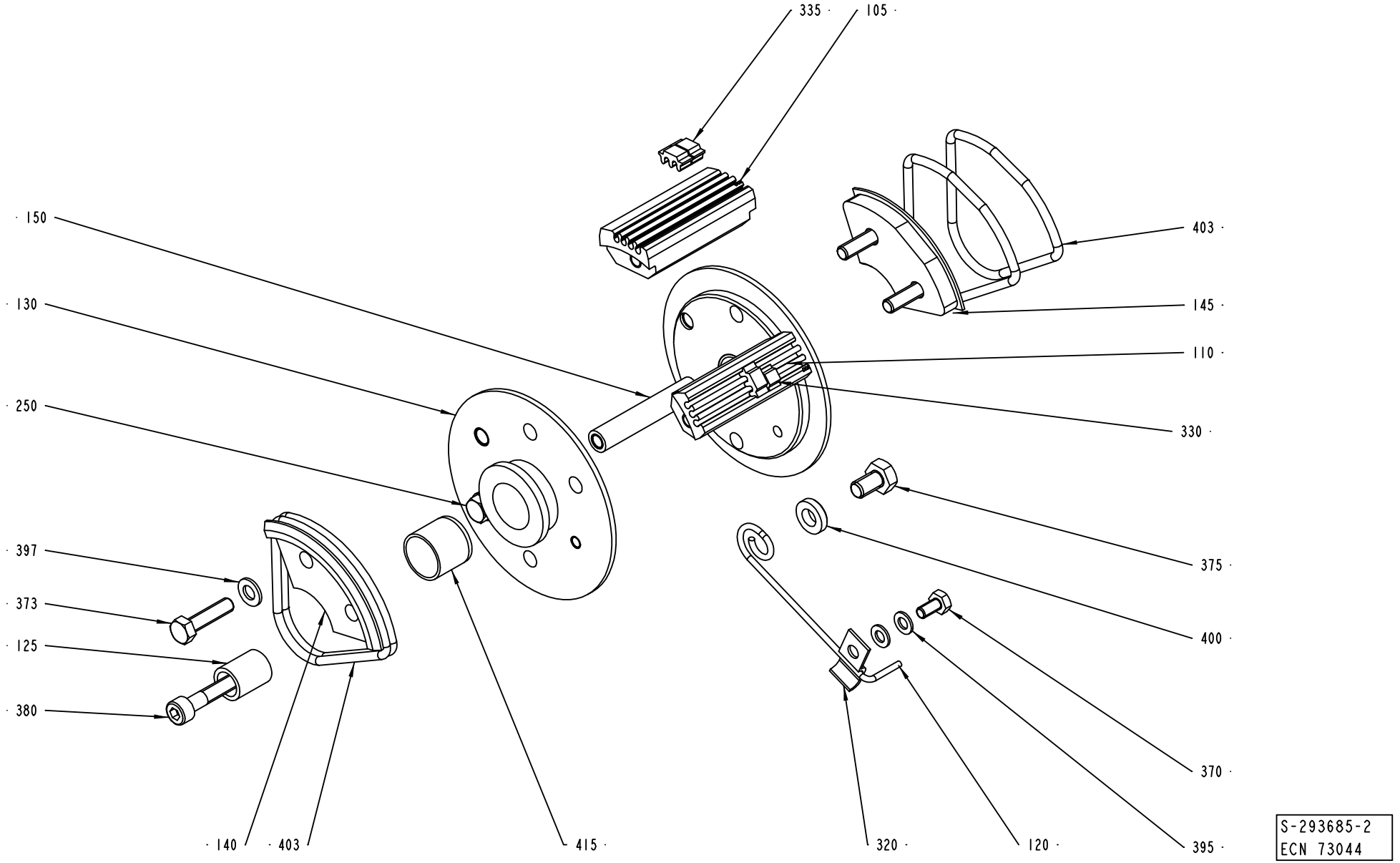
335
105
150
403
130
145
110
250
330
375
397
400
373
125
370
380
140
403
415
320
120
395
S-293685-2
ECN 73044

ECM: 102361 - 20011206
Group number: 293685-0200
Assembly Drawing: 293685-2_1_AB

Issue: 20020822

Pos	Part No	SP	UN	Qty	Description	Page No
0200B OR 0250B						
105-02	293395-0002	A		2	TYPE HOLDER	
110-02	293395-0001	A		2	TYPE HOLDER	
130	292412-0000	A		1	END SECTION	
135	292413-0000	A		1	END SECTION	
140	292414-0000	A		1	CARRIER	
373-02	312101-0331	-		7	SCREW M6S M5X20 FZB	
397-02	315101-0146	-		7	WASHER PLAIN, BRB, 5,3/10 H=1	
405	315202-0304	A		2	O-RING 64,5X3 MM	
410	315202-0305	A		2	O-RING 69,5X3 MM	
Common Parts						
120	32691-0000	A		1	LOCKING SPRING	
125	33011-0000	A		1	SLEEVE	
320	90165-0010	-		1	CLIP	
330	90413-0033	A		1	CODE INSERT SET 0-9	
330	90413-0043	A		1	CODE INSERT SET	
335	90413-0044	A		1	CODE INSERT SET	
335	90413-0047	A		1	CODE INSERT SET	
370	312101-0287	-		1	SCREW M6S M4X8 FZB	
375	312101-0364	-		1	SCREW M6S M6X10 FZB	
380	312111-0335	-		1	SCREW HEX.SOCK.HD.MC6S-TT 5X30 88 FZB	
395	315101-0136	-		1	WASHER PLAIN, BRB, 4,3/8 H=0,8	
400	315111-0153	-		1	WASHER PLAIN, TBRB 6,4/12 H=3	
415	321120-0122	A		2	BEARING BUSHING WITHOUT FL, 15X17X15 MM	

Pos	Part No	SP	UN	Qty	Description	Page No

Volume: 100B. 125S. 180B. 189B. 200B. 236B. 250B.ml
284B. 300B. 300S. 330S.ml

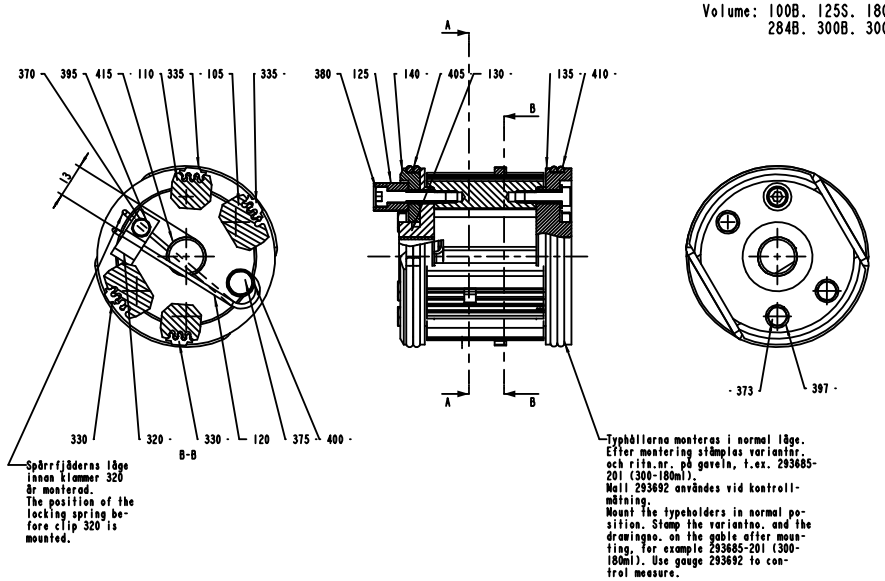

Spärrfjäderns läge innan klammer 320 är monterad.
The position of the locking spring before clip 320 is mounted.

Typhållarna monteras i normal läge. Efter montering stämplas variantnr. och ritn.nr. på gaveln, t.ex. 293685-201 (300-180ml).
Mall 293692 användes vid kontrollmätning.
Mount the typeholders in normal position. Stamp the variantno. and the drawingno. on the gable after mounting, for example 293685-201 (300-180ml). Use gauge 293692 to control measure.

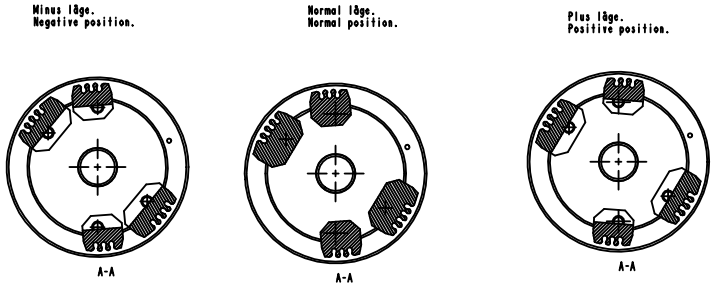

Volume: 375S ml.

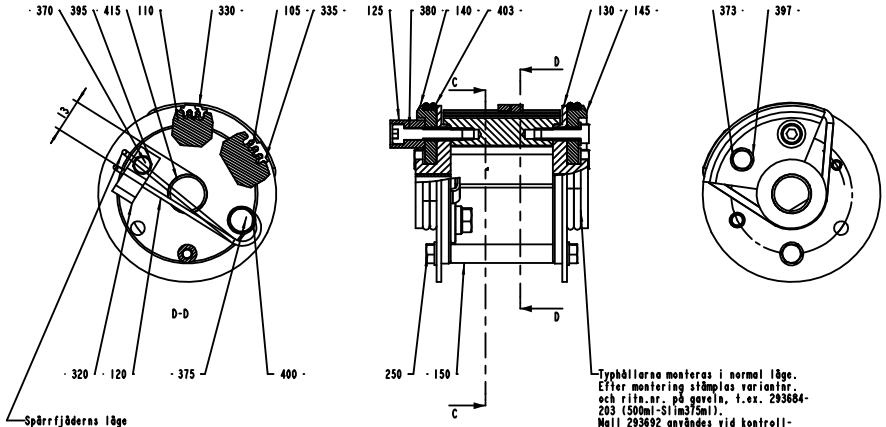

Spärrfjäderns läge innan klammer 320 är monterad.
The position of the locking spring before clip 320 is mounted.

Typhållarna monteras i normal läge. Efter montering stämplas variantnr. och ritn.nr. på gaveln, t.ex. 293684-203 (500ml-Slim375ml).
Mall 293692 användes vid kontrollmätning.
Mount the typeholders in normal position. Stamp the variantno. and the drawingno. on the gable after mounting, for example 293684-203 (500ml-Slim 375ml). Use gauge 293692 to control measure.

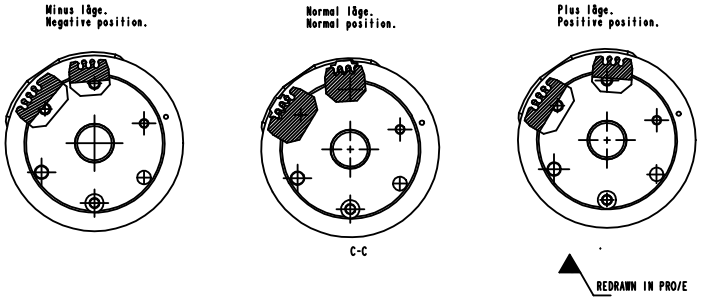

ECM: 102361 - 20011206
Group number: 293685-0200
Assembly Drawing: 293685-2_2_AB

Issue: 20020822

Pos	Part No	SP	UN	Qty	Description	Page No
0200B OR 0250B						
105-02	293395-0002	A		2	TYPE HOLDER	
110-02	293395-0001	A		2	TYPE HOLDER	
130	292412-0000	A		1	END SECTION	
135	292413-0000	A		1	END SECTION	
140	292414-0000	A		1	CARRIER	
373-02	312101-0331	-		7	SCREW M6S M5X20 FZB	
397-02	315101-0146	-		7	WASHER PLAIN, BRB, 5,3/10 H=1	
405	315202-0304	A		2	O-RING 64,5X3 MM	
410	315202-0305	A		2	O-RING 69,5X3 MM	
Common Parts						
120	32691-0000	A		1	LOCKING SPRING	
125	33011-0000	A		1	SLEEVE	
320	90165-0010	-		1	CLIP	
330	90413-0033	A		1	CODE INSERT SET 0-9	
330	90413-0043	A		1	CODE INSERT SET	
335	90413-0044	A		1	CODE INSERT SET	
335	90413-0047	A		1	CODE INSERT SET	
370	312101-0287	-		1	SCREW M6S M4X8 FZB	
375	312101-0364	-		1	SCREW M6S M6X10 FZB	
380	312111-0335	-		1	SCREW HEX.SOCK.HD.MC6S-TT 5X30 88 FZB	
395	315101-0136	-		1	WASHER PLAIN, BRB, 4,3/8 H=0,8	
400	315111-0153	-		1	WASHER PLAIN, TBRB 6,4/12 H=3	
415	321120-0122	A		2	BEARING BUSHING WITHOUT FL, 15X17X15 MM	

Pos	Part No	SP	UN	Qty	Description	Page No

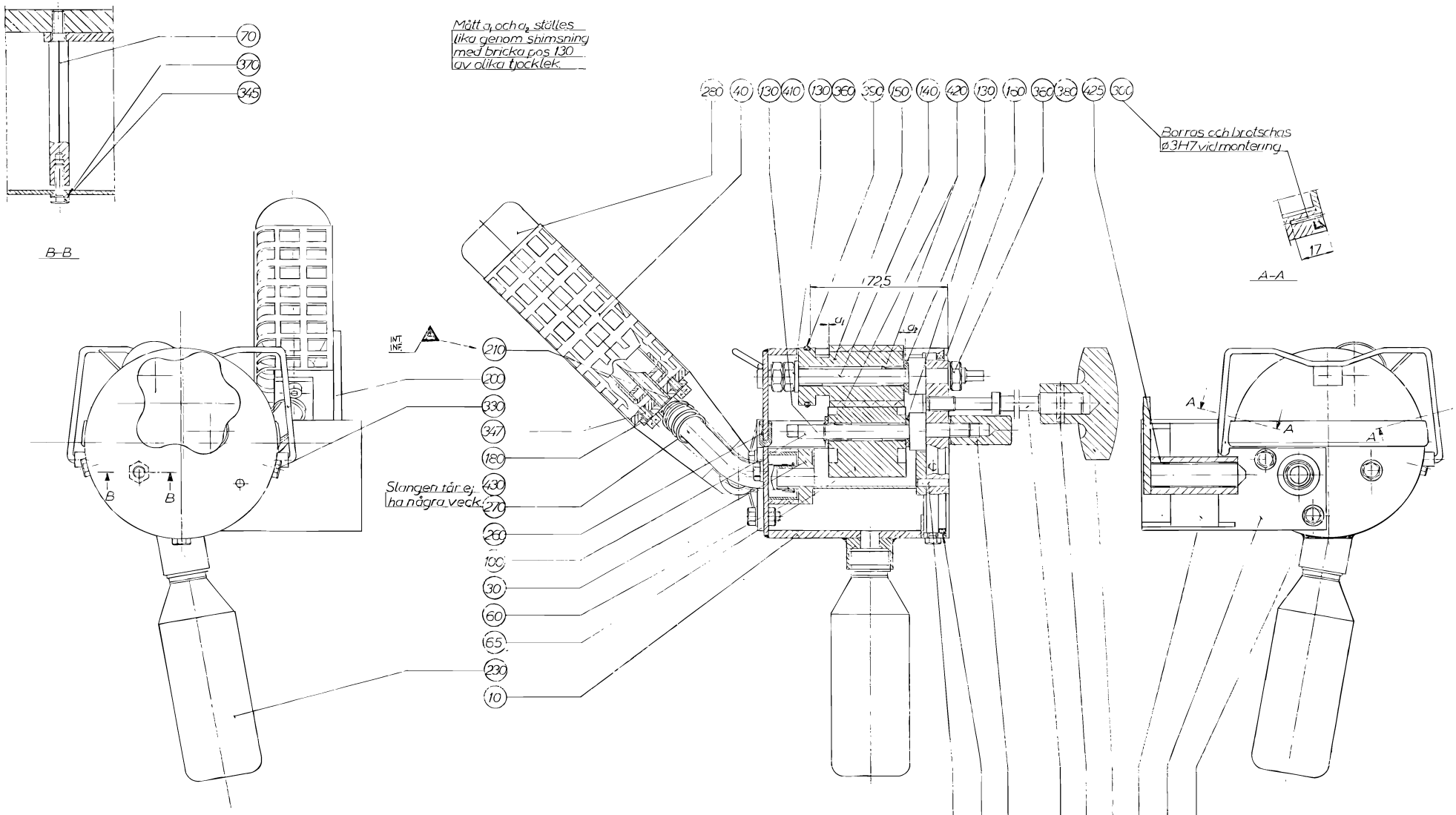

Listpos 260 limmas med ett mjukt två komp. lim som är best mot den. etanol och glykoleter tex gun mi. lösn. 6-5522 och primer 1-8427 från Trelleborg AB

ECM: 102381 - 20011206
Group number: 434774-0300
Assembly Drawing: 434774-3_1_AA

Issue: 20020822

Pos	Part No	SP	UN	Qty	Description	Page No
TBA/9 OR TBA/9 R						
230	90050-0012	A		1	BOTTLE, 50ML PLASTIC	
Common Parts						
010	297989-0000	-		1	COVER	
030	297210-0000	-		1	INK WELL	
040	476356-0000	B		1	HOLDER FOR INK BOTTLE	
060	445542-0000	-		1	MANTEL RUBBER	
065	450355-0000	A		1	INK ROLLER	
070	33010-0000	-		1	SCREW	
080	35547-0000	A		1	SPRING	
100	292044-0000	-		1	SHAFT	
110	293667-0000	A		1	DOWEL	
120	436927-0000	B		1	NUT	
130	293669-0004	-		2	WASHER	
130	293669-0001	-		4	WASHER	
130	293669-0002	-		2	WASHER	
130	293669-0003	-		2	WASHER	
140	293670-0000	-		1	SHAFT	
150	B543135-0000	A		1	INK TRANSFER ROLLER	
	321120-0100	-		*1*	*BEARING BUSHING WITHOUT FLANGE,8/10X12*	
	90153-0050	-		*1*	*ADHESIVE*	
160	297213-0000	A		1	END SECTION	
180	476355-0000	A		1	CANNULAR TUBE	
190	456772-0000	B		1	PIVOT BRACKET	
200	434747-0000	A		1	BOW CLAMP	
210	537308-0000	-		1	SPRING	
250	90051-0077	A		1	HANDLE	
260	90143-0029	A	MM	295	STRIP	
270	90166-0138	A	MM	100	HOSE	
280	90299-0072	A		1	INK	
300	311103-0236	-		2	PARALLELL PIN, M6, 3X16 MM	
310	311103-0238	-		1	PARALLELL PIN, M6, 3X20 MM	
320	311103-0270	-		1	PARALLELL PIN, M6, 4X16 MM	
330	312105-0291	-		3	SCREW M6S ISO 4017 M4X12 A480	
340	312105-0327	-		2	SCREW M6S ISO 4017 M5X12 A480	
345	312105-0329	-		1	SCREW M6S ISO 4017 M5X16 A480	
347	312115-0287	-		2	SCREW MC6S M4X8 A280	
350	312605-0314	-		2	HEXAGON NUT, M6M M5 A280	
360	312605-0318	-		3	HEXAGON NUT, M6M M8 A280	
370	315105-0146	-		3	WASHER PLAIN, BRB, 5,3/10,H=1	
380	315105-0165	-		2	WASHER PLAIN, BRB, 8,4/16,H=1,5	
390	315202-0218	A		1	O-RING 26,2X3 MM	
400	315202-0309	A		1	O-RING 89,5X3 MM	
410	315750-0105	A		1	RETAIN. RING, 8	
420	321120-0100	A		4	BEARING BUSHING WITHOUT FLANGE,8/10X12	
425	321120-0109	A		2	BEARING BUSHING WITHOUT FLANGE,12/14X10	
430	352113-0101	A		1	CLIP STRIP, 92X2,5 MM	

Machine Type | Group Description | Used-In | Group Number | Page No

BENDING ROLLER

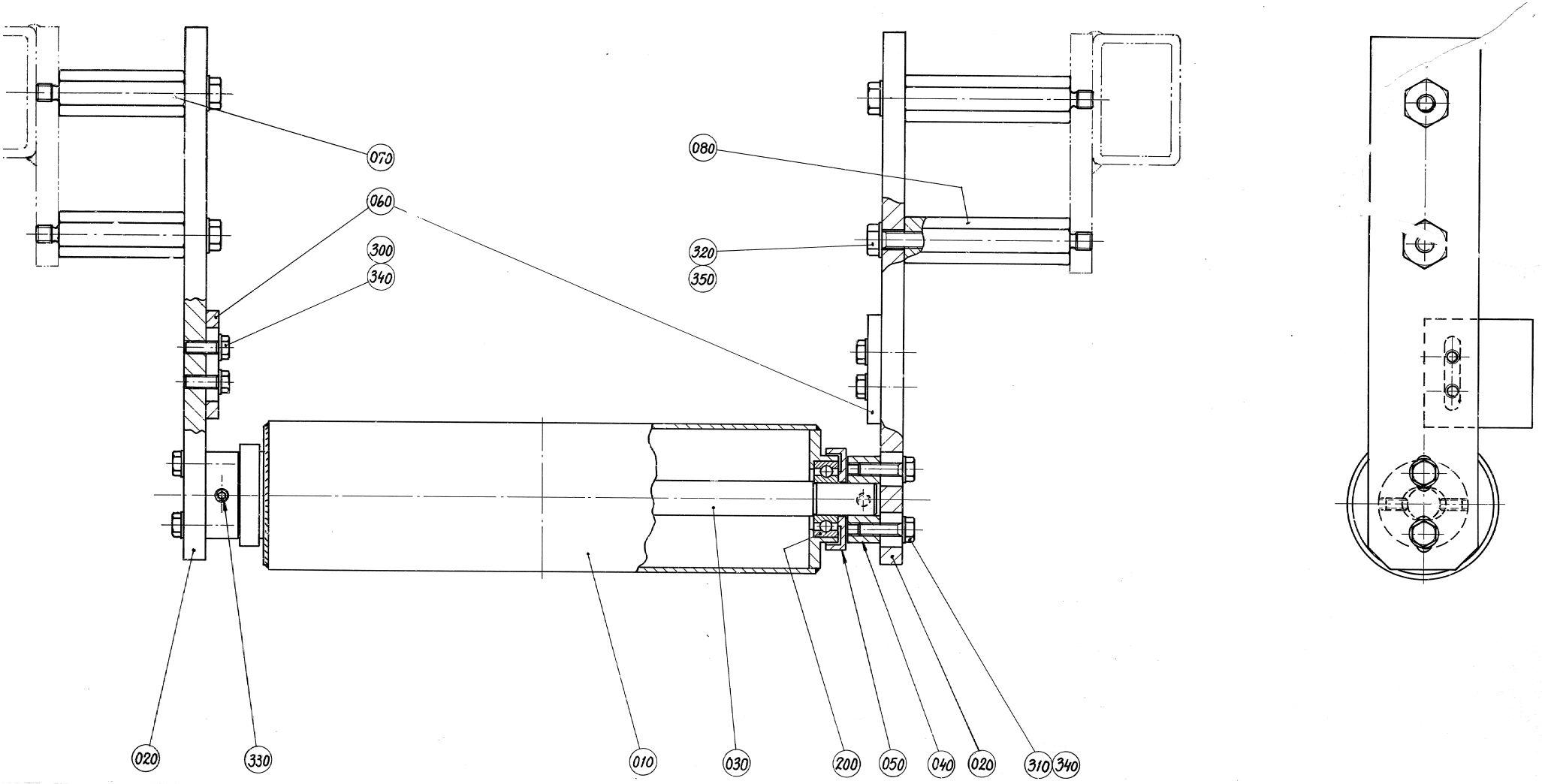

ECM: 102395 - 20011206
Group number: 456919-0100
Assembly Drawing: 456919-1_1_AA

Issue: 20020822

Pos	Part No	SP	UN	Qty	Description	Page No
Common Parts						
010	256984-0000	B		1	BENDING ROLLER	
020	456920-0000	-		2	BRACKET	
030	256985-0000	A		1	SHAFT	
040	265567-0000	B		2	BEARING UNIT	
050	265568-0000	-		2	DUST COVER	
060	456921-0000	-		2	STOP	
070	456922-0001	-		2	STRUT	
080	456922-0002	-		2	STRUT	
200	90214-0098	-		2	BALL BEARING, 15X35X11 MM	
300	312105-0368	-		4	SCREW M6S M6X16 A280	
310	312105-0370	-		4	SCREW M6S ISO 4017 M6X20 A480	
320	312105-0453	-		4	SCREW M6S ISO 4017 M8X25 A480	
330	312318-0364	-		4	SCREW HEX.SOCK.SET CUP P.MSK6SS6X10 SS	
340	315105-0153	-		8	WASHER PLAIN, BRB, 6,4/12,H=1,5	
350	315105-0165	-		4	WASHER PLAIN, BRB, 8,4/16,H=1,5	

Pos	Part No	SP	UN	Qty	Description	Page No

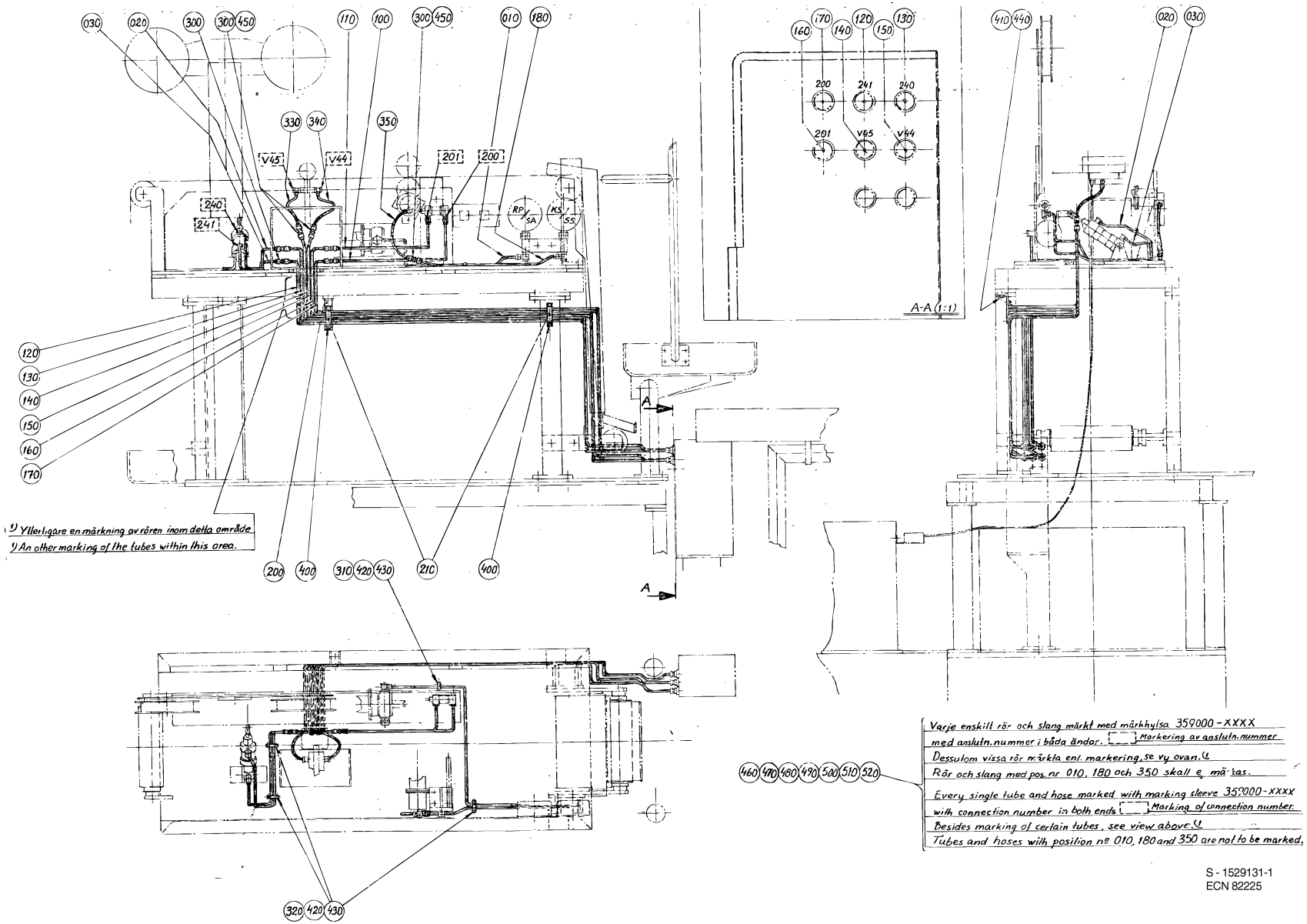
A-A (1:1)
1) Ytterligare en märkning av rören inom detta område
1) An other marking of the tubes within this area.
Varje enskilt rör och slang märkt med märkhylsa 359000-XXXX
med anslutn.nummer i båda ändor. Markering av anslutn.nummer
Dessutom vissa rör märkta enl. markering, se vy ovan. 1)
Rör och slang med pos.nr 010, 180 och 350 skall ej mätas.
Every single tube and hose marked with marking sleeve 359000-XXXX
with connection number in both ends Marking of connection number
Besides marking of certain tubes, see view above. 1)
Tubes and hoses with position nr 010, 180 and 350 are not to be marked.
S - 1529131-1
ECN 82225

ECM: 87057 - 20010226
Group number: 1529131-0100
Assembly Drawing: 1529131-1_1_AA

Issue: 20020822

Pos	Part No	SP	UN	Qty	Description	Page No
0200B OR 0250B						
010	456731-0001	-		1	PIPE	
020	456737-0001	-		1	PIPE	
030	456738-0001	-		1	PIPE	
100	456730-0001	-		1	PIPE	
110	456730-0002	-		1	PIPE	
0200S						
010	456731-0002	-		1	PIPE	
020	456737-0002	-		1	PIPE	
030	456738-0002	-		1	PIPE	
100	456730-0003	-		1	PIPE	
110	456730-0004	-		1	PIPE	
Common Parts						
120	456938-0000	-		1	PIPE 241	
130	456939-0000	-		1	PIPE 240	
140	456940-0000	-		1	PIPE V45	
150	456941-0000	-		1	PIPE V44	
160	456942-0000	-		1	PIPE 201	
170	456943-0000	-		1	PIPE 200	
180	456732-0000	-		1	PIPE	
200	456936-0000	-		1	FASTENING BRACKET	
210	456937-0000	-		2	CRAMP	
300	90030-0075	-		7	PIPE CONNECTION G-6	
310	90165-0005	-		1	PIPE CLIP FOR TUBE D=6 MM	
320	90165-0006	-		3	CLIP	
330	90166-0132	-	MM	350	TUBE 6 MM PA,TRANSP.	
340	90166-0132	-	MM	350	TUBE 6 MM PA,TRANSP.	
350	90166-0132	-	MM	350	TUBE 6 MM PA,TRANSP.	
400	312105-0364	-		4	SCREW M6S ISO 4017 M6X10 A480	
410	312105-0451	-		1	SCREW M6S ISO 4017 M8X20 A480	
420	312125-0285	-		7	SCREW SLOT.PAN HD. MCS 4X6 A480	
430	315105-0136	-		7	WASHER PLAIN, BRB, 4,3/8,H=0,8	
440	315105-0165	-		1	WASHER PLAIN, BRB, 8,4/16,H=1,5	
450	342708-0101	-		3	REINFORCING RING VSH 6X1 MM	
460	359000-0064	-		60	MARKING CO2/4 OMÄRKT	
470	359000-0400	-		20	MARKING CO2/4"0"	
480	359000-0401	-		10	MARKING COLLAR 2/4 "1" YELLOW	
490	359000-0402	-		20	MARKING COLLAR 2/4 "2" YELLOW	
500	359000-0404	-		25	MARKING COLLAR PA2/4 "4" YELLOW	
510	359000-0405	-		5	MARKING CO2/4"5"	
520	359000-0771	-		10	MARKING CO2/4"V"	

Machine Type	Group Description	Used-In	Group Number	Page No

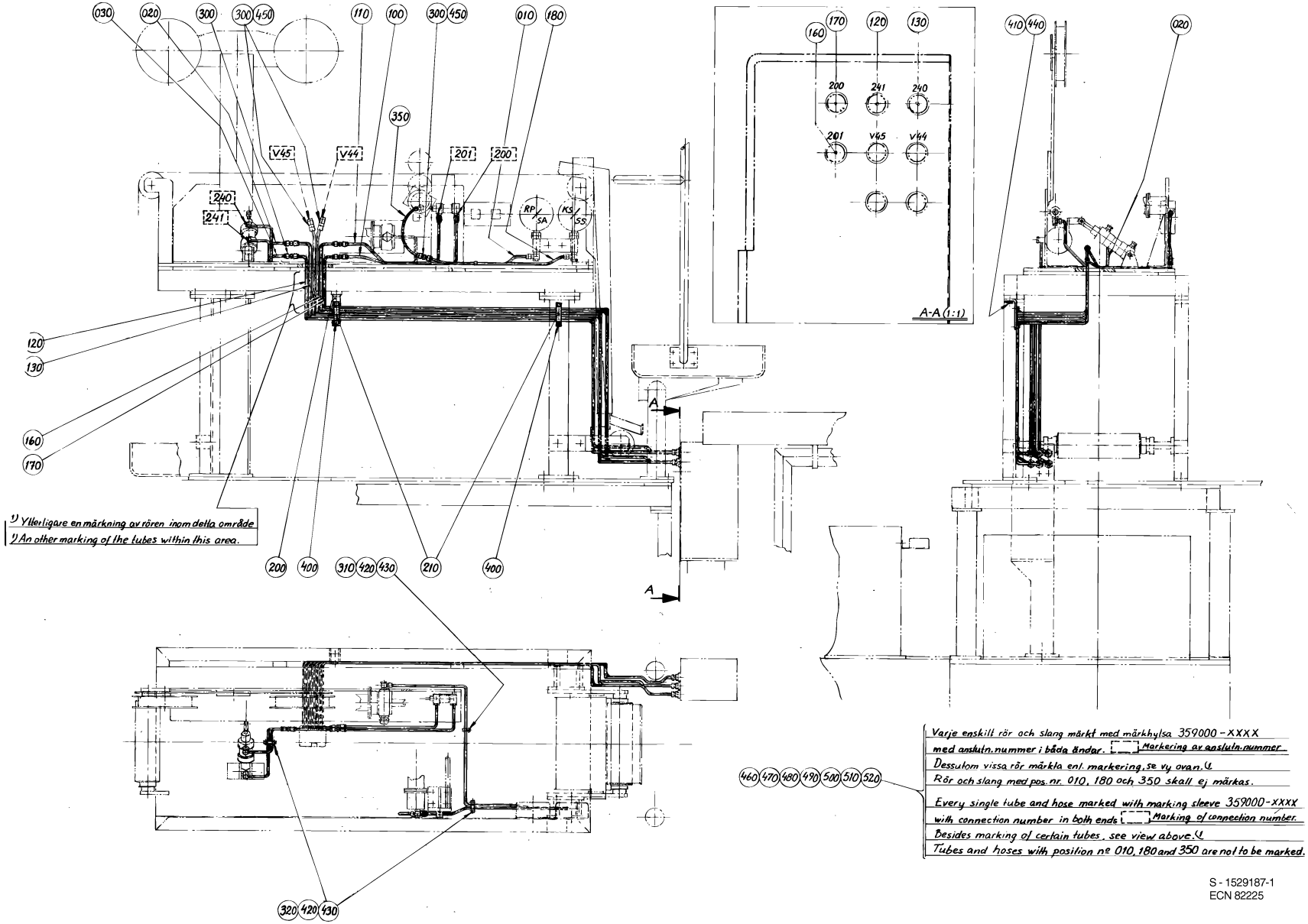

S - 1529187-1
ECN 82225

ECM: 87058 - 20010226
Group number: 1529187-0100
Assembly Drawing: 1529187-1_1_AA

Issue: 20020822

Pos	Part No	SP	UN	Qty	Description	Page No
0200B OR 0250B						
010	456731-0001	-		1	PIPE	
020	751073-0001	-		1	PIPE 240	
030	751074-0001	-		1	PIPE 241	
100	751080-0001	-		1	PIPE 200	
110	751144-0001	-		1	PIPE 201	
0200S						
010	456731-0002	-		1	PIPE	
020	751073-0002	-		1	PIPE 240	
030	751074-0002	-		1	PIPE 241	
100	751080-0002	-		1	PIPE 200	
110	751144-0002	-		1	PIPE 201	
Common Parts						
120	456938-0000	-		1	PIPE 241	
130	456939-0000	-		1	PIPE 240	
140	456940-0000	-		1	PIPE V45	
150	456941-0000	-		1	PIPE V44	
160	456942-0000	-		1	PIPE 201	
170	456943-0000	-		1	PIPE 200	
180	456732-0000	-		1	PIPE	
200	456936-0000	-		1	FASTENING BRACKET	
210	456937-0000	-		2	CRAMP	
300	90030-0075	-		7	PIPE CONNECTION G-6	
310	90165-0005	-		1	PIPE CLIP FOR TUBE D=6 MM	
320	90165-0006	-		2	CLIP	
350	90166-0132	-	MM	350	TUBE 6 MM PA,TRANSP.	
400	312105-0364	-		4	SCREW M6S ISO 4017 M6X10 A480	
410	312105-0451	-		1	SCREW M6S ISO 4017 M8X20 A480	
420	312125-0285	-		5	SCREW SLOT.PAN HD. MCS 4X6 A480	
430	315105-0136	-		5	WASHER PLAIN, BRB, 4,3/8,H=0,8	
440	315105-0165	-		1	WASHER PLAIN, BRB, 8,4/16,H=1,5	
450	342708-0101	-		3	REINFORCING RING VSH 6X1 MM	
460	359000-0064	-		60	MARKING CO2/4 OMÄRKT	
470	359000-0400	-		20	MARKING CO2/4"0"	
480	359000-0401	-		10	MARKING COLLAR 2/4 "1" YELLOW	
490	359000-0402	-		20	MARKING COLLAR 2/4 "2" YELLOW	
500	359000-0404	-		25	MARKING COLLAR PA2/4 "4" YELLOW	
510	359000-0405	-		5	MARKING CO2/4"5"	
520	359000-0771	-		10	MARKING CO2/4"V"	

Pos	Part No	SP	UN	Qty	Description	Page No

Machine Type | Group Description | Used-In | Group Number | Page No

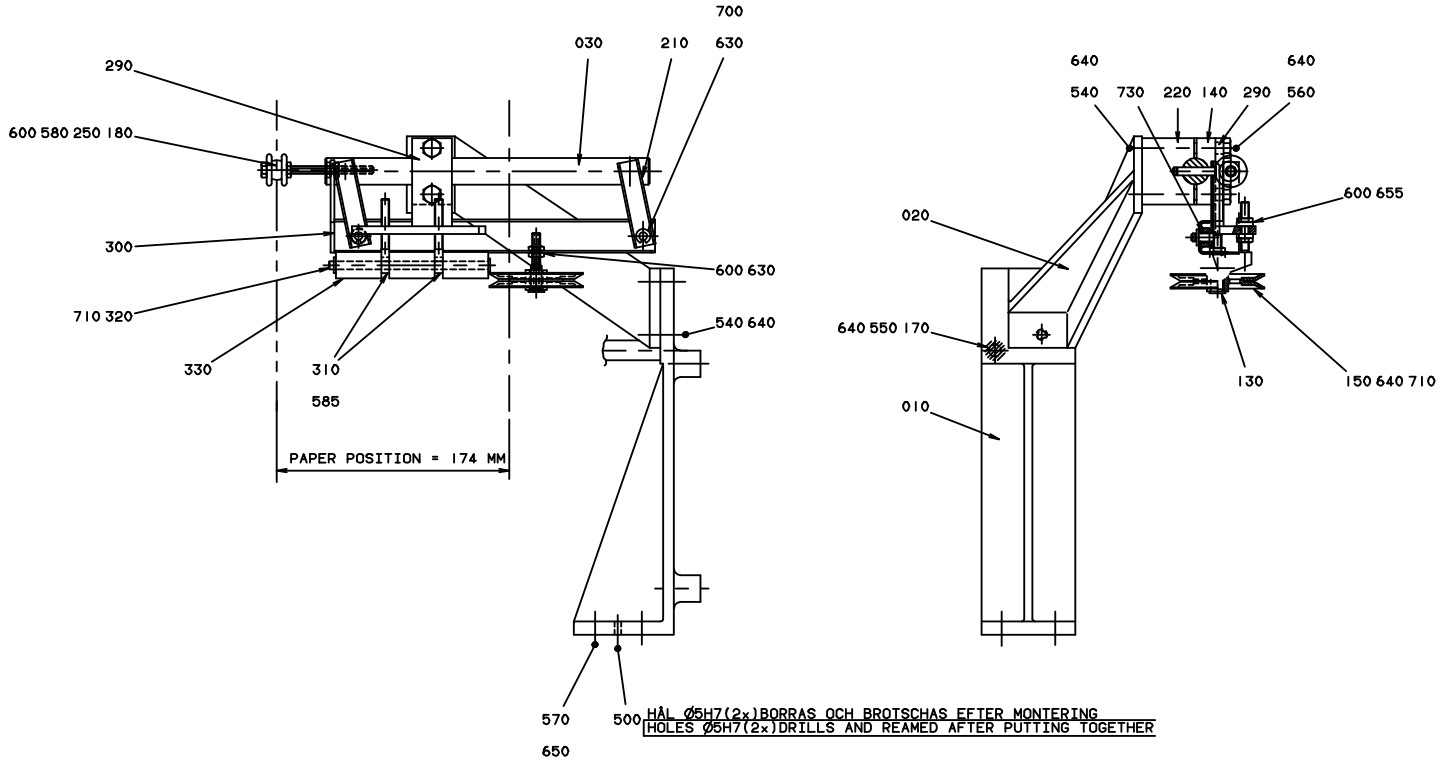
700
030
210
630
290
600 580 250 180
300
600 630
710 320
540 640
330
310
585
PAPER POSITION = 174 MM
640
640
540
730
220
140
290
560
600 655
020
640 550 170
130
150 640 710
010
570
650
500
HÅL Ø5H7(2x)BORRAS OCH BROTSCHAS EFTER MONTERING
HOLES Ø5H7(2x)DRILLS AND REAMED AFTER PUTTING TOGETHER

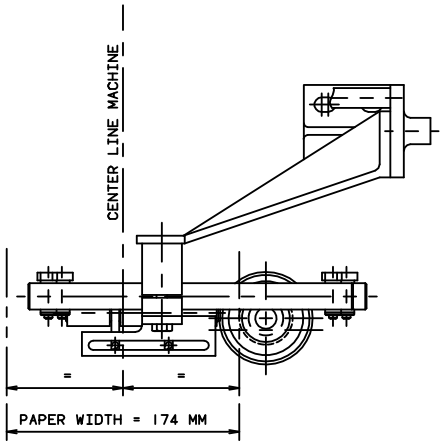
CENTER LINE MACHINE
=
=
PAPER WIDTH = 174 MM

ECM: 97925 - 20011016
Group number: 1529358-0100
Assembly Drawing: 1529358-1_1_AA

Issue: 20020822

Pos	Part No	SP	UN	Qty	Description	Page No
Common Parts						
010	243218-0000	-		1	CANTILEVER	
020	272173-0000	-		1	CANTILEVER	
030	243151-0000	D		1	SHAFT	
130	590328-0000	C		1	SHAFT	
140	31423-0000	-		1	MOUNTING LUG	
150	590333-0000	C		1	GUIDE WHEEL	
170	256986-0003	-		1	STRUT	
180	257923-0000	C		1	GUIDE WHEEL	
190	266049-0000	-		1	SUPPORT	
210	590334-0000	C		2	LINK	
220	266761-0000	-		1	MOUNTING LUG	
250	456022-0000	C		1	SLEEVE	
290	590335-0000	-		1	BRACKET	
300	591616-0000	D		1	LEAD ARM	
310	590336-0000	D		2	HOLDER	
320	590329-0000	D		1	SHAFT	
330	590331-0000	C		3	ROLLER	
500	311305-0308	-		2	SLOTTED PIRPC5X16FZB	
540	312105-0451	-		4	SCREW M6S ISO 4017 M8X20 A480	
550	312105-0453	-		2	SCREW M6S ISO 4017 M8X25 A480	
560	312105-0459	-		2	SCREW M6S ISO 4014 M8X40 A480	
570	312105-0491	-		4	SCREW M6S ISO 4017 M10X20 A480	
580	312109-0386	-		1	SCREW M6S ISO 4017 M6X80 A480	
585	312318-0218	-		2	SCREW SOCK.SET CUP P MSK6SS M3X4 A4	
600	312605-0316	-		5	HEXAGON NUT, M6M M6 A280	
630	315105-0153	-		4	WASHER PLAIN, BRB, 6,4/12,H=1,5	
640	315105-0165	-		9	WASHER PLAIN, BRB, 8,4/16,H=1,5	
650	315105-0173	-		4	WASHER PLAIN, BRB, 10,5/22,H=2	
655	315115-0153	-		2	WASHER PLAIN, TBRB 6,4/12 H=3	
700	315755-0107	C		2	LOCKING WASHER 5	
710	315755-0109	C		2	LOCKING WASHER 7	
730	321141-0060	C		2	BEARING BUSHING WITHOUT FL, 6X8X6 MM	

Pos	Part No	SP	UN	Qty	Description	Page No

Machine Type | Group Description | Used-In | Group Number | Page No

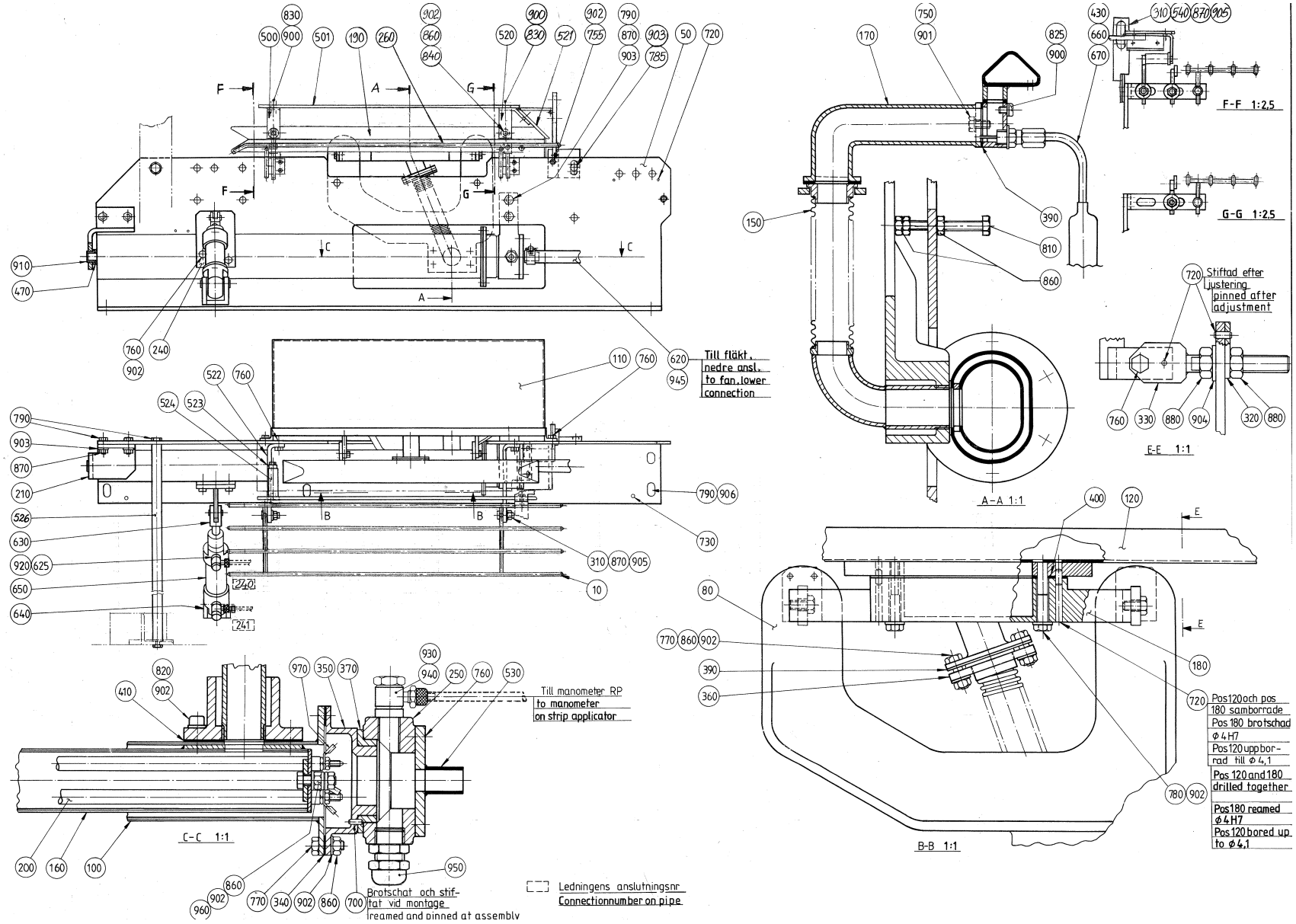
Till fläkt, nedre ansl.
to fan, lower connection
Till manometer RP
to manometer on strip applicator
Brotschat och stiftat vid montage
reamed and pinned at assembly
Ledningens anslutningsnr
Connectionnumber on pipe
F-F 1:2,5
G-G 1:2,5
E-E 1:1
A-A 1:1
B-B 1:1
C-C 1:1
Stiftad efter justering
pinned after adjustment
Pos 120 och pos 180 samborrade
Pos 180 brotschad ⌀4H7
Pos 120 uppborrad till ⌀4,1
Pos 120 and 180 drilled together
Pos 180 reamed ⌀4H7
Pos 120 bored up to ⌀4,1

ECM: 97897 - 20011016
Group number: 1529357-0100
Assembly Drawing: 1529357-1_1_AA

Issue: 20020822

Pos	Part No	SP	UN	Qty	Description	Page No
Common Parts						
010	1103765-0000	C		1	PAPER SUPPORT	
050	751093-0000	-		1	MOUNTING SHEET	
080	32668-0000	-		1	ARM	
100	36749-0000	-		1	MANTLE	
110	267306-0000	-		1	TOUCH GUARD	
120	283361-0000	C		1	AIR NOZZLE	
150	32451-0000	D		1	AIR DUCT	
160	32453-0000	-		1	MANTLE	
170	32474-0000	-		1	ATTACHMENT	
180	245189-0001	-		1	ATTACHMENT	
190	591556-0000	-		1	PAPER SUPPORT	
200	251279-0000	C		1	COIL HEATER	
210	251490-0000	D		1	FASTENING BRACKET	
240	751087-0000	D		1	BRACKET	
250	283172-0000	-		1	BEARING HOUSING	
260	591555-0000	-		1	PAPER SUPPORT	
310	22559-0000	C		6	GRUB SCREW	
320	32213-0000	-		2	WASHER	
330	32215-0000	D		2	HOLDER	
340	531733-0000	C		1	GASKET	
350	32217-0000	-		1	BOTTOM SECTION	
360	32219-0000	-		1	WASHER	
370	32223-0000	C		1	BEARING	
380	32400-0000	-		2	HOLDER	
390	531734-0000	C		2	GASKET	
400	531735-0000	C		1	GASKET	
410	531736-0000	C		1	GASKET	
430	90326-0089	C		1	THERMOCOUPLE, 5110-089-000	
470	230107-0000	C		1	WASHER	
500	591610-0000	-		1	ANGLE BRACKET	
501	591609-0000	-		1	HEAT GUARD	
520	591612-0000	-		1	ANGLE BRACKET	
521	591611-0000	-		1	HEAT GUARD	
522	591606-0000	-		2	BRACKET	
523	251504-0000	-		1	HOLDER	
524	591607-0000	-		1	SPACER	
526	256986-0006	-		1	STRUT	
530	279672-0000	-		1	ATTACHMENT	
540	590321-0000	-		1	BRACKET	
620	90166-0087	-	MM	300	HOSE 15/23 REINF.PVC TRANSP.	
625	90235-0274	C		2	THROTTLE CHECK VALVES,G1/8"	
630	90239-0516	C		1	ROD END,CLEVIS WITH AXLE M10X1,25	
640	90239-0488	C		1	REAR,CLEVIS,MINI-ISO 32	
650	90239-0858	C		1	DOUBLE ACTING, MINI-ISO, CYL.32-50	
660	90326-0012	C		1	PROTECTIVE COVER, T31A4618	
670	90326-0020	C		1	PLUG, FEMALE YELLOW CR-AL	
700	311103-0232	-		1	PARALLELL PIN, M6, 3X8 MM	
720	311103-0267	-		10	PARALLELL PIN, M6, 4X10 MM	
730	311305-0308	-		2	SLOTTED PIRPC5X16FZB	
750	312105-0325	-		2	SCREW M6S ISO 4017 M5X10 A480	
755	312105-0362	-		1	SCREW M6S ISO 4017 M6X8 A480	
760	312105-0366	-		16	SCREW M6S M6X12 A280	
770	312105-0368	-		12	SCREW M6S M6X16 A280	
780	312105-0378	-		2	SCREW M6S ISO 4014 M6X40 A480	
785	312105-0447	-		1	SCREW M6S ISO 4017 M8X12 A480	
790	312105-0451	-		12	SCREW M6S ISO 4017 M8X20 A480	
810	312109-0381	-		2	SCREW M6S ISO 4017 M6X55 A480	
820	312115-0368	-		4	SCREW MC6S M6X16 A280	
825	312125-0285	-		1	SCREW SLOT.PAN HD. MCS 4X6 A480	
830	312125-0287	-		6	SCREW PAN HEAD MCS M4X8 SS	
840	312155-0368	-		1	SCREW HEX.SOCK.COUNT.MF6S M6X16 A280	
860	312605-0316	-		15	HEXAGON NUT, M6M M6 A280	
870	312605-0318	-		10	HEXAGON NUT, M6M M8 A280	
880	312605-0320	-		4	HEXAGON NUT, M6M M10 A280	
900	315105-0136	-		7	WASHER PLAIN, BRB, 4,3/8,H=0,8	
901	315105-0146	-		2	WASHER PLAIN, BRB, 5,3/10,H=1	
902	315105-0153	-		23	WASHER PLAIN, BRB, 6,4/12,H=1,5	
903	315105-0165	-		5	WASHER PLAIN, BRB, 8,4/16,H=1,5	
904	315105-0173	-		2	WASHER PLAIN, BRB, 10,5/22,H=2	
905	315115-0165	-		6	WASHER PLAIN, TBRB 8,4/16 H=3	
906	315125-0165	-		6	WASHER PLAIN ROUND,CHAMF. 8,4/26, H=5	
910	321101-0173	C		1	FLANGE BUS 12F7X12	
920	342797-0121	-		2	CONN. BANJO, RINGPIECE 6-1/8	
930	342797-0122	-		1	CONN. BANJO, RINGPIECE 6-1/4	
940	342980-0304	-		1	BANJO-HOLLOW BOLT COUPL,EXT.THR.01-G1/4"	
945	342991-0103	-		2	HOSE CLIP,WORM DRIVE TYPE (19)-23	
950	352103-0106	-		1	CABLE GLAND, ST 11, PR18,6/PG11	
960	353101-0134	-		1	CABLE SHOE	
970	353104-0130	-		2	CABLE SHOEYAV 025 M 4*	

Machine Type | Group Description | Used-In | Group Number | Page No

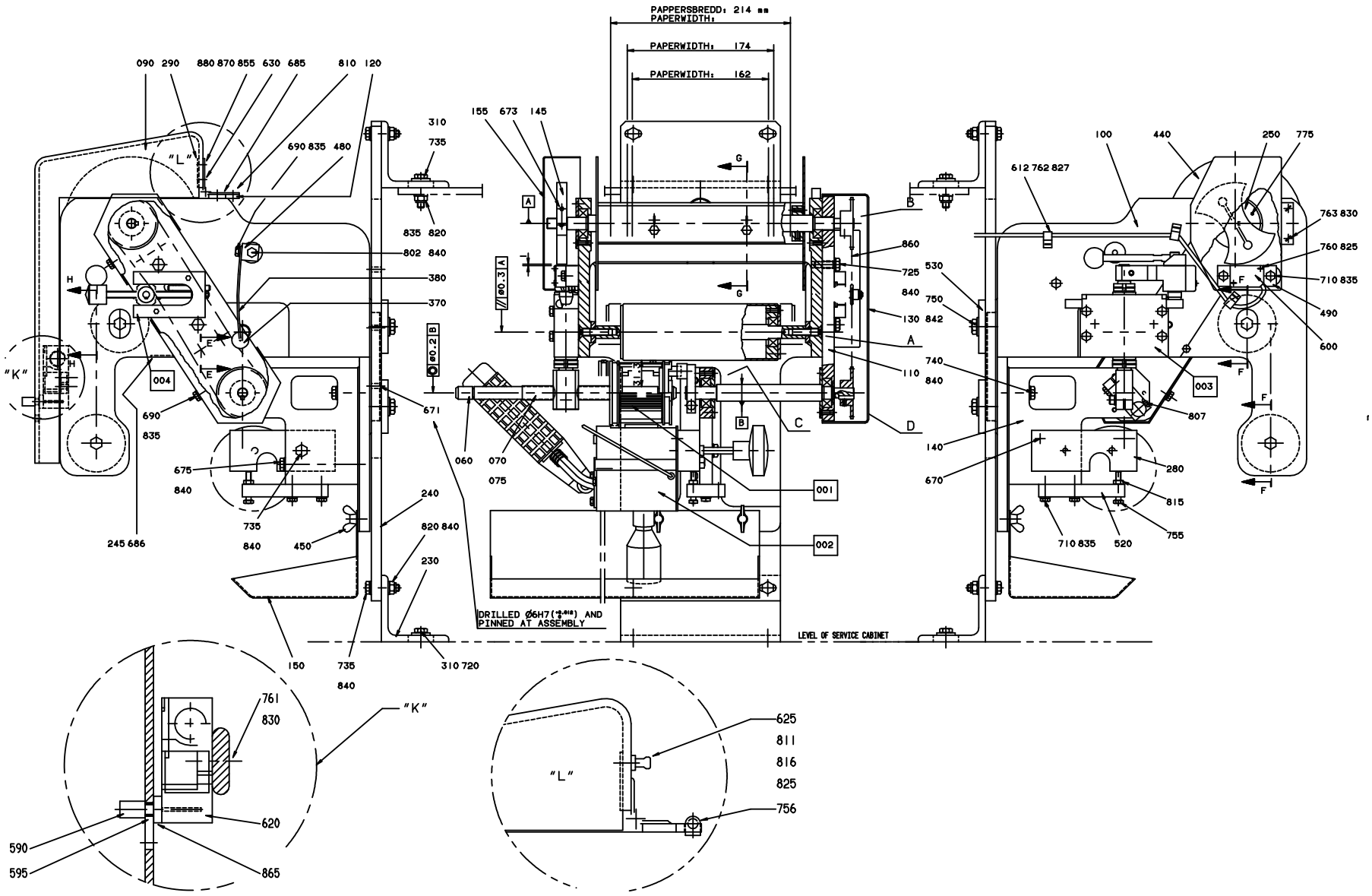
PAPPERSBREDD: 214 mm
PAPERWIDTH:
PAPERWIDTH: 174
PAPERWIDTH: 162
090 290 880 870 855 630 685 810 120
690 835 480
310
735
835 820
802 840
380
370
155 673 145
"L"
"K"
004
690
835
675
840
735
840
245 686
450
240
820 840
230
671
060
070
075
001
002
003
860
725
530
840
750
130 842
740
840
110
140
670
807
280
815
755
710 835
520
612 762 827
100
440
250 775
763 830
760 825
710 835
490
600
DRILLED Ø6H7(+0,018) AND PINNED AT ASSEMBLY
LEVEL OF SERVICE CABINET
150
735
840
310 720
761
830
620
590
595
865
625
811
816
825
756

ECM: 102692 - 20020320
Group number: 1529407-0100
Assembly Drawing: 1529407-1_1_AA

Issue: 20020822

Pos	Part No	SP	UN	Qty	Description	Page No
ST-ER						
001	A293684-0200	-		2	PRINTING WHEEL NSS	**793, 795**
ST-R						
001	A293685-0200	-		2	PRINTING WHEEL SS	**797, 799**
Common Parts						
002	A434774-0300	-		1	INK UNIT	**801**
003	A751718-0100	-		1	HOLDER	**821**
004	A543143-0100	-		1	ADJUSTMENT DEVICE	**823, 825**
010	752542-0002	B		1	BENDING ROLLER	
020	752543-0002	B		1	SHAFT	
030	594952-0000	B		2	CREASE BAR	
040	752536-0002	B		1	SHAFT	
050	B594953-0000	B		2	SPACER	
	312911-0115	-		*2*	*THREADED INSERTS M5X2,0D*	
060	456334-0000	B		1	SHAFT	
070	90166-0059	-	MM	37	HOSE PVC 12/16MM TRANSP.	
075	90166-0059	-	MM	37	HOSE PVC 12/16MM TRANSP.	
090	572251-0000	-		1	COVER	
100	752200-0000	-		1	CANTILEVER	
110	752526-0000	-		1	PLATE	
120	572252-0000	-		1	BRACKET	
130	752528-0000	-		1	COVER	
140	752527-0000	-		1	CANTILEVER	
145	491965-0000	-		1	CAM	
150	491723-0000	-		1	SPLASH PLATE	
155	556422-0000	-		1	PROTECTION	
160	752529-0000	B		1	BEARING COVER	
230	456331-0000	-		2	ANGLE BRACKET	
240	752539-0000	-		1	PLATE	
245	572460-0000	-		1	SHEET	
250	752240-0000	-		1	LID	
260	752537-0000	B		2	BENDING ROLLER	
270	752538-0000	B		2	SHAFT	
280	752642-0000	-		1	BRACKET	
290	572253-0000	-		1	SHEET	
300	2526428-0000	B		1	SHAFT	
310	28036-0000	-		8	WASHER	
320	2033-0011	B		20	WASHER	
330	265568-0000	A		4	DUST COVER	
340	32925-0000	B		1	CARRIER	
350	32926-0000	B		1	ROLL	
360	32927-0000	B		1	SHAFT	
370	33182-0000	A		1	ROLL	
380	752237-0000	A		1	SPRING	
410	256248-0001	B		2	LID	
420	256398-0000	B		1	LID	
430	752530-0000	A		2	SPROCKET	
440	256406-0000	-		2	GABLE PLATE	
450	752644-0000	-		2	SCREW	
460	256409-0000	-		6	WASHER	
470	257141-0000	-		2	RETAINING RING	
480	752531-0000	-		1	BRACKET	
490	752534-0000	-		1	PLATE	
520	752541-0000	-		1	CANTILEVER	
530	253107-0000	B		2	WASHER	
540	752544-0001	B		6	SHIM	
550	752544-0002	B		8	SHIM	
560	591567-0000	A		12	LACE	
590	572254-0000	-		1	HANDLE	
595	572255-0000	-		2	SPACER	
600	90044-0104	-		1	PROX.SWITCH IFM IN 3002	
612	90074-0001	-		6	CABLE CLIPS, D=10 MM	
615	90214-0098	-		10	BALL BEARING, 15X35X11 MM	
620	B90044-0103	-		1	KEY SAFETY SWITCH AZ 15 ZVR	
	90044-0310	*A*		*1*	*KEY FOR SAFETY SWITCH, AZ 15/16 B1*	
625	90184-0001	-		1	SNAP-IN BALL LOCK, 49X9 MM	
630	90248-0026	-		2	HINGE, 1703-80X32	
655	311103-0312	-		2	PARALLELL PIN, M6, 5X25 MM	
670	311103-0357	-		1	PARALLELL PIN, M6, 6X30 MM	
671	311103-0353	-		2	PARALLELL PIN, M6, 6X20 MM	
673	312115-0333	-		2	SCREW MC6S M5X25 A280	
675	312111-0471	-		1	SCREW HEX.SOCK.HD.MC6S-TT 8X100 88 FZ	
680	312105-0327	-		2	SCREW M6S ISO 4017 M5X12 A480	
685	312105-0329	-		2	SCREW M6S ISO 4017 M5X16 A480	
686	312105-0331	-		3	SCREW M6S ISO 4017 M5X20 A480	
690	312105-0364	-		3	SCREW M6S ISO 4017 M6X10 A480	
705	312105-0370	-		2	SCREW M6S ISO 4017 M6X20 A480	
710	312105-0372	-		5	SCREW M6S ISO 4017 M6X25 A480	
720	312105-0451	-		2	SCREW M6S ISO 4017 M8X20 A480	
725	312105-0453	-		2	SCREW M6S ISO 4017 M8X25 A480	
735	312105-0457	-		7	SCREW M6S ISO 4014 M8X35 A480	
740	312105-0459	-		5	SCREW M6S ISO 4014 M8X40 A480	

Machine Type | Group Description | Used-In | Group Number | Page No

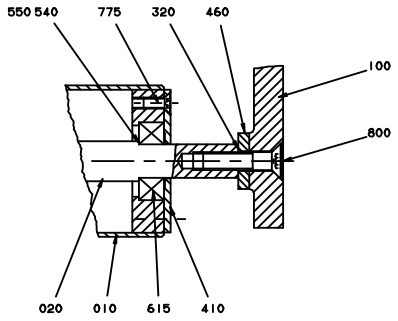

DET.A

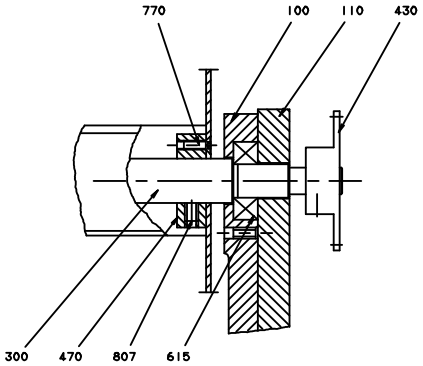

DET.B

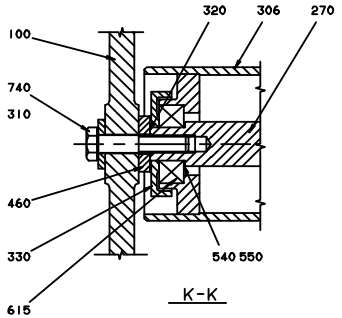

K-K

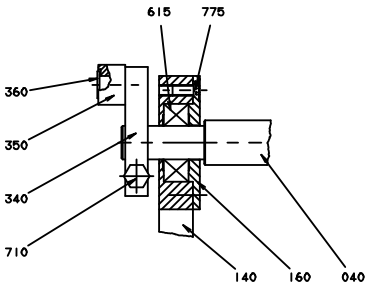

DET.C

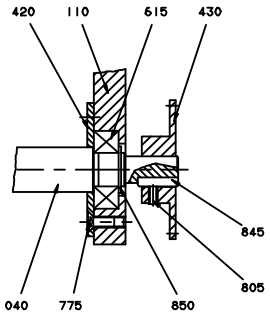

DET.D

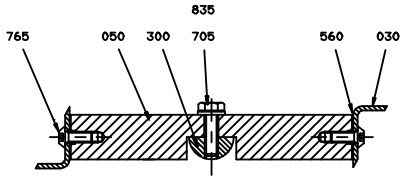

G-G

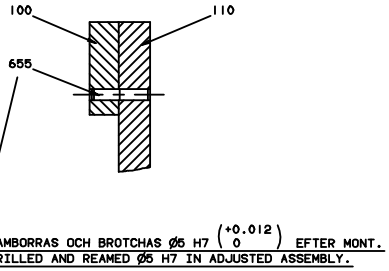

E-E

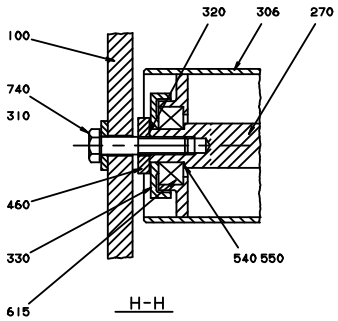

H-H
ONLY 250 ml

Pos	Part No	SP	UN	Qty	Description	Page No
Common Parts (Cont'd)						
750	312105-0493	-		2	SCREW M6S ISO 4017 M10X25 A480	
755	312109-0376	-		1	SCREW M6S ISO 4017 M6X35 A480	
756	312125-0224	-		2	SCREW SLOT.PAN HD. MCS 3X10 A480	
760	312125-0230	-		2	SCREW PAN HEAD MCS M3X20 SS	
761	312125-0329	-		2	SCREW PAN HEAD MCS M5X16 SS	
762	312125-0289	-		6	SCREW SLOT.PAN HD. MCS 4X10 A480	
763	312125-0325	-		2	SCREW SLOT.PAN HD. MCS 5X10 A480	
765	90287-0331	-		4	SCREW SOCK. BUT. HEAD K6S M5X12 A4	
770	312155-0291	-		6	SCREW HEX.SOCK.COUNT.MF6S M4X12 A480	
775	312155-0327	-		15	SCREW HEX.SOCK.COUNT.MF6S M5X12 A280	
800	312155-0457	-		2	SCREW HEX.SOCK.COUNT.MF6S M8X35 A280	
802	312105-0382	-		1	SCREW M6S ISO 4014 M6X60 A480	
805	312318-0287	-		2	SCREW SOCK.SET CUP P MSK6SS M4X8 A4	
807	312318-0362	-		3	SCREW SOCK.SET CUP P MSK6SS M6X8 A4	
810	312145-0285	-		6	SCREW COUNTERS.SLOT.HD. MFS 4X6 SS	
811	312145-0228	-		2	SCREW COUNTERS.SLOT.HD. MFS 3X16 SS	
815	312605-0316	-		1	HEXAGON NUT, M6M M6 A280	
816	312812-0310	-		2	HEXAGON NUT, NY-LOCK M3 A480	
820	312812-0318	-		6	HEXAGON NUT, NY-LOCK M8 A480	
825	315105-0124	-		4	WASHER PLAIN, BRB, 3,2/6,H=0,5	
827	315105-0136	-		6	WASHER PLAIN, BRB, 4,3/8,H=0,8	
830	315105-0146	-		6	WASHER PLAIN, BRB, 5,3/10,H=1	
835	315105-0153	-		10	WASHER PLAIN, BRB, 6,4/12,H=1,5	
840	315105-0165	-		15	WASHER PLAIN, BRB, 8,4/16,H=1,5	
842	315105-0173	-		2	WASHER PLAIN, BRB, 10,5/22,H=2	
845	315701-0169	-		2	PARALLEL KEY W. ROUND ENDS 4X4X18 MM	
850	315751-0112	-		1	RETAIN. RING, 15	
855	312145-0293	-		6	SCREW COUNTERS.SLOT.HD. MFS 4X16 SS	
860	318207-0168	-		1	ROLLER CHAIN, SINGLE 6MM-168	
870	312812-0312	-		6	HEXAGON NUT, NY-LOCK M4 A480	
880	315101-0136	-		6	WASHER PLAIN, BRB, 4,3/8 H=0,8	
900	352101-0102	-		1	LEAD-IN, PR15,2/PG9, E-1457515	

Pos	Part No	SP	UN	Qty	Description	Page No

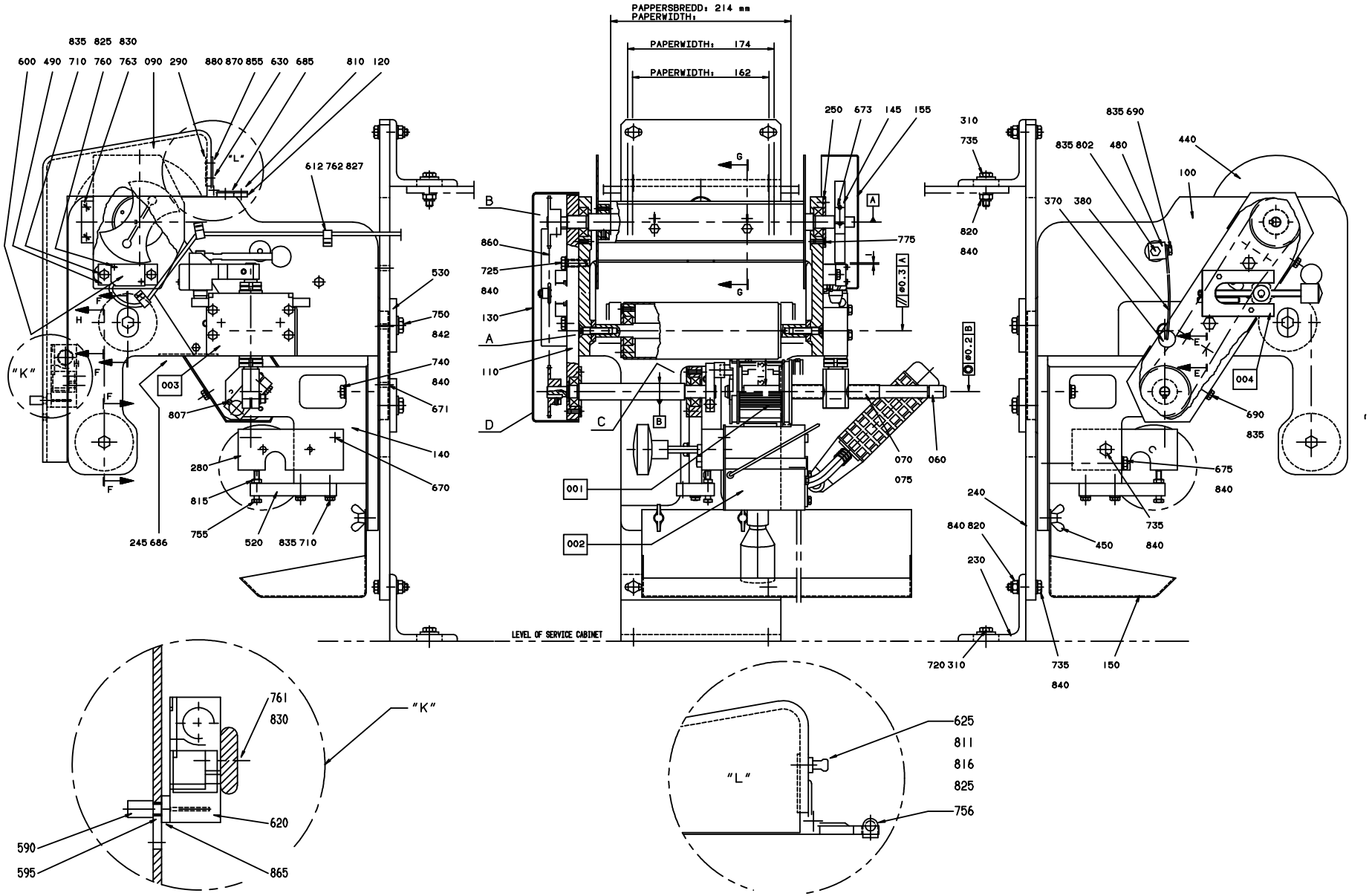
PAPPERSBREDD: 214 mm
PAPERWIDTH:
PAPERWIDTH: 174
PAPERWIDTH: 162
LEVEL OF SERVICE CABINET
"K"
"L"
001
002
003
004

Pos	Part No	SP	UN	Qty	Description	Page No	Pos	Part No	SP	UN	Qty	Description	Page No

SEE PREVIOUS LISTS PAGES: 813, 815.

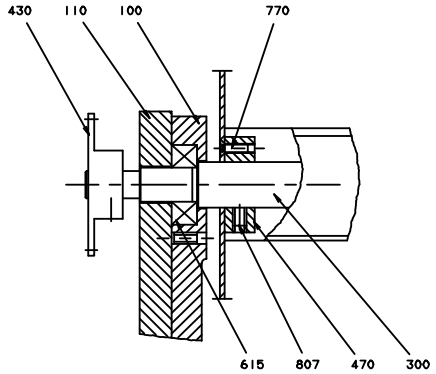

DET.B

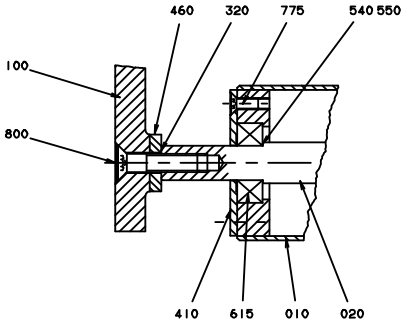

DET.A

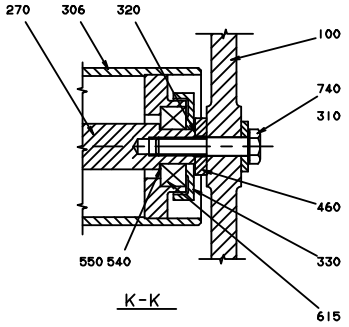

K-K

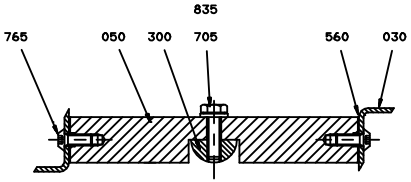

G-G

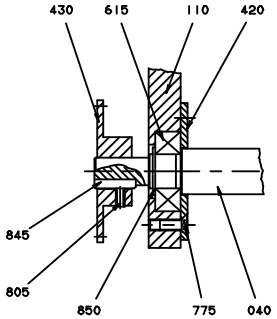

DET.D

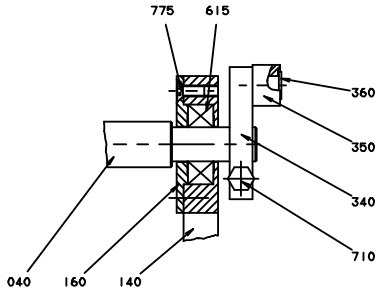

DET.C

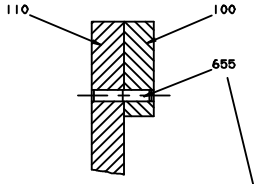

SAMBORRAS OCH BROTCHAS Ø5 H7 $\left(^{+0.012}_{0}\right)$ EFTER MONT.
DRILLED AND REAMED Ø5 H7 IN ADJUSTED ASSEMBLY.

E-E

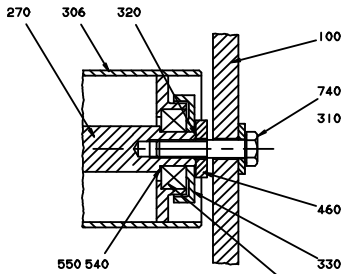

H-H
ONLY 250 ml

Pos	Part No	SP	UN	Qty	Description	Page No	Pos	Part No	SP	UN	Qty	Description	Page No

SEE PREVIOUS LISTS PAGES: 813, 815.

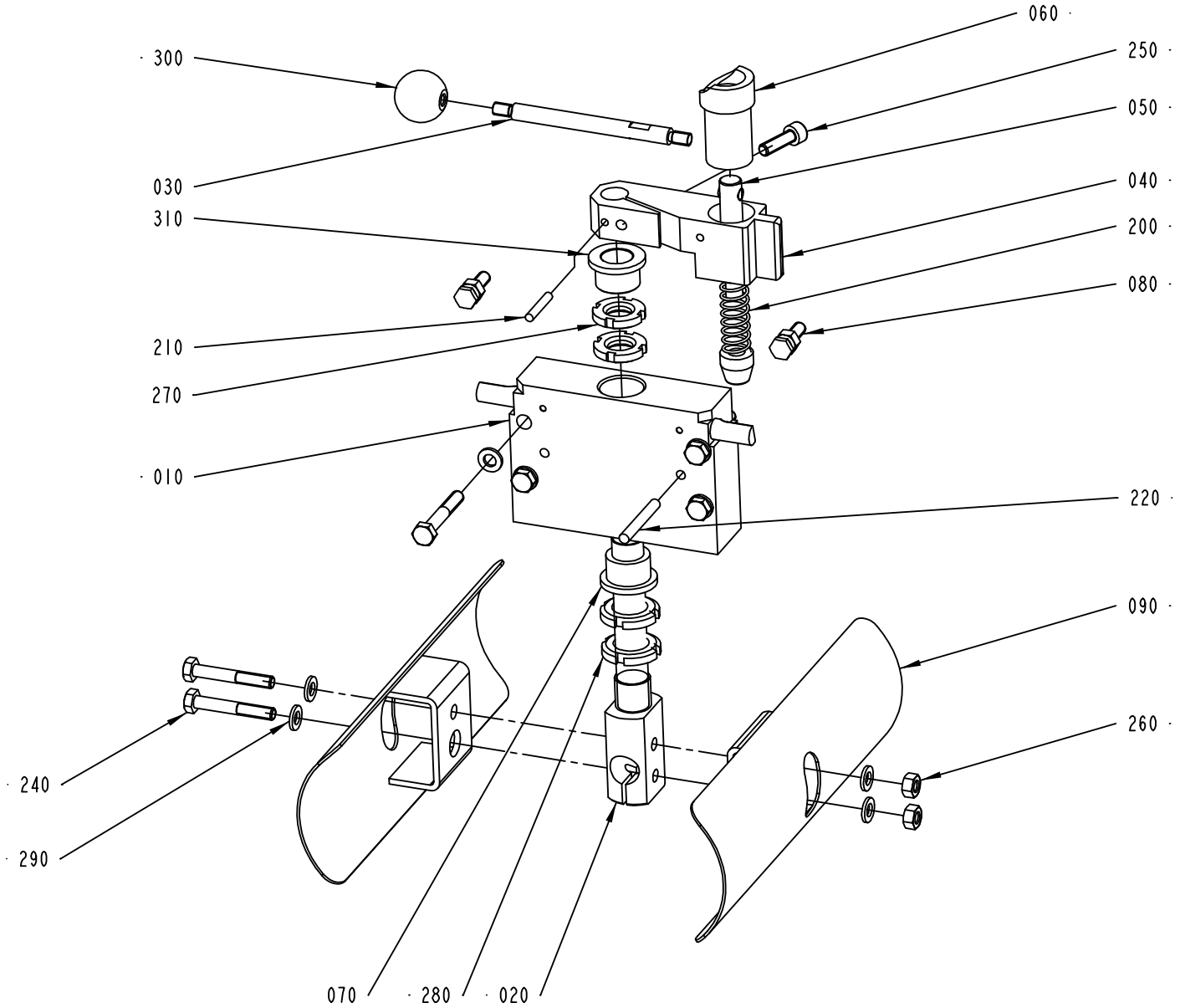

751718-1
ECN 73294

ECM: 73294 - 20011129
Group number: 751718-0100
Assembly Drawing: 751718-1_1_AD

Issue: 20020822

Pos	Part No	SP	UN	Qty	Description	Page No
Common Parts						
010	464009-0003	-		1	BLOCKING PIECE	
020	979960-0000	B		1	SHAFT	
030	450500-0000	B		1	DOWEL	
040	464010-0000	-		1	ARM	
050	464011-0000	B		1	LOCK STUD	
060	464012-0000	-		1	CURVE	
070	B466430-0000	B		1	BUSHING	
	321111-0212	*-*		*1*	*BEAR.BUSHING WITH FLANGE, 15/21X15 MM*	
080	B476377-0000	-		2	SCREW	
	312105-0371	*-*		*1*	*SCREW M6S ISO 4017 M6X22 A480*	
090	979942-0000	-		2	COVER	
200	90335-0064	B		1	SPRING	
210	311103-0274	-		2	PARALLELL PIN, M6, 4X25 MM	
220	311103-0318	-		2	PARALLELL PIN, M6, 5X40 MM	
240	312105-0378	-		6	SCREW M6S ISO 4014 M6X40 A480	
250	312115-0370	-		1	SCREW MC6S M6X20 A280	
260	312605-0316	-		4	HEXAGON NUT, M6M M6 A280	
270	312805-0102	-		2	NUT ROUND WITH SLOTS M15X1 FE	
280	312805-0103	-		2	NUT ROUND WITH SLOTS M17X1 FE	
290	315105-0153	-		8	WASHER PLAIN, BRB, 6,4/12,H=1,5	
300	318800-0103	-		1	HANDLES,SPHERICAL KNOB,INT.THRE.,D.25-M6	
310	321111-0212	B		1	BEAR.BUSHING WITH FLANGE, 15/21X15 MM	

Pos	Part No	SP	UN	Qty	Description	Page No

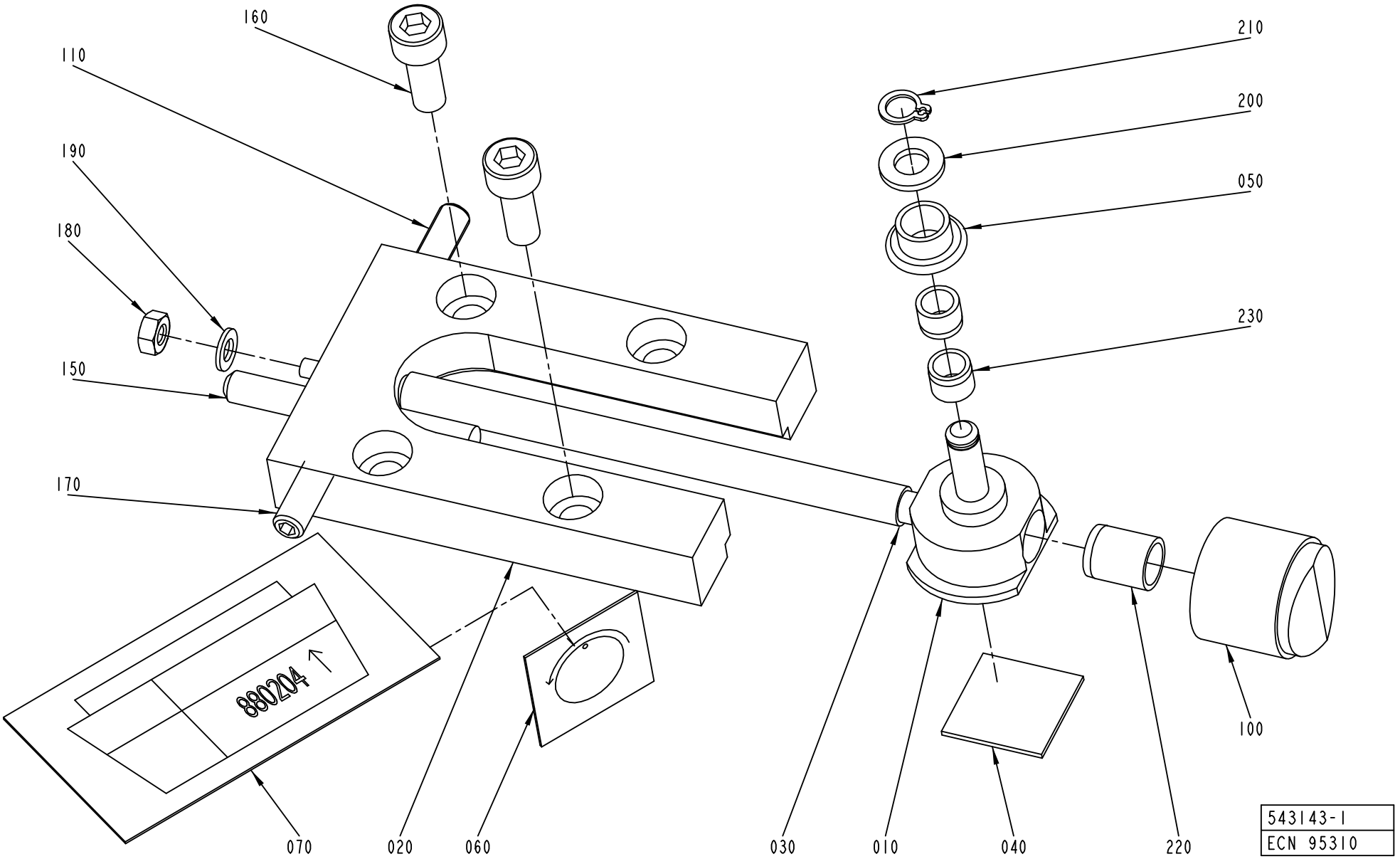
160
110
190
180
150
170
210
200
050
230
100
880204
070
020
060
030
010
040
220
543143-1
ECN 95310

ECM: 99112 - 20011129
Group number: 543143-0100
Assembly Drawing: 543143-1_1_AC

Issue: 20020822

Pos	Part No	SP	UN	Qty	Description	Page No
Common Parts						
010	526984-0000	A		1	SADDLE	
020	526985-0000	B		1	PLATE	
030	526986-0001	B		1	SHAFT	
040	527649-0000	B		1	DISTANCE RUBBER	
050	529362-0000	A		1	SPROCKET	
060	543141-0000	-		1	SIGN	
070	543142-0000	-		1	SIGN	
100	90051-0089	-		1	SHIFTER HANDLE	
110	90287-0167	-		1	SCREW SPRINGLOAD. SOCK. HEX HEAD M6X20	
150	311103-0365	-		1	PARALLELL PIN, M6, 6X50 MM	
160	312115-0368	-		2	SCREW MC6S M6X16 A280	
170	312318-0368	-		1	SCREW SOCK.SET CUP P MSK6SS M6X16 A4	
180	312605-0312	-		1	HEXAGON NUT, M6M M4 A280	
190	315105-0136	-		1	WASHER PLAIN, BRB, 4,3/8,H=0,8	
200	315105-0153	-		1	WASHER PLAIN, BRB, 6,4/12,H=1,5	
210	315751-0103	-		1	RETAIN. RING, 6	
220	321120-0100	A		1	BEARING BUSHING WITHOUT FLANGE,8/10X12	
230	321120-0101	A		2	BEARING BUSHING WITHOUT FLANGE,6/8X6	

Pos	Part No	SP	UN	Qty	Description	Page No

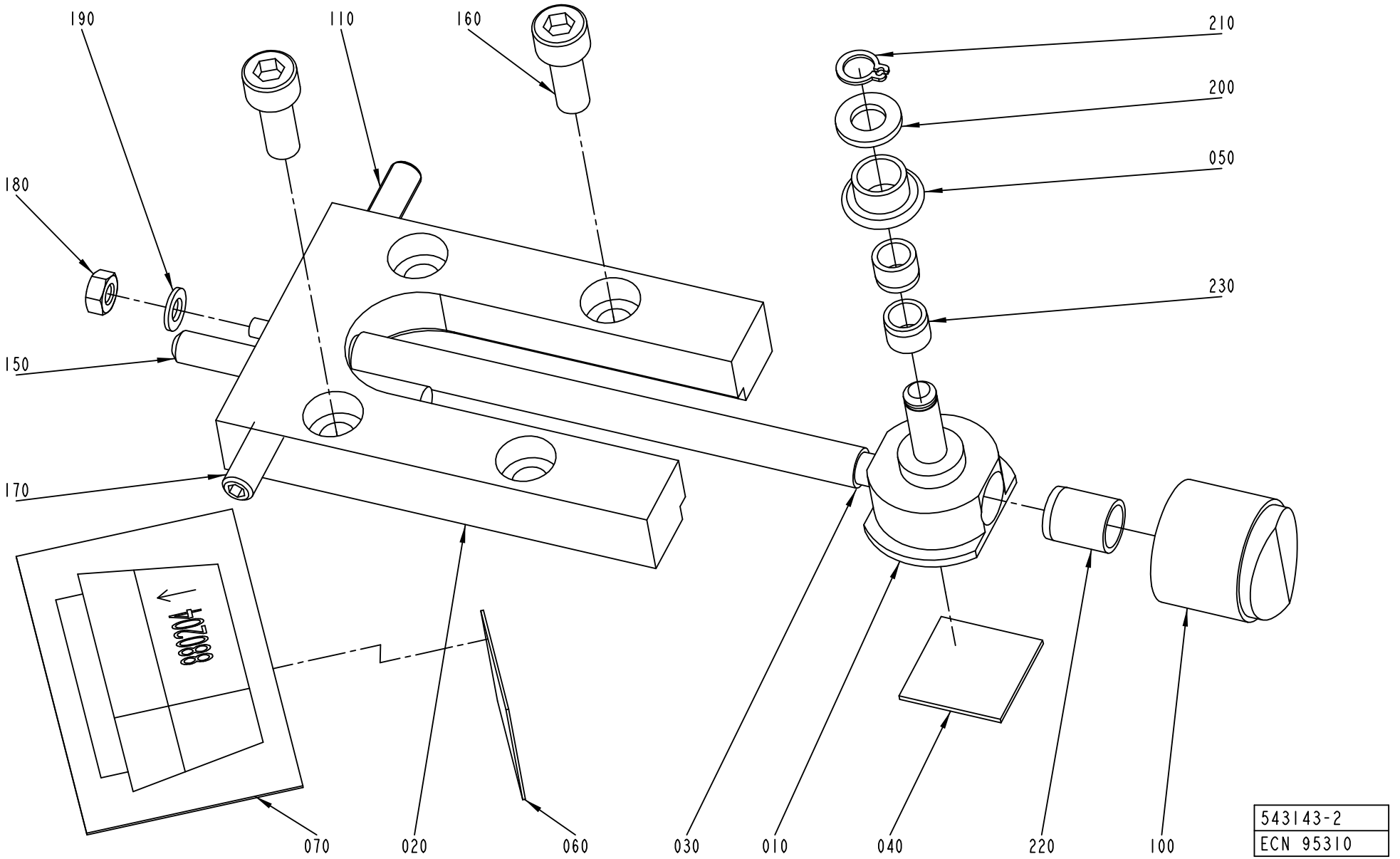
190
110
160
210
200
050
180
230
150
170
070
020
060
030
010
040
220
100
543143-2
ECN 95310

ECM: 99112 - 20011129
Group number: 543143-0100
Assembly Drawing: 543143-2_1_AB

Issue: 20020822

Pos	Part No	SP	UN	Qty	Description	Page No
Common Parts						
010	526984-0000	A		1	SADDLE	
020	526985-0000	B		1	PLATE	
030	526986-0001	B		1	SHAFT	
040	527649-0000	B		1	DISTANCE RUBBER	
050	529362-0000	A		1	SPROCKET	
060	543141-0000	-		1	SIGN	
070	543142-0000	-		1	SIGN	
100	90051-0089	-		1	SHIFTER HANDLE	
110	90287-0167	-		1	SCREW SPRINGLOAD. SOCK. HEX HEAD M6X20	
150	311103-0365	-		1	PARALLELL PIN, M6, 6X50 MM	
160	312115-0368	-		2	SCREW MC6S M6X16 A280	
170	312318-0368	-		1	SCREW SOCK.SET CUP P MSK6SS M6X16 A4	
180	312605-0312	-		1	HEXAGON NUT, M6M M4 A280	
190	315105-0136	-		1	WASHER PLAIN, BRB, 4,3/8,H=0,8	
200	315105-0153	-		1	WASHER PLAIN, BRB, 6,4/12,H=1,5	
210	315751-0103	-		1	RETAIN. RING, 6	
220	321120-0100	A		1	BEARING BUSHING WITHOUT FLANGE,8/10X12	
230	321120-0101	A		2	BEARING BUSHING WITHOUT FLANGE,6/8X6	

Pos	Part No	SP	UN	Qty	Description	Page No

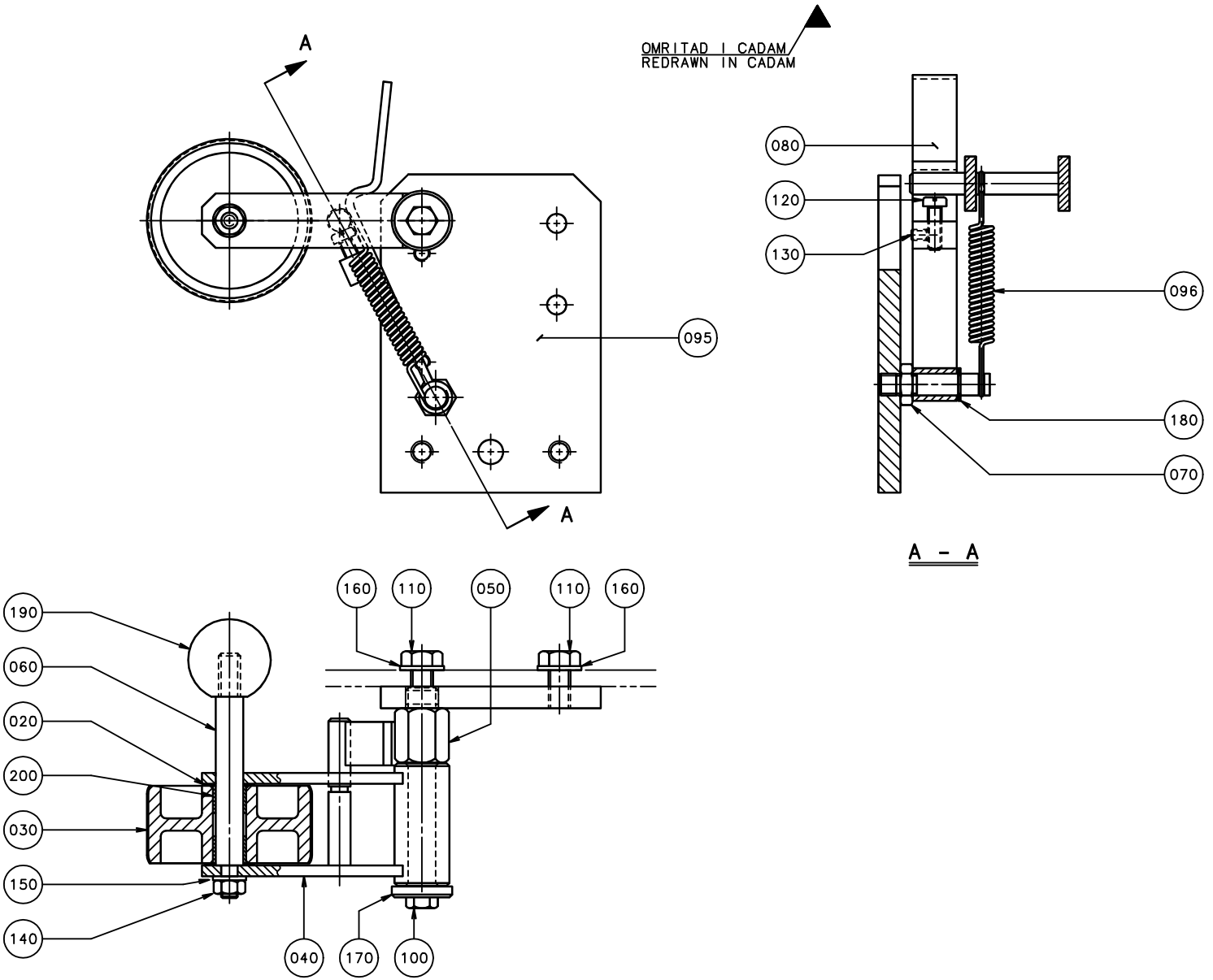
A
A
095
OMRITAD I CADAM
REDRAWN IN CADAM
080
120
130
096
180
070
A - A
160
110
050
110
160
190
060
020
200
030
150
140
040
170
100

ECM: - -
Group number: 246388-0200
Assembly Drawing: 246388-2_1_AA

Issue: 20020822

Pos	Part No	SP	UN	Qty	Description	Page No
Common Parts						
020	2033-0009	-		2	WASHER	
030	21903-0000	-		1	ROLL	
040	251493-0000	-		1	FORK	
050	251494-0000	-		1	SHAFT	
060	251495-0000	-		1	SHAFT	
070	251496-0000	-		1	SHAFT	
080	251498-0000	-		1	BARRIER	
095	266752-0000	-		1	MOUNTING SHEET	
096	279074-0000	-		1	TENSION SPRING	
100	312105-0368	-		1	SCREW M6S M6X16 A280	
110	312105-0449	-		2	SCREW M6S ISO 4017 M8X16 A480	
120	312125-0329	-		1	SCREW PAN HEAD MCS M5X16 SS	
130	312318-0285	-		1	SCREW SOCK.SET CUP P MSK6SS M4X6 A4	
140	312605-0316	-		1	HEXAGON NUT, M6M M6 A280	
150	315105-0153	-		1	WASHER PLAIN, BRB, 6,4/12,H=1,5	
160	315105-0165	-		2	WASHER PLAIN, BRB, 8,4/16,H=1,5	
170	315121-0153	-		1	WASHER PLAIN, TBRSB 6,4/22 H=4	
180	315750-0105	-		1	RETAIN. RING, 8	
190	318800-0104	-		1	HANDLE,SPHERICAL KNOB,INT.THRE.,D.30-M8	
200	321120-0104	-		2	BEARING BUSHING WITHOUT FLANGE,10/12X10	

Pos	Part No	SP	UN	Qty	Description	Page No

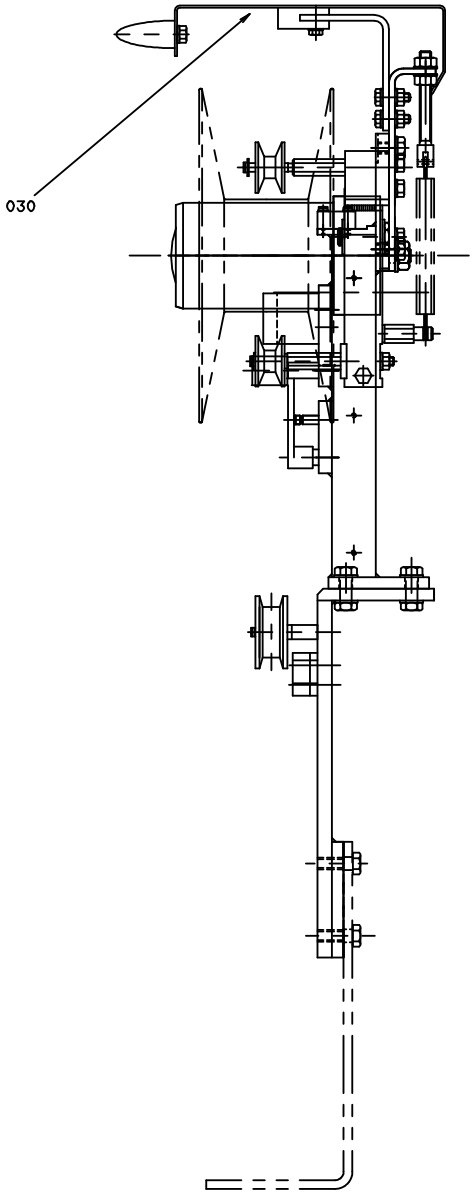
030

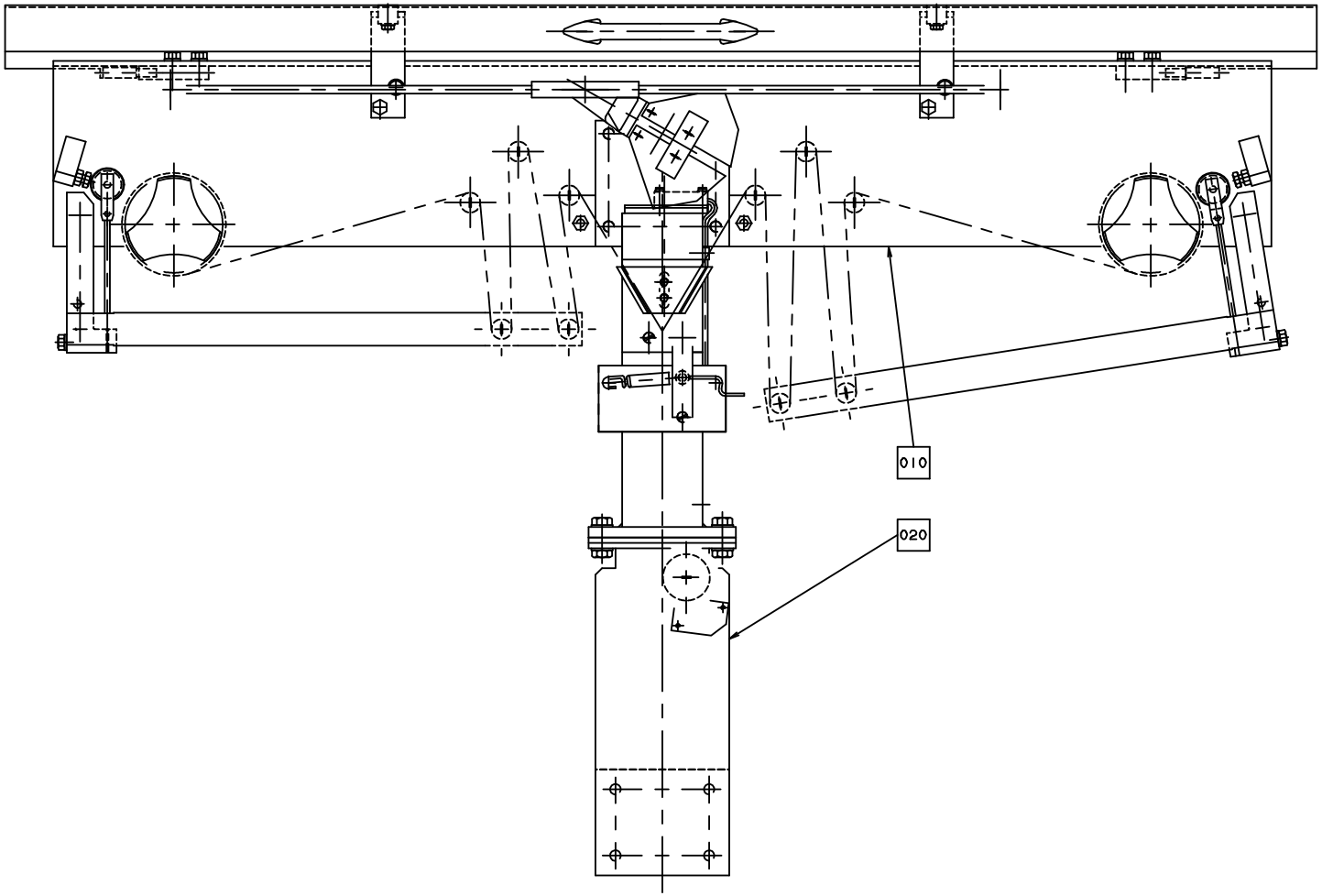
010
020

ECM: 86442 - 20010226
Group number: 1529020-0100
Assembly Drawing: 1529020-1_1_AA

Issue: 20020822

Pos	Part No	SP	UN	Qty	Description	Page No
Common Parts						
010	A543823-0100	-		1	STRIP MAGAZINE	**831**
020	A1529021-0100	-		1	PILLAR	**841**
030	1529270-0000	-		1	SIGN	

Pos	Part No	SP	UN	Qty	Description	Page No

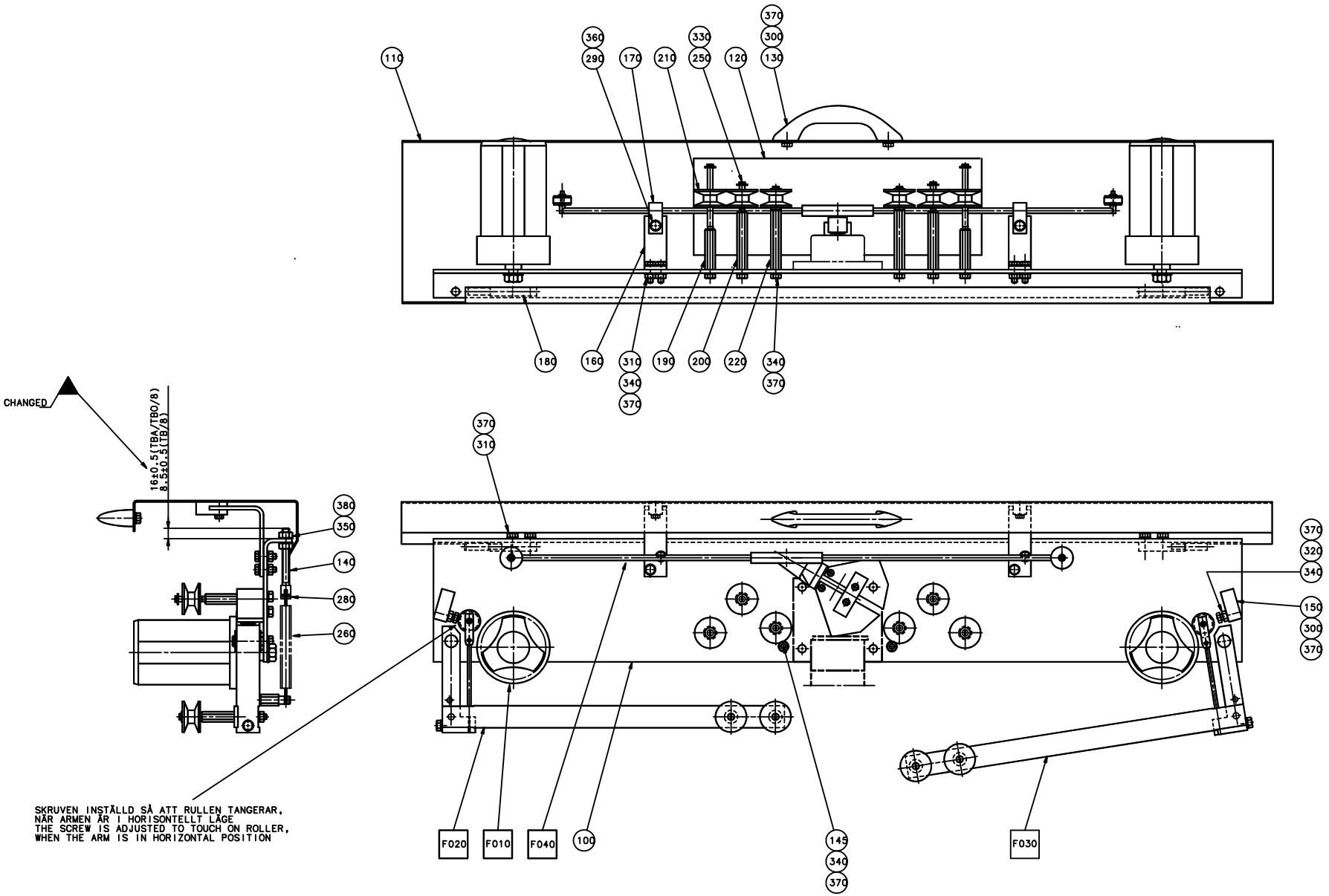
CHANGED
16±0.5(TBA/TBO/8)
8.5±0.5(TB/8)
SKRUVEN INSTÄLLD SÅ ATT RULLEN TANGERAR,
NÄR ARMEN ÄR I HORISONTELLT LÄGE
THE SCREW IS ADJUSTED TO TOUCH ON ROLLER,
WHEN THE ARM IS IN HORIZONTAL POSITION
110
360
290
170
210
330
250
120
370
300
130
180
160
310
340
370
190
200
220
340
370
370
310
380
350
140
280
260
370
320
340
150
300
370
F020
F010
F040
100
145
340
370
F030

Pos	Part No	SP	UN	Qty	Description	Page No
Common Parts						
100	540869-0000	-		1	SHEET	
110	543818-0000	-		1	PROTECTION PLATE	
120	545113-0000	-		1	SIGN STRIP MAGAZINE	
130	7309-0000	-		1	HANDLE	
140	541068-0000	B		2	SPRING HOLDER	
145	541172-0000	-		2	SET SCREW	
150	541173-0000	-		2	STOP	
160	543125-0000	-		2	ANGLE	
170	543126-0000	-		2	STOP LUG	
180	543819-0000	-		2	HINGE	
190	544725-0000	A		2	AXLE PIN	
200	544727-0000	A		2	AXLE PIN	
210	B544730-0000	A		6	ROLL	
	321120-0101	*-*		*2*	*BEARING BUSHING WITHOUT FLANGE,6/8X6*	
220	536916-0000	A		2	AXLE PIN	
250	90005-0082	-		6	WASHER PLAIN ROUND 4,3(M4)/12,H=1	
260	90335-0015	A		2	SPRING 42360 BARNES	
280	311112-0205	-		2	PIN, STRAIGHT SLOTTED SPRING FRP 3X10	
290	312105-0327	-		2	SCREW M6S ISO 4017 M5X12 A480	
300	312105-0366	-		6	SCREW M6S M6X12 A280	
310	312105-0368	-		8	SCREW M6S M6X16 A280	
320	312109-0374	-		2	SCREW M6S ISO 4017 M6X30 A480	
330	312125-0287	-		6	SCREW PAN HEAD MCS M4X8 SS	
340	312605-0316	-		14	HEXAGON NUT, M6M M6 A280	
350	312605-0318	-		4	HEXAGON NUT, M6M M8 A280	
360	315105-0146	-		2	WASHER PLAIN, BRB, 5,3/10,H=1	
370	315105-0153	-		24	WASHER PLAIN, BRB, 6,4/12,H=1,5	
380	315105-0165	-		4	WASHER PLAIN, BRB, 8,4/16,H=1,5	
F010	A537329-0100	-		2	HUB JUMBO	**833**
F020	A543822-0100	-		1	BRAKE ARM	**835**
F030	A594620-0100	-		1	BRAKE ARM	**837**
F040	A543821-0100	-		1	LEVEL PROBE	**839**

Pos	Part No	SP	UN	Qty	Description	Page No

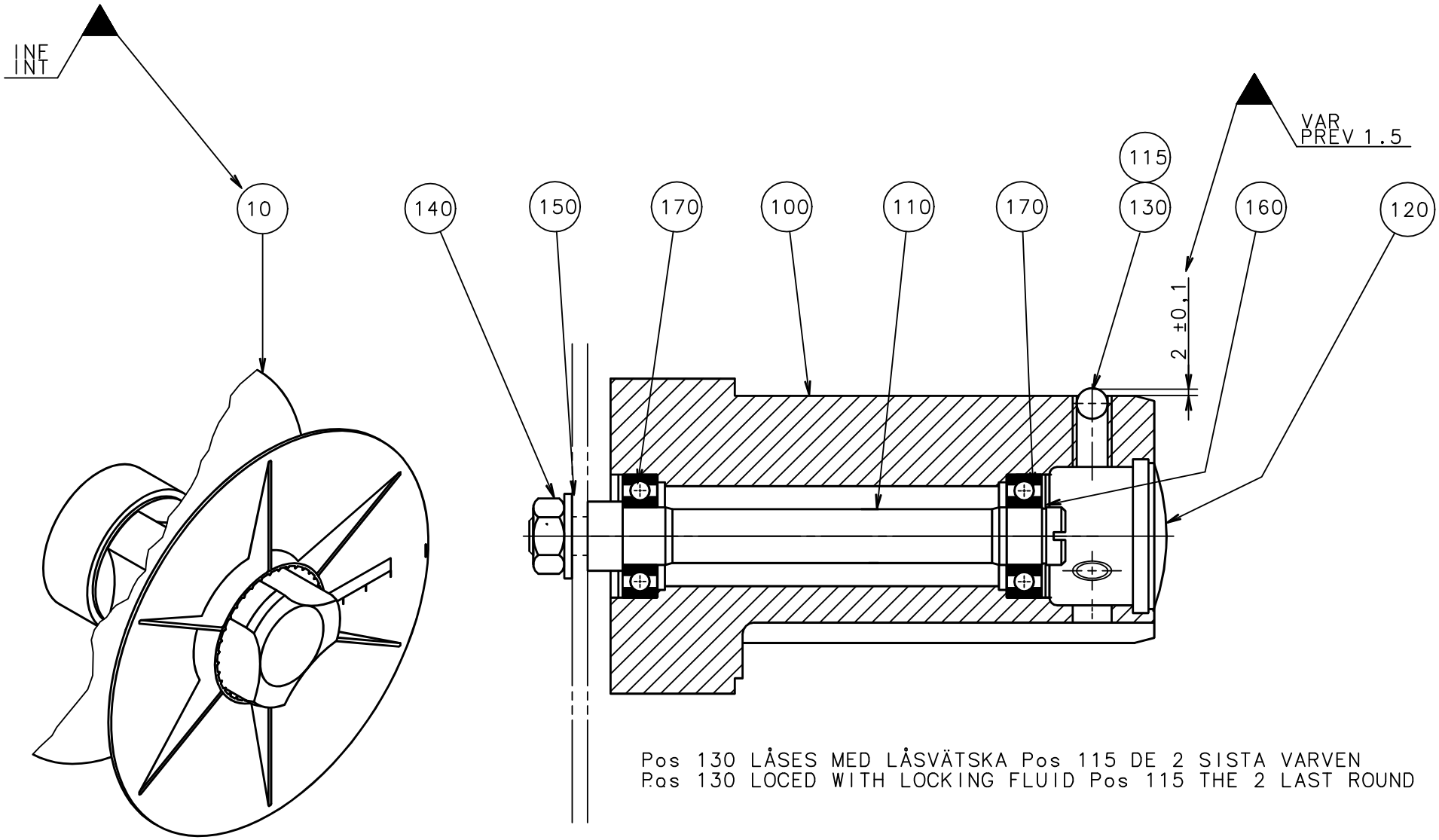
INF
INT
10
140
150
170
100
110
170
115
130
VAR
PREV 1.5
2 ±0,1
160
120
Pos 130 LÅSES MED LÅSVÄTSKA Pos 115 DE 2 SISTA VARVEN
Pos 130 LOCED WITH LOCKING FLUID Pos 115 THE 2 LAST ROUND

SCALE 1:2

ECM: 72191 - 19990215
Group number: 537329-0100
Assembly Drawing: 537329-1_1_AA

Issue: 20020822

Pos	Part No	SP	UN	Qty	Description	Page No
Common Parts						
010	541751-0000	-		1	CONICAL BOBBIN	
100	536913-0000	D		1	HUB	
110	537327-0000	D		1	SHAFT	
115	90157-0016	-		1	LOCKING FLUID	
120	90261-0049	-		1	PLUG, BLIND, PLASTIC, NO. SR1750	
130	90287-0106	-		3	SCREW SPRINGLOAD. SLOTTED HEAD M10X21	
140	312605-0320	-		1	HEXAGON NUT, M6M M10 A280	
150	315105-0173	-		1	WASHER PLAIN, BRB, 10,5/22,H=2	
160	315751-0112	-		1	RETAIN. RING, 15	
170	321308-0202	C		2	BALL BEARING, 2 SEALS, 15X32X9 MM	

Pos	Part No	SP	UN	Qty	Description	Page No

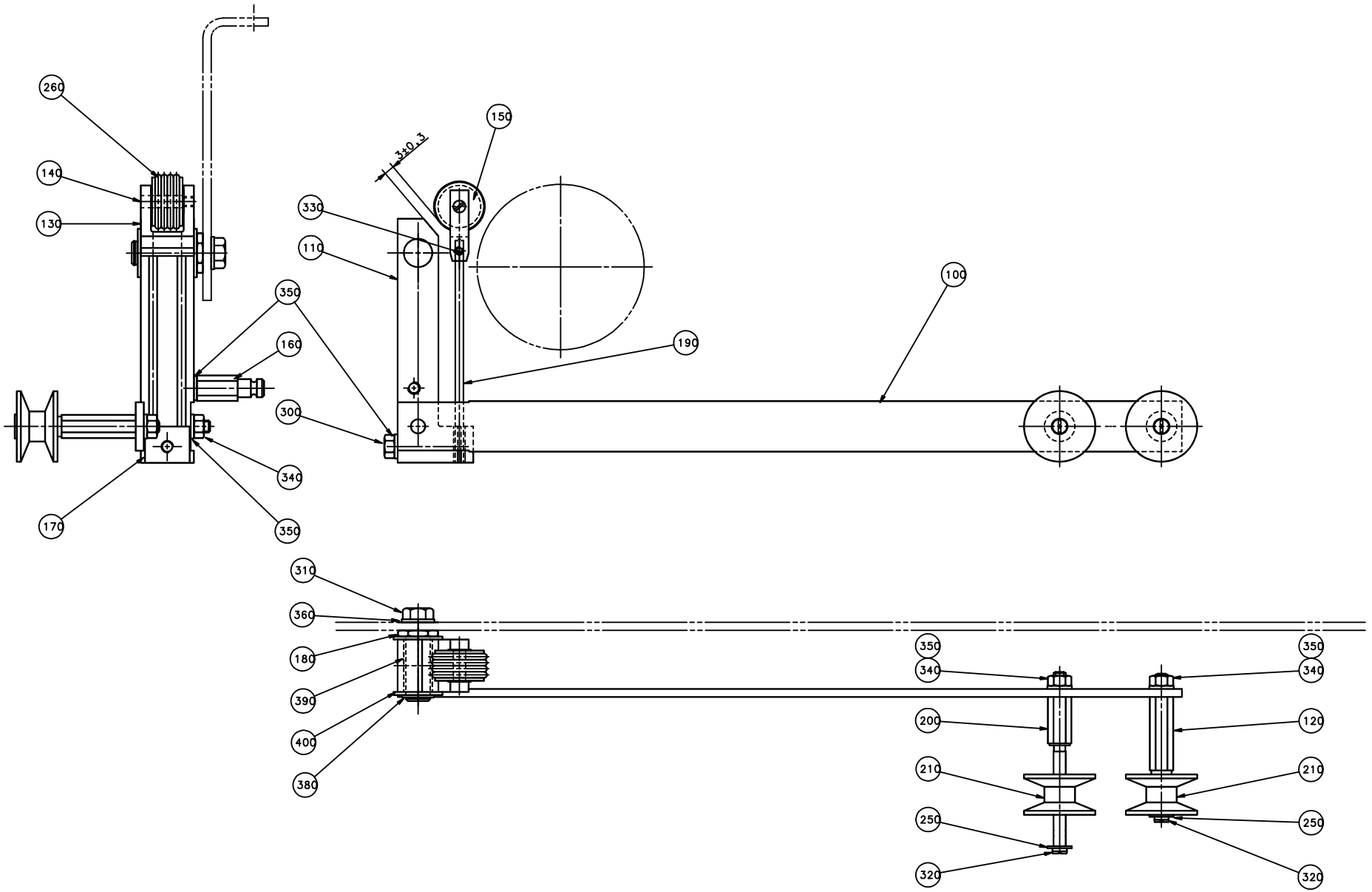
260
140
130
150
3±0.3
330
110
100
350
160
190
300
340
170
350
310
360
180
390
400
380
350
340
200
210
250
320
350
340
120
210
250
320

ECM: 102350 - 20011206
Group number: 543822-0100
Assembly Drawing: 543822-1_1_AA

Issue: 20020822

Pos	Part No	SP	UN	Qty	Description	Page No
Common Parts						
100	540870-0000	B		1	ARM	
110	541057-0000	B		1	ARM	
120	536917-0000	A		1	AXLE PIN	
130	541064-0000	B		1	FORK	
140	541065-0000	B		1	SHAFT	
150	541066-0000	A		1	ROLL	
160	541067-0000	B		1	SPRING BRACKET	
170	541069-0000	B		1	SPRING BRACKET	
180	541070-0000	B		1	SHAFT	
190	543820-0000	A		2	SPRING	
200	544726-0000	A		1	AXLE PIN	
210	B544730-0000	A		2	ROLL	
	321120-0101	*-*		*2*	*BEARING BUSHING WITHOUT FLANGE,6/8X6*	
250	90005-0082	-		2	WASHER PLAIN ROUND 4,3(M4)/12,H=1	
260	90242-0148	A		4	O-RING 19,2X3 MM	
300	312105-0378	-		1	SCREW M6S ISO 4014 M6X40 A480	
310	312105-0449	-		1	SCREW M6S ISO 4017 M8X16 A480	
320	312125-0287	-		2	SCREW PAN HEAD MCS M4X8 SS	
330	312318-0283	-		2	SCREW SOCK.SET CUP P MSK6SS M4X4 A4	
340	312605-0316	-		3	HEXAGON NUT, M6M M6 A280	
350	315105-0153	-		5	WASHER PLAIN, BRB, 6,4/12,H=1,5	
360	315105-0165	-		1	WASHER PLAIN, BRB, 8,4/16,H=1,5	
380	315751-0109	-		1	RETAIN. RING, 12	
390	321120-0113	A		1	BEARING BUSHING WITHOUT FLANGE,12/14X25	
400	321129-0104	-		1	THRUST WASHER, 12/24X1,5	

Pos	Part No	SP	UN	Qty	Description	Page No

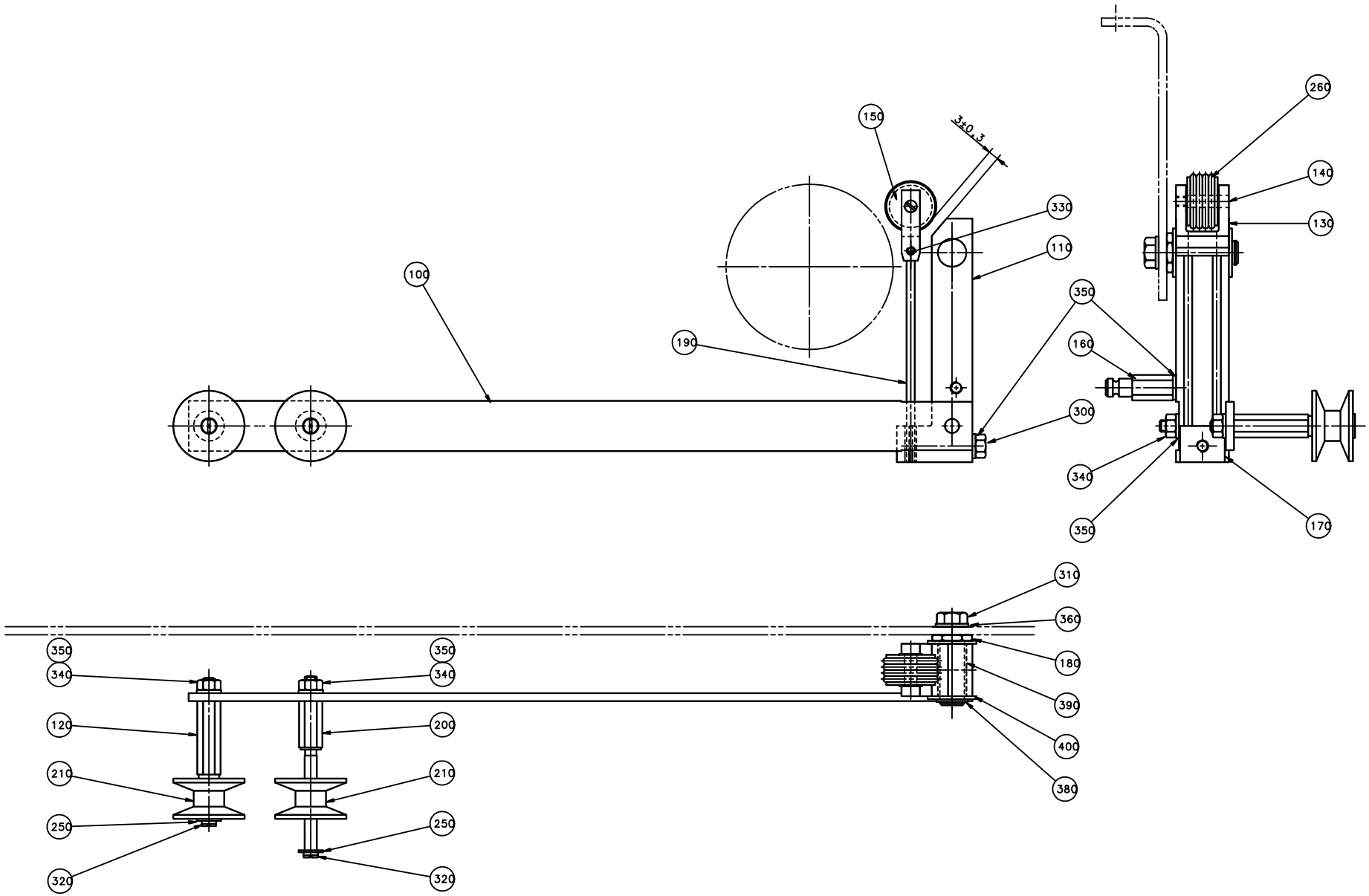
150
3±0.3
260
140
130
330
110
100
350
190
160
300
340
350
170
310
360
180
390
400
380
350
340
120
210
250
320
350
340
200
210
250
320

ECM: 102351 - 20011206
Group number: 594620-0100
Assembly Drawing: 594620-1_1_AA

Issue: 20020822

Pos	Part No	SP	UN	Qty	Description	Page No
Common Parts						
100	540870-0000	B		1	ARM	
110	541057-0000	B		1	ARM	
120	536917-0000	A		1	AXLE PIN	
130	541064-0000	B		1	FORK	
140	541065-0000	B		1	SHAFT	
150	541066-0000	A		1	ROLL	
160	541067-0000	B		1	SPRING BRACKET	
170	541069-0000	B		1	SPRING BRACKET	
180	541070-0000	B		1	SHAFT	
190	543820-0000	A		2	SPRING	
200	544726-0000	A		1	AXLE PIN	
210	B544730-0000	A		2	ROLL	
	321120-0101	*-*		*2*	*BEARING BUSHING WITHOUT FLANGE,6/8X6*	
250	90005-0082	-		2	WASHER PLAIN ROUND 4,3(M4)/12,H=1	
260	90242-0148	A		4	O-RING 19,2X3 MM	
300	312105-0378	-		1	SCREW M6S ISO 4014 M6X40 A480	
310	312105-0449	-		1	SCREW M6S ISO 4017 M8X16 A480	
320	312125-0287	-		2	SCREW PAN HEAD MCS M4X8 SS	
330	312318-0283	-		2	SCREW SOCK.SET CUP P MSK6SS M4X4 A4	
340	312605-0316	-		3	HEXAGON NUT, M6M M6 A280	
350	315105-0153	-		5	WASHER PLAIN, BRB, 6,4/12,H=1,5	
360	315105-0165	-		1	WASHER PLAIN, BRB, 8,4/16,H=1,5	
380	315751-0109	-		1	RETAIN. RING, 12	
390	321120-0113	A		1	BEARING BUSHING WITHOUT FLANGE,12/14X25	
400	321129-0104	-		1	THRUST WASHER, 12/24X1,5	

Pos	Part No	SP	UN	Qty	Description	Page No

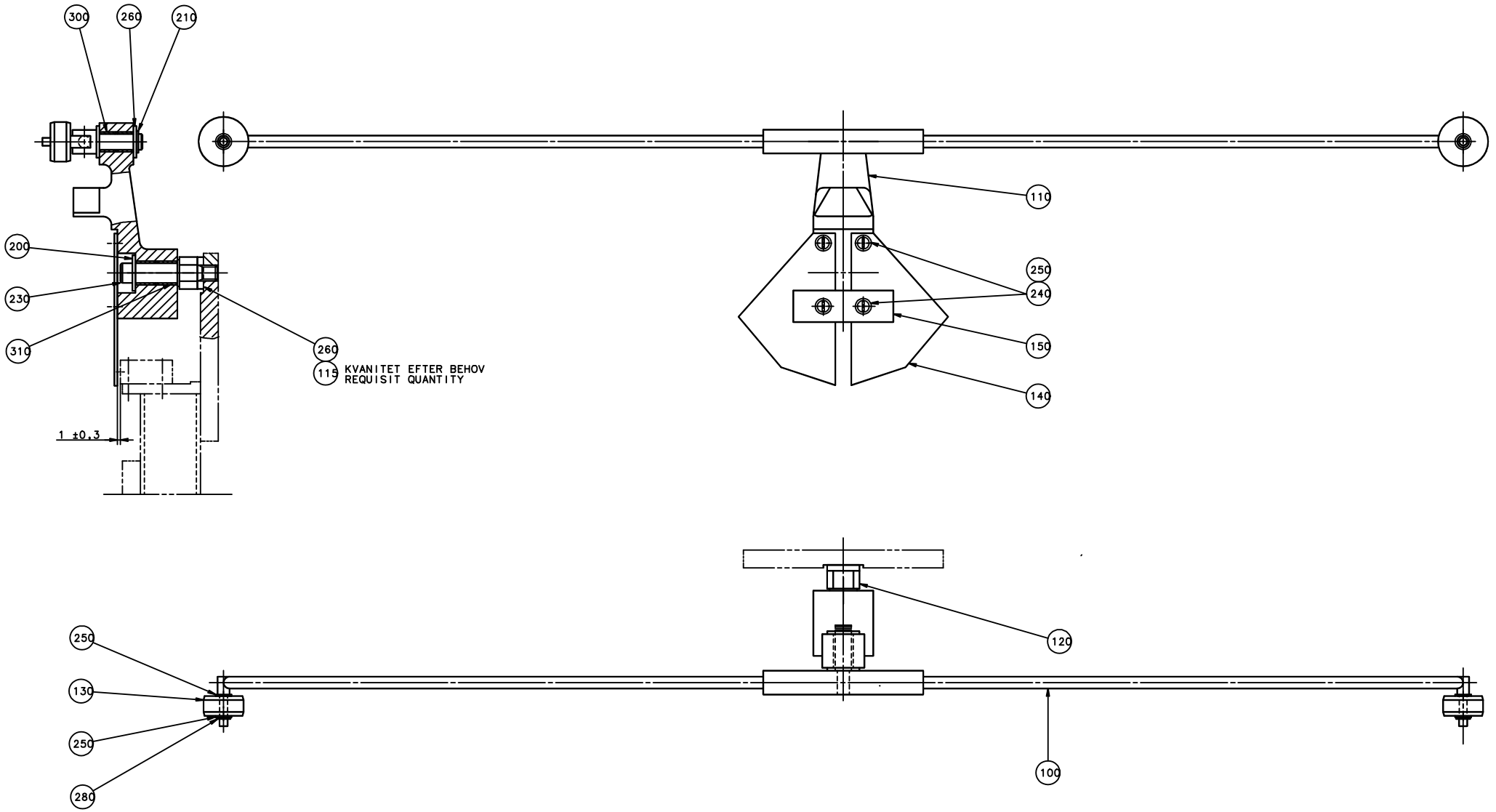
300
260
210
200
230
310
260
115
KVANITET EFTER BEHOV
REQUISIT QUANTITY
1 ±0,3
110
250
240
150
140
250
130
250
280
120
100

ECM: 102352 - 20011206
Group number: 543821-0100
Assembly Drawing: 543821-1_1_AA

Issue: 20020822

Pos	Part No	SP	UN	Qty	Description	Page No
Common Parts						
100	542781-0000	B		1	ARM	
110	542784-0000	B		1	LINK ARM	
115	2033-0008	B		3	WASHER	
120	542782-0000	B		1	AXLE PIN	
130	542785-0000	A		2	ROLL	
140	542786-0000	B		2	FLAG	
150	543575-0000	-		1	LOCK SHEET	
200	90005-0060	-		1	WASHER PLAIN, RBS 6,4/M6)/18,H=1,5	
210	90141-0015	-		1	RETAIN. RING, 8	
230	312115-0366	-		1	SCREW MC6S M6X12 A280	
240	312125-0287	-		4	SCREW PAN HEAD MCS M4X8 SS	
250	315105-0136	-		8	WASHER PLAIN, BRB, 4,3/8,H=0,8	
260	315105-0165	-		3	WASHER PLAIN, BRB, 8,4/16,H=1,5	
280	315755-0105	-		2	LOCKING WASHER 3,2	
300	321120-0103	A		2	BEARING BUSHING WITHOUT FLANGE,8/10X8	
310	321120-0104	A		2	BEARING BUSHING WITHOUT FLANGE,10/12X10	

Pos	Part No	SP	UN	Qty	Description	Page No

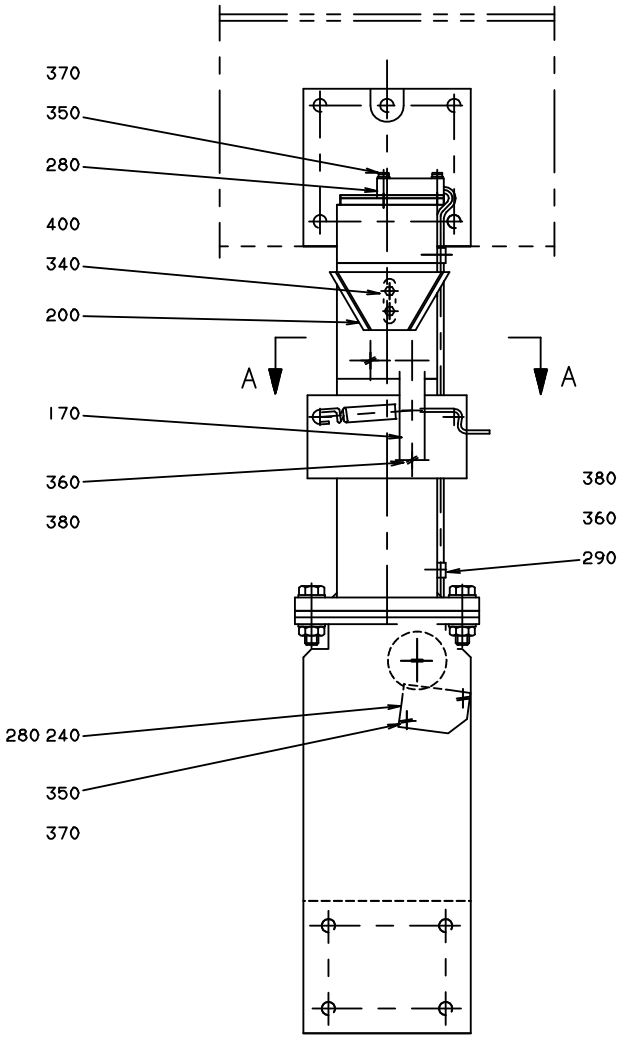
370
350
280
400
340
200
A
A
170
360
380
380
360
290
280 240
350
370

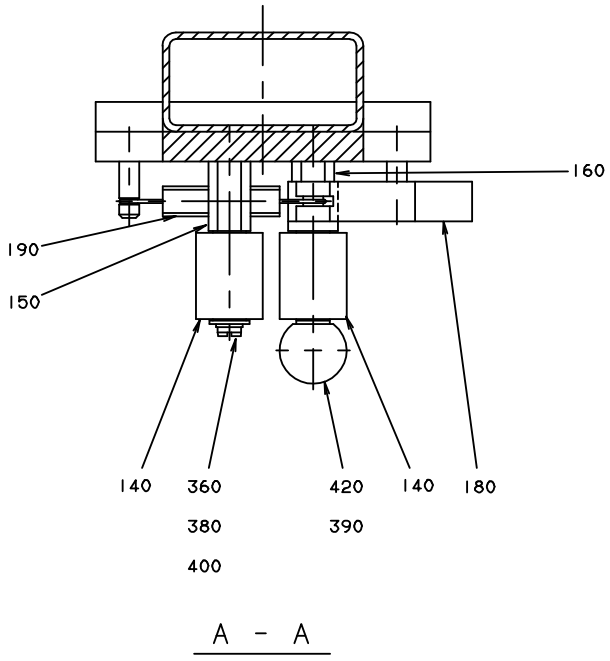
160
190
150
140
360
380
400
420
390
140
180

A - A

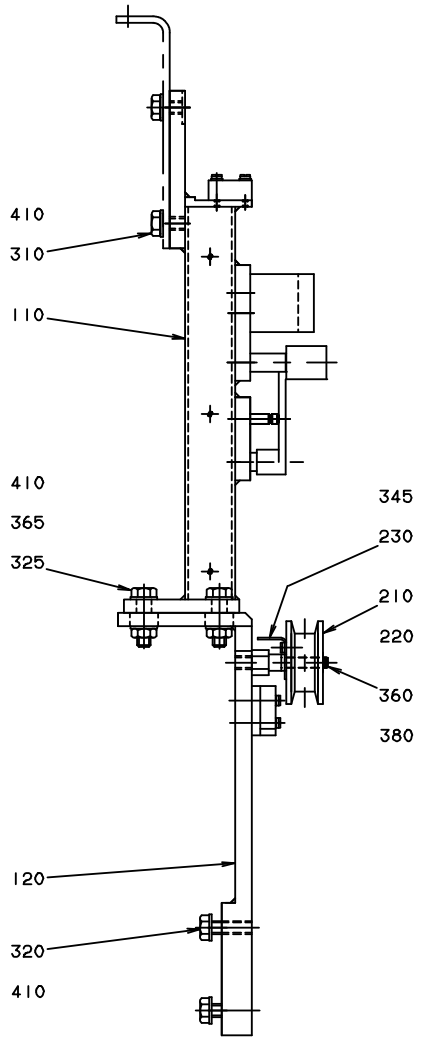
410
310
110
410
365
325
345
230
210
220
360
380
120
320
410

Pos	Part No	SP	UN	Qty	Description	Page No
Common Parts						
110	544974-0000	B		1	PILLAR	
120	1529018-0000	B		1	PILLAR	
140	232979-0000	A		2	PRESSURE ROLLER	
150	269053-0001	A		1	SHAFT	
160	269053-0003	A		1	SHAFT	
170	269054-0000	B		1	ARM	
180	269056-0000	B		1	CATCH	
190	269057-0000	A		1	TENSION SPRING	
200	279480-0000	B		1	STEERING RAIL	
210	491762-0000	B		1	SHAFT	
220	751504-0000	B		2	ROLL	
230	751505-0000	B		1	TINPLATE	
240	1529245-0000	-		1	SPACER	
280	90044-0194	A		2	PROX.SW. IN5329/IN3002-BPKG	
290	90165-0060	-		3	PIPE CLIP FOR TUBE D=5 MM	
310	312105-0449	-		4	SCREW M6S ISO 4017 M8X16 A480	
320	312105-0452	-		4	SCREW M6S ISO 4017 M8X22 A480	
330	312105-0455	-		4	SCREW M6S ISO 4017 M8X30 A480	
340	312115-0366	-		2	SCREW MC6S M6X12 A280	
345	312125-0222	-		1	SCREW PAN HEAD MCS M3X8 SS	
350	312125-0230	-		4	SCREW PAN HEAD MCS M3X20 SS	
360	312125-0285	-		6	SCREW SLOT.PAN HD. MCS 4X6 A480	
370	315105-0124	-		4	WASHER PLAIN, BRB, 3,2/6,H=0,5	
380	315105-0136	-		6	WASHER PLAIN, BRB, 4,3/8,H=0,8	
390	315105-0146	-		1	WASHER PLAIN, BRB, 5,3/10,H=1	
400	315105-0153	-		3	WASHER PLAIN, BRB, 6,4/12,H=1,5	
410	315105-0165	-		12	WASHER PLAIN, BRB, 8,4/16,H=1,5	
420	318800-0102	-		1	HANDLES,SPHERICAL KNOB,INT.THRE.,D.20-M5	
440	321120-0101	A		2	BEARING BUSHING WITHOUT FLANGE,6/8X6	

Pos	Part No	SP	UN	Qty	Description	Page No

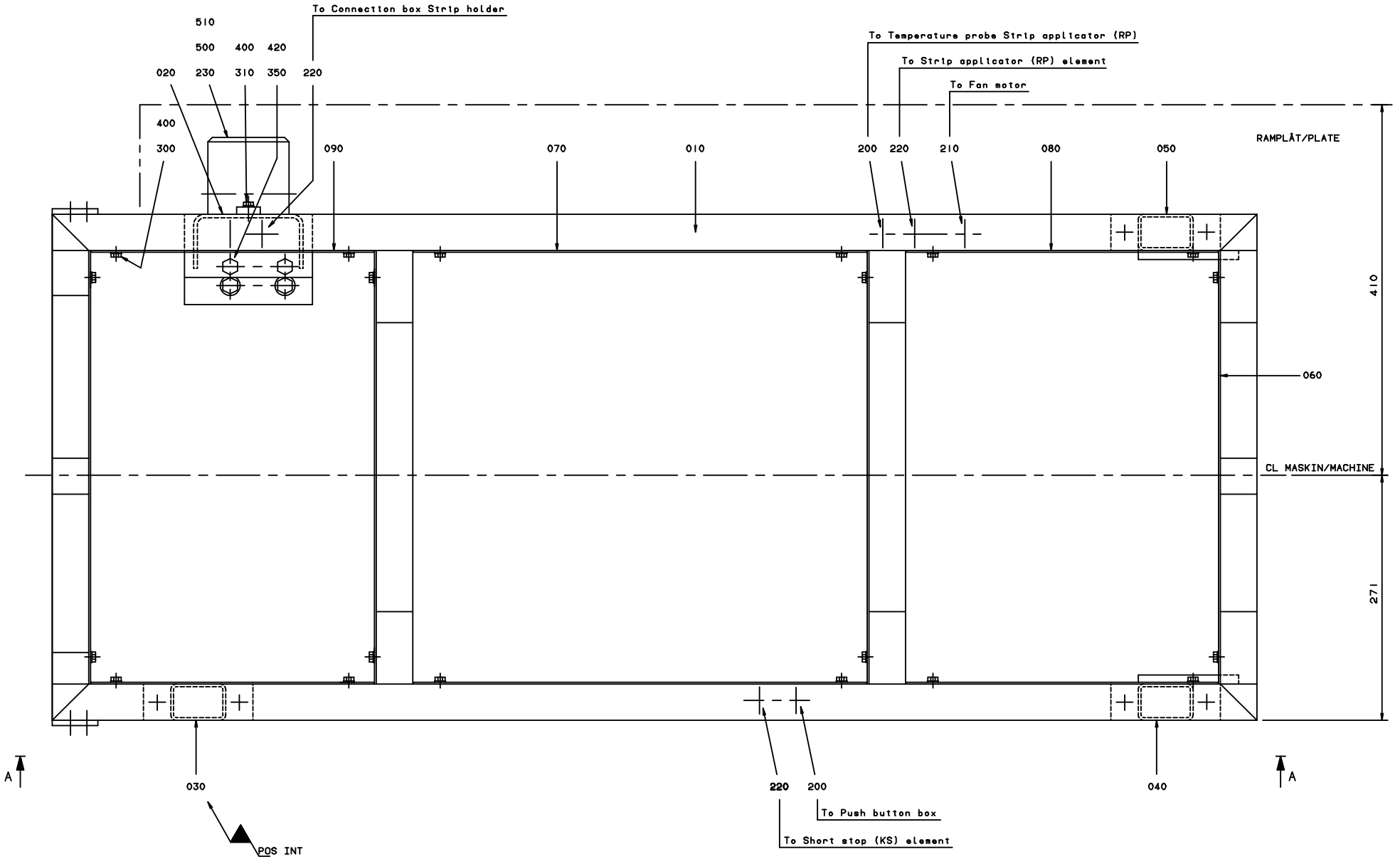
To Connection box Strip holder
510
500
400
420
020
230
310
350
220
To Temperature probe Strip applicator (RP)
To Strip applicator (RP) element
To Fan motor
400
300
090
070
010
200
220
210
080
050
RAMPLÅT/PLATE
410
060
CL MASKIN/MACHINE
271
A
030
POS INT
220
200
To Push button box
To Short stop (KS) element
040
A

ECM: 102939 - 20020320
Group number: 1529099-0100
Assembly Drawing: 1529099-1_1_AB

Issue: 20020822

Pos	Part No	SP	UN	Qty	Description	Page No
SOURCE,TBA/9-100V OR SOURCE,TBA/9-110V						
020	1529089-0000	-		1	LEG	
030	456926-0000	-		1	LEG	
040	456927-0000	-		1	LEG	
050	456928-0000	-		1	LEG	
200	90015-0020	-		2	LEAD-IN, TET5-7, E-1458016	
210	90015-0021	-		1	LEAD-IN, TET10-14, E-1458023	
220	90015-0023	-		3	LEAD-IN, TET7-10, E-1458019	
350	312105-0493	-		16	SCREW M6S ISO 4017 M10X25 A480	
SOURCE,TBA/9-120V						
020	1529090-0000	-		1	LEG	
030	491726-0000	-		1	LEG	
040	456927-0000	-		1	LEG	
050	456928-0000	-		1	LEG	
200	90015-0020	-		2	LEAD-IN, TET5-7, E-1458016	
210	90015-0021	-		1	LEAD-IN, TET10-14, E-1458023	
220	90015-0023	-		3	LEAD-IN, TET7-10, E-1458019	
350	312105-0493	-		16	SCREW M6S ISO 4017 M10X25 A480	
Common Parts						
010	456924-0000	-		1	FRAME	
060	456929-0000	-		4	LID	
070	456930-0000	-		2	LID	
080	456931-0000	-		2	LID	
090	456932-0000	-		2	LID	
100	456933-0000	-		1	LID	
230	90052-0011	-		1	HORN, YO3/BT 24-50VDC NO.654005	
300	312105-0366	-		22	SCREW M6S M6X12 A280	
310	312105-0368	-		2	SCREW M6S M6X16 A280	
340	312105-0491	-		2	SCREW M6S ISO 4017 M10X20 A480	
400	315105-0153	-		22	WASHER PLAIN, BRB, 6,4/12,H=1,5	
420	315105-0173	-		16	WASHER PLAIN, BRB, 10,5/22,H=2	
500	351150-0403	-	M	10	CABLE OLFLEX 3X0,75 MM2 LIGHT/GREY	
510	352103-0110	-		1	CABLE GLAND, STR 16, PR22,5/PG16	

Pos	Part No	SP	UN	Qty	Description	Page No

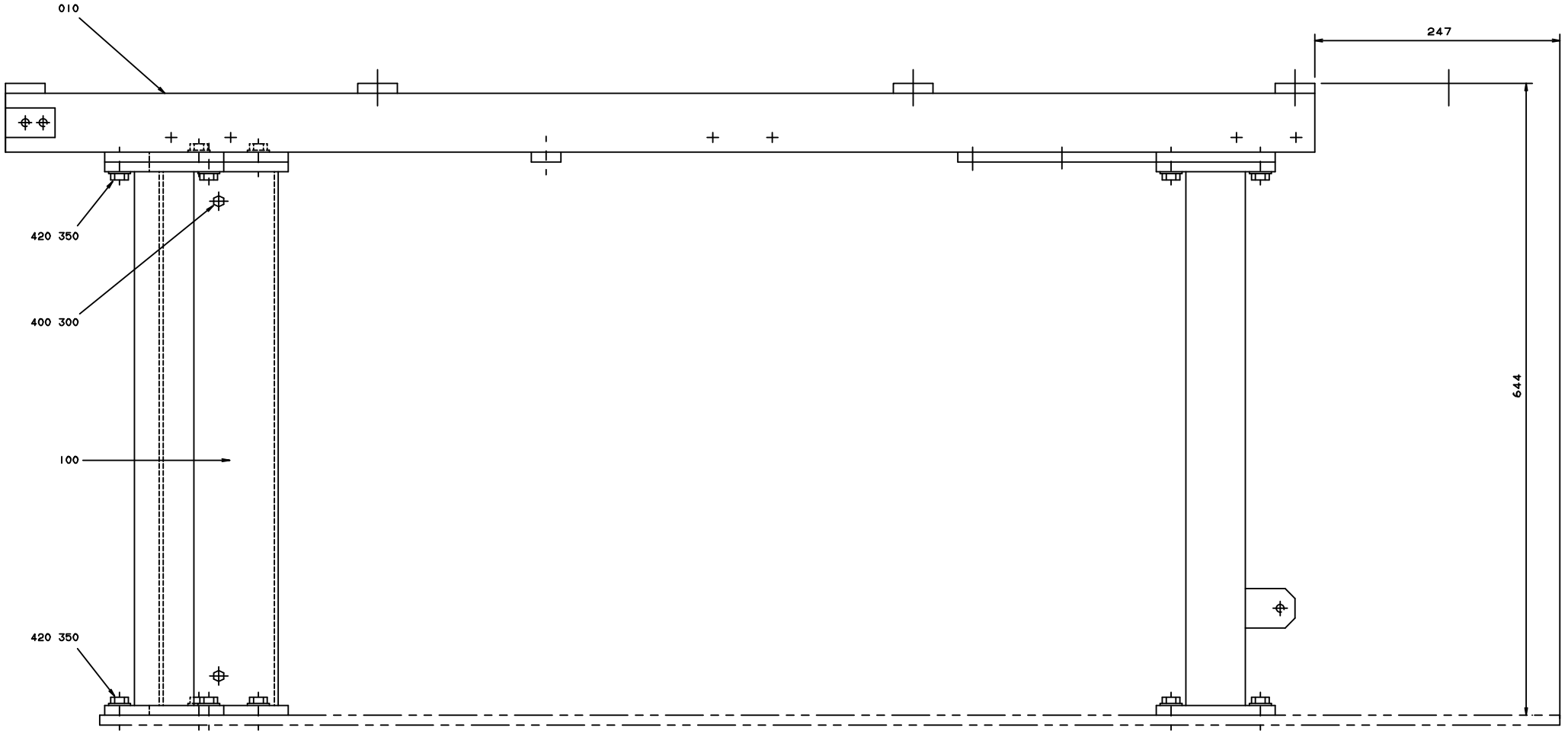

VIEW A-A

ECM: 102939 - 20020320
Group number: 1529099-0100
Assembly Drawing: 1529099-2_1_AB

Issue: 20020822

Pos	Part No	SP	UN	Qty	Description	Page No
SOURCE,TBA/9-100V OR SOURCE,TBA/9-110V						
020	1529089-0000	-		1	LEG	
030	456926-0000	-		1	LEG	
040	456927-0000	-		1	LEG	
050	456928-0000	-		1	LEG	
200	90015-0020	-		2	LEAD-IN, TET5-7, E-1458016	
210	90015-0021	-		1	LEAD-IN, TET10-14, E-1458023	
220	90015-0023	-		3	LEAD-IN, TET7-10, E-1458019	
350	312105-0493	-		16	SCREW M6S ISO 4017 M10X25 A480	
SOURCE,TBA/9-120V						
020	1529090-0000	-		1	LEG	
030	491726-0000	-		1	LEG	
040	456927-0000	-		1	LEG	
050	456928-0000	-		1	LEG	
200	90015-0020	-		2	LEAD-IN, TET5-7, E-1458016	
210	90015-0021	-		1	LEAD-IN, TET10-14, E-1458023	
220	90015-0023	-		3	LEAD-IN, TET7-10, E-1458019	
350	312105-0493	-		16	SCREW M6S ISO 4017 M10X25 A480	
Common Parts						
010	456924-0000	-		1	FRAME	
060	456929-0000	-		4	LID	
070	456930-0000	-		2	LID	
080	456931-0000	-		2	LID	
090	456932-0000	-		2	LID	
100	456933-0000	-		1	LID	
230	90052-0011	-		1	HORN, YO3/BT 24-50VDC NO.654005	
300	312105-0366	-		22	SCREW M6S M6X12 A280	
310	312105-0368	-		2	SCREW M6S M6X16 A280	
340	312105-0491	-		2	SCREW M6S ISO 4017 M10X20 A480	
400	315105-0153	-		22	WASHER PLAIN, BRB, 6,4/12,H=1,5	
420	315105-0173	-		16	WASHER PLAIN, BRB, 10,5/22,H=2	
500	351150-0403	-	M	10	CABLE OLFLEX 3X0,75 MM2 LIGHT/GREY	
510	352103-0110	-		1	CABLE GLAND, STR 16, PR22,5/PG16	

Pos	Part No	SP	UN	Qty	Description	Page No

This page is intentionally left blank.

ECM: - -
Group number: 295668-0300
Assembly Drawing:

Issue: 20020822

Pos	Part No	SP	UN	Qty	Description	Page No
Common Parts						
010	251279-0000	-		1	COIL HEATER	
020	21903-0000	-		1	ROLL	
030	531733-0000	-		1	GASKET	
040	531734-0000	-		2	GASKET	
050	531735-0000	-		1	GASKET	
060	531736-0000	-		1	GASKET	
070	90206-0031	-		1	HEATING ELEMENT 700+1200W,220V	

Pos	Part No	SP	UN	Qty	Description	Page No

Tetra Pak

SPC
Spare Parts Catalogue

This page is intentionally left blank.

ECM: 102935 - 20020320
Group number: 648154-0100
Assembly Drawing:
Issue: 20020822

Pos	Part No	SP	UN	Qty	Description	Page No
TBA,SOURCE,TBA/9-100V OR TBA,SOURCE,TBA/9-110V						
005	A490590-0100	-		1	CONVEYOR FRAME	**853, 855**
110	A1529140-0100	-		1	CREASE ROLLER	**27, 857**
300	491092-0000	-		1	COVERING PLATE	
500	1529181-0000	-		1	AIR-DIAGRAM	
560	1529182-0000	-		1	PANEL SURVEY	
580	751148-0000	-		1	CIRQUIT DIAG.CENTRAL-LUB.	
TBA,SOURCE,TBA/9-120V						
005	A490590-0100	-		1	CONVEYOR FRAME	**853, 855**
110	A1529172-0100	-		1	CREASE ROLLER	**143, 859**
300	491092-0000	-		1	COVERING PLATE	
500	1529181-0000	-		1	AIR-DIAGRAM	
560	1529182-0000	-		1	PANEL SURVEY	
580	751148-0000	-		1	CIRQUIT DIAG.CENTRAL-LUB.	
TWA,SOURCE,TBA/9-100V OR TWA,SOURCE,TBA/9-110V						
005	A1529459-0100	-		1	CONVEYOR FRAME	**861**
110	A1529140-0100	-		1	CREASE ROLLER	**27, 857**
120	A752495-0100	-		1	ATTACHMENT	**863**
300	1529345-0000	-		1	COVER PLATE	
310	564543-0000	-		1	CLEANING PIPE	
500	1529300-0000	-		1	AIR-DIAGRAM	
560	1529301-0000	-		1	PANEL SURVEY	
580	751148-0000	-		1	CIRQUIT DIAG.CENTRAL-LUB.	
700	591653-0000	-		1	SETTING PLATE	
710	591670-0000	-		1	SETTING PLATE	
720	594980-0000	-		1	TEMPLATE	
730	594987-0000	-		1	TEMPLATE	
740	594988-0000	-		1	TEMPLATE	
750	594986-0000	-		1	TEMPLATE	
760	2537124-0000	-		1	TEMPLATE	
TWA,SOURCE,TBA/9-120V						
005	A1529459-0100	-		1	CONVEYOR FRAME	**861**
110	A1529172-0100	-		1	CREASE ROLLER	**143, 859**
120	A752495-0100	-		1	ATTACHMENT	**863**
300	1529345-0000	-		1	COVER PLATE	
310	564543-0000	-		1	CLEANING PIPE	
500	1529300-0000	-		1	AIR-DIAGRAM	
560	1529301-0000	-		1	PANEL SURVEY	
580	751148-0000	-		1	CIRQUIT DIAG.CENTRAL-LUB.	
700	591653-0000	-		1	SETTING PLATE	
710	591670-0000	-		1	SETTING PLATE	
720	594980-0000	-		1	TEMPLATE	
730	594987-0000	-		1	TEMPLATE	
740	594988-0000	-		1	TEMPLATE	
750	594986-0000	-		1	TEMPLATE	
760	2537124-0000	-		1	TEMPLATE	
Common Parts						
040	A491942-0100	-		1	(PAPER)REEL TROLLEY	**865, 867, 869**
050	A295904-0100	-		1	CLAMPING PIECE	**871**
080	A469294-0100	-		1	TYPE EXTRACTOR	**873**
090	A531345-0100	-		1	PERSONAL PROTECT. EQ H2O2	**875**
100	A77099-0100	-		1	TOOL KIT	**877**
400	598878-0000	-		1	MACHINE SIGN 2 ADR. EEA	
410	979548-0000	-		8	MACHINE PLATE	
450	441725-0000	-		1	COVERING PLATE	
540	1529201-0000	-		1	WATER DIAGRAM	
585	1529259-0000	-		1	ASEPTIC DIAGRAM	
590	491922-0000	-		1	HYDRAULIC DIAGRAM	
910	90347-0079	-		10	DAMPER TFE 601	

Machine Type | Group Description | Used-In | Group Number | Page No

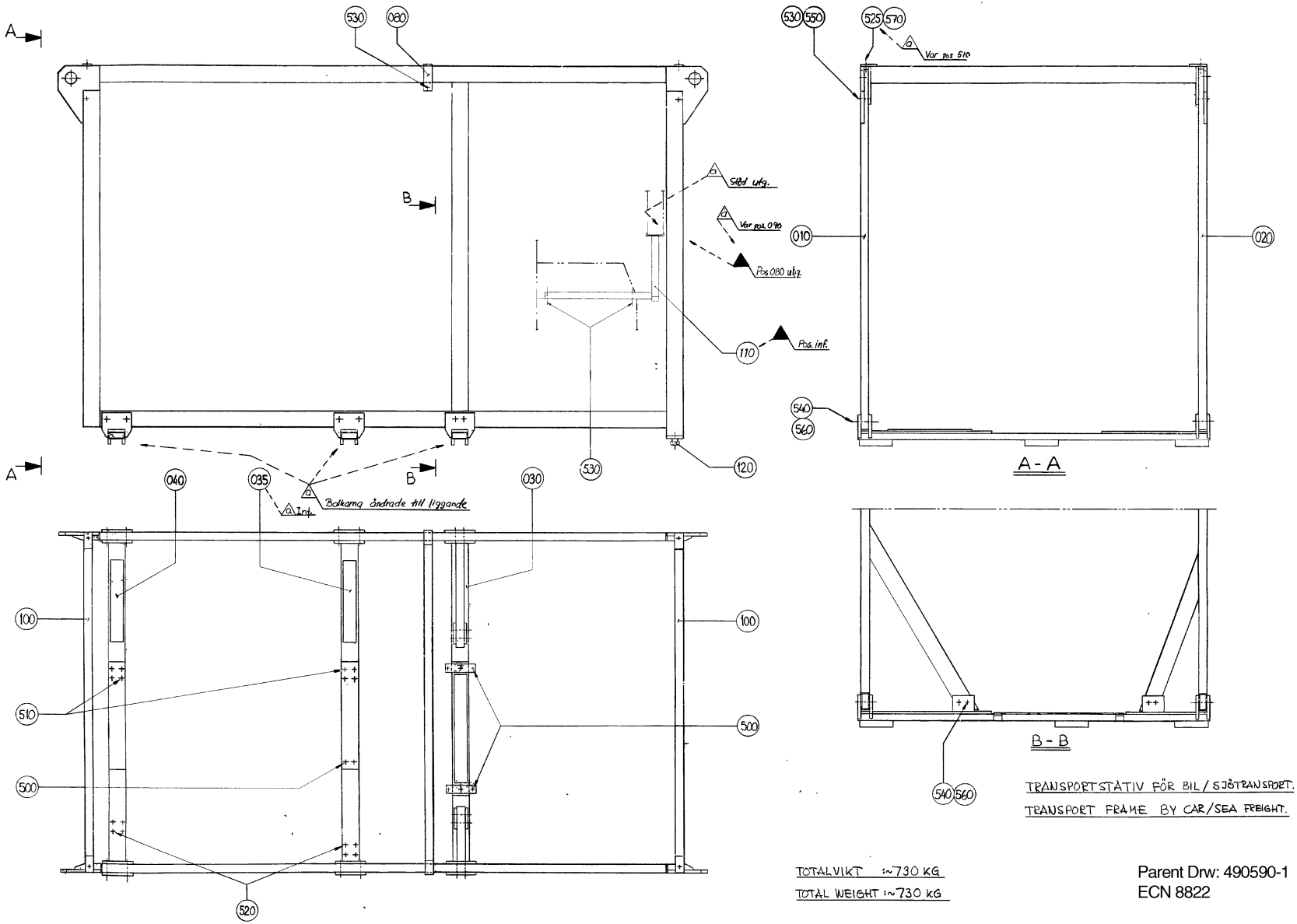

TOTALVIKT :~730 KG
TOTAL WEIGHT :~730 kg

Parent Drw: 490590-1
ECN 8822

ECM: 73027 - 20000321
Group number: 490590-0100
Assembly Drawing: 490590-1_1_AA

Issue: 20020822

Pos	Part No	SP	UN	Qty	Description	Page No
By air						
050	B490583-0000	-		1	BEAM, FRONT.	
	490578-0000	-		*4*	*BRACKET*	
	490562-0000	-		*4*	*BRACKET*	
060	B490584-0000	-		1	BEAM, MIDDLE.	
	490561-0000	-		*4*	*BRACKET*	
070	B490585-0000	-		1	BEAM, BACK.	
	490561-0000	-		*4*	*BRACKET*	
By Truck/Sea						
030	B491465-0000	-		1	GIRDER FRONT	
	491468-0000	-		*2*	*BRACKET*	
	490578-0000	-		*2*	*BRACKET*	
	490562-0000	-		*4*	*BRACKET*	
035	B491466-0000	-		1	GIRDER MIDDLE	
	491469-0000	-		*2*	*BRACKET*	
	490561-0000	-		*2*	*BRACKET*	
040	B491467-0000	-		1	GIRDER REAR	
	490561-0000	-		*2*	*BRACKET*	
	491469-0000	-		*2*	*BRACKET*	
120	490589-0000	-		2	SPACER BOLT	
Common Parts						
010	B490579-0000	-		1	FRAME RIGHT	
	490598-0000	-		*2*	*SUPPORT*	
	490597-0000	-		*2*	*HOOK HOLDER*	
020	B490580-0000	-		1	FRAME LEFT	
	490597-0000	-		*2*	*HOOK HOLDER*	
	490598-0000	-		*2*	*SUPPORT*	
080	469861-0000	-		1	CROSS BAR	
100	490587-0000	-		2	CORNER BAR	
110	491680-0000	-		1	SUPPORT	
500	312101-0493	-		8	SCREW M6S M10X25 FZB	
510	312101-0453	-		8	SCREW M6S M8X25 FZB	
520	312101-0457	-		8	SCREW M6S M8X35 FZB	
525	312101-0538	-		4	SCREW M6S M12X35 FZB	
530	312101-0548	-		8	SCREW M6S M12X80 FZB	
540	312101-0640	-		16	SCREW M6S M16X100 FZB	
550	312810-0322	-		4	HEXAGON NUT, NY-LOCK M12 FZB	
560	312810-0324	-		16	HEXAGON NUT, NY-LOCK M16 FZB	
570	315101-0180	-		4	WASHER PLAIN, BRB, 14/28 H=2	

Pos	Part No	SP	UN	Qty	Description	Page No

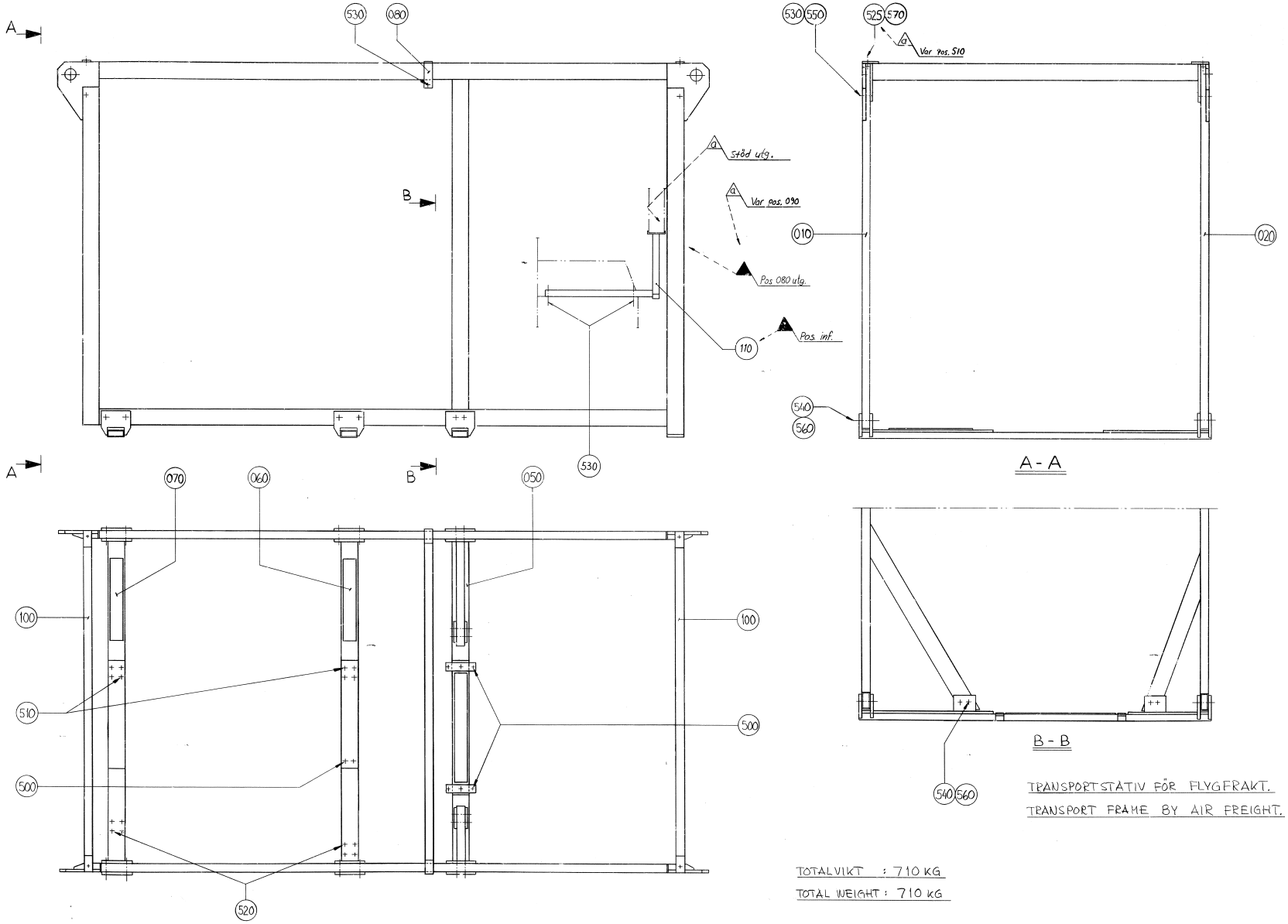
A
B
530
080
530 550
525 570
Var pos. 510
Stöd utg.
Var pos. 030
Pos 080 utg.
Pos inf.
110
010
020
540
560
530
A - A
070
060
050
100
510
500
520
B - B
TRANSPORTSTÄTIV FÖR FLYGFRAKT.
TRANSPORT FRAME BY AIR FREIGHT.
TOTALVIKT : 710 KG
TOTAL WEIGHT : 710 KG

ECM: 73027 - 20000321
Group number: 490590-0100
Assembly Drawing: 490590-2_1_AA

Issue: 20020822

Pos	Part No	SP	UN	Qty	Description	Page No
By air						
050	B490583-0000	-		1	BEAM, FRONT.	
	490578-0000	-		*4*	*BRACKET*	
	490562-0000	-		*4*	*BRACKET*	
060	B490584-0000	-		1	BEAM, MIDDLE.	
	490561-0000	-		*4*	*BRACKET*	
070	B490585-0000	-		1	BEAM, BACK.	
	490561-0000	-		*4*	*BRACKET*	
By Truck/Sea						
030	B491465-0000	-		1	GIRDER FRONT	
	491468-0000	-		*2*	*BRACKET*	
	490578-0000	-		*2*	*BRACKET*	
	490562-0000	-		*4*	*BRACKET*	
035	B491466-0000	-		1	GIRDER MIDDLE	
	491469-0000	-		*2*	*BRACKET*	
	490561-0000	-		*2*	*BRACKET*	
040	B491467-0000	-		1	GIRDER REAR	
	490561-0000	-		*2*	*BRACKET*	
	491469-0000	-		*2*	*BRACKET*	
120	490589-0000	-		2	SPACER BOLT	
Common Parts						
010	B490579-0000	-		1	FRAME RIGHT	
	490598-0000	-		*2*	*SUPPORT*	
	490597-0000	-		*2*	*HOOK HOLDER*	
020	B490580-0000	-		1	FRAME LEFT	
	490597-0000	-		*2*	*HOOK HOLDER*	
	490598-0000	-		*2*	*SUPPORT*	
080	469861-0000	-		1	CROSS BAR	
100	490587-0000	-		2	CORNER BAR	
110	491680-0000	-		1	SUPPORT	
500	312101-0493	-		8	SCREW M6S M10X25 FZB	
510	312101-0453	-		8	SCREW M6S M8X25 FZB	
520	312101-0457	-		8	SCREW M6S M8X35 FZB	
525	312101-0538	-		4	SCREW M6S M12X35 FZB	
530	312101-0548	-		8	SCREW M6S M12X80 FZB	
540	312101-0640	-		16	SCREW M6S M16X100 FZB	
550	312810-0322	-		4	HEXAGON NUT, NY-LOCK M12 FZB	
560	312810-0324	-		16	HEXAGON NUT, NY-LOCK M16 FZB	
570	315101-0180	-		4	WASHER PLAIN, BRB, 14/28 H=2	

Pos	Part No	SP	UN	Qty	Description	Page No

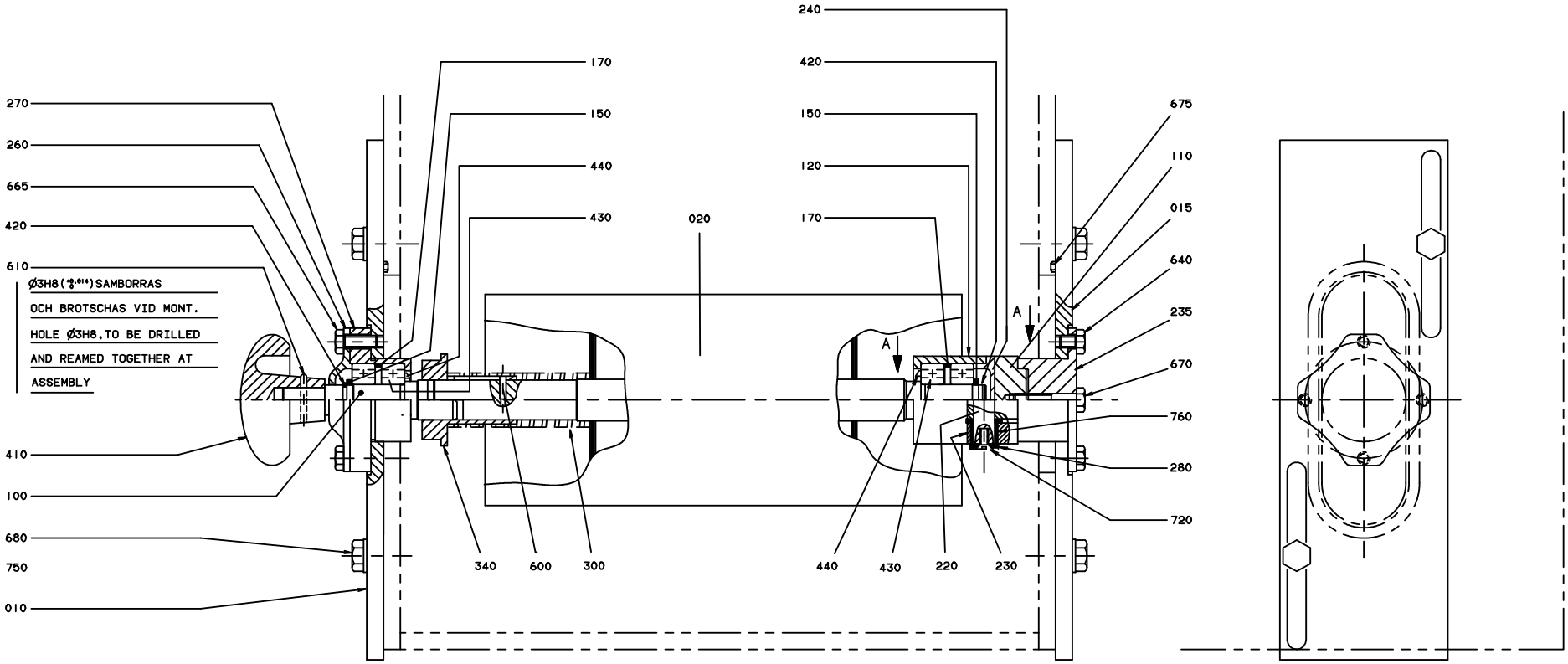

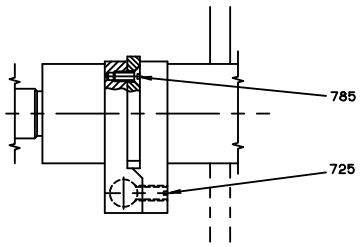

SNITT/SECTION A-A

445 KULLAGER (90214-98) FETTSMORDA
MED SILIKONFETT TP-no:90296-9
BALL BEARINGS (90214-98) GREASED WITH
SILICON-GREASE,TP-No:90296-9

TBA/9R 100V/110V

ECM: 102791 - 20020207
Group number: 1529140-0100
Assembly Drawing: 1529140-1_1_AA

Issue: 20020822

Pos	Part No	SP	UN	Qty	Description	Page No
Common Parts						
010	1529216-0000	-		1	PLATE	
015	1529217-0000	-		1	PLATE	
020	490882-0000	-		1	ROLL	
100	752744-0000	B		1	SHAFT	
110	271837-0000	B		1	BRACKET	
120	456012-0000	A		1	BEARING SEAT	
150	15529-0000	-		2	WASHER	
170	247172-0000	A		2	SPACER RING	
220	751467-0000	A		1	SHAFT	
230	271656-0000	A		2	WASHER	
235	271837-0000	B		1	BRACKET	
240	456013-0000	A		1	BEARING COVER	
260	752745-0000	B		1	BEARING COVER	
270	271841-0000	B		1	BEARING SEAT	
280	271844-0000	-		1	WASHER	
300	272001-0000	A		1	COMPRESSION SPRING	
340	295010-0000	A		1	GUIDE SLEEVE	
410	90051-0045	B		1	STELLAR KNOB, NO. 8323-2575	
420	90141-0011	A		2	RETAIN. RING, SPEC 12,8	
430	90214-0098	A		4	BALL BEARING, 15X35X11 MM	
440	90214-0303	-		2	SEALING RING, 18,6X35X2 MM	
445	90296-0009	-	L	1	SILICONE GREASE TUBE 100 GR.	
600	311103-0234	A		1	PARALLELL PIN, M6, 3X12 MM	
610	311103-0238	A		1	PARALLELL PIN, M6, 3X20 MM	
640	312105-0364	-		4	SCREW M6S ISO 4017 M6X10 A480	
665	312105-0370	-		4	SCREW M6S ISO 4017 M6X20 A480	
670	312105-0374	-		2	SCREW M6S ISO 4014 M6X30 A480	
675	315204-0313	-		2	O-RING 109,5X3 MM	
680	312105-0451	-		4	SCREW M6S ISO 4017 M8X20 A480	
720	312145-0287	-		1	SCREW COUNTERS.SLOT.HD. MFS 4X8 SS	
725	312318-0364	-		1	SCREW HEX.SOCK.SET CUP P.MSK6SS6X10 SS	
750	315115-0165	-		4	WASHER PLAIN, TBRB 8,4/16 H=3	
760	321127-0100	A		2	BEARING BUSHING WITHOUT FL, 10X13X10 MM	
785	312155-0291	-		4	SCREW HEX.SOCK.COUNT.MF6S M4X12 A480	

Pos	Part No	SP	UN	Qty	Description	Page No

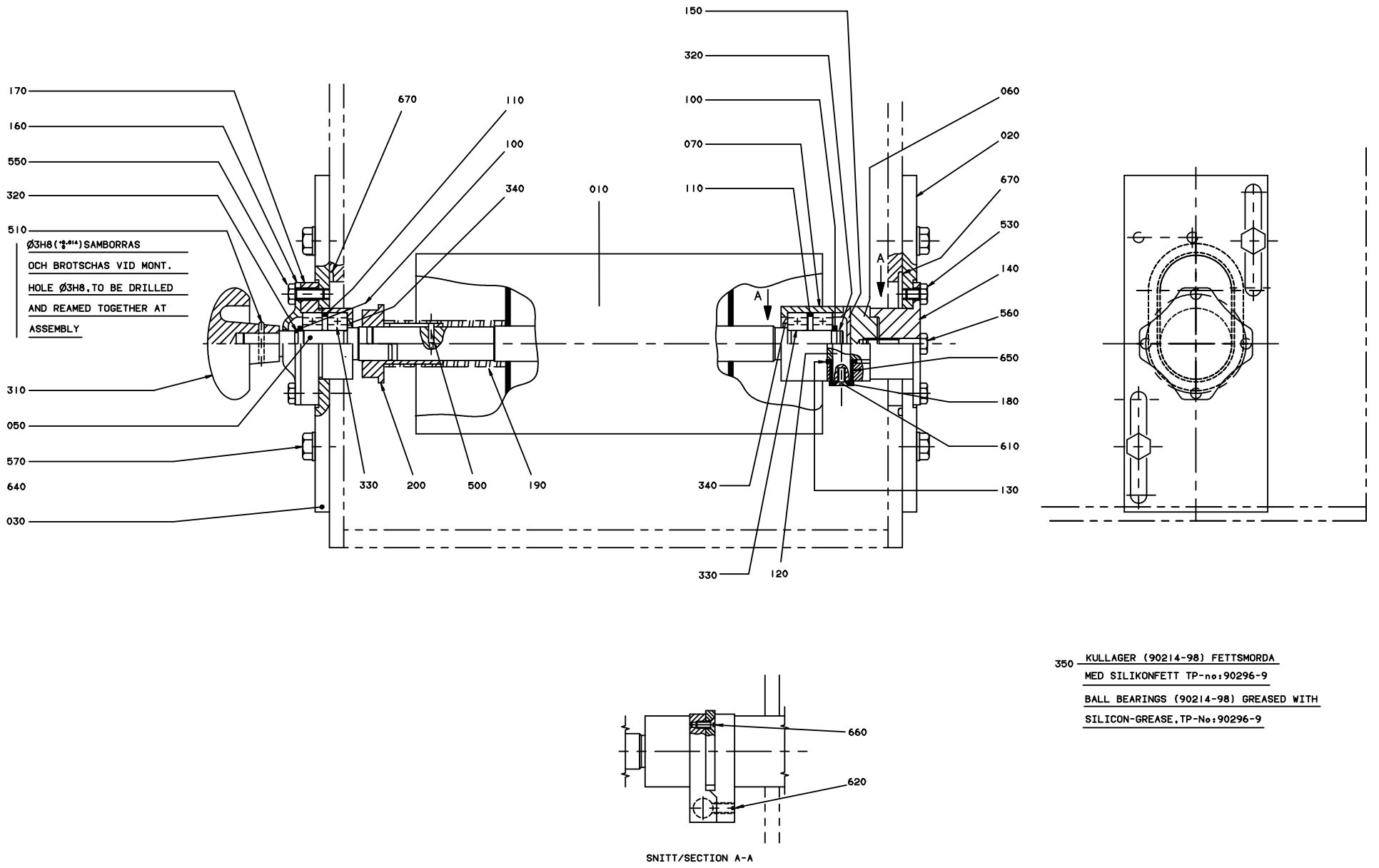
170
160
550
320
510
Ø3H8(⁺⁰·⁰¹⁴)SAMBORRAS
OCH BROTSCHAS VID MONT.
HOLE Ø3H8,TO BE DRILLED
AND REAMED TOGETHER AT
ASSEMBLY
310
050
570
640
030
670
110
100
340
010
330
200
500
190
150
320
100
070
110
060
020
670
530
140
560
650
180
610
130
340
330
120
A
A
660
620
SNITT/SECTION A-A
350 KULLAGER (90214-98) FETTSMORDA
MED SILIKONFETT TP-no:90296-9
BALL BEARINGS (90214-98) GREASED WITH
SILICON-GREASE,TP-No:90296-9

Pos	Part No	SP	UN	Qty	Description	Page No
0200B OR 0250B						
670	315204-0303	-		2	O-RING 59,5X3 MM	
0200S						
670	315204-0306	-		2	O-RING 74,5X3 MM	
Common Parts						
010	490882-0000	-		1	ROLL	
020	491626-0000	-		1	BEARING PANEL	
030	491627-0000	-		1	BEARING PANEL	
050	752744-0000	B		1	SHAFT	
060	271835-0000	B		1	BRACKET	
070	456012-0000	A		1	BEARING SEAT	
100	15529-0000	-		2	WASHER	
110	247172-0000	A		2	SPACER RING	
120	751467-0000	A		1	SHAFT	
130	271656-0000	A		2	WASHER	
140	271837-0000	B		1	BRACKET	
150	456013-0000	A		1	BEARING COVER	
160	752745-0000	B		1	BEARING COVER	
170	271841-0000	B		1	BEARING SEAT	
180	271844-0000	B		1	WASHER	
190	272001-0000	A		1	COMPRESSION SPRING	
200	295010-0000	A		1	GUIDE SLEEVE	
310	90051-0045	B		1	STELLAR KNOB, NO. 8323-2575	
320	90141-0011	A		2	RETAIN. RING, SPEC 12,8	
330	90214-0098	A		4	BALL BEARING, 15X35X11 MM	
340	90214-0303	-		2	SEALING RING, 18,6X35X2 MM	
350	90296-0009	-	L	1	SILICONE GREASE TUBE 100 GR.	
500	311103-0234	A		1	PARALLELL PIN, M6, 3X12 MM	
510	311103-0238	A		1	PARALLELL PIN, M6, 3X20 MM	
530	312105-0362	-		4	SCREW M6S ISO 4017 M6X8 A480	
550	312105-0368	-		4	SCREW M6S M6X16 A280	
560	312105-0374	-		2	SCREW M6S ISO 4014 M6X30 A480	
570	312105-0451	-		4	SCREW M6S ISO 4017 M8X20 A480	
610	312145-0287	-		1	SCREW COUNTERS.SLOT.HD. MFS 4X8 SS	
620	312318-0364	-		1	SCREW HEX.SOCK.SET CUP P.MSK6SS6X10 SS	
640	315115-0165	-		4	WASHER PLAIN, TBRB 8,4/16 H=3	
650	321127-0100	A		2	BEARING BUSHING WITHOUT FL, 10X13X10 MM	
660	312155-0291	-		4	SCREW HEX.SOCK.COUNT.MF6S M4X12 A480	
670	315204-0309	-		2	O-RING 89,5X3 MM	

Pos	Part No	SP	UN	Qty	Description	Page No

Machine Type | Group Description | Used-In | Group Number | Page No

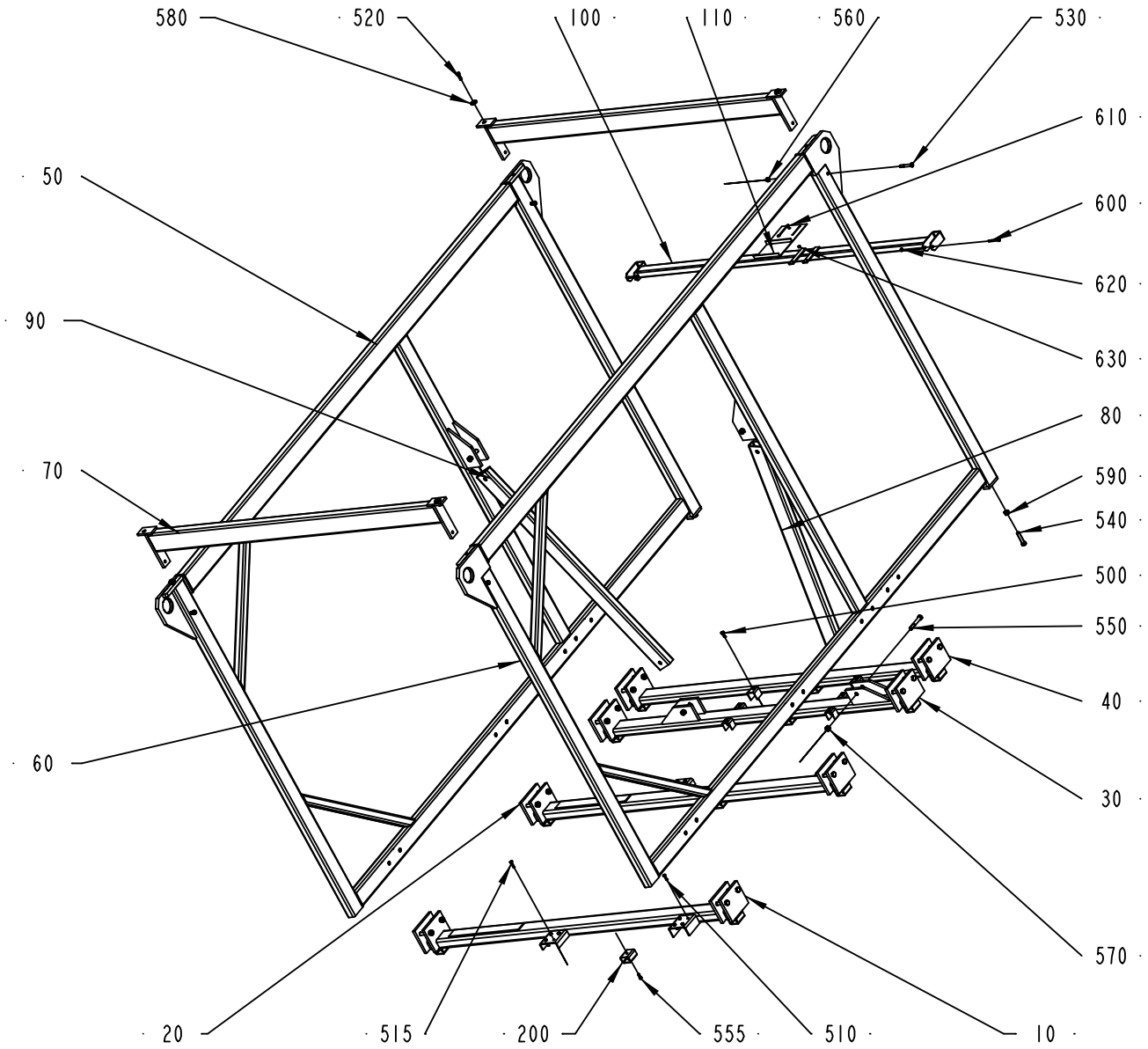

1529459-1
ECM 101170

ECM: 105985 - 20020320
Group number: 1529459-0100
Assembly Drawing: 1529459-1_1_AA

Issue: 20020822

Pos	Part No	SP	UN	Qty	Description	Page No
Common Parts						
010	1529452-0000	-		1	BEAM 1	
020	1529453-0000	-		1	BEAM 2	
030	1529454-0000	-		1	BEAM 3	
040	1529455-0000	-		1	BEAM 4	
050	563455-0000	-		1	GABLE RIGHT	
060	563456-0000	-		1	GABLE LEFT	
070	1529456-0000	-		2	CORNER BEAM	
080	563458-0000	-		1	CROSS BAR LEFT	
090	563459-0000	-		1	CROSS BAR	
100	1529461-0000	-		1	SUPPORT BEAM	
110	1529460-0000	-		1	SUPPORTING SHEET	
200	565570-0000	-		12	SUPPORT	
500	312101-0493	-		6	SCREW M6S M10X25 FZB	
510	312101-0453	-		8	SCREW M6S M8X25 FZB	
515	312101-0457	-		8	SCREW M6S M8X35 FZB	
520	312101-0538	-		4	SCREW M6S M12X35 FZB	
530	312101-0548	-		4	SCREW M6S M12X80 FZB	
540	312104-0634	-		2	SCREW M6S M16X70H FZB	
550	312101-0640	-		20	SCREW M6S M16X100 FZB	
555	312111-0451	-		12	SCREW HEX.SOCK.HD.MC6S-TT 8X20 88 FZB	
560	312810-0322	-		4	HEXAGON NUT, NY-LOCK M12 FZB	
570	312810-0324	-		20	HEXAGON NUT, NY-LOCK M16 FZB	
580	315121-0179	-		4	WASHER PLAIN, TBRSB 13,5/36 H=6	
590	312901-0324	-		2	NUT M6M16VFZB	
600	312101-0384	-		2	SCREW M6S M6X70 FZB	
610	312101-0368	-		2	SCREW M6S M6X16 FZB	
620	312810-0318	-		2	HEXAGON NUT, NY-LOCK M8 FZB	
630	312810-0316	-		2	HEXAGON NUT, NY-LOCK M6 FZB	

Pos	Part No	SP	UN	Qty	Description	Page No

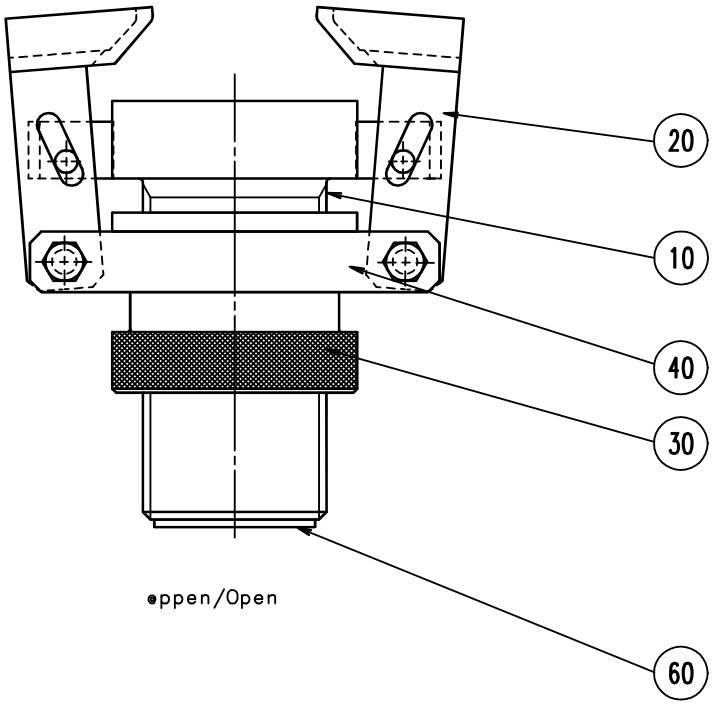
20
10
40
30
60
•ppen/Open

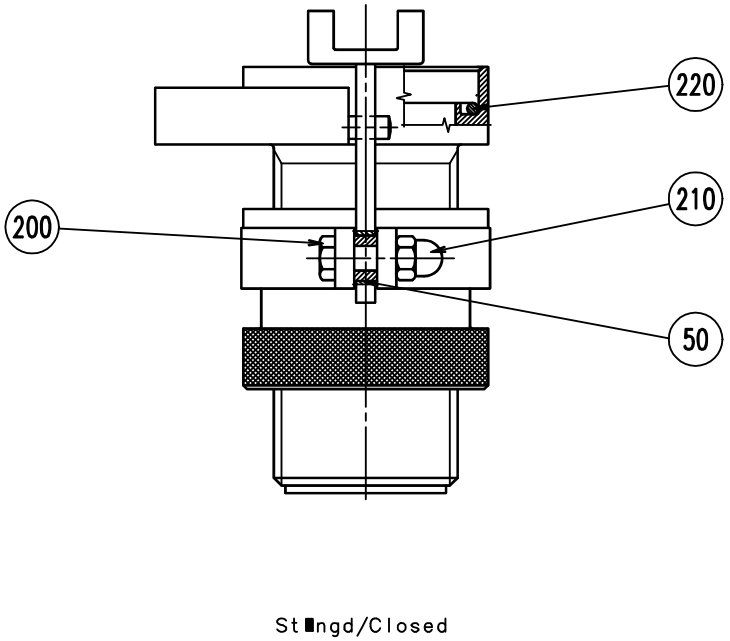
220
210
200
50
St■ngd/Closed

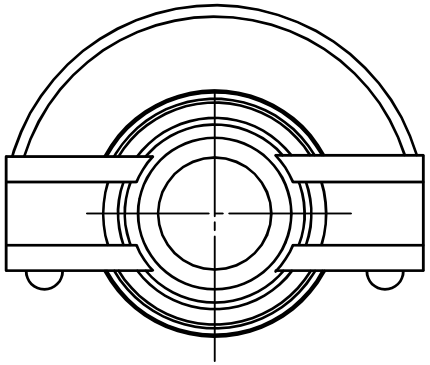

ECM: 102931 - 20020110
Group number: 752495-0100
Assembly Drawing: 752495-1_1_AA

Issue: 20020822

Pos	Part No	SP	UN	Qty	Description	Page No
0200S						
010	752517-0000	-		1	CLEANING PIPE	
020	752521-0000	-		2	CATCH	
220	315204-0526	A		1	O-RING 36,1X3,53 MM	
0200B OR 0250B						
010	752496-0000	-		1	CLEANING PIPE	
020	752498-0000	-		2	CATCH	
220	90242-0182	A		1	O-RING 50X4 MM	
Common Parts						
030	752497-0000	-		1	NUT	
040	752499-0000	-		2	RING	
050	553586-0000	-		2	SPACER	
060	12242-0002	A		1	GASKET 40X32X5,5	
200	312105-0371	-		2	SCREW M6S ISO 4017 M6X22 A480	
210	312811-0316	-		2	NUT HEX.LOCK HELI COIL MID GRIP M6 SS	

Pos	Part No	SP	UN	Qty	Description	Page No

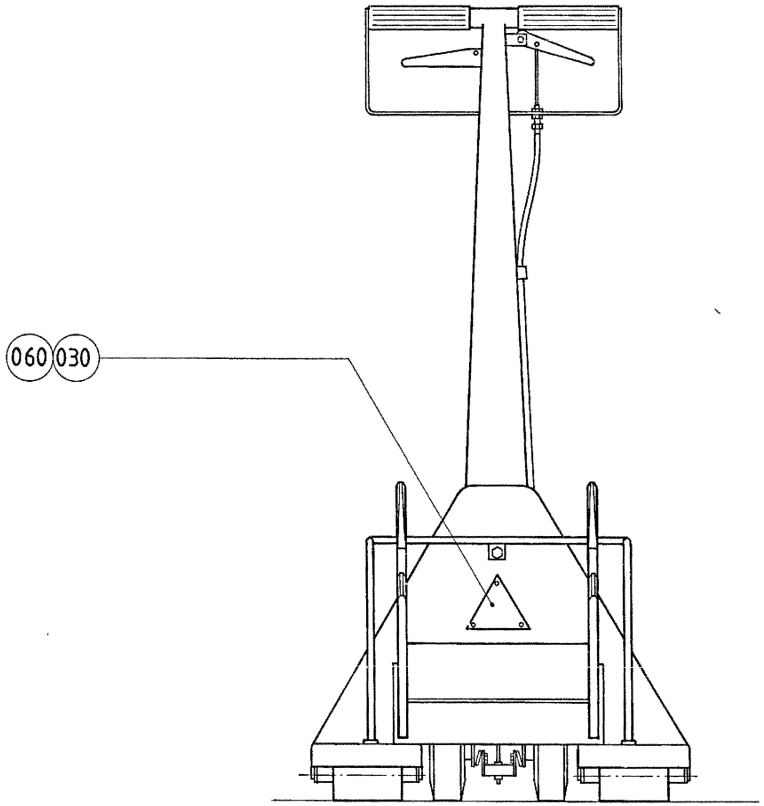
060
030

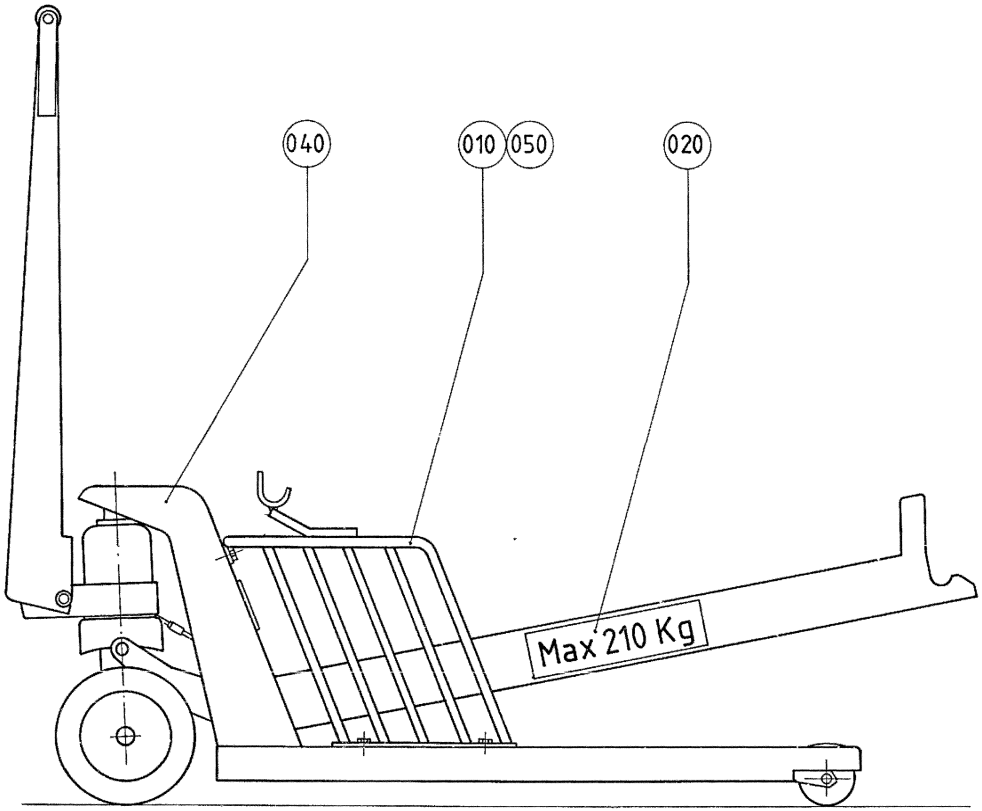
040
010
050
020
Max 210 Kg

ECM: 99777 - 20011105
Group number: 491942-0100
Assembly Drawing: 491942-1_1_AA

Issue: 20020822

Pos	Part No	SP	UN	Qty	Description	Page No
Common Parts						
010	295106-0000	-		1	PROTECTION	
020	491189-0000	-		2	SIGN	
030	574658-0000	-		1	LOGOTYPE TP	
040	B90067-0010	-		1	CARRIAGE	
	90067-0317	*-*		*1*	*BRAKE LINING*	
	90067-0302	*C*		*1*	*TORSION SPRING*	
	90067-0301	*C*		*1*	*BRAKE WIRE*	
	90067-0300	*C*		*1*	*SPARE PARTS KIT*	
050	312105-0364	-		5	SCREW M6S ISO 4017 M6X10 A480	
060	312121-0224	-		3	SCREW SLOT.PAN HD. MCS 3X10 FZB	
110	90067-0300	A		1	SPARE PARTS KIT	
120	90067-0301	A		1	BRAKE WIRE	
130	90067-0302	A		2	TORSION SPRING	
140	90067-0317	A		2	BRAKE LINING	
150	90067-0322	A		1	REPAIR KIT	
160	90067-0323	A		1	BEARING KIT	
170	90067-0324	A		1	REPAIR KIT	
180	90067-0325	A		1	PUMP PISTON	
190	90067-0326	A		1	REPAIR KIT	
200	90067-0327	A		1	RETURN SPRING	
210	90067-0328	A		1	VALVE	
220	90067-0329	A		2	COPPER WASHER	
230	90067-0330	A		1	VALVE ARM	
240	90067-0331	A		1	TOP BEARING KIT	
250	90067-0332	A		1	LIFT PISTON	
260	90067-0333	A		1	VALVE	
270	90067-0334	A		1	AXIAL BEARING KIT	
280	90067-0335	A		1	YOKE UNIT	
290	90067-0336	A		1	GUIDE SHAFT UNIT	
300	90067-0337	A		2	BRAKE DRUM	
310	90067-0338	A		2	GUIDE ROLLER 32 44 117 2	
320	90067-0339	A		2	WHEEL	
330	90067-0340	A		4	SLEEVE	
340	90067-0341	A		2	SHAFT	
350	90067-0342	A		4	TENSION SPRING	
500	311303-0271	A		2	SLOTTED PIRPB4X18FZB	
510	315204-0108	A		2	O-RING 10,10X1,6 MM	
520	315750-0119	A		4	RETAIN. RING, 25	

Pos	Part No	SP	UN	Qty	Description	Page No

Machine Type	Group Description	Used-In	Group Number	Page No

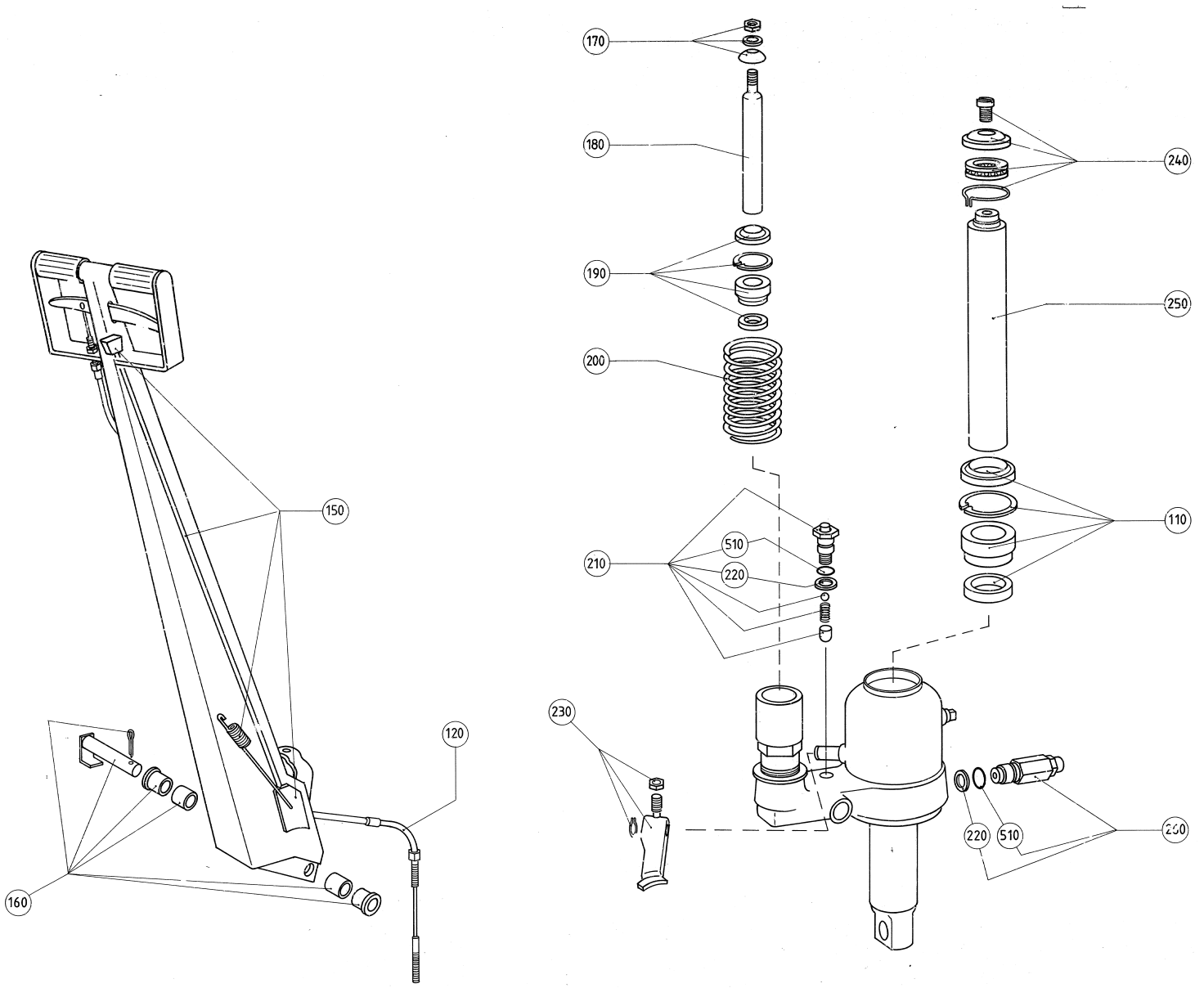
170
180
190
200
210
510
220
230
240
250
110
260
150
120
160

ECM: 99777 - 20011105
Group number: 491942-0100
Assembly Drawing: 491942-2_1_AA

Issue: 20020822

Pos	Part No	SP	UN	Qty	Description	Page No
Common Parts						
010	295106-0000	-		1	PROTECTION	
020	491189-0000	-		2	SIGN	
030	574658-0000	-		1	LOGOTYPE TP	
040	B90067-0010	-		1	CARRIAGE	
	90067-0317	*-*		*1*	*BRAKE LINING*	
	90067-0302	*C*		*1*	*TORSION SPRING*	
	90067-0301	*C*		*1*	*BRAKE WIRE*	
	90067-0300	*C*		*1*	*SPARE PARTS KIT*	
050	312105-0364	-		5	SCREW M6S ISO 4017 M6X10 A480	
060	312121-0224	-		3	SCREW SLOT.PAN HD. MCS 3X10 FZB	
110	90067-0300	A		1	SPARE PARTS KIT	
120	90067-0301	A		1	BRAKE WIRE	
130	90067-0302	A		2	TORSION SPRING	
140	90067-0317	A		2	BRAKE LINING	
150	90067-0322	A		1	REPAIR KIT	
160	90067-0323	A		1	BEARING KIT	
170	90067-0324	A		1	REPAIR KIT	
180	90067-0325	A		1	PUMP PISTON	
190	90067-0326	A		1	REPAIR KIT	
200	90067-0327	A		1	RETURN SPRING	
210	90067-0328	A		1	VALVE	
220	90067-0329	A		2	COPPER WASHER	
230	90067-0330	A		1	VALVE ARM	
240	90067-0331	A		1	TOP BEARING KIT	
250	90067-0332	A		1	LIFT PISTON	
260	90067-0333	A		1	VALVE	
270	90067-0334	A		1	AXIAL BEARING KIT	
280	90067-0335	A		1	YOKE UNIT	
290	90067-0336	A		1	GUIDE SHAFT UNIT	
300	90067-0337	A		2	BRAKE DRUM	
310	90067-0338	A		2	GUIDE ROLLER 32 44 117 2	
320	90067-0339	A		2	WHEEL	
330	90067-0340	A		4	SLEEVE	
340	90067-0341	A		2	SHAFT	
350	90067-0342	A		4	TENSION SPRING	
500	311303-0271	A		2	SLOTTED PIRPB4X18FZB	
510	315204-0108	A		2	O-RING 10,10X1,6 MM	
520	315750-0119	A		4	RETAIN. RING, 25	

Pos	Part No	SP	UN	Qty	Description	Page No

Machine Type	Group Description	Used-In	Group Number	Page No

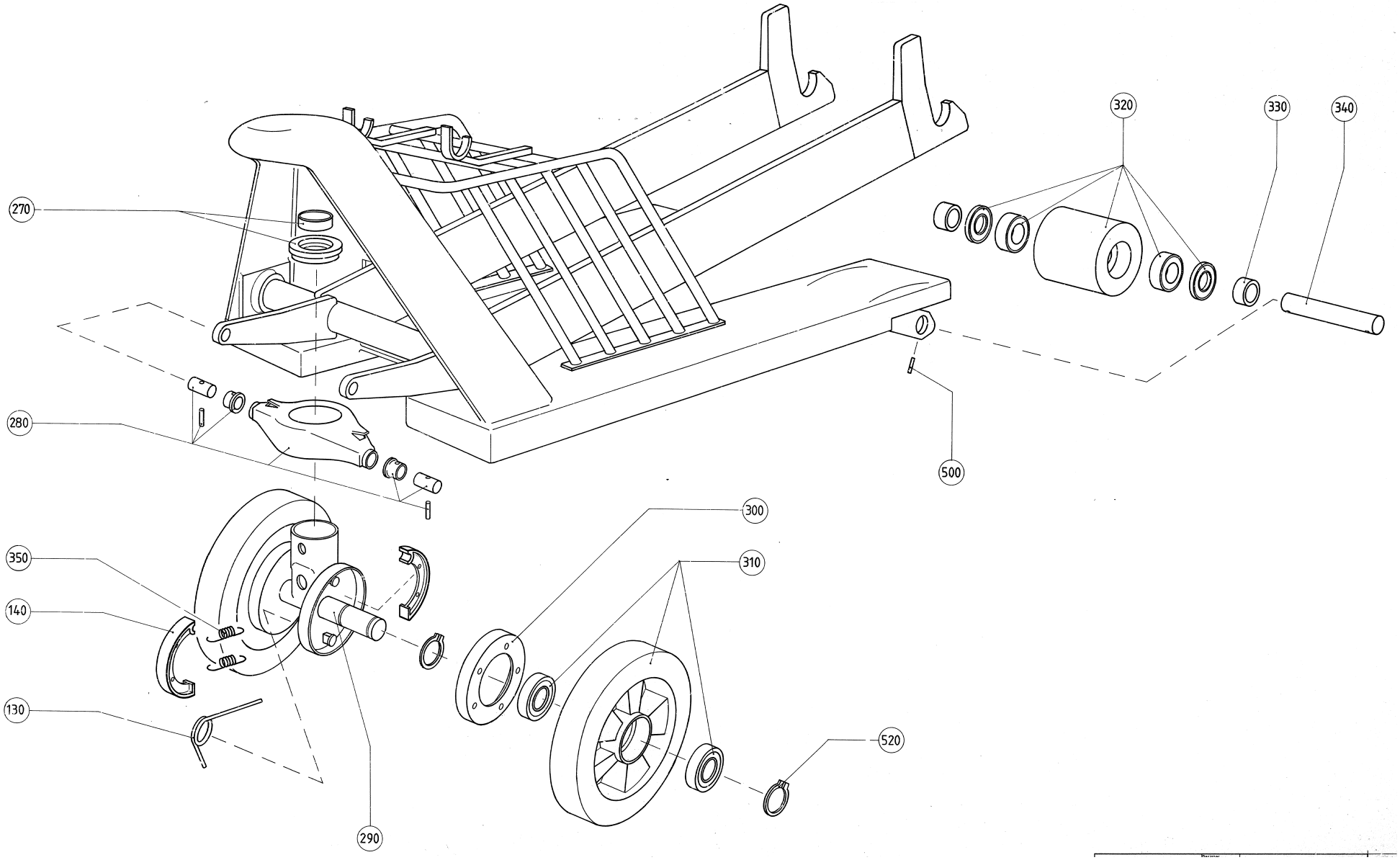
270
280
320
330
340
500
300
310
350
140
130
520
290

ECM: 99777 - 20011105
Group number: 491942-0100
Assembly Drawing: 491942-3_1_AA

Issue: 20020822

Pos	Part No	SP	UN	Qty	Description	Page No
Common Parts						
010	295106-0000	-		1	PROTECTION	
020	491189-0000	-		2	SIGN	
030	574658-0000	-		1	LOGOTYPE TP	
040	B90067-0010	-		1	CARRIAGE	
	90067-0317	*-*		*1*	*BRAKE LINING*	
	90067-0302	*C*		*1*	*TORSION SPRING*	
	90067-0301	*C*		*1*	*BRAKE WIRE*	
	90067-0300	*C*		*1*	*SPARE PARTS KIT*	
050	312105-0364	-		5	SCREW M6S ISO 4017 M6X10 A480	
060	312121-0224	-		3	SCREW SLOT.PAN HD. MCS 3X10 FZB	
110	90067-0300	A		1	SPARE PARTS KIT	
120	90067-0301	A		1	BRAKE WIRE	
130	90067-0302	A		2	TORSION SPRING	
140	90067-0317	A		2	BRAKE LINING	
150	90067-0322	A		1	REPAIR KIT	
160	90067-0323	A		1	BEARING KIT	
170	90067-0324	A		1	REPAIR KIT	
180	90067-0325	A		1	PUMP PISTON	
190	90067-0326	A		1	REPAIR KIT	
200	90067-0327	A		1	RETURN SPRING	
210	90067-0328	A		1	VALVE	
220	90067-0329	A		2	COPPER WASHER	
230	90067-0330	A		1	VALVE ARM	
240	90067-0331	A		1	TOP BEARING KIT	
250	90067-0332	A		1	LIFT PISTON	
260	90067-0333	A		1	VALVE	
270	90067-0334	A		1	AXIAL BEARING KIT	
280	90067-0335	A		1	YOKE UNIT	
290	90067-0336	A		1	GUIDE SHAFT UNIT	
300	90067-0337	A		2	BRAKE DRUM	
310	90067-0338	A		2	GUIDE ROLLER 32 44 117 2	
320	90067-0339	A		2	WHEEL	
330	90067-0340	A		4	SLEEVE	
340	90067-0341	A		2	SHAFT	
350	90067-0342	A		4	TENSION SPRING	
500	311303-0271	A		2	SLOTTED PIRPB4X18FZB	
510	315204-0108	A		2	O-RING 10,10X1,6 MM	
520	315750-0119	A		4	RETAIN. RING, 25	

Pos	Part No	SP	UN	Qty	Description	Page No

Machine Type	Group Description	Used-In	Group Number	Page No

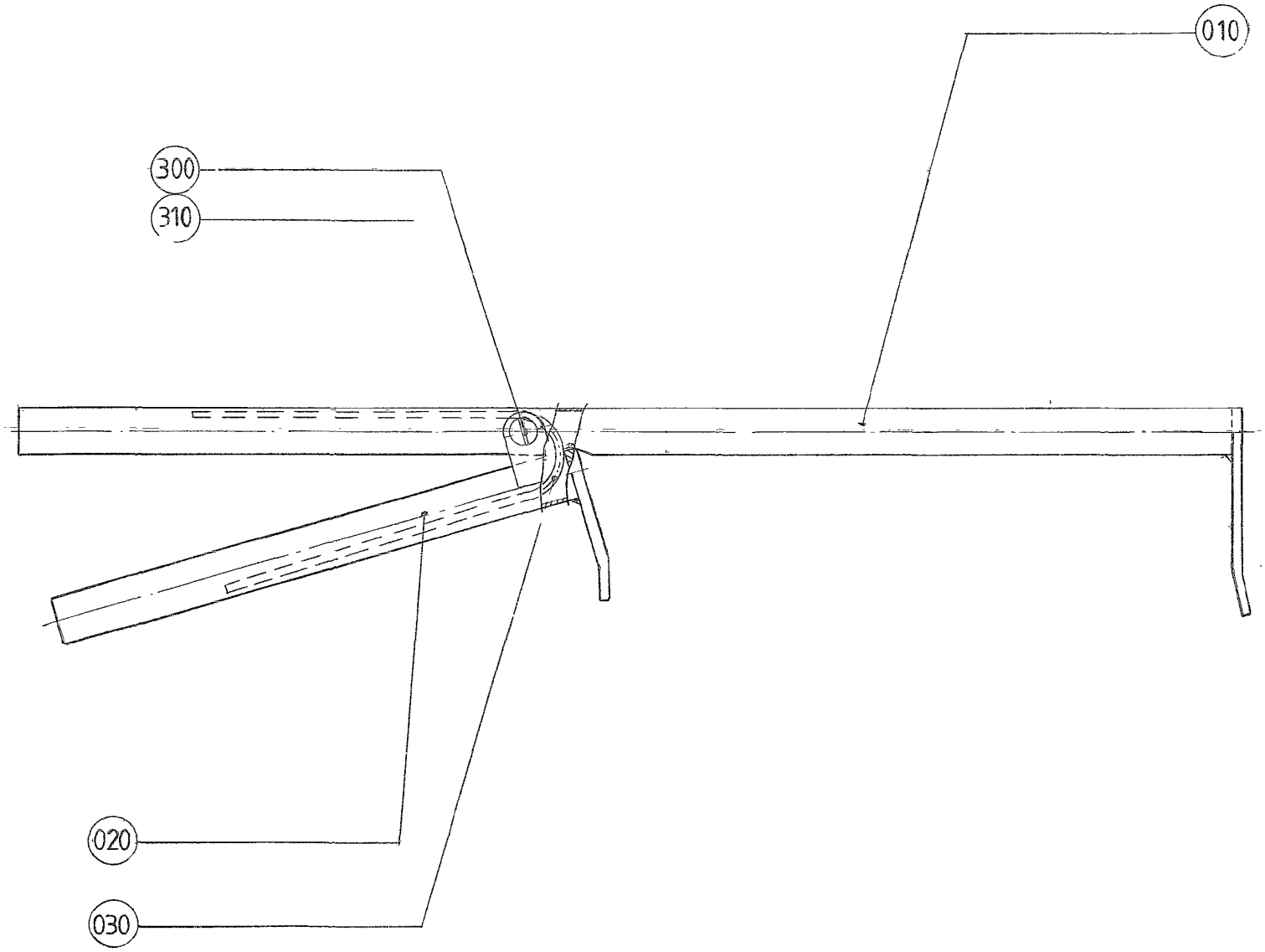
010
300
310
020
030

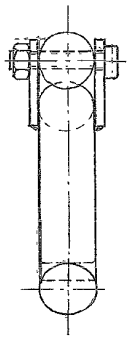

ECM: 71313 - 20000327
Group number: 295904-0100
Assembly Drawing: 295904-1_1_AA

Issue: 20020822

Pos	Part No	SP	UN	Qty	Description	Page No
TBA 0200S OR TWA 0200S						
010	295905-0002	-		1	HOLDER	
TBA 0200B OR TBA 0250B						
010	295905-0003	-		1	HOLDER	
Common Parts						
020	295906-0000	-		1	HANDLE	
030	295907-0000	-		1	SPRING	
300	312125-0295	-		1	SCREW PAN HEAD MCS M4X20 SS	
310	312605-0312	-		1	HEXAGON NUT, M6M M4 A280	

Pos	Part No	SP	UN	Qty	Description	Page No

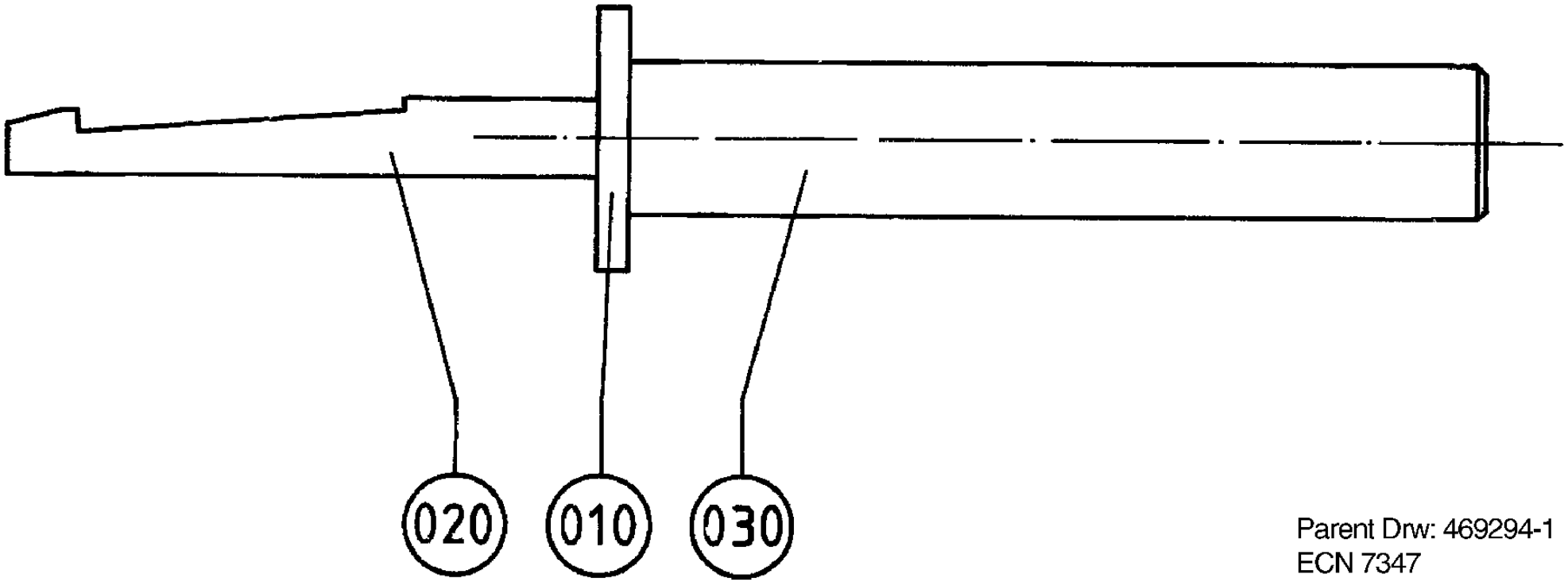

Parent Drw: 469294-1
ECN 7347

ECM: - -
Group number: 469294-0100
Assembly Drawing: 469294-1_1_AA

Issue: 20020822

Pos	Part No	SP	UN	Qty	Description	Page No
Common Parts						
010	274177-0000	-		1	WASHER	
020	469293-0000	-		1	CLAW	
030	274179-0000	-		1	HANDLE	

Pos	Part No	SP	UN	Qty	Description	Page No

This page is intentionally left blank.

ECM: 72871 - 19990909
Group number: 531345-0100
Assembly Drawing:

Issue: 20020822

Pos	Part No	SP	UN	Qty	Description	Page No
Common Parts						
010	90303-0012	-		1	PROTECTIVE GLOVES	
020	90303-0013	-		1	APRON	
030	90303-0011	-		1	PROTECTIVE GOGGLES	

Pos	Part No	SP	UN	Qty	Description	Page No

This page is intentionally left blank.

ECM: - -
Group number: 77099-0100
Assembly Drawing:

Issue: 20020822

Pos	Part No	SP	UN	Qty	Description	Page No
Common Parts						
010	75665-0000	-		1	ASSEMBLY TOOL	
020	72947-0000	-		1	HOOK SPANNER	
030	B76167-0000	-		1	LOCKING LOOP	
	90287-0113	*-*		*1*	*SCREW M8X60*	
	90287-0114	*-*		*1*	*PRESSURE PLATE M8*	
	312715-0118	*-*		*1*	*NUT WING COLD WORK.MVM-K M8 A280*	
040	76138-0000	-		1	LOCKING LOOP	
050	434841-0000	-		1	GAUGE	
060	76131-0000	-		1	ASSEMBLY CONE	
070	76132-0000	-		1	ASSEMBLY TOOL	
080	76153-0000	-		1	SETTING TOOL	
090	77247-0000	-		1	ASSEMBLY PIN	
210	777120-0215	-		2	SPANNER 6X7	
220	777120-0220	-		2	C-SPANNER	
230	777120-0232	-		2	SPANNER 12X13	
240	777122-0137	-		1	C-SPANNER V=36	
250	777122-0142	-		1	C-SPANNER V=46	
260	777150-0801	-		2	KEY SET ,SEXKANT	
270	777200-0101	-		1	PIPE WRENCEL	

Pos	Part No	SP	UN	Qty	Description	Page No

Tetra Pak

SPC
Spare Parts Catalogue

This page is intentionally left blank.

Pos	Part No	SP	UN	Qty	Description	Page No
DATEUNIT						
020	A2547578-0100	-		1	EXTERNAL DATING UNIT	**883**
DISCHARGEUNIT						
010	A1529495-0100	-		1	DISCHARGE UNIT	**891**

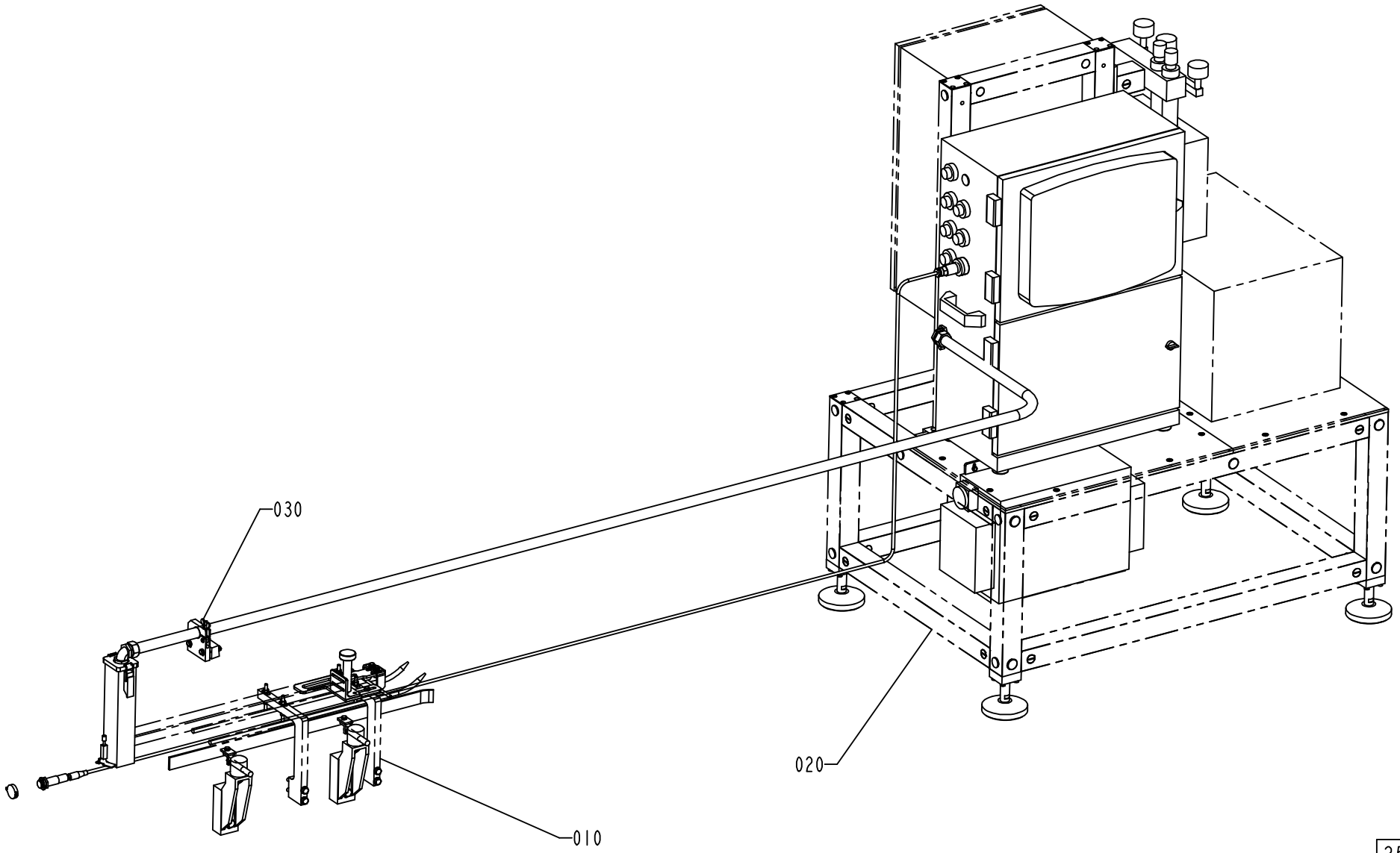

2547578-1
ECN 106713

ECM: 109571 - 20020614
Group number: 2547578-0100
Assembly Drawing: 2547578-1_1_AA

Issue: 20020822

Pos	Part No	SP	UN	Qty	Description	Page No
Common Parts						
010	A2514769-0100	-		1	GUIDE	**885**
020	A2514770-0100	-		1	SERVICE TOOL	**887**
030	A1529299-0100	-		1	BRACKET	**889**

Pos	Part No	SP	UN	Qty	Description	Page No

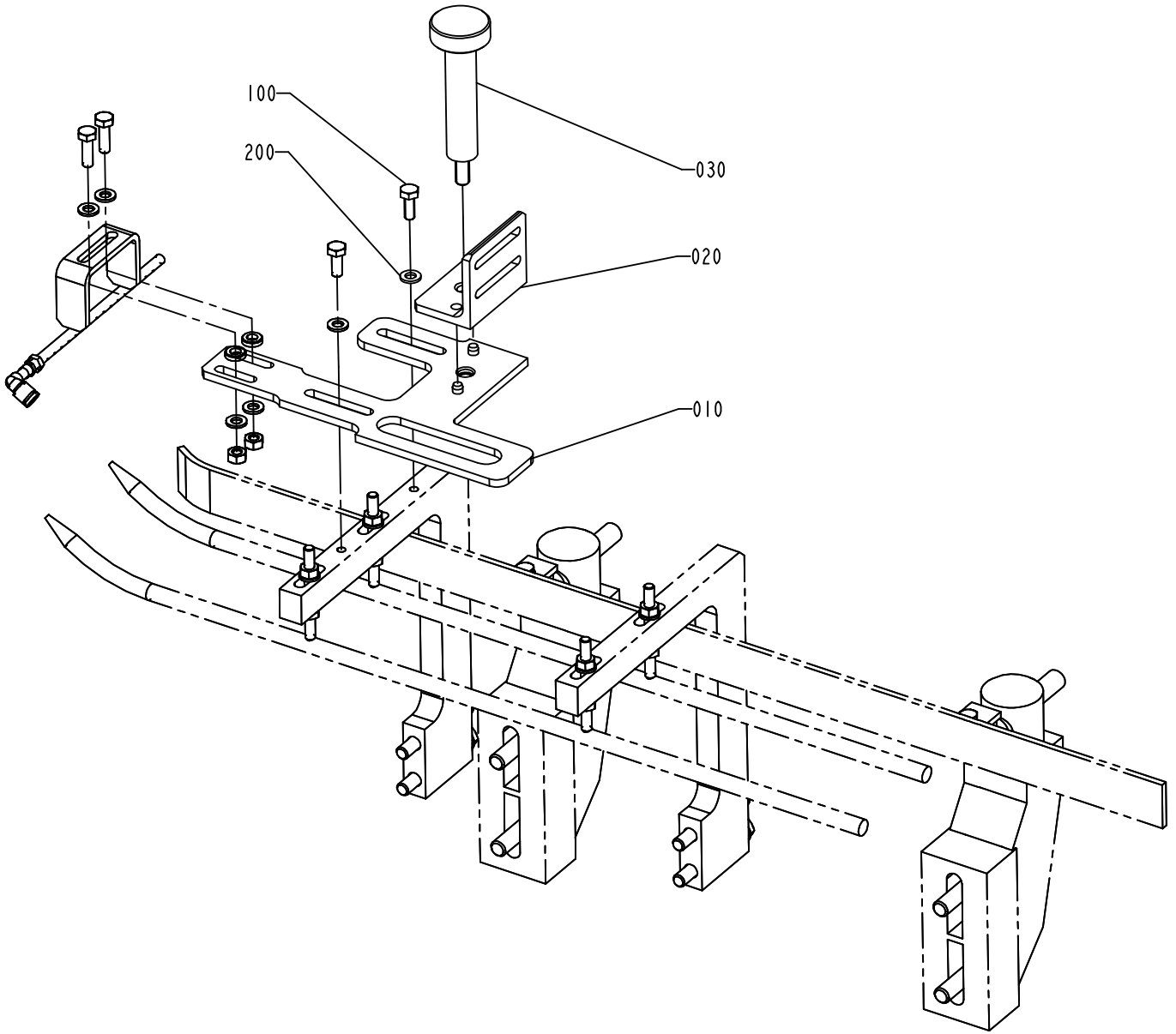

2514769-1
ECN 97078

ECM: 97080 - 20011220
Group number: 2514769-0100
Assembly Drawing: 2514769-1_1_AA

Issue: 20020822

Pos	Part No	SP	UN	Qty	Description	Page No
Common Parts						
010	598026-0000	-		1	HOLDER	
020	598027-0000	-		1	ANGLE BRACKET	
030	598028-0000	-		1	TIGHTENING SCREW	
100	312105-0368	-		1	SCREW M6S M6X16 A280	
200	315105-0153	-		1	WASHER PLAIN, BRB, 6,4/12,H=1,5	

Pos	Part No	SP	UN	Qty	Description	Page No

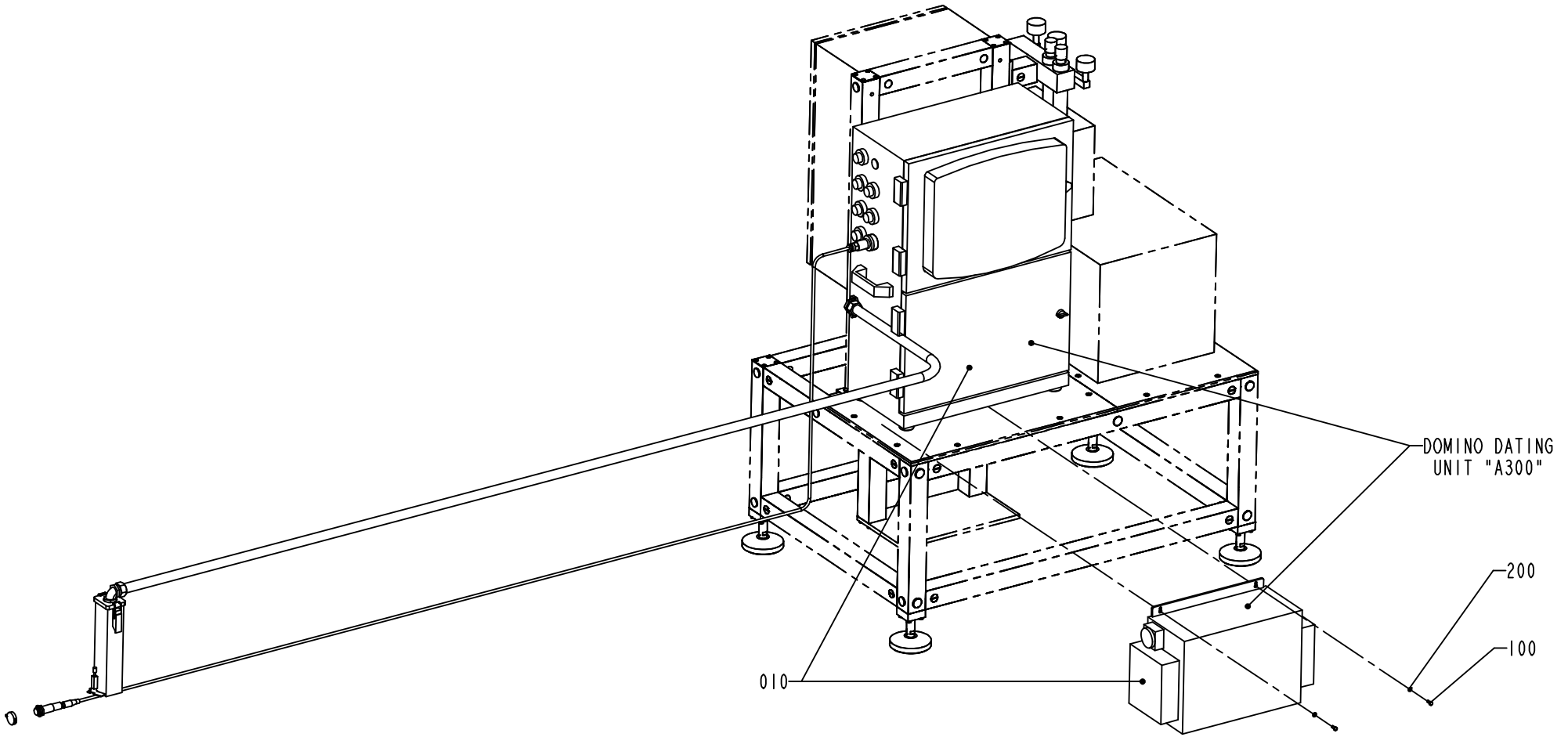

2514770-1
ECN 97078

ECM: 97081 - 20011220
Group number: 2514770-0100
Assembly Drawing: 2514770-1_1_AA

Issue: 20020822

Pos	Part No	SP	UN	Qty	Description	Page No
Common Parts						
010	90427-0013	-		1	INK JET PRINTER A300W	
100	312105-0327	-		2	SCREW M6S ISO 4017 M5X12 A480	
200	315105-0146	-		2	WASHER PLAIN, BRB, 5,3/10,H=1	

Pos	Part No	SP	UN	Qty	Description	Page No

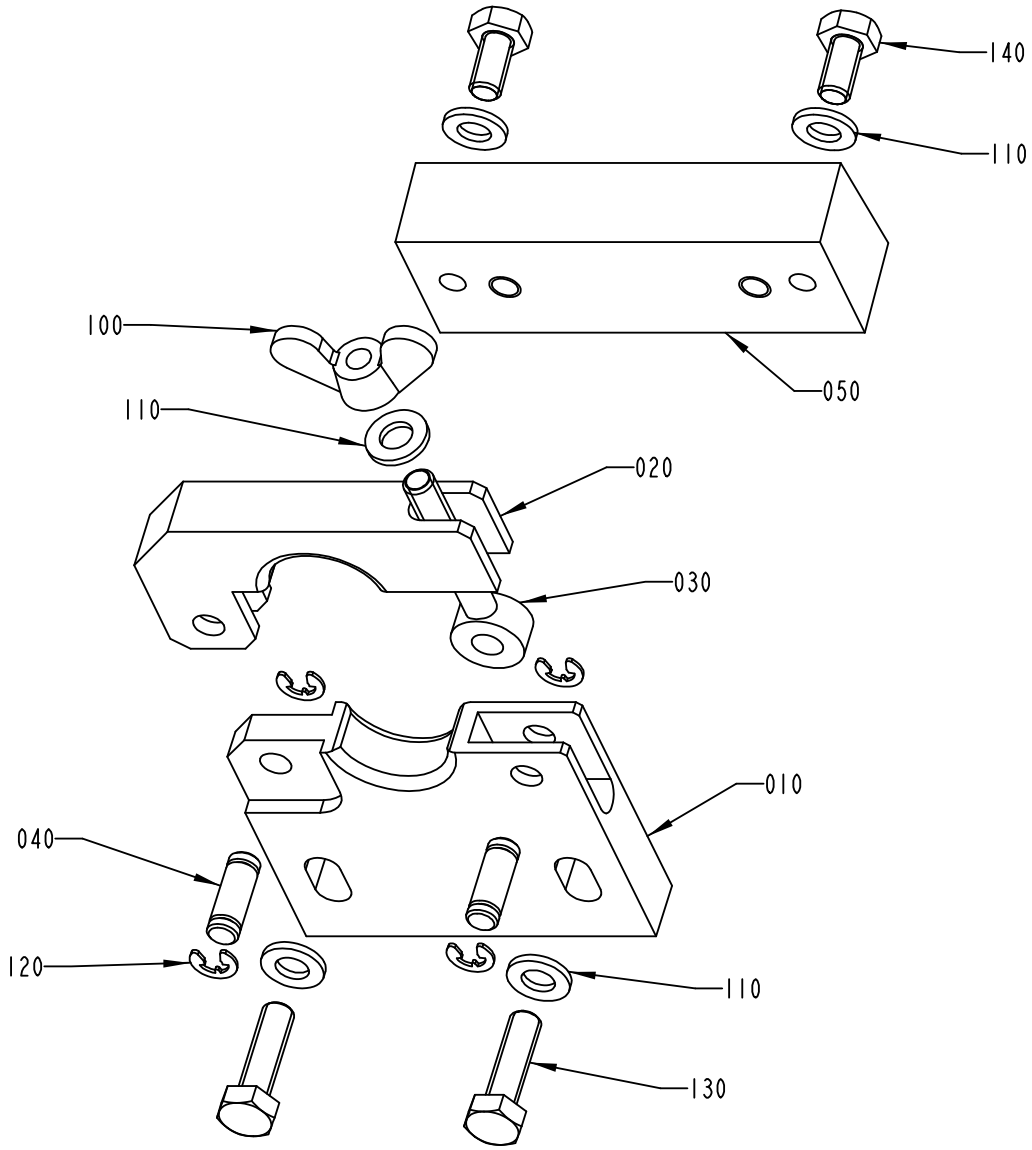

1529299-1
ECM 106713

ECM: 108208 - 20020614
Group number: 1529299-0100
Assembly Drawing: 1529299-1_1_AA

Issue: 20020822

Pos	Part No	SP	UN	Qty	Description	Page No
Common Parts						
010	1529483-0000	-		2	BRACKET	
020	1529484-0000	-		1	BRACKET	
030	1529485-0000	-		1	SCREW	
040	1529486-0000	-		1	AXLE PIN	
050	1529482-0000	-		1	BRACKET	
100	312715-0116	-		1	NUT WING COLD WORK.MVM-K M6 A280	
110	315105-0153	-		5	WASHER PLAIN, BRB, 6,4/12,H=1,5	
120	315755-0106	-		4	LOCKING WASHER 4	
130	312105-0371	-		2	SCREW M6S ISO 4017 M6X22 A480	
140	312105-0366	-		2	SCREW M6S M6X12 A280	

Pos	Part No	SP	UN	Qty	Description	Page No

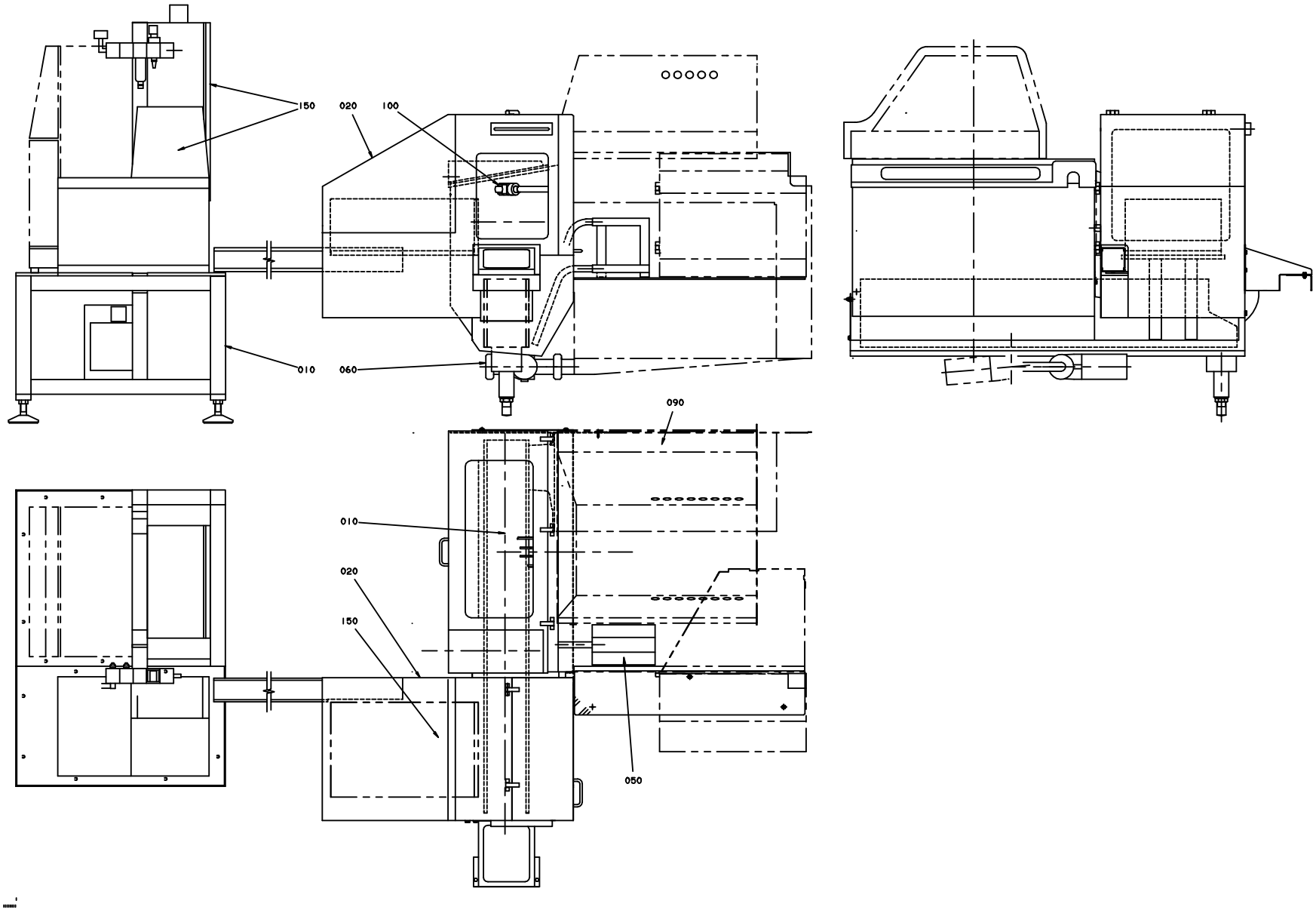
150
020
100
010
060
090
010
020
150
050

ECM: 108522 - 20020614
Group number: 1529495-0100
Assembly Drawing: 1529495-1_1_AA

Issue: 20020822

Pos	Part No	SP	UN	Qty	Description	Page No
Common Parts						
	A2552573-0100	-		1	MODIFIED ARTICLES:	
010	A2547577-0100	-		1	DISCHARGE UNIT	**893**
020	A2552639-0100	-		1	COVERS	**917**
050	A2551443-0100	-		1	OUTFEEDER TRAY EVACUATION	**927**
060	A2552041-0100	-		1	BOTTOM VALVE	**929**
090	A1529469-0100	-		1	TUBE ASSEMBLY	**931**
100	A1529283-0100	-		1	CLEANING SYSTEM	**933**
110	A1529471-0100	-		1	AIR PANEL	**937**
120	1529473-0000	-		1	AIR-DIAGRAM	
150	A1529475-0100	-		1	STRAW APPLICATOR	
200	A2535941-0100	-		1	EL. RK "SERVO OUTFEEDER"	**939**

Pos	Part No	SP	UN	Qty	Description	Page No

This page is intentionally left blank.

ECM: 109389 - 20020614
Group number: 2547577-0100
Assembly Drawing:

Issue: 20020822

Pos	Part No	SP	UN	Qty	Description	Page No
Common Parts						
010	A1478863-0100	-		1	CONVEYING EQUIPMENT	**895, 897**
030	591586-0000	-		1	HOLDER	
040	A591633-0100	-		1	SERVICE TABLE	**911**
100	A1511445-0100	-		1	GUIDE	**915**

Pos	Part No	SP	UN	Qty	Description	Page No

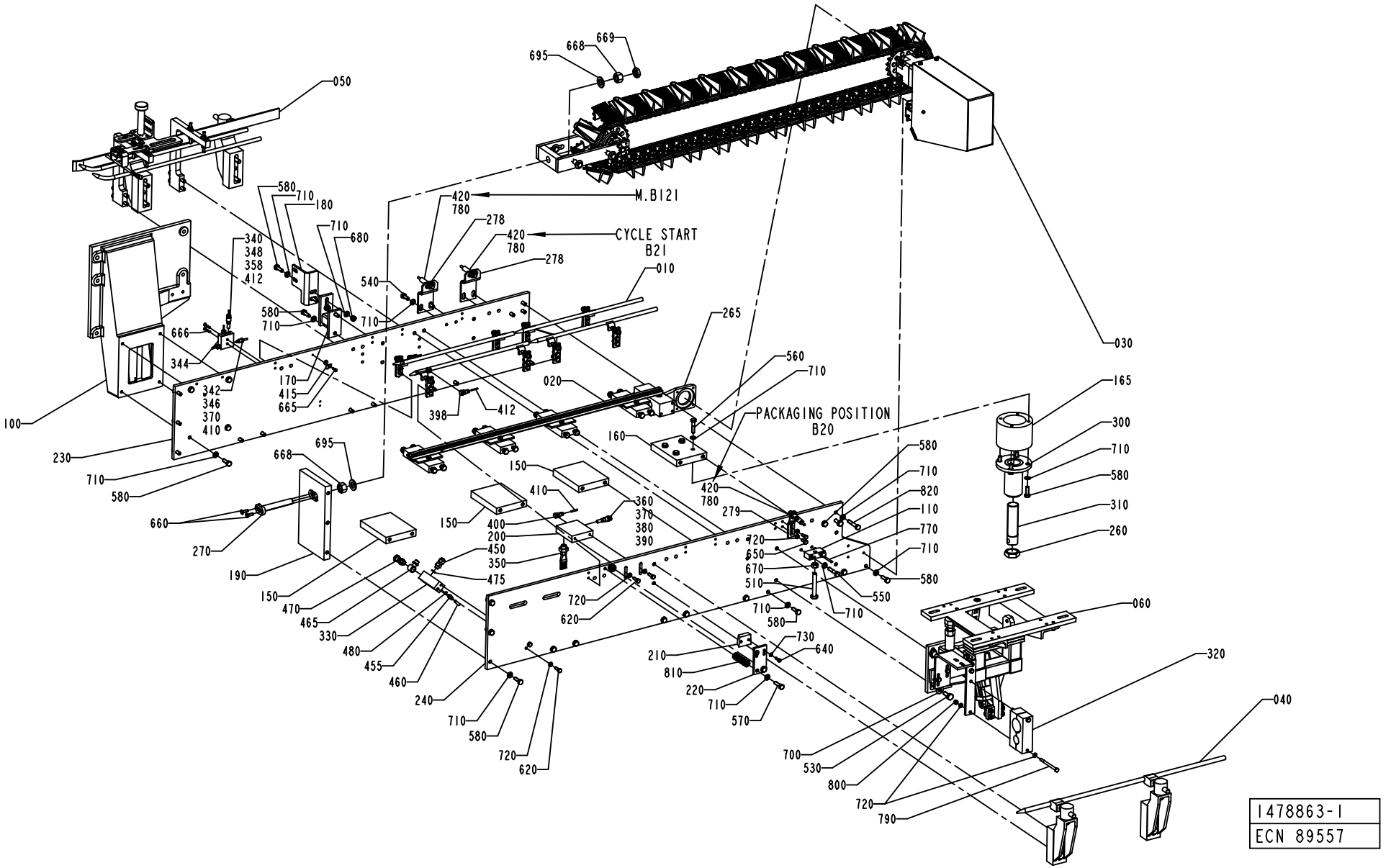
M.B121
CYCLE START
B21
PACKAGING POSITION
B20
050
030
010
020
060
040
320
165
300
310
260
1478863-1
ECN 89557

ECM: 89563 - 20010308
Group number: 1478863-0100
Assembly Drawing: 1478863-1_1_AD

Issue: 20020822

Pos	Part No	SP	UN	Qty	Description	Page No
Common Parts						
010	A598034-0100	-		1	GUIDE RAIL	**899**
020	A591505-0100	-		1	CHAIN GUIDE	**901**
030	A598014-0100	-		1	CHAIN FEED CONVEYOR	**903**
040	A591574-0100	-		1	SLIDE RAIL	**905**
050	A1538922-0100	-		1	GUIDE	**907**
060	A1360723-0100	-		1	CANTILEVER	**909**
100	B591466-0000	-		1	CANTILEVER	
	312911-0127	-		*6*	*THREADED INSERTS M8X2,0D*	
110	591477-0000	-		1	LUG	
150	B591516-0000	-		3	SPACER PLATE	
	312911-0127	-		*4*	*THREADED INSERTS M8X2,0D*	
160	B591623-0000	-		1	SPACER PLATE	
	312911-0127	-		*4*	*THREADED INSERTS M8X2,0D*	
165	591624-0000	-		1	SPACER PIPE	
170	591628-0000	-		1	STRUT	
180	591629-0000	-		1	HOLDER	
190	B597960-0000	-		1	GABLE PART	
	312911-0119	-		*2*	*THREADED INSERTS M6X2,0D*	
	312911-0127	-		*6*	*THREADED INSERTS M8X2,0D*	
200	591522-0000	-		1	PLATE	
210	B591527-0000	D		1	BLOCKING PIECE	
	312911-0115	-		*2*	*THREADED INSERTS M5X2,0D*	
220	1538919-0000	-		1	HOLDER	
230	B1511429-0000	-		1	GABLE PLATE RIGHT	
	312911-0129	-		*4*	*THREADED INSERTS M10X1,0D*	
	312911-0125	-		*9*	*THREADED INSERTS M8X1,0D*	
	312911-0117	-		*8*	*THREADED INSERTS M6X1,0D*	
	312911-0111	-		*3*	*THREADED INSERTS M4X2,0D*	
240	B1511442-0000	-		1	GABLE PLATE LEFT	
	312911-0129	-		*8*	*THREADED INSERTS M10X1,0D*	
	312911-0125	-		*4*	*THREADED INSERTS M8X1,0D*	
	312911-0117	-		*13*	*THREADED INSERTS M6X1,0D*	
260	591625-0000	-		1	NUT	
265	B1349669-0000	-		1	BRACKET	
	312115-0460	-		*1*	*SCREW MC6S M8X45 A280*	
	312115-0449	-		*1*	*SCREW MC6S M8X16 A280*	
270	597958-0000	-		1	SCREW	
278	594997-0000	-		2	HOLDER	
279	598030-0000	-		1	HOLDER	
300	469095-0000	-		1	HOLDER	
310	469096-0000	-		1	LEG	
320	1478850-0000	-		1	BRACKET	
330	1511408-0000	-		1	BLOCK	
340	90028-0020	-		2	CONE TUBE 2,5MM	
342	90028-0021	-		2	CONE TUBE 4 MM	
344	90032-0038	-		1	BLOCK 2 WAYS	
346	90134-0038	-		2	BUSHING/NUT INLET/OUTLET 4 MM	
348	90134-0039	-		2	BUSHING VALVE CONNECTION 2,5 MM	
350	90092-0048	C		1	OIL BRUSH, FLAT, 5/16-24 UNF	
358	90092-0052	C		2	METERING VALVE 10 MM3	
360	90092-0054	C		1	METERING VALVE 50 MM3	
370	90134-0031	C		3	SLEEVE FOR PLASTIC TUBE	
380	90134-0042	-		1	SPACER DOSING VALVE	
390	90134-0045	C		1	PLUG M12X1	
398	90134-0058	C		2	CONNECTION	
400	90134-0068	C		1	CONNECTION	
410	90166-0109	C	M	2	TUBE 4 MM PA,TRANSP.	
412	90166-0143	C	M	1	TUBE 2,5 MM PA,TRANSP.	
415	90165-0003	-		1	PIPE CLIP FOR TUBE D=4 MM	
420	90458-0672	-		3	PROXIMITY SENSOR E2E2-X5MB1-5M	
450	90424-0016	-		1	SPRAY NOZZLE 103 DEG R 1/8 GG8W	
455	342921-0112	-		1	STRAIGHT COUPLING,EXT.THREADED 6/4-6M	
460	90166-0117	-	M	1	HOSE 4/6 PVC BLUE	
465	342980-0132	-		1	BANJO-CONNECTION,RING 10/8-G1/4"	
470	342980-0304	-		1	BANJO-HOLLOW BOLT COUPL,EXT.THR.01-G1/4"	
475	315233-0109	-		1	WASHER PL.RND.NYL.10,3/14,H=1	
480	90005-0056	-		1	WASHER PL.RND.NYL.6/8,5,H=1	
510	90287-0330	-		1	SCREW M6S ISO 4017 M10X70 A480	
530	312105-0493	-		4	SCREW M6S ISO 4017 M10X25 A480	
540	312105-0451	-		2	SCREW M6S ISO 4017 M8X20 A480	
550	312105-0459	-		2	SCREW M6S ISO 4014 M8X40 A480	
560	312105-0457	-		4	SCREW M6S ISO 4014 M8X35 A480	
570	312105-0455	-		2	SCREW M6S ISO 4017 M8X30 A480	
580	312105-0453	-		36	SCREW M6S ISO 4017 M8X25 A480	
620	312105-0370	-		4	SCREW M6S ISO 4017 M6X20 A480	
640	312105-0329	-		2	SCREW M6S ISO 4017 M5X16 A480	
650	312105-0368	-		2	SCREW M6S M6X16 A280	
660	312155-0370	-		2	SCREW HEX.SOCK.COUNT.MF6S M6X20 A280	
665	312105-0291	-		1	SCREW M6S ISO 4017 M4X12 A480	
666	312155-0297	-		2	SCREW HEX.SOCK.COUNT.MF6S M4X25 A480	
668	312605-0324	-		2	HEXAGON NUT, M6M M16 A280	
669	90099-0131	-		1	NUT HEX. M16X2 SS	
670	312605-0320	-		1	HEXAGON NUT, M6M M10 A280	

Machine Type | Group Description | Used-In | Group Number | Page No

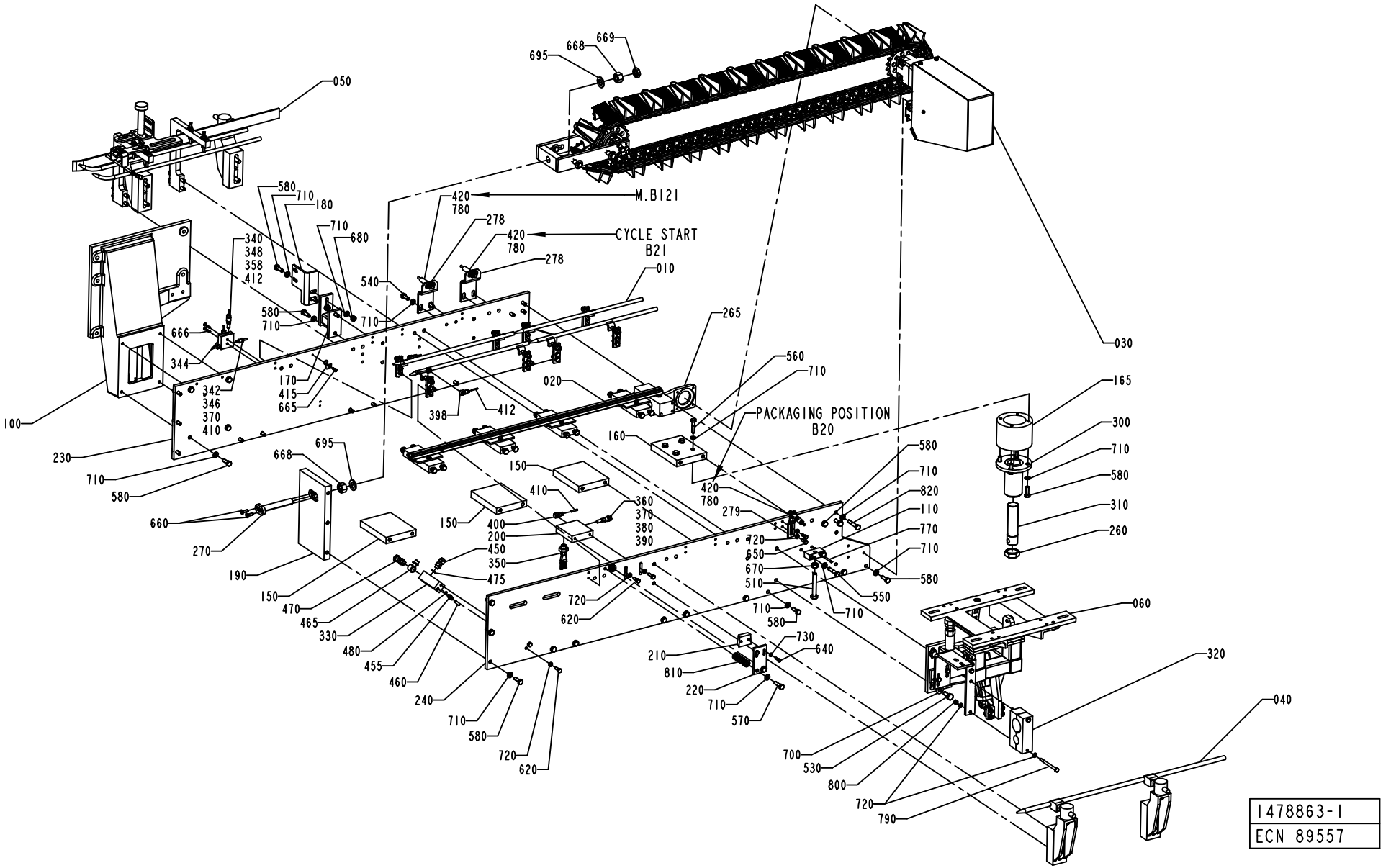
M.B121
CYCLE START B21
PACKAGING POSITION B20
050
010
020
030
040
060
100
165
230
265
270
300
310
320
400
410
420
530
540
550
570
620
640
660
680
700
720
730
780
790
800
810
820
1478863-1
ECN 89557

Pos	Part No	SP	UN	Qty	Description	Page No
Common Parts (Cont'd)						
680	312605-0318	-		2	HEXAGON NUT, M6M M8 A280	
695	315105-0186	-		2	WASHER PLAIN, BRB, 17/30,H=3	
700	315105-0173	-		4	WASHER PLAIN, BRB, 10,5/22,H=2	
710	315105-0165	-		52	WASHER PLAIN, BRB, 8,4/16,H=1,5	
720	315105-0153	-		10	WASHER PLAIN, BRB, 6,4/12,H=1,5	
730	315105-0146	-		2	WASHER PLAIN, BRB, 5,3/10,H=1	
770	311112-0262	-		2	PIN, STRAIGHT SLOTTED SPRING FRP 4X32	
780	352113-0101	-		6	CLIP STRIP, 92X2,5 MM	
790	312105-0386	-		2	SCREW M6S ISO 4014 M6X80 A480	
800	312605-0316	-		2	HEXAGON NUT, M6M M6 A280	
810	315105-0171	-		12	WASHER PLAIN, BRB, 10/18,H=2	
820	312105-0460	-		4	SCREW M6S ISO 4014 M8X45 A480	

Pos	Part No	SP	UN	Qty	Description	Page No

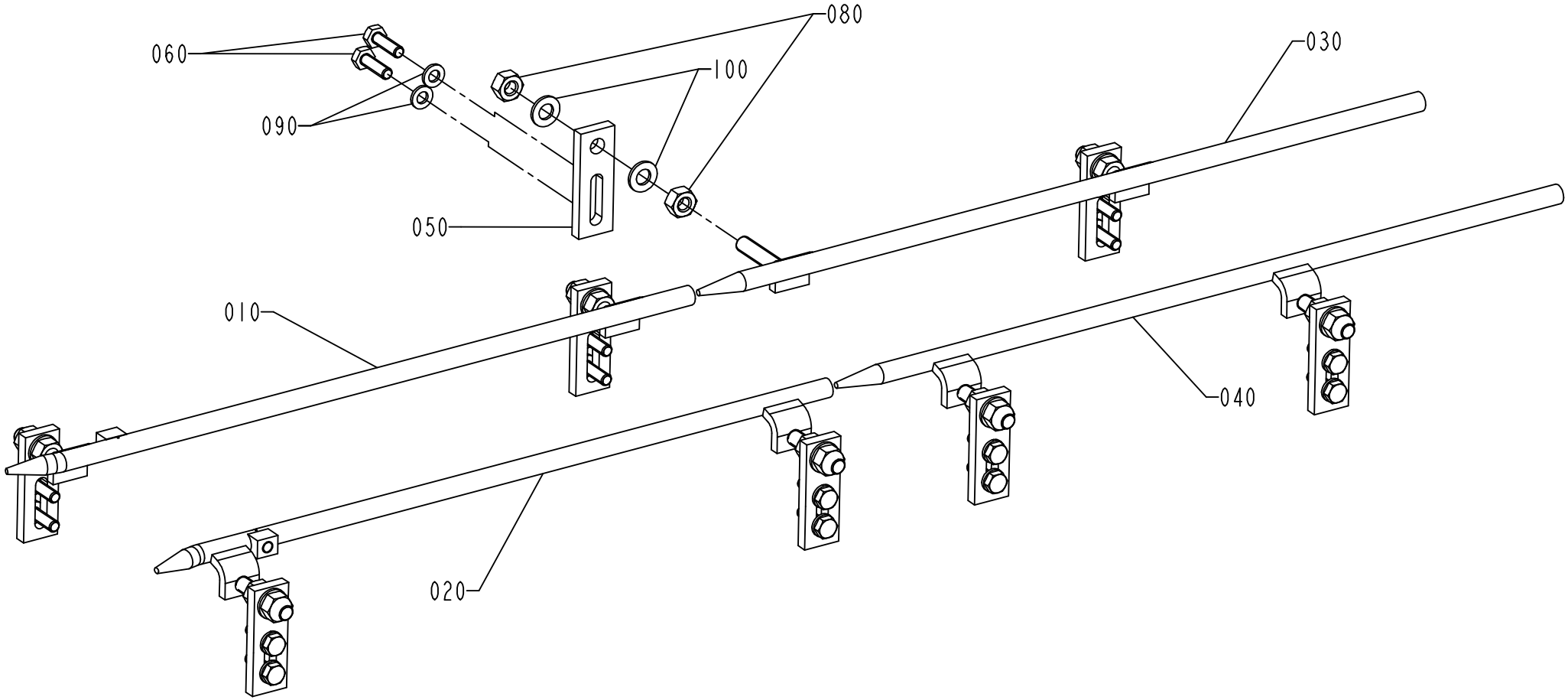

598034-1
ECN 89557

ECM: 89561 - 20010308
Group number: 598034-0100
Assembly Drawing: 598034-1_1_AB

Issue: 20020822

Pos	Part No	SP	UN	Qty	Description	Page No
Common Parts						
010	594924-0000	D		1	GUIDE RIGHT	
020	594925-0000	D		1	GUIDE LEFT	
030	594926-0000	D		1	GUIDE RIGHT	
040	594927-0000	D		1	GUIDE LEFT	
050	594928-0000	-		8	BRACKET	
060	312105-0370	-		16	SCREW M6S ISO 4017 M6X20 A480	
080	312605-0318	-		16	HEXAGON NUT, M6M M8 A280	
090	315105-0153	-		16	WASHER PLAIN, BRB, 6,4/12,H=1,5	
100	315105-0165	-		16	WASHER PLAIN, BRB, 8,4/16,H=1,5	

Pos	Part No	SP	UN	Qty	Description	Page No

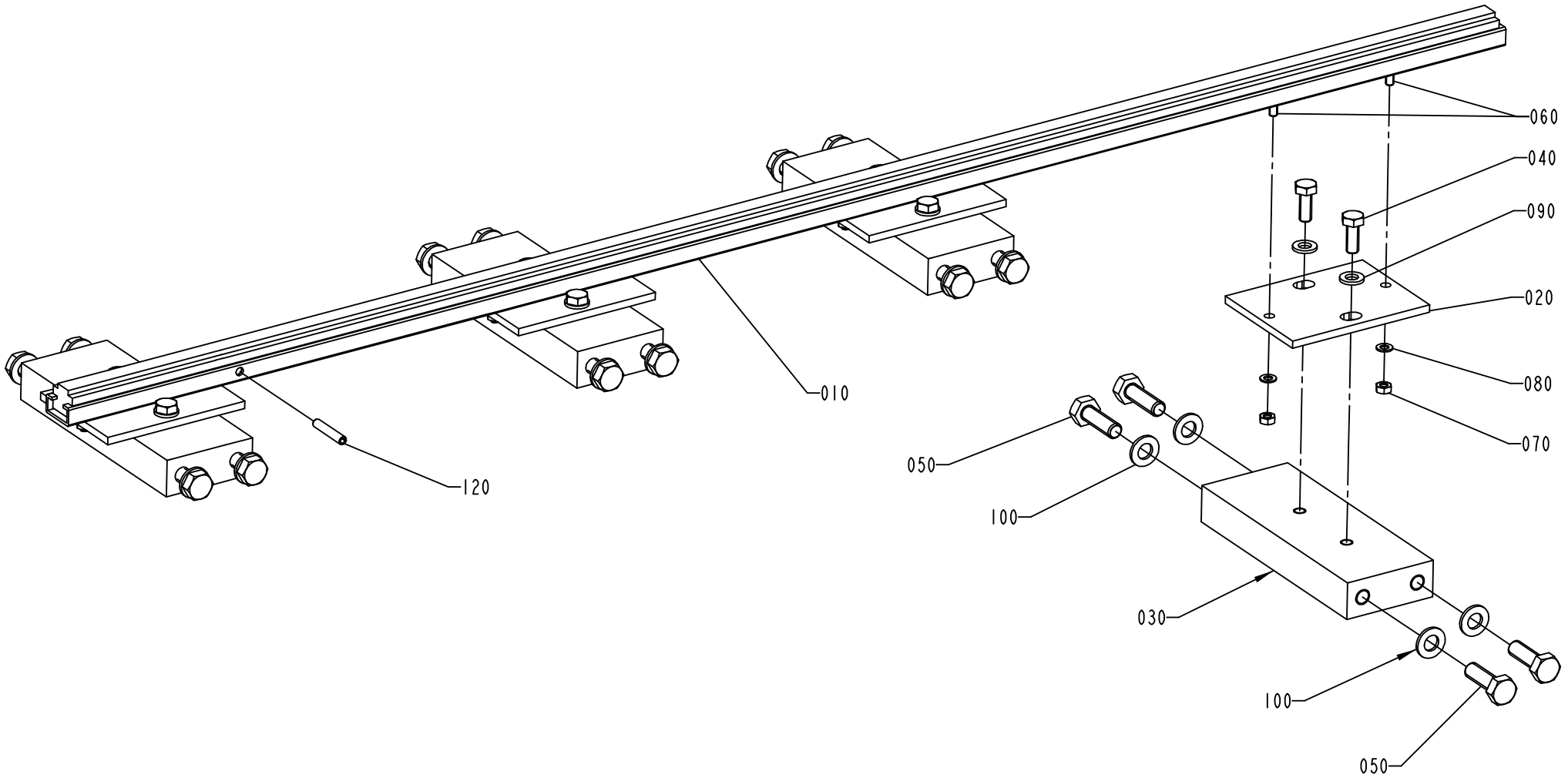

591505-1
ECN 89557

ECM: 89560 - 20010308
Group number: 591505-0100
Assembly Drawing: 591505-1_1_AB

Issue: 20020822

Pos	Part No	SP	UN	Qty	Description	Page No
Common Parts						
010	591506-0000	C		1	SLIDING STRIP	
020	591507-0000	-		4	FASTENING PLATE	
030	591508-0000	-		4	SPACER PART	
040	312105-0368	-		8	SCREW M6S M6X16 A280	
050	312105-0453	-		16	SCREW M6S ISO 4017 M8X25 A480	
060	312155-0291	-		8	SCREW HEX.SOCK.COUNT.MF6S M4X12 A480	
070	312605-0312	-		8	HEXAGON NUT, M6M M4 A280	
080	315105-0136	-		8	WASHER PLAIN, BRB, 4,3/8,H=0,8	
090	315105-0153	-		8	WASHER PLAIN, BRB, 6,4/12,H=1,5	
100	315105-0165	-		16	WASHER PLAIN, BRB, 8,4/16,H=1,5	
120	311112-0258	-		1	PIN, STRAIGHT SLOTTED SPRING FRP 4X24	

Pos	Part No	SP	UN	Qty	Description	Page No

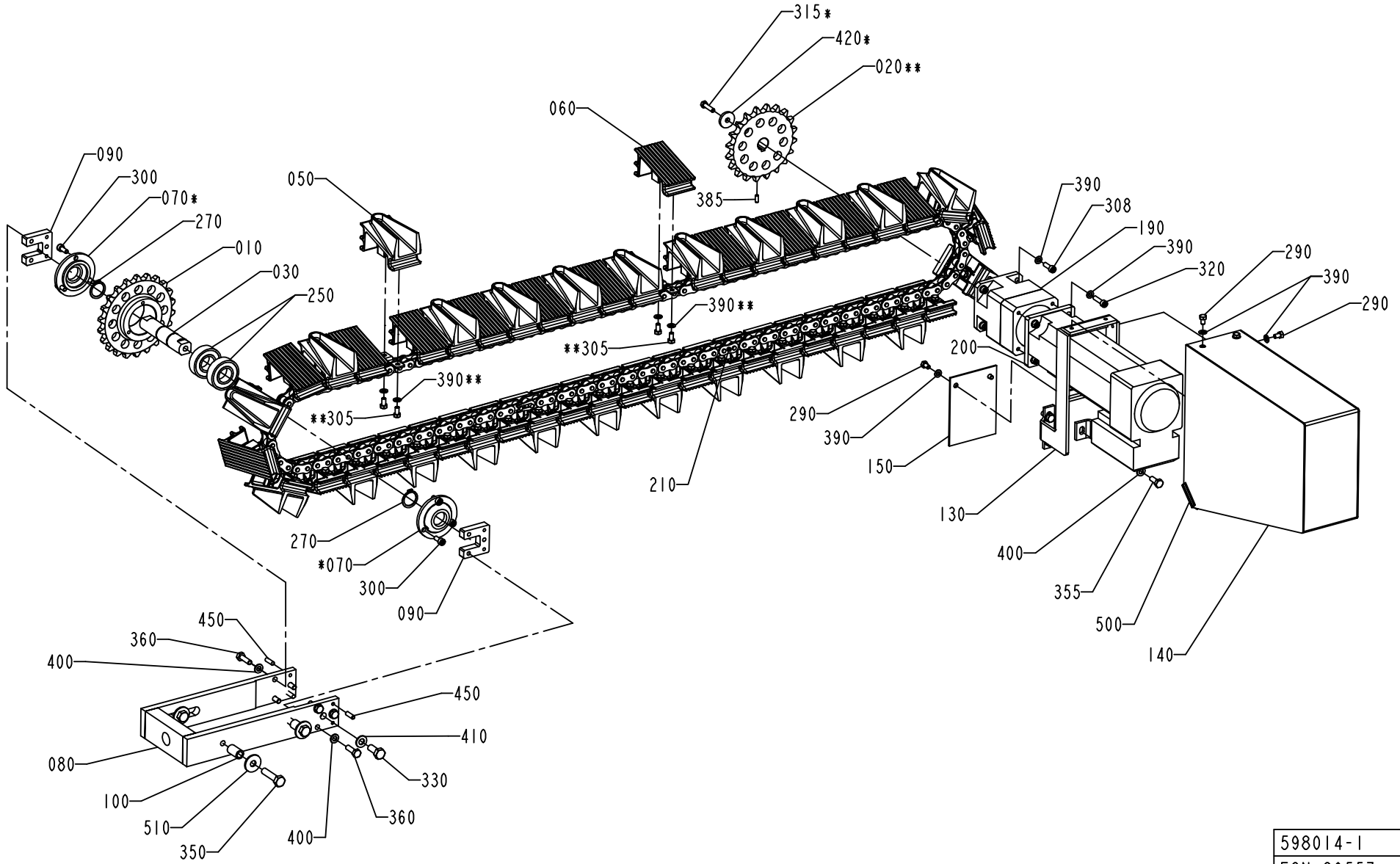

598014-1
ECN 89557

ECM: 89562 - 20010308
Group number: 598014-0100
Assembly Drawing: 598014-1_1_AB

Issue: 20020822

Pos	Part No	SP	UN	Qty	Description	Page No
Common Parts						
010	597953-0000	C		1	SPROCKET	
020	1478845-0000	C		1	SPROCKET	
030	597957-0000	D		1	SHAFT	
050	591478-0000	C		24	SIDE STEERING	
060	591479-0000	C		24	BOTTOM GUIDE	
070	591470-0000	C		2	SEAL COVER	
080	597955-0000	D		1	YOKE	
090	597956-0000	D		2	CRADDLE	
100	597959-0000	D		3	SLEEVE	
130	1360677-0000	D		1	FRAME	
140	1360678-0000	D		1	HOOD	
150	1360679-0000	-		1	COVERING PLATE	
190	90056-0166	D		1	GEARS, PLANETARY PL70-10-M1	
200	90045-0164	D		1	SERVO MOTOR EP 075-112-44T3B	
210	90288-0085	C		1	ROLLER CHAIN, SINGLE 5/8 -144	
250	90214-0095	C		2	BALL BEARING, 2 SEALS, 20X42X12 MM	
270	315751-0116	C		2	RETAIN. RING, 20	
290	312105-0323	-		7	SCREW M6S ISO 4017 M5X8 A480	
300	312115-0327	-		6	SCREW MC6S M5X12 A280	
305	312105-0325	-		96	SCREW M6S ISO 4017 M5X10 A480	
308	312115-0329	-		4	SCREW MC6S M5X16 A280	
315	312105-0331	-		1	SCREW M6S ISO 4017 M5X20 A480	
320	312115-0331	-		4	SCREW MC6S M5X20 A280	
330	312105-0451	-		1	SCREW M6S ISO 4017 M8X20 A480	
350	312105-0457	-		3	SCREW M6S ISO 4014 M8X35 A480	
355	312105-0368	-		3	SCREW M6S M6X16 A280	
360	312105-0370	-		6	SCREW M6S ISO 4017 M6X20 A480	
385	312318-0289	-		1	SCREW SOCK.SET CUP P MSK6SS M4X10 A4	
390	315105-0146	-		111	WASHER PLAIN, BRB, 5,3/10,H=1	
400	315105-0153	-		9	WASHER PLAIN, BRB, 6,4/12,H=1,5	
410	315105-0165	-		1	WASHER PLAIN, BRB, 8,4/16,H=1,5	
420	315125-0153	-		1	WASHER PLAIN ROUND,CHAMF. 6,4/22, H=4	
450	311103-0308	-		4	PARALLELL PIN, M6, 5X16 MM	
480	90157-0036	-		1	FLANGE SEALING COMPOUND 574	
490	90157-0016	-	ML	1	LOCKING FLUID	
500	90143-0060	-	MM	150	EDGE STRIP 9,5X6,3MM BLACK PVC	
510	90005-0116	-		3	WASHER PLAIN ROUND 8,4(M8)/24, H=2	

Pos	Part No	SP	UN	Qty	Description	Page No

Machine Type | Group Description | Used-In | Group Number | Page No

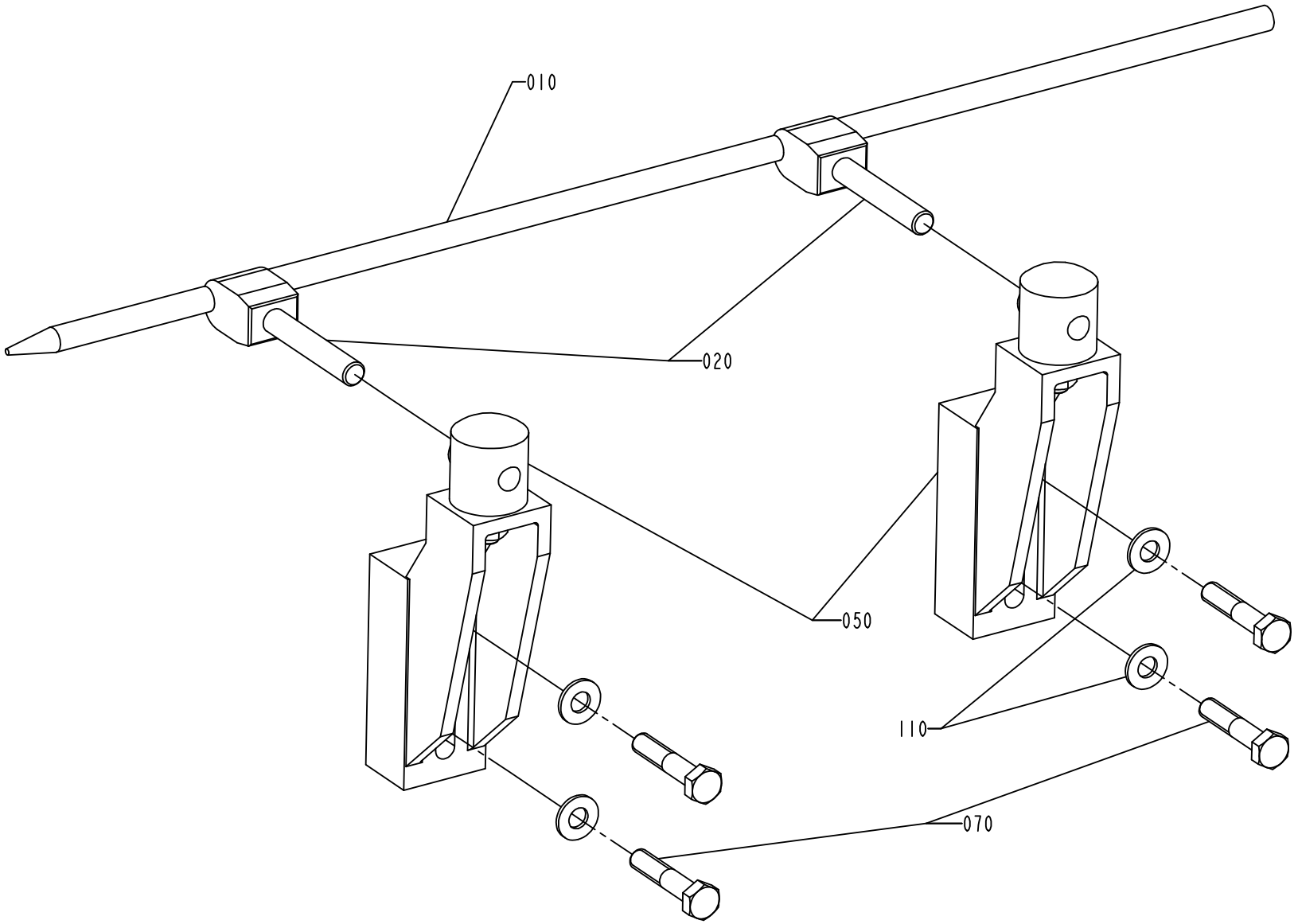

591574-1
ECN 89557

ECM: 89559 - 20010308
Group number: 591574-0100
Assembly Drawing: 591574-1_1_AB

Issue: 20020822

Pos	Part No	SP	UN	Qty	Description	Page No
Common Parts						
010	591549-0000	D		1	GUIDE ROD	
020	591580-0000	-		2	PIN	
050	90236-0044	D		2	GUIDE HOLDER	
070	312105-0501	-		4	SCREW M6S ISO 4014 M10X50 A480	
110	315105-0173	-		4	WASHER PLAIN, BRB, 10,5/22,H=2	

Pos	Part No	SP	UN	Qty	Description	Page No

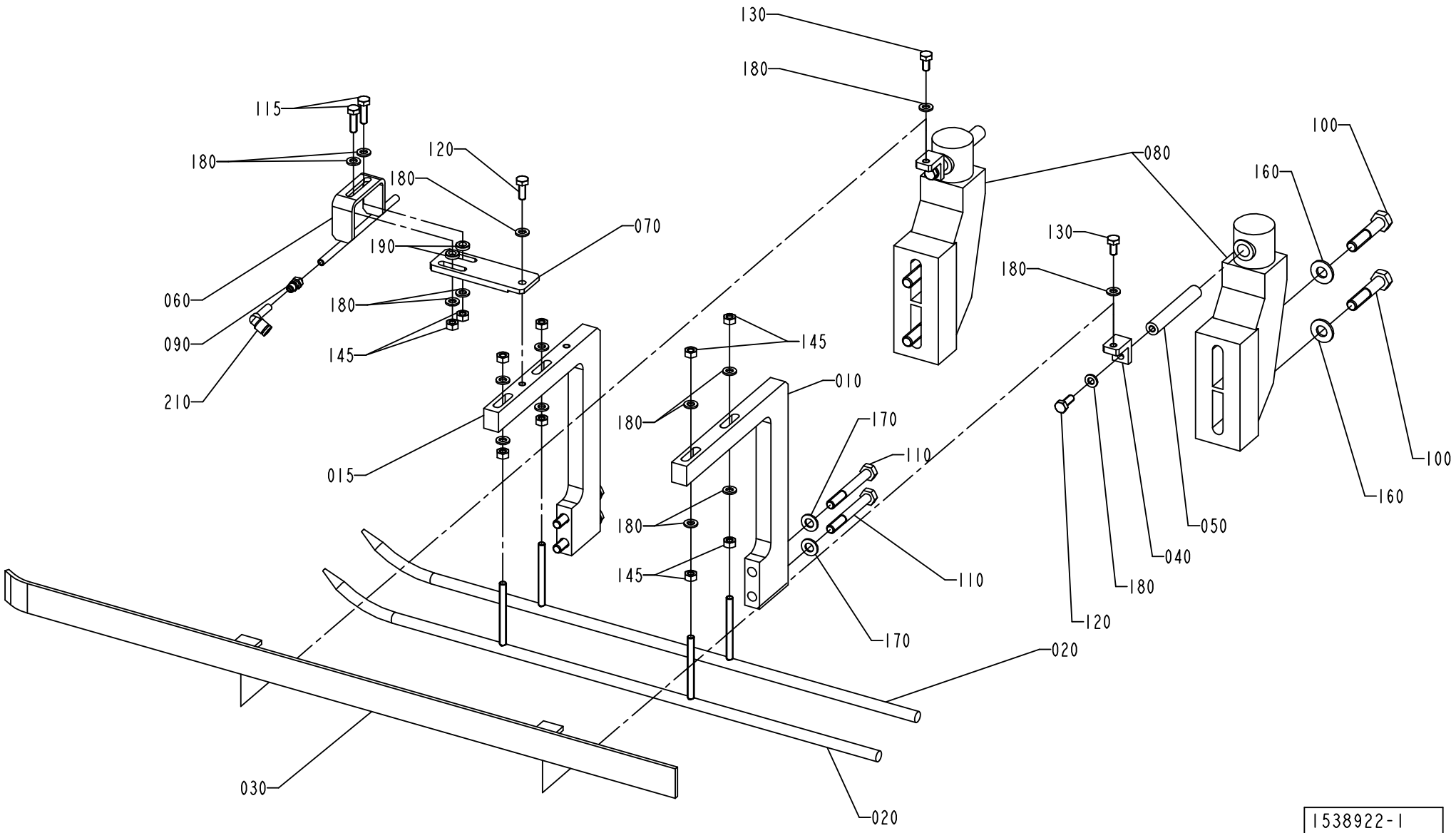

1538922-1
ECN 96478

Pos	Part No	SP	UN	Qty	Description	Page No
TWA 0200S						
010	591589-0000	D		1	ANGLE BRACKET	
015	591613-0000	D		1	ANGLE BRACKET	
Common Parts						
020	591590-0000	D		2	GUIDE ROD	
030	598035-0000	D		1	STEERING RAIL	
040	591592-0000	-		2	BRACKET	
050	591593-0000	-		2	PIN	
060	1538912-0000	-		1	TUBE	
070	2506602-0000	-		1	BRACKET	
080	90236-0044	D		2	GUIDE HOLDER	
090	342921-0111	-		1	STRAIGHT COUPLING,EXT.THREADED 6/4-M5	
100	312105-0501	-		4	SCREW M6S ISO 4014 M10X50 A480	
110	312105-0464	-		4	SCREW M6S ISO 4014 M8X65 A480	
115	312105-0370	-		2	SCREW M6S ISO 4017 M6X20 A480	
120	312105-0368	-		3	SCREW M6S M6X16 A280	
130	312105-0366	-		2	SCREW M6S M6X12 A280	
145	312605-0316	-		10	HEXAGON NUT, M6M M6 A280	
160	315105-0173	-		4	WASHER PLAIN, BRB, 10,5/22,H=2	
170	315105-0165	-		4	WASHER PLAIN, BRB, 8,4/16,H=1,5	
180	315105-0153	-		17	WASHER PLAIN, BRB, 6,4/12,H=1,5	
190	315115-0153	-		2	WASHER PLAIN, TBRB 6,4/12 H=3	
210	90055-0217	-		1	ELBOW PIPE JOINT	

Pos	Part No	SP	UN	Qty	Description	Page No

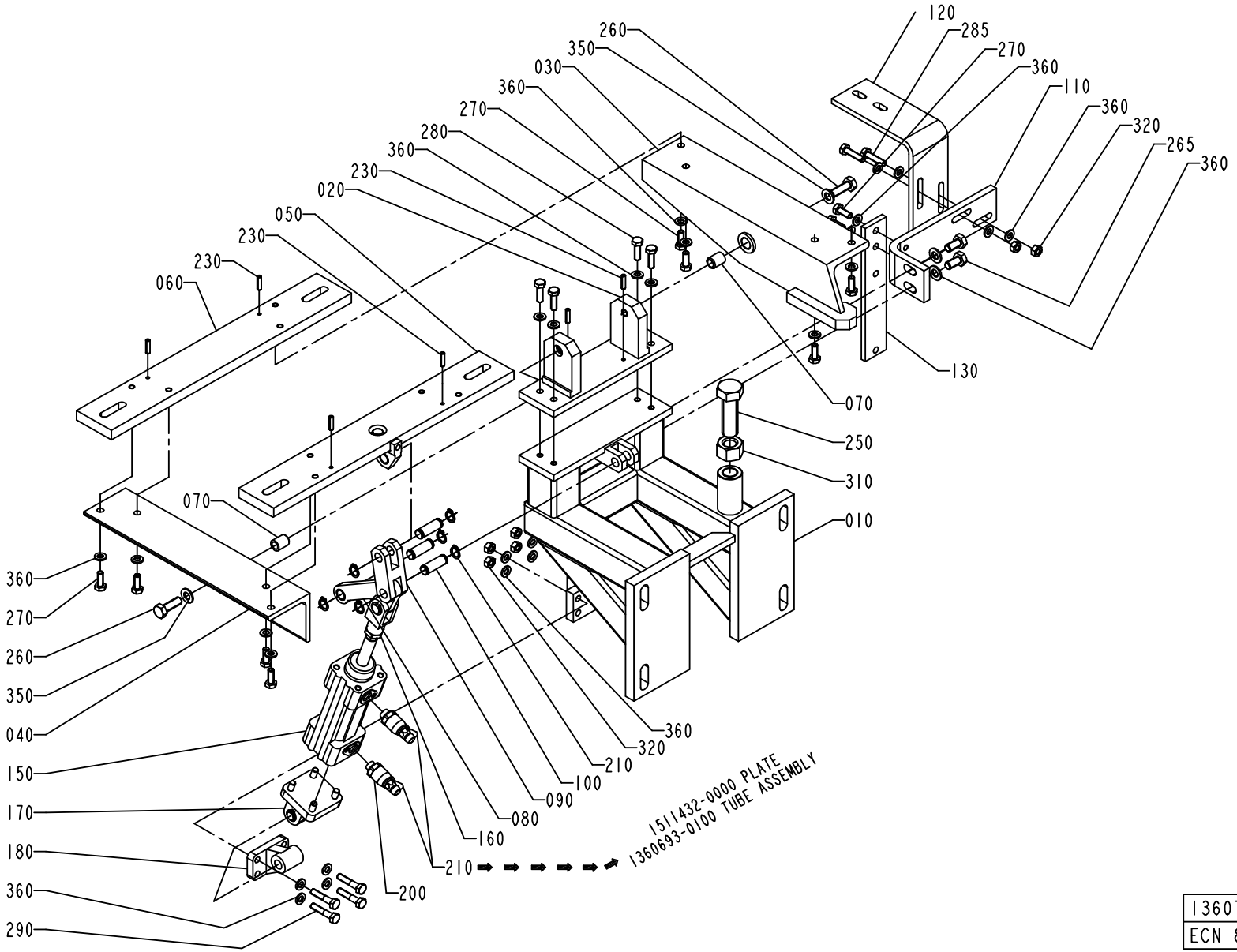

1360723-1
ECN 86090

ECM: 86096 - 20010206
Group number: 1360723-0100
Assembly Drawing: 1360723-1_1_AA

Issue: 20020822

Pos	Part No	SP	UN	Qty	Description	Page No
Common Parts						
010	1360724-0000	-		1	CANTILEVER	
020	1360725-0000	-		1	PLATE	
030	1360726-0000	-		1	ANGLE IRON	
040	1360727-0000	-		1	ANGLE IRON	
050	1360728-0000	-		1	PLATE	
060	1360729-0000	-		1	PLATE	
070	1360730-0000	-		2	SLEEVE	
080	1360731-0000	-		1	LINK ARM	
090	1360732-0000	-		1	LINK	
100	1360733-0000	-		3	PIVOT PIN	
110	1511411-0000	-		1	ANGLE STRUT	
120	1511412-0000	-		1	BRACKET	
130	1538940-0000	-		1	BRACKET	
150	90450-0328	-		1	DOUBLE ACTING,PROFILE,CYL 32-25	
160	90239-0516	-		1	ROD END,CLEVIS WITH AXLE M10X1,25	
170	90450-0654	-		1	BRACKET,REAR,EYE WITH AXLE 32	
180	90450-0655	-		1	BRACKET,REAR,CLEVIS FLANGE WITH FOOT 32	
200	90235-0846	-		2	THROTTLE CHECK VALVE G1/8", MANUAL, 6	
210	90166-0081	-	M	3	TUBE 6 MM PA BLUE	
220	90141-0016	-		6	RETAIN. RING, 10	
230	311112-0254	-		6	PIN, STRAIGHT SLOTTED SPRING FRP 4X16	
250	312105-0630	-		1	SCREW M6S ISO 4017 M16X50 A480	
260	312105-0453	-		2	SCREW M6S ISO 4017 M8X25 A480	
265	312105-0449	-		2	SCREW M6S ISO 4017 M8X16 A480	
270	312105-0368	-		10	SCREW M6S M6X16 A280	
280	312105-0370	-		4	SCREW M6S ISO 4017 M6X20 A480	
285	312105-0372	-		2	SCREW M6S ISO 4017 M6X25 A480	
290	312105-0374	-		4	SCREW M6S ISO 4014 M6X30 A480	
310	312605-0324	-		1	HEXAGON NUT, M6M M16 A280	
320	312605-0316	-		6	HEXAGON NUT, M6M M6 A280	
350	315105-0165	-		4	WASHER PLAIN, BRB, 8,4/16,H=1,5	
360	315105-0153	-		26	WASHER PLAIN, BRB, 6,4/12,H=1,5	

Pos	Part No	SP	UN	Qty	Description	Page No

Machine Type | Group Description | Used-In | Group Number | Page No

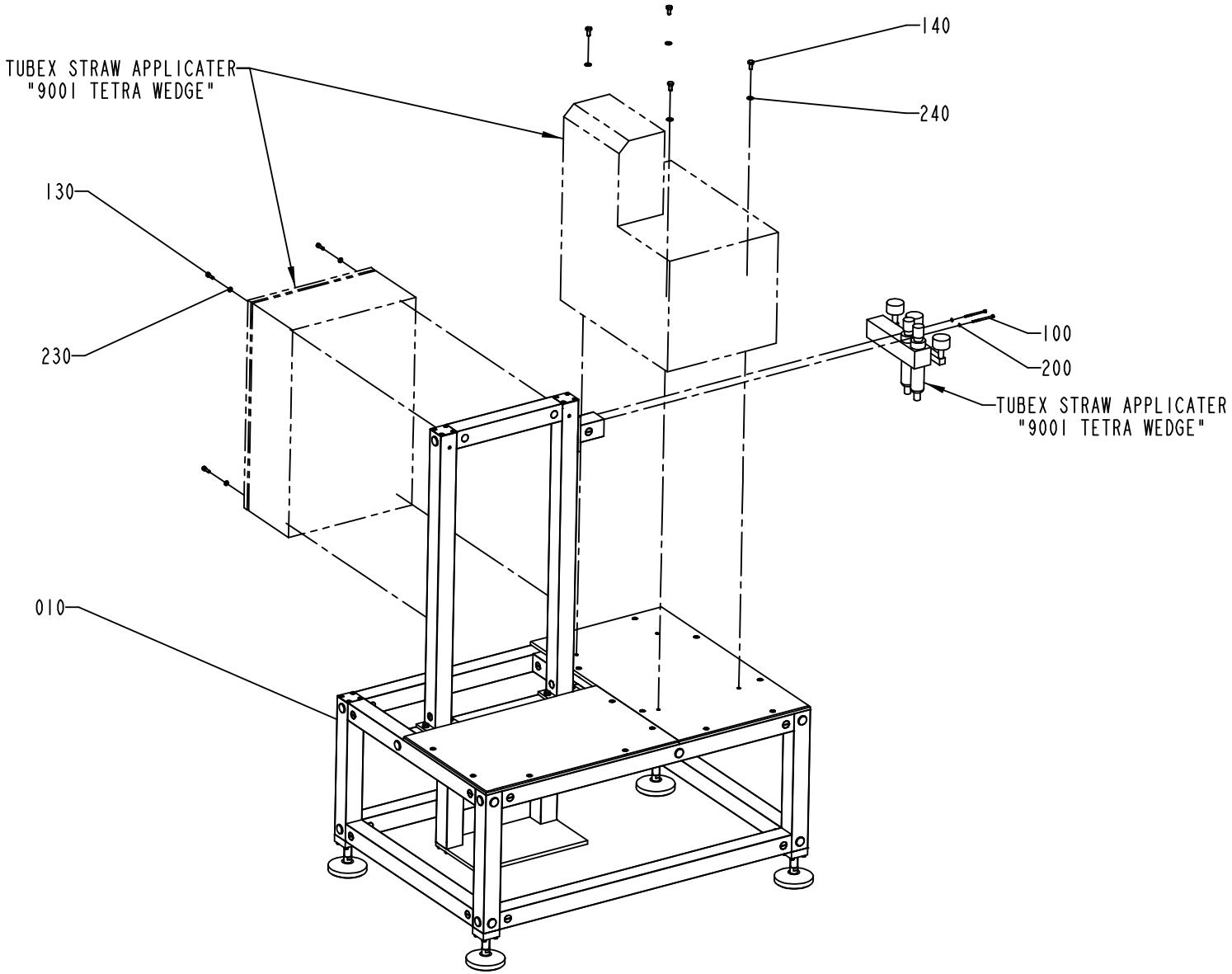

591633-1
ECN 96478

ECM: 96480 - 20011025
Group number: 591633-0100
Assembly Drawing: 591633-1_1_AD

Issue: 20020822

Pos	Part No	SP	UN	Qty	Description	Page No
Common Parts						
010	A594929-0100	-		1	TABLE	**913**
100	312111-0307	-		2	SCREW HEX.SOCK.HD.MC6S-TT 4X60 88 FZB	
130	312115-0370	-		4	SCREW MC6S M6X20 A280	
140	312105-0449	-		4	SCREW M6S ISO 4017 M8X16 A480	
200	315105-0136	-		2	WASHER PLAIN, BRB, 4,3/8,H=0,8	
210	315105-0146	-		2	WASHER PLAIN, BRB, 5,3/10,H=1	
230	315105-0153	-		4	WASHER PLAIN, BRB, 6,4/12,H=1,5	
240	315105-0165	-		4	WASHER PLAIN, BRB, 8,4/16,H=1,5	

Pos	Part No	SP	UN	Qty	Description	Page No

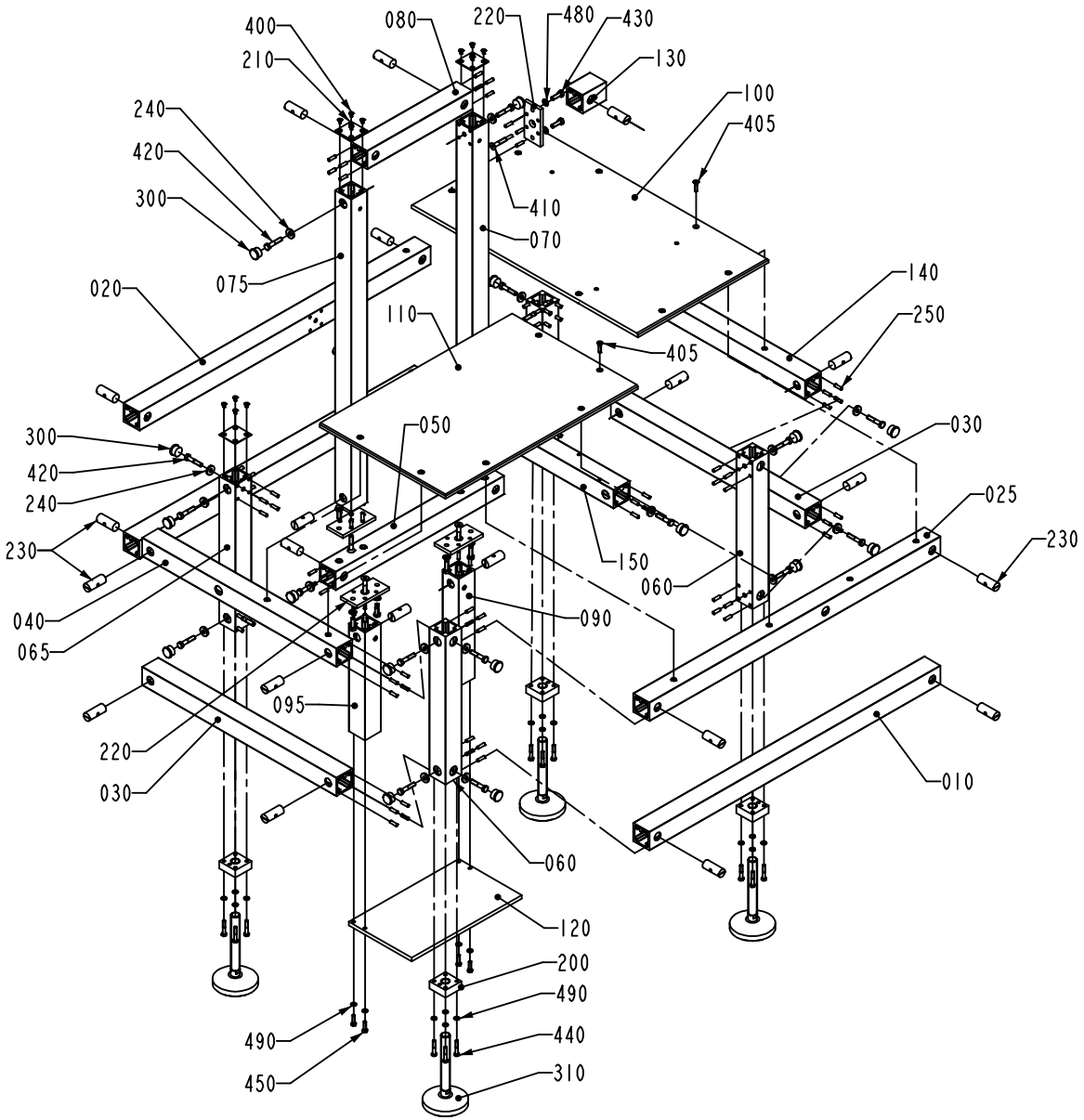

594929-1
ECN 90621

ECM: 90623 - 20010626
Group number: 594929-0100
Assembly Drawing: 594929-1_1_AB

Issue: 20020822

Pos	Part No	SP	UN	Qty	Description	Page No
Common Parts						
010	594905-0000	-		2	PROFILE	
020	594906-0000	-		1	PROFILE	
025	594907-0000	-		1	PROFILE	
030	594908-0000	-		2	PROFILE	
040	594909-0000	-		1	PROFILE	
050	594910-0000	-		1	PROFILE	
060	594911-0000	-		3	PROFILE	
065	594912-0000	-		1	PROFILE	
070	594913-0000	-		1	PROFILE	
075	594914-0000	-		1	PROFILE	
080	594915-0000	-		1	PROFILE	
090	594916-0000	-		1	PROFILE	
095	594917-0000	-		1	PROFILE	
100	594918-0000	-		1	PLATE	
110	594919-0000	-		1	PLATE	
120	594920-0000	-		1	PLATE	
130	594921-0000	-		1	PROFILE	
140	594922-0000	-		1	PROFILE	
150	594923-0000	-		1	PROFILE	
200	556601-0000	-		4	BRACKET	
210	556604-0000	-		3	COVER PLATE	
220	556624-0000	-		5	FRAME BRACKET	
230	486268-0000	-		27	NUT	
240	548599-0000	-		22	WASHER	
250	1065410-0000	-		108	SLOTTED PIN	
300	90261-0060	-		22	PLUG, BLIND, PLASTIC, NO. IKPK25X1, 5	
310	90347-0142	-		4	FOOT	
400	312155-0323	-		12	SCREW HEX.SOCK.COUNT.MF6S M5X8 A280	
405	312155-0372	-		14	SCREW HEX.SOCK.COUNT.MF6S M6X25 A280	
410	312155-0459	-		5	SCREW HEX.SOCK.COUNT.MF6S M8X40 A280	
420	312105-0459	-		22	SCREW M6S ISO 4014 M8X40 A480	
430	312105-0453	-		10	SCREW M6S ISO 4017 M8X25 A480	
440	312105-0376	-		16	SCREW M6S ISO 4014 M6X35 A480	
450	312105-0371	-		4	SCREW M6S ISO 4017 M6X22 A480	
480	315105-0165	-		10	WASHER PLAIN, BRB, 8,4/16,H=1,5	
490	315105-0153	-		20	WASHER PLAIN, BRB, 6,4/12,H=1,5	

Pos	Part No	SP	UN	Qty	Description	Page No

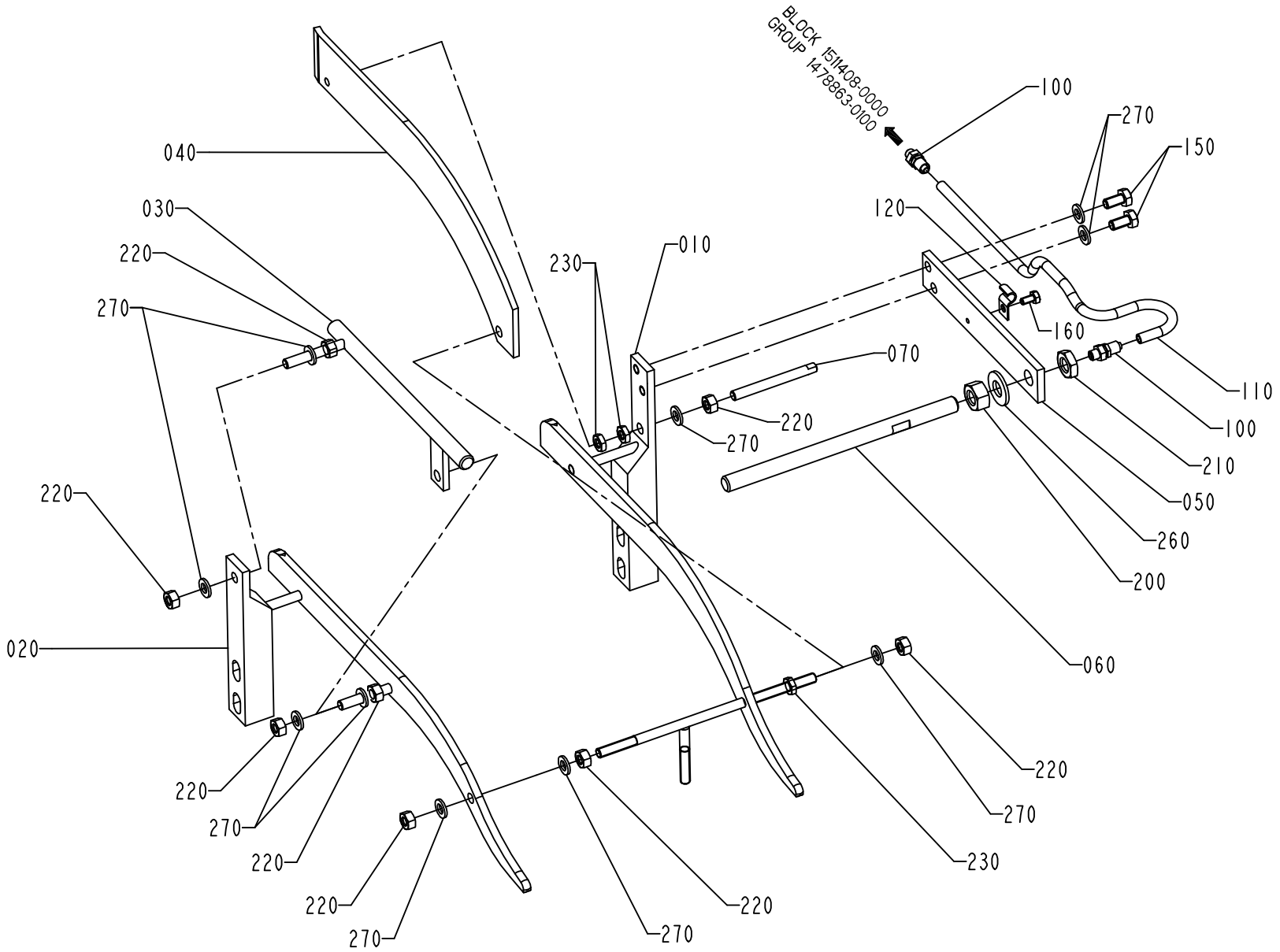

1511445-1
ECN 80465

ECM: 83423 - 20010206
Group number: 1511445-0100
Assembly Drawing: 1511445-1_1_AA

Issue: 20020822

Pos	Part No	SP	UN	Qty	Description	Page No
Common Parts						
010	1511446-0000	-		1	RAIL	
020	1511447-0000	-		1	SLIDE RAIL	
030	1511448-0000	-		1	GUIDE	
040	1511450-0000	-		1	HEAD PLATE	
050	1511451-0000	-		1	MOUNTING SHEET	
060	1511452-0000	-		1	NOZZLE	
070	1511453-0000	-		1	SETTING SCREW	
100	342921-0112	-		2	STRAIGHT COUPLING,EXT.THREADED 6/4-6M	
110	90166-0117	-	MM	1500	HOSE 4/6 PVC BLUE	
120	90165-0057	-		1	PIPE CLIP FOR TUBE D=6 MM	
150	312105-0366	-		2	SCREW M6S M6X12 A280	
160	312105-0287	-		1	SCREW M6S ISO 4017 M4X8 A480	
200	312605-0320	-		1	HEXAGON NUT, M6M M10 A280	
210	312625-0320	-		1	NUT HEX. M10 SS	
220	312605-0316	-		8	HEXAGON NUT, M6M M6 A280	
230	312625-0316	-		3	NUT HEX. M6 SS	
260	315105-0173	-		1	WASHER PLAIN, BRB, 10,5/22,H=2	
270	315105-0153	-		10	WASHER PLAIN, BRB, 6,4/12,H=1,5	

Pos	Part No	SP	UN	Qty	Description	Page No

Machine Type | Group Description | Used-In | Group Number | Page No

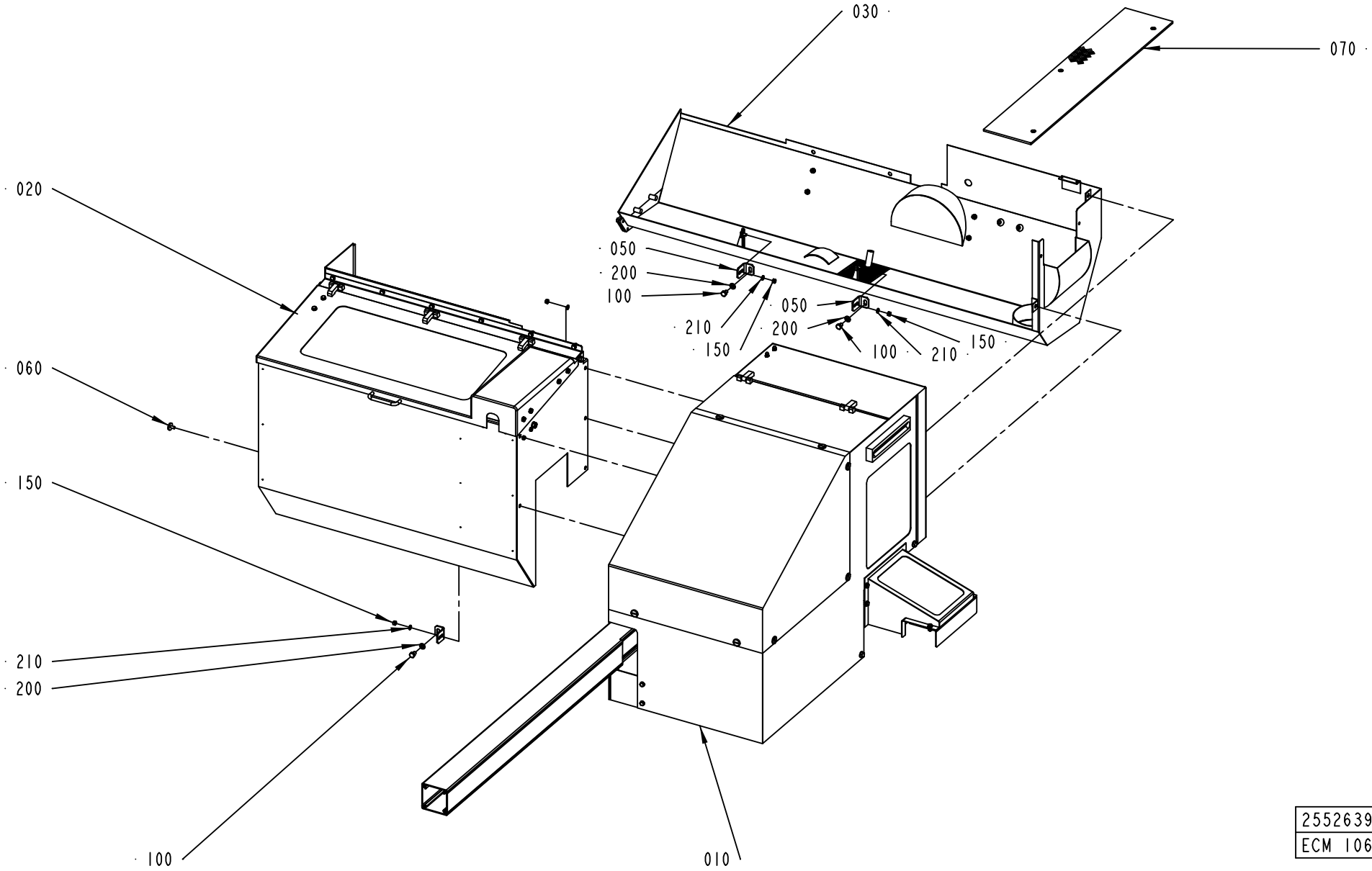

2552639-1
ECM 106713

ECM: 110143 - 20020614
Group number: 2552639-0100
Assembly Drawing: 2552639-1_1_AA

Issue: 20020822

Pos	Part No	SP	UN	Qty	Description	Page No
Common Parts						
010	A1529490-0100	-		1	COVERING PANEL	**919**
020	A1529491-0100	-		1	COVERING PANEL	**923**
030	A1529496-0100	-		1	DRIP PLATE	**925**
050	2547581-0000	-		3	BRACKET	
060	979707-0000	-		1	SCREW	
070	591622-0000	-		1	CHECKER PLATE	
100	312105-0447	-		3	SCREW M6S ISO 4017 M8X12 A480	
150	312605-0316	-		7	HEXAGON NUT, M6M M6 A280	
200	315105-0165	-		3	WASHER PLAIN, BRB, 8,4/16,H=1,5	
210	315105-0153	-		7	WASHER PLAIN, BRB, 6,4/12,H=1,5	

Pos	Part No	SP	UN	Qty	Description	Page No

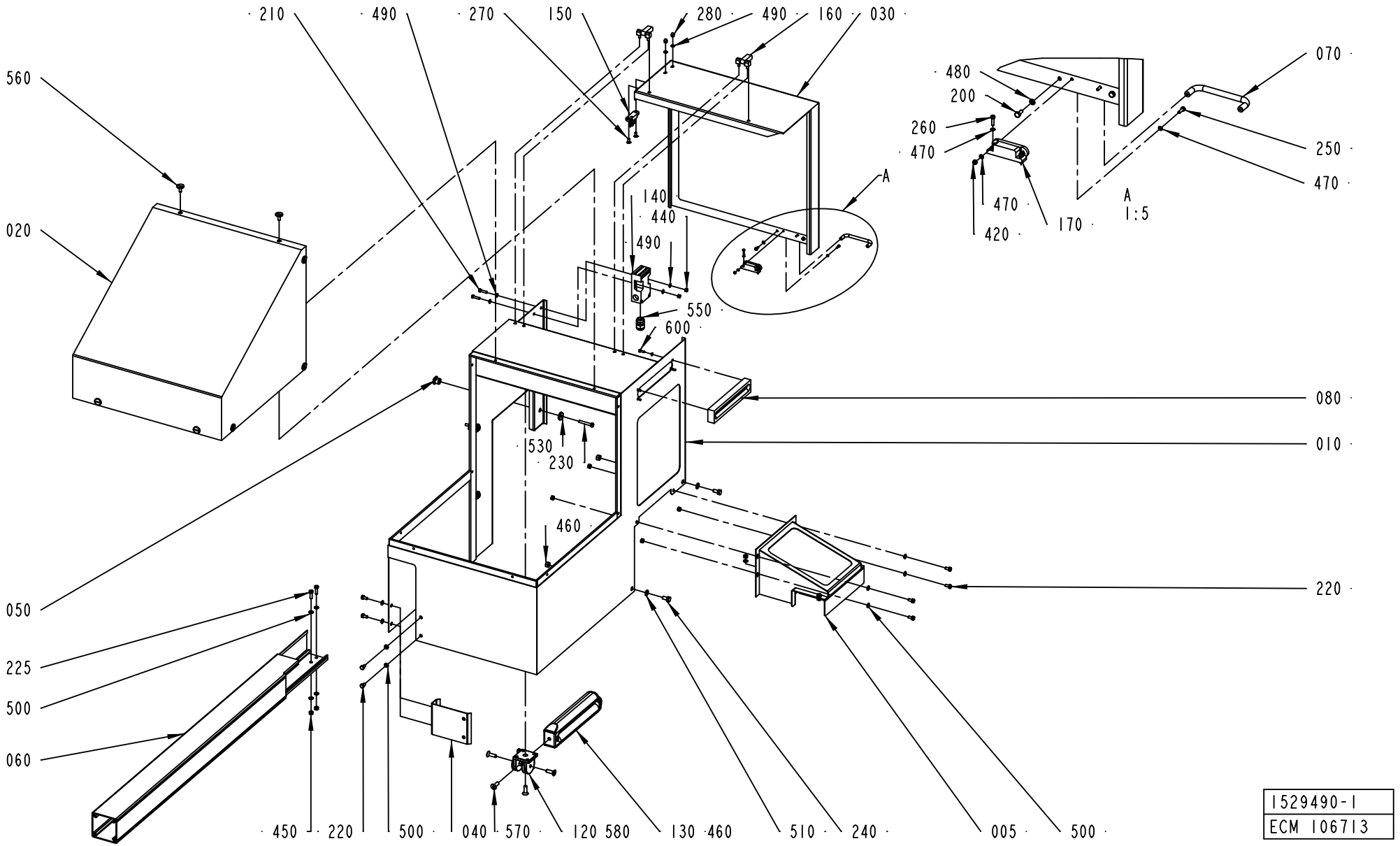
210
490
270
150
280
490
160
030
560
020
140
440
490
550
600
A
480
200
260
470
070
250
470
470
420
170
A
1:5
080
010
530
230
460
220
050
225
500
060
450
220
500
040
570
120 580
130 460
510
240
005
500
1529490-1
ECM 106713

ECM: 107959 - 20020614
Group number: 1529490-0100
Assembly Drawing: 1529490-1_1_AA

Issue: 20020822

Pos	Part No	SP	UN	Qty	Description	Page No
Common Parts						
005	A1360745-0100	-		1	COVER	**921**
010	B1529487-0000	-		1	COVER	
010	*1360613-0000*	-		*1*	*GLASS*	
020	*90157-0041*	-		*1*	*SEALING COMPOUND*	
020	1529488-0000	-		1	COVER	
030	B1529489-0000	-		1	COVER	
010	*1360614-0000*	-		*1*	*GLASS*	
020	*90157-0041*	-		*1*	*SEALING COMPOUND*	
040	1529493-0000	-		1	SUPPORTING SHEET	
050	1529492-0000	-		4	SETTING SCREW	
060	1360630-0000	-		1	CABLE DUCT	
070	1089374-0000	-		1	HANDLE	
080	1528392-0000	-		1	GUIDE FRAME	
120	556384-0000	-		2	LINK FORK	
130	556386-0000	-		1	STEERING	
140	90044-0139	-		1	KEY SAF.SW. AZ16-02 ZVR K-2254	
150	90044-0311	-		1	KEY FOR SAFETY SWITCH, AZ15/16 B2	
160	90248-0036	-		2	HINGE, 1055-U7 S/S 304	
170	90339-0004	-		1	MAGNETIC LOCK, 57X16X19 MM	
200	312105-0289	-		2	SCREW M6S ISO 4017 M4X10 A480	
210	312105-0331	-		2	SCREW M6S ISO 4017 M5X20 A480	
220	312105-0366	-		8	SCREW M6S M6X12 A280	
225	312105-0370	-		2	SCREW M6S ISO 4017 M6X20 A480	
230	312105-0378	-		4	SCREW M6S ISO 4014 M6X40 A480	
240	312105-0449	-		2	SCREW M6S ISO 4017 M8X16 A480	
250	312115-0224	-		2	SCREW HEX.SOCK.HD.MC6S-TT 3X10 A480	
260	312115-0226	-		4	SCREW MC6S M3X12 A280	
270	312155-0327	-		2	SCREW HEX.SOCK.COUNT.MF6S M5X12 A280	
280	312705-0314	-		2	NUT HEX. DOMED CAP MHM-6 M5 A280	
420	312605-0310	-		4	HEXAGON NUT, M6M M3 A280	
440	312605-0314	-		2	HEXAGON NUT, M6M M5 A280	
450	312605-0316	-		8	HEXAGON NUT, M6M M6 A280	
460	312605-0318	-		5	HEXAGON NUT, M6M M8 A280	
470	315105-0124	-		8	WASHER PLAIN, BRB, 3,2/6,H=0,5	
480	315105-0136	-		6	WASHER PLAIN, BRB, 4,3/8,H=0,8	
490	315105-0146	-		6	WASHER PLAIN, BRB, 5,3/10,H=1	
500	315105-0153	-		13	WASHER PLAIN, BRB, 6,4/12,H=1,5	
510	315105-0165	-		3	WASHER PLAIN, BRB, 8,4/16,H=1,5	
530	315125-0153	-		4	WASHER PLAIN ROUND,CHAMF. 6,4/22, H=4	
550	352103-0106	-		1	CABLE GLAND, ST 11, PR18,6/PG11	
560	90287-0062	-		10	SCREW M6	
570	312155-0453	-		4	SCREW HEX.SOCK.COUNT.MF6S M8X25 A280	
580	312812-0318	-		1	HEXAGON NUT, NY-LOCK M8 A480	
590	315105-0165	-		1	WASHER PLAIN, BRB, 8,4/16,H=1,5	
600	312105-0291	-		4	SCREW M6S ISO 4017 M4X12 A480	

Machine Type | Group Description | Used-In | Group Number | Page No

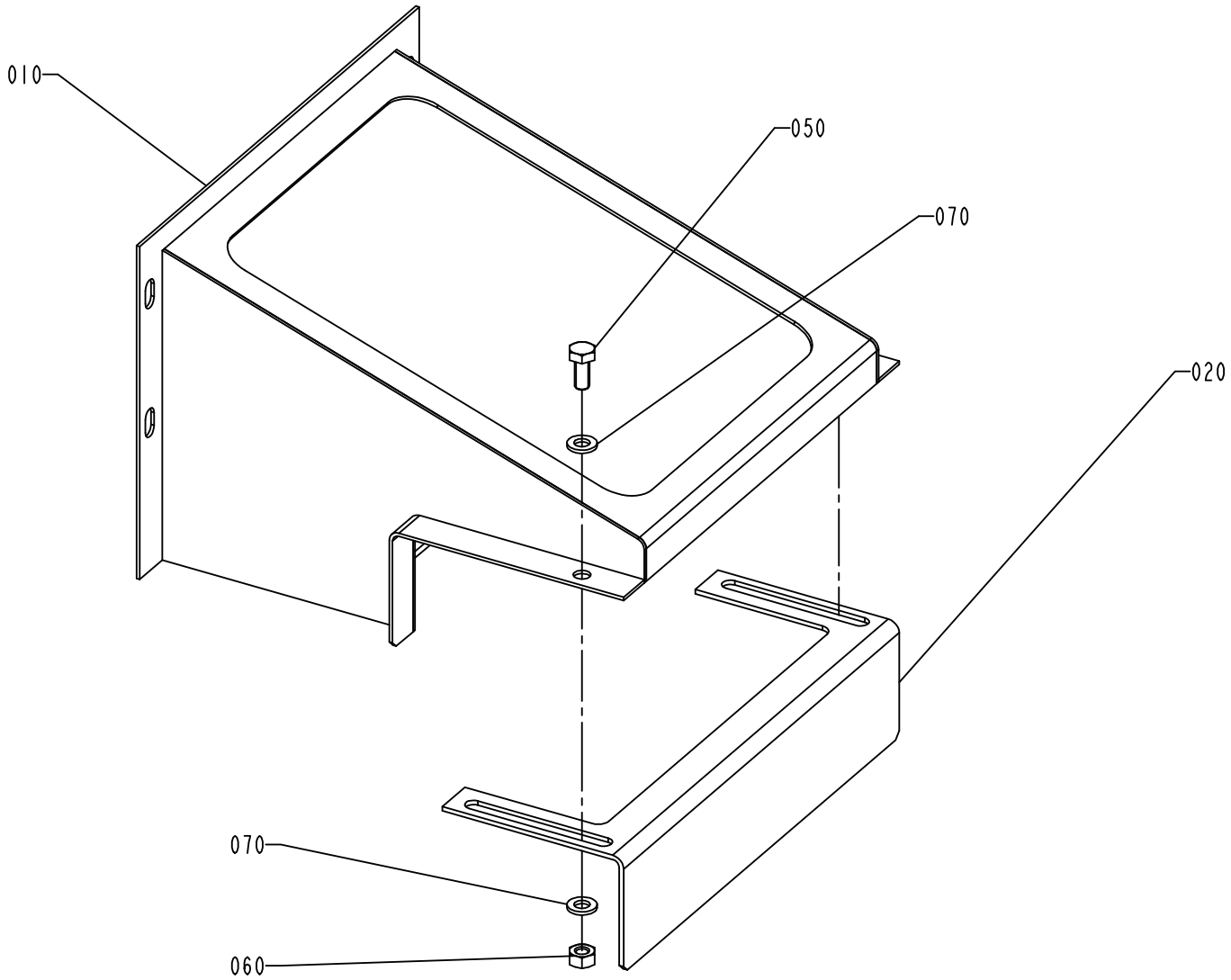

1360745-1
ECN 98616

ECM: 98619 - 20011220
Group number: 1360745-0100
Assembly Drawing: 1360745-1_1_AB

Issue: 20020822

Pos	Part No	SP	UN	Qty	Description	Page No
Common Parts						
010	B1360709-0000	-		1	COVER	
010	*1360609-0000*	*-*		*1*	*GLASS*	
020	*90157-0041*	*-*		*1*	*SEALING COMPOUND*	
020	1360710-0000	-		1	PLATE	
050	312105-0367	-		2	SCREW M6S M6X14 A280	
060	312605-0316	-		2	HEXAGON NUT, M6M M6 A280	
070	315105-0153	-		4	WASHER PLAIN, BRB, 6,4/12,H=1,5	

Pos	Part No	SP	UN	Qty	Description	Page No

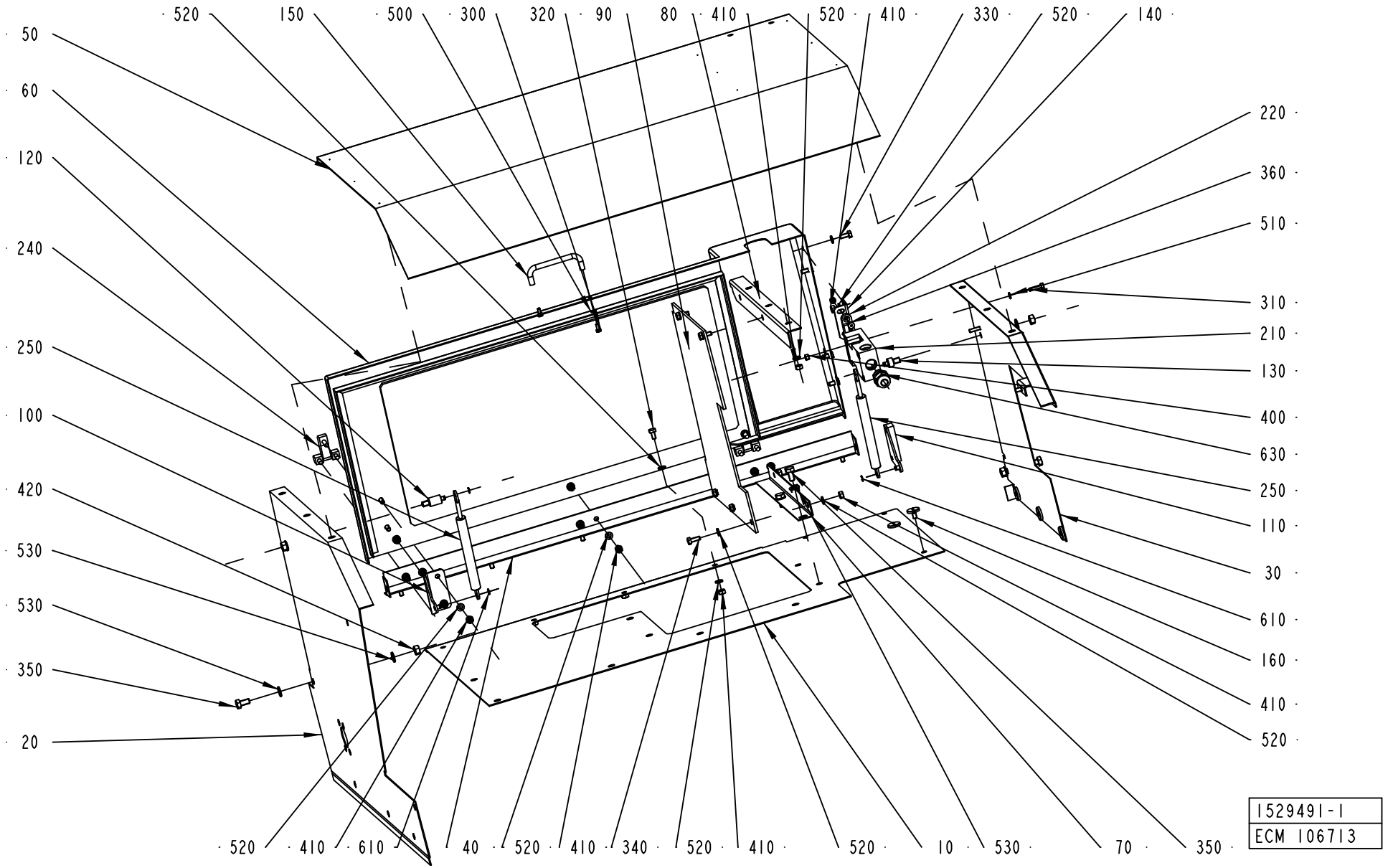
520
150
500
300
320
90
80
410
520
410
330
520
140
50
60
120
240
250
100
420
530
530
350
20
220
360
510
310
210
130
400
630
250
110
30
610
160
410
520
520
410
610
40
520
410
340
520
410
520
10
530
70
350
1529491-1
ECM 106713

ECM: 108207 - 20020614
Group number: 1529491-0100
Assembly Drawing: 1529491-1_1_AA

Issue: 20020822

Pos	Part No	SP	UN	Qty	Description	Page No
Common Parts						
010	1529361-0000	-		1	FRONT PLATE	
020	1529363-0000	D		1	SIDE PLATE	
030	1529476-0000	D		1	SIDE PLATE	
040	1529474-0000	-		1	FRONT PLATE	
050	1529477-0000	D		1	FRONT PLATE	
060	1529292-0000	-		1	COVER	
070	1529435-0000	-		1	BRACKET	
080	1529289-0000	-		1	BRACKET	
090	1529434-0000	-		1	PLATE	
100	1529478-0000	-		1	BRACKET	
110	1529479-0000	-		1	BRACKET	
120	1529480-0000	-		1	BRACKET	
130	1529481-0000	-		1	BRACKET	
140	1529462-0000	-		1	BRACKET	
150	1089374-0000	-		1	HANDLE	
160	979707-0000	-		2	SCREW	
210	90044-0139	-		1	KEY SAF.SW. AZ16-02 ZVR K-2254	
220	90044-0311	-		1	KEY FOR SAFETY SWITCH, AZ15/16 B2	
240	90248-0036	-		3	HINGE, 1055-U7 S/S 304	
250	90347-0096	-		2	GAS SPRING NO. 03-06-100 082473	
300	312105-0289	-		2	SCREW M6S ISO 4017 M4X10 A480	
310	312105-0331	-		2	SCREW M6S ISO 4017 M5X20 A480	
320	312105-0366	-		8	SCREW M6S M6X12 A280	
330	312105-0367	-		4	SCREW M6S M6X14 A280	
340	312105-0368	-		5	SCREW M6S M6X16 A280	
350	312105-0449	-		4	SCREW M6S ISO 4017 M8X16 A480	
360	312155-0327	-		2	SCREW HEX.SOCK.COUNT.MF6S M5X12 A280	
400	312605-0314	-		4	HEXAGON NUT, M6M M5 A280	
410	312605-0316	-		33	HEXAGON NUT, M6M M6 A280	
420	312605-0318	-		4	HEXAGON NUT, M6M M8 A280	
500	315105-0136	-		2	WASHER PLAIN, BRB, 4,3/8,H=0,8	
510	315105-0146	-		4	WASHER PLAIN, BRB, 5,3/10,H=1	
520	315105-0153	-		50	WASHER PLAIN, BRB, 6,4/12,H=1,5	
530	315105-0165	-		8	WASHER PLAIN, BRB, 8,4/16,H=1,5	
610	315755-0106	-		4	LOCKING WASHER 4	
630	352103-0106	-		1	CABLE GLAND, ST 11, PR18,6/PG11	

Pos	Part No	SP	UN	Qty	Description	Page No

Machine Type	Group Description	Used-In	Group Number	Page No

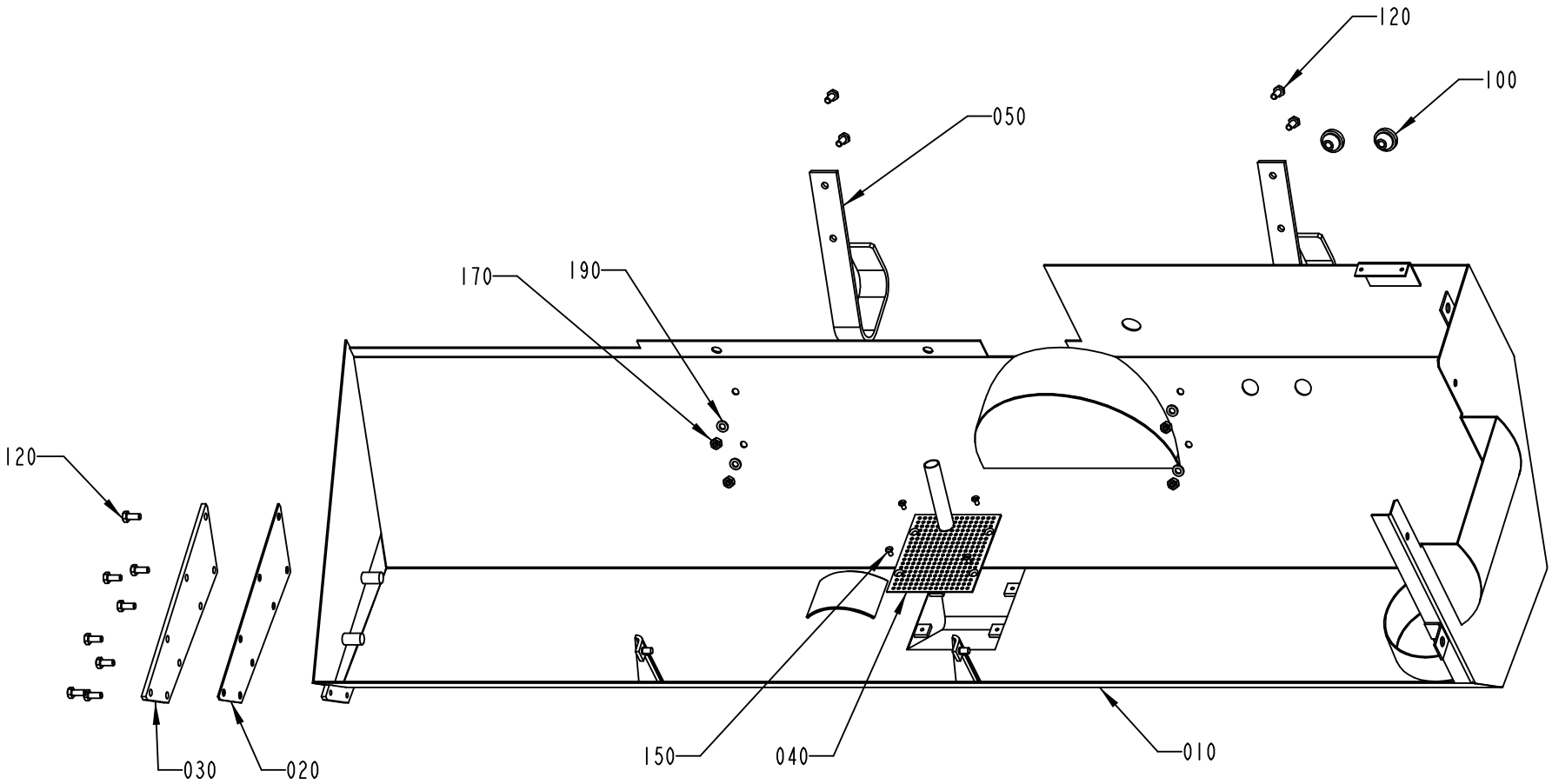

1529496-1
ECM 106713

ECM: 108493 - 20020614
Group number: 1529496-0100
Assembly Drawing: 1529496-1_1_AA

Issue: 20020822

Pos	Part No	SP	UN	Qty	Description	Page No
Common Parts						
010	1529494-0000	D		1	DRIP PLATE	
020	1529497-0000	D		1	GASKET	
030	1529498-0000	D		1	FLANGE	
040	2547574-0000	-		1	STRAINER	
050	2547582-0000	-		2	BRACKET	
100	90015-0023	-		2	LEAD-IN, TET7-10, E-1458019	
120	312105-0367	-		12	SCREW M6S M6X14 A280	
150	312145-0287	-		4	SCREW COUNTERS.SLOT.HD. MFS 4X8 SS	
170	312605-0316	-		4	HEXAGON NUT, M6M M6 A280	
190	315105-0153	-		4	WASHER PLAIN, BRB, 6,4/12,H=1,5	

Pos	Part No	SP	UN	Qty	Description	Page No

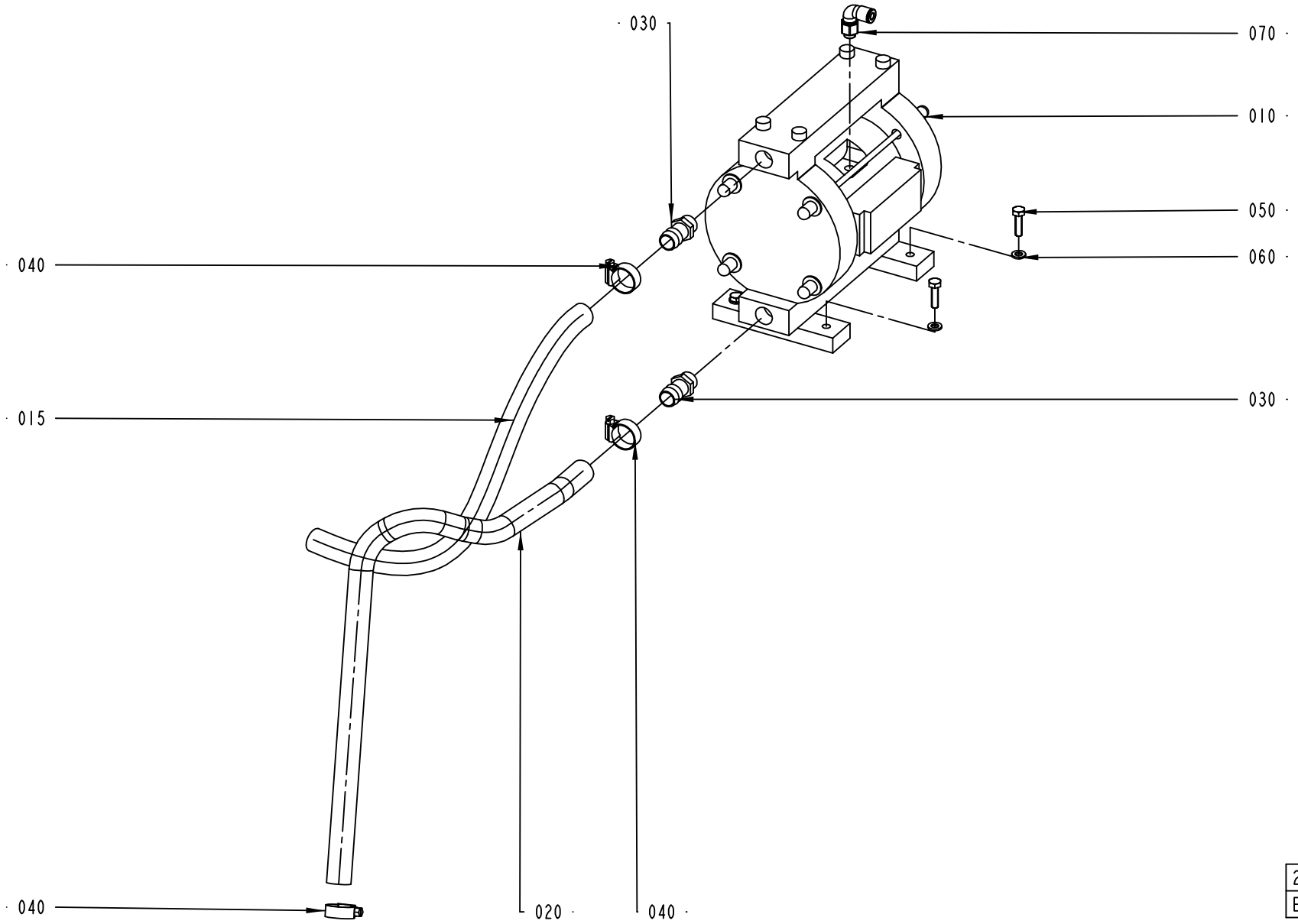

2551443-1
ECM 106713

ECM: 109495 - 20020614
Group number: 2551443-0100
Assembly Drawing: 2551443-1_1_AA

Issue: 20020822

Pos	Part No	SP	UN	Qty	Description	Page No
Common Parts						
010	90459-0710	B		1	DIAPHRAGM PUMP, RM10	
015	90166-0002	-	MM	400	HOSE 16/21 PVC	
020	90166-0002	-	MM	550	HOSE 16/21 PVC	
030	342901-0106	-		2	HOSE NIPPLE, EXT.THR. R3/8-17 MM	
040	342991-0103	-		3	HOSE CLIP,WORM DRIVE TYPE (19)-23	
050	312105-0371	-		4	SCREW M6S ISO 4017 M6X22 A480	
060	315105-0153	-		4	WASHER PLAIN, BRB, 6,4/12,H=1,5	
070	90459-0487	-		1	ELBOW PIPE JOINT, EXT.THREAD, D=6MM G1/8	

Pos	Part No	SP	UN	Qty	Description	Page No

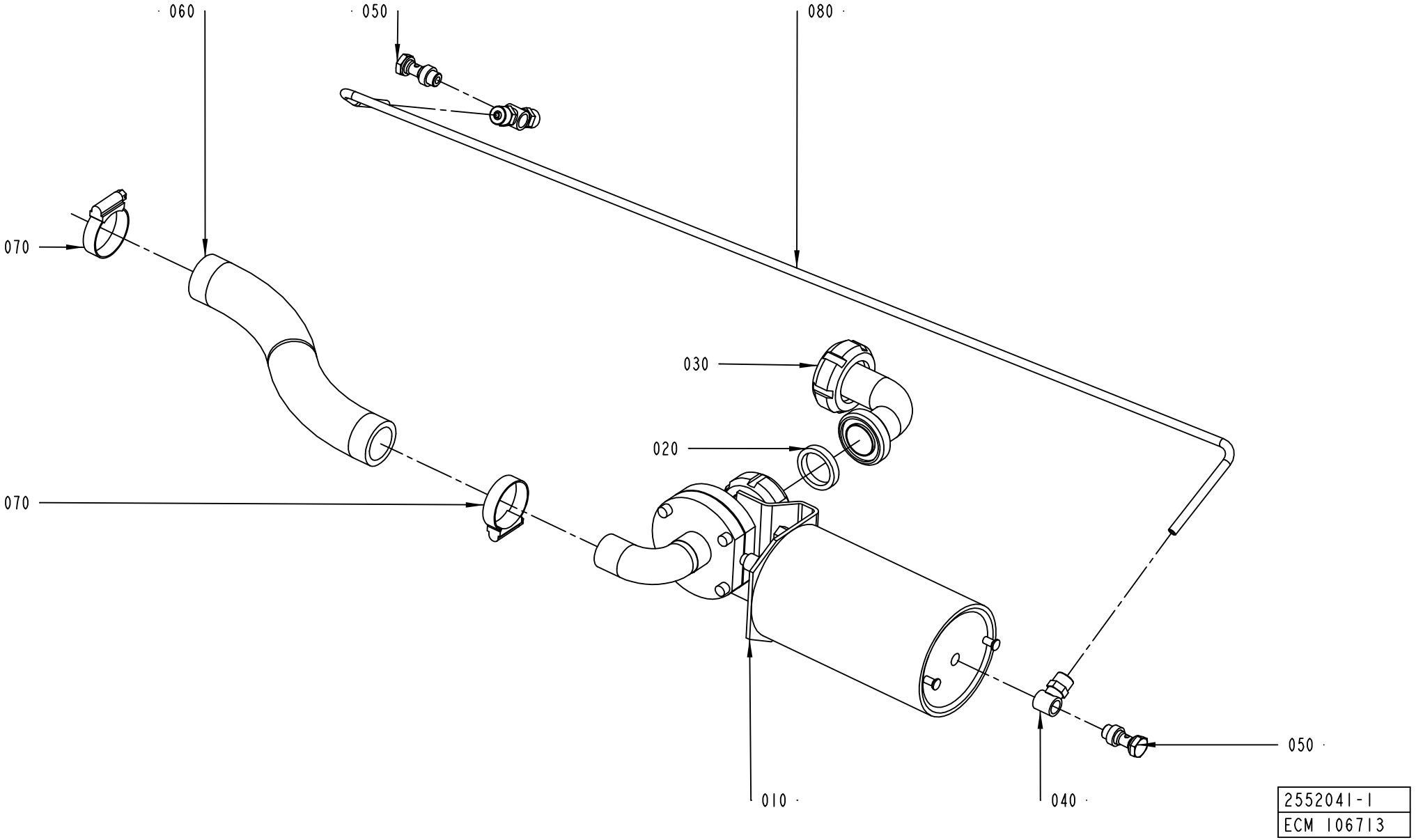
060
050
080
070
030
020
070
050
010
040
2552041-1
ECM 106713

ECM: 109917 - 20020614
Group number: 2552041-0100
Assembly Drawing: 2552041-1_1_AA

Issue: 20020822

Pos	Part No	SP	UN	Qty	Description	Page No
Common Parts						
010	2552059-0000	-		1	BOTTOM VALVE	
020	315250-0101	-		1	GASKET 32X25X5,5 MM	
030	342807-0101	-		1	PIPE ELBOW 90 DEGR. SMS1220, D=25 MM	
040	342980-0113	-		1	BANJO-CONNECTION,RING 6/4-G1/8"	
050	342980-0303	-		2	BANJO-HOLLOW BOLT COUPL,EXT.THR.01-G1/8"	
060	90166-0049	-	MM	230	HOSE PVC 25/33-34	
070	342991-0106	-		2	HOSE CLIP,WORM DRIVE TYPE (30)-36	
080	90166-0089	-	MM	900	HOSE 4/6.2 PE BLUE	
090	342980-0213	-		1	BANJO-CONNECTION,T-RING 6/4-G1/8"	

Pos	Part No	SP	UN	Qty	Description	Page No

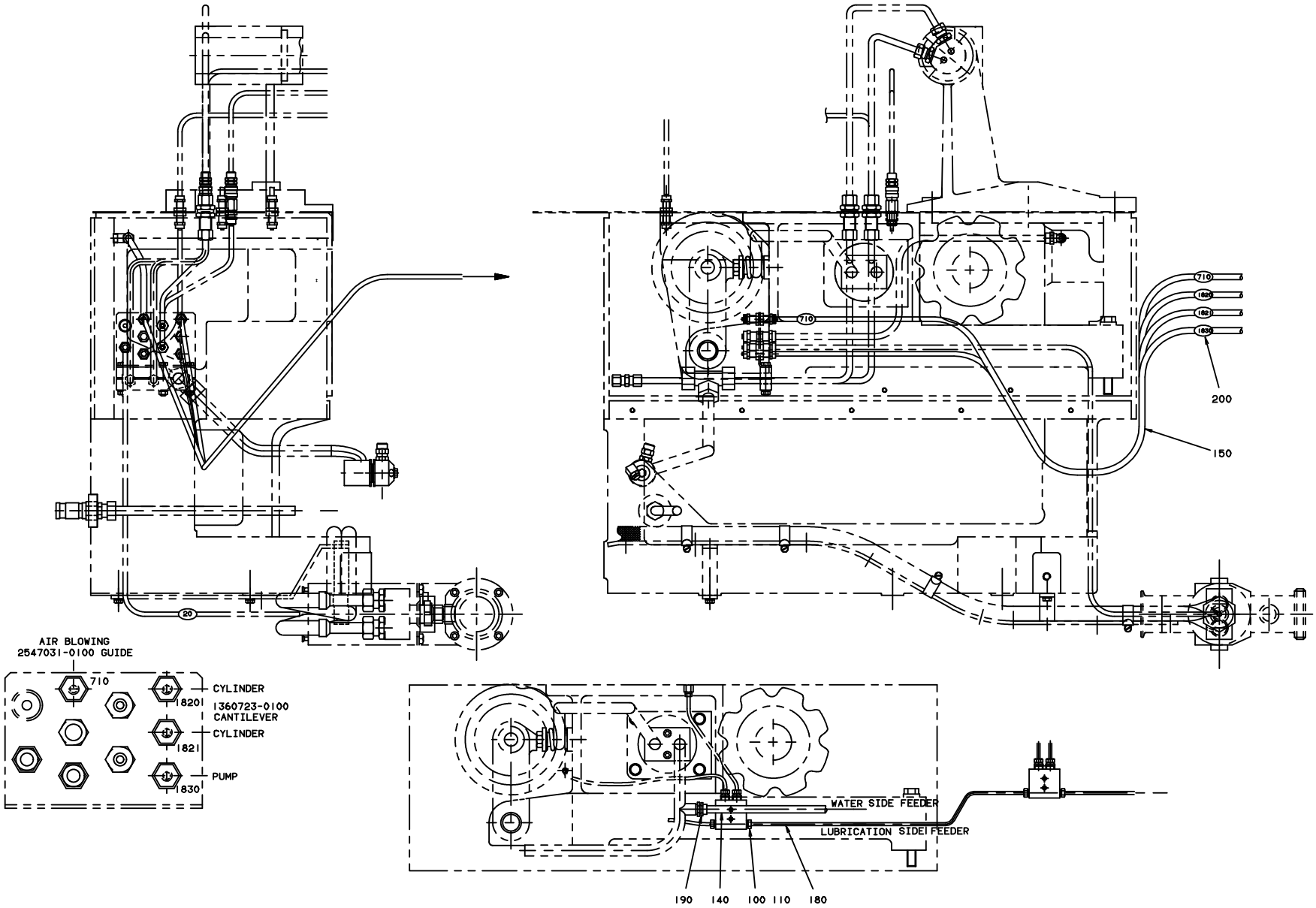
AIR BLOWING
2547031-0100 GUIDE
710
CYLINDER
1820
1360723-0100
CANTILEVER
CYLINDER
1821
PUMP
1830
20
710
200
150
WATER SIDE FEEDER
LUBRICATION SIDE FEEDER
190
140
100
110
180

ECM: 108174 - 20020614
Group number: 1529469-0100
Assembly Drawing: 1529469-1_1_AA

Issue: 20020822

Pos	Part No	SP	UN	Qty	Description	Page No
Common Parts						
100	90028-0021	-		1	CONE TUBE 4 MM	
110	90134-0038	-		1	BUSHING/NUT INLET/OUTLET 4 MM	
140	90166-0140	C	MM	5000	HOSE	
150	90166-0081	C	M	15	TUBE 6 MM PA BLUE	
180	90166-0109	-	MM	5000	TUBE 4 MM PA,TRANSP.	
190	342921-0132	C		1	STRAIGHT COUPL.,EXT.THREADED 10/8-G1/4"	
200	359000-0403	-		1	MARKING COLLAR PA2/4 "3" YELLOW	

Pos	Part No	SP	UN	Qty	Description	Page No

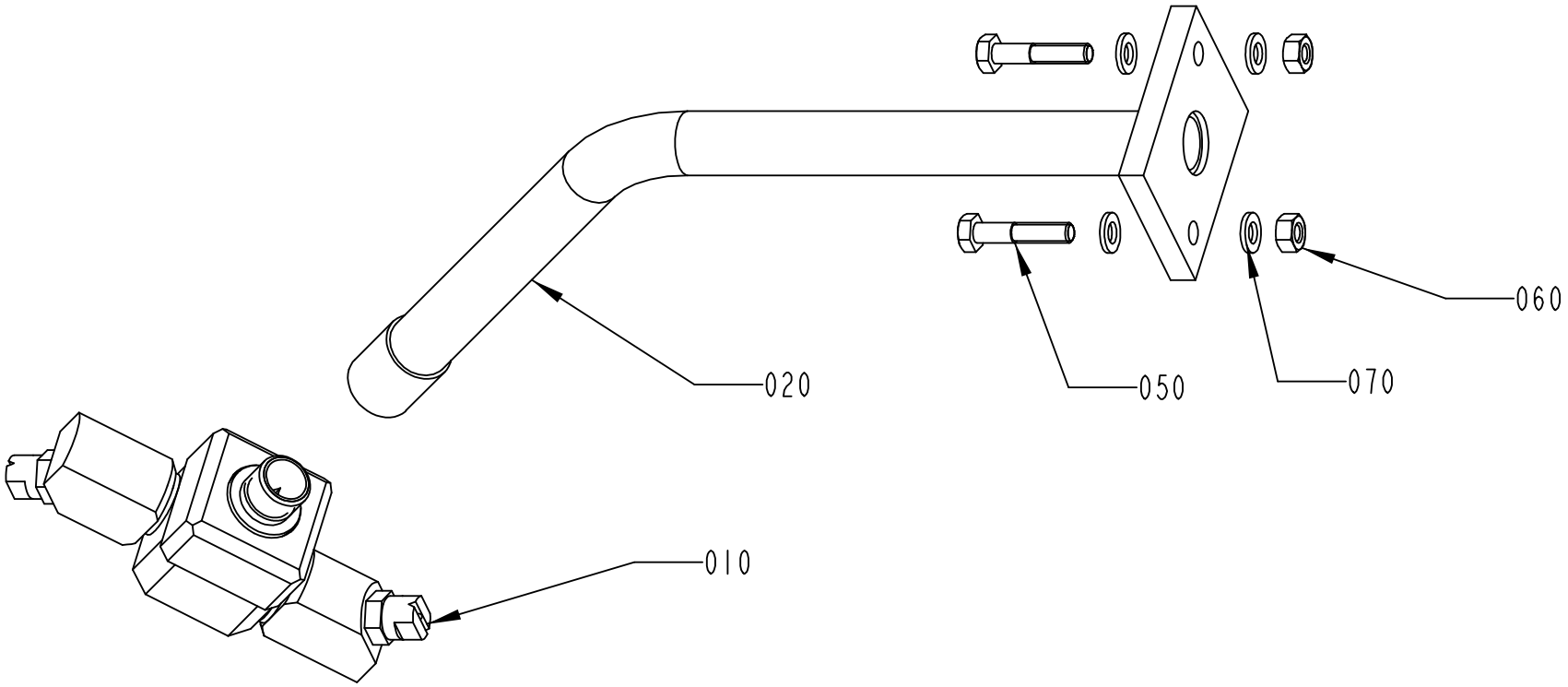

1529283-1
ECM 106713

Pos	Part No	SP	UN	Qty	Description	Page No
Common Parts						
010	A591674-0100	B		1	ROTOR	**935**
020	1529282-0000	A		1	PIPE	
050	312105-0374	-		2	SCREW M6S ISO 4014 M6X30 A480	
060	312605-0316	-		2	HEXAGON NUT, M6M M6 A280	
070	315105-0153	-		4	WASHER PLAIN, BRB, 6,4/12,H=1,5	

Pos	Part No	SP	UN	Qty	Description	Page No

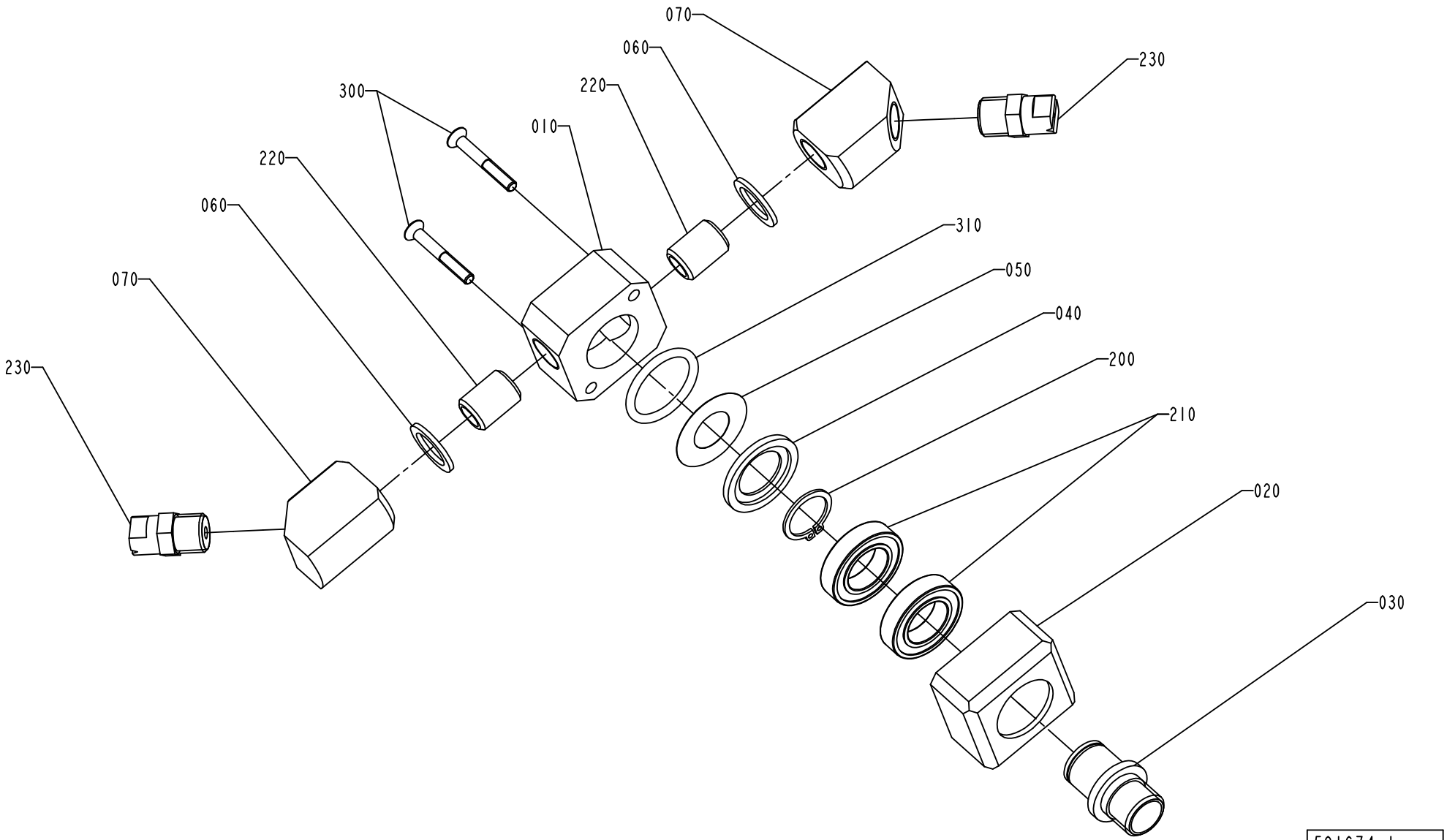
070
060
230
300
220
010
220
060
310
070
050
040
230
200
210
020
030
591674-1
ECN 86090

ECM: 84792 - 20010206
Group number: 591674-0100
Assembly Drawing: 591674-1_1_AB

Issue: 20020822

Pos	Part No	SP	UN	Qty	Description	Page No
Common Parts						
010	441792-0000	D		1	HEAD	
020	441793-0000	D		1	BEARING HOUSING	
030	441794-0000	D		1	PIVOT PIN	
040	441795-0000	D		1	WASHER	
050	441796-0000	C		1	SEAL	
060	441797-0000	C		2	SHIM	
070	591637-0000	C		2	ATTACHMENT	
200	90141-0017	C		1	RETAIN. RING, 17	
210	90214-0092	C		2	BALL BEARING, 17X30X7 MM	
220	90330-0101	C		2	NIPPLES, EXT. THREAD, G1/4	
230	90424-0035	C		2	SPRAY NOZZLE 95 DEG	
300	312155-0299	-		2	SCREW HEX.SOCK.COUNT.MF6S M4X30 A480	
310	315202-0217	C		1	O-RING 24,2X3 MM	

Pos	Part No	SP	UN	Qty	Description	Page No

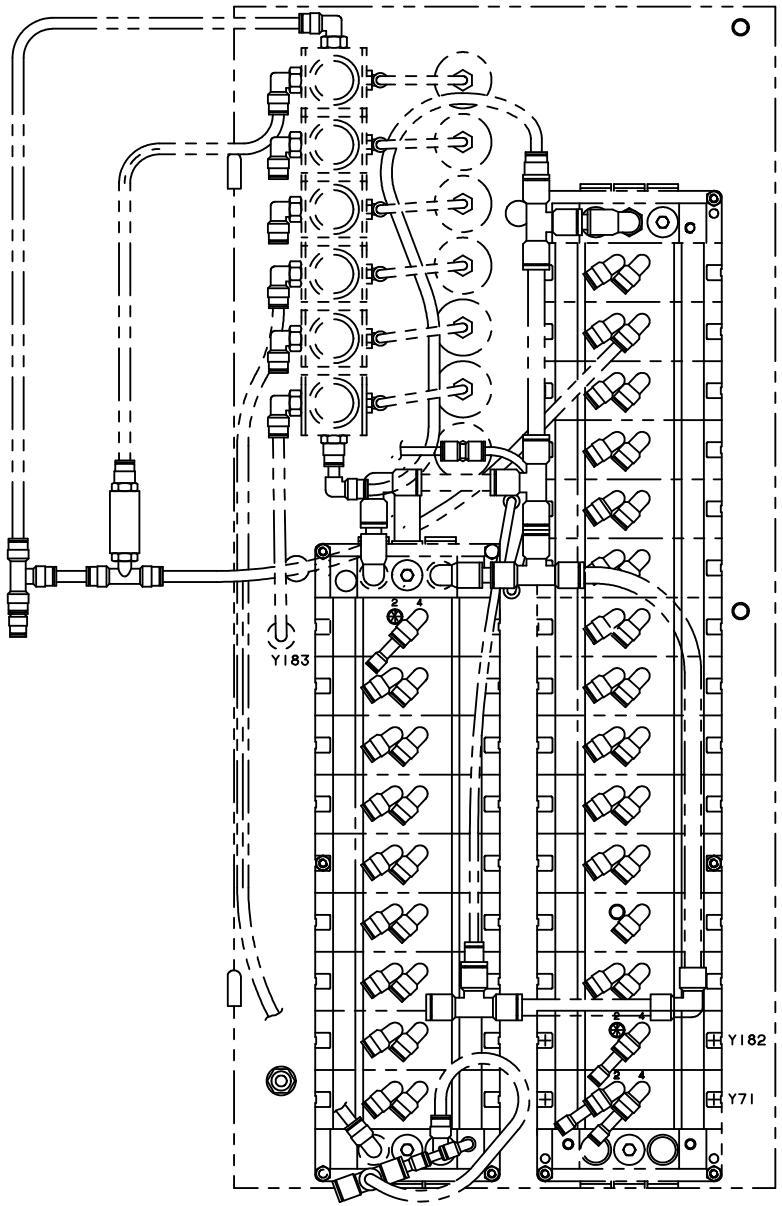
Y183
Y182
Y71

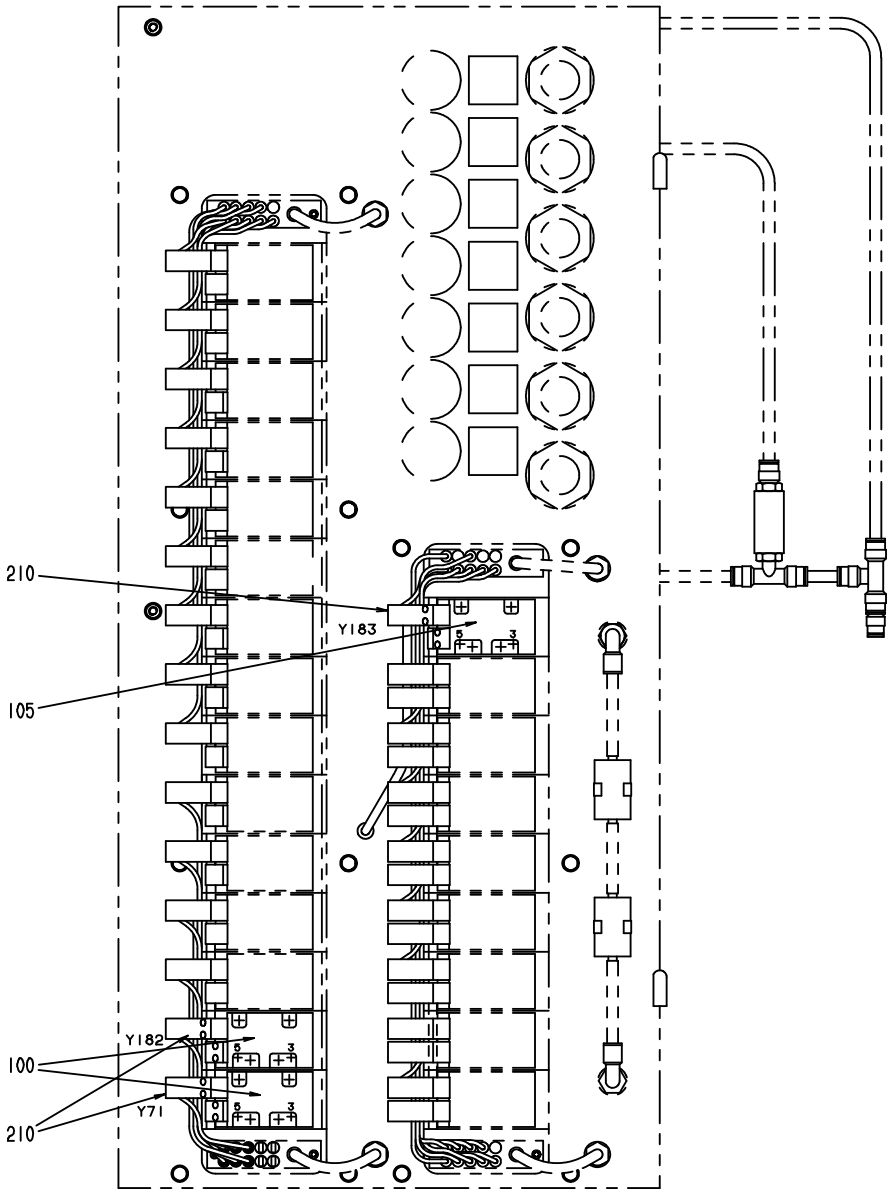
210
105
Y183
100
Y182
Y71
210

ECM: 106990 - 20020614
Group number: 1529471-0100
Assembly Drawing: 1529471-1_1_AA

Issue: 20020822

Pos	Part No	SP	UN	Qty	Description	Page No
Common Parts						
100	90042-0215	-		2	VALVE BODY 5/2 UNISTABLE	
105	90042-0271	-		1	VALVE BODY 2X3/2	
210	90042-0539	-		3	PILOT VALVE L=350MM	

Pos	Part No	SP	UN	Qty	Description	Page No

This page is intentionally left blank.

ECM: 104671 - 20020614
Group number: 2535941-0100
Assembly Drawing:

Issue: 20020822

Pos	Part No	SP	UN	Qty	Description	Page No
Common Parts						
0010	A2535942-0100	-		1	ELECTRICAL DOCUMENT	
0020	A2535943-0100	-		1	ELECTRIC MATERIALS	**941**

Pos	Part No	SP	UN	Qty	Description	Page No

Machine Type	Group Description	Used-In	Group Number	Page No

This page is intentionally left blank.

Pos	Part No	SP	UN	Qty	Description	Page No
Common Parts						
1010	A2536057-0100	-		1	TERMINAL X300	**943**
1020	A2535944-0100	-		1	TERMINAL X302	**945**
1030	90135-0039	-		1	SHIELD CLIP KLBU 4-13.5	
1040	90135-0037	-	MM	100	GROUNDING RAIL 10X3 CU	
1050	353245-0004	-		1	GLAND, EXTENDED WITH INSERT, PG16/PR 22,	
1060	351160-0102	-	M	100	CABLE AWM 1X0,75 MM2 DARKBLUE	
1070	351162-0104	-	M	6	CABLE AWM 1X1,5 MM2 YELLOW-GREEN	
1080	351164-0104	-	M	45	CABLE AWM 1X1,5 MM2 BLACK	
1100	352103-0101	-		3	CABLE GLAND, ST 9, PR15,2/PG9	
1110	352103-0106	-		1	CABLE GLAND, ST 11, PR18,6/PG11	
1120	352103-0111	-		2	CABLE GLAND, ST 16, PR22,5/PG16	
1130	90099-0117	-		1	NUT, PR 18,6 (PG11)	
1140	90099-0110	-		2	NUT, PR 22,5 (PG16)	
A310	90458-0397	-		1	SERVO DRIVE DMC2 50720 P	
A310.1	90045-0376	-		1	CONNECTOR KIT 9-032-011-970	
A310.2	2546442-0001	-		1	DMC-PROGRAM	
A321	90119-0084	-		1	EXPANSION RELAY, JSR1T-500MS	
F310	90007-0146	-		1	CIRCUIT BREAKER, 3P 6 A K	
K310	B90075-0124	-		1	CONTACTOR, 4KW 24VDC	
	90075-0313	*C*		*1*	*AUXILIARY CONTACT K&M 22 DILM.2NO;2NC*	
K311	B90075-0124	-		1	CONTACTOR, 4KW 24VDC	
	90075-0313	*C*		*1*	*AUXILIARY CONTACT K&M 22 DILM.2NO;2NC*	
Q310	90095-0076	-		1	OVERLOAD PROTECTION, PKZM 6,3 A	
Q310.1	90259-0317	-		1	AUX.CONTACT K&M NHI 11-PKZ0	
Q310.2	90259-0312	-		1	ADAPTER PLATE K&M SP PKZ SOND C	
W310	90220-0116	-	M	11	MOTOR CABLE 4X1,0+2(2X0,5)+SHIELD	
W311	1255692-0110	-		1	RESOLVER CABLE L=11000 MM	
W312	351150-0405	-	M	5	CABLE OLFLEX 5X0,75 MM2 LIGHT/GREY	
W313	351150-0405	-	M	15	CABLE OLFLEX 5X0,75 MM2 LIGHT/GREY	
Z310	90024-0037	-		1	INPUT FILTER, 8 A	

Pos	Part No	SP	UN	Qty	Description	Page No

This page is intentionally left blank.

ECM: 104813 - 20020614
Group number: 2536057-0100
Assembly Drawing:

Issue: 20020822

Pos	Part No	SP	UN	Qty	Description	Page No
Common Parts						
001	353042-0005	-	MM	200	RAIL TS 35/7.5	
002	353024-0205	-		2	EARTH TERMINAL, 1010.1	
003	90077-0113	-		5	FEED THROUGH TERMINAL, 10-00102150-1	
004	353032-0009	-		1	END PLATE, WAP 16/35	
005	359011-0807	-		2	MARKING PLATES 5-FW 1-50	
006	359011-0834	-		1	SET OF SIGNS 6-GW(EARTH)	

Pos	Part No	SP	UN	Qty	Description	Page No

This page is intentionally left blank.

ECM: 104812 - 20020614
Group number: 2535944-0100
Assembly Drawing:

Issue: 20020822

Pos	Part No	SP	UN	Qty	Description	Page No
Common Parts						
001	353042-0004	-	MM	100	RAIL TS 35/7,5	
002	353024-0205	-		5	EARTH TERMINAL, 1010.1	
003	359011-0834	-		1	SET OF SIGNS 6-GW(EARTH)	

Pos	Part No	SP	UN	Qty	Description	Page No

Tetra Pak

SPC
Spare Parts Catalogue

This page is intentionally left blank.

Pos	Part No	SP	UN	Qty	Description	Page No
Common Parts						
0010	A1370872-0100	-		1	ELECTRICAL COMPONENTS	**951, 953, 955, 957, 959**
0020	A1370873-0100	-		1	CABLES	**971, 973**
0030	A1370874-0100	-		1	ELECTRICAL DOCUMENT	
0040	A1370875-0100	-		1	STANDARD EQUIPMENT	
0050	A1370876-0100	-		1	EXTRA EQUIPMENT	**975**
0060	A1370877-0100	-		1	SPARE PART	**977**
0070	A1370878-0100	-		1	CONTROL PANEL	**979**
0080	A1559000-0100	-		1	ELECTRICAL CABINET	**983**
0090	A1559022-0100	-		1	CONTROL PANEL	**1005**

Pos	Part No	SP	UN	Qty	Description	Page No

This page is intentionally left blank.

ECM: 106384 - 20020521
Group number: 1370872-0100
Assembly Drawing:
Issue: 20020822

Pos	Part No	SP	UN	Qty	Description	Page No
Common Parts						
_1000	B67388-0101	-		1	FRONT MOUNTED RACK 42TE	
020 1	*542038-0001*	-		*1*	*COMPONENTS WITHOUT TP-NO*	
_1000:1	B68445-0104	-		3	FRONT PLATE 8 TE	
010 4	*543921-0004*	-		*1*	*COMPONENTS WITHOUT TP-NO*	
_1010	B67388-0103	-		1	RACK FRONTMOUNTED 28TE	
020 3	*542038-0003*	-		*1*	*COMPONENTS WITHOUT TP-NO.*	
040	*540281-0001*	-		*1*	*DETAIL DRAWING*	
_1020	90194-0133	-		1	SIGN "DELIVERED DESIGN"	
_1030	359705-0015	-		4	WARNING SIGN ISO, RISK OF ELECTRIC SHOCK	
_1040	90194-0080	-		1	SIGN, IDENTIFICATION OF WIRING	
_1100	351164-0110	-	M	38	CABLE AWM 1X25 MM2 BLACK	
_1110	351164-0107	-	M	46	CABLE AWM 1X6 MM2 BLACK	
_1120	351164-0106	-	M	9	CABLE AWM 1X4 MM2 BLACK	
_1130	351164-0105	-	M	23	CABLE AWM 1X2,5 MM2 BLACK	
_1140	351164-0104	-	M	210	CABLE AWM 1X1,5 MM2 BLACK	
_1150	351164-0102	-	M	21	CABLE AWM 1X0,75 MM2 BLACK	
_1160	351161-0110	-	M	6	CABLE AWM 1X25 MM2 LIGHTBLUE	
_1170	351161-0107	-	M	3	CABLE AWM 1X6 MM2 LIGHTBLUE	
_1180	351161-0105	-	M	7	CABLE AWM 1X2,5 MM2 LIGHTBLUE	
_1190	351161-0104	-	M	19	CABLE AWM 1X1,5 MM2 LIGHTBLUE	
_1200	351161-0102	-	M	20	CABLE AWM 1X0,75 MM2 LIGHTBLUE	
_1210	351160-0104	-	M	3	CABLE AWM 1X1,5 MM2 DARKBLUE	
_1220	351160-0102	-	M	691	CABLE AWM 1X0,75 MM2 DARKBLUE	
_1230	351162-0109	-	M	6	CABLE AWM 1X16 MM2 YELLOW-GREEN	
_1240	351162-0108	-	M	8	CABLE AWM 1X10 MM2 YELLOW-GREEN	
_1250	351162-0107	-	M	11	CABLE AWM 1X6 MM2 YELLOW-GREEN	
_1260	351162-0105	-	M	10	CABLE AWM 1X2,5 MM2 YELLOW-GREEN	
_1270	351162-0104	-	M	5	CABLE AWM 1X1,5 MM2 YELLOW-GREEN	
_1280	351162-0102	-	M	12	CABLE AWM 1X0,75 MM2 YELLOW-GREEN	
_1290	351160-0106	-	M	5	CABLE AWM 1X4 MM2 DARKBLUE	
_1300	351166-0102	-	M	15	CABLE AWM 1X0,75 MM2 ORANGE	
_1310	90203-0009	-	M	1	CU LITZ CABLE 15X2 MM	
_1320	90259-0310	-		25	ADAPTER PLATE, K&M SP PKZ M	
_1330	90259-0312	-		1	ADAPTER PLATE K&M SP PKZ SOND C	
_1340	90135-0038	-		12	CABLE CLAMP K&M K*12 5-1	
_1350	353021-0213	-		19	FEED THROUGH TERMINAL, 10201.0	
_1360	353031-0203	-		13	END PLATE, 10612.0	
A002	90430-0067	-		1	DC MOTOR DRIVE PME 1802A CD2	
A002.1	B68262-0101	-		1	BACKPLANE FRONT RACK 8TE	
100	*543371-0000*	-		*1*	*CIRCUIT BOARD 8TE*	
110	*551927-0001*	-		*1*	*COMPONENTS WITHOUT TP-NO*	
120	*551928-0000*	-		*1*	*TERMINAL LABELS 8TE*	
A002.2	90135-0039	-		1	SHIELD CLIP KLBU 4-13.5	
A004	B558230-0301	-		1	TMCC CONTROLLER	
100	*B558370-0301*	-		*1*	*TMCC, MAIN PCB*	
110	*596751-0000*	-		*1*	*PRINTED CIRCUIT BOARD*	
A004.1	B68262-0101	-		1	BACKPLANE FRONT RACK 8TE	
100	*543371-0000*	-		*1*	*CIRCUIT BOARD 8TE*	
110	*551927-0001*	-		*1*	*COMPONENTS WITHOUT TP-NO*	
120	*551928-0000*	-		*1*	*TERMINAL LABELS 8TE*	
A004.2	48890-0101	-		1	TMCC PROGRAMME	
A010	90119-0106	-		1	SAFETY RELAY JOKAB RT 6	
A011	90119-0106	-		1	SAFETY RELAY JOKAB RT 6	
A013	90119-0106	-		1	SAFETY RELAY JOKAB RT 6	
A023	90119-0063	-		1	OPTO-RELAY, DC/DC AMMS-10-1/30VDC	
A024	90119-0063	-		1	OPTO-RELAY, DC/DC AMMS-10-1/30VDC	
A100	90031-0051	-		1	BASEPLATE, 10-SLOT	
A102	90031-0058	-		1	PLC, DIGITAL INPUT MODULE	
A103	90031-0057	-		1	PLC, DIGITAL INPUT MODULE	
A104	90031-0057	-		1	PLC, DIGITAL INPUT MODULE	
A105	90031-0057	-		1	PLC, DIGITAL INPUT MODULE	
A106	90031-0057	-		1	PLC, DIGITAL INPUT MODULE	
A107	90031-0057	-		1	PLC, DIGITAL INPUT MODULE	
A108	90031-0057	-		1	PLC, DIGITAL INPUT MODULE	
A120	B90031-0053	-		1	BASEPLATE,10-SLOT	
	90031-0302	-		*1*	*I/O BUS TERMINATION PLUG*	
A121	90031-0059	-		1	PLC, DIGITAL OUTPUT MODULE	
A122	90031-0059	-		1	PLC, DIGITAL OUTPUT MODULE	
A123	90031-0059	-		1	PLC, DIGITAL OUTPUT MODULE	
A124	90031-0059	-		1	PLC, DIGITAL OUTPUT MODULE	
A125	90031-0059	-		1	PLC, DIGITAL OUTPUT MODULE	
A126	90031-0059	-		1	PLC, DIGITAL OUTPUT MODULE	
A127	90031-0059	-		1	PLC, DIGITAL OUTPUT MODULE	
A128	90031-0059	-		1	PLC, DIGITAL OUTPUT MODULE	
A129	90031-0059	-		1	PLC, DIGITAL OUTPUT MODULE	
A201	90410-0051	-		1	TEMPERATURE CONTROLLER, KS 40	
A201.1	359241-0123	-		1	SIGN, TEMP. PRE-STERILIZATION VALVE	
A201.2	359240-0100	-		1	SIGN HOLDER FOR 359240-0001	
A202	90410-0051	-		1	TEMPERATURE CONTROLLER, KS 40	
A202.1	359241-0141	-		1	SIGN, PEROXIDE / WATER BATH	
A202.2	359240-0100	-		1	SIGN HOLDER FOR 359240-0001	
A203	90410-0051	-		1	TEMPERATURE CONTROLLER, KS 40	
A203.1	359241-0131	-		1	SIGN, TEMP. LS HEATER	

Machine Type | Group Description | Used-In | Group Number | Page No

This page is intentionally left blank.

Pos	Part No	SP	UN	Qty	Description	Page No
Common Parts (Cont'd)						
A203.2	359240-0100	-		1	SIGN HOLDER FOR 359240-0001	
A204	90410-0051	-		1	TEMPERATURE CONTROLLER, KS 40	
A204.1	359241-0130	-		1	SIGN, TEMP. AIR SUPER HEATER	
A204.2	359240-0100	-		1	SIGN HOLDER FOR 359240-0001	
A205	90410-0051	-		1	TEMPERATURE CONTROLLER, KS 40	
A205.1	359241-0126	-		1	SIGN, TEMP. AIR KNIFE	
A205.2	359240-0100	-		1	SIGN HOLDER FOR 359240-0001	
A206	90410-0051	-		1	TEMPERATURE CONTROLLER, KS 40	
A206.1	359241-0121	-		1	SIGN "STEAM"	
A206.2	359240-0100	-		1	SIGN HOLDER FOR 359240-0001	
A207	90410-0051	-		1	TEMPERATURE CONTROLLER, KS 40	
A207.1	359241-0125	-		1	SIGN, PEROXIDE BATH	
A207.2	359240-0100	-		1	SIGN HOLDER FOR 359240-0001	
A208	90410-0051	-		1	TEMPERATURE CONTROLLER, KS 40	
A208.1	359241-0132	-		1	SIGN, TEMP. STRIP APPLICATOR	
A208.2	359240-0100	-		1	SIGN HOLDER FOR 359240-0001	
A301	90314-0038	-		1	LEVEL CONTROL RELAY, RM3 220-240VAC	
A302	90314-0038	-		1	LEVEL CONTROL RELAY, RM3 220-240VAC	
A303	90314-0038	-		1	LEVEL CONTROL RELAY, RM3 220-240VAC	
A304	90314-0038	-		1	LEVEL CONTROL RELAY, RM3 220-240VAC	
A305	90314-0038	-		1	LEVEL CONTROL RELAY, RM3 220-240VAC	
A401	B67600-0501	-		1	TPIH GENERATOR	
10	*542036-0000*	-			*TP SIGN BOARD "PART NO" 84X140MM*	
500	*565140-0001*	-			*COMPONENTS WITHOUT TP-NO*	
510	*565144-0000*	-			*LABEL LED*	
520	*565145-0000*	-			*LABEL X1/X2*	
530	*565146-0000*	-			*INSULATION SPACER*	
540	*565147-0000*	-			*GUIDE RAIL LEFT*	
550	*565148-0000*	-			*GUIDE RAIL RIGHT*	
560	*565149-0000*	-			*GUIDE RAIL BACK*	
570	*565150-0000*	-			*FRONT HANDLE*	
580	*565151-0000*	-			*BOX BOTTOM*	
590	*565152-0000*	-			*FRAME*	
600	*565153-0000*	-			*COMPLETE BOX*	
610	*565154-0000*	-			*BOX UPPER PART*	
F100	*B67577-0501*	-			*POWER CARD*	
130	*573137-0001*	-			*COMPONENTS WITHOUT TP-NO*	
140	*565299-0000*	-			*SORTING INSTRUCTION*	
150	*543112-0000*	-			*MODIFYING EUROPECONNECTOR*	
160	*573138-0000*	-		*3*	*HEAT SINK L*	
180	*565301-0000*	-			*CAPACITOR CABLE RED*	
190	*565300-0000*	-			*CAPACITOR CABLE BLACK*	
200	*575980-0000*	-			*CIRCUIT DIAGRAM*	
F101	*B67564-0101*	-			*THIH TOROID COIL 1*	
100	*564253-0001*	-			*COMPONENTS WITHOUT TP-NO*	
110	*532687-0000*	-			*TOROID COIL 1*	
F102	*B67565-0101*	-			*TPIH TOROID COIL 2*	
100	*564254-0001*	-			*COMPONENTS WITHOUT TP-NO*	
110	*532688-0000*	-			*TOROID COIL 2*	
F103	*B67566-0101*	-			*TPIH TOROID COIL 3*	
100	*564255-0001*	-			*COMPONENTS WITHOUT TP-NO*	
110	*532689-0000*	-			*TOROID COIL 3*	
F104	*B67567-0101*	-			*TPIH THERMOSTAT CABLE*	
100	*564256-0001*	-			*COMPONENTS WITHOUT TP-NO*	
110	*532690-0000*	-			*THERMOSTAT CABLE*	
F105	*B67568-0101*	-			*TPIH COIL SINGLE LAYER*	
100	*564257-0001*	-			*COMPONENTS WITHOUT TP-NO*	
110	*532692-0000*	-			*COIL SINGLE LAYER*	
120	*532691-0000*	-			*COIL FORMER*	
F106	*B67569-0101*	-			*TPIH TANK COIL*	
100	*564260-0001*	-			*COMPONENTS WITHOUT TP-NO*	
110	*532693-0000*	-			*BOTTOM GABLE*	
120	*532695-0000*	-			*GABLE*	
130	*532696-0000*	-			*RING SPRING*	
140	*532697-0000*	-			*WINDING HOLDER*	
150	*565286-0000*	-			*WINDING HOLDER*	
160	*565287-0000*	-			*SPACER*	
170	*532694-0000*	-			*TANK COIL*	
F107	*B67570-0101*	-			*TPIH CAPACITOR CARD*	
100	*564261-0001*	-			*COMPONENTS WITHOUT TP-NO*	
120	*484995-0000*	-			*PRINTED CIRCUIT BOARD*	
130	*565289-0000*	-			*COMPONENT REFERENCE*	
F108	*B67582-0101*	-			*TPIH HEATSINK PREREGULATO*	
100	*573134-0001*	-			*COMPONENTS WITHOUT TP-NO*	
110	*565290-0000*	-			*HEAT SINK V1*	
120	*532703-0000*	-			*HEAT SINK V2*	
130	*565291-0000*	-			*HEAT SINK V3*	
140	*573135-0000*	-			*HEAT SINK PREREGULATOR*	
F110	*B67573-0101*	-			*TPIH TRANSISTOR PACKAGE R*	
100	*564264-0001*	-			*COMPONENTS WITHOUT TP-NO*	
110	*565295-0000*	-			*GABLE LEFT*	
120	*532709-0000*	-			*GABLE RIGHT*	
130	*532710-0000*	-			*STUDSCREW*	

Machine Type | Group Description | Used-In | Group Number | Page No

This page is intentionally left blank.

Pos	Part No	SP	UN	Qty	Description	Page No
Common Parts (Cont'd)						
A401	B67600-0501	-		1	TPIH GENERATOR	
10	*542036-0000*	-			*TP SIGN BOARD "PART NO" 84X140MM*	
500	*565140-0001*	-			*COMPONENTS WITHOUT TP-NO*	
510	*565144-0000*	-			*LABEL LED*	
520	*565145-0000*	-			*LABEL X1/X2*	
530	*565146-0000*	-			*INSULATION SPACER*	
540	*565147-0000*	-			*GUIDE RAIL LEFT*	
550	*565148-0000*	-			*GUIDE RAIL RIGHT*	
560	*565149-0000*	-			*GUIDE RAIL BACK*	
570	*565150-0000*	-			*FRONT HANDLE*	
580	*565151-0000*	-			*BOX BOTTOM*	
590	*565152-0000*	-			*FRAME*	
600	*565153-0000*	-			*COMPLETE BOX*	
610	*565154-0000*	-			*BOX UPPER PART*	
F100	*B67577-0501*	-			*POWER CARD*	
130	*573137-0001*	-			*COMPONENTS WITHOUT TP-NO*	
140	*565299-0000*	-			*SORTING INSTRUCTION*	
150	*543112-0000*	-			*MODIFYING EUROPECONNECTOR*	
160	*573138-0000*	-		*3*	*HEAT SINK L*	
180	*565301-0000*	-			*CAPACITOR CABLE RED*	
190	*565300-0000*	-			*CAPACITOR CABLE BLACK*	
200	*575980-0000*	-			*CIRCUIT DIAGRAM*	
F101	*B67564-0101*	-			*THIH TOROID COIL 1*	
100	*564253-0001*	-			*COMPONENTS WITHOUT TP-NO*	
110	*532687-0000*	-			*TOROID COIL 1*	
F102	*B67565-0101*	-			*TPIH TOROID COIL 2*	
100	*564254-0001*	-			*COMPONENTS WITHOUT TP-NO*	
110	*532688-0000*	-			*TOROID COIL 2*	
F103	*B67566-0101*	-			*TPIH TOROID COIL 3*	
100	*564255-0001*	-			*COMPONENTS WITHOUT TP-NO*	
110	*532689-0000*	-			*TOROID COIL 3*	
F104	*B67567-0101*	-			*TPIH THERMOSTAT CABLE*	
100	*564256-0001*	-			*COMPONENTS WITHOUT TP-NO*	
110	*532690-0000*	-			*THERMOSTAT CABLE*	
F105	*B67568-0101*	-			*TPIH COIL SINGLE LAYER*	
100	*564257-0001*	-			*COMPONENTS WITHOUT TP-NO*	
110	*532692-0000*	-			*COIL SINGLE LAYER*	
120	*532691-0000*	-			*COIL FORMER*	
F106	*B67569-0101*	-			*TPIH TANK COIL*	
100	*564260-0001*	-			*COMPONENTS WITHOUT TP-NO*	
110	*532693-0000*	-			*BOTTOM GABLE*	
120	*532695-0000*	-			*GABLE*	
130	*532696-0000*	-			*RING SPRING*	
140	*532697-0000*	-			*WINDING HOLDER*	
150	*565286-0000*	-			*WINDING HOLDER*	
160	*565287-0000*	-			*SPACER*	
170	*532694-0000*	-			*TANK COIL*	
F107	*B67570-0101*	-			*TPIH CAPACITOR CARD*	
100	*564261-0001*	-			*COMPONENTS WITHOUT TP-NO*	
120	*484995-0000*	-			*PRINTED CIRCUIT BOARD*	
130	*565289-0000*	-			*COMPONENT REFERENCE*	
F108	*B67582-0101*	-			*TPIH HEATSINK PREREGULATO*	
100	*573134-0001*	-			*COMPONENTS WITHOUT TP-NO*	
110	*565290-0000*	-			*HEAT SINK V1*	
120	*532703-0000*	-			*HEAT SINK V2*	
130	*565291-0000*	-			*HEAT SINK V3*	
140	*573135-0000*	-			*HEAT SINK PREREGULATOR*	
F110	*B67573-0101*	-			*TPIH TRANSISTOR PACKAGE R*	
100	*564264-0001*	-			*COMPONENTS WITHOUT TP-NO*	
110	*565295-0000*	-			*GABLE LEFT*	
120	*532709-0000*	-			*GABLE RIGHT*	
130	*532710-0000*	-			*STUDSCREW*	
140	*532711-0000*	-			*HEAT SINK PLATE PLANE*	
150	*532712-0000*	-			*DISTANCE PLATE*	
160	*565296-0000*	-			*WASHER*	
170	*565297-0000*	-			*TRANSISTOR PACKAGE R*	
F111	*B67581-0101*	-			*TPIH TRANSISTOR PACKAGE L*	
100	*565312-0001*	-			*COMPONENTS WITHOUT TP-NO*	
110	*565295-0000*	-			*GABLE LEFT*	
120	*532709-0000*	-			*GABLE RIGHT*	
130	*532710-0000*	-			*STUDSCREW*	
140	*532711-0000*	-			*HEAT SINK PLATE PLANE*	
150	*532712-0000*	-			*DISTANCE PLATE*	
160	*565296-0000*	-			*WASHER*	
180	*565298-0000*	-			*TRANSISTOR PACKAGE L*	
F112	*B67574-0401*	-			*OUTPUT TRANSFORMER*	
100	*565134-0001*	-			*COMPONENTS WITHOUT TP-NO*	
110	*532716-0000*	-			*OUTPUT TRANSFORMER*	
F200	*B67578-0101*	-			*TPIH FAN HOLDER*	
202	*565136-0001*	-			*COMPONENTS WITHOUT TP-NO*	
203	*543120-0000*	-			*PARTITION WALL*	
204	*533839-0000*	-			*FILTER*	
205	*533840-0000*	-			*GASKET*	

Machine Type | Group Description | Used-In | Group Number | Page No

This page is intentionally left blank.

Pos	Part No	SP	UN	Qty	Description	Page No
Common Parts (Cont'd)						
K100.1	90129-0006	-		1	BASE, S3-B	
K102	90119-0056	-		1	RELAY, AUXILIARY MK3P5-S 24VDC	
K102.1	90129-0006	-		1	BASE, S3-B	
K103	90119-0056	-		1	RELAY, AUXILIARY MK3P5-S 24VDC	
K103.1	90129-0006	-		1	BASE, S3-B	
K104	90119-0056	-		1	RELAY, AUXILIARY MK3P5-S 24VDC	
K104.1	90129-0006	-		1	BASE, S3-B	
K105	90119-0056	-		1	RELAY, AUXILIARY MK3P5-S 24VDC	
K105.1	90129-0006	-		1	BASE, S3-B	
K106	90119-0056	-		1	RELAY, AUXILIARY MK3P5-S 24VDC	
K106.1	90129-0006	-		1	BASE, S3-B	
K107	90119-0056	-		1	RELAY, AUXILIARY MK3P5-S 24VDC	
K107.1	90129-0006	-		1	BASE, S3-B	
K108	90119-0056	-		1	RELAY, AUXILIARY MK3P5-S 24VDC	
K108.1	90129-0006	-		1	BASE, S3-B	
K109	90119-0056	-		1	RELAY, AUXILIARY MK3P5-S 24VDC	
K109.1	90129-0006	-		1	BASE, S3-B	
K110	90119-0056	-		1	RELAY, AUXILIARY MK3P5-S 24VDC	
K110.1	90129-0006	-		1	BASE, S3-B	
K111	90119-0056	-		1	RELAY, AUXILIARY MK3P5-S 24VDC	
K111.1	90129-0006	-		1	BASE, S3-B	
K201	90119-0067	-		1	SOLID-STATE RELAY, H12WD4850	
K202	90119-0067	-		1	SOLID-STATE RELAY, H12WD4850	
K203	90119-0067	-		1	SOLID-STATE RELAY, H12WD4850	
K204	90119-0067	-		1	SOLID-STATE RELAY, H12WD4850	
K205	90119-0067	-		1	SOLID-STATE RELAY, H12WD4850	
K206	90119-0067	-		1	SOLID-STATE RELAY, H12WD4850	
K207	90119-0067	-		1	SOLID-STATE RELAY, H12WD4850	
K208	90119-0067	-		1	SOLID-STATE RELAY, H12WD4850	
L001	90297-0306	-		1	BALLAST COIL 50/60 HZ	
L002	90297-0306	-		1	BALLAST COIL 50/60 HZ	
L004	90297-0306	-		1	BALLAST COIL 50/60 HZ	
M002	90264-0026	-		1	FAN / EQK8-35-2 + EQN 68-35-2 INCL	
P002	90178-0007	-		1	HOUR COUNTER, BG 40,17-1 12-48VDC	
P004	90053-0029	-		1	COUNTER, F524.800FA3C 24VDC	
P005	90459-0083	-		1	RECORDER 1-CHANNEL, LOGOLINE 500	
Q001	90111-0135	-		1	MAIN SWITCH P3-100/EA/SVB-SW/N/HI11/H-P3	
Q001.1	359241-0124	-		1	SIGN, MAIN SWITCH	
Q001.2	359241-0297	-		1	SIGN, 400 V, 50 HZ, 63 A	
Q001.3	359240-0100	-		2	SIGN HOLDER FOR 359240-0001	
Q003	90095-0074	-		1	OVERLOAD PROTECTION, PKZM 2,5 A	
Q003.1	90259-0313	-		1	AUX. CONTACT K&M NHI21-PKZM0	
Q012	90095-0077	-		1	OVERLOAD PROTECTION, PKZM 6-10 A	
Q012.1	90259-0313	-		1	AUX. CONTACT K&M NHI21-PKZM0	
Q013	90095-0077	-		1	OVERLOAD PROTECTION, PKZM 6-10 A	
Q013.1	90259-0313	-		1	AUX. CONTACT K&M NHI21-PKZM0	
Q014	90095-0073	-		1	OVERLOAD PROTECTION, PKZM 1,6 A	
Q014.1	90259-0313	-		1	AUX. CONTACT K&M NHI21-PKZM0	
Q030	90095-0080	-		1	OVERLOAD PROTECTION, PKZM 25 A	
Q030.1	90259-0313	-		1	AUX. CONTACT K&M NHI21-PKZM0	
Q033	90095-0077	-		1	OVERLOAD PROTECTION, PKZM 6-10 A	
Q033.1	90259-0313	-		1	AUX. CONTACT K&M NHI21-PKZM0	
Q034	90095-0073	-		1	OVERLOAD PROTECTION, PKZM 1,6 A	
Q034.1	90259-0313	-		1	AUX. CONTACT K&M NHI21-PKZM0	
Q035	90095-0075	-		1	OVERLOAD PROTECTION, PKZM 4 A	
Q035.1	90259-0313	-		1	AUX. CONTACT K&M NHI21-PKZM0	
Q036	90095-0073	-		1	OVERLOAD PROTECTION, PKZM 1,6 A	
Q036.1	90259-0313	-		1	AUX. CONTACT K&M NHI21-PKZM0	
Q037	90095-0077	-		1	OVERLOAD PROTECTION, PKZM 6-10 A	
Q037.1	90259-0313	-		1	AUX. CONTACT K&M NHI21-PKZM0	
Q038	90095-0078	-		1	OVERLOAD PROTECTION, PKZM0-16	
Q038.1	90259-0313	-		1	AUX. CONTACT K&M NHI21-PKZM0	
Q039	90095-0072	-		1	OVERLOAD PROTECTION, PKZM 1,0 A	
Q039.1	90259-0313	-		1	AUX. CONTACT K&M NHI21-PKZM0	
Q040	90095-0071	-		1	OVERLOAD PROTECTION, PKZM 0-0,63 A	
Q040.1	90259-0313	-		1	AUX. CONTACT K&M NHI21-PKZM0	
Q101	90111-0172	-		1	EARTH FAULT BREAKER, F 362-25/0.03	
R003	90130-0017	-		1	POTENTIOMETER, 10 KOHM	
R003.1	90130-0301	-		1	ADJUSTING KNOB WITH DIAL	
R003.2	359241-0260	-		1	SIGN "TS RIGHT"	
R003.3	359240-0100	-		1	SIGN HOLDER FOR 359240-0001	
R004	90130-0017	-		1	POTENTIOMETER, 10 KOHM	
R004.1	90130-0301	-		1	ADJUSTING KNOB WITH DIAL	
R004.2	359241-0261	-		1	SIGN "TS LEFT"	
R004.3	359240-0100	-		1	SIGN HOLDER FOR 359240-0001	
S002	90111-0124	-		1	KEY SWITCH, 1NO,1NC CONTACT	
S002.1	359241-0122	-		1	SIGN, CIP OF STEAM BARRIER SPACE	
S002.2	359240-0100	-		1	SIGN HOLDER FOR 359240-0001	
S003	90111-0142	-		1	SWITCH GEAR, NO.OF DIGIT: 4	
S003.1	359320-0002	-		1	SIGN, THUMB WHEEL UNIT, FILLING ON	
S003.2	359240-0100	-		1	SIGN HOLDER FOR 359240-0001	
S004	90111-0122	-		1	KEY SWITCH, 2 NO CONTACTS	
S004.1	359241-0133	-		1	SIGN, SERVICE SWITCH	

This page is intentionally left blank.

Pos	Part No	SP	UN	Qty	Description	Page No
Common Parts (Cont'd)						
S004.2	359240-0100	-		1	SIGN HOLDER FOR 359240-0001	
S032	90064-0124	-		1	SWITCH, EM. STOP, ZB2-BS844+ZB2-BZ1045	
S032.1	486826-0001	-		1	SIGN "EMERGENCY STOP"	
S034	90064-0085	-		1	PUSH BUTTON, RED	
S034.1	359301-0110	-		1	SIGN "SHORT STOP"	
T001	90245-0019	-		1	TRANSF. 3-PH.750VA SEC.23A	
T002	23139-0000	-		1	TRANSFORMER 1PH. AUTO 2,1 KVA	
T003	23118-0000	-		1	TRANSFORMER	
V001	90038-0024	-		1	RECTIFIER, 10/22A SKD 50/04A3	
W001	90220-0059	-	MM	3000	THERMOCOUPLE CABLE K/ 2X0,81MM2	
W002	90220-0059	-	MM	3000	THERMOCOUPLE CABLE K/ 2X0,81MM2	
W003	90220-0059	-	MM	3000	THERMOCOUPLE CABLE K/ 2X0,81MM2	
W004	90220-0059	-	MM	3000	THERMOCOUPLE CABLE K/ 2X0,81MM2	
W005	90220-0059	-	MM	500	THERMOCOUPLE CABLE K/ 2X0,81MM2	
W006	90220-0059	-	MM	3000	THERMOCOUPLE CABLE K/ 2X0,81MM2	
W007	90220-0059	-	MM	3000	THERMOCOUPLE CABLE K/ 2X0,81MM2	
W008	90220-0059	-	MM	3000	THERMOCOUPLE CABLE K/ 2X0,81MM2	
W009	90220-0059	-	MM	3000	THERMOCOUPLE CABLE K/ 2X0,81MM2	
W010	90220-0059	-	MM	3000	THERMOCOUPLE CABLE K/ 2X0,81MM2	
W011	90220-0059	-	MM	3000	THERMOCOUPLE CABLE K/ 2X0,81MM2	
W020	548770-0012	-		1	COAXIAL CABLE L=700 MM	
W021	551969-0001	-		1	COAXIAL CABLE L=1900 MM	
W022	551969-0001	-		1	COAXIAL CABLE L=1900 MM	
W023	1143884-0000	-		8	COPPER BRAID	
W024	1512322-0000	-		2	COPPER BRAID	
W100	90031-0305	-		1	I/O EXPANSION CABLE	
X001	A1369401-0100	-		1	TERMINAL X001	**961**
X002	A1369402-0100	-		1	TERMINAL	**963**
X003	A1369403-0100	-		1	TERMINAL	**965**
X010	A1369404-0100	-		1	TERMINAL	**967**
X021	90077-0102	-		1	TERMINAL BLOCK, 1952.2	
X023	90077-0102	-		1	TERMINAL BLOCK, 1952.2	
X024	90077-0102	-		1	TERMINAL BLOCK, 1952.2	
X101	90001-0033	-		1	WALL SOCKET OUTLET	
XL	A1369405-0100	-		1	TERMINAL	**969**
Z002	90024-0060	-		1	POWER LINE FILTER, 80 A 250/440 VAC	
Z003	90024-0036	-		1	FILTERED TERMINAL BLOCK	

Pos	Part No	SP	UN	Qty	Description	Page No

Machine Type Group Description Used-In Group Number Page No

This page is intentionally left blank.

ECM: 101562 - 20011221
Group number: 1369401-0100
Assembly Drawing:

Issue: 20020822

Pos	Part No	SP	UN	Qty	Description	Page No
Common Parts						
001	353042-0005	-	MM	350	RAIL TS 35/7.5	
002	353042-0005	-	MM	350	RAIL TS 35/7.5	
003	353042-0005	-	MM	1300	RAIL TS 35/7.5	
004	353024-0209	-		1	EARTH TERMINAL, 1010.5	
005	353021-0219	-		4	FEED THROUGH TERMINAL, 10205.0	
006	353021-0214	-		6	FEED THROUGH TERMINAL, 10202.0	
007	353024-0206	-		5	EARTH TERMINAL, 1010.2	
008	353021-0213	-		57	FEED THROUGH TERMINAL, 10201.0	
009	353024-0205	-		56	EARTH TERMINAL, 1010.1	
010	90077-0113	-		152	FEED THROUGH TERMINAL, 10-00102150-1	
011	353032-0009	-		36	END PLATE, WAP 16/35	
012	359011-0821	-		2	SET OF SIGNS 6-FW 1-50	
013	359011-0822	-		2	SET OF SIGNS 6-FW 51-100	
014	359011-0834	-		3	SET OF SIGNS 6-GW(EARTH)	
015	359011-0809	-		2	MARKING PLATES 5-FW 101-150	
016	359011-0810	-		2	MARKING PLATES 5-FW 151-200	
017	359011-0811	-		2	MARKING PLATES 5-FW 201-250	
018	359011-0812	-		2	SET OF SIGNS 5-FW 251-300	
019	359011-0813	-		2	SET OF SIGNS 5-FW 301-350	
020	359011-0814	-		2	SET OF SIGNS 5-FW 350-400	
021	359011-0815	-		2	SET OF SIGNS 5-FW 401-450	
022	353033-0105	-		1	PARTITITION, 10501.0	

Pos	Part No	SP	UN	Qty	Description	Page No

This page is intentionally left blank.

ECM: 82568 - 20010322
Group number: 1369402-0100
Assembly Drawing:

Issue: 20020822

Pos	Part No	SP	UN	Qty	Description	Page No
Common Parts						
001	353024-0208	-		2	EARTH TERMINAL, 1010.4	
002	353024-0207	-		3	EARTH TERMINAL, 1010.3	
003	353024-0206	-		4	EARTH TERMINAL, 1010.2	
004	353024-0205	-		10	EARTH TERMINAL, 1010.1	
005	359011-0821	-		1	SET OF SIGNS 6-FW 1-50	

Pos	Part No	SP	UN	Qty	Description	Page No

This page is intentionally left blank.

ECM: 82569 - 20010322
Group number: 1369403-0100
Assembly Drawing:

Issue: 20020822

Pos	Part No	SP	UN	Qty	Description	Page No
Common Parts						
001	353042-0005	-	MM	150	RAIL TS 35/7.5	
002	353041-0106	-		1	HOLDER ZB35 K 5026.8	
003	353031-0203	-		2	END PLATE, 10612.0	
004	353022-0003	-		10	NEUTRAL TERMINAL, 10108.8	
005	353033-0104	-		3	END PLATE, 10502.8	
006	359011-0821	-		1	SET OF SIGNS 6-FW 1-50	
007	353041-0001	-	MM	150	RAIL 10X3MM SSCH	

Pos	Part No	SP	UN	Qty	Description	Page No

This page is intentionally left blank.

ECM: 82570 - 20010322
Group number: 1369404-0100
Assembly Drawing:

Issue: 20020822

Pos	Part No	SP	UN	Qty	Description	Page No
Common Parts						
001	353042-0005	-	MM	280	RAIL TS 35/7.5	
002	B90082-0013	-		1	OVERVOLTAGE PROTECTOR	
	90082-0301	*A*		*3*	*OVERVOLTOLTAGE PROTECTOR*	
003	359011-0807	-		1	MARKING PLATES 5-FW 1-50	
004	353021-0219	-		10	FEED THROUGH TERMINAL, 10205.0	
005	353034-0035	-		5	BRIDGE CONNECTOR, WQV 35/10, 10531.6	
006	359011-0819	-		1	MARKING PLATES 5-GW (EARTH)	
007	353031-0203	-		2	END PLATE, 10612.0	
008	353033-0105	-		1	PARTITITION, 10501.0	

Pos	Part No	SP	UN	Qty	Description	Page No

This page is intentionally left blank.

ECM: 82571 - 20010322
Group number: 1369405-0100
Assembly Drawing:

Issue: 20020822

Pos	Part No	SP	UN	Qty	Description	Page No
Common Parts						
001	353042-0005	-	MM	450	RAIL TS 35/7.5	
002	353024-0205	-		2	EARTH TERMINAL, 1010.1	
003	353021-0213	-		30	FEED THROUGH TERMINAL, 10201.0	
004	353032-0004	-		6	END PLATE WAP 2,5-10 BEIGE	
005	353034-0031	-		6	BRIDGE CONNECTOR, WQV 4/10, 10520.6	
006	353021-0122	-		1	TERMINAL DISCONNECTBLE, WTR 2,5 D	
007	359011-0821	-		14	SET OF SIGNS 6-FW 1-50	

Pos	Part No	SP	UN	Qty	Description	Page No

This page is intentionally left blank.

ECM: 106385 - 20020521
Group number: 1370873-0100
Assembly Drawing:
Issue: 20020822

Pos	Part No	SP	UN	Qty	Description	Page No
Common Parts						
001	351164-0110	-	MM	5800	CABLE AWM 1X25 MM2 BLACK	
002	351164-0110	-	MM	5800	CABLE AWM 1X25 MM2 BLACK	
003	351164-0110	-	MM	5800	CABLE AWM 1X25 MM2 BLACK	
004	351164-0110	-	MM	5800	CABLE AWM 1X25 MM2 BLACK	
005	351120-0167	-	MM	3500	CABLE SIHF 4X6MM2 GREEN/YELLOW	
006	351120-0167	-	MM	6000	CABLE SIHF 4X6MM2 GREEN/YELLOW	
007	351120-0145	-	MM	6000	CABLE SIHF 3X25MM2 GREEN/YELLOW	
008	351120-0145	-	MM	6000	CABLE SIHF 3X25MM2 GREEN/YELLOW	
009	351120-0144	-	MM	5000	CABLE SIHF 3X15MM2 GREEN/YELLOW	
010	351120-0144	-	MM	6000	CABLE SIHF 3X15MM2 GREEN/YELLOW	
011	351150-0413	-	MM	4600	CABLE OLFLEX 4X1,5 MM2 LIGHT/GREY	
012	351150-0413	-	MM	4700	CABLE OLFLEX 4X1,5 MM2 LIGHT/GREY	
013	351150-0413	-	MM	6000	CABLE OLFLEX 4X1,5 MM2 LIGHT/GREY	
014	351150-0413	-	MM	6600	CABLE OLFLEX 4X1,5 MM2 LIGHT/GREY	
015	351150-0413	-	MM	2500	CABLE OLFLEX 4X1,5 MM2 LIGHT/GREY	
016	351150-0413	-	MM	6600	CABLE OLFLEX 4X1,5 MM2 LIGHT/GREY	
017	351150-0412	-	MM	5700	CABLE OLFLEX 3X1,5 MM2 LIGHT/GREY	
018	351150-0413	-	MM	6700	CABLE OLFLEX 4X1,5 MM2 LIGHT/GREY	
019	351150-0415	-	MM	4000	CABLE OLFLEX 7X1,5 MM2 LIGHT/GREY	
020	351150-0413	-	MM	2600	CABLE OLFLEX 4X1,5 MM2 LIGHT/GREY	
021	351150-0413	-	MM	5000	CABLE OLFLEX 4X1,5 MM2 LIGHT/GREY	
022	90220-0108	-	MM	8000	SCR. CABLE 5X1,5MM2	
023	351150-0412	-	MM	5000	CABLE OLFLEX 3X1,5 MM2 LIGHT/GREY	
024	351150-0412	-	MM	3200	CABLE OLFLEX 3X1,5 MM2 LIGHT/GREY	
025	351150-0412	-	MM	3800	CABLE OLFLEX 3X1,5 MM2 LIGHT/GREY	
026	351150-0412	-	MM	5500	CABLE OLFLEX 3X1,5 MM2 LIGHT/GREY	
027	351120-0144	-	MM	6000	CABLE SIHF 3X15MM2 GREEN/YELLOW	
028	90220-0034	-	MM	6300	THERMOCOUPLE CABLE K/ 2X0,5MM2	
029	90220-0034	-	MM	5500	THERMOCOUPLE CABLE K/ 2X0,5MM2	
030	90220-0034	-	MM	5000	THERMOCOUPLE CABLE K/ 2X0,5MM2	
031	90220-0034	-	MM	5000	THERMOCOUPLE CABLE K/ 2X0,5MM2	
032	90220-0034	-	MM	6200	THERMOCOUPLE CABLE K/ 2X0,5MM2	
033	90220-0034	-	MM	5800	THERMOCOUPLE CABLE K/ 2X0,5MM2	
034	90220-0034	-	MM	5600	THERMOCOUPLE CABLE K/ 2X0,5MM2	
035	90220-0034	-	MM	6200	THERMOCOUPLE CABLE K/ 2X0,5MM2	
036	90220-0034	-	MM	5300	THERMOCOUPLE CABLE K/ 2X0,5MM2	
039	351150-0407	-	MM	4700	CABLE OLFLEX 12X0,75 MM2 LIGHT/GREY	
041	351150-0431	-	MM	6000	CABLE OLFLEX 2X0,75 MM2 LIGHT/GREY	
042	351150-0404	-	MM	2800	CABLE OLFLEX 4X0,75 MM2 LIGHT/GREY	
043	351150-0405	-	MM	4000	CABLE OLFLEX 5X0,75 MM2 LIGHT/GREY	
044	351150-0405	-	MM	4000	CABLE OLFLEX 5X0,75 MM2 LIGHT/GREY	
046	351150-0405	-	MM	6100	CABLE OLFLEX 5X0,75 MM2 LIGHT/GREY	
047	351150-0403	-	MM	4500	CABLE OLFLEX 3X0,75 MM2 LIGHT/GREY	
048	351150-0403	-	MM	4100	CABLE OLFLEX 3X0,75 MM2 LIGHT/GREY	
049	351150-0403	-	MM	4300	CABLE OLFLEX 3X0,75 MM2 LIGHT/GREY	
050	351150-0404	-	MM	6000	CABLE OLFLEX 4X0,75 MM2 LIGHT/GREY	
051	351150-0403	-	MM	4100	CABLE OLFLEX 3X0,75 MM2 LIGHT/GREY	
052	351150-0403	-	MM	4600	CABLE OLFLEX 3X0,75 MM2 LIGHT/GREY	
053	351150-0405	-	MM	5600	CABLE OLFLEX 5X0,75 MM2 LIGHT/GREY	
054	351150-0403	-	MM	3900	CABLE OLFLEX 3X0,75 MM2 LIGHT/GREY	
057	351150-0403	-	MM	4100	CABLE OLFLEX 3X0,75 MM2 LIGHT/GREY	
058	351150-0403	-	MM	4000	CABLE OLFLEX 3X0,75 MM2 LIGHT/GREY	
059	351150-0403	-	MM	5000	CABLE OLFLEX 3X0,75 MM2 LIGHT/GREY	
060	351150-0403	-	MM	4300	CABLE OLFLEX 3X0,75 MM2 LIGHT/GREY	
061	351150-0403	-	MM	5000	CABLE OLFLEX 3X0,75 MM2 LIGHT/GREY	
062	351150-0403	-	MM	5200	CABLE OLFLEX 3X0,75 MM2 LIGHT/GREY	
063	351150-0403	-	MM	4200	CABLE OLFLEX 3X0,75 MM2 LIGHT/GREY	
064	351150-0403	-	MM	2900	CABLE OLFLEX 3X0,75 MM2 LIGHT/GREY	
065	351150-0405	-	MM	6500	CABLE OLFLEX 5X0,75 MM2 LIGHT/GREY	
066	351150-0427	-	MM	6700	CABLE OLFLEX 34X0,75 MM2 LIGHT/GREY	
067	351150-0428	-	MM	4500	CABLE OLFLEX 41X0,75 MM2 LIGHT/GREY	
068	351150-0406	-	MM	6600	CABLE OLFLEX 7X0,75 MM2 LIGHT/GREY	
073	351150-0407	-	MM	4500	CABLE OLFLEX 12X0,75 MM2 LIGHT/GREY	
074	351150-0428	-	MM	6300	CABLE OLFLEX 41X0,75 MM2 LIGHT/GREY	
075	1140285-0007	-		1	COAXIAL CABLE L= 4000 MM	
076	1140285-0007	-		1	COAXIAL CABLE L= 4000 MM	
077	548770-0008	-		1	COAXIAL CABLE L=600 MM	
078	548770-0008	-		1	COAXIAL CABLE L=600 MM	
079	351162-0109	-	MM	4000	CABLE AWM 1X16 MM2 YELLOW-GREEN	
101	351121-0209	-	MM	1	CABLE RADOX 155 1X25 MM2 BLACK	
102	351121-0209	-	MM	1	CABLE RADOX 155 1X25 MM2 BLACK	
103	351121-0209	-	MM	1	CABLE RADOX 155 1X25 MM2 BLACK	
104	351121-0209	-	MM	1	CABLE RADOX 155 1X25 MM2 BLACK	
105	351150-0413	-	MM	1	CABLE OLFLEX 4X1,5 MM2 LIGHT/GREY	
116	351150-0403	-	MM	2000	CABLE OLFLEX 3X0,75 MM2 LIGHT/GREY	
117	351150-0406	-	MM	2000	CABLE OLFLEX 7X0,75 MM2 LIGHT/GREY	
118	351150-0405	-	MM	2500	CABLE OLFLEX 5X0,75 MM2 LIGHT/GREY	
122	351150-0404	-	MM	3500	CABLE OLFLEX 4X0,75 MM2 LIGHT/GREY	
123	351150-0404	-	MM	4200	CABLE OLFLEX 4X0,75 MM2 LIGHT/GREY	
421	351150-0403	-	MM	3000	CABLE OLFLEX 3X0,75 MM2 LIGHT/GREY	
422	351150-0403	-	MM	3100	CABLE OLFLEX 3X0,75 MM2 LIGHT/GREY	
423	351150-0403	-	MM	3000	CABLE OLFLEX 3X0,75 MM2 LIGHT/GREY	
428	351150-0404	-	MM	3100	CABLE OLFLEX 4X0,75 MM2 LIGHT/GREY	

This page is intentionally left blank.

Pos	Part No	SP	UN	Qty	Description	Page No
Common Parts (Cont'd)						
429	351150-0403	-	MM	1800	CABLE OLFLEX 3X0,75 MM2 LIGHT/GREY	
430	351150-0403	-	MM	1600	CABLE OLFLEX 3X0,75 MM2 LIGHT/GREY	
431	351150-0403	-	MM	2500	CABLE OLFLEX 3X0,75 MM2 LIGHT/GREY	
432	351150-0405	-	MM	2600	CABLE OLFLEX 5X0,75 MM2 LIGHT/GREY	
433	351150-0405	-	MM	2000	CABLE OLFLEX 5X0,75 MM2 LIGHT/GREY	
434	351150-0405	-	MM	3000	CABLE OLFLEX 5X0,75 MM2 LIGHT/GREY	
435	351150-0405	-	MM	3000	CABLE OLFLEX 5X0,75 MM2 LIGHT/GREY	
614	351150-0405	-	MM	3200	CABLE OLFLEX 5X0,75 MM2 LIGHT/GREY	
615	351150-0431	-	MM	1000	CABLE OLFLEX 2X0,75 MM2 LIGHT/GREY	
713	351150-0403	-	MM	2500	CABLE OLFLEX 3X0,75 MM2 LIGHT/GREY	

Pos	Part No	SP	UN	Qty	Description	Page No

This page is intentionally left blank.

ECM: 81809 - 20010322
Group number: 1370876-0100
Assembly Drawing:

Issue: 20020822

Pos	Part No	SP	UN	Qty	Description	Page No
Common Parts						
0010	90245-0024	-		1	MATCHING TRANSF. 65 KVA	

Pos	Part No	SP	UN	Qty	Description	Page No

This page is intentionally left blank.

ECM: 106387 - 20020521
Group number: 1370877-0100
Assembly Drawing:

Issue: 20020822

Pos	Part No	SP	UN	Qty	Description	Page No
Common Parts						
0010	90036-0057	-		5	LIGHT BULB, BA9S 28V	
0020	353021-0122	-		1	TERMINAL DISCONNECTBLE, WTR 2,5 D	
0030	90064-0098	-		1	PUSH BUTTON, CLEAR	
0035	90064-0315	-		1	LAMP REMOVER, NO:700	
0040	90119-0056	-		1	RELAY, AUXILIARY MK3P5-S 24VDC	
0050	90119-0067	-		1	SOLID-STATE RELAY, H12WD4850	
0060	B90233-0027	-		10	TUBE FUSE, 16A	
	90233-0305	*C*		*1*	*INDICATOR*	
0070	90233-0028	-		10	TUBE FUSE, 10A	
0080	90233-0029	-		10	TUBE FUSE, 25A	
0090	352551-0134	-		2	FINE-WIRE FUSE 2 A SLOW;5X20MM	
0100	352550-0136	-		2	FINE-WIRE, 3,15 A	
0110	90082-0301	-		1	OVERVOLTOLTAGE PROTECTOR	
0120	90459-0085	-		1	ROLL CHART PAPER	
0130	90459-0086	-		1	1-CHANNEL PEN	

Pos	Part No	SP	UN	Qty	Description	Page No

This page is intentionally left blank.

ECM: 102255 - 20011221
Group number: 1370878-0100
Assembly Drawing:

Issue: 20020822

Pos	Part No	SP	UN	Qty	Description	Page No
Common Parts						
1000	A1369406-0100	-		1	TERMINAL	**981**
1010	90194-0016	-		1	SIGN, FLASH, ELECTRIC EQUIPMENT SYMBOL	
PA004	B558389-0101	-		1	MULTI PURPOSE POTENTIOM.	
100	*578265-0000*	-		*1*	*COMPONENTS WITHOUT TP-NO*	
110	*578266-0000*	-		*1*	*CIRCUIT BOARD*	
120	*578267-0000*	-		*1*	*CASING*	
PA004.1	551922-0000	-		1	LABEL,POTENTIOMETER DESIGN CORR.	
PA110	1367180-0001	-		1	CIRCUIT BOARD TBA/9-6000	
PA110.1	1367181-0000	-		1	ALARM DISPLAY TBA/9-6000	
PA111	B68699-0101	-		1	MULTIPLEXER CARD 56LED	
010	*578860-0000*	-		*1*	*CIRCUIT BOARD*	
020	*578861-0001*	-			*COMPONENTS WITHOUT TP-NO*	
PA112	B68699-0101	-		1	MULTIPLEXER CARD 56LED	
010	*578860-0000*	-		*1*	*CIRCUIT BOARD*	
020	*578861-0001*	-			*COMPONENTS WITHOUT TP-NO*	
PP003	90053-0024	-		1	COUNTER KUBLER 24VDC 6 DIGITS	
PP003.1	90053-0305	-		1	FRAME KUBLER F 1 DV	
PS001	90064-0124	-		1	SWITCH, EM. STOP, ZB2-BS844+ZB2-BZ1045	
PS001.1	486826-0001	-		1	SIGN "EMERGENCY STOP"	
PS002H	90064-0098	-		1	PUSH BUTTON, CLEAR	
PS002H.1	359301-0090	-		1	SIGN "INCHING"	
PS003H	90064-0098	-		1	PUSH BUTTON, CLEAR	
PS003H.1	359301-0001	-		1	SIGN "UP"	
PS004H	B90064-0082	-		1	PUSH BUTTON, WHITE	
	90036-0057	*B*		*1*	*LIGHT BULB, BA9S 28V*	
PS004H.1	359301-0005	-		1	SIGN "DOWN"	
PS006H	90064-0084	-		1	PUSH BUTTON, YELLOW	
PS006H.1	359301-0110	-		1	SIGN "SHORT STOP"	
PS007	90111-0120	-		1	SWITCH, 2 POS.704.510 .0A+704.901.5/A	
PS011H	90064-0098	-		1	PUSH BUTTON, CLEAR	
PS011H.1	359301-0105	-		1	SIGN "ALARM RESET"	
PS012	90064-0098	-		1	PUSH BUTTON, CLEAR	
PS012.1	359301-0130	-		1	SIGN "LAMPTEST"	
PS013	90111-0139	-		1	SWITCH, 704.504.0 + 704.901.3	
PS019	90064-0098	-		1	PUSH BUTTON, CLEAR	
PS019.1	359301-0050	-		1	SIGN "DROP CHUTE"	
PS020	90064-0098	-		1	PUSH BUTTON, CLEAR	
PS020.1	359301-0170	-		1	SIGN "MANUAL FLUSHING FFU"	

Pos	Part No	SP	UN	Qty	Description	Page No

Machine Type | Group Description | Used-In | Group Number | Page No

This page is intentionally left blank.

ECM: 82572 - 20010322
Group number: 1369406-0100
Assembly Drawing:

Issue: 20020822

Pos	Part No	SP	UN	Qty	Description	Page No
Common Parts						
001	353042-0005	-	MM	220	RAIL TS 35/7.5	
002	353024-0205	-		2	EARTH TERMINAL, 1010.1	
003	353021-0212	-		40	FEED THROUGH TERMINAL, 10200.0	
004	359011-0807	-		2	MARKING PLATES 5-FW 1-50	

Pos	Part No	SP	UN	Qty	Description	Page No

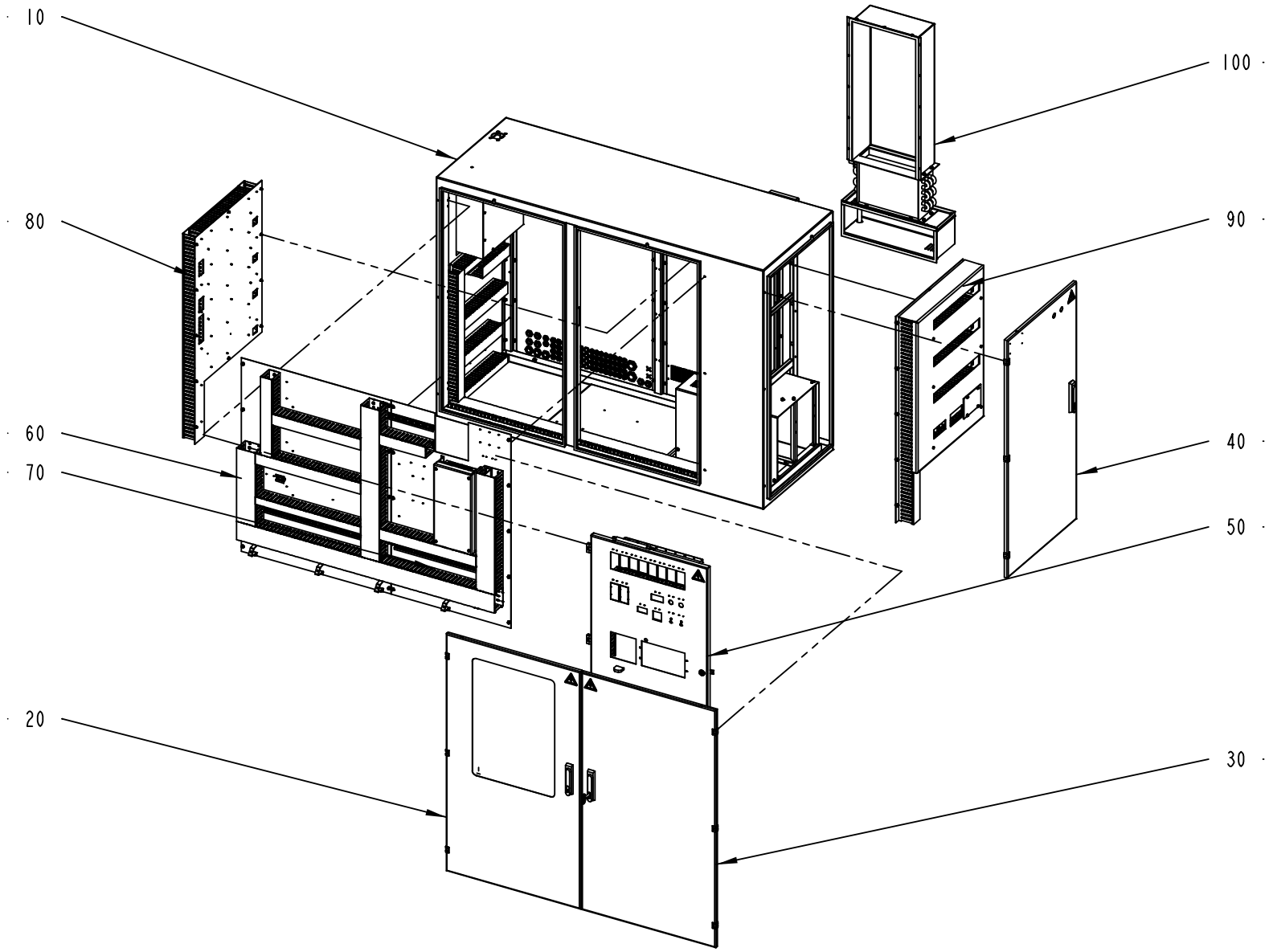

1559000-1
ECN 87205

ECM: 87207 - 20010212
Group number: 1559000-0100
Assembly Drawing: 1559000-1_1_AA

Issue: 20020822

Pos	Part No	SP	UN	Qty	Description	Page No
Common Parts						
010	A1559001-0100	-		1	CABINET	**985**
020	A1559002-0100	-		1	DOOR	**987**
030	A1559003-0100	-		1	DOOR	**989**
040	A1559004-0100	-		1	DOOR	**991**
050	A1559005-0100	-		1	SWING FRAME	**993**
060	A1559006-0100	-		1	MOUNTING PLATE	**995**
070	A1559007-0100	-		1	MOUNTING PLATE	**997**
080	A1559008-0100	-		1	MOUNTING PLATE	**999**
090	A1559009-0100	-		1	MOUNTING PLATE	**1001**
100	A1559010-0100	-		1	FAN SYSTEM	**1003**

Pos	Part No	SP	UN	Qty	Description	Page No

Machine Type | Group Description | Used-In | Group Number | Page No

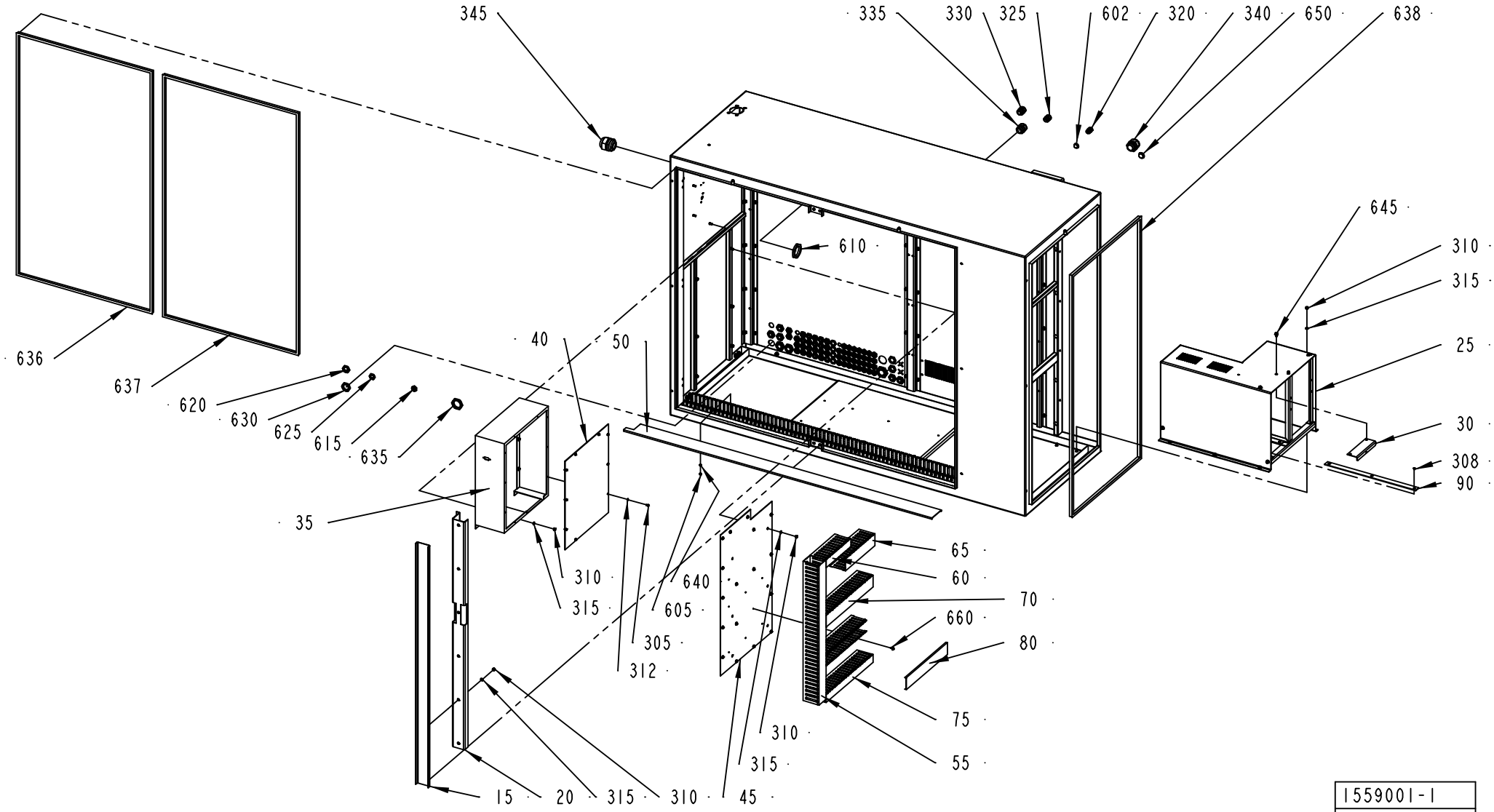

1559001-1
ECN 107540

ECM: 107578 - 20020508
Group number: 1559001-0100
Assembly Drawing: 1559001-1_1_AB

Issue: 20020822

Pos	Part No	SP	UN	Qty	Description	Page No
Common Parts						
010	1559025-0000	-		1	CABINET	
015	1559026-0000	-		1	POST	
020	1559027-0000	-		1	BRACKET	
025	1559028-0000	-		1	COVER	
030	1559043-0000	-		1	BRACKET	
035	1559044-0000	-		1	COVER	
040	1559049-0000	-		1	COVER PLATE	
045	2547653-0000	-		1	MOUNTING SHEET	
050	1559053-0000	-		1	CABLE DUCT	
055	1559054-0000	-		1	CABLE DUCT	
060	1559055-0000	-		1	CABLE DUCT	
065	1559056-0000	-		1	CABLE DUCT	
070	1559057-0000	-		1	CABLE DUCT	
075	1559058-0000	-		1	CABLE DUCT	
080	1559059-0000	-		1	CABLE DUCT	
090	731049-0000	-		2	SLIDING STRIP TPIH	
305	312105-0287	-		14	SCREW M6S ISO 4017 M4X8 A480	
308	312145-0285	-		6	SCREW COUNTERS.SLOT.HD. MFS 4X6 SS	
310	312812-0316	-		134	HEXAGON NUT, NY-LOCK M6 A480	
312	315105-0136	-		14	WASHER PLAIN, BRB, 4,3/8,H=0,8	
315	315105-0153	-		146	WASHER PLAIN, BRB, 6,4/12,H=1,5	
320	352103-0101	-		32	CABLE GLAND, ST 9, PR15,2/PG9	
325	352103-0106	-		25	CABLE GLAND, ST 11, PR18,6/PG11	
330	352103-0111	-		6	CABLE GLAND, ST 16, PR22,5/PG16	
335	352103-0116	-		3	CABLE GLAND, ST 21, PR28,3/PG21	
340	352103-0121	-		2	CABLE GLAND, ST 29, PR37,0/PG29	
345	352103-0122	-		1	CABLE GLAND, ST 36, PR47,0/PG36	
602	90002-0009	-		5	BLANK-OFF PLUG, PR 18.6 SKINDICHT-BLK11	
605	90005-0158	-		29	WASHER PL.RND.NYL.4,3/8, H=5	
610	90099-0103	-		1	NUT, PR 47 (PG36)	
615	90099-0104	-		32	NUT, PR 15,2 (PG9)	
620	90099-0110	-		8	NUT, PR 22,5 (PG16)	
625	90099-0117	-		30	NUT, PR 18,6 (PG11)	
630	90099-0119	-		3	NUT, PR 28,3 (PG21)	
635	90099-0120	-		2	NUT, PR 37 (PG29)	
636	90143-0057	-	MM	3760	STRIP EMKA 1011-05 21X11MM	
637	90143-0057	-	MM	3760	STRIP EMKA 1011-05 21X11MM	
638	90143-0057	-	MM	3598	STRIP EMKA 1011-05 21X11MM	
640	90261-0079	-		29	PLUG, BLIND, PLASTIC, NO. 1955	
645	90287-0157	-		6	SCREW M6SF FLAT HEAD M6X10 88	
650	90002-0004	-		4	BLANK-OFF PLUG, PR 22,5 SKINDICHT-BLK16	
660	90287-0337	-		18	SCREW RECESSED HEAD M4X10 WH. NYLON	

Machine Type	Group Description	Used-In	Group Number	Page No

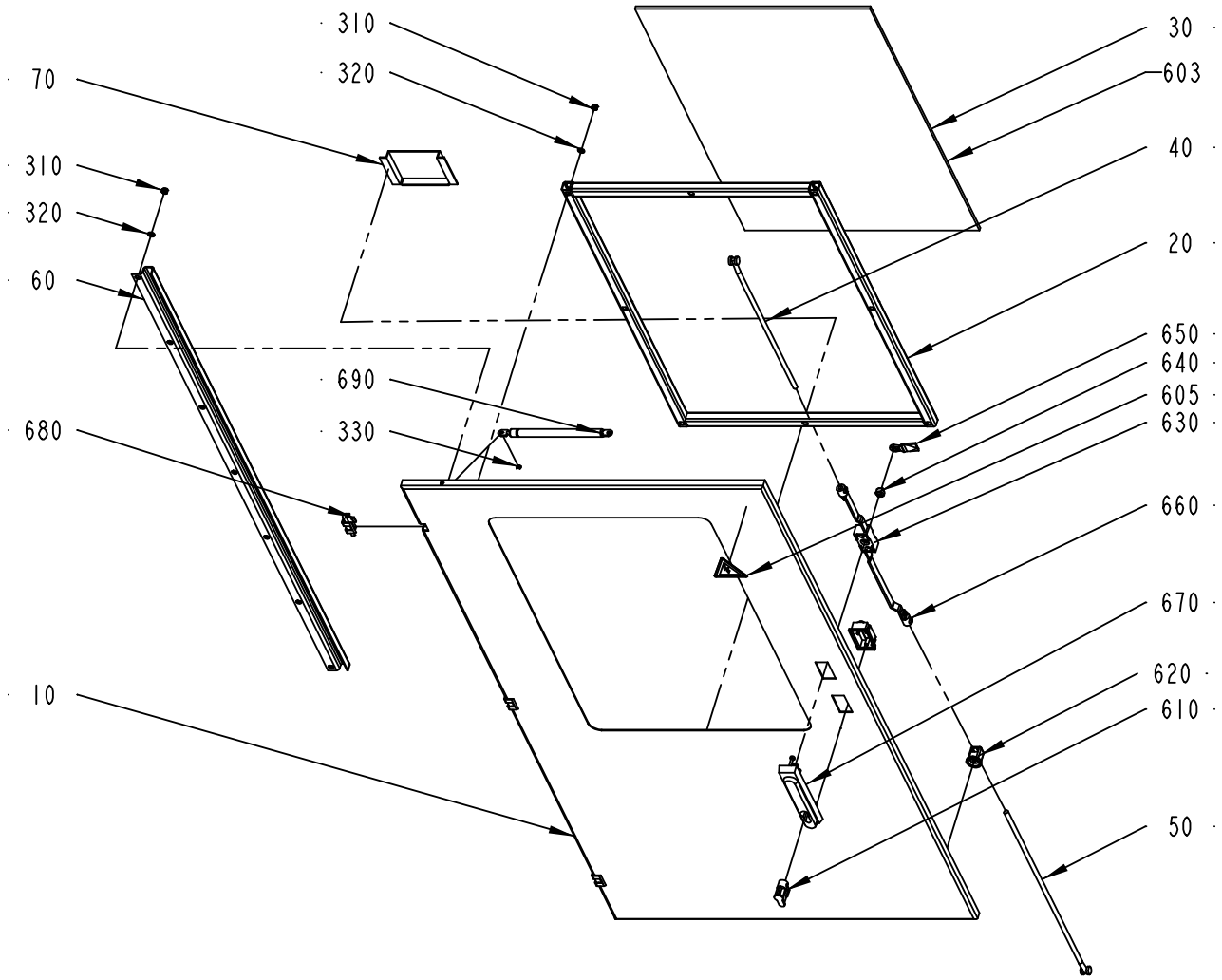

1559002-1
ECN 87205

Pos	Part No	SP	UN	Qty	Description	Page No
Common Parts						
010	1559034-0000	-		1	DOOR	
020	1559035-0000	-		1	FRAME	
030	1559045-0000	-		1	GLASS PANE	
040	1559046-0000	-		1	ROD	
050	1559047-0000	-		1	ROD	
060	1559048-0000	-		1	REINFORCEMENT	
070	970802-0000	-		1	DISCETTE BOX 3,5"	
310	312812-0316	-		15	HEXAGON NUT, NY-LOCK M6 A480	
320	315105-0153	-		15	WASHER PLAIN, BRB, 6,4/12,H=1,5	
330	315755-0106	-		2	LOCKING WASHER 4	
603	90157-0041	-	L		SEALING COMPOUND	
605	90194-0016	-		1	SIGN, FLASH, ELECTRIC EQUIPMENT SYMBOL	
610	90237-0128	-		1	LOCK CYLINDER, 1109-U3	
620	90237-0151	-		2	GUIDE, 1001-U11	
630	90237-0153	-		1	LOCK HOUSING, 1121-U26-0B	
640	90237-0155	-		1	LOCK ADAPTER, 1121-U40	
650	90237-0156	-		1	LOCK BOLT, 1000-16	
660	90237-0158	-		2	ROUND BAR, NO. 1049-U18-L839.5	
670	90237-0176	-		1	TURNING HANDLE	
680	90248-0032	-		3	HINGE, 1110-U2	
690	90347-0050	-		1	GAS SPRING NO. 0306 150 398535	

Pos	Part No	SP	UN	Qty	Description	Page No

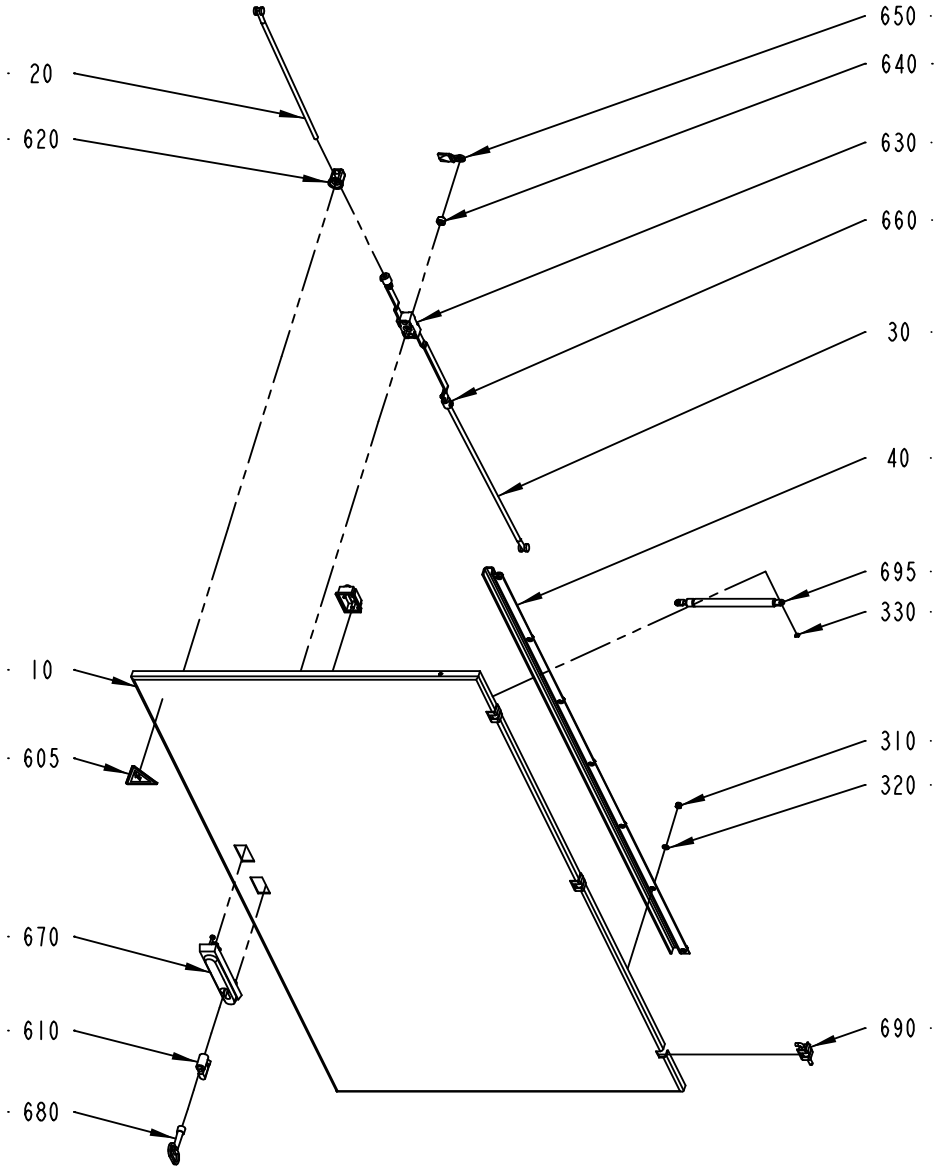

1559003-1
ECN 87205

ECM: 87210 - 20010212
Group number: 1559003-0100
Assembly Drawing: 1559003-1_1_AA

Issue: 20020822

Pos	Part No	SP	UN	Qty	Description	Page No
Common Parts						
010	1559036-0000	-		1	DOOR	
020	1559046-0000	-		1	ROD	
030	1559047-0000	-		1	ROD	
040	1559048-0000	-		1	REINFORCEMENT	
310	312812-0316	-		7	HEXAGON NUT, NY-LOCK M6 A480	
320	315105-0153	-		7	WASHER PLAIN, BRB, 6,4/12,H=1,5	
330	315755-0106	-		2	LOCKING WASHER 4	
605	90194-0016	-		1	SIGN, FLASH, ELECTRIC EQUIPMENT SYMBOL	
610	90237-0129	-		1	LOCK CYLINDER, 1109-U2	
620	90237-0151	-		2	GUIDE, 1001-U11	
630	90237-0153	-		1	LOCK HOUSING, 1121-U26-0B	
640	90237-0155	-		1	LOCK ADAPTER, 1121-U40	
650	90237-0156	-		1	LOCK BOLT, 1000-16	
660	90237-0158	-		2	ROUND BAR, NO. 1049-U18-L839.5	
670	90237-0176	-		1	TURNING HANDLE	
680	90237-0324	-		1	KEY, 1104-02 FOR SQUARE 8 MM	
690	90248-0032	-		3	HINGE, 1110-U2	
695	90347-0050	-		1	GAS SPRING NO. 0306 150 398535	

Pos	Part No	SP	UN	Qty	Description	Page No

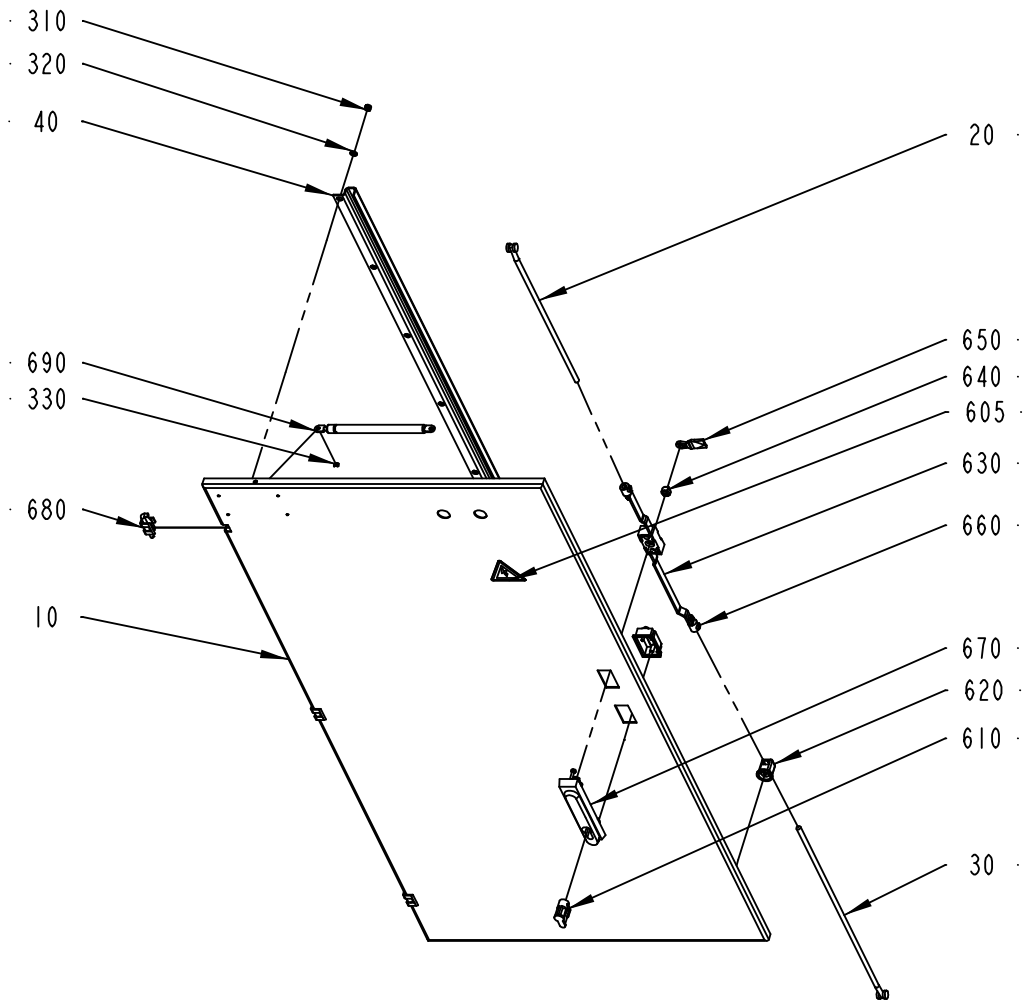

1559004-1
ECN 87205

ECM: 87211 - 20010212
Group number: 1559004-0100
Assembly Drawing: 1559004-1_1_AA

Issue: 20020822

Pos	Part No	SP	UN	Qty	Description	Page No
Common Parts						
010	1559037-0000	-		1	DOOR	
020	1559046-0000	-		1	ROD	
030	1559047-0000	-		1	ROD	
040	1559048-0000	-		1	REINFORCEMENT	
310	312812-0316	-		7	HEXAGON NUT, NY-LOCK M6 A480	
320	315105-0153	-		7	WASHER PLAIN, BRB, 6,4/12,H=1,5	
330	315755-0106	-		2	LOCKING WASHER 4	
610	90237-0128	-		1	LOCK CYLINDER, 1109-U3	
620	90237-0151	-		2	GUIDE, 1001-U11	
630	90237-0153	-		1	LOCK HOUSING, 1121-U26-0B	
640	90237-0155	-		1	LOCK ADAPTER, 1121-U40	
650	90237-0156	-		1	LOCK BOLT, 1000-16	
660	90237-0158	-		2	ROUND BAR, NO. 1049-U18-L839.5	
670	90237-0176	-		1	TURNING HANDLE	
680	90248-0032	-		3	HINGE, 1110-U2	
690	90347-0050	-		1	GAS SPRING NO. 0306 150 398535	

Pos	Part No	SP	UN	Qty	Description	Page No

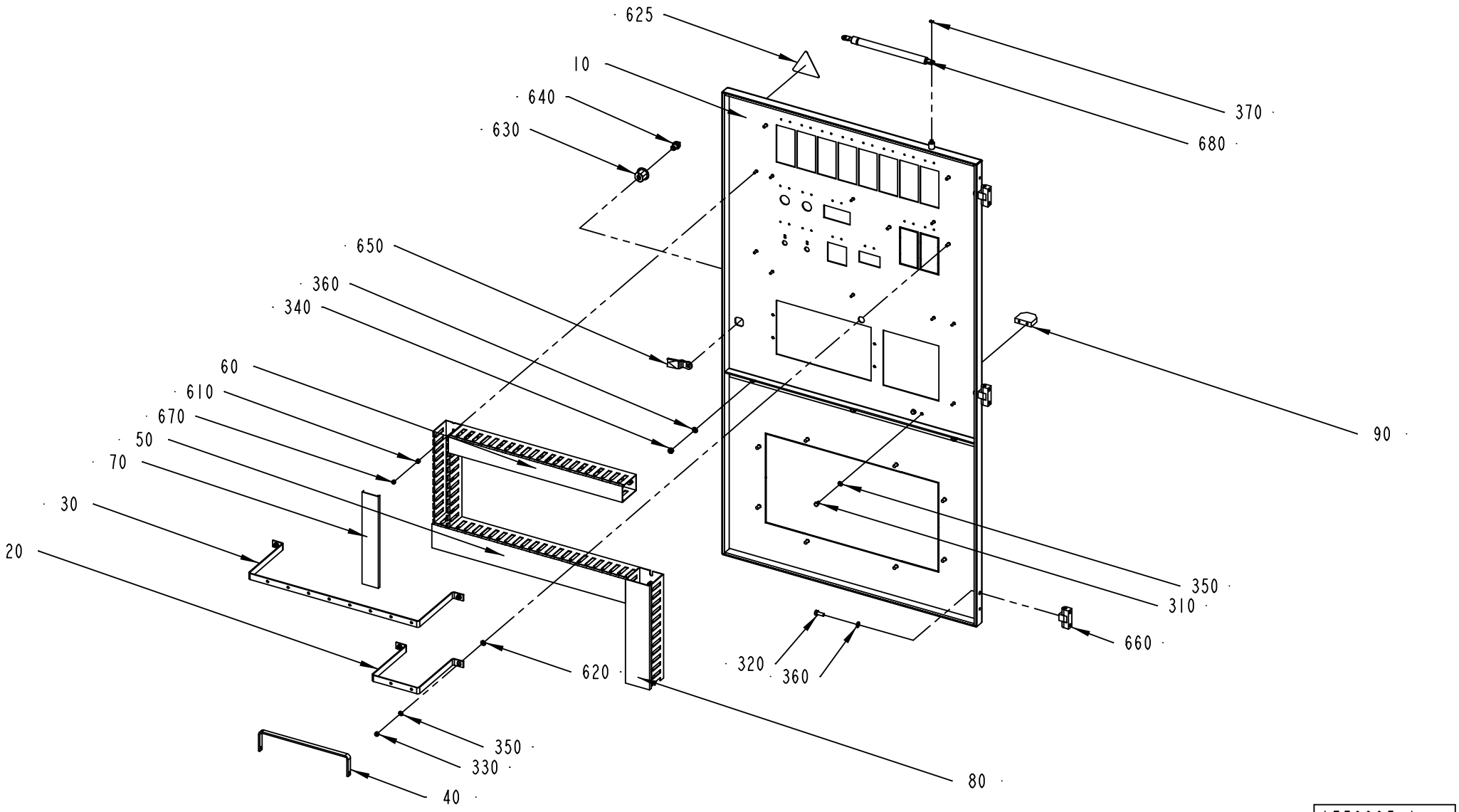

1559005-1
ECN 87205

Pos	Part No	SP	UN	Qty	Description	Page No
Common Parts						
010	1559029-0000	-		1	SWING FRAME	
020	1559050-0000	-		1	COUPLING RAIL	
030	1559051-0000	-		1	COUPLING RAIL	
040	1559052-0000	-		1	COUPLING RAIL	
050	1559060-0000	-		1	CABLE DUCT	
060	1559061-0000	-		1	CABLE DUCT	
070	1559062-0000	-		1	CABLE DUCT	
080	1559063-0000	-		1	CABLE DUCT	
090	970215-0000	-		1	STOP BLOCK	
310	312105-0323	-		2	SCREW M6S ISO 4017 M5X8 A480	
320	312105-0368	-		3	SCREW M6S M6X16 A280	
330	312812-0314	-		4	HEXAGON NUT, NY-LOCK M5 A480	
340	312812-0316	-		3	HEXAGON NUT, NY-LOCK M6 A480	
350	315105-0146	-		6	WASHER PLAIN, BRB, 5,3/10,H=1	
360	315105-0153	-		6	WASHER PLAIN, BRB, 6,4/12,H=1,5	
370	315755-0106	-		2	LOCKING WASHER 4	
610	90005-0158	-		10	WASHER PL.RND.NYL.4,3/8, H=5	
620	90062-0060	-		4	LOCK WASHER SERRAT.EXT.GEAR,5,3/10 H=0,6	
625	90194-0016	-		1	SIGN, FLASH, ELECTRIC EQUIPMENT SYMBOL	
630	90237-0142	-		1	LOCK HOUSING, 1000-U45	
640	90237-0202	-		1	LOCK, INSERT SQUARE,1000-U2 8 MM	
650	90237-0335	-		1	LOCKING CATCH	
660	90248-0019	-		3	HINGE 1054-U1	
670	90261-0079	-		10	PLUG, BLIND, PLASTIC, NO. 1955	
680	90347-0050	-		1	GAS SPRING NO. 0306 150 398535	

Pos	Part No	SP	UN	Qty	Description	Page No

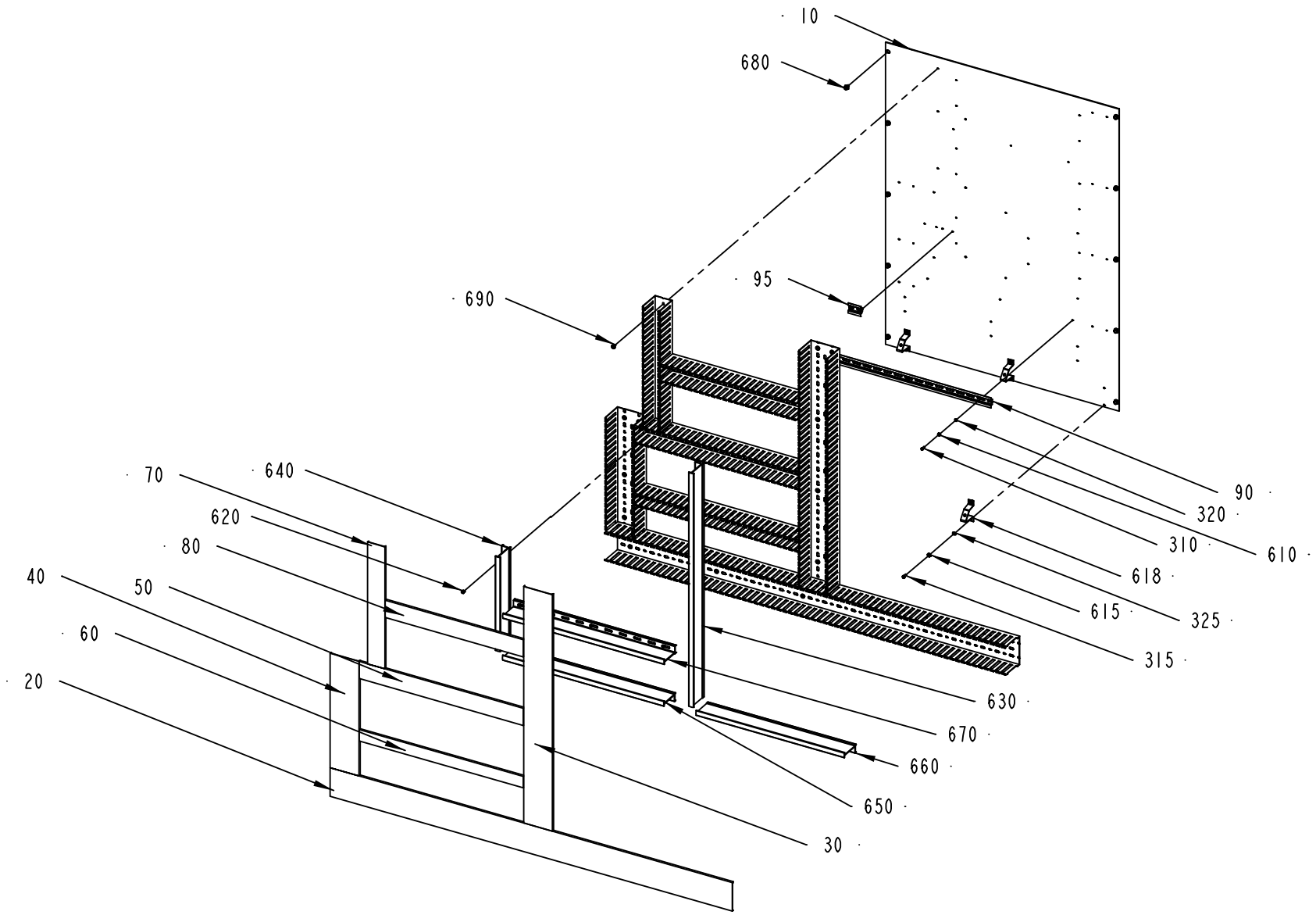

1559006-1
ECN 87205

ECM: 87213 - 20010212
Group number: 1559006-0100
Assembly Drawing: 1559006-1_1_AA

Issue: 20020822

Pos	Part No	SP	UN	Qty	Description	Page No
Common Parts						
010	1559030-0000	-		1	MOUNTING PLATE	
020	1559064-0000	-		1	CABLE DUCT	
030	1559065-0000	-		1	CABLE DUCT	
040	1559066-0000	-		1	CABLE DUCT	
050	1559067-0000	-		1	CABLE DUCT	
060	1559068-0000	-		1	CABLE DUCT	
070	1559069-0000	-		1	CABLE DUCT	
080	1559070-0000	-		1	CABLE DUCT	
090	1559071-0000	-		1	RAIL	
095	1559089-0000	-		1	RAIL	
310	312125-0291	-		5	SCREW PAN HEAD MCS M4X12 SS	
315	312125-0327	-		6	SCREW PAN HEAD MCS M5X12 SS	
320	315105-0136	-		5	WASHER PLAIN, BRB, 4,3/8,H=0,8	
325	315105-0146	-		6	WASHER PLAIN, BRB, 5,3/10,H=1	
610	90062-0059	-		5	LOCK WASHER SERRAT.EXT.GEAR,4,3/8 H=0,5	
615	90062-0060	-		6	LOCK WASHER SERRAT.EXT.GEAR,5,3/10 H=0,6	
618	90094-0005	-		3	RAIL BRACKET	
620	90181-0064	-		15	LOCK ZP1 FOR CHANNEL T1	
630	90181-0067	-	MM	820	DIVIDING PLATE SEP80	
640	90181-0067	-	MM	330	DIVIDING PLATE SEP80	
650	90181-0067	-	MM	560	DIVIDING PLATE SEP80	
660	90181-0067	-	MM	515	DIVIDING PLATE SEP80	
670	90181-0067	-	MM	560	DIVIDING PLATE SEP80	
680	90287-0157	-		10	SCREW M6SF FLAT HEAD M6X10 88	
690	90287-0337	-		32	SCREW RECESSED HEAD M4X10 WH. NYLON	

Pos	Part No	SP	UN	Qty	Description	Page No

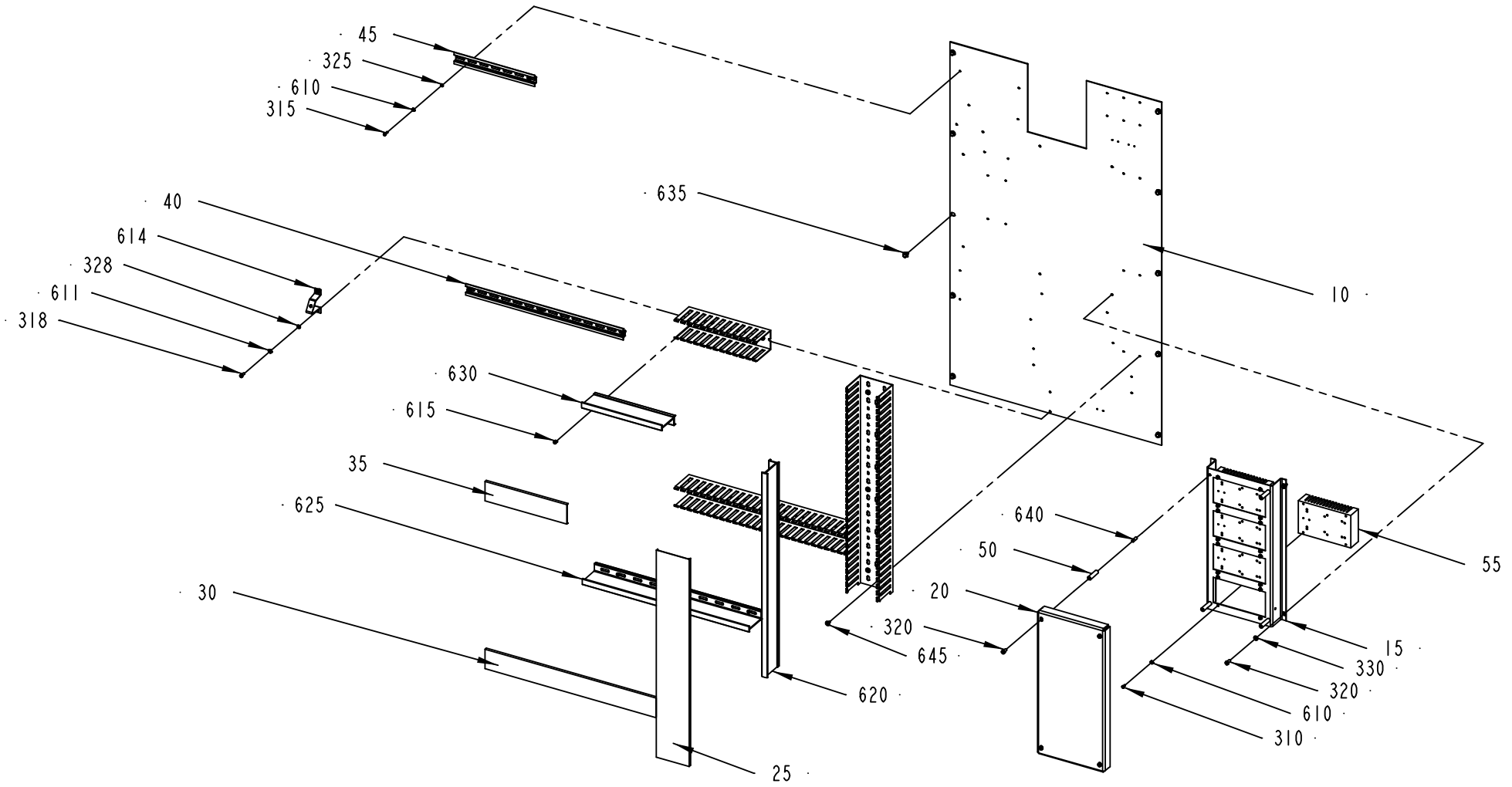

1559007-1
ECN 87205

ECM: 87214 - 20010212
Group number: 1559007-0100
Assembly Drawing: 1559007-1_1_AA

Issue: 20020822

Pos	Part No	SP	UN	Qty	Description	Page No
Common Parts						
010	1559031-0000	-		1	MOUNTING PLATE	
015	1559038-0000	-		1	BRACKET	
020	1559039-0000	-		1	COVER PLATE	
025	1559072-0000	-		1	CABLE DUCT	
030	1559073-0000	-		1	CABLE DUCT	
035	1559074-0000	-		1	CABLE DUCT	
040	1559075-0000	-		1	RAIL	
045	1559076-0000	-		1	RAIL	
050	495130-0040	-		4	SPACER TUBE L=40MM	
055	731771-0000	-		4	COOLING PLATE,SOLIDSTATE	
310	312125-0287	-		16	SCREW PAN HEAD MCS M4X8 SS	
315	312125-0291	-		5	SCREW PAN HEAD MCS M4X12 SS	
318	312125-0327	-		2	SCREW PAN HEAD MCS M5X12 SS	
320	312125-0366	-		8	SCREW PAN HEAD MCS M6X12 SS	
325	315105-0136	-		5	WASHER PLAIN, BRB, 4,3/8,H=0,8	
328	315105-0146	-		2	WASHER PLAIN, BRB, 5,3/10,H=1	
330	315105-0153	-		4	WASHER PLAIN, BRB, 6,4/12,H=1,5	
610	90062-0059	-		21	LOCK WASHER SERRAT.EXT.GEAR,4,3/8 H=0,5	
611	90062-0060	-		2	LOCK WASHER SERRAT.EXT.GEAR,5,3/10 H=0,6	
614	90094-0005	-		1	RAIL BRACKET	
615	90181-0064	-		8	LOCK ZP1 FOR CHANNEL T1	
620	90181-0067	-	MM	630	DIVIDING PLATE SEP80	
625	90181-0067	-	MM	510	DIVIDING PLATE SEP80	
630	90181-0067	-	MM	245	DIVIDING PLATE SEP80	
635	90287-0157	-		10	SCREW M6SF FLAT HEAD M6X10 88	
640	90287-0336	-		4	SCREW HEX. SOCK. SET, M6X20 PLASTIC	
645	90287-0337	-		11	SCREW RECESSED HEAD M4X10 WH. NYLON	

Pos	Part No	SP	UN	Qty	Description	Page No

Machine Type | Group Description | Used-In | Group Number | Page No

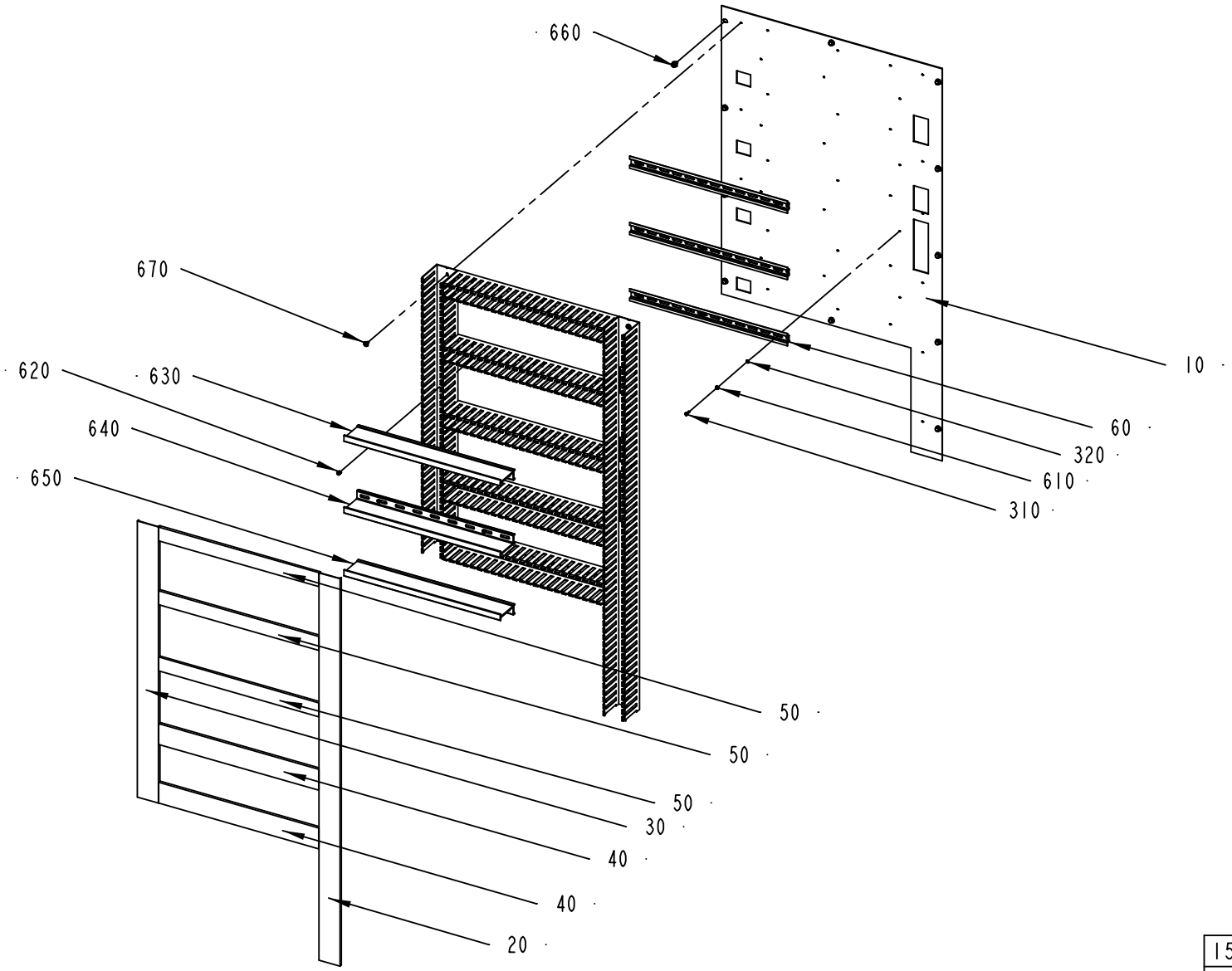

1559008-1
ECN 87205

ECM: 87215 - 20010212
Group number: 1559008-0100
Assembly Drawing: 1559008-1_1_AA

Issue: 20020822

Pos	Part No	SP	UN	Qty	Description	Page No
Common Parts						
010	1559032-0000	-		1	MOUNTING PLATE	
020	1559077-0000	-		1	CABLE DUCT	
030	1559078-0000	-		1	CABLE DUCT	
040	1559079-0000	-		2	CABLE DUCT	
050	1559080-0000	-		3	CABLE DUCT	
060	1559081-0000	-		3	RAIL	
310	312125-0291	-		9	SCREW PAN HEAD MCS M4X12 SS	
320	315105-0136	-		9	WASHER PLAIN, BRB, 4,3/8,H=0,8	
610	90062-0059	-		9	LOCK WASHER SERRAT.EXT.GEAR,4,3/8 H=0,5	
620	90181-0064	-		6	LOCK ZP1 FOR CHANNEL T1	
630	90181-0067	-	MM	446	DIVIDING PLATE SEP80	
640	90181-0067	-	MM	446	DIVIDING PLATE SEP80	
650	90181-0067	-	MM	446	DIVIDING PLATE SEP80	
660	90287-0157	-		11	SCREW M6SF FLAT HEAD M6X10 88	
670	90287-0337	-		25	SCREW RECESSED HEAD M4X10 WH. NYLON	

Pos	Part No	SP	UN	Qty	Description	Page No

MOUNTING PLATE

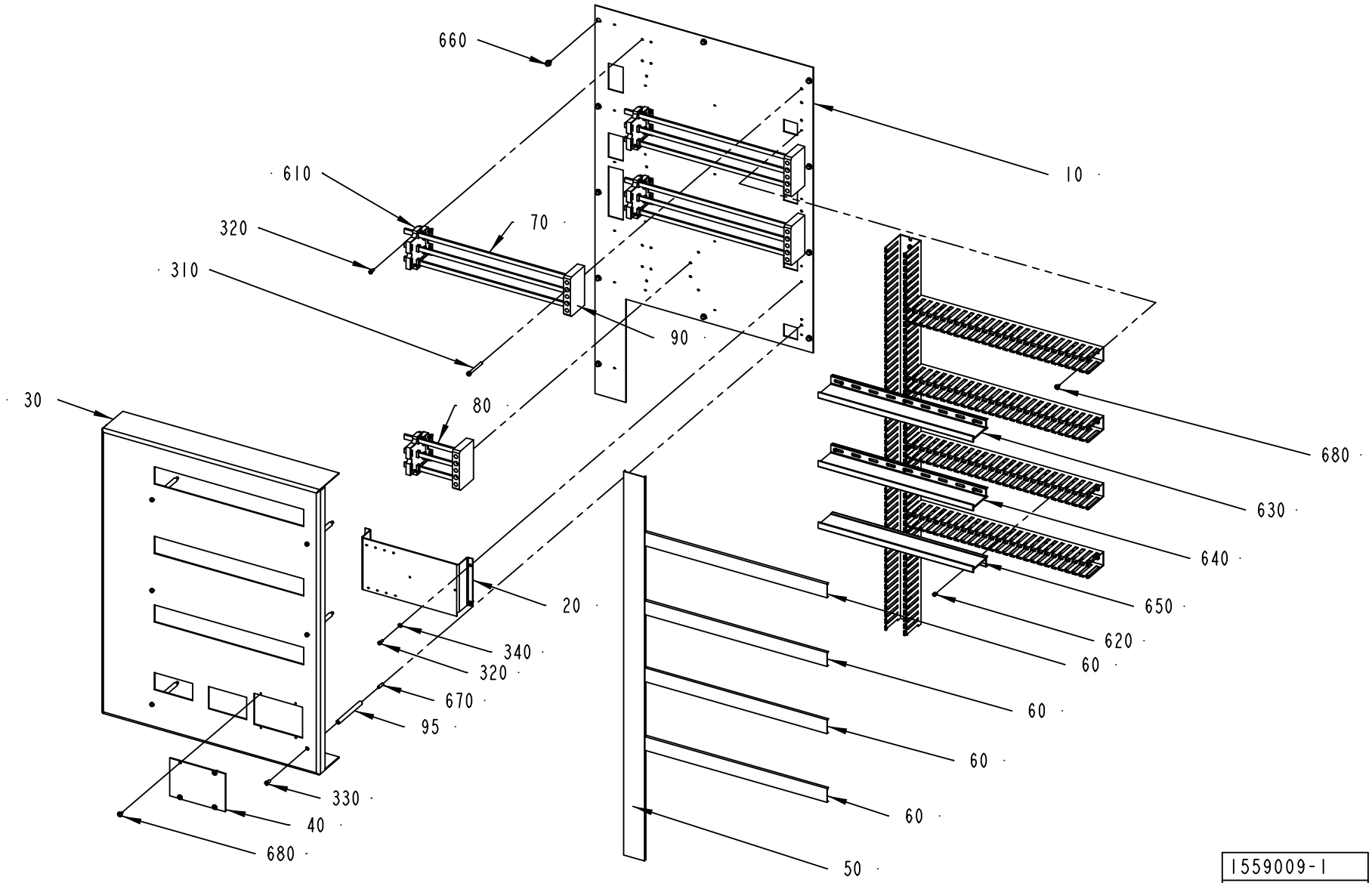

1559009-1
ECN 87205

ECM: 107544 - 20020508
Group number: 1559009-0100
Assembly Drawing: 1559009-1_1_AA

Issue: 20020822

Pos	Part No	SP	UN	Qty	Description	Page No
Common Parts						
010	1559033-0000	-		1	MOUNTING PLATE	
020	1559082-0000	-		1	BRACKET	
030	1559083-0000	-		1	COVER PLATE	
040	1559084-0000	-		1	COVER PLATE	
050	1559085-0000	-		1	CABLE DUCT	
060	1559086-0000	-		4	CABLE DUCT	
070	1559087-0000	-		9	COUPLING RAIL	
080	1559088-0000	-		3	COUPLING RAIL	
090	734789-0000	-		4	SUPPORT F LIVE RAIL	
095	495131-0013	-		6	SPACER TUBE L=13MM	
310	312115-0382	-		8	SCREW MC6S M6X60 A280	
320	312125-0327	-		20	SCREW PAN HEAD MCS M5X12 SS	
330	312125-0366	-		6	SCREW PAN HEAD MCS M6X12 SS	
340	315105-0146	-		4	WASHER PLAIN, BRB, 5,3/10,H=1	
610	90135-0031	-		4	BUSBAR HOLDER K&M SHO165/2	
620	90181-0064	-		9	LOCK ZP1 FOR CHANNEL T1	
630	90181-0067	-	MM	446	DIVIDING PLATE SEP80	
640	90181-0067	-	MM	446	DIVIDING PLATE SEP80	
650	90181-0067	-	MM	446	DIVIDING PLATE SEP80	
660	90287-0157	-		11	SCREW M6SF FLAT HEAD M6X10 88	
670	90287-0336	-		6	SCREW HEX. SOCK. SET, M6X20 PLASTIC	
680	90287-0337	-		22	SCREW RECESSED HEAD M4X10 WH. NYLON	

Pos	Part No	SP	UN	Qty	Description	Page No

Machine Type | Group Description | Used-In | Group Number | Page No

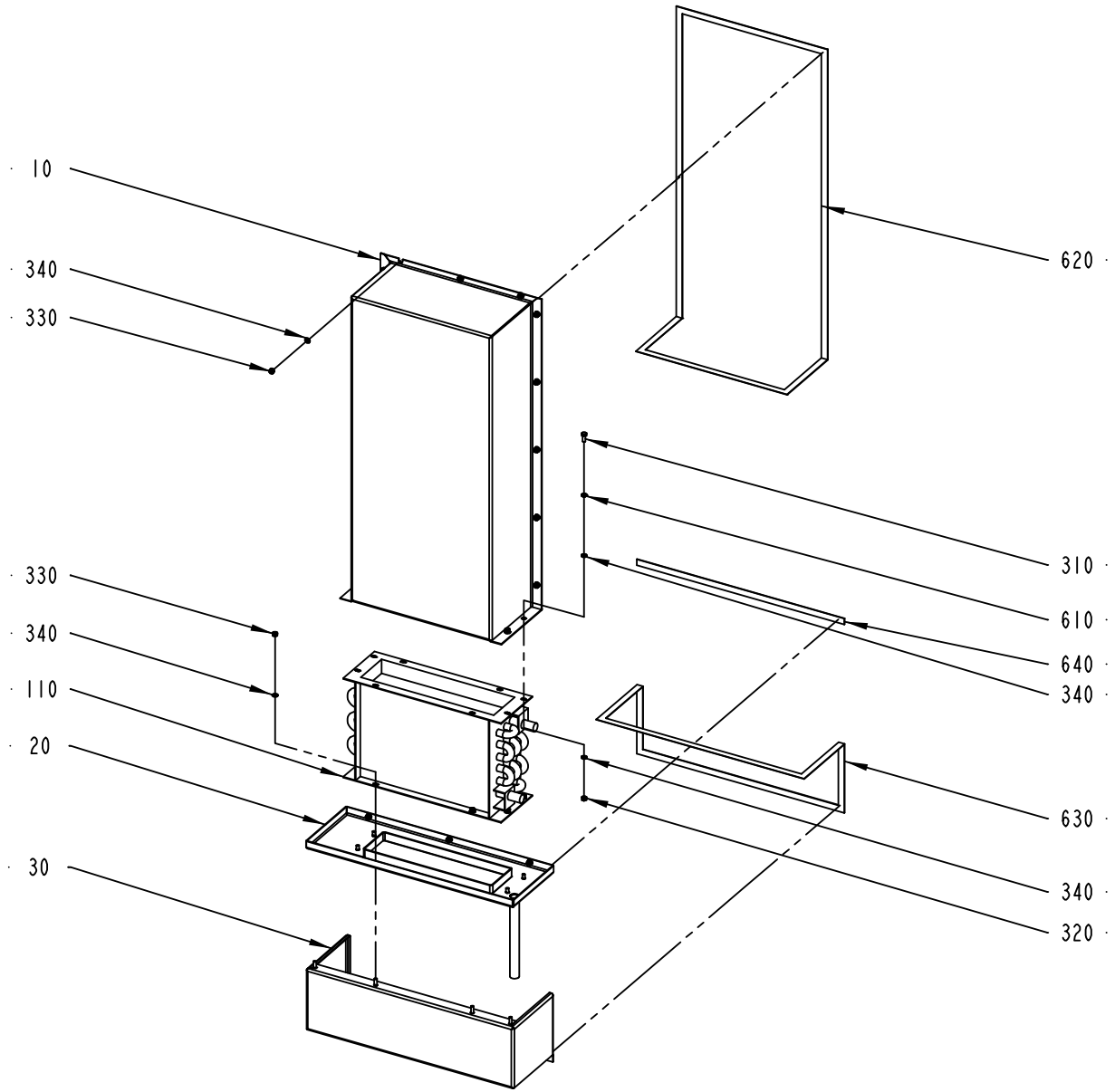

1559010-1
ECN 87205

ECM: 87217 - 20010212
Group number: 1559010-0100
Assembly Drawing: 1559010-1_1_AA

Issue: 20020822

Pos	Part No	SP	UN	Qty	Description	Page No
Common Parts						
010	1559040-0000	-		1	COVER	
020	1559041-0000	-		1	COVER	
030	1559042-0000	-		1	COVER	
110	495201-0000	-		1	COOLING ELEMENT	
310	312105-0368	-		4	SCREW M6S M6X16 A280	
320	312605-0316	-		4	HEXAGON NUT, M6M M6 A280	
330	312812-0316	-		27	HEXAGON NUT, NY-LOCK M6 A480	
340	315105-0153	-		35	WASHER PLAIN, BRB, 6,4/12,H=1,5	
610	90062-0015	-		4	LOCK WASHER SERRAT.EXT.GEAR,6,4/11 H=0,7	
620	90143-0073	-	MM	2570	RUBBER STRIP	
630	90143-0073	-	MM	1666	RUBBER STRIP	
640	90143-0073	-	MM	516	RUBBER STRIP	

Pos	Part No	SP	UN	Qty	Description	Page No

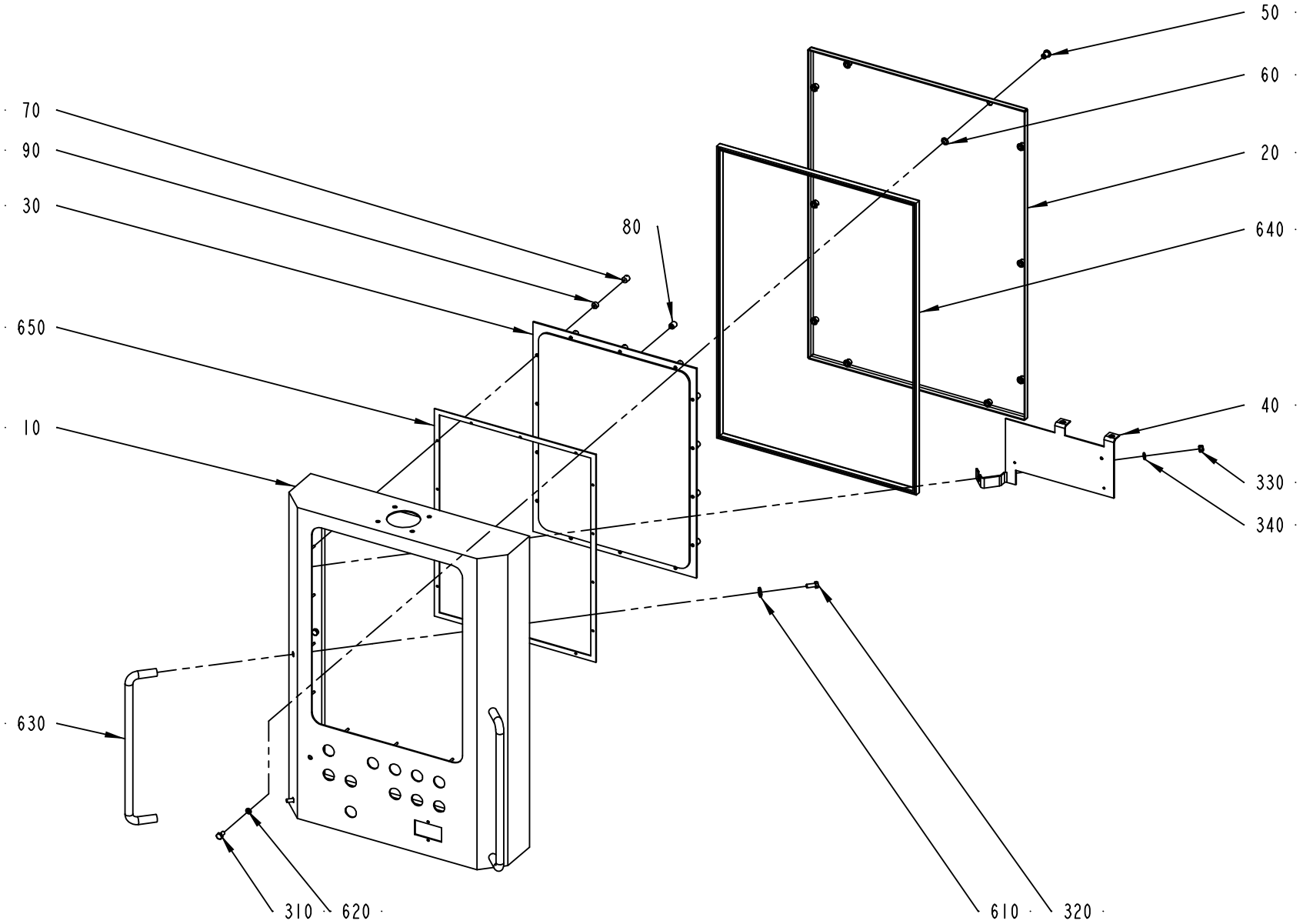

1559022-1
ECN 87205

ECM: 87218 - 20010212
Group number: 1559022-0100
Assembly Drawing: 1559022-1_1_AA

Issue: 20020822

Pos	Part No	SP	UN	Qty	Description	Page No
Common Parts						
010	1559100-0000	-		1	CABINET	
020	1559101-0000	-		1	DOOR	
030	1559102-0000	-		1	WINDOW	
040	1559103-0000	-		1	MOUNTING PLATE	
050	495722-0000	-		10	SCREW BUSHING	
060	495765-0000	-		10	WASHER	
070	970261-0000	-		14	SPACER SCREW 10,2X10MM	
080	970262-0000	-		12	SPACER NUT	
090	971286-0000	-		14	SPACER H=6MM	
310	312105-0366	-		10	SCREW M6S M6X12 A280	
320	312105-0368	-		4	SCREW M6S M6X16 A280	
330	312812-0316	-		3	HEXAGON NUT, NY-LOCK M6 A480	
340	315105-0153	-		3	WASHER PLAIN, BRB, 6,4/12,H=1,5	
610	90005-0077	-		4	WASHER PL.RND.NYL.8,4/7, H=2	
620	90005-0078	-		10	WASHER PL.RND.FIBRE 6/10, H=1,5	
630	90017-0015	-		2	HANDLE, NO. 14.4012.02.308	
640	90143-0059	-	MM	1988	SEAL STRIP 4610069	
650	90144-0072	-	MM	1412	TAPE SCOTCH VHBS 4945 W=12,7MM	

Pos	Part No	SP	UN	Qty	Description	Page No

Tetra Pak

SPC
Spare Parts Catalogue

Part No	Description	Page No
2033-0007	WASHER	77, 79, 189, 191
2033-0008	WASHER	93, 95, 209, 211, 839
2033-0009	WASHER	427, 429, 555, 771, 827
2033-0011	WASHER	29, 31, 83, 85, 89, 91, 93, 95, 145, 147, 209, 211, 813, 815
2033-0014	WASHER	427, 429
2873-0000	SHAFT	29, 31, 145, 147
6161-0000	ROLL	51, 127, 165
6278-0000	WASHER	243, 277, 541
7309-0000	HANDLE	511, 657, 777, 779, 781, 831
10793-0083	MOUNTING RAIL	99
12228-0000	COMPRESSION SPRING	355
12242-0001	GASKET 32X25X5,5	33, 35, 61, 63, 65, 67, 71, 111, 149, 151, 175, 177, 179, 181, 183, 223, 233
12242-0002	GASKET 40X32X5,5	111, 223, 863
12242-0003	GASKET 48X38X5,5	39, 41, 61, 63, 65, 67, 81, 111, 123, 135, 155, 157, 175, 177, 179, 181, 193, 223
12242-0005	GASKET 61X51X5,5	81, 193
15529-0000	WASHER	27, 143, 857, 859
18542-0000	WASHER	261
20239-0000	COMPRESSION SPRING	385, 387
20702-0000	COVERING PLATE	453
20705-0001	INSULATING PIPE	455, 457
20772-0000	INSULATOR BODY 70X70X15MM	455, 457
21047-0000	LOCK WASHER	451, 535
21521-0000	COMPRESSION SPRING	59, 69, 173
21903-0000	ROLL	771, 827, 847
22463-0000	ROLL	365, 367, 369, 371
22475-0000	CURVE ROLLER	385, 387
22559-0000	GRUB SCREW	769, 811
23118-0000	TRANSFORMER	951, 953, 955, 957, 959
23139-0000	TRANSFORMER 1PH. AUTO 2,1 KVA	951, 953, 955, 957, 959
23580-0000	SHIFTER HANDLE	103, 215, 767
23582-0000	HOLDER	15, 103, 215, 767
23583-0000	GUIDE FINGER	15, 103, 215, 767
23584-0000	SCREW	15, 103, 215, 767
23762-0002	SIDE PIPE	453
23763-0002	SPACER PIPE	453
23763-0006	SPACER PIPE	453
23763-0007	SPACER PIPE	453
23765-0002	INSULATING PIPE	453
23765-0003	INSULATING PIPE	453
23765-0005	INSULATING PIPE	453
23769-0000	STOP PLATE	453
23771-0000	SPACER RING 4X78X1MM	455, 457
24351-0000	BOW CLAMP	15, 767
24352-0000	SHAFT	767
24354-0000	WASHER	103, 215
24355-0000	DOWEL	15, 103, 215, 767
24356-0000	PIECE	15, 103, 215, 767
26490-0000	WASHER	83, 85
27815-0000	WASHER	39, 41, 155, 157, 427, 429
28036-0000	WASHER	51, 81, 127, 165, 695, 773, 775, 785, 787, 789, 813, 815
28037-0000	WASHER	83, 85, 209, 211
28509-0000	WASHER	389, 391
29411-0000	SPACER PIPE	455
29413-0000	LACE	455, 457
29876-0000	COVER	17, 137
30298-0000	INSULATION	17, 137
30310-0002	FF HEATING ELEMENT TOP	455
30311-0001	FF HEATINGELEMENT BUTTOM KANTHAL 2333-02	457
31017-0000	KNIFE	605
31390-0100	FF-ELEMENT TOP	453
31390-0110	FF-ELEMENT BOTTOM	453, 537
31418-0000	SHAFT	763, 765
31423-0000	MOUNTING LUG	763, 765, 809
31425-0000	GUIDE WHEEL	763, 765
31553-0001	WASHER	575
31559-0000	SPRING PLATE	575
31653-0001	SHEET	455
31653-0002	FIX PLATE 39X85X0,5MM	457
31723-0000	TEFLON STRIP	605
31724-0000	LOCK BAR	605
32079-0000	WASHER	389, 391
32213-0000	WASHER	769, 811
32215-0000	HOLDER	769, 811
32217-0000	BOTTOM SECTION	769, 811
32219-0000	WASHER	769, 811
32223-0000	BEARING	769, 811
32400-0000	HOLDER	769, 811
32451-0000	AIR DUCT	769, 811
32453-0000	MANTLE	769, 811
32474-0000	ATTACHMENT	769, 811
32544-0000	INSULATION NUT	389, 391
32644-0000	WASHER	421
32668-0000	ARM	769, 811
32691-0000	LOCKING SPRING	793, 795, 797, 799

Part No	Description	Page No
32919-0000	BEARING BLOCK	785, 787, 789
32923-0000	SPRING	785, 787, 789
32925-0000	CARRIER	785, 787, 789, 813, 815
32926-0000	ROLL	813, 815
32927-0000	SHAFT	785, 787, 789, 813, 815
33010-0000	SCREW	801
33011-0000	SLEEVE	793, 795, 797, 799
33182-0000	ROLL	785, 787, 789, 813, 815
33183-0000	SPRING	785, 787, 789
33408-0000	BEARING	365, 367, 369, 371
33577-0000	CANTILEVER	105, 133, 217, 773, 775
35547-0000	SPRING	801
35918-0000	SHAFT	93, 95, 209, 211
35919-0000	COMPRESSION SPRING	93, 95, 209, 211
35962-0000	LID	617, 629
36316-0000	PAPER SUPPORT	769
36325-0000	KNOB	93, 95, 209, 211
36749-0000	MANTLE	769, 811
36816-0000	LINK	23, 25, 125
36817-0000	CLAMPING ELEMENT	23, 25, 125
37296-0000	ARM	23, 25, 125
37535-0000	SUPPORTING PART 56X56X31,5MM	455, 457
37536-0000	INSULATOR BODY LOWER 70X70X15MM	455, 457
37537-0000	SPACER RING LOWER 72X78X1MM	455, 457
37638-0000	PENDULUM SUSPENSION	57, 97
37774-0000	PROTECTIVE COVER	613
37775-0000	LAMP HOLDER	613
37877-0300	HEATING BLOCK	603
37879-0000	LOCKING ARM	605
37880-0000	HINGE	605
37882-0000	PROTECTION PLATE	605
37883-0000	LOCK BAR	605
37884-0000	SHAFT	605
37885-0000	TENSION SPRING	605
37886-0000	INSULATING DISK	605
37888-0000	ROLL	605
37889-0000	SHAFT	605
37890-0000	FLANGE ROLLER	605
37892-0000	CONNECTION BOX	605
37893-0000	LID	605
37894-0100	COUNTER RAIL	603
37895-0000	RAIL	607
37896-0000	DOWEL	607
37897-0000	WASHER	607
37901-0000	SHAFT	609
37908-0000	PLATE	613
37910-0000	LOCK	613
37911-0000	LACE	613
37912-0000	LOCK PLATE	613
37913-0000	RULER	613
37917-0000	RULER	613
37927-0000	COMPRESSION SPRING	611
38087-0000	WASHER	495, 559
38535-0001	LOCKING FINGER	23, 25
38535-0002	LOCKING FINGER	23, 25, 125
38630-0003	COUNTER ROLLER	29, 31, 145, 147
48890-0101	TMCC PROGRAMME	951, 953, 955, 957, 959
67379-0105	IMPEDANCE TRANSFORMER	389, 391
67379-0114	IMPEDANCE TRANSFORMER	389, 391
67388-0101	FRONT MOUNTED RACK 42TE	951, 953, 955, 957, 959
67388-0103	RACK FRONTMOUNTED 28TE	951, 953, 955, 957, 959
67600-0501	TPIH GENERATOR	951, 953, 955, 957, 959
68262-0101	BACKPLANE FRONT RACK 8TE	951, 953, 955, 957, 959
68445-0104	FRONT PLATE 8 TE	951, 953, 955, 957, 959
68699-0101	MULTIPLEXER CARD 56LED	979
72947-0000	HOOK SPANNER	877
75665-0000	ASSEMBLY TOOL	877
76131-0000	ASSEMBLY CONE	877
76132-0000	ASSEMBLY TOOL	877
76138-0000	LOCKING LOOP	877
76153-0000	SETTING TOOL	877
76167-0000	LOCKING LOOP	877
77099-0100	TOOL KIT	851
77247-0000	ASSEMBLY PIN	877
90001-0033	WALL SOCKET OUTLET	951, 953, 955, 957, 959
90002-0004	BLANK-OFF PLUG, PR 22,5 SKINDICHT-BLK16	985
90002-0009	BLANK-OFF PLUG, PR 18.6 SKINDICHT-BLK11	107, 109, 219, 221, 497, 985
90002-0012	BLANK-OFF PLUG, PR 28,3 SKINDICHT-BLK21	321
90002-0013	BLANK-OFF PLUG, PR 15,2 SKINDICHT-BLK9	99, 107, 109, 113, 219, 221, 587, 589, 721, 783
90005-0003	GASKET BOLT HEAD 6,7X11X1 MM M6	373, 375, 377, 379, 381, 383, 423, 431, 433
90005-0005	GASKET BOLT HEAD 13,7X20,6X2,1 MM G1/4"	431, 433
90005-0006	GASKET BOLT HEAD 16,7X24X1,5 MM M16	61, 63, 175, 177
90005-0007	GASKET BOLT HEAD 8,7X14X1 MM M8	373, 375, 377, 379, 381, 383, 431, 433, 463, 543
90005-0014	GASKET BOLT HEAD 21,5X28,6X2,5 MM G1/2"	423

Part No	Description	Page No
90005-0016	GASKET BOLT HEAD 27/35X2,5 MM G3/4"	709, 711
90005-0020	GASKET BOLT HEAD 33,9X42,9X3,4 MM G1"	721
90005-0044	WASHER,PL.RND.CU.15/19,H=1,5	703
90005-0045	WASHER PLAIN ROUND 10(3/8)/14,H=2	263, 265, 287, 289, 669, 671, 673
90005-0048	WASHER,PL.RND.CU.18,2/23,9 H=1,5	475, 553
90005-0056	WASHER PL.RND.NYL.6/8,5,H=1	451, 461, 535, 895, 897
90005-0060	WASHER PLAIN, RBS 6,4/M6)/18,H=1,5	247, 249, 251, 413, 415, 417, 419, 489, 509, 715, 839
90005-0061	WASHER PL.RND.FIBRE 14/24,H=1,5	669, 671, 673, 709, 711
90005-0067	GASKET BOLT HEAD 10X17X1,5 MM M10	491
90005-0077	WASHER PL.RND.NYL.8,4/7, H=2	1005
90005-0078	WASHER PL.RND.FIBRE 6/10, H=1,5	1005
90005-0082	WASHER PLAIN ROUND 4,3(M4)/12,H=1	831, 835, 837
90005-0116	WASHER PLAIN ROUND 8,4(M8)/24, H=2	903
90005-0126	WASHER PLAIN ROUND 13(M12)/24, H=2	653
90005-0158	WASHER PL.RND.NYL.4,3/8, H=5	985, 993
90006-0008	BUSHING 657	53, 55
90006-0009	BUSHING 0002004	53, 55
90007-0118	FUSE,	951, 953, 955, 957, 959
90007-0128	CIRCUIT BREAKER, 1P 6 A K	951, 953, 955, 957, 959
90007-0129	CIRCUIT BREAKER, 1P 10 A K	951, 953, 955, 957, 959
90007-0131	CIRCUIT BREAKER, 1P 16 A K	951, 953, 955, 957, 959
90007-0146	CIRCUIT BREAKER, 3P 6 A K	941
90007-0147	CIRCUIT BREAKER, 3P 10 A K	951, 953, 955, 957, 959
90012-0063	CABLE GLAND PR 15,2	99
90012-0137	GLAND, EXTENDED WITH INSERT, PG11	21, 141
90015-0010	BUSHING	571
90015-0020	LEAD-IN, TET5-7, E-1458016	107, 109, 219, 221, 309, 311, 843, 845
90015-0021	LEAD-IN, TET10-14, E-1458023	107, 109, 219, 221, 703, 709, 711, 843, 845
90015-0022	LEAD-IN, TET14-20, E-1458029	709, 711
90015-0023	LEAD-IN, TET7-10, E-1458019	107, 109, 219, 221, 843, 845, 925
90015-0024	LEAD-IN, TET20-26, E-1458035	73, 107, 109, 185, 219, 221
90015-0028	LEAD-IN BUSHING	475, 553
90016-0010	DISC SPRINGS,50X25,4X2	327, 329
90017-0001	BIKE HANDLE	605, 609, 649
90017-0015	HANDLE, NO. 14.4012.02.308	1005
90020-0027	SLEEVE	201
90020-0028	SLEEVE	197, 199
90024-0035	VARISTOR VG B DIL 24;24VDC K&M	951, 953, 955, 957, 959
90024-0036	FILTERED TERMINAL BLOCK	951, 953, 955, 957, 959
90024-0037	INPUT FILTER, 8 A	941
90024-0060	POWER LINE FILTER, 80 A 250/440 VAC	951, 953, 955, 957, 959
90028-0001	CONE 5/32"	253, 255, 279, 281
90028-0020	CONE TUBE 2,5MM	253, 255, 279, 281, 325, 331, 333, 335, 337, 339, 341, 343, 345, 423, 431, 433, 451, 535, 895, 897
90028-0021	CONE TUBE 4 MM	253, 255, 263, 265, 279, 281, 287, 289, 325, 331, 333, 335, 337, 339, 341, 343, 345, 451, 475, 535, 553, 895, 897, 931
90028-0025	CONE TUBE 6 MM	475, 553
90030-0030	CONN. BULKHEAD SV 12-L/SY	709, 711
90030-0051	CONN. STR., 6-R1/8, EXT. THREAD	253, 255, 279, 281
90030-0058	CONN. T-PIPE T-12	61, 63, 65, 67, 175, 177, 179, 181, 709, 711, 719, 773, 775
90030-0062	CONN. STR. GE 6-1/4-18 NPTF	233
90030-0065	PIPE CONNECTION	263, 265, 287, 289, 373, 375, 377, 379, 381, 383, 393, 395, 431, 433
90030-0067	CONN. BULKHEAD SV 8-L/SY	463, 543
90030-0075	PIPE CONNECTION G-6	105, 133, 805, 807
90030-0076	CONN. T-PIPE T-6	75, 187
90030-0091	CONN. PIPE G-8	463, 543, 709, 711
90030-0092	STRAIGHT CONN., 6-R1/4,EXT. TAPPERED	105, 133, 217
90030-0096	CONN. ELBOW W-12	719
90030-0098	ACCESSORIES, FERRULE 8	253, 255, 279, 281
90030-0106	CONN. PIPE G-12	61, 63, 709, 711, 719
90030-0109	CONN. STR., 12-R1/2, EXT. THREAD	39, 41, 61, 63, 81, 155, 157, 175, 177, 193
90030-0110	ACCESSORIES, FERRULE 12	719
90030-0112	NIPPLE	705, 707
90030-0116	NIPPLES, REDUCING, EXT. THR. NO. 2520	669, 671, 673
90030-0120	ADJ. L-PIPE CONNECTION EVL, INT.T-10	705, 707
90030-0121	CONN. ELBOW ADJ.,INT 10	705, 707
90030-0127	CONN. T-PIPE ADJ. ,EVT,INT.T-6	669, 671, 673
90030-0132	ACCESSORIES, PLUG PL-6	81, 193
90030-0137	CONN. ELBOW WA 6-R1/8	571
90030-0140	CONN. ELBOW ADJ.,INT 8	705, 707
90030-0151	CONN. STR.,15-R1/2, EXT. THREAD	261, 463, 543
90030-0152	CONN. T-PIPE 15-L/SY	73
90030-0157	CONN. STR. 10-R3/8, EXT. THREAD	705, 707
90030-0159	CONN. BULKHEAD SV 15-L/SY	709, 711
90030-0162	CONN. STR. 6-M10X1, EXT. THREAD	253, 255, 279, 281
90030-0166	NIPPLE,REDUCING G1/4"-G1/4"	681
90030-0171	ADJUSTABLE ELBOW CONNECTION,EXT 6-G1/8	263, 265, 287, 289
90030-0178	CONN. STR., 10-R1/4, EXT. THREAD	705, 707
90030-0181	CONN. STR. GE 12-3/8-18 NPTF	719
90030-0184	CONN. STR. GA-6-G1/8	53, 55, 73, 75, 87, 129, 185, 187, 207, 431, 433, 727
90030-0185	CONN. STR. GA-8-G1/4	263, 265, 287, 289, 463, 543
90030-0187	CONN. STR. GA-12-G3/8	53, 55, 59, 61, 63, 65, 67, 81, 87, 129, 155, 157, 167, 169, 173, 175, 177, 179, 181, 193, 207, 505, 719
90030-0188	CONN. STR. GA-15-G1/2	73, 185, 709, 711

Part No	Description	Page No
90030-0200	CONN. ELBOW, 6-M10X1, EXT.THREAD	253, 255, 279, 281
90030-0202	CONN. STR., 6-G1/4, EXT. THREAD	75, 187
90030-0203	ADJUSTABLE ELBOW CONNECTION,EXT 6-G1/4	75, 187
90030-0209	REDUCER	721
90030-0221	CONN. ELBOW BULKHEAD WSV 12	719
90030-0253	CONN. STR. 12-1/4 NPT, EXT. TAPPERED	719
90030-0339	CONN. STR., 12-G3/8, EXT. THREAD	705, 707
90030-0340	NIPPLES, EXT. THREAD, HEXAGON, RA-G1/2A3	705, 707
90030-0341	CONN. STR., 12-G1/2, EXT. THREAD	705, 707
90031-0051	BASEPLATE, 10-SLOT	951, 953, 955, 957, 959
90031-0053	BASEPLATE,10-SLOT	951, 953, 955, 957, 959
90031-0057	PLC, DIGITAL INPUT MODULE	951, 953, 955, 957, 959
90031-0058	PLC, DIGITAL INPUT MODULE	951, 953, 955, 957, 959
90031-0059	PLC, DIGITAL OUTPUT MODULE	951, 953, 955, 957, 959
90031-0068	PLC, POWER SUPPLY	951, 953, 955, 957, 959
90031-0074	CPU350, NO COMMUNICATION	951, 953, 955, 957, 959
90031-0305	I/O EXPANSION CABLE	951, 953, 955, 957, 959
90032-0014	DISTR. BLOCK & DIST.5/16-24UNF X6	253, 255, 279, 281
90032-0026	DISTR. BLOCK, 5/16-24UNF X2	253, 255, 279, 281
90032-0030	DISTR. BLOCK, 5/16-24UNF X3	253, 255, 279, 281
90032-0031	DISTR. BLOCK, 5/16-24UNF X5	253, 255, 279, 281
90032-0038	BLOCK 2 WAYS	253, 255, 279, 281, 325, 475, 553, 895, 897
90032-0039	BLOCK 4 WAYS	253, 255, 279, 281, 339, 341, 343, 345
90032-0040	BLOCK 6 WAYS	331, 333, 335, 337, 451, 535
90035-0005	COVER	331, 333, 335, 337
90036-0009	LIGHT BULB, BA15D 24V	613
90036-0057	LIGHT BULB, BA9S 28V	977
90036-0068	BULB 6.5W 24V	273
90037-0001	LAMPHOLDER	613
90038-0024	RECTIFIER, 10/22A SKD 50/04A3	951, 953, 955, 957, 959
90042-0109	SOLENOID VALVE 553-121-000	651
90042-0134	SOLENOID VALVE ASCO SCG 210 802 24VDC	709, 711
90042-0171	SOLENOID VALVE BUERKERT	75, 187
90042-0172	SOLENOID VALVE 4023/1005/1032 24VDC	669, 671, 673
90042-0173	SOLENOID VALVE BURKERT	669, 671, 673, 675
90042-0215	VALVE BODY 5/2 UNISTABLE	685, 687, 937
90042-0271	VALVE BODY 2X3/2	685, 687, 937
90042-0345	COIL 24V DC	651
90042-0366	CONTACT, 2-POLE+EARTH	651
90042-0438	CONNECTION RAMP 553-400-001	651
90042-0519	BLANK PLATE ISO SIZE 1	685, 687
90042-0521	EL.CONNECTION MECMAN 04938 278 04	685, 687
90042-0522	PORTED END PIECE ISO SIZE 1	685, 687
90042-0526	PROTECTIVE SLEEVE MECMAN	685, 687
90042-0528	BLANKING KIT SEALS ISO SIZE 1	685, 687
90042-0532	BASE PLATE ISO SIZE 1	685, 687
90042-0538	PILOT VALVE L=500MM	685, 687
90042-0539	PILOT VALVE L=350MM	685, 687, 937
90043-0006	PRESSURE GAUGE, 2041 D=63 MM	669, 671, 673
90043-0034	PRESSURE GAUGE	105, 133, 217, 773, 775
90043-0036	PRESSURE GAUGE, 2041 D=63 MM	669, 671, 673
90043-0050	PRESSURE GAUGE, 2940.100 MM+2940	81, 193
90043-0062	MANOMETER	705, 707
90043-0064	PRESSURE GAUGE, 2048 D=40 MM	685, 687
90043-0065	PRESSURE GAUGE, 2048 D=40 MM	685, 687
90043-0090	PRESSURE GAUGE, 2048 D=40 MM	685, 687
90043-0095	PRESSURE GAUGE, 2740, D=63 MM, GLYC.	113
90043-0302	SCREW	105, 133, 217, 773, 775
90044-0084	LIMIT SW. 14 CE1-4	39, 41, 155, 157, 355
90044-0087	PROXIMITY SWITCH REPL.BY 90044-104	639
90044-0103	KEY SAFETY SWITCH AZ 15 ZVR	813, 815
90044-0104	PROX.SWITCH IFM IN 3002	37, 47, 81, 103, 111, 153, 193, 215, 223, 813, 815
90044-0139	KEY SAF.SW. AZ16-02 ZVR K-2254	77, 79, 189, 191, 309, 311, 509, 561, 785, 787, 789, 919, 923
90044-0194	PROX.SW. IN5329/IN3002-BPKG	21, 39, 41, 77, 79, 141, 155, 157, 161, 189, 191, 785, 787, 789, 841
90044-0310	KEY FOR SAFETY SWITCH, AZ 15/16 B1	77, 79, 189, 191, 299, 301, 511
90044-0311	KEY FOR SAFETY SWITCH, AZ15/16 B2	561, 919, 923
90045-0079	MOTOR 3GAA 092001-HSA	705, 707
90045-0087	MOTOR 3GAA 071002-CSA M2AA 71B	727
90045-0096	MOTOR ABB REPL.BY 90045-159	321
90045-0134	ROLL MOTOR 113X250	641
90045-0164	SERVO MOTOR EP 075-112-44T3B	903
90045-0376	CONNECTOR KIT 9-032-011-970	941
90048-0041	OIL PUMP NO CONTAINER	669, 671, 673
90048-0440	GASKET	703
90050-0011	BOTTLE	617, 629
90050-0012	BOTTLE, 50ML PLASTIC	801
90051-0045	STELLAR KNOB, NO. 8323-2575	27, 143, 857, 859
90051-0053	KNOB, INTERNAL THREAD, M6 24X17	39, 41
90051-0077	HANDLE	801
90051-0082	KNOB, CIRCUL, THREADED BUSH, M6 25X21 MM	355
90051-0089	SHIFTER HANDLE	823, 825
90052-0011	HORN, YO3/BT 24-50VDC NO.654005	843, 845
90053-0024	COUNTER KUBLER 24VDC 6 DIGITS	979

Part No	Description	Page No
90053-0029	COUNTER, F524.800FA3C 24VDC	951, 953, 955, 957, 959
90053-0305	FRAME KUBLER F 1 DV	979
90055-0100	Y-CONNECTION, 6-6	115, 117, 119, 121, 225, 227, 229
90055-0118	ELBOW PIPE JOINT -8MM	685, 687
90055-0173	ELBOW WITH TAILPIECE 8/6 MM	685, 687
90055-0207	ELBOW PIPE JOINT,EXT.THREAD,D=6 MM M5	571
90055-0209	BULKHEAD LEAD-IN	571
90055-0210	ELBOW PIPE JOINT,EXT.THREAD,D=6 MM G1/8	571
90055-0211	ELBOW PIPE JOINT,EXT.THREAD,D=8 MM G1/8	571
90055-0212	STRAIGHT COUPLING, D=6 MM - G1/8"	571
90055-0217	ELBOW PIPE JOINT	907
90056-0071	WORM GEAR	577, 579
90056-0072	WORM GEAR	327, 329
90056-0166	GEARS, PLANETARY PL70-10-M1	903
90059-0001	THERMOSTAT	605
90061-0027	ANGLE ENCODER 670900035	699
90062-0015	LOCK WASHER SERRAT.EXT.GEAR,6,4/11 H=0,7	1003
90062-0016	LOCK WASHER SERRAT.EXT.GEAR,8,4/15 H=0,8	669, 671, 673
90062-0059	LOCK WASHER SERRAT.EXT.GEAR,4,3/8 H=0,5	995, 997, 999
90062-0060	LOCK WASHER SERRAT.EXT.GEAR,5,3/10 H=0,6	993, 995, 997
90064-0082	PUSH BUTTON, WHITE	979
90064-0084	PUSH BUTTON, YELLOW	679, 773, 775, 979
90064-0085	PUSH BUTTON, RED	773, 775, 951, 953, 955, 957, 959
90064-0098	PUSH BUTTON, CLEAR	977, 979
90064-0124	SWITCH, EM. STOP, ZB2-BS844+ZB2-BZ1045	107, 109, 219, 221, 951, 953, 955, 957, 959, 979
90064-0315	LAMP REMOVER, NO:700	977
90066-0020	PUSH BUTTON BOX	773, 775
90066-0021	PUSH BUTTON BOX XAP-M1501	107, 109, 219, 221
90067-0010	CARRIAGE	865, 867, 869
90067-0300	SPARE PARTS KIT	865, 867, 869
90067-0301	BRAKE WIRE	865, 867, 869
90067-0302	TORSION SPRING	865, 867, 869
90067-0317	BRAKE LINING	865, 867, 869
90067-0322	REPAIR KIT	865, 867, 869
90067-0323	BEARING KIT	865, 867, 869
90067-0324	REPAIR KIT	865, 867, 869
90067-0325	PUMP PISTON	865, 867, 869
90067-0326	REPAIR KIT	865, 867, 869
90067-0327	RETURN SPRING	865, 867, 869
90067-0328	VALVE	865, 867, 869
90067-0329	COPPER WASHER	865, 867, 869
90067-0330	VALVE ARM	865, 867, 869
90067-0331	TOP BEARING KIT	865, 867, 869
90067-0332	LIFT PISTON	865, 867, 869
90067-0333	VALVE	865, 867, 869
90067-0334	AXIAL BEARING KIT	865, 867, 869
90067-0335	YOKE UNIT	865, 867, 869
90067-0336	GUIDE SHAFT UNIT	865, 867, 869
90067-0337	BRAKE DRUM	865, 867, 869
90067-0338	GUIDE ROLLER 32 44 117 2	865, 867, 869
90067-0339	WHEEL	865, 867, 869
90067-0340	SLEEVE	865, 867, 869
90067-0341	SHAFT	865, 867, 869
90067-0342	TENSION SPRING	865, 867, 869
90069-0281	GEARS, WORM MOTOR OKM87-60E3	21, 141
90074-0001	CABLE CLIPS, D=10 MM	115, 117, 119, 121, 225, 227, 229, 813, 815
90074-0005	CABLE CLIPS, D=18 MM	709, 711
90074-0026	PIPE CLIP FOR TUBE D=24-35 MM	327, 329
90075-0124	CONTACTOR, 4KW 24VDC	941, 951, 953, 955, 957, 959
90075-0125	CONTACTOR, 7,5KW 24VDC	951, 953, 955, 957, 959
90075-0126	CONTACTOR, 22KW 24VDC	951, 953, 955, 957, 959
90077-0079	FEED THROUGH TERMINAL, 02943.6	693
90077-0102	TERMINAL BLOCK, 1952.2	583, 585, 605, 951, 953, 955, 957, 959
90077-0113	FEED THROUGH TERMINAL, 10-00102150-1	943, 961
90077-0328	RAIL TS15/5	693
90082-0013	OVERVOLTAGE PROTECTOR	967
90082-0301	OVERVOLTOLTAGE PROTECTOR	977
90083-0016	PLATE FOR AXK 2035	325, 339, 341, 343, 345
90086-0001	NIPPLE, M10X1	613
90087-0002	PIPE PLUG	243, 277
90087-0019	PLUG M10X1 STAINLESS	325, 331, 333, 335, 337, 451, 535
90087-0023	PLUG, EXT. THREAD HEX. SOCKET VSTI 3/8-E	705, 707
90087-0036	PLUG	685, 687
90089-0003	REDUCING SLEEVE, PR22,5/PR18,6	107, 109, 219, 221
90089-0018	REDUCING SLEEVE, 3/4NPT /PR22,5	719
90090-0001	BALL, D=15,081 MM	785, 787, 789
90090-0003	BALL, D=12,7 MM	29, 31, 145, 147
90090-0005	BALL, D=3 MM	365, 367, 369, 371, 373, 375, 377, 379, 381, 383, 393, 395
90090-0008	BALL, D=7,1 MM	253, 255, 279, 281
90090-0013	BALL, D=4 MM	451, 467, 469, 535, 547
90090-0014	BALL, D=7,938 MM	425
90090-0016	BALL, D=15 MM	115, 117, 119, 121, 225, 227, 229
90091-0089	ROD SEAL, GLIDORING 16X22X2,5 MM	373, 375, 377, 379, 381, 383, 393, 395
90091-0091	ROD SEAL, GLIDORING 10X14X1,7 MM	365, 367, 369, 371

Part No	Description	Page No
90091-0106	SCRAPER 30X40X10 MM	243, 277
90091-0107	ROD SEAL, GLIDORING 25X32X2,7 MM	373, 375, 377, 379, 381, 383
90091-0136	ROD SEAL, GLIDORING 36X44X3,1 MM	459, 539
90091-0137	RADIAL SEAL TYPE VARILIP 20X35X7 MM	727
90091-0159	GASKET 330X308X9 MM	705, 707
90091-0160	ROD SEAL, STEPSEAL 16X23,5X3,2 MM	451, 467, 469, 535, 547
90091-0162	WEAR RING 16X19X3,2 MM	393, 395, 451, 467, 469, 535, 547
90091-0163	WEAR RING 20X23X3,2 MM	451, 467, 469, 535, 547
90091-0165	ROD SEAL, STEPSEAL 20X27,5X3,2 MM	451, 467, 469, 535, 547
90091-0169	WEAR RING 12X15X3,2 MM	365, 367, 369, 371
90091-0170	WEAR RING 25X30X4,2 MM	393, 395
90091-0180	GASKET 32X25X4,8 MM	57, 171, 183
90091-0182	GASKET 48X38X4,8 MM	57, 97, 171, 213
90091-0214	ROD SEAL, GLIDORING 16X20,9X2,2 MM	393, 395
90091-0215	ROD SEAL, GLIDORING 25X32,5X3,2 MM	393, 395
90091-0216	PISTON SEAL, GLIDORING 7,1X12X2,2 MM	365, 367, 369, 371
90091-0304	RADIAL SEAL 45X65X8 MM DUST LIP	515
90092-0048	OIL BRUSH, FLAT, 5/16-24 UNF	475, 553, 895, 897
90092-0052	METERING VALVE 10 MM3	253, 255, 279, 281, 325, 331, 333, 335, 337, 339, 341, 343, 345, 373, 375, 377, 379, 381, 383, 393, 395, 423, 431, 433, 895, 897
90092-0053	METERING VALVE 30 MM3	253, 255, 279, 281, 331, 333, 335, 337, 339, 341, 343, 345, 373, 375, 377, 379, 381, 383, 393, 395, 431, 433
90092-0054	METERING VALVE 50 MM3	385, 387, 451, 475, 535, 553, 895, 897
90094-0005	RAIL BRACKET	995, 997
90095-0071	OVERLOAD PROTECTION, PKZM 0-0,63 A	951, 953, 955, 957, 959
90095-0072	OVERLOAD PROTECTION, PKZM 1,0 A	951, 953, 955, 957, 959
90095-0073	OVERLOAD PROTECTION, PKZM 1,6 A	951, 953, 955, 957, 959
90095-0074	OVERLOAD PROTECTION, PKZM 2,5 A	951, 953, 955, 957, 959
90095-0075	OVERLOAD PROTECTION, PKZM 4 A	951, 953, 955, 957, 959
90095-0076	OVERLOAD PROTECTION, PKZM 6,3 A	941
90095-0077	OVERLOAD PROTECTION, PKZM 6-10 A	951, 953, 955, 957, 959
90095-0078	OVERLOAD PROTECTION, PKZM0-16	951, 953, 955, 957, 959
90095-0080	OVERLOAD PROTECTION, PKZM 25 A	951, 953, 955, 957, 959
90099-0001	NUT PR 15,2 BRASS	721
90099-0002	NUT PR 18,6 BRASS	245, 605
90099-0003	NUT	617, 629, 721
90099-0011	NUT PR 37 BRASS	107, 109, 219, 221
90099-0015	NUT HEX. ML6M, M12X1,5, FE	699
90099-0057	NUT HEX. M20X1,5	459, 539
90099-0103	NUT, PR 47 (PG36)	985
90099-0104	NUT, PR 15,2 (PG9)	105, 133, 217, 553, 985
90099-0110	NUT, PR 22,5 (PG16)	941, 985
90099-0116	NUT, PR 12,5 (PG7)	583, 585
90099-0117	NUT, PR 18,6 (PG11)	497, 559, 941, 985
90099-0119	NUT, PR 28,3 (PG21)	985
90099-0120	NUT, PR 37 (PG29)	985
90099-0131	NUT HEX. M16X2 SS	895, 897
90110-0095	CONNECTOR 3 POLE + EARTH	697
90110-0114	CONTACT HOUSING, 1321 G1	583, 585
90110-0116	CONTACT PIN, AWG 2-8	583, 585
90110-0121	FEMALE INSERT GDS A-H 09 06 215 2811	951, 953, 955, 957, 959
90110-0122	COVER, 09 06 000 9957	951, 953, 955, 957, 959
90111-0120	SWITCH, 2 POS.704.510 .0A+704.901.5/A	679, 979
90111-0122	KEY SWITCH, 2 NO CONTACTS	951, 953, 955, 957, 959
90111-0124	KEY SWITCH, 1NO,1NC CONTACT	951, 953, 955, 957, 959
90111-0135	MAIN SWITCH P3-100/EA/SVB-SW/N/HI11/H-P3	951, 953, 955, 957, 959
90111-0139	SWITCH, 704.504.0 + 704.901.3	979
90111-0142	SWITCH GEAR, NO.OF DIGIT: 4	951, 953, 955, 957, 959
90111-0172	EARTH FAULT BREAKER, F 362-25/0.03	951, 953, 955, 957, 959
90113-0044	PRESSURE REGULATOR	705, 707
90113-0072	PRESSURE REGULATOR	669, 671, 673
90113-0140	QUICK CLAMP	685, 687
90113-0374	SLOW STARTING VALVE	669, 671, 673
90113-0375	PRESSURE DISTRIBUTION	669, 671, 673
90113-0377	SHUT-OFF VALVE	669, 671, 673
90113-0378	SHUT-OFF VALVE	669, 671, 673
90113-0469	MANIFOLD REGULATOR 4 BAR	685, 687
90113-0470	MANIFOLD REGULATOR 10 BAR	685, 687
90115-0006	ROD ENDS,RE-LUBRICATEABLE	639
90115-0009	ROD END, ID=6 MM, M6X1	571
90115-0010	ROD ENDS,RE-LUBRICATEABLE	571
90115-0054	ROD END, ID=8 MM, M8X1,25	609
90115-0068	ROD END, ID=6 MM, M6X1	645
90119-0056	RELAY, AUXILIARY MK3P5-S 24VDC	951, 953, 955, 957, 959, 977
90119-0063	OPTO-RELAY, DC/DC AMMS-10-1/30VDC	951, 953, 955, 957, 959
90119-0067	SOLID-STATE RELAY, H12WD4850	951, 953, 955, 957, 959, 977
90119-0084	EXPANSION RELAY, JSR1T-500MS	941
90119-0106	SAFETY RELAY JOKAB RT 6	951, 953, 955, 957, 959
90125-0020	PLATE	87, 207, 771
90129-0006	BASE, S3-B	951, 953, 955, 957, 959
90130-0017	POTENTIOMETER, 10 KOHM	951, 953, 955, 957, 959
90130-0301	ADJUSTING KNOB WITH DIAL	951, 953, 955, 957, 959
90132-0021	HOSE CLIP 6-10MM	733, 735
90132-0023	HOSE CLIP S 15/9	733, 735

Part No	Description	Page No
90134-0003	BUSHING	253, 255, 279, 281
90134-0004	PIPE CONNECTION R1/8	535, 553
90134-0019	CONN. STRAIGHT, GE 6-LM FZB	263, 265, 287, 289, 669, 671, 673
90134-0030	SLEEVE FOR PLASTIC TUBE	253, 255, 279, 281
90134-0031	SLEEVE FOR PLASTIC TUBE	253, 255, 263, 265, 279, 281, 287, 289, 325, 331, 333, 335, 337, 451, 475, 535, 553, 895, 897
90134-0034	NIPPLE	253, 255, 263, 265, 279, 281, 287, 289
90134-0038	BUSHING/NUT INLET/OUTLET 4 MM	253, 255, 263, 265, 279, 281, 287, 289, 325, 331, 333, 335, 337, 339, 341, 343, 345, 451, 475, 535, 553, 895, 897, 931
90134-0039	BUSHING VALVE CONNECTION 2,5 MM	253, 255, 279, 281, 325, 331, 333, 335, 337, 339, 341, 343, 345, 423, 431, 433, 451, 535, 895, 897
90134-0040	BUSHING VALVE CONNECTION 4 MM	475, 553
90134-0042	SPACER DOSING VALVE	373, 375, 377, 379, 381, 383, 393, 395, 475, 553, 895, 897
90134-0045	PLUG M12X1	373, 375, 377, 379, 381, 383, 393, 395, 475, 553, 895, 897
90134-0047	CONNECTION FOR DOSING VALVE	373, 375, 377, 379, 381, 383, 393, 395
90134-0051	SPACING COLLAR DOSING BLOCK	475, 553
90134-0052	PLUG DOSING BLOCK	253, 255, 279, 281, 331, 333, 335, 337
90134-0055	BUSHING/NUT INLET/OUTLET 6 MM	475, 553
90134-0058	CONNECTION	325, 327, 329, 331, 333, 335, 337, 339, 341, 343, 345, 365, 367, 369, 371, 373, 375, 377, 379, 381, 383, 385, 387, 393, 395, 423, 451, 535, 895, 897
90134-0066	CONNECTION M6 TUBE 4 MM	431, 433
90134-0068	CONNECTION	357, 359, 385, 387, 431, 433, 475, 553, 895, 897
90135-0026	EARTH TERMINAL, 3802.6	693
90135-0031	BUSBAR HOLDER K&M SHO165/2	1001
90135-0037	GROUNDING RAIL 10X3 CU	941
90135-0038	CABLE CLAMP K&M K*12 5-1	951, 953, 955, 957, 959
90135-0039	SHIELD CLIP KLBU 4-13.5	941, 951, 953, 955, 957, 959
90137-0010	BANJO CONN. M6, D=2,5 MM	243, 277
90141-0011	RETAIN. RING, SPEC 12,8	27, 143, 857, 859
90141-0015	RETAIN. RING, 8	839
90141-0016	RETAIN. RING, 10	167, 169, 909
90141-0017	RETAIN. RING, 17	477, 485, 493, 935
90141-0020	RETAIN. RING, 42	785, 787, 789
90141-0022	SNAP RING B 16	171, 213
90142-0005	HOSE	327, 329
90143-0010	STRIP	243, 277
90143-0012	STRIP	309, 311
90143-0016	STRIP	499, 501, 563, 565, 567
90143-0020	STRIP	729
90143-0028	STRIP	551, 553, 557
90143-0029	STRIP	801
90143-0039	STRIP	499, 501, 563, 565, 567
90143-0047	RUBBER STRIP	657
90143-0049	RUBBERSTRIP 11X21MM	299, 301, 499, 501, 563, 565, 567, 599, 655
90143-0056	STRIP	473
90143-0057	STRIP EMKA 1011-05 21X11MM	985
90143-0059	SEAL STRIP 4610069	1005
90143-0060	EDGE STRIP 9,5X6,3MM BLACK PVC	299, 301, 903
90143-0068	RUBBERSTRIP EMKA 1011-06	303, 305
90143-0073	RUBBER STRIP	1003
90144-0004	TREBOFLON-TAPE W=13MM	723, 725, 727
90144-0030	TAPE	607
90144-0072	TAPE SCOTCH VHBS 4945 W=12,7MM	1005
90144-0073	TREBOFLON-TAPE W=13MM	75, 187, 327, 329, 475, 553
90145-0005	WIRE	455
90148-0036	HOSE	705, 707
90148-0037	HOSE	253, 255, 279, 281
90148-0038	HOSE	253, 255, 279, 281
90151-0001	BRASS PIPE DI=2,6 MM	253, 255, 279, 281
90152-0001	HOSE L=280MM THREAD M10X1	613
90152-0016	HOSE	307
90152-0017	HOSE	581
90153-0001	ADHESIVE	601, 625
90153-0015	ADHESIVE LOCTITE IS 496/CYANOLIT 303	365, 367, 369, 371
90153-0016	ADHESIVE TUBE 100G RHODORSIL CAF 3	39, 41, 155, 157
90153-0017	ADHESIVE 160 ML	309, 311
90153-0020	ADHESIVE BOSTIK 1782 125ML	17, 137, 553
90153-0035	ADHESIVE	669, 671, 673
90153-0049	ADHESIVE	511
90155-0008	HANGER CHAIN, 18	111, 223
90157-0016	LOCKING FLUID	243, 277, 327, 329, 351, 353, 413, 415, 417, 419, 555, 599, 625, 657, 833, 903
90157-0021	LOCKING FLUID	425, 617
90157-0022	SEALING COMPOUND	39, 41, 243, 277, 303, 305, 309, 311, 499, 501, 553, 563, 565, 567, 601, 625
90157-0034	SEALING COMPOUND LOCTITE 572 50 ML	463, 543
90157-0036	FLANGE SEALING COMPOUND 574	903
90157-0041	SEALING COMPOUND	511, 987
90161-0001	O-RING MATERIAL 3 MM	247, 249, 251, 515
90163-0014	QUICK COUPLING, (M) LP-006-1-WR013	581
90163-0016	QUICK COUPLING, (F) LP 006-0-WR013	669, 671, 673
90163-0028	QUICK COUPLING, LP 006-0-WR513	463, 543
90163-0046	SLEEVE LP-004-0-WR 0510-21-1 BRASS	553
90163-0048	NIPPLE LP-004-2-WR 510-23-1	535
90163-0050	QUICK COUPLING, (M) 5089 / 9	703
90163-0052	HOSE NIPPLE, EXT.THR. 1/4-12 MM	577, 579, 703

Part No	Description	Page No
90163-0057	NIPPLE 1/8" BRASS	81, 193
90163-0062	QUICK COUPLING, (F) 5053-1/8	81, 193, 543, 553
90163-0063	QUICK COUPLING, (M) 5450-6/4	535
90163-0066	NIPPLE 3/8"	703
90163-0076	QUICK COUPLING, (F) LP-006-0-WR021	705, 707
90163-0080	QUICK COUPLING, (M) 5450-8/6	537
90164-0015	LIGHT FIXTURE, DWDCV111B/230V 50HZ	309, 311
90164-0301	HOLDING FIXTURE	245, 951, 953, 955, 957, 959
90164-0302	BRACKET	309, 311
90165-0002	CLIP	253, 255, 279, 281, 331, 333, 335, 337, 339, 341, 343, 345
90165-0003	PIPE CLIP FOR TUBE D=4 MM	895, 897
90165-0005	PIPE CLIP FOR TUBE D=6 MM	805, 807
90165-0006	CLIP	805, 807
90165-0007	PIPE CLIP FOR TUBE D=8 MM	253, 255, 279, 281, 573
90165-0009	PIPE CLIP FOR TUBE D=12 MM	709, 711
90165-0010	CLIP	797, 799
90165-0019	TOOL CLIP, 81/3, OPEN, 20 - 30 MM	685, 687
90165-0022	PIPE CLIP, FOR TUBE D=2,5 MM, B-3570	253, 255, 279, 281, 325, 331, 333, 335, 337, 339, 341, 343, 345
90165-0023	CLIP	253, 255, 279, 281
90165-0024	PIPE CLIP FOR TUBE D=5 MM	785, 787, 789
90165-0039	PIPE CLAMP, RSGU 1.15/12, D=15 MM	253, 255, 279, 281
90165-0044	CLIP	669, 671, 673, 703
90165-0057	PIPE CLIP FOR TUBE D=6 MM	915
90165-0060	PIPE CLIP FOR TUBE D=5 MM	841
90165-0065	PIPE CLAMP, RSGU 1.8/9, D=8 MM	339, 341, 343, 345, 357, 359
90166-0002	HOSE 16/21 PVC	927
90166-0008	HOSE 7/10 PVC TRANSP.	617, 629, 703
90166-0013	TUBE 8 MM PA BLUE	279, 281, 571, 661, 663, 665, 667, 669, 671, 673, 685, 687, 709, 711
90166-0023	SHRINKABLE HOSE 38MM	583, 585
90166-0049	HOSE PVC 25/33-34	731, 929
90166-0059	HOSE PVC 12/16MM TRANSP.	785, 787, 789, 813, 815
90166-0060	HOSE 19/26-27 REINF.PVC	327, 329, 633
90166-0068	TUBE 12 MM PA BLUE	661, 663, 665, 667
90166-0081	TUBE 6 MM PA BLUE	279, 281, 543, 571, 661, 663, 665, 667, 669, 671, 673, 685, 687, 709, 711, 909, 931
90166-0087	HOSE 15/23 REINF.PVC TRANSP.	619, 631, 769, 771, 811
90166-0089	HOSE 4/6.2 PE BLUE	465, 545, 929
90166-0101	HOSE, SILICONE, 60 SHORE, 6/10 MM	733, 735
90166-0108	TUBE 6 MM PA,TRANSP.	253, 255, 279, 281
90166-0109	TUBE 4 MM PA,TRANSP.	253, 255, 279, 281, 339, 341, 343, 345, 431, 433, 451, 475, 535, 553, 895, 897, 931
90166-0113	HOSE	577, 579, 703
90166-0117	HOSE 4/6 PVC BLUE	451, 463, 535, 543, 895, 897, 915
90166-0118	TUBE 8 MM PA BLACK	253, 255, 279, 281, 661, 663, 665, 667, 681, 709, 711
90166-0119	HOSE PUR 4/6 BLACK	105, 133, 217, 231, 661, 663, 665, 667, 681, 709, 711
90166-0124	TUBE 6 MM PA,TRANSP.	115, 117, 119, 121, 225, 227, 229
90166-0132	TUBE 6 MM PA,TRANSP.	105, 133, 217, 253, 255, 263, 265, 287, 289, 397, 399, 401, 403, 463, 543, 633, 651, 805, 807
90166-0133	TUBE 8 MM PA,TRANSP.	253, 255, 327, 329, 453, 463, 537, 543
90166-0138	HOSE	733, 735, 801
90166-0140	HOSE	931
90166-0143	TUBE 2,5 MM PA,TRANSP.	331, 333, 335, 337, 339, 341, 343, 345, 373, 375, 377, 379, 381, 383, 393, 395, 423, 431, 433, 451, 535, 895, 897
90166-0151	HOSE	719
90166-0156	HOSE	719
90166-0159	RUBBER HOSE	409, 411
90166-0193	TUBE 6 MM PUR BLUE	553
90166-0194	TUBE 8 MM PUR BLUE	685, 687
90166-0195	TUBE 12 MM PA BLUE	685, 687
90178-0007	HOUR COUNTER, BG 40,17-1 12-48VDC	951, 953, 955, 957, 959
90181-0064	LOCK ZP1 FOR CHANNEL T1	995, 997, 999, 1001
90181-0067	DIVIDING PLATE SEP80	995, 997, 999, 1001
90184-0001	SNAP-IN BALL LOCK, 49X9 MM	785, 787, 789, 813, 815
90187-0029	BALL VALVE G1/2, NPBR	39, 41, 155, 157, 669, 671, 673
90187-0051	BALL VALVE G3/8 PTFE	111, 223
90187-0059	BALL VALVE FOR HYDR.PER. G1/2 3MM HOLE	193, 731
90187-0120	FLAP VALVE, G1/4, L=38	705, 707
90187-0191	BALL VALVE R1/8, 6 MM	231
90189-0019	BALL BUSHING, 20X30X30 MM	499, 501, 563, 565, 567
90194-0016	SIGN, FLASH, ELECTRIC EQUIPMENT SYMBOL	99, 389, 391, 587, 589, 605, 669, 671, 673, 693, 783, 979, 987, 989, 993
90194-0080	SIGN, IDENTIFICATION OF WIRING	951, 953, 955, 957, 959
90194-0133	SIGN "DELIVERED DESIGN"	951, 953, 955, 957, 959
90195-0020	TERMINAL BLOCK, 1977.2	245, 617, 629
90195-0028	TERM.BLOCK 6-POLE STEATIT	17, 137
90195-0029	CONN. LINK NO324 FOR -28	17, 137
90199-0010	LEVEL GLASS	39, 41, 155, 157
90201-0010	VALVE	697
90201-0014	VALVE	705, 707
90201-0057	VALVE	697
90201-0058	SOLENOID VALVE	697
90201-0303	SPARE PARTS KIT	697
90201-0306	BLOCK	697

Machine Type Group Description Page No

Part No	Description	Page No
90201-0307	BLANKING, NO. DGMA-3-C1-10	705, 707
90201-0308	BLANKING, NO. DGVM-3-10-R	705, 707
90203-0002	RIBBON CABLE 20X1,5MM2	313
90203-0009	CU LITZ CABLE 15X2 MM	951, 953, 955, 957, 959
90206-0031	HEATING ELEMENT 700+1200W,220V	87, 123, 135, 207, 771, 847
90206-0053	HEATING ELEMENT 230V 1200W	605
90206-0070	HEATING ELEMENT 6000W 380/220V	39, 41, 123, 135, 155, 157
90206-0322	GASKET	87, 207, 771
90206-0326	JUNCTION BOX FOR 90206-56	39, 41, 155, 157
90207-0363	GASKET	195
90207-0365	GASKET	195
90208-0031	BUSHING	443, 445
90208-0047	COLLAR	499, 501, 563, 565, 567
90208-0080	CLAMPING ELEMENT WITH SLEEVE, 25X34 MM	699
90208-0120	CONE CLAMP. ELEMENT 22/32, L=25	327, 329
90208-0121	CONE CLAMP. ELEMENT 25/34, L=25	351, 353
90208-0128	CONE CLAMP. ELEMENT 60/77, L=55	351, 353
90214-0035	BALL BEARING REPBY 0090214-0138	15
90214-0040	BALL BEARING, 8X22X7 MM	37, 153
90214-0092	BALL BEARING, 17X30X7 MM	477, 493, 935
90214-0095	BALL BEARING, 2 SEALS, 20X42X12 MM	903
90214-0098	BALL BEARING, 15X35X11 MM	19, 21, 27, 37, 139, 141, 143, 153, 753, 755, 757, 759, 761, 785, 787, 789, 803, 813, 815, 857, 859
90214-0122	BALL BEARING, 30X72X27 MM	525, 533
90214-0138	BALL BEARING, 5X19X6 MM	103, 215, 767
90214-0167	BALL BEARING SOLID OIL 10X22X6 MM	519
90214-0225	BALL BEARING SOLID OIL 20X42X12 MM	485
90214-0303	SEALING RING, 18,6X35X2 MM	19, 21, 27, 37, 139, 141, 143, 153, 155, 157, 857, 859
90214-0312	SEALING RING, 50X74,6X2,5 MM	327, 329
90217-0026	NUT	61, 63, 175, 177
90217-0035	NUT	39, 41, 155, 157
90217-0041	NIPPLE LKBN, RD 60-6 - R1 1/2 M	491, 557
90220-0034	THERMOCOUPLE CABLE K/ 2X0,5MM2	971, 973
90220-0059	THERMOCOUPLE CABLE K/ 2X0,81MM2	951, 953, 955, 957, 959
90220-0108	SCR. CABLE 5X1,5MM2	971, 973
90220-0116	MOTOR CABLE 4X1,0+2(2X0,5)+SHIELD	941
90224-0078	PIPE SOCKET, ART.NO RAN 1612	39, 41, 155, 157, 675
90224-0094	NIPPLE	617
90224-0186	NIPPLE	463, 543
90224-0234	BRACKET	267, 269, 291, 293
90224-0296	CONN. BULKHEAD, ART.NO. 116 1500	669, 671, 673, 709, 711
90224-0297	REDUCER, ART. NO 166 1215	669, 671, 673
90224-0305	PIPE CONNECTION	709, 711
90224-0307	STRAIGHT FITTING, 6MM, 1/8",	81, 105, 133, 193, 217
90224-0308	CONN. BANJO, ART. NO. 2023-1/8-1/8	81, 193
90230-0017	NON RETURN VALVE RHD 10-L	705, 707
90230-0018	NON RETURN VALVE VCR-844-1/4"-04	681
90230-0028	NON-RETURN VALVE H 151 R 3/8"	661, 663, 665, 667, 677
90232-0129	PH.CELL E3S-CR61-5M	633
90232-0304	REFLECTOR MIRROR VISOLUX C110	601, 625
90233-0027	TUBE FUSE, 16A	951, 953, 955, 957, 959, 977
90233-0028	TUBE FUSE, 10A	951, 953, 955, 957, 959, 977
90233-0029	TUBE FUSE, 25A	951, 953, 955, 957, 959, 977
90233-0303	FUSE HOLDER, ST10	951, 953, 955, 957, 959
90233-0304	FUSE HOLDER, ST10	951, 953, 955, 957, 959
90235-0064	VALVE	681
90235-0151	NON-RETURN VALVE	685, 687
90235-0259	VALVE	81, 193
90235-0274	THROTTLE CHECK VALVES,G1/8"	81, 87, 161, 193, 769, 771, 811
90235-0275	THROTTLE CHECK VALVES,G1/4"	29, 31, 37, 47, 53, 55, 57, 97, 129
90235-0282	THROTTLE CHECK VALVES,G1/8	145, 147, 153, 167, 169, 207, 571
90235-0450	PLATE	669, 671, 673
90235-0766	VALVE	669, 671, 673
90235-0846	THROTTLE CHECK VALVE G1/8", MANUAL, 6	909
90236-0044	GUIDE HOLDER	905, 907
90237-0044	LOCK HANDLE, 3-26689-01	599
90237-0071	MAGNETIC LOCK, 92X16X15,5 MM	299, 301, 777, 779, 781
90237-0128	LOCK CYLINDER, 1109-U3	987, 991
90237-0129	LOCK CYLINDER, 1109-U2	989
90237-0142	LOCK HOUSING, 1000-U45	993
90237-0151	GUIDE, 1001-U11	987, 989, 991
90237-0153	LOCK HOUSING, 1121-U26-0B	987, 989, 991
90237-0155	LOCK ADAPTER, 1121-U40	987, 989, 991
90237-0156	LOCK BOLT, 1000-16	987, 989, 991
90237-0158	ROUND BAR, NO. 1049-U18-L839.5	987, 989, 991
90237-0176	TURNING HANDLE	987, 989, 991
90237-0202	LOCK, INSERT SQUARE,1000-U2 8 MM	993
90237-0324	KEY, 1104-02 FOR SQUARE 8 MM	989
90237-0335	LOCKING CATCH	993
90239-0012	BRACKET	53, 55
90239-0073	CYLINDER	87
90239-0084	CYLINDER	571
90239-0088	BRACKET	87, 571, 771
90239-0099	BRACKET	87

Part No	Description	Page No
90239-0127	BRACKET	29, 31, 47, 129
90239-0130	BRACKET	571
90239-0166	CYLINDER	29, 31, 57, 97
90239-0189	CYLINDER	37, 47, 53, 55, 129
90239-0320	BRACKET	37
90239-0357	ROD END,CLEVIS WITH AXLE M10X1,25	397, 399, 401, 403
90239-0405	ROD END,BALL JOINT EYE,MINI-ISO M10X1,25	153, 247, 249, 251, 397, 399, 401, 403
90239-0453	BRACKET	59, 69, 145, 147, 153, 161, 173
90239-0460	BRACKET	167, 169
90239-0487	REAR,CLEVIS,MINI-ISO 20-25	207
90239-0488	REAR,CLEVIS,MINI-ISO 32	769, 811
90239-0516	ROD END,CLEVIS WITH AXLE M10X1,25	59, 69, 145, 147, 161, 167, 169, 173, 769, 811, 909
90239-0532	ROD END,CLEVIS WITH AXLE M8	167, 169, 207, 571
90239-0750	CYLINDER	643
90239-0773	CYLINDER	153, 161
90239-0779	CYLINDER	59, 69, 145, 147, 167, 169, 171, 173, 213
90239-0846	DOUBLE ACTING, MINI-ISO, CYL.20-25	771
90239-0847	DOUBLE ACTING, MINI-ISO, CYL.20-50	207, 571
90239-0858	DOUBLE ACTING, MINI-ISO, CYL.32-50	769, 811
90239-0983	CYLINDER	651
90240-0048	PLAIN BEAR,SELF ADJ.SPHER. 25X42X20 MM	331, 333, 335, 337, 339, 341, 343, 345
90240-0050	PLAIN BEAR,SELF ADJ.SPHER. 20X35X24 MM	331, 333, 335, 337, 339, 341, 343, 345
90240-0052	BEARING BUSHING WITHOUT FL, 12X14X15 MM	499, 501, 563, 565, 567
90240-0055	BEARING BUSHING WITHOUT FL, 25X28X25 MM	475, 553
90240-0073	RICTION BEARING	247, 249, 251
90240-0076	RICTION BEARING	499, 501, 563, 565, 567
90240-0083	BEARING BUSHING WITHOUT FL, 8X10X10 MM	499, 501
90240-0093	PLAIN BEAR,SELF ADJ.SPHER. 10X26X12 MM	355
90240-0094	BEARING BUSHING WITHOUT FL, 50X55X40 MM	459, 539
90240-0146	FLANGE BUSHING,15X21X20 MM	39, 41, 155, 157
90240-0180	FLANGE BUSHING,10X14X15 MM NFB	427, 429
90242-0065	O-RING 24,2X3 MM	719
90242-0084	O-RING 203,0X3 MM	61, 63, 123, 135, 175, 177
90242-0093	O-RING MATERIAL 1,5 MM	365, 367, 369, 371
90242-0148	O-RING 19,2X3 MM	835, 837
90242-0153	O-RING	727
90242-0163	O-RING	733, 735
90242-0168	O-RING	45, 723, 725
90242-0171	O-RING	723, 725
90242-0173	O-RING	727
90242-0182	O-RING 50X4 MM	863
90242-0186	O-RING	723, 725
90242-0188	O-RING REPBY 0315204-0307	723, 725
90242-0189	O-RING	723, 725
90243-0061	AIR GUN, CEJN SERIE 204 ED: 90459-0173	307
90243-0133	CONTAINER	657
90243-0134	FLOW METER	681
90245-0019	TRANSF. 3-PH.750VA SEC.23A	951, 953, 955, 957, 959
90245-0024	MATCHING TRANSF. 65 KVA	975
90248-0013	HINGE 3562E STUV	599
90248-0019	HINGE 1054-U1	993
90248-0022	HINGE, 1055-U6 S/S 304	495, 559, 561
90248-0026	HINGE, 1703-80X32	785, 787, 789, 813, 815
90248-0032	HINGE, 1110-U2	987, 989, 991
90248-0036	HINGE, 1055-U7 S/S 304	919, 923
90256-0001	TAPE SUPPLY HOLDER, TYPE 2000	657
90257-0002	FILTER PLUG, NO. 8145-00-120 TYP F12	577, 579
90258-0031	PIN, STRAIGHT SLOTTED SPRING FRP 3X20	763, 765
90259-0310	ADAPTER PLATE, K&M SP PKZ M	951, 953, 955, 957, 959
90259-0312	ADAPTER PLATE K&M SP PKZ SOND C	941, 951, 953, 955, 957, 959
90259-0313	AUX. CONTACT K&M NHI21-PKZM0	951, 953, 955, 957, 959
90259-0317	AUX.CONTACT K&M NHI 11-PKZ0	941
90261-0008	PLUG, BLIND, PLASTIC GPN300F26	619, 631
90261-0018	PLUG, BLIND, PLASTIC GPN300F-183	577, 579
90261-0033	PLUG, BLIND, PLASTIC GPN300F182	491
90261-0049	PLUG, BLIND, PLASTIC, NO. SR1750	833
90261-0060	PLUG, BLIND, PLASTIC, NO. IKPK25X1, 5	913
90261-0079	PLUG, BLIND, PLASTIC, NO. 1955	985, 993
90264-0026	FAN / EQK8-35-2 + EQN 68-35-2 INCL	951, 953, 955, 957, 959
90264-0078	FAN	773, 775
90265-0037	CONNECTION BOX ROSE	243, 277
90266-0006	TUBE	253, 255, 279, 281
90266-0019	PIPE	253, 255, 279, 281, 325, 331, 333, 335, 337, 339, 341, 343, 345, 431, 433
90270-0017	COMPRESSOR NASH/ELMO 112 MB/4-2083	61, 63, 175, 177
90270-0347	VALVE	61, 63, 175, 177, 719
90274-0029	LEVEL GUARD, 60VA/250V	703
90274-0045	PRESSURE GUARD, 14 KPA	113
90274-0053	LEVEL GUARD, 40VA/250V AC/DC	705, 707
90274-0056	PRESSURE SWITCH, 100 - 1200 KPA	669, 671, 673
90274-0065	PRESSURE SWITCH, 7 - 200 KPA	719
90274-0074	PRESSURE GUARD, 530 KPA	669, 671, 673
90274-0084	PRESSURE GUARD, 1800 KPA	669, 671, 673
90277-0041	TANK BREATH. FILTER / UC-SAB-3101 UCC	705, 707
90277-0045	FILTER / 9900-05-BK	685, 687

Part No	Description	Page No
90277-0046	FILTER / 9933-05-101	685, 687
90277-0323	FILTER HOUSING / ART.NO 95S6-1/4 S 5430	669, 671, 673
90277-0324	FILTER CARTRIDGE / 050-11-A	669, 671, 673
90287-0009	SPRINGLOADED SCREW M10X19	103, 215, 767
90287-0062	SCREW M6	495, 497, 499, 501, 509, 557, 559, 563, 565, 567, 777, 779, 781, 919
90287-0081	SCREW MC6S M6X10 129	327, 329
90287-0106	SCREW SPRINGLOAD. SLOTTED HEAD M10X21	39, 41, 155, 157, 833
90287-0119	SCREW,SOCK.SET FLATPOINT MMP6SS M5X12 A2	451, 535
90287-0128	SCREW, SOCK.SET DOGPOINT M4X6	365, 367, 369, 371, 373, 375, 377, 379, 381, 383
90287-0134	SCREW POZIE, RXS B10X13 A4	481
90287-0143	SCREW MC6S M6X25 129	339, 341, 343, 345
90287-0144	SCREW MC6S M6X35 129	339, 341, 343, 345
90287-0145	SCREW MC6S M5X16 129	351, 353
90287-0149	SCREW MC6S M6X8 109	327, 329
90287-0157	SCREW M6SF FLAT HEAD M6X10 88	985, 995, 997, 999, 1001
90287-0159	SCREW, SOCK.SET DOGPOINT M6X16	727
90287-0167	SCREW SPRINGLOAD. SOCK. HEX HEAD M6X20	823, 825
90287-0208	SCREW M6S M5X70 A480	453
90287-0212	SCREW MC6S M5X85 129	669, 671, 673
90287-0215	SCREW MC6S M5X130 129	669, 671, 673
90287-0328	SCREW M6S M12X160 A280	551
90287-0330	SCREW M6S ISO 4017 M10X70 A480	895, 897
90287-0331	SCREW SOCK. BUT. HEAD K6S M5X12 A4	785, 787, 789, 813, 815
90287-0335	SCREW MC6S M8X90 A280	295
90287-0336	SCREW HEX. SOCK. SET, M6X20 PLASTIC	997, 1001
90287-0337	SCREW RECESSED HEAD M4X10 WH. NYLON	985, 995, 997, 999, 1001
90288-0085	ROLLER CHAIN, SINGLE 5/8 -144	903
90296-0009	SILICONE GREASE TUBE 100 GR.	21, 27, 141, 143, 153, 857, 859
90296-0012	LUBRICANT	555
90296-0028	OIL (QTY OF STOCK REFLECTS LITERS)	449, 527
90296-0068	GREASE UNIWAY LI 62 CARTRIDGE 400 GR.	327, 329, 373, 375, 377, 379, 381, 383, 393, 395
90296-0070	GREASE	447, 525, 533
90296-0075	OIL 54322-320 ACC TO M 1254.322	327, 329
90296-0076	OIL	577, 579
90296-0091	LUBRICATION GREASE	517
90297-0006	FLUORESCENT TUBE, PL9	245
90297-0007	FLUORESCENT TUBE, PL11	951, 953, 955, 957, 959
90297-0306	BALLAST COIL 50/60 HZ	951, 953, 955, 957, 959
90298-0012	INHIBITOR	601, 625
90299-0072	INK	801
90303-0011	PROTECTIVE GOGGLES	875
90303-0012	PROTECTIVE GLOVES	875
90303-0013	APRON	875
90304-0013	CONTAINER	703
90304-0301	PIPE	703
90304-0302	PIPE FITTING	703
90304-0303	COVER	703
90304-0305	PIPE	703
90314-0038	LEVEL CONTROL RELAY, RM3 220-240VAC	951, 953, 955, 957, 959
90321-0015	PUMP 502 CFX 7ETV 302 50HZ IP55	491, 557
90321-0017	PUMP C660P 220V 50HZ;50W	617
90321-0018	GEAR PUMP MLPS/T124D	705, 707
90321-0034	PUMP 502 CFX 5ETV 362 60HZ IP55	491, 557
90321-0037	"PUMP C-6125P EP 220V;50HZ"	629
90321-0108	PUMP CALPEDA 7001002003Z NT61	721
90321-0381	HYDR.ACCUMULATOR, SBO-210-0.75E1/112-0/1	705, 707
90321-0382	FLANGE, RG 26/12-3/8 FOR 90321-18	705, 707
90321-0383	PUMP CONN. ELBOW FLANGE RG 26/12-1/2	705, 707
90321-0384	DISTANCE PIECE	705, 707
90321-0385	COUPLING	705, 707
90321-0411	GASKET	727
90326-0012	PROTECTIVE COVER, T31A4618	17, 39, 41, 53, 55, 57, 65, 67, 81, 129, 137, 155, 157, 167, 169, 171, 179, 181, 193, 769, 811
90326-0019	THERMOELEMENT	39, 41, 155, 157
90326-0020	PLUG, FEMALE YELLOW CR-AL	17, 39, 41, 53, 55, 57, 65, 67, 81, 129, 137, 155, 157, 167, 169, 171, 179, 181, 193, 769, 811
90326-0048	THERMOCOUPLE, 12826-31	53, 55, 129, 167, 169
90326-0051	THERMOCOUPLE, 12826-33	17, 57, 65, 67, 137, 171, 179, 181
90326-0052	THERMO ELEMENT	39, 41, 53, 55, 129, 155, 157, 167, 169
90326-0089	THERMOCOUPLE, 5110-089-000	81, 193, 769, 811
90326-0304	LEAD IN, 9041-15-KS-UB60	53, 55, 129, 167, 169
90326-0306	GLAND FITTING 9041-45-KS-KR.1/8" D=4,5MM	39, 41, 53, 55, 129, 155, 157, 167, 169
90328-0001	SILENCER	669, 671, 673
90328-0003	SILENCER	81, 193
90328-0017	SILENCER, D=6 MM	685, 687
90328-0020	SILENCER	651
90328-0024	SILENCER G3/8	685, 687
90330-0012	SLEEVE, REDUCTION, INT, R-2021/4X1/8	113
90330-0020	ELBOW, 90 INT. THREAD, R-2221/2	723, 725
90330-0021	NIPPLES, EXT. THREAD. R-207R1/2	723, 725
90330-0024	T-PIPE, INT. THREAD, RP1/4	75
90330-0025	BUSHING, INT/EXT. THR. R1/4-RP1/8	105, 133, 217
90330-0026	PLUG, EXT. G-THREAD, G1/4	39, 41
90330-0028	NIPPLES, EXT. THREAD. R-207R3/8	111, 223, 505

Part No	Description	Page No
90330-0029	PLUG, EXT. G-THREAD, R-236R3/8	61, 63, 175, 177
90330-0032	NIPPLES, EXT. THREAD. ISO 7/1 R1/8-R1/8	81, 193
90330-0037	PLUG, EXT. G-THREAD, G1/2	423, 709, 711
90330-0038	NUT, HEXAGON, G3/8	773, 775
90330-0042	BUSHING, INT/EXT. THR. R3/8-RP1/4	113
90330-0043	NIPPLES, EXT. THREAD. R-207R1/4	75
90330-0048	BUSHING, INT/EXT. THR. R1/2-RP3/8	81, 193
90330-0061	CONN. STRAIGHT. R 1/2X12MM R-1322	709, 711
90330-0062	STRIGHT COUPLING R3/8" R131U	81, 193
90330-0066	PLUG, EXT. G-THREAD, G1/8	105, 133, 217, 365, 367, 369, 371
90330-0067	T-PIPE, INT. THREAD, R-221R3/8	505
90330-0078	BUSHING, INT/EXT. THR. R3/4-RP3/8	53, 55, 475, 553
90330-0080	NIPPLES, EXT. THREAD. R3/4-R1/2	723, 725
90330-0081	ELBOW, 90 INT. THREAD, R-222R1/4	463, 581
90330-0085	BUSHING, INT/EXT. THR. R1/2-RP1/4	577, 579
90330-0093	NUT, HEXAGON, G1/2	709, 711
90330-0097	NIPPLES, EXT. THREAD, G1/8	261
90330-0099	ELBOW, 90 INT. THREAD, R-222R1/8	261
90330-0101	NIPPLES, EXT. THREAD, G1/4	477, 493, 935
90330-0105	NUT, HEXAGON, R3/8	105, 133, 217
90330-0120	NUT, HEXAGON, G1/4	113
90335-0004	SPRING	609
90335-0008	SPRING	83, 85
90335-0011	SPRING	425
90335-0015	SPRING 42360 BARNES	831
90335-0025	SPRING BARNES 22010	647
90335-0055	SPRING	499, 501, 563, 565, 567
90335-0064	SPRING	821
90335-0096	SPRING	479
90339-0004	MAGNETIC LOCK, 57X16X19 MM	561, 657, 919
90344-0022	SPROCKET	355
90347-0004	VIBRATION DAMPER D=30 TH=M8 H=17 H2=21MM	275, 777, 779, 781
90347-0005	DAMPER, NO. F 1006 B	659
90347-0011	VIBRATION DAMPER MEGI 781056	623, 701
90347-0012	DAMPER	649
90347-0035	DAMPER	495, 559
90347-0050	GAS SPRING NO. 0306 150 398535	987, 989, 991, 993
90347-0079	DAMPER TFE 601	851
90347-0096	GAS SPRING NO. 03-06-100 082473	923
90347-0142	FOOT	913
90347-0189	SHOCK ABSORBER, 370-050-400	459, 539
90348-0007	FREE WHEEL COUPLING	21, 141
90355-0031	TORQUE RIGID COUPLING, 10X10 MM	699
90355-0048	TORQUE RIGID COUPLING, 22X22 MM	347, 349
90355-0160	SHAFT COUPLING	327, 329
90360-0005	STEAM TRAP / TYPE 2010	709, 711
90360-0006	ATTACHMENT FOR STEAM TRAP 2010	709, 711
90410-0051	TEMPERATURE CONTROLLER, KS 40	951, 953, 955, 957, 959
90411-0005	INSULATOR	17, 137
90413-0033	CODE INSERT SET 0-9	793, 795, 797, 799
90413-0043	CODE INSERT SET	793, 795, 797, 799
90413-0044	CODE INSERT SET	793, 795, 797, 799
90413-0047	CODE INSERT SET	793, 795, 797, 799
90415-0018	FILTER FOR LIME SEPARATING / D MOD.AD	669, 671, 673
90415-0019	FILTER / ART.NO. HH-M15-RG	669, 671, 673
90415-0022	FILTER / R1 1/2" TYP. 1012	491, 557
90415-0029	FULL PR. FILTER / MDF BN 30 G 10 B1-BYP	705, 707
90415-0033	OIL FILTER REFILLING UC-HP-1229-25	703
90415-0316	FILTER / 6051-200-SS	123, 135
90416-0014	INDEXING DEVICE	449
90416-0021	INDEXING DEVICE	527
90417-0076	TIMING BELT T10X920X25 POLYURETHANE	327, 329
90417-0081	TIMING BELT T5X610X6 POLYURETHANE	785, 787, 789
90417-0139	TIMING BELT T10X1560X25 POLYURETHANE	695
90422-0008	COOLER	705, 707
90424-0009	SPRAY NOZZLE 103 DEG	463, 475, 543, 553
90424-0016	SPRAY NOZZLE 103 DEG R 1/8 GG8W	463, 543, 895, 897
90424-0017	SPRAY NOZZLE	233
90424-0025	SPRAY NOZZLE 145 DEG	493
90424-0027	SPRAY NOZZLE TIP, 8613-8V-TC	243, 277
90424-0032	SPRAY NOZZLE 95 DEG	261
90424-0033	SPRAY NOZZLE 76 DEG	261
90424-0035	SPRAY NOZZLE 95 DEG	261, 477, 499, 501, 505, 563, 565, 567, 935
90424-0036	SPRAY NOZZLE 95 DEG R 3/8 BD3	499, 501, 563, 565, 567
90424-0304	GASKET	123, 135
90426-0003	HAND SHOWER	581
90427-0013	INK JET PRINTER A300W	887
90430-0067	DC MOTOR DRIVE PME 1802A CD2	951, 953, 955, 957, 959
90432-0023	BRAKE ORTLINGHAUS	327, 329
90450-0033	CYLINDER	247, 249, 251
90450-0096	CYLINDER	397, 399, 401, 403
90450-0328	DOUBLE ACTING,PROFILE,CYL 32-25	909
90450-0438	DOUBLE ACTING, COMPACT, CYL 25-25	571
90450-0654	BRACKET,REAR,EYE WITH AXLE 32	909

Part No	Description	Page No
90450-0655	BRACKET,REAR,CLEVIS FLANGE WITH FOOT 32	909
90457-0078	PANEL NUT	685, 687
90457-0144	REGULATOR 0,3-2 BAR	685, 687
90457-1106	CURRENT CONTROL RELAY, EIH 84 871 010	951, 953, 955, 957, 959
90458-0138	PROX.SW. E2EG-X1R5B1-5M	357, 359
90458-0256	PROXIMITY SWITCH IIA 3010-BPKG/6M	247, 249, 251
90458-0292	BASE, KT70-1001	273
90458-0293	LIGHT ELEMENT, RED, KL70-401R	273
90458-0294	LIGHT ELEMENT, YELLOW, KL70-401Y	273
90458-0295	LIGHT ELEMENT, BLUE, KL70-401L	273
90458-0397	SERVO DRIVE DMC2 50720 P	941
90458-0533	BALL BEARING, 17X35X10 MM	485
90458-0601	PHOTOCELL, SICK PHOTOCELL 1	115, 117, 119, 121, 225, 227, 229
90458-0672	PROXIMITY SENSOR E2E2-X5MB1-5M	475, 571, 895, 897
90458-0675	PROXIMITY SENSOR, E2EG-X5MB1-5M	519, 553
90458-1548	COMPRESSION SPRING, 2X20X62	517
90458-1854	KEY SAF.SW. AZM 415-11/02 ZPKA 24V AC/DC	569, 583, 585
90458-1855	KEY FOR SAFETY SWITCH, AZM 415-B2	569, 583, 585
90458-2964	ELBOW PIPE JOINT, EXT.THREAD, D=8MM-G1/8	685, 687
90459-0083	RECORDER 1-CHANNEL, LOGOLINE 500	951, 953, 955, 957, 959
90459-0085	ROLL CHART PAPER	977
90459-0086	1-CHANNEL PEN	977
90459-0487	ELBOW PIPE JOINT, EXT.THREAD, D=6MM G1/8	927
90459-0710	DIAPHRAGM PUMP, RM10	927
106758-0000 ..	WASHER	785, 787, 789
111543-0000 ..	GUIDE CONE	15, 103, 215, 767
179595-0000 ..	CLOSING DEVICE	61, 63, 175, 177
179596-0000 ..	FLOAT	61, 63, 175, 177
206913-0000 ..	LOCKING LOOP	609
208173-0000 ..	SHAFT	605
209145-0000 ..	THROTTLE SCREW	65, 67, 179, 181, 773, 775
209146-0000 ..	BARRIER NUT	65, 67, 179, 181, 773, 775
209181-0000 ..	LID	111, 223
209183-0000 ..	RING	111, 223
209331-0001 ..	GEAR WHEEL	21, 141
209331-0009 ..	GEAR WHEEL	21, 141
209331-0011 ..	GEAR WHEEL	21, 141
228652-0000 ..	STOPPER DOWEL	785, 787, 789
229207-0000 ..	BEARING SLEEVE	487
229775-0000 ..	SPACER	605
230107-0000 ..	WASHER	769, 811
230551-0000 ..	GASKET	61, 63, 123, 135, 175, 177
230918-0000 ..	WASHER	639
232979-0000 ..	PRESSURE ROLLER	841
237871-0000 ..	BARRIER	81
237873-0000 ..	SHAFT	81
239440-0000 ..	SHAFT	29, 31, 145, 147
240797-0000 ..	HANDLE	425
243132-0000 ..	PROTECTION PLATE	605
243133-0000 ..	SHIELD PLATE	605
243151-0000 ..	SHAFT	763, 765, 809
243218-0000 ..	CANTILEVER	763, 765, 809
245039-0000 ..	GUIDE WHEEL	487
245189-0001 ..	ATTACHMENT	769, 811
245210-0000 ..	BODY	103, 215, 767
245221-0000 ..	STOP	605
246342-0000 ..	PAPER SUPPORT	769
246343-0000 ..	FASTENING BRACKET	769
246344-0000 ..	HEAT GUARD	769
246388-0200 ..	PRESSURE ROLLER	741, 743, 745, 747, 749, 751
247170-0000 ..	BEARING COVER	19, 37, 139, 153
247172-0000 ..	SPACER RING	21, 27, 39, 41, 141, 143, 155, 157, 857, 859
247173-0000 ..	BEARING SEAT	21, 39, 41, 141, 155, 157
247227-0001 ..	AIR NOZZLE	453
247239-0000 ..	WHEEL	39, 41, 155, 157
247248-0000 ..	PIN	39, 41, 155, 157
247349-0000 ..	STEERING	77, 79, 189, 191
247350-0000 ..	GASKET HOLDER	77, 79
247355-0000 ..	LOCK WASHER	77, 79, 189, 191
247357-0000 ..	SPROCKET	189, 191
247358-0000 ..	SHIFTER HANDLE	77, 79, 189, 191
247385-0000 ..	SIGN	705, 707
247386-0000 ..	SIGN	705, 707
250588-0000 ..	FLANGE	753, 755, 757, 759
250590-0000 ..	BEARING COVER	21, 141
250592-0000 ..	WASHER	21, 141
251279-0000 ..	COIL HEATER	769, 811, 847
251490-0000 ..	FASTENING BRACKET	769, 811
251493-0000 ..	FORK	827
251494-0000 ..	SHAFT	827
251495-0000 ..	SHAFT	827
251496-0000 ..	SHAFT	827
251498-0000 ..	BARRIER	827
251501-0000 ..	FASTENING BRACKET	769

Part No	Description	Page No
251502-0000 ..	HEAT GUARD	769
251504-0000 ..	HOLDER	769, 811
251505-0000 ..	SPACER	769
252766-0001 ..	INSULATING PIPE	453, 537
252766-0002 ..	INSULATING PIPE	453
252972-0000 ..	SHOULDER SCREW	777, 779, 781
253107-0000 ..	WASHER	813, 815
255064-0000 ..	BUSHING	763, 765
255301-0000 ..	HEATING RAIL	605
255416-0000 ..	PLATE	771
255417-0000 ..	WASHER	771
255609-0000 ..	ARM CUTTING JAW	385, 387
255697-0001 ..	INTERMEDIATE PIPE	373, 375, 377, 379, 381, 383
255697-0002 ..	INTERMEDIATE PIPE	373, 375, 377, 379, 381, 383
255742-0000 ..	COMPRESSION SPRING	365, 367, 369, 371
255801-0000 ..	RETAINING RING	365, 367, 369, 371
255870-0000 ..	VALVE HOUSING	59, 173
255871-0000 ..	PIECE	59, 173
255874-0000 ..	BEARING COVER	59, 69, 173
255875-0000 ..	BUSHING	59, 69, 173
255879-0000 ..	PIPE	71, 183
255897-0004 ..	GEAR WHEEL	21, 141
255897-0007 ..	GEAR WHEEL	21, 141
255897-0008 ..	GEAR WHEEL	21, 141
255898-0000 ..	HUB	21, 141
255905-0000 ..	PIPE	71, 183
255939-0000 ..	WASHER	247, 249, 251
255940-0000 ..	SPACER	247, 249, 251
255943-0000 ..	HOLDER	247, 249, 251
255969-0000 ..	SHAFT	29, 31, 145, 147
255970-0000 ..	BUSHING	29, 31, 145, 147
255971-0000 ..	BUSHING	29, 31
255972-0000 ..	BEARING PLATE	29, 31
255974-0000 ..	BRACKET	29, 31
255977-0000 ..	SHAFT	33, 35, 149, 151
255978-0000 ..	FORK	33, 35, 149, 151
255981-0000 ..	NUT	33, 35, 149, 151
255984-0001 ..	CYLINDER BRACKET	47
255986-0000 ..	WHEEL	77, 79, 189, 191
255989-0000 ..	SHAFT	19
255995-0000 ..	SCREW	47, 161
256001-0000 ..	CANTILEVER	39, 41
256005-0000 ..	GASKET	39, 41, 155, 157
256006-0000 ..	AXLE SUPPORT	39, 41, 155, 157
256007-0000 ..	AXLE SUPPORT	39, 41, 155, 157
256010-0000 ..	NUT	39, 41, 155, 157
256011-0000 ..	DOWEL	39, 41
256012-0000 ..	SHAFT	39, 41
256022-0000 ..	BUSHING	47, 161
256031-0000 ..	SHAFT	49, 101
256056-0000 ..	PIVOT ARM	53, 55, 129
256058-0000 ..	LEAD	53, 55
256059-0000 ..	COVER	53, 55
256063-0000 ..	CYLINDER BRACKET	53, 55, 129
256066-0000 ..	GASKET REPBY 0751010-0000	51
256073-0000 ..	SCREW	53, 55
256082-0000 ..	CAP	385, 387
256112-0000 ..	BRACKET	87, 207
256117-0000 ..	BRACKET	87
256148-0000 ..	HOLDER	653
256150-0000 ..	SCREW	653
256163-0000 ..	SHAFT	77, 79, 189, 191
256165-0000 ..	SPROCKET	77, 79
256170-0000 ..	DRIP PLATE	77, 79, 189, 191
256174-0002 ..	PULLEY	327, 329
256176-0000 ..	GEAR WHEEL	327, 329
256177-0000 ..	SHAFT	327, 329
256178-0000 ..	FIXING RING	327, 329
256179-0000 ..	SPACER SLEEVE	327, 329
256180-0000 ..	SPACER	327, 329
256181-0000 ..	SPACER PIPE	327, 329
256190-0000 ..	NUT	479
256199-0300 ..	BELT STRETCHER	317, 319
256200-0300 ..	INTERMEDIARY SHAFT	317, 319
256203-0300 ..	HOLD-DOWN DEVICE	317, 319
256208-0400 ..	KNIFE HOLDER	363
256209-0300 ..	VOLUME FLAP VERSION 01	363
256210-0300 ..	VOLUME FLAP VERSION 02	363
256214-0400 ..	PRESSURE RAIL	363
256217-0400 ..	GUIDES	363
256222-0200 ..	VOLUME CURVE PIECE IH	363
256223-0400 ..	SUPPORT ROLLER	363
256248-0001 ..	LID	785, 787, 789, 813, 815
256258-0000 ..	CYLINDER BRACKET	29, 31

Part No	Description	Page No
256276-0000 ..	SHAFT	475, 553
256279-0000 ..	ANGLE	89, 91
256280-0000 ..	DOWEL	83, 85, 89, 91
256309-0000 ..	SHAFT	83, 85
256312-0000 ..	WASHER	83, 85
256355-0000 ..	CANTILEVER	81
256391-0001 ..	BENDING ROLLER	785, 787, 789
256392-0001 ..	SHAFT	785, 787, 789
256392-0003 ..	SHAFT	785, 787, 789
256398-0000 ..	LID	785, 787, 789, 813, 815
256399-0001 ..	SHAFT	785, 787, 789
256400-0000 ..	SHAFT	785, 787, 789
256403-0000 ..	TOOTHED WHEEL	785, 787, 789
256406-0000 ..	GABLE PLATE	785, 787, 789, 813, 815
256408-0001 ..	SPACER	785, 787, 789
256409-0000 ..	WASHER	785, 787, 789, 813, 815
256410-0300 ..	INDEXING UNIT	437, 439
256410-0400 ..	INDEXING UNIT	437, 439
256412-0000 ..	HEAD PLATE	449, 527
256418-0000 ..	BEARING BRACKET	339, 341
256421-0000 ..	PULLEY	331, 333, 335, 337
256422-0000 ..	WASHER	331, 333, 335, 337, 339, 341, 343, 345
256426-0001 ..	WASHER	331, 333, 335, 337, 339, 341, 343, 345
256426-0002 ..	WASHER	331, 333, 335, 337, 339, 341, 343, 345
256427-0000 ..	SHAFT	331, 333, 335, 337, 339, 341, 343, 345
256436-0500 ..	PRESSURE DEVICE	437, 439
256437-0200 ..	DISC COUPLING	437, 439
256438-0200 ..	WORM GEAR	437, 439
256461-0000 ..	DOWEL	451, 535
256462-0000 ..	SCREW	451, 535
256463-0000 ..	WASHER	451, 535
256472-0000 ..	WASHER	325, 331, 333, 335, 337, 339, 341, 343, 345
256514-0000 ..	SHAFT	325
256515-0000 ..	END PIECE	339, 341, 343, 345
256516-0000 ..	CAP	325, 339, 341, 343, 345
256517-0000 ..	SCREW	339, 341, 343, 345
256518-0000 ..	SHAFT	325
256519-0000 ..	SPRING BRACKET	325
256547-0300 ..	ELEMENT	437, 439
256548-0000 ..	HEATING CHAMBER	453
256557-0001 ..	WASHER	373, 375, 377, 379, 381, 383, 393, 395
256557-0002 ..	WASHER	373, 375, 377, 379, 381, 383, 393, 395
256557-0003 ..	WASHER	373, 375, 377, 379, 381, 383, 393, 395
256576-0000 ..	ROLL	373, 375, 377, 379, 381, 383, 393, 395
256607-0000 ..	AXLE PIN	365, 367, 369, 371
256621-0000 ..	WASHER	397, 399, 401, 403
256626-0000 ..	EAR	365, 367, 369, 371
256628-0000 ..	PIECE	385, 387
256629-0001 ..	AXLE PIN	385, 387
256629-0003 ..	AXLE PIN	385, 387
256640-0000 ..	HOLDER	491
256641-0000 ..	LEG	491, 557
256653-0000 ..	SPACER	351, 353
256659-0000 ..	OPERATING ROD	365, 367, 369, 371
256665-0200 ..	HATCH	239, 241
256674-0200 ..	BOTTOM VALVE	437, 439
256689-0000 ..	AIR NOZZLE	87, 207
256692-0000 ..	CARRIER	369, 371
256693-0000 ..	CARRIER	365, 367
256704-0000 ..	WASHER	385, 387
256705-0000 ..	LACE	397, 399, 401, 403
256706-0000 ..	BEARING PLATE	365, 367, 369, 371
256707-0000 ..	BRACKET	397, 399, 401, 403
256710-0000 ..	SHAFT	385, 387
256712-0400 ..	PULL-DOWN DEVICE	437, 439
256738-0000 ..	WASHER	423
256739-0000 ..	SCREW	423
256769-0000 ..	CUTTING JAW	365, 367, 369, 371
256770-0000 ..	BEARING HOUSING	365, 367, 369, 371
256806-0300 ..	CRANK	317, 319
256812-0000 ..	SHAFT	355
256814-0000 ..	WASHER	355
256816-0000 ..	PIPE	355
256828-0000 ..	SPRING	355
256829-0000 ..	SCREW	385, 387, 423
256831-0001 ..	SPACER	385, 387
256831-0002 ..	SPACER	385, 387
256831-0003 ..	SPACER	385, 387, 423
256831-0004 ..	SPACER	423
256834-0000 ..	YOKE	385, 387
256840-0002 ..	PIPE	65, 67
256840-0003 ..	PIPE	179, 181
256859-0000 ..	SCREW	409, 411
256860-0000 ..	ROLL	409, 411

Part No	Description	Page No
256870-0000 ..	BRACKET	385, 387
256873-0200 ..	DOOR	593, 595
256875-0200 ..	HATCH	593, 595
256882-0000 ..	WASHER	421
256889-0000 ..	PLUNGER	385, 387
256890-0000 ..	LACE	385, 387
256891-0000 ..	LACE	385, 387
256899-0000 ..	SHAFT	51, 127, 165
256907-0000 ..	WASHER	463, 543
256912-0000 ..	DOWEL	323
256914-0000 ..	SPACER RING	323
256915-0000 ..	SPACER RING	323
256916-0000 ..	STRUT	323
256918-0000 ..	WASHER	323
256953-0000 ..	BLOCK RIGHT	385
256954-0000 ..	BLOCK LEFT	387
256966-0200 ..	BENDING ROLLER BRACKET	741, 743, 745, 747, 749, 751
256967-0200 ..	BENDING ROLLER	741, 743, 745, 747, 749, 751
256975-0000 ..	PROTECTION	297
256984-0000 ..	BENDING ROLLER	761, 803
256985-0000 ..	SHAFT	753, 755, 757, 759, 761, 803
256986-0001 ..	STRUT	753, 755, 757, 759
256986-0002 ..	STRUT	763, 765
256986-0003 ..	STRUT	763, 765, 809
256986-0005 ..	STRUT	769
256986-0006 ..	STRUT	769, 811
256992-0000 ..	CANTILEVER	761
256993-0000 ..	CANTILEVER	761
257000-0000 ..	NIPPLE	431, 433
257040-0000 ..	FORK	29, 31, 145, 147
257041-0000 ..	FORK	29, 31, 145, 147
257042-0000 ..	BRACKET	29, 31, 145, 147
257043-0000 ..	ANGLE BRACKET	29, 31, 145, 147
257044-0000 ..	ROLL	29, 31, 145, 147
257050-0000 ..	SHAFT	29, 31, 145, 147
257089-0000 ..	PLATE	83, 85
257090-0000 ..	SHIFTER HANDLE	83, 85
257101-0000 ..	LOCK	23, 25
257141-0000 ..	RETAINING RING	785, 787, 789, 813, 815
257146-0200 ..	LID	593, 595
257151-0000 ..	BRACKET	701
257166-0300 ..	PAPER GUIDE	11, 13
257174-0000 ..	SEALING WASHER	327, 329
257175-0000 ..	WASHER	93, 95, 209, 211
257179-0000 ..	GEAR WHEEL	327, 329, 355
257190-0000 ..	SEPARATION BLOCK	261
257202-0000 ..	STRAINER	723, 725
257213-0000 ..	BUSHING	385, 387
257231-0000 ..	WINDOW	303, 305
257249-0000 ..	SCREW	373, 375, 377, 379, 381, 383, 393, 395
257250-0000 ..	LID	373, 375, 377, 379, 381, 383, 393, 395
257271-0000 ..	STOP	701
257306-0000 ..	ROLL	331, 333, 335, 337
257308-0000 ..	SCREW	331, 333, 335, 337
257309-0000 ..	SHAFT	331, 333, 335, 337, 357, 359
257310-0000 ..	NUT	331, 333, 335, 337, 357, 359
257311-0000 ..	CAP	331, 333, 335, 337, 339, 341, 343, 345
257317-0000 ..	LACE	385, 387
257326-0000 ..	CRANK	355
257327-0000 ..	SLIDER	355
257328-0000 ..	END PIECE	355
257330-0000 ..	PRESSURE ROLLER	33, 35, 123, 135, 149, 151
257334-0000 ..	LEAF SPRING	397, 399, 401, 403
257362-0000 ..	LACE	365, 367, 369, 371
257379-0000 ..	HYDRAULIC PIPE RIGHT	431
257380-0000 ..	HYDRAULIC PIPE LEFT	433
257381-0300 ..	MANIFOLD RIGHT	363
257382-0300 ..	MANIFOLD LEFT	363
257393-0001 ..	NUT	425
257393-0002 ..	NUT	425
257395-0000 ..	WASHER	425
257397-0000 ..	PIN	657
257923-0000 ..	GUIDE WHEEL	763, 765, 809
259807-0000 ..	WASHER	453
260427-0000 ..	WASHER	451, 535
263150-0000 ..	BRACKET	643
263152-0000 ..	SHAFT	643
263153-0000 ..	NUT	643
263311-0000 ..	WASHER	47, 161
263655-0002 ..	SHAFT	83, 85
263655-0003 ..	SHAFT	89, 91
263655-0004 ..	SHAFT	89, 91, 93, 95, 209, 211
263655-0005 ..	SHAFT	83, 85
263655-0006 ..	SHAFT	29, 31, 77, 79, 93, 95, 145, 147, 189, 191, 209, 211

Part No	Description	Page No
263655-0007 ..	SHAFT	93, 95, 209, 211
263655-0009 ..	SHAFT	93, 95, 209, 211
263655-0011 ..	SHAFT	83, 85
263655-0016 ..	SHAFT	89, 91
263655-0018 ..	SHAFT	93, 95, 209, 211
263655-0019 ..	SHAFT	83, 85
263673-0000 ..	GASKET	453
265567-0000 ..	BEARING UNIT	753, 755, 757, 759, 761, 803
265568-0000 ..	DUST COVER	753, 755, 757, 759, 761, 803, 813, 815
266049-0000 ..	SUPPORT	763, 765, 809
266389-0000 ..	PISTON ROD	57, 97, 171, 213
266390-0000 ..	NUT	57, 97, 171, 213
266391-0000 ..	RING	57, 97, 171, 213
266394-0000 ..	BRACKET	57, 97
266710-0000 ..	WHEEL	643
266727-0000 ..	AIR NOZZLE	771
266728-0000 ..	CANTILEVER	771
266730-0000 ..	HOLDER	771
266731-0000 ..	SHAFT	771
266732-0000 ..	SHAFT	771
266733-0000 ..	MOUNTING BLOCK	771
266734-0000 ..	CAP	771
266737-0000 ..	WASHER	59, 69, 173, 771
266739-0000 ..	CABLE GLAND	87, 207, 771
266740-0003 ..	SPACER	87, 771
266752-0000 ..	MOUNTING SHEET	827
266761-0000 ..	MOUNTING LUG	763, 765, 809
267033-0000 ..	WASHER	77, 79, 189, 191
267306-0000 ..	TOUCH GUARD	769, 811
267311-0000 ..	FASTENING PLATE	773, 775
267315-0100 ..	PAPER GUIDE	741, 743, 745, 747, 749, 751
267316-0000 ..	CANTILEVER	767
267494-0000 ..	COIL HEATER	53, 55, 123
268059-0000 ..	ROLL	29, 31, 145, 147
269053-0001 ..	SHAFT	841
269053-0003 ..	SHAFT	841
269054-0000 ..	ARM	841
269056-0000 ..	CATCH	841
269057-0000 ..	TENSION SPRING	841
269400-0000 ..	VALVE HOUSING	97
269401-0000 ..	HOUSE	57, 97, 213
269443-0000 ..	BRACKET	61, 63, 175, 177
269461-0000 ..	CANISTER	61, 63, 175, 177
269859-0000 ..	BRACKET	61, 63, 175, 177
271007-0000 ..	POINTER	351, 353
271011-0000 ..	WASHER	657
271017-0300 ..	BENDING ROLLER	633
271036-0000 ..	CANTILEVER	39, 41
271051-0002 ..	BLOCK LEFT	451
271052-0002 ..	BLOCK RIGHT	451
271088-0000 ..	SPACER	263, 265, 287, 289
271100-0000 ..	DOWEL	385, 387
271121-0000 ..	FORCE SPRING	261
271128-0300 ..	MOTOR	317, 319
271132-0000 ..	SPACER	397, 399, 401, 403
271163-0000 ..	CANTILEVER	247, 249, 251
271167-0000 ..	VALVE HOUSING	57, 171
271168-0400 ..	BLOCK	695
271169-0200 ..	VALVE	11, 13
271169-0300 ..	VALVE	11, 13
271181-0200 ..	AIR SUPER-HEATER	11, 13
271181-0300 ..	AIR SUPER-HEATER	11, 13
271183-0000 ..	PIPE	17, 137
271184-0000 ..	DISCHARGE TRAY	17, 137
271185-0000 ..	DISCHARGE TRAY	17, 137
271191-0000 ..	LID	453
271211-0000 ..	WASHER	103, 215
271219-0000 ..	HINGE	299, 301
271220-0000 ..	HINGE	299, 301
271221-0000 ..	PIN	299, 301
271229-0000 ..	BOX	617
271251-0000 ..	DISTANCE SPACER	65, 67
271261-0500 ..	CLEANING SYSTEM	253, 255, 279, 281
271269-0000 ..	BUSHING	37, 53, 55, 87, 129, 153, 167, 169, 207
271280-0000 ..	PIPE	39, 41
271284-0000 ..	BLOCKING PIECE	397, 399, 401, 403
271316-0000 ..	BRACKET	87
271320-0000 ..	HOLDER	709, 711
271321-0000 ..	HOLDER	709, 711
271322-0000 ..	HOLDER	709, 711
271323-0000 ..	HOLDER	263, 265, 287, 289
271343-0000 ..	HOLDER	263, 265, 287, 289
271344-0000 ..	HOLDER	263, 265, 287, 289
271345-0000 ..	BRACKET	53, 55, 129

Part No	Description	Page No
271346-0000 ..	FORK	53, 55, 129
271347-0000 ..	ARM	23, 25, 125
271348-0000 ..	LINK	23, 25, 125
271380-0000 ..	LINK	659
271381-0000 ..	STRUT	659
271387-0300 ..	SPRAY GUN	437, 439
271414-0200 ..	AIR JET GUN	239, 241
271419-0000 ..	FORK	29, 31, 145, 147
271420-0000 ..	CANTILEVER	29, 31, 145, 147
271421-0000 ..	HOLDER	29, 31, 145, 147
271422-0000 ..	SPRING	29, 31, 145, 147
271423-0001 ..	SHAFT	29, 31, 145, 147
271423-0005 ..	SHAFT	53, 55, 129
271428-0000 ..	HOLDER	659
271433-0000 ..	PIPE	491
271435-0000 ..	WASHER	491
271441-0000 ..	BRACKET	785, 787, 789
271451-0000 ..	BRACKET	617
271452-0200 ..	DETERGENT PUMP	593, 595
271454-0200 ..	CATCH HANDLE	633
271456-0000 ..	CATCH LEVER	701
271457-0000 ..	CATCH LEVER	701
271461-0000 ..	GASKET	61, 63, 123, 135, 175, 177
271468-0200 ..	GUIDE	593, 595
271469-0200 ..	GUIDE	593, 595
271472-0000 ..	BRACKET	623
271478-0000 ..	PLATE	463
271499-0000 ..	ELECTRICAL CONNECTION	453, 537
271508-0000 ..	BRACKET	107, 109, 219, 221
271509-0000 ..	JUNCTION BLOCK	231
271546-0000 ..	BASKET	633
271547-0000 ..	DOOR	633
271548-0000 ..	LINK	633
271558-0000 ..	BRACKET	633
271562-0600 ..	PIPE WORK MACHINE BODY	239, 241
271585-0000 ..	WASHER	495, 559
271586-0001 ..	WASHER	495
271586-0002 ..	WASHER	495
271587-0000 ..	WASHER	461, 495
271591-0000 ..	BUTTON	473, 551
271608-0000 ..	CLAMP SCREW	499, 501, 563, 565, 567
271621-0000 ..	LACE	253, 255, 279, 281
271622-0000 ..	LACE	253, 255, 279, 281
271623-0000 ..	LACE	253, 255, 279, 281
271626-0300 ..	SUSPENSION ARM	603
271632-0000 ..	HOOD	611
271640-0000 ..	LID	61, 63, 175, 177
271641-0300 ..	TABLE	603
271654-0000 ..	RETAINING RING	103, 215
271656-0000 ..	WASHER	27, 143, 857, 859
271689-0000 ..	WASHER	327, 329
271699-0300 ..	SPLICING APPARATUS	593, 595
271708-0000 ..	SLIDE RAIL	499, 501, 563, 565, 567
271717-0000 ..	SPACER	83, 85, 209, 211
271718-0000 ..	WASHER	83, 85, 209, 211
271731-0000 ..	COMPRESSION SPRING	451, 467, 469, 535, 547
271742-0000 ..	PIPE	253, 255, 279, 281
271743-0000 ..	PIPE	253, 255, 279, 281
271747-0000 ..	COTTER	81
271748-0000 ..	BEARING BLOCK	81
271753-0000 ..	SHAFT	597
271759-0000 ..	CURVE	351, 353
271760-0000 ..	CURVE	351, 353
271762-0000 ..	NUT	709, 711
271820-0002 ..	STEERING RAIL	47, 161
271823-0000 ..	FILTER	669, 671, 673
271827-0002 ..	HEAD PLATE	47, 161
271835-0000 ..	BRACKET	143, 859
271837-0000 ..	BRACKET	27, 143, 857, 859
271841-0000 ..	BEARING SEAT	27, 143, 857, 859
271844-0000 ..	WASHER	27, 29, 31, 53, 55, 129, 143, 145, 147, 857, 859
271846-0000 ..	INSULATION NUT	421
271848-0000 ..	SCREW	421
271858-0000 ..	FLANGE	47, 161
271860-0000 ..	CLAMP BLOCK	49, 101, 131, 163
271863-0000 ..	SHAFT	77, 79, 189, 191
271864-0000 ..	WASHER	77, 79, 189, 191
271865-0000 ..	SLEEVE	47
271867-0000 ..	PIPE	709, 711
271868-0000 ..	PIPE	709, 711
271869-0000 ..	PIPE	709, 711
271870-0000 ..	PIPE	709, 711
271871-0000 ..	PIPE	709, 711
271872-0000 ..	PIPE	709, 711

Part No	Description	Page No
271890-0000 ..	BRANCH PIPE	57
271893-0000 ..	SHAFT	37, 153
271898-0000 ..	SCREW	37, 153
271899-0000 ..	SCREW	37, 153
271911-0000 ..	SHAFT	643
271912-0000 ..	SHAFT	643
271934-0300 ..	PAPER GUIDE PLATE	633
271941-0002 ..	FRAME	47, 161
271942-0002 ..	AIR GUIDE	47, 161
271949-0000 ..	NUT	669, 671, 673
271950-0000 ..	HOLLOW SCREW	669, 671, 673
271959-0000 ..	BRACKET	623
271961-0000 ..	SCREW	623
271992-0200 ..	PAPER HOLDER	593, 595
271993-0000 ..	BEARING	659
271995-0000 ..	SLEEVE	659
272001-0000 ..	COMPRESSION SPRING	27, 143, 857, 859
272002-0000 ..	PROTECTIVE COVER LEFT	77, 79, 189, 191
272003-0000 ..	PROTECTIVE COVER RIGHT	77, 79, 189, 191
272004-0200 ..	BENDING ROLLER	11, 13
272004-0300 ..	BENDING ROLLER	11, 13
272005-0000 ..	BENDING ROLLER	19, 139
272017-0000 ..	AXLE SUPPORT	19
272018-0000 ..	AXLE SUPPORT	19, 139
272022-0000 ..	AIR KNIFE, MOVABLE	47, 161
272023-0000 ..	FIXED AIR KNIFE	47, 161
272025-0300 ..	AIR KNIFE	11, 13
272026-0002 ..	AIR DISTRIBUTOR	47, 161
272027-0002 ..	GLASS PANE	47, 161
272033-0000 ..	BRACKET	37, 153
272045-0001 ..	SLIDE SHEET	467, 469
272045-0002 ..	SLIDE SHEET	467, 469
272045-0003 ..	SLIDE SHEET	467, 469
272058-0000 ..	LID	243, 277
272083-0000 ..	COVER	87
272084-0200 ..	STRETCHER	633
272085-0000 ..	PENDULUM ARM	639
272087-0000 ..	HOLDER	639
272088-0000 ..	GUIDE	639
272089-0000 ..	SLIDE RAIL	639
272090-0000 ..	SLIDE RAIL	639
272091-0000 ..	BRACKET	639
272095-0000 ..	SHAFT	51, 127, 165
272105-0000 ..	CONNECTION HOUS.(MINOR)	53, 55
272114-0000 ..	HEAT GUARD	53, 55, 129, 167, 169
272116-0000 ..	CAP	331, 333, 335, 337
272129-0000 ..	BRACKET	669, 671, 673
272130-0000 ..	SPACER	669, 671, 673
272140-0002 ..	HEAD PLATE	47, 161
272141-0002 ..	FILTER	47, 161
272145-0000 ..	CONNECTION DEVICE	53, 55
272146-0000 ..	BRIDGE CONNECTOR	53, 55
272157-0000 ..	CONTAINER	75
272173-0000 ..	CANTILEVER	763, 765, 809
272177-0000 ..	LINK	763, 765
272184-0000 ..	COVER	773, 775
272186-0000 ..	ATTACHMENT	773, 775
272188-0000 ..	BRACKET	773, 775
272189-0000 ..	LID	773, 775
272190-0000 ..	LACE	773, 775
272191-0000 ..	DISTRIBUTOR	463, 543
272263-0000 ..	BEARING HOUSING	365, 367, 369, 371
272274-0000 ..	CONTAINER	233
272275-0000 ..	LID	233
272276-0000 ..	BOTTOM	233
272277-0000 ..	GASKET	233
272284-0000 ..	HEATING PIPE	53, 55
272286-0000 ..	AXLE SUPPORT	53, 55, 129
272287-0000 ..	AXLE SUPPORT	87, 207
272308-0003 ..	PIPE	65, 67
272312-0000 ..	PIPE	65, 67, 179, 181
272319-0000 ..	DISCHARGE TRAY	233
272320-0000 ..	DISCHARGE TRAY	233
272325-0000 ..	SPIRAL	233
272329-0002 ..	LACE	47, 161
272337-0200 ..	VALVE	11, 13
272337-0300 ..	VALVE	11, 13
272340-0000 ..	PIPE	669, 671, 673
272341-0000 ..	SPINDLE GUIDE	57, 97
272343-0400 ..	PRESSURE ROLLER	741, 743, 745, 747, 749, 751
272346-0000 ..	PIPE	253, 255, 279, 281
272349-0001 ..	PIPE	65, 67
272349-0004 ..	PIPE	179, 181
272352-0000 ..	PIPE	81

Part No	Description	Page No
272356-0000 ..	PIPE	65, 67
272359-0200 ..	BENDING ROLLER	593, 595
272360-0000 ..	CANTILEVER	597
272361-0000 ..	BOW CLAMP	597
272362-0000 ..	BEARING	597
272372-0000 ..	HOUSE	327, 329
272374-0000 ..	CARRIER	327, 329
272376-0000 ..	SHUTTER	327, 329
272377-0001 ..	CRAMP	327, 329
272377-0002 ..	CRAMP	327, 329
272388-0000 ..	CRAMP	327, 329
272407-0200 ..	GENERATOR	11, 13
272415-0000 ..	ARM	385, 387
272419-0000 ..	CARRIER	365, 367, 369, 371
272422-0000 ..	FOLDING FLAP	365, 367, 369, 371
272423-0000 ..	FOLDING FLAP	365, 367, 369, 371
272424-0000 ..	FOLDING FLAP	365, 367, 369, 371
272425-0000 ..	FOLDING FLAP	365, 367, 369, 371
272429-0000 ..	ARM	397, 399, 401, 403
272431-0000 ..	BRACKET	321
272434-0000 ..	SHAFT	321
272440-0000 ..	PIPE	65, 67
272442-0000 ..	CANTILEVER	331, 333, 335, 337
272453-0000 ..	SPACER	657
272454-0000 ..	PIVOT PIN	385, 387
272455-0000 ..	BEARING BRACKET	331, 333, 335, 337
272457-0000 ..	BOW CLAMP	331, 333, 335, 337
272458-0000 ..	ECCENTRIC SHAFT	331, 333, 335, 337
272459-0000 ..	WASHER	331, 333, 335, 337
272460-0000 ..	WASHER	331, 333, 335, 337
272461-0000 ..	WASHER	331, 333, 335, 337
272462-0000 ..	AXLE BOLT	339, 341, 343, 345
272464-0000 ..	ANGLE BRACKET	47, 161
272467-0000 ..	BOW CLAMP	103, 215
272472-0000 ..	END PIECE	357, 359
272473-0100 ..	BENDING ROLLER	633
272474-0000 ..	SHAFT	637
272475-0000 ..	CAP	637
272476-0000 ..	SHAFT	639
272477-0000 ..	HOLDER	639
272479-0000 ..	PRESSURE ROLLER	33, 35, 123, 135, 149, 151
272488-0000 ..	CLAMP RIGHT	373, 375, 377, 393
272489-0000 ..	CLAMP LEFT	379, 381, 383, 395
272490-0000 ..	SLEEVE	423
272491-0000 ..	BRACKET	397, 399, 401, 403
272492-0000 ..	ARM RIGHT	385
272493-0000 ..	ARM LEFT	387
272496-0000 ..	BRACKET RIGHT	385
272497-0000 ..	BRACKET LEFT	387
272500-0000 ..	SHAFT	373, 375, 377, 379, 381, 383, 393, 395
272501-0000 ..	BRACKET RIGHT	373, 375, 377, 393
272502-0000 ..	BRACKET LEFT	379, 381, 383, 395
272503-0000 ..	CLAMPING PIECE	373, 375, 377, 379, 381, 383, 393, 395
272506-0000 ..	LACE	373, 375, 377, 379, 381, 383, 393, 395
272510-0000 ..	HINGE	657
272511-0000 ..	HINGE	657
272552-0000 ..	BRACKET	653
272554-0000 ..	TOUCH GUARD	81, 193
272555-0000 ..	TOUCH GUARD	81, 193
272556-0001 ..	TOUCH GUARD	65, 67, 179, 181
272557-0001 ..	TOUCH GUARD	65, 67, 179, 181
272559-0000 ..	CABLE TRACK	615, 627
272564-0000 ..	BEARING	633
272565-0000 ..	ARM	323
272566-0000 ..	AXLE PIN	323
272567-0000 ..	ROLL	323
272569-0000 ..	CATCH HANDLE	649
272576-0000 ..	BRACKET	451
272586-0000 ..	TOUCH GUARD	65, 67
272596-0000 ..	GUIDE	701
272597-0000 ..	STEERING RAIL	701
272600-0000 ..	ARM	247, 249, 251
272602-0000 ..	SCREW	247, 249, 251
272603-0000 ..	STOP LUG	649
272604-0000 ..	GUIDE LUG	649
272606-0000 ..	CRADLE	325
272607-0000 ..	BELT HOLDER	339, 341, 343, 345
272608-0000 ..	BELT HOLDER	325
272620-0000 ..	GUIDE	623
272621-0000 ..	STEERING RAIL	623
272622-0000 ..	DRINKING STRAW	773, 775
272630-0000 ..	BARRIER	623
272631-0000 ..	BRACKET	623
272632-0000 ..	SILENCER	773, 775

Part No	Description	Page No
272636-0000 ..	BRACKET	777, 779, 781
272640-0002 ..	COUNTER CAM	397, 399, 401, 403
272640-0005 ..	COUNTER CAM	397, 399, 401, 403
272640-0009 ..	COUNTER CAM	397, 399, 401, 403
272641-0000 ..	PILLAR	397, 399
272642-0000 ..	PILLAR	401, 403
272644-0000 ..	PISTON	373, 375, 377, 379, 381, 383
272645-0000 ..	RAIL	397, 399, 401, 403
272652-0300 ..	CHAIN TENSIONER	475, 553
272654-0000 ..	ECCENTRIC SHAFT	397, 399, 401, 403
272659-0000 ..	SIDE PIECE	473, 551
272660-0000 ..	SIDE PIECE	473, 551
272661-0000 ..	STAIR	473, 551
272664-0000 ..	CANTILEVER	355
272671-0000 ..	CHUTE	243, 277
272673-0000 ..	LEG	473, 551
272679-0000 ..	PIPE	261
272689-0000 ..	BRACKET	423
272690-0000 ..	COVER	355
272691-0000 ..	BRACKET	355
272692-0000 ..	LID	355
272693-0000 ..	RING	355
272694-0000 ..	BARRIER	355
272696-0000 ..	HOLDER	601, 625
272697-0000 ..	BRACKET	633
272698-0000 ..	BRACKET	601, 625
272728-0000 ..	BARRIER	647
272736-0000 ..	CANTILEVER	355
272737-0000 ..	BRACKET	355
272741-0000 ..	SEAL	463, 543
272742-0000 ..	FINGER	247, 249, 251
272743-0000 ..	LID	473, 551
272745-0000 ..	HATCH	473, 551
272746-0000 ..	ROD	575
272747-0000 ..	CONNECTION	575
272751-0000 ..	BOTTOM VALVE	465
272753-0000 ..	STEERING	405, 407
272755-0000 ..	NUT	405, 407
272758-0000 ..	TIMING BELT PULLEY	577, 579
272761-0000 ..	FORK	425
272772-0000 ..	ARM	355
272780-0000 ..	COVER SLIP	49, 163
272781-0002 ..	COVER SLIP	101, 131
272782-0000 ..	COVER SLIP	49, 101, 131, 163
272783-0002 ..	GLASS PANE	101, 131
272783-0003 ..	GLASS PANE	49, 163
272784-0002 ..	RUBBER STRIP	101, 131
272785-0000 ..	RUBBER STRIP	49, 163
272786-0000 ..	HINGE	49, 101
272787-0000 ..	WASHER	49, 101
272790-0000 ..	SIDE PIECE	635
272791-0000 ..	SPACER ROD	635
272792-0000 ..	HEATING PIPE	17, 137
272793-0000 ..	SUPPORT	17
272794-0000 ..	SUPPORT	17, 137
272797-0000 ..	ROLL	83, 85, 209, 211
272808-0000 ..	BRACKET	65, 67, 179, 181
272814-0000 ..	SLEEVE	647
272815-0001 ..	SLEEVE	647
272815-0003 ..	SLEEVE	647
272816-0001 ..	SHAFT	647
272816-0003 ..	SHAFT	647
272818-0000 ..	GASKET	719
272820-0000 ..	TIMING BELT PULLEY	351, 353
272821-0000 ..	PROTRACTOR	351, 353
272840-0000 ..	ROD	423
272844-0000 ..	BRACKET	75, 187
272852-0000 ..	HOLDER	247, 249, 251
272853-0000 ..	SCREW	247, 249, 251
272857-0000 ..	RING	347, 349
272862-0000 ..	HOLDER	611
272864-0000 ..	BRACKET	611
272865-0000 ..	SHAFT	611
272866-0000 ..	LOCKING FLANGE	611
272867-0000 ..	SPRING HOUSING	611
272868-0000 ..	STOPPER DOWEL	167, 169, 611
272869-0001 ..	FLAP	611
272869-0002 ..	FLAP	611
272886-0000 ..	RULER	613
272888-0000 ..	RULER	613
272905-0001 ..	ARM	467, 469
272905-0003 ..	ARM	467, 469
272905-0006 ..	ARM	467, 469
272906-0001 ..	ARM	467, 469

Part No	Description	Page No
272906-0003 ..	ARM	467, 469
272906-0006 ..	ARM	467, 469
272926-0000 ..	FORK	37, 153
272927-0000 ..	PRESSURE ARM	37, 153
272928-0000 ..	ARM	37
272929-0000 ..	BRACKET	37
272945-0000 ..	LOCK	107, 109, 219, 221
272948-0002 ..	SHAFT	87
272948-0003 ..	SHAFT	207
272953-0000 ..	VOLUME CAM LEFT	425
272955-0000 ..	VOLUME CAM LEFT	425
272961-0000 ..	VOLUME CAM RIGHT	425
272963-0000 ..	VOLUME CAM RIGHT	425
272969-0000 ..	BRACKET	425
272970-0000 ..	ARM LEFT	425
272971-0000 ..	ARM RIGHT	425
272972-0000 ..	RULER	425
272973-0000 ..	DOWEL	425
272974-0001 ..	BRACKET	427, 429
272978-0000 ..	SPINDLE	425
272985-0001 ..	ARM	409, 411
272986-0001 ..	VOLUME SHIM	409, 411
272986-0003 ..	VOLUME SHIM	409, 411
272990-0000 ..	VOLUME BULGE	409, 411
272991-0000 ..	VOLUME SHIM	409, 411
272997-0000 ..	STOPPER	459, 475, 539, 553
273429-0000 ..	WASHER	53, 55, 129, 167, 169
273449-0000 ..	SIGN	685, 687
273450-0000 ..	SIGN	685, 687
273452-0000 ..	SIGN	685, 687
273454-0000 ..	SIGN	669, 671, 673
273455-0000 ..	LABEL (COLD WATER)	669, 671, 673, 709, 711
273456-0000 ..	SIGN	669, 671, 673, 709, 711
273458-0000 ..	LABEL (AIR)	669, 671, 673, 709, 711
273937-0000 ..	DIAPHRAGM	39, 41, 155, 157
273953-0000 ..	SEAL	77, 79, 189, 191
273954-0000 ..	SEAL	39, 41, 155, 157
273964-0000 ..	LID	729
273965-0001 ..	WEIGHT	729
273977-0000 ..	NUT	737
273978-0000 ..	LEVEL GLASS	737
273980-0000 ..	SPRING	737
273981-0000 ..	GASKET	733, 735
273982-0000 ..	WEIGHT	733, 735
273996-0000 ..	NUT	737
274177-0000 ..	WASHER	873
274179-0000 ..	HANDLE	873
279008-0000 ..	BUSHING	77, 79, 189, 191
279010-0000 ..	BEARING PLATE	77, 79, 189, 191
279074-0000 ..	TENSION SPRING	827
279480-0000 ..	STEERING RAIL	841
279515-0000 ..	WASHER	703
279589-0000 ..	NUT	65, 67, 179, 181, 773, 775
279590-0000 ..	REDUCTION	773, 775
279672-0000 ..	ATTACHMENT	769, 811
283172-0000 ..	BEARING HOUSING	769, 811
283361-0000 ..	AIR NOZZLE	769, 811
292044-0000 ..	SHAFT	801
292412-0000 ..	END SECTION	793, 795, 797, 799
292413-0000 ..	END SECTION	793, 795, 797, 799
292414-0000 ..	CARRIER	797, 799
292449-0000 ..	PUMP HOUSING	727
292456-0000 ..	BEARING COVER	727
292473-0000 ..	CANTILEVER	699
292477-0000 ..	SHAFT	699
292482-0000 ..	WASHER	699
293395-0001 ..	TYPE HOLDER	793, 795, 797, 799
293395-0002 ..	TYPE HOLDER	793, 795, 797, 799
293659-0000 ..	CARRIER	793, 795
293667-0000 ..	DOWEL	801
293669-0001 ..	WASHER	801
293669-0002 ..	WASHER	801
293669-0003 ..	WASHER	801
293669-0004 ..	WASHER	801
293670-0000 ..	SHAFT	801
293684-0200 ..	PRINTING WHEEL NSS	785, 787, 789, 813, 815
293685-0200 ..	PRINTING WHEEL SS	785, 787, 789, 813, 815
295010-0000 ..	GUIDE SLEEVE	27, 143, 857, 859
295015-0000 ..	BRACKET	645
295016-0000 ..	BRACKET	645
295057-0001 ..	RAIL	467, 469
295057-0002 ..	RAIL	467, 469
295058-0001 ..	RAIL	467, 469
295058-0002 ..	RAIL	467, 469

Part No	Description	Page No
295061-0000 ..	RAIL	467, 469
295062-0000 ..	RAIL	467, 469
295072-0000 ..	BUFFER RING	451, 467, 469, 535, 547
295075-0000 ..	PROTECTION	247, 249, 251
295078-0001 ..	PIPE	73
295081-0000 ..	PIPE	73
295083-0000 ..	PIPE	73
295097-0000 ..	SLIDER	247, 249, 251
295103-0000 ..	SPACER	47
295106-0000 ..	PROTECTION	865, 867, 869
295110-0000 ..	SPACER	639
295111-0000 ..	BENDING ROLLER	39, 41, 155, 157
295140-0000 ..	PIN	327, 329, 351, 353
295150-0003 ..	PIPE	73
295156-0000 ..	LID	653
295157-0000 ..	ARM	653
295158-0000 ..	DOOR	599
295160-0000 ..	GASKET	57, 97, 171, 213
295196-0002 ..	PIPE	73
295201-0000 ..	FRAME	459, 539
295202-0001 ..	SWIVEL	459, 539
295202-0002 ..	SWIVEL	459
295203-0000 ..	LID	459, 539
295204-0001 ..	SHIM	459, 539
295204-0002 ..	SHIM	459, 539
295204-0003 ..	SHIM	459, 539
295205-0000 ..	SPACER SLEEVE	459, 539
295206-0000 ..	FLAP	459
295207-0000 ..	HOLDER	459, 539
295208-0000 ..	SECURING PLATE	459, 539
295218-0100 ..	FOLDING BAR	437, 439
295246-0000 ..	HOLDER	599
295247-0000 ..	LEAF SPRING	599
295250-0000 ..	PIPE	81, 193
295252-0000 ..	PRESSURE FLANGE	23, 25
295259-0000 ..	HOLDER	619, 631
295296-0000 ..	CABLE TRACK	615, 627
295300-0000 ..	FORCE SPRING	111, 223
295301-0000 ..	FLUSH PIPE	111, 223
295302-0000 ..	HATCH	243, 277
295306-0000 ..	COVER	453, 537
295307-0000 ..	FLEXIBLE CONDUIT	453
295313-0000 ..	SHAFT	459, 539
295332-0000 ..	RAIL	495
295334-0000 ..	SIDE PLATE	495
295336-0000 ..	BOTTOM PANEL	495
295340-0000 ..	GABLE PLATE	495
295341-0000 ..	SPACER	495, 559
295342-0000 ..	CRAMP	495
295347-0000 ..	BEARING BRACKET	499, 501
295348-0000 ..	GLASS	499, 501
295349-0000 ..	BEARING BRACKET	499, 501, 563, 565, 567
295355-0000 ..	BEARING BRACKET	499, 501, 563, 565, 567
295356-0000 ..	HOUSING	499, 501
295357-0000 ..	ROD	499, 501
295358-0000 ..	RULER	499, 501, 563, 565, 567
295375-0000 ..	FORK	33, 35, 149, 151
295376-0000 ..	SHAFT	33, 35, 149, 151
295377-0001 ..	HOOD	33, 35, 149, 151
295377-0002 ..	HOOD	33, 35, 149, 151
295384-0000 ..	SUCTION PIPE	617
295387-0000 ..	SIGN BOARD	617, 629
295388-0000 ..	GASKET	39, 41, 123, 135, 155, 157
295390-0000 ..	SIGN	617
295391-0002 ..	THROTTLE SCREW	697
295391-0003 ..	THROTTLE SCREW	697
295399-0000 ..	HOLDER	247, 249, 251
295408-0000 ..	ARM	659
295409-0000 ..	SHAFT	659
295412-0000 ..	PIPE	491
295417-0000 ..	GASKET	261, 491, 557
295423-0000 ..	SEAL	499, 501, 563, 565, 567
295424-0000 ..	SIGN	685, 687
295425-0000 ..	SIGN	685, 687
295426-0000 ..	CAP	77, 79, 189, 191
295427-0000 ..	LOCK	77, 79, 189, 191
295428-0000 ..	HINGE	77, 79, 189, 191
295429-0000 ..	HANDLE	77, 79, 189, 191
295431-0000 ..	SCREW	459, 539
295434-0000 ..	BUSHING	491, 557
295463-0000 ..	CABLE TRENCH	107, 109
295465-0002 ..	LID	107, 109
295466-0000 ..	LOCK	107, 109, 219, 221
295496-0000 ..	BLOCKING PIECE	669, 671, 673

Part No	Description	Page No
295529-0000 ..	PIPE	709, 711
295530-0000 ..	PIPE	709, 711
295531-0000 ..	PIPE	709, 711
295533-0000 ..	PIPE	709, 711
295536-0000 ..	PIPE	709, 711
295539-0000 ..	PIPE	709, 711
295540-0000 ..	FASTENING PLATE	709, 711
295541-0000 ..	BRACKET	709, 711
295549-0000 ..	CRAMP	65, 67, 179, 181, 709, 711
295557-0000 ..	PIPE	105, 133, 217
295560-0000 ..	PIPE	105, 133
295568-0000 ..	PIPE	105, 133, 217
295570-0000 ..	PIPE	105, 133
295571-0000 ..	PIPE	105, 133
295575-0000 ..	PIPE	105, 133
295577-0000 ..	PIPE	105, 133
295581-0000 ..	PIPE	105, 133
295583-0000 ..	PIPE	105, 133
295585-0000 ..	PIPE	105, 133
295587-0000 ..	PIPE	105, 133
295588-0000 ..	PIPE	105, 133
295589-0000 ..	PIPE	105, 133
295590-0000 ..	PIPE	105, 133, 217
295591-0000 ..	PIPE	105, 133, 217
295594-0000 ..	PIPE	105, 133, 217
295600-0000 ..	PIPE	105, 133
295601-0000 ..	PIPE	105, 133
295602-0000 ..	PIPE	105, 133
295603-0000 ..	PIPE	105, 133
295604-0000 ..	CRAMP	105, 133, 217
295605-0000 ..	BRACKET	105, 133, 217
295617-0001 ..	AIR NOZZLE	453
295617-0003 ..	AIR NOZZLE	453
295618-0001 ..	AIR NOZZLE	453
295618-0003 ..	AIR NOZZLE	453
295622-0000 ..	AIR NOZZLE	453
295624-0000 ..	LID	99
295639-0000 ..	BOTTOM PANEL	601, 625
295645-0000 ..	COVER, UPPER	601, 625
295646-0000 ..	COVER, LOWER	601, 625
295647-0000 ..	CORNER STRIP	601, 625
295648-0000 ..	CORNER STRIP	601, 625
295650-0000 ..	COVERING PLATE	601, 625
295651-0000 ..	COVERING PLATE	601, 625
295652-0000 ..	COVERING PLATE	601, 625
295653-0000 ..	COVERING PLATE	601, 625
295654-0000 ..	COVERING PLATE	601, 625
295658-0000 ..	COVER SLIP	601, 625
295659-0000 ..	COVER SLIP	601, 625
295661-0000 ..	SHAFT	659
295668-0300 ..	START-UP KIT	741, 743, 745, 747, 749, 751
295716-0000 ..	BOW CLAMP	643
295717-0000 ..	CANTILEVER	643
295729-0000 ..	WASHER	471
295730-0000 ..	SPACER SHEET	81
295734-0000 ..	PIPE	105, 133, 217
295735-0000 ..	PIPE	105, 133, 217
295736-0000 ..	PIPE	105, 133, 217
295737-0000 ..	PIPE	105, 133, 217
295738-0000 ..	PIPE	105, 133, 217
295739-0000 ..	PIPE	105, 133, 217
295740-0000 ..	PIPE	105, 133, 217
295742-0000 ..	PIPE	105, 133
295743-0000 ..	PIPE	105, 133
295744-0000 ..	SCREW	427, 429
295748-0001 ..	BACK PIECE	427, 429
295748-0003 ..	BACK PIECE	427, 429
295749-0000 ..	ADJUSTING BLOCK	427, 429
295750-0002 ..	STEERING RAIL	427, 429
295766-0000 ..	SCREW	327, 329
295767-0000 ..	SEALING WASHER	327, 329
295770-0000 ..	AXLE BOLT	331, 333, 335, 337
295773-0000 ..	SPACER	355
295775-0000 ..	PIPE	105, 133
295776-0000 ..	PIPE	105, 133
295778-0200 ..	START-UP KIT	11, 13
295778-0300 ..	START-UP KIT	11, 13
295782-0000 ..	CABLE TRENCH	107, 109, 219, 221
295783-0000 ..	LID	107, 109, 219, 221
295785-0000 ..	FORCE SPRING	261
295819-0003 ..	LID	107, 109, 219, 221
295843-0001 ..	BRACKET	467, 469
295843-0003 ..	BRACKET	467, 469
295843-0006 ..	BRACKET	467, 469

Part No	Description	Page No
295862-0001 ..	FOLDING BAR	461
295862-0003 ..	FOLDING BAR	461
295864-0000 ..	FOLDING BAR	461
295871-0001 ..	BRACKET	461
295871-0002 ..	BRACKET	461
295871-0004 ..	BRACKET	461
295873-0000 ..	BRACKET	643
295878-0000 ..	THROTTLE SCREW	65, 67
295879-0000 ..	NUT	65, 67
295881-0000 ..	BRACKET	309, 311
295882-0000 ..	BRACKET	309, 311
295891-0300 ..	STRIP APPLICATOR	741, 743, 745, 747, 749, 751
295904-0100 ..	CLAMPING PIECE	851
295905-0002 ..	HOLDER	871
295905-0003 ..	HOLDER	871
295906-0000 ..	HANDLE	871
295907-0000 ..	SPRING	871
295909-0000 ..	BUSHING	53, 55, 129, 167, 169
295910-0000 ..	BUSHING	87, 207
295936-0000 ..	BUSHING	53, 55, 87, 129, 207
295978-0000 ..	PIPE	261
295983-0000 ..	CONNECTION	347, 349
295984-0000 ..	DRIP GUARD	33, 35, 149, 151
295985-0000 ..	FORCE SPRING	261
295986-0000 ..	HOLDER	253, 255, 279, 281
295987-0000 ..	THROTTLE	23, 25, 125
295993-0000 ..	GASKET HOLDER	233
297091-0000 ..	ARM	699
297092-0000 ..	ARM	699
297195-0000 ..	SPACER	193
297210-0000 ..	INK WELL	801
297213-0000 ..	END SECTION	801
297989-0000 ..	COVER	801
311101-0267 ..	PARALLELL PIN, CP, H6, 4X10 MM	331, 333, 335, 337, 339, 341, 343, 345
311103-0232 ..	PARALLELL PIN, M6, 3X8 MM	769, 811
311103-0233 ..	PARALLELL PIN, M6, 3X10 MM	29, 31, 47, 145, 147, 161
311103-0234 ..	PARALLELL PIN, M6, 3X12 MM	27, 51, 127, 143, 425, 733, 735, 857, 859
311103-0236 ..	PARALLELL PIN, M6, 3X16 MM	155, 157, 233, 801
311103-0238 ..	PARALLELL PIN, M6, 3X20 MM	27, 29, 31, 143, 145, 147, 425, 801, 857, 859
311103-0240 ..	PARALLELL PIN, M6, 3X25 MM	373, 375, 377, 379, 381, 383, 785, 787, 789
311103-0242 ..	PARALLELL PIN, M6, 3X30 MM	393, 395
311103-0267 ..	PARALLELL PIN, M6, 4X10 MM	331, 333, 335, 337, 339, 341, 343, 345, 659, 769, 811
311103-0268 ..	PARALLELL PIN, M6, 4X12 MM	385, 387
311103-0270 ..	PARALLELL PIN, M6, 4X16 MM	39, 41, 155, 157, 421, 801
311103-0272 ..	PARALLELL PIN, M6, 4X20 MM	77, 79, 189, 191, 261, 351, 353
311103-0273 ..	PIN,STRAIGHT M6 4X22 RFR	733, 735
311103-0274 ..	PARALLELL PIN, M6, 4X25 MM	647, 821
311103-0276 ..	PARALLELL PIN, M6, 4X30 MM	77, 79, 189, 191, 451, 535
311103-0280 ..	PARALLELL PIN, M6, 4X40 MM	413, 415, 417, 419
311103-0308 ..	PARALLELL PIN, M6, 5X16 MM	39, 41, 189, 191, 449, 527, 903
311103-0310 ..	PARALLELL PIN, M6, 5X20 MM	21, 61, 63, 77, 79, 141, 155, 157, 175, 177, 189, 191
311103-0312 ..	PARALLELL PIN, M6, 5X25 MM	93, 95, 209, 211, 365, 367, 369, 371, 373, 375, 377, 379, 381 383, 393, 395, 471, 785, 787, 789, 813, 815
311103-0314 ..	PARALLELL PIN, M6, 5X30 MM	397, 399, 401, 403, 785, 787, 789
311103-0316 ..	PARALLELL PIN, M6, 5X35 MM	397, 399, 401, 403
311103-0318 ..	PARALLELL PIN, M6, 5X40 MM	517, 785, 787, 789, 821
311103-0320 ..	PARALLELL PIN, CP, M6, 5X45 MM	397, 399, 401, 403
311103-0350 ..	PARALLELL PIN, CP, M6, 6X14 MM	103, 215, 767
311103-0351 ..	PARALLELL PIN, M6, 6X16 MM	77, 79, 597
311103-0353 ..	PARALLELL PIN, M6, 6X20 MM	813, 815
311103-0355 ..	PARALLELL PIN, M6, 6X25 MM	355, 425
311103-0356 ..	PIN,STRIGHT M6 6X28 RFR	267, 269, 291, 293
311103-0357 ..	PARALLELL PIN, M6, 6X30 MM	729, 785, 787, 789, 813, 815
311103-0361 ..	PARALLELL PIN, M6, 6X40 MM	61, 63, 175, 177, 355
311103-0365 ..	PARALLELL PIN, M6, 6X50 MM	823, 825
311103-0401 ..	PARALLELL PIN, M6, 8X20 MM	385, 387, 423, 553
311103-0405 ..	PARALLELL PIN, M6, 8X30 MM	235, 427, 429
311103-0407 ..	PARALLELL PIN, M6, 8X35 MM	499, 501, 563, 565, 567, 619, 631
311103-0409 ..	PARALLELL PIN, M6, 8X40 MM	397, 399, 401, 403
311103-0413 ..	PARALLELL PIN, M6, 8X50 MM	131, 163
311103-0415 ..	PARALLELL PIN, CP, M6, 8X55 MM	243, 277
311103-0470 ..	PARALLELL PIN, M6, 10X60 MM	355
311111-0207 ..	PIN, STRAIGHT SLOTTED SPRING FRP 3X14	365, 367, 369, 371
311111-0308 ..	PIN, STRAIGHT SLOTTED SPRING FRP 5X20	365, 367, 369, 371
311112-0205 ..	PIN, STRAIGHT SLOTTED SPRING FRP 3X10	831
311112-0254 ..	PIN, STRAIGHT SLOTTED SPRING FRP 4X16	909
311112-0255 ..	PIN, STRAIGHT SLOTTED SPRING FRP 4X18	633
311112-0256 ..	PIN, STRAIGHT SLOTTED SPRING FRP 4X20	727
311112-0258 ..	PIN, STRAIGHT SLOTTED SPRING FRP 4X24	901
311112-0262 ..	PIN, STRAIGHT SLOTTED SPRING FRP 4X32	895, 897
311112-0314 ..	PIN, STRAIGHT SLOTTED SPRING FRP 5X32	485
311303-0234 ..	SLOTTED PIRPB3X12FZB	331, 333, 335, 337
311303-0271 ..	SLOTTED PIRPB4X18FZB	865, 867, 869
311305-0274 ..	SLOTTED PIRPC4X25FZB	355

Part No	Description	Page No
311305-0308 ..	SLOTTED PIRPC5X16FZB	763, 765, 769, 773, 775, 809, 811
311307-0275 ..	SLOTTED PIRPD4X28FZB	355
311411-0140 ..	SPLIT PIN SP1,6X16RFR	29, 31, 145, 147
311411-0150 ..	SPLIT PIN SP2X12RFR	93, 95, 209, 211
311411-0152 ..	SPLIT PIN SP2X16RFR	479
311411-0165 ..	SPLIT PIN SP2,5X16RFR	93, 95, 209, 211
311411-0169 ..	SPLIT PIN SP2,5X25RFR	727
311411-0181 ..	SPLIT PIN SP3,2X20RFR	81
311520-0329 ..	RIVET, BLANK 2,4X8	617, 679
311520-0435 ..	RIVET, BLANK 3,2X10	299
311521-0142 ..	BLANK RIVET 3,2X6	723, 725
312101-0287 ..	SCREW M6S M4X8 FZB	793, 795, 797, 799
312101-0289 ..	SCREW M6S M4X10 FZB	357, 359
312101-0297 ..	SCREW M6S M4X25 FZB	325, 331, 333, 335, 337, 339, 341, 343, 345, 475
312101-0325 ..	SCREW M6S M5X10 FZB	351, 353
312101-0327 ..	SCREW M6S M5X12 FZB	675
312101-0329 ..	SCREW M6S M5X16 FZB	327, 329, 577, 579
312101-0331 ..	SCREW M6S M5X20 FZB	247, 249, 251, 793, 795, 797, 799
312101-0333 ..	SCREW M6S M5X25 FZB	325, 339, 341, 343, 345
312101-0337 ..	SCREW M6S M5X35 FZB	253, 255, 279, 281
312101-0343 ..	SCREW M6S M5X60 FZB	389, 391
312101-0362 ..	SCREW M6S M6X8 FZB	331, 333, 335, 337, 339, 341, 343, 345
312101-0364 ..	SCREW M6S M6X10 FZB	325, 331, 333, 335, 337, 339, 341, 343, 345, 627, 793, 795, 797, 799
312101-0366 ..	SCREW M6S M6X12 FZB	327, 329, 699
312101-0368 ..	SCREW M6S M6X16 FZB	327, 329, 719, 861
312101-0370 ..	SCREW M6S M6X20 FZB	327, 329, 617
312101-0372 ..	SCREW M6S M6X25 FZB	263, 265, 287, 289
312101-0376 ..	SCREW M6S M6X35 FZB	327, 329, 357, 359
312101-0378 ..	SCREW M6S M6X40 FZB	709, 711
312101-0381 ..	SCREW M6S M6X55 FZB	647
312101-0384 ..	SCREW M6S M6X70 FZB	861
312101-0385 ..	SCREW M6S M6X75 FZB	263, 265, 287, 289
312101-0388 ..	SCREW M6S M6X90 FZB	263, 265, 287, 289, 709, 711
312101-0451 ..	SCREW M6S M8X20 FZB	685, 687, 705, 707
312101-0453 ..	SCREW M6S M8X25 FZB	331, 333, 335, 337, 355, 575, 853, 855, 861
312101-0455 ..	SCREW M6S M8X30 FZB	575
312101-0457 ..	SCREW M6S M8X35 FZB	321, 325, 853, 855, 861
312101-0459 ..	SCREW M6S M8X40 FZB	575
312101-0466 ..	SCREW M6S M8X75 FZB	785, 787, 789
312101-0488 ..	SCREW M6S M10X14 FZB	327, 329
312101-0493 ..	SCREW M6S M10X25 FZB	331, 333, 335, 337, 339, 341, 343, 345, 853, 855, 861
312101-0499 ..	SCREW M6S M10X40 FZB	247, 249, 251, 321
312101-0500 ..	SCREW M6S M10X45 FZB	351, 353
312101-0502 ..	SCREW M6S M10X55 FZB	357, 359
312101-0504 ..	SCREW M6S M10X65 FZB	327, 329, 331, 333, 335, 337, 339, 341, 343, 345
312101-0507 ..	SCREW M6S M10X80 FZB	331, 333, 335, 337
312101-0515 ..	SCREW M6S M10X120 FZB	339, 341, 343, 345
312101-0530 ..	SCREW M6S M12X16 FZB	443, 445
312101-0538 ..	SCREW M6S M12X35 FZB	853, 855, 861
312101-0546 ..	SCREW M6S M12X70 FZB	323
312101-0548 ..	SCREW M6S M12X80 FZB	853, 855, 861
312101-0550 ..	SCREW M6S M12X90 FZB	327, 329
312101-0552 ..	SCREW M6S M12X100 FZB	475, 577, 579
312101-0629 ..	SCREW M6S M16X45 FZB	627
312101-0640 ..	SCREW M6S M16X100 FZB	853, 855, 861
312104-0499 ..	SCREW M6S M10X40H FZB	355
312104-0505 ..	SCREW M6S M10X70H FZB	321
312104-0634 ..	SCREW M6S M16X70H FZB	861
312105-0287 ..	SCREW M6S ISO 4017 M4X8 A480	21, 51, 61, 63, 87, 115, 117, 119, 121, 127, 141, 165, 175 177, 207, 225, 227, 229, 639, 709, 711, 723, 725, 915, 985
312105-0289 ..	SCREW M6S ISO 4017 M4X10 A480	253, 255, 279, 281, 919, 923
312105-0291 ..	SCREW M6S ISO 4017 M4X12 A480	639, 801, 895, 897, 919
312105-0293 ..	SCREW M6S ISO 4017 M4X16 A480	47, 161, 355
312105-0295 ..	SCREW M6S ISO 4017 M4X20 A480	253, 255, 279, 281
312105-0297 ..	SCREW M6S ISO 4017 M4X25 A480	253, 255, 279, 281, 553, 605
312105-0304 ..	SCREW M6S M4X45 A280	605
312105-0323 ..	SCREW M6S ISO 4017 M5X8 A480	487, 605, 903, 993
312105-0325 ..	SCREW M6S ISO 4017 M5X10 A480	17, 39, 41, 51, 53, 55, 93, 95, 127, 137, 165, 209, 211, 233 245, 425, 451, 467, 469, 535, 547, 599, 613, 651, 695, 769, 773, 775, 811, 903
312105-0327 ..	SCREW M6S ISO 4017 M5X12 A480	77, 79, 129, 167, 169, 189, 191, 243, 261, 277, 299, 301 413, 415, 417, 419, 453, 499, 501, 519, 563, 565, 567, 609, 669, 671, 673, 719, 777, 779, 781, 785 787, 789, 801, 813, 815, 831, 887
312105-0329 ..	SCREW M6S ISO 4017 M5X16 A480	93, 95, 115, 117, 119, 121, 193, 209, 211, 225, 227, 229 299, 301, 499, 501, 511, 563, 565, 567, 571, 609, 669, 671, 673, 785, 787, 789, 801, 813, 815, 895, 897
312105-0331 ..	SCREW M6S ISO 4017 M5X20 A480	29, 31, 47, 103, 145, 147, 161, 171, 213, 215, 299, 301 449, 525, 527, 533, 813, 815, 903, 919, 923
312105-0332 ..	SCREW M6S ISO 4017 M5X22 A480	39, 41, 83, 85, 93, 95, 155, 157, 209, 211, 499, 501, 563 565, 567, 785, 787, 789
312105-0333 ..	SCREW M6S ISO 4017 M5X25 A480	51, 81, 127, 165, 427, 429, 715
312105-0335 ..	SCREW M6S ISO 4014 M5X30 A480	297, 389, 391, 443, 445
312105-0337 ..	SCREW M6S ISO 4014 M5X35 A480	29, 31, 145, 147
312105-0341 ..	SCREW M6S ISO 4014 M5X50 A480	681
312105-0362 ..	SCREW M6S ISO 4017 M6X8 A480	107, 109, 143, 219, 221, 309, 311, 499, 501, 563, 565, 567 613, 811, 859

Part No	Description	Page No
312105-0364 ..	SCREW M6S ISO 4017 M6X10 A480	27, 29, 31, 33, 35, 37, 47, 53, 55, 65, 67, 69, 77, 79, 87, 107, 109, 111, 129, 145, 147, 149, 151, 153, 161, 167, 169, 179, 181, 189, 191, 193, 207, 219, 221, 223, 261, 297, 461, 605, 611, 615, 633, 657, 709, 711, 773, 775, 785, 787, 789, 805, 807, 813, 815, 857, 865, 867, 869
312105-0366 ..	SCREW M6S M6X12 A280	19, 29, 31, 37, 39, 41, 47, 49, 51, 53, 55, 57, 59, 61, 63, 65, 67, 71, 73, 75, 87, 97, 99, 101, 105, 107, 109, 113, 115, 117, 119, 121, 127, 129, 131, 133, 139, 145, 147, 153, 155, 157, 161, 163, 165, 171, 173, 175, 177, 179, 181, 183, 185, 187, 207, 213, 215, 217, 219, 221, 225, 227, 229, 231, 243, 247, 249, 251, 277, 355, 425, 427, 429, 459, 475, 489, 495, 509, 511, 537, 539, 541, 547, 553, 559, 561, 569, 571, 583, 585, 623, 629, 649, 669, 671, 673, 695, 701, 703, 709, 711, 719, 723, 725, 733, 735, 769, 773, 775, 777, 779, 781, 785, 787, 789, 811, 831, 843, 845, 889, 907, 915, 919, 923, 1005
312105-0367 ..	SCREW M6S M6X14 A280	21, 65, 67, 141, 179, 181, 365, 367, 369, 371, 551, 921, 923, 925
312105-0368 ..	SCREW M6S M6X16 A280	17, 29, 31, 39, 41, 47, 53, 55, 69, 71, 77, 79, 83, 85, 87, 93, 95, 103, 129, 137, 143, 145, 147, 155, 157, 161, 167, 169, 183, 189, 191, 207, 209, 211, 215, 233, 235, 243, 247, 249, 251, 277, 355, 385, 387, 397, 399, 401, 403, 413, 415, 417, 419, 451, 453, 461, 467, 469, 487, 491, 495, 507, 517, 531, 535, 537, 553, 569, 571, 619, 631, 633, 643, 645, 669, 671, 673, 683, 695, 703, 709, 711, 719, 723, 725, 731, 763, 765, 767, 769, 777, 779, 781, 785, 787, 789, 803, 811, 827, 831, 843, 845, 859, 885, 895, 897, 901, 903, 907, 909, 923, 993, 1003, 1005
312105-0370 ..	SCREW M6S ISO 4017 M6X20 A480	19, 27, 29, 31, 47, 59, 65, 67, 69, 71, 87, 89, 91, 93, 95, 103, 115, 117, 119, 121, 129, 139, 145, 147, 155, 157, 161, 167, 169, 173, 179, 181, 183, 207, 209, 211, 215, 225, 227, 229, 243, 277, 309, 311, 355, 373, 375, 377, 379, 381, 383, 393, 395, 425, 427, 429, 459, 471, 473, 475, 491, 515, 523, 531, 537, 539, 549, 557, 571, 573, 629, 649, 727, 733, 735, 753, 755, 757, 759, 761, 771, 773, 775, 785, 787, 789, 803, 813, 815, 857, 895, 897, 899, 903, 907, 909, 919
312105-0371 ..	SCREW M6S ISO 4017 M6X22 A480	535, 709, 711, 863, 889, 913, 927
312105-0372 ..	SCREW M6S ISO 4017 M6X25 A480	21, 33, 35, 39, 41, 65, 67, 71, 77, 79, 83, 85, 87, 141, 145, 147, 149, 151, 167, 169, 179, 181, 183, 189, 191, 207, 247, 249, 251, 253, 255, 271, 279, 281, 295, 397, 399, 401, 403, 413, 415, 417, 419, 423, 451, 453, 461, 463, 471, 475, 491, 503, 523, 531, 535, 543, 557, 773, 775, 813, 815, 909
312105-0374 ..	SCREW M6S ISO 4014 M6X30 A480	17, 27, 137, 143, 209, 211, 243, 277, 331, 333, 335, 337, 339, 341, 343, 345, 355, 373, 375, 377, 379, 381, 383, 393, 395, 423, 451, 459, 463, 467, 469, 471, 535, 539, 547, 549, 557, 651, 709, 711, 719, 731, 785, 787, 789, 857, 859, 909, 933
312105-0376 ..	SCREW M6S ISO 4014 M6X35 A480	49, 101, 167, 169, 209, 211, 247, 249, 251, 365, 367, 369, 371, 373, 375, 377, 379, 381, 383, 385, 387, 393, 395, 409, 411, 431, 433, 459, 539, 685, 687, 753, 755, 757, 759, 913
312105-0378 ..	SCREW M6S ISO 4014 M6X40 A480	77, 79, 189, 191, 231, 261, 463, 499, 501, 537, 543, 563, 565, 567, 645, 703, 709, 711, 733, 735, 769, 785, 787, 789, 811, 821, 835, 837, 919
312105-0379 ..	SCREW M6S ISO 4014 M6X45 A480	397, 399, 401, 403, 709, 711
312105-0380 ..	SCREW M6S ISO 4014 M6X50 A480	247, 249, 251, 385, 387, 463, 537, 669, 671, 673, 681
312105-0381 ..	SCREW M6S ISO 4014 M6X55 A480	93, 95, 209, 211
312105-0382 ..	SCREW M6S ISO 4014 M6X60 A480	355, 495, 559, 685, 687, 727, 813, 815
312105-0384 ..	SCREW M6S ISO 4014 M6X70 A480	77, 79, 189, 191, 397, 399, 401, 403, 491, 557
312105-0386 ..	SCREW M6S ISO 4014 M6X80 A480	895, 897
312105-0447 ..	SCREW M6S ISO 4017 M8X12 A480	61, 63, 153, 161, 175, 177, 373, 375, 377, 379, 381, 383, 393, 395, 811, 917
312105-0448 ..	SCREW M6S ISO 4017 M8X14 A480	773, 775
312105-0449 ..	SCREW M6S ISO 4017 M8X16 A480	29, 31, 37, 39, 41, 51, 57, 97, 99, 115, 117, 119, 121, 127, 145, 147, 155, 157, 167, 169, 225, 227, 229, 267, 269, 291, 293, 309, 311, 495, 497, 507, 519, 559, 597, 605, 653, 773, 775, 827, 835, 837, 841, 909, 911, 919, 923
312105-0451 ..	SCREW M6S ISO 4017 M8X20 A480	21, 27, 29, 31, 61, 63, 77, 79, 81, 83, 85, 89, 91, 99, 131, 141, 143, 145, 147, 155, 157, 163, 171, 175, 177, 189, 191, 193, 213, 243, 247, 249, 251, 277, 425, 473, 487, 491, 495, 499, 501, 551, 557, 559, 597, 611, 641, 643, 659, 669, 671, 673, 723, 725, 731, 753, 755, 757, 759, 761, 763, 765, 769, 771, 773, 775, 777, 779, 781, 785, 787, 789, 805, 807, 809, 811, 813, 815, 857, 859, 895, 897, 903
312105-0452 ..	SCREW M6S ISO 4017 M8X22 A480	423, 639, 841
312105-0453 ..	SCREW M6S ISO 4017 M8X25 A480	17, 53, 55, 81, 129, 137, 145, 147, 175, 177, 189, 191, 209, 211, 263, 265, 287, 289, 309, 311, 373, 375, 377, 379, 381, 383, 385, 387, 393, 395, 467, 469, 619, 631, 641, 695, 709, 711, 733, 735, 763, 765, 773, 775, 777, 779, 781, 785, 787, 789, 803, 809, 813, 815, 895, 897, 901, 909, 913
312105-0455 ..	SCREW M6S ISO 4017 M8X30 A480	17, 37, 87, 89, 91, 111, 137, 167, 169, 207, 223, 247, 249, 251, 267, 269, 291, 293, 373, 375, 377, 379, 381, 383, 385, 387, 393, 395, 397, 399, 401, 403, 423, 467, 469, 483, 499, 501, 521, 547, 563, 565, 567, 609, 659, 695, 785, 787, 789, 841, 895, 897
312105-0457 ..	SCREW M6S ISO 4014 M8X35 A480	425, 427, 429, 461, 495, 573, 785, 787, 789, 813, 815, 895, 897, 903
312105-0459 ..	SCREW M6S ISO 4014 M8X40 A480	261, 267, 269, 275, 291, 293, 397, 399, 401, 403, 427, 429, 475, 495, 541, 553, 559, 573, 611, 659, 695, 733, 735, 763, 765, 771, 777, 779, 781, 785, 787, 789, 809, 813, 815, 895, 897, 913
312105-0460 ..	SCREW M6S ISO 4014 M8X45 A480	895, 897
312105-0461 ..	SCREW M6S ISO 4014 M8X50 A480	47, 729
312105-0462 ..	SCREW M6S ISO 4014 M8X55 A480	53, 55, 129, 167, 169, 365, 367, 369, 371
312105-0463 ..	SCREW M6S ISO 4014 M8X60 A480	463, 543
312105-0464 ..	SCREW M6S ISO 4014 M8X65 A480	161, 491, 557, 907
312105-0489 ..	SCREW M6S ISO 4017 M10X16 A480	243, 277
312105-0491 ..	SCREW M6S ISO 4017 M10X20 A480	61, 63, 153, 175, 177, 491, 557, 613, 633, 763, 765, 809, 843, 845
312105-0492 ..	SCREW M6S ISO 4017 M10X22 A480	351, 353, 499, 501, 563, 565, 567
312105-0493 ..	SCREW M6S ISO 4017 M10X25 A480	175, 177, 701, 813, 815, 843, 845, 895, 897
312105-0495 ..	SCREW M6S ISO 4017 M10X30 A480	61, 63, 93, 95, 175, 177, 623
312105-0497 ..	SCREW M6S ISO 4017 M10X35 A480	175, 177
312105-0499 ..	SCREW M6S ISO 4014 M10X40 A480	77, 79, 189, 191
312105-0500 ..	SCREW M6S ISO 4014 M10X45 A480	649
312105-0501 ..	SCREW M6S ISO 4014 M10X50 A480	905, 907
312105-0532 ..	SCREW M6S ISO 4017 M12X20 A480	491, 557
312105-0536 ..	SCREW M6S ISO 4017 M12X30 A480	29, 31, 37, 93, 95, 145, 147, 153, 209, 211, 515, 619, 631, 639

Part No	Description	Page No
312105-0538 ..	SCREW M6S ISO 4017 M12X35 A480	491, 557
312105-0540 ..	SCREW M6S ISO 4017 M12X40 A480	619, 631
312105-0541 ..	SCREW M6S ISO 4014 M12X45 A480	515
312105-0542 ..	SCREW M6S ISO 4014 M12X50 A480	539
312105-0544 ..	SCREW M6S ISO 4014 M12X60 A480	473, 539
312105-0547 ..	SCREW M6S ISO 4014 M12X75 A480	449, 527
312105-0548 ..	SCREW M6S ISO 4014 M12X80 A480	539
312105-0552 ..	SCREW M6S ISO 4014 M12X100 A480	553
312105-0629 ..	SCREW M6S ISO 4017 M16X45 A480	615
312105-0630 ..	SCREW M6S ISO 4017 M16X50 A480	909
312109-0335 ..	SCREW M6S ISO 4017 M5X30 A480	115, 117, 119, 121
312109-0374 ..	SCREW M6S ISO 4017 M6X30 A480	459, 539, 831
312109-0376 ..	SCREW M6S ISO 4017 M6X35 A480	785, 787, 789, 813, 815
312109-0381 ..	SCREW M6S ISO 4017 M6X55 A480	769, 811
312109-0386 ..	SCREW M6S ISO 4017 M6X80 A480	763, 765, 809
312109-0457 ..	SCREW M6S ISO 4017 M8X35 A480	129, 167, 169, 485
312109-0459 ..	SCREW M6S ISO 4017 M8X40 A480	425, 695
312109-0460 ..	SCREW M6S ISO 4017 M8X45 A480	485
312109-0463 ..	SCREW M6S ISO 4017 M8X60 A480	39, 41, 59, 155, 157, 173
312111-0307 ..	SCREW HEX.SOCK.HD.MC6S-TT 4X60 88 FZB	911
312111-0333 ..	SCREW HEX.SOCK.HD.MC6S-TT 5X25 88 FZB	705, 707
312111-0335 ..	SCREW HEX.SOCK.HD.MC6S-TT 5X30 88 FZB	793, 795, 797, 799
312111-0340 ..	SCREW HEX.SOCK.HD.MC6S-TT 5X45 88 FZB	651
312111-0343 ..	SCREW HEX.SOCK.HD.MC6S-TT 5X60 88 FZB	705, 707
312111-0368 ..	SCREW HEX.SOCK.HD.MC6S-TT 6X16 88 FZB	347, 349
312111-0372 ..	SCREW HEX.SOCK.HD.MC6S-TT 6X25 88 FZB	587, 589
312111-0376 ..	SCREW HEX.SOCK.HD.MC6S-TT 6X35 88 FZB	331, 333, 335, 337
312111-0378 ..	SCREW HEX.SOCK.HD.MC6S-TT 6X40 88 FZB	331, 333, 335, 337
312111-0380 ..	SCREW HEX.SOCK.HD.MC6S-TT 6X50 88 FZB	327, 329
312111-0451 ..	SCREW HEX.SOCK.HD.MC6S-TT 8X20 88 FZB	861
312111-0471 ..	SCREW HEX.SOCK.HD.MC6S-TT 8X100 88 FZ	263, 265, 287, 289, 675, 813, 815
312115-0220 ..	SCREW HEX.SOCK.HD.MC6S-TT 3X6 A480	309, 311
312115-0224 ..	SCREW HEX.SOCK.HD.MC6S-TT 3X10 A480	69, 919
312115-0226 ..	SCREW MC6S M3X12 A280	919
312115-0228 ..	SCREW MC6S M3X16 A280	81, 103, 193, 215
312115-0230 ..	SCREW MC6S M3X20 A280	21, 141
312115-0285 ..	SCREW HEX.SOCK.HD.MC6S-TTS 4X6 A480	247, 249, 251
312115-0287 ..	SCREW MC6S M4X8 A280	801
312115-0289 ..	SCREW HEX.SOCK.HD.MC6S-TT 4X10 A480	253, 255, 279, 281
312115-0291 ..	SCREW MC6S M4X12 A280	21, 141, 199, 571
312115-0293 ..	SCREW MC6S M4X16 A280	421
312115-0305 ..	SCREW MC6S M4X50 A280	193
312115-0323 ..	SCREW MC6S M5X8 A280	21, 141, 613
312115-0325 ..	SCREW HEX.SOCK.HD.MC6S-TT 5X10 A480	47, 161, 271, 295
312115-0327 ..	SCREW MC6S M5X12 A280	21, 141, 537, 587, 589, 643, 903
312115-0329 ..	SCREW MC6S M5X16 A280	39, 41, 65, 67, 77, 79, 81, 155, 157, 179, 181, 189, 191, 193, 309, 311, 365, 367, 369, 371, 509, 561, 703, 903
312115-0331 ..	SCREW MC6S M5X20 A280	245, 355, 421, 535, 903
312115-0333 ..	SCREW MC6S M5X25 A280	813, 815
312115-0364 ..	SCREW HEX.SOCK.HD.MC6S-TT 6X10 A480	69, 261, 699
312115-0366 ..	SCREW MC6S M6X12 A280	15, 39, 41, 47, 53, 55, 103, 155, 157, 161, 215, 365, 367, 369, 371, 573, 767, 839, 841
312115-0368 ..	SCREW MC6S M6X16 A280	61, 63, 175, 177, 633, 727, 769, 811, 823, 825
312115-0370 ..	SCREW MC6S M6X20 A280	77, 79, 189, 191, 365, 367, 369, 371, 569, 785, 787, 789, 821, 911
312115-0371 ..	SCREW HEX.SOCK.HD.MC6S-TT 6X22 A480	373, 375, 377, 379, 381, 383, 393, 395
312115-0372 ..	SCREW MC6S M6X25 A280	423, 475, 553, 785, 787, 789
312115-0374 ..	SCREW MC6S M6X30 A280	499, 501, 507, 563, 565, 567, 583, 585
312115-0376 ..	SCREW MC6S M6X35 A280	569
312115-0378 ..	SCREW MC6S M6X40 A280	507
312115-0380 ..	SCREW MC6S M6X50 A280	605
312115-0382 ..	SCREW MC6S M6X60 A280	1001
312115-0449 ..	SCREW MC6S M8X16 A280	409, 411, 451, 535, 633
312115-0451 ..	SCREW MC6S M8X20 A280	21, 141
312115-0453 ..	SCREW MC6S M8X25 A280	267, 269, 291, 293, 295, 397, 399, 401, 403, 427, 429, 623, 701
312115-0455 ..	SCREW MC6S M8X30 A280	33, 35, 149, 151, 451, 467, 469
312115-0457 ..	SCREW MC6S M8X35 A280	267, 269, 291, 293, 547
312115-0459 ..	SCREW MC6S M8X40 A280	203, 205, 271
312115-0461 ..	SCREW MC6S M8X50 A280	295
312115-0463 ..	SCREW MC6S M8X60 A280	303, 305
312115-0465 ..	SCREW MC6S M8X70 A280	695
312115-0467 ..	SCREW MC6S M8X80 A280	655
312115-0491 ..	SCREW MC6S M10X20 A280	473, 551, 611
312115-0495 ..	SCREW MC6S M10X30 A280	611
312115-0497 ..	SCREW MC6S M10X35 A280	623
312115-0501 ..	SCREW MC6S M10X50 A280	471
312115-0503 ..	SCREW MC6S M10X60 A280	243, 277
312115-0536 ..	SCREW MC6S M12X30 A280	635
312121-0224 ..	SCREW SLOT.PAN HD. MCS 3X10 FZB	865, 867, 869
312121-0285 ..	SCREW SLOT.PAN HD. MCS 4X6 FZB	627
312121-0287 ..	SCREW SLOT.PAN HD. MCS 4X8 FZB	325, 331, 333, 335, 337, 339, 341, 343, 345
312121-0323 ..	SCREW SLOT.PAN HD. MCS 5X8 FZB	327, 329
312121-0333 ..	SCREW SLOT.PAN HD. MCS 5X25 FZB	679
312122-0287 ..	SCREW PAN HEAD MCS M4X8 NL. PL.	651
312122-0294 ..	SCREW SLOT.PAN HD. MCS 4X18 BR NP	389, 391

Part No	Description	Page No
312125-0220 ..	SCREW SLOT.PAN HD. MCS 3X6 A480	87, 207, 245, 621, 685, 687, 771
312125-0222 ..	SCREW PAN HEAD MCS M3X8 SS	53, 55, 297, 657, 841
312125-0224 ..	SCREW SLOT.PAN HD. MCS 3X10 A480	573, 785, 787, 789, 813, 815
312125-0226 ..	SCREW PAN HEAD MCS M3X12 SS	129, 167, 169, 561
312125-0228 ..	SCREW PAN HEAD MCS M3X16 A480	37, 47, 111, 153, 161, 223, 639
312125-0230 ..	SCREW PAN HEAD MCS M3X20 SS	39, 41, 77, 79, 155, 157, 189, 191, 245, 583, 585, 605, 785, 787, 789, 813, 815, 841
312125-0285 ..	SCREW SLOT.PAN HD. MCS 4X6 A480	17, 39, 41, 61, 63, 75, 87, 137, 155, 157, 175, 177, 187, 207, 617, 629, 633, 651, 769, 805, 807, 811, 841
312125-0287 ..	SCREW PAN HEAD MCS M4X8 SS	77, 79, 189, 191, 253, 255, 279, 281, 583, 585, 605, 669, 671, 673, 703, 769, 811, 831, 835, 837, 839, 997
312125-0289 ..	SCREW SLOT.PAN HD. MCS 4X10 A480	785, 787, 789, 813, 815
312125-0291 ..	SCREW PAN HEAD MCS M4X12 SS	53, 55, 87, 207, 243, 277, 303, 305, 611, 621, 657, 659, 669, 671, 673, 719, 771, 995, 997, 999
312125-0293 ..	SCREW PAN HEAD MCS M4X16 SS	693
312125-0295 ..	SCREW PAN HEAD MCS M4X20 SS	871
312125-0297 ..	SCREW PAN HEAD MCS M4X25 SS	633
312125-0299 ..	SCREW PAN HEAD MCS M4X30 SS	53, 55
312125-0323 ..	SCREW PAN HEAD MCS M5X8 SS	17, 107, 109, 129, 137, 167, 169, 197, 199, 201, 219, 221, 243, 247, 249, 251, 253, 255, 277, 279, 281, 777, 779, 781
312125-0325 ..	SCREW SLOT.PAN HD. MCS 5X10 A480	601, 625, 709, 711, 773, 775, 813, 815
312125-0327 ..	SCREW PAN HEAD MCS M5X12 SS	995, 997, 1001
312125-0329 ..	SCREW PAN HEAD MCS M5X16 SS	243, 277, 303, 709, 711, 785, 787, 789, 813, 815, 827
312125-0331 ..	SCREW PAN HEAD MCS M5X20 SS	17, 39, 41, 137, 155, 157
312125-0364 ..	SCREW SLOT.PAN HD. MCS 6X10 A480	99, 587, 589
312125-0366 ..	SCREW PAN HEAD MCS M6X12 SS	17, 137, 785, 787, 789, 997, 1001
312125-0370 ..	SCREW PAN HEAD MCS M6X20 SS	733, 735
312125-0374 ..	SCREW PAN HEAD MCS M6X30 SS	783
312132-0284 ..	SCREW SLOT. PAN HEAD MSCS M4X5	693
312132-0323 ..	SCREW SLOT. PAN HEAD MSCS M5X8	783
312145-0220 ..	SCREW COUNTERS.SLOT.HD. MFS 3X6 SS	331, 333, 335, 337, 339, 341, 343, 345, 613
312145-0222 ..	SCREW COUNTERS.SLOT.HD. MFS 3X8 SS	299, 301
312145-0228 ..	SCREW COUNTERS.SLOT.HD. MFS 3X16 SS	87, 207, 785, 787, 789, 813, 815
312145-0238 ..	SCREW COUNTERS.SLOT.HD. MFS 3X40 SS	771
312145-0285 ..	SCREW COUNTERS.SLOT.HD. MFS 4X6 SS	29, 31, 145, 147, 785, 787, 789, 813, 815, 985
312145-0287 ..	SCREW COUNTERS.SLOT.HD. MFS 4X8 SS	27, 53, 55, 129, 143, 639, 857, 859, 925
312145-0291 ..	SCREW COUNTERS.SLOT.HD. MFS 4X12 A4	299, 301, 365, 367, 369, 371, 409, 411, 609, 657
312145-0293 ..	SCREW COUNTERS.SLOT.HD. MFS 4X16 SS	785, 787, 789, 813, 815
312145-0323 ..	SCREW COUNTERS.SLOT.HD. MFS 5X8 SS	601, 625
312145-0453 ..	SCREW COUNTERS.SLOT.HD. MFS 8X25 SS	653
312151-0287 ..	SCREW HEX.SOCK.COUNT.MF6S 4X8 FZB	331, 333, 335, 337, 339, 341, 343, 345, 699
312151-0364 ..	SCREW HEX.SOCK.COUNT.MF6S 6X10 FZB	331, 333, 335, 337, 339, 341, 343, 345
312151-0366 ..	SCREW HEX.SOCK.COUNT.MF6S 6X12 FZB	355
312151-0460 ..	SCREW HEX.SOCK.COUNT.MF6S 8X45 FZB	447
312155-0289 ..	SCREW HEX.SOCK.COUNT.MF6S M4X10 A480	499, 501, 563, 565, 567
312155-0291 ..	SCREW HEX.SOCK.COUNT.MF6S M4X12 A480	27, 143, 777, 779, 781, 785, 787, 789, 813, 815, 857, 859, 901
312155-0295 ..	SCREW HEX.SOCK.COUNT.MF6S M4X20 A480	451, 535
312155-0297 ..	SCREW HEX.SOCK.COUNT.MF6S M4X25 A480	895, 897
312155-0299 ..	SCREW HEX.SOCK.COUNT.MF6S M4X30 A480	477, 493, 935
312155-0323 ..	SCREW HEX.SOCK.COUNT.MF6S M5X8 A280	785, 787, 789, 913
312155-0325 ..	SCREW HEX.SOCK.COUNT.MF6S M5X10 A280	243, 277, 511
312155-0327 ..	SCREW HEX.SOCK.COUNT.MF6S M5X12 A280	299, 301, 561, 633, 785, 787, 789, 813, 815, 919, 923
312155-0329 ..	SCREW HEX.SOCK.COUNT.MF6S M5X16 A280	299, 301, 389, 391
312155-0331 ..	SCREW HEX.SOCK.COUNT.MF6S M5X20 A280	487, 509, 715
312155-0364 ..	SCREW HEX.SOCK.COUNT.MF6S M6X10 A280	59, 69, 173, 733, 735
312155-0366 ..	SCREW HEX.SOCK.COUNT.MF6S M6X12 A280	243, 277, 413, 415, 417, 419, 623, 637, 701
312155-0368 ..	SCREW HEX.SOCK.COUNT.MF6S M6X16 A280	247, 249, 251, 413, 415, 417, 419, 447, 495, 499, 501, 559, 563, 565, 567, 639, 643, 811
312155-0370 ..	SCREW HEX.SOCK.COUNT.MF6S M6X20 A280	69, 895, 897
312155-0372 ..	SCREW HEX.SOCK.COUNT.MF6S M6X25 A280	499, 501, 563, 565, 567, 913
312155-0374 ..	SCREW HEX.SOCK.COUNT.MF6S M6X30 A280	59, 173, 701
312155-0376 ..	SCREW HEX.SOCK.COUNT.MF6S M6X35 A280	785, 787, 789
312155-0378 ..	SCREW HEX.SOCK.COUNT.MF6S M6X40 A280	499, 501, 563, 565, 567
312155-0380 ..	SCREW HEX.SOCK.COUNT.MF6S M6X50 A280	559
312155-0447 ..	SCREW HEX.SOCK.COUNT.MF6S 8X12 SS	327, 329
312155-0449 ..	SCREW HEX.SOCK.COUNT.MF6S M8X16 A280	275, 309, 311, 451, 535, 639, 701
312155-0453 ..	SCREW HEX.SOCK.COUNT.MF6S M8X25 A280	309, 311, 507, 535, 919
312155-0455 ..	SCREW HEX.SOCK.COUNT.MF6S M8X30 A280	499, 501, 563, 565, 567
312155-0457 ..	SCREW HEX.SOCK.COUNT.MF6S M8X35 A280	813, 815
312155-0459 ..	SCREW HEX.SOCK.COUNT.MF6S M8X40 A280	913
312155-0461 ..	SCREW HEX.SOCK.COUNT.MF6S M8X50 A280	495, 497
312155-0501 ..	SCREW HEX.SOCK.COUNT.MF6S M10X50 A280	309, 311
312155-0532 ..	SCREW HEX.SOCK.COUNT.MF6S 12X20 SS	193
312165-0325 ..	SCREW SLOT.RAIS.COUNT.HD.MKFS 5X10 SS	253, 255, 279, 281
312165-0329 ..	SCREW SLOT.RAIS.COUNT.HD.MKFS 5X16 SS	599
312303-0374 ..	SCREW STUD, METAL END=1D, PS 6X25 SS	553
312303-0378 ..	SCREW STUD, METAL END=1D, PS 6X30 SS	39, 41
312311-0321 ..	SCREW, SOCK.SET DOGPOINT M5X6	339, 341, 343, 345
312311-0327 ..	SCREW, SOCK.SET DOGPOINT M5X12	467, 469, 547
312311-0366 ..	SCREW, SOCK.SET DOGPOINT M6X12	321
312316-0283 ..	SCREW HEX.SOCK.SET CUP P.MSK6SS4X4 FZB	767
312316-0291 ..	SCREW HEX.SOCK.SET CUP P.MSK6SS4X12 FZB	767

Part No	Description	Page No
312316-0362 ..	SCREW HEX.SOCK.SET CUP P.MSK6SS6X8 FZB	699
312318-0218 ..	SCREW SOCK.SET CUP P MSK6SS M3X4 A4	809
312318-0283 ..	SCREW SOCK.SET CUP P MSK6SS M4X4 A4	15, 21, 103, 141, 215, 835, 837
312318-0285 ..	SCREW SOCK.SET CUP P MSK6SS M4X6 A4	15, 29, 31, 93, 95, 103, 145, 147, 209, 211, 215, 767, 827
312318-0287 ..	SCREW SOCK.SET CUP P MSK6SS M4X8 A4	355, 605, 813, 815
312318-0289 ..	SCREW SOCK.SET CUP P MSK6SS M4X10 A4	903
312318-0291 ..	SCREW SOCK.SET CUP P MSK6SS M4X12 A4	15, 103, 215, 771
312318-0321 ..	SCREW HEX.SOCK.SET CUP P.MSK6SS 5X6 SS	427, 429, 597, 609
312318-0323 ..	SCREW SOCK.SET CUP P MSK6SS M5X8 A4	61, 63, 175, 177, 225, 227, 229, 235, 271, 295, 459, 539, 597, 643
312318-0325 ..	SCREW HEX.SOCK.SET CUP P.MSK6SS5X10 SS	115, 117, 119, 121, 475, 553, 753, 755, 757, 759
312318-0327 ..	SCREW SOCK.SET CUP P MSK6SS M5X12 A4	37, 153
312318-0331 ..	SCREW SOCK.SET CUP P MSK6SS M5X20 A4	537
312318-0360 ..	SCREW HEX.SOCK.SET CUP P.MSK6SS6X6 SS	49, 101, 385, 387, 517, 597, 637, 639, 695
312318-0362 ..	SCREW SOCK.SET CUP P MSK6SS M6X8 A4	37, 153, 355, 485, 523, 531, 613, 659, 763, 765, 777, 779, 781, 785, 787, 789, 813, 815
312318-0364 ..	SCREW HEX.SOCK.SET CUP P.MSK6SS6X10 SS	21, 27, 141, 143, 563, 565, 567, 753, 755, 757, 759, 761, 803, 857, 859
312318-0368 ..	SCREW SOCK.SET CUP P MSK6SS M6X16 A4	29, 31, 145, 147, 155, 157, 385, 387, 823, 825
312318-0372 ..	SCREW SOCK.SET CUP P MSK6SS M6X25 A4	145, 147
312318-0451 ..	SCREW SOCK.SET CUP P MSK6SS M8X20 A4	29, 31, 145, 147
312502-0120 ..	DRIVE SCREW ROUND HEAD KDS 0X5	105, 133, 217, 669, 671, 673, 685, 687, 709, 711, 777, 779, 781
312502-0171 ..	DRIVE SCREW ROUND HEAD KDS 2X6	705, 707
312502-0221 ..	DRIVE SCREW ROUND HEAD KDS 4X6	703
312503-0410 ..	SCREW CROSS RECES.RND.HD.TAPP. B10X13	599
312601-0316 ..	NUT M6M 6-8 FZB	617, 699
312601-0318 ..	NUT M6M8FZB	331, 333, 335, 337, 339, 341, 343, 345, 685, 687
312601-0320 ..	NUT M6M 10-8 FZB	247, 249, 251, 321
312601-0324 ..	NUT M6M 16-8 FZB	339, 341, 343, 345
312602-0312 ..	HEXAGON NUT, M6M M4 BR	389, 391
312605-0310 ..	HEXAGON NUT, M6M M3 A280	29, 31, 39, 41, 145, 147, 155, 157, 297, 561, 605, 785, 787, 789, 919
312605-0312 ..	HEXAGON NUT, M6M M4 A280	15, 39, 41, 45, 51, 53, 55, 61, 63, 75, 103, 127, 155, 157, 165, 175, 177, 187, 215, 303, 305, 633, 657, 719, 723, 725, 767, 823, 825, 871, 901
312605-0314 ..	HEXAGON NUT, M6M M5 A280	39, 41, 47, 49, 101, 103, 131, 155, 157, 161, 163, 215, 233, 261, 299, 301, 355, 487, 509, 537, 561, 571, 601, 625, 651, 657, 709, 711, 723, 725, 771, 785, 787, 789, 801, 919, 923
312605-0316 ..	HEXAGON NUT, M6M M6 A280	21, 29, 31, 39, 41, 47, 53, 55, 65, 67, 77, 79, 107, 109, 141, 145, 147, 161, 179, 181, 189, 191, 209, 211, 219, 221, 271, 309, 311, 451, 463, 489, 491, 495, 499, 501, 507, 509, 535, 541, 543, 553, 557, 559, 561, 563, 565, 567, 571, 629, 643, 645, 685, 687, 709, 711, 719, 731, 733, 735, 763, 765, 769, 783, 785, 787, 789, 809, 811, 813, 815, 821, 827, 831, 835, 837
		895, 897, 907, 909, 915, 917, 919, 921, 923, 925, 933, 1003
312605-0318 ..	HEXAGON NUT, M6M M8 A280	29, 31, 33, 35, 39, 41, 51, 53, 55, 59, 89, 91, 127, 129, 145, 147, 149, 151, 155, 157, 165, 167, 169, 173, 247, 249, 251, 267, 269, 291, 293, 365, 367, 369, 371, 425, 507, 523, 531, 557, 563, 565, 567, 573, 609, 653, 669, 671, 673, 763, 765, 769, 771, 777, 779, 781, 785, 787, 789, 801, 811, 831, 895, 897, 899, 919, 923
312605-0320 ..	HEXAGON NUT, M6M M10 A280	29, 31, 39, 41, 47, 61, 63, 145, 147, 155, 157, 175, 177, 355, 451, 467, 469, 535, 547, 571, 649, 727, 769, 811, 833, 895, 897, 915
312605-0322 ..	HEXAGON NUT, M6M M12 A280	275, 639
312605-0324 ..	HEXAGON NUT, M6M M16 A280	607, 895, 897, 909
312605-0326 ..	HEXAGON NUT, M6M M20 A280	103, 215
312625-0316 ..	NUT HEX. M6 SS	427, 429, 915
312625-0320 ..	NUT HEX. M10 SS	915
312631-0324 ..	NUT HEX. M16X1,5 FE FZB	633
312705-0314 ..	NUT HEX. DOMED CAP MHM-6 M5 A280	299, 301, 309, 311, 919
312705-0316 ..	NUT HEX. DOMED CAP MHM-6 M6 A280	107, 109, 219, 221, 495
312705-0318 ..	NUT HEX. DOMED CAP MHM-6 M8 A280	495
312715-0116 ..	NUT WING COLD WORK.MVM-K M6 A280	889
312805-0102 ..	NUT ROUND WITH SLOTS M15X1 FE	821
312805-0103 ..	NUT ROUND WITH SLOTS M17X1 FE	821
312805-0106 ..	NUT ROUND WITH SLOTS M30X1,5 FE	525, 533
312810-0314 ..	HEXAGON NUT, NY-LOCK M5 FZB	303
312810-0316 ..	HEXAGON NUT, NY-LOCK M6 FZB	861
312810-0318 ..	HEXAGON NUT, NY-LOCK M8 FZB	861
312810-0322 ..	HEXAGON NUT, NY-LOCK M12 FZB	853, 855, 861
312810-0324 ..	HEXAGON NUT, NY-LOCK M16 FZB	447, 525, 533, 853, 855, 861
312811-0316 ..	NUT HEX.LOCK HELI COIL MID GRIP M6 SS	455, 457, 727, 733, 735, 863
312811-0318 ..	NUT HEX.LOCK HELI COIL MID GRIP M8 SS	323, 385, 387
312811-0320 ..	NUT HEX.LOCK HELI COIL MID GRIP M10 SS	323, 427, 429
312811-0322 ..	NUT HEX.LOCK HELI COIL MID GRIP M12 SS	331, 333, 335, 337
312811-0324 ..	NUT HEX.LOCK HELI COIL MID GRIP M16 SS	331, 333, 335, 337, 339, 341, 343, 345
312811-0326 ..	NUT HEX.LOCK HELI COIL MID GRIP M20 SS	331, 333, 335, 337, 339, 341, 343, 345
312812-0310 ..	HEXAGON NUT, NY-LOCK M3 A480	785, 787, 789, 813, 815
312812-0312 ..	HEXAGON NUT, NY-LOCK M4 A480	777, 779, 781, 785, 787, 789, 813, 815
312812-0314 ..	HEXAGON NUT, NY-LOCK M5 A480	571, 645, 777, 779, 781, 993
312812-0316 ..	HEXAGON NUT, NY-LOCK M6 A480	115, 117, 119, 121, 225, 227, 229, 295, 409, 411, 499, 501, 563, 565, 567, 647, 777, 779, 781, 985, 987, 989, 991, 993, 1003, 1005
312812-0318 ..	HEXAGON NUT, NY-LOCK M8 A480	115, 117, 119, 121, 225, 227, 229, 777, 779, 781, 785, 787, 789, 813, 815, 919
312901-0324 ..	NUT M6M16VFZB	339, 341, 343, 345, 861
312902-0316 ..	NUT HEX. LEFT THREAD, M6 A280	571
312923-0122 ..	NUT BLIND RIVET PO M5X12,6 SS	601, 625
315101-0136 ..	WASHER PLAIN, BRB, 4,3/8 H=0,8	325, 331, 333, 335, 337, 339, 341, 343, 345, 475, 583, 585

Part No	Description	Page No
		793, 795, 797, 799, 813, 815
315101-0146 ..	WASHER PLAIN, BRB, 5,3/10 H=1	253, 255, 279, 281, 325, 339, 341, 343, 345, 351, 353, 675
		679, 793, 795, 797, 799
315101-0153 ..	WASHER PLAIN, BRB, 6,4/12 H=1,5	263, 265, 287, 289, 327, 329, 331, 333, 335, 337, 339, 341
		343, 345, 357, 359, 617, 647, 699, 709, 711
315101-0165 ..	WASHER PLAIN, BRB, 8,4/16 H=1,5	325, 331, 333, 335, 337, 355, 685, 687, 705, 707
315101-0173 ..	WASHER PLAIN, BRB, 10,5/22 H=2	331, 333, 335, 337, 339, 341, 343, 345, 351, 353
315101-0178 ..	WASHER PLAIN, BRB, 13/24 H=2	577, 579
315101-0180 ..	WASHER PLAIN, BRB, 14/28 H=2	853, 855
315101-0186 ..	WASHER PLAIN, BRB, 17/30 H=3	331, 333, 335, 337, 339, 341, 343, 345
315105-0124 ..	WASHER PLAIN, BRB, 3,2/6,H=0,5	39, 41, 77, 79, 81, 155, 157, 189, 191, 193, 245, 297, 561
		573, 639, 657, 771, 785, 787, 789, 813, 815, 841, 919
315105-0136 ..	WASHER PLAIN, BRB, 4,3/8,H=0,8	21, 45, 53, 55, 75, 93, 95, 141, 155, 157, 175, 177, 187, 193
		209, 211, 247, 249, 251, 253, 255, 279, 281, 309, 311, 421, 553, 605, 611, 639, 657, 709, 711, 723
		725, 769, 777, 779, 781, 785, 787, 789, 805, 807, 811, 813, 815, 823, 825, 839, 841, 901, 911, 919
		923, 985, 995, 997, 999
315105-0146 ..	WASHER PLAIN, BRB, 5,3/10,H=1	17, 21, 39, 41, 47, 115, 117, 119, 121, 137, 141, 155, 157
		161, 193, 225, 227, 229, 233, 243, 245, 247, 249, 251, 261, 277, 297, 299, 301, 303, 309, 311, 355
		389, 391, 413, 415, 417, 419, 421, 443, 445, 449, 453, 487, 499, 501, 509, 511, 519, 525, 527, 533
		537, 561, 563, 565, 567, 571, 599, 601, 609, 613, 625, 645, 651, 669, 671, 673, 681, 695, 763, 765
		767, 769, 777, 779, 781, 785, 787, 789, 801, 811, 813, 815, 831, 841, 887, 895, 897, 903, 911, 919
		923, 993, 995, 997, 1001
315105-0153 ..	WASHER PLAIN, BRB, 6,4/12,H=1,5	21, 29, 31, 37, 39, 41, 47, 51, 59, 61, 63, 65, 67, 69, 75, 77
		79, 87, 103, 107, 109, 111, 115, 117, 119, 121, 127, 141, 145, 147, 153, 155, 157, 161, 165, 173
		175, 177, 179, 181, 187, 189, 191, 207, 215, 219, 221, 223, 243, 247, 249, 251, 261, 271, 277, 295
		297, 309, 311, 355, 373, 375, 377, 379, 381, 383, 393, 395, 397, 399, 401, 403, 413, 415, 417, 419
		423, 425, 427, 429, 453, 455, 457, 459, 461, 463, 467, 469, 471, 473, 475, 487, 489, 495, 499, 501
		503, 507, 509, 511, 523, 531, 535, 537, 539, 541, 543, 547, 549, 551, 553, 557, 559, 561, 563, 565
		567, 569, 571, 573, 605, 629, 633, 643, 645, 651, 657, 669, 671, 673, 683, 685, 687, 695, 703, 709
		711, 715, 719, 723, 725, 727, 753, 755, 757, 759, 761, 763, 765, 767, 769, 771, 777, 779, 781, 783
		785, 787, 789, 803, 809, 811, 813, 815, 821, 823, 825, 827, 831, 835, 837, 841, 843, 845, 885, 889
		895, 897, 899, 901, 903, 907, 909, 911, 913, 915, 917, 919, 921, 923, 925, 927, 933, 985, 987, 989
		991, 993, 997, 1003, 1005
315105-0165 ..	WASHER PLAIN, BRB, 8,4/16,H=1,5	29, 31, 39, 41, 53, 55, 61, 63, 83, 85, 93, 95, 111, 129, 145
		147, 155, 157, 167, 169, 175, 177, 209, 211, 223, 243, 247, 249, 251, 263, 265, 267, 269, 275, 277
		287, 289, 291, 293, 303, 305, 309, 311, 373, 375, 377, 379, 381, 383, 385, 387, 393, 395, 397, 399
		401, 403, 423, 425, 427, 429, 461, 473, 483, 485, 487, 491, 495, 497, 507, 519, 521, 523, 531, 541
		547, 551, 557, 559, 573, 597, 609, 611, 639, 641, 643, 653, 655, 659, 669, 671, 673, 695, 763, 765
		769, 771, 773, 775, 777, 779, 781, 785, 787, 789, 801, 803, 805, 807, 809, 811, 813, 815, 827, 831
		835, 837, 839, 841, 895, 897, 899, 901, 903, 907, 909, 911, 913, 917, 919, 923
315105-0171 ..	WASHER PLAIN, BRB, 10/18,H=2	695, 895, 897
315105-0173 ..	WASHER PLAIN, BRB, 10,5/22,H=2	47, 61, 63, 175, 177, 427, 429, 499, 501, 563, 565, 567, 623
		701, 727, 763, 765, 769, 809, 811, 813, 815, 833, 843, 845, 895, 897, 905, 907, 915
315105-0178 ..	WASHER PLAIN, BRB, 13/24,H=2	473, 491, 515, 539, 551, 557, 619, 631, 639
315105-0186 ..	WASHER PLAIN, BRB, 17/30,H=3	633, 777, 779, 781, 895, 897
315111-0153 ..	WASHER PLAIN, TBRB 6,4/12 H=3	793, 795, 797, 799
315111-0156 ..	WASHER PLAIN, TBRB 6,7/14 H=3	559
315111-0165 ..	WASHER PLAIN, TBRB 8,4/16 H=3	321, 323, 475, 553
315111-0173 ..	WASHER PLAIN, TBRB 10,5/22 H=4	321, 323, 327, 329, 331, 333, 335, 337, 339, 341, 343, 345
315111-0178 ..	WASHER PLAIN, TBRB 13/24 H=4	327, 329, 449, 475, 527, 553
315111-0186 ..	WASHER PLAIN, TBRB 17/30 H=6	447, 525, 533
315115-0153 ..	WASHER PLAIN, TBRB 6,4/12 H=3	37, 77, 79, 115, 117, 119, 121, 153, 189, 191, 193, 225, 227
		229, 365, 367, 369, 371, 373, 375, 377, 379, 381, 383, 385, 387, 393, 395, 431, 433, 451, 453, 455
		457, 499, 501, 507, 535, 549, 563, 565, 567, 569, 657, 681, 719, 809, 907
315115-0165 ..	WASHER PLAIN, TBRB 8,4/16 H=3	17, 21, 27, 29, 31, 51, 77, 79, 83, 85, 89, 91, 115, 117, 119
		121, 127, 141, 143, 145, 147, 175, 177, 189, 191, 225, 227, 229, 247, 249, 251, 397, 399, 401, 403
		427, 429, 467, 469, 619, 631, 723, 725, 733, 735, 763, 765, 769, 777, 779, 781, 811, 857, 859
315115-0173 ..	WASHER PLAIN, TBRB 10,5/22 H=4	61, 63, 77, 79, 175, 177, 189, 191
315115-0178 ..	WASHER PLAIN, TBRB 13/24 H=4	29, 31, 93, 95, 145, 147, 209, 211
315121-0153 ..	WASHER PLAIN, TBRSB 6,4/22 H=4	327, 329, 355, 557, 577, 579, 771, 827
315121-0173 ..	WASHER PLAIN, TBRSB 10,5/28 H=6	323, 357, 359
315121-0178 ..	WASHER PLAIN, TBRSB 13/36 H=6	323, 327, 329
315121-0179 ..	WASHER PLAIN, TBRSB 13,5/36 H=6	861
315125-0153 ..	WASHER PLAIN ROUND,CHAMF. 6,4/22, H=4	33, 35, 65, 67, 77, 79, 149, 151, 167, 169, 179
		181, 189, 191, 517, 709, 711, 753, 755, 757, 759, 903, 919
315125-0165 ..	WASHER PLAIN ROUND,CHAMF. 8,4/26, H=5	53, 55, 61, 63, 87, 129, 137, 167, 169, 175, 177
		207, 499, 501, 547, 769, 811
315202-0102 ..	O-RING 4,1X1,6 MM	373, 375, 377, 379, 381, 383, 393, 395, 421
315202-0104 ..	O-RING 6,1X1,6 MM	655
315202-0105 ..	O-RING 7,1X1,6 MM	303, 305
315202-0106 ..	O-RING 8,1X1,6 MM	373, 375, 377, 379, 381, 383, 393, 395, 423
315202-0108 ..	O-RING 10,1X1,6 MM	373, 375, 377, 379, 381, 383, 393, 395
315202-0109 ..	O-RING 11,1X1,6 MM	617
315202-0115 ..	O-RING 17,1X1,6 MM	475
315202-0116 ..	O-RING 18,1X1,6 MM	681
315202-0117 ..	O-RING 19,1X1,6 MM	475
315202-0118 ..	O-RING 22,1X1,6 MM	553
315202-0119 ..	O-RING 25,1X1,6 MM	61, 63, 175, 177
315202-0204 ..	O-RING 5,3X2,4 MM	423
315202-0206 ..	O-RING 7,3X2,4 MM	247, 249, 251, 385, 387
315202-0207 ..	O-RING 8,3X2,4 MM	385, 387, 423
315202-0215 ..	O-RING 19,2X3 MM	267, 269, 291, 293, 459, 475, 491, 539, 553, 557
315202-0217 ..	O-RING 24,2X3 MM	477, 493, 935
315202-0218 ..	O-RING 26,2X3 MM	801

Part No	Description	Page No
315202-0219 ..	O-RING 29,2X3 MM	385, 387, 423
315202-0225 ..	O-RING 44,2X3 MM	705, 707
315202-0265 ..	O-RING 12,3X2,4 MM	365, 367, 369, 371
315202-0304 ..	O-RING 64,5X3 MM	201, 475, 553, 793, 795, 797, 799
315202-0305 ..	O-RING 69,5X3 MM	793, 795, 797, 799
315202-0306 ..	O-RING 74,5X3 MM	443, 445, 525, 533
315202-0308 ..	O-RING 84,5X3 MM	197, 199
315202-0309 ..	O-RING 89,5X3 MM	447, 801
315202-0710 ..	O-RING 25,12X1,78 MM	669, 671, 673
315204-0103 ..	O-RING 5,1X1,6 MM	61, 63, 175, 177
315204-0108 ..	O-RING 10,10X1,6 MM	865, 867, 869
315204-0109 ..	O-RING 11,1X1,6 MM	77, 79, 189, 191
315204-0110 ..	O-RING 12,1X1,6 MM	69, 173
315204-0111 ..	O-RING 13,1X1,6 MM	37, 153
315204-0117 ..	O-RING 19,1X1,6 MM	723, 725
315204-0119 ..	O-RING 25,1X1,6 MM	179, 181
315204-0208 ..	O-RING 9,3X2,4 MM	77, 79, 189, 191
315204-0213 ..	O-RING 15,2X2,4 MM	39, 41, 61, 63, 75, 155, 157, 175, 177, 187
315204-0214 ..	O-RING 17,3X2,4 MM	33, 35, 123, 135, 149, 151
315204-0215 ..	O-RING 19,2X3 MM	39, 41, 197, 199, 201
315204-0217 ..	O-RING 24,2X3 MM	33, 35, 61, 63, 149, 151, 175, 177
315204-0218 ..	O-RING 26,2X3 MM	73, 123, 135, 185
315204-0222 ..	O-RING 36,2X3 MM	65, 67, 69, 179, 181
315204-0223 ..	O-RING 39,2X3 MM	57, 71, 73, 123, 135, 171, 183, 185, 719
315204-0224 ..	O-RING 42,2X3 MM	111, 223, 719
315204-0301 ..	O-RING 49,5X3 MM	33, 35, 71, 149, 151, 183, 201
315204-0302 ..	O-RING 54,5X3 MM	59, 69, 173, 731
315204-0303 ..	O-RING 59,5X3 MM	111, 143, 223, 859
315204-0305 ..	O-RING 69,5X3 MM	21, 75, 141, 155, 157, 187, 453, 537
315204-0306 ..	O-RING 74,5X3 MM	143, 859
315204-0309 ..	O-RING 89,5X3 MM	143, 859
315204-0310 ..	O-RING 94,5X3 MM	21, 141
315204-0313 ..	O-RING 109,5X3 MM	27, 857
315204-0526 ..	O-RING 36,1X3,53 MM	863
315205-0508 ..	O-RING 9,19X2,62 MM	517
315205-0729 ..	O-RING 39,34X2,62 MM	517
315211-0105 ..	GASKET BOLT HEAD 10,4X15,9X2 MM G1/8	263, 265, 287, 289
315211-0107 ..	GASKET BOLT HEAD 12,7X18X1,5 MM M12	491
315211-0108 ..	GASKET BOLT HEAD 13,7X20,6X2 MM G1/4	263, 265, 287, 289
315220-0210 ..	V-RINGS 54X64X13 MM V-60S	443, 445, 447, 525, 533
315221-0169 ..	RADIAL SEAL 30X47X7 MM	327, 329
315221-0177 ..	RADIAL SEAL 35X52X7 MM	525, 533
315230-0157 ..	BEARING SEAL 12X16X3 MM	365, 367, 369, 371
315233-0101 ..	WASHER PL.RND.NYL.5,2/8,H=1	197, 199, 201, 441, 529
315233-0109 ..	WASHER PL.RND.NYL.10,3/14,H=1	243, 277, 397, 399, 401, 403, 475, 543, 651, 669, 671, 673, 675, 681, 683, 895, 897
315233-0110 ..	WASHER PL.RND.NYL.13,3/17,H=1	463, 499, 501, 563, 565, 567, 581, 669, 671, 673, 675, 681, 703
315233-0111 ..	WASHER PL.RND.NYL.17/22,H=1	247, 249, 251, 475, 499, 501, 543, 553, 563, 565, 567, 675, 677, 681, 703
315233-0113 ..	WASHER PL.RND.NYL.21,4/27,H=1,2	261, 463, 543, 581, 669, 671, 673, 675, 683, 709, 711
315233-0115 ..	WASHER PL.RND.NYL.26,6/34,H=1,2	669, 671, 673
315234-0101 ..	WASHER,PL.RND.CU.5/8 H=0,8	451, 467, 469, 535, 547
315234-0109 ..	WASHER,PL.RND.CU.10,3/13,5 H=1,0	53, 55, 87, 207, 253, 255, 279, 281, 393, 395, 553
315234-0110 ..	WASHER,PL.RND.CU.13,5/18 H=1,5	113, 577, 579
315234-0113 ..	WASHER PL.RND.CU.21,3//26 H=1,5	577, 579
315237-0106 ..	WASHER,PL.RND.AL.6/10,H=1	365, 367, 369, 371, 393, 395
315237-0107 ..	WASHER,PL.RND.AL.8/14,H=1	393, 395
315237-0109 ..	WASHER,PL.RND.AL.10/14,H=1,5	365, 367, 369, 371
315237-0110 ..	WASHER,PL.RND.AL.13,5/18,H=1,5	373, 375, 377, 379, 381, 383, 393, 395
315250-0101 ..	GASKET 32X25X5,5 MM	929
315250-0103 ..	GASKET 48X38X5,5 MM	491, 557
315250-0104 ..	GASKET 61X51X5,5 MM	465, 491, 545, 557
315259-0102 ..	FELT SEAL 22-47 MM	243, 277
315402-0136 ..	LOCK WASHER FBB 4,1	199
315402-0156 ..	LOCK WASHER FBB 6,5	455, 457
315402-0165 ..	LOCK WASHER FBB 8,2	309, 311
315410-0106 ..	LOCK WASHER MB 6 D=30 H=1,25	525, 533
315701-0169 ..	PARALLEL KEY W. ROUND ENDS 4X4X18 MM	813, 815
315701-0170 ..	PARALLEL KEY W. ROUND ENDS 4X4X20 MM	785, 787, 789
315701-0232 ..	PARALLEL KEY W. ROUND ENDS 6X6X20 MM	355
315701-0235 ..	PARALLEL KEY W. ROUND ENDS 6X6X28 MM	347, 349
315701-0239 ..	PARALLEL KEY W. ROUND ENDS 6X6X40 MM	327, 329, 347, 349
315701-0262 ..	PARALLEL KEY W. ROUND ENDS 8X7X18 MM	699
315701-0263 ..	PARALLEL KEY W. ROUND ENDS 8X7X20 MM	449, 527
315701-0268 ..	PARALLEL KEY W. ROUND ENDS 8X7X32 MM	327, 329
315701-0271 ..	PARALLEL KEY W. ROUND ENDS 8X7X45 MM	449, 527
315701-0335 ..	PARALLEL KEY W. ROUND ENDS 12X8X56 MM	331, 333, 335, 337, 339, 341, 343, 345
315705-0135 ..	PARALLEL KEY W. ROUND ENDS 3X3X12 MM	517
315705-0196 ..	PARALLEL KEY W. ROUND ENDS 5X5X10 MM	727
315705-0265 ..	PARALLEL KEY W. ROUND ENDS 8X7X25 MM	517
315742-0102 ..	COLLAR, 6/16, H=8	397, 399, 401, 403
315742-0111 ..	COLLAR, 15/30, H=12	597, 637, 639
315742-0112 ..	COLLAR, 16/32, H=12	37, 153, 659, 777, 779, 781
315742-0116 ..	COLLAR, 20/36, H=13	355

Part No	Description	Page No
315750-0105 ..	RETAIN. RING, 8	801, 827
315750-0107 ..	RETAIN. RING, 10	771
315750-0112 ..	RETAIN. RING, 15	643
315750-0119 ..	RETAIN. RING, 25	699, 865, 867, 869
315751-0103 ..	RETAIN. RING, 6	571, 823, 825
315751-0109 ..	RETAIN. RING, 12	835, 837
315751-0112 ..	RETAIN. RING, 15	39, 41, 155, 157, 571, 813, 815, 833
315751-0116 ..	RETAIN. RING, 20	903
315752-0123 ..	RETAIN. RING, 32	323
315754-0107 ..	LOCKING WAE 5	763, 765
315754-0110 ..	LOCKING WAE 9	763, 765
315754-0113 ..	LOCKING WAE 15	197, 199, 201
315755-0105 ..	LOCKING WASHER 3,2	839
315755-0106 ..	LOCKING WASHER 4	889, 923, 987, 989, 991, 993
315755-0107 ..	LOCKING WASHER 5	809
315755-0109 ..	LOCKING WASHER 7	809
315755-0112 ..	LOCKING WASHER 12	21, 141
318108-0111 ..	V-BELT SPZ 1137X9,5	327, 329
318172-0156 ..	TIMING BELT T10X1010X16 POLYURETHANE	483
318201-0150 ..	ROLLER CHAIN, SINGLE 3/8 -150	355
318207-0168 ..	ROLLER CHAIN, SINGLE 6MM-168	813, 815
318800-0102 ..	HANDLES,SPHERICAL KNOB,INT.THRE.,D.20-M5	841
318800-0103 ..	HANDLES,SPHERICAL KNOB,INT.THRE.,D.25-M6	77, 79, 189, 191, 821
318800-0104 ..	HANDLE,SPHERICAL KNOB,INT.THRE.,D.30-M8	827
321101-0143 ..	FLANGE BUS 8F7X8	115, 117, 119, 121, 225, 227, 229
321101-0173 ..	FLANGE BUS 12F7X12	605, 769, 811
321101-0202 ..	FLANGE BUS 16F7X12	643, 659
321101-0233 ..	FLANGE BUS 20F7X20	325, 611, 659
321111-0096 ..	BEAR.BUSHING WITH FLANGE, 8/12X8 MM	299, 301
321111-0134 ..	BEAR.BUSHING WITH FLANGE, 10/16X8 MM	611
321111-0212 ..	BEAR.BUSHING WITH FLANGE, 15/21X15 MM	821
321111-0240 ..	BEAR.BUSHING WITH FLANGE, 16/22X12 MM	699
321116-0151 ..	BEAR. BUSH. WITHOUT FL, 12X16X12	611
321120-0098 ..	BEARING BUSHING WITHOUT FLANG,10/12X8	397, 399, 401, 403
321120-0100 ..	BEARING BUSHING WITHOUT FLANGE,8/10X12	801, 823, 825
321120-0101 ..	BEARING BUSHING WITHOUT FLANGE,6/8X6	823, 825, 841
321120-0103 ..	BEARING BUSHING WITHOUT FLANGE,8/10X8	839
321120-0104 ..	BEARING BUSHING WITHOUT FLANGE,10/12X10	771, 827, 839
321120-0109 ..	BEARING BUSHING WITHOUT FLANGE,12/14X10	801
321120-0110 ..	BEARING BUSHING WITHOUT FL, 12X14X12 MM	771
321120-0112 ..	BEARING BUSHING WITHOUT FLANGE,12/14X20	623
321120-0113 ..	BEARING BUSHING WITHOUT FLANGE,12/14X25	835, 837
321120-0118 ..	BEARING BUSHING WITHOUT FL, 14X16X15 MM	397, 399, 401, 403
321120-0122 ..	BEARING BUSHING WITHOUT FL, 15X17X15 MM	793, 795, 797, 799
321120-0132 ..	BEARING BUSHING WITHOUT FL, 18X20X20 MM	373, 375, 377, 379, 381, 383, 393, 395
321120-0138 ..	BEARING BUSHING WITHOUT FLANGE,20/23X20	355
321120-0147 ..	BEARING BUSHING WITHOUT FL, 22X25X25 MM	785, 787, 789
321120-0153 ..	BEARING BUSHING WITHOUT FL, 24X27X20 MM	397, 399, 401, 403
321127-0100 ..	BEARING BUSHING WITHOUT FL, 10X13X10 MM	27, 29, 31, 53, 55, 103, 129, 143, 145, 147
		215, 857, 859
321129-0104 ..	THRUST WASHER, 12/24X1,5	835, 837
321129-0117 ..	THRUST WASHER, 16/30X1,5	659
321129-0131 ..	THRUST WASHER, 20/36X1,5	355
321129-0137 ..	THRUST WASHER, 22/38X1,5	331, 333, 335, 337
321135-0219 ..	BUSHING, 16X18X15 MM	517
321141-0060 ..	BEARING BUSHING WITHOUT FL, 6X8X6 MM	809
321155-0221 ..	FLANGE BUSHING, 16X18X17 MM	517
321306-0105 ..	BALL BEARING, 25X47X12 MM	447
321308-0202 ..	BALL BEARING, 2 SEALS, 15X32X9 MM	323, 597, 637, 639, 643, 833
321308-0205 ..	BALL BEARING, 2 SEALS, 25X47X12 MM	699
321308-0207 ..	BALL BEARING, 2 SEALS, 35X62X14 MM	327, 329
321313-0105 ..	BALL BEARING, 2 SEALS, 25X52X15 MM	327, 329
321531-0248 ..	NEEDLE SLEEVE WITHOUT CONE, 20X26X16 MM	325, 331, 333, 335, 337, 339, 341, 343, 345
321576-0260 ..	BEARING ROLLER, 2 SEALS, 20X47X25 MM	331, 333, 335, 337, 339, 341, 343, 345
321580-0165 ..	CAM ROLLER, 12X30X40 MM	699
321582-0212 ..	CAM ROLLER, 2 SEALS, 16X35X52 MM	633
321600-0114 ..	OIL SEAL (LL3052	327, 329
341001-0148 ..	COPPER TUBE	669, 671, 673
342221-0110 ..	ELBOW, 90, INT/EXT. THREAD, SIZE. 8	705, 707
342221-0113 ..	ELBOW, 90, INT/EXT. THREAD, SIZE. 15	705, 707
342700-0205 ..	NIPPLES,HEXAGON,EXT.G-THREAD G1/2"-G1/4"	669, 671, 673
342701-0201 ..	BUSHING,INT./EXT.G-THREAD G1/4"-G1/8"	669, 671, 673, 703
342701-0205 ..	BUSHING,INT./EXT.G-THREAD G1/2"-G1/4"	581, 669, 671, 673
342701-0208 ..	BUSHING, INT/EXT. G-THREAD NO. 3/4-1/4	327, 329, 705, 707
342703-0208 ..	NUT, PIPES & CONNECTORS,NUT M-8 SS	253, 255, 279, 281
342703-0215 ..	NUT, PIPES & CONNECTORS,NUT M-12 SS	719
342704-0114 ..	ACCESSORIES, FERRULE 15-MSG	675
342707-0113 ..	SLEEVE, INT. THREAD, NO. 2543-1/2	669, 671, 673
342708-0101 ..	REINFORCING RING VSH 6X1 MM	805, 807
342708-0107 ..	REINFORCING RING VSH 12X1 MM	463, 543
342708-0109 ..	REINFORCING RING VSH 15X1 MM	709, 711
342710-0115 ..	REDUCTION RBM 16/8	261
342712-0205 ..	BUSHING, INT/EXT. G-THREAD NO. 1/2X1/4	705, 707
342713-0209 ..	PLUG, EXT THREAD HEX SOCKET 8638-00-180	393, 395, 675

Part No	Description	Page No
342713-0210 ..	PLUG, EXT THREAD HEX SOCKET 8638-00-140	675
342713-0211 ..	PLUG, EXT THREAD HEX SOCKET 8638-00-380	675, 681, 685, 687
342713-0213 ..	PLUG, EXT THREAD HEX SOCKET 8638-00-120	545, 669, 671, 673, 683, 709, 711
342713-0215 ..	PLUG, EXT THREAD HEX SOCKET 8638-00-340	709, 711
342713-0310 ..	PLUG, EXT. THREAD HEX. SOCKET. BPS14	697
342713-0313 ..	PLUG, EXT. THREAD HEX. SOCKET. BPS12	697
342714-0110 ..	REDUCTION KOR 15/12-L/SY	709, 711
342714-0201 ..	REDUCTION KOR 8/6-LFZB	705, 707
342714-0203 ..	REDUCTION KOR 10/8-LFZB	705, 707
342715-0102 ..	BLIND PLUG 6 MM	685, 687
342715-0103 ..	BLIND PLUG 8 MM	685, 687
342716-0203 ..	REDUCER 6-8	685, 687
342716-0209 ..	REDUCER 8-12	685, 687
342720-0102 ..	CONN. STR. GA-6-G1/8	669, 671, 673
342720-0114 ..	CONN. STR. GA-15-G1/2	261, 683, 709, 711
342722-0197 ..	STRAIGHT COUPLING	537
342722-0202 ..	PIPE COUPLING 1/8" D=6MM	263, 265, 287, 289, 669, 671, 673
342722-0203 ..	STRAIGHT COUPLING	669, 671, 673
342722-0204 ..	PIPE COUPLING	669, 671, 673
342722-0205 ..	STRAIGHT COUPLING D=8-G1/4"	669, 671, 673, 675, 685, 687
342722-0206 ..	STRAIGHT COUPLING D=8-G3/8"	675
342723-0114 ..	CONN. STR. PIPE GI-15-G1/2	709, 711
342725-0114 ..	CONN. STR. PIPE GI-15-G1/2	709, 711
342726-0109 ..	CONN. PIPE G-12	261, 709, 711
342726-0114 ..	CONN. PIPE G-15	709, 711
342727-0102 ..	CONN. PIPE G-6-LFZB	253, 255, 279, 281
342727-0214 ..	CONN. PIPE G-15-L/SY	719
342730-0114 ..	CONN. ELBOW WA-15-1/2	669, 671, 673
342731-0108 ..	CONN. ELBOW WE 10-LRFZB	705, 707
342732-0102 ..	ELBOW PIPE JOINT, EXT.THREAD, D=6MM-G1/8	263, 265, 287, 289, 571, 685, 687
342732-0103 ..	ELBOW PIPE JOINT, EXT.THREAD, D=6MM-G1/4	669, 671, 673, 685, 687
342732-0104 ..	ELBOW PIPE JOINT, EXT.THREAD, D=8MM-G1/4	543, 685, 687, 705, 707
342732-0105 ..	ELBOW PIPE D8-R3/8"	685, 687
342732-0110 ..	ELBOW PIPE JOINT, EXT.THREAD,D=12MM-G3/8	669, 671, 673, 685, 687
342732-0801 ..	ELBOW PIPE JOINT, EXT.THREAD, D=8MM-G1/8	669, 671, 673
342735-0102 ..	ELBOW PIPE JOINT	685, 687
342735-0103 ..	ELBOW PIPE JOINT	661, 663, 665, 667, 669, 671, 673, 685, 687
342735-0109 ..	ELBOW PIPE JOINT	661, 663, 665, 667, 685, 687
342736-0109 ..	CONN. ELBOW W-12	253, 255, 279, 281
342736-0114 ..	CONN. ELBOW W-15	261
342736-0115 ..	CONN. ELBOW W-16	675
342737-0221 ..	CONN. ELBOW W-15 LRFR	719
342738-0208 ..	ADJUSTABLE ELBOW CONNECTION,EXT 8-G1/4	263, 265, 287, 289
342738-0221 ..	ADJUSTABLE ELBOW CONNECTION,EXT 15-G1/2	709, 711
342742-0104 ..	T-COUPLING,ADJUST,F.PLASTIC TUBE 8-G1/4"	669, 671, 673, 685, 687
342744-0102 ..	CONN. ELBOW ADJ.,INT 6	705, 707
342746-0114 ..	CONN. T-PIPE T-15	261, 463, 543
342748-0102 ..	T-CONNECTION 6MM	661, 663, 665, 667
342748-0103 ..	T-CONNECTION 8MM	685, 687
342748-0104 ..	T-CONNECTION 10MM	685, 687
342748-0109 ..	T-CONNECTION 12MM	685, 687
342752-0103 ..	CONN. STR. GA-8-G1/4	697
342752-0114 ..	CONN. STR. GA-15-G1/2	697, 705, 707
342761-0103 ..	ADJ. L-PIPE CONNECTION EVL, INT.T-8	705, 707
342762-0103 ..	CONN. BULKHEAD SV 8-LFZB	703, 705, 707
342764-0114 ..	CONN. ELBOW BULKHEAD LWSV15-LFZB	705, 707
342767-0100 ..	CONN. BULKHEAD G1/8	253, 255, 279, 281, 669, 671, 673
342767-0104 ..	CONN. BULKHEAD G1/4	669, 671, 673
342767-0114 ..	CONN. BULKHEAD G1/2	669, 671, 673
342770-0105 ..	STRAIGHT COUPLING INT, D=6 MM - G1/8	685, 687
342772-0113 ..	ELBOW FITTING, 6 - G1/8	571
342772-0121 ..	ELBOW FITTING	685, 687
342790-0102 ..	CONN. PRESS. GAUGE MAV6-LRFZB	705, 707
342792-0114 ..	CONN. BANJO,WH 15-G1/2	705, 707
342797-0121 ..	CONN. BANJO, RINGPIECE 6-1/8	59, 69, 87, 105, 113, 133, 145, 147, 153, 161, 167, 169, 171, 173, 207, 213, 217, 253, 255, 279, 281, 571, 769, 771, 811
342797-0122 ..	CONN. BANJO, RINGPIECE 6-1/4	29, 31, 37, 47, 57, 73, 97, 113, 185, 669, 671, 673, 769, 773, 775, 811
342797-0132 ..	CONN. BANJO, RINGPIECE 8-1/4	669, 671, 673
342803-0103 ..	UNION NUT, RD 60-6 (SMS 38)	111, 223, 491
342803-0104 ..	UNION NUT, RD 70-6 (SMS 51)	81, 193
342807-0101 ..	PIPE ELBOW 90 DEGR. SMS1220, D=25 MM	929
342807-0104 ..	PIPE ELBOW 90 DEGR. SMS1220, D=51 MM	465, 545
342812-0103 ..	FERRULE, SMS 1145, 2333, NO. 190706	111, 223
342812-0104 ..	FERRULE, SMS 1145, 2333, NO. 190707	81, 193
342901-0106 ..	HOSE NIPPLE, EXT.THR. R3/8-17 MM	927
342903-0111 ..	NUT WITH SPRING 6/4-M10X1	651
342903-0121 ..	NUT WITH SPRING 8/6-M12X1	247, 249, 251, 669, 671, 673
342920-0114 ..	STRAIGHT COUPLING,EXT.THREADED 6/4-R1/4"	669, 671, 673
342920-0122 ..	STRAIGHT COUPLING,EXT.THREADED 8/6-R1/4"	453, 463, 537
342921-0111 ..	STRAIGHT COUPLING,EXT.THREADED 6/4-M5	907
342921-0112 ..	STRAIGHT COUPLING,EXT.THREADED 6/4-6M	461, 535, 541, 895, 897, 915
342921-0113 ..	STRAIGHT COUPLING,EXT.THREADED 6/4-G1/8"	105, 133, 217, 231, 553, 651
342921-0114 ..	STRAIGHT COUPLING,EXT.THREADED 6/4-G1/4"	553

Part No	Description	Page No
342921-0115 ..	STRAIGHT COUPLING,EXT.THREADED 6/4-G3/8"	661, 663, 665, 667
342921-0121 ..	STRAIGHT COUPLING,EXT.THREADED 8/6-G1/8"	105, 133, 217, 263, 265, 287, 289, 543, 681, 683
342921-0132 ..	STRAIGHT COUPL.,EXT.THREADED 10/8-G1/4"	931
342930-0113 ..	ELBOW 90 COUPL.,EXT.THREAD 6/4-R1/8"	681
342930-0114 ..	ELBOW 90 COUPL.,EXT.THREAD 6/4-R1/4"	719
342930-0121 ..	ELBOW 90 COUPL.,EXT.THREAD 8/6-R1/8"	681
342930-0122 ..	ELBOW 90 COUPL.,EXT.THREAD 8/6-R1/4"	327, 329
342931-0113 ..	ELBOW 90 COUPL.,EXT.THREAD 6/4-G1/8"	531
342940-0115 ..	T-COUPLING,EXT.THREAD 6/4-R3/8"	661, 663, 665, 667
342960-0112 ..	BULKHEAD COUPLING 6/4	463, 475, 543, 553, 669, 671, 673
342960-0121 ..	BULKHEAD COUPLING 8/6-6/4	463, 543, 669, 671, 673
342960-0122 ..	BULKHEAD COUPLING 8/6	463, 543, 669, 671, 673
342980-0111 ..	BANJO-CONNECTION,RING 6/4-M5	651
342980-0113 ..	BANJO-CONNECTION,RING 6/4-G1/8"	105, 133, 217, 397, 399, 401, 403, 451, 535, 545, 643, 651, 669, 671, 673, 771, 929
342980-0114 ..	BANJO-CONNECTION,RING 6/4-G1/4"	53, 55, 129
342980-0121 ..	BANJO-CONNECTION,RING 8/6-G1/8"	247, 249, 251, 431, 433, 669, 671, 673, 681
342980-0122 ..	BANJO-CONNECTION,RING 8/6-G1/4"	263, 265, 287, 289, 327, 329, 669, 671, 673, 681, 705, 707
342980-0132 ..	BANJO-CONNECTION,RING 10/8-G1/4"	895, 897
342980-0213 ..	BANJO-CONNECTION,T-RING 6/4-G1/8"	465, 929
342980-0301 ..	BANJO-HOLLOW BOLT COUPL.,EXT.THREA.01-M5	651
342980-0303 ..	BANJO-HOLLOW BOLT COUPL,EXT.THR.01-G1/8"	59, 69, 105, 113, 133, 171, 173, 213, 217, 247, 249, 251, 253, 255, 279, 281, 397, 399, 401, 403, 431, 433, 451, 465, 535, 545, 651, 669, 671, 673, 681, 771, 929
342980-0304 ..	BANJO-HOLLOW BOLT COUPL,EXT.THR.01-G1/4"	73, 113, 185, 263, 265, 287, 289, 327, 329, 669, 671, 673, 705, 707, 769, 773, 775, 811, 895, 897
342980-0313 ..	BANJO-HOLLOW BOLT COUPL,EXT.THR.02-G1/8"	105, 133, 217, 397, 399, 401, 403, 643, 681
342980-0314 ..	BANJO-HOLLOW BOLT COUPL,EXT.THR.02-G1/4"	113, 263, 265, 287, 289, 669, 671, 673
342991-0100 ..	HOSE CLIP,WORM DRIVE TYPE 10-13	703
342991-0101 ..	HOSE CLIP,WORM DRIVE TYPE (13)-16	577, 579, 703
342991-0103 ..	HOSE CLIP,WORM DRIVE TYPE (19)-23	769, 771, 811, 927
342991-0104 ..	HOSE CLIP,WORM DRIVE TYPE (23)-27	327, 329, 619, 631
342991-0105 ..	HOSE CLIP,WORM DRIVE TYPE (27)-30	633
342991-0106 ..	HOSE CLIP,WORM DRIVE TYPE (30)-36	463, 543, 719, 731, 929
342991-0107 ..	HOSE CLIP 32-44MMRFR	719
342991-0108 ..	HOSE CLIP 38-50MMRFR	773, 775
344502-0021 ..	GREASE NIPPLE STRAIGHT M6	447
351120-0144 ..	CABLE SIHF 3X15MM2 GREEN/YELLOW	971, 973
351120-0145 ..	CABLE SIHF 3X25MM2 GREEN/YELLOW	971, 973
351120-0167 ..	CABLE SIHF 4X6MM2 GREEN/YELLOW	971, 973
351121-0209 ..	CABLE RADOX 155 1X25 MM2 BLACK	971, 973
351150-0403 ..	CABLE OLFLEX 3X0,75 MM2 LIGHT/GREY	843, 845, 971, 973
351150-0404 ..	CABLE OLFLEX 4X0,75 MM2 LIGHT/GREY	971, 973
351150-0405 ..	CABLE OLFLEX 5X0,75 MM2 LIGHT/GREY	941, 971, 973
351150-0406 ..	CABLE OLFLEX 7X0,75 MM2 LIGHT/GREY	971, 973
351150-0407 ..	CABLE OLFLEX 12X0,75 MM2 LIGHT/GREY	971, 973
351150-0412 ..	CABLE OLFLEX 3X1,5 MM2 LIGHT/GREY	971, 973
351150-0413 ..	CABLE OLFLEX 4X1,5 MM2 LIGHT/GREY	971, 973
351150-0415 ..	CABLE OLFLEX 7X1,5 MM2 LIGHT/GREY	971, 973
351150-0427 ..	CABLE OLFLEX 34X0,75 MM2 LIGHT/GREY	971, 973
351150-0428 ..	CABLE OLFLEX 41X0,75 MM2 LIGHT/GREY	971, 973
351150-0431 ..	CABLE OLFLEX 2X0,75 MM2 LIGHT/GREY	971, 973
351160-0102 ..	CABLE AWM 1X0,75 MM2 DARKBLUE	941, 951, 953, 955, 957, 959
351160-0104 ..	CABLE AWM 1X1,5 MM2 DARKBLUE	951, 953, 955, 957, 959
351160-0106 ..	CABLE AWM 1X4 MM2 DARKBLUE	951, 953, 955, 957, 959
351161-0102 ..	CABLE AWM 1X0,75 MM2 LIGHTBLUE	951, 953, 955, 957, 959
351161-0104 ..	CABLE AWM 1X1,5 MM2 LIGHTBLUE	951, 953, 955, 957, 959
351161-0105 ..	CABLE AWM 1X2,5 MM2 LIGHTBLUE	951, 953, 955, 957, 959
351161-0107 ..	CABLE AWM 1X6 MM2 LIGHTBLUE	951, 953, 955, 957, 959
351161-0110 ..	CABLE AWM 1X25 MM2 LIGHTBLUE	951, 953, 955, 957, 959
351162-0102 ..	CABLE AWM 1X0,75 MM2 YELLOW-GREEN	951, 953, 955, 957, 959
351162-0104 ..	CABLE AWM 1X1,5 MM2 YELLOW-GREEN	941, 951, 953, 955, 957, 959
351162-0105 ..	CABLE AWM 1X2,5 MM2 YELLOW-GREEN	951, 953, 955, 957, 959
351162-0107 ..	CABLE AWM 1X6 MM2 YELLOW-GREEN	951, 953, 955, 957, 959
351162-0108 ..	CABLE AWM 1X10 MM2 YELLOW-GREEN	951, 953, 955, 957, 959
351162-0109 ..	CABLE AWM 1X16 MM2 YELLOW-GREEN	951, 953, 955, 957, 959, 971, 973
351164-0102 ..	CABLE AWM 1X0,75 MM2 BLACK	951, 953, 955, 957, 959
351164-0104 ..	CABLE AWM 1X1,5 MM2 BLACK	941, 951, 953, 955, 957, 959
351164-0105 ..	CABLE AWM 1X2,5 MM2 BLACK	951, 953, 955, 957, 959
351164-0106 ..	CABLE AWM 1X4 MM2 BLACK	951, 953, 955, 957, 959
351164-0107 ..	CABLE AWM 1X6 MM2 BLACK	951, 953, 955, 957, 959
351164-0110 ..	CABLE AWM 1X25 MM2 BLACK	951, 953, 955, 957, 959, 971, 973
351166-0102 ..	CABLE AWM 1X0,75 MM2 ORANGE	951, 953, 955, 957, 959
352100-0106 ..	CABLE GLANR.18,6-10,5	53, 55, 129, 167, 169
352100-0107 ..	CABLE GLANR.18,6-12	453, 537
352100-0112 ..	CABLE GLANR.22,5-15	107, 109, 219, 221
352100-0121 ..	CABLE GLANR. 37-23,5	17, 137
352101-0102 ..	LEAD-IN, PR15,2/PG9, E-1457515	613, 693, 813, 815
352101-0103 ..	LEAD-IN, PR18,6/PG11, E-1457518	669, 671, 673, 685, 687
352101-0105 ..	LEAD-IN, PR22,5/PG16, E-1457522	629, 709, 711
352101-0107 ..	LEAD-IN, PR37/PG29, E-1457537	107, 109, 219, 221
352103-0095 ..	CABLE GLAND, STR 7, PR 12,5/PG7	583, 585
352103-0100 ..	CABLE GLAND, STR 9, PR15,2/PG9	243, 267, 269, 277, 291, 293, 571, 693, 783
352103-0101 ..	CABLE GLAND, ST 9, PR15,2/PG9	77, 79, 99, 105, 107, 109, 133, 189, 191, 217, 219, 221, 587

Part No	Description	Page No
		589, 601, 625, 679, 693, 783, 941, 985
352103-0105 ..	CABLE GLAND, STR 11, PR 18,6/PG11	613
352103-0106 ..	CABLE GLAND, ST 11, PR18,6/PG11	87, 107, 109, 207, 219, 221, 243, 245, 277, 309, 311, 497
		559, 561, 587, 589, 601, 605, 621, 625, 693, 769, 771, 811, 919, 923, 941, 985
352103-0108 ..	CABLE GLAND, ST 13,5 , PR20,4/PG13,5	267, 269, 291, 293, 583, 585
352103-0110 ..	CABLE GLAND, STR 16, PR22,5/PG16	557, 617, 629, 679, 719, 727, 773, 775, 843, 845
352103-0111 ..	CABLE GLAND, ST 16, PR22,5/PG16	107, 109, 175, 177, 219, 221, 705, 707, 721, 783, 941, 985
352103-0116 ..	CABLE GLAND, ST 21, PR28,3/PG21	107, 109, 219, 221, 321, 985
352103-0121 ..	CABLE GLAND, ST 29, PR37,0/PG29	99, 107, 109, 219, 221, 587, 589, 985
352103-0122 ..	CABLE GLAND, ST 36, PR47,0/PG36	985
352110-0100 ..	CABLE CLIPS, D=5-7 MM	77, 79, 189, 191, 633, 651
352110-0101 ..	CABLE CLIPS, D=7-10 MM	633
352110-0102 ..	CABLE CLIPS, D=10-14 MM	611, 617, 629
352110-0103 ..	CABLE CLIPS, D=14-20 MM	577, 579
352113-0101 ..	CLIP STRIP, 92X2,5 MM	253, 255, 279, 281, 339, 341, 343, 345, 617, 629, 661, 663, 665, 667
		801, 895, 897
352113-0102 ..	CLIP-STRIP, BLACK 188X4,8 MM	583, 585, 661, 663, 665, 667, 709, 711, 719
352113-0104 ..	CLIP STRIP, 300X4,8 MM	661, 663, 665, 667
352113-0205 ..	ANCHOR PLATES FOR STRIPS, TYPE TM2S8-C10	583, 585, 627, 719
352135-0106 ..	SPIRAL CONDUIT DI=16 MM	583, 585
352136-0129 ..	GLAND FITTING PR22,5/PG16 DI=16MM	583, 585, 719
352550-0136 ..	FINE-WIRE, 3,15 A	977
352551-0134 ..	FINE-WIRE FUSE 2 A SLOW;5X20MM	977
353001-0102 ..	END SLEEVE 0,75MM2	583, 585
353021-0122 ..	TERMINAL DISCONNECTBLE, WTR 2,5 D	969, 977
353021-0212 ..	FEED THROUGH TERMINAL, 10200.0	99, 587, 589, 783, 981
353021-0213 ..	FEED THROUGH TERMINAL, 10201.0	951, 953, 955, 957, 959, 961, 969
353021-0214 ..	FEED THROUGH TERMINAL, 10202.0	961
353021-0219 ..	FEED THROUGH TERMINAL, 10205.0	961, 967
353021-0302 ..	TERMINALS,TRIPLE-LEVEL, DLD 2,5/35 PA	99, 587, 589
353022-0003 ..	NEUTRAL TERMINAL, 10108.8	965
353024-0205 ..	EARTH TERMINAL, 1010.1	99, 587, 589, 783, 943, 945, 961, 963, 969, 981
353024-0206 ..	EARTH TERMINAL, 1010.2	961, 963
353024-0207 ..	EARTH TERMINAL, 1010.3	963
353024-0208 ..	EARTH TERMINAL, 1010.4	963
353024-0209 ..	EARTH TERMINAL, 1010.5	961
353031-0203 ..	END PLATE, 10612.0	951, 953, 955, 957, 959, 965, 967
353032-0004 ..	END PLATE WAP 2,5-10 BEIGE	969
353032-0009 ..	END PLATE, WAP 16/35	943, 961
353032-0302 ..	END PLATE WAP	99, 587, 589
353033-0104 ..	END PLATE, 10502.8	965
353033-0105 ..	PARTITITION, 10501.0	961, 967
353034-0031 ..	BRIDGE CONNECTOR, WQV 4/10, 10520.6	969
353034-0035 ..	BRIDGE CONNECTOR, WQV 35/10, 10531.6	967
353034-0401 ..	BRIDGE CONNECTOR Q2, 13125.0	99
353034-0403 ..	BRIDGE CONNECTOR Q4, 13127,0	587, 589
353034-0404 ..	BRIDGE CONNECTOR Q10, 13131.0	99
353041-0001 ..	RAIL 10X3MM SSCH	965
353041-0106 ..	HOLDER ZB35 K 5026.8	965
353042-0004 ..	RAIL TS 35/7,5	783, 945
353042-0005 ..	RAIL TS 35/7.5	943, 961, 965, 967, 969, 981
353101-0123 ..	CABLE SHOE 0,5-1,5MM2 RED	491, 557
353101-0126 ..	CABLE SHOE	491, 557
353101-0132 ..	CABLE SHOE, RING ø5,3MM	129, 167, 169
353101-0134 ..	CABLE SHOE	769, 811
353104-0130 ..	CABLE SHOEYAV 025 M 4*	53, 55, 87, 207, 769, 771, 811
353104-0144 ..	CABLE SHOEYAV 06 M 8*	669, 671, 673
353104-0161 ..	CABLE SHOEYAV 10 M6*	313
353104-0162 ..	CABLE SHOEYAV 10 M8*	313
353243-0001 ..	EXTENDED WITHOUT INSERT, PG9	553
353245-0004 ..	GLAND, EXTENDED WITH INSERT, PG16/PR 22,	941
359000-0064 ..	MARKING CO2/4 OMÄRKT	805, 807
359000-0400 ..	MARKING CO2/4"0"	105, 133, 217, 231, 253, 255, 279, 281, 543, 571, 633, 661, 663, 665, 667
		685, 687, 709, 711, 805, 807
359000-0401 ..	MARKING COLLAR 2/4 "1" YELLOW	105, 133, 217, 253, 255, 279, 281, 543, 571, 661, 663, 665
		667, 685, 687, 709, 711, 805, 807
359000-0402 ..	MARKING COLLAR 2/4 "2" YELLOW	105, 133, 217, 253, 255, 279, 281, 571, 661, 663, 665, 667
		685, 687, 709, 711, 805, 807
359000-0403 ..	MARKING COLLAR PA2/4 "3" YELLOW	105, 133, 217, 231, 253, 255, 279, 281, 543, 661, 663
		665, 667, 685, 687, 709, 711, 931
359000-0404 ..	MARKING COLLAR PA2/4 "4" YELLOW	105, 133, 217, 253, 255, 279, 281, 633, 661, 663, 665
		667, 709, 711, 805, 807
359000-0405 ..	MARKING CO2/4"5"	105, 133, 217, 253, 255, 279, 281, 661, 663, 665, 667, 709, 711, 805, 807
359000-0406 ..	MARKING COLLAR PA2/4 "6" YELLOW	105, 133, 217, 253, 255, 279, 281, 661, 663, 665, 667
		709, 711
359000-0407 ..	MARKING COLLAR PA2/4 "7" YELLOW	105, 133, 217, 253, 255, 279, 281, 543, 571, 661, 663
		665, 667, 709, 711
359000-0408 ..	MARKING COLLAR PA2/4 "8" YELLOW	105, 133, 217, 709, 711
359000-0409 ..	MARKING COLLAR PA2/4 "9" YELLOW	105, 133, 217, 231, 661, 663, 665, 667, 709, 711
359000-0771 ..	MARKING CO2/4"V1	05, 133, 217, 231, 253, 255, 279, 281, 661, 663, 665, 667, 709, 711, 805, 807
359011-0807 ..	MARKING PLATES 5-FW 1-50	99, 587, 589, 693, 783, 943, 967, 981
359011-0808 ..	MARKING PLATES 5-FW 51-100	99, 587, 589
359011-0809 ..	MARKING PLATES 5-FW 101-150	961
359011-0810 ..	MARKING PLATES 5-FW 151-200	961

Part No	Description	Page No
359011-0811 ..	MARKING PLATES 5-FW 201-250	961
359011-0812 ..	SET OF SIGNS 5-FW 251-300	961
359011-0813 ..	SET OF SIGNS 5-FW 301-350	961
359011-0814 ..	SET OF SIGNS 5-FW 350-400	961
359011-0815 ..	SET OF SIGNS 5-FW 401-450	961
359011-0819 ..	MARKING PLATES 5-GW (EARTH)	967
359011-0821 ..	SET OF SIGNS 6-FW 1-50	961, 963, 965, 969
359011-0822 ..	SET OF SIGNS 6-FW 51-100	961
359011-0834 ..	SET OF SIGNS 6-GW(EARTH)	99, 587, 589, 943, 945, 961
359240-0100 ..	SIGN HOLDER FOR 359240-0001	679, 951, 953, 955, 957, 959
359241-0121 ..	SIGN "STEAM"	951, 953, 955, 957, 959
359241-0122 ..	SIGN, CIP OF STEAM BARRIER SPACE	951, 953, 955, 957, 959
359241-0123 ..	SIGN, TEMP. PRE-STERILIZATION VALVE	951, 953, 955, 957, 959
359241-0124 ..	SIGN, MAIN SWITCH	951, 953, 955, 957, 959
359241-0125 ..	SIGN, PEROXIDE BATH	951, 953, 955, 957, 959
359241-0126 ..	SIGN, TEMP. AIR KNIFE	951, 953, 955, 957, 959
359241-0130 ..	SIGN, TEMP. AIR SUPER HEATER	951, 953, 955, 957, 959
359241-0131 ..	SIGN, TEMP. LS HEATER	951, 953, 955, 957, 959
359241-0132 ..	SIGN, TEMP. STRIP APPLICATOR	951, 953, 955, 957, 959
359241-0133 ..	SIGN, SERVICE SWITCH	951, 953, 955, 957, 959
359241-0140 ..	SIGN "LIGHTING MACHINE"	679
359241-0141 ..	SIGN, PEROXIDE / WATER BATH	951, 953, 955, 957, 959
359241-0260 ..	SIGN "TS RIGHT"	951, 953, 955, 957, 959
359241-0261 ..	SIGN "TS LEFT"	951, 953, 955, 957, 959
359241-0297 ..	SIGN, 400 V, 50 HZ, 63 A	951, 953, 955, 957, 959
359301-0001 ..	SIGN "UP"	979
359301-0005 ..	SIGN "DOWN"	979
359301-0050 ..	SIGN "DROP CHUTE"	979
359301-0090 ..	SIGN "INCHING"	979
359301-0100 ..	SIGN "SPLICING"	773, 775
359301-0105 ..	SIGN "ALARM RESET"	979
359301-0110 ..	SIGN "SHORT STOP"	773, 775, 951, 953, 955, 957, 959, 979
359301-0125 ..	SIGN "LUBRICATION"	679
359301-0130 ..	SIGN "LAMPTEST"	979
359301-0170 ..	SIGN "MANUAL FLUSHING FFU"	979
359320-0002 ..	SIGN, THUMB WHEEL UNIT, FILLING ON	951, 953, 955, 957, 959
359705-0002 ..	WARNING SIGN ISO, ENTAGLEMENT	561
359705-0015 ..	WARNING SIGN ISO, RISK OF ELECTRIC SHOCK	951, 953, 955, 957, 959
359710-0001 ..	WARNING SIGN ISO, HOT SURFACE	537
434747-0000 ..	BOW CLAMP	801
434774-0300 ..	INK UNIT	785, 787, 789, 813, 815
434841-0000 ..	GAUGE	877
436927-0000 ..	NUT	801
440630-0101 ..	VALVE	81
440630-0200 ..	AP-VALVE	193
440631-0000 ..	VALVE BODY 51	195
440632-0000 ..	CYLINDER HOUSING	197, 199
440633-0000 ..	CYLINDER HOUSING	201
440634-0000 ..	HOUSE	195
440635-0000 ..	PISTON ROD	199
440636-0000 ..	PISTON ROD	201
440637-0000 ..	PISTON ROD	197
440638-0000 ..	PISTON	197, 199
440646-0000 ..	PISTON	201
440647-0000 ..	SLEEVE	193
440648-0000 ..	SEALING WASHER	199
440650-0000 ..	WASHER	199
440651-0000 ..	WASHER	197, 199
440652-0000 ..	WASHER	201
440654-0000 ..	SPACER SLEEVE	201
440655-0000 ..	RING	197
440656-0000 ..	WASHER	201
440659-0000 ..	CYLINDRICAL PIN	199
440660-0000 ..	COMPRESSION SPRING	199
440661-0000 ..	COMPRESSION SPRING	199
440662-0000 ..	COMPRESSION SPRING	201
440663-0000 ..	COMPRESSION SPRING	197, 199
440664-0000 ..	SEALING WASHER	201
440695-0000 ..	END SECTION	201
440731-0000 ..	PLATE	193
440978-0000 ..	PIPE BEND	81, 193
441024-0000 ..	LACE	327, 329
441027-0000 ..	BRACKET	777, 779, 781
441031-0000 ..	LINK BEARING	423
441067-0000 ..	SIDE COVER LEFT	601, 625
441068-0000 ..	SIDE PLATE	601, 625
441069-0001 ..	BRACKET	601, 625
441069-0002 ..	BRACKET	601, 625
441074-0001 ..	FILLER TUBE	23, 25
441074-0002 ..	FILLER TUBE	23, 25
441077-0000 ..	NOZZLE BRACKET	243
441143-0000 ..	SPACER PIECE	453
441162-0000 ..	PROTECTION PLATE	243, 277
441212-0000 ..	HOLDER	243, 277

Part No	Description	Page No
441217-0000 ..	BUSHING LOWER	243, 277
441218-0000 ..	BUSHING UPPER	243, 277
441221-0000 ..	WASHER	243, 277
441268-0000 ..	GUIDE	423
441269-0000 ..	GUIDE	423
441286-0000 ..	NUT	171, 213
441295-0000 ..	HOLDER	709, 711
441296-0000 ..	HOLDER	709, 711
441307-0200 ..	UPPER TUBE SUPPORT	11, 13
441312-0000 ..	CABLE CONDUIT	107, 109
441328-0000 ..	GUIDE PIN	479
441339-0000 ..	SHAFT	347, 349
441348-0000 ..	PAPER SUPPORT	769
441349-0000 ..	CARRIER RIGHT	373, 375, 377
441350-0000 ..	CARRIER LEFT	379, 381, 383
441353-0000 ..	TENSION SPRING	325
441354-0000 ..	HEAT GUARD	771
441355-0000 ..	BLEEDING SCREW	365, 367, 369, 371, 373, 375, 377, 379, 381, 383, 393, 395, 423, 431, 433
441356-0000 ..	BRACKET	327, 329
441359-0000 ..	GUIDE	499, 501
441360-0000 ..	PLATE	327, 329
441385-0000 ..	HUB	373, 375, 377, 379, 381, 383, 393, 395
441387-0000 ..	MOTOR CRADLE	321
441411-0000 ..	CURVE	351, 353
441412-0000 ..	CURVE	351, 353
441441-0000 ..	PIPE	105, 133, 217
441444-0000 ..	PIPE	65, 67
441445-0000 ..	PIPE	65, 67
441448-0000 ..	GASKET	271, 295
441449-0001 ..	PIPE	709, 711
441474-0000 ..	SHIM	39, 41, 155, 157
441483-0000 ..	CYLINDER BRACKET	59, 69, 145, 147
441486-0200 ..	DIVIDED FORMING RING	11, 13
441486-0300 ..	DIVIDED FORMING RING	11, 13
441499-0000 ..	HOLDER	463, 543
441500-0000 ..	HOSE	463, 543
441501-0000 ..	INSULATION	233
441512-0000 ..	STRUT END	267, 269, 291, 293
441534-0100 ..	LIGHT FIXTURE	243, 277
441536-0000 ..	GASKET	245
441546-0000 ..	BENDING ROLLER	21, 141
441554-0000 ..	CREASE BAR	785, 787, 789
441556-0002 ..	SPACER	785, 787, 789
441556-0004 ..	SPACER	785, 787, 789
441556-0009 ..	SPACER	785, 787, 789
441572-0000 ..	COVER	785, 787, 789
441576-0000 ..	SPACER	161
441578-0001 ..	CYLINDER BRACKET	161
441578-0002 ..	CYLINDER BRACKET	153
441583-0000 ..	SHAFT	447
441584-0000 ..	TENSION SPROCKET	447
441587-0000 ..	WASHER	447
441588-0000 ..	SPACER	447
441589-0000 ..	SHIM	447, 533
441593-0000 ..	GASKET	243, 277
441594-0100 ..	TENSION SPROCKET	437, 439
441595-0000 ..	MACHINE BODY	473
441596-0000 ..	CANTILEVER	473, 551
441598-0000 ..	SUPPORTING ARM	475
441599-0000 ..	BED	475
441600-0000 ..	LINK ARM	475, 553
441603-0000 ..	BRACKET	491, 557
441624-0000 ..	BENDING ROLLER	39, 41
441635-0000 ..	BEARING SEAT	39, 41
441636-0000 ..	SHAFT	155, 157
441637-0000 ..	DOWEL	155, 157
441658-0000 ..	FRONT PLATE	243, 277
441665-0000 ..	FORCE SPRING	261
441668-0000 ..	HOLDER	299
441677-0000 ..	FRONT PLATE	243, 277
441679-0000 ..	STAIR	275
441687-0000 ..	STRUT	267, 269, 291, 293
441691-0000 ..	PLATE	299, 301
441692-0000 ..	HOLDER	301
441693-0000 ..	HANDLE	453
441695-0100 ..	MACHINE BODY	437, 439
441706-0000 ..	WASHER	385, 387
441709-0000 ..	CYLINDER	373, 375, 377, 379, 381, 383
441710-0000 ..	BEARING HOUSING	373, 375, 377, 379, 381, 383, 393, 395
441712-0000 ..	BEARING HOUSING	373, 375, 377, 379, 381, 383, 393, 395
441718-0000 ..	SPACER	49, 101, 131, 163
441720-0000 ..	SPACER	347, 349
441721-0000 ..	GASKET	65, 67, 123, 135, 179, 181
441723-0000 ..	CANTILEVER	193

Part No	Description	Page No
441725-0000 ..	COVERING PLATE	851
441726-0000 ..	COMPRESSION SPRING	405, 407
441727-0000 ..	CUTTING JAW	365, 367, 369, 371
441735-0000 ..	BRACKET	65, 67, 179, 181
441737-0000 ..	WASHER	131, 163, 189, 191
441739-0000 ..	WASHER	131, 163
441740-0000 ..	HINGE FLANGE	131, 163
441741-0000 ..	HINGE FLANGE	131, 163
441749-0000 ..	CURVE	423
441750-0000 ..	YOKE	423
441751-0000 ..	LACE	423
441752-0000 ..	GABLE PLATE	785, 787, 789
441753-0000 ..	FASTENING PLATE	785, 787, 789
441754-0000 ..	SPACER	785, 787, 789
441758-0000 ..	PIPE RIGHT	425
441759-0000 ..	PIPE LEFT	425
441762-0000 ..	CONNECTION RIGHT	373, 375, 377, 393
441763-0000 ..	CONNECTION LEFT	379, 381, 383, 395
441764-0000 ..	SHAFT	373, 375, 377, 379, 381, 383, 393, 395
441792-0000 ..	HEAD	477, 493, 935
441793-0000 ..	BEARING HOUSING	477, 493, 935
441794-0000 ..	PIVOT PIN	477, 493, 935
441795-0000 ..	WASHER	477, 493, 935
441796-0000 ..	SEAL	477, 493, 935
441797-0000 ..	SHIM	477, 493, 935
441798-0100 ..	ROTOR	475, 553
441799-0000 ..	ATTACHMENT	477
441800-0000 ..	STRAIGHT FITTING	493
441804-0000 ..	COIL HEATER	129, 135, 167, 169
441806-0000 ..	COLLAR	243, 277
441809-0000 ..	FRONT PLATE	243, 277
441810-0000 ..	GASKET	243, 277
441811-0100 ..	ROTOR	491, 557
441829-0000 ..	PIPE	499, 501
441839-0000 ..	JUNCTION PIPE	491
441843-0000 ..	BRACKET	171, 213
441871-0000 ..	PENDULUM SUSPENSION	171, 213
441894-0000 ..	SLEEVE	451, 467, 469, 535, 547
441895-0000 ..	BUFFER RING	451, 467, 469, 535, 547
441896-0000 ..	WASHER	451, 467, 469, 535, 547
441903-0000 ..	ARM	47, 161
441904-0000 ..	ARM	153
441905-0000 ..	RETARD PIN	275
441907-0000 ..	RULING GUIDE	633
441908-0000 ..	BOW CLAMP	633
441918-0000 ..	BRACKET	93, 95, 209, 211
442236-0000 ..	THROTTLE SCREW	61, 63
442237-0000 ..	NUT	61, 63, 175, 177, 179, 181
445533-0000 ..	SIGN	669, 671, 673
445534-0000 ..	SIGN	669, 671, 673
445535-0000 ..	SIGN	669, 671, 673
445542-0000 ..	MANTEL RUBBER	801
449193-0000 ..	PRESSURE GAUGE TUBE	81, 193
449939-0001 ..	HEATING ELEMENT 15KW	17, 137
450098-0000 ..	SHEET	613
450099-0000 ..	SHEET	613
450100-0000 ..	SPRING	613
450101-0100 ..	TEARING DEVICE	603
450102-0000 ..	PRESSURE ARM	609
450103-0000 ..	KNIFE	609
450278-0000 ..	RULER	613
450355-0000 ..	INK ROLLER	801
450500-0000 ..	DOWEL	821
450833-0000 ..	FILTER	75, 187
450837-0000 ..	LID	75, 187
451117-0000 ..	ROLL	93, 95, 209, 211
451148-0000 ..	BRACKET	93, 95, 209, 211
451149-0000 ..	SHAFT	93, 95, 209, 211
451348-0100 ..	CONNECTION BOX	593, 595
451423-0000 ..	CIRCUIT BOARD	621
451430-0000 ..	CONNECTION HOUS.(MINOR)	17, 137
456002-0000 ..	BEARING	423
456004-0000 ..	SPACER	423
456005-0001 ..	VOLUME BULGE	409, 411
456005-0003 ..	VOLUME BULGE	409, 411
456009-0000 ..	LINK	405, 407
456011-0000 ..	PIN	681
456012-0000 ..	BEARING SEAT	27, 143, 857, 859
456013-0000 ..	BEARING COVER	27, 143, 857, 859
456017-0000 ..	HOSE HOLDER RIGHT	431
456018-0000 ..	HOSE HOLDER LEFT	433
456022-0000 ..	SLEEVE	763, 765, 809
456023-0000 ..	JOINT	763, 765
456024-0000 ..	GUIDE SHAFT	763, 765

Part No	Description	Page No
456025-0000 ..	CLAMP HOLDER	763, 765
456026-0000 ..	BRACKET	763, 765
456027-0000 ..	CLAMP HOLDER	763, 765
456028-0000 ..	JOINT	763, 765
456029-0000 ..	JOINT	763, 765
456030-0000 ..	FASTENING BRACKET	763, 765
456031-0000 ..	BRACKET	763, 765
456032-0100 ..	STRIP GUIDE	741, 743, 745, 747, 749, 751
456034-0000 ..	SETTING PLATE	83, 85
456035-0000 ..	CANTILEVER	83, 85
456042-0000 ..	SCREW	83, 85
456072-0000 ..	WASHER	633
456076-0000 ..	ROLL	89, 91
456077-0000 ..	ROLL	89, 91
456078-0000 ..	ROLL	83, 85
456079-0000 ..	ROLL	83, 85
456080-0000 ..	ROLL	83, 85
456081-0000 ..	ROLL	83, 85
456082-0000 ..	ROLL	93, 95, 209, 211
456085-0000 ..	ROLL	93, 95, 209, 211
456086-0000 ..	ROLL	93, 95, 209, 211
456090-0000 ..	ROLL	29, 31, 145, 147
456093-0000 ..	HOLDER	29, 31
456119-0000 ..	SHAFT	103, 215
456121-0000 ..	ARM	103, 215
456123-0000 ..	SUPPORT	17, 137
456124-0000 ..	ANGLE BRACKET	17
456125-0000 ..	FASTENING PLATE	17, 137
456128-0000 ..	FORCE SPRING	261
456129-0002 ..	FORCE SPRING	261
456130-0000 ..	LOCK PLATE	29, 31
456131-0000 ..	LOCK PLATE	29, 31
456132-0000 ..	LOCK PLATE	29, 31
456137-0000 ..	HOSE	669, 671, 673
456138-0000 ..	PLATE	83, 85
456139-0000 ..	LOCK PLATE	83, 85
456140-0000 ..	SHAFT	83, 85
456141-0000 ..	SHAFT	83, 85
456143-0000 ..	PIPE	73
456146-0000 ..	DROP CHUTE	247, 249, 251
456147-0000 ..	HEAD PLATE	247, 249, 251
456149-0000 ..	HEAD PLATE	247, 249, 251
456152-0000 ..	HEAD PLATE	247, 249, 251
456153-0000 ..	HOLDER	89, 91
456154-0000 ..	LOCK PLATE	89, 91
456155-0000 ..	LOCK PLATE	89, 91
456156-0000 ..	SHAFT	89, 91
456164-0000 ..	LEAF SPRING	247, 249, 251
456165-0000 ..	LEAF SPRING	247, 249, 251
456166-0000 ..	LEAF SPRING	247, 249, 251
456167-0000 ..	LEAF SPRING	247, 249, 251
456180-0100 ..	DROP CHUTE	239, 241
456181-0000 ..	SPACER	93, 95, 209, 211
456182-0000 ..	PLATE	93, 95
456183-0000 ..	LOCKING PLATE	93, 95, 209, 211
456184-0000 ..	LOCKING PLATE	93, 95, 209, 211
456185-0000 ..	LOCK PLATE	93, 95, 209, 211
456186-0000 ..	LOCK PLATE	93, 95, 209, 211
456187-0000 ..	LOCK PLATE	93, 95, 209, 211
456188-0000 ..	LOCK PLATE	93, 95, 209, 211
456189-0000 ..	PIPE	61, 63
456198-0000 ..	LOCK PLATE	93, 95, 209, 211
456199-0000 ..	LOCK PLATE	93, 95, 209, 211
456230-0000 ..	ANGLE BRACKET	93, 95
456249-0000 ..	PROTECTIVE COVER	583, 585
456263-0000 ..	SHEET	245
456264-0000 ..	GLASS	245
456269-0000 ..	PIPE	61, 63, 175, 177
456270-0000 ..	PIPE	61, 63, 175, 177
456271-0000 ..	PIPE	61, 63, 175, 177
456272-0000 ..	PLATE	703
456285-0000 ..	COVER	495
456289-0000 ..	BLOCKING PIECE	495
456290-0000 ..	GUSSET PLATE	495
456293-0000 ..	PIPE	491, 557
456304-0000 ..	ROLL	93, 95, 209, 211
456305-0000 ..	ROLL	93, 95, 209, 211
456306-0000 ..	ROLL	93, 95, 209, 211
456309-0200 ..	LOWER FORMING RING	11, 13
456309-0300 ..	LOWER FORMING RING	11, 13
456311-0000 ..	TORSION SPRING RIGHT	373, 375, 377, 393
456312-0000 ..	TORSION SPRING LEFT	379, 381, 383, 395
456320-0000 ..	SLEEVE	373, 375, 377, 379, 381, 383
456328-0000 ..	BENDING ROLLER	785, 787, 789

Part No	Description	Page No
456331-0000 ..	ANGLE BRACKET	785, 787, 789, 813, 815
456333-0000 ..	RAIL	785, 787, 789
456334-0000 ..	SHAFT	785, 787, 789, 813, 815
456335-0000 ..	BRACKET	785, 787, 789
456336-0000 ..	BRACKET	785, 787, 789
456337-0000 ..	CANTILEVER	785, 787, 789
456343-0000 ..	SHAFT	355
456344-0000 ..	SLEEVE	355
456345-0000 ..	BRACKET	355
456373-0000 ..	CURVE	351, 353
456374-0000 ..	CURVE	351, 353
456393-0000 ..	PIPE	491, 557
456394-0000 ..	SEALING WASHER	491, 557
456395-0000 ..	GASKET	491, 557
456396-0000 ..	GASKET	491, 557
456407-0000 ..	LACE	253, 255, 279, 281
456411-0000 ..	LID	105, 133, 217
456472-0000 ..	ANGLE	39, 41, 155, 157
456474-0000 ..	ADJUSTMENT PLATE	39, 41, 155, 157
456515-0000 ..	SHAFT	21, 141
456516-0000 ..	BEARING COVER	21, 39, 41, 141, 155, 157
456527-0000 ..	BENDING ROLLER	21, 141
456530-0000 ..	PIPE	73
456544-0000 ..	BENDING ROLLER	597, 637, 639
456545-0000 ..	FLANGE	597
456554-0000 ..	CANTILEVER	99
456556-0100 ..	PEROXIDE PIPE	11, 13
456556-0200 ..	PEROXIDE PIPE	11, 13
456561-0000 ..	BRACKET	263, 265, 287, 289
456567-0100 ..	SEPARATION INSERT	437, 439
456568-0000 ..	SHEET	481
456569-0000 ..	BRACKET	481
456573-0000 ..	FRONT PLATE	243, 277
456588-0300 ..	CLEANING SYSTEM	437, 439
456589-0003 ..	V-BELT PULLEY	321
456589-0004 ..	V-BELT PULLEY	321
456591-0002 ..	PIPE	65, 67
456591-0003 ..	PIPE	179, 181
456592-0002 ..	PIPE	65, 67, 179, 181
456597-0000 ..	ATTACHMENT PIPE	709, 711
456598-0000 ..	CABLE CONDUIT	709, 711
456599-0000 ..	PIPE	709, 711
456730-0001 ..	PIPE	805
456730-0002 ..	PIPE	805
456730-0003 ..	PIPE	805
456730-0004 ..	PIPE	805
456731-0001 ..	PIPE	805, 807
456731-0002 ..	PIPE	805, 807
456732-0000 ..	PIPE	805, 807
456737-0001 ..	PIPE	805
456737-0002 ..	PIPE	805
456738-0001 ..	PIPE	805
456738-0002 ..	PIPE	805
456744-0000 ..	HUB	351, 353
456755-0000 ..	BLOCK	675
456756-0000 ..	BLOCK	675
456758-0000 ..	ATTACHMENT	709, 711
456760-0003 ..	FOLDING FLAP CAM 200S	397, 399, 401, 403
456760-0010 ..	FOLDING FLAP CAM 200B & 125S	397, 399, 401, 403
456760-0011 ..	FOLDING FLAP CAM 250B	397, 399, 401, 403
456767-0000 ..	CREASE BAR	785, 787, 789
456772-0000 ..	PIVOT BRACKET	801
456776-0000 ..	MANTLE	785, 787, 789
456777-0000 ..	SLEEVE	785, 787, 789
456778-0000 ..	SHAFT	785, 787, 789
456784-0000 ..	LID	39, 41, 155, 157
456794-0000 ..	RING	77, 79, 189, 191
456796-0000 ..	ROLLER	77, 79, 189, 191
456797-0000 ..	AXLE SUPPORT	77, 79, 189, 191
456798-0000 ..	DOWEL	77, 79, 189, 191
456801-0000 ..	ARM	77, 79, 189, 191
456802-0000 ..	LOCKING CIRCLIP	77, 79
456803-0000 ..	PIVOT PIN	77, 79, 189, 191
456809-0000 ..	SHAFT	235
456811-0000 ..	SHAFT	785, 787, 789
456813-0000 ..	SHAFT	785, 787, 789
456817-0001 ..	SHIM	785, 787, 789
456824-0000 ..	PIPE	709, 711
456825-0000 ..	BRACKET	709, 711
456826-0000 ..	PIPE CLAMP	709, 711
456829-0000 ..	SHIM	299, 301
456836-0200 ..	CLEANING SYSTEM	11, 13
456836-0300 ..	CLEANING SYSTEM	11, 13
456837-0000 ..	HOLDER	29, 31, 145, 147

Part No	Description	Page No
456838-0000 ..	LOCK PLATE	29, 31, 145, 147
456839-0000 ..	LOCK PLATE	29, 31, 145, 147
456840-0000 ..	LOCK PLATE	29, 31, 145, 147
456852-0000 ..	DISTRIBUTOR	463
456853-0001 ..	PIPE CLAMP	463
456853-0002 ..	PIPE CLAMP	463
456853-0003 ..	PIPE CLAMP	463
456854-0001 ..	CRAMP	463, 543
456854-0002 ..	CRAMP	463, 543
456857-0000 ..	BRACKET	111, 223
456858-0000 ..	PIPE	111, 223
456859-0002 ..	PIPE	111, 223
456860-0000 ..	PIPE	111
456864-0001 ..	BLOCK RIGHT	451
456865-0001 ..	BLOCK LEFT	451
456869-0000 ..	LOCKING PLATE	93, 95, 209, 211
456870-0000 ..	LOCK PLATE	93, 95, 209, 211
456871-0000 ..	LOCK PLATE	93, 95, 209, 211
456872-0000 ..	LOCK PLATE	93, 95, 209, 211
456873-0000 ..	LOCK PLATE	93, 95, 209, 211
456874-0000 ..	LOCK PLATE	93, 95, 209, 211
456881-0000 ..	SHAFT	93, 95, 209, 211
456882-0100 ..	PUSH BUTTON BOX	669, 671, 673
456883-0000 ..	PUSH BUTTON BOX	679
456886-0000 ..	WASHER	57, 97
456889-0000 ..	COVER	77, 79
456890-0000 ..	COVERING PLATE	77, 79, 189, 191
456897-0000 ..	PIPE	75, 187
456900-0000 ..	PIPE	75, 187
456901-0000 ..	CLEANING PIPE	111
456902-0000 ..	PIPE	111, 223
456904-0000 ..	PIPE	65, 67, 179, 181
456905-0000 ..	FASTENING PLATE	83, 85
456906-0000 ..	LOCK PLATE	83, 85
456907-0000 ..	LOCK PLATE	83, 85
456908-0000 ..	ROLL	83, 85
456909-0000 ..	ROLL	83, 85
456910-0000 ..	ROLL	83, 85
456913-0000 ..	TOUCH GUARD	65, 67, 179, 181
456914-0000 ..	ROCKER ARM	771
456915-0000 ..	COVER	771
456917-0000 ..	HEAT GUARD	771
456918-0000 ..	PAPER SUPPORT	769
456919-0100 ..	BENDING ROLLER	741, 743, 745, 747, 749, 751
456920-0000 ..	BRACKET	803
456921-0000 ..	STOP	803
456922-0001 ..	STRUT	803
456922-0002 ..	STRUT	803
456924-0000 ..	FRAME	843, 845
456926-0000 ..	LEG	843, 845
456927-0000 ..	LEG	843, 845
456928-0000 ..	LEG	843, 845
456929-0000 ..	LID	843, 845
456930-0000 ..	LID	843, 845
456931-0000 ..	LID	843, 845
456932-0000 ..	LID	843, 845
456933-0000 ..	LID	843, 845
456934-0000 ..	SEALING WASHER	327, 329
456936-0000 ..	FASTENING BRACKET	805, 807
456937-0000 ..	CRAMP	805, 807
456938-0000 ..	PIPE 241	805, 807
456939-0000 ..	PIPE 240	805, 807
456940-0000 ..	PIPE V45	805, 807
456941-0000 ..	PIPE V44	805, 807
456942-0000 ..	PIPE 201	805, 807
456943-0000 ..	PIPE 200	805, 807
456964-0000 ..	CLAMP HOLDER	777, 779, 781
456965-0000 ..	CLAMP HALF	777, 779, 781
456967-0000 ..	SHOULDER SCREW	777, 779, 781
456973-0000 ..	BRACKET	773, 775
456978-0000 ..	PIPE	709, 711
456979-0002 ..	CABLE CONDUIT	267, 269, 291, 293
456993-0000 ..	COVER	39, 41
456994-0000 ..	BENDING ROLLER	39, 41, 155, 157
456995-0000 ..	CARRIER	39, 41, 155, 157
456996-0000 ..	ROLLER	29, 31, 77, 79, 145, 147, 189, 191
457367-0000 ..	SHAFT	115, 117, 119, 121, 225, 227, 229
457368-0000 ..	SPRING	115, 117, 119, 121, 225, 227, 229
457696-0001 ..	JOINT PIECE	487
458379-0000 ..	FRAME	613
458383-0200 ..	PAPER REEL HOLDER	633
458962-0001 ..	ELECTRODE REPBY 0567189-0101	61, 63
464009-0003 ..	BLOCKING PIECE	821
464010-0000 ..	ARM	821

Part No	Description	Page No
464011-0000 ..	LOCK STUD	821
464012-0000 ..	CURVE	821
464173-0000 ..	LABEL HOLDER	105, 133, 217
464174-0000 ..	SIGN	105, 133, 217
464175-0000 ..	SIGN	105, 133, 217
464176-0000 ..	SIGN	777, 779, 781
464177-0000 ..	SIGN	777, 779, 781
464297-0000 ..	CONNECTION BOX	621
464368-0000 ..	CRAMP	297, 389, 391
466074-0002 ..	SLIDER	487
466430-0000 ..	BUSHING	821
466474-0000 ..	VALVE HOUSING	69
466477-0000 ..	INNER PIPE	69
466478-0000 ..	OUTER PIPE	69
466479-0000 ..	PIECE	69
466483-0000 ..	CLAMPING PIECE	69
466484-0000 ..	NET	69
469000-0000 ..	HOLDER	263, 265
469001-0000 ..	HOLDER	263, 265, 287, 289
469004-0000 ..	PLATFORM	309, 311
469006-0000 ..	FRAME	309, 311
469008-0000 ..	SIDE PIECE	275
469010-0000 ..	FRAME SHEET	309, 311
469013-0000 ..	CABLE DUCT	309, 311
469014-0000 ..	LID	309, 311
469016-0000 ..	FRAME SECTION	309, 311
469017-0000 ..	SHEET	309, 311
469018-0000 ..	PLATFORM	309, 311
469019-0000 ..	LEG	309, 311
469020-0000 ..	LEG	309, 311
469021-0000 ..	LEG	309, 311
469022-0000 ..	FRAME SECTION	309, 311
469023-0000 ..	RAILING	267, 269, 291, 293
469025-0000 ..	RAILING	267, 269, 291, 293
469026-0000 ..	INTERMEDIATE PART	267, 269, 291, 293
469028-0000 ..	GASKET	267, 269, 291, 293
469033-0000 ..	COVERING PLATE	601, 625
469034-0000 ..	GUSSET PLATE	601, 625
469035-0000 ..	GUSSET PLATE	601, 625
469038-0000 ..	COVERING PLATE	601, 625
469039-0000 ..	COVERING PLATE	601, 625
469041-0000 ..	HOLDER	89, 91
469042-0000 ..	LOCK PLATE	89, 91
469043-0000 ..	LOCK PLATE	89, 91
469044-0000 ..	LOCK PLATE	89, 91
469045-0000 ..	ROLL	89, 91
469046-0000 ..	ROLL	89, 91
469047-0000 ..	ANGLE	89, 91
469050-0000 ..	FRONT GUARD	499, 501
469053-0000 ..	CHECKER PLATE	499, 501, 563, 565, 567
469054-0000 ..	PLATE	499, 501, 563, 565, 567
469056-0000 ..	CHECKER PLATE	499, 501
469058-0000 ..	HANDLE	499, 501, 563, 565, 567
469061-0000 ..	PLATE	499, 501, 563, 565, 567
469063-0000 ..	HEAD	499, 501, 563, 565, 567
469066-0000 ..	SHAFT	499, 501, 563, 565, 567
469068-0000 ..	SLEEVE	499, 501, 563, 565, 567
469069-0000 ..	PLATE	499, 501, 563, 565, 567
469070-0000 ..	WIRING DIAGRAM	17
469071-0000 ..	SPACER	263, 265, 287, 289
469074-0100 ..	SPLICE DETECTOR	11, 13
469074-0200 ..	SPLICE DETECTOR	11, 13
469076-0000 ..	ARM	611
469085-0000 ..	RULER	613
469091-0200 ..	FILLER TUBE	11, 13
469092-0000 ..	SHIM	77, 79, 189, 191
469095-0000 ..	HOLDER	243, 277, 619, 631, 895, 897
469096-0000 ..	LEG	243, 277, 619, 631, 895, 897
469118-0200 ..	FLOW METER	669, 671, 673
469119-0000 ..	BLOCK	681
469120-0000 ..	HOLDER	681
469121-0200 ..	JUNCTION BLOCK	669, 671, 673
469122-0000 ..	BLOCK	683
469131-0000 ..	LACE	253, 255, 279, 281
469132-0000 ..	PIPE	253, 255, 279, 281
469133-0000 ..	PIPE	253, 255, 279, 281
469134-0000 ..	BRACKET	261
469135-0000 ..	HOLDER	261
469141-0000 ..	HOLDER	659
469143-0000 ..	LEAD-IN	475
469146-0000 ..	HOSE	261
469148-0000 ..	CANTILEVER	61, 63
469149-0000 ..	PIPE	61, 63
469150-0000 ..	COVER	61, 63, 175, 177

Part No	Description	Page No
469151-0000 ..	PIPE	61, 63
469152-0000 ..	PIPE	61, 63
469153-0000 ..	PIPE	61, 63, 175, 177
469154-0000 ..	PIPE	61, 63, 175, 177
469155-0000 ..	SUPPORT	61, 63
469156-0000 ..	PIPE	61, 63, 175, 177
469157-0000 ..	PIPE	61, 63, 175, 177
469158-0000 ..	PIPE	61, 63, 175, 177
469159-0000 ..	PIN	77, 79, 189, 191
469160-0000 ..	VIBRATION DAMPER	61, 63, 175, 177
469293-0000 ..	CLAW	873
469294-0100 ..	TYPE EXTRACTOR	851
469328-0000 ..	BANJO CONNECTION	669, 671, 673
469330-0000 ..	SIGN	669, 671, 673
469331-0000 ..	HOLDER	669, 671, 673
469332-0000 ..	ATTACHMENT	669, 671, 673
469336-0000 ..	COVER	245
469337-0000 ..	REFLECTOR	245
469343-0000 ..	CABLE TRENCH	107, 109
469344-0000 ..	CABLE TRENCH	107, 109
469345-0000 ..	CABLE TRENCH	107, 109
469346-0000 ..	CABLE TRENCH	107, 109, 219, 221
469347-0000 ..	LID	107, 109, 219, 221
469348-0000 ..	COVER	107, 109, 219, 221
469349-0000 ..	CABLE TRENCH	107, 109, 219, 221
469350-0000 ..	LID	107, 109, 219, 221
469351-0000 ..	LID	107, 109, 219, 221
469352-0000 ..	LID	107, 109, 219, 221
469353-0000 ..	LID	107, 109, 219, 221
469355-0000 ..	LID	107, 109, 219, 221
469378-0000 ..	PIPE	73
469384-0100 ..	START-UP KIT	593, 595
469385-0000 ..	PIPE	65, 67, 179, 181
469387-0000 ..	PIPE	65, 67
469405-0000 ..	BLOCKING PIECE	451
469406-0000 ..	BLOCKING PIECE	451
469409-0000 ..	PLATE	703
469410-0000 ..	HOSE ATTACHMENT	703
469416-0000 ..	ATTACHMENT	51, 127
469418-0000 ..	AIR NOZZLE	51, 127
469420-0000 ..	AIR NOZZLE	51, 127
469445-0000 ..	SPACER	309, 311
469452-0100 ..	COMPRESSOR UNIT	11, 13
469452-0200 ..	COMPRESSOR UNIT	11, 13
469458-0000 ..	BRACKET	51, 127, 165
469459-0000 ..	BRACKET	51, 127, 165
469460-0000 ..	BRACKET	51, 127, 165
469461-0000 ..	ROLL	51, 127, 165
469463-0000 ..	SHAFT	51, 127, 165
469464-0000 ..	ROLL	51, 127, 165
469466-0000 ..	PLATE	51, 127, 165
469467-0000 ..	PLATE	51, 127
469489-0000 ..	HAND RAIL	267, 269, 291, 293
469490-0000 ..	HAND RAIL	267, 269, 291, 293
469492-0000 ..	SPACER	299, 301
469497-0000 ..	PIPE	105, 133, 217
469498-0000 ..	PIPE	105, 133, 217
469501-0100 ..	AIR NOZZLE	11, 13
469501-0200 ..	AIR NOZZLE	11, 13
469501-0300 ..	AIR NOZZLE	11, 13
469502-0000 ..	SLIDER	247, 249, 251
469503-0000 ..	ELBOW PIPE	81, 193
469511-0000 ..	BOTTOM COVER	61, 63, 175, 177
469515-0000 ..	PIPE	75, 187
469516-0000 ..	SIDE PLATE RIGHT	601, 625
469518-0000 ..	PENDULUM ARM	639
469521-0000 ..	BEARING PLATE	77, 79, 189, 191
469523-0000 ..	SIGN	703
469524-0000 ..	BRACKET	93, 95, 209, 211
469526-0000 ..	DOOR	657
469527-0000 ..	SETTING PLATE	459, 539
469535-0100 ..	DOOR	593, 595
469550-0000 ..	SLEEVE	709, 711
469745-0000 ..	BRACKET	93, 95, 209, 211
469761-0000 ..	HOLDER	703
469762-0100 ..	LADDER	239, 241
469786-0000 ..	NIPPLE	39, 41
469791-0000 ..	GASKET REPBY 0751024-0000	51
469792-0000 ..	PIPE-LINE	51, 127
469796-0000 ..	GASKET REPBY 0491983-0000	51
469811-0000 ..	SHAFT	499, 501, 563, 565, 567
469812-0000 ..	BEARING	499, 501, 563, 565, 567
469813-0000 ..	CLAMPING PART	499, 501, 563, 565, 567
469814-0000 ..	LINK ARM	499, 501, 563, 565, 567

Part No	Description	Page No
469815-0000 ..	END PIECE	499, 501, 563, 565, 567
469816-0000 ..	CAP	499, 501, 563, 565, 567
469817-0000 ..	PIN	499, 501, 563, 565, 567
469818-0000 ..	ROD	499, 501, 563, 565, 567
469819-0000 ..	PEEL-OFF SHIM	499, 501, 563, 565, 567
469820-0000 ..	BRACKET	499, 501, 563, 565, 567
469821-0000 ..	CATCH	503
469822-0000 ..	AXLE PIN	503
469831-0004 ..	COVER	243
469832-0001 ..	COVER	243
469832-0002 ..	COVER	243
469842-0000 ..	LEG	777, 779, 781
469843-0000 ..	LEG	777, 779, 781
469846-0000 ..	STOP LUG	777, 779, 781
469847-0000 ..	SHAFT	777, 779, 781
469861-0000 ..	CROSS BAR	853, 855
469867-0000 ..	HOSE HOLDER	327, 329
469922-0000 ..	SPRING	235
469927-0000 ..	RIM	235
469937-0000 ..	PIPE	243, 277
469962-0000 ..	BOX	39, 41
469964-0000 ..	LID	303
469965-0000 ..	RAILING	267, 269, 291, 293
469967-0000 ..	RAILING	267, 269, 291, 293
469968-0000 ..	EDGE STRIP	499, 501, 563, 565, 567
469969-0000 ..	PIPE	65, 67
469972-0001 ..	FILLING TUBE LOWER	125
469972-0002 ..	FILLING TUBE LOWER	125
469973-0000 ..	PRESSURE FLANGE	125
469977-0000 ..	ELECTRICAL CONNECTION	453
469979-0000 ..	HOLDER	103, 215
469981-0000 ..	BRACKET	103, 215
469982-0000 ..	WASHER	39, 41, 155, 157
469987-0000 ..	CONTAINER	111, 223
469991-0000 ..	RAIL	47
469992-0000 ..	PIPE	71, 183
469994-0000 ..	ATTACHMENT	719
469999-0000 ..	FLANGE	327, 329
476185-0000 ..	VALVE CONE	201
476203-0000 ..	PROTECTION	197
476220-0000 ..	SPACER	487
476355-0000 ..	CANNULAR TUBE	801
476356-0000 ..	HOLDER FOR INK BOTTLE	801
476377-0000 ..	SCREW	821
476398-0000 ..	LID	155, 157
476859-0200 ..	CHANGE-OVER VALVE	65, 67, 179, 181
479234-0000 ..	WASHER	113
479354-0000 ..	SCREW	699
484190-0000 ..	BALL BEARING	39, 41, 155, 157
484192-0000 ..	VALVE	73, 185
484196-0000 ..	FILTER	75, 187
484536-0000 ..	VALVE	723, 725
484538-0000 ..	VALVE	73, 185
484701-0000 ..	SHUTTER	487, 489
484975-0000 ..	WASHER	197, 199
484998-0000 ..	END SECTION	197, 199
486268-0000 ..	NUT	913
486826-0001 ..	SIGN "EMERGENCY STOP"	951, 953, 955, 957, 959, 979
490500-0000 ..	GASKET	271, 295
490506-0000 ..	HOSE	709, 711
490508-0000 ..	PROTECTION	709, 711
490509-0000 ..	SPACER	709, 711
490510-0000 ..	SECURING PLATE	709, 711
490512-0000 ..	HOLDER	709, 711
490513-0000 ..	HOLDER	709, 711
490514-0000 ..	HOLDER	709, 711
490518-0000 ..	HOLDER	145, 147
490538-0000 ..	LOCKING PLATE	145, 147
490539-0000 ..	LOCK PLATE	145, 147
490540-0000 ..	LOCK PLATE	145, 147
490547-0000 ..	ROLL	93, 95, 209, 211
490548-0000 ..	ROLL	93, 95, 209, 211
490549-0000 ..	ROLL	93, 95, 209, 211
490550-0000 ..	ROLL	93, 95, 209, 211
490551-0000 ..	ROLL	93, 95, 209, 211
490552-0000 ..	ROLL	93, 95, 209, 211
490566-0001 ..	TIMING BELT	325
490579-0000 ..	FRAME RIGHT	853, 855
490580-0000 ..	FRAME LEFT	853, 855
490583-0000 ..	BEAM, FRONT.	853, 855
490584-0000 ..	BEAM, MIDDLE.	853, 855
490585-0000 ..	BEAM, BACK.	853, 855
490587-0000 ..	CORNER BAR	853, 855
490589-0000 ..	SPACER BOLT	853, 855

Part No	Description	Page No
490590-0100 ..	CONVEYOR FRAME	851
490608-0000 ..	SIGN	709, 711
490609-0000 ..	SEALING WASHER	709, 711
490618-0000 ..	BRANCH	463, 543
490619-0000 ..	HOSE	463
490761-0100 ..	DETERGENT PUMP	593, 595
490768-0000 ..	BOX	629
490769-0000 ..	BRACKET	629
490777-0000 ..	BRACKET	703
490779-0000 ..	BRACKET LEFT	633
490780-0000 ..	BRACKET RIGHT	633
490862-0000 ..	PIPE	61, 63, 175, 177
490867-0000 ..	BRACKET	47, 161
490873-0000 ..	HOLDER	225, 227, 229
490874-0000 ..	CANTILEVER	225, 227, 229
490875-0000 ..	FASTENING PLATE	225, 227, 229
490876-0000 ..	BRACKET	115, 117, 119, 121, 225, 227, 229
490882-0000 ..	ROLL	27, 143, 857, 859
490884-0000 ..	BRANCH PIPE	171
490894-0000 ..	OVER HOUSE	189, 191
490895-0000 ..	OVER HOUSE	189, 191
490896-0000 ..	CONTAINER	111, 223
490899-0000 ..	RING	77, 79, 189, 191
490901-0000 ..	SEAL	77, 79, 189, 191
490902-0000 ..	AXLE SUPPORT	77, 79, 189, 191
490903-0000 ..	SHAFT	77, 79, 189, 191
490904-0000 ..	ARM	77, 79, 189, 191
490906-0000 ..	SCREW	71, 183
490907-0000 ..	NUT	71, 183
490912-0100 ..	CATCH	499, 501, 563, 565, 567
490916-0000 ..	AXLE PIN	331, 333, 335, 337, 339, 341, 343, 345
490918-0000 ..	PILLAR	189, 191
490919-0000 ..	PILLAR	189, 191
490932-0000 ..	SLEEVE	475, 553
490933-0000 ..	NUT	475, 553
490940-0000 ..	CYLINDER	393, 395
490942-0000 ..	COMPRESSION SPRING	393, 395, 451, 535
490943-0000 ..	COMPRESSION SPRING	393, 395
490944-0000 ..	PLUNGER	365, 367, 369, 371
490949-0000 ..	SHEET	777, 779, 781
490950-0000 ..	HINGE	777, 779, 781
490955-0000 ..	BACK PLATE	777, 779, 781
490956-0000 ..	HINGE	777, 779, 781
490957-0000 ..	LID	777, 779, 781
490958-0000 ..	BRACKET	777, 779, 781
490964-0000 ..	COVER	189, 191
490965-0000 ..	BRACKET	777, 779, 781
490966-0000 ..	PIPE	185
490967-0000 ..	BRACKET	71, 183
490974-0000 ..	COMPRESSION SPRING	373, 375, 377, 379, 381, 383
490975-0000 ..	COMPRESSION SPRING	373, 375, 377, 379, 381, 383
490976-0000 ..	VALVE HOUSING	213
490979-0000 ..	PIPE	185
490980-0000 ..	CYLINDER	451, 467, 469, 535, 547
490983-0000 ..	PIPE	193
490984-0000 ..	TOUCH GUARD	193
490985-0000 ..	SPACER SHEET	193
490986-0000 ..	SHEET	243, 277
490991-0000 ..	HOSE	73, 185
490994-0000 ..	PIPE	185
490996-0000 ..	PIPE	185
490997-0000 ..	PIPE	175, 177
490998-0000 ..	THROTTLE SCREW	175, 177, 179, 181
491019-0000 ..	PIPE	113
491020-0000 ..	PIPE	113
491021-0000 ..	BEARING PLATE	145, 147
491022-0000 ..	CYLINDER BRACKET	145, 147
491089-0000 ..	PIPE	179, 181
491090-0000 ..	PIPE	175, 177
491092-0000 ..	COVERING PLATE	851
491095-0000 ..	PIPE	175, 177
491097-0000 ..	HEAT GUARD	87, 207
491101-0000 ..	HOUSE	171
491125-0000 ..	LID	39, 41
491126-0000 ..	SCREW	155, 157
491127-0000 ..	BRACKET	103, 215
491128-0000 ..	GASKET	77, 79, 189, 191
491130-0000 ..	ROLLER CHAIN	39, 41
491138-0000 ..	STRUT	267, 269, 291, 293
491139-0000 ..	FILLER TUBE	23, 25
491140-0000 ..	PRESSURE FLANGE	23, 25
491141-0000 ..	THROTTLE	23, 25, 125
491142-0000 ..	FLOAT	23, 25, 125
491143-0000 ..	BRACKET	51, 127, 165

Part No	Description	Page No
491148-0000 ..	BRACKET	103
491149-0000 ..	SPRING	103, 215
491153-0000 ..	COMPRESSION GLAND	83, 85
491154-0000 ..	PIPE	179, 181
491165-0000 ..	ROLL	339, 341, 343, 345
491166-0000 ..	SHAFT	339, 341, 343, 345
491169-0000 ..	PIVOT ARM	167, 169
491170-0000 ..	COVER	129, 167, 169
491171-0000 ..	BEARING BLOCK	167, 169
491172-0000 ..	GASKET	167, 169
491173-0000 ..	BRACKET	167, 169
491174-0000 ..	ARM	167, 169
491175-0000 ..	LINK	167, 169
491176-0000 ..	BRACKET	167, 169
491177-0000 ..	ARM	167, 169
491178-0000 ..	BRACKET	51, 127
491181-0000 ..	PIPE	719
491183-0000 ..	PIPE	709, 711
491185-0000 ..	HOSE	709, 711
491186-0000 ..	COVER SLIP	601
491187-0000 ..	PIPE	709, 711
491189-0000 ..	SIGN	865, 867, 869
491190-0000 ..	PIPE	709, 711
491191-0000 ..	CONTAINER	187
491192-0000 ..	NUT	187
491203-0000 ..	STRUT	723, 725
491209-0001 ..	PIPE	179, 181
491209-0002 ..	PIPE	179, 181
491218-0000 ..	SUPPORT	137
491219-0000 ..	PIPE	179, 181
491220-0000 ..	PIPE	179, 181
491221-0000 ..	PIPE	179, 181
491222-0000 ..	COUNTER ROLLER	29, 31, 145, 147
491223-0000 ..	COVER	207
491224-0000 ..	BRACKET	207
491225-0100 ..	STATION CHAIN	437, 439
491227-0000 ..	SLIDER	441, 529
491228-0001 ..	SHAFT	441, 529
491228-0002 ..	SHAFT	441, 529
491229-0000 ..	BUSHING	441, 529
491230-0000 ..	GRUB SCREW	441, 529
491231-0000 ..	BUSHING	441, 529
491233-0000 ..	GUIDE LUG	299, 301
491235-0000 ..	WASHER	299, 301
491241-0000 ..	HOLDER	709, 711
491242-0000 ..	HOLDER	709, 711
491244-0000 ..	PIPE WATER	263, 265, 287, 289
491245-0000 ..	PIPE CENTRAL LUBRICATION	263, 265, 287, 289
491246-0000 ..	PIPE CENTRAL LUBRICATION	263, 265, 287, 289
491247-0000 ..	PIPE WATER	263, 265, 287, 289
491248-0000 ..	PIPE WATER	263, 265, 287, 289
491249-0000 ..	PIPE HYDRAULIC	263, 265, 287, 289
491250-0000 ..	PIPE HYDRAULIC	263, 265, 287, 289
491251-0000 ..	PIPE WATER	263, 265, 287, 289
491252-0000 ..	PIPE HYDRAULIC	263, 265, 287, 289
491253-0000 ..	PIPE HYDRAULIC	263, 265, 287, 289
491254-0000 ..	DISTRIBUTOR BLOCK RIGHT	263, 265, 287, 289
491255-0000 ..	DISTRIBUTOR BLOCK LEFT	263, 265, 287, 289
491256-0000 ..	DISTRIBUTOR BLOCK LEFT	263, 265, 287, 289
491258-0000 ..	DRIVE WHEEL	443, 445
491259-0100 ..	GUIDE	437, 439
491260-0000 ..	RAIL BRACKET	471
491264-0000 ..	SPACER BLOCK	471
491265-0000 ..	PLATE	471, 549
491266-0000 ..	SHIM	471, 549
491270-0000 ..	FILLING TUBE LOWER	125
491271-0000 ..	PRESSURE FLANGE	125
491274-0000 ..	HUB	327, 329
491291-0000 ..	LID	525, 533
491297-0000 ..	CARRIER RIGHT	393
491298-0000 ..	CARRIER LEFT	395
491299-0000 ..	TOUCH GUARD	179, 181
491303-0000 ..	WASHER	723, 725
491304-0000 ..	WASHER	723, 725
491305-0000 ..	CONN.DIAGRAM AIR SUPERH.	137
491310-0000 ..	GUIDING FLANGE RIGHT	447
491312-0000 ..	GUIDE FLANGE LEFT	447
491314-0000 ..	SCREW	77, 79, 189, 191
491319-0000 ..	LACE	339, 341, 343, 345
491333-0000 ..	SPACER RING	21, 141
491345-0000 ..	CURVE SEGMENT	351, 353
491346-0000 ..	CURVE SEGMENT	351, 353
491349-0000 ..	BEARING SEAT	385, 387
491350-0000 ..	SLIDER	385, 387

Part No	Description	Page No
491360-0000 ..	PIPE	71, 183
491363-0000 ..	NUT	39, 41, 155, 157
491364-0000 ..	BEARING HOLDER	39, 41, 155, 157
491365-0000 ..	THRUST BEARING	39, 41, 155, 157
491390-0000 ..	PIPE CENTRAL LUBRICATION	253, 255, 279, 281
491392-0000 ..	SHAFT	139
491393-0000 ..	AXLE SUPPORT	139
491396-0000 ..	CALENDER ROLLER	37, 153
491397-0000 ..	CALENDER ROLLER	37, 153
491398-0000 ..	PIPE	185
491399-0000 ..	PIPE	185
491409-0000 ..	WASHER	327, 329
491410-0000 ..	LACE	327, 329
491413-0000 ..	BEARING PANEL	21, 141
491414-0000 ..	PLATE	149, 151
491415-0000 ..	FASTENING PLATE	149, 151
491418-0001 ..	O-RING	33, 35, 149, 151
491418-0002 ..	O-RING	77, 79, 189, 191
491423-0000 ..	LID	133, 217
491433-0000 ..	VOLUME CAM LEFT, WIDE	425
491434-0000 ..	VOLUME CAM RIGHT	425
491435-0000 ..	VOLUME CAM RIGHT, WIDE	425
491436-0000 ..	VOLUME CAM LEFT	425
491453-0000 ..	HOLDER	709, 711
491455-0000 ..	PIPE	709, 711
491459-0000 ..	CURVE SEGMENT	351, 353
491460-0000 ..	CURVE SEGMENT	351, 353
491461-0000 ..	CURVE SEGMENT	351, 353
491462-0000 ..	CURVE SEGMENT	351, 353
491465-0000 ..	GIRDER FRONT	853, 855
491466-0000 ..	GIRDER MIDDLE	853, 855
491467-0000 ..	GIRDER REAR	853, 855
491487-0000 ..	BUSHING	167, 169
491536-0100 ..	NON-RETURN VALVE	675
491542-0000 ..	CANTILEVER	225, 227, 229
491545-0000 ..	BRACKET	207
491552-0000 ..	MOUNTING SHEET	777, 779, 781
491555-0000 ..	SCREW	393, 395
491576-0000 ..	WATER DIAGRAM TBA/9	709, 711
491578-0000 ..	BRACKET	215
491587-0000 ..	HOLDER	29, 31, 145, 147
491593-0000 ..	COVER	155, 157
491594-0000 ..	BENDING ROLLER	155, 157
491595-0000 ..	LID	155, 157
491596-0000 ..	PIPE	155, 157
491597-0000 ..	PIPE	155, 157
491598-0000 ..	BEARING SEAT	155, 157
491599-0000 ..	CANTILEVER	155, 157
491600-0000 ..	CANTILEVER	155, 157
491601-0000 ..	ROLLER CHAIN	155, 157
491602-0000 ..	GASKET HOLDER	189, 191
491626-0000 ..	BEARING PANEL	143, 859
491627-0000 ..	BEARING PANEL	143, 859
491643-0000 ..	HEATING PIPE	129
491649-0000 ..	BRACKET	669, 671, 673
491650-0100 ..	DISTRIBUTOR BLOCK	253, 255
491655-0000 ..	PIPE 190	217
491656-0000 ..	PIPE 191	217
491657-0000 ..	PIPE 200	217
491658-0000 ..	PIPE 201	217
491660-0000 ..	PIPE 230	217
491661-0000 ..	PIPE 231	217
491662-0000 ..	PIPE 240	217
491663-0000 ..	PIPE 241	217
491664-0000 ..	PIPE 250	217
491665-0000 ..	PIPE 251	217
491666-0000 ..	PIPE 260	217
491667-0000 ..	PIPE 261	217
491668-0000 ..	PIPE 210	217
491669-0000 ..	PIPE 211	217
491670-0000 ..	PIPE 210	217
491671-0000 ..	PIPE 211	217
491672-0000 ..	PIPE 210 (211)	217
491680-0000 ..	SUPPORT	853, 855
491681-0000 ..	GASKET	421
491722-0000 ..	PLATE	785, 787, 789
491723-0000 ..	SPLASH PLATE	785, 787, 789, 813, 815
491724-0000 ..	PLATE	785, 787, 789
491726-0000 ..	LEG	843, 845
491731-0000 ..	WASHER	479
491732-0000 ..	WASHER	479
491737-0000 ..	SHAFT	155, 157
491748-0000 ..	PIPE	175, 177
491749-0000 ..	CANTILEVER	175, 177

Part No	Description	Page No
491750-0000 ..	SUPPORT	175, 177
491755-0000 ..	PIPE	179, 181
491760-0000 ..	PIPE	183
491762-0000 ..	SHAFT	841
491768-0000 ..	DOCUMENT FOLDER	709, 711
491770-0000 ..	BUSHING	727
491771-0000 ..	BRACKET	451, 535
491772-0001 ..	SPINDLE	451, 535
491772-0002 ..	SPINDLE	451
491772-0004 ..	SPINDLE	451
491778-0000 ..	PIPE	113
491798-0000 ..	BLOCKING PIECE	451
491800-0000 ..	BLOCKING PIECE	451
491802-0000 ..	WASHER	451, 535
491803-0000 ..	HOUSE	451, 535
491804-0000 ..	BLOCKING PIECE	467, 469
491806-0000 ..	BLOCKING PIECE	467, 469
491807-0000 ..	PIPE	463, 543
491808-0000 ..	CLEANING EQUIPMENT	491
491836-0000 ..	CABLE TRENCH	219, 221
491837-0000 ..	CABLE TRENCH	219, 221
491838-0000 ..	CABLE CONDUIT	219, 221
491846-0100 ..	TENSION SPROCKET	437, 439
491847-0000 ..	TENSION SPROCKET	525
491848-0000 ..	SHAFT	525, 533
491849-0000 ..	ADJUSTING SHIM	525
491850-0100 ..	DRIVE WHEEL	437, 439
491851-0000 ..	LID	443, 445
491854-0000 ..	PIPE WATER	253, 255
491855-0000 ..	PIPE WATER	253, 255
491859-0000 ..	HOLDER	253, 255, 279, 281
491860-0000 ..	HOLDER	253, 255, 279, 281
491861-0000 ..	HOLDER	253, 255, 279, 281
491862-0000 ..	HOLDER	253, 255, 279, 281
491864-0000 ..	PIPE	709, 711
491865-0000 ..	HOSE	709, 711
491866-0000 ..	PIPE	709, 711
491870-0000 ..	BRANCH PIPE	261
491880-0000 ..	FASTENING PLATE	115, 117, 119, 121, 225, 227, 229
491881-0001 ..	PIVOT ARM	247, 249, 251
491889-0000 ..	HOLDER	703
491890-0100 ..	OIL TANK	593, 595
491891-0000 ..	BOW CLAMP	703
491892-0000 ..	HOSE	703
491894-0100 ..	HYDRAULIC SYSTEM	593, 595
491907-0000 ..	ANGLE BRACKET	209, 211
491922-0000 ..	HYDRAULIC DIAGRAM	851
491929-0000 ..	IMPELLER WHEEL	727
491931-0000 ..	SHAFT	167, 169
491942-0100 ..	(PAPER)REEL TROLLEY	851
491945-0000 ..	CABLE TRACK	627
491946-0000 ..	CABLE TRACK	627
491951-0000 ..	BANJO CONNECTION	669, 671, 673
491965-0000 ..	CAM	813, 815
491983-0000 ..	GASKET	127
491987-0000 ..	ANGLE BRACKET	209, 211
493652-0100 ..	LID	723, 725, 731
495130-0040 ..	SPACER TUBE L=40MM	997
495131-0013 ..	SPACER TUBE L=13MM	1001
495201-0000 ..	COOLING ELEMENT	1003
495722-0000 ..	SCREW BUSHING	1005
495765-0000 ..	WASHER	1005
497748-0000 ..	PIN	203, 205
497933-0000 ..	BUSHING	197, 199, 201
499255-0100 ..	SEAL KIT	135
499255-0101 ..	SEAL KIT**	123
499501-0000 ..	VALVE	719
525233-0000 ..	GASKET 16X2X6MM	455, 457
525386-0000 ..	PROTECTIVE GRATING	491
525387-0000 ..	WASTE CHUTE	495
525388-0000 ..	FASTENING IRON	495
525392-0000 ..	CHECKER PLATE	495
525393-0000 ..	CHECKER PLATE	495
526984-0000 ..	SADDLE	823, 825
526985-0000 ..	PLATE	823, 825
526986-0001 ..	SHAFT	823, 825
527120-0000 ..	STEERING	733, 735
527121-0001 ..	BOW CLAMP	733, 735
527121-0002 ..	BOW CLAMP	733, 735
527122-0000 ..	ATTACHMENT	733, 735
527124-0000 ..	BEARING	733, 735
527125-0000 ..	STEERING	733, 735
527126-0000 ..	LEAF SPRING	733, 735
527127-0000 ..	DOWEL	733, 735

Part No	Description	Page No
527128-0000 ..	GUIDE PIN	733, 735
527649-0000 ..	DISTANCE RUBBER	823, 825
527705-0000 ..	HEAT EXCHANGER	65, 67, 179, 181
527898-0100 ..	CONTAINER H2O2	717
527905-0000 ..	GASKET	731
527906-0000 ..	GASKET	731
527912-0000 ..	NON-RETURN VALVE	733, 735
529362-0000 ..	SPROCKET	823, 825
530551-0000 ..	WASHER	733, 735
530587-0000 ..	WASHER	201
530588-0000 ..	SEAL RING	57, 97, 171, 201, 213
530589-0000 ..	SEAL RING	197, 199
530590-0000 ..	VALVE CONE	197, 199
530591-0000 ..	HOLDER	199
530592-0000 ..	SEAL RING HOLDER	197
530595-0000 ..	SEAL RING HOLDER	197
530597-0000 ..	WASHER	199
530598-0000 ..	WASHER	199
530599-0000 ..	RING	199
531345-0100 ..	PERSONAL PROTECT. EQ H2O2	851
531730-0000 ..	FLANGE SEAL	453
531731-0000 ..	GASKET	17, 137
531732-0000 ..	GASKET	773, 775
531733-0000 ..	GASKET	769, 811, 847
531734-0000 ..	GASKET	769, 811, 847
531735-0000 ..	GASKET	769, 811, 847
531736-0000 ..	GASKET	769, 811, 847
531737-0000 ..	GASKET	65, 67, 179, 181
531742-0000 ..	GASKET	57, 61, 63, 65, 67, 123, 135, 171, 175, 177, 179, 181, 233
532117-0000 ..	CLAMP RING	203
532118-0000 ..	CLAMP RING	205
532205-0000 ..	LID	731
532206-0000 ..	GASKET	731
532348-0000 ..	SPINDLE GUIDE	171, 213
532349-0000 ..	PLAIN BEARING	171, 213
532655-0000 ..	CAUTION SIGN	737
533169-0000 ..	DIAPHRAGM	197
536374-0000 ..	WASHER	115, 117, 119, 121, 225, 227, 229
536913-0000 ..	HUB	833
536916-0000 ..	AXLE PIN	831
536917-0000 ..	AXLE PIN	835, 837
537308-0000 ..	SPRING	801
537327-0000 ..	SHAFT	833
537329-0100 ..	HUB JUMBO	831
539209-0100 ..	A-CYLINDER	195
539210-0100 ..	C-CYLINDER	195
539211-0100 ..	B-CYLINDER	195
539212-0000 ..	GASKET	195
540869-0000 ..	SHEET	831
540870-0000 ..	ARM	835, 837
541057-0000 ..	ARM	835, 837
541064-0000 ..	FORK	835, 837
541065-0000 ..	SHAFT	835, 837
541066-0000 ..	ROLL	835, 837
541067-0000 ..	SPRING BRACKET	835, 837
541068-0000 ..	SPRING HOLDER	831
541069-0000 ..	SPRING BRACKET	835, 837
541070-0000 ..	SHAFT	835, 837
541163-0100 ..	CLAMP RING	195
541164-0100 ..	CLAMP RING	195
541165-0000 ..	WASHER	203, 205
541166-0000 ..	WASHER	197
541167-0000 ..	SPACER SLEEVE	197
541172-0000 ..	SET SCREW	831
541173-0000 ..	STOP	831
541751-0000 ..	CONICAL BOBBIN	833
542063-0000 ..	FLANGE	699
542781-0000 ..	ARM	839
542782-0000 ..	AXLE PIN	839
542784-0000 ..	LINK ARM	839
542785-0000 ..	ROLL	839
542786-0000 ..	FLAG	839
543125-0000 ..	ANGLE	831
543126-0000 ..	STOP LUG	831
543135-0000 ..	INK TRANSFER ROLLER	801
543141-0000 ..	SIGN	823, 825
543142-0000 ..	SIGN	823, 825
543143-0100 ..	ADJUSTMENT DEVICE	813, 815
543470-0000 ..	LEVEL GLASS	155, 157
543575-0000 ..	LOCK SHEET	839
543818-0000 ..	PROTECTION PLATE	831
543819-0000 ..	HINGE	831
543820-0000 ..	SPRING	835, 837
543821-0100 ..	LEVEL PROBE	831

Part No	Description	Page No
543822-0100 ..	BRAKE ARM	831
543823-0100 ..	STRIP MAGAZINE	829
544392-0000 ..	ROLL	785, 787, 789
544725-0000 ..	AXLE PIN	831
544726-0000 ..	AXLE PIN	835, 837
544727-0000 ..	AXLE PIN	831
544730-0000 ..	ROLL	831, 835, 837
544894-0000 ..	SPRING	33, 35, 149, 151
544906-0000 ..	SOLENOID VALVE	75, 187
544974-0000 ..	PILLAR	841
545113-0000 ..	SIGN STRIP MAGAZINE	831
546116-0000 ..	CANTILEVER	753, 755, 757, 759
548599-0000 ..	WASHER	913
548770-0008 ..	COAXIAL CABLE L=600 MM	971, 973
548770-0012 ..	COAXIAL CABLE L=700 MM	951, 953, 955, 957, 959
550487-0000 ..	FLOAT	23, 25, 125
551922-0000 ..	LABEL,POTENTIOMETER DESIGN CORR.	979
551969-0001 ..	COAXIAL CABLE L=1900 MM	951, 953, 955, 957, 959
552837-0000 ..	CANTILEVER	719
552838-0000 ..	PIPE	719
553586-0000 ..	SPACER	863
555540-0000 ..	SPACER	69
555541-0000 ..	BRACKET	69
555542-0000 ..	BRACKET	69
556384-0000 ..	LINK FORK	919
556386-0000 ..	STEERING	919
556422-0000 ..	PROTECTION	813, 815
556601-0000 ..	BRACKET	913
556604-0000 ..	COVER PLATE	913
556624-0000 ..	FRAME BRACKET	913
558230-0301 ..	TMCC CONTROLLER	951, 953, 955, 957, 959
558321-0101 ..	TPIH-SWITCH	951, 953, 955, 957, 959
558389-0101 ..	MULTI PURPOSE POTENTIOM.	979
560931-0000 ..	BRACKET	45, 75, 155, 157, 175, 177, 187, 723, 725
561427-0000 ..	CONTAINER	737
563286-0000 ..	GASKET	723, 725
563287-0000 ..	WASHER	723, 725
563455-0000 ..	GABLE RIGHT	861
563456-0000 ..	GABLE LEFT	861
563458-0000 ..	CROSS BAR LEFT	861
563459-0000 ..	CROSS BAR	861
564543-0000 ..	CLEANING PIPE	223, 851
565250-0000 ..	WASHER	737
565251-0000 ..	VALVE	737
565461-0000 ..	FILLING TUBE UPPER	33, 35, 149, 151
565570-0000 ..	SUPPORT	861
566015-0000 ..	WASHER	495
566174-0000 ..	ATTACHMENT PIPE	65, 67, 179, 181
566175-0000 ..	ELBOW PIPE	65, 67, 179, 181
566404-0002 ..	TIMING BELT	325
566695-0000 ..	SHAFT	37, 153
566696-0000 ..	GUIDE CONSOLE	153
566697-0000 ..	AXLE SUPPORT	37, 153
567070-0001 ..	ELECTRODE	45
567070-0007 ..	ELECTRODE	75, 187
567070-0008 ..	ELECTRODE	45
567070-0011 ..	ELECTRODE	75, 187
567070-0012 ..	ELECTRODE	155, 157, 175, 177
567070-0016 ..	ELECTRODE	723, 725
567070-0017 ..	ELECTRODE	723, 725
567189-0106 ..	ELECTRODE	39, 41
567684-0000 ..	PROTECTION	695
568921-0000 ..	PIPE	705, 707
568922-0000 ..	PIPE	705, 707
568923-0000 ..	PIPE	705, 707
568924-0000 ..	PIPE	705, 707
568926-0000 ..	PIPE	705, 707
568927-0000 ..	PIPE	705, 707
568928-0000 ..	PIPE	705, 707
568929-0000 ..	PIPE	705, 707
568930-0000 ..	PIPE	705, 707
568931-0000 ..	PIPE	705, 707
568932-0000 ..	PIPE	705, 707
568933-0000 ..	PIPE	705, 707
569016-0000 ..	GASKET	155, 157
570523-0000 ..	CAP	641
570524-0000 ..	BEARING	641
571103-0000 ..	NOZZLE	231
571871-0000 ..	BUSBAR,RIGHT	389
571872-0000 ..	BUSBAR,LEFT	391
571929-0000 ..	RAIL	587, 589
572158-0000 ..	BEARING PANEL	141
572251-0000 ..	COVER	813, 815
572252-0000 ..	BRACKET	785, 787, 789, 813, 815

Part No	Description	Page No
572253-0000 ..	SHEET	785, 787, 789, 813, 815
572254-0000 ..	HANDLE	785, 787, 789, 813, 815
572255-0000 ..	SPACER	785, 787, 789, 813, 815
572345-0000 ..	HATCH	655
572460-0000 ..	SHEET	813, 815
574658-0000 ..	LOGOTYPE TP	299, 865, 867, 869
575002-0000 ..	PLUNGER	647
577747-0000 ..	ROLL	519
577748-0000 ..	FITTING BOLT	519
579944-0000 ..	HOLDER	389, 391
590321-0000 ..	BRACKET	811
590328-0000 ..	SHAFT	809
590329-0000 ..	SHAFT	809
590331-0000 ..	ROLLER	809
590333-0000 ..	GUIDE WHEEL	809
590334-0000 ..	LINK	809
590335-0000 ..	BRACKET	809
590336-0000 ..	HOLDER	809
591417-0000 ..	CARTON STATION	529
591418-0000 ..	TURNING DEVICE	571
591419-0000 ..	PUSHER	571
591422-0000 ..	RIGGING SCREW	571
591427-0000 ..	STOPPER	413, 415
591428-0000 ..	STOPPER	417, 419
591429-0000 ..	SPRING	413, 415
591430-0000 ..	SPRING	417, 419
591432-0000 ..	SPACER	413, 415, 417, 419
591433-0000 ..	SLEEVE	413, 415, 417, 419
591434-0000 ..	WASHER	413, 415, 417, 419
591435-0000 ..	CARRIER	409, 411
591436-0000 ..	SHAFT	409, 411
591437-0000 ..	DOWEL	409, 411
591438-0000 ..	SHAFT	409, 411
591439-0000 ..	VOLUME FLAP	409, 411
591440-0000 ..	SHAFT	347, 349
591443-0000 ..	RAIL LEFT	547
591444-0000 ..	RAIL RIGHT	547
591445-0000 ..	FOLDING FLAP RIGHT	365, 367, 369, 371
591446-0000 ..	FOLDING FLAP LEFT	365, 367, 369, 371
591451-0000 ..	SPACER	571
591452-0000 ..	MOUNTING PLATE	571
591453-0000 ..	COVERING PLATE	571
591454-0000 ..	GASKET	571
591455-0000 ..	SPACER FRAME	551
591457-0000 ..	BRACKET	571
591466-0000 ..	CANTILEVER	895, 897
591470-0000 ..	SEAL COVER	903
591477-0000 ..	LUG	895, 897
591478-0000 ..	SIDE STEERING	903
591479-0000 ..	BOTTOM GUIDE	903
591489-0000 ..	EXTENSION PIPE	557
591493-0000 ..	FRAME	557
591494-0000 ..	SEPARATION INSERT	557
591505-0100 ..	CHAIN GUIDE	895, 897
591506-0000 ..	SLIDING STRIP	901
591507-0000 ..	FASTENING PLATE	901
591508-0000 ..	SPACER PART	901
591509-0000 ..	BRACKET	571
591510-0000 ..	WASHER	571
591512-0000 ..	SHAFT	571
591514-0100 ..	TURNING DEVICE	437, 439
591516-0000 ..	SPACER PLATE	895, 897
591522-0000 ..	PLATE	895, 897
591525-0000 ..	BRACKET	547
591527-0000 ..	BLOCKING PIECE	895, 897
591529-0000 ..	BLOCK	535
591542-0000 ..	SHAFT	531
591549-0000 ..	GUIDE ROD	905
591550-0000 ..	HEATING CHAMBER	537
591552-0000 ..	LID	537
591553-0000 ..	FLANGE SEAL	537
591554-0000 ..	STOP PLATE	537
591555-0000 ..	PAPER SUPPORT	811
591556-0000 ..	PAPER SUPPORT	811
591559-0000 ..	VOLUME BULGE	409, 411
591560-0000 ..	VOLUME SHIM	409, 411
591567-0000 ..	LACE	785, 787, 789, 813, 815
591574-0100 ..	SLIDE RAIL	895, 897
591575-0000 ..	PIPE	557
591576-0000 ..	PIPE	543
591577-0000 ..	PIPE	543
591578-0000 ..	PIPE	543
591579-0000 ..	PIPE	543
591580-0000 ..	PIN	905

Part No	Description	Page No
591586-0000 ..	HOLDER	893
591588-0000 ..	SHIM	459, 539
591589-0000 ..	ANGLE BRACKET	907
591590-0000 ..	GUIDE ROD	907
591592-0000 ..	BRACKET	907
591593-0000 ..	PIN	907
591606-0000 ..	BRACKET	811
591607-0000 ..	SPACER	811
591609-0000 ..	HEAT GUARD	811
591610-0000 ..	ANGLE BRACKET	811
591611-0000 ..	HEAT GUARD	811
591612-0000 ..	ANGLE BRACKET	811
591613-0000 ..	ANGLE BRACKET	907
591616-0000 ..	LEAD ARM	809
591622-0000 ..	CHECKER PLATE	917
591623-0000 ..	SPACER PLATE	895, 897
591624-0000 ..	SPACER PIPE	895, 897
591625-0000 ..	NUT	895, 897
591627-0000 ..	PIPE	557
591628-0000 ..	STRUT	895, 897
591629-0000 ..	HOLDER	895, 897
591630-0000 ..	DISTRIBUTOR	543
591633-0100 ..	SERVICE TABLE	893
591634-0100 ..	STATION CHAIN	437, 439
591637-0000 ..	ATTACHMENT	935
591649-0000 ..	SHAFT	531
591653-0000 ..	SETTING PLATE	851
591657-0000 ..	HOLDER PRESSURE BLOCK	535
591661-0000 ..	AIR NOZZLE	537
591662-0000 ..	NUT	537
591666-0000 ..	FOLDING BAR	541
591667-0000 ..	BLOCKING PIECE	535
591670-0000 ..	SETTING PLATE	851
591674-0100 ..	ROTOR	933
591677-0100 ..	PULL DOWN DEVICE	437, 439
591678-0100 ..	FOLDING BAR	437, 439
591680-0100 ..	GUIDE	437, 439
591688-0000 ..	HANDLE	537
592586-0000 ..	HOLDER	769
594620-0100 ..	BRAKE ARM	831
594905-0000 ..	PROFILE	913
594906-0000 ..	PROFILE	913
594907-0000 ..	PROFILE	913
594908-0000 ..	PROFILE	913
594909-0000 ..	PROFILE	913
594910-0000 ..	PROFILE	913
594911-0000 ..	PROFILE	913
594912-0000 ..	PROFILE	913
594913-0000 ..	PROFILE	913
594914-0000 ..	PROFILE	913
594915-0000 ..	PROFILE	913
594916-0000 ..	PROFILE	913
594917-0000 ..	PROFILE	913
594918-0000 ..	PLATE	913
594919-0000 ..	PLATE	913
594920-0000 ..	PLATE	913
594921-0000 ..	PROFILE	913
594922-0000 ..	PROFILE	913
594923-0000 ..	PROFILE	913
594924-0000 ..	GUIDE RIGHT	899
594925-0000 ..	GUIDE LEFT	899
594926-0000 ..	GUIDE RIGHT	899
594927-0000 ..	GUIDE LEFT	899
594928-0000 ..	BRACKET	899
594929-0100 ..	TABLE	911
594933-0000 ..	SHIM	573
594939-0000 ..	CARRIER RIGHT	365, 367
594940-0000 ..	CARRIER LEFT	369, 371
594948-0000 ..	CARRIER RIGHT	393
594949-0000 ..	CARRIER LEFT	395
594952-0000 ..	CREASE BAR	785, 787, 789, 813, 815
594953-0000 ..	SPACER	785, 787, 789, 813, 815
594969-0000 ..	PIPE RIGHT	425
594970-0000 ..	PIPE LEFT	425
594973-0000 ..	STEERING RAIL L	549
594974-0000 ..	STEERING RAIL R	549
594975-0000 ..	LINK	331, 333, 335, 337
594977-0000 ..	SPLASH PLATE	547
594978-0000 ..	MOUNTING PLATE	541
594980-0000 ..	TEMPLATE	851
594986-0000 ..	TEMPLATE	851
594987-0000 ..	TEMPLATE	851
594988-0000 ..	TEMPLATE	851
594994-0000 ..	SIDE PLATE	571

Part No	Description	Page No
594995-0000 ..	GASKET	571
594996-0000 ..	PROTECTIVE COVER	571
594997-0000 ..	HOLDER	895, 897
594998-0000 ..	STRUT RIGHT	571
594999-0000 ..	STRUT LEFT	571
597953-0000 ..	SPROCKET	903
597955-0000 ..	YOKE	903
597956-0000 ..	CRADDLE	903
597957-0000 ..	SHAFT	903
597958-0000 ..	SCREW	895, 897
597959-0000 ..	SLEEVE	903
597960-0000 ..	GABLE PART	895, 897
598014-0100 ..	CHAIN FEED CONVEYOR	895, 897
598026-0000 ..	HOLDER	885
598027-0000 ..	ANGLE BRACKET	885
598028-0000 ..	TIGHTENING SCREW	885
598030-0000 ..	HOLDER	895, 897
598034-0100 ..	GUIDE RAIL	895, 897
598035-0000 ..	STEERING RAIL	907
598878-0000 ..	MACHINE SIGN 2 ADR. EEA	851
599035-0000 ..	PLATE	33, 35
599037-0000 ..	FASTENING PLATE	33, 35
731049-0000 ..	SLIDING STRIP TPIH	985
731771-0000 ..	COOLING PLATE,SOLIDSTATE	997
734789-0000 ..	SUPPORT F LIVE RAIL	1001
751001-0000 ..	CABLE TRENCH	219, 221
751009-0000 ..	INSULATION	17, 137
751010-0000 ..	GASKET	53, 55, 127, 165
751013-0000 ..	GASKET	53, 55
751015-0000 ..	GASKET	87, 207
751016-0000 ..	GASKET	17, 137
751017-0000 ..	GASKET	491, 557
751018-0000 ..	WASHER	87, 207
751019-0000 ..	WASHER	53, 55, 129, 167, 169
751020-0000 ..	GASKET	53, 55, 129, 167, 169
751023-0000 ..	GASKET	53, 55, 87, 129, 167, 169, 207
751024-0000 ..	GASKET	127, 165
751048-0000 ..	SUPPORT	753, 755, 757, 759
751049-0000 ..	HAND RAIL	267, 269, 291, 293
751050-0000 ..	HAND RAIL	267, 269, 291, 293
751051-0000 ..	RAILING	267, 269, 291, 293
751052-0000 ..	RAILING	267, 269, 291, 293
751055-0000 ..	STRUT	267, 269, 291, 293
751056-0000 ..	STRUT END	267, 269, 291, 293
751057-0000 ..	RAILING	267, 269, 291, 293
751059-0000 ..	BRACKET	627
751060-0000 ..	BRACKET	627
751066-0000 ..	PIPE	719
751070-0000 ..	DISTRIBUTOR BLOCK	475, 553
751071-0000 ..	PIPE	105, 133, 217
751073-0001 ..	PIPE 240	807
751073-0002 ..	PIPE 240	807
751074-0001 ..	PIPE 241	807
751074-0002 ..	PIPE 241	807
751075-0002 ..	CABLE CONDUIT	267, 269, 291, 293
751076-0000 ..	CABLE TRENCH	219, 221
751077-0000 ..	LID	219, 221
751078-0000 ..	BRACKET RIGHT	339, 341
751079-0000 ..	BRACKET LEFT	343, 345
751080-0001 ..	PIPE 200	807
751080-0002 ..	PIPE 200	807
751083-0000 ..	FASTENING PLATE	773, 775
751085-0000 ..	BUSHING	243, 277
751086-0000 ..	NIPPLE	677
751087-0000 ..	BRACKET	769, 811
751093-0000 ..	MOUNTING SHEET	769, 811
751095-0000 ..	PLUG	271
751096-0000 ..	LOCKING CIRCLIP	271, 295
751097-0000 ..	BRAKE RING	271, 295
751098-0000 ..	FRICTION DISC	271, 295
751099-0000 ..	LEAD-IN	271, 295
751100-0000 ..	BEARING HOUSING	271, 295
751105-0000 ..	PIPE 90	217
751106-0000 ..	PIPE 90	217
751107-0000 ..	PIPE	217
751108-0000 ..	SECURING PLATE	271, 295
751109-0000 ..	RAIL RIGHT	471, 549
751110-0000 ..	RAIL LEFT	471, 549
751119-0000 ..	BRACKET RIGHT	471
751120-0000 ..	BRACKET LEFT	471
751121-0000 ..	CLEANING PIPE	223
751124-0000 ..	FRONT PLATE	243, 277
751131-0000 ..	SHAFT	77, 79, 189, 191
751132-0000 ..	SHAFT	37, 153

Part No	Description	Page No
751143-0000 ..	CYLINDER BRACKET	771
751144-0001 ..	PIPE 201	807
751144-0002 ..	PIPE 201	807
751148-0000 ..	CIRQUIT DIAG.CENTRAL-LUB.	851
751162-0000 ..	INLET PIPE	491, 557
751163-0000 ..	COVER	451, 467, 469, 535, 547
751165-0000 ..	BUSHING	47, 161
751171-0000 ..	CAM DISC	699
751177-0000 ..	TIMING BELT PULLEY	699
751182-0000 ..	GASKET	267, 269, 291, 293
751183-0000 ..	GASKET	267, 269, 291, 293
751209-0000 ..	PLATE	209, 211
751212-0000 ..	ARM	331, 333, 335, 337, 339, 341, 343, 345
751213-0000 ..	BEARING BRACKET	343, 345
751220-0000 ..	FILLER CAP	723, 725
751221-0000 ..	PIPE	723, 725
751222-0000 ..	SPACER	733, 735
751223-0000 ..	LID	731
751230-0000 ..	PLAIN BEARING	29, 31, 77, 79, 83, 85, 89, 91, 93, 95, 145, 147, 189, 191, 209, 211
751231-0000 ..	PLAIN BEARING	93, 95, 209, 211
751243-0000 ..	TOOTHED PULLY	327, 329
751245-0000 ..	FLANGE	327, 329
751254-0000 ..	ROLL	323
751282-0000 ..	AIR NOZZLE	165
751293-0000 ..	GASKET	165
751309-0000 ..	RAILING	267, 269, 291, 293
751316-0000 ..	ELBOW PIPE	727
751318-0000 ..	SHAFT	93, 95, 209, 211
751322-0000 ..	BRACKET	651
751323-0000 ..	BRAKE BLOCK	651
751324-0000 ..	HOLDER	651
751325-0000 ..	BRACKET	651
751326-0000 ..	BRACKET	651
751331-0000 ..	GASKET	155, 157
751332-0100 ..	BRACKET	267, 269
751357-0000 ..	PROTECTION	723, 725
751362-0000 ..	RETURN PIPE	719
751364-0000 ..	PUMP PIPE	719
751366-0000 ..	PIPE	719
751373-0100 ..	PEROXIDE TANK	717
751374-0000 ..	PEROXIDE TANK	723, 725
751375-0000 ..	PIPE COIL	723, 725
751376-0000 ..	INSULATING PLATE	723, 725
751377-0000 ..	INSULATING PLATE	723, 725
751378-0000 ..	INSULATING PLATE	723, 725
751380-0000 ..	FILLER TUBE	723, 725
751381-0000 ..	ATTACHMENT	723, 725
751382-0000 ..	PROTECTION PIPE	723, 725
751383-0000 ..	LEVEL TUBE	723, 725
751393-0100 ..	PEROXIDE PUMP	723, 725
751394-0000 ..	EXTENSION PIPE	727
751395-0000 ..	FLANGE	727
751400-0000 ..	ATTACHMENT PIPE	731
751402-0000 ..	WASHER	731
751403-0000 ..	BRACKET	731
751406-0100 ..	CONNECTION HOUSING	717
751407-0000 ..	FRAME	733, 735
751410-0100 ..	VALVE PANEL	733, 735
751456-0000 ..	HOLDER	115, 117, 119, 121
751457-0000 ..	CANTILEVER	115, 117, 119, 121
751459-0000 ..	AIR NOZZLE	165
751465-0000 ..	ATTACHMENT	773, 775
751467-0000 ..	SHAFT	27, 143, 857, 859
751476-0000 ..	CANTILEVER	115, 117, 119, 121
751477-0000 ..	DOWEL	189, 191
751478-0200 ..	BRAKE	633
751484-0000 ..	CLAMPING RING	267, 269, 291, 293
751485-0000 ..	SCREW	267, 269, 291, 293
751504-0000 ..	ROLL	841
751505-0000 ..	TINPLATE	841
751552-0000 ..	ARM	451, 535
751553-0000 ..	ARM	451, 535
751554-0001 ..	SHAFT	451, 535
751554-0002 ..	SHAFT	451, 535
751555-0000 ..	BUSHING	451, 535
751557-0000 ..	SLEEVE	451, 535
751575-0000 ..	RULERPART R	365, 367
751576-0000 ..	RULERPART L	369, 371
751577-0000 ..	RULERPART R	365, 367
751578-0000 ..	RULERPART L	369, 371
751579-0000 ..	ADJUSTING SCREW	365, 367, 369, 371
751580-0000 ..	SHIM	365, 367, 369, 371
751603-0000 ..	SETTING PLATE	209, 211
751604-0000 ..	SPRING	33, 35, 149, 151

Part No	Description	Page No
751605-0000 ..	SETTING PLATE	209, 211
751667-0000 ..	TROUGH	695
751668-0000 ..	FASTENING PLATE	695
751669-0000 ..	ARM	695
751670-0000 ..	BRACKET	695
751671-0000 ..	SHAFT	699
751672-0000 ..	SPACER SLEEVE	699
751674-0000 ..	HATCH	235
751682-0000 ..	SHAFT	699
751684-0000 ..	STOP LUG	189, 191
751689-0100 ..	CURVE PACK	695
751691-0100 ..	IMPULSE TRANSMITTER	593, 595
751698-0000 ..	HOLDER	39, 41, 155, 157
751699-0000 ..	WASHER	39, 41, 155, 157
751702-0100 ..	HATCH	11, 13
751703-0000 ..	SHAFT	699
751707-0000 ..	FOLDING BAR RIGHT	471
751708-0000 ..	FOLDING BAR LEFT	471
751709-0000 ..	FOLDING BAR RIGHT	471
751710-0000 ..	FOLDING BAR LEFT	471
751718-0100 ..	HOLDER	813, 815
751722-0000 ..	PIPE-LINE	165
751730-0000 ..	LOCKING CIRCLIP	189, 191
751731-0000 ..	BEARING COVER	59, 173
751732-0000 ..	BRACKET	59, 173
751733-0000 ..	HEATING PIPE	87, 207
751734-0000 ..	LID	53, 55, 129, 167, 169
751735-0000 ..	GASKET	53, 55, 129, 167, 169
751736-0000 ..	PIPE	59, 173
751737-0001 ..	PIPE	59, 173
751737-0002 ..	PIPE	59, 173
751740-0000 ..	STOP	59, 173
751743-0000 ..	PISTON	393, 395
751745-0000 ..	CABLE CONDUIT	267, 269, 291, 293
751760-0000 ..	CYLINDER BRACKET	173
751761-0000 ..	ARM	39, 41, 155, 157
751762-0000 ..	SHAFT	39, 41, 155, 157
751763-0000 ..	BRACKET	155, 157
751769-0000 ..	SLEEVE	393, 395
751972-0000 ..	SPRING HOLDER	645
752001-0000 ..	GUIDE RING	647
752009-0000 ..	RULERPART R	365, 367
752010-0000 ..	RULERPART R	365, 367
752011-0000 ..	RULERPART L	369, 371
752012-0000 ..	RULERPART L	369, 371
752047-0000 ..	BUSHING	145, 147
752048-0002 ..	CARTON STATION WITH BEVEL	441
752048-0004 ..	CARTON STATION WITH BEVEL	441
752057-0000 ..	STOP	641
752083-0000 ..	PISTON	451, 467, 469, 535, 547
752084-0000 ..	SPRING	645
752085-0000 ..	SPRING	645
752093-0000 ..	HOLDER	495, 559
752175-0000 ..	STRUT	71, 183
752178-0000 ..	BOW CLAMP	645
752179-0000 ..	BOW CLAMP	645
752180-0000 ..	GUIDING ARBOR	645
752181-0000 ..	GUIDING ARBOR	645
752183-0000 ..	SPRING HOLDER	645
752184-0000 ..	SPRING HOLDER	645
752200-0000 ..	CANTILEVER	813, 815
752212-0000 ..	VOLUME FLAP 200 ML	409, 411
752218-0000 ..	ATTACHMENT	165
752237-0000 ..	SPRING	813, 815
752240-0000 ..	LID	813, 815
752250-0000 ..	BEARING COVER	785, 787, 789
752251-0000 ..	BEARING COVER	785, 787, 789
752252-0000 ..	BEARING COVER	785, 787, 789
752425-0000 ..	LINK	413, 415, 417, 419
752485-0000 ..	SUPPORTING ARM	553
752491-0000 ..	TIGHTENING PIECE	695
752495-0100 ..	ATTACHMENT	851
752496-0000 ..	CLEANING PIPE	863
752497-0000 ..	NUT	863
752498-0000 ..	CATCH	863
752499-0000 ..	RING	863
752501-0000 ..	SLEEVE	75, 187
752502-0000 ..	PROTECTIVE CASING	601, 625
752503-0000 ..	PROTECTIVE CASING	601, 625
752504-0000 ..	COVERING PLATE	601, 625
752505-0000 ..	BRACKET	601, 625
752512-0000 ..	BEARING CONSOLE	785, 787, 789
752517-0000 ..	CLEANING PIPE	863
752521-0000 ..	CATCH	863

Part No	Description	Page No
752526-0000 ..	PLATE	813, 815
752527-0000 ..	CANTILEVER	813, 815
752528-0000 ..	COVER	813, 815
752529-0000 ..	BEARING COVER	813, 815
752530-0000 ..	SPROCKET	813, 815
752531-0000 ..	BRACKET	813, 815
752534-0000 ..	PLATE	813, 815
752536-0002 ..	SHAFT	813, 815
752537-0000 ..	BENDING ROLLER	813, 815
752538-0000 ..	SHAFT	813, 815
752539-0000 ..	PLATE	813, 815
752541-0000 ..	CANTILEVER	813, 815
752542-0002 ..	BENDING ROLLER	813, 815
752543-0002 ..	SHAFT	813, 815
752544-0001 ..	SHIM	813, 815
752544-0002 ..	SHIM	813, 815
752554-0000 ..	SPACER	115, 117, 119, 121
752556-0000 ..	SPACER	413, 415, 417, 419
752559-0000 ..	STOP PERF 1	413, 415
752560-0000 ..	STOP PERF 2	417, 419
752566-0000 ..	PIPE	719
752568-0000 ..	PROTECTION	21, 141
752574-0000 ..	END PIECE	365, 367, 369, 371
752598-0000 ..	SHAFT	409, 411
752603-0000 ..	WASHER	695
752604-0000 ..	PIPE HOLDER	695
752612-0001 ..	CARRIER	409, 411
752613-0000 ..	PIPE	719
752614-0000 ..	HOLDER	723, 725
752615-0000 ..	SPACER	409, 411
752622-0000 ..	STOP	695
752637-0001 ..	BENDING ROLLER	753, 755, 757, 759
752637-0003 ..	BENDING ROLLER	753, 755, 757, 759
752642-0000 ..	BRACKET	813, 815
752644-0000 ..	SCREW	813, 815
752649-0000 ..	CANTILEVER	427, 429
752659-0000 ..	PIPE	719
752660-0000 ..	PIPE	719
752661-0000 ..	HOSE	719
752673-0000 ..	SPACER	413, 415, 417, 419
752675-0000 ..	PIPE	75, 187
752676-0000 ..	PIPE	75, 187
752678-0000 ..	SPRING PERF 1	413, 415
752679-0000 ..	SPRING PERF 2	417, 419
752680-0000 ..	SLEEVE	413, 415, 417, 419
752681-0000 ..	WASHER	413, 415, 417, 419
752690-0000 ..	CAM DISC	699
752694-0000 ..	FILLING TUBE UPPER	33, 35, 149, 151
752741-0000 ..	PIPE	81, 193
752744-0000 ..	SHAFT	27, 143, 857, 859
752745-0000 ..	BEARING COVER	27, 143, 857, 859
752767-0000 ..	SETTING SHEET	699
752774-0000 ..	PLUNGER	351, 353
752810-0000 ..	METERING DEVICE	731
752864-0000 ..	HOSE	719
752999-0000 ..	VOLUME FLAP 200S	409, 411
777120-0215 ..	SPANNER 6X7	877
777120-0220 ..	C-SPANNER	877
777120-0232 ..	SPANNER 12X13	877
777122-0137 ..	C-SPANNER V=36	877
777122-0142 ..	C-SPANNER V=46	877
777150-0801 ..	KEY SET ,SEXKANT	877
777200-0101 ..	PIPE WRENCEL	877
795581-0000 ..	PLATE	21, 141
927422-0003 ..	O.RING 24.2X3 SILICON	737
970215-0000 ..	STOP BLOCK	993
970261-0000 ..	SPACER SCREW 10,2X10MM	1005
970262-0000 ..	SPACER NUT	1005
970802-0000 ..	DISCETTE BOX 3,5"	987
971286-0000 ..	SPACER H=6MM	1005
978048-0100 ..	CLAMPING ELEMENT	553
978049-0000 ..	NUT	555
978050-0001 ..	SCREW	555
978050-0002 ..	SCREW	555
978051-0000 ..	ECCENTRIC	555
978052-0000 ..	WASHER	555
978184-0000 ..	STOPPER	397, 399, 401, 403
978185-0000 ..	SHIM	397, 399, 401, 403
978190-0000 ..	WASHER	475, 553
978191-0000 ..	LEAD-IN	475
978193-0000 ..	FASTENING PLATE	583, 585
978262-0000 ..	GUIDE PIN	351, 353
978272-0000 ..	BRACKET	331, 333, 335, 337, 339, 341, 343, 345
978275-0000 ..	BEARING HOLDER	331, 333, 335, 337, 339, 341, 343, 345

Part No	Description	Page No
978366-0000 ..	VOLUME FLAP 250 ML	409, 411
978409-0000 ..	DROP CHUTE TBA/9 V0200	247, 249, 251
978411-0000 ..	DROP CHUTE TBA/9 V0250	247, 249, 251
978413-0000 ..	CHUTE	243, 277
978461-0000 ..	PROTECTION PLATE	47, 161
978462-0000 ..	PROTECTION PLATE	37, 153
978478-0000 ..	TANK	705, 707
978479-0000 ..	LID	705, 707
978480-0000 ..	LEVEL TUBE	705, 707
978481-0000 ..	BLOCK	705, 707
978527-0000 ..	GASKET	537
978531-0000 ..	BRACKET	77, 79, 189, 191
978532-0000 ..	BRACKET	77, 79, 189, 191
978542-0000 ..	FRAME	163
978543-0000 ..	FRAME	131
978547-0000 ..	TOUCH GUARD	155, 157
978561-0000 ..	SHAFT	727
978562-0000 ..	LOCKING FINGER	125
978569-0000 ..	SHAFT	39, 41, 155, 157
978583-0000 ..	PIPE	669, 671, 673
978584-0000 ..	PIPE	669, 671, 673
978585-0001 ..	PIPE	669, 671, 673
978585-0003 ..	PIPE	669, 671, 673
978586-0000 ..	PIPE	669, 671, 673
978587-0000 ..	PIPE	669, 671, 673
978588-0000 ..	PIPE	669, 671, 673
978589-0000 ..	PIPE	669, 671, 673
978590-0000 ..	PIPE	669, 671, 673
978592-0000 ..	PIPE	669, 671, 673
978593-0000 ..	JUNCTION BLOCK	669, 671, 673
978596-0000 ..	CANTILEVER	113
978603-0000 ..	SIGN	685, 687
978607-0000 ..	SIDE PLATE, LEFT	495
978609-0000 ..	ALIGNMENT TEMPLATE	351, 353
978735-0000 ..	FASTENING PLATE	115, 117, 119, 121
978745-0000 ..	CATCH	365, 367, 369, 371
978746-0000 ..	CATCH	373, 375, 377, 379, 381, 383, 393, 395
978756-0000 ..	PIN	427, 429
978757-0000 ..	ROLLER 180-284ML	427, 429
978760-0000 ..	ROLLER TBA200SL	427, 429
979133-0000 ..	PIPE	669, 671, 673
979217-0000 ..	PIPE	629
979219-0000 ..	SPACER PIPE	685, 687
979459-0000 ..	LEAD-IN	553
979548-0000 ..	MACHINE PLATE	851
979707-0000 ..	SCREW	917, 923
979719-0000 ..	SPACER	301
979782-0000 ..	BOW CLAMP	611
979942-0000 ..	COVER	821
979960-0000 ..	SHAFT	821
988547-0000 ..	CABLE DUCT	39, 41
1020146-0000 .	LOCKING BLOCK REPL BY 1020290-101	487
1065410-0000 .	SLOTTED PIN	913
1089374-0000 .	HANDLE	919, 923
1091670-0100 .	OUTFEED TRANSFER	483
1091673-0000 .	GUIDE RAIL	489
1091677-0000 .	SHAFT	485
1091679-0100 .	CONVEYOR	483
1091681-0000 .	PLATE	487
1091682-0000 .	PLATE	487
1091683-0000 .	SPACER	487
1091684-0000 .	RAIL	487
1091685-0000 .	RAIL	487
1091686-0000 .	SPACER	487
1091687-0000 .	GUIDE PLATE	489
1091688-0000 .	RAIL	487
1091715-0100 .	PIPE	499, 501
1091716-0000 .	PIPE	505
1091717-0100 .	CANTILEVER	513
1091719-0000 .	BRACKET	487
1091727-0000 .	GUIDE	523
1091728-0000 .	GUIDE	523
1091729-0000 .	GUIDE	523
1091730-0000 .	SHAFT	523
1091731-0000 .	SHAFT	523
1091733-0100 .	PROTECTION	437, 439
1091734-0100 .	DOOR	509
1091735-0000 .	GUIDE RAIL	509
1091736-0000 .	COLUMN	497
1091738-0000 .	FRONT PLATE	497
1091739-0000 .	LID	511
1091740-0000 .	COVER	509
1091741-0000 .	PIN	511
1091742-0000 .	GLASS PANE	511

Part No	Description	Page No
1091743-0000	.PROTECTIVE COVER	509
1091746-0000	.RAIL	487
1091747-0000	.BRACKET	519
1091748-0000	.TUBE	463
1091749-0000	.TUBE	463
1091750-0000	.TUBE	463
1091751-0000	.TUBE	463
1091759-0000	.GUIDE RAIL	489
1091763-0000	.GUIDE RAIL	509
1091766-0000	.GUIDE PLATE	489
1091771-0100	.SAFETY GUARD	499, 501
1091773-0000	.BRACKET	507
1091774-0100	.COVER PLATE	495
1091777-0000	.BRACKET	483
1091778-0000	.HANDLE	499, 501
1091779-0000	.CARRIER	485
1091780-0000	.ROLLER	485
1091781-0000	.DRUM	485
1091783-0000	.CANTILEVER	515
1091784-0000	.BRACKET	519
1091785-0000	.BRACKET	507
1091813-0000	.LINK	23, 25, 125
1091882-0000	.PIPE	113
1091883-0000	.PIPE	113
1103765-0000	.PAPER SUPPORT	811
1110391-0000	.DOLLY	365, 367, 369, 371
1110532-0000	.INDUCTOR	421
1110534-0000	.INDUCTOR	421
1110820-0000	.CUTTING RAIL	365, 367, 369, 371
1138080-0001	.RAIL HOLDER, B50 WIDTH 15 MM	487
1138080-0002	.RAIL HOLDER, B50 WIDTH 30 MM	487
1140285-0007	.COAXIAL CABLE L= 4000 MM	971, 973
1143884-0000	.COPPER BRAID	951, 953, 955, 957, 959
1143975-0000	.DRIVE WHEEL	443, 445
1144943-0000	.SPACER	487
1255692-0110	.RESOLVER CABLE L=11000 MM	941
1260486-0000	.PLATE	115, 117, 119, 121
1260487-0000	.PLATE	115, 117, 119, 121
1260490-0000	.NUT	115, 117, 119, 121
1260491-0000	.NUT	115, 117, 119, 121
1279044-0000	.HATCH	303
1279045-0000	.HATCH	305
1282444-0000	.CARTON STATION WITH BEVEL	441
1282646-0000	.KNIFE	405, 407
1282647-0000	.KNIFE	405, 407
1296815-0100	.HATCH	239, 241
1317435-0000	.COVER	453
1334234-0000	.HUB	21, 141
1346268-0000	.MOTOR PLATE	141
1348053-0000	.BRACKET	365, 367, 369, 371
1349669-0000	.BRACKET	895, 897
1360581-0000	.LID	515, 539
1360585-0000	.BRACKET	425
1360586-0000	.VOLUME CAM LEFT	425
1360587-0000	.VOLUME CAM RIGHT	425
1360607-0000	.BRACKET	571
1360630-0000	.CABLE DUCT	919
1360633-0000	.FOLDING FLAP CAM 200S	397, 399, 401, 403
1360634-0000	.COUNTER CAM	397, 399, 401, 403
1360653-0000	.CANTILEVER	539
1360667-0000	.PIPE WATER	279, 281
1360668-0000	.HOLDER	287, 289
1360672-0000	.COVERING PLATE	557
1360677-0000	.FRAME	903
1360678-0000	.HOOD	903
1360679-0000	.COVERING PLATE	903
1360696-0000	.GUIDE PLATE	571
1360709-0000	.COVER	921
1360710-0000	.PLATE	921
1360718-0100	.TENSION SPROCKET	437, 439
1360719-0000	.TENSION SPROCKET	533
1360723-0100	.CANTILEVER	895, 897
1360724-0000	.CANTILEVER	909
1360725-0000	.PLATE	909
1360726-0000	.ANGLE IRON	909
1360727-0000	.ANGLE IRON	909
1360728-0000	.PLATE	909
1360729-0000	.PLATE	909
1360730-0000	.SLEEVE	909
1360731-0000	.LINK ARM	909
1360732-0000	.LINK	909
1360733-0000	.PIVOT PIN	909
1360742-0000	.PLATE	277
1360745-0100	.COVER	919

Part No	Description	Page No
1360748-0000	.BLOCKING PIECE	547
1367180-0001	.CIRCUIT BOARD TBA/9-6000	979
1367181-0000	.ALARM DISPLAY TBA/9-6000	979
1369401-0100	.TERMINAL X001	951, 953, 955, 957, 959
1369402-0100	.TERMINAL	951, 953, 955, 957, 959
1369403-0100	.TERMINAL	951, 953, 955, 957, 959
1369404-0100	.TERMINAL	951, 953, 955, 957, 959
1369405-0100	.TERMINAL	951, 953, 955, 957, 959
1369406-0100	.TERMINAL	979
1370872-0100	.ELECTRICAL COMPONENTS	949
1370873-0100	.CABLES	949
1370874-0100	.ELECTRICAL DOCUMENT	949
1370875-0100	.STANDARD EQUIPMENT	949
1370876-0100	.EXTRA EQUIPMENT	949
1370877-0100	.SPARE PART	949
1370878-0100	.CONTROL PANEL	949
1380572-0000	.PRESSURE FINGER	535
1380573-0000	.SHIM	535
1380574-0000	.BRACKET	535
1478843-0000	.TUBE	537
1478845-0000	.SPROCKET	903
1478850-0000	.BRACKET	895, 897
1478863-0100	.CONVEYING EQUIPMENT	893
1484791-0000	.SCALE	331, 333, 335, 337, 339, 341, 343, 345
1484792-0000	.SCALE	331, 333, 335, 337, 339, 341, 343, 345
1490113-0000	.LINK HEAD	357, 359
1490114-0000	.PIN	357, 359
1490116-0000	.SPACER	357, 359
1490117-0000	.NUT	357, 359
1490118-0000	.LINK	357, 359
1490119-0000	.SHAFT	357, 359
1490120-0100	.DISCONNECTION LINK LEFT	317, 319
1490133-0000	.SPACER	357, 359
1498194-0000	.SPACER	357, 359
1511408-0000	.BLOCK	895, 897
1511409-0000	.CLAMPING PIECE	531
1511411-0000	.ANGLE STRUT	909
1511412-0000	.BRACKET	909
1511429-0000	.GABLE PLATE RIGHT	895, 897
1511441-0000	.PIPE CONNECTION	553
1511442-0000	.GABLE PLATE LEFT	895, 897
1511444-0000	.FINGER	573
1511445-0100	.GUIDE	893
1511446-0000	.RAIL	915
1511447-0000	.SLIDE RAIL	915
1511448-0000	.GUIDE	915
1511450-0000	.HEAD PLATE	915
1511451-0000	.MOUNTING SHEET	915
1511452-0000	.NOZZLE	915
1511453-0000	.SETTING SCREW	915
1511572-0000	.CLIP	793, 795
1512126-0000	.SUPPORT	459, 539
1512127-0000	.CLAMP	459, 539
1512128-0000	.PLUG	459, 539
1512132-0000	.SUPPORT	459
1512133-0000	.STOP	459, 539
1512322-0000	.COPPER BRAID	951, 953, 955, 957, 959
1517641-0000	.FLANGE BUSHING	365, 367, 369, 371, 373, 375, 377, 379, 381, 383, 385, 387, 393, 395
1528036-0000	.SPACER	785, 787, 789
1528392-0000	.GUIDE FRAME	919
1529009-0000	.HOUSE	189, 191
1529010-0000	.HOUSE	189, 191
1529014-0000	.FRAME	49
1529016-0000	.FRAME	101
1529018-0000	.PILLAR	841
1529020-0100	.STRIP MAGAZINE	741, 743, 745, 747, 749, 751
1529021-0100	.PILLAR	829
1529022-0100	.DOOR	11, 13
1529023-0100	.DOOR	11, 13
1529025-0100	.PAPER GUARD	741, 743, 745, 747, 749, 751
1529026-0000	.LID	777, 779, 781
1529027-0000	.LID	777, 779, 781
1529028-0000	.PROTECTION PLATE	777, 779, 781
1529029-0000	.SUPPORT	777, 779, 781
1529031-0000	.RAILING	267, 269, 291, 293
1529032-0000	.RAILING	267, 269, 291, 293
1529033-0100	.ALARM DEVICE	267, 269, 291, 293
1529034-0000	.COVER PLATE	309, 311
1529035-0000	.PLATFORM	309, 311
1529039-0000	.PROTECTION	633
1529041-0000	.PROTECTION	633
1529043-0000	.BRACKET	715
1529044-0000	.PROTECTION	715
1529046-0000	.SIDE PIECE	635

Part No	Description	Page No
1529047-0100	.PROTECTION	593, 595
1529048-0000	.MOTOR PLATE	141
1529049-0000	.COVER	21, 141
1529050-0000	.SPACER PIECE	619, 631
1529051-0001	.COVER PLATE	601, 625
1529055-0100	.PROTECTIVE COVER	437, 439
1529057-0000	.ARM	385, 387
1529059-0000	.END SECTION	785, 787, 789
1529060-0000	.END SECTION	785, 787, 789
1529061-0000	.BRACKET	785, 787, 789
1529063-0100	.TURNING DEVICE	483
1529064-0000	.PLATE	773, 775
1529065-0100	.CONNECTION BOX	777, 779, 781
1529066-0100	.CONNECTION BOX	593, 595
1529068-0000	.CONNECTION BOX	693
1529077-0000	.HEATING PIPE	167, 169
1529078-0000	.BATH	155, 157
1529079-0000	.BATH	39, 41
1529080-0100	.BENDING ROLLER	11, 13
1529083-0100	.CHANGE-OVER VALVE	11, 13
1529084-0100	.HOT AIR ELEMENT	11, 13
1529085-0100	.SPRAY SYSTEM	11, 13
1529087-0000	.CONNECTION BOX	783
1529088-0100	.GAUGE GROUP	11, 13
1529089-0000	.LEG	843, 845
1529090-0000	.LEG	843, 845
1529091-0100	.DOOR	11, 13
1529092-0100	.DOOR	11, 13
1529095-0100	.CONNECTION BOX	583, 585
1529096-0000	.CONNECTION BOX	587, 589
1529097-0000	.SPACER	587, 589
1529098-0100	.EL.CONNECTION BOX	11, 13
1529099-0100	.MACHINE BODY	741, 743, 745, 747, 749, 751
1529100-0100	.AIR PANEL	661, 663, 665, 667
1529101-0000	.SHEET	685, 687
1529103-0100	.CUTTING JAW RIGHT	363
1529104-0100	.CUTTING JAW LEFT	363
1529105-0100	.MODIFIED ARTICLES	363
1529106-0100	.YOKE RIGHT	363
1529107-0100	.YOKE LEFT	363
1529108-0100	.TRANSFER RIGHT	363
1529109-0100	.TRANSFER LEFT	363
1529110-0100	.MODIFIED ARTICLES	317, 319
1529111-0100	.WORM GEAR	317, 319
1529113-0100	.MODIFIED ARTICLES	11, 13
1529114-0100	.ARM	317, 319
1529116-0100	.VALVE PANEL	593, 595
1529117-0100	.VALVE PANEL	661, 663, 665, 667
1529118-0000	.SHEET	669, 671, 673
1529120-0100	.ASEPTIC CHAMBER	11, 13
1529121-0000	.PILLAR	77, 79
1529122-0000	.PILLAR	77, 79
1529126-0100	.PLATFORM TBA/9R	239, 241
1529127-0100	.RAILING TBA/9R	239, 241
1529128-0100	.MACHINE BODY TBA/9R	239, 241
1529131-0100	.PIPE WORK	741, 743, 745, 747, 749, 751
1529132-0100	.DOOR TBA/9R	239, 241
1529133-0100	.DOOR TBA/9R	239, 241
1529134-0100	.PIPE WORK	437, 439
1529135-0000	.DOOR	299
1529136-0000	.DOOR	301
1529137-0000	.BRACKET	299
1529138-0000	.BRACKET	301
1529139-0000	.INDICATOR	21, 141
1529140-0100	.CREASE ROLLER	11, 13, 851
1529141-0100	.CABLE CONNECTION	437, 439
1529142-0100	.CANTILEVER	437, 439
1529143-0000	.SHIELD PLATE	475
1529144-0000	.CHECKER PLATE	499, 501
1529145-0000	.HOOD	499, 501
1529146-0000	.WASHER	499, 501, 563, 565, 567
1529147-0100	.OUTFEED TRANSFER	437, 439
1529148-0100	.MOUNTING PLATE	437, 439
1529149-0100	.COVERING PANEL	437, 439
1529150-0100	.PIPE WORK	593, 595
1529151-0100	.LINK ARM, RIGHT	317, 319
1529152-0100	.LINK ARM, LEFT	317, 319
1529153-0100	.PRESSURE JAW RIGHT	363
1529153-0200	.PRESSURE JAW RIGHT	363
1529154-0100	.PRESSURE JAW LEFT	363
1529154-0200	.PRESSURE JAW LEFT	363
1529158-0100	.HYDROGEN PEROXIDE	593, 595
1529160-0100	.PUMP	719
1529161-0100	.MODIFIED ARTICLES:	593, 595

Part No	Description	Page No
1529162-0100	.MODIFIED ARTICLES:	239, 241
1529163-0100	.MODIFIED ARTICLES:	741, 743, 745, 747, 749, 751
1529164-0100	.BELT STRETCHER	513
1529166-0000	.BRACKET	21, 141
1529167-0100	.GUIDE	513
1529168-0100	.BATH	11, 13
1529170-0000	.BRACKET	39, 41
1529171-0100	.BATH	11, 13
1529172-0100	.CREASE ROLLER	11, 13, 851
1529173-0100	.HOT AIR ELEMENT	11, 13
1529174-0100	.HOT AIR ELEMENT	11, 13
1529175-0100	.HOT AIR ELEMENT	11, 13
1529176-0000	.COVER	785, 787, 789
1529178-0100	.CHANGE-OVER VALVE	11, 13
1529180-0100	.PIPE WORK	717
1529181-0000	.AIR-DIAGRAM	851
1529182-0000	.PANEL SURVEY	851
1529183-0000	.SHEET	309, 311
1529184-0000	.SHEET	309, 311
1529185-0100	.BENDING ROLLER	11, 13
1529186-0100	.MOUNTING PLATE	741, 743, 745, 747, 749, 751
1529187-0100	.PIPE WORK	741, 743, 745, 747, 749, 751
1529188-0100	.TRANSMISSION TBA/9R	239, 241
1529189-0000	.BOX	99
1529190-0100	.ASEPTIC CHAMBER	11, 13
1529191-0000	.HOUSE	77, 79
1529192-0000	.HOUSE	77, 79
1529193-0000	.BRACKET	297
1529198-0100	.SPRAY SYSTEM	11, 13
1529201-0000	.WATER DIAGRAM	851
1529204-0100	.AIR INJECTOR	669, 671, 673
1529205-0000	.MACHINE BODY	243, 277
1529206-0000	.PLATE	243, 277
1529207-0100	.MACHINE BODY	593, 595
1529209-0100	.COVERING PLATE	593, 595
1529210-0000	.MACHINE BODY	619, 631
1529211-0100	.CONDUIT	11, 13
1529212-0100	.CONDUIT	11, 13
1529213-0000	.SHEET	309, 311
1529214-0000	.PLATE	773, 775
1529215-0000	.MOTOR PLATE	21, 141
1529216-0000	.PLATE	27, 857
1529217-0000	.PLATE	27, 857
1529220-0000	.CABLE TRENCH	615, 627
1529221-0100	.CABLE TRACK	593, 595
1529222-0100	.CABLE TRACK	593, 595
1529223-0100	.COVERING PLATE	593, 595
1529225-0100	.CARRIAGE	593, 595
1529226-0100	.CARRIAGE	633
1529227-0000	.PIPE	709, 711
1529228-0000	.PIPE	709, 711
1529229-0000	.PIPE	709, 711
1529230-0100	.MACHINE BODY	593, 595
1529231-0000	.CABLE CONDUIT	219, 221
1529232-0000	.CABLE CONDUIT	219, 221
1529233-0000	.CABLE CONDUIT	107, 109, 219, 221
1529236-0100	.CABLE TRENCH	11, 13
1529237-0100	.CABLE TRENCH	11, 13
1529238-0100	.PIPE WORK-PNEUMATIC	11, 13
1529239-0100	.PIPE WORK-PNEUMATIC	11, 13
1529240-0100	.PIPE WORK-PNEUMATIC	11, 13
1529241-0000	.CABLE CONDUIT	309, 311
1529242-0000	.CABLE CONDUIT	309, 311
1529243-0100	.UPPER FILLING TUBE	11, 13
1529244-0000	.LEG	777, 779, 781
1529245-0000	.SPACER	841
1529246-0000	.FASTENING PLATE	777, 779, 781
1529247-0000	.CONNECTION BOX	105
1529248-0000	.CONNECTION BOX	133, 217
1529249-0000	.PIPE HOLDER	71, 183
1529250-0100	.SUCTION PIPE	11, 13
1529251-0100	.SUCTION PIPE	11, 13
1529252-0000	.PIPE	71
1529254-0100	.VALVE	11, 13
1529255-0100	.PRODUCT VALVE	11, 13
1529256-0100	.HOT AIR ELEMENT	11, 13
1529257-0100	.AIR KNIFE	11, 13
1529259-0000	.ASEPTIC DIAGRAM	851
1529263-0100	.CALENDER ROLLER	11, 13
1529264-0100	.CALENDER ROLLER	11, 13
1529265-0000	.PIPE	105, 133, 217
1529266-0100	.PHOTOCELL UNIT	11, 13
1529267-0100	.PHOTOCELL UNIT	11, 13
1529268-0000	.CABLE DUCT	107, 109

Machine Type Group Description Page No

Part No	Description	Page No
1529269-0000	.CABLE DUCT	107, 109
1529270-0000	.SIGN	829
1529271-0000	.PIPE	105, 133, 217
1529272-0000	.PIPE	105, 133, 217
1529273-0000	.TANK	731
1529274-0100	.PEROXIDE TANK	717
1529278-0000	.FILM	309, 311
1529279-0000	.STRIP	309, 311
1529280-0000	.COVER	777, 779, 781
1529281-0000	.JUNCTION PIPE	557
1529282-0000	.PIPE	933
1529283-0100	.CLEANING SYSTEM	891
1529289-0000	.BRACKET	923
1529291-0000	.BLOCK	295
1529292-0000	.COVER	923
1529299-0100	.BRACKET	883
1529300-0000	.AIR-DIAGRAM	851
1529301-0000	.PANEL SURVEY	851
1529302-0000	.CARRIER RIGHT	373, 375, 377
1529303-0000	.CARRIER LEFT	379, 381, 383
1529304-0100	.CAM PACKAGE IH	317, 319
1529305-0000	.MACHINE BODY	551
1529306-0000	.SHIELD PLATE	553
1529307-0000	.FRONT GUARD	563, 565, 567
1529308-0000	.HOOD	563, 565, 567
1529310-0100	.MACHINE BODY	437, 439
1529311-0100	.PROTECTIVE COVER	437, 439
1529312-0000	.GLASS	563, 565, 567
1529313-0000	.CHECKER PLATE	563, 565, 567
1529314-0000	.CHECKER PLATE	563, 565, 567
1529315-0000	.PIPE	563, 565, 567
1529316-0000	.BRACKET	563, 565, 567
1529324-0100	.CLEANING SYSTEM	437, 439
1529325-0000	.CLEANING EQUIPMENT	557
1529329-0100	.CANTILEVER	437, 439
1529331-0000	.GUIDE	563, 565, 567
1529335-0100	.CONNECTION BOX	583, 585
1529337-0100	.PIPE WORK	437, 439
1529338-0100	.LOWER FILLING PIPE	11, 13
1529339-0100	.LOWER FILLING PIPE	11, 13
1529341-0000	.PIPE	279, 281
1529343-0000	.BED	553
1529344-0000	.BEARING BRACKET	563, 565, 567
1529345-0000	.COVER PLATE	851
1529346-0100	.DESIGN CORRECTION DEVICE RIGHT	363
1529347-0100	.DESIGN CORRECTION DEVICE LEFT	363
1529348-0100	.START-UP KIT	363
1529350-0100	.MOVABLE FORMING RING	11, 13
1529351-0000	.ROLL	83, 85
1529352-0100	.SHOCK ABSORBER	363
1529353-0100	.SHOCK ABSORBER	363
1529354-0000	.BRACKET	557
1529355-0100	.PIPE WORK	239, 241
1529356-0100	.DISTRIBUTOR BLOCK	279, 281
1529357-0100	.STRIP APPLICATOR	741, 743, 745, 747, 749, 751
1529358-0100	.STRIP GUIDE	741, 743, 745, 747, 749, 751
1529359-0100	.MODIFIED ARTICLES:	437, 439
1529361-0000	.FRONT PLATE	923
1529363-0000	.SIDE PLATE	923
1529369-0000	.PILLAR	559
1529371-0000	.SIDE PLATE	559
1529374-0000	.COVER PLATE	559
1529388-0000	.COVER	537
1529390-0100	.SEALING UNIT	437, 439
1529392-0000	.LID	557
1529397-0100	.FRAME	437, 439
1529403-0100	.GUIDE RAIL	437, 439
1529406-0100	.DATING UNIT	741, 743, 745, 747, 749, 751
1529407-0100	.DATING UNIT	741, 743, 745, 747, 749, 751
1529410-0100	.PAPER GUIDE	633
1529420-0100	.BRACKET	291, 293
1529421-0100	.RAILING	239, 241
1529427-0000	.HOLDER	573
1529428-0000	.FRONT PLATE	559
1529429-0000	.BRACKET	559
1529430-0100	.COVERING PANEL	437, 439
1529431-0000	.COVER	561
1529432-0000	.FRONT PLATE	559
1529433-0000	.PLATE	561
1529434-0000	.PLATE	923
1529435-0000	.BRACKET	923
1529437-0000	.COVER	559
1529438-0100	.MACHINE BODY	239, 241
1529439-0000	.BRACKET	561

Part No	Description	Page No
1529440-0000	.BLOCK	559
1529441-0000	.BRACKET	561
1529442-0000	.PLATE	559
1529443-0000	.COLUMN	559
1529444-0000	.SIDE PLATE	559
1529446-0000	.RAIL	559
1529447-0000	.SIDE PLATE	559
1529448-0000	.CHECKER PLATE	559
1529449-0000	.CHECKER PLATE	559
1529450-0000	.WASTE CHUTE	559
1529451-0100	.HOOD	559
1529452-0000	.BEAM 1	861
1529453-0000	.BEAM 2	861
1529454-0000	.BEAM 3	861
1529455-0000	.BEAM 4	861
1529456-0000	.CORNER BEAM	861
1529458-0000	.COVER PLATE	559
1529459-0100	.CONVEYOR FRAME	851
1529460-0000	.SUPPORTING SHEET	861
1529461-0000	.SUPPORT BEAM	861
1529462-0000	.BRACKET	923
1529463-0000	.GUIDE	563, 565, 567
1529464-0000	.PLATE	563, 565, 567
1529465-0000	.SPACER PIECE	537
1529467-0000	.FLAP	539
1529469-0100	.TUBE ASSEMBLY	891
1529471-0100	.AIR PANEL	891
1529473-0000	.AIR-DIAGRAM	891
1529474-0000	.FRONT PLATE	923
1529475-0100	.STRAW APPLICATOR	891
1529476-0000	.SIDE PLATE	923
1529477-0000	.FRONT PLATE	923
1529478-0000	.BRACKET	923
1529479-0000	.BRACKET	923
1529480-0000	.BRACKET	923
1529481-0000	.BRACKET	923
1529482-0000	.BRACKET	889
1529483-0000	.BRACKET	889
1529484-0000	.BRACKET	889
1529485-0000	.SCREW	889
1529486-0000	.AXLE PIN	889
1529487-0000	.COVER	919
1529488-0000	.COVER	919
1529489-0000	.COVER	919
1529490-0100	.COVERING PANEL	917
1529491-0100	.COVERING PANEL	917
1529492-0000	.SETTING SCREW	919
1529493-0000	.SUPPORTING SHEET	919
1529494-0000	.DRIP PLATE	925
1529495-0100	.DISCHARGE UNIT	881
1529496-0100	.DRIP PLATE	917
1529497-0000	.GASKET	925
1529498-0000	.FLANGE	925
1538910-0000	.GUIDE	573
1538911-0000	.GUIDE	573
1538912-0000	.TUBE	907
1538913-0000	.SIDE PLATE	573
1538914-0000	.SIDE PLATE	573
1538919-0000	.HOLDER	895, 897
1538922-0100	.GUIDE	895, 897
1538925-0000	.SUPPORT	539
1538933-0000	.GUIDE RAIL	531
1538934-0000	.GUIDE RAIL	531
1538935-0000	.GUIDE	531
1538940-0000	.BRACKET	909
1539766-0100	.DISCONNECTION LINK RIGHT	317, 319
1548313-0000	.FORCE LIMITING DEVICE	357, 359
1549878-0000	.CURVE SEGMENT	351, 353
1549879-0000	.CURVE SEGMENT	351, 353
1549880-0000	.CURVE	351, 353
1549881-0000	.CURVE	351, 353
1559000-0100	.ELECTRICAL CABINET	949
1559001-0100	.CABINET	983
1559002-0100	.DOOR	983
1559003-0100	.DOOR	983
1559004-0100	.DOOR	983
1559005-0100	.SWING FRAME	983
1559006-0100	.MOUNTING PLATE	983
1559007-0100	.MOUNTING PLATE	983
1559008-0100	.MOUNTING PLATE	983
1559009-0100	.MOUNTING PLATE	983
1559010-0100	.FAN SYSTEM	983
1559022-0100	.CONTROL PANEL	949
1559025-0000	.CABINET	985

Part No	Description	Page No
1559026-0000	.POST	985
1559027-0000	.BRACKET	985
1559028-0000	.COVER	985
1559029-0000	.SWING FRAME	993
1559030-0000	.MOUNTING PLATE	995
1559031-0000	.MOUNTING PLATE	997
1559032-0000	.MOUNTING PLATE	999
1559033-0000	.MOUNTING PLATE	1001
1559034-0000	.DOOR	987
1559035-0000	.FRAME	987
1559036-0000	.DOOR	989
1559037-0000	.DOOR	991
1559038-0000	.BRACKET	997
1559039-0000	.COVER PLATE	997
1559040-0000	.COVER	1003
1559041-0000	.COVER	1003
1559042-0000	.COVER	1003
1559043-0000	.BRACKET	985
1559044-0000	.COVER	985
1559045-0000	.GLASS PANE	987
1559046-0000	.ROD	987, 989, 991
1559047-0000	.ROD	987, 989, 991
1559048-0000	.REINFORCEMENT	987, 989, 991
1559049-0000	.COVER PLATE	985
1559050-0000	.COUPLING RAIL	993
1559051-0000	.COUPLING RAIL	993
1559052-0000	.COUPLING RAIL	993
1559053-0000	.CABLE DUCT	985
1559054-0000	.CABLE DUCT	985
1559055-0000	.CABLE DUCT	985
1559056-0000	.CABLE DUCT	985
1559057-0000	.CABLE DUCT	985
1559058-0000	.CABLE DUCT	985
1559059-0000	.CABLE DUCT	985
1559060-0000	.CABLE DUCT	993
1559061-0000	.CABLE DUCT	993
1559062-0000	.CABLE DUCT	993
1559063-0000	.CABLE DUCT	993
1559064-0000	.CABLE DUCT	995
1559065-0000	.CABLE DUCT	995
1559066-0000	.CABLE DUCT	995
1559067-0000	.CABLE DUCT	995
1559068-0000	.CABLE DUCT	995
1559069-0000	.CABLE DUCT	995
1559070-0000	.CABLE DUCT	995
1559071-0000	.RAIL	995
1559072-0000	.CABLE DUCT	997
1559073-0000	.CABLE DUCT	997
1559074-0000	.CABLE DUCT	997
1559075-0000	.RAIL	997
1559076-0000	.RAIL	997
1559077-0000	.CABLE DUCT	999
1559078-0000	.CABLE DUCT	999
1559079-0000	.CABLE DUCT	999
1559080-0000	.CABLE DUCT	999
1559081-0000	.RAIL	999
1559082-0000	.BRACKET	1001
1559083-0000	.COVER PLATE	1001
1559084-0000	.COVER PLATE	1001
1559085-0000	.CABLE DUCT	1001
1559086-0000	.CABLE DUCT	1001
1559087-0000	.COUPLING RAIL	1001
1559088-0000	.COUPLING RAIL	1001
1559089-0000	.RAIL	995
1559100-0000	.CABINET	1005
1559101-0000	.DOOR	1005
1559102-0000	.WINDOW	1005
1559103-0000	.MOUNTING PLATE	1005
2501270-0000	.BRACKET	507, 569
2501347-0000	.TOOTHED PULLEY	485
2501348-0000	.SHAFT	485
2501828-0100	.DRIVE SHAFT	513
2501829-0000	.SHAFT	517
2501830-0000	.COVER	517
2501831-0000	.SHAFT	517
2501832-0000	.WASHER	517
2501833-0000	.ROLLER	517
2501854-0000	.TOOTHED PULLEY	517
2502976-0000	.PIN	23, 25, 125
2506602-0000	.BRACKET	907
2506889-0100	.SAFETY GUARD	563, 565, 567
2506890-0000	.BRACKET	569
2506891-0000	.BRACKET	569
2506892-0000	.BRACKET	569

Part No	Description	Page No
2514769-0100	.GUIDE	883
2514770-0100	.SERVICE TOOL	883
2519434-0000	.GUIDE RAIL	489
2526424-0000	.NOZZLE	531
2526428-0000	.SHAFT	785, 787, 789, 813, 815
2527136-0000	.RAIL	421
2527137-0000	.RAIL (TITANIUM)	421
2527765-0000	.CAM	485
2535941-0100	.EL. RK "SERVO OUTFEEDER"	891
2535942-0100	.ELECTRICAL DOCUMENT	939
2535943-0100	.ELECTRIC MATERIALS	939
2535944-0100	.TERMINAL X302	941
2536057-0100	.TERMINAL X300	941
2537124-0000	.TEMPLATE	851
2541977-0000	.BRACKET	531
2542344-0000	.SPACER	559
2543297-0100	.CABLE	309, 311
2545018-0100	.FINGER	437, 439
2545290-0000	.SPACER SLEEVE	615, 627
2545666-0000	.LID	107, 109, 219, 221
2546320-0000	.TOUCH GUARD	65, 67, 179, 181
2546442-0001	.DMC-PROGRAM	941
2546455-0100	.TUBE FLUSHING DEVICE	11, 13
2546477-0000	.PLATE	543
2547176-0100	.PRESSURE DEVICE	437, 439
2547574-0000	.STRAINER	925
2547577-0100	.DISCHARGE UNIT	891
2547578-0100	.EXTERNAL DATING UNIT	881
2547581-0000	.BRACKET	917
2547582-0000	.BRACKET	925
2547653-0000	.MOUNTING SHEET	985
2547665-0000	.FLEXIBLE CONDUIT	537
2549232-0100	.FRAME	437, 439
2551443-0100	.OUTFEEDER TRAY EVACUATION	891
2552041-0100	.BOTTOM VALVE	891
2552042-0000	.BOTTOM VALVE	545
2552059-0000	.BOTTOM VALVE	929
2552234-0100	.BELT TIGHTENER	519
2552235-0000	.TENSION ARM	521
2552236-0000	.BRACKET	521
2552237-0000	.TORSION SPRING	521
2552501-0100	.BOTTOM VALVE	437, 439
2552573-0100	.MODIFIED ARTICLES:	891
2552639-0100	.COVERS	891
2552716-0000	.BLOCK	497

Tetra Pak

SPC
Spare Parts Catalogue

Pos	Part No	Description	Page No
A			
A002.1	68262-0101	BACKPLANE FRONT RACK 8TE	951, 953, 955, 957, 959
A002.2	90135-0039	SHIELD CLIP KLBU 4-13.5	951, 953, 955, 957, 959
A002	90430-0067	DC MOTOR DRIVE PME 1802A CD2	951, 953, 955, 957, 959
A004.2	48890-0101	TMCC PROGRAMME	951, 953, 955, 957, 959
A004.1	68262-0101	BACKPLANE FRONT RACK 8TE	951, 953, 955, 957, 959
A004	558230-0301	TMCC CONTROLLER	951, 953, 955, 957, 959
A010	90119-0106	SAFETY RELAY JOKAB RT 6	951, 953, 955, 957, 959
A011	90119-0106	SAFETY RELAY JOKAB RT 6	951, 953, 955, 957, 959
A013	90119-0106	SAFETY RELAY JOKAB RT 6	951, 953, 955, 957, 959
A023	90119-0063	OPTO-RELAY, DC/DC AMMS-10-1/30VDC	951, 953, 955, 957, 959
A024	90119-0063	OPTO-RELAY, DC/DC AMMS-10-1/30VDC	951, 953, 955, 957, 959
A100	90031-0051	BASEPLATE, 10-SLOT	951, 953, 955, 957, 959
A102	90031-0058	PLC, DIGITAL INPUT MODULE	951, 953, 955, 957, 959
A103	90031-0057	PLC, DIGITAL INPUT MODULE	951, 953, 955, 957, 959
A104	90031-0057	PLC, DIGITAL INPUT MODULE	951, 953, 955, 957, 959
A105	90031-0057	PLC, DIGITAL INPUT MODULE	951, 953, 955, 957, 959
A106	90031-0057	PLC, DIGITAL INPUT MODULE	951, 953, 955, 957, 959
A107	90031-0057	PLC, DIGITAL INPUT MODULE	951, 953, 955, 957, 959
A108	90031-0057	PLC, DIGITAL INPUT MODULE	951, 953, 955, 957, 959
A120	90031-0053	BASEPLATE,10-SLOT	951, 953, 955, 957, 959
A121	90031-0059	PLC, DIGITAL OUTPUT MODULE	951, 953, 955, 957, 959
A122	90031-0059	PLC, DIGITAL OUTPUT MODULE	951, 953, 955, 957, 959
A123	90031-0059	PLC, DIGITAL OUTPUT MODULE	951, 953, 955, 957, 959
A124	90031-0059	PLC, DIGITAL OUTPUT MODULE	951, 953, 955, 957, 959
A125	90031-0059	PLC, DIGITAL OUTPUT MODULE	951, 953, 955, 957, 959
A126	90031-0059	PLC, DIGITAL OUTPUT MODULE	951, 953, 955, 957, 959
A127	90031-0059	PLC, DIGITAL OUTPUT MODULE	951, 953, 955, 957, 959
A128	90031-0059	PLC, DIGITAL OUTPUT MODULE	951, 953, 955, 957, 959
A129	90031-0059	PLC, DIGITAL OUTPUT MODULE	951, 953, 955, 957, 959
A201	90410-0051	TEMPERATURE CONTROLLER, KS 40	951, 953, 955, 957, 959
A201.2	359240-0100	SIGN HOLDER FOR 359240-0001	951, 953, 955, 957, 959
A201.1	359241-0123	SIGN, TEMP. PRE-STERILIZATION VALVE	951, 953, 955, 957, 959
A202	90410-0051	TEMPERATURE CONTROLLER, KS 40	951, 953, 955, 957, 959
A202.2	359240-0100	SIGN HOLDER FOR 359240-0001	951, 953, 955, 957, 959
A202.1	359241-0141	SIGN, PEROXIDE / WATER BATH	951, 953, 955, 957, 959
A203	90410-0051	TEMPERATURE CONTROLLER, KS 40	951, 953, 955, 957, 959
A203.2	359240-0100	SIGN HOLDER FOR 359240-0001	951, 953, 955, 957, 959
A203.1	359241-0131	SIGN, TEMP. LS HEATER	951, 953, 955, 957, 959
A204	90410-0051	TEMPERATURE CONTROLLER, KS 40	951, 953, 955, 957, 959
A204.2	359240-0100	SIGN HOLDER FOR 359240-0001	951, 953, 955, 957, 959
A204.1	359241-0130	SIGN, TEMP. AIR SUPER HEATER	951, 953, 955, 957, 959
A205	90410-0051	TEMPERATURE CONTROLLER, KS 40	951, 953, 955, 957, 959
A205.2	359240-0100	SIGN HOLDER FOR 359240-0001	951, 953, 955, 957, 959
A205.1	359241-0126	SIGN, TEMP. AIR KNIFE	951, 953, 955, 957, 959
A206	90410-0051	TEMPERATURE CONTROLLER, KS 40	951, 953, 955, 957, 959
A206.2	359240-0100	SIGN HOLDER FOR 359240-0001	951, 953, 955, 957, 959
A206.1	359241-0121	SIGN "STEAM"	951, 953, 955, 957, 959
A207	90410-0051	TEMPERATURE CONTROLLER, KS 40	951, 953, 955, 957, 959
A207.2	359240-0100	SIGN HOLDER FOR 359240-0001	951, 953, 955, 957, 959
A207.1	359241-0125	SIGN, PEROXIDE BATH	951, 953, 955, 957, 959
A208	90410-0051	TEMPERATURE CONTROLLER, KS 40	951, 953, 955, 957, 959
A208.2	359240-0100	SIGN HOLDER FOR 359240-0001	951, 953, 955, 957, 959
A208.1	359241-0132	SIGN, TEMP. STRIP APPLICATOR	951, 953, 955, 957, 959
A301	90314-0038	LEVEL CONTROL RELAY, RM3 220-240VAC	951, 953, 955, 957, 959
A302	90314-0038	LEVEL CONTROL RELAY, RM3 220-240VAC	951, 953, 955, 957, 959
A303	90314-0038	LEVEL CONTROL RELAY, RM3 220-240VAC	951, 953, 955, 957, 959
A304	90314-0038	LEVEL CONTROL RELAY, RM3 220-240VAC	951, 953, 955, 957, 959
A305	90314-0038	LEVEL CONTROL RELAY, RM3 220-240VAC	951, 953, 955, 957, 959
A310.1	90045-0376	CONNECTOR KIT 9-032-011-970	941
A310	90458-0397	SERVO DRIVE DMC2 50720 P	941
A310.2	2546442-0001	DMC-PROGRAM	941
A321	90119-0084	EXPANSION RELAY, JSR1T-500MS	941
A401	67600-0501	TPIH GENERATOR	951, 953, 955, 957, 959
A401.1	90110-0121	FEMALE INSERT GDS A-H 09 06 215 2811	951, 953, 955, 957, 959
A401.2	90110-0122	COVER, 09 06 000 9957	951, 953, 955, 957, 959
A402.1	68262-0101	BACKPLANE FRONT RACK 8TE	951, 953, 955, 957, 959
A402	558321-0101	TPIH-SWITCH	951, 953, 955, 957, 959
A450	90457-1106	CURRENT CONTROL RELAY, EIH 84 871 010	951, 953, 955, 957, 959
A451	90457-1106	CURRENT CONTROL RELAY, EIH 84 871 010	951, 953, 955, 957, 959
D			
D100	90031-0074	CPU350, NO COMMUNICATION	951, 953, 955, 957, 959
E			
E001.1	90164-0301	HOLDING FIXTURE	951, 953, 955, 957, 959
E001	90297-0007	FLUORESCENT TUBE, PL11	951, 953, 955, 957, 959
F			
F001	90233-0028	TUBE FUSE, 10A	951, 953, 955, 957, 959
F001.1	90233-0304	FUSE HOLDER, ST10	951, 953, 955, 957, 959
F002	90233-0029	TUBE FUSE, 25A	951, 953, 955, 957, 959
F002.1	90233-0304	FUSE HOLDER, ST10	951, 953, 955, 957, 959
F003	90233-0027	TUBE FUSE, 16A	951, 953, 955, 957, 959
F003.1	90233-0304	FUSE HOLDER, ST10	951, 953, 955, 957, 959
F004	90233-0027	TUBE FUSE, 16A	951, 953, 955, 957, 959

Pos	Part No	Description	Page No
F			
F004.1	90233-0303	FUSE HOLDER, ST10	951, 953, 955, 957, 959
F005	90233-0027	TUBE FUSE, 16A	951, 953, 955, 957, 959
F005.1	90233-0303	FUSE HOLDER, ST10	951, 953, 955, 957, 959
F006	90007-0129	CIRCUIT BREAKER, 1P 10 A K	951, 953, 955, 957, 959
F007	90007-0129	CIRCUIT BREAKER, 1P 10 A K	951, 953, 955, 957, 959
F008	90007-0131	CIRCUIT BREAKER, 1P 16 A K	951, 953, 955, 957, 959
F009	90007-0129	CIRCUIT BREAKER, 1P 10 A K	951, 953, 955, 957, 959
F010	499255-0101	SEAL KIT**	123
F010	537329-0100	HUB JUMBO	831
F015	476859-0200	CHANGE-OVER VALVE	65, 67, 179, 181
F020	31390-0110	FF-ELEMENT BOTTOM	537
F020	90007-0147	CIRCUIT BREAKER, 3P 10 A K	951, 953, 955, 957, 959
F020	543822-0100	BRAKE ARM	831
F020	1529180-0100	PIPE WORK	717
F030	594620-0100	BRAKE ARM	831
F030	751373-0100	PEROXIDE TANK	717
F031	90007-0128	CIRCUIT BREAKER, 1P 6 A K	951, 953, 955, 957, 959
F032	90007-0128	CIRCUIT BREAKER, 1P 6 A K	951, 953, 955, 957, 959
F040	543821-0100	LEVEL PROBE	831
F040	1529274-0100	PEROXIDE TANK	717
F050	751406-0100	CONNECTION HOUSING	717
F060	527898-0100	CONTAINER H2O2	717
F070	271261-0500	CLEANING SYSTEM	253, 255
F080	491650-0100	DISTRIBUTOR BLOCK	253, 255
F101	90007-0118	FUSE,	951, 953, 955, 957, 959
F102	90007-0118	FUSE,	951, 953, 955, 957, 959
F235	441811-0100	ROTOR	491
F310	90007-0146	CIRCUIT BREAKER, 3P 6 A K	941
G			
G100	90031-0068	PLC, POWER SUPPLY	951, 953, 955, 957, 959
G120	90031-0068	PLC, POWER SUPPLY	951, 953, 955, 957, 959
K			
K001	90075-0125	CONTACTOR, 7,5KW 24VDC	951, 953, 955, 957, 959
K002	90075-0125	CONTACTOR, 7,5KW 24VDC	951, 953, 955, 957, 959
K003	90075-0125	CONTACTOR, 7,5KW 24VDC	951, 953, 955, 957, 959
K004	90075-0125	CONTACTOR, 7,5KW 24VDC	951, 953, 955, 957, 959
K005	90075-0125	CONTACTOR, 7,5KW 24VDC	951, 953, 955, 957, 959
K006	90075-0124	CONTACTOR, 4KW 24VDC	951, 953, 955, 957, 959
K012	90075-0125	CONTACTOR, 7,5KW 24VDC	951, 953, 955, 957, 959
K013	90075-0125	CONTACTOR, 7,5KW 24VDC	951, 953, 955, 957, 959
K014	90075-0125	CONTACTOR, 7,5KW 24VDC	951, 953, 955, 957, 959
K030.1	90024-0035	VARISTOR VG B DIL 24;24VDC K&M	951, 953, 955, 957, 959
K030	90075-0126	CONTACTOR, 22KW 24VDC	951, 953, 955, 957, 959
K031	90075-0124	CONTACTOR, 4KW 24VDC	951, 953, 955, 957, 959
K032	90075-0124	CONTACTOR, 4KW 24VDC	951, 953, 955, 957, 959
K033	90075-0125	CONTACTOR, 7,5KW 24VDC	951, 953, 955, 957, 959
K034	90075-0125	CONTACTOR, 7,5KW 24VDC	951, 953, 955, 957, 959
K035	90075-0124	CONTACTOR, 4KW 24VDC	951, 953, 955, 957, 959
K036	90075-0124	CONTACTOR, 4KW 24VDC	951, 953, 955, 957, 959
K037	90075-0124	CONTACTOR, 4KW 24VDC	951, 953, 955, 957, 959
K038	90075-0125	CONTACTOR, 7,5KW 24VDC	951, 953, 955, 957, 959
K039	90075-0124	CONTACTOR, 4KW 24VDC	951, 953, 955, 957, 959
K040	90075-0124	CONTACTOR, 4KW 24VDC	951, 953, 955, 957, 959
K100	90119-0056	RELAY, AUXILIARY MK3P5-S 24VDC	951, 953, 955, 957, 959
K100.1	90129-0006	BASE, S3-B	951, 953, 955, 957, 959
K102	90119-0056	RELAY, AUXILIARY MK3P5-S 24VDC	951, 953, 955, 957, 959
K102.1	90129-0006	BASE, S3-B	951, 953, 955, 957, 959
K103	90119-0056	RELAY, AUXILIARY MK3P5-S 24VDC	951, 953, 955, 957, 959
K103.1	90129-0006	BASE, S3-B	951, 953, 955, 957, 959
K104	90119-0056	RELAY, AUXILIARY MK3P5-S 24VDC	951, 953, 955, 957, 959
K104.1	90129-0006	BASE, S3-B	951, 953, 955, 957, 959
K105	90119-0056	RELAY, AUXILIARY MK3P5-S 24VDC	951, 953, 955, 957, 959
K105.1	90129-0006	BASE, S3-B	951, 953, 955, 957, 959
K106	90119-0056	RELAY, AUXILIARY MK3P5-S 24VDC	951, 953, 955, 957, 959
K106.1	90129-0006	BASE, S3-B	951, 953, 955, 957, 959
K107	90119-0056	RELAY, AUXILIARY MK3P5-S 24VDC	951, 953, 955, 957, 959
K107.1	90129-0006	BASE, S3-B	951, 953, 955, 957, 959
K108	90119-0056	RELAY, AUXILIARY MK3P5-S 24VDC	951, 953, 955, 957, 959
K108.1	90129-0006	BASE, S3-B	951, 953, 955, 957, 959
K109	90119-0056	RELAY, AUXILIARY MK3P5-S 24VDC	951, 953, 955, 957, 959
K109.1	90129-0006	BASE, S3-B	951, 953, 955, 957, 959
K110	90119-0056	RELAY, AUXILIARY MK3P5-S 24VDC	951, 953, 955, 957, 959
K110.1	90129-0006	BASE, S3-B	951, 953, 955, 957, 959
K111	90119-0056	RELAY, AUXILIARY MK3P5-S 24VDC	951, 953, 955, 957, 959
K111.1	90129-0006	BASE, S3-B	951, 953, 955, 957, 959
K201	90119-0067	SOLID-STATE RELAY, H12WD4850	951, 953, 955, 957, 959
K202	90119-0067	SOLID-STATE RELAY, H12WD4850	951, 953, 955, 957, 959
K203	90119-0067	SOLID-STATE RELAY, H12WD4850	951, 953, 955, 957, 959
K204	90119-0067	SOLID-STATE RELAY, H12WD4850	951, 953, 955, 957, 959
K205	90119-0067	SOLID-STATE RELAY, H12WD4850	951, 953, 955, 957, 959
K206	90119-0067	SOLID-STATE RELAY, H12WD4850	951, 953, 955, 957, 959
K207	90119-0067	SOLID-STATE RELAY, H12WD4850	951, 953, 955, 957, 959

Pos	Part No	Description	Page No
K			
K208	90119-0067	SOLID-STATE RELAY, H12WD4850	951, 953, 955, 957, 959
K310	90075-0124	CONTACTOR, 4KW 24VDC	941
L			
L001	90297-0306	BALLAST COIL 50/60 HZ	951, 953, 955, 957, 959
L002	90297-0306	BALLAST COIL 50/60 HZ	951, 953, 955, 957, 959
L004	90297-0306	BALLAST COIL 50/60 HZ	951, 953, 955, 957, 959
M			
M002	90264-0026	FAN / EQK8-35-2 + EQN 68-35-2 INCL	951, 953, 955, 957, 959
P			
P002	90178-0007	HOUR COUNTER, BG 40,17-1 12-48VDC	951, 953, 955, 957, 959
P004	90053-0029	COUNTER, F524.800FA3C 24VDC	951, 953, 955, 957, 959
P005	90459-0083	RECORDER 1-CHANNEL, LOGOLINE 500	951, 953, 955, 957, 959
PA004.1	551922-0000	LABEL,POTENTIOMETER DESIGN CORR.	979
PA004	558389-0101	MULTI PURPOSE POTENTIOM.	979
PA110	1367180-0001	CIRCUIT BOARD TBA/9-6000	979
PA110.1	1367181-0000	ALARM DISPLAY TBA/9-6000	979
PA111	68699-0101	MULTIPLEXER CARD 56LED	979
PA112	68699-0101	MULTIPLEXER CARD 56LED	979
PP003	90053-0024	COUNTER KUBLER 24VDC 6 DIGITS	979
PP003.1	90053-0305	FRAME KUBLER F 1 DV	979
PS001	90064-0124	SWITCH, EM. STOP, ZB2-BS844+ZB2-BZ1045	979
PS001.1	486826-0001	SIGN "EMERGENCY STOP"	979
PS007	90111-0120	SWITCH, 2 POS.704.510 .0A+704.901.5/A	979
PS012	90064-0098	PUSH BUTTON, CLEAR	979
PS012.1	359301-0130	SIGN "LAMPTEST"	979
PS013	90111-0139	SWITCH, 704.504.0 + 704.901.3	979
PS019	90064-0098	PUSH BUTTON, CLEAR	979
PS019.1	359301-0050	SIGN "DROP CHUTE"	979
PS020	90064-0098	PUSH BUTTON, CLEAR	979
PS020.1	359301-0170	SIGN "MANUAL FLUSHING FFU"	979
Q			
Q001	90111-0135	MAIN SWITCH P3-100/EA/SVB-SW/N/HI11/H-P3	951, 953, 955, 957, 959
Q001.3	359240-0100	SIGN HOLDER FOR 359240-0001	951, 953, 955, 957, 959
Q001.1	359241-0124	SIGN, MAIN SWITCH	951, 953, 955, 957, 959
Q001.2	359241-0297	SIGN, 400 V, 50 HZ, 63 A	951, 953, 955, 957, 959
Q003	90095-0074	OVERLOAD PROTECTION, PKZM 2,5 A	951, 953, 955, 957, 959
Q003.1	90259-0313	AUX. CONTACT K&M NHI21-PKZM0	951, 953, 955, 957, 959
Q012	90095-0077	OVERLOAD PROTECTION, PKZM 6-10 A	951, 953, 955, 957, 959
Q012.1	90259-0313	AUX. CONTACT K&M NHI21-PKZM0	951, 953, 955, 957, 959
Q013	90095-0077	OVERLOAD PROTECTION, PKZM 6-10 A	951, 953, 955, 957, 959
Q013.1	90259-0313	AUX. CONTACT K&M NHI21-PKZM0	951, 953, 955, 957, 959
Q014	90095-0073	OVERLOAD PROTECTION, PKZM 1,6 A	951, 953, 955, 957, 959
Q014.1	90259-0313	AUX. CONTACT K&M NHI21-PKZM0	951, 953, 955, 957, 959
Q030	90095-0080	OVERLOAD PROTECTION, PKZM 25 A	951, 953, 955, 957, 959
Q030.1	90259-0313	AUX. CONTACT K&M NHI21-PKZM0	951, 953, 955, 957, 959
Q033	90095-0077	OVERLOAD PROTECTION, PKZM 6-10 A	951, 953, 955, 957, 959
Q033.1	90259-0313	AUX. CONTACT K&M NHI21-PKZM0	951, 953, 955, 957, 959
Q034	90095-0073	OVERLOAD PROTECTION, PKZM 1,6 A	951, 953, 955, 957, 959
Q034.1	90259-0313	AUX. CONTACT K&M NHI21-PKZM0	951, 953, 955, 957, 959
Q035	90095-0075	OVERLOAD PROTECTION, PKZM 4 A	951, 953, 955, 957, 959
Q035.1	90259-0313	AUX. CONTACT K&M NHI21-PKZM0	951, 953, 955, 957, 959
Q036	90095-0073	OVERLOAD PROTECTION, PKZM 1,6 A	951, 953, 955, 957, 959
Q036.1	90259-0313	AUX. CONTACT K&M NHI21-PKZM0	951, 953, 955, 957, 959
Q037	90095-0077	OVERLOAD PROTECTION, PKZM 6-10 A	951, 953, 955, 957, 959
Q037.1	90259-0313	AUX. CONTACT K&M NHI21-PKZM0	951, 953, 955, 957, 959
Q038	90095-0078	OVERLOAD PROTECTION, PKZM0-16	951, 953, 955, 957, 959
Q038.1	90259-0313	AUX. CONTACT K&M NHI21-PKZM0	951, 953, 955, 957, 959
Q039	90095-0072	OVERLOAD PROTECTION, PKZM 1,0 A	951, 953, 955, 957, 959
Q039.1	90259-0313	AUX. CONTACT K&M NHI21-PKZM0	951, 953, 955, 957, 959
Q040	90095-0071	OVERLOAD PROTECTION, PKZM 0-0,63 A	951, 953, 955, 957, 959
Q040.1	90259-0313	AUX. CONTACT K&M NHI21-PKZM0	951, 953, 955, 957, 959
Q101	90111-0172	EARTH FAULT BREAKER, F 362-25/0.03	951, 953, 955, 957, 959
Q310	90095-0076	OVERLOAD PROTECTION, PKZM 6,3 A	941
Q310.2	90259-0312	ADAPTER PLATE K&M SP PKZ SOND C	941
Q310.1	90259-0317	AUX.CONTACT K&M NHI 11-PKZ0	941
R			
R003	90130-0017	POTENTIOMETER, 10 KOHM	951, 953, 955, 957, 959
R003.1	90130-0301	ADJUSTING KNOB WITH DIAL	951, 953, 955, 957, 959
R003.3	359240-0100	SIGN HOLDER FOR 359240-0001	951, 953, 955, 957, 959
R003.2	359241-0260	SIGN "TS RIGHT"	951, 953, 955, 957, 959
R004	90130-0017	POTENTIOMETER, 10 KOHM	951, 953, 955, 957, 959
R004.1	90130-0301	ADJUSTING KNOB WITH DIAL	951, 953, 955, 957, 959
R004.3	359240-0100	SIGN HOLDER FOR 359240-0001	951, 953, 955, 957, 959
R004.2	359241-0261	SIGN "TS LEFT"	951, 953, 955, 957, 959
S			
S002	90111-0124	KEY SWITCH, 1NO,1NC CONTACT	951, 953, 955, 957, 959
S002.2	359240-0100	SIGN HOLDER FOR 359240-0001	951, 953, 955, 957, 959
S002.1	359241-0122	SIGN, CIP OF STEAM BARRIER SPACE	951, 953, 955, 957, 959
S003	90111-0142	SWITCH GEAR, NO.OF DIGIT: 4	951, 953, 955, 957, 959
S003.2	359240-0100	SIGN HOLDER FOR 359240-0001	951, 953, 955, 957, 959
S003.1	359320-0002	SIGN, THUMB WHEEL UNIT, FILLING ON	951, 953, 955, 957, 959
S004	90111-0122	KEY SWITCH, 2 NO CONTACTS	951, 953, 955, 957, 959

Pos	Part No	Description	Page No
S			
S004.2	359240-0100	SIGN HOLDER FOR 359240-0001	951, 953, 955, 957, 959
S004.1	359241-0133	SIGN, SERVICE SWITCH	951, 953, 955, 957, 959
S032	90064-0124	SWITCH, EM. STOP, ZB2-BS844+ZB2-BZ1045	951, 953, 955, 957, 959
S032.1	486826-0001	SIGN "EMERGENCY STOP"	951, 953, 955, 957, 959
S034	90064-0085	PUSH BUTTON, RED	951, 953, 955, 957, 959
S034.1	359301-0110	SIGN "SHORT STOP"	951, 953, 955, 957, 959
T			
T001	90245-0019	TRANSF. 3-PH.750VA SEC.23A	951, 953, 955, 957, 959
T002	23139-0000	TRANSFORMER 1PH. AUTO 2,1 KVA	951, 953, 955, 957, 959
T003	23118-0000	TRANSFORMER	951, 953, 955, 957, 959
V			
V001	90038-0024	RECTIFIER, 10/22A SKD 50/04A3	951, 953, 955, 957, 959
W			
W001	90220-0059	THERMOCOUPLE CABLE K/ 2X0,81MM2	951, 953, 955, 957, 959
W002	90220-0059	THERMOCOUPLE CABLE K/ 2X0,81MM2	951, 953, 955, 957, 959
W003	90220-0059	THERMOCOUPLE CABLE K/ 2X0,81MM2	951, 953, 955, 957, 959
W004	90220-0059	THERMOCOUPLE CABLE K/ 2X0,81MM2	951, 953, 955, 957, 959
W005	90220-0059	THERMOCOUPLE CABLE K/ 2X0,81MM2	951, 953, 955, 957, 959
W006	90220-0059	THERMOCOUPLE CABLE K/ 2X0,81MM2	951, 953, 955, 957, 959
W007	90220-0059	THERMOCOUPLE CABLE K/ 2X0,81MM2	951, 953, 955, 957, 959
W008	90220-0059	THERMOCOUPLE CABLE K/ 2X0,81MM2	951, 953, 955, 957, 959
W009	90220-0059	THERMOCOUPLE CABLE K/ 2X0,81MM2	951, 953, 955, 957, 959
W010	90220-0059	THERMOCOUPLE CABLE K/ 2X0,81MM2	951, 953, 955, 957, 959
W011	90220-0059	THERMOCOUPLE CABLE K/ 2X0,81MM2	951, 953, 955, 957, 959
W020	548770-0012	COAXIAL CABLE L=700 MM	951, 953, 955, 957, 959
W021	551969-0001	COAXIAL CABLE L=1900 MM	951, 953, 955, 957, 959
W022	551969-0001	COAXIAL CABLE L=1900 MM	951, 953, 955, 957, 959
W023	1143884-0000	COPPER BRAID	951, 953, 955, 957, 959
W024	1512322-0000	COPPER BRAID	951, 953, 955, 957, 959
W100	90031-0305	I/O EXPANSION CABLE	951, 953, 955, 957, 959
W310	90220-0116	MOTOR CABLE 4X1,0+2(2X0,5)+SHIELD	941
W311	1255692-0110	RESOLVER CABLE L=11000 MM	941
W312	351150-0405	CABLE OLFLEX 5X0,75 MM2 LIGHT/GREY	941
X			
X001	1369401-0100	TERMINAL X001	951, 953, 955, 957, 959
X002	1369402-0100	TERMINAL	951, 953, 955, 957, 959
X003	1369403-0100	TERMINAL	951, 953, 955, 957, 959
X010	1369404-0100	TERMINAL	951, 953, 955, 957, 959
X021	90077-0102	TERMINAL BLOCK, 1952.2	951, 953, 955, 957, 959
X023	90077-0102	TERMINAL BLOCK, 1952.2	951, 953, 955, 957, 959
X024	90077-0102	TERMINAL BLOCK, 1952.2	951, 953, 955, 957, 959
XL	1369405-0100	TERMINAL	951, 953, 955, 957, 959
X101	90001-0033	WALL SOCKET OUTLET	951, 953, 955, 957, 959
Z			
Z002	90024-0060	POWER LINE FILTER, 80 A 250/440 VAC	951, 953, 955, 957, 959
Z003	90024-0036	FILTERED TERMINAL BLOCK	951, 953, 955, 957, 959
Z310	90024-0037	INPUT FILTER, 8 A	941

Tetra Pak

SPC binder labels. 40 mm Full width *Note! This page is generated* **automatically.**
using the **variable definitions** *made in the* **front page** *file!!*

TBA/9R 1(2)
648152-6000
Issue: 2002-08-26 Doc No: SPC-80322-0104

TBA/9R 1(2)
648152-6000
Issue: 2002-08-26 Doc No: SPC-80322-0104

TBA/9R 2(2)
648152-6000
Issue: 2002-08-26 Doc No: SPC-80322-0104

TBA/9R 2(2)
648152-6000
Issue: 2002-08-26 Doc No: SPC-80322-0104

TBA/9R 1(2)
648152-6000
Issue: 2002-08-26 Doc No: SPC-80322-0104

TBA/9R 1(2)
648152-6000
Issue: 2002-08-26 Doc No: SPC-80322-0104

TBA/9R 2(2)
648152-6000
Issue: 2002-08-26 Doc No: SPC-80322-0104

TBA/9R 2(2)
648152-6000
Issue: 2002-08-26 Doc No: SPC-80322-0104

TBA/9R 1(2)
648152-6000
Issue: 2002-08-26 Doc No: SPC-80322-0104

TBA/9R 1(2)
648152-6000
Issue: 2002-08-26 Doc No: SPC-80322-0104

TBA/9R 2(2)
648152-6000
Issue: 2002-08-26 Doc No: SPC-80322-0104

TBA/9R 2(2)
648152-6000
Issue: 2002-08-26 Doc No: SPC-80322-0104