10.2 Templates and Tools

Fig.	Description
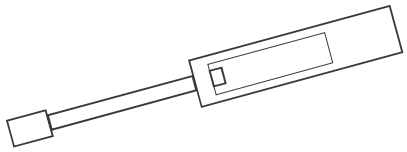	**Dynamometer** TP No. 74767-0102 1 Superstructure 4 Jaw system 5 Final folder module
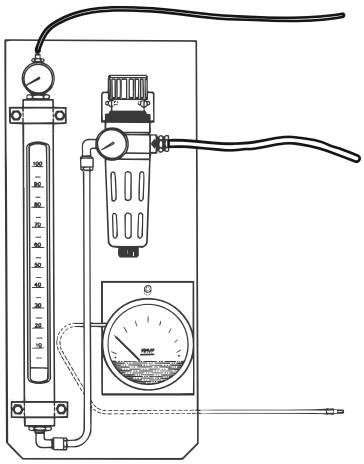	**Leak finding equipment** TP No. 533014-0101 1 Superstructure OPTIONAL
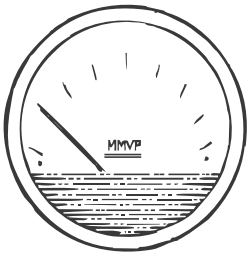	**Pressure gauge** TP No. 90243-0137 1 Superstructure OPTIONAL
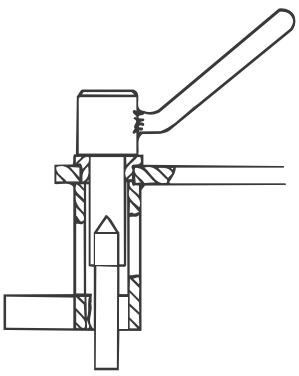	**Removal tool for AP-valve** TP No. 449969-0101 1 Superstructure

TechPub_2614345_0102B7647Y01en.fm

Fig.	Description
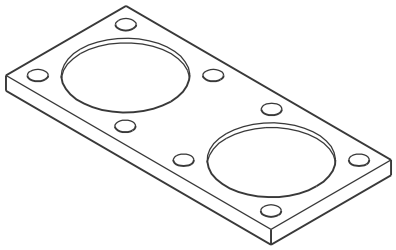	**Heat exchanger bottom blank-off flange** TP No. 1348263 1 Superstructure
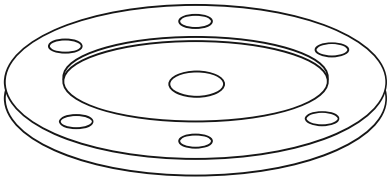	**Heat exchanger top blank-off flange** TP No. 979951 1 Superstructure
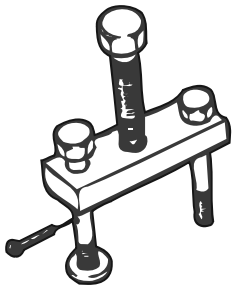	**Extractor** TP No. 74305-0101 1 Superstructure
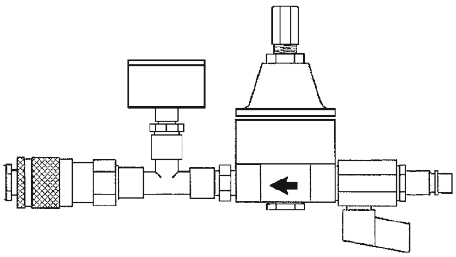	**Hydrostatic test instrument** TP No. 565536-0101 1 Superstructure OPTIONAL
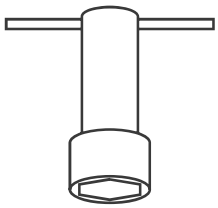	**Socket wrench** TP No. 90206-0330 1 Superstructure
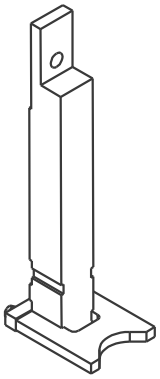	**Filling pipe alignment (level probe)** TP No. 1498676-0100 1 Superstructure

TechPub_2614345_0102B7647Y01en.fm

Fig.	Description
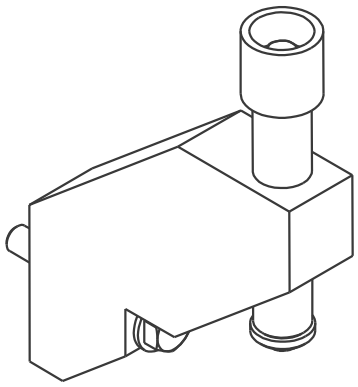	**Filling pipe alignment (level probe)** TP No. 1498674-0100 1 Superstructure
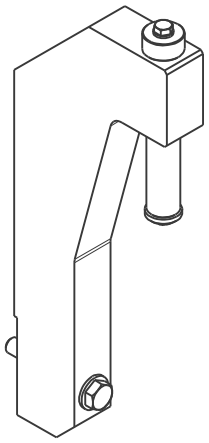	**Filling pipe alignment (float)** TP No. 1498674-0100 1 Superstructure
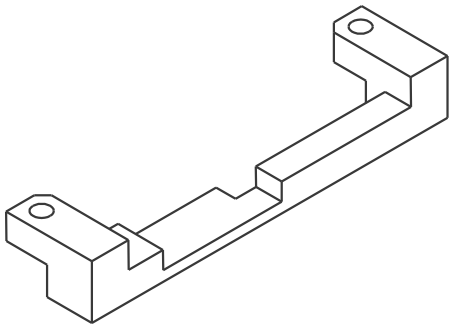	**LS roller adjustment template** TP No. 1498687 (200B, 250B, 250S and 200M) TP No. 2500588 (200 S) 1 Superstructure
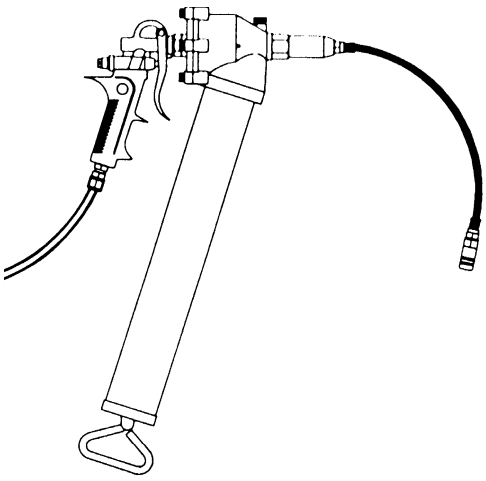	**Pneumatic grease-gun** TP No. 1512559 4 Jaw system OPTIONAL

TechPub_2614345_0102B7647Y01en.fm

Fig.	Description
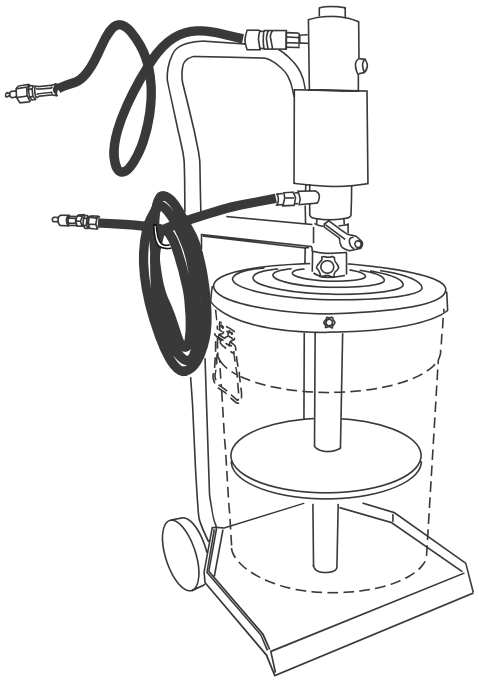	**Portable grease pump** TP No. 90459-2334 4 Jaw system OPTIONAL
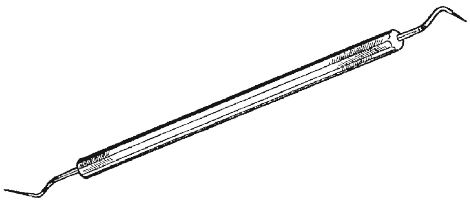	**Tool** TP No. 90243-0146 4 Jaw system
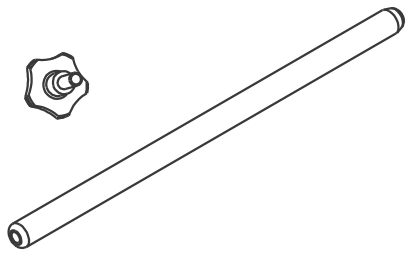	**Knives synchronisation template** TP No. 1317922 TP No. 90051-81 4 Jaw system
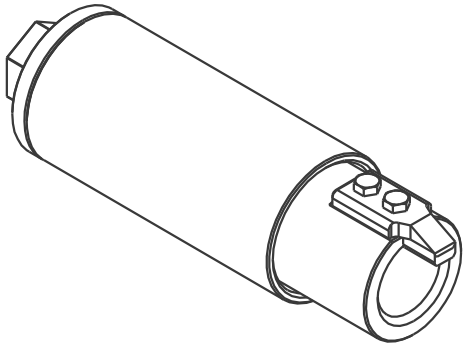	**Jaw bearing extraction tool** TP No. 1487215 Attachment for sealing jaws, 1499129 (thick) Attachment for pressure jaws, 1499186 (thin) 4 Jaw system

TechPub_2614345_0102B7647Y01en.fm

Fig.	Description
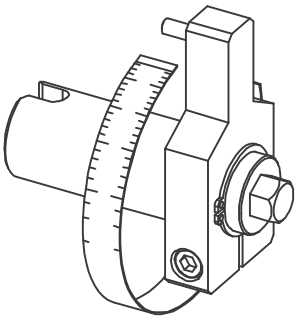	**Gearbox play** TP No. 2566274-0100 4 Jaw system OPTIONAL
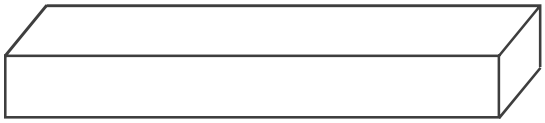	**Template** TP No. 2640362 4 Jaw system
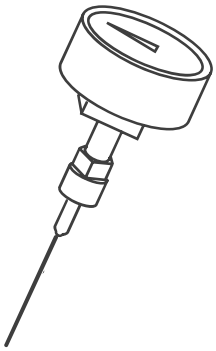	**Needle pressure gauge** TP No. 1478583-0100 5 Final folder module OPTIONAL
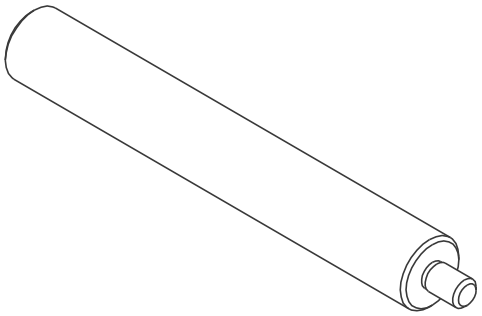	**Template** TP No. 1350716 5 Final folder module
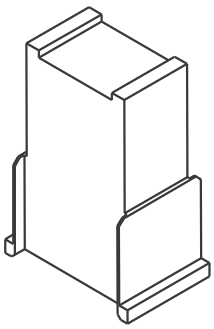	**Heat applicator template** TP No. 2508395 (200B) TP No. 2508396 (250B) TP No. 2501225 (200S) TP No. 2501229 (200M) TP No. 2501230 (250S) 5 Final folder module

TechPub_2614345_0102B7647Y01en.fm

Fig.	Description
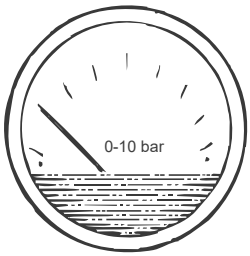	**Pressure gauge** TP No. 90043-0086 (0-10bar) 6 Service unit OPTIONAL
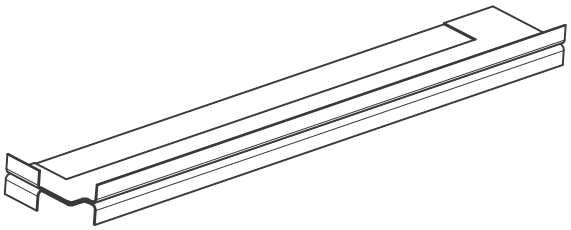	**Tool** TP No. 2522095 8 Automatic splicing unit
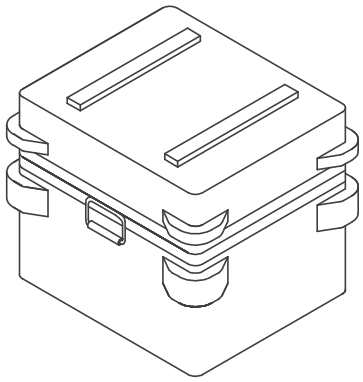	**Calibration equipment** TP No. 567732-0101 9 Electrical cabinet OPTIONAL
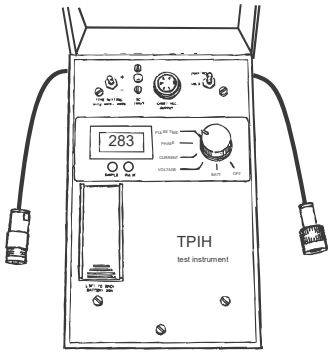	**Test instrument** TP No. 68462-0101 9 Electrical cabinet OPTIONAL
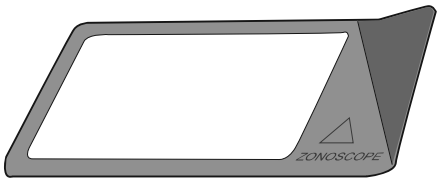	**Tool** TP No. 90243-203 9 Electrical cabinet

TechPub_2614345_0102B7647Y01en.fm

Fig.	Description
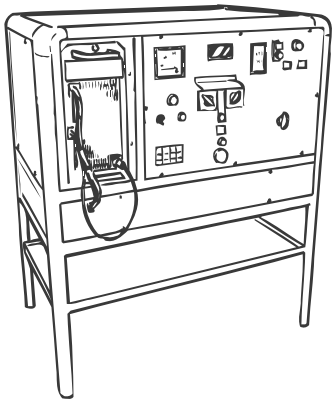	**Test instrument** TP No. 68466 9 Electrical cabinet OPTIONAL
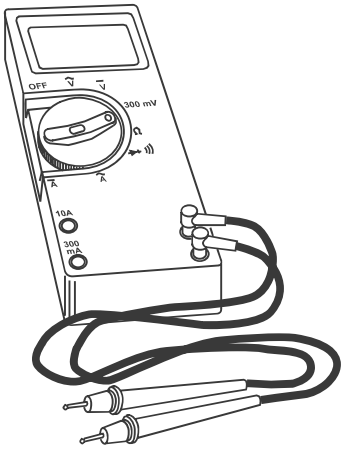	**Digital multimeter** TP No. 90220-078 9 Electrical cabinet OPTIONAL
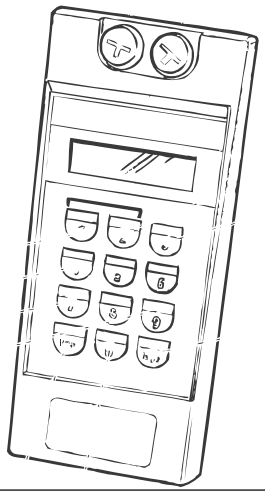	**Calibration equipment** **Temperature calibrator (Micromite instrument)** TP No. 90410-0338 **Extension wire male 5m. (temp.controller)** TP No. 90410-0308 **Extension wire female 1m. (oven)** TP No. 90410-0309 **Label** TP No. 90194-0113 9 Electrical cabinet OPTIONAL

TechPub_2614345_0102B7647Y01en.fm

Fig.	Description
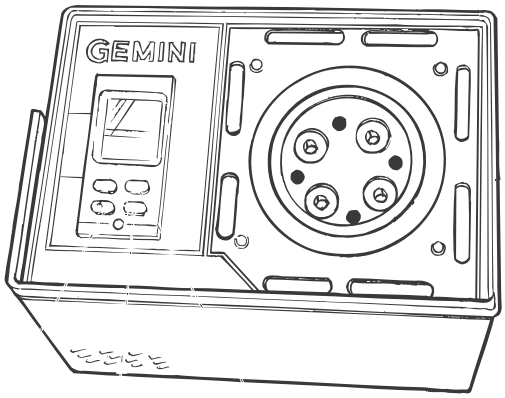	**Calibration equipment** **Temperature calibrator oven (Gemini)** TP No. 90410-0337 **Calibrated thermocouple type K** TP No. 90410-0310 9 Electrical cabinet OPTIONAL

TechPub_2614345_0102B7647Y01en.fm