SPC
Spare Parts Catalogue

Tetra Straw Applicator 22 HS
678253-0200

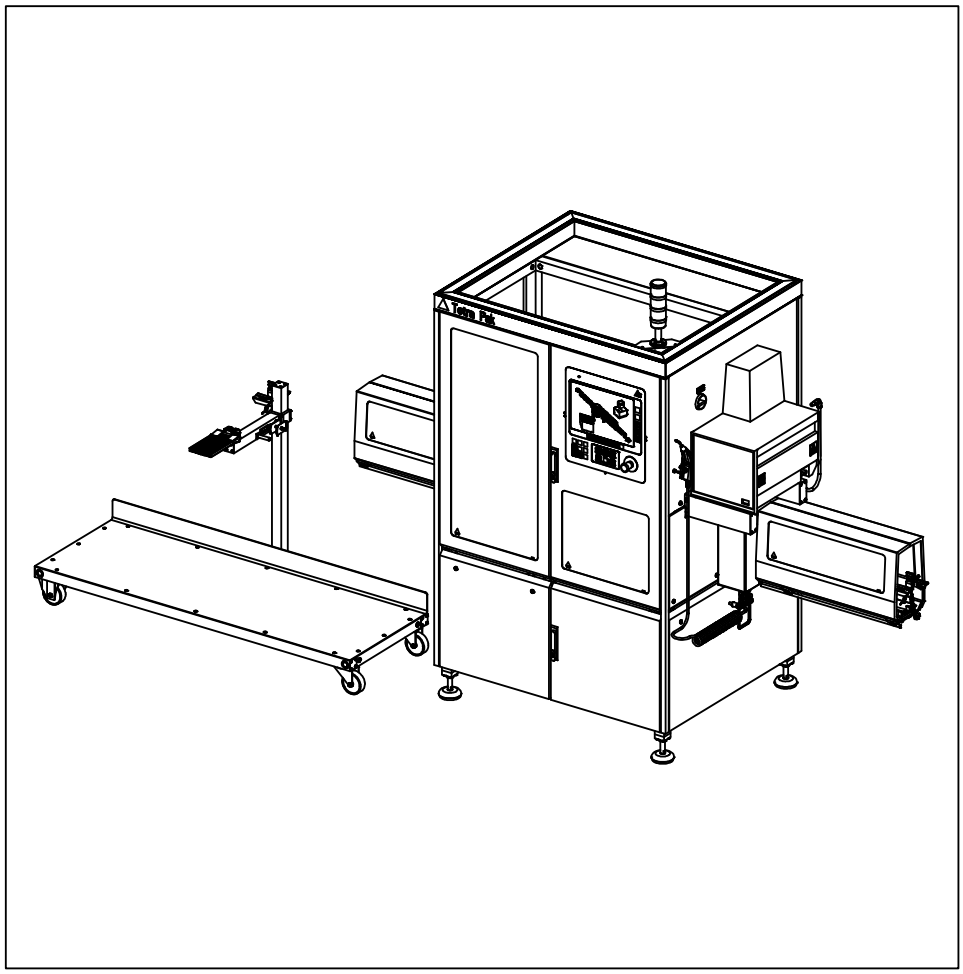

Tetra Pak

Doc. No: SPC-1366219-0103

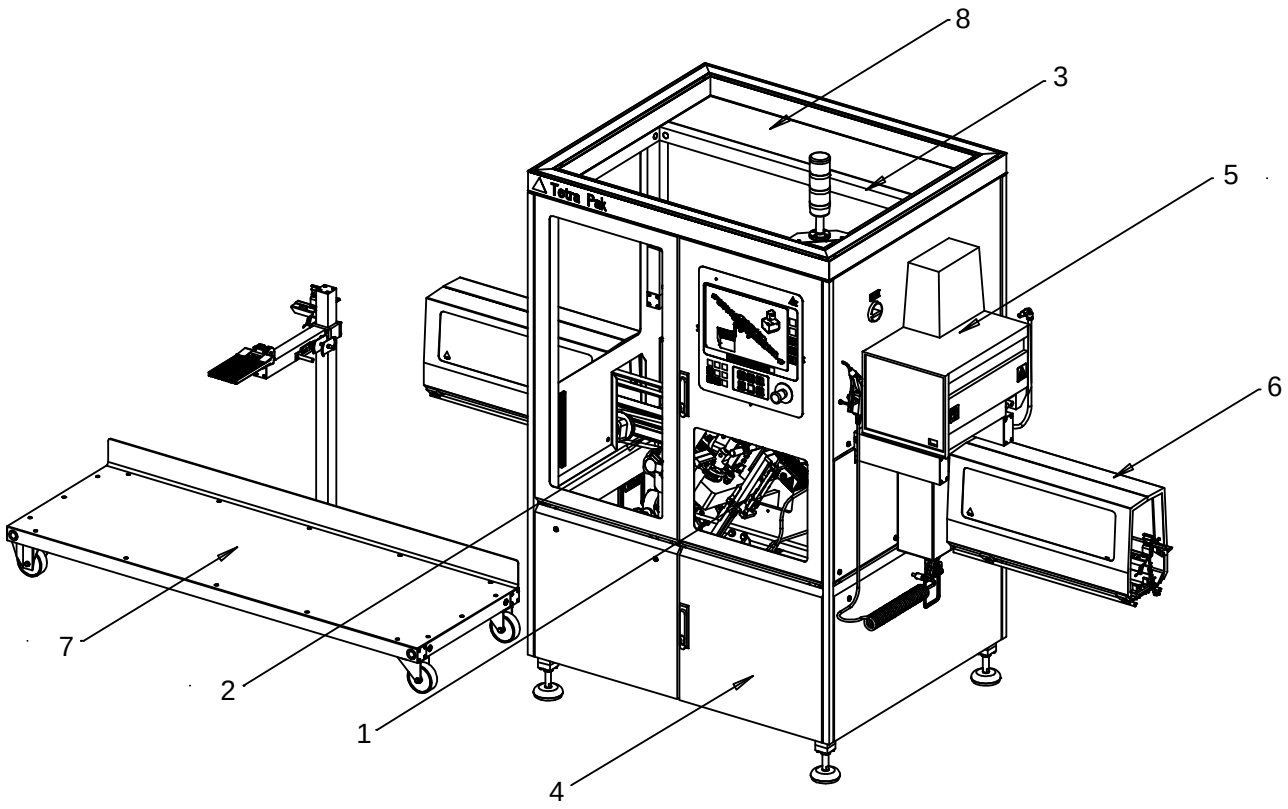

9 Optional Equipment

The position numbers in the illustration correspond with the chapter numbers listed on the next page.

Copyright © 2004 Tetra Pak Group

All rights reserved. No part of this document may be reproduced or copied in any form or by any means without written permission from Tetra Pak Carton Ambient AB.

Tetra Pak and all Tetra Pak products are trademarks belonging to the Tetra Pak Group.

The content of this manual is in accordance with the design and construction of the machine or equipment at the time of publishing. Tetra Pak reserves the right to introduce design modifications without prior notice.

This document was produced by:

Tetra Pak Carton Ambient AB
Ruben Rausings gata
SE-221 86 Lund
Sweden

This Tetra Pak equipment was manufactured by:

Tetra Pak Carton Ambient AB
Ruben Rausings gata
SE-221 86 Lund
Sweden

Additional copies can be ordered from Tetra Pak Parts or the nearest Tetra Pak office. When ordering additional copies, always provide the document number. This can be found in the machine specification document. It is also printed on the front cover and in the footer on each page of the manual.

Doc. No. SPC-1366219-0103

Issue 2004-05

This document is valid from:

Series No/Machine No Sign.

SPC

Spare Parts Catalogue

Tetra Brik Aseptic
Tetra Straw Applicator 22 HS
678253-0200

A list of all optional equipment, optional kits, and rebuilding kits that this catalogue is valid for is found on the next page.

i Introduction

1 Applicator Unit
B-678210-0100

2 Conveyor Section
B-678214-0200

3 Frame
B-678215-0200

4 Shrouding
B-678216-0200

5 Hot Melt Equipment
B-678217-0200

6 Regular Accessories
B-678218-0200

7 Straw Magazine
B-678219-0100

8 Electrical Cabinet
B-679342-0200

9 Optional Equipment
B-678225-0100

ii Part Number Index

iii Alphabetical Index

iv Electrical Parts Index

v SP Code Parts Index

Doc. No: SPC-1366219-0103

Issue 2004-05

Tetra Pak

Tetra Pak Carton Ambient AB

Valid for:

Tetra Straw Applicator 22 HS
678253-0200

Update Log for Doc. No. SPC-1366219-0103

This table shows all changes made to this catalogue, such as kits installed and pages added or removed.

Date	Installed Kit	Added Pages (Doc. No.)	Removed Pages	Signature

Date	Installed Kit	Added Pages (Doc. No.)	Removed Pages	Signature

i Introduction

TechPub-2660371-0101

en About the Introduction Chapter
This chapter contains basic information about this catalogue and related Tetra Pak equipment.

da Om indledningen
Kapitlet indeholder grundlæggende oplysninger om dette katalog og tilhørende Tetra Pak-udstyr.

de Zur Einleitung
Dieses Kapitel enthält grundlegende Informationen zu diesem Handbuch und der entsprechenden Tetra Pak Ausrüstung.

el Σχετικά με το Κεφάλαιο 'Εισαγωγή'
Αυτό το κεφάλαιο περιέχει βασικές πληροφορίες για τον παρόντα κατάλογο και τον σχετικό εξοπλισμό της Tetra Pak.

es Sobre el Capítulo de Introducción
Este capítulo contiene información básica sobre este manual y el equipo Tetra Pak relacionado.

fi Tietoja Johdanto-luvusta
Tässä luvussa on perustietoja tästä luettelosta ja Tetra Pak -laitteesta.

fr Concernant le chapitre d'Introduction
Le présent chapitre contient les renseignements de base concernant ce manuel et l'équipement Tetra Pak concerné.

it Informazioni sulla sezione Introduzione
Questa sezione contiene informazioni generali sul presente catalogo e la relativa macchina Tetra Pak.

nl Omtrent het hoofdstuk Inleiding
Dit hoofdstuk bevat basisinformatie betreffende dit handboek en daarmee verband houdende apparatuur van Tetra Pak.

no Om kapitlet Introduksjon
Dette kapitlet inneholder grunnleggende informasjon om denne katalogen og relatert Tetra Pak-ustyr.

po Sobre o capítulo Introdução
Este capítulo contém informações básicas sobre este catálogo e ao equipamento Tetra Pak relacionado.

sv Om inledningskapitlet
Det här kapitlet innehåller grundläggande information om katalogen och Tetra Pak-utrustningen.

TechPub-2660371-0101

Introduction

Illustrations . . . . . i - 5
English Text . . . . . i - 7

Indledning

Illustrationer . . . . . i - 5
Dansk tekst . . . . . i - 11

Einleitung

Abbildungen . . . . . i - 5
Deutscher Text . . . . . i - 15

Εισαγωγή

Εικόνες . . . . . i - 5
Ελληνικό Κείμενο . . . . . i- 19

Introducción

Ilustraciones . . . . . i - 5
Texto español . . . . . i - 23

Johdanto

Kuvat . . . . . i - 5
Suomenkielinen teksti . . . . . i - 27

Introduction

Figures . . . . . i - 5
Texte français . . . . . i - 31

Introduzione

Figure . . . . . i - 5
Testo in italiano . . . . . i - 35

Inleiding

Illustraties . . . . . i - 5
Nederlands tekst . . . . . i - 39

Introduksjon

Illustrasjoner . . . . . i - 5
Norsk tekst . . . . . i - 43

Introdução

Ilustrações . . . . . i - 5
Texto em portugese . . . . . i - 47

TechPub-2660371-0101

Inledning

Bilder . . . . . i - 5
Svensk text . . . . . i - 51

TechPub-2660371-0101

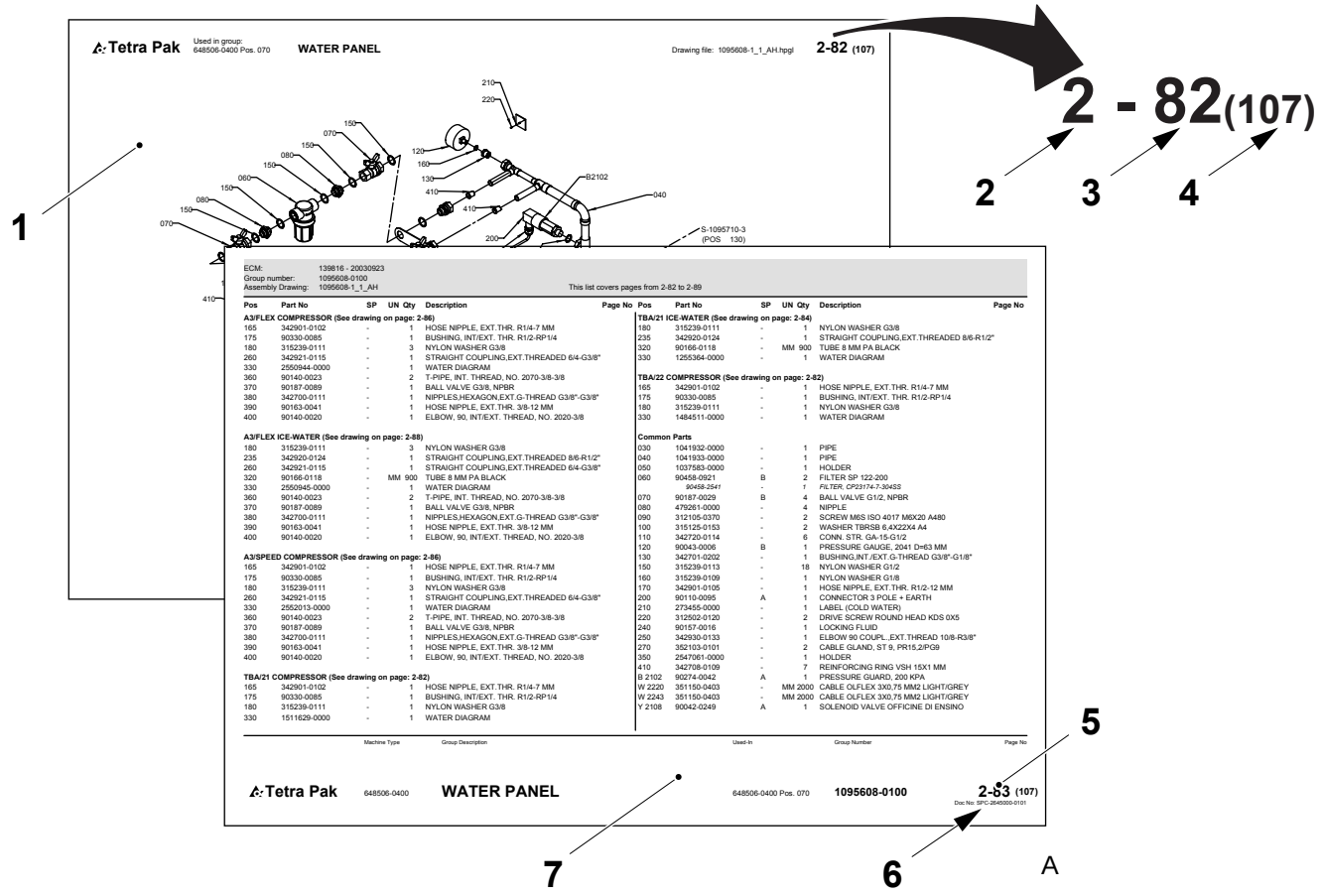

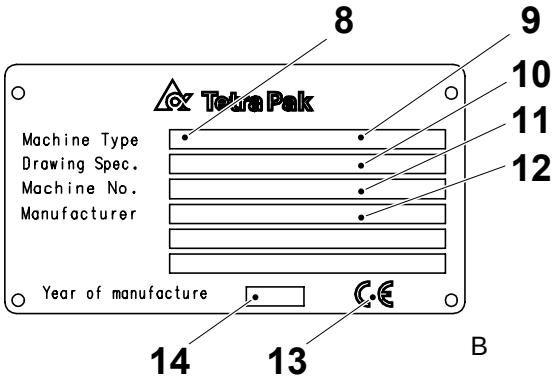

MACHINE SPECIFICATION

Machine Sign Data

Machine Type	: TBA/22 - 200 B
Drawing Spec.	: 648571-0400
Machine No.	: 21070 /83816
Designed by	: Tetra Brik Packaging Systems S.p.A. Via A. Delfini 41100 Modena Italy
Manufacturer	: Tetra Brik Packaging Systems S.p.A. Via A. Delfini 41100 Modena Italy
Year of Manufacture	: 2000

Machine No. : 21070 / 83816

Date of Issue	: 10/23/2000
Machine Type	: **TBA/22 - 200 Baseline**
Issued by	: Tetra Brik
No. of Sheets	: 1/1
No of M. Dev.	: 1

Basic Design

Machine Body	B-648522 0400
Drive Unit	B-648523 - 0500
Jaw System	B-648524 - 0400
Final Folder	B-648525 - 0400
Service Unit	B-648506 - 0300
Strip Applicator	B-648507 - 0400
Regular Accessories	B-648547 - 0100
Superstructure	B-648521 - 0300
Aut. Splicing Unit	B-648513 - 0400
Electrical Cabinet	BE-648538 - 0200

Equipment Included

1282762-0101 Trolley

527898-0101 Container H2O2

Variables

ECN No. EL	71390
Frequency	Hz - 50
Voltage	400/230
Machine Speed	20000/H

Documentation Included

SPC 81511-102 MM 82302-104
MM 82302-604 OM 82346-104
OM 82346-604 IM 82358-103
IM 82358-603 UM 82351-103
UM 82351-603 UM 82197-102
TEM 27080-102 TEM 27085-602
EM 82318-104 EM 82318-604

C

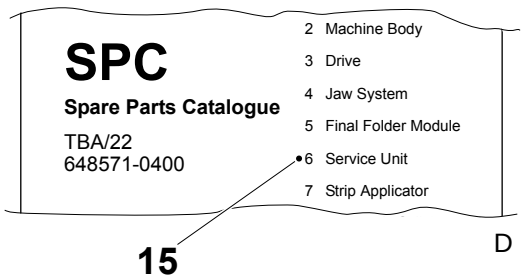

TechPub-2660371-0101

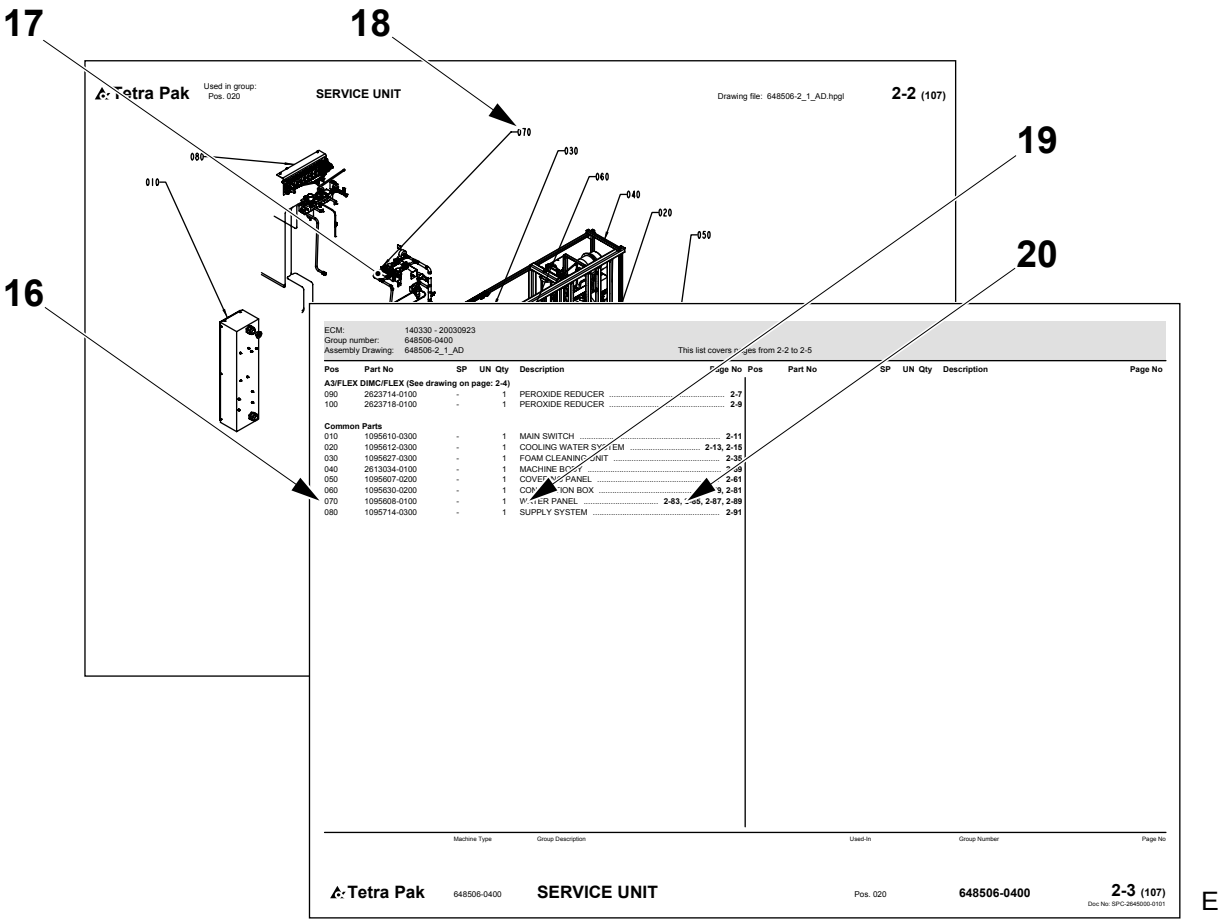

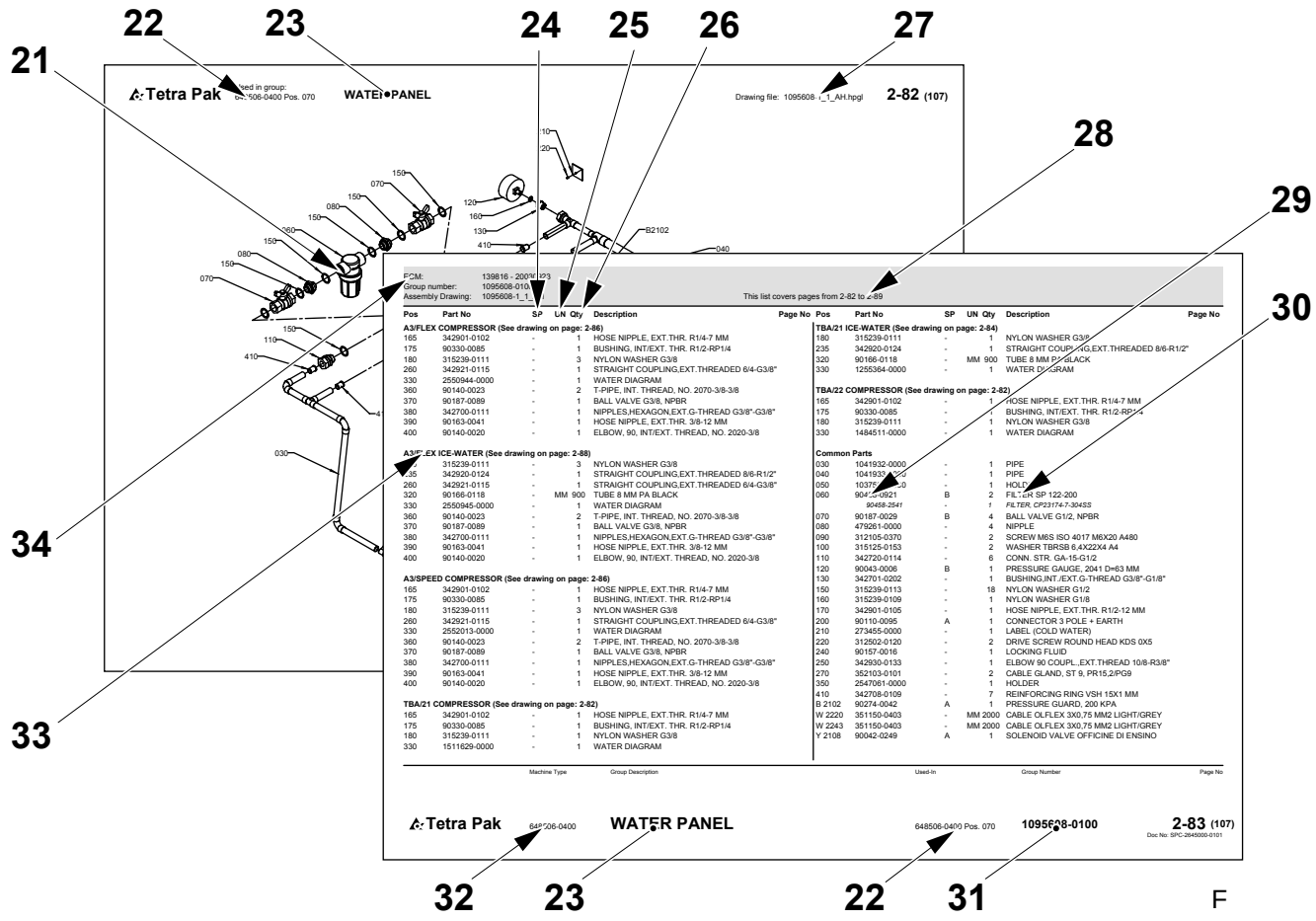

TechPub-2660371-0101

Introduction

Manual Information

Tetra Pak recommends reading all delivered manuals carefully. Make sure that the delivered manuals are available to personnel who operate or maintain the equipment.

It is important to keep this catalogue for the lifetime of the equipment and to pass the catalogue on to any subsequent holder or user.

Tetra Pak will not be held responsible for any damage to the equipment caused by not following the instructions given in the manuals that accompany this equipment.

Delivered Manuals

The manuals delivered with this equipment may include

- Conversion Manual (CM)
  This manual provides technicians with information on converting the equipment between different production modes.
- Electrical Manual (EM)
  This manual provides technicians with information about the equipment's electrical system.
- Installation Manual (IM)
  This manual provides technicians with information required to safely install the equipment.
- Maintenance Manual (MM)
  This manual provides technicians with information on maintaining the equipment.
- Operation Manual (OM)
  This manual provides the operator with information on handling and operating the equipment before, during, and after production.
- Spare Parts Catalogue (SPC)
  This manual provides the information necessary to order spare parts from Tetra Pak
- Technical Manual (TeM)
  - provides technicians with information required to safely install the equipment
  - provides technicians with information on maintaining the equipment
  - provides technicians with information about the equipment's electrical system
  - provides the information necessary to order spare parts from Tetra Pak

TechPub-2660371-0101

Page Layout

Refer to the illustration (A) on page i-5: The main pages in a Spare Parts Catalogue consist of an illustration page (1) and a corresponding list page (7). The page number (5) is shown in the header of an illustration page and in the footer of a list page. The document number (6) is shown in the footer of a list page.

Page Numbering

Refer to the illustration (A) on page i-5: A page number (5) has three parts:

- chapter number (2)
- consecutive page number within the chapter (3)
- total number of pages in the chapter (4)

Machine Introduction

Manufacturer

For the manufacturer’s name and address, see the second page of this catalogue.

Service

To order spare parts for this machine, or to report problems associated with operating this machine, contact the nearest Tetra Pak office.

Contact the Liaison with other inquiries, comments, or suggestions for improvement regarding the equipment and its documentation.

Identification

CE Classification

This equipment complies with the basic health and safety regulations of the European Economic Area (EEA).

TechPub-2660371-0101

Machine Plate

The illustration (B) on page i-5 shows an example of a machine plate. An illustration of the valid machine plate and its location on the equipment is shown in the Introduction chapter of the manuals delivered with this equipment. The machine plate contains the data listed below, needed when contacting Tetra Pak concerning this specific equipment.

- Machine type (8)
- Volume (9)
- Drawing specifications (10)
- Machine serial number (11)
- Manufacturer (12)
- CE mark (13)
- Year of manufacture (14)

The illustration (C) on page i-5 shows an example of a machine specification. Make sure that the equipment data listed in the front pages of this manual corresponds to the machine plate data and the machine specification.

TechPub-2660371-0101

How to Use This Spare Parts Catalogue

Locate a Spare Part Number

a) Refer to the illustration (D) on page i-5: Go to the chapter number (15) indicated beside the main group that contains the part you want to locate.

Items b) and c) refer to the illustration (E) on page i-6.

b) On the main group illustration, look for the machine subgroup (17) that contains the part or subgroup you are looking for. Note the position number (18) and go to the list page that follows the illustration.

c) Look for the position number (16) or the subgroup name (19). Go to the corresponding page number (20) listed in the right-hand column.

Items d) and e) refer to the illustration (F) on page i-6.

d) Locate the part (21) that you are looking for on the subgroup illustration and note the part's position number.

e) The part number (29) and part description (30) are listed beside the position number on the list page.

Information Listed in a Spare Parts Catalogue

The list below refers to the illustration (F) on page i-6. A Spare Parts Catalogue contains the following information about groups, subgroups, and spare parts for the equipment:

- Group structure reference (22). Indicates the next higher group in the equipment list structure.
- Group name (23)
- Spare part code (24). See the Spare Part Codes section.
- Unit of measure (25)
- Quantity (26)
- Assembly drawing number (27)
- List page range (28). Included if there are multiple pages in the group illustration or list.
- Part or subgroup number (29)
- Subgroup name or part description (30)
- Group number (31)
- Equipment number (32)
- Group information heading (33). Indicates if the section below the heading is for a specific machine variant or if it is a list of common parts. If a list has more than one variant and each variant has its own assembly drawing, a page reference to the variant's assembly drawing is shown.
- Internal information (34)

TechPub-2660371-0101

Spare Part Codes

The tables below show the two possible types of Spare Part (SP) Code that may be listed in the SP column of a Spare Parts Catalogue list page.

SP Code	Meaning
A	Critical part
B	Non-critical part

SP Code	Meaning
U	Start-up kit supplied with machine delivery
P	Production kit to be held at production site
S	Service kit to be held at service stations store
C	Central depot kit to be available at the central store

Indledning

Information om manualen

Tetra Pak anbefaler, at alle leverede manualer læses omhyggeligt. Sørg for, at de leverede manualer er tilgængelige for medarbejdere, der betjener eller vedligeholder udstyret.

Det er vigtigt at opbevare dette katalog hele udstyrets levetid og give kataloget videre til eventuelt kommende ejere eller brugere.

Tetra Pak kan ikke holdes ansvarlig for eventuel beskadigelse af udstyr, der opstår, fordi instruktionerne i manualerne til dette udstyr ikke følges.

Leverede manualer

De manualer, der leveres sammen med dette udstyr, kan omfatte:

- Konverteringsmanual (CM)
  Denne manual forsyner teknikere med informationer om konvertering af udstyret mellem forskellige produktionstilstande.
- Elektrisk manual (EM)
  Denne manual forsyner teknikere med informationer om udstyrets elektriske system.
- Installationsmanual (IM)
  Denne manual forsyner teknikere med informationer, der er nødvendige for en sikker installation af udstyret.
- Vedligeholdelsesmanual (MM)
  Denne manual forsyner teknikere med informationer om vedligeholdelse af udstyret.
- Betjeningsmanual (OM)
  Denne manual forsyner operatøren med informationer om håndtering og betjening af udstyret før, under og efter produktion.
- Reservedelskatalog (SPC)
  Denne manual indeholder de informationer, der er nødvendige for at kunne bestille reservedele fra Tetra Pak.
- Teknisk manual (TeM)
  - forsyner teknikere med informationer, der er nødvendige for en sikker installation af udstyret.
  - forsyner teknikere med informationer om vedligeholdelse af udstyret.
  - forsyner teknikere med informationer om udstyrets elektriske system.
  - indeholder de informationer, der er nødvendige for at kunne bestille reservedele fra Tetra Pak.

TechPub-2660371-0101

Sidelayout

Se illustrationen (A) på side i-5: Hovedsiderne i et reservedelskatalog består af en illustrationsside (1) og en tilsvarende listeside (7). Sidenummeret (5) vises i sidehovedet på en illlustrationsside og i sidefoden på en listeside. Dokumentnummeret (6) vises i sidefoden på en listeside.

Sidenummerering

Se illustrationen (A) på side i-5: Et sidenummer (5) har tre dele:

- kapitelnummer (2)
- fortløbende sidenummer i kapitlet (3)
- samlet sideantal i kapitlet (4)

Præsentation af maskinen

Producent

Producentens navn og adresse findes på side to i dette katalog.

Service

Kontakt nærmeste Tetra Pak-kontor for at bestille reservedele eller rapportere problemer i forbindelse med betjening af denne maskine.

Kontakt kontaktpersonen med andre forespørgsler, kommentarer eller forslag til forbedringer af udstyret og dets dokumentation.

Identifikation

CE-klassificering

Dette udstyr overholder de grundlæggende sundheds- og sikkerheds-bestemmelser for Det Europæiske Økonomiske Samarbejdsområde (EØS).

TechPub-2660371-0101

Maskinskilt

Illustrationen (B) på side i-5 viser et eksempel på et maskinskilt. En illustration af et gyldigt maskinskilt og dets placering på udstyret er vist i indledningskapitlet i de manualer, der leveres med dette udstyr. Maskinskiltet indeholder nedennævnte data. Disse er nødvendige ved kontakt med Tetra Pak vedrørende dette specifikke udstyr.

- Maskintype (8)
- Volumen (9)
- Tegningsspecifikationer (10)
- Maskinens serienummer (11)
- Producent (12)
- CE-mærke (13)
- Produktionsår (14)

Illustrationen (C) på side i-5 viser et eksempel på en maskinspecifikation. Kontroller, at de udstyrsdata, der er anført på de første sider i denne manual, svarer til maskinskiltsdataene og maskinspecifikationen.

TechPub-2660371-0101

Sådan bruges dette reservedelskatalog

Find et reservedelsnummer

a) Se illustrationen (D) på side i-5: Gå til kapitelnummeret (15), der er angivet ved siden af hovedgruppen, der indeholder den del, der ønskes fundet.

Punkterne b) og c) refererer til illustrationen (E) på side i-6.

b) I hovedgruppeillustrationen skal man se efter maskinundergruppen (17), som indeholder den del eller undergruppe, der søges. Bemærk placeringsnummeret (18), og gå til listesiden, som følger illustrationen.

c) Se efter placeringsnummeret (16) eller undergruppens navn (19). Gå til det tilsvarende sidenummer (20) angivet i den højre kolonne.

Punkterne d) og e) refererer til illustrationen (F) på side i-6.

d) Find den del (21), du søger i undergruppeillustrationen, og notér delens placeringsnummer.

e) Reservedelsnummeret (29) og -beskrivelsen (30) er angivet ved siden af placeringsnummeret på listesiden.

Informationer der er angivet i et reservedelskatalog

Listen nedenfor refererer til illustrationen (F) på side i-6. Et reservedelskatalog indeholder følgende informationer om grupper, undergrupper og reservedele til udstyret:

- Gruppestrukturreference (22). Angiver næste overordnede gruppe i udstyrslistestrukturen.
- Gruppenavn (23)
- Reservedelskode (24). Se afsnit Reservedelskoder.
- Måleenhed (25)
- Antal (26)
- Samletegningsnummer (27)
- Listens sideområde (28). Er angivet, hvis gruppeillustrationen eller -listen inkluderer mange sider.
- Del- eller undergruppenummer (29)
- Undergruppens navn eller delsbeskrivelse (30)
- Gruppenummer (31)
- Udstyrsnummer (32)
- Overskrift for gruppeinformation (33). Angiver om afsnittet under overskriften er for en specifik maskinvariant, eller om det er en liste over fælles dele. Hvis en liste har mere end én variant, og hver variant har sin egen samletegning, vises en sidereference til variantens samletegning.
- Intern information (34)

Reservedelskoder

Tabellerne nedenfor viser de to mulige typer reservedelskoder (SP), som kan være anført i SP-kolonnen på listesiden i et reservedelskatalog.

SP-kode	Betydning
A	Kritisk del
B	Ikke-kritisk del

SP-kode	Betydning
U	Startsæt der leveres med maskinen
P	Produktionssæt til opbevaring på produktionsstedet
S	Servicesæt til opbevaring på servicestationslager
C	Centraldepotsæt der skal være til rådighed på centrallageret

TechPub-2660371-0101

Einleitung

Handbuch-Informationen

Tetra Pak empfiehlt, alle gelieferten Handbücher sorgfältig zu lesen. Es muss sichergestellt werden, dass die gelieferten Handbücher dem Bediener- oder Wartungspersonal der Ausrüstung verfügbar sind.

Es ist wichtig, dieses Handbuch während der Lebensdauer der Ausrüstung vorzuhalten und es an nachfolgende Halter oder Benutzer weiterzugeben.

Tetra Pak ist nicht verantwortlich für Schäden an der Ausrüstung, die durch die Nichtbefolgung der Anweisungen dieses Handbuchs verursacht werden.

Gelieferte Handbücher

Die mit dieser Ausrüstung gelieferten Handbücher umfassen

- Umbauhandbuch (CM)
  Dieses Handbuch liefert den Technikern Informationen über den Umbau der Ausrüstung zwischen den verschiedenen Produktionsweisen.
- Elektrohandbuch (EM)
  Dieses Handbuch liefert den Technikern Informationen zum Elektrosystem der Ausrüstung.
- Installationshandbuch (IM)
  Dieses Handbuch liefert den Technikern Informationen für die sichere Installation der Ausrüstung.
- Wartungshandbuch (MM)
  Dieses Handbuch liefert den Technikern Informationen über die Wartung der Ausrüstung.
- Betriebshandbuch (OM)
  Dieses Handbuch liefert dem Bediener Informationen über die Handhabung und den Betrieb der Ausrüstung vor, während und nach der Produktion.
- Ersatzteilkatalog (SPC)
  Dieses Handbuch liefert Informationen, wie sie für die Bestellung von Ersatzteilen bei Tetra Pak erforderlich sind.
- Technisches Handbuch (TeM)
  - liefert den Technikern Informationen für die sichere Installation der Ausrüstung
  - liefert den Technikern Informationen über die Wartung der Ausrüstung
  - liefert den Technikern Informationen über das Elektrosystem der Ausrüstung
  - liefert die erforderlichen Informationen für die Bestellung von Ersatzteilen bei Tetra Pak.

TechPub-2660371-0101

Seitenlayout

Bezugnahme Abbildung (A) auf Seite i-5: Die Hauptseiten in einem Ersatzteilkatalog bestehen aus einer Abbildungsseite (1) und einer entsprechenden Listenseite (7). Die Seitennummer (5) ist im Kopf einer Abbilldungsseite und im Fuß einer Listenseite aufgeführt. Die Dokumentennummer (6) ist ist im Fuß einer Listenseite angegeben.

Seitennummerierung

Bezugnahme Abbildung (A) auf Seite i-5: Eine Seitennummer (5) besteht aus drei Teilen:

- Kapitelnummer (2)
- Fortlaufende Seitennummer innerhalb des Kapitels (3)
- Gesamtanzahl der Seiten im Kapitel (4)

Einführung in die Maschine

Hersteller

Für Name und Anschrift des Herstellers, siehe die zweite Seite dieses Kataloges.

Service

Um Ersatzteile für diese Maschine zu bestellen oder um über Probleme beim Betrieb dieser Maschine zu berichten, ist das nächstgelegene Büro von Tetra Pak anzusprechen.

Mit anderen Anfragen. Kommentaren oder Vorschlägen zur Ausrüstung und der Dokumentation ist die Verbindungsstelle anzusprechen.

Identifizierung

CE-Klassifizierung

Diese Ausrüstung entspricht den grundlegenden Gesundheits- und Sicherheitsvorschriften des Europäischen Wirtschaftsraumes (EEA).

TechPub-2660371-0101

Maschinenschild

Die Abbildung (B) auf Seite i-5 zeigt das Beispiel eines Maschinenschildes. Die Abbildung eines gültigen Maschinenschildes und die Lage desselben auf der Ausrüstung befindet sich im Einleitungskapitel der mit der Ausrüstung gelieferten Handbücher. Das Maschinenschild enthält die nachstehend aufgeführten Daten, wie sie erforderlich sind, wenn Tetra Pak wegen dieser spezifischen Ausrüstung anzusprechen ist.

- Maschinentyp (8)
- Volumen (9)
- Zeichnungs-Spezifikationen (10)
- Serien-Nummer der Maschine (11)
- Hersteller (12)
- CE-Markierung (13)
- Baujahr (14)

Die Abbildung (C) auf Seite i-5 zeigt das Beispiel einer Maschinenspezifikation. Es muss sichergestellt sein, dass die in den Frontseiten dieses Handbuchs aufgeführten Ausrüstungsdaten mit den Daten des Maschinenschildes und der Maschinenspezifikation übereinstimmen.

TechPub-2660371-0101

Verwendung dieses Ersatzteilkatalogs

Anordnung einer Ersatzteilnummer

a) Bezugnahme auf Abbildung (D) auf Seite i-5: Weiter zur Kapitelnummer (15), die neben der Hauptgruppe angegeben ist, die das entsprechende Teil enthält.

Die Pos. b) und c) beziehen sich auf die Abbildung (E) auf Seite i-6.

b) Auf der Hauptgruppenabbildung die Maschinen-Untergruppe (17) suchen, die das gesuchte Teil oder die gesuchte Untergruppe enthält. Die Positionsnummer (18) notieren und weiter zur Listenseite gehen, die der Abbildung folgt.

c) Die Positionsnummer (16) oder den Namen der Untergruppe (19) suchen. Dann zur entsprechenden Seitennummer (20) in der rechten Spalte gehen.

Pos. d) und e) beziehen sich auf die Abbildung (F) auf Seite i-6.

d) Suchen Sie Teil (21) auf der Untergruppen-Abbildung und notieren Sie die Positionsnummer des Teils.

e) Die Teilnummer (29) und die Teilebeschreibung (30) finden Sie neben der Positionsnummer auf der Listenseite.

In einem Ersatzteilkatalog enthaltene Information

Die nachstehende Liste bezieht sich auf die Abbildung (F) auf Seite i-6.
Ein Ersatzteilkatalog enthält folgende Informationen über Gruppen, Untergruppen und Ersatzteile für die Ausrüstung:

- Gruppenstrukturreferenz (22). Sie gibt die nächst höhere Gruppe in der Ausrüstungslistenstruktur an
- Gruppenname (23)
- Ersatzteilcode (24). Siehe Kapitel Spare Part Codes
- Maßeinheit (25)
- Menge (26)
- Nummer der Zusammenbauzeichnung (27)
- Listenseite, Bereich (28). Eingeschlossen, wenn Mehrfachseiten in der Gruppenabbildung oder Liste enthalten sind
- Teile- oder Untergruppennummer (29)
- Untergruppenname oder Teilebeschreibung (30)
- Gruppennummer (31)
- Ausrüstungsnummer (32)
- Gruppeninformationsüberschrift (33). Gibt an, ob der Abschnitt unter der Überschrift sich auf eine spezifische Maschinenvariante bezieht oder eine Liste der allgemeinen Teile ist. Wenn eine Liste sich auf mehr als eine Variante bezieht und jede Variante eine eigene Zusammenbauzeichnung hat, wird eine Seitenreferenz zur Zusammenbauzeichnung der Variante vorgestellt.
- Interne Information (34)

TechPub-2660371-0101

Ersatzteilcode

Die nachstehenden Tabellen zeigen die beiden möglichen Typen von Ersatzteilcode (SP), die in der SP-Spalte einer Listenseite des Ersatzteilkatalogs enthalten sein können.

SP Code	Bedeutung
A	Kritisches Teil
B	Unkritisches Teil

SP Code	Bedeutung
U	Mit der Maschine gelieferterAnfahr-Kit
P	Vor Ort vorzuhaltender Produktions-Kit
S	Im Lager der Servicestation vorzuhaltender Service-Kit
C	Im Zentrallager vorzuhaltender Zentraldepot-Kit

Εισαγωγή

Πληροφορίες για τα Εγχειρίδια

Η Tetra Pak σάς συνιστά να διαβάζετε προσεκτικά όλα τα παρεχόμενα εγχειρίδια. Εξασφαλίζετε ότι όλα τα παρεχόμενα εγχειρίδια διατίθενται στο προσωπικό που χειρίζεται ή συντηρεί τον εξοπλισμό.

Είναι σημαντικό να διατηρείτε αυτό τον κατάλογο καθ' όλη τη διάρκεια ζωής του εξοπλισμού καθώς και να παραδίδετε τον κατάλογο στον τυχόν επόμενο ιδιοκτήτη ή χρήστη του εξοπλισμού.

Η Tetra Pak δεν πρόκειται να αναλάβει καμία ευθύνη για οποιαδήποτε ζημιά που μπορεί να προκληθεί στον εξοπλισμό εξαιτίας της μη τήρησης των οδηγιών οι οποίες παρέχονται στα εγχειρίδια που συνοδεύουν αυτό τον εξοπλισμό.

Παρεχόμενα Εγχειρίδια

Στα εγχειρίδια που παρέχονται μαζί μ' αυτό τον εξοπλισμό, μπορεί να περιλαμβάνονται τα εξής:

- Εγχειρίδιο Μετατροπής (CM)
  Αυτό το εγχειρίδιο παρέχει στους τεχνικούς πληροφορίες για τη μετατροπή του εξοπλισμού μεταξύ των διάφορων λειτουργιών παραγωγής.
- Ηλεκτρικό Εγχειρίδιο (EM)
  Αυτό το εγχειρίδιο παρέχει στους τεχνικούς πληροφορίες για το ηλεκτρικό σύστημα του εξοπλισμού.
- Εγχειρίδιο Εγκατάστασης (IM)
  Αυτό το εγχειρίδιο παρέχει στους τεχνικούς τις απαιτούμενες πληροφορίες για την ασφαλή εγκατάσταση του εξοπλισμού.
- Εγχειρίδιο Συντήρησης (MM)
  Αυτό το εγχειρίδιο παρέχει στους τεχνικούς πληροφορίες για τη συντήρηση του εξοπλισμού.
- Εγχειρίδιο Χειρισμού (OM)
  Αυτό το εγχειρίδιο παρέχει στο χειριστή πληροφορίες για το χειρισμό και τη λειτουργία του εξοπλισμού πριν, κατά τη διάρκεια και μετά την παραγωγή.
- Κατάλογος Ανταλλακτικών (SPC)
  Αυτό το εγχειρίδιο παρέχει τις απαραίτητες πληροφορίες για την παραγγελία ανταλλακτικών από την Tetra Pak.
- Τεχνικό Εγχειρίδιο (TeM)
  - παρέχει στους τεχνικούς τις απαιτούμενες πληροφορίες για την ασφαλή εγκατάσταση του εξοπλισμού
  - παρέχει στους τεχνικούς πληροφορίες για τη συντήρηση του εξοπλισμού
  - παρέχει στους τεχνικούς πληροφορίες για το ηλεκτρικό σύστημα του εξοπλισμού
  - παρέχει τις απαραίτητες πληροφορίες για την παραγγελία ανταλλακτικών από την Tetra Pak

TechPub-2660371-0101

ιάταξη Σελίδων

Ανατρέξτε στην εικόνα (A) της σελίδας i-5: Οι κύριες σελίδες ενός Καταλόγου Ανταλλακτικών αποτελούνται από μία εικονογραφημένη σελίδα (1) και από μία αντίστοιχη σελίδα λίστας (7). Ο αριθμός σελίδας (5) εμφανίζεται στην κεφαλίδα μιας εικονογραφημένης σελίδας και στο υποσέλιδο μιας σελίδας λίστας. Ο αριθμός εγγράφου (6) εμφανίζεται στο υποσέλιδο μιας σελίδας λίστας.

Αρίθμηση Σελίδων

Ανατρέξτε στην εικόνα (A) της σελίδας i-5: Ένας αριθμός σελίδας (5) αποτελείται από τα εξής τρία μέρη:

- αριθμός κεφαλαίου (2)
- αύξων αριθμός σελίδας του κεφαλαίου (3)
- συνολικός αριθμός σελίδων του κεφαλαίου (4)

Παρουσίαση Μηχανής

Κατασκευαστής

Για το όνομα και τη διεύθυνση του κατασκευαστή, ανατρέξτε στη δεύτερη σελίδα αυτού του καταλόγου.

Τεχνική εξυπηρέτηση

Για να παραγγείλετε ανταλλακτικά για τη συγκεκριμένη μηχανή ή για να αναφέρετε προβλήματα που σχετίζονται με τη λειτουργία αυτής της μηχανής, επικοινωνήστε με το πλησιέστερο γραφείο της Tetra Pak.

Εάν έχετε άλλου είδους ερωτήσεις, σχόλια ή προτάσεις βελτίωσης σχετικά με τον εξοπλισμό και την έγγραφη τεκμηρίωσή του, επικοινωνήστε με το Τμήμα Σχέσεων.

Στοιχεία ταυτότητας

Σήμανση CE

Αυτός ο εξοπλισμός συμμορφώνεται με τους βασικούς κανονισμούς υγείας και ασφάλειας του Ευρωπαϊκού Οικονομικού Χώρου (ΕΟΧ).

TechPub-2660371-0101

Πινακίδα Αναγνώρισης Μηχανής

Η εικόνα (B) της σελίδας i-5 δείχνει ένα παράδειγμα μιας πινακίδας αναγνώρισης μηχανής. Μια εικόνα που δείχνει την ενδεδειγμένη μορφή και θέση της πινακίδας αναγνώρισης μηχανής στον εξοπλισμό, παρουσιάζεται στο κεφάλαιο 'Εισαγωγή' των εγχειριδίων που παρέχονται μ' αυτόν τον εξοπλισμό. Η πινακίδα αναγνώρισης μηχανής αναγράφει τα δεδομένα που παρατίθενται στη συνέχεια, τα οποία είναι απαραίτητα όταν επικοινωνείτε με την Tetra Pak για θέματα που αφορούν αυτό το συγκεκριμένο εξοπλισμό.

- Τύπος μηχανής (8)
- Χωρητικότητα (9)
- Στοιχεία σχεδίου (10)
- Αριθμός σειράς μηχανής (11)
- Κατασκευαστής (12)
- Σήμανση CE (13)
- Έτος κατασκευής (14)

Η εικόνα (C) της σελίδας i-5 δείχνει ένα παράδειγμα τεχνικών χαρακτηριστικών μηχανής. Βεβαιωθείτε ότι τα δεδομένα εξοπλισμού που παρατίθενται στις πρώτες σελίδες αυτού του εγχειριδίου συμφωνούν με τα δεδομένα της πινακίδας αναγνώρισης μηχανής και των τεχνικών χαρακτηριστικών μηχανής.

TechPub-2660371-0101

Πώς Χρησιμοποιείται Αυτός ο Κατάλογος Ανταλλακτικών

Εύρεση ενός Αριθμού Ανταλλακτικού

a) Ανατρέξτε στην εικόνα (D) της σελίδας i-5: Πηγαίνετε στον αριθμό κεφαλαίου (15) που υποδεικνύεται δίπλα από την κύρια ομάδα της μηχανής η οποία περιλαμβάνει το εξάρτημα που θέλετε να βρείτε.

Τα βήματα b) και c) αναφέρονται στην εικόνα (E) της σελίδας i-6.

b) Στην εικόνα της κύριας ομάδας μηχανής, αναζητήστε την υποομάδα μηχανής (17) η οποία περιλαμβάνει το εξάρτημα ή την υποομάδα που αναζητάτε. Σημειώστε τον αριθμό θέσης (18) και πηγαίνετε στη σελίδα λίστας που ακολουθεί την εικόνα.

c) Αναζητήστε τον αριθμό θέσης (16) ή το όνομα υποομάδας (19). Πηγαίνετε στον αντίστοιχο αριθμό σελίδας (20) που αναγράφεται στη δεξιά στήλη.

Τα βήματα d) και e) αναφέρονται στην εικόνα (F) της σελίδας i-6.

d) Βρείτε το εξάρτημα (21) που αναζητάτε στην εικόνα υποομάδας μηχανής και σημειώστε τον αριθμό θέσης του εξαρτήματος.

e) Ο αριθμός του εξαρτήματος (29) και η περιγραφή του εξαρτήματος (30) παρατίθενται δίπλα στον αριθμό θέσης στη σελίδα λίστας.

Πληροφορίες που Περιέχονται σε έναν Κατάλογο Ανταλλακτικών

Η λίστα που ακολουθεί αναφέρεται στην εικόνα (F) της σελίδας i-6. Ένας Κατάλογος Ανταλλακτικών περιέχει τις παρακάτω πληροφορίες σχετικά με τις ομάδες, τις υποομάδες και τα ανταλλακτικά του εξοπλισμού:

- Αναφορά δομής ομάδας (22). Υποδηλώνει την επόμενη μεγαλύτερη ομάδα στη δομή λίστας του εξοπλισμού.
- Όνομα ομάδας (23)
- Κωδικός ανταλλακτικού (24). είτε την ενότητα Κωδικοί Ανταλλακτικών.
- Μονάδα μέτρησης (25)
- Ποσότητα (26)
- Αριθμός σχεδίου συγκροτήματος (27)
- Περιοχή σελίδων λίστας (28). Περιλαμβάνεται εφόσον η εικόνα ή η λίστα μιας ομάδας εκτίθεται σε περισσότερες από μία σελίδες.
- Αριθμός εξαρτήματος ή υποομάδας (29)
- Αριθμός υποομάδας ή περιγραφή εξαρτήματος (30)
- Αριθμός ομάδας (31)
- Αριθμός εξοπλισμού (32)
- Επικεφαλίδα πληροφοριών ομάδας (33). Υποδεικνύει εάν η ενότητα κάτω από την επικεφαλίδα αφορά μια συγκεκριμένη παραλλαγή μηχανής ή αποτελεί μια λίστα κοινών εξαρτημάτων. Σε περίπτωση που μια λίστα περιέχει περισσότερες από μία παραλλαγές και κάθε παραλλαγή έχει ξεχωριστό σχέδιο συγκροτήματος, εμφανίζεται μια παραπομπή προς τη σελίδα όπου βρίσκεται το σχέδιο συγκροτήματος της παραλλαγής.
- Εσωτερικές πληροφορίες (34)

Κωδικοί Ανταλλακτικών

Οι πίνακες που ακολουθούν δείχνουν τους δύο δυνατούς τύπους Κωδικών Ανταλλακτικών που μπορεί να αναγράφονται στη στήλη Κωδικών Ανταλλακτικών (SP) σε μία σελίδα λίστας ενός Καταλόγου Ανταλλακτικών.

Κωδικός Ανταλλακτικού	**Σημασία**
A	Βασικό εξάρτημα
B	Μη βασικό εξάρτημα

Κωδικός Ανταλλακτικού	**Σημασία**
U	Κιτ εκκίνησης που παραδίδεται μαζί με τη μηχανή
P	Κιτ παραγωγής που διατηρείται στο χώρο παραγωγής
S	Κιτ συντήρησης που διατηρείται στις αποθήκες των κέντρων εξυπηρέτησης
C	Κιτ κεντρικής αποθήκης που διατίθεται στην κεντρική αποθήκη

TechPub-2660371-0101

Introducción

Información del manual

Tetra Pak recomienda que se lean cuidadosamente todos los manuales entregados. Comprobar que todos los manuales entregados estén disponibles para el personal que efectúe la operación o el mantenimiento del equipo.

Es importante conservar este manual durante la vida útil del equipo, así como facilitárselo a cualquier propietario o usuario posterior.

Tetra Pak no se responsabilizará de daños en la máquina o equipo debidos a la inobservancia de las instrucciones dadas en los manuales que acompañan este equipo.

Manuales entregados

Los manuales entregados con este equipo pueden incluir

- Manual de conversión (CM)
  Este manual proporciona a los técnicos información sobre cómo convertir el equipo entre diferentes modos de producción.
- Manual eléctrico (EM)
  Este manual proporciona a los técnicos información acerca del sistema eléctrico del sistema.
- Manual de instalación (IM)
  Este manual proporciona a los técnicos la información necesaria para la instalación segura del equipo.
- Manual de mantenimiento (MM)
  Este manual proporciona a los técnicos la información acerca del mantenimiento del equipo.
- Manual de servicio (OM)
  Este manual proporciona al operador información acerca de la manipulación y operación de la máquina antes, durante y después de la producción.
- Catálogo de piezas de recambio (SPC)
  Este manual proporciona la información necesaria para pedir piezas de recambio a Tetra Pak.
- Manual técnico (TeM)
  - proporciona a los técnicos la información necesaria para la instalación segura del equipo
  - proporciona a los técnicos la información acerca del mantenimiento del equipo
  - proporciona a los técnicos información acerca del sistema eléctrico del sistema
  - proporciona la información necesaria para pedir piezas de recambio a Tetra Pak

TechPub-2660371-0101

Organización de las páginas

Remitirse a la ilustración (A) en la página i-5: Las páginas principales en un Catálogo de piezas de recambio se componen de una página de ilustración (1) y una página de lista correspondiente (7). El número de la página (5) se muestra en el encabezado de una página de ilustración y en el pie de página de una página de lista. El número del documento (6) se muestra en el pie de página de una página de lista.

Numeración de las páginas

Remitirse a la ilustración (A) en la página i-5: Un número de página (5) se compone de tres partes:

- Número de capítulo (2)
- número de página consecutivo (2) dentro del capítulo (3)
- número total de páginas del capítulo (4)

Introducción a la máquina

Fabricante

Para el nombre y la dirección del fabricante, ver la segunda página de este catálogo.

Servicio

Para pedir piezas de recambio para esta máquina o informar problemas asociados con la operación de esta máquina, contactar con la oficina de Tetra Pak más cercana.

Ponerse en contacto con el responsable correspondiente para otras preguntas, comentarios o sugerencias sobre mejoras de la máquina o equipo y su documentación.

Identificación

Clasificación de la CE

Este equipo cumple los requisitos esenciales relativos a la salud y la seguridad del Área Económica Europea (EEA).

TechPub-2660371-0101

Placa de la máquina

La ilustración (B) en la página i-5 muestra un ejemplo de placa de máquina. En la Introducción del capítulo de los manuales entregados con este equipo se muestra una ilustración de la placa de máquina válida y su ubicación en el equipo La placa de máquina contiene los datos listados a continuación requeridos al contactar con Tetra Pak en relaciôn a este equipo específico.

- Tipo de máquina (8)
- Volumen (9)
- Especificaciones de plano (10)
- Número de serie de la máquina (11)
- Fabricante (12)
- Marca de la CE (13)
- Año de fabricación (14)

La ilustración (C) en la página i-5 muestra un ejemplo de especificación máquina. Asegúrese que los datos de equipo listados en las páginas de cubierta de este manual corresponden a los datos de la placa de máquina y la especificación máquinav.

TechPub-2660371-0101

Cómo utilizar este Catálogo de piezas de recambio

Localizar un número de pieza de recambio

a) Remitirse a la ilustración (D) en la página i-5: Ir al número de capítulo (15) indicado detrás el grupo principal que contiene la parte que usted desea localizar.

Los items b) y c) se refieren a la ilustracióni (E) en la página i-6.

b) En la ilustración del grupo principal, buscar el subgrupo máquina (17) que contiene la pieza o subgrupo que usted busca. Anote el número de posición (18) y vaya a la página de lista que sigue la ilustración.

c) Busque el número de posición (16) o el nombre del subgrupo (19). Vaya al número de página correspondiente (20) listado en la columna de la derecha.

Los items d) y e) se refieren a la ilustración (F) en la página i-6.

d) Localizar la pieza (21) que busca en la ilustración del subgrupo y anotar el número de posición de la pieza.

e) El número de pieza (29) y la descripción de pieza (30) están listadas detrás del número de posición en la página de lista.

Información listada en un Catálogo de piezas de recambio

La lista a continuación remite a la ilustración (F) en la página i-6.
Un Catálogo de piezas de recambio contiene la siguiente información sobre grupos, subgrupos y piezas de recambio para el equipo:

- Referencia de estructura de grupo (22). Indica el siguiente grupo más alto en la estructura de lista del equipo.
- Nombre del grupo (23)
- Código de pieza de recambio (24). Consultar la sección Spare Part Codes.
- Unidad de medida (25)
- Cantidad (26)
- Número de plano de conjunto (27)
- Gama de página lista (28). Incluida si hay páginas múltiples en la ilustración o lista de grupo.
- Número de pieza o subgrupo (29)
- Nombre, subgrupo o descripción de pieza (30)
- Número de grupo (31)
- Número de equipo (32)
- Encabezado de información grupo (33). Indica si la sección debajo del encabezado es para una variante máquina específica o si es una lista de piezas comunes. Si la lista tiene más de una variante y cada variante tiene su propio plano de conjunto, se muestra una referencia página para el plano de conjunto de la variante.
- Información interna (34)

TechPub-2660371-0101

Códigos de piezas de recambio

Las tablas a continuación muestran los dos tipos posibles de códigos de Piezas de recambio (PR) que se pueden listar en la columna PR o en una página de lista de Catálogo de piezas de recambio.

Código PR	Significado
A	Pieza crítica
B	Pieza no crítica

Código PR	Significado
U	Kit de inicio suministrado con la entrega de la máquina.
P	Kit de producción debe guardarse en el sitio de producción.
S	Kit de servicio; debe guardarse en el almacén de las estaciones de servicio.
C	Kit de almacén central; debe guardarse en el almacén central.

Johdanto

Tietoja käsikirjasta

Tetra Pak suosittelee kaikkien toimitettavien oppaiden lukemista huolellisesti. Varmista, että toimitetut oppaat ovat laitetta käyttävän tai huoltavan henkilökunnan saatavilla.

Tämä luettelo on säilytettävä laitteen käyttöiän ajan ja toimitettava edelleen mahdolliselle seuraavalle omistajalle tai käyttäjälle.

Tetra Pak ei vastaa laitevaurioista, jotka aiheutuvat laitteen mukana tulevissa oppaissa annettujen ohjeiden noudattamatta jättämisestä.

Toimitettavat ohjeet

Tämän laitteen mukana toimitettaviin ohjeisiin kuuluvat:

- Muutoskirja (CM)
  Tässä oppaassa on teknikoille tarkoitettuja ohjeita laitteiston muuttamisesta eti tuotantotiloihin.
- Sähkökirja (EM)
  Tässä oppaassa on teknikoille tarkoitettuja tietoja laitteen sähköjärjestelmästä.
- Asennuskäsikirja (IM)
  Tässä oppaassa on teknikoille tarkoitettuja tietoja, jotka tarvitaan laitteen turvallista asentamista varten.
- Huoltokäsikirja (MM)
  Tässä oppaassa on teknikoille tarkoitettuja tietoja tämän laitteen huoltamisesta.
- Käyttäjän käsikirja (OM)
  Tässä oppaassa on käyttäjälle tarkoitettuja tietoja laitteiston käsittelystä ja käyttämisestä ennen tuotantoa, tuotannon aikana ja sen jälkeen.
- Varaosakuvasto (SPC)
  Tässä oppaassa on tietoja, joita tarvitaan varaosien tilaamiseen Tetra Pakilta.
- Tekninen käsikirja (TeM)
  - sisältää teknikoille tarkoitettuja tietoja, joita tarvitaan laitteen turvallista asentamista varten
  - sisältää teknikoille tarkoitettuja tietoja laitteen huoltamisesta
  - sisältää teknikoille tarkoitettuja tietoja laitteen sähköjärjestelmästä
  - sisältää tietoja, joita tarvitaan varaosien tilaamiseen Tetra Pakilta.

TechPub-2660371-0101

Sivujen asettelu

Katso kuva (A) sivulla i-5: Varaosaluettelon pääsivut koostuvat kuvasivusta (1) ja sitä vastaavasta luettelosivusta (7). Sivunumero (5) näytetään kuvasivun ylätunnisteessa ja luettelosivun alatunnisteessa. Asiakirjan numero (6) näytetään luettelosivun alatunnisteessa.

Sivunumerointi

Katso kuva (A) sivulla i-5: Sivunumerossa (5) on kolme osaa:

- luvun numero (2)
- perättäinen sivunumero (3) luvun sisällä
- luvun kokonaissivumäärä (4).

Koneen esittely

Valmistaja

Valmistajan nimi ja osoite on ilmoitettu tämän luettelon toisella sivulla.

Huolto

Jos haluat tilata tähän koneeseen varaosia tai jos tämän koneen käytössä ilmenee ongelmia, jotka haluat raportoida, ota yhteyttä lähimpään Tetra Pakin toimistoon.

Jos sinulla on muuta kysyttävää, huomautettavaa tai ehdotuksia laitteistoa ja sen asiakirjoja koskevista parannuksista, ota yhteys yhteyshenkilöön.

Tunnistetiedot

CE-luokitus

Tämä laite vastaa Euroopan talousalueen (EEA) perustason terveys- ja turvallisuusvaatimuksia.

TechPub-2660371-0101

Koneen tyyppikilpi

Kuvassa (B) sivulla i-5 on esimerkki koneen tyyppikilvestä. Voimassa olevan tyyppikilven kuva ja sen sijainti koneessa käy ilmi laitteiston mukana tulleiden ohjeiden Johdanto-luvusta. Tyyppikilvessä on tarvitsemasi Tetra Pakin voimassa olevat yhteystiedot, kun on kyseessä tämä nimenomainen laite.

- Konetyyppi (8)
- Tilavuus (9)
- Piirustuserittelyt (10)
- Koneen sarjanumero (11)
- Valmistaja (12)
- CE-merkki (13)
- Valmistusvuosi (14)

Kuvassa (C) sivulla i-5 on esimerkki koneen erittelystä. Varmista, että tämän ohjeen etusivuilla ilmoitetut laitetiedot vastaavat tyyppikilven ja kone-erittelyn tietoja.

Tämän varaosaluettelon käyttäminen

Etsi varaosan numero

a) Katso kuva (D) sivulla i-5: Siirry lukuun (15), joka on ilmoitettu etsittävän osan pääryhmän vieressä.

Kohdat b) ja c) viittaavat kuvaan (E) sivulla i-6.

b) Etsi pääryhmän kuvasta koneen alaryhmä (17), joka sisältää etsimäsi osan tai alaryhmän. Merkitse muistiin paikkanumero (18) ja siirry luettelosivulle, joka seuraa kuvaa.

c) Etsi paikkanumero (16) tai alaryhmän nimi (19). Siirry vastaavalle sivunumerolle (20), joka on ilmoitettu oikeassa sarakkeessa.

Kohdat d) ja e) viittaavat kuvaan (F) sivulla i-6.

d) Hae etsittävä osa (21) alaryhmän kuvasta ja merkitse osan paikkanumero muistiin.

e) Osanumero (29) ja osan kuvaus (30) on annettu paikkanumeron vieressä luettelosivulla.

TechPub-2660371-0101

Varaosaluettelossa olevat tiedot

Alla oleva luettelo viittaa kuvaan (F) sivulla i-6. Varaosaluettelo sisältää seuraavat tiedot ryhmistä, alaryhmistä ja laitteen varaosista:

- Ryhmärakenneviite (22). Osoittaa seuraavaksi ylemmän ryhmän laiteluettelorakenteessa.
- Ryhmän nimi (23)
- Varaosan koodi (24). Katso osio Varaosakoodit.
- Mittayksikkö (25)
- Määrä (26)
- Kokoonpanopiirustuksen numero (27)
- Luettelosivun väli (28). Tämä on mukana, jos ryhmäkuvassa tai luettelossa on useita sivuja.
- Osan tai alaryhmän numero (29)
- Alaryhmän nimi tai osan kuvaus (30)
- Ryhmän numero (31)
- Laitteen numero (32)
- Ryhmätietojen otsikko (33). Osoittaa, koskeeko alla oleva osio tiettyä koneversiota vai onko kyseessä yleisten osien luettelo. Jos luettelolla on useampi kuin yksi versio ja kullakin versiolla on oma kokoonpanopiirustuksensa, näytetään version kokoonpanopiirustuksen sivuviittaus.
- Sisäiset tiedot (34)

Varaosakoodit

Alla oleva taulukko osoittaa kaksi mahdollista varaosan (SP) koodin tyyppiä, jotka voidaan luetella varaosaluettelon luettelosivun SP-sarakkeessa.

SP-koodi	Merkitys
A	Kriittinen osa
B	Ei-kriittinen osa

SP-koodi	Merkitys
U	Aloituspaketti, joka toimitetaan koneen mukana
P	Tuotantopaketti, joka pidetään tuotantopaikassa
S	Huoltosarja, joka pidetään huoltokorjaamon varastossa
C	Keskusvarastosarja, jonka saa keskusvarastolta

TechPub-2660371-0101

Introduction

Information sur le manuel

Tetra Pak recommande de lire attentivement tous les manuels fournis. S'assurer que les manuels fournis soient accessibles au personnel qui s'occupe du fonctionnement ou de la maintenance de l'équipement.

Il est important de conserver ce manuel pendant toute la durée d'utilisation de la machine et de le transmettre à tout détenteur ou utilisateur ultérieur.

Tetra Pak ne sera pas tenu responsable d’un dommage causé à la machine ou à l’équipement par le fait de ne pas avoir respecté les instructions figurant dans le présent manuel.

Manuels fournis

Les manuels fournis avec cette machine comprennent

- Le Manuel de Conversion (CM)
  Ce manuel fournit aux techniciens les informations nécessaires pour convertir la machine en vue des différents modes de production.
- Manuel Electrique (EM)
  Ce manuel fournit aux techniciens les informations sur le système électrique de la machine.
- Manuel de Mise en Place (IM)
  Ce manuel fournit aux techniciens les informations nécessaires pour l'installation de la machine en toute sécurité.
- Manuel de Maintenance (MM)
  Ce manuel fournit aux techniciens les informations pour la maintenance.
- Manuel d'Opérateur (OM)
  Ce manuel fournit aux opérateurs les informations nécessaires pour la manutention et le fonctionnement de la machine avant, pendant et après la production.
- Catalogue de Pièces de Rechange (SPC)
  Ce manuel fournit l'information nécessaire à la commande de pièces de rechange auprès de Tetra Pak
- Manuel Technique (TeM)
  - fournit aux techniciens les informations nécessaires pour l'installation de la machine en toute sécurité
  - fournit aux techniciens les informations pour la maintenance
  - fournit aux techniciens les informations sur le système électrique de la machine
  - fournit l' information nécessaire à la commande de pièces de rechange auprès de Tetra Pak

TechPub-2660371-0101

Présentation d’une page

Se référer à la figure (A) à la page i-5: Les pages principales du Catalogue des Pièces de Rechange sont composées d'une page de figure (1) et d'une page de liste correspondante (7). Le numéro de page (5) est indiqué dans le titre de la page de figure et dans le bas de page d'une page de liste.
Le numéro de document (6) est indiqué dans le bas de page de la page de liste.

Numérotation de page

Se référer (A) à la page i-5: Un numéro de page (5) possède trois parties:

- Numéro de chapitre (2)
- numéro de page consécutif (2) à l'intérieur du chapitre (3)
- nombre total de pages dans le chapitre (4)

Présentation de la machine

Fabricant

Pour le nom et l'adresse du fabricant, voir la deuxième page de ce catalogue.

Assistance technique

Pour commander les pièces de rechange de cette machine ou pour rapporter les problèmes associés au fonctionnement de celle-ci, prendre contact avec le bureau Tetra Pak le plus proche.

Prendre contact avec le responsable de liaison pour les renseignements, commentaires ou suggestions concernant la machine ou l’équipement et sa documentation.

Identification

Certification CE

Cet équipement est conforme aux réglementations essentielles d'hygiène et de sécurité de la Communauté Economique Européenne (CEE).

TechPub-2660371-0101

Plaque signalétique de machine

La figure (B) à la page i-5 montre un exemple d'une plaque signalétique de machine.
Une représentation de la plaque de machine valable et son emplacement sur l'équipement est indiquée au Chapitre Introduction des manuels fournis avec l'équipement. La plaque de machine contient les caractéristiques figurant dans la liste ci-dessous, nécessaires pour prendre contact avec Tetra Pak au sujet de cet équipement spécifique.

- Type de machine (8)
- Volume (9)
- Spécifications du plan (10)
- Numéro de série de la machine (11)
- Fabricant (12)
- Marquage CE (13)
- Année de fabrication (14)

La figure (C) à la page i-5 montre un exemple d'une spécification de machine. S'assurer que les caractéristiques de l'équipement figurant dans la liste des pages de garde de ce manuel correspondent aux caractéristiques de la plaque signalétique de la machine et à ses spécifications.

TechPub-2660371-0101

Comment utiliser ce Catalogue de Pièces de Rechange

Localiser un numéro de pièce de rechange

a) Se référer à la figure (D) à la page i-5: Aller au numéro de chapitre (15) indiqué à côté du groupe principal qui contient la pièce que vous souhaitez localiser.

Les articles b) et c) se réfèrent à la figure (E) à la page i-6.

b) Sur la figure du groupe principal, chercher la sous-groupe de machine (17) qui contient la pièce ou le sous-groupe que vous recherchez. Noter le numéro de repère (18) et aller à la page de liste qui suit la figure.

c) Rechercher le numéro de repère (16) ou le nom de sous-groupe (19). Aller au numéro de page correspondant (20) figurant dans la liste de la colonne de droite.

Les articles d) et e) se réfèrent à la figure (F) à la page i-6.

d) Localiser la pièce (21) que vous recherchez sur la figure de sous-groupe et noter le numéro de repère de la pièce.

e) Le numéro de pièce (29) et la description de la pièce (30) figurent dans la liste à côté du numéro de repère sur la page de liste.

Informations figurant dans la liste dans un Catalogue de Pièces de Rechange

La liste ci-dessous se réfère à la figure (F) à la page i-6. Un Catalogue de Pièces de Rechange contient les renseignements suivants relatifs aux groupes, sous-groupes et pièces de rechange de l'équipement:

- Référence de structure de groupe (22). Indique le groupe supérieur suivant dans la structure de liste d'équipement.
- Nom du groupe (23).
- Code de pièce de rechange (24). Voir la section Spare Part Codes.
- Unité de mesure (25).
- Quantité (26).
- Numéro de plan de montage (27).
- Gamme de la page de liste (28). Incluse s'il y a des pages multiples dans la figure de groupe ou dans la liste.
- Numéro de pièce ou de sous-groupe (29).
- Nom de sous-groupe ou description de la pièce (30).
- Numéro de groupe (31).
- Numéro de l'équipement (32).
- Titre des informations de groupe (33). Indique si la section sous le titre est pour une variante de machine spécifique ou s'il y a une liste de pièces communes. Si une liste comporte plus d'une variante et que chaque variante possède son propre plan de montage, une référence de page au plan de montage de la variante est alors indiqué.
- Renseignements internes (34).

TechPub-2660371-0101

Codes des pièces de rechange

Les tableaux ci-dessous montrent les deux types possibles de Code de Pièces de rechange (SP) qui peuvent figurer dans la liste dans la colonne de pièces de rechange d'une page de liste de Catalogue de Pièces de Rechange.

Code SP	Signification
A	Pièce critique
B	Pièce non critique

Code SP	Signification
U	Kit de mise en route avec livraison de la machine
P	Kit de production à conserver sur le site de production
S	Kit d'assistance à conserver au magasin des postes d'assistance
C	Kit de dépôt central disponible au magasin central

Introduzione

Informazioni sul manuale

Tetra Pak consiglia di leggere con attenzione tutti i manuali forniti in dotazione. Assicurarsi che tutti i manuali in dotazione siano disponibili per il personale addetto al funzionamento e alla manutenzione della macchina.

È importante conservare il presente catalogo per tutta la durata della macchina e consegnarlo al successivo proprietario o utilizzatore.

Tetra Pak non sarà da ritenersi responsabile per eventuali danni alla macchina causati dal mancato rispetto delle istruzioni fornite nei manuali che accompagnano le macchine.

Manuali in dotazione

I manuali consegnati con la presente macchina possono comprendere:

- Manuale di Conversione (CM)
  Questo manuale fornisce ai tecnici le informazioni necessarie per la conversione della macchina da una modalità di produzione a un'altra.
- Manuale Elettrico (EM)
  Questo manuale fornisce ai tecnici informazioni sull'impianto elettrico della macchina.
- Manuale di Installazione (IM)
  Questo manuale fornisce ai tecnici le informazioni necessarie per installare in sicurezza la macchina.
- Manuale di Manutenzione (MM)
  Questo manuale fornisce ai tecnici le informazioni necessarie per la manutenzione della macchina.
- Manuale Operativo (OM)
  Questo manuale fornisce all'operatore le informazioni sull'utilizzo e il funzionamento della macchina prima, durante e dopo la produzione.
- Catalogo Pezzi di Ricambio (SPC)
  Questo manuale fornisce le informazioni necessarie per ordinare a Tetra Pak i pezzi di ricambio.
- Manuale Tecnico (TeM)
  - fornisce ai tecnici le informazioni necessarie per installare in sicurezza la macchina
  - fornisce ai tecnici le informazioni necessarie per la manutenzione della macchina
  - fornisce ai tecnici informazioni sull'impianto elettrico della macchina
  - fornisce le informazioni necessarie per ordinare a Tetra Pak i pezzi di ricambio.

TechPub-2660371-0101

Schema della pagina

Consultare la figura (A) a pagina i-5. Le pagine principali del Catalogo Pezzi di Ricambio consistono in una pagina con la figura (1) e una pagina elenco corrispondente (7). Il numero di pagina (5) è indicato nell'intestazione delle pagine con le figure e nel piè di pagina delle pagine elenco. Il codice del documento (6) è indicato nel piè di pagina delle pagine elenco.

Numerazione delle pagine

Consultare la figura (A) a pagina i-5. Il numero di pagina (5) è suddiviso in tre parti:

- numero della sezione (2)
- numero progressivo di pagina all'interno della sezione (3)
- numero totale di pagine della sezione (4)

Introduzione alla macchina

Fabbricante

Il nome e l'indirizzo del fabbricante sono riportati sulla seconda pagina del presente catalogo.

Assistenza

Per ordinare i pezzi di ricambio per questa macchina oppure per riferire problemi associati con il funzionamento della macchina, contattare il più vicino ufficio Tetra Pak.

Per tutte le altre richieste, commenti o suggerimenti per eventuali miglioramenti da apportare alla macchina e alla relativa documentazione, contattare il responsabile di collegamento.

Identificazione

Marchio CE

La macchina è conforme alle principali norme sanitarie e di sicurezza dell'Area Economica Europea (EEA).

TechPub-2660371-0101

Targhetta della macchina

La figura (B) a pagina i-5 illustra un esempio di targhetta della macchina. La sezione Introduzione di tutti i manuali consegnati con la presente macchina contiene invece la figura della targhetta della macchina valida e l'illustrazione della sua posizione sulla macchina. La targhetta riporta i dati elencati sotto che sono necessari per contattare Tetra Pak in relazione a questa macchina specifica.

- Tipo di macchina (8)
- Volume (9)
- Specifiche disegno (10)
- Numero di matricola della macchina (11)
- Fabbricante (12)
- Marchio CE (13)
- Anno di fabbricazione (14)

La figura (C) a pagina i-5 mostra un esempio delle specifiche di una macchina. Verificare che i dati relativi alla macchina elencati nelle pagine iniziali del manuale corrispondano ai dati riportati sulla targhetta della macchina e nelle specifiche della macchina.

TechPub-2660371-0101

Come usare questo Catalogo Pezzi di Ricambio

Individuare il numero del pezzo di ricambio

f) Vedere la figura (D) a pagina i-5. Andare al numero della sezione (15) indicato accanto al gruppo principale che contiene il pezzo che si desidera individuare.

I punti b) e c) fanno riferimento alla figura (E) a pagina i-6.

g) Nella figura del gruppo principale, identificare il sottogruppo della macchina (17) che contiene il pezzo o il sottogruppo cercato. Annotare il numero di posizione (18) e andare alla pagina elenco che segue la figura.

h) Identificare il numero di posizione (16) o il nome del sottogruppo (19). Andare al numero di pagina corrispondente (20) indicato nella colonna di destra.

I punti d) e e) fanno riferimento alla figura (F) a pagina i-6.

i) Individuare il pezzo (21) cercato sulla figura del sottogruppo e annotare il numero di posizione del pezzo.

j) Il numero del pezzo (29) e la descrizione del pezzo (30) sono indicati accanto al numero di posizione sulla pagina elenco.

Informazioni contenute nel Catalogo Pezzi di Ricambio

L'elenco seguente fa riferimento alla figura (F) a pagina i-6. Il Catalogo Pezzi di Ricambio contiene le seguenti informazioni sui gruppi, i sottogruppi e i pezzi di ricambio della macchina:

- Riferimento struttura gruppo (22). Indica il gruppo superiore più prossimo nella struttura elenco della macchina.
- Nome gruppo (23)
- Codice pezzo di ricambio (24). Vedere la sezione Codici pezzi di ricambio.
- Unità di misura (25)
- Quantità (26)
- Numero disegno di assemblaggio (27)
- Pagine dell'elenco (28). Questa informazione è presente se la figura o l'elenco relativi al gruppo occupano più di una pagina del manuale.
- Numero pezzo o sottogruppo (29)
- Nome sottogruppo o descrizione pezzo (30)
- Numero gruppo (31)
- Numero macchina (32)
- Titolo informazioni gruppo (33). Indica se la sezione che segue il titolo si riferisce a una variante di macchina specifica oppure se si tratta di un elenco di parti comuni. Se un elenco contiene più di una variante ed esiste un disegno di assemblaggio specifico per ogni variante, viene fornito il riferimento alla pagina in cui è riportato il disegno di assemblaggio relativo alla variante.
- Informazioni interne (34)

Codici pezzi di ricambio

Le tabelle seguenti mostrano le due tipologie di codici dei pezzi di ricambio (SP) che è possibile trovare nella colonna SP di una pagina elenco del Catalogo Pezzi di Ricambio.

Codice SP	Spiegazione
A	Pezzo critico
B	Pezzo non critico

Codice SP	Spiegazione
U	Kit d'avviamento fornito insieme alla macchina
P	Kit di produzione da conservare nei locali di produzione
S	Kit d'assistenza da conservare presso il magazzino del centro di assistenza
C	Kit magazzino centrale che deve essere disponibile presso il magazzino centrale

TechPub-2660371-0101

Inleiding

Informatie betreffende dit handboek

Tetra Pak raadt aan alle geleverde documentatie zorgvuldig te lezen. Ga na of de geleverde documentatie ter beschikking is van het personeel dat de machine moet bedienen of servicewerkzaamheden moet uitvoeren.

Het is belangrijk deze catalogus voor de duur van de machine te bewaren en de catalogus door te geven aan elke volgende eigenaar of gebruiker.

Tetra Pak aanvaardt geen verantwoordelijkheid voor om het even welke soort beschadiging aan de machine als gevolg van het niet opvolgen van de in dit handboek gegeven instructies.

Bijgeleverde handboeken

De met deze apparatuur geleverde handboeken omvatten

- Conversiehandboek (CM)
  Dit handboek geeft technici informatie over het ombouwen van de apparatuur tussen verschillende productiemodi.
- Handboek Elektriciteit (EM)
  Dit handboek geeft elektriciens en servicetechnici informatie betreffende het elektrisch systeem van de apparatuur.
- Installatiehandboek (IM)
  Dit handboek geeft installatiepersoneel informatie om op veilige wijze de apparatuur te installeren.
- Onderhoudshandboek (MM)
  Dit handboek geeft technici informatie over het onderhoud van de apparatuur.
- Bedieningshandboek (OM)
  Dit handboek geeft de operator informatie betreffende het omgaan met en bedienen van de apparatuur, voor, tijdens en na productie.
- Catalogus reservedelen (SPC).
  Dit handboek geeft de nodige informatie om reserveonderdelen bij Tetra Pak te bestellen.
- Technisch Handboek (TeM)
  - Dit handboek geeft technici informatie, nodig om op veilige wijze de apparatuur te installeren
  - Dit handboek geeft technici informatie over het onderhoud van de apparatuur
  - Dit handboek geeft technici informatie betreffende het elektrisch systeem van de apparatuur
  - geeft de nodige informatie, nodig om reserveonderdelen bij Tetra Pak te bestellen

TechPub-2660371-0101

Pagina lay-out

Refereer naar de illustratie (A) op bladzijde i-5: De belangrijkste bladzijden van een Catalogus Reserveonderdelen bestaan uit een bladzijde met een illustratie (1) en een corresponderende bladzijde met een lijst (7).
Het bladzijdenummer (5) is te vinden in de kop van een illustratiebladzijde en in de voetnoot van de lijstbladzijde. Het documentnummer (6) is te vinden in de voetnoot van een lijstbladzijde.

Bladzijdenummering

Refereer naar de illustratie (A) op bladzijde i-5: een bladzijdenummer (5) bestaat uit drie delen:

- hoofdstuknummer (2)
- opeenvolgende bladzijdenummer in het hoofdstuk (3)
- totaal aantal bladzijden in het hoofdstuk (4)

Introductie van de machine

Fabrikant

Voor naam en adres van de fabrikant, zie de tweede bladzijde van deze catalogus.

Service

Voor het bestellen van reserveonderdelen of om bedieningsproblemen van deze machine te melden, contacteer de dichtst bijzijnde vestiging van Tetra Pak.

Neem contact op met de contactpersoon voor andere informatie, opmerkingen of suggesties ter verbetering van de machine en de bijbehorende documentatie.

Identificatie

CE-classificatie

Deze apparatuur voldoet aan de basiseisen voor gezondheid en veiligheid voor het Europese Economische Gebied (EEA).

TechPub-2660371-0101

Machineplaatje

De illustratie (B) op bladzijde i-5 toont een voorbeeld van een machineplaatje.
Een illustratie van het wettige machineplaatje en de plaatsing ervan wordt getoond in het hoofdstuk Introductie van de handboeken, meegeleverd met deze apparatuur. Het machineplaatje bevat onderstaande gegevens die nodig zijn wanneer Tetra Pak moet worden gecontacteerd betreffende deze apparatuur.

- Machinetype (8)
- Volume (9)
- Tekeningspecificaties (10)
- Serienummer machine (11)
- Fabrikant (12)
- CE-markering (13)
- Fabricagejaar (14)

De illustratie (C) op bladzijde i-5 toont een voorbeeld van een machineplaatje. Controleer of de gegevens betreffende de apparatuur in de voorste bladzijden van dit handboek overeenkomen met de gegevens op het machineplaatje en de machinespecificaties.

TechPub-2660371-0101

Hoe dient deze catalogus reserveonderdelen te worden gebruikt

Lokaliseren van een nummer van een reserveonderdeel

a) Refereer naar de illustratie (D) op bladzijde i-5: ga naar het hoofdstuknummer (15), naast de hoofdgroep die het gewenste deel bevat.

Items b) en c) refereer naar de illustratie (E) op bladzijde i-6.

b) Op de illustratie van de hoofdgroep, zoek de machinesub-groep (17) op die het deel van de gewenste sub-groep bevat. Noteer het positienummer (18) en ga naar de lijstbladzijde die op de illustratie volgt.

c) Op de illustratie van de hoofdgroep, zoek de machinesub-groep (17) op die het deel van de gewenste sub-groep bevat. Noteer het positienummer (18) en ga naar de lijstbladzijde die op de illustratie volgt.

Items d) en e) refereren naar de illustratie (F) op bladzijde i-6.

d) Lokaliseer het gewenste onderdeel (21) in de illustratie van de sub-groep en noteer het positienummer van het onderdeel.

e) Het onderdeelnummer (29) en de beschrijving ervan (30) worden naast het positienummer op de lijstbladzijde weergegeven.

Informatie die in een Catalogus reserveonderdelen wordt gegeven

Onderstaande lijst verwijst naar de illustratie (F) op bladzijde i-6.
Een Catalogus reserveonderdelen bevat de volgende informatie betreffende groepen, sub-groepen en reserveonderdelen voor de apparatuur:

- Referentie groepsstructuur (22). Geeft de volgende hoogste groep in de structuur van de apparatuur aan.
- Groepsnaam(23)
- Code reserveonderdeel (24). Zie deel Spare Part Codes.
- Meeteenheid (25)
- Hoeveelheid (26)
- Tekeningnummer montage (27)
- Lijst met bladzijdenreeks (28). Inclusief indien er meerdere bladzijden in de groepsillustratie of lijst voorkomen.
- Onderdeel of sub-groepsnummer (29)
- Naam sub-groep of beschrijving onderdeel (30)
- Groepsnummer (31)
- Apparatuurnummer (32)
- Titel groepsinformatie (33). Geeft aan of het deel onder de titel voor een specifieke machine is, voor een variant of een lijst is met algemene onderdelen. Indien een lijst meer dan één variant bevat en elke variant heeft zijn eigen montagetekening, wordt een bladzijdenreferentie naar de montagetekening van de variant gegeven.
- Interne informatie (34)

Codes reserveonderdelen

Onderstaande tabellen tonen de twee mogelijke codetypes van reserveonderdelen (SP) die vermeld kunnen worden in de SP-kolom van een bladzijde van de Catalogus reserveonderdelen.

SP-code	Omschrijving
A	Essentieel onderdeel
B	Niet essentieel onderdeel

SP-code	Omschrijving
U	Start-up kit, met de machine meegeleverd
P	Productiekit, op te slaan op productielocatie
S	Servicekit, op te slaan op servicelocatie
C	Kit centrale depot, beschikbaar te zijn in centraal magazijn

TechPub-2660371-0101

Introduksjon

Informasjon om håndboken

Tetra Pak anbefaler at du leser nøye gjennom alle leverte håndbøker. Sørg for at håndbøkene er tilgjengelige for alle som betjener eller vedlikeholder utstyret.

Det er viktig at du tar vare på denne katalogen under hele levetiden til utstyret og at du gir den videre til eventuelle nye eiere eller brukere.

Tetra Pak vil ikke være ansvarlig for skader på utstyret som oppstår fordi brukeren ikke følger instruksjonene i håndbøkene som følger med utstyret.

Leverte håndbøker

Håndbøkene som leveres med dette utstyret, kan inkludere

- Konverteringsmanual (CM)
  Denne håndboken gir teknikere informasjon om hvordan de konverterer utstyret mellom ulike produksjonsmodi.
- Electrisk manual (EM)
  Denne håndboken gir teknikere informasjon om utstyrets elektriske system.
- Installasjonsmanual (IM)
  Denne håndboken gir teknikere informasjon som kreves for å kunne installere utstyret på en sikker måte.
- Vedlikeholdsmanual (MM)
  Denne håndboken gir teknikere informasjon om vedlikehold av utstyret.
- Driftsmanual (OM)
  Denne håndboken gir operatøren informasjon om hvordan han håndterer og bruker utstyret før, under og etter produksjon.
- Reservedelskatalog (SPC)
  Denne håndboken inneholder informasjon som du trenger for å bestille reservedeler fra Tetra Pak.
- Teknisk manual (TeM)
  - gir teknikere informasjon om sikker installasjon av utstyret
  - gir teknikere informasjon om vedlikehold av utstyret
  - gir teknikere informasjon om utstyrets elektriske system
  - inneholder informasjon som du trenger for å bestille reservedeler fra Tetra Pak

TechPub-2660371-0101

Sideoppsett

Se illustrasjonen (A) på side i-5: Hovedsidene i reservedelskatalogen består av en illustrasjonsside (1) og en korresponderende listeside (7). Sidenummeret (5) vises i topptekstenpå illustrasjonssiden og i bunnteksten listesiden. Dokumentnummeret (6) vises i bunnteksten på listesiden.

Sidenummerering

Se illustrasjonen (A) på side i-5: Et sidenummer (5) består av tre deler:

- kapittelnummer (2)
- etterfølgende sidenummer i kapitlet (3)
- det totale antall sider i kapitlet (4)

Introduksjon av maskinen

Produsent

Hvis du ønsker produsentens navn og adresse, kan du se side to i denne katalogen.

Service

Når du skal bestille reservedeler til denne maskinen eller rapportere problemer forbundet med driften av denne maskinen, må du kontakte ditt nærmeste Tetra Pak-kontor.

Når det gjelder andre forespørsler, kommentarer eller forslag til forbedringer av utstyret og dets dokumentasjon, kan du ta kontakt med din kontaktperson.

Identifisering

CE-klassifisering

Dette utstyret er i overensstemmelse med de grunnleggende helse- og sikkerhetsforskriftene i Det europeiske økonomiske samarbeidsområdet (EØS).

TechPub-2660371-0101

Maskinplate

Illustrasjonen (B) på side i-5 viser et eksempel på en maskinplate. En illustrasjon av en gyldig maskinplate og hvor denne er plassert på utstyret, er vist i introduksjonskapitlet i håndbøkene som følger med dette utstyret. Maskinplaten inneholder nedenstående data, som du trenger når du skal kontakte Tetra Pak angående dette bestemte utstyret.

- Maskintype (8)
- Volum (9)
- Tegningsspesifikasjoner (10)
- Maskin-serienummer (11)
- Produsent (12)
- CE-merke (13)
- Produksjonsår (14)

Illustrasjonen (C) på side i-5 viser et eksempel på en maskinspesifikasjon. Sørg for at utstyrsdataene som står oppført foran i denne håndboken samsvarer med dataene på maskinplaten og maskinspesifikasjonen.

TechPub-2660371-0101

Hvordan bruke denne reservedelskatalogen

Finn et reservedelsnummer

a) Se illustrasjonen (D) på side i-5: Gå til kapittelnummeret (15) som er angitt ved siden av hovedgruppen som inneholder delen du vil finne.

Punkt b) og c) viser til illustrasjonen (E) på side i-6.

b) På hovedgruppeillustrasjonen ser du etter maskinundergruppen (17) som inneholder delen eller undergruppen du ser etter. Merk deg posisjonsnummeret (18), og gå til listesiden som kommer etter illustrasjonen.

c) Se etter posisjonsnummeret (16) eller undergruppenavnet (19). Gå til det korresponderende sidenummeret (20) som står oppført i høyre kolonne.

Punkt d) og e) viser til illustrasjonen (F) på side i-6.

d) Finn delen (21) du ser etter på undergruppeillustrasjonen, og merk deg delens posisjonsnummer.

e) Delenummeret (29) og delebeskrivelsen (30) finner du ved siden av posisjonsnummeret på listesiden.

Informasjon i en reservedelskatalog

Listen nedenfor viser til illustrasjonen (F) på side i-6. En reservedelskatalog inneholder følgende informasjon om grupper, undergrupper og reservedeler for utstyret:

- Gruppeinndelingsreferanse (22). Angir den neste gruppen opp i inndelingen av utstyrslisten.
- Gruppenavn (23)
- Reservedelskode (24). Se avsnittet Reservedelskoder.
- Målenhet (25)
- Antall (26)
- Tegningsnummer (27)
- Listesideområde (28). Inkludert hvis det er flere sider i gruppeillustrasjonen eller listen.
- Dele- eller undergruppenummer (29)
- Undergruppenavn eller delebeskrivelse (30)
- Gruppenummer (31)
- Utstyrsnummer (32)
- Gruppeinformasjonsoverskrift (33). Angir om avsnittet under overskriften er for en bestemt maskinvariant eller om det er en liste over vanlige deler. Hvis en liste har flere varianter og hver variant har sin egen sammenstillingstegning, vises det en sidereferanse til variantens sammenstillingstegning.
- Intern informasjon (34)

Reservedelskoder

Tabellene nedenfor viser de to mulige typene av reservedelskode (SP) som kan stå oppført i SP-kolonnen på en listeside i en reservedelskatalog.

SP-kode	Betydning
A	Kritisk del
B	Ikke-kritisk del

SP-kode	Betydning
U	Oppstartsett som følger med maskinleveransen
P	Produksjonssett som skal være på produksjonsstedet
S	Servicesett som skal være på servicestasjonen
C	Sentrallagersett som skal være tilgjengelig på sentrallageret

TechPub-2660371-0101

Introdução

Informação do Manual

A Tetra Pak recomenda ler cuidadosamente todos os manuais fornecidos. Verificar se os manuais fornecidos estão ao dispor do pessoal que trabalha com o equipamento ou que faz a manutenção do mesmo.

É importante guardar este catálogo durante o tempo útil de vida da máquina ou do equipamento e de entregar o catálogo a qualquer proprietário ou utilizador subsequente.

A Tetra Pak não toma a responsabilidade por quaisquer danos no equipamento causados devido ao facto de que as instruções dadas nos manuais que acompanham este equipamento não foram seguidas.

Manuais fornecidos

Os manuais fornecidos com este equipamento incluem

- Manual de Conversão (CM)
  Este manual fornece aos técnicos as informações sobre a conversão do equipamento entre os diferentes modos de produção.
- Manual Eléctrico (EM)
  Este manual fornece aos técnicos as informações sobre o sistema eléctrico do equipamento.
- Manual de Instalação (IM)
  Este manual fornece aos técnicos as informações necessárias para instalar seguramente o equipamento.
- Manual de Manutenção (MM)
  Este manual fornece aos técnicos as informações para a manutenção do equipamento.
- Manual de Operação (OM)
  Este manual fornece ao operador as informações que ele necessita para manejar e accionar o equipamento antes, durante e depois da produção.
- Catálogo de Peças Sobressalentes (SPC)
  Este manual fornece as informações necessárias para encomendar peças sobressalentes à Tetra Pak.
- Manual Técnico (TeM)
  - fornece aos técnicos as informações necessárias para instalar seguramente o equipamento
  - fornece aos técnicos as informações para a manutenção do equipamento
  - fornece aos técnicos as informações sobre o sistema eléctrico do equipamento
  - fornece as informações necessárias para encomendar peças sobressalentes à Tetra Pak

TechPub-2660371-0101

Disposição da página

Referência à ilustração (A) na página i-5: As páginas principais num Catálogo de Peças Sobressalentes consistem numa página ilustrada (1) e numa página com a lista correspondente (7). O número da página (5) é mostrado no cabeçalho de uma página ilustrada e no rodapé de uma página com lista. O número do documento (6) é mostrado no rodapé de uma página com lista.

Numeração da página

Referência à ilustração (A) na página i-5: Um número de página (5) tem três partes:

- Número do capítulo (2)
- número consecutivo da página dentro do capítulo (3)
- número total de páginas no capítulo (4)

Introdução da máquina

Fabricante

Para o nome e morada do fabricante, ver a segunda página deste catálogo.

Assistência técnica

Para encomendar peças sobressalentes para esta máquina, ou para relatar problemas associados com a operação desta máquina, contactar a companhia Tetra Pak mais próxima.

Contactar a Liaison se tiver quaisquer questões, comentários ou sugestões para o desenvolvimento relacionado com o equipamento e a sua documentação.

Identificação

Classificação CE

Este equipamento está de acordo com os regulamentos de segurança e saúde da Área Económica Europeia (EEA).

TechPub-2660371-0101

Placa da máquina

A ilustração (B) na página i-5 mostra um exemplo de uma placa da máquina. Uma ilustração da placa da máquina válida e a sua localização no equipamento é mostrada no capítulo Introdução dos manuais fornecidos com este equipamento. A placa da máquina contem os dados alistados em baixo, necessários quando se contactar a Tetra Pak relacionando-se a este equipamento em específico.

- Tipo da máquina (8)
- Volume (9)
- Especificações dos desenhos (10)
- Número de série da máquina (11)
- Fabricante (12)
- Marca CE (13)
- Ano de construção (14)

A ilustração (C) na página i-5 mostra um exemplo de uma especificação da máquina. Verificar se os dados do equipamento alistados nas páginas da frente deste manual correspondem aos dados na placa da máquina e à especificação da máquina.

TechPub-2660371-0101

Como usar este Catálogo de Peças Sobressalentes

Localizar um Número da peça sobressalente

f) Referência à ilustração (D) na página i-5: Para o número do capítulo (15) indicado ao lado do grupo principal que contem a peça que quer localizar.

Pos. b) e c) referem-se à ilustração (E) na página i-6.

g) Na ilustração do grupo principal, procurar o subgrupo da máquina (17) que contem a peça ou subgrupo que está à procura. Anotar o número da posição (18) e passar para a página da lista que segue a ilustração.

h) Procurar o número da posição (16) ou o nome do subgrupo (19). Passar para o número da página correspondente (20) alistado na coluna do lado direito.

Pos. d) e e) referem-se à ilustração (F) na página i-6.

i) Localizar a peça (21) que está à procura na ilustração do subgrupo e anotar o número da posição da peça.

j) O número da peça (29) e a descrição da peça (30) estão alistados ao lado do número da posição na página da lista.

Informações indicadas num Catálogo de Peças Sobressalentes

A lista em baixo refere-se à ilustração (F) na página i-6. Um Catálogo de Peças Sobressalentes contem as seguintes informações sobre grupos, subgrupos e peças sobressalentes para o equipamento:

- Referência da estrutura do grupo (22). Indica o grupo a seguir mais elevado na estrutura da lista do equipamento.
- Nome do grupo (23)
- Código da peça sobressalente (24). Ver o capítulo Spare Part Codes.
- Unidade de medição (25)
- Quantidade (26)
- Número do desenho de montagem (27)
- Gama da página de lista (28). Incluída se houver páginas múltiplas na ilustração do grupo ou lista.
- Número da peça ou do subgrupo (29)
- Nome do subgrupo ou descrição da peça (30)
- Número do grupo (31)
- Número do equipamento (32)
- Título da informação do grupo (33). Indica se a secção abaixo do título é para uma variante de máquina específica ou se é uma lista de peças comuns. Se uma lista tiver mais do que uma variante e cada variante tiver o seu próprio desenho de montagem, é mostrada uma referência para a página do desenho de montagem da variante.
- Informação interna (34)

Códigos de peças sobressalentes

As tabelas em baixo mostram os dois tipos possíveis do código de Peça Sobressalente (SP) que podem estar alistadas na coluna SP de uma página de lista do Catálogo de Peças Sobressalentes.

Código SP	Significado
A	Peça crítica
B	Peça não crítica

Código SP	Significado
U	Kit de colocação ao serviço fornecido com a máquina
P	Kit de produção que deve estar presente no local de produção
S	Conjunto de serviço de assistência para ser mantido no armazém das estações de serviço.
C	Conjunto do depósito geral para estar disponível no armazém central.

TechPub-2660371-0101

Inledning

Information om manualerna

Tetra Pak rekommenderar att alla manualer läses noggrant. Se till att manualerna är tillgängliga för personalen som använder eller underhåller utrustningen.

Det är viktigt att denna katalog behålls under utrustningens livslängd, och att den överlämnas till varje efterföljande innehavare eller användare av utrustningen.

Tetra Pak tar inte ansvar för någon skada på utrustningen som orsakats av att instruktionerna i medföljande manualer inte har följts.

Medföljande manualer

Följande manualer levereras tillsammans med utrustningen:

- Konverteringsmanual (CM)
  Manualen innehåller information för tekniker om hur utrustningen ska konverteras mellan olika produktionslägen.
- Elektrisk manual (EM)
  Manualen innehåller information för tekniker om utrustningens elektriska system.
- Installationsmanual (IM)
  Manualen innehåller information för tekniker om hur utrustningen installeras på ett säkert sätt.
- Underhållsmanual (MM)
  Manualen innehåller information för tekniker om hur utrustningen ska underhållas.
- Driftsmanual (OM)
  Manualen innehåller information för operatören om hur utrustningen ska hanteras före, under och efter produktion.
- Reservdelskatalog (SPC)
  Manualen innehåller information som behövs för beställning av reservdelar från Tetra Pak.
- Teknisk manual (TeM)
  - innehåller information för tekniker om hur utrustningen installeras på ett säkert sätt.
  - innehåller information för tekniker om hur utrustningen ska underhållas.
  - innehåller information för tekniker om utrustningens elektriska system.
  - innehåller information som behövs för beställning av reservdelar från Tetra Pak.

TechPub-2660371-0101

Sidlayout

Se bilden (A) på sidan i-5: Huvudsidorna i reservdelskatalogen består av en bildsida (1) och en motsvarande listsida (7). Sidnumret (5) visas i sidhuvudet på bildsidan och i sidfoten på listsidan. Dokumentnumret (6) visas i sidfoten på listsidan.

Sidnumrering

Se bilden (A) på sidan i-5: Ett sidnummer (5) består av tre delar:

- kapitelnummer (2)
- löpande sidnummer inom kapitlet (3)
- totalt sidantal i kapitlet (4)

Introduktion till maskinen

Tillverkare

Tillverkarens namn och adress finns på sidan 2 i katalogen.

Service

För att beställa reservdelar till denna maskin eller för att rapportera problem som uppstått i samband med driften kontaktar du närmaste Tetra Pak-kontor.

Har du andra frågor, kommentarer eller förslag som gäller förbättring av maskinen eller utrustningen och dokumentationen vänder du dig till din kontaktperson på Tetra Pak.

Identifiering

CE-klassificering

Denna utrustning överensstämmer med de grundläggande hälso- och säkerhetsbestämmelserna inom den europeiska ekonomiska unionen (EEA).

TechPub-2660371-0101

Maskinskylt

Bilden (B) på sidan i-5 visar ett exempel på en maskinskylt. En bild på giltig maskinskylt och dess placering på utrustningen visas i inledningskapitlet som medföljer utrustningen. Skylten innehåller de uppgifter som listas nedan och som behövs vid kontakt med Tetra Pak angående utrustningen.

- Maskintyp (8)
- Volym (9)
- Ritningsspecifikationer (10)
- Maskinnummer (11)
- Tillverkare (12)
- CE-märkning (13)
- Tillverkningsår (14)

Bilden (C) på sidan i-5 visar ett exempel på en maskinspecifikation. Kontrollera att informationen om utrustningen som listas på manualens framsida motsvarar informationen på maskinskylten och i maskinspecifikationen.

Använda reservdelskatalogen

Hitta ett reservdelsnummer

a) Se bilden (D) på sidan i-5: Gå till kapitelnumret (15) som står vid sidan om huvudgruppen som innehåller den del du vill leta reda på.

Punkt b) och c) hänvisar till bilden (E) på sidan i-6.

b) På huvudgruppsbilden letar du efter den maskinundergrupp (17) som innehåller delen eller undergruppen du letar efter. Notera positionsnumret (18) och gå till listsidan som följer efter bilden.

c) Leta efter positionsnumret (16) eller undergruppsnamnet (19). Gå till motsvarande sidnummer (20) som listas i den högra kolumnen.

Punkt d) och e) hänvisar till bilden (F) på sidan i-6.

d) Leta reda på delen (21) i undergruppsbilden och notera delens positionsnummer.

e) Reservdelsnumret (29) och reservdelsbeskrivningen (30) står bredvid positionsnumret på listsidan.

TechPub-2660371-0101

Information i reservdelskatalogen

Listan nedan hänvisar till bilden (F) på sidan i-6. Reservdelskatalogen innehåller följande information om grupper, undergrupper och reservdelar för utrustningen:

- Gruppstrukturreferens (22). Anger nästa högre grupp i utrustningslistans struktur.
- Gruppnamn (23)
- Reservdelskod (24). Se avsnittet Reservdelskoder.
- Måttenhet (25)
- Kvantitet (26)
- Monteringsritningsnummer (27)
- Listsidesintervall (28). Står med om det finns flera sidor i gruppbilden eller listan.
- Reservdels- eller undergruppsnummer (29)
- Undergruppsnamn eller reservdelsbeskrivning (30)
- Gruppnummer (31)
- Utrustningsnummer (32)
- Gruppinformationsrubrik (33). Anger om avsnittet under rubriken gäller en viss maskinvariant eller om det är en lista över allmänna delar. Om en lista har fler än en variant och varje variant har sin egen monteringsritning, visas en sidhänvisning till variantens monteringsritning.
- Intern information (34)

Reservdelskoder

Tabellerna nedan visar de två typerna av reservdelskoder (SP) som kan finnas i SP-kolumnen på en listsida i reservdelskatalogen.

SP-kod	Betydelse
A	Primär reservdel
B	Sekundär reservdel

SP-kod	Betydelse
U	Startsats som ingår i maskinleveransen
P	Produktionssats som bör finnas på produktionsplatsen
S	Servicesats som bör finnas på servicestationen
C	Central lagringssats tillgänglig vid centrallagret

TechPub-2660371-0101

SPC
Spare Parts Catalogue

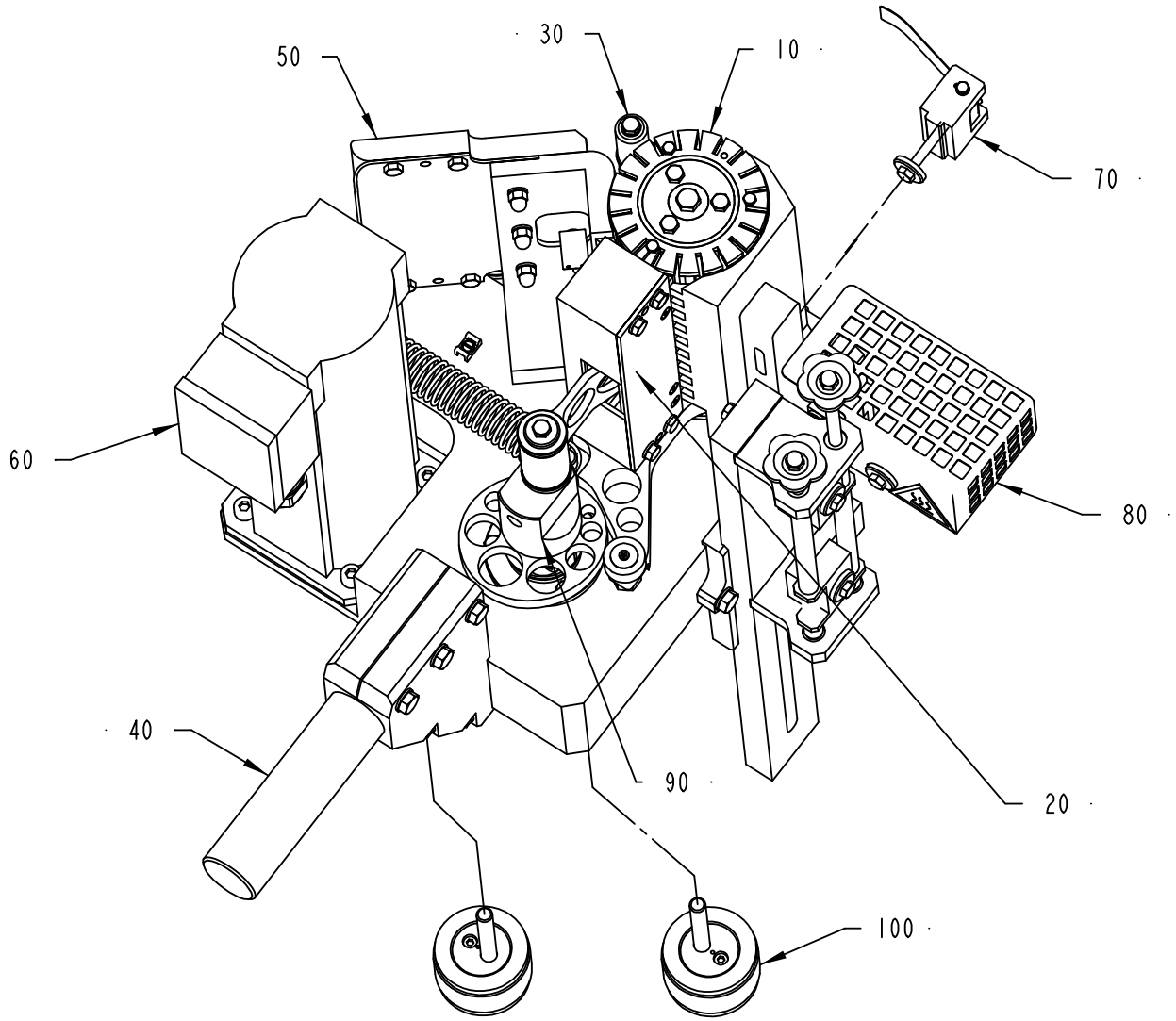

S-678210-I
ECN 25441

ECM: 106536 - 20021022
Group number: 678210-0100
Assembly Drawing: 678210-1_1_AA

Pos	Part No	SP	UN	Qty	Description	Page No
-						
010	595650-0100	-		1	FEED WHEEL UNIT	**1-5, 1-7**
020	595651-0100	-		1	CUTTING UNIT	**1-9**
030	595652-0100	-		1	SQUEEZER	**1-11, 1-13**
040	595653-0100	-		1	FRAME	**1-15**
050	595654-0100	-		1	LADDER BAND GUIDE	**1-17**
060	595655-0100	-		1	DRIVE MOTOR	**1-19**
070	595656-0100	-		1	SPRING HOLDER	**1-21**
080	595657-0100	-		1	GUN HOLDER	**1-23**
090	595681-0100	-		1	CAMSHAFT	**1-25**
100	595682-0100	-		2	BELT TIGHTENER	**1-27**

FEED WHEEL UNIT

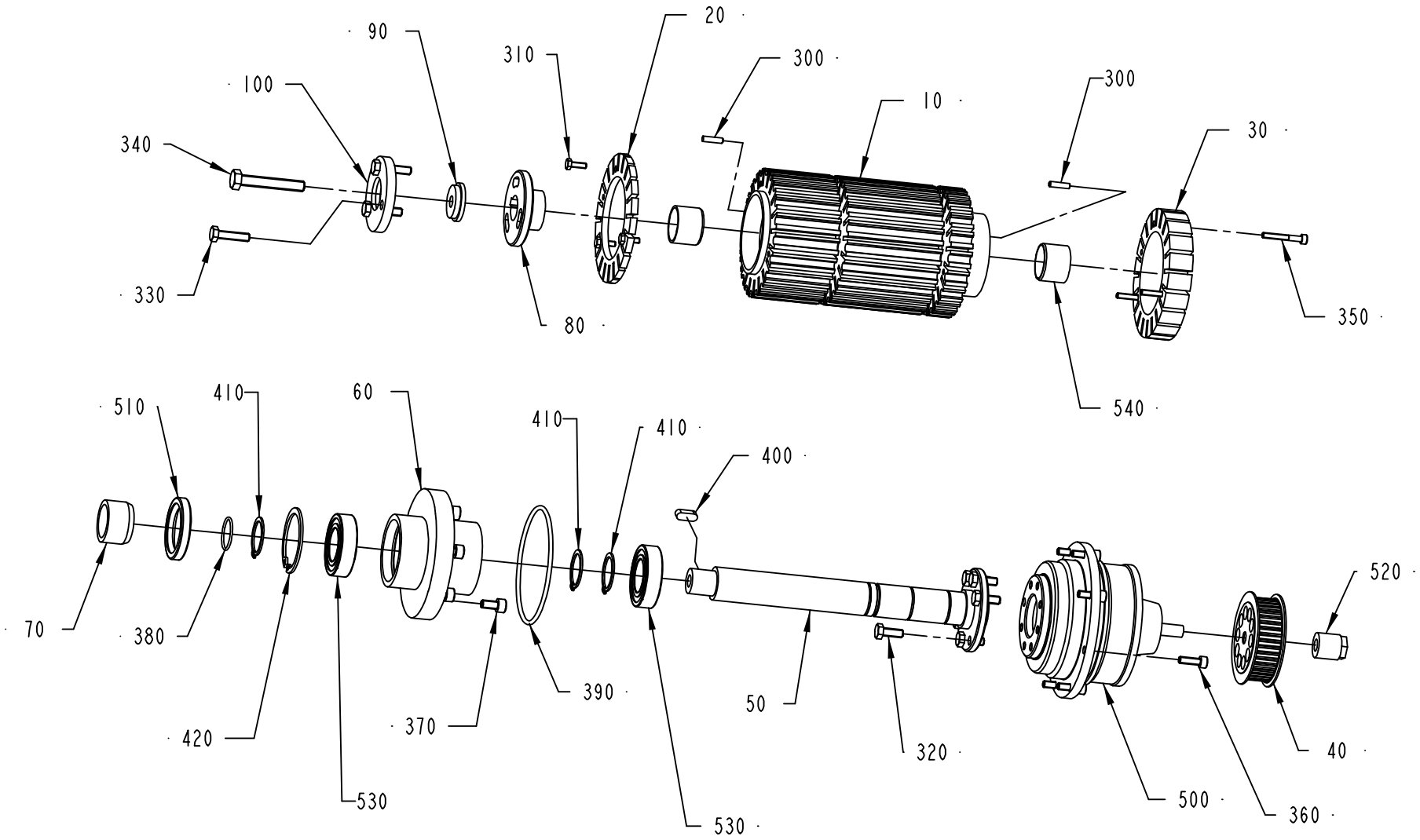

595650-1
ECM 111138

ECM: 111248 - 20021022
Group number: 595650-0100
Assembly Drawing: 595650-1_1_AB

This list covers pages from 1-4 to 1-7

Pos	Part No	SP	UN	Qty	Description	Page No
S3-100 TUBEX 15 (See drawing on page: 1-4)						
010	1363087-0000	A		1	FEED WHEEL	
020	595718-0000	A		1	PROTECTION RING	
030	595724-0000	A		1	SUPPORT RING	
040	595734-0000	A		1	PULLEY	
S4-100 TUBEX 15 (See drawing on page: 1-4)						
010	1368548-0000	A		1	FEED WHEEL	
020	595718-0000	A		1	PROTECTION RING	
030	595724-0000	A		1	SUPPORT RING	
040	595734-0000	A		1	PULLEY	
S4-120 TUBEX 15, S4-118 FOSHAN 15 (See drawing on page: 1-4)						
010	1368557-0000	A		1	FEED WHEEL	
020	595718-0000	A		1	PROTECTION RING	
030	595724-0000	A		1	SUPPORT RING	
040	595734-0000	A		1	PULLEY	
S5-100 TUBEX 15 (See drawing on page: 1-4)						
010	1364415-0000	A		1	FEED WHEEL	
020	595718-0000	A		1	PROTECTION RING	
030	595724-0000	A		1	SUPPORT RING	
040	595734-0000	A		1	PULLEY	
S5-120 TUBEX 15 (See drawing on page: 1-4)						
010	595632-0000	A		1	FEED WHEEL	
020	595718-0000	A		1	PROTECTION RING	
030	595724-0000	A		1	SUPPORT RING	
040	595734-0000	A		1	PULLEY	
S5-96 SOYEZ 15 (See drawing on page: 1-4)						
010	1364415-0000	A		1	FEED WHEEL	
020	595718-0000	A		1	PROTECTION RING	
030	595724-0000	A		1	SUPPORT RING	
040	595734-0000	A		1	PULLEY	
T4/5-150 TUBEX 15 (See drawing on page: 1-4)						
010	1364418-0000	A		1	FEED WHEEL	
020	595718-0000	A		1	PROTECTION RING	
030	1364421-0000	A		1	SUPPORT RING	
040	595734-0000	A		1	PULLEY	
T5/6-150 TUBEX 15 (See drawing on page: 1-4)						
010	1364419-0000	A		1	FEED WHEEL	
020	595718-0000	A		1	PROTECTION RING	
030	1364421-0000	A		1	SUPPORT RING	
040	595734-0000	A		1	PULLEY	
T5/6-190 TUBEX 15 (See drawing on page: 1-4)						
010	2500544-0000	A		1	FEED WHEEL	
020	595718-0000	A		1	PROTECTION RING	
030	1364421-0000	A		1	SUPPORT RING	
040	595734-0000	A		1	PULLEY	
U4-145 TUBEX 22 (See drawing on page: 1-6)						
010	1364389-0000	A		1	FEED WHEEL	
020	1363025-0000	A		1	PROTECTION RING	
030	1363024-0000	A		1	SUPPORT RING	
040	595733-0000	A		1	PULLEY	
U4-149 SPF 22 (See drawing on page: 1-6)						
010	1363062-0000	A		1	FEED WHEEL	
020	1363025-0000	A		1	PROTECTION RING	
030	1363024-0000	A		1	SUPPORT RING	
040	595733-0000	A		1	PULLEY	
U4-160 TUBEX 22 (See drawing on page: 1-6)						
010	1364420-0000	A		1	FEED WHEEL	
020	1363025-0000	A		1	PROTECTION RING	
030	1363024-0000	A		1	SUPPORT RING	
040	595733-0000	A		1	PULLEY	
U4-165 TUBEX 22 (See drawing on page: 1-6)						
010	1363061-0000	A		1	FEED WHEEL	
020	1363025-0000	A		1	PROTECTION RING	
030	1363024-0000	A		1	SUPPORT RING	
040	595733-0000	A		1	PULLEY	
U5-145 TUBEX 22 (See drawing on page: 1-6)						
010	1368558-0000	A		1	FEED WHEEL	
020	1363025-0000	A		1	PROTECTION RING	
030	1363024-0000	A		1	SUPPORT RING	
040	595733-0000	A		1	PULLEY	

FEED WHEEL UNIT

Drawing file: 595650-2_1_AB.hpgl

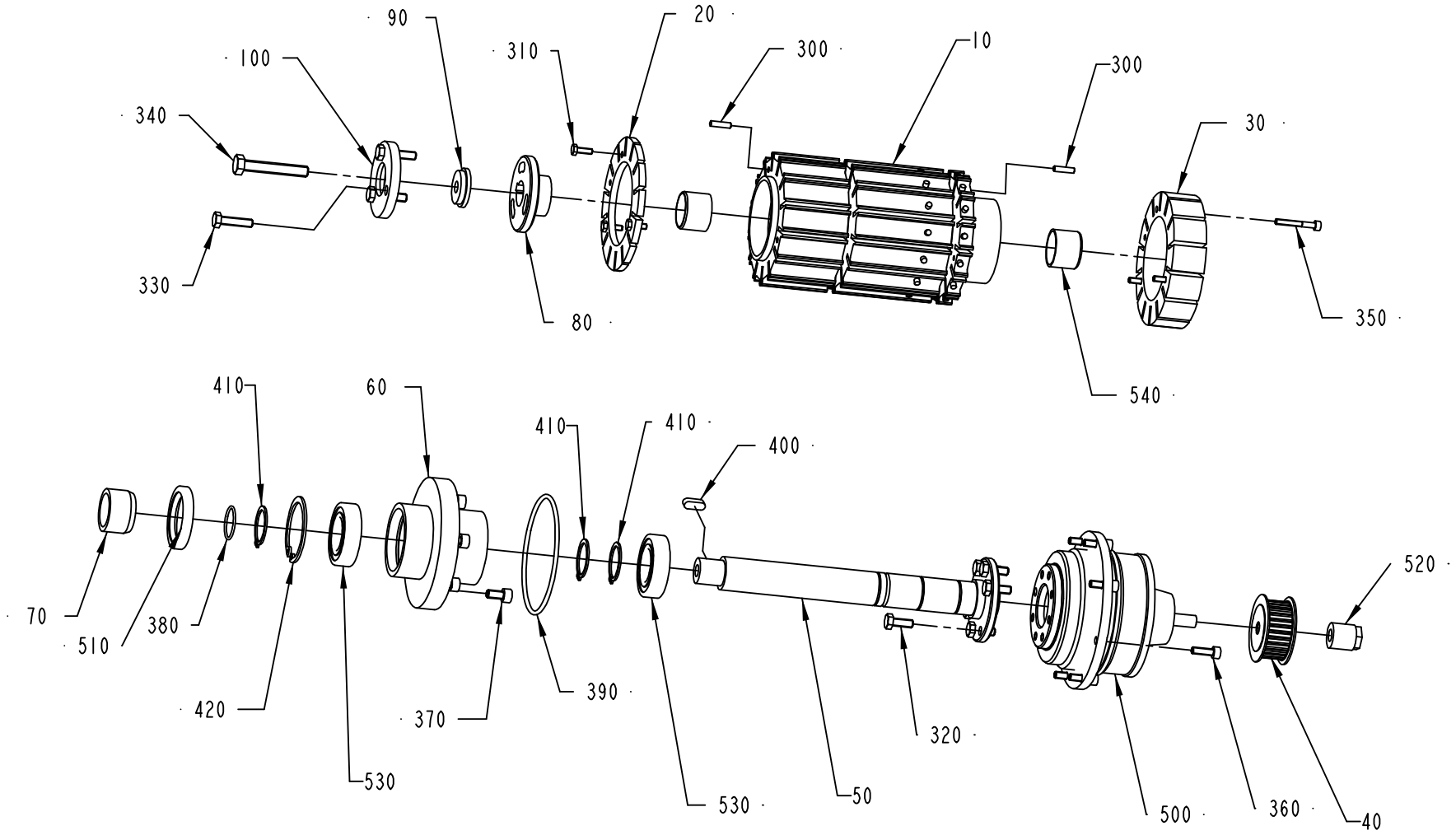

595650-2
ECM 111138

Pos	Part No	SP	UN	Qty	Description	Page No
U5-165 TUBEX 22 (Cont'd) (See drawing on page: 1-6)						
010	1368559-0000	A		1	FEED WHEEL	
020	1363025-0000	A		1	PROTECTION RING	
030	1363024-0000	A		1	SUPPORT RING	
040	595733-0000	A		1	PULLEY	
U5-180 TUBEX 22 (See drawing on page: 1-6)						
010	2500543-0000	A		1	FEED WHEEL	
020	1363025-0000	A		1	PROTECTION RING	
030	1363024-0000	A		1	SUPPORT RING	
040	595733-0000	A		1	PULLEY	
Common Parts						
050	595630-0000	A		1	SHAFT	
060	595631-0000	-		1	BEARING HUB	
070	595635-0000	A		1	SLEEVE	
080	595636-0000	-		1	GUIDE	
090	595637-0000	-		1	WASHER	
100	595638-0000	-		1	COVER DISC	
300	311103-0270	-		2	PARALLEL PIN ISO 2338 4M6X16 A1	
310	312105-0291	-		3	SCREW M6S ISO 4017 M4X12 A470	
320	312105-0368	-		6	SCREW M6S ISO 4017 M6X16 A480	
330	312105-0372	-		3	SCREW M6S ISO 4017 M6X25 A480	
340	312109-0461	-		1	SCREW M6S ISO 4017 M8X50 A480	
350	312115-0299	-		3	SCREW ISO4762 M4X30 A4	
360	312115-0329	-		7	SCREW ISO4762 M5X16 A4	
370	312115-0366	-		6	SCREW ISO4762 M6X12 A4	
380	315204-0118	A		1	O-RING 22,1X1,7 MM	
390	315204-0308	-		1	O-RING 84,5X3 MM	
400	315705-0230	A		1	PARALLEL KEY W. ROUND ENDS 6X6X16 MM	
410	315751-0119	-		3	RETAINING RING FOR SHAFT DIN 471 25 A2	
420	315753-0130	-		1	RETAINING RING FOR BORE DIN 472 47 A2	
500	90056-0175	A		1	GEARS, PLANETARY VRKF-5C-500	
510	90459-1014	A		1	BEARING SEAL 32X47X7 MM	
520	90208-0101	A		1	TRANTORQUE BUSHING 9MM DB	
530	90214-0163	A		2	BALL BEARING SOLID OIL 25X47X12 MM	
540	90240-0292	A		2	BUSHING, 25X28X20 MM	

Pos	Part No	SP	UN	Qty	Description	Page No

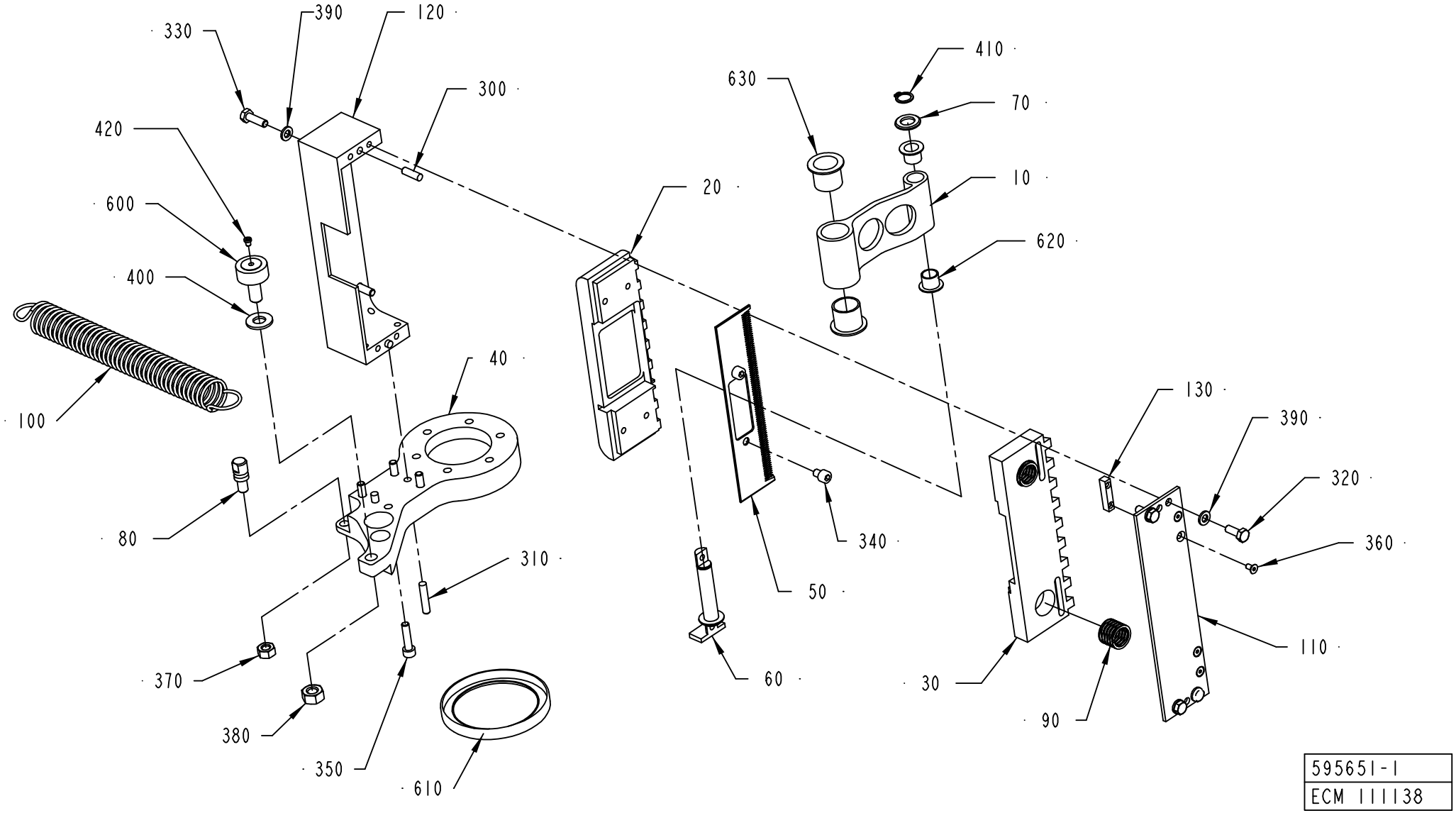
330
390
120
300
420
600
400
100
40
80
310
370
380
350
610
20
630
410
70
10
620
50
340
60
130
390
320
360
110
30
90
595651-1
ECM 111138

ECM: 111260 - 20021022
Group number: 595651-0100
Assembly Drawing: 595651-1_1_AB

Pos	Part No	SP	UN	Qty	Description	Page No
Straw Pitch 15						
010	595642-0000	A		1	CONNECTING ROD	
020	595760-0000	A		1	BEARING PLATE	
030	595761-0000	A		1	BEARING PLATE	
Straw Pitch 22						
010	1363032-0000	A		1	CONNECTING ROD	
020	1363027-0000	A		1	BEARING PLATE	
030	1363028-0000	A		1	BEARING PLATE	
Common Parts						
040	595634-0000	A		1	ARM	
050	595639-0000	A		1	KNIFE	
060	595640-0000	A		1	AXLE BOLT	
070	595641-0000	A		1	WASHER	
080	595806-0000	-		1	DOWEL	
090	595868-0000	A		2	SPRING	
100	1364400-0000	A		1	TENSION SPRING	
110	1363030-0000	-		1	LID	
120	1363031-0000	-		1	HOUSE	
130	1363108-0000	-		2	BLOCK	
300	311103-0353	-		2	PARALLEL PIN ISO 2338 6M6X20 A1	
310	311103-0357	-		2	PARALLEL PIN ISO 2338 6M6X30 A1	
320	312105-0368	-		4	SCREW M6S ISO 4017 M6X16 A480	
330	312105-0370	-		4	SCREW M6S ISO 4017 M6X20 A480	
340	312115-0362	-		2	SCREW ISO4762 M6X8 A4	
350	312115-0372	-		4	SCREW ISO4762 M6X25 A4	
360	312155-0287	-		4	SCREW EN 10642 MF6S M4X8 A480	
370	312605-0318	-		1	HEXAGON NUT, M6M M8 A280	
380	312630-0320	-		1	HEX.NUT FINE, EN 24032 M6M M10X1 FZB8	
390	315105-0153	-		8	WASHER BRB6,4X12RFR	
400	315105-0173	-		1	WASHER BRB10,5X22RFR	
410	315751-0109	-		1	RETAINING RING FOR SHAFT DIN 471 12 A2	
420	344510-0101	-		1	GREASE NIPPLE FOR CURVE ROLLERS 4 MM	
600	90083-0054	A		1	CAM ROLLER, 10X26X36 MM	
610	90459-1015	A		1	BEARING SEAL 70X90X10 MM	
620	90240-0262	A		2	FLANGE BUSHING, 12X14X12 MM	
630	90240-0265	A		2	FLANGE BUSHING, 20X23X21 MM	

Pos	Part No	SP	UN	Qty	Description	Page No

Machine Type | Group Description | Used-In | Group Number | Page No

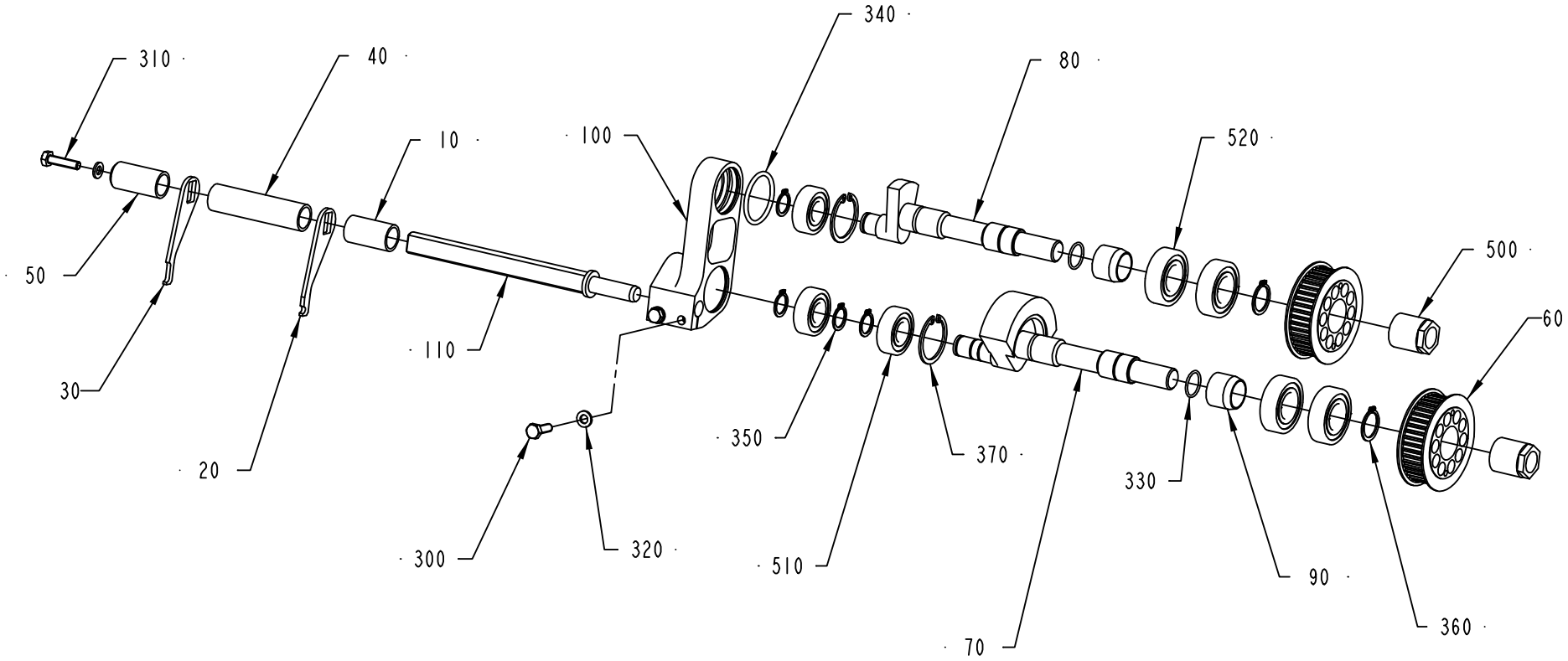

595652-2
ECM 120671

Pos	Part No	SP	UN	Qty	Description	Page No
S3-100 TUBEX 15						
010	595748-0000	-		1	SLEEVE	
020	1363091-0000	A		1	ARM	
030	1363091-0000	A		1	ARM	
040	1363092-0000	-		1	SLEEVE	
050	1363093-0000	-		1	WASHER	
S4-100 TUBEX 15						
010	595748-0000	-		1	SLEEVE	
020	595892-0000	A		1	ARM	
030	595892-0000	A		1	ARM	
040	1363092-0000	-		1	SLEEVE	
050	1363093-0000	-		1	WASHER	
S4-120 TUBEX 15, S4-118 FOSHAN 15						
010	595748-0000	-		1	SLEEVE	
020	595892-0000	A		1	ARM	
030	595892-0000	A		1	ARM	
040	595751-0000	-		1	SLEEVE	
050	595752-0000	-		1	WASHER	
S5-100 TUBEX 15						
010	595748-0000	-		1	SLEEVE	
020	595749-0000	A		1	ARM	
030	595749-0000	A		1	ARM	
040	1363092-0000	-		1	SLEEVE	
050	1363093-0000	-		1	WASHER	
S5-120 TUBEX 15						
010	595748-0000	-		1	SLEEVE	
020	595749-0000	A		1	ARM	
030	595749-0000	A		1	ARM	
040	595751-0000	-		1	SLEEVE	
050	595752-0000	-		1	WASHER	
S5-96 SOYEZ 15						
010	595748-0000	-		1	SLEEVE	
020	595892-0000	A		1	ARM	
030	595892-0000	A		1	ARM	
040	1363092-0000	-		1	SLEEVE	
050	1363093-0000	-		1	WASHER	

Pos	Part No	SP	UN	Qty	Description	Page No
T4/5-150 TUBEX 15						
010	1364422-0000	-		1	SLEEVE	
020	595892-0000	A		1	ARM	
030	595749-0000	A		1	ARM	
040	1363092-0000	-		1	SLEEVE	
050	1367354-0000	-		1	WASHER	
T5/6-150 TUBEX 15						
010	1364422-0000	-		1	SLEEVE	
020	595749-0000	A		1	ARM	
030	1364423-0000	A		1	ARM	
040	1363092-0000	-		1	SLEEVE	
050	1367354-0000	-		1	WASHER	
T5/6-190 TUBEX 15						
010	1364422-0000	-		1	SLEEVE	
020	595749-0000	A		1	ARM	
030	1364423-0000	A		1	ARM	
040	2500547-0000	-		1	SLEEVE	
050	2500548-0000	-		1	WASHER	
U4-145 TUBEX 22						
010	595748-0000	-		1	SLEEVE	
020	595892-0000	A		1	ARM	
030	595893-0000	A		1	ARM	
040	1363092-0000	-		1	SLEEVE	
050	1363093-0000	-		1	WASHER	
U4-149 SPF 22						
010	595748-0000	-		1	SLEEVE	
020	595892-0000	A		1	ARM	
030	595893-0000	A		1	ARM	
040	1363063-0000	-		1	SLEEVE	
050	1363064-0000	-		1	WASHER	
U4-160 TUBEX 22						
010	595748-0000	-		1	SLEEVE	
020	595892-0000	A		1	ARM	
030	595893-0000	A		1	ARM	
040	1364425-0000	-		1	SLEEVE	
050	1364424-0000	-		1	WASHER	

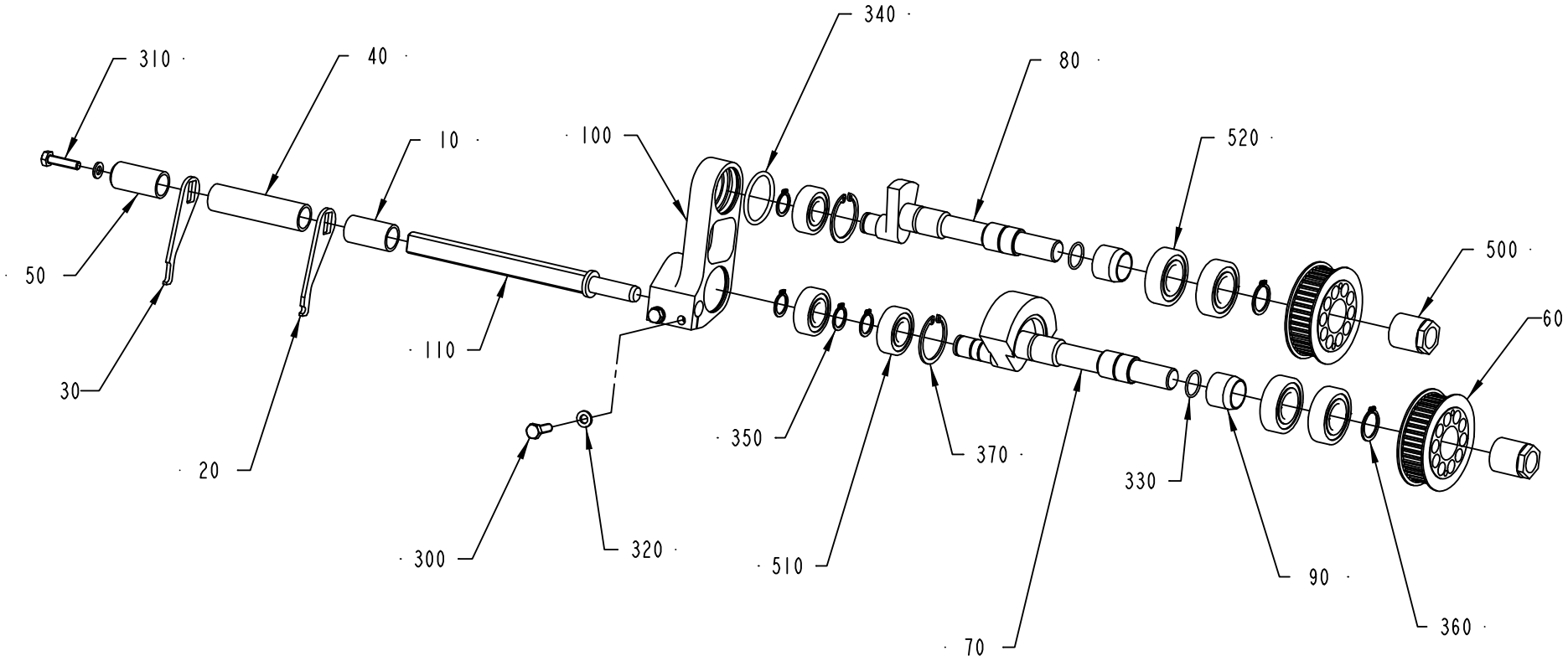

595652-2
ECM 120671

Pos	Part No	SP	UN	Qty	Description	Page No
U4-165 TUBEX 22 (Cont'd)						
010	595748-0000	-		1	SLEEVE	
020	595892-0000	A		1	ARM	
030	595893-0000	A		1	ARM	
040	595751-0000	-		1	SLEEVE	
050	595752-0000	-		1	WASHER	
U5-145 TUBEX 22						
010	595748-0000	-		1	SLEEVE	
020	595749-0000	A		1	ARM	
030	1368560-0000	A		1	ARM	
040	1363092-0000	-		1	SLEEVE	
050	1363093-0000	-		1	WASHER	
U5-165 TUBEX 22						
010	595748-0000	-		1	SLEEVE	
020	595749-0000	A		1	ARM	
030	1368560-0000	A		1	ARM	
040	595751-0000	-		1	SLEEVE	
050	595752-0000	-		1	WASHER	
U5-180 TUBEX 22						
010	595748-0000	-		1	SLEEVE	
020	595749-0000	A		1	ARM	
030	1368560-0000	A		1	ARM	
040	2500545-0000	-		1	SLEEVE	
050	2500546-0000	-		1	WASHER	
Common Parts						
060	595735-0000	A		2	PULLEY	
070	595736-0000	A		1	CRANK SHAFT	
080	595737-0000	A		1	CRANK SHAFT	
090	595742-0000	A		2	SLEEVE	
100	595746-0000	A		1	BEARING HOUSING	
110	595747-0000	A		1	ROD	
300	312105-0370	-		2	SCREW M6S ISO 4017 M6X20 A480	
310	312105-0372	-		1	SCREW M6S ISO 4017 M6X25 A480	
320	315105-0153	-		3	WASHER BRB6,4X12RFR	
330	315204-0115	A		2	O-RING 17,1X1,6 MM	
340	315204-0221	A		1	O-RING 34,2X3 MM	
350	315751-0112	-		4	RETAINING RING FOR SHAFT DIN 471 15 A2	
360	315751-0116	-		2	RETAINING RING FOR SHAFT DIN 471 20 A2	
370	315753-0124	-		2	RETAINING RING FOR BORE DIN 472 35 A2	
500	90208-0137	A		2	CLAMPING ELEMENT	
510	90214-0169	A		3	BALL BEARING SOLID OIL 15X35X11 MM	
520	90214-0225	A		4	BALL BEARING SOLID OIL 20X42X12 MM	

Machine Type | Group Description | Used-In | Group Number | Page No

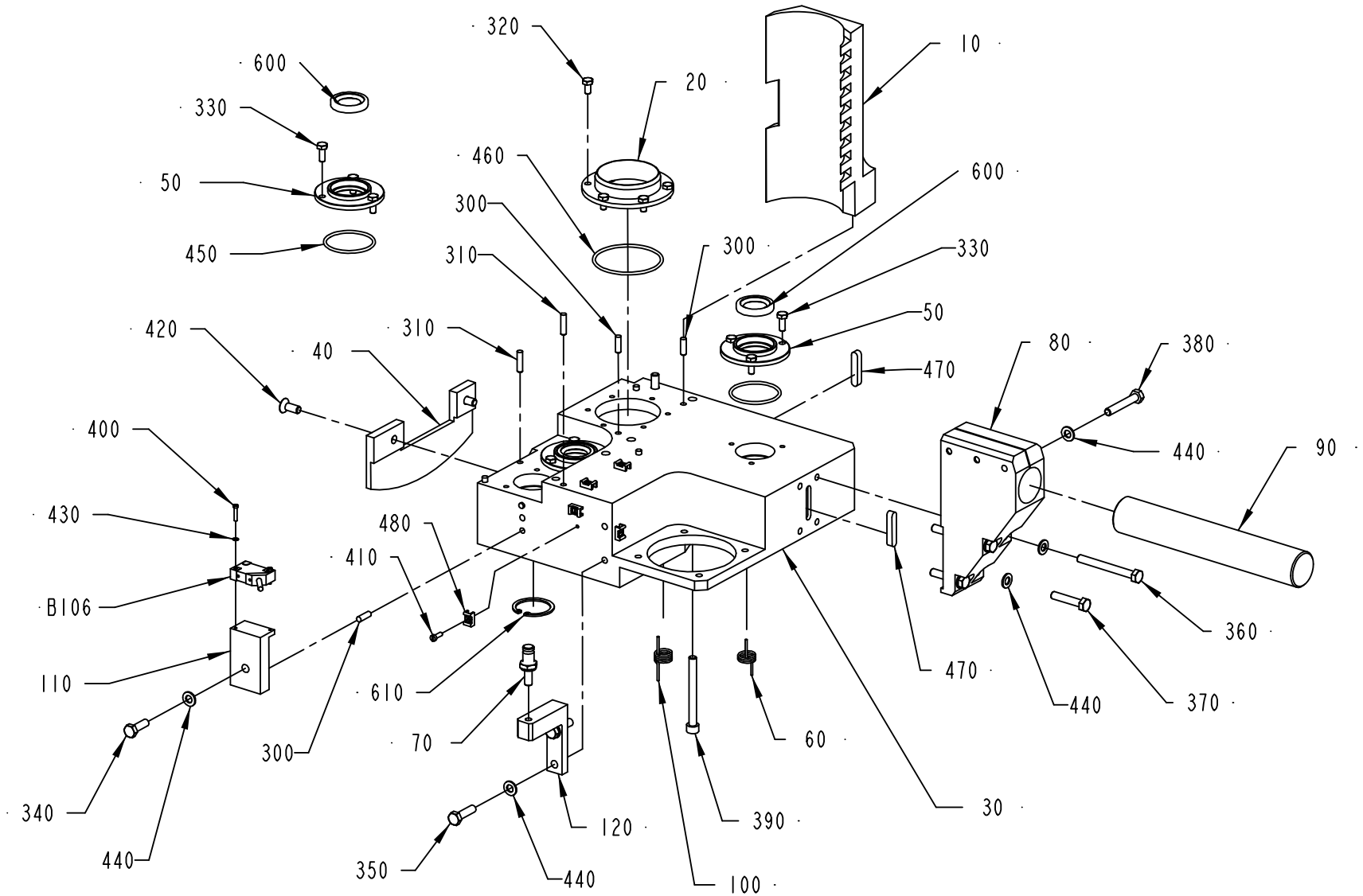

595653-1
ECM 111138

ECM: 111258 - 20021022
Group number: 595653-0100
Assembly Drawing: 595653-1_1_AB

Pos	Part No	SP	UN	Qty	Description	Page No
TBA 0200B Pitch 15, TBA 0250B Pitch 15, TBA 0284B Pitch 15, TBA 0300S Pitch 15						
010	595808-0000	-		1	GUIDE CONSOLE	
040	595728-0000	-		1	SUPPORT PLATE	
TBA 0200B Pitch 22, TBA 0250B Pitch 22, TBA 0284B Pitch 22, TBA 0300S Pitch 22						
010	1363026-0000	-		1	GUIDE CONSOLE	
040	595728-0000	-		1	SUPPORT PLATE	
TBA 0200S Pitch 15, TBA 0200M Pitch 15, TBA 0250S Pitch 15						
010	595808-0000	-		1	GUIDE CONSOLE	
040	1368542-0000	-		1	SUPPORT PLATE	
TBA 0200S Pitch 22, TBA 0200M Pitch 22, TBA 0250S Pitch 22						
010	1363026-0000	-		1	GUIDE CONSOLE	
040	1368542-0000	-		1	SUPPORT PLATE	
Common Parts						
020	595633-0000	-		1	SEALING FLANGE	
030	595727-0000	A		1	FRAME	
050	595745-0000	-		3	BEARING COVER	
060	595791-0000	A		1	TURN SPRING	
070	595807-0000	A		1	DOWEL	
080	595830-0000	-		1	AXLE SUPPORT	
090	595831-0000	-		1	AXLE PIN	
100	595873-0000	A		1	TURN SPRING	
110	595879-0000	-		1	HOLDER	
120	1364363-0000	-		1	SPRING BRACKET	
300	311103-0353	-		6	PARALLEL PIN ISO 2338 6M6X20 A1	
310	311103-0355	-		3	PARALLELL PIN, M6, 6X25 MM	
320	312105-0366	-		6	SCREW M6S ISO 4017 M6X12 A480	
330	312105-0368	-		9	SCREW M6S ISO 4017 M6X16 A480	
340	312105-0453	-		1	SCREW M6S ISO 4017 M8X25 A480	
350	312105-0455	-		2	SCREW M6S ISO 4017 M8X30 A480	
360	312105-0466	-		2	SCREW M6S ISO 4014 M8X75 A480	
370	312109-0459	-		2	SCREW M6S ISO 4017 M8X40 A480	
380	312109-0461	-		3	SCREW M6S ISO 4017 M8X50 A480	
390	312115-0467	-		2	SCREW ISO4762 M8X80 A4	
400	312125-0228	-		2	SCREW ISO 1207 M3X16 A4	
410	312125-0291	-		5	SCREW ISO 1207 M4X12 A4	
420	312155-0451	-		2	SCREW EN 10642 MF6S M8X20 A480	
430	315105-0124	-		2	WASHER BRB3,2X6RFR	
440	315105-0165	-		10	WASHER BRB8,4X16RFR	
450	315204-0301	B		3	O-RING 49,5X3 MM	
460	315204-0305	B		1	O-RING 69,5X3 MM	
470	315705-0270	-		2	PARALLEL KEY W. ROUND ENDS 8X7X40 MM	
480	352113-0205	-		5	ANCHOR PLATES FOR STRIPS, TYPE TM2S8-C10	
600	90459-1016	A		3	BEARING SEAL 25X40X7 MM	
610	90141-0020	-		2	RETAINING RING FOR BORE DIN 472 42 A2	
B106	90044-0194	A		1	PROX.SW. IN5329/IN3002-BPKG	

Machine Type | Group Description | Used-In | Group Number | Page No

LADDER BAND GUIDE

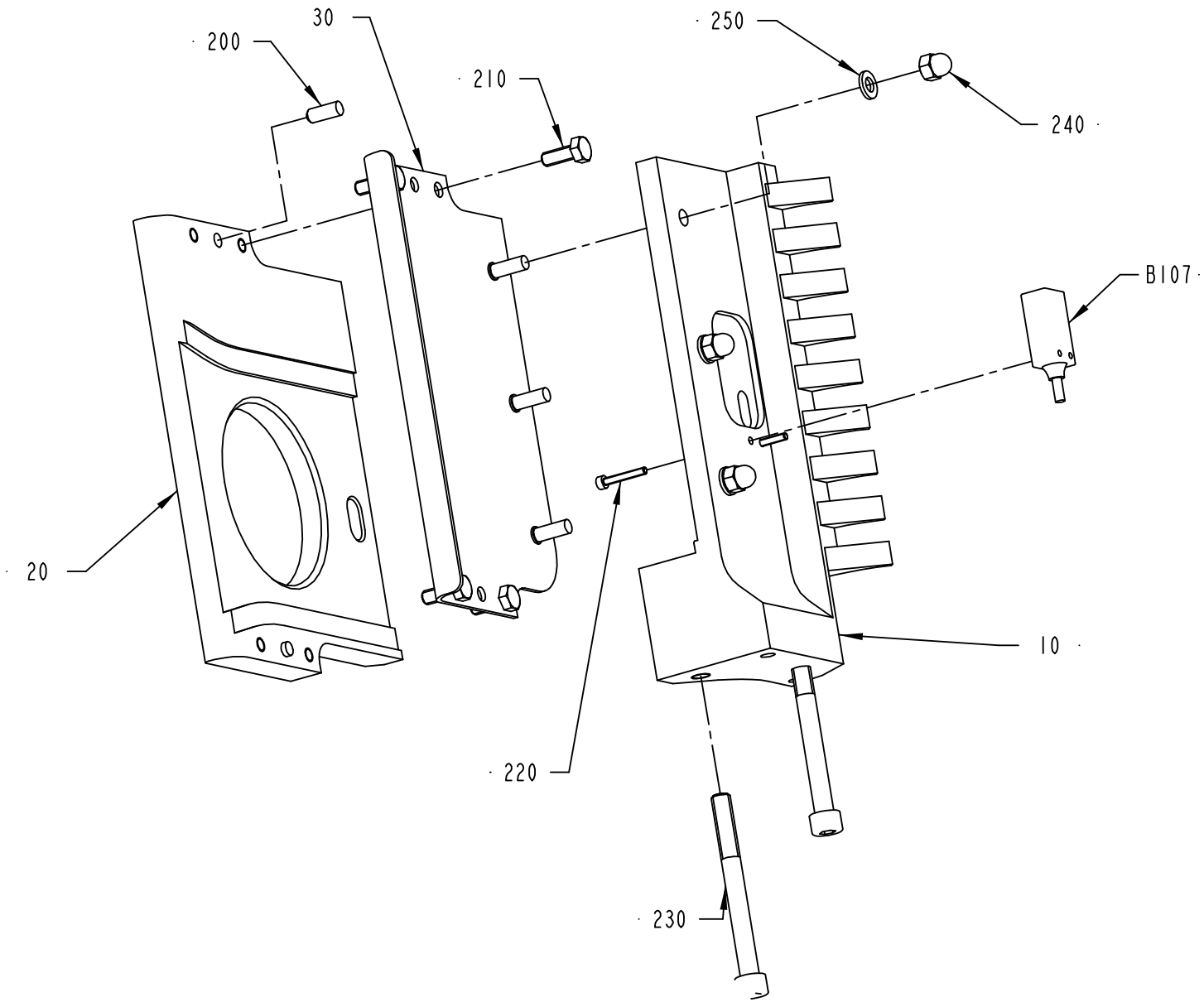

595654-1
ECM 100505

ECM: 107245 - 20021022
Group number: 595654-0100
Assembly Drawing: 595654-1_1_AB

Pos	Part No	SP	UN	Qty	Description	Page No
U5-180 TUBEX 22						
010	1363033-0000	-		1	GUIDE CONSOLE	
020	2500541-0000	-		1	LADDER BAND GUIDE	
S3-100 TUBEX 15						
010	595824-0000	-		1	GUIDE CONSOLE	
020	1363086-0000	-		1	LADDER BAND GUIDE	
S4-100 TUBEX 15						
010	595824-0000	-		1	GUIDE CONSOLE	
020	1368556-0000	-		1	LADDER BAND GUIDE	
S4-118 FOSHAN 15						
010	595824-0000	-		1	GUIDE CONSOLE	
020	2500567-0000	-		1	LADDER BAND GUIDE	
S4-120 TUBEX 15						
010	595824-0000	-		1	GUIDE CONSOLE	
020	1368562-0000	-		1	LADDER BAND GUIDE	
S5-100 TUBEX 15						
010	595824-0000	-		1	GUIDE CONSOLE	
020	1368561-0000	-		1	LADDER BAND GUIDE	
S5-120 TUBEX 15						
010	595824-0000	-		1	GUIDE CONSOLE	
020	1363066-0000	-		1	LADDER BAND GUIDE	
S5-96 SOYEZ 15						
010	595824-0000	-		1	GUIDE CONSOLE	
020	1364417-0000	-		1	LADDER BAND GUIDE	
T4/5-150 TUBEX 15						
010	595824-0000	-		1	GUIDE CONSOLE	
020	1367350-0000	-		1	LADDER BAND GUIDE	
T5/6-150 TUBEX 15						
010	595824-0000	-		1	GUIDE CONSOLE	
020	1367351-0000	-		1	LADDER BAND GUIDE	
T5/6-190 TUBEX 15						
010	595824-0000	-		1	GUIDE CONSOLE	
020	2500542-0000	-		1	LADDER BAND GUIDE	
U4-145 TUBEX 22						
010	1363033-0000	-		1	GUIDE CONSOLE	
020	1364416-0000	-		1	LADDER BAND GUIDE	
U4-149 SPF 22						
010	1363033-0000	-		1	GUIDE CONSOLE	
020	1363058-0000	-		1	LADDER BAND GUIDE	
U4-160 TUBEX 22						
010	1363033-0000	-		1	GUIDE CONSOLE	
020	1367352-0000	-		1	LADDER BAND GUIDE	
U4-165 TUBEX 22						
010	1363033-0000	-		1	GUIDE CONSOLE	
020	1363065-0000	-		1	LADDER BAND GUIDE	
U5-145 TUBEX 22						
010	1363033-0000	-		1	GUIDE CONSOLE	
020	1368563-0000	-		1	LADDER BAND GUIDE	
U5-165 TUBEX 22						
010	1363033-0000	-		1	GUIDE CONSOLE	
020	1368564-0000	-		1	LADDER BAND GUIDE	
Common Parts						
030	595825-0000	-		1	PLATE	
200	311103-0351	-		2	PARALLEL PIN ISO 2338 6M6X16 A1	
210	312105-0368	-		4	SCREW M6S ISO 4017 M6X16 A480	
220	312115-0230	-		2	SCREW ISO4762 M3X20 A4	
230	312115-0467	-		2	SCREW ISO4762 M8X80 A4	
240	312705-0316	-		3	NUT HEX. DOMED CAP MHM-6 M6 A280	
250	315105-0153	-		3	WASHER BRB6,4X12RFR	
B107	90232-0117	A		1	PH.CELL WT4-2P135S10	

Machine Type | Group Description | Used-In | Group Number | Page No

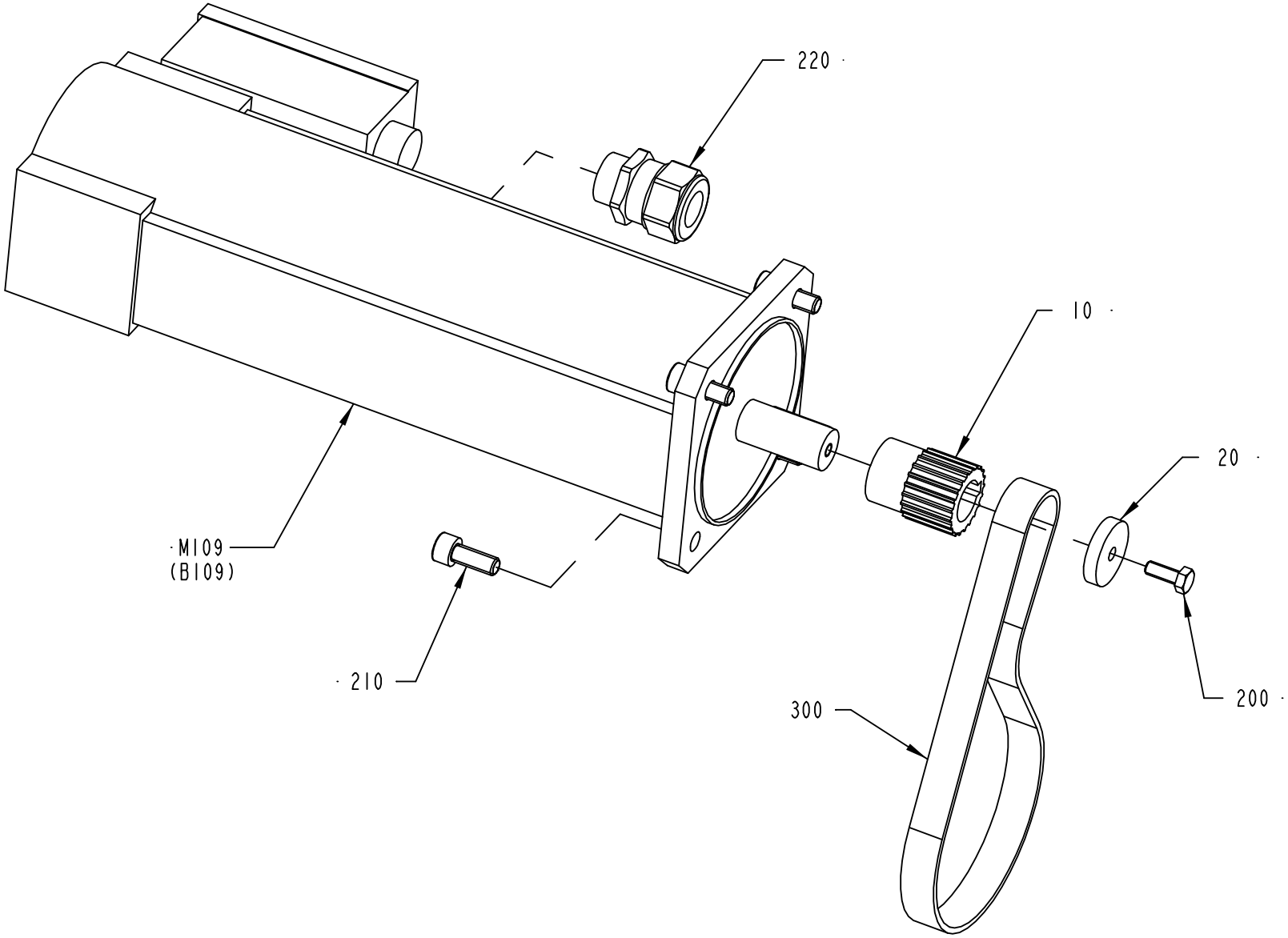

S-595655-I
ECN 25441

ECM: 111262 - 20021022
Group number: 595655-0100
Assembly Drawing: 595655-1_1_AA

Pos	Part No	SP	UN	Qty	Description	Page No
-						
010	595767-0000	A		1	PULLEY	
020	595772-0000	-		1	WASHER	
200	312105-0368	-		1	SCREW M6S ISO 4017 M6X16 A480	
210	312115-0451	-		4	SCREW ISO4762 M8X20 A4	
220	353245-0005	-		1	GLAND, EXTENDED WITH INSERT, PG16/PR 22,	
300	90417-0320	A		1	TIMING BELT AT5 525X16 MM	
M109	90045-0194	A		1	SERVO MOTOR EP 115-131-66T3B	

Pos	Part No	SP	UN	Qty	Description	Page No

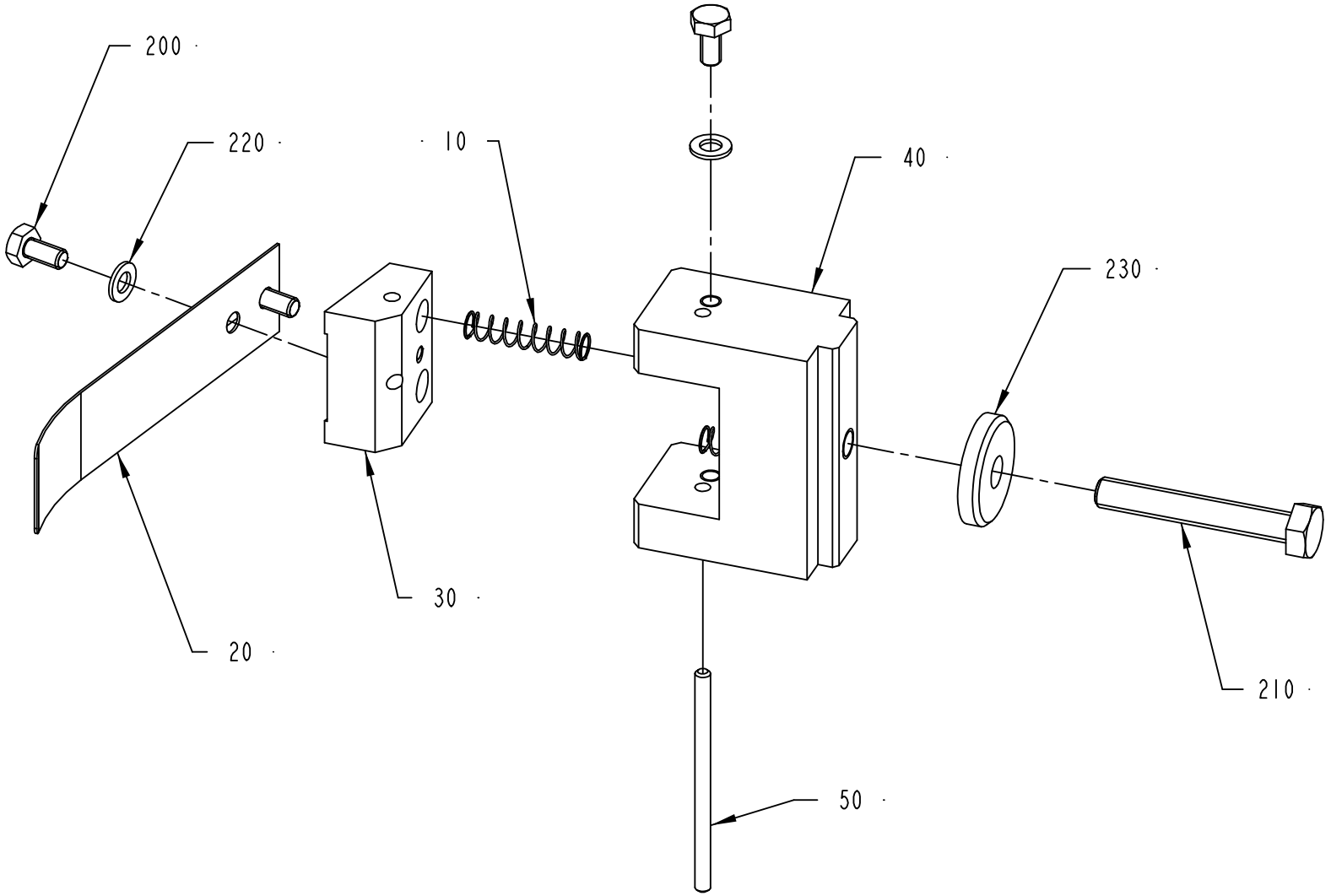

S-595656-I
ECN 25441

ECM: 111263 - 20021022
Group number: 595656-0100
Assembly Drawing: 595656-1_1_AA

Pos	Part No	SP	UN	Qty	Description	Page No
-						
010	536204-0000	A		2	COMPRESSION SPRING	
020	595811-0000	A		1	LEAF SPRING	
030	595812-0000	-		1	HOLDER	
040	595813-0000	-		1	SPRING BRACKET	
050	595816-0000	-		1	SHAFT	
200	312105-0287	-		4	SCREW M6S ISO4017 M4X8 A470	
210	312109-0378	-		1	SCREW M6S ISO4017 M6X40 A480	
220	315105-0136	-		4	WASHER BRB4,3XRFR	
230	315125-0153	-		1	WASHER TBRSB 6,4X22X4 A4	

Pos	Part No	SP	UN	Qty	Description	Page No

GUN HOLDER

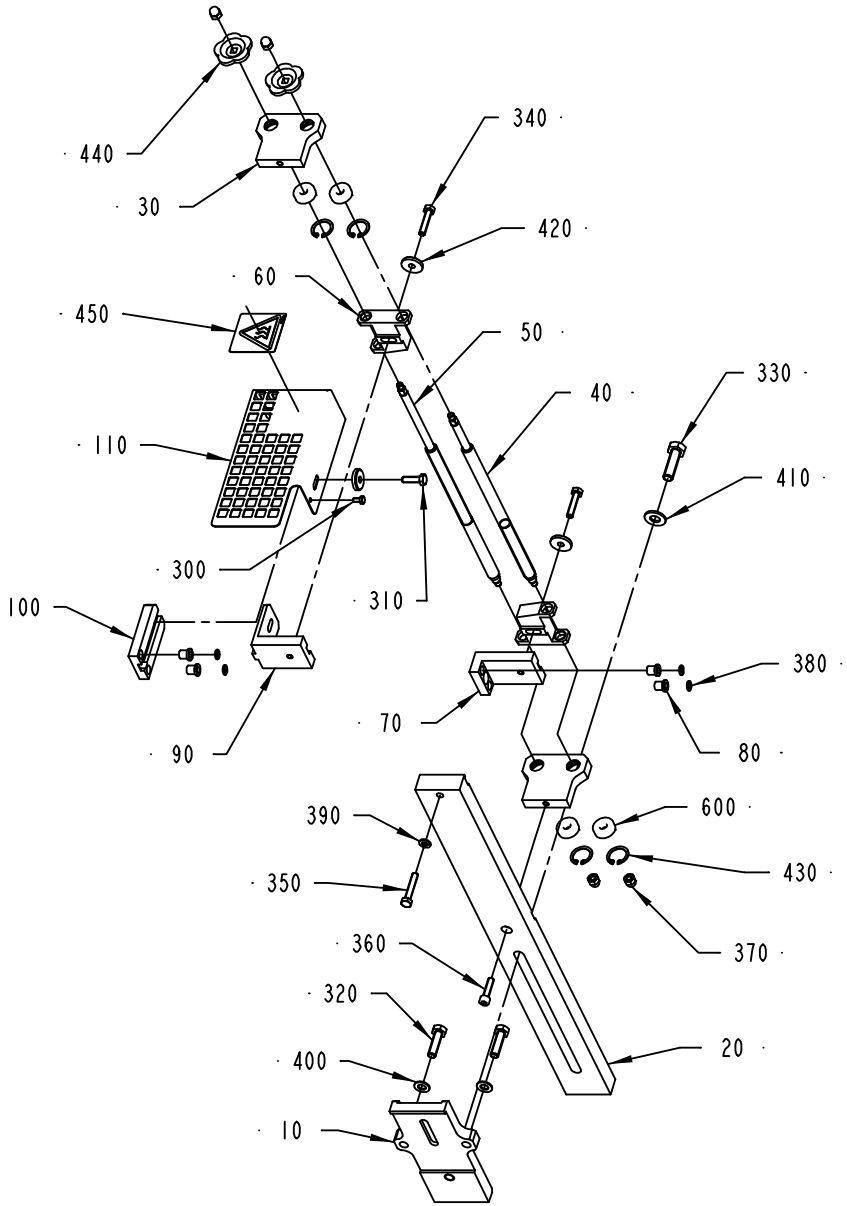

595657-1
172049

ECM: 172049 - 20040507
Group number: 595657-0100
Assembly Drawing: 595657-1_1_AC

Pos	Part No	SP	UN	Qty	Description	Page No
ANSI						
450	359725-0120	-		1	WARNING SIGN ANSI (H), HEAT ENERGY	
ISO						
450	1128844-0000	-		1	CAUTION SIGN	
Common Parts						
010	595847-0000	-		1	CLAMPING PART	
020	595850-0000	-		1	HOLDER	
030	595855-0000	-		2	BLOCK	
040	595857-0000	-		1	ADJUSTING SCREW	
050	595858-0000	-		1	ADJUSTING SCREW	
060	595861-0000	-		2	BEARING BLOCK	
070	595862-0000	-		1	ADJUSTMENT BRACKET	
080	595864-0000	-		4	ISOLERHYLSA	
090	595865-0000	-		1	ADJUSTMENT BRACKET	
100	595866-0000	-		1	ADJUSTMENT BRACKET	
110	1363098-0000	-		1	PROTECTION	
300	312105-0287	-		1	SCREW M6S ISO4017 M4X8 A470	
310	312105-0370	-		1	SCREW M6S ISO 4017 M6X20 A480	
320	312105-0455	-		2	SCREW M6S ISO 4017 M8X30 A480	
330	312105-0497	-		1	SCREW M6S ISO 4017 M10X35 A480	
340	312109-0374	-		2	SCREW M6S ISO 4017 M6X30 A480	
350	312109-0376	-		1	SCREW M6S ISO 4017 M6X35 A480	
360	312115-0372	-		1	SCREW ISO4762 M6X25 A4	
370	312705-0316	-		4	NUT HEX. DOMED CAP MHM-6 M6 A280	
380	315105-0146	-		4	WASHER BRB5,3X10RFR	
390	315105-0153	-		1	WASHER BRB6,4X12RFR	
400	315105-0165	-		2	WASHER BRB8,4X16RFR	
410	315105-0173	-		1	WASHER BRB10,5X22RFR	
420	315125-0153	-		3	WASHER TBRSB 6,4X22X4 A4	
430	315753-0117	-		4	RETAINING RING FOR BORE DIN 472 22 A2	
440	318853-0101	-		2	STELLAR KNOB, SQUARE HOLE, NO. 8306-1010	
600	90214-0027	-		4	BALL BEARING, 8X22X7 MM	

Pos	Part No	SP	UN	Qty	Description	Page No

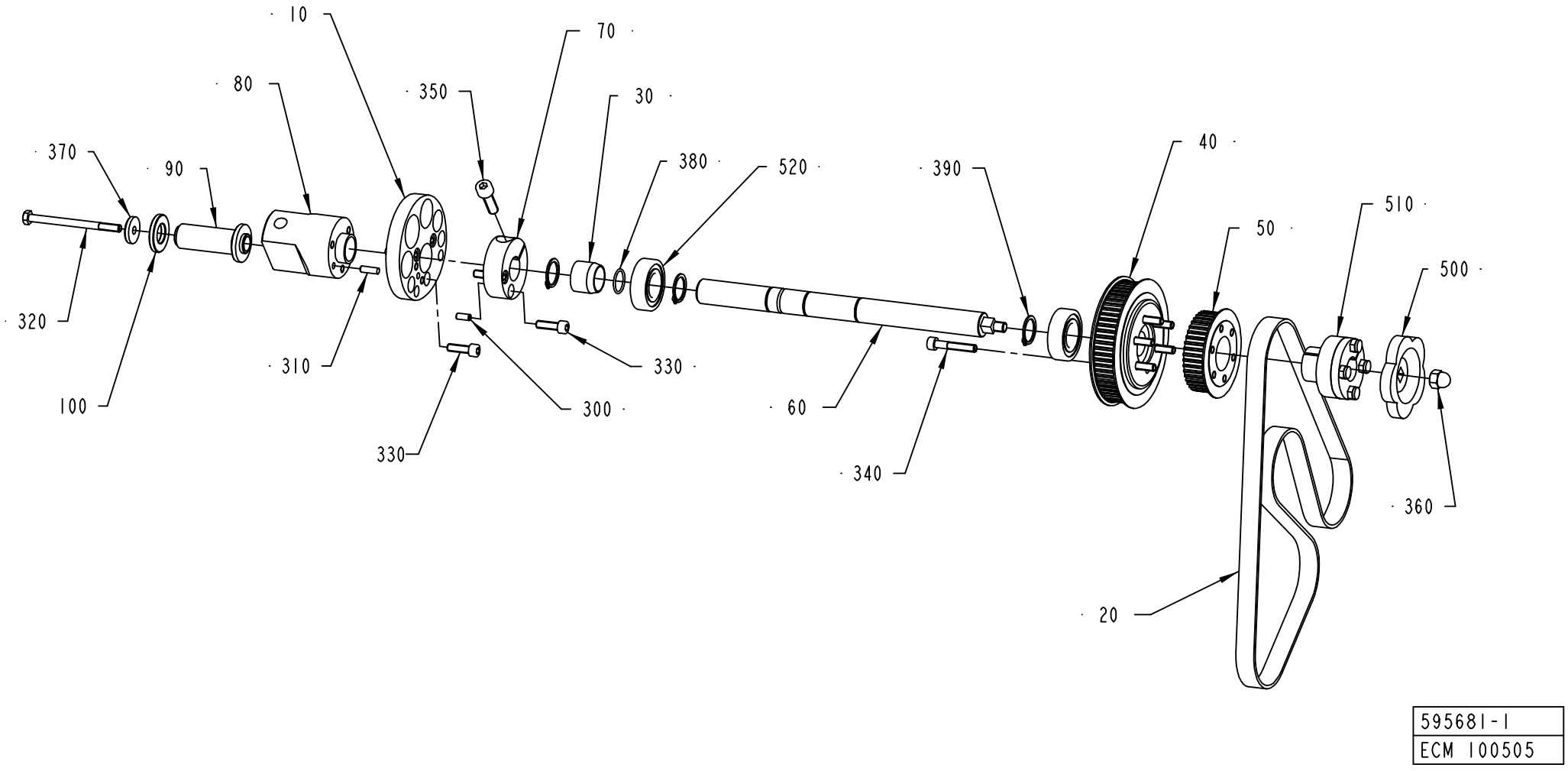
10
70
80
350
30
370
90
380
520
390
40
510
50
500
320
310
330
100
330
300
60
340
360
20
595681-1
ECM 100505

ECM: 111261 - 20021022
Group number: 595681-0100
Assembly Drawing: 595681-1_1_AB

Pos	Part No	SP	UN	Qty	Description	Page No
Straw Pitch 15						
010	595798-0000	A		1	CAM	
020	90417-0417	A		1	TIMING BELT AT5 1075X16 MM	
Straw Pitch 22						
010	595889-0000	A		1	CAM	
020	90417-0418	A		1	TIMING BELT AT5 1020X16 MM	
Common Parts						
030	595742-0000	A		1	SLEEVE	
040	595768-0000	A		1	PULLEY	
050	595769-0000	A		1	PULLEY	
060	595770-0000	A		1	SHAFT	
070	595771-0000	A		1	CLAMP BLOCK	
080	595800-0000	-		1	AXLE SUPPORT	
090	595801-0000	A		1	AXLE PIN	
100	595804-0000	A		1	SPACER DISC	
300	311103-0306	-		1	PARALLEL PIN ISO 2338 5M6X12 A1	
310	311103-0308	-		1	PARALLEL PIN ISO 2338 5M6X16 A1	
320	312105-0386	-		1	SCREW M6S ISO 4014 M6X80 A480	
330	312115-0370	-		5	SCREW ISO4762 M6X20 A4	
340	312115-0376	-		6	SCREW ISO4762 M6X35 A4	
350	312115-0453	-		1	SCREW ISO4762 M8X25 A4	
360	312705-0318	-		1	NUT HEX. DOMED CAP MHM-6 M8 A280	
370	315125-0153	-		1	WASHER TBRSB 6,4X22X4 A4	
380	315204-0115	A		1	O-RING 17,1X1,6 MM	
390	315751-0116	-		3	RETAINING RING FOR SHAFT DIN 471 20 A2	
500	90051-0079	-		1	STELLAR KNOB, SQUARE HOLE, NO. 8306 1304	
510	90208-0078	A		1	CLAMPING ELEMENT WITH SLEEVE, 20X28 MM	
520	90214-0225	A		2	BALL BEARING SOLID OIL 20X42X12 MM	

Pos	Part No	SP	UN	Qty	Description	Page No

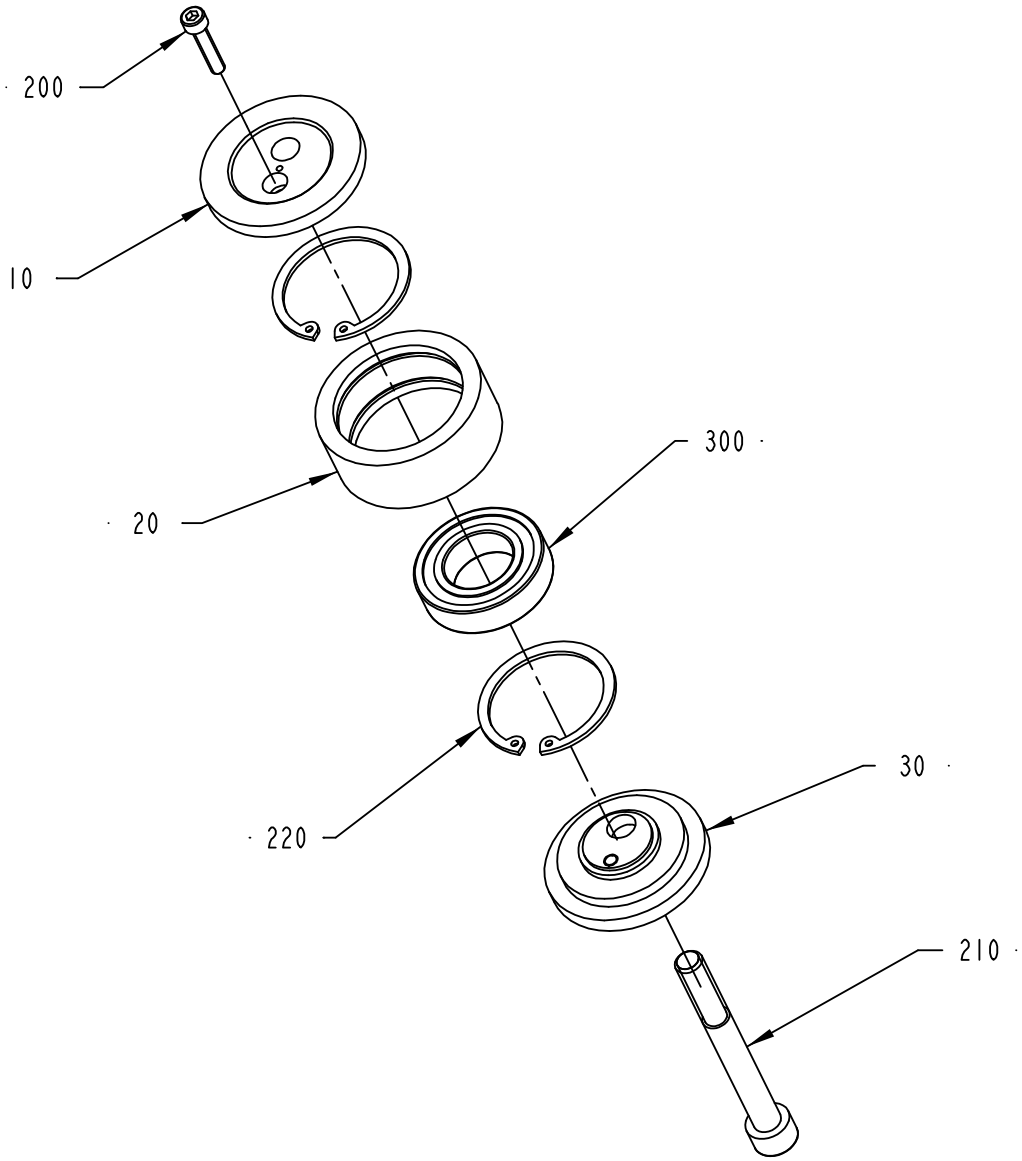

S-595682-I
ECN 25441

ECM: 111264 - 20021022
Group number: 595682-0100
Assembly Drawing: 595682-1_1_AA

Pos	Part No	SP	UN	Qty	Description	Page No
-						
010	595773-0000	-		1	BEARING HOLDER	
020	595774-0000	-		1	BEARING SLEEVE	
030	595775-0000	-		1	LID	
200	312115-0333	-		1	SCREW ISO4762 M5X25 A4	
210	312115-0509	-		1	SCREW ISO4762 M10X90 A4	
220	315753-0130	-		2	RETAINING RING FOR BORE DIN 472 47 A2	
300	90214-0163	A		1	BALL BEARING SOLID OIL 25X47X12 MM	

Pos	Part No	SP	UN	Qty	Description	Page No

Tetra Pak

SPC
Spare Parts Catalogue

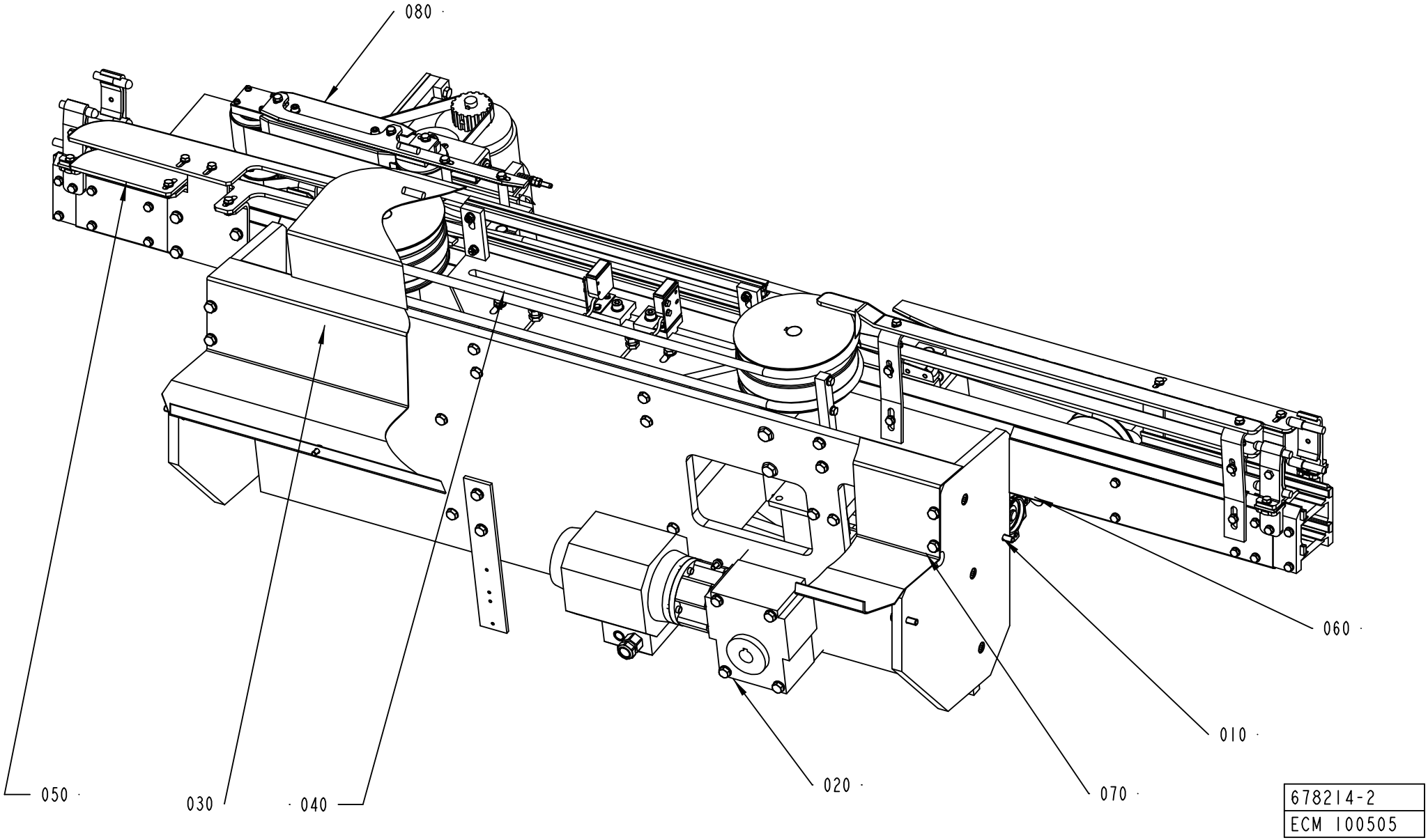
080
060
010
020
070
050
030
040
678214-2
ECM 100505

ECM: 105121 - 20021022
Group number: 678214-0200
Assembly Drawing: 678214-2_1_AA

Pos	Part No	SP	UN	Qty	Description	Page No
-						
010	595662-0100	-		1	FRAME	2-5
020	595663-0200	-		1	DRIVE UNIT	2-7
030	595664-0200	-		1	SUPPORT BELT	2-9
040	595665-0200	-		1	DRIVE BELT	2-11
050	595666-0200	-		1	CONVEYOR FRAME	2-13
060	595667-0200	-		1	OUTFEED WHEEL	2-15
070	595668-0100	-		1	COVERING PLATE	2-17
080	2519606-0100	-		1	BELT BRAKE	2-19

Pos	Part No	SP	UN	Qty	Description	Page No

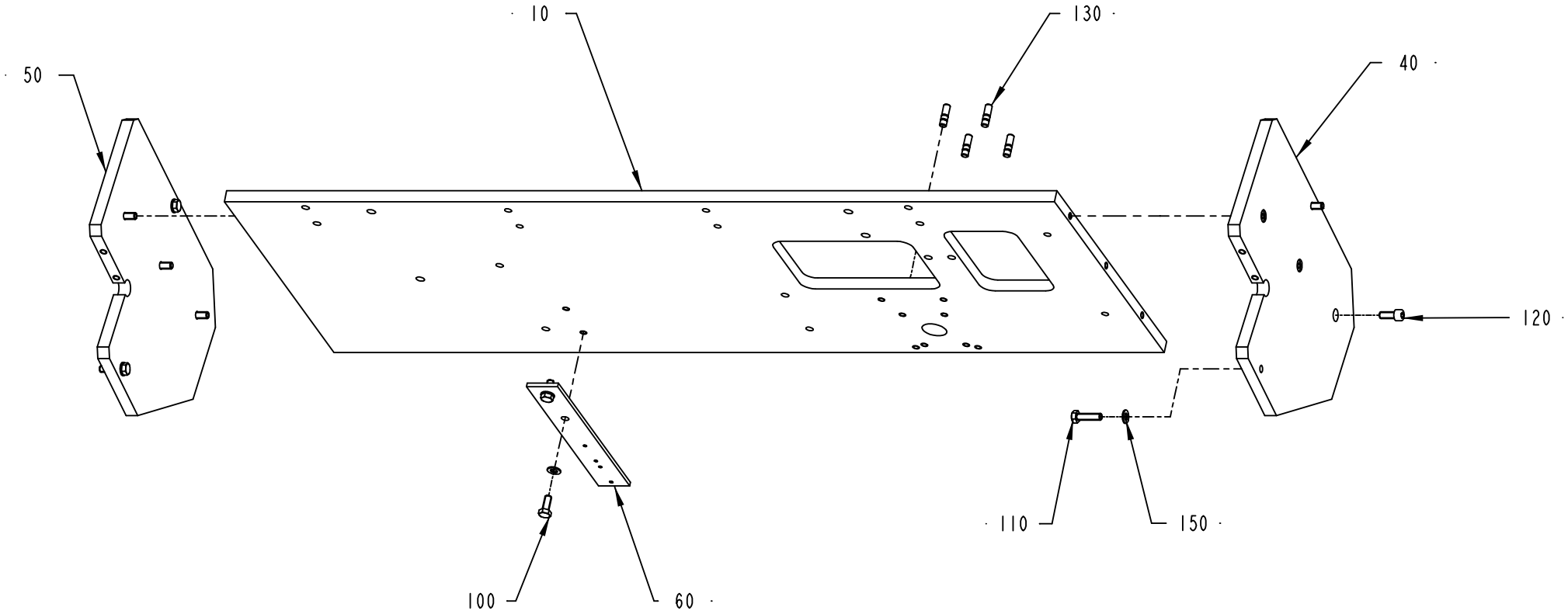

S-595662-I
ECN 25441

ECM: 25441 -
Group number: 595662-0100
Assembly Drawing: 595662-1_1_AA

Pos	Part No	SP	UN	Qty	Description	Page No
-						
010	595730-0000	-		1	SHEET	
040	595729-0000	-		1	SIDE PLATE	
050	595731-0000	-		1	SIDE PLATE	
060	1363090-0000	-		1	BRACKET	
100	312105-0451	-		2	SCREW M6S ISO 4017 M8X20 A480	
110	312105-0455	-		4	SCREW M6S ISO 4017 M8X30 A480	
120	312115-0451	-		6	SCREW ISO4762 M8X20 A4	
130	312303-0455	-		4	SCREW DIN 938 PS M8X20 A4 80	
150	315105-0165	-		6	WASHER BRB8,4X16RFR	

Pos	Part No	SP	UN	Qty	Description	Page No

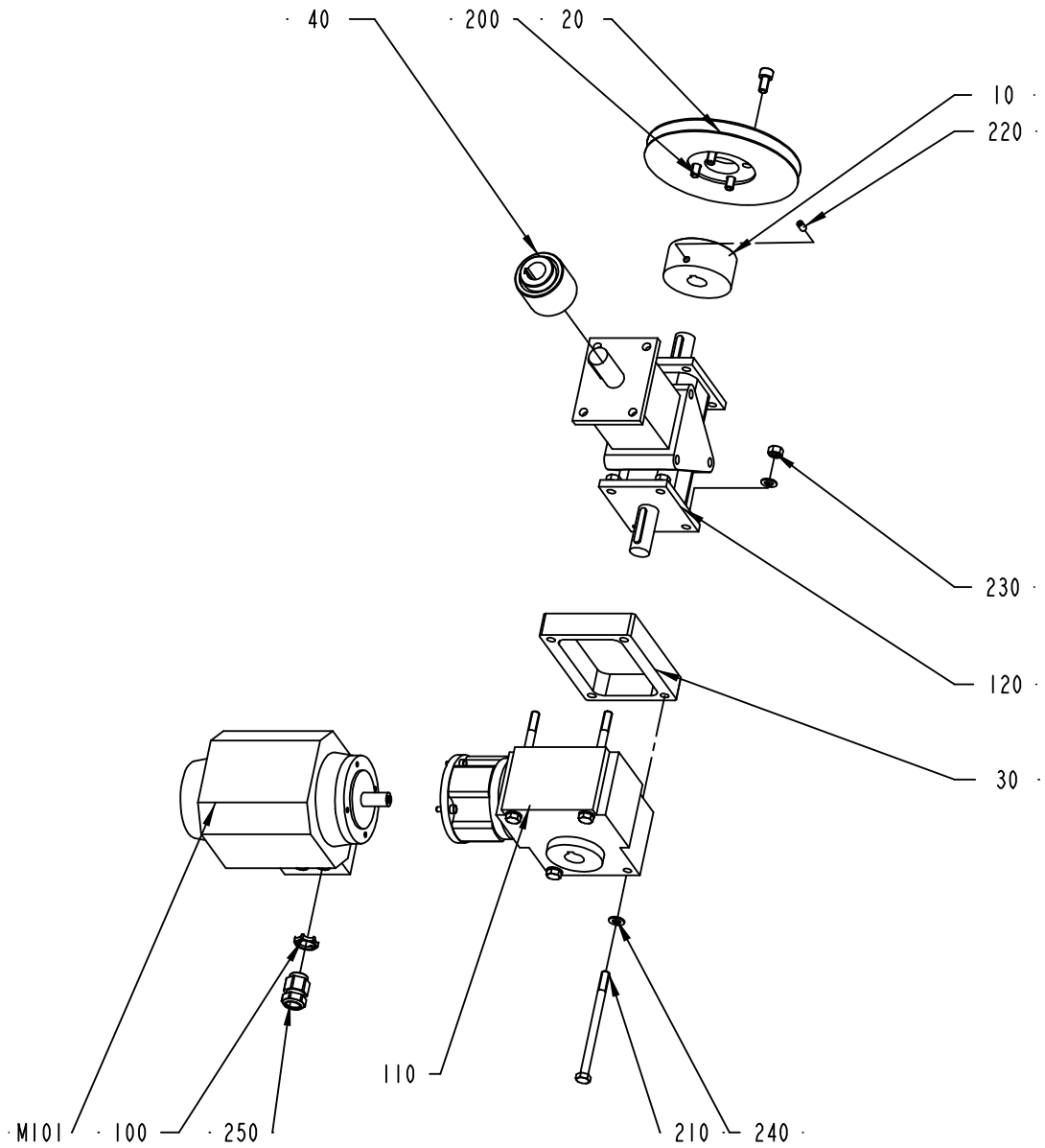

595663-2
ECM 100505

ECM: 105126 - 20021022
Group number: 595663-0200
Assembly Drawing: 595663-2_1_AA

Pos	Part No	SP	UN	Qty	Description	Page No
-						
010	595740-0000	-		1	SLEEVE	
020	595741-0000	A		1	PULLEY	
030	1363040-0000	-		1	SPACER PLATE	
040	1363099-0000	A		1	CONNECTION	
100	90099-0200	-		1	GLAND, LOCKNUT, PG 11	
110	90457-0973	-		1	WORM GEAR BS40F-0O-VM-3-IEC 63-B14	
120	90056-0173	A		1	GEARS, BEVEL RAN 20 DA	
200	312105-0449	-		4	SCREW M6S ISO 4017 M8X16 A480	
210	312105-0475	-		4	SCREW M6S ISO 4014 M8X120 A480	
220	312318-0366	-		1	SCREW ISO4029 M6X12 A4	
230	312605-0318	-		4	HEXAGON NUT, M6M M8 A280	
240	315105-0165	-		8	WASHER BRB8,4X16RFR	
250	353245-0011	-		1	GLAND, EXTENDED WITH INSERT, PR18,6/PG11	
M101	90458-2482	A		1	MOTOR 3GVA062142-CSB	

Pos	Part No	SP	UN	Qty	Description	Page No

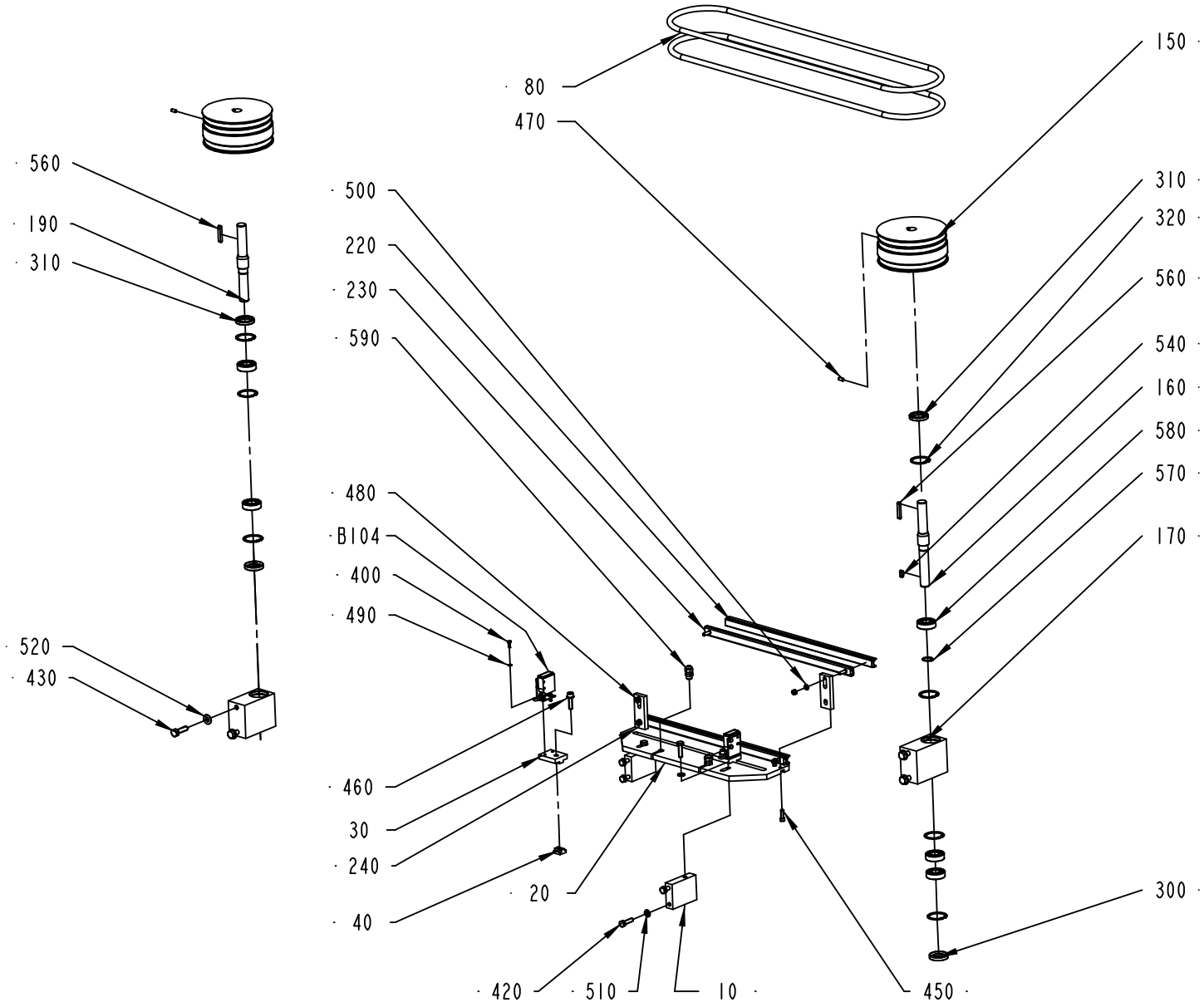

595664-2
ECM 100505

ECM: 105127 - 20021022
Group number: 595664-0200
Assembly Drawing: 595664-2_1_AA

Pos	Part No	SP	UN	Qty	Description	Page No
-						
010	595785-0000	-		2	BRACKET	
020	595786-0000	-		1	SHEET	
030	595788-0000	-		2	BRACKET	
040	595789-0000	-		2	NUT	
080	595809-0000	A		2	BELT	
150	1363041-0000	-		2	PULLEY	
160	1363042-0000	-		1	SHAFT	
170	1363043-0000	-		2	BEARING HOUSING	
190	2519621-0000	-		1	SHAFT	
220	1363101-0000	A		2	STEERING RAIL	
230	1363102-0000	A		2	STEERING RAIL	
240	1363103-0000	-		2	BRACKET	
300	90091-0446	A		2	RADIAL SEAL 20X42X7 MM DUST LIP	
310	90459-1020	A		2	BEARING SEAL 25X42X7 MM	
320	90141-0020	-		7	RETAINING RING FOR BORE DIN 472 42 A2	
400	312105-0291	-		4	SCREW M6S ISO 4017 M4X12 A470	
420	312105-0455	-		6	SCREW M6S ISO 4017 M8X30 A480	
430	312105-0497	-		4	SCREW M6S ISO 4017 M10X35 A480	
450	312115-0370	-		4	SCREW ISO4762 M6X20 A4	
460	312115-0455	-		2	SCREW ISO4762 M8X30 A4	
470	312318-0366	-		2	SCREW ISO4029 M6X12 A4	
480	312812-0316	-		4	HEXAGON NUT, NY-LOCK M6 A480	
490	315105-0136	-		4	WASHER BRB4,3XRFR	
500	315105-0153	-		4	WASHER BRB6,4X12RFR	
510	315105-0165	-		8	WASHER BRB8,4X16RFR	
520	315105-0173	-		4	WASHER BRB10,5X22RFR	
540	315705-0230	-		1	PARALLEL KEY W. ROUND ENDS 6X6X16 MM	
560	315705-0239	-		2	PARALLEL KEY W. ROUND ENDS 6X6X40 MM	
570	315751-0116	-		1	RETAINING RING FOR SHAFT DIN 471 20 A2	
580	321308-0204	A		5	BALL BEARING, 20X42X12 MM	
590	352103-0095	-		2	CABLE GLAND, STR 7, PR 12,5/PG7	
B104	90232-0128	A		1	PH.CELL E3S-CL2-5M	
B108	90232-0128	A		1	PH.CELL E3S-CL2-5M	

Pos	Part No	SP	UN	Qty	Description	Page No

Machine Type	Group Description	Used-In	Group Number	Page No

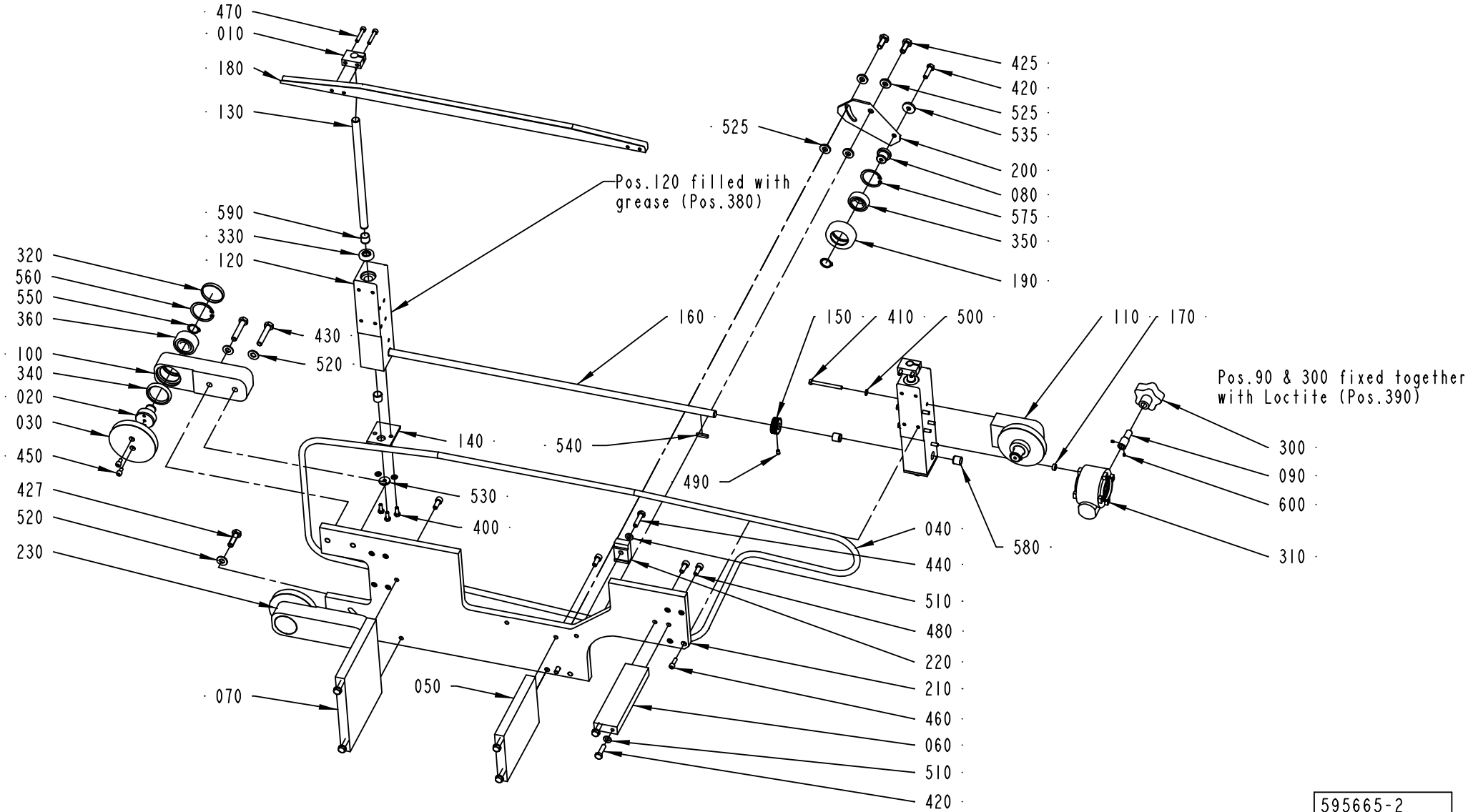

595665-2
ECM 120671

ECM: 127214 - 20030227
Group number: 595665-0200
Assembly Drawing: 595665-2_1_AB

Pos	Part No	SP	UN	Qty	Description	Page No
-						
010	595817-0000	-		2	BRACKET	
020	595821-0000	-		3	ROLLER	
030	595822-0000	-		3	PULLEY	
040	595823-0000	A		1	BELT	
050	595826-0000	-		1	BRACKET	
060	595827-0000	-		1	BRACKET	
070	595828-0000	-		1	BRACKET	
080	2532797-0000	-		1	AXLE BOLT	
090	2519622-0000	-		1	SHAFT	
100	1363068-0000	-		1	BEARING HOUSING	
110	1363069-0000	-		1	BEARING HOUSING	
120	1364413-0000	-		2	BRACKET	
130	1363072-0000	-		2	RACK GEAR	
140	1364414-0000	-		2	LID	
150	1363074-0000	-		2	GEAR WHEEL	
160	1364411-0000	-		1	SHAFT	
170	1363076-0000	-		1	SPACER	
180	1364412-0000	A		1	HEAD PLATE	
190	2532796-0000	-		1	BELT STRETCHER	
200	2532798-0000	-		1	BRACKET	
210	1364410-0000	-		1	SHEET	
220	1364362-0000	-		1	CLAMPING ELEMENT	
230	2549801-0000	-		1	BEARING HOUSING	
300	90051-0064	-		1	STELLAR KNOB, NO. 8323-4357	
310	90056-0174	B		1	WORM GEAR VF 30 P1 70 HS B3	
320	90091-0445	B		3	SEAL COVER, >47, H=6,5	
330	90459-0130	-		2	RADIAL SEAL 15X30X7 MM DUST LIP	
340	90459-1019	A		3	BEARING SEAL 40X52X7 MM	
350	90214-0225	-		1	BALL BEARING SOLID OIL 20X42X12 MM	
360	90214-0238	A		3	ANG. BALL BEAR, 20X47X20,6 MM	
380	90296-0057	B		1	GREASE	
390	90153-0015	B	KG	1	ADHESIVE,LOCTITE IS 496/CYANOLOT 303	
400	312105-0368	-		6	SCREW M6S ISO 4017 M6X16 A480	
410	312105-0383	-		5	SCREW M6S ISO 4014 M6X65 A480	
420	312105-0455	-		7	SCREW M6S ISO 4017 M8X30 A480	
425	312105-0493	-		2	SCREW M6S ISO 4017 M10X25 A480	
427	312105-0497	-		2	SCREW M6S ISO 4017 M10X35 A480	
430	312105-0502	-		2	SCREW M6S ISO 4014 M10X55 A480	
440	312109-0457	-		1	SCREW M6S ISO 4017 M8X35 A480	
450	312115-0366	-		6	SCREW ISO4762 M6X12 A4	
460	312115-0370	-		8	SCREW ISO4762 M6X20 A4	
470	312115-0376	-		4	SCREW ISO4762 M6X35 A4	
480	312115-0451	-		6	SCREW ISO4762 M8X20 A4	
490	312318-0362	-		2	SCREW ISO4029 M6X8 A4	
500	315105-0153	-		11	WASHER BRB6,4X12RFR	
510	315105-0165	-		7	WASHER BRB8,4X16RFR	
520	315105-0173	-		4	WASHER BRB10,5X22RFR	
525	315115-0173	-		4	WASHER PLAIN, TBRB 10,5/22 H=4	
530	315125-0153	-		2	WASHER TBRSB 6,4X22X4 A4	
535	315125-0165	-		1	WASHER TBRSB 8,4X26X5 A4	
540	315705-0202	-		1	PARALLEL KEY W ROUND ENDS 5X5X25MM	
550	315751-0116	-		4	RETAINING RING FOR SHAFT DIN 471 20 A2	
560	315753-0130	-		3	RETAINING RING FOR BORE DIN 472 47 A2	
575	90141-0020	-		1	RETAINING RING FOR BORE DIN 472 42 A2	
580	321120-0118	B		4	BEARBUSHING W/O FL 14X16X15	
590	321120-0122	B		4	BEARING BUSHING W/O FL, 15X17X15 MM	
600	312318-0283	-		2	SCREW ISO4029 M4X4 A4	

Machine Type | Group Description | Used-In | Group Number | Page No

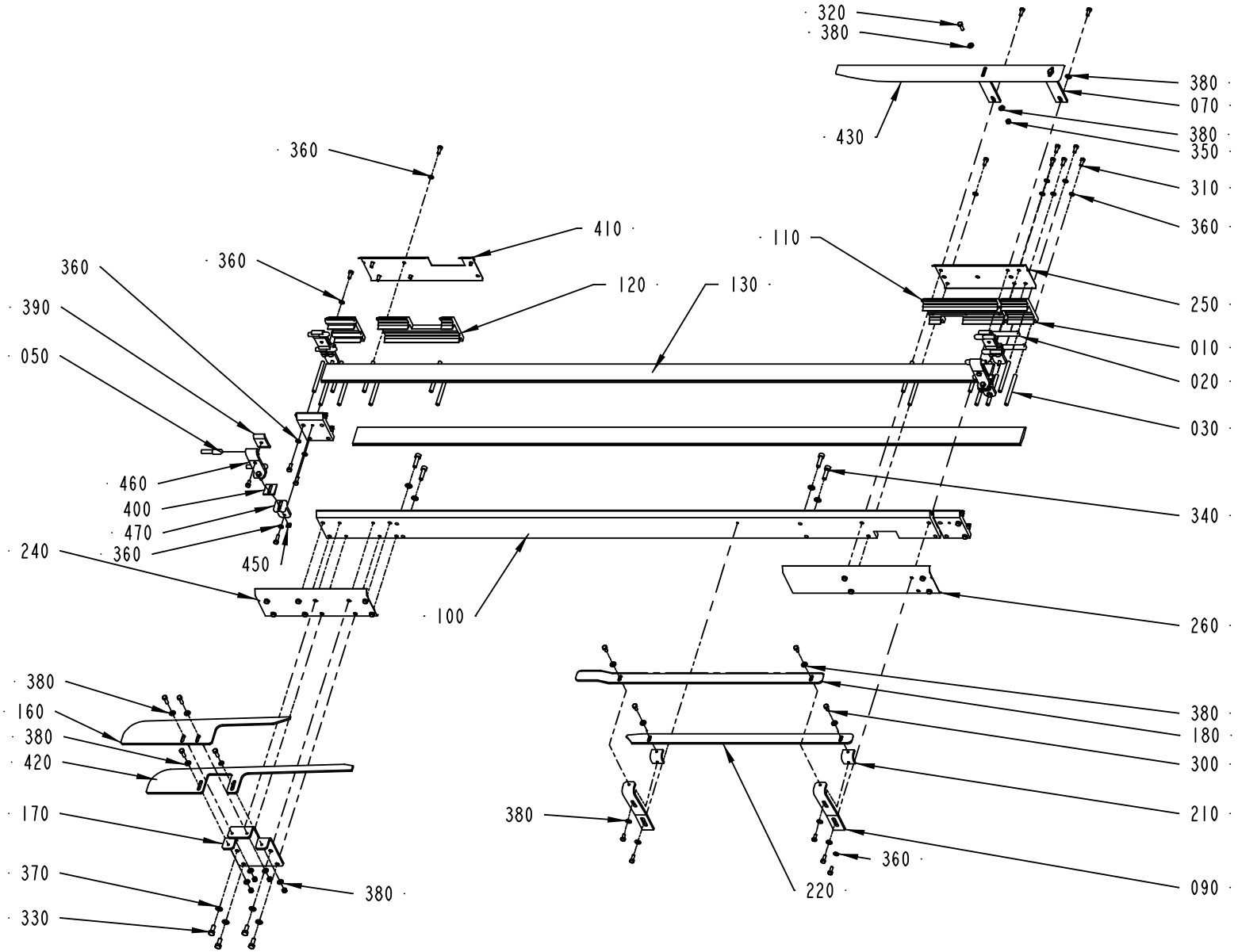

595666-2
ECM 120671

ECM: 127215 - 20030227
Group number: 595666-0200
Assembly Drawing: 595666-2_1_AB

Pos	Part No	SP	UN	Qty	Description	Page No
-						
010	457696-0001	-		4	JOINT PIECE	
020	466074-0002	-		8	SLIDER	
030	476220-0000	-		16	SPACER	
050	531956-0000	-		8	GUIDE STUD	
070	595699-0000	-		2	ANGLE IRON	
090	595753-0000	-		2	BRACKET	
100	595848-0000	-		1	CLAMPING PART	
110	595849-0000	-		1	CLAMPING PART	
120	2500539-0000	-		1	CLAMP	
130	595852-0000	-		2	SLIDE RAIL	
160	1368552-0000	-		1	GUIDE PLATE	
170	595859-0000	-		1	HOLDER	
180	595900-0000	-		1	SHEET	
210	1363012-0000	-		2	BRACKET	
220	1363013-0000	-		1	SHEET	
240	1363084-0000	-		1	COVERING PLATE	
250	1363088-0000	-		1	COVERING PLATE	
260	1363089-0000	-		1	COVERING PLATE	
300	312105-0366	-		8	SCREW M6S ISO 4017 M6X12 A480	
310	312105-0368	-		33	SCREW M6S ISO 4017 M6X16 A480	
320	312105-0370	-		14	SCREW M6S ISO 4017 M6X20 A480	
330	312105-0451	-		4	SCREW M6S ISO 4017 M8X20 A480	
340	312115-0455	-		4	SCREW ISO4762 M8X30 A4	
350	312605-0316	-		6	HEXAGON NUT, M6M M6 A280	
360	315105-0153	-		38	WASHER BRB6,4X12RFR	
370	315105-0165	-		8	WASHER BRB8,4X16RFR	
380	315105-0156	-		21	WASHER BRB 6.7X14 RFR	
390	1366727-0000	-		4	CLAMP	
400	1380701-0000	-		4	SPACER	
410	2500540-0000	-		1	COVER PLATE	
420	1368553-0000	-		1	GUIDE PLATE	
430	2543142-0000	-		1	HEAD RAIL	
450	1359565-0000	-		4	NUT	
460	1366726-0000	-		4	HOLDER	
470	1359085-0000	-		4	T-HOLDER	

Pos	Part No	SP	UN	Qty	Description	Page No

Machine Type | Group Description | Used-In | Group Number | Page No

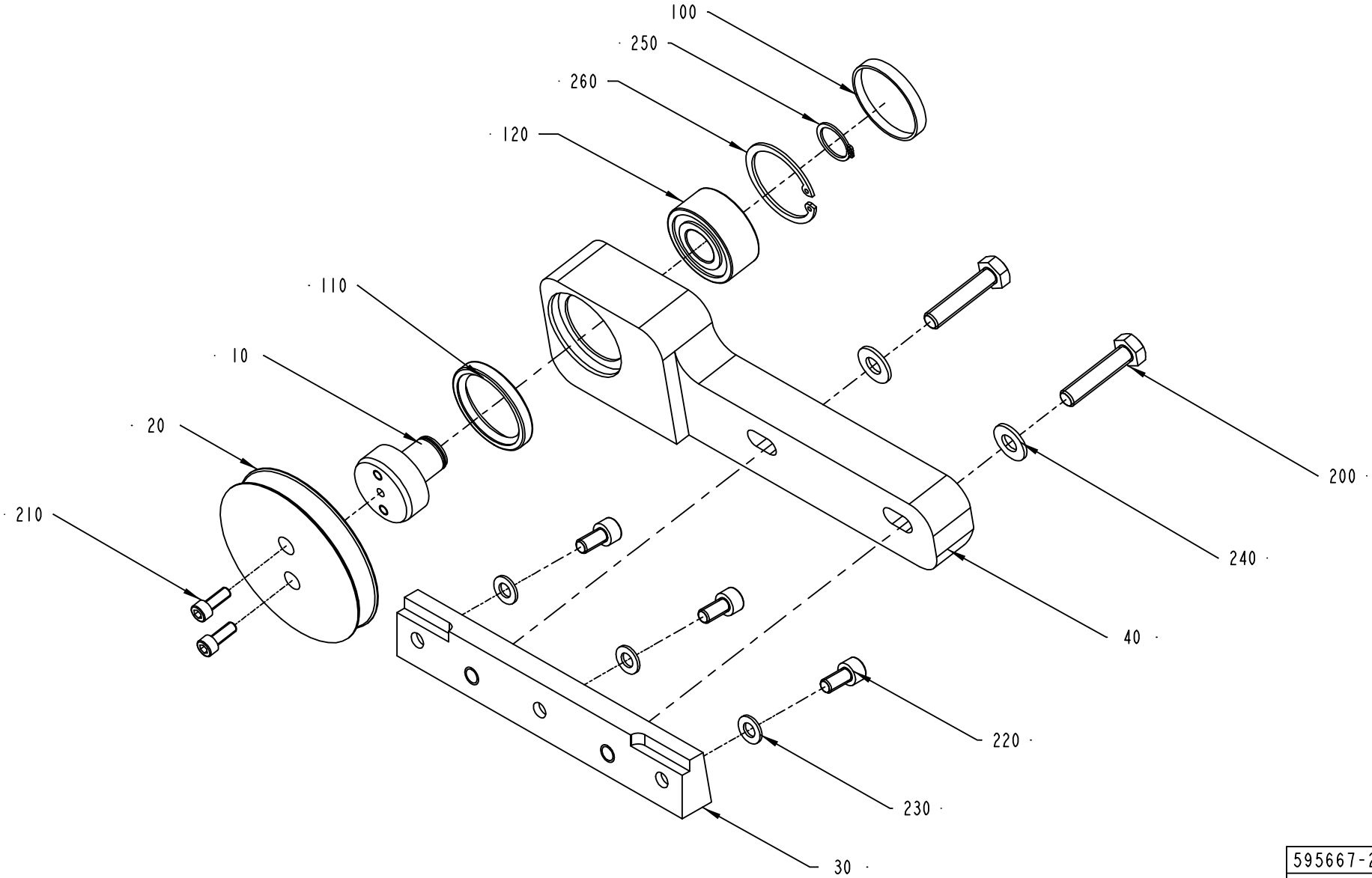

595667-2
ECM 100505

ECM: 105288 - 20021022
Group number: 595667-0200
Assembly Drawing: 595667-2_1_AA

Pos	Part No	SP	UN	Qty	Description	Page No
-						
010	595821-0000	-		1	ROLLER	
020	595822-0000	-		1	PULLEY	
030	595872-0000	-		1	BRACKET	
040	1363097-0000	-		1	BEARING HOUSING	
100	90091-0445	B		1	SEAL COVER, >47, H=6,5	
110	90459-1019	-		1	BEARING SEAL 40X52X7 MM	
120	90214-0238	A		1	ANG. BALL BEAR, 20X47X20,6 MM	
200	312109-0500	-		2	SCREW M6S ISO 4017 M10X45 A480	
210	312115-0368	-		2	SCREW ISO4762 M6X16 A4	
220	312115-0449	-		3	SCREW ISO4762 M8X16 A4	
230	315105-0165	-		3	WASHER BRB8,4X16RFR	
240	315105-0173	-		2	WASHER BRB10,5X22RFR	
250	315751-0116	-		1	RETAINING RING FOR SHAFT DIN 471 20 A2	
260	315753-0130	-		1	RETAINING RING FOR BORE DIN 472 47 A2	

Pos	Part No	SP	UN	Qty	Description	Page No

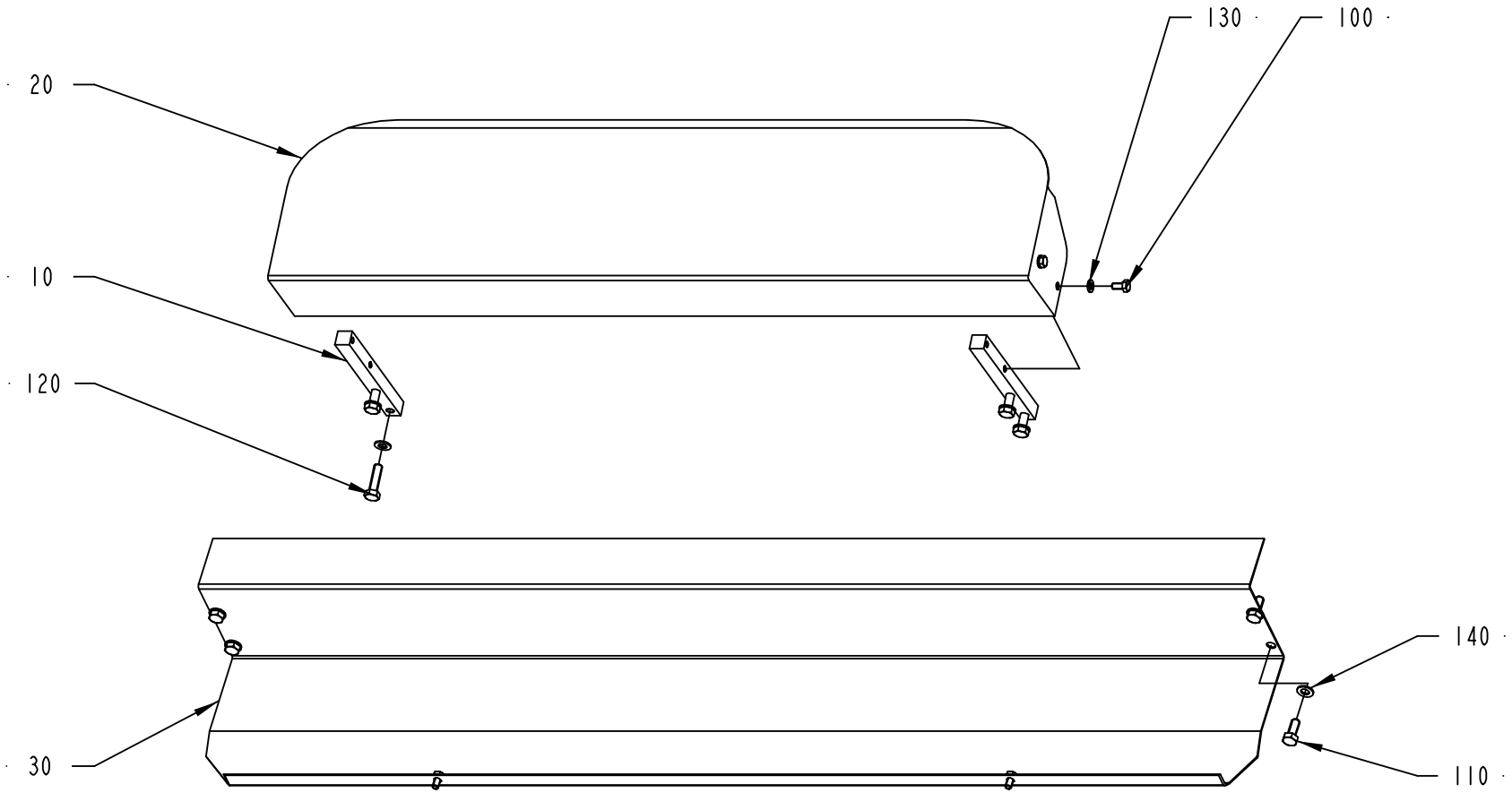

S-595668-1
ECN 25441

ECM: 25441 -
Group number: 595668-0100
Assembly Drawing: 595668-1_1_AA

Pos	Part No	SP	UN	Qty	Description	Page No
-						
010	1363094-0000	-		2	BRACKET	
020	1363095-0000	-		1	PROTECTION	
030	1363096-0000	-		1	PROTECTION	
100	312105-0366	-		6	SCREW M6S ISO 4017 M6X12 A480	
110	312105-0451	-		4	SCREW M6S ISO 4017 M8X20 A480	
120	312105-0455	-		4	SCREW M6S ISO 4017 M8X30 A480	
130	315105-0153	-		6	WASHER BRB6,4X12RFR	
140	315105-0165	-		8	WASHER BRB8,4X16RFR	

Pos	Part No	SP	UN	Qty	Description	Page No

BELT BRAKE

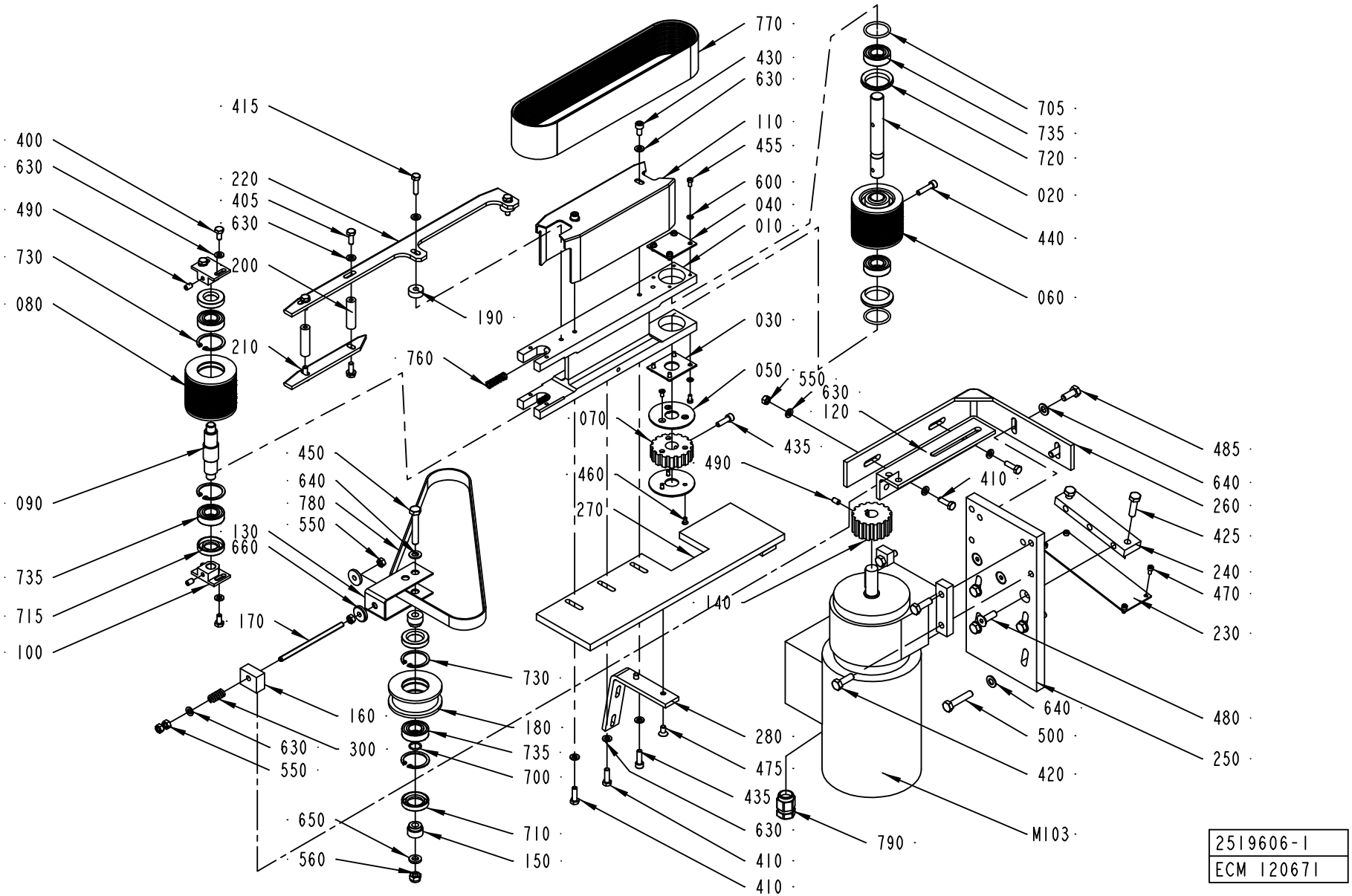

2519606-1
ECM 120671

ECM: 127213 - 20030227
Group number: 2519606-0100
Assembly Drawing: 2519606-1_1_AB

Pos	Part No	SP	UN	Qty	Description	Page No
-						
010	533209-0000	-		1	HOLDER	
020	533233-0000	A		1	SHAFT	
030	533234-0000	-		1	LID	
040	533235-0000	-		1	LID	
050	533241-0000	-		2	FLANGE	
060	561652-0000	A		1	WHEEL	
070	1020646-0000	A		1	TOOTHED PULLEY	
080	1359389-0000	A		1	ROLL	
090	1359390-0000	A		1	SHAFT	
100	1359391-0000	-		2	MOUNTING BLOCK	
110	1359451-0000	-		1	SUPPORT	
120	533216-0000	-		1	CANTILEVER	
130	533217-0000	-		1	BOW CLAMP	
140	533221-0000	A		1	TOOTHED PULLEY	
150	533237-0000	A		2	AXLE PIN	
160	533238-0000	-		1	BLOCKING PIECE	
170	2532800-0000	-		1	STUD SCREW	
180	533240-0000	A		1	WHEEL	
190	2500560-0000	-		2	SPACER	
200	2500561-0000	-		2	SPACER	
210	2543144-0000	-		1	GUIDE HOLDER	
220	2543143-0000	-		1	GUIDE HOLDER	
230	2500559-0000	-		1	PLATE	
240	2500558-0000	-		1	BRACKET	
250	2500556-0000	-		1	MOTOR BRACKET	
260	2500557-0000	-		1	BRACKET	
270	2500526-0000	-		1	PLATE	
280	2500527-0000	-		2	BRACKET	
300	533134-0000	A		1	COMPRESSION SPRING	
400	312105-0366	-		4	SCREW M6S ISO 4017 M6X12 A480	
405	312105-0368	-		4	SCREW M6S ISO 4017 M6X16 A480	
410	312105-0370	-		4	SCREW M6S ISO 4017 M6X20 A480	
415	312105-0372	-		2	SCREW M6S ISO 4017 M6X25 A480	
420	312105-0453	-		4	SCREW M6S ISO 4017 M8X25 A480	
425	312105-0455	-		2	SCREW M6S ISO 4017 M8X30 A480	
430	312115-0366	-		2	SCREW ISO4762 M6X12 A4	
435	312115-0370	-		2	SCREW ISO4762 M6X20 A4	
440	312115-0372	-		1	SCREW ISO4762 M6X25 A4	
450	312105-0461	-		1	SCREW M6S ISO 4014 M8X50 A480	
455	312125-0287	-		8	SCREW ISO 1207 M4X8 A4	
460	312145-0287	-		6	SCREW ISO 2009 MFS M4X8 A4	
470	312115-0287	-		4	SCREW ISO4762 M4X8 A4	
475	312155-0366	-		4	SCREW EN 10642 MF6S M6X12 A480	
480	312155-0453	-		3	SCREW EN 10642 MF6S M8X25 A480	
485	312105-0451	-		2	SCREW M6S ISO 4017 M8X20 A480	
490	312318-0364	A		3	SCREW ISO4029 M6X10 A4	
500	312109-0459	-		4	SCREW M6S ISO 4017 M8X40 A480	
550	312605-0316	-		6	HEXAGON NUT, M6M M6 A280	
560	312810-0318	-		1	HEXAGON NUT, NY-LOCK M8 FZB	
600	315105-0136	-		8	WASHER BRB4,3XRFR	
630	315105-0153	-		20	WASHER BRB6,4X12RFR	
640	315105-0165	-		7	WASHER BRB8,4X16RFR	
650	315115-0165	-		1	WASHER PLAIN, TBRB 8,4/16 H=3	
660	315125-0153	-		2	WASHER TBRSB 6,4X22X4 A4	
700	315202-0111	A		1	O-RING 13,1X1,6 MM	
705	315202-0219	A		2	O-RING 29,2X3 MM	
710	315221-0145	A		2	RADIAL SEAL 20X35X7 MM	
715	315221-0137	A		2	RADIAL SEAL 17X35X7 MM	
720	315220-0172	A		2	V-RINGS 29X37X10,5 MM V-32S	
730	315753-0124	A		4	RETAINING RING FOR BORE DIN 472 35 A2	
735	321308-0203	-		5	BALL BEARING, 17X35X10 MM	
760	90335-0067	A		2	COMP. SPRING 22370, 1,6X9,6X31,75	
770	90252-0036	A		1	V-BELT J22	
780	90458-1922	A		1	TIMING BELT T10X780X16 POLYURETHANE	
790	90458-0438	-		1	GLAND, EXTENDED WITH INSERT, M20X1,5	
M103	90458-1373	A		1	GEARS, HELICAL MOTOR SK ON-63 L/4	

Machine Type | Group Description | Used-In | Group Number | Page No

Tetra Pak

SPC
Spare Parts Catalogue

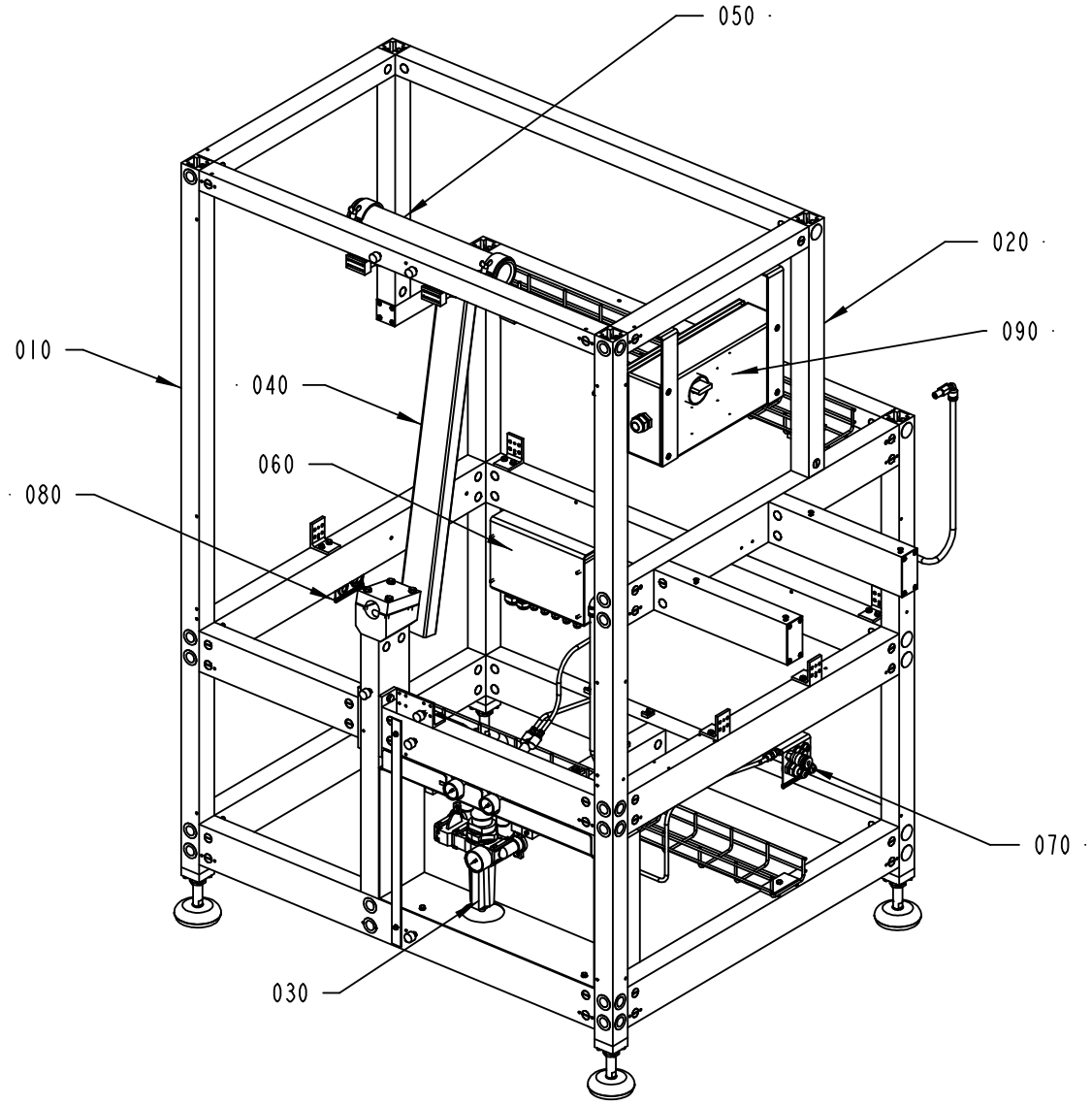

678215-2
ECM 100505

ECM: 105122 - 20021022
Group number: 678215-0200
Assembly Drawing: 678215-2_1_AA

Pos	Part No	SP	UN	Qty	Description	Page No
-						
010	595660-0200	-		1	FRAME SECTION,LOWER	**3-5, 3-7**
020	595661-0200	-		1	FRAME SECTION,UPPER	**3-9**
030	595677-0200	-		1	COMPRESSED-AIR SUPPLY	**3-11, 3-13**
040	595678-0200	-		1	CABLE DUCT	**3-17**
050	595680-0100	-		1	LIGHT FIXTURE	**3-19**
060	595688-0200	-		1	CONNECTION BOX	**3-21**
070	595689-0100	-		1	LEAD-IN PLATE	**3-25**
080	595690-0100	-		1	LEAD-IN PLATE	**3-27**
090	2553411-0100	-		1	MAINS CONNECTION	**3-29**

Pos	Part No	SP	UN	Qty	Description	Page No

FRAME SECTION,LOWER

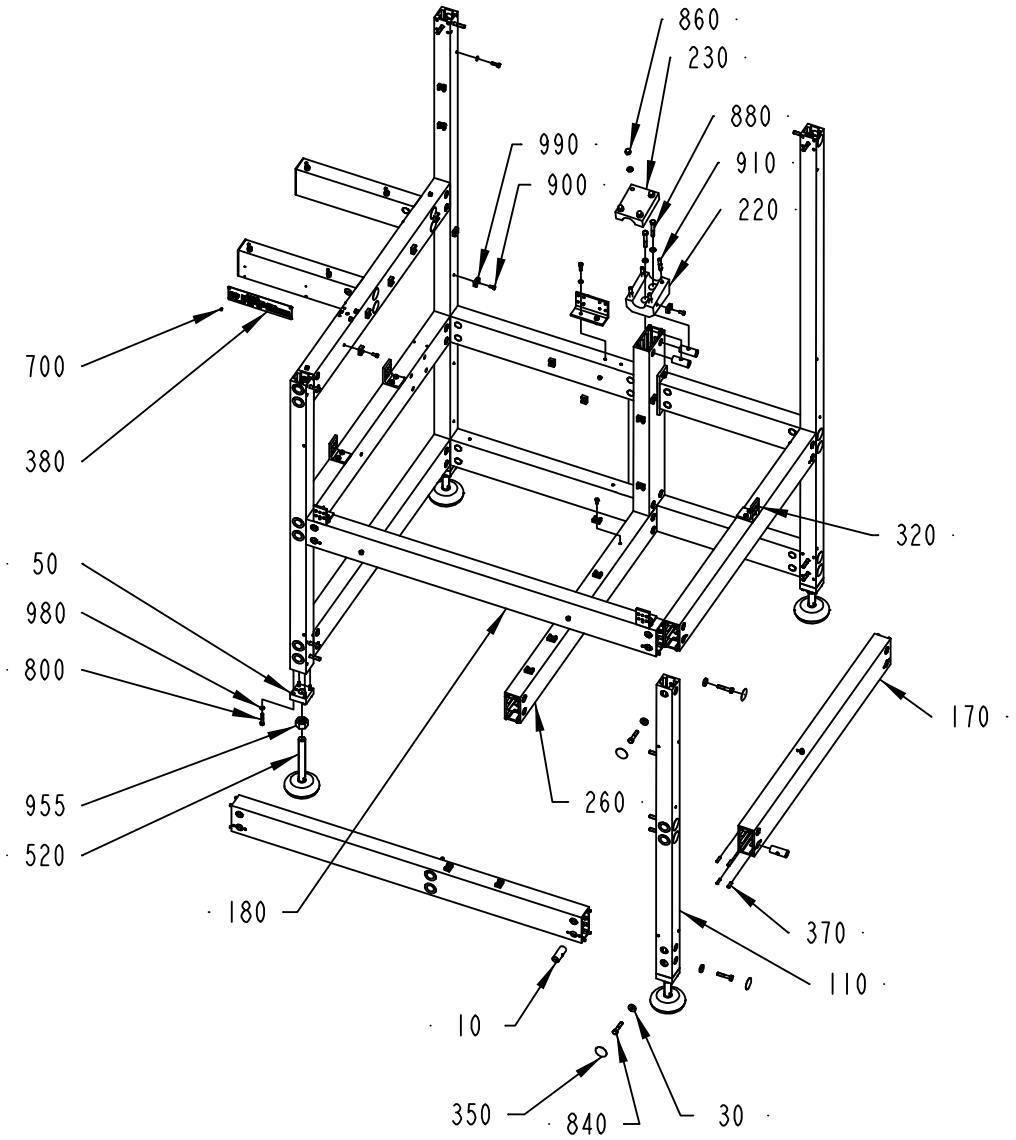

595660-2
ECM 120671

ECM: 127216 - 20030227
Group number: 595660-0200
Assembly Drawing: 595660-2_1_AB

This list covers pages from 3-4 to 3-7

Pos	Part No	SP	UN	Qty	Description	Page No
-						
010	486268-0000	-		52	NUT	
030	548599-0000	-		52	WASHER	
050	556601-0000	-		4	BRACKET	
070	556603-0000	-		2	COVER PLATE	
100	2532773-0000	-		1	PROFILE	
110	2532777-0000	-		1	PROFILE	
120	595646-0000	-		1	PROFILE	
130	2519614-0000	-		1	PROFILE	
140	595648-0000	-		1	PROFILE 50 X 100	
150	595649-0000	-		1	PROFILE 50 X 100	
160	2519613-0000	-		1	PROFILE	
170	595702-0000	-		1	PROFILE 50 X 100	
180	2519619-0000	-		1	PROFILE	
190	595704-0000	-		1	PROFILE 50 X 100	
200	2519617-0000	-		1	PROFILE	
210	595706-0000	-		1	PROFILE 50 X 100	
220	595716-0000	-		1	HOLDER	
230	595717-0000	-		1	HOLDER	
240	595719-0000	-		2	PLATE	
250	2519615-0000	-		1	PROFILE	
260	595721-0000	-		1	PROFILE 50 X 100	
270	2519616-0000	-		1	PROFILE	
290	2519618-0000	-		1	PROFILE	
300	2532775-0000	-		1	PROFILE	
310	2532776-0000	-		1	PROFILE	
315	595860-0000	-		1	COVER SLIP	
320	975884-0000	-		5	BRACKET	
330	595887-0000	-		1	CANTILEVER	
350	1021933-0000	-		55	COVER TAPE	
370	1065410-0000	-		104	SLOTTED PIN	
380	580923-0000	-		1	MACHINE SIGN CE	
390	1363029-0000	-		1	CANTILEVER	
500	90347-0011	-		4	VIBRATION DAMPER MEGI 781056	
520	90458-1508	-		4	FLOOR PLATE, DAMPER, M105-20-160	
700	311520-0329	-		4	RIVET, BLANK 2,4X8	
720	312105-0323	-		2	SCREW M6S ISO 4017 M5X8 A480	
760	312105-0370	-		3	SCREW M6S ISO 4017 M6X20 A480	
780	312105-0368	-		10	SCREW M6S ISO 4017 M6X16 A480	
800	312105-0376	-		16	SCREW M6S ISO 4014 M6X35 A480	
820	312105-0453	-		4	SCREW M6S ISO 4017 M8X25 A480	
840	312105-0459	-		52	SCREW M6S ISO 4014 M8X40 A480	
860	312705-0318	-		4	NUT HEX. DOMED CAP MHM-6 M8 A280	
880	312105-0461	-		2	SCREW M6S ISO 4014 M8X50 A480	
900	312125-0366	-		25	SCREW ISO 1207 M6X12 A4	
910	312303-0461	-		4	SCREW DIN 938 PS M8X40 A4 80	
920	312145-0325	-		8	SCREW ISO 2009 MFS M5X10 A4	
940	312155-0459	-		4	SCREW EN 10642 MF6S M8X40 A480	
950	312318-0372	-		4	SCREW ISO4029 M6X25 A4	
955	312605-0326	-		4	HEXAGON NUT, M6M M20 A280	
960	312625-0316	-		4	HEXAGON THIN NUT, EN 24035 ML6M M6 A4	
970	315105-0146	-		2	WASHER BRB5,3X10RFR	
980	315105-0153	-		29	WASHER BRB6,4X12RFR	
985	315105-0165	-		10	WASHER BRB8,4X16RFR	
990	352113-0204	-		25	ANCHOR PLATES FOR STRIPS, TYPE TM3S25-M	

Machine Type | Group Description | Used-In | Group Number | Page No

FRAME SECTION,LOWER

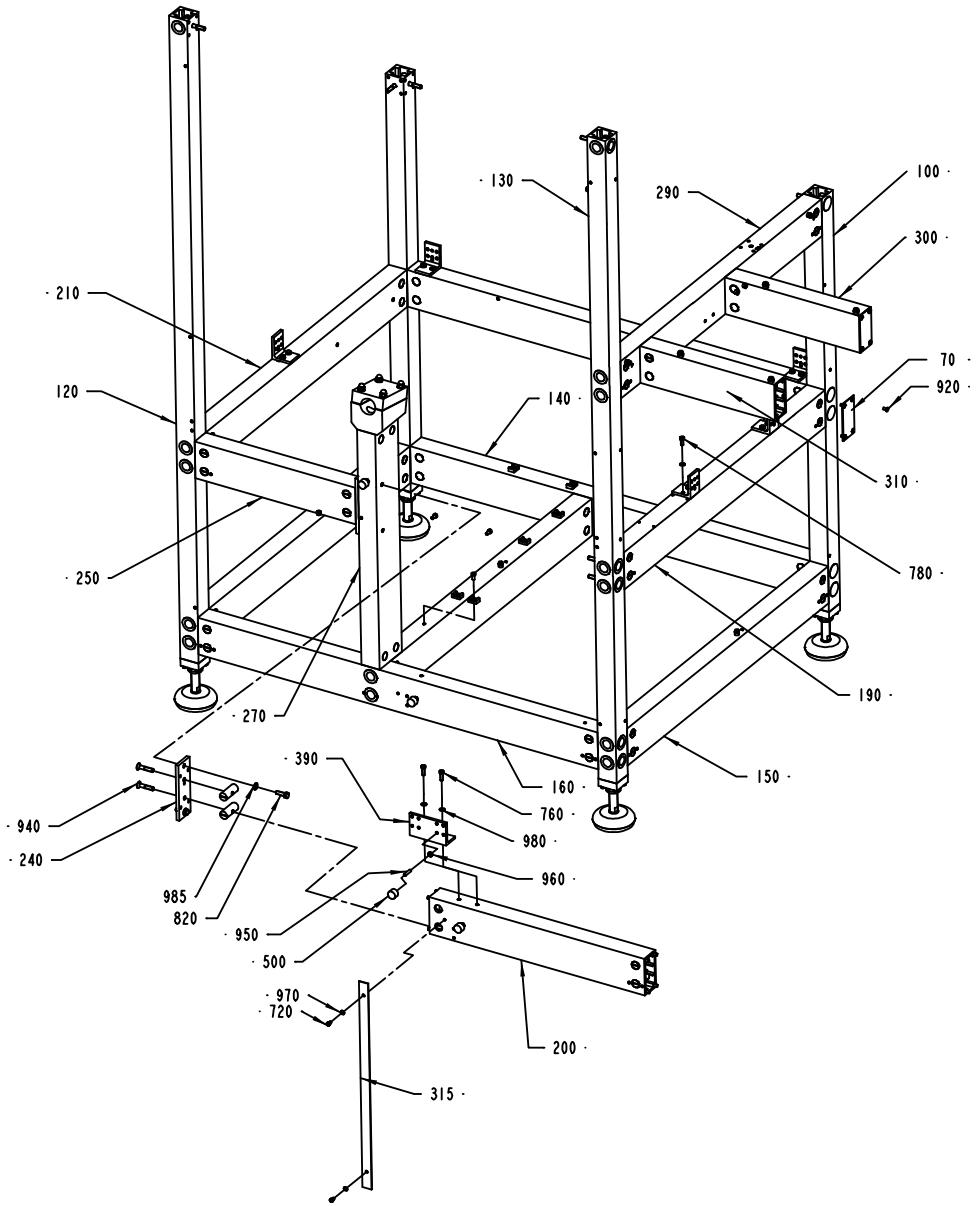

ECM: 127216 - 20030227
Group number: 595660-0200
Assembly Drawing: 595660-2_2_AB

This list covers pages from 3-4 to 3-7

Pos	Part No	SP	UN	Qty	Description	Page No
-						
010	486268-0000	-		52	NUT	
030	548599-0000	-		52	WASHER	
050	556601-0000	-		4	BRACKET	
070	556603-0000	-		2	COVER PLATE	
100	2532773-0000	-		1	PROFILE	
110	2532777-0000	-		1	PROFILE	
120	595646-0000	-		1	PROFILE	
130	2519614-0000	-		1	PROFILE	
140	595648-0000	-		1	PROFILE 50 X 100	
150	595649-0000	-		1	PROFILE 50 X 100	
160	2519613-0000	-		1	PROFILE	
170	595702-0000	-		1	PROFILE 50 X 100	
180	2519619-0000	-		1	PROFILE	
190	595704-0000	-		1	PROFILE 50 X 100	
200	2519617-0000	-		1	PROFILE	
210	595706-0000	-		1	PROFILE 50 X 100	
220	595716-0000	-		1	HOLDER	
230	595717-0000	-		1	HOLDER	
240	595719-0000	-		2	PLATE	
250	2519615-0000	-		1	PROFILE	
260	595721-0000	-		1	PROFILE 50 X 100	
270	2519616-0000	-		1	PROFILE	
290	2519618-0000	-		1	PROFILE	
300	2532775-0000	-		1	PROFILE	
310	2532776-0000	-		1	PROFILE	
315	595860-0000	-		1	COVER SLIP	
320	975884-0000	-		5	BRACKET	
330	595887-0000	-		1	CANTILEVER	
350	1021933-0000	-		55	COVER TAPE	
370	1065410-0000	-		104	SLOTTED PIN	
380	580923-0000	-		1	MACHINE SIGN CE	
390	1363029-0000	-		1	CANTILEVER	
500	90347-0011	-		4	VIBRATION DAMPER MEGI 781056	
520	90458-1508	-		4	FLOOR PLATE, DAMPER, M105-20-160	
700	311520-0329	-		4	RIVET, BLANK 2,4X8	
720	312105-0323	-		2	SCREW M6S ISO 4017 M5X8 A480	
760	312105-0370	-		3	SCREW M6S ISO 4017 M6X20 A480	
780	312105-0368	-		10	SCREW M6S ISO 4017 M6X16 A480	
800	312105-0376	-		16	SCREW M6S ISO 4014 M6X35 A480	
820	312105-0453	-		4	SCREW M6S ISO 4017 M8X25 A480	
840	312105-0459	-		52	SCREW M6S ISO 4014 M8X40 A480	
860	312705-0318	-		4	NUT HEX. DOMED CAP MHM-6 M8 A280	
880	312105-0461	-		2	SCREW M6S ISO 4014 M8X50 A480	
900	312125-0366	-		25	SCREW ISO 1207 M6X12 A4	
910	312303-0461	-		4	SCREW DIN 938 PS M8X40 A4 80	
920	312145-0325	-		8	SCREW ISO 2009 MFS M5X10 A4	
940	312155-0459	-		4	SCREW EN 10642 MF6S M8X40 A480	
950	312318-0372	-		4	SCREW ISO4029 M6X25 A4	
955	312605-0326	-		4	HEXAGON NUT, M6M M20 A280	
960	312625-0316	-		4	HEXAGON THIN NUT, EN 24035 ML6M M6 A4	
970	315105-0146	-		2	WASHER BRB5,3X10RFR	
980	315105-0153	-		29	WASHER BRB6,4X12RFR	
985	315105-0165	-		10	WASHER BRB8,4X16RFR	
990	352113-0204	-		25	ANCHOR PLATES FOR STRIPS, TYPE TM3S25-M	

Machine Type | Group Description | Used-In | Group Number | Page No

FRAME SECTION,UPPER

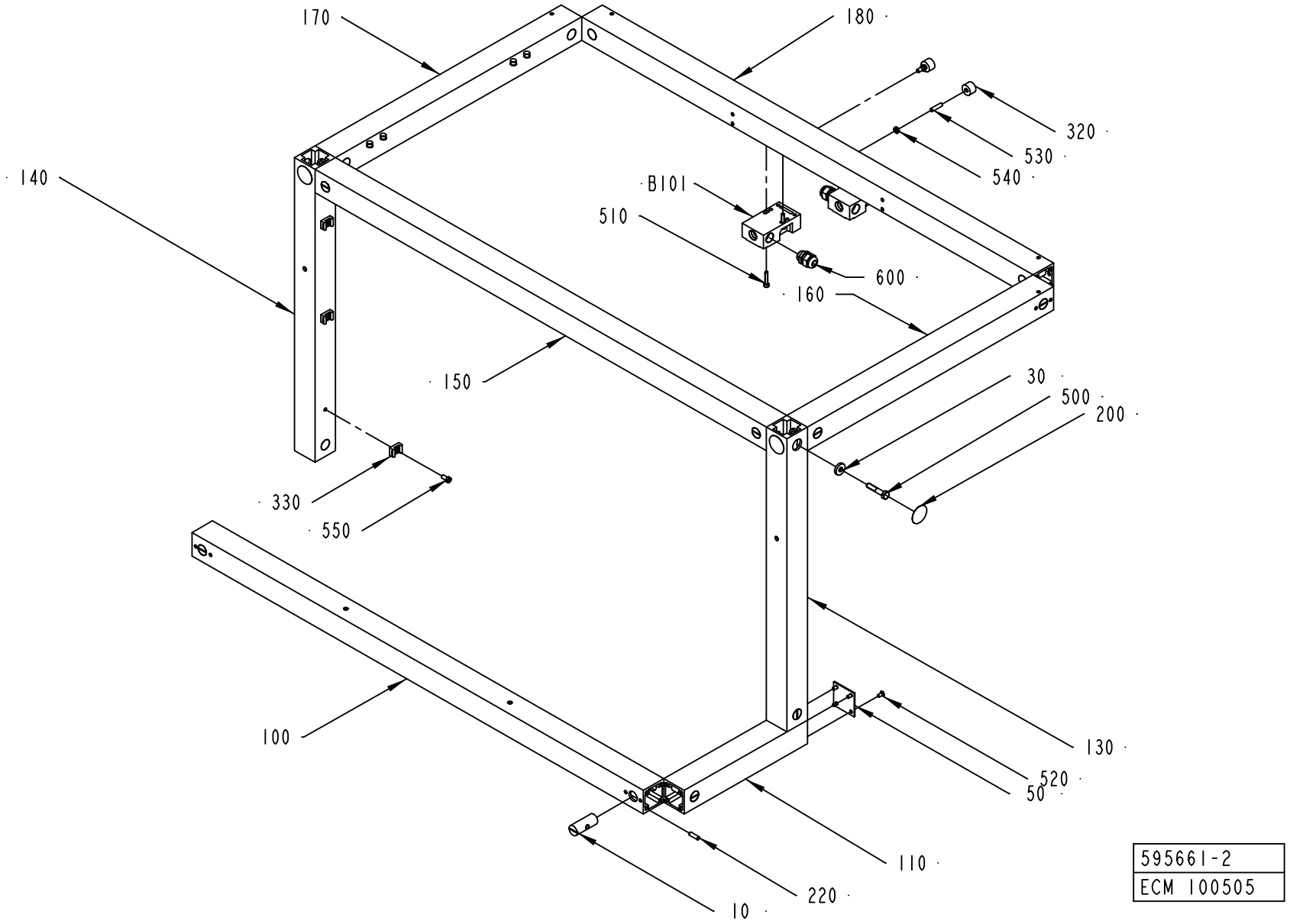

595661-2
ECM 100505

ECM: 105131 - 20021022
Group number: 595661-0200
Assembly Drawing: 595661-2_1_AA

Pos	Part No	SP	UN	Qty	Description	Page No
-						
010	486268-0000	-		13	NUT	
030	548599-0000	-		5	WASHER	
050	556604-0000	-		1	COVER PLATE	
100	2532771-0000	-		1	PROFILE	
110	595708-0000	-		1	PROFILE 50 X 50	
120	595709-0000	-		1	PROFILE 50 X 50	
130	595710-0000	-		1	PROFILE 50 X 50	
140	2532772-0000	-		1	PROFILE	
150	595712-0000	-		1	PROFILE 50 X 50	
160	595713-0000	-		1	PROFILE 50 X 50	
170	595714-0000	-		1	PROFILE	
180	595715-0000	-		1	PROFILE 50 X 50	
200	1021933-0000	-		5	COVER TAPE	
220	1065410-0000	-		52	SLOTTED PIN	
320	90347-0011	-		2	VIBRATION DAMPER MEGI 781056	
330	352113-0204	-		3	ANCHOR PLATES FOR STRIPS, TYPE TM3S25-M	
500	312105-0459	-		5	SCREW M6S ISO 4014 M8X40 A480	
510	312115-0333	-		4	SCREW ISO4762 M5X25 A4	
520	312145-0325	-		4	SCREW ISO 2009 MFS M5X10 A4	
530	312318-0372	-		2	SCREW ISO4029 M6X25 A4	
540	312621-0316	-		2	ROD END,NUT M6	
550	312125-0366	-		3	SCREW ISO 1207 M6X12 A4	
600	352103-0106	-		2	CABLE GLAND, ST 11, PR18,6/PG11	
B101	90044-0139	A		1	KEY SAF.SW. AZ16-02 ZVR K-2254	
B102	90044-0139	A		1	KEY SAF.SW. AZ16-02 ZVR K-2254	

Pos	Part No	SP	UN	Qty	Description	Page No

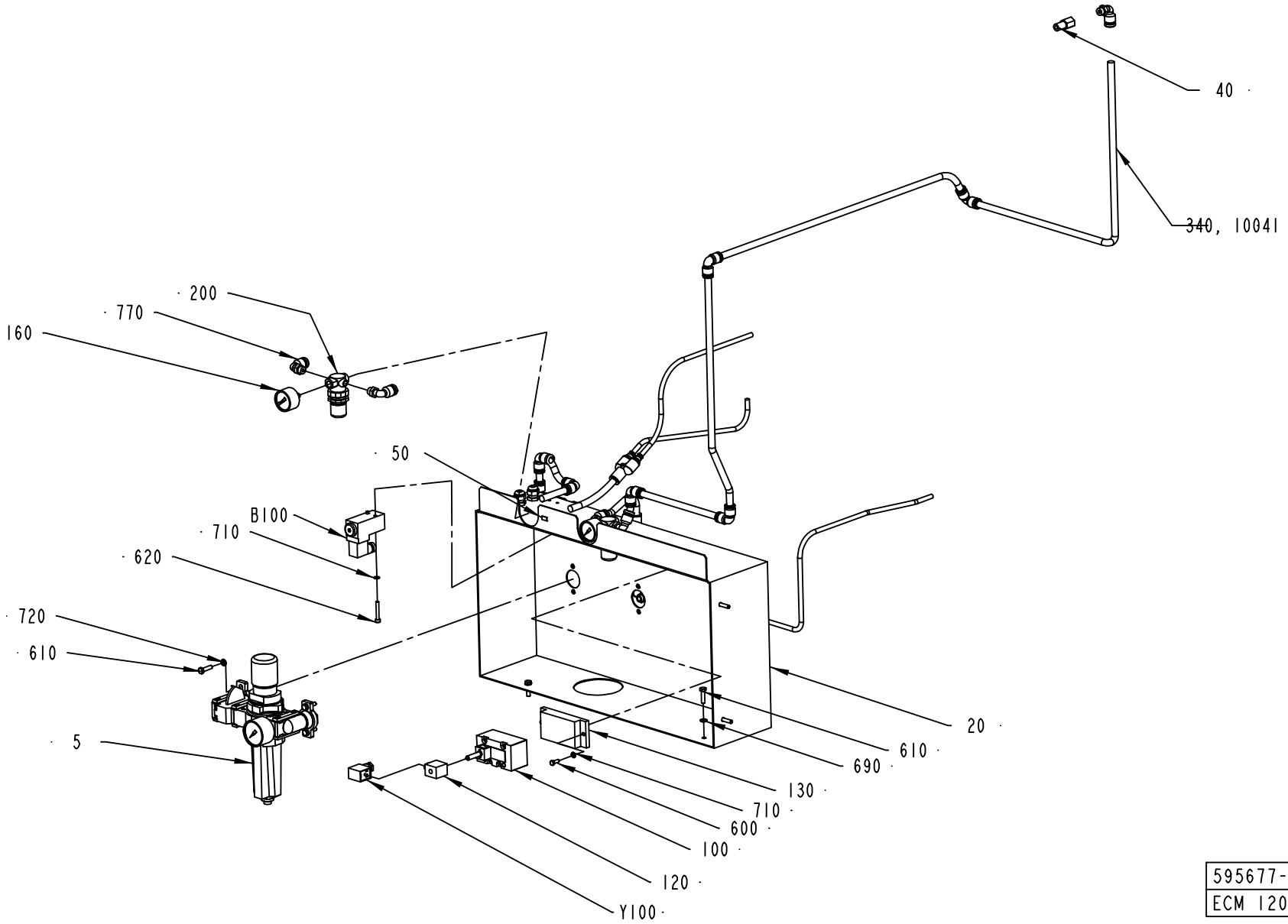

595677-2
ECM 120671

ECM: 127342 - 20030227
Group number: 595677-0200
Assembly Drawing: 595677-2_1_AB

This list covers pages from 3-10 to 3-13

Pos	Part No	SP	UN	Qty	Description	Page No
-						
005	595693-0100	-		1	FILTER-REGULATOR	**3-15**
020	2532783-0000	-		1	CABINET	
040	1119677-0000	-		1	ATTACHMENT	
050	2542356-0000	-		1	SET OF SIGNS	
100	90042-0074	A		1	SOLENOID VALVE MECMAN 581-211-100	
	90042-0371	*C*		*1*	*WEAR & TEAR PARTS KIT*	
	90042-0385	*-*		*1*	*SEAL KIT 04904 273 09*	
120	90042-0345	A		1	COIL 24V DC	
130	90042-0360	-		1	CONN.PLATE	
160	90043-0043	B		2	PRESSURE GAUGE WIEGAND 0-10 BAR 1/8"	
170	90055-0147	-		1	HOSE,Y-CONNECTION,PARALLEL,FPT, 12X12MM	
180	90099-0104	-		2	NUT, PR 15,2 (PG9)	
200	90113-0021	-		2	AIR PRESSURE REGULATOR	
260	90166-0013	A	MM	400	TUBE 8 MM PA BLUE	
270	90166-0013	A	MM	500	TUBE 8 MM PA BLUE	
280	90166-0013	A	MM	1000	TUBE 8 MM PA BLUE	
300	90166-0068	A	MM	80	TUBE 12 MM PA BLUE	
310	90166-0068	A	MM	215	TUBE 12 MM PA BLUE	
320	90166-0068	A	MM	410	TUBE 12 MM PA BLUE	
330	90166-0068	A	MM	850	TUBE 12 MM PA BLUE	
340	90166-0068	A	MM	650	TUBE 12 MM PA BLUE	
350	90166-0068	A	MM	50	TUBE 12 MM PA BLUE	
360	90166-0068	A	MM	50	TUBE 12 MM PA BLUE	
370	90166-0068	A	MM	100	TUBE 12 MM PA BLUE	
380	90166-0068	A	MM	100	TUBE 12 MM PA BLUE	
390	90166-0068	A	MM	95	TUBE 12 MM PA BLUE	
400	90166-0068	A	MM	105	TUBE 12 MM PA BLUE	
410	90166-0068	A	MM	120	TUBE 12 MM PA BLUE	
420	90166-0068	A	MM	670	TUBE 12 MM PA BLUE	
440	90166-0068	-	MM	70	TUBE 12 MM PA BLUE	
480	90328-0002	-		1	SILENCER	
600	312105-0328	-		2	SCREW M6S ISO 4017 M5X14 A480	
610	312105-0372	-		8	SCREW M6S ISO 4017 M6X25 A480	
620	312115-0337	-		2	SCREW ISO4762 M5X35 A4	
680	312605-0316	-		4	HEXAGON NUT, M6M M6 A280	
690	315101-0153	-		4	WASHER PLAIN, BRB, 6,4/12 H=1,5	
710	315105-0146	-		4	WASHER BRB5,3X10RFR	
720	315105-0153	-		8	WASHER BRB6,4X12RFR	
730	342713-0210	-		1	PLUG, EXT THREAD HEX SOCKET 8638-00-140	
740	342716-0209	-		3	REDUCER 8-12	
770	90458-2959	-		7	ELBOW PIPE JOINT, EXT.THREAD,D=12MM-G1/4	
790	342735-0109	-		7	ELBOW PIPE JOINT	
800	90055-0278	-		2	T-COUPLING, ADJ.12-G1/4"	
810	342748-0109	-		1	T-CONNECTION 12MM	
850	352103-0101	-		3	CABLE GLAND, ST 9, PR15,2/PG9	
860	359000-0400	-		6	MARKING CO2/4"0"	
870	359000-0401	-		5	MARKING COLLAR 2/4 "1" YELLOW	
880	359000-0402	-		5	MARKING COLLAR 2/4 "2" YELLOW	
890	359000-0404	-		2	MARKING COLLAR PA2/4 "4" YELLOW	
900	359000-0409	-		2	MARKING COLLAR PA2/4 "9" YELLOW	
910	359000-0500	-		10	MARKING COLLAR 3/6 "0" YELLOW	
920	359000-0501	-		7	MARKING COLLAR 3/6 "1" YELLOW	
930	359000-0502	-		2	MARKING CO3/6"2"	
940	359000-0504	-		5	MARKING CO3/6"4"	
B100	90274-0074	A		1	PRESSURE GUARD, 530 KPA	
B100:1	90042-0371	A		1	WEAR & TEAR PARTS KIT	
B100:2	90042-0385	A		1	SEAL KIT 04904 273 09	
Y100	90042-0392	A		1	CONTACT 2 POLE + EARTH	

Machine Type | Group Description | Used-In | Group Number | Page No

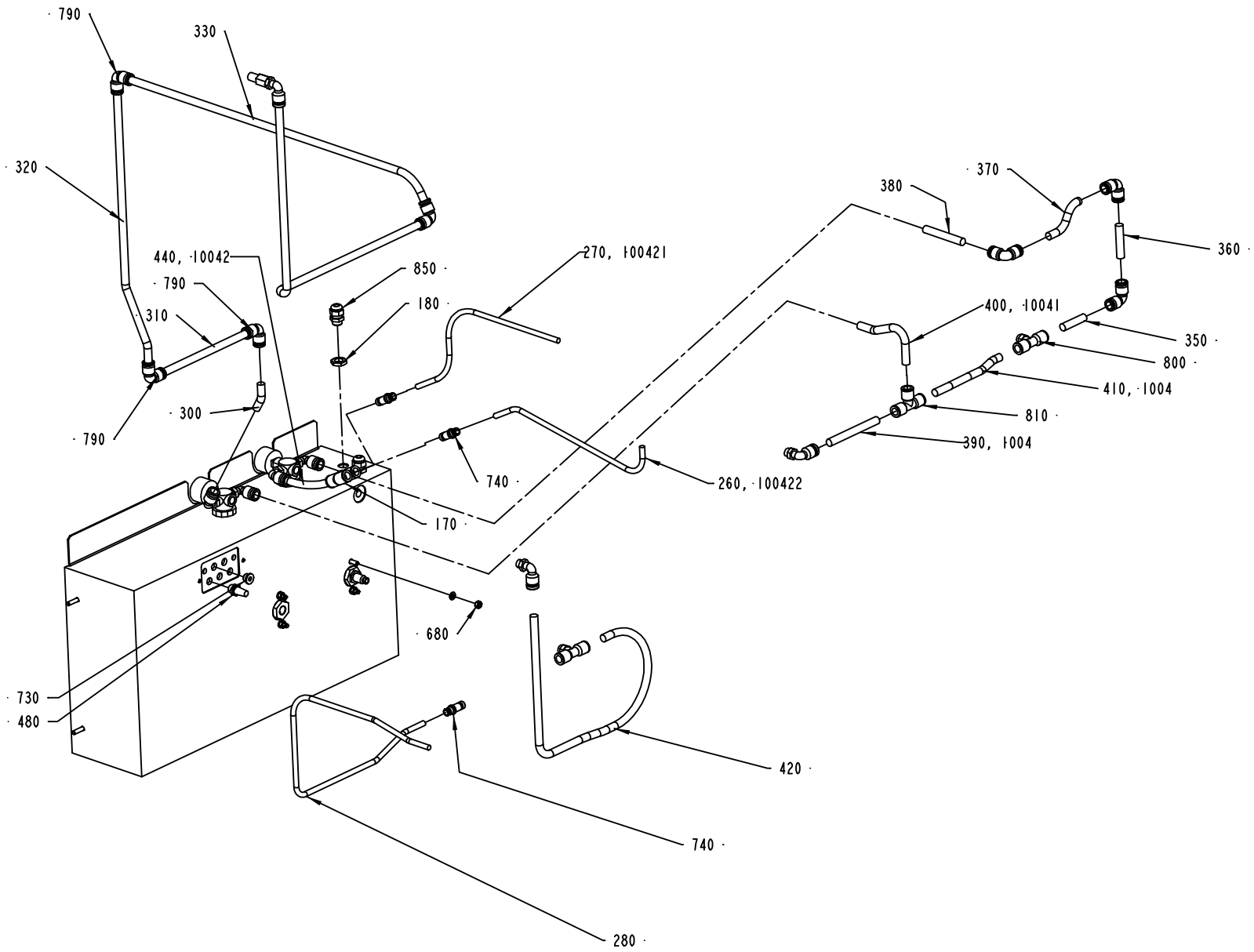
790
330
320
370
380
360
440, 10042
270, 100421
850
790
180
400, 10041
310
350
800
410, 1004
300
810
790
390, 1004
740
260, 100422
170
680
730
480
420
740
280

ECM: 127342 - 20030227
Group number: 595677-0200
Assembly Drawing: 595677-2_2_AB

This list covers pages from 3-10 to 3-13

Pos	Part No	SP	UN	Qty	Description	Page No
-						
005	595693-0100	-		1	FILTER-REGULATOR	**3-15**
020	2532783-0000	-		1	CABINET	
040	1119677-0000	-		1	ATTACHMENT	
050	2542356-0000	-		1	SET OF SIGNS	
100	90042-0074	A		1	SOLENOID VALVE MECMAN 581-211-100	
	90042-0371	*C*		*1*	*WEAR & TEAR PARTS KIT*	
	90042-0385	*-*		*1*	*SEAL KIT 04904 273 09*	
120	90042-0345	A		1	COIL 24V DC	
130	90042-0360	-		1	CONN.PLATE	
160	90043-0043	B		2	PRESSURE GAUGE WIEGAND 0-10 BAR 1/8"	
170	90055-0147	-		1	HOSE,Y-CONNECTION,PARALLEL,FPT, 12X12MM	
180	90099-0104	-		2	NUT, PR 15,2 (PG9)	
200	90113-0021	-		2	AIR PRESSURE REGULATOR	
260	90166-0013	A	MM	400	TUBE 8 MM PA BLUE	
270	90166-0013	A	MM	500	TUBE 8 MM PA BLUE	
280	90166-0013	A	MM	1000	TUBE 8 MM PA BLUE	
300	90166-0068	A	MM	80	TUBE 12 MM PA BLUE	
310	90166-0068	A	MM	215	TUBE 12 MM PA BLUE	
320	90166-0068	A	MM	410	TUBE 12 MM PA BLUE	
330	90166-0068	A	MM	850	TUBE 12 MM PA BLUE	
340	90166-0068	A	MM	650	TUBE 12 MM PA BLUE	
350	90166-0068	A	MM	50	TUBE 12 MM PA BLUE	
360	90166-0068	A	MM	50	TUBE 12 MM PA BLUE	
370	90166-0068	A	MM	100	TUBE 12 MM PA BLUE	
380	90166-0068	A	MM	100	TUBE 12 MM PA BLUE	
390	90166-0068	A	MM	95	TUBE 12 MM PA BLUE	
400	90166-0068	A	MM	105	TUBE 12 MM PA BLUE	
410	90166-0068	A	MM	120	TUBE 12 MM PA BLUE	
420	90166-0068	A	MM	670	TUBE 12 MM PA BLUE	
440	90166-0068	-	MM	70	TUBE 12 MM PA BLUE	
480	90328-0002	-		1	SILENCER	
600	312105-0328	-		2	SCREW M6S ISO 4017 M5X14 A480	
610	312105-0372	-		8	SCREW M6S ISO 4017 M6X25 A480	
620	312115-0337	-		2	SCREW ISO4762 M5X35 A4	
680	312605-0316	-		4	HEXAGON NUT, M6M M6 A280	
690	315101-0153	-		4	WASHER PLAIN, BRB, 6,4/12 H=1,5	
710	315105-0146	-		4	WASHER BRB5,3X10RFR	
720	315105-0153	-		8	WASHER BRB6,4X12RFR	
730	342713-0210	-		1	PLUG, EXT THREAD HEX SOCKET 8638-00-140	
740	342716-0209	-		3	REDUCER 8-12	
770	90458-2959	-		7	ELBOW PIPE JOINT, EXT.THREAD,D=12MM-G1/4	
790	342735-0109	-		7	ELBOW PIPE JOINT	
800	90055-0278	-		2	T-COUPLING, ADJ.12-G1/4"	
810	342748-0109	-		1	T-CONNECTION 12MM	
850	352103-0101	-		3	CABLE GLAND, ST 9, PR15,2/PG9	
860	359000-0400	-		6	MARKING CO2/4"0"	
870	359000-0401	-		5	MARKING COLLAR 2/4 "1" YELLOW	
880	359000-0402	-		5	MARKING COLLAR 2/4 "2" YELLOW	
890	359000-0404	-		2	MARKING COLLAR PA2/4 "4" YELLOW	
900	359000-0409	-		2	MARKING COLLAR PA2/4 "9" YELLOW	
910	359000-0500	-		10	MARKING COLLAR 3/6 "0" YELLOW	
920	359000-0501	-		7	MARKING COLLAR 3/6 "1" YELLOW	
930	359000-0502	-		2	MARKING CO3/6"2"	
940	359000-0504	-		5	MARKING CO3/6"4"	
B100	90274-0074	A		1	PRESSURE GUARD, 530 KPA	
B100:1	90042-0371	A		1	WEAR & TEAR PARTS KIT	
B100:2	90042-0385	A		1	SEAL KIT 04904 273 09	
Y100	90042-0392	A		1	CONTACT 2 POLE + EARTH	

Machine Type | Group Description | Used-In | Group Number | Page No

FILTER-REGULATOR

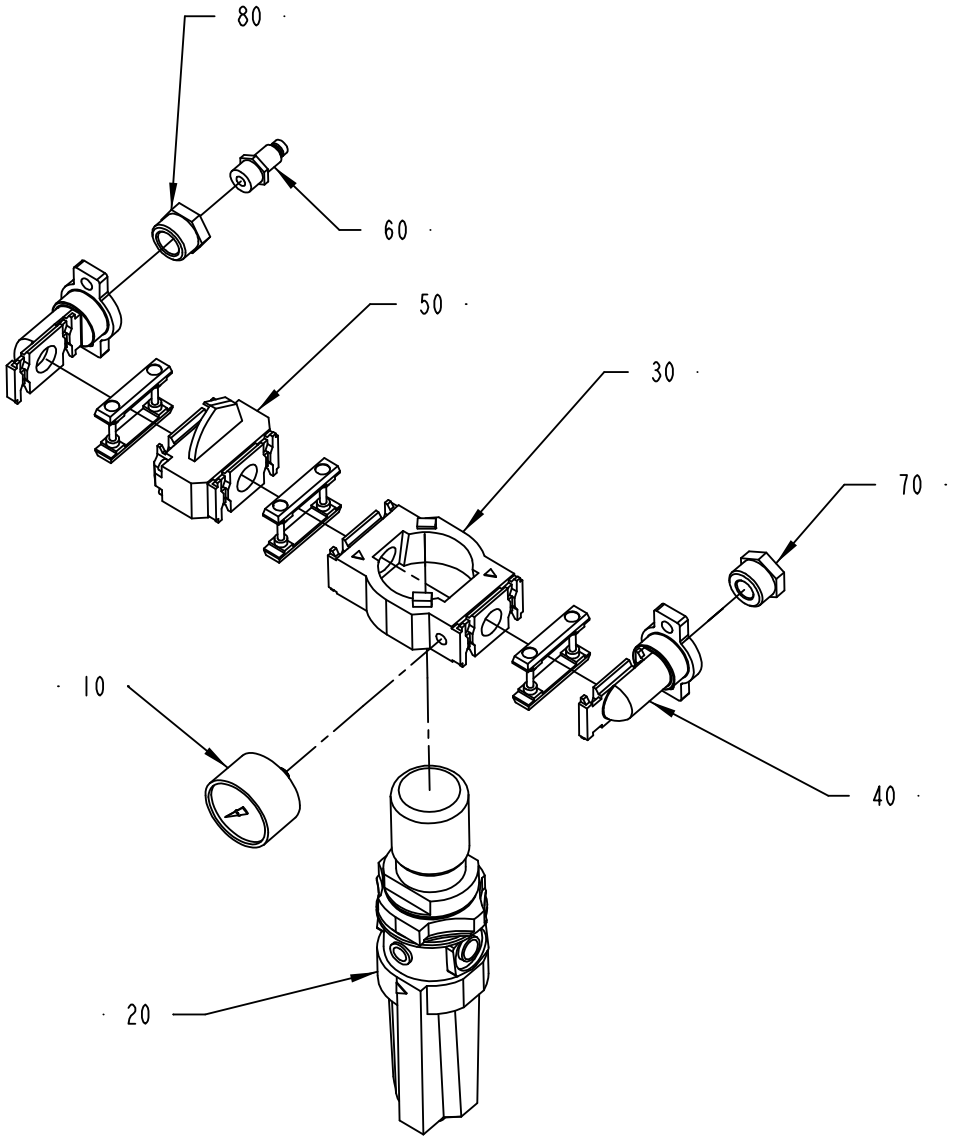

S-595693-I
ECN 25441

ECM: 111940 - 20021022
Group number: 595693-0100
Assembly Drawing: 595693-1_1_AA

Pos	Part No	SP	UN	Qty	Description	Page No
-						
010	90043-0128	A		1	MANOMETER	
020	90113-0113	A		1	FILTER REGULATOR, B64G-NNK-AD3-RMN	
030	90113-0407	-		1	YOKE, SINGLE	
040	90113-0413	-		2	END CONNECTOR	
050	90113-0427	A		1	SHUT O FF VALVE	
060	90163-0019	-		1	QUICK COUPLING, (M) 8202 1202-52	
070	342701-0208	-		1	BUSHING, INT/EXT. G-THREAD NO. 3/4-1/4	
080	342701-0209	-		1	BUSHING,INT./EXT.G-THREAD G3/4"-G3/8"	

Pos	Part No	SP	UN	Qty	Description	Page No

CABLE DUCT

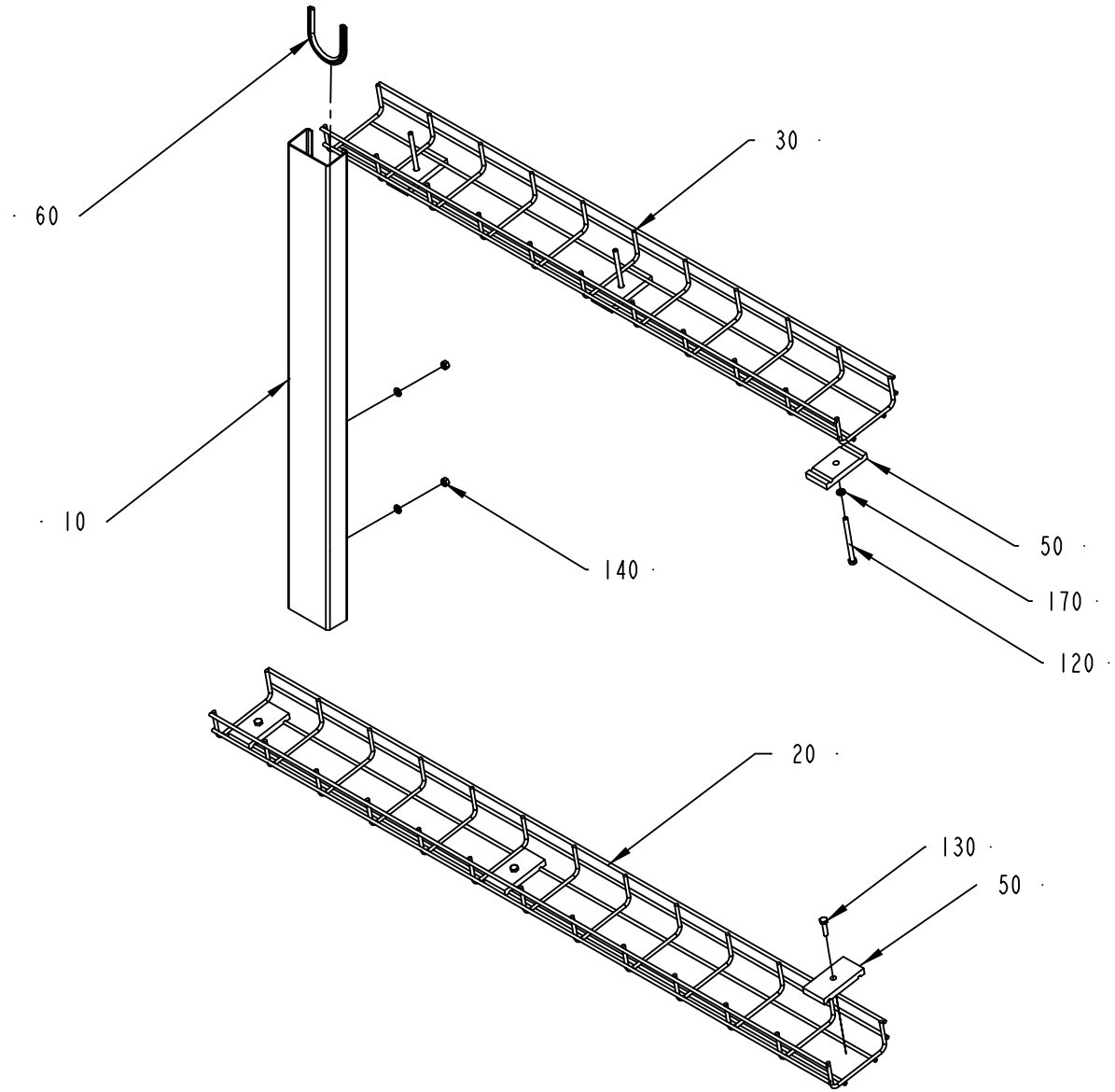

595678-2
ECM 100505

ECM: 105133 - 20021022
Group number: 595678-0200
Assembly Drawing: 595678-2_1_AA

Pos	Part No	SP	UN	Qty	Description	Page No
-						
010	595895-0000	-		1	CABLE DUCT	
020	2532793-0000	-		1	CABLE DUCT	
030	595896-0000	-		1	KABELKANAL	
050	595897-0000	-		6	HOLDER	
060	90143-0060	-	MM	175	EDGE STRIP 9,5X6,3MM BLACK PVC	
120	312105-0386	-		3	SCREW M6S ISO 4014 M6X80 A480	
130	312105-0372	-		3	SCREW M6S ISO 4017 M6X25 A480	
140	312605-0316	-		2	HEXAGON NUT, M6M M6 A280	
170	315105-0153	-		5	WASHER BRB6,4X12RFR	

Pos	Part No	SP	UN	Qty	Description	Page No

LIGHT FIXTURE

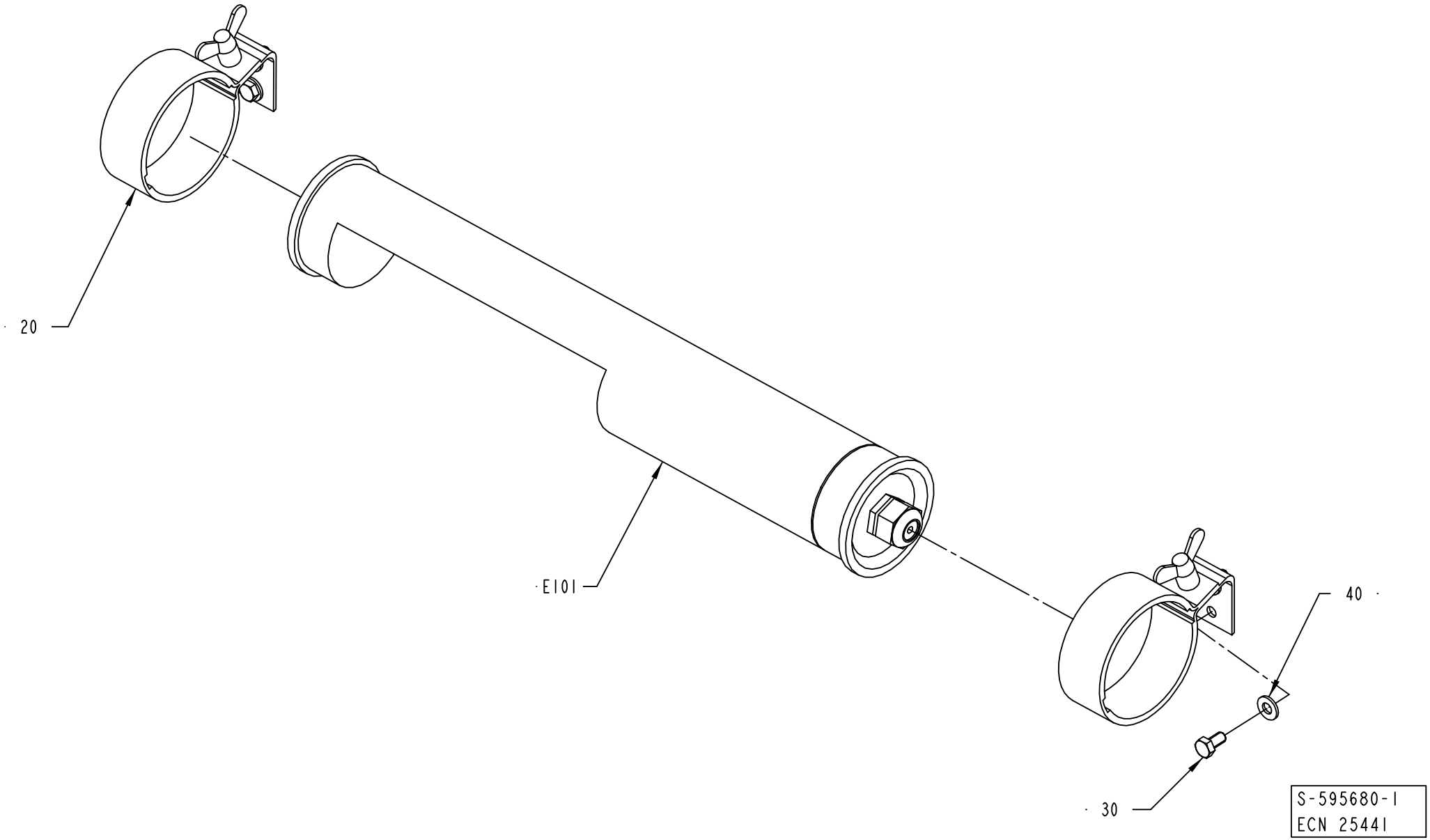

ECM: 111941 - 20021022
Group number: 595680-0100
Assembly Drawing: 595680-1_1_AA

Pos	Part No	SP	UN	Qty	Description	Page No
-						
020	90164-0303	-		2	BRACKET SK2202 WALDMANN	
030	312105-0366	-		4	SCREW M6S ISO 4017 M6X12 A480	
040	315105-0156	-		4	WASHER BRB 6.7X14 RFR	
E101	90164-0015	-		1	LIGHT FIXTURE, DWDCV111B/230V 50HZ	
	90297-0007	*B*		*1*	*FLUORESCENT TUBE, PLS 11*	
E101:1	90297-0007	B		1	FLUORESCENT TUBE, PLS 11	

Pos	Part No	SP	UN	Qty	Description	Page No

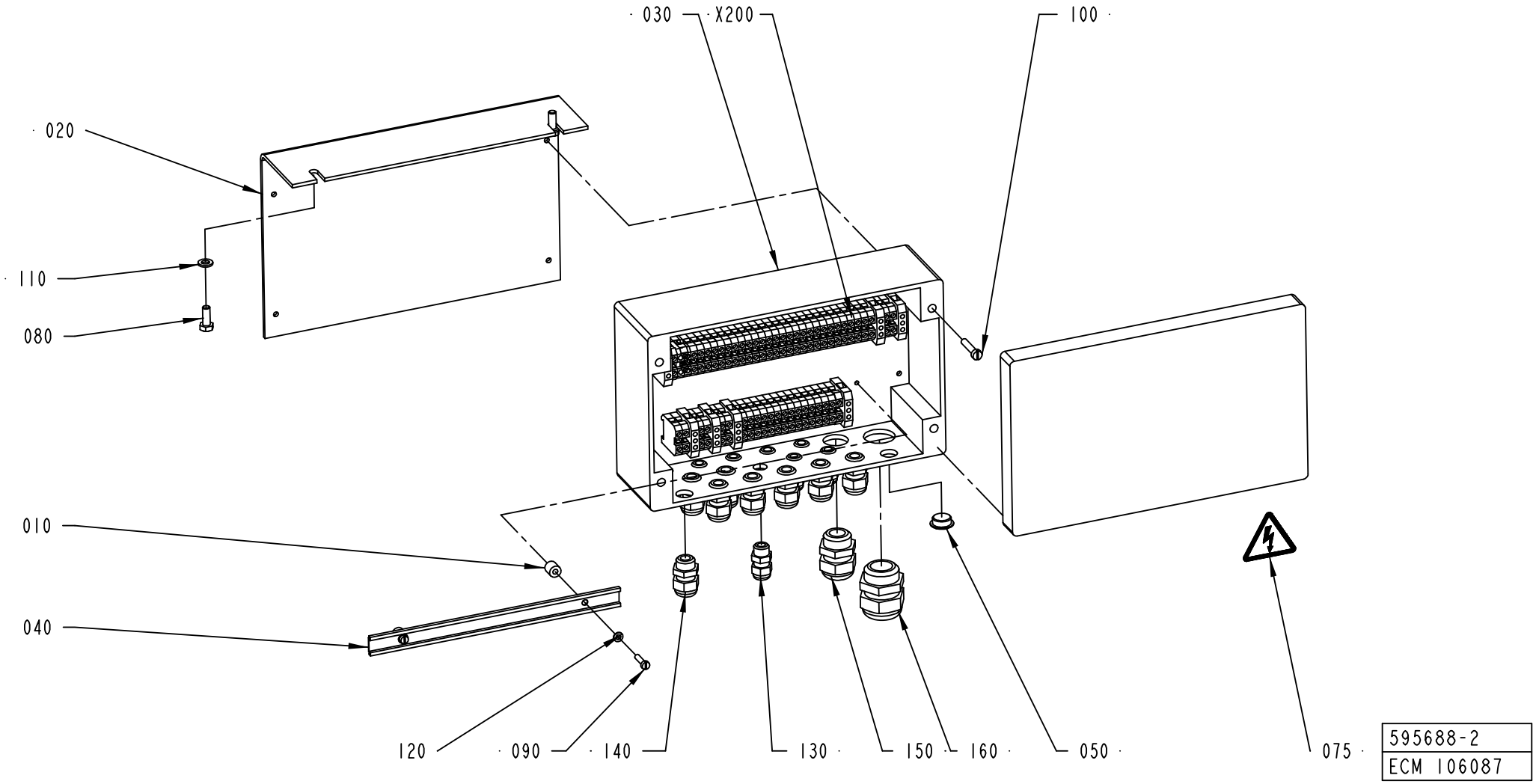
030
X200
100
020
110
080
010
040
120
090
140
130
150
160
050
075
595688-2
ECM 106087

ECM: 172179 - 20040507
Group number: 595688-0200
Assembly Drawing: 595688-2_1_AA

Pos	Part No	SP	UN	Qty	Description	Page No
ANSI						
075	359715-0100	-		1	WARNING SIGN ANSI(H), ELECTRIC SHOCK	
ISO						
075	359705-0015	-		1	WARNING SIGN ISO, RISK OF ELECTRIC SHOCK	
Common Parts						
010	479110-0000	-		4	SPACER	
020	1124522-0000	-		1	BRACKET	
030	1363010-0000	-		1	CONNECTION BOX	
040	8490-0010	-		2	MOUNTING RAIL	
050	90002-0013	-		1	BLANK-OFF PLUG, PR 15,2 SKINDICHT-BLK9	
080	312105-0368	-		2	SCREW M6S ISO 4017 M6X16 A480	
090	312125-0293	-		4	SCREW ISO 1207 M4X16 A4	
100	312125-0333	-		4	SCREW ISO 1207 M5X25 A4	
110	315101-0153	-		2	WASHER PLAIN, BRB, 6,4/12 H=1,5	
120	315105-0136	-		4	WASHER BRB4,3XRFR	
130	352103-0096	-		8	CABLE GLAND, ST 7, PR 12,5/PG7	
140	352103-0101	-		8	CABLE GLAND, ST 9, PR15,2/PG9	
150	352103-0101	-		1	CABLE GLAND, ST 9, PR15,2/PG9	
160	352103-0116	-		1	CABLE GLAND, ST 21, PR28,3/PG21	
X200	2532781-0100	-		1	TERMINAL	**3-23**

Pos	Part No	SP	UN	Qty	Description	Page No

Machine Type | Group Description | Used-In | Group Number | Page No

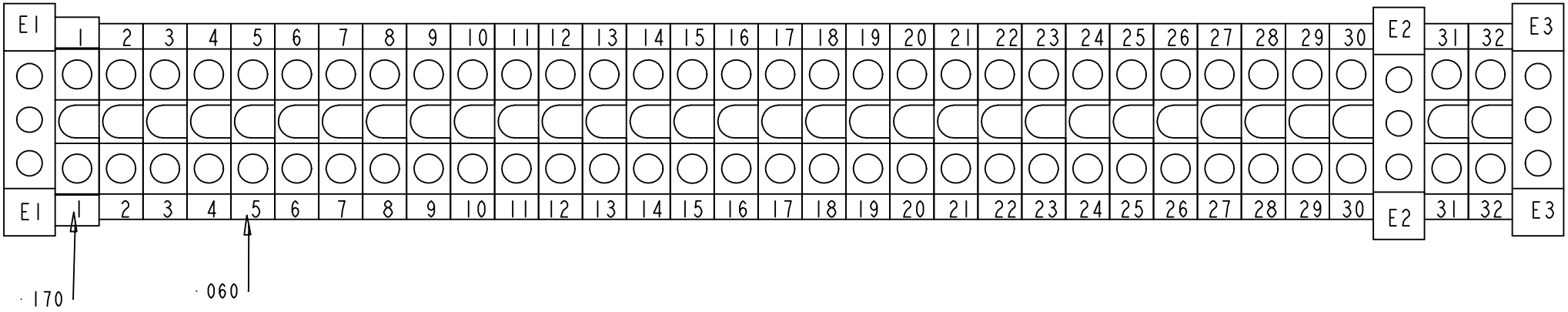

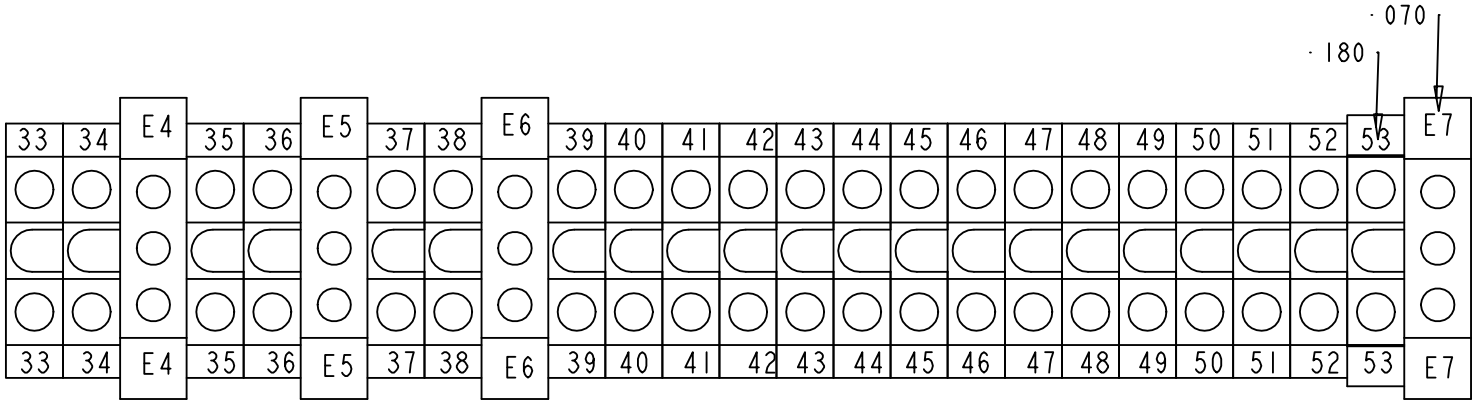

2532781-1
ECM 106087

ECM: 106087 - 20021022
Group number: 2532781-0100
Assembly Drawing: 2532781-1_1_AA

Pos	Part No	SP	UN	Qty	Description	Page No
-						
060	90077-0079	-		53	FEED THROUGH TERMINAL, 02943.6	
070	90135-0026	-		7	EARTH TERMINAL, 3802.6	
170	359011-0821	-		2	SET OF SIGNS 6-FW 1-50	
180	359011-0822	-		2	SET OF SIGNS 6-FW 51-100	

Pos	Part No	SP	UN	Qty	Description	Page No

LEAD-IN PLATE

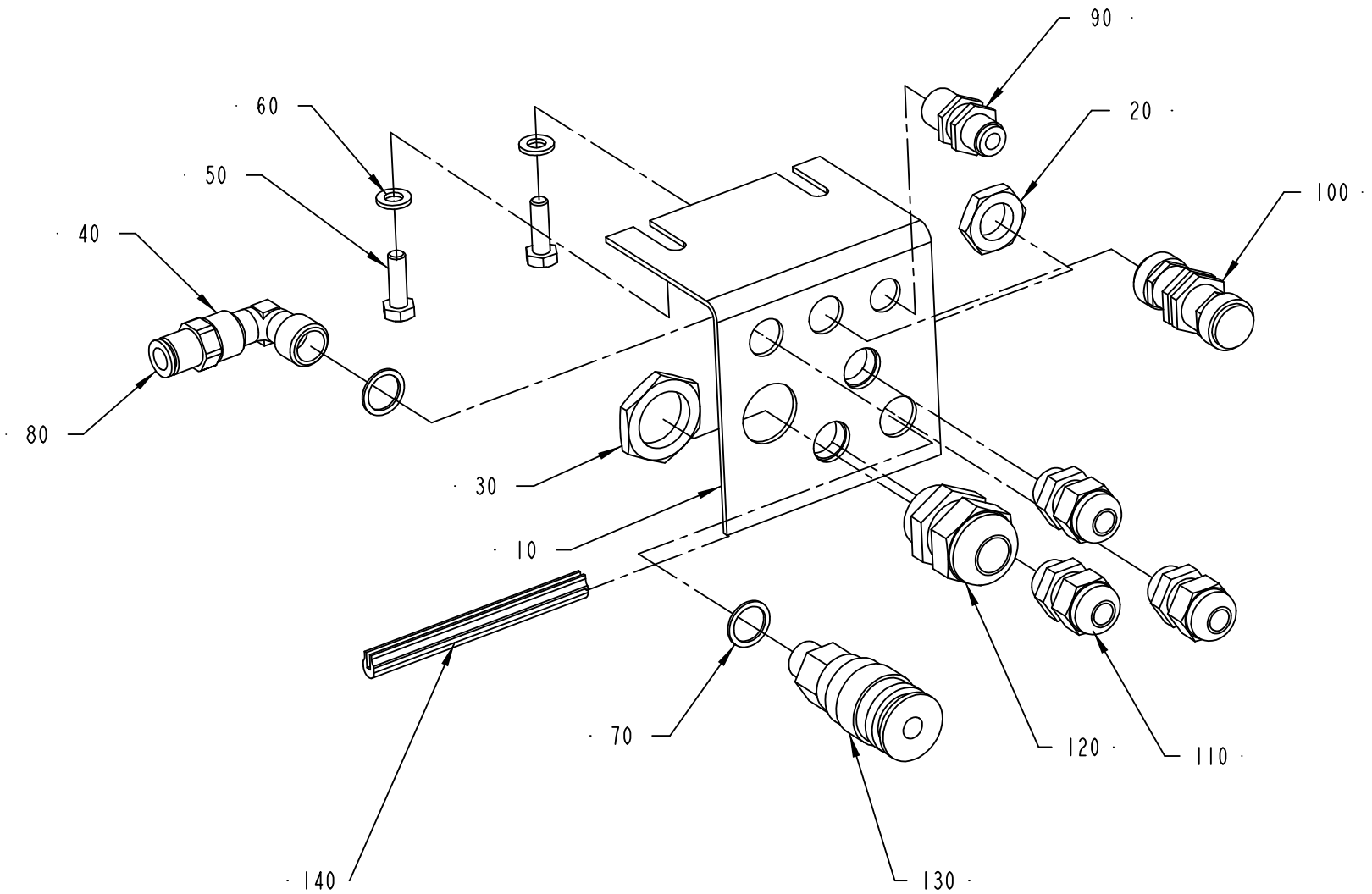

595689-1
ECM 111138

ECM: 111252 - 20021022
Group number: 595689-0100
Assembly Drawing: 595689-1_1_AB

Pos	Part No	SP	UN	Qty	Description	Page No
-						
010	1363014-0000	-		1	BRACKET	
020	90099-0104	-		3	NUT, PR 15,2 (PG9)	
030	90099-0110	-		1	NUT, PR 22,5 (PG16)	
040	90140-0019	-		1	ELBOW, 90, INT. THREAD, NO. 2013-1/4	
050	312105-0370	-		2	SCREW M6S ISO 4017 M6X20 A480	
060	315105-0153	-		2	WASHER BRB6,4X12RFR	
070	315233-0110	-		2	WASHER CAPTIVE SEALING G1/4	
080	342722-0205	-		1	STRAIGHT COUPLING D=8-G1/4"	
090	342768-0102	-		1	BULKHEAD CONNECTOR, 6 MM	
100	342960-0133	-		1	BULKHEAD COUPLING 10/8	
110	352103-0101	-		3	CABLE GLAND, ST 9, PR15,2/PG9	
120	352103-0110	-		1	CABLE GLAND, STR 16, PR22,5/PG16	
130	90163-0008	-		1	CONNECTION 1/4"	
140	90143-0060	-	MM	90	EDGE STRIP 9,5X6,3MM BLACK PVC	

Pos	Part No	SP	UN	Qty	Description	Page No

LEAD-IN PLATE

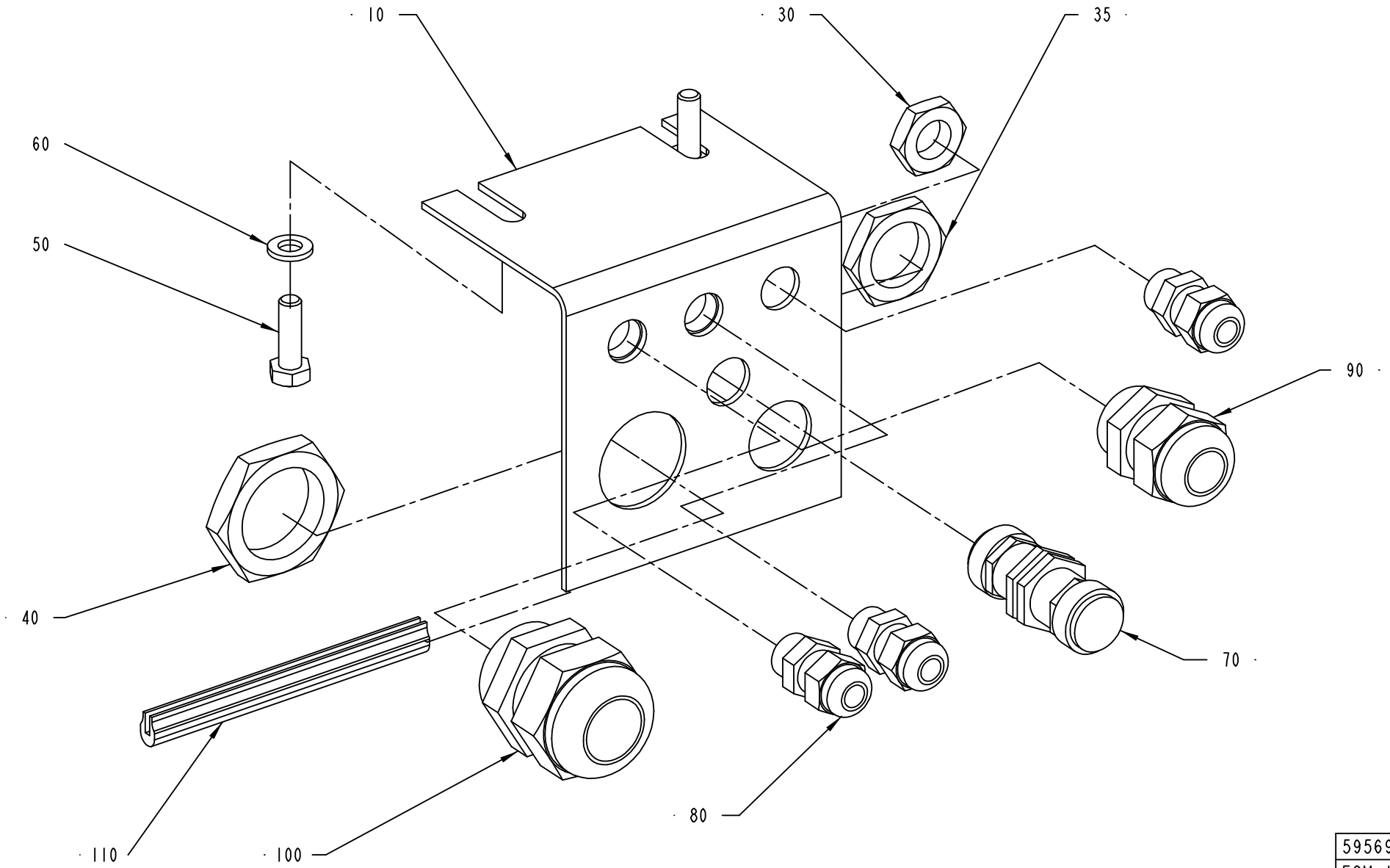

595690-1
ECM 111138

ECM: 111251 - 20021022
Group number: 595690-0100
Assembly Drawing: 595690-1_1_AB

Pos	Part No	SP	UN	Qty	Description	Page No
-						
010	1363015-0000	-		1	BRACKET	
030	90099-0116	-		3	NUT, PR 12,5 (PG7)	
035	90099-0118	-		1	NUT, PR 20,4 (PG13,5)	
040	90099-0119	-		1	NUT, PR 28,3 (PG21)	
050	312105-0370	-		2	SCREW M6S ISO 4017 M6X20 A480	
060	315105-0153	-		2	WASHER BRB6,4X12RFR	
070	342960-0133	-		1	BULKHEAD COUPLING 10/8	
080	352103-0096	-		3	CABLE GLAND, ST 7, PR 12,5/PG7	
090	352103-0108	-		1	CABLE GLAND, ST 13,5 , PR20,4/PG13,5	
100	352103-0116	-		1	CABLE GLAND, ST 21, PR28,3/PG21	
110	90143-0060	-	MM	90	EDGE STRIP 9,5X6,3MM BLACK PVC	

Pos	Part No	SP	UN	Qty	Description	Page No

MAINS CONNECTION

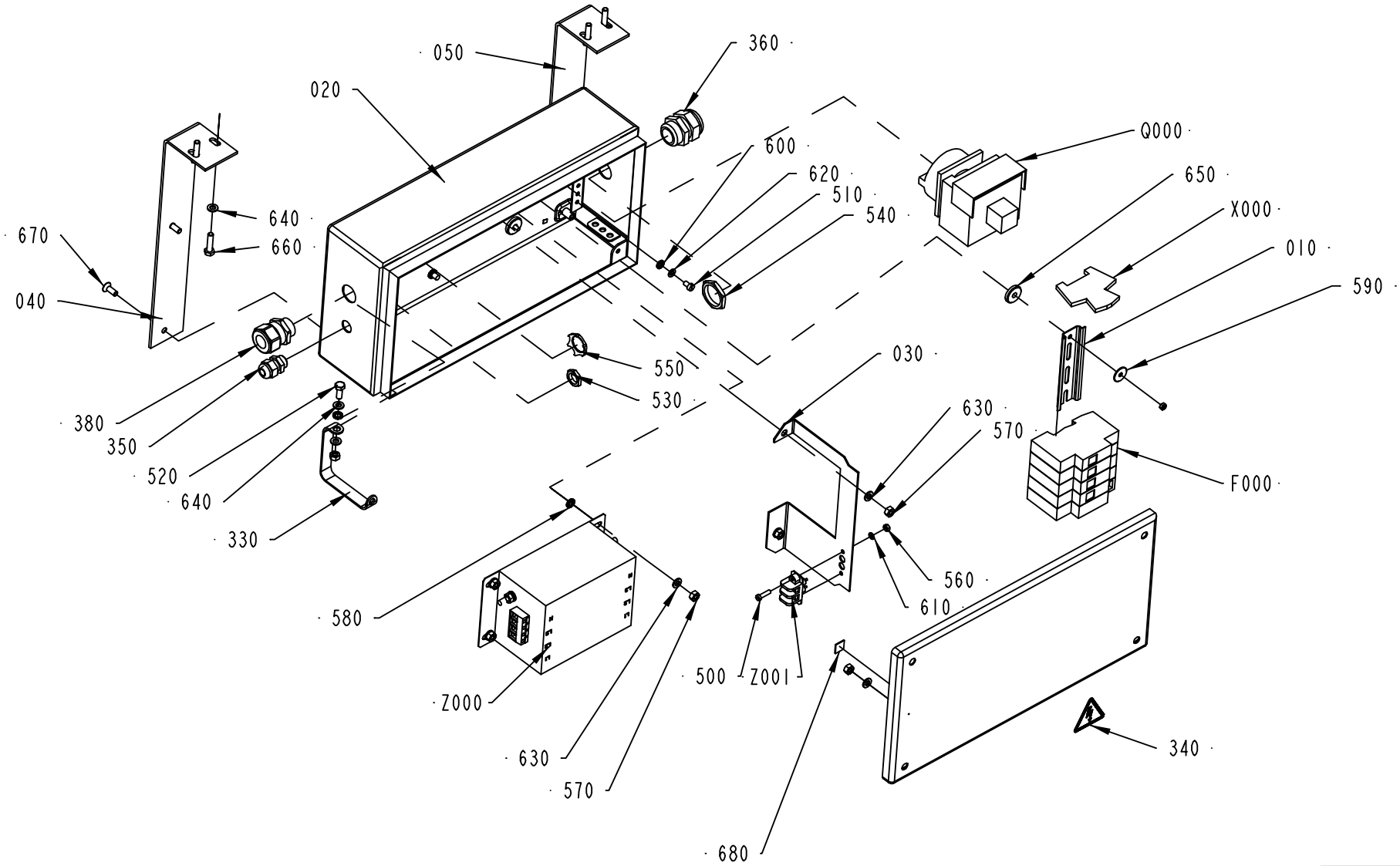

2553411-1
172049

ECM: 172180 - 20040507
Group number: 2553411-0100
Assembly Drawing: 2553411-1_1_AB

Pos	Part No	SP	UN	Qty	Description	Page No
ANSI						
340	359715-0100	-		1	WARNING SIGN ANSI(H), ELECTRIC SHOCK	
ISO						
340	359705-0015	-		1	WARNING SIGN ISO, RISK OF ELECTRIC SHOCK	
Common Parts						
010	2553423-0000	-		1	RAIL	
020	2549823-0000	-		1	ELECTRICAL CABINET	
030	2553421-0000	-		1	PLATE	
040	2549816-0000	-		1	BRACKET	
050	2549817-0000	-		1	BRACKET	
330	90135-0043	-		1	EARTH WIRE L=200 MM 16 MM2	
350	352103-0101	-		1	CABLE GLAND, ST 9, PR15,2/PG9	
360	352103-0116	-		1	CABLE GLAND, ST 21, PR28,3/PG21	
380	353245-0005	-		1	GLAND, EXTENDED WITH INSERT, PG16/PR 22,	
500	312121-0293	-		2	SCREW ISO 1207 M4X16 4.8 - 5.8 Z.PL.	
510	312121-0323	-		1	SCREW ISO 1207 M5X8 4.8 - 5.8 Z.PL.	
520	312105-0368	-		1	SCREW M6S ISO 4017 M6X16 A480	
530	90099-0001	-		1	NUT PG 9/PR 15,2	
540	90099-0004	-		1	NUT	
550	90099-0178	-		1	GLAND, LOCKNUT, PG 16	
560	312605-0312	-		4	HEXAGON NUT, M6M M4 A280	
570	312605-0316	-		10	HEXAGON NUT, M6M M6 A280	
580	90062-0015	-		10	LOCK WASHER SERRAT.EXT.GEAR,6,4/11 H=0,7	
590	90005-0102	-		2	WASHER PLAIN ROUND 5/19, H=1 FZB	
600	90062-0060	-		1	LOCK WASHER SERRAT.EXT.GEAR,5,3/10 H=0,6	
610	315101-0136	-		2	WASHER BRB, 4,3/8 H=0,8	
620	315101-0146	-		1	WASHER PLAIN, BRB, 5,3/10 H=1	
630	315101-0153	-		9	WASHER PLAIN, BRB, 6,4/12 H=1,5	
640	315105-0153	-		6	WASHER BRB6,4X12RFR	
650	315121-0153	-		2	WASHER PLAIN, TBRSB 6,4/22 H=4	
660	312105-0372	-		4	SCREW M6S ISO 4017 M6X25 A480	
670	312155-0368	-		4	SCREW EN 10642 MF6S M6X16 A480	
F000	90082-0013	A		1	OVER VOLT. PROTECT. PU 4C-R 230 VAC	
	90082-0301	*A*		*3*	*OVER VOLT. PROTECT. PU 0 C 833951*	
Q000	90111-0132	A		1	MAIN SWITCH P1-25/EA/SVB-SW/N/HI11/H-P14	
X000	2553445-0100	-		1	TERMINAL	**3-31**
Z000	90024-0049	A		1	POWER LINE FILTER, 16 A 400 VAC	
Z001	90024-0036	A		1	FILTERED TERMINAL BLOCK	

Machine Type	Group Description	Used-In	Group Number	Page No

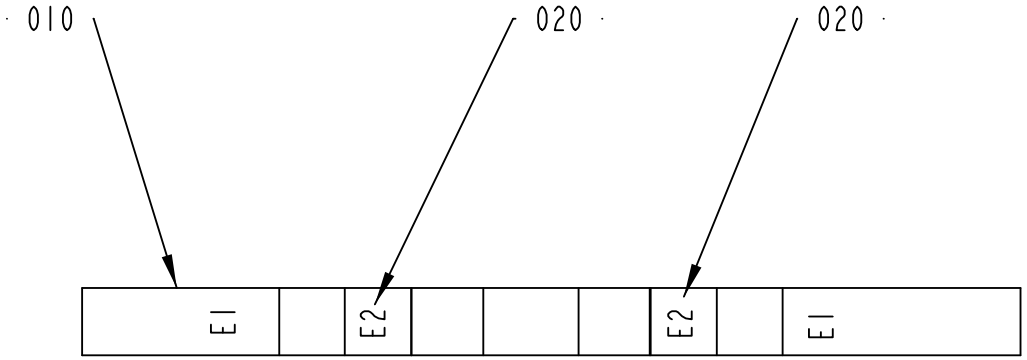

This side against the fuses.

2553445-1
ECM 106087

ECM: 111942 - 20021022
Group number: 2553445-0100
Assembly Drawing: 2553445-1_1_AA

Pos	Part No	SP	UN	Qty	Description	Page No
-						
010	353024-0212	-		1	EARTH TERMINAL, 10363.0	
020	90459-0606	-		2	MARKING PLATES 5-FW E1-E50	

Pos	Part No	SP	UN	Qty	Description	Page No

Tetra Pak

SPC
Spare Parts Catalogue

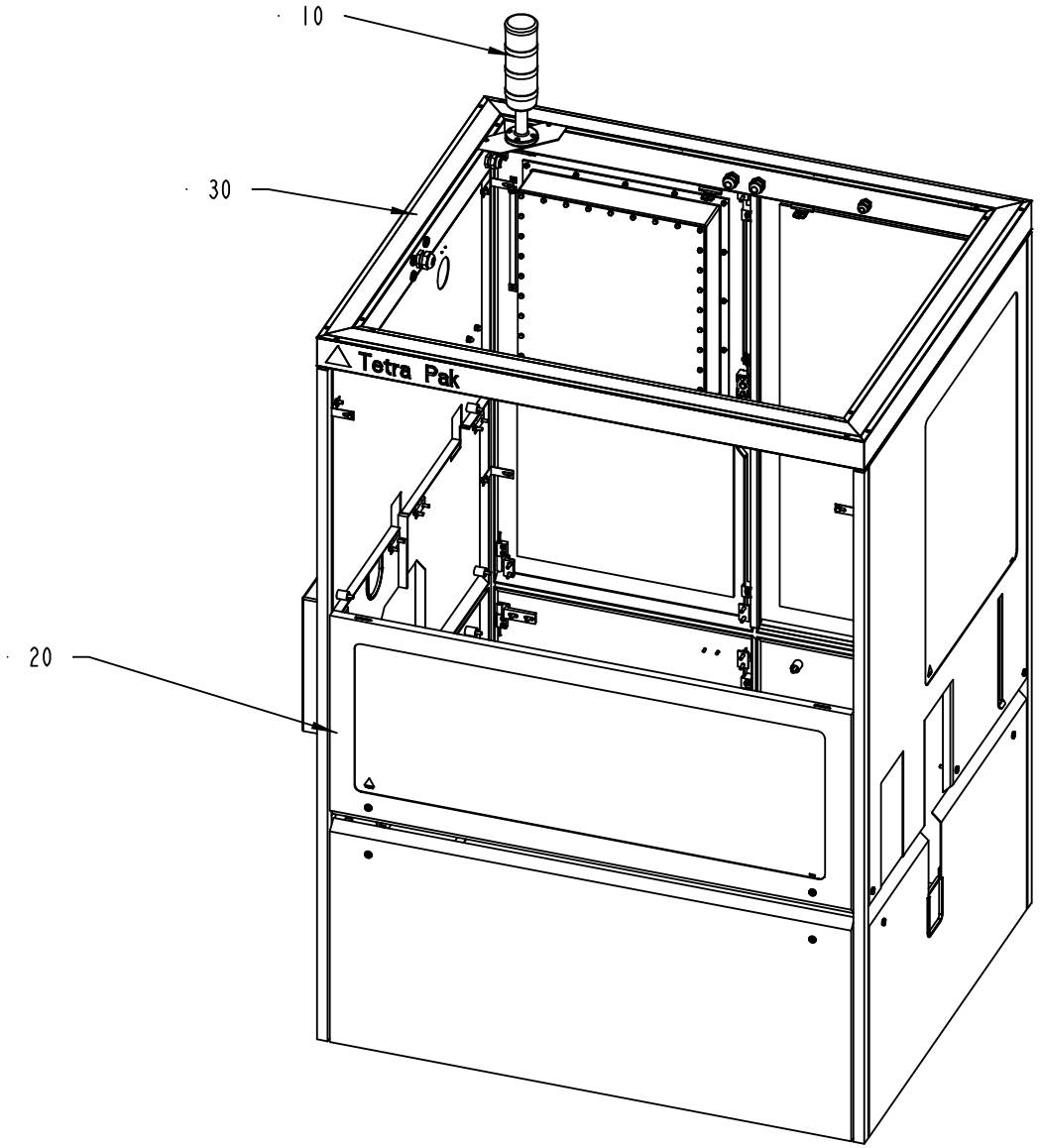

678216-2
ECM 100505

ECM: 105123 - 20021022
Group number: 678216-0200
Assembly Drawing: 678216-2_1_AA

Pos	Part No	SP	UN	Qty	Description	Page No
-						
010	581689-0400	-		1	WARNING LAMP	**4-5**
020	595669-0200	-		1	MACHINE COVERING	**4-7**
030	595676-0100	-		1	CABLE DUCT	**4-45**

Pos	Part No	SP	UN	Qty	Description	Page No

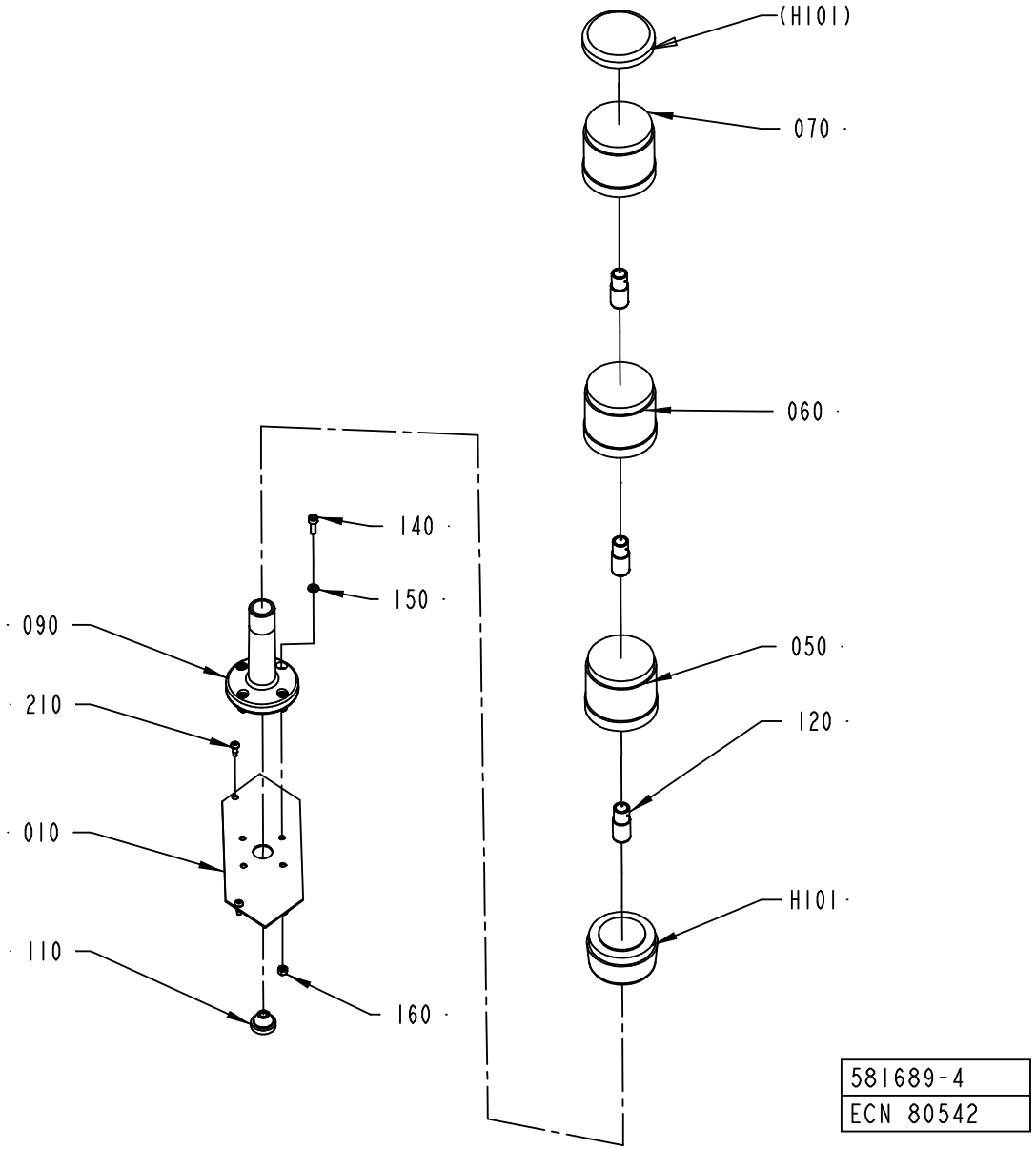
(H101)
070
060
140
150
090
050
210
120
010
H101
110
160
581689-4
ECN 80542

ECM: 109630 - 20020703
Group number: 581689-0400
Assembly Drawing: 581689-4_1_AA

Pos	Part No	SP	UN	Qty	Description	Page No
-						
010	1189303-0000	-		1	MOUNTING SHEET	
050	90458-0295	B		1	LIGHT ELEMENT, BLUE, KL70-401L	
060	90458-0294	B		1	LIGHT ELEMENT, YELLOW, KL70-401Y	
070	90458-0293	B		1	LIGHT ELEMENT, RED, KL70-401R	
090	90458-0297	B		1	BASE WITH TUBE 110 MM KA70-1011	
110	90015-0023	B		1	LEAD-IN, TET7-10, E-1458019	
120	90036-0068	B		3	BULB 6.5W 24V	
140	312115-0329	-		4	SCREW ISO4762 M5X16 A4	
150	315105-0146	-		8	WASHER BRB5,3X10RFR	
160	312605-0314	-		4	HEXAGON NUT, M6M M5 A280	
210	312504-0342	-		2	TAPPING SCREW ISO 7049-A4-ST4,2X13-C-Z	
H101	90458-0292	B		1	BASE, KT70-1001	

Pos	Part No	SP	UN	Qty	Description	Page No

MACHINE COVERING

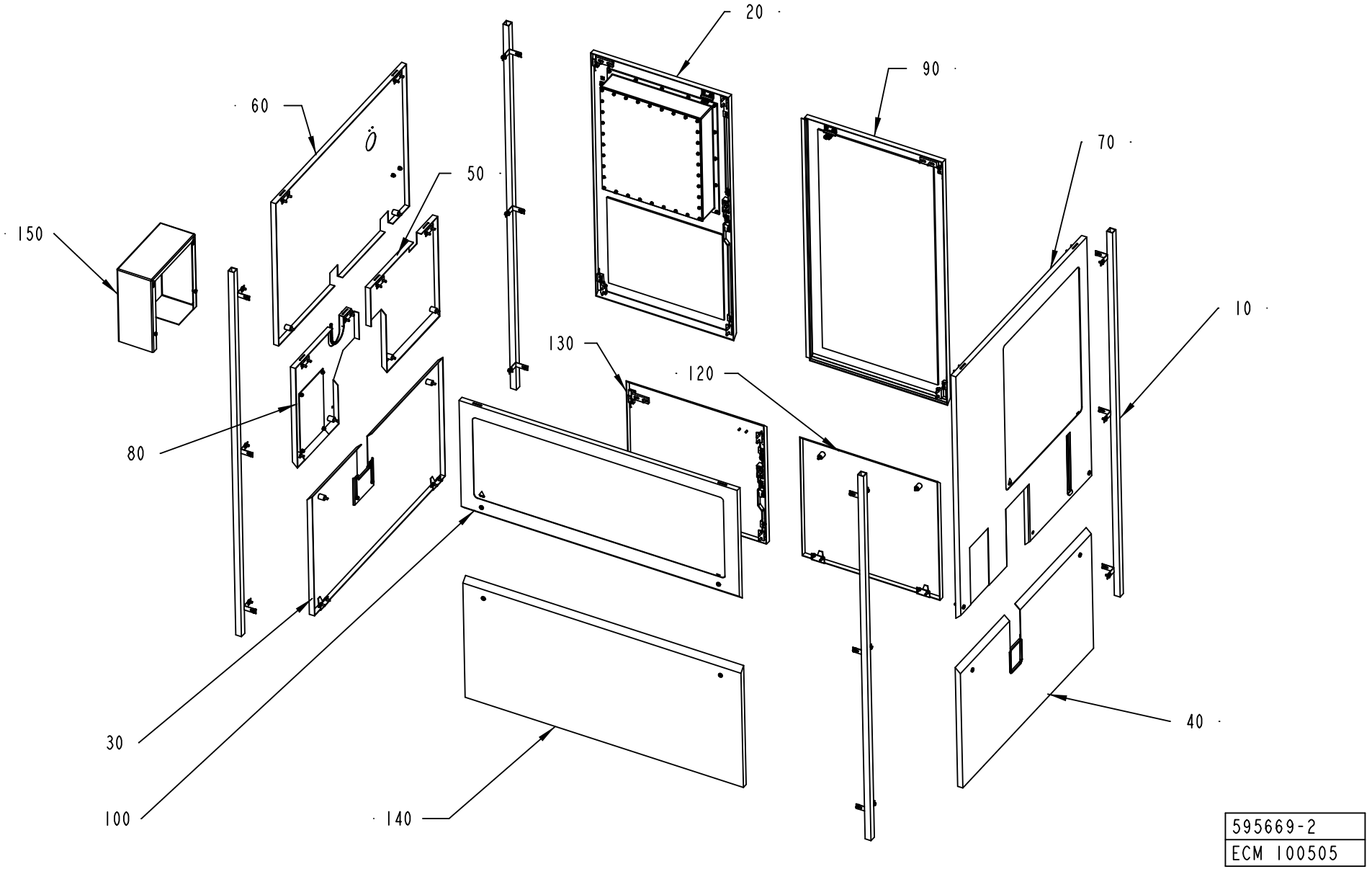

ECM: 105134 - 20021022
Group number: 595669-0200
Assembly Drawing: 595669-2_1_AA

Pos	Part No	SP	UN	Qty	Description	Page No
-						
010	2519604-0100	-		1	GUSSET PLATE	**4-9**
020	1364398-0200	-		1	PANEL DOOR	**4-11, 4-13**
030	595671-0200	-		1	COVERING PLATE	**4-21**
040	595672-0200	-		1	COVERING PLATE	**4-23**
050	595673-0200	-		1	COVERING PLATE	**4-25**
060	2519608-0100	-		1	COVERING PLATE	**4-27**
070	595675-0200	-		1	COVERING PLATE	**4-29**
080	2519610-0100	-		1	COVERING PLATE	**4-31**
090	959703-0201	-		1	GLASS DOOR	**4-33**
100	2519625-0100	-		1	COVERING PLATE	**4-35**
120	2519623-0100	-		1	COVERING PLATE	**4-37**
130	959708-0204	-		1	DOOR	**4-39**
140	959709-0102	-		1	COVERING PLATE	**4-41**
150	2532795-0100	-		1	COVER	**4-43**

Pos	Part No	SP	UN	Qty	Description	Page No

Machine Type | Group Description | Used-In | Group Number | Page No

GUSSET PLATE

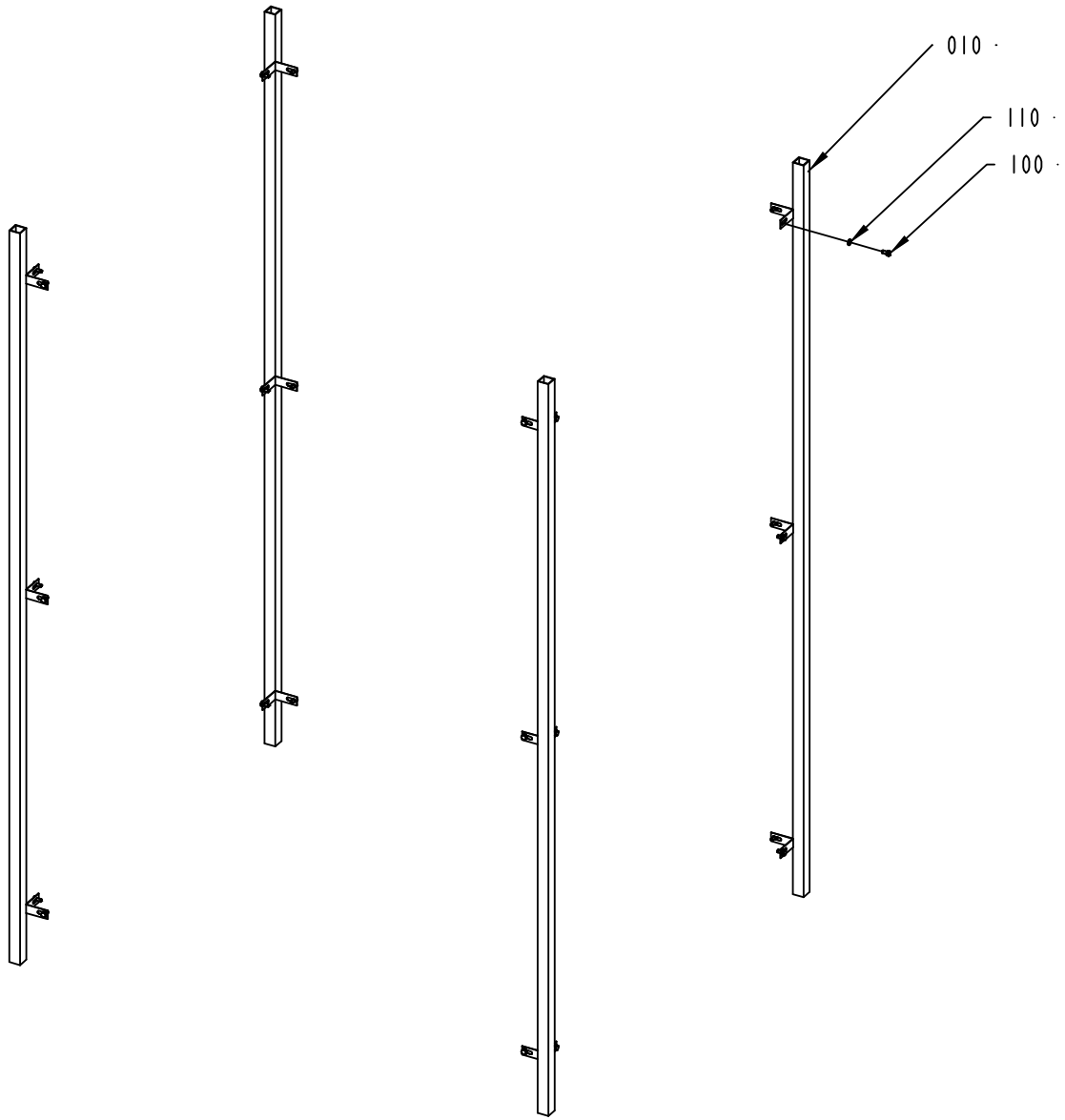

2519604-1
ECM 100505

ECM: 105285 - 20021022
Group number: 2519604-0100
Assembly Drawing: 2519604-1_1_AA

Pos	Part No	SP	UN	Qty	Description	Page No
-						
010	975950-0000	-		4	CORNER STRIP	
100	312105-0366	-		24	SCREW M6S ISO 4017 M6X12 A480	
110	315105-0153	-		24	WASHER BRB6,4X12RFR	

Pos	Part No	SP	UN	Qty	Description	Page No

PANEL DOOR

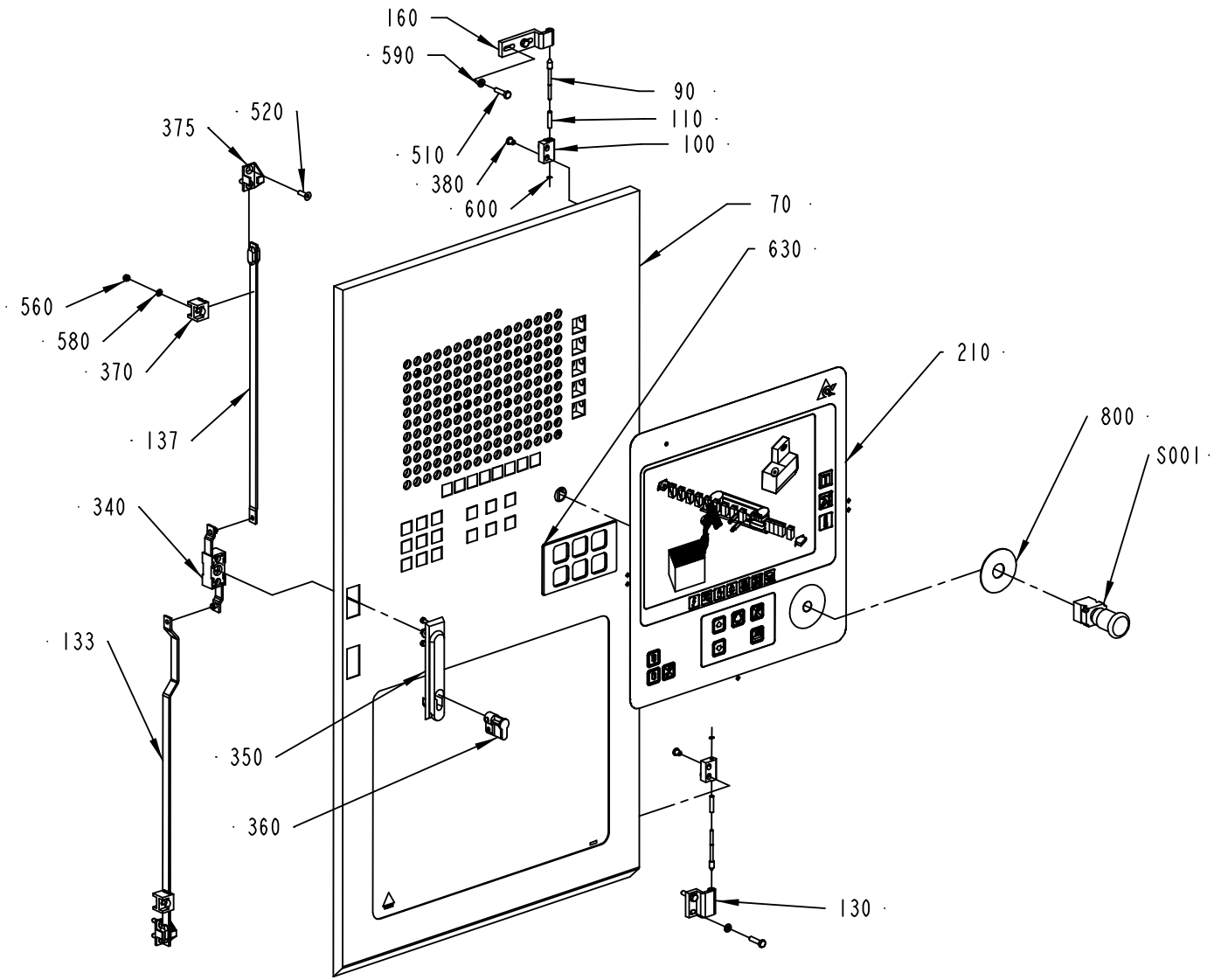

1364398-2
ECM 100505

ECM: 105283 - 20021022
Group number: 1364398-0200
Assembly Drawing: 1364398-2_1_AA

This list covers pages from 4-10 to 4-13

Pos	Part No	SP	UN	Qty	Description	Page No
-						
010	555077-0000	-		1	PLATE	
020	555287-0000	-		6	SPACER	
030	555288-0000	-		14	SPACER	
040	555333-0000	-		4	SPACER	
050	555334-0000	-		1	HOLDER	
055	575034-0000	-		2	ROUND NUT	
070	1364399-0000	-		1	HATCH	
080	599754-0000	-		1	CABLE DUCT	
090	959656-0000	-		2	COTTER	
100	959657-0000	-		2	HINGE FLANGE	
110	959658-0000	-		2	SPRING	
120	975849-0000	-		5	SPACER	
130	975880-0000	-		1	HINGE FLANGE	
133	975888-0003	-		1	STRUT	
137	975889-0003	-		1	STRUT	
140	975917-0000	-		1	KEY FOR SAFETY SWITCH 90044-103	
145	975918-0002	-		1	GLASS	
150	975924-0000	-		1	WASHER	
160	975927-0000	-		1	HINGE FLANGE	
170	1363036-0000	-		1	PROTECTIVE CASING	
180	1363037-0000	-		1	PROTECTIVE CASING	
190	1363038-0000	-		1	RUBBER GASKET	
200	1363039-0000	-		1	RUBBER GASKET	
210	598366-0000	-		1	DISPLAY	
290	90036-0057	B		3	LIGHT BULB, BA9S 28V	
300	90062-0015	-		2	LOCK WASHER SERRAT.EXT.GEAR,6,4/11 H=0,7	
310	90099-0119	-		1	NUT, PR 28,3 (PG21)	
315	90099-0193	-		2	NUT HEX. DOMED CAP MHM-6.6 M5 PL	
320	90135-0035	-		1	EARTH WIRE, L=250 MM 16 MM2	
330	90194-0152	-		2	SIGN, EARTH	
340	90237-0123	-		1	LOCK, 1121-U10C	
350	90237-0175	-		1	TURNING HANDLE	
360	90237-0128	-		1	LOCK CYLINDER, 1109-U3	
370	90237-0144	-		2	GUIDE, 1121-SU540	
375	90237-0147	-		2	LOCKING LUG, NO. 1121-53-0P	
380	90287-0205	-		4	SCREW	
500	312105-0323	-		34	SCREW M6S ISO 4017 M5X8 A480	
510	312105-0372	-		4	SCREW M6S ISO 4017 M6X25 A480	
520	312155-0370	-		4	SCREW EN 10642 MF6S M6X20 A480	
530	312605-0310	-		20	HEXAGON NUT, M6M M3 A280	
540	312605-0314	-		16	HEXAGON NUT, M6M M5 A280	
550	312605-0316	-		2	HEXAGON NUT, M6M M6 A280	
560	312812-0314	-		2	HEXAGON NUT, NY-LOCK M5 A480	
570	315105-0124	-		20	WASHER BRB3,2X6RFR	
580	315105-0146	-		52	WASHER BRB5,3X10RFR	
590	315105-0153	-		6	WASHER BRB6,4X12RFR	
600	315755-0105	-		2	RETAINING RING SHAFT DIN 6799 3,2 A2	
610	352103-0115	-		1	CABLE GLAND, STR 21, PR28,3/PG21	
620	90077-0328	-	MM	158	RAIL TS15/5	
630	975958-0000	-		1	PLATE	
700	90157-0041	-	L		SEALING COMPOUND	
800	486826-0001	-		1	SIGN "EMERGENCY STOP"	
A071	583399-0102	A		1	PUSHBUTTON BOARD	**4-15**
A072	68699-0101	A		1	MULTIPLEXER CARD 56LED	**4-17**
H001	90124-0027	B		1	LAMP HOLDER BA9S	
H002	90124-0027	B		1	LAMP HOLDER BA9S	
H003	90124-0027	B		1	LAMP HOLDER BA9S	
H021	90038-0045	B		1	LIGHT DIODE, 24-60V YELLOW	
H022	90038-0045	B		1	LIGHT DIODE, 24-60V YELLOW	
H025	90038-0045	B		1	LIGHT DIODE, 24-60V YELLOW	
H026	90038-0045	B		1	LIGHT DIODE, 24-60V YELLOW	
H027	90038-0045	B		1	LIGHT DIODE, 24-60V YELLOW	
S001	90064-0124	A		1	SWITCH, EM. STOP, ZB2-BS844+ZB2-BZ1045	
X010	2542372-0100	-		1	TERMINAL	**4-19**

Machine Type | Group Description | Used-In | Group Number | Page No

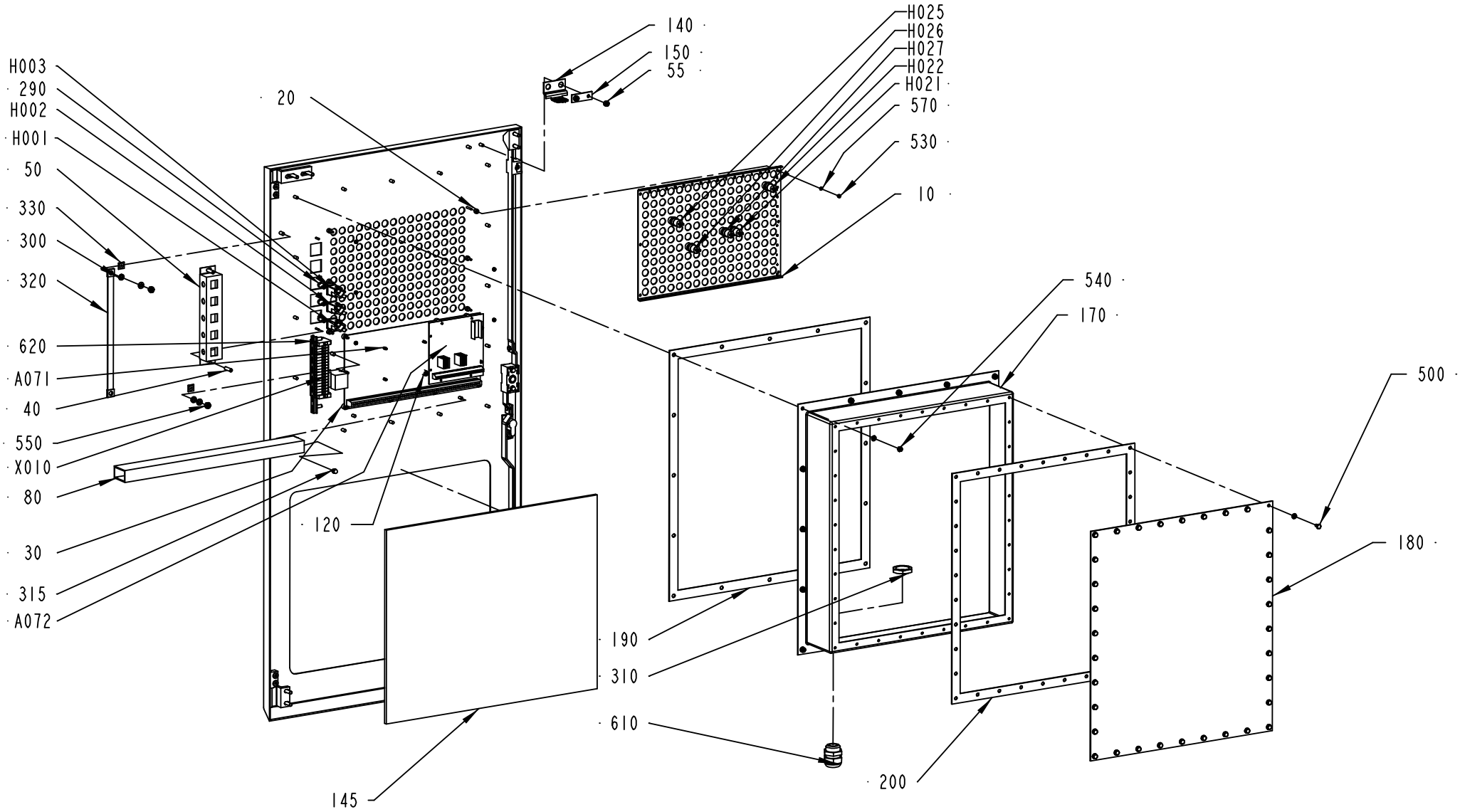
H003
290
H002
H001
50
330
300
320
620
A071
40
550
X010
80
30
315
A072
20
140
150
55
H025
H026
H027
H022
H021
570
530
10
540
170
500
180
120
190
310
610
145
200

ECM: 105283 - 20021022
Group number: 1364398-0200
Assembly Drawing: 1364398-2_2_AA

This list covers pages from 4-10 to 4-13

Pos	Part No	SP	UN	Qty	Description	Page No
-						
010	555077-0000	-		1	PLATE	
020	555287-0000	-		6	SPACER	
030	555288-0000	-		14	SPACER	
040	555333-0000	-		4	SPACER	
050	555334-0000	-		1	HOLDER	
055	575034-0000	-		2	ROUND NUT	
070	1364399-0000	-		1	HATCH	
080	599754-0000	-		1	CABLE DUCT	
090	959656-0000	-		2	COTTER	
100	959657-0000	-		2	HINGE FLANGE	
110	959658-0000	-		2	SPRING	
120	975849-0000	-		5	SPACER	
130	975880-0000	-		1	HINGE FLANGE	
133	975888-0003	-		1	STRUT	
137	975889-0003	-		1	STRUT	
140	975917-0000	-		1	KEY FOR SAFETY SWITCH 90044-103	
145	975918-0002	-		1	GLASS	
150	975924-0000	-		1	WASHER	
160	975927-0000	-		1	HINGE FLANGE	
170	1363036-0000	-		1	PROTECTIVE CASING	
180	1363037-0000	-		1	PROTECTIVE CASING	
190	1363038-0000	-		1	RUBBER GASKET	
200	1363039-0000	-		1	RUBBER GASKET	
210	598366-0000	-		1	DISPLAY	
290	90036-0057	B		3	LIGHT BULB, BA9S 28V	
300	90062-0015	-		2	LOCK WASHER SERRAT.EXT.GEAR,6,4/11 H=0,7	
310	90099-0119	-		1	NUT, PR 28,3 (PG21)	
315	90099-0193	-		2	NUT HEX. DOMED CAP MHM-6.6 M5 PL	
320	90135-0035	-		1	EARTH WIRE, L=250 MM 16 MM2	
330	90194-0152	-		2	SIGN, EARTH	
340	90237-0123	-		1	LOCK, 1121-U10C	
350	90237-0175	-		1	TURNING HANDLE	
360	90237-0128	-		1	LOCK CYLINDER, 1109-U3	
370	90237-0144	-		2	GUIDE, 1121-SU540	
375	90237-0147	-		2	LOCKING LUG, NO. 1121-53-0P	
380	90287-0205	-		4	SCREW	
500	312105-0323	-		34	SCREW M6S ISO 4017 M5X8 A480	
510	312105-0372	-		4	SCREW M6S ISO 4017 M6X25 A480	
520	312155-0370	-		4	SCREW EN 10642 MF6S M6X20 A480	
530	312605-0310	-		20	HEXAGON NUT, M6M M3 A280	
540	312605-0314	-		16	HEXAGON NUT, M6M M5 A280	
550	312605-0316	-		2	HEXAGON NUT, M6M M6 A280	
560	312812-0314	-		2	HEXAGON NUT, NY-LOCK M5 A480	
570	315105-0124	-		20	WASHER BRB3,2X6RFR	
580	315105-0146	-		52	WASHER BRB5,3X10RFR	
590	315105-0153	-		6	WASHER BRB6,4X12RFR	
600	315755-0105	-		2	RETAINING RING SHAFT DIN 6799 3,2 A2	
610	352103-0115	-		1	CABLE GLAND, STR 21, PR28,3/PG21	
620	90077-0328	-	MM	158	RAIL TS15/5	
630	975958-0000	-		1	PLATE	
700	90157-0041	-	L		SEALING COMPOUND	
800	486826-0001	-		1	SIGN "EMERGENCY STOP"	
A071	583399-0102	A		1	PUSHBUTTON BOARD	**4-15**
A072	68699-0101	A		1	MULTIPLEXER CARD 56LED	**4-17**
H001	90124-0027	B		1	LAMP HOLDER BA9S	
H002	90124-0027	B		1	LAMP HOLDER BA9S	
H003	90124-0027	B		1	LAMP HOLDER BA9S	
H021	90038-0045	B		1	LIGHT DIODE, 24-60V YELLOW	
H022	90038-0045	B		1	LIGHT DIODE, 24-60V YELLOW	
H025	90038-0045	B		1	LIGHT DIODE, 24-60V YELLOW	
H026	90038-0045	B		1	LIGHT DIODE, 24-60V YELLOW	
H027	90038-0045	B		1	LIGHT DIODE, 24-60V YELLOW	
S001	90064-0124	A		1	SWITCH, EM. STOP, ZB2-BS844+ZB2-BZ1045	
X010	2542372-0100	-		1	TERMINAL	**4-19**

Machine Type | Group Description | Used-In | Group Number | Page No

This page is intentionally left blank.

ECM: - -
Group number: 583399-0102
Assembly Drawing:

Pos	Part No	SP	UN	Qty	Description	Page No
-						
0001	582084-0000	-		1	PRINTED CIRCUIT BOARD	
H006	90038-0047	-		1	DIODE	
H007	90038-0047	-		1	DIODE	
H008	90038-0047	-		1	DIODE	
H009	90038-0047	-		1	DIODE	
H010	90038-0047	-		1	DIODE	
H011	90038-0047	-		1	DIODE	
H012	90038-0047	-		1	DIODE	
H013	90038-0047	-		1	DIODE	
KA,K B	90129-0016	-		1	CONNECTOR, SCOTT 52072 S-070 B-00	
R001	90121-0121	-		1	RESISTANCE FIXED, 0,56 KOHM, 2 W	
R002	90121-0121	-		1	RESISTANCE FIXED, 0,56 KOHM, 2 W	
R003	90121-0121	-		1	RESISTANCE FIXED, 0,56 KOHM, 2 W	
R004	90121-0121	-		1	RESISTANCE FIXED, 0,56 KOHM, 2 W	
R005	90121-0121	-		1	RESISTANCE FIXED, 0,56 KOHM, 2 W	
R007	90121-0121	-		1	RESISTANCE FIXED, 0,56 KOHM, 2 W	
R008	90121-0121	-		1	RESISTANCE FIXED, 0,56 KOHM, 2 W	
R009	90121-0121	-		1	RESISTANCE FIXED, 0,56 KOHM, 2 W	
R010	90121-0121	-		1	RESISTANCE FIXED, 0,56 KOHM, 2 W	
R011	90121-0121	-		1	RESISTANCE FIXED, 0,56 KOHM, 2 W	
R012	90121-0121	-		1	RESISTANCE FIXED, 0,56 KOHM, 2 W	
R013	90121-0121	-		1	RESISTANCE FIXED, 0,56 KOHM, 2 W	
R014	90121-0121	-		1	RESISTANCE FIXED, 0,56 KOHM, 2 W	
R015	90121-0121	-		1	RESISTANCE FIXED, 0,56 KOHM, 2 W	
R016	90121-0121	-		1	RESISTANCE FIXED, 0,56 KOHM, 2 W	
R017	90121-0121	-		1	RESISTANCE FIXED, 0,56 KOHM, 2 W	
R018	90121-0121	-		1	RESISTANCE FIXED, 0,56 KOHM, 2 W	
R019	90121-0121	-		1	RESISTANCE FIXED, 0,56 KOHM, 2 W	
R020	90121-0121	-		1	RESISTANCE FIXED, 0,56 KOHM, 2 W	
R021	90121-0121	-		1	RESISTANCE FIXED, 0,56 KOHM, 2 W	
R022	90121-0121	-		1	RESISTANCE FIXED, 0,56 KOHM, 2 W	
R023	90121-0121	-		1	RESISTANCE FIXED, 0,56 KOHM, 2 W	
ROO6	90121-0121	-		1	RESISTANCE FIXED, 0,56 KOHM, 2 W	
S01H	90064-0111	-		1	PUSH BUTTON, WHITE	
S02H	90064-0111	-		1	PUSH BUTTON, WHITE	
S03H	90064-0111	-		1	PUSH BUTTON, WHITE	
S04H	90064-0111	-		1	PUSH BUTTON, WHITE	
S05H	90064-0111	-		1	PUSH BUTTON, WHITE	
S06H	90064-0111	-		1	PUSH BUTTON, WHITE	
S07H	90064-0111	-		1	PUSH BUTTON, WHITE	
S08H	90064-0111	-		1	PUSH BUTTON, WHITE	
S09H	90064-0111	-		1	PUSH BUTTON, WHITE	
S10H	90064-0111	-		1	PUSH BUTTON, WHITE	
S11H	90064-0111	-		1	PUSH BUTTON, WHITE	
S12H	90064-0111	-		1	PUSH BUTTON, WHITE	
S13H	90064-0111	-		1	PUSH BUTTON, WHITE	
S14H	90064-0111	-		1	PUSH BUTTON, WHITE	
S15H	90064-0111	-		1	PUSH BUTTON, WHITE	
X011	90077-0099	-		60	PCB TERMINAL GSE 5/1 1-POLE	
X011 :1	90077-0325	-		1	END PLATE	
X011 :2	359011-0807	-		1	MARKING PLATES 5-FW 1-50	
X011 :3	359011-0808	-		1	MARKING PLATES 5-FW 51-100	

Machine Type	Group Description	Used-In	Group Number	Page No

This page is intentionally left blank.

ECM: - -
Group number: 68699-0101
Assembly Drawing:

Pos	Part No	SP	UN	Qty	Description	Page No
-						
010	578860-0000	-		1	CIRCUIT BOARD	
020	578861-0001	-			COMPONENTS WITHOUT TP-NO	

Pos	Part No	SP	UN	Qty	Description	Page No

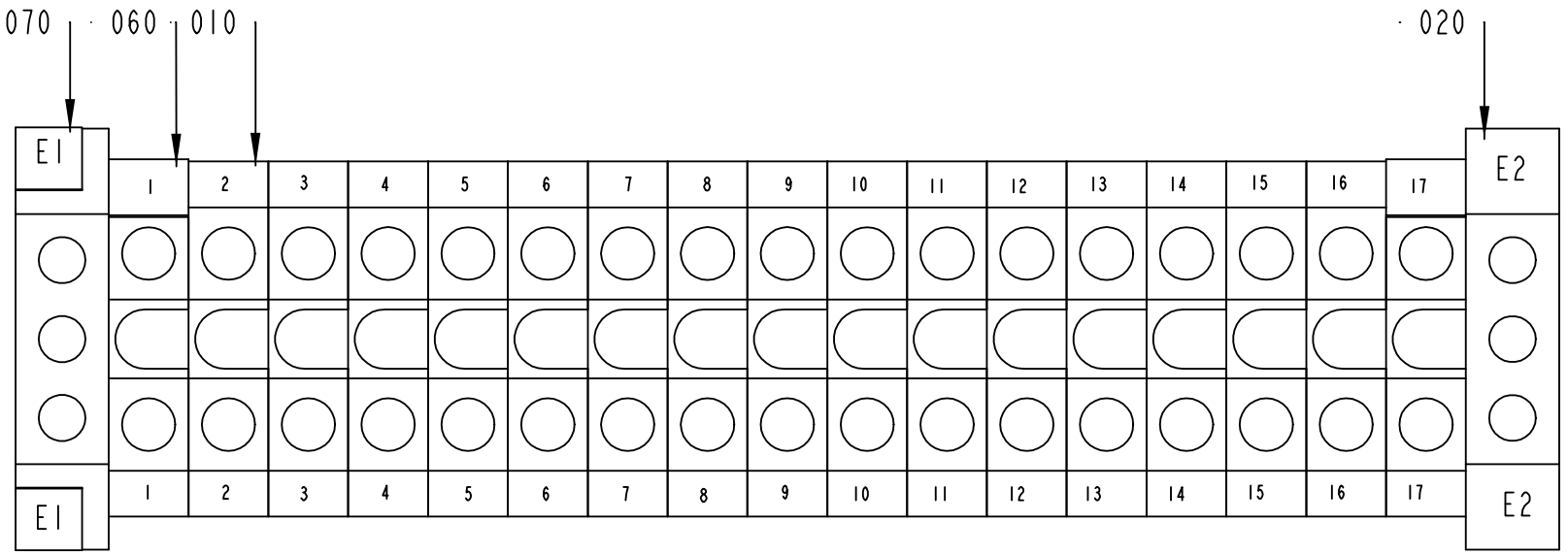

2542372-1
ECM 106087

ECM: 107242 - 20021022
Group number: 2542372-0100
Assembly Drawing: 2542372-1_1_AA

Pos	Part No	SP	UN	Qty	Description	Page No
-						
010	90077-0079	-		17	FEED THROUGH TERMINAL, 02943.6	
020	90135-0026	-		2	EARTH TERMINAL, 3802.6	
060	359011-0821	-		2	SET OF SIGNS 6-FW 1-50	
070	90459-0606	-		2	MARKING PLATES 5-FW E1-E50	

Pos	Part No	SP	UN	Qty	Description	Page No

COVERING PLATE

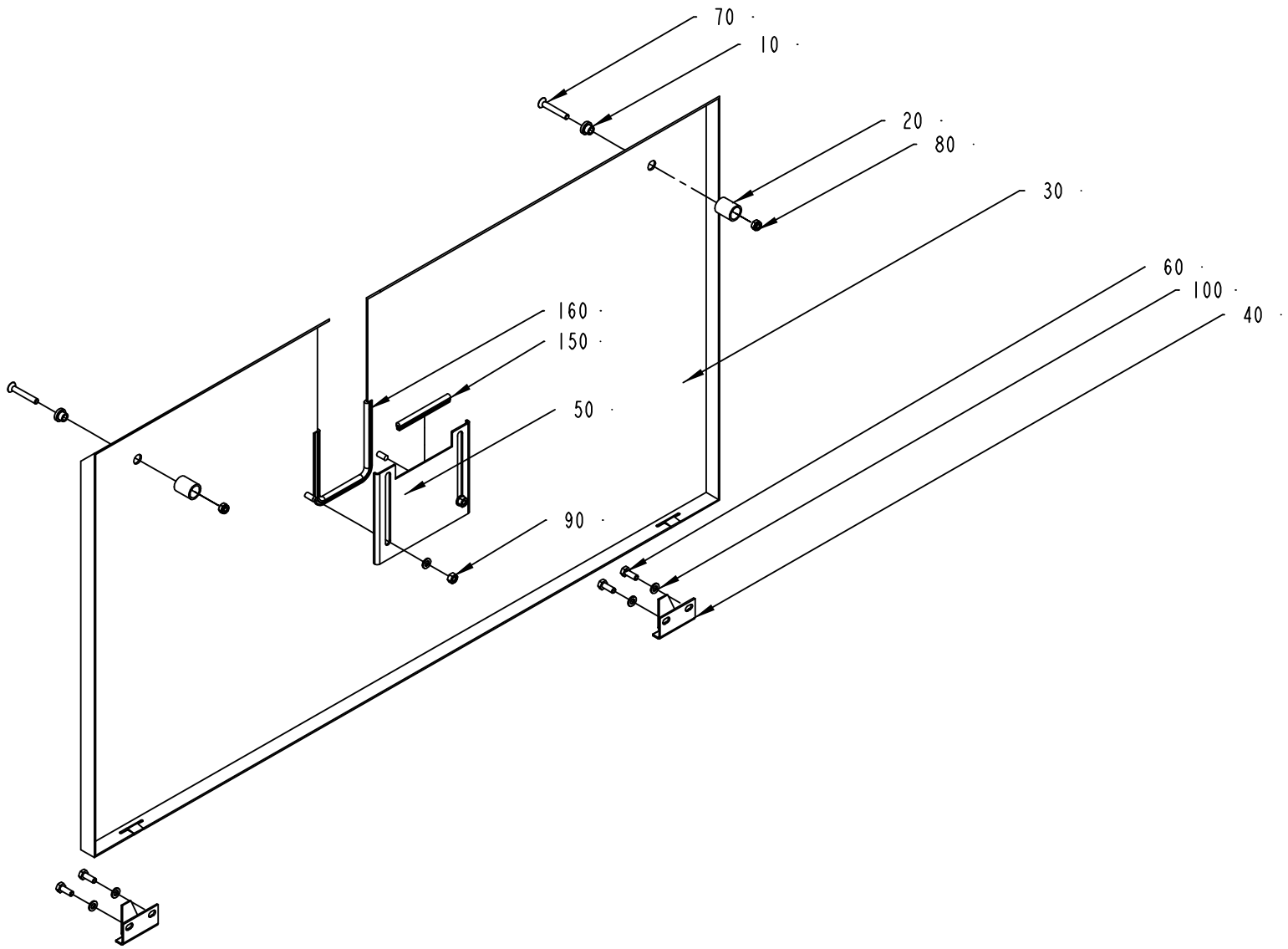

595671-2
ECM 100505

ECM: 105136 - 20021022
Group number: 595671-0200
Assembly Drawing: 595671-2_1_AA

Pos	Part No	SP	UN	Qty	Description	Page No
-						
010	578196-0000	-		2	SLEEVE	
020	578197-0000	-		2	SPACER	
030	2532791-0000	-		1	COVER	
040	975887-0000	-		2	CATCH	
050	2532792-0000	-		1	COVER	
060	312105-0368	-		4	SCREW M6S ISO 4017 M6X16 A480	
070	312155-0378	-		2	SCREW EN 10642 MF6S M6X40 A480	
080	312812-0316	-		2	HEXAGON NUT, NY-LOCK M6 A480	
100	315105-0153	-		4	WASHER BRB6,4X12RFR	
150	90143-0060	-	MM	80	EDGE STRIP 9,5X6,3MM BLACK PVC	
160	90143-0060	-	MM	270	EDGE STRIP 9,5X6,3MM BLACK PVC	

Pos	Part No	SP	UN	Qty	Description	Page No

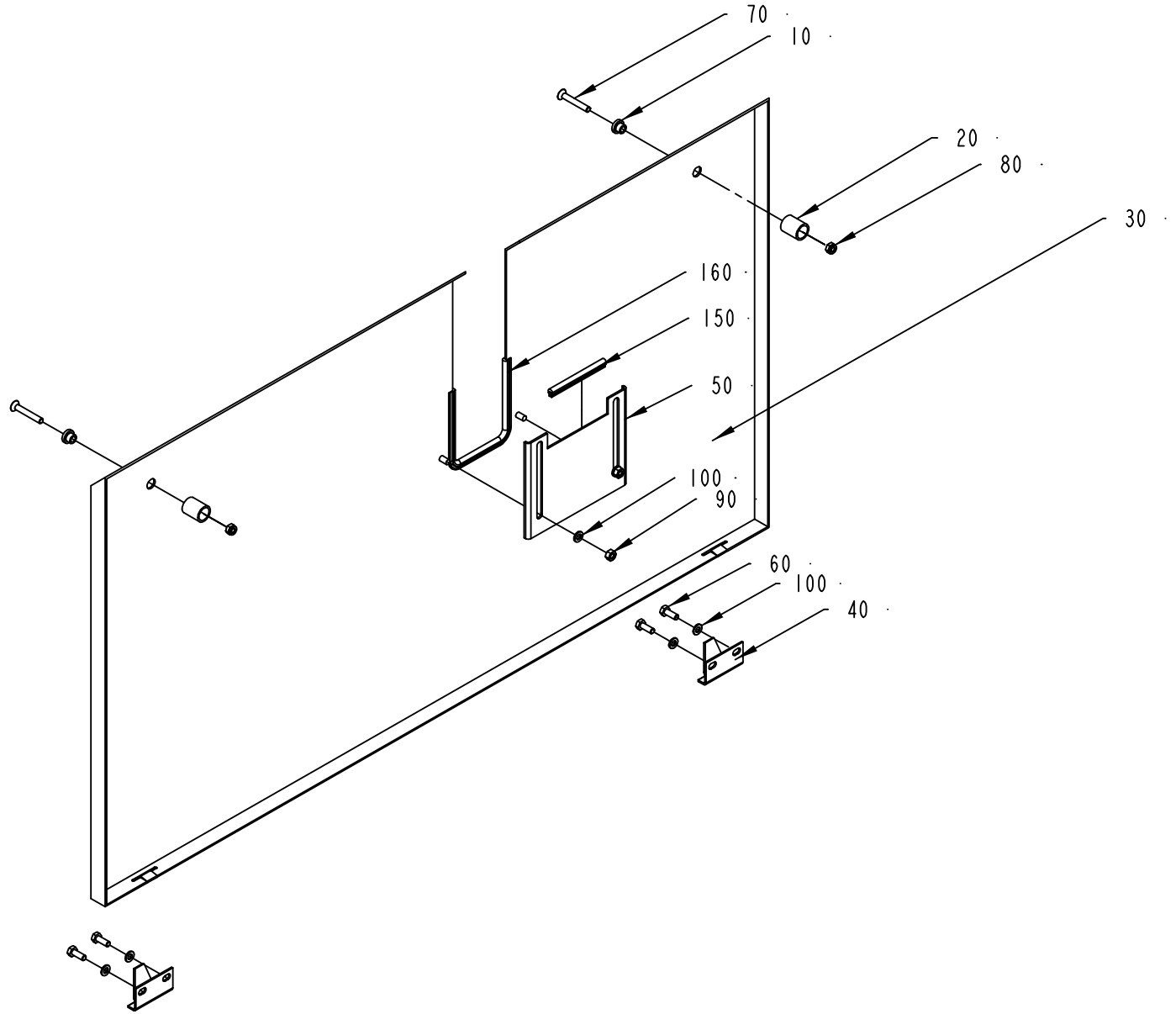

595672-2
ECM 100505

ECM: 105137 - 20021022
Group number: 595672-0200
Assembly Drawing: 595672-2_1_AA

Pos	Part No	SP	UN	Qty	Description	Page No
-						
010	578196-0000	-		2	SLEEVE	
020	578197-0000	-		2	SPACER	
030	2532790-0000	-		1	COVER	
040	975887-0000	-		2	CATCH	
050	2532792-0000	-		1	COVER	
060	312105-0368	-		4	SCREW M6S ISO 4017 M6X16 A480	
070	312155-0378	-		2	SCREW EN 10642 MF6S M6X40 A480	
080	312812-0316	-		2	HEXAGON NUT, NY-LOCK M6 A480	
090	312605-0316	-		2	HEXAGON NUT, M6M M6 A280	
100	315105-0153	-		6	WASHER BRB6,4X12RFR	
150	90143-0060	-	MM	80	EDGE STRIP 9,5X6,3MM BLACK PVC	
160	90143-0060	-	MM	270	EDGE STRIP 9,5X6,3MM BLACK PVC	

Pos	Part No	SP	UN	Qty	Description	Page No

COVERING PLATE

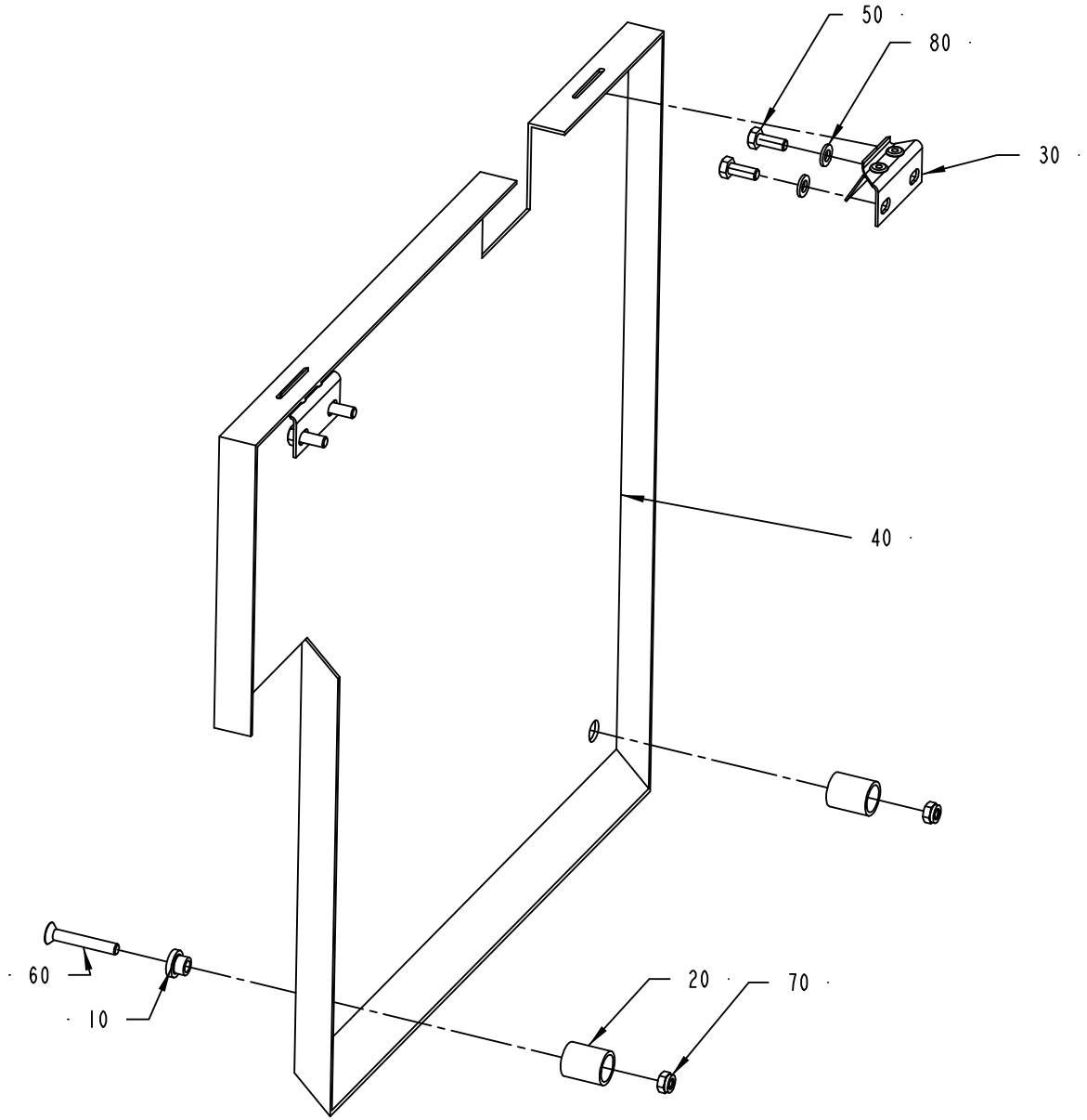

595673-2
ECM 100505

ECM: 105281 - 20021022
Group number: 595673-0200
Assembly Drawing: 595673-2_1_AA

Pos	Part No	SP	UN	Qty	Description	Page No
-						
010	578196-0000	-		2	SLEEVE	
020	578197-0000	-		2	SPACER	
030	1030767-0000	-		2	CATCH	
040	2532774-0000	-		1	COVER	
050	312105-0368	-		4	SCREW M6S ISO 4017 M6X16 A480	
060	312155-0378	-		2	SCREW EN 10642 MF6S M6X40 A480	
070	312812-0316	-		2	HEXAGON NUT, NY-LOCK M6 A480	
080	315105-0153	-		4	WASHER BRB6,4X12RFR	

Pos	Part No	SP	UN	Qty	Description	Page No

COVERING PLATE

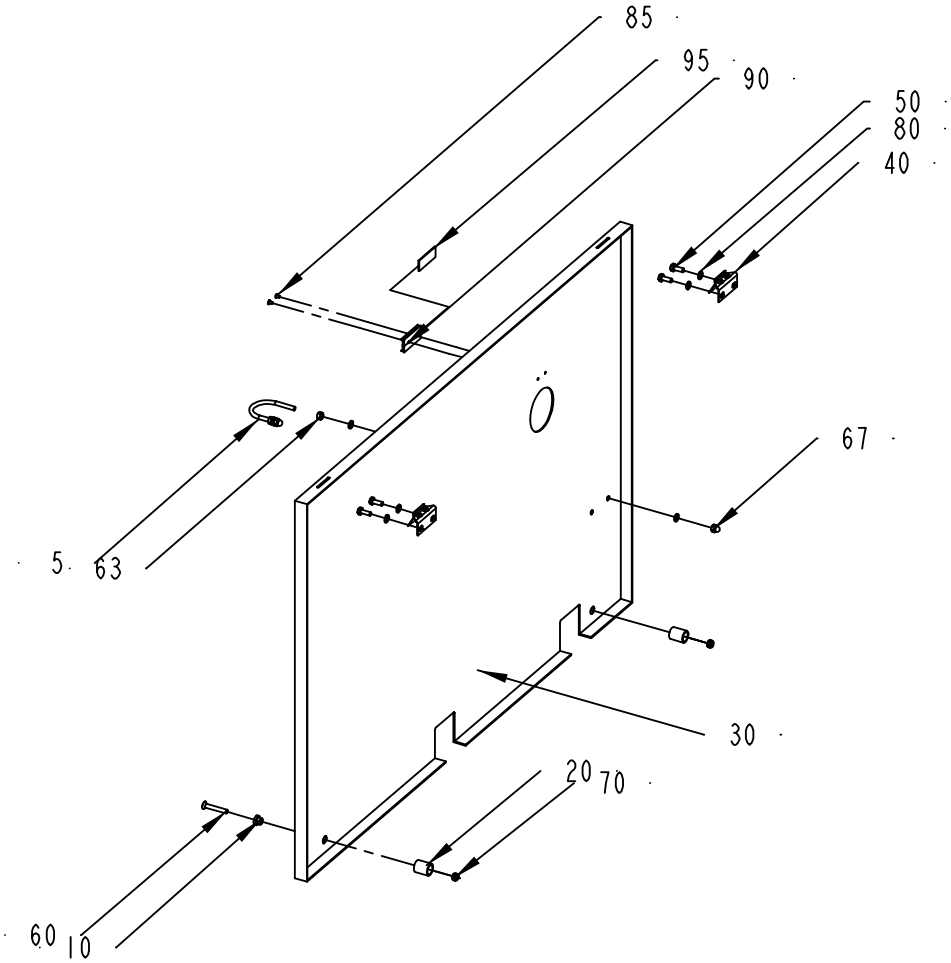

CANADA

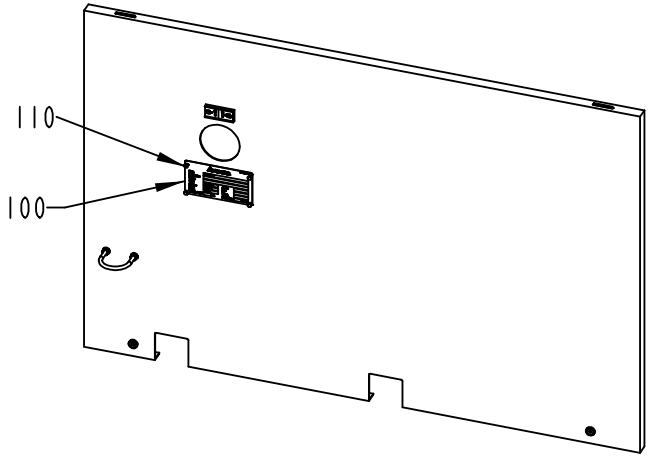

2519608-1
172049

ECM: 172049 - 20040507
Group number: 2519608-0100
Assembly Drawing: 2519608-1_1_AB

Pos	Part No	SP	UN	Qty	Description	Page No
CANADA						
100	90458-2636	-		1	ELECTRICAL EQUIPMENT SIGN	
110	311521-0143	-		4	BLANK RIVET 3,2X8	
Common Parts						
005	531616-0000	-		1	HOLDER	
010	578196-0000	-		2	SLEEVE	
020	578197-0000	-		2	SPACER	
030	2519609-0000	-		1	PROTECTION PLATE	
040	1030767-0000	-		2	CATCH	
050	312105-0368	-		4	SCREW M6S ISO 4017 M6X16 A480	
060	312155-0378	-		2	SCREW EN 10642 MF6S M6X40 A480	
063	312605-0316	-		2	HEXAGON NUT, M6M M6 A280	
067	312705-0316	-		2	NUT HEX. DOMED CAP MHM-6 M6 A280	
070	312812-0316	-		2	HEXAGON NUT, NY-LOCK M6 A480	
080	315105-0153	-		8	WASHER BRB6,4X12RFR	
085	311521-0143	-		2	BLANK RIVET 3,2X8	
090	359240-0100	-		1	SIGN HOLDER FOR 359240-0001	
095	359241-0124	-		1	SIGN, MAIN SWITCH	

Pos	Part No	SP	UN	Qty	Description	Page No

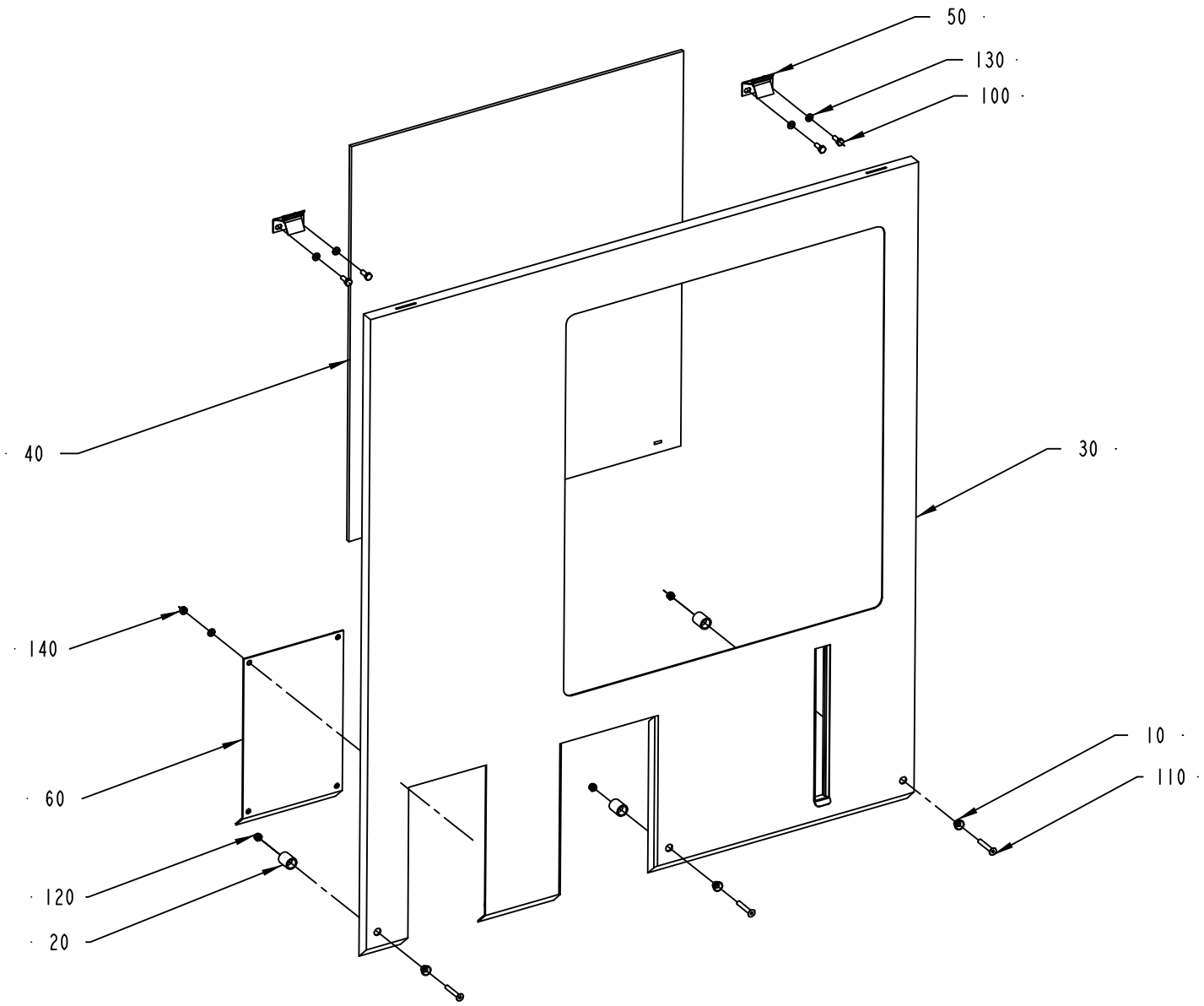

595675-2
ECM 100505

ECM: 105138 - 20021022
Group number: 595675-0200
Assembly Drawing: 595675-2_1_AA

Pos	Part No	SP	UN	Qty	Description	Page No
-						
	90157-0041	-	L		SEALING COMPOUND	
010	578196-0000	-		3	SLEEVE	
020	578197-0000	-		3	SPACER	
030	2532778-0000	-		1	COVER	
040	2532779-0000	-		1	GLASS	
050	1030767-0000	-		2	CATCH	
060	2532787-0000	-		1	COVER	
100	312105-0368	-		4	SCREW M6S ISO 4017 M6X16 A480	
110	312155-0378	-		3	SCREW EN 10642 MF6S M6X40 A480	
120	312812-0316	-		3	HEXAGON NUT, NY-LOCK M6 A480	
130	315105-0153	-		8	WASHER BRB6,4X12RFR	
140	312605-0316	-		1	HEXAGON NUT, M6M M6 A280	

Pos	Part No	SP	UN	Qty	Description	Page No

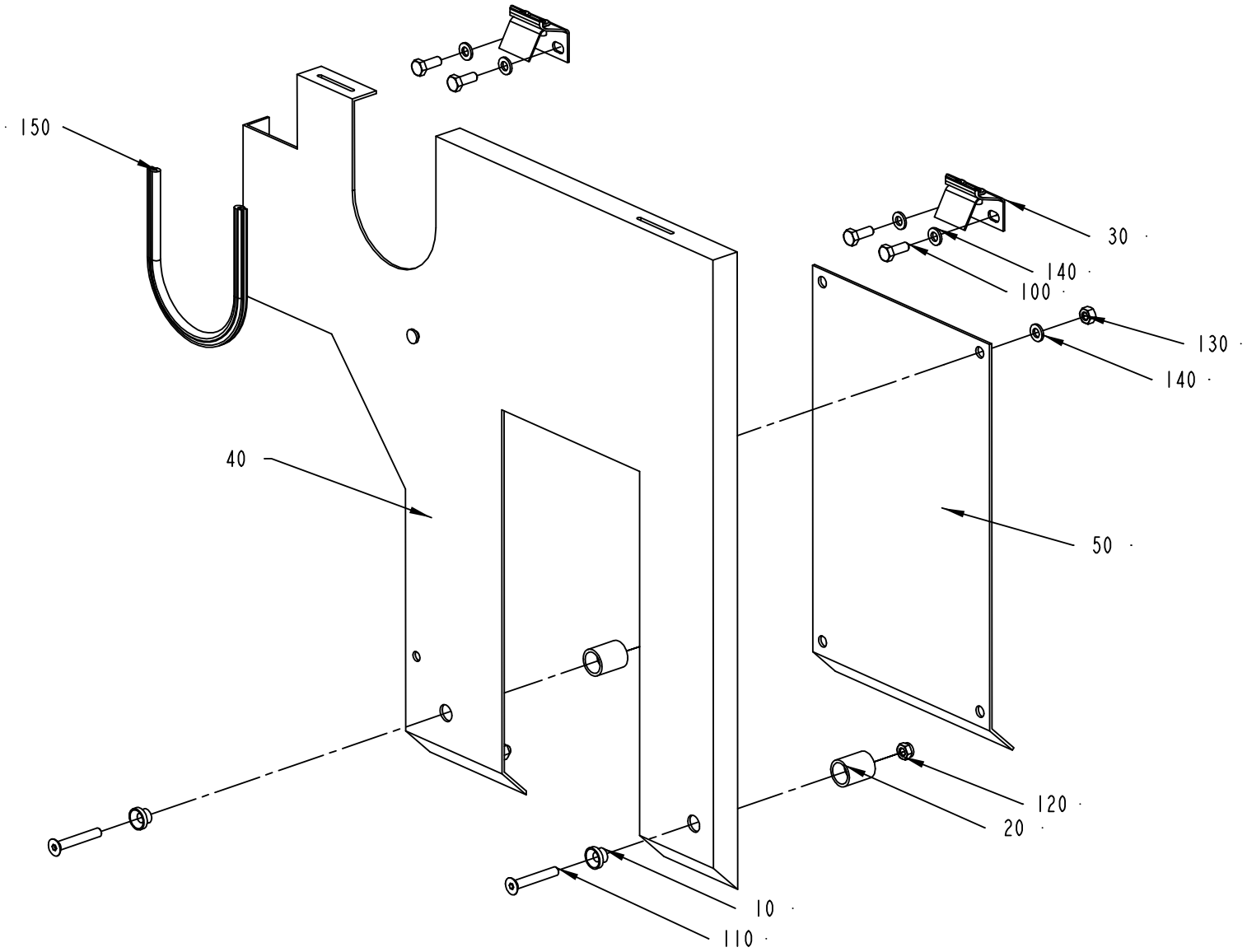

2519610-1
ECM 100505

ECM: 105282 - 20021022
Group number: 2519610-0100
Assembly Drawing: 2519610-1_1_AA

Pos	Part No	SP	UN	Qty	Description	Page No
-						
010	578196-0000	-		2	SLEEVE	
020	578197-0000	-		2	SPACER	
030	1030767-0000	-		2	CATCH	
040	2519611-0000	-		1	PROTECTION PLATE	
050	2532787-0000	-		1	COVER	
100	312105-0368	-		4	SCREW M6S ISO 4017 M6X16 A480	
110	312155-0378	-		2	SCREW EN 10642 MF6S M6X40 A480	
120	312812-0316	-		2	HEXAGON NUT, NY-LOCK M6 A480	
130	312605-0316	-		4	HEXAGON NUT, M6M M6 A280	
140	315105-0153	-		8	WASHER BRB6,4X12RFR	
150	90143-0060	-	MM	265	EDGE STRIP 9,5X6,3MM BLACK PVC	

Pos	Part No	SP	UN	Qty	Description	Page No

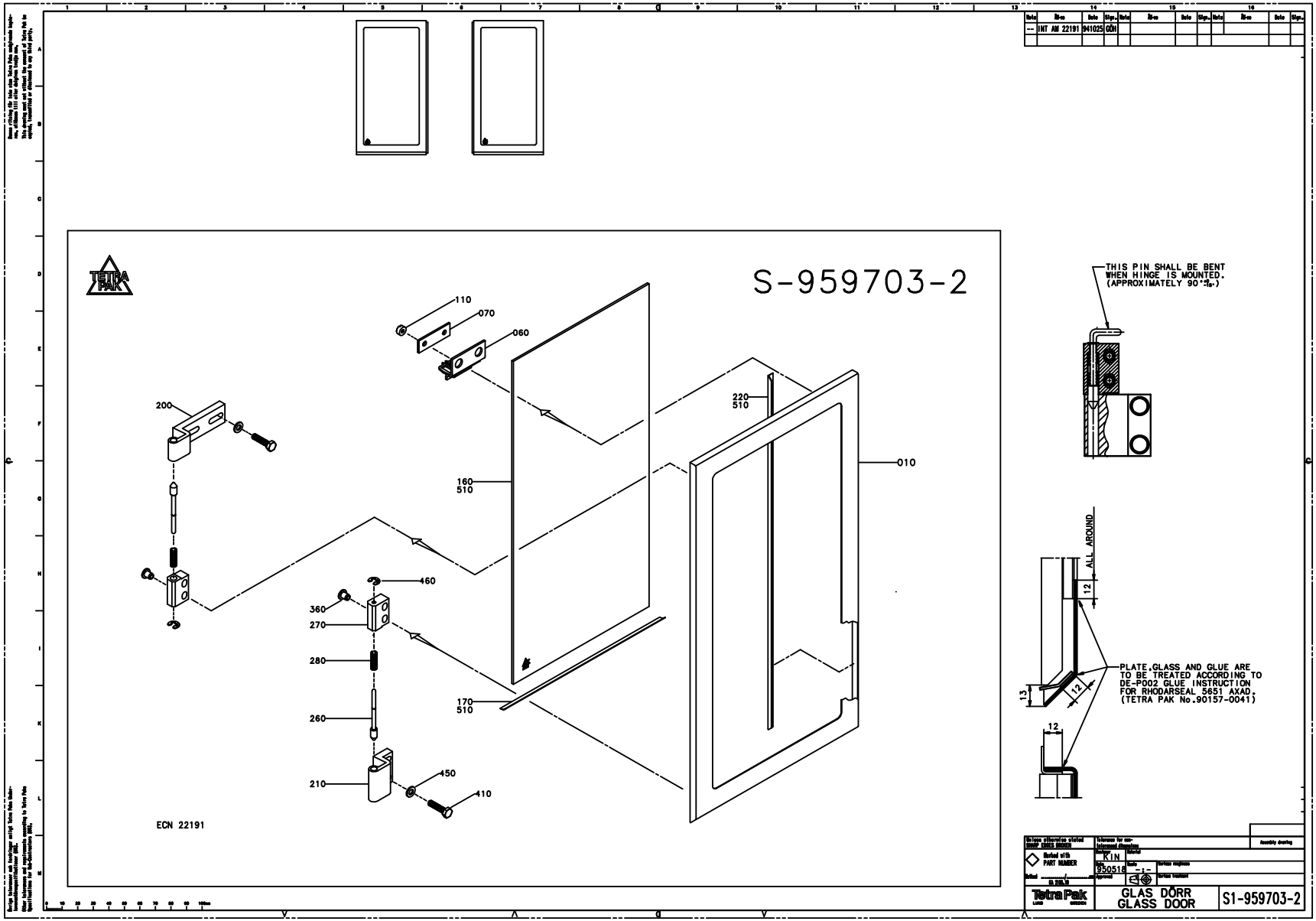
S-959703-2
110
070
060
200
220
510
010
160
510
460
360
270
280
260
170
510
210
450
410
ECN 22191
THIS PIN SHALL BE BENT WHEN HINGE IS MOUNTED. (APPROXIMATELY 90°)
ALL AROUND
12
13
12
12
PLATE,GLASS AND GLUE ARE TO BE TREATED ACCORDING TO DE-P002 GLUE INSTRUCTION FOR RHODARSEAL 5651 AXAD. (TETRA PAK No.90157-0041)
INT AM 22191 941025 GDH
KIN
950518
GLAS DÖRR
GLASS DOOR
S1-959703-2

ECM: - -
Group number: 959703-0201
Assembly Drawing: 959703-2_1_AA

Pos	Part No	SP	UN	Qty	Description	Page No
-						
010 1	975891-0000	-		1	HATCH	
060	975917-0000	-		1	KEY FOR SAFETY SWITCH 90044-103	
070	975924-0000	-		1	WASHER	
110	575034-0000	-		2	ROUND NUT	
160	975918-0001	-		1	GLASS	
170	975883-0000	-		1	DRIP PLATE	
200	975927-0000	-		1	HINGE FLANGE	
210	975880-0000	-		1	HINGE FLANGE	
220	975885-0000	-		1	SHEET	
260	959656-0000	-		2	COTTER	
270	959657-0000	-		2	HINGE FLANGE	
280	959658-0000	-		2	SPRING	
360	90287-0205	-		4	SCREW	
410	312105-0372	-		4	SCREW M6S ISO 4017 M6X25 A480	
450	315105-0153	-		4	WASHER BRB6,4X12RFR	
460	315755-0105	-		2	RETAINING RING SHAFT DIN 6799 3,2 A2	
510	90157-0041	-	L		SEALING COMPOUND	

Pos	Part No	SP	UN	Qty	Description	Page No

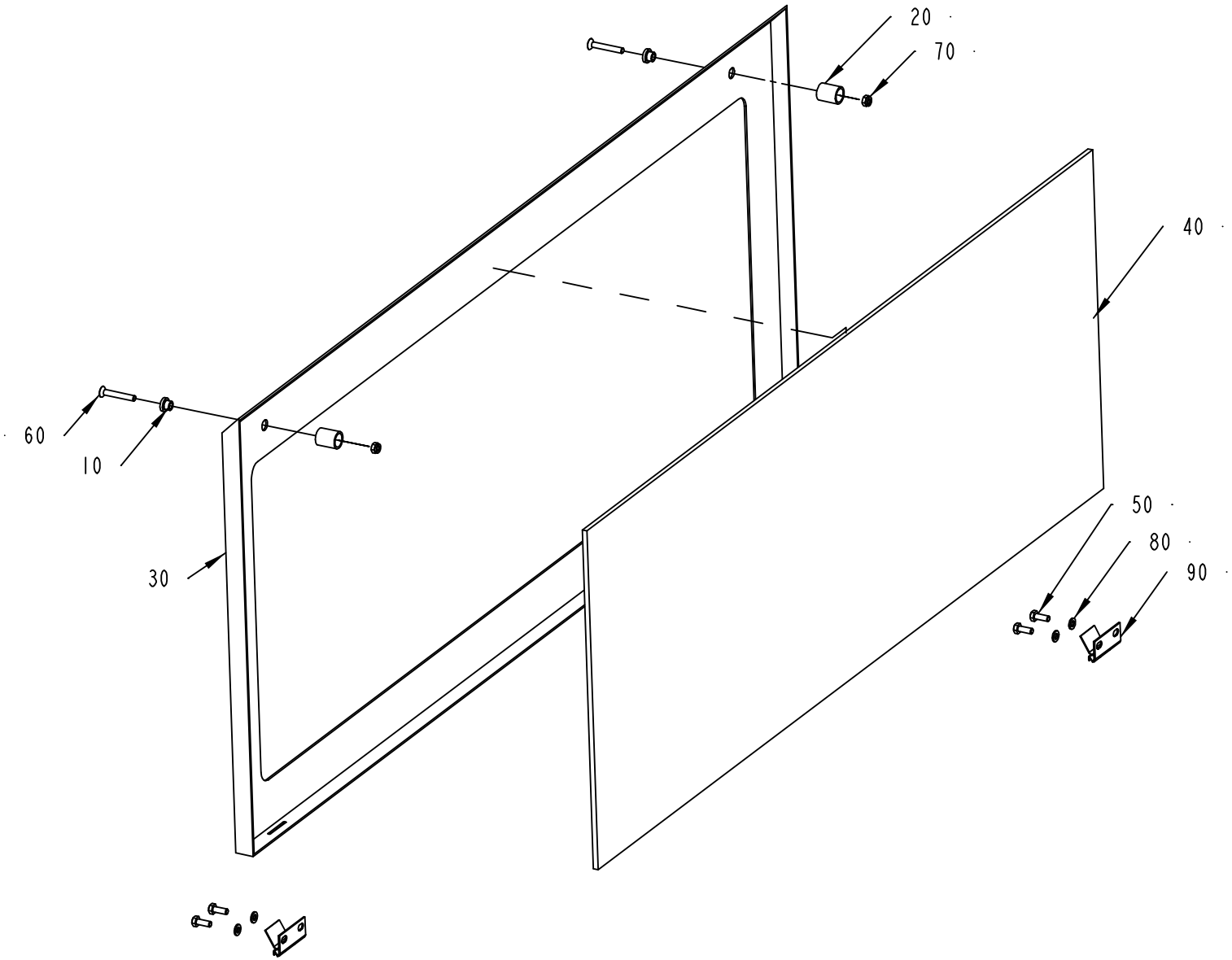

2519625-1
ECM 100505

ECM: 105135 - 20021022
Group number: 2519625-0100
Assembly Drawing: 2519625-1_1_AA

Pos	Part No	SP	UN	Qty	Description	Page No
-						
	90157-0041	-	L		SEALING COMPOUND	
010	578196-0000	-		2	SLEEVE	
020	578197-0000	-		2	SPACER	
030	2519626-0000	-		1	COVER	
040	2532780-0000	-		1	GLASS	
050	312105-0368	-		4	SCREW M6S ISO 4017 M6X16 A480	
060	312155-0378	-		2	SCREW EN 10642 MF6S M6X40 A480	
070	312812-0316	-		2	HEXAGON NUT, NY-LOCK M6 A480	
080	315105-0153	-		4	WASHER BRB6,4X12RFR	
090	1030767-0000	-		2	CATCH	

Pos	Part No	SP	UN	Qty	Description	Page No

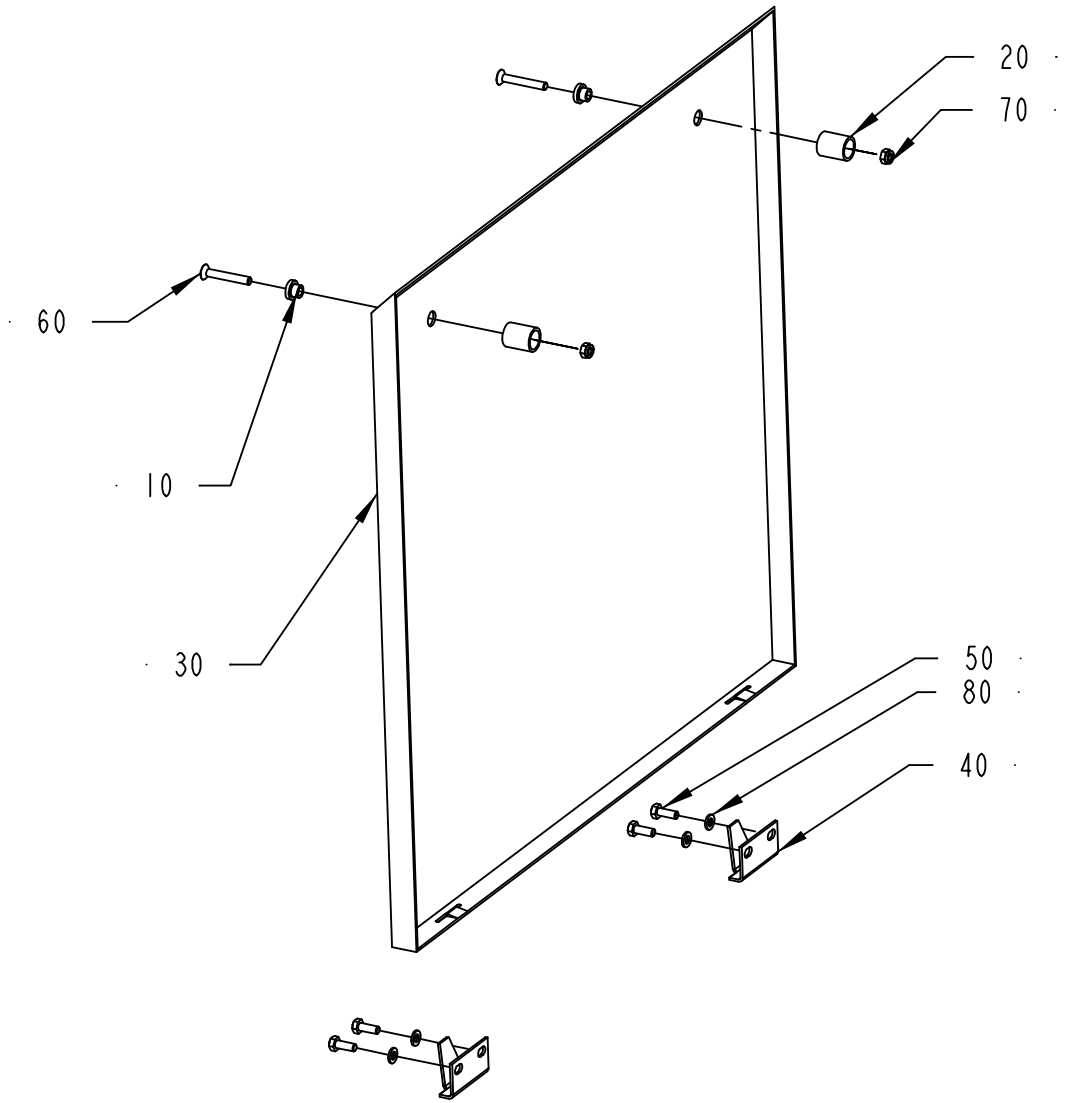

2519623-1
ECM 100505

ECM: 105279 - 20021022
Group number: 2519623-0100
Assembly Drawing: 2519623-1_1_AA

Pos	Part No	SP	UN	Qty	Description	Page No
-						
010	578196-0000	-		2	SLEEVE	
020	578197-0000	-		2	SPACER	
030	2519624-0000	-		1	COVER	
040	975887-0000	-		2	CATCH	
050	312105-0368	-		4	SCREW M6S ISO 4017 M6X16 A480	
060	312155-0378	-		2	SCREW EN 10642 MF6S M6X40 A480	
070	312812-0316	-		2	HEXAGON NUT, NY-LOCK M6 A480	
080	315105-0153	-		4	WASHER BRB6,4X12RFR	

Pos	Part No	SP	UN	Qty	Description	Page No

This page is intentionally left blank.

ECM: - -
Group number: 959708-0204
Assembly Drawing: 959708-2_1_AA

Pos	Part No	SP	UN	Qty	Description	Page No
-						
010 2	975905-0000	-		1	HATCH	
180	975888-0001	-		1	STRUT	
190	975889-0001	-		1	STRUT	
200	975927-0000	-		2	HINGE FLANGE	
260	959656-0000	-		2	COTTER	
270	959657-0000	-		2	HINGE FLANGE	
280	959658-0000	-		2	SPRING	
310	90237-0123	-		1	LOCK, 1121-U10C	
320	90237-0175	-		1	TURNING HANDLE	
330	90237-0128	-		1	LOCK CYLINDER, 1109-U3	
340	90237-0144	-		2	GUIDE, 1121-SU540	
350	90237-0147	-		2	LOCKING LUG, NO. 1121-53-0P	
360	90287-0205	-		4	SCREW	
410	312105-0371	-		4	SCREW M6S ISO 4017 M6X22 A480	
420	312155-0370	-		4	SCREW EN 10642 MF6S M6X20 A480	
430	312812-0314	-		2	HEXAGON NUT, NY-LOCK M5 A480	
440	315105-0146	-		2	WASHER BRB5,3X10RFR	
450	315105-0153	-		4	WASHER BRB6,4X12RFR	
460	315755-0105	-		2	RETAINING RING SHAFT DIN 6799 3,2 A2	

Pos	Part No	SP	UN	Qty	Description	Page No

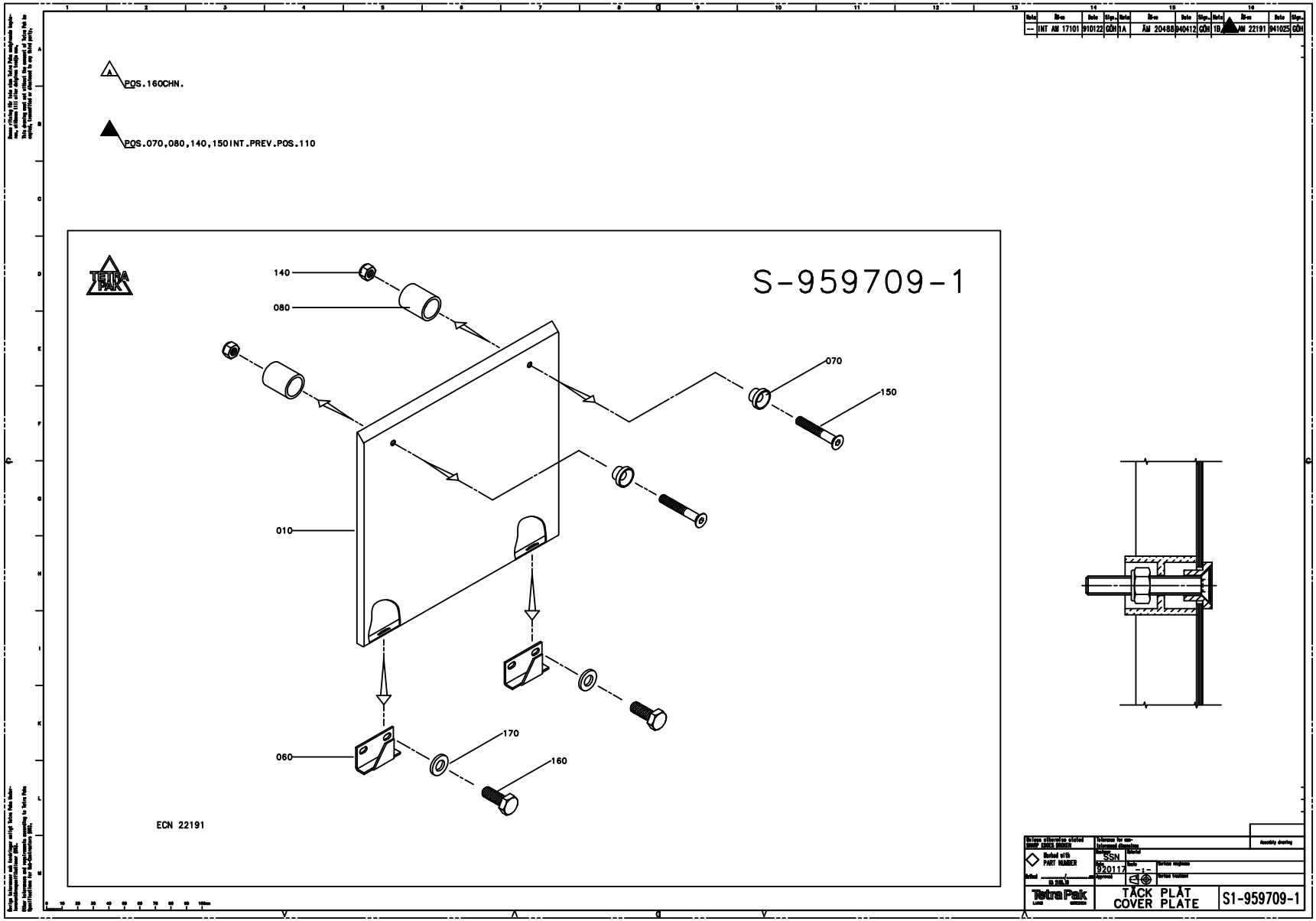
POS.160CHN.
POS.070,080,140,150INT.PREV.POS.110
S-959709-1
140
080
070
150
010
060
170
160
ECN 22191
TACK PLAT
COVER PLATE
S1-959709-1

ECM: 17101 -
Group number: 959709-0102
Assembly Drawing: 959709-1_1_AA

Pos	Part No	SP	UN	Qty	Description	Page No
-						
010 2	975907-0000	-		1	PROTECTION PLATE	
060	975887-0000	-		2	CATCH	
070	578196-0000	-		2	SLEEVE	
080	578197-0000	-		2	SPACER	
140	312812-0316	-		2	HEXAGON NUT, NY-LOCK M6 A480	
150	312155-0378	-		2	SCREW EN 10642 MF6S M6X40 A480	
160	312105-0368	-		4	SCREW M6S ISO 4017 M6X16 A480	
170	315105-0153	-		4	WASHER BRB6,4X12RFR	

Pos	Part No	SP	UN	Qty	Description	Page No

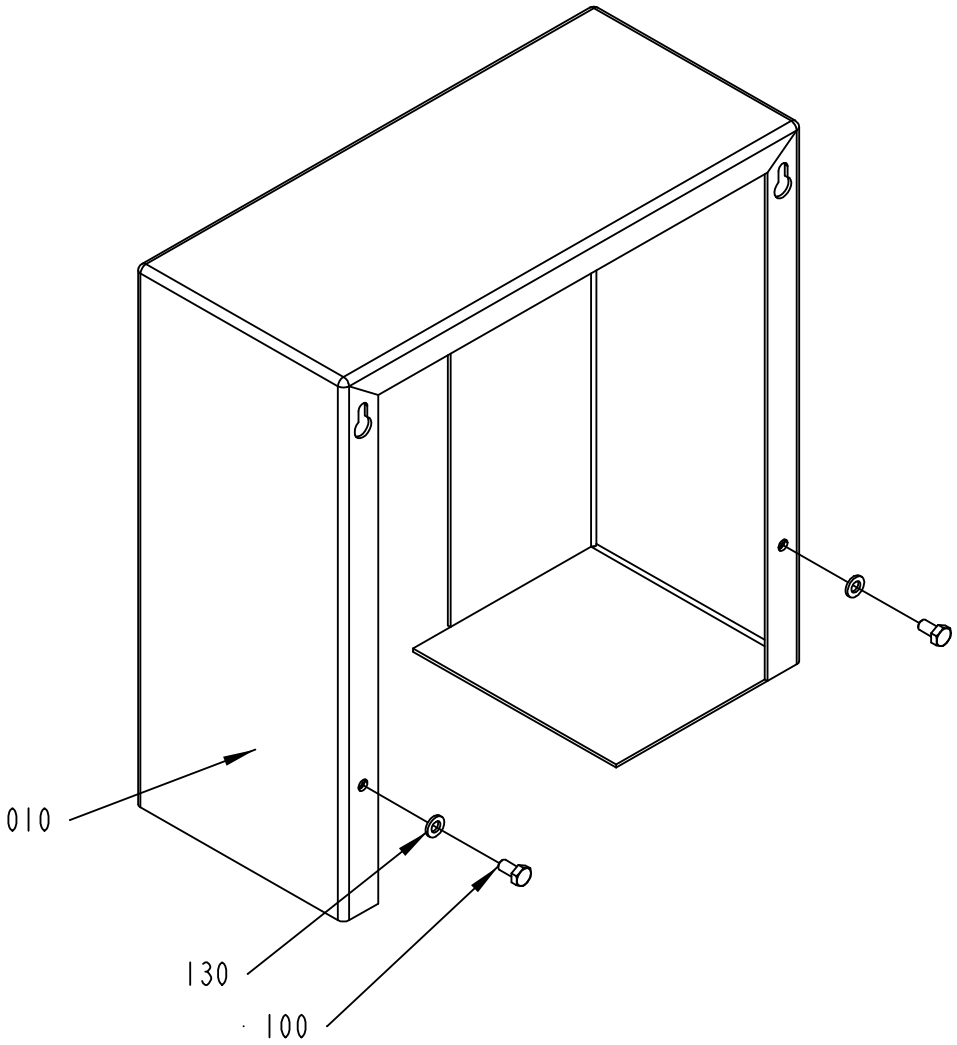

2532795-1
ECM 100505

ECM: 105284 - 20021022
Group number: 2532795-0100
Assembly Drawing: 2532795-1_1_AA

Pos	Part No	SP	UN	Qty	Description	Page No
-						
010	2532788-0000	-		1	COVER	
100	312105-0366	-		2	SCREW M6S ISO 4017 M6X12 A480	
130	315105-0153	-		2	WASHER BRB6,4X12RFR	

Pos	Part No	SP	UN	Qty	Description	Page No

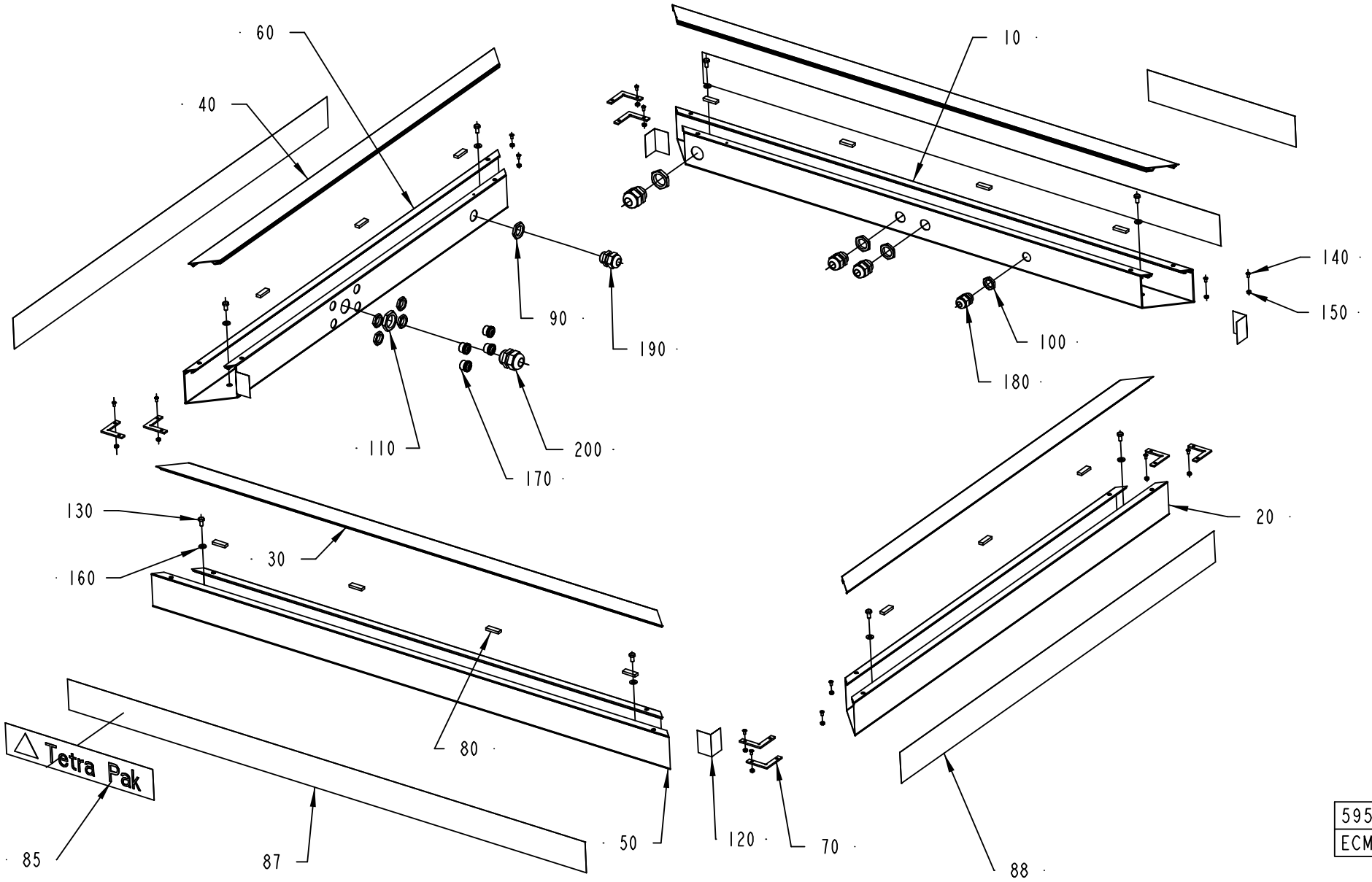

595676-1
ECM 111138

ECM: 111259 - 20021022
Group number: 595676-0100
Assembly Drawing: 595676-1_1_AB

Pos	Part No	SP	UN	Qty	Description	Page No
-						
010	595776-0000	-		1	CABLE DUCT	
020	595777-0000	-		1	CABLE DUCT	
030	595778-0000	-		2	LID	
040	595779-0000	-		2	LID	
050	595875-0000	-		1	CABLE DUCT	
060	595877-0000	-		1	CABLE DUCT	
070	975934-0000	-		8	GUSSET PLATE	
080	975939-0000	-		14	SEAL	
085	1021990-0000	-		2	SIGN	
087	1021991-0000	-	M		STRIP	
088	1021991-0000	-	M		STRIP	
090	90099-0110	-		3	NUT, PR 22,5 (PG16)	
100	90099-0117	-		5	NUT, PR 18,6 (PG11)	
110	90099-0119	-		2	NUT, PR 28,3 (PG21)	
120	90144-0067	-			TAPE ELFA NO:1160	
130	312105-0366	-		8	SCREW M6S ISO 4017 M6X12 A480	
140	312145-0287	-		16	SCREW ISO 2009 MFS M4X8 A4	
150	312605-0312	-		16	HEXAGON NUT, M6M M4 A280	
160	315105-0156	-		8	WASHER BRB 6.7X14 RFR	
170	352101-0103	-		4	LEAD-IN, PR18,6/PG11, E-1457518	
180	352103-0106	-		1	CABLE GLAND, ST 11, PR18,6/PG11	
190	352103-0110	-		3	CABLE GLAND, STR 16, PR22,5/PG16	
200	352103-0115	-		2	CABLE GLAND, STR 21, PR28,3/PG21	

Pos	Part No	SP	UN	Qty	Description	Page No

Tetra Pak

SPC
Spare Parts Catalogue

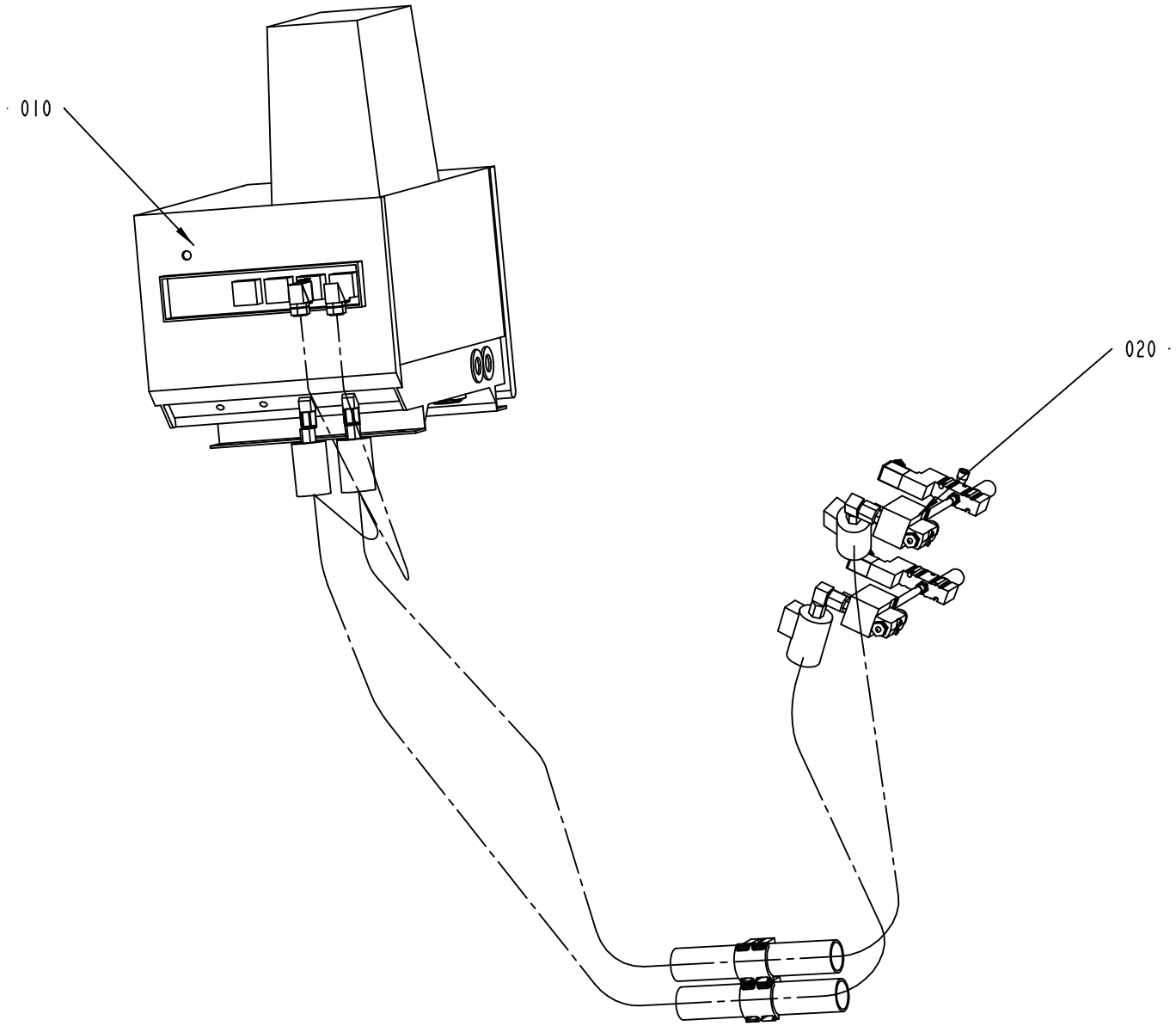

678217-2
ECM 100505

ECM: 105124 - 20021022
Group number: 678217-0200
Assembly Drawing: 678217-2_1_AA

Pos	Part No	SP	UN	Qty	Description	Page No
-						
010	595658-0100	-		1	HOTMELT EQUIPMENT NORDSON	**5-5**
020	595659-0200	-		1	HOTMELT GUN	**5-7**

Pos	Part No	SP	UN	Qty	Description	Page No

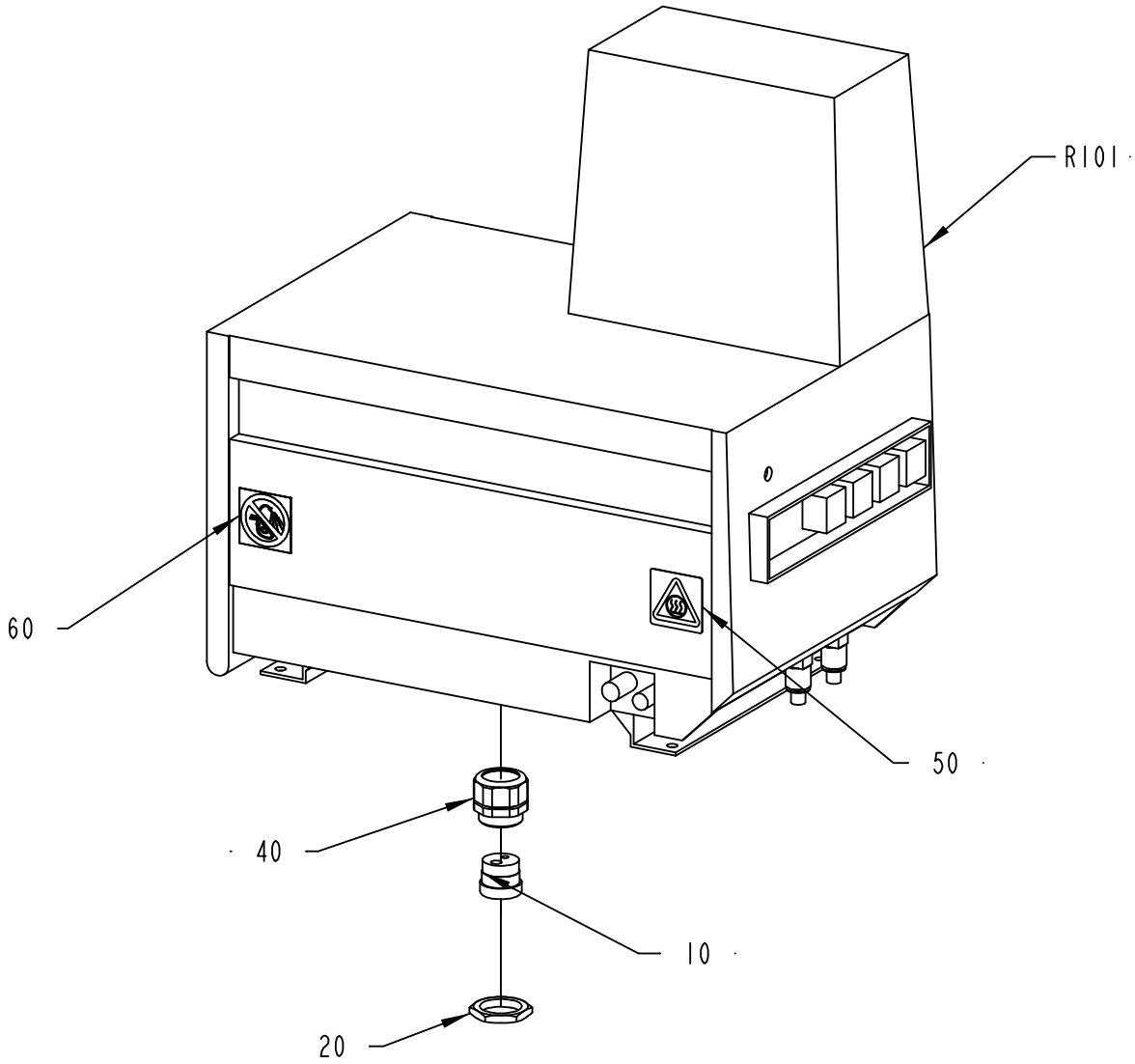

595658-1
ECM 172049

ECM: 172049 - 20040507
Group number: 595658-0100
Assembly Drawing: 595658-1_1_AC

Pos	Part No	SP	UN	Qty	Description	Page No
ANSI						
050	359725-0120	-		1	WARNING SIGN ANSI (H), HEAT ENERGY	
060	90459-2232	-		1	WARNING SIGN ANSI (H), DO NOT WASH	
ISO						
050	1128844-0000	-		1	CAUTION SIGN	
060	90459-2265	-		1	PROHIBITION SIGN ISO, DO NOT WASH	
Common Parts						
010	1354035-0000	-		1	INSERT	
020	90099-0120	-		1	NUT PR 37 (PG29)	
040	353240-0006	-		1	SCREW CAP PG 29	
R101	90439-0274	A		1	HOT MELT UNIT, NO. 249788	
	90439-0284	*-*		*1*	*O-RING, NO.940133*	
	90439-0285	*-*		*1*	*SUPPORT RING, NO. 954013*	
	90439-0286	*-*		*1*	*CUP, NO. 163039*	
	90439-0287	*-*		*1*	*O-RING, NO.105526*	
	90439-0288	*-*		*1*	*OVERHAUL KIT, NO. 105463*	
	90439-0289	*-*		*1*	*CIRCUIT BOARD. NO. 248042*	
	90439-0290	*-*		*1*	*DISPLAY, NO. 248044*	
	90439-0291	*-*		*1*	*CIRCUIT BOARD, NO. 248043*	
	90439-0292	*-*		*1*	*CONTROL UNIT, NO. 248041*	
	352550-0131	*-*		*1*	*FINE-WIRE, 1 A*	
	352550-0139	*-*		*1*	*FINE-WIRE, 6,3 A*	
	90439-0283	*-*		*1*	*RTD, NO. 108907*	
	90439-0184	*-*		*1*	*O-RING*	
	90439-0187	*-*		*1*	*O-RING*	
	90439-0188	*-*		*1*	*RING*	
	90439-0189	*-*		*1*	*O-RING*	
	90439-0201	*-*		*1*	*O-RING*	
	90439-0276	*-*		*1*	*FUSE, NO. 939491*	
	90439-0278	*-*		*1*	*FILTER, NO. 274578*	
	90439-0279	*-*		*1*	*THERMOSTAT*	
	90439-0280	*-*		*1*	*SOLENOID, 229519*	
	90439-0281	*-*		*1*	*FILTER, NO. 165870*	
	90439-0282	*-*		*1*	*PUMP, NO.161424*	
R101:01	90439-0288	A		1	OVERHAUL KIT, NO. 105463	
R101:02	90439-0287	A		1	O-RING, NO.105526	
R101:03	90439-0285	A		1	SUPPORT RING, NO. 954013	
R101:04	90439-0284	A		1	O-RING, NO.940133	
R101:05	90439-0289	A		1	CIRCUIT BOARD. NO. 248042	
R101:06	352550-0131	A		1	FINE-WIRE, 1 A	
R101:07	90439-0292	A		1	CONTROL UNIT, NO. 248041	
R101:08	90439-0291	A		1	CIRCUIT BOARD, NO. 248043	
R101:09	90439-0290	A		1	DISPLAY, NO. 248044	
R101:10	90439-0201	A		1	O-RING	
R101:10	90439-0283	A		1	RTD, NO. 108907	
R101:12	90439-0189	A		1	O-RING	
R101:13	90439-0188	A		1	RING	
R101:14	90439-0187	A		1	O-RING	
R101:15	90439-0184	A		1	O-RING	
R101:16	90439-0276	A		1	FUSE, NO. 939491	
R101:17	90439-0282	A		1	PUMP, NO.161424	
R101:18	90439-0281	A		1	FILTER, NO. 165870	
R101:19	90439-0280	A		1	SOLENOID, 229519	
R101:20	90439-0279	A		1	THERMOSTAT	
R101:21	90439-0278	A		1	FILTER, NO. 274578	

Machine Type | Group Description | Used-In | Group Number | Page No

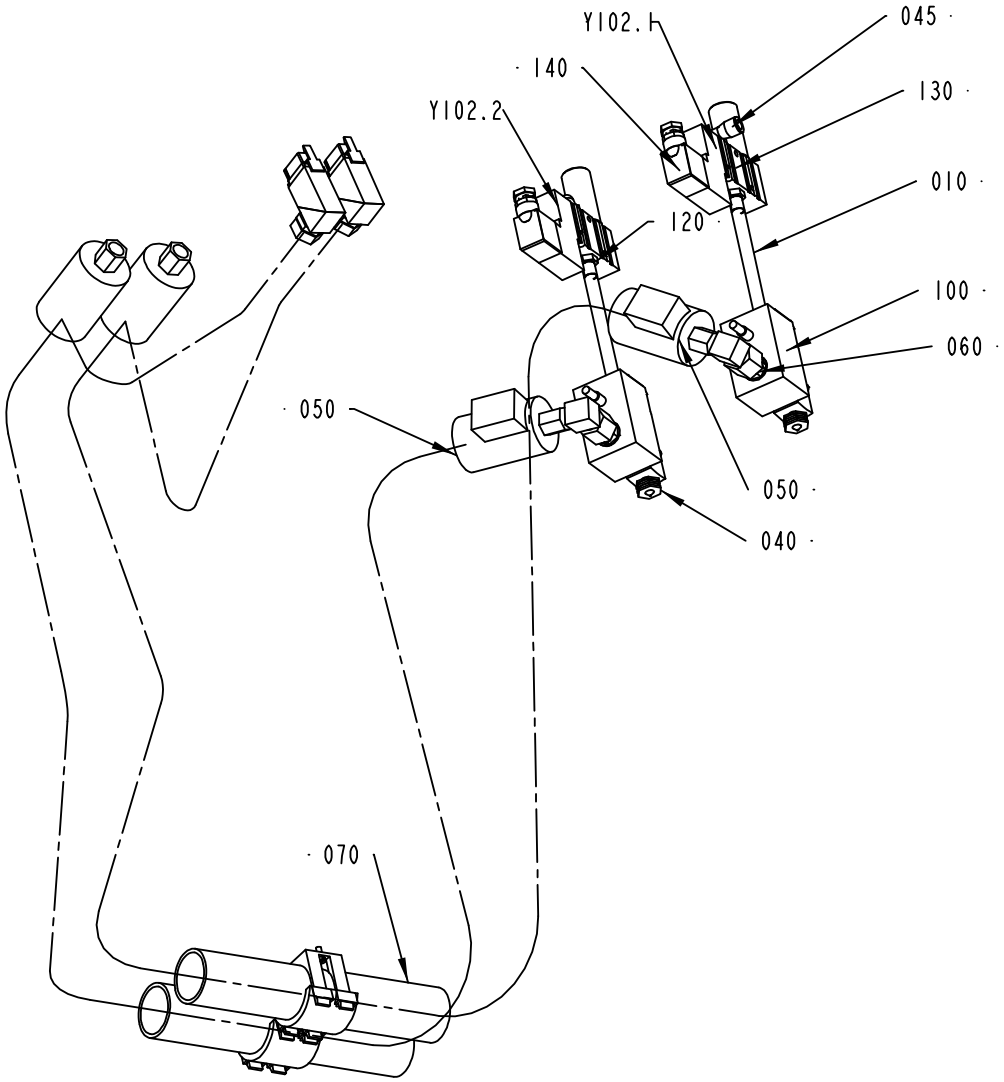

595659-2
ECM 100505

ECM: 105286 - 20021022
Group number: 595659-0200
Assembly Drawing: 595659-2_1_AA

Pos	Part No	SP	UN	Qty	Description	Page No
-						
010	2500569-0000	A		2	PIPE	
040	90439-0155	A		2	PRECISION NOZZLE SATURN 322012	
045	90458-2958	-		2	ELBOW PIPE JOINT, EXT.THREAD, D=8MM-G1/4	
050	90439-0213	A		2	HOT MELT HOSE, PART NO. 274793	
060	90439-0233	A		2	FILTER	
	90439-0214	*C*		*1*	*FILTER INSERT / PART NO.271600*	
070	90439-0295	-		2	SERVICE KIT, NO. 111940	
100	90458-0852	A		2	HOT MELT GUN H-401-T PART NO. 224939	**5-9**
100:01	90458-0300	A		1	MODULE TYPE H400, NORDSON #326583	
100:02	90439-0216	A		1	ELEMENT 150 W 938123	
100:03	90439-0206	A		1	CABLE	
120	342701-0201	-		2	BUSHING,INT./EXT.G-THREAD G1/4"-G1/8"	
130	90459-0321	-		2	SILENCER, 1/4" 231267	
140	90042-0392	A		2	CONTACT 2 POLE + EARTH	
60:01	90439-0233	A		1	FILTER	
	90439-0214	*C*		*1*	*FILTER INSERT / PART NO.271600*	
Y102.1	90459-0322	A		1	SOLENOID VALVE, 771132	
Y102.2	90459-0322	A		1	SOLENOID VALVE, 771132	

Pos	Part No	SP	UN	Qty	Description	Page No

This page is intentionally left blank.

ECM: 89555 - 20010112
Group number: 90458-0852
Assembly Drawing:

Pos	Part No	SP	UN	Qty	Description	Page No
-						
	90458-0300	-		1	MODULE TYPE H400, NORDSON #326583	
	90439-0216	-		1	ELEMENT 150 W 938123	
	90439-0211	-		1	THERMOSTAT	
	90439-0206	-		1	CABLE	

Pos	Part No	SP	UN	Qty	Description	Page No

Machine Type	Group Description	Used-In	Group Number	Page No

Tetra Pak

SPC
Spare Parts Catalogue

REGULAR ACCESSORIES

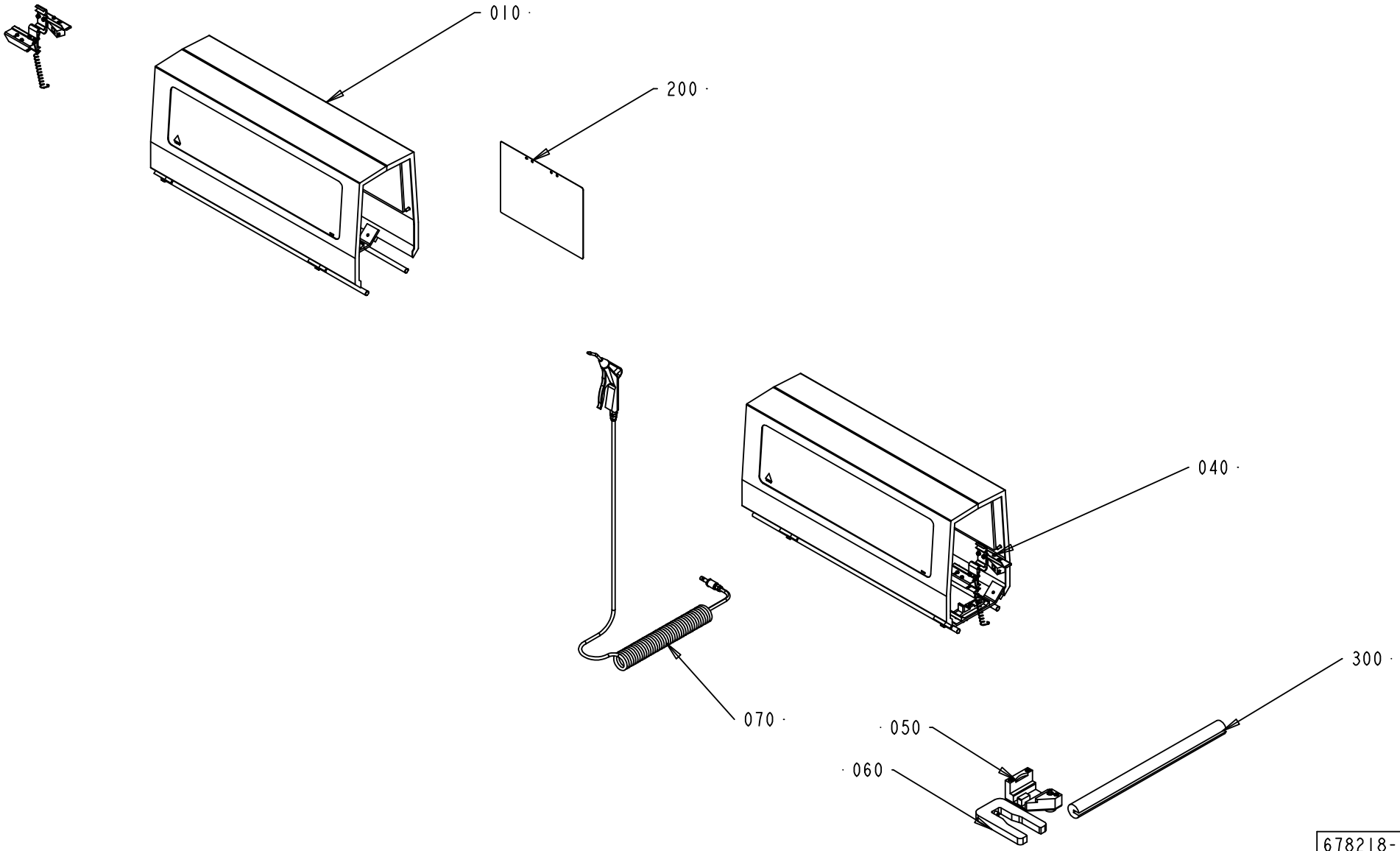

ECM: 105125 - 20021022
Group number: 678218-0200
Assembly Drawing: 678218-2_1_AA

Pos	Part No	SP	UN	Qty	Description	Page No
-						
010	1124035-0100	-		2	TUNNEL	**6-5**
040	2532786-0100	-		1	QUEUE GUARD	**6-7**
050	1364387-0100	-		1	SETTING TEMPLATE	**6-13, 9-25**
060	1367353-0100	-		1	SETTING TEMPLATE	**6-15**
070	567111-0200	-		1	AIR JET GUN	**6-17**
100	2549800-0000	-		1	INSTALLATION DRAWING	
200	2553430-0000	-		1	PNEUMATIC DIAGRAM	
300	2532789-0000	-		1	PIPE	
400	2553422-0100	-			WARNING SIGNS	**6-19**

Pos	Part No	SP	UN	Qty	Description	Page No

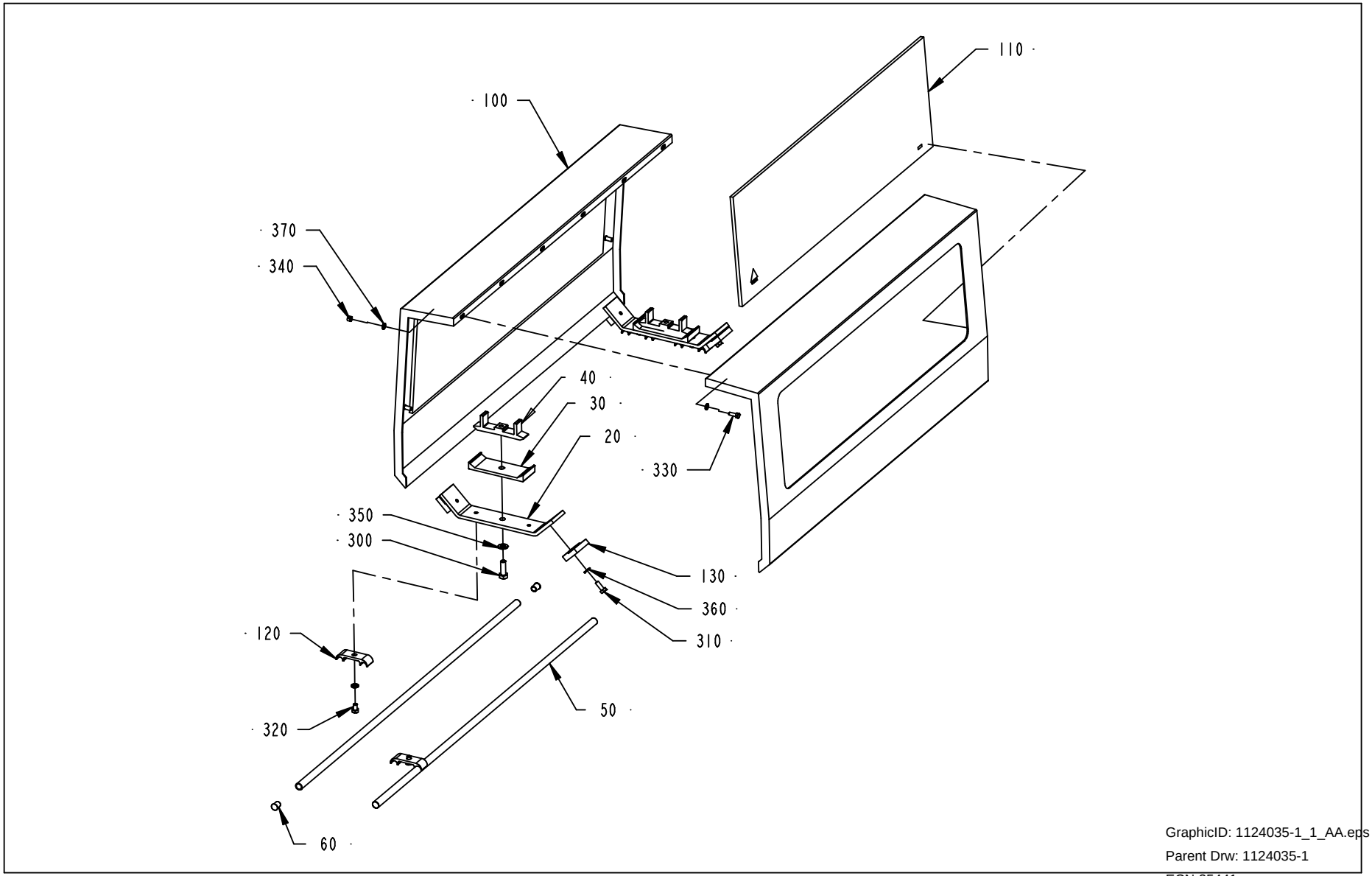

GraphicID: 1124035-1_1_AA.eps
Parent Drw: 1124035-1
ECN 25441

ECM: 25441 -
Group number: 1124035-0100
Assembly Drawing: 1124035-1_1_AA

Pos	Part No	SP	UN	Qty	Description	Page No
B55S, B65, B79, B40, B55, B68						
020 1	1128870-0000	-		2	BRACKET	
030 1	537483-0000	-		2	BRACKET	
040 1	537482-0000	-		2	BRACKET	
050	476221-0008	-		2	PIPE	
060	484701-0000	-		4	SHUTTER	
330	312105-0328	-		6	SCREW M6S ISO 4017 M5X14 A480	
340	312605-0314	-		6	HEXAGON NUT, M6M M5 A280	
370	315105-0146	-		12	WASHER BRB5,3X10RFR	
Common Parts						
100	577862-0000	-		2	TUNNEL HALF	
110	1074379-0000	-		2	GLASS	
120	1020634-0001	-		4	HOLDER	
130	1128871-0000	-		4	CLAMPING PLATE	
200	90157-0041	-	L		SEALING COMPOUND	
300	312105-0453	-		2	SCREW M6S ISO 4017 M8X25 A480	
310	312105-0368	-		4	SCREW M6S ISO 4017 M6X16 A480	
320	312105-0364	-		4	SCREW M6S ISO 4017 M6X10 A480	
350	315105-0165	-		2	WASHER BRB8,4X16RFR	
360	315105-0153	-		8	WASHER BRB6,4X12RFR	

Pos	Part No	SP	UN	Qty	Description	Page No

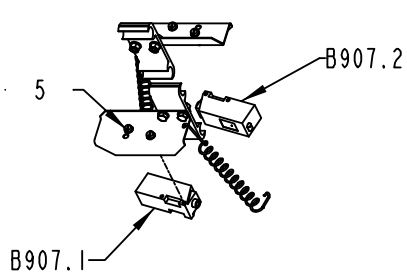

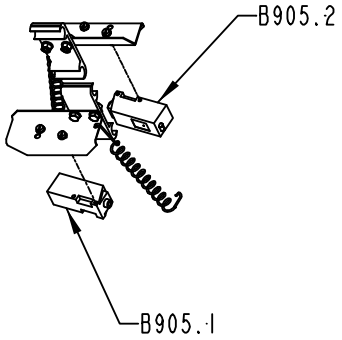

2532786-1
ECM 100505

ECM: 105287 - 20021022
Group number: 2532786-0100
Assembly Drawing: 2532786-1_1_AA

Pos	Part No	SP	UN	Qty	Description	Page No
-						
005	1359042-0104	-		2	QUEUE GUARD,SINGLE ATTACHM ONLY B50-R109 .	**6-9**
B905 .1	90232-0103	A		1	PH.CELL E3S-CT61-L-5M	
B905 .2	90232-0104	A		1	PH.CELL E3S-CT61-D-5M	
B907 .1	90232-0103	A		1	PH.CELL E3S-CT61-L-5M	
B907 .2	90232-0104	A		1	PH.CELL E3S-CT61-D-5M	

Pos	Part No	SP	UN	Qty	Description	Page No

This page is intentionally left blank.

ECM: 16549 -
Group number: 1359042-0104
Assembly Drawing: 1359042-2_1_AA

Pos	Part No	SP	UN	Qty	Description	Page No
-						
005	1086724-0201	-		1	PACKING DESCRIPTION	**6-11**
060	1020637-0000	-		2	HOLDER	
090 2	1086889-0000	-		2	COVER	
150	532412-0000	-		2	SPRING	
200	312105-0327	-		4	SCREW M6S ISO 4017 M5X12 A480	
220	312125-0293	-		4	SCREW ISO 1207 M4X16 A4	
240	312605-0314	-		4	HEXAGON NUT, M6M M5 A280	
260	315105-0136	-		4	WASHER BRB4,3XRFR	
270	315105-0146	-		8	WASHER BRB5,3X10RFR	

Pos	Part No	SP	UN	Qty	Description	Page No

Machine Type | Group Description | Used-In | Group Number | Page No

This page is intentionally left blank.

ECM: - -
Group number: 1086724-0201
Assembly Drawing: 1086724-2_1_AA

Pos	Part No	SP	UN	Qty	Description	Page No
-						
010	539161-0000	-		1	CORRUGATED CARDBOARD BOX	
050	1086871-0000	-		1	LABEL TAPE	
070	90003-0474	-			PACKING	

Pos	Part No	SP	UN	Qty	Description	Page No

SETTING TEMPLATE

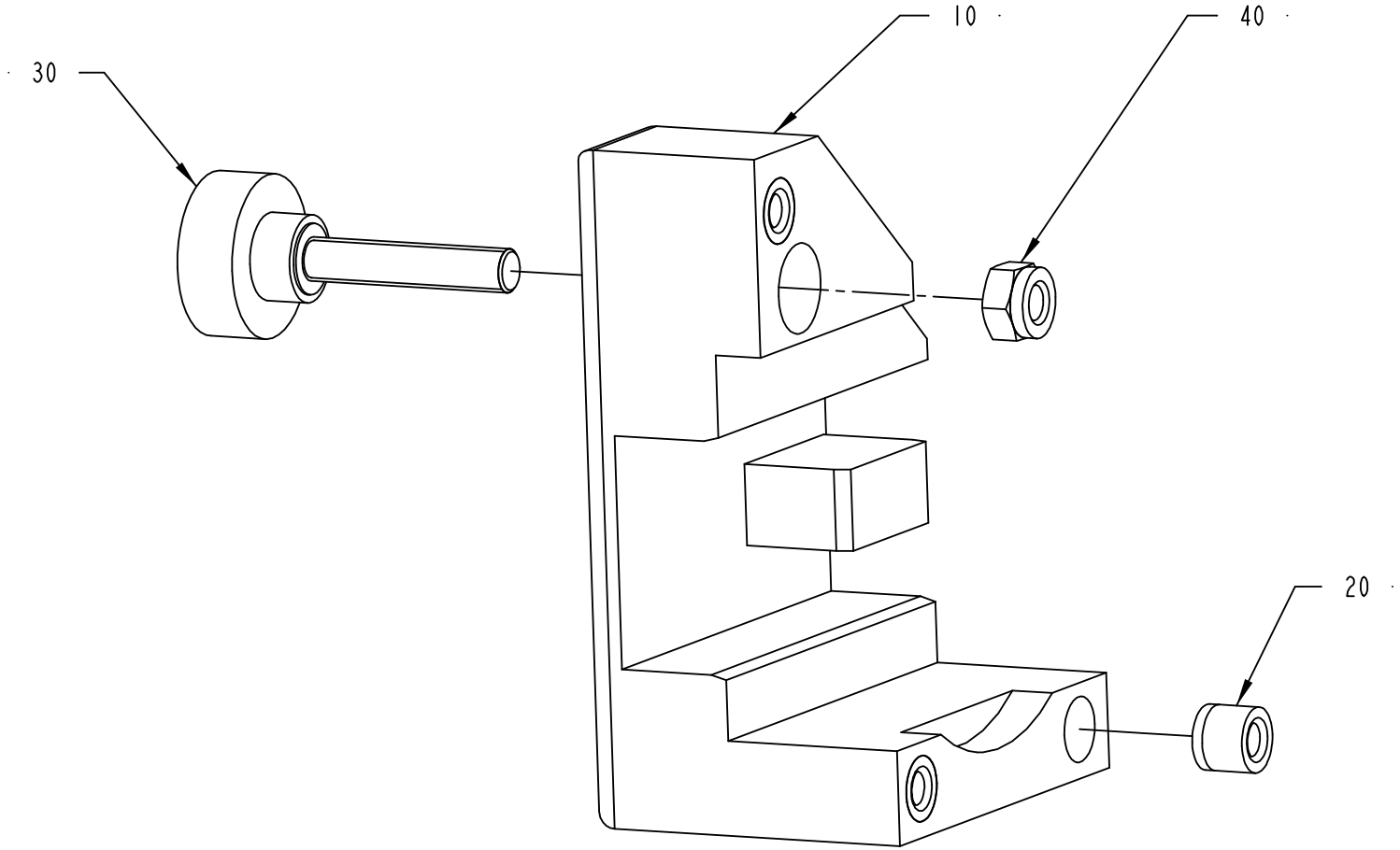

S-1364387-1
ECN 25441

ECM: 111249 - 20021022
Group number: 1364387-0100
Assembly Drawing: 1364387-1_1_AA

Pos	Part No	SP	UN	Qty	Description	Page No
Straw Pitch 15						
010	1363105-0000	-		1	SETTING TEMPLATE	
Straw Pitch 22						
010	1363106-0000	-		1	SETTING TEMPLATE	
Common Parts						
020	90240-0336	-		3	BEARING BUSHING W/O FL, 6,10X12X10 MM	
030	90287-0358	-		1	KNURLED SCREW	
040	312812-0318	-		1	HEXAGON NUT, NY-LOCK M8 A480	

Pos	Part No	SP	UN	Qty	Description	Page No

SETTING TEMPLATE

Drawing file: 1367353-1_1_AA.hpgl

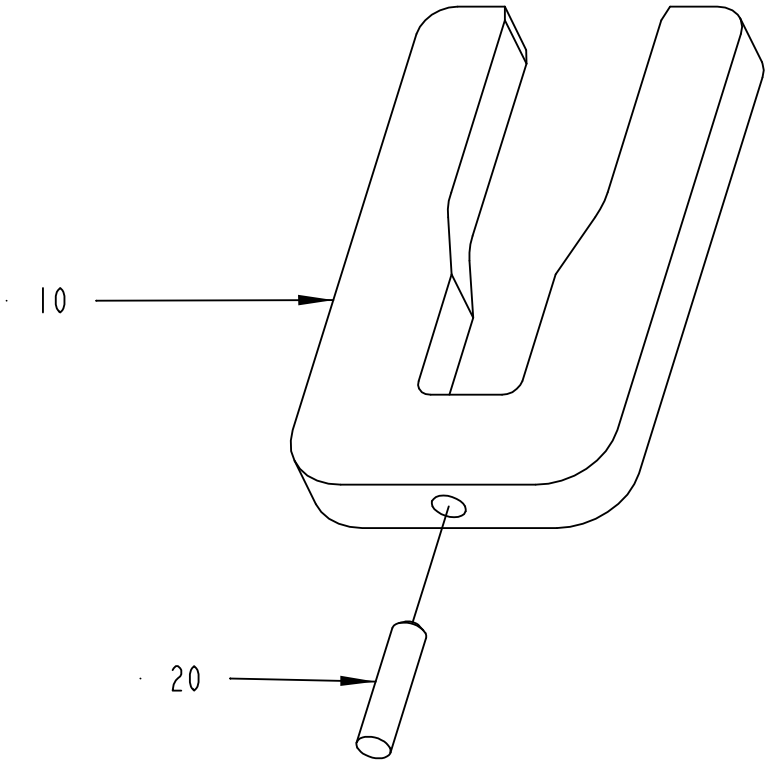

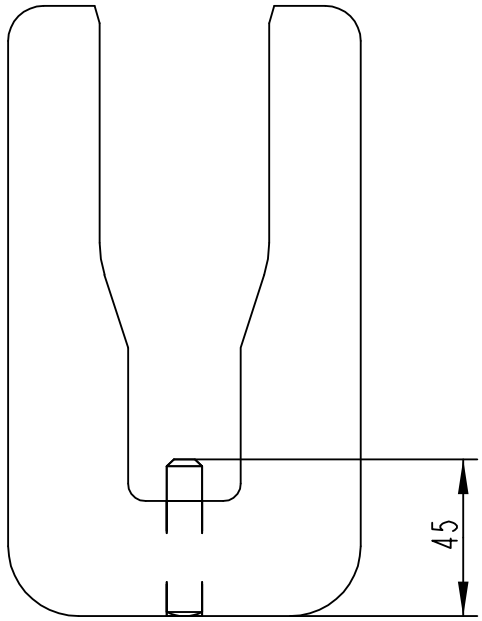

S-1367353-1
ECN 28208

ECM: 86261 - 20010515
Group number: 1367353-0100
Assembly Drawing: 1367353-1_1_AA

Pos	Part No	SP	UN	Qty	Description	Page No
-						
010	595881-0000	-		1	SETTING TEMPLATE	
020	311103-0464	-		1	PARALLEL PIN ISO 2338 10M6X45 A1	

Pos	Part No	SP	UN	Qty	Description	Page No

AIR JET GUN

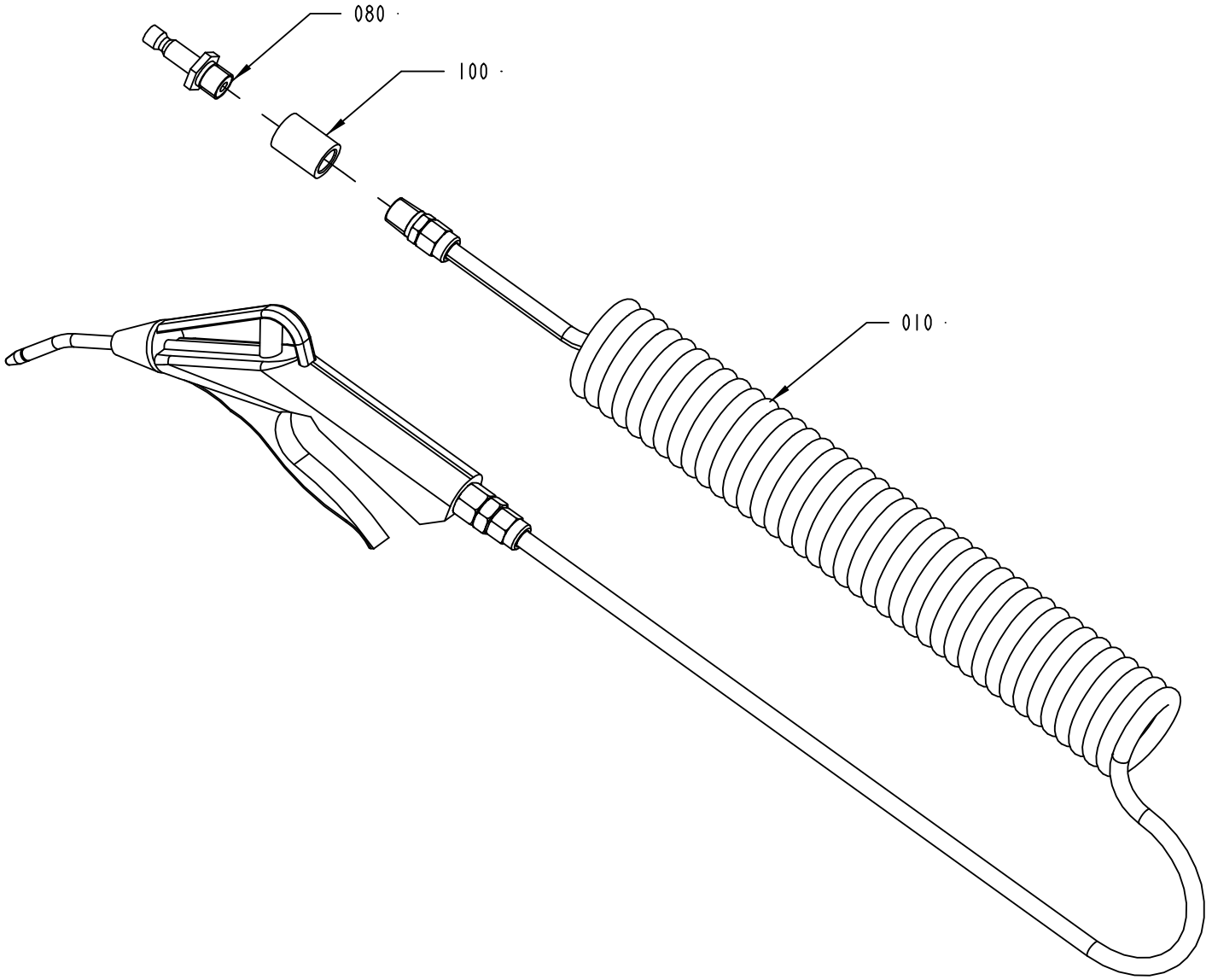

567111-2
ECM 105207

ECM: 105207 - 20020301
Group number: 567111-0200
Assembly Drawing: 567111-2_1_AA

Pos	Part No	SP	UN	Qty	Description	Page No
-						
010	90458-1740	-		1	AIR GUN ASSEMBLY, CEJN 199589668	
080	90163-0007	-		1	CONNECTION	
100	90330-0102	-		1	SLEEVE, INT, THREAD, NO., R-201R1/4	

Pos	Part No	SP	UN	Qty	Description	Page No

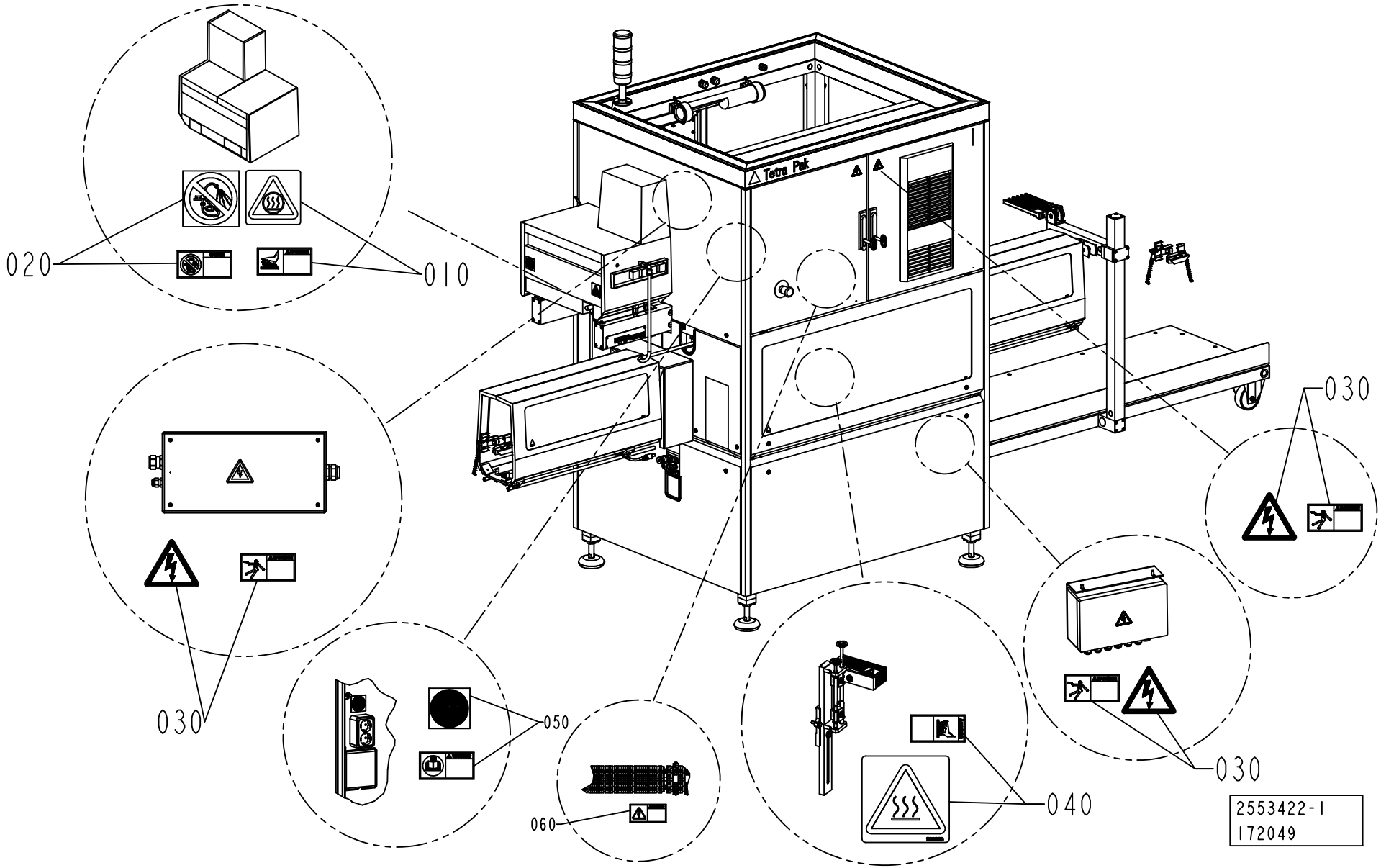
020
010
030
030
050
060
040
030
2553422-1
172049

ECM: 172049 - 20040507
Group number: 2553422-0100
Assembly Drawing: 2553422-1_1_AB

Pos	Part No	SP	UN	Qty	Description	Page No
ANSI						
010	359725-0120	-		1	WARNING SIGN ANSI (H), HEAT ENERGY	
020	90459-2232	-		1	WARNING SIGN ANSI (H), DO NOT WASH	
030	359715-0100	-		4	WARNING SIGN ANSI(H), ELECTRIC SHOCK	
040	359725-0121	-		1	WARNING SIGN ANSI, HEAT ENERGY	
050	90459-2021	-		1	WARNING SIGN ANSI (H), READ OM	
CANADA						
060	90458-2635	-		1	WARNING SIGN ANSI(H), EXT.VOLTAGE,ORANGE	
ISO						
010	1128844-0000	-		1	CAUTION SIGN	
020	90459-2265	-		1	PROHIBITION SIGN ISO, DO NOT WASH	
030	359705-0015	-		4	WARNING SIGN ISO, RISK OF ELECTRIC SHOCK	
040	1128853-0000	-		1	CAUTION SIGN	
050	90459-1738	-		1	MANDATORY ACTION SIGN ISO, READ MAINTENA	

Pos	Part No	SP	UN	Qty	Description	Page No

Tetra Pak

SPC
Spare Parts Catalogue

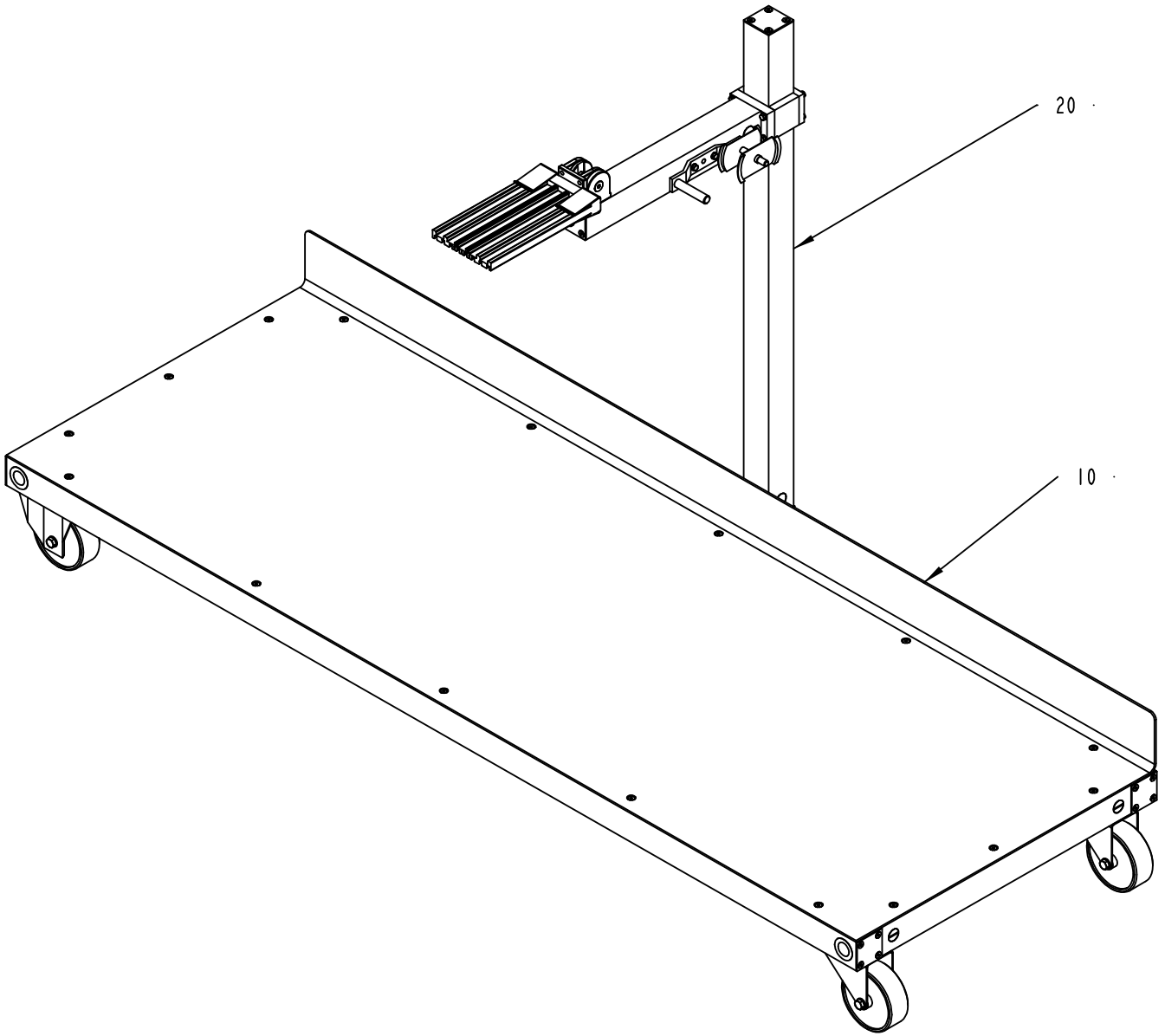

678219-1
ECM 111138

ECM: 111253 - 20021022
Group number: 678219-0100
Assembly Drawing: 678219-1_1_AB

Pos	Part No	SP	UN	Qty	Description	Page No
-						
010	595695-0100	-		1	TABLE	**7-5**
020	595696-0100	-		1	SPLICING TABLE	**7-7**

Pos	Part No	SP	UN	Qty	Description	Page No

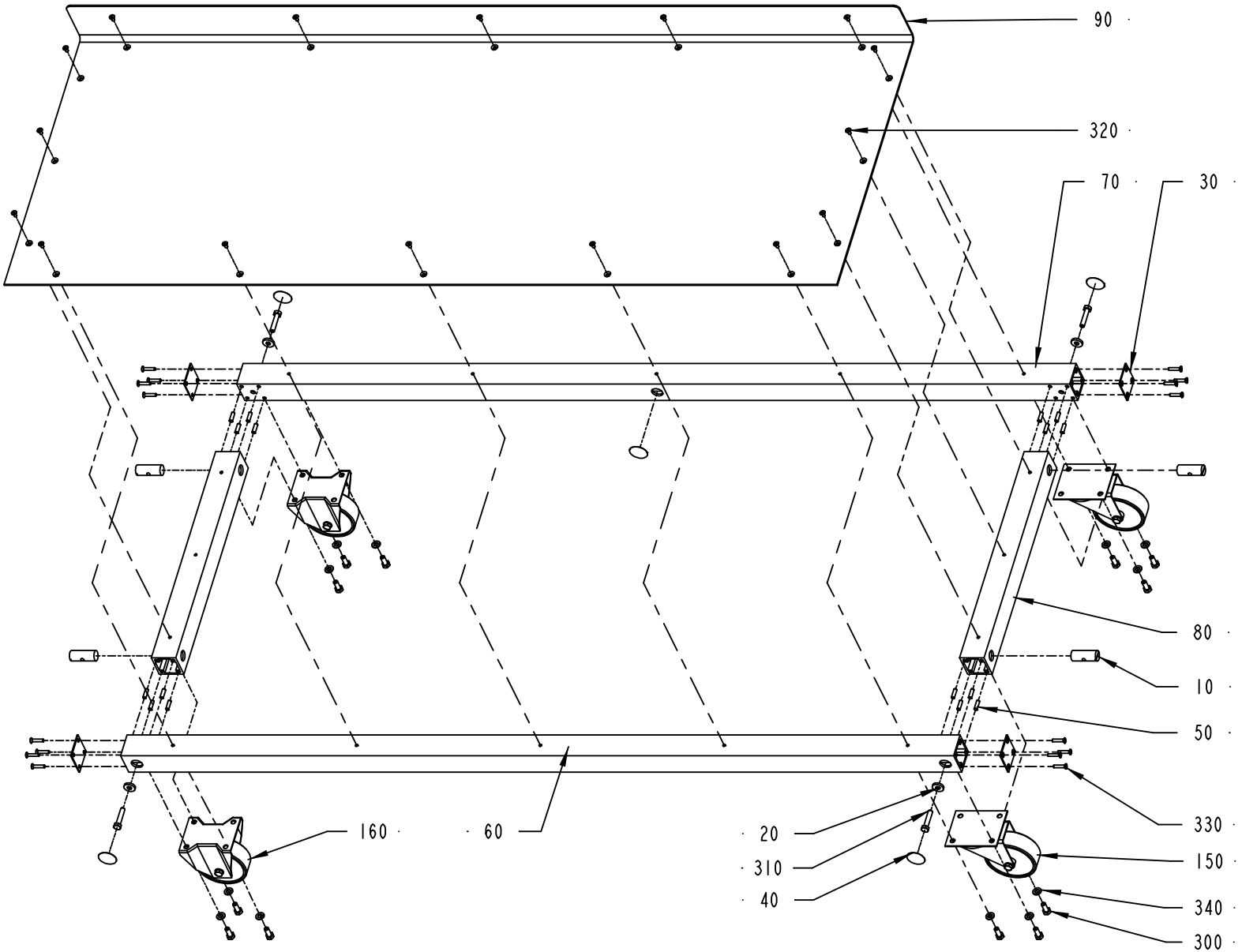
90
320
70
30
80
10
50
330
150
340
300
160
60
20
310
40
S-595695-I
ECN 25441

ECM: 111266 - 20021022
Group number: 595695-0100
Assembly Drawing: 595695-1_1_AA

Pos	Part No	SP	UN	Qty	Description	Page No
-						
010	486268-0000	-		4	NUT	
020	548599-0000	-		4	WASHER	
030	556604-0000	-		4	COVER PLATE	
040	1021933-0000	-		5	COVER TAPE	
050	1065410-0000	-		16	SLOTTED PIN	
060	1363048-0000	-		1	PROFILE	
070	1363049-0000	-		1	PROFILE	
080	1363050-0000	-		2	PROFILE	
090	1363051-0000	-		1	PLATE	
150	90191-0063	B		2	CASTOR WHEEL, NO. LKE-J-100-ND/K	
	90191-0065	*C*		*1*	*WHEEL, NO. LI-100-ND/K*	
160	90191-0064	B		2	CASTOR WHEEL, NO. LPPE-100-ND/K	
	90191-0065	*C*		*1*	*WHEEL, NO. LI-100-ND/K*	
300	312105-0451	-		12	SCREW M6S ISO 4017 M8X20 A480	
310	312109-0459	-		4	SCREW M6S ISO 4017 M8X40 A480	
320	312155-0325	-		16	SCREW EN 10642 MF6S M5X10 A480	
330	312155-0333	-		16	SCREW EN 10642 MF6S M5X25 A480	
340	315105-0165	-		12	WASHER BRB8,4X16RFR	

Pos	Part No	SP	UN	Qty	Description	Page No

SPLICING TABLE

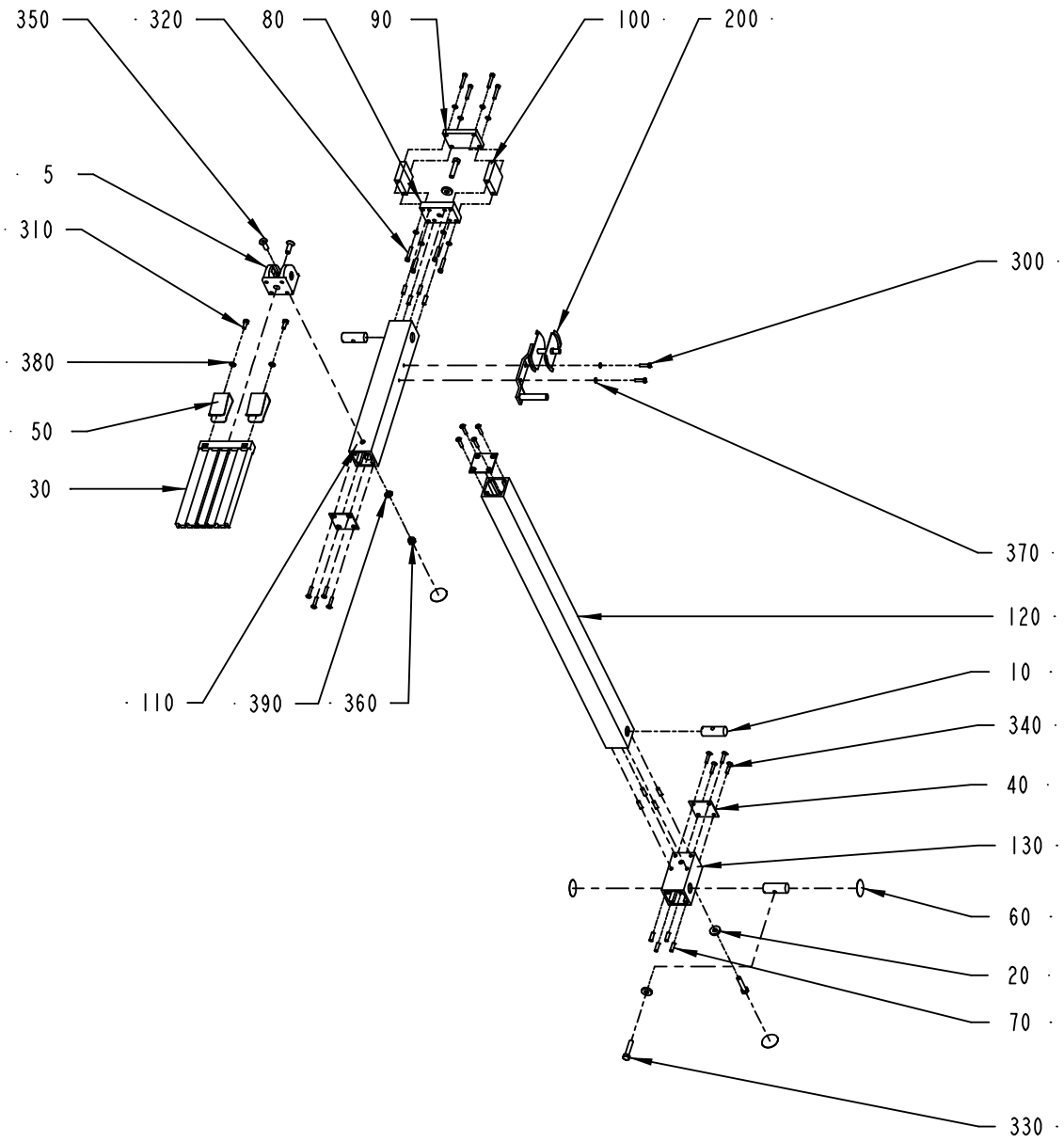

S-595696-1
ECN 25441

ECM: 111939 - 20021022
Group number: 595696-0100
Assembly Drawing: 595696-1_1_AA

Pos	Part No	SP	UN	Qty	Description	Page No
-						
005	573210-0100	B		1	JOINT	**7-9**
010	486268-0000	-		3	NUT	
020	548599-0000	-		3	WASHER	
030	556365-0000	B		1	SPLICING DEVICE	
040	556604-0000	-		3	COVER PLATE	
050	567778-0000	-		2	CLAMP	
060	1021933-0000	-		4	COVER TAPE	
070	1065410-0000	-		12	SLOTTED PIN	
080	1363052-0000	-		1	FASTENING PLATE	
090	1363053-0000	-		1	END PLATE	
100	1363054-0000	-		2	SUPPORT IRON	
110	1363055-0000	-		1	PROFILE	
120	1363056-0000	-		1	PROFILE	
130	1363057-0000	-		1	SHAFT	
200	90256-0001	B		1	TAPE SUPPLY HOLDER, TYPE 2000	
300	312105-0331	-		2	SCREW M6S ISO 4017 M5X20 A480	
310	312105-0368	-		2	SCREW M6S ISO 4017 M6X16 A480	
320	312109-0335	-		8	SCREW M6S ISO 4017 M5X30 A480	
330	312109-0459	-		3	SCREW M6S ISO 4017 M8X40 A480	
340	312155-0333	-		12	SCREW EN 10642 MF6S M5X25 A480	
350	312155-0453	-		2	SCREW EN 10642 MF6S M8X25 A480	
360	312812-0318	-		1	HEXAGON NUT, NY-LOCK M8 A480	
370	315105-0146	-		10	WASHER BRB5,3X10RFR	
380	315105-0153	-		2	WASHER BRB6,4X12RFR	
390	319030-0140	-		1	DISC SPRING, CONICAL 16X8,2X0,6 MM	

Pos	Part No	SP	UN	Qty	Description	Page No

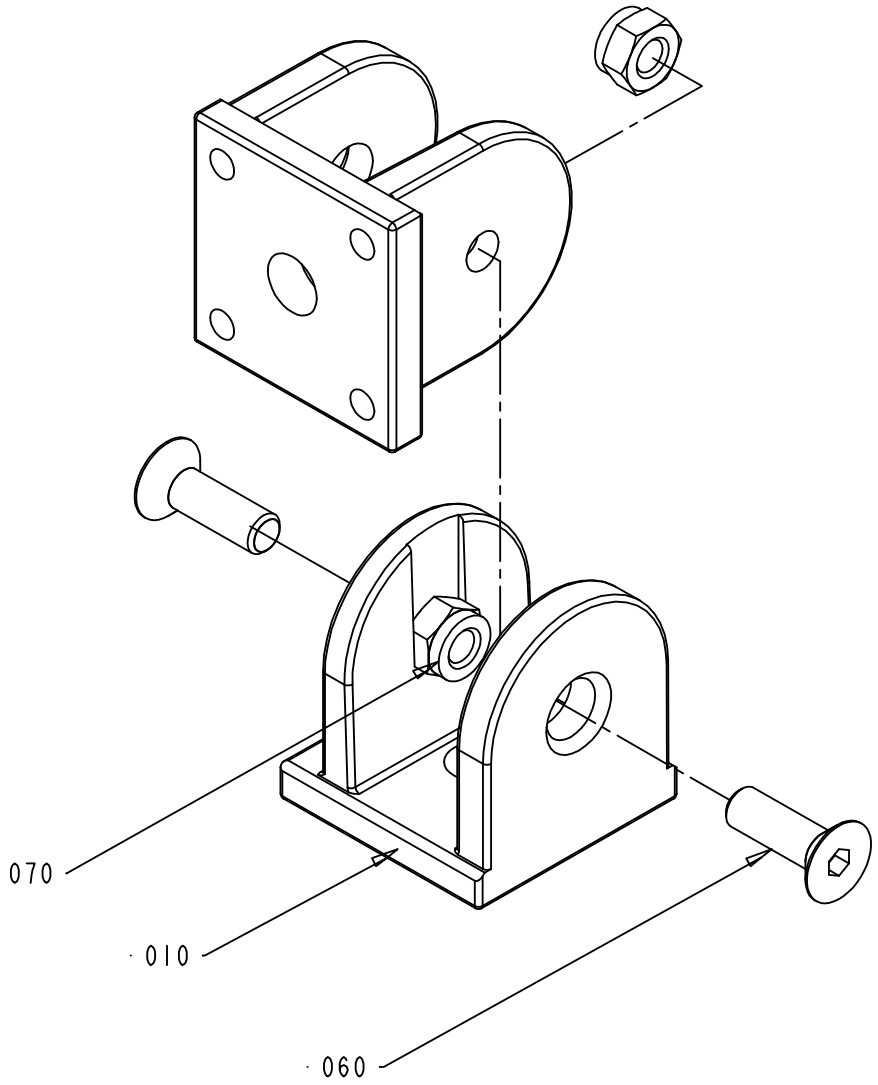

573210-1
ECM 100505

ECM: 111257 - 20021022
Group number: 573210-0100
Assembly Drawing: 573210-1_1_AB

Pos	Part No	SP	UN	Qty	Description	Page No
-						
010	556384-0000	-		2	LINK FORK	
060	312155-0453	-		2	SCREW EN 10642 MF6S M8X25 A480	
070	312812-0318	-		2	HEXAGON NUT, NY-LOCK M8 A480	

Pos	Part No	SP	UN	Qty	Description	Page No

Tetra Pak

SPC
Spare Parts Catalogue

ELECTRICAL CABINET

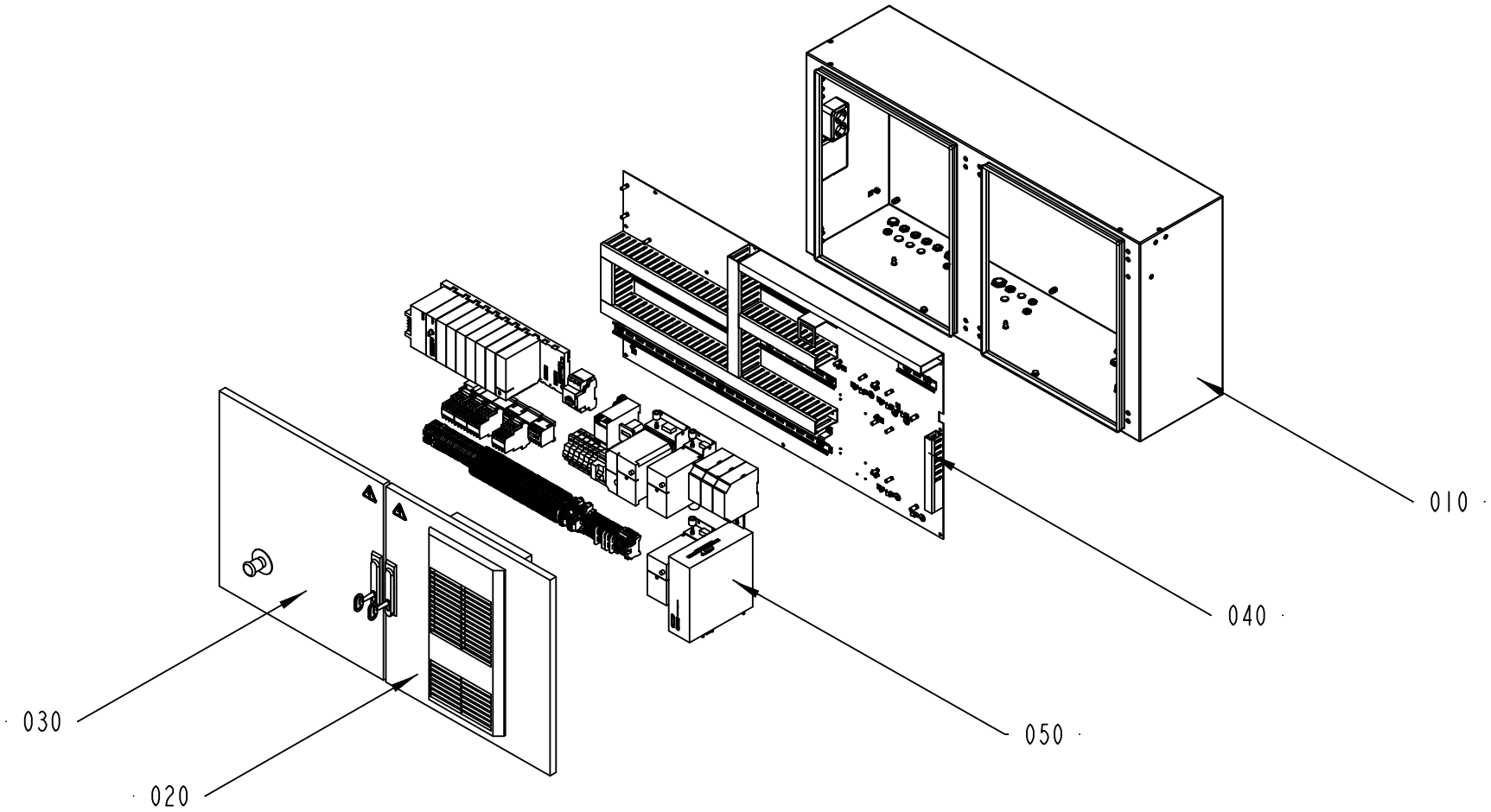

679342-2
ECM 106087

ECM: 106087 - 20021022
Group number: 679342-0200
Assembly Drawing: 679342-2_1_AA

Pos	Part No	SP	UN	Qty	Description	Page No
-						
010	2519605-0100	-		1	CABINET	**8-5**
020	595684-0100	-		1	DOOR ELECTRICAL CABINET	**8-7**
030	595685-0100	-		1	DOOR ELECTRICAL CABINET	**8-9**
040	595683-0200	-		1	ASSEMBLY PLATE	**8-11**
050	2519607-0100	-		1	ELECTRIC EQUIPMENT	**8-13, 8-15**
400	44887-0200	-		1	MACHINE	**8-39**
500	44891-0100	-		1	SPARE PART KIT	**8-43**

Pos	Part No	SP	UN	Qty	Description	Page No

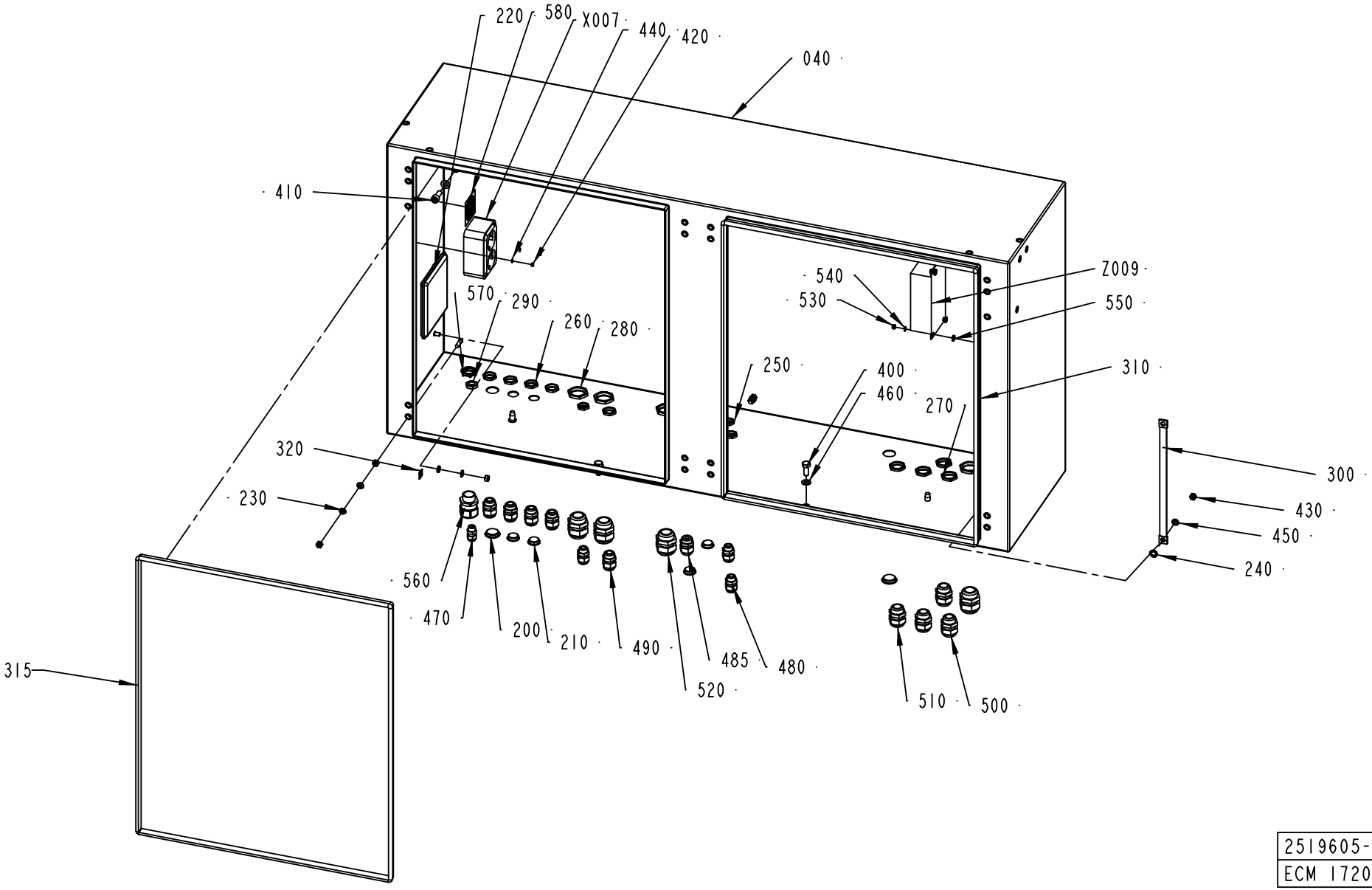

2519605-1
ECM 172049

ECM: 172049 - 20040507
Group number: 2519605-0100
Assembly Drawing: 2519605-1_1_AB

Pos	Part No	SP	UN	Qty	Description	Page No
ANSI						
580	90459-2021	-		1	WARNING SIGN ANSI (H), READ OM	
ISO						
580	90459-1738	-		1	MANDATORY ACTION SIGN ISO, READ MAINTENA	
Common Parts						
040	2519603-0000	-		1	CABINET	
200	90002-0004	-		2	BLANK-OFF PLUG, PR 22,5 SKINDICHT-BLK16	
210	90002-0009	-		4	BLANK-OFF PLUG, PR 18.6 SKINDICHT-BLK11	
220	90031-0304	-		1	DISCETTE BOX, 350 XM-6615-7258-1	
230	90062-0015	-		10	LOCK WASHER SERRAT.EXT.GEAR,6,4/11 H=0,7	
240	90062-0016	-		2	LOCK WASHER SERRAT.EXT.GEAR,8,4/15 H=0,8	
250	90099-0001	-		3	NUT PG 9/PR 15,2	
260	90099-0002	-		6	NUT PR 18,6 BRASS	
270	90099-0003	-		4	NUT	
280	90099-0004	-		4	NUT	
290	90099-0116	-		1	NUT, PR 12,5 (PG7)	
300	90135-0035	-		2	EARTH WIRE, L=250 MM 16 MM2	
310	90143-0057	-	MM	2200	STRIP EMKA 1011-05 21X11MM	
315	90143-0057	-	MM	2200	STRIP EMKA 1011-05 21X11MM	
320	90194-0152	-		1	SIGN, EARTH	
400	312105-0451	-		2	SCREW M6S ISO 4017 M8X20 A480	
410	312115-0451	-		2	SCREW ISO4762 M8X20 A4	
420	312601-0310	-		2	NUT M6M3FZB	
430	312601-0316	-		21	NUT M6M 6-8 FZB	
440	315101-0124	-		2	WASHER PLAIN, BRB, 3,2/6 H=0,5	
450	315101-0153	-		12	WASHER PLAIN, BRB, 6,4/12 H=1,5	
460	315105-0165	-		4	WASHER BRB8,4X16RFR	
470	352103-0096	-		1	CABLE GLAND, ST 7, PR 12,5/PG7	
480	352103-0101	-		3	CABLE GLAND, ST 9, PR15,2/PG9	
485	352103-0105	-		1	CABLE GLAND, STR 11, PR 18,6/PG11	
490	352103-0106	-		5	CABLE GLAND, ST 11, PR18,6/PG11	
500	352103-0110	-		1	CABLE GLAND, STR 16, PR22,5/PG16	
510	352103-0111	-		3	CABLE GLAND, ST 16, PR22,5/PG16	
520	352103-0116	-		4	CABLE GLAND, ST 21, PR28,3/PG21	
530	312601-0312	-		4	NUT M6M 4-8 FZB	
540	315101-0136	-		4	WASHER BRB, 4,3/8 H=0,8	
550	90062-0060	-		4	LOCK WASHER SERRAT.EXT.GEAR,5,3/10 H=0,6	
560	353245-0005	-		1	GLAND, EXTENDED WITH INSERT, PG16/PR 22,	
570	90099-0178	-		1	GLAND, LOCKNUT, PG 16	
X007	90001-0033	-		1	WALL SOCKET OUTLET	
Z009	90024-0037	-		1	INPUT FILTER, 8 A	

Machine Type | Group Description | Used-In | Group Number | Page No

DOOR ELECTRICAL CABINET

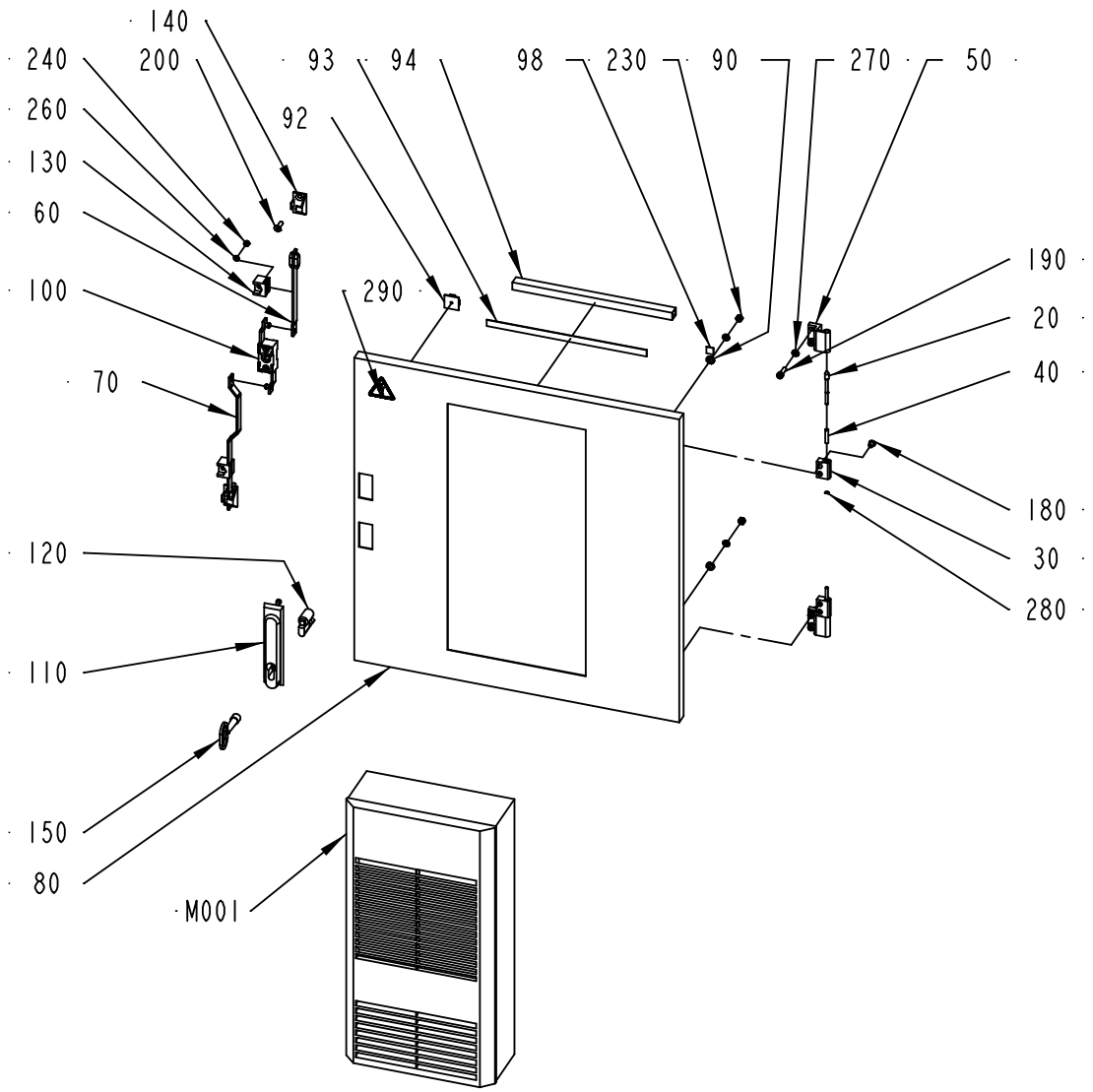

595684-1
ECM 106087

ECM: 171994 - 20040507
Group number: 595684-0100
Assembly Drawing: 595684-1_1_AB

Pos	Part No	SP	UN	Qty	Description	Page No
ANSI						
290	359715-0100	-		1	WARNING SIGN ANSI(H), ELECTRIC SHOCK	
ISO						
290	359705-0015	-		1	WARNING SIGN ISO, RISK OF ELECTRIC SHOCK	
Common Parts						
020	959656-0000	-		2	COTTER	
030	959657-0000	-		2	HINGE FLANGE	
040	959658-0000	-		2	SPRING	
050	975880-0000	-		2	HINGE FLANGE	
060	975889-0011	-		1	STRUT	
070	975888-0009	-		1	STRUT	
080	595883-0000	-		1	HATCH	
090	90062-0016	-		2	LOCK WASHER SERRAT.EXT.GEAR,8,4/15 H=0,8	
092	352113-0206	-		1	ANCHOR PLATES FOR STRIPS, TYPE ABM100-AT	
093	90144-0072	-	MM	290	TAPE SCOTCH VHBS 4945 W=12,7MM	
094	90181-0033	-	MM	290	CABLE DUCT, 15X18MM	
098	90194-0152	-		1	SIGN, EARTH	
100	90237-0123	-		1	LOCK, 1121-U10C	
110	90237-0175	-		1	TURNING HANDLE	
120	90237-0129	-		1	LOCK CYLINDER, 1109-U6	
130	90237-0144	-		2	GUIDE, 1121-SU540	
140	90237-0147	-		2	LOCKING LUG, NO. 1121-53-0P	
150	90237-0324	-		1	KEY, 1104-02 FOR SQUARE 8 MM	
180	90287-0205	-		4	SCREW	
190	312115-0370	-		4	SCREW ISO4762 M6X20 A4	
200	312155-0370	-		4	SCREW EN 10642 MF6S M6X20 A480	
230	312605-0316	-		2	HEXAGON NUT, M6M M6 A280	
240	312812-0314	-		2	HEXAGON NUT, NY-LOCK M5 A480	
260	315105-0146	-		2	WASHER BRB5,3X10RFR	
270	315105-0153	-		6	WASHER BRB6,4X12RFR	
280	315755-0105	-		2	RETAINING RING SHAFT DIN 6799 3,2 A2	
M001	90422-0049	-		1	COOLER, SK 3203.100	

Pos	Part No	SP	UN	Qty	Description	Page No

Machine Type | Group Description | Used-In | Group Number | Page No

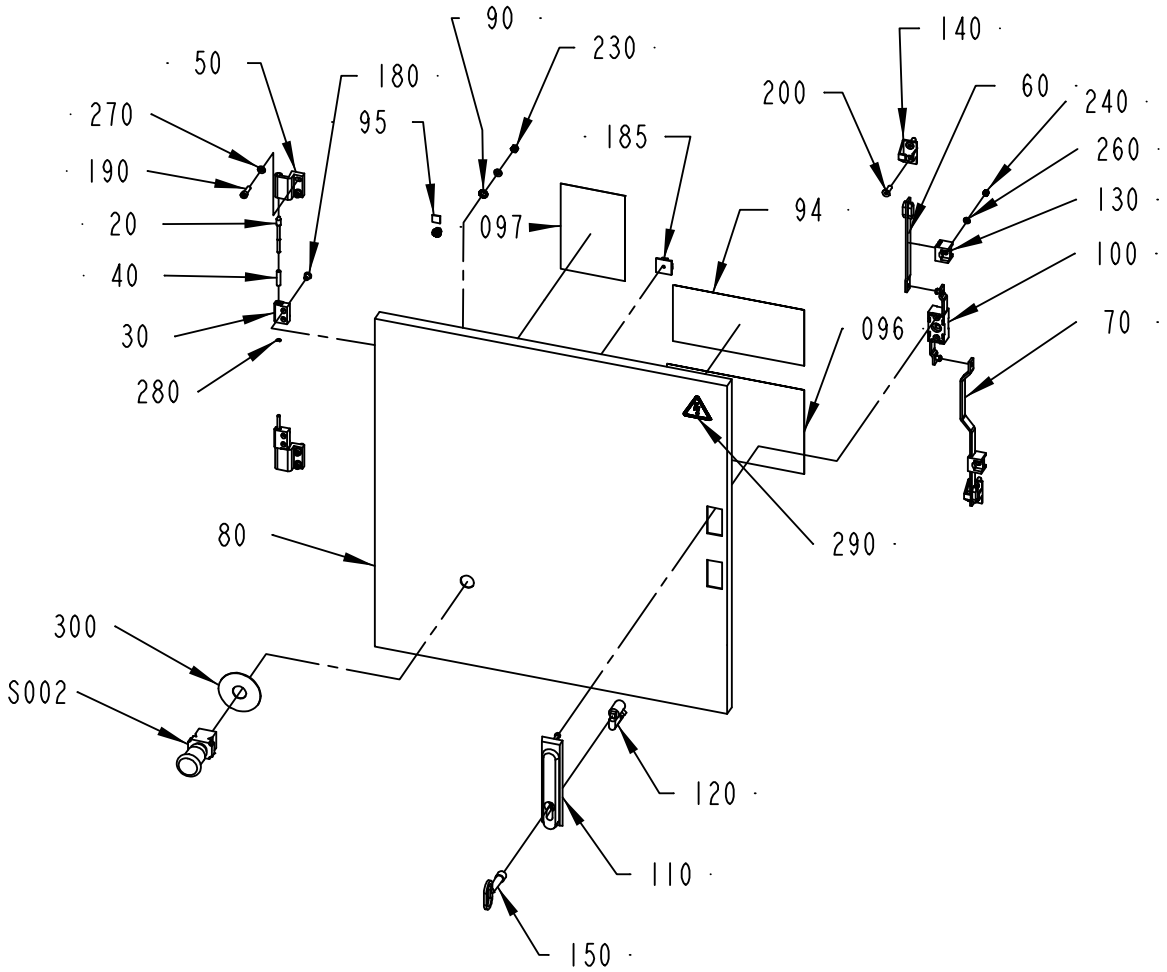

595685-1
ECM 106087

ECM: 171995 - 20040507
Group number: 595685-0100
Assembly Drawing: 595685-1_1_AB

Pos	Part No	SP	UN	Qty	Description	Page No
ANSI						
290	359715-0100	-		1	WARNING SIGN ANSI(H), ELECTRIC SHOCK	
ISO						
290	359705-0015	-		1	WARNING SIGN ISO, RISK OF ELECTRIC SHOCK	
Common Parts						
020	959656-0000	-		2	COTTER	
030	959657-0000	-		2	HINGE FLANGE	
040	959658-0000	-		2	SPRING	
050	975880-0000	-		2	HINGE FLANGE	
060	975889-0011	-		1	STRUT	
070	975888-0009	-		1	STRUT	
080	595884-0000	-		1	HATCH	
090	90062-0016	-		2	LOCK WASHER SERRAT.EXT.GEAR,8,4/15 H=0,8	
094	90194-0080	-		1	SIGN, IDENTIFICATION OF WIRING	
095	90194-0152	-		1	SIGN, EARTH	
096	2543149-0000	-		1	DELIVERED DESIGN	
097	2543150-0000	-		1	FUSE PANEL LABEL	
100	90237-0123	-		1	LOCK, 1121-U10C	
110	90237-0175	-		1	TURNING HANDLE	
120	90237-0129	-		1	LOCK CYLINDER, 1109-U6	
130	90237-0144	-		2	GUIDE, 1121-SU540	
140	90237-0147	-		2	LOCKING LUG, NO. 1121-53-0P	
150	90237-0324	-		1	KEY, 1104-02 FOR SQUARE 8 MM	
180	90287-0205	-		4	SCREW	
185	352113-0206	-		1	ANCHOR PLATES FOR STRIPS, TYPE ABM100-AT	
190	312115-0370	-		4	SCREW ISO4762 M6X20 A4	
200	312155-0370	-		4	SCREW EN 10642 MF6S M6X20 A480	
230	312605-0316	-		2	HEXAGON NUT, M6M M6 A280	
240	312812-0314	-		2	HEXAGON NUT, NY-LOCK M5 A480	
260	315105-0146	-		2	WASHER BRB5,3X10RFR	
270	315105-0153	-		6	WASHER BRB6,4X12RFR	
280	315755-0105	-		2	RETAINING RING SHAFT DIN 6799 3,2 A2	
300	486826-0001	-		1	SIGN "EMERGENCY STOP"	
S002	90064-0124	-		1	SWITCH, EM. STOP, ZB2-BS844+ZB2-BZ1045	

Pos	Part No	SP	UN	Qty	Description	Page No

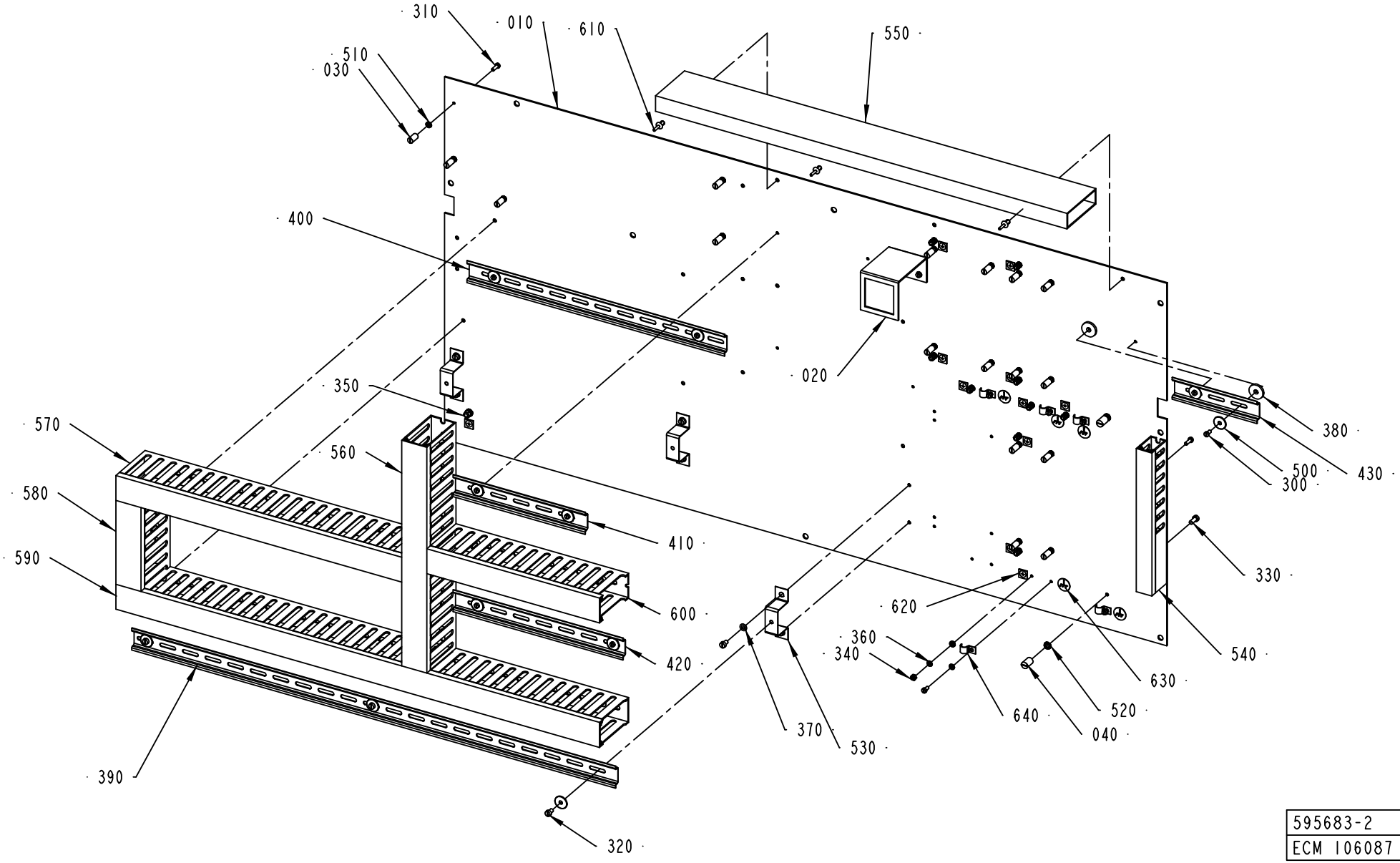

595683-2
ECM 106087

ECM: 106087 - 20021022
Group number: 595683-0200
Assembly Drawing: 595683-2_1_AA

Pos	Part No	SP	UN	Qty	Description	Page No
-						
010	2519602-0000	-		1	ASSEMBLY PLATE	
020	583570-0000	-		1	BRACKET	
030	1259310-0000	-		17	SLEEVE	
040	1361850-0000	-		2	SLEEVE	
300	312121-0287	-		15	SCREW ISO 1207 M4X8 4.8 - 5.8 Z.PL.	
310	312121-0291	-		27	SCREW ISO 1207 M4X12 4.8 - 5.8 Z.PL.	
320	312121-0323	-		9	SCREW ISO 1207 M5X8 4.8 - 5.8 Z.PL.	
330	312121-0327	-		3	SCREW ISO 1207 M5X12 4.8 - 5.8 Z.PL.	
340	312601-0312	-		10	NUT M6M 4-8 FZB	
350	312601-0314	-		1	NUT M6M5FZB	
360	315101-0136	-		17	WASHER BRB, 4,3/8 H=0,8	
370	315101-0146	-		7	WASHER PLAIN, BRB, 5,3/10 H=1	
380	315121-0153	-		2	WASHER PLAIN, TBRSB 6,4/22 H=4	
390	353042-0004	-	MM	770	RAIL TS 35/7,5	
400	353042-0004	-	MM	410	RAIL TS 35/7,5	
410	353042-0004	-	MM	210	RAIL TS 35/7,5	
420	353042-0004	-	MM	270	RAIL TS 35/7,5	
430	353042-0004	-	MM	135	RAIL TS 35/7,5	
500	90005-0102	-		11	WASHER PLAIN ROUND 5/19, H=1 FZB	
510	90062-0059	-		27	LOCK WASHER SERRAT.EXT.GEAR,4,3/8 H=0,5	
520	90062-0060	-		3	LOCK WASHER SERRAT.EXT.GEAR,5,3/10 H=0,6	
530	90077-0310	-		3	BRACKET, TSTR, 10-0099003-1	
540	90181-0037	-	MM	230	CABLE DUCT, 25X40MM	
550	90181-0052	-	MM	655	CABLE DUCT, 25X80MM	
560	90181-0053	-	MM	363	CABLE DUCT, 40X80MM	
570	90181-0053	-	MM	455	CABLE DUCT, 40X80MM	
580	90181-0053	-	MM	135	CABLE DUCT, 40X80MM	
590	90181-0053	-	MM	770	CABLE DUCT, 40X80MM	
600	90181-0053	-	MM	275	CABLE DUCT, 40X80MM	
610	90181-0088	-		17	PLASTIC RIVET, PR 52314	
620	90194-0152	-		11	SIGN, EARTH	
630	90194-0164	-		5	SIGN, FRAME/CHASSIS WITHIN CIRCLE	
640	90458-0721	-		5	PIPE CLIP FOR TUBE D=8 MMSZ 2367080	

Pos	Part No	SP	UN	Qty	Description	Page No

Machine Type | Group Description | Used-In | Group Number | Page No

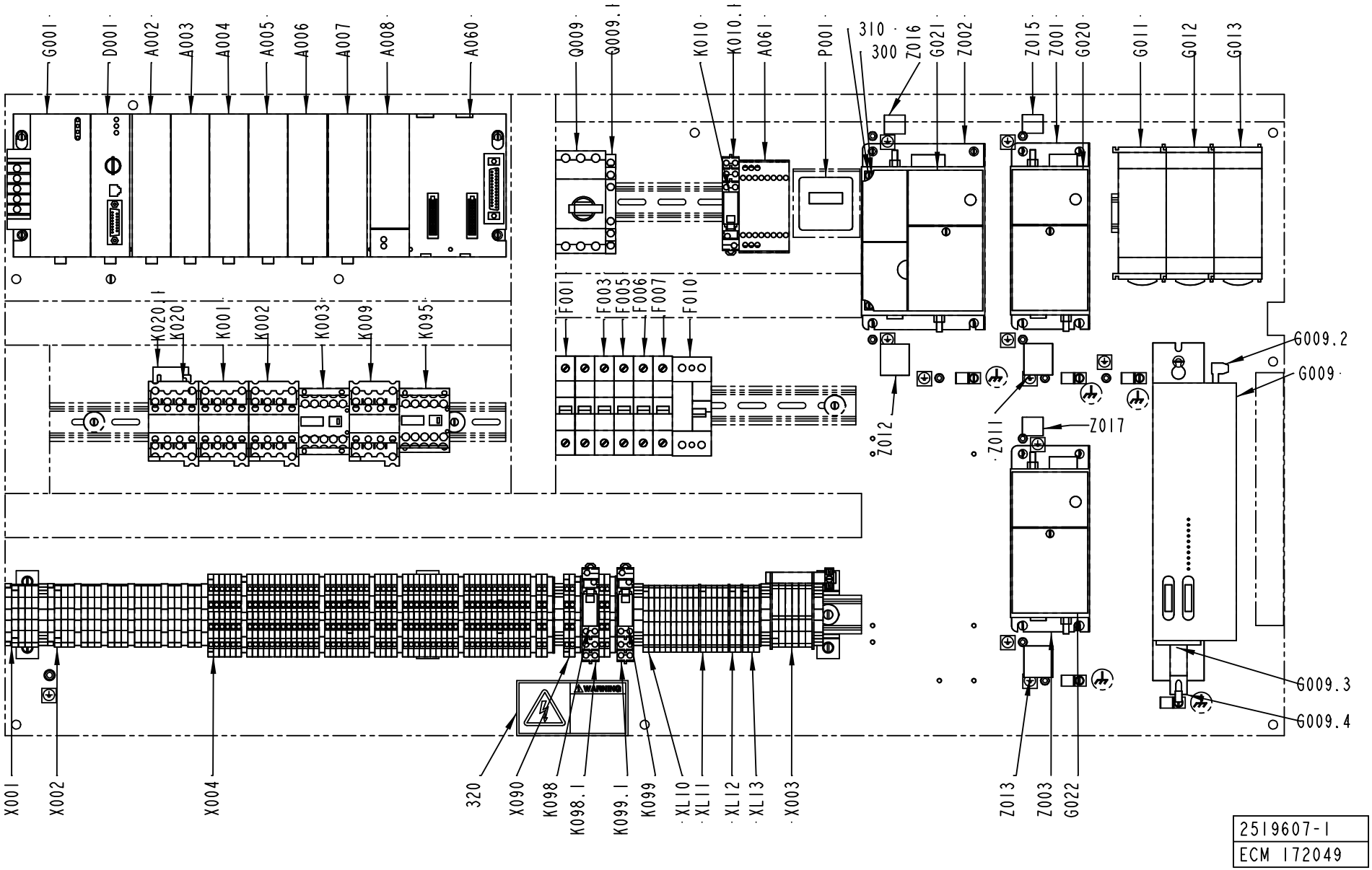
G001
D001
A002
A003
A004
A005
A006
A007
A008
A060
Q009
Q009.1
K010
K010.1
A061
P001
310
300
Z016
G021
Z002
Z015
Z001
G020
G011
G012
G013
K020.1
K020
K001
K002
K003
K009
K095
F001
F003
F005
F006
F007
F010
G009.2
G009
Z012
Z011
Z017
G009.3
G009.4
X001
X002
X004
320
X090
K098
K098.1
K099.1
K099
XL10
XL11
XL12
XL13
X003
Z013
Z003
G022
2519607-1
ECM 172049

ECM: 172049 - 20040507
Group number: 2519607-0100
Assembly Drawing: 2519607-1_1_AB

This list covers pages from 8-12 to 8-15

Pos	Part No	SP	UN	Qty	Description	Page No
CANADA						
320	90458-2635	-		1	WARNING SIGN ANSI(H), EXT.VOLTAGE,ORANGE	
F001	90458-2511	A		2	FUSE, ATDR-10	
F001.1	90458-2506	-		1	FUSE HOLDER, USCC2 2-POLE ULTRASAFE	
F003	90458-2510	A		1	FUSE, ATDR-6	
F003.1	90458-2507	-		1	FUSE HOLDER, USCC1 1-POLE ULTRASAFE	
F005	90458-2511	A		1	FUSE, ATDR-10	
F005.1	90458-2507	-		1	FUSE HOLDER, USCC1 1-POLE ULTRASAFE	
F006	90458-2511	A		1	FUSE, ATDR-10	
F006.1	90458-2507	-		1	FUSE HOLDER, USCC1 1-POLE ULTRASAFE	
F007	90458-2511	A		1	FUSE, ATDR-10	
F007.1	90458-2507	-		1	FUSE HOLDER, USCC1 1-POLE ULTRASAFE	
OTHER COUNTRIES						
F001	90007-0138	A		1	CIRCUIT BREAKER, 2P 10 A K	
F003	90007-0128	A		1	CIRCUIT BREAKER, 1P 6 A K	
F005	90007-0129	A		1	CIRCUIT BREAKER, 1P 10 A K	
F006	90007-0129	A		1	CIRCUIT BREAKER, 1P 10 A K	
F007	90007-0129	A		1	CIRCUIT BREAKER, 1P 10 A K	
Common Parts						
1000	351160-0102	B	MM		CABLE AWM 1X0,75 MM2 DARKBLUE	
1005	351160-0104	B	MM		CABLE AWM 1X1,5 MM2 DARKBLUE	
1010	351166-0102	B	MM		CABLE AWM 1X0,75 MM2 ORANGE	
1020	351162-0104	B	MM		CABLE AWM 1X1,5 MM2 YELLOW-GREEN	
1025	351162-0110	B	MM		CABLE AWM 1X25 MM2 YELLOW-GREEN	
1030	351164-0109	B	MM		CABLE AWM 1X16 MM2 BLACK	
1035	351164-0110	B	MM		CABLE AWM 1X25 MM2 BLACK	
1040	351161-0104	B	MM		CABLE AWM LIGTH BLUE 1,5MM2	
1045	351161-0110	B	MM		CABLE AWM 1X25 MM2 LIGHTBLUE	
1110	353001-0103	B			END SLEEVE 0,75 MM2	
1115	353001-0104	B			END SLEEVE 1,5 MM2	
1120	353001-0105	B			END SLEEVE 2,5 MM2	
300	90062-0059	B		8	LOCK WASHER SERRAT.EXT.GEAR,4,3/8 H=0,5	
310	312121-0291	B		8	SCREW ISO 1207 M4X12 4.8 - 5.8 Z.PL.	
A002	90031-0058	A		1	PLC, DIGITAL INPUT MODULE	
A003	90031-0058	A		1	PLC, DIGITAL INPUT MODULE	
A004	90031-0058	A		1	PLC, DIGITAL INPUT MODULE	
A005	90031-0059	A		1	PLC, DIGITAL OUTPUT MODULE	
A006	90031-0059	A		1	PLC, DIGITAL OUTPUT MODULE	
A007	90031-0059	A		1	PLC, DIGITAL OUTPUT MODULE	
A008	90031-0078	A		1	GENIUS BUS CONTROLLER	
A060	90031-0051	A		1	BASEPLATE, 10-SLOT	
A061	90119-0106	A		1	SAFETY RELAY JOKAB RT 6	
D001	90031-0075	A		1	CPU363, SERIAL COMMUNICATION	
D001.1	39878-1002	A		1	PLC PROGRAMME MEDIA	**8-17**
F010	90111-0172	A		1	EARTH FAULT BREAKER, F 362-25/0.03	
G001	90031-0068	A		1	PLC, POWER SUPPLY	
	352551-0134	*A*		*1*	*FINE-WIRE FUSE 2 A SLOW;5X20MM*	
	90031-0301	*A*		*1*	*SPARE BATTERY CPU,PCM,2PCS*	
G009	90458-0397	A		1	SERVO DRIVE DMC2 50720 P	
G009.1	44892-1002	A		1	SERVO PROGRAMME MEDIA	**8-19**
G009.2	90045-0376	A		1	CONNECTOR KIT 9-032-011-970	
G009.3	90110-0142	A		1	PLUG DA15P064TX	
G009.4	90110-0145	A		1	COVER 8630-5169014-15-01	
G011	90458-2457	A		1	POWER SUPPLY UNIT, 100-240VAC/24VDC 2,5A	
G012	90458-2457	A		1	POWER SUPPLY UNIT, 100-240VAC/24VDC 2,5A	
G013	90458-2457	A		1	POWER SUPPLY UNIT, 100-240VAC/24VDC 2,5A	
G020	90459-0178	A		1	FREQUENCY CHANGER 3G3MV-AB004	
G021	90459-0238	A		1	FREQUENCY CHANGER 3G3MV-AB007	
G022	90459-0178	A		1	FREQUENCY CHANGER 3G3MV-AB004	
K001	90075-0124	A		1	CONTACTOR, 4KW 24VDC	
	90075-0313	*A*		*1*	*AUXILIARY CONTACT K&M 22 DILM.2NO;2NC*	
K002	90075-0124	A		1	CONTACTOR, 4KW 24VDC	
	90075-0313	*A*		*1*	*AUXILIARY CONTACT K&M 22 DILM.2NO;2NC*	
K003	90075-0141	A		1	CONTACTOR, 4KW 24VDC	
K009	90075-0124	A		1	CONTACTOR, 4KW 24VDC	
	90075-0313	*A*		*1*	*AUXILIARY CONTACT K&M 22 DILM.2NO;2NC*	
K010	90119-0108	A		1	RELAY OMRON G2R-2-SNI-24DC	
	90129-0018	*-*		*1*	*BASE OMRON P2RF-08-E*	
K010 .1	90129-0018	A		1	BASE OMRON P2RF-08-E	
K020	90075-0124	A		1	CONTACTOR, 4KW 24VDC	
	90075-0313	*A*		*1*	*AUXILIARY CONTACT K&M 22 DILM.2NO;2NC*	
K020.1	90024-0034	B		1	DIODE SURGE SUPPRESSOR, FD B DIL	
K095	90075-0143	A		1	CONTACTOR, 4KW 24VDC	
K098	90119-0108	A		1	RELAY OMRON G2R-2-SNI-24DC	
	90129-0018	*-*		*1*	*BASE OMRON P2RF-08-E*	
K098.1	90129-0018	A		1	BASE OMRON P2RF-08-E	
K099	90119-0108	A		1	RELAY OMRON G2R-2-SNI-24DC	
	90129-0018	*-*		*1*	*BASE OMRON P2RF-08-E*	
K099 .1	90129-0018	A		1	BASE OMRON P2RF-08-E	
P001	90178-0007	B		1	HOUR COUNTER, BG 40,17-1 12-48VDC	
Q009	90095-0077	A		1	OVERLOAD PROTECTION, PKZM 6-10 A	
Q009 .1	90259-0317	A		1	AUX.CONTACT K&M NHI 11-PKZ0	

Machine Type | Group Description | Used-In | Group Number | Page No

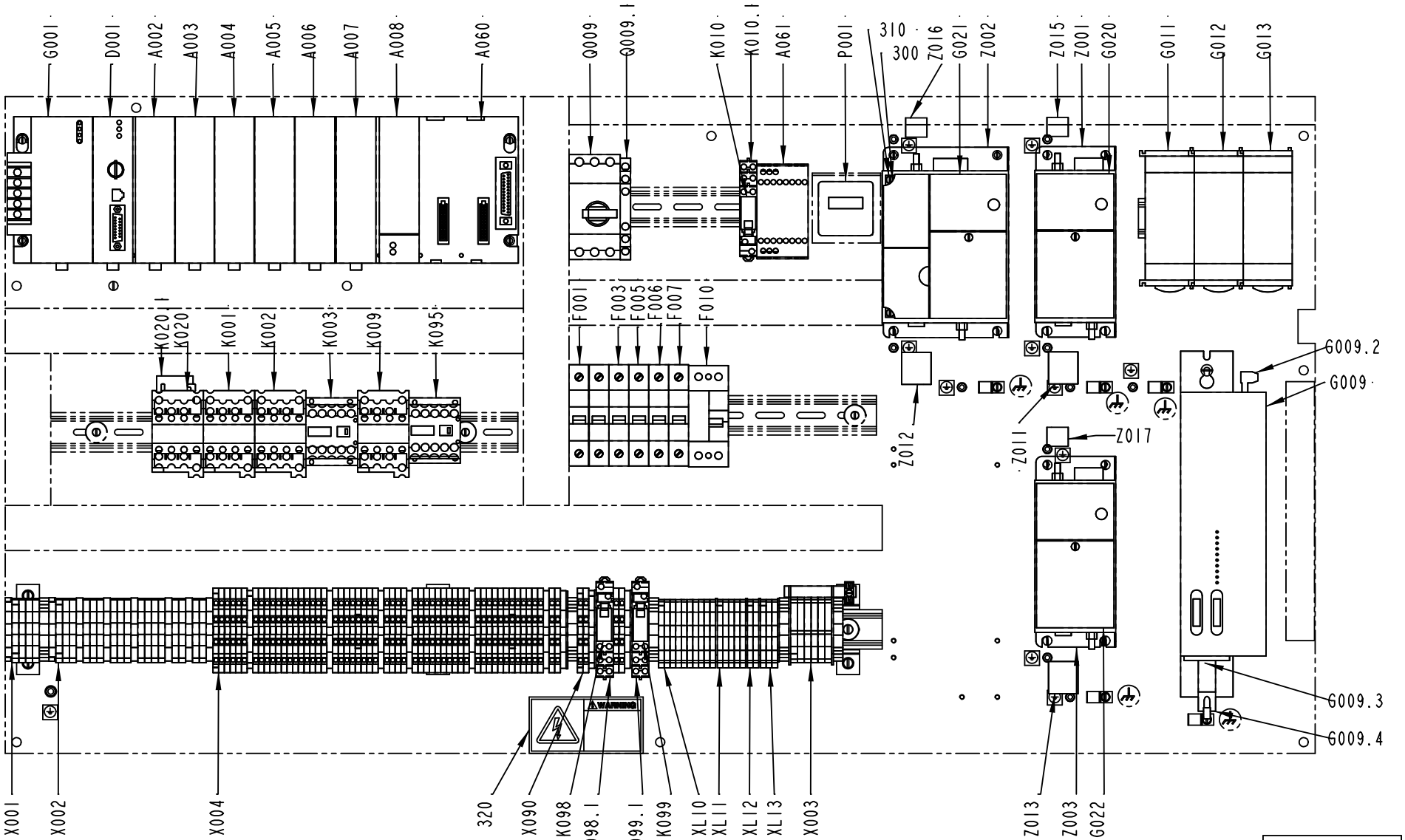
G001
D001
A002
A003
A004
A005
A006
A007
A008
A060
Q009
Q009.1
K010
K010.1
A061
P001
310
300
Z016
G021
Z002
Z015
Z001
G020
G011
G012
G013
K020.1
K020
K001
K002
K003
K009
K095
F001
F003
F005
F006
F007
F010
G009.2
G009
Z012
Z011
Z017
G009.3
G009.4
X001
X002
X004
320
X090
K098
K098.1
K099.1
K099
XL10
XL11
XL12
XL13
X003
Z013
Z003
G022
2519607-1
ECM 172049

Pos	Part No	SP	UN	Qty	Description	Page No
Common Parts (Cont'd)						
X001	2500574-0100	-		1	TERMINAL	**8-21**
X002	2500572-0100	-		1	TERMINAL	**8-23**
X003	2500571-0100	-		1	TERMINAL	**8-25**
X004	2500573-0100	-		1	TERMINAL	**8-27**
X090	2543148-0100	-		1	TERMINAL	**8-29**
XL10	2500575-0100	-		1	TERMINAL	**8-31**
XL11	2543145-0100	-		1	TERMINAL	**8-33**
XL12	2543146-0100	-		1	TERMINAL	**8-35**
XL13	2543147-0100	-		1	TERMINAL	**8-37**
Z001	90459-0796	A		1	FILTER 3G3MV-PFI 1010-E	
Z002	90459-0797	A		1	FILTER 3G3MV-PFI 1020-E	
Z003	90459-0796	A		1	FILTER 3G3MV-PFI 1010-E	
Z011	90024-0047	B		1	EMI SUPPRESSION FERRITE	
Z012	90024-0047	B		1	EMI SUPPRESSION FERRITE	
Z013	90024-0047	B		1	EMI SUPPRESSION FERRITE	
Z015	90024-0064	-		1	FERRITE, RT187-102-170-A5	
Z016	90024-0064	-	M	1	FERRITE, RT187-102-170-A5	
Z017	90024-0064	-	M	1	FERRITE, RT187-102-170-A5	

Pos	Part No	SP	UN	Qty	Description	Page No

This page is intentionally left blank.

ECM: 109509 - 20021022
Group number: 39878-1002
Assembly Drawing:

Pos	Part No	SP	UN	Qty	Description	Page No
-						
0010	39878-0002	-		1	SOFTWARE	
0010.1	90025-0041	-		1	FLOPPY DISKETT 3,5"-2D	
0010.2	575453-0000	-		1	LABEL ELECTRICAL EQUIPM.	

Pos	Part No	SP	UN	Qty	Description	Page No

This page is intentionally left blank.

ECM: 109510 - 20021022
Group number: 44892-1002
Assembly Drawing:

Pos	Part No	SP	UN	Qty	Description	Page No
-						
0010	44892-0002	-		1	SOFTWARE	
0010.1	90025-0041	-		1	FLOPPY DISKETT 3,5"-2D	
0010.2	575453-0000	-		1	LABEL ELECTRICAL EQUIPM.	

Pos	Part No	SP	UN	Qty	Description	Page No

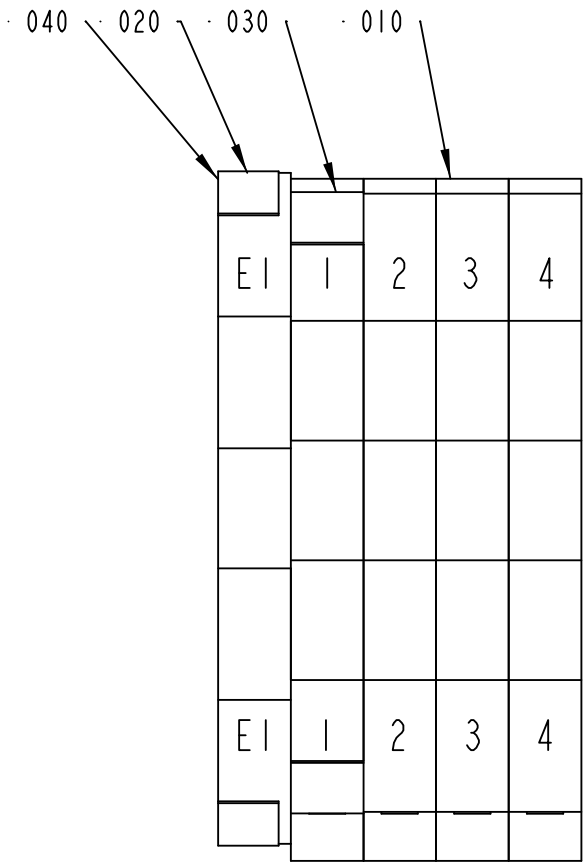

2500574-1
ECM 106087

ECM: 106537 - 20021022
Group number: 2500574-0100
Assembly Drawing: 2500574-1_1_AA

Pos	Part No	SP	UN	Qty	Description	Page No
-						
010	353021-0213	B		4	FEED THROUGH TERMINAL, 10201.0	
020	353024-0205	B		1	EARTH TERMINAL, 1010.1	
030	359011-0821	B		2	SET OF SIGNS 6-FW 1-50	
040	90459-0606	B		2	MARKING PLATES 5-FW E1-E50	

Pos	Part No	SP	UN	Qty	Description	Page No

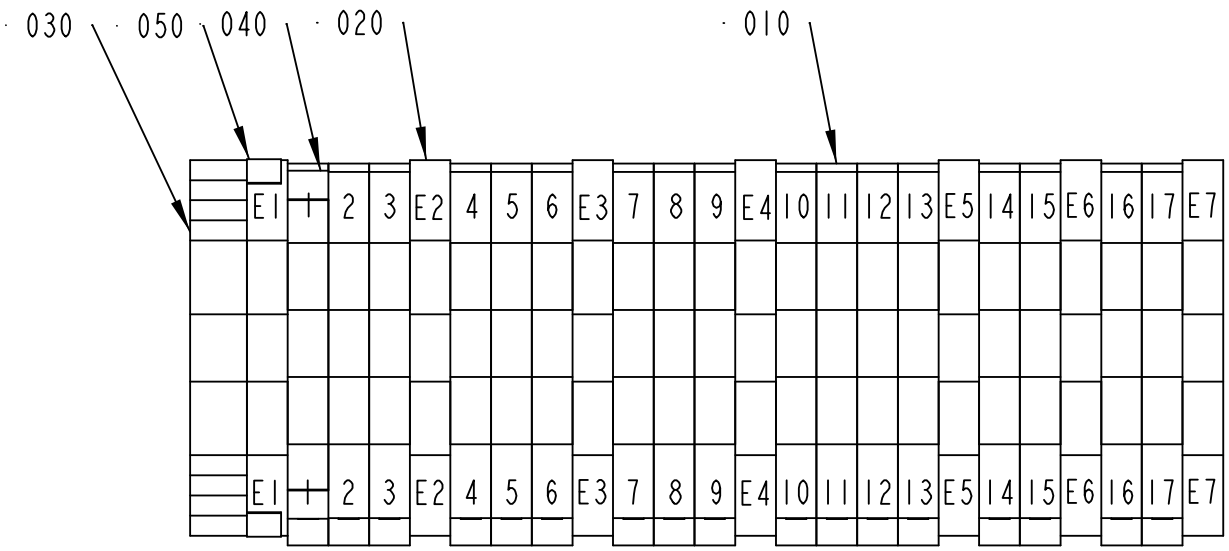

2500572-1
ECM 106087

ECM: 106539 - 20021022
Group number: 2500572-0100
Assembly Drawing: 2500572-1_1_AA

Pos	Part No	SP	UN	Qty	Description	Page No
-						
010	353021-0213	B		17	FEED THROUGH TERMINAL, 10201.0	
020	353024-0205	B		7	EARTH TERMINAL, 1010.1	
030	353031-0203	B		1	END SUPPORT, WEW 35/2	
040	359011-0821	B		2	SET OF SIGNS 6-FW 1-50	
050	90459-0606	B		2	MARKING PLATES 5-FW E1-E50	

Pos	Part No	SP	UN	Qty	Description	Page No

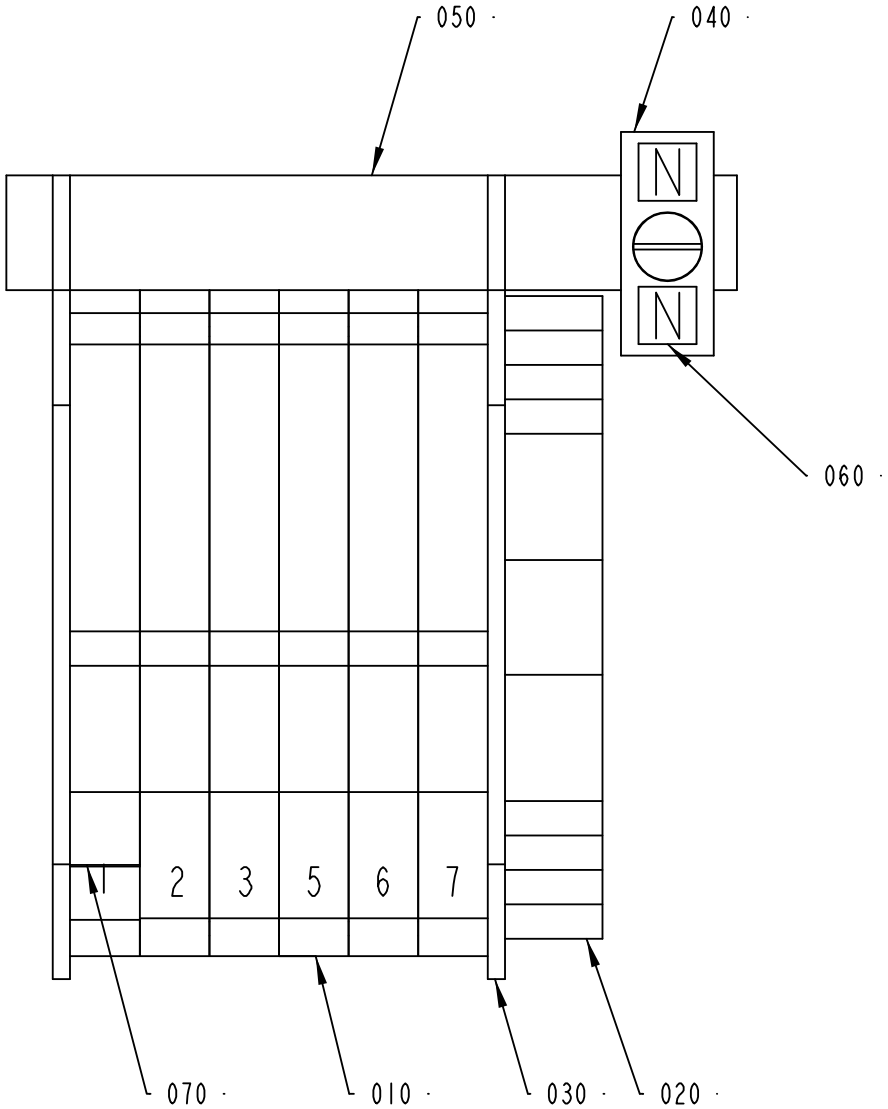

2500571-1
ECM 106087

ECM: 106541 - 20021022
Group number: 2500571-0100
Assembly Drawing: 2500571-1_1_AA

Pos	Part No	SP	UN	Qty	Description	Page No
-						
010	353022-0002	B		6	NEUTRAL TERMINAL, 10107.8	
020	353031-0203	B		1	END SUPPORT, WEW 35/2	
030	353033-0104	B		2	END PLATE, 10502.8	
040	353041-0104	B		1	CLAMPING YOKE PZB 4 K	
050	353041-0001	B	MM	63	RAIL 10X3MM SSCH	
060	359010-0613	B		2	SIGN BOARD BSG 1/2 "N"	
070	359011-0821	B		1	SET OF SIGNS 6-FW 1-50	

Pos	Part No	SP	UN	Qty	Description	Page No

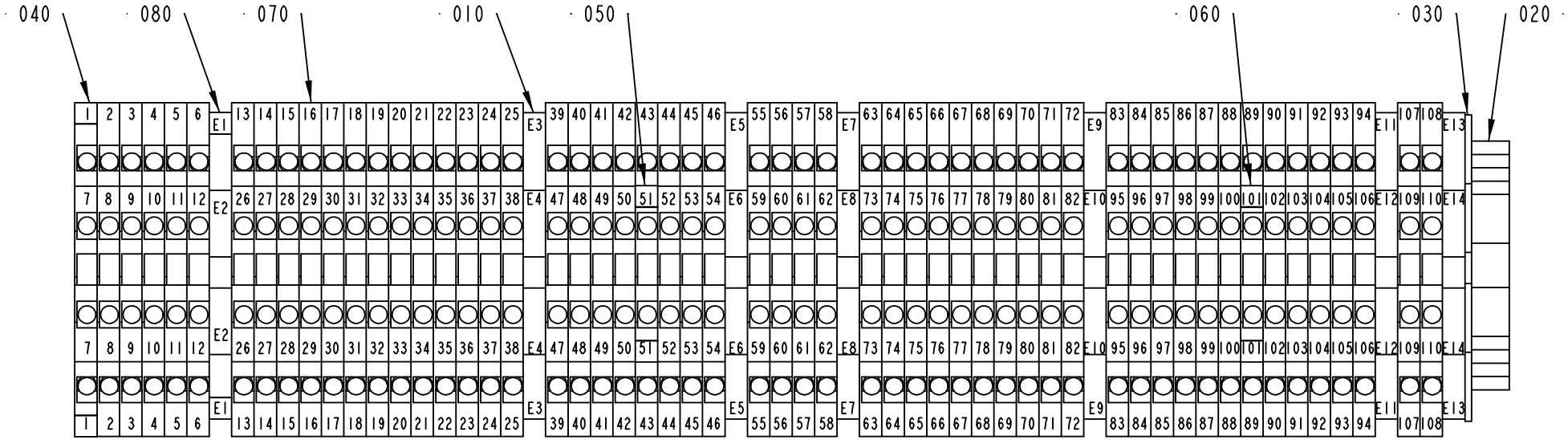

2500573-1
ECM 106087

ECM: 106540 - 20021022
Group number: 2500573-0100
Assembly Drawing: 2500573-1_1_AA

Pos	Part No	SP	UN	Qty	Description	Page No
-						
010	353024-0212	B		7	EARTH TERMINAL, 10363.0	
020	353031-0203	B		1	END SUPPORT, WEW 35/2	
030	353032-0009	B		1	END PLATE, WAP FOR WDK	
040	359011-0807	B		2	MARKING PLATES 5-FW 1-50	
050	359011-0808	B		2	MARKING PLATES 5-FW 51-100	
060	359011-0809	B		2	MARKING PLATES 5-FW 101-150	
070	90077-0113	B		55	FEED THROUGH TERMINAL, 10-00102150-1	
080	90459-0606	B		2	MARKING PLATES 5-FW E1-E50	

Pos	Part No	SP	UN	Qty	Description	Page No

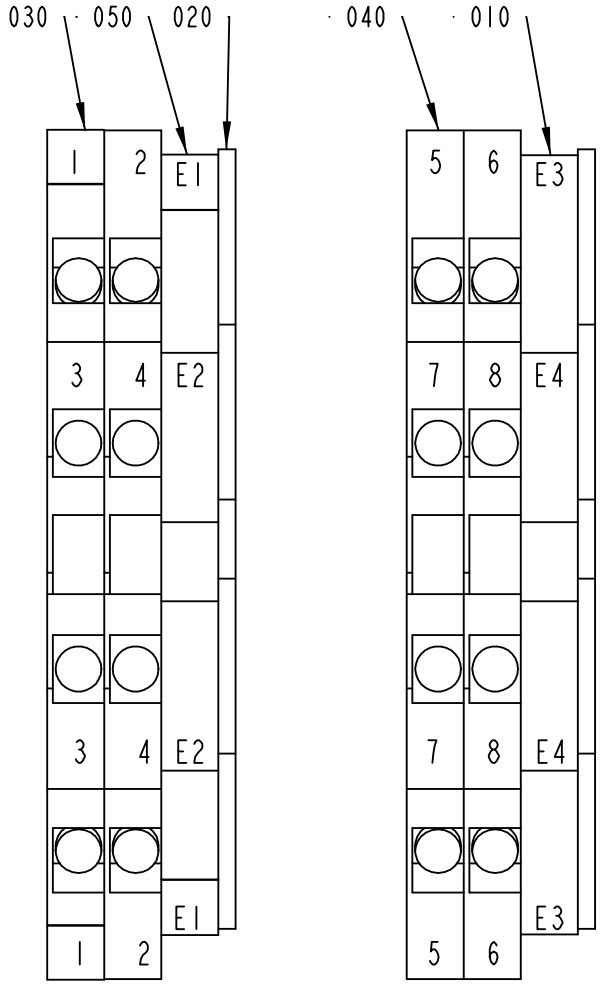

2543148-1
ECM 106087

ECM: 106863 - 20021022
Group number: 2543148-0100
Assembly Drawing: 2543148-1_1_AA

Pos	Part No	SP	UN	Qty	Description	Page No
-						
010	353024-0212	B		2	EARTH TERMINAL, 10363.0	
020	353032-0009	B		2	END PLATE, WAP FOR WDK	
030	359011-0807	B		2	MARKING PLATES 5-FW 1-50	
040	90077-0113	B		4	FEED THROUGH TERMINAL, 10-00102150-1	
050	90459-0606	B		2	MARKING PLATES 5-FW E1-E50	

Pos	Part No	SP	UN	Qty	Description	Page No

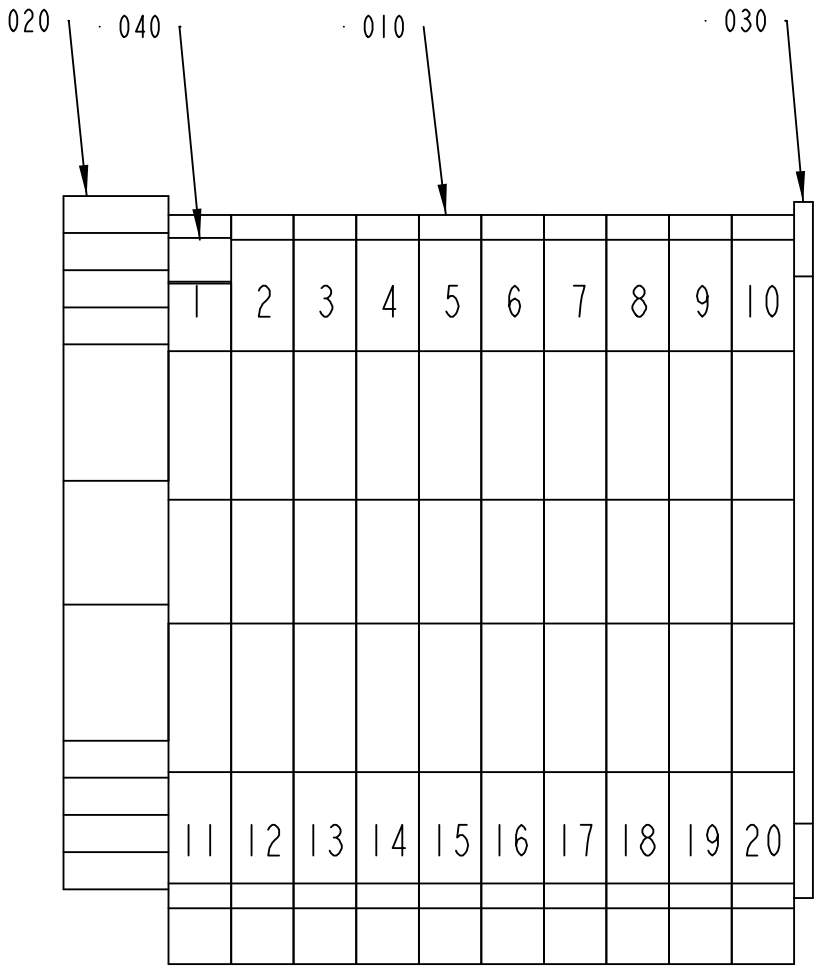

2500575-1
ECM 106087

ECM: 106538 - 20021022
Group number: 2500575-0100
Assembly Drawing: 2500575-1_1_AA

Pos	Part No	SP	UN	Qty	Description	Page No
-						
010	353021-0212	B		10	FEED THROUGH TERMINAL, 10200.0	
020	353031-0203	B		1	END SUPPORT, WEW 35/2	
030	353033-0105	B		1	PARTITITION, 10501.0	
040	359011-0807	B		1	MARKING PLATES 5-FW 1-50	

Pos	Part No	SP	UN	Qty	Description	Page No

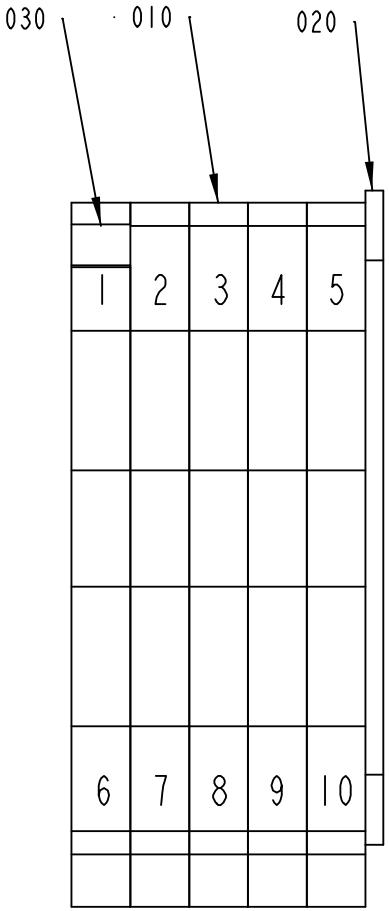

2543145-1
ECM 106087

ECM: 106542 - 20021022
Group number: 2543145-0100
Assembly Drawing: 2543145-1_1_AA

Pos	Part No	SP	UN	Qty	Description	Page No
-						
010	353021-0212	B		5	FEED THROUGH TERMINAL, 10200.0	
020	353033-0105	B		1	PARTITITION, 10501.0	
030	359011-0807	B		1	MARKING PLATES 5-FW 1-50	

Pos	Part No	SP	UN	Qty	Description	Page No

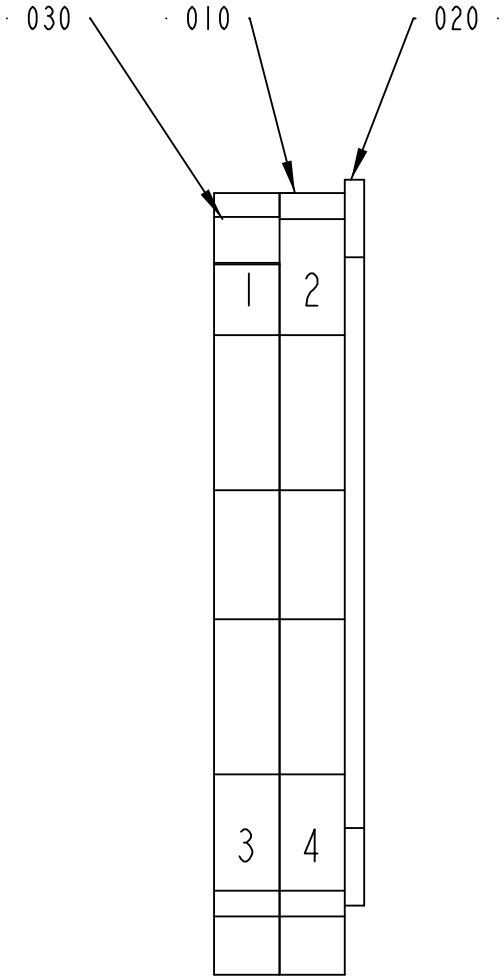

2543146-1
ECM 106087

ECM: 106861 - 20021022
Group number: 2543146-0100
Assembly Drawing: 2543146-1_1_AA

Pos	Part No	SP	UN	Qty	Description	Page No
-						
010	353021-0212	B		2	FEED THROUGH TERMINAL, 10200.0	
020	353033-0105	B		1	PARTITITION, 10501.0	
030	359011-0807	B		1	MARKING PLATES 5-FW 1-50	

Pos	Part No	SP	UN	Qty	Description	Page No

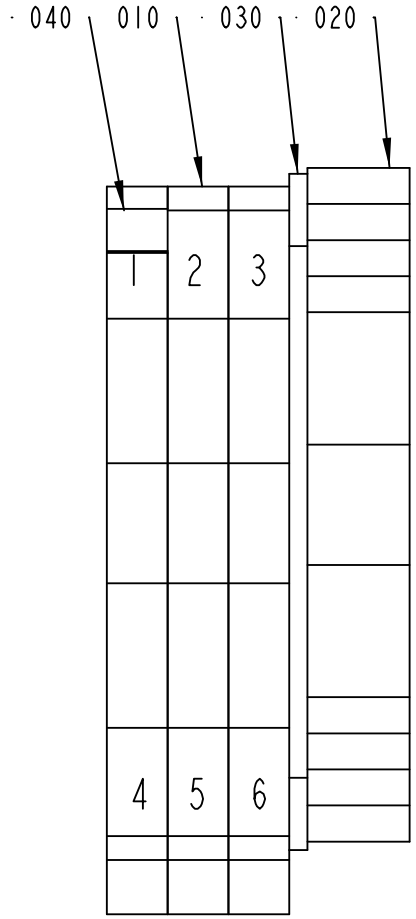

2543147-1
ECM 106087

ECM: 106862 - 20021022
Group number: 2543147-0100
Assembly Drawing: 2543147-1_1_AA

Pos	Part No	SP	UN	Qty	Description	Page No
-						
010	353021-0212	B		3	FEED THROUGH TERMINAL, 10200.0	
020	353031-0203	B		1	END SUPPORT, WEW 35/2	
030	353033-0105	B		1	PARTITITION, 10501.0	
040	359011-0807	B		1	MARKING PLATES 5-FW 1-50	

Pos	Part No	SP	UN	Qty	Description	Page No

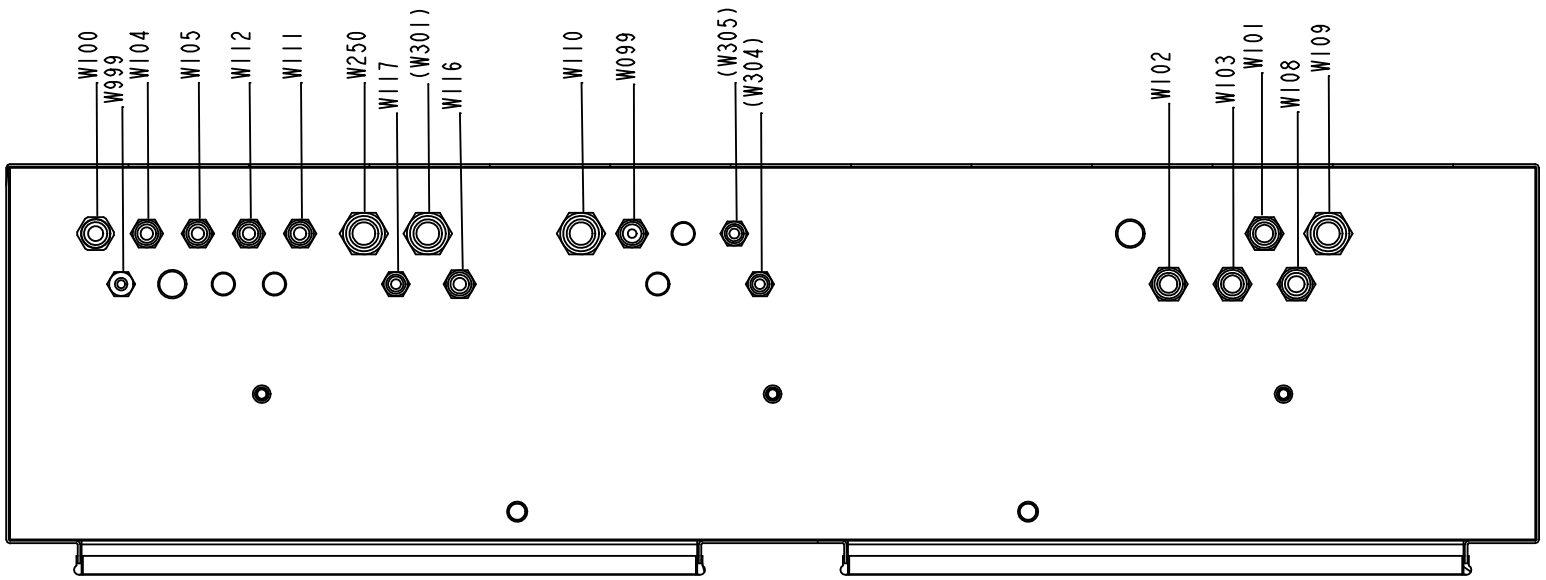

ELECTRICAL CABINET FROM INSIDE

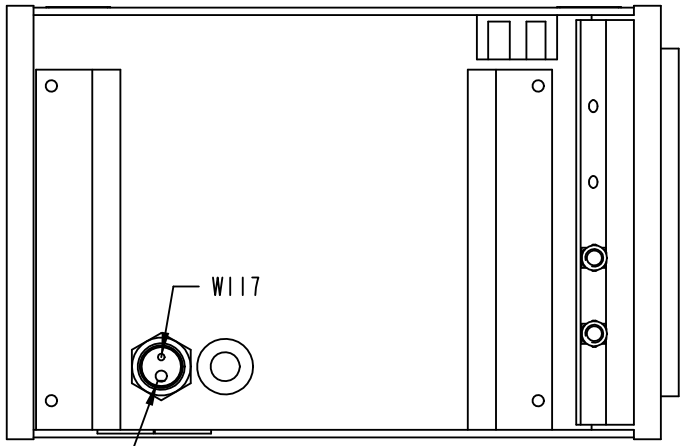

HOTMELT UNIT

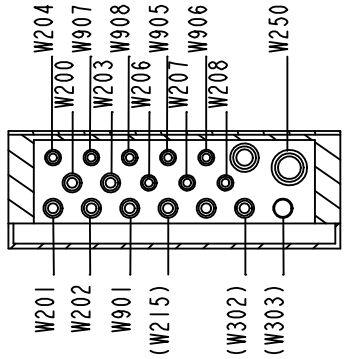

CONNECTION BOX FROM INSIDE

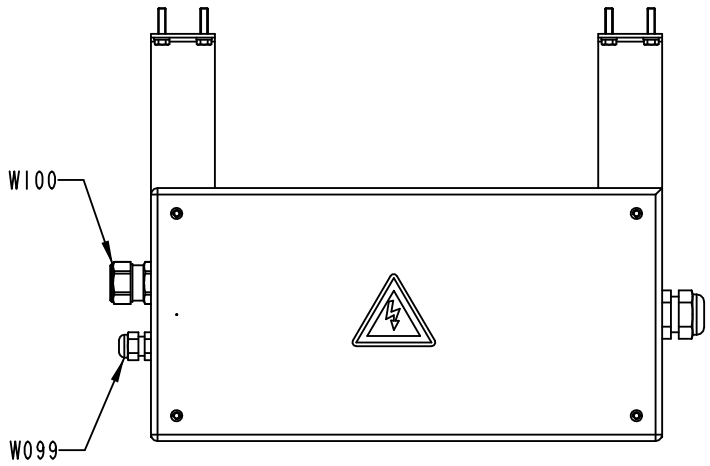

MAIN CONNECTION

44887-2
ECM 106087

ECM: 107241 - 20021022
Group number: 44887-0200
Assembly Drawing: 44887-2_1_AA

Pos	Part No	SP	UN	Qty	Description	Page No
-						
W099	351150-0431	B	MM	4000	CABLE OLFLEX 2X0,75 MM2 LIGHT/GREY	
W100	90220-0109	A	MM	1500	SCR. CABLE 5X2,5MM2	
W101	90220-0104	A	MM	2500	SCR. CABLE 4X1,5MM2	
W102	90220-0104	A	MM	6500	SCR. CABLE 4X1,5MM2	
W102.1	353245-0011	B		1	GLAND, EXTENDED WITH INSERT, PR18,6/PG11	
W103	90220-0104	A	MM	4000	SCR. CABLE 4X1,5MM2	
W104	351150-0413	B	MM	1500	CABLE OLFLEX 4X1,5 MM2 LIGHT/GREY	
W105	351150-0412	B	MM	3300	CABLE OLFLEX 3X1,5 MM2 LIGHT/GREY	
W108	1364383-0100	A		1	RESOLVER CABLE	**8-41**
W109	90220-0084	A	MM	3500	MOTOR CABLE 4X2,5+2(2X0.75)+SHIELD	
W110	351150-0425	B	MM	2700	CABLE OLFLEX 25X0,75 MM2 LIGHT/GREY	
W111	351150-0405	B	MM	2400	CABLE OLFLEX 5X0,75 MM2 LIGHT/GREY	
W112	351150-0405	B	MM	2400	CABLE OLFLEX 5X0,75 MM2 LIGHT/GREY	
W116	351150-0405	B	MM	2000	CABLE OLFLEX 5X0,75 MM2 LIGHT/GREY	
W117	351150-0431	B	MM	1500	CABLE OLFLEX 2X0,75 MM2 LIGHT/GREY	
W200	351150-0403	B	MM	2400	CABLE OLFLEX 3X0,75 MM2 LIGHT/GREY	
W201	351150-0403	B	MM	2400	CABLE OLFLEX 3X0,75 MM2 LIGHT/GREY	
W202	351150-0403	B	MM	2500	CABLE OLFLEX 3X0,75 MM2 LIGHT/GREY	
W203	351150-0403	B	MM	2500	CABLE OLFLEX 3X0,75 MM2 LIGHT/GREY	
W215	351150-0403	B	MM		CABLE OLFLEX 3X0,75 MM2 LIGHT/GREY	
W250	351150-0425	B	MM	2400	CABLE OLFLEX 25X0,75 MM2 LIGHT/GREY	
W301	351150-0424	B	MM		CABLE OLFLEX 18X0,75 MM2 LIGHT/GREY	
W302	351150-0431	B	MM		CABLE OLFLEX 2X0,75 MM2 LIGHT/GREY	
W303	351150-0431	B	MM		CABLE OLFLEX 2X0,75 MM2 LIGHT/GREY	
W305	90220-0091	B	MM		PAIR TWISTED CABLE 2X2X0,25MM2	
W901	351150-0403	B	MM	2400	CABLE OLFLEX 3X0,75 MM2 LIGHT/GREY	
W999	351162-0105	B	MM	1000	CABLE AWM 1X2,5 MM2 YELLOW-GREEN	

Pos	Part No	SP	UN	Qty	Description	Page No

RESOLVER CABLE

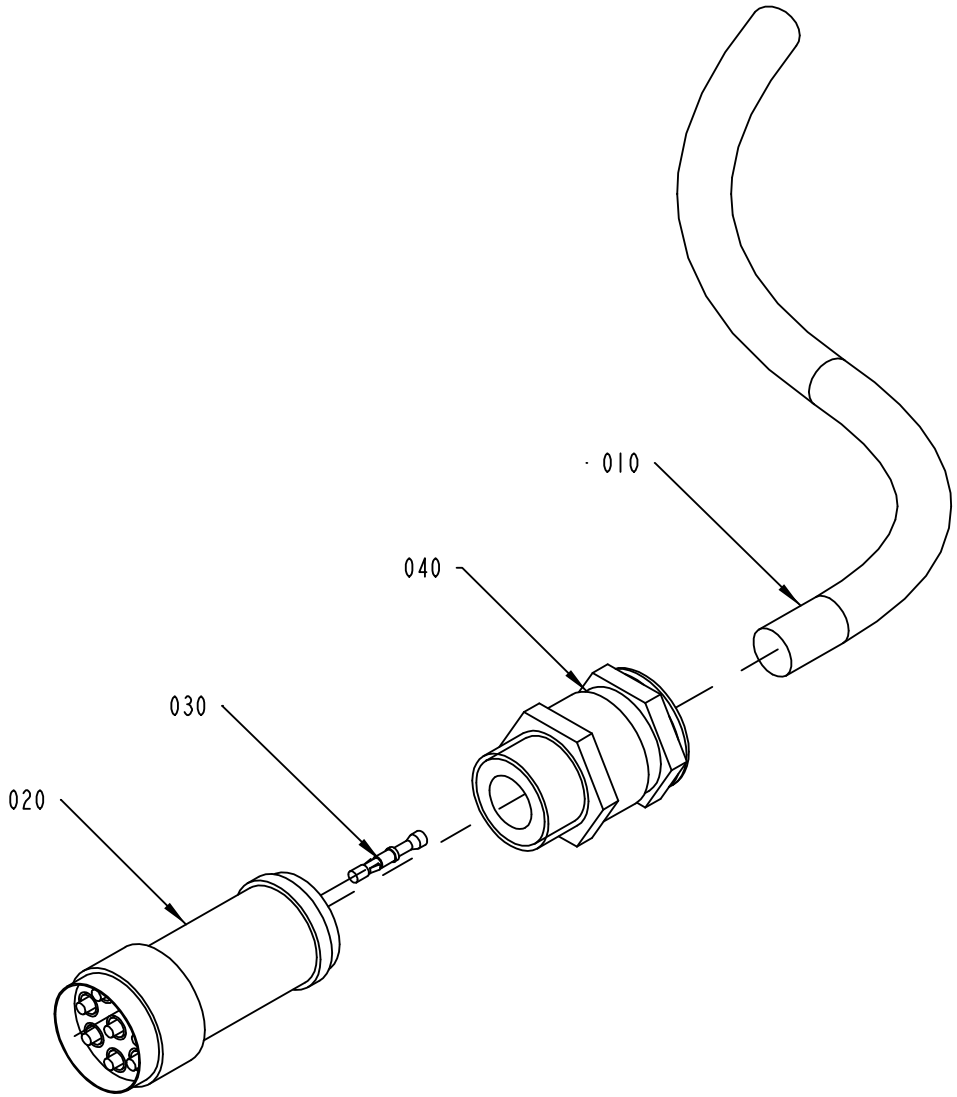

1364383-1
ECM 100505

ECM: 111254 - 20021022
Group number: 1364383-0100
Assembly Drawing: 1364383-1_1_AB

Pos	Part No	SP	UN	Qty	Description	Page No
-						
010	90220-0131	-	MM	3500	PAIR TWISTED CABLE 3X2X0,25MM2	
020	90110-0208	-		1	CABLE CONTACT	
030	90110-0209	-		6	CONTACT PIN, RC20M13K	
040	90012-0117	-		1	GLAND, EXTENDED WITH INSERT, PG11	

Pos	Part No	SP	UN	Qty	Description	Page No

This page is intentionally left blank.

ECM: - -
Group number: 44891-0100
Assembly Drawing:

Pos	Part No	SP	UN	Qty	Description	Page No
-						
0010	90036-0057	-		2	LIGHT BULB, BA9S 28V	
0020	90038-0045	-		1	LIGHT DIODE, 24-60V YELLOW	
0040	779910-0101	-		1	PADLOCK	

Pos	Part No	SP	UN	Qty	Description	Page No

Tetra Pak

SPC
Spare Parts Catalogue

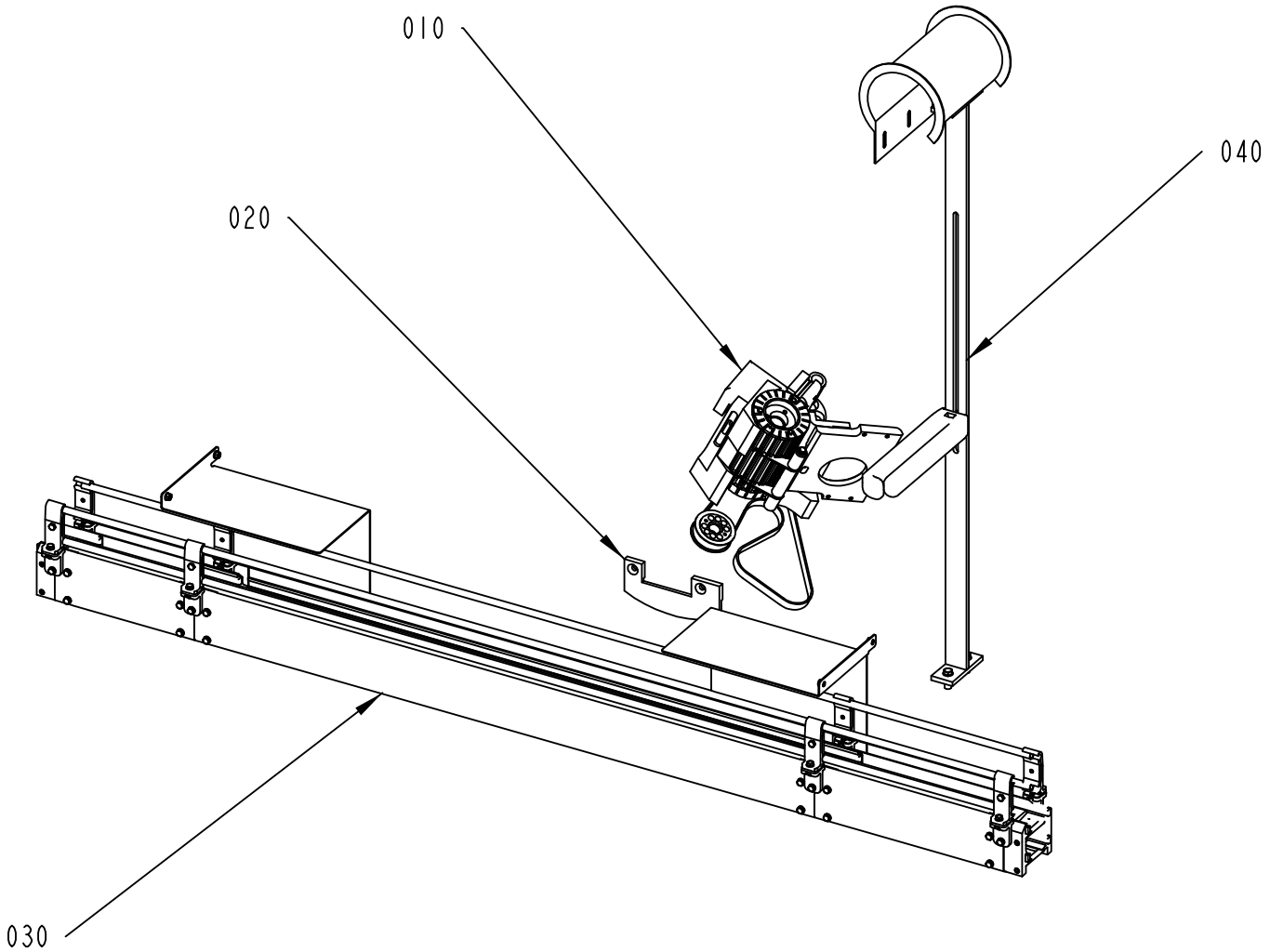

678225-1
ECM 148099

ECM: 148217 - 20031029
Group number: 678225-0100
Assembly Drawing: 678225-1_1_AA

Pos	Part No	SP	UN	Qty	Description	Page No
-						
010	2542370-0100	-		1	EXTRA STRAW KIT	**9-5**
020	2542371-0100	-		1	EXTRA VOLUME KIT	**9-27**
030	2543163-0200	-		1	U-FEED	**9-29**
040	2543171-0200	-		1	STRAW TOP RIGHT	**9-35**

Pos	Part No	SP	UN	Qty	Description	Page No

EXTRA STRAW KIT

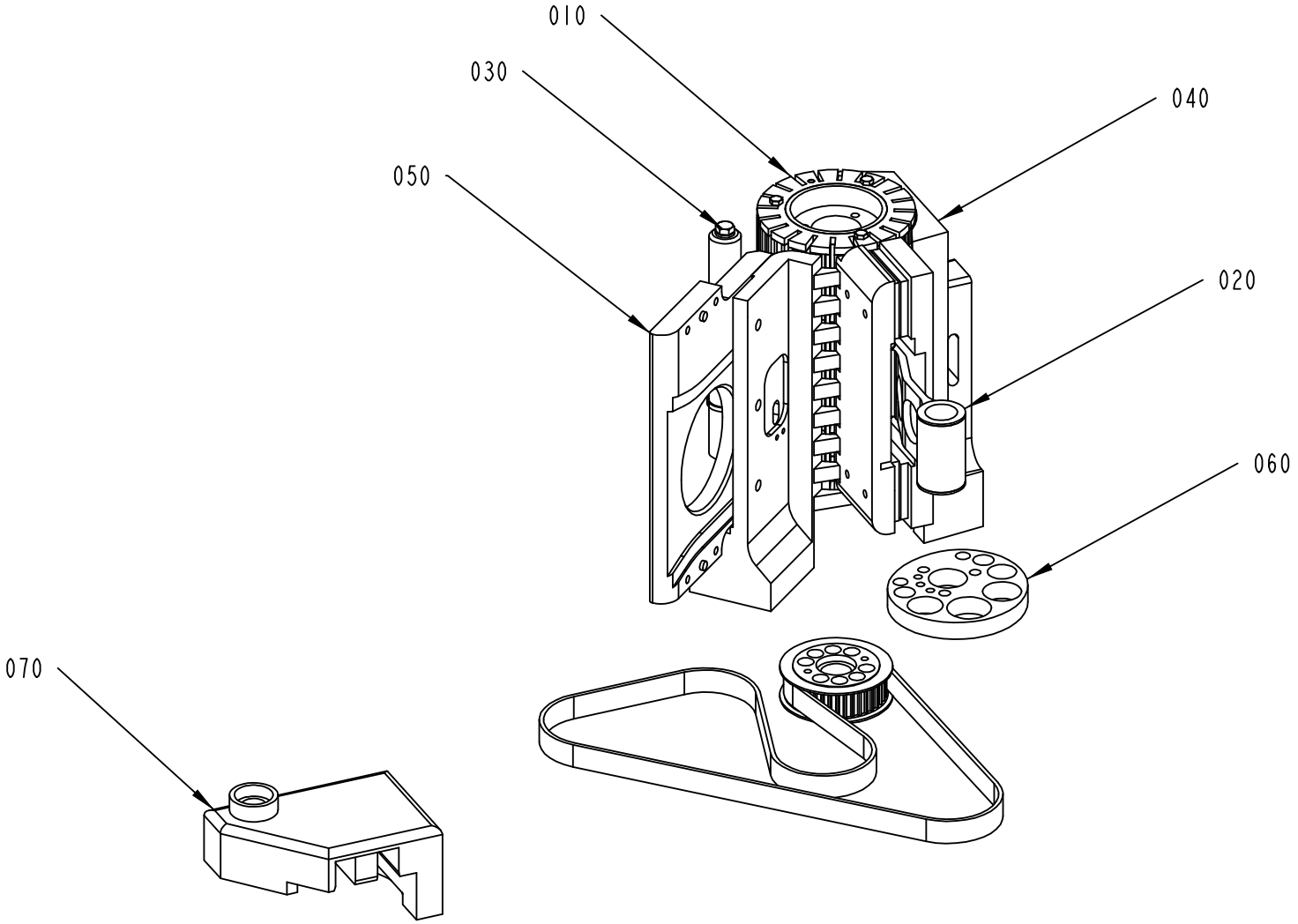

2542370-1
ECM 141155

ECM: 142048 - 20030829
Group number: 2542370-0100
Assembly Drawing: 2542370-1_1_AB

Pos	Part No	SP	UN	Qty	Description	Page No
-						
010	2542369-0100	-		1	FEED WHEEL UNIT	**9-7**
020	2542363-0100	-		1	CUTTING UNIT	**9-11**
030	2542364-0100	-		1	SQUEEZER	**9-13, 9-15**
040	2542365-0100	-		1	FRAME	**9-17**
050	2542367-0100	-		1	LADDER BAND GUIDE	**9-19**
060	2542368-0100	-		1	CAMSHAFT	**9-23**
070	1364387-0100	-		1	SETTING TEMPLATE	**6-13, 9-25**

Pos	Part No	SP	UN	Qty	Description	Page No

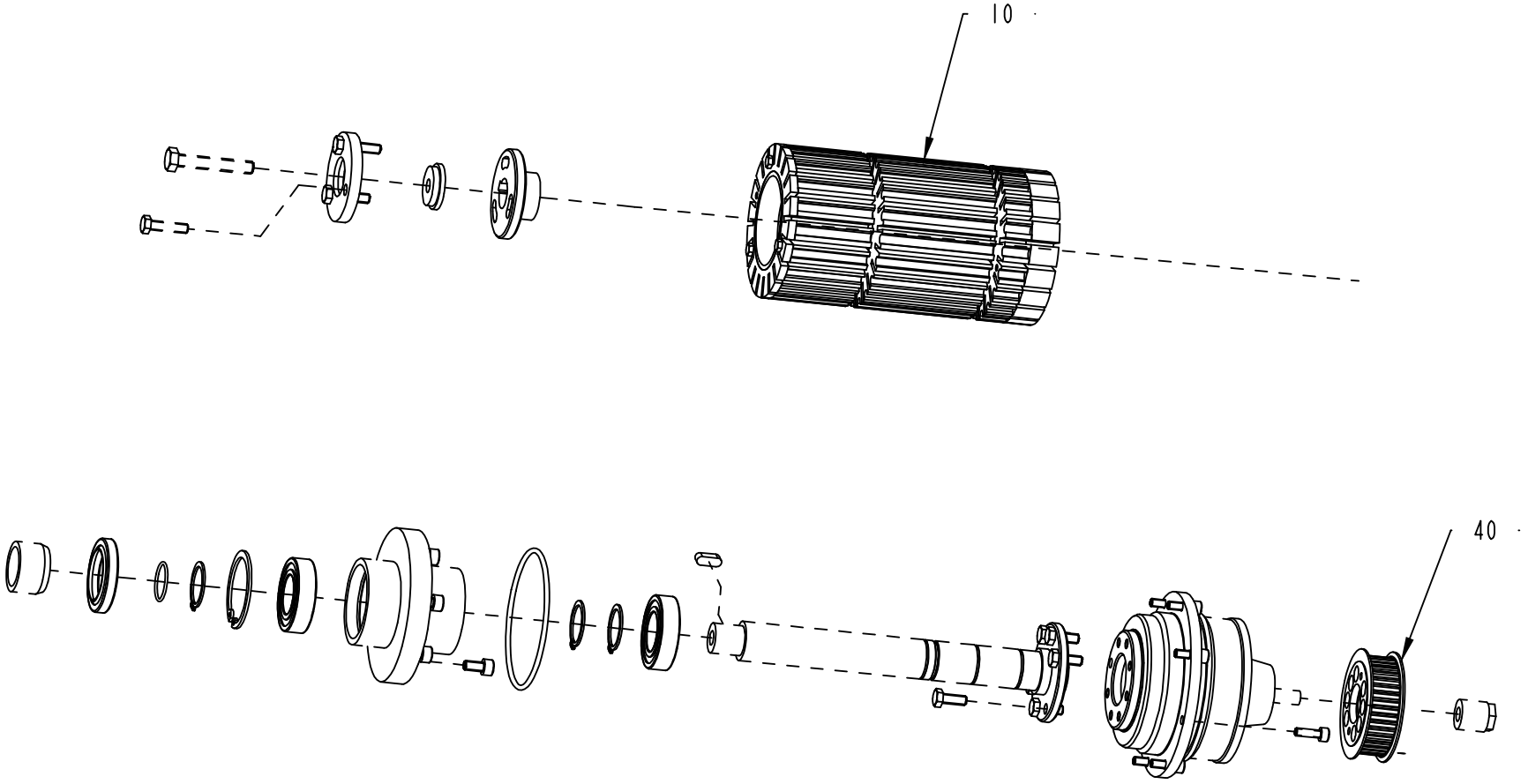

2542369-1
ECM 141155

ECM: 142047 - 20030829
Group number: 2542369-0100
Assembly Drawing: 2542369-1_1_AB

Pos	Part No	SP	UN	Qty	Description	Page No
T5/6-150 TUBEX 15, T4/5-150 TUBEX 15, S5-120 TUBEX 15, S5-96 SOYEZ 15, S3-100 TUBEX 15, S4-100 TUBEX 15, S5-100 TUBEX 15, S4-120 TUBEX 15, T5/6-190 TUBEX 15, S4-118 FOSHAN 15						
040	595734-0000	A		1	PULLEY	
U4-165 TUBEX 22, U4-160 TUBEX 22, U4-149 SPF 22, U5-165 TUBEX 22, U5-180 TUBEX 22, U4-145 TUBEX 22, U5-145 TUBEX 22						
040	595733-0000	A		1	PULLEY	
Common Parts						
010	2542362-0100	-		1	FEED WHEEL UNIT	**9-9**

Pos	Part No	SP	UN	Qty	Description	Page No

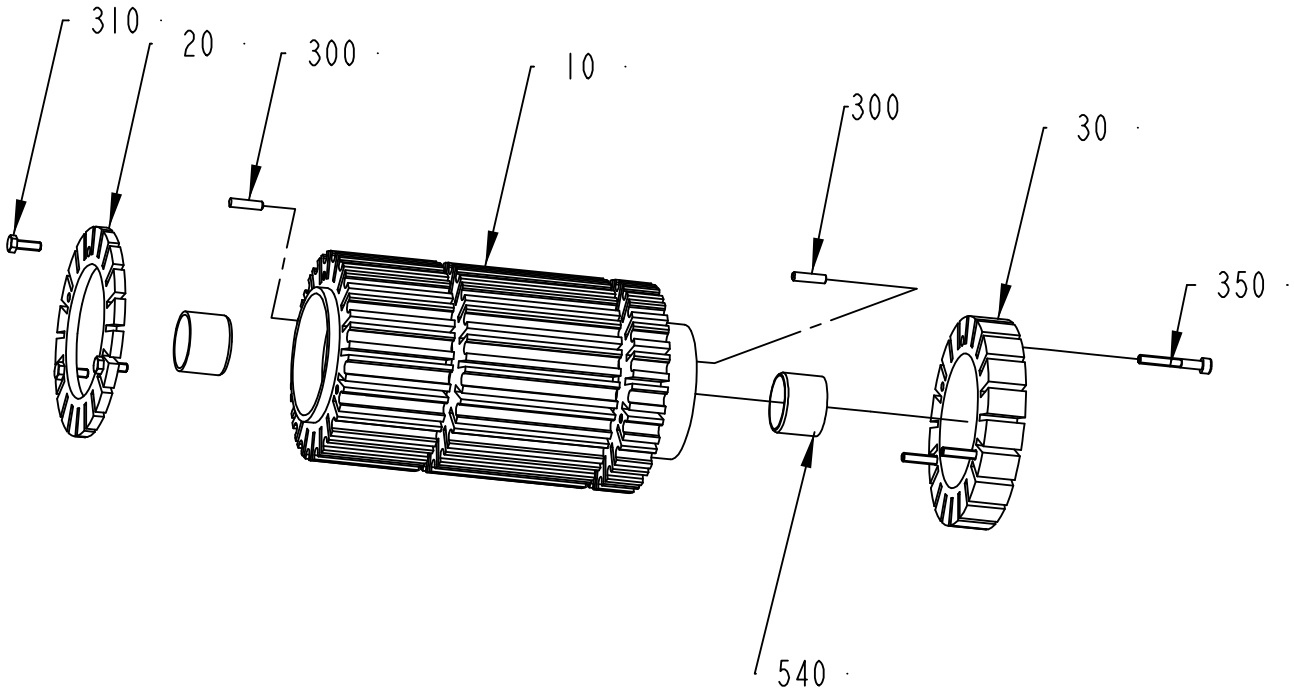

2542362-1
ECM 141155

ECM: 142045 - 20030829
Group number: 2542362-0100
Assembly Drawing: 2542362-1_1_AB

Pos	Part No	SP	UN	Qty	Description	Page No
S3-100 TUBEX 15						
010	1363087-0000	A		1	FEED WHEEL	
020	595718-0000	A		1	PROTECTION RING	
030	595724-0000	A		1	SUPPORT RING	
S4-100 TUBEX 15						
010	1368548-0000	A		1	FEED WHEEL	
020	595718-0000	A		1	PROTECTION RING	
030	595724-0000	A		1	SUPPORT RING	
S4-120 TUBEX 15, S4-118 FOSHAN 15						
010	1368557-0000	A		1	FEED WHEEL	
020	595718-0000	A		1	PROTECTION RING	
030	595724-0000	A		1	SUPPORT RING	
S5-120 TUBEX 15						
010	595632-0000	A		1	FEED WHEEL	
020	595718-0000	A		1	PROTECTION RING	
030	595724-0000	A		1	SUPPORT RING	
S5-96 SOYEZ 15, S5-100 TUBEX 15						
010	1364415-0000	A		1	FEED WHEEL	
020	595718-0000	A		1	PROTECTION RING	
030	595724-0000	A		1	SUPPORT RING	
T4/5-150 TUBEX 15						
010	1364418-0000	A		1	FEED WHEEL	
020	595718-0000	A		1	PROTECTION RING	
030	1364421-0000	A		1	SUPPORT RING	
T5/6-150 TUBEX 15						
010	1364419-0000	A		1	FEED WHEEL	
020	595718-0000	A		1	PROTECTION RING	
030	1364421-0000	A		1	SUPPORT RING	
T5/6-190 TUBEX 15						
010	2500544-0000	A		1	FEED WHEEL	
020	595718-0000	A		1	PROTECTION RING	
030	1364421-0000	A		1	SUPPORT RING	
U4-145 TUBEX 22						
010	1364389-0000	A		1	FEED WHEEL	
020	1363025-0000	A		1	PROTECTION RING	
030	1363024-0000	A		1	SUPPORT RING	
U4-149 SPF 22						
010	1363062-0000	A		1	FEED WHEEL	
020	1363025-0000	A		1	PROTECTION RING	
030	1363024-0000	A		1	SUPPORT RING	
U4-160 TUBEX 22						
010	1364420-0000	A		1	FEED WHEEL	
020	1363025-0000	A		1	PROTECTION RING	
030	1363024-0000	A		1	SUPPORT RING	
U4-165 TUBEX 22						
010	1363061-0000	A		1	FEED WHEEL	
020	1363025-0000	A		1	PROTECTION RING	
030	1363024-0000	A		1	SUPPORT RING	
U5-145 TUBEX 22						
010	1368558-0000	A		1	FEED WHEEL	
020	1363025-0000	A		1	PROTECTION RING	
030	1363024-0000	A		1	SUPPORT RING	
U5-165 TUBEX 22						
010	1368559-0000	A		1	FEED WHEEL	
020	1363025-0000	A		1	PROTECTION RING	
030	1363024-0000	A		1	SUPPORT RING	
U5-180 TUBEX 22						
010	2500543-0000	A		1	FEED WHEEL	
020	1363025-0000	A		1	PROTECTION RING	
030	1363024-0000	A		1	SUPPORT RING	
Common Parts						
300	311103-0270	-		2	PARALLEL PIN ISO 2338 4M6X16 A1	
310	312105-0291	-		3	SCREW M6S ISO 4017 M4X12 A470	
350	312115-0299	-		3	SCREW ISO4762 M4X30 A4	
540	90240-0292	A		2	BUSHING, 25X28X20 MM	

Machine Type | Group Description | Used-In | Group Number | Page No

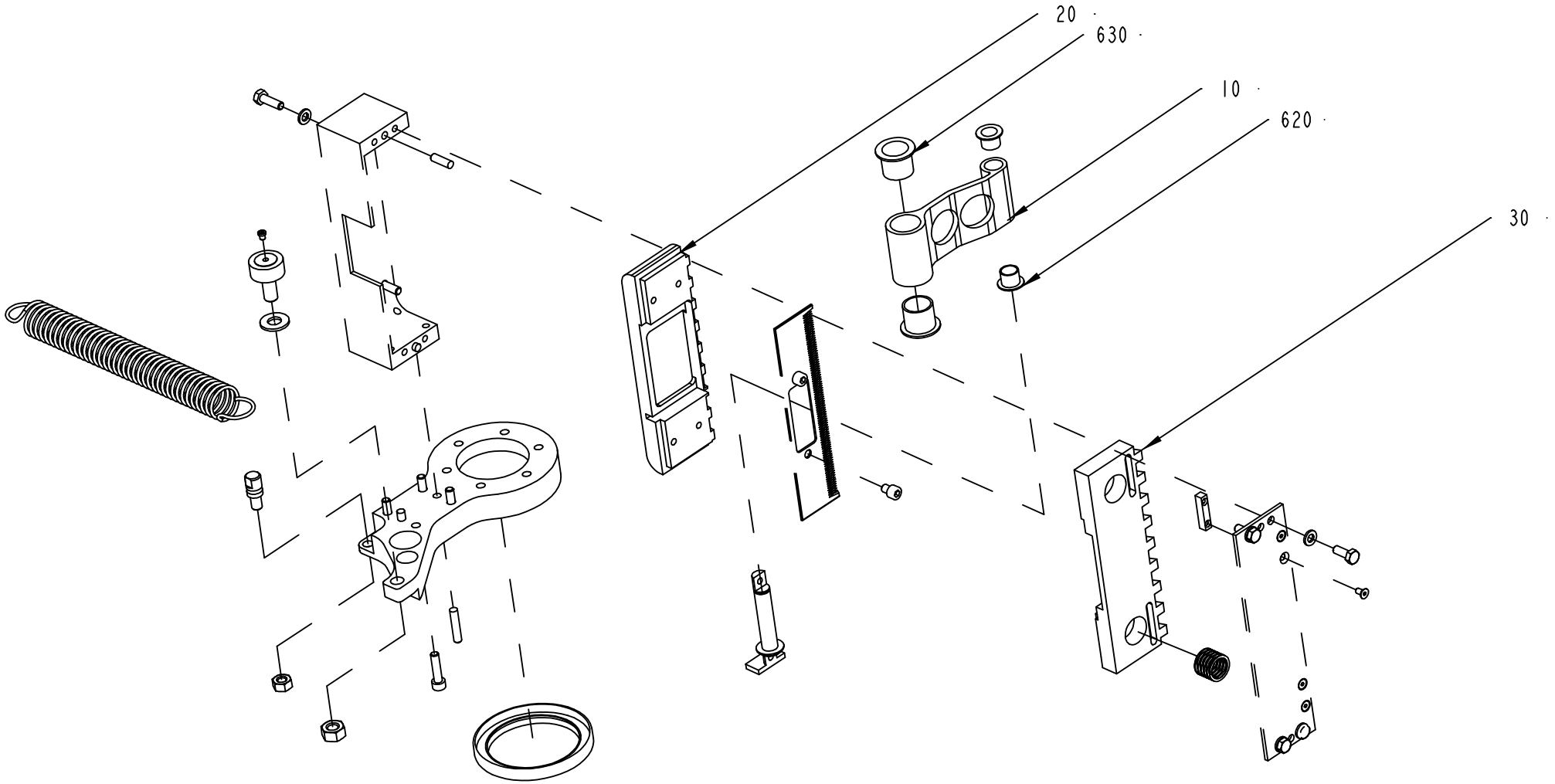

2542363-1
ECM 141155

ECM: 142044 - 20030829
Group number: 2542363-0100
Assembly Drawing: 2542363-1_1_AB

Pos	Part No	SP	UN	Qty	Description	Page No
Straw Pitch 15						
010	595642-0000	A		1	CONNECTING ROD	
020	595760-0000	A		1	BEARING PLATE	
030	595761-0000	A		1	BEARING PLATE	
Straw Pitch 22						
010	1363032-0000	A		1	CONNECTING ROD	
020	1363027-0000	A		1	BEARING PLATE	
030	1363028-0000	A		1	BEARING PLATE	
Common Parts						
620	90240-0262	A		2	FLANGE BUSHING, 12X14X12 MM	
630	90240-0265	A		2	FLANGE BUSHING, 20X23X21 MM	

Pos	Part No	SP	UN	Qty	Description	Page No

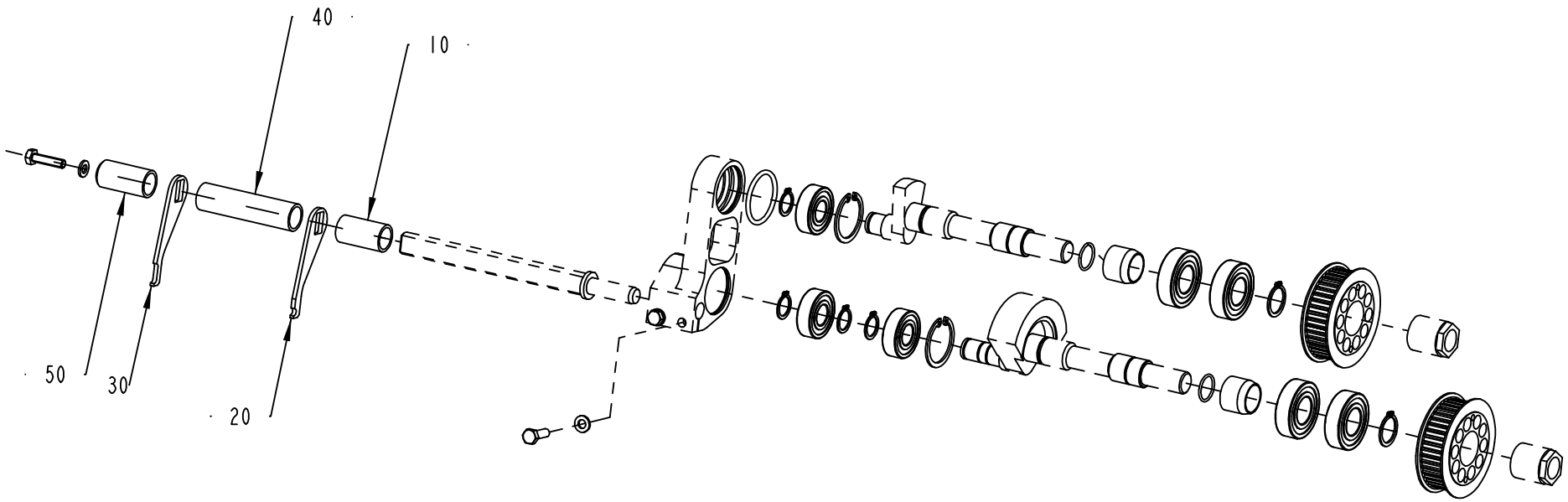

2542364-1
ECN 141155

Pos	Part No	SP	UN	Qty	Description	Page No
S3-100 TUBEX 15						
010	595748-0000	-		1	SLEEVE	
020	1363091-0000	A		1	ARM	
030	1363091-0000	A		1	ARM	
040	1363092-0000	-		1	SLEEVE	
050	1363093-0000	-		1	WASHER	
S4-100 TUBEX 15						
010	595748-0000	-		1	SLEEVE	
020	595892-0000	A		1	ARM	
030	595892-0000	A		1	ARM	
040	1363092-0000	-		1	SLEEVE	
050	1363093-0000	-		1	WASHER	
S4-120 TUBEX 15, S4-118 FOSHAN 15						
010	595748-0000	-		1	SLEEVE	
020	595892-0000	A		1	ARM	
030	595892-0000	A		1	ARM	
040	595751-0000	-		1	SLEEVE	
050	595752-0000	-		1	WASHER	
S5-100 TUBEX 15						
010	595748-0000	-		1	SLEEVE	
020	595749-0000	A		1	ARM	
030	595749-0000	A		1	ARM	
040	1363092-0000	-		1	SLEEVE	
050	1363093-0000	-		1	WASHER	
S5-120 TUBEX 15						
010	595748-0000	-		1	SLEEVE	
020	595749-0000	A		1	ARM	
030	595749-0000	A		1	ARM	
040	595751-0000	-		1	SLEEVE	
050	595752-0000	-		1	WASHER	
S5-96 SOYEZ 15						
010	595748-0000	-		1	SLEEVE	
020	595892-0000	A		1	ARM	
030	595892-0000	A		1	ARM	
040	1363092-0000	-		1	SLEEVE	
050	1363093-0000	-		1	WASHER	
T4/5-150 TUBEX 15						
010	1364422-0000	-		1	SLEEVE	
020	595892-0000	A		1	ARM	
030	595749-0000	A		1	ARM	
040	1363092-0000	-		1	SLEEVE	
050	1367354-0000	-		1	WASHER	
T5/6-150 TUBEX 15						
010	1364422-0000	-		1	SLEEVE	
020	595749-0000	A		1	ARM	
030	1364423-0000	A		1	ARM	
040	1363092-0000	-		1	SLEEVE	
050	1367354-0000	-		1	WASHER	
T5/6-190 TUBEX 15						
010	1364422-0000	-		1	SLEEVE	
020	595749-0000	A		1	ARM	
030	1364423-0000	A		1	ARM	
040	2500547-0000	-		1	SLEEVE	
050	2500548-0000	-		1	WASHER	
U4-145 TUBEX 22						
010	595748-0000	-		1	SLEEVE	
020	595892-0000	A		1	ARM	
030	595893-0000	A		1	ARM	
040	1363092-0000	-		1	SLEEVE	
050	1363093-0000	-		1	WASHER	
U4-149 SPF 22						
010	595748-0000	-		1	SLEEVE	
020	595892-0000	A		1	ARM	
030	595893-0000	A		1	ARM	
040	1363063-0000	-		1	SLEEVE	
050	1363064-0000	-		1	WASHER	
U4-160 TUBEX 22						
010	595748-0000	-		1	SLEEVE	
020	595892-0000	A		1	ARM	
030	595893-0000	A		1	ARM	
040	1364425-0000	-		1	SLEEVE	
050	1364424-0000	-		1	WASHER	

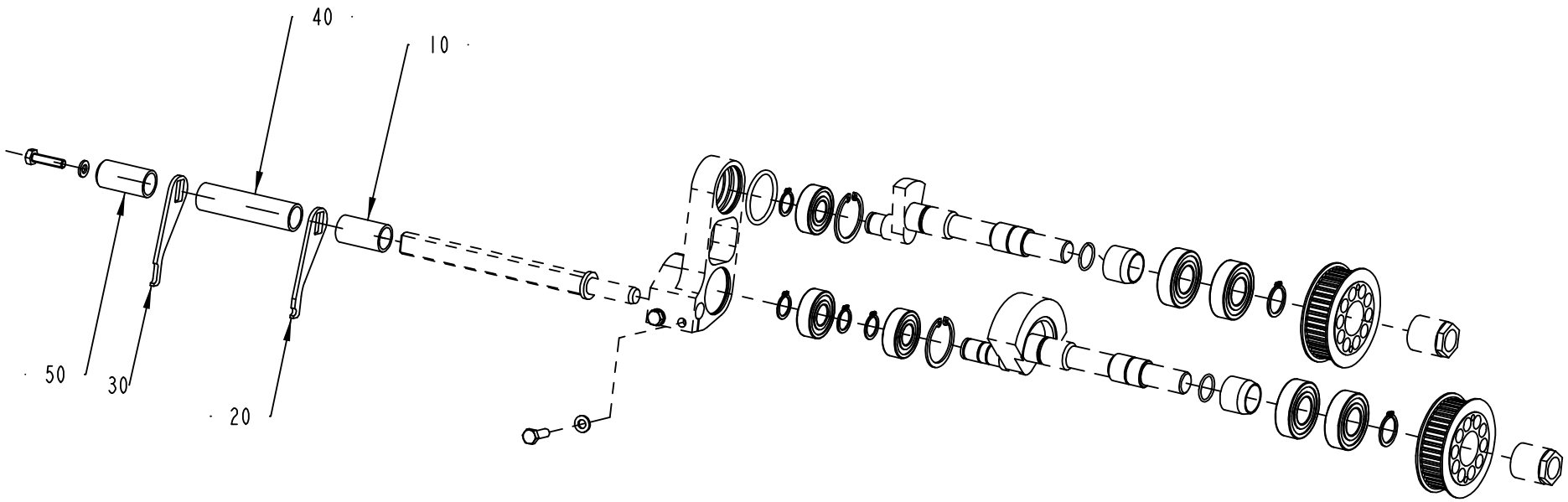

2542364-1
ECN 141155

Pos	Part No	SP	UN	Qty	Description	Page No
U4-165 TUBEX 22 (Cont'd)						
010	595748-0000	-		1	SLEEVE	
020	595892-0000	A		1	ARM	
030	595893-0000	A		1	ARM	
040	595751-0000	-		1	SLEEVE	
050	595752-0000	-		1	WASHER	
U5-145 TUBEX 22						
010	595748-0000	-		1	SLEEVE	
020	595749-0000	A		1	ARM	
030	1368560-0000	A		1	ARM	
040	1363092-0000	-		1	SLEEVE	
050	1363093-0000	-		1	WASHER	
U5-165 TUBEX 22						
010	595748-0000	-		1	SLEEVE	
020	595749-0000	A		1	ARM	
030	1368560-0000	A		1	ARM	
040	595751-0000	-		1	SLEEVE	
050	595752-0000	-		1	WASHER	
U5-180 TUBEX 22						
010	595748-0000	-		1	SLEEVE	
020	595749-0000	A		1	ARM	
030	1368560-0000	A		1	ARM	
040	2500545-0000	-		1	SLEEVE	
050	2500546-0000	-		1	WASHER	

Pos	Part No	SP	UN	Qty	Description	Page No

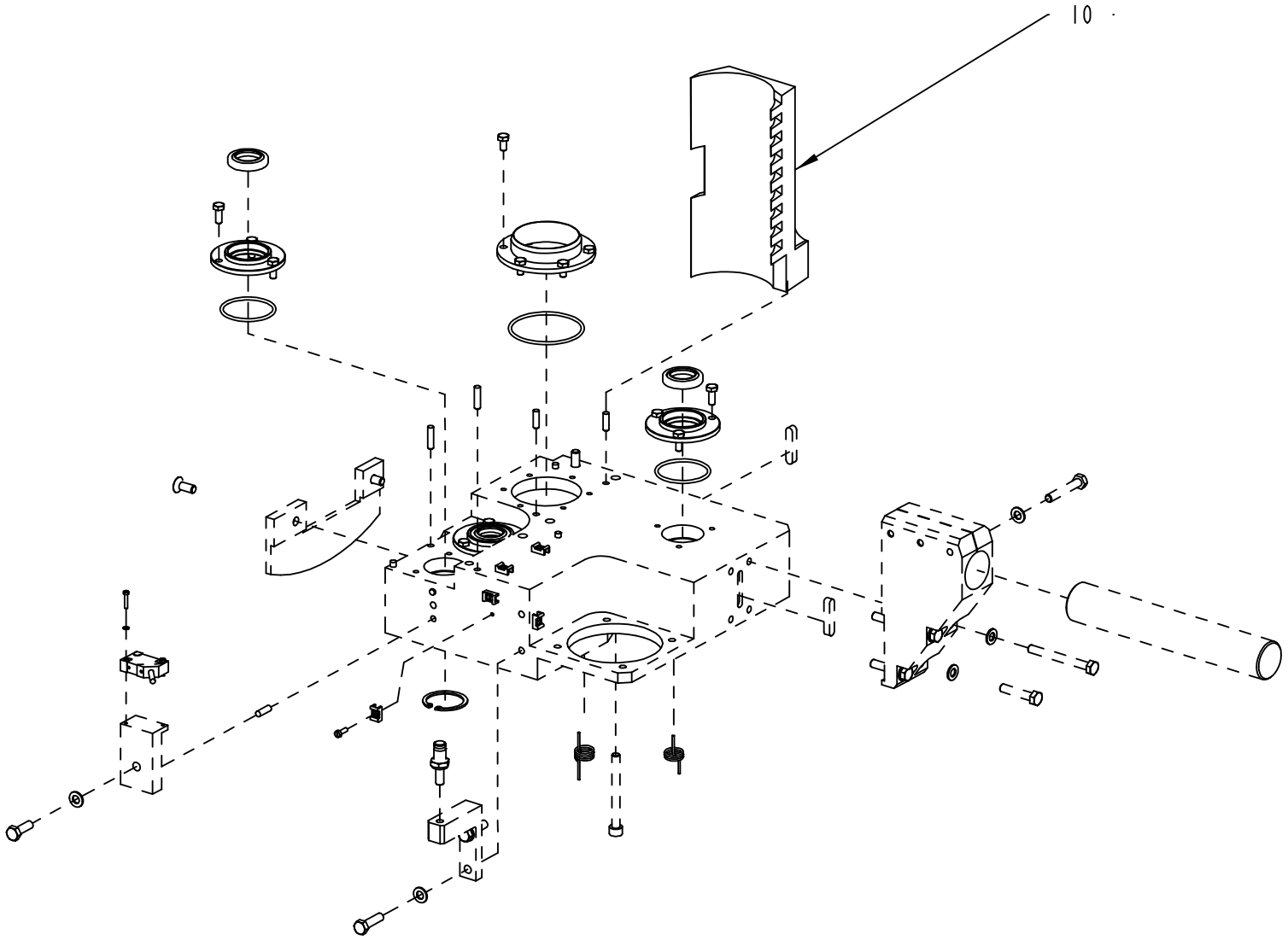

2542365-1
ECM 141155

ECM: 142040 - 20030829
Group number: 2542365-0100
Assembly Drawing: 2542365-1_1_AB

Pos	Part No	SP	UN	Qty	Description	Page No
T5/6-150 TUBEX 15, T4/5-150 TUBEX 15, S5-120 TUBEX 15, S5-96 SOYEZ 15, S3-100 TUBEX 15, S4-100 TUBEX 15, S5-100 TUBEX 15, S4-120 TUBEX 15, T5/6-190 TUBEX 15, S4-118 FOSHAN 15						
010	595808-0000	-		1	GUIDE CONSOLE	
U4-165 TUBEX 22, U4-160 TUBEX 22, U4-149 SPF 22, U5-165 TUBEX 22, U5-180 TUBEX 22, U4-145 TUBEX 22, U5-145 TUBEX 22						
010	1363026-0000	-		1	GUIDE CONSOLE	

Pos	Part No	SP	UN	Qty	Description	Page No

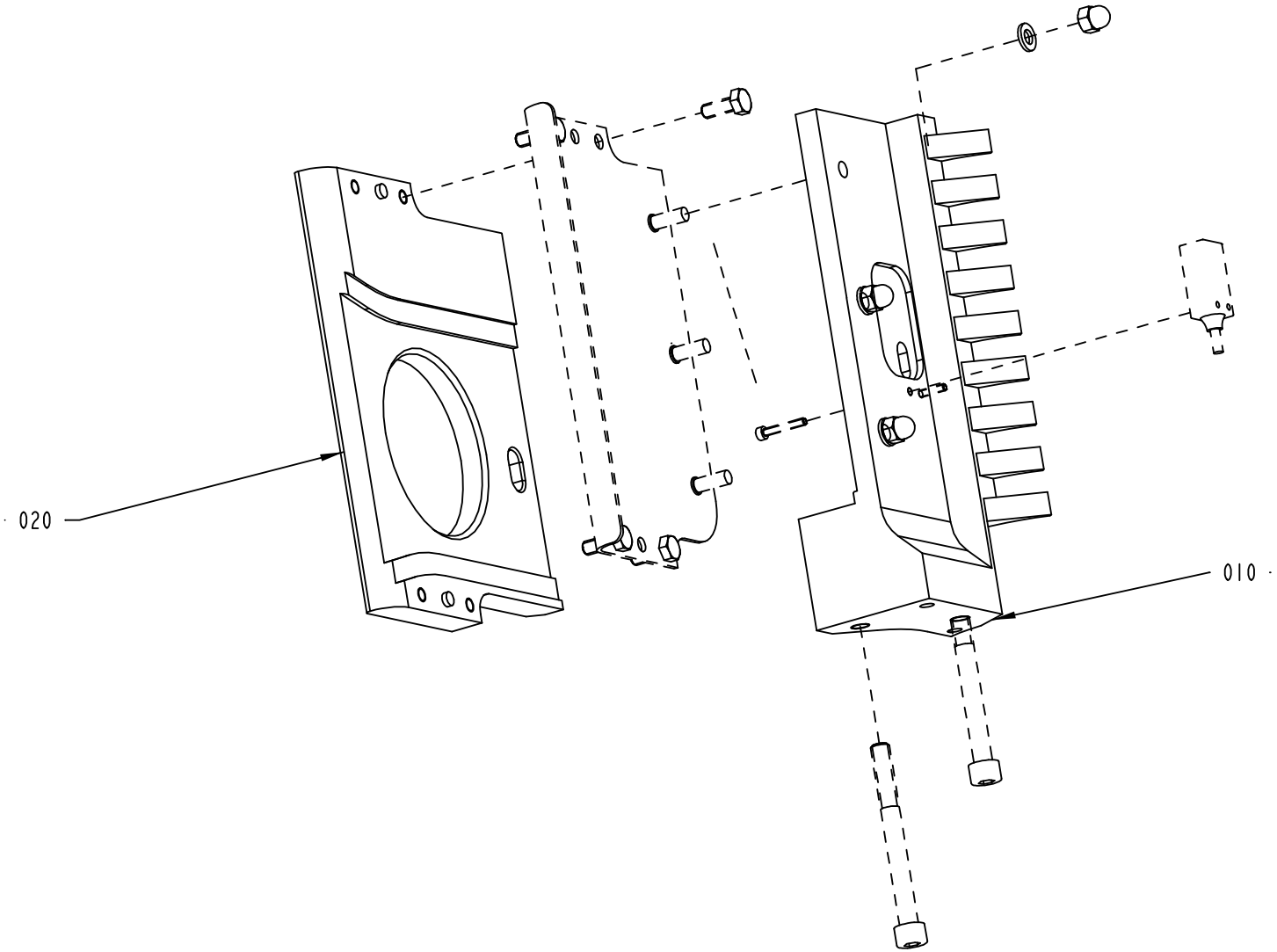

2542367-1
ECM 141155

ECM: 142037 - 20030829
Group number: 2542367-0100
Assembly Drawing: 2542367-1_1_AB

Pos	Part No	SP	UN	Qty	Description	Page No
T5/6-150 TUBEX 15, T4/5-150 TUBEX 15, S5-120 TUBEX 15, S5-96 SOYEZ 15, S3-100 TUBEX 15, S4-100 TUBEX 15, S5-100 TUBEX 15, S4-120 TUBEX 15, T5/6-190 TUBEX 15, S4-118 FOSHAN 15						
010	595824-0000	-		1	GUIDE CONSOLE	
U4-165 TUBEX 22, U4-160 TUBEX 22, U4-149 SPF 22, U5-165 TUBEX 22, U5-180 TUBEX 22, U4-145 TUBEX 22, U5-145 TUBEX 22						
010	1363033-0000	-		1	GUIDE CONSOLE	
Common Parts						
020	2542366-0100	-		1	LADDER BAND GUIDE	**9-21**

Pos	Part No	SP	UN	Qty	Description	Page No

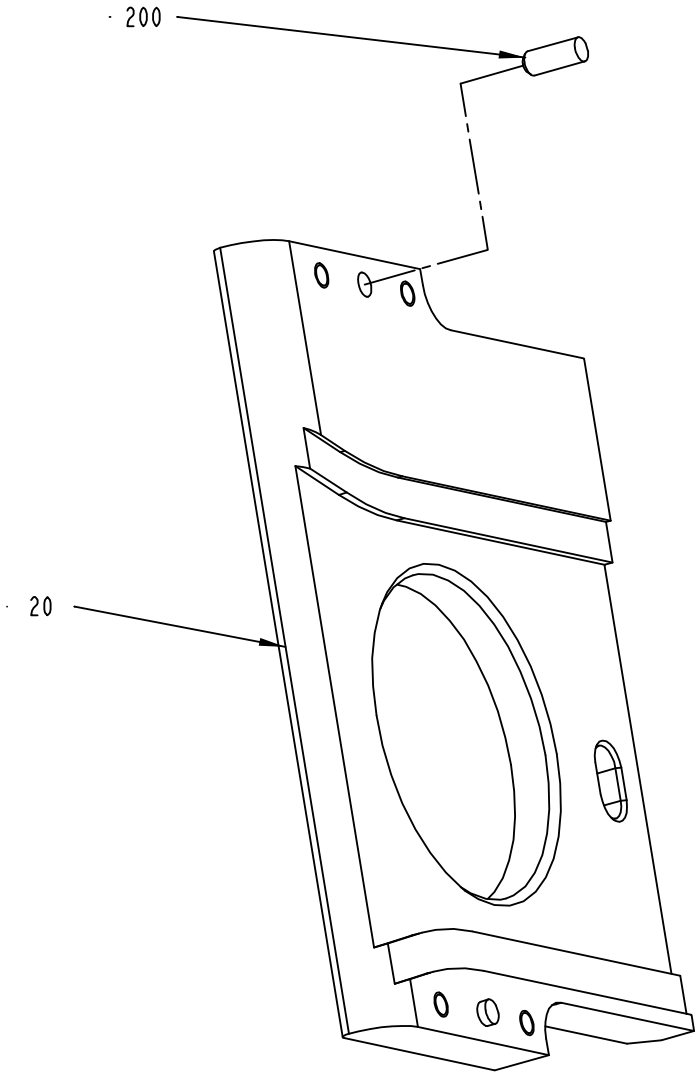

2542366-1
ECM 141155

ECM: 142035 - 20030829
Group number: 2542366-0100
Assembly Drawing: 2542366-1_1_AB

Pos	Part No	SP	UN	Qty	Description	Page No
U5-180 TUBEX 22						
020	2500541-0000	-		1	LADDER BAND GUIDE	
S3-100 TUBEX 15						
020	1363086-0000	-		1	LADDER BAND GUIDE	
S4-100 TUBEX 15						
020	1368556-0000	-		1	LADDER BAND GUIDE	
S4-118 FOSHAN 15						
020	2500567-0000	-		1	LADDER BAND GUIDE	
S4-120 TUBEX 15						
020	1368562-0000	-		1	LADDER BAND GUIDE	
S5-100 TUBEX 15						
020	1368561-0000	-		1	LADDER BAND GUIDE	
S5-120 TUBEX 15						
020	1363066-0000	-		1	LADDER BAND GUIDE	
S5-96 SOYEZ 15						
020	1364417-0000	-		1	LADDER BAND GUIDE	
T4/5-150 TUBEX 15						
020	1367350-0000	-		1	LADDER BAND GUIDE	
T5/6-150 TUBEX 15						
020	1367351-0000	-		1	LADDER BAND GUIDE	
T5/6-190 TUBEX 15						
020	2500542-0000	-		1	LADDER BAND GUIDE	
U4-145 TUBEX 22						
020	1364416-0000	-		1	LADDER BAND GUIDE	
U4-149 SPF 22						
020	1363058-0000	-		1	LADDER BAND GUIDE	
U4-160 TUBEX 22						
020	1367352-0000	-		1	LADDER BAND GUIDE	
U4-165 TUBEX 22						
020	1363065-0000	-		1	LADDER BAND GUIDE	
U5-145 TUBEX 22						
020	1368563-0000	-		1	LADDER BAND GUIDE	
U5-165 TUBEX 22						
020	1368564-0000	-		1	LADDER BAND GUIDE	
Common Parts						
200	311103-0351	-		2	PARALLEL PIN ISO 2338 6M6X16 A1	

Machine Type | Group Description | Used-In | Group Number | Page No

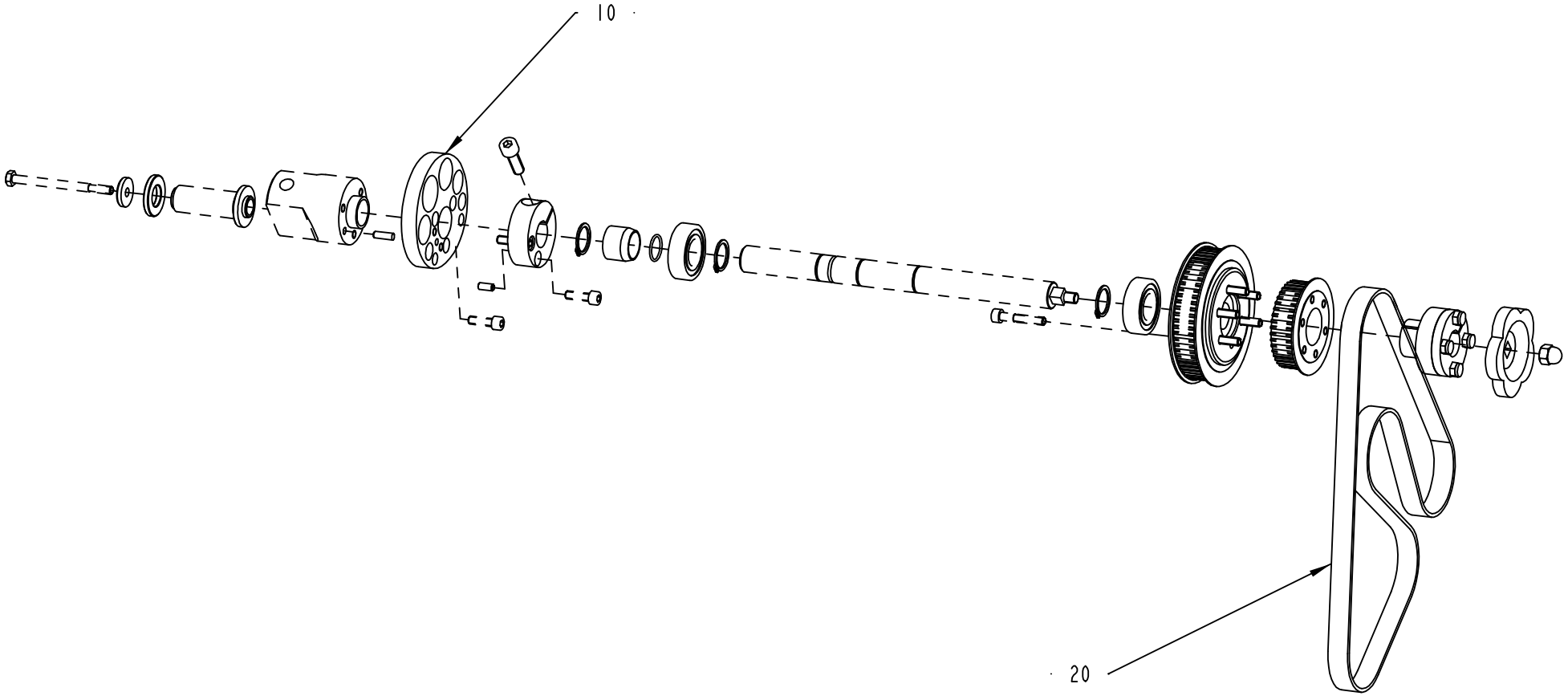

2542368-1
ECM 141155

ECM: 142026 - 20030829
Group number: 2542368-0100
Assembly Drawing: 2542368-1_1_AB

Pos	Part No	SP	UN	Qty	Description	Page No
Straw Pitch 15						
010	595798-0000	A		1	CAM	
020	90417-0417	A		1	TIMING BELT AT5 1075X16 MM	
Straw Pitch 22						
010	595889-0000	A		1	CAM	
020	90417-0418	A		1	TIMING BELT AT5 1020X16 MM	

Pos	Part No	SP	UN	Qty	Description	Page No

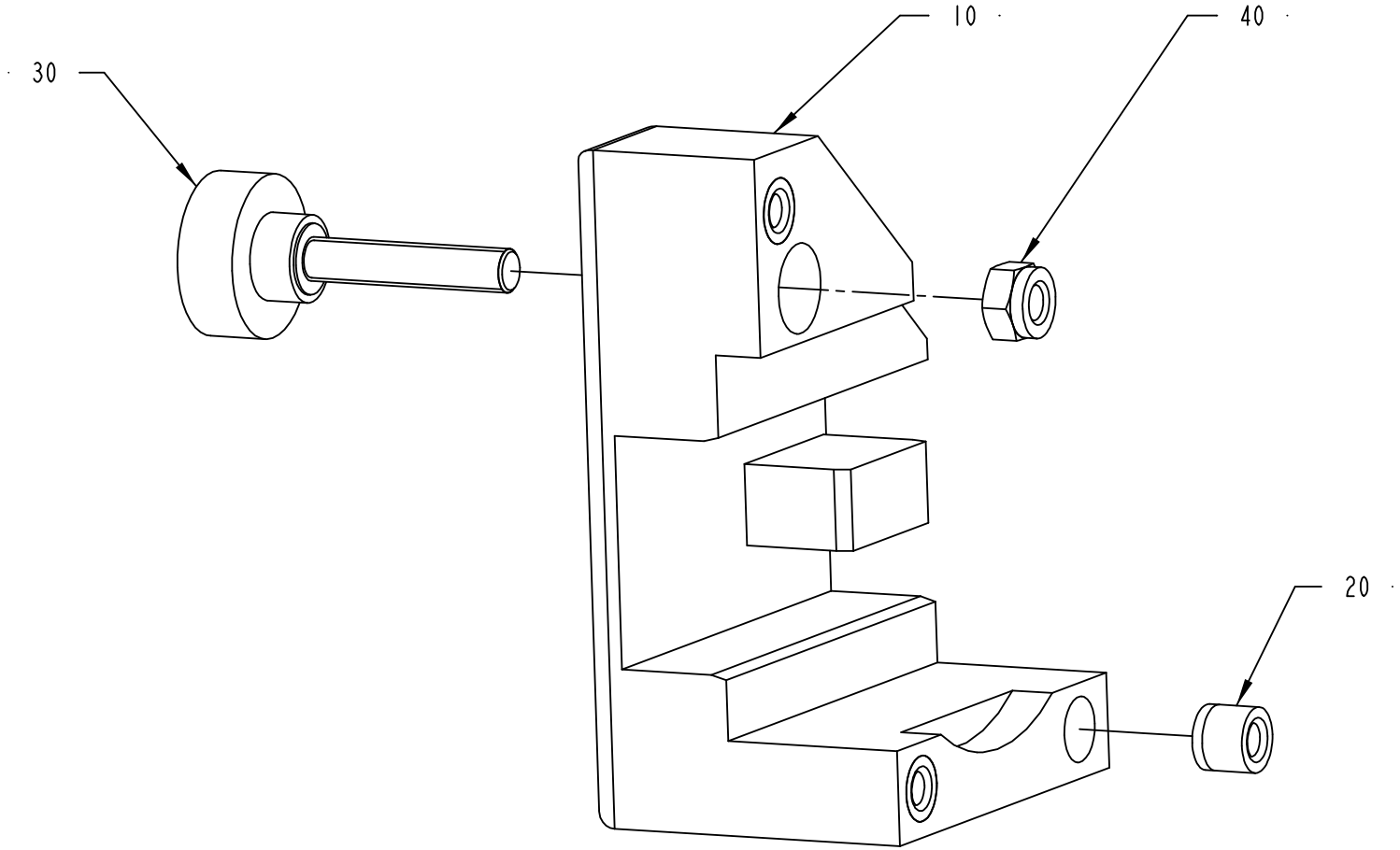

S-1364387-1
ECN 25441

ECM: 111249 - 20021022
Group number: 1364387-0100
Assembly Drawing: 1364387-1_1_AA

Pos	Part No	SP	UN	Qty	Description	Page No
Straw Pitch 15						
010	1363105-0000	-		1	SETTING TEMPLATE	
Straw Pitch 22						
010	1363106-0000	-		1	SETTING TEMPLATE	
Common Parts						
020	90240-0336	-		3	BEARING BUSHING W/O FL, 6,10X12X10 MM	
030	90287-0358	-		1	KNURLED SCREW	
040	312812-0318	-		1	HEXAGON NUT, NY-LOCK M8 A480	

Pos	Part No	SP	UN	Qty	Description	Page No

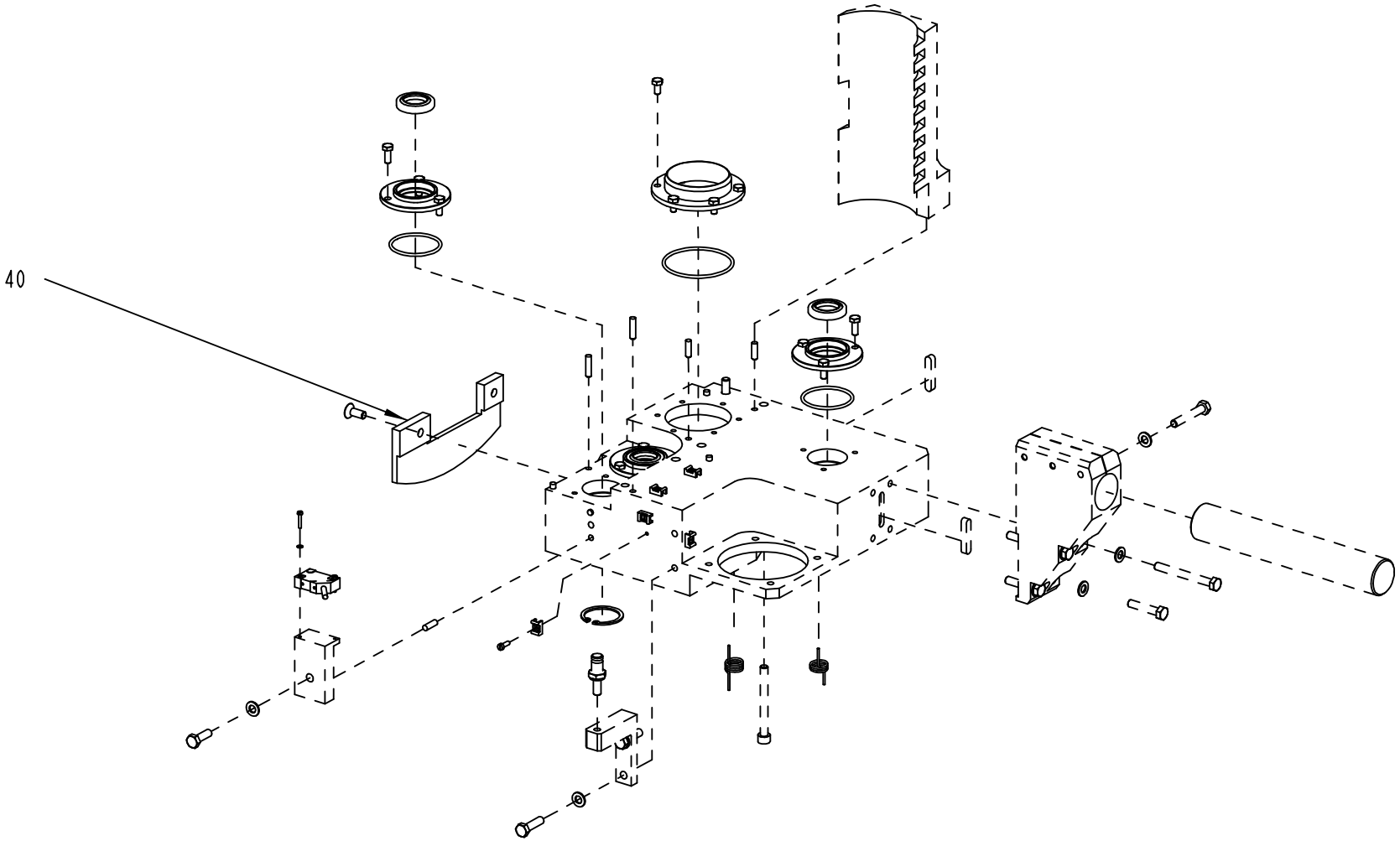

2542371-1
ECM 111138

ECM: 111138 - 20021022
Group number: 2542371-0100
Assembly Drawing: 2542371-1_1_AA

Pos	Part No	SP	UN	Qty	Description	Page No
TBA 0250S, TBA 0200S, TBA 0200M						
040	1368542-0000	-		1	SUPPORT PLATE	
TBA 0300S, TBA 0200B, TBA 0284B, TBA 0250B						
040	595728-0000	-		1	SUPPORT PLATE	

Pos	Part No	SP	UN	Qty	Description	Page No

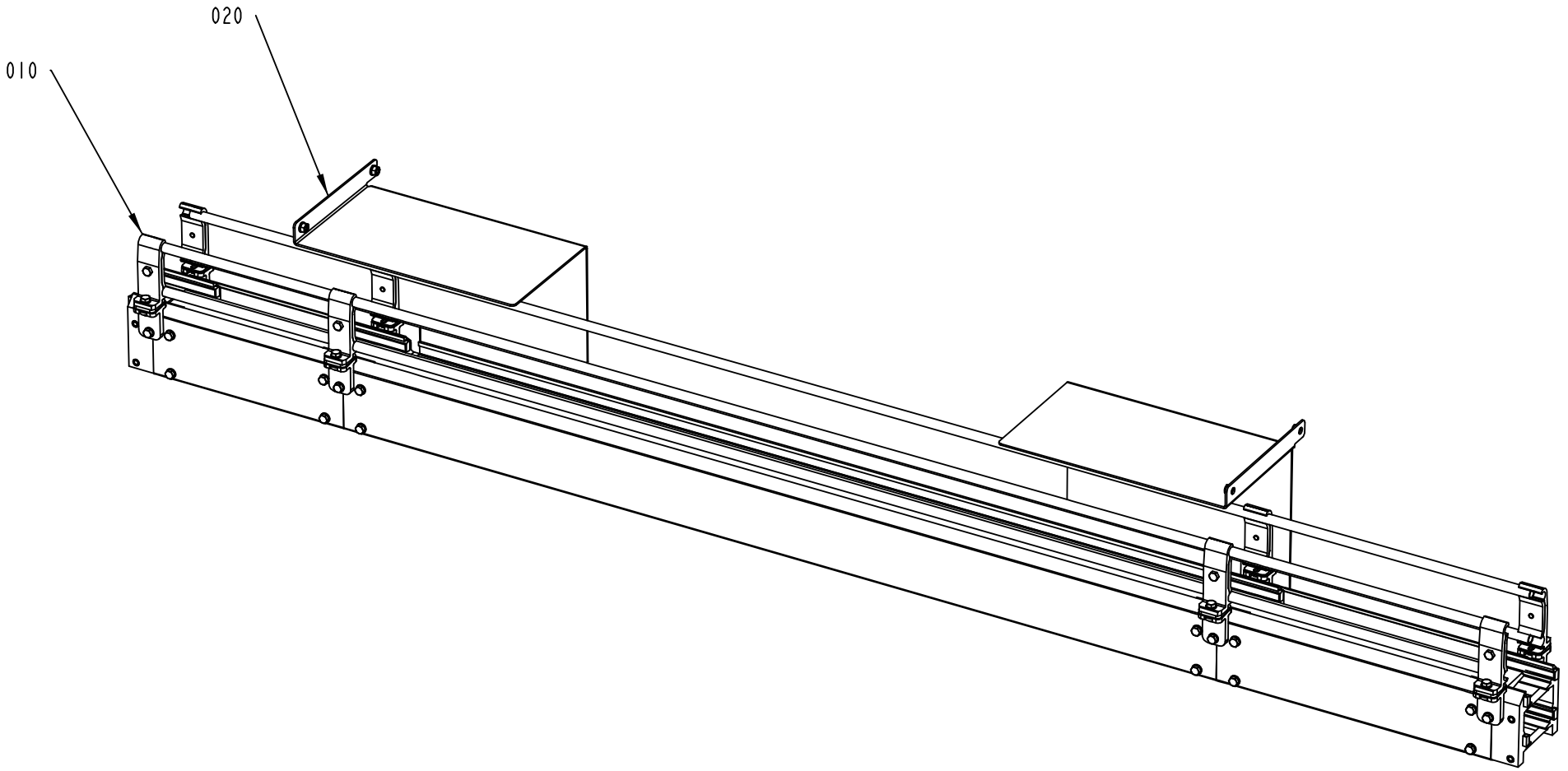

2543163-2
ECM 130114

ECM: 130117 - 20030710
Group number: 2543163-0200
Assembly Drawing: 2543163-2_1_AA

Pos	Part No	SP	UN	Qty	Description	Page No
-						
010	2543161-0200	-		1	CONVEYOR SECTION	**9-31**
020	2543164-0200	-		1	PROTECTION	**9-33**

Pos	Part No	SP	UN	Qty	Description	Page No

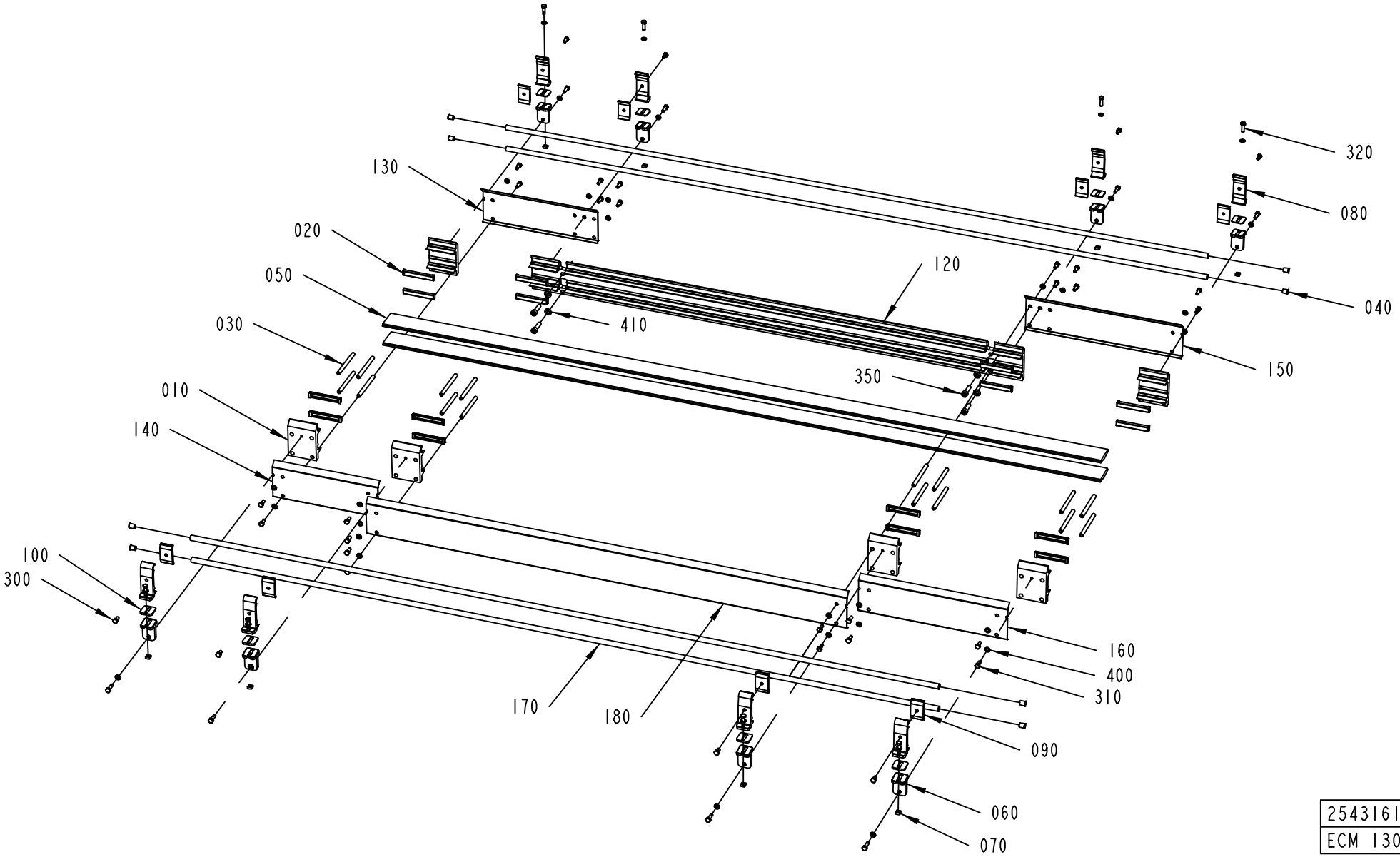

2543161-2
ECM 130114

ECM: 130118 - 20030710
Group number: 2543161-0200
Assembly Drawing: 2543161-2_1_AA

Pos	Part No	SP	UN	Qty	Description	Page No
-						
010	457696-0001	-		6	JOINT PIECE	
020	466074-0002	-		16	SLIDER	
030	476220-0000	-		16	SPACER	
040	484701-0000	-		8	SHUTTER	
050	595852-0000	-		2	SLIDE RAIL	
060	1359085-0000	-		8	T-HOLDER	
070	1359565-0000	-		8	NUT	
080	1366726-0000	-		8	HOLDER	
090	1366727-0000	-		8	CLAMP	
100	1380701-0000	-		8	SPACER	
120	2543162-0000	-		1	CLAMPING PART	
130	2561628-0000	-		1	SIDE PLATE	
140	2561629-0000	-		1	SIDE PLATE	
150	2561630-0000	-		1	SIDE PLATE	
160	2561631-0000	-		1	SIDE PLATE	
170	2561633-0000	-		4	TUBE	
180	2589837-0000	-		1	SIDE PLATE	
300	312105-0366	-		8	SCREW M6S ISO 4017 M6X12 A480	
310	312105-0368	-		25	SCREW M6S ISO 4017 M6X16 A480	
320	312105-0370	-		16	SCREW M6S ISO 4017 M6X20 A480	
350	312115-0455	-		4	SCREW ISO4762 M8X30 A4	
400	315105-0153	-		40	WASHER BRB6,4X12RFR	
410	315105-0165	-		4	WASHER BRB8,4X16RFR	

Pos	Part No	SP	UN	Qty	Description	Page No

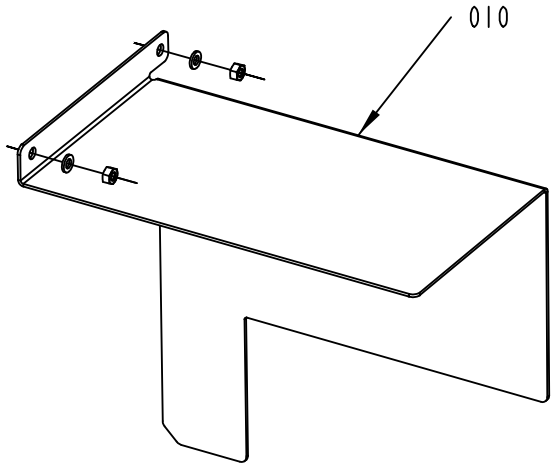

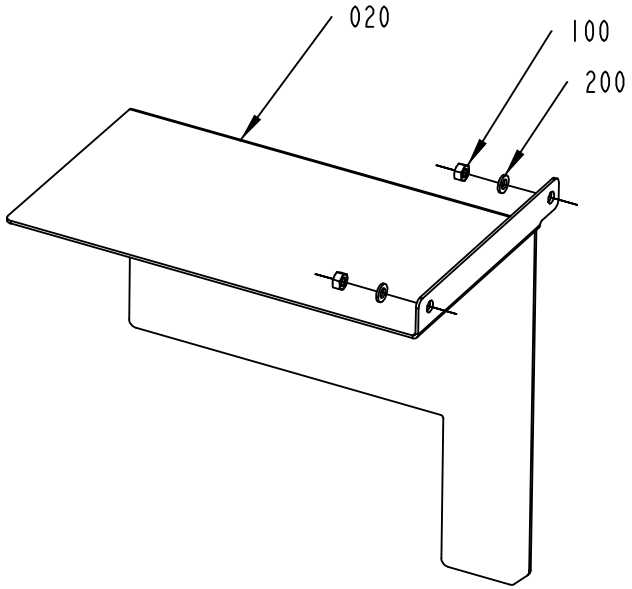

2543164-2
ECM 130114

ECM: 130119 - 20030710
Group number: 2543164-0200
Assembly Drawing: 2543164-2_1_AA

Pos	Part No	SP	UN	Qty	Description	Page No
-						
010	2561592-0000	-		1	PROTECTION PLATE	
020	2561632-0000	-		1	PROTECTION PLATE	
100	312605-0316	-		4	HEXAGON NUT, M6M M6 A280	
200	315105-0153	-		4	WASHER BRB6,4X12RFR	

Pos	Part No	SP	UN	Qty	Description	Page No

STRAW TOP RIGHT

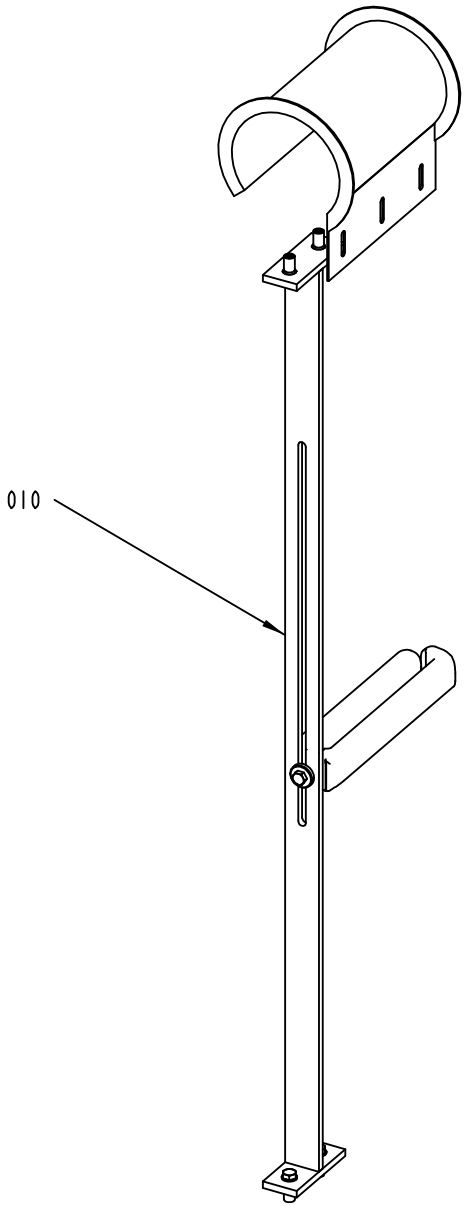

2543171-2
ECM 148099

ECM: 148215 - 20031029
Group number: 2543171-0200
Assembly Drawing: 2543171-2_1_AA

Pos	Part No	SP	UN	Qty	Description	Page No
-						
010	2543173-0200	-		1	LADDER BAND GUIDE	**9-37**

Pos	Part No	SP	UN	Qty	Description	Page No

LADDER BAND GUIDE

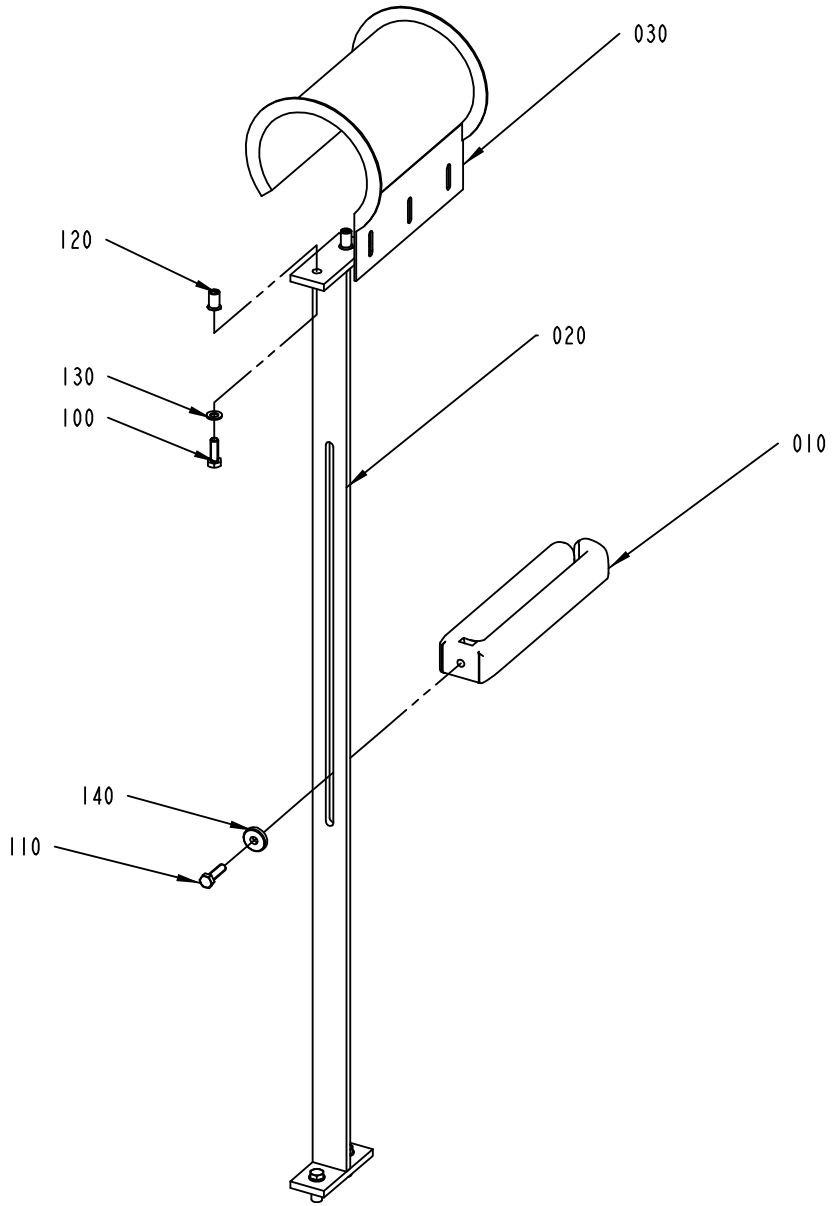

2543173-2
ECM 148099

ECM: 148216 - 20031029
Group number: 2543173-0200
Assembly Drawing: 2543173-2_1_AA

Pos	Part No	SP	UN	Qty	Description	Page No
-						
010	556386-0000	-		1	STEERING	
020	2543141-0000	-		1	BRACKET	
030	2543172-0000	-		1	LADDER BAND GUIDE	
100	312105-0453	-		4	SCREW M6S ISO 4017 M8X25 A480	
110	312105-0455	-		1	SCREW M6S ISO 4017 M8X30 A480	
120	312927-0150	-		4	RIVET NUT M8, CLAMP. LENGTH 3,0 - 4,5	
130	315105-0165	-		4	WASHER BRB8,4X16RFR	
140	315125-0165	-		1	WASHER TBRSB 8,4X26X5 A4	

Pos	Part No	SP	UN	Qty	Description	Page No

Tetra Pak

SPC
Spare Parts Catalogue

Part No	Description	Page No
8490-0010	MOUNTING RAIL	3-21
39878-0002	SOFTWARE	8-17
39878-1002	PLC PROGRAMME MEDIA	8-13, 8-15
44887-0200	MACHINE	8-3
44891-0100	SPARE PART KIT	8-3
44892-0002	SOFTWARE	8-19
44892-1002	SERVO PROGRAMME MEDIA	8-13, 8-15
68699-0101	MULTIPLEXER CARD 56LED	4-11, 4-13
90001-0033	WALL SOCKET OUTLET	8-5
90002-0004	BLANK-OFF PLUG, PR 22,5 SKINDICHT-BLK16	8-5
90002-0009	BLANK-OFF PLUG, PR 18.6 SKINDICHT-BLK11	8-5
90002-0013	BLANK-OFF PLUG, PR 15,2 SKINDICHT-BLK9	3-21
90003-0474	PACKING	6-11
90005-0102	WASHER PLAIN ROUND 5/19, H=1 FZB	3-29, 8-11
90007-0128	CIRCUIT BREAKER, 1P 6 A K	8-13, 8-15
90007-0129	CIRCUIT BREAKER, 1P 10 A K	8-13, 8-15
90007-0138	CIRCUIT BREAKER, 2P 10 A K	8-13, 8-15
90012-0117	GLAND, EXTENDED WITH INSERT, PG11	8-41
90015-0023	LEAD-IN, TET7-10, E-1458019	4-5
90024-0034	DIODE SURGE SUPPRESSOR, FD B DIL	8-13, 8-15
90024-0036	FILTERED TERMINAL BLOCK	3-29
90024-0037	INPUT FILTER, 8 A	8-5
90024-0047	EMI SUPPRESSION FERRITE	8-13, 8-15
90024-0049	POWER LINE FILTER, 16 A 400 VAC	3-29
90024-0064	FERRITE, RT187-102-170-A5	8-13, 8-15
90025-0041	FLOPPY DISKETT 3,5"-2D	8-17, 8-19
90031-0051	BASEPLATE, 10-SLOT	8-13, 8-15
90031-0058	PLC, DIGITAL INPUT MODULE	8-13, 8-15
90031-0059	PLC, DIGITAL OUTPUT MODULE	8-13, 8-15
90031-0068	PLC, POWER SUPPLY	8-13, 8-15
90031-0075	CPU363, SERIAL COMMUNICATION	8-13, 8-15
90031-0078	GENIUS BUS CONTROLLER	8-13, 8-15
90031-0304	DISCETTE BOX, 350 XM-6615-7258-1	8-5
90036-0057	LIGHT BULB, BA9S 28V	4-11, 4-13, 8-43
90036-0068	BULB 6.5W 24V	4-5
90038-0045	LIGHT DIODE, 24-60V YELLOW	4-11, 4-13, 8-43
90038-0047	DIODE	4-15
90042-0074	SOLENOID VALVE MECMAN 581-211-100	3-11, 3-13
90042-0345	COIL 24V DC	3-11, 3-13
90042-0360	CONN.PLATE	3-11, 3-13
90042-0371	WEAR & TEAR PARTS KIT	3-11, 3-13
90042-0385	SEAL KIT 04904 273 09	3-11, 3-13
90042-0392	CONTACT 2 POLE + EARTH	3-11, 3-13, 5-7
90043-0043	PRESSURE GAUGE WIEGAND 0-10 BAR 1/8"	3-11, 3-13
90043-0128	MANOMETER	3-15
90044-0139	KEY SAF.SW. AZ16-02 ZVR K-2254	3-9
90044-0194	PROX.SW. IN5329/IN3002-BPKG	1-15
90045-0194	SERVO MOTOR EP 115-131-66T3B	1-19
90045-0376	CONNECTOR KIT 9-032-011-970	8-13, 8-15
90051-0064	STELLAR KNOB, NO. 8323-4357	2-11
90051-0079	STELLAR KNOB, SQUARE HOLE, NO. 8306 1304	1-25
90055-0147	HOSE,Y-CONNECTION,PARALLEL,FPT, 12X12MM	3-11, 3-13
90055-0278	T-COUPLING, ADJ.12-G1/4"	3-11, 3-13
90056-0173	GEARS, BEVEL RAN 20 DA	2-7
90056-0174	WORM GEAR VF 30 P1 70 HS B3	2-11
90056-0175	GEARS, PLANETARY VRKF-5C-500	1-5, 1-7
90062-0015	LOCK WASHER SERRAT.EXT.GEAR,6,4/11 H=0,7	3-29, 4-11, 4-13, 8-5
90062-0016	LOCK WASHER SERRAT.EXT.GEAR,8,4/15 H=0,8	8-5, 8-7, 8-9
90062-0059	LOCK WASHER SERRAT.EXT.GEAR,4,3/8 H=0,5	8-11, 8-13, 8-15
90062-0060	LOCK WASHER SERRAT.EXT.GEAR,5,3/10 H=0,6	3-29, 8-5, 8-11
90064-0111	PUSH BUTTON, WHITE	4-15
90064-0124	SWITCH, EM. STOP, ZB2-BS844+ZB2-BZ1045	4-11, 4-13, 8-9
90075-0124	CONTACTOR, 4KW 24VDC	8-13, 8-15
90075-0141	CONTACTOR, 4KW 24VDC	8-13, 8-15
90075-0143	CONTACTOR, 4KW 24VDC	8-13, 8-15
90077-0079	FEED THROUGH TERMINAL, 02943.6	3-23, 4-19
90077-0099	PCB TERMINAL GSE 5/1 1-POLE	4-15
90077-0113	FEED THROUGH TERMINAL, 10-00102150-1	8-27, 8-29
90077-0310	BRACKET, TSTR, 10-0099003-1	8-11
90077-0325	END PLATE	4-15
90077-0328	RAIL TS15/5	4-11, 4-13
90082-0013	OVER VOLT. PROTECT. PU 4C-R 230 VAC	3-29
90083-0054	CAM ROLLER, 10X26X36 MM	1-9
90091-0445	SEAL COVER, >47, H=6,5	2-11, 2-15
90091-0446	RADIAL SEAL 20X42X7 MM DUST LIP	2-9
90095-0077	OVERLOAD PROTECTION, PKZM 6-10 A	8-13, 8-15
90099-0001	NUT PG 9/PR 15,2	3-29, 8-5
90099-0002	NUT PR 18,6 BRASS	8-5
90099-0003	NUT	8-5
90099-0004	NUT	3-29, 8-5
90099-0104	NUT, PR 15,2 (PG9)	3-11, 3-13, 3-25
90099-0110	NUT, PR 22,5 (PG16)	3-25, 4-45
90099-0116	NUT, PR 12,5 (PG7)	3-27, 8-5
90099-0117	NUT, PR 18,6 (PG11)	4-45

Part No	Description	Page No
90099-0118	NUT, PR 20,4 (PG13,5)	3-27
90099-0119	NUT, PR 28,3 (PG21)	3-27, 4-11, 4-13, 4-45
90099-0120	NUT PR 37 (PG29)	5-5
90099-0178	GLAND, LOCKNUT, PG 16	3-29, 8-5
90099-0193	NUT HEX. DOMED CAP MHM-6.6 M5 PL	4-11, 4-13
90099-0200	GLAND, LOCKNUT, PG 11	2-7
90110-0142	PLUG DA15P064TX	8-13, 8-15
90110-0145	COVER 8630-5169014-15-01	8-13, 8-15
90110-0208	CABLE CONTACT	8-41
90110-0209	CONTACT PIN, RC20M13K	8-41
90111-0132	MAIN SWITCH P1-25/EA/SVB-SW/N/HI11/H-P14	3-29
90111-0172	EARTH FAULT BREAKER, F 362-25/0.03	8-13, 8-15
90113-0021	AIR PRESSURE REGULATOR	3-11, 3-13
90113-0113	FILTER REGULATOR, B64G-NNK-AD3-RMN	3-15
90113-0407	YOKE, SINGLE	3-15
90113-0413	END CONNECTOR	3-15
90113-0427	SHUT O FF VALVE	3-15
90119-0106	SAFETY RELAY JOKAB RT 6	8-13, 8-15
90119-0108	RELAY OMRON G2R-2-SNI-24DC	8-13, 8-15
90121-0121	RESISTANCE FIXED, 0,56 KOHM, 2 W	4-15
90124-0027	LAMP HOLDER BA9S	4-11, 4-13
90129-0016	CONNECTOR, SCOTT 52072 S-070 B-00	4-15
90129-0018	BASE OMRON P2RF-08-E	8-13, 8-15
90135-0026	EARTH TERMINAL, 3802.6	3-23, 4-19
90135-0035	EARTH WIRE, L=250 MM 16 MM2	4-11, 4-13, 8-5
90135-0043	EARTH WIRE L=200 MM 16 MM2	3-29
90140-0019	ELBOW, 90, INT. THREAD, NO. 2013-1/4	3-25
90141-0020	RETAINING RING FOR BORE DIN 472 42 A2	1-15, 2-9, 2-11
90143-0057	STRIP EMKA 1011-05 21X11MM	8-5
90143-0060	EDGE STRIP 9,5X6,3MM BLACK PVC	3-17, 3-25, 3-27, 4-21, 4-23, 4-31
90144-0067	TAPE ELFA NO:1160	4-45
90144-0072	TAPE SCOTCH VHBS 4945 W=12,7MM	8-7
90153-0015	ADHESIVE,LOCTITE IS 496/CYANOLOT 303	2-11
90157-0041	SEALING COMPOUND	4-11, 4-13, 4-29, 4-33, 4-35, 6-5
90163-0007	CONNECTION	6-17
90163-0008	CONNECTION 1/4"	3-25
90163-0019	QUICK COUPLING, (M) 8202 1202-52	3-15
90164-0015	LIGHT FIXTURE, DWDCV111B/230V 50HZ	3-19
90164-0303	BRACKET SK2202 WALDMANN	3-19
90166-0013	TUBE 8 MM PA BLUE	3-11, 3-13
90166-0068	TUBE 12 MM PA BLUE	3-11, 3-13
90178-0007	HOUR COUNTER, BG 40,17-1 12-48VDC	8-13, 8-15
90181-0033	CABLE DUCT, 15X18MM	8-7
90181-0037	CABLE DUCT, 25X40MM	8-11
90181-0052	CABLE DUCT, 25X80MM	8-11
90181-0053	CABLE DUCT, 40X80MM	8-11
90181-0088	PLASTIC RIVET, PR 52314	8-11
90191-0063	CASTOR WHEEL, NO. LKE-J-100-ND/K	7-5
90191-0064	CASTOR WHEEL, NO. LPPE-100-ND/K	7-5
90194-0080	SIGN, IDENTIFICATION OF WIRING	8-9
90194-0152	SIGN, EARTH	4-11, 4-13, 8-5, 8-7, 8-9, 8-11
90194-0164	SIGN, FRAME/CHASSIS WITHIN CIRCLE	8-11
90208-0078	CLAMPING ELEMENT WITH SLEEVE, 20X28 MM	1-25
90208-0101	TRANTORQUE BUSHING 9MM DB	1-5, 1-7
90208-0137	CLAMPING ELEMENT	1-11, 1-13
90214-0027	BALL BEARING, 8X22X7 MM	1-23
90214-0163	BALL BEARING SOLID OIL 25X47X12 MM	1-5, 1-7, 1-27
90214-0169	BALL BEARING SOLID OIL 15X35X11 MM	1-11, 1-13
90214-0225	BALL BEARING SOLID OIL 20X42X12 MM	1-11, 1-13, 1-25, 2-11
90214-0238	ANG. BALL BEAR, 20X47X20,6 MM	2-11, 2-15
90220-0084	MOTOR CABLE 4X2,5+2(2X0.75)+SHIELD	8-39
90220-0091	PAIR TWISTED CABLE 2X2X0,25MM2	8-39
90220-0104	SCR. CABLE 4X1,5MM2	8-39
90220-0109	SCR. CABLE 5X2,5MM2	8-39
90220-0131	PAIR TWISTED CABLE 3X2X0,25MM2	8-41
90232-0103	PH.CELL E3S-CT61-L-5M	6-7
90232-0104	PH.CELL E3S-CT61-D-5M	6-7
90232-0117	PH.CELL WT4-2P135S10	1-17
90232-0128	PH.CELL E3S-CL2-5M	2-9
90237-0123	LOCK, 1121-U10C	4-11, 4-13, 4-39, 8-7, 8-9
90237-0128	LOCK CYLINDER, 1109-U3	4-11, 4-13, 4-39
90237-0129	LOCK CYLINDER, 1109-U6	8-7, 8-9
90237-0144	GUIDE, 1121-SU540	4-11, 4-13, 4-39, 8-7, 8-9
90237-0147	LOCKING LUG, NO. 1121-53-0P	4-11, 4-13, 4-39, 8-7, 8-9
90237-0175	TURNING HANDLE	4-11, 4-13, 4-39, 8-7, 8-9
90237-0324	KEY, 1104-02 FOR SQUARE 8 MM	8-7, 8-9
90240-0262	FLANGE BUSHING, 12X14X12 MM	1-9, 9-11
90240-0265	FLANGE BUSHING, 20X23X21 MM	1-9, 9-11
90240-0292	BUSHING, 25X28X20 MM	1-5, 1-7, 9-9
90240-0336	BEARING BUSHING W/O FL, 6,10X12X10 MM	6-13, 9-25
90252-0036	V-BELT J22	2-19
90256-0001	TAPE SUPPLY HOLDER, TYPE 2000	7-7
90259-0317	AUX.CONTACT K&M NHI 11-PKZ0	8-13, 8-15
90274-0074	PRESSURE GUARD, 530 KPA	3-11, 3-13

Part No	Description	Page No
90287-0205	SCREW	4-11, 4-13, 4-33, 4-39, 8-7, 8-9
90287-0358	KNURLED SCREW	6-13, 9-25
90296-0057	GREASE	2-11
90297-0007	FLUORESCENT TUBE, PLS 11	3-19
90328-0002	SILENCER	3-11, 3-13
90330-0102	SLEEVE, INT, THREAD, NO., R-201R1/4	6-17
90335-0067	COMP. SPRING 22370, 1,6X9,6X31,75	2-19
90347-0011	VIBRATION DAMPER MEGI 781056	3-5, 3-7, 3-9
90417-0320	TIMING BELT AT5 525X16 MM	1-19
90417-0417	TIMING BELT AT5 1075X16 MM	1-25, 9-23
90417-0418	TIMING BELT AT5 1020X16 MM	1-25, 9-23
90422-0049	COOLER, SK 3203.100	8-7
90439-0155	PRECISION NOZZLE SATURN 322012	5-7
90439-0184	O-RING	5-5
90439-0187	O-RING	5-5
90439-0188	RING	5-5
90439-0189	O-RING	5-5
90439-0201	O-RING	5-5
90439-0206	CABLE	5-7, 5-9
90439-0211	THERMOSTAT	5-9
90439-0213	HOT MELT HOSE, PART NO. 274793	5-7
90439-0216	ELEMENT 150 W 938123	5-7, 5-9
90439-0233	FILTER	5-7
90439-0274	HOT MELT UNIT, NO. 249788	5-5
90439-0276	FUSE, NO. 939491	5-5
90439-0278	FILTER, NO. 274578	5-5
90439-0279	THERMOSTAT	5-5
90439-0280	SOLENOID, 229519	5-5
90439-0281	FILTER, NO. 165870	5-5
90439-0282	PUMP, NO.161424	5-5
90439-0283	RTD, NO. 108907	5-5
90439-0284	O-RING, NO.940133	5-5
90439-0285	SUPPORT RING, NO. 954013	5-5
90439-0287	O-RING, NO.105526	5-5
90439-0288	OVERHAUL KIT, NO. 105463	5-5
90439-0289	CIRCUIT BOARD. NO. 248042	5-5
90439-0290	DISPLAY, NO. 248044	5-5
90439-0291	CIRCUIT BOARD, NO. 248043	5-5
90439-0292	CONTROL UNIT, NO. 248041	5-5
90439-0295	SERVICE KIT, NO. 111940	5-7
90457-0973	WORM GEAR BS40F-0O-VM-3-IEC 63-B14	2-7
90458-0292	BASE, KT70-1001	4-5
90458-0293	LIGHT ELEMENT, RED, KL70-401R	4-5
90458-0294	LIGHT ELEMENT, YELLOW, KL70-401Y	4-5
90458-0295	LIGHT ELEMENT, BLUE, KL70-401L	4-5
90458-0297	BASE WITH TUBE 110 MM KA70-1011	4-5
90458-0300	MODULE TYPE H400, NORDSON #326583	5-7, 5-9
90458-0397	SERVO DRIVE DMC2 50720 P	8-13, 8-15
90458-0438	GLAND, EXTENDED WITH INSERT, M20X1,5	2-19
90458-0721	PIPE CLIP FOR TUBE D=8 MMSZ 2367080	8-11
90458-0852	HOT MELT GUN H-401-T PART NO. 224939	5-7
90458-1373	GEARS, HELICAL MOTOR SK ON-63 L/4	2-19
90458-1508	FLOOR PLATE, DAMPER, M105-20-160	3-5, 3-7
90458-1740	AIR GUN ASSEMBLY, CEJN 199589668	6-17
90458-1922	TIMING BELT T10X780X16 POLYURETHANE	2-19
90458-2457	POWER SUPPLY UNIT, 100-240VAC/24VDC 2,5A	8-13, 8-15
90458-2482	MOTOR 3GVA062142-CSB	2-7
90458-2506	FUSE HOLDER, USCC2 2-POLE ULTRASAFE	8-13, 8-15
90458-2507	FUSE HOLDER, USCC1 1-POLE ULTRASAFE	8-13, 8-15
90458-2510	FUSE, ATDR-6	8-13, 8-15
90458-2511	FUSE, ATDR-10	8-13, 8-15
90458-2635	WARNING SIGN ANSI(H), EXT.VOLTAGE,ORANGE	6-19, 8-13, 8-15
90458-2636	ELECTRICAL EQUIPMENT SIGN	4-27
90458-2958	ELBOW PIPE JOINT, EXT.THREAD, D=8MM-G1/4	5-7
90458-2959	ELBOW PIPE JOINT, EXT.THREAD,D=12MM-G1/4	3-11, 3-13
90459-0130	RADIAL SEAL 15X30X7 MM DUST LIP	2-11
90459-0178	FREQUENCY CHANGER 3G3MV-AB004	8-13, 8-15
90459-0238	FREQUENCY CHANGER 3G3MV-AB007	8-13, 8-15
90459-0321	SILENCER, 1/4" 231267	5-7
90459-0322	SOLENOID VALVE, 771132	5-7
90459-0606	MARKING PLATES 5-FW E1-E50	3-31, 4-19, 8-21, 8-23, 8-27, 8-29
90459-0796	FILTER 3G3MV-PFI 1010-E	8-13, 8-15
90459-0797	FILTER 3G3MV-PFI 1020-E	8-13, 8-15
90459-1014	BEARING SEAL 32X47X7 MM	1-5, 1-7
90459-1015	BEARING SEAL 70X90X10 MM	1-9
90459-1016	BEARING SEAL 25X40X7 MM	1-15
90459-1019	BEARING SEAL 40X52X7 MM	2-11, 2-15
90459-1020	BEARING SEAL 25X42X7 MM	2-9
90459-1738	MANDATORY ACTION SIGN ISO, READ MAINTENA	6-19, 8-5
90459-2021	WARNING SIGN ANSI (H), READ OM	6-19, 8-5
90459-2232	WARNING SIGN ANSI (H), DO NOT WASH	5-5, 6-19
90459-2265	PROHIBITION SIGN ISO, DO NOT WASH	5-5, 6-19
311103-0270	PARALLEL PIN ISO 2338 4M6X16 A1	1-5, 1-7, 9-9
311103-0306	PARALLEL PIN ISO 2338 5M6X12 A1	1-25

Part No	Description	Page No
311103-0308 ..	PARALLEL PIN ISO 2338 5M6X16 A1	1-25
311103-0351 ..	PARALLEL PIN ISO 2338 6M6X16 A1	1-17, 9-21
311103-0353 ..	PARALLEL PIN ISO 2338 6M6X20 A1	1-9, 1-15
311103-0355 ..	PARALLELL PIN, M6, 6X25 MM	1-15
311103-0357 ..	PARALLEL PIN ISO 2338 6M6X30 A1	1-9
311103-0464 ..	PARALLEL PIN ISO 2338 10M6X45 A1	6-15
311520-0329 ..	RIVET, BLANK 2,4X8	3-5, 3-7
311521-0143 ..	BLANK RIVET 3,2X8	4-27
312105-0287 ..	SCREW M6S ISO4017 M4X8 A470	1-21, 1-23
312105-0291 ..	SCREW M6S ISO 4017 M4X12 A470	1-5, 1-7, 2-9, 9-9
312105-0323 ..	SCREW M6S ISO 4017 M5X8 A480	3-5, 3-7, 4-11, 4-13
312105-0327 ..	SCREW M6S ISO 4017 M5X12 A480	6-9
312105-0328 ..	SCREW M6S ISO 4017 M5X14 A480	3-11, 3-13, 6-5
312105-0331 ..	SCREW M6S ISO 4017 M5X20 A480	7-7
312105-0364 ..	SCREW M6S ISO 4017 M6X10 A480	6-5
312105-0366 ..	SCREW M6S ISO 4017 M6X12 A480	1-15, 2-13, 2-17, 2-19, 3-19, 4-9, 4-43, 4-45, 9-31
312105-0368 ..	SCREW M6S ISO 4017 M6X16 A480	1-5, 1-7, 1-9, 1-15, 1-17, 1-19, 2-11, 2-13, 2-19, 3-5, 3-7, 3-21, 3-29, 4-21, 4-23, 4-25, 4-27, 4-29, 4-31, 4-35, 4-37, 4-41, 6-5, 7-7, 9-31
312105-0370 ..	SCREW M6S ISO 4017 M6X20 A480	1-9, 1-11, 1-13, 1-23, 2-13, 2-19, 3-5, 3-7, 3-25, 3-27, 9-31
312105-0371 ..	SCREW M6S ISO 4017 M6X22 A480	4-39
312105-0372 ..	SCREW M6S ISO 4017 M6X25 A480	1-5, 1-7, 1-11, 1-13, 2-19, 3-11, 3-13, 3-17, 3-29, 4-11, 4-13, 4-33
312105-0376 ..	SCREW M6S ISO 4014 M6X35 A480	3-5, 3-7
312105-0383 ..	SCREW M6S ISO 4014 M6X65 A480	2-11
312105-0386 ..	SCREW M6S ISO 4014 M6X80 A480	1-25, 3-17
312105-0449 ..	SCREW M6S ISO 4017 M8X16 A480	2-7
312105-0451 ..	SCREW M6S ISO 4017 M8X20 A480	2-5, 2-13, 2-17, 2-19, 7-5, 8-5
312105-0453 ..	SCREW M6S ISO 4017 M8X25 A480	1-15, 2-19, 3-5, 3-7, 6-5, 9-37
312105-0455 ..	SCREW M6S ISO 4017 M8X30 A480	1-15, 1-23, 2-5, 2-9, 2-11, 2-17, 2-19, 9-37
312105-0459 ..	SCREW M6S ISO 4014 M8X40 A480	3-5, 3-7, 3-9
312105-0461 ..	SCREW M6S ISO 4014 M8X50 A480	2-19, 3-5, 3-7
312105-0466 ..	SCREW M6S ISO 4014 M8X75 A480	1-15
312105-0475 ..	SCREW M6S ISO 4014 M8X120 A480	2-7
312105-0493 ..	SCREW M6S ISO 4017 M10X25 A480	2-11
312105-0497 ..	SCREW M6S ISO 4017 M10X35 A480	1-23, 2-9, 2-11
312105-0502 ..	SCREW M6S ISO 4014 M10X55 A480	2-11
312109-0335 ..	SCREW M6S ISO 4017 M5X30 A480	7-7
312109-0374 ..	SCREW M6S ISO 4017 M6X30 A480	1-23
312109-0376 ..	SCREW M6S ISO 4017 M6X35 A480	1-23
312109-0378 ..	SCREW M6S ISO4017 M6X40 A480	1-21
312109-0457 ..	SCREW M6S ISO 4017 M8X35 A480	2-11
312109-0459 ..	SCREW M6S ISO 4017 M8X40 A480	1-15, 2-19, 7-5, 7-7
312109-0461 ..	SCREW M6S ISO 4017 M8X50 A480	1-5, 1-7, 1-15
312109-0500 ..	SCREW M6S ISO 4017 M10X45 A480	2-15
312115-0230 ..	SCREW ISO4762 M3X20 A4	1-17
312115-0287 ..	SCREW ISO4762 M4X8 A4	2-19
312115-0299 ..	SCREW ISO4762 M4X30 A4	1-5, 1-7, 9-9
312115-0329 ..	SCREW ISO4762 M5X16 A4	1-5, 1-7, 4-5
312115-0333 ..	SCREW ISO4762 M5X25 A4	1-27, 3-9
312115-0337 ..	SCREW ISO4762 M5X35 A4	3-11, 3-13
312115-0362 ..	SCREW ISO4762 M6X8 A4	1-9
312115-0366 ..	SCREW ISO4762 M6X12 A4	1-5, 1-7, 2-11, 2-19
312115-0368 ..	SCREW ISO4762 M6X16 A4	2-15
312115-0370 ..	SCREW ISO4762 M6X20 A4	1-25, 2-9, 2-11, 2-19, 8-7, 8-9
312115-0372 ..	SCREW ISO4762 M6X25 A4	1-9, 1-23, 2-19
312115-0376 ..	SCREW ISO4762 M6X35 A4	1-25, 2-11
312115-0449 ..	SCREW ISO4762 M8X16 A4	2-15
312115-0451 ..	SCREW ISO4762 M8X20 A4	1-19, 2-5, 2-11, 8-5
312115-0453 ..	SCREW ISO4762 M8X25 A4	1-25
312115-0455 ..	SCREW ISO4762 M8X30 A4	2-9, 2-13, 9-31
312115-0467 ..	SCREW ISO4762 M8X80 A4	1-15, 1-17
312115-0509 ..	SCREW ISO4762 M10X90 A4	1-27
312121-0287 ..	SCREW ISO 1207 M4X8 4.8 - 5.8 Z.PL.	8-11
312121-0291 ..	SCREW ISO 1207 M4X12 4.8 - 5.8 Z.PL.	8-11, 8-13, 8-15
312121-0293 ..	SCREW ISO 1207 M4X16 4.8 - 5.8 Z.PL.	3-29
312121-0323 ..	SCREW ISO 1207 M5X8 4.8 - 5.8 Z.PL.	3-29, 8-11
312121-0327 ..	SCREW ISO 1207 M5X12 4.8 - 5.8 Z.PL.	8-11
312125-0228 ..	SCREW ISO 1207 M3X16 A4	1-15
312125-0287 ..	SCREW ISO 1207 M4X8 A4	2-19
312125-0291 ..	SCREW ISO 1207 M4X12 A4	1-15
312125-0293 ..	SCREW ISO 1207 M4X16 A4	3-21, 6-9
312125-0333 ..	SCREW ISO 1207 M5X25 A4	3-21
312125-0366 ..	SCREW ISO 1207 M6X12 A4	3-5, 3-7, 3-9
312145-0287 ..	SCREW ISO 2009 MFS M4X8 A4	2-19, 4-45
312145-0325 ..	SCREW ISO 2009 MFS M5X10 A4	3-5, 3-7, 3-9
312155-0287 ..	SCREW EN 10642 MF6S M4X8 A480	1-9
312155-0325 ..	SCREW EN 10642 MF6S M5X10 A480	7-5
312155-0333 ..	SCREW EN 10642 MF6S M5X25 A480	7-5, 7-7
312155-0366 ..	SCREW EN 10642 MF6S M6X12 A480	2-19
312155-0368 ..	SCREW EN 10642 MF6S M6X16 A480	3-29
312155-0370 ..	SCREW EN 10642 MF6S M6X20 A480	4-11, 4-13, 4-39, 8-7, 8-9
312155-0378 ..	SCREW EN 10642 MF6S M6X40 A480	4-21, 4-23, 4-25, 4-27, 4-29, 4-31, 4-35, 4-37, 4-41
312155-0451 ..	SCREW EN 10642 MF6S M8X20 A480	1-15
312155-0453 ..	SCREW EN 10642 MF6S M8X25 A480	2-19, 7-7, 7-9

Part No	Description	Page No
312155-0459 ..	SCREW EN 10642 MF6S M8X40 A480	3-5, 3-7
312303-0455 ..	SCREW DIN 938 PS M8X20 A4 80	2-5
312303-0461 ..	SCREW DIN 938 PS M8X40 A4 80	3-5, 3-7
312318-0283 ..	SCREW ISO4029 M4X4 A4	2-11
312318-0362 ..	SCREW ISO4029 M6X8 A4	2-11
312318-0364 ..	SCREW ISO4029 M6X10 A4	2-19
312318-0366 ..	SCREW ISO4029 M6X12 A4	2-7, 2-9
312318-0372 ..	SCREW ISO4029 M6X25 A4	3-5, 3-7, 3-9
312504-0342 ..	TAPPING SCREW ISO 7049-A4-ST4,2X13-C-Z	4-5
312601-0310 ..	NUT M6M3FZB	8-5
312601-0312 ..	NUT M6M 4-8 FZB	8-5, 8-11
312601-0314 ..	NUT M6M5FZB	8-11
312601-0316 ..	NUT M6M 6-8 FZB	8-5
312605-0310 ..	HEXAGON NUT, M6M M3 A280	4-11, 4-13
312605-0312 ..	HEXAGON NUT, M6M M4 A280	3-29, 4-45
312605-0314 ..	HEXAGON NUT, M6M M5 A280	4-5, 4-11, 4-13, 6-5, 6-9
312605-0316 ..	HEXAGON NUT, M6M M6 A280	2-13, 2-19, 3-11, 3-13, 3-17, 3-29, 4-11, 4-13, 4-23, 4-27, 4-29, 4-31, 8-7, 8-9, 9-33
312605-0318 ..	HEXAGON NUT, M6M M8 A280	1-9, 2-7
312605-0326 ..	HEXAGON NUT, M6M M20 A280	3-5, 3-7
312621-0316 ..	ROD END,NUT M6	3-9
312625-0316 ..	HEXAGON THIN NUT, EN 24035 ML6M M6 A4	3-5, 3-7
312630-0320 ..	HEX.NUT FINE, EN 24032 M6M M10X1 FZB8	1-9
312705-0316 ..	NUT HEX. DOMED CAP MHM-6 M6 A280	1-17, 1-23, 4-27
312705-0318 ..	NUT HEX. DOMED CAP MHM-6 M8 A280	1-25, 3-5, 3-7
312810-0318 ..	HEXAGON NUT, NY-LOCK M8 FZB	2-19
312812-0314 ..	HEXAGON NUT, NY-LOCK M5 A480	4-11, 4-13, 4-39, 8-7, 8-9
312812-0316 ..	HEXAGON NUT, NY-LOCK M6 A480	2-9, 4-21, 4-23, 4-25, 4-27, 4-29, 4-31, 4-35, 4-37, 4-41
312812-0318 ..	HEXAGON NUT, NY-LOCK M8 A480	6-13, 7-7, 7-9, 9-25
312927-0150 ..	RIVET NUT M8, CLAMP. LENGTH 3,0 - 4,5	9-37
315101-0124 ..	WASHER PLAIN, BRB, 3,2/6 H=0,5	8-5
315101-0136 ..	WASHER BRB, 4,3/8 H=0,8	3-29, 8-5, 8-11
315101-0146 ..	WASHER PLAIN, BRB, 5,3/10 H=1	3-29, 8-11
315101-0153 ..	WASHER PLAIN, BRB, 6,4/12 H=1,5	3-11, 3-13, 3-21, 3-29, 8-5
315105-0124 ..	WASHER BRB3,2X6RFR	1-15, 4-11, 4-13
315105-0136 ..	WASHER BRB4,3XRFR	1-21, 2-9, 2-19, 3-21, 6-9
315105-0146 ..	WASHER BRB5,3X10RFR	1-23, 3-5, 3-7, 3-11, 3-13, 4-5, 4-11, 4-13, 4-39, 6-5, 6-9, 7-7, 8-7, 8-9
315105-0153 ..	WASHER BRB6,4X12RFR	1-9, 1-11, 1-13, 1-17, 1-23, 2-9, 2-11, 2-13, 2-17, 2-19, 3-5, 3-7, 3-11, 3-13, 3-17, 3-25, 3-27, 3-29, 4-9, 4-11, 4-13, 4-21, 4-23, 4-25, 4-27, 4-29, 4-31, 4-33, 4-35, 4-37, 4-39, 4-41, 4-43, 6-5, 7-7, 8-7, 8-9, 9-31, 9-33
315105-0156 ..	WASHER BRB 6.7X14 RFR	2-13, 3-19, 4-45
315105-0165 ..	WASHER BRB8,4X16RFR	1-15, 1-23, 2-5, 2-7, 2-9, 2-11, 2-13, 2-15, 2-17, 2-19, 3-5, 3-7, 6-5, 7-5, 8-5, 9-31, 9-37
315105-0173 ..	WASHER BRB10,5X22RFR	1-9, 1-23, 2-9, 2-11, 2-15
315115-0165 ..	WASHER PLAIN, TBRB 8,4/16 H=3	2-19
315115-0173 ..	WASHER PLAIN, TBRB 10,5/22 H=4	2-11
315121-0153 ..	WASHER PLAIN, TBRSB 6,4/22 H=4	3-29, 8-11
315125-0153 ..	WASHER TBRSB 6,4X22X4 A4	1-21, 1-23, 1-25, 2-11, 2-19
315125-0165 ..	WASHER TBRSB 8,4X26X5 A4	2-11, 9-37
315202-0111 ..	O-RING 13,1X1,6 MM	2-19
315202-0219 ..	O-RING 29,2X3 MM	2-19
315204-0115 ..	O-RING 17,1X1,6 MM	1-11, 1-13, 1-25
315204-0118 ..	O-RING 22,1X1,7 MM	1-5, 1-7
315204-0221 ..	O-RING 34,2X3 MM	1-11, 1-13
315204-0301 ..	O-RING 49,5X3 MM	1-15
315204-0305 ..	O-RING 69,5X3 MM	1-15
315204-0308 ..	O-RING 84,5X3 MM	1-5, 1-7
315220-0172 ..	V-RINGS 29X37X10,5 MM V-32S	2-19
315221-0137 ..	RADIAL SEAL 17X35X7 MM	2-19
315221-0145 ..	RADIAL SEAL 20X35X7 MM	2-19
315233-0110 ..	WASHER CAPTIVE SEALING G1/4	3-25
315705-0202 ..	PARALLEL KEY W ROUND ENDS 5X5X25MM	2-11
315705-0230 ..	PARALLEL KEY W. ROUND ENDS 6X6X16 MM	1-5, 1-7, 2-9
315705-0239 ..	PARALLEL KEY W. ROUND ENDS 6X6X40 MM	2-9
315705-0270 ..	PARALLEL KEY W. ROUND ENDS 8X7X40 MM	1-15
315751-0109 ..	RETAINING RING FOR SHAFT DIN 471 12 A2	1-9
315751-0112 ..	RETAINING RING FOR SHAFT DIN 471 15 A2	1-11, 1-13
315751-0116 ..	RETAINING RING FOR SHAFT DIN 471 20 A2	1-11, 1-13, 1-25, 2-9, 2-11, 2-15
315751-0119 ..	RETAINING RING FOR SHAFT DIN 471 25 A2	1-5, 1-7
315753-0117 ..	RETAINING RING FOR BORE DIN 472 22 A2	1-23
315753-0124 ..	RETAINING RING FOR BORE DIN 472 35 A2	1-11, 1-13, 2-19
315753-0130 ..	RETAINING RING FOR BORE DIN 472 47 A2	1-5, 1-7, 1-27, 2-11, 2-15
315755-0105 ..	RETAINING RING SHAFT DIN 6799 3,2 A2	4-11, 4-13, 4-33, 4-39, 8-7, 8-9
318853-0101 ..	STELLAR KNOB, SQUARE HOLE, NO. 8306-1010	1-23
319030-0140 ..	DISC SPRING, CONICAL 16X8,2X0,6 MM	7-7
321120-0118 ..	BEARBUSHING W/O FL 14X16X15	2-11
321120-0122 ..	BEARING BUSHING W/O FL, 15X17X15 MM	2-11
321308-0203 ..	BALL BEARING, 17X35X10 MM	2-19
321308-0204 ..	BALL BEARING, 20X42X12 MM	2-9
342701-0201 ..	BUSHING,INT./EXT.G-THREAD G1/4"-G1/8"	5-7
342701-0208 ..	BUSHING, INT/EXT. G-THREAD NO. 3/4-1/4	3-15
342701-0209 ..	BUSHING,INT./EXT.G-THREAD G3/4"-G3/8"	3-15
342713-0210 ..	PLUG, EXT THREAD HEX SOCKET 8638-00-140	3-11, 3-13
342716-0209 ..	REDUCER 8-12	3-11, 3-13

Part No	Description	Page No
342722-0205 ..	STRAIGHT COUPLING D=8-G1/4"	3-25
342735-0109 ..	ELBOW PIPE JOINT	3-11, 3-13
342748-0109 ..	T-CONNECTION 12MM	3-11, 3-13
342768-0102 ..	BULKHEAD CONNECTOR, 6 MM	3-25
342960-0133 ..	BULKHEAD COUPLING 10/8	3-25, 3-27
344510-0101 ..	GREASE NIPPLE FOR CURVE ROLLERS 4 MM	1-9
351150-0403 ..	CABLE OLFLEX 3X0,75 MM2 LIGHT/GREY	8-39
351150-0405 ..	CABLE OLFLEX 5X0,75 MM2 LIGHT/GREY	8-39
351150-0412 ..	CABLE OLFLEX 3X1,5 MM2 LIGHT/GREY	8-39
351150-0413 ..	CABLE OLFLEX 4X1,5 MM2 LIGHT/GREY	8-39
351150-0424 ..	CABLE OLFLEX 18X0,75 MM2 LIGHT/GREY	8-39
351150-0425 ..	CABLE OLFLEX 25X0,75 MM2 LIGHT/GREY	8-39
351150-0431 ..	CABLE OLFLEX 2X0,75 MM2 LIGHT/GREY	8-39
351160-0102 ..	CABLE AWM 1X0,75 MM2 DARKBLUE	8-13, 8-15
351160-0104 ..	CABLE AWM 1X1,5 MM2 DARKBLUE	8-13, 8-15
351161-0104 ..	CABLE AWM LIGTH BLUE 1,5MM2	8-13, 8-15
351161-0110 ..	CABLE AWM 1X25 MM2 LIGHTBLUE	8-13, 8-15
351162-0104 ..	CABLE AWM 1X1,5 MM2 YELLOW-GREEN	8-13, 8-15
351162-0105 ..	CABLE AWM 1X2,5 MM2 YELLOW-GREEN	8-39
351162-0110 ..	CABLE AWM 1X25 MM2 YELLOW-GREEN	8-13, 8-15
351164-0109 ..	CABLE AWM 1X16 MM2 BLACK	8-13, 8-15
351164-0110 ..	CABLE AWM 1X25 MM2 BLACK	8-13, 8-15
351166-0102 ..	CABLE AWM 1X0,75 MM2 ORANGE	8-13, 8-15
352101-0103 ..	LEAD-IN, PR18,6/PG11, E-1457518	4-45
352103-0095 ..	CABLE GLAND, STR 7, PR 12,5/PG7	2-9
352103-0096 ..	CABLE GLAND, ST 7, PR 12,5/PG7	3-21, 3-27, 8-5
352103-0101 ..	CABLE GLAND, ST 9, PR15,2/PG9	3-11, 3-13, 3-21, 3-25, 3-29, 8-5
352103-0105 ..	CABLE GLAND, STR 11, PR 18,6/PG11	8-5
352103-0106 ..	CABLE GLAND, ST 11, PR18,6/PG11	3-9, 4-45, 8-5
352103-0108 ..	CABLE GLAND, ST 13,5 , PR20,4/PG13,5	3-27
352103-0110 ..	CABLE GLAND, STR 16, PR22,5/PG16	3-25, 4-45, 8-5
352103-0111 ..	CABLE GLAND, ST 16, PR22,5/PG16	8-5
352103-0115 ..	CABLE GLAND, STR 21, PR28,3/PG21	4-11, 4-13, 4-45
352103-0116 ..	CABLE GLAND, ST 21, PR28,3/PG21	3-21, 3-27, 3-29, 8-5
352113-0204 ..	ANCHOR PLATES FOR STRIPS, TYPE TM3S25-M	3-5, 3-7, 3-9
352113-0205 ..	ANCHOR PLATES FOR STRIPS, TYPE TM2S8-C10	1-15
352113-0206 ..	ANCHOR PLATES FOR STRIPS, TYPE ABM100-AT	8-7, 8-9
352550-0131 ..	FINE-WIRE, 1 A	5-5
353001-0103 ..	END SLEEVE 0,75 MM2	8-13, 8-15
353001-0104 ..	END SLEEVE 1,5 MM2	8-13, 8-15
353001-0105 ..	END SLEEVE 2,5 MM2	8-13, 8-15
353021-0212 ..	FEED THROUGH TERMINAL, 10200.0	8-31, 8-33, 8-35, 8-37
353021-0213 ..	FEED THROUGH TERMINAL, 10201.0	8-21, 8-23
353022-0002 ..	NEUTRAL TERMINAL, 10107.8	8-25
353024-0205 ..	EARTH TERMINAL, 1010.1	8-21, 8-23
353024-0212 ..	EARTH TERMINAL, 10363.0	3-31, 8-27, 8-29
353031-0203 ..	END SUPPORT, WEW 35/2	8-23, 8-25, 8-27, 8-31, 8-37
353032-0009 ..	END PLATE, WAP FOR WDK	8-27, 8-29
353033-0104 ..	END PLATE, 10502.8	8-25
353033-0105 ..	PARTITITION, 10501.0	8-31, 8-33, 8-35, 8-37
353041-0001 ..	RAIL 10X3MM SSCH	8-25
353041-0104 ..	CLAMPING YOKE PZB 4 K	8-25
353042-0004 ..	RAIL TS 35/7,5	8-11
353240-0006 ..	SCREW CAP PG 29	5-5
353245-0005 ..	GLAND, EXTENDED WITH INSERT, PG16/PR 22,	1-19, 3-29, 8-5
353245-0011 ..	GLAND, EXTENDED WITH INSERT, PR18,6/PG11	2-7, 8-39
359000-0400 ..	MARKING CO2/4"0"	3-11, 3-13
359000-0401 ..	MARKING COLLAR 2/4 "1" YELLOW	3-11, 3-13
359000-0402 ..	MARKING COLLAR 2/4 "2" YELLOW	3-11, 3-13
359000-0404 ..	MARKING COLLAR PA2/4 "4" YELLOW	3-11, 3-13
359000-0409 ..	MARKING COLLAR PA2/4 "9" YELLOW	3-11, 3-13
359000-0500 ..	MARKING COLLAR 3/6 "0" YELLOW	3-11, 3-13
359000-0501 ..	MARKING COLLAR 3/6 "1" YELLOW	3-11, 3-13
359000-0502 ..	MARKING CO3/6"2"	3-11, 3-13
359000-0504 ..	MARKING CO3/6"4"	3-11, 3-13
359010-0613 ..	SIGN BOARD BSG 1/2 "N"	8-25
359011-0807 ..	MARKING PLATES 5-FW 1-50	4-15, 8-27, 8-29, 8-31, 8-33, 8-35, 8-37
359011-0808 ..	MARKING PLATES 5-FW 51-100	4-15, 8-27
359011-0809 ..	MARKING PLATES 5-FW 101-150	8-27
359011-0821 ..	SET OF SIGNS 6-FW 1-50	3-23, 4-19, 8-21, 8-23, 8-25
359011-0822 ..	SET OF SIGNS 6-FW 51-100	3-23
359240-0100 ..	SIGN HOLDER FOR 359240-0001	4-27
359241-0124 ..	SIGN, MAIN SWITCH	4-27
359705-0015 ..	WARNING SIGN ISO, RISK OF ELECTRIC SHOCK	3-21, 3-29, 6-19, 8-7, 8-9
359715-0100 ..	WARNING SIGN ANSI(H), ELECTRIC SHOCK	3-21, 3-29, 6-19, 8-7, 8-9
359725-0120 ..	WARNING SIGN ANSI (H), HEAT ENERGY	1-23, 5-5, 6-19
359725-0121 ..	WARNING SIGN ANSI, HEAT ENERGY	6-19
457696-0001 ..	JOINT PIECE	2-13, 9-31
466074-0002 ..	SLIDER	2-13, 9-31
476220-0000 ..	SPACER	2-13, 9-31
476221-0008 ..	PIPE	6-5
479110-0000 ..	SPACER	3-21
484701-0000 ..	SHUTTER	6-5, 9-31
486268-0000 ..	NUT	3-5, 3-7, 3-9, 7-5, 7-7

Part No	Description	Page No
486826-0001	SIGN "EMERGENCY STOP"	4-11, 4-13, 8-9
531616-0000	HOLDER	4-27
531956-0000	GUIDE STUD	2-13
532412-0000	SPRING	6-9
533134-0000	COMPRESSION SPRING	2-19
533209-0000	HOLDER	2-19
533216-0000	CANTILEVER	2-19
533217-0000	BOW CLAMP	2-19
533221-0000	TOOTHED PULLEY	2-19
533233-0000	SHAFT	2-19
533234-0000	LID	2-19
533235-0000	LID	2-19
533237-0000	AXLE PIN	2-19
533238-0000	BLOCKING PIECE	2-19
533240-0000	WHEEL	2-19
533241-0000	FLANGE	2-19
536204-0000	COMPRESSION SPRING	1-21
537482-0000	BRACKET	6-5
537483-0000	BRACKET	6-5
539161-0000	CORRUGATED CARDBOARD BOX	6-11
548599-0000	WASHER	3-5, 3-7, 3-9, 7-5, 7-7
555077-0000	PLATE	4-11, 4-13
555287-0000	SPACER	4-11, 4-13
555288-0000	SPACER	4-11, 4-13
555333-0000	SPACER	4-11, 4-13
555334-0000	HOLDER	4-11, 4-13
556365-0000	SPLICING DEVICE	7-7
556384-0000	LINK FORK	7-9
556386-0000	STEERING	9-37
556601-0000	BRACKET	3-5, 3-7
556603-0000	COVER PLATE	3-5, 3-7
556604-0000	COVER PLATE	3-9, 7-5, 7-7
561652-0000	WHEEL	2-19
567111-0200	AIR JET GUN	6-3
567778-0000	CLAMP	7-7
573210-0100	JOINT	7-7
575034-0000	ROUND NUT	4-11, 4-13, 4-33
575453-0000	LABEL ELECTRICAL EQUIPM.	8-17, 8-19
577862-0000	TUNNEL HALF	6-5
578196-0000	SLEEVE	4-21, 4-23, 4-25, 4-27, 4-29, 4-31, 4-35, 4-37, 4-41
578197-0000	SPACER	4-21, 4-23, 4-25, 4-27, 4-29, 4-31, 4-35, 4-37, 4-41
578860-0000	CIRCUIT BOARD	4-17
578861-0001	COMPONENTS WITHOUT TP-NO	4-17
580923-0000	MACHINE SIGN CE	3-5, 3-7
581689-0400	WARNING LAMP	4-3
582084-0000	PRINTED CIRCUIT BOARD	4-15
583399-0102	PUSHBUTTON BOARD	4-11, 4-13
583570-0000	BRACKET	8-11
595630-0000	SHAFT	1-5, 1-7
595631-0000	BEARING HUB	1-5, 1-7
595632-0000	FEED WHEEL	1-5, 1-7, 9-9
595633-0000	SEALING FLANGE	1-15
595634-0000	ARM	1-9
595635-0000	SLEEVE	1-5, 1-7
595636-0000	GUIDE	1-5, 1-7
595637-0000	WASHER	1-5, 1-7
595638-0000	COVER DISC	1-5, 1-7
595639-0000	KNIFE	1-9
595640-0000	AXLE BOLT	1-9
595641-0000	WASHER	1-9
595642-0000	CONNECTING ROD	1-9, 9-11
595646-0000	PROFILE	3-5, 3-7
595648-0000	PROFILE 50 X 100	3-5, 3-7
595649-0000	PROFILE 50 X 100	3-5, 3-7
595650-0100	FEED WHEEL UNIT	1-3
595651-0100	CUTTING UNIT	1-3
595652-0100	SQUEEZER	1-3
595653-0100	FRAME	1-3
595654-0100	LADDER BAND GUIDE	1-3
595655-0100	DRIVE MOTOR	1-3
595656-0100	SPRING HOLDER	1-3
595657-0100	GUN HOLDER	1-3
595658-0100	HOTMELT EQUIPMENT NORDSON	5-3
595659-0200	HOTMELT GUN	5-3
595660-0200	FRAME SECTION,LOWER	3-3
595661-0200	FRAME SECTION,UPPER	3-3
595662-0100	FRAME	2-3
595663-0200	DRIVE UNIT	2-3
595664-0200	SUPPORT BELT	2-3
595665-0200	DRIVE BELT	2-3
595666-0200	CONVEYOR FRAME	2-3
595667-0200	OUTFEED WHEEL	2-3
595668-0100	COVERING PLATE	2-3
595669-0200	MACHINE COVERING	4-3

Part No	Description	Page No
595671-0200 ..	COVERING PLATE	4-7
595672-0200 ..	COVERING PLATE	4-7
595673-0200 ..	COVERING PLATE	4-7
595675-0200 ..	COVERING PLATE	4-7
595676-0100 ..	CABLE DUCT	4-3
595677-0200 ..	COMPRESSED-AIR SUPPLY	3-3
595678-0200 ..	CABLE DUCT	3-3
595680-0100 ..	LIGHT FIXTURE	3-3
595681-0100 ..	CAMSHAFT	1-3
595682-0100 ..	BELT TIGHTENER	1-3
595683-0200 ..	ASSEMBLY PLATE	8-3
595684-0100 ..	DOOR ELECTRICAL CABINET	8-3
595685-0100 ..	DOOR ELECTRICAL CABINET	8-3
595688-0200 ..	CONNECTION BOX	3-3
595689-0100 ..	LEAD-IN PLATE	3-3
595690-0100 ..	LEAD-IN PLATE	3-3
595693-0100 ..	FILTER-REGULATOR	3-11, 3-13
595695-0100 ..	TABLE	7-3
595696-0100 ..	SPLICING TABLE	7-3
595699-0000 ..	ANGLE IRON	2-13
595702-0000 ..	PROFILE 50 X 100	3-5, 3-7
595704-0000 ..	PROFILE 50 X 100	3-5, 3-7
595706-0000 ..	PROFILE 50 X 100	3-5, 3-7
595708-0000 ..	PROFILE 50 X 50	3-9
595709-0000 ..	PROFILE 50 X 50	3-9
595710-0000 ..	PROFILE 50 X 50	3-9
595712-0000 ..	PROFILE 50 X 50	3-9
595713-0000 ..	PROFILE 50 X 50	3-9
595714-0000 ..	PROFILE	3-9
595715-0000 ..	PROFILE 50 X 50	3-9
595716-0000 ..	HOLDER	3-5, 3-7
595717-0000 ..	HOLDER	3-5, 3-7
595718-0000 ..	PROTECTION RING	1-5, 1-7, 9-9
595719-0000 ..	PLATE	3-5, 3-7
595721-0000 ..	PROFILE 50 X 100	3-5, 3-7
595724-0000 ..	SUPPORT RING	1-5, 1-7, 9-9
595727-0000 ..	FRAME	1-15
595728-0000 ..	SUPPORT PLATE	1-15, 9-27
595729-0000 ..	SIDE PLATE	2-5
595730-0000 ..	SHEET	2-5
595731-0000 ..	SIDE PLATE	2-5
595733-0000 ..	PULLEY	1-5, 1-7, 9-7
595734-0000 ..	PULLEY	1-5, 1-7, 9-7
595735-0000 ..	PULLEY	1-11, 1-13
595736-0000 ..	CRANK SHAFT	1-11, 1-13
595737-0000 ..	CRANK SHAFT	1-11, 1-13
595740-0000 ..	SLEEVE	2-7
595741-0000 ..	PULLEY	2-7
595742-0000 ..	SLEEVE	1-11, 1-13, 1-25
595745-0000 ..	BEARING COVER	1-15
595746-0000 ..	BEARING HOUSING	1-11, 1-13
595747-0000 ..	ROD	1-11, 1-13
595748-0000 ..	SLEEVE	1-11, 1-13, 9-13, 9-15
595749-0000 ..	ARM	1-11, 1-13, 9-13, 9-15
595751-0000 ..	SLEEVE	1-11, 1-13, 9-13, 9-15
595752-0000 ..	WASHER	1-11, 1-13, 9-13, 9-15
595753-0000 ..	BRACKET	2-13
595760-0000 ..	BEARING PLATE	1-9, 9-11
595761-0000 ..	BEARING PLATE	1-9, 9-11
595767-0000 ..	PULLEY	1-19
595768-0000 ..	PULLEY	1-25
595769-0000 ..	PULLEY	1-25
595770-0000 ..	SHAFT	1-25
595771-0000 ..	CLAMP BLOCK	1-25
595772-0000 ..	WASHER	1-19
595773-0000 ..	BEARING HOLDER	1-27
595774-0000 ..	BEARING SLEEVE	1-27
595775-0000 ..	LID	1-27
595776-0000 ..	CABLE DUCT	4-45
595777-0000 ..	CABLE DUCT	4-45
595778-0000 ..	LID	4-45
595779-0000 ..	LID	4-45
595785-0000 ..	BRACKET	2-9
595786-0000 ..	SHEET	2-9
595788-0000 ..	BRACKET	2-9
595789-0000 ..	NUT	2-9
595791-0000 ..	TURN SPRING	1-15
595798-0000 ..	CAM	1-25, 9-23
595800-0000 ..	AXLE SUPPORT	1-25
595801-0000 ..	AXLE PIN	1-25
595804-0000 ..	SPACER DISC	1-25
595806-0000 ..	DOWEL	1-9
595807-0000 ..	DOWEL	1-15
595808-0000 ..	GUIDE CONSOLE	1-15, 9-17

Part No	Description	Page No
595809-0000 ..	BELT	2-9
595811-0000 ..	LEAF SPRING	1-21
595812-0000 ..	HOLDER	1-21
595813-0000 ..	SPRING BRACKET	1-21
595816-0000 ..	SHAFT	1-21
595817-0000 ..	BRACKET	2-11
595821-0000 ..	ROLLER	2-11, 2-15
595822-0000 ..	PULLEY	2-11, 2-15
595823-0000 ..	BELT	2-11
595824-0000 ..	GUIDE CONSOLE	1-17, 9-19
595825-0000 ..	PLATE	1-17
595826-0000 ..	BRACKET	2-11
595827-0000 ..	BRACKET	2-11
595828-0000 ..	BRACKET	2-11
595830-0000 ..	AXLE SUPPORT	1-15
595831-0000 ..	AXLE PIN	1-15
595847-0000 ..	CLAMPING PART	1-23
595848-0000 ..	CLAMPING PART	2-13
595849-0000 ..	CLAMPING PART	2-13
595850-0000 ..	HOLDER	1-23
595852-0000 ..	SLIDE RAIL	2-13, 9-31
595855-0000 ..	BLOCK	1-23
595857-0000 ..	ADJUSTING SCREW	1-23
595858-0000 ..	ADJUSTING SCREW	1-23
595859-0000 ..	HOLDER	2-13
595860-0000 ..	COVER SLIP	3-5, 3-7
595861-0000 ..	BEARING BLOCK	1-23
595862-0000 ..	ADJUSTMENT BRACKET	1-23
595864-0000 ..	ISOLERHYLSA	1-23
595865-0000 ..	ADJUSTMENT BRACKET	1-23
595866-0000 ..	ADJUSTMENT BRACKET	1-23
595868-0000 ..	SPRING	1-9
595872-0000 ..	BRACKET	2-15
595873-0000 ..	TURN SPRING	1-15
595875-0000 ..	CABLE DUCT	4-45
595877-0000 ..	CABLE DUCT	4-45
595879-0000 ..	HOLDER	1-15
595881-0000 ..	SETTING TEMPLATE	6-15
595883-0000 ..	HATCH	8-7
595884-0000 ..	HATCH	8-9
595887-0000 ..	CANTILEVER	3-5, 3-7
595889-0000 ..	CAM	1-25, 9-23
595892-0000 ..	ARM	1-11, 1-13, 9-13, 9-15
595893-0000 ..	ARM	1-11, 1-13, 9-13, 9-15
595895-0000 ..	CABLE DUCT	3-17
595896-0000 ..	KABELKANAL	3-17
595897-0000 ..	HOLDER	3-17
595900-0000 ..	SHEET	2-13
598366-0000 ..	DISPLAY	4-11, 4-13
599754-0000 ..	CABLE DUCT	4-11, 4-13
779910-0101 ..	PADLOCK	8-43
959656-0000 ..	COTTER	4-11, 4-13, 4-33, 4-39, 8-7, 8-9
959657-0000 ..	HINGE FLANGE	4-11, 4-13, 4-33, 4-39, 8-7, 8-9
959658-0000 ..	SPRING	4-11, 4-13, 4-33, 4-39, 8-7, 8-9
959703-0201 ..	GLASS DOOR	4-7
959708-0204 ..	DOOR	4-7
959709-0102 ..	COVERING PLATE	4-7
975849-0000 ..	SPACER	4-11, 4-13
975880-0000 ..	HINGE FLANGE	4-11, 4-13, 4-33, 8-7, 8-9
975883-0000 ..	DRIP PLATE	4-33
975884-0000 ..	BRACKET	3-5, 3-7
975885-0000 ..	SHEET	4-33
975887-0000 ..	CATCH	4-21, 4-23, 4-37, 4-41
975888-0001 ..	STRUT	4-39
975888-0003 ..	STRUT	4-11, 4-13
975888-0009 ..	STRUT	8-7, 8-9
975889-0001 ..	STRUT	4-39
975889-0003 ..	STRUT	4-11, 4-13
975889-0011 ..	STRUT	8-7, 8-9
975891-0000 ..	HATCH	4-33
975905-0000 ..	HATCH	4-39
975907-0000 ..	PROTECTION PLATE	4-41
975917-0000 ..	KEY FOR SAFETY SWITCH 90044-103	4-11, 4-13, 4-33
975918-0001 ..	GLASS	4-33
975918-0002 ..	GLASS	4-11, 4-13
975924-0000 ..	WASHER	4-11, 4-13, 4-33
975927-0000 ..	HINGE FLANGE	4-11, 4-13, 4-33, 4-39
975934-0000 ..	GUSSET PLATE	4-45
975939-0000 ..	SEAL	4-45
975950-0000 ..	CORNER STRIP	4-9
975958-0000 ..	PLATE	4-11, 4-13
1020634-0001 .	HOLDER	6-5
1020637-0000 .	HOLDER	6-9
1020646-0000 .	TOOTHED PULLEY	2-19

Part No	Description	Page No
1021933-0000	.COVER TAPE	3-5, 3-7, 3-9, 7-5, 7-7
1021990-0000	.SIGN	4-45
1021991-0000	.STRIP	4-45
1030767-0000	.CATCH	4-25, 4-27, 4-29, 4-31, 4-35
1065410-0000	.SLOTTED PIN	3-5, 3-7, 3-9, 7-5, 7-7
1074379-0000	.GLASS	6-5
1086724-0201	.PACKING DESCRIPTION	6-9
1086871-0000	.LABEL TAPE	6-11
1086889-0000	.COVER	6-9
1119677-0000	.ATTACHMENT	3-11, 3-13
1124035-0100	.TUNNEL	6-3
1124522-0000	.BRACKET	3-21
1128844-0000	.CAUTION SIGN	1-23, 5-5, 6-19
1128853-0000	.CAUTION SIGN	6-19
1128870-0000	.BRACKET	6-5
1128871-0000	.CLAMPING PLATE	6-5
1189303-0000	.MOUNTING SHEET	4-5
1259310-0000	.SLEEVE	8-11
1354035-0000	.INSERT	5-5
1359042-0104	.QUEUE GUARD,SINGLE ATTACHM ONLY B50-R109	6-7
1359085-0000	.T-HOLDER	2-13, 9-31
1359389-0000	.ROLL	2-19
1359390-0000	.SHAFT	2-19
1359391-0000	.MOUNTING BLOCK	2-19
1359451-0000	.SUPPORT	2-19
1359565-0000	.NUT	2-13, 9-31
1361850-0000	.SLEEVE	8-11
1363010-0000	.CONNECTION BOX	3-21
1363012-0000	.BRACKET	2-13
1363013-0000	.SHEET	2-13
1363014-0000	.BRACKET	3-25
1363015-0000	.BRACKET	3-27
1363024-0000	.SUPPORT RING	1-5, 1-7, 9-9
1363025-0000	.PROTECTION RING	1-5, 1-7, 9-9
1363026-0000	.GUIDE CONSOLE	1-15, 9-17
1363027-0000	.BEARING PLATE	1-9, 9-11
1363028-0000	.BEARING PLATE	1-9, 9-11
1363029-0000	.CANTILEVER	3-5, 3-7
1363030-0000	.LID	1-9
1363031-0000	.HOUSE	1-9
1363032-0000	.CONNECTING ROD	1-9, 9-11
1363033-0000	.GUIDE CONSOLE	1-17, 9-19
1363036-0000	.PROTECTIVE CASING	4-11, 4-13
1363037-0000	.PROTECTIVE CASING	4-11, 4-13
1363038-0000	.RUBBER GASKET	4-11, 4-13
1363039-0000	.RUBBER GASKET	4-11, 4-13
1363040-0000	.SPACER PLATE	2-7
1363041-0000	.PULLEY	2-9
1363042-0000	.SHAFT	2-9
1363043-0000	.BEARING HOUSING	2-9
1363048-0000	.PROFILE	7-5
1363049-0000	.PROFILE	7-5
1363050-0000	.PROFILE	7-5
1363051-0000	.PLATE	7-5
1363052-0000	.FASTENING PLATE	7-7
1363053-0000	.END PLATE	7-7
1363054-0000	.SUPPORT IRON	7-7
1363055-0000	.PROFILE	7-7
1363056-0000	.PROFILE	7-7
1363057-0000	.SHAFT	7-7
1363058-0000	.LADDER BAND GUIDE	1-17, 9-21
1363061-0000	.FEED WHEEL	1-5, 1-7, 9-9
1363062-0000	.FEED WHEEL	1-5, 1-7, 9-9
1363063-0000	.SLEEVE	1-11, 1-13, 9-13, 9-15
1363064-0000	.WASHER	1-11, 1-13, 9-13, 9-15
1363065-0000	.LADDER BAND GUIDE	1-17, 9-21
1363066-0000	.LADDER BAND GUIDE	1-17, 9-21
1363068-0000	.BEARING HOUSING	2-11
1363069-0000	.BEARING HOUSING	2-11
1363072-0000	.RACK GEAR	2-11
1363074-0000	.GEAR WHEEL	2-11
1363076-0000	.SPACER	2-11
1363084-0000	.COVERING PLATE	2-13
1363086-0000	.LADDER BAND GUIDE	1-17, 9-21
1363087-0000	.FEED WHEEL	1-5, 1-7, 9-9
1363088-0000	.COVERING PLATE	2-13
1363089-0000	.COVERING PLATE	2-13
1363090-0000	.BRACKET	2-5
1363091-0000	.ARM	1-11, 1-13, 9-13, 9-15
1363092-0000	.SLEEVE	1-11, 1-13, 9-13, 9-15
1363093-0000	.WASHER	1-11, 1-13, 9-13, 9-15
1363094-0000	.BRACKET	2-17
1363095-0000	.PROTECTION	2-17
1363096-0000	.PROTECTION	2-17

Part No	Description	Page No
1363097-0000	.BEARING HOUSING	2-15
1363098-0000	.PROTECTION	1-23
1363099-0000	.CONNECTION	2-7
1363101-0000	.STEERING RAIL	2-9
1363102-0000	.STEERING RAIL	2-9
1363103-0000	.BRACKET	2-9
1363105-0000	.SETTING TEMPLATE	6-13, 9-25
1363106-0000	.SETTING TEMPLATE	6-13, 9-25
1363108-0000	.BLOCK	1-9
1364362-0000	.CLAMPING ELEMENT	2-11
1364363-0000	.SPRING BRACKET	1-15
1364383-0100	.RESOLVER CABLE	8-39
1364387-0100	.SETTING TEMPLATE	6-3, 9-5
1364389-0000	.FEED WHEEL	1-5, 1-7, 9-9
1364398-0200	.PANEL DOOR	4-7
1364399-0000	.HATCH	4-11, 4-13
1364400-0000	.TENSION SPRING	1-9
1364410-0000	.SHEET	2-11
1364411-0000	.SHAFT	2-11
1364412-0000	.HEAD PLATE	2-11
1364413-0000	.BRACKET	2-11
1364414-0000	.LID	2-11
1364415-0000	.FEED WHEEL	1-5, 1-7, 9-9
1364416-0000	.LADDER BAND GUIDE	1-17, 9-21
1364417-0000	.LADDER BAND GUIDE	1-17, 9-21
1364418-0000	.FEED WHEEL	1-5, 1-7, 9-9
1364419-0000	.FEED WHEEL	1-5, 1-7, 9-9
1364420-0000	.FEED WHEEL	1-5, 1-7, 9-9
1364421-0000	.SUPPORT RING	1-5, 1-7, 9-9
1364422-0000	.SLEEVE	1-11, 1-13, 9-13, 9-15
1364423-0000	.ARM	1-11, 1-13, 9-13, 9-15
1364424-0000	.WASHER	1-11, 1-13, 9-13, 9-15
1364425-0000	.SLEEVE	1-11, 1-13, 9-13, 9-15
1366726-0000	.HOLDER	2-13, 9-31
1366727-0000	.CLAMP	2-13, 9-31
1367350-0000	.LADDER BAND GUIDE	1-17, 9-21
1367351-0000	.LADDER BAND GUIDE	1-17, 9-21
1367352-0000	.LADDER BAND GUIDE	1-17, 9-21
1367353-0100	.SETTING TEMPLATE	6-3
1367354-0000	.WASHER	1-11, 1-13, 9-13, 9-15
1368542-0000	.SUPPORT PLATE	1-15, 9-27
1368548-0000	.FEED WHEEL	1-5, 1-7, 9-9
1368552-0000	.GUIDE PLATE	2-13
1368553-0000	.GUIDE PLATE	2-13
1368556-0000	.LADDER BAND GUIDE	1-17, 9-21
1368557-0000	.FEED WHEEL	1-5, 1-7, 9-9
1368558-0000	.FEED WHEEL	1-5, 1-7, 9-9
1368559-0000	.FEED WHEEL	1-5, 1-7, 9-9
1368560-0000	.ARM	1-11, 1-13, 9-13, 9-15
1368561-0000	.LADDER BAND GUIDE	1-17, 9-21
1368562-0000	.LADDER BAND GUIDE	1-17, 9-21
1368563-0000	.LADDER BAND GUIDE	1-17, 9-21
1368564-0000	.LADDER BAND GUIDE	1-17, 9-21
1380701-0000	.SPACER	2-13, 9-31
2500526-0000	.PLATE	2-19
2500527-0000	.BRACKET	2-19
2500539-0000	.CLAMP	2-13
2500540-0000	.COVER PLATE	2-13
2500541-0000	.LADDER BAND GUIDE	1-17, 9-21
2500542-0000	.LADDER BAND GUIDE	1-17, 9-21
2500543-0000	.FEED WHEEL	1-5, 1-7, 9-9
2500544-0000	.FEED WHEEL	1-5, 1-7, 9-9
2500545-0000	.SLEEVE	1-11, 1-13, 9-13, 9-15
2500546-0000	.WASHER	1-11, 1-13, 9-13, 9-15
2500547-0000	.SLEEVE	1-11, 1-13, 9-13, 9-15
2500548-0000	.WASHER	1-11, 1-13, 9-13, 9-15
2500556-0000	.MOTOR BRACKET	2-19
2500557-0000	.BRACKET	2-19
2500558-0000	.BRACKET	2-19
2500559-0000	.PLATE	2-19
2500560-0000	.SPACER	2-19
2500561-0000	.SPACER	2-19
2500567-0000	.LADDER BAND GUIDE	1-17, 9-21
2500569-0000	.PIPE	5-7
2500571-0100	.TERMINAL	8-13, 8-15
2500572-0100	.TERMINAL	8-13, 8-15
2500573-0100	.TERMINAL	8-13, 8-15
2500574-0100	.TERMINAL	8-13, 8-15
2500575-0100	.TERMINAL	8-13, 8-15
2519602-0000	.ASSEMBLY PLATE	8-11
2519603-0000	.CABINET	8-5
2519604-0100	.GUSSET PLATE	4-7
2519605-0100	.CABINET	8-3
2519606-0100	.BELT BRAKE	2-3

Part No	Description	Page No
2519607-0100	.ELECTRIC EQUIPMENT	8-3
2519608-0100	.COVERING PLATE	4-7
2519609-0000	.PROTECTION PLATE	4-27
2519610-0100	.COVERING PLATE	4-7
2519611-0000	.PROTECTION PLATE	4-31
2519613-0000	.PROFILE	3-5, 3-7
2519614-0000	.PROFILE	3-5, 3-7
2519615-0000	.PROFILE	3-5, 3-7
2519616-0000	.PROFILE	3-5, 3-7
2519617-0000	.PROFILE	3-5, 3-7
2519618-0000	.PROFILE	3-5, 3-7
2519619-0000	.PROFILE	3-5, 3-7
2519621-0000	.SHAFT	2-9
2519622-0000	.SHAFT	2-11
2519623-0100	.COVERING PLATE	4-7
2519624-0000	.COVER	4-37
2519625-0100	.COVERING PLATE	4-7
2519626-0000	.COVER	4-35
2532771-0000	.PROFILE	3-9
2532772-0000	.PROFILE	3-9
2532773-0000	.PROFILE	3-5, 3-7
2532774-0000	.COVER	4-25
2532775-0000	.PROFILE	3-5, 3-7
2532776-0000	.PROFILE	3-5, 3-7
2532777-0000	.PROFILE	3-5, 3-7
2532778-0000	.COVER	4-29
2532779-0000	.GLASS	4-29
2532780-0000	.GLASS	4-35
2532781-0100	.TERMINAL	3-21
2532783-0000	.CABINET	3-11, 3-13
2532786-0100	.QUEUE GUARD	6-3
2532787-0000	.COVER	4-29, 4-31
2532788-0000	.COVER	4-43
2532789-0000	.PIPE	6-3
2532790-0000	.COVER	4-23
2532791-0000	.COVER	4-21
2532792-0000	.COVER	4-21, 4-23
2532793-0000	.CABLE DUCT	3-17
2532795-0100	.COVER	4-7
2532796-0000	.BELT STRETCHER	2-11
2532797-0000	.AXLE BOLT	2-11
2532798-0000	.BRACKET	2-11
2532800-0000	.STUD SCREW	2-19
2542356-0000	.SET OF SIGNS	3-11, 3-13
2542362-0100	.FEED WHEEL UNIT	9-7
2542363-0100	.CUTTING UNIT	9-5
2542364-0100	.SQUEEZER	9-5
2542365-0100	.FRAME	9-5
2542366-0100	.LADDER BAND GUIDE	9-19
2542367-0100	.LADDER BAND GUIDE	9-5
2542368-0100	.CAMSHAFT	9-5
2542369-0100	.FEED WHEEL UNIT	9-5
2542370-0100	.EXTRA STRAW KIT	9-3
2542371-0100	.EXTRA VOLUME KIT	9-3
2542372-0100	.TERMINAL	4-11, 4-13
2543141-0000	.BRACKET	9-37
2543142-0000	.HEAD RAIL	2-13
2543143-0000	.GUIDE HOLDER	2-19
2543144-0000	.GUIDE HOLDER	2-19
2543145-0100	.TERMINAL	8-13, 8-15
2543146-0100	.TERMINAL	8-13, 8-15
2543147-0100	.TERMINAL	8-13, 8-15
2543148-0100	.TERMINAL	8-13, 8-15
2543149-0000	.DELIVERED DESIGN	8-9
2543150-0000	.FUSE PANEL LABEL	8-9
2543161-0200	.CONVEYOR SECTION	9-29
2543162-0000	.CLAMPING PART	9-31
2543163-0200	.U-FEED	9-3
2543164-0200	.PROTECTION	9-29
2543171-0200	.STRAW TOP RIGHT	9-3
2543172-0000	.LADDER BAND GUIDE	9-37
2543173-0200	.LADDER BAND GUIDE	9-35
2549800-0000	.INSTALLATION DRAWING	6-3
2549801-0000	.BEARING HOUSING	2-11
2549816-0000	.BRACKET	3-29
2549817-0000	.BRACKET	3-29
2549823-0000	.ELECTRICAL CABINET	3-29
2553411-0100	.MAINS CONNECTION	3-3
2553421-0000	.PLATE	3-29
2553422-0100	.WARNING SIGNS	6-3
2553423-0000	.RAIL	3-29
2553430-0000	.PNEUMATIC DIAGRAM	6-3
2553445-0100	.TERMINAL	3-29
2561592-0000	.PROTECTION PLATE	9-33

Part No	Description	Page No
2561628-0000	.SIDE PLATE	9-31
2561629-0000	.SIDE PLATE	9-31
2561630-0000	.SIDE PLATE	9-31
2561631-0000	.SIDE PLATE	9-31
2561632-0000	.PROTECTION PLATE	9-33
2561633-0000	.TUBE	9-31
2589837-0000	.SIDE PLATE	9-31

Part No	Description	Page No

Part No	Description	Page No	Part No	Description	Page No

Machine Type	Group Description	Page No

Tetra Pak

SPC
Spare Parts Catalogue

Part No	Description	Page No
90153-0015	ADHESIVE,LOCTITE IS 496/CYANOLOT 303	2-11
595857-0000 ..	ADJUSTING SCREW	1-23
595858-0000 ..	ADJUSTING SCREW	1-23
595862-0000 ..	ADJUSTMENT BRACKET	1-23
595865-0000 ..	ADJUSTMENT BRACKET	1-23
595866-0000 ..	ADJUSTMENT BRACKET	1-23
90458-1740	AIR GUN ASSEMBLY, CEJN 199589668	6-17
567111-0200 ..	AIR JET GUN	6-3
90113-0021	AIR PRESSURE REGULATOR	3-11, 3-13
352113-0206 ..	ANCHOR PLATES FOR STRIPS, TYPE ABM100-AT	8-7, 8-9
352113-0205 ..	ANCHOR PLATES FOR STRIPS, TYPE TM2S8-C10	1-15
352113-0204 ..	ANCHOR PLATES FOR STRIPS, TYPE TM3S25-M	3-5, 3-7, 3-9
90214-0238	ANG. BALL BEAR, 20X47X20,6 MM	2-11, 2-15
595699-0000 ..	ANGLE IRON	2-13
595634-0000 ..	ARM	1-9
595749-0000 ..	ARM	1-11, 1-13, 9-13, 9-15
595892-0000 ..	ARM	1-11, 1-13, 9-13, 9-15
595893-0000 ..	ARM	1-11, 1-13, 9-13, 9-15
1363091-0000 .	ARM	1-11, 1-13, 9-13, 9-15
1364423-0000 .	ARM	1-11, 1-13, 9-13, 9-15
1368560-0000 .	ARM	1-11, 1-13, 9-13, 9-15
595683-0200 ..	ASSEMBLY PLATE	8-3
2519602-0000 .	ASSEMBLY PLATE	8-11
1119677-0000 .	ATTACHMENT	3-11, 3-13
90259-0317	AUX.CONTACT K&M NHI 11-PKZ0	8-13, 8-15
595640-0000 ..	AXLE BOLT	1-9
2532797-0000 .	AXLE BOLT	2-11
533237-0000 ..	AXLE PIN	2-19
595801-0000 ..	AXLE PIN	1-25
595831-0000 ..	AXLE PIN	1-15
595800-0000 ..	AXLE SUPPORT	1-25
595830-0000 ..	AXLE SUPPORT	1-15
90214-0169	BALL BEARING SOLID OIL 15X35X11 MM	1-11, 1-13
90214-0225	BALL BEARING SOLID OIL 20X42X12 MM	1-11, 1-13, 1-25, 2-11
90214-0163	BALL BEARING SOLID OIL 25X47X12 MM	1-5, 1-7, 1-27
321308-0203 ..	BALL BEARING, 17X35X10 MM	2-19
321308-0204 ..	BALL BEARING, 20X42X12 MM	2-9
90214-0027	BALL BEARING, 8X22X7 MM	1-23
90129-0018	BASE OMRON P2RF-08-E	8-13, 8-15
90458-0297	BASE WITH TUBE 110 MM KA70-1011	4-5
90458-0292	BASE, KT70-1001	4-5
90031-0051	BASEPLATE, 10-SLOT	8-13, 8-15
321120-0118 ..	BEARBUSHING W/O FL 14X16X15	2-11
595861-0000 ..	BEARING BLOCK	1-23
321120-0122 ..	BEARING BUSHING W/O FL, 15X17X15 MM	2-11
90240-0336	BEARING BUSHING W/O FL, 6,10X12X10 MM	6-13, 9-25
595745-0000 ..	BEARING COVER	1-15
595773-0000 ..	BEARING HOLDER	1-27
595746-0000 ..	BEARING HOUSING	1-11, 1-13
1363043-0000 .	BEARING HOUSING	2-9
1363068-0000 .	BEARING HOUSING	2-11
1363069-0000 .	BEARING HOUSING	2-11
1363097-0000 .	BEARING HOUSING	2-15
2549801-0000 .	BEARING HOUSING	2-11
595631-0000 ..	BEARING HUB	1-5, 1-7
595760-0000 ..	BEARING PLATE	1-9, 9-11
595761-0000 ..	BEARING PLATE	1-9, 9-11
1363027-0000 .	BEARING PLATE	1-9, 9-11
1363028-0000 .	BEARING PLATE	1-9, 9-11
90459-1016	BEARING SEAL 25X40X7 MM	1-15
90459-1020	BEARING SEAL 25X42X7 MM	2-9
90459-1014	BEARING SEAL 32X47X7 MM	1-5, 1-7
90459-1019	BEARING SEAL 40X52X7 MM	2-11, 2-15
90459-1015	BEARING SEAL 70X90X10 MM	1-9
595774-0000 ..	BEARING SLEEVE	1-27
595809-0000 ..	BELT	2-9
595823-0000 ..	BELT	2-11
2519606-0100 .	BELT BRAKE	2-3
2532796-0000 .	BELT STRETCHER	2-11
595682-0100 ..	BELT TIGHTENER	1-3
311521-0143 ..	BLANK RIVET 3,2X8	4-27
90002-0013	BLANK-OFF PLUG, PR 15,2 SKINDICHT-BLK9	3-21
90002-0009	BLANK-OFF PLUG, PR 18.6 SKINDICHT-BLK11	8-5
90002-0004	BLANK-OFF PLUG, PR 22,5 SKINDICHT-BLK16	8-5
595855-0000 ..	BLOCK	1-23
1363108-0000 .	BLOCK	1-9
533238-0000 ..	BLOCKING PIECE	2-19
533217-0000 ..	BOW CLAMP	2-19
537482-0000 ..	BRACKET	6-5
537483-0000 ..	BRACKET	6-5
556601-0000 ..	BRACKET	3-5, 3-7
583570-0000 ..	BRACKET	8-11
595753-0000 ..	BRACKET	2-13
595785-0000 ..	BRACKET	2-9

Part No	Description	Page No
595788-0000 ..	BRACKET	2-9
595817-0000 ..	BRACKET	2-11
595826-0000 ..	BRACKET	2-11
595827-0000 ..	BRACKET	2-11
595828-0000 ..	BRACKET	2-11
595872-0000 ..	BRACKET	2-15
975884-0000 ..	BRACKET	3-5, 3-7
1124522-0000 .	BRACKET	3-21
1128870-0000 .	BRACKET	6-5
1363012-0000 .	BRACKET	2-13
1363014-0000 .	BRACKET	3-25
1363015-0000 .	BRACKET	3-27
1363090-0000 .	BRACKET	2-5
1363094-0000 .	BRACKET	2-17
1363103-0000 .	BRACKET	2-9
1364413-0000 .	BRACKET	2-11
2500527-0000 .	BRACKET	2-19
2500557-0000 .	BRACKET	2-19
2500558-0000 .	BRACKET	2-19
2532798-0000 .	BRACKET	2-11
2543141-0000 .	BRACKET	9-37
2549816-0000 .	BRACKET	3-29
2549817-0000 .	BRACKET	3-29
90164-0303	BRACKET SK2202 WALDMANN	3-19
90077-0310	BRACKET, TSTR, 10-0099003-1	8-11
90036-0068	BULB 6.5W 24V	4-5
342768-0102 ..	BULKHEAD CONNECTOR, 6 MM	3-25
342960-0133 ..	BULKHEAD COUPLING 10/8	3-25, 3-27
90240-0292	BUSHING, 25X28X20 MM	1-5, 1-7, 9-9
342701-0208 ..	BUSHING, INT/EXT. G-THREAD NO. 3/4-1/4	3-15
342701-0201 ..	BUSHING,INT./EXT.G-THREAD G1/4"-G1/8"	5-7
342701-0209 ..	BUSHING,INT./EXT.G-THREAD G3/4"-G3/8"	3-15
2519603-0000 .	CABINET	8-5
2519605-0100 .	CABINET	8-3
2532783-0000 .	CABINET	3-11, 3-13
90439-0206	CABLE	5-7, 5-9
351160-0102 ..	CABLE AWM 1X0,75 MM2 DARKBLUE	8-13, 8-15
351166-0102 ..	CABLE AWM 1X0,75 MM2 ORANGE	8-13, 8-15
351160-0104 ..	CABLE AWM 1X1,5 MM2 DARKBLUE	8-13, 8-15
351162-0104 ..	CABLE AWM 1X1,5 MM2 YELLOW-GREEN	8-13, 8-15
351164-0109 ..	CABLE AWM 1X16 MM2 BLACK	8-13, 8-15
351162-0105 ..	CABLE AWM 1X2,5 MM2 YELLOW-GREEN	8-39
351164-0110 ..	CABLE AWM 1X25 MM2 BLACK	8-13, 8-15
351161-0110 ..	CABLE AWM 1X25 MM2 LIGHTBLUE	8-13, 8-15
351162-0110 ..	CABLE AWM 1X25 MM2 YELLOW-GREEN	8-13, 8-15
351161-0104 ..	CABLE AWM LIGTH BLUE 1,5MM2	8-13, 8-15
90110-0208	CABLE CONTACT	8-41
595676-0100 ..	CABLE DUCT	4-3
595678-0200 ..	CABLE DUCT	3-3
595776-0000 ..	CABLE DUCT	4-45
595777-0000 ..	CABLE DUCT	4-45
595875-0000 ..	CABLE DUCT	4-45
595877-0000 ..	CABLE DUCT	4-45
595895-0000 ..	CABLE DUCT	3-17
599754-0000 ..	CABLE DUCT	4-11, 4-13
2532793-0000 .	CABLE DUCT	3-17
90181-0033	CABLE DUCT, 15X18MM	8-7
90181-0037	CABLE DUCT, 25X40MM	8-11
90181-0052	CABLE DUCT, 25X80MM	8-11
90181-0053	CABLE DUCT, 40X80MM	8-11
352103-0106 ..	CABLE GLAND, ST 11, PR18,6/PG11	3-9, 4-45, 8-5
352103-0108 ..	CABLE GLAND, ST 13,5 , PR20,4/PG13,5	3-27
352103-0111 ..	CABLE GLAND, ST 16, PR22,5/PG16	8-5
352103-0116 ..	CABLE GLAND, ST 21, PR28,3/PG21	3-21, 3-27, 3-29, 8-5
352103-0096 ..	CABLE GLAND, ST 7, PR 12,5/PG7	3-21, 3-27, 8-5
352103-0101 ..	CABLE GLAND, ST 9, PR15,2/PG9	3-11, 3-13, 3-21, 3-25, 3-29, 8-5
352103-0105 ..	CABLE GLAND, STR 11, PR 18,6/PG11	8-5
352103-0110 ..	CABLE GLAND, STR 16, PR22,5/PG16	3-25, 4-45, 8-5
352103-0115 ..	CABLE GLAND, STR 21, PR28,3/PG21	4-11, 4-13, 4-45
352103-0095 ..	CABLE GLAND, STR 7, PR 12,5/PG7	2-9
351150-0424 ..	CABLE OLFLEX 18X0,75 MM2 LIGHT/GREY	8-39
351150-0425 ..	CABLE OLFLEX 25X0,75 MM2 LIGHT/GREY	8-39
351150-0431 ..	CABLE OLFLEX 2X0,75 MM2 LIGHT/GREY	8-39
351150-0403 ..	CABLE OLFLEX 3X0,75 MM2 LIGHT/GREY	8-39
351150-0412 ..	CABLE OLFLEX 3X1,5 MM2 LIGHT/GREY	8-39
351150-0413 ..	CABLE OLFLEX 4X1,5 MM2 LIGHT/GREY	8-39
351150-0405 ..	CABLE OLFLEX 5X0,75 MM2 LIGHT/GREY	8-39
595798-0000 ..	CAM	1-25, 9-23
595889-0000 ..	CAM	1-25, 9-23
90083-0054	CAM ROLLER, 10X26X36 MM	1-9
595681-0100 ..	CAMSHAFT	1-3
2542368-0100 .	CAMSHAFT	9-5
533216-0000 ..	CANTILEVER	2-19
595887-0000 ..	CANTILEVER	3-5, 3-7

Part No	Description	Page No
1363029-0000	CANTILEVER	3-5, 3-7
90191-0063	CASTOR WHEEL, NO. LKE-J-100-ND/K	7-5
90191-0064	CASTOR WHEEL, NO. LPPE-100-ND/K	7-5
975887-0000	CATCH	4-21, 4-23, 4-37, 4-41
1030767-0000	CATCH	4-25, 4-27, 4-29, 4-31, 4-35
1128844-0000	CAUTION SIGN	1-23, 5-5, 6-19
1128853-0000	CAUTION SIGN	6-19
578860-0000	CIRCUIT BOARD	4-17
90439-0291	CIRCUIT BOARD, NO. 248043	5-5
90439-0289	CIRCUIT BOARD. NO. 248042	5-5
90007-0129	CIRCUIT BREAKER, 1P 10 A K	8-13, 8-15
90007-0128	CIRCUIT BREAKER, 1P 6 A K	8-13, 8-15
90007-0138	CIRCUIT BREAKER, 2P 10 A K	8-13, 8-15
567778-0000	CLAMP	7-7
1366727-0000	CLAMP	2-13, 9-31
2500539-0000	CLAMP	2-13
595771-0000	CLAMP BLOCK	1-25
90208-0137	CLAMPING ELEMENT	1-11, 1-13
1364362-0000	CLAMPING ELEMENT	2-11
90208-0078	CLAMPING ELEMENT WITH SLEEVE, 20X28 MM	1-25
595847-0000	CLAMPING PART	1-23
595848-0000	CLAMPING PART	2-13
595849-0000	CLAMPING PART	2-13
2543162-0000	CLAMPING PART	9-31
1128871-0000	CLAMPING PLATE	6-5
353041-0104	CLAMPING YOKE PZB 4 K	8-25
90042-0345	COIL 24V DC	3-11, 3-13
90335-0067	COMP. SPRING 22370, 1,6X9,6X31,75	2-19
578861-0001	COMPONENTS WITHOUT TP-NO	4-17
595677-0200	COMPRESSED-AIR SUPPLY	3-3
533134-0000	COMPRESSION SPRING	2-19
536204-0000	COMPRESSION SPRING	1-21
90042-0360	CONN.PLATE	3-11, 3-13
595642-0000	CONNECTING ROD	1-9, 9-11
1363032-0000	CONNECTING ROD	1-9, 9-11
90163-0007	CONNECTION	6-17
1363099-0000	CONNECTION	2-7
90163-0008	CONNECTION 1/4"	3-25
595688-0200	CONNECTION BOX	3-3
1363010-0000	CONNECTION BOX	3-21
90045-0376	CONNECTOR KIT 9-032-011-970	8-13, 8-15
90129-0016	CONNECTOR, SCOTT 52072 S-070 B-00	4-15
90042-0392	CONTACT 2 POLE + EARTH	3-11, 3-13, 5-7
90110-0209	CONTACT PIN, RC20M13K	8-41
90075-0124	CONTACTOR, 4KW 24VDC	8-13, 8-15
90075-0141	CONTACTOR, 4KW 24VDC	8-13, 8-15
90075-0143	CONTACTOR, 4KW 24VDC	8-13, 8-15
90439-0292	CONTROL UNIT, NO. 248041	5-5
595666-0200	CONVEYOR FRAME	2-3
2543161-0200	CONVEYOR SECTION	9-29
90422-0049	COOLER, SK 3203.100	8-7
975950-0000	CORNER STRIP	4-9
539161-0000	CORRUGATED CARDBOARD BOX	6-11
959656-0000	COTTER	4-11, 4-13, 4-33, 4-39, 8-7, 8-9
1086889-0000	COVER	6-9
2519624-0000	COVER	4-37
2519626-0000	COVER	4-35
2532774-0000	COVER	4-25
2532778-0000	COVER	4-29
2532787-0000	COVER	4-29, 4-31
2532788-0000	COVER	4-43
2532790-0000	COVER	4-23
2532791-0000	COVER	4-21
2532792-0000	COVER	4-21, 4-23
2532795-0100	COVER	4-7
90110-0145	COVER 8630-5169014-15-01	8-13, 8-15
595638-0000	COVER DISC	1-5, 1-7
556603-0000	COVER PLATE	3-5, 3-7
556604-0000	COVER PLATE	3-9, 7-5, 7-7
2500540-0000	COVER PLATE	2-13
595860-0000	COVER SLIP	3-5, 3-7
1021933-0000	COVER TAPE	3-5, 3-7, 3-9, 7-5, 7-7
595668-0100	COVERING PLATE	2-3
595671-0200	COVERING PLATE	4-7
595672-0200	COVERING PLATE	4-7
595673-0200	COVERING PLATE	4-7
595675-0200	COVERING PLATE	4-7
959709-0102	COVERING PLATE	4-7
1363084-0000	COVERING PLATE	2-13
1363088-0000	COVERING PLATE	2-13
1363089-0000	COVERING PLATE	2-13
2519608-0100	COVERING PLATE	4-7
2519610-0100	COVERING PLATE	4-7
2519623-0100	COVERING PLATE	4-7

Part No	Description	Page No
2519625-0100	COVERING PLATE	4-7
90031-0075	CPU363, SERIAL COMMUNICATION	8-13, 8-15
595736-0000	CRANK SHAFT	1-11, 1-13
595737-0000	CRANK SHAFT	1-11, 1-13
595651-0100	CUTTING UNIT	1-3
2542363-0100	CUTTING UNIT	9-5
2543149-0000	DELIVERED DESIGN	8-9
90038-0047	DIODE	4-15
90024-0034	DIODE SURGE SUPPRESSOR, FD B DIL	8-13, 8-15
319030-0140	DISC SPRING, CONICAL 16X8,2X0,6 MM	7-7
90031-0304	DISCETTE BOX, 350 XM-6615-7258-1	8-5
598366-0000	DISPLAY	4-11, 4-13
90439-0290	DISPLAY, NO. 248044	5-5
959708-0204	DOOR	4-7
595684-0100	DOOR ELECTRICAL CABINET	8-3
595685-0100	DOOR ELECTRICAL CABINET	8-3
595806-0000	DOWEL	1-9
595807-0000	DOWEL	1-15
975883-0000	DRIP PLATE	4-33
595665-0200	DRIVE BELT	2-3
595655-0100	DRIVE MOTOR	1-3
595663-0200	DRIVE UNIT	2-3
90111-0172	EARTH FAULT BREAKER, F 362-25/0.03	8-13, 8-15
353024-0205	EARTH TERMINAL, 1010.1	8-21, 8-23
353024-0212	EARTH TERMINAL, 10363.0	3-31, 8-27, 8-29
90135-0026	EARTH TERMINAL, 3802.6	3-23, 4-19
90135-0043	EARTH WIRE L=200 MM 16 MM2	3-29
90135-0035	EARTH WIRE, L=250 MM 16 MM2	4-11, 4-13, 8-5
90143-0060	EDGE STRIP 9,5X6,3MM BLACK PVC	3-17, 3-25, 3-27, 4-21, 4-23, 4-31
342735-0109	ELBOW PIPE JOINT	3-11, 3-13
90458-2958	ELBOW PIPE JOINT, EXT.THREAD, D=8MM-G1/4	5-7
90458-2959	ELBOW PIPE JOINT, EXT.THREAD,D=12MM-G1/4	3-11, 3-13
90140-0019	ELBOW, 90, INT. THREAD, NO. 2013-1/4	3-25
2519607-0100	ELECTRIC EQUIPMENT	8-3
2549823-0000	ELECTRICAL CABINET	3-29
90458-2636	ELECTRICAL EQUIPMENT SIGN	4-27
90439-0216	ELEMENT 150 W 938123	5-7, 5-9
90024-0047	EMI SUPPRESSION FERRITE	8-13, 8-15
90113-0413	END CONNECTOR	3-15
90077-0325	END PLATE	4-15
1363053-0000	END PLATE	7-7
353033-0104	END PLATE, 10502.8	8-25
353032-0009	END PLATE, WAP FOR WDK	8-27, 8-29
353001-0103	END SLEEVE 0,75 MM2	8-13, 8-15
353001-0104	END SLEEVE 1,5 MM2	8-13, 8-15
353001-0105	END SLEEVE 2,5 MM2	8-13, 8-15
353031-0203	END SUPPORT, WEW 35/2	8-23, 8-25, 8-27, 8-31, 8-37
2542370-0100	EXTRA STRAW KIT	9-3
2542371-0100	EXTRA VOLUME KIT	9-3
1363052-0000	FASTENING PLATE	7-7
90077-0079	FEED THROUGH TERMINAL, 02943.6	3-23, 4-19
90077-0113	FEED THROUGH TERMINAL, 10-00102150-1	8-27, 8-29
353021-0212	FEED THROUGH TERMINAL, 10200.0	8-31, 8-33, 8-35, 8-37
353021-0213	FEED THROUGH TERMINAL, 10201.0	8-21, 8-23
595632-0000	FEED WHEEL	1-5, 1-7, 9-9
1363061-0000	FEED WHEEL	1-5, 1-7, 9-9
1363062-0000	FEED WHEEL	1-5, 1-7, 9-9
1363087-0000	FEED WHEEL	1-5, 1-7, 9-9
1364389-0000	FEED WHEEL	1-5, 1-7, 9-9
1364415-0000	FEED WHEEL	1-5, 1-7, 9-9
1364418-0000	FEED WHEEL	1-5, 1-7, 9-9
1364419-0000	FEED WHEEL	1-5, 1-7, 9-9
1364420-0000	FEED WHEEL	1-5, 1-7, 9-9
1368548-0000	FEED WHEEL	1-5, 1-7, 9-9
1368557-0000	FEED WHEEL	1-5, 1-7, 9-9
1368558-0000	FEED WHEEL	1-5, 1-7, 9-9
1368559-0000	FEED WHEEL	1-5, 1-7, 9-9
2500543-0000	FEED WHEEL	1-5, 1-7, 9-9
2500544-0000	FEED WHEEL	1-5, 1-7, 9-9
595650-0100	FEED WHEEL UNIT	1-3
2542362-0100	FEED WHEEL UNIT	9-7
2542369-0100	FEED WHEEL UNIT	9-5
90024-0064	FERRITE, RT187-102-170-A5	8-13, 8-15
90439-0233	FILTER	5-7
90459-0796	FILTER 3G3MV-PFI 1010-E	8-13, 8-15
90459-0797	FILTER 3G3MV-PFI 1020-E	8-13, 8-15
90113-0113	FILTER REGULATOR, B64G-NNK-AD3-RMN	3-15
90439-0281	FILTER, NO. 165870	5-5
90439-0278	FILTER, NO. 274578	5-5
595693-0100	FILTER-REGULATOR	3-11, 3-13
90024-0036	FILTERED TERMINAL BLOCK	3-29
352550-0131	FINE-WIRE, 1 A	5-5
533241-0000	FLANGE	2-19
90240-0262	FLANGE BUSHING, 12X14X12 MM	1-9, 9-11

Part No	Description	Page No
90240-0265	FLANGE BUSHING, 20X23X21 MM	1-9, 9-11
90458-1508	FLOOR PLATE, DAMPER, M105-20-160	3-5, 3-7
90025-0041	FLOPPY DISKETT 3,5"-2D	8-17, 8-19
90297-0007	FLUORESCENT TUBE, PLS 11	3-19
595653-0100 ..	FRAME	1-3
595662-0100 ..	FRAME	2-3
595727-0000 ..	FRAME	1-15
2542365-0100 .	FRAME	9-5
595660-0200 ..	FRAME SECTION,LOWER	3-3
595661-0200 ..	FRAME SECTION,UPPER	3-3
90459-0178	FREQUENCY CHANGER 3G3MV-AB004	8-13, 8-15
90459-0238	FREQUENCY CHANGER 3G3MV-AB007	8-13, 8-15
90458-2507	FUSE HOLDER, USCC1 1-POLE ULTRASAFE	8-13, 8-15
90458-2506	FUSE HOLDER, USCC2 2-POLE ULTRASAFE	8-13, 8-15
2543150-0000 .	FUSE PANEL LABEL	8-9
90458-2511	FUSE, ATDR-10	8-13, 8-15
90458-2510	FUSE, ATDR-6	8-13, 8-15
90439-0276	FUSE, NO. 939491	5-5
1363074-0000 .	GEAR WHEEL	2-11
90056-0173	GEARS, BEVEL RAN 20 DA	2-7
90458-1373	GEARS, HELICAL MOTOR SK ON-63 L/4	2-19
90056-0175	GEARS, PLANETARY VRKF-5C-500	1-5, 1-7
90031-0078	GENIUS BUS CONTROLLER	8-13, 8-15
90458-0438	GLAND, EXTENDED WITH INSERT, M20X1,5	2-19
90012-0117	GLAND, EXTENDED WITH INSERT, PG11	8-41
353245-0005 ..	GLAND, EXTENDED WITH INSERT, PG16/PR 22,	1-19, 3-29, 8-5
353245-0011 ..	GLAND, EXTENDED WITH INSERT, PR18,6/PG11	2-7, 8-39
90099-0200	GLAND, LOCKNUT, PG 11	2-7
90099-0178	GLAND, LOCKNUT, PG 16	3-29, 8-5
975918-0001 ..	GLASS	4-33
975918-0002 ..	GLASS	4-11, 4-13
1074379-0000 .	GLASS	6-5
2532779-0000 .	GLASS	4-29
2532780-0000 .	GLASS	4-35
959703-0201 ..	GLASS DOOR	4-7
90296-0057	GREASE	2-11
344510-0101 ..	GREASE NIPPLE FOR CURVE ROLLERS 4 MM	1-9
595636-0000 ..	GUIDE	1-5, 1-7
595808-0000 ..	GUIDE CONSOLE	1-15, 9-17
595824-0000 ..	GUIDE CONSOLE	1-17, 9-19
1363026-0000 .	GUIDE CONSOLE	1-15, 9-17
1363033-0000 .	GUIDE CONSOLE	1-17, 9-19
2543143-0000 .	GUIDE HOLDER	2-19
2543144-0000 .	GUIDE HOLDER	2-19
1368552-0000 .	GUIDE PLATE	2-13
1368553-0000 .	GUIDE PLATE	2-13
531956-0000 ..	GUIDE STUD	2-13
90237-0144	GUIDE, 1121-SU540	4-11, 4-13, 4-39, 8-7, 8-9
595657-0100 ..	GUN HOLDER	1-3
975934-0000 ..	GUSSET PLATE	4-45
2519604-0100 .	GUSSET PLATE	4-7
595883-0000 ..	HATCH	8-7
595884-0000 ..	HATCH	8-9
975891-0000 ..	HATCH	4-33
975905-0000 ..	HATCH	4-39
1364399-0000 .	HATCH	4-11, 4-13
1364412-0000 .	HEAD PLATE	2-11
2543142-0000 .	HEAD RAIL	2-13
312630-0320 ..	HEX.NUT FINE, EN 24032 M6M M10X1 FZB8	1-9
312605-0326 ..	HEXAGON NUT, M6M M20 A280	3-5, 3-7
312605-0310 ..	HEXAGON NUT, M6M M3 A280	4-11, 4-13
312605-0312 ..	HEXAGON NUT, M6M M4 A280	3-29, 4-45
312605-0314 ..	HEXAGON NUT, M6M M5 A280	4-5, 4-11, 4-13, 6-5, 6-9
312605-0316 ..	HEXAGON NUT, M6M M6 A280	2-13, 2-19, 3-11, 3-13, 3-17, 3-29, 4-11, 4-13, 4-23, 4-27, 4-29, 4-31, 8-7, 8-9, 9-33
312605-0318 ..	HEXAGON NUT, M6M M8 A280	1-9, 2-7
312812-0314 ..	HEXAGON NUT, NY-LOCK M5 A480	4-11, 4-13, 4-39, 8-7, 8-9
312812-0316 ..	HEXAGON NUT, NY-LOCK M6 A480	2-9, 4-21, 4-23, 4-25, 4-27, 4-29, 4-31, 4-35, 4-37, 4-41
312812-0318 ..	HEXAGON NUT, NY-LOCK M8 A480	6-13, 7-7, 7-9, 9-25
312810-0318 ..	HEXAGON NUT, NY-LOCK M8 FZB	2-19
312625-0316 ..	HEXAGON THIN NUT, EN 24035 ML6M M6 A4	3-5, 3-7
959657-0000 ..	HINGE FLANGE	4-11, 4-13, 4-33, 4-39, 8-7, 8-9
975880-0000 ..	HINGE FLANGE	4-11, 4-13, 4-33, 8-7, 8-9
975927-0000 ..	HINGE FLANGE	4-11, 4-13, 4-33, 4-39
531616-0000 ..	HOLDER	4-27
533209-0000 ..	HOLDER	2-19
555334-0000 ..	HOLDER	4-11, 4-13
595716-0000 ..	HOLDER	3-5, 3-7
595717-0000 ..	HOLDER	3-5, 3-7
595812-0000 ..	HOLDER	1-21
595850-0000 ..	HOLDER	1-23
595859-0000 ..	HOLDER	2-13
595879-0000 ..	HOLDER	1-15
595897-0000 ..	HOLDER	3-17

Part No	Description	Page No
1020634-0001	HOLDER	6-5
1020637-0000	HOLDER	6-9
1366726-0000	HOLDER	2-13, 9-31
90055-0147	HOSE,Y-CONNECTION,PARALLEL,FPT, 12X12MM	3-11, 3-13
90458-0852	HOT MELT GUN H-401-T PART NO. 224939	5-7
90439-0213	HOT MELT HOSE, PART NO. 274793	5-7
90439-0274	HOT MELT UNIT, NO. 249788	5-5
595658-0100 ..	HOTMELT EQUIPMENT NORDSON	5-3
595659-0200 ..	HOTMELT GUN	5-3
90178-0007	HOUR COUNTER, BG 40,17-1 12-48VDC	8-13, 8-15
1363031-0000	HOUSE	1-9
90024-0037	INPUT FILTER, 8 A	8-5
1354035-0000	INSERT	5-5
2549800-0000	INSTALLATION DRAWING	6-3
595864-0000 ..	ISOLERHYLSA	1-23
573210-0100 ..	JOINT	7-7
457696-0001 ..	JOINT PIECE	2-13, 9-31
595896-0000 ..	KABELKANAL	3-17
975917-0000 ..	KEY FOR SAFETY SWITCH 90044-103	4-11, 4-13, 4-33
90044-0139	KEY SAF.SW. AZ16-02 ZVR K-2254	3-9
90237-0324	KEY, 1104-02 FOR SQUARE 8 MM	8-7, 8-9
595639-0000 ..	KNIFE	1-9
90287-0358	KNURLED SCREW	6-13, 9-25
575453-0000 ..	LABEL ELECTRICAL EQUIPM.	8-17, 8-19
1086871-0000	LABEL TAPE	6-11
595654-0100 ..	LADDER BAND GUIDE	1-3
1363058-0000	LADDER BAND GUIDE	1-17, 9-21
1363065-0000	LADDER BAND GUIDE	1-17, 9-21
1363066-0000	LADDER BAND GUIDE	1-17, 9-21
1363086-0000	LADDER BAND GUIDE	1-17, 9-21
1364416-0000	LADDER BAND GUIDE	1-17, 9-21
1364417-0000	LADDER BAND GUIDE	1-17, 9-21
1367350-0000	LADDER BAND GUIDE	1-17, 9-21
1367351-0000	LADDER BAND GUIDE	1-17, 9-21
1367352-0000	LADDER BAND GUIDE	1-17, 9-21
1368556-0000	LADDER BAND GUIDE	1-17, 9-21
1368561-0000	LADDER BAND GUIDE	1-17, 9-21
1368562-0000	LADDER BAND GUIDE	1-17, 9-21
1368563-0000	LADDER BAND GUIDE	1-17, 9-21
1368564-0000	LADDER BAND GUIDE	1-17, 9-21
2500541-0000	LADDER BAND GUIDE	1-17, 9-21
2500542-0000	LADDER BAND GUIDE	1-17, 9-21
2500567-0000	LADDER BAND GUIDE	1-17, 9-21
2542366-0100	LADDER BAND GUIDE	9-19
2542367-0100	LADDER BAND GUIDE	9-5
2543172-0000	LADDER BAND GUIDE	9-37
2543173-0200	LADDER BAND GUIDE	9-35
90124-0027	LAMP HOLDER BA9S	4-11, 4-13
595689-0100 ..	LEAD-IN PLATE	3-3
595690-0100 ..	LEAD-IN PLATE	3-3
352101-0103 ..	LEAD-IN, PR18,6/PG11, E-1457518	4-45
90015-0023	LEAD-IN, TET7-10, E-1458019	4-5
595811-0000 ..	LEAF SPRING	1-21
533234-0000 ..	LID	2-19
533235-0000 ..	LID	2-19
595775-0000 ..	LID	1-27
595778-0000 ..	LID	4-45
595779-0000 ..	LID	4-45
1363030-0000	LID	1-9
1364414-0000	LID	2-11
90036-0057	LIGHT BULB, BA9S 28V	4-11, 4-13, 8-43
90038-0045	LIGHT DIODE, 24-60V YELLOW	4-11, 4-13, 8-43
90458-0295	LIGHT ELEMENT, BLUE, KL70-401L	4-5
90458-0293	LIGHT ELEMENT, RED, KL70-401R	4-5
90458-0294	LIGHT ELEMENT, YELLOW, KL70-401Y	4-5
595680-0100 ..	LIGHT FIXTURE	3-3
90164-0015	LIGHT FIXTURE, DWDCV111B/230V 50HZ	3-19
556384-0000 ..	LINK FORK	7-9
90237-0128	LOCK CYLINDER, 1109-U3	4-11, 4-13, 4-39
90237-0129	LOCK CYLINDER, 1109-U6	8-7, 8-9
90062-0059	LOCK WASHER SERRAT.EXT.GEAR,4,3/8 H=0,5	8-11, 8-13, 8-15
90062-0060	LOCK WASHER SERRAT.EXT.GEAR,5,3/10 H=0,6	3-29, 8-5, 8-11
90062-0015	LOCK WASHER SERRAT.EXT.GEAR,6,4/11 H=0,7	3-29, 4-11, 4-13, 8-5
90062-0016	LOCK WASHER SERRAT.EXT.GEAR,8,4/15 H=0,8	8-5, 8-7, 8-9
90237-0123	LOCK, 1121-U10C	4-11, 4-13, 4-39, 8-7, 8-9
90237-0147	LOCKING LUG, NO. 1121-53-0P	4-11, 4-13, 4-39, 8-7, 8-9
44887-0200	MACHINE	8-3
595669-0200 ..	MACHINE COVERING	4-3
580923-0000 ..	MACHINE SIGN CE	3-5, 3-7
90111-0132	MAIN SWITCH P1-25/EA/SVB-SW/N/HI11/H-P14	3-29
2553411-0100	MAINS CONNECTION	3-3
90459-1738	MANDATORY ACTION SIGN ISO, READ MAINTENA	6-19, 8-5
90043-0128	MANOMETER	3-15
359000-0400 ..	MARKING CO2/4"0"	3-11, 3-13

Part No	Description	Page No
359000-0502 ..	MARKING CO3/6"2"	3-11, 3-13
359000-0504 ..	MARKING CO3/6"4"	3-11, 3-13
359000-0401 ..	MARKING COLLAR 2/4 "1" YELLOW	3-11, 3-13
359000-0402 ..	MARKING COLLAR 2/4 "2" YELLOW	3-11, 3-13
359000-0500 ..	MARKING COLLAR 3/6 "0" YELLOW	3-11, 3-13
359000-0501 ..	MARKING COLLAR 3/6 "1" YELLOW	3-11, 3-13
359000-0404 ..	MARKING COLLAR PA2/4 "4" YELLOW	3-11, 3-13
359000-0409 ..	MARKING COLLAR PA2/4 "9" YELLOW	3-11, 3-13
359011-0807 ..	MARKING PLATES 5-FW 1-50	4-15, 8-27, 8-29, 8-31, 8-33, 8-35, 8-37
359011-0809 ..	MARKING PLATES 5-FW 101-150	8-27
359011-0808 ..	MARKING PLATES 5-FW 51-100	4-15, 8-27
90459-0606	MARKING PLATES 5-FW E1-E50	3-31, 4-19, 8-21, 8-23, 8-27, 8-29
90458-0300	MODULE TYPE H400, NORDSON #326583	5-7, 5-9
90458-2482	MOTOR 3GVA062142-CSB	2-7
2500556-0000 .	MOTOR BRACKET	2-19
90220-0084	MOTOR CABLE 4X2,5+2(2X0.75)+SHIELD	8-39
1359391-0000 .	MOUNTING BLOCK	2-19
8490-0010	MOUNTING RAIL	3-21
1189303-0000 .	MOUNTING SHEET	4-5
68699-0101	MULTIPLEXER CARD 56LED	4-11, 4-13
353022-0002 ..	NEUTRAL TERMINAL, 10107.8	8-25
90099-0003	NUT	8-5
90099-0004	NUT	3-29, 8-5
486268-0000 ..	NUT	3-5, 3-7, 3-9, 7-5, 7-7
595789-0000 ..	NUT	2-9
1359565-0000 .	NUT	2-13, 9-31
312705-0316 ..	NUT HEX. DOMED CAP MHM-6 M6 A280	1-17, 1-23, 4-27
312705-0318 ..	NUT HEX. DOMED CAP MHM-6 M8 A280	1-25, 3-5, 3-7
90099-0193	NUT HEX. DOMED CAP MHM-6.6 M5 PL	4-11, 4-13
312601-0312 ..	NUT M6M 4-8 FZB	8-5, 8-11
312601-0316 ..	NUT M6M 6-8 FZB	8-5
312601-0310 ..	NUT M6M3FZB	8-5
312601-0314 ..	NUT M6M5FZB	8-11
90099-0001	NUT PG 9/PR 15,2	3-29, 8-5
90099-0002	NUT PR 18,6 BRASS	8-5
90099-0120	NUT PR 37 (PG29)	5-5
90099-0116	NUT, PR 12,5 (PG7)	3-27, 8-5
90099-0104	NUT, PR 15,2 (PG9)	3-11, 3-13, 3-25
90099-0117	NUT, PR 18,6 (PG11)	4-45
90099-0118	NUT, PR 20,4 (PG13,5)	3-27
90099-0110	NUT, PR 22,5 (PG16)	3-25, 4-45
90099-0119	NUT, PR 28,3 (PG21)	3-27, 4-11, 4-13, 4-45
90439-0184	O-RING	5-5
90439-0187	O-RING	5-5
90439-0189	O-RING	5-5
90439-0201	O-RING	5-5
315202-0111 ..	O-RING 13,1X1,6 MM	2-19
315204-0115 ..	O-RING 17,1X1,6 MM	1-11, 1-13, 1-25
315204-0118 ..	O-RING 22,1X1,7 MM	1-5, 1-7
315202-0219 ..	O-RING 29,2X3 MM	2-19
315204-0221 ..	O-RING 34,2X3 MM	1-11, 1-13
315204-0301 ..	O-RING 49,5X3 MM	1-15
315204-0305 ..	O-RING 69,5X3 MM	1-15
315204-0308 ..	O-RING 84,5X3 MM	1-5, 1-7
90439-0287	O-RING, NO.105526	5-5
90439-0284	O-RING, NO.940133	5-5
595667-0200 ..	OUTFEED WHEEL	2-3
90082-0013	OVER VOLT. PROTECT. PU 4C-R 230 VAC	3-29
90439-0288	OVERHAUL KIT, NO. 105463	5-5
90095-0077	OVERLOAD PROTECTION, PKZM 6-10 A	8-13, 8-15
90003-0474	PACKING	6-11
1086724-0201 .	PACKING DESCRIPTION	6-9
779910-0101 ..	PADLOCK	8-43
90220-0091	PAIR TWISTED CABLE 2X2X0,25MM2	8-39
90220-0131	PAIR TWISTED CABLE 3X2X0,25MM2	8-41
1364398-0200 .	PANEL DOOR	4-7
315705-0202 ..	PARALLEL KEY W ROUND ENDS 5X5X25MM	2-11
315705-0230 ..	PARALLEL KEY W. ROUND ENDS 6X6X16 MM	1-5, 1-7, 2-9
315705-0239 ..	PARALLEL KEY W. ROUND ENDS 6X6X40 MM	2-9
315705-0270 ..	PARALLEL KEY W. ROUND ENDS 8X7X40 MM	1-15
311103-0464 ..	PARALLEL PIN ISO 2338 10M6X45 A1	6-15
311103-0270 ..	PARALLEL PIN ISO 2338 4M6X16 A1	1-5, 1-7, 9-9
311103-0306 ..	PARALLEL PIN ISO 2338 5M6X12 A1	1-25
311103-0308 ..	PARALLEL PIN ISO 2338 5M6X16 A1	1-25
311103-0351 ..	PARALLEL PIN ISO 2338 6M6X16 A1	1-17, 9-21
311103-0353 ..	PARALLEL PIN ISO 2338 6M6X20 A1	1-9, 1-15
311103-0357 ..	PARALLEL PIN ISO 2338 6M6X30 A1	1-9
311103-0355 ..	PARALLELL PIN, M6, 6X25 MM	1-15
353033-0105 ..	PARTITITION, 10501.0	8-31, 8-33, 8-35, 8-37
90077-0099	PCB TERMINAL GSE 5/1 1-POLE	4-15
90232-0128	PH.CELL E3S-CL2-5M	2-9
90232-0104	PH.CELL E3S-CT61-D-5M	6-7
90232-0103	PH.CELL E3S-CT61-L-5M	6-7
90232-0117	PH.CELL WT4-2P135S10	1-17

Part No	Description	Page No
476221-0008 ..	PIPE	6-5
2500569-0000 .	PIPE	5-7
2532789-0000 .	PIPE	6-3
90458-0721	PIPE CLIP FOR TUBE D=8 MMSZ 2367080	8-11
90181-0088	PLASTIC RIVET, PR 52314	8-11
555077-0000 ..	PLATE	4-11, 4-13
595719-0000 ..	PLATE	3-5, 3-7
595825-0000 ..	PLATE	1-17
975958-0000 ..	PLATE	4-11, 4-13
1363051-0000 .	PLATE	7-5
2500526-0000 .	PLATE	2-19
2500559-0000 .	PLATE	2-19
2553421-0000 .	PLATE	3-29
39878-1002	PLC PROGRAMME MEDIA	8-13, 8-15
90031-0058	PLC, DIGITAL INPUT MODULE	8-13, 8-15
90031-0059	PLC, DIGITAL OUTPUT MODULE	8-13, 8-15
90031-0068	PLC, POWER SUPPLY	8-13, 8-15
90110-0142	PLUG DA15P064TX	8-13, 8-15
342713-0210 ..	PLUG, EXT THREAD HEX SOCKET 8638-00-140	3-11, 3-13
2553430-0000 .	PNEUMATIC DIAGRAM	6-3
90024-0049	POWER LINE FILTER, 16 A 400 VAC	3-29
90458-2457	POWER SUPPLY UNIT, 100-240VAC/24VDC 2,5A	8-13, 8-15
90439-0155	PRECISION NOZZLE SATURN 322012	5-7
90043-0043	PRESSURE GAUGE WIEGAND 0-10 BAR 1/8"	3-11, 3-13
90274-0074	PRESSURE GUARD, 530 KPA	3-11, 3-13
582084-0000 ..	PRINTED CIRCUIT BOARD	4-15
595646-0000 ..	PROFILE	3-5, 3-7
595714-0000 ..	PROFILE	3-9
1363048-0000 .	PROFILE	7-5
1363049-0000 .	PROFILE	7-5
1363050-0000 .	PROFILE	7-5
1363055-0000 .	PROFILE	7-7
1363056-0000 .	PROFILE	7-7
2519613-0000 .	PROFILE	3-5, 3-7
2519614-0000 .	PROFILE	3-5, 3-7
2519615-0000 .	PROFILE	3-5, 3-7
2519616-0000 .	PROFILE	3-5, 3-7
2519617-0000 .	PROFILE	3-5, 3-7
2519618-0000 .	PROFILE	3-5, 3-7
2519619-0000 .	PROFILE	3-5, 3-7
2532771-0000 .	PROFILE	3-9
2532772-0000 .	PROFILE	3-9
2532773-0000 .	PROFILE	3-5, 3-7
2532775-0000 .	PROFILE	3-5, 3-7
2532776-0000 .	PROFILE	3-5, 3-7
2532777-0000 .	PROFILE	3-5, 3-7
595648-0000 ..	PROFILE 50 X 100	3-5, 3-7
595649-0000 ..	PROFILE 50 X 100	3-5, 3-7
595702-0000 ..	PROFILE 50 X 100	3-5, 3-7
595704-0000 ..	PROFILE 50 X 100	3-5, 3-7
595706-0000 ..	PROFILE 50 X 100	3-5, 3-7
595721-0000 ..	PROFILE 50 X 100	3-5, 3-7
595708-0000 ..	PROFILE 50 X 50	3-9
595709-0000 ..	PROFILE 50 X 50	3-9
595710-0000 ..	PROFILE 50 X 50	3-9
595712-0000 ..	PROFILE 50 X 50	3-9
595713-0000 ..	PROFILE 50 X 50	3-9
595715-0000 ..	PROFILE 50 X 50	3-9
90459-2265	PROHIBITION SIGN ISO, DO NOT WASH	5-5, 6-19
1363095-0000 .	PROTECTION	2-17
1363096-0000 .	PROTECTION	2-17
1363098-0000 .	PROTECTION	1-23
2543164-0200 .	PROTECTION	9-29
975907-0000 ..	PROTECTION PLATE	4-41
2519609-0000 .	PROTECTION PLATE	4-27
2519611-0000 .	PROTECTION PLATE	4-31
2561592-0000 .	PROTECTION PLATE	9-33
2561632-0000 .	PROTECTION PLATE	9-33
595718-0000 ..	PROTECTION RING	1-5, 1-7, 9-9
1363025-0000 .	PROTECTION RING	1-5, 1-7, 9-9
1363036-0000 .	PROTECTIVE CASING	4-11, 4-13
1363037-0000 .	PROTECTIVE CASING	4-11, 4-13
90044-0194	PROX.SW. IN5329/IN3002-BPKG	1-15
595733-0000 ..	PULLEY	1-5, 1-7, 9-7
595734-0000 ..	PULLEY	1-5, 1-7, 9-7
595735-0000 ..	PULLEY	1-11, 1-13
595741-0000 ..	PULLEY	2-7
595767-0000 ..	PULLEY	1-19
595768-0000 ..	PULLEY	1-25
595769-0000 ..	PULLEY	1-25
595822-0000 ..	PULLEY	2-11, 2-15
1363041-0000 .	PULLEY	2-9
90439-0282	PUMP, NO.161424	5-5
90064-0111	PUSH BUTTON, WHITE	4-15

Part No	Description	Page No
583399-0102 ..	PUSHBUTTON BOARD	4-11, 4-13
2532786-0100 .	QUEUE GUARD	6-3
1359042-0104 .	QUEUE GUARD,SINGLE ATTACHM ONLY B50-R109	6-7
90163-0019	QUICK COUPLING, (M) 8202 1202-52	3-15
1363072-0000 .	RACK GEAR	2-11
90459-0130	RADIAL SEAL 15X30X7 MM DUST LIP	2-11
315221-0137 ..	RADIAL SEAL 17X35X7 MM	2-19
315221-0145 ..	RADIAL SEAL 20X35X7 MM	2-19
90091-0446	RADIAL SEAL 20X42X7 MM DUST LIP	2-9
2553423-0000 .	RAIL	3-29
353041-0001 ..	RAIL 10X3MM SSCH	8-25
353042-0004 ..	RAIL TS 35/7,5	8-11
90077-0328	RAIL TS15/5	4-11, 4-13
342716-0209 ..	REDUCER 8-12	3-11, 3-13
90119-0108	RELAY OMRON G2R-2-SNI-24DC	8-13, 8-15
90121-0121	RESISTANCE FIXED, 0,56 KOHM, 2 W	4-15
1364383-0100 .	RESOLVER CABLE	8-39
315753-0117 ..	RETAINING RING FOR BORE DIN 472 22 A2	1-23
315753-0124 ..	RETAINING RING FOR BORE DIN 472 35 A2	1-11, 1-13, 2-19
90141-0020	RETAINING RING FOR BORE DIN 472 42 A2	1-15, 2-9, 2-11
315753-0130 ..	RETAINING RING FOR BORE DIN 472 47 A2	1-5, 1-7, 1-27, 2-11, 2-15
315751-0109 ..	RETAINING RING FOR SHAFT DIN 471 12 A2	1-9
315751-0112 ..	RETAINING RING FOR SHAFT DIN 471 15 A2	1-11, 1-13
315751-0116 ..	RETAINING RING FOR SHAFT DIN 471 20 A2	1-11, 1-13, 1-25, 2-9, 2-11, 2-15
315751-0119 ..	RETAINING RING FOR SHAFT DIN 471 25 A2	1-5, 1-7
315755-0105 ..	RETAINING RING SHAFT DIN 6799 3,2 A2	4-11, 4-13, 4-33, 4-39, 8-7, 8-9
90439-0188	RING	5-5
312927-0150 ..	RIVET NUT M8, CLAMP. LENGTH 3,0 - 4,5	9-37
311520-0329 ..	RIVET, BLANK 2,4X8	3-5, 3-7
595747-0000 ..	ROD	1-11, 1-13
312621-0316 ..	ROD END,NUT M6	3-9
1359389-0000 .	ROLL	2-19
595821-0000 ..	ROLLER	2-11, 2-15
575034-0000 ..	ROUND NUT	4-11, 4-13, 4-33
90439-0283	RTD, NO. 108907	5-5
1363038-0000 .	RUBBER GASKET	4-11, 4-13
1363039-0000 .	RUBBER GASKET	4-11, 4-13
90119-0106	SAFETY RELAY JOKAB RT 6	8-13, 8-15
90220-0104	SCR. CABLE 4X1,5MM2	8-39
90220-0109	SCR. CABLE 5X2,5MM2	8-39
90287-0205	SCREW	4-11, 4-13, 4-33, 4-39, 8-7, 8-9
353240-0006 ..	SCREW CAP PG 29	5-5
312303-0455 ..	SCREW DIN 938 PS M8X20 A4 80	2-5
312303-0461 ..	SCREW DIN 938 PS M8X40 A4 80	3-5, 3-7
312155-0287 ..	SCREW EN 10642 MF6S M4X8 A480	1-9
312155-0325 ..	SCREW EN 10642 MF6S M5X10 A480	7-5
312155-0333 ..	SCREW EN 10642 MF6S M5X25 A480	7-5, 7-7
312155-0366 ..	SCREW EN 10642 MF6S M6X12 A480	2-19
312155-0368 ..	SCREW EN 10642 MF6S M6X16 A480	3-29
312155-0370 ..	SCREW EN 10642 MF6S M6X20 A480	4-11, 4-13, 4-39, 8-7, 8-9
312155-0378 ..	SCREW EN 10642 MF6S M6X40 A480	4-21, 4-23, 4-25, 4-27, 4-29, 4-31, 4-35, 4-37, 4-41
312155-0451 ..	SCREW EN 10642 MF6S M8X20 A480	1-15
312155-0453 ..	SCREW EN 10642 MF6S M8X25 A480	2-19, 7-7, 7-9
312155-0459 ..	SCREW EN 10642 MF6S M8X40 A480	3-5, 3-7
312125-0228 ..	SCREW ISO 1207 M3X16 A4	1-15
312121-0291 ..	SCREW ISO 1207 M4X12 4.8 - 5.8 Z.PL.	8-11, 8-13, 8-15
312125-0291 ..	SCREW ISO 1207 M4X12 A4	1-15
312121-0293 ..	SCREW ISO 1207 M4X16 4.8 - 5.8 Z.PL.	3-29
312125-0293 ..	SCREW ISO 1207 M4X16 A4	3-21, 6-9
312121-0287 ..	SCREW ISO 1207 M4X8 4.8 - 5.8 Z.PL.	8-11
312125-0287 ..	SCREW ISO 1207 M4X8 A4	2-19
312121-0327 ..	SCREW ISO 1207 M5X12 4.8 - 5.8 Z.PL.	8-11
312125-0333 ..	SCREW ISO 1207 M5X25 A4	3-21
312121-0323 ..	SCREW ISO 1207 M5X8 4.8 - 5.8 Z.PL.	3-29, 8-11
312125-0366 ..	SCREW ISO 1207 M6X12 A4	3-5, 3-7, 3-9
312145-0287 ..	SCREW ISO 2009 MFS M4X8 A4	2-19, 4-45
312145-0325 ..	SCREW ISO 2009 MFS M5X10 A4	3-5, 3-7, 3-9
312318-0283 ..	SCREW ISO4029 M4X4 A4	2-11
312318-0364 ..	SCREW ISO4029 M6X10 A4	2-19
312318-0366 ..	SCREW ISO4029 M6X12 A4	2-7, 2-9
312318-0372 ..	SCREW ISO4029 M6X25 A4	3-5, 3-7, 3-9
312318-0362 ..	SCREW ISO4029 M6X8 A4	2-11
312115-0509 ..	SCREW ISO4762 M10X90 A4	1-27
312115-0230 ..	SCREW ISO4762 M3X20 A4	1-17
312115-0299 ..	SCREW ISO4762 M4X30 A4	1-5, 1-7, 9-9
312115-0287 ..	SCREW ISO4762 M4X8 A4	2-19
312115-0329 ..	SCREW ISO4762 M5X16 A4	1-5, 1-7, 4-5
312115-0333 ..	SCREW ISO4762 M5X25 A4	1-27, 3-9
312115-0337 ..	SCREW ISO4762 M5X35 A4	3-11, 3-13
312115-0366 ..	SCREW ISO4762 M6X12 A4	1-5, 1-7, 2-11, 2-19
312115-0368 ..	SCREW ISO4762 M6X16 A4	2-15
312115-0370 ..	SCREW ISO4762 M6X20 A4	1-25, 2-9, 2-11, 2-19, 8-7, 8-9
312115-0372 ..	SCREW ISO4762 M6X25 A4	1-9, 1-23, 2-19
312115-0376 ..	SCREW ISO4762 M6X35 A4	1-25, 2-11

Part No	Description	Page No
312115-0362 ..	SCREW ISO4762 M6X8 A4	1-9
312115-0449 ..	SCREW ISO4762 M8X16 A4	2-15
312115-0451 ..	SCREW ISO4762 M8X20 A4	1-19, 2-5, 2-11, 8-5
312115-0453 ..	SCREW ISO4762 M8X25 A4	1-25
312115-0455 ..	SCREW ISO4762 M8X30 A4	2-9, 2-13, 9-31
312115-0467 ..	SCREW ISO4762 M8X80 A4	1-15, 1-17
312105-0502 ..	SCREW M6S ISO 4014 M10X55 A480	2-11
312105-0376 ..	SCREW M6S ISO 4014 M6X35 A480	3-5, 3-7
312105-0383 ..	SCREW M6S ISO 4014 M6X65 A480	2-11
312105-0386 ..	SCREW M6S ISO 4014 M6X80 A480	1-25, 3-17
312105-0475 ..	SCREW M6S ISO 4014 M8X120 A480	2-7
312105-0459 ..	SCREW M6S ISO 4014 M8X40 A480	3-5, 3-7, 3-9
312105-0461 ..	SCREW M6S ISO 4014 M8X50 A480	2-19, 3-5, 3-7
312105-0466 ..	SCREW M6S ISO 4014 M8X75 A480	1-15
312105-0493 ..	SCREW M6S ISO 4017 M10X25 A480	2-11
312105-0497 ..	SCREW M6S ISO 4017 M10X35 A480	1-23, 2-9, 2-11
312109-0500 ..	SCREW M6S ISO 4017 M10X45 A480	2-15
312105-0291 ..	SCREW M6S ISO 4017 M4X12 A470	1-5, 1-7, 2-9, 9-9
312105-0327 ..	SCREW M6S ISO 4017 M5X12 A480	6-9
312105-0328 ..	SCREW M6S ISO 4017 M5X14 A480	3-11, 3-13, 6-5
312105-0331 ..	SCREW M6S ISO 4017 M5X20 A480	7-7
312109-0335 ..	SCREW M6S ISO 4017 M5X30 A480	7-7
312105-0323 ..	SCREW M6S ISO 4017 M5X8 A480	3-5, 3-7, 4-11, 4-13
312105-0364 ..	SCREW M6S ISO 4017 M6X10 A480	6-5
312105-0366 ..	SCREW M6S ISO 4017 M6X12 A480	1-15, 2-13, 2-17, 2-19, 3-19, 4-9, 4-43, 4-45, 9-31
312105-0368 ..	SCREW M6S ISO 4017 M6X16 A480	1-5, 1-7, 1-9, 1-15, 1-17, 1-19, 2-11, 2-13, 2-19, 3-5, 3-7, 3-21, 3-29, 4-21, 4-23, 4-25, 4-27, 4-29, 4-31, 4-35, 4-37, 4-41, 6-5, 7-7, 9-31
312105-0370 ..	SCREW M6S ISO 4017 M6X20 A480	1-9, 1-11, 1-13, 1-23, 2-13, 2-19, 3-5, 3-7, 3-25, 3-27, 9-31
312105-0371 ..	SCREW M6S ISO 4017 M6X22 A480	4-39
312105-0372 ..	SCREW M6S ISO 4017 M6X25 A480	1-5, 1-7, 1-11, 1-13, 2-19, 3-11, 3-13, 3-17, 3-29, 4-11, 4-13, 4-33
312109-0374 ..	SCREW M6S ISO 4017 M6X30 A480	1-23
312109-0376 ..	SCREW M6S ISO 4017 M6X35 A480	1-23
312105-0449 ..	SCREW M6S ISO 4017 M8X16 A480	2-7
312105-0451 ..	SCREW M6S ISO 4017 M8X20 A480	2-5, 2-13, 2-17, 2-19, 7-5, 8-5
312105-0453 ..	SCREW M6S ISO 4017 M8X25 A480	1-15, 2-19, 3-5, 3-7, 6-5, 9-37
312105-0455 ..	SCREW M6S ISO 4017 M8X30 A480	1-15, 1-23, 2-5, 2-9, 2-11, 2-17, 2-19, 9-37
312109-0457 ..	SCREW M6S ISO 4017 M8X35 A480	2-11
312109-0459 ..	SCREW M6S ISO 4017 M8X40 A480	1-15, 2-19, 7-5, 7-7
312109-0461 ..	SCREW M6S ISO 4017 M8X50 A480	1-5, 1-7, 1-15
312105-0287 ..	SCREW M6S ISO4017 M4X8 A470	1-21, 1-23
312109-0378 ..	SCREW M6S ISO4017 M6X40 A480	1-21
975939-0000 ..	SEAL	4-45
90091-0445	SEAL COVER, >47, H=6,5	2-11, 2-15
90042-0385	SEAL KIT 04904 273 09	3-11, 3-13
90157-0041	SEALING COMPOUND	4-11, 4-13, 4-29, 4-33, 4-35, 6-5
595633-0000 ..	SEALING FLANGE	1-15
90439-0295	SERVICE KIT, NO. 111940	5-7
90458-0397	SERVO DRIVE DMC2 50720 P	8-13, 8-15
90045-0194	SERVO MOTOR EP 115-131-66T3B	1-19
44892-1002	SERVO PROGRAMME MEDIA	8-13, 8-15
2542356-0000 .	SET OF SIGNS	3-11, 3-13
359011-0821 ..	SET OF SIGNS 6-FW 1-50	3-23, 4-19, 8-21, 8-23, 8-25
359011-0822 ..	SET OF SIGNS 6-FW 51-100	3-23
595881-0000 ..	SETTING TEMPLATE	6-15
1363105-0000 .	SETTING TEMPLATE	6-13, 9-25
1363106-0000 .	SETTING TEMPLATE	6-13, 9-25
1364387-0100 .	SETTING TEMPLATE	6-3, 9-5
1367353-0100 .	SETTING TEMPLATE	6-3
533233-0000 ..	SHAFT	2-19
595630-0000 ..	SHAFT	1-5, 1-7
595770-0000 ..	SHAFT	1-25
595816-0000 ..	SHAFT	1-21
1359390-0000 .	SHAFT	2-19
1363042-0000 .	SHAFT	2-9
1363057-0000 .	SHAFT	7-7
1364411-0000 .	SHAFT	2-11
2519621-0000 .	SHAFT	2-9
2519622-0000 .	SHAFT	2-11
595730-0000 ..	SHEET	2-5
595786-0000 ..	SHEET	2-9
595900-0000 ..	SHEET	2-13
975885-0000 ..	SHEET	4-33
1363013-0000 .	SHEET	2-13
1364410-0000 .	SHEET	2-11
90113-0427	SHUT O FF VALVE	3-15
484701-0000 ..	SHUTTER	6-5, 9-31
595729-0000 ..	SIDE PLATE	2-5
595731-0000 ..	SIDE PLATE	2-5
2561628-0000 .	SIDE PLATE	9-31
2561629-0000 .	SIDE PLATE	9-31
2561630-0000 .	SIDE PLATE	9-31
2561631-0000 .	SIDE PLATE	9-31
2589837-0000 .	SIDE PLATE	9-31

Part No	Description	Page No
1021990-0000	SIGN	4-45
486826-0001	SIGN "EMERGENCY STOP"	4-11, 4-13, 8-9
359010-0613	SIGN BOARD BSG 1/2 "N"	8-25
359240-0100	SIGN HOLDER FOR 359240-0001	4-27
90194-0152	SIGN, EARTH	4-11, 4-13, 8-5, 8-7, 8-9, 8-11
90194-0164	SIGN, FRAME/CHASSIS WITHIN CIRCLE	8-11
90194-0080	SIGN, IDENTIFICATION OF WIRING	8-9
359241-0124	SIGN, MAIN SWITCH	4-27
90328-0002	SILENCER	3-11, 3-13
90459-0321	SILENCER, 1/4" 231267	5-7
578196-0000	SLEEVE	4-21, 4-23, 4-25, 4-27, 4-29, 4-31, 4-35, 4-37, 4-41
595635-0000	SLEEVE	1-5, 1-7
595740-0000	SLEEVE	2-7
595742-0000	SLEEVE	1-11, 1-13, 1-25
595748-0000	SLEEVE	1-11, 1-13, 9-13, 9-15
595751-0000	SLEEVE	1-11, 1-13, 9-13, 9-15
1259310-0000	SLEEVE	8-11
1361850-0000	SLEEVE	8-11
1363063-0000	SLEEVE	1-11, 1-13, 9-13, 9-15
1363092-0000	SLEEVE	1-11, 1-13, 9-13, 9-15
1364422-0000	SLEEVE	1-11, 1-13, 9-13, 9-15
1364425-0000	SLEEVE	1-11, 1-13, 9-13, 9-15
2500545-0000	SLEEVE	1-11, 1-13, 9-13, 9-15
2500547-0000	SLEEVE	1-11, 1-13, 9-13, 9-15
90330-0102	SLEEVE, INT, THREAD, NO., R-201R1/4	6-17
595852-0000	SLIDE RAIL	2-13, 9-31
466074-0002	SLIDER	2-13, 9-31
1065410-0000	SLOTTED PIN	3-5, 3-7, 3-9, 7-5, 7-7
39878-0002	SOFTWARE	8-17
44892-0002	SOFTWARE	8-19
90042-0074	SOLENOID VALVE MECMAN 581-211-100	3-11, 3-13
90459-0322	SOLENOID VALVE, 771132	5-7
90439-0280	SOLENOID, 229519	5-5
476220-0000	SPACER	2-13, 9-31
479110-0000	SPACER	3-21
555287-0000	SPACER	4-11, 4-13
555288-0000	SPACER	4-11, 4-13
555333-0000	SPACER	4-11, 4-13
578197-0000	SPACER	4-21, 4-23, 4-25, 4-27, 4-29, 4-31, 4-35, 4-37, 4-41
975849-0000	SPACER	4-11, 4-13
1363076-0000	SPACER	2-11
1380701-0000	SPACER	2-13, 9-31
2500560-0000	SPACER	2-19
2500561-0000	SPACER	2-19
595804-0000	SPACER DISC	1-25
1363040-0000	SPACER PLATE	2-7
44891-0100	SPARE PART KIT	8-3
556365-0000	SPLICING DEVICE	7-7
595696-0100	SPLICING TABLE	7-3
532412-0000	SPRING	6-9
595868-0000	SPRING	1-9
959658-0000	SPRING	4-11, 4-13, 4-33, 4-39, 8-7, 8-9
595813-0000	SPRING BRACKET	1-21
1364363-0000	SPRING BRACKET	1-15
595656-0100	SPRING HOLDER	1-3
595652-0100	SQUEEZER	1-3
2542364-0100	SQUEEZER	9-5
556386-0000	STEERING	9-37
1363101-0000	STEERING RAIL	2-9
1363102-0000	STEERING RAIL	2-9
90051-0064	STELLAR KNOB, NO. 8323-4357	2-11
90051-0079	STELLAR KNOB, SQUARE HOLE, NO. 8306 1304	1-25
318853-0101	STELLAR KNOB, SQUARE HOLE, NO. 8306-1010	1-23
342722-0205	STRAIGHT COUPLING D=8-G1/4"	3-25
2543171-0200	STRAW TOP RIGHT	9-3
1021991-0000	STRIP	4-45
90143-0057	STRIP EMKA 1011-05 21X11MM	8-5
975888-0001	STRUT	4-39
975888-0003	STRUT	4-11, 4-13
975888-0009	STRUT	8-7, 8-9
975889-0001	STRUT	4-39
975889-0003	STRUT	4-11, 4-13
975889-0011	STRUT	8-7, 8-9
2532800-0000	STUD SCREW	2-19
1359451-0000	SUPPORT	2-19
595664-0200	SUPPORT BELT	2-3
1363054-0000	SUPPORT IRON	7-7
595728-0000	SUPPORT PLATE	1-15, 9-27
1368542-0000	SUPPORT PLATE	1-15, 9-27
595724-0000	SUPPORT RING	1-5, 1-7, 9-9
1363024-0000	SUPPORT RING	1-5, 1-7, 9-9
1364421-0000	SUPPORT RING	1-5, 1-7, 9-9
90439-0285	SUPPORT RING, NO. 954013	5-5
90064-0124	SWITCH, EM. STOP, ZB2-BS844+ZB2-BZ1045	4-11, 4-13, 8-9

Part No	Description	Page No
342748-0109 ..	T-CONNECTION 12MM	3-11, 3-13
90055-0278	T-COUPLING, ADJ.12-G1/4"	3-11, 3-13
1359085-0000 .	T-HOLDER	2-13, 9-31
595695-0100 ..	TABLE	7-3
90144-0067	TAPE ELFA NO:1160	4-45
90144-0072	TAPE SCOTCH VHBS 4945 W=12,7MM	8-7
90256-0001	TAPE SUPPLY HOLDER, TYPE 2000	7-7
312504-0342 ..	TAPPING SCREW ISO 7049-A4-ST4,2X13-C-Z	4-5
1364400-0000 .	TENSION SPRING	1-9
2500571-0100 .	TERMINAL	8-13, 8-15
2500572-0100 .	TERMINAL	8-13, 8-15
2500573-0100 .	TERMINAL	8-13, 8-15
2500574-0100 .	TERMINAL	8-13, 8-15
2500575-0100 .	TERMINAL	8-13, 8-15
2532781-0100 .	TERMINAL	3-21
2542372-0100 .	TERMINAL	4-11, 4-13
2543145-0100 .	TERMINAL	8-13, 8-15
2543146-0100 .	TERMINAL	8-13, 8-15
2543147-0100 .	TERMINAL	8-13, 8-15
2543148-0100 .	TERMINAL	8-13, 8-15
2553445-0100 .	TERMINAL	3-29
90439-0211	THERMOSTAT	5-9
90439-0279	THERMOSTAT	5-5
90417-0418	TIMING BELT AT5 1020X16 MM	1-25, 9-23
90417-0417	TIMING BELT AT5 1075X16 MM	1-25, 9-23
90417-0320	TIMING BELT AT5 525X16 MM	1-19
90458-1922	TIMING BELT T10X780X16 POLYURETHANE	2-19
533221-0000 ..	TOOTHED PULLEY	2-19
1020646-0000 .	TOOTHED PULLEY	2-19
90208-0101	TRANTORQUE BUSHING 9MM DB	1-5, 1-7
2561633-0000 .	TUBE	9-31
90166-0068	TUBE 12 MM PA BLUE	3-11, 3-13
90166-0013	TUBE 8 MM PA BLUE	3-11, 3-13
1124035-0100 .	TUNNEL	6-3
577862-0000 ..	TUNNEL HALF	6-5
595791-0000 ..	TURN SPRING	1-15
595873-0000 ..	TURN SPRING	1-15
90237-0175	TURNING HANDLE	4-11, 4-13, 4-39, 8-7, 8-9
2543163-0200 .	U-FEED	9-3
90252-0036	V-BELT J22	2-19
315220-0172 ..	V-RINGS 29X37X10,5 MM V-32S	2-19
90347-0011	VIBRATION DAMPER MEGI 781056	3-5, 3-7, 3-9
90001-0033	WALL SOCKET OUTLET	8-5
581689-0400 ..	WARNING LAMP	4-3
90459-2232	WARNING SIGN ANSI (H), DO NOT WASH	5-5, 6-19
359725-0120 ..	WARNING SIGN ANSI (H), HEAT ENERGY	1-23, 5-5, 6-19
90459-2021	WARNING SIGN ANSI (H), READ OM	6-19, 8-5
359715-0100 ..	WARNING SIGN ANSI(H), ELECTRIC SHOCK	3-21, 3-29, 6-19, 8-7, 8-9
90458-2635	WARNING SIGN ANSI(H), EXT.VOLTAGE,ORANGE	6-19, 8-13, 8-15
359725-0121 ..	WARNING SIGN ANSI, HEAT ENERGY	6-19
359705-0015 ..	WARNING SIGN ISO, RISK OF ELECTRIC SHOCK	3-21, 3-29, 6-19, 8-7, 8-9
2553422-0100 .	WARNING SIGNS	6-3
548599-0000 ..	WASHER	3-5, 3-7, 3-9, 7-5, 7-7
595637-0000 ..	WASHER	1-5, 1-7
595641-0000 ..	WASHER	1-9
595752-0000 ..	WASHER	1-11, 1-13, 9-13, 9-15
595772-0000 ..	WASHER	1-19
975924-0000 ..	WASHER	4-11, 4-13, 4-33
1363064-0000 .	WASHER	1-11, 1-13, 9-13, 9-15
1363093-0000 .	WASHER	1-11, 1-13, 9-13, 9-15
1364424-0000 .	WASHER	1-11, 1-13, 9-13, 9-15
1367354-0000 .	WASHER	1-11, 1-13, 9-13, 9-15
2500546-0000 .	WASHER	1-11, 1-13, 9-13, 9-15
2500548-0000 .	WASHER	1-11, 1-13, 9-13, 9-15
315105-0156 ..	WASHER BRB 6.7X14 RFR	2-13, 3-19, 4-45
315101-0136 ..	WASHER BRB, 4,3/8 H=0,8	3-29, 8-5, 8-11
315105-0173 ..	WASHER BRB10,5X22RFR	1-9, 1-23, 2-9, 2-11, 2-15
315105-0124 ..	WASHER BRB3,2X6RFR	1-15, 4-11, 4-13
315105-0136 ..	WASHER BRB4,3XRFR	1-21, 2-9, 2-19, 3-21, 6-9
315105-0146 ..	WASHER BRB5,3X10RFR	1-23, 3-5, 3-7, 3-11, 3-13, 4-5, 4-11, 4-13, 4-39, 6-5, 6-9, 7-7, 8-7, 8-9
315105-0153 ..	WASHER BRB6,4X12RFR	1-9, 1-11, 1-13, 1-17, 1-23, 2-9, 2-11, 2-13, 2-17, 2-19, 3-5, 3-7, 3-11, 3-13, 3-17, 3-25, 3-27, 3-29, 4-9, 4-11, 4-13, 4-21, 4-23, 4-25, 4-27, 4-29, 4-31, 4-33, 4-35, 4-37, 4-39, 4-41, 4-43, 6-5, 7-7, 8-7, 8-9, 9-31, 9-33
315105-0165 ..	WASHER BRB8,4X16RFR	1-15, 1-23, 2-5, 2-7, 2-9, 2-11, 2-13, 2-15, 2-17, 2-19, 3-5, 3-7, 6-5, 7-5, 8-5, 9-31, 9-37
315233-0110 ..	WASHER CAPTIVE SEALING G1/4	3-25
90005-0102	WASHER PLAIN ROUND 5/19, H=1 FZB	3-29, 8-11
315101-0124 ..	WASHER PLAIN, BRB, 3,2/6 H=0,5	8-5
315101-0146 ..	WASHER PLAIN, BRB, 5,3/10 H=1	3-29, 8-11
315101-0153 ..	WASHER PLAIN, BRB, 6,4/12 H=1,5	3-11, 3-13, 3-21, 3-29, 8-5
315115-0173 ..	WASHER PLAIN, TBRB 10,5/22 H=4	2-11
315115-0165 ..	WASHER PLAIN, TBRB 8,4/16 H=3	2-19
315121-0153 ..	WASHER PLAIN, TBRSB 6,4/22 H=4	3-29, 8-11
315125-0153 ..	WASHER TBRSB 6,4X22X4 A4	1-21, 1-23, 1-25, 2-11, 2-19

Part No	Description	Page No
315125-0165 ..	WASHER TBRSB 8,4X26X5 A4	2-11, 9-37
90042-0371	WEAR & TEAR PARTS KIT	3-11, 3-13
533240-0000 ..	WHEEL	2-19
561652-0000 ..	WHEEL	2-19
90457-0973	WORM GEAR BS40F-0O-VM-3-IEC 63-B14	2-7
90056-0174	WORM GEAR VF 30 P1 70 HS B3	2-11
90113-0407	YOKE, SINGLE	3-15

Part No	Description	Page No

Part No	Description	Page No	Part No	Description	Page No

Machine Type	Group Description	Page No

Tetra Pak

SPC
Spare Parts Catalogue

Pos	Part No	Description	Page No
A			
A002	90031-0058	PLC, DIGITAL INPUT MODULE	8-13, 8-15
A003	90031-0058	PLC, DIGITAL INPUT MODULE	8-13, 8-15
A004	90031-0058	PLC, DIGITAL INPUT MODULE	8-13, 8-15
A005	90031-0059	PLC, DIGITAL OUTPUT MODULE	8-13, 8-15
A006	90031-0059	PLC, DIGITAL OUTPUT MODULE	8-13, 8-15
A007	90031-0059	PLC, DIGITAL OUTPUT MODULE	8-13, 8-15
A008	90031-0078	GENIUS BUS CONTROLLER	8-13, 8-15
A060	90031-0051	BASEPLATE, 10-SLOT	8-13, 8-15
A061	90119-0106	SAFETY RELAY JOKAB RT 6	8-13, 8-15
A071	583399-0102	PUSHBUTTON BOARD	4-11, 4-13
A072	68699-0101	MULTIPLEXER CARD 56LED	4-11, 4-13
B			
B100	90274-0074	PRESSURE GUARD, 530 KPA	3-11, 3-13
B100:1	90042-0371	WEAR & TEAR PARTS KIT	3-11, 3-13
B100:2	90042-0385	SEAL KIT 04904 273 09	3-11, 3-13
B101	90044-0139	KEY SAF.SW. AZ16-02 ZVR K-2254	3-9
B102	90044-0139	KEY SAF.SW. AZ16-02 ZVR K-2254	3-9
B104	90232-0128	PH.CELL E3S-CL2-5M	2-9
B106	90044-0194	PROX.SW. IN5329/IN3002-BPKG	1-15
B107	90232-0117	PH.CELL WT4-2P135S10	1-17
B108	90232-0128	PH.CELL E3S-CL2-5M	2-9
B905 .1	90232-0103	PH.CELL E3S-CT61-L-5M	6-7
B905 .2	90232-0104	PH.CELL E3S-CT61-D-5M	6-7
B907 .1	90232-0103	PH.CELL E3S-CT61-L-5M	6-7
B907 .2	90232-0104	PH.CELL E3S-CT61-D-5M	6-7
D			
D001.1	39878-1002	PLC PROGRAMME MEDIA	8-13, 8-15
D001	90031-0075	CPU363, SERIAL COMMUNICATION	8-13, 8-15
E			
E101	90164-0015	LIGHT FIXTURE, DWDCV111B/230V 50HZ	3-19
E101:1	90297-0007	FLUORESCENT TUBE, PLS 11	3-19
F			
F000	90082-0013	OVER VOLT. PROTECT. PU 4C-R 230 VAC	3-29
F001	90007-0138	CIRCUIT BREAKER, 2P 10 A K	8-13, 8-15
F001.1	90458-2506	FUSE HOLDER, USCC2 2-POLE ULTRASAFE	8-13, 8-15
F001	90458-2511	FUSE, ATDR-10	8-13, 8-15
F003	90007-0128	CIRCUIT BREAKER, 1P 6 A K	8-13, 8-15
F003.1	90458-2507	FUSE HOLDER, USCC1 1-POLE ULTRASAFE	8-13, 8-15
F003	90458-2510	FUSE, ATDR-6	8-13, 8-15
F005	90007-0129	CIRCUIT BREAKER, 1P 10 A K	8-13, 8-15
F005.1	90458-2507	FUSE HOLDER, USCC1 1-POLE ULTRASAFE	8-13, 8-15
F005	90458-2511	FUSE, ATDR-10	8-13, 8-15
F006	90007-0129	CIRCUIT BREAKER, 1P 10 A K	8-13, 8-15
F006.1	90458-2507	FUSE HOLDER, USCC1 1-POLE ULTRASAFE	8-13, 8-15
F006	90458-2511	FUSE, ATDR-10	8-13, 8-15
F007	90007-0129	CIRCUIT BREAKER, 1P 10 A K	8-13, 8-15
F007.1	90458-2507	FUSE HOLDER, USCC1 1-POLE ULTRASAFE	8-13, 8-15
F007	90458-2511	FUSE, ATDR-10	8-13, 8-15
F010	90111-0172	EARTH FAULT BREAKER, F 362-25/0.03	8-13, 8-15
G			
G001	90031-0068	PLC, POWER SUPPLY	8-13, 8-15
G009.1	44892-1002	SERVO PROGRAMME MEDIA	8-13, 8-15
G009.2	90045-0376	CONNECTOR KIT 9-032-011-970	8-13, 8-15
G009.3	90110-0142	PLUG DA15P064TX	8-13, 8-15
G009.4	90110-0145	COVER 8630-5169014-15-01	8-13, 8-15
G009	90458-0397	SERVO DRIVE DMC2 50720 P	8-13, 8-15
G011	90458-2457	POWER SUPPLY UNIT, 100-240VAC/24VDC 2,5A	8-13, 8-15
G012	90458-2457	POWER SUPPLY UNIT, 100-240VAC/24VDC 2,5A	8-13, 8-15
G013	90458-2457	POWER SUPPLY UNIT, 100-240VAC/24VDC 2,5A	8-13, 8-15
G020	90459-0178	FREQUENCY CHANGER 3G3MV-AB004	8-13, 8-15
G021	90459-0238	FREQUENCY CHANGER 3G3MV-AB007	8-13, 8-15
G022	90459-0178	FREQUENCY CHANGER 3G3MV-AB004	8-13, 8-15
H			
H001	90124-0027	LAMP HOLDER BA9S	4-11, 4-13
H002	90124-0027	LAMP HOLDER BA9S	4-11, 4-13
H003	90124-0027	LAMP HOLDER BA9S	4-11, 4-13
H006	90038-0047	DIODE	4-15
H007	90038-0047	DIODE	4-15
H008	90038-0047	DIODE	4-15
H009	90038-0047	DIODE	4-15
H010	90038-0047	DIODE	4-15
H011	90038-0047	DIODE	4-15
H012	90038-0047	DIODE	4-15
H013	90038-0047	DIODE	4-15
H021	90038-0045	LIGHT DIODE, 24-60V YELLOW	4-11, 4-13
H022	90038-0045	LIGHT DIODE, 24-60V YELLOW	4-11, 4-13
H025	90038-0045	LIGHT DIODE, 24-60V YELLOW	4-11, 4-13
H026	90038-0045	LIGHT DIODE, 24-60V YELLOW	4-11, 4-13
H027	90038-0045	LIGHT DIODE, 24-60V YELLOW	4-11, 4-13
H101	90458-0292	BASE, KT70-1001	4-5
K			
K001	90075-0124	CONTACTOR, 4KW 24VDC	8-13, 8-15

Pos	Part No	Description	Page No
K			
K002	90075-0124	CONTACTOR, 4KW 24VDC	8-13, 8-15
K003	90075-0141	CONTACTOR, 4KW 24VDC	8-13, 8-15
K009	90075-0124	CONTACTOR, 4KW 24VDC	8-13, 8-15
K010	90119-0108	RELAY OMRON G2R-2-SNI-24DC	8-13, 8-15
K010 .1	90129-0018	BASE OMRON P2RF-08-E	8-13, 8-15
K020.1	90024-0034	DIODE SURGE SUPPRESSOR, FD B DIL	8-13, 8-15
K020	90075-0124	CONTACTOR, 4KW 24VDC	8-13, 8-15
K095	90075-0143	CONTACTOR, 4KW 24VDC	8-13, 8-15
K098	90119-0108	RELAY OMRON G2R-2-SNI-24DC	8-13, 8-15
K098.1	90129-0018	BASE OMRON P2RF-08-E	8-13, 8-15
K099	90119-0108	RELAY OMRON G2R-2-SNI-24DC	8-13, 8-15
K099 .1	90129-0018	BASE OMRON P2RF-08-E	8-13, 8-15
M			
M001	90422-0049	COOLER, SK 3203.100	8-7
M101	90458-2482	MOTOR 3GVA062142-CSB	2-7
M103	90458-1373	GEARS, HELICAL MOTOR SK ON-63 L/4	2-19
M109	90045-0194	SERVO MOTOR EP 115-131-66T3B	1-19
P			
P001	90178-0007	HOUR COUNTER, BG 40,17-1 12-48VDC	8-13, 8-15
Q			
Q000	90111-0132	MAIN SWITCH P1-25/EA/SVB-SW/N/HI11/H-P14	3-29
Q009	90095-0077	OVERLOAD PROTECTION, PKZM 6-10 A	8-13, 8-15
Q009 .1	90259-0317	AUX.CONTACT K&M NHI 11-PKZ0	8-13, 8-15
R			
R001	90121-0121	RESISTANCE FIXED, 0,56 KOHM, 2 W	4-15
R002	90121-0121	RESISTANCE FIXED, 0,56 KOHM, 2 W	4-15
R003	90121-0121	RESISTANCE FIXED, 0,56 KOHM, 2 W	4-15
R004	90121-0121	RESISTANCE FIXED, 0,56 KOHM, 2 W	4-15
R005	90121-0121	RESISTANCE FIXED, 0,56 KOHM, 2 W	4-15
R007	90121-0121	RESISTANCE FIXED, 0,56 KOHM, 2 W	4-15
R008	90121-0121	RESISTANCE FIXED, 0,56 KOHM, 2 W	4-15
R009	90121-0121	RESISTANCE FIXED, 0,56 KOHM, 2 W	4-15
R010	90121-0121	RESISTANCE FIXED, 0,56 KOHM, 2 W	4-15
R011	90121-0121	RESISTANCE FIXED, 0,56 KOHM, 2 W	4-15
R012	90121-0121	RESISTANCE FIXED, 0,56 KOHM, 2 W	4-15
R013	90121-0121	RESISTANCE FIXED, 0,56 KOHM, 2 W	4-15
R014	90121-0121	RESISTANCE FIXED, 0,56 KOHM, 2 W	4-15
R015	90121-0121	RESISTANCE FIXED, 0,56 KOHM, 2 W	4-15
R016	90121-0121	RESISTANCE FIXED, 0,56 KOHM, 2 W	4-15
R017	90121-0121	RESISTANCE FIXED, 0,56 KOHM, 2 W	4-15
R018	90121-0121	RESISTANCE FIXED, 0,56 KOHM, 2 W	4-15
R019	90121-0121	RESISTANCE FIXED, 0,56 KOHM, 2 W	4-15
R020	90121-0121	RESISTANCE FIXED, 0,56 KOHM, 2 W	4-15
R021	90121-0121	RESISTANCE FIXED, 0,56 KOHM, 2 W	4-15
R022	90121-0121	RESISTANCE FIXED, 0,56 KOHM, 2 W	4-15
R023	90121-0121	RESISTANCE FIXED, 0,56 KOHM, 2 W	4-15
R101	90439-0274	HOT MELT UNIT, NO. 249788	5-5
R101:01	90439-0288	OVERHAUL KIT, NO. 105463	5-5
R101:02	90439-0287	O-RING, NO.105526	5-5
R101:03	90439-0285	SUPPORT RING, NO. 954013	5-5
R101:04	90439-0284	O-RING, NO.940133	5-5
R101:05	90439-0289	CIRCUIT BOARD. NO. 248042	5-5
R101:06	352550-0131	FINE-WIRE, 1 A	5-5
R101:07	90439-0292	CONTROL UNIT, NO. 248041	5-5
R101:08	90439-0291	CIRCUIT BOARD, NO. 248043	5-5
R101:09	90439-0290	DISPLAY, NO. 248044	5-5
R101:10	90439-0201	O-RING	5-5
R101:10	90439-0283	RTD, NO. 108907	5-5
R101:12	90439-0189	O-RING	5-5
R101:13	90439-0188	RING	5-5
R101:14	90439-0187	O-RING	5-5
R101:15	90439-0184	O-RING	5-5
R101:16	90439-0276	FUSE, NO. 939491	5-5
R101:17	90439-0282	PUMP, NO.161424	5-5
R101:18	90439-0281	FILTER, NO. 165870	5-5
R101:19	90439-0280	SOLENOID, 229519	5-5
R101:20	90439-0279	THERMOSTAT	5-5
R101:21	90439-0278	FILTER, NO. 274578	5-5
S			
S001	90064-0124	SWITCH, EM. STOP, ZB2-BS844+ZB2-BZ1045	4-11, 4-13
S002	90064-0124	SWITCH, EM. STOP, ZB2-BS844+ZB2-BZ1045	8-9
W			
W099	351150-0431	CABLE OLFLEX 2X0,75 MM2 LIGHT/GREY	8-39
W100	90220-0109	SCR. CABLE 5X2,5MM2	8-39
W101	90220-0104	SCR. CABLE 4X1,5MM2	8-39
W102	90220-0104	SCR. CABLE 4X1,5MM2	8-39
W102.1	353245-0011	GLAND, EXTENDED WITH INSERT, PR18,6/PG11	8-39
W103	90220-0104	SCR. CABLE 4X1,5MM2	8-39
W104	351150-0413	CABLE OLFLEX 4X1,5 MM2 LIGHT/GREY	8-39
W105	351150-0412	CABLE OLFLEX 3X1,5 MM2 LIGHT/GREY	8-39
W108	1364383-0100	RESOLVER CABLE	8-39
W109	90220-0084	MOTOR CABLE 4X2,5+2(2X0.75)+SHIELD	8-39

Pos	Part No	Description	Page No
W			
W110	351150-0425	CABLE OLFLEX 25X0,75 MM2 LIGHT/GREY	8-39
W111	351150-0405	CABLE OLFLEX 5X0,75 MM2 LIGHT/GREY	8-39
W112	351150-0405	CABLE OLFLEX 5X0,75 MM2 LIGHT/GREY	8-39
W116	351150-0405	CABLE OLFLEX 5X0,75 MM2 LIGHT/GREY	8-39
W117	351150-0431	CABLE OLFLEX 2X0,75 MM2 LIGHT/GREY	8-39
W200	351150-0403	CABLE OLFLEX 3X0,75 MM2 LIGHT/GREY	8-39
W201	351150-0403	CABLE OLFLEX 3X0,75 MM2 LIGHT/GREY	8-39
W202	351150-0403	CABLE OLFLEX 3X0,75 MM2 LIGHT/GREY	8-39
W203	351150-0403	CABLE OLFLEX 3X0,75 MM2 LIGHT/GREY	8-39
W215	351150-0403	CABLE OLFLEX 3X0,75 MM2 LIGHT/GREY	8-39
W250	351150-0425	CABLE OLFLEX 25X0,75 MM2 LIGHT/GREY	8-39
W301	351150-0424	CABLE OLFLEX 18X0,75 MM2 LIGHT/GREY	8-39
W302	351150-0431	CABLE OLFLEX 2X0,75 MM2 LIGHT/GREY	8-39
W303	351150-0431	CABLE OLFLEX 2X0,75 MM2 LIGHT/GREY	8-39
W305	90220-0091	PAIR TWISTED CABLE 2X2X0,25MM2	8-39
W901	351150-0403	CABLE OLFLEX 3X0,75 MM2 LIGHT/GREY	8-39
W999	351162-0105	CABLE AWM 1X2,5 MM2 YELLOW-GREEN	8-39
X			
X000	2553445-0100	TERMINAL	3-29
X001	2500574-0100	TERMINAL	8-13, 8-15
X002	2500572-0100	TERMINAL	8-13, 8-15
X003	2500571-0100	TERMINAL	8-13, 8-15
X004	2500573-0100	TERMINAL	8-13, 8-15
X007	90001-0033	WALL SOCKET OUTLET	8-5
X010	2542372-0100	TERMINAL	4-11, 4-13
X011	90077-0099	PCB TERMINAL GSE 5/1 1-POLE	4-15
X011 :1	90077-0325	END PLATE	4-15
X011 :2	359011-0807	MARKING PLATES 5-FW 1-50	4-15
X011 :3	359011-0808	MARKING PLATES 5-FW 51-100	4-15
XL10	2500575-0100	TERMINAL	8-13, 8-15
XL11	2543145-0100	TERMINAL	8-13, 8-15
XL12	2543146-0100	TERMINAL	8-13, 8-15
XL13	2543147-0100	TERMINAL	8-13, 8-15
X090	2543148-0100	TERMINAL	8-13, 8-15
X200	2532781-0100	TERMINAL	3-21
Y			
Y100	90042-0392	CONTACT 2 POLE + EARTH	3-11, 3-13
Y102.1	90459-0322	SOLENOID VALVE, 771132	5-7
Y102.2	90459-0322	SOLENOID VALVE, 771132	5-7
Z			
Z000	90024-0049	POWER LINE FILTER, 16 A 400 VAC	3-29
Z001	90024-0036	FILTERED TERMINAL BLOCK	3-29
Z001	90459-0796	FILTER 3G3MV-PFI 1010-E	8-13, 8-15
Z002	90459-0797	FILTER 3G3MV-PFI 1020-E	8-13, 8-15
Z003	90459-0796	FILTER 3G3MV-PFI 1010-E	8-13, 8-15
Z009	90024-0037	INPUT FILTER, 8 A	8-5
Z011	90024-0047	EMI SUPPRESSION FERRITE	8-13, 8-15
Z012	90024-0047	EMI SUPPRESSION FERRITE	8-15
Z013	90024-0047	EMI SUPPRESSION FERRITE	8-15
Z015	90024-0064	FERRITE, RT187-102-170-A5	8-13, 8-15

Pos	Part No	Description	Page No	Pos	Part No	Description	Page No

Machine Type	Group Description	Page No

Tetra Pak

SPC
Spare Parts Catalogue

A- Critical Spare Part

Pos	Part No	Description	Page No
D001.1	39878-1002	PLC PROGRAMME MEDIA	8-13, 8-15
G009.1	44892-1002	SERVO PROGRAMME MEDIA	8-13, 8-15
A072	68699-0101	MULTIPLEXER CARD 56LED	4-11, 4-13
F003	90007-0128	CIRCUIT BREAKER, 1P 6 A K	8-13, 8-15
F005	90007-0129	CIRCUIT BREAKER, 1P 10 A K	8-13, 8-15
F001	90007-0138	CIRCUIT BREAKER, 2P 10 A K	8-13, 8-15
Z001	90024-0036	FILTERED TERMINAL BLOCK	3-29
Z000	90024-0049	POWER LINE FILTER, 16 A 400 VAC	3-29
A060	90031-0051	BASEPLATE, 10-SLOT	8-13, 8-15
A002	90031-0058	PLC, DIGITAL INPUT MODULE	8-13, 8-15
A005	90031-0059	PLC, DIGITAL OUTPUT MODULE	8-13, 8-15
G001	90031-0068	PLC, POWER SUPPLY	8-13, 8-15
D001	90031-0075	CPU363, SERIAL COMMUNICATION	8-13, 8-15
A008	90031-0078	GENIUS BUS CONTROLLER	8-13, 8-15
100	90042-0074	SOLENOID VALVE MECMAN 581-211-100	3-11, 3-13
120	90042-0345	COIL 24V DC	3-11, 3-13
B100:1	90042-0371	WEAR & TEAR PARTS KIT	3-11, 3-13
B100:2	90042-0385	SEAL KIT 04904 273 09	3-11, 3-13
Y100	90042-0392	CONTACT 2 POLE + EARTH	3-11, 3-13, 5-7
010	90043-0128	MANOMETER	3-15
B101	90044-0139	KEY SAF.SW. AZ16-02 ZVR K-2254	3-9
B106	90044-0194	PROX.SW. IN5329/IN3002-BPKG	1-15
M109	90045-0194	SERVO MOTOR EP 115-131-66T3B	1-19
G009.2	90045-0376	CONNECTOR KIT 9-032-011-970	8-13, 8-15
120	90056-0173	GEARS, BEVEL RAN 20 DA	2-7
500	90056-0175	GEARS, PLANETARY VRKF-5C-500	1-5, 1-7
S001	90064-0124	SWITCH, EM. STOP, ZB2-BS844+ZB2-BZ1045	4-11, 4-13
K001	90075-0124	CONTACTOR, 4KW 24VDC	8-13, 8-15
K003	90075-0141	CONTACTOR, 4KW 24VDC	8-13, 8-15
K095	90075-0143	CONTACTOR, 4KW 24VDC	8-13, 8-15
F000	90082-0013	OVER VOLT. PROTECT. PU 4C-R 230 VAC	3-29
600	90083-0054	CAM ROLLER, 10X26X36 MM	1-9
300	90091-0446	RADIAL SEAL 20X42X7 MM DUST LIP	2-9
Q009	90095-0077	OVERLOAD PROTECTION, PKZM 6-10 A	8-13, 8-15
G009.3	90110-0142	PLUG DA15P064TX	8-13, 8-15
G009.4	90110-0145	COVER 8630-5169014-15-01	8-13, 8-15
Q000	90111-0132	MAIN SWITCH P1-25/EA/SVB-SW/N/HI11/H-P14	3-29
F010	90111-0172	EARTH FAULT BREAKER, F 362-25/0.03	8-13, 8-15
020	90113-0113	FILTER REGULATOR, B64G-NNK-AD3-RMN	3-15
050	90113-0427	SHUT O FF VALVE	3-15
A061	90119-0106	SAFETY RELAY JOKAB RT 6	8-13, 8-15
K010	90119-0108	RELAY OMRON G2R-2-SNI-24DC	8-13, 8-15
K010 .1	90129-0018	BASE OMRON P2RF-08-E	8-13, 8-15
260	90166-0013	TUBE 8 MM PA BLUE	3-11, 3-13
300	90166-0068	TUBE 12 MM PA BLUE	3-11, 3-13
510	90208-0078	CLAMPING ELEMENT WITH SLEEVE, 20X28 MM	1-25
520	90208-0101	TRANTORQUE BUSHING 9MM DB	1-5, 1-7
500	90208-0137	CLAMPING ELEMENT	1-11, 1-13
530	90214-0163	BALL BEARING SOLID OIL 25X47X12 MM	1-5, 1-7, 1-27
510	90214-0169	BALL BEARING SOLID OIL 15X35X11 MM	1-11, 1-13
520	90214-0225	BALL BEARING SOLID OIL 20X42X12 MM	1-11, 1-13, 1-25
360	90214-0238	ANG. BALL BEAR, 20X47X20,6 MM	2-11, 2-15
W109	90220-0084	MOTOR CABLE 4X2,5+2(2X0.75)+SHIELD	8-39
W101	90220-0104	SCR. CABLE 4X1,5MM2	8-39
W100	90220-0109	SCR. CABLE 5X2,5MM2	8-39
B905 .1	90232-0103	PH.CELL E3S-CT61-L-5M	6-7
B905 .2	90232-0104	PH.CELL E3S-CT61-D-5M	6-7
B107	90232-0117	PH.CELL WT4-2P135S10	1-17
B104	90232-0128	PH.CELL E3S-CL2-5M	2-9
620	90240-0262	FLANGE BUSHING, 12X14X12 MM	1-9, 9-11
630	90240-0265	FLANGE BUSHING, 20X23X21 MM	1-9, 9-11
540	90240-0292	BUSHING, 25X28X20 MM	1-5, 1-7, 9-9
770	90252-0036	V-BELT J22	2-19
Q009 .1	90259-0317	AUX.CONTACT K&M NHI 11-PKZ0	8-13, 8-15
B100	90274-0074	PRESSURE GUARD, 530 KPA	3-11, 3-13
760	90335-0067	COMP. SPRING 22370, 1,6X9,6X31,75	2-19
300	90417-0320	TIMING BELT AT5 525X16 MM	1-19
020	90417-0417	TIMING BELT AT5 1075X16 MM	1-25, 9-23
020	90417-0418	TIMING BELT AT5 1020X16 MM	1-25, 9-23
040	90439-0155	PRECISION NOZZLE SATURN 322012	5-7
R101:15	90439-0184	O-RING	5-5
R101:14	90439-0187	O-RING	5-5
R101:13	90439-0188	RING	5-5
R101:12	90439-0189	O-RING	5-5
R101:10	90439-0201	O-RING	5-5
100:03	90439-0206	CABLE	5-7
050	90439-0213	HOT MELT HOSE, PART NO. 274793	5-7
100:02	90439-0216	ELEMENT 150 W 938123	5-7
060	90439-0233	FILTER	5-7
R101	90439-0274	HOT MELT UNIT, NO. 249788	5-5
R101:16	90439-0276	FUSE, NO. 939491	5-5
R101:21	90439-0278	FILTER, NO. 274578	5-5

Pos	Part No	Description	Page No
A- Critical Spare Part			
R101:20	90439-0279	THERMOSTAT	5-5
R101:19	90439-0280	SOLENOID, 229519	5-5
R101:18	90439-0281	FILTER, NO. 165870	5-5
R101:17	90439-0282	PUMP, NO.161424	5-5
R101:10	90439-0283	RTD, NO. 108907	5-5
R101:04	90439-0284	O-RING, NO.940133	5-5
R101:03	90439-0285	SUPPORT RING, NO. 954013	5-5
R101:02	90439-0287	O-RING, NO.105526	5-5
R101:01	90439-0288	OVERHAUL KIT, NO. 105463	5-5
R101:05	90439-0289	CIRCUIT BOARD. NO. 248042	5-5
R101:09	90439-0290	DISPLAY, NO. 248044	5-5
R101:08	90439-0291	CIRCUIT BOARD, NO. 248043	5-5
R101:07	90439-0292	CONTROL UNIT, NO. 248041	5-5
100:01	90458-0300	MODULE TYPE H400, NORDSON #326583	5-7
G009	90458-0397	SERVO DRIVE DMC2 50720 P	8-13, 8-15
100	90458-0852	HOT MELT GUN H-401-T PART NO. 224939	5-7
M103	90458-1373	GEARS, HELICAL MOTOR SK ON-63 L/4	2-19
780	90458-1922	TIMING BELT T10X780X16 POLYURETHANE	2-19
G011	90458-2457	POWER SUPPLY UNIT, 100-240VAC/24VDC 2,5A	8-13, 8-15
M101	90458-2482	MOTOR 3GVA062142-CSB	2-7
F003	90458-2510	FUSE, ATDR-6	8-13, 8-15
F001	90458-2511	FUSE, ATDR-10	8-13, 8-15
G020	90459-0178	FREQUENCY CHANGER 3G3MV-AB004	8-13, 8-15
G021	90459-0238	FREQUENCY CHANGER 3G3MV-AB007	8-13, 8-15
Y102.1	90459-0322	SOLENOID VALVE, 771132	5-7
Z001	90459-0796	FILTER 3G3MV-PFI 1010-E	8-13, 8-15
Z002	90459-0797	FILTER 3G3MV-PFI 1020-E	8-13, 8-15
510	90459-1014	BEARING SEAL 32X47X7 MM	1-5, 1-7
610	90459-1015	BEARING SEAL 70X90X10 MM	1-9
600	90459-1016	BEARING SEAL 25X40X7 MM	1-15
340	90459-1019	BEARING SEAL 40X52X7 MM	2-11
310	90459-1020	BEARING SEAL 25X42X7 MM	2-9
490	312318-0364	SCREW ISO4029 M6X10 A4	2-19
700	315202-0111	O-RING 13,1X1,6 MM	2-19
705	315202-0219	O-RING 29,2X3 MM	2-19
330	315204-0115	O-RING 17,1X1,6 MM	1-11, 1-13, 1-25
380	315204-0118	O-RING 22,1X1,7 MM	1-5, 1-7
340	315204-0221	O-RING 34,2X3 MM	1-11, 1-13
720	315220-0172	V-RINGS 29X37X10,5 MM V-32S	2-19
715	315221-0137	RADIAL SEAL 17X35X7 MM	2-19
710	315221-0145	RADIAL SEAL 20X35X7 MM	2-19
400	315705-0230	PARALLEL KEY W. ROUND ENDS 6X6X16 MM	1-5, 1-7
730	315753-0124	RETAINING RING FOR BORE DIN 472 35 A2	2-19
580	321308-0204	BALL BEARING, 20X42X12 MM	2-9
R101:06	352550-0131	FINE-WIRE, 1 A	5-5
300	533134-0000	COMPRESSION SPRING	2-19
140	533221-0000	TOOTHED PULLEY	2-19
020	533233-0000	SHAFT	2-19
150	533237-0000	AXLE PIN	2-19
180	533240-0000	WHEEL	2-19
010	536204-0000	COMPRESSION SPRING	1-21
060	561652-0000	WHEEL	2-19
A071	583399-0102	PUSHBUTTON BOARD	4-11, 4-13
050	595630-0000	SHAFT	1-5, 1-7
010	595632-0000	FEED WHEEL	1-5, 1-7, 9-9
040	595634-0000	ARM	1-9
070	595635-0000	SLEEVE	1-5, 1-7
050	595639-0000	KNIFE	1-9
060	595640-0000	AXLE BOLT	1-9
070	595641-0000	WASHER	1-9
010	595642-0000	CONNECTING ROD	1-9, 9-11
020	595718-0000	PROTECTION RING	1-5, 1-7, 9-9
030	595724-0000	SUPPORT RING	1-5, 1-7, 9-9
030	595727-0000	FRAME	1-15
040	595733-0000	PULLEY	1-5, 1-7, 9-7
040	595734-0000	PULLEY	1-5, 1-7, 9-7
060	595735-0000	PULLEY	1-11, 1-13
070	595736-0000	CRANK SHAFT	1-11, 1-13
080	595737-0000	CRANK SHAFT	1-11, 1-13
020	595741-0000	PULLEY	2-7
090	595742-0000	SLEEVE	1-11, 1-13, 1-25
100	595746-0000	BEARING HOUSING	1-11, 1-13
110	595747-0000	ROD	1-11, 1-13
020	595749-0000	ARM	1-11, 1-13, 9-13, 9-15
020	595760-0000	BEARING PLATE	1-9, 9-11
030	595761-0000	BEARING PLATE	1-9, 9-11
010	595767-0000	PULLEY	1-19
040	595768-0000	PULLEY	1-25
050	595769-0000	PULLEY	1-25
060	595770-0000	SHAFT	1-25
070	595771-0000	CLAMP BLOCK	1-25
060	595791-0000	TURN SPRING	1-15

Pos	Part No	Description	Page No
A- Critical Spare Part			
010	595798-0000	CAM	1-25, 9-23
090	595801-0000	AXLE PIN	1-25
100	595804-0000	SPACER DISC	1-25
070	595807-0000	DOWEL	1-15
080	595809-0000	BELT	2-9
020	595811-0000	LEAF SPRING	1-21
040	595823-0000	BELT	2-11
090	595868-0000	SPRING	1-9
100	595873-0000	TURN SPRING	1-15
010	595889-0000	CAM	1-25, 9-23
020	595892-0000	ARM	1-11, 1-13, 9-13, 9-15
030	595893-0000	ARM	1-11, 1-13, 9-13, 9-15
070	1020646-0000	TOOTHED PULLEY	2-19
080	1359389-0000	ROLL	2-19
090	1359390-0000	SHAFT	2-19
030	1363024-0000	SUPPORT RING	1-5, 1-7, 9-9
020	1363025-0000	PROTECTION RING	1-5, 1-7, 9-9
020	1363027-0000	BEARING PLATE	1-9, 9-11
030	1363028-0000	BEARING PLATE	1-9, 9-11
010	1363032-0000	CONNECTING ROD	1-9, 9-11
010	1363061-0000	FEED WHEEL	1-5, 1-7, 9-9
010	1363062-0000	FEED WHEEL	1-5, 1-7, 9-9
010	1363087-0000	FEED WHEEL	1-5, 1-7, 9-9
020	1363091-0000	ARM	1-11, 1-13, 9-13, 9-15
040	1363099-0000	CONNECTION	2-7
220	1363101-0000	STEERING RAIL	2-9
230	1363102-0000	STEERING RAIL	2-9
W108	1364383-0100	RESOLVER CABLE	8-39
010	1364389-0000	FEED WHEEL	1-5, 1-7, 9-9
100	1364400-0000	TENSION SPRING	1-9
180	1364412-0000	HEAD PLATE	2-11
010	1364415-0000	FEED WHEEL	1-5, 1-7, 9-9
010	1364418-0000	FEED WHEEL	1-5, 1-7, 9-9
010	1364419-0000	FEED WHEEL	1-5, 1-7, 9-9
010	1364420-0000	FEED WHEEL	1-5, 1-7, 9-9
030	1364421-0000	SUPPORT RING	1-5, 1-7, 9-9
030	1364423-0000	ARM	1-11, 1-13, 9-13, 9-15
010	1368548-0000	FEED WHEEL	1-5, 1-7, 9-9
010	1368557-0000	FEED WHEEL	1-5, 1-7, 9-9
010	1368558-0000	FEED WHEEL	1-5, 1-7, 9-9
010	1368559-0000	FEED WHEEL	1-5, 1-7, 9-9
030	1368560-0000	ARM	1-11, 1-13, 9-13, 9-15
010	2500543-0000	FEED WHEEL	1-5, 1-7, 9-9
010	2500544-0000	FEED WHEEL	1-5, 1-7, 9-9
010	2500569-0000	PIPE	5-7
B- Non - Critical Spares Part			
110	90015-0023	LEAD-IN, TET7-10, E-1458019	4-5
K020.1	90024-0034	DIODE SURGE SUPPRESSOR, FD B DIL	8-13, 8-15
Z011	90024-0047	EMI SUPPRESSION FERRITE	8-13, 8-15
290	90036-0057	LIGHT BULB, BA9S 28V	4-11, 4-13
120	90036-0068	BULB 6.5W 24V	4-5
H021	90038-0045	LIGHT DIODE, 24-60V YELLOW	4-11, 4-13
160	90043-0043	PRESSURE GAUGE WIEGAND 0-10 BAR 1/8"	3-11, 3-13
310	90056-0174	WORM GEAR VF 30 P1 70 HS B3	2-11
300	90062-0059	LOCK WASHER SERRAT.EXT.GEAR,4,3/8 H=0,5	8-13, 8-15
070	90077-0113	FEED THROUGH TERMINAL, 10-00102150-1	8-27, 8-29
320	90091-0445	SEAL COVER, >47, H=6,5	2-11, 2-15
H001	90124-0027	LAMP HOLDER BA9S	4-11, 4-13
390	90153-0015	ADHESIVE,LOCTITE IS 496/CYANOLOT 303	2-11
P001	90178-0007	HOUR COUNTER, BG 40,17-1 12-48VDC	8-13, 8-15
150	90191-0063	CASTOR WHEEL, NO. LKE-J-100-ND/K	7-5
160	90191-0064	CASTOR WHEEL, NO. LPPE-100-ND/K	7-5
W305	90220-0091	PAIR TWISTED CABLE 2X2X0,25MM2	8-39
200	90256-0001	TAPE SUPPLY HOLDER, TYPE 2000	7-7
380	90296-0057	GREASE	2-11
E101:1	90297-0007	FLUORESCENT TUBE, PLS 11	3-19
H101	90458-0292	BASE, KT70-1001	4-5
070	90458-0293	LIGHT ELEMENT, RED, KL70-401R	4-5
060	90458-0294	LIGHT ELEMENT, YELLOW, KL70-401Y	4-5
050	90458-0295	LIGHT ELEMENT, BLUE, KL70-401L	4-5
090	90458-0297	BASE WITH TUBE 110 MM KA70-1011	4-5
040	90459-0606	MARKING PLATES 5-FW E1-E50	8-21, 8-23, 8-27, 8-29
310	312121-0291	SCREW ISO 1207 M4X12 4.8 - 5.8 Z.PL.	8-13, 8-15
450	315204-0301	O-RING 49,5X3 MM	1-15
460	315204-0305	O-RING 69,5X3 MM	1-15
580	321120-0118	BEARBUSHING W/O FL 14X16X15	2-11
590	321120-0122	BEARING BUSHING W/O FL, 15X17X15 MM	2-11
W200	351150-0403	CABLE OLFLEX 3X0,75 MM2 LIGHT/GREY	8-39
W111	351150-0405	CABLE OLFLEX 5X0,75 MM2 LIGHT/GREY	8-39
W105	351150-0412	CABLE OLFLEX 3X1,5 MM2 LIGHT/GREY	8-39
W104	351150-0413	CABLE OLFLEX 4X1,5 MM2 LIGHT/GREY	8-39
W301	351150-0424	CABLE OLFLEX 18X0,75 MM2 LIGHT/GREY	8-39

Pos	Part No	Description	Page No
B- Non - Critical Spares Part			
W110	351150-0425	CABLE OLFLEX 25X0,75 MM2 LIGHT/GREY	8-39
W099	351150-0431	CABLE OLFLEX 2X0,75 MM2 LIGHT/GREY	8-39
1000	351160-0102	CABLE AWM 1X0,75 MM2 DARKBLUE	8-13, 8-15
1005	351160-0104	CABLE AWM 1X1,5 MM2 DARKBLUE	8-13, 8-15
1040	351161-0104	CABLE AWM LIGTH BLUE 1,5MM2	8-13, 8-15
1045	351161-0110	CABLE AWM 1X25 MM2 LIGHTBLUE	8-13, 8-15
1020	351162-0104	CABLE AWM 1X1,5 MM2 YELLOW-GREEN	8-13, 8-15
W999	351162-0105	CABLE AWM 1X2,5 MM2 YELLOW-GREEN	8-39
1025	351162-0110	CABLE AWM 1X25 MM2 YELLOW-GREEN	8-13, 8-15
1030	351164-0109	CABLE AWM 1X16 MM2 BLACK	8-13, 8-15
1035	351164-0110	CABLE AWM 1X25 MM2 BLACK	8-13, 8-15
1010	351166-0102	CABLE AWM 1X0,75 MM2 ORANGE	8-13, 8-15
1110	353001-0103	END SLEEVE 0,75 MM2	8-13, 8-15
1115	353001-0104	END SLEEVE 1,5 MM2	8-13, 8-15
1120	353001-0105	END SLEEVE 2,5 MM2	8-13, 8-15
010	353021-0212	FEED THROUGH TERMINAL, 10200.0	8-31, 8-33, 8-35, 8-37
010	353021-0213	FEED THROUGH TERMINAL, 10201.0	8-21, 8-23
010	353022-0002	NEUTRAL TERMINAL, 10107.8	8-25
020	353024-0205	EARTH TERMINAL, 1010.1	8-21, 8-23
010	353024-0212	EARTH TERMINAL, 10363.0	8-27, 8-29
030	353031-0203	END SUPPORT, WEW 35/2	8-23, 8-25, 8-27, 8-31, 8-37
030	353032-0009	END PLATE, WAP FOR WDK	8-27, 8-29
030	353033-0104	END PLATE, 10502.8	8-25
030	353033-0105	PARTITITION, 10501.0	8-31, 8-33, 8-35, 8-37
050	353041-0001	RAIL 10X3MM SSCH	8-25
040	353041-0104	CLAMPING YOKE PZB 4 K	8-25
W102.1	353245-0011	GLAND, EXTENDED WITH INSERT, PR18,6/PG11	8-39
060	359010-0613	SIGN BOARD BSG 1/2 "N"	8-25
040	359011-0807	MARKING PLATES 5-FW 1-50	8-27, 8-29, 8-31, 8-33, 8-35, 8-37
050	359011-0808	MARKING PLATES 5-FW 51-100	8-27
060	359011-0809	MARKING PLATES 5-FW 101-150	8-27
030	359011-0821	SET OF SIGNS 6-FW 1-50	8-21, 8-23, 8-25
030	556365-0000	SPLICING DEVICE	7-7
005	573210-0100	JOINT	7-7

Pos	Part No	Description	Page No

Tetra Pak

SPC binder labels. 40 mm Full width using the **variable definitions** *made in the* **front page** *file!!*

Note! This page is generated **automatically.**

Tetra Straw Applicator 22 HS

678253-0200

Issue: 2004-05 Doc No: SPC-1366219-0103

Tetra Straw Applicator 22 HS

678253-0200

Issue: 2004-05 Doc No: SPC-1366219-0103

Tetra Straw Applicator 22 HS

678253-0200

Issue: 2004-05 Doc No: SPC-1366219-0103

Tetra Straw Applicator 22 HS

678253-0200

Issue: 2004-05 Doc No: SPC-1366219-0103

Tetra Straw Applicator 22 HS

678253-0200

Issue: 2004-05 Doc No: SPC-1366219-0103

Tetra Straw Applicator 22 HS

678253-0200

Issue: 2004-05 Doc No: SPC-1366219-0103

Tetra Straw Applicator 22 HS

678253-0200

Issue: 2004-05 Doc No: SPC-1366219-0103

SPC binder labels. 30 mm Half width *Note! This page is generated* **automatically.**
using the **variable definitions** *made in the* **front page** *file!!*

Tetra Straw Applicator 22 HS
678253-0200
Issue: 2004-05 Doc No: SPC-1366219-0103

Tetra Straw Applicator 22 HS
678253-0200
Issue: 2004-05 Doc No: SPC-1366219-0103

Tetra Straw Applicator 22 HS
678253-0200
Issue: 2004-05 Doc No: SPC-1366219-0103

Tetra Straw Applicator 22 HS
678253-0200
Issue: 2004-05 Doc No: SPC-1366219-0103

Tetra Straw Applicator 22 HS
678253-0200
Issue: 2004-05 Doc No: SPC-1366219-0103

Tetra Straw Applicator 22 HS
678253-0200
Issue: 2004-05 Doc No: SPC-1366219-0103

Tetra Straw Applicator 22 HS
678253-0200
Issue: 2004-05 Doc No: SPC-1366219-0103

Tetra Straw Applicator 22 HS
678253-0200
Issue: 2004-05 Doc No: SPC-1366219-0103

Tetra Straw Applicator 22 HS
678253-0200
Issue: 2004-05 Doc No: SPC-1366219-0103

Tetra Straw Applicator 22 HS
678253-0200
Issue: 2004-05 Doc No: SPC-1366219-0103

Tetra Straw Applicator 22 HS
678253-0200
Issue: 2004-05 Doc No: SPC-1366219-0103

Tetra Straw Applicator 22 HS
678253-0200
Issue: 2004-05 Doc No: SPC-1366219-0103