IM

Installation Manual

Tetra Pak A3/CompactFlex

641550-0300

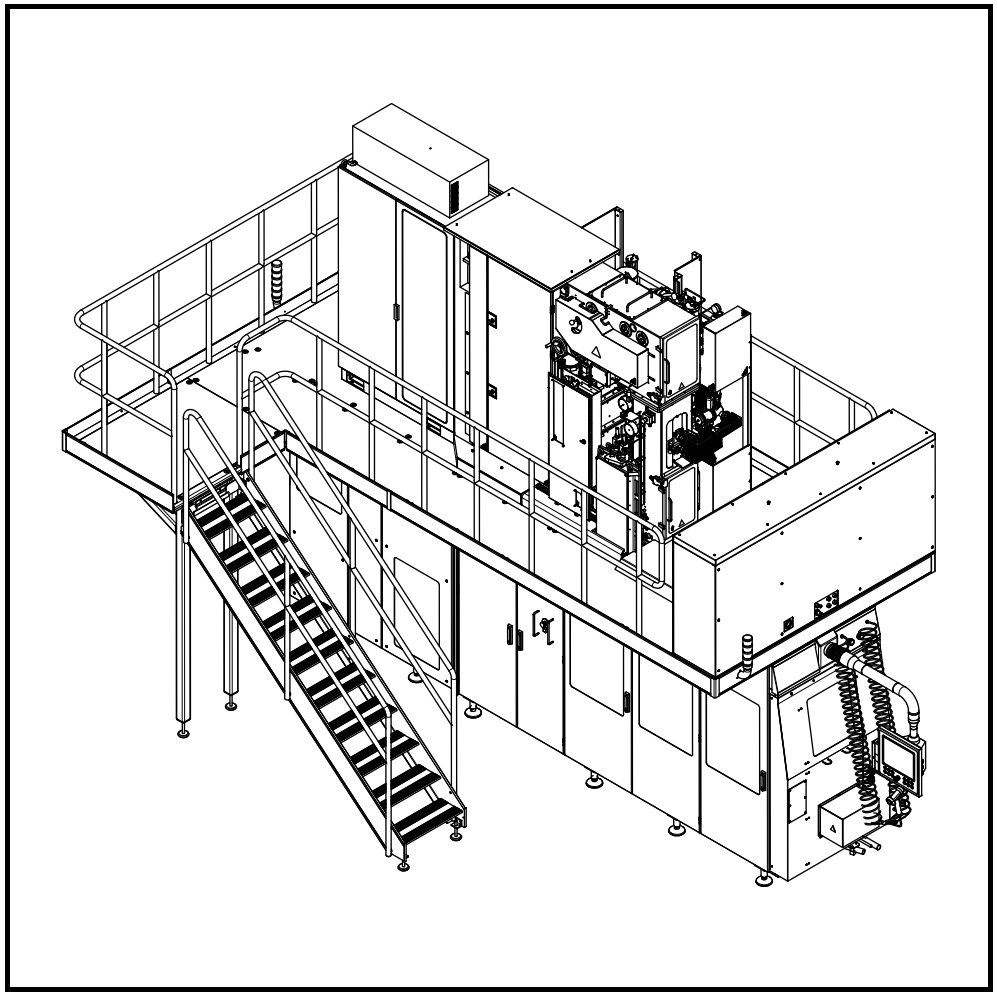

WARNING

Read and follow all safety precaution instructions throughout this manual and on safety signs attached to this equipment.

Failure to follow all safety precaution instructions could result in death or serious injury.

Tetra Pak

Doc. No. IM-3212176-0107

Copyright © 2013 Tetra Pak Group

All rights reserved. No part of this document may be reproduced or copied in any form or by any means without written permission from Tetra Pak Packaging Solutions.

Tetra Pak and all Tetra Pak products are trademarks belonging to the Tetra Pak Group.

The content of this manual is in accordance with the design and construction of the machine or equipment at the time of publishing. Tetra Pak reserves the right to introduce design modifications without prior notice.

The English language version of this document contains the original instructions. All other language versions are translations of the original instructions.

This document was produced by:

Tetra Pak Packaging Solutions
Via Delfini 1
41123 Modena
Italy

Additional copies can be ordered from Tetra Pak. When ordering additional copies, always provide the document number.

Doc. No. IM-3212176-0107

Issue 2013-09

This manual is valid for:

Series No. / Machine no. Sign.

IM
Installation Manual

Tetra Pak
A3/CompactFlex
641550-0300

i Introduction
ii Safety Precautions
1 Technical Specification
2 Preparatory Requirements
3 Mechanical Completion
4 Commissioning
5 Performance Validation
6 Disassembly and Removal

Machine or equipment configurations that this manual is valid for are described on the next page.

Doc. No. IM-3212176-0107
Issue 2013-09

Tetra Pak

Tetra Pak Packaging Solutions

Valid for:

Name	Drawing Specification and Development Step	Additional Information
Tetra Pak A3/CompactFlex	641550-0300	Optional Equipment: HI - Headspace by Injection HVA - High Viscosity Aseptic PT CompactFlex ICU - Integrated Cleaning Unit Multi Installation

i Introduction

About the Introduction Chapter

This chapter contains basic information about this manual and the related Tetra Pak equipment.

About the Introduction Chapter i-2

Abbreviations and Terminology i-5

Manual Information i-7

Delivered Manuals i-7

CM i-7

EM i-7

IM i-7

MM i-7

OM i-7

SPC i-7

TeM i-8

Page Layout i-9

Page Numbering i-10

Typographical Conventions i-10

Symbols i-10

Machine Introduction i-11

Intended Use of the Equipment i-11

Manufacturer i-11

Support and Feedback i-11

Declaration of Conformity i-11

. . . . . i-11

Identification i-21

CE Classification i-21

3-A Compliance i-21

Machine Plate i-21

Delivered Design Label i-22

Orientation i-23

Hygiene i-24

Packaging Material i-24
Steam Barrier in the Product Valve i-24
How to Use This IM i-25
Purpose of the IM i-25
Installation Workflow i-25

Abbreviations and Terminology

Abbreviation/Terminology	Meaning	Translation
ASU	Automatic Splicing Unit	Automatic Splicing Unit
B	Base (package shape)	Base (package shape)
CE	Communautés Européennes/European Communities	Communautés Européennes/European Communities
CF	CompactFlex	CompactFlex
CIP	Cleaning In Place	Cleaning In Place
DE	Distribution Equipment	Distribution Equipment
ECM	Engineering Change Management	Engineering Change Management
EM	Electrical Manual	Electrical Manual
HI	Headspace by gas Injection	Headspace by gas Injection
HVA	High Viscosity Aseptic	High Viscosity Aseptic
HVAC	Heating Ventilation and Air Conditioning	Heating Ventilation and Air Conditioning
ICU	Integrated Cleaning Unit	Integrated Cleaning Unit
IM	Installation Manual	Installation Manual
LED	Light Emitted Diode	Light Emitted Diode
LH	Left Hand	Left Hand
LS	Longitudinal Seal(ing)	Longitudinal Seal(ing)
MB	Master Batch	Master Batch
min	Minimum	Minimum
max	Maximum	Maximum
MKC	Mandatory Kit Corrective	Mandatory Kit Corrective
MKS	Mandatory Kit Human and Product Safety	Mandatory Kit Human and Product Safety
MM	Maintenance Manual	Maintenance Manual
OE	Optional Equipment	Optional Equipment
OK	Optional Kit	Optional Kit
OM	Operation Manual	Operation Manual
PE	Polyethylene	Polyethylene
PM	Packaging Material	Packaging Material
PT	PullTab	PullTab
RH	Right Hand	Right Hand
RK	Rebuilding Kit	Rebuilding Kit
RM	Rebuilding Manual	Rebuilding Manual
S	Slim (package shape)	Slim (package shape)
SA	Strip Applicator	Strip Applicator
SPC	Spare Parts Catalogue	Spare Parts Catalogue

Abbreviation/Terminology	Meaning	Translation
Sq	Square (package shape)	Square (package shape)
TBA	Tetra Brik Aseptic	Tetra Brik Aseptic
TeM	Technical Manual	Technical Manual
TMCC	Tetra Multi-purpose Compact Controller	Tetra Multi-purpose Compact Controller
TPOP	Tetra Pak Operator Panel	Tetra Pak Operator Panel
TS	Transversal Sealing	Transversal Sealing
UK	Upgrade Kit	Upgrade Kit
UP	Update Pages	Update Pages

Manual Information

Tetra Pak recommends reading all delivered manuals carefully. Make sure that the delivered manuals are available to personnel who operate or maintain the equipment.

It is important to keep this manual for the lifetime of the equipment and to pass the manual on to any subsequent holder or user.

Any item that is named specifically in this manual is to be considered a designated item for the equipment. Designated items are verified by Tetra Pak for use with the equipment.

Tetra Pak will not be held responsible for any damage, loss, injury, or death caused by not following the instructions in the manuals that accompany this equipment, or by a failure to use designated items specified in the manuals that accompany this equipment.

Delivered Manuals

Manuals delivered with this equipment:

CM

The Conversion Manual provides technicians with information on converting the equipment between different production modes.

EM

The Electrical Manual provides technicians with information about the equipment's electrical system.

IM

The Installation Manual provides technicians with information required to safely install the equipment.

MM

The Maintenance Manual provides technicians with information on maintaining the equipment.

OM

The Operation Manual provides the operator with information on handling and operating the equipment before, during, and after production.

SPC

The Spare Parts Catalogue provides the information necessary to order spare parts from Tetra Pak.

TeM

The Technical Manual provides technicians with information which can be:

- information required to safely install the equipment
- information required to maintaining the equipment
- information about the machine's/equipment's electrical system
- information necessary to order spare parts from Tetra Pak
- other technical information

Page Layout

Every main page in a manual contains a header and a footer. The page header contains the chapter name (1) and the section name (2). The page footer contains the page number (3), and the document number (4). See also the Page Numbering section.

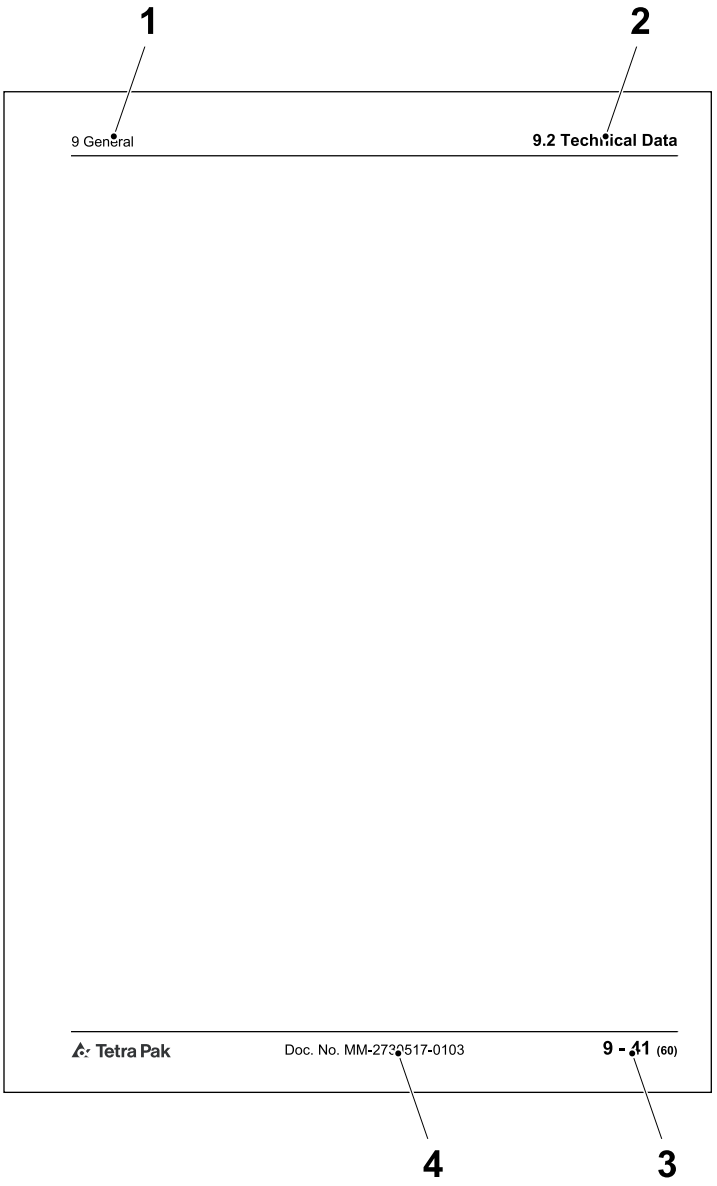

1 Chapter name
2 Section name
3 Page number
4 Document number

Page Numbering

A page number has three parts:

- chapter number (1)
- consecutive page number (2) within the chapter
- total number of pages (3) in the chapter

Note! The letters UP may replace the chapter number (1) if the manual includes update pages. The consecutive page number (2) and the total number of pages (3) of update pages do not follow the existing sequential page numbering of the chapter.

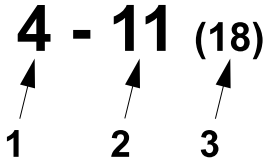

1 Chapter number
2 Consecutive page number
3 Total number of pages

Typographical Conventions

Controls on the operator panel, emergency stop devices, and program steps are printed in CAPITAL LETTERS.

Menu names, button names and other text displayed in software are printed in COURIER.

Cross-references are underlined.

Symbols

Symbols used in illustrations.

	A pointer arrow indicates the position of an object.
	A zoom arrow indicates that an object view is enlarged. The arrow points towards the enlarged view of the object.
	A rotation movement arrow indicates rotational movement of an object. The arrow points in the direction of rotation.
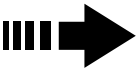	A straight movement arrow indicates movement of an object. The arrow points in the direction of movement.

Machine Introduction

Intended Use of the Equipment

The intended use of this Tetra Pak equipment is to pack liquid food products.

All other use is prohibited. Tetra Pak will not be held responsible for injury or damage if the equipment is used for any other purpose than the intended use described above.

Manufacturer

This Tetra Pak equipment has been manufactured by

Tetra Pak Packaging Solutions
Via Delfini 1
41123 Modena
Italy

Support and Feedback

For assistance when operating this equipment, or other inquiries, comments, or suggestions, pose the questions or give feedback by contacting the nearest Tetra Pak representative. If access to the Tetra Pak intranet is available, contact Liaison via Query by typing QuTI-P in the address field of your browser. If access to QuTI-P is not available, request access by contacting the Global Service Desk.

Declaration of Conformity

A copy of the Declaration of Conformity can be found below. The signed Declaration of Conformity is delivered separately with the equipment.

This page intentionally left blank

Tetra Pak

Declaration of Conformity

Tetra Pak Packaging Solutions S.p.A.
Via Delfini 1
41123 Modena
Italy

declare that this machine/ equipment/ complex installation:

Tetra Pak A3/CompactFlex (641550-0300)
21220/xxxxx

is in conformity with the following harmonized standards:

EN 415-3:1999+A1:2009
EN 61000-6-2:2005
EN 61000-6-4:2007

and is in conformity with the provisions of the Directive(s) - including amendments:

[X] 2006/42/EC Machinery
[X] 2004/108/EC Electromagnetic compatibility (EMC)
[ ] 2006/95/EC Low Voltage

The following person is authorised to compile the technical file:

Mauro Ferretti
Tetra Pak Packaging Solutions S.p.A.
Via Delfini 1
41123 Modena
Italy

Modena 01/12/2011

Giovan Battista Bisogni
Director, SCO - Capital Equipment - Carton Value & Distribution Equipment

English
FORM 5293 version 2010-01-14

This page intentionally left blank

Tetra Pak

Konformitätserklärung

Tetra Pak Packaging Solutions S.p.A.
Via Delfini 1
41123 Modena
Italy

erklärt hiermit, dass diese Maschine / Anlage / komplexe Einrichtung:

Tetra Pak A3/CompactFlex (641550-0300)
21220/xxxxx

konform ist mit den folgenden harmonisierten Standards:

EN 415-3:1999+A1:2009
EN 61000-6-2:2005
EN 61000-6-4:2007

und übereinstimmt mit den Vorschriften der Richtlinien einschließlich deren Ergänzungen:

[X] 2006/42/EC Maschine
[X] 2004/108/EC Elektromagnetische Verträglichkeit (EMV)
[ ] 2006/95/EC Niederspannung

Folgender Person ist es gestattet, die technischen Unterlagen zusammenzustellen:

Mauro Ferretti
Tetra Pak Packaging Solutions S.p.A.
Via Delfini 1
41123 Modena
Italy

Modena 01/12/2011

Giovan Battista Bisogni
Director, SCO - Capital Equipment - Carton Value & Distribution Equipment

Deutsch/German
FORM 5293 version 2010-01-14

Tetra Pak

Konformitetserklæring

Tetra Pak Packaging Solutions S.p.A.
Via Delfini 1
41123 Modena
Italy

erklærer at dette maskineri/dette udstyr/ kompleks installation:

Tetra Pak A3/CompactFlex (641550-0300)
21220/xxxxx

holder følgende harmoniserede standarder:

EN 415-3:1999+A1:2009
EN 61000-6-2:2005
EN 61000-6-4:2007

samt bestemmelserne iht. direktivet/direktiverne, inkl. ændringer:

[X] 2006/42/EC Maskineri
[X] 2004/108/EC Elektromagnetisk kompatibilitet
[ ] 2006/95/EC Lav spænding

Følgende person er authoriseret til at udarbejde den tekniske fil:

Mauro Ferretti
Tetra Pak Packaging Solutions S.p.A.
Via Delfini 1
41123 Modena
Italy

Modena 01/12/2011

Giovan Battista Bisogni
Director, SCO - Capital Equipment - Carton Value & Distribution Equipment

Dansk/Danish
FORM 5293 version 2010-01-14

Tetra Pak

Declaración de Conformidad

Tetra Pak Packaging Solutions S.p.A.
Via Delfini 1
41123 Modena
Italy

declaramos que esta máquina/equipo/instalación compleja:

Tetra Pak A3/CompactFlex (641550-0300)
21220/xxxxx

es conforme a los siguientes estándares armonizados:

EN 415-3:1999+A1:2009
EN 61000-6-2:2005
EN 61000-6-4:2007

y cumple con lo que dicta(n) la(s) Directiva(s) - y sucesivas modificaciones:

[X] 2006/42/EC máquinas
[X] 2004/108/EC compatibilidad electromagnética
[ ] 2006/95/EC equipo eléctrico diseñado para el uso dentro de ciertos límites de voltaje

La persona indicada a continuación está autorizada para compilar el archivo técnico:

Mauro Ferretti
Tetra Pak Packaging Solutions S.p.A.
Via Delfini 1
41123 Modena
Italy

Modena 01/12/2011

Giovan Battista Bisogni
Director, SCO - Capital Equipment - Carton Value & Distribution Equipment

Español/Spanish
FORM 5293 version 2010-01-14

Tetra Pak

Yhdenmukaistusvakuutus

Tetra Pak Packaging Solutions S.p.A.
Via Delfini 1
41123 Modena
Italy

vakuuttaa, että allamainittu kone/koneen osa/laitteisto/kompleksi asennus:

Tetra Pak A3/CompactFlex (641550-0300)
21220/xxxxx

vastaa seuraavia harmonisoituja standardeja:

EN 415-3:1999+A1:2009
EN 61000-6-2:2005
EN 61000-6-4:2007

sekä seuraavia direktiivejä ja niihin liittyviä muutoksia:

[X] 2006/42/EY Kone
[X] 2004/108/EY Sähkömagneettinen yhteensopivuus
[ ] 2006/95/EY Pienjännite

Seuraava henkilö on valtuutettu täyttämään teknisen tiedoston:

Mauro Ferretti
Tetra Pak Packaging Solutions S.p.A.
Via Delfini 1
41123 Modena
Italy

Modena 01/12/2011

Giovan Battista Bisogni
Director, SCO - Capital Equipment - Carton Value & Distribution Equipment

Suomi/Finnish
FORM 5293 version 2010-01-14

Tetra Pak

Déclaration de Conformité

Tetra Pak Packaging Solutions S.p.A.
Via Delfini 1
41123 Modena
Italy

déclare que la présente machine / l'équipement / l'installation complexe :

Tetra Pak A3/CompactFlex (641550-0300)
21220/xxxxx

est conforme aux normes harmonisées suivantes :

EN 415-3:1999+A1:2009
EN 61000-6-2:2005
EN 61000-6-4:2007

et est conforme aux dispositions des directives suivantes (amendements compris) :

[X] 2006/42/EC Machine
[X] 2004/108/EC Compatibilité électromagnétique (EMC)
[ ] 2006/95/EC Basse tension

La personne suivante est autorisée à élaborer le dossier technique :

Mauro Ferretti
Tetra Pak Packaging Solutions S.p.A.
Via Delfini 1
41123 Modena
Italy

Modena 01/12/2011

Giovan Battista Bisogni
Director, SCO - Capital Equipment - Carton Value & Distribution Equipment

Français / French
FORM 5293 version 2010-01-14

Tetra Pak

Δήλωση Συμμόρφωσης

Tetra Pak Packaging Solutions S.p.A.
Via Delfini 1
41123 Modena
Italy

δηλώνει ότι η μηχανή / ο εξοπλισμός / σύνθετες εγκατάστασεις:

Tetra Pak A3/CompactFlex (641550-0300)
21220/xxxxx

είναι σε συμμόρφωση με τα ακόλουθα εναρμονισμένα πρότυπα:

EN 415-3:1999+A1:2009
EN 61000-6-2:2005
EN 61000-6-4:2007

και είναι σε συμμόρφωση με τις διατάξεις της(των) Οδηγίας(ών) - συμπεριλαμβανόμενων των τροπολογιών:

[X] 2006/42/ΕΚ Μηχανημάτων
[X] 2004/108/ΕΚ Ηλεκτρομαγνητικής Συμβατότητας (EMC)
[ ] 2006/95/ΕΚ Χαμηλής Τάσης

Το παρακάτω άτομο είναι εξουσιοδοτημένο να συντάξει τον τεχνικό φάκελο:

Mauro Ferretti
Tetra Pak Packaging Solutions S.p.A.
Via Delfini 1
41123 Modena
Italy

Modena 01/12/2011

Giovan Battista Bisogni
Director, SCO - Capital Equipment - Carton Value & Distribution Equipment

Ελληνικά/Greek
FORM 5293 version 2010-01-14

Tetra Pak

Verklaring van Overeenstemming

Tetra Pak Packaging Solutions S.p.A.
Via Delfini 1
41123 Modena
Italy

verklaart dat deze machine/uitrusting/ complexe installatie:

Tetra Pak A3/CompactFlex (641550-0300)
21220/xxxxx

overeenstemt met de volgende geharmoniseerde normen:

EN 415-3:1999+A1:2009
EN 61000-6-2:2005
EN 61000-6-4:2007

en overeenstemt met de bepalingen van de Richtlijn(en) - inclusief amendementen:

[X] 2006/42/EG Machine(s)
[X] 2004/108/ EG Elektromagnetische compatibiliteit (EMC)
[ ] 2006/95/EG Laagspanning

De volgende persoon heeft toestemming om het technische dossier samen te stellen:

Mauro Ferretti
Tetra Pak Packaging Solutions S.p.A.
Via Delfini 1
41123 Modena
Italy

Modena 01/12/2011

Giovan Battista Bisogni
Director, SCO - Capital Equipment - Carton Value & Distribution Equipment

Nederlands/Dutch
FORM 5293 version 2010-01-14

Tetra Pak

Erklæring om samsvar

Tetra Pak Packaging Solutions S.p.A.
Via Delfini 1
41123 Modena
Italy

erklærer at denne maskinen / dette utstyret / denne komplekse installasjonen:

Tetra Pak A3/CompactFlex (641550-0300)
21220/xxxxx

er i samsvar med følgende harmoniserte standarder:

EN 415-3:1999+A1:2009
EN 61000-6-2:2005
EN 61000-6-4:2007

og er i samsvar med bestemmelsene i følgende direktiver med endringer:

[X] 2006/42/EF Maskiner
[X] 2004/108/EF Elektromagnetisk kompatibilitet (EMC)
[ ] 2006/95/EF Lavspenning

Følgende person er autorisert til å kompilere den tekniske filen:

Mauro Ferretti
Tetra Pak Packaging Solutions S.p.A.
Via Delfini 1
41123 Modena
Italy

Modena 01/12/2011

Giovan Battista Bisogni
Director, SCO - Capital Equipment - Carton Value & Distribution Equipment

Norsk/Norwegian
FORM 5293 version 2010-01-14

Tetra Pak

Declaração de Conformidade

Tetra Pak Packaging Solutions S.p.A.
Via Delfini 1
41123 Modena
Italy

declaramos que a máquina/ equipamento/ instalação complexa:

Tetra Pak A3/CompactFlex (641550-0300)
21220/xxxxx

está em conformidade com as seguintes normas harmonizadas:

EN 415-3:1999+A1:2009
EN 61000-6-2:2005
EN 61000-6-4:2007

e está em conformidade com as disposições da(s) Directiva(s) - inclusive as sucessivas modificações:

[X] 2006/42/CE Máquinas
[X] 2004/108/CE Compatibilidade electromagnética (CEM)
[ ] 2006/95/CE Baixa Tensão

A pessoa abaixo está autorizada a compilar o ficheiro técnico:

Mauro Ferretti
Tetra Pak Packaging Solutions S.p.A.
Via Delfini 1
41123 Modena
Italy

Modena 01/12/2011

Giovan Battista Bisogni
Director, SCO - Capital Equipment - Carton Value & Distribution Equipment

Português/Portuguese
FORM 5293 version 2010-01-14

Tetra Pak

Samræmisyfirlýsing

Tetra Pak Packaging Solutions S.p.A.
Via Delfini 1
41123 Modena
Italy

lýsa hér með yfir að viðkomandi vélbúnaður/búnaður/ uppsetning samstæðu:

Tetra Pak A3/CompactFlex (641550-0300)
21220/xxxxx

er í samræmi við eftirfarandi samræmda staðla:

EN 415-3:1999+A1:2009
EN 61000-6-2:2005
EN 61000-6-4:2007

og í samræmi við ákvæði þessara tilskipana - að meðtöldum breytingum:

[X] 2006/42/EB Vélbúnaður
[X] 2004/108/EB Rafsegulsviðssamhæfi (EMC)
[ ] 2006/95/EB Lágspenna

Eftirfarandi einstaklingur hefur heimild til að taka saman tækniskjalið:

Mauro Ferretti
Tetra Pak Packaging Solutions S.p.A.
Via Delfini 1
41123 Modena
Italy

Modena 01/12/2011

Giovan Battista Bisogni
Director, SCO - Capital Equipment - Carton Value & Distribution Equipment

Íslenska/Icelandic
FORM 5293 version 2010-01-14

Tetra Pak

Dichiarazione di Conformità

Tetra Pak Packaging Solutions S.p.A.
Via Delfini 1
41123 Modena
Italy

dichiara che questa macchina/ apparecchiatura/ installazione complessa:

Tetra Pak A3/CompactFlex (641550-0300)
21220/xxxxx

è conforme alle seguenti norme armonizzate:

EN 415-3:1999+A1:2009
EN 61000-6-2:2005
EN 61000-6-4:2007

ed in conformità con quanto disposto nelle Direttive - e relativi emendamenti:

[X] 2006/42/EC Macchinari
[X] 2004/108/EC Compatibilità elettromagnetica (EMC)
[ ] 2006/95/EC Bassa tensione

La seguente persona è autorizzata a redigere il file tecnico:

Mauro Ferretti
Tetra Pak Packaging Solutions S.p.A.
Via Delfini 1
41123 Modena
Italy

Modena 01/12/2011

Giovan Battista Bisogni
Director, SCO - Capital Equipment - Carton Value & Distribution Equipment

Italiano/Italian
FORM 5293 version 2010-01-14

Tetra Pak

Försäkran om överensstämmelse

Tetra Pak Packaging Solutions S.p.A.
Via Delfini 1
41123 Modena
Italy

försäkrar att denna maskin/utrustning/komplexa anläggning:

Tetra Pak A3/CompactFlex (641550-0300)
21220/xxxxx

är i överensstämmelse med följande harmoniserade standarder:

EN 415-3:1999+A1:2009
EN 61000-6-2:2005
EN 61000-6-4:2007

och överensstämmer med bestämmelserna i följande direktiv inklusive tillhörande ändringar:

[X] 2006/42/EG, maskiner
[X] 2004/108/EG, elektromagnetisk kompatibilitet (EMC)
[ ] 2006/95/EG, lågspänning

Följande person är behörig att ställa samman den tekniska dokumentationen:

Mauro Ferretti
Tetra Pak Packaging Solutions S.p.A.
Via Delfini 1
41123 Modena
Italy

Modena 01/12/2011

Giovan Battista Bisogni
Director, SCO - Capital Equipment - Carton Value & Distribution Equipment

Svenska/Swedish
FORM 5293 version 2010-01-14

Tetra Pak

Prohlášení o shodě

Tetra Pak Packaging Solutions S.p.A.
Via Delfini 1
41123 Modena
Italy

prohlašuje, že tento stroj/vybavení/komplexní instalace:

Tetra Pak A3/CompactFlex (641550-0300)
21220/xxxxx

je v souladu s následujícími sladěnými normami:

EN 415-3:1999+A1:2009
EN 61000-6-2:2005
EN 61000-6-4:2007

a je v souladu s ustanoveními následujících směrnic včetně jejich dodatků:

[X] 2006/42/EC Strojní zařízení
[X] 2004/108/EC Elektromagnetická kompatibilita
[ ] 2006/95/EC Nízké napětí

Ke zpracování technických souborů je oprávněna následující osoba:

Mauro Ferretti
Tetra Pak Packaging Solutions S.p.A.
Via Delfini 1
41123 Modena
Italy

Modena 01/12/2011

Giovan Battista Bisogni
Director, SCO - Capital Equipment - Carton Value & Distribution Equipment

Čeština/Czech
FORM 5293 version 2010-01-14

Tetra Pak

Vastavuse Deklaratsioon

Tetra Pak Packaging Solutions S.p.A.
Via Delfini 1
41123 Modena
Italy

deklareerib, et käesolev masin/seade/komplekspaigaldis:

Tetra Pak A3/CompactFlex (641550-0300)
21220/xxxxx

vastab järgmistele harmoniseeritud standardite nõuetele:

EN 415-3:1999+A1:2009
EN 61000-6-2:2005
EN 61000-6-4:2007

ja on vastavuses direktiivide sätetega kaasa arvatud muudatused:

[X] 2006/42/EC Masinad
[X] 2004/108/EC Elektromagnetiline ühilduvus
[ ] 2006/95/EC Madalpinge

Tehnilise faili koostamiseks on luba järgmisel isikul:

Mauro Ferretti
Tetra Pak Packaging Solutions S.p.A.
Via Delfini 1
41123 Modena
Italy

Modena 01/12/2011

Giovan Battista Bisogni
Director, SCO - Capital Equipment - Carton Value & Distribution Equipment

Eesti/Estonian
FORM 5293 version 2010-01-14

Tetra Pak

Megfelelőségi Nyilatkozat

Tetra Pak Packaging Solutions S.p.A.
Via Delfini 1
41123 Modena
Italy

nyilatkozom, hogy ez a gép/berendezés/komplex összeszerelés:

Tetra Pak A3/CompactFlex (641550-0300)
21220/xxxxx

megfelel a következő harmonizált szabványoknak:

EN 415-3:1999+A1:2009
EN 61000-6-2:2005
EN 61000-6-4:2007

és megfelel a következő, módosításokat is magukban foglaló Direktíváknak:

[X] 2006/42/EC Gépek
[X] 2004/108/EC Elektromágneses összeférhetőség (EMC)
[ ] 2006/95/EC Alacsony feszültségi direktíva

A műszaki dokumentum összeállítására jogosult személy:

Mauro Ferretti
Tetra Pak Packaging Solutions S.p.A.
Via Delfini 1
41123 Modena
Italy

Modena 01/12/2011

Giovan Battista Bisogni
Director, SCO - Capital Equipment - Carton Value & Distribution Equipment

Magyar/Hungarian
FORM 5293 version 2010-01-14

Tetra Pak

Atbilstības deklarācija

Tetra Pak Packaging Solutions S.p.A.
Via Delfini 1
41123 Modena
Italy

deklarējam to, ka šī mašīna/iekārta/sarežģīta instalācija:

Tetra Pak A3/CompactFlex (641550-0300)
21220/xxxxx

atbilst šādiem harmonizētajiem standartiem:

EN 415-3:1999+A1:2009
EN 61000-6-2:2005
EN 61000-6-4:2007

un ir saskaņā ar direktīvas(u) prasībām, ieskaitot direktīvas(u) labojumus:

[X] 2006/42/EK Mašīnas
[X] 2004/108/EK Elektromagnētiskā savietojamība
[ ] 2006/95/EK Zemspriegums

Sastādīt tehnisko lietu ir pilnvarota šāda persona:

Mauro Ferretti
Tetra Pak Packaging Solutions S.p.A.
Via Delfini 1
41123 Modena
Italy

Modena 01/12/2011

Giovan Battista Bisogni
Director, SCO - Capital Equipment - Carton Value & Distribution Equipment

Latviski/Latvian
FORM 5293 version 2010-01-14

Tetra Pak

Deklaracja Zgodności

Tetra Pak Packaging Solutions S.p.A.
Via Delfini 1
41123 Modena
Italy

deklaruje, że niniejsza maszyna/wyposażenie/
instalacja kompleksowa:

Tetra Pak A3/CompactFlex (641550-0300)
21220/xxxxx

jest zgodna z następującymi normami zharmonizowanymi:

EN 415-3:1999+A1:2009
EN 61000-6-2:2005
EN 61000-6-4:2007

oraz jest zgodna z postanowieniami następujących Dyrektyw,
wraz ze zmianami:

[X] 2006/42/WE Maszyny
[X] 2004/108/WE Kompatybilność elektromagnetyczna
[ ] 2006/95/WE Niskonapięciowy sprzęt elektryczny

Następująca osoba jest upoważniona do opracowania pliku technicznego:

Mauro Ferretti
Tetra Pak Packaging Solutions S.p.A.
Via Delfini 1
41123 Modena
Italy

Modena 01/12/2011

Giovan Battista Bisogni
Director, SCO - Capital Equipment - Carton Value & Distribution Equipment

Polski/Polish
FORM 5293 version 2010-01-14

Tetra Pak

Atitikties deklaracija

Tetra Pak Packaging Solutions S.p.A.
Via Delfini 1
41123 Modena
Italy

pareiškia, kad šis mechanizmas/įrenginys/kompleksinė įranga:

Tetra Pak A3/CompactFlex (641550-0300)
21220/xxxxx

atitinka šiuos darniuosius standartus:

EN 415-3:1999+A1:2009
EN 61000-6-2:2005
EN 61000-6-4:2007

taip pat atitinka šių direktyvų nuostatas,
įskaitant jų pataisas:

[X] 2006/42/EB mašinų direktyva
[X] 2004/108/EB direktyva dėl elektromagnetinio suderinamumo
[ ] 2006/95/EB žemųjų įtampų direktyva

Techninį failą sudaryti įgaliotas šis asmuo:

Mauro Ferretti
Tetra Pak Packaging Solutions S.p.A.
Via Delfini 1
41123 Modena
Italy

Modena 01/12/2011

Giovan Battista Bisogni
Director, SCO - Capital Equipment - Carton Value & Distribution Equipment

Lietuvių k./Lithuanian
FORM 5293 version 2010-01-14

Tetra Pak

ДЕКЛАРАЦИЯ ЗА СЪОТВЕТСТВИЕ

Tetra Pak Packaging Solutions S.p.A.
Via Delfini 1
41123 Modena
Italy

декларира, че тази машина/ оборудване/ сложна инсталация:

Tetra Pak A3/CompactFlex (641550-0300)
21220/xxxxx

е в съответствие със следните хармонизационни стандарти:

EN 415-3:1999+A1:2009
EN 61000-6-2:2005
EN 61000-6-4:2007

и е в съответствие с клаузите на Директивата(ите): -
включително поправките:

[X] 2006/42/EC Машини
[X] 2004/108/EC Електромагнитна съвместимост (EMC)
[ ] 2006/95/EC Нисък волтаж

Следното лице е оторизирано да попълни техническия файл:

Mauro Ferretti
Tetra Pak Packaging Solutions S.p.A.
Via Delfini 1
41123 Modena
Italy

Modena 01/12/2011

Giovan Battista Bisogni
Director, SCO - Capital Equipment - Carton Value & Distribution Equipment

Български/ Bulgarian
FORM 5293 version 2010-01-14

Tetra Pak

Declarație de conformitate

Tetra Pak Packaging Solutions S.p.A.
Via Delfini 1
41123 Modena
Italy

declară că această maşină/ echipament/ instalație complexă:

Tetra Pak A3/CompactFlex (641550-0300)
21220/xxxxx

este în conformitate cu următoarele standarde armonizate:

EN 415-3:1999+A1:2009
EN 61000-6-2:2005
EN 61000-6-4:2007

şi este în conformitate cu prevederile Directivelor -
inclusiv cu amendamentele:

[X] 2006/42/EC Utilaje
[X] 2004/108/EC Compatibilitate electromagnetică (EMC)
[ ] 2006/95/EC Joasă tensiune

Următoarea persoană este autorizată să redacteze dosarul tehnic:

Mauro Ferretti
Tetra Pak Packaging Solutions S.p.A.
Via Delfini 1
41123 Modena
Italy

Modena 01/12/2011

Giovan Battista Bisogni
Director, SCO - Capital Equipment - Carton Value & Distribution Equipment

Română/Romanian
FORM 5293 version 2010-01-14

Tetra Pak

Vyhlásenie o zhode

Tetra Pak Packaging Solutions S.p.A.
Via Delfini 1
41123 Modena
Italy

vyhlasuje, že tento stroj/zariadenie/komplexná inštalácia:

Tetra Pak A3/CompactFlex (641550-0300)
21220/xxxxx

zodpovedá požiadavkám nasledujúcich harmonizovaných noriem:

EN 415-3:1999+A1:2009
EN 61000-6-2:2005
EN 61000-6-4:2007

a je v zhode s ustanoveniami Smernice (Smerníc) -
vrátane ich zmien a doplnkov:

[X] 2006/42/ES Strojárska
[X] 2004/108/ES Elektromagnetická kompatibilita (EMC)
[ ] 2006/95/ES Nízkonapäťové zariadenia

Nasledujúca osoba je oprávnená zostavovať súbor technickej dokumentácie:

Mauro Ferretti
Tetra Pak Packaging Solutions S.p.A.
Via Delfini 1
41123 Modena
Italy

Modena 01/12/2011

Giovan Battista Bisogni
Director, SCO - Capital Equipment - Carton Value & Distribution Equipment

Slovensky/Slovak
FORM 5293 version 2010-01-14

Tetra Pak

Deklaracija o Skladnosti

Tetra Pak Packaging Solutions S.p.A.
Via Delfini 1
41123 Modena
Italy

izjavljam, da je ta stroj/oprema/kompleksna namestitev:

Tetra Pak A3/CompactFlex (641550-0300)
21220/xxxxx

izdelan v skladu z naslednjimi standardi:

EN 415-3:1999+A1:2009
EN 61000-6-2:2005
EN 61000-6-4:2007

in v skladu z direktivo (direktivami) - vključno z dopolnili

[X] 2006/42/EC Varnost strojev
[X] 2004/108/EC Elektromagnetna združljivost (EMC)
[ ] 2006/95/EC Električna oprema, namenjena za uporabo v določenih napetostnih območjih

Oseba, ki je pooblaščena za sestavljanje tehnične datoteke:

Mauro Ferretti
Tetra Pak Packaging Solutions S.p.A.
Via Delfini 1
41123 Modena
Italy

Modena 01/12/2011

Giovan Battista Bisogni
Director, SCO - Capital Equipment - Carton Value & Distribution Equipment

Slovenščina/Slovenian
FORM 5293 version 2010-01-14

Identification

CE Classification

This equipment complies with the basic health and safety regulations of the European Economic Area (EEA).

3-A Compliance

This equipment complies with the 3-A Sanitary Standards for Formers, Fillers, and Sealers of Containers for Fluid Milk and Fluid Milk Products, Number 17-10.

Machine Plate

The illustration below shows an example of the machine plate and its location on the equipment. The machine plate carries data needed when contacting Tetra Pak concerning this specific equipment.

Make sure that the equipment data in the front pages of this manual corresponds to the machine plate data and the machine specification.

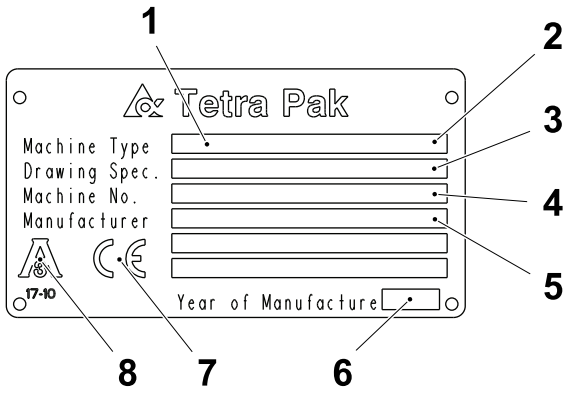

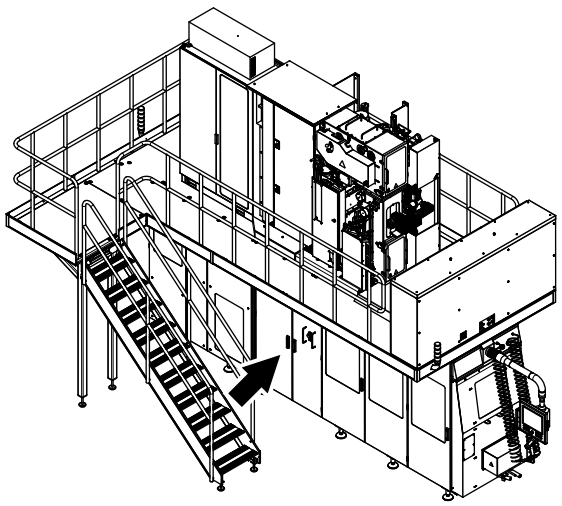

1 Machine type
2 Volume
3 Drawing specifications
4 Machine serial number
5 Manufacturer
6 Year of manufacture
7 CE mark
8 3-A mark (if applicable)

Delivered Design Label

The illustration below shows an example of the delivered design label and its location on the equipment. The delivered design label lists information tracking any rebuilding done to the electrical design, and any alterations done in the electrical cabinet and to related electrical components.

The delivered design label is filled in by the person performing the rebuilding or alteration.

DELIVERED DESIGN

REGISTERED ALTERATIONS

ECM	REBUILDING KIT OR VARIANT	MACHINE DEV.	TECHNICAL BULLETIN	REMARK	MANUFACTURED BY	DATE	SIGN.

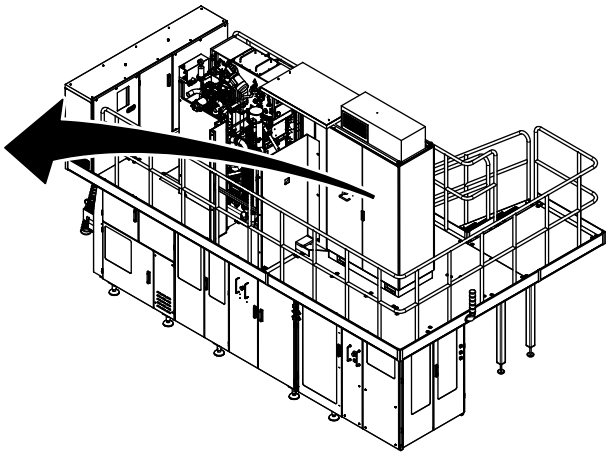

Orientation

The illustration below shows the orientation of the equipment. This orientation information will be used throughout this manual. The arrows indicate the flow of material.

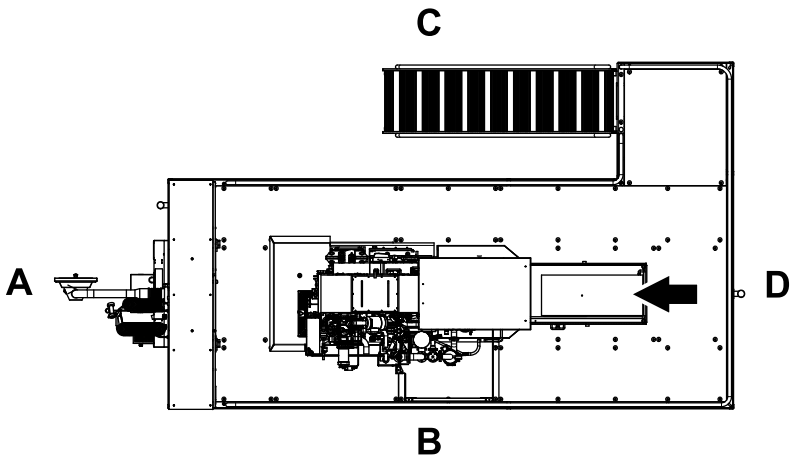

A Front
B Right-hand side
C Left-hand side
D Back

Hygiene

Packaging Material

Avoid microbiological contamination of the packaging material:

- Always protect your packaging material against contamination.
- Always keep the doors to the filling room (area) closed. To prevent contamination via air streams, never open a window when the machine is in production.
- Never clean the floors or the machine in the filling room (area) when the machine is in production.
- Compressed air used for cleaning purposes is to be used only for cleaning filters and should only be used outside of the filling room (area) or in the final folder compartment of the filling machine.
- Prepare the splicing of the packaging material as late as possible.
- Disinfect your hands before touching anything that may come into contact with the product. Use code H disinfectant. See the Technical Data chapter of the Maintenance Manual.
- Keep your hands clean.
- Always wear some type of hair protection (cap or hairnet) and clean clothes (preferably white).
- Do not wear a watch, ring, necklace, earrings, or any other exposed jewellery.

Steam Barrier in the Product Valve

The filling machine's product valve employs a steam barrier to separate the product supply line from the filling machine. The steam barrier allows the machine and the product supply line to be independently sterilised to commercial sterility conditions.

- Never disengage the steam barrier, and never interrupt the steam supply when the filling machine or the product supply line is being brought to the pre-sterilization phase, or when the machine is already in the production phase.
- If any maintenance activity requires disengagement of the steam barrier or the interruption of the steam supply to the machine, make sure that the product supply line is idle and empty of product.

How to Use This IM

Purpose of the IM

The IM provides technical specifications and preparatory information needed during the quotation of the equipment and during the entire installation process. The IM describes the equipment requirements in the packaging line. It also provides instructions on how to mechanically install, commission, and validate the performance of the equipment, and how to disassemble and remove the equipment.

The intended users of the IM are project leaders, installation planners, installation technicians, and other technicians involved in the equipment installation project.

Installation Workflow

An installation of any Tetra Pak equipment follows the Installation to Performance process. The process consists of five main activities and the IM is structured to support the process. See the illustration and the table below.

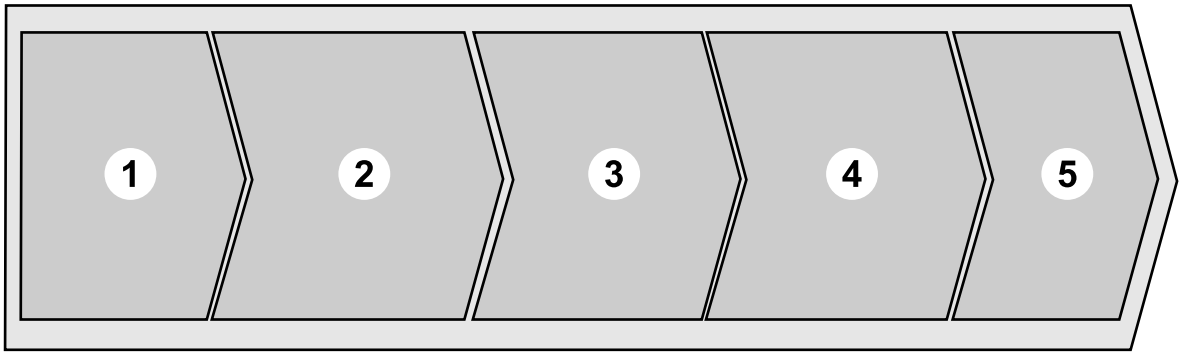

Pos.	Process Activity	End State	Related IM Chapters	Intended User
1	Preparation	Equipment at prepared site	Chapter 1 and 2	Installation planner/Project leader
2	Mechanical Completion	Equipment mechanically installed	Chapter 3	Installation technician
3	Commissioning	Equipment commissioned and functionally validated	Chapter 4	Installation technician
4	Performance Validation	Equipment performance validated	Chapter 5	Project leader
5	Hand Over	Contract fulfilled	-	-

This page intentionally left blank

ii Safety Precautions

Description

Safety Precaution Instructions

WARNING

Read and understand this manual before using the machine.
Failure to follow safety precautions and instructions can result in death or serious injury.

Definition of Lockout Procedure

A lockout procedure is a procedure to put each necessary energy isolating device in its safe position to prevent the energisation of the equipment, such as when a maintenance procedure should be carried out.

A lockout is the use of a device, for example, a padlock, to make sure that an energy isolating device cannot be operated.

An energy isolating device is a mechanical device that physically prevents transmission or release of energy, such as an electrical supply disconnecting device.

Description ii-2

Safety Messages Description ii-7

Personnel Requirements ii-8

Skilled Person ii-8

Instructed Person ii-8

Safety Signs ii-9

Location of Safety Signs ii-12

Location of Safety Signs - ICU (OE) ii-20

Location of Safety Signs - HVA (OE) ii-21

Location of Safety Signs - HI (OE) ii-23

Location of Safety Signs - PT (OE) ii-24

Protective Devices ii-27

Emergency Stop ii-27

Emergency Stop Push-Buttons ii-28

Safeguards ii-29

Indicating Tower ii-34

Audible Alarm ii-35

Safe Manual Handling ii-36

Personal Protection ii-37

Noise ii-37

Entanglement ii-37

Hazardous Substances ii-38

Disposal of Chemical Substances ii-38

Hydrogen Peroxide (H_2O_2) ii-38

Emergency Procedures ii-38

Eyes ii-39

Skin ii-39

Inhalation **ii-39**
Ingestion **ii-39**
Personal Protective Equipment **ii-39**
Handling of Hydrogen Peroxide **ii-40**
Storage of Hydrogen Peroxide **ii-41**
Disposal of Hydrogen Peroxide **ii-42**
Caustic Soda/Sodium Hydroxide (NaOH) **ii-42**
Emergency Procedures **ii-42**
Inhalation **ii-42**
Ingestion **ii-42**
Skin Contact **ii-42**
Eye Contact **ii-42**
Accidental Release, Spillage or Splashing **ii-42**
Personal Protective Equipment **ii-43**
Handling and Storage of Caustic Soda/Sodium Hydroxide **ii-43**
Disposal of Caustic Soda/Sodium Hydroxide **ii-43**
Estinguishing Media **ii-43**
Specific Hazards **ii-43**
Protective Measures in Fire **ii-44**
Nitric Acid (HNO_3) **ii-44**
Emergency Procedures **ii-44**
Inhalation **ii-44**
Ingestion **ii-44**
Skin Contact **ii-44**
Eye Contact **ii-44**
Accidental Release, Spillage or Splashing **ii-44**
Personal Protective Equipment **ii-45**
Handling and Storage of Nitric Acid **ii-45**
Disposal of Nitric Acid **ii-45**
Fire **ii-46**
Explosion **ii-46**
Estinguishing Media **ii-46**
Special Information **ii-46**

Protective Measures In Fire..... ii-46

Magnetic Components ii-47

Supply Systems..... ii-48

Electrical Supply ii-48

Residual Voltage..... ii-49

Electrical Cabinet..... ii-49

Socket Outlet..... ii-50

Air Supply..... ii-51

Steam Supply..... ii-54

Water Supply ii-55

Equipement for Lifting and Moving Loads ii-56

This page intentionally left blank

Safety Messages Description

A safety message is always accompanied by a safety alert symbol and a signal word.

The safety alert symbol is used to alert about potential personal injury hazards. To avoid hazards, obey all safety messages that follow this symbol.

The following safety alert symbols and signal words are used in this manual to inform the user of hazards.

DANGER	Danger indicates an imminently hazardous situation which, if not avoided, **will** result in **death or serious injury**.
WARNING	Warning indicates a potentially hazardous situation which, if not avoided, **could** result in **death or serious injury**.
CAUTION	Caution indicates a potentially hazardous situation which, if not avoided, **may** result in **minor or moderate injury.** It may also be used to alert against unsafe practices.
CAUTION	Caution without the safety alert symbol indicates a potentially hazardous situation which, if not avoided, **may** result in **property damage**.

Personnel Requirements

Note! Personnel includes all persons working on or near this equipment.

Only skilled or instructed persons are allowed to work with this equipment.

Skilled Person

A skilled person must have relevant education and experience to enable him or her to identify hazards, analyse risks, and avoid hazards which electricity, machinery, chemicals, other energies, and supply systems on this equipment can create.

Skilled persons must meet local regulations, such as certifications and qualifications for working with these energies and systems.

Instructed Person

An instructed person must be adequately advised or supervised by a skilled person. The skilled person enables the instructed person to identify hazards, analyse risks, and avoid hazards which electricity, machinery, chemicals, other energies, and supply systems on this equipment can create.

Safety Signs

WARNING

Damaged or missing safety signs.
Safety signs are used to indicate safety hazards. If the signs are missing or damaged, they can not fulfil this function. Replace all missing or damaged safety signs immediately.

Safety signs are attached to the equipment. The table below lists all the signs that are used, and illustrations show their locations on the equipment. Each position number refers to two standards of a safety sign in the table, but only one is used on the equipment.

- Make sure that each safety sign is legible and in its correct position after installation and maintenance.
- Replace all missing or damaged safety signs immediately.

Pos	ISO Standard	ANSI Standard
1	 **Moving part can crush and cut.** Do not operate with guard removed. Follow lockout procedure before maintenance.	
2	 **Hazardous voltage.** Will shock, burn, or cause death. Follow lockout procedure before maintenance.	
3	 **Chemical burn hazard.** Wear personal protective equipment.	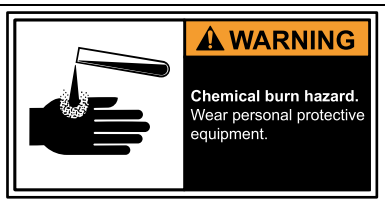

(Cont'd)

(Cont'd)

Pos	ISO Standard	ANSI Standard
4	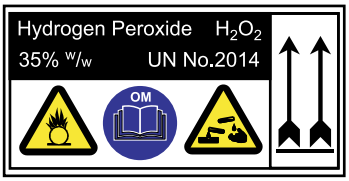	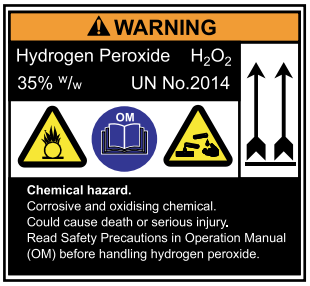
	Chemical hazard. Corrosive and oxidising chemical. Could cause death or serious injury. Read Safety Precautions in Operation Manual (OM) before handling hydrogen peroxide.	
5		
	Risk of eye injury. Wear eye protection.	
6		
	Hot surface. Do not touch. Follow lockout procedure before maintenance.	
7		
	Hazardous voltage. Can shock, burn, or cause death. Read Maintenance Manual (MM) before using this socket outlet.	
8		
	Hazardous rotating shafts and belts. Can crush and cut. Keep hands clear while the machine is operating.	

(Cont'd)

(Cont'd)

Pos	ISO Standard	ANSI Standard
9		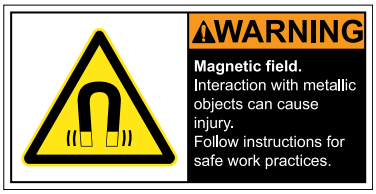

Magnetic field.
Interaction with metallic objects can cause injury.
Follow instructions for safe work practices.

Location of Safety Signs

The illustration shows where the safety signs are located. The position numbers refer to the table in the Safety Signs section.

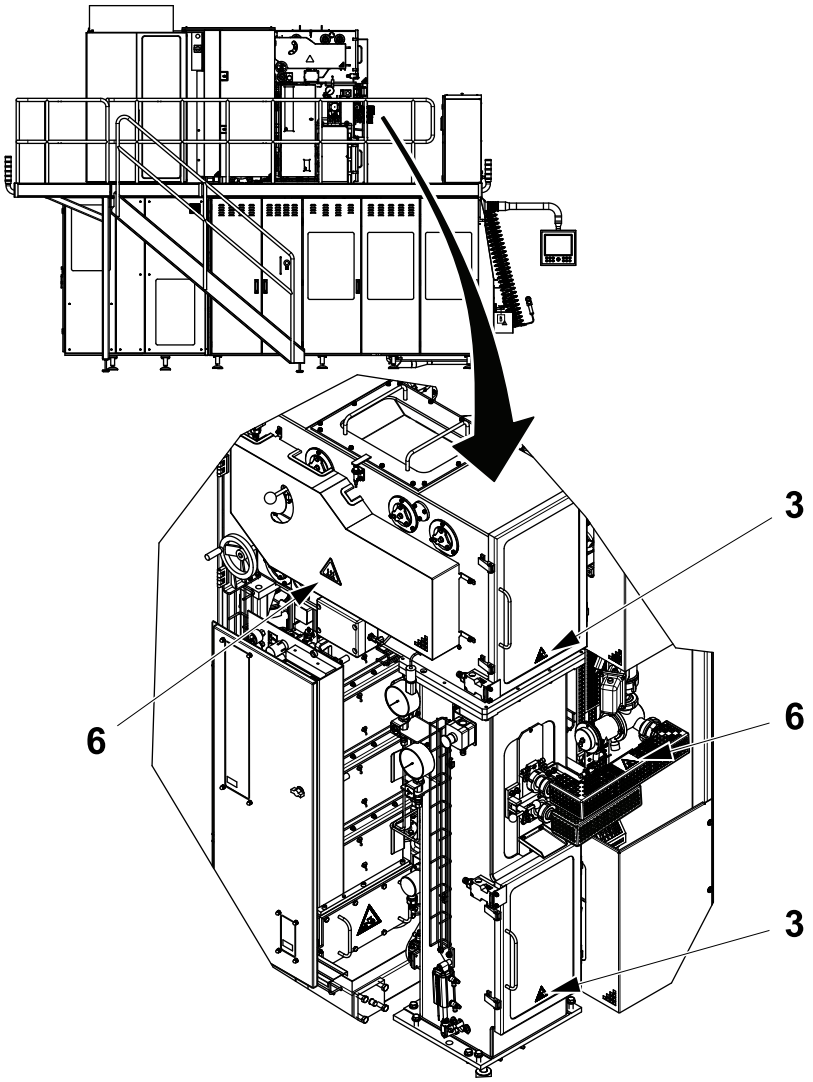

(Cont'd)

(Cont'd)

The illustration shows where the safety signs are located. The position numbers refer to the table in the Safety Signs section.

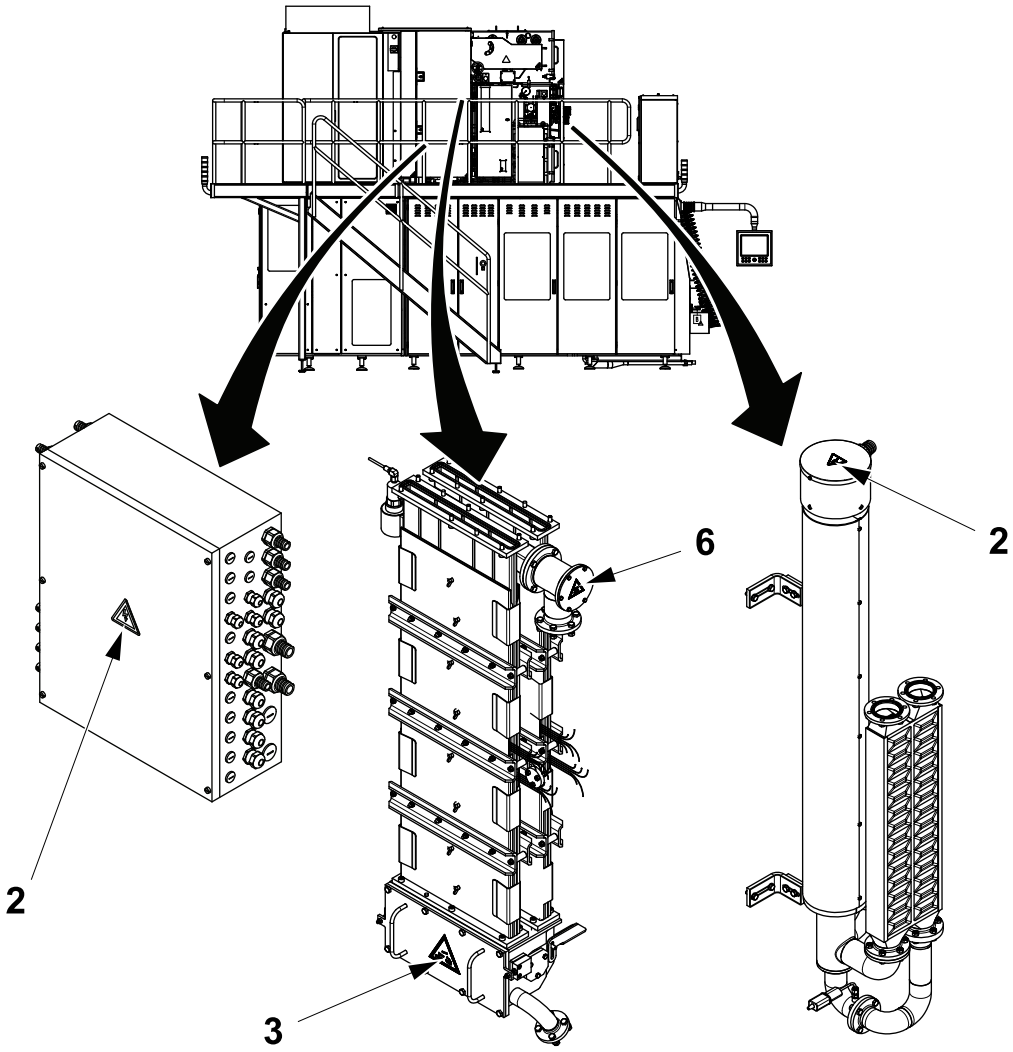

(Cont'd)

(Cont'd)

The illustration shows where the safety signs are located. The position numbers refer to the table in the Safety Signs section.

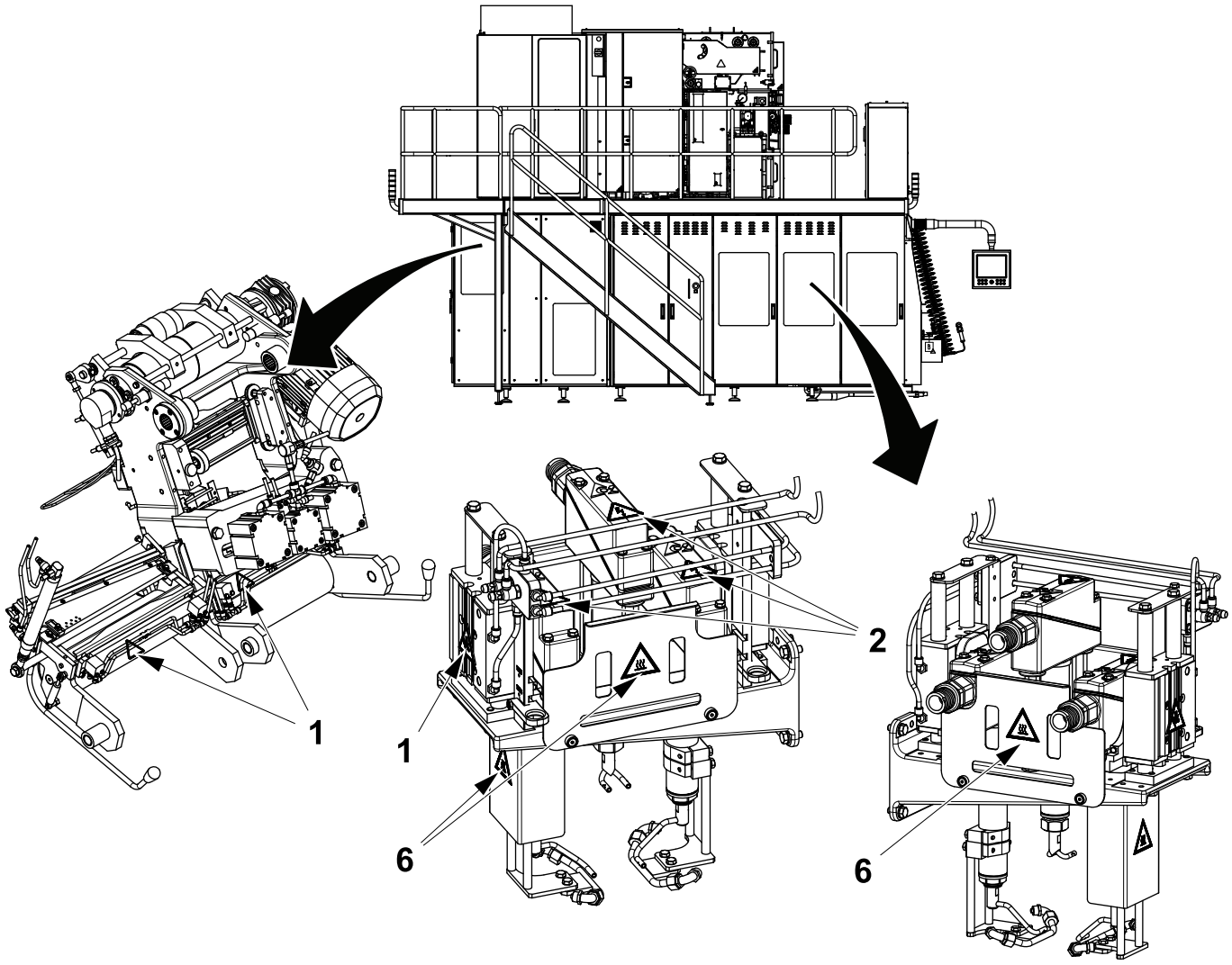

(Cont'd)

(Cont'd)

The illustration shows where the safety signs are located. The position numbers refer to the table in the Safety Signs section.

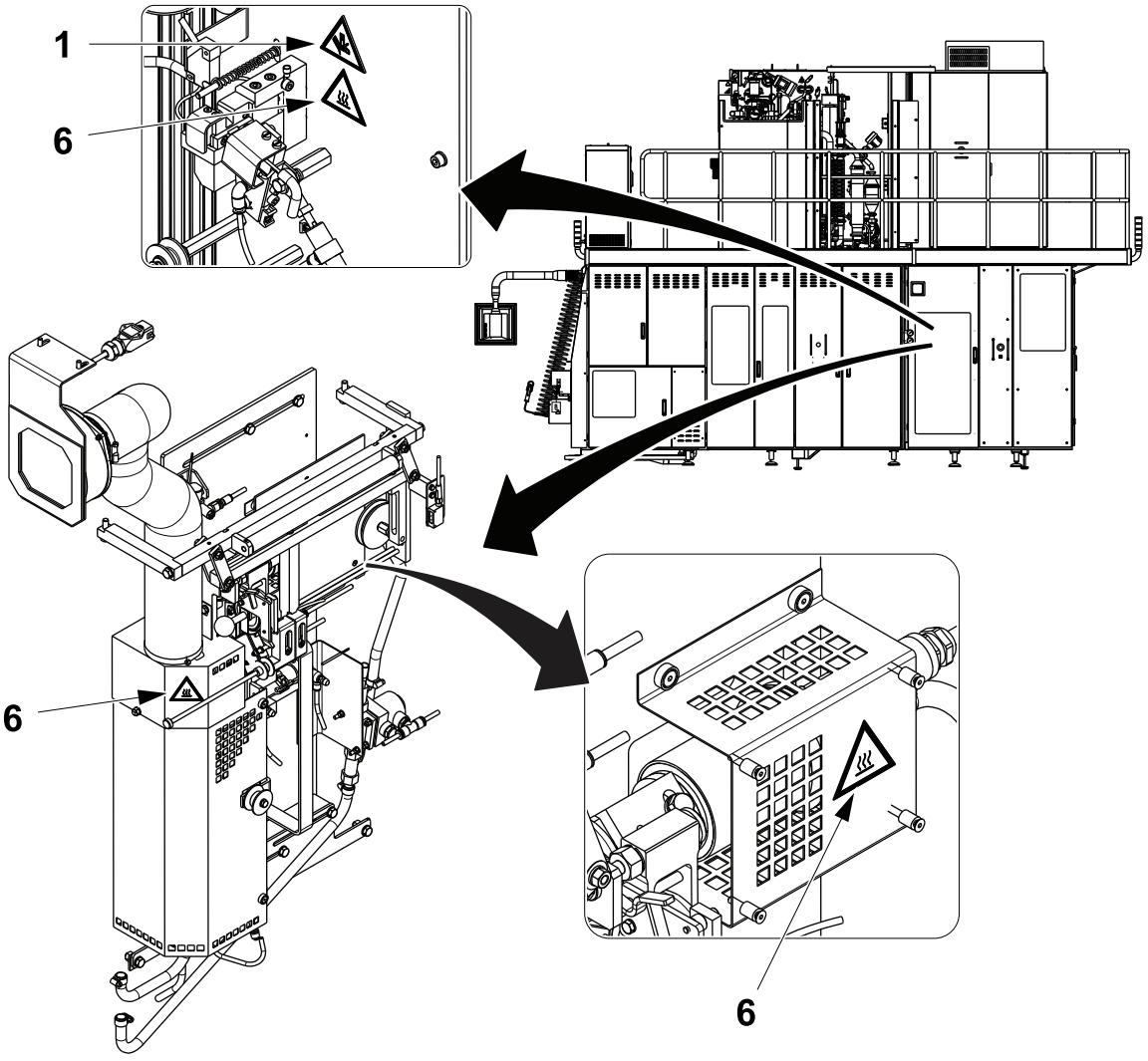

(Cont'd)

(Cont'd)

The illustration shows where the safety signs are located. The position numbers refer to the table in the Safety Signs section.

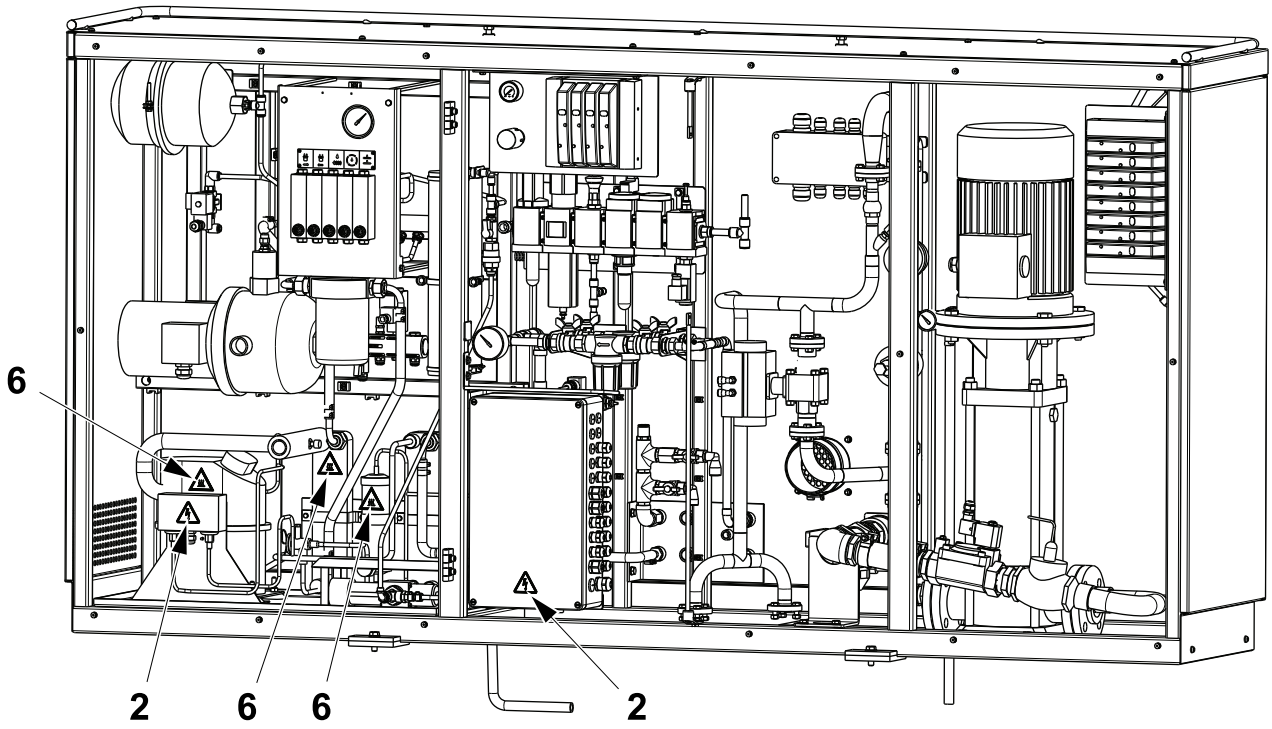

(Cont'd)

(Cont'd)

The illustration shows where the safety signs are located. The position numbers refer to the table in the Safety Signs section.

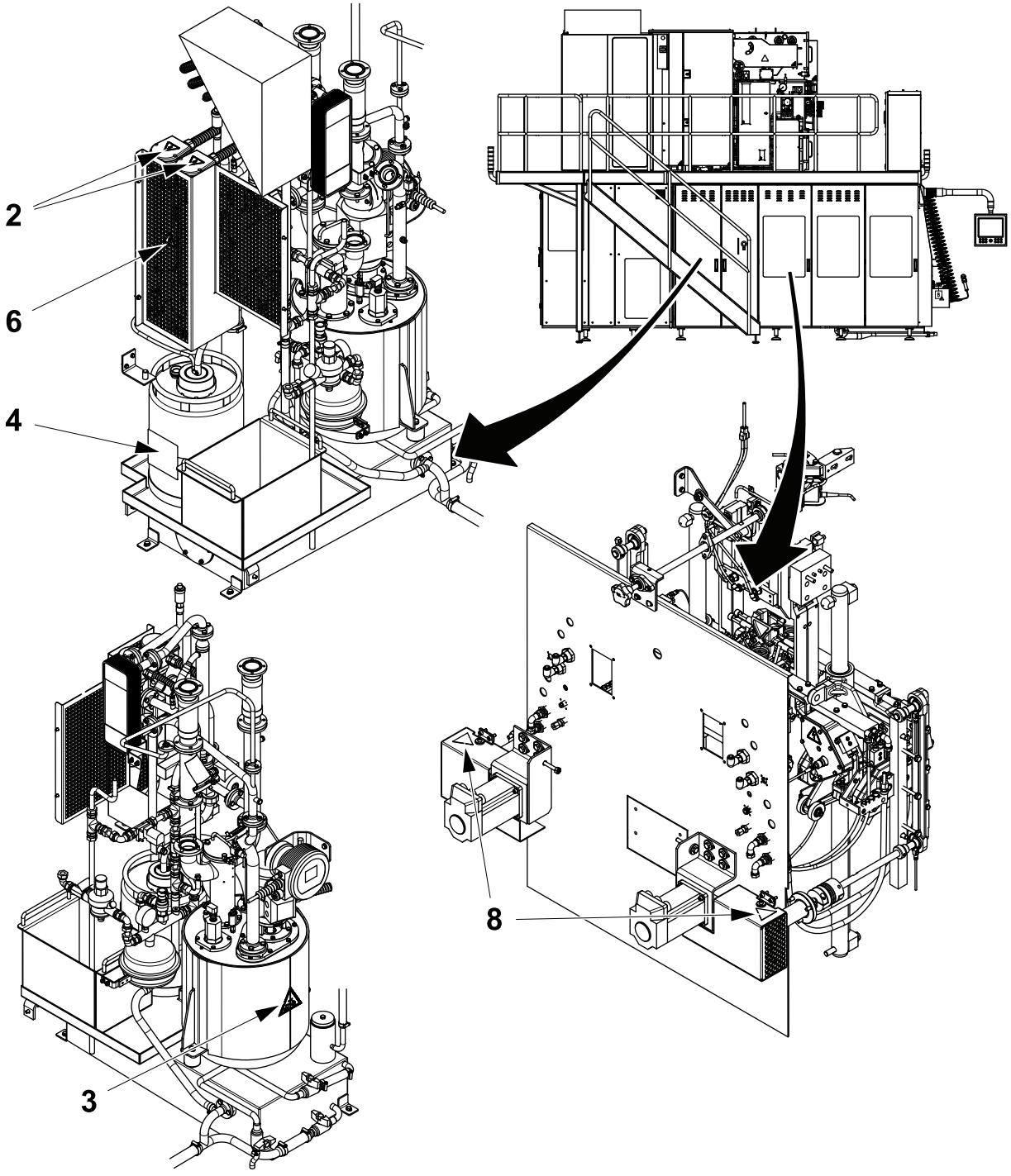

(Cont'd)

(Cont'd)

The illustration shows where the safety signs are located. The position numbers refer to the table in the Safety Signs section.

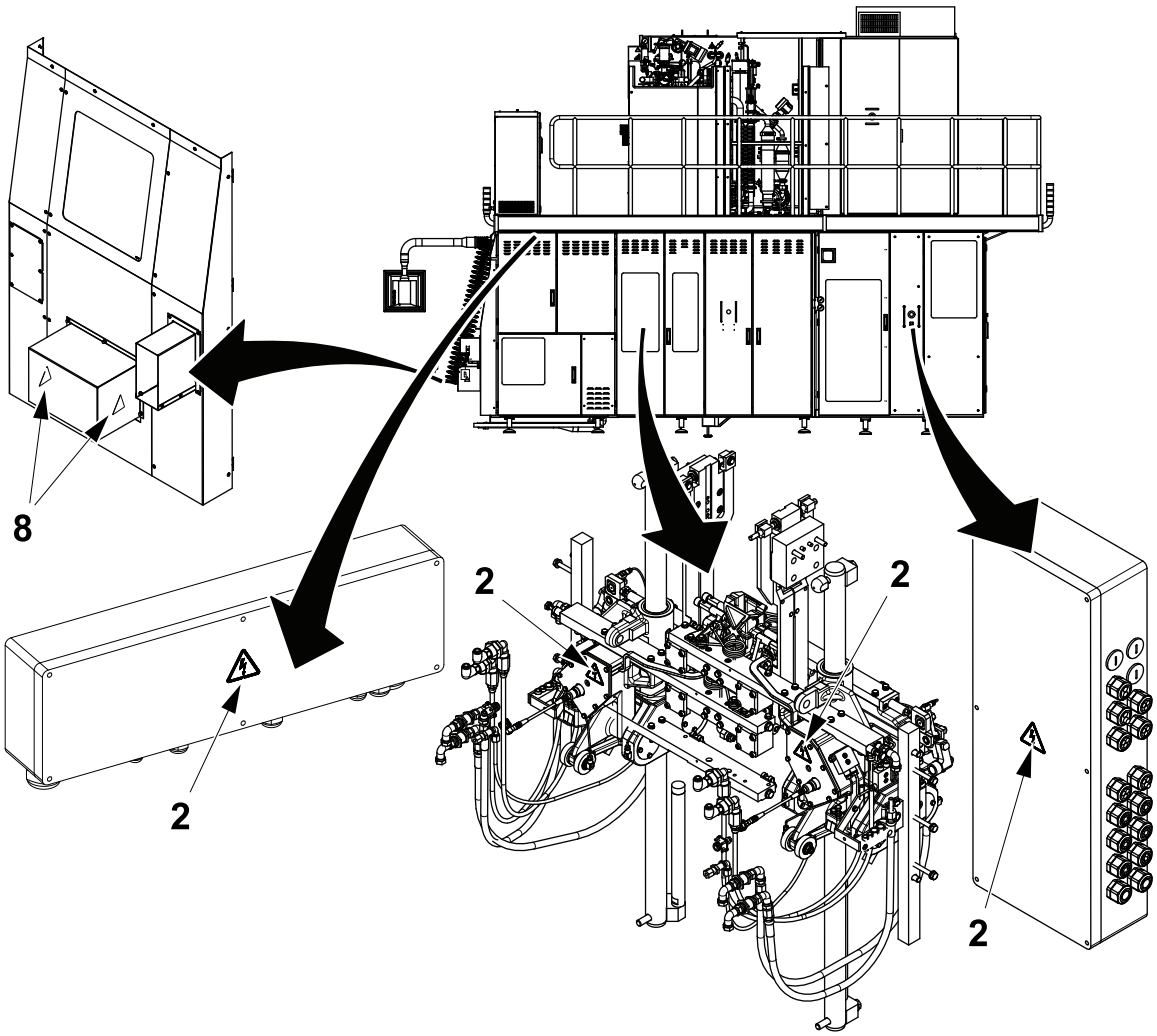

(Cont'd)

(Cont'd)

The illustration shows where the safety signs are located. The position numbers refer to the table in the Safety Signs section.

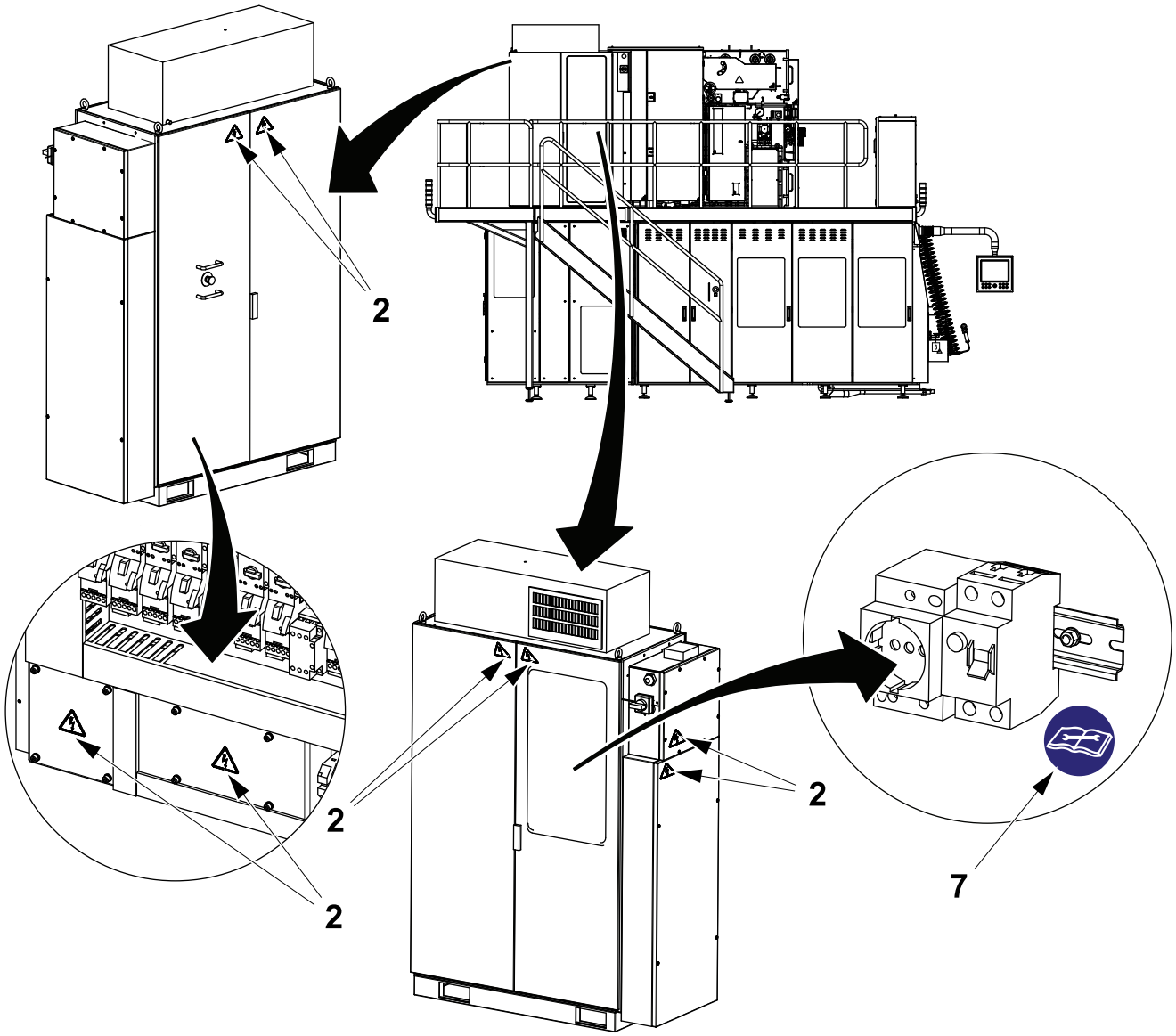

Location of Safety Signs - ICU (OE)

The illustration shows where the safety signs are located. The position numbers refer to the table in the Safety Signs section.

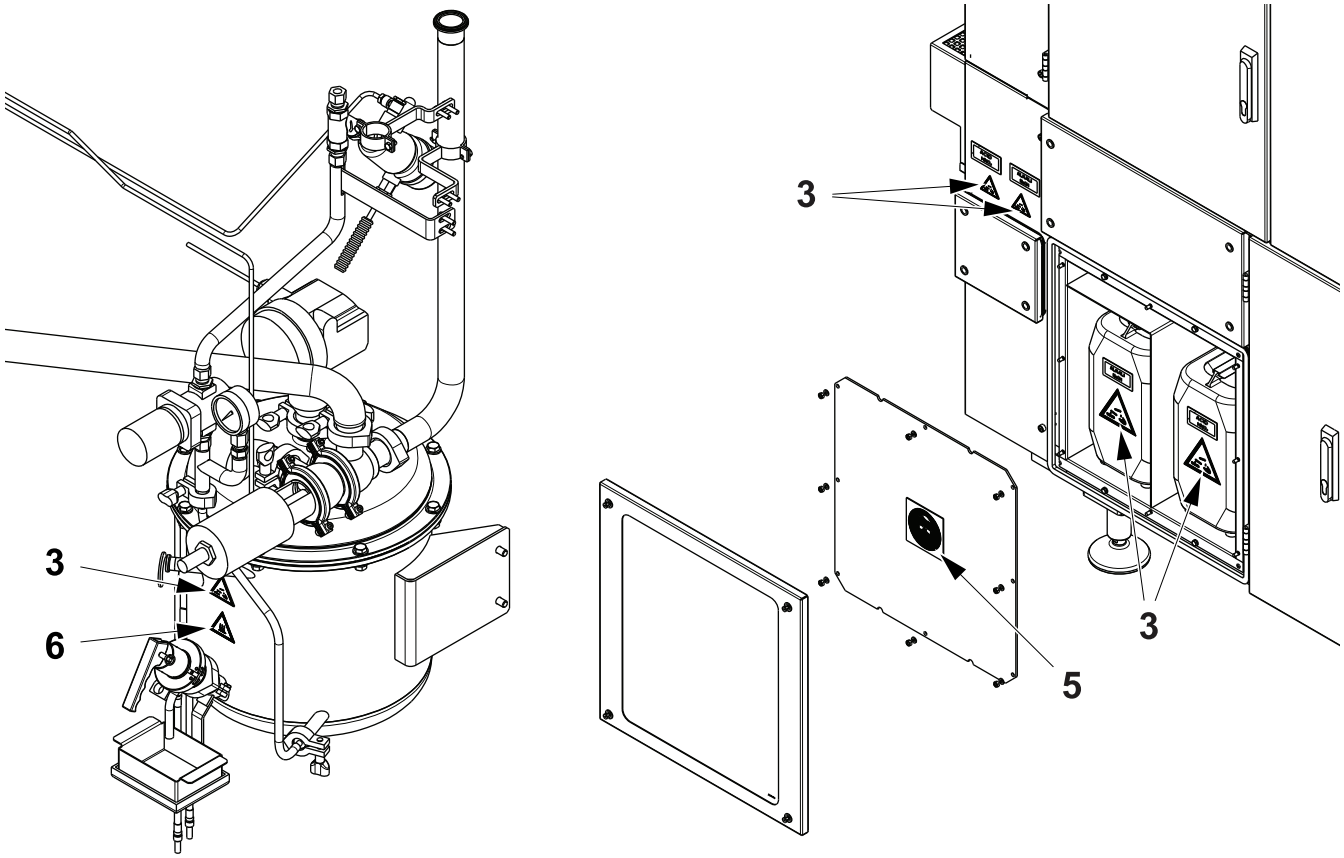

Location of Safety Signs - HVA (OE)

The illustration shows where the safety signs are located. The position numbers refer to the table in the Safety Signs section.

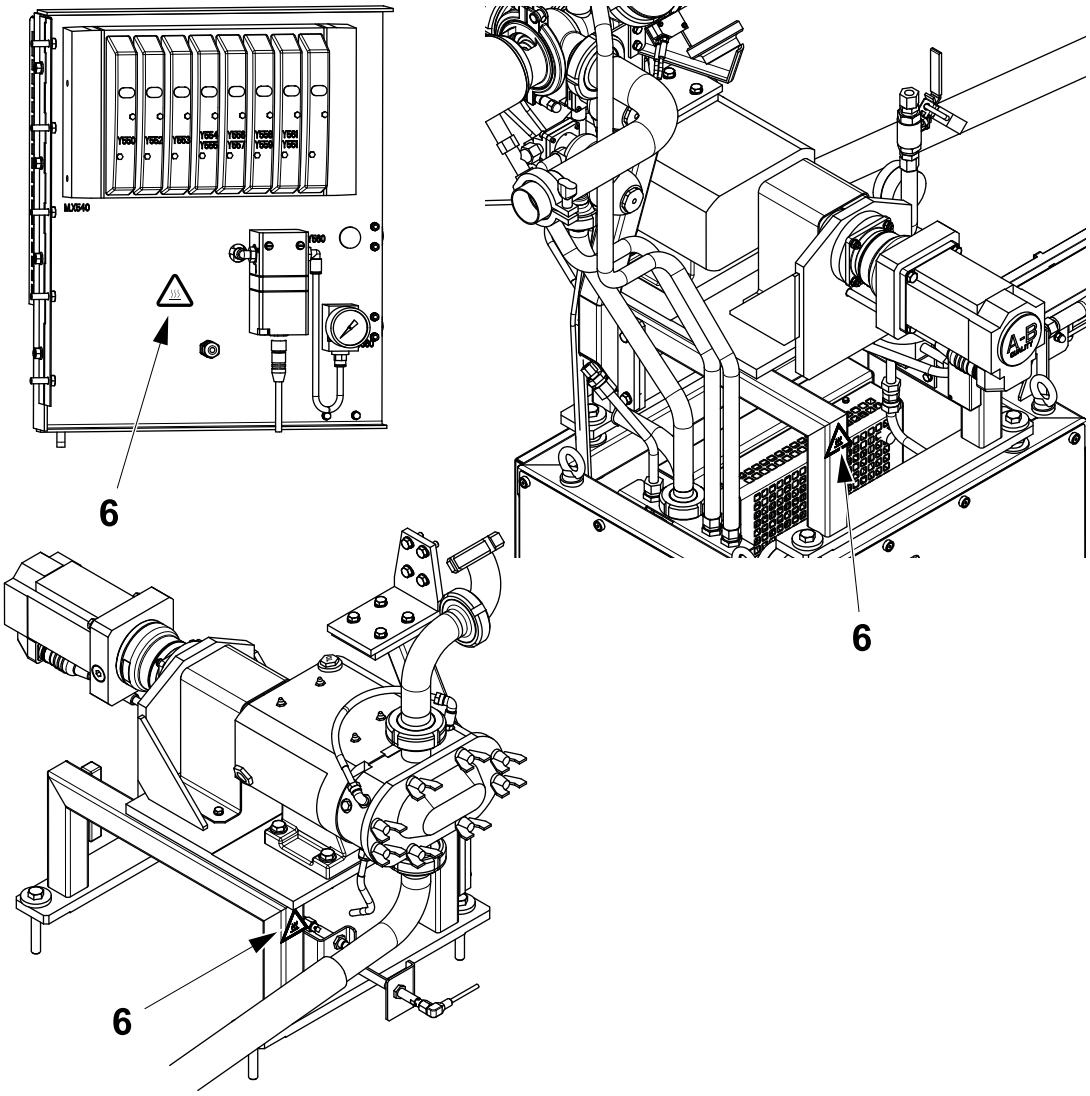

(Cont'd)

(Cont'd)

The illustration shows where the safety signs are located. The position numbers refer to the table in the Safety Signs section.

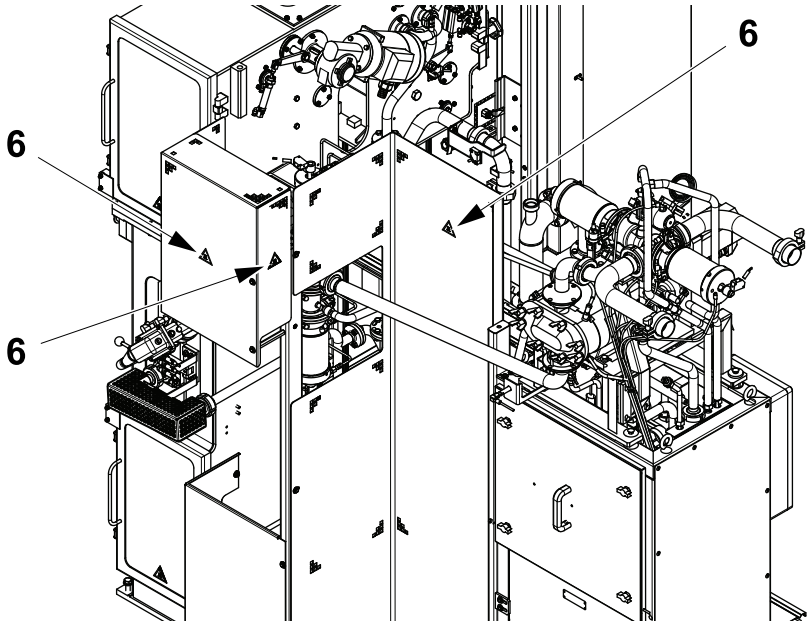

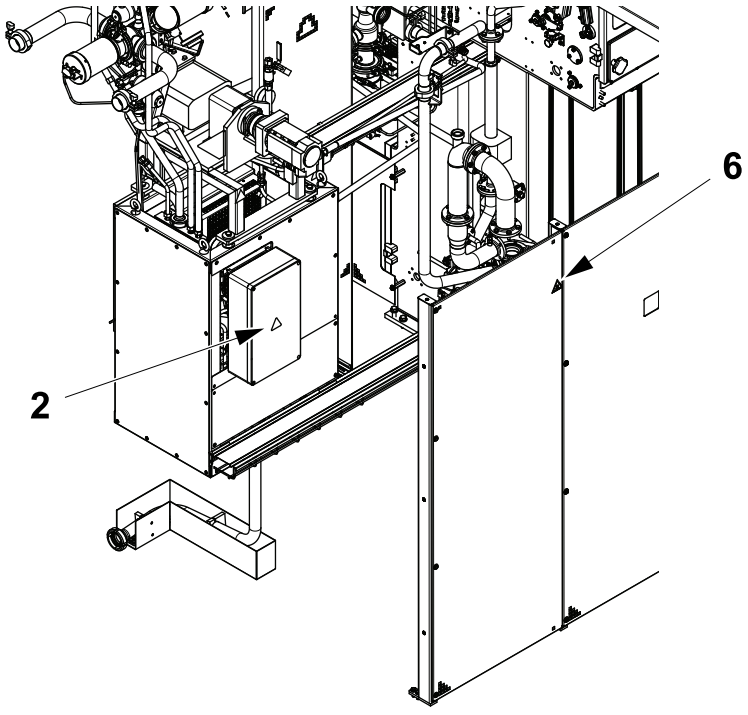

Location of Safety Signs - HI (OE)

The illustration shows where the safety signs are located. The position numbers refer to the table in the Safety Signs section.

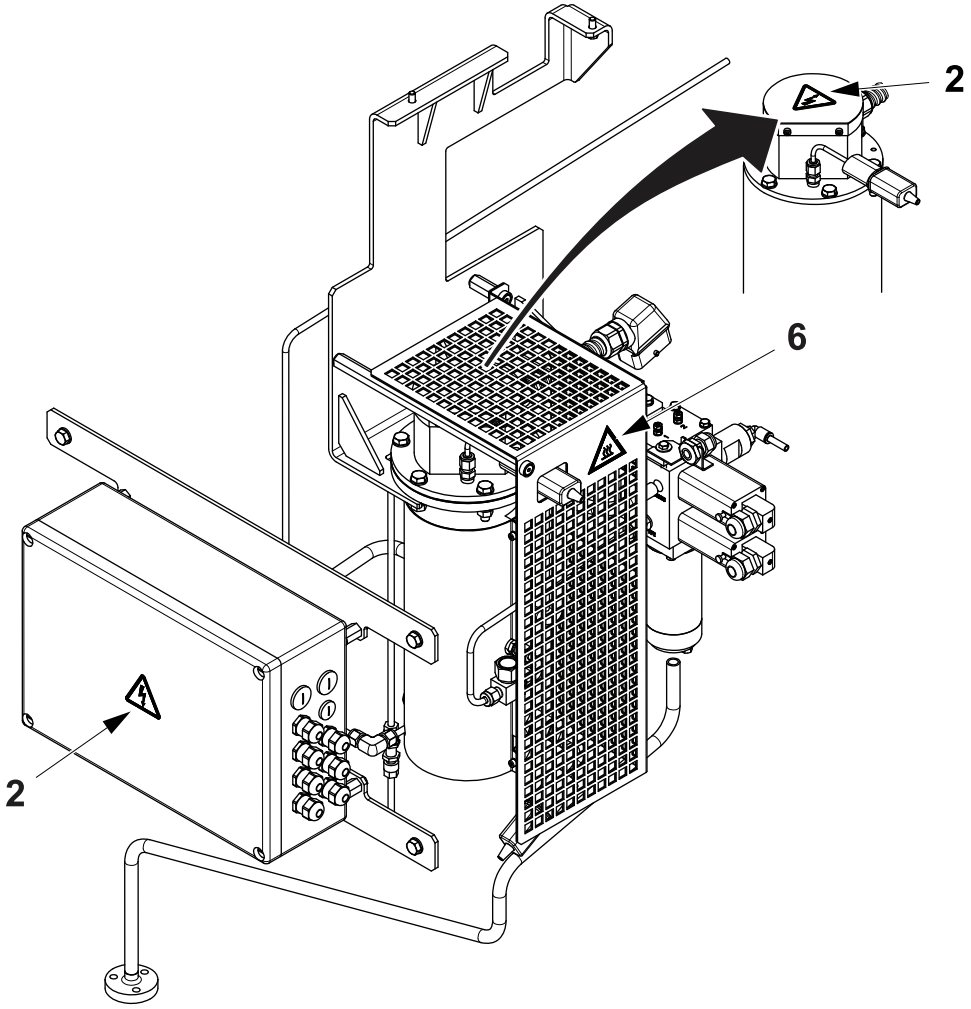

Location of Safety Signs - PT (OE)

The illustration shows where the safety signs are located. The position numbers refer to the table in the Safety Signs section.

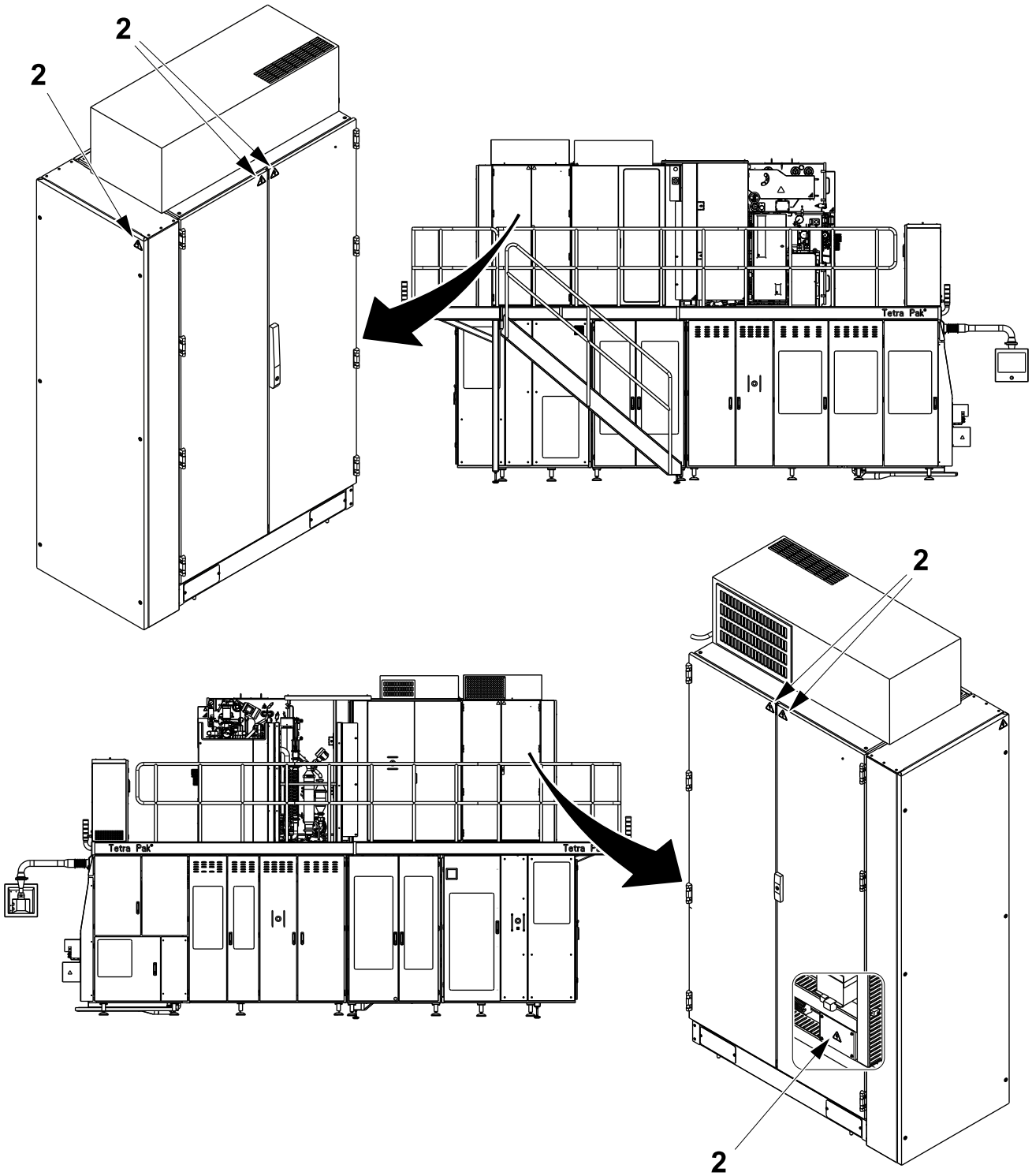

(Cont'd)

(Cont'd)

The illustration shows where the safety signs are located. The position numbers refer to the table in the Safety Signs section.

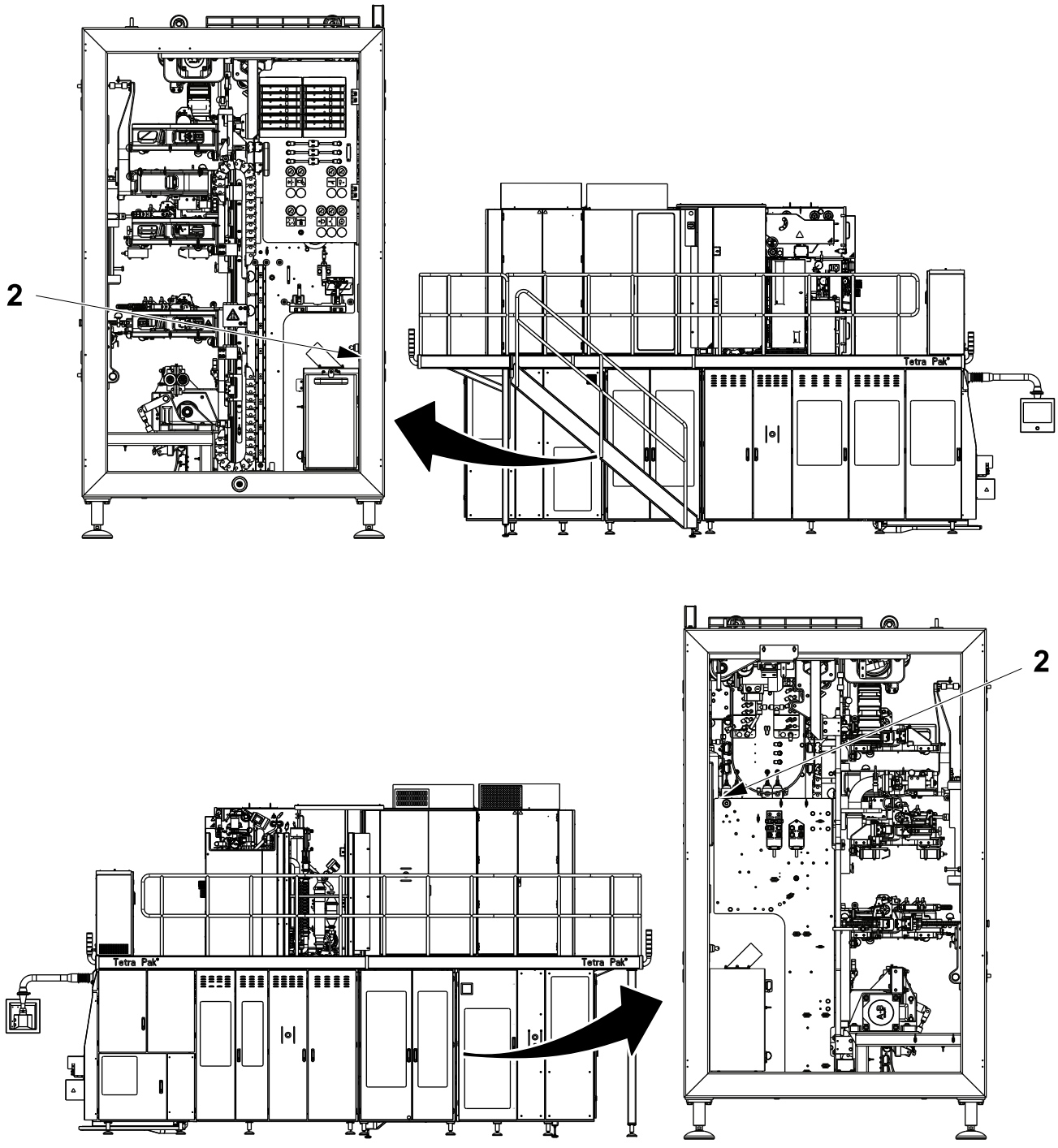

(Cont'd)

(Cont'd)

The illustration shows where the safety signs are located. The position numbers refer to the table in the Safety Signs section.

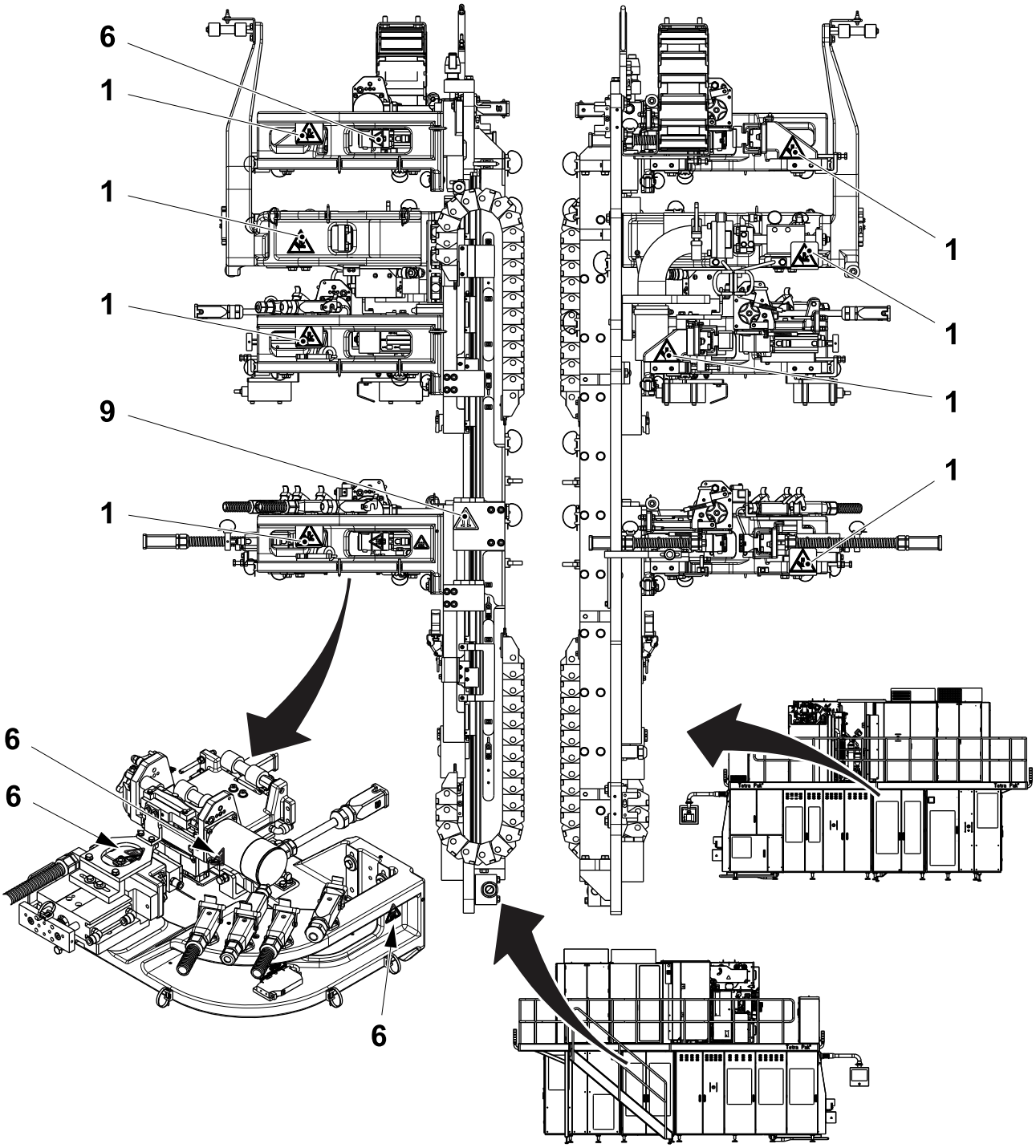

Protective Devices

There are different kinds of protective device designed to ensure safe use of the equipment. See the sections below.

WARNING

Hazardous zones.

Hazardous zones are safeguarded and provided with protective devices. Do not inch or run this equipment if any protective device is inoperative.

Change inoperative components of the safety system immediately.

For the locations of safeguards and/or other protective devices not mentioned in this section, see the Maintenance Manual.

Emergency Stop

DANGER

Hazardous voltage.

Will shock, burn, or cause death.

Hazardous voltage remains ON after activating an EMERGENCY STOP.

Emergency stop devices are used to stop this equipment immediately in a hazardous situation. Learn the positions of all emergency stop devices and how to use them.

Instructions for a normal production stop are included in the Stop chapter of the Operation Manual.

Emergency Stop Push-Buttons

Push one of the EMERGENCY STOP push-buttons to stop this equipment immediately.

The location of each EMERGENCY STOP push-button for the filling machine is shown by an arrow.

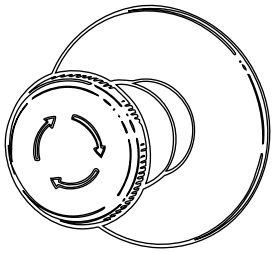

(behind door)

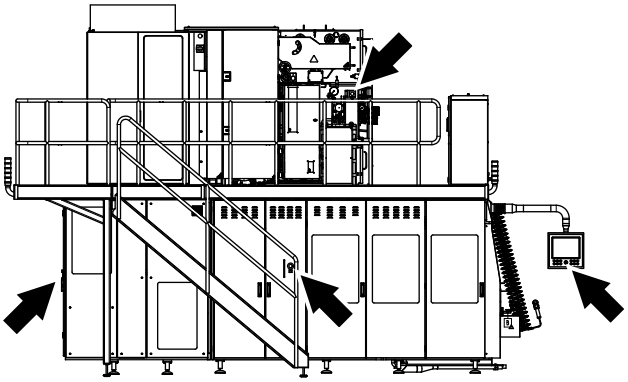

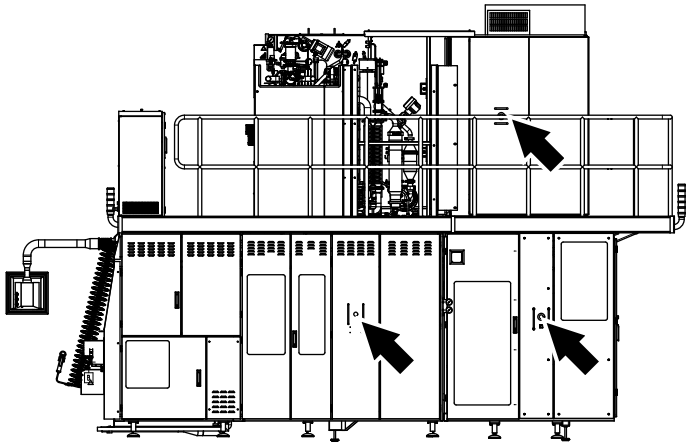

(Cont'd)

(Cont'd)

The location of each EMERGENCY STOP push-button for the filling machine with PullTab is shown by an arrow.

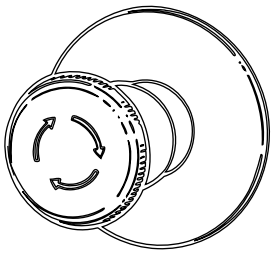

(behind door)

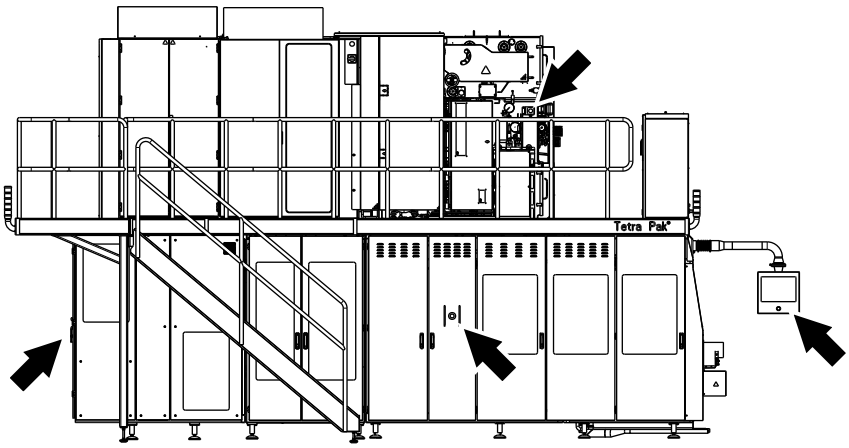

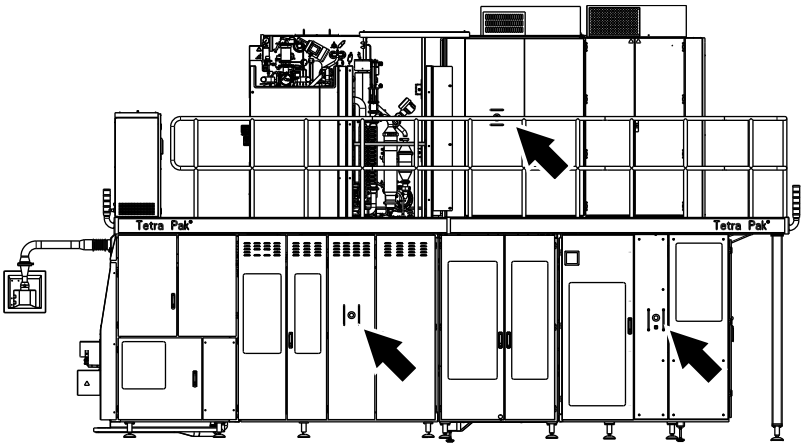

Safeguards

⚠ WARNING
Moving machinery parts.
Never defeat or bypass the interlocking devices.

Movable guards, for example, doors and covers leading to hazardous zones, are fitted with interlocking devices where required. These devices are usually electric safety switches that are parts of the safety system and must never be defeated, bypassed, or otherwise made inoperative.

Where movable guards (doors) are equipped with means to be locked in a nonclosed position, any person with the intention to preside, for any reason, behind such a guard must lock the guard in the nonclosed position by use of a padlock.

(Cont'd)

(Cont'd)

Note! For work on the electrical equipment, the electrical power must also be disconnected.

CAUTION
Corners and edges.
Close the doors, guards, or parts of the equipment unless they must be open during work.

CAUTION
Burn hazard.
Parts of the equipment protected by guards may be hot after operation. Allow components to cool down or use personal protective equipment.

After installation and maintenance, and before this equipment is inched or run, check that all safeguards are in place and that they operate correctly.

CAUTION
Equipment damage.
The equipment can be damaged if it is not stopped in the correct way. Never stop this equipment by opening a movable guard, for example, a door or cover, equipped with an interlocking device.

(Cont'd)

(Cont'd)

The location of each interlocking device for filling machine is shown by an arrow.

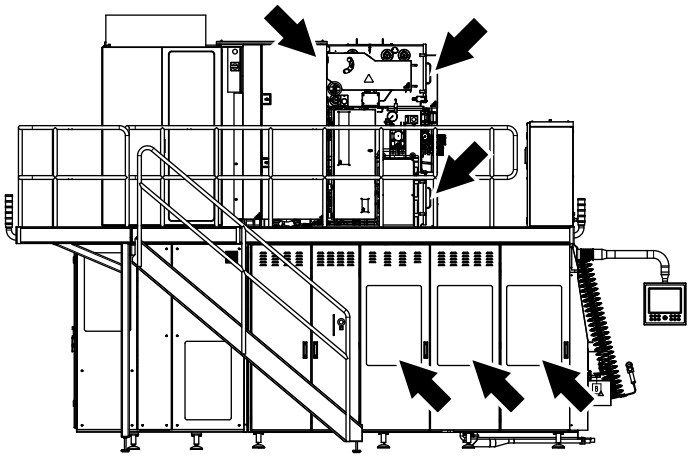

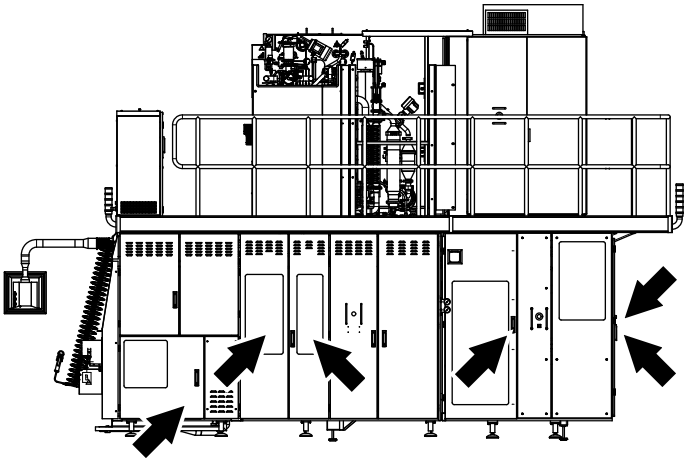

(Cont'd)

(Cont'd)

The location of each interlocking device for filling machine with PullTab is shown by an arrow.

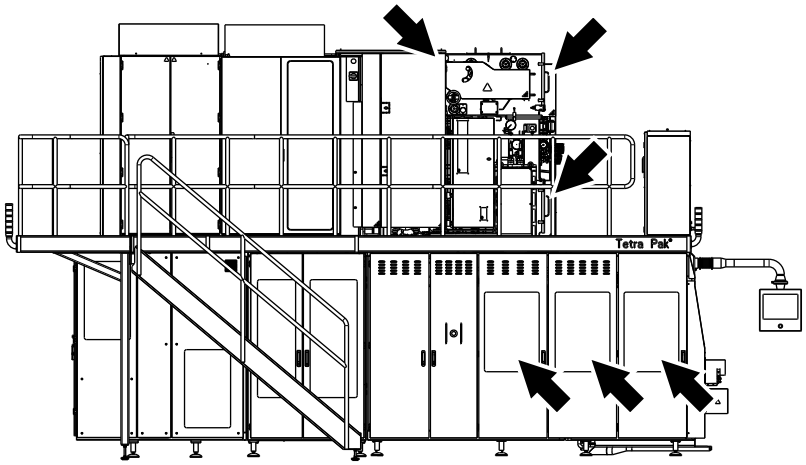

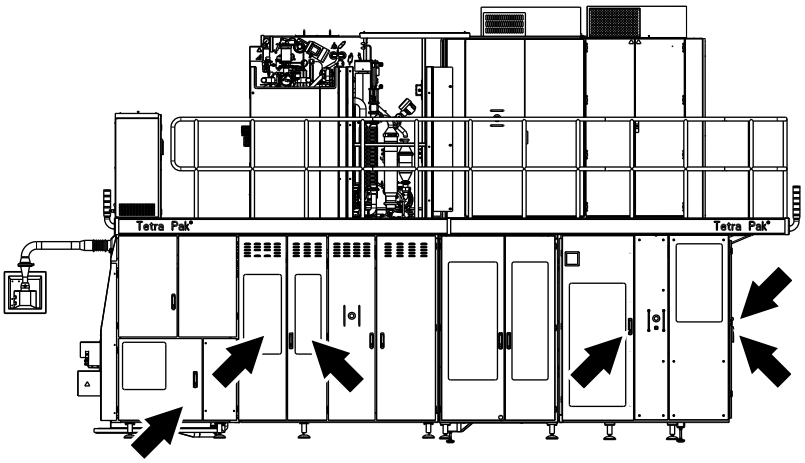

(Cont'd)

(Cont'd)

The location of each interlocking device for filling machine with PullTab is shown by an arrow.

Note! For machines without the outer patch station and magazine the interlocking guard is fitted to the external door.

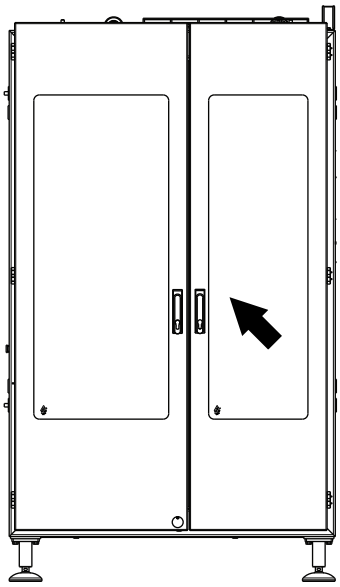

RH Side

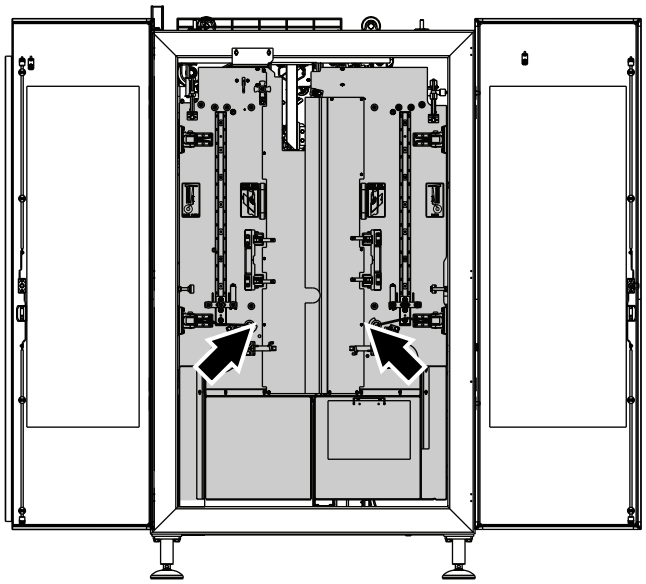

LH Side

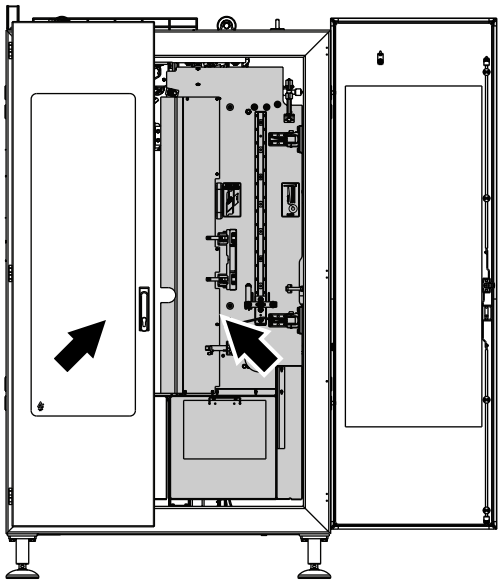

LH Side, no outer patch magazine

Indicating Tower

An indicating tower is a column of warning lights:

- A red light (1) indicates a hazardous condition. This is a situation that requires immediate action.
- A yellow light (2) indicates an abnormal or impending critical condition. This is a condition calling for action by the operator.
- A blue light (3) indicates that operator action is required.
- A green light (4) indicates a normal condition.

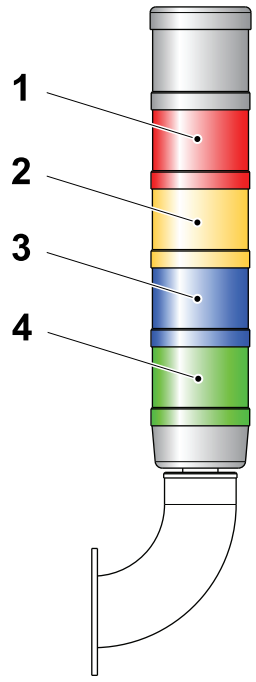

1 Red light
2 Yellow light
3 Blue light
4 Green light

Audible Alarm

The audible alarm (1) produces a warning signal every time this equipment is about to start. The warning signal sounds for approximately three seconds prior to starting to alert personnel.

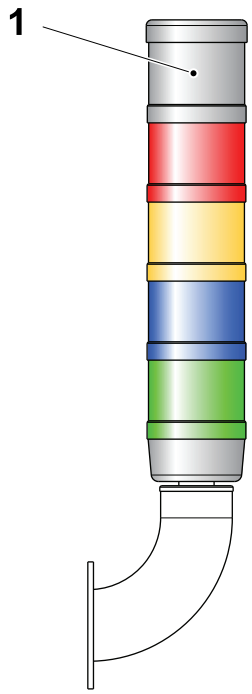

1 Audible alarm

Safe Manual Handling

Use mechanical lifting aids whenever possible. If mechanical lifting aids are not available, do not attempt to lift loads over 23 kg without the assistance of a colleague. Avoid lifting below knee height and above shoulder height. If it is necessary to lift from the floor, follow the instructions below to reduce the risk of back and disc injuries.

- Use safety shoes and be sure that the surface of the floor is not slippery.
- Get close to the load.
- Take a wide stance and find the best positions for your feet.
- Bend your hips and knees, and use your leg muscles.
- Keep the load close to your body.
- Do not twist your body while moving the load.
- Take small steps when turning.

In order to reduce the risk of injury to discs and back muscles, be careful to not bend or twist your back when lifting. Keep the load close to your body to reduce the strain on your back.

To reduce the ergonomic risks to each individual operator, job rotation is recommended, so that recovery and variety are provided.

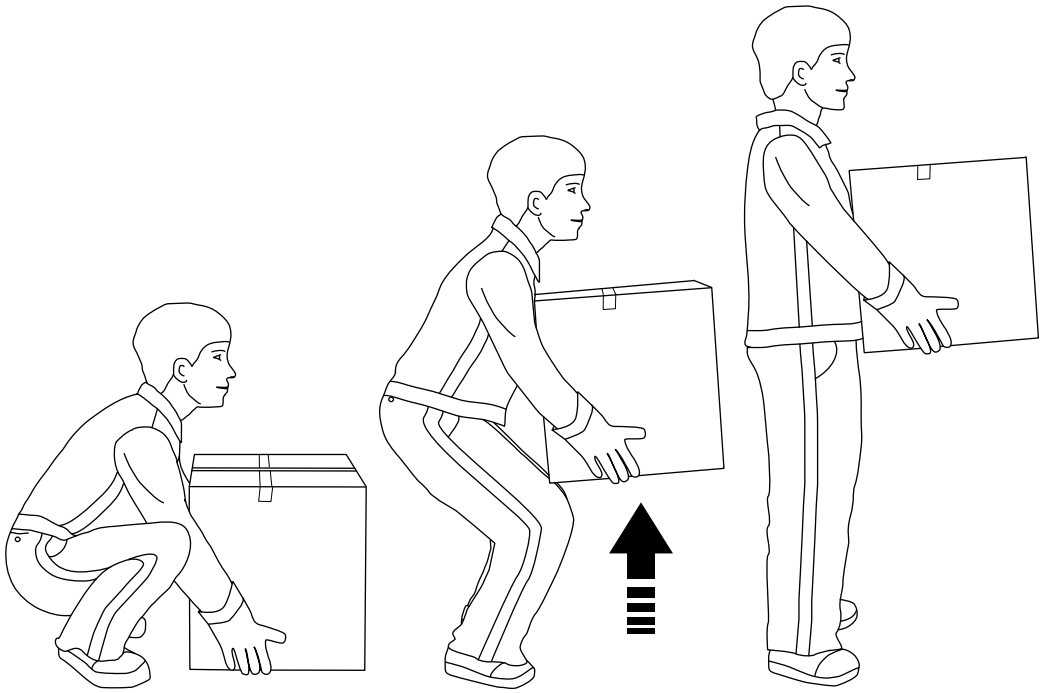

Personal Protection

This section applies to all personnel at all times when this equipment is in operation. For special personal protective equipment required when handling hazardous substances, see the Hazardous Substances section.

Noise

WARNING
Hazardous noise.
Can cause impaired hearing.
Wear hearing protection whenever this equipment is in operation.

CAUTION
Hazardous noise.
May cause impaired hearing.
Hearing protection is recommended whenever this equipment is in operation.

Entanglement

WARNING
Risk of entanglement.
Do not wear jewellery or loose clothing when working on or near this equipment. Restrain long hair with, for example, clips or rubber bands.

Hazardous Substances

WARNING
Contact with chemicals can cause death, serious injury, or illness.
Always read and follow the instructions in the safety data sheet supplied by the manufacturer or local supplier, when handling chemicals.

Make sure that

- the safety data sheet is available
- preparations have been done to ensure that the stated safety measures in the safety data sheet can be followed
- the locations of the first aid equipment are learned in order to act immediately in case of an accident

Disposal of Chemical Substances

Always read and follow the disposal instructions in the safety data sheet supplied by the manufacturer or local supplier.

It is strongly recommended that used chemical containers are

- disposed of according to the instructions immediately after use
- not used as disposal containers for other chemicals in order to avoid uncontrolled chemical reactions within the container

Hydrogen Peroxide (H_2O_2)

WARNING
Corrosive chemical.
Wear personal protective equipment.

In both liquid and gas states, hydrogen peroxide may cause irritation or damage if it comes into contact with skin, mucous membranes, eyes, or clothes. Call for medical attention immediately if there is an accident.

Liquid hydrogen peroxide in concentrations of less than 1% is generally considered harmless to humans.

Consult the instructions on the label of the tank or container.

Emergency Procedures

If there is an accident involving hydrogen peroxide, rinse the affected area as soon as possible with large amounts of water.

Eyes

If splashes or vapour from hydrogen peroxide come in contact with the eyes

- wash the eyes thoroughly with lukewarm water for 15 minutes (keep eyelids wide apart)
- call for medical attention immediately

Skin

If hydrogen peroxide comes into contact with skin or clothes

- rinse immediately with plenty of water
- call for medical attention immediately if skin burns appear
- thoroughly wash the clothes before wearing them again

Inhalation

If irritation or pain is experienced due to having **inhaled** hydrogen peroxide vapour

- leave the affected area and get some fresh air
- call for medical attention if the symptoms get worse

Ingestion

If hydrogen peroxide is swallowed

- do not attempt to cause vomiting
- drink large amounts of lukewarm water to dilute the peroxide
- call for medical attention immediately

Personal Protective Equipment

The personal protective equipment for hydrogen peroxide is

- protective goggles (for instance, TP No. 90303-11), tight fitting
  If there is a risk of splashes, a visor is a suitable complement
- protective gloves made of neoprene (for instance, TP No. 90303-12), nitrile, or butyl rubber
- protective apron (for instance, TP No. 90303-13), or protective suit when handling larger amounts
- protective shoes or boots made of PVC, PE plastic, or rubber
- proper respiratory equipment, if ventilation is insufficient

Handling of Hydrogen Peroxide

WARNING

Sudden and violent chemical reaction.
Avoid any contamination of hydrogen peroxide.

Hydrogen peroxide can react very suddenly and violently in combination with many compounds, or if it is contaminated. Never pour surplus hydrogen peroxide back into the original container. There is a risk of a violent decomposition liberating oxygen and heat, with a big increase in volume due to the oxygen generated by the peroxide decomposition. This will cause a large overpressure if the contaminated hydrogen peroxide is in a closed container. If the integrity of the container fails, this could result in a dangerous hazard.

Ensure that equipment used for handling and diluting hydrogen peroxide is clean before it comes in contact with hydrogen peroxide. Pumps or other equipment used for handling hydrogen peroxide must be **used for this purpose only** and must be manufactured from appropriate materials, such as stainless steel 316 L, glass, polyethylene, or teflon. After use, make sure that all peroxide residue is rinsed away.

If hydrogen peroxide is spilled, dilute it with large amounts of water. Dispose of the diluted hydrogen peroxide according to local regulations.

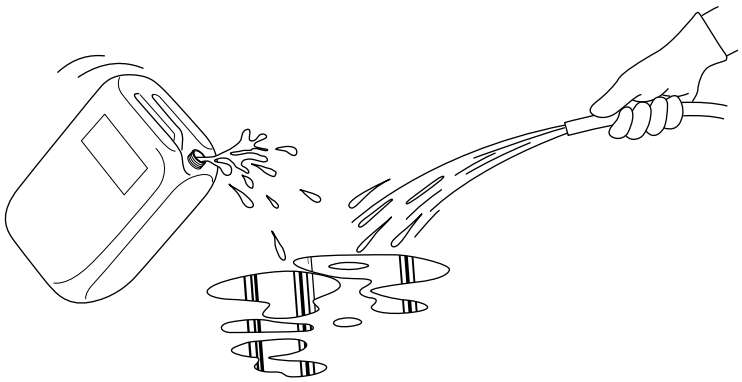

WARNING

Self-ignition.
Never wipe up hydrogen peroxide with materials such as rags or paper as these may self-ignite several hours after contact. If there is a fire, spray with large quantities of water.

Storage of Hydrogen Peroxide

WARNING

Containers may become overpressurised if they are not properly ventilated. If the integrity of a container fails, this could result in a dangerous hazard.

Keep the container upright and fitted with its proper ventilation cap. If there is a fire, cool all containers by spraying them with large quantities of water.

Hydrogen peroxide decomposes much faster with increasing temperature. There is a risk of a container becoming overpressurised at high temperatures, since the ventilation cap cannot release the gases produced quickly enough. If the integrity of the container fails, this could result in a dangerous hazard.

Hydrogen peroxide **must** be stored in the **original container** delivered by the supplier. Keep the container upright and fitted with its proper ventilation cap, which allows oxygen to escape. Otherwise there is a risk of overpressurisation of the container due to violent decomposition of the peroxide. If the integrity of the container fails, this could result in a dangerous hazard.

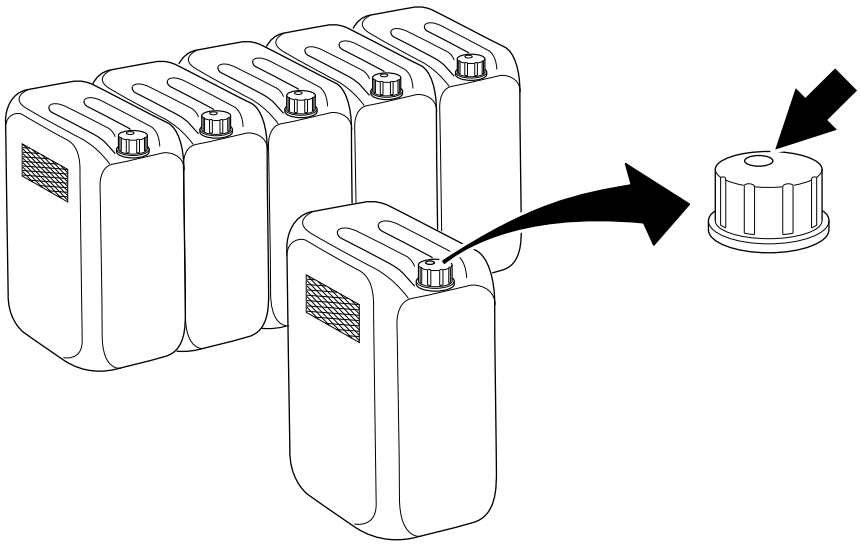

Make sure that the container is always properly closed.

Commercial food-grade hydrogen peroxide has been stabilized to inhibit the catalytic decomposition effects of metals and other impurities, but it can decompose into oxygen and water if it is exposed to heat or contaminated.

Make sure that the area used for storage of hydrogen peroxide is

- cool, clean, and well ventilated
- shielded from direct sunlight
- kept free from combustible materials

Disposal of Hydrogen Peroxide

Always read and follow the disposal instructions in the safety data sheet supplied by the manufacturer or local supplier.

Caustic Soda/Sodium Hydroxide (NaOH)

WARNING
Corrosive chemical.
Wear personal protective equipment.

Caustic soda/sodium hydroxide is highly corrosive in all forms and can cause serious burns on contact with skin and eyes.

Emergency Procedures

Inhalation

Remove victim immediately from source of exposure, provide rest, warmth and fresh air, get medical attention if any discomfort continues.

Ingestion

Do not induce vomiting, immediately rinse mouth and drink plenty of water (200 - 300 ml) and get medical attention immediately!

Skin Contact

Immediately remove contaminated clothing, rinse the skin with lots of water and get medical attention.

Eye Contact

May cause permanent damage if eye is not immediately irrigated. Make sure to remove any contact lenses from eyes before rinsing. Promptly wash eyes with plenty of water while lifting the eyelids, get immediately medical attention and continue to rinse.

Accidental Release, Spillage or Splashing

WARNING
Corrosive chemical.
Wear personal protective equipment.

In case of accidental release, spillage or splashing

- wash contaminated area with water. Alternatively, absorb in vermiculite, dry sand or earth, place into containers and wash the affected area
- in case of contact with eyes or skin wash with plenty of water
- remove any contaminated clothing immediately

Personal Protective Equipment

The personal protective equipment for caustic soda/sodium hydroxide is

- protective goggles (TP No. 90303-11)
- protective gloves made of neoprene (TP No. 90303-12)
- protective apron (TP No. 90303-13)
- protective shoes made of PVC, PE plastic, or rubber

Handling and Storage of Caustic Soda/Sodium Hydroxide

WARNING
Sudden and violent chemical reaction.
Avoid any contamination of caustic soda/sodium hydroxide. Never store or mix caustic soda together with hydrogen peroxide.

Ensure that

- containers are kept tightly closed
- containers are stored in a cool dry place away from direct sunlight or sources of heat
- designated storage and handling areas are adequately ventilated and that emergency shower and eye wash facilities are available nearby
- handle containers carefully during transport
- avoid spilling, skin and eye contact
- use dedicated equipment when sampling, pouring or decanting
- never store or mix caustic soda together with hydrogen peroxide

Disposal of Caustic Soda/Sodium Hydroxide

Dispose of waste and residues in accordance with local authority requirements. Used caustic soda should be sent to an approved facility for destruction. Never allow caustic soda to be disposed into the drain.

Estinguishing Media

CAUTION
Fire-Fighting Measures
Always apply the following measures.

The product is non-combustible, use fire extinguishing media appropriate for surrounding materials.

Specific Hazards

Corrosive liquid.

Protective Measures in Fire

Self-contained breathing apparatus and full-protective clothing must be worn in case of fire.

Note! Always refer to your supplier's Material Safety Data Sheet (MSDS) for caustic soda.

Nitric Acid (HNO_3)

WARNING
Corrosive chemical.
Wear personal protective equipment.

Nitric acid is extremely hazardous; it is corrosive, reactive, a strong oxidizer and a poison. Liquid and mist can cause serious burns on contact with skin and eyes; contact with other material may cause fire; liquid and mist cause severe burns to skin and eyes; inhalation may cause lung and tooth damage.

Emergency Procedures

Inhalation

Remove victim immediately from source of exposure, provide rest, warmth and fresh air. If not breathing, give artificial respiration; if breathing is difficult give oxigen. Get medical attention immediately.

Ingestion

Do not induce vomiting, immediately rinse mouth and drink plenty of water or milk if available. Never give anything by mouth to an unconscious person. Get medical attention immediately.

Skin Contact

Immediately remove contaminated clothing, rinse the skin with lots of water and get medical attention.

Eye Contact

May cause permanent damage if eye is not immediately irrigated. Make sure to remove any contact lenses from eyes before rinsing. Promptly wash eyes with plenty of water while lifting the eyelids, get immediately medical attention and continue to rinse. Get medical attention if any discomfort continues.

Accidental Release, Spillage or Splashing

WARNING
Corrosive chemical.
Wear personal protective equipment.

In case of accidental release, spillage or splashing

- ventilate area of leak or spill, isolate hazard area, keep unnecessary and unprotected personnel from entering, contain and recover liquid when possible, neutralise with alkaline material (soda ash, lime) then absorb

(Cont'd)

(Cont'd)

with an inert material (e.g. ,vermiculite, dry sand or earth), place in a chemical waste container; do not use combustible materials, such as saw dust, rags, paper, wood

- in case of contact with eyes or skin wash with plenty of water
- remove any contaminated clothing immediately; see the Fire-fighting (fire) measures section on page ii-46

Personal Protective Equipment

The personal protective equipment for nitric acid is

- protective goggles (TP No. 90303-11)
- protective gloves made of neoprene (TP No. 90303-12)
- protective apron (TP No. 90303-13)
- protective shoes made of PVC, PE plastic, or rubber

Handling and Storage of Nitric Acid

WARNING
Sudden and violent chemical reaction.
Avoid any contamination of nitric acid.

Ensure that

- containers are kept tightly closed
- containers are stored in a cool dry place away from direct sunlight or sources of heat, water and incompatible materials and that emergency shower and eye wash facilities are available nearby
- designated storage and handling areas are adequately ventilated and have acid-resistant floors
- handle containers carefully during transport
- avoid spilling, skin and eye contact
- use dedicated equipment when sampling, pouring or decanting
- do not wash out container and use it for other purposes. Containers of this material may be hazardous when empty since they retain product residues (vapours, liquid)

Disposal of Nitric Acid

Dispose of waste and residue in accordance with local authority requirements. Used nitric acid should be sent to an approved facility for destruction. Never allow nitric acid to be disposed into the drain.

Fire

The product is non-combustible, but it is a strong oxidiser and its heat of reaction with reducing agents or combustibles may cause ignition. Can react with metals to release flammable hydrogen gas.

Explosion

Reacts explosively with combustible organic or readily oxidizable materials such as alcohols, turpentine, charcoal, organic refuse, metal powder, hydrogen sulphide, etc. Reacts with most metals to release hydrogen gas which can form explosive mixtures with air.

Estinguishing Media

CAUTION
Fire-Fighting Measures
Always apply the following measures.

The product is non-combustible, use fire extinguishing media appropriate for surrounding materials.

Special Information

Increases the flammability of combustible, organic and readily oxidizable materials.

Protective Measures In Fire

Self-contained breathing apparatus and full-protective clothing must be worn in case of fire.

Note! Always refer to your supplier's Material Safety Data Sheet (MSDS) for nitric acid.

Magnetic Components

WARNING

Strong magnetic field.

Can cause serious injuries to persons with pacemakers. Maintain at least 300 mm distance.

The magnet can attract tools and other metal objects causing pinch, cut, or impact. Keep metal objects away from the magnet.

The location of each magnet is shown by an arrow.

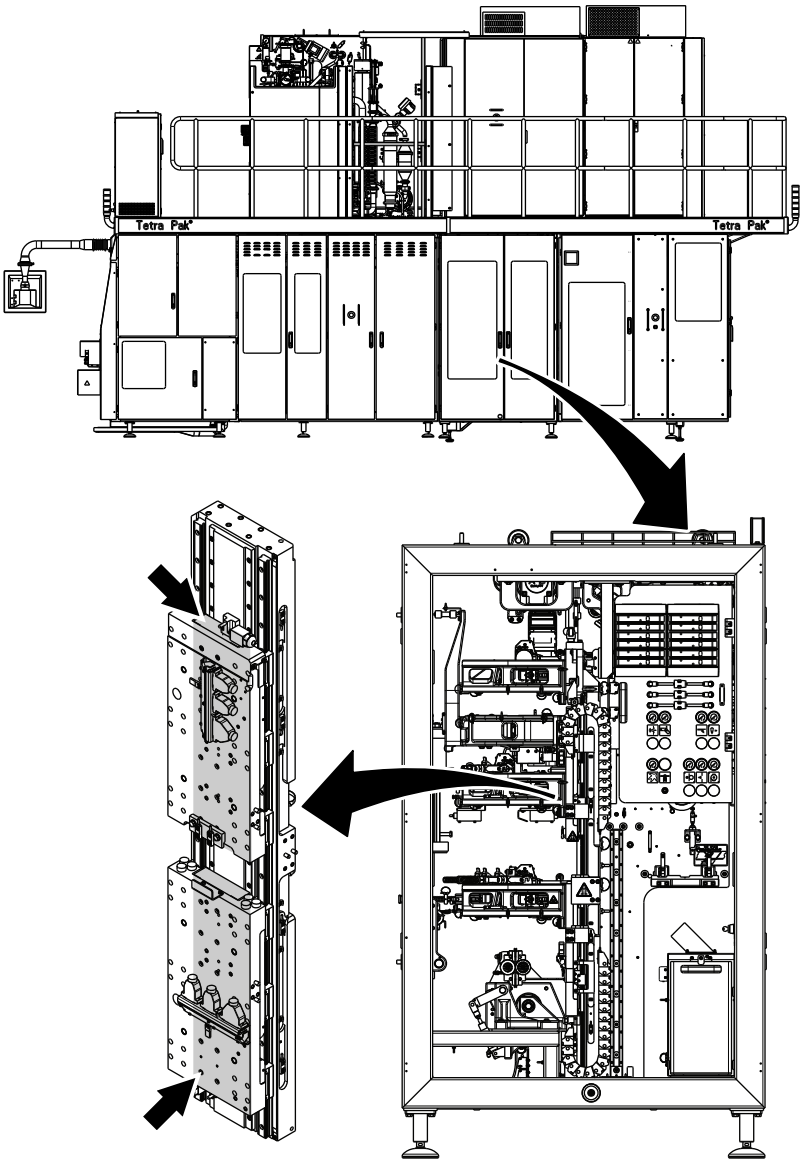

Supply Systems

Electrical Supply

DANGER

Hazardous voltage and moving machinery.
The electrical supply disconnecting device must be in position O (OFF) and secured with a lock before any work with the equipment that requires the electrical supply to be disconnected. See the Machine Status section of the MM Procedure Start Table.

Note! The key to the lock must be removed by the technician and retained in his/her possession until all work is completed.

DANGER

Hazardous voltage can be present with the electrical supply disconnecting device in position O (OFF).
Circuits identified by orange-coloured conductors are not disconnected by the main electrical supply disconnecting device. The location of the electrical supply disconnecting device of these circuits is described in the Maintenance Manual procedures that include work on these types of circuit.

Certain procedures may require that the electrical supply disconnecting device is in position I (ON). These exceptions are clearly stated in the manuals.

The illustrations show the electrical supply disconnecting device and its location.

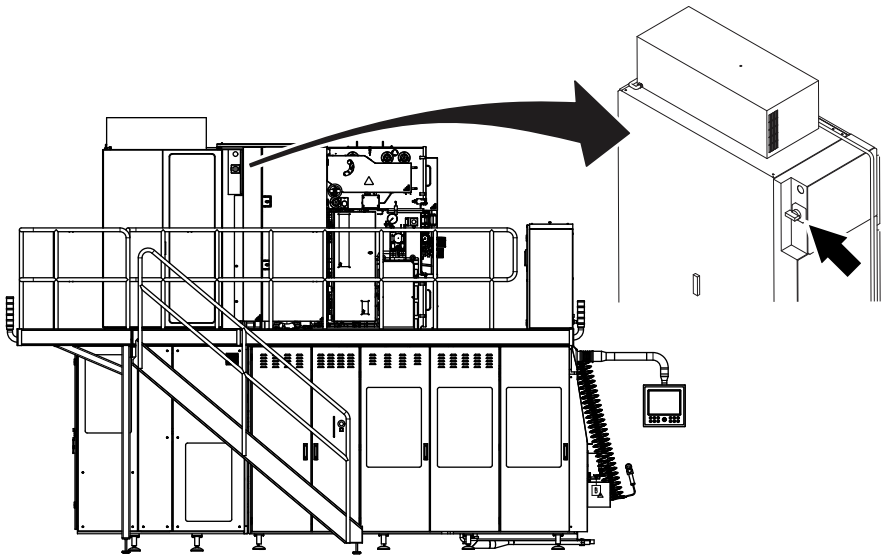

Residual Voltage

DANGER

Hazardous voltage.
Will shock, burn, or cause death.
After the electrical supply disconnecting device is turned to position O (OFF), residual voltage remains in the capacitor circuits. Wait five minutes before opening the enclosure containing these circuits. Ensure that no residual voltage remains on the capacitors before touching them.

Electrical Cabinet

DANGER

Hazardous voltage
Will shock, burn, or cause death.
Parts behind doors to electrical enclosures may be live. The electrical supply disconnecting device must be turned to position O (OFF) and secured with a lock before maintenance inside the electrical cabinet.

Note! The key to the lock must be removed by the technician and retained in his/her possession until all work is completed.

Make sure that the electrical cabinet doors are closed after working inside the electrical cabinet. Doors with locks must be locked.

The location of each electrical cabinet for filling machine is shown by an arrow.

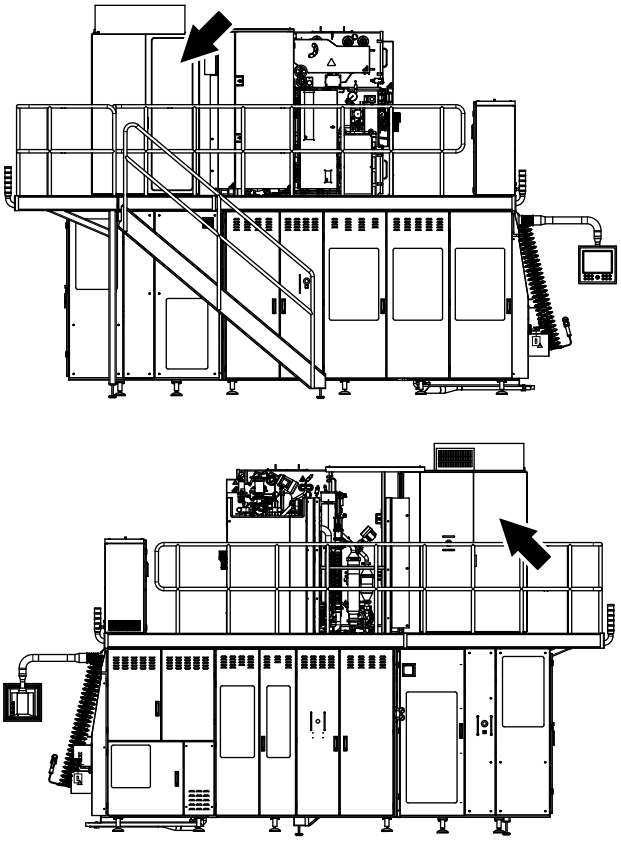

(Cont'd)

(Cont'd)

The location of each electrical cabinet for filling machine with PullTab is shown by an arrow.

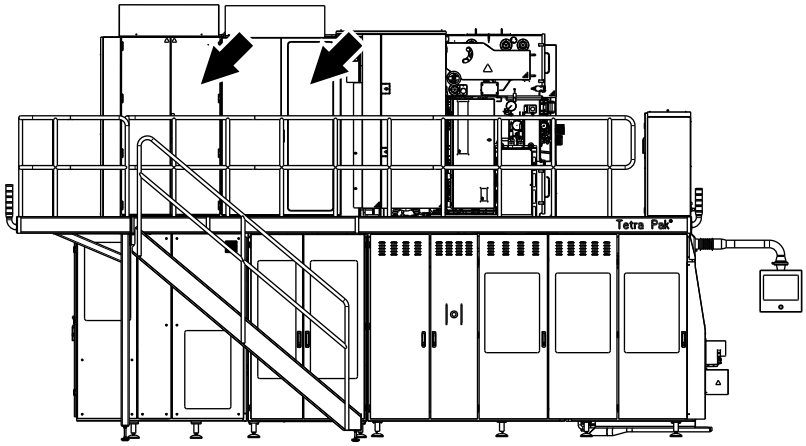

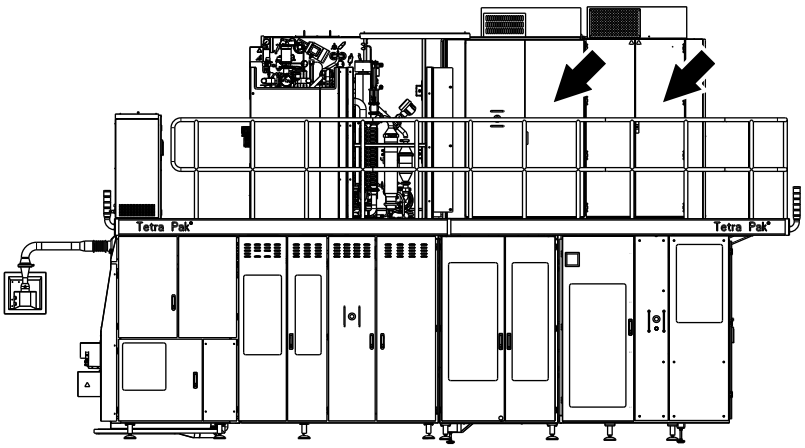

Socket Outlet

WARNING
Hazardous voltage.
Can shock, burn, or cause death.
Read the Maintenance Manual before using this socket outlet.

(Cont'd)

(Cont'd)

The socket outlet (1) is connected to a residual current device (2) to protect users against electrical shock if there is an earth fault in the connected equipment. The residual current device must be tested each time before the socket outlet is being used. See the MM for test procedure.

The illustrations show the socket outlet, the residual current device, and their locations.

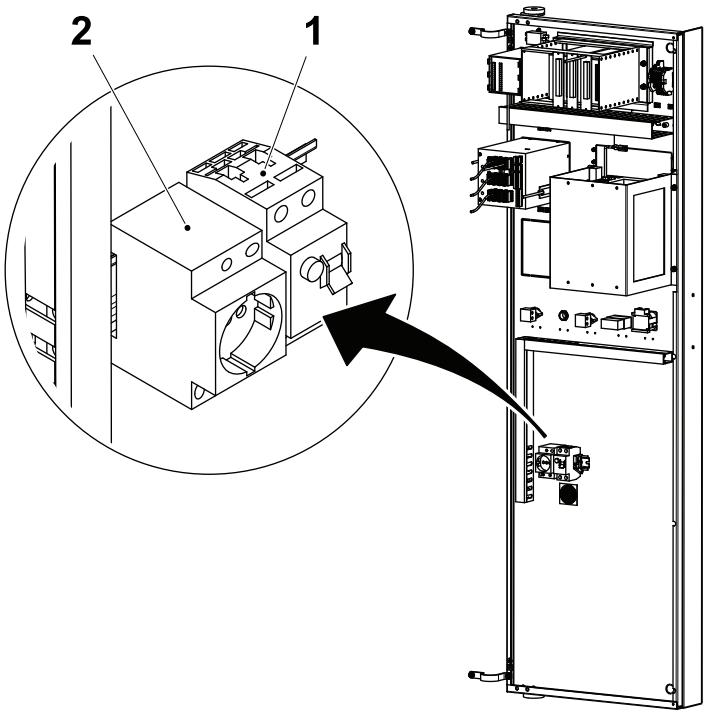

1 Socket outlet
2 Residual current device

Air Supply

WARNING

Compressed air and moving machinery.

Close the main air valve and lock it, and safely release compressed air from the air system before any work with the equipment that requires the air supply to be closed. See the Machine Status section of the Procedure Start Table.

Note! The key to the lock must be removed by the technician and retained in his/her possession until all work is completed.

Certain maintenance procedures may require the air supply systems to be on. These exceptions are clearly stated in the manuals.

(Cont'd)

(Cont'd)

The illustrations show the main air valve (1) and its location.

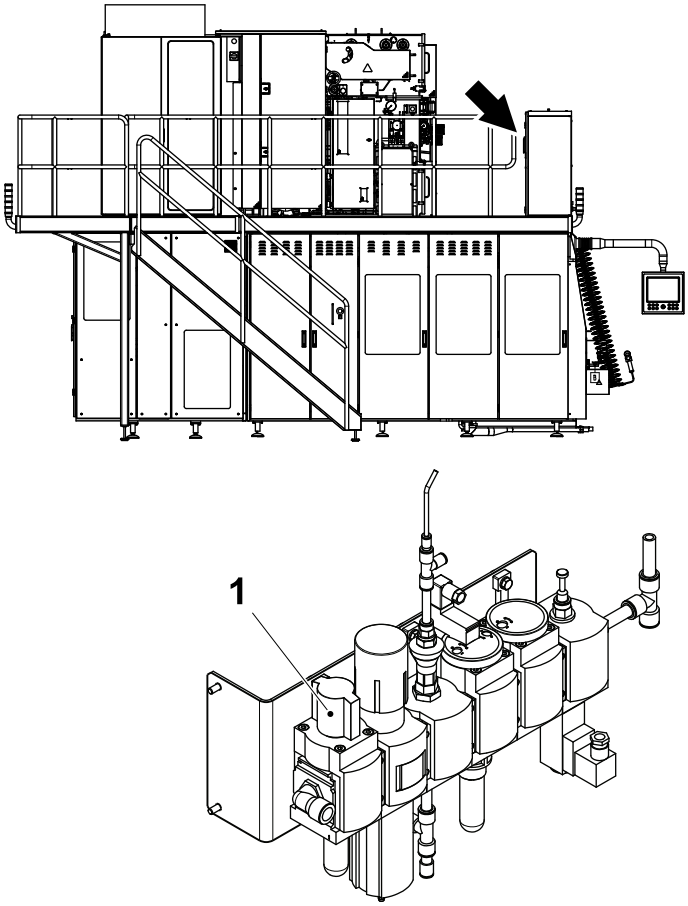

1 Main air valve

(Cont'd)

(Cont'd)

Note! The air for the pre-applicator pneumatic panel are taken before the main air valve (1).

The illustrations show the main air valve (1), the air valve (2) for the pre-applicator, the main air valve (3) on the pre-applicator pneumatic panel and their location in the filling machine.

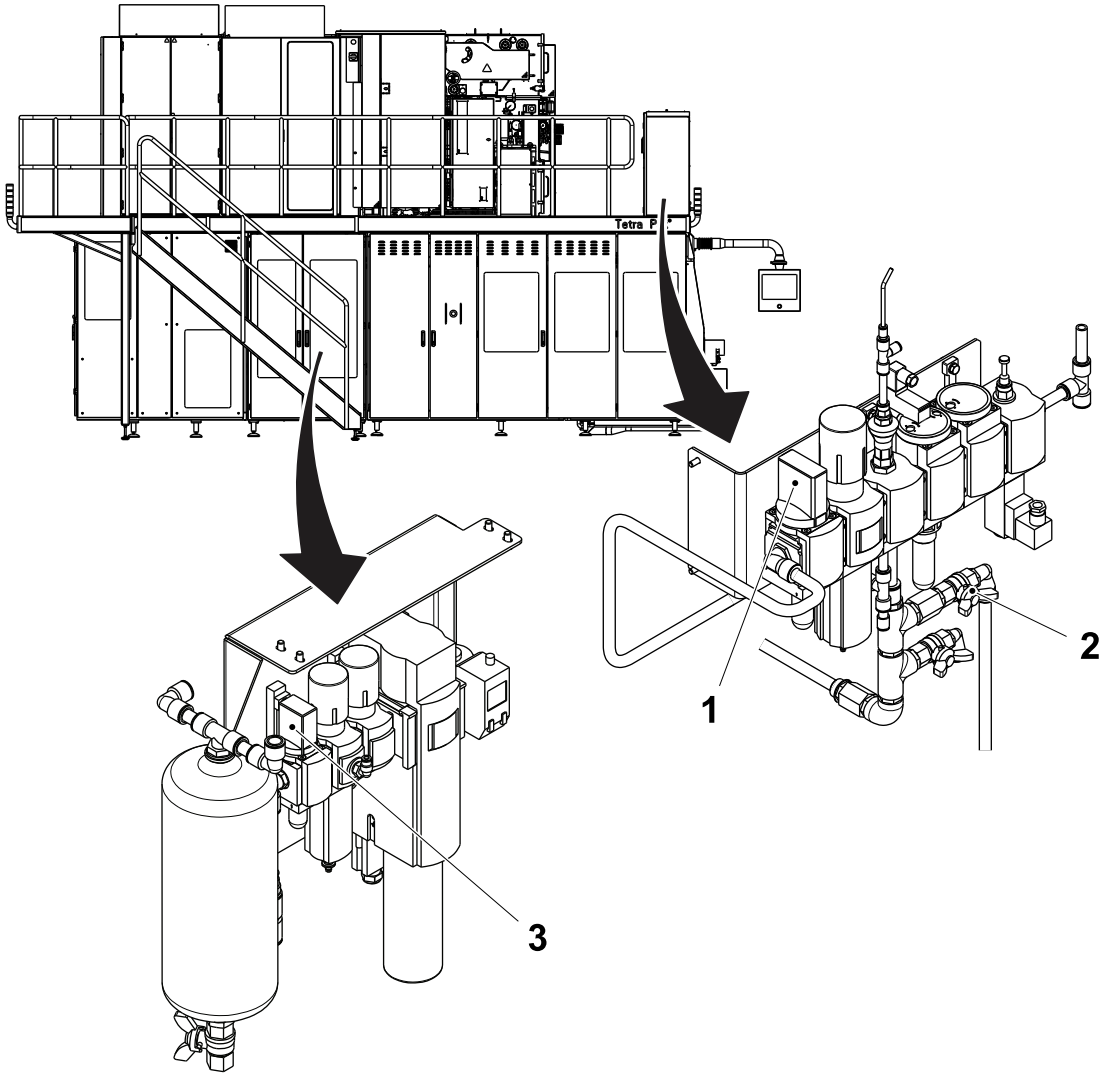

1 Main air valve
2 Valve
3 Main air valve

Steam Supply

WARNING

Hot steam can cause scalds.
Pressurised steam can be discharged unexpectedly.
Close the steam supply valve and lock it, and safely vent all steam pressure from the steam system before any work on parts with steam, such as pipes and valves, that requires the steam supply to be closed. See the Machine Status section of the Procedure Start Table.

Note! The key to the lock must be removed by the technician and retained in his/her possession until all work is completed.

Certain procedures may require the steam supply systems to be on. These exceptions are clearly stated in the manuals.

The illustrations show the steam supply valve (1), and its location.

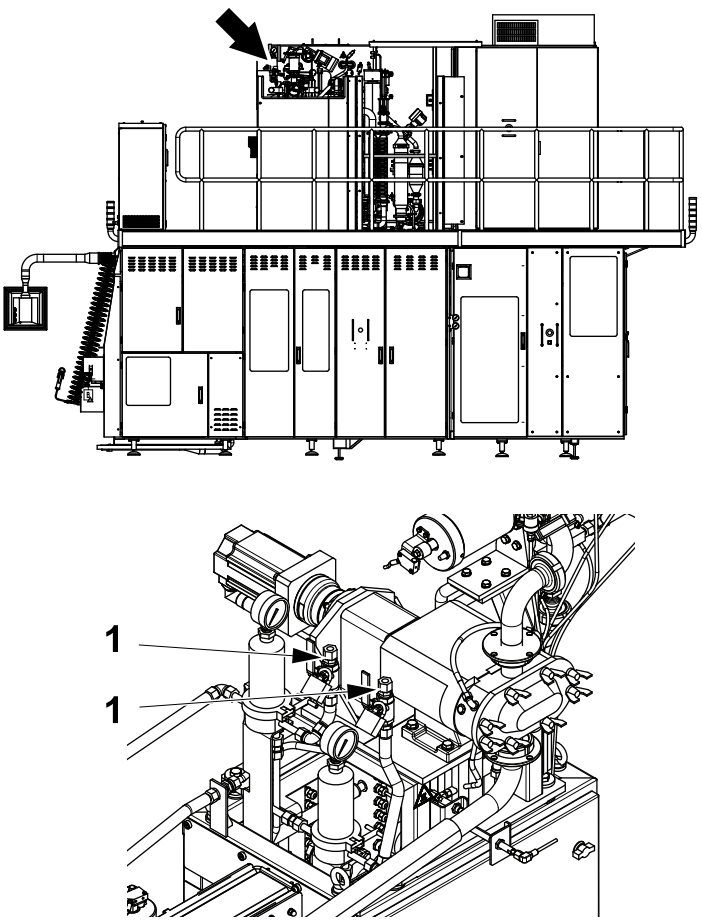

Machine equipped with HVA

Machine not equipped with HVA

1 Steam supply valve

Water Supply

CAUTION

Water under pressure.

Close the water supply valves before any work with the equipment that requires the water supply to be closed. See the Machine Status section of the Procedure Start Table.

Certain maintenance procedures may require the water supply systems to be on. These exceptions are clearly stated in the manuals.

The illustration shows the water supply valve (1) and the water supply valve (2), and their location.

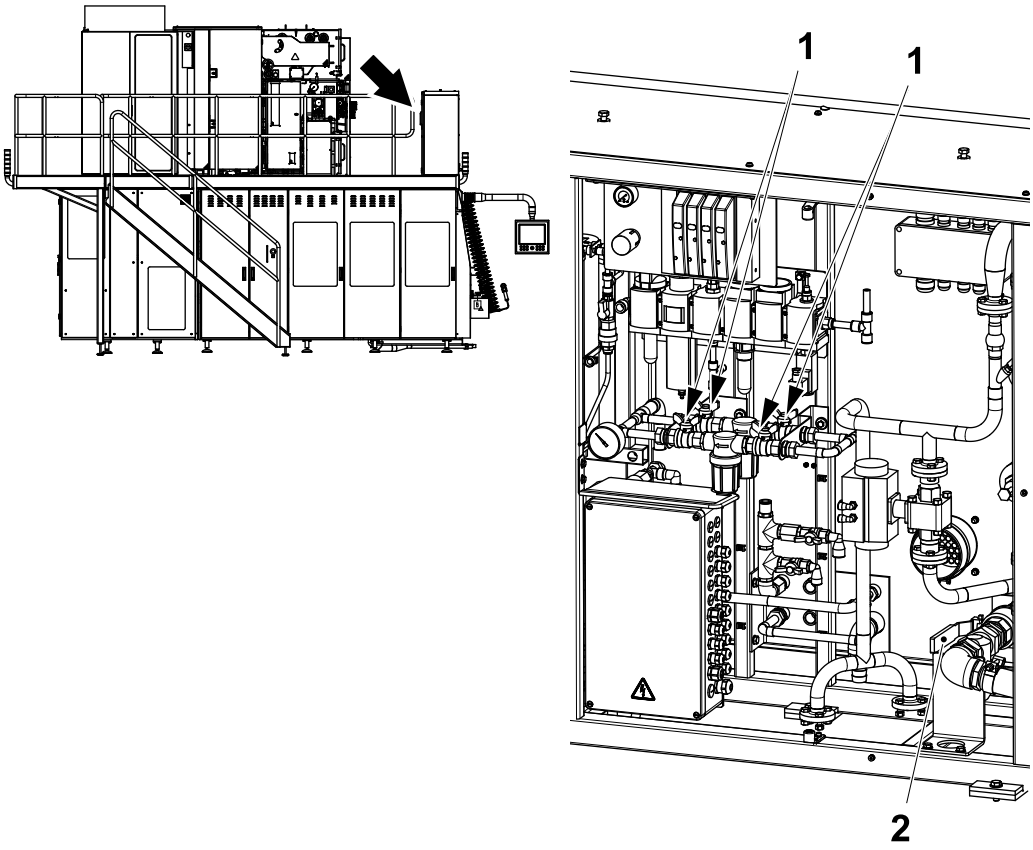

1 Valve, circulating cooling water
2 Valve, hot water external cleaning

Equipement for Lifting and Moving Loads

WARNING

Risk of crushing injury.

Make sure that the capacity of the lifting equipment is adequate and that the equipment itself is in proper working order.

If lifting tackle must be joined to make up the necessary lengths, make sure that the joints are secure and have the same lifting capacity as the rest of the lifting tackle.

Always engage safety clips fitted to lifting hooks to prevent the lifting tackle from slipping off.

Use ropes or poles to steady and manoeuvre suspended loads. Do **not** use hands or feet.

Make sure that the route and destination are free from obstacles before moving a suspended load. It must always be possible to quickly and safely lower the load to the floor in an emergency.

When depositing loads, keep lifting tackle in place until the stability of the load has been substantiated.

1 Technical Specification

Description

This chapter describes the equipment's technical specification and data. The information is used during the planning and installation of the equipment.

Description 1-2

1.1 Installation Drawings 1-9

1.1.1 System Drawings 1-10

1.1.2 LH Side Views 1-11

1.1.2.1 LH Side Views, TP A3/CompactFlex Standard or TP A3/CompactFlex with HVA 1-11

1.1.2.2 LH Side View, TP A3/CompactFlex with PT or TP A3/CompactFlex with PT and HVA 1-12

1.1.3 Top Views 1-13

1.1.3.1 Top View, TP A3/CompactFlex Standard 1-13

1.1.3.2 Top View, TP A3/CompactFlex UL-CSA 1-14

1.1.3.3 Top View, TP A3/CompactFlex with HVA 1-15

1.1.3.4 Top View, TP A3/CompactFlex with HVA UL-CSA, LH Stair 1-16

1.1.3.5 Top View, TP A3/CompactFlex with HVA UL-CSA, RH Stair 1-17

1.1.3.6 Top View, TP A3/CompactFlex with PT 1-18

1.1.3.7 Top View, TP A3/CompactFlex with PT UL-CSA 1-19

1.1.3.8 Top View, TP A3/CompactFlex with PT and HVA 1-20

1.1.3.9 Top View, TP A3/CompactFlex with PT and HVA UL-CSA, LH Stair 1-21

1.1.3.10 Top View, TP A3/CompactFlex with PT and HVA UL-CSA, RH Stair 1-22

1.1.4 Drainage Locations 1-23

1.1.5 Machine Feet 1-24

1.1.5.1 Machine Feet , TP A3/CompactFlex Standard 1-24

1.1.5.2 Machine Feet, TP A3/CompactFlex with HVA, LH Stair 1-25

1.1.5.3 Machine Feet, TP A3/CompactFlex with HVA, RH Stair 1-26

1.1.5.4 Machine Feet, TP A3/CompactFlex with PT 1-27

1.1.5.5 Machine Feet, TP A3/CompactFlex with PT and HVA, LH Stair 1-28

1.1.5.6 Machine Feet, TP A3/CompactFlex with PT and HVA, RH Stair 1-29

1.1.6 Front View 1-30
1.1.6.1 Front View, TP A3/CompactFlex or TP A3/CompactFlex with PT 1-30
1.1.6.2 Front View, TP A3/CompactFlex with HVA or TP A3/CompactFlex with PT and HVA 1-31
1.1.7 Service Unit Connection Plate 1-32
1.2 Equipment Specification 1-33
1.2.1 Configurations 1-33
1.2.2 Mass 1-33
1.2.3 Discharge Requirements 1-33
1.2.3.1 Discharge Conveyor 1-33
1.2.3.2 Package Outfeed Side 1-34
1.2.4 Additional Material 1-35
1.2.5 Start Up Material 1-35
1.3 Lifting and Transportation Data 1-36
1.3.1 Crate and Equipment 1-36
1.3.1.1 Main Crate (1) 1-36
1.3.1.1.1 Weight and Dimensions 1-36
1.3.1.1.2 Contents 1-36
1.3.1.2 Second Crate (2) 1-37
1.3.1.2.1 Weight and Dimensions 1-37
1.3.1.2.2 Contents 1-37
1.3.1.3 Third Crate (3) 1-37
1.3.1.3.1 Weight and Dimensions 1-37
1.3.1.3.2 Contents 1-38
1.3.1.4 Fourth Crate (4) 1-38
1.3.1.4.1 Weight and Dimensions 1-38
1.3.1.4.2 Content 1-38
1.3.2 Lifting and Transportation Equipment 1-39
1.3.2.1 Lifting Equipment Specifications 1-39
1.3.2.2 Lifting Equipment Specifications for Uncrated Equipment 1-40
1.3.2.3 Lifting Tool Specifications 1-40

1.3.2.3.1 General Recommendations 1-41
1.3.2.3.2 Example of Lifting Balanced Loads 1-43
1.3.2.4 Auxiliary Equipment 1-44
1.3.3 Space Requirement 1-44
1.3.3.1 Unpacking Area 1-44
1.4 Utility and Utility Connection Data 1-45
1.4.1 Electrical Power 1-45
1.4.1.1 Electrical Power Specification 1-45
1.4.1.2 Preconditions for the Main Connection Calculation 1-46
1.4.1.3 TP A3/CompactFlex Electrical Power Consumption 1-47
1.4.1.4 TP A3/CompactFlex with PT Electrical Power Consumption 1-47
1.4.2 Uninterruptable Power Supply System (UPS) 1-47
1.4.2.1 UPS Specifications TP A3/CompactFlex and A3/CompactFlex PullTab 1-48
1.4.3 Compressed Air 1-48
1.4.3.1 Compressed Air Requirements 1-48
1.4.3.2 Compressed Air Specifications 1-49
1.4.3.3 Compressed Air Consumption 1-49
1.4.4 Sanitary Air 1-49
1.4.4.1 Sanitary Air Requirements 1-49
1.4.4.2 Sanitary Air Specifications 1-50
1.4.5 Water Supply Specifications 1-50
1.4.5.1 Cooling Water Supply 1-51
1.4.5.2 Water Quality Standards 1-51
1.4.5.3 Technical Water Parameters 1-51
1.4.5.4 Water Sanitization 1-52
1.4.6 Steam 1-53
1.4.6.1 Steam Requirements 1-53
1.4.6.2 Steam Specifications 1-53
1.4.7 Hydrogen Peroxide 1-54
1.4.8 Nitrogen 1-55

1.4.9 Lubrication....1-55
1.5 Product and Product Connection Data....1-56
1.5.1 Product Capacity....1-56
1.5.2 Product Requirements....1-56
1.5.3 Product Specifications....1-57
1.6 Hygiene Function Connection Data....1-58
1.6.1 Cleaning....1-58
1.6.1.1 CIP with Integrated Cleaning Unit....1-58
1.6.1.2 CIP with External Cleaning Equipment....1-59
1.6.1.3 External Cleaning....1-60
1.6.1.4 Manual Cleaning....1-60
1.7 Mechanical Line Integration and Connection....1-61
1.7.1 Downstream Connection to DE....1-61
1.8 Communication....1-62
1.8.1 Signal Exchange....1-62
1.9 Noise....1-63
1.9.1 Sound Pressure Level....1-63
1.9.1.1 TP A3/CompactFlex....1-63
1.9.1.2 TP A3/CompactFlex with PT....1-63
1.9.2 Sound Power Level....1-63
1.9.2.1 TP A3/CompactFlex....1-63
1.9.2.2 TP A3/CompactFlex with PT....1-63
1.10 Emissions and Thermal Load....1-64
1.10.1 Emissions....1-64
1.10.2 Thermal Load....1-64
1.11 Site Environment....1-65
1.11.1 Ambient Temperature....1-65
1.12 Material Specification....1-66

1.12.1 Packaging Material Storage and Handling 1-66
1.12.2 Additional Material Storage and Handling 1-66

This page intentionally left blank

1.1 Installation Drawings

This section includes drawings showing:

- overall dimensions,
- connection positions and dimensions,
- access dimensions.

Values are in millimetres unless otherwise stated. All dimensions must be observed.

Note! The drawings show the filling machine without HI equipment since dimensions are not affected by the presence of the HI kit.

Note! The drawings show the filling machine with the stair on the LH side only. In case of filling machines with the stair on the RH side consider that the measurements are symmetrical.

The following drawings are provided:

- 1.1.2 LH Side Views
- 1.1.3 Top Views
- 1.1.4 Drainage Locations
- 1.1.5 Machine Feet
- 1.1.6 Front View
- 1.1.7 Service Unit Connection Plate

1.1.1 System Drawings

The following documents are located in the document holder on the inside of the door (1) on the RH side of the filling machine. These include:

- installation drawings
- external cleaning diagram
- aseptic diagram
- filling diagram
- pneumatic diagram, ASU
- pneumatic diagram, superstructure
- pneumatic diagram, machine body
- pneumatic diagram, service unit
- peroxide system diagram
- lubrication diagram
- hydraulic diagram
- water diagram
- extra equipment (if relevant).

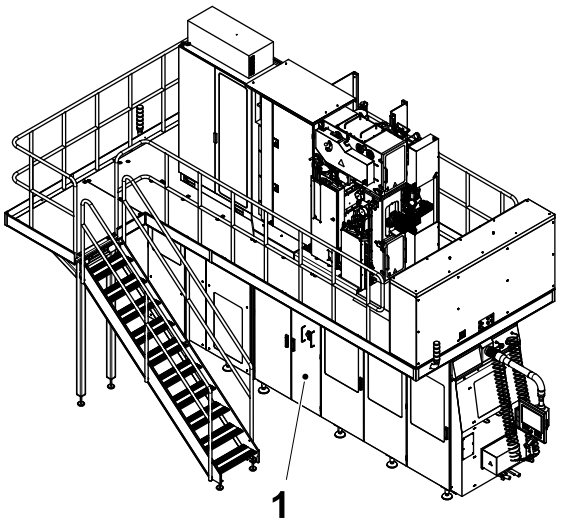

1 Door

1.1.2 LH Side Views

1.1.2.1 LH Side Views, TP A3/CompactFlex Standard or TP A3/CompactFlex with HVA

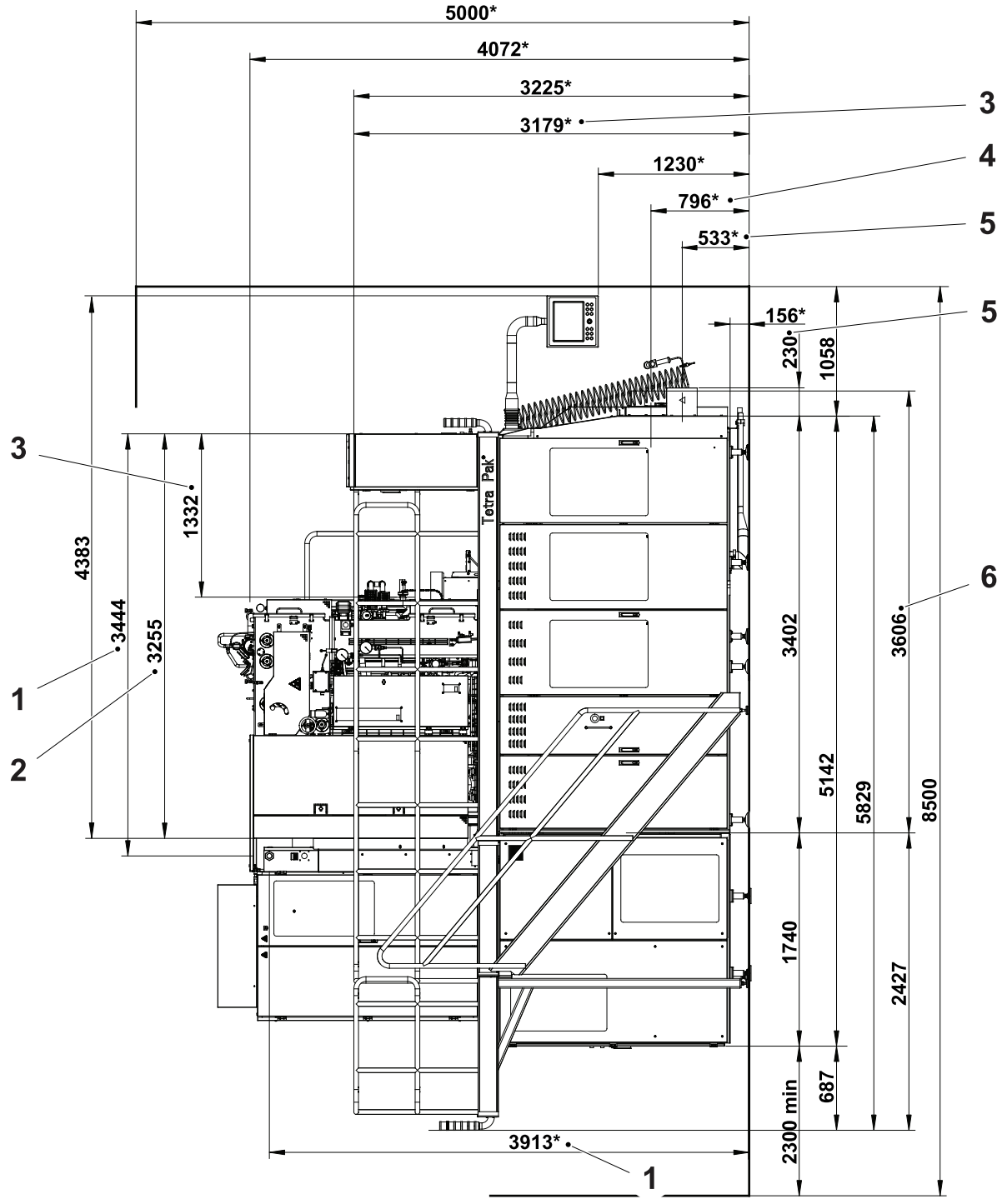

* All measurements from the floor have a tolerance of +100/-0 mm.

1 Electrical supply
2 Connection plate
3 Cleaning in place (CIP) Out Ø1 1/2" (No ICU only)
4 Conveyor top surface
5 Waste outlet
6 Connection surface for line conveyor

1.1.2.2 LH Side View, TP A3/CompactFlex with PT or TP A3/CompactFlex with PT and HVA

For all other dimensions, see 1.1.2.1 LH Side Views, TP A3/CompactFlex Standard or TP A3/CompactFlex with HVA.

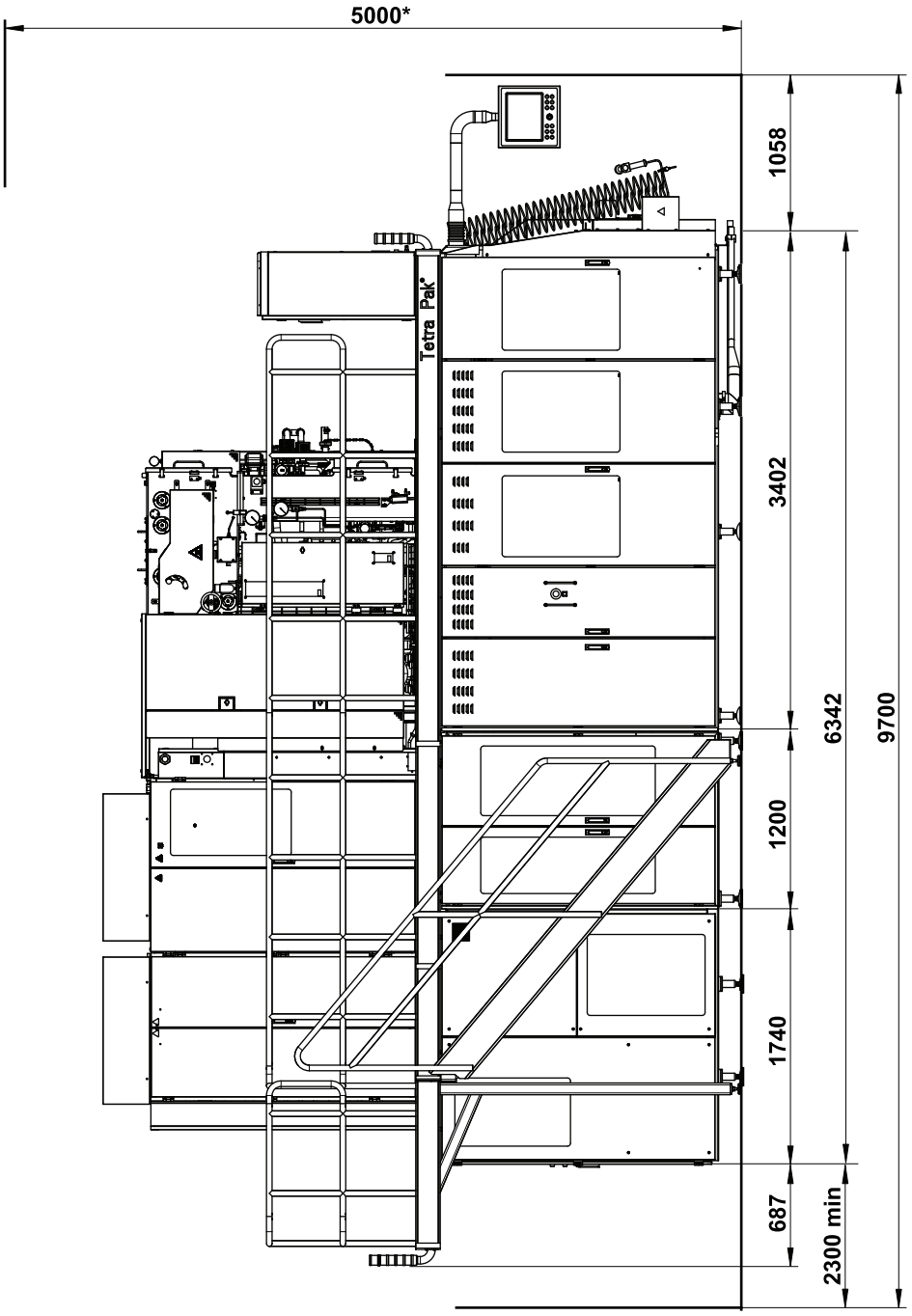

* All measurements from the floor have a tolerance of +100/-0 mm.

1.1.3 Top Views

1.1.3.1 Top View, TP A3/CompactFlex Standard

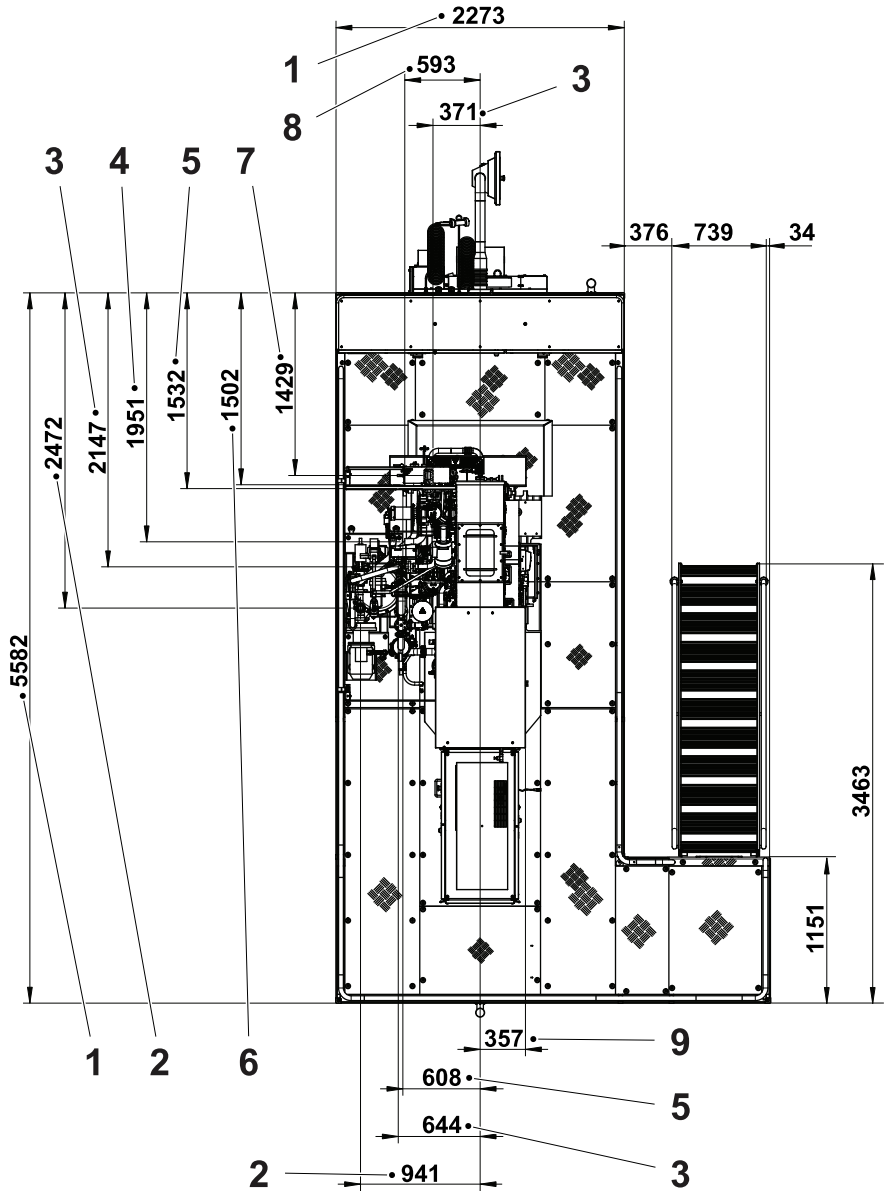

1 Platform
2 ICU chemical discharge Ø1 1/2"
3 Cleaning in place (CIP) IN Ø1 1/2"
4 Left product connection IN/OUT Ø2"
5 Steam connection IN Ø12
6 Right product connection IN/OUT Ø2"
7 ICU steam connection IN Ø12
8 Product connection IN/OUT Ø2"
9 Electrical supply

1.1.3.2 Top View, TP A3/CompactFlex UL-CSA

For all other dimensions, see 1.1.3.1 Top View, TP A3/CompactFlex Standard.

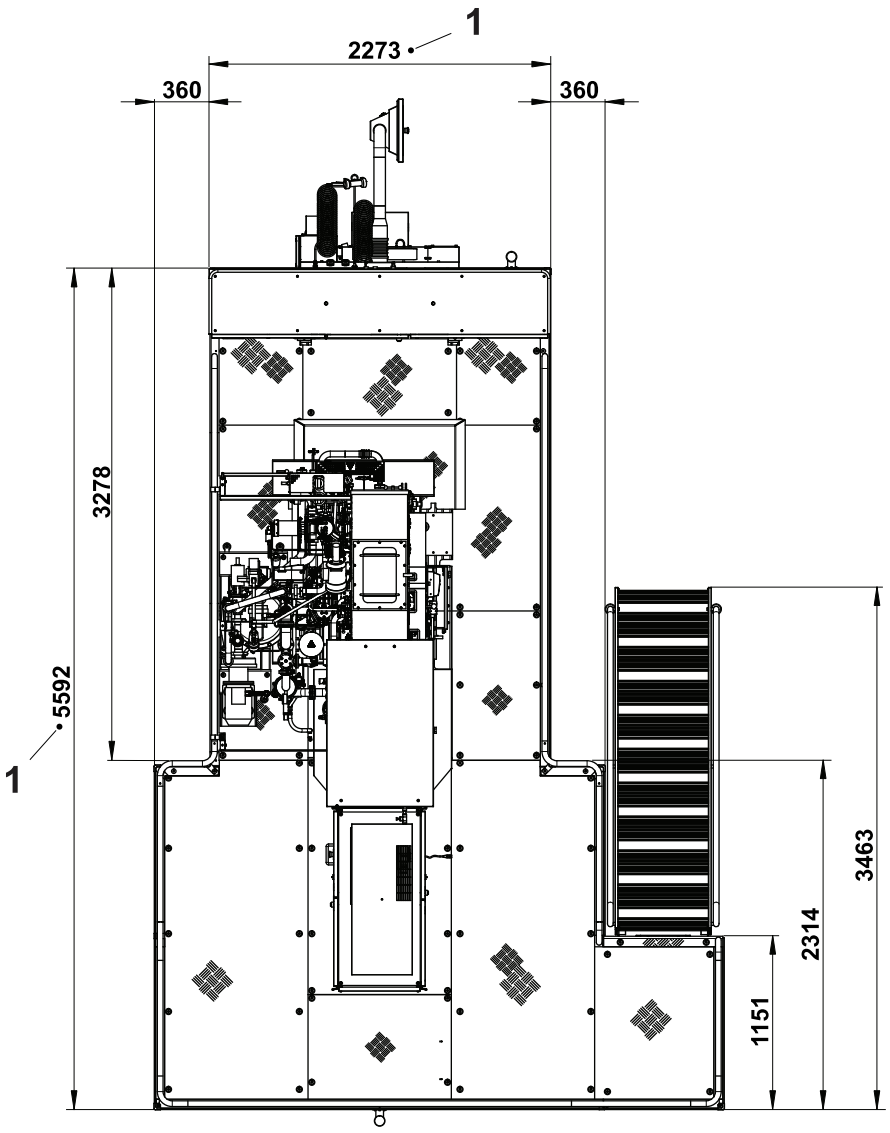

1 Platform

1.1.3.3 Top View, TP A3/CompactFlex with HVA

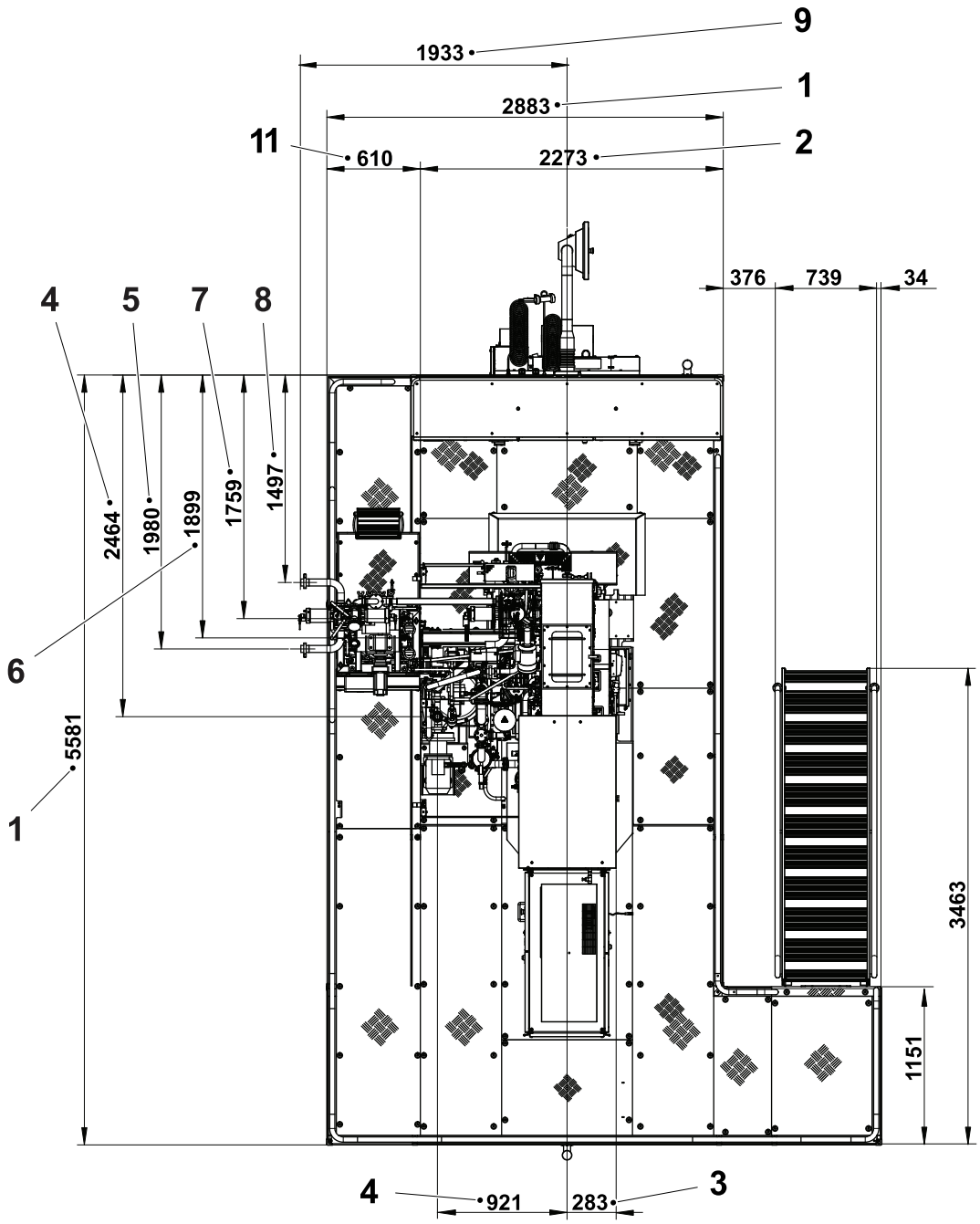

1 Platform
2 Standard platform
3 Electrical supply
4 ICU chemical discharge Ø1 ½”
5 LH product connection IN/OUT Ø2"
6 ICU steam connection IN Ø12
7 HVA steam connection IN Ø12"
8 RH product connection IN/OUT Ø2
9 Product connection IN/OUT Ø2

1.1.3.4 Top View, TP A3/CompactFlex with HVA UL-CSA, LH Stair

For all other dimensions, see 1.1.3.3 Top View, TP A3/CompactFlex with HVA.

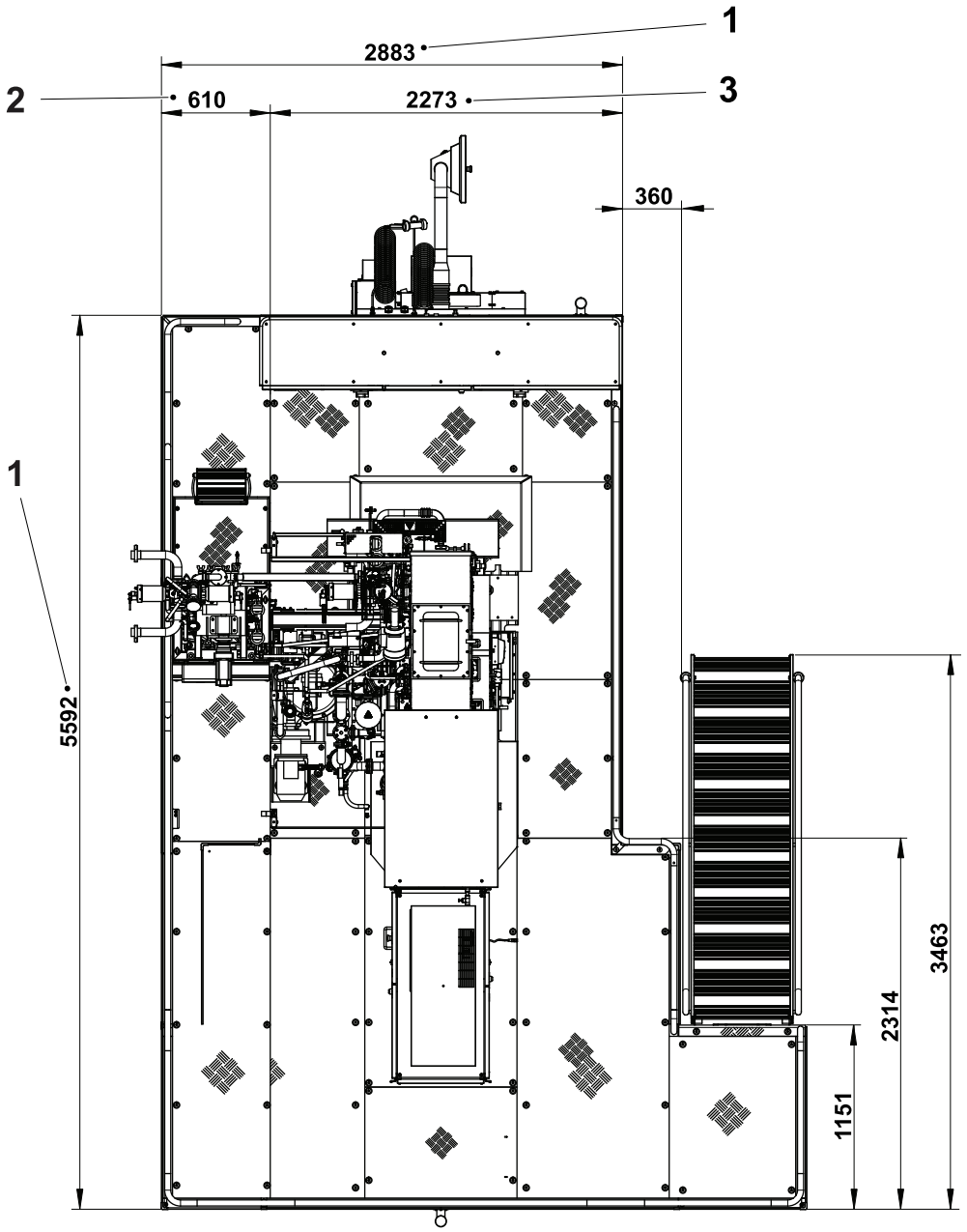

1 Platform
2 Extra platform
3 Standard platform

1.1.3.5 Top View, TP A3/CompactFlex with HVA UL-CSA, RH Stair

For all other dimensions, see 1.1.3.3 Top View, TP A3/CompactFlex with HVA.

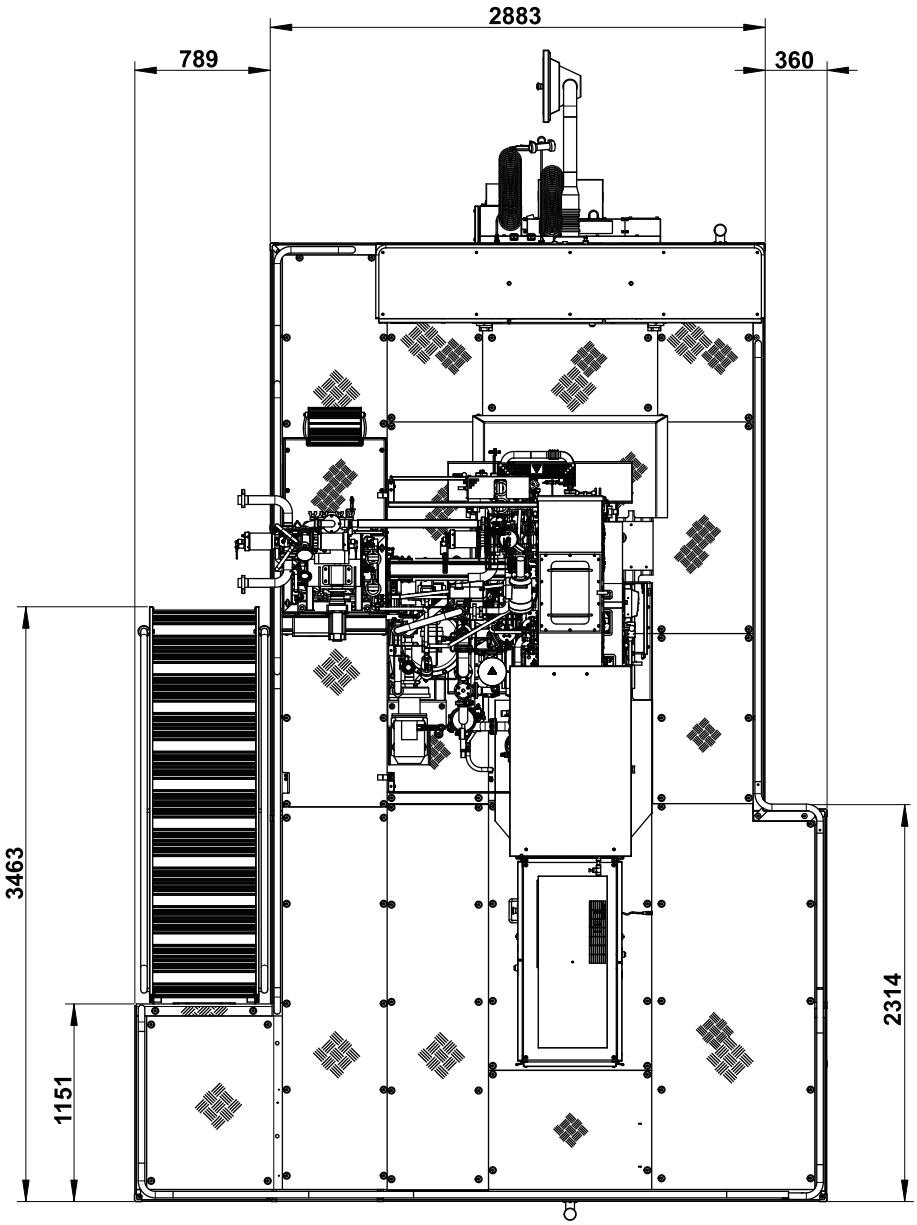

1.1.3.6 Top View, TP A3/CompactFlex with PT

For all other dimensions, see 1.1.3.1 Top View, TP A3/CompactFlex Standard.

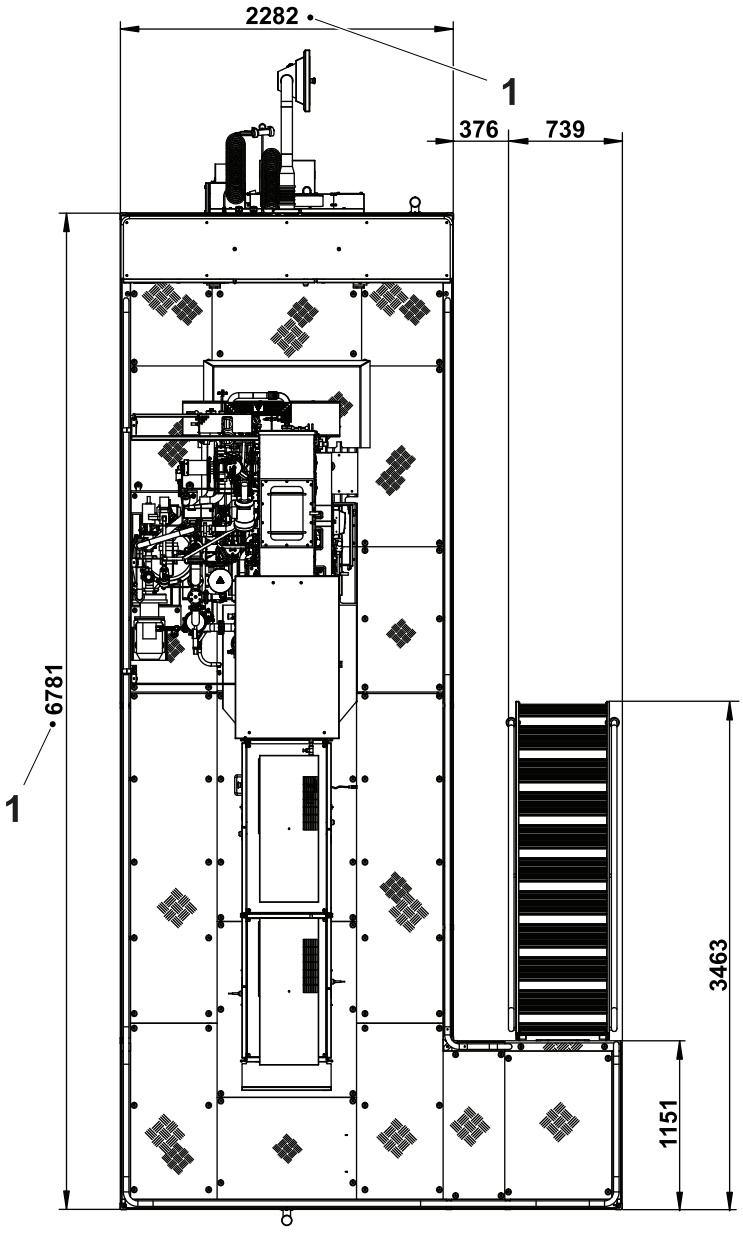

1 Platform

1.1.3.7 Top View, TP A3/CompactFlex with PT UL-CSA

For all other dimensions, see 1.1.3.1 Top View, TP A3/CompactFlex Standard.

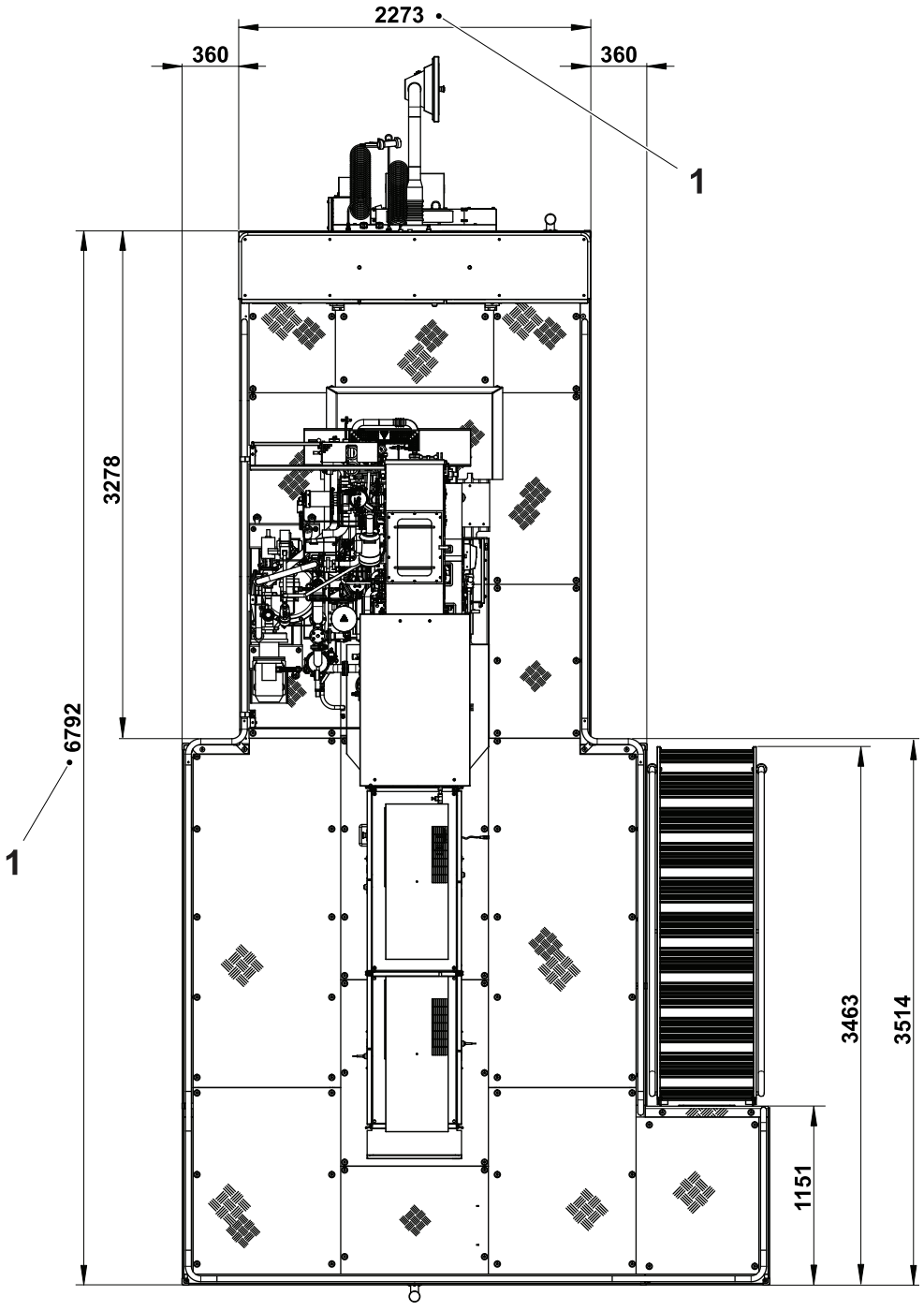

1 Platform

1.1.3.8 Top View, TP A3/CompactFlex with PT and HVA

For all other dimensions, see 1.1.3.3 Top View, TP A3/CompactFlex with HVA.

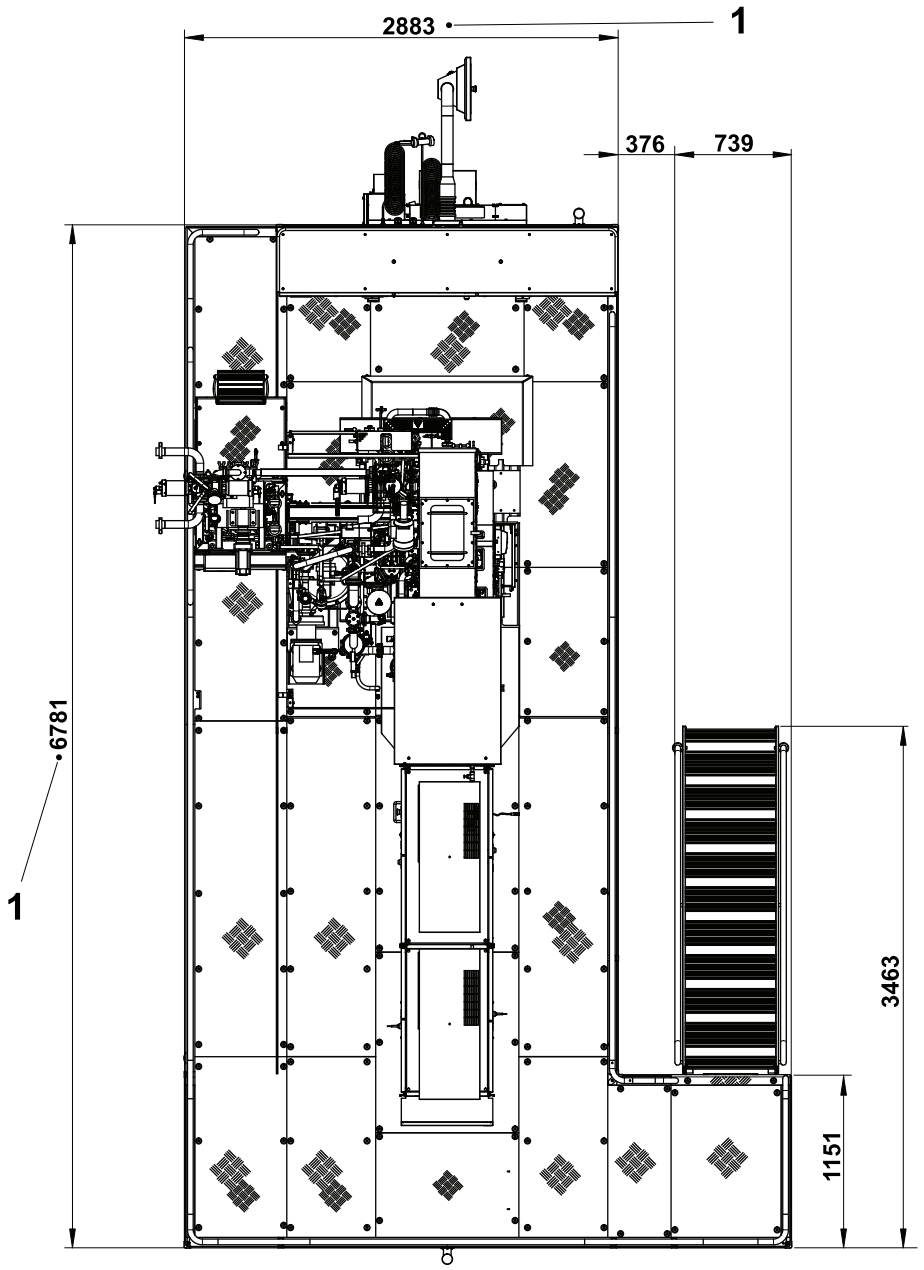

1 Platform

1.1.3.9 Top View, TP A3/CompactFlex with PT and HVA UL-CSA, LH Stair

For all other dimensions, see 1.1.3.3 Top View, TP A3/CompactFlex with HVA.

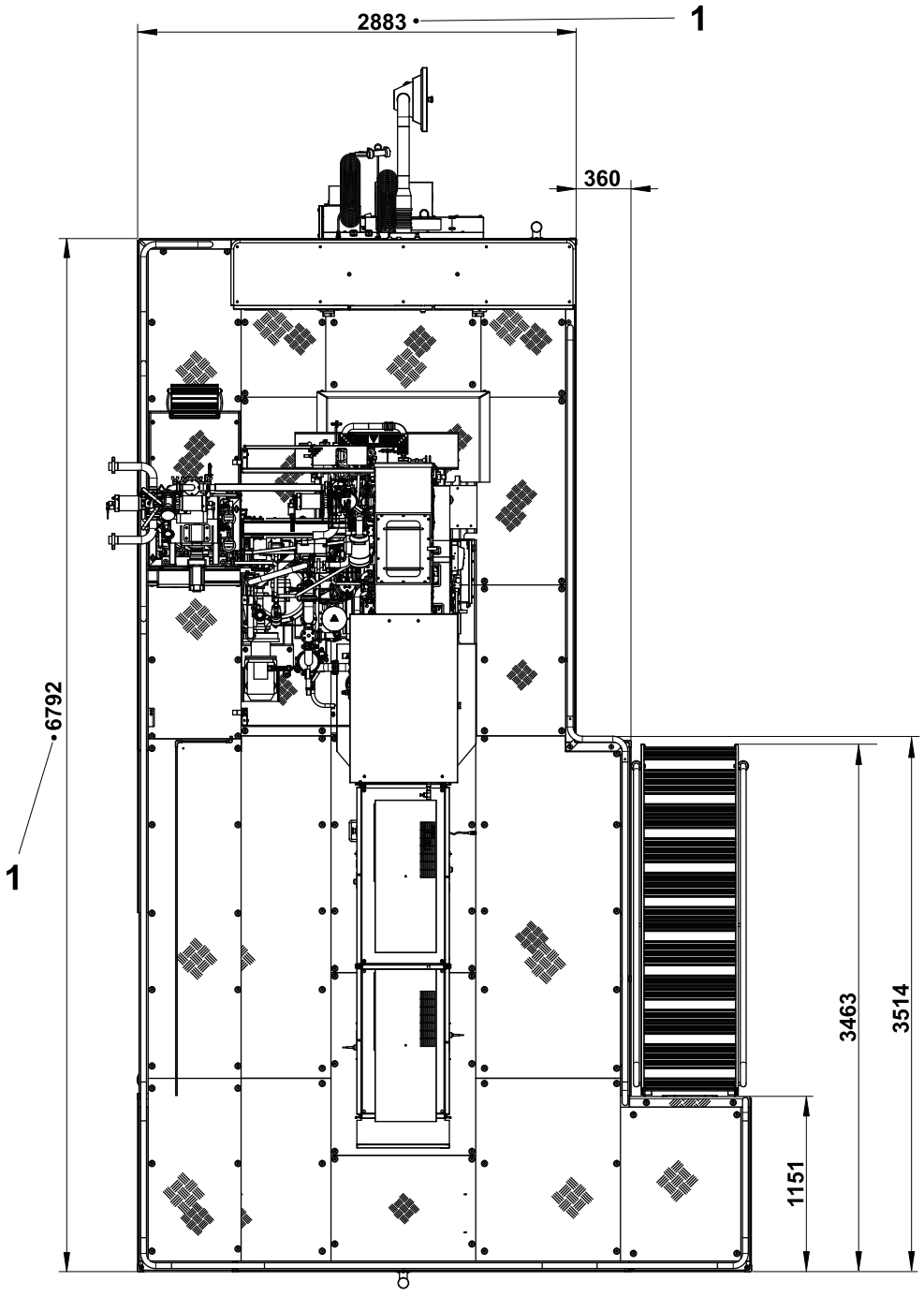

1 Platform

1.1.3.10 Top View, TP A3/CompactFlex with PT and HVA UL-CSA, RH Stair

For all other dimensions, see 1.1.3.3 Top View, TP A3/CompactFlex with HVA.

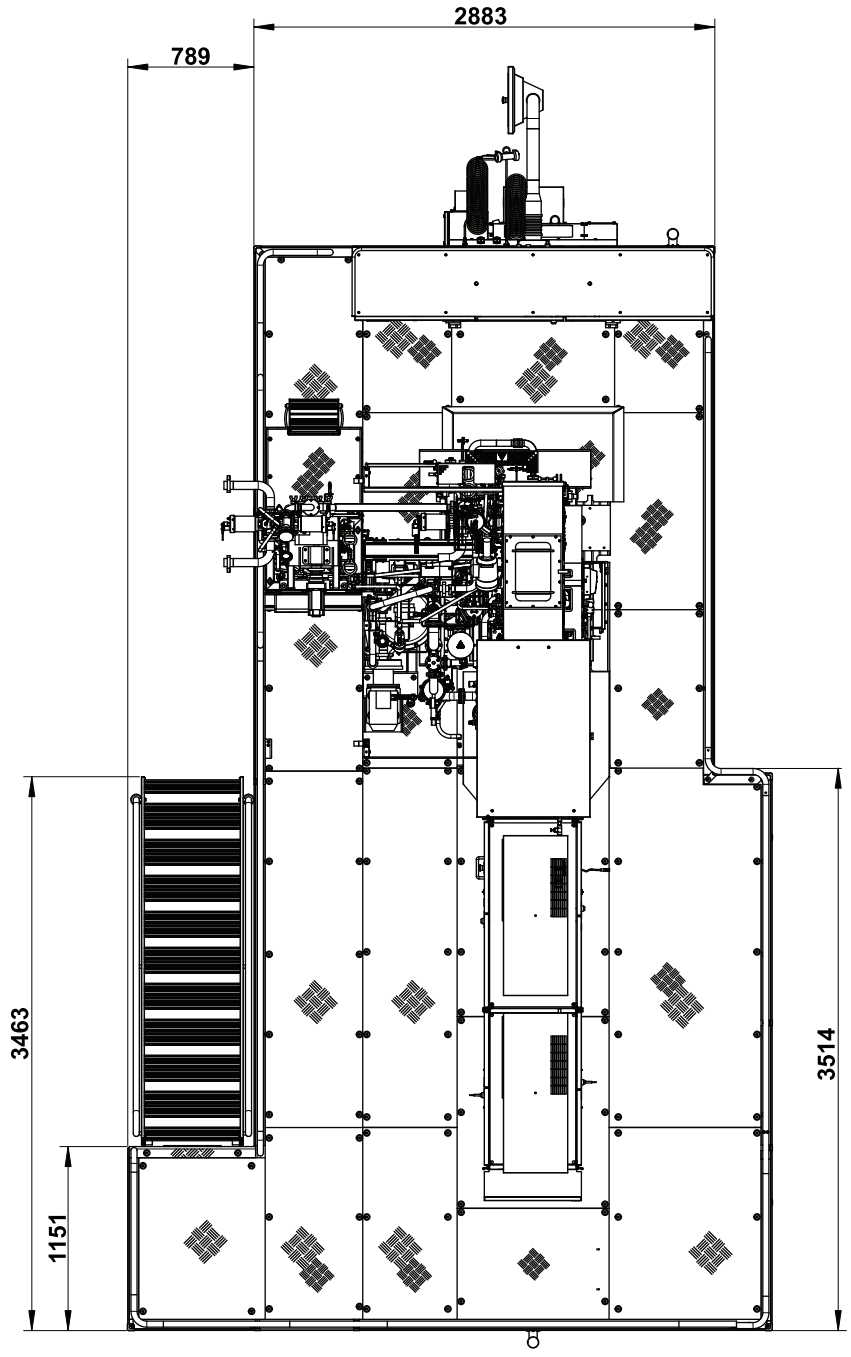

1.1.4 Drainage Locations

* All measurements from the floor have a tolerance of +100/-0 mm.

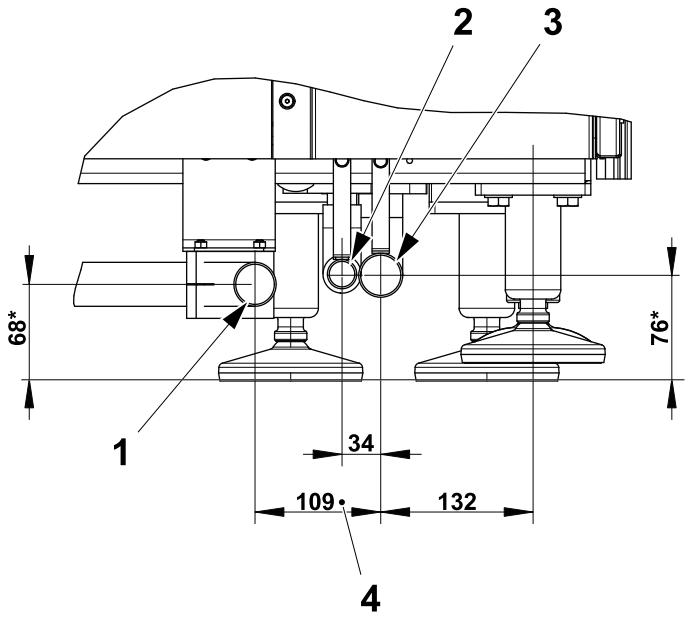

Front view

1 Drain outlet pipe Ø38.1 mm
2 Steam outlet pipe Ø25.4 mm
3 Cleaning outlet pipe Ø38.1 mm
4 Drain

1.1.5 Machine Feet

1.1.5.1 Machine Feet , TP A3/CompactFlex Standard

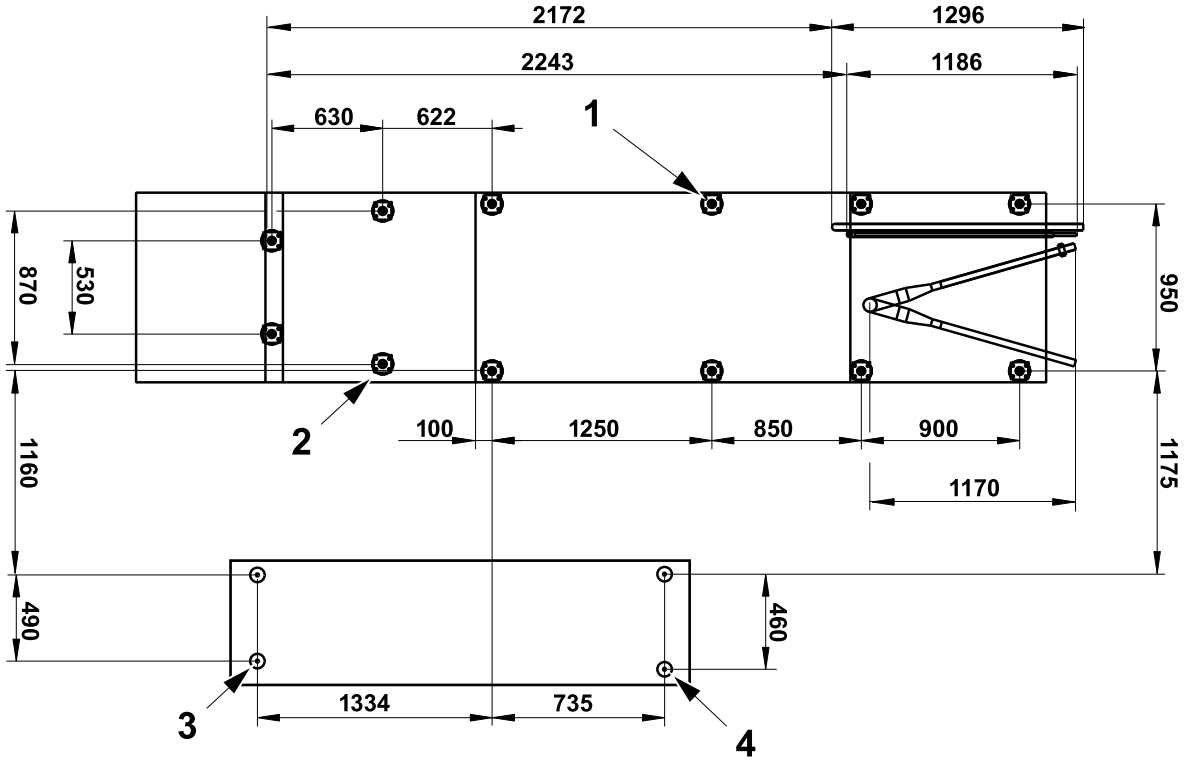

Bottom view

1 Machine body feet (8x)
2 ASU feet (4x)
3 Landing feet (2x)
4 Stair feet (2x)

1.1.5.2 Machine Feet, TP A3/CompactFlex with HVA, LH Stair

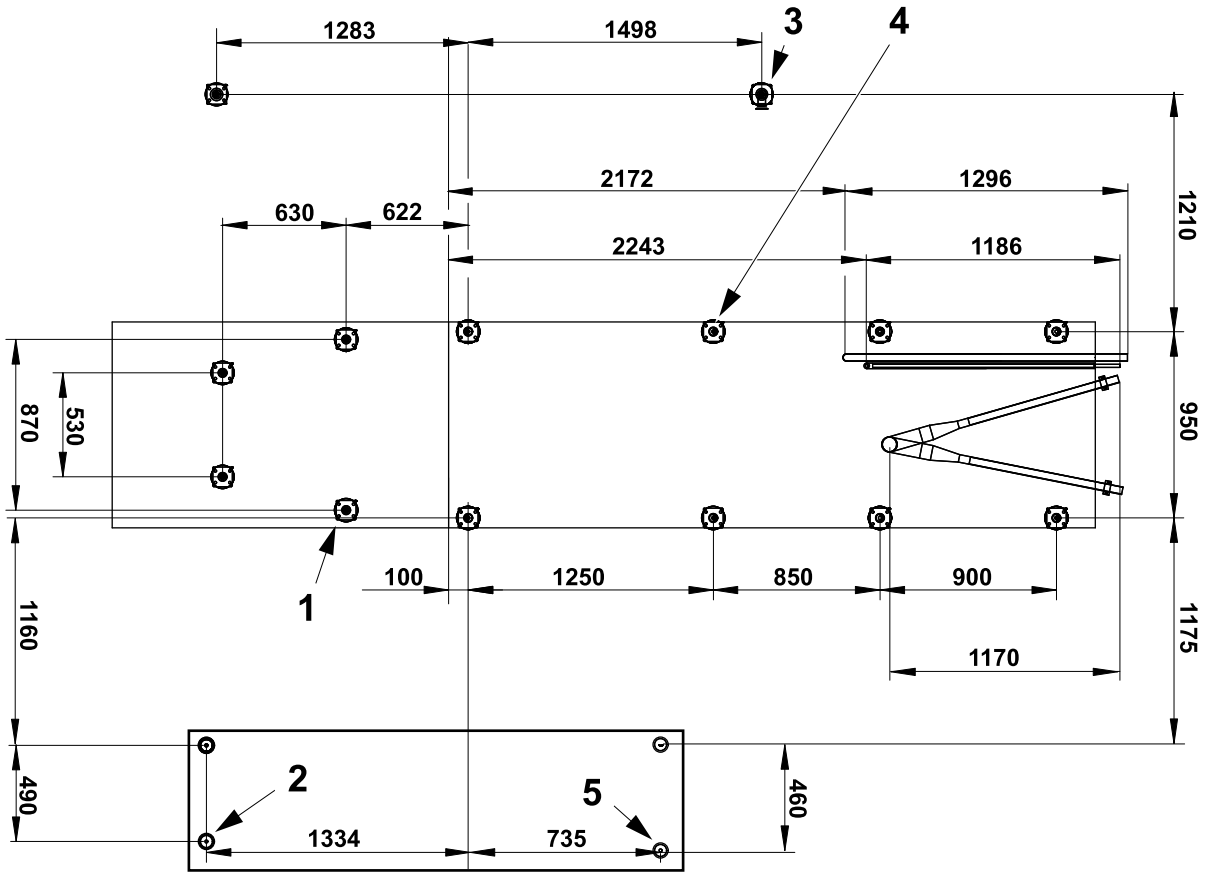

Bottom view

1 ASU feet (4x)
2 Landing feet (2x)
3 Extra platform HVA feet (2x)
4 Machine body feet (8x)
5 Stair feet (2x)

1.1.5.3 Machine Feet, TP A3/CompactFlex with HVA, RH Stair

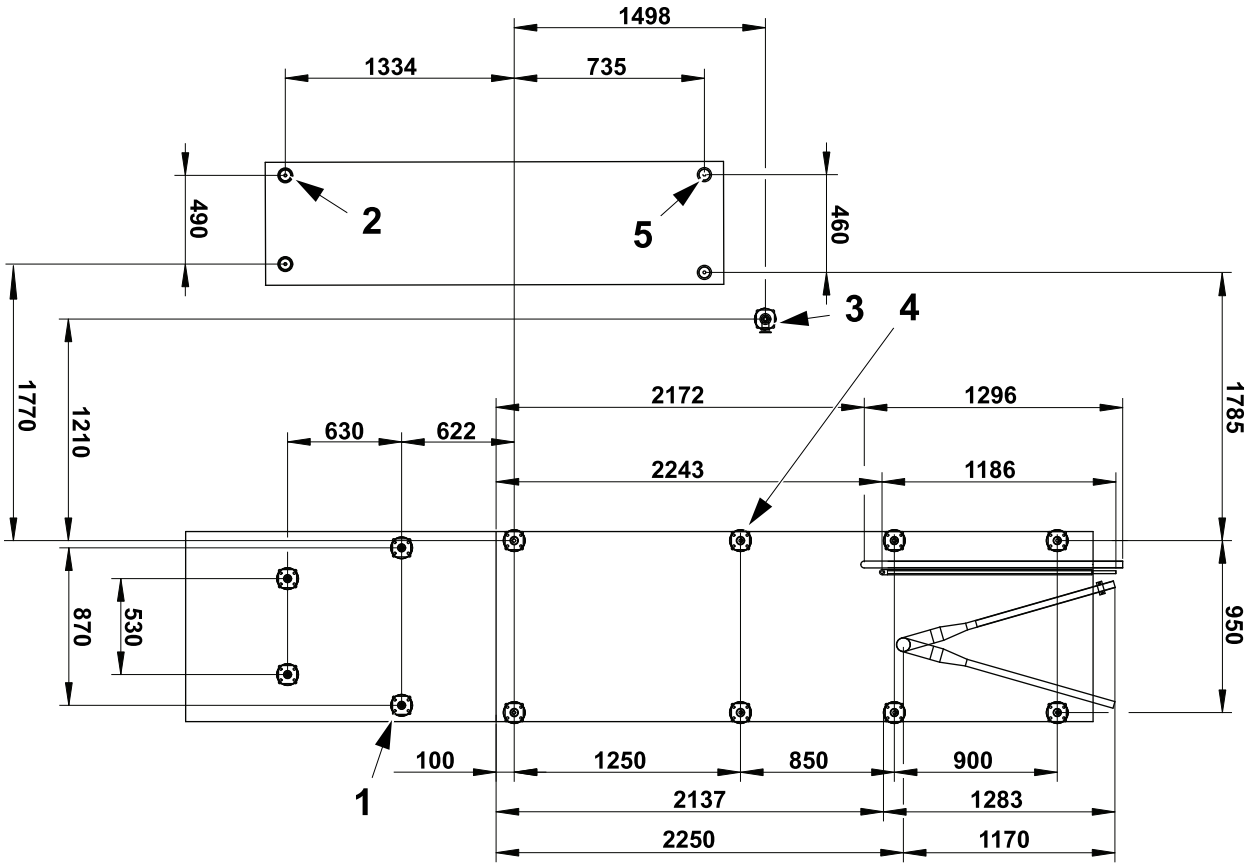

Bottom view

1 ASU feet (4x)
2 Landing feet (2x)
3 Extra platform HVA feet (1x)
4 Machine body feet (8x)
5 Stair feet (2x)

1.1.5.4 Machine Feet, TP A3/CompactFlex with PT

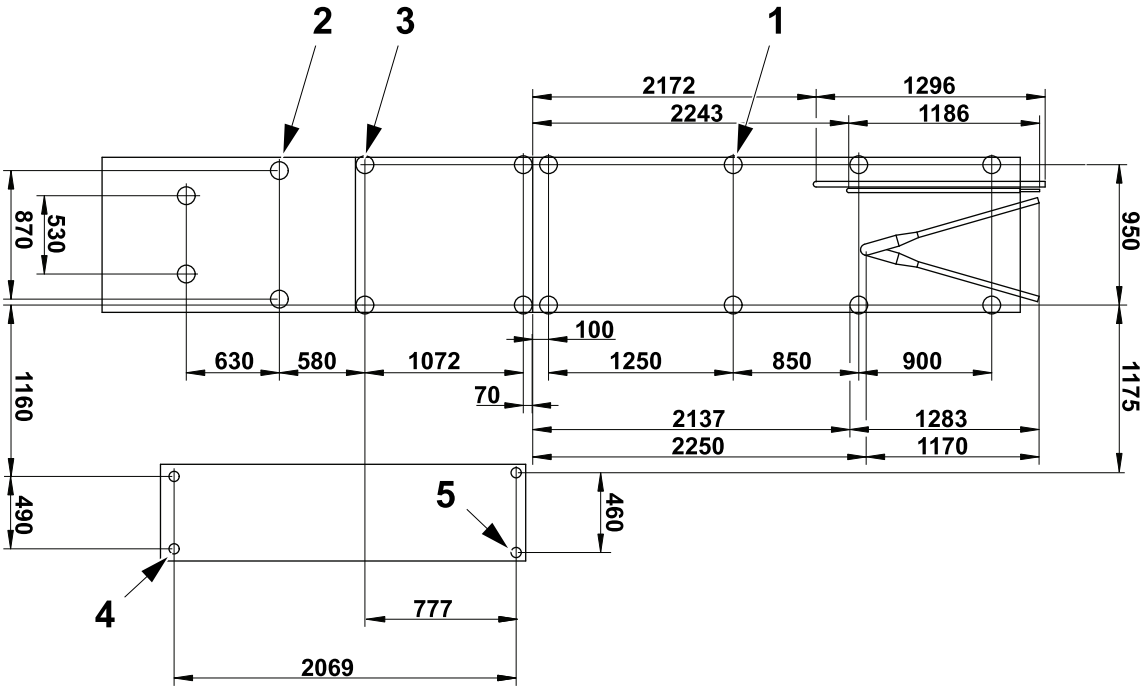

Bottom view

1 Machine body feet (8x)
2 ASU feet (4x)
3 PT feet (4x)
4 Landing feet (2x)
5 Stair feet (2x)

1.1.5.5 Machine Feet, TP A3/CompactFlex with PT and HVA, LH Stair

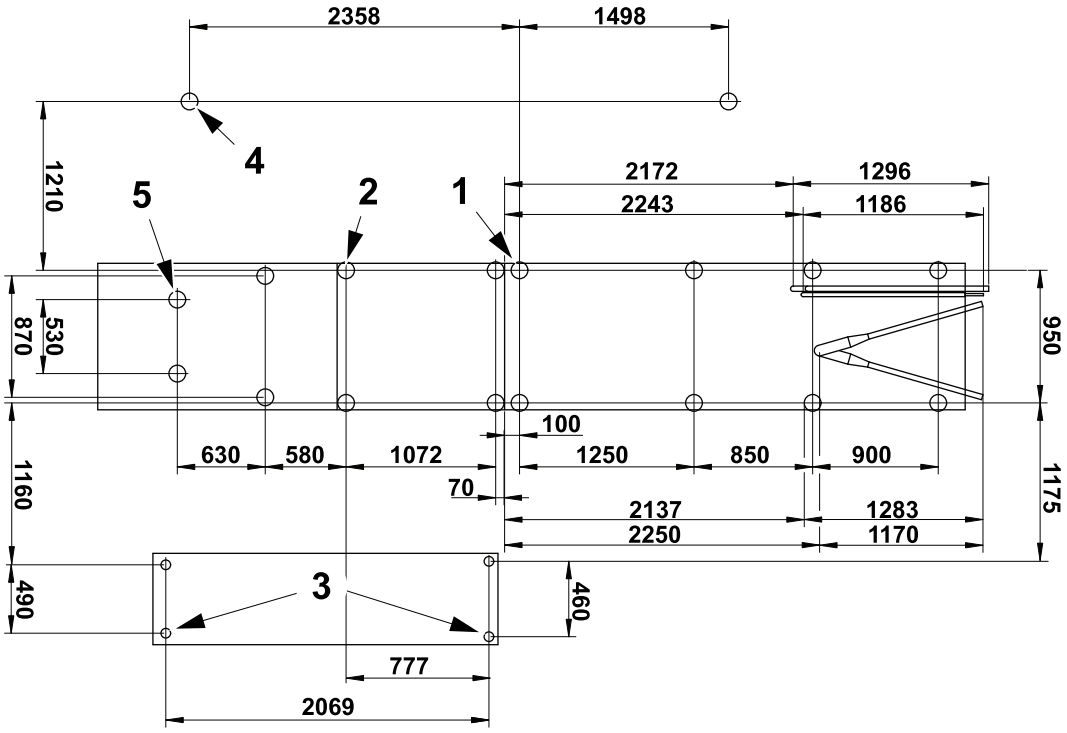

Bottom view

1 Machine body feet (8x)
2 PT feet (4x)
3 Stair feet (4x)
4 Extra platform HVA feet (2x)
5 ASU feet (4x)

1.1.5.6 Machine Feet, TP A3/CompactFlex with PT and HVA, RH Stair

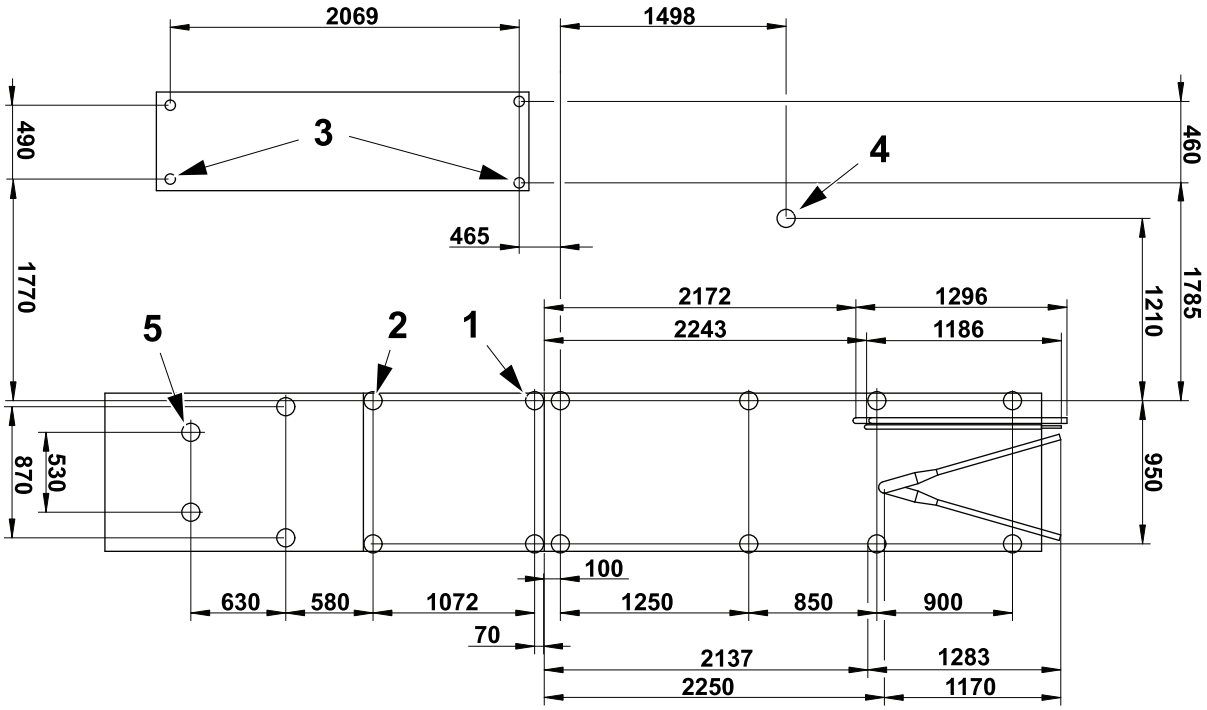

Bottom view

1 Machine body feet (8x)
2 PT feet (4x)
3 Stair feet (4x)
4 Extra platform HVA feet (1x)
5 ASU feet (4x)

1.1.6 Front View

1.1.6.1 Front View, TP A3/CompactFlex or TP A3/CompactFlex with PT

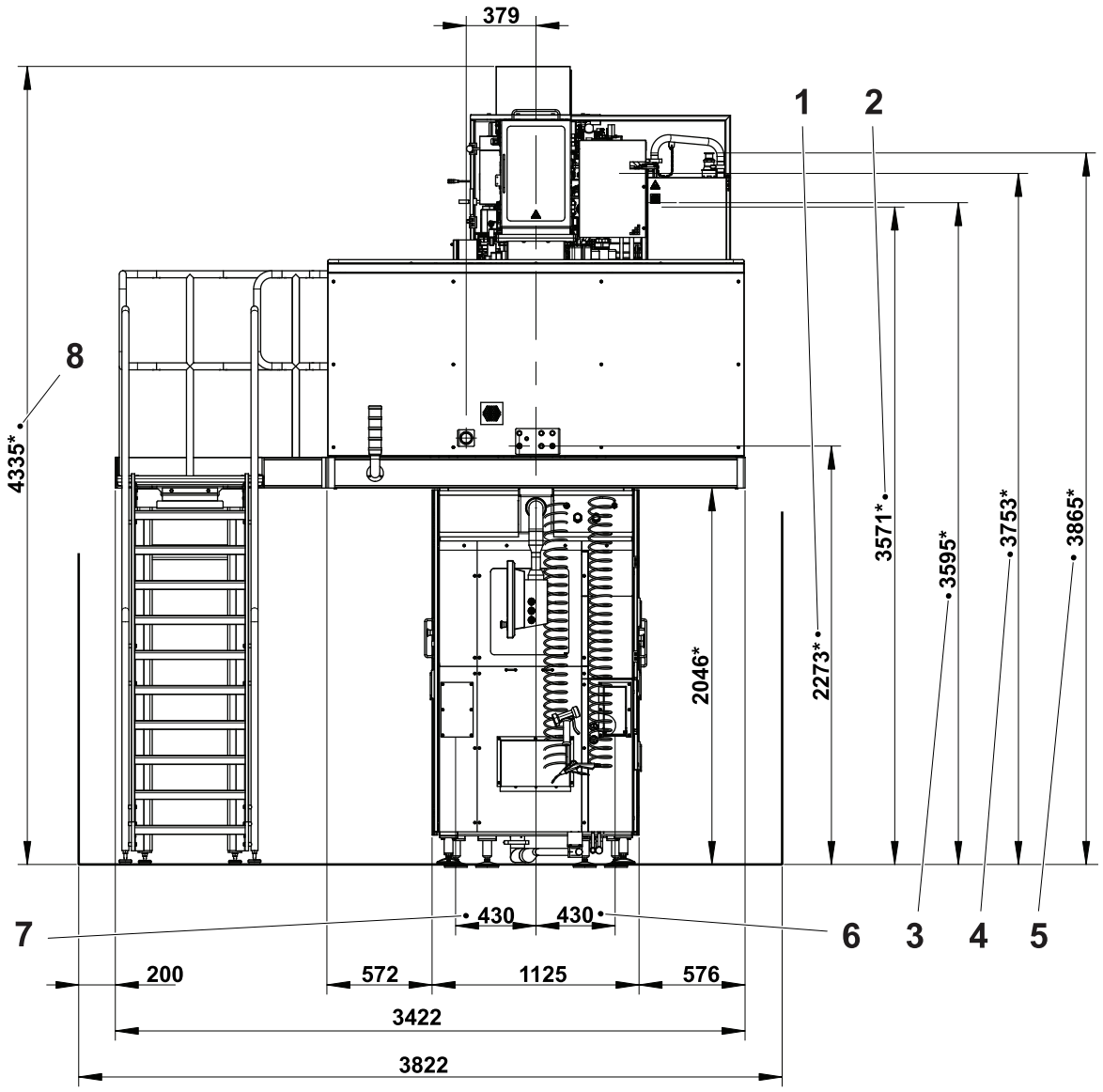

* All measurements from the floor have a tolerance of +100/-0 mm.

1 Connection plate
2 Cleaning in place (CIP) IN Ø1 1/2" (NO ICU)
3 Product connection IN/OUT Ø2"
4 Steam connection IN Ø12
5 ICU chemical discharge Ø1 1/2"
6 RH outfeed conveyor center line
7 LH outfeed conveyor center line
8 Electrical cabinet

1.1.6.2 Front View, TP A3/CompactFlex with HVA or TP A3/CompactFlex with PT and HVA

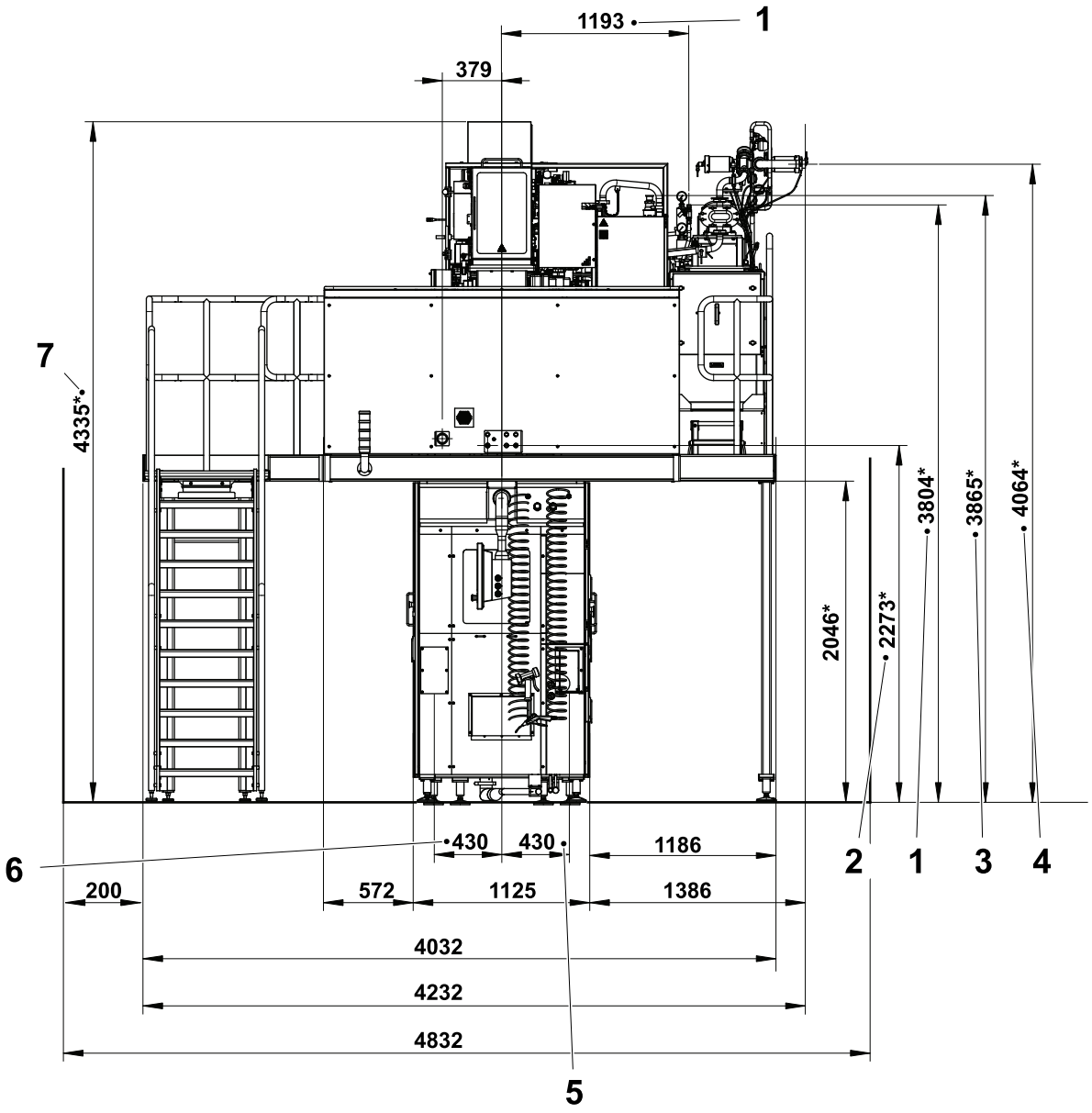

* All measurements from the floor have a tolerance of +100/-0 mm.

1 Steam connection in Ø12
2 Connection Plate
3 ICU chemical discharge Ø1 ½”
4 Product connection IN/OUT 2”
5 RH outfeed conveyor centre line
6 LH outfeed conveyor centre line
7 Electrical cabinet
8 PT Electrical cabinet

1.1.7 Service Unit Connection Plate

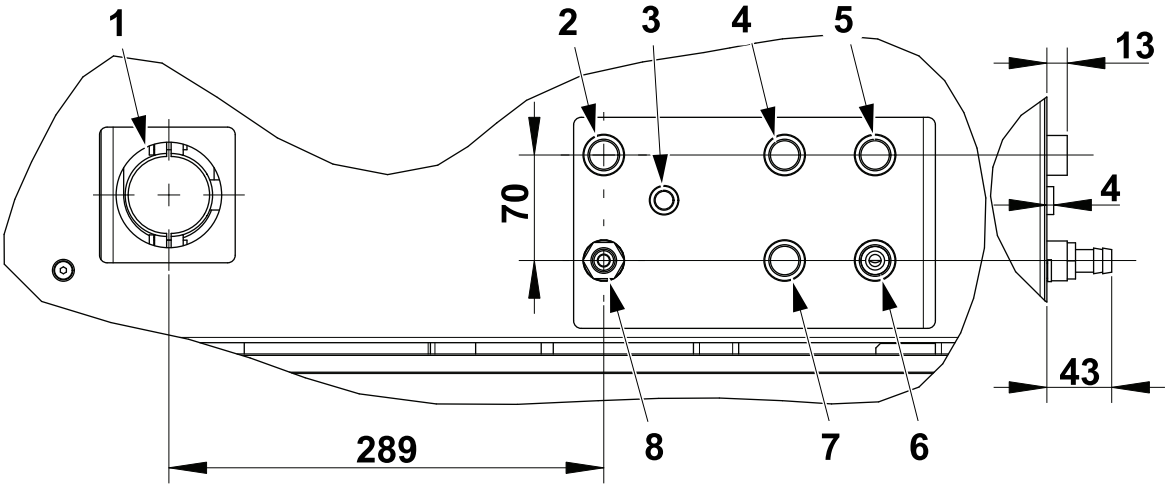

1 Water in Ø 1 1/2”
2 Cold water in RP 1/2” (ISO 7/1)
3 Supply HI and HL RP 1/4” (ISO 7/1)
4 Spare (Ice water in RP 1/2” (ISO 7/1))
5 Air in RP 1/2” (ISO 7/1)
6 Cold water out RP 1/2” (ISO 7/1)
7 Spare (Ice water out RP 1/2” (ISO 7/1)
8 ICU water in (Hose Ø 1/2”)

1.2 Equipment Specification

1.2.1 Configurations

For information about configurations and limitations, see the Tetra Pak Product Portfolio Configurator.

1.2.2 Mass

Characteristic	Value	Note
Machine mass - TP A3/CompactFlex standard - TP A3/CompactFlex with HVA - TP A3/CompactFlex with PT	 = 7200 kg (= 15873 lbs) = 7900 kg (= 17417 lbs) = 7955 kg (= 17538 lbs)	
Static load	1207 kgf	Maximum per leg
Dynamic load	1357 kg	Maximum per leg
Static area mass	0.10 kg/mm^2	Maximum per leg
Dynamic area mass	0.11 kg/mm^2	Maximum per leg

1.2.3 Discharge Requirements

1.2.3.1 Discharge Conveyor

Characteristic	Value	Notes
Recommended conveyor make/model	Tetra Package Conveyor 23	
Recommended conveyor speed	21 - 26 m/min.	

Note! The outfeed conveyor speed is managed by the PLC program as software recipe parameter depending on the production capacity. A different conveyor speed is stored for each production capacity.

1.2.3.2 Package Outfeed Side

The table below lists the standard package outfeed side depending on the package opening. The package outfeed side can be configured to either the LH or RH side, depending on the down stream equipment available.

Package	Opening	Outfeed Side
TBA 80 S	Straw Hole PPH	RH side
TBA 100 B	Straw Hole PPH	RH side
TBA 125 S	Straw Hole PPH PullTab	RH side
TBA 160 S	Straw Hole PPH	RH side
TBA 180 S	Straw Hole PPH	RH side
TBA 200 B	Straw Hole PPH PullTab	RH side
TBA 200 E	Straw Hole PPH	RH side
	HeliCap	LH side
TBA 200 M	Straw Hole PPH PullTab	RH side
TBA 200 S	Straw Hole PPH PullTab	RH side
TBA 200 Sq	StreamCap	LH side
TBA 250 B	Straw Hole PPH PullTab	RH side
TBA 250 E	HeliCap	LH side
	Straw Hole PPH	RH side
TBA 250 S	Straw Hole PPH PullTab	RH side
TBA 250 Sq	StreamCap	LH side
TBA 284 B	Straw Hole PPH	RH side
TBA 300 S	Straw Hole PPH	RH side
TBA 330 S	Straw Hole PPH PullTab	RH side
TBA 375 S	Straw Hole PPH PullTab	RH side
TPA 125 Sq	Straw Hole PPH PullTab	RH side
TPA 200 Sq	Straw Hole PPH PullTab	RH side
TPA 250 Sq	Straw Hole PPH PullTab	RH side
TPA 330 Sq	StreamCap DreamCap	LH side
	PullTab	RH side

1.2.4 Additional Material

The following additional material is needed during the installation:

Equipment	TP No.	Notes
Packaging Material reel lifting trolley	90603-3401	
Matching Transformer	90245-00XX	**Note!** Used if supply voltage from factory does not corresponds with machine supply voltage. See 1.4.1 Electrical Power and the Electrical Manual for more details.

See also the section Regular Accessories in the SPC delivered with the machine.

1.2.5 Start Up Material

The following material is needed during the start up of the equipment:

Material	Quantity	Notes
Packaging Material	1 reel	for filling machine
LS strip	1 reel	for filling machine
Hydrogen Peroxide	1 container	for Filling machine
Tab strip	1 reel	for PullTab
Patch strip	1 reel	for PullTab
Apron	1 piece	
Goggles	1	
Gloves	1 pair	

Some of the start-up material is volume and package-dependant. For more details, contact Tetra Pak.

1.3 Lifting and Transportation Data

The following sections contain information specific to the correct handling of this crated equipment.

1.3.1 Crate and Equipment

Note! The TP A3/CompactFlex machine is delivered in two crates. The TP A3/CompactFlex with PT and TP A3/CompactFlex with HVA machine configurations are delivered in three crates. See the Packing List for a complete list of all parts included in each crate.

1.3.1.1 Main Crate (1)

1.3.1.1.1 Weight and Dimensions

Note! The weight of the crates can increase significantly if the crates become wet.

Note! The gross weight of the crate may vary from the weight specified below depending on the contents. Check the weight specified on the crate label.

Machine type	Gross weight kg (lbs)	Net weight kg (lbs)	Length mm (ft.-in)	Width mm (ft.-in)	Height mm (ft.-in)
TP A3/CompactFlex standard	6970 (15370)	5570 (12280)	6000 (19’7”)	2260 (7´4”)	2500 (8’2”)
TP A3/CompactFlex with HVA					
TP A3/CompactFlex with PT	4400 (9700)	3590 (7915)	4000 (13’1”)	2260 (7’4”)	2500 (8’2”)
TP A3/CompactFlex with PT and HVA					

1.3.1.1.2 Contents

The crate contains the machine body and the platforms. For a complete list of the crate content, see the packing list. For the location of the packing list, see section 3.1.5 Unpacking the Crates.

1.3.1.2 Second Crate (2)

1.3.1.2.1 Weight and Dimensions

Note! The weight of the crates can increase significantly if the crates become wet.

Note! The gross weight of the crate may vary from the weight specified below depending on the contents. Check the weight specified on the crate label.

Machine type	Gross weight kg (lbs)	Net weight kg (lbs)	Length mm (ft.-in)	Width mm (ft.-in)	Height mm (ft.-in)
TP A3/CompactFlex, TP A3/CompactFlex with HVA, TP A3/CompactFlex with PT or TP A3/CompactFlex with PT and HVA	2450 (5400)	1790 (3950)	3000 (9´8”)	1900 (6´2”)	2500 (8’2”)

1.3.1.2.2 Contents

The crate contains the superstructure and the electrical cabinet. For a complete list of the crate content, see the packing list. For the location of the packing list, see section 3.1.5 Unpacking the Crates.

1.3.1.3 Third Crate (3)

1.3.1.3.1 Weight and Dimensions

Note! The weight of the crates can increase significantly if the crates become wet.

Note! The gross weight of the crate may vary from the weight specified below depending on the contents. Check the weight specified on the crate label.

Machine type	Gross weight kg (lbs)	Net weight kg (lbs)	Length mm (ft.-in)	Width mm (ft.-in)	Height mm (ft.-in)
TP A3/CompactFlex with HVA	610 (1350)	270 (600)	2000 (6’6”)	1310 (4´3”)	2260 (7’4”)
TP A3/CompactFlex with PT or TP A3/CompactFlex with PT and HVA	3780 (8334)	2960 (6526)	4000 (13’1”)	2260 (7’4”)	2500 (8’2”)

1.3.1.3.2 Contents

The crate contains the HVA main unit or the ASU and PT units. For a complete list of the crate content, see the packing list. For the location of the packing list, see section 3.1.5 Unpacking the Crates.

1.3.1.4 Fourth Crate (4)

1.3.1.4.1 Weight and Dimensions

Note! The weight of the crates can increase significantly if the crates become wet.

Note! The gross weight of the crate may vary from the weight specified below depending on the contents. Check the weight specified on the crate label.

Machine type	Gross weight kg (lbs)	Net weight kg (lbs)	Length mm (ft.-in)	Width mm (ft.-in)	Height mm (ft.-in)
TP A3/CompactFlex with PT and HVA	950 (2095)	610 (1345)	2000 (6’6”)	1310 (4´3”)	2260 (7’4”)

1.3.1.4.2 Content

The crate contains the HVA main unit. For a complete list of the crate content, see the packing list. For the location of the packing list, see section 3.1.5 Unpacking the Crates.

1.3.2 Lifting and Transportation Equipment

1.3.2.1 Lifting Equipment Specifications

The following types of equipment can be used to lift and move the crates:

- overhead gantry
- mobile crane
- fork lift.

Make sure that the lifting equipment complies with the specifications given in the following table.

Equipment or tackle	**Lifting capacity kg (lbs)**	**Notes**
Overhead gantry	7000 (15500)	8000 kg (18000 lbs) required if gantry does not have gradual acceleration deceleration ramps.
Mobile crane	7000 (15500)	8000 kg (18000 lbs) required if crane does not have gradual acceleration deceleration ramps.
Lifting chains, cables, ropes or hoist slings	7000 (15500)	8000 kg (18000 lbs) required if lifting equipment does not have gradual acceleration deceleration ramps. Min. length hook to hook: • Main crate: 15 m (50’) • Second crate: 15 m (50’)
Fork lift	8000 (18000)	A higher capacity fork lift truck allows the centre of gravity of the crate to be raised safely to a height of 1500 mm (5’).
Lifting forks	8000 (18000)	Min. length: • Main crate: 2000 mm (6’6”) • Second crate: 2000 mm (6’6”) Recommended setting width: • Main crate: 2000 mm (6’6”) • Second crate: 2000 mm (6’6”)

1.3.2.2 Lifting Equipment Specifications for Uncrated Equipment

Make sure that the lifting equipment used to move the uncrated equipment complies with the specifications given in the following table.

Equipment or tackle	Minimum lifting capacity kg (lbs)	Notes
Lifting chains, cables, ropes or hoist slings	1000 (2200)	Electrical cabinet Lifting tool, TP No. 2720716-0000
	500 (1100)	Service unit Lifting tool, TP No. 2720716-0000 Min. length hook to hook = 3.0 m (10’)
	1000 (2200)	Platform Four pieces:Min. length hook to hook = 2.0 m (6’7”)
Lifting forks	4000 (8800)	Machine body Min. length 1700 mm (5’6”) Recommended setting width = 1800 mm (5’9”)
	5000 (11000)	Machine body and ASU Min. length 1 500 mm (4’9”) Recommended setting width = 1600 mm (5’3”)
	1500 (3300)	Superstructure (fork tubes dim. = 230 x 90 mm) Min. length 1 500 mm (4’9”) Recommended setting width = 880 mm (2’9”)
	1000 (1770)	Electrical cabinet (fork tubes dim. = 176 x 78 mm) Min. length 1 500 mm (4’9”) Recommended setting width = 615 mm (2’)
	2000 (4400)	ASU and PT Compact Flex Min. length 1700 mm (5’6”) Recommended setting width = 1800 mm (5’9”)

1.3.2.3 Lifting Tool Specifications

The lifting tool TP No. 2720716-0000 has been made for moving equipment with a rigid and non-deformable structure through a mobile crane having the following specifications:

- maximum lifting capacity: 3200 Kg (7054 lbs)
- maximum lifting velocity: 10 m/min.
- maximum translation velocity: 50 m/min.

1.3.2.3.1 General Recommendations

- Before starting any moving operation check the condition of each part of the tool (eye bolts, pullers, chain connections).
- Do not lift loads with weight higher than the maximum lifting capacity of the tool.
- Do not attach the loads on the tip of the hook but always in the hook throat.
- Do not suspend the loads to a twisted chain.
- Do not walk, stay or operate under the suspended loads.
- Do not sway the tool and the suspended load during the translation.

(Cont'd)

(Cont'd)

The table below show the different types of pullers provided with this tool. Go to 1.3.2.2 Lifting Equipment Specifications for Uncrated Equipment to see which pullers must be used for each Tetra Pak equipment.

Type A	Type B	Type C	Type D
No. 2 Connecting Link 3/8"	No. 2 Connecting Link 3/8"	No. 2 Connecting Link 3/8"	No. 2 Connecting Link 3/8"
No. 24 Chain	No. 20 Chain	No. 38 Chain	No. 14 Chain
No. 1 Hook SL-7WA	No. 1 Hook SL- 7WA	No. 1 Hook SL-10WA (small size)	No. 1 Hook SL-7WA
No. 1 Eye Bolt VLBG M12	No. 1 Eye Bolt VLBG M12	No. 1 Eye Bolt VLBG M20	No. 1 Eye Bolt VLBG M16

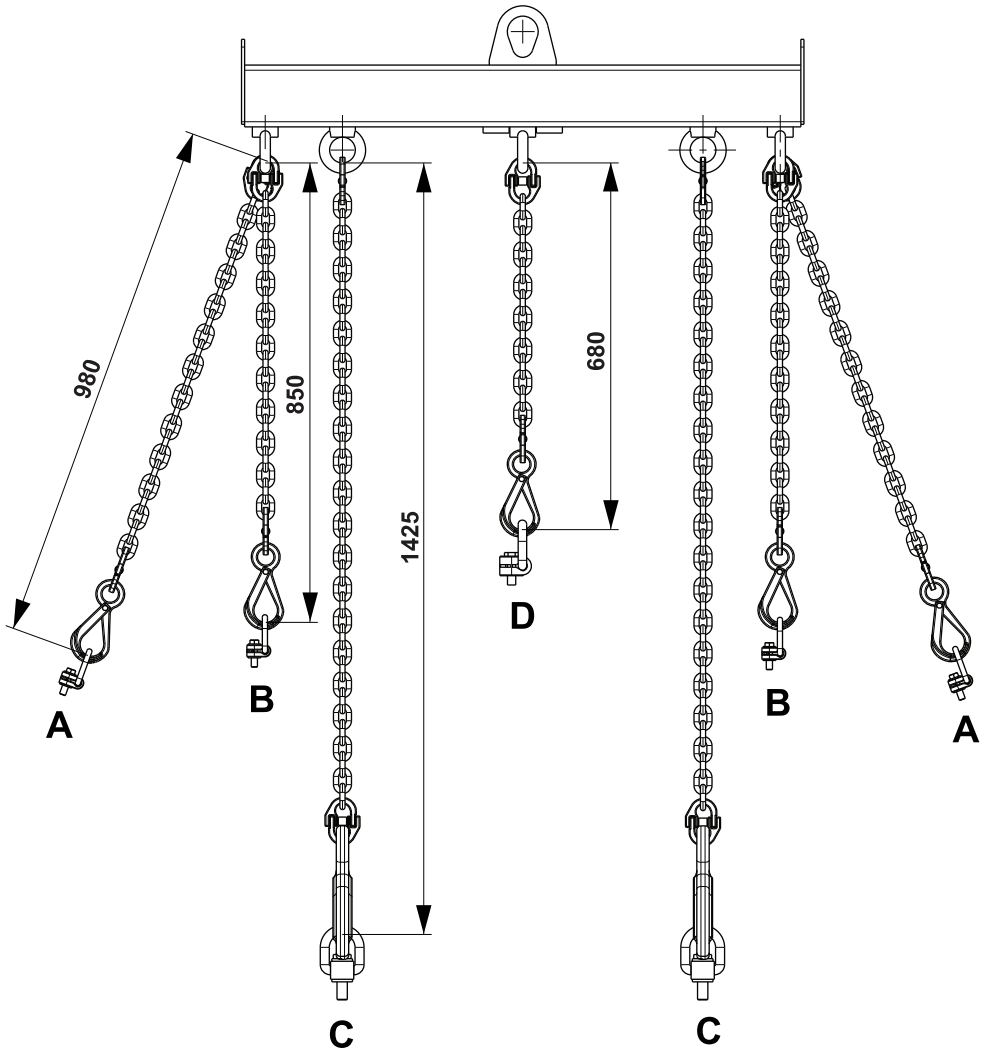

Max. load = 3000 kg (6613 lbs)
Weight = 60 kg (132 lbs)

(Cont'd)

(Cont'd)

Note! In any lifting configuration the tool must be used in horizontal position and parallel to the ground.

Using this tool it is possible to lift balanced loads with a fixed distance between centres of 700 or 1000 mm.

1.3.2.3.2 Example of Lifting Balanced Loads

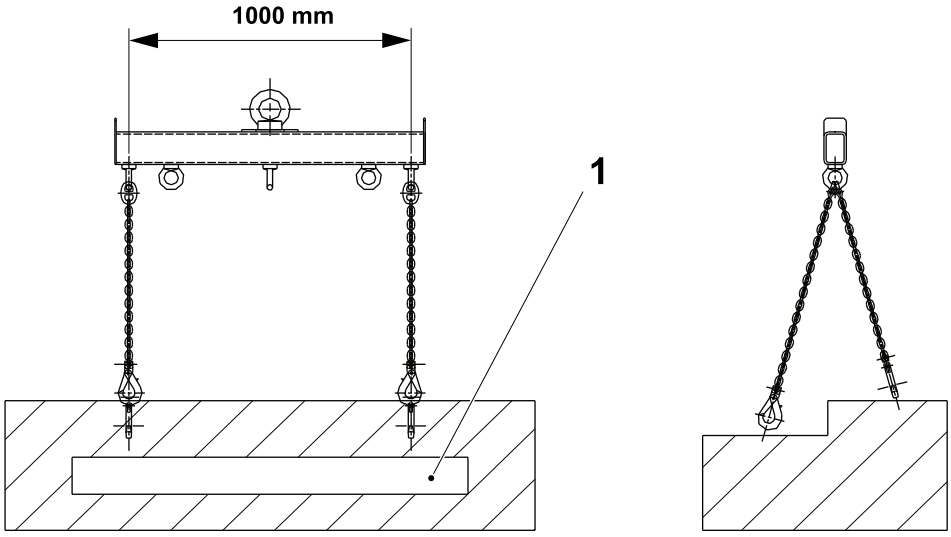

Configuration with 2 couples of external pullers

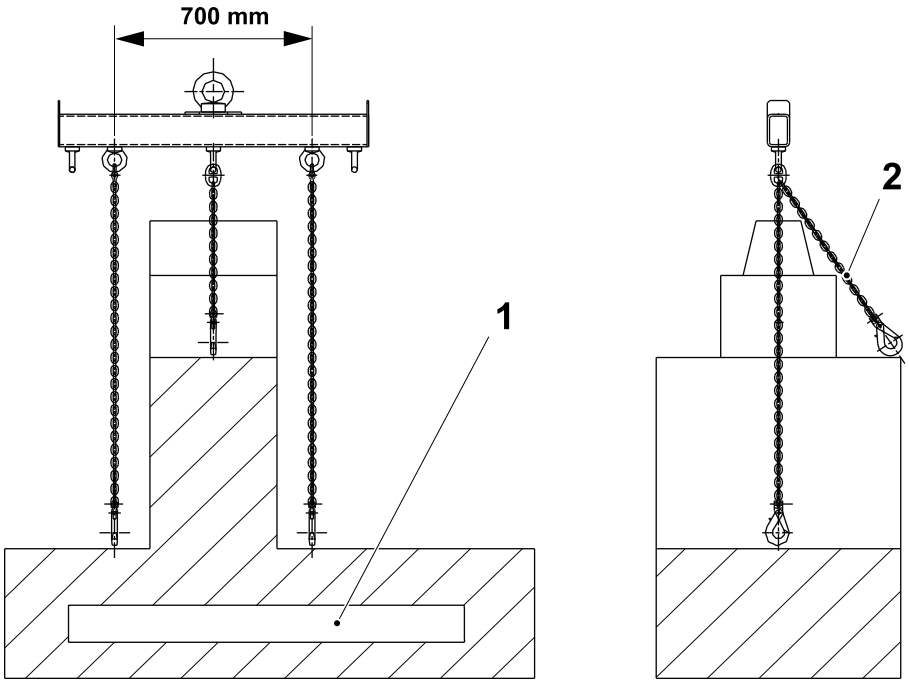

Configuration with 2 intermediate main pullers and security attachment

1 Max. load 3000 Kg (6613 lbs)
2 Security attachment

1.3.2.4 Auxiliary Equipment

The following tools and materials are needed to move and install the equipment:

- two hydraulic jacks, min. capacity 3 tons
- pallet trolley, capacity 800 kg (1765 lbs)
- spirit level, TP No. 90243-163
- 2 m (7') step ladder
- pneumatic or electric powered wrench
- crowbar or strong lever
- large rubber coated mallet
- cable ties
- insulating tape.

The following special tools may also be available from the local service organisation:

- lifting equipment, TP No. 2720716-0000
- lifting eye bolt TP No. 318302-0120 (x4), screws TP No. 312105-0507 (x4) and washers TP No. 2756247-0000 (x8).

1.3.3 Space Requirement

1.3.3.1 Unpacking Area

The minimum unpacking area must be at least twice the size of the main crate (number 1). This only allows an area large enough for one crate to be unpacked at a time.

Minimum area: 11000 x 5000 x 5000 mm high (36 x 16,5 x 16,5 ft high)

The ideal unpacking area allows all crates to be unpacked together.

WARNING
Risk of personal injury.
Make sure there is sufficient room to move safely around the installation site. If machines around the site cannot be stopped, place guards around them to prevent accidental contact.

1.4 Utility and Utility Connection Data

1.4.1 Electrical Power

1.4.1.1 Electrical Power Specification

The table below specifies the electrical characteristics for the equipment at the connection point.

Characteristic	Value	Notes
Supply voltage to machine	400 VAC ±10%	
Phase	3/N/PE	Three-phase, five-wire system with a separate neutral and protective conductor (IEC 61293:1994 Annex A, partly and modified)
Frequency	50 or 60 Hz ±2%	To be specified on order.
Full-load current value	57 A	
Peak starting current	65 A	
Short-curcuit breaking capacity	20 kA	
Maximum permissible supply source impedance	500 mΩ	
Eath leakage current	< 900 mA	Depending on the actual site conditions, the actual earth leakage current value may differ considerably from the stated value.
Overcurrent protective device for the supply cable(s)	125 A	If a matching transformer is used, see "Electrical Manual", chapter 9 "Mains Connection".
Recommended supply cables, minimum cross-sectional area	35 mm^2	For information concerning maximum cable length, voltage drop, and if a matching transformer is used, see "Electrical Manual", chapter 9 "Mains Connection". For preconditions of the calculation/selection of the overcurrent protective device, see1.4.1.2 Preconditions for the Main Connection Calculation.
Recommended cable type for supply cables (according to EN 60204-1, clause 17.4)		If a matching transformer is used, see "Electrical Manual", chapter 9 "Mains Connection". For preconditions of the calculation/selection of the overcurrent protective device, see1.4.1.2 Preconditions for the Main Connection Calculation.
Position of the supply cables (according to EN 60204-1, clause 17.4)		

1.4.1.2 Preconditions for the Main Connection Calculation

Cable areas in this recommendation are dimensioned according to the IEC 60364-series (mainly IEC 60364-4-43 and IEC 60364-5-52), however, the national regulations in each country must still be followed.

Tetra Pak provides recommendations, however, Tetra Pak is not responsible for the dimensioning at installation. This implies that the installer must review and abide by the local demands.

The mains connection calculation is based on the following preconditions.

Characteristic	Value	Notes
Supply impedance at supply connection point for cable supplying machine or matching transformer	30 mΩ	
Voltage drop between the supply point for cable supplying machine and the machine itself	≤ 1,5%	
Size of matching transformer	65 kVA	The part No. of the matching transformer is listed in the SPC
Matching transformer impedance (U_k)	2,4%	The part No. of the matching transformer is listed in the SPC
Matching transformer secondary impedance	59 mΩ	The part No. of the matching transformer is listed in the SPC
Ambient temperature	40°C	
Installation method	Cable ladder system	Reduction factor 0.78
Type of protective device (s)	MCCB	Selectivity (discrimination) is considered when choosing the type and rating of the protective device
Purpose of the protective device(s)	Overload protection as well as short-circuit protection	

1.4.1.3 TP A3/CompactFlex Electrical Power Consumption

Machine phase:	Consumption	Notes
Tube sealing	22.7 kW	
Heat sterilization, preheating (Peak)	30.1 (36.3) kW	
Heat sterilization, spraying	34.6 kW	
Heat sterilization, drying (Peak)	22.4 (44.0) kW	
Production	24.4 kW	

1.4.1.4 TP A3/CompactFlex with PT Electrical Power Consumption

Machine phase:	Consumption	Notes
Tube sealing	22.6 kW	
Heat sterilization, preheating	27.5 kW	
Heat sterilization, spraying	26.0 kW	
Heat sterilization, drying	19.8 kW	
Production (peak)	27.5 (36.7) kW	

1.4.2 Uninterruptable Power Supply System (UPS)

A UPS system provides a back-up power supply during interruptions to the normal utility power supply to the machine or equipment. Unlike a back-up generator a UPS system provides an immediate and uninterrupted power supply focused on safeguarding the electronic components of the machine or equipment that are sensitive to brief power outages. A power outage can be measured in milliseconds, although generally a UPS system can safeguard equipment for periods of up to 15 minutes.

If the normal utility power supply to the filling machine is disrupted for more than a certain period of time, the filling machine will step to Zero and require the operator to repeat the CIP and sterilization phases before the machine can be returned to Production. Any delay or deviation from the normal Production due to a power supply interruption will effect both the filling machine and the plant efficiency.

The type and size of a UPS system connected to Tetra Pak equipment should be determined after a thorough analysis of the plant utility power supply.

Note! The UPS backup time should be greater than the average power interruption time measured.

Follow the manufacturers instructions when installing a UPS system. The UPS system must also comply with local regulations and have the capacity to safeguard the filling machine electrical power characteristics described in the UPS specification tables.

(Cont'd)

(Cont'd)

Note! The specifications described in the tables are the requirements of the filling machine only. A UPS system must be defined after consideration of the requirements of all the equipment on the plant site. The UPS specifications are based upon a plant with a utility power supply complying with the electrical power specifications described in the section 1.4.1 Electrical Power.

1.4.2.1 UPS Specifications TP A3/CompactFlex and A3/CompactFlex PullTab

Characteristic	Value	Notes
Nominal power	38 kW	
Peak power	40 kW	
Nominal current	57 A	
Peak current	65 A	

1.4.3 Compressed Air

1.4.3.1 Compressed Air Requirements

- Oil is invariably introduced into compressed air from oil-lubricated compressors and must be removed as completely as possible. Oil is a serious pollutant which is difficult to remove from instruments.
- Water will condense within the pneumatic system in quantities varying with the humidity of the input air, the temperature before and after the compressor, or after a temperature drop in a section of the air line routed through a cold zone.
- To avoid condensation, the air must be dried to an extent determined by the lowest temperature after the drier.
- Air expands and cools down in orifices and nozzles inside instruments with condensation as a result.
- For this reason, the dew point of the air at the instrument inlet must be at least 3°C.
- Dirt in the form of solid particles down to a size of 15 microns (0.015 mm) must be removed, for instance by means of filters or filter-equipped reducing valves.
- Position the filters so they can be seen and easily checked. The filters must be checked daily and their cartridges or inserts renewed whenever necessary.
- The air supply line must include a master shut-off valve.

1.4.3.2 Compressed Air Specifications

CAUTION
Risk of damage to the equipment.
Non compliance with these requirements may endanger the equipment.

Characteristic	Value	Notes
Min. supply pressure	600 to 700 kPa (6 to 7 bar) [87 to 102 psi]	
Max particle size	20 µm	
Max particle content	25 mg/m^3	
Dew point	3°C (34.7°F)	
Oil content	0.01 mg/m3	

1.4.3.3 Compressed Air Consumption

Machine configuration	Average consumption during production	Peak consumption (duration < 2 secs.)
TP A3/CompactFlex	581 ±21 Nl/min. (20.5 cu.ft/min)	1014 ±30 Nl/min. (35.8 cu.ft/min)
TP A3/CompactFlex with PT	1245 ±32 Nl/min. (44.0 cu.ft/min)	1370 ±34 Nl/min. (48.4 cu.ft/min)

1.4.4 Sanitary Air

Note! Sanitary air can be used with HI (Optional kit) as an alternative to nitrogen.

1.4.4.1 Sanitary Air Requirements

The sanitary air must be dry and clean with no traces of oil.

- Use a compressor without oil lubrication in the cylinder to achieve oil-free air.
- Compressors are available from Tetra Pak as optional equipment.
- To produce dry air, the compressor can be equipped with an after-cooler and/or an air drier.
- Dirt in the form of solid particles larger than 15 microns (0.015 mm) must be removed, for instance by filters or filter-equipped reducing valves.
- Position the filters so they can be seen and easily checked. The filters must be checked daily and their cartridges or inserts renewed whenever necessary.
- The air supply line must include a master shut-off valve.

  Note! Sanitary air must not be used as instrument air.

1.4.4.2 Sanitary Air Specifications

CAUTION
Risk of damage to the equipment.
Non compliance with these requirements may endanger the equipment.

Characteristics:	
oil content	none
max. dew point	min. 6°C below ambient temperature. For the sterile air filter, a pressure dew point of +8°C is sufficient
solid particles	max. 0.01 mm

1.4.5 Water Supply Specifications

In order to ensure good equipment operation and cleanliness, as a minimum, it is **mandatory** to use a supply of water to the equipment with **drinking water** quality.

This applies to water used for cooling, product flushing, rinsing and cleaning.

Local water standards, when they exist, must take preferences over the standard mentioned in the section 1.4.5.2 Water Quality Standards.

CAUTION
Risk of damage to the equipment.
Deposits due to water of inferior quality circulating in the plant can cause malfunction of vital parts.

- The water supply pipe must be equipped with a master shut-off valve.
- The supply pressure must be constant.
- Water used in the plant must be soft (by water softening if necessary) and clean in order to avoid deposits.

1.4.5.1 Cooling Water Supply

Characteristic	Value	Notes
Supply pressure	300 to 450 kPa (3 to 4.5 bar) [43.5 to 65 psi]	
Max inlet temperature range	14-20°C (57-68°F)	
Production consumption, TP A3/CompactFlex	5.7 ±0.3 l/min (1.8 imp. galls/min.)	
Production consumption, TP A3/CompactFlex PT CompactFlex	6.9 ±0.3 l/min.	
pH	5 to 8	

1.4.5.2 Water Quality Standards

A definition and description of drinking water may be found in the document listed in the table below.

Term	Geographic area	Definition according to geographic area and document(s)
Drinking water	**EEA/EU**	COUNCIL DIRECTIVE 98/83/EC
	USA	FDA Title 40 Code of Federal Regulations - CFR Part 141, 142 and 143.
	All Countries except USA and EU/EEA	WHO Guidelines for Drinking Water Quality

1.4.5.3 Technical Water Parameters

CAUTION
Risk of damage to the equipment.
The drinking water physical-chemicals parameters below have been identified to be critical in cleaning efficiency and to avoid/prevent corrosion and the formation/build-up of deposits. It is therefore strongly recommended to use water with these parameters falling within the ranges listed below.

(Cont'd)

(Cont'd)

Parameter	Recommended values	Additional info
pH	between 6 and 8 pH units	In order to minimise corrosion the water should be slightly alkaline (the pH value is easily determined by litmus paper or a pH meter).
Water hardness	between 5 and 10°f, French degrees of hardness (i.e. between 3 and 6 German degrees of hardness)	If the water is hard (high concentration of calcium carbonate, $CaCO_3$), deposits will accumulate in devices such as valves. This process is accelerated at high temperatures. Cleaning results and detergent consumption will also be affected due to hard water. These effects become more severe the harder the water.
Chlorides	lower than 50 ppm	In order to minimise corrosion the water must have low concentrations of chlorine ions (Cl^-).
Silicates	lower than 10 ppm	In order to reduce the formation of solid deposits difficult to be removed.

1.4.5.4 Water Sanitization

WARNING

Hazardous substances.

Always read and follow the instructions in the safety data sheet supplied by the manufacturer or local supplier, when handling chemicals.

Chlorine tablet TP No. 90600-5773 are used for the sanitization of the water in the Sterile Water System.

Characteristic	Value	Notes
Sodium Dichloroisocyanurate, dihydrate	TP No. 90600-5773	Tablets for sanitizing water purification equipment

1.4.6 Steam

1.4.6.1 Steam Requirements

The steam must be of good quality and free from condensate and air.

Supply line:

- The steam supply line must be equipped with a pressure controller to maintain a constant feed pressure.
- Condensate traps must be provided close to the process line to produce dry steam.
- A master shut-off valve must be installed in the steam supply line.
- Steam pipes must be insulated as protection against personal injury.
- Before connecting the steam supply to the process line, the steam pipes must be blown clear with repeated blasts of steam, lasting 5-10 minutes.
- Boiler additives must be suitable for use with drinking water. Where required steam must be of "culinary quality" and produced according to the 3-A Accepted Practices No.609-
- The pipe of the steam supply lines should be designed and installed in a manner that allows the free passage of an operator.

1.4.6.2 Steam Specifications

CAUTION
Risk of damage to the equipment.
Non compliance with these requirements may endanger the equipment.

Characteristic	Value	Notes
Water quality	Drinking water, suitable for producing steam of culinary quality	Boiler additives must be suitable for use with drinking water. Where required steam must be of "culinary quality" and produced according to the 3-A Accepted Practices No.609-
Steam quality	dry saturated steam	
Humidity	max. 5% condensate	
pH	8.5 - 9.2	
Carbon dioxide	max. 2 ppm	
Solid particles	max. 0.5 mm	
Turbidity	max. 3 ppm $KMnO_4$	
Minimum supply pressure TCSB	200 kPa (2.0 bar)	TP A3/CompactFlex standard
	300 kPa (3.0 bar) [44 psi]	TP A3/CompactFlex with HVA
Minimum supply pressure ICU (OE)	200 kPa (2.0 bar) [29 psi]	

(Cont'd)

(Cont'd)

Characteristic	Value	Notes
Maximum pressure fluctuation	±30 kPa (±0.3 bar) [4.5psi]	Valid for TCSB and ICU (OE) supply pressures
Minimum capacity supply TCSB	2.4 kg/h (5.3 lbs/h)	TP A3/CompactFlex standard
	12 kg/h (26.5 lbs/h)	TP A3/CompactFlex with HVA
Minimum capacity supply ICU	7.0 kg/h (15.4 lbs/h)	
Inlet temperature	130 ±4 °C (266°F)	Measured after APV. If necessary, during periods when the machine is switched off, the steam temperature for the Aseptic Product Valve steam barrier may be monitored by removing the blank plug next to the thermocouple T50B1440 and installing a thermocouple connected to an external monitoring system.
Consumption during Sterilization	2.4 kg/h (5.3 lbs/h)	TP A3/CompactFlex standard
	12 kg/h (26.5 lbs/h)	TP A3/CompactFlex with HVA
Consumption during CIP with ICU (OE)	7.0 kg/h (15.4 lbs/h)	

1.4.7 Hydrogen Peroxide

Characteristic	Value	Notes
Chemical designation	H_2O_2	
Grade	Food Grade Aseptic Grade Packaging Grade	
Concentration	35% ÷ 40% w/w	
Appearance	Clear, colourless	
Density at 20ºC	1132 ÷ 1153	
Stability	Bath grade	
Conductivity	>50 µs/cm	
Non volatile matter	<150 ppm	at 105 °C
Consumption	0.7 to 1.2 l/h	

1.4.8 Nitrogen

Note! Only valid for machines equipped with the HI kit.

Characteristic	Value	Notes
Quality	Food grade quality. Nitrogen must comply with local regulations and specifications. In the absence of local regulations and specifications follow either the Commission Directive 98/86/EC or the US Code of Federal Regulations 21CFR184.1540	
Supply pressure	600 to 700 kPa (6 to 7 bar) 90 to 100 psi]	
Consumption	2 to 5 Nl/min plus nominal headspace volume Nl/min	The 2 to 5 Nl/min represents the amount of nitrogen consumed during the HI process. The nominal headspace volume Nl/min represents the amount of nitrogen determined by the local customised head space setting. Both amounts are dependent on the type of package and product being produced.

1.4.9 Lubrication

Characteristic	Value	Notes
Consumption	0.01 l/h	

1.5 Product and Product Connection Data

1.5.1 Product Capacity

Machine configuration	Production Capacity	Notes
TP A3/CompactFlex	80 > 330 ml 9000 p/h (0 to +1%) 375 ml 8500 p/h (0 to +1%)	

Note! For volumes TBA 100 B, TBA 125 S, TBA 160 S, TBA 180 S, TBA 200 B, TBA 200 M, TBA 200 S, TBA 200 Sq, TBA 250 B, TBA 250 S, TBA 250 Sq, TBA 284 B, TBA 300 S, TBA 330 S, TBA 375 S, TPA 200 Sq, TPA 250 Sq, TPA 330 Sq, TBA 200 E and TBA 250 E it is possible to select a nominal capacity of 7500 p/h.

1.5.2 Product Requirements

The pipe of the product supply line should be designed and installed in a manner that allows the free passage of an operator.

1.5.3 Product Specifications

Characteristic	Value	Notes
Supply pressure	70 to 250 kPa (0.7 to 2.5 bar) [10.1 to 36.2 psi]	
Supply pressure, Production with HVA	100 to 300 kPa (1.0 to 3.0 bar) [14.5 to 43.5 psi]	
Maximum variation in supply pressure	±10 kPa (±0.1 bar)[±1.45 psi]	
Max pressure shocks	100 kPa (1 bar) [14.5 psi]	The pressure shock duration is a maximum of **1 second** (within the pressure range).
Filling temperature	10 - 40°C (50 to 104°F)	Maximum fluctuation during production ±5 °C
Overcapacity	20%	Feed capacity at the first start, see note below.
Particles	Absent	The filled product must be homogeneous, i.e. no particles must be retained on a sieve 600 µm mesh, after sieving.
Citrus fibres	≤ 5%	Measured as fibre residue on a 600 µm mesh.
pH	2.5 to 8	

Note! At the machines first start it is recommended to have a feed capacity of 20% more than the filling capacity. When several filling machines are connected together, the total feed capacity must be the combined feed capacity plus 20% of the filling capacity of the machine with the highest capacity. If the supply system cannot provide the recommended over capacity, the quantity of wasted packages at the machine start-up may increase. If several machines start simultaneously, the quantity of wasted packages at machine start-up may increase.

1.6 Hygiene Function Connection Data

For more info check the following documents:

- Cleaning of Tetra Brik Aseptic Filling Machines, TeM-81648-0101 provides an introduction and overview on cleaning issues and procedures.
- Food Safety Chart (FSC) for Filling Machine: provides an overview of food safety relevant information related to equipment functionality for the different process steps, as well as operational and preventive maintenance requirements.

1.6.1 Cleaning

Only use a drinking water supply for both CIP and EXTERNAL CLEANING, see section 1.4.5 Water Supply Specifications.

Note! It is not recommended to clean more than one machine at a time due to the risk of pressure loss.

1.6.1.1 CIP with Integrated Cleaning Unit

Characteristic	Value	Notes
Cold water supply	Min. 3000 l/h	
Cold water quality	Drinking water	De-ionized water can be used but with a minimum conductivity of 50 μS/cm.
Cold water consumption	350 l/cycle (77imp. galls/cycle)	
Water supply pressure	Max. 450 kPa (4.5 bar) [65 psi]	
Acid consumption HNO_3(50%)	0.4 l/cycle (0.09 imp. galls/cycle)	
Alkali consumption NaOH (30%)	0.5 l/cycle (0.10 imp. galls/cycle)	

1.6.1.2 CIP with External Cleaning Equipment

For machines not equipped with ICU, the following parameter must be respected to ensure the correct cleaning of the machine.

If not respected, the machine software that is monitoring the process, will not allow the next production run.

Cleaning cycle	Flow rate (l/h)		Temperature (°C)	Conductivity (mS/cm)	Time (sec)
	No HVA	HVA			
Alkali cleaning	≥ 8000	≥ 6000	≥ 78	≥ 69	≥ 680
Acid cleaning *	≥ 8000	≥ 6000	≥ 58	≥ 54	≥ 560
Total duration	≥ 8000	≥ 6000	-	-	≥ 1240

* Acid cleaning is optional, it activates after the Alkali cycle has succeeded and the temperature and conductivity is above the values specified in the table.

The illustration below shows the minimum time required to perform the CIP.

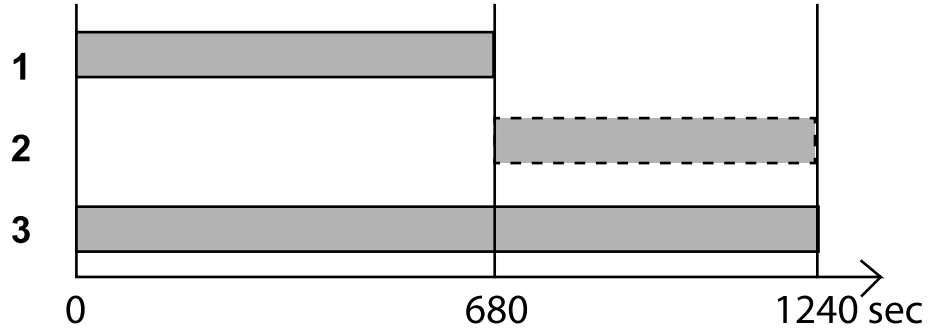

1 Alcali cycle
2 Acid cycle
3 Total duration

(Cont'd)

(Cont'd)

The illustration below shows the CIP Signal Exchange between the external cleaning unit and the filling machine.

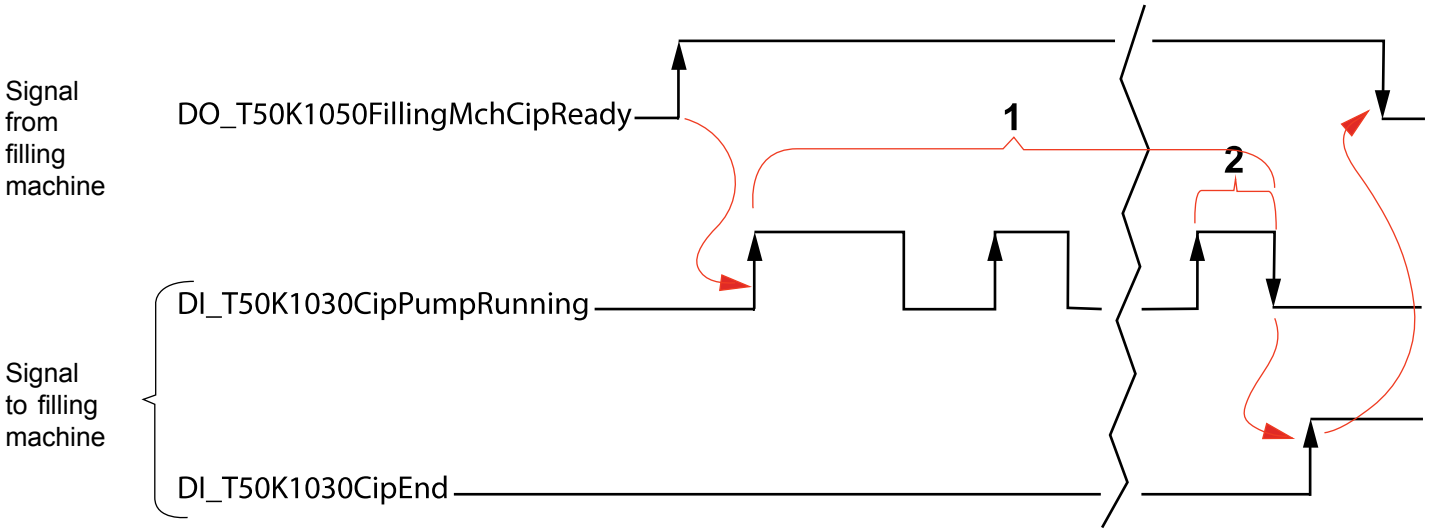

1 CIP phases
2 Last rinsing

1.6.1.3 External Cleaning

Characteristic	Value	Notes
Warm water supply pressure	300 to 450 kPa (3 to 4.5 bar) [43.5 to 65 psi]	See 2.2.1.1 Warm Water Supply for External Cleaning on page 2-6 in chapter 2 Preparatory Requirements
Warm water max inlet temperature	20 to 25°C (68 to 77°F)	
Warm water consumption	250 l/cycle (55imp. galls/cycle)	Maximum flow 95 l/min.
Detergent pH	10 to 12	
Detergent consumption	1.8 l/cycle (0.4 imp. galls/cycle)	

1.6.1.4 Manual Cleaning

For information regarding manual cleaning, see the chapter Care and Cleaning section in the Operation Manual for the equipment.

1.7 Mechanical Line Integration and Connection

1.7.1 Downstream Connection to DE

See section 3.3.8-1 Filling Machine Queue Guard Photocells for more details.

1.8 Communication

See section 3.3.9-1 Connection to Line Controller 30 for more details.

1.8.1 Signal Exchange

See the EM chapter Dairy Signal Exchange and 3.3.14-1 Connection to Process Dairy Panel for signal connection details.

1.9 Noise

The tables below gives the noise level measurements for the machine under the following conditions:

- machine on a concrete floor supported by standard feet
- production under normal operating conditions.

Note! Emission sound pressure/power values in accordance with ISO 4871.

1.9.1 Sound Pressure Level

1.9.1.1 TP A3/CompactFlex

Characteristic	Symbol	Value dB(A)	Notes
Declared maximum emitted sound pressure level, operator position	L_{pA}	78	Determined according to ISO 11204 (engineering method)
Uncertainty factor	K_{pA}	2.5	

1.9.1.2 TP A3/CompactFlex with PT

Characteristic	Symbol	Value dB(A)	Notes
Declared maximum emitted sound pressure level, operator position	L_{pA}	79.5	Determined according to ISO 11204 (engineering method)
Uncertainty factor	K_{pA}	2.5	

1.9.2 Sound Power Level

1.9.2.1 TP A3/CompactFlex

Characteristic	Symbol	Value dB(A)	Notes
Declared maximum emitted sound power level, operator position	L_{wA}	95.5	Determined according to ISO 3744 (engineering method)
Uncertainty factor	K_{wA}	2.5	

1.9.2.2 TP A3/CompactFlex with PT

Characteristic	Symbol	Value dB(A)	Notes
Declared maximum emitted sound power level, operator position	L_{wA}	98	Determined according to ISO 3744 (engineering method)
Uncertainty factor	K_{wA}	2.5	

1.10 Emissions and Thermal Load

1.10.1 Emissions

Characteristic	Value	Notes
Hydrogen peroxide fumes in operator´s environment	< 1 ppm	TWA - Time Weighted Average value
Hydrogen peroxide outlet to drain	≤1%	
Oil fumes in the operator´s environment	None	
Oil spillage	None	
Detergent spillage	None	
Water spillage	None	Except during external cleaning
Product spillage	None	

1.10.2 Thermal Load

Machine configuration	Value	Notes
TP A3/CompactFlex	Approx. 16.3 kW ±1.0 kW	during PRODUCTION
TP A3/CompactFlex with PT	Approx. 16.7 kW ±1.0 kW	during PRODUCTION

1.11 Site Environment

CAUTION
Risk of damage to the equipment.
Never position the ventilation outlets of HVAC equipment directly at the superstructure module of the filling machine.

For detailed information on the site environment, see the Procedures & Guidelines QAM-588013-0104, a Guideline for the Hygienic Production of Liquid Food, Site and Building Recommendations.

1.11.1 Ambient Temperature

Characteristic	**Value**	
Ambient temperature	+15°C to +40°C (59°F to 104°F)	
Dew point	25°C (77°F)	
Ambient humidity	Temperature (°C)	Relative Humidity (%)
	15	95
	20	95
	25	95
	30	74
	35	56
	40	43

1.12 Material Specification

The production material is volume and product dependant.

When choosing packaging material for a specific package consult the Product Portfolio Configurator or the Tetra Pak Product Portfolio Book. Contact Tetra Pak for more information.

1.12.1 Packaging Material Storage and Handling

See information in the Customer Specification, delivered on request. Contact Tetra Pak for more information.

1.12.2 Additional Material Storage and Handling

See information in the Customer Specification, delivered on request. Contact Tetra Pak for more information.

2 Preparatory Requirements

Description

This chapter describes preparatory requirements and recommendations to ensure a good installation. Its purpose is to help the installation technicians and other involved in the installation project to quickly locate information about the site preparation, including requirements for utility, space, tools, and other required installation equipment, and specific construction details.

Description 2-2

2.1 Organization and Training 2-5

2.1.1 Resources 2-5

2.1.2 Special Skills 2-5

2.1.3 Special Practices 2-5

2.1.4 Training 2-5

2.2 Special Equipment 2-6

2.2.1 Specific Construction Details 2-6

2.2.1.1 Warm Water Supply for External Cleaning 2-6

2.3 Consumables 2-7

2.3.1 Lubricants 2-7

2.3.2 Cleaning Compounds 2-7

2.4 Maintenance Details 2-8

2.5 Spare Parts Supply 2-9

2.5.1 Start-Up Parts 2-9

2.5.2 Parts Inventory Management System 2-9

2.5.3 Parts Recommendation Tool 2-9

2.6 Quality Level and Procedures 2-10

2.6.1 Good Manufacturing Practices 2-10

2.6.2 Procedures and Guidelines from Tetra Pak 2-11

2.6.2.1 Food Safety Chart 2-11

2.6.2.2 Microbiological Validation Document 2-11

2.7 Site Preparation 2-12

2.7.1 Site Location 2-12

2.7.2 Installation Area 2-12

This page intentionally left blank

2.1 Organization and Training

2.1.1 Resources

During Installation		
Personnel	No.	Note
Technicians	2-3	
Electrician	1	
During Production		
Personnel	No.	Note
Operators	2	
Technician	1	For troubleshooting purposes.
During Maintenance		
Personnel	No.	Note
Technicians	2	
Electrician	1	

2.1.2 Special Skills

Only skilled or instructed Tetra Pak installation personnel are allowed to assemble the Tetra Pak filling machine.

See section the Personnel Requirements on page ii-8.

Personnel must know how to use the portable PC computer programs for modifying PLC program parameters and downloading the PLC program.

2.1.3 Special Practices

Tetra Pak recommends that Tetra Pak staff and the final users cooperate during installation, commissioning, and validation of the equipment. The cooperation is a part of the training in how to operate and maintain the equipment.

2.1.4 Training

All operators of the equipment must have participated at a Tetra Pak operator training.

Contact the TP Technical Training Centre for more information about Customer Adapted Training (CAT).

2.2 Special Equipment

2.2.1 Specific Construction Details

2.2.1.1 Warm Water Supply for External Cleaning

The external foam cleaning system needs a substantial amount of warm water during short periods of cleaning, see chapter 1 Technical Specification for the correct water supply figures.

If the existing water supply system cannot deliver the necessary amount of water, place a tank or other kind of vessel with a capacity of at least 250 litres of water above the warm water inlet of the machine. This position ensures adequate gravity feed pressure. The supply pipe must not be smaller than Ø 48.3 x 3.2 mm ($1^1/_2$ inch thread). A full tank of this size will manage one warm water rinse (The normal cleaning has two warm water rinses. A full cleaning, all the programs after each other, needs four warm water rinses).

CAUTION
Risk of damage to the equipment.
A constant supply to the cleaning pump is essential. There is a risk of severe pump damage if the pump runs dry.

The method of water heating may vary depending on local equipment. Note, however, that there are only 10 minutes for filling and heating a full tank of water.

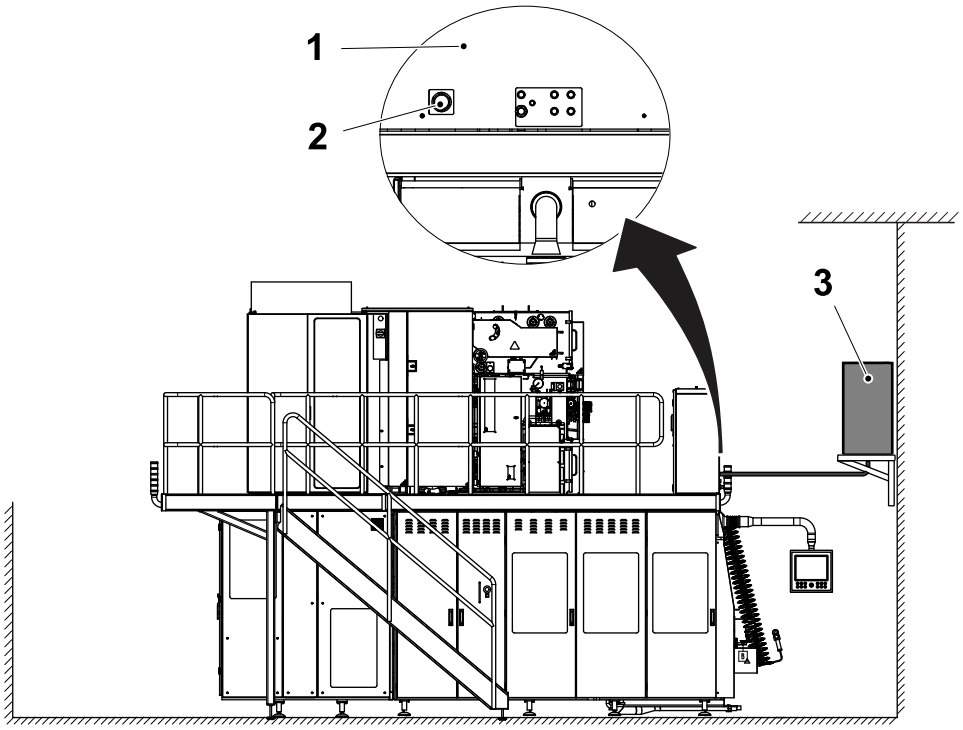

1 Front of the machine
2 Warm water inlet
3 Water tank

2.3 Consumables

2.3.1 Lubricants

Refer to the ii Safety Precautions for the handling procedures for consumables.

See chapter Technical Data in the MM delivered with the machine.

2.3.2 Cleaning Compounds

Refer to the ii Safety Precautions for the handling procedures for consumables.

See chapter Technical Data in the OM delivered with the machine.

2.4 Maintenance Details

Tetra Pak recommends that the Tetra Pak Maintenance System (TPMS) is used. See the TPMS section in the Maintenance Manual for more information.

2.5 Spare Parts Supply

The spare parts supply must be managed to ensure the availability of needed spare parts. Tetra Pak provides services to support the spare parts supply.

2.5.1 Start-Up Parts

Start-Up Parts is a service that supports the final user of the equipment in optimizing the on-site parts inventory for selected equipment. The service is available during the first 12 months of production or 3000 hours of production. Tetra Pak and the final user regularly analyse parts consumption and optimize the inventory accordingly.

The service gives good parts management, optimized total parts cost, easy access to the right parts at the right time, improved cash flow, and reduced working capital, all of which leads to increased production availability.

2.5.2 Parts Inventory Management System

Parts Inventory Management System (PIMS) has been developed to provide an appropriate level of administration and control of the stock held on the final user's site. The main purpose of the system is to optimize the quantity of stock held, in order to ensure that the correct spare parts are available when needed.

2.5.3 Parts Recommendation Tool

The Parts Recommendation Tool identifies the type and quantity of parts the final user of the equipment should have on hand when installing new equipment. This recommendation focuses on the first 3000 production hours and is based on the final user's operation, equipment, and level of security and risk.

2.6 Quality Level and Procedures

2.6.1 Good Manufacturing Practices

Good Manufacturing Practices (GMPs) are guidelines used by food processing and packaging facilities.

Important General GMPs are listed below:

- Keep facilities clean and in good repair.
- Use well constructed trash receptacles and keep them clean and in good repair.
- Provide adequate ventilation to minimize odours and vapours.
- Identify toxic cleaning compounds and sanitation agents and store them carefully, so that they cannot contaminate product, product-contact surfaces, or packaging materials.
- Clean and decontaminate all product-contact surfaces regularly. See the Operation Manual for information about cleaning procedures.
- Also the non-product contact surfaces should be clean. Clean as needed to protect against contamination of product. See the Operation Manual for information about cleaning procedures.
- Make sure that sewage and liquid waste are drained from the product processing and packaging areas.
- Provide adequate floor drainage for water, cleaning solutions, and product that is released onto the floor.
- Sewers and drains must be accessible for cleaning. Drains should never be located directly underneath the equipment.
- Provide convenient hand washing facilities with warm running water.
- Provide properly designed heating, venting, and air conditioning (HVAC) systems to reduce the risk of airborne contamination.
- Provide proper personal hygiene apparel as described in your facility's GMPs and operating and safety procedures.

2.6.2 Procedures and Guidelines from Tetra Pak

2.6.2.1 Food Safety Chart

Make sure that the Customer Quality Department receives the TeM Food Safety Chart (FSC).

The Food Safety Chart provides an overview of food safety relevant information related to:

- Equipment requirements
- Operational requirements
- Preventive Maintenance requirements

The FSC is an important document for the customer in order to prepare the HACCP (Hazard Analysis Critical Control Points) analysis/plan for the entire production line.

2.6.2.2 Microbiological Validation Document

The microbiological validation is recommended to be performed according to Quality Assurance Management guideline, QAM-588002-0105 Guideline for Microbiological Evaluations of Commercially Sterile Products, the section for High Acid products should be used.

See Section 4.2-2 Microbiological Validation for specific information about how to perform the microbiological validation test.

Sampling during commercial production is also recommended to be performed according to QAM-588002-0105 Guideline for Microbiological Evaluations of Commercially Sterile Products.

2.7 Site Preparation

2.7.1 Site Location

The choice of site location should be determined with regard to the utilities and supplies required by the machine and access limitations.

Access is required for a fork lift or lifting equipment should be available to site the machine.

The installation site must be prepared in advance by the customer.

No special foundation work is required for the machine. The floor should be strong enough to support the full weight of the machine when packaging material is present.

See also the following Tetra Pak Guidelines:

Document Name	Document No.	Note
Guideline for the Hygienic Production of Liquid Food, Site & Building Recommendations	QAM-588013-010X	Available in English and Spanish

2.7.2 Installation Area

a) Make sure that all customer preparation work has been completed to prepare the site for the machine.

b) Make sure that all the necessary utility supplies are available, see section 1 Technical Specification.

c) Clear all obstacles away from the installation site and, if necessary, clean the floor of the site before starting to install the machine.

d) Leave the protective packing on parts until they are required during the machine assembly procedure.

e) Make sure that the lighting is adequate. Arrange additional portable lights if required, making sure that the cables are routed safely.

3 Mechanical Completion

Description

This chapter describes the mechanical completion of the equipment. The mechanical completion covers all activities from receipt of the equipment until the equipment is mechanically installed.

The chapter includes procedures to receive, assemble, and install the equipment. It also includes a checklist used to verify that the equipment is mechanical correctly installed.

Description 3-2

3.1 Crate Handling 3-9

3.1.1 Goods Reception and Storage 3-9

3.1.1.1 Inspection Documentation 3-9

3.1.1.2 Lifting and Unloading the Crated Equipment 3-10

3.1.1.2.1 Labels, Symbols and Warning Placards 3-10

3.1.1.2.2 Centre of Gravity 3-11

3.1.1.2.3 Crate - Lift using an Overhead Gantry or Mobile Crane 3-12

3.1.1.2.4 Crate - Lift using a Fork Lift 3-13

3.1.2 Moving the Crated Equipment 3-14

3.1.3 Storing the Crated Equipment 3-14

3.1.4 Opening the Crates 3-15

3.1.5 Unpacking the Crates 3-17

3.1.5.1 Main Crate (1) 3-17

3.1.5.1-1 Main Crate (1) - Inspection 3-17

3.1.5.1-2 Main Crate (1) - Remove the Service Unit with an Overhead Gantry or Mobile Crane 3-18

3.1.5.1-3 Main Crate (1) - Remove the Service Unit with a Fork Lift 3-19

3.1.5.1-4 Main Crate (1) - Remove the Machine Body with a Fork Lift 3-19

3.1.5.2 Unpacking the Second Crate (2) 3-20

3.1.5.2-1 Second Crate (2) - Inspection 3-21

3.1.5.2-2 Second Crate (2) - Remove the Machine Parts with an Overhead Gantry or Mobile Crane 3-22

3.1.5.2-3 Second Crate (2) - Remove the Machine Parts with a Fork Lift 3-23

3.1.5.3 Unpacking the Third Crate (3) and or Fourth Crate (4) 3-25

3.1.5.3-1 Third Crate (3) and or Fourth Crate (4) - Inspection 3-25

3.1.5.3-2 Third Crate (3) and or Fourth Crate (4) - Remove the Machine Parts with an Overhead Gantry or Mobile Crane 3-26

3.1.5.3-3 Third Crate (3) and or Fourth Crate (4) - Remove the Machine Parts with a Fork Lift 3-27

3.1.6 Disposing of Reusable Materials and Waste 3-28

3.2 Positioning and Assembly 3-29

3.2.1 Moving 3-29

3.2.1.1 Moving the Machine Body 3-29

3.2.1.2 Moving the Machine Parts 3-29

3.2.2 Positioning 3-29

3.2.2-1 Position the Machine Body 3-29

3.2.3 Levelling the Equipment 3-33

3.2.3-1 Set the Machine Body Height 3-33

3.2.3-2 Level the Machine Body 3-36

3.2.4 Assembling 3-38

3.2.4-1 Transport Equipment - Remove 3-38

3.2.4-2 ASU and PT - Docking 3-39

3.2.4-3 Assembling the Platform, Filling Machine Standard 3-41

3.2.4-4 Assembling the Platform, TP A3/CompactFlex with PT 3-44

3.2.4-5 Assembling the Platform, TP A3/CompactFlex with HVA 3-46

3.2.4-6 Assembling the Platform, TP A3/CompactFlex with PT and HVA 3-48

3.2.4-7 Assembling the Platform, Filling Machine Standard UL-CSA 3-49

3.2.4-8 Assembling the Platform, TP A3/CompactFlex with PT UL-CSA 3-51

3.2.4-9 Assembling the Platform, TP A3/CompactFlex with HVA UL-CSA 3-54

3.2.4-10 Assembling the Platform, TP A3/CompactFlex with PT and HVA UL-CSA 3-54

3.2.4-11 Assembling the Superstructure 3-55

3.2.4-12 Assembling the Service Unit 3-56

3.2.4-13 Assembling the Drive Units 3-57

3.2.4-14 Electrical Cabinet - Assembly 3-58

3.2.4-15 Pre-applicator Electrical Cabinet - Assembly 3-60

3.2.4-16 Assembling the HVA 3-61

3.2.4-17 Assembling the ICU (OE) 3-62

3.2.4-18 Assembling the Stairs 3-64
3.2.4-19 Assembling the Railings 3-68
3.2.4-20 Assemble the Indicating Towers 3-77

3.3 Equipment Interfaces and Connections 3-78

3.3.1 Product and Utility Connections 3-78

3.3.1.1 Product Connections 3-78

3.3.1.2 Utility Connections 3-78

3.3.2 Drainage Connections 3-78

3.3.2-1 Filling Machine Drainage Connection 3-79
3.3.2-2 Steam Condensate Drainage Connection 3-80
3.3.2-3 ICU Drainage Connection 3-81

3.3.3 Service Unit Connections 3-82

3.3.3-1 Cooling Water Connections 3-82
3.3.3-2 Water Panel Connections 3-84
3.3.3-3 Pneumatic Connections 3-85
3.3.3-4 Foam Cleaning Connections 3-86
3.3.3-5 ICU Cold Water Connection 3-88
3.3.3-6 Nitrogen Connection 3-89
3.3.3-7 Exhaust Tube Connection 3-90
3.3.3-8 Electrical Connections 3-91

3.3.4 Superstructure Connections 3-92

3.3.4-1 Peroxide Pipe Connections 3-92
3.3.4-2 Pneumatic Connections 3-93
3.3.4-3 CIP Drainage Connection 3-97
3.3.4-4 ICU Drainage Connections 3-99
3.3.4-5 Cold Water Connections 3-101
3.3.4-6 Water Drainage Connections 3-102
3.3.4-7 Steam Drainage Connections 3-103
3.3.4-8 ICU Connections 3-104
3.3.4-9 ICU Storage Tubes Connections 3-108
3.3.4-10 HVA Connections 3-109

3.3.5 Pulltab Connections 3-112

3.3.5-1 Pulltab Air Connections 3-112

3.3.6 ASU Connections 3-114

3.3.6-1 ASU Air Connections 3-114

3.3.7 Electrical Cabinet(s) and Power and Signal Connections 3-116

3.3.7-1 Filling Machine Electrical Cabinet Cable Ducts 3-116

3.3.7-2 Filling Machine Electrical Cabinet Power and Signal Cables 3-117

3.3.7-3 Filling Machine Electrical Cabinet Main Power Cable 3-121

3.3.7-4 Filling Machine Electrical Cabinet Direct Cabinet Connections 3-123

3.3.7-5 Filling Machine Electrical Cabinet Cable Ducts 3-129

3.3.7-6 Pre-applicator Electrical Cabinet 3-130

3.3.8 Conveyor Equipment 3-140

3.3.8-1 Filling Machine Queue Guard Photocells 3-141

3.3.8-2 Last Point DE Photocells with Line Controller 30 3-144

3.3.8-3 Last Point DE Photocells without Line Controller 30 3-145

3.3.9 Ethernet Communication 3-146

3.3.9-1 Connection to Line Controller 30 3-146

3.3.9-2 Connection to PLMS Master PC 3-150

3.3.10 Line Supervision 3-152

3.3.10-1 Connect Line Supervision 3-152

3.3.10-2 Single Distribution Equipment 3-153

3.3.10-3 Multiple Distribution Equipment 3-154

3.3.11 DE Configuration 3-156

3.3.12 Domino Printing Unit (OE) 3-157

3.3.12-1 Domino Printing Unit (OE) - Assemble 3-157

3.3.13 External Cleaning Equipment 3-158

3.3.13-1 Connect External Cleaning Equipment 3-158

3.3.14 Signal Communication 3-159

3.3.14-1 Connection to Process Dairy Panel 3-159

3.4 Final Procedures 3-160

3.4.1 Final Folder 3-160

3.4.1-1 Final Folder Outfeed 3-160

3.4.2 ASU 3-168

3.4.2-1 Transport Devices 3-168

3.4.3 Superstructure 3-169

3.4.3.1 Filling System 3-169

3.4.3-1 Manometers 3-170

3.4.3-2 CIP Equipment 3-170

3.4.4 Service Unit 3-171

3.4.4-1 Cooling Water System 3-171

3.4.5 TPOP 3-171

3.4.5-1 TPOP - Configure 3-171

3.4.5-2 TPOP - Create Production Recipe 3-178

3.4.6 Machine Body 3-182

3.4.6-1 Hydrogen Peroxide System 3-182

3.4.6-2 Package Outfeed 3-183

3.4.6-3 Chemical Containers 3-184

3.4.7 Drive Unit 3-186

3.4.7-1 Servo Motors Commissioning 3-186

3.4.8 Jaw System 3-189

3.4.8-1 Transport Devices 3-189

3.4.8-2 Jaw System Referencing 3-189

3.4.9 Machine Covers 3-190

3.4.9-1 Equipment Covers - Assemble 3-190

3.4.10 PullTab Unit 3-192

3.4.10-1 Transport Devices 3-192

3.5 Restore Tools and Site 3-193

3.6 Mechanical Completion Inspection 3-194

3.6.1 Mechanical Completion Checklist 3-194

3.6.2 Crate Handling Checks 3-196

3.7 Positioning, Assembly and Connections Checks 3-199
3.7.1 Filling Machine 3-199
3.8 Lubricant Level Checks 3-202
3.9 Valve Checks 3-204
3.10 Safety Checks 3-207

3.1 Crate Handling

The following sections contain information specific to the correct handling of the crated equipment.

3.1.1 Goods Reception and Storage

3.1.1.1 Inspection Documentation

No claims will be accepted for machines in commercial production if the **Start-Up Machine Quality Report** (SUMQR) has not been returned to the manufacturer. Compile the:

- **Transport Damage Report** (a section of the SUMQR).
- If no damage has occurred during transport, state “NO TRANSPORT DAMAGE”.
- **Feedback from MC** form **only in case of claims on the equipment**.
- For further information about claims see the **Claim and Complaint Handling** procedure, available from the local Service Organisation.

3.1.1.2 Lifting and Unloading the Crated Equipment

3.1.1.2.1 Labels, Symbols and Warning Placards

Labels, symbols and warning placards are located on the external surfaces of the transit crates and outline the handling principles which must be observed.

- The crates should not be subjected to sudden shocks or movement
- The crates are not load bearing and must not be stacked or have other items placed on them
- The transit crates should be kept in the indicated upright position.

Labels may be installed to indicate that the crates have been tipped over or exposed to extremes of humidity.

Symbol	Meaning
	Centre of gravity
	Lifting points for chains, cables, ropes, or slings
	This way up
	Fragile
	Keep dry
↑TOP↑	Top of crate
FRAGILE	‘Fragile’ warning
HANDLE WITH CARE	‘Handle with care’ warning
NOT TO BE DROPPED	‘Not to be dropped’ warning
GROSS KG.	‘Gross weight’ value
NET KG.	‘Net weight’ value

3.1.1.2.2 Centre of Gravity

WARNING

Risk of serious personal injury.

The purpose of the illustration below is to give an example of how the centre of gravity is indicated on a crate. For information on the location of the centre of gravity for a specific crate, see the actual marks on the crate.

The illustration below shows an example of how the centre of gravity is indicated on a Tetra Pak crate.

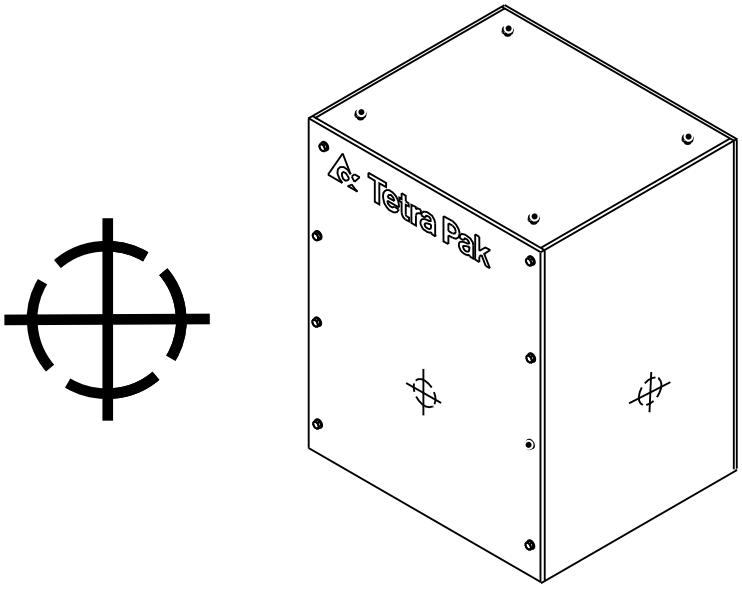

3.1.1.2.3 Crate - Lift using an Overhead Gantry or Mobile Crane

The crates are marked with lifting tackle symbols.

The lifting tackle must be passed under and fixed at these points when lifting the crate.

For capacity and length of the lifting tackle, see 1.3.2 Lifting and Transportation Equipment.

Use ropes or poles to steady and manoeuvre loads. Do **not** use hands or feet.

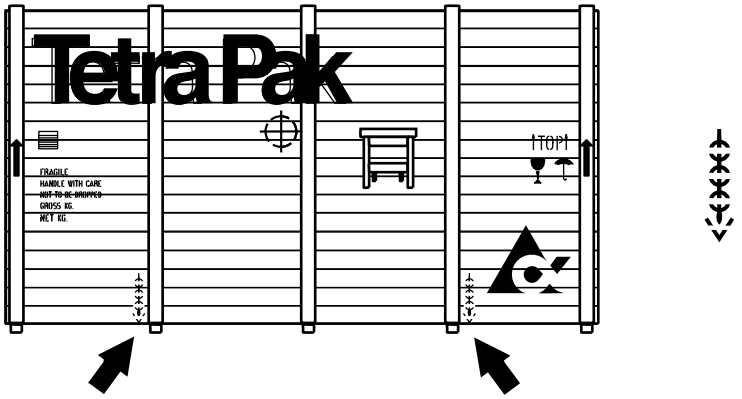

3.1.1.2.4 Crate - Lift using a Fork Lift

DANGER

Immediate danger to life.
The crate will tilt if not observing the centre of gravity or the fork-lift points. Failure to obey may result in immediate danger to life and/or major damage to machine.

The crates are marked with centre of gravity symbols.

The lifting forks must be positioned at equal distances from the symbol when lifting the crate.

For the capacity, length and setting width of the lifting forks, see 1.3.2 Lifting and Transportation Equipment.

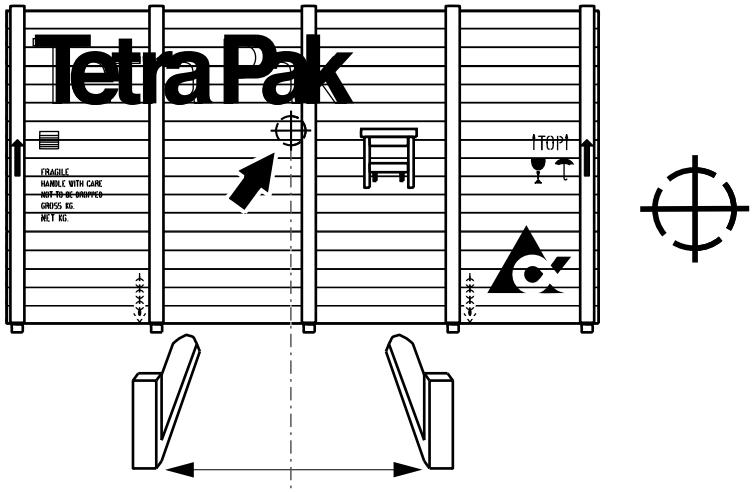

3.1.2 Moving the Crated Equipment

CAUTION
Risk of damage to the equipment.
Move the crate slowly and gently.

If installation has to start immediately, check whether it is possible to move the crates to the installation site. Uncrating and installation can then be performed together.

When moving the crates to the installation site, deposit them so that the equipment can be lifted out and positioned without being turned around. Open the customs inspection panels to see inside the crates.

Wait until installation can start before unpacking the crates.

a) Lift the crate as instructed in 3.1.1.2 Lifting and Unloading the Crated Equipment. **Lift only** enough to clear the floor.
b) Make sure that the crate remains stable on the lifting equipment.
c) Move the crate to its destination.
d) Look through the customs inspection panel to see in what way the contents are facing. Position the crate to face the most convenient direction.
e) Lower the crate gently to the floor, leaving enough room around it for easy access to all sides.
f) Make sure that the crate is firmly supported. Place blocks or plates under it if required.
g) Remove the lifting equipment.

3.1.3 Storing the Crated Equipment

CAUTION
Risk of damage to the equipment.
Do not stack the crates on top of each other. Store the crates indoors. Exposure to damp or to high or low temperatures may damage the equipment.

- Make sure that the storage environment respects the conditions specified in the table below.
- Store the crates with about 1000 mm (3 ft) of free access space around and above for access and ventilation.
- If the floor under the crates is uneven, place blocks or plates under them to provide a steady support.

(Cont'd)

(Cont'd)

Characteristic	Value	Notes
Min and max temperatures °C (°F)	5 - 40 (40 - 105)	If the water system is drained, the equipment can withstand freezing conditions.
Max relative humidity %	80	Non-condensing.

3.1.4 Opening the Crates

The following sections contain the correct procedures for opening the crates and unpacking this equipment.

Examine the outside of the crates before starting to unpack the equipment and record any damage. Record the readings of the humidity indicators and tipping indicators attached to the outside of the crates (if present).

This information must later be recorded on the **Transport Damage Report** (a section of the Start-up Machine Quality report), see section .

(Cont'd)

(Cont'd)

WARNING

Risk of personal injury.

Take care when disassembling the crates. Some machine parts may have been loosened during transport.

Note! The following instructions apply to all crates. Open the crates in the order in which the equipment components are required.

- Remove the top of the crate and the reinforcement cross-beams, see figure 1.
- Unscrew any screws fixing the contents to the front of the crate and remove the front of the crate, see figure 2.
- Unscrew any screws fixing the contents to the back of the crate and remove the back of the crate, see figure 3.
- Unscrew any screws fixing the contents to the sides of the crate and remove the sides of the crate, see figure 4.
- Remove all loose boxes and packages.

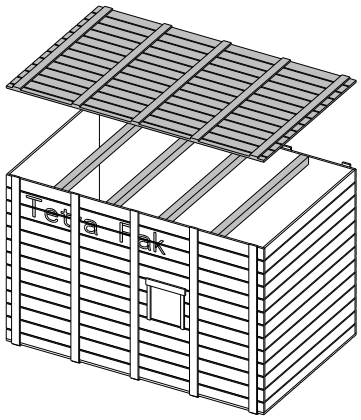

Fig.1

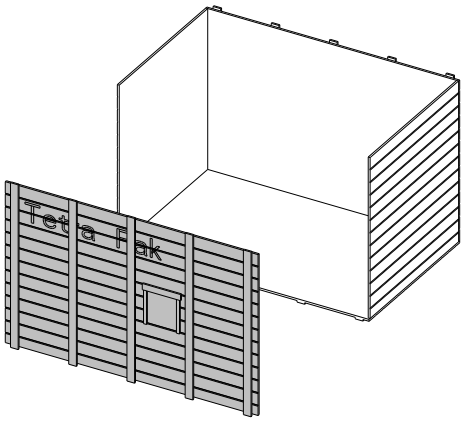

Fig 2

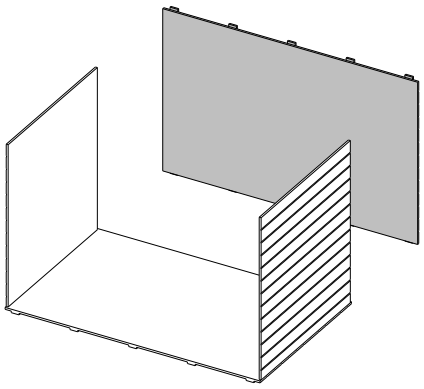

Fig.3

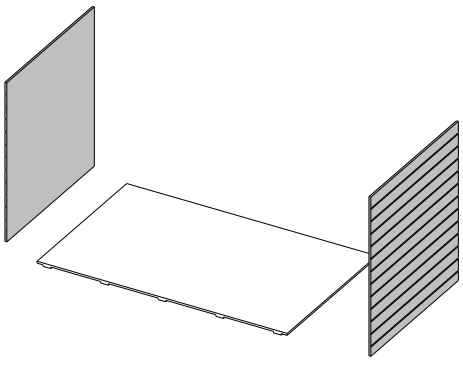

Fig 4

3.1.5 Unpacking the Crates

3.1.5.1 Main Crate (1)

Look through the customs inspection panel to see in which direction the contents are facing. Position the crate to face the most convenient direction.

Open the crate according to section 3.1.4 Opening the Crates.

3.1.5.1-1 Main Crate (1) - Inspection

a) Use the packing list to check that nothing is missing.

b) Inspect the machine and the accessories for damage.

c) Open the machine document box and check that the documentation corresponds with the machine and the machine number.

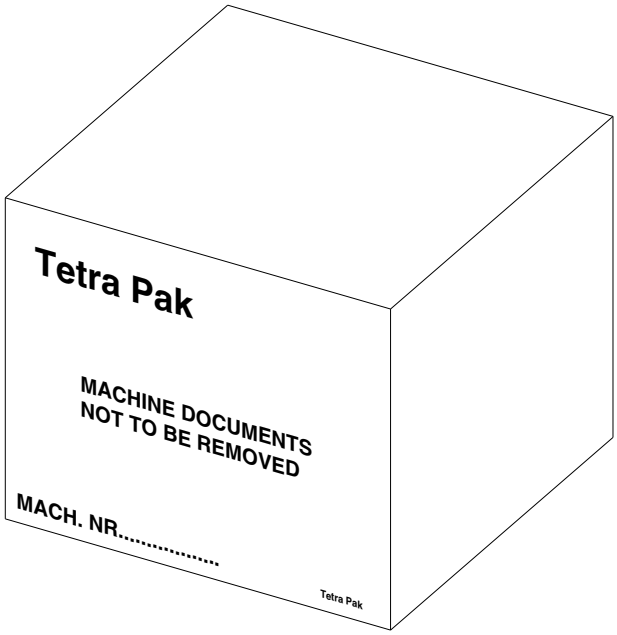

Separate Components

Place all separate components in a location where they will not disturb the installation work and the normal plant activities. If possible do not remove any transportation protections until the components are required.

3.1.5.1-2 Main Crate (1) - Remove the Service Unit with an Overhead Gantry or Mobile Crane

CAUTION
Risk of damage to the equipment.
Using lifting positions other than shown and careless handling when lifting the Service Unit can severely damage the machine part frames.

a) Fit the eye bolts as illustrated. Attach the lifting equipment (a Tetra Pak tool is illustrated but other equivalent lifting equipment can be used, see section 1.3.2 Lifting and Transportation Equipment for specifications).

b) Lift only enough to clear the crate.

c) Manoeuvre each machine part out of the crate.

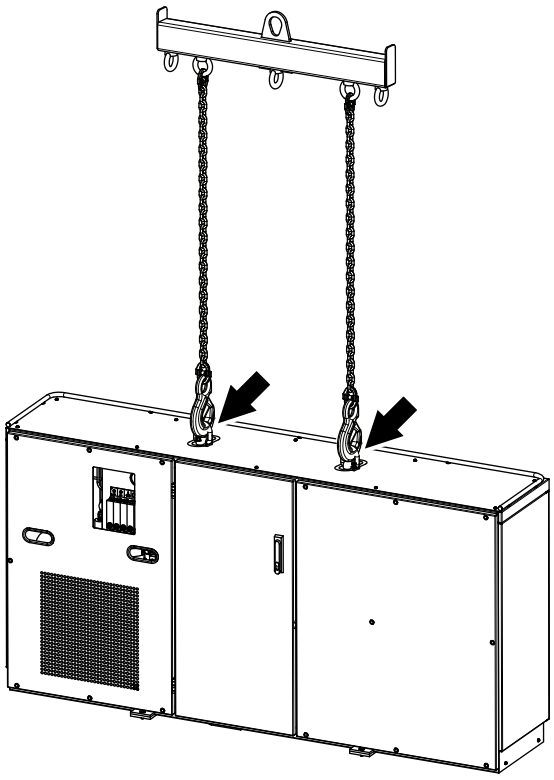

3.1.5.1-3 Main Crate (1) - Remove the Service Unit with a Fork Lift

CAUTION
Risk of damage to the equipment.
Using lifting positions other than shown and careless handling when lifting the service unit can severely damage the machine part frames.

a) Fit the eye bolts and the lifting equipment. Place the forks as indicated in the illustration.

b) Lift only enough to clear the crate.

c) Manoeuvre the supply unit out of the crate.

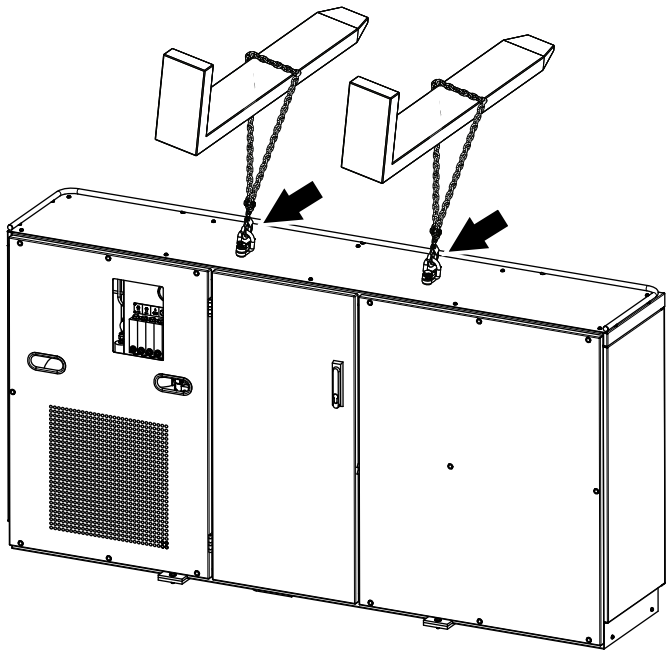

3.1.5.1-4 Main Crate (1) - Remove the Machine Body with a Fork Lift

CAUTION
Risk of damage to the equipment.
Using lifting positions other than shown and careless handling when lifting the machine body can severely damage the machine frame.

Note! For the correct lifting equipment, see section 1.3.2 Lifting and Transportation Equipment.

(Cont'd)

(Cont'd)

a) Place the forks as indicated in the illustration.
b) Lift only enough to clear the crate.
c) Manoeuvre the machine body out of the crate.
d) Lower the machine feet (156 mm) to facilitate the levelling later on.

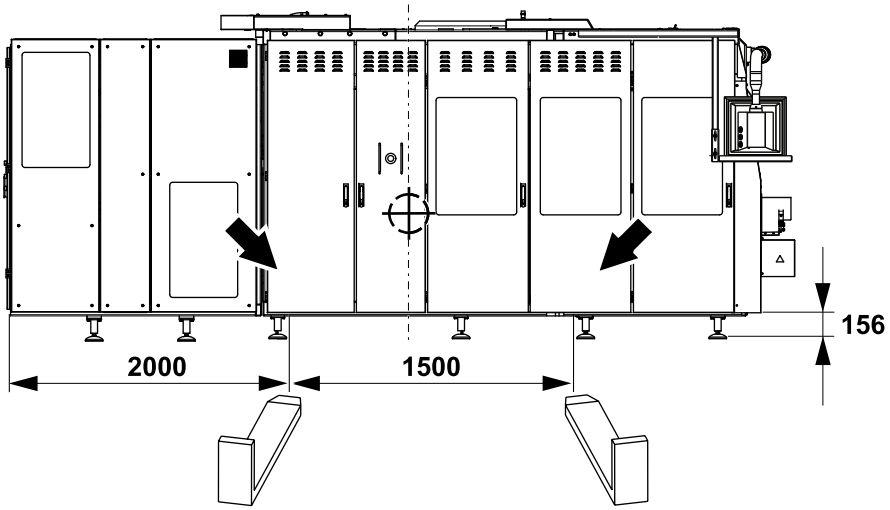

Filling machine standard

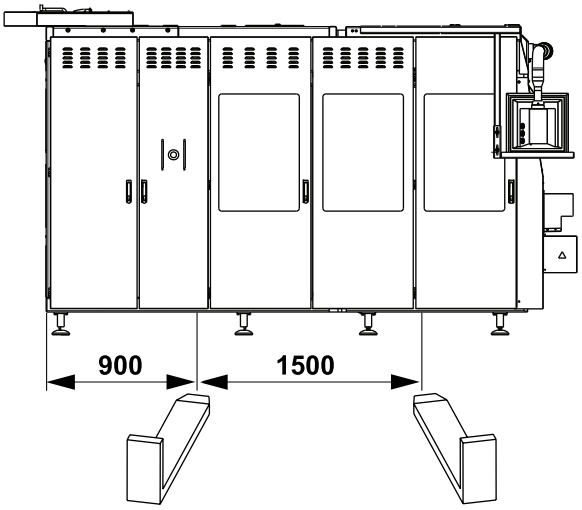

Filling machine standard with PullTab

3.1.5.2 Unpacking the Second Crate (2)

Look through the customs inspection panel to see in which direction the contents are facing. Position the crate to face the most convenient direction.

Open the crate, see section 3.1.4 Opening the Crates.

3.1.5.2-1 Second Crate (2) - Inspection

a) Use the packing list to check that nothing is missing.

b) Inspect the machine parts and the accessories for damage.

Separate Components

Place all separate components aside in a location where they will not disturb the installation work and the normal plant activities. If possible do not remove any transportation protection until the components are required.

CAUTION

Risk of damage to the equipment.

To protect vital parts from being damaged, the superstructure is equipped with transportation supports. Do not remove the supports until the superstructure is ready to be lifted up onto the machine body.

Note! Be careful when moving the superstructure to do not bend the protruding drain pipe (1).

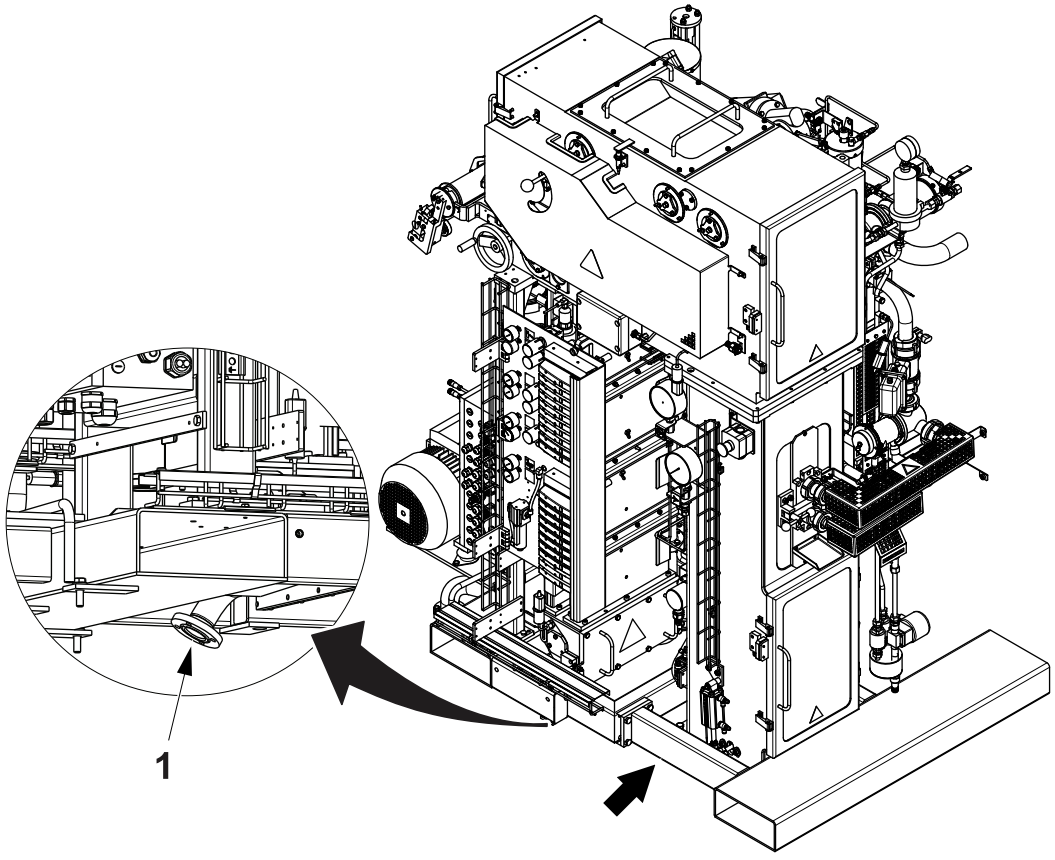

1 Drain pipe

3.1.5.2-2 Second Crate (2) - Remove the Machine Parts with an Overhead Gantry or Mobile Crane

Superstructure

CAUTION
Risk of damage to the equipment.
Using lifting positions other than shown and careless handling when lifting the machine parts can severely damage the machine part frames.

a) Fit the eye bolts as illustrated. Attach the lifting equipment (a Tetra Pak tool is illustrated but other equivalent lifting equipment can be used, see section 1.3.2 Lifting and Transportation Equipment for specifications).

b) Lift only enough to clear the crate.

c) Manoeuvre the machine part out of the crate.

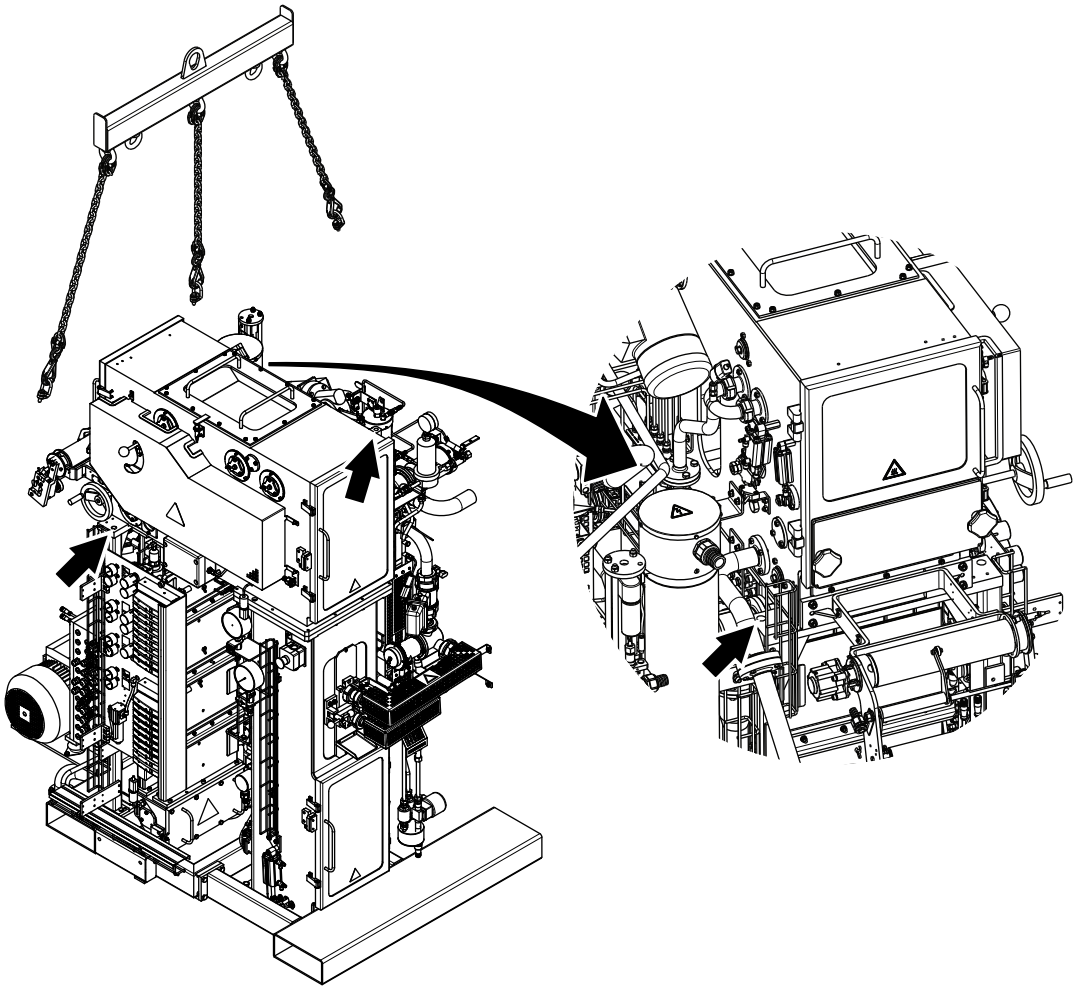

(Cont'd)

(Cont'd)

Electrical Cabinet

CAUTION
Risk of damage to the equipment.
Using lifting positions other than shown and careless handling when lifting the machine parts can severely damage the machine part frames.

a) Fit the eye bolts as illustrated. Attach the lifting equipment (a Tetra Pak tool is illustrated but other equivalent lifting equipment can be used, see section 1.3.2 Lifting and Transportation Equipment for specifications).

b) Lift only enough to clear the crate.

c) Manoeuvre the machine part out of the crate.

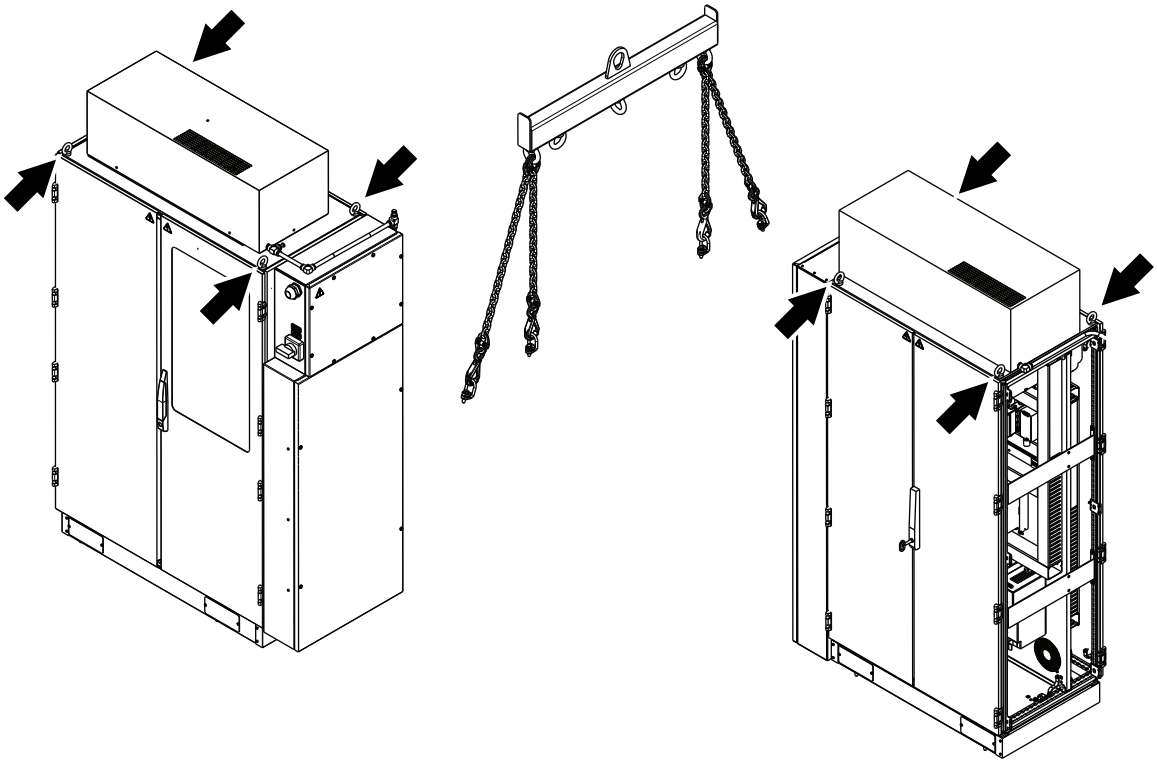

Electrical cabinet for filling machine

Electrical cabinet for PullTab

3.1.5.2-3 Second Crate (2) - Remove the Machine Parts with a Fork Lift

CAUTION
Risk of damage to the equipment.
Using lifting positions other than shown and careless handling when lifting the machine parts can severely damage the machine part frames.

(Cont'd)

(Cont'd)

a) Place the forks in the fork tubes as illustrated. Both sides can be used depending on the access. See section 1.3.2 Lifting and Transportation Equipment for specifications.

b) Lift only enough to clear the crate.

c) Manoeuvre the machine part out of the crate.

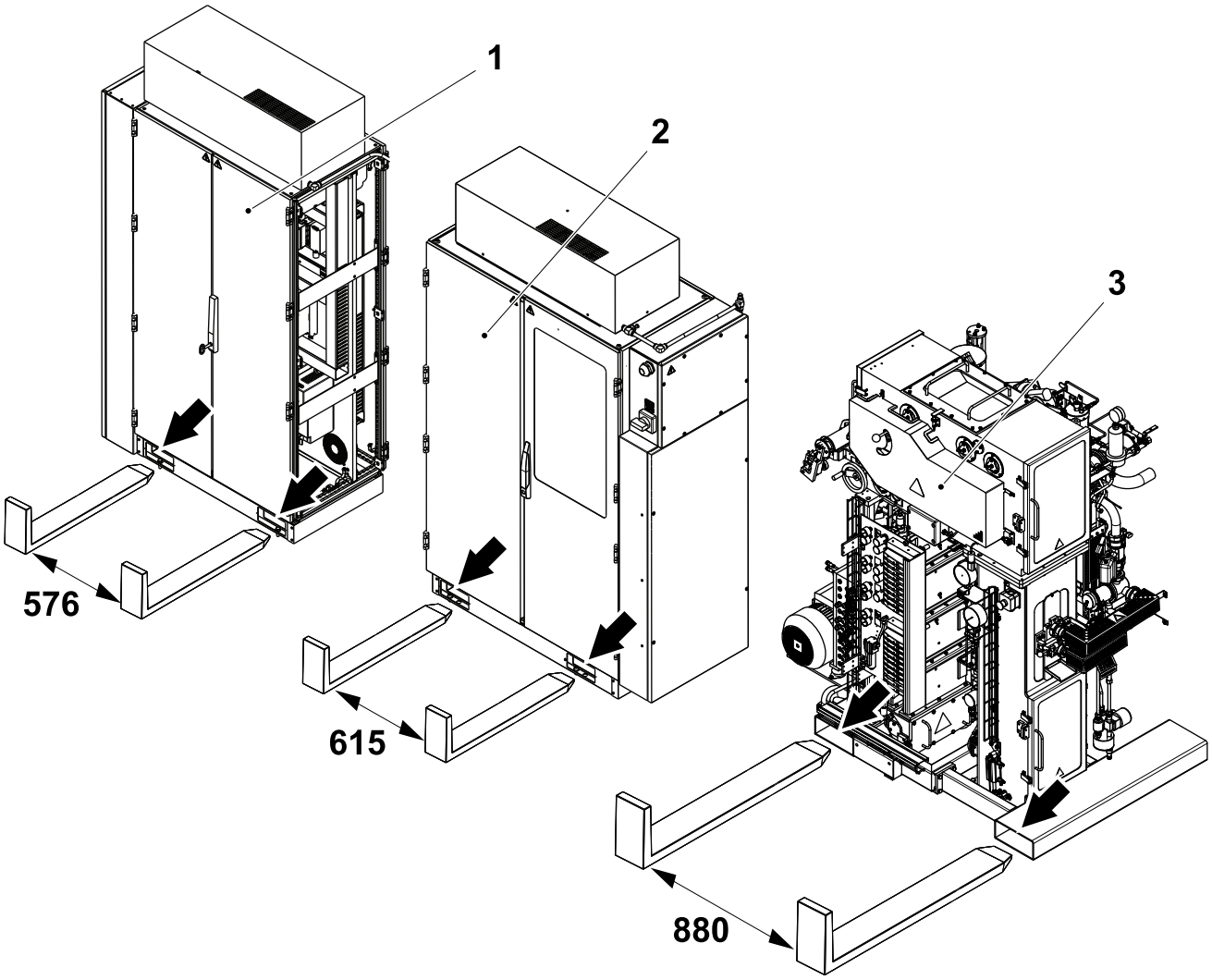

1 PT electrical cabinet (tubes 174 x 78 mm)

2 Electrical cabinet (tubes 174 x 78 mm)

3 Superstructure (tubes 230 x 90 mm)

ICU

CAUTION
Risk of damage to the equipment.
Using lifting positions other than shown and careless handling when lifting the machine parts can severely damage the machine part frames.

(Cont'd)

(Cont'd)

a) Place the forks in the fork tubes as illustrated. Both sides can be used depending on the access. See section 1.3.2 Lifting and Transportation Equipment for specifications.

b) Lift only enough to clear the crate.

c) Manoeuvre the machine part out of the crate.

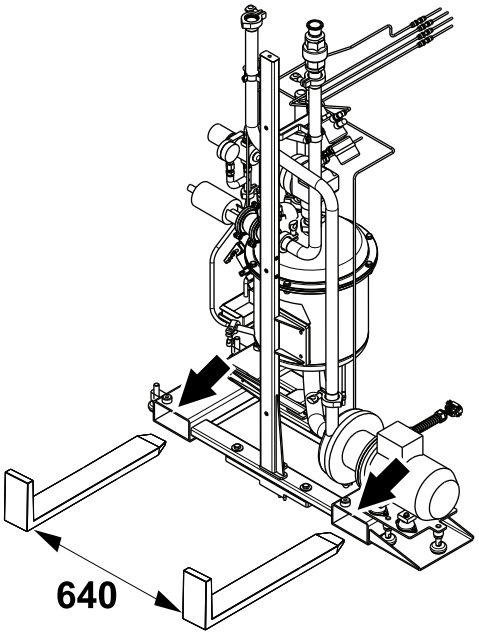

ICU (OE) (tubes 150 x 70 mm)

3.1.5.3 Unpacking the Third Crate (3) and or Fourth Crate (4)

The content of the third and fourth crates depend on the machine configuration, see 1.3.1.3 Third Crate (3) and 1.3.1.4 Fourth Crate (4) for details.

Look through the customs inspection panel to see in which direction the contents are facing. Position the crate to face the most convenient direction.

Open the crate, see section 3.1.4 Opening the Crates.

3.1.5.3-1 Third Crate (3) and or Fourth Crate (4) - Inspection

a) Use the packing list to check that nothing is missing.

b) Inspect the machine parts and the accessories for damage.

Separate Components

Place all separate components aside in a location where they will not disturb the installation work and the normal plant activities. If possible do not remove any transportation protection until the components are required.

3.1.5.3-2 Third Crate (3) and or Fourth Crate (4) - Remove the Machine Parts with an Overhead Gantry or Mobile Crane

CAUTION
Risk of damage to the equipment.
Using lifting positions other than shown and careless handling when lifting the machine parts can severely damage the machine part frames.

HVA

a) Fit the eye bolts as illustrated. Attach the lifting equipment (a Tetra Pak tool is illustrated but other equivalent lifting equipment can be used, see section 1.3.2 Lifting and Transportation Equipment for specifications).

b) Lift only enough to clear the crate.

c) Manoeuvre the machine part out of the crate.

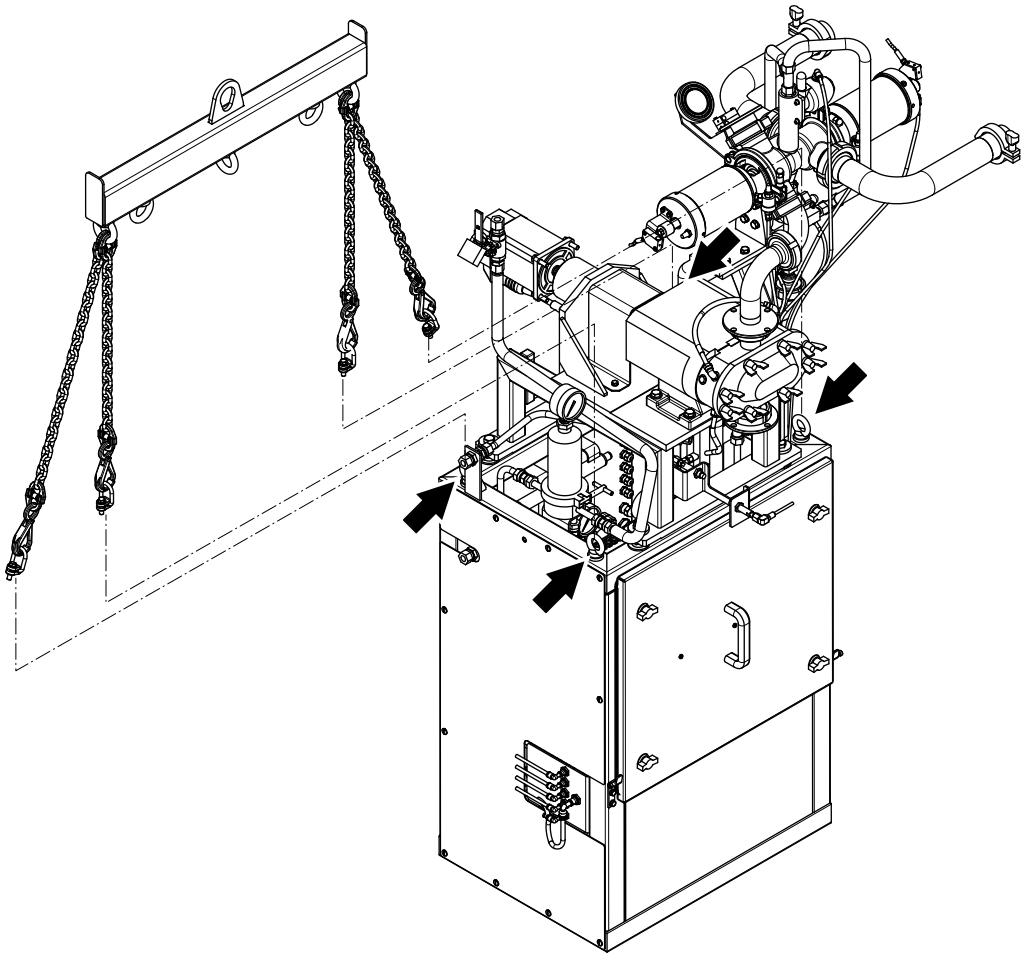

3.1.5.3-3 Third Crate (3) and or Fourth Crate (4) - Remove the Machine Parts with a Fork Lift

CAUTION

Risk of damage to the equipment.

Using lifting positions other than shown and careless handling when lifting the machine parts can severely damage the machine part frames.

HVA

a) Place the forks as indicated in the illustration. Both sides can be used depending on the access. See section 1.3.2 Lifting and Transportation Equipment for specifications.

b) Lift only enough to clear the crate.

c) Manoeuvre the machine part out of the crate.

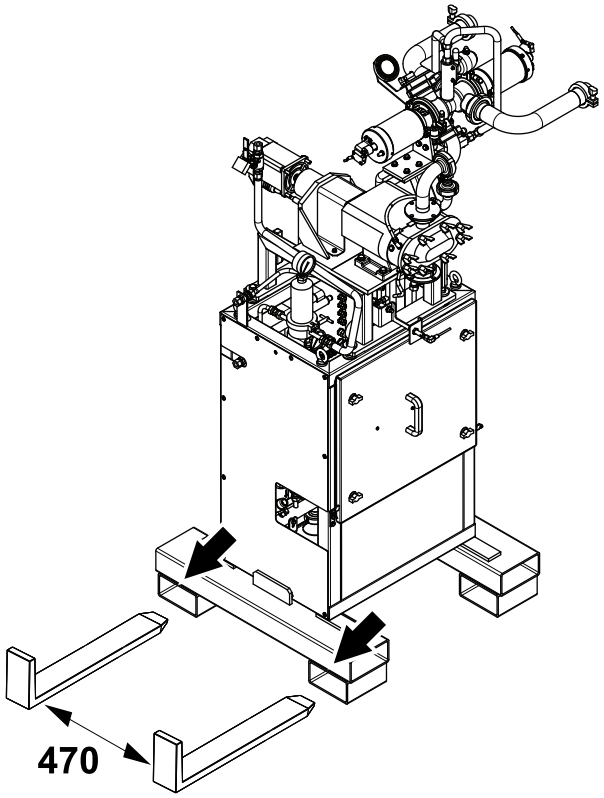

(Cont'd)

(Cont'd)

PT CF and ASU

Place the forks as indicated in the illustration. Both sides can be used depending on the access. See section 1.3.2 Lifting and Transportation Equipment for specifications.

a) Lift only enough to clear the crate.

b) Manoeuvre the machine part out of the crate.

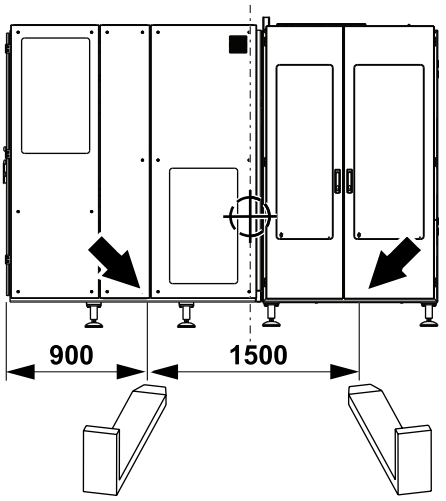

3.1.6 Disposing of Reusable Materials and Waste

Note! Packing materials (including crates, wrapping and boxes) are not normally returned to the manufacturer.

a) Check with the customer if there is a special agreement for the return of the packing to the manufacturer.

b) If the packing must be returned to the manufacturer, prepare an area to store the crates and other returnable packing.

c) Check with the customer if there is a special agreement for recycling packing.

d) If packing has not to be recycled, check with the customer how to separate and dispose of packing (wood, plastic, paper, etc.).

e) Dispose of pollutant waste (bubble wrapping, plastic bags, expanded polystyrene, etc.) in accordance with local regulations.

3.2 Positioning and Assembly

The following section contains the correct procedures for transporting the uncrated equipment to the installation area and assembling the equipment components.

WARNING
Risk of falling.
Take care when working on machine platforms without railings. If work is performed on the platforms before railings are mounted, it is strongly recommended to use safety harness.

3.2.1 Moving

3.2.1.1 Moving the Machine Body

After uncrating, transfer the machine body directly to the installation area.

3.2.1.2 Moving the Machine Parts

Move the machine parts as they are needed to the installation area with the lifting equipment.

3.2.2 Positioning

The following section contains the correct procedures for positioning this equipment in the installation area.

3.2.2-1 Position the Machine Body

Set the machine in its exact position if not already done. Place a damper underneath each machine foot. Respect minimum distances around the machine.

Note! The filling machine is delivered with the left platform installed onto the machine body. If necessary, remove the left platform.

(Cont'd)

(Cont'd)

Filling Machine Standard

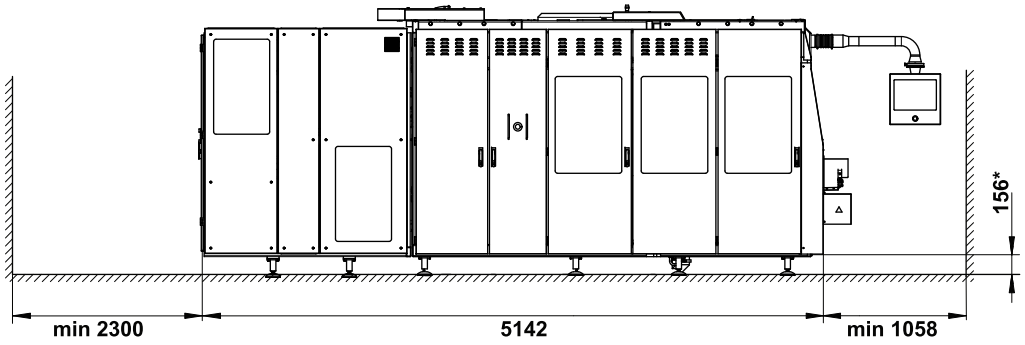

* All measurements from the floor have a tolerance of +100/-0 mm.

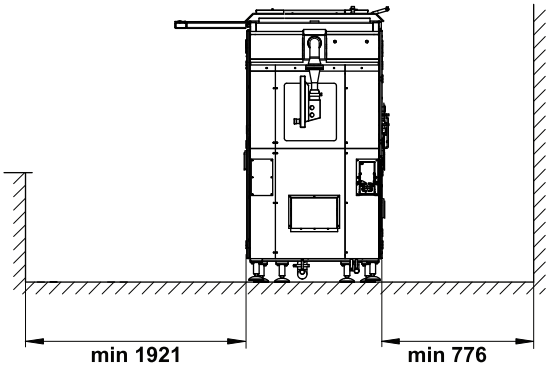

Filling machine standard

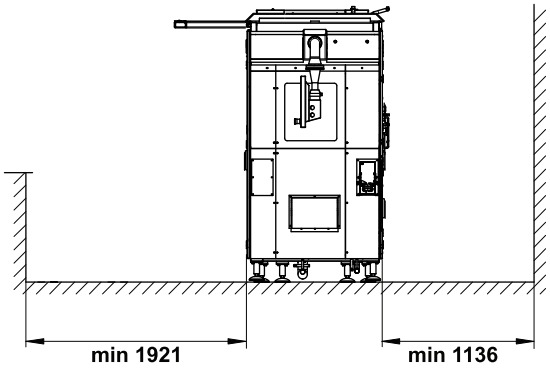

Filling machine with UL-CSA platforms

(Cont'd)

(Cont'd)

Filling Machine with HVA

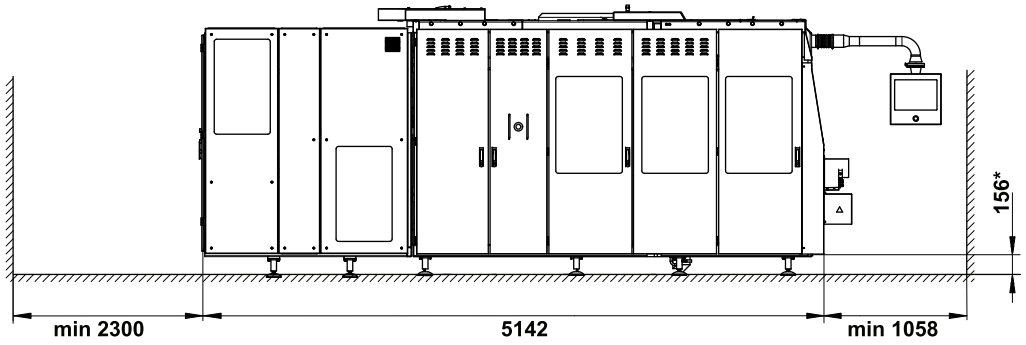

* All measurements from the floor have a tolerance of +100/-0 mm.

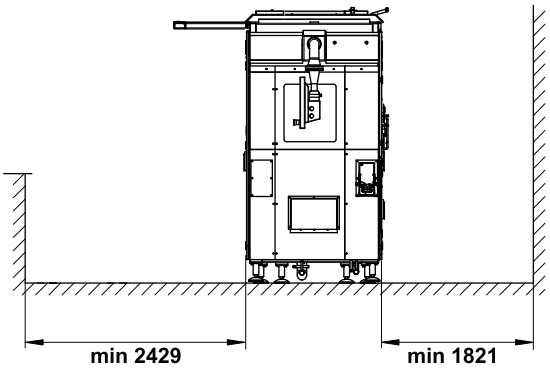

Filling machine with HVA / Filling machine with HVA and with UL-CSA platforms

(Cont'd)

(Cont'd)

Filling Machine with PT

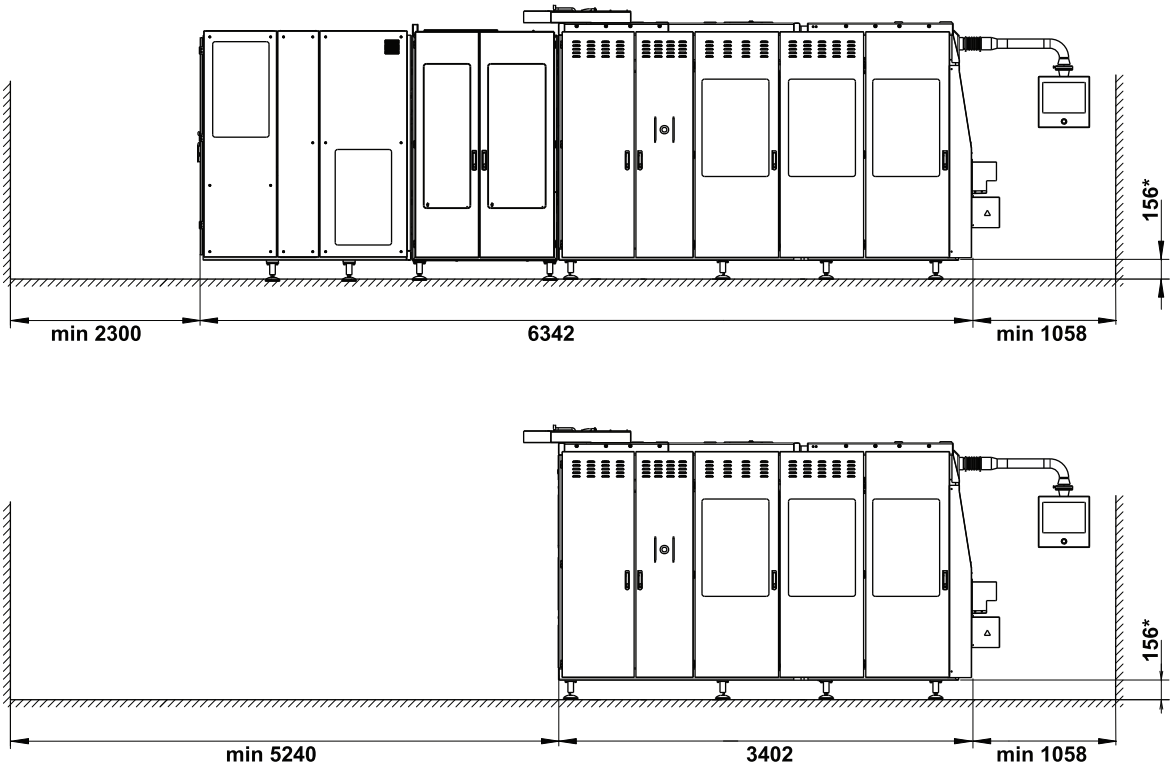

* All measurements from the floor have a tolerance of +100/-0 mm.

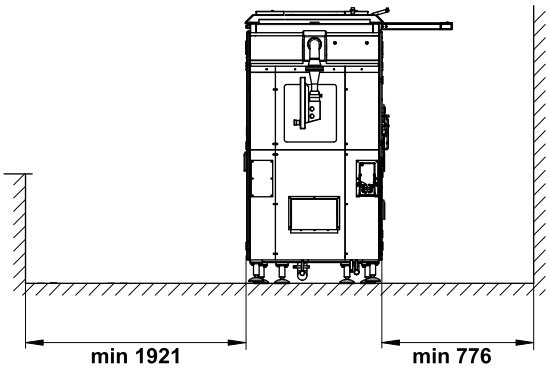

Filling machine with PT

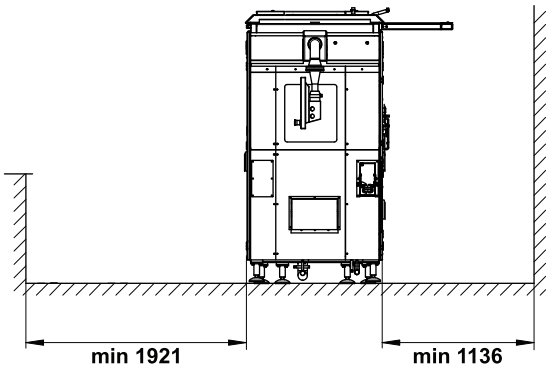

Filling machine with PT and UL-CSA platforms

(Cont'd)

(Cont'd)

Filling Machine Multi Installation

Note! Distance **A** is between the platforms without covers and toe plates.

Position the new machine at distance **A** from the other machine.

Note! The level of the two machines must be very accurate otherwise it is not possible to merge the platforms, follow the instructions 3.2.3 Levelling the Equipment for both machines.

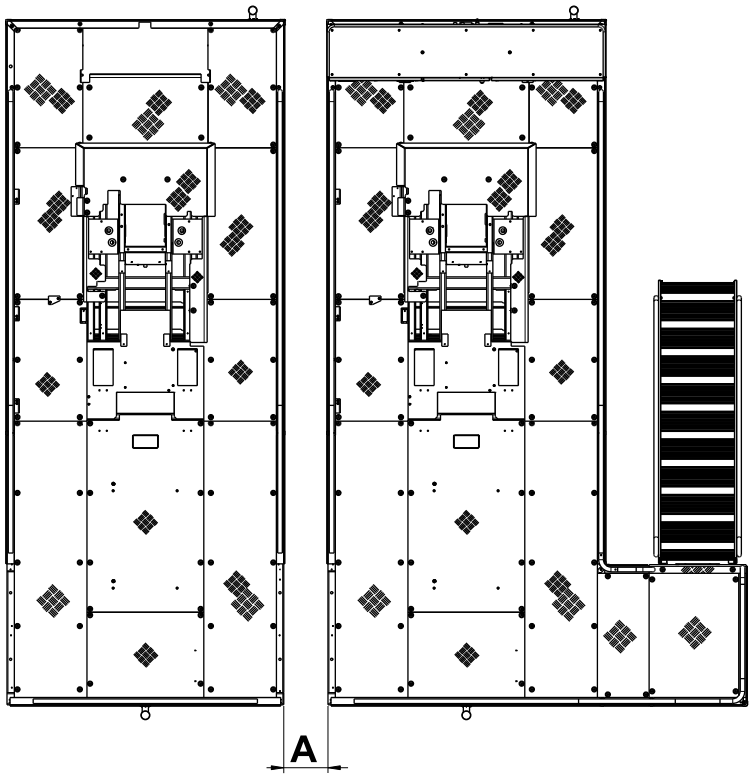

A = 360 $^{0/+5}$ mm

3.2.3 Levelling the Equipment

The following sections contain the correct procedures for setting the height and level of this equipment.

3.2.3-1 Set the Machine Body Height

Set the machine body to the correct height by adjusting the four machine feet (1). For installations with existing conveyor equipment, the machine's outfeed conveyor should be adjusted to the same height as the conveyor equipment. For new installations adjust the height to 156 mm (nominal height).

(Cont'd)

(Cont'd)

Filling Machine Standard

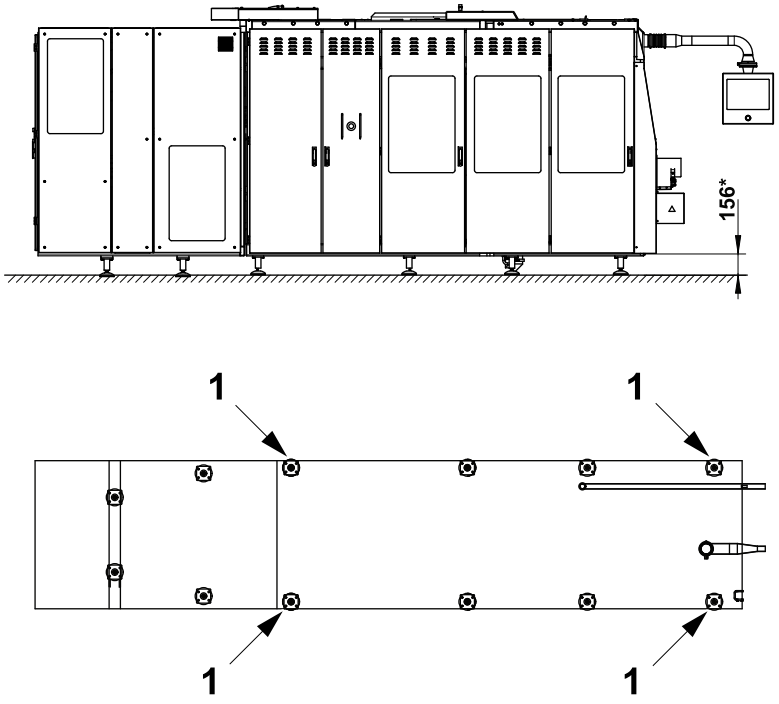

* All measurements from the floor have a tolerance of +100/-0 mm.

1 Machine feet

(Cont'd)

(Cont'd)

Filling Machine with PT

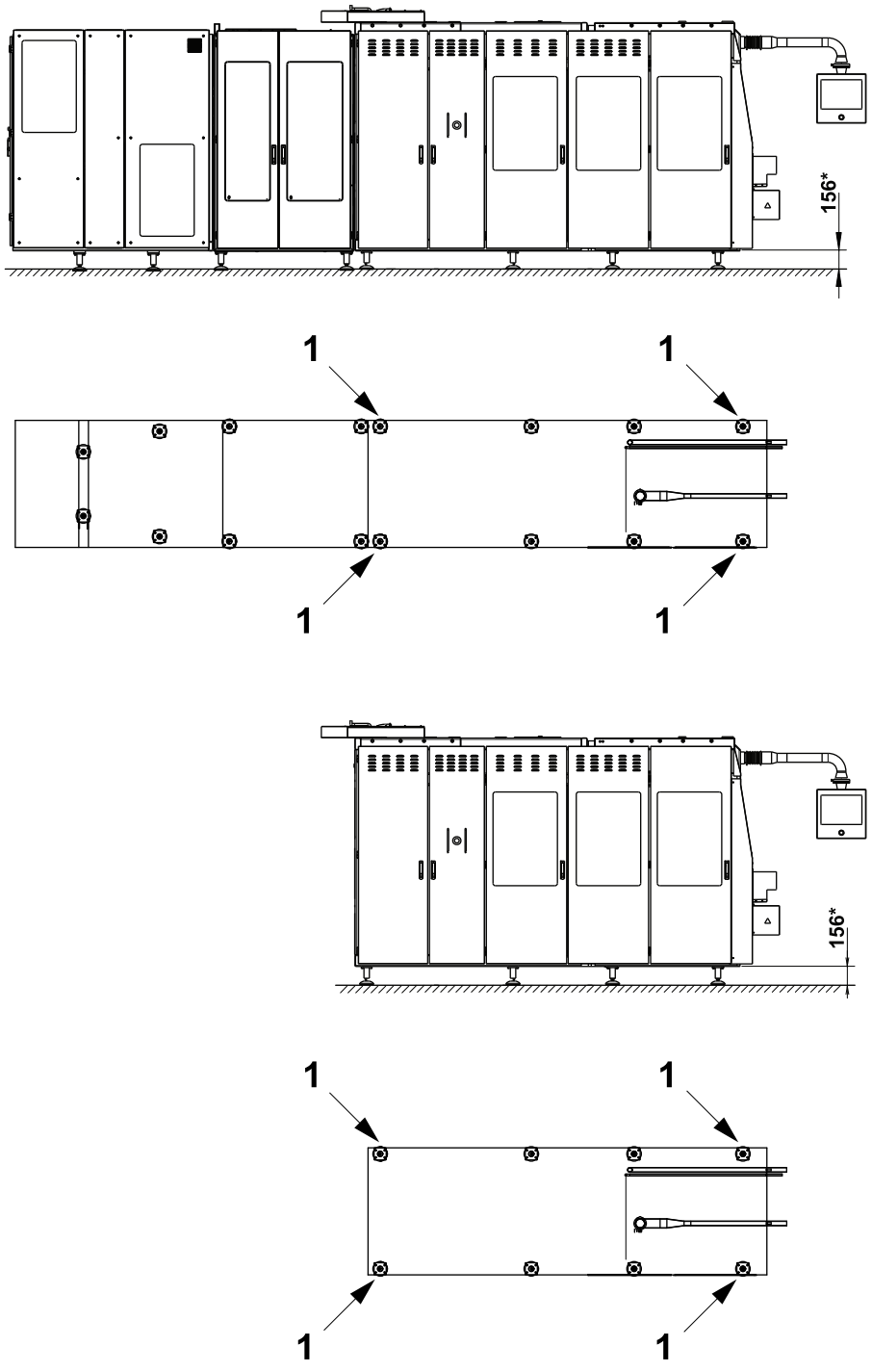

* All measurements from the floor have a tolerance of +100/-0 mm.

3.2.3-2 Level the Machine Body

Filling Machine Standard

a) Level the machine transversally with the four machine feet (1). Check and set the level by measuring with a spirit level on the machined surface that supports the superstructure or alternatively the side of the jaw system frame.

b) Level the machine lengthwise with the two machine feet (2). Check and set the level by measuring with a spirit level on the machined surface that supports the superstructure or alternatively the side of the jaw system frame.

c) Carefully lower the rest of the machine feet (3).

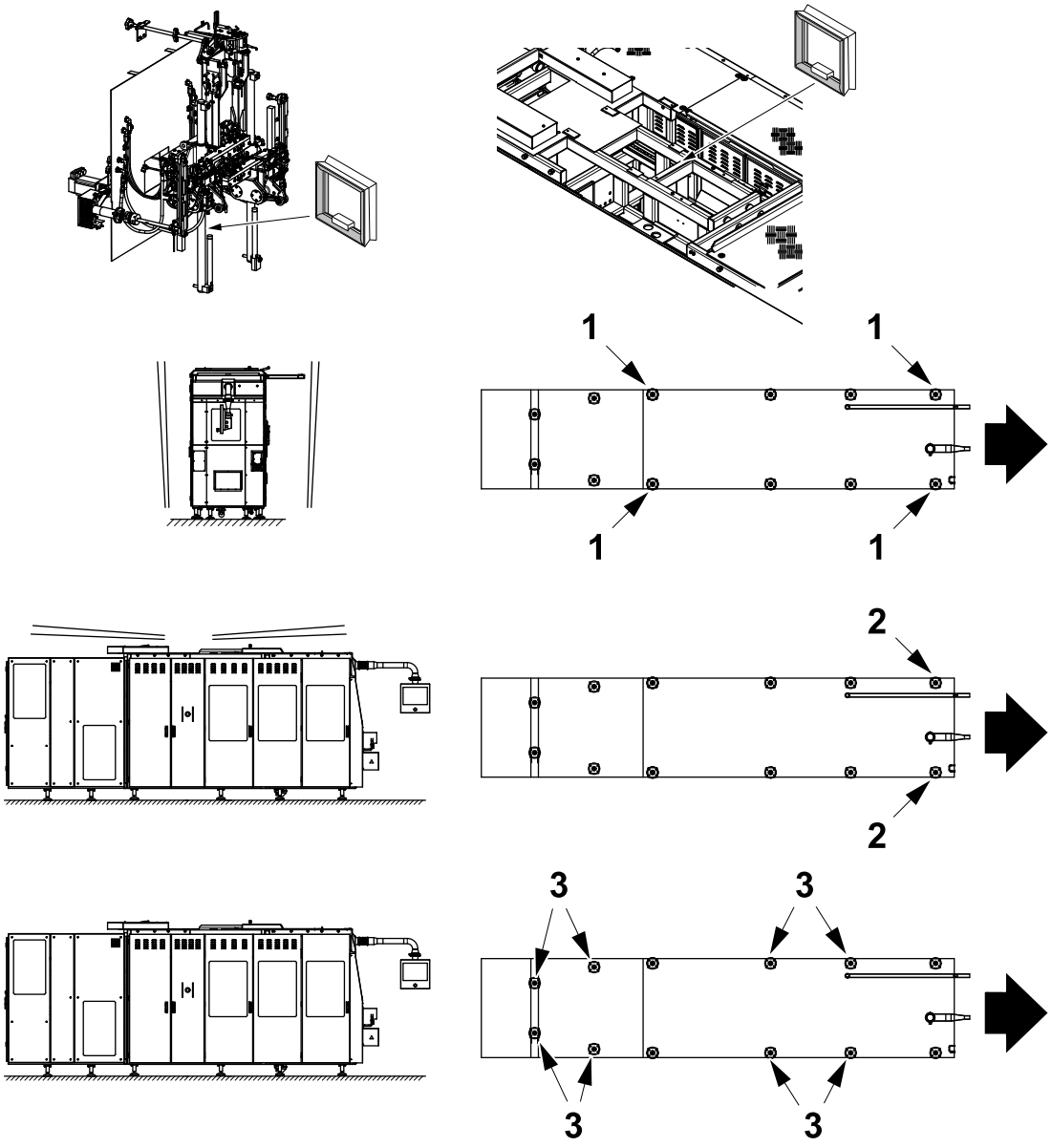

1 Machine feet 2 Machine feet 3 Machine feet

(Cont'd)

(Cont'd)

Filling Machine with PT

a) Level the machine transversally with the four machine feet (1). Check and set the level by measuring with a spirit level on the machined surface that supports the superstructure or alternatively the side of the jaw system frame.

b) Level the machine lengthwise with the two machine feet (2). Check and set the level by measuring with a spirit level on the machined surface that supports the superstructure or alternatively the side of the jaw system frame.

c) Carefully lower the rest of the machine feet (3).

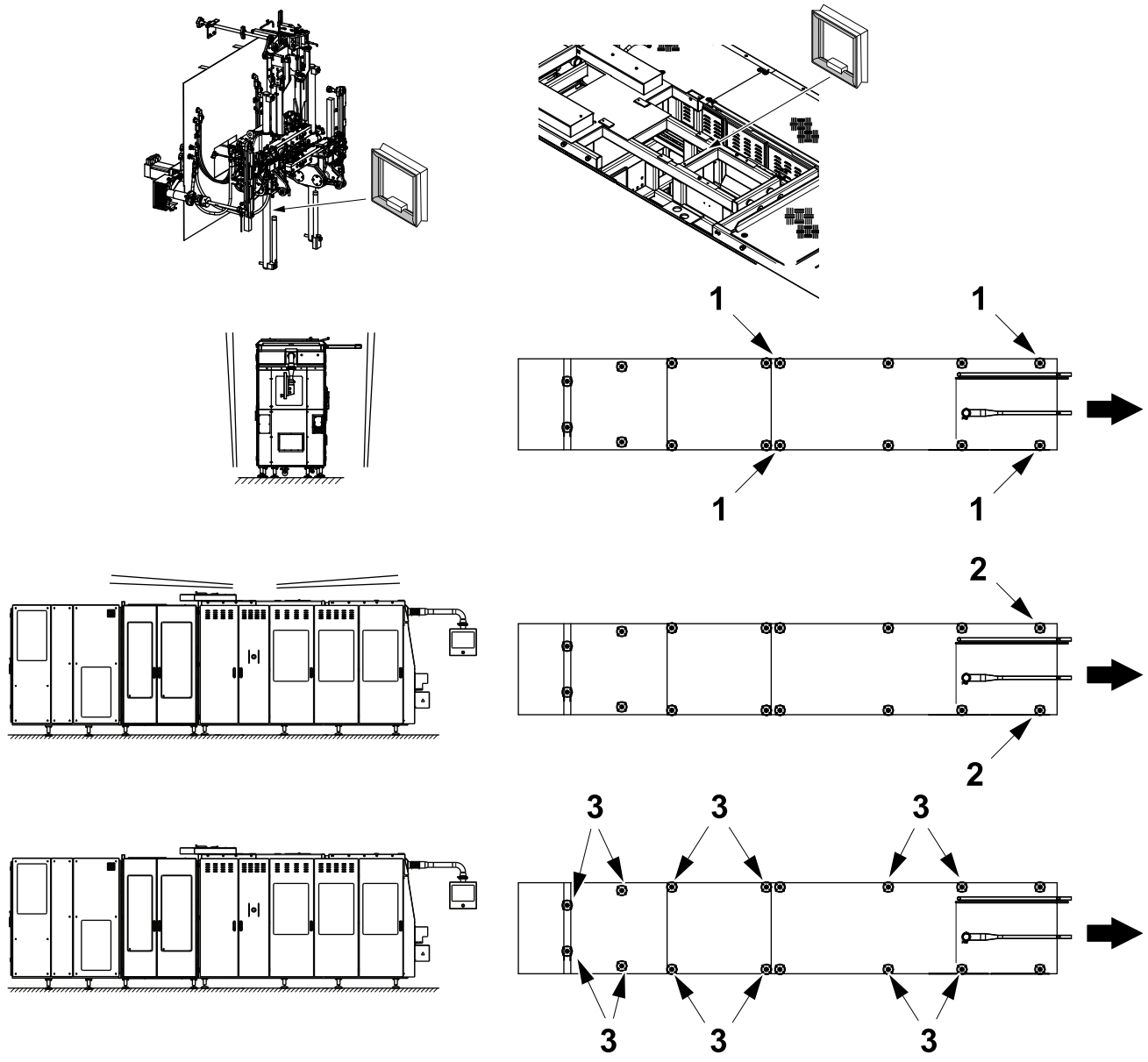

1 Machine feet 2 Machine feet 3 Machine feet

3.2.4 Assembling

3.2.4-1 Transport Equipment - Remove

a) Loosen the screws (1) and remove the transport equipment (2).

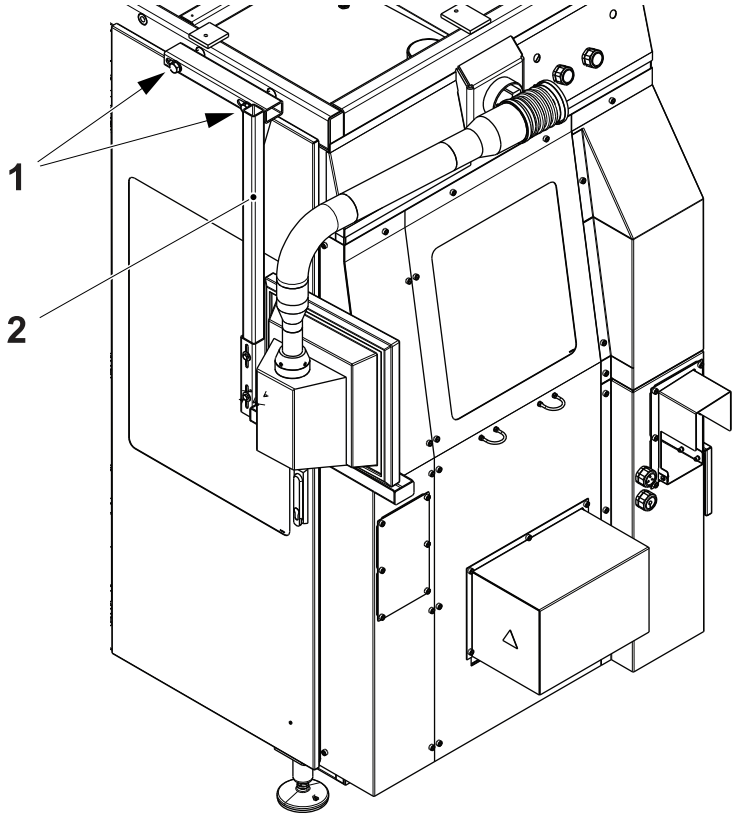

1 Screw
2 Transport equipment

(Cont'd)

(Cont'd)

b) Loosen the hose clip (3) and hose clip (4).

c) Insert the lip (5) of the rubber bellow (6) over the frame (7).

d) Tighten the hose clip (3).

e) Pull the rubber bellow (6) at a distance **A** from the surface (8) and tighten the hose clip (4).

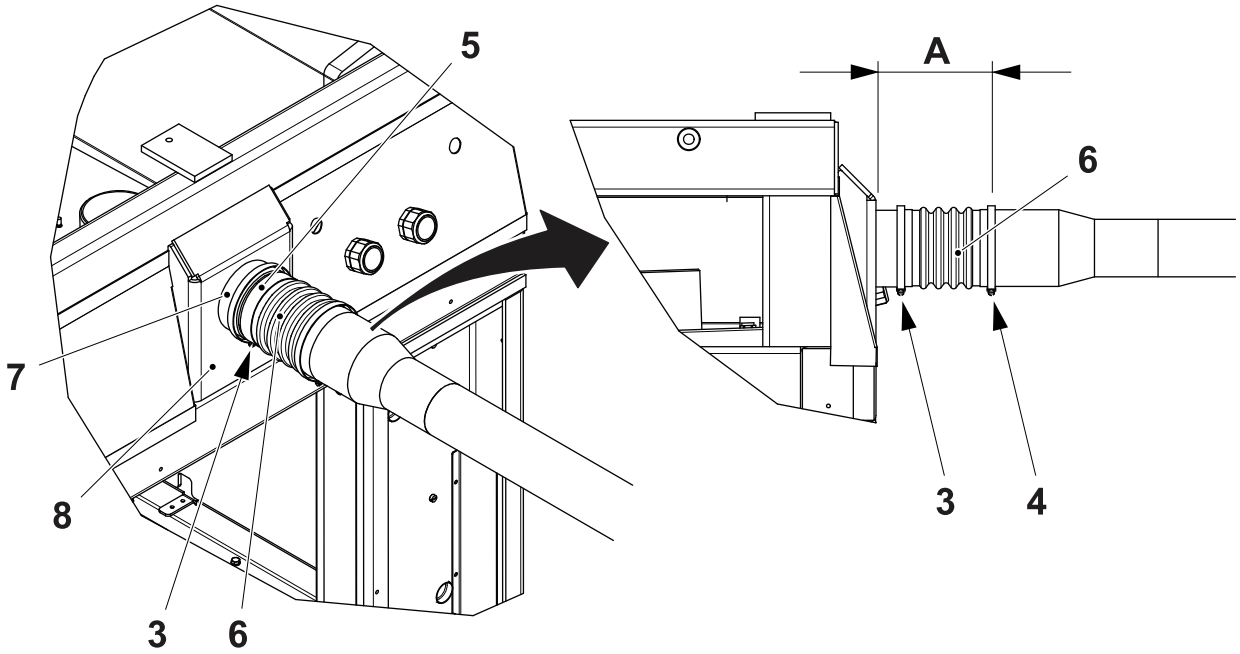

A = 195 ±5 mm

3 Hose clip	5 Lip	7 Frame
4 Hose clip	6 Rubber bellow	8 Surface

3.2.4-2 ASU and PT - Docking

Note! Only valid for machines equipped with PT.

(Cont'd)

(Cont'd)

a) Fit the ASU (1) with the PT (2) to the machine body (3) .
b) The guide pin (4) will give the exact position between the units.
c) Tighten the four screw (5).

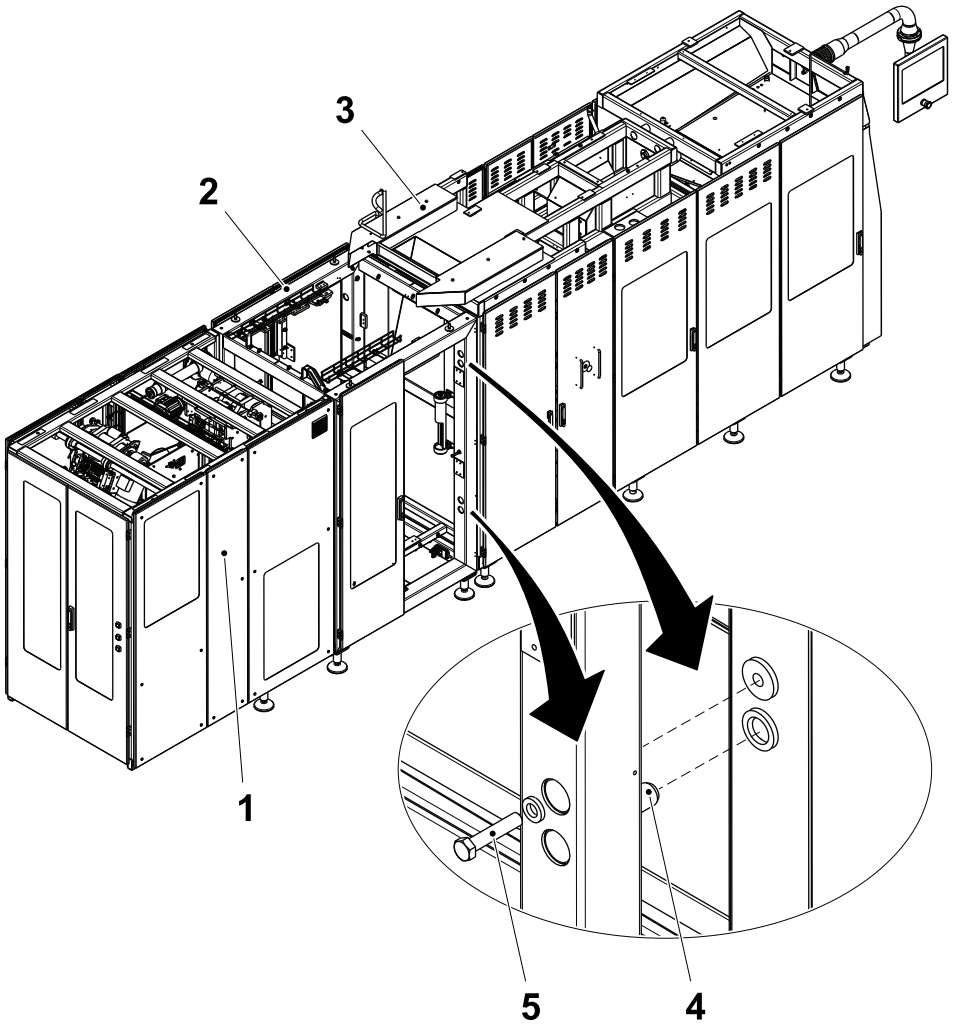

1 ASU
2 PT
3 Machine body
4 Pin
5 Screw

(Cont'd)

(Cont'd)

d) Carefully lower the ASU feet (6) and the PT feet (7).

e) Check the horizontal alignment of the ASU (1) by placing a spirit level (8) on the splicing device shaft (9). If necessary, adjust the horizontal alignment by means of the ASU feet (6).

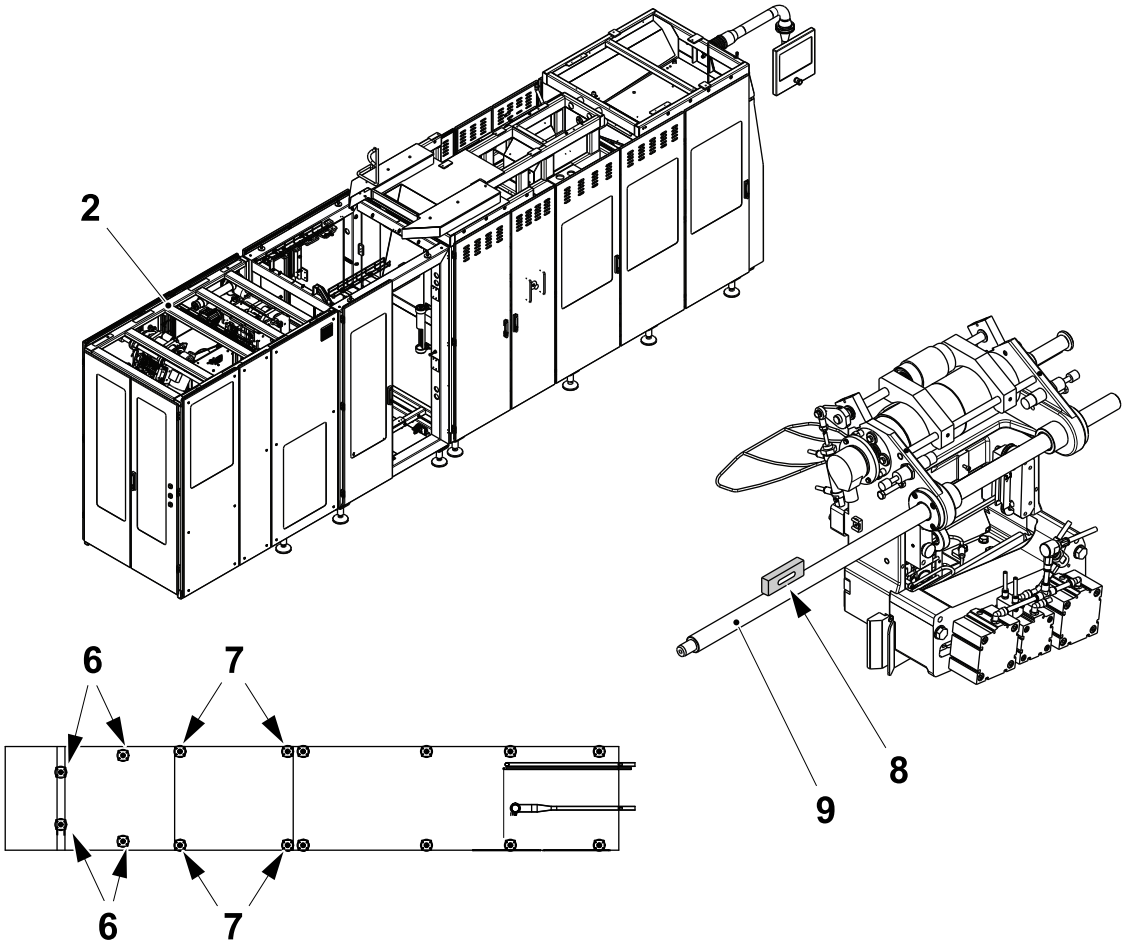

1 ASU
6 Feet
7 Feet
8 Spirit level
9 Splicing device shaft

3.2.4-3 Assembling the Platform, Filling Machine Standard

WARNING
Risk of falling.
Take care when working on machines without platforms and railings. If work is performed on the platforms before railings are mounted, it is strongly recommended to use a safety hardness.

(Cont'd)

(Cont'd)

a) Fit the beam (1) onto the back platforms (2) with the screws (3).
b) Fit the platform (4) to the machine body with the screws (5).
c) Fit the platform (6) to the machine body with the screws (7).

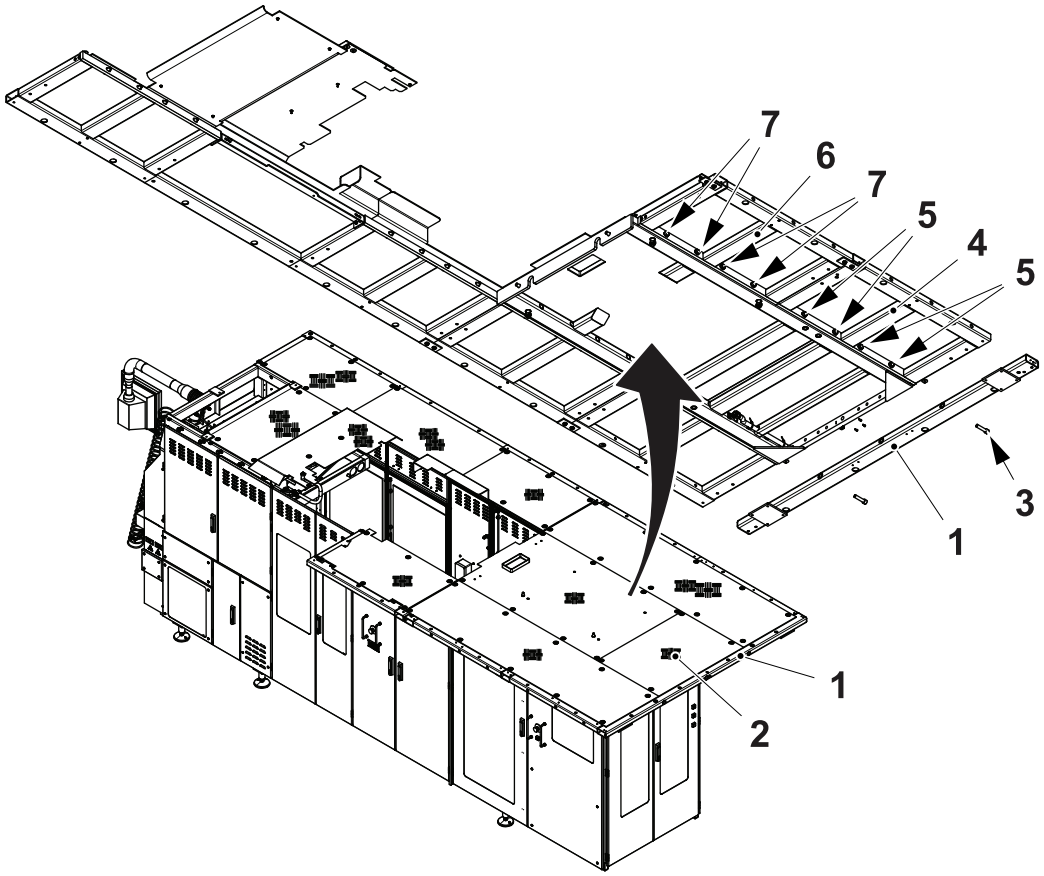

Platform screws (3), screws (5) and screws (7), torque 60 Nm

1 Beam
2 Back platform
3 Screw
4 Platform
5 Screw
6 Platform
7 Screw

(Cont'd)

(Cont'd)

d) Fit the platform (8) to the machine body with the screws (9).
e) Fit the bracket (10) and tighten the screws (11).
f) Fit the beam (12) next to the platform (8).
g) Fit the platform (13) to the machine body with the screw (14).
h) Fit the checker plates (15) with the screws (16).
i) Thread the cables from the ASU through the hole (17).
j) Fit the plates (18) to the platforms with the screws (19).

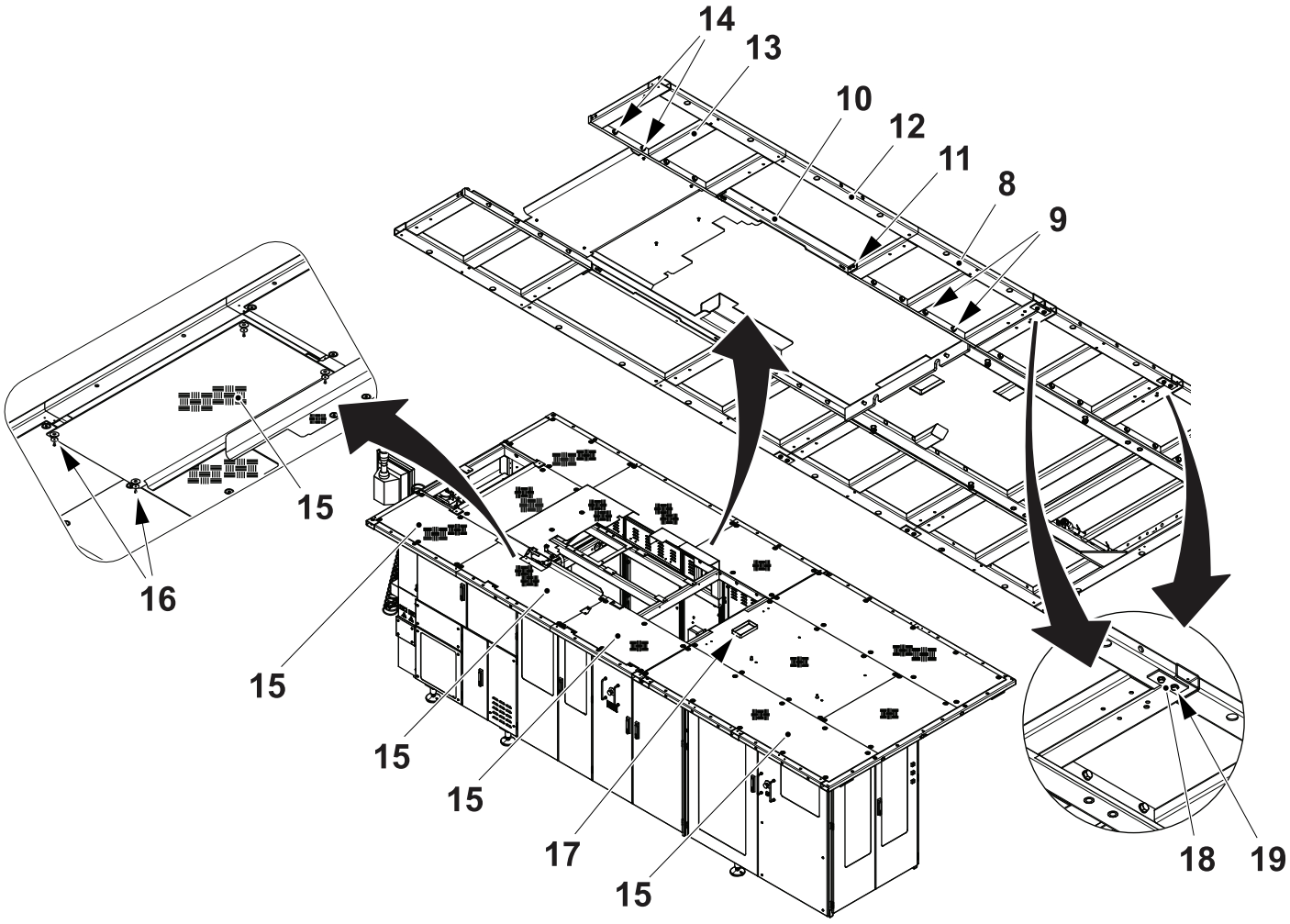

Platform screws (9), screw (14) torque 60 Nm

Platform screws (11), torque 20 Nm

8 Platform	11 Screw	14 Screw	17 Hole
9 Screw	12 Beam	15 Checker plate	18 Plate
10 Bracket	13 Platform	16 Screw	19 Screw

3.2.4-4 Assembling the Platform, TP A3/CompactFlex with PT

WARNING

Risk of falling.

Take care when working on machines without platforms and railings. If work is performed on the platforms before railings are mounted, it is strongly recommended to use a safety hardness.

a) Fit the beam (1) onto the back platforms (2) with the screws (3).

b) Fit the platform (4) to the machine body with the screws (5).

c) Fit the platform (6) to the machine body with the screws (7).

d) Fit the platform (8) to the machine body with the screws (9).

e) Fit the platform (10) to the machine body with the screws (11).

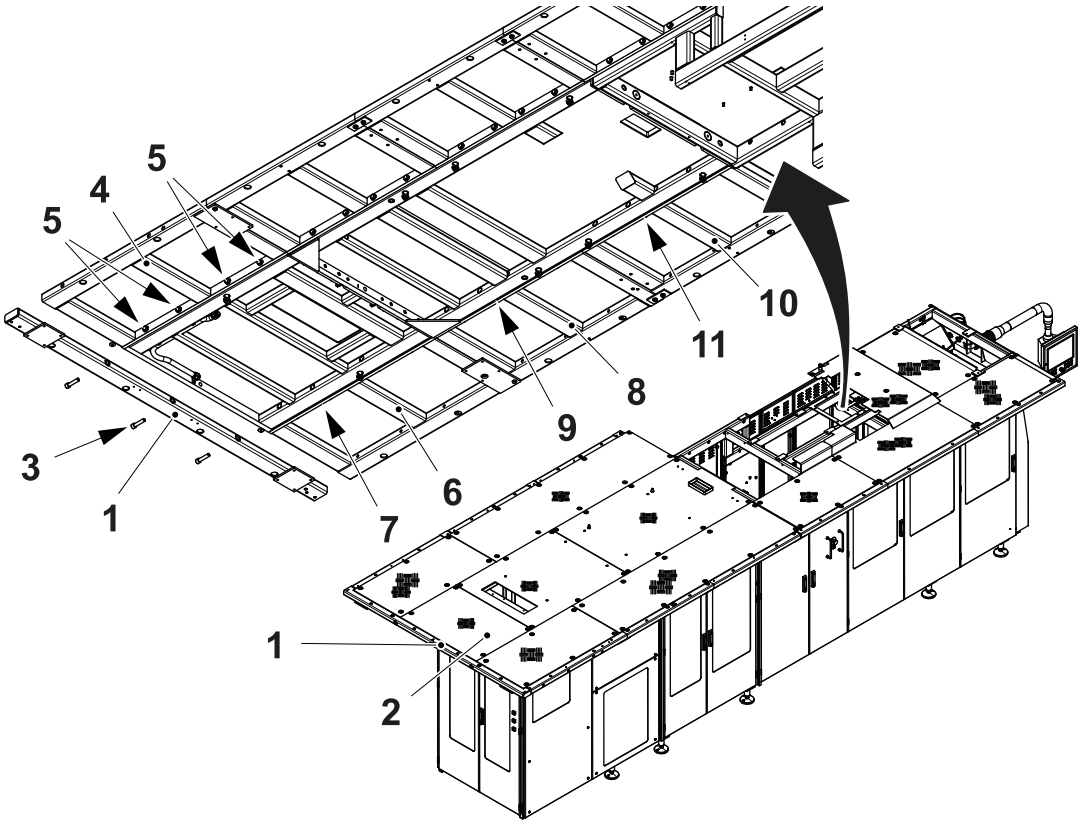

1 Beam
2 Back platform
3 Screw
4 Platform
5 Screw
6 Platform
7 Screw
8 Platform
9 Screw
10 Platform
11 Screw

(Cont'd)

(Cont'd)

f) Fit the platform (12) to the machine body with the screws (13).
g) Fit the bracket (14) and tighten the screws (15).
h) Fit the beam (16) next to the platform (12).
i) Fit the platform (17) to the machine body with the screws (18).
j) Fit the checker plates (19) with the screws (20).
k) Thread the cables from the ASU through the hole (21).
l) Fit the plates (22) to the platforms with the screws (23).

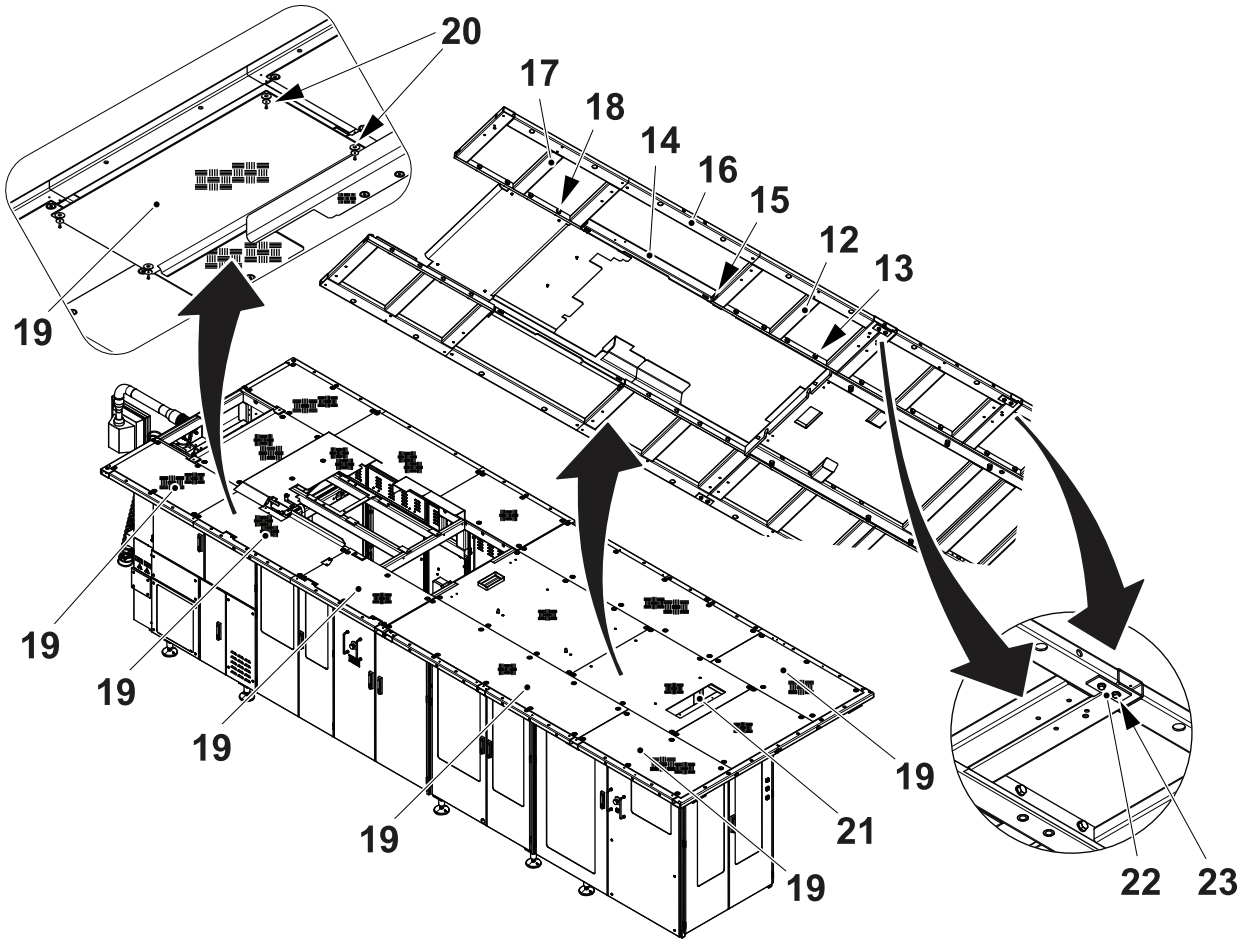

Platform screws (13) and screws (18), torque 60 Nm

Platform screws (15), torque 20 Nm

12 Platform	15 Screw	18 Screw	21 Hole
13 Screw	16 Beam	19 Checker plate	22 Plate
14 Bracket	17 Platform	20 Screw	23 Screw

3.2.4-5 Assembling the Platform, TP A3/CompactFlex with HVA

DANGER

Risk of personal injury.
Do not stand on the platforms until the supporting feet are fitted.

WARNING

Risk of falling.
Take care when working on machines without platforms and railings. If work is performed on the platforms before railings are mounted, it is strongly recommended to use a safety hardness.

Note! For machine equipped with HVA, fit the platforms according to 3.2.4-3 Assembling the Platform, Filling Machine Standard. For machine equipped with PT and HVA, fit the platforms according to 3.2.4-4 Assembling the Platform, TP A3/CompactFlex with PT.

(Cont'd)

(Cont'd)

a) Fit the beams (1) of the HVA platform (2) into the slots (3) and tighten the screws (4).

b) Fit the beams (5) of the HVA platform (6) into the slots (7) and tighten the screws (8) and the screw (9).

c) Secure the HVA platform (2) and HVA platform (6) with the bracket (10) and the screws (11).

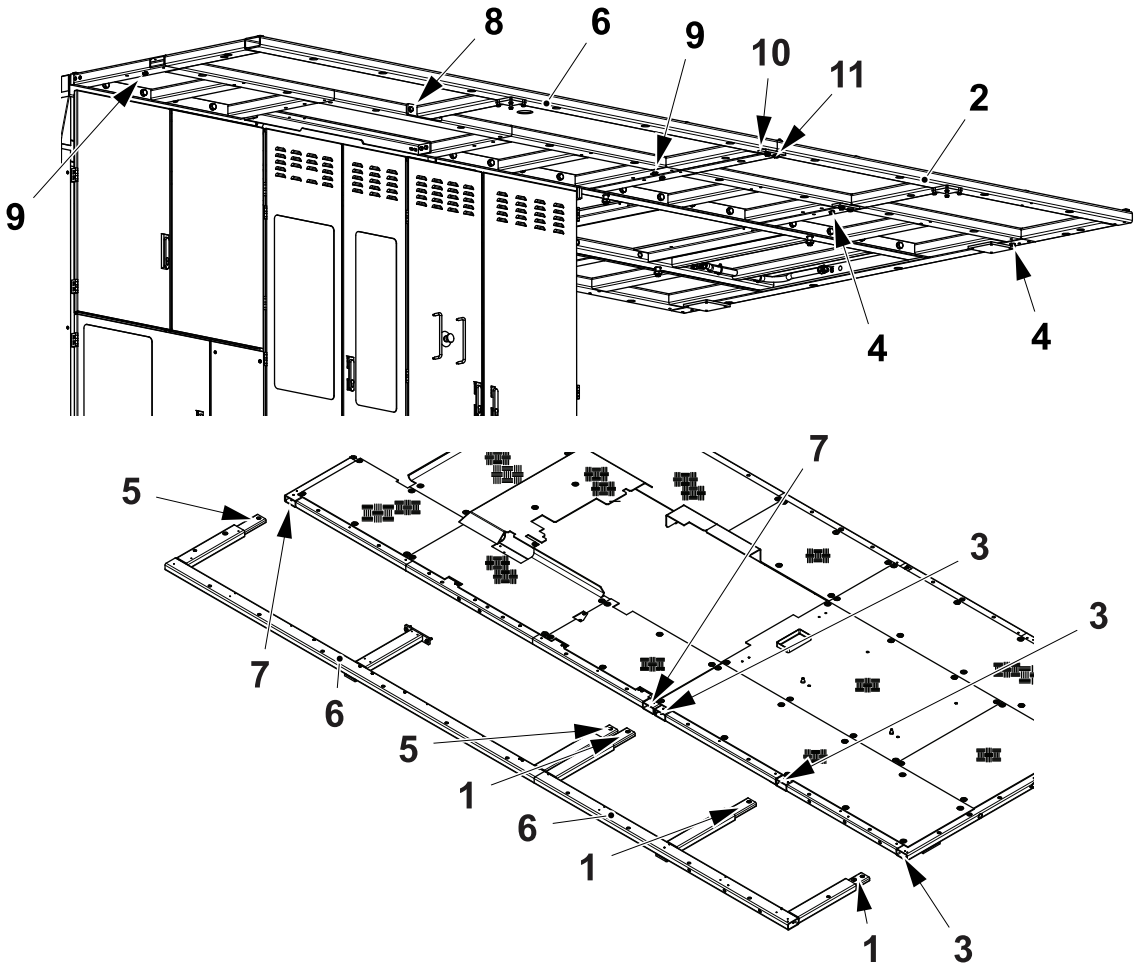

1 Beam	4 Screw	7 Slot	10 Bracket
2 HVA platform	5 Beam	8 Screw	11 Screw
3 Slot	6 HVA platform	9 Screw	

(Cont'd)

(Cont'd)

d) Fit the feet (12) to the HVA platforms with the screws (13).
e) Fit the checker plates (14) with the screws (15).
f) Remove the screws (16) and the plate (17) from the frame (18).
g) Fit the frame (18) to the platform with the screws (19).
h) Fit the plate (17) to the frame (18) with the screws (16).

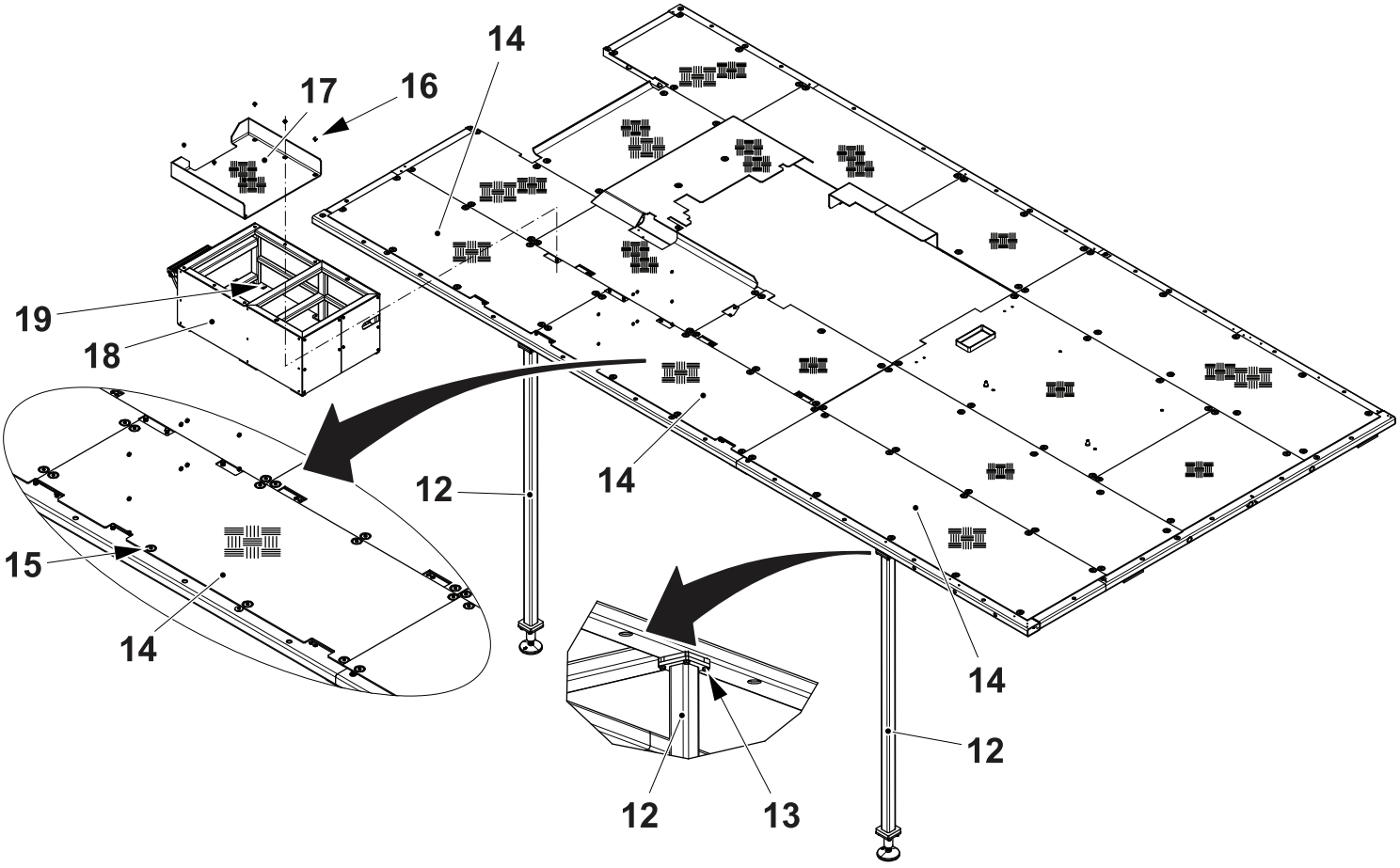

12 Feet
13 Screw
14 Checker plate
15 Screw
16 Screw
17 Plate
18 Frame
19 Screw

3.2.4-6 Assembling the Platform, TP A3/CompactFlex with PT and HVA

Refer to procedure 3.2.4-4 Assembling the Platform, TP A3/CompactFlex with PT and to procedure 3.2.4-5 Assembling the Platform, TP A3/CompactFlex with HVA to assemble the machine platforms.

3.2.4-7 Assembling the Platform, Filling Machine Standard UL-CSA

DANGER

Risk of personal injury.
Do not stand on the platforms until the supporting feet are fitted.

WARNING

Risk of falling.
Take care when working on machines without platforms and railings. If work is performed on the platforms before railings are mounted, it is strongly recommended to use a safety hardness.

(Cont'd)

(Cont'd)

a) Fit the beam (1) to the back platform (2) with the screws (3).
b) Fit the platform (4) aligned to the beam (1) with the screws (5).
c) Fit the platform (6) with the screws (7).
d) Fit the brackets (8) and (9).
e) Fit the platform (10) aligned to the beam (1) with the screw (11).
f) Fit the platform (12) with the screw (13).
g) Fit the brackets (14) and (15).
h) Fit the platform (16) with the screws (17).
i) Fit the bracket (18) with the screws (19).
j) Fit the beam (20) next to the platform (16).
k) Fit the platform (21) with the screws (22).
l) Fit the foot (23) with the screws (24).

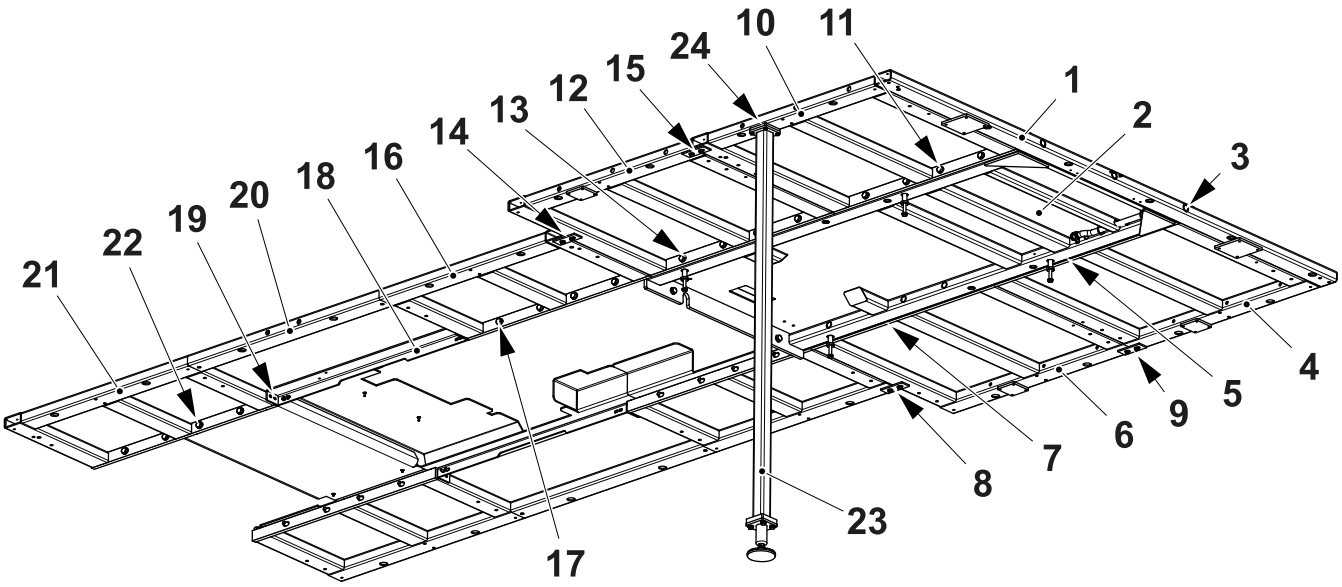

Platforms screws (3), screws (5), screws (7), screw (11), screw (13), screws (17) and screws (22), torque 60 Nm

Platform screws (19), torque 20 Nm

1 Beam	7 Screw	13 Screw	19 Screw
2 Back platform	8 Bracket	14 Bracket	20 Beam
3 Screw	9 Bracket	15 Bracket	21 Platform
4 Platform	10 Platform	16 Platform	22 Screw
5 Screw	11 Screw	17 Screw	23 Foot
6 Platform	12 Platform	18 Bracket	24 Screw

(Cont'd)

(Cont'd)

m) Fit the checker plates (25) with the screws (26).

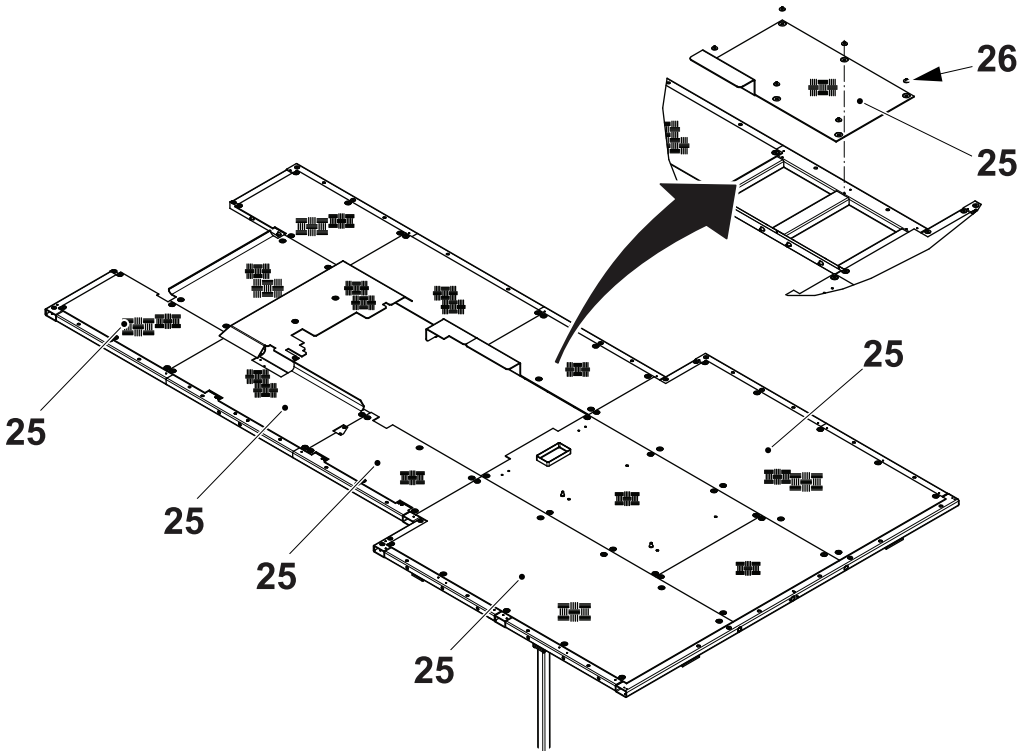

25 Checker plate
26 Screw

3.2.4-8 Assembling the Platform, TP A3/CompactFlex with PT UL-CSA

DANGER

Risk of personal injury.
Do not stand on the platforms until the supporting feet are fitted.

WARNING

Risk of falling.
Take care when working on machines without platforms and railings. If work is performed on the platforms before railings are mounted, it is strongly recommended to use a safety hardness.

(Cont'd)

(Cont'd)

a) Fit the beam (1) to the back platform (2) with the screws (3).
b) Fit the platform (4) aligned to the beam (1) with the screws (5).
c) Fit the platform (6) with the screws (7).
d) Fit the platform (8) with the screw (9).
e) Tighten the screws to the bracket (10).
f) Fit the brackets (11) and (12).
g) Fit the platform (13) with the screw (14).
h) Fit the platform (15) with the screws (16).
i) Fit the platform (17) with the screws (18).
j) Tighten the screws to the bracket (19).
k) Fit the brackets (20) and (21).

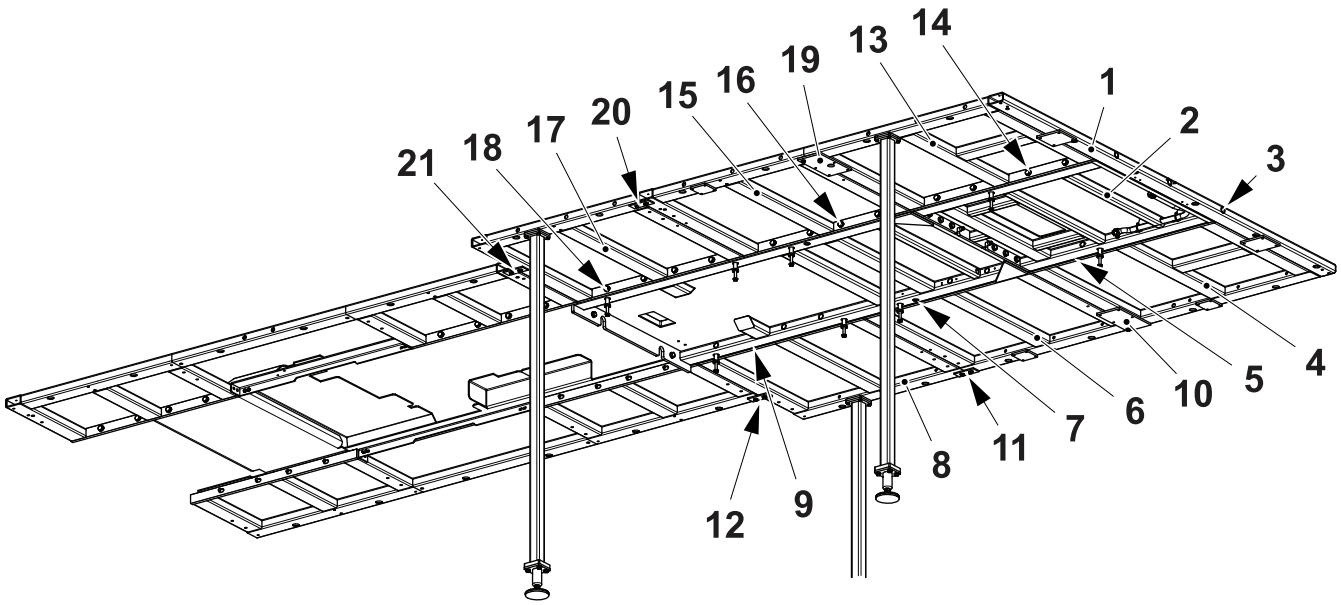

Platform screws (3), screws (5), screws (7), screw (9), screw (14), screws (16) and screws (18), torque 60 Nm

1 Beam
2 Back platform
3 Screw
4 Platform
5 Screw
6 Platform
7 Screw
8 Platform
9 Screw
10 Bracket
11 Bracket
12 Bracket
13 Platform
14 Screw
15 Platform
16 Screw
17 Platform
18 Screw
19 Bracket
20 Bracket
21 Bracket

(Cont'd)

(Cont'd)

l) Fit the feet (22) with the screws (23).
m) Fit the platform (24) with the screws (25).
n) Fit the bracket (26) and tighten the screws (27).
o) Fit the beam (28) next to the platform (24).
p) Fit the platform (29) with the screws (30).
q) Fit the bracket (31).

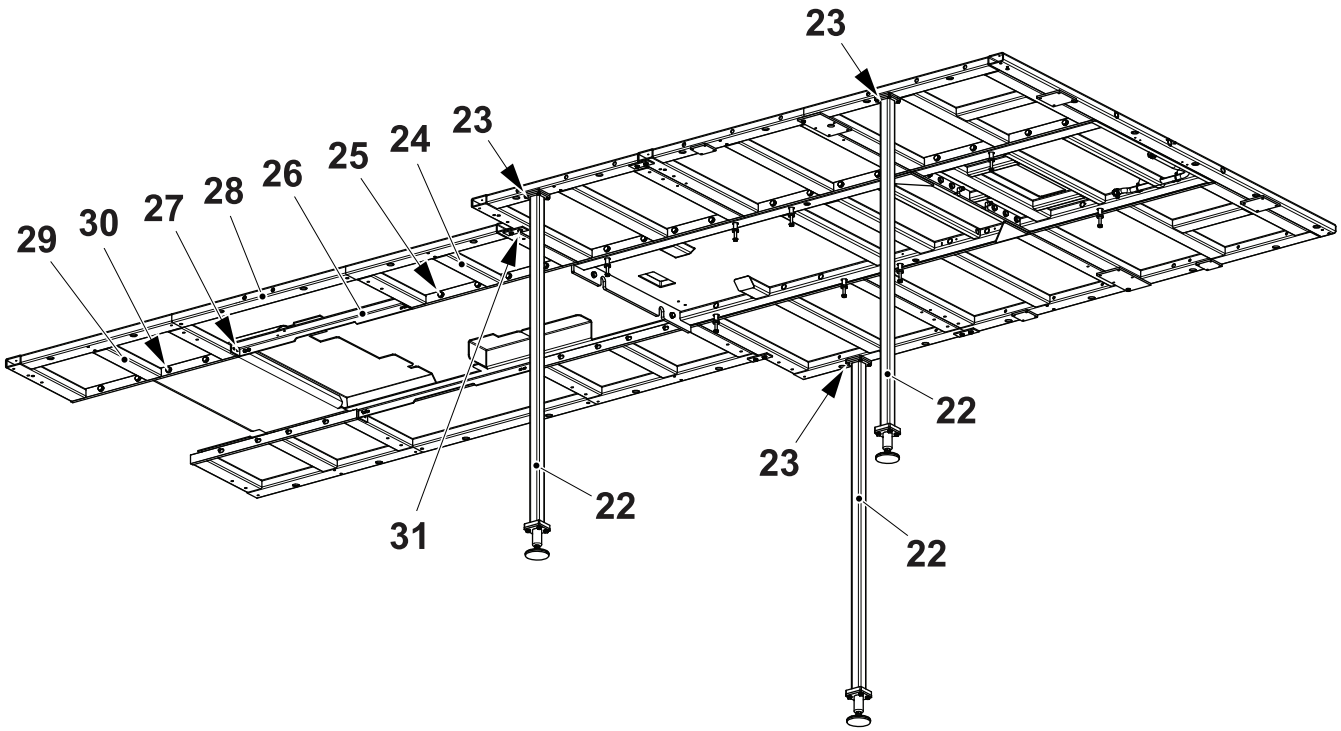

Platform screws (25) and screws (30), torque to 60 Nm

Platform screws (27), torque 20 Nm

22 Foot	25 Screw	28 Beam	30 Screw
23 Screw	26 Bracket	29 Platform	31 Bracket
24 Platform	27 Screw		

(Cont'd)

(Cont'd)

r) Fit the checker plates (32) with the screws (33).

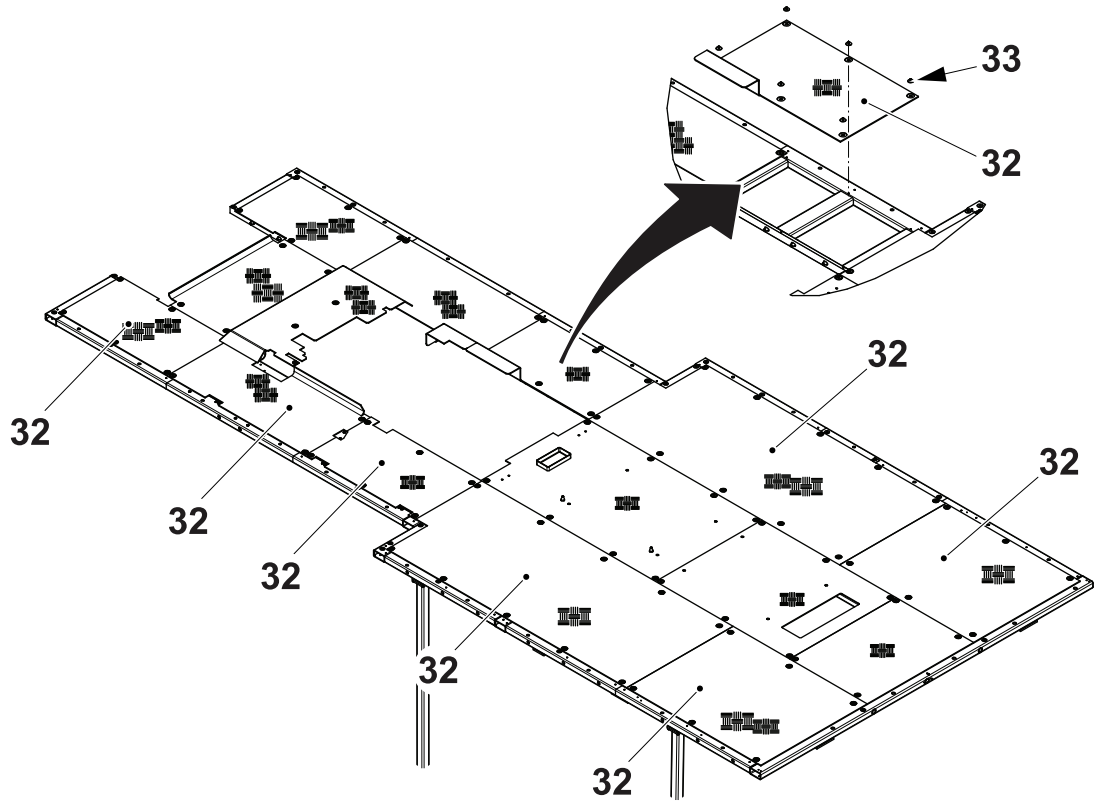

32 Checker plate
33 Screw

3.2.4-9 Assembling the Platform, TP A3/CompactFlex with HVA UL-CSA

Refer to procedure 3.2.4-7 Assembling the Platform, Filling Machine Standard UL-CSA and to procedure 3.2.4-5 Assembling the Platform, TP A3/CompactFlex with HVA to assemble the machine platforms.

3.2.4-10 Assembling the Platform, TP A3/CompactFlex with PT and HVA UL-CSA

Refer to procedure 3.2.4-8 Assembling the Platform, TP A3/CompactFlex with PT UL-CSA and to procedure 3.2.4-5 Assembling the Platform, TP A3/CompactFlex with HVA to assemble the machine platforms.

3.2.4-11 Assembling the Superstructure

a) Clear any dirt from the contact surfaces.

b) Lift the superstructure up on to the machine body. The two guide pins (1) on the machine body will give the exact position to the superstructure.

c) Tighten the superstructure to the machine body by means of the eight screws (2), (3), (4) and (5).

d) Remove the beam (6) by means of the screws (7).

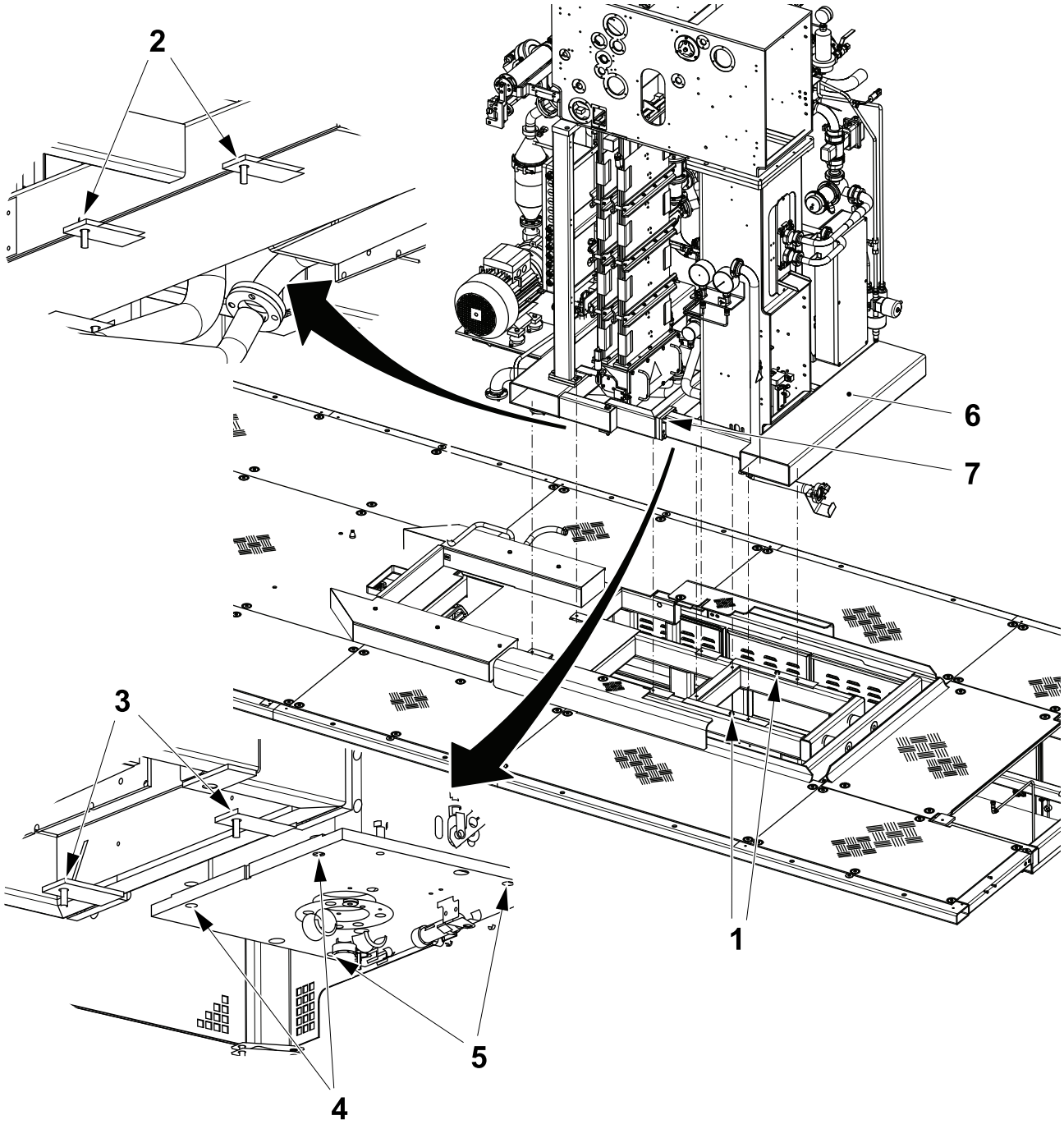

1 Guide pin
2 Screw
3 Screw
4 Screw
5 Screw
6 Beam
7 Screw

3.2.4-12 Assembling the Service Unit

Lift the service unit up on to the front of the machine body. Tighten the service unit to the machine body by means of the three screws (1).

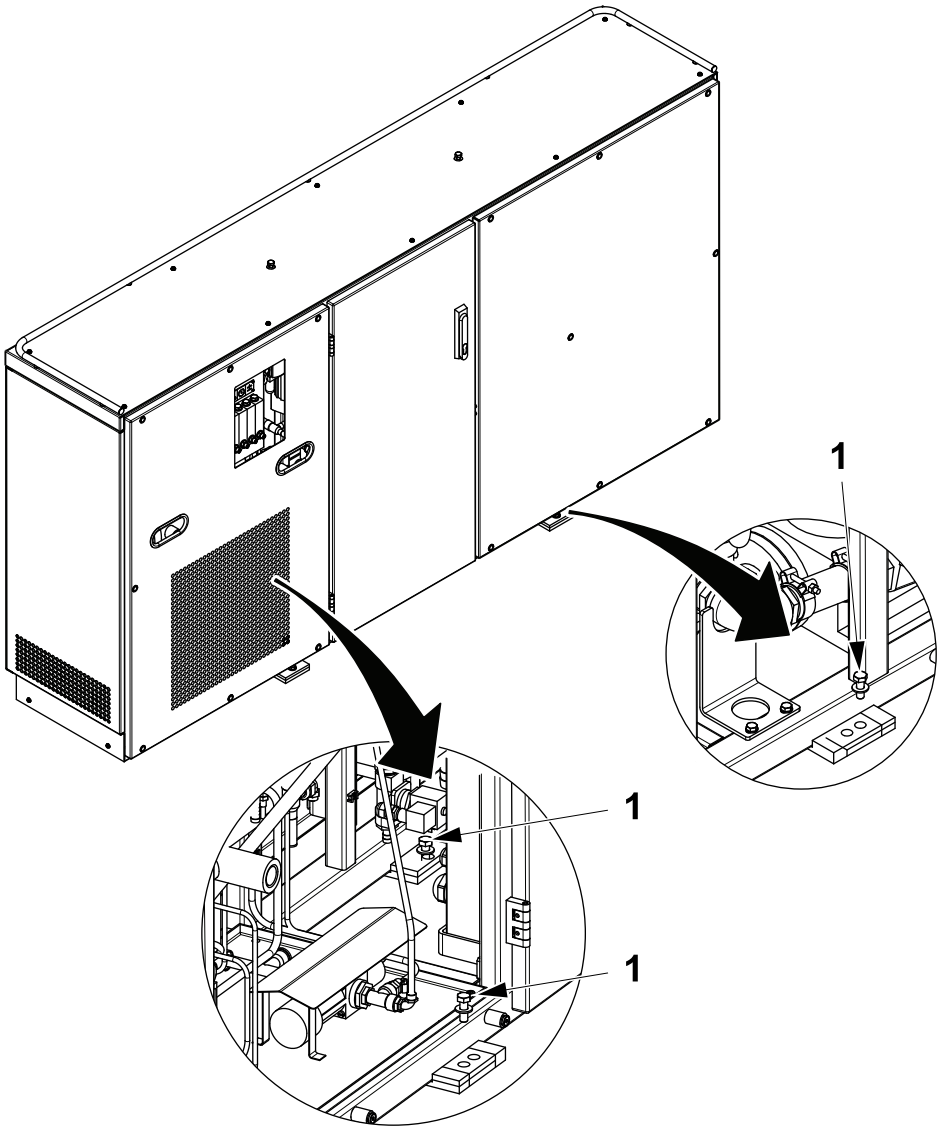

1 Screw

3.2.4-13 Assembling the Drive Units

a) Lift both the drive units (1) up onto the platform.

Note! The drive units (1) has to match with the pins (2) of the machine body.

Note! Pay attention to do not squeeze the belts against the pulleys.

b) On both the LH and RH sides of the superstructure, fit the drive units (1) by means of the four screws (3).

Note! The drive belts must be fitted after the servo motors have been commissioned, see 3.4.7-1 Servo Motors Commissioning.

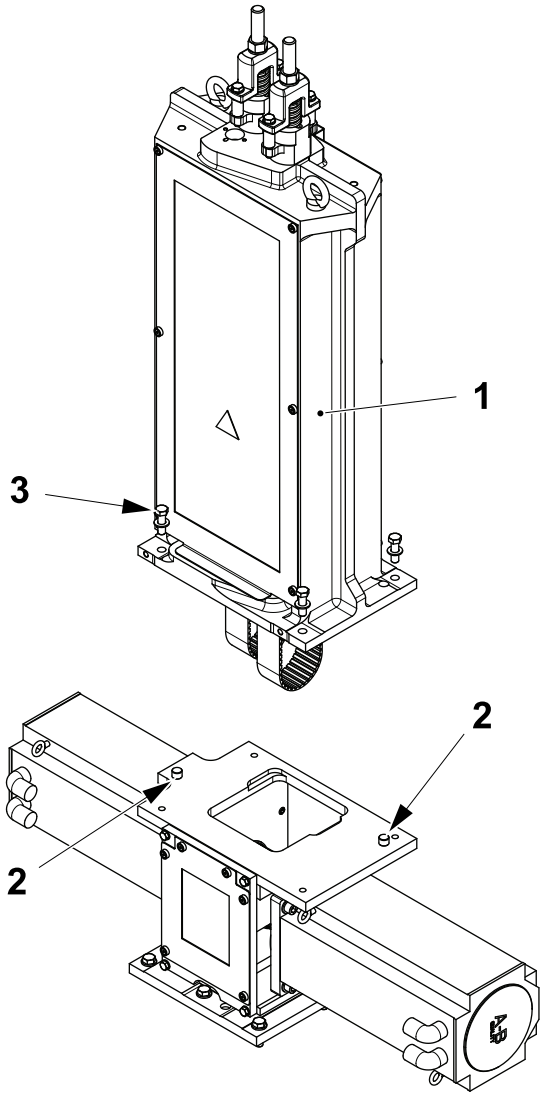

1 Drive unit
2 Pin
3 Screw

3.2.4-14 Electrical Cabinet - Assembly

a) Open the electrical cabinet and remove the sponge emitters.

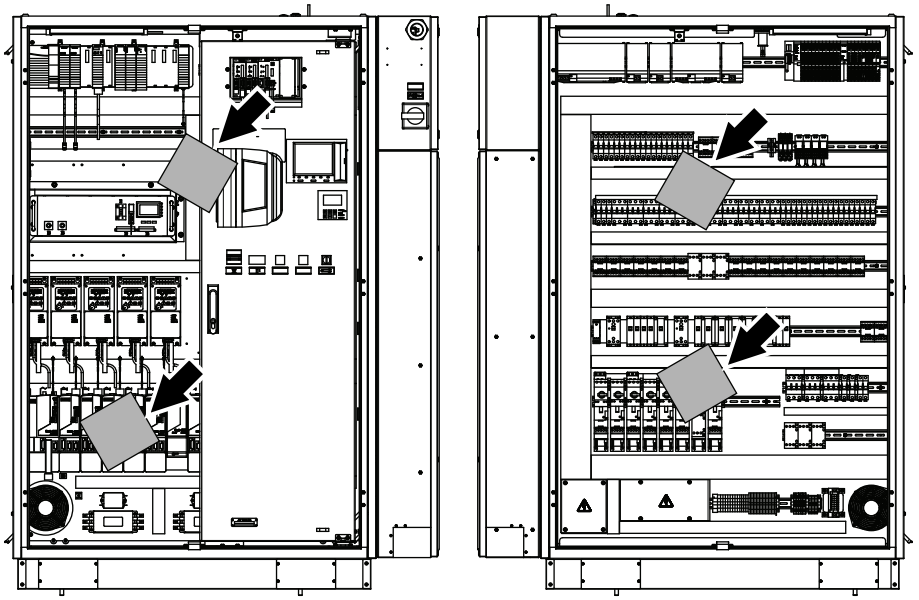

LH side RH side

(Cont'd)

(Cont'd)

b) Organize all the electrical cables so they will not interfere with the installation of the electrical cabinet cabinet (1).

c) Lift the electrical cabinet cabinet (1) up on to the platform. The two guide pins (2) on the platform will give the exact position for the electrical cabinet cabinet (1).

d) Secure the electrical cabinet cabinet (1) to the platform by means of the screws (3).

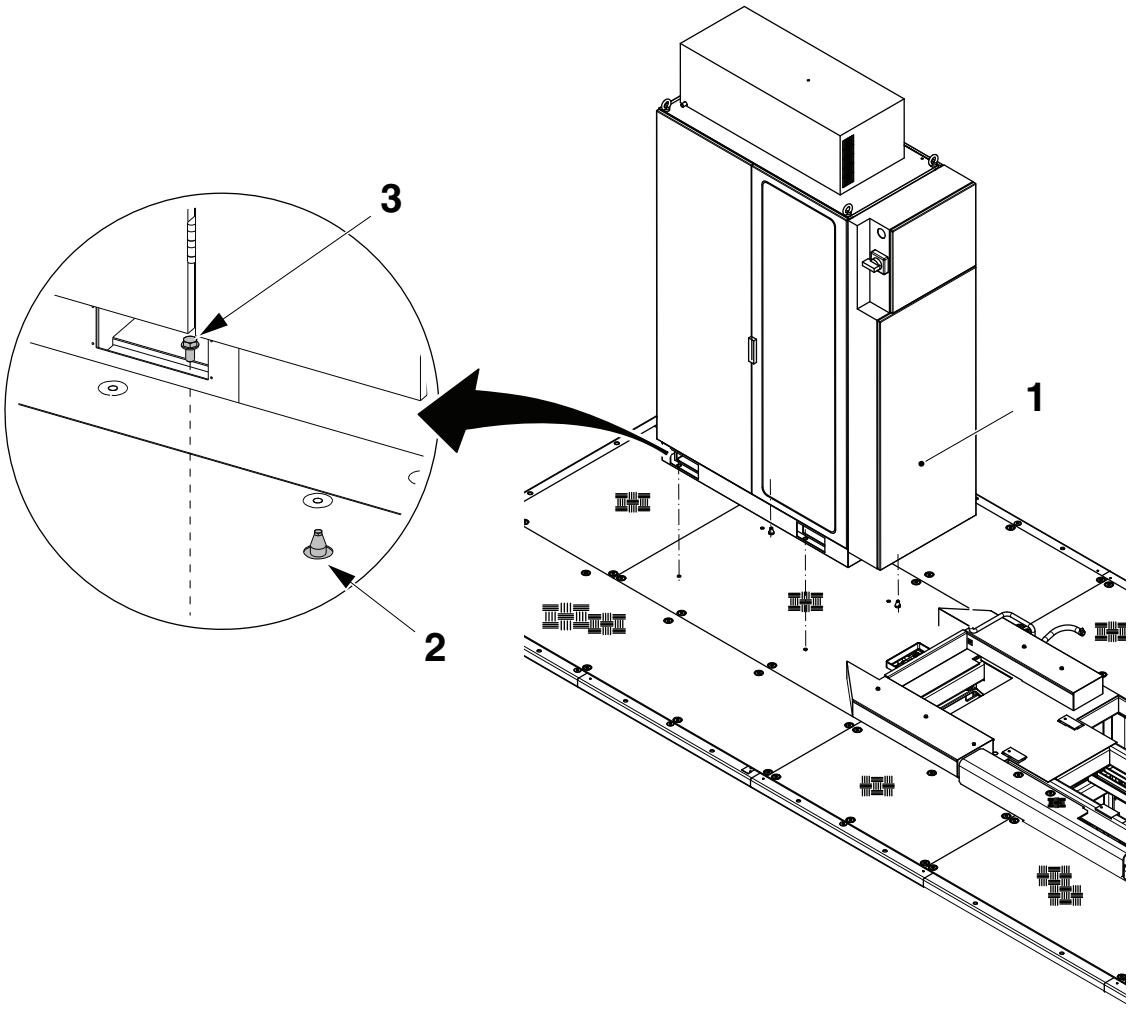

1 Cabinet cabinet
2 Guide pin (x2)
3 Screw (x4)

3.2.4-15 Pre-applicator Electrical Cabinet - Assembly

a) Organize all the PullTab electrical cables so they will not interfere with the installation of the PullTab electrical cabinet (1).

b) Make sure that the electrical cabinet cover (2) is easy to remove so the electrical cables from the PullTab unit can be passed through.

c) Lift the PullTab electrical cabinet (1) up on to the platform. Secure the PullTab electrical cabinet (1) to the platform by means of the screws (3).

d) Secure the PullTab electrical cabinet to the filling machine electrical cabinet by means of the six clamps (4) and the screws (5).

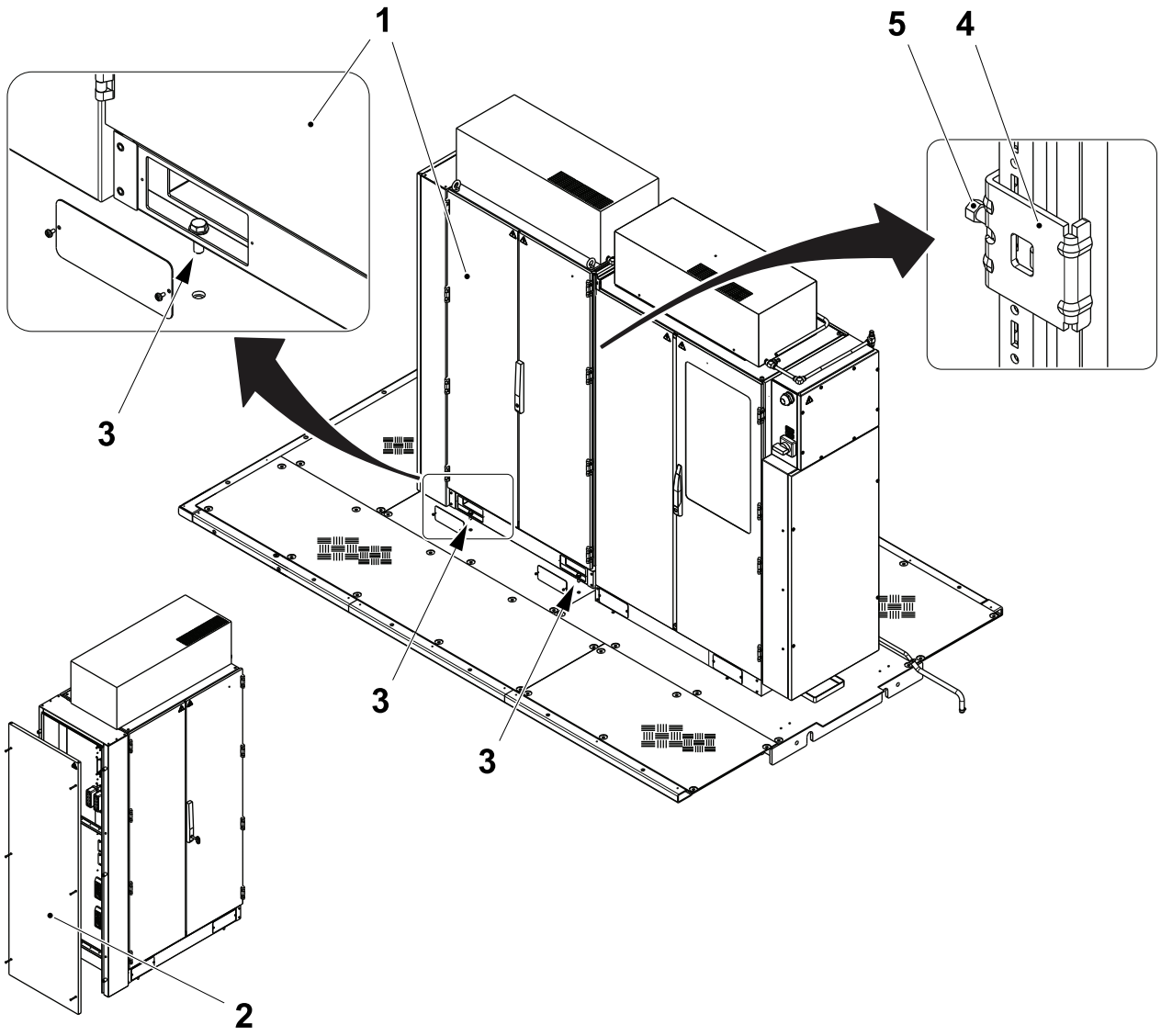

1 Electrical cabinet
2 Cover
3 Screw (x4)
4 Clamp (x6)
5 Screw (x6)

3.2.4-16 Assembling the HVA

Secure the HVA unit (1) to the frame (2) with the screws (3).

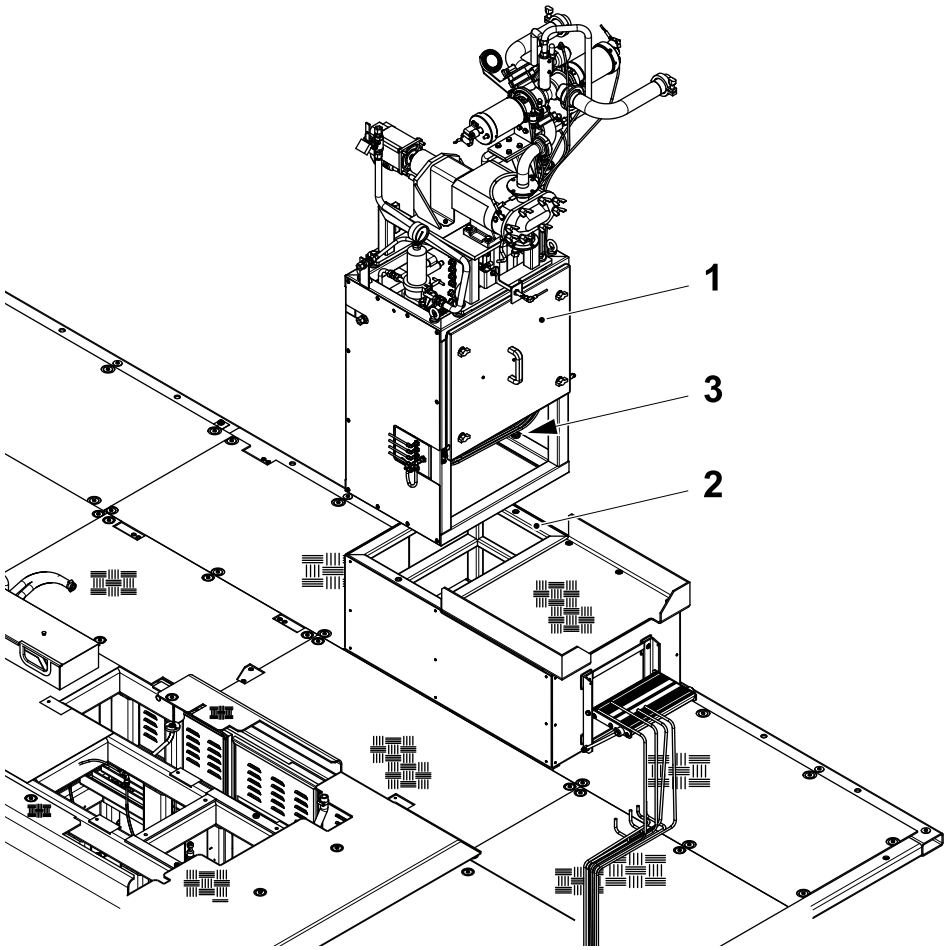

1 HVA unit
2 Frame
3 Screw

3.2.4-17 Assembling the ICU (OE)

a) Loosen the screws (1) and the clamp (2) and remove the pipe (3) to facilitate the fitting of the ICU unit.

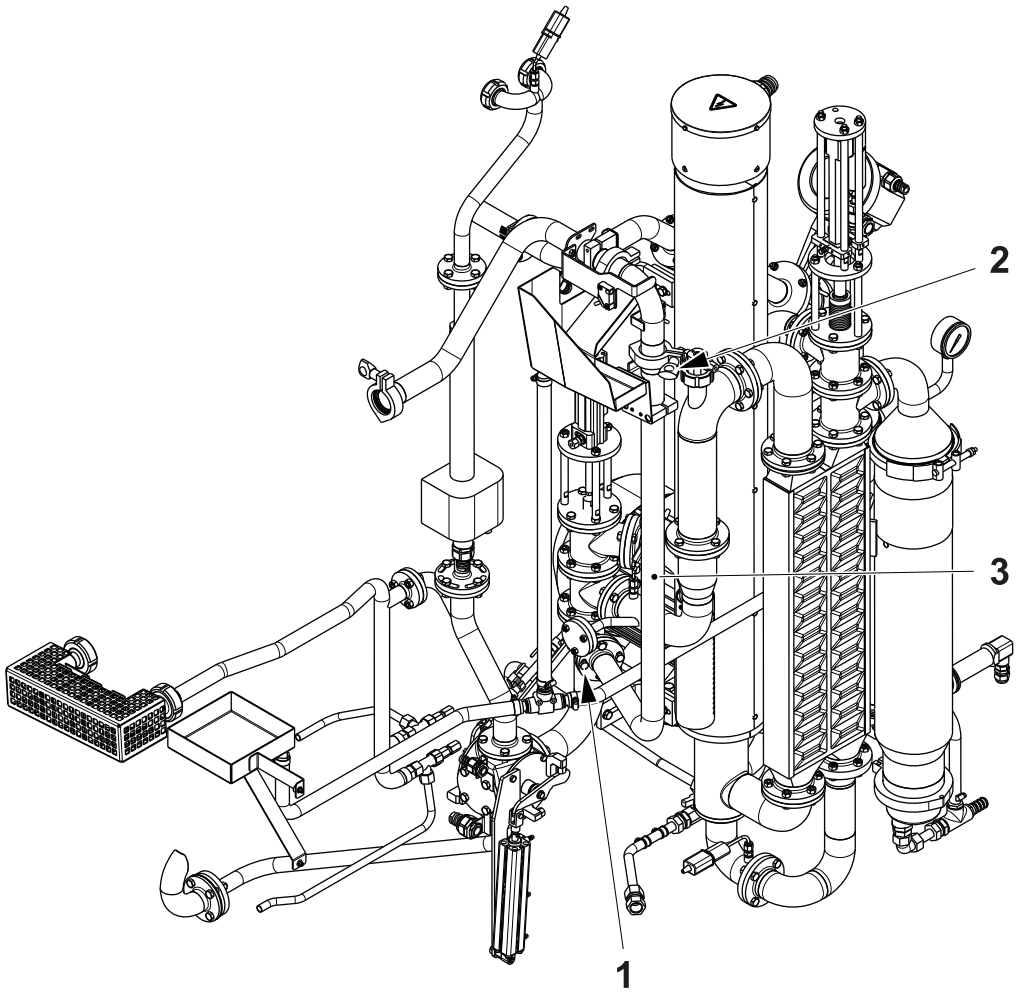

1 Screw
2 Clamp
3 Pipe

(Cont'd)

(Cont'd)

b) Fit the spacers (4) and (5) to the platform (6) with the screws (7) and (8).
c) Position the ICU unit (9) on the platform above the spacers (4) and (5).
d) Fit the screws (10) without tightening them.
e) Fit the pipe (3).

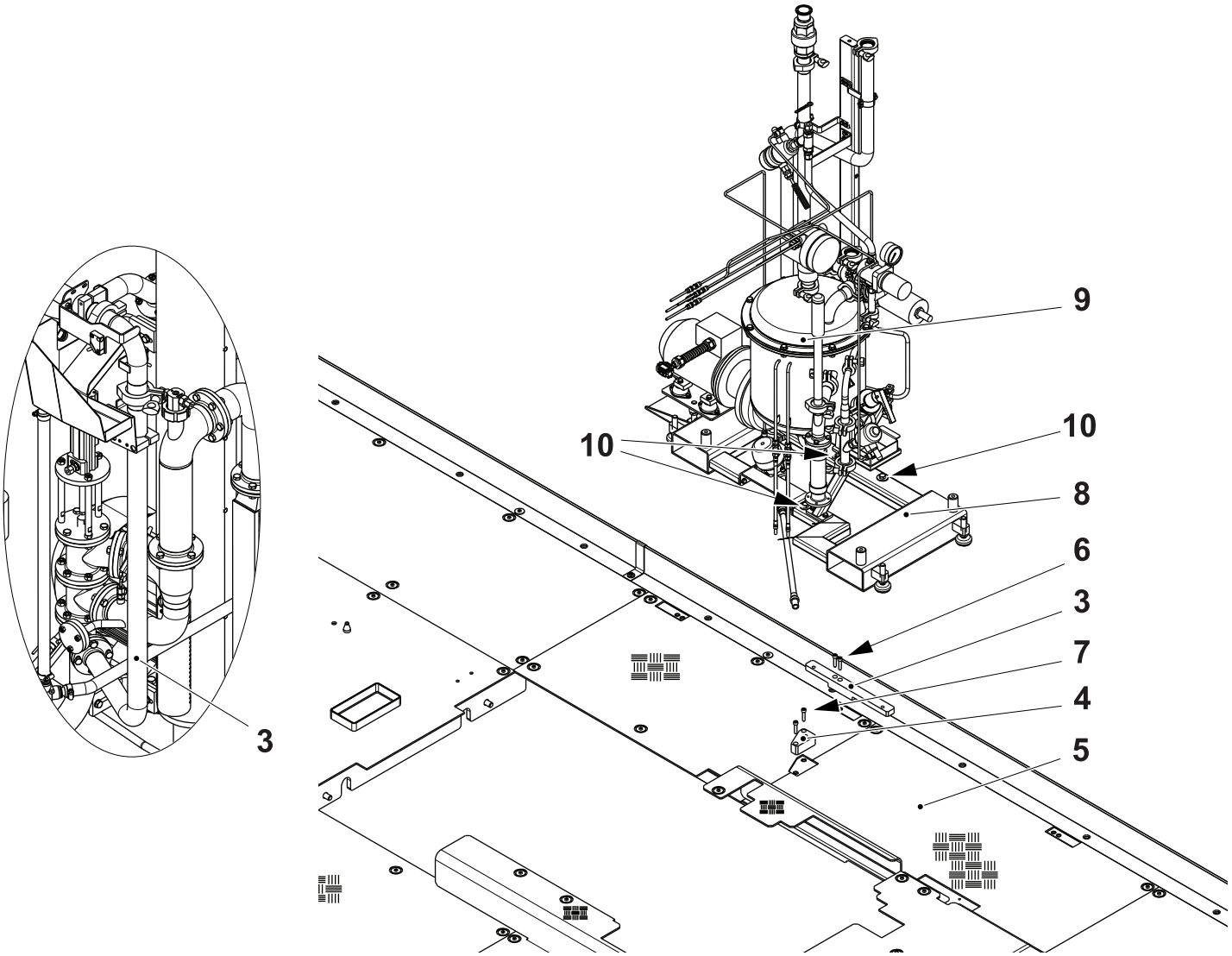

4 Spacer
5 Spacer
6 Platform
7 Screw
8 Screw
9 ICU unit
10 Screw

3.2.4-18 Assembling the Stairs

Note! The stair can be mounted in the LH side or in the RH side of the machine, see Stair on LH side (Standard Platforms) or or Stair on RH side (Standard Platforms) or . In case of Multi Installation, no stair will be provided with the machine, see No Stair - Multi installation.

WARNING

Risk of falling.

Take care when working on machines without platforms and railings. If work is performed on the platforms before railings are mounted, it is strongly recommended to use a safety hardness.

Stair Preparation

Note! Make sure that the checker plate (1) is fitted in the desired configuration, see illustration below.

a) If required remove the screws (2) and fit the checker plate (1) in the 'Stair in LH side' or 'Stair in LH side' configuration, using the hole (4).

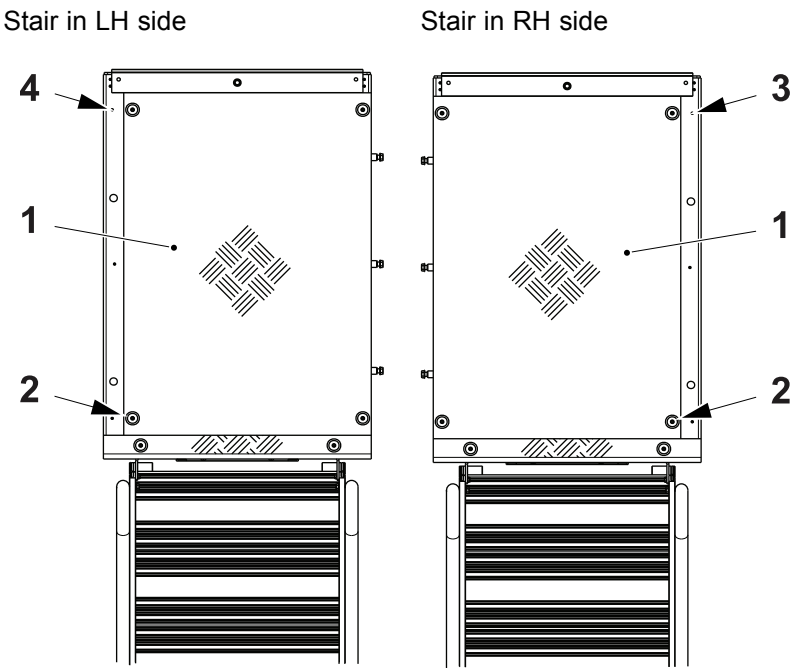

Platform screws (2) torque 44 Nm

1 Checker plate
2 Screw
3 Hole
4 Hole

(Cont'd)

(Cont'd)

Stair on LH side (Standard Platforms)

Note! The link (5) is not symmetrical.

a) Make sure that the longer side (6) of the link (5) is oriented towards the machine platform (7).

b) Fit the link (5) to the machine platform (7) with the screws (8).

c) Fit the stair platform (9) to the link (5).

d) Fit the stair (10) to the stair platform (9) with the screws (11).

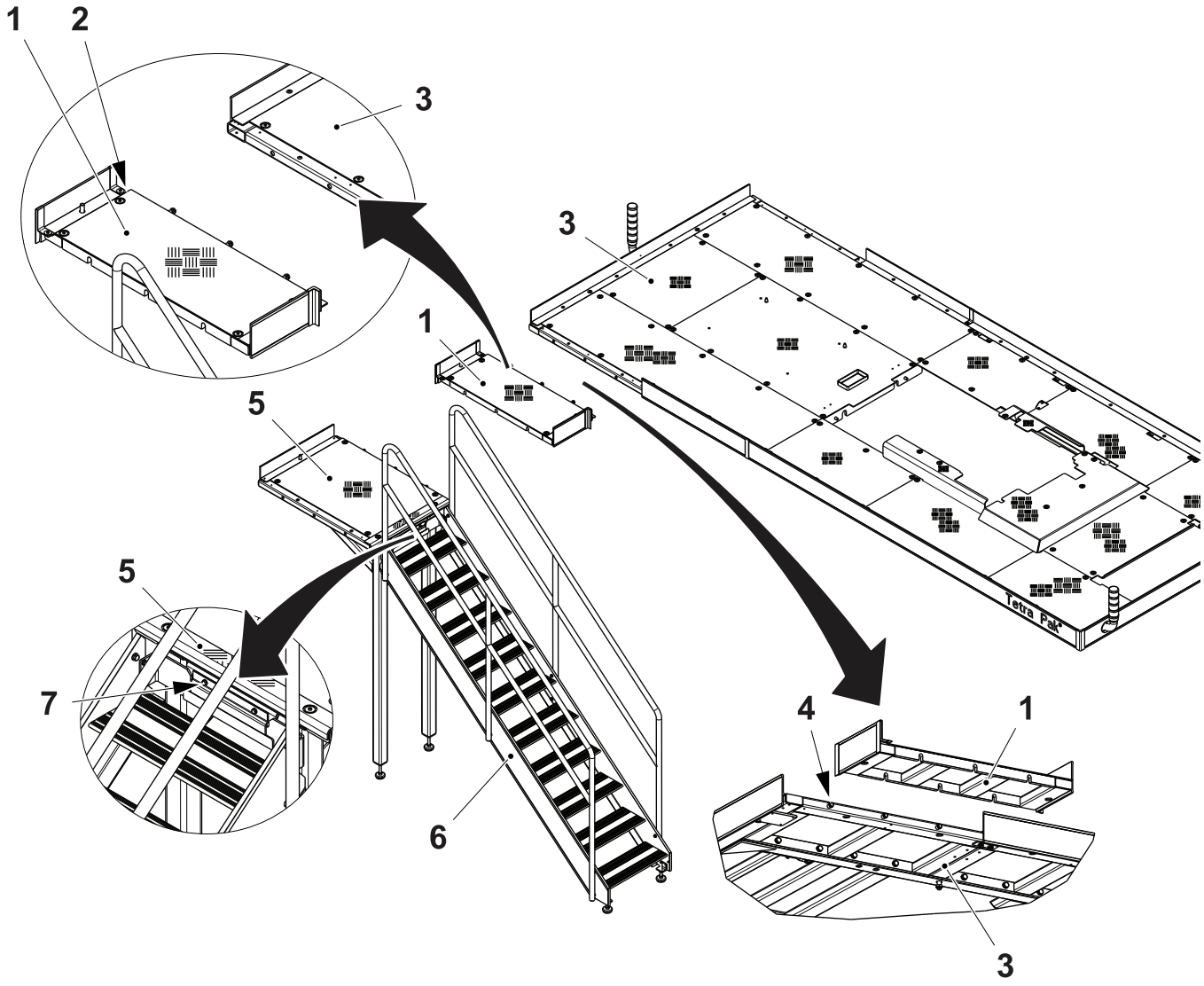

Platform screws torque 44 Nm

5 Link	8 Screw	10 Stair
6 Longer side	9 Stair platform	11 Screw
7 Machine platform		

(Cont'd)

(Cont'd)

Stair on RH side (Standard Platforms)

Note! The link (1) is not symmetrical.

a) Make sure that the longer side (2) of the link (1) is oriented towards the machine platform (3).

b) Fit the link (1) to the machine platform (3) with the screws (4).

c) Fit the stair platform (5) to the link (1) with the screws.

d) Fit the stair (6) to the stair platform (5) with the screws (7).

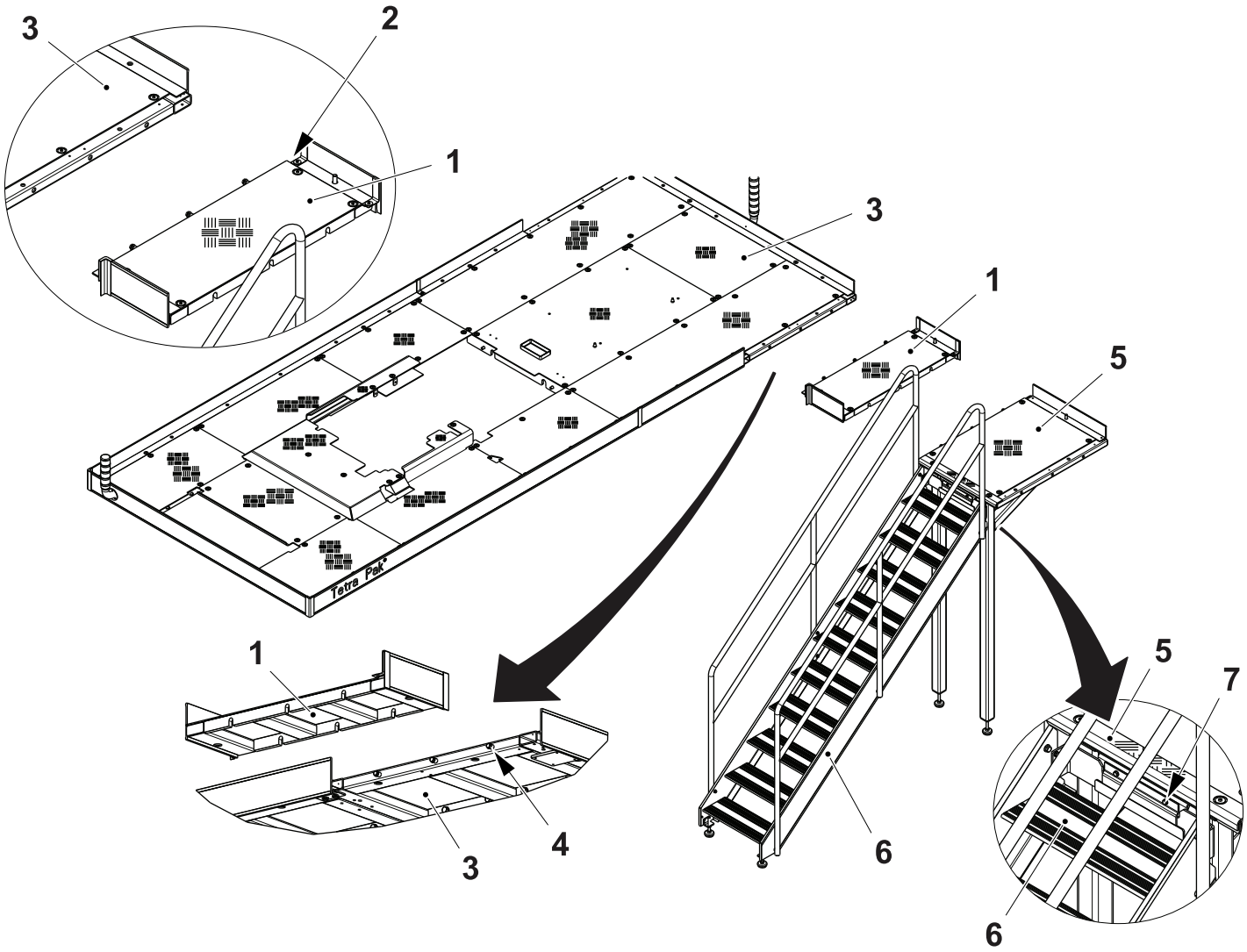

Platform screws torque 44 Nm

1 Link
2 Longer side
3 Machine platform
4 Screw
5 Stair platform
6 Stair
7 Screw

(Cont'd)

(Cont'd)

No Stair - Multi installation

Note! In case of Multi installation, no stair is delivered with the machine. The Multi installation machine has to be attached to a machine with the stair.

Note! It is possible to attach a Multi installation machine to the LH side of a machine. The stair has to be the RH side.

a) Remove the hand rail (1) from the previously installed machine platform (2).

b) Fit the link (3) to the previously installed machine platform (2).

c) Place the new machine platform (4) beside the previously installed machine platform (2) at the correct height.

d) Connect the new machine platform (4) to the link (3).

e) Fit all the rails (5) to the new machine platform (4) and connect them to the rails of the previously installed machine platform (2).

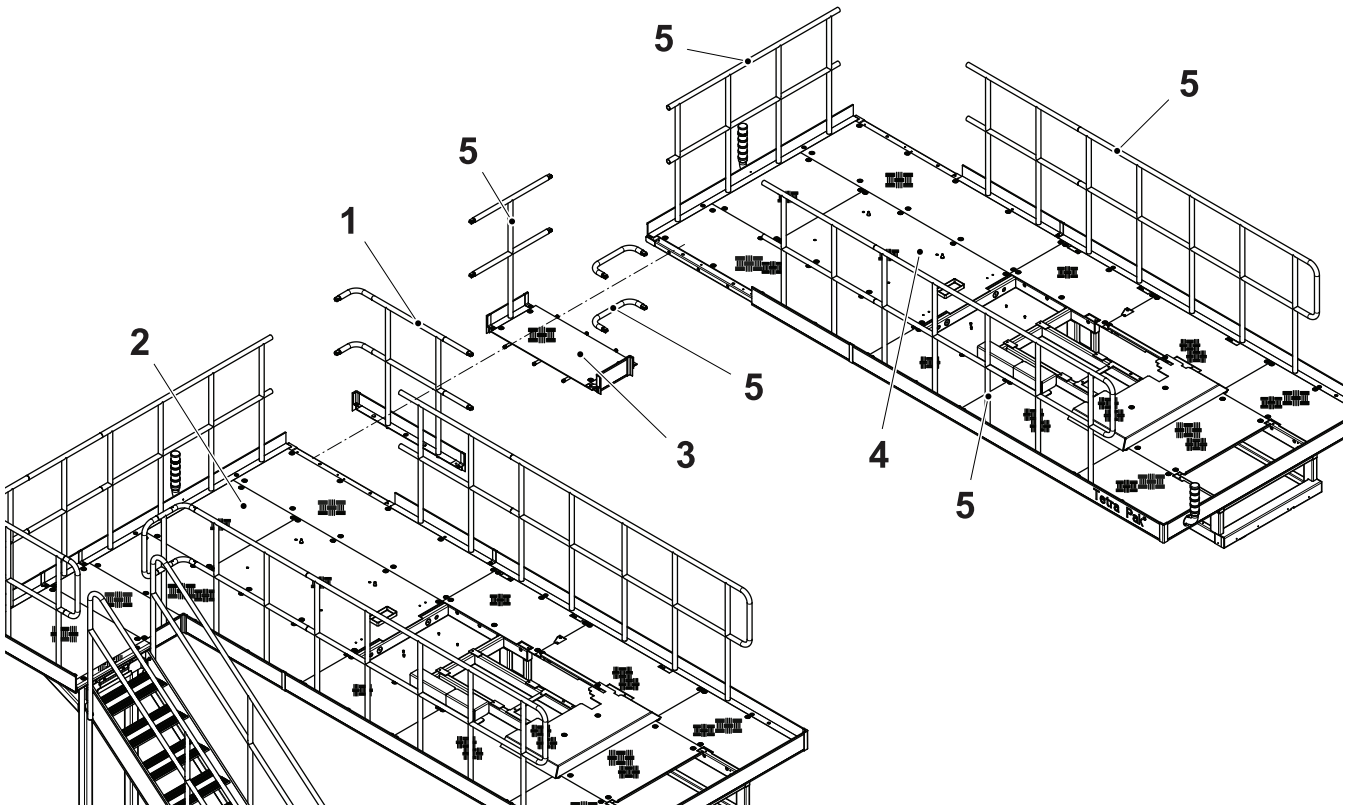

1 Hand rail
2 Machine platform
3 Link
4 New machine platform
5 Rail

3.2.4-19 Assembling the Railings

Note! Two different types of railings may be fitted: the standard railings (1) or the Australian railings (2) (with three horizontal bars and smaller space between the bars), see examples below. The assembling procedure does not change, see on page 3-71.

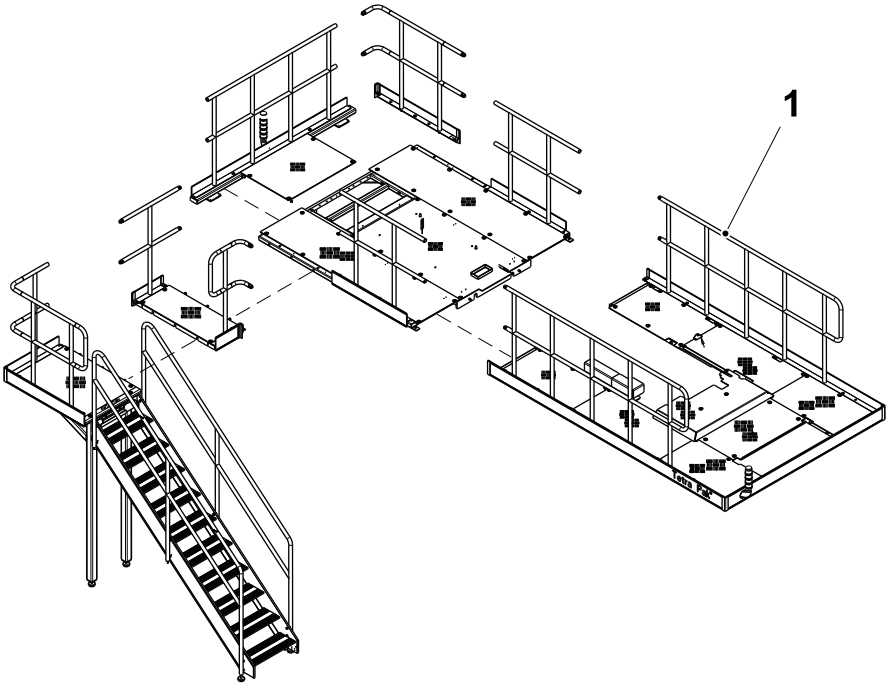

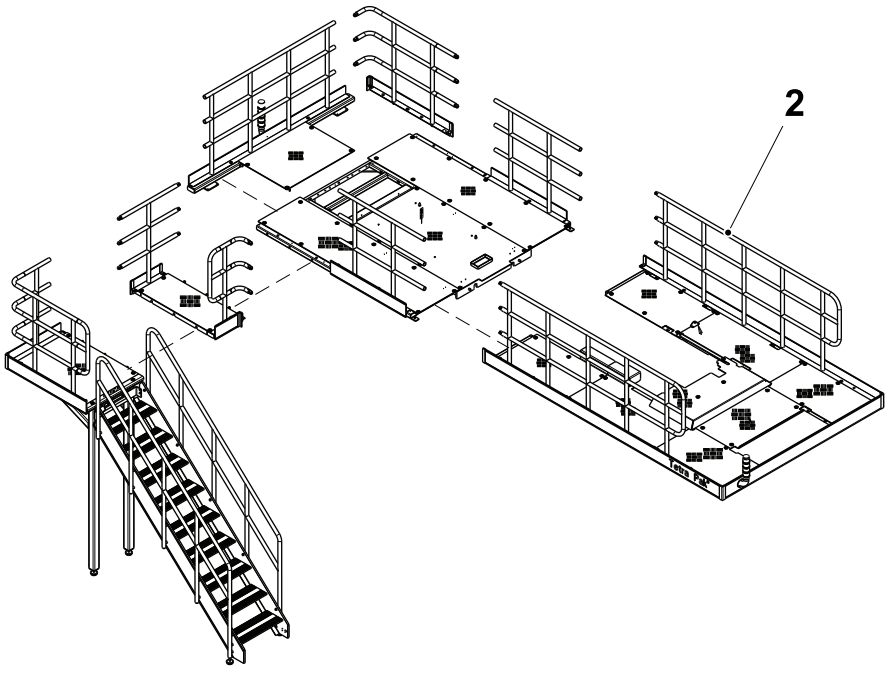

1 Standard railing
2 Australian railing

(Cont'd)

(Cont'd)

Note! The quantity of railings to be fitted differs according to the platforms installed, due to the machine configuration (presence of the pre-applicator), to the optional equipments installed (HVA) or to the platform type (CE or UL/CSA), see examples below.

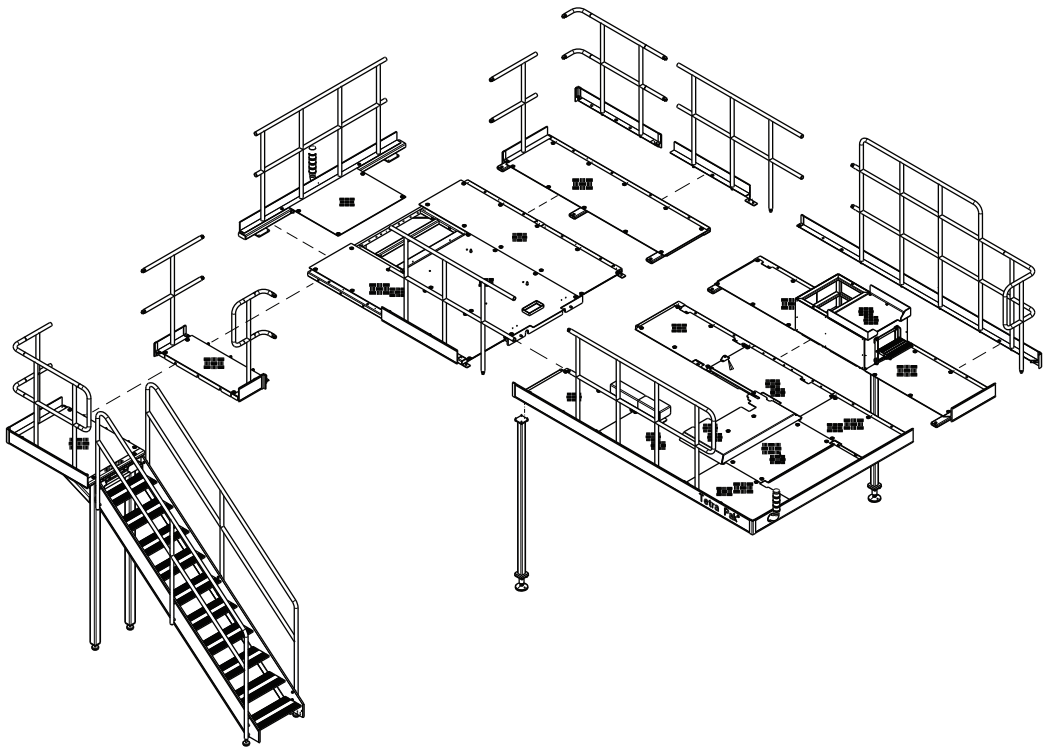

Filling machine with HVA, CE platforms

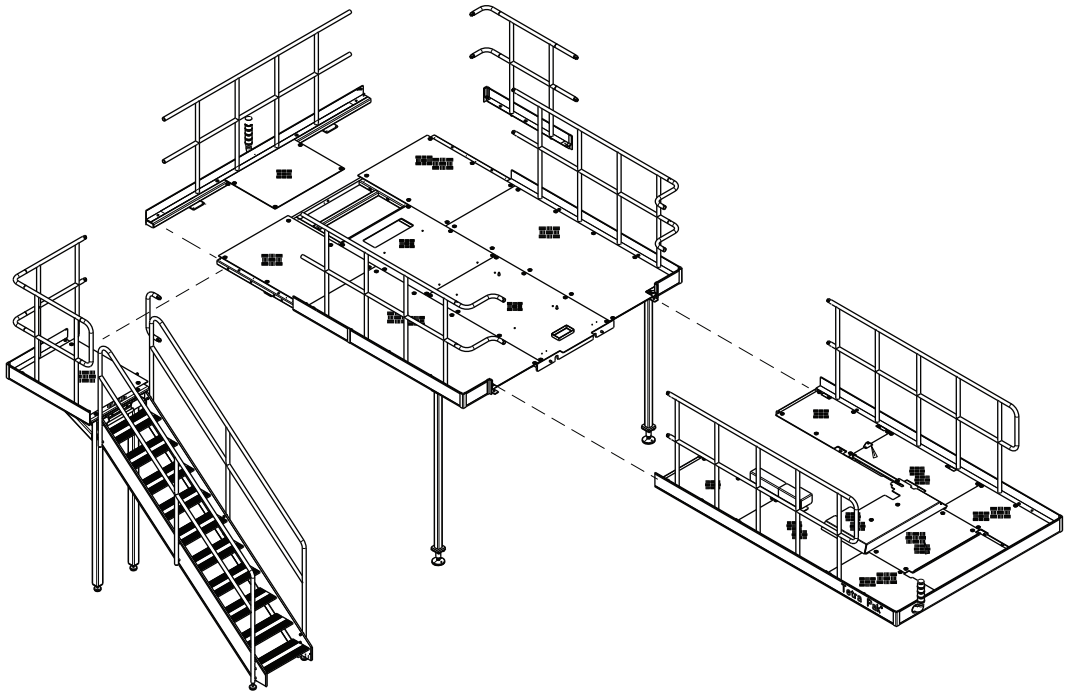

Filling machine with pre-applicator, UL/CSA platforms

(Cont'd)

(Cont'd)

Note! The stair can be mounted in the LH side or in the RH side of the machine, see Stair on LH side or Stair on RH side. In case of Multi Installation, no stair will be provided with the machine.

WARNING

Risk of falling.

Take care when working on machines without platforms and railings. If work is performed on the platforms before railings are mounted, it is strongly recommended to use a safety hardness.

(Cont'd)

(Cont'd)

Stair on LH side

Note! The sign holders (1) are fixed onto the platform frame by means of the hand rails (2). Fit the handrails and sign holders together.

a) Fit the sign holders (1) and the hand rails (2) with of the screws (3), the connections (4) and the screws (5).

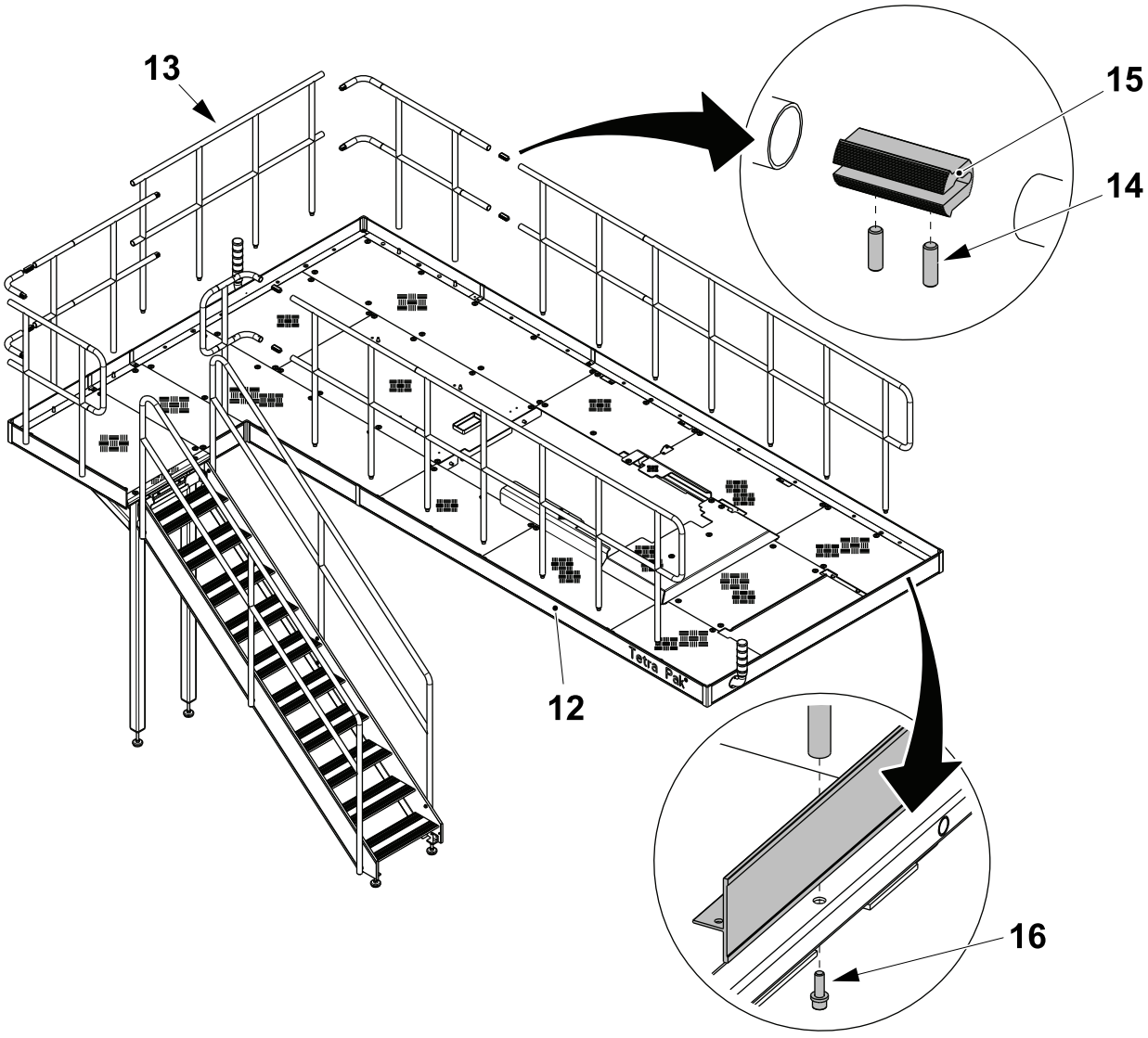

Hand rail, screws (3) torque 19 Nm

Hand rail, stop screws (5) torque 44 Nm

1 Sign holder
2 Hand rail
3 Screw
4 Connection
5 Screw

(Cont'd)

(Cont'd)

b) For machines with Australian handrails (6), fit three connections (4) with the screws (3) on each handrail.

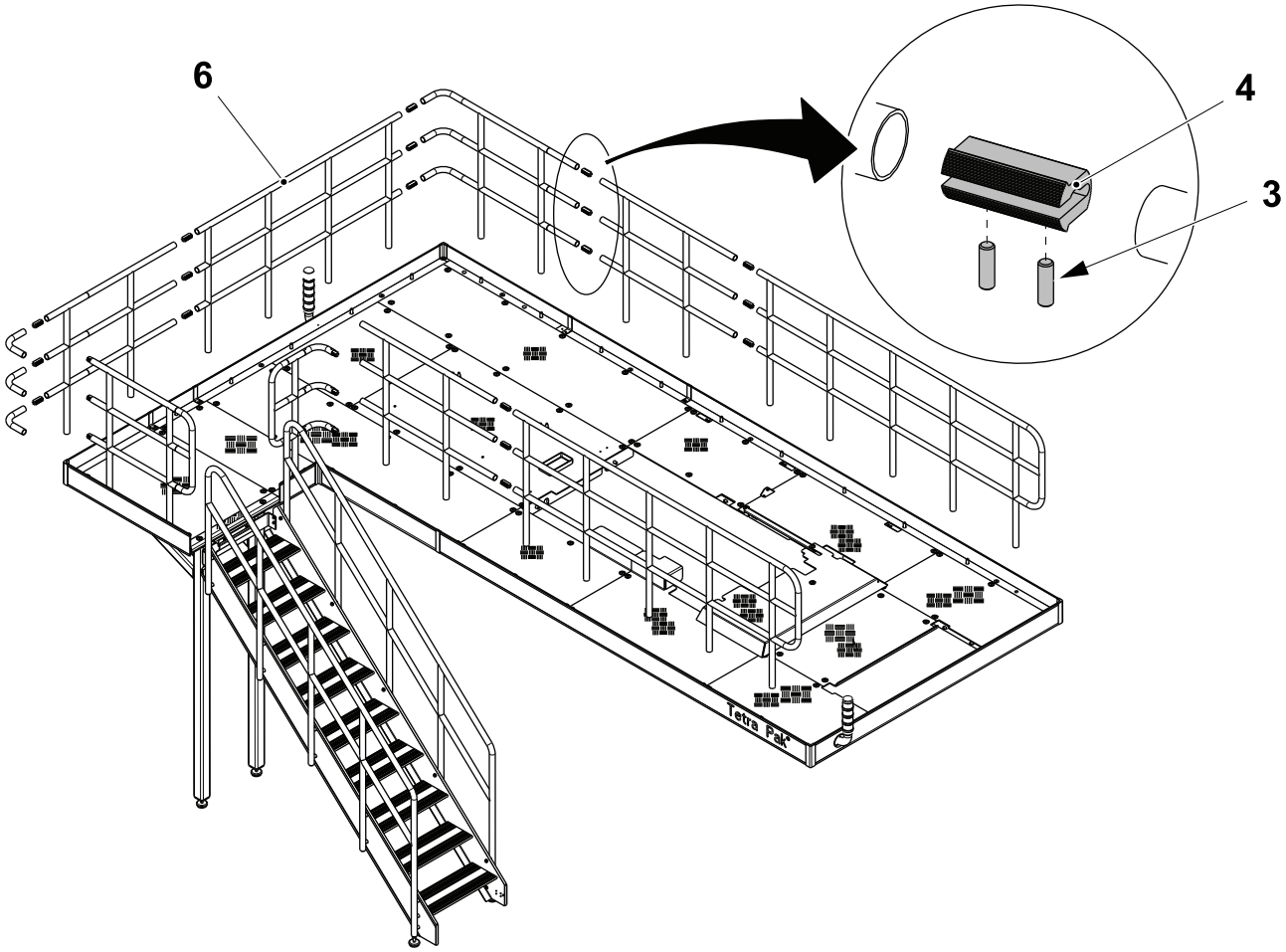

Filling machine with Australian railings shown

3 Screw
4 Connection
6 Australian handrails

(Cont'd)

(Cont'd)

c) Fit the brackets (7).
d) Fit the corner pieces (8) by means of the nuts (9).
e) Fit the brackets (10).
f) Fit the strips (11) by means of the nuts (12).

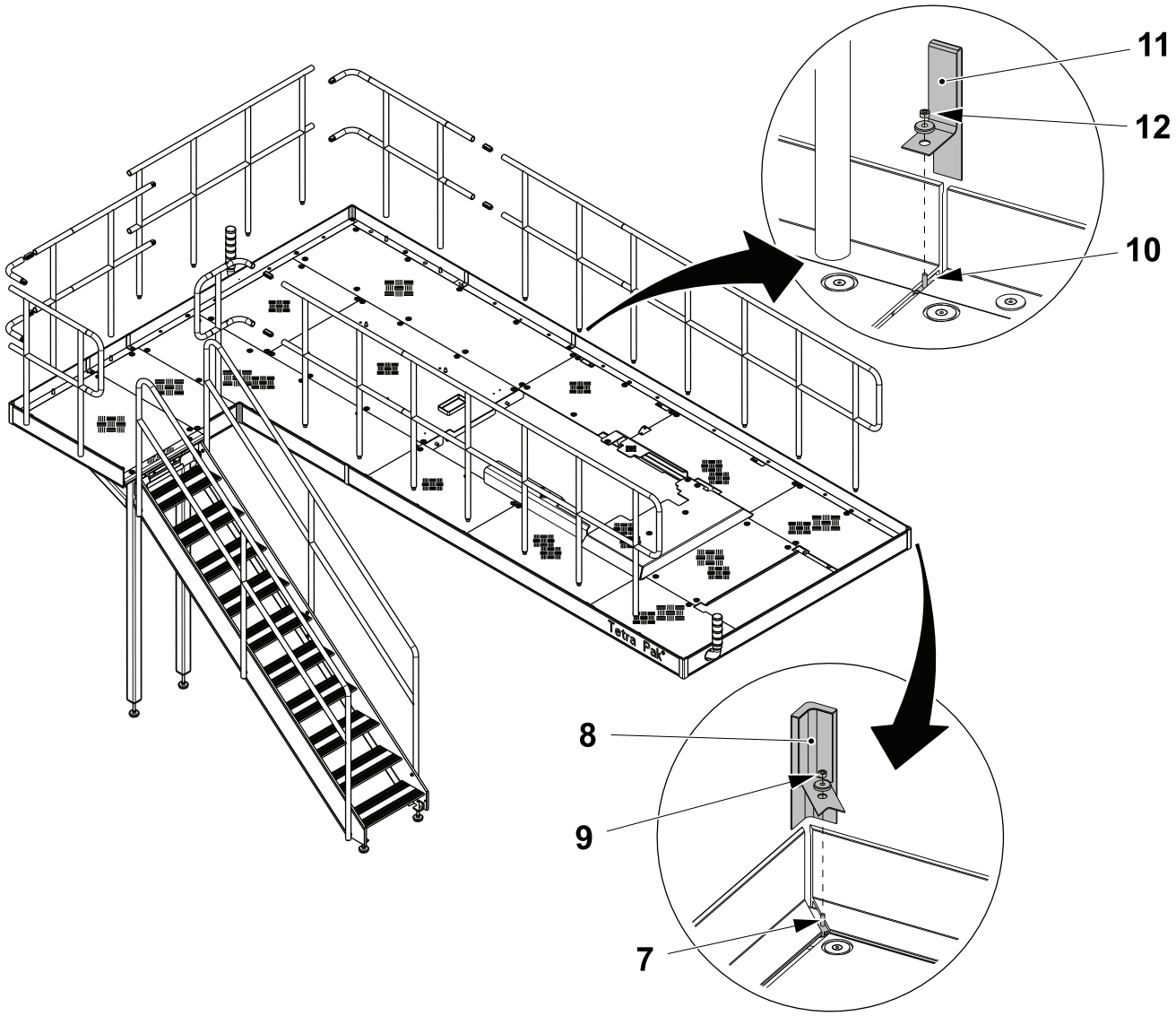

Hand rail, screws (3) torque 19 Nm

Hand rail, stop screws (5) torque 44 Nm

7 Bracket	10 Bracket
8 Corner piece	11 Strip
9 Nut	12 Nut

(Cont'd)

(Cont'd)

Stair on RH side

Note! The sign holders (1) are fixed onto the platform frame by means of the hand rails (2). Fit the handrails and sign holders together.

a) Fit the sign holders (1) and the hand rails (2) with of the screws (3), the connections (4) and the screws (5).

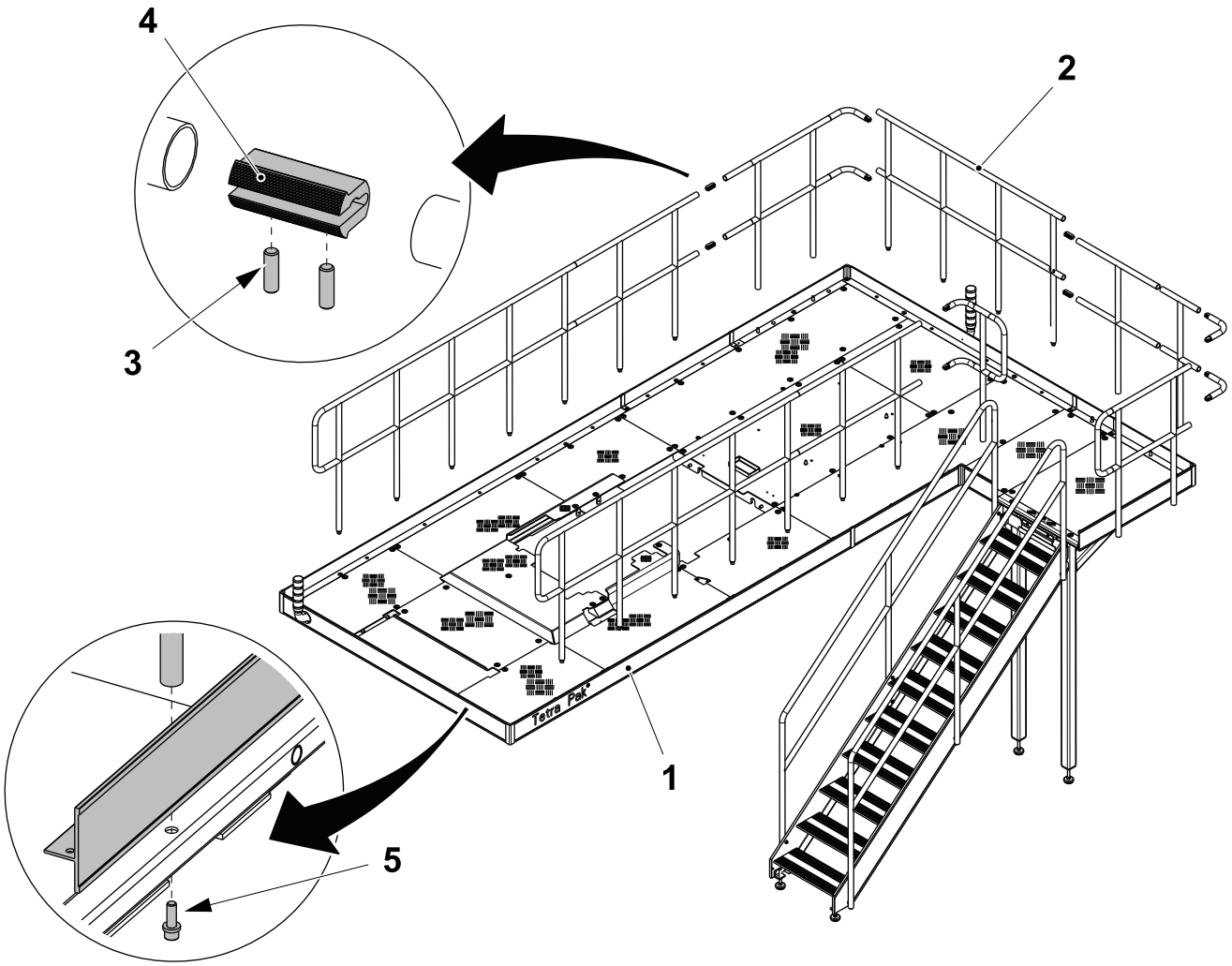

Hand rail, screws (3) torque 19 Nm

Hand rail, stop screws (5) torque 44 Nm

1 Sign holder
2 Hand rail
3 Screw
4 Connection
5 Screw

(Cont'd)

(Cont'd)

b) For machines with Australian handrails (6), fit three connections (4) with the screws (3) on each handrail.

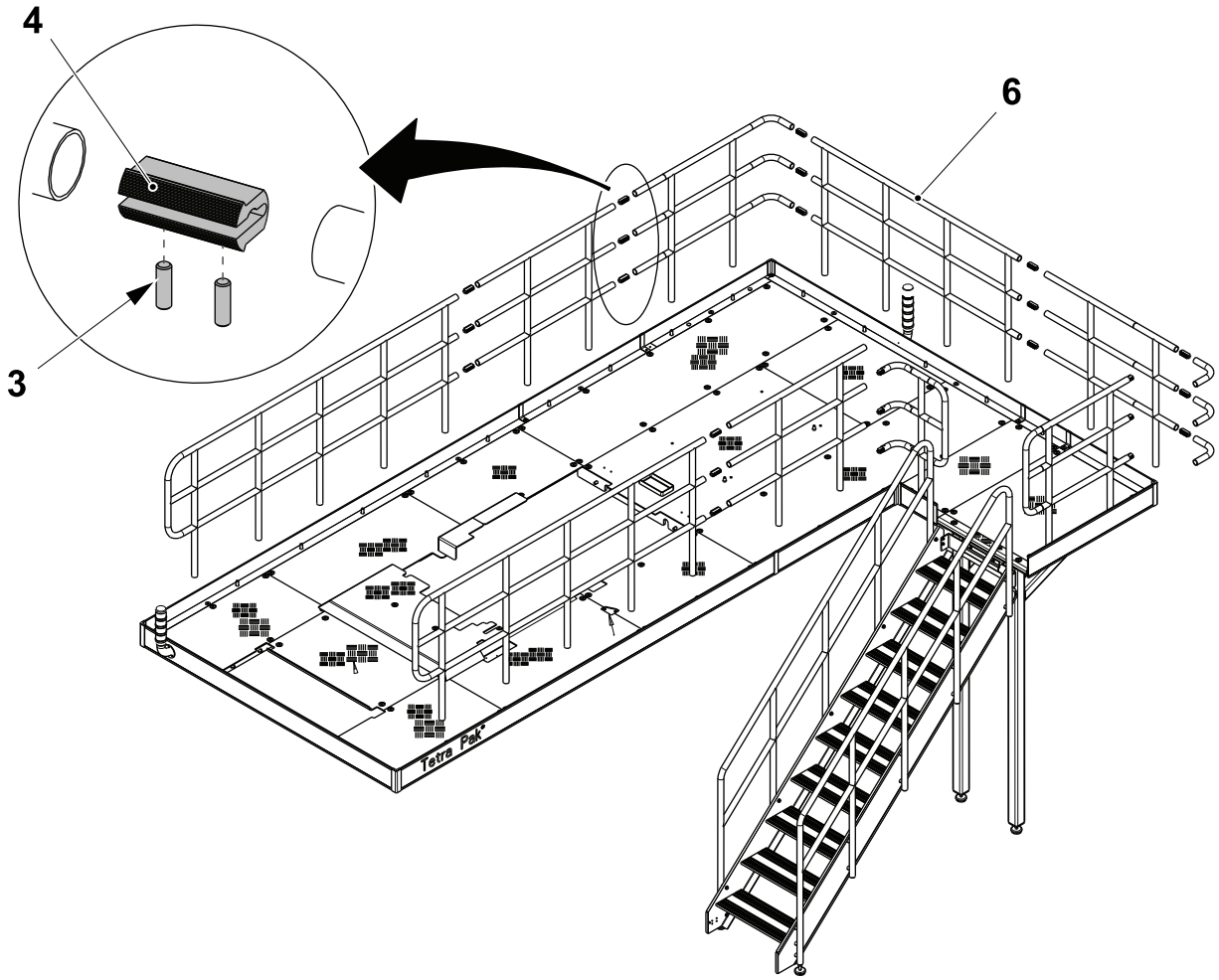

Filling machine with Australian railings shows

3 Screw
4 Connection
6 Australian handrail

(Cont'd)

(Cont'd)

c) Fit the brackets (7).
d) Fit the corner pieces (8) by means of the nuts (9).
e) Fit the brackets (10).
f) Fit the strips (11) by means of the nuts (12).

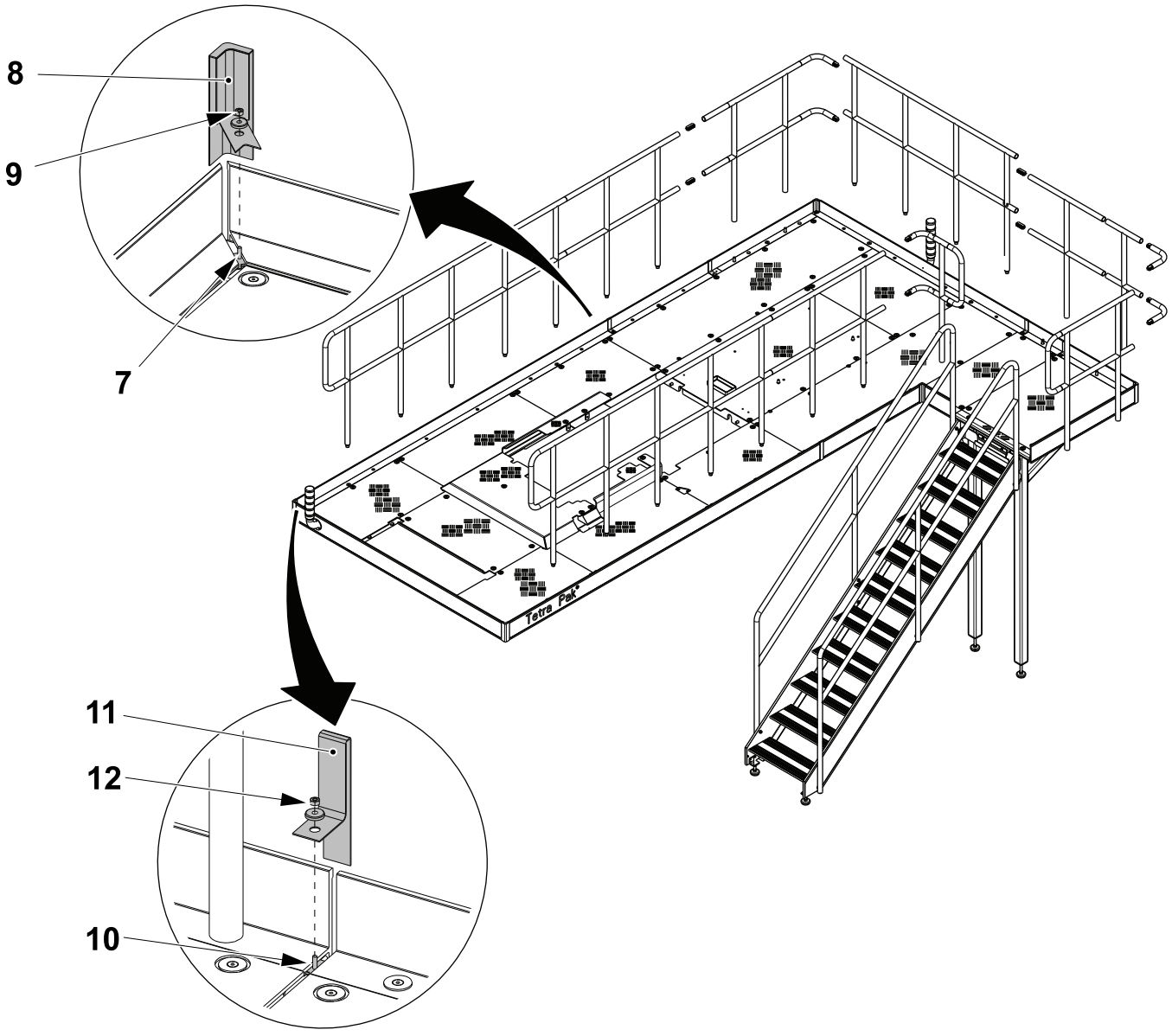

7 Bracket	10 Bracket
8 Corner piece	11 Strip
9 Nut	12 Nut

3.2.4-20 Assemble the Indicating Towers

Fit and connect the two indicating towers to the machine.

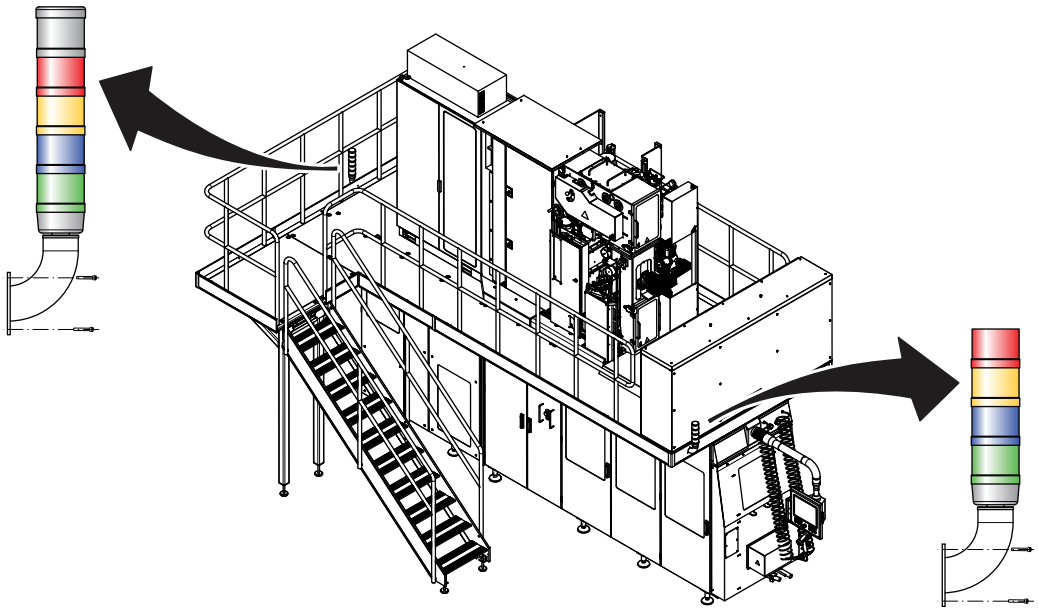

3.3 Equipment Interfaces and Connections

The following sections contain the correct procedures for making connections to utility sources and the internal connections between the different modules of this equipment.

3.3.1 Product and Utility Connections

3.3.1.1 Product Connections

Prepare the connections to the filling system, see section 1.1 Installation Drawings for measurements and dimensions.

3.3.1.2 Utility Connections

Prepare the connections of the service unit, see section 1.1 Installation Drawings for measurements and dimensions.

3.3.2 Drainage Connections

Note! Check the local legal requirements applicable to the disposal of diluted hydrogen peroxide. A separate drain may have to be used.

3.3.2-1 Filling Machine Drainage Connection

Connect the filling machine drain outlet (1) as indicated in the illustration, to the water drain.

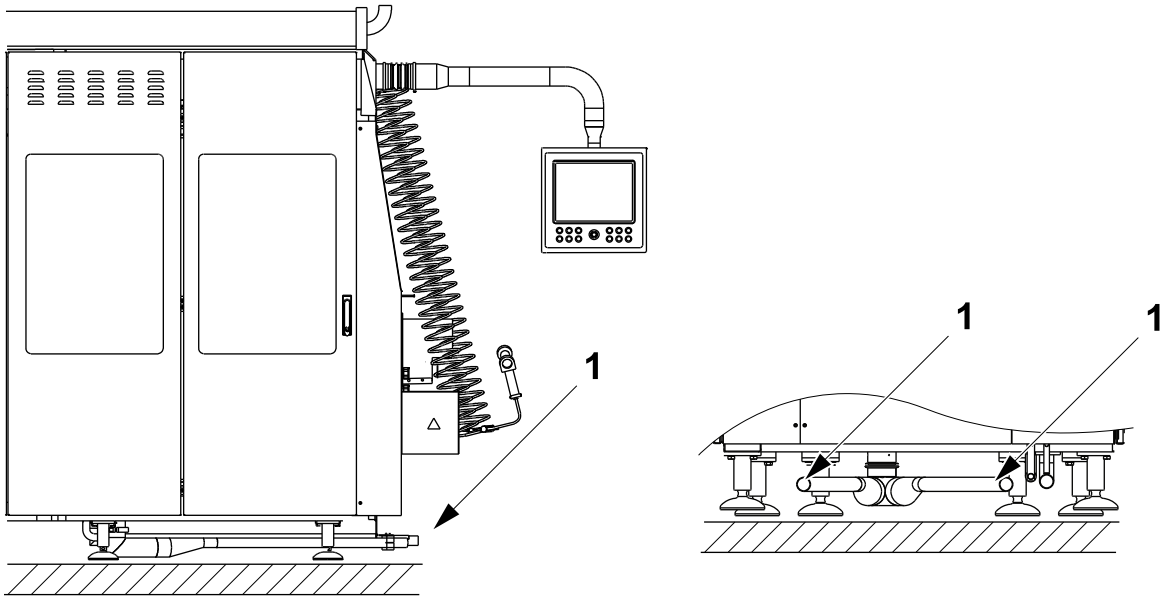

Front view

1 Filling machine drain outlet

3.3.2-2 Steam Condensate Drainage Connection

CAUTION

Burn hazard.

During the filling machine's normal operation, steam and steam condensate are released intermittently from the steam condensate drain outlet. To avoid injury, the steam condensate drain outlet must be connected to a drain using an insulated hose or pipe.

Connect the steam condensate drain outlet (1) as indicated in the illustration, to a suitable waste water drain using an insulated hose or pipe.

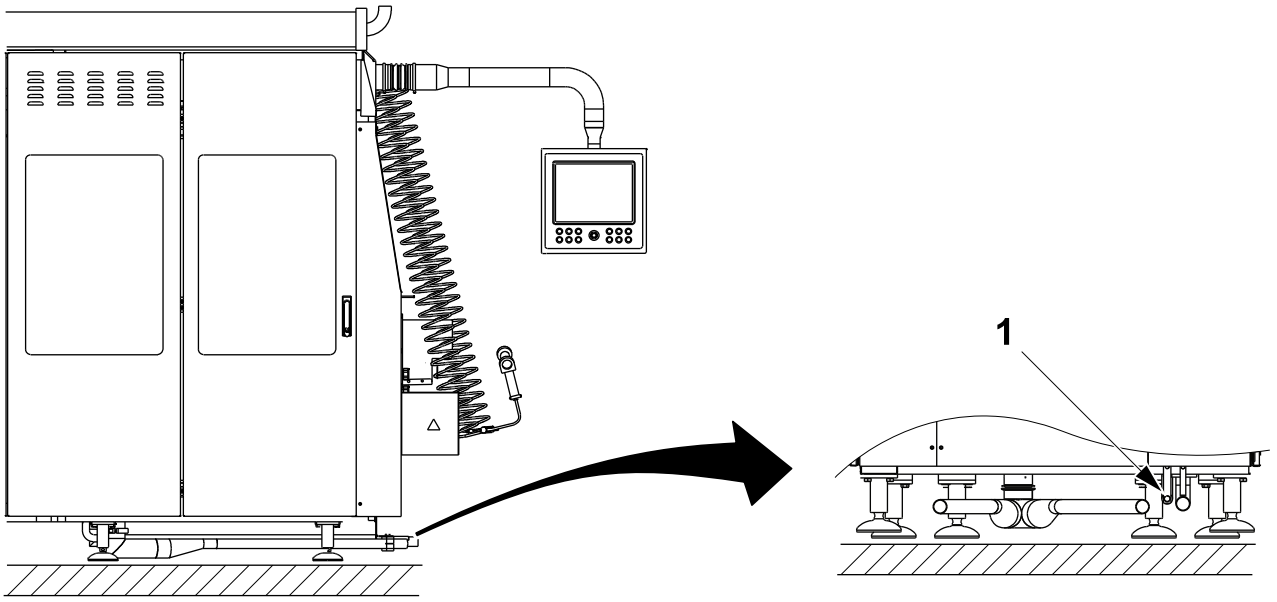

Front view

1 Steam condensate drain outlet

3.3.2-3 ICU Drainage Connection

CAUTION

Risk of damage to the equipment.

Make sure that the piping system used to evacuate the waste alkali/acid from the ICU outlet (2) incorporates an atmospheric breaker to prevent any back-flow of the waste.

Connect the ICU drain outlet (1) to a suitable waste drain. Connect the waste (acid/alkali) ICU outlet (2) to a suitable waste receptacle.

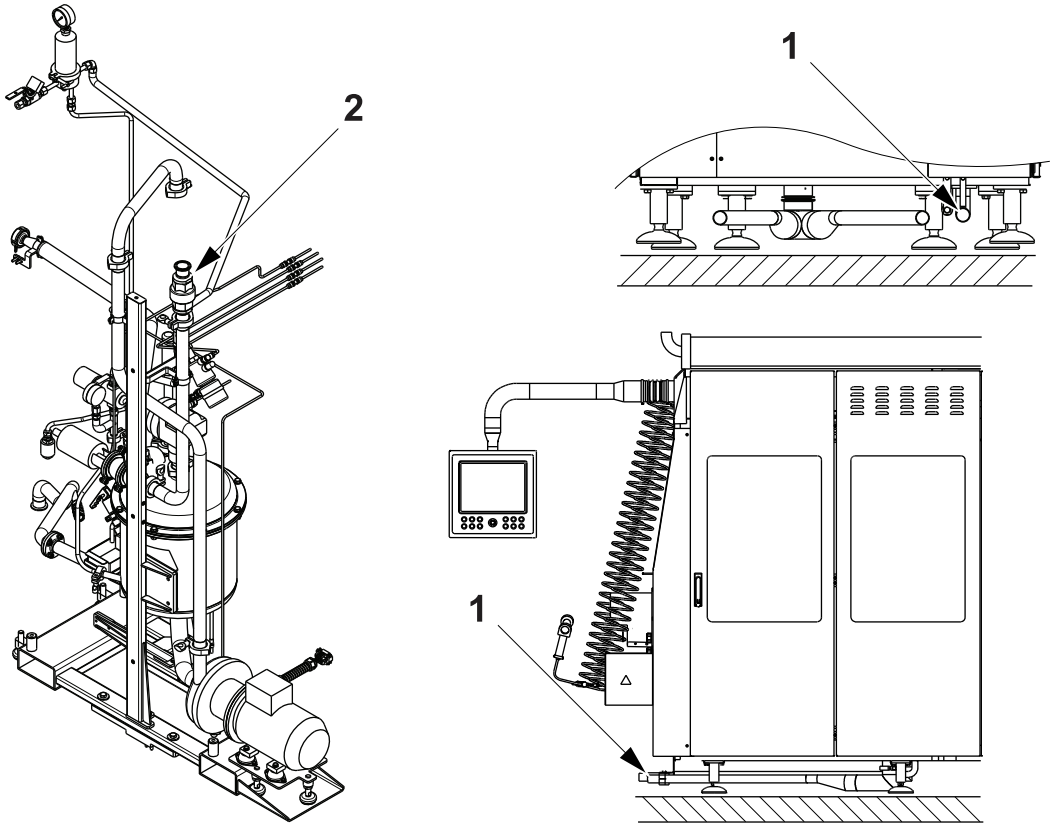

1 Drain outlet
2 ICU outlet

3.3.3 Service Unit Connections

3.3.3-1 Cooling Water Connections

Connect the cooling water hoses to the connections on the cooling water pump as follows.

- connection for hose T40W3108, TS sealing LH side (flow) (1)
- connection for hose T50W0057, Final folder guide cooling (flow) (2)
- connection for hose T40W0024, Hydraulic system cooling (flow) (3)
- connection for hose T40W3208, TS sealing RH side (flow) (4).

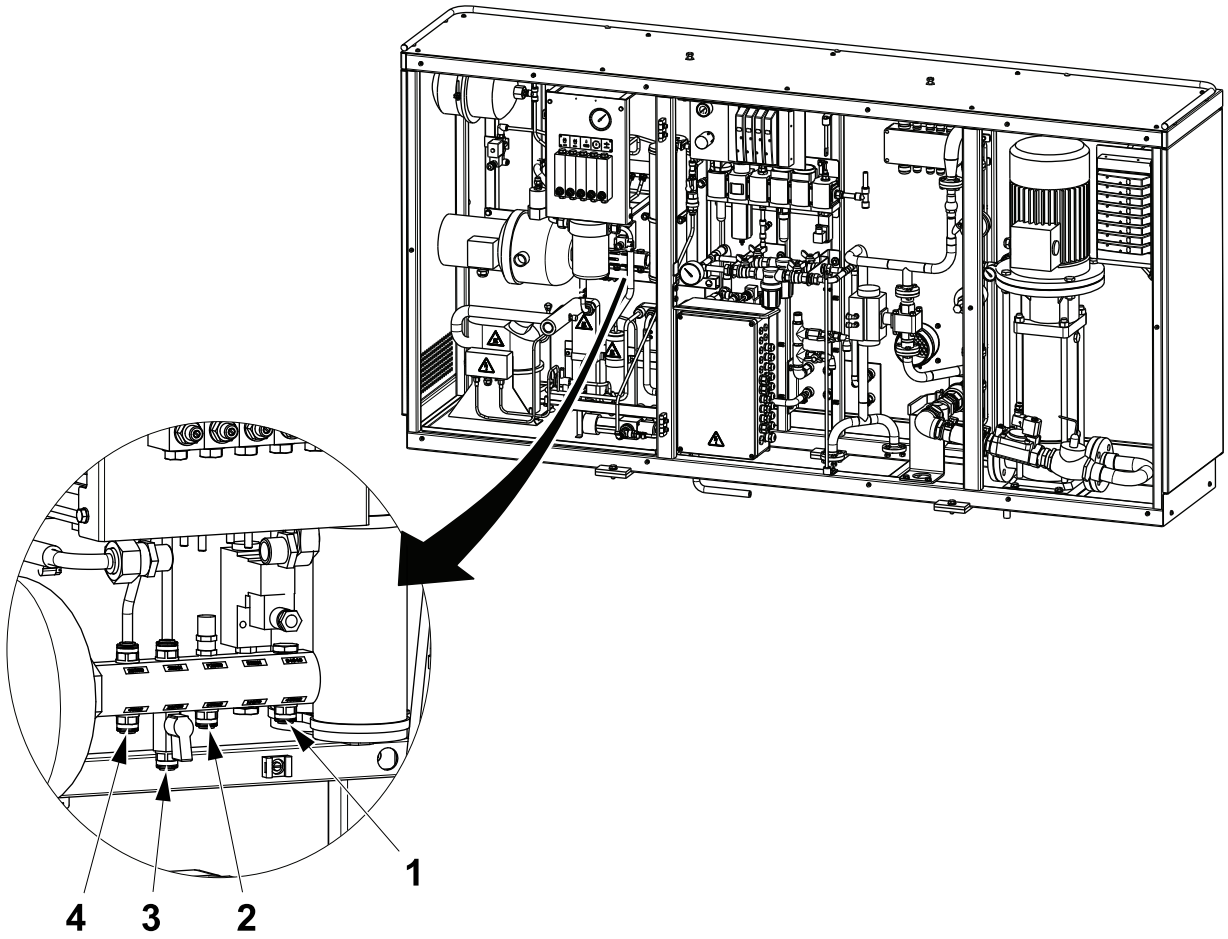

1 T40W3108, TS sealing LH side (flow)

2 T50W0057, Final folder guide cooling (flow)

3 T40W0024, Hydraulic system cooling (flow)

4 T40W3208, TS sealing RH side (flow)

(Cont'd)

(Cont'd)

Connect the cooling water hoses to the connections on the rear side of the flow meter panel as follows.

- connection for hose T50W0053, Final folder guide cooling (return) (5)
- connection for hose T40W3203, TS sealing LH side (return) (6)
- connection for hose T40W3103, TS sealing RH side (return) (7).
- connection for hose T40W0029, Hydraulic system cooling (return) (8) to the valve (9).

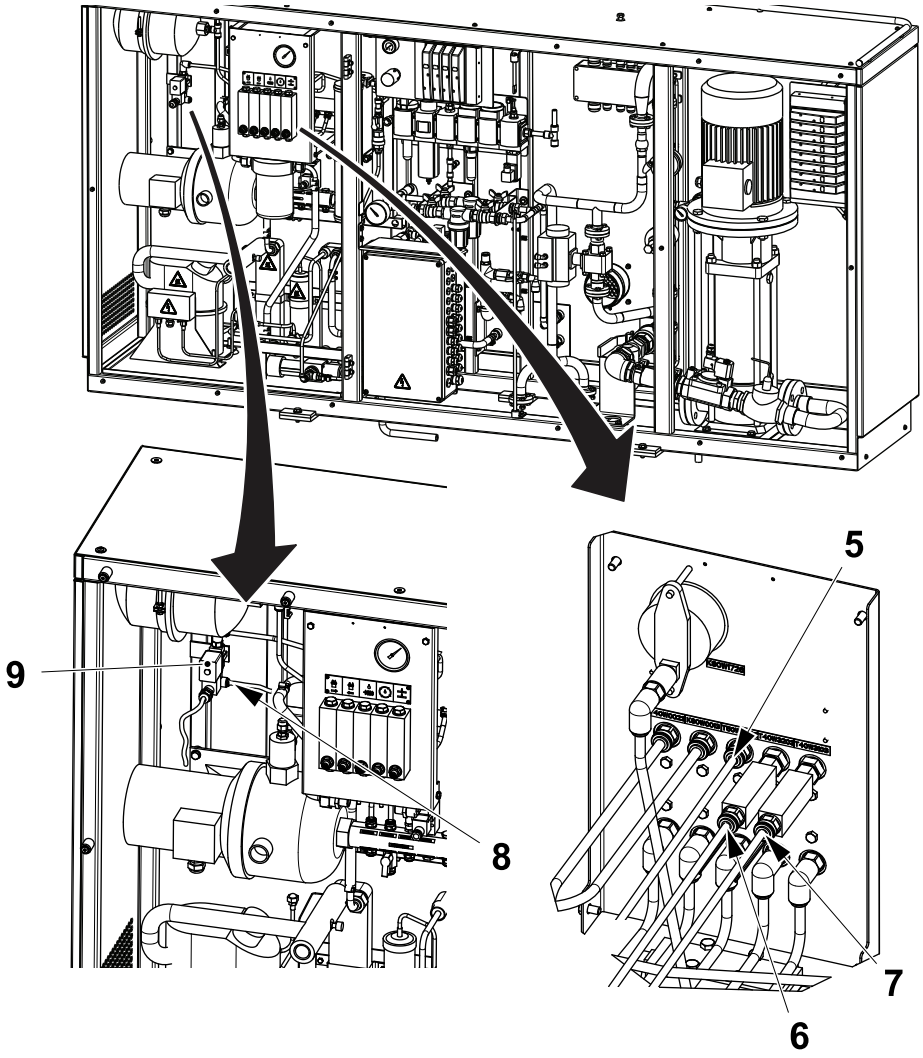

5 T50W0053, Final folder guide cooling (return)

6 T40W3203, TS sealing LH side (return)

7 T40W3103, TS sealing RH side (return)

8 T40W0029, Hydraulic system cooling (return)

9 Valve

3.3.3-2 Water Panel Connections

Connect the cold water hoses to the connections on the water panel as follows.

- connection for hose
  T50W0842, Flushing, final folder (cleaning circuit) (1)
- connection for hose
  U70W1192, Sterile system and peroxide system, superstructure (2)
- connection for hose T40W2692, Tube flusher, jaw system (3)
- connection for hose K80W1716, Spray gun (4)

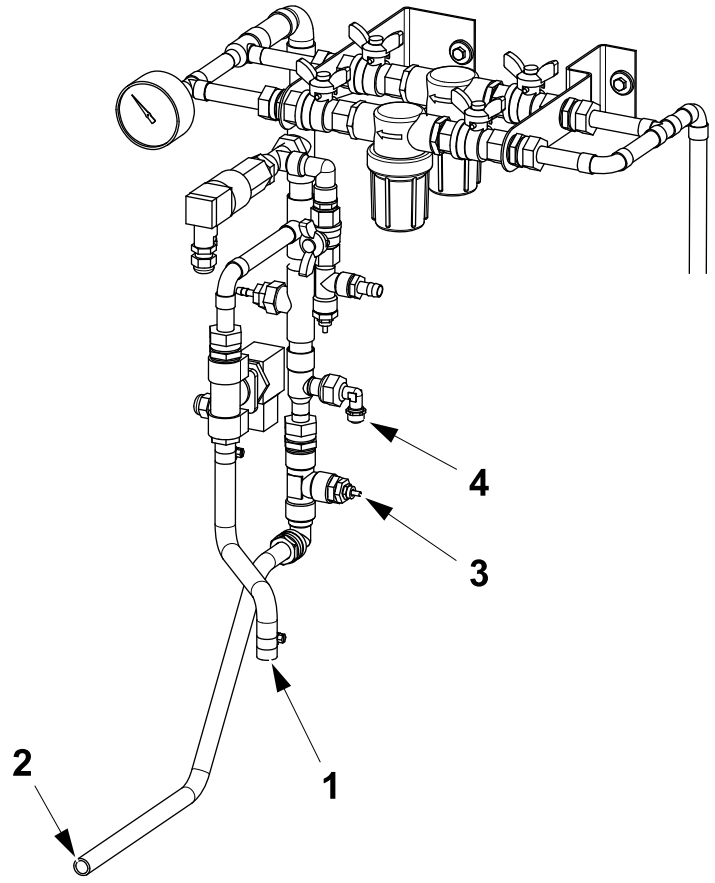

1 T50W0842, Flushing, final folder (cleaning circuit)

2 U70W1192, Sterile system and peroxide system, superstructure

3 T40W2692, Tube flusher, jaw system

4 K80W1716, Spray gun

3.3.3-3 Pneumatic Connections

Connect the pneumatic hoses to the connections on the pneumatic unit as follows.

- connection for hose T50W6997, constant supply (1)
- connection for hose T50W6993, regulated supply (2)
- connection for hose, K80W1343, air gun (3)
- connection for hose T50W6995, pilot valve supply (4) .

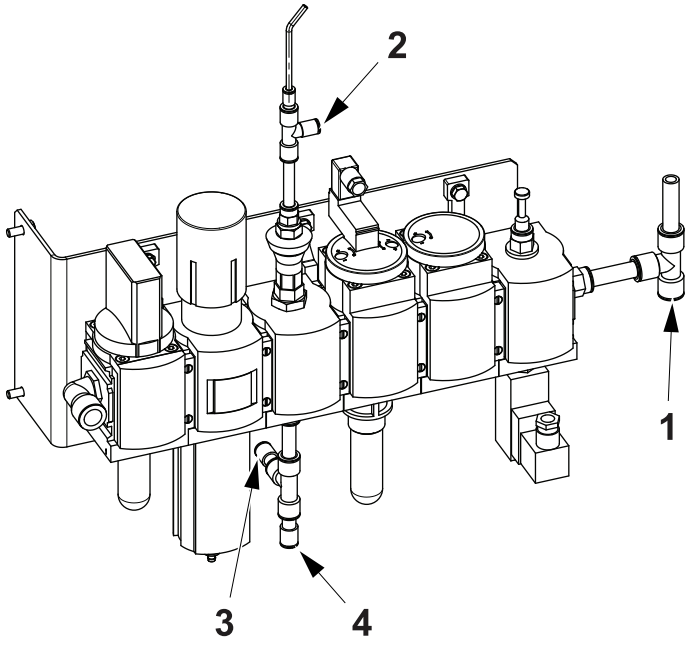

1 T50W6997, constant supply
2 T50W6993, regulated supply
3 K80W1343, air gun
4 T50W6995, pilot valve supply

3.3.3-4 Foam Cleaning Connections

Connect the two flanges (1) to the two flanges (2) on the machine body cleaning system (3).

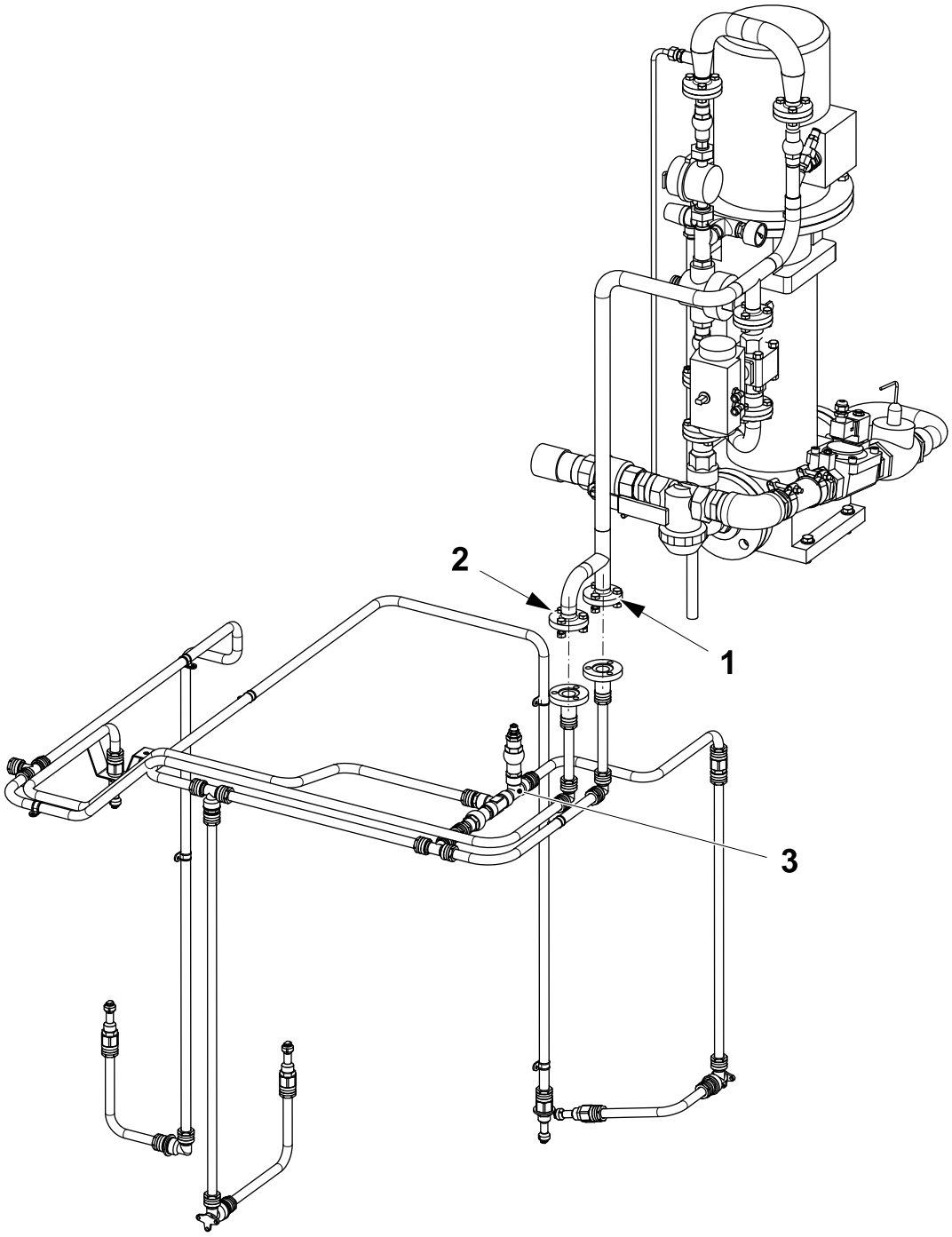

1 Flange
2 Flange
3 Cleaning system

(Cont'd)

(Cont'd)

Connect the hose (4) for the foam cleaning detergent to the connection (5).

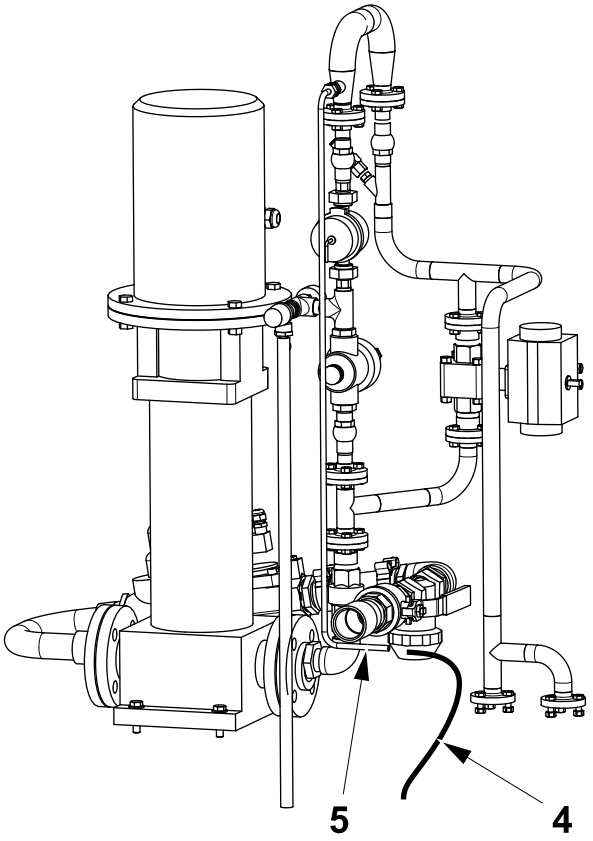

4 Hose
5 Connection

3.3.3-5 ICU Cold Water Connection

a) Fit the pipe (1) to the ICU (2) with the clamp (3) .

b) Connect the ICU water inlet hose (4) to the ICU pipe (1) and to the connection (5) on the rear of the service unit connection plate (6) according to the water diagram.

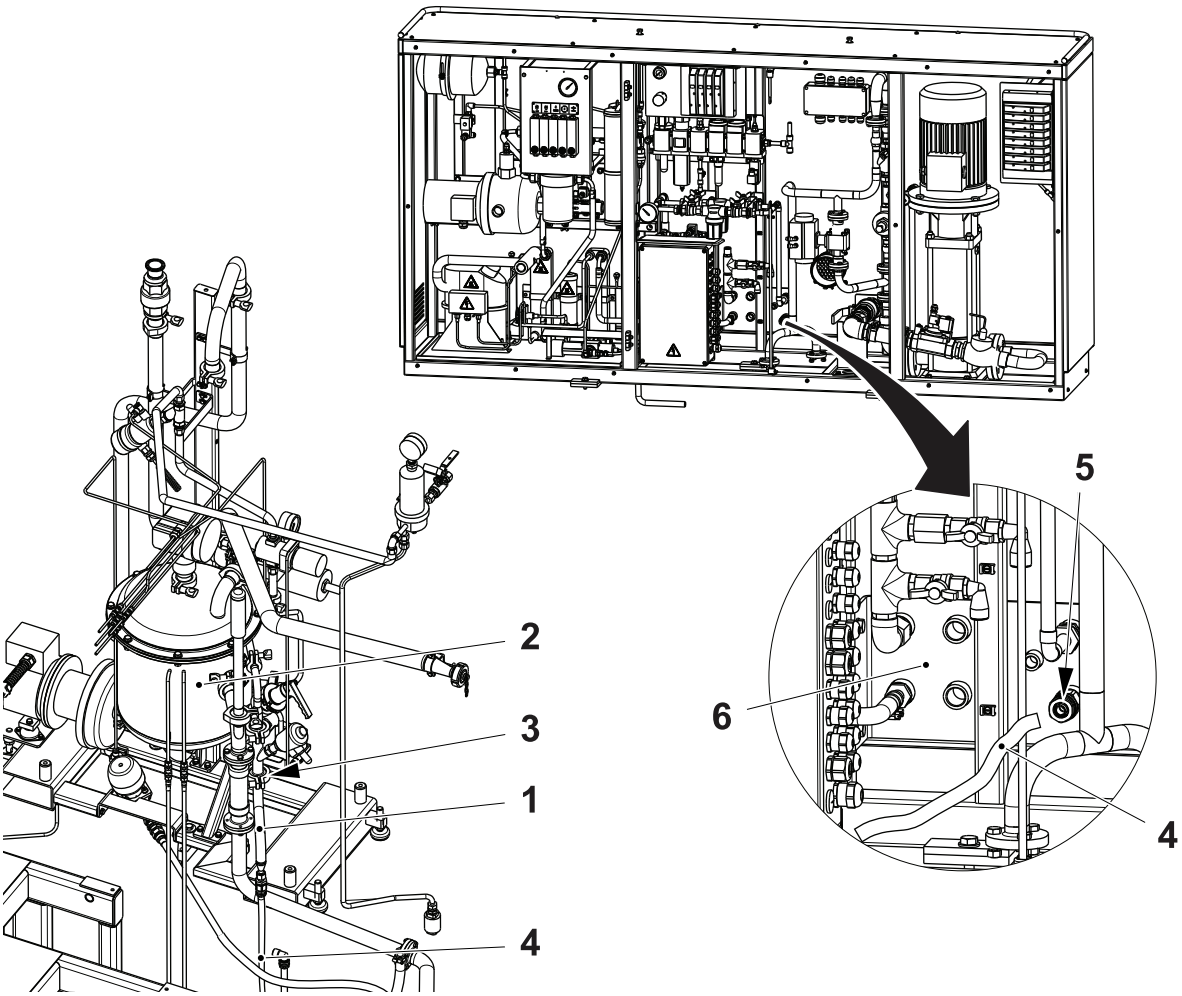

1 Pipe
2 ICU
3 Clamp
4 Hose
5 Connection
6 Connection plate

3.3.3-6 Nitrogen Connection

Note! Only valid for machines equipped with the Headspace Unit (OE).

Connect the nitrogen hose (1) to the connection (2) on the rear of the service unit connection plate (3) as indicated in the illustration. Thread the nitrogen hose (1) through the platforms and connect it to the connection (4) on the valve U70K4230 (5).

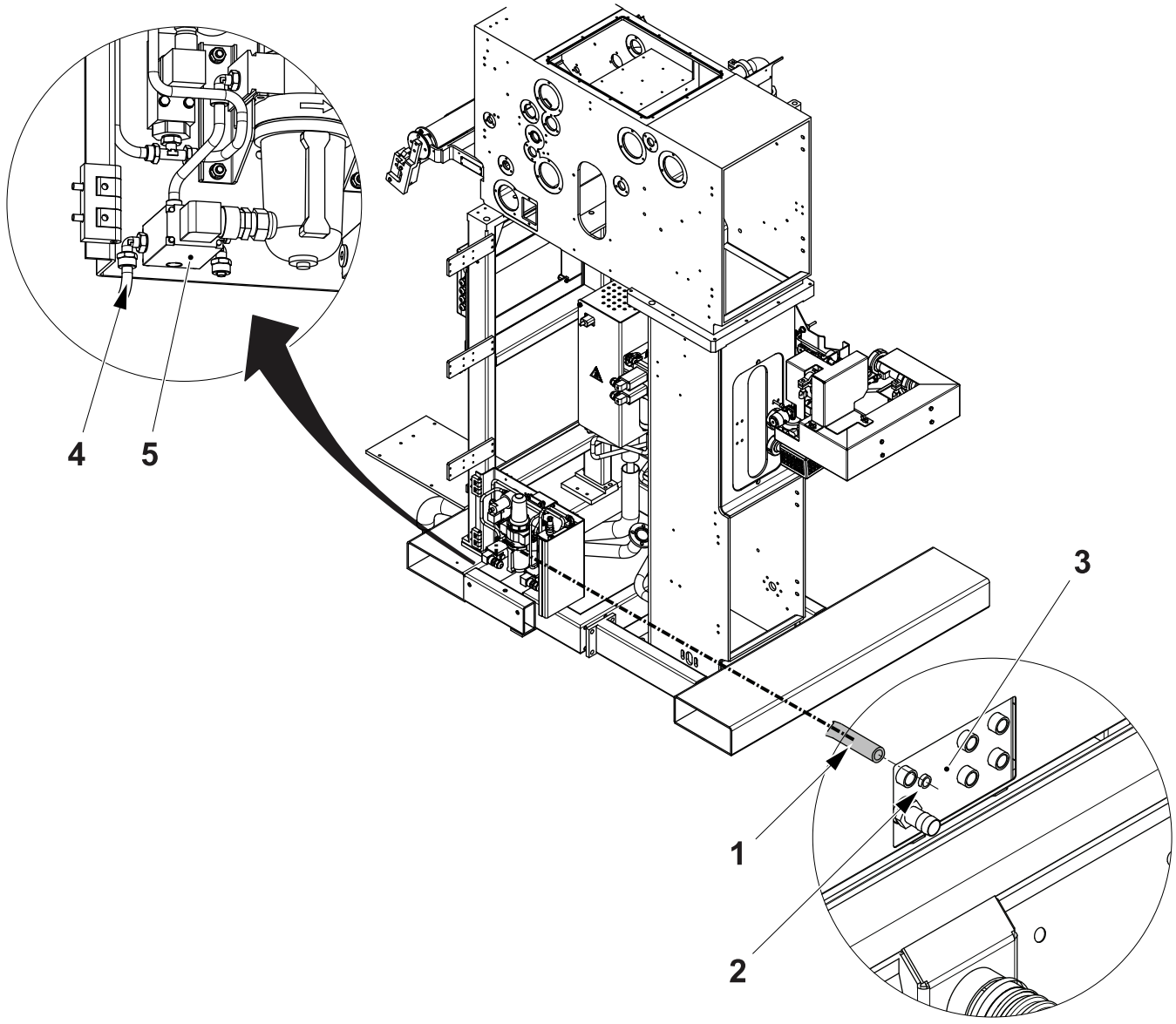

1 Nitrogen hose
2 Connection
3 Connection plate
4 Connection
5 Valve U70K4230

3.3.3-7 Exhaust Tube Connection

a) Connect the exhaust tube (1), coming from the machine body, to the connection (2) in the service unit.

b) Lock exhaust tube (1) in position with the metal wrapper.

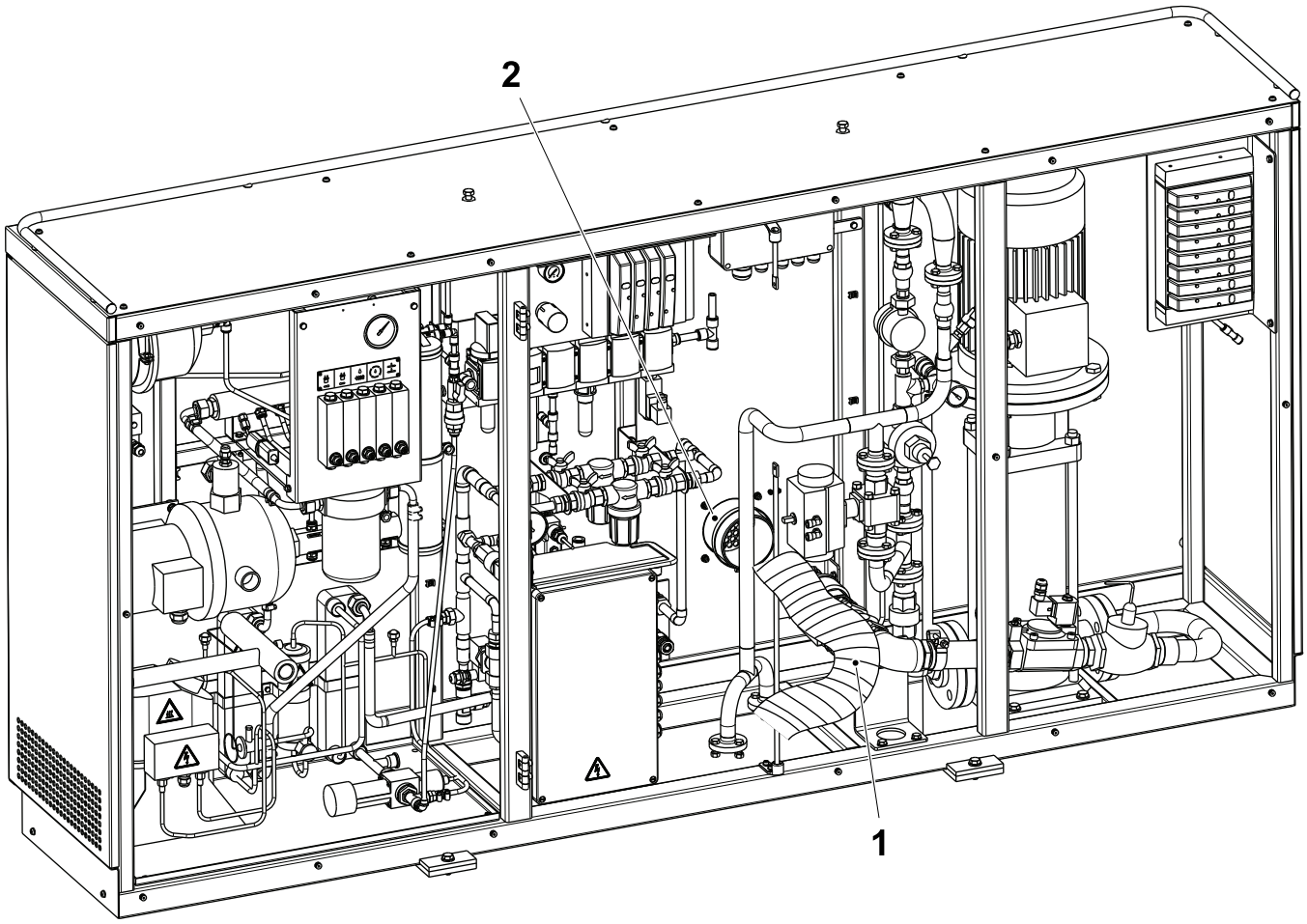

1 Exhaust tube
2 Connection

3.3.3-8 Electrical Connections

a) Fit the electrical connections (1) from the service unit to the machine body.

b) Connect the Device Net cables to the service unit connection box (2) according to the EM.

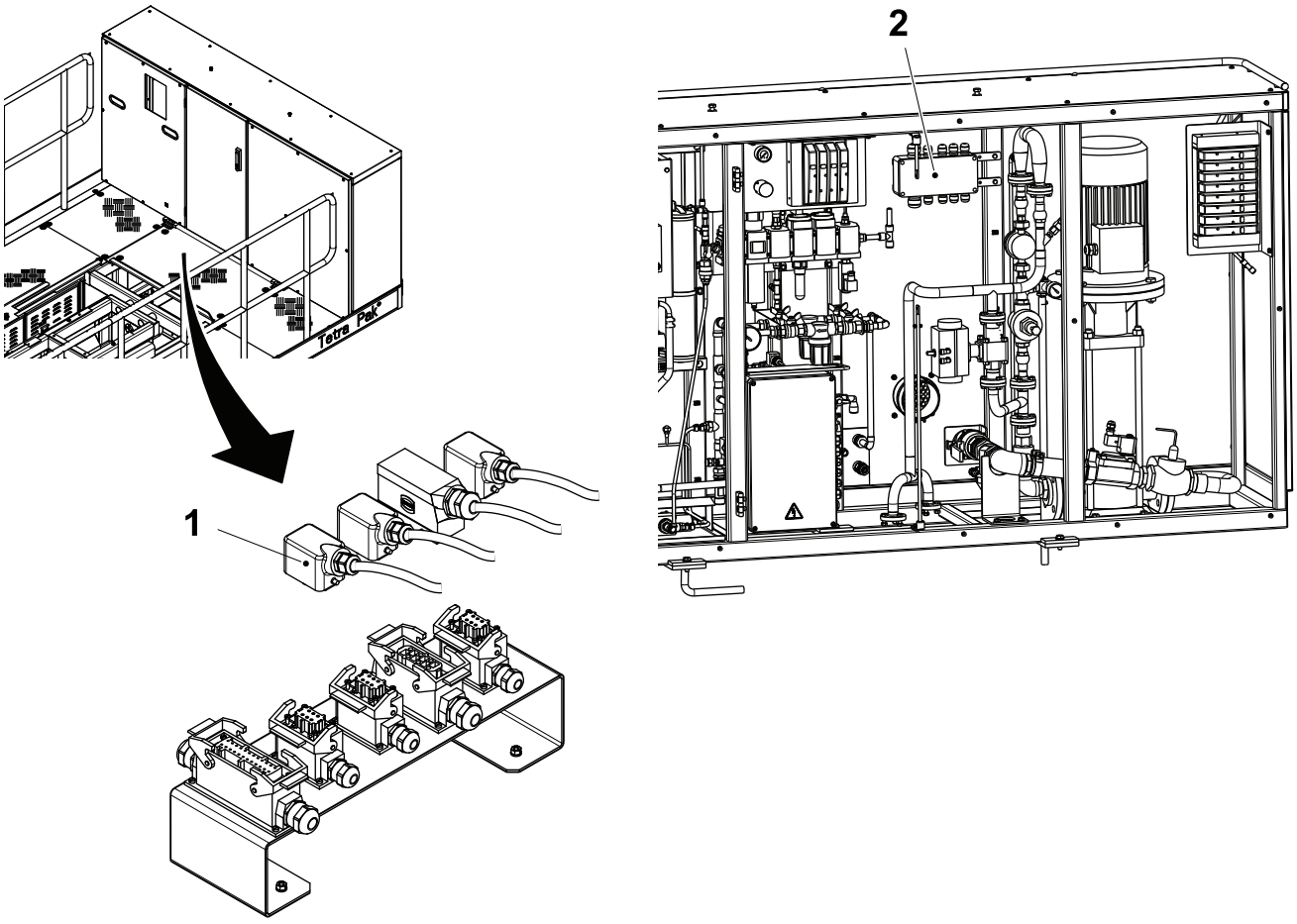

1 Connection
2 Connection box

3.3.4 Superstructure Connections

3.3.4-1 Peroxide Pipe Connections

a) Fit the peroxide pipe (1) to the pipe (2) of the superstructure and to the pipe (3) of the machine body by means of the nuts (4).

b) Fit the peroxide pipe (5) to the pipe (6) of the superstructure and to the pipe (7) of the machine body by means of the nuts (8).

c) Fit the peroxide pipe (9) to the pipe (10) of the superstructure and to the pipe (11) of the machine body by means of the nuts (12).

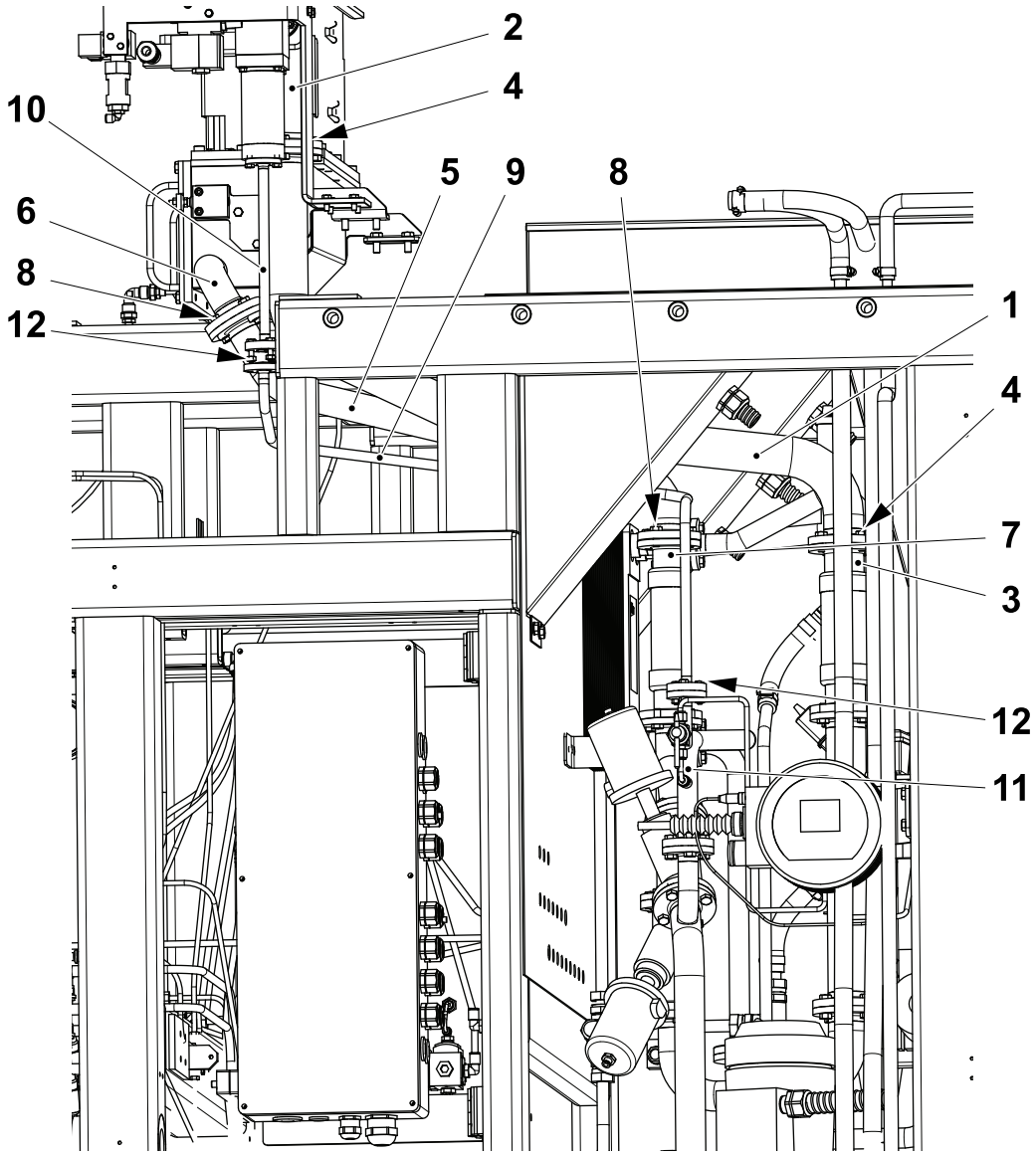

1 Peroxide pipe
2 Pipe
3 Pipe
4 Nut
5 Peroxide pipe
6 Pipe
7 Pipe
8 Nut
9 Peroxide pipe
10 Pipe
11 Pipe
12 Nut

3.3.4-2 Pneumatic Connections

a) Connect the superstructure pneumatic hoses from the superstructure valve panel (1) to the connections on the machine body as follows.
- the hose P1, U70W1123 (2), for the constant supply connection
- the hose P2,U70W1143 (3), for the regulated supply connection
- the hose P3, U70W1741 (4), for the pilot valve supply connection

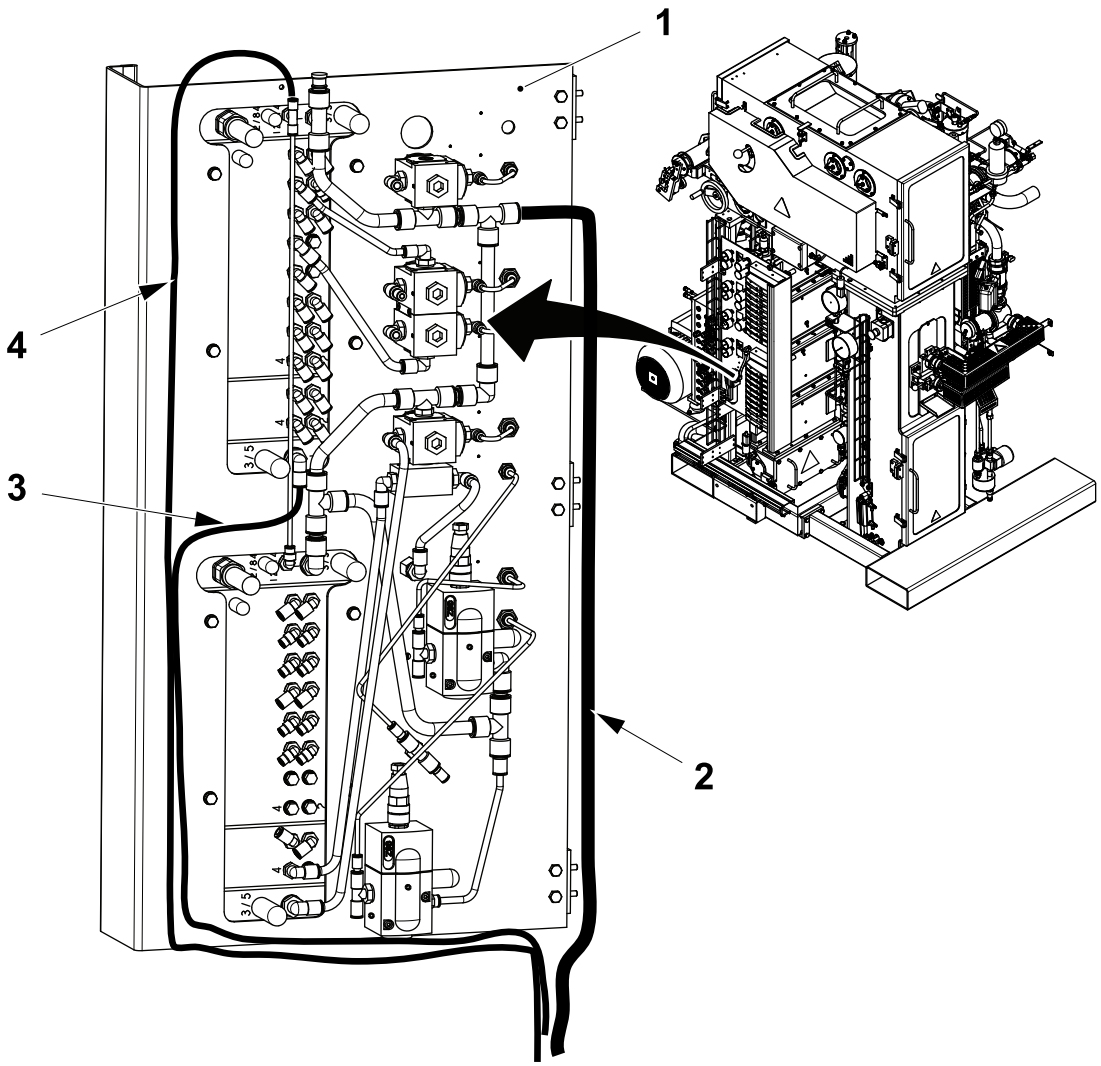

1 Valve panel
2 Hose P1, U70W1123
3 Hose P2, U70W1143
4 Hose P3, U70W1741

(Cont'd)

(Cont'd)

b) Connect the hose P1, U70W1123 (2) for the constant supply to the T-connection (5).

c) Connect the hose P3, U70W1741 (4) for the pilot valve supply to the T-connection (6).

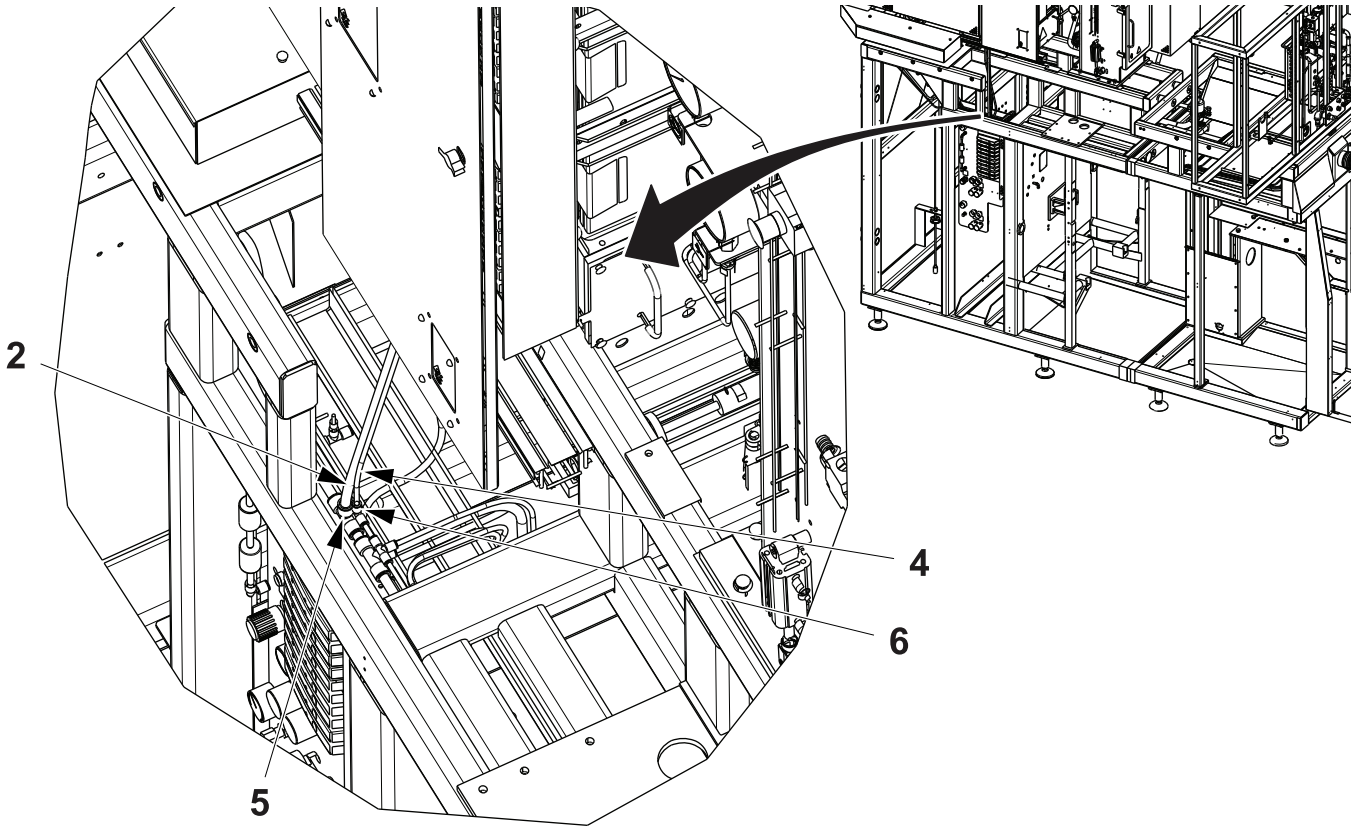

2 Hose P1, U70W1123
4 Hose P3, U70W1741
5 T-connection
6 T-connection

(Cont'd)

(Cont'd)

d) Connect the hose P2,U70W1143 (3) for the regulated supply to the T-connection (7).

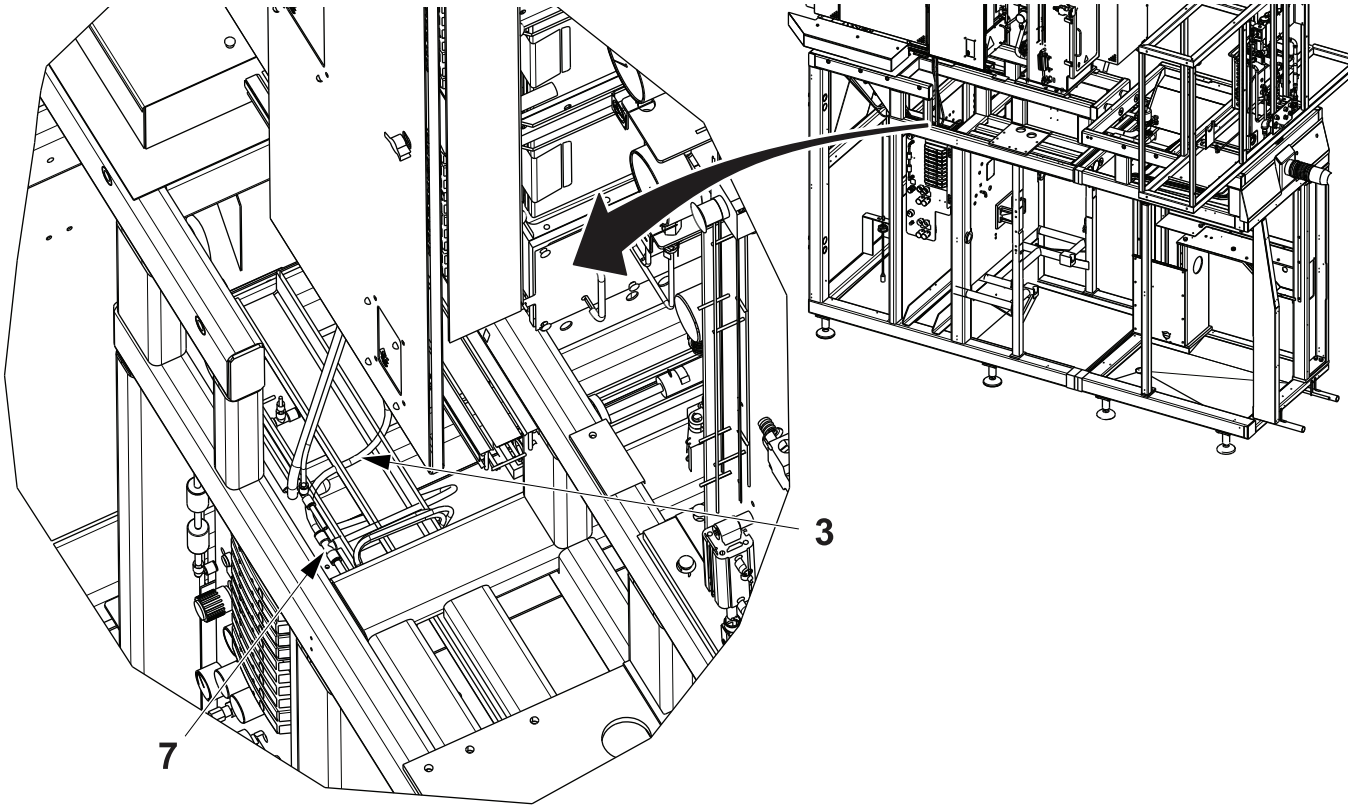

3 Hose P2, U70W1143
7 T-connection

(Cont'd)

(Cont'd)

e) Connect the hose U70W7064 (8) to the CIP draining valve (9).

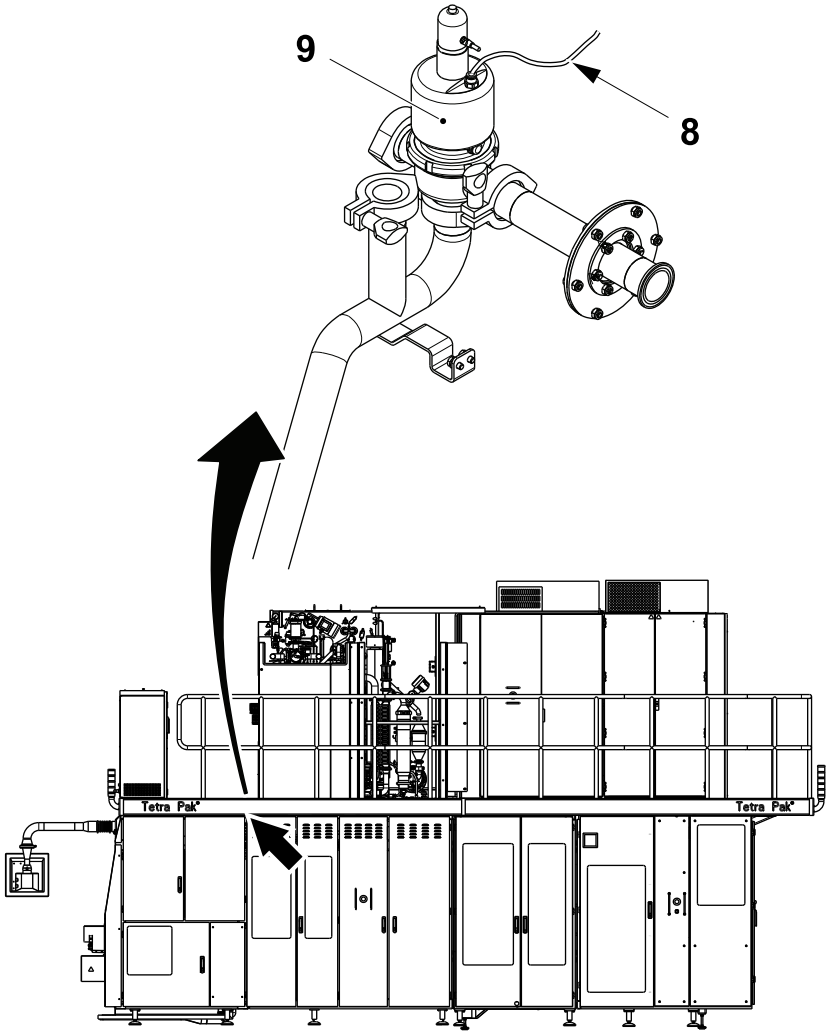

8 Hose U70W7064
9 Valve

3.3.4-3 CIP Drainage Connection

a) Fit the pipe (1) to the CIP draining valve group (2) and tighten the clamp (3).

b) Fit the cleaning system (4) to the pipe (1) and tighten the clamp (5).

c) Fit the bracket (6) to the machine and to the cleaning system (4).

d) Fit the conductivity sensor (7) and tighten the clamp (8) .

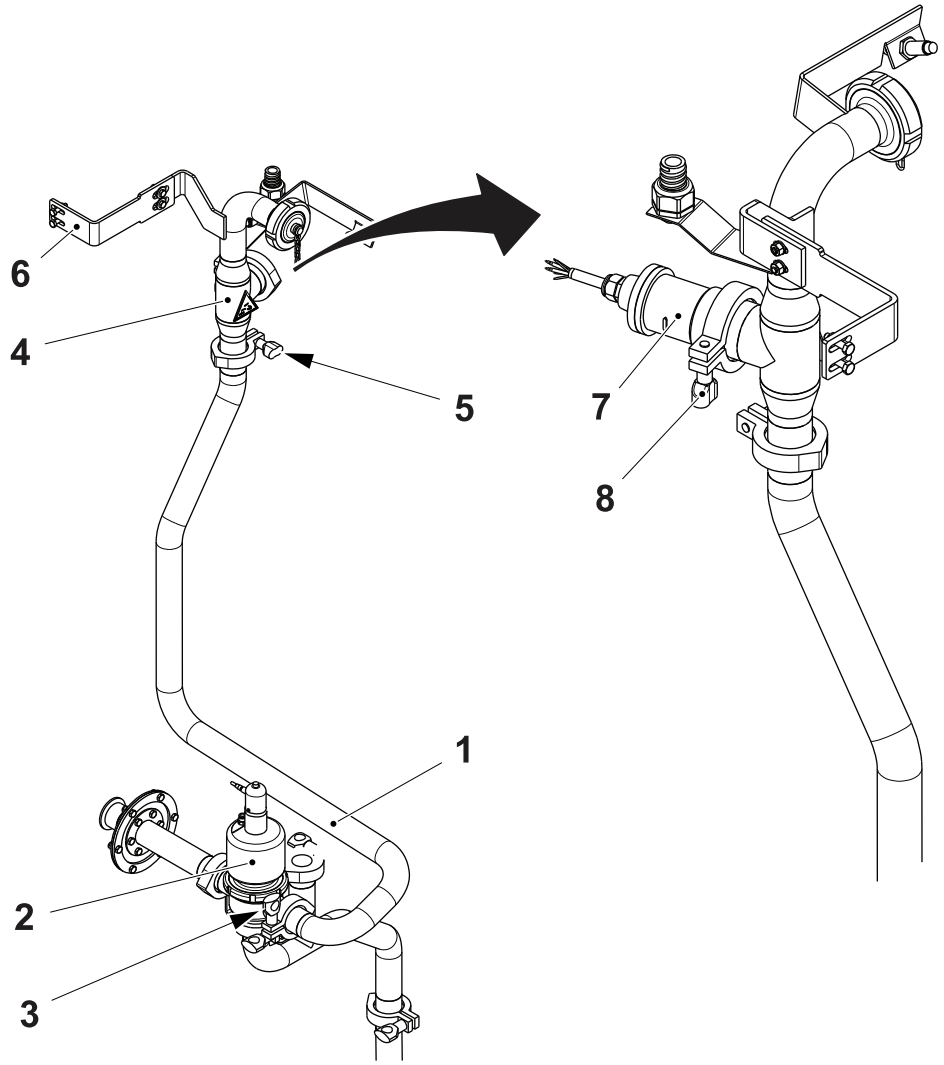

1 Pipe
2 Valve group
3 Clamp
4 Cleaning system
5 Clamp
6 Bracket
7 Conductivity sensor
8 Clamp

(Cont'd)

(Cont'd)

Note! For machine not equipped with ICU the cleaning unit pipe (9) is not delivered with the machine.

e) When manufacturing the cleaning unit pipe (9) make sure that the product pipe (10) can be fitted between the cleaning system (4) and the cleaning unit pipe (9) as illustrated below.

f) The cleaning unit pipe (9) does not have to interfere with the covers (11).

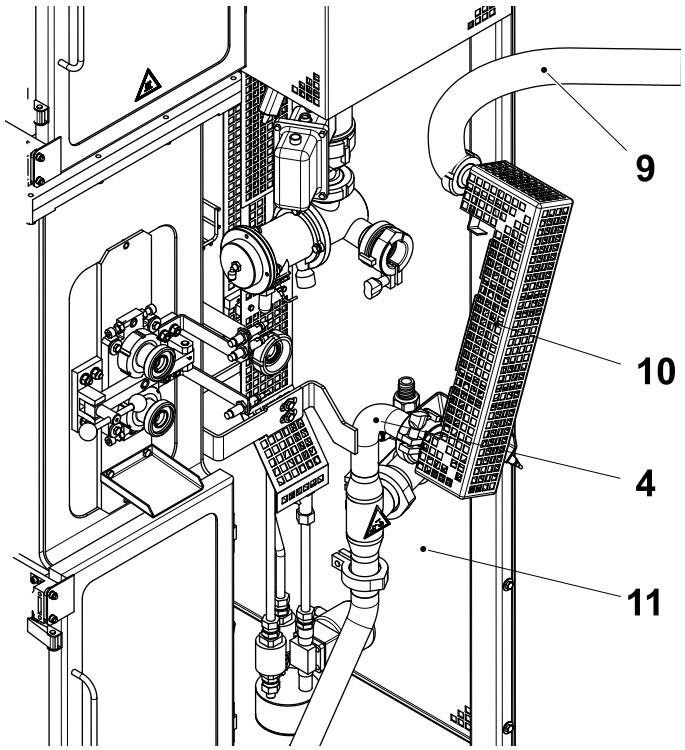

4 Cleaning system
9 Cleaning unit pipe
10 Product pipe
11 Cover

3.3.4-4 ICU Drainage Connections

CAUTION
Risk of damage to the equipment.
Make sure that the piping system used to evaquate the waste alkali/acid from the ICU outlet (1) incorporates an atmospheric breaker to prevent any backflow of the waste.

a) Connect the waste (acid/alkali) ICU outlet (1) to a suitable waste receptacle.

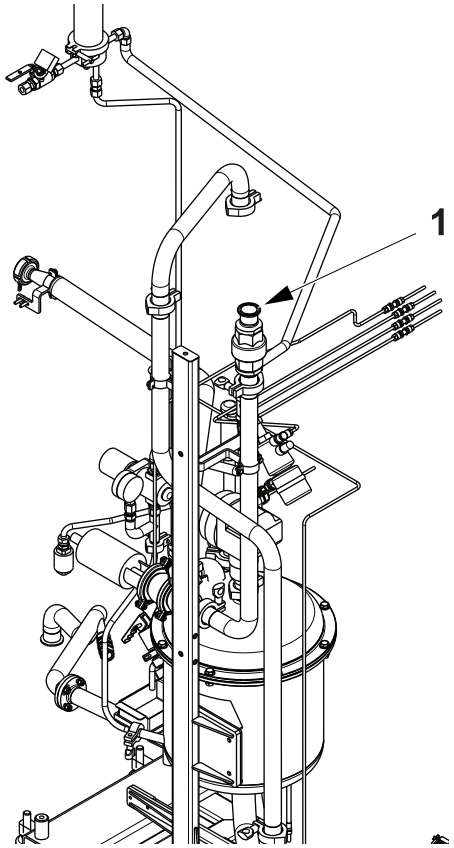

1 ICU outlet

(Cont'd)

(Cont'd)

b) Fit the pipe (2) to the machine body pipe with the clamp (3) .

c) Fit the ICU drain outlet (4) to the ICU unit and to the pipe (2) with the screws (5).

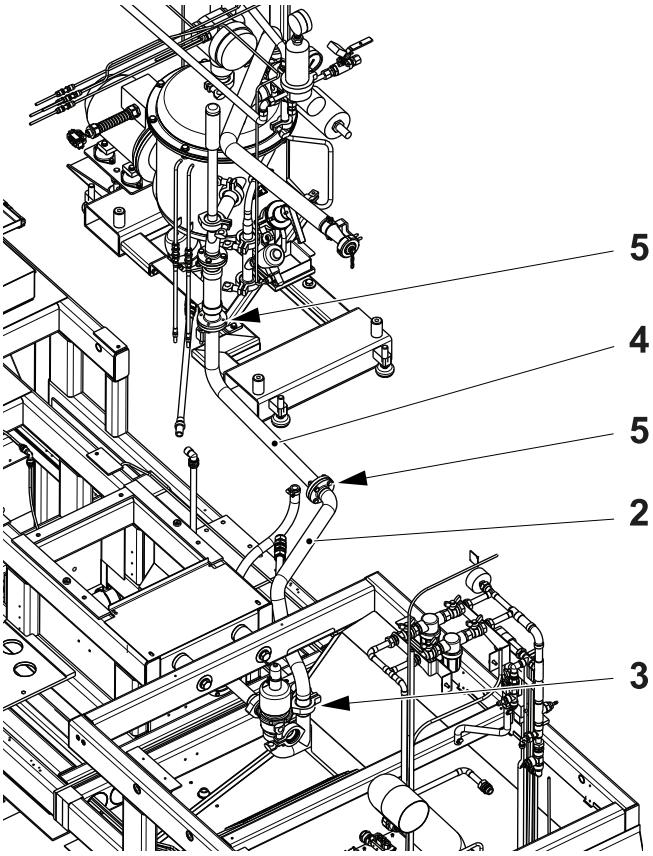

2 Pipe
3 Clamp
4 ICU drain outlet
5 Screw

3.3.4-5 Cold Water Connections

a) Connect the cold water pipe (1) for the peroxide systems to the connection of the machine body as indicated in the illustration.

b) Connect the cold water hose (2) for the sterile air U70W1192 from the machine body to the connection (3) of the superstructure as indicated in the illustration.

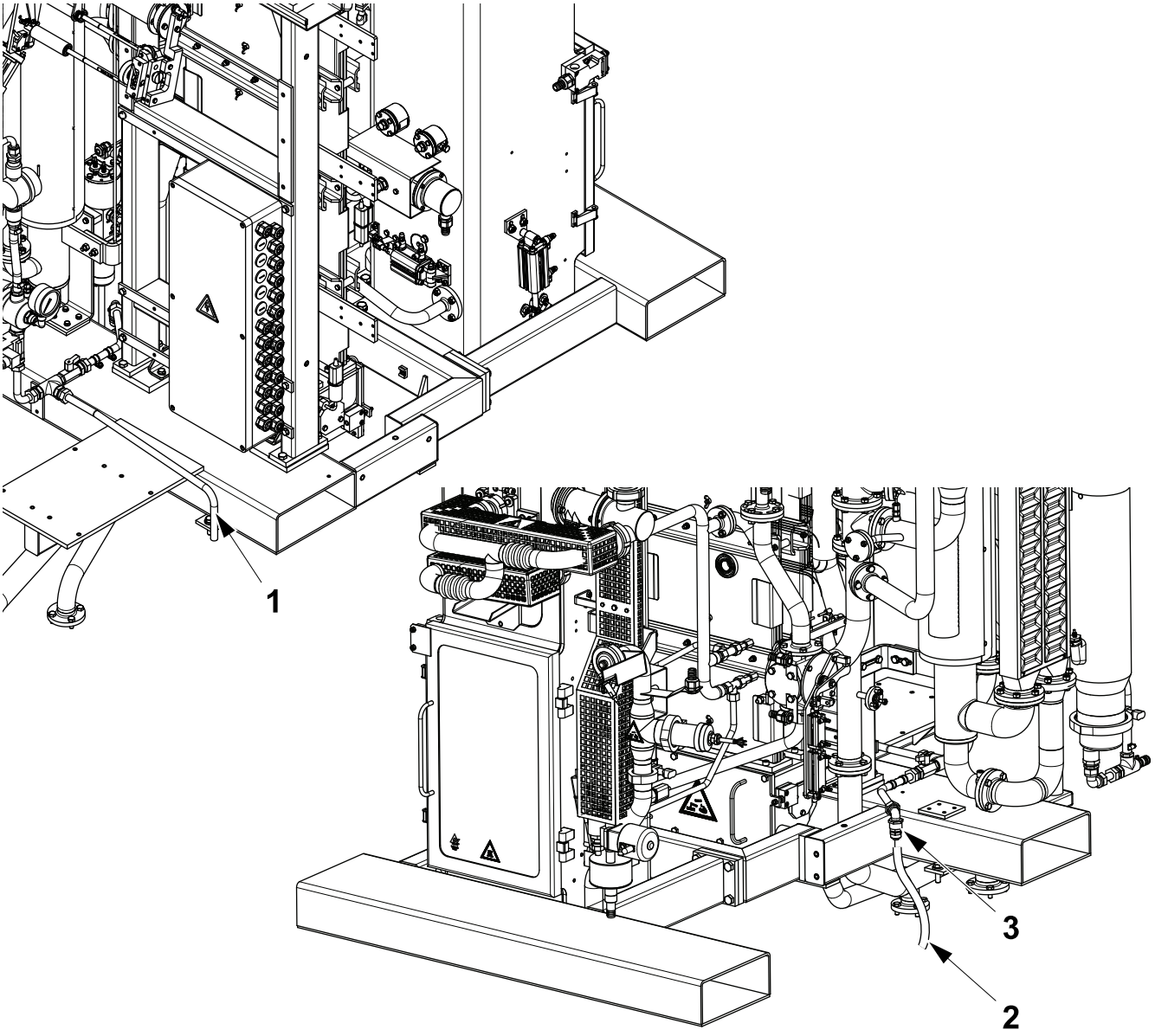

1 Pipe
2 Hose
3 Connection

3.3.4-6 Water Drainage Connections

Connect the water drainage hoses as indicated in the illustration.

Make sure that:

- the hose (1) from the electrical cabinet cooler is connected onto the inlet of the machine body platform.
- the hose (2) from the separator is connected onto the inlet of the machine body platform.

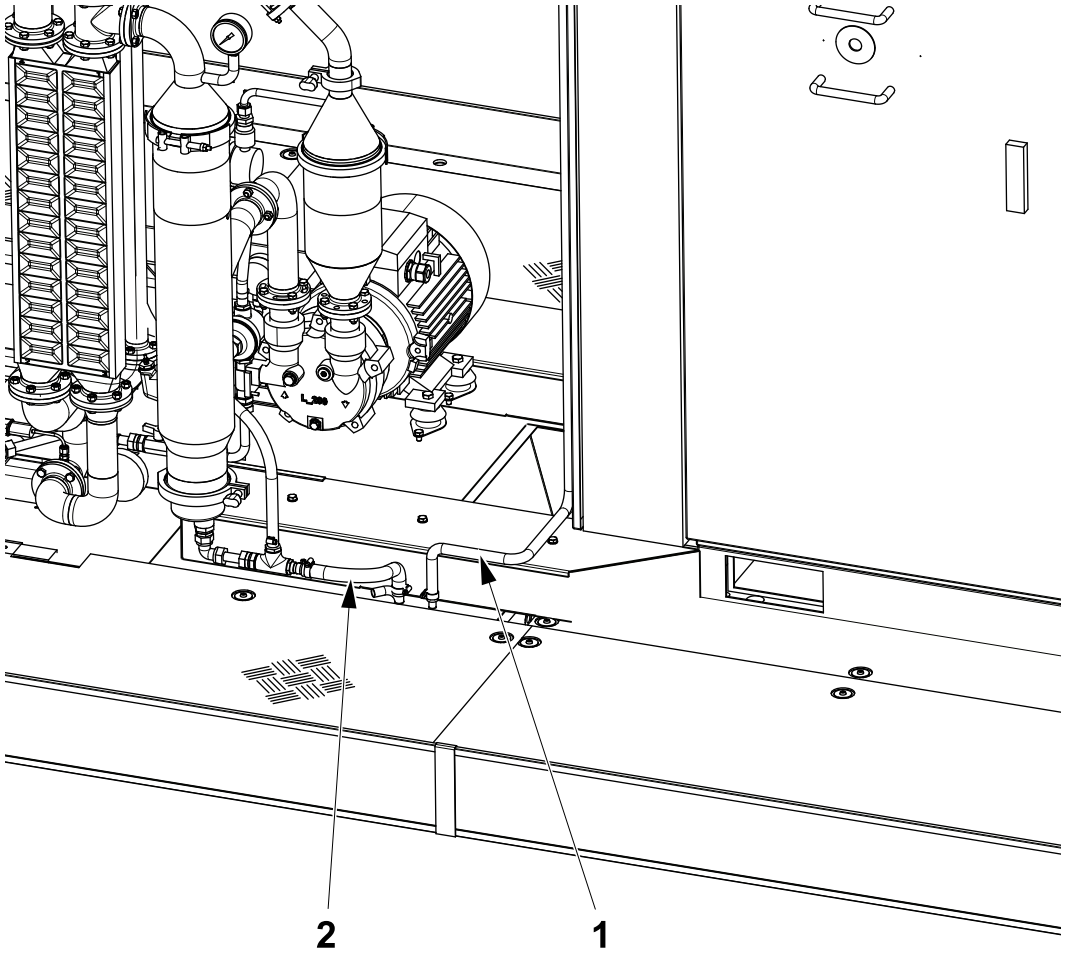

1 Hose
2 Hose

3.3.4-7 Steam Drainage Connections

Note! This instruction is not valid for machine equipped with HVA.

Connect the insulated hose (1) for the steam circuit condensation drainage to the connection (2).

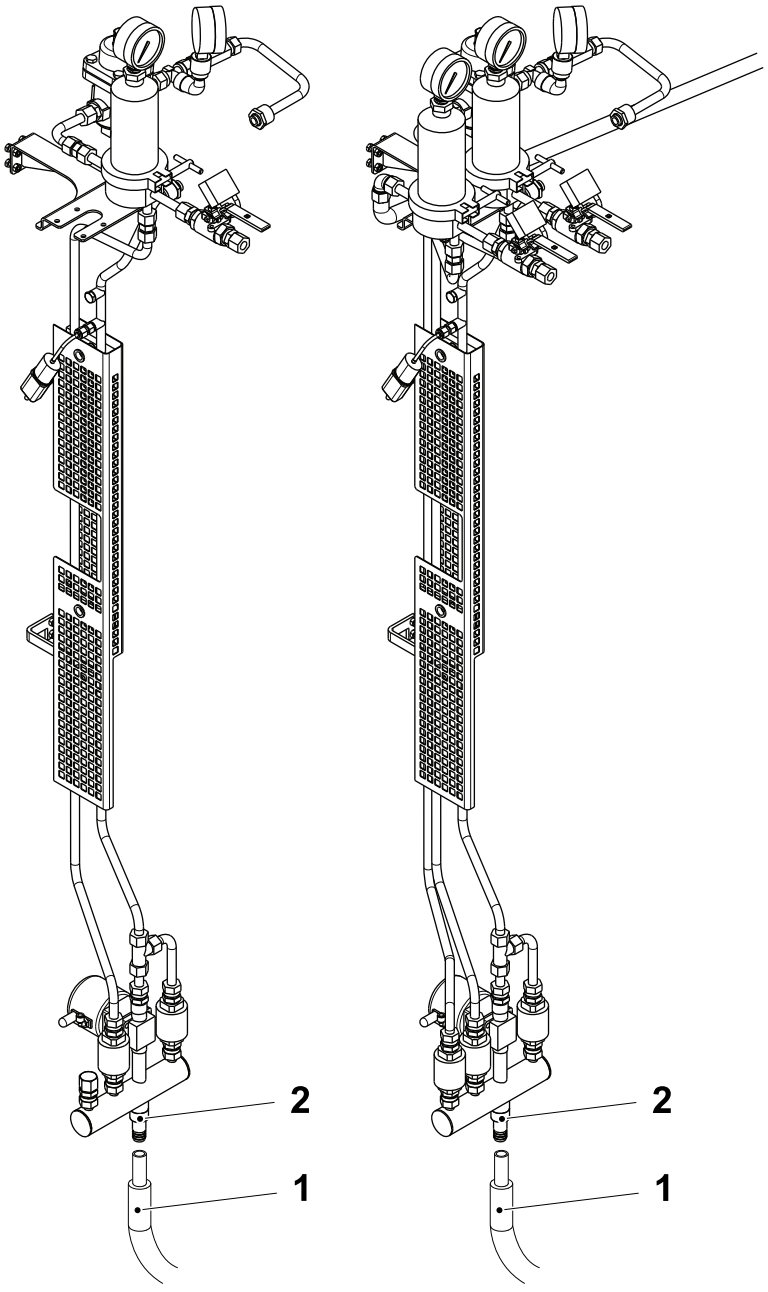

Machine not equipped with ICU

Machine equipped with ICU

1 Hose
2 Connection

3.3.4-8 ICU Connections

a) Fit the ICU drain outlet (1) to the ICU unit and to the pipe (2) with the screws (3) .

b) Connect theICU water inlet hose (4) to the connection (5) of the pipe (2) .

c) Connect the hoses (6) located in the machine body to the pipes (7).

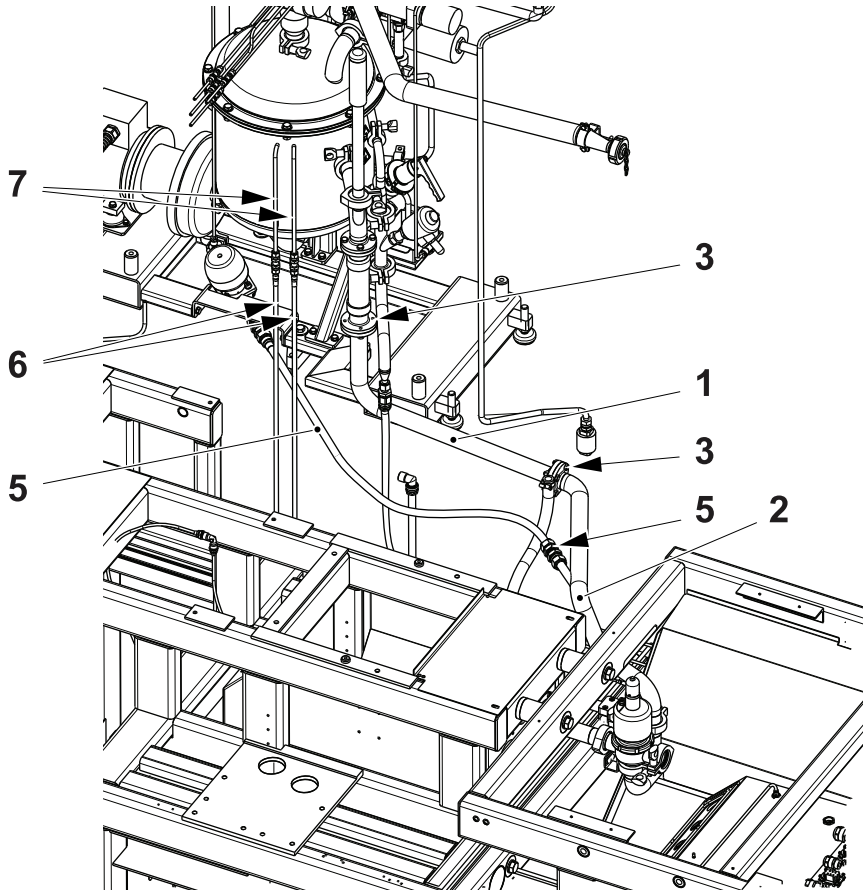

1 ICU drain outlet
2 Pipe
3 Screw
4 ICU water inlet hose
5 Connection
6 Hose
7 Pipe

(Cont'd)

(Cont'd)

d) Fit the pipe (8) to the steam system (9) and the ICU unit (10).

e) Connect the air pipes (11) to the connections bracket (12) according to the ICU pneumatic diagram.

f) Connect the air hoses (13) from the connections bracket (12) to the ICU valve panel (14) in the service unit according to the ICU pneumatic diagram.

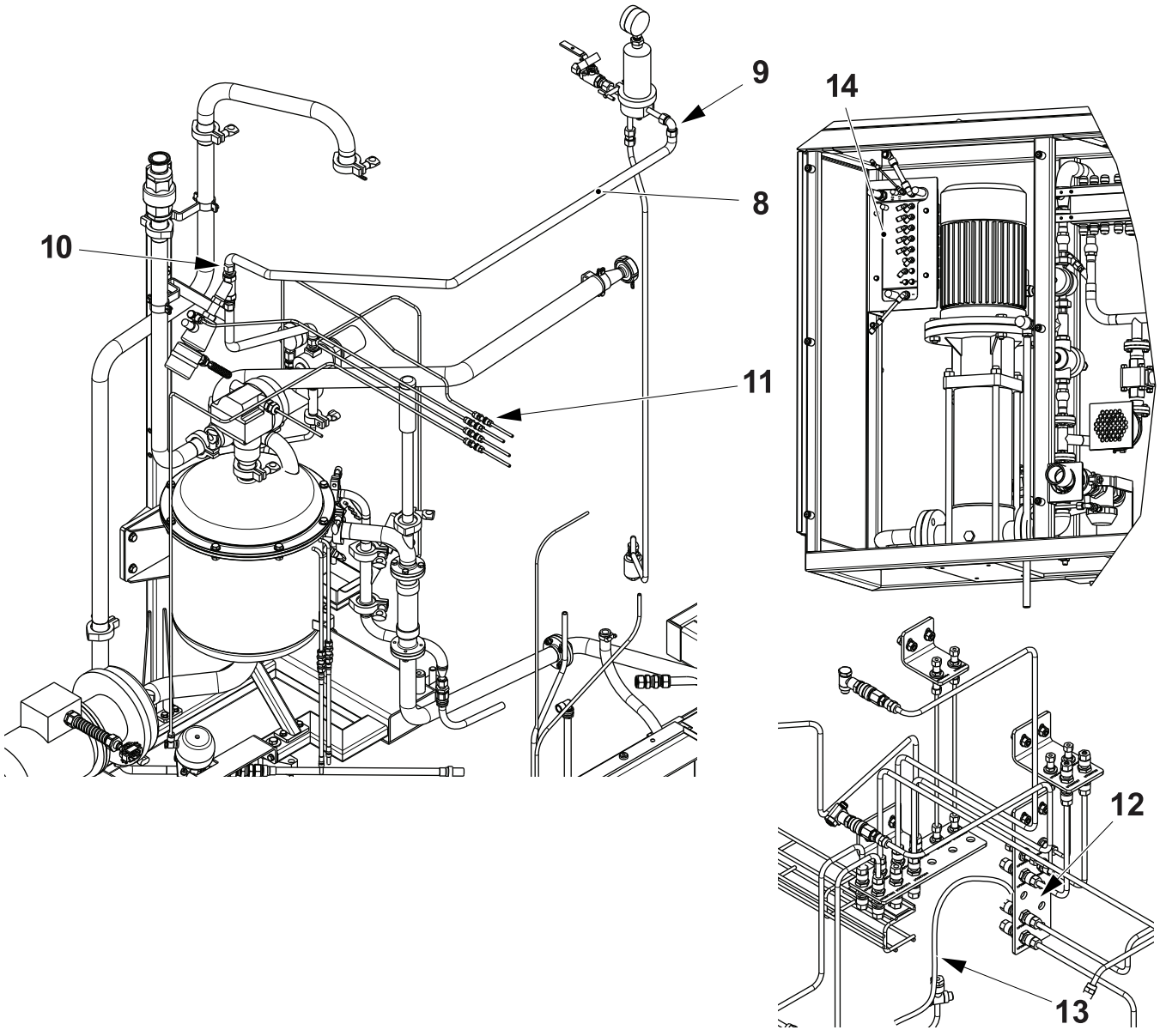

8 Pipe
9 Steam system
10 ICU unit
11 Air pipe
12 Connections bracket
13 Air hose
14 ICU valve panel

(Cont'd)

(Cont'd)

Note! Not valid for machines equipped with HVA

g) Fit the pipe (15) to the ICU with the clamp (17)

Note! Valid for machines equipped with HVA

h) Fit the pipe (15) and the pipe (16) to the ICU with the clamp (17).

Note! Valid for all machines equipped with ICU

i) Fit the pipe (18) to the ICU with the clamp (19) .

j) Lower the feet (20) until they are in contact with the platform (21).

k) Tighten the screws (22).

HVA variant

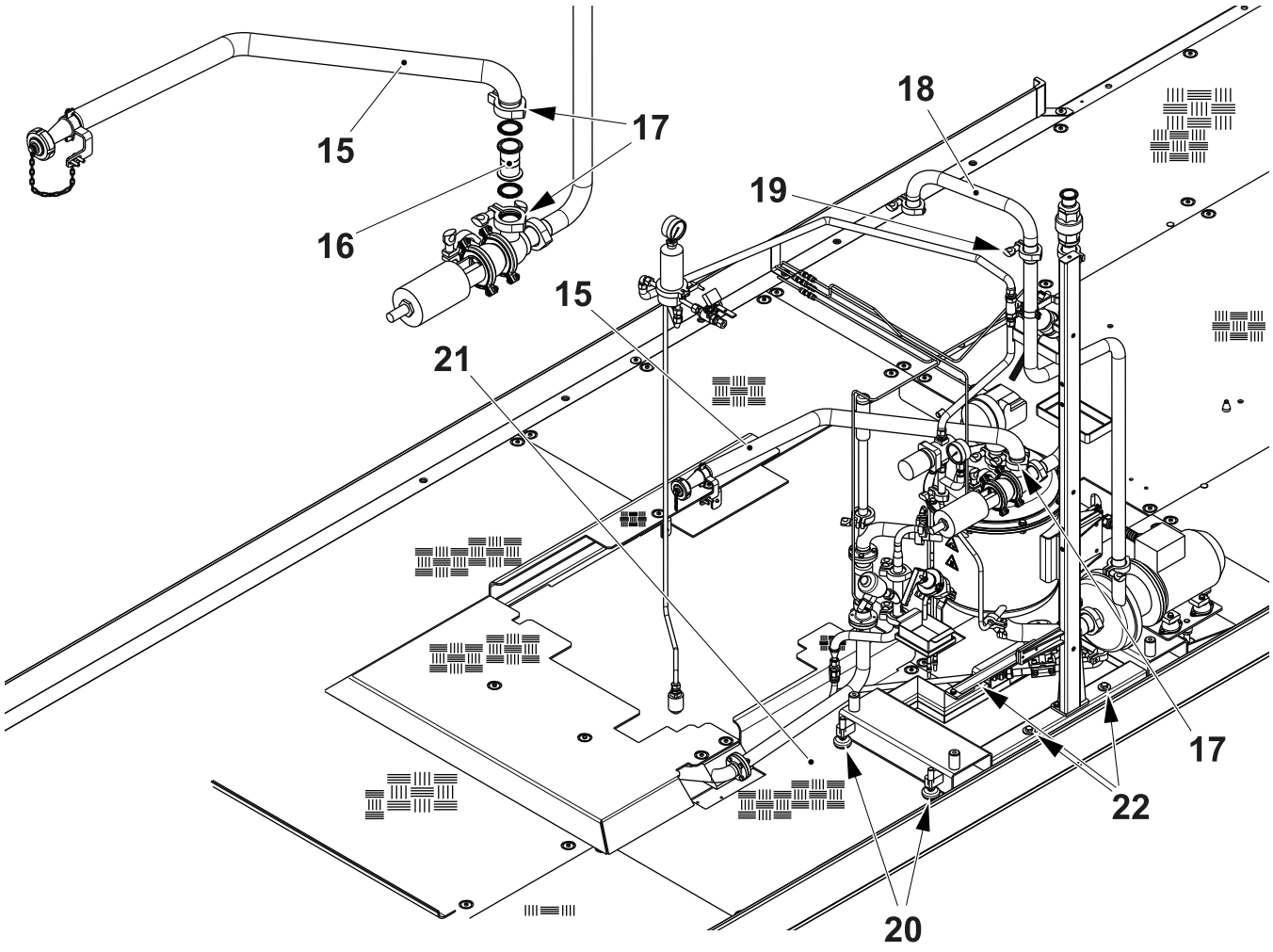

15 Pipe
16 Pipe
17 Clamp
18 Pipe
19 Clamp
20 Feet
21 Platform
22 Screw

(Cont'd)

(Cont'd)

l) Connect the hose (23) of the solenoid valve (24) to the machine body (25) according to the pneumatic diagram.

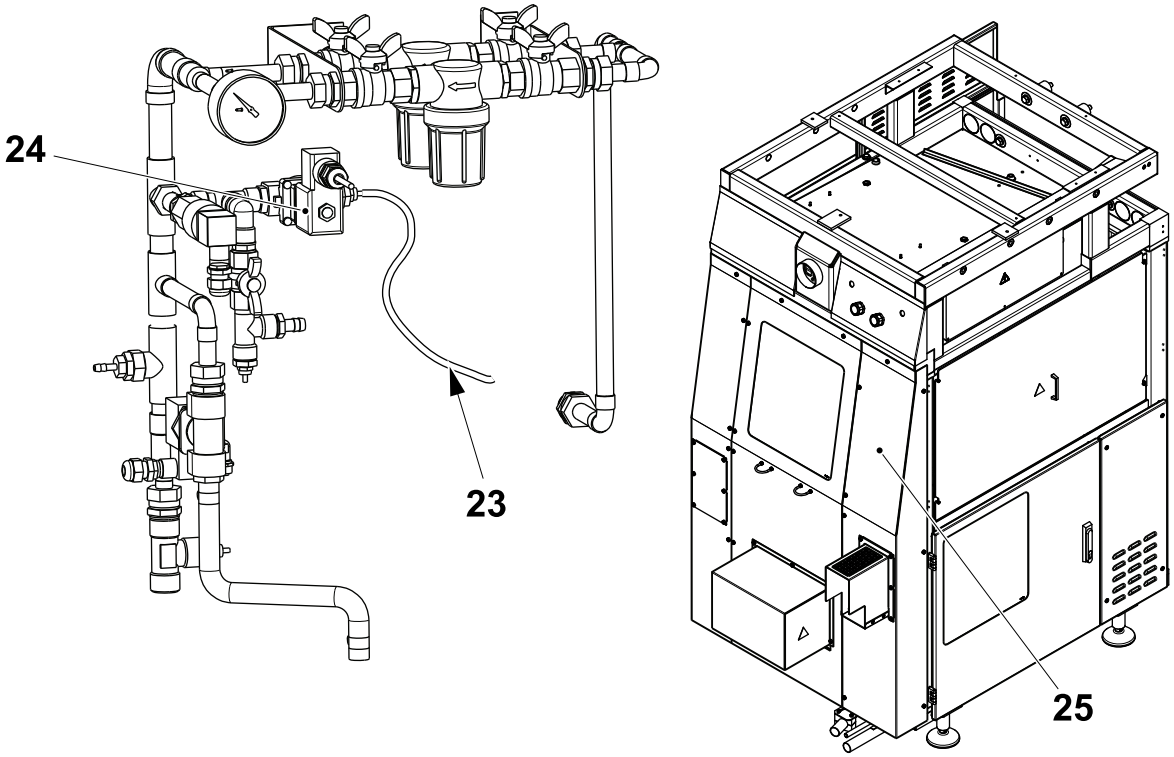

23 Hose
24 Solenoid valve
25 Machine body

3.3.4-9 ICU Storage Tubes Connections

a) Fit the ICU storage (1) to the stair (2) at a specific height from the floor, see illustration below, and tighten the screws (3).

b) Connect the ICU storage tubes drain outlet (4) to a suitable waste drain.

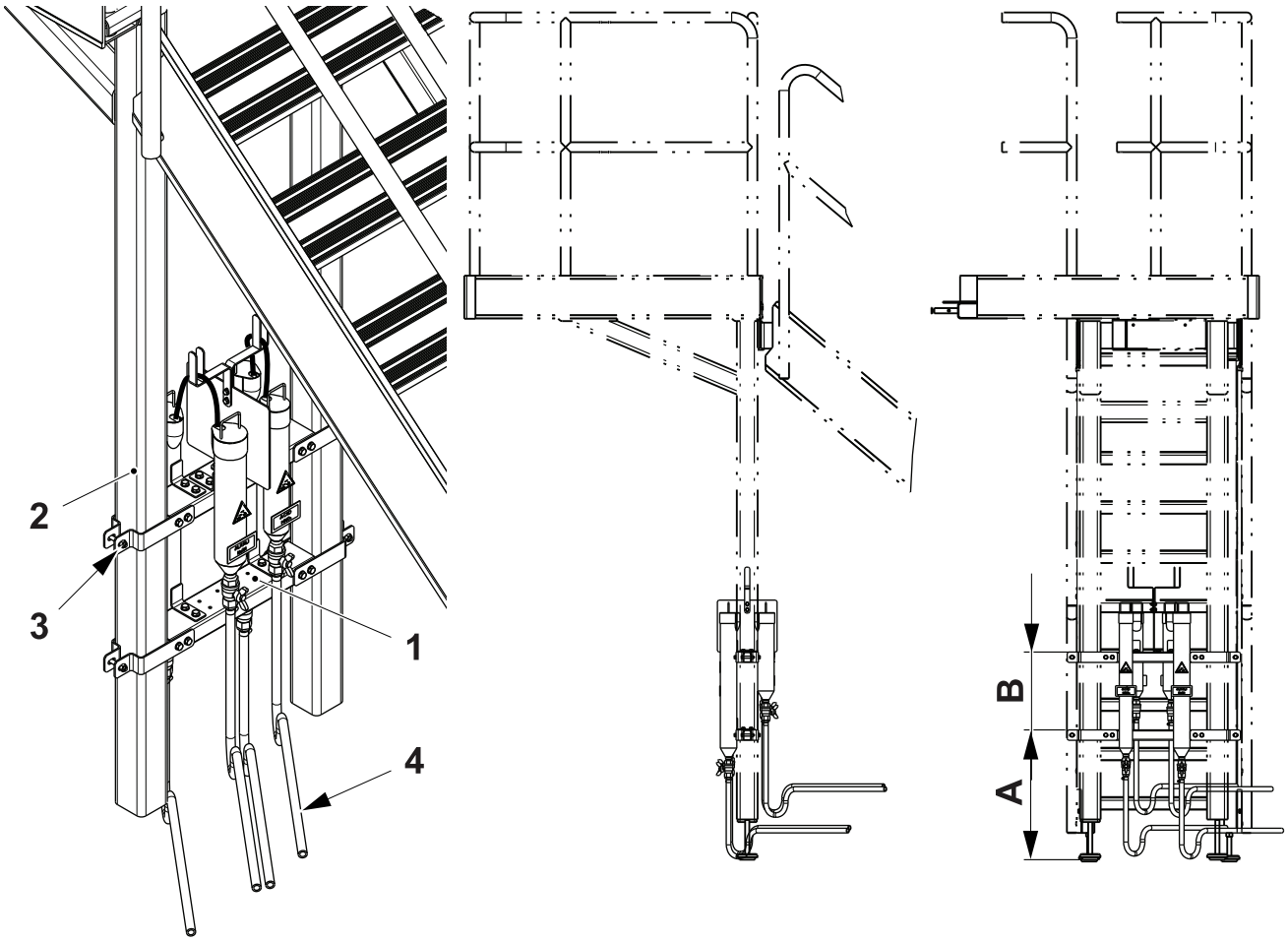

A = 300 ±1 mm
B = 500 ±1 mm

1 ICU storage
2 Stair
3 Screw
4 ICU storage tubes drain outlet

3.3.4-10 HVA Connections

a) Fit the pipe (1) to the HVA unit (2) and tighten the clamp (3).
b) Fit the pipe (4) to the pipe (5) in the machine body and to the pipe (1).
c) Tighten the clamps (6) and (7).
d) Fit the pipes (8) and (9) to the valve group (10).

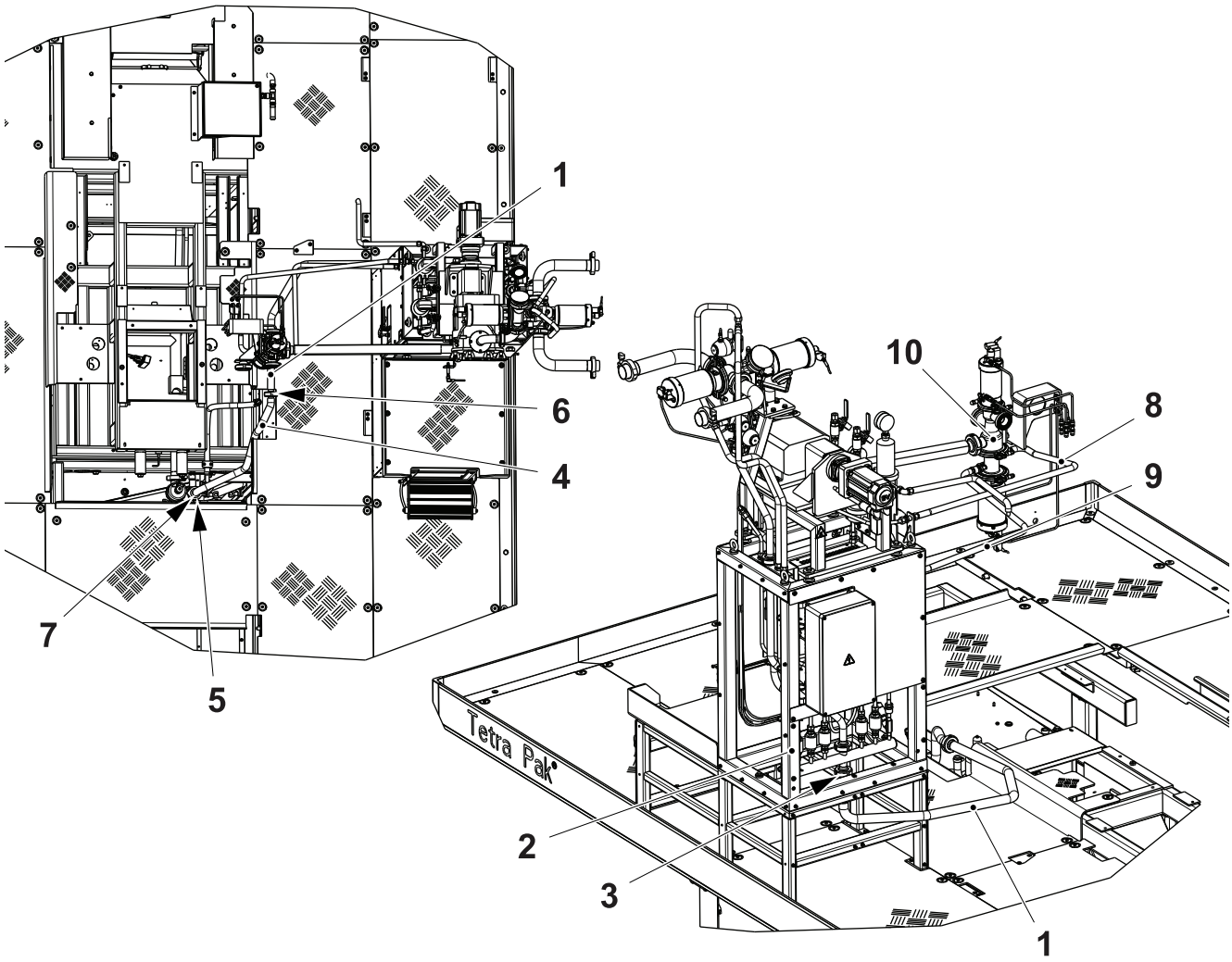

1 Pipe
2 HVA unit
3 Clamp
4 Pipe
5 Pipe
6 Clamp
7 Clamp
8 Pipe
9 Pipe
10 Valve group

(Cont'd)

(Cont'd)

e) Fit the pipe (11) to the pump (12) and to the valve group (10).

f) Fit the pipe (13) to the ICU valve (14).

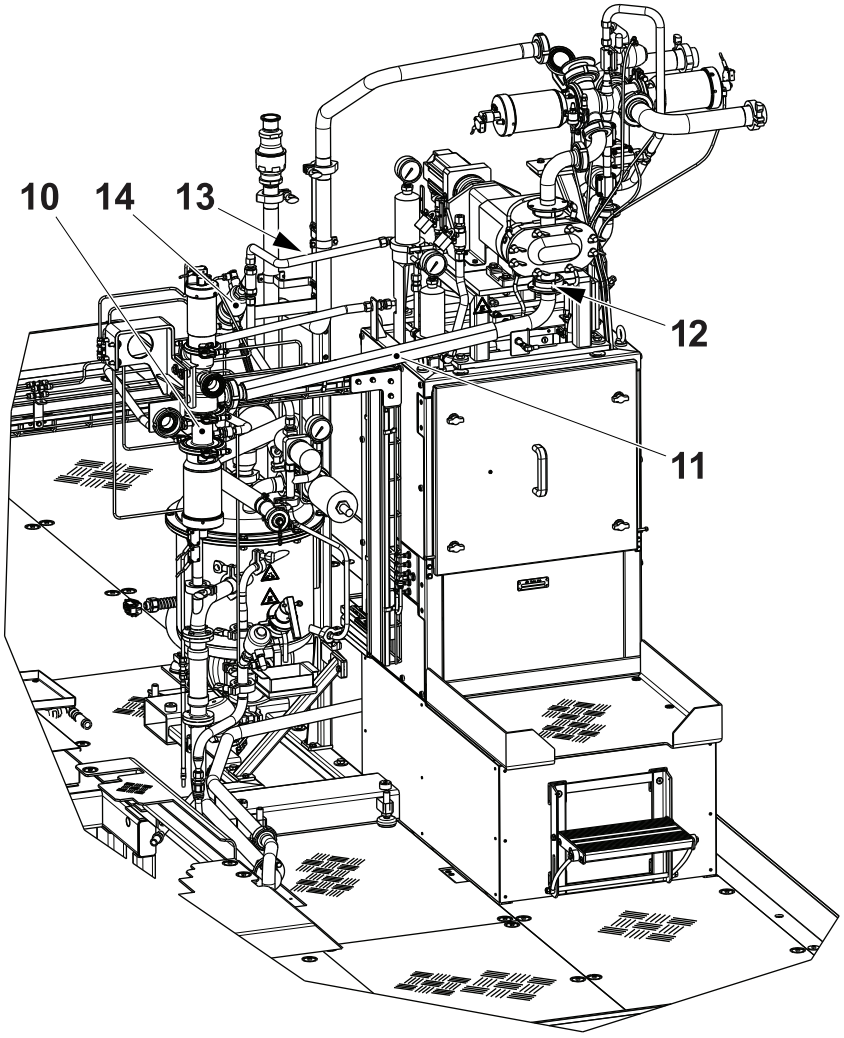

10 Valve group
11 Pipe
12 Pump
13 Pipe
14 ICU valve

(Cont'd)

(Cont'd)

g) Connect the air pipe (15) to the superstructure.
h) Fit the cable trench (16) and (17).

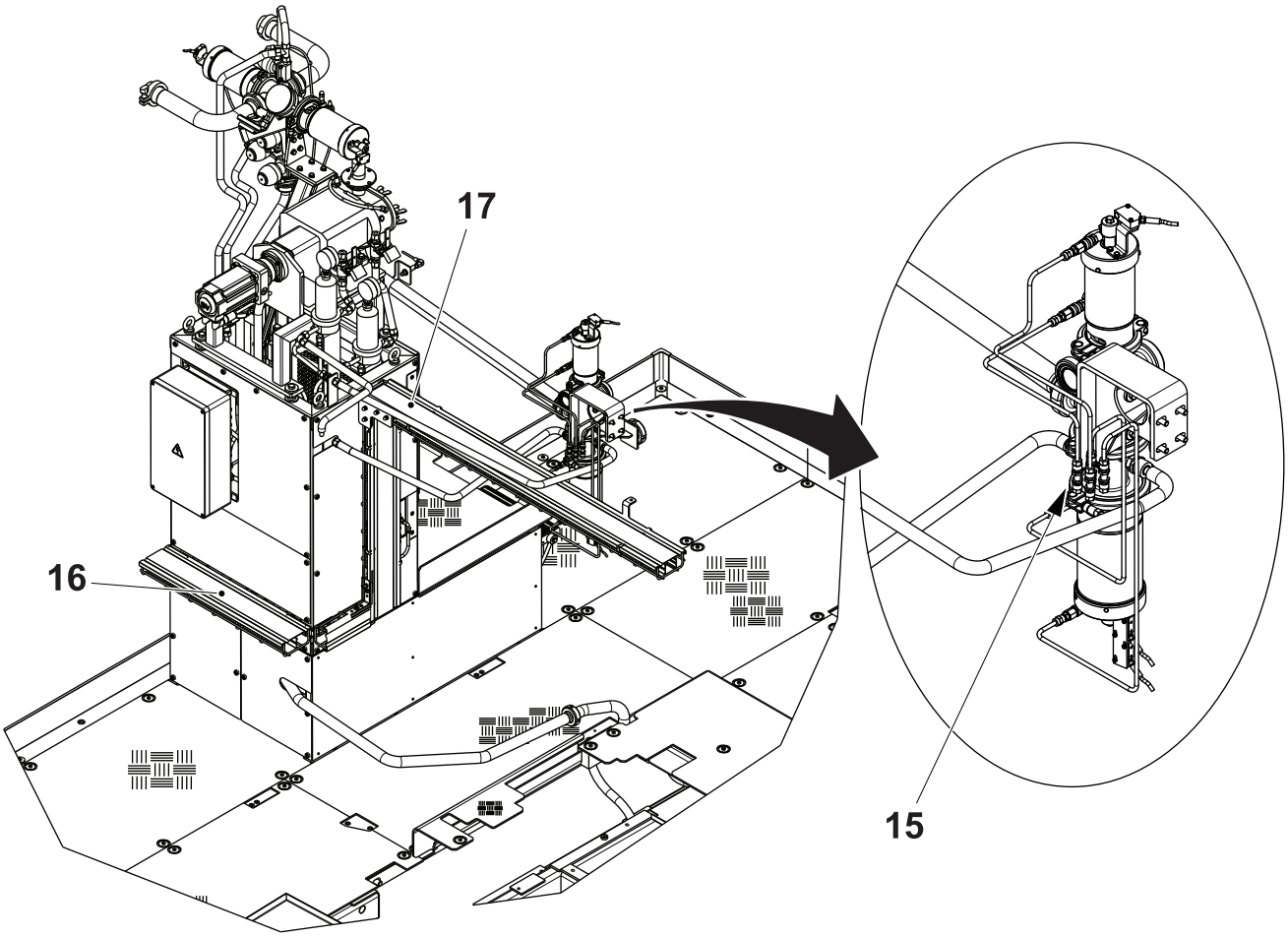

15 Air pipe
16 Cable trench
17 Cable trench

3.3.5 Pulltab Connections

3.3.5-1 Pulltab Air Connections

a) Connect the pipe K80W0025 to the air valve K80S0022 (1).

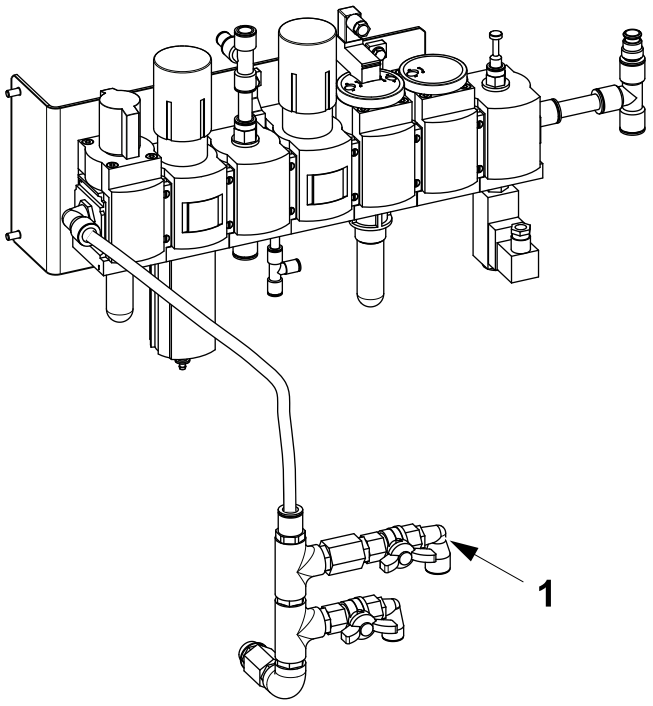

1 Air valve

(Cont'd)

(Cont'd)

b) Connect the pipe K80W0025 to the air valve (2).

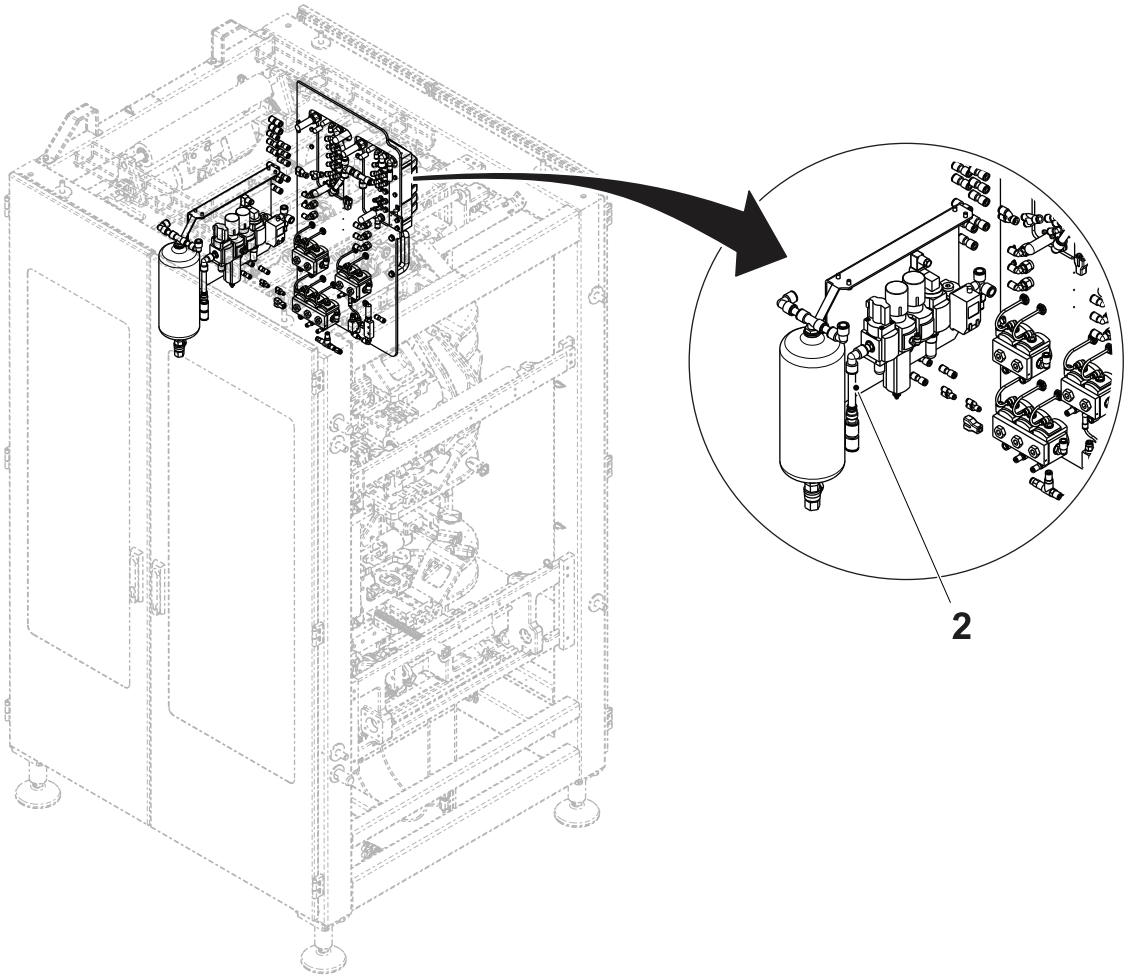

2 Air valve

3.3.6 ASU Connections

3.3.6-1 ASU Air Connections

a) The pipes for the ASU must be connected to the system of the main air valve (1).

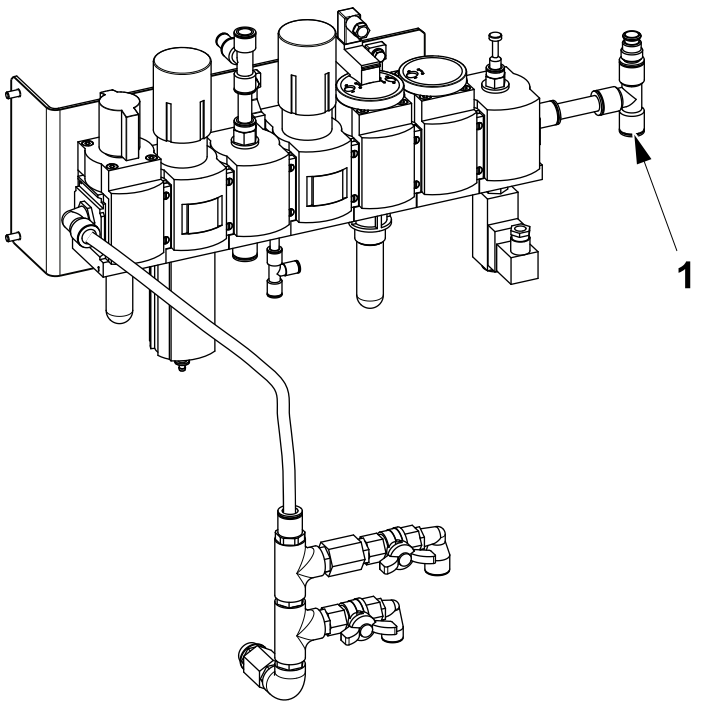

1 Main air valve

(Cont'd)

(Cont'd)

b) Pass the pipes through the Pulltab section.

c) Connect the pipe T10W1178 to the T-pipe connection (2) then proceed to the valves (3).

d) Connect the pipe T10W1179 to the air supply unit (4).

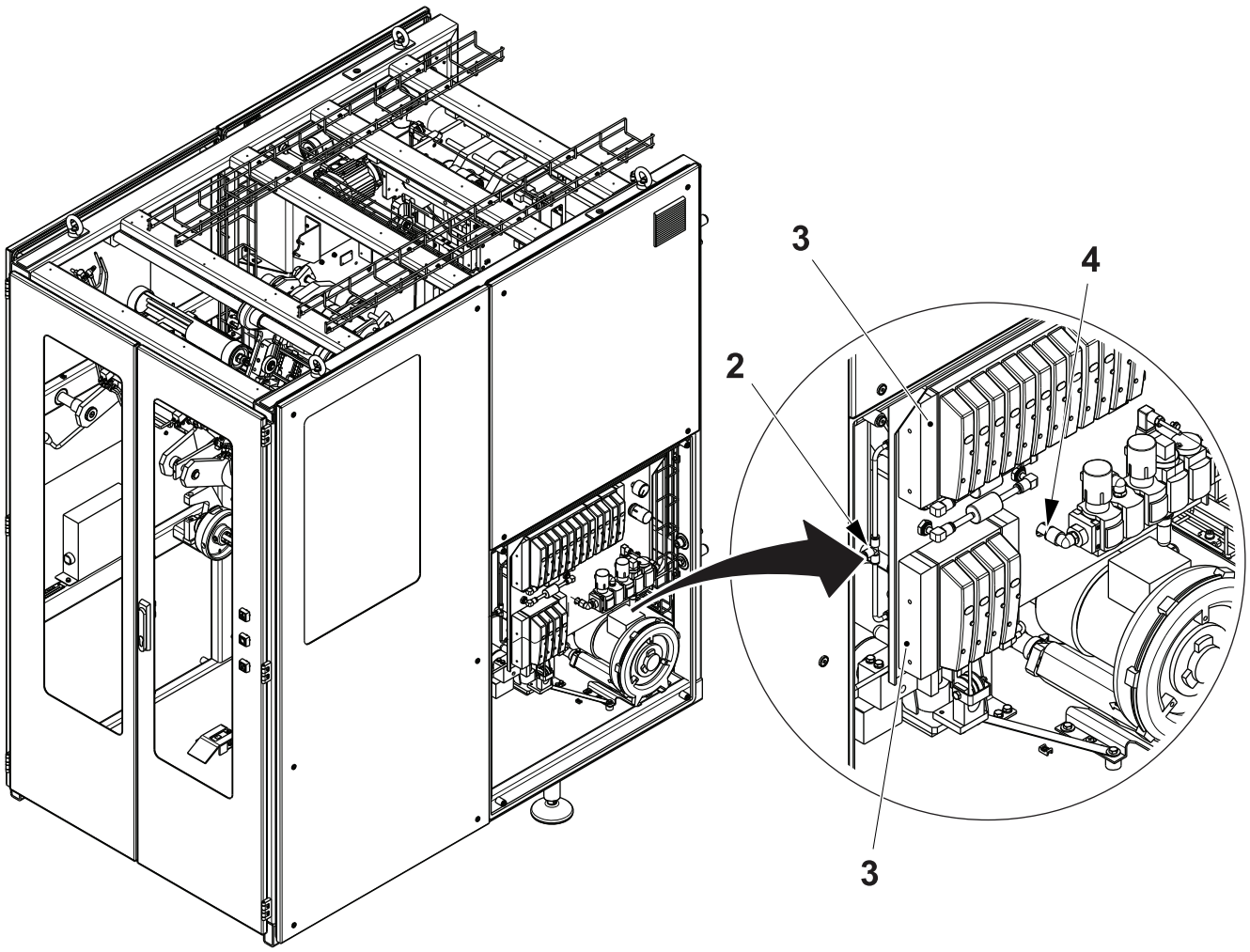

2 T-pipe connection
3 Valve
4 Air supply unit

3.3.7 Electrical Cabinet(s) and Power and Signal Connections

3.3.7-1 Filling Machine Electrical Cabinet Cable Ducts

a) Fit and secure both the cable duct (1) and (2) to the machine body platform.

b) Remove the cover (3) to the electrical cabinet.

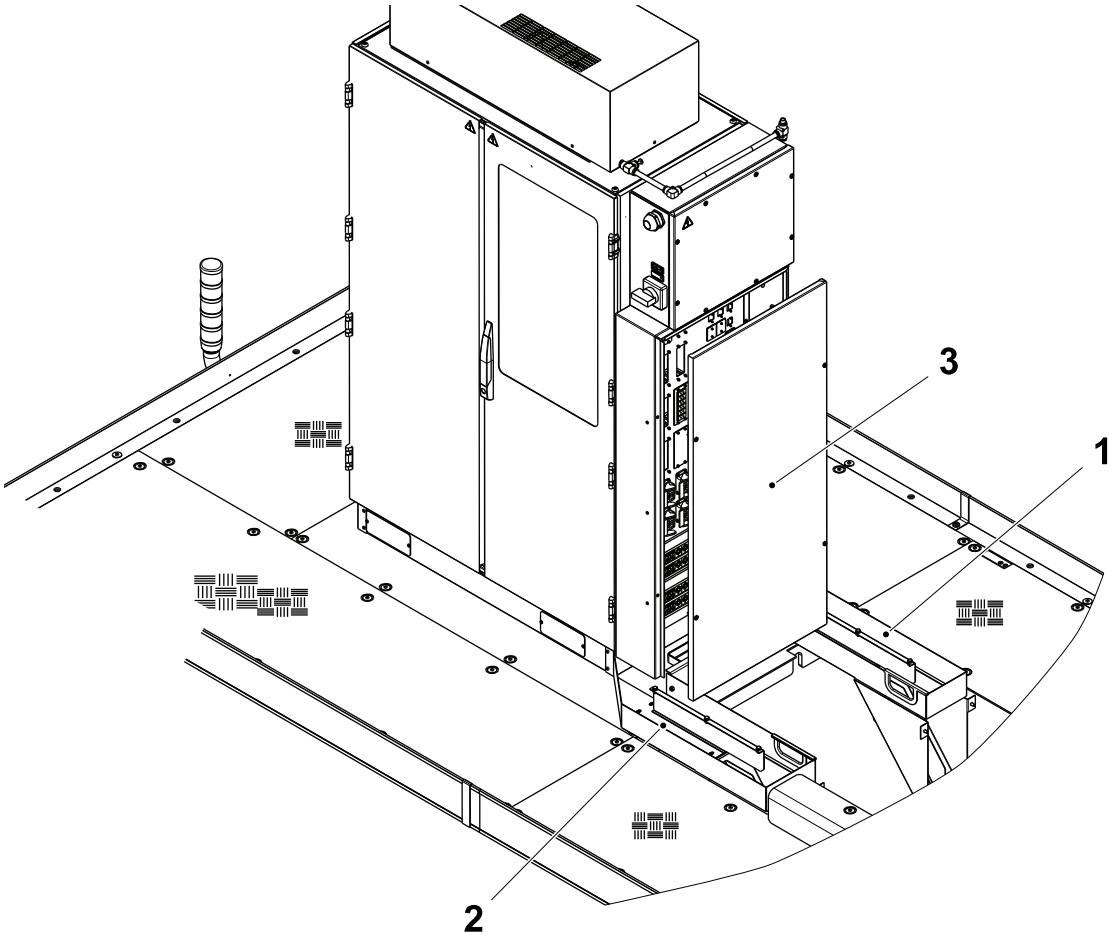

1 Cable duct
2 Cable duct
3 Cover

3.3.7-2 Filling Machine Electrical Cabinet Power and Signal Cables

Note! When threading and positioning cables vertically, always place power cables to the right and signal cables separately to the left. When threading and positioning cables horizontally, always place power cables at the bottom and signal cables separately at the top.

a) Use the EM to identify and separate the power cables (1) and the signal cables (2) coming through the platform from the machine body as indicated in the illustration.

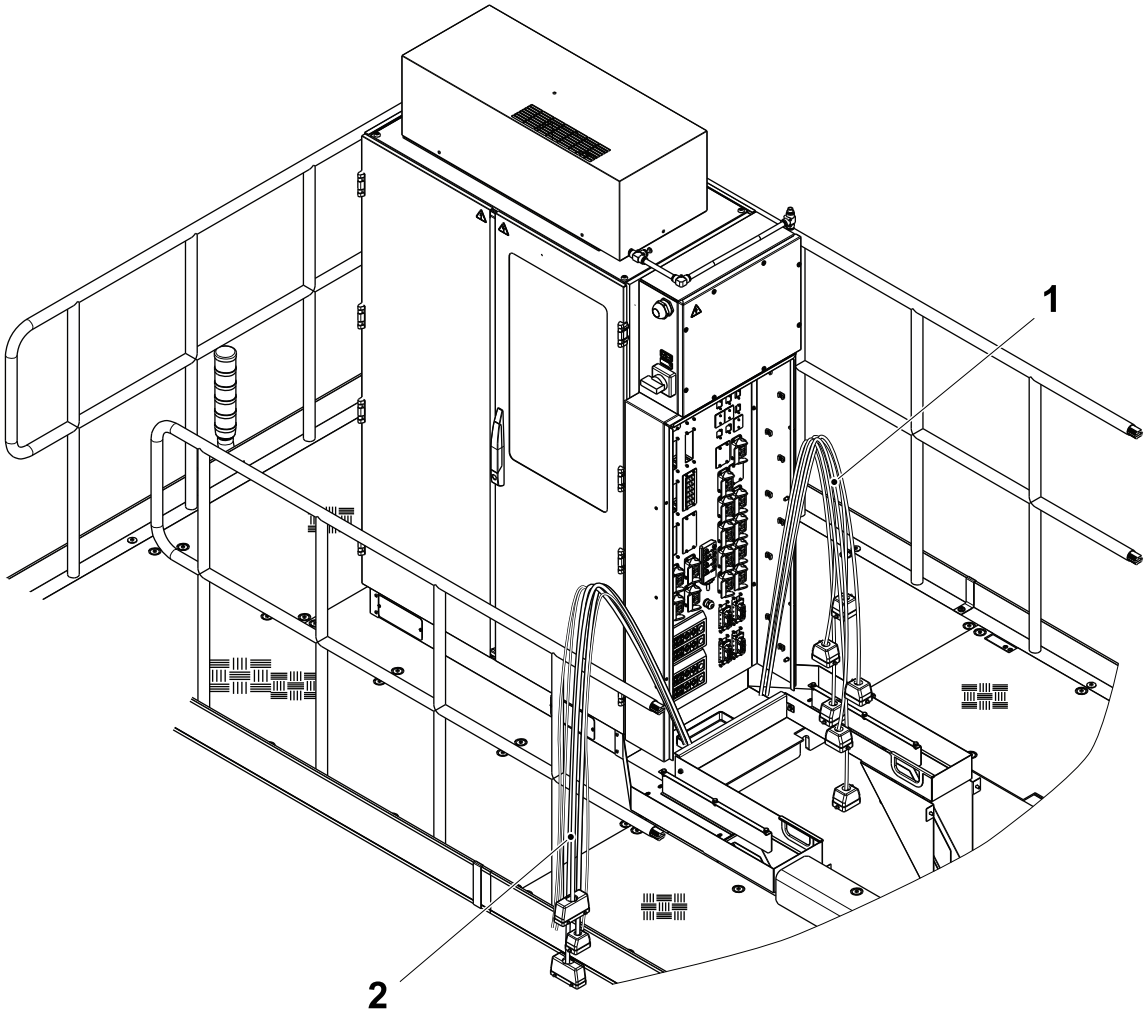

1 Power cable
2 Signal cable

(Cont'd)

(Cont'd)

Note! The connection area is a confined space and the connections should be made in a logical order starting from the bottom of the connection plate and then working upwards.

b) Feed the power cables (1) into the connection area. If necessary, loop any excess cable along the full length of the inside of the covering panel (3) and secure with cable ties.

c) Feed the signal cables (2) into the connection area. If necessary, loop any excess cable along the full length of the inside of the ccovering panel (3) and secure with cable ties.

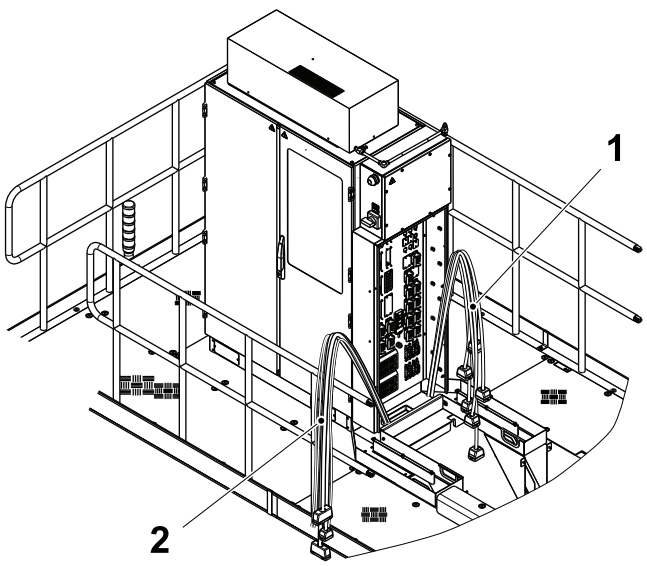

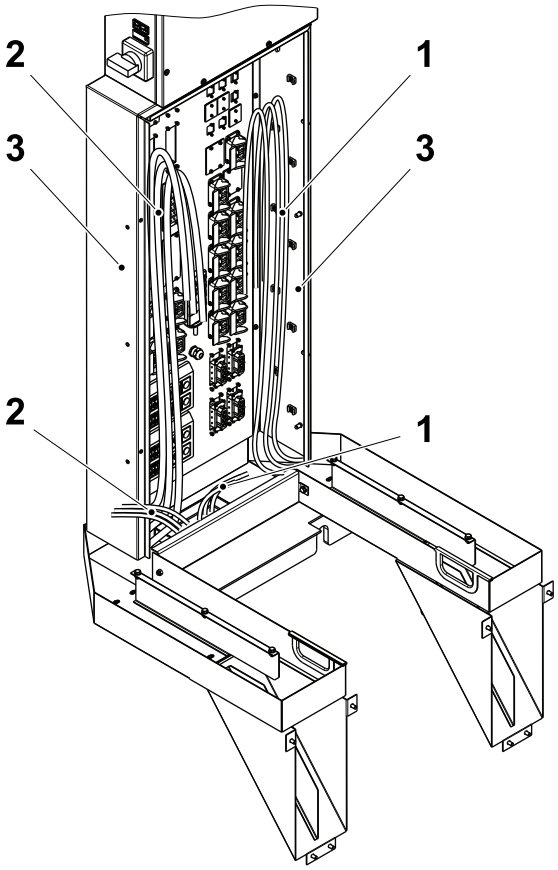

1 Power cable
2 Signal cable
3 Covering panel

(Cont'd)

(Cont'd)

Note! The cables must not hang directly from the connectors to avoid the future possibility of broken contacts.

d) Connect the power and signal cables to the connection plate (4). Take care to match the marking on the cable to the corresponding marking on the cabinet connector. Support the cables by fastening them to the cabinet wall.

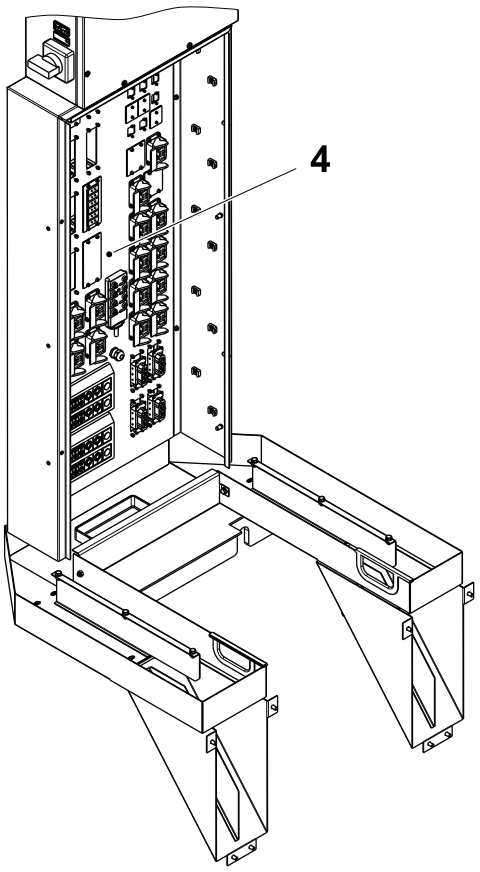

4 Connection plate

(Cont'd)

(Cont'd)

e) Thread all the directly connected cables into the electrical cabinet. After the cables have been threaded through, remove the protective strips (5) from around the slots in the connection plate.

f) Fit the servo motor power cables connector (6) and the servo motor feedback cables connector (7) with the plates (8) and the screws (9).

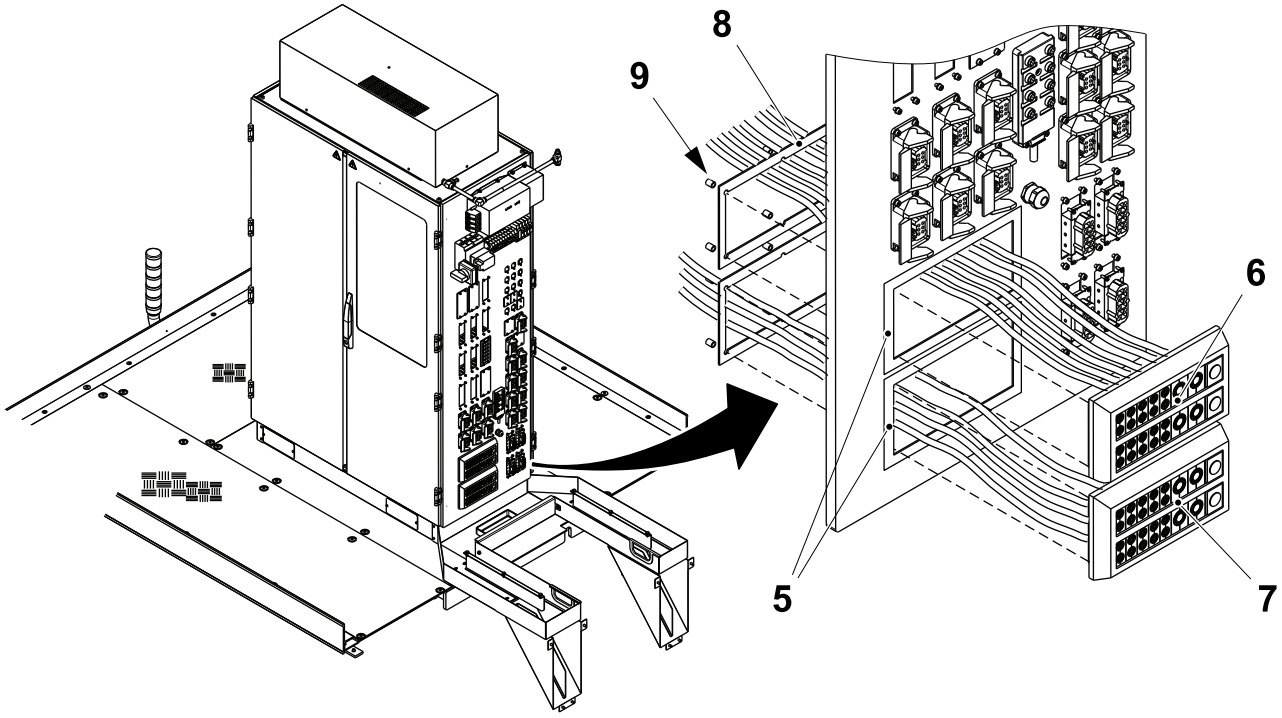

5 Protective strip
6 Connector
7 Connector
8 Plate
9 Screw

3.3.7-3 Filling Machine Electrical Cabinet Main Power Cable

DANGER

Risk of electrocution.
In case of an accident call for medical attention immediately.

a) Make sure that the main electrical power supply to the machine is OFF.

b) Make sure that the main switch on the electrical cabinet is in the OFF position.

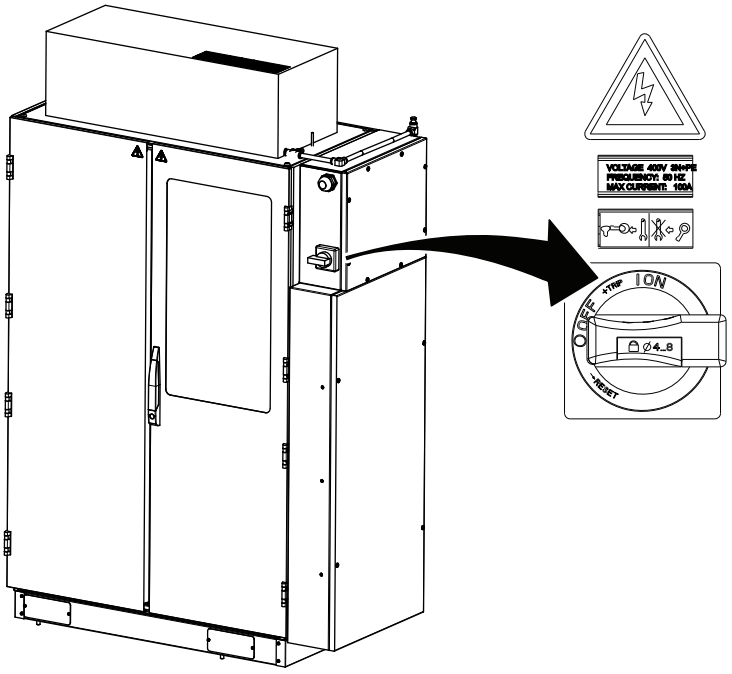

(Cont'd)

(Cont'd)

DANGER

Risk of electrocution.
In case of an accident call for medical attention immediately.

c) Connect the electrical mains supply cable (1) to the main supply box (2) of the electrical cabinet according to the electrical diagram in section 9 Mains Connections in the filling machine's EM.

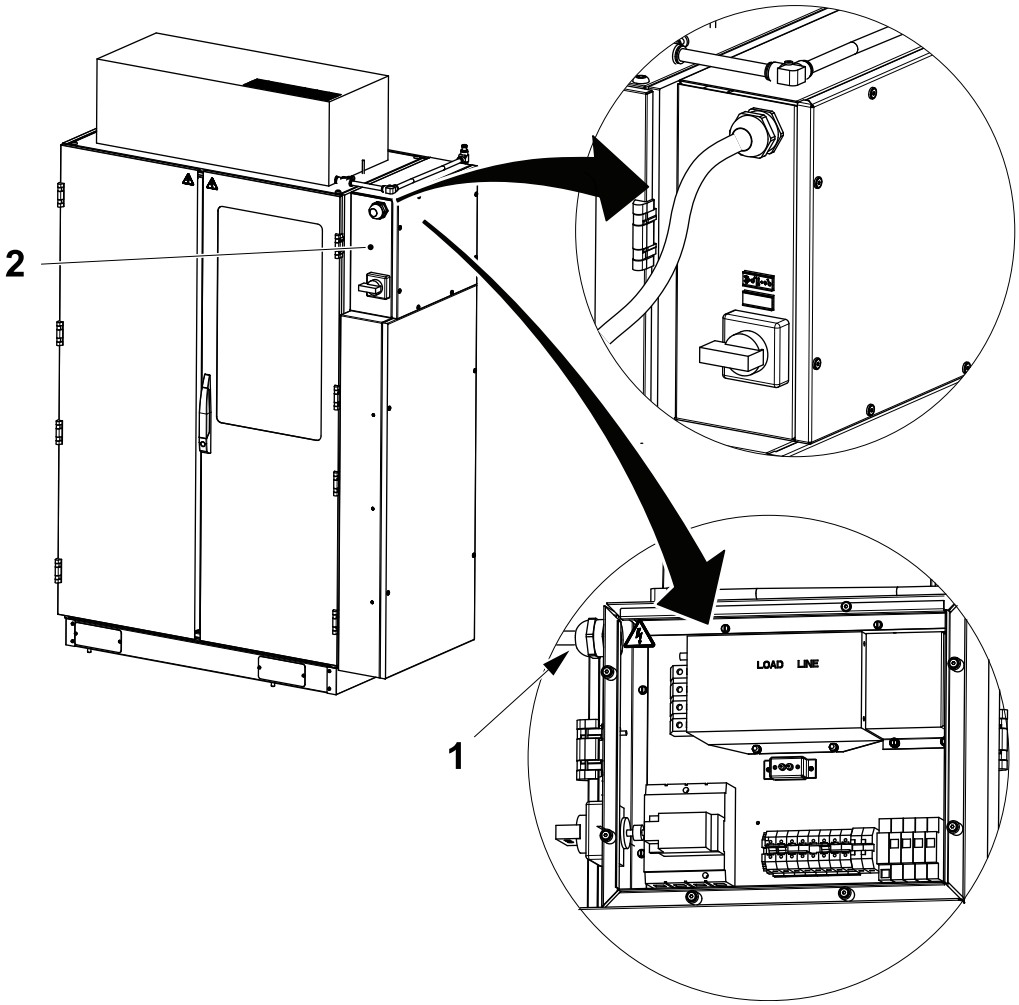

1 Mains supply cable
2 Main supply box

3.3.7-4 Filling Machine Electrical Cabinet Direct Cabinet Connections

Note! Follow the Electrical Manual circuit diagrams when wiring cables directly inside the electrical cabinet. Always check the circuit diagrams for notes regarding shielded cables and follow the wiring instructions for the cable shield as detailed in the Electrical Manual chapter 10 Drawing Remarks.

a) Thread the servo motor feed back cables (1) through the cable ducts as indicated in the illustration and connect the cables according to the EM.

b) Thread the Servo motor power cables (2) through the cable ducts as indicated the illustration and connect them according to the EM.

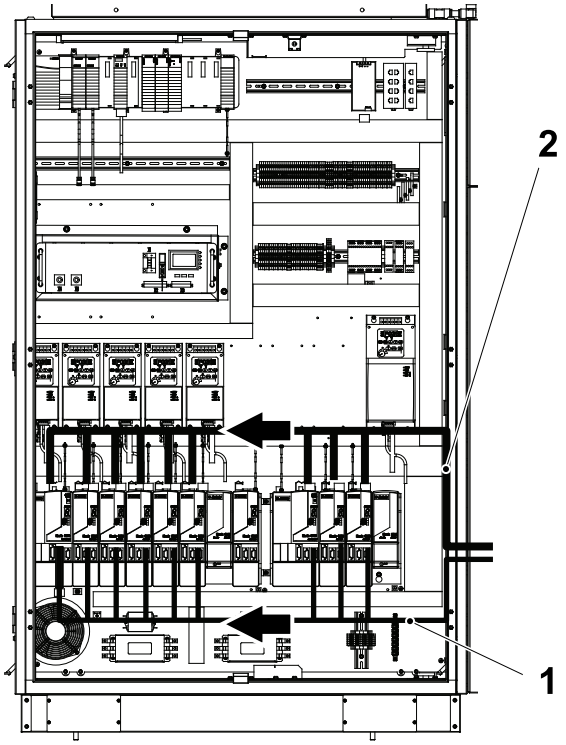

1 Servo motor feed back cable
2 Servo motor power cable

(Cont'd)

(Cont'd)

c) Make sure that the power cable shields for servo drives are correctly connected to the cable shield terminal blocks (3) , use a screwdriver to push down the bracket at the point indicated in the illustration.

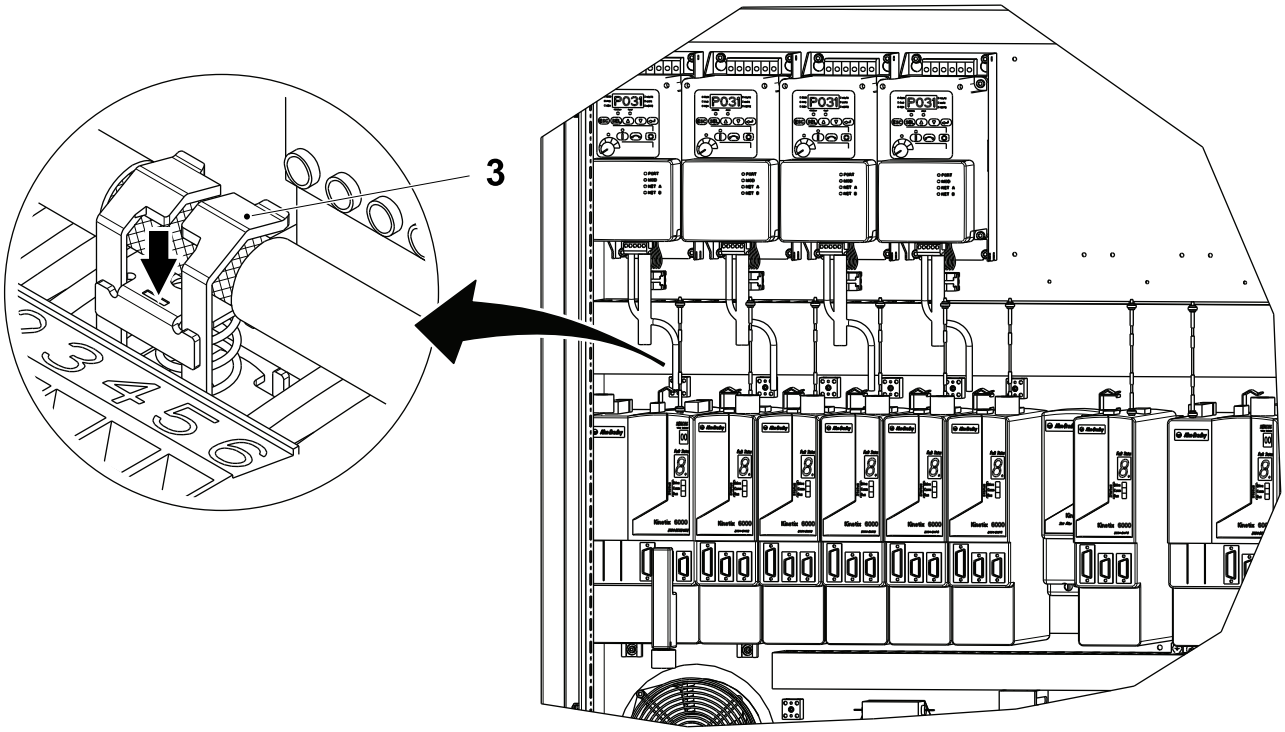

3 Cable shield terminal block

(Cont'd)

(Cont'd)

d) Connect the ethernet cable (4) to the ethernet switch (5).

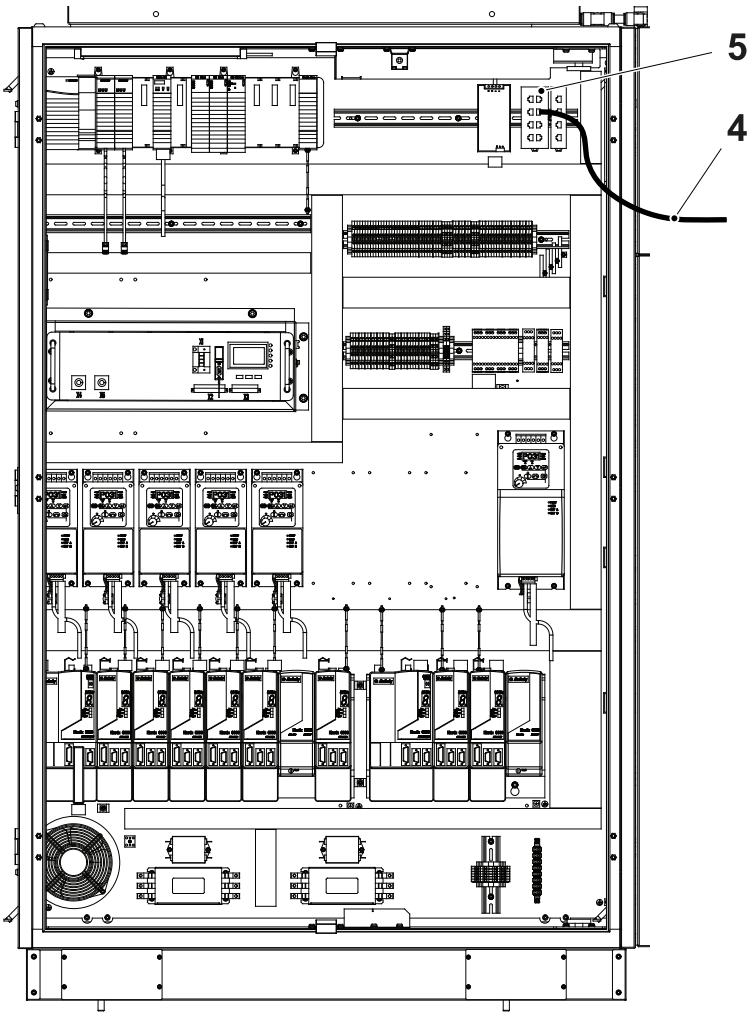

4 Ethernet cable
5 Ethernet switch

(Cont'd)

(Cont'd)

e) Connect the TMCC2 cables to the terminal (6).

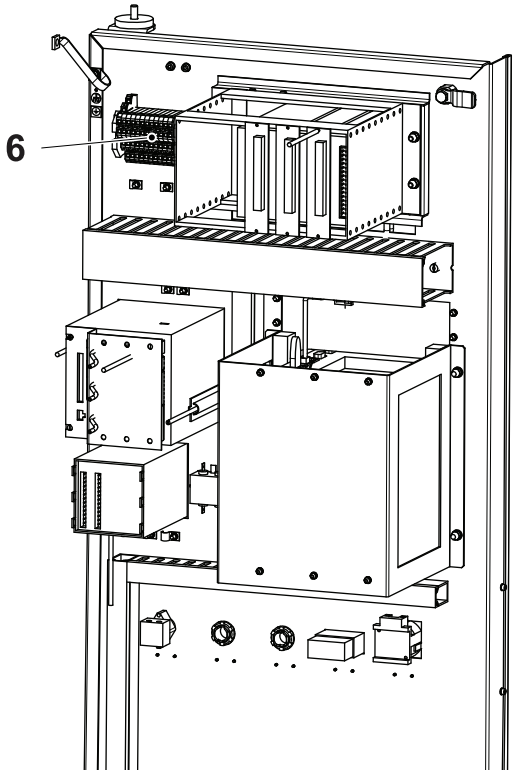

6 Terminal

(Cont'd)

(Cont'd)

f) Connect the DeviceNet cables to the DeviceNet connection box (7).

g) Connect the flowmeter cable (8) to the TMCC2 card (9).

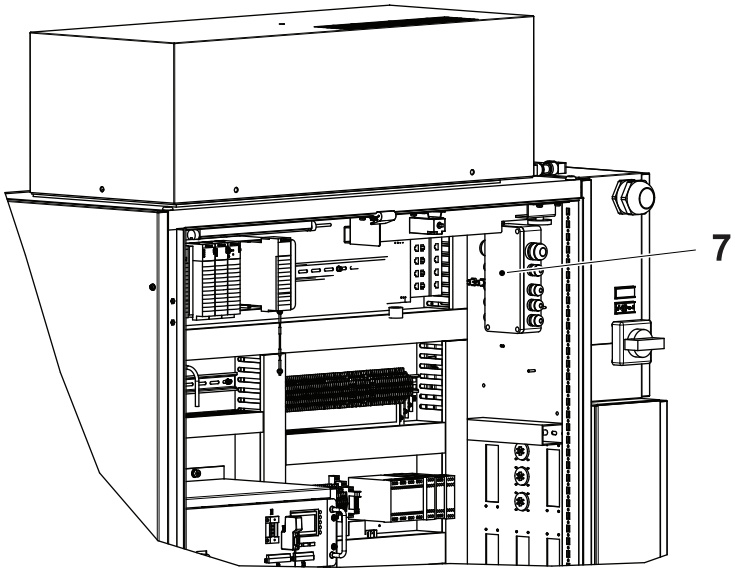

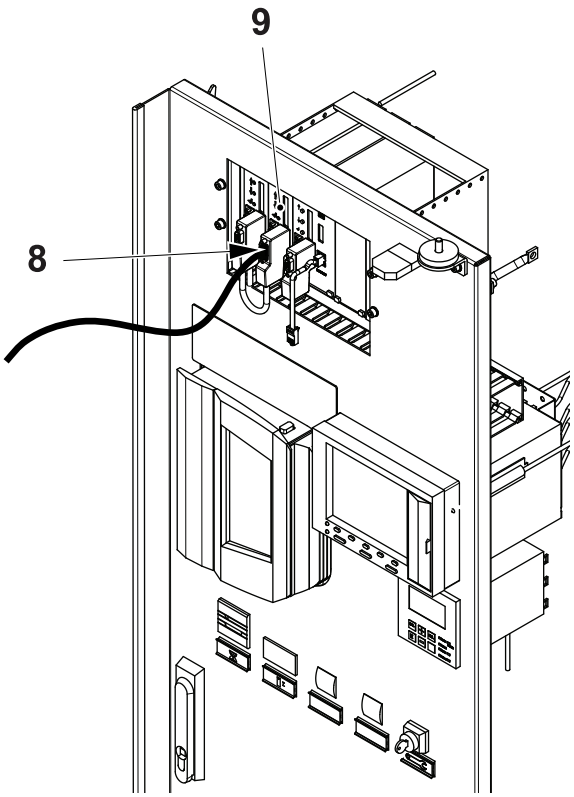

7 Connection box
8 Flowmeter cable
9 TMCC2 card

(Cont'd)

(Cont'd)

h) Connect the coaxial cables (10) and (11) to the TPIH (12).

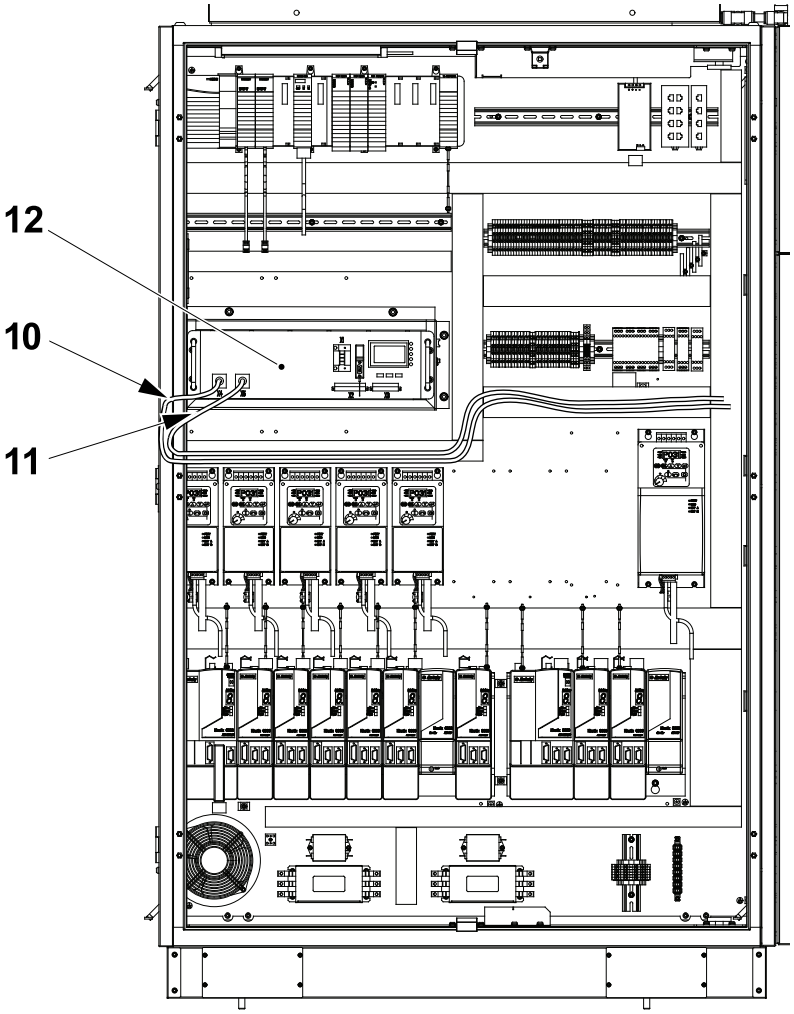

10 Coaxial cable
11 Coaxial cable
12 TPIH

3.3.7-5 Filling Machine Electrical Cabinet Cable Ducts

Fit the covers (1), (2), (3) and (4) to the electrical cabinet.

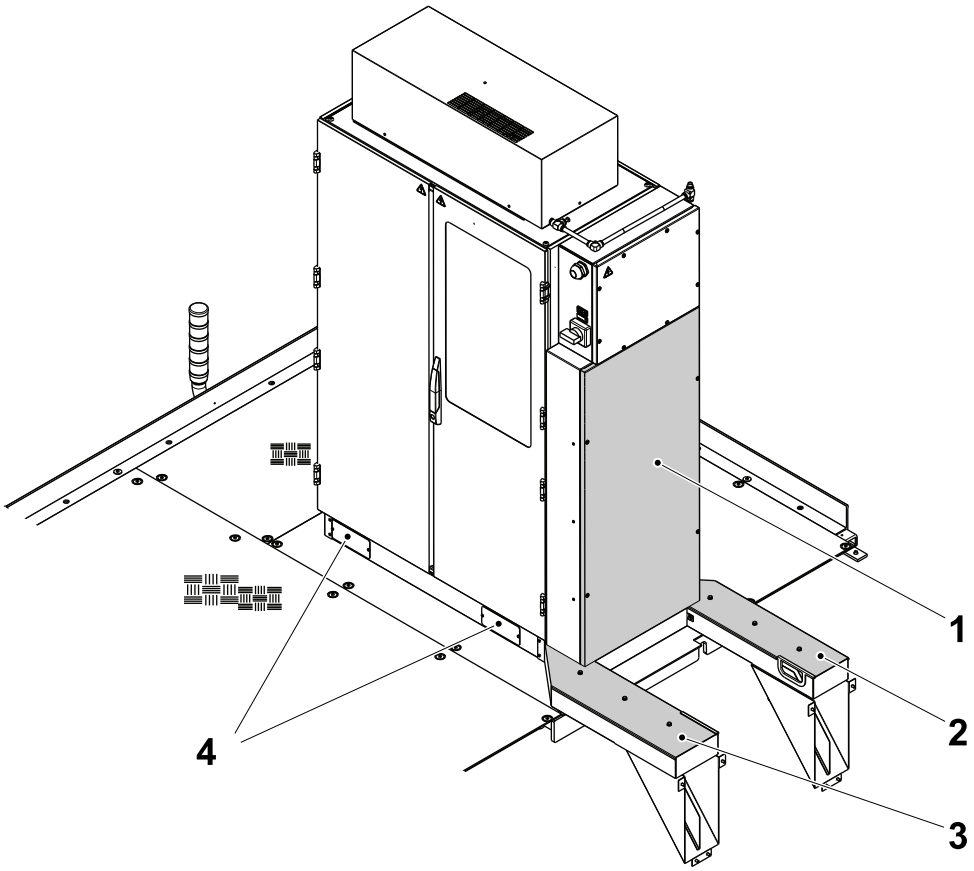

1 Cover
2 Cover
3 Cover
4 Cover (x4)

3.3.7-6 Pre-applicator Electrical Cabinet

Note! When threading and positioning cables vertically, always place power cables to the left and signal cables separately to the right. When threading and positioning cables horizontally, always place power cables at the bottom and signal cables separately at the top.

a) The power cables (1) and signal cables (2) exit the pre-applicator in two separate predefined sets. Use the EM to identify the power cables (1) and the signal cables (2)

b) Taking care to keep the two sets of cables separated, thread the cables up through the platform and into the pre-applicator electrical cabinet. Tie wrap the cables to the two fixing points on the underside of the platform frame.

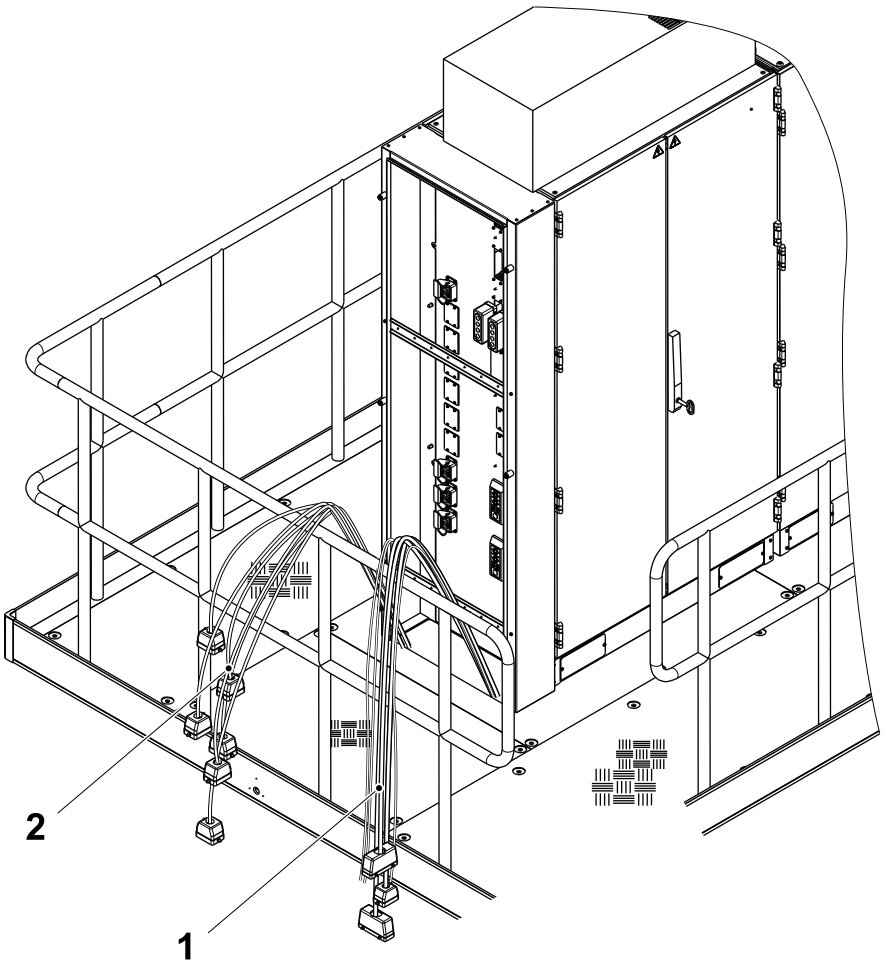

1 Power cable
2 Signal cable

(Cont'd)

(Cont'd)

Note! Do not fasten power cables together with signal cables, do not loop the excess power and signal cables together. The cables must not hang directly from the connectors to avoid the damaging the contacts.

c) Arrange the power cables (1) and signal cables (2) as indicated in the illustration. Loop any excess cable along the height of the inside of the connection area and secure with cable ties to the plates (3), keeping the two sets of cables.

d) Connect the power cables (1) and signal cables (2) to the connection plate (4) Take care to match the marking on the cable to the corresponding marking on the cabinet connector.

Note! Where the cables must pass from one side of the connection plate to the other, make sure the power and signal cables do not pass over each other and that the cables are secured horizontally at 90° from the vertical.

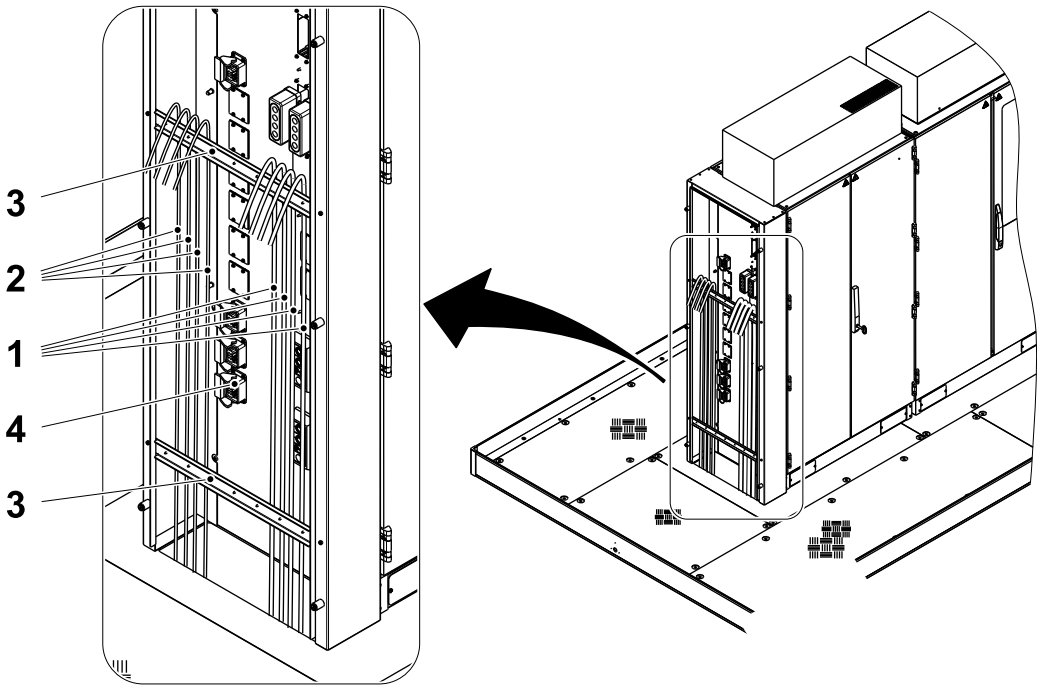

1 Power cable
2 Signal cable
3 Plate
4 Connection plate

(Cont'd)

(Cont'd)

PT Flex Servo and Signal Cables

a) Remove the screws (1) and the plates (2) from cabinet connections (3) and store them in a safe place.

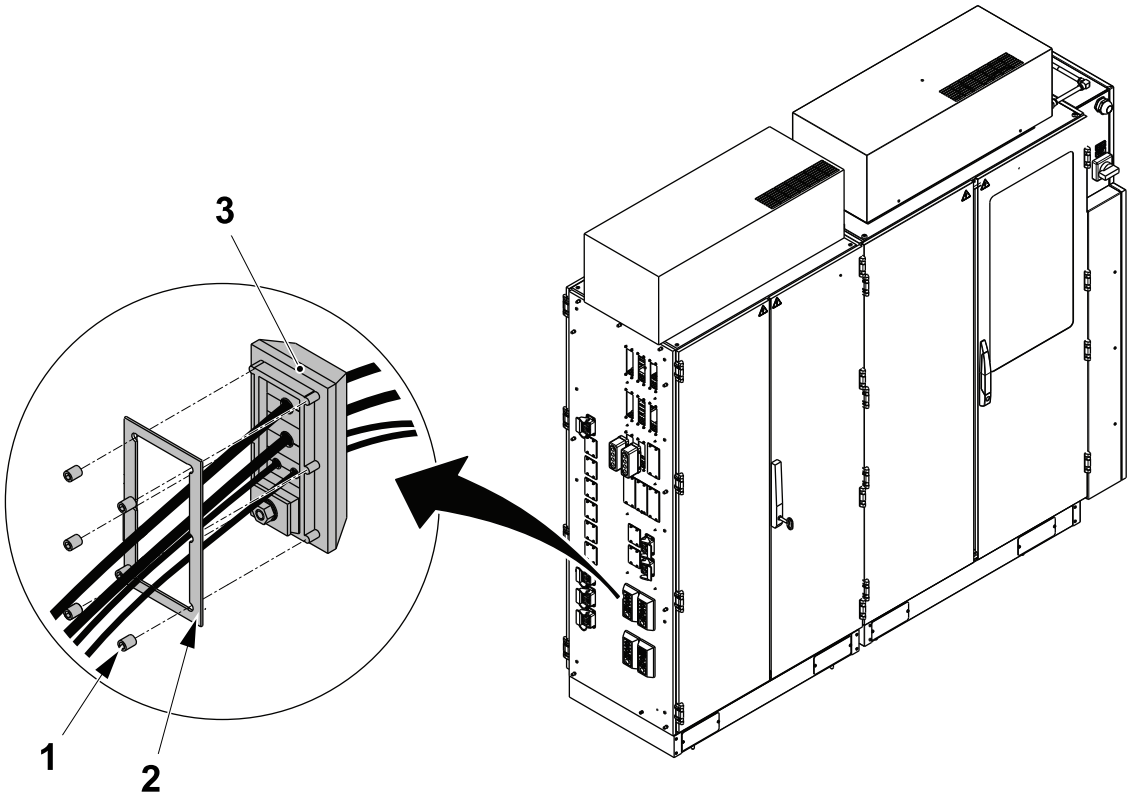

1 Screw
2 Plate
3 Cabinet connection

(Cont'd)

(Cont'd)

Note! Follow the pre-applicator Electrical Manual circuit diagrams when wiring cables directly inside the electrical cabinet. Always check the circuit diagrams for notes regarding shielded cables and follow the wiring instructions for the cable shield as detailed in the pre-applicator Electrical Manual chapter 10 Drawing Remarks.

b) Thread the servo and feedback cables into the electrical cabinet, keeping the two groups of cables separated and then remove the protective strips (4) from around the holes in the connection plate.

c) Fit the cabinet connections (3) for the servo cables with the plates (2) and the screws (1).

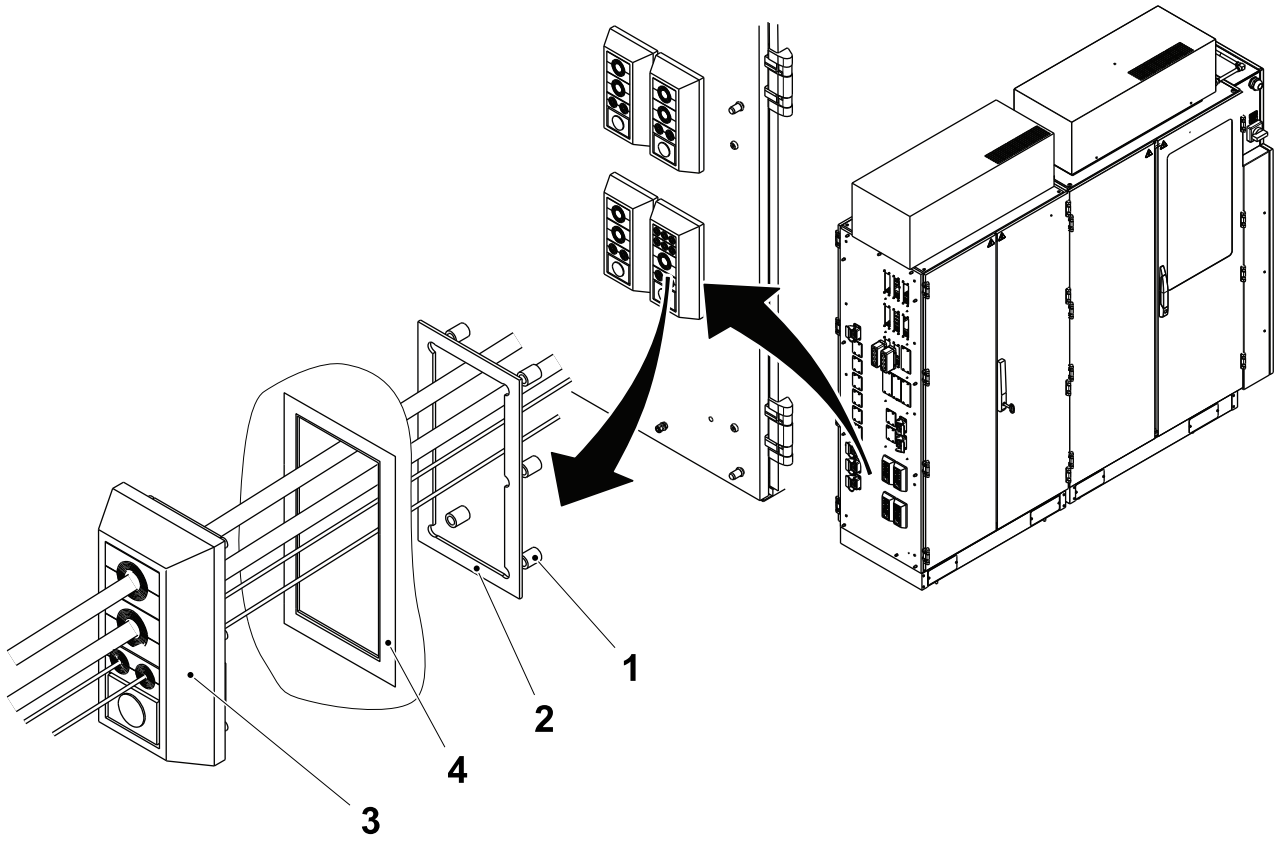

1 Screw
2 Plate
3 Cabinet connection
4 Protective strip

(Cont'd)

(Cont'd)

Note! Do not fasten power and feedback cables together.

d) Thread the servo motor feed back cables (5) straight to the servo drives without using the cable ducts as indicated in the illustration and connect the cables according to the EM.

e) Thread theservo motor power cable (6) straight to the servo drives and to the brake modules without using the cable ducts as indicated the illustration and connect them according to the EM.

f) Make sure that the servo motor power cable shields are correctly connected to the cable cable shield terminal blocks (7), use a screwdriver to push down the bracket at the point indicated in the illustration.

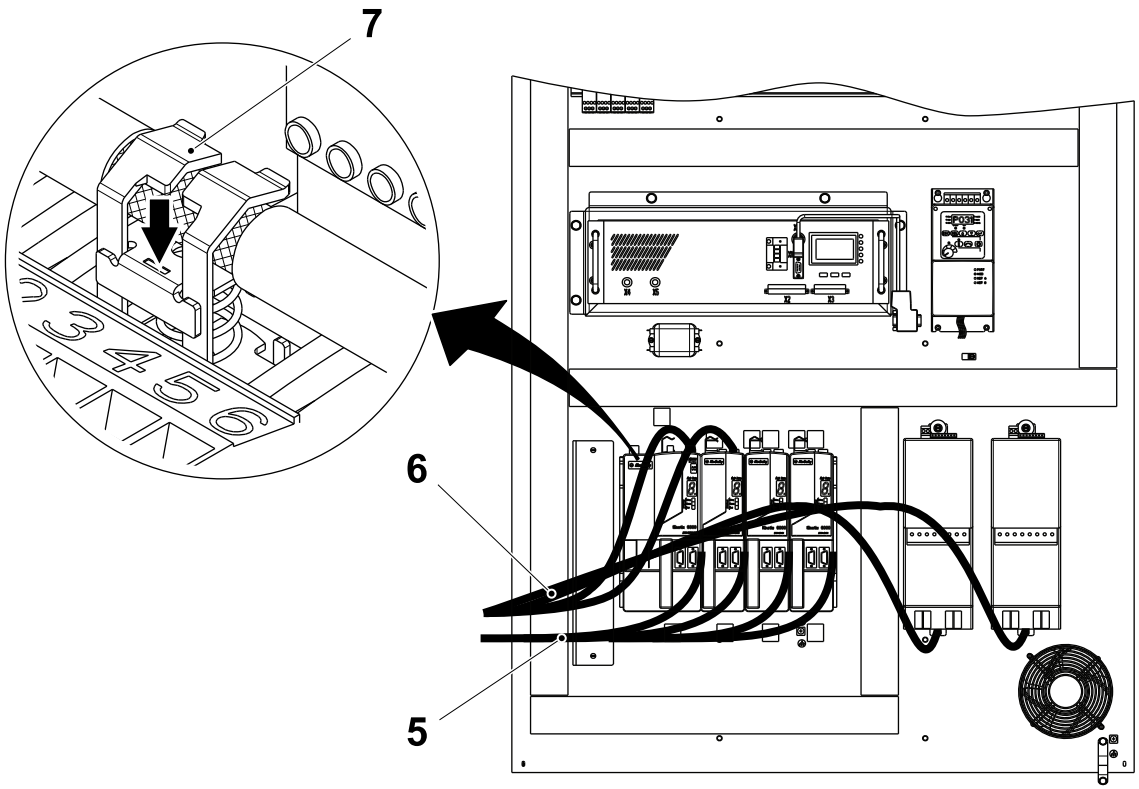

5 servo motor feed back cable
6 Servo motor power cable
7 Cable shield terminal block

(Cont'd)

(Cont'd)

Note! Follow the pre-applicator Electrical Manual circuit diagrams when wiring cables directly inside the electrical cabinet. Always check the circuit diagrams for notes regarding shielded cables and follow the wiring instructions for the cable shield as detailed in the pre-applicator Electrical Manual chapter 10 Drawing Remarks.

g) Fit the cabinet connection (8) for the cables G24W3310, G24W4310 and A20W4100 and the cabinet connection (9) for the cable G25W1100 as indicated in the illustration.

h) Thread the cables G24W3310 and G24W4310 through the cable duct and connect the cables according to the EM, making sure that the cable shields are correctly connected to the shield terminal blocks.

Note! To connect the cable A20W4100, see the procedure described in DeviceNet Connection on page 3-138.

i) Thread the cable G25W1100 straight to the TPIH unit without using the cable ducts and connect the cable according to the EM

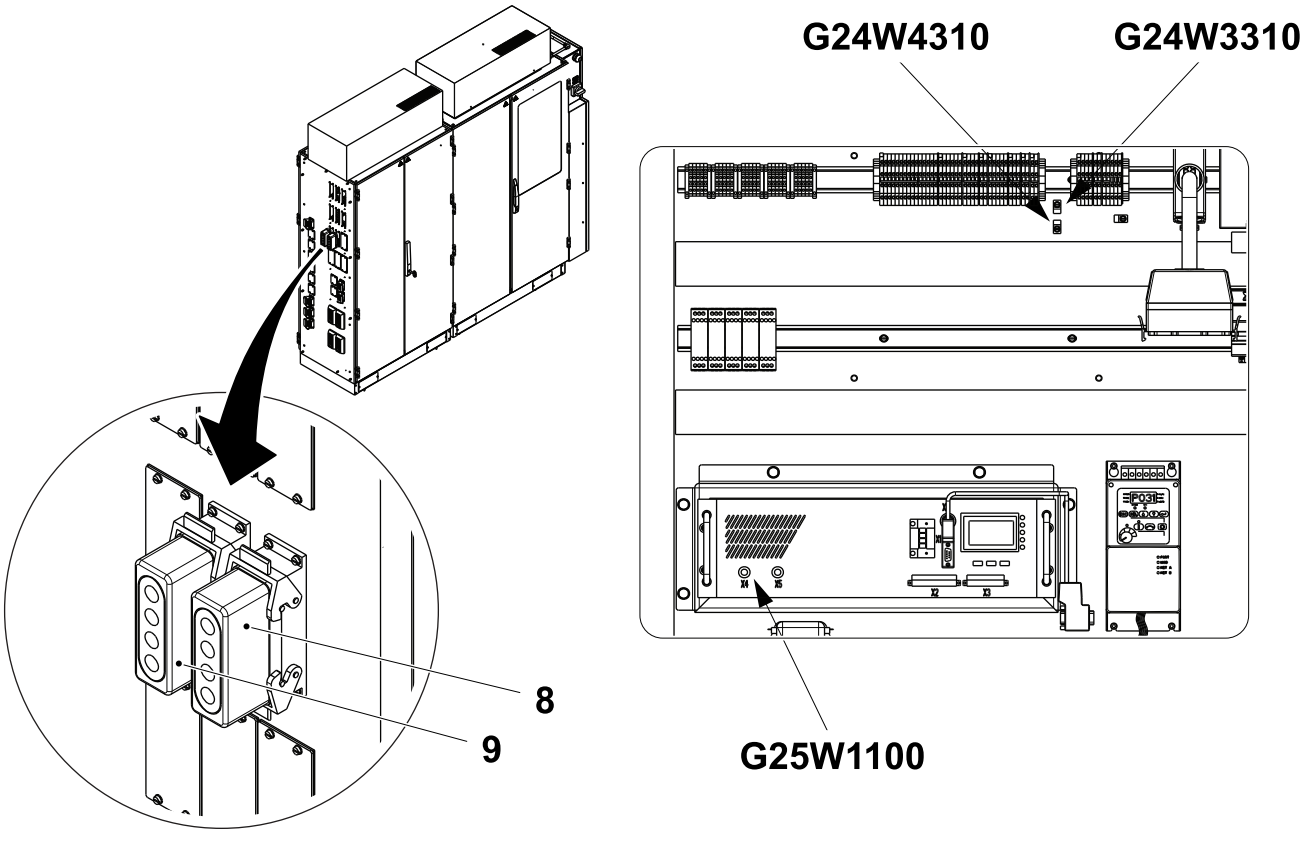

8 Cabinet connection 9 Cabinet connection

(Cont'd)

(Cont'd)

Note! Follow the filling machine and the pre-applicator Electrical Manual circuit diagrams when wiring cables directly inside the electrical cabinet. Always check the circuit diagrams for notes regarding shielded cables and follow the wiring instructions for the cable shield as detailed in the filling machine and the pre-applicator Electrical Manual chapter 10 Drawing Remarks.

j) Remove the terminating resistor of the CAN BUS from the connector T40X0240 (11) in the filling machine electrical cabinet and connect it to in the connector G25X1110 (10) in the pre-applicator electrical cabinet according to the EM.

k) Connect the cable G25W1110 between the connector T40X0240 (11) in the filling machine electrical cabinet and the connector G25X1110 (10) in the pre-applicator electrical cabinet.

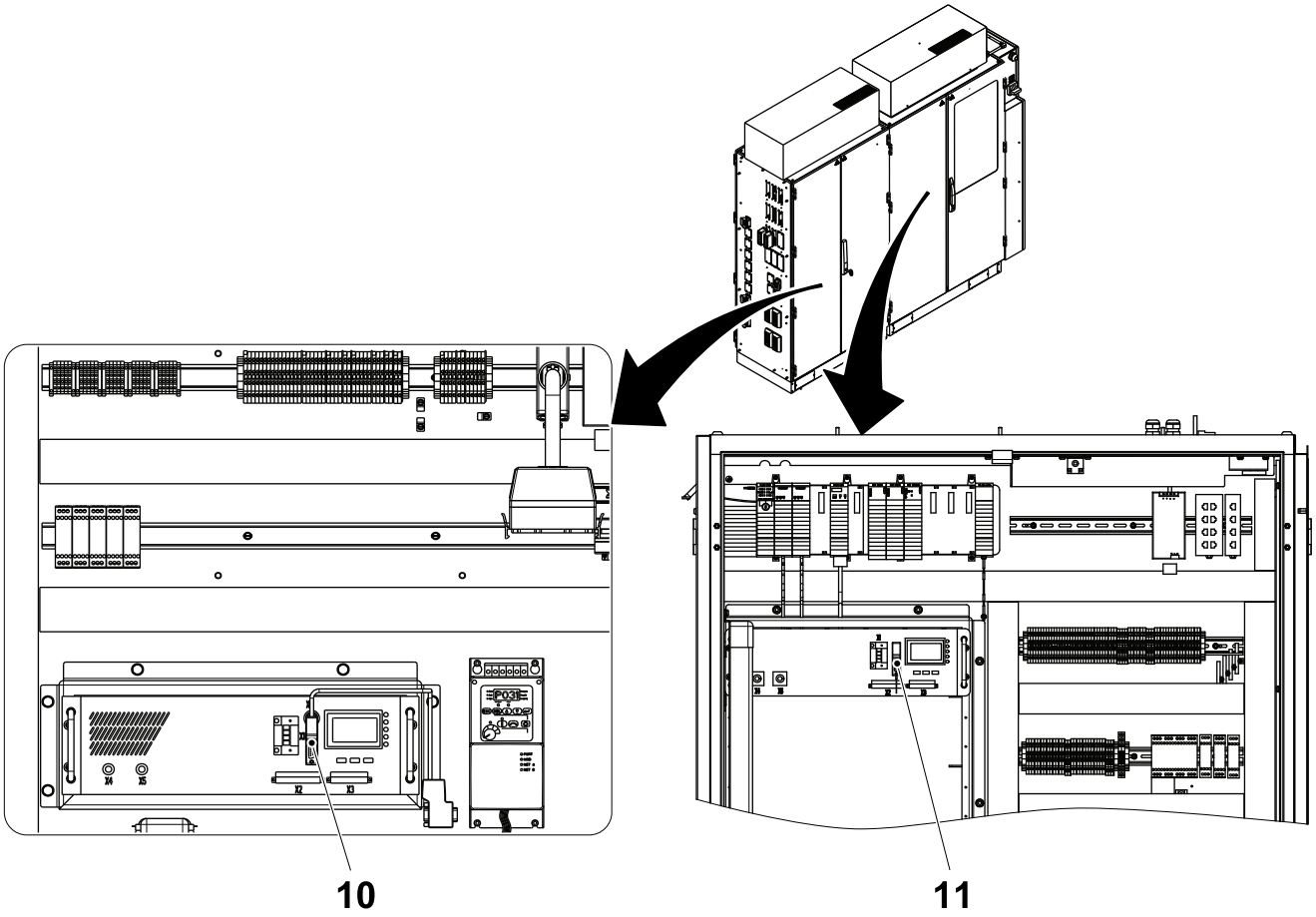

10 Connector G25X1110 11 Connector T40X0240

(Cont'd)

(Cont'd)

Ethernet Connection

Pass the ethernet communication cable A20W5010 (1) from the PLC CPU module (2) in the pre-applicator electrical cabinet, through the cable ducts and connect the cable to the ethernet switch A01W6030 (3) in the filling machine electrical cabinet.

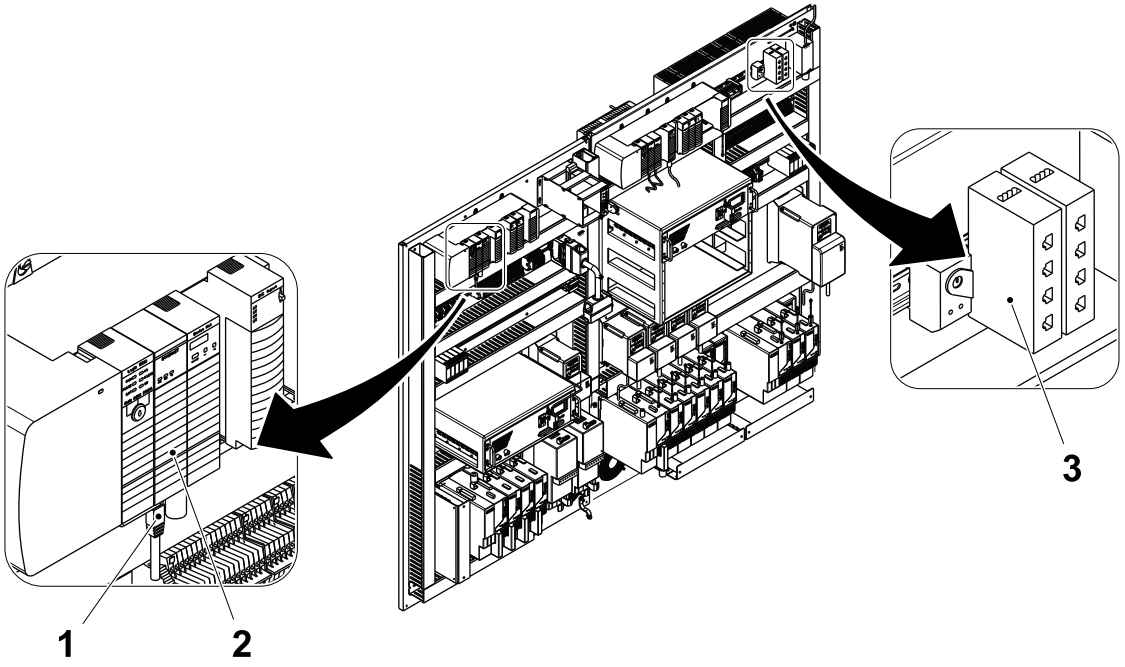

1 Ethernet communication cable A20W5010
2 PLC CPU module
3 Ethernet switch A01W6030

(Cont'd)

(Cont'd)

DeviceNet Connection

Connect the DeviceNet communication cable A20W4100 from the PT CompactFlex unit to the pre-applicator terminal block A20X5580 (1) in the electrical cabinet.

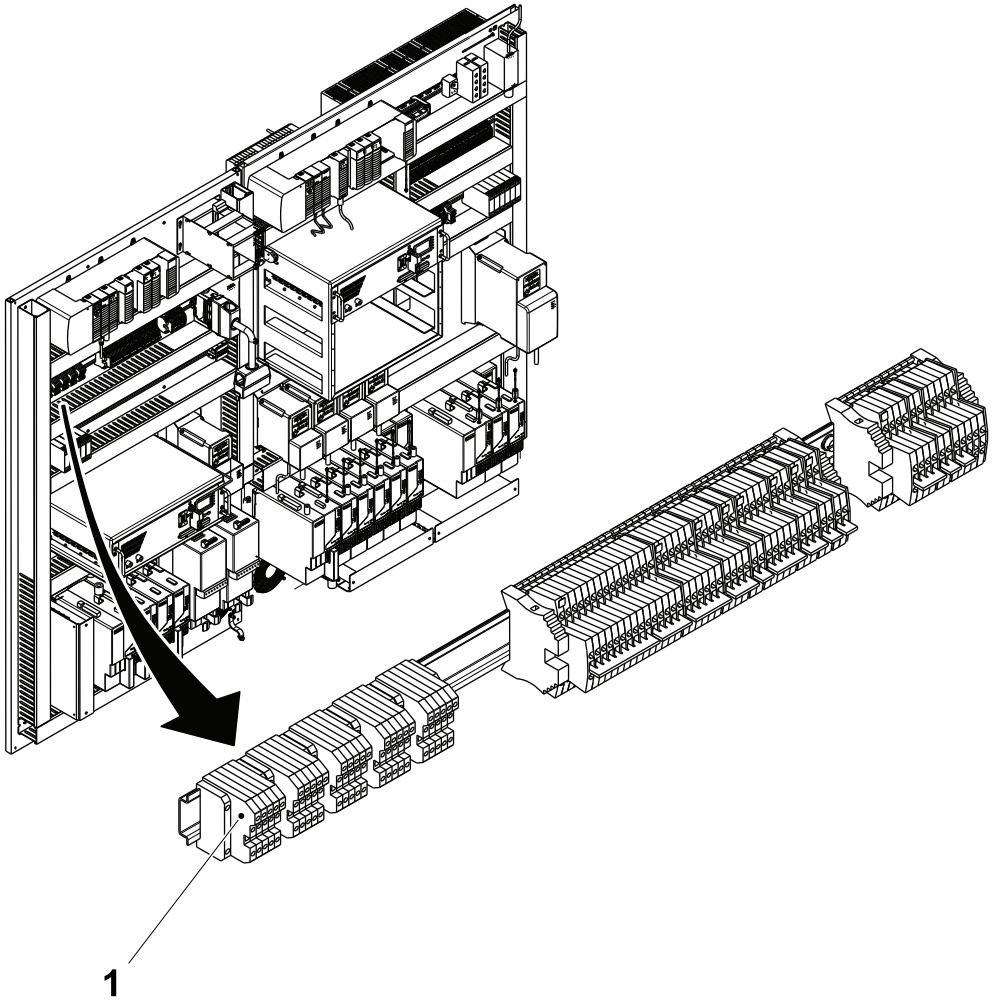

1 Pre-applicator terminal block A20X5580

(Cont'd)

(Cont'd)

Pre-applicator Interface Signals Connection

Fit the interface signal cconnection cable F20W5600 (1) between the machine electrical cabinet (2) and pre-applicator electrical cabinet (3), according to the electrical diagram.

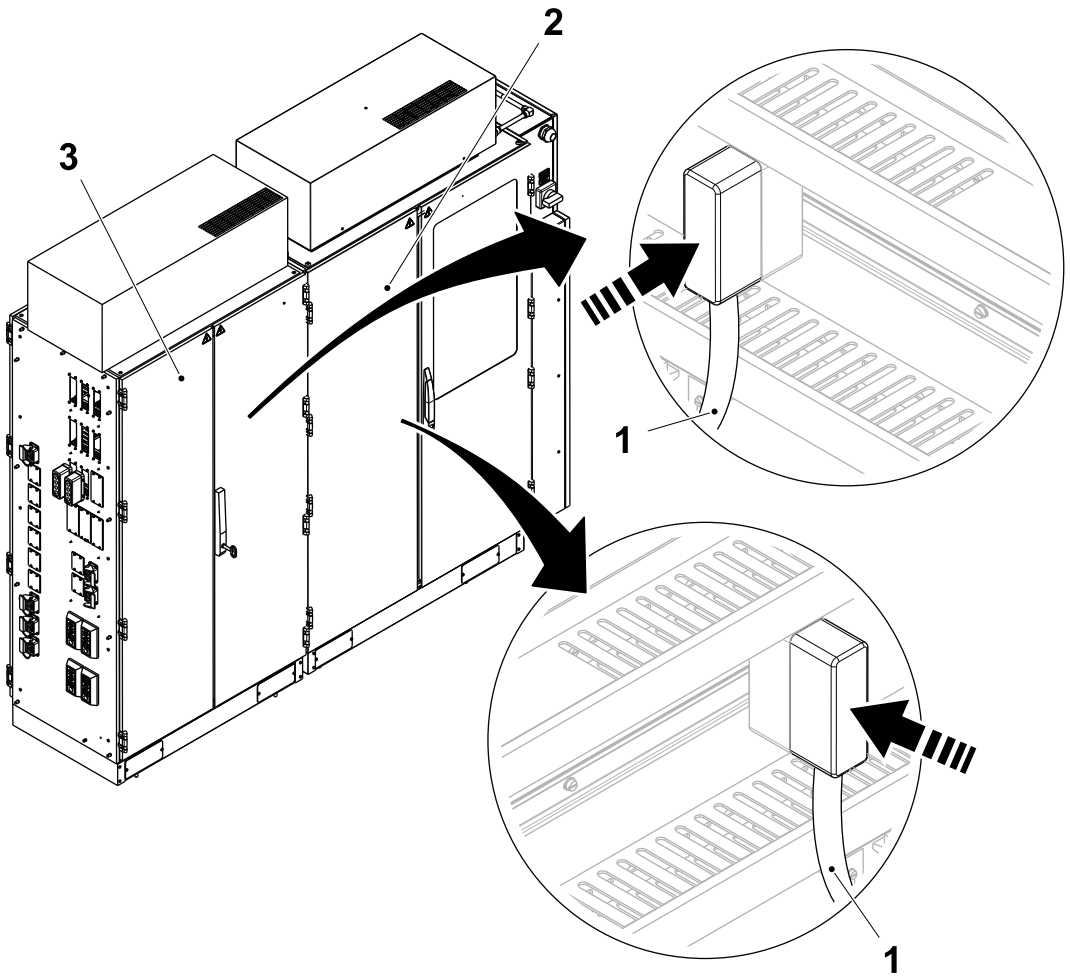

1 Connection cable F20W5600
2 Machine electrical cabinet
3 Pre-applicator electrical cabinet

(Cont'd)

(Cont'd)

Pre-applicator Main Power Connection

Fit the main power connection cable A20W8600 (1) from the pre-applicator electrical cabinet (3) and machine electrical cabinet (2), according to the electrical diagram.

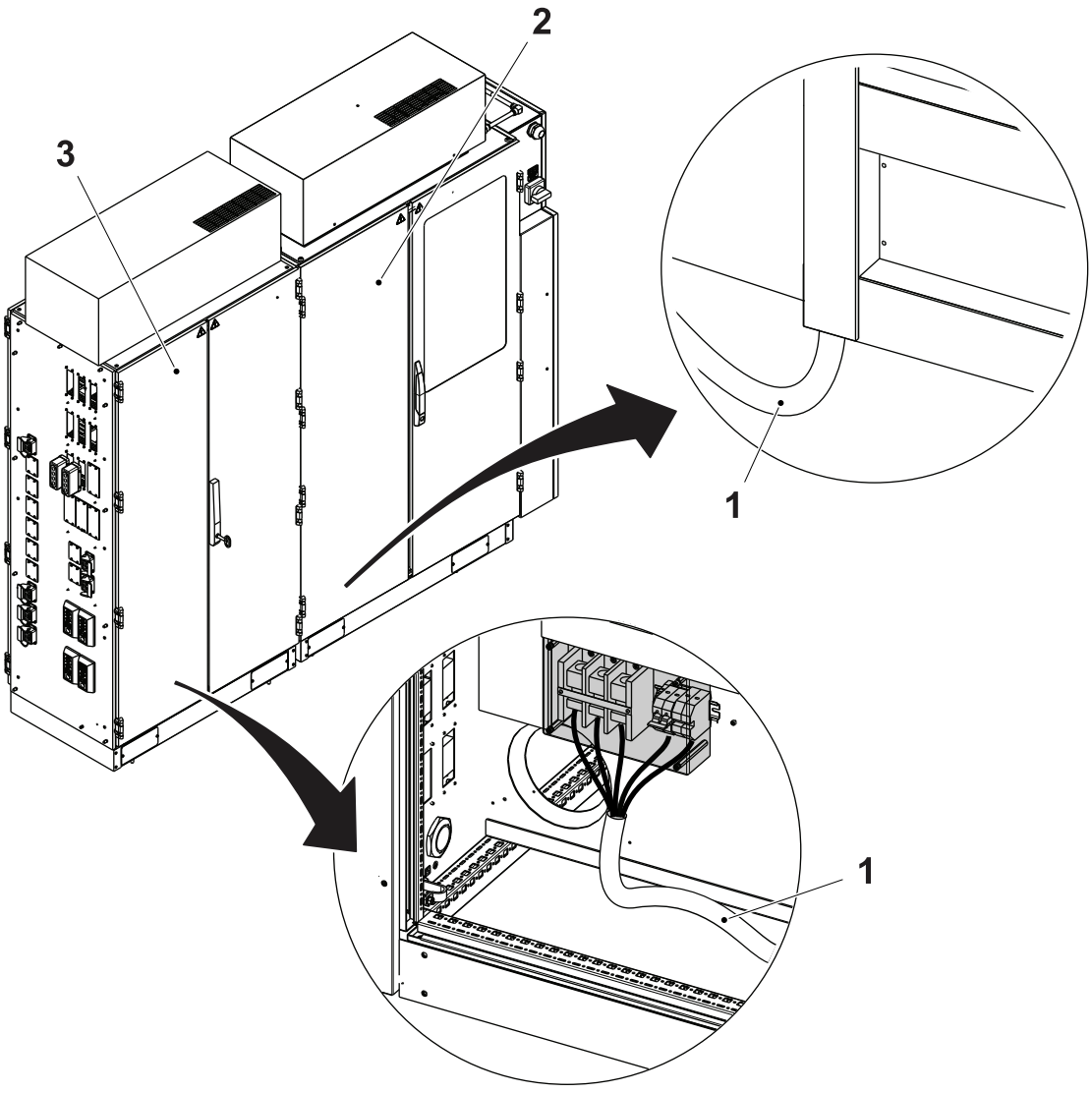

1 Main power connection cable A20W8600
2 Machine electrical cabinet
3 Pre-applicator electrical cabinet

3.3.8 Conveyor Equipment

Note! The connection of the machine to the plant conveyor system could be started when convenient.

Connect the package out feed conveyor according to the plant installation and connection drawings. See the package conveyor installation manual for details.

3.3.8-1 Filling Machine Queue Guard Photocells

a) Fit the machine queue guard photocells (1) to the package conveyor immediately after the FFU external conveyor onto the next DE conveyor.

The position of the queue guard photocells have to secure:

- the stop of the filling machine in phase
- to empty the FFU
- to print all the packages
- to accumulate the packages onto the filling machine external conveyor.

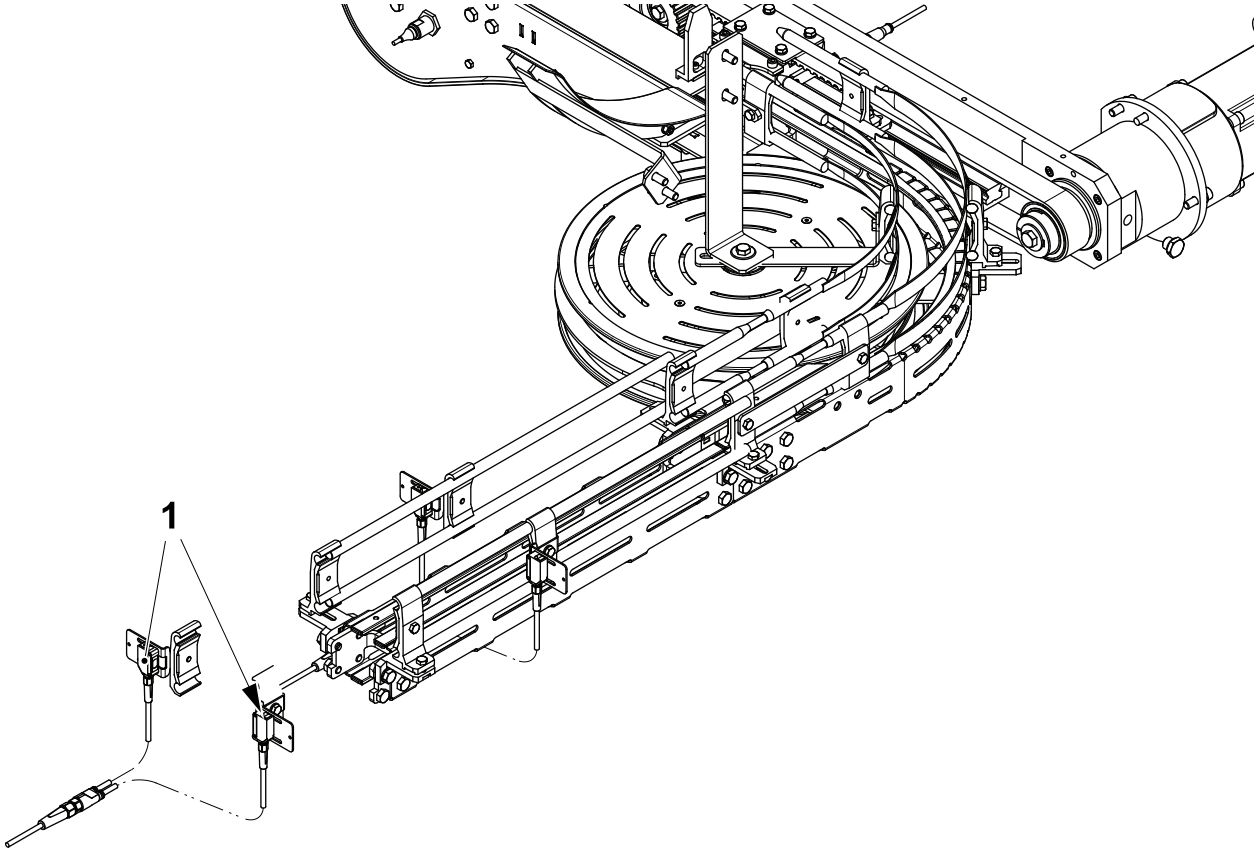

1 Queue guard photocell

(Cont'd)

(Cont'd)

Note! The time entered corresponds to the time that occurs when the photocells detect a conveyor congestion and the stop of the filling machine.

b) Set the timing of the queue guard photocells (1) according to the instruction below:

- Touch the MAINTENANCE CONTROL button (2)
- Log on to access the MAINTENANCE CONTROL window, see 9.6.3-2 HMI - User Management Log On in the MM of the filling machine.
- touch the DOWN STREAM button (3) and the EXTERNAL CONVEYOR CONGESTION icon (4),
- set the time in seconds in the TIME BOX (5).

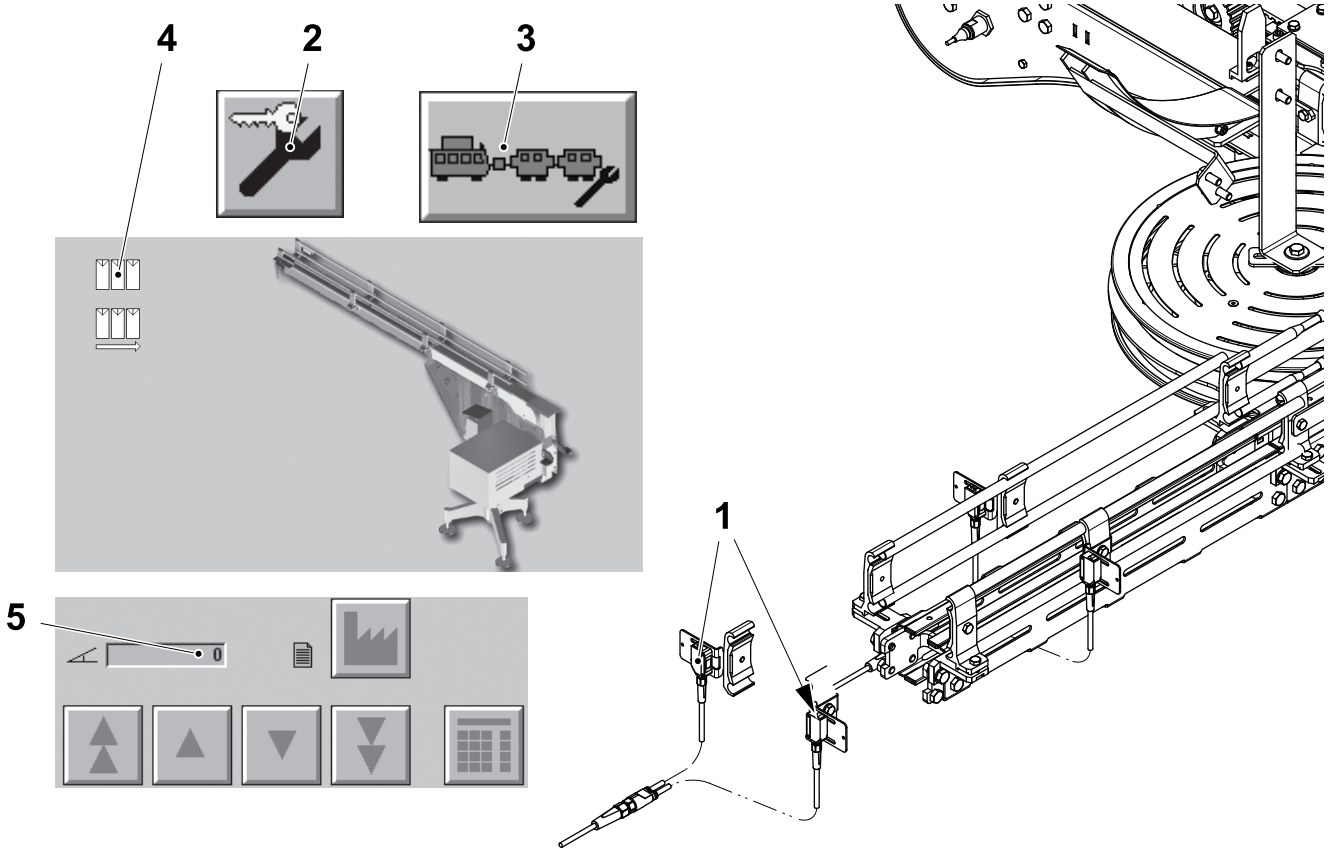

1 Queue guard photocell
2 Maintenance control button
3 Down stream button
4 External conveyor congestion icon
5 Time box

(Cont'd)

(Cont'd)

Note! Make sure to insert these time values for all the recipes and all the capacity (p/h) within the recipes.

c) Set the timing of the counting photocell (6) according to the instruction below:

- touch the DOWN STREAM button (3) and the PACKAGE COUNTER AFTER FFU icon (7),
- set the time in seconds in the TIME BOX (5).

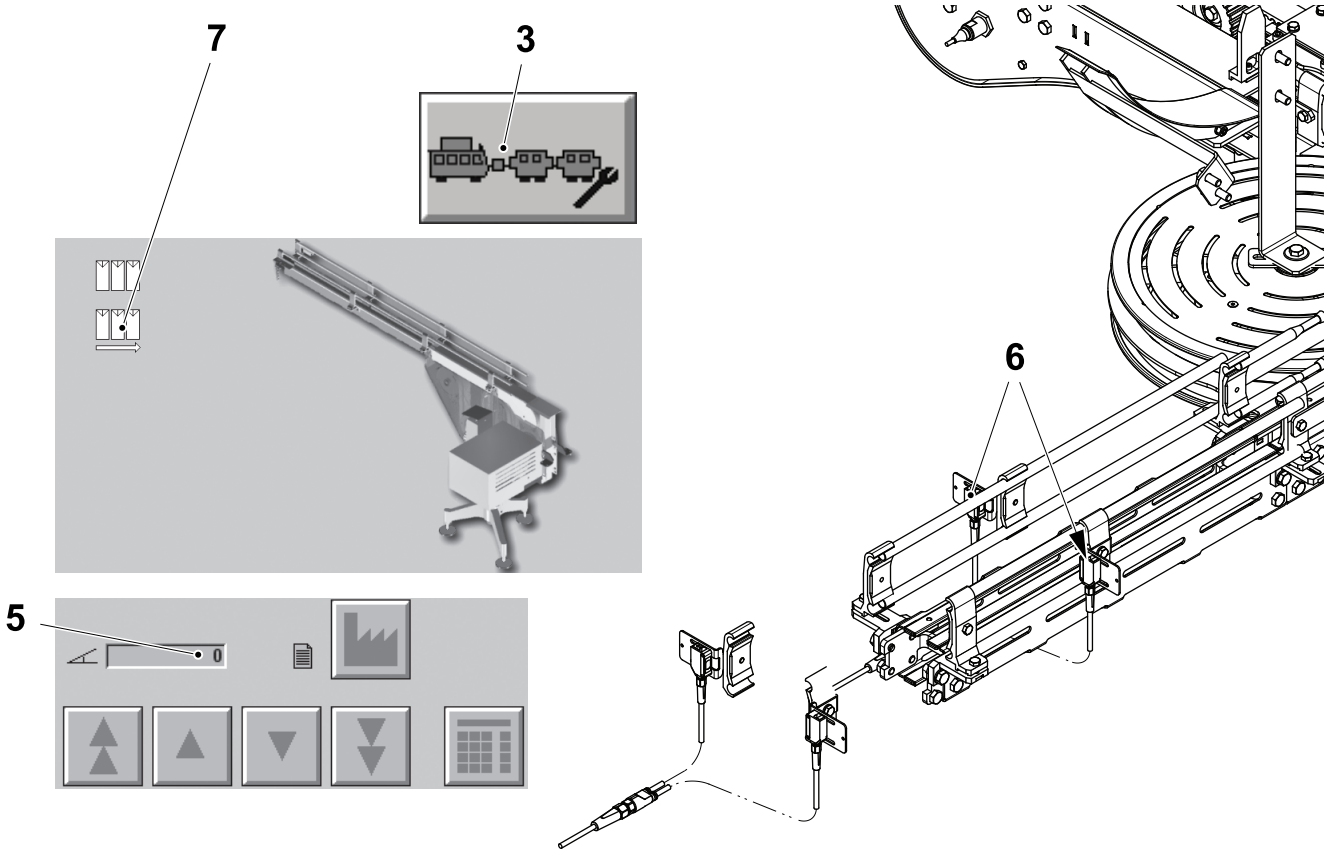

3 Down stream button
5 Time box
6 Counting photocell
7 Package counter after FFU icon

3.3.8-2 Last Point DE Photocells with Line Controller 30

The last point DE package counting photocells for the filling machine in an iLine configuration is obtained from the last point DE in the iLine that is selected by the Line Controller 30. If the last DE is not able to provide the counting of the packages, the Line Controller 30 allows the possibility to install up to four pairs of photocells to provide counting, see the TeM for the Line Controller 30 for further details.

To select the last point DE photocells with the Line Controller 30 on the filling machine TPOP, proceed as follows:

a) Touch the `SYSTEM SETUP` button.

b) Touch the `LAST PACKAGE POINT SELECTION` button.

c) Touch the `LINE CONTROLLER` button.

d) Touch the `EXIT` button.

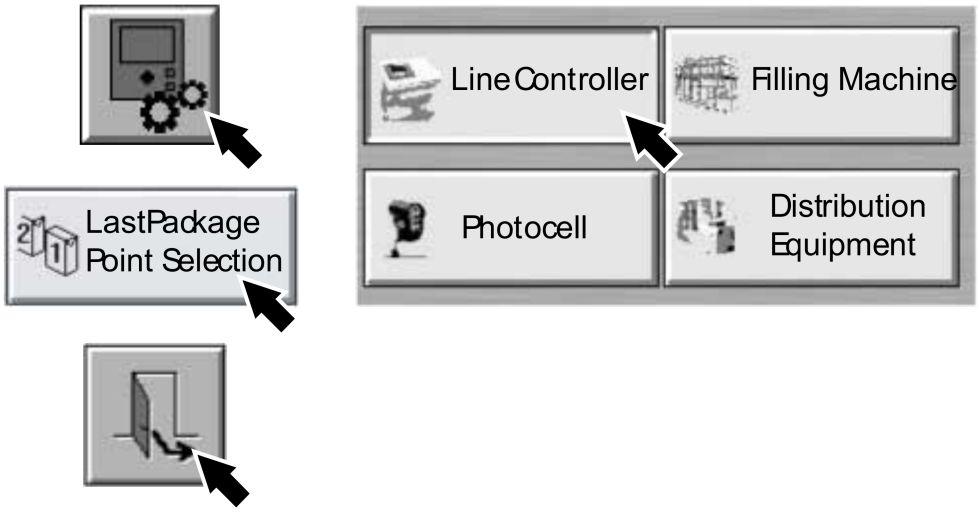

3.3.8-3 Last Point DE Photocells without Line Controller 30

a) Fit the last point counter (1) in a suitable place in the distribution line for the filling machine (2) according to the following specifications:

- the last point counter (1) should be situated so that the risk of unintentional false counts is minimized
- in **example 1** the last point counter (1) should be placed after the last distribution equipment unit (3) , in the distribution line
- in **example 2** the last point counter (1) should be placed before the conveyor switch (4) where packages from one or several other filling machines (5) converge on to the distribution line.

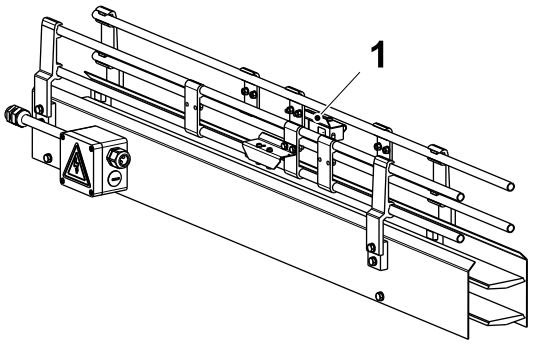

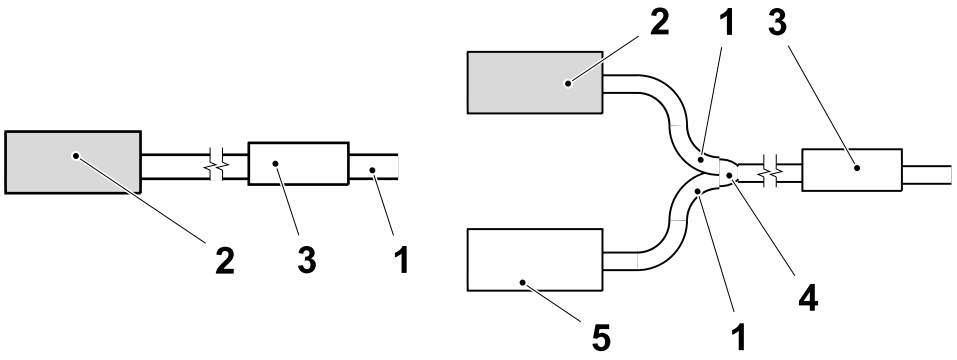

Example 1:
One machine - one distribution line

Example 2:
Several machines - one distribution line

1 Last point counter
2 Filling machine
3 Last distribution equipment unit
4 Conveyor switch
5 Other filling machine

(Cont'd)

(Cont'd)

b) Make all necessary electrical connections, see the EM for further details.

c) Set the recommended conveyor speed, see the package conveyors own installation manual for instructions.

d) To select the last point DE photocells without the LIne Controller 30 on the filling machine TPOP, proceed as follows:
   - Touch the `SYSTEM SETUP` button
   - touch the `LAST POINT PACKAGE SELECTION` button
   - touch the `PHOTOCELL` button
   - touch the `EXIT` button.

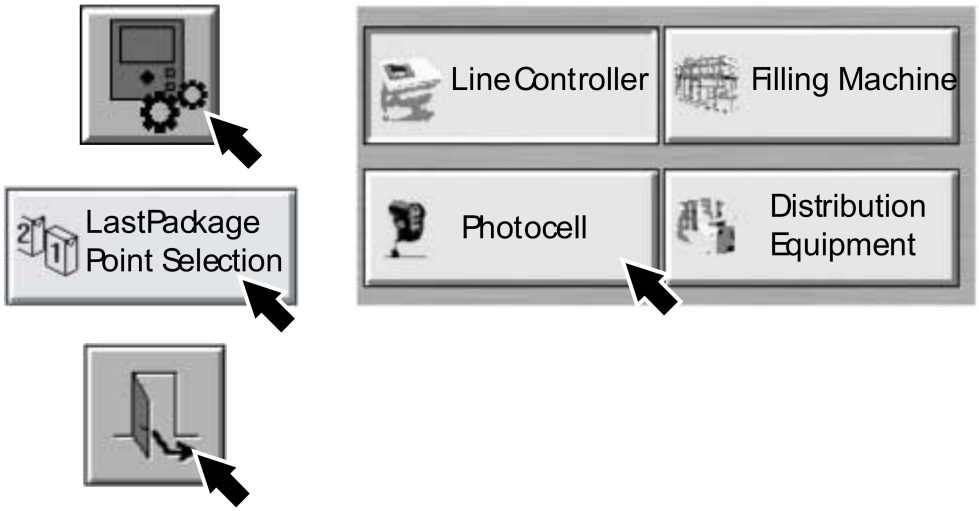

3.3.9 Ethernet Communication

Note! Make sure all cables coming from the filling machine are protected with cable ducts. Take care not to place the Ethernet cable near to any power supply cables coming from other equipment.

3.3.9-1 Connection to Line Controller 30

When the filling machine in the production line is managed by the line controller Line Controller 30, it is connected to the LC 30 cabinet through the Ethernet network. Proceed as follows:

(Cont'd)

(Cont'd)

a) Open the connection box T50X1000 (1)

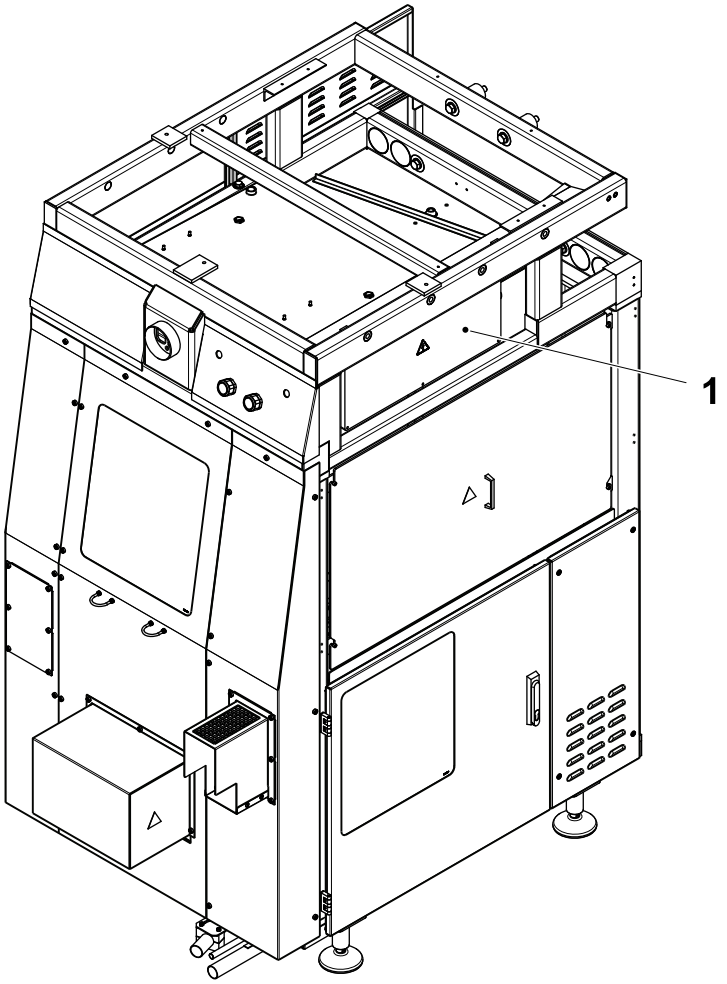

1 Connection box T50X1000

(Cont'd)

(Cont'd)

Note! The end of the Ethernet cable must be connected directly to the terminal board T50X1000, without RJ-45 plug.

b) Thread a two pair Ethernet cable through the machine body and into the connection box T50X1000 (1)

c) Wire as follows:

Wire	Terminal
White/Orange	T50X1000:143
Orange	T50X1000:144
White/Green	T50X1000:145
Green	T50X1000:146
Braided Shield	T50X1000:147

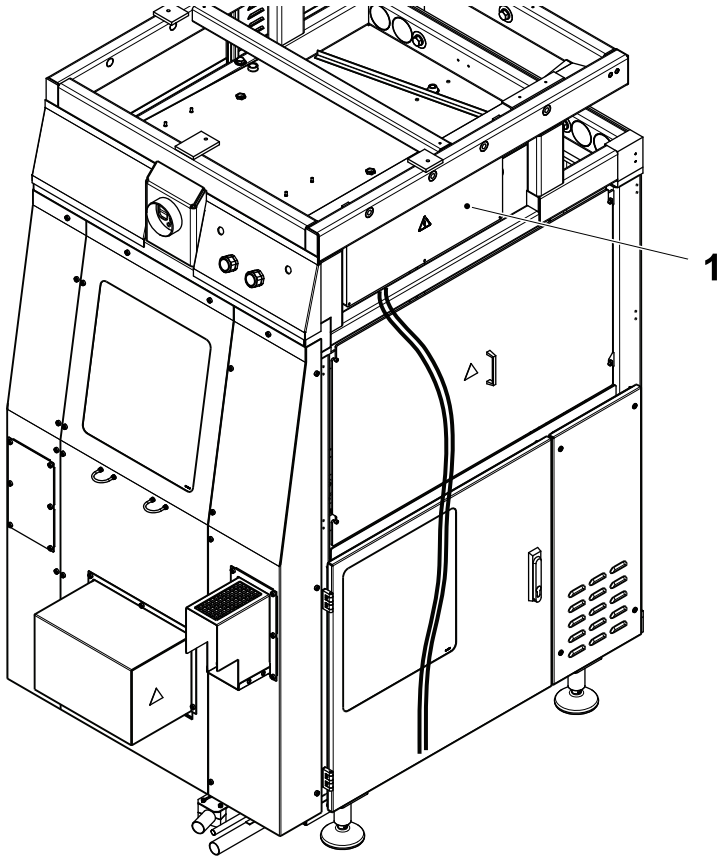

1 Connection box T50X1000

(Cont'd)

(Cont'd)

d) Thread the Ethernet cable to the LC 30 cabinet.

e) Fit an Ethernet plug (RJ-45 Phoenix type) on the end of the Ethernet cable going to the LC 30 cabinet and wire as follows:

Wire	Terminal
White/Green	White/Green
Green	Green
White/Orange	White/Orange
Orange	Orange

f) Thread the Ethernet cable into the LC 30 cabinet through the cable duct (2) and the slot (3), insert it through one of the slots (4) on the bottom and connect it to the Ethernet switch (5).

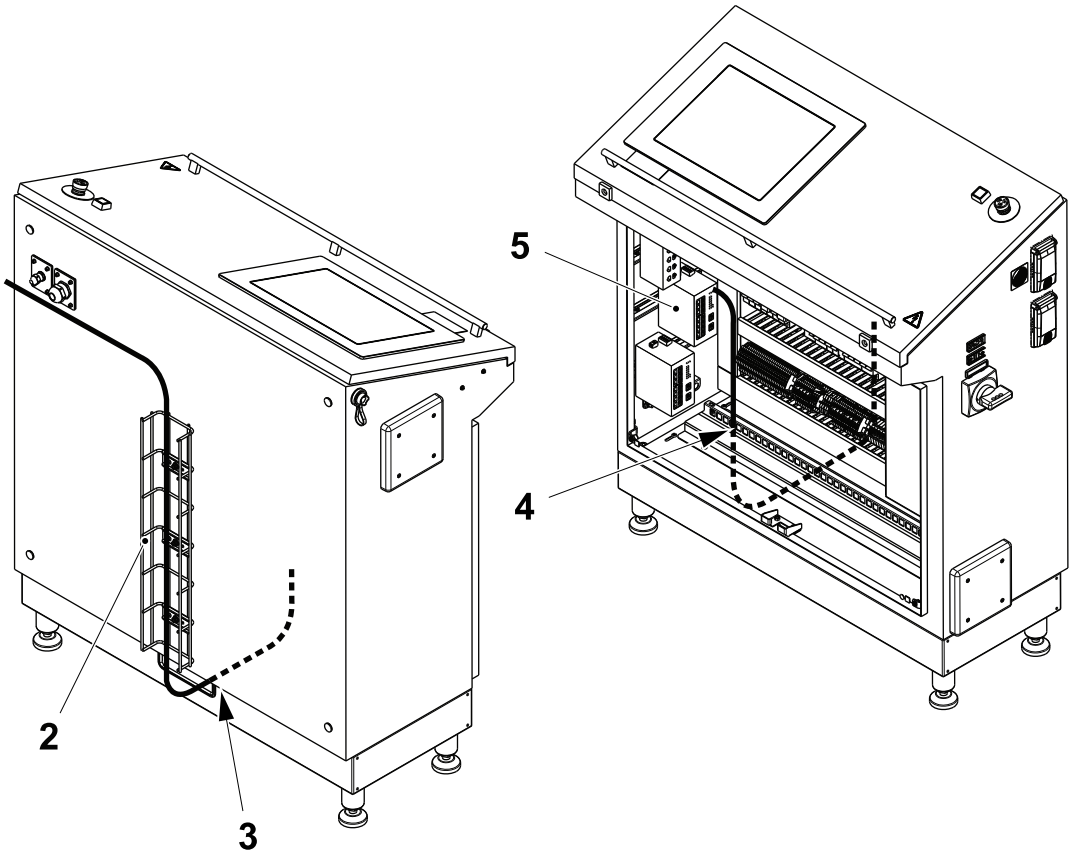

2 Cable duct
3 Slot
4 Slot
5 Ethernet switch

3.3.9-2 Connection to PLMS Master PC

a) Thread the Ethernet cable as shown for the 3.3.9-1 Connection to Line Controller 30 on page 3-146.

b) Wire as follows:

Wire	Terminal
White/Orange	T50X1000:137
Orange	T50X1000:138
White/Green	T50X1000:139
Green	T50X1000:140
Braided Shield	T50X1000:141

c) Connect the ethernet cable (1) to the ethernet switch (2) in the dairy's PLMS master PC office.

d) Connect the PLMS master PC to the ethernet switch (2) using the ethernet cable (3) .

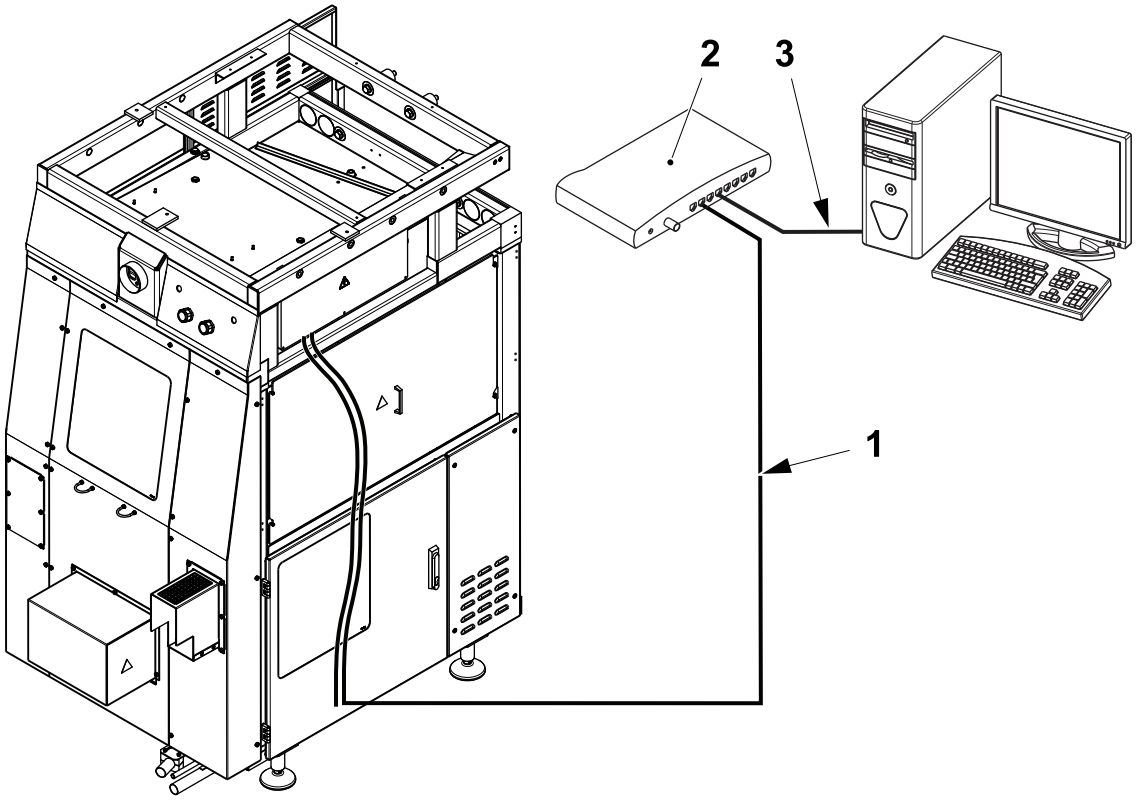

1 Ethernet cable
2 Ethernet switch
3 Ethernet cable

(Cont'd)

(Cont'd)

Note! For Ethernet communication the PLMS Send and PLMS Receive software are no longer needed for communication between the PLMS master PC and filling machines, but can be retained as a means of communication between the PLMS master PC's and remote locations.

e) Install the PLMS NETCOM software onto the PLMS master PC, see the PLMS NETCOM User Manual. Install the PLMS CENTRE onto the PC, see the PLMS CENTRE User Manual.

3.3.10 Line Supervision

3.3.10-1 Connect Line Supervision

Note! Make sure all cables coming from the filling machine and to the DE equipment are protected with cable ducts. Take care not to place the signal and communication cables near to any power supply cables coming from other equipment.

a) Open the machine body door (1) and remove the cover of the connection box (2) T50X1000.

b) Thread the line supervision cable (3) through the cable gland (4) and into the connection box (2) T50X1000. Connect the line supervision cable (3) according to the table below.

From	To
WH	131
GN	132
YE	133
BN	134
Shield	135

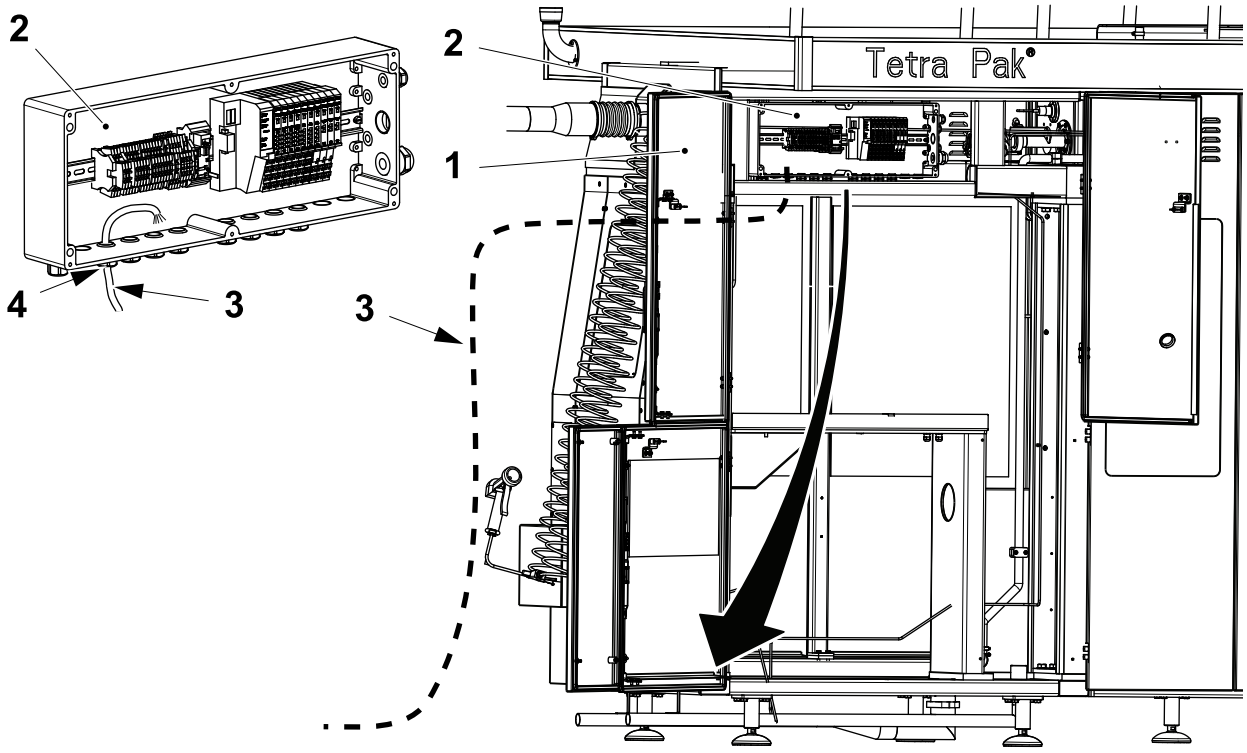

1 Door
2 Connection box
3 Line supervision cable
4 Cable gland

3.3.10-2 Single Distribution Equipment

a) Route the external cable through the dairy to the distribution equipment and prepare the ends of the cable (1) as indicated in the illustration.

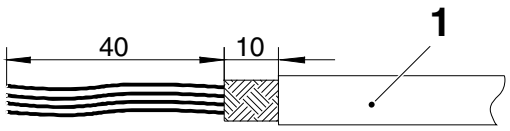

b) Connect the line supervision cable (1) to the port on the PLC power supply unit of the distribution equipment (2) by means of the connector X2454.1 (3) and according to the electrical drawing.

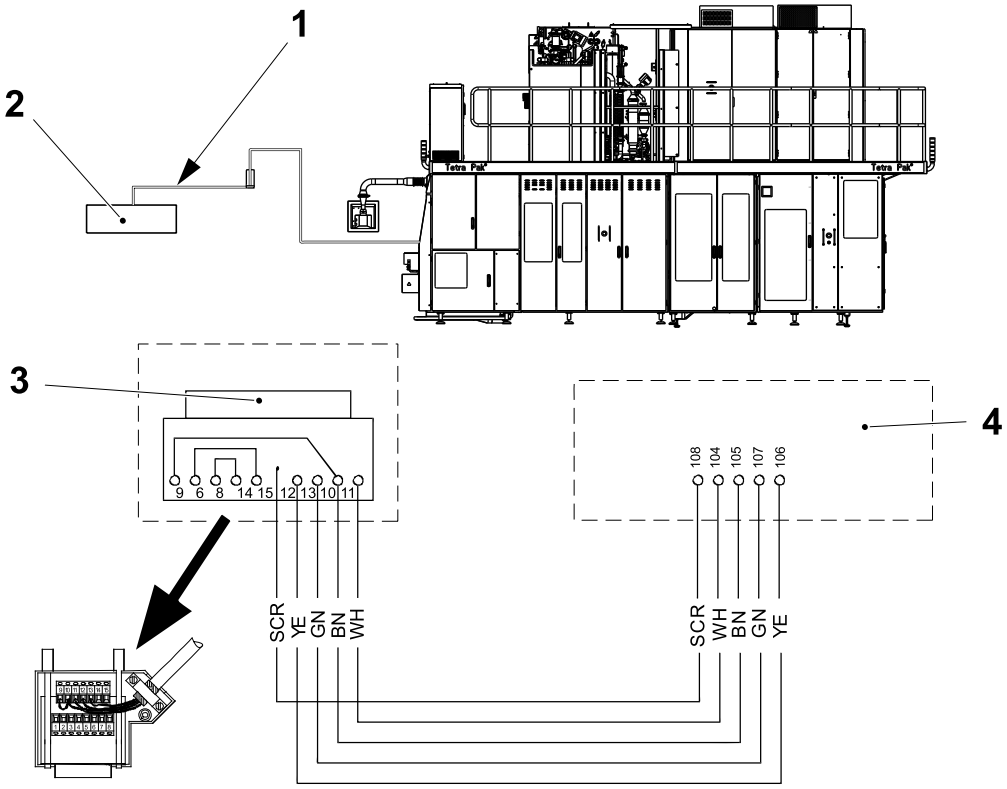

1 Cable
2 Distribution equipment
3 Connector X2454.1
4 Connection box T50X1000

(Cont'd)

(Cont'd)

c) Close the connection box (4) and fit back the cover (5).

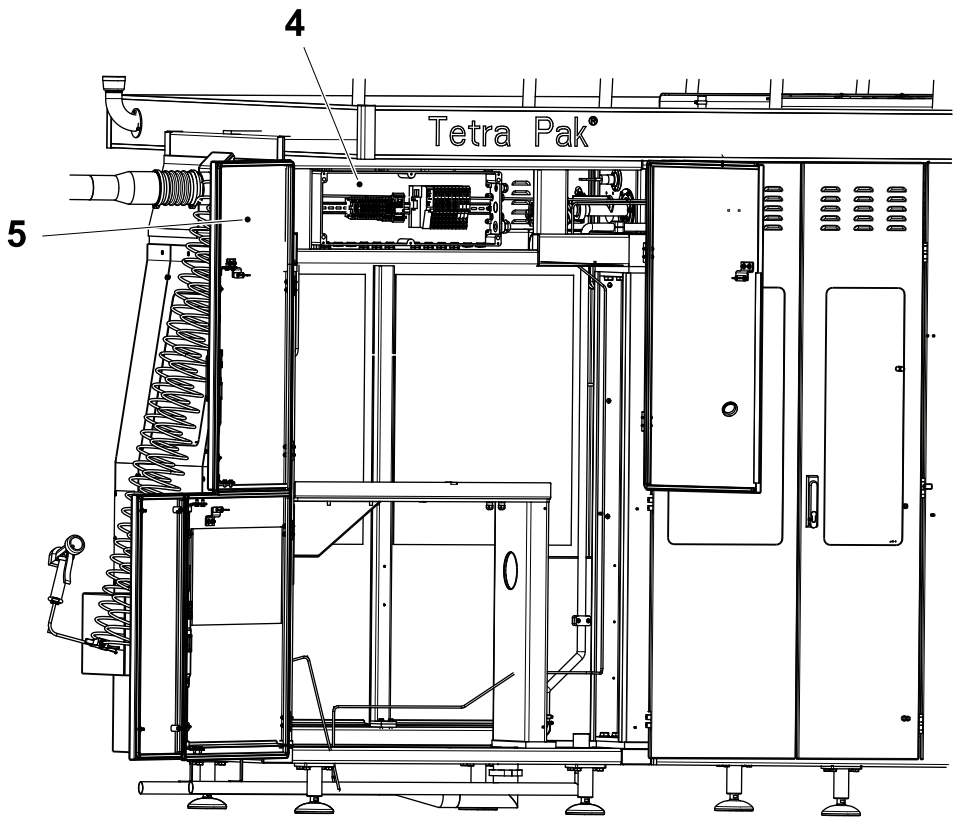

4 Connection box T50X1000

5 Cover

3.3.10-3 Multiple Distribution Equipment

a) Route the external cable through the dairy to where the first DE equipment is located and prepare the ends of the cable (1) as indicated in the illustration.

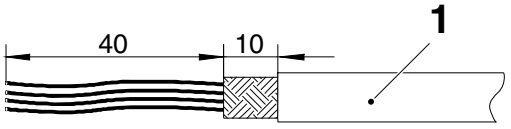

1 Cable

(Cont'd)

(Cont'd)

b) Connect the line supervision cable (2) to the port on the PLC power supply unit of the first and intermediate DE (3) by means of the connector X2454.1 (6) and according to the electrical drawing.

c) Connect the line supervision cable (2) to the port on the PLC power supply unit of the last DE (4) by means of the connector X2454.2 (5) and according to the electrical drawing.

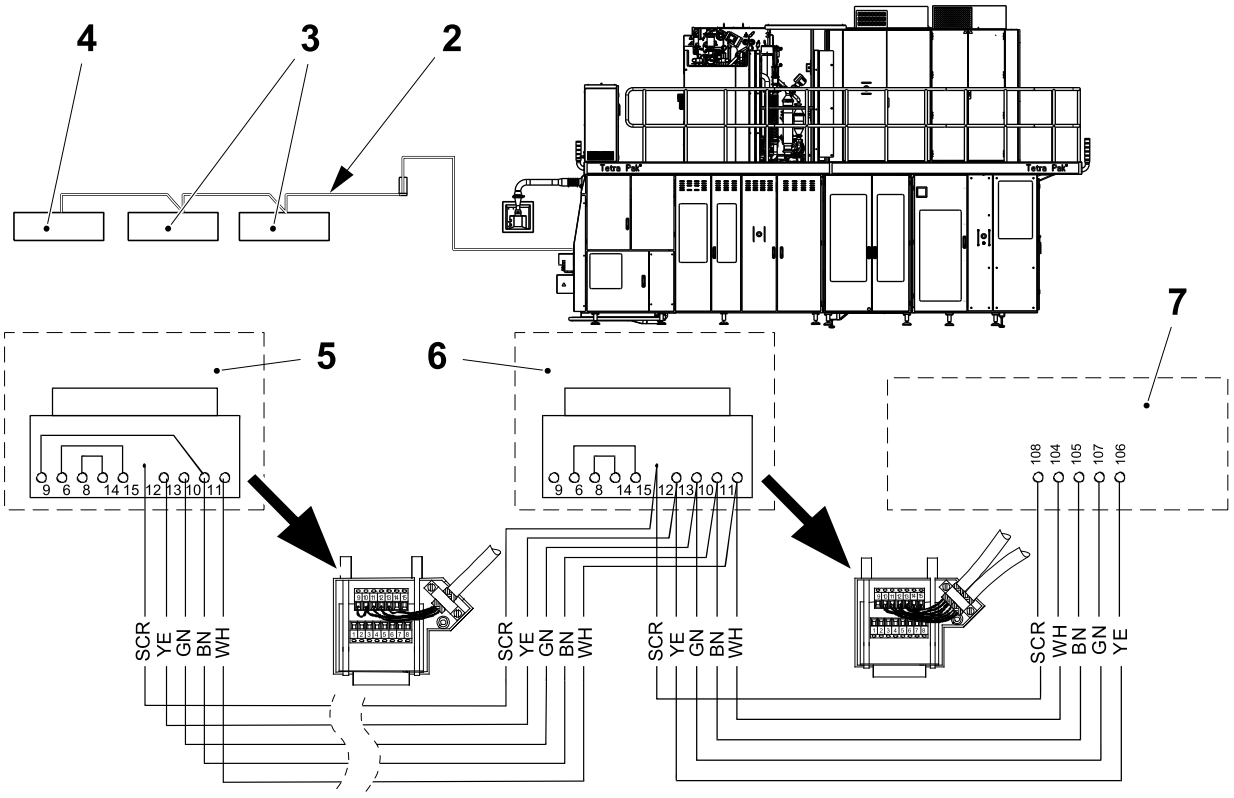

2 Line supervision cable
3 First and intermediate DE
4 Last DE
5 Connector X2454.2
6 Connector X2454.1
7 Connection box T50X1000

(Cont'd)

(Cont'd)

d) Close the connection box T50X1000 (7) and fit back the cover (8)

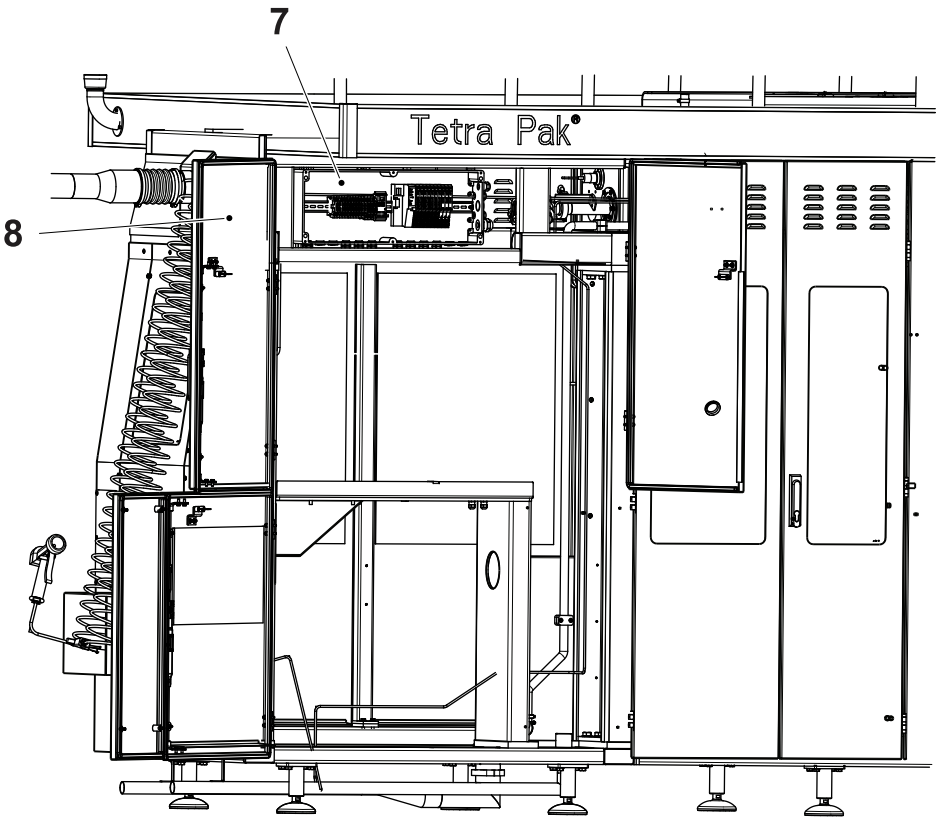

7 Connection box T50X1000

8 Cover

3.3.11 DE Configuration

The config file of each DE (and Tetra Pak LC30) must be installed on the filling machine Industrial PC, see the filling machine MM section 8.6-4 HMI and PLMS - Install DE Config Files.

3.3.12 Domino Printing Unit (OE)

3.3.12-1 Domino Printing Unit (OE) - Assemble

a) Position the Domino printing unit (1) close to the filling machine along the conveyor line (2).

b) Assemble the printing head (3) and support onto the conveyor line (2) immediately after the filling machine package outfeed.

c) Connect the Domino printing unit (1) according to the plant installation and connection drawings, see the instructions in the separate installation manual for the Domino printing unit (1).

Note! The Domino printing unit (1) main power supply must be separated from the filling machine.

d) Make all necessary electrical connections, see the EM for further details.

e) Set the Domino printing unit (1), see the separate installation manual for setting instructions.

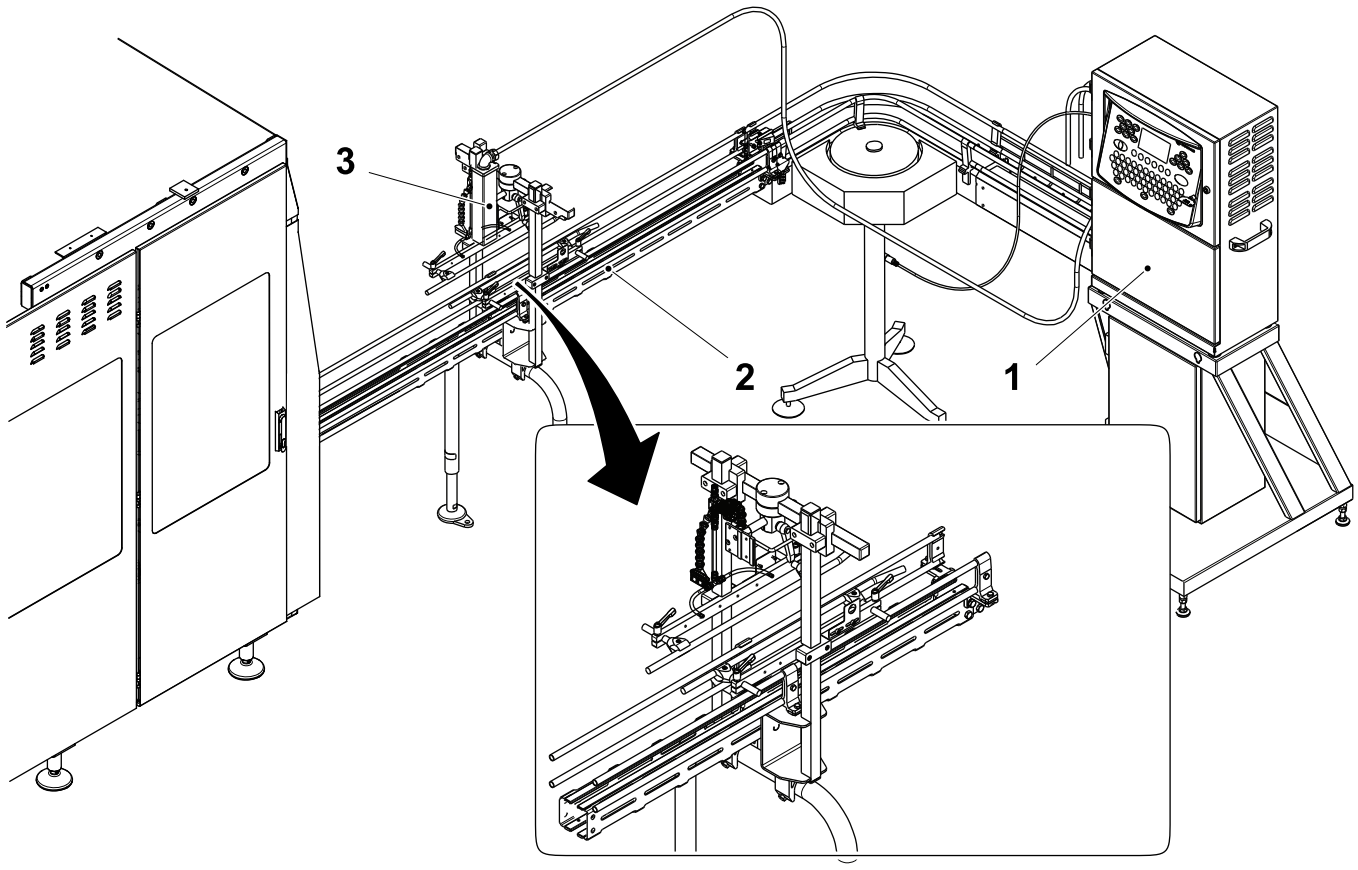

Printer head and support valid for PC23 Conveyor

1 Domino printing unit 2 Conveyor line 3 Printing head

3.3.13 External Cleaning Equipment

3.3.13-1 Connect External Cleaning Equipment

Note! To utilize an external cleaning equipment the filling machine requires the following two signals: CIP PUMP RUNNING and the CIP END from the equipment. The filling machine sends to the external cleaning equipment the following signal: FILLING MACHINE READY FOR CIP.

a) Open the connection box T50X1000 (1).

b) Thread a cable from the external cleaning equipment into the connection box T50X1000 (1).

c) Wire according to the Circuit Diagram in the filling machine Electrical Manual.

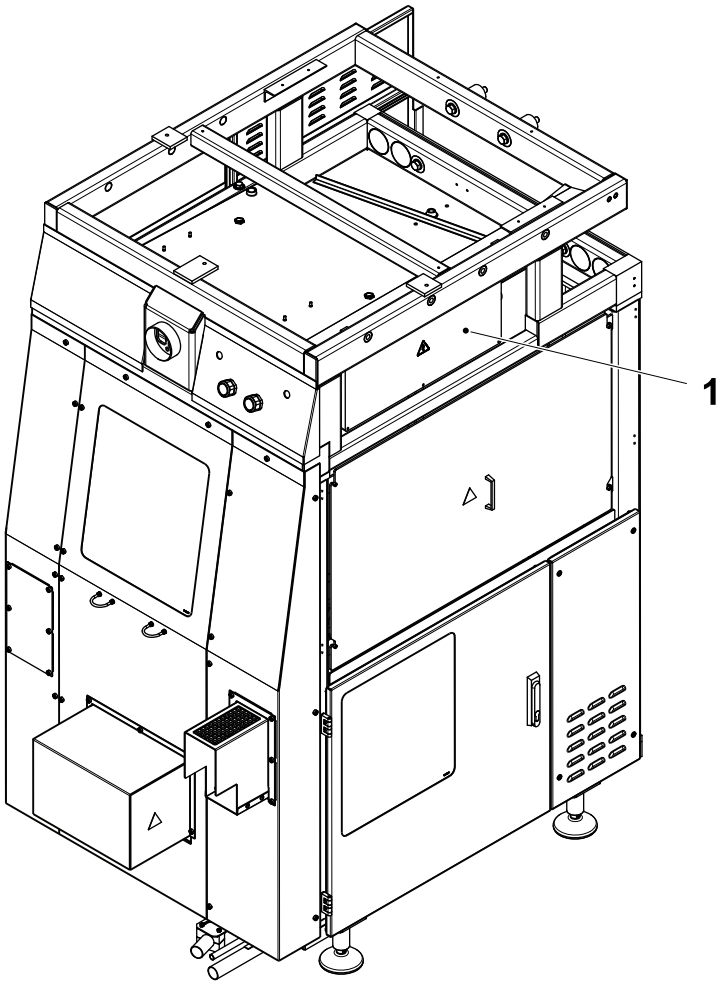

1 Connection box T50X1000

3.3.14 Signal Communication

3.3.14-1 Connection to Process Dairy Panel

CAUTION
Risk of serious production fault!
It is strongly recommended that following signals are connected to plant control system. Functionality and correctness must be verified and validated during equipment start-up and commissioning phases (see checklists in 3.7.1 Filling Machine and 4.3.2.3 Function Checks Before Start).
Signals connections between equipments and plant control system must be documented by appropriate circuit diagrams and/or flowcharts.
Make sure that there are no electrical bypass bridges on equipment and plant sides. Make sure that there are no undocumented electrical modifications on equipment and plant sides.

Thread the signal cable (1) from the connection box T50X1000 (2) to the process dairy panel (3) and connect it according to the EM, see the Circuit Diagrams on page 157 for signal connection details.

Note! Make sure that there are no electrical bridges in the connection box T50X1000 (2).

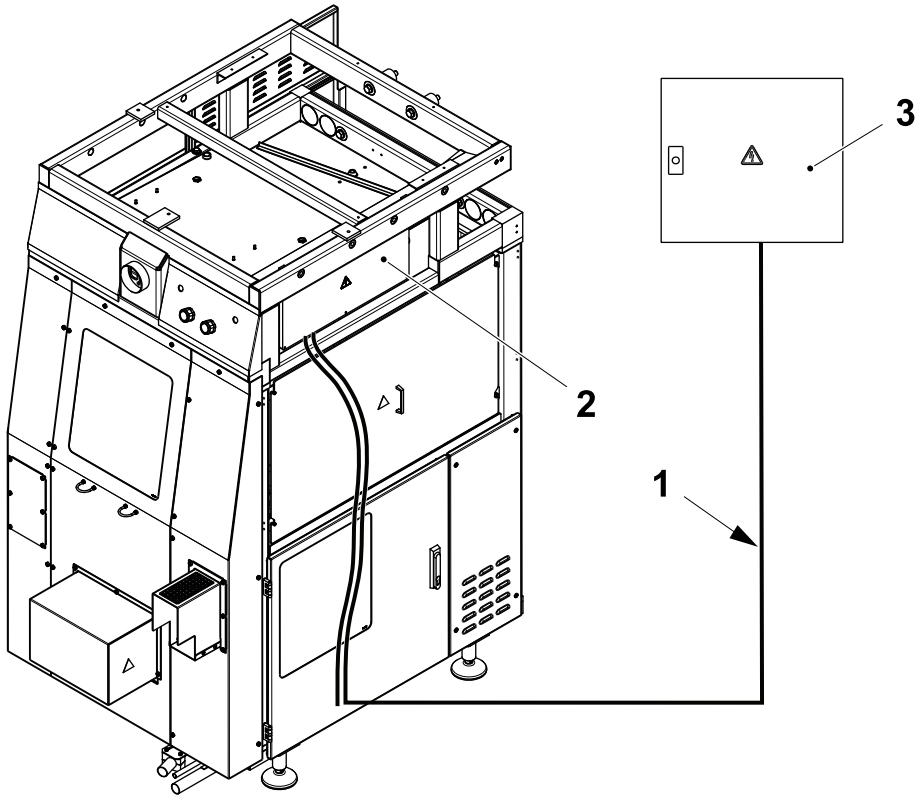

1 Signal cable
2 Connection box T50X1000
3 Process dairy panel

3.4 Final Procedures

3.4.1 Final Folder

3.4.1-1 Final Folder Outfeed

Machine Status	Electrical supply disconnecting device in position I (ON) Main air valve ON Main steam valve ON Main water valve ON
SPC Reference	2805993-0400 2819316-0200 2805993-0300

The outfeed of the final folder unit can be modified to the LH side or to the RH side configuration according to the customer need.

To change from RH side to LH side configuration of the outfeed follow the procedure below.

To change from LH side to RH side configuration of the outfeed follow the procedure below in the reverse order.

(Cont'd)

(Cont'd)

Change from RH Side to LH Side Configuration

a) Remove the conveyor belt from the outfeed.
b) Remove the screw (1).
c) Remove the screws (2) and the guide (3).
d) Remove the screws (4) and the support (5).
e) Fit back the screws (4).

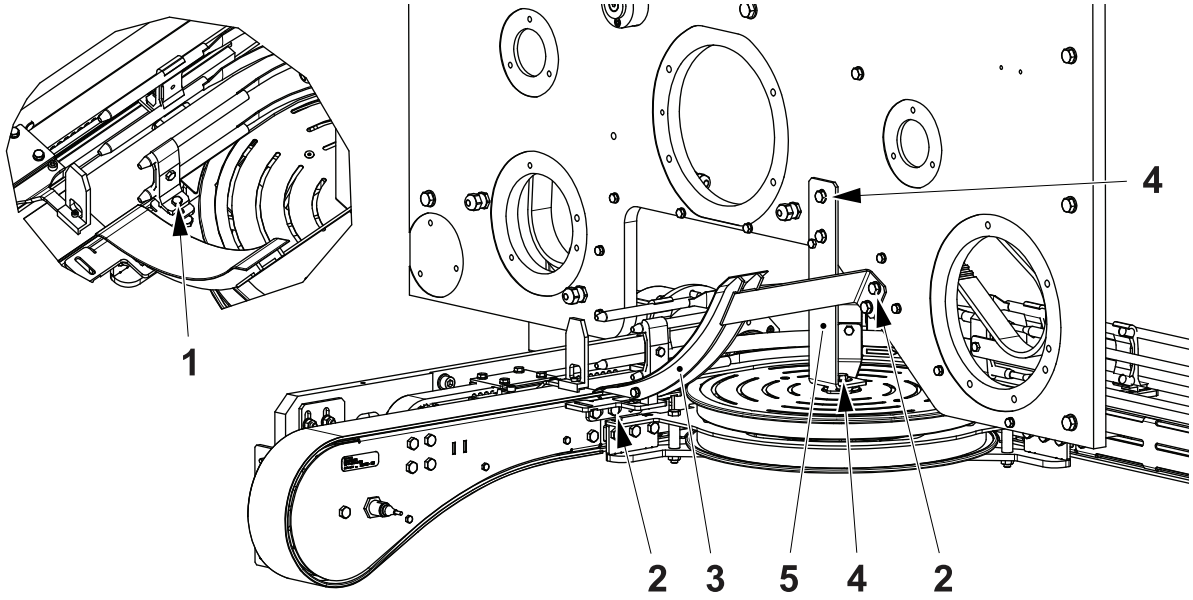

1 Screw
2 Screw
3 Guide
4 Screw
5 Support

(Cont'd)

(Cont'd)

f) Remove the screws (6) and the support (7).

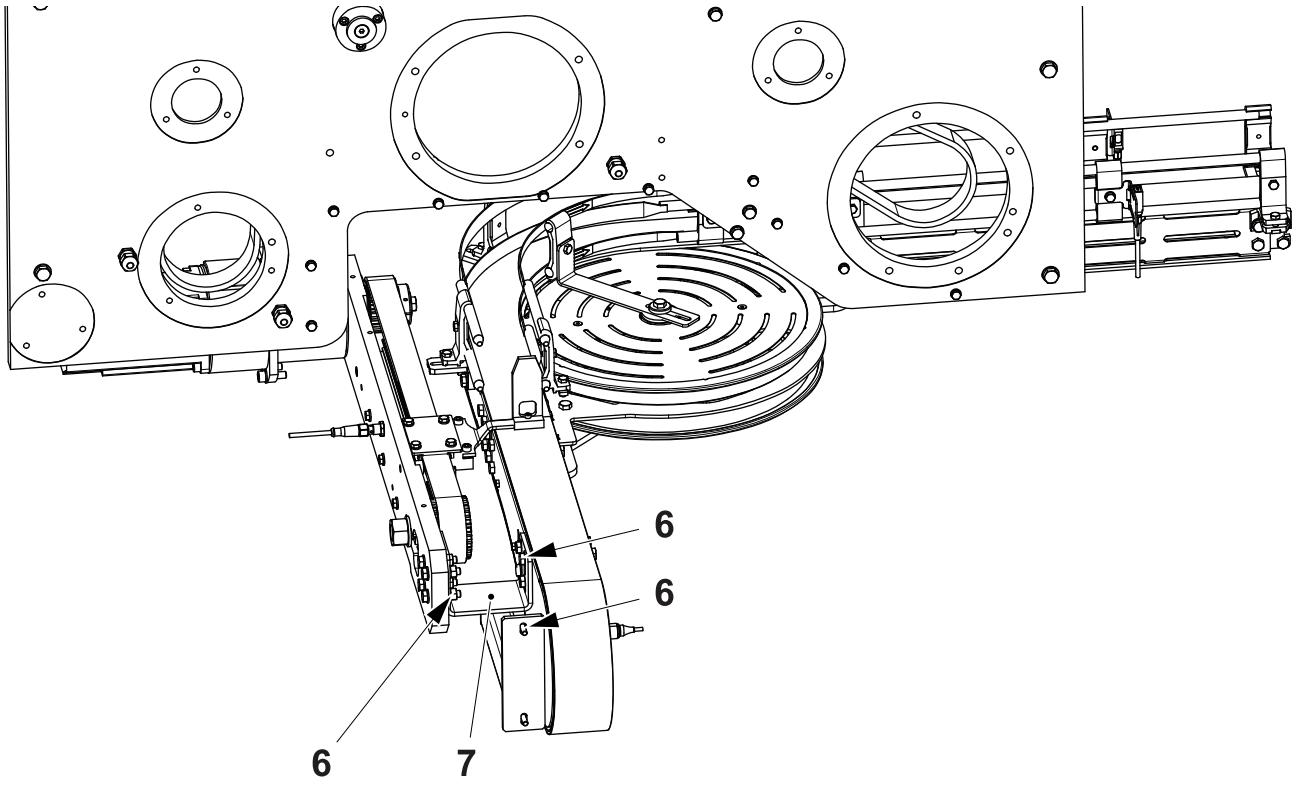

6 Screw
7 Support

(Cont'd)

(Cont'd)

g) Remove the screws (8) and the outfeed straight part (9).

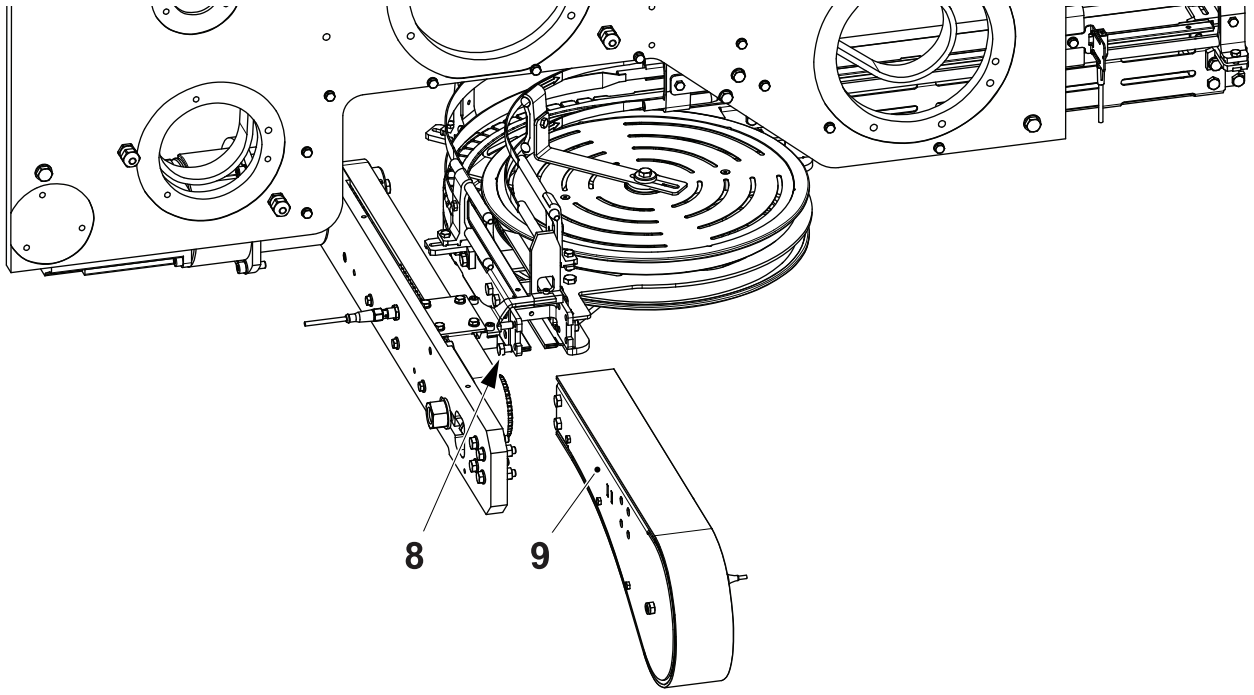

8 Screw
9 Outfeed straight part

(Cont'd)

(Cont'd)

h) Remove the screws (10) and the outfeed straight part (11).

i) Loosen the screws (12) and remove all the rails (13) from the outfeed curve part (14).

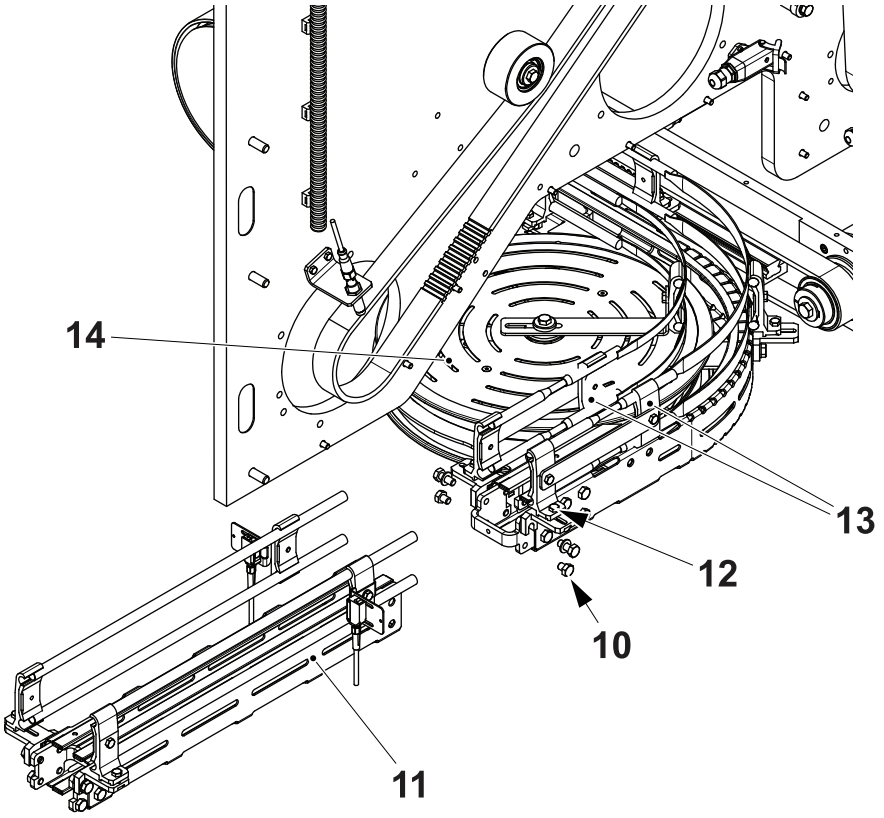

10 Screw
11 Outfeed straight part
12 Screw
13 Rail
14 Outfeed curve part

(Cont'd)

(Cont'd)

j) Turn the outfeed curve part (14) 90° and fit it to the final folder frame with the new support (15) and the screws (16).

k) Fit the guide (3) to the final folder frame with the screws (2).

l) Turn the rails (13) upside down and fit them with the screws (12) and the screw (1).

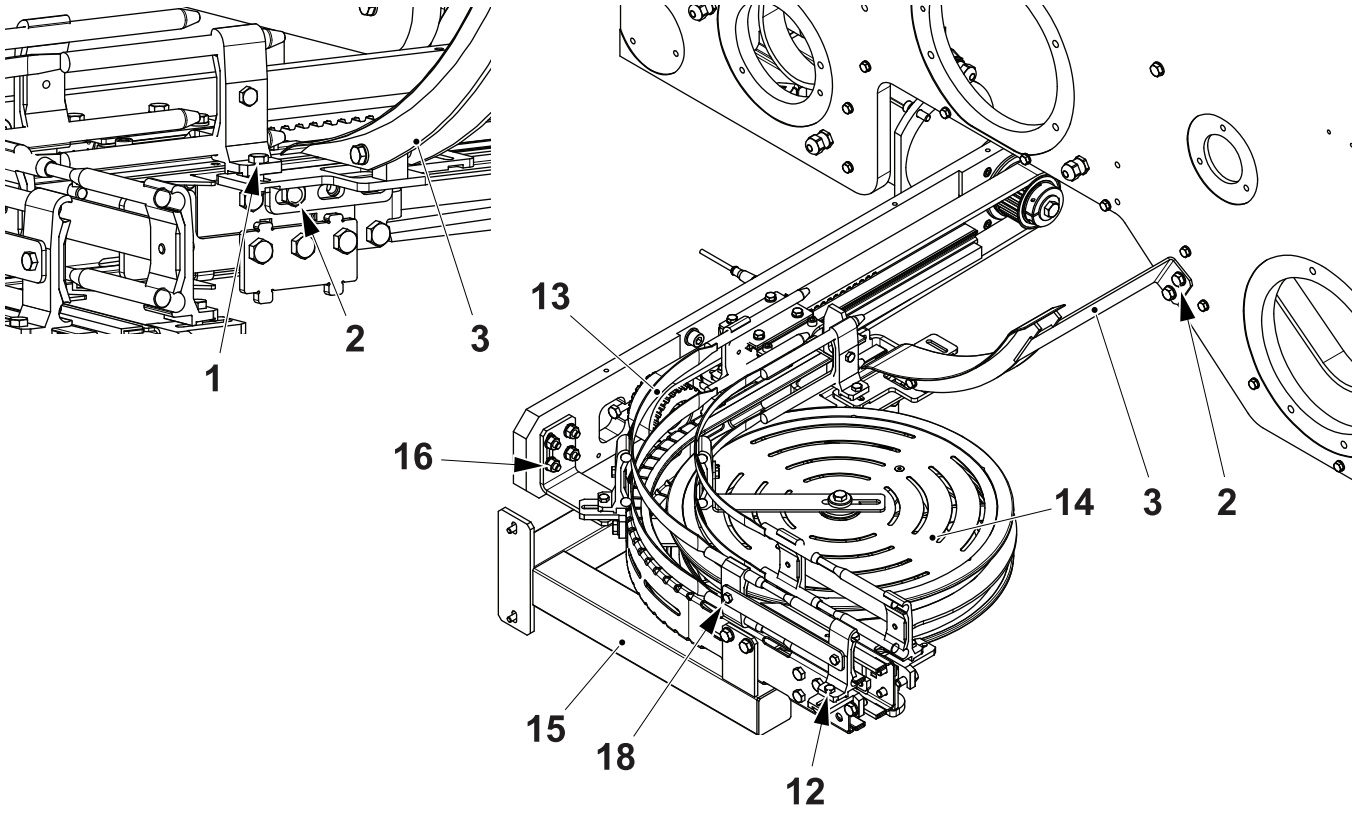

1 Screw
2 Screw
3 Guide
12 Screw
13 Rail
14 Outfeed curve part
15 Support
16 Screw
17 Screw

(Cont'd)

(Cont'd)

m) Fit the outfeed straight part (9) to the outfeed curve part (14) with the screws (18).

n) Fit the new bracket (19) with the screws (20).

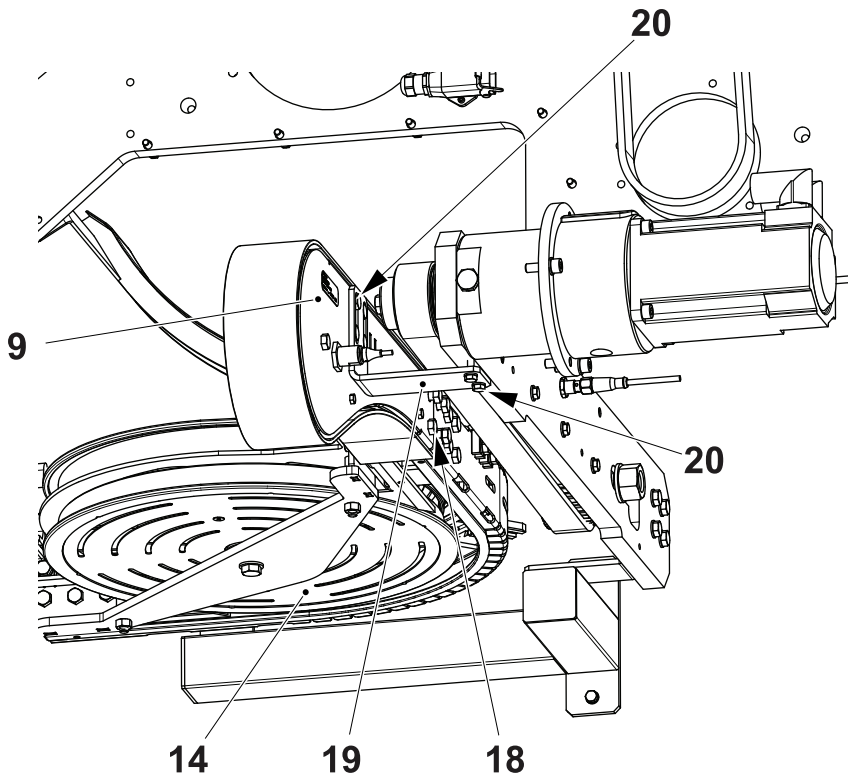

9 Outfeed straight part
14 Outfeed curve part
18 Screw
19 Bracket
20 Screw

(Cont'd)

(Cont'd)

o) Fit the outfeed straight part (11) to the outfeed curve part (14) with the screws (21).

p) Fit the conveyor belt to the outfeed.

q) On the TPOP touch the MACHINE CONFIGURATION button (22).

r) Touch the FFU LH, RH OUTFEED icon (23).

s) Touch the ON button (24) for LH side outfeed configuration or touch the OFF button (25) for RH side outfeed configuration.

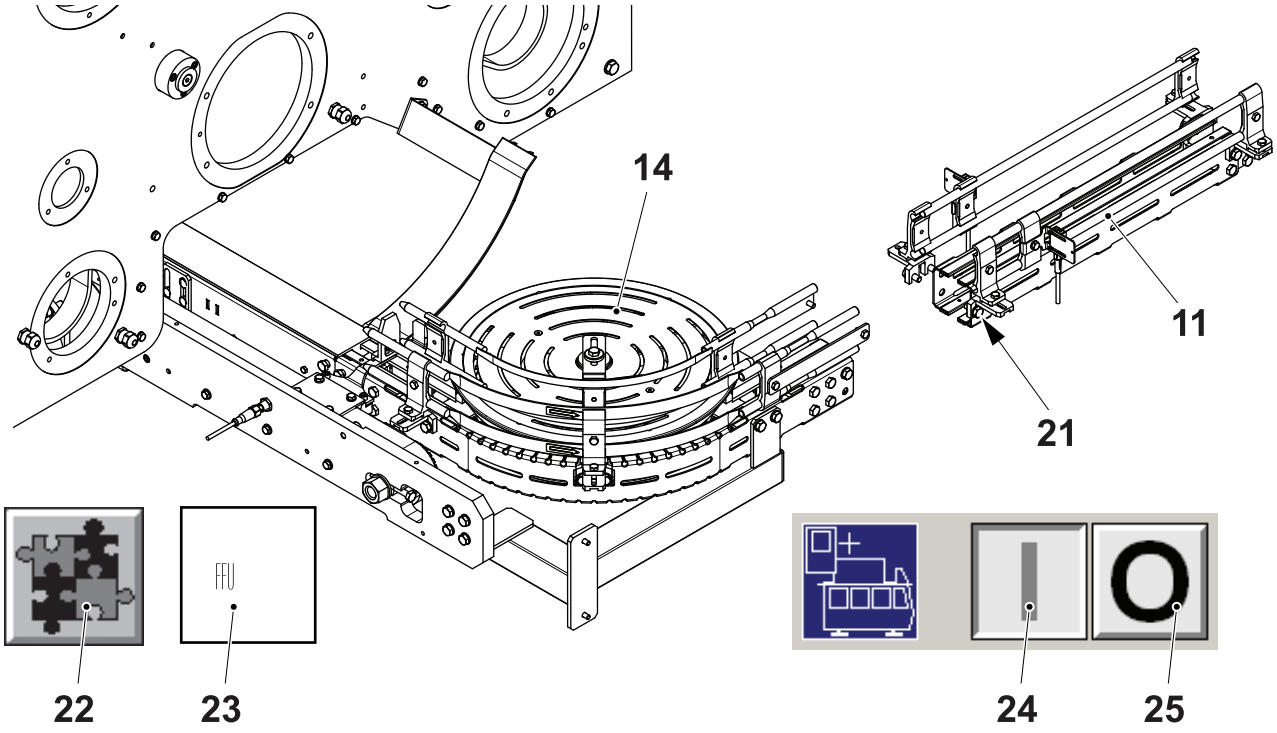

11 Outfeed straight part
14 Outfeed curve part
21 Screw
22 MACHINE CONFIGURATION button
23 FFU LH, RH OUTFEED icon
24 ON button
25 OFF button

3.4.2 ASU

3.4.2-1 Transport Devices

Remove any transport devices securing the ASU components.

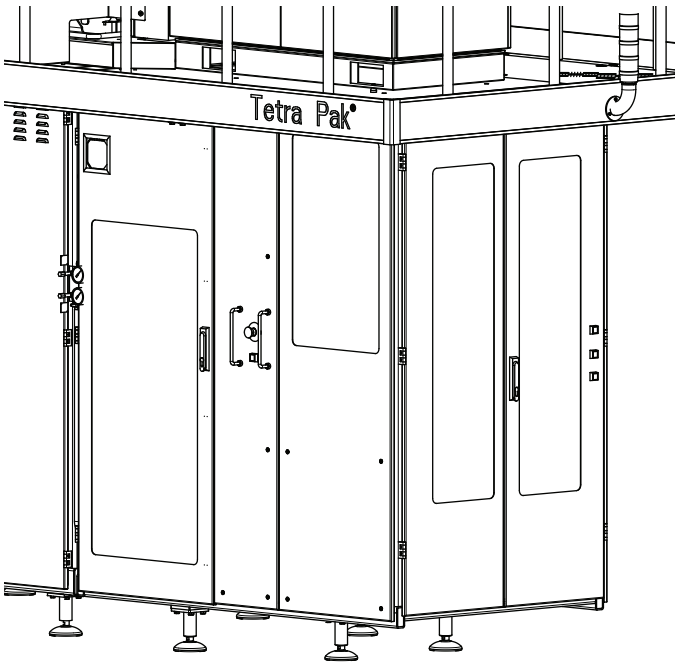

3.4.3 Superstructure

3.4.3.1 Filling System

a) Fit the seal ring (1) and the filling pipe (2).

b) Follow the complete setting sequence flowchart (type1 settings) for the superstructure as detailed in the filling machine MM.

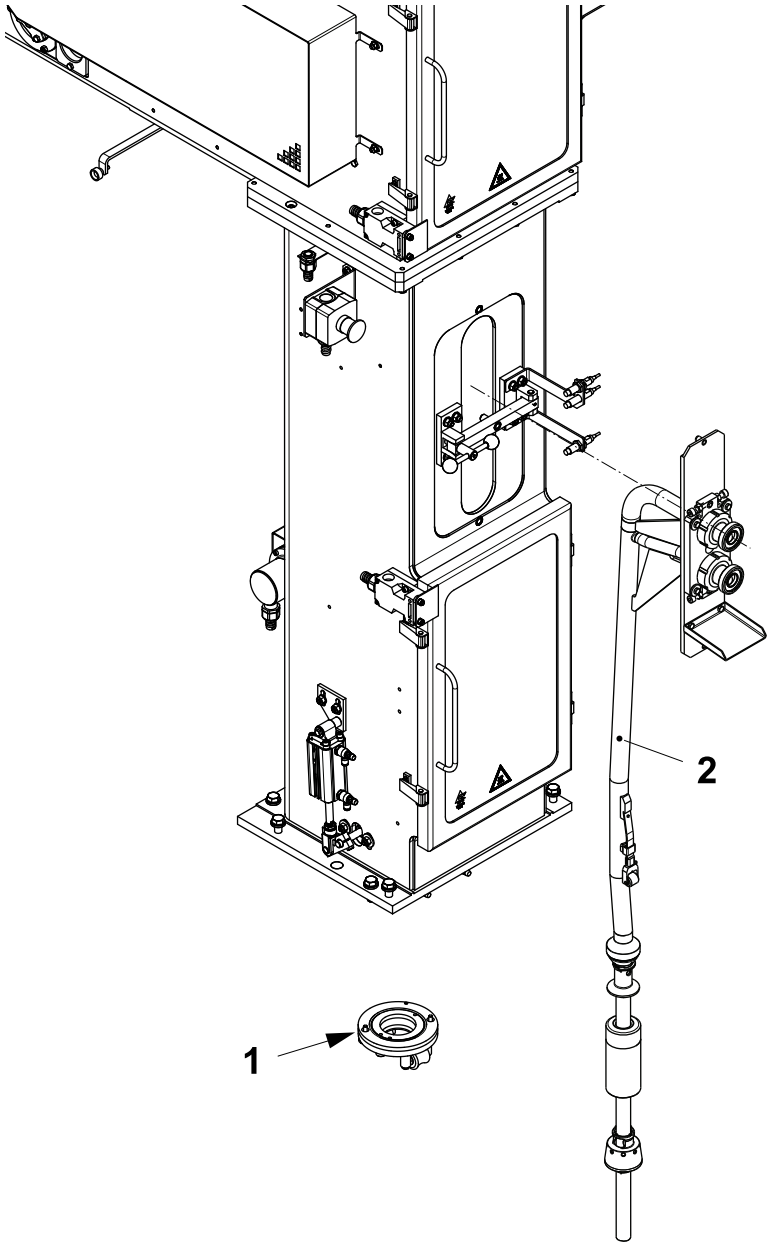

1 Seal ring
2 Filling pipe

3.4.3-1 Manometers

Note! For the manometer on the compressor unit to function correctly the transport pin should be removed.

a) Make sure that the transport pins are in the working position for the manometers on the:
   - compressor unit
   - steam main inlet
   - Steam TCSB
   - Steam pump barrier (HVA only)
   - ICU steam regulator

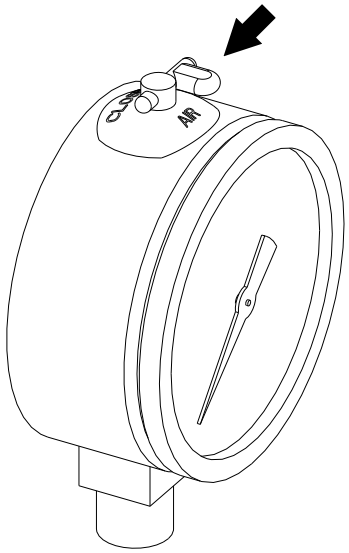

3.4.3-2 CIP Equipment

Locate and check that the CIP equipment is complete as shown below.

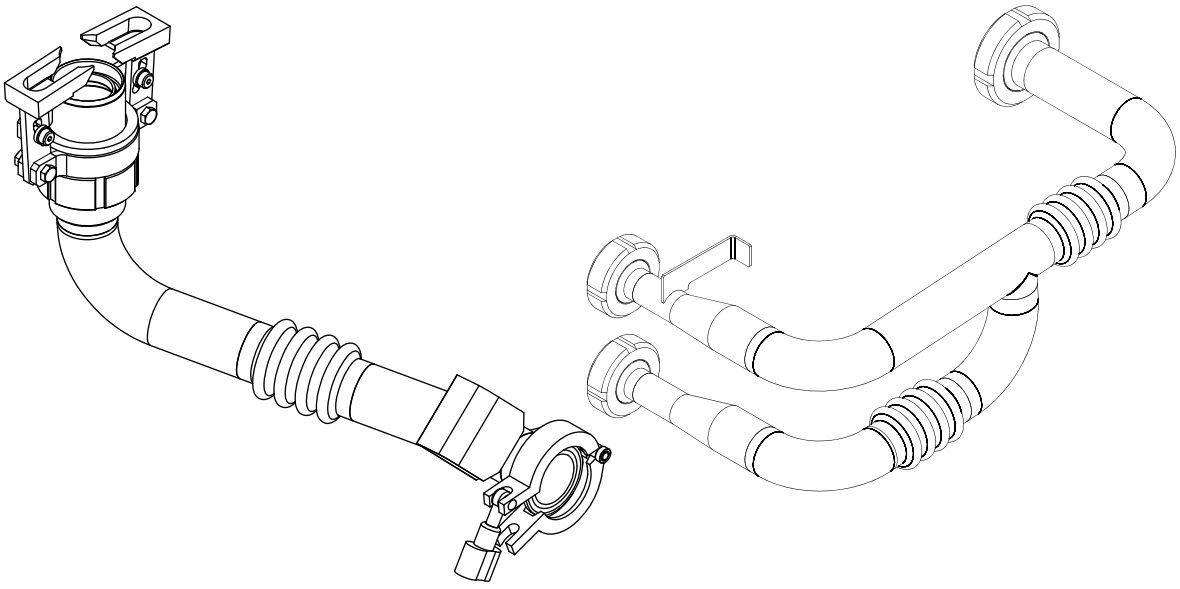

3.4.4 Service Unit

3.4.4-1 Cooling Water System

The cooling water system (1) in the service unit must be filled with water, see the MM section Cooling Water System - Fill.

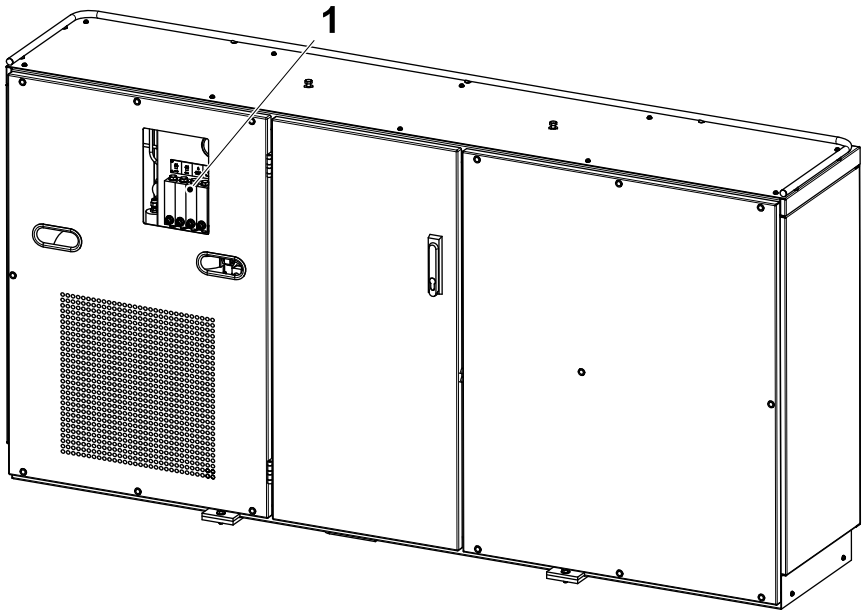

1 Cooling water system

3.4.5 TPOP

3.4.5-1 TPOP - Configure

Configure the:

- date, time, language and shift settings, see the filling machine OM chapter 2 Control Panels, System Setup.
- PLMS components in the PLMS Live window, see the filling machine MM section 8.6.1 PLMS NRG Configurator.

Main Configurations

Log on to the HMI as TP Service Technician, see the filling machine MM section 8.6.3-2 HMI - User Management Log On.

(Cont'd)

(Cont'd)

Note! the KIT button (5) is used to enable the software options after the installation of a rebuilding kit.

a) Touch the MACHINE CONFIGURATION button (1). The machine configuration window appears; the main configurations are available in the LH side area:
   - the machine serial number through the SERIAL NUMBER icon (2)
   - the volume performed through the VOLUME icon (3)
   - the Ethernet IP address Level 6 through ETHERNET IP ADDRESS icon (4)

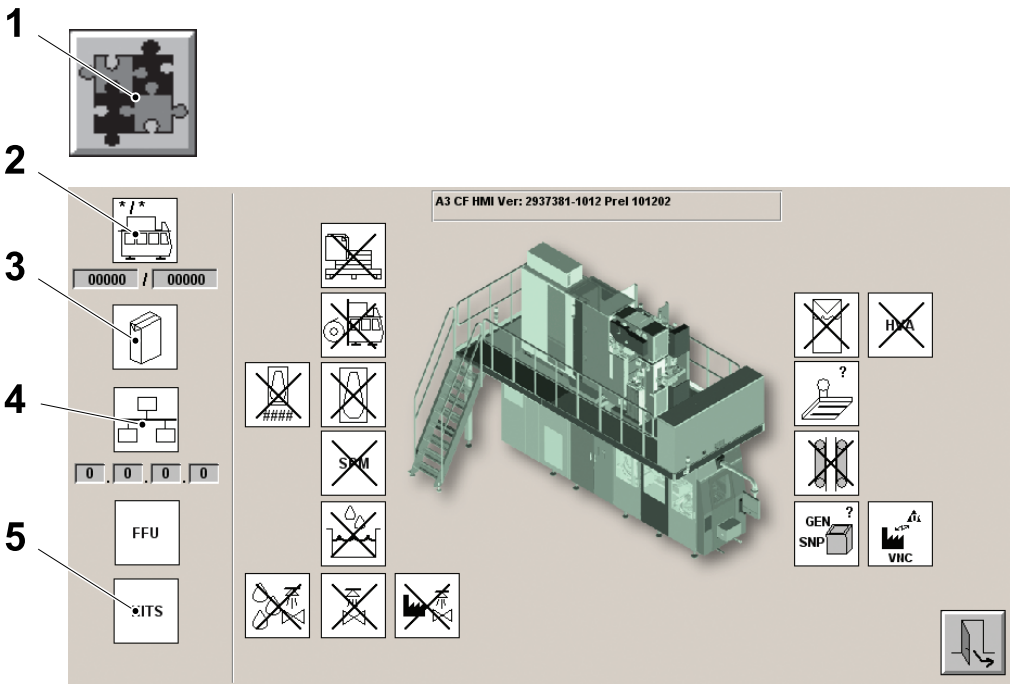

1 MACHINE CONFIGURATION button
2 SERIAL NUMBER icon
3 VOLUME icon
4 ETHERNET IP ADDRESS icon
5 KIT button

(Cont'd)

(Cont'd)

CAUTION
Risk of machine program fault.
The PLC program is associated to the machine serial number. Make sure to set the correct serial number to load the correct PLC program version.

Note! The serial number is composed by a first part (6) which identifies the machine type and relative development step and can not be modified, whereas a second part (7) identifies the T-order of the selected machine.

b) Touch the SERIAL NUMBER icon (2).

c) Touch the T-ORDER NUMBER icon (9).

d) Set the second part of the serial number (T-order) by the keypad and touch the OK button (8) to confirm.

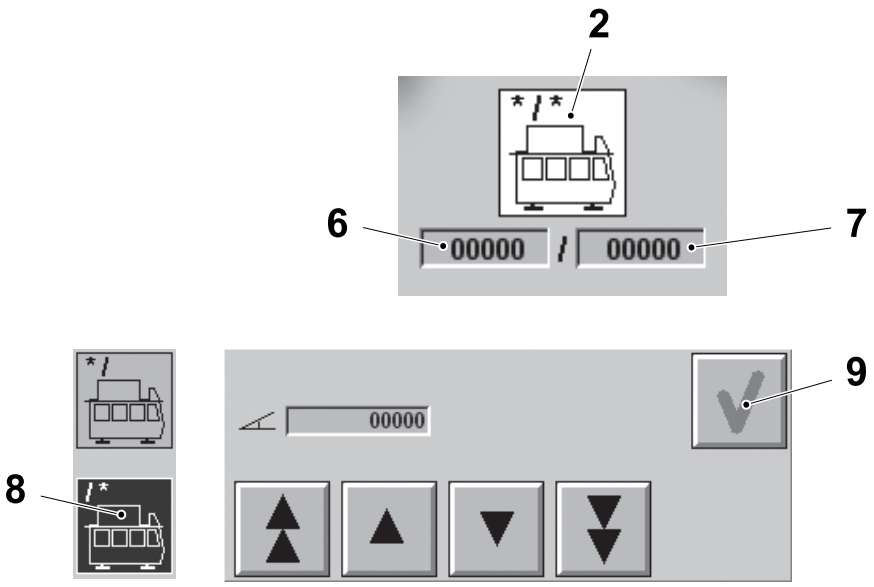

2 SERIAL NUMBER icon
6 First part
7 Second part
8 OK button
9 T-ORDER NUMBER icon

(Cont'd)

(Cont'd)

e) Set the package that will be performed by the machine as follows:
- Touch the VOLUME icon (3) and the available VOLUME tabs appear
- In the VOLUME TABS window (10), select the volume that will be performed by the machine.

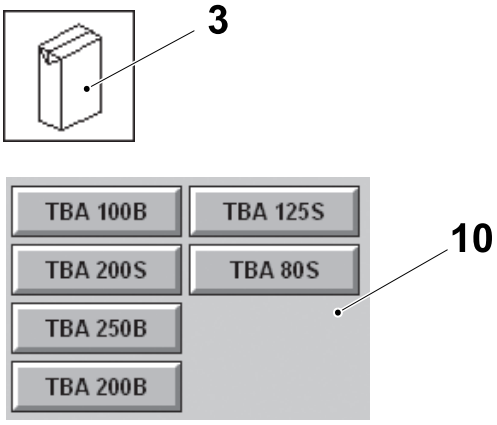

3 VOLUME icon
10 Volume tabs window

f) Set the Ethernet IP address Level 6 as follows:
- touch the ETHERNET IP ADDRESS icon (4)
- in the dialogue window (11) set the IP address, subnet mask and gateway as indicated in the filling machine MM, section 8.1.3-5 EtherNet/IP Module - Change IP Address.

Note! The dialogue window (11) shows the default values.

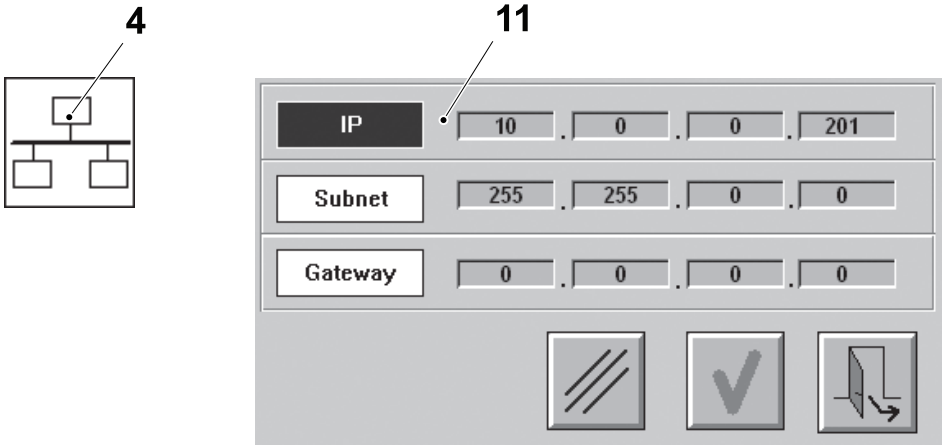

4 ETHERNET IP ADDRESS icon
11 Dialogue window

(Cont'd)

(Cont'd)

g) Check that in the TPOP home window are displayed the correct informations:
   - the machine name (12)
   - the package performed (13)
   - the machine speed (14).

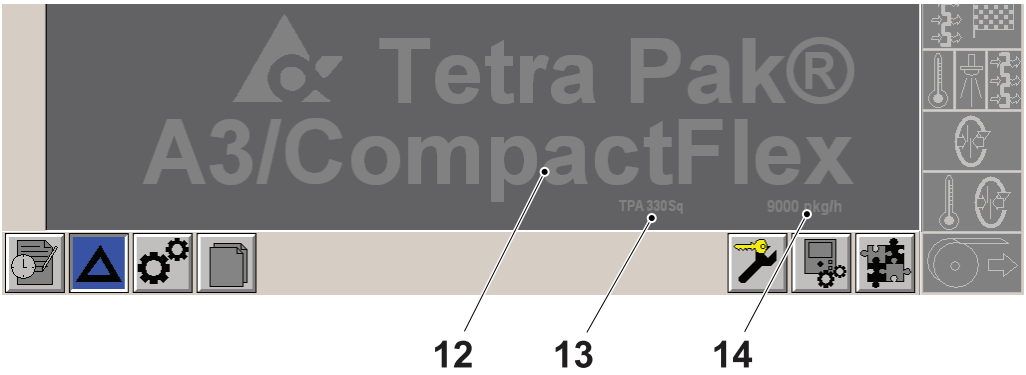

12 Machine name
13 Package performed
14 Machine speed

(Cont'd)

(Cont'd)

Set Machine Options

Enable the machine options required as follows:

a) Log on to the HMI as TP Service Technician, see the filling machine MM section 8.6.3-2 HMI - User Management Log On.

b) Touch the MACHINE CONFIGURATION button (1).

c) Touch the icon of the machine option to be enabled. The ON/OFF buttons appear.

d) Touch the ON button (2) to enable the option selected.

Note! Icons marked with a cross are not enabled.

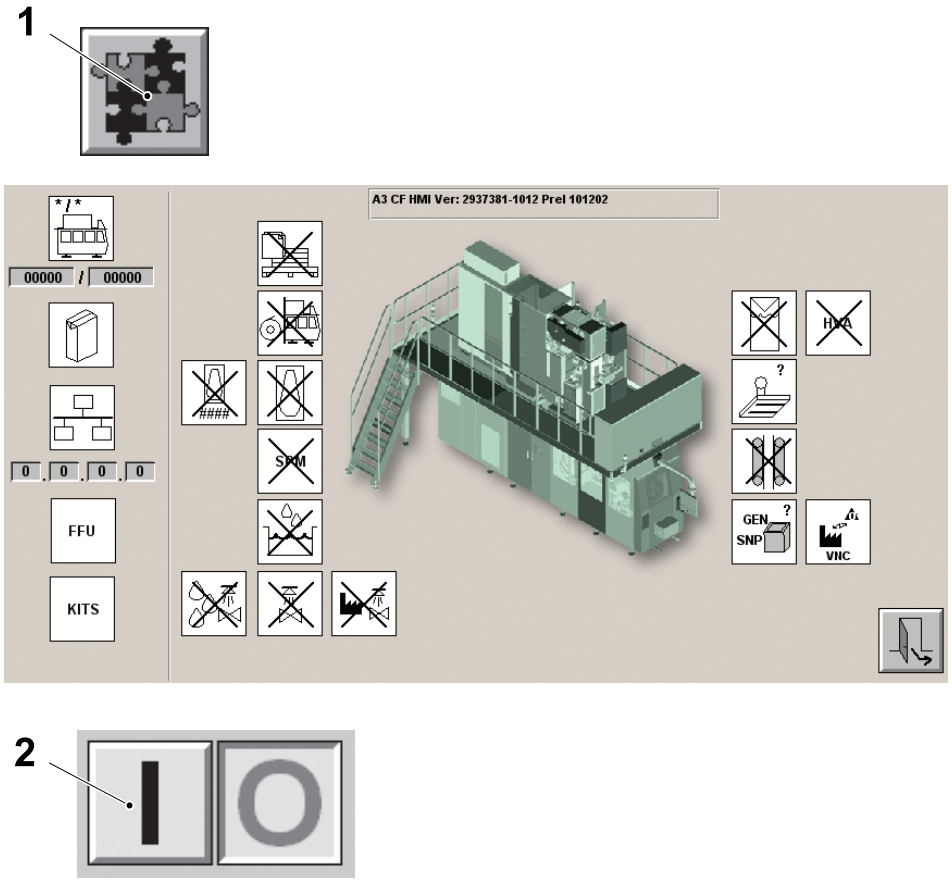

1 Machine configuration button
2 On button

(Cont'd)

(Cont'd)

Note! Touching the option `DATE UNIT` (14) a second level of selection is displayed to specify the type of printer, see 8.6.4-1 Date Unit - Set Date Unit in the MM for the Filling machine.

e) The selectable machine options are listed below:

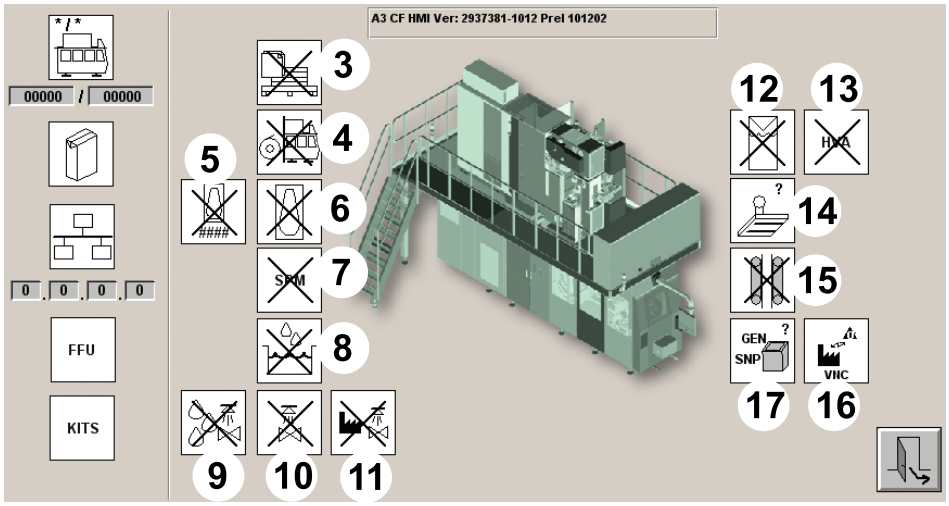

3 PPI
4 ASU separate room
5 PullTab development step
6 PullTab
7 Strip position monitoring
8 Dilution kit
9 Extra Cleaning
10 ICU
11 ICU central refilling
12 Headspace by Injection
13 High Viscosity Aseptic
14 Date unit
15 Belt brake
16 Remoto control
17 Line Supervision

3.4.5-2 TPOP - Create Production Recipe

a) Log on to the HMI as TP Service Technician, see the filling machine MM section 8.6.3-2 HMI - User Management Log On.

b) Touch the RECIPE button (1).

c) In the RECIPE window, touch the NEW RECIPE button (2).

d) In the NEW RECIPE window, touch the VOLUME button (3).

e) Use the ARROW buttons (4) to select the package volume for the production recipe.

Note! If the options for PullTab application and HI are not present on the machine, the respective PULLTAB icon (5) and HI icon (6) will not be displayed.

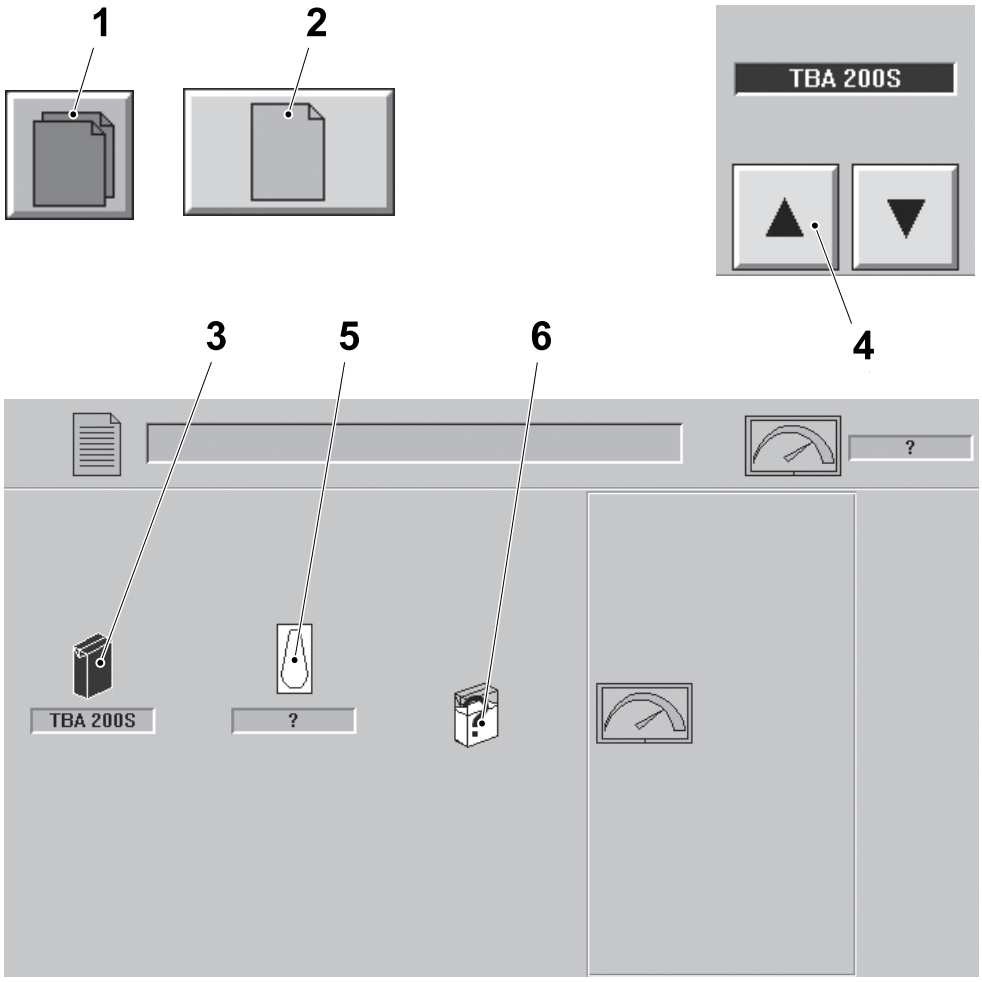

1 Recipe button
2 New recipe button
3 Volume button
4 Arrow button
5 PullTab icon
6 HI icon

(Cont'd)

(Cont'd)

PullTab Pre-applicator

Note! If no pre-applicator is present continue with HI on page 3-180.

a) Touch the PULLTAB icon (5), use the ARROW buttons (4) to select:
   - the HOLE TYPE option (7), if the PullTab is selected for the production recipe
   - the NONE option (8), if the PullTab is not selected for the production recipe.

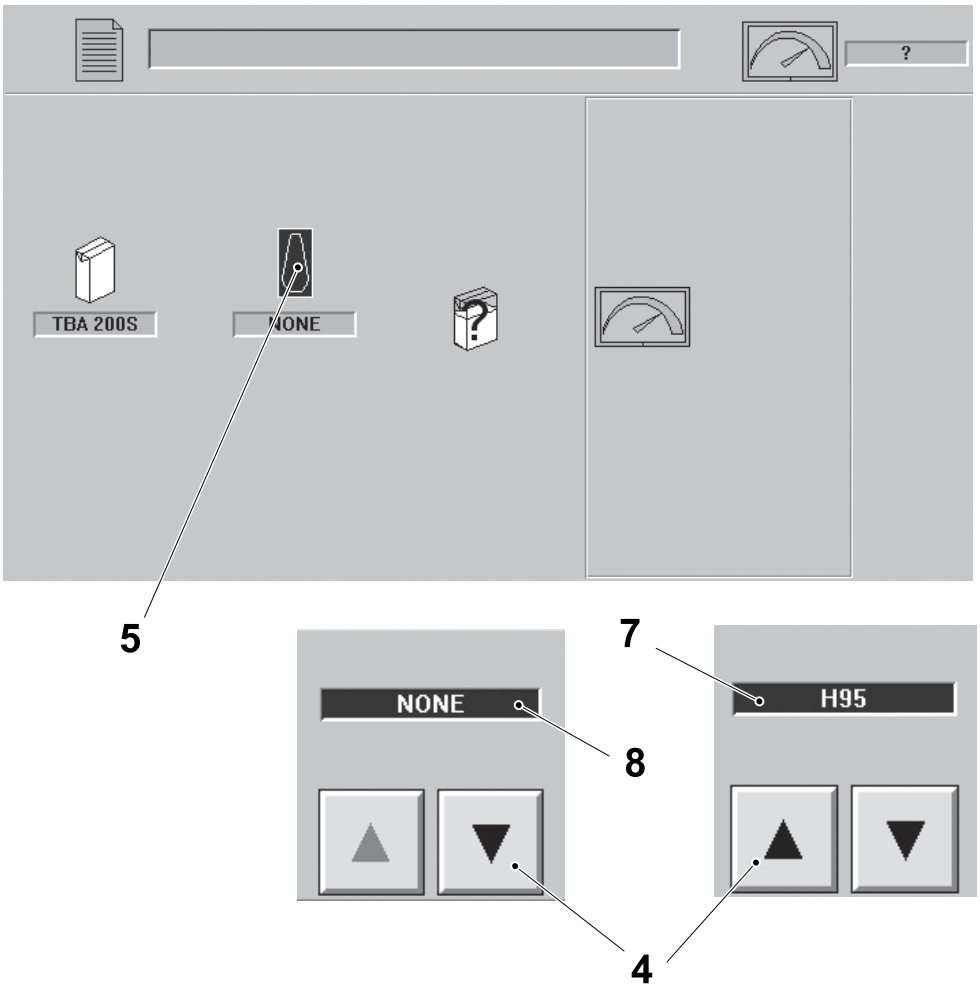

4 Arrow button
5 PullTab icon
7 Hole type option
8 None option

(Cont'd)

(Cont'd)

HI

a) Touch the `HI` icon (6), use the `ARROW` buttons (4) to select HI or no HI for the production recipe.

b) Touch the `PRODUCTION SPEED` icon (9).

c) Touch each of the `PRODUCTION SPEED` button (10) that will be enabled for the production recipe.

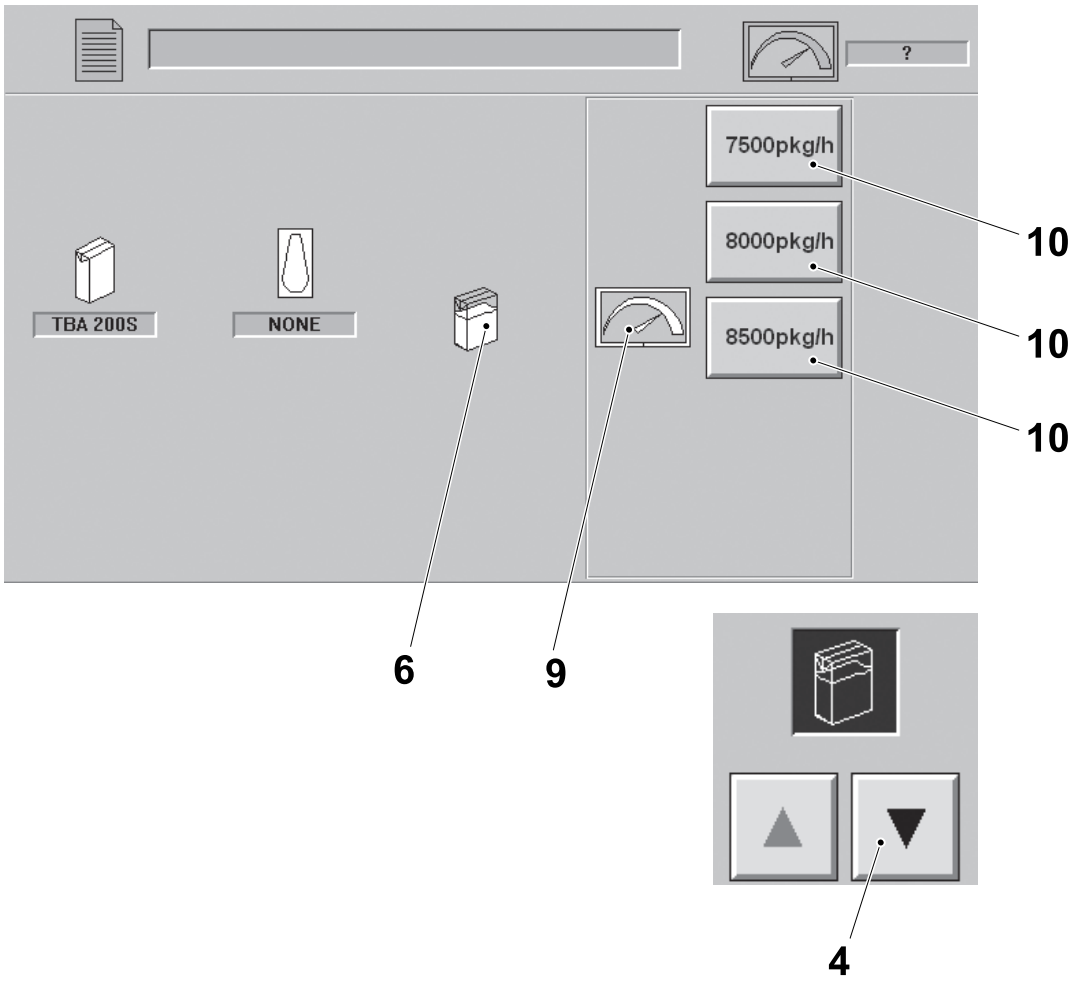

4 Arrow button
6 HI icon
9 Production speed icon
10 Production speed button

(Cont'd)

(Cont'd)

d) Touch the OK button (11) to save the new recipe.

e) When the KEYBOARD (12) appears enter a name for the new recipe and touch the OK button (13) on the keyboard.

Note! If a name of an existing recipe is entered, the OK button (13) stays grey and the recipe cannot be saved.

Note! It is recommended to create a backup copy of all the recipes in an external PC once they have been saved.

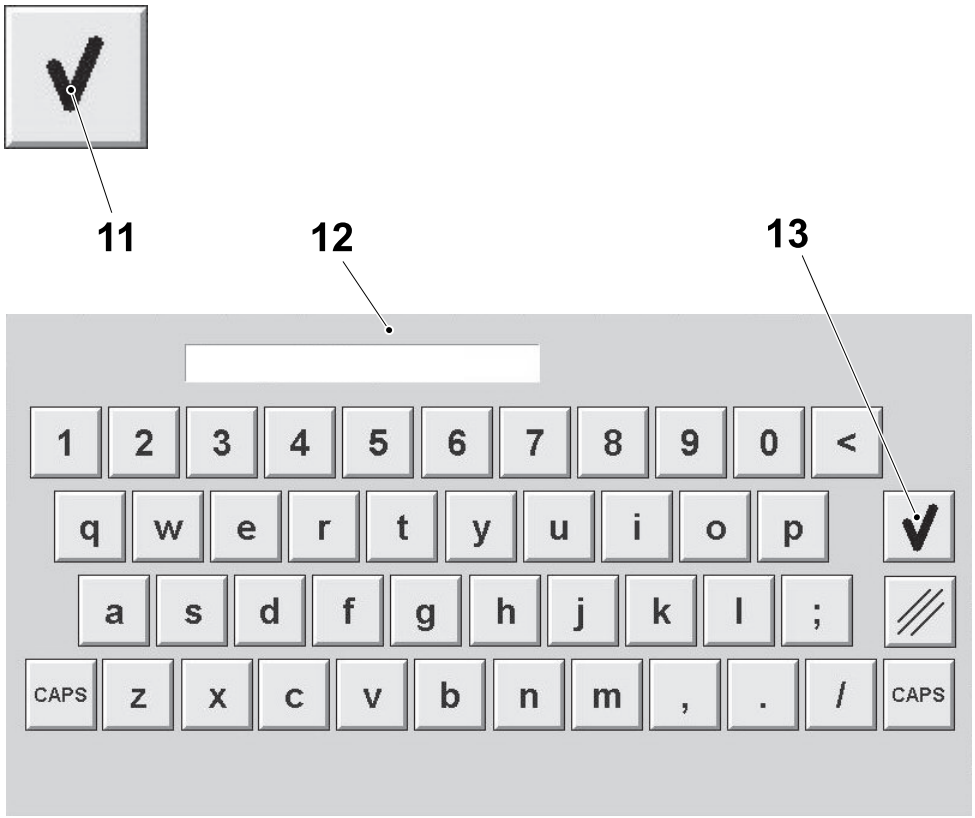

11 OK button
12 Keyboard
13 OK button

3.4.6 Machine Body

3.4.6-1 Hydrogen Peroxide System

a) Open the tap (1) to fill the water circulation system until the pressure on the pressure gauge (2) reach **1.5** bar. If required, remove the cap (3) and turn the screw below the cap (3).

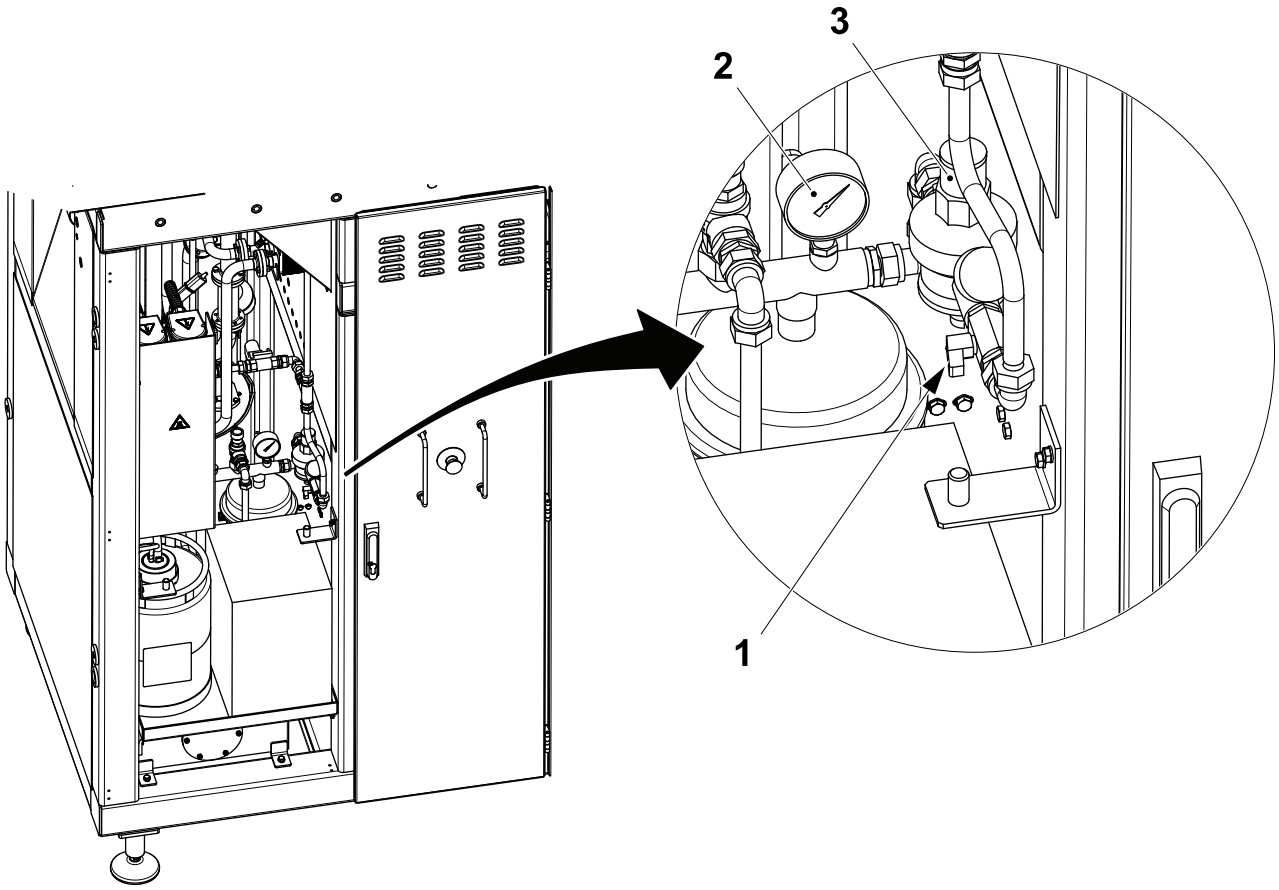

1 Tap
2 Pressure gauge
3 Cap

3.4.6-2 Package Outfeed

a) Fit the protective cover (1) over the package outfeed.

b) Fit the protective cover (2) over the package waste conveyor.

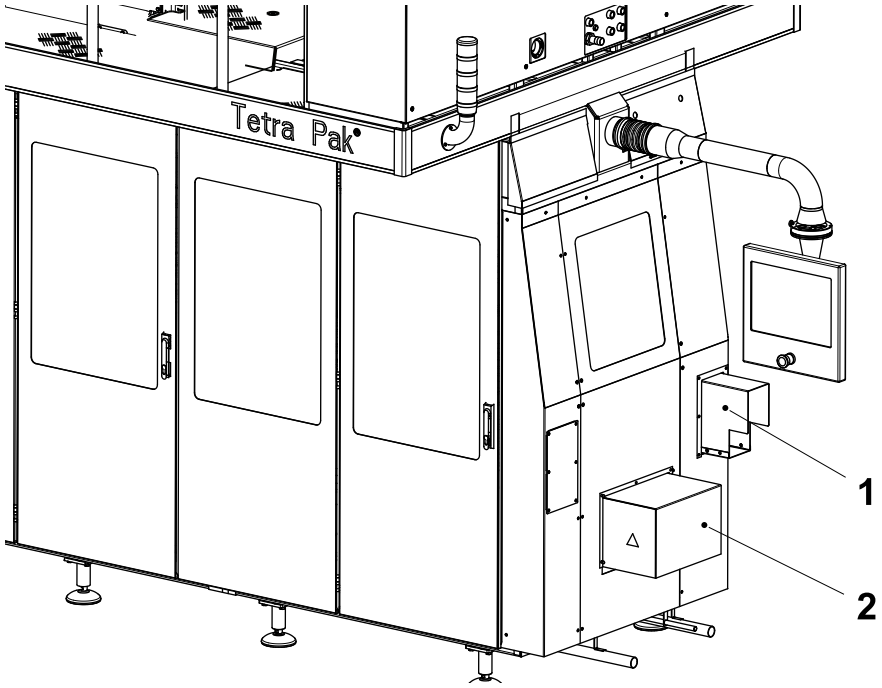

1 Protective cover
2 Protective cover

3.4.6-3 Chemical Containers

a) Fill the ICU chemical containers, see the Operator Manual for instructions on how to fill the containers.

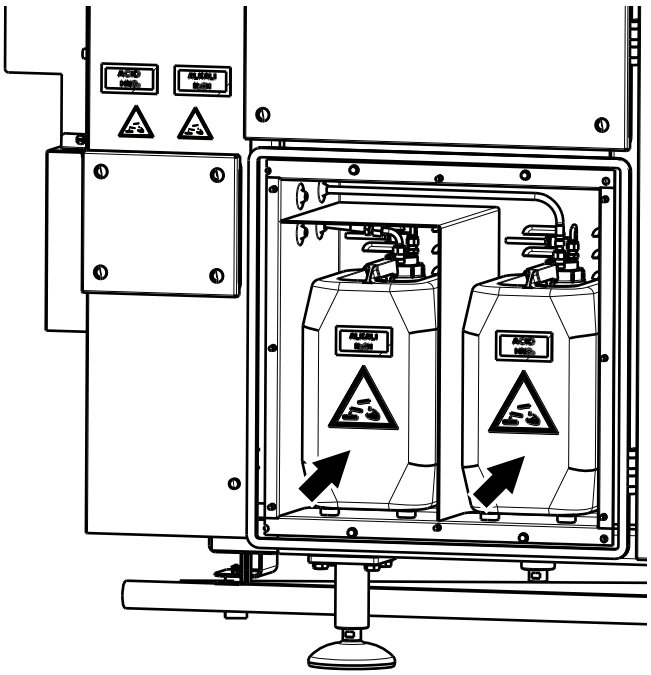

(Cont'd)

(Cont'd)

b) Locate the detergent container (1) and place it in the compartment, see the Operator Manual for instructions on how to fill the container.

c) Locate the peroxide container (2) and place it in the compartment.

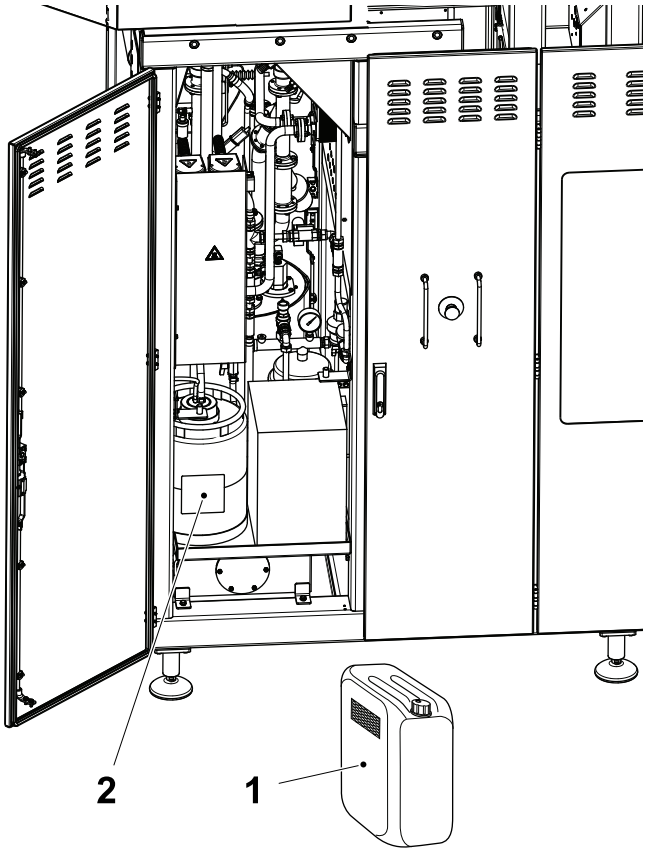

1 Detergent container
2 Peroxide container

3.4.7 Drive Unit

3.4.7-1 Servo Motors Commissioning

a) Turn ON the main power and step up the filling machine to PREPARATION.

b) Log on to the JAW SYSTEM window, see the filling machine MM section 8.6.3-2 HMI - User Manager Log On.

c) Touch the `JAW SYSTEM` button (1) to display the `JAW SYSTEM` window.

d) Touch the appropriate `SERVO MOTOR TEST` icon (2) for the motor to be tested.

e) Touch the `POWER` button (3).

f) Touch the `OK` button (4).

g) Check that the `POWER` button (3) turns green.

- if the `POWER` button (3) turns green the servo motor test is complete
- if the`POWER` button (3) does not turn green, there is a fault in the power cables or in the feedback cables. Continue with item h).

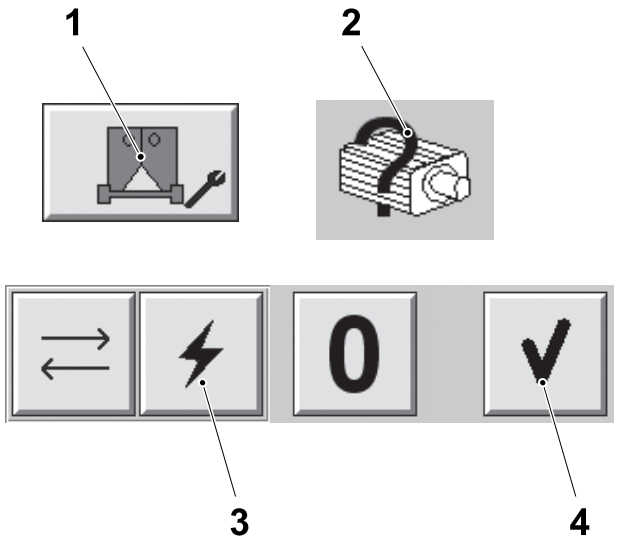

1 `JAW SYSTEM` button
2 Servo motor test icon
3 Power button
4 OK button

(Cont'd)

(Cont'd)

h) Touch the FEEDBACK button (5).

i) Touch the OK button (3).

j) Wait for the FEEDBACK button (5) to turn green.

- if the FEEDBACK button (5) turns green the power cables are inverted, check the power cable connections
- if the FEEDBACK button (5) does not turn green, the feedback cables are inverted, check the feedback cable connections.

k) Repeat items a) to j) for the other servo motors.

l) Touch the ZERO button (6) and then touch the OK button (4) to return to the JAW SYSTEM window.

m) Touch the EXIT button (7) to exit from the JAW SYSTEM window.

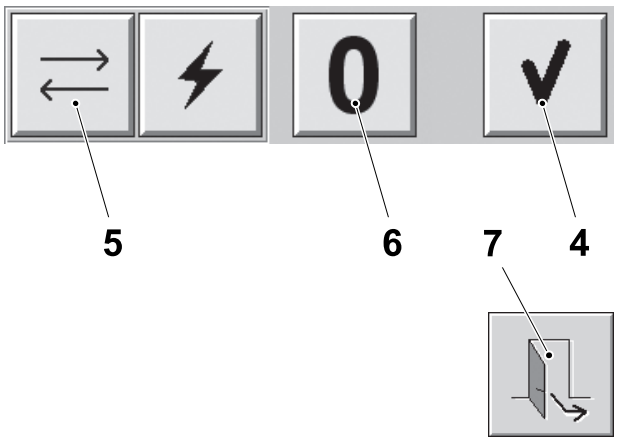

4 OK button
5 Feedback button
6 Zero button
7 Exit button

(Cont'd)

(Cont'd)

Note! Ensure the drive belt teeth are seated correctly in the servo motor pulley (8).

n) On each of the servo motor (9):
- make sure that the drive belt (10) is loosen.
- fit the drive belt (10) around the servo motor pulley (8)
- tension the drive belt (10), see the MM.

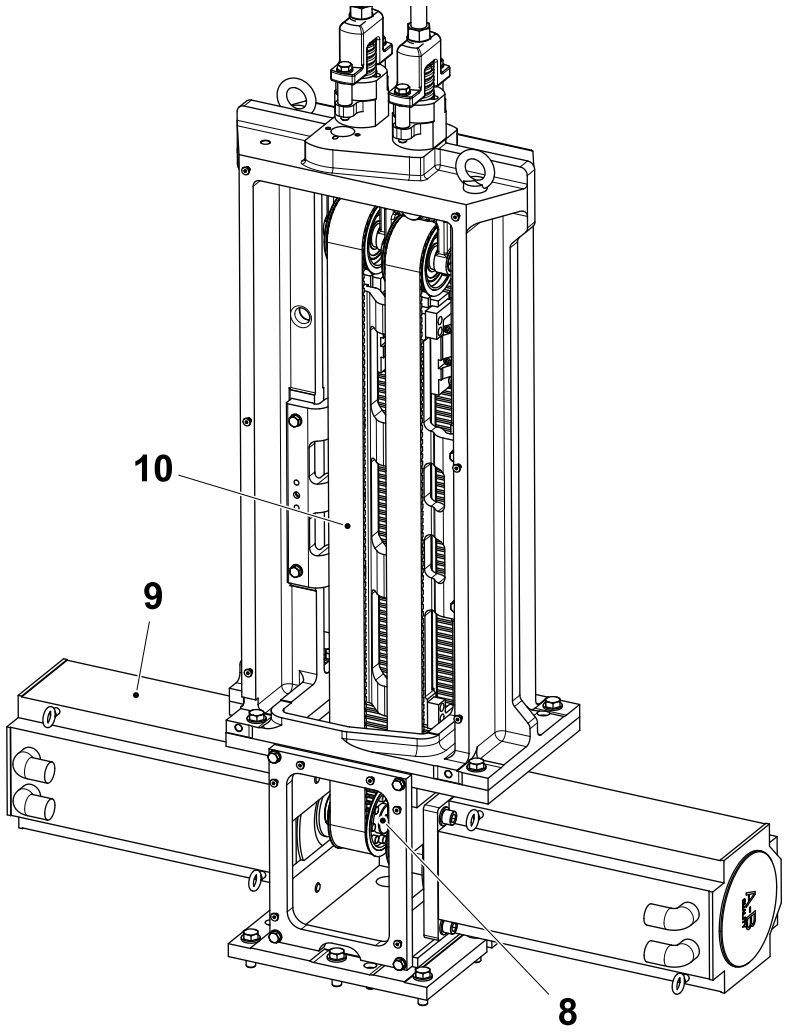

8 Servo motor pulley
9 Servo motor
10 Drive belt

(Cont'd)

(Cont'd)

o) On the LH and RH side drive units, fit the link arms (11) to the runner blocks (12) onto the drive unit belts.

p) Perform the servomotor referencing, see the MM.

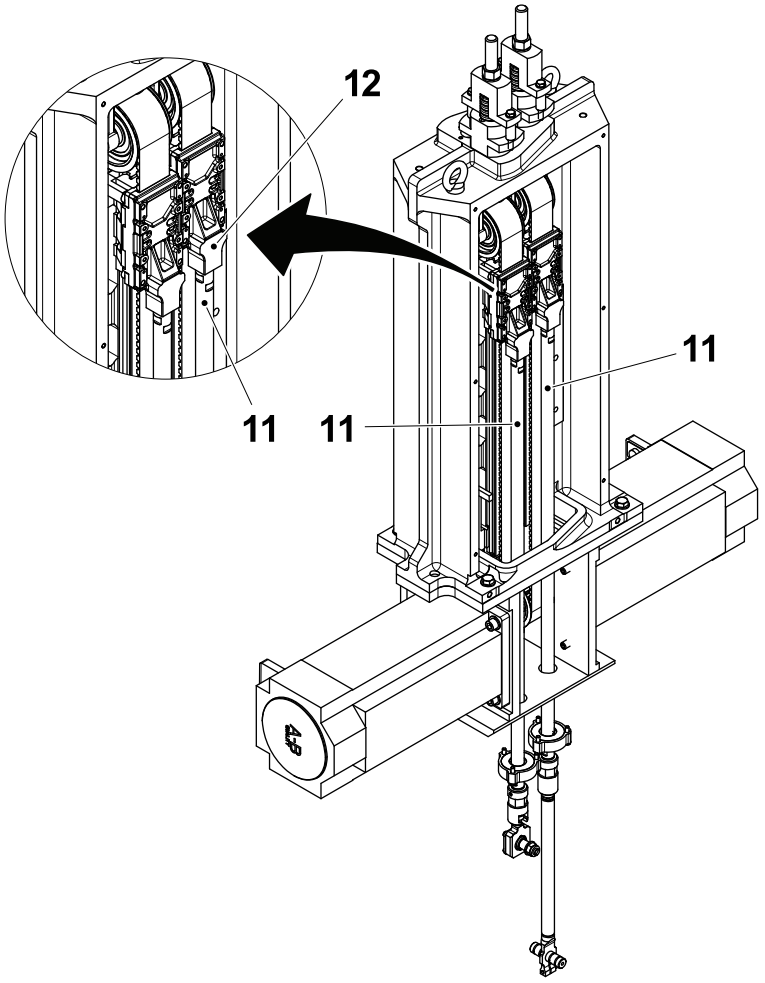

11 Link arms
12 Runner block

3.4.8 Jaw System

3.4.8-1 Transport Devices

Remove any transport devices securing the jaw system components.

3.4.8-2 Jaw System Referencing

Follow the procedure in the MM section 3-4 Drive Unit - Referencing to establish the reference position for the drive units and to connect the link arms to the jaw system.

3.4.9 Machine Covers

3.4.9-1 Equipment Covers - Assemble

Standard Filling Machine

Make sure that the covers shown below are fitted to the machine.

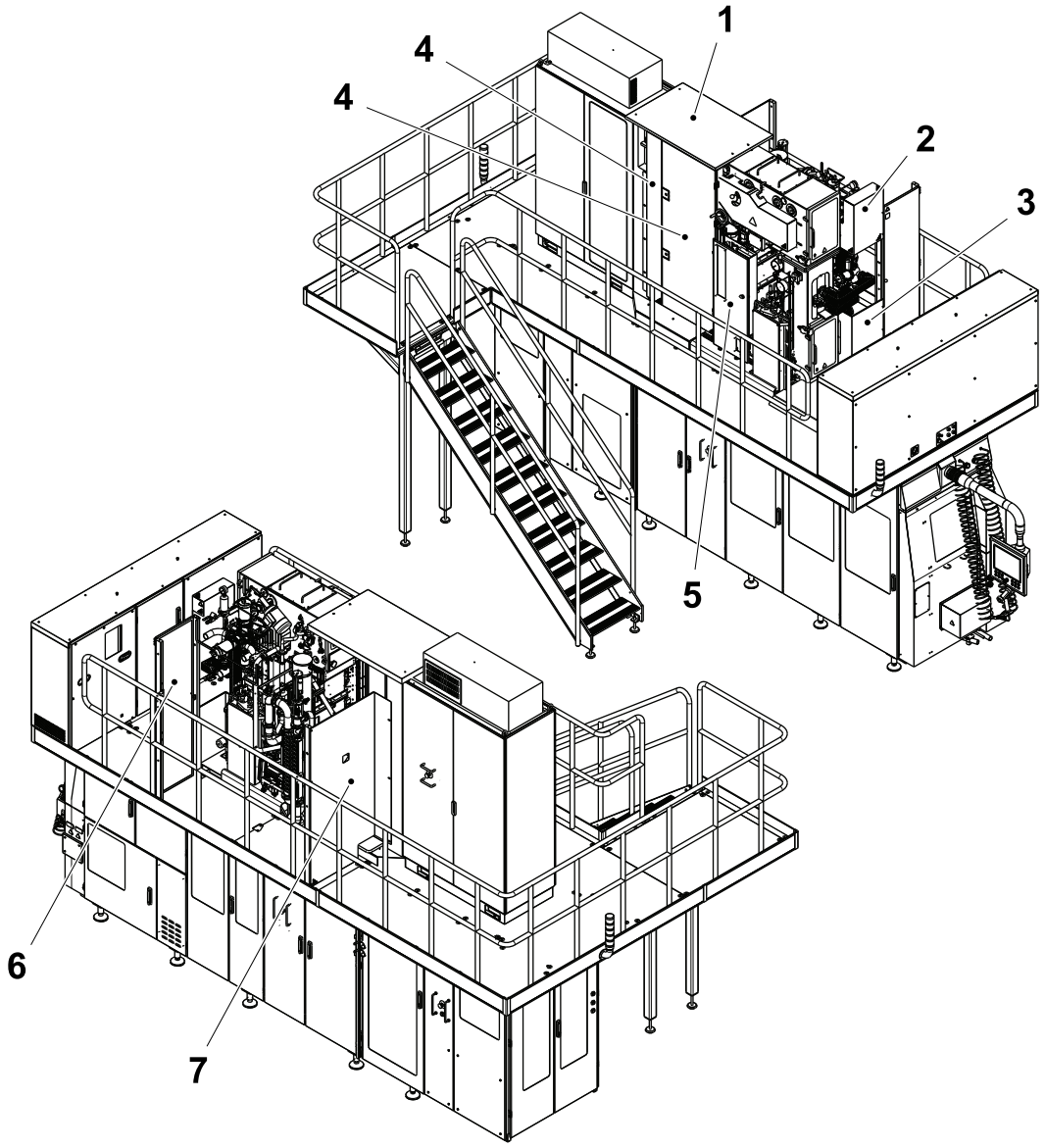

1 Cover, superstructure top
2 Covers, steam system
3 Cover, steam trap
4 Door, superstructure LH side
5 Cover plate, superstructure valve panel
6 Door, superstructure sterile air front
7 Cover plate, superstructure sterile air rear

(Cont'd)

(Cont'd)

Filling Machine with HVA

Make sure that the covers shown below are fitted to the machine.

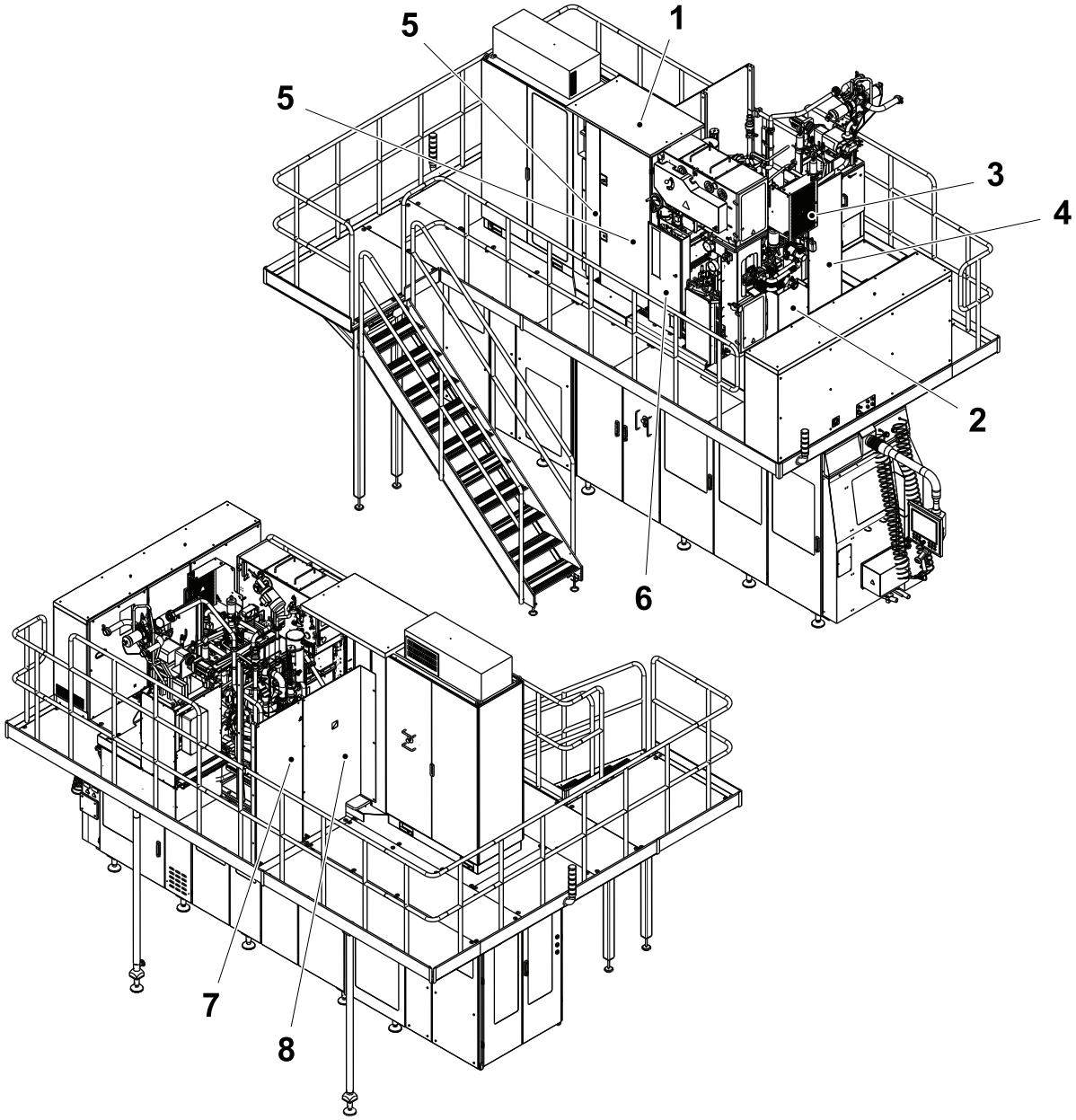

1 Cover, superstructure top
2 Cover, steam trap
3 Covers, steam system
4 Door, HVA front
5 Door, superstructure LH side
6 Cover plate, superstructure valve panel
7 Cover plate, HVA rear
8 Cover plate, superstructure sterile air rear

3.4.10 PullTab Unit

3.4.10-1 Transport Devices

Remove the two transport devices securing the patch and tab applicator stations.

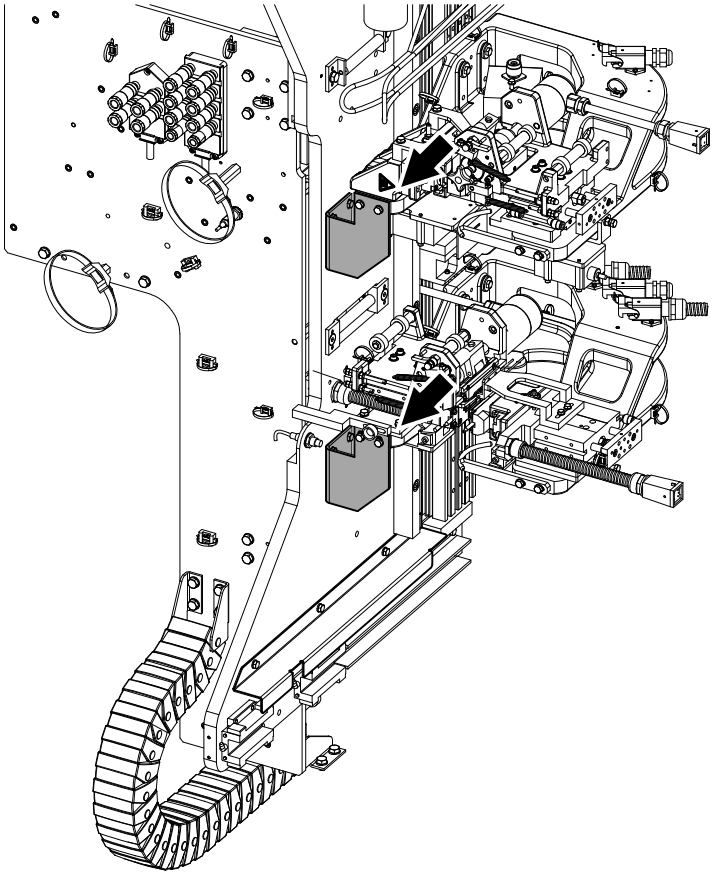

3.5 Restore Tools and Site

Make sure that:

- all protective plastic is removed from the equipment;
- all lifting tools and other installation tools are removed from the area around the equipment;
- the area around the equipment is properly cleaned;
- the equipment is properly cleaned;
- the site is restored to production status.

3.6 Mechanical Completion Inspection

The purpose of the mechanical completion inspection is to verify that the equipment in question has been delivered and is installed in accordance with the relevant documentation. This inspection must be carried out in conjunction with all involved parties, and prior to commissioning. All relevant installation documents are to be used for this task.

Defects or faults together with necessary actions and timing to correct the deviations must be recorded in the checklist. See Section 3.6.1 Mechanical Completion Checklist. Commissioning must not be started until the mechanical completion inspection has been completed.

Use the checklist as follows:

- Under Note, document any deviations, incorrect values, or comments.
- Under Value, document the actual value.
- Under Signature, sign that the check is performed.

3.6.1 Mechanical Completion Checklist

(Cont'd)

(Cont'd)

Machine No.	Country	Final User	Site

Checklist completed by	Checklist completion date

3.6.2 Crate Handling Checks

(Cont'd)

(Cont'd)

No.	Check	Reference Document (IM unless other document specified)	Note	Value	Signature
1	Equipment delivered in accordance with machine order and packing list.	Packing List			
2	Crates inspected for outer damage	Notification Reporting Tools in SAP/R3			
3	All delivered equipment has been checked for transport damages. All transport damages have been reported	Crate opening/Damage report (ItP)			
4	The IMD (Individual Machine Documentation) binder is included in the delivery and contains the following: -Machine Specification -Machine Deviation (if relevant) -Declaration of Conformity -Final Inspection Report -System drawings -Technical Publications (Manuals)	Receipt of Documentation (ItP)			
5	Ensure that the Machine Program Binder is included in the delivery containing the following: -Machine Software TP No. XXXXXX-XXXX -TPOP Software TP No. XXXXXX-XXXX -Backup Machine Program XXXXXX-XXXX The TP No. on the program CD corresponds to the TP No. in the EM.	Receipt of Documentation (ItP)			

(Cont'd)

(Cont'd)

No.	Check	Reference Document (IM unless other document specified)	Note	Value	Signature
6	The Technical Publications below are available in the correct EU language, quantity, and correspond to the specific machine: English version: -SPC (one piece) -IM (one piece) -MM (one piece -EM (two piece) -OM (two pieces) Translated version: -SPC (one piece) -IM (one piece) -MM (one piece -EM (two piece) -OM (two pieces)	Packing List on the Machine Documents box			
7	All documentation has been stored as agreed with the User.				
8	The packaging material, strips and all the additional material to be used for tests is taken care of and stored according to the instruction in the IM				
9	The spare parts have been deposited in the spare parts stores.				
10	The disposal/return of crates and additional packing material has been taken care of as agreed with the User or according to the Local Regulations.				

3.7 Positioning, Assembly and Connections Checks

3.7.1 Filling Machine

(Cont'd)

(Cont'd)

No.	Checks	Reference document IM unless other document specified	Note	Value	Signature
1	The main machine is positioned according to approved layout and without interference with service area.	Layout drawing			
2	The machine is level transversely and longitudinally.				
3	All railings have been fitted.				
4	The utility connections work is completed.				
5	The conveyor equipment is connected and the last point DE is in place.				
6	The connection work to the service unit is finished.				
7	The external data unit (OE) is in place and connected.				
8	The connection work to the superstructure is finished.				
9	The connectors plate in the electrical cabinet:. - all the connectors and cable glands are installed - all the slots and holes are plugged.				
10	The electrical power cables are correctly connected: - in the main switch cabinet - between the main switch and the electrical cabinet - in the electrical cabinet.				
11	The connections of the cooling units drainage pipes are correctly fitted. 				

(Cont'd)

(Cont'd)

No.	Checks	Reference document IM unless other document specified	Note	Value	Signature
12	The signal connections between filler and plant control system are correctly connected.				
13	Turn ON the electrical power upstream. Turn the main switch to the ON position. 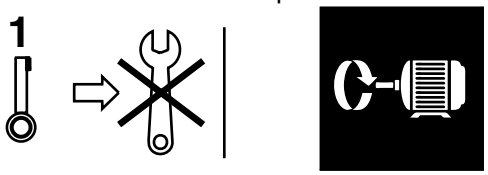				
14	All covers are fitted.				
15	The water circulation system is filled.				
16	The filling pipe and seal ring are fitted.				
17	The protective cover for the out feed is fitted.				
18	The peroxide container is in place.				
19	The detergent container(s) are installed and filled with the correct detergent, see OM.				
20	The transport securing devices are removed.				
21	The cooling water system is filled.				
23	The eject conveyor/bin is connected/positioned.				
24	Upstream valves/switches are open/on: • electrical power • cold water • ice water supply and return (OE) • warm water • compressed air • steam				
25	There are no leakages from the utility connections.				
26	The production line is flushed with water to eliminate welding residue, and to detect any leakages.				
27	The TPOP has been set.				
28	The machine crates and other packing have been taken care of as agreed with the customer.				

3.8 Lubricant Level Checks

(Cont'd)

(Cont'd)

No.	Checks	Reference document IM unless other document specified	Note	Value	Signature
1	Machine body - Hydraulic system				
2	Machine body - Lubrication system				

3.9 Valve Checks

(Cont'd)

(Cont'd)

No.	Checks	Reference document IM unless other document specified	Note	Value	Signature
1	The **three** peroxide valves are in the closed position: • Peroxide tank, drain valve • Peroxide tank, sampling valve • Dilution tank, drain valve. 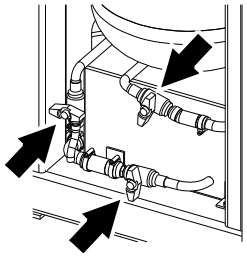				

(Cont'd)

(Cont'd)

No.	Checks	Reference document IM unless other document specified	Note	Value	Signature
2	The air valve and water valves in the service unit are open. 				

3.10 Safety Checks

(Cont'd)

(Cont'd)

No.	Checks	Reference document IM unless other document specified	Note	Value	Signature
1	All doors open and close correctly.				
2	All hatches and safety covers are secured.				
3	In the electrical cabinet doors: - the locking rods engage correctly their brackets - the hinges open smoothly and without noise - the handles open and close correctly - the handle, once locked, can open the door only with the key				
4	All the EMERGENCY STOP buttons. See the Safety Precautions for further details. Press each EMERGENCY STOP button and make sure that the machine steps down to OFF.				
5	All the doors, covers and guards. See the Safety Precautions for further details. Open each door, cover or guard and make sure that the TPOP shows the correct one.				
6	The filling machine and the area around the machine are free from any remaining installation packing and wrapping.				

4 Commissioning

Description

This chapter describes the commissioning of the equipment. The commissioning covers all activities from the first start up of the equipment until the equipment is validated and ready for commercial production. The commissioning activity is finalized when a commissioning certificate is signed.

The chapter includes procedures to start up and validate the function of the equipment. It also describes the commissioning validation of the equipment, and how to verify the packages with package integrity tests and microbiological validation.

Make sure any local validation requirements are observed.

Note! Commissioning covers only the functioning of the individual machine. A line performance test is required to check the functioning of the machine as part of a complete line. Check with the local service organisation as to what arrangements have been made for a line performance test.

Description 4-2

4.1 Functional Validation 4-5

4.1-1 Presence and Correctness Checks 4-5

4.1-2 Product and Utility Value Checks 4-6

4.1-3 Function Checks Before Start 4-7

4.1-4 After Start Checks 4-10

4.1-5 Health and Safety Checks 4-11

4.2 Commissioning Validation 4-12

4.2-1 Verify Plant Conditions 4-12

4.2-2 Microbiological Validation 4-12

4.3 Commissioning Inspection 4-13

4.3.1 Commissioning Checklist 4-13

4.3.2 Functional Validation 4-15

4.3.2.1 Presence and Correctness Checks 4-15

4.3.2.2 Product and Utility Value Checks 4-18

4.3.2.3 Function Checks Before Start 4-21

4.3.2.4 After Start Checks 4-23

4.3.2.5 Health and Safety Checks 4-25

4.3.3 Commissioning Validation 4-27

4.3.3.1 Training 4-27

4.3.3.2 TPMS 4-29

4.3.4 Commissioning Inspection 4-31

This page intentionally left blank

4.1 Functional Validation

Note! During Commissioning, make sure to have the OM and the MM delivered with the equipment as support for setting values and equipment start instructions.

4.1-1 Presence and Correctness Checks

PLC program

Make sure that the TP. No. on the program support (USB key or CD) corresponds to the TP No. in the EM.

Electrical Cabinet Keys

Check that:

- the keys in the electrical cabinet are present.
- the key in the PullTab is present

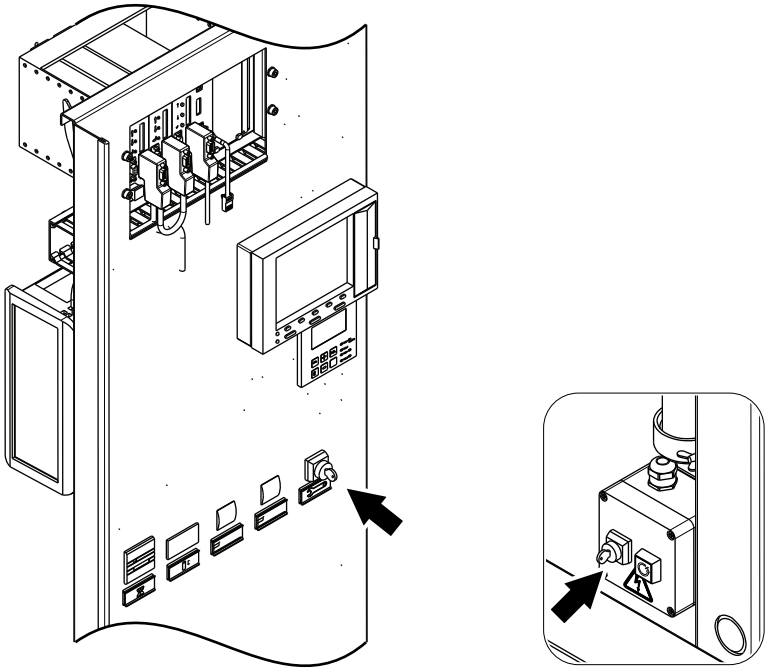

Operator Equipment

The accessories are available to the operator:

- apron
- gloves
- goggles.

Supply and Quality of Product

Make sure that the supply and quality of product is sufficient for the purpose of the commissioning.

(Cont'd)

(Cont'd)

Equipment Supplies

Make sure that the supplies are of the correct type and are available in sufficient quantities for the purpose of the commissioning:

- Packaging material
- LS strip
- IS Patch strip*
- Tab strip*
- Hydrogen Peroxide
- Detergent

* Only with PT

4.1-2 Product and Utility Value Checks

Make sure that the product and utility values are correct. Ask for the assistance of the customer technical personnel if required. If values are incorrect, inform the customer technical personnel, see section 1 Technical Specification.

Product supply

- pressure
- max pressure fluctuation
- inlet temperature
- max particle size

Electrical voltage supply

- voltage
- max voltage fluctuation
- frequency
- fuse rating

Cold water supply

- pressure
- max inlet temperature
- pH

Warm water supply

- pressure
- inlet temperature

(Cont'd)

(Cont'd)

Compressed air supply

- pressure
- max particle size
- max particle content
- dew point
- oil content

Steam supply

- water quality
- pressure
- max pressure fluctuation
- inlet temperature

Detergent

- correct type (specifications)
- pH

Hydrogen Peroxide supply

- aseptic (food) grade
- concentration (35%)

4.1-3 Function Checks Before Start

a) Make sure that the PLC program on the software USB key (or software CD) corresponds with that in the machine PLC. See the for further details.

b) Connect a cold water supply to the product inlet connection. If the product pipes have been welded, have them flushed thoroughly before using.

c) Switch ON the mains power switch. Make absolutely sure that all electrical motors have the correct direction rotation. See the EM for further details.

d) Insert a CompactFlash memory card in the recorder, see OM for further details.

(Cont'd)

(Cont'd)

e) Perform CIP. See the OM for further details.
   - Make sure that during and after CIP, there is no leakage from the pipe work on the ICU tank (1) and the ICU chemical unit (2).

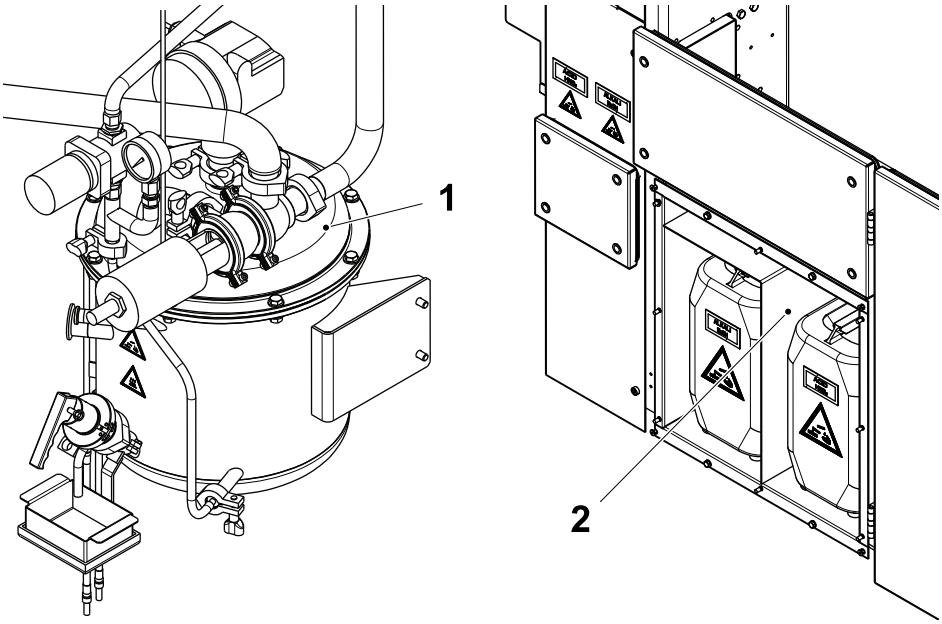

1 ICU tank
2 ICU chemical unit

f) Prepare the machine for production. See the OM for further details.

g) Make sure that the start up from cold takes less than 35 minutes at ambient temperature not inferior than 20ºC (68ºF).

h) Start up the package outfeed conveyor (and eject conveyor if present).

i) Step up the machine to PRODUCTION according to the OM.

Test Run with Water

Note! Coordination with the plant is necessary to perform the test run with water.

Machine verification is performed using water as a fill medium.

The machine's operation must be verified. This verification must include all functions of the machine, including internal (CIP) and external cleaning.

Before the test run, check that:

- the utility supplies are sufficient and stable
- the utility supply shut-off devices are working properly
- connection to the cleaning system is made.

(Cont'd)

(Cont'd)

Test Run with Product

Note! Coordination with the plant is necessary to perform the test run with product.

Machine verification is performed using product as a fill medium. This test run is performed together with the production personnel.

Before the test run with product make sure that:

- all required production personnel are available
- the operators have been trained and informed about:
  a) machine operation
  b) use of the Operation Manual (OM)
  c) Emergency Stops and utility supply shut-off devices
  d) safety and hazard information
- all site preparation is finished
- the utility supplies are sufficient and stable
- the utility supply shut-off devices are working properly
- all consumables are available in sufficient supply
- product is available, stable and of the correct quality.

4.1-4 After Start Checks

a) The first packages during the start sequence must be safely and distinctly fed into the final folder. Press the package ejector button a couple of times to verify the function.

b) All flaps of the packages must be correctly sealed. Check continuously.

c) The package out feed conveyor speed is set properly. The packages must enter in the conveyor chain without problems.

d) Finished packages are correct in terms of:
   - size and shape
   - longitudinal and transversal sealing
   - date code printing
   - filled package weight/volume
   - See section Package Checks in the OM for the filling machine.

e) Production capacity is as specified (count the packages produced in ten minutes and multiply by six).

f) All pressures remain within tolerance. See the MM for further details.

g) There are no fluid leaks.

h) There are no unusual noises which could indicate loose or misaligned parts.

i) There are no unusual smells which could indicate internal leaks or burning of electrical circuits.

j) The peroxide concentration continuously to detect any sign of degradation.

k) Defective packages are ejected (start up, short stop, material splice, strip splice, production stop).

l) Perform manual strip splice to verify the function. See the OM for further details. Three packages shall be discarded, the package before the splice, the package with the splice, and the following package.

m) Packaging material trolley function.

n) Perform manual package material splice to verify the function. See the OM for further details. Three packages shall be discarded, the package before the splice, the package with the splice, and the following package.

o) Stop methods. Stop the machine according to the OM to verify the different stop functions.

p) Perform EXTERNAL CLEANING.

q) The recorder (CIP data) is functioning or for paper recorders (OE) that the CIP printout is readable.

r) The process recorder (OE) is functioning and the printout is readable.

s) Operate the different TPOP systems to verify they function. See the OM for further details.

4.1-5 Health and Safety Checks

a) All the EMERGENCY STOP buttons. See the Safety Precautions for further details. Press each EMERGENCY STOP button and make sure that the machine steps down to OFF.

b) All the doors, covers and guards. See the Safety Precautions for further details. Open each door, cover or guard and make sure that the TPOP shows the correct one.

c) Make sure that each of the safety signs on the equipment is undamaged, in the correct position and visible after the installation. Replace any missing or damaged safety signs. See the Safety Precautions for further details.

d) The MANUAL STRIP SPLICE button is disabled when the SA door is opened.

e) The MANUAL PACKAGING MATERIAL SPLICE button is disabled when an ASU door is opened.

f) Filled packages and outlet water samples have the correct hydrogen peroxide residue/content as measured using:

- test kit 90298-31 for packages
- test kit 90298-30 for outlet water.

4.2 Commissioning Validation

The commissioning validation consist of a verification of the plant conditions and microbiological evaluations. The commissioning validation must be in a cooperation with the Tetra Pak installation project. The validation must be performed in accordance with the procedures specified in this section and the recommendations from the Tetra Pak Quality Assurance Management (QAM).

4.2-1 Verify Plant Conditions

See section 4.3 Commissioning Inspection.

4.2-2 Microbiological Validation

Perform the microbiological validation according to the document specified in the below table, local regulations and in cooperation with Tetra Pak and final user of the equipment.

Doc. Name	Doc No.	Note
Guideline for Microbiological Evaluation of Commercially Sterile Products	QAM-588002-xxxx	Available in English, German and Spanish

Contact Tetra Pak for information about the above document.

4.3 Commissioning Inspection

The purpose of the commissioning inspection is to verify that the equipment in question is ready for commercial production. This inspection must be carried out in conjunction with all involved parties, and prior to the performance validation.

Defects or faults together with necessary actions and timing to correct the deviations must be recorded in the checklist. See Section 4.3.1 Commissioning Checklist. Performance validation must not be started until the commissioning inspection has been completed.

Use the checklist as follows:

- Under Note, document any deviations, incorrect values, or comments.
- Under Value, document the actual value.
- Under Signature, sign that the check is performed.

4.3.1 Commissioning Checklist

(Cont'd)

(Cont'd)

Machine No.	Country	Final User	Site
		Checklist completed by	Checklist completion date

4.3.2 Functional Validation

4.3.2.1 Presence and Correctness Checks

(Cont'd)

(Cont'd)

No.	Check	Reference Document (IM unless other document specified)	Note	Value	Signature
1	The TP No. on the program diskette corresponds to the TP No. in the EM.				
2	The spare parts have been deposited in the spare parts stores.				
3	The accessories are available to the operator: • apron • gloves • goggles.	OM			
4	All the documents correspond to the specific machine. • EM • IM • OM • MM • SPC • System drawings • Machine Specification Document • Final Inspection Report • Machine Deviation Report (if relevant).	OM			
5	The OM and the OM Package Checks are available to the operator.				
6	A packaging material trolley must be available and functioning correctly.				
7	The supply and quality of product is sufficient for the purpose of the commissioning.				
8	The tools and templates are on site and stored in an appropriate way.				
9	Consumables such as lubrication oil, gearbox oil, and hydraulic oil according to specification are available on site.				

(Cont'd)

(Cont'd)

No.	Check	Reference Document (IM unless other document specified)	Note	Value	Signature
10	All supplies are of the correct type and are available in sufficient quantities for the purpose of the commissioning: • Packaging material • LS strip • IS patch strip* • Tab strip* • Hydrogen peroxide • Detergent. * Only with PullTab				
11	The compressed air valve keys in the service unit are present				
12	The keys in the electrical cabinet are present				
13	The key in the PullTab unit is present				

4.3.2.2 Product and Utility Value Checks

Make sure that the product and utility values are correct and include actual value in the value column. Ask for assistance by the final user's technical personnel if necessary. If a value can't be measured, make a note of value stated by final user in the note column. If values aren't according to specification in IM, inform the final user's technical personnel. If the value can't be rectified a comment about incorrect value should be added in the “Note” column.

(Cont’d)

(Cont'd)

No.	Check	Reference Document (IM unless other document specified)	Note	Value	Signature
1	Product supply • pressure • max pressure • fluctuation • inlet temperature • max particle • size				
2	Electrical voltage supply • voltage • max voltage fluctuation • frequency • fuse rating				
3	Cold water supply • pressure • max inlet temperature • pH				
4	Warm water supply • pressure • inlet temperature				
5	Compressed air supply • pressure • max particle size • max particle content • dew point • oil content				

(Cont'd)

(Cont'd)

No.	Check	Reference Document (IM unless other document specified)	Note	Value	Signature
6	Steam supply • water quality • pressure • max pressure fluctuation • inlet temperature				
7	Detergent • correct type (specifications) • pH				
8	Hydrogen Peroxide supply • aseptic (food) grade • max particle size				

4.3.2.3 Function Checks Before Start

(Cont'd)

(Cont'd)

No.	Check	Reference Document (IM unless other document specified)	Note	Value	Signature
1	Make sure that the PLC program on the USB key (or CD) corresponds with that in the machine PLC. See the for further details.				
2	All the EMERGENCY STOP buttons and cords activate the correct alarm on the TPOP.				
3	All the door, cover, and guard safety switches activate the correct alarm on the TPOP.				
4	TPOP set for machine configuration				
5	The speed of the first DE conveyor after the filling machine is set.				
6	Functional verification of the signal exchange between filler and plant control system.				

4.3.2.4 After Start Checks

(Cont'd)

(Cont'd)

No.	Check	Reference Document (IM unless other document specified)	Note	Value	Signature
1	There are no leakages from the pipe and hose connections between the filling platform and package section (when the machine is stepped up).				
2	There are no unusual noises which could indicate loose or misaligned parts.				
3	There are no unusual smells which could indicate internal leaks or burning of electrical components.				
4	Finished packages (final user packaging material) are correct in terms of: • the quality of the LS-strip • longitudinal and transversal sealing • no damage on the lid • filled package weight/volume • all flaps of the packages are correctly sealed • size and shape • package integrity checked and approved • date code printing • cap application (if applicable).				
5	Packaging material splice performed and function verified.				
6	Product capacity is as specified (count the packages produced in ten minutes and multiply by six).				

4.3.2.5 Health and Safety Checks

(Cont'd)

(Cont'd)

No.	Check	Reference Document (IM unless other document specified)	Note	Value	Signature
1	All the EMERGENCY STOP buttons. See the Safety Precautions for further details. Press each EMERGENCY STOP button and make sure that the machine steps down to OFF.				
2	All the doors, covers and guards. See the Safety Precautions for further details. Open each door, cover or guard and make sure that the TPOP shows the correct one.				
3	Make sure that each of the safety signs on the equipment is undamaged, in the correct position and visible after the installation. Replace any missing or damaged safety signs. See the Safety Precautions for further details				
4	The MANUAL STRIP SPLICE button is disabled when the SA door is opened.				
5	The MANUAL PACKAGING MATERIAL SPLICE button is disabled when an ASU door is opened.				
6	Filled packages and outlet water samples have the correct hydrogen peroxide residue/content as measured.				

4.3.3 Commissioning Validation

4.3.3.1 Training

(Cont'd)

(Cont'd)

No.	Check	Reference Document (IM unless other document specified)	Note	Value	Signature
1	Training level of final user technicians • Participation during installation work • Service work				
2	Training level of final user operators • Operator training completed • Number of operators trained • Names of operators trained	OM			
3	Training, final user laboratory personnel • Operator training completed (applicable parts) • Additional laboratory personnel training completed • Number of laboratory personnel trained • Names of laboratory personnel trained • Quality control procedures are in place	OM / Hygiene documentation including: "Swab evaluation document" Guideline for Microbiological Evaluation of Chilled Dairy Products (FSQ-588003-0104) Draft Installation support hyg eval july04			

4.3.3.2 TPMS

(Cont'd)

(Cont'd)

No.	Check	Reference Document (IM unless other document specified)	Note	Value	Signature
1	Procedures for maintenance (TPMS) have been established (not later than in time for the completion of the Commissioning): • Daily check list • Weekly check list • 250 h check list "training"	CLO			

4.3.4 Commissioning Inspection

(Cont'd)

(Cont'd)

No.	Check	Reference Document (IM unless other document specified)	Note	Value	Signature
1	Functional validation performed.				
2	Commissioning validation performed.				
3	Commissioning certificate issued.				

5 Performance Validation

Description

This chapter describes the performance validation of the equipment. The performance validation covers the activities from when the equipment is ready for commercial production until the equipment is handed over to the final user.

The chapter includes information on how to verify that the equipment achieves the performance targets during commercial production.

Description 5-2

5.1 Performance Preconditions 5-5

5.2 Commercial Production 5-6

5.3 Monitor and Improve the Performance 5-7

5.4 Performance Test 5-8

5.5 Performance Validation Inspection 5-9

5.5.1 Performance Validation Checklist 5-9

5.5.2 Performance Validation Criteria 5-11

5.5.3 Performance Validation Completed 5-13

This page intentionally left blank

5.1 Performance Preconditions

To ensure an effective and successful performance validation, the following has to be in place prior to the execution of the performance validation:

- Commercial production: commercial production must have started.
- Attendance: both Tetra Pak and the final user must have appointed representatives to participate in the performance validation.
- Operation: the equipment must be operated according to the Operation Manual for each component in the line.
- Qualified personnel from the final user should operate the equipment during the performance validation procedures.
- Production plan: a production plan covering the duration of the performance validation must be available and agreed between Tetra Pak and the final user of the equipment before the start of performance validation.
- The production plan should reflect the normal constant running conditions, including the range of products and packaging material that the final user intends to use with the equipment, as well as any expected product changes.
- The production plan should include, in particular:
  a) preparation/sterilisation schedule
  b) production schedule and resources
  c) CIP schedule
  d) volume to be produced
  e) number of product changes and product availability
  f) number of design changes and packaging/additional material availability.
- Packaging material: all packaging materials and secondary packaging material must be available (including strips, tabs, and so on).
- Consumables: all relevant consumables (hydrogen peroxide, lubricants, ink, and so on) have to be available.
- Parts: an adequate supply of spare parts must be maintained on site according to Tetra Pak recommendations.

5.2 Commercial Production

The performance validation is performed when the equipment runs in commercial production.

See the sales agreement for more information.

5.3 Monitor and Improve the Performance

During the performance monitoring period the actual performance of the equipment is measured and any non-performance issues are solved.

See the sales agreement for more information.

5.4 Performance Test

During the performance test the actual performance of the equipment during a pre-defined period is measured. The result of the performance test is recorded as the certified performance in the performance certificate.

See the sales agreement for more information.

5.5 Performance Validation Inspection

The purpose of the performance validation inspection is to verify that the equipment in question fulfils the performance agreed upon. This inspection must be carried out in conjunction with all involved parties, prior to final hand over of the equipment.

Defects or faults together with necessary actions and time to correct the deviations must be recorded in the checklist. See Section 5.5.1 Performance Validation Checklist.

Use the checklist as follows:

- Under Note, document any deviations, incorrect values, or comments.
- Under Value, document the actual value.
- Under Signature, sign that the check is performed.

5.5.1 Performance Validation Checklist

(Cont'd)

(Cont'd)

Machine No.	Country	Final User	Site
		Checklist completed by	Checklist completion date

5.5.2 Performance Validation Criteria

(Cont'd)

(Cont'd)

No.	Checks	Reference document IM unless other document specified	Note	Value	Signature
1	Commercial production started.				
2	The General Performance Preconditions are fulfilled.	Sales agreement with schedules			
3	The Special Performance Preconditions are fulfilled (if applicable).	Sales agreement with schedules			
4	A production plan for the performance validation period is established and communicated.	Sales agreement with schedules			
5	The Machine Mechanical Efficiency (MME) and Line Machine Mechanical Efficiency (LMME) has been monitored and optimized.				
6	Performance Test has been carried out (if applicable).	PLMS, Performance specification			
7	PLMS data (bin files) has been downloaded for Performance Monitoring Period and Line Performance Test.	PLMS			

5.5.3 Performance Validation Completed

(Cont'd)

(Cont'd)

No.	Check	Reference document IM unless other document specified	Note	Value	Signature
	Performance certificate issued.				

6 Disassembly and Removal

Description

This chapter contains information about how to safely disassemble and remove the machine for reuse in another location or for final disposal.

Description 6-2

6.1 General 6-5

6.1.1 Draining Methods 6-5

6.2 Filling Machine Draining 6-6

6.2-1 Filling machine - Preparation 6-6

6.2-2 Filling Machine - Drain Cleaning Pump Circuit 6-7

6.2-3 Filling Machine - Drain Cold Water System Circuit 6-9

6.2-4 Filling Machine - Cooling Water System, Compressor 6-13

6.3 Moving and Transporting the Equipment 6-19

6.3-1 Short Moves and Short-Term Storage 6-19

6.3-2 Long Moves and Long-Term Storage 6-21

6.4 Return to the Manufacturer 6-23

6.5 Disposal 6-24

6.5-1 Disposing of the Equipment 6-24

This page intentionally left blank

6.1 General

CAUTION
Risk of damage to the equipment.
If the equipment is going to stand or travel in freezing conditions, the water circuits must be drained to avoid damage from freezing.

The equipment can be moved **for short distances** without being drained or disassembled, but **only if no freezing conditions will be encountered**.

The equipment must be drained before long distance moves or long term storage. If draining is required, perform the draining procedure before disconnecting the equipment from the mains power supply.

Only skilled or instructed installation technicians are allowed to disassemble the equipment for moving to other installation positions.

6.1.1 Draining Methods

To drain certain circuits, the solenoid valves controlling them must be energised. This can be done in two ways:

- electronically (using a portable PC to force PLC outputs)
- by manually bridging terminals in the electrical cabinet.

The following material is needed for the electronic procedure:

- portable PC running the latest update of PLC software
- Serial cable, TP No. 90031-300 or Ethernet cable
- EM.

The following material is needed for the manual bridging procedure:

- a piece of cable approximately 2.0 m (7 ft) metres in length
- EM.

6.2 Filling Machine Draining

CAUTION
Risk of injury and equipment damage.
Make sure that fluid expelled under pressure cannot cause injury or damage.

6.2-1 Filling machine - Preparation

a) Shut off the cold and warm water supplies upstream from the machine. Operate the water gun to release the residual pressure from the cold water circuit.

b) Disconnect the cold water inlet and warm water inlet supplies at the connection panel on the Service unit.

c) If the Ice-Water Cooling System (OE) is present, disconnect the ice-water in and ice-water out at the connection panel on the Service unit.

d) Arrange a compressed air line for the connection to the water systems. Use a special adapter if available. Otherwise block the pipe around the air line to prevent the air from escaping.

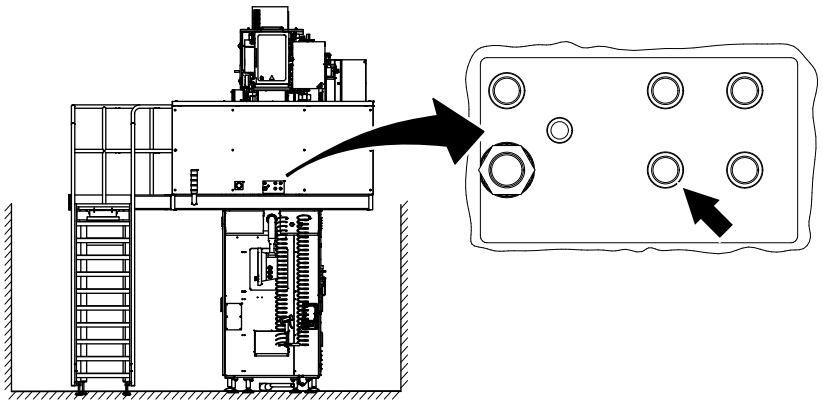

CAUTION
Risk of damage to the equipment.
When bridging control and power terminals, connect the cable to the control terminal first and then to the power terminal. Take care not to cause short circuits.

e) Prepare for the chosen procedure:
- for the electronic procedure, connect the PC to the PLC unit
- for the manual bridging procedure, connect the bridge cable from a control terminal to any free terminal on the +24VDC power terminal block XL.12 in the electrical cabinet.

f) Turn ON the mains power switch. Make sure that no EMERGENCY STOP buttons are engaged, all doors with switches are closed, and no error conditions are present. Check also on the TPOP screen for any alarm message.

6.2-2 Filling Machine - Drain Cleaning Pump Circuit

a) Activate the warm water supply valve (1).

b) Remove the drain plug (2) to the rear of the cleaning pump to drain the water. Fit the drain plug (2).

c) Remove the filter (3) and clean it. Fit back the filter (3).

d) Connect the compressed air to the warm water inlet.

e) Slowly open the main valve (4) to avoid damage.

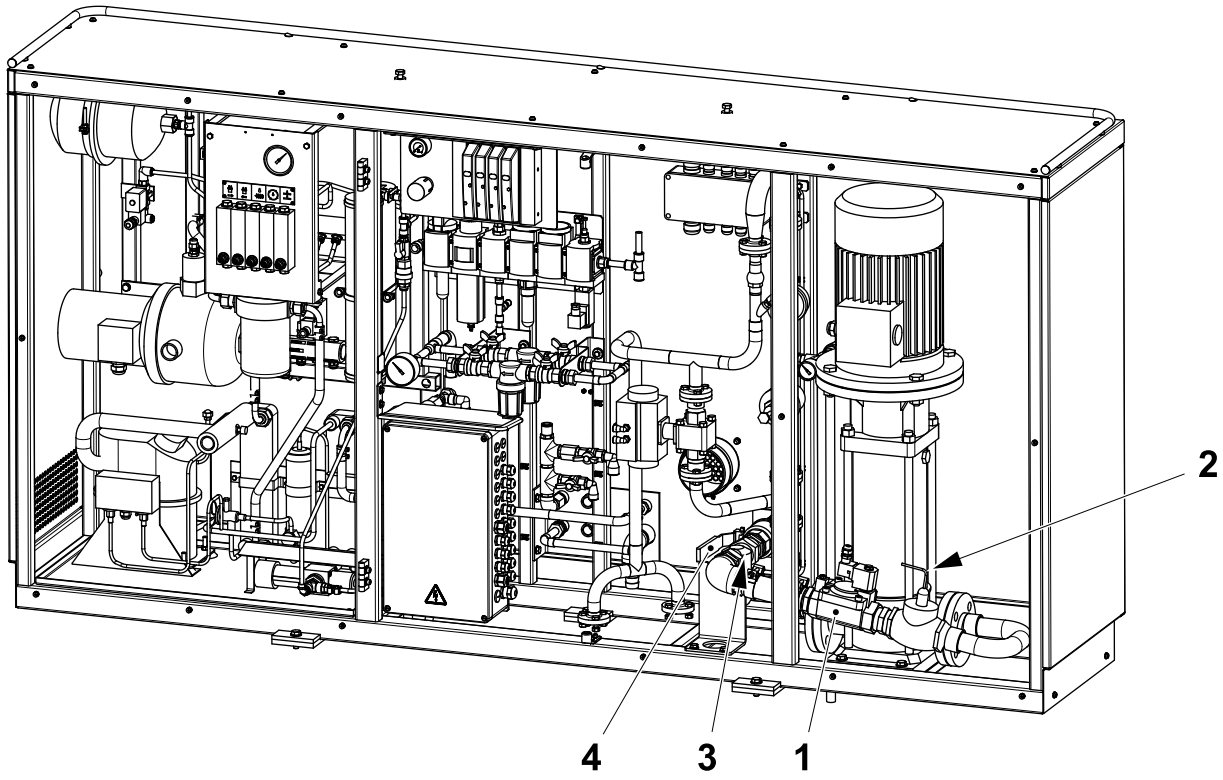

1 Warm water supply valve
2 Drain plug (rear side)
3 Filter
4 Main valve

(Cont'd)

(Cont'd)

f) On the Service unit valve panel manually open:
   - the flushing pneumatic valve (5)

g) Close the main valve (4) to stop the compressed air supply.

h) Loosen the drain plug (2) at the back of the cleaning pump to drain the remaining water.

i) Tighten the drain plug (2).

j) Install all removed parts and reset the pneumatic valves.

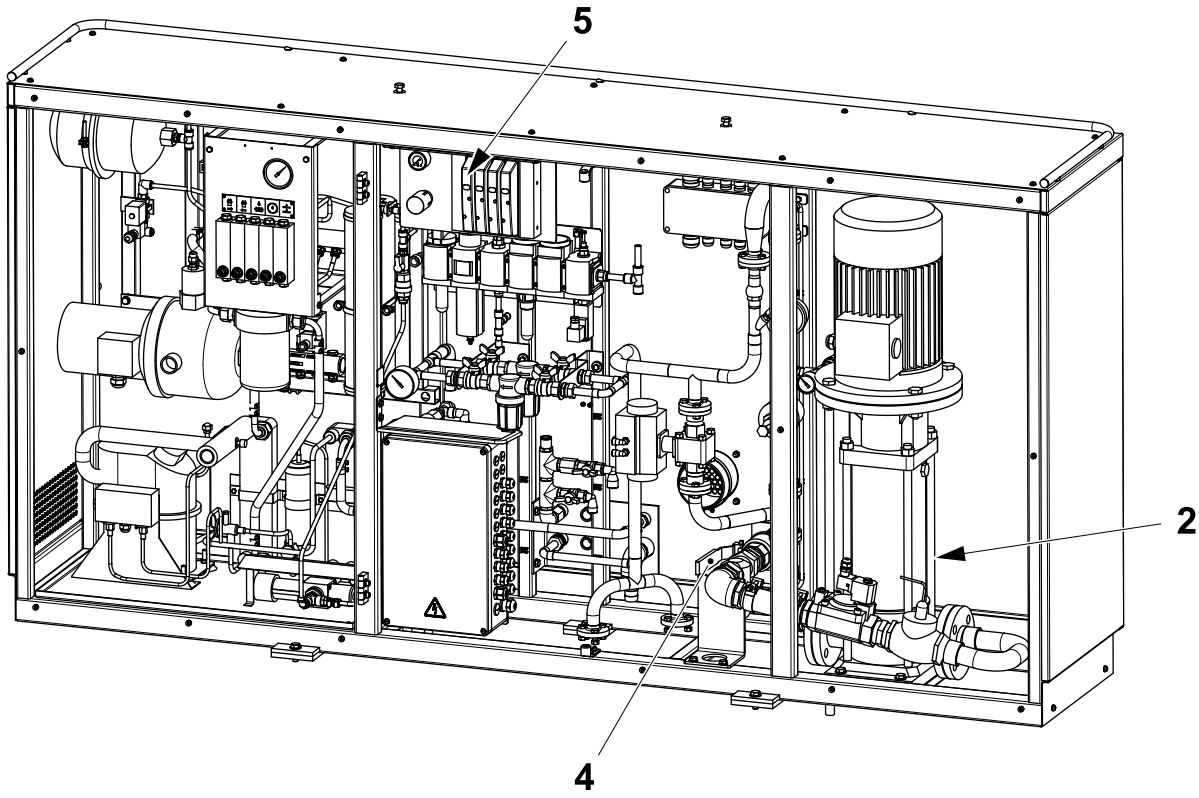

2 Drain plug (rear side)
4 Main valve
5 Pneumatic valve

6.2-3 Filling Machine - Drain Cold Water System Circuit

a) Close the four cold water supply valves (1).

b) Release the pipe clamp and disconnect the hose (2) from the water saving valve. Fold over the end of the hose (2) and secure it with tape.

c) Remove the plug (3) and drain the water from the valve (4). Fit the plug (3).

d) Remove the non-return valve (5). Open the valve (6) and drain the water softener completely. Fit the non-return valve (5).

e) Remove the two plugs and water filter inserts (7) and clean them with compressed air. Fit the two water filter inserts (7) with the plugs.

f) Connect the compressed air to the cold water inlet on the Service unit connection plate. Slowly open the four cold water supply valves (1).

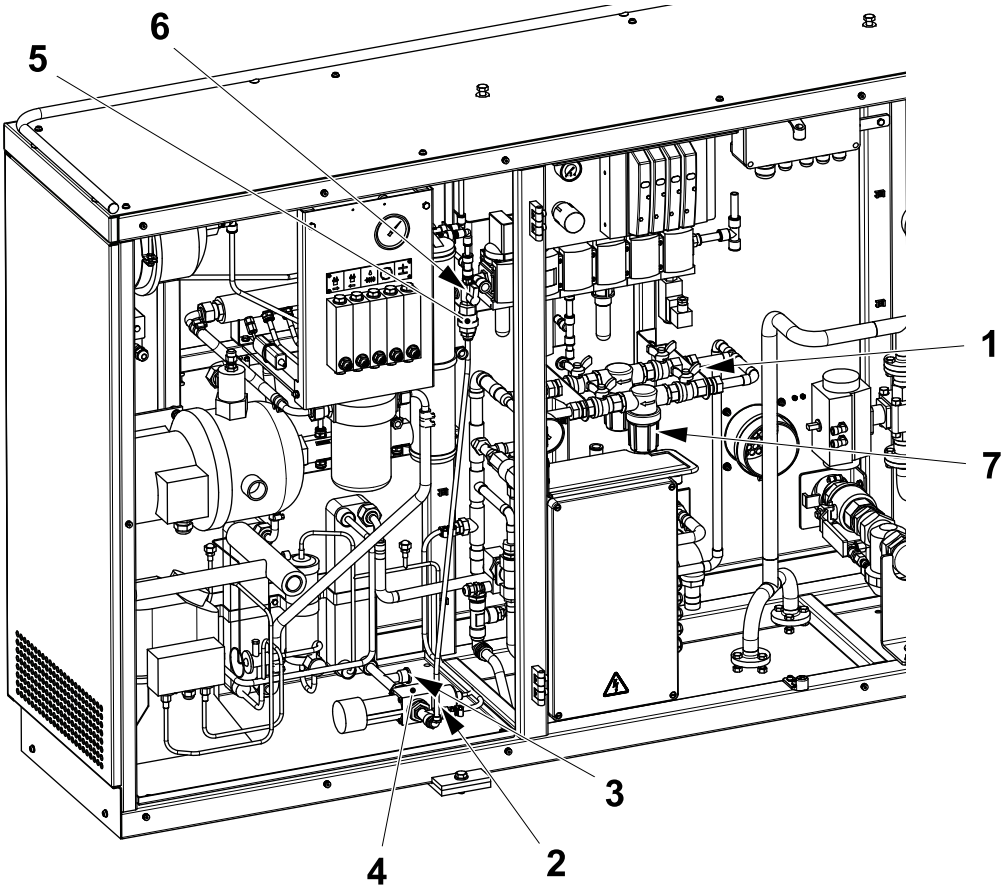

1 Cold water supply valve
2 Hose
3 Plug
4 Valve
5 Non-return valve
6 Valve
7 Water filter insert

(Cont'd)

(Cont'd)

g) Activate the tube flushing valve (8) until only dry air comes out of the tube flushing nozzles.

h) Operate the water gun until only dry air comes out.

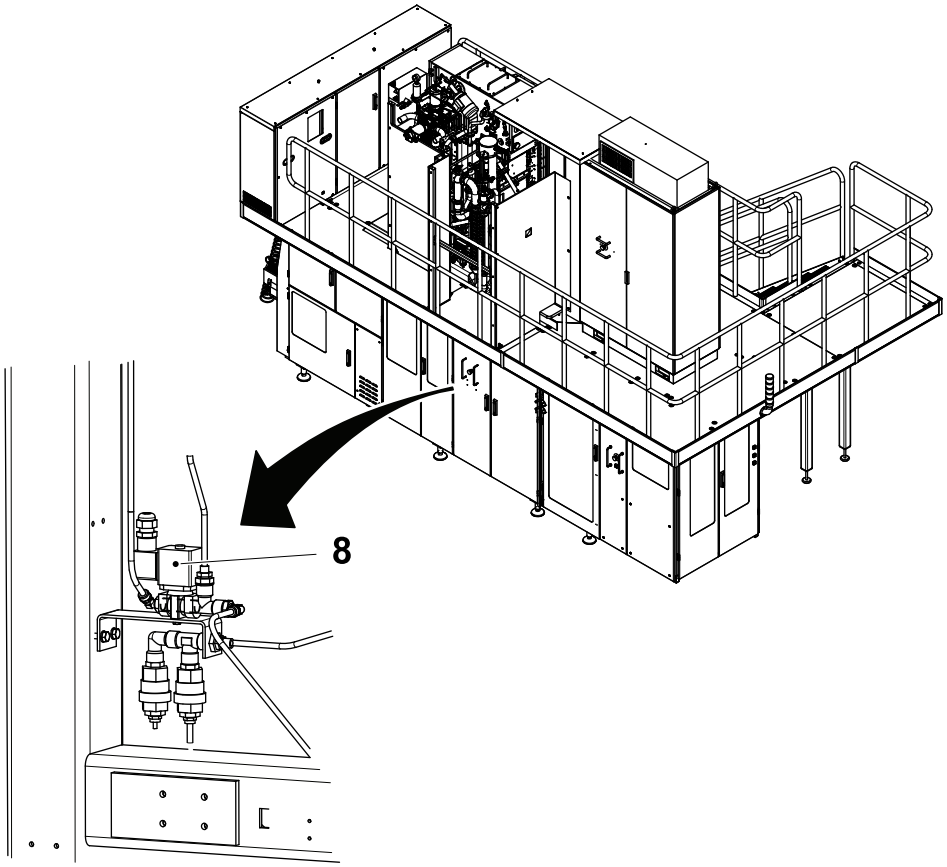

8 Tube flushing valve

(Cont'd)

(Cont'd)

i) Open the drain valves (9) and (10).

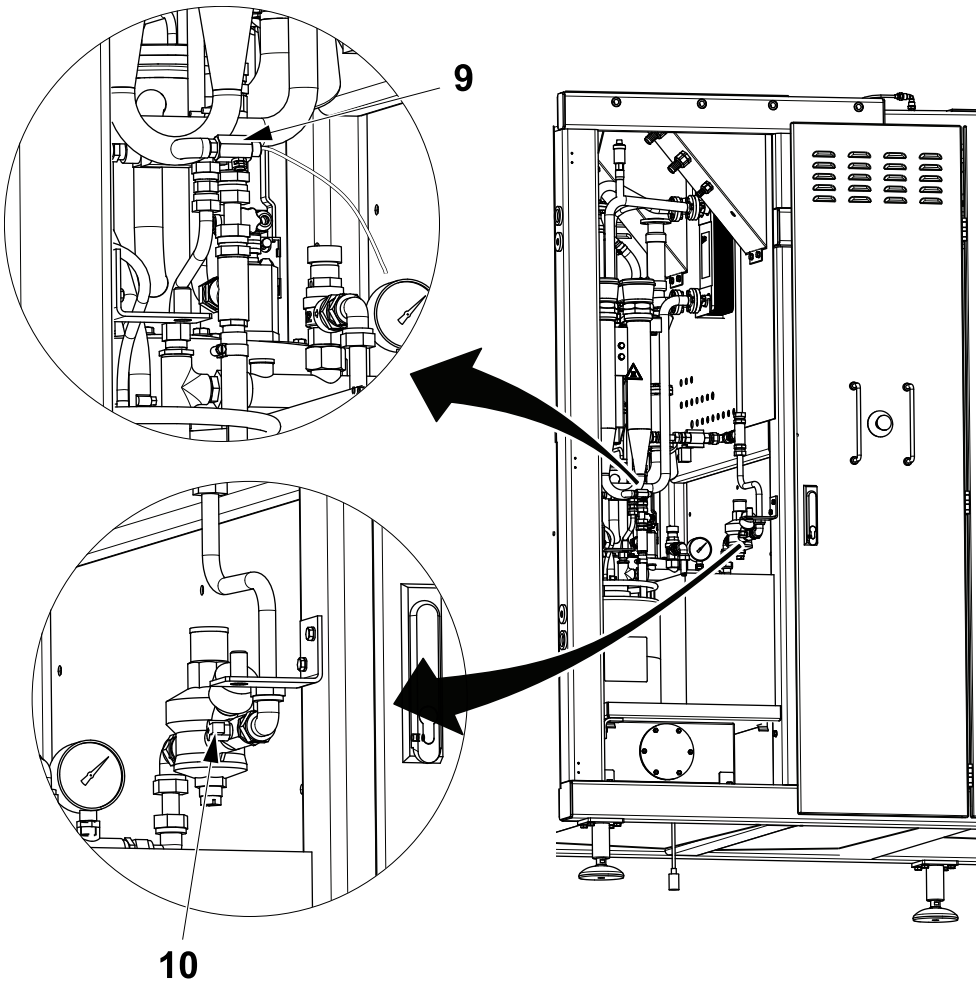

9 Drain valve
10 Drain valve

(Cont'd)

(Cont'd)

j) Activate the seal water valve (11).

k) Activate the cooling water bath valves (12) and (13).

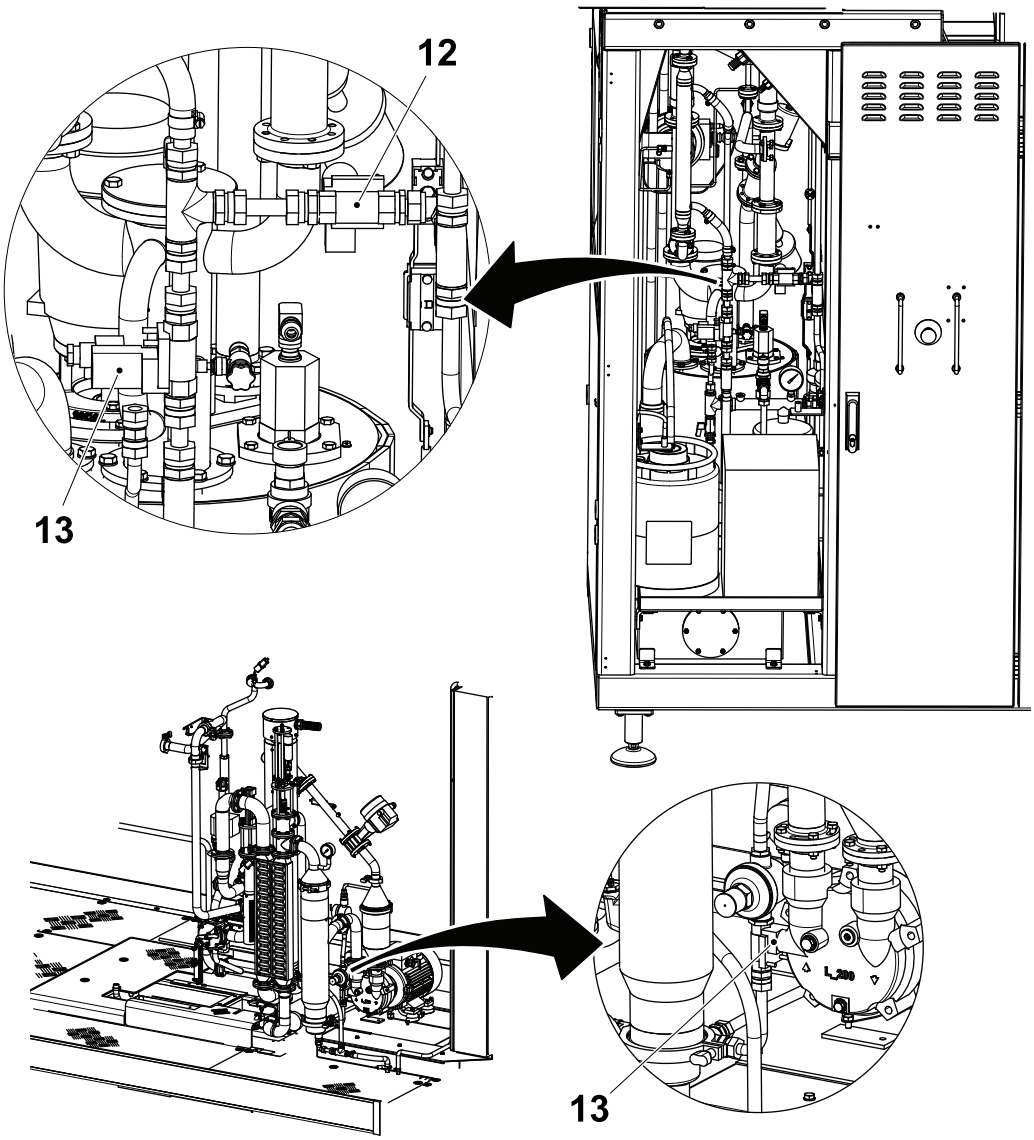

11 Seal water valve

12 Cooling water bath valve

13 Valve

6.2-4 Filling Machine - Cooling Water System, Compressor

a) Disconnect one of the cooling hoses (1) from the final folder to release the system pressure and drain some water. Connect back the cooling hoses (1).

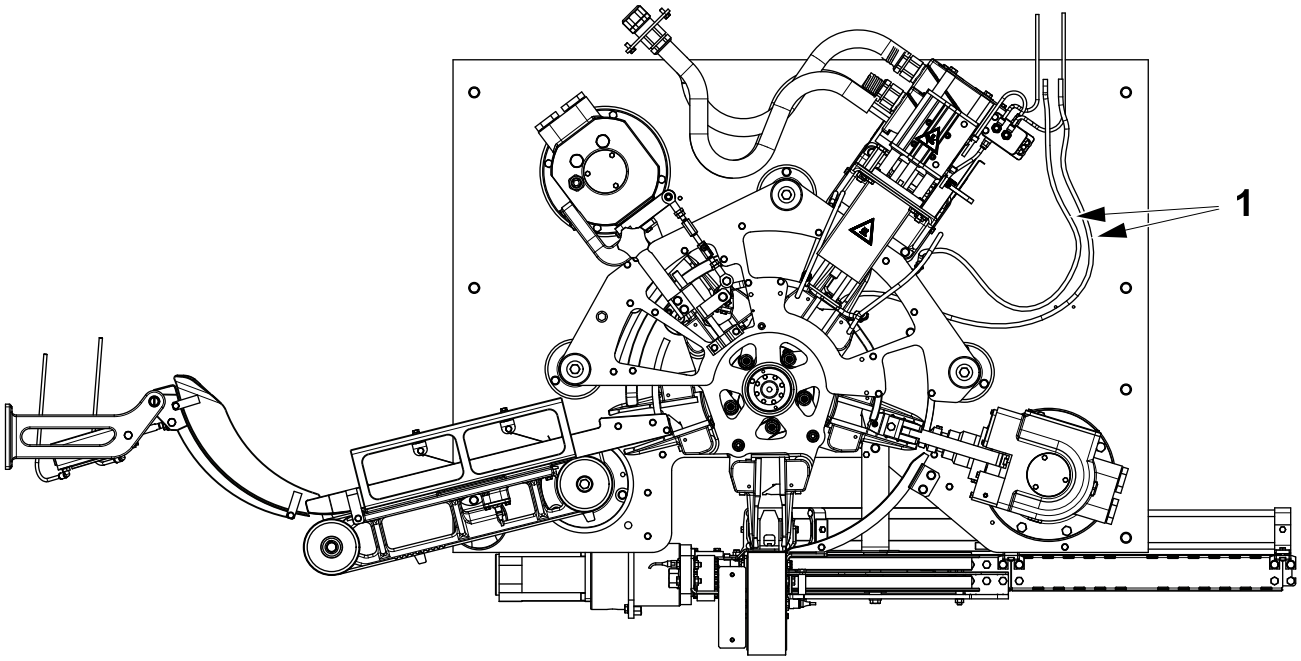

1 Cooling hose

(Cont'd)

(Cont'd)

b) Disconnect the lower hose connection (2) on heat exchanger K2510. Carefully blow compressed air into the hose until the water is drained out. Check on the flow meters (4).

c) Open the drain plug (3) on the circulation pump and drain the water completely. Close the drain plug.

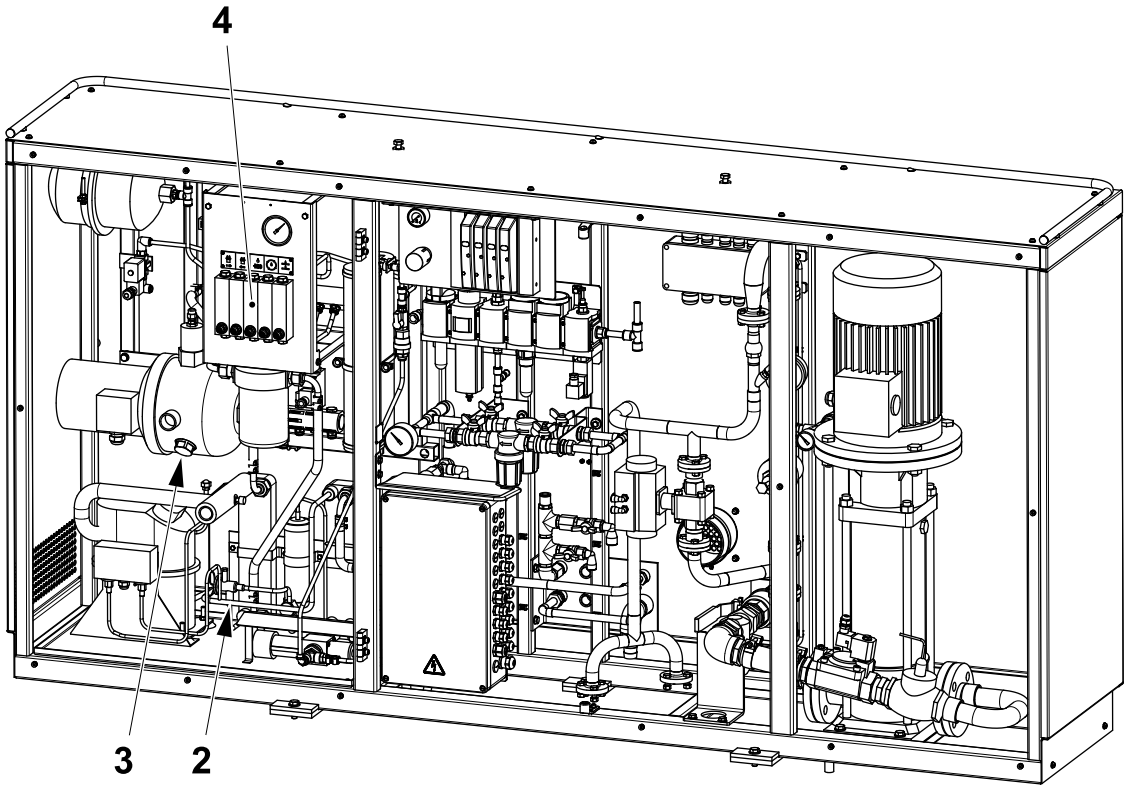

2 Lower hose connection
3 Drain plug
4 Flow meters

(Cont'd)

(Cont'd)

Compressor

Remove the drain plug (1) and drain the water from the compressor. Fit back the drain plug (1).

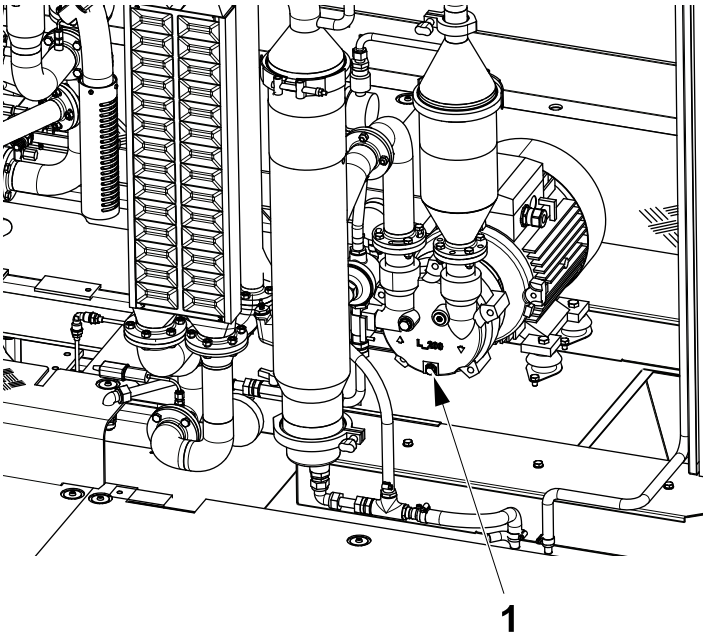

1 Drain plug

(Cont'd)

(Cont'd)

Separator

Remove the clamp (1) and remove the float chamber and drain the water from the separator (2). Fit back the float chamber.

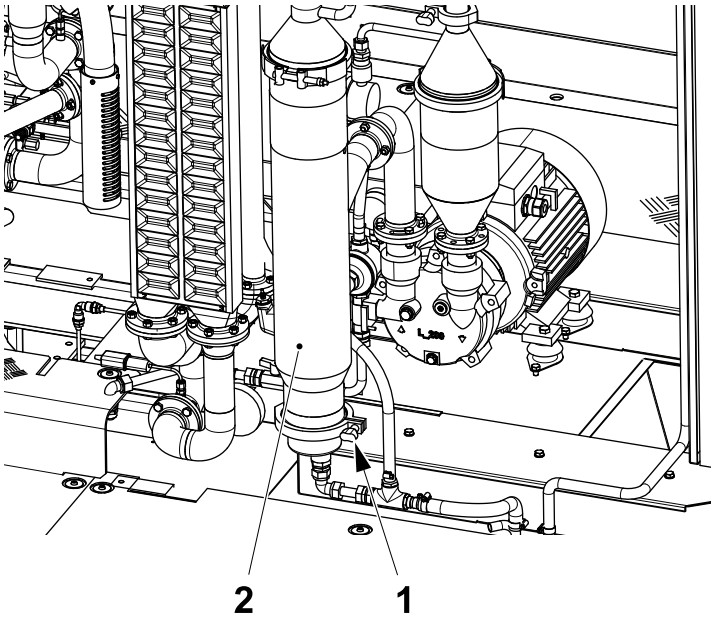

1 Clamp
2 Separator

(Cont'd)

(Cont'd)

Bath Water Circulation Pump

Open the drain valve (1) to drain the water. Close the drain valve (1).

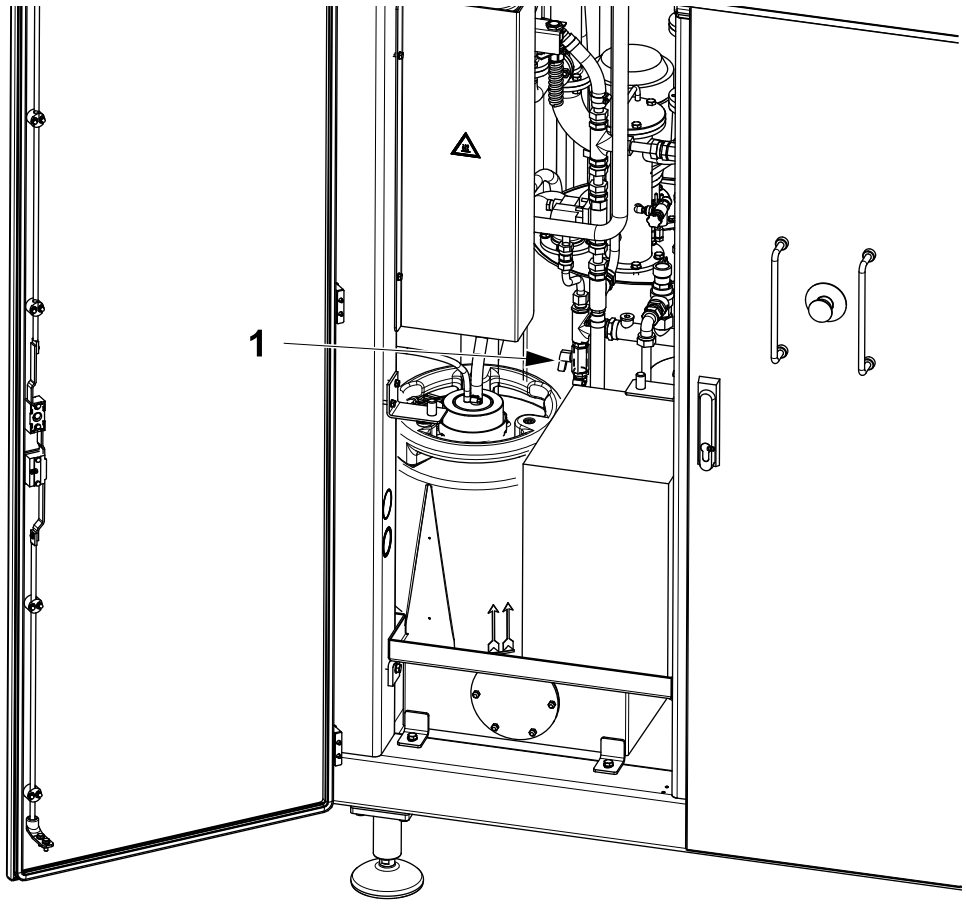

1 Drain valve

(Cont'd)

(Cont'd)

Peroxide Tank

WARNING
Hydrogen Peroxide.
Follow the Safety Precautions.

Drain the remaining peroxide from the peroxide tank and rinse the tank with water to avoid peroxide residue when dismantling the machine, see the ii Safety Precautions.

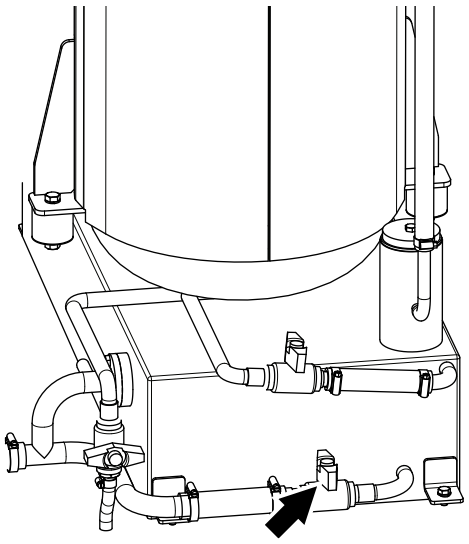

Final Checks

a) Make sure that all the cables used for the draining procedure are disconnected.

b) Make sure that the cleaning pump filter and the cold water filters are fitted.

c) Make sure that all involved valve handles are in open position to avoid freezing damage from water residue.

d) Check that all couplings and adapters on the connection panel of the Service unit have been removed.

6.3 Moving and Transporting the Equipment

6.3-1 Short Moves and Short-Term Storage

CAUTION
Risk of damage to the equipment.
The filling machine electrical cabinet and pre-applicator electrical cabinet must never be lifted as one unit. Always lift the electrical cabinets separately.

Note! The fully assembled filling machine can be moved by forklift. Overhead gantries and mobile cranes **cannot** be used.

To disassemble parts, follow the assembly instructions in the reverse order, see section 3.2 Positioning and Assembly for further details.

Before disassembly the referencing of the drive unit servo motors must be erased from the servo system. This is performed to ensure that after any future reassembling of the filling machine, the jaw system cannot be restarted without first performing the drive unit referencing as described in the MM.

To erase the referencing and lower the jaw system follow the instruction 3-2 Drive Unit - Lower Jaw System in the MM for the filling machine.

a) Turn off and padlock the mains power switch.

b) Shut off all the utility and product supplies upstream:
- electrical power
- cold water
- warm water
- compressed air
- product
- steam
- CIP
- communication cables (when used)
- ice-water (OE)
- nitrogen (OE).

c) Release pressure from the water and air circuits by operating the water and air guns. Close the following valves:
- compressed air valve
- cold water valves
- warm water valve
- steam valve
- ice-water valves (OE).

d) Disconnect the power, utility, drain and product lines:
- electrical power (disconnect at power terminal and remove the cable)
- communication cables (when used)
- cold water

(Cont'd)

(Cont'd)

- warm water
- compressed air
- product
- steam
- CIP lines
- drainage
- ice-water lines (OE)
- nitrogen (OE).

e) Disconnect all ASU electrical cables and the compressed air line from the filling machine.

f) Plug or protect all open connections.

g) Make sure that all cables are put away safely.

h) Disconnect the package out feed conveyor.

i) Disconnect the eject conveyor or remove the eject bin.

j) Remove the stair and the stair support from the platforms.

k) **WARNING**
Risk of crushing.
The fully assembled filling machine can weigh up to approximately 7200 kg (15873 lbs). Take extreme care when fitting the transporters and moving the unit.

Fit the transporters to the machine, or position the forks, see 3.2 Positioning and Assembly.

Note! The PT unit is 980 kg, the PT platforms are 365 Kg and PT Electrical cabinet is 415 kg to be added to the 7200 kg.

l) **CAUTION**
Risk of damage to the equipment.
Do not leave the equipment on the transporters. If the equipment is not supported evenly, the frame may be subjected to damaging torsional forces.

Move the equipment to its new position.

Note! If the equipment has to be stored for a while make sure to fulfil the storage conditions, see 3.1.3 Storing the Crated Equipment.

m) Level the equipment even if it is not going to be used, see 3.2.2 Positioning.

6.3-2 Long Moves and Long-Term Storage

CAUTION

Risk of damage to the equipment and/or personal injury.
The filling machine electrical cabinet and the pre-applicator electrical cabinet must never be lifted as one unit. Always lift the electrical cabinets separately.

See chapter 3.2 Positioning and Assembly for further details on the operations in this section.

a) Drain the equipment, see 6.1 General for further details.

b) Perform all the disconnection work mentioned in the section 6.3-1 Short Moves and Short-Term Storage.

c) Empty the cleaning liquid containers. Follow the manufacturers instructions for disposal of the liquid.

d) Dismantle the machine by following the section 3.2 Positioning and Assembly in the **reverse** order.

e) Collect all materials such as screws, washers, nuts, cables, etc., grouped as they are used in marked plastic bags.

f) The dismantled machine parts shall be:
   - the electrical cabinet
   - the pre-applicator electrical cabinet
   - the superstructure
   - the drive units
   - the service unit
   - the machine body
   - the ASU
   - railings, platforms, stair and stair support
   - non fixed parts such as: covers, dating unit accessories, CIP equipment, filling pipe (needs proper coverage to protect the level probe), cleaning liquid containers (emptied), peroxide container (emptied), warning beacons, light assembly, etc.

g) Fit transport devices in the same locations from which they were removed and from when the machine was assembled. The purpose is to prevent movement during transport.

h) Lubricate all sliding components such as rods, cams, etc.

i) Wrap small components in bubble wrapping or similar to prevent damage.

j) The equipment must be packed in suitable crates to ensure safe transport and the correct storage conditions. Use the original crates and packing if available. Make sure that the parts are adequately protected from transport damage. All parts must be fixed to the crates with proper bolts or similar equipment. Fix any loose sub-crates or boxes to the floors or walls of the crates to prevent them from moving during transport. The

(Cont'd)

(Cont'd)

crates must also be protected from the weather to prevent rain, snow, sand, etc. from entering the crates.

6.4 Return to the Manufacturer

a) Drain the equipment, see section 6.1 General.

b) Prepare the equipment for transport, see section 6.3 Moving and Transporting the Equipment.

c) Contact the local service organisation for further instructions and to arrange shipment.

6.5 Disposal

6.5-1 Disposing of the Equipment

If the equipment has to be permanently disposed of, perform the following operations.

a) Drain the equipment see section 6.1 General.

b) Drain the hydraulic tank and dispose of the hydraulic fluid in compliance with the local regulations. See the MM for further details.

c) Drain the central lubrication tank. Follow the manufacturers instructions for disposal of the liquid.

d) Empty the cleaning liquid containers. Follow the manufacturers instructions for disposal of the liquid.

e) Drain oil from the gear boxes. See the MM for further details. Follow the manufacturer instructions for disposal of the liquid.

f) Remove the packaging material and the strip reels. Dispose of these in compliance with local regulations.

g) **CAUTION**
Refrigerant gas.
Wear personal protective equipment.
Cooling equipment containing any kind of cooling media must be dismantled, but only as far as can be considered safe without any cooling media leakage. Send the cooling media to an authorized company for proper handling.

h) Disassemble the machine as far as possible and separate the following materials:
- stainless steel
- aluminium
- glass panes
- cast iron
- rubber (seals, O-rings, etc.)
- nylon and other plastics
- electrical cables
- hydraulic, central lubrication, and pneumatic hoses
- electrical components

i) Recycle or dispose of all materials, groups and components in compliance with local regulations.

Tetra Pak A3/CompactFlex
641550-0300 Issue 2013-09
Doc. No. IM-3212176-0107

Tetra Pak A3/CompactFlex
641550-0300 Issue 2013-09
Doc. No. IM-3212176-0107

Tetra Pak A3/CompactFlex
641550-0300 Issue 2013-09
Doc. No. IM-3212176-0107

Tetra Pak A3/CompactFlex
641550-0300 Issue 2013-09
Doc. No. IM-3212176-0107

Tetra Pak A3/CompactFlex
641550-0300 Issue 2013-09
Doc. No. IM-3212176-0107

Tetra Pak A3/CompactFlex
641550-0300 Issue 2013-09
Doc. No. IM-3212176-0107

Tetra Pak A3/CompactFlex
641550-0300 Issue 2013-09
Doc. No. IM-3212176-0107

Tetra Pak A3/CompactFlex
641550-0300 Issue 2013-09
Doc. No. IM-3212176-0107

Tetra Pak A3/CompactFlex 1(2)
641550-0300 Issue 2013-09
Doc. No. IM-3212176-0107

Tetra Pak A3/CompactFlex 2(2)
641550-0300 Issue 2013-09
Doc. No. IM-3212176-0107

Tetra Pak A3/CompactFlex 1(2)
641550-0300 Issue 2013-09
Doc. No. IM-3212176-0107

Tetra Pak A3/CompactFlex 2(2)
641550-0300 Issue 2013-09
Doc. No. IM-3212176-0107

Tetra Pak A3/CompactFlex 1(3)
641550-0300 Issue 2013-09
Doc. No. IM-3212176-0107

Tetra Pak A3/CompactFlex 2(3)
641550-0300 Issue 2013-09
Doc. No. IM-3212176-0107

Tetra Pak A3/CompactFlex 3(3)
641550-0300 Issue 2013-09
Doc. No. IM-3212176-0107

Tetra Pak A3/CompactFlex 3(3)
641550-0300 Issue 2013-09
Doc. No. IM-3212176-0107

Tetra Pak A3/CompactFlex
641550-0300 Issue 2013-09
Doc. No. IM-3212176-0107

Tetra Pak A3/CompactFlex
641550-0300 Issue 2013-09
Doc. No. IM-3212176-0107

Tetra Pak A3/CompactFlex 1(2)
641550-0300 Issue 2013-09
Doc. No. IM-3212176-0107

Tetra Pak A3/CompactFlex
641550-0300 Issue 2013-09
Doc. No. IM-3212176-0107

Tetra Pak A3/CompactFlex 2(2)
641550-0300 Issue 2013-09
Doc. No. IM-3212176-0107

Tetra Pak A3/CompactFlex
641550-0300 Issue 2013-09
Doc. No. IM-3212176-0107

Tetra Pak A3/CompactFlex 1(3)
641550-0300 Issue 2013-09
Doc. No. IM-3212176-0107

Tetra Pak A3/CompactFlex
641550-0300 Issue 2013-09
Doc. No. IM-3212176-0107

Tetra Pak A3/CompactFlex 2(3)
641550-0300 Issue 2013-09
Doc. No. IM-3212176-0107

Tetra Pak A3/CompactFlex
641550-0300 Issue 2013-09
Doc. No. IM-3212176-0107

Tetra Pak A3/CompactFlex 3(3)
641550-0300 Issue 2013-09
Doc. No. IM-3212176-0107

Tetra Pak A3/CompactFlex
641550-0300 Issue 2013-09
Doc. No. IM-3212176-0107

Tetra Pak A3/CompactFlex 3(3)
641550-0300 Issue 2013-09
Doc. No. IM-3212176-0107

Tetra Pak A3/CompactFlex
641550-0300 Issue 2013-09
Doc. No. IM-3212176-0107

Tetra Pak A3/CompactFlex
641550-0300 Issue 2013-09
Doc. No. IM-3212176-0107

Tetra Pak A3/CompactFlex
641550-0300 Issue 2013-09
Doc. No. IM-3212176-0107

Tetra Pak A3/CompactFlex 1(3)
641550-0300 Issue 2013-09
Doc. No. IM-3212176-0107

Tetra Pak A3/CompactFlex 1(2)
641550-0300 Issue 2013-09
Doc. No. IM-3212176-0107

Tetra Pak A3/CompactFlex 2(3)
641550-0300 Issue 2013-09
Doc. No. IM-3212176-0107

Tetra Pak A3/CompactFlex 2(2)

641550-0300 Issue 2013-09

Doc. No. IM-3212176-0107

Tetra Pak A3/CompactFlex 3(3)

641550-0300 Issue 2013-09

Doc. No. IM-3212176-0107